EMISSION APPLICATIONS

2014 Jeep - Cherokee

EMISSION APPLICATIONS

2014 Cherokee

Engine & Fuel System	(1) Emission Control Systems & Devices	EGR Test No.
2.4L (144") 4-Cyl. SFI	(2) **CCV, EVAP, TWC, FR, SPK,** (3) **HO2S, CEC, MIL,** EVAP-LDP, EVAP-CPCS, EVAP-ORVR, EVAP-VC	...
3.2L (198") V6 SFI	(2) **CCV, EVAP,** (3) **TWC, FR, SPK,** (4) **HO2S, CEC, MIL,** EVAP-LDP, EVAP-CPCS, EVAP-ORVR, EVAP-VC	...

(1) Major emission control systems and devices are listed in bold type. Components and other related devices are listed in light type.

(2) System uses a vacuum controlled (PCV) valve.

(3) Equipped with 2.

(4) Equipped with 4.

EMISSION CONTROL ABBREVIATIONS

Gasoline & Diesel

"A"

A/C

Air Conditioning

A/C-ISUS

A/C Idle Speed-Up Solenoid

A/F

Air/Fuel

AAI

Air Assist Injector

ACL

Air Cleaner (Thermostatic Air Cleaner)

ACL-BMS

ACL Bimetallic Sensor

ACL-CKV

ACL Check Valve

ACL-DV

ACL Delay Valve

ACL-PVS

ACL Ported Vacuum Switch

ACL-RDV

ACL Reverse Delay Valve

ACL-RDVS

ACL Reverse Delay Valve (Single)

ACL-TCV

ACL Thermal Control Valve

ACL-TS

ACL Temperature Sensor

ACL-TSOV

ACL Temperature Sensor Override Valve

ACL-TVS

ACL Thermal Vacuum Switch

ACL-TVV

ACL Thermal Vacuum Valve

ACL-VCDV

ACL Vacuum Control Delay Valve

ACL-VCV

ACL Vacuum Control Valve

ACL-VM

ACL Vacuum Motor

ACL-WP

ACL Wax Pellet Type Motor

ADS

Anti-Dieseling Solenoid

AFR

Air/Fuel Ratio Sensor

AFS

Air/Fuel Ratio Sensor

AIH

Air Intake Heaters

AIH-TS

AIH Temperature Sensor

AIR

Air Injection System

AIS

Air Injection System

AIS-ACV

AIS Air Control Valve

AIS-AMV

AIS Air Management Valve

AIS-ASV

AIS Air Switching Valve

AIS-BPV

AIS By-Pass Valve

AIS-CC

AIS Computer Controlled

AIS-CKV

AIS Check Valve

AIS-CSV

AIS Control Solenoid Valve

AIS-CV

AIS Combination Valve

AIS-DV

AIS Diverter Valve

AIS-IMCV

AIS Intake Manifold Change-Over Valve

AIS-MCV

AIS Manifold Change-Over Valve

AIS-PAF

AIS Pulse Air Feeder

AIS-PM

AIS Pump Motor

AIS-PV

AIS Pneumatic Valve

AIS-RV

AIS Relief Valve

AIS-SAV

AIS Secondary Air Valve

AIS-SOL

AIS Solenoid

AIS-SV

AIS Solenoid Valve

AIS-VCV

AIS Vacuum Control Valve

AIS-VSV

AIS Vacuum Switching Valve

AIS-VT

AIS Vacuum Tank

AIS-VCV

AIS Vacuum Control Valve

AIS-VSV

AIS Vacuum Switching Valve

AIV

Air Injection Valve

AIV-SOL

Air Injection Valve Solenoid

ALVW

Adjusted Loaded Vehicle Weight

AMV

Air Management Valve

AP

Air Pump Injection System

AP-ACV

AP Air Control Valve

AP-AMV

AP Air Management Valve

AP-ASRV

AP Air Switching Relief Valve

AP-ASS

AP Air Switching Solenoid

AP-ASV

AP Air Switching Valve

AP-BPV

AP By-Pass Valve

AP-CKV

AP Check Valve

AP-CS

AP Control Solenoid

AP-DCTO

AP Dual Coolant Temperature Override

AP-DLY

AP Delay Valve

AP-DV

AP Diverter Valve

AP-EADV

AP Electric Air Control Diverter Valve

AP-EAMR

AP Electric Air Management Relay

AP-EAMS

AP Electric Air Management Solenoid

AP-EAP

AP Electric Air Pump

AP-EC

AP Electromagnetic Clutch

AP-ERLY

AP Electric Air Pump Relay

AP-RDV

AP Reed Valve

AP-RV

AP Relief Valve

AP-SOL

AP Solenoid

AP-SOV

AP Shut-Off Valve

AP-SV

AP Solenoid Valve

AP-SWV

AP Switchover Valve

AP-TV

AP Transmitting Valve

AP-VCS

AP Vacuum Control Solenoid

AP-VCSV

AP Vacuum Controlled Air Shut-Off Valve

AP-VCV

AP Vacuum Control Valve

AP-VSV

AP Vacuum Switching Valve

A/T

Automatic Transmission

ATCV

Air Temperature Control Valve

"B"

BP/EGR

Backpressure EGR System

BP/EGR-BPS

BP/EGR Backpressure Sensor

BP/EGR-BPT

BP/EGR Backpressure Transducer

BP/EGR-BPV

BP/EGR Backpressure Valve

BP/EGR-BS

BP/EGR Bleed Solenoid

BP/EGR-BVSV

BP/EGR Bimetallic Vacuum Switching Valve

BP/EGR-C

BP/EGR Controller

BP/EGR-CLR

BP/EGR Cooler

BP/EGR-CS

BP/EGR Control Solenoid

BP/EGR-CTO

BP/EGR Coolant Temperature Override

BP/EGR-CV

BP/EGR Control Valve

BP/EGR-DCTO

BP/EGR Dual Coolant Temperature Override

BP/EGR-DS

BP/EGR Diagnostic Solenoid

BP/EGR-DSOL

BP/EGR Duty Solenoid

BP/EGR-DTVSW

BP/EGR Distributor Thermal Vacuum Switch

BP/EGR-DV

BP/EGR Delay Valve

BP/EGR-EET

BP/EGR Electric Transducer

BP/EGR-EPV

BP/EGR External Pressure Valve

BP/EGR-FDV

BP/EGR Forward Delay Valve

BP/EGR-LC

BP/EGR Load Control Valve

BP/EGR-PS

BP/EGR Position Sensor

BP/EGR-PT

BP/EGR Pressure Tranducer

BP/EGR-PVS

BP/EGR Ported Vacuum Switch

BP/EGR-RES

BP/EGR Reservoir

BP/EGR-RST

BP/EGR Restrictor

BP/EGR-SOL

BP/EGR Solenoid

BP/EGR-TCTVS

BP/EGR Torque Converter Thermal Vacuum Switch

BP/EGR-TCV

BP/EGR Thermal Control Valve

BP/EGR-TCVLV

BP/EGR Temperature Control Valve

BP/EGR-TS

BP/EGR Temperature Sensor

BP/EGR-TVS

BP/EGR Thermal Vacuum Switch

BP/EGR-TVV

BP/EGR Thermal Vacuum Valve

BP/EGR-VCV

BP/EGR Vacuum Control Valve

BP/EGR-VM

BP/EGR Vacuum Modulator

BP/EGR-VRV

BP/EGR Vacuum Regulator Valve

BP/EGR-VS

BP/EGR Vacuum Switch

BP/EGR-VSOL

BP/EGR Vent Solenoid

BP/EGR-VSV

BP/EGR Vacuum Switching Valve

"C"

C-4

Computer Controlled Catalytic Converter

CAC

Charge Air Cooler

CAS

Clean Air System

CB

Crankcase Breather

CB-VC

Crankcase Breather-Vapor Canister

CBPS

Coasting By-Pass System

CBVC

Crankcase Breather Vapor Canister

CCIEV

Coolant Controlled Idle Enrichment Valve

CCS

Controlled Combustion System

CCV

Closed Crankcase Ventilation

CD-REGVLV

Crankcase Depression Regulator Valve

CDRV

Crankcase Depression Relief Valve

CEAB

Cold Engine Air Bleed

CEAB-TVS

CEAB Thermal Vacuum Switch

CEAB-TVV

CEAB Thermal Vacuum Valve

CEC

Computerized Engine Controls

CESS

Cold Engine Sensor Switch

CETS

Cold Engine Temperature Switch

CFI

Continuous Fuel Injection

CMH

Cold Mixture Heater

CNG

Compressed Natural Gas

CO

Carbon Monoxide

CO2

Carbon Dioxide

CPI

Central Port Injection

CRV

Coasting Richer Valve

CSI

Central Sequential Injection

CTAVS

Cold Temperature Activated Vacuum System

CTOX

Continous Trap Oxidizer

"D"

DCLV

Deceleration Valve

DCS

Deceleration Control System

DDI

Direct Diesel Injection

DFI

Direct Diesel Injection

DI

Direct Injection

DKV

Deceleration Kick Valve

DMCV

Deceleration Mixture Control Valve

DMS

Dual Manifold System

DOC

Diesel Oxidation Catalyst

DOHC

Dual Overhead Cam

DPF

Diesel Particulate Filter

DPFE

Differential Pressure Feedback EGR Valve

DPFEGR

Differential Pressure Feedback EGR Valve

DTM

Deceleration Throttle Modulator

"E"

EAIR

Electric Air Injection System

EAIR-DV

EAIR Diverter Valve

ECM

Electronic Control Module

ECU

Electronic Control Unit

EDC

Electronic Diesel Control

EDS

Electronic Diesel System

EEC

Electronic Engine Control

EFE

Early Fuel Evaporation

EFE-CKV

EFE Check Valve

EFE-CV

EFE Control Valve

EFE-DTVS

EFE Delay Thermal Vacuum Switch

EFE-HTR

EFE Heater

EFE-HCV

EFE Heat Control Valve

EFE-OTS

EFE Oil Temperature Switch

EFE-PTC

EFE Positive Temperature Coefficient (Intake Heater Grid)

EFE-PVS

EFE Ported Vacuum Switch

EFE-SOL

EFE Solenoid

EFE-TVS

EFE Thermal Vacuum Switch

EFE-TVV

EFE Thermal Vacuum Valve

EFE-VSV

EFE Vacuum Switching Valve

EFI

Electronic Fuel Injection

EFI-MA

EFI Mass Airflow Sensor

EFI-MAF

EFI Mass Airflow Sensor

EGR

Exhaust Gas Recirculation System

EGR-BCS

EGR Boost Check Solenoid

EGR-BPBV

EGR By-Pass Backpressure Valve

EGR-BPT

EGR Backpressure Transducer

EGR-BPV

EGR By-Pass Valve

EGR-BS

EGR Bleed Solenoid

EGR-BSSV

EGR Boost Sensor Solenoid Valve

EGR-BVSV

EGR Bimetallic Vacuum Switching Valve

EGR-C

EGR Controller

EGR-CC

EGR Coolant Controlled

EGR-CLR

EGR Cooler

EGR-VSOL

EGR Vacuum Solenoid

EGR-CKV

EGR Check Valve

EGR-CS

EGR Control Solenoid

EGR-CSOL

EGR Cut-Off Solenoid

EGR-CSV

EGR Control Solenoid

EGR-CTO

EGR Coolant Temperature Override

EGR-CTS

EGR Charge Temperature Sensor

EGR-CTSW

EGR Charge Temperature Switch

EGR-CTTS

EGR Coolant Temperature Thermoswitch

EGR-CV

EGR Control Valve

EGR-CVCV

EGR Constant Vacuum Control Valve

EGR-CVS

EGR Control Vent Solenoid

EGR-DC

EGR Digital Control

EGR-DCTO

EGR Dual Coolant Temperature Override

EGR-DPFE

Differential Pressure Feedback EGR Sensor

EGR-DPFS

EGR Differential Pressure Feedback Sensor

EGR-DS

EGR Diagnostic Solenoid

EGR-DSOL

EGR Duty Solenoid

EGR-DTVS

EGR Delay Thermal Vacuum Switch

EGR-DTVSW

EGR Distributor Thermal Vacuum Switch

EGR-DV

EGR Delay Valve

EGR-EPRS

EGR Exhaust Pressure Regulator Solenoid

EGR-EPRV

EGR Exhaust Pressure Regulator Valve

EGR-EPV

EGR External Pressure Valve

EGR/EVAP-CSV

EGR/EVAP Control Solenoid Valve

EGR-EVR

EGR Vacuum Regulator

EGR-EVRV

EGR Electronic Vacuum Regulator Valve

EGR-FDV

EGR Forward Delay Valve

EGR-FJS

EGR Floor Jet System

EGR-FPS

EGR Feedback Pressure Sensor

EGR-LCV

EGR Load Control Valve

EGR-MAP

EGR Manifold Absolute Pressure Sensor

EGR-PFE

EGR-PFE Sensor

EGR-PS

EGR Position Sensor

EGR-PSW

EGR Pulse Switch

EGR-PVS

EGR Ported Vacuum Switch

EGR-REG

EGR Regulator

EGR-RES

EGR Reservoir

EGR-RST

EGR Restrictor

EGR-SC

EGR Signal Converter

EGR-SEC

EGR, Secondary

EGR-SEN

EGR Sensor

EGR-SOL

EGR Solenoid

EGR-SU

EGR Switchover Valve

EGR-SUB

Sub-EGR Valve

EGR-SVV

EGR Solenoid Vacuum Valve

EGR-T

EGR Temperature Sensor

EGR-TC

EGR Transmission Controlled

EGR-TCTVS

EGR Torque Converter Thermal Vacuum Switch

EGR-TCV

EGR Thermal Control Valve

EGR-TCVLV

EGR Temperature Control Valve

EGR-TRANS

EGR Transducer

EGR-TS

EGR Temperature Sensor

EGR-TSW

EGR Temperature Switch

EGR-TVD

EGR Throttle Valve Diaphragm

EGR-TVS

EGR Thermal Vacuum Switch

EGR-TVSOL

EGR Throttle Valve Solenoid

EGR-TVV

EGR Thermal Vacuum Valve

EGR-VA

EGR Vacuum Amplifier

EGR-VCV

EGR Vacuum Control Valve

EGR-VM

EGR Vacuum Modulator

EGR-VR

EGR Vacuum Regulator

EGR-VRS

EGR Vacuum Regulator Solenoid

EGR-VRSV

EGR Vacuum Regulator Solenoid Valve

EGR-VRV

EGR Vacuum Regulator Valve

EGR-VS

EGR Vacuum Switch

EGR-VSDV

EGR Vacuum Switch Dump Valve

EGR-VSEN

EGR Vacuum Sensor

EGR-VSOL

EGR Vent Solenoid

EGR-VSS

EGR Vacuum Switching Solenoid

EGR-VST

EGR Vacuum Surge Tank

EGR-VSV

EGR Vacuum Switching Valve

EGR-VVCS

EGR Venturi Vacuum Control System

EGRB

EGR Boost Sensor

EGRC

EGR Control Solenoid

EGRC-BPT

EGR Control Backpressure Transducer

EGRC-SV

EGR Control Solenoid Valve

EHOC

Electronically Heated Oxidation Catalyst

EHTWC

Electronically Heated Three-Way Catalyst

EI

Electronic Ignition System

EIS

Electronic Ignition System

ELB

Electronic Lean Burn

EPR

Exhaust Pressure Regulator

EPR-SOL

EPR Solenoid

ESA

Electronic Spark Advance

EVAP

Fuel Evaporative System

EVAP-AAC

EVAP Auxiliary Air Control

EVAP-BPSV

EVAP By-Pass Solenoid Valve

EVAP-BVSV

EVAP Bimetallic Vacuum Switching Valve

EVAP-CAV

EVAP Canister Air Valve

EVAP-CCV

EVAP Control Canister Close Valve

EVAP-CCVSV

EVAP Control Canister Vent Shut Valve

EVAP-CCVVSV

EVAP Closed Canister Valve Vacuum Switching Valve

EVAP-CDCV

EVAP Canister Drain Cut Valve

EVAP-CKV

EVAP Check Valve

EVAP-CPCS

EVAP Canister Purge Control Solenoid

EVAP-CPCSV

EVAP Canister Purge Control Solenoid Valve

EVAP-CPCV

EVAP Canister Purge Control Valve

EVAP-CPRV

EVAP Canister Purge Regulator Valve

EVAP-CPSV

EVAP Canister Vent Shut Valve

EVAP-CPT

EVAP Canister Purge Timer

EVAP-CPTVS

EVAP Canister Purge Thermal Vacuum Switch

EVAP-CPV

EVAP Canister Vent Valve

EVAP-CPVCSV

EVAP Canister Purge Volume Control

EVAP-CPVCV

EVAP Canister Purge Volume Control Valve

EVAP-CPVDV

EVAP Canister Purge Vacuum Delay Valve

EVAP-CPVR

EVAP Canister Purge Valve Resonator

EVAP-CS

EVAP Control Solenoid

EVAP-CSPS

EVAP Control System Pressure Sensor

EVAP-CST

EVAP Canister Surge Tank

EVAP-CT

EVAP Catch Tank

EVAP-CVCS

EVAP Canister Vent Control Solenoid

EVAP-CVCV

EVAP Canister Vent Control Valve

EVAP-CVS

EVAP Canister Vent Solenoid

EVAP-CVSV

EVAP Carburetor Vent Switching Valve

EVAP-CVV

EVAP Canister Vent Valve

EVAP-DCTO

EVAP Dual Coolant Temperature Override

EVAP-DF

EVAP Drain Filter

EVAP-DPS

EVAP Differential Pressure Sensor

EVAP-DV

EVAP-Drain Valve

EVAP-EV

EVAP Emission Valve

EVAP-FBVV

EVAP Fuel Bowl Vent Valve

EVAP-FBVS

EVAP Fuel Bowl Vent Solenoid

EVAP-FCV

EVAP Fuel Cut Valve

EVAP-FLS

EVAP Fuel Level Sensor

EVAP-FOLV

EVAP Fuel Overflow Limiter Valve

EVAP-FS

EVAP Flow Switch

EVAP-FSV

EVAP Flow Switchover Valve<

EVAP-FTEV

EVAP Fuel Tank EVAP Valve

EVAP-FTPCSV

EVAP Fuel Tank Pressure Control Solenoid Valve

EVAP-FTPS

EVAP Fuel Tank Pressure Sensor

EVAP-FTS

EVAP Fuel Temperature Sensor

EVAP-FVCV

EVAP Fuel Vapor Control Valve

EVAP-FVS

EVAP Fuel Vapor Separator

EVAP-FVTS

EVAP Fuel Vapor Temperature Sensor

EVAP-FVV

EVAP Fuel Vent Valve

EVAP-FVVV

EVAP Fuel Vapor Vent Valve

EVAP-IVS

EVAP Inner Vent Solenoid

EVAP-LDP

EVAP Leak Detection Pump

EVAP-LDPAF

EVAP Leak Detection Pump Air Filter

EVAP-LDPF

EVAP Leak Detection Pump Filter

EVAP-LDPVV

EVAP Leak Detection Pump Vent Valve

EVAP-LSEP

EVAP Liquid Separator

EVAP-NVLD

EVAP Natural Vacuum Leak Detection

EVAP-ORVR

Evaporative On-Board Refueling Vapor Recovery System

EVAP-ORVRCV

Evaporative On-Board Refueling Vapor Recovery Check Valve

EVAP-ORVRFTVRV

EVAP-ORVR Fuel Tank Vapor Recirculation

EVAP-OVCV

EVAP Outer Vent Control Valve

EVAP-OWV

EVAP One-Way Valve

EVAP-PCDV

EVAP Purge Control Diaphram Valve

EVAP-PCSV

EVAP Purge Cut-Off Solenoid Valve

EVAP-PFS

EVAP Purge Flow Sensor

EVAP-PFSVVSV

EVAP Purge Flow Switching Valve Vacuum Switching Valve

EVAP-PRRV

EVAP Pressure Relief Rollover Valve

EVAP-PSVVSV

EVAP Pressure Switching Valve Vacuum Switching Valve

EVAP-PSOL

EVAP Purge Solenoid

EVAP-PSSV

EVAP Pressure Switching Solenoid

EVAP-PSVVSV

EVAP Pressure Switching Valve Vacuum Switching Valve

EVAP-PV

EVAP Purge (Frequency) Valve

EVAP-PVS

EVAP Ported Vacuum Switch

EVAP-RV

EVAP Rollover Valve

EVAP-RV/FTPS

EVAP Rollover Valve/Fuel Tank

EVAP-RVSV

EVAP Rollover Vapor Separator Valve

EVAP-SNR

EVAP Canister Sensor

EVAP-SOL

EVAP Solenoid

EVAP-SOV

EVAP Shutoff Valve

EVAP-SSV

EVAP Shut-Off Solenoid Valve

EVAP-SV

EVAP Solenoid Valve

EVAP-TC

EVAP Trap Canister

EVAP-TS

EVAP Temperature Switch

EVAP-TPBPV

EVAP Tank Pressure By-Pass Valve

EVAP-TPCS

EVAP Tank Pressure Control Solenoid

EVAP-TPCV

EVAP Tank Pressure Control Valve

EVAP-TRWV

EVAP Tree-Way Valve

EVAP-TV

EVAP Thermal Valve

EVAP-TVS

EVAP Thermal Vacuum Switch

EVAP-TVV

EVAP Thermal Vacuum Valve

EVAP-TWV

EVAP Two-Way Valve

EVAP-VC

EVAP Vapor Canister

EVAP-VCAT

EVAP Vapor Canister Air Tank

EVAP-VCF

EVAP Vapor Canister Filter

EVAP-VCSV

EVAP Vapor Canister Shut-off Valve

EVAP-VCTV

EVAP Vacuum Control Valve

EVAP-VCV

EVAP Vacuum Canister Valve

EVAP-VCVS

EVAP Vapor Canister Vent Solenoid

EVAP-VM

EVAP Vacuum Motor

EVAP-VPS

EVAP Vapor Pressure Sensor

EVAP-VPSVSV

EVAP Vapor Pressure Sensor Vacuum Switching Valve

EVAP-VS

EVAP Vacuum Sensor

EVAP-VSOL

EVAP Ventilation Solenoid

EVAP-VSOL/LDP

EVAP Ventilation Solenoid/Leak Detection Pump

EVAP-VST

EVAP Vacuum Surge Tank

EVAP-VSV

EVAP Vacuum Switching Valve

EVAP-VV

EVAP Ventilation Valve

EVRS

EGR Vacuum Regulator Solenoid

"F"

FBC

Feedback Carburetor

FCOV

Fuel Change Over Valve

FF

Flex Fuel

FF-CKV

Fuel Fill Check Valve

FF-FCV

Fuel Tank Fuel Cut-Off Valve

FF-FLVV

Fuel Tank Fill Limit Vent Valve

FGOV

Fuel Gravity/Overflow Valve

FGVV

Fuel Gravity Vent Valve

FI

Fuel Injected

FICD

Fast Idle Control Device

FISR

Fast Idle Solenoid Relay

FLV

Fill Limit Valve

FLVV

Fill Limiting Vent Valve

FP-CKV

Fill Pipe Check Valve

FP-RV

Fill Pipe Rollover Valve

FR

Fill Pipe Restrictor

FT-FLVV

Fuel Tank Fill Limit Vent Valve

FT-GVV

Fuel Tank Grade Vent Valve

FT-OPRV

Fuel Tank Over Pressure Vent Valve

FT-PCV

Fuel Tank Pressure Control Valve

FT-VCV

Fuel Tank Vapor Control Valve

FT-VRV

Fuel Tank Vapor Recirculation Valve

FTCV

Fuel Tank Check Valve

FTDPS

Fuel Tank Differential Pressure Sensor

FTEV

Fuel Tank EVAP Valve

FTPS

Fuel Tank Pressure Sensor

FTT

Fuel Tank Temperature Sensor

FTTS

Fuel Tank Temperature Sensor

FTV/LSV

Fuel Tank Vapor/Liquid Seperation Valve

FTVCV

Fuel Tank Vapor Control Valve

FTVPRV

Fuel Tank Ventilation Pressure Retention Valve

FVPS

Fuel Vapor Pressure Sensor

FTVV

Fuel Tank Vent Valve

FVV

Fuel Vapor Valve

"G"

GVWR

Gross Vehicle Weight Rating

"H"

HAC

High Altitude Compensator

HAFS

Heated Air Fuel Ratio Sensor

HAI

Hot Air Intake

HAS

High Altitude System

HC

Hydrocarbons

HCAC-VSV

Hydrocarbon Absorber Catalyst Vacuum Switching Valve

HDC

Heavy Duty Cooling

HDC-CTO

HDC Coolant Temperature Override

HFM-SFI

Hot Film Engine Management SFI

HIC

Hot Idle Compensator

HIM

Heated Intake Manifold

HO

High Output

HO2S

Heated Oxygen Sensor

HP

High Performance

HP

Horsepower

HPCA

Housing Pressure Cold Advance

HSC

High Swirl Combustion

"I"

IAC

Idle Air Control Valve

IACV-SW

IACV Switch

ICOM

Idle Compensator

IDI

Indirect Diesel Injection

IES

Idle Enrichment System

IMCO

Improved Combustion System

"K"

KS

Knock Sensor

"L"

LH-SFI

Hot Wire Sequential Multiport Fuel Injection

LVFD

Liquid/Vapor Fuel Discriminator

LVW

Loaded Vehicle Weight

"M"

MD-TICS

Timing & Injection rate Control System

MDP

Manifold Differential Pressure sensor

ME-SFI

Motor Electronics Sequential Fuel Injection

MFI

Multiport Fuel Injection

MFI-MAF

MFI Mass Airflow Sensor

MFLS

Main Fuel Level Sensor

MI

Mechanical Fuel Injection

MIL

Malfunction Indicator Light

M/T

Manual Transmission

"N"

NAC

Nitrogen Oxides (NOx) Adsorbing Catalyst

NLV

Non-Linear Valve

NOS

NOx Sensor

NOx

NOx Emission Control

NOxC

Nitrogen Oxide Catalyst

NOxS

Nitrogen Oxide Sensor

NOxTWC

NOx adsorptive TWC

NSC

Nitrogen Oxides (NOx) Storage Catalyst

"O"

OBD

On-Board Diagnostic System

PBD (F)/(P)

Full/Partial On-Board Diagnostic

OC

Oxidation Catalytic Converter

OHC

Overhead Cam

ORVR

On-Board Refueling Vapor Recovery

ORVR-COV

ORVR Cut-Off Valve

ORVR-CV

ORVR Control Valve

ORVR-FMV

ORVR Flow Management Valve

ORVR-FTVCV

ORVR Fuel Tank Vapor Control Valve

ORVR-FTVRV

ORVR Fuel Tank Vapor Recirculation Valve

ORVR-LV

ORVR Leveling Valve

ORVR-OCKV

ORVR Overfill Check Valve

ORVR-RCV

ORVR Refueling Control Valve

ORVR-VCV

ORVR Vapor Cut Valve

ORVR-VRV

ORVR Vapor Recirculating Valve

ORVR-VSV

ORVR Vent Shut Valve

ORVR-VV

ORVR Vent Valve

OVCV

Outer Vent Control Valve

O2S

Oxygen Sensor

"P"

PAIR

Pulsed Secondary Air Injection

PAIR-ABV

PAIR Anti-Backfire Valve

PAIR-ACOV

PAIR Air Cut-Off Valve

PAIR-ACS

PAIR Air Control Solenoid

PAIR-ACV

PAIR Air Control Valve

PAIR-AIV

PAIR Air Injection Valve

PAIR-ASCS

PAIR Air Suction Control Solenoid

PAIR-ASOV

PAIR Air Shutoff Valve

PAIR-ASS

PAIR Air Switching Solenoid

PAIR-ASV

PAIR Air Switching Valve

PAIR-ASVL

PAIR Air Suction Valve

PAIR-AVCS

PAIR Air Valve Control Solenoid

PAIR-CSV

PAIR Control Solenoid Valve

PAIR-CKV

PAIR Check Valve

PAIR-DV

PAIR Diverter Valve

PAIR-PAF

PAIR Pulse Air Feeder

PAIR-PAV

PAIR Pulse Air Valve

PAIR-RES

PAIR Resonator

PAIR-RV

PAIR Reed Valve

PAIR-SCSV

PAIR Swirl Control Solenoid Valve

PAIR-SCV

PAIR Swirl Control Valve

PAIR-SOL

PAIR Solenoid

PAIR-VSV

PAIR Vacuum Switching Valve

PCM

Powertrain Control Module

PCV

Positive Crankcase Ventilation

PCV-DOV

PCV Dual Orifice Valve

PCV-HCB

PCV Heated Crankcase Breather

PCV-HE

PCV Heating Element

PCV-PRV

PCV Pressure Regulator Valve

PCV-SOL

PCV Solenoid

PEVR

Power Enrichment Vacuum Regulator

PPM

Parts Per Million

PTOX

Periodic Trap Oxidizer

PURCV

Purge Crankcase Ventilation

PVCS

Ported Valve Control System

PVCS-A

PVCS Actuator

PVCS-CS

PVCS Control Solenoid

PVLCS

Power Valve Control System

"R"

ROV

Rollover Valve

"S"

SAI-SV

Secondary Air Injection Shutoff Valve

SAIR-CV

Secondary Air Injection Control Valve

SC

Supercharged or Super Charger

SC MFI

Supercharged Multiport Fuel Injection

SCR

Selective Catalytic Reduction

SCSV

Swirl Control Solenoid Valve

SCV

Swirl Control Valve

SCV-A

SCV Actuator

SFI

Sequential Multiport Fuel Injection

SFI-MAF

SFI Mass Airflow Sensor

SFLS

Sub-Fuel Level Sensor

SOHC

Single Overhead Cam

SPK

Spark Controls

SPK-AVM

SPK Advance Vacuum Modulator

SPK-BVSV

SPK Bimetal Vacuum Switching Valve

SPK-CC

SPK Computer Controlled

SPK-CKV

SPK Check Valve

SPK-CSSA

SPK Cold Start Spark Advance System

SPK-CSSH

SPK Cold Start Spark Hold System

SPK-CTO

SPK Coolant Temperature Override

SPK-DAVS

SPK Distributor Vacuum Advance Solenoid

SPK-DCKV

SPK Distributor Check Valve

SPK-DCTO

SPK Dual Coolant Temperature Override

SPK-DDD

SPK Dual Diaphragm Distributor

SPK-DMV

SPK Distributor Modulator Valve

SPK-DPD

SPK Dual Point Distributor

SPK-DPVS

SPK Distributor Ported Vacuum Switch

SPK-DRCV

SPK Distributor Retard Control Valve

SPK-DRS

SPK Distributor Retard Solenoid

SPK-DSVMV

SPK Distributor Spark Vacuum Modulator Valve

SPK-DTVS

SPK Distributor Thermal Vacuum Switch

SPK-DTVV

SPK Distributor Thermal Vacuum Valve

SPK-DV

SPK Delay Valve

SPK-DVA

SPK Distributor Vacuum Advance

SPK-DVAS

SPK Distributor Vacuum Advance Solenoid

SPK-DVCS

SPK Distributor Vacuum Control Solenoid

SPK-DVCSW

SPK Distributor Vacuum Controlled Switch

SPK-DVCV

SPK Distributor Vacuum Control Valve

SPK-DVDV

SPK Distributor Vacuum Delay Valve

SPK-DVRS

SPK Distributor Vacuum Retard Switch

SPK-DVRV

SPK Distributor Vacuum Regulating Valve

SPK-DVVV

SPK Distributor Vacuum Vent Valve

SPK-EAVS

SPK Electronically Actuated Vacuum Switch

SPK-EDM

SPK Electronic Distributor Modulator

SPK-EI

SPK Electronic Ignition

SPK-ESA

SPK Electronic Spark Advance

SPK-ESC

SPK Electronic Spark Control (Retard)

SPK-ESS

SPK Electronic Spark Selection

SPK-EST

SPK Electronic Spark Timing

SPK-FDV

SPK Forward Delay Valve

SPK-HPCA

SPK Housing Pressure Cold Advance

SPK-ITCS

SPK Ignition Timing Control System

SPK-ITVS

SPK Ignition Timing Vacuum Switch

SPK-NLVR

SPK Non-Linear Vacuum Regulator

SPK-OSAC

SPK Orifice Spark Advance Control

SPK-PVA

SPK Ported Vacuum Advance

SPK-PVS

SPK Ported Vacuum Switch

SPK-RDO

SPK Retard Delay Orifice

SPK-RDV

SPK Reverse Delay Valve

SPK-RDVD

SPK Reverse Delay Valve (Dual)

SPK-RDVLV

SPK Retard Delay Valve

SPK-RDVS

SPK Reverse Delay Valve (Single)

SPK-RETS

SPK Retard Switch

SPK-SC

SPK Speed Controlled

SPK-SOL

SPK Solenoid

SPK-SRRV

SPK Spark Relay Regulator Valve

SPK-TAVIA

SPK Temperature Activated Vacuum Ignition Advance

SPK-TCS

SPK Transmission Controlled Spark

SPK-TCSYS

SPK Timing Control System

SPK-TIDC

SPK Thermostatic Ignition Distributor Control

SPK-TV

SPK Thermal Valve

SPK-TVS

SPK Thermal Vacuum Switch

SPK-VACTO

SPK Vacuum Advance Coolant Temperature Override

SPK-VAS

SPK Vacuum Advance Solenoid

SPK-VAV

SPK Vacuum Advance Valve

SPK-VR

SPK Vacuum Retard

SPK-VRSW

SPK Vacuum Retard Switch

SPK-VSV

SPK Vacuum Switching Valve

SPK-VTCS

SPK Vacuum Timing Control System

SPL

Smoke Puff Limiter

SRI

Service Reminder Indicator

SSCA

Stepped Speed Control Actuator

SSCS

Stepped Speed Control Solenoid

STS

Service Throttle Soon Light

STVS

Secondary Throttle Valve System

SUB-HO2S

Sub-Heated Oxygen Sensor (after CAT)

SUB-O2S

Sub-Oxygen Sensor

SUB-TWC

Sub Three-Way Catalytic Converter

"T"

TAA

Turbo Air-To-Air

TAA

Throttle Actuator Assembly

TAB

Thermactor Air By-Pass

TAD

Thermactor Air Diverter

TAC

Thermostatic Air Cleaner

TBI

Throttle Body Injection

TBPCS

Throttle By-Pass Control System

TC

Turbo Charger

TCC

Torque Converter Clutch

TCCL

Torque Converter Control

TCD

Throttle Closing Dashpot

TC-DV

TC Delay Valve

TC-TVC

TC Thermal Vacuum Switch

TC-VS

TC Vacuum Switch

TD

Thermactor Diverter

TFT

Tank Fuel Temperature Sensor

THOS2

Third Heated Oxygen Sensor

TICV

Thermal Ignition Control Valve

TIV

Thermal Idle Valve

TK

Throttle Kicker

TLUC

Transmission Lock-Up Converter

TLUC-TVS

TLUC Thermal Vacuum Switch

TLUC-VS

TLUC Vacuum Switch

TM

Throttle Modulator

TOS

Throttle Opener System

TP

Throttle Positioner

TPI

Tuned Port Fuel Injection

TPV

Throttle Poppet Valve

TR

Thermal Reactor

TRC

Throttle Return Control

TRCS

Throttle Return Control Solenoid

TRCTL

Throttle Return Control Throttle Lever Actuator

TRSCV

Throttle Return Solenoid Control Valve

TRTVV

Temperature Regulator Thermal Vacuum Valve

TRVV

Transmission Vacuum Valve

TSOL

Throttle Solenoid

TVISD

Throttle Vacuum Idle Speed Diaphragm

TVM

Transmission Vacuum Modulator

TWC

Three-Way Catalytic Converter

TWC+OC

Three-Way + Oxidation Catalytic Converter

"V"

VA

Vacuum Advance Unit

VAC-AMP

Vacuum Amplifier

VA-CTO

VA Coolant Temperature Override

VCV

Vacuum Cut Valve

VCV-BV

VCV By-Pass Valve

VLFR

Vent Line Flow Restrictor/Anti-Trickle Fill Valve

"W"

WU

Warm-Up Catalyst

WU-OC

Warm-Up Oxidation Converter

WU-TWC

Warm-Up Three-Way Catalytic Converter

GENERAL INFORMATION

Anti-Lock Brake Safety Precautions

* PLEASE READ THIS FIRST *

This article is intended for general information purposes only. This information may not apply to all makes and models. If vehicle is equipped with Anti-Lock Brake System (ABS), refer to appropriate ANTI-LOCK BRAKE SYSTEM article in the BRAKES section for description, operation, depressurizing, testing, system bleeding, trouble shooting and servicing of specific system.

ANTI-LOCK BRAKE SAFETY PRECAUTIONS

WARNING: Failure to depressurize ABS could lead to physical injury.

- NEVER open a bleeder valve or loosen a hydraulic line while ABS is pressurized.
- NEVER disconnect or reconnect any electrical connectors while ignition is on. Damage to ABS control unit may result.
- **DO NOT** attempt to bleed hydraulic system without first referring to the appropriate ANTI-LOCK BRAKE SYSTEM article in the BRAKES section.
- Only use specially designed brake hoses/lines on ABS equipped vehicles.
- **DO NOT** tap on speed sensor components (sensor, sensor rings). Sensor rings must be pressed into hubs, NOT hammered into hubs. Striking these components can cause demagnetization or a loss of polarization, affecting the accuracy of the speed signal returning to the ABS control unit.
- **DO NOT** mix tire sizes. Increasing the width, as long as tires remain close to the original diameter, is acceptable. Rolling diameter must be identical for all 4 tires. Some manufacturers recommend tires of the same brand, style and type. Failure to follow this precaution may cause inaccurate wheel speed readings.
- **DO NOT** contaminate speed sensor components with grease. Only use recommended coating, when system calls for an anti-corrosion coating.
- When speed sensor components have been removed, ALWAYS check sensor-to-ring air gaps when applicable. These specifications can be found in each appropriate article.
- ONLY use recommended brake fluids. **DO NOT** use silicone brake fluids in an ABS equipped vehicle.
- When installing transmission devices (CB's, telephones, etc.) on ABS equipped vehicles, **DO NOT** locate the antenna near the ABS control unit (or any control unit).
- Disconnect all on-board computers, when using electric welding equipment.
- **DO NOT** expose the ABS control unit to prolonged periods of high heat (185 °F/85°C for 2 hours is generally considered a maximum limit).

GENERAL INFORMATION

Clutch Trouble Shooting

* PLEASE READ THIS FIRST *

NOTE: **This is GENERAL information. This article is not intended to be specific to any unique situation or individual vehicle configuration. For model-specific information see appropriate articles where available.**

ALL MODELS

NOTE: **This is GENERAL information. This article is not intended to be specific to any unique situation or individual vehicle configuration. For model-specific information see appropriate articles where available.**

CLUTCH TROUBLE SHOOTING

Problem & Possible Cause	Action
Clutch Chatters/Grabs	
Incorrect Pedal Adjustment	Adjust Free Play
Worn Input Shaft Spline	Replace Input Shaft
Binding Pressure Plate	Replace Pressure Plate
Binding Throw-Out Lever	Check Throw-Out Lever, Check Throw-Out Bearing, Check Bearing Retainer
Uneven Pressure Plate Contact With Flywheel	Align/Replace Worn Parts
Transmission Misaligned	Align Transmission
Worn Pressure Plate	Replace Clutch Assembly
Oil-Saturated Disc	Replace Clutch Assembly, Repair Oil Leak
Loose Engine Mounts	Replace Engine Mounts
Clutch Pedal Sticks Down	
Clutch Cable Binding	Replace Clutch Cable
Weak Pressure Plate Springs	Replace Clutch Assembly
Binding Clutch Linkage	Lubricate Linkage
Broken Clutch Pedal Return Spring	Replace Return Spring
Clutch Will Not Release	
Oil-Saturated Disc	Replace Clutch Assembly, Repair Oil Leak
Defective Disc Face	Replace Clutch Assembly
Disc Sticking on Input Shaft Splines	Replace Disc/Input Shaft

Binding Pilot Bearing	Replace Pilot Bearing
Faulty Clutch Master Cylinder	Replace Master Cylinder
Faulty Clutch Slave Cylinder	Replace Slave Cylinder
Blown Clutch Hose	Replace Hose
Sticky Throw-Out Bearing Sleeve	Clean/Lube Sleeve
Clutch Cable Binding	Replace Clutch Cable
Broken/Loose Bellhousing	Check Bellhousing
Rattling/Squeaking	
Broken Throw-Out Lever Return Spring	Replace Return Spring
Faulty Throw-Out Bearing	Replace Throw-Out Bearing
Faulty Clutch Disc	Replace Clutch Disc
Faulty Pilot Bearing	Replace Pilot Bearing
Worn Throw-Out Bearing	Replace Throw-Out Bearing
Dry Bearing Retainer Slide For Throw-Out Bearing Sleeve	Lubricate Slide
Slipping	
Faulty Pressure Plate	Replace Clutch Assembly
Worn Clutch Disc	Replace Clutch Assembly
Incorrect Alignment	Realign Clutch Assembly
Faulty Clutch Slave Cylinder	Replace Slave Cylinder
No Pedal Pressure	
Leaky Hydraulic System	Check Clutch Master Cylinder, Check Clutch Slave Cylinder
	Check Clutch Hose
Broken Clutch Cable	Replace Clutch Cable
Faulty Throw-Out Lever	Replace Throw-Out Lever
Broken Clutch Linkage	Repair Clutch Linkage
Noisy Clutch Pedal	
Faulty Safety Switch	Check/Replace Switch
Noisy Self-Adj. Ratchet	Replace Ratchet
Dry Throw-Out Bearing	Replace Throw-Out Bearing
Dry Pilot Bearing	Replace Pilot Bearing
Worn Input Shaft	Replace Input Shaft

GENERAL INFORMATION

Drive Axle Noise Diagnosis

* PLEASE READ THIS FIRST *

NOTE: **This is GENERAL information. This article is not intended to be specific to any unique situation or individual vehicle configuration. For model-specific information see appropriate articles where available.**

UNRELATED NOISES

NOTE: **This is GENERAL information. This article is not intended to be specific to any unique situation or individual vehicle configuration. For model-specific information see appropriate articles where available.**

Some driveline trouble symptoms are also common to the engine, transmission, wheel bearings, tires and other parts of the vehicle. Make sure that cause of trouble actually is in the drive axle before adjusting, repairing, or replacing any parts.

NON-DRIVE AXLE NOISES

NOTE: **This is GENERAL information. This article is not intended to be specific to any unique situation or individual vehicle configuration. For model-specific information see appropriate articles where available.**

A few conditions can sound just like drive axle noise and have to be considered in pre-diagnosis. The 4 most common noises are exhaust, tires, CV/universal joints and trim moldings.

In certain conditions, the pitch of exhaust gases may sound like gear whine. At other times, it may be mistaken for a wheel bearing rumble.

Tires, especially radial and snow tires, can have a high-pitched tread whine or roar, similar to gear noise. Also, some non-standard tires with an unusual tread construction may emit a roar or whine.

Defective CV/universal joints may cause clicking noises or excessive driveline play that can be improperly diagnosed as drive axle problems.

Trim and moldings can also cause a whistling or whining noise. Ensure that none of these components are causing the noise before disassembling the drive axle.

GEAR NOISE

NOTE: **This is GENERAL information. This article is not intended to be specific to any**

unique situation or individual vehicle configuration. For model-specific information see appropriate articles where available.

A "howling" or "whining" noise from the ring and pinion gear can be caused by an improper gear pattern, gear damage, or improper bearing preload. It can occur at various speeds and driving conditions, or it can be continuous.

Before disassembling axle to diagnose and correct gear noise, make sure that tires, exhaust, and vehicle trim have been checked as possible causes.

CHUCKLE

NOTE: **This is GENERAL information. This article is not intended to be specific to any unique situation or individual vehicle configuration. For model-specific information see appropriate articles where available.**

This is a particular rattling noise that sounds like a stick against the spokes of a spinning bicycle wheel. It occurs while decelerating from 40 MPH and usually can be heard until vehicle comes to a complete stop. The frequency varies with the speed of the vehicle.

A chuckle that occurs on the driving phase is usually caused by excessive clearance due to differential gear wear, or by a damaged tooth on the coast side of the pinion or ring gear. Even a very small tooth nick or a ridge on the edge of a gear tooth is enough to cause the noise.

This condition can be corrected simply by cleaning the gear tooth nick or ridge with a small grinding wheel. If either gear is damaged or scored badly, the gear set must be replaced. If metal has broken loose, the carrier and housing must be cleaned to remove particles that could cause damage.

KNOCK

NOTE: **This is GENERAL information. This article is not intended to be specific to any unique situation or individual vehicle configuration. For model-specific information see appropriate articles where available.**

This is very similar to a chuckle, though it may be louder, and occur on acceleration of deceleration. Knock can be caused by a gear tooth that is damaged on the drive side of the ring and pinion gears. Ring gear bolts that are hitting the carrier casting can cause knock. Knock can also be due to excessive end play in the axle shafts.

CLUNK

NOTE: **This is GENERAL information. This article is not intended to be specific to any unique situation or individual vehicle configuration. For model-specific information see appropriate articles where available.**

Clunk is a metallic noise heard when an automatic transmission is engaged in Reverse or Drive, or when throttle

is applied or released. It is caused by backlash somewhere in the driveline, but not necessarily in the axle. To determine whether driveline clunk is caused by the axle, check the total axle backlash as follows:

1. Raise vehicle on a frame or twinpost hoist so that drive wheels are free. Clamp a bar between axle companion flange and a part of the frame or body so that flange cannot move.
2. On conventional drive axles, lock the left wheel to keep it from turning. On all models, turn the right wheel slowly until it is felt to be in drive condition. Hold a chalk marker on side of tire about 12" from center of wheel. Turn wheel in the opposite direction until it is again felt to be in drive condition.
3. Measure the length of the chalk mark, which is the total axle backlash. If backlash is one inch or less, clunk will not be eliminated by overhauling drive axle.

BEARING WHINE

NOTE: This is GENERAL information. This article is not intended to be specific to any unique situation or individual vehicle configuration. For model-specific information see appropriate articles where available.

Bearing whine is a high-pitched sound similar to a whistle. It is usually caused by malfunctioning pinion bearings. Pinion bearings operate at driveshaft speed. Roller wheel bearings may whine in a similar manner if they run completely dry of lubricant. Bearing noise will occur at all driving speeds. This distinguishes it from gear whine, which usually comes and goes as speed changes.

BEARING RUMBLE

NOTE: This is GENERAL information. This article is not intended to be specific to any unique situation or individual vehicle configuration. For model-specific information see appropriate articles where available.

Bearing rumble sounds like marbles being tumbled. It is usually caused by a malfunctioning wheel bearing. The lower pitch is because the wheel bearing turns at only about 1/3 of driveshaft speed.

CHATTER ON TURNS

NOTE: This is GENERAL information. This article is not intended to be specific to any unique situation or individual vehicle configuration. For model-specific information see appropriate articles where available.

This is a condition where the whole front or rear vibrates when vehicle is moving. The vibration is easily felt and heard. Extra differential thrust washers installed during axle repair can cause a condition of partial lock-up that creates the chatter.

AXLE SHAFT NOISE

NOTE: This is GENERAL information. This article is not intended to be specific to any

unique situation or individual vehicle configuration. For model-specific information see appropriate articles where available.

Axle shaft noise is similar to gear noise and pinion bearing whine. Axle shaft bearing noise will normally distinguish itself from gear noise by occurring in all driving modes. Noise will persist with transmission in neutral while vehicle is moving at problem speed.

If vehicle displays this noise condition, remove suspect axle shafts and replace axle bearings. Re-evaluate vehicle for noise before removing any internal components.

VIBRATION

NOTE: **This is GENERAL information. This article is not intended to be specific to any unique situation or individual vehicle configuration. For model-specific information see appropriate articles where available.**

Vibration is a high-frequency trembling, shaking or grinding condition (felt or heard) that may be constant or variable in level and con occur during the total operating speed range of the vehicle.

The types of vibrations that can be felt in the vehicle can be divided into 3 main groups:

- Vibrations of various unbalanced rotating parts of the vehicle.
- Resonance vibrations of the body and frame structures caused by rotating of unbalance parts.
- Tip-in moans of resonance vibrations from stressed engine or exhaust system mounts or driveline flexing modes.

GENERAL INFORMATION

Electrostatic Discharge (ESD) Warning - Basic Information

* PLEASE READ THIS FIRST *

NOTE: **This article is intended for general information purposes only. Contents are generic in nature and all information may or may not apply to all vehicles.**

INTRODUCTION

NOTE: **This article is intended for general information purposes only. Contents are generic in nature and all information may or may not apply to all vehicles.**

All Electrostatic Discharge (ESD) sensitive components contain solid state circuits (transistors, diodes, semiconductors) that may become damaged when contacted with an electrostatic charge. The following information applies to all ESD sensitive devices. The ESD symbol shown in Fig. **Fig. 1** may be used on schematics to indicate which components are ESD sensitive. See **Fig. 1**. Although different manufactures may display different symbols to represent ESD sensitive devices, the handling and measuring precautions and procedures are the same.

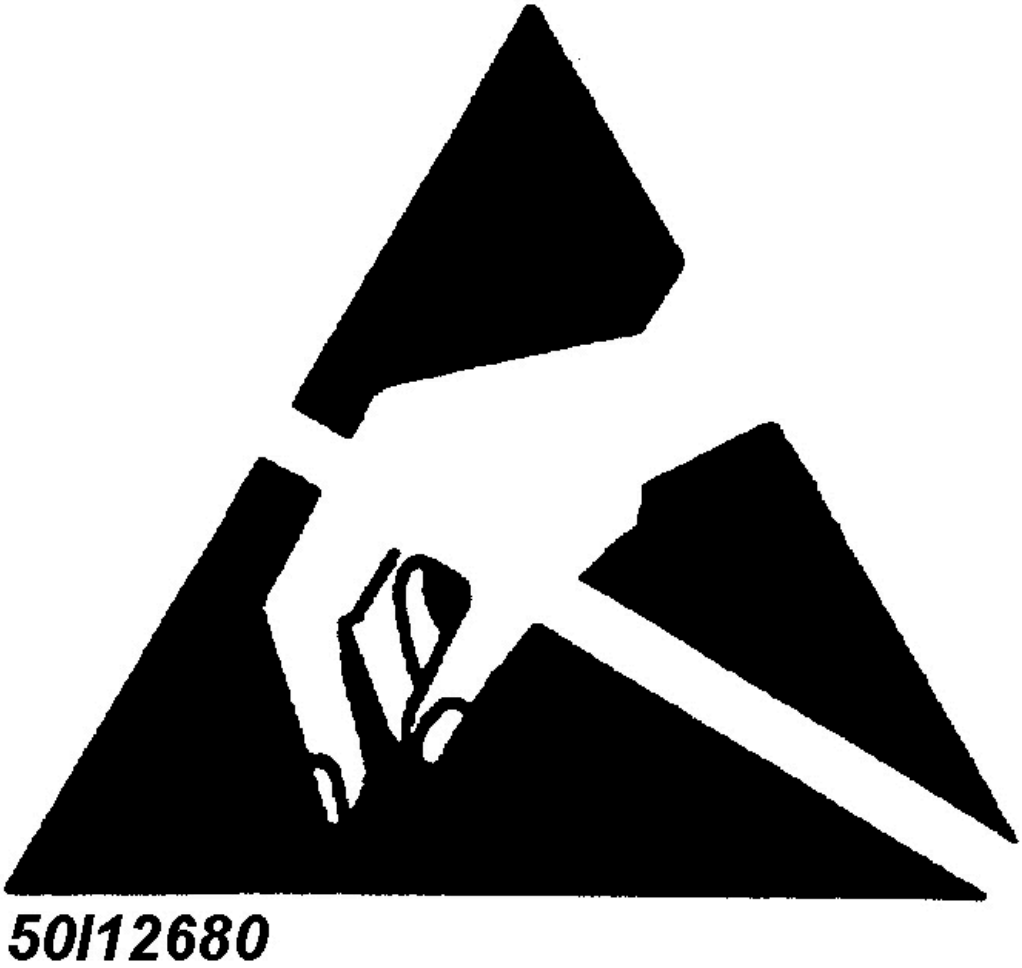

Fig. 1: Sample ESD Symbol

HANDLING STATIC-SENSITIVE CIRCUITS/DEVICES

NOTE: This article is intended for general information purposes only. Contents are generic in nature and all information may or may not apply to all vehicles.

When handling an electronic part that is ESD sensitive, the technician should follow these guidelines to reduce any possible electrostatic charge build-up on the technician's body and the electronic part.

1. Always touch a known good ground source before handling the part. This should be repeated while handling the part and more frequently after sitting down from a standing position, sliding across the seat or walking a distance.

2. Avoid touching electrical terminals of the part, unless instructed by a diagnostic procedure.
3. DO NOT open the package of a new part until it is time to install the part.
4. Before removing the part from its package, ground the package to a known good ground source.

CHECKING STATIC-SENSITIVE CIRCUITS/DEVICES

NOTE: This article is intended for general information purposes only. Contents are generic in nature and all information may or may not apply to all vehicles.

1. Solid State circuits in electronic devices are shown greatly simplified in schematics. See **Fig. 2**. Due to the simplification of the electronic devices on the schematic, resistance measurements could be misleading or could lead to an electrostatic discharge. Always follow the recommended diagnostic procedure.

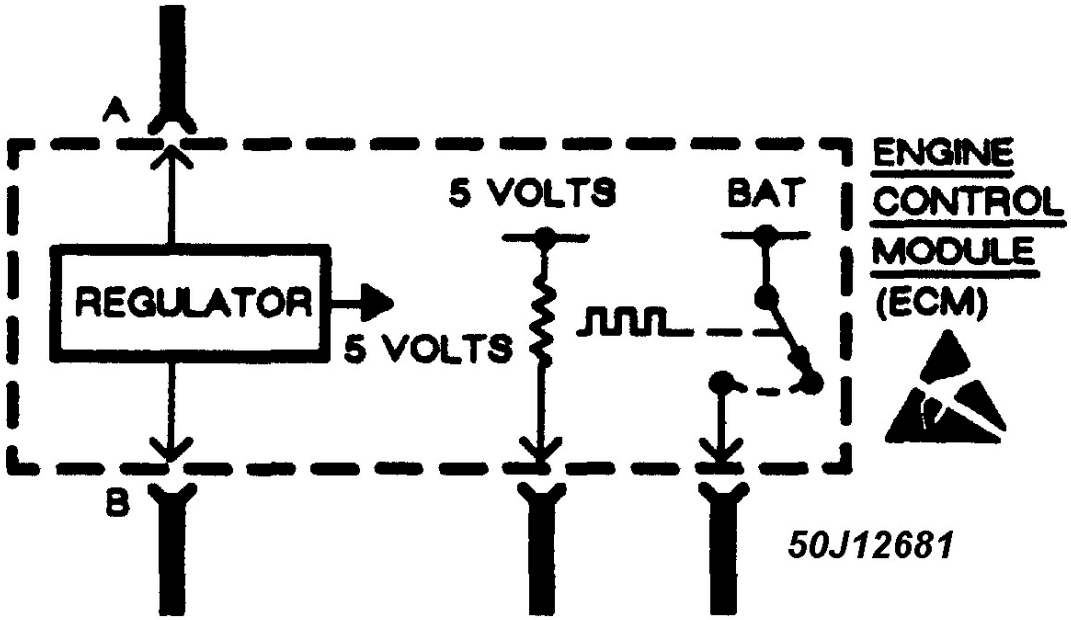

Fig. 2: Sample Schematic Showing Typical ESD Sensitive Device

2. Only measure resistance at the terminals of the devices when instructed by the recommended diagnostic procedure.
3. When using a voltmeter, be sure to connect the ground lead first.

GENERAL INFORMATION

Engine Overhaul Procedures

* PLEASE READ THIS FIRST *

NOTE: **Examples used in this article are general in nature and do not necessarily relate to a specific engine or system. Illustrations and procedures have been chosen to guide mechanic through engine overhaul process. Descriptions of processes of cleaning, inspection, assembly and machine shop practice are included.**

Always refer to appropriate engine overhaul article, if available, in the ENGINES section for complete overhaul procedures and specifications for the vehicle being repaired.

DESCRIPTION

Examples used in this article are general in nature and do not necessarily relate to a specific engine or system. Illustrations and procedures have been chosen to guide mechanic through engine overhaul process. Descriptions of cleaning, inspection, and assembly processes are included.

ENGINE IDENTIFICATION

Engine may be identified from Vehicle Identification Number (VIN) stamped on a metal tab. Metal tab may be located in different locations depending on manufacturer. Engine identification number or serial number is located on cylinder block. Location varies with each manufacturer.

INSPECTION PROCEDURES

* PLEASE READ THIS FIRST *

NOTE: **Examples used in this article are general in nature and do not necessarily relate to a specific engine or system. Illustrations and procedures have been chosen to guide mechanic through engine overhaul process. Descriptions of processes of cleaning, inspection, assembly and machine shop practice are included.**

Always refer to appropriate engine overhaul article, if available, in the ENGINES section for complete overhaul procedures and specifications for the vehicle being repaired.

GENERAL

NOTE: **Examples used in this article are general in nature and do not necessarily relate to a specific engine or system. Illustrations and procedures have been chosen**

to guide mechanic through engine overhaul process. Descriptions of processes of cleaning, inspection, assembly and machine shop practice are included.

Always refer to appropriate engine overhaul article, if available, in the ENGINES section for complete overhaul procedures and specifications for the vehicle being repaired.

Engine components must be inspected to meet manufacturer's specifications and tolerances during overhaul. Proper dimensions and tolerances must be met to obtain proper performance and maximum engine life.

Micrometers, depth gauges and dial indicator are used for checking tolerances during engine overhaul. Magnaflux, Magnaglo, dye-check, ultrasonic and x-ray inspection procedures are used for parts inspection.

MAGNETIC PARTICLE INSPECTION

NOTE: **Examples used in this article are general in nature and do not necessarily relate to a specific engine or system. Illustrations and procedures have been chosen to guide mechanic through engine overhaul process. Descriptions of processes of cleaning, inspection, assembly and machine shop practice are included.**

Always refer to appropriate engine overhaul article, if available, in the ENGINES section for complete overhaul procedures and specifications for the vehicle being repaired.

Magnaflux & Magnaglo

Magnaflux is an inspection technique used to locate material flaws and stress cracks. Component is subjected to a strong magnetic field. Entire component or a localized area can be magnetized. Component is coated with either a wet or dry material that contains fine magnetic particles.

Cracks which are outlined by the particles cause an interruption of magnetic field. Dry powder method of Magnaflux can be used in normal lighting and crack appears as a bright line.

Fluorescent liquid is used along with a Black light in the Magnaglo Magnaflux system. Darkened room is required for this procedure. The crack will appear as a glowing line. Complete demagnetizing of component upon completion is required on both procedures. Magnetic particle inspection applies to ferrous materials only.

PENETRANT INSPECTION

NOTE: **Examples used in this article are general in nature and do not necessarily relate to a specific engine or system. Illustrations and procedures have been chosen to guide mechanic through engine overhaul process. Descriptions of processes of cleaning, inspection, assembly and machine shop practice are included.**

Always refer to appropriate engine overhaul article, if available, in the ENGINES section for complete overhaul procedures and specifications for the vehicle

being repaired.

Zyglo

The Zyglo process coats material with a fluorescent dye penetrant. Component is often warmed to expand cracks that will be penetrated by the dye. Using darkened room and Black light, component is inspected for cracks. Crack will glow brightly.

Developing solution is often used to enhance results. Parts made of any material, such as aluminum cylinder heads or plastics, may be tested using this process.

Dye Check

Penetrating dye is sprayed on the previously cleaned component. Dye is left on component for 5-45 minutes, depending upon material density. Component is then wiped clean and sprayed with a developing solution. Surface cracks will show up as a bright line.

ULTRASONIC INSPECTION

NOTE: **Examples used in this article are general in nature and do not necessarily relate to a specific engine or system. Illustrations and procedures have been chosen to guide mechanic through engine overhaul process. Descriptions of processes of cleaning, inspection, assembly and machine shop practice are included.**

Always refer to appropriate engine overhaul article, if available, in the ENGINES section for complete overhaul procedures and specifications for the vehicle being repaired.

If an expensive part is suspected of internal cracking, ultrasonic testing is used. Sound waves are used for component inspection.

X-RAY INSPECTION

NOTE: **Examples used in this article are general in nature and do not necessarily relate to a specific engine or system. Illustrations and procedures have been chosen to guide mechanic through engine overhaul process. Descriptions of processes of cleaning, inspection, assembly and machine shop practice are included.**

Always refer to appropriate engine overhaul article, if available, in the ENGINES section for complete overhaul procedures and specifications for the vehicle being repaired.

This form of inspection is used on highly stressed components. X-ray inspection may be used to detect internal and external flaws in any material.

PRESSURE TESTING

NOTE: **Examples used in this article are general in nature and do not necessarily relate to a specific engine or system. Illustrations and procedures have been chosen to guide mechanic through engine overhaul process. Descriptions of processes of cleaning, inspection, assembly and machine shop practice are included.**

Always refer to appropriate engine overhaul article, if available, in the ENGINES section for complete overhaul procedures and specifications for the vehicle being repaired.

Cylinder heads can be tested for cracks using a pressure tester. Pressure testing is performed by plugging all but one of the holes of cylinder head and injecting air or water into the open passage.

Leaks are indicated by the appearance of wet or damp areas when using water. When air is used, it is necessary to spray the head surface with a soap solution. Bubbles will indicate a leak. Cylinder head may also be submerged in water heated to specified temperature to check for cracks created during heat expansion.

CLEANING PROCEDURES

*** PLEASE READ THIS FIRST ***

NOTE: **Examples used in this article are general in nature and do not necessarily relate to a specific engine or system. Illustrations and procedures have been chosen to guide mechanic through engine overhaul process. Descriptions of processes of cleaning, inspection, assembly and machine shop practice are included.**

Always refer to appropriate engine overhaul article, if available, in the ENGINES section for complete overhaul procedures and specifications for the vehicle being repaired.

GENERAL

NOTE: **Examples used in this article are general in nature and do not necessarily relate to a specific engine or system. Illustrations and procedures have been chosen to guide mechanic through engine overhaul process. Descriptions of processes of cleaning, inspection, assembly and machine shop practice are included.**

Always refer to appropriate engine overhaul article, if available, in the ENGINES section for complete overhaul procedures and specifications for the vehicle being repaired.

All components of an engine do not have the same cleaning requirements. Physical methods include bead blasting and manual removal. Chemical methods include solvent blast, solvent tank, hot tank, cold tank and steam cleaning of components.

BEAD BLASTING

NOTE: **Examples used in this article are general in nature and do not necessarily relate to a specific engine or system. Illustrations and procedures have been chosen to guide mechanic through engine overhaul process. Descriptions of processes of cleaning, inspection, assembly and machine shop practice are included.**

Always refer to appropriate engine overhaul article, if available, in the ENGINES section for complete overhaul procedures and specifications for the vehicle being repaired.

Manual removal of deposits may be required prior to bead blasting, followed by some other cleaning method. Carbon, paint and rust may be removed using bead blasting method. Components must be free of oil and grease prior to bead blasting. Beads will stick to grease or oil soaked areas causing area not to be cleaned.

Use air pressure to remove all trapped residual beads from component after cleaning. After cleaning internal engine parts made of aluminum, wash thoroughly with hot soapy water. Component must be thoroughly cleaned as glass beads will enter engine oil resulting in bearing damage.

CHEMICAL CLEANING

NOTE: **Examples used in this article are general in nature and do not necessarily relate to a specific engine or system. Illustrations and procedures have been chosen to guide mechanic through engine overhaul process. Descriptions of processes of cleaning, inspection, assembly and machine shop practice are included.**

Always refer to appropriate engine overhaul article, if available, in the ENGINES section for complete overhaul procedures and specifications for the vehicle being repaired.

Solvent tank is used for cleaning oily residue from components. Solvent blasting sprays solvent through a siphon gun using compressed air.

The hot tank, using heated caustic solvents, is used for cleaning ferrous materials only. DO NOT clean aluminum parts such as cylinder heads, bearings or other soft metals using the hot tank. After cleaning, flush parts with hot water.

A non-ferrous part will be ruined and caustic solution will be diluted if placed in the hot tank. Always use eye protection and gloves when using the hot tank.

Use of a cold tank is for cleaning aluminum cylinder heads, carburetors and other soft metals. A less caustic and unheated solution is used. Parts may be left in the tank for several hours without damage. After cleaning, flush parts with hot water.

Steam cleaning, with boiling hot water sprayed at high pressure, is recommended as the final cleaning process when using either hot or cold tank cleaning.

COMPONENT CLEANING

*** PLEASE READ THIS FIRST ***

NOTE: **Examples used in this article are general in nature and do not necessarily relate to a specific engine or system. Illustrations and procedures have been chosen to guide mechanic through engine overhaul process. Descriptions of processes of cleaning, inspection, assembly and machine shop practice are included.**

Always refer to appropriate engine overhaul article, if available, in the ENGINES section for complete overhaul procedures and specifications for the vehicle being repaired.

SHEET METAL PARTS

NOTE: **Examples used in this article are general in nature and do not necessarily relate to a specific engine or system. Illustrations and procedures have been chosen to guide mechanic through engine overhaul process. Descriptions of processes of cleaning, inspection, assembly and machine shop practice are included.**

Always refer to appropriate engine overhaul article, if available, in the ENGINES section for complete overhaul procedures and specifications for the vehicle being repaired.

Examples of sheet metal parts are rocker covers, front and side covers, oil pan and bellhousing dust cover. Glass bead blasting or hot tank may be used for cleaning.

Ensure all mating surfaces are flat. Deformed surfaces should be straightened. Check all sheet metal parts for cracks and dents.

INTAKE & EXHAUST MANIFOLDS

NOTE: **Examples used in this article are general in nature and do not necessarily relate to a specific engine or system. Illustrations and procedures have been chosen to guide mechanic through engine overhaul process. Descriptions of processes of cleaning, inspection, assembly and machine shop practice are included.**

Always refer to appropriate engine overhaul article, if available, in the ENGINES section for complete overhaul procedures and specifications for the vehicle being repaired.

Using solvent cleaning or bead blasting, clean manifolds for inspection. If intake manifold has an exhaust crossover, all carbon deposits must be removed. Inspect manifolds for cracks, burned or eroded areas, corrosion and damage to fasteners.

Exhaust heat and products of combustion cause threads of fasteners to corrode. Replace studs and bolts as necessary. On "V" type intake manifolds, sheet metal oil shield must be removed for proper cleaning and inspection. Ensure all manifold parting surfaces are flat and free of burrs.

CYLINDER HEAD REPLACEMENT

*** PLEASE READ THIS FIRST ***

NOTE: **Examples used in this article are general in nature and do not necessarily relate to a specific engine or system. Illustrations and procedures have been chosen to guide mechanic through engine overhaul process. Descriptions of processes of cleaning, inspection, assembly and machine shop practice are included.**

Always refer to appropriate engine overhaul article, if available, in the ENGINES section for complete overhaul procedures and specifications for the vehicle being repaired.

REMOVAL

NOTE: **Examples used in this article are general in nature and do not necessarily relate to a specific engine or system. Illustrations and procedures have been chosen to guide mechanic through engine overhaul process. Descriptions of processes of cleaning, inspection, assembly and machine shop practice are included.**

Always refer to appropriate engine overhaul article, if available, in the ENGINES section for complete overhaul procedures and specifications for the vehicle being repaired.

Remove intake and exhaust manifolds and valve cover. Cylinder head and camshaft carrier bolts (if equipped) should be removed only when engine is cold. On many aluminum cylinder heads, removal while hot will cause cylinder head warpage. Mark rocker arm or overhead cam components for location.

Remove rocker arm components or overhead cam components. Components must be installed in original location. Individual design rocker arms may utilize shafts, ball-type pedestal mounts or no rocker arms. For all design types, wire components together and identify according to corresponding valve. Remove cylinder head bolts. Note length and location. Some applications require cylinder head bolts be removed in proper sequence to prevent cylinder head damage. See **Fig. 1**. Remove cylinder head.

INSTALLATION

NOTE: **Examples used in this article are general in nature and do not necessarily relate to a specific engine or system. Illustrations and procedures have been chosen to guide mechanic through engine overhaul process. Descriptions of processes of cleaning, inspection, assembly and machine shop practice are included.**

Always refer to appropriate engine overhaul article, if available, in the ENGINES section for complete overhaul procedures and specifications for the vehicle being repaired.

Ensure all surfaces and head bolts are clean. Check that head bolt holes of cylinder block are clean and dry to prevent block damage when bolts are tightened. Clean threads with tap to ensure accurate bolt torque.

Install head gasket on cylinder block. Some manufacturers may recommend sealant be applied to head gasket prior to installation. Note that all holes are aligned. Some gasket applications may be marked so that certain area faces upward. Install cylinder head using care not to damage head gasket. Ensure cylinder head is fully seated on cylinder block.

Some applications require head bolts be coated with sealant prior to installation. This is done if head bolts are exposed to coolant passages. Some applications require head bolts be coated with light coat of engine oil.

Install head bolts. Head bolts should be tightened in proper steps and sequence to specification. See **Fig. 1**. Install remaining components. Tighten all bolts to specification. Adjust valves if required. See VALVE ADJUSTMENT.

NOTE: Some manufacturers require that head bolts be retightened after specified amount of operation. This must be done to prevent head gasket failure.

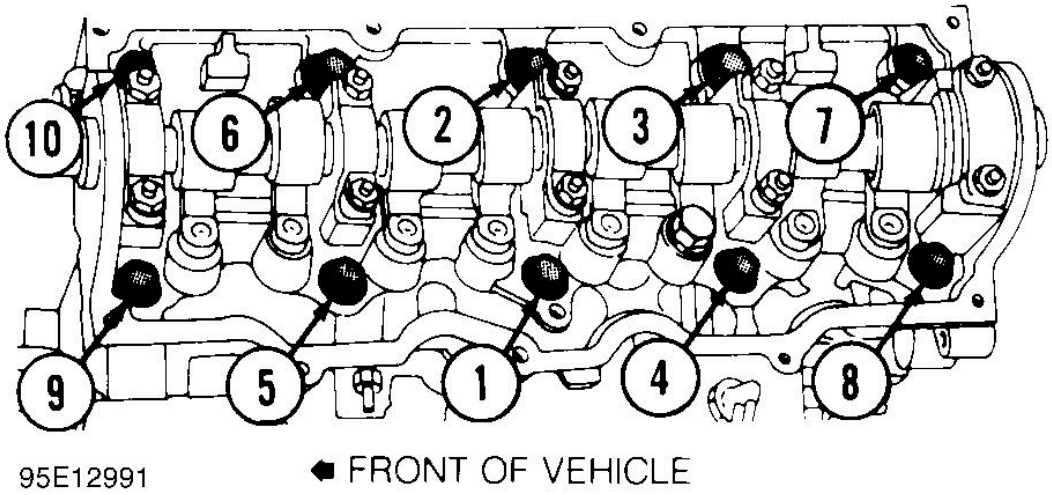

Fig. 1: Typical Cylinder Head Tightening or Loosening Sequence

VALVE ADJUSTMENT

NOTE: Examples used in this article are general in nature and do not necessarily relate to a specific engine or system. Illustrations and procedures have been chosen to guide mechanic through engine overhaul process. Descriptions of processes of cleaning, inspection, assembly and machine shop practice are included.

Always refer to appropriate engine overhaul article, if available, in the ENGINES

section for complete overhaul procedures and specifications for the vehicle being repaired.

Engine specifications will indicate valve train clearance and temperature at which adjustment is to be made on most models. In most cases, adjustment will be made with a cold engine. In some cases, both a cold and a hot clearance will be given for maintenance convenience.

On some models, adjustment is not required. Rocker arms are tightened to specification and valve lash is automatically set. On some models with push rod actuated valve train, adjustment is made at push rod end of rocker arm while other models do not require adjustment.

Clearance will be checked between tip of rocker arm and tip of valve stem in proper sequence using a feeler gauge. Adjustment is made by rotating adjusting screw until proper clearance is obtained. Lock nut is then tightened. Engine will be rotated to obtain all valve adjustments to manufacturer's specifications.

Some models require hydraulic lifter to be bled down and clearance measured. Push rods of different length can be used to obtain proper clearance. Clearance will be checked between tip of rocker arm and tip of valve stem in proper sequence using a feeler gauge.

Overhead cam engines designed without rocker arms actuate valves directly on a cam follower. A hardened, removable disc is installed between the cam lobe and lifter. Clearance will be checked between cam heel and adjusting disc in proper sequence using a feeler gauge. Engine will be rotated to obtain all valve adjustments.

On overhead cam engines designed with rocker arms, adjustment is made at valve end of rocker arm. Ensure valve to be adjusted is riding on heel of cam on all engines. Clearance will be checked between tip of rocker arm and tip of valve stem in proper sequence using a feeler gauge. Adjustment is made by rotating adjusting screw until proper clearance is obtained. Lock nut is then tightened. Engine will be rotated to obtain all valve adjustments to manufacturer's specifications.

CYLINDER HEAD OVERHAUL

*** PLEASE READ THIS FIRST ***

NOTE: **Examples used in this article are general in nature and do not necessarily relate to a specific engine or system. Illustrations and procedures have been chosen to guide mechanic through engine overhaul process. Descriptions of processes of cleaning, inspection, assembly and machine shop practice are included.**

Always refer to appropriate engine overhaul article, if available, in the ENGINES section for complete overhaul procedures and specifications for the vehicle being repaired.

CYLINDER HEAD DISASSEMBLY

NOTE: **Examples used in this article are general in nature and do not necessarily relate**

to a specific engine or system. Illustrations and procedures have been chosen to guide mechanic through engine overhaul process. Descriptions of processes of cleaning, inspection, assembly and machine shop practice are included.

Always refer to appropriate engine overhaul article, if available, in the ENGINES section for complete overhaul procedures and specifications for the vehicle being repaired.

Mark valves for location. Using valve spring compressor, compress valve springs. Remove valve locks. Carefully release spring compressor. Remove retainer or rotator, valve spring, spring seat and valve. See **Fig. 2**.

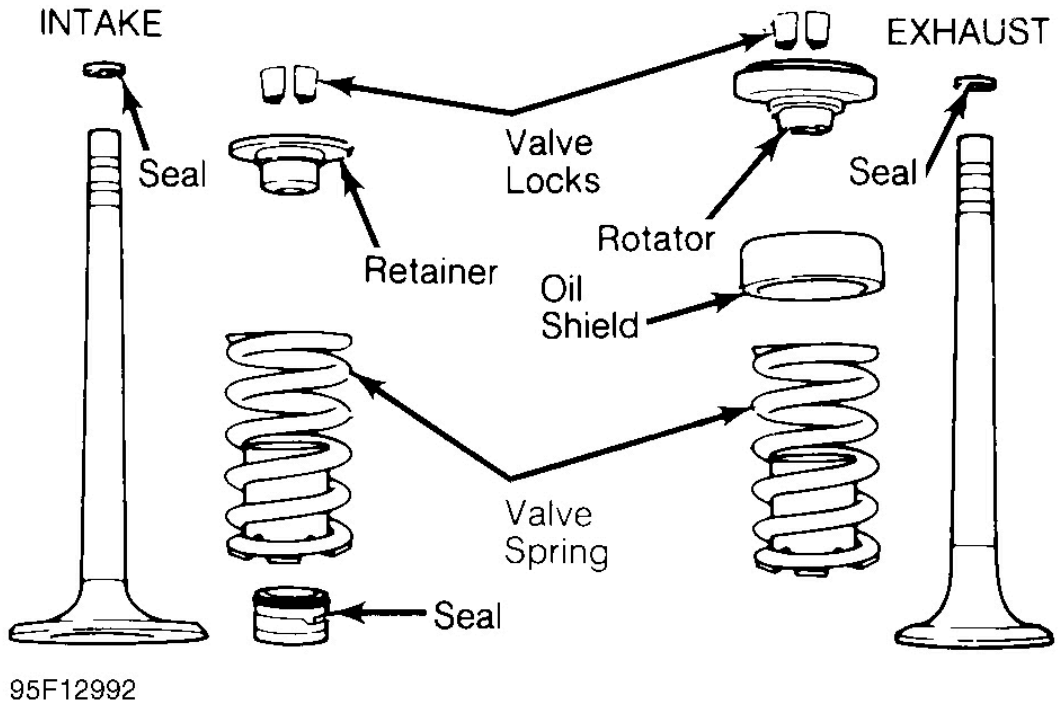

Fig. 2: Exploded View of Valve Assemblies

CYLINDER HEAD CLEANING & INSPECTION

NOTE: **Examples used in this article are general in nature and do not necessarily relate to a specific engine or system. Illustrations and procedures have been chosen to guide mechanic through engine overhaul process. Descriptions of processes of cleaning, inspection, assembly and machine shop practice are included.**

Always refer to appropriate engine overhaul article, if available, in the ENGINES section for complete overhaul procedures and specifications for the vehicle

being repaired.

Clean cylinder head and valve components using approved cleaning methods. Inspect cylinder head for cracks, damage or warped gasket surface. Place straightedge across gasket surface. Determine clearance at center of straightedge. Measure across both diagonals, longitudinal center line and across cylinder head at several points. See **Fig. 3**.

On cast iron cylinder heads, if warpage exceeds .003" (.08 mm) in a 6" span, or .006" (.15 mm) over total length, cylinder head must be resurfaced. On most aluminum cylinder heads, if warpage exceeds .002" (.05 mm) in any area, cylinder head must be resurfaced. Warpage specification may vary by manufacturer. If warpage exceeds specification on some cylinder heads, cylinder head must be replaced.

Cylinder head thickness should be measured to determine amount of material which can be removed before replacement is required. Cylinder head thickness must not be less than the manufacturer's specification.

If cylinder head required resurfacing, it may not align properly with intake manifold. On "V" type engines, misalignment is corrected by machining intake manifold surface that contacts cylinder head. Cylinder head may be machined on surface that contacts intake manifold. Using oil stone, remove burrs or scratches from all sealing surfaces.

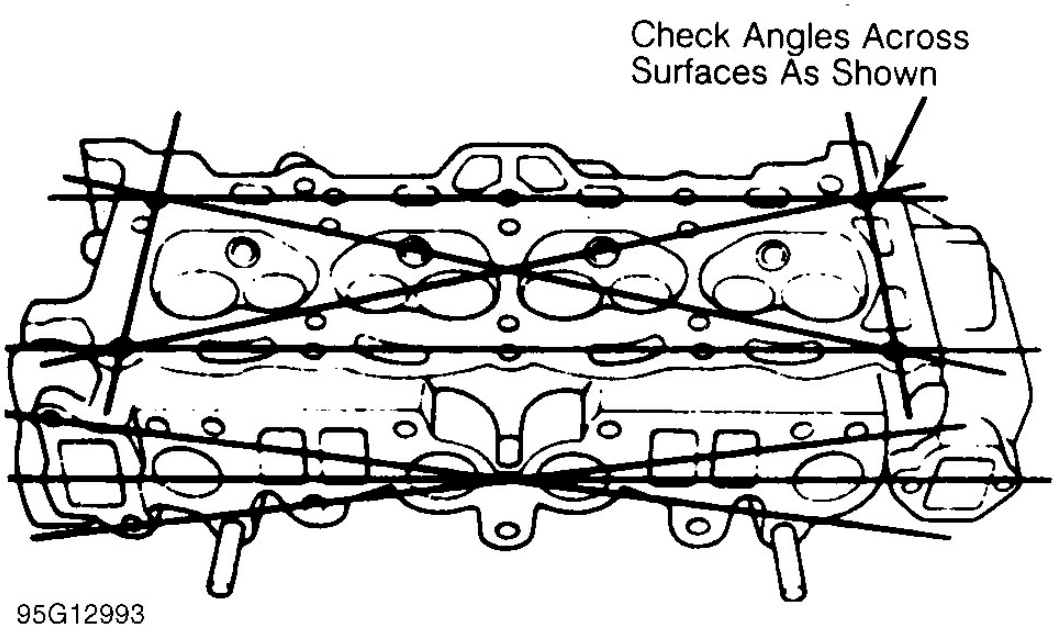

Fig. 3: Checking Cylinder Head for Warpage

VALVE SPRINGS

NOTE: **Examples used in this article are general in nature and do not necessarily relate to a specific engine or system. Illustrations and procedures have been chosen to guide mechanic through engine overhaul process. Descriptions of processes of cleaning, inspection, assembly and machine shop practice are included.**

Always refer to appropriate engine overhaul article, if available, in the ENGINES section for complete overhaul procedures and specifications for the vehicle being repaired.

Inspect valve springs for corroded or pitted valve spring surfaces which may lead to breakage. Polished spring ends caused by a rotating spring indicate that spring surge has occurred. Replace springs showing evidence of these conditions.

Inspect valve springs for squareness using a 90-degree straightedge. See **Fig. 4**. Replace valve spring if out-of-square exceeds manufacturer's specification.

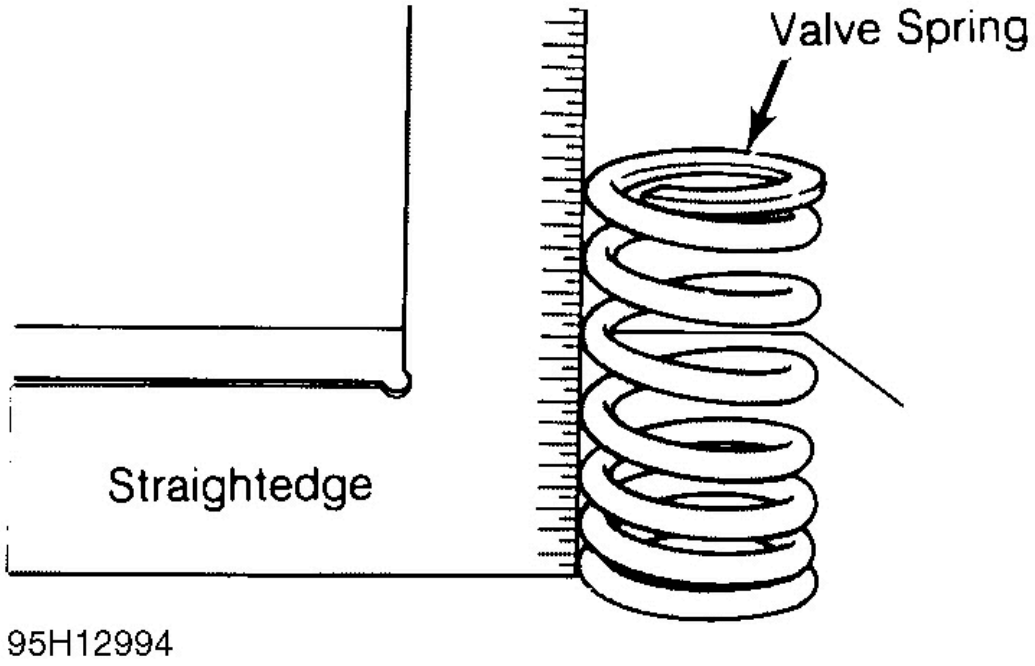

Fig. 4: Checking Valve Spring Squareness

Using vernier caliper, measure free length of all valve springs. Replace springs if not within specification.
Using valve spring tester, test valve spring pressure at installed and compressed heights. See **Fig. 5**.

Usually compressed height is installed height minus valve lift. Replace valve spring if not within specification.

It is recommended to replace all valve springs when overhauling cylinder head. Valve springs may need to be installed with color coded end or small coils at specified area according to manufacturer.

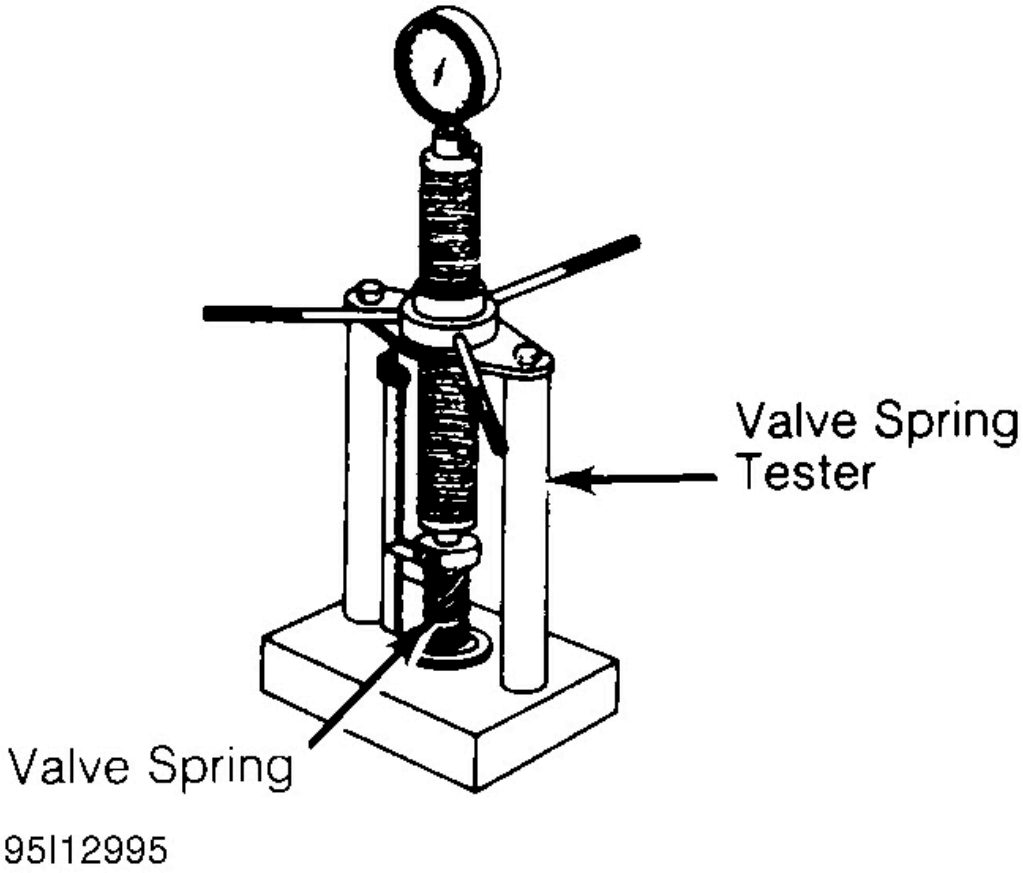

Fig. 5: Checking Valve Spring Pressure

VALVE GUIDE

NOTE: **Examples used in this article are general in nature and do not necessarily relate to a specific engine or system. Illustrations and procedures have been chosen to guide mechanic through engine overhaul process. Descriptions of processes of cleaning, inspection, assembly and machine shop practice are included.**

Always refer to appropriate engine overhaul article, if available, in the ENGINES section for complete overhaul procedures and specifications for the vehicle being repaired.

Measuring Valve Guide Clearance

Check valve stem-to-guide clearance. Ensure valve stem diameter is within specification. Install valve in valve guide. Install dial indicator assembly on cylinder head with tip resting against valve stem just above valve guide. See **Fig. 6**.

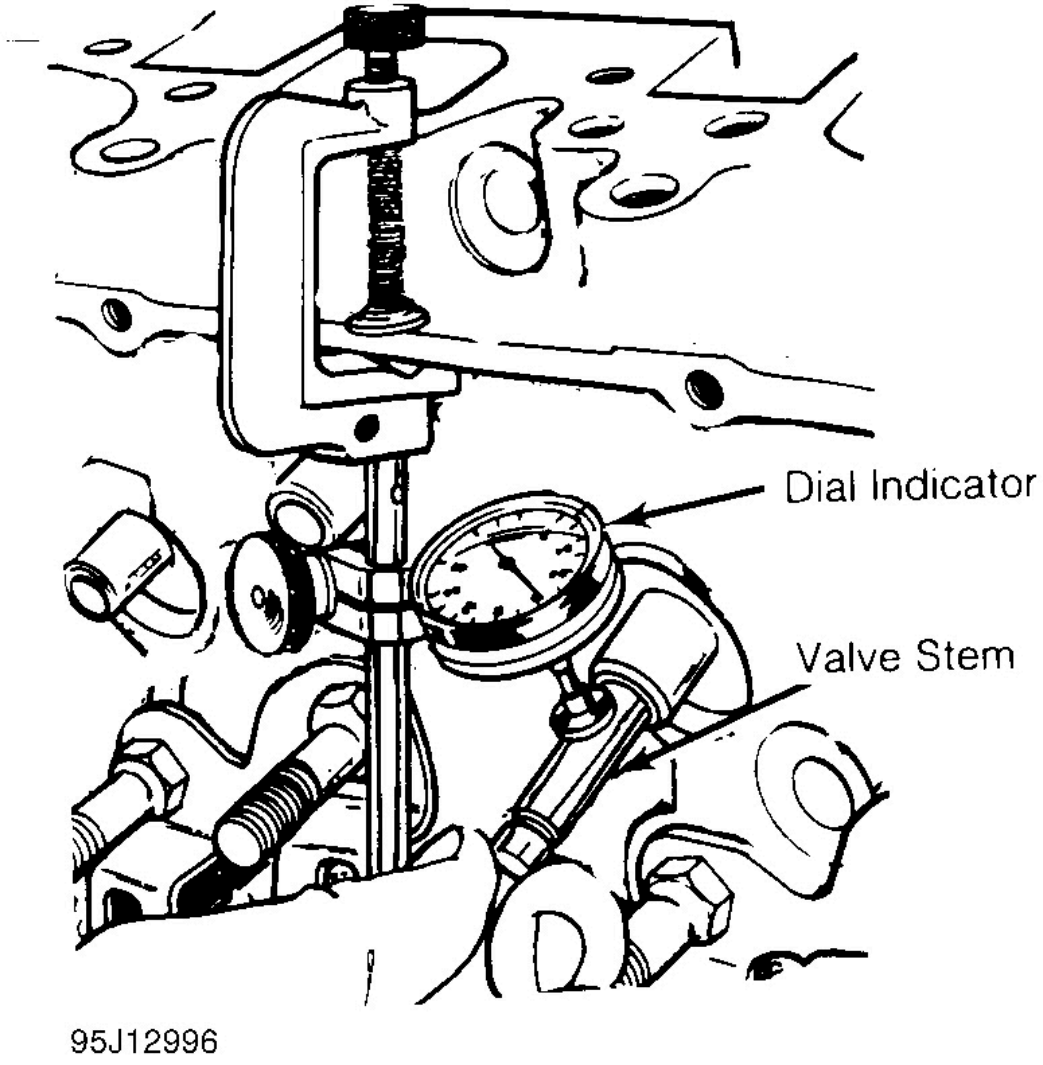

Fig. 6: Measuring Valve Stem-to-Guide Clearance

Lower valve approximately 1/16" below valve seat. Push valve stem against valve guide as far as possible. Adjust dial indicator to zero. Push valve stem in opposite direction and note reading. Clearance must be within specification.

If valve guide clearance exceeds specification, valves with oversize stems may be used and valve guides are reamed to larger size or valve guide must be replaced. On some applications, a false guide is installed, then reamed to proper specification. Valve guide reamer set is used to ream valve guide to obtain proper clearance for new valve.

Reaming Valve Guide

Select proper reamer for size of valve stem. Reamer must be of proper length to provide clean cut through entire length of valve guide. Install reamer in valve guide and rotate to cut valve guide. See **Fig. 7**.

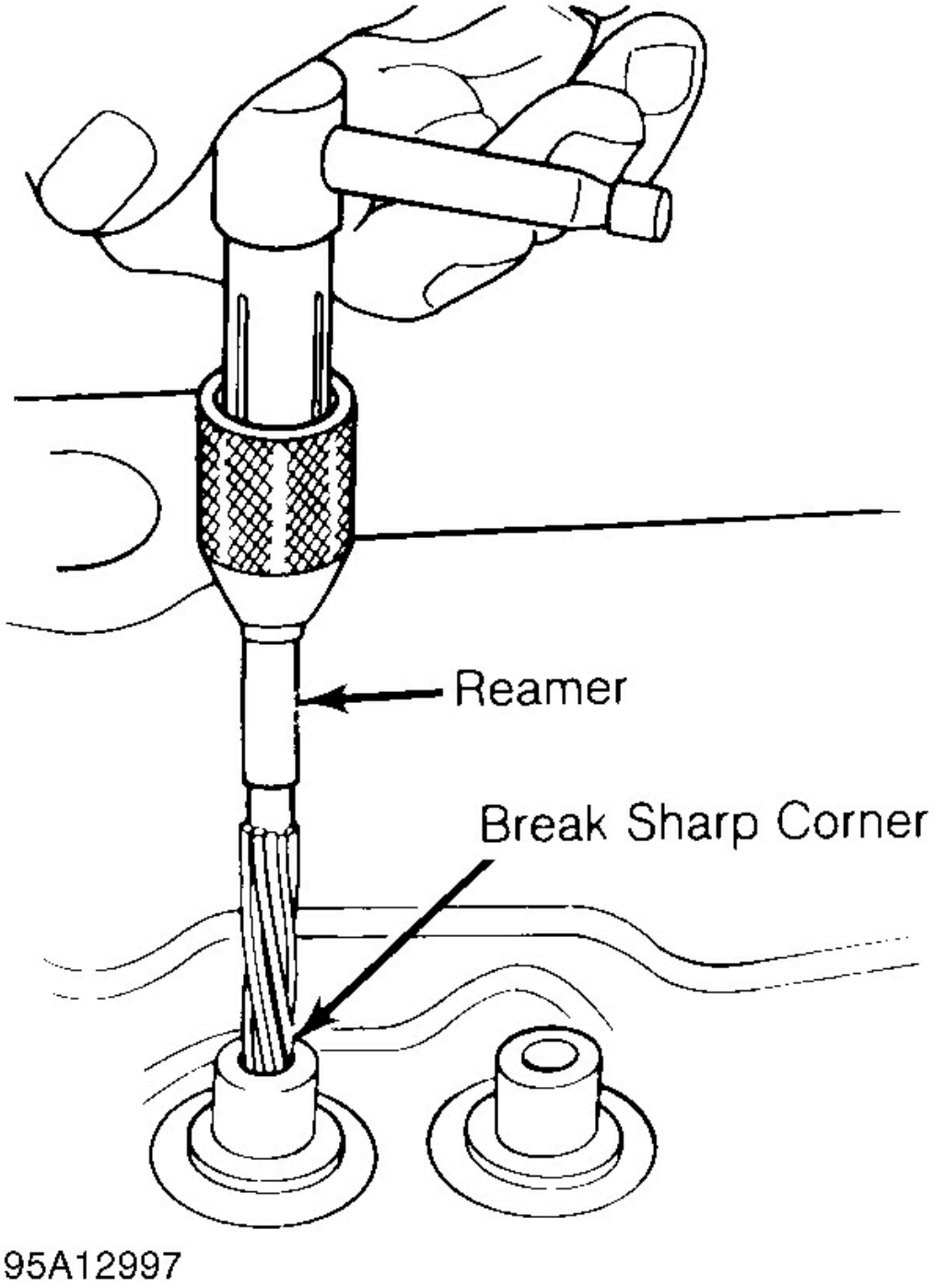

Fig. 7: Reaming Valve Guides

Replacing Valve Guide

Replace valve guide if clearance exceeds specification. Valve guides are either pressed, hammered or shrunk in place, depending upon cylinder head design and type of metal used.

Remove valve guide from cylinder head by pressing or tapping on a stepped drift. See **Fig. 8**. Once valve guide is installed, distance from cylinder head to top of valve guide must be checked. This distance must be within specification.

Aluminum heads are often heated before installing valve guide. Valve guide is sometimes cooled in dry ice prior to installation. Combination of a heated cylinder head and cooled valve guide ensures a tight guide fit upon assembly. The new guide must be reamed to specification.

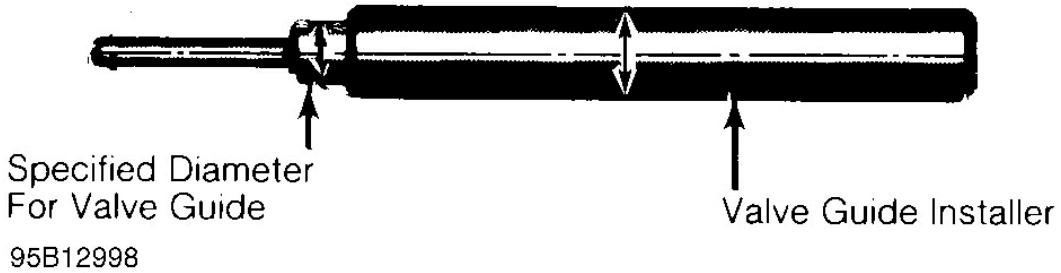

Fig. 8: Typical Valve Guide Remover & Installer

VALVES & VALVE SEATS

NOTE: **Examples used in this article are general in nature and do not necessarily relate to a specific engine or system. Illustrations and procedures have been chosen to guide mechanic through engine overhaul process. Descriptions of processes of cleaning, inspection, assembly and machine shop practice are included.**

Always refer to appropriate engine overhaul article, if available, in the ENGINES section for complete overhaul procedures and specifications for the vehicle being repaired.

Valve Grinding

Valve stem O.D. should be measured in several areas to indicate amount of wear. Replace valve if not within specification. Valve margin area should be measured to ensure that valve can be ground. See **Fig. 9**.

If valve margin is less than specification, the valves will be burned. Valve must be replaced. Due to minimum margin dimensions during manufacture, some new type valves cannot be reground. Some manufacturers use stellite coated valves that must NOT be machined. Valves can only be lapped into valve seat.

CAUTION: Some valves are sodium filled. Extreme care must be used when disposing of damaged or worn sodium-filled valves.

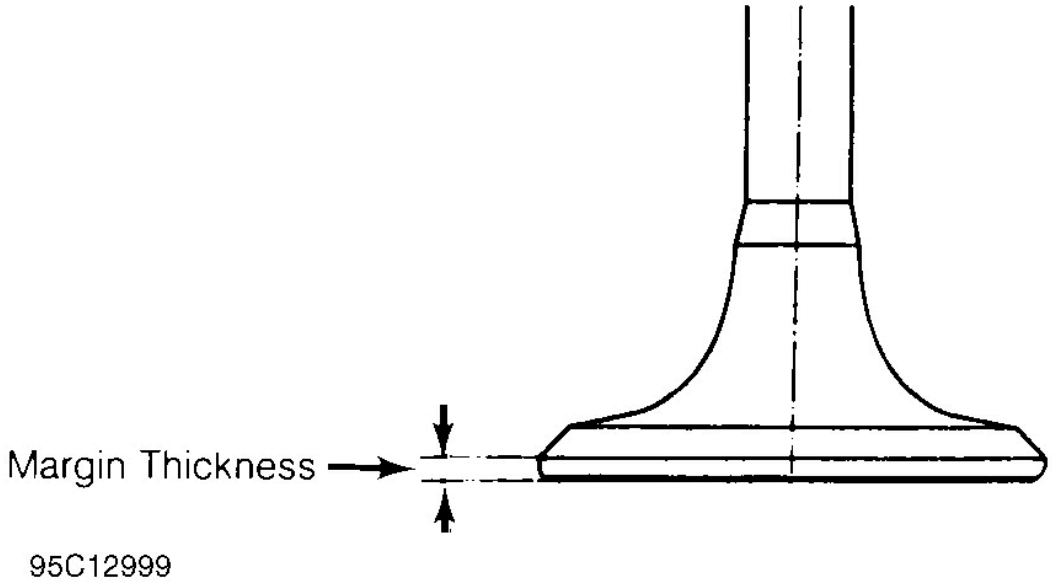

Fig. 9: Measuring Valve Head Margin

Resurface valve to proper angle specification using valve grinding machine. Follow manufacturer's instructions for valve grinding machine. Specifications may indicate a different valve face angle than seat angle. Measure valve margin after grinding. Replace valve if not within specification. Valve stem tip can be refinished using valve grinding machine.

Valve Lapping

During valve lapping of recently designed valves, be sure to follow manufacturer's recommendations. Surface hardening and materials used with some valves do not permit lapping. Lapping process will remove excessive amounts of the hardened surface.

Valve lapping is done to ensure adequate sealing between valve face and seat. Use either a hand drill or lapping stick with suction cup attached.

Moisten and attach suction cup to valve. Lubricate valve stem and guide. Apply a thin coat of fine valve grinding compound between valve and seat. Rotate lapping tool between the palms or with hand drill.

Lift valve upward off the seat and change position often. This is done to prevent grooving of valve seat. Lap valve until a smooth polished seat is obtained. Thoroughly clean grinding compound from components. Valve-to-valve seat concentricity should be checked. See **VALVE SEAT CONCENTRICITY**.

CAUTION: Valve guides must be in good condition and free of carbon deposits prior to valve seat grinding. Some engines contain an induction hardened valve seat. Excessive material removal will damage valve seats.

Valve Seat Grinding

Select coarse stone of correct size and angle for seat to be ground. Ensure stone is true and has a smooth surface. Select correct size pilot for valve guide dimension. Install pilot in valve guide. Lightly lubricate pilot shaft. Install stone on pilot. Move stone off and on the seat approximately 2 times per second during grinding operation.

Select a fine stone to finish grinding operation. Various angle grinding stones are used to center and narrow the valve seat as required. See **Fig. 10**.

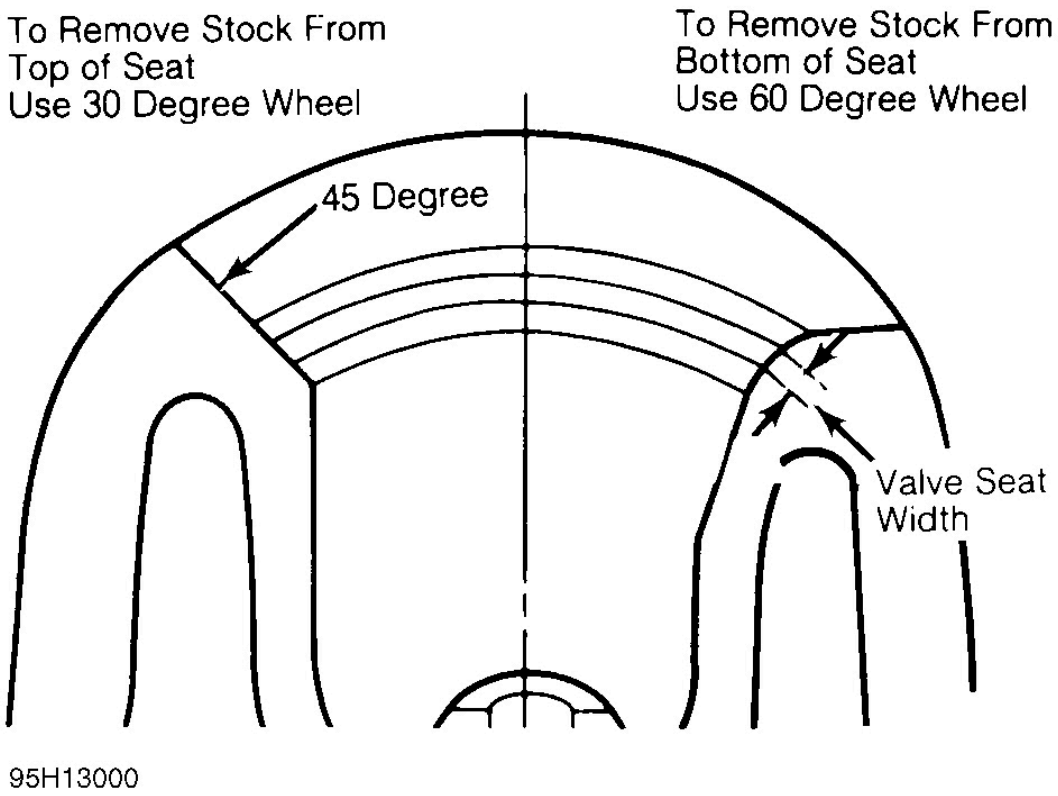

Fig. 10: Adjusting Valve Seat Width

Valve Seat Replacement

Replacement of valve seat inserts is done by cutting out the old insert and machining an oversize insert bore. Replacement oversize insert is usually cooled and the cylinder head is sometimes warmed. Valve seat is pressed

into the head. This operation requires specialized machine shop equipment.

Valve Seat Concentricity

Using dial gauge, install gauge pilot in valve guide. Position gauge arm on the valve seat. Adjust dial indicator to zero. Rotate arm 360 degrees and note reading. Runout should not exceed specification.

To check valve-to-valve seat concentricity, coat valve face lightly with Prussian Blue dye. Install valve and rotate it on valve seat. If pattern is even and entire seat is coated at valve contact point, valve is concentric with the valve seat.

CYLINDER HEAD REASSEMBLY

NOTE: Examples used in this article are general in nature and do not necessarily relate to a specific engine or system. Illustrations and procedures have been chosen to guide mechanic through engine overhaul process. Descriptions of processes of cleaning, inspection, assembly and machine shop practice are included.

Always refer to appropriate engine overhaul article, if available, in the ENGINES section for complete overhaul procedures and specifications for the vehicle being repaired.

Valve Stem Installed Height

Valve stem installed height must be checked when new valves are installed or when valves or valve seats have been ground. Install valve in valve guide. Measure distance from tip of valve stem to spring seat. See **Fig. 11**. Distance must be within specification to allow sufficient clearance for valve operation.

Remove valve and grind valve stem tip if height exceeds specification. Valve tips are surface hardened. DO NOT remove more than .010" (.25 mm) from tip. Chamfer sharp edge of reground valve tip. Recheck valve stem installed height.

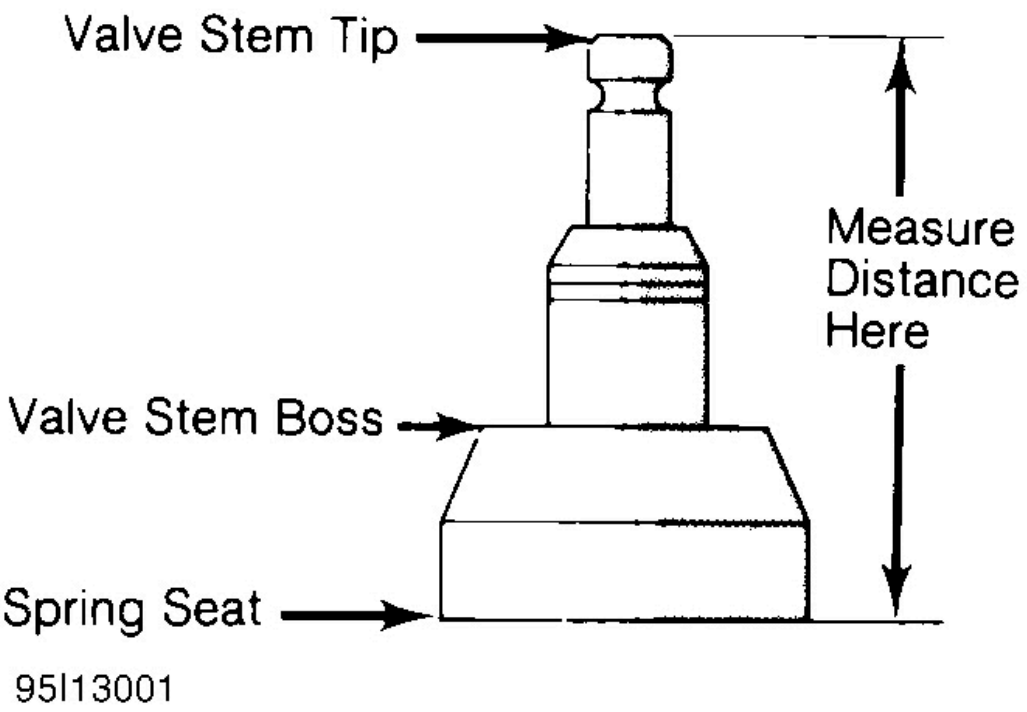

Fig. 11: Measuring Valve Stem Installed Height

VALVE STEM OIL SEALS

NOTE: **Examples used in this article are general in nature and do not necessarily relate to a specific engine or system. Illustrations and procedures have been chosen to guide mechanic through engine overhaul process. Descriptions of processes of cleaning, inspection, assembly and machine shop practice are included.**

Always refer to appropriate engine overhaul article, if available, in the ENGINES section for complete overhaul procedures and specifications for the vehicle being repaired.

Valve stem oil seals must be installed on valve stem. See **Fig. 2**. Seals are needed due to pressure differential at the ends of valve guides. Atmospheric pressure above intake guide, combined with manifold vacuum below guide, causes oil to be drawn into the cylinder.

Exhaust guides also have pressure differential created by exhaust gas flowing past the guide, creating a low pressure area. This low pressure area draws oil into the exhaust system.

Some manufacturers require that special color code or specified height valve stem oil seal be installed in

designated area.

Replacement (On-Vehicle)

Mark rocker arm or overhead cam components for location. Remove rocker arm components or overhead cam components. Components must be installed in original location. Remove spark plugs. Valve stem oil seals may be replaced by holding valves against seats using air pressure.

Air pressure must be installed in cylinder using an adapter for spark plug hole. An adapter can be constructed by welding air hose connection to spark plug body with porcelain removed.

Rotate engine until piston is at top of stroke. Install adapter in spark plug hole. Apply a minimum of 140 psi (9.8 kg/cm^2) line pressure to adapter. Air pressure should hold valve closed. If air pressure does not hold valve closed, check for damaged or bent valve. Cylinder head must be removed for service.

Using valve spring compressor, compress valve springs. Remove valve locks. Carefully release spring compressor. Remove retainer or rotator and valve spring. Remove valve stem oil seal.

If oversize valves have been installed, oversize oil seals must be used. Coat valve stem with engine oil. Install protective sleeve over end of valve stem. Install new oil seal over valve stem and seat on valve guide. Remove protective sleeve. Install spring seat, valve spring and retainer or rotator. Compress spring and install valve locks. Remove spring compressor. Ensure valve locks are fully seated.

Install rocker arms or overhead cam components. Tighten all bolts to specification. Adjust valves if required. Remove adapter. Install spark plugs, valve cover and gasket.

VALVE SPRING INSTALLED HEIGHT

NOTE: **Examples used in this article are general in nature and do not necessarily relate to a specific engine or system. Illustrations and procedures have been chosen to guide mechanic through engine overhaul process. Descriptions of processes of cleaning, inspection, assembly and machine shop practice are included.**

Always refer to appropriate engine overhaul article, if available, in the ENGINES section for complete overhaul procedures and specifications for the vehicle being repaired.

Valve spring installed height should be checked during reassembly. Measure height from lower edge of valve spring to the upper edge. DO NOT include valve spring seat or retainer. Distance must be within specification. If valves and/or seats have been ground, a valve spring shim may be required to correct spring height. See **Fig. 12**.

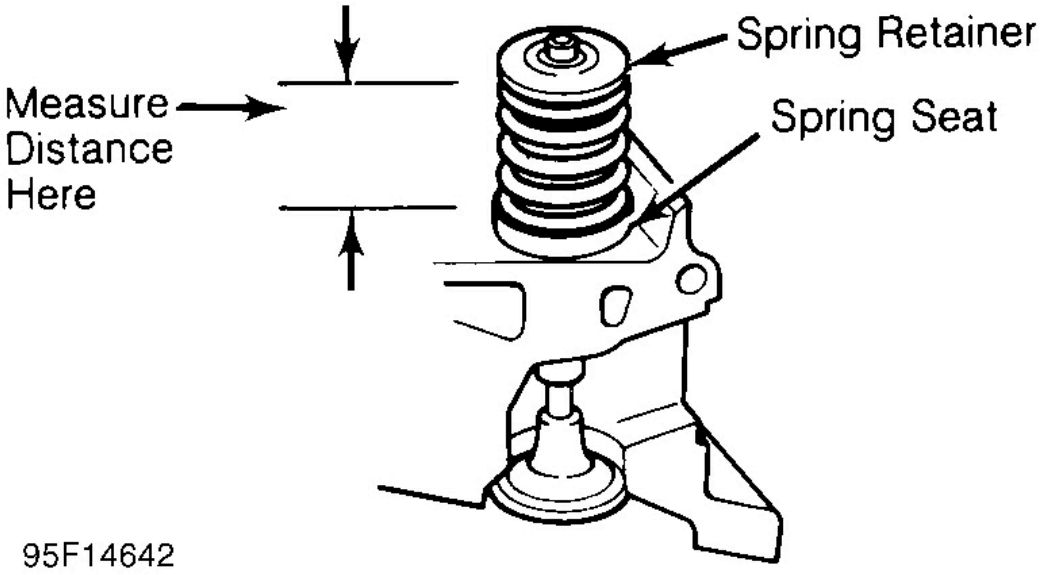

Fig. 12: Measuring Valve Spring Installed Height

ROCKER ARMS & ASSEMBLIES

NOTE: **Examples used in this article are general in nature and do not necessarily relate to a specific engine or system. Illustrations and procedures have been chosen to guide mechanic through engine overhaul process. Descriptions of processes of cleaning, inspection, assembly and machine shop practice are included.**

Always refer to appropriate engine overhaul article, if available, in the ENGINES section for complete overhaul procedures and specifications for the vehicle being repaired.

Rocker Studs

Rocker studs are either threaded or pressed in place. Threaded studs are removed by locking 2 nuts on the stud. Unscrew the stud by turning the jam nut. Coat new stud threads with Loctite and install. Tighten to specification.

Pressed-in stud can be removed using a stud puller. Ream stud bore to proper specification and press in a new oversize stud. Pressed-in studs are often replaced by cutting threads in the stud bore to accept a threaded stud.

Rocker Arms & Shafts

Mark rocker arms for location. Remove rocker arm retaining bolts. Remove rocker arms. Inspect rocker arms,

shafts, bushings and pivot balls (if equipped) for excessive wear. Inspect rocker arms for wear in valve stem contact area. Measure rocker arm bushing I.D. Replace bushings if excessively worn.

The rocker arm valve stem contact point may be reground, using special fixture for valve grinding machine. Remove minimum amount of material as possible. Ensure all oil passages are clear. Install rocker arm components in original location. Ensure rocker arm is properly seated in push rod. Tighten bolts to specification. Adjust valves if required. See **VALVE ADJUSTMENT**.

PUSH RODS

NOTE: **Examples used in this article are general in nature and do not necessarily relate to a specific engine or system. Illustrations and procedures have been chosen to guide mechanic through engine overhaul process. Descriptions of processes of cleaning, inspection, assembly and machine shop practice are included.**

Always refer to appropriate engine overhaul article, if available, in the ENGINES section for complete overhaul procedures and specifications for the vehicle being repaired.

Remove rocker arms. Mark push rods for location. Remove push rods. Push rods can be steel or aluminum, solid or hollow. Hollow push rods must be internally cleaned to ensure oil passage to rocker arms is cleaned. Check push rods for damage, such as loose ends on steel tipped aluminum types.

Check push rod for straightness. Roll push rod on a flat surface. Using feeler gauge, check clearance at center. Replace push rod if bent. The push rod can also be supported at each end and rotated. A dial indicator is used to detect a bent area in the push rod.

Lubricate ends of push rod and install push rod in original location. Ensure push rod is properly seated in lifter. Install rocker arm. Tighten bolts to specification. Adjust valves if required. See **VALVE ADJUSTMENT**.

LIFTERS

NOTE: **Examples used in this article are general in nature and do not necessarily relate to a specific engine or system. Illustrations and procedures have been chosen to guide mechanic through engine overhaul process. Descriptions of processes of cleaning, inspection, assembly and machine shop practice are included.**

Always refer to appropriate engine overhaul article, if available, in the ENGINES section for complete overhaul procedures and specifications for the vehicle being repaired.

Hydraulic Lifters

Before replacing a hydraulic lifter for noisy operation, ensure noise is not caused by worn rocker arms or valve tips. Also ensure sufficient oil pressure exists. Hydraulic lifters must be installed in original location. Remove rocker arm assembly and push rod. Mark components for location. Some applications require intake manifold,

cylinder head or lifter cover removal. Remove lifter retainer plate (if used). To remove lifters, use a hydraulic lifter remover or magnet. Different type lifters are used. See **Fig. 13**.

On sticking lifters, disassemble and clean lifter. DO NOT mix lifter components or positions. Parts are select-fitted and are not interchangeable. Inspect all components for wear. Note amount of wear in lifter body-to-camshaft contact area. Surface must have smooth and convex contact face. If wear is apparent, carefully inspect cam lobe.

Inspect push rod contact area and lifter body for scoring or signs of wear. If body is scored, inspect lifter bore for damage and lack of lubrication. On roller type lifters, inspect roller for flaking, pitting, loss of needle bearings and roughness during rotation.

Measure lifter body O.D. in several areas. Measure lifter bore I.D. Ensure components or oil clearance is within specification. Some models offer oversize lifters. Replace lifter if damaged.

If lifter check valve is not operating, obstructions may be preventing it from closing or valve spring may be broken. Clean or replace components as necessary.

Check plunger operation. Plunger should drop to bottom of the body by its own weight when assembled dry. If plunger is not free, soak lifter in solvent to dissolve deposits.

Lifter leak-down test can be performed on lifter. Lifter must be filled with special test oil. New lifters contain special test oil. Using lifter leak-down tester, perform leak-down test following manufacturer's instructions. If leak-down time is not within specifications, replace lifter assembly.

Lifters should be soaked in clean engine oil several hours prior to installation. Coat lifter base, roller (if equipped) and lifter body with ample amount of Molykote or camshaft lubricant. See **Fig. 13**. Install lifter in original location. Install remaining components. Valve lash adjustment is not required on most hydraulic lifters. Preload of hydraulic lifter is automatic. Some models may require adjustment.

NOTE: Some manufacturers require that a crankcase conditioner be added to engine oil and engine operated for specified amount of time to aid in lifter break-in procedure if new lifters or camshaft are installed.

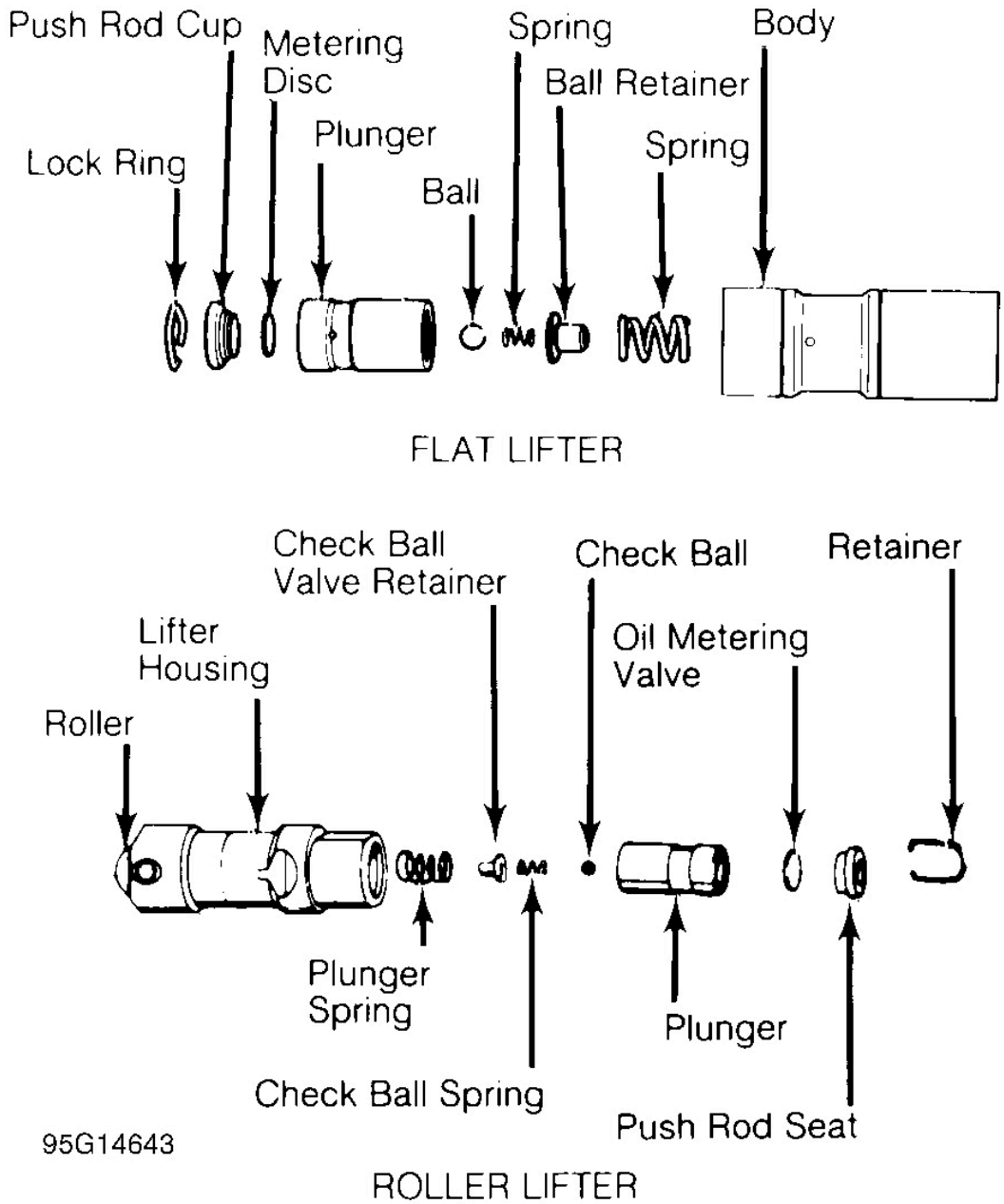

Fig. 13: Typical Hydraulic Valve Lifter Assemblies

Mechanical Lifters

Lifter assemblies must be installed in original locations. Remove rocker arm assembly and push rod. Mark components for location. Some applications require intake manifold or lifter cover removal. Remove lifter retainer plate (if used). To remove lifters, use lifter remover or magnet.

Inspect push rod contact area and lifter body for scoring or signs of wear. If body is scored, inspect lifter bore for damage and lack of lubrication. Note amount of wear in lifter body-to-camshaft contact area. Surface must have smooth and convex contact face. If wear is apparent, carefully inspect cam lobe.

Coat lifter base, roller (if equipped) and lifter body with ample amount of Molykote or camshaft lubricant. Install lifter in original location. Install remaining components. Tighten bolts to specification. Adjust valves. See **VALVE ADJUSTMENT**.

PISTONS, CONNECTING RODS & BEARINGS

*** PLEASE READ THIS FIRST ***

NOTE: **Examples used in this article are general in nature and do not necessarily relate to a specific engine or system. Illustrations and procedures have been chosen to guide mechanic through engine overhaul process. Descriptions of processes of cleaning, inspection, assembly and machine shop practice are included.**

Always refer to appropriate engine overhaul article, if available, in the ENGINES section for complete overhaul procedures and specifications for the vehicle being repaired.

RIDGE REMOVAL

NOTE: **Examples used in this article are general in nature and do not necessarily relate to a specific engine or system. Illustrations and procedures have been chosen to guide mechanic through engine overhaul process. Descriptions of processes of cleaning, inspection, assembly and machine shop practice are included.**

Always refer to appropriate engine overhaul article, if available, in the ENGINES section for complete overhaul procedures and specifications for the vehicle being repaired.

Ridge in cylinder wall must be removed prior to piston removal. Failure to remove ridge prior to removing pistons will cause piston damage in piston ring lands or grooves.

With piston at bottom dead center, place rag in bore to trap metal chips. Install ridge reamer in cylinder bore. Adjust ridge reamer using manufacturer's instructions. Remove ridge using ridge reamer. DO NOT remove an excessive amount of material. Ensure ridge is completely removed.

PISTON & CONNECTING ROD REMOVAL

NOTE: **Examples used in this article are general in nature and do not necessarily relate to a specific engine or system. Illustrations and procedures have been chosen to guide mechanic through engine overhaul process. Descriptions of processes of cleaning, inspection, assembly and machine shop practice are included.**

Always refer to appropriate engine overhaul article, if available, in the ENGINES section for complete overhaul procedures and specifications for the vehicle being repaired.

Note top of piston. Some pistons may contain a notch, arrow or be marked FRONT. Piston must be installed in proper direction to prevent damage with valve operation.

Check that connecting rod and cap are numbered for cylinder location and which side of cylinder block the number faces. Proper cap and connecting rod must be installed together. Connecting rod cap must be installed on connecting rod in proper direction to ensure bearing lock procedure. Mark connecting rod and cap if necessary. Pistons must be installed in original location.

Remove cap retaining nuts or bolts. Remove bearing cap. Install tubing protectors on connecting rod bolts. This protects cylinder walls from scoring during removal. Ensure proper removal of ridge. Push piston and connecting rod from cylinder. Connecting rod boss can be tapped with a wooden dowel or hammer handle to aid in removal.

PISTON & CONNECTING ROD

NOTE: **Examples used in this article are general in nature and do not necessarily relate to a specific engine or system. Illustrations and procedures have been chosen to guide mechanic through engine overhaul process. Descriptions of processes of cleaning, inspection, assembly and machine shop practice are included.**

Always refer to appropriate engine overhaul article, if available, in the ENGINES section for complete overhaul procedures and specifications for the vehicle being repaired.

Disassembly

Using ring expander, remove piston rings. Remove piston pin retaining rings (if equipped). Note direction of piston installation on connecting rod. On pressed type piston pins, special fixtures and procedures according to manufacturer must be used to remove piston pins. Follow manufacturer's recommendations to avoid piston distortion or breakage.

Cleaning

Remove all carbon and varnish from piston. Pistons and connecting rods may be cleaned in cold type chemical tank. Using ring groove cleaner, clean all deposits from ring grooves. Ensure all deposits are cleaned from ring grooves to prevent ring breakage or sticking. DO NOT attempt to clean pistons with wire brush.

Inspection

Inspect pistons for nicks, scoring, cracks or damage in ring areas. Connecting rod should be checked for cracks using Magnaflux procedure. Piston diameter must be measured in manufacturer's specified area.

Using telescopic gauge and micrometer, measure piston pin bore of piston in 2 areas, 90 degrees apart. This is done to check diameter and out-of-round.

Install proper bearing cap on connecting rod. Ensure bearing cap is installed in proper location. Tighten bolts or nuts to specification. Using inside micrometer, measure inside diameter in 2 areas, 90 degrees apart.

Connecting rod I.D. and out-of-round must be within specification. Measure piston pin bore I.D. and piston pin O.D. All components must be within specification. Subtract piston pin diameter from piston pin bore in piston and connecting rod to determine proper fit.

Connecting rod length must be measured from center of crankshaft journal inside diameter to center of piston pin bushing using proper caliper. Connecting rods must be the same length. Connecting rods should be checked on an alignment fixture for bent or twisted condition. Replace all components which are damaged or not within specification.

PISTON & CYLINDER BORE FIT

NOTE: **Examples used in this article are general in nature and do not necessarily relate to a specific engine or system. Illustrations and procedures have been chosen to guide mechanic through engine overhaul process. Descriptions of processes of cleaning, inspection, assembly and machine shop practice are included.**

Always refer to appropriate engine overhaul article, if available, in the ENGINES section for complete overhaul procedures and specifications for the vehicle being repaired.

Ensure cylinder is checked for taper, out-of-round and properly honed prior to checking piston and cylinder bore fit. See **CYLINDER BLOCK**. Using dial bore gauge, measure cylinder bore.

Measure piston skirt diameter at 90 degree angle to piston pin at specified area by manufacturer. Subtract piston diameter from cylinder bore diameter to determine piston-to-cylinder clearance. Clearance must be within specification. Mark piston for proper cylinder location.

ASSEMBLING PISTON & CONNECTING ROD

NOTE: **Examples used in this article are general in nature and do not necessarily relate to a specific engine or system. Illustrations and procedures have been chosen to guide mechanic through engine overhaul process. Descriptions of processes of cleaning, inspection, assembly and machine shop practice are included.**

Always refer to appropriate engine overhaul article, if available, in the ENGINES section for complete overhaul procedures and specifications for the vehicle being repaired.

Install piston on connecting rod for corresponding cylinder. Ensure reference marking on top of piston corresponds with connecting rod and cap number. See **Fig. 14**.

Lubricate piston pin and install in connecting rod. Ensure piston pin retainers are fully seated (if equipped). On pressed type piston pins, follow manufacturer's recommended procedure to avoid distortion or breakage.

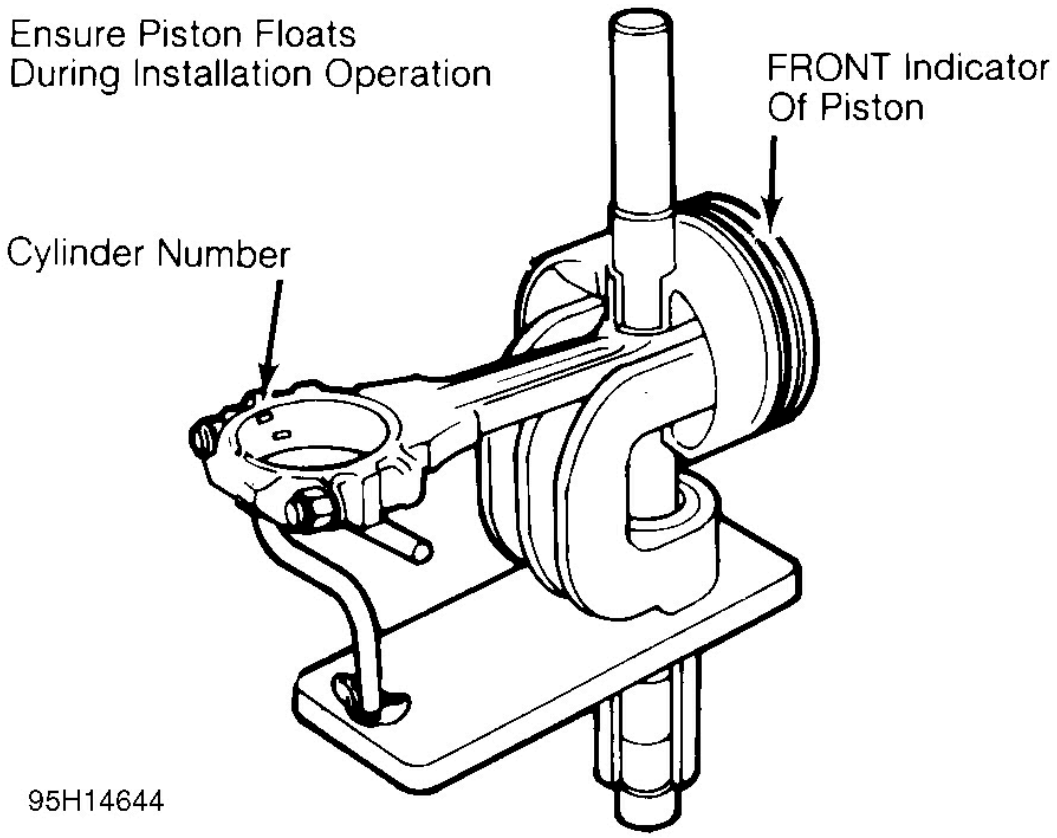

Fig. 14: Installing Typical Piston Pin

CHECKING PISTON RING CLEARANCES

NOTE: **Examples used in this article are general in nature and do not necessarily relate to a specific engine or system. Illustrations and procedures have been chosen to guide mechanic through engine overhaul process. Descriptions of processes of cleaning, inspection, assembly and machine shop practice are included.**

Always refer to appropriate engine overhaul article, if available, in the ENGINES section for complete overhaul procedures and specifications for the vehicle being repaired.

Piston rings must be checked for side clearance and end gap. To check end gap, install piston ring in cylinder in which it is to be installed. Using an inverted piston, push ring to bottom of cylinder in smallest cylinder

diameter.

Using feeler gauge, check ring end gap. See **Fig. 15**. Piston ring end gap must be within specification. Ring breakage will occur if insufficient ring end gap exists.

Some manufacturers permit correcting insufficient ring end gap by using a fine file while other manufacturers recommend using another ring set. Mark rings for proper cylinder installation after checking end gap.

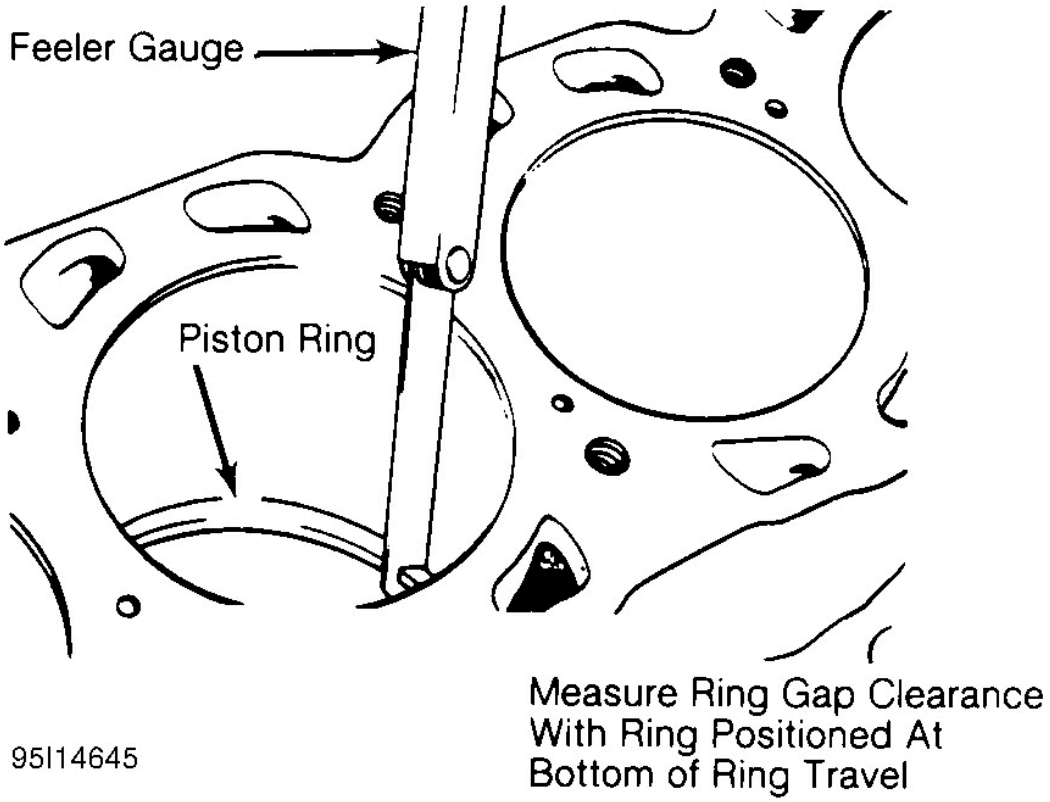

Fig. 15: Checking Piston Ring End Gap

For checking side clearance, install rings on piston. Using feeler gauge, measure clearance between piston ring and piston ring land. Check side clearance in several areas around piston. Side clearance must be within specification.

If side clearance is excessive, piston ring grooves can be machined to accept oversize piston rings (if available). Normal practice is to replace piston.

PISTON & CONNECTING ROD INSTALLATION

NOTE: **Examples used in this article are general in nature and do not necessarily relate to a specific engine or system. Illustrations and procedures have been chosen to guide mechanic through engine overhaul process. Descriptions of processes of cleaning, inspection, assembly and machine shop practice are included.**

Always refer to appropriate engine overhaul article, if available, in the ENGINES section for complete overhaul procedures and specifications for the vehicle being repaired.

Cylinders must be honed prior to piston installation. See **CYLINDER HONING** under CYLINDER BLOCK.

Install upper connecting rod bearings. Lubricate upper bearings with engine oil. Install lower bearings in rod caps. Ensure bearing tabs are properly seated. Position piston ring gaps according to manufacturer's recommendations. See **Fig. 16**. Lubricate pistons, rings and cylinder walls.

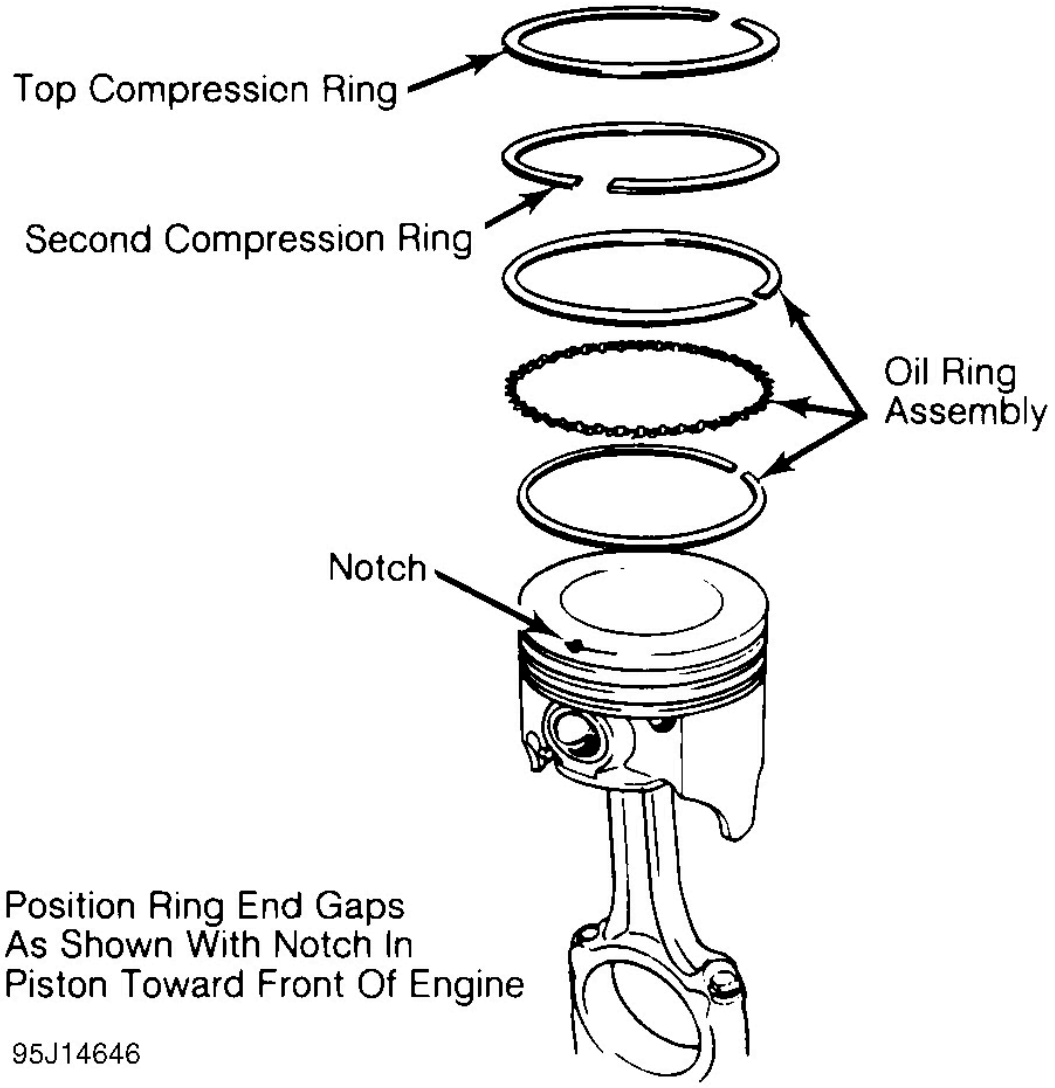

Fig. 16: Positioning Typical Piston Ring End Gap

Install ring compressor. Use care not to rotate piston rings. Compress rings with ring compressor. Install plastic tubing protectors over connecting rod bolts. Install piston and connecting rod assembly. Ensure piston notch, arrow or FRONT mark is toward front of engine. See **Fig. 17**.

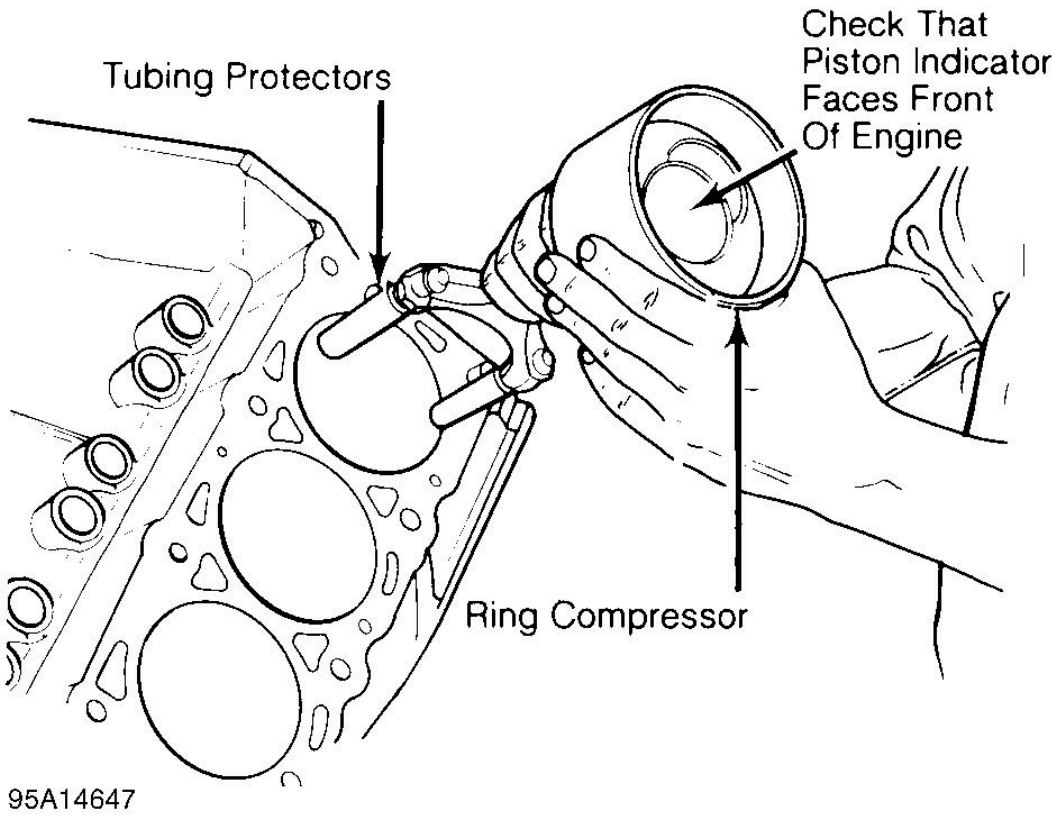

Fig. 17: Installing Piston & Connecting Rod Assembly

Carefully tap piston into cylinder until rod bearing is seated on crankshaft journal. Remove protectors. Install rod cap and bearing. Lightly tighten connecting rod bolts. Repeat procedure for remaining cylinders. Check bearing clearance. See **MAIN & CONNECTING ROD BEARING CLEARANCE**.

Once clearance is checked, lubricate journals and bearings. Install bearing caps. Ensure marks are aligned on connecting rod and cap. Tighten rod nuts or bolts to specification. Ensure rod moves freely on crankshaft. Check connecting rod side clearance. See **CONNECTING ROD SIDE CLEARANCE**.

CONNECTING ROD SIDE CLEARANCE

NOTE: **Examples used in this article are general in nature and do not necessarily relate to a specific engine or system. Illustrations and procedures have been chosen to guide mechanic through engine overhaul process. Descriptions of processes of cleaning, inspection, assembly and machine shop practice are included.**

Always refer to appropriate engine overhaul article, if available, in the ENGINES section for complete overhaul procedures and specifications for the vehicle

being repaired.

Position connecting rod toward one side of crankshaft as far as possible. Using feeler gauge, measure clearance between side of connecting rod and crankshaft. See **Fig. 18**. Clearance must be within specification.

Check for improper bearing installation, wrong bearing cap or insufficient bearing clearance if side clearance is insufficient. Connecting rod may require machining to obtain proper clearance. Excessive clearance usually indicates excessive wear at crankshaft. Crankshaft must be repaired or replaced.

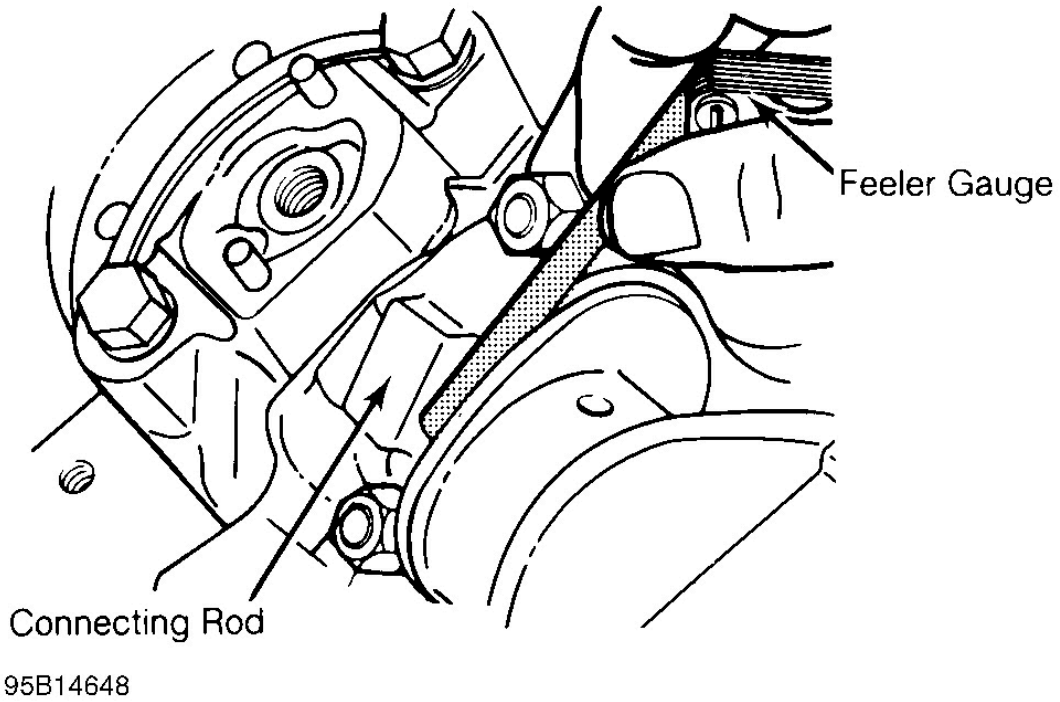

Fig. 18: Measuring Connecting Rod Side Clearance

MAIN & CONNECTING ROD BEARING CLEARANCE

NOTE: **Examples used in this article are general in nature and do not necessarily relate to a specific engine or system. Illustrations and procedures have been chosen to guide mechanic through engine overhaul process. Descriptions of processes of cleaning, inspection, assembly and machine shop practice are included.**

Always refer to appropriate engine overhaul article, if available, in the ENGINES section for complete overhaul procedures and specifications for the vehicle being repaired.

Plastigage Method

Plastigage method may be used to determine bearing clearance. Plastigage can be used with an engine in service or during reassembly. Plastigage material is oil soluble.

Ensure journals and bearings are free of oil or solvent. Oil or solvent will dissolve material and false reading will be obtained. Install small piece of Plastigage along full length of bearing journal. Install bearing cap in original location. Tighten bolts to specification.

CAUTION: DO NOT rotate crankshaft while Plastigage is installed. Bearing clearance will not be obtained if crankshaft is rotated.

Remove bearing cap. Compare Plastigage width with scale on Plastigage container to determine bearing clearance. See **Fig. 19**. Rotate crankshaft 90 degrees. Repeat procedure. This is done to check journal eccentricity. This procedure can be used to check oil clearance on both connecting rod and main bearings.

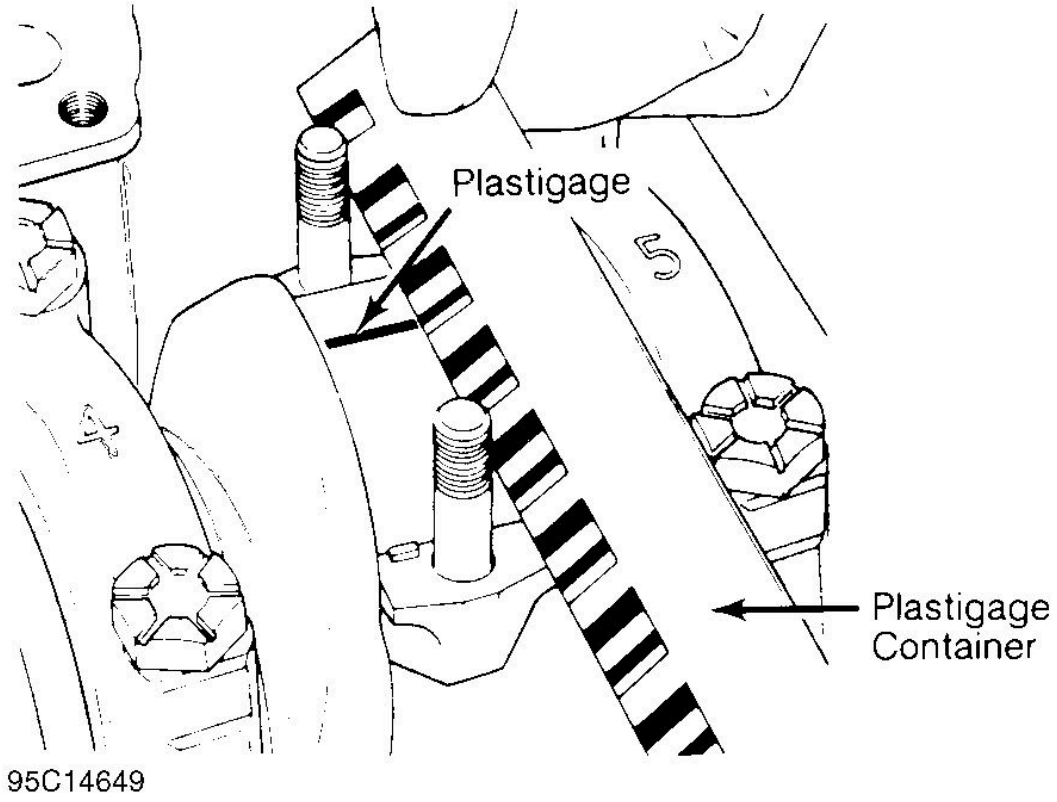

Fig. 19: Measuring Bearing Clearance

Micrometer & Telescopic Gauge Method

A micrometer is used to determine journal diameter, taper and out-of-round dimensions of the crankshaft. See **CLEANING & INSPECTION** under CRANKSHAFT & MAIN BEARINGS in this article.

With crankshaft removed, install bearings and caps in original location on cylinder block. Tighten bolts to specification. On connecting rods, install bearings and caps on connecting rods. Install proper connecting rod cap on corresponding rod. Ensure bearing cap is installed in original location. Tighten bolts to specification.

Using a telescopic gauge and micrometer or inside micrometer, measure inside diameter of connecting rod and main bearings bores. Subtract each crankshaft journal diameter from the corresponding inside bearing bore diameter. This is the bearing clearance.

CRANKSHAFT & MAIN BEARINGS

*** PLEASE READ THIS FIRST ***

NOTE: **Examples used in this article are general in nature and do not necessarily relate to a specific engine or system. Illustrations and procedures have been chosen to guide mechanic through engine overhaul process. Descriptions of processes of cleaning, inspection, assembly and machine shop practice are included.**

Always refer to appropriate engine overhaul article, if available, in the ENGINES section for complete overhaul procedures and specifications for the vehicle being repaired.

REMOVAL

NOTE: **Examples used in this article are general in nature and do not necessarily relate to a specific engine or system. Illustrations and procedures have been chosen to guide mechanic through engine overhaul process. Descriptions of processes of cleaning, inspection, assembly and machine shop practice are included.**

Always refer to appropriate engine overhaul article, if available, in the ENGINES section for complete overhaul procedures and specifications for the vehicle being repaired.

Ensure all main bearing caps are marked for location on cylinder block. Some main bearing caps have an arrow stamped on them. The arrow must face timing belt or timing chain end of engine. Remove main bearing cap bolts. Remove main bearing caps. Carefully remove crankshaft. Use care not to bind crankshaft in cylinder block during removal.

CLEANING & INSPECTION

NOTE: **Examples used in this article are general in nature and do not necessarily relate to a specific engine or system. Illustrations and procedures have been chosen to guide mechanic through engine overhaul process. Descriptions of processes**

of cleaning, inspection, assembly and machine shop practice are included.

Always refer to appropriate engine overhaul article, if available, in the ENGINES section for complete overhaul procedures and specifications for the vehicle being repaired.

Thoroughly clean crankshaft using solvent. Dry with compressed air. Ensure all oil passages are clear and free of sludge, rust, dirt and metal chips.

Inspect crankshaft for scoring and nicks. Inspect crankshaft for cracks using Magnaflux procedure. Inspect rear seal area for grooving or damage. Inspect bolt hole threads for damage. If pilot bearing or bushing is used, check pilot bearing or bushing fit in crankshaft. Inspect crankshaft gear for damaged or cracked teeth. Replace gear if damaged. Ensure oil passage plugs are tight (if equipped).

Using micrometer, measure all journals in 4 areas to determine journal taper, out-of-round and undersize. See **Fig. 20**. Some crankshafts can be reground to the next largest undersize, depending on the amount of wear or damage. Crankshafts with rolled fillet cannot be reground and must be replaced.

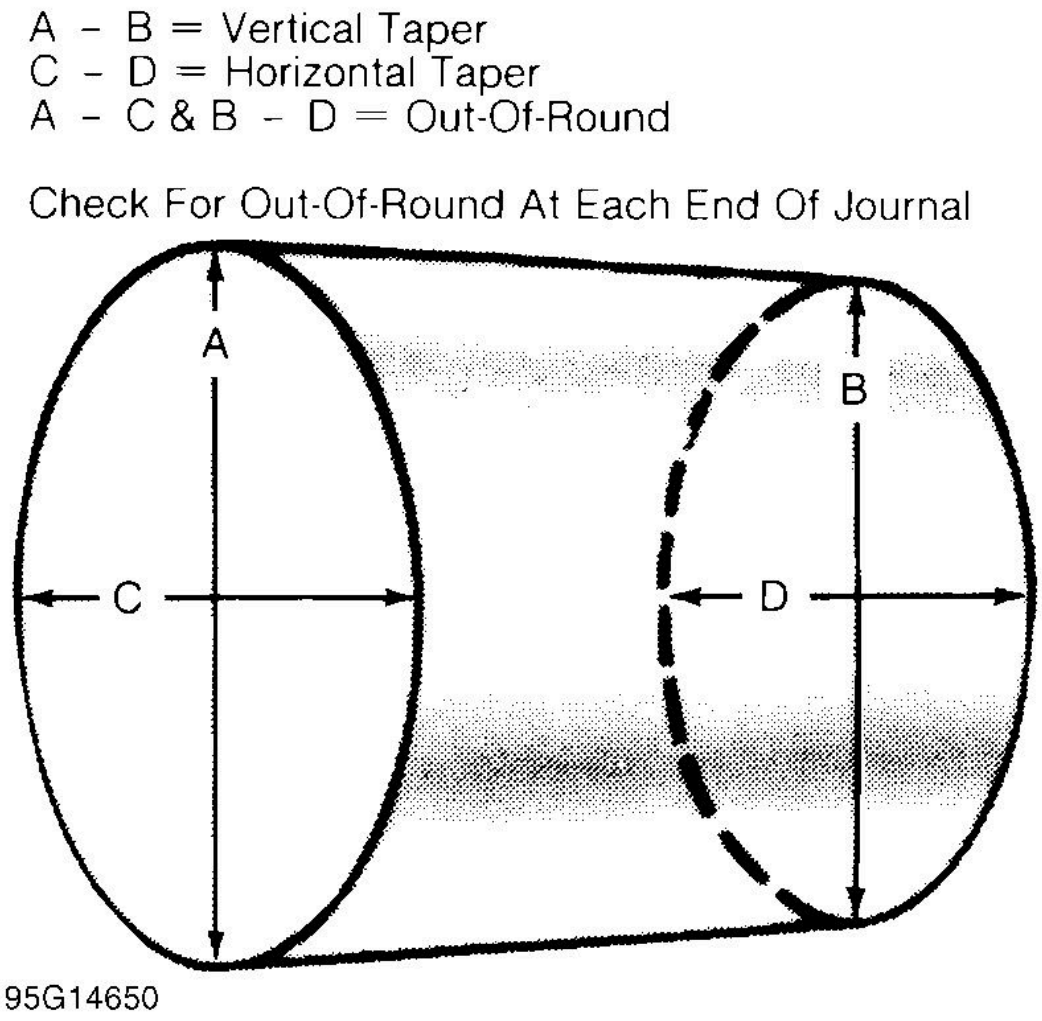

Fig. 20: Measuring Crankshaft Journals

Crankshaft journal runout should be checked. Install crankshaft in "V" blocks or bench center. Position dial indicator with tip resting on the main bearing journal area. See **Fig. 21**. Rotate crankshaft and note reading. Journal runout must not exceed specification. Repeat procedure on all main bearing journals. Crankshaft must be replaced if runout exceeds specification.

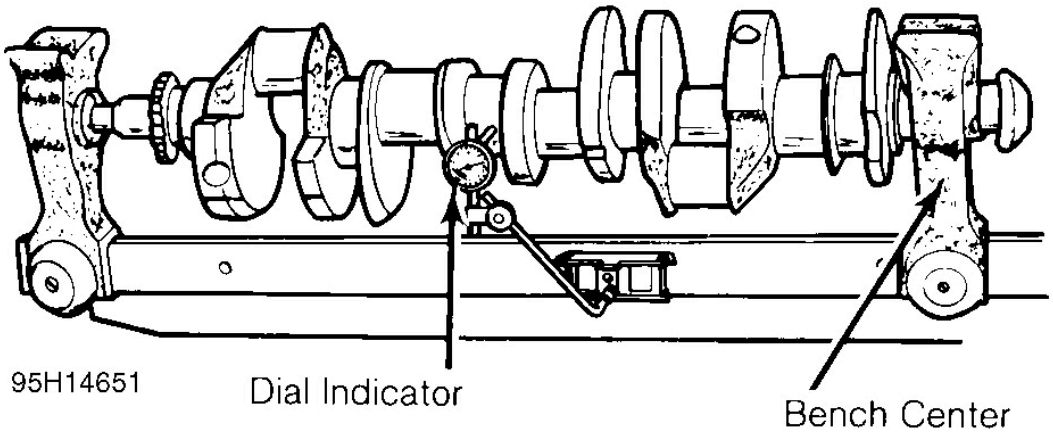

Fig. 21: Measuring Crankshaft Main Bearing Journal Runout

INSTALLATION

NOTE: **Examples used in this article are general in nature and do not necessarily relate to a specific engine or system. Illustrations and procedures have been chosen to guide mechanic through engine overhaul process. Descriptions of processes of cleaning, inspection, assembly and machine shop practice are included.**

Always refer to appropriate engine overhaul article, if available, in the ENGINES section for complete overhaul procedures and specifications for the vehicle being repaired.

Install upper main bearing in cylinder block. Ensure lock tab is properly located in cylinder block. Install bearings in main bearing caps. Ensure all oil passages are aligned. Install rear seal (if removed).

Ensure crankshaft journals are clean. Lubricate upper main bearings with clean engine oil. Carefully install crankshaft. Check each main bearing clearance using Plastigage method. See **MAIN & CONNECTING ROD BEARING CLEARANCE**.

Once clearance is checked, lubricate lower main bearing and journals. Install main bearing caps in original location. Install rear seal in rear main bearing cap (if removed). Some rear main bearing caps require sealant to be applied in corners to prevent oil leakage.

Install and tighten all bolts except thrust bearing cap to specification. Tighten thrust bearing cap bolts finger tight only. Some models require that thrust bearing be aligned. On most applications, crankshaft must be moved rearward then forward. Procedure may vary with manufacturer. Thrust bearing cap is then tightened to specification. Ensure crankshaft rotates freely. Crankshaft end play should be checked. See **CRANKSHAFT END PLAY**.

CRANKSHAFT END PLAY

NOTE: Examples used in this article are general in nature and do not necessarily relate to a specific engine or system. Illustrations and procedures have been chosen to guide mechanic through engine overhaul process. Descriptions of processes of cleaning, inspection, assembly and machine shop practice are included.

Always refer to appropriate engine overhaul article, if available, in the ENGINES section for complete overhaul procedures and specifications for the vehicle being repaired.

Dial Indicator Method

Crankshaft end play can be checked using dial indicator. Mount dial indicator on rear of cylinder block. Position dial indicator tip against rear of crankshaft. Ensure tip is resting against flat surface.

Pry crankshaft rearward. Adjust dial indicator to zero. Pry crankshaft forward and note reading. Crankshaft end play must be within specification. If end play is not within specification, check for faulty thrust bearing installation or worn crankshaft. Some applications offer oversize thrust bearings.

Feeler Gauge Method

Crankshaft end play can be checked using feeler gauge. Pry crankshaft rearward. Pry crankshaft forward. Using feeler gauge, measure clearance between crankshaft and thrust bearing surface. See **Fig. 22**.

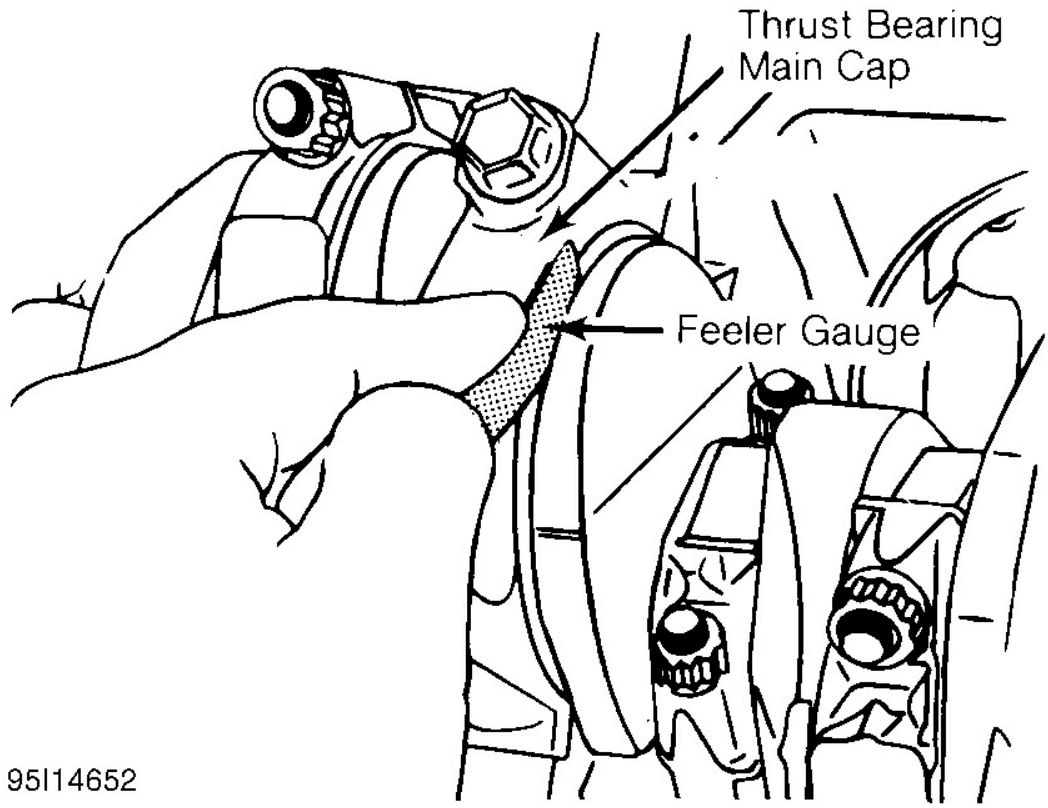

Fig. 22: Checking Crankshaft End Play

Crankshaft end play must be within specification. If end play is not within specification, check for faulty thrust bearing installation or worn crankshaft. Some applications offer oversize thrust bearings.

CYLINDER BLOCK

NOTE: **Examples used in this article are general in nature and do not necessarily relate to a specific engine or system. Illustrations and procedures have been chosen to guide mechanic through engine overhaul process. Descriptions of processes of cleaning, inspection, assembly and machine shop practice are included.**

Always refer to appropriate engine overhaul article, if available, in the ENGINES section for complete overhaul procedures and specifications for the vehicle being repaired.

Block Cleaning

Only cast cylinder blocks should be hot tank cleaned. Aluminum cylinder blocks should be cleaned using cold

tank method. Cylinder block is cleaned in order to remove carbon deposits, gasket residue and water jacket scale. Remove oil gallery plugs, freeze plugs and cam bearings before cleaning block.

Block Inspection

Visually inspect the block. Check suspected areas for cracks using the Dye Penetrant inspection method. Block may be checked for cracks using the Magnaflux method.

Cracks are most commonly found at the bottom of cylinders, main bearing saddles, near expansion plugs and between cylinders and water jackets. Inspect lifter bores for damage. Inspect all head bolt holes for damaged threads. Threads should be cleaned using tap to ensure proper head bolt torque. Consult machine shop concerning possible welding and machining (if required).

Cylinder Bore Inspection

Inspect bore for scoring or roughness. Cylinder bore is dimensionally checked for out-of-round and taper using dial bore gauge. For determining out-of-round, measure cylinder parallel and perpendicular to the block center line. Difference in the 2 readings is the bore out-of-round. Cylinder bore must be checked at top, middle and bottom of piston travel area.

Bore taper is obtained by measuring bore at the top and bottom. If wear has exceeded allowable limits, block must be honed or bored to next available oversize piston dimension.

Cylinder Honing

Cylinder must be properly honed to allow new piston rings to properly seat. Cross-hatching at correct angle and depth is critical to lubrication of cylinder walls and pistons.

A flexible drive hone and power drill are commonly used. Drive hone must be lubricated during operation. Mix equal parts of kerosene and SAE 20W engine oil for lubrication.

Apply lubrication to cylinder wall. Operate cylinder hone from top to bottom of cylinder using even strokes to produce 45 degree cross-hatch pattern on the cylinder wall. DO NOT allow cylinder hone to extend below cylinder during operation.

Recheck bore dimension after final honing. Wash cylinder wall with hot soapy water to remove abrasive particles. Blow dry with compressed air. Coat cleaned cylinder walls with lubricating oil.

Deck Warpage

Check deck for damage or warped gasket surface. Place a straightedge across gasket surface of the deck. Using feeler gauge, measure clearance at center of straightedge. Measure across width and length of cylinder block at several points.

If warpage exceeds specifications, deck must be resurfaced. If warpage exceeds manufacturer's maximum tolerance for material removal, replace block.

NOTE: Some manufacturers recommend that a total amount of material (cylinder head and cylinder block) can only be removed before components must be replaced.

Deck Height

Distance from crankshaft center line to block deck is called the deck height. Measure and record front and rear main journals of crankshaft. To compute this distance, install crankshaft and retain with center main bearing and cap only. Measure distance from crankshaft journal to block deck, parallel to cylinder center line.

Add one half of main bearing journal diameter to distance from crankshaft journal to block deck. This dimension should be checked at front and rear of cylinder block. Both readings should be the same.

If difference exceeds specification, cylinder block must be repaired or replaced. Deck height and warpage should be corrected at the same time.

Main Bearing Bore & Alignment

For checking main bearing bore, remove all bearings from cylinder block and main bearing caps. Install main bearing caps in original location. Tighten bolts to specification. Using inside micrometer, measure main bearing bore in 2 areas 90 degrees apart. Determine bore size and out-of-round. If diameter is not within specification, block must be align-bored.

For checking alignment, place a straightedge along center line of main bearing saddles. Check for clearance between straightedge and main bearing saddles. Block must be align-bored if clearance exists.

Expansion Plug Removal

Drill hole in center of expansion plug. Remove with screwdriver or punch. Use care not to damage sealing surface.

Expansion Plug Installation

Ensure sealing surface is free of burrs. Coat expansion plug with sealer. Using wooden dowel or pipe of slightly smaller diameter, install expansion plug. Ensure expansion plug is evenly located.

Oil Gallery Plug Removal

Remove threaded oil gallery plugs using appropriate wrench. Soft press-in plugs are removed by drilling into plug and installing a sheet metal screw. Remove plug with slide hammer or pliers.

Oil Gallery Plug Installation

Ensure threads or sealing surface is clean. Coat threaded oil gallery plugs with sealer and install. Replacement soft press-in plugs are installed with a hammer and drift.

CAMSHAFT

*** PLEASE READ THIS FIRST ***

NOTE: **Examples used in this article are general in nature and do not necessarily relate to a specific engine or system. Illustrations and procedures have been chosen to guide mechanic through engine overhaul process. Descriptions of processes of cleaning, inspection, assembly and machine shop practice are included.**

Always refer to appropriate engine overhaul article, if available, in the ENGINES section for complete overhaul procedures and specifications for the vehicle being repaired.

CLEANING & INSPECTION

NOTE: **Examples used in this article are general in nature and do not necessarily relate to a specific engine or system. Illustrations and procedures have been chosen to guide mechanic through engine overhaul process. Descriptions of processes of cleaning, inspection, assembly and machine shop practice are included.**

Always refer to appropriate engine overhaul article, if available, in the ENGINES section for complete overhaul procedures and specifications for the vehicle being repaired.

Clean camshaft with solvent. Ensure all oil passages are clear. Inspect cam lobes and bearing journals for pitting, flaking or scoring. Using micrometer, measure bearing journal O.D.

Support camshaft at each end with "V" blocks. Position dial indicator with tip resting on center bearing journal. Rotate camshaft and note camshaft runout reading. If reading exceeds specification, replace camshaft.

Check cam lobe lift by measuring base circle of camshaft using micrometer. Measure again at 90-degree angle to tip of cam lobe. Cam lift can be determined by subtracting base circle diameter from tip of cam lobe measurement.

Different lift dimensions are given for intake and exhaust cam lobes. Reading must be within specification. Replace camshaft if cam lobes or bearing journals are not within specification.

Inspect camshaft gear for chipped, eroded or damaged teeth. Replace gear if damaged. On camshafts using thrust plate, measure distance between thrust plate and camshaft shoulder. Replace thrust plate if not within specification.

CAMSHAFT BEARINGS

NOTE: **Examples used in this article are general in nature and do not necessarily relate to a specific engine or system. Illustrations and procedures have been chosen to guide mechanic through engine overhaul process. Descriptions of processes of cleaning, inspection, assembly and machine shop practice are included.**

Always refer to appropriate engine overhaul article, if available, in the ENGINES section for complete overhaul procedures and specifications for the vehicle being repaired.

Removal & Installation

Remove camshaft rear plug. Camshaft bearing remover is assembled with shoulder resting against bearing to be removed according to manufacturer's instructions. Tighten puller nut until bearing is removed. Remove remaining bearings, leaving front and rear bearings until last. These bearings act as a guide for camshaft bearing remover.

To install new bearings, puller is rearranged to pull bearings toward the center of block. Ensure all lubrication passages of bearing are aligned with cylinder block. Coat new camshaft rear plug with sealant. Install camshaft rear plug. Ensure plug is even in cylinder block.

CAMSHAFT INSTALLATION

NOTE: **Examples used in this article are general in nature and do not necessarily relate to a specific engine or system. Illustrations and procedures have been chosen to guide mechanic through engine overhaul process. Descriptions of processes of cleaning, inspection, assembly and machine shop practice are included.**

Always refer to appropriate engine overhaul article, if available, in the ENGINES section for complete overhaul procedures and specifications for the vehicle being repaired.

Lubricate bearing surfaces and cam lobes with ample amount of Molykote or camshaft lubricant. Carefully install camshaft. Use care not to damage bearing journals during installation. Install thrust plate retaining bolts (if equipped). Tighten bolts to specification. On overhead camshafts, install bearing caps in original location. Tighten bolts to specification. On all applications, check camshaft end play.

CAMSHAFT END PLAY

NOTE: **Examples used in this article are general in nature and do not necessarily relate to a specific engine or system. Illustrations and procedures have been chosen to guide mechanic through engine overhaul process. Descriptions of processes of cleaning, inspection, assembly and machine shop practice are included.**

Always refer to appropriate engine overhaul article, if available, in the ENGINES section for complete overhaul procedures and specifications for the vehicle being repaired.

Using dial indicator, check camshaft end play. Position dial indicator on front of engine block or cylinder head. Position indicator tip against camshaft. Push camshaft toward rear of cylinder head or engine and adjust indicator to zero.

Move camshaft forward and note reading. Camshaft end play must be within specification. End play may be adjusted by relocating gear, shimming thrust plate or replacing thrust plate depending on each manufacturer.

TIMING CHAINS & BELTS

*** PLEASE READ THIS FIRST ***

NOTE: **Examples used in this article are general in nature and do not necessarily relate to a specific engine or system. Illustrations and procedures have been chosen to guide mechanic through engine overhaul process. Descriptions of processes of cleaning, inspection, assembly and machine shop practice are included.**

Always refer to appropriate engine overhaul article, if available, in the ENGINES section for complete overhaul procedures and specifications for the vehicle being repaired.

TIMING CHAINS

NOTE: **Examples used in this article are general in nature and do not necessarily relate to a specific engine or system. Illustrations and procedures have been chosen to guide mechanic through engine overhaul process. Descriptions of processes of cleaning, inspection, assembly and machine shop practice are included.**

Always refer to appropriate engine overhaul article, if available, in the ENGINES section for complete overhaul procedures and specifications for the vehicle being repaired.

Timing chains will stretch during operation. Limits are placed upon amount of stretch before replacement is required. Timing chain stretch will alter ignition timing and valve timing.

To check timing chain stretch, rotate crankshaft to eliminate slack from one side of timing chain. Mark reference point on cylinder block. Rotate crankshaft in opposite direction to eliminate slack from remaining side of timing chain. Force other side of chain outward and measure distance between reference point and timing chain. See **Fig. 23**. Replace timing chain and gears if not within specification.

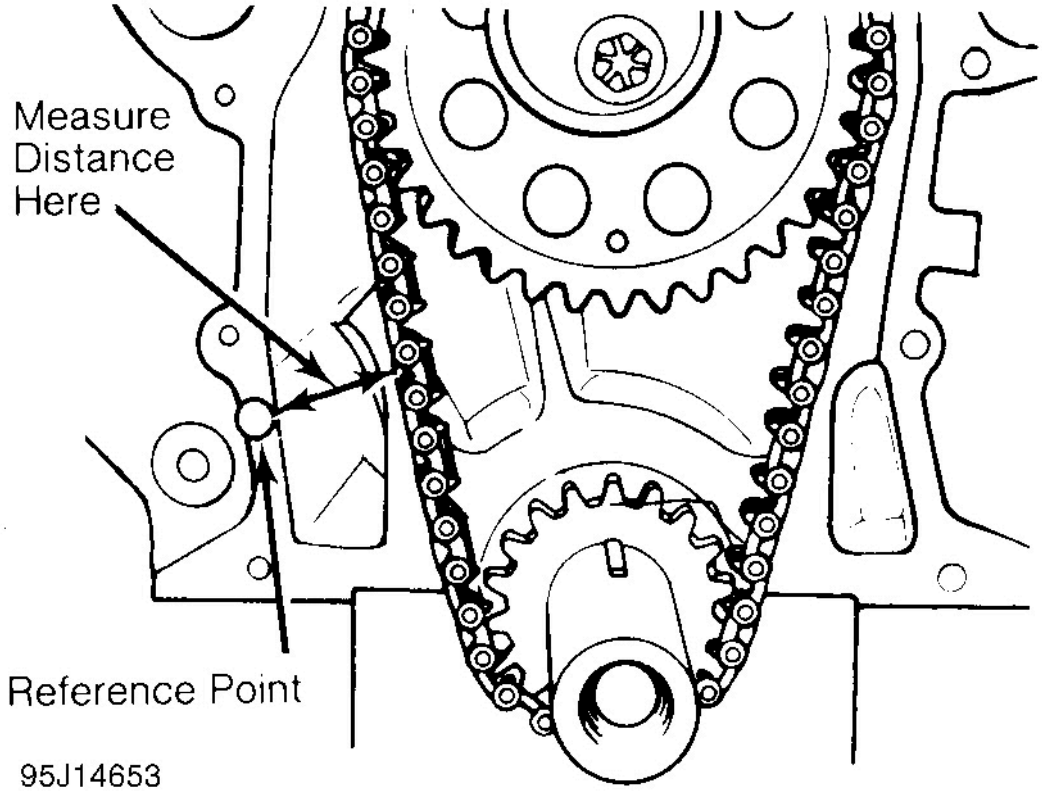

Fig. 23: Measuring Timing Chain Stretch

Timing chains must be installed so timing marks on camshaft gear and crankshaft gear are aligned according to manufacturer. See **Fig. 24**.

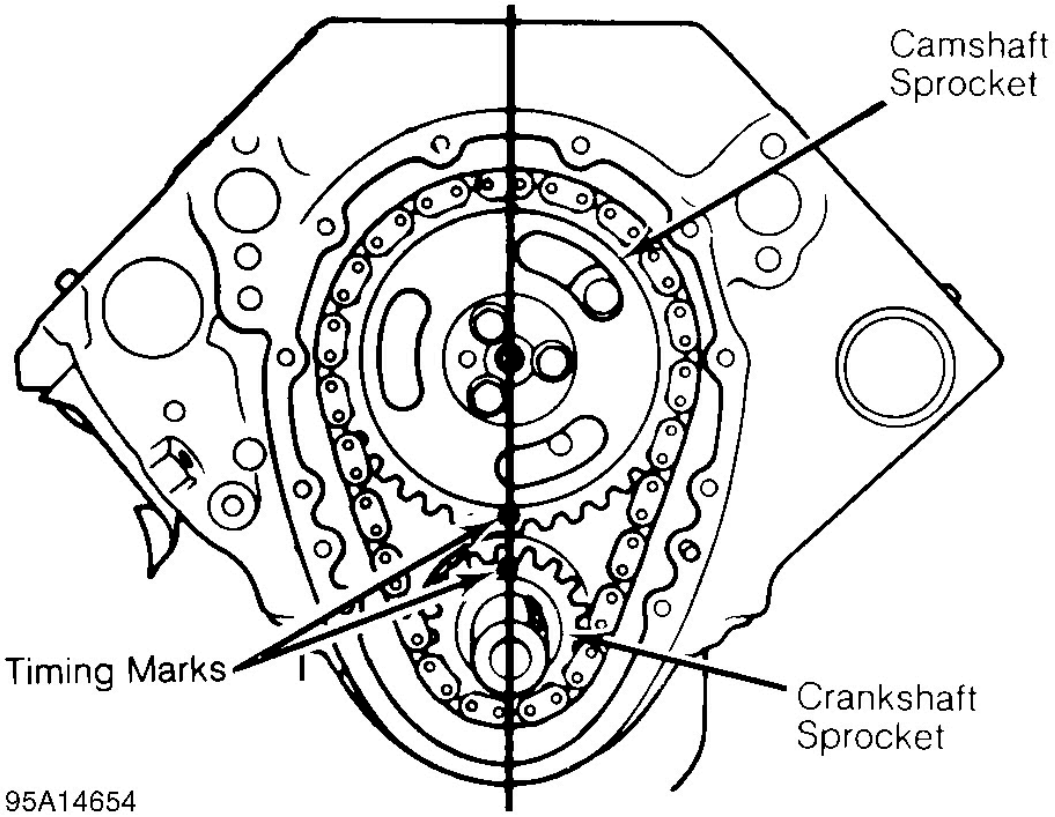

Fig. 24: Typical Gear Timing Mark Alignment

TIMING BELTS

NOTE: **Examples used in this article are general in nature and do not necessarily relate to a specific engine or system. Illustrations and procedures have been chosen to guide mechanic through engine overhaul process. Descriptions of processes of cleaning, inspection, assembly and machine shop practice are included.**

Always refer to appropriate engine overhaul article, if available, in the ENGINES section for complete overhaul procedures and specifications for the vehicle being repaired.

Cogged tooth belts are commonly used on overhead cam engines. Inspect belt teeth for rounded corners or cracking. Replace belt if it is cracked, damaged, missing teeth or oil soaked.

Used timing belt must be installed in original direction of rotation. Inspect all sprocket teeth for wear. Replace all worn sprockets. Sprockets are marked for timing purposes. Engine is positioned so that crankshaft sprocket mark will be upward. Camshaft sprocket is aligned with reference mark on cylinder head or timing belt cover

and then timing belt can be installed. See **Fig. 25**.

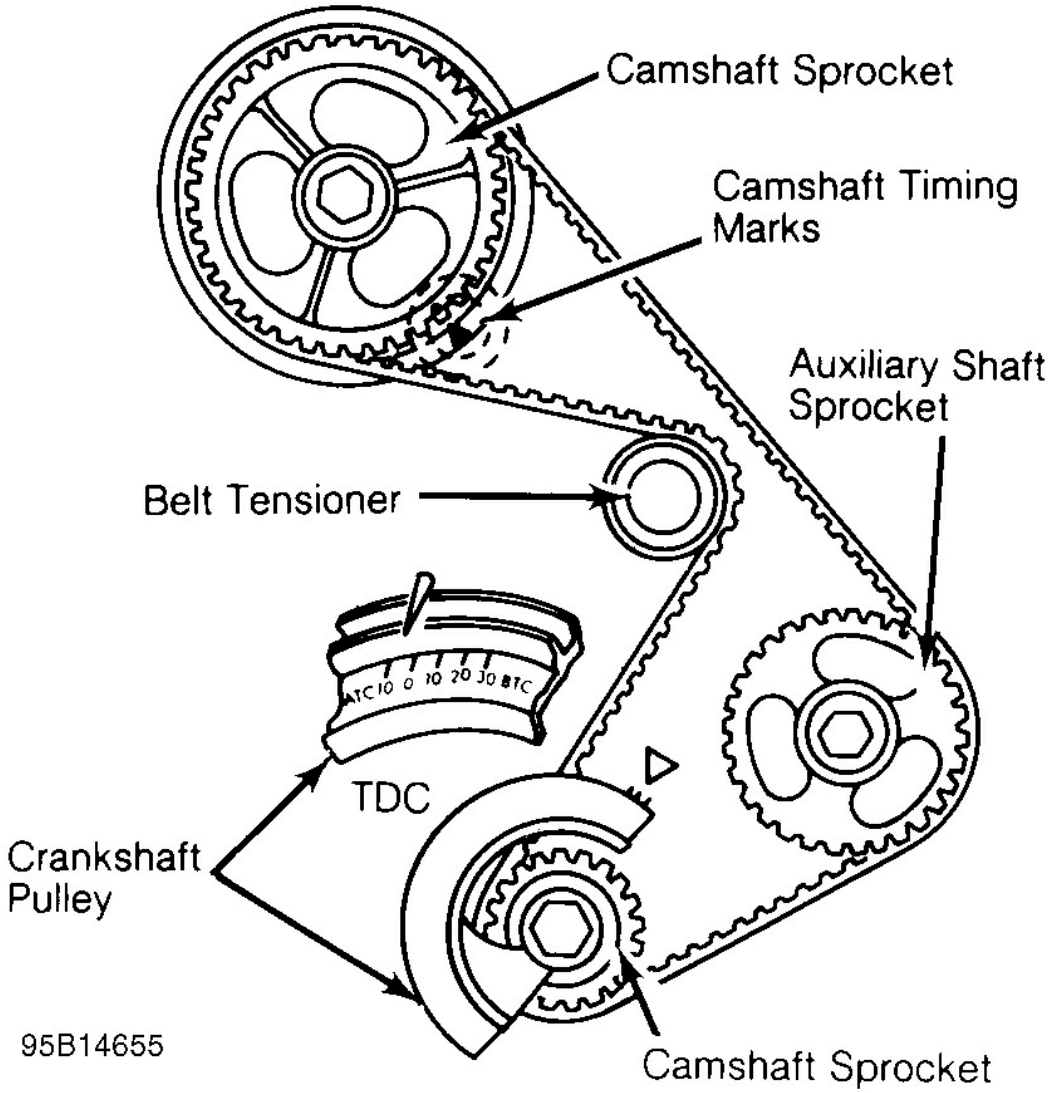

Fig. 25: Typical Camshaft Belt Sprocket Alignment

TENSION ADJUSTMENT

NOTE: **Examples used in this article are general in nature and do not necessarily relate to a specific engine or system. Illustrations and procedures have been chosen to guide mechanic through engine overhaul process. Descriptions of processes of cleaning, inspection, assembly and machine shop practice are included.**

Always refer to appropriate engine overhaul article, if available, in the ENGINES section for complete overhaul procedures and specifications for the vehicle being repaired.

If guide rails are used with spring loaded tensioners, ensure at least half of original rail thickness remains. Spring loaded tensioner should be inspected for damage.

Ensure all timing marks are aligned. Adjust belt tension using manufacturer's recommendations. Belt tension may require checking using tension gauge. See **Fig. 26**.

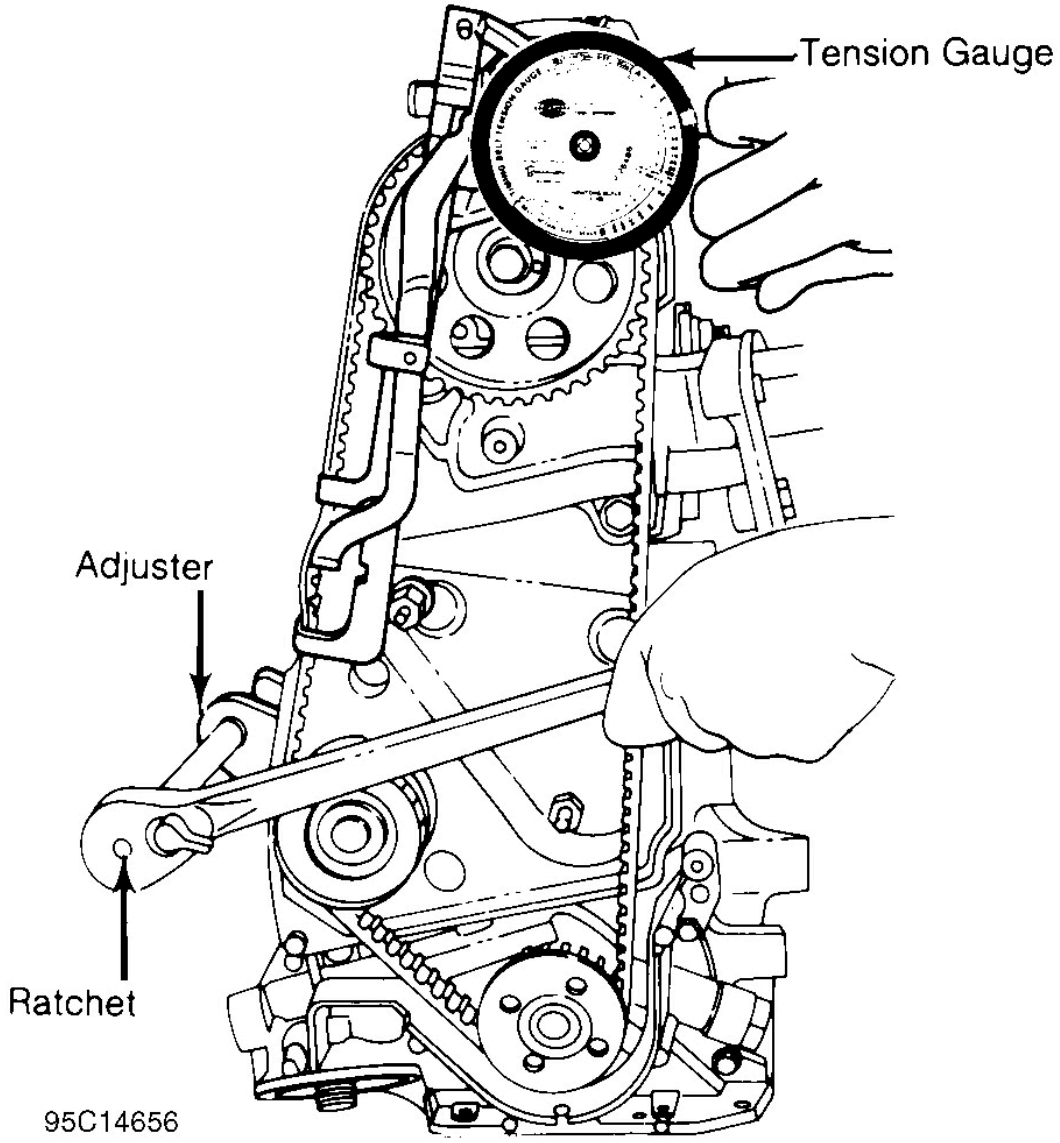

Fig. 26: Adjusting Typical Timing Belt Tension

TIMING GEARS

*** PLEASE READ THIS FIRST ***

NOTE: **Examples used in this article are general in nature and do not necessarily relate to a specific engine or system. Illustrations and procedures have been chosen to guide mechanic through engine overhaul process. Descriptions of processes of cleaning, inspection, assembly and machine shop practice are included.**

Always refer to appropriate engine overhaul article, if available, in the ENGINES section for complete overhaul procedures and specifications for the vehicle being repaired.

TIMING GEAR BACKLASH & RUNOUT

NOTE: **Examples used in this article are general in nature and do not necessarily relate to a specific engine or system. Illustrations and procedures have been chosen to guide mechanic through engine overhaul process. Descriptions of processes of cleaning, inspection, assembly and machine shop practice are included.**

Always refer to appropriate engine overhaul article, if available, in the ENGINES section for complete overhaul procedures and specifications for the vehicle being repaired.

On engines where camshaft gear operates directly on crankshaft gear, gear backlash and runout must be checked. To check backlash, install dial indicator with tip resting on tooth of camshaft gear. Rotate camshaft gear as far as possible. Adjust indicator to zero. Rotate camshaft gear in opposite direction as far as possible and note reading.

To determine timing gear runout, mount dial indicator with tip resting on face edge of camshaft gear. Adjust indicator to zero. Rotate camshaft gear 360 degrees and note reading. If backlash or runout exceeds specification, replace camshaft and/or crankshaft gear.

REAR MAIN OIL SEAL INSTALLATION

NOTE: **Examples used in this article are general in nature and do not necessarily relate to a specific engine or system. Illustrations and procedures have been chosen to guide mechanic through engine overhaul process. Descriptions of processes of cleaning, inspection, assembly and machine shop practice are included.**

Always refer to appropriate engine overhaul article, if available, in the ENGINES section for complete overhaul procedures and specifications for the vehicle being repaired.

One-Piece Type Seal

For one-piece type oil seal installation, coat block contact surface of seal with sealer if seal is not factory coated. Ensure seal surface is free of burrs. Lubricate seal lip with engine oil and press seal into place using proper oil seal installer. See **Fig. 27**.

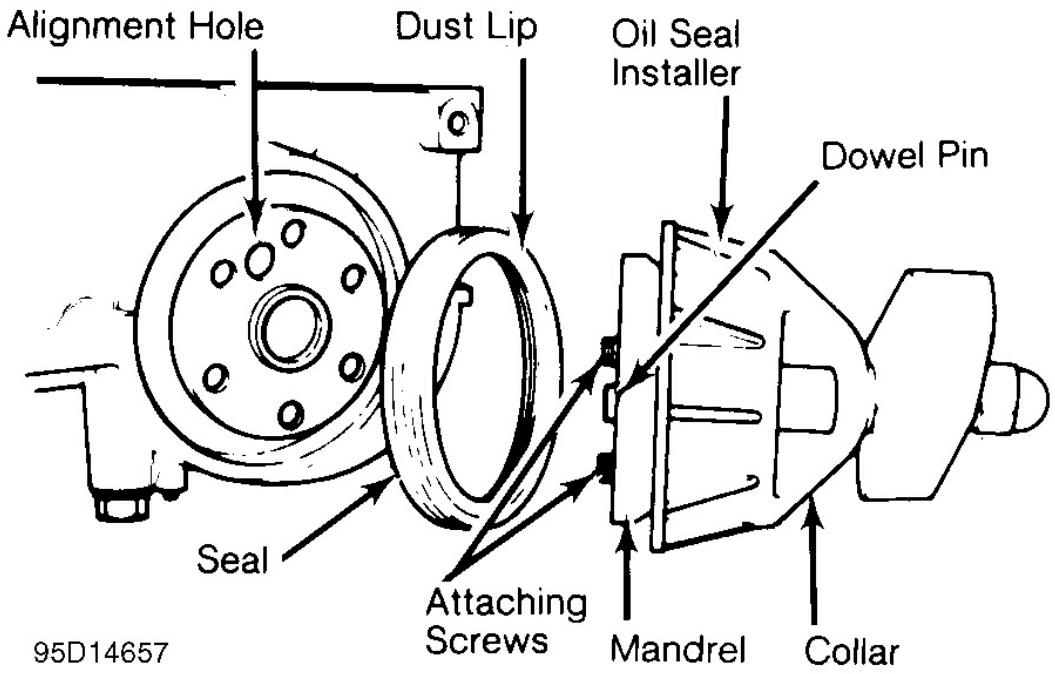

Fig. 27: Installing Typical One-Piece Oil Seal

Rope Type Seal

For rope type rear main oil seal installation, press seal lightly into seat area. Using seal installer, fully seat seal in bearing cap or cylinder block.

Trim seal ends even with cylinder block parting surface. Some applications require sealer to be applied on main bearing cap before installing. See **Fig. 28**.

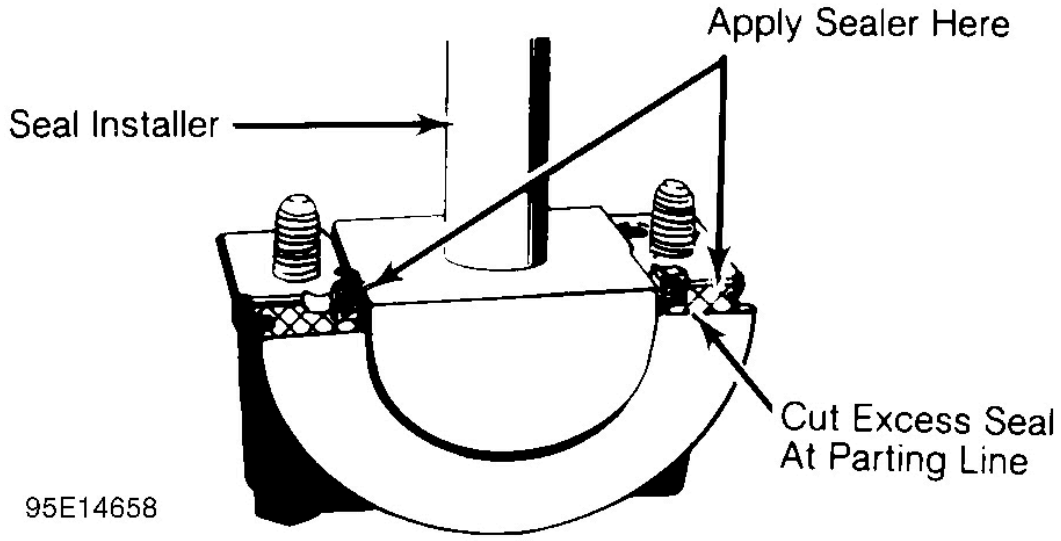

Fig. 28: Installing Typical Rope Seal

Split-Rubber Type Seal

Follow manufacturer's procedures when installing split-rubber type rear main oil seals. Installation procedures vary with manufacturer and engine type. See **Fig. 29**.

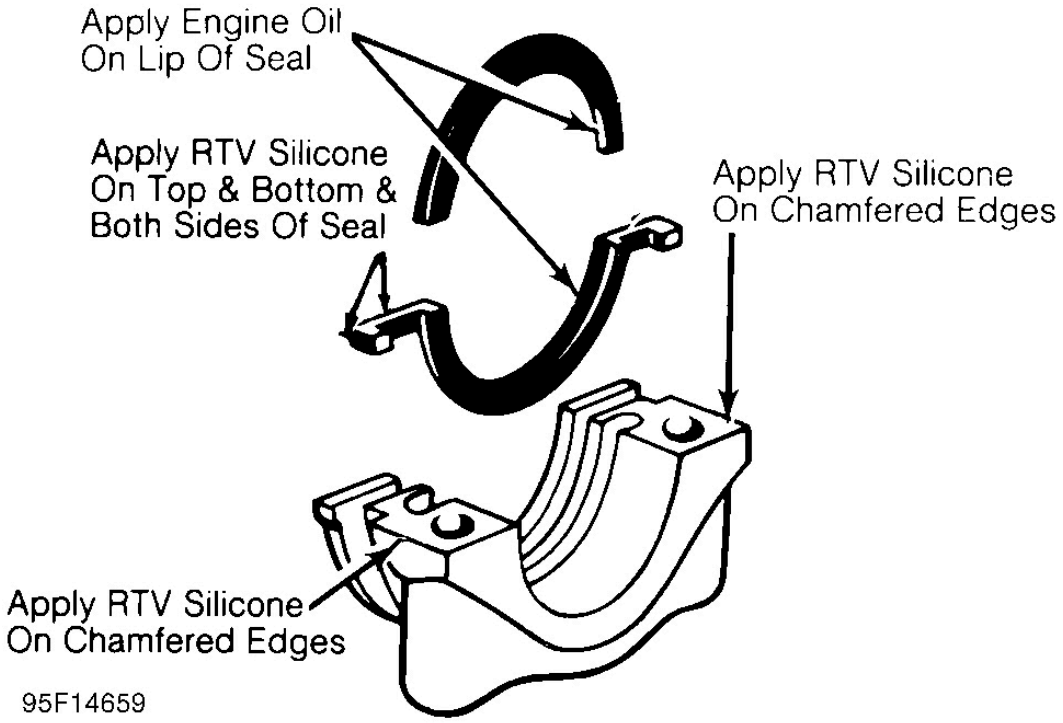

Fig. 29: Installing Typical Split-Rubber Seal

OIL PUMP

*** PLEASE READ THIS FIRST ***

NOTE: **Examples used in this article are general in nature and do not necessarily relate to a specific engine or system. Illustrations and procedures have been chosen to guide mechanic through engine overhaul process. Descriptions of processes of cleaning, inspection, assembly and machine shop practice are included.**

Always refer to appropriate engine overhaul article, if available, in the ENGINES section for complete overhaul procedures and specifications for the vehicle being repaired.

ROTOR TYPE

NOTE: **Examples used in this article are general in nature and do not necessarily relate to a specific engine or system. Illustrations and procedures have been chosen to guide mechanic through engine overhaul process. Descriptions of processes of cleaning, inspection, assembly and machine shop practice are included.**

Always refer to appropriate engine overhaul article, if available, in the ENGINES section for complete overhaul procedures and specifications for the vehicle being repaired.

Mark oil pump rotor locations before removing. See **Fig. 30**. Remove outer rotor and measure thickness and diameter. Measure inner rotor thickness. Inspect shaft for scoring or wear. Inspect rotors for pitting or damage. Inspect cover for grooving or wear. Replace worn or damaged components.

Measure outer rotor-to-body clearance. Replace pump assembly if clearance exceeds specification. Measure clearance between rotors. See **Fig. 31**. Replace shaft and both rotors if clearance exceeds specification.

Install rotors in pump body. Position straightedge across pump body. Using feeler gauge, measure clearance between rotors and straightedge. Pump cover wear is measured using a straightedge and feeler gauge. Replace pump if clearance exceeds specification.

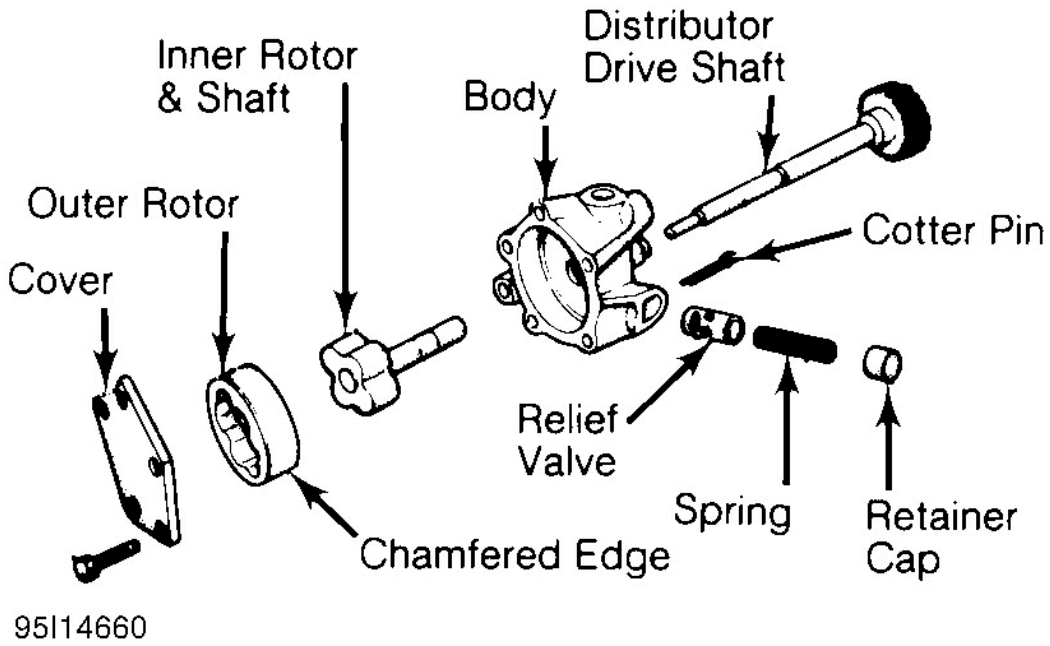

Fig. 30: Typical Rotor Type Oil Pump

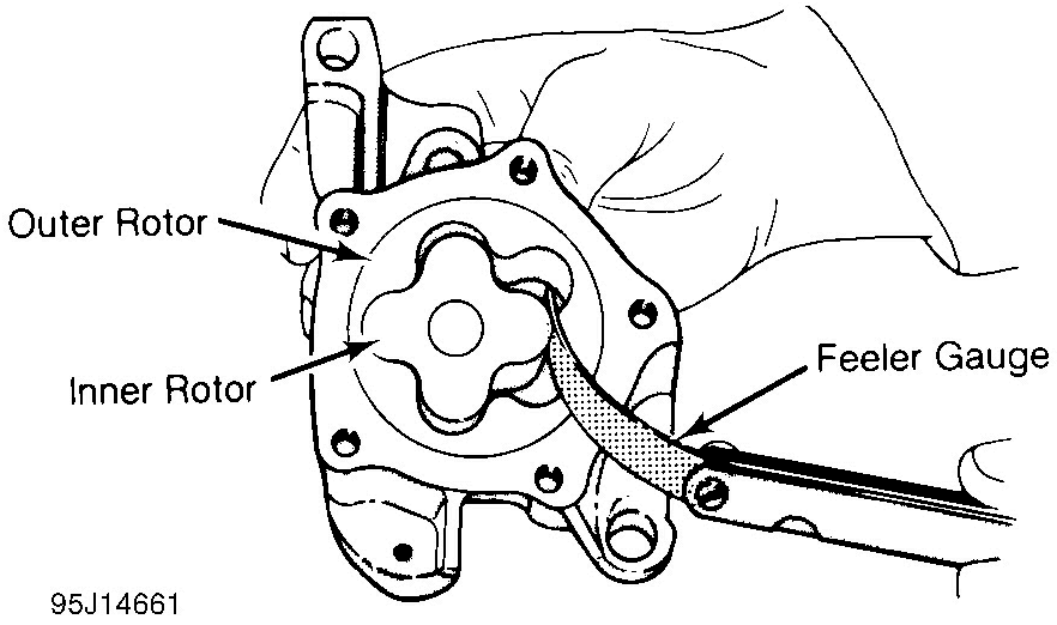

Fig. 31: Measuring Rotor Clearance

GEAR TYPE

NOTE: **Examples used in this article are general in nature and do not necessarily relate to a specific engine or system. Illustrations and procedures have been chosen to guide mechanic through engine overhaul process. Descriptions of processes of cleaning, inspection, assembly and machine shop practice are included.**

Always refer to appropriate engine overhaul article, if available, in the ENGINES section for complete overhaul procedures and specifications for the vehicle being repaired.

Mark oil pump gear location before removing. See **Fig. 32**. Remove gears from pump body. Inspect gears for pitting or damage. Inspect cover for grooving or wear. Measure gear diameter and length. Measure gear housing cavity depth and diameter. See **Fig. 33**. Replace worn or damaged components.

Pump cover wear is measured using a straightedge and feeler gauge. Replace pump or components if warpage or wear exceeds specification, or mating surface of pump cover is scratched or grooved.

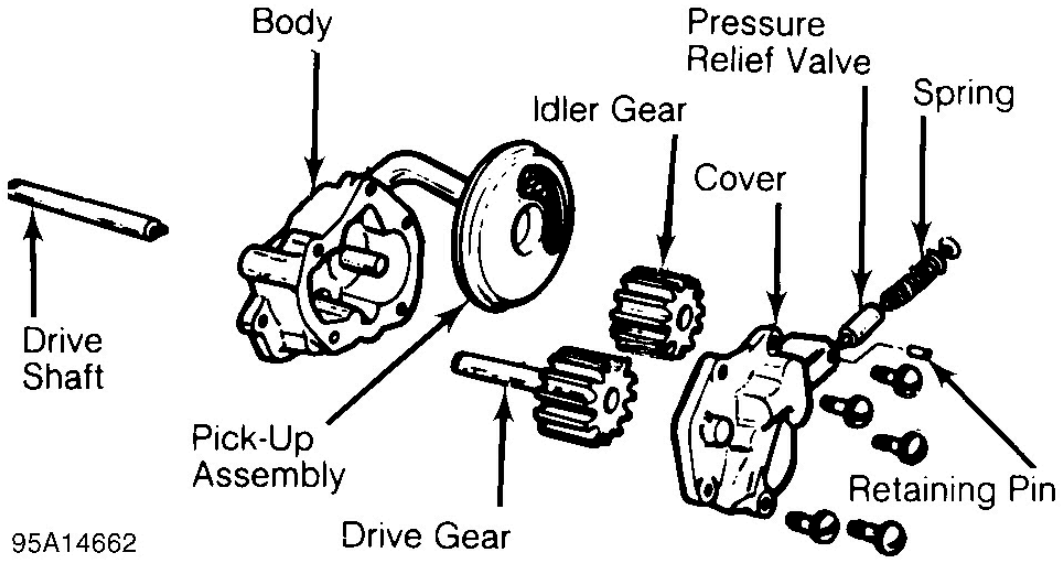

Fig. 32: Typical Gear Type Oil Pump

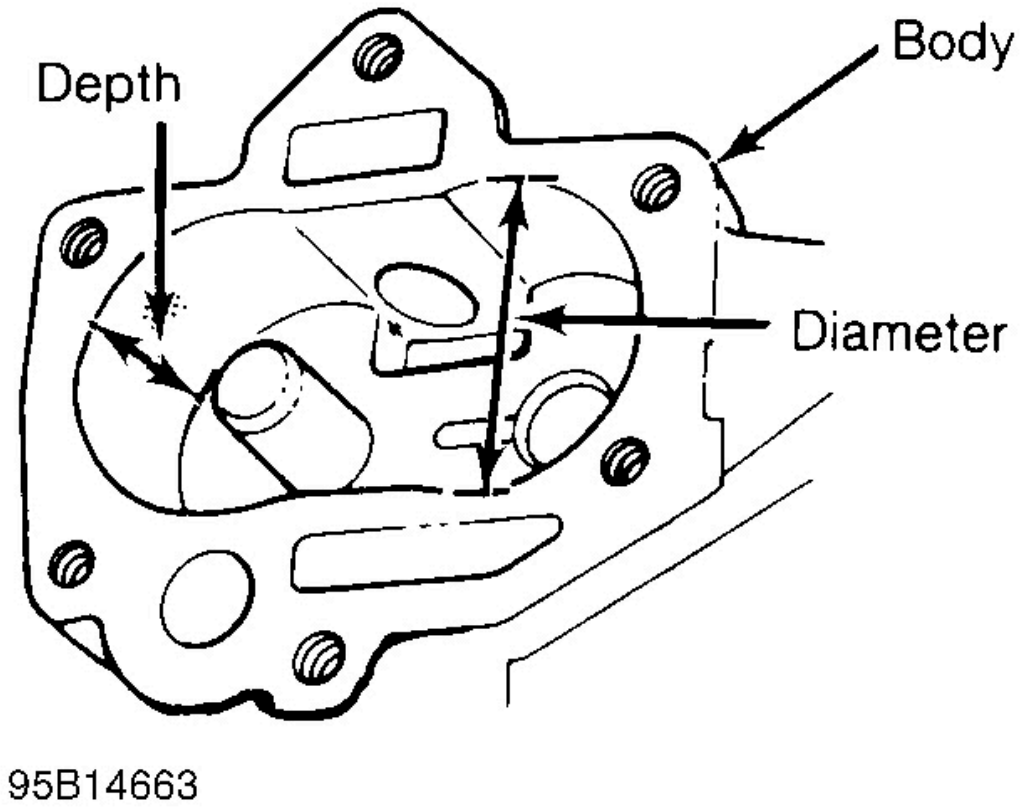

Fig. 33: Measuring Oil Pump Gear Cavity

BREAK-IN PROCEDURE

*** PLEASE READ THIS FIRST ***

NOTE: **Examples used in this article are general in nature and do not necessarily relate to a specific engine or system. Illustrations and procedures have been chosen to guide mechanic through engine overhaul process. Descriptions of processes of cleaning, inspection, assembly and machine shop practice are included.**

Always refer to appropriate engine overhaul article, if available, in the ENGINES section for complete overhaul procedures and specifications for the vehicle being repaired.

ENGINE PRE-OILING

NOTE: **Examples used in this article are general in nature and do not necessarily relate to a specific engine or system. Illustrations and procedures have been chosen to guide mechanic through engine overhaul process. Descriptions of processes of cleaning, inspection, assembly and machine shop practice are included.**

Always refer to appropriate engine overhaul article, if available, in the ENGINES section for complete overhaul procedures and specifications for the vehicle being repaired.

Pre-oil engine prior to operation to prevent engine damage. Lightly oiled oil pump will cavitate unless oil pump cavities are filled with engine oil or petroleum jelly.

Engine pre-oiling can be done using pressure oiler (if available). Connect pressure oiler to cylinder block oil passage such as oil pressure sending unit. Operate pressure oiler long enough to ensure correct amount of oil has filled crankcase. Check oil level while pre-oiling.

If pressure oiler is not available, disconnect ignition system. Remove oil pressure sending unit and replace with oil pressure test gauge. Using starter motor, rotate engine starter until gauge shows normal oil pressure for several seconds. DO NOT crank engine for more than 30 seconds to avoid starter motor damage. Ensure oil pressure has reached the most distant point from the oil pump.

NOTE: **If new lifters or camshaft are installed, some manufacturers require that a crankcase conditioner be added to engine oil. The engine should be operated for specified amount of time to aid in lifter break-in procedure.**

INITIAL START-UP

NOTE: **Examples used in this article are general in nature and do not necessarily relate to a specific engine or system. Illustrations and procedures have been chosen to guide mechanic through engine overhaul process. Descriptions of processes of cleaning, inspection, assembly and machine shop practice are included.**

Always refer to appropriate engine overhaul article, if available, in the ENGINES section for complete overhaul procedures and specifications for the vehicle being repaired.

Start engine and operate engine at low speed while checking for coolant, fuel and oil leaks. Stop engine. Recheck coolant and oil level. Adjust if necessary.

CAMSHAFT

NOTE: **Examples used in this article are general in nature and do not necessarily relate to a specific engine or system. Illustrations and procedures have been chosen to guide mechanic through engine overhaul process. Descriptions of processes of cleaning, inspection, assembly and machine shop practice are included.**

Always refer to appropriate engine overhaul article, if available, in the ENGINES section for complete overhaul procedures and specifications for the vehicle being repaired.

Break-in procedure is required when new or reground camshaft has been installed. Operate and maintain engine speed between 1500-2500 RPM for approximately 30 minutes. Procedure may vary due to manufacturer's recommendations.

PISTON RINGS

NOTE: **Examples used in this article are general in nature and do not necessarily relate to a specific engine or system. Illustrations and procedures have been chosen to guide mechanic through engine overhaul process. Descriptions of processes of cleaning, inspection, assembly and machine shop practice are included.**

Always refer to appropriate engine overhaul article, if available, in the ENGINES section for complete overhaul procedures and specifications for the vehicle being repaired.

Piston rings require a break-in procedure to ensure seating of rings to cylinder walls. Serious damage may occur to rings if correct procedures are not followed.

Extremely high piston ring temperatures are obtained during break-in process. If rings are exposed to excessively high RPM or high cylinder pressures, ring damage can occur. Follow piston ring manufacturer's recommended break-in procedure.

FINAL ADJUSTMENTS

NOTE: **Examples used in this article are general in nature and do not necessarily relate to a specific engine or system. Illustrations and procedures have been chosen to guide mechanic through engine overhaul process. Descriptions of processes of cleaning, inspection, assembly and machine shop practice are included.**

Always refer to appropriate engine overhaul article, if available, in the ENGINES section for complete overhaul procedures and specifications for the vehicle being repaired.

Check or adjust ignition timing and dwell (if applicable). Adjust valves (if necessary). Adjust idle speed and mixture. Retighten cylinder heads (if required). If cylinder head or block is aluminum, retighten bolts when engine is cold. Follow the engine manufacturer's recommended break-in procedure and maintenance schedule for new engines.

NOTE: **Some manufacturers require that head bolts be retightened after specified amount of operation. This must be done to prevent head gasket failure.**

GENERAL INFORMATION

Engine Performance Diagnostic Routine Outline

* PLEASE READ THIS FIRST *

NOTE: **This article is generic in nature and all information does not apply to all vehicles. For vehicle specific information, see the appropriate articles in the ENGINE PERFORMANCE category.**

WHERE DOES DRIVEABILITY DIAGNOSIS START?

PERFORM BASIC INSPECTION

NOTE: **This article is generic in nature and all information does not apply to all vehicles. For vehicle specific information, see the appropriate articles in the ENGINE PERFORMANCE category.**

1. Verify Customer Complaint
2. Check for Relevant Technical Service Bulletins (TSBs)
3. Perform Visual Inspection **(See Basic Diagnostic Procedures)**
4. Test Engine Sub-Systems **(See Basic Diagnostic Procedures)**
   - Mechanical Condition (Compression)
   - Ignition Output
   - Fuel Delivery
5. Check Air Induction System For Leaks
6. Check & Adjust Basic Engine Settings**(See On-Vehicle Adjustments)**
   - Ignition Timing
   - Idle Speed

CHECK FOR TROUBLE CODES

NOTE: **This article is generic in nature and all information does not apply to all vehicles. For vehicle specific information, see the appropriate articles in the ENGINE PERFORMANCE category.**

1. Check for Diagnostic Trouble Codes (DTCs).**(See Self-Diagnostics)**
2. Repair cause of DTCs.
3. Clear PCM memory and repeat self-test.

DIAGNOSE SYMPTOM

NOTE: **This article is generic in nature and all information does not apply to all vehicles. For vehicle specific information, see the appropriate articles in the ENGINE PERFORMANCE category.**

1. If no self-diagnostics available, or no trouble codes present, identify symptom.
2. See trouble shooting procedure to identify problem. **(See Trouble Shooting - No Codes)**

TEST SYSTEM

NOTE: **This article is generic in nature and all information does not apply to all vehicles. For vehicle specific information, see the appropriate articles in the ENGINE PERFORMANCE category.**

1. Perform required tests. **(See Systems & Component Testing)**
2. Verify complaint is repaired.

GENERAL INFORMATION

Engine Performance Safety Precautions

- Always refer to Emission Decal in engine compartment before servicing vehicle. If manual and decal differ, always use decal specifications.
- Do not allow or create a condition of misfire in more than one cylinder for an extended period of time. Damage to converter may occur due to loading converter with unburned air/fuel mixture.
- Always turn ignition off and disconnect negative battery cable BEFORE disconnecting or connecting computer or other electrical components.
- DO NOT drop or shock electrical components such as computer, airflow meter, etc.
- DO NOT use fuel system cleaning compounds that are not recommended by the manufacturer. Damage to gaskets, diaphragm materials and catalytic converter may result.
- Before performing a compression test or cranking engine using a remote starter switch, disconnect coil wire from distributor and secure it to a good engine ground, or disable ignition.
- Before disconnecting any fuel system component, ensure fuel system pressure is released.
- Use a shop towel to absorb any spilled fuel to prevent fire.
- DO NOT create sparks or have an open flame near battery.
- If any fuel system components such as hoses or clamps are replaced, ensure they are replaced with components designed for fuel system use.
- Always reassemble throttle body components with new gaskets, "O" rings and seals.
- If equipped with an inertia switch, DO NOT reset switch until fuel system has been inspected for leaks.
- Wear safety goggles when drilling or grinding.
- Wear proper clothing which protects against chemicals and other hazards.

GENERAL INFORMATION

Gear Tooth Contact Patterns

* PLEASE READ THIS FIRST *

NOTE: **This is GENERAL information. This article is not intended to be specific to any unique situation or individual vehicle configuration. For model-specific information see appropriate articles where available.**

INSPECTION

NOTE: **This is GENERAL information. This article is not intended to be specific to any unique situation or individual vehicle configuration. For model-specific information see appropriate articles where available.**

Wipe lubricant from internal parts. Rotate gears and inspect for wear or damage. Mount dial indicator to housing and check backlash at several points around ring gear. Backlash must be within specification at all points. If no defects are found, check gear tooth pattern contact.

NOTE: **Drive pattern should be well centered on ring gear teeth. Coast pattern should be centered, but may be slightly toward toe of ring gear teeth.**

GEAR TOOTH CONTACT PATTERN

NOTE: **This is GENERAL information. This article is not intended to be specific to any unique situation or individual vehicle configuration. For model-specific information see appropriate articles where available.**

1. Paint ring gear teeth with marking compound. Wrap cloth or rope around drive pinion flange to act as brake. Rotate gear until clear contact pattern is obtained.
2. Contact pattern will indicate whether correct pinion bearing mounting shim has been installed and if drive gear backlash has been set properly. Backlash between drive gear pinion must be maintained within specified limits until correct tooth pattern is obtained.

ADJUSTMENTS

NOTE: **This is GENERAL information. This article is not intended to be specific to any unique situation or individual vehicle configuration. For model-specific information see appropriate articles where available.**

GEAR BACKLASH & PINION SHIM CHANGES

NOTE: **This is GENERAL information. This article is not intended to be specific to any unique situation or individual vehicle configuration. For model-specific information see appropriate articles where available.**

1. With no change in backlash, moving pinion further from ring gear moves drive pattern toward heel and top of tooth, and moves coast pattern toward toe and top of tooth.
2. With no change in backlash, moving pinion closer to ring gear moves drive pattern toward toe and bottom of tooth, and moves coast pattern toward heel and bottom of tooth.
3. With no change in pinion shim thickness, an increase in backlash moves ring gear further from pinion. Both drive and coast patterns move toward heel and top of tooth.
4. With no change in pinion shim thickness, a decrease in backlash moves ring gear closer to pinion gear. Both drive and coast patterns move toward toe and bottom of tooth.

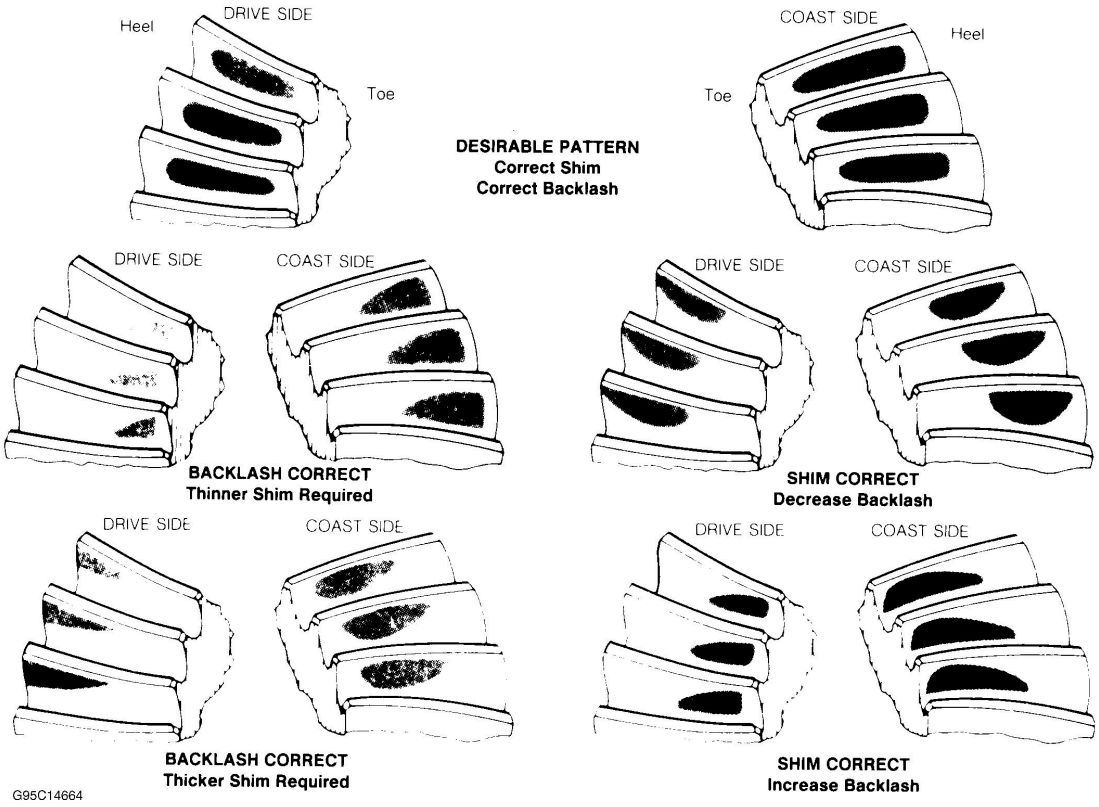

Fig. 1: Drive Axle Gear Tooth Patterns

GENERAL INFORMATION

General Cooling System Service

* PLEASE READ THIS FIRST *

This article is generic in nature and all information does not apply to all vehicles including those without a liquid cooling system. For vehicle specific information, see the appropriate articles in the ENGINE category.

DESCRIPTION

The liquid cooling system consists of a radiator, water pump, thermostat, electric or belt-driven cooling fan, pressure cap, heater, and various connecting hoses and cooling passages in the engine block and cylinder head.

MAINTENANCE

DRAINING

Remove radiator cap and open heater control valve to maximum heat position. Open drain cocks or remove plugs in bottom of radiator and engine block. In-line engines usually have one plug or drain cock, while "V" type engines have 2, one in each bank of cylinders.

FLUSHING

CAUTION: Some manufacturers use an aluminum and plastic radiator. Flushing solution must be compatible with aluminum.

Radiator

Connect flushing gun to water outlet of radiator. Disconnect water inlet hose. To prevent flooding engine, use a hose connected to radiator inlet. Use air in short bursts to prevent damage to radiator. Continue flushing until water runs clear.

Engine Block

To flush engine, remove thermostat. Connect flushing gun to water outlet of radiator. Use air in short bursts to prevent damage to radiator. Continue flushing until water runs clear.

REFILLING

To prevent air from being trapped in engine block, engine should be running when refilling cooling system. After system is full, continue running engine until thermostat is open, then recheck fill level. Do not overfill system.

TESTING

THERMOSTAT

1. Remove and inspect thermostat for corrosion and proper seating of valve. If okay, suspend thermostat and thermometer in a 50/50 mixture of coolant and water. See **Fig. 1**. DO NOT allow thermostat or thermometer to touch bottom or container. Heat water until thermostat begins to open.
2. Read temperature on thermometer. This is the initial opening temperature and should be within specification. Continue heating water until thermostat is fully open and note temperature. This is the fully open temperature. If either reading is not to specification, replace thermostat.

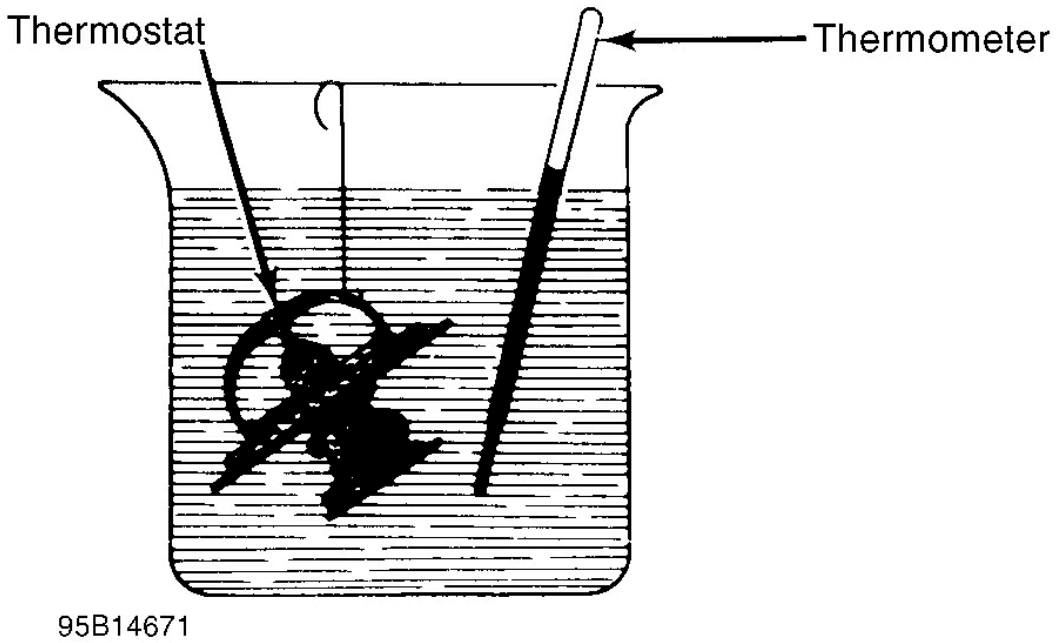

Fig. 1: Testing Thermostat in Coolant/Water Solution

PRESSURE TESTING

A pressure tester is used to check both radiator cap and complete cooling system. Follow pressure tester manufacturer instructions and test components as follows:

Radiator Cap

Visually inspect radiator cap. If cap looks okay, connect pressure tester to cap. See **Fig. 2**. Pressurize tester to full radiator cap specification. Replace cap if it fails to hold pressure.

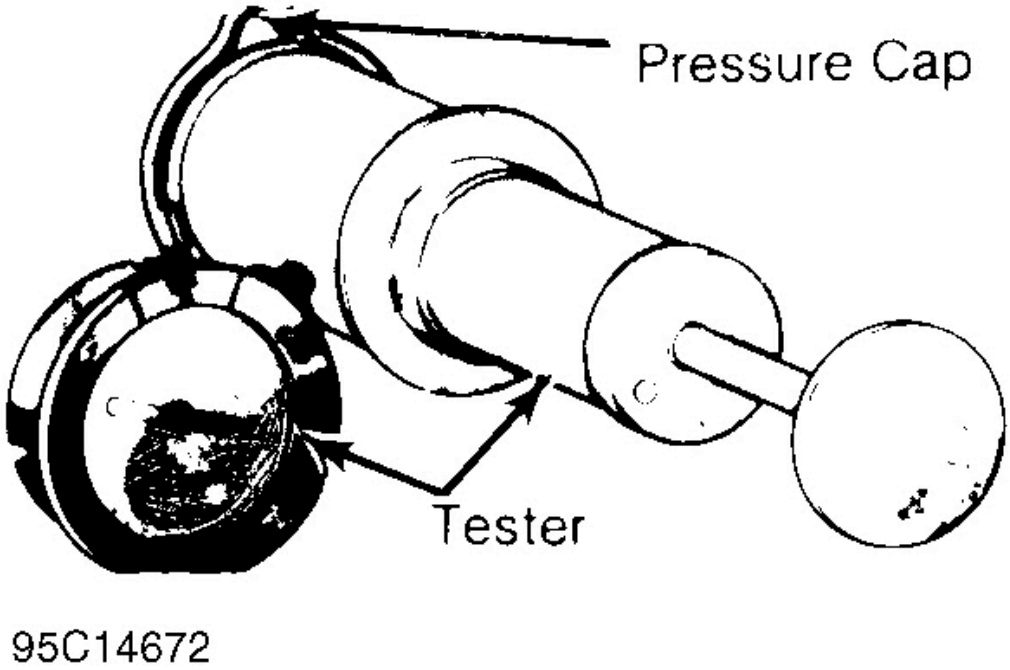

Fig. 2: Pressure Testing Radiator Cap

Cooling System

1. Turn ignition off and allow engine to cool. Ensure radiator if filled to correct level. Remove cap and attach pressure tester to radiator. Pressurize tester to full radiator rating specification.
2. If pressure drops, check for external leaks. If no leaks are found, start engine and allow to idle. If pressure builds up immediately, check cylinder head and block for cracks. If pressure does not build up immediately, go to next step.

CAUTION: DO NOT allow excess pressure to build in cooling system or damage may result.

3. Using pressure tester, pump cooling system up to pressure specified on radiator cap. If pump gauge pointer vibrates, compression or combustion leak into cooling system is indicated. Isolate leak by shorting each spark plug wire to cylinder block. Gauge pointer vibration will stop or decrease when leaking cylinder is shorted.

GENERAL INFORMATION

Manual Transmission Trouble Shooting

* PLEASE READ THIS FIRST *

NOTE: **This is GENERAL information. This article is not intended to be specific to any unique situation or individual vehicle configuration. For model-specific information see appropriate articles where available.**

INTRODUCTION

NOTE: **This is GENERAL information. This article is not intended to be specific to any unique situation or individual vehicle configuration. For model-specific information see appropriate articles where available.**

There are many times when the transmission is incorrectly blamed for shifting problems or noises that are actually caused by other reasons. Shift difficulties are frequently caused by conditions outside of the transmission or transaxle. Typical conditions include: shift linkage, shift cables, alignment of engine to transmission, worn engine mounts or clutch problems. Drive train noises may come from many sources such as tires, road surfaces, wheel bearings, differentials, engine or exhaust system. Repairing or overhauling transmission will not cure these problems.

No manufacturer makes a perfectly quiet transmission. Gear rollover noise is present in most constant mesh transmissions and will tend to disappear when the clutch is disengaged or transmission is placed in gear. If clutch is properly adjusted, clutch release bearing noise will disappear when release bearing is moved enough to slide release bearing away from pressure plate.

Trouble shooting can be helped by driving vehicle on a smooth level road to help eliminate tire and body noise. Note whether noise occurs on acceleration, coasting, deceleration or steady driving conditions. Some problems may only occur when transmission is either hot or cold. Gear lubricant that is too thick can cause hard shifting on cold mornings before engine is warm and vehicle has been driven.

MANUAL TRANSMISSION/TRANSAXLE TROUBLE SHOOTING

Condition	Possible Cause
Noisy In Forward Gears	Low Gear Oil Level, Loose Bellhousing Bolts, Worn Bearings Or Gears
Clunk On Deceleration (FWD Only)	Loose Engine Mounts, Worn Inboard CV Joints, Worn Differential Pinion Shaft, Oversized Side Gear Hub Counterbore in Case
Gear Clash When Shifting Forward Gears	Clutch Out Of Alignment, Shift Linkage Damaged Or Out Of Adjustment, Gears Or Synchronizers Damaged, Low Gear Oil Level
Transmission Noisy When Moving (RWD Only); Quiet In Neutral With Clutch Engaged	Worn Rear Output Shaft Bearing

Gear Rattle	Worn Bearings, Worn Gear Oil, Low Gear Oil, Worn Gears
Steady Ticking At Idle (Increases With RPM)	Broken Tooth On A Gear
Gear Clash When Shifting Forward Gears	Worn Or Broken Synchronizers, Faulty Clutch
Loud Whine In Reverse	Normal Condition (1)
Noise When Stepping On Clutch	Faulty Release Bearing, Worn Pilot Bearing
Ticking Or Screeching As Clutch Is Engaged	Faulty Release Bearing, Uneven Pressure Plate Fingers
Click Or Snap When Clutch Is Engaged	Worn Clutch Fork, Worn Pivot Ball, Worn Or Broken Front Bearing Retainer
Transmission Shifts Hard	Clutch Not Releasing, Incorrect Gear Oil, Shift Mechanism Binding, Clutch Installed Backward
Will Not Shift Into One Gear, Shifts Into All Others	Bent Shift Fork, Worn Detent Balls
Locked Into Gear, Cannot Shift	Clutch Adjustment, Worn Detent Balls
Transmission Jumps Out Of Gear	Pilot Bearing Worn, Bent Shift Fork, Worn Gear Teeth Or Face, Excessive Gear Train End Play, Worn Synchronizers, Missing Detent Ball Spring, Shift Mechanism Worn Or Out Of Adjustment, Engine Or Transmission Mount Bolts Loose, Transmission Not Aligned
Shift Lever Rattle	Worn Detents Or Shift Lever, Worn Shift Fork, Worn Synchronizer Sleeves
Shift Lever Hops Under Acceleration	Worn Engine Or Transmission Mounts
(1) Most units use spur cut gears in Reverse and are naturally noisy.	

GENERAL INFORMATION

Parasitic Load Explanation & Test Procedures

* PLEASE READ THIS FIRST *

NOTE: **This is GENERAL information. This article is not intended to be specific to any unique situation or individual vehicle configuration. For model-specific information see appropriate articles where available.**

GENERAL INFORMATION

NOTE: **This is GENERAL information. This article is not intended to be specific to any unique situation or individual vehicle configuration. For model-specific information see appropriate articles where available.**

The term Parasitic Load refers to electrical devices that continue to use or draw current after the ignition switch is turned to OFF position. This small amount of continuous battery draw is expressed in milliamps (mA). On Chrysler vehicles, a typical Parasitic Load should be no more than 30 milliamps (0.030 amps). On Ford Motor Co. and General Motors vehicles produced after 1980, a typical Parasitic Load should be no more than 50 milliamps (0.050 amps).

Vehicles produced since 1980 have memory devices that draw current with ignition off for as long as 20 minutes before shutting down the Parasitic Drain. When Parasitic Load exceeds normal specifications, the vehicle may exhibit dead battery and no-start condition.

Follow test procedure for checking Parasitic Loads to completion. A brief overview of a suggested test procedure is included along with some typical Parasitic Load specifications. Refer to GENERAL MOTORS PARASITIC LOAD TABLE chart.

TESTING FOR PARASITIC LOAD

NOTE: **This is GENERAL information. This article is not intended to be specific to any unique situation or individual vehicle configuration. For model-specific information see appropriate articles where available.**

CAUTION: **Always turn ignition off when connecting or disconnecting battery cables, battery chargers or jumper cables. DO NOT turn test switch to OFF position (which causes current to run through ammeter or vehicle electrical system).**

NOTE: **Memory functions of various accessories must be reset after the battery is reconnected.**

The battery circuit must be opened to connect test switch (shunt) and ammeter into the circuit. When a battery cable is removed, timer circuits within the vehicle computer are interrupted and immediately begin to discharge. If in doubt about the condition of the ammeter fuse, test it with an ohmmeter prior to beginning test. An open fuse will show the same reading (00.00) as no parasitic drain. Begin test sequence with the meter installed and on the 10-amp scale. Select lower scale to read parasitic draw.

CHRYSLER IGNITION OFF DRAW (IOD) TEST

To test for excessive IOD, verify that all electrical accessories are OFF. Turn off all lights, remove ignition key, and close all doors and decklid. If the vehicle is equipped with electronic accessories (illuminated entry, automatic load leveler, body computer, or high line radio), allow the system to automatically shut off (time out), up to 3 minutes.

1. Raise the hood and disconnect both battery cables, negative first.

CAUTION: IOD greater than 3 amps may damage millampmeter.

2. Reconnect the negative cable and connect a typical 12-volt test light (low wattage bulb) between the positive cable clamp and the positive battery post. Remove the engine compartment lamp bulb. If the test light does not light, proceed to step 3. If the test light does light, proceed to step, 4. The test light will indicate IOD greater than 3 amps. After higher amperage IOD has been corrected, proceed to step 3.
3. ith 12-volt test light still connected (not lit), connect an ammeter (milliampere scale) between the positive cable clamp and the positive battery post, disconnect test light, refer to instructions provided with ammeter being used. A reading of 30 milliamperes or less indicates normal electrical draw. If ammeter reads more than 30 milliamperes, excessive IOD must be corrected.
4. Locate the fuse panel and remove fuses or circuit breakers one at a time, and observe ammeter after each fuse or circuit breaker is removed. If test light goes out and the reading drops below 30 milliamperes when a certain fuse or circuit breaker is removed, that circuit may have a defect.
5. If IOD is detected after all fuses and circuit breakers have been removed, disconnect the 60-way connector at the Single Module Engine Control (SMEC), located outboard of the battery.
6. If excessive IOD is detected after all fused circuits and SMEC have been verified, disconnect the B+ terminal from the alternator. If reading drops below 30 milliamperes, reinstall all fuses and circuit breakers, reconnect B+ terminal at alternator, reconnect battery, and perform alternator diagnostics.
7. Install engine compartment lamp bulb.

TEST PROCEDURE USING TEST SWITCH

1. Turn ignition off. Remove negative battery terminal cable. Install Disconnect Tool (J-38758) test switch male end to negative battery cable. Turn test switch knob to OFF position (current through meter). Install negative battery cable to the female end of test switch.
2. Turn test switch knob to ON position (current through switch). Road test vehicle with vehicle accessories on (radio, air conditioner, etc). After road test, turn ignition switch to LOCKED position and remove key. Connect ammeter terminals to test switch terminals. See **Fig. 1**. Select 10-amp scale.

3. Turn off all electrical accessories. Turn off interior lights, underhood lamp, trunk light, illuminated entry, etc. To avoid damaging ammeter or obtaining a false meter reading, all accessories must be off before turning test switch knob to OFF position.
4. Turn test switch knob to OFF position to allow current to flow through ammeter. If meter reads wrong polarity, turn test switch to ON position and reverse leads. Turn test switch to OFF position. Observe current reading. If reading is less than 2 amps, turn test switch to ON position to keep electrical circuits powered-up.
5. Select low amp scale. Switch lead to the correct meter position. Turn test switch to OFF position and compare results to normal current draw. See **GENERAL MOTORS PARASITIC LOAD TABLE (MILLIAMPS)**. If current draw is unusually high for the vehicle's overall electrical system, remove system fuses one at a time until current draw returns to normal.
6. Turn test switch to ON position each time door is opened or fuse is removed. Turn switch to OFF position to read current draw value through meter. When the cause of excessive current drain has been located and repaired, remove test switch and reconnect negative battery cable to the negative battery terminal.

INTERMITTENT PARASITIC LOAD PROBLEMS

Intermittent parasitic load can occur because of a memory device that does not power down with ignition off. With an intermittent parasitic load, battery draw can be greater than 1.0 amp.

To find an intermittent problem requires that an ammeter and Disconnect Tool (J-38758) test switch be connected and left in the circuit. See **Fig. 1**. Road test vehicle. After road test, turn ignition off and remove key.

Monitor the milliamps scale for 15-20 minutes after ignition is turned off. This allows monitoring memory devices to determine if they time out and stop drawing memory current. The test switch is needed to protect ammeter when the vehicle is started.

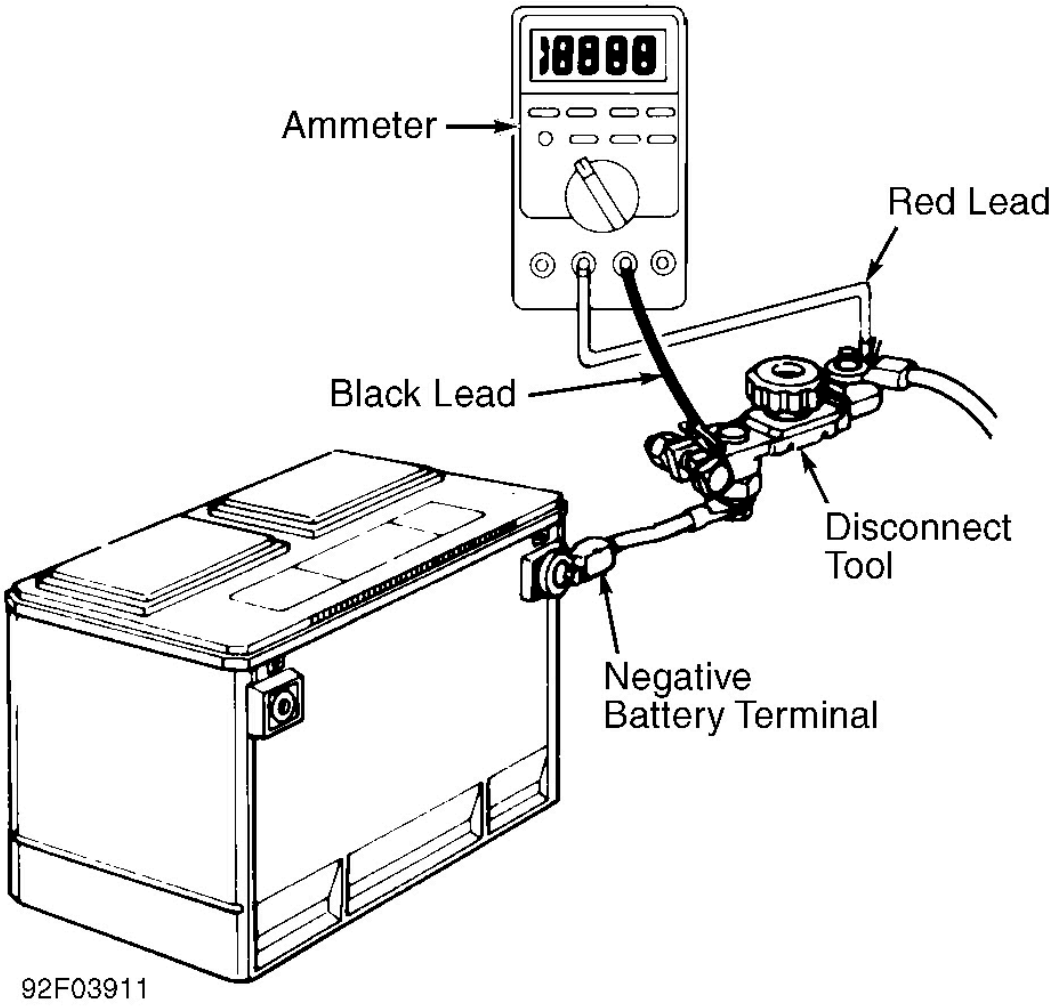

Fig. 1: Connecting Kent-Moore Disconnect Tool (J-38758)
Courtesy of GENERAL MOTORS CORP.

GENERAL MOTORS PARASITIC LOAD

Component	Normal Draw	Maximum Draw	Time-Out (Minutes)
Anti-Theft System	0.4	1.0	.....
Auto Door Lock	1.0	1.0	.....
Body Control Module	3.6	12.4	20
Central Processing System	1.6	2.7	20
Electronic Control Module	5.6	10.0	.....
Electronic Level Control	2.0	3.3	20

Heated Windshield Module	0.3	0.4	.....
HVAC Power Module	1.0	1.0	.....
Illuminated Entry	1.0	1.0	1
Light Control Module	0.5	1.0	.....
Oil Level Module	0.1	0.1	.....
Multi-Function Chime	1.0	1.0	.....
Pass Key Decoder Module	0.75	1.0	.....
Power Control Module	5.0	7.0	.....
Retained Accessory Power	3.8	3.8	.....
Radio	7.0	8.0	15
Twilight Sentinel Module	1.0	1.0	.....
Voltage Regulator	1.4	2.0	.....

DIODE CHECK & SOLENOID TEST

Step 1) Select the X1 SCALE and zero the needle.
Step 2) Attach the POSITIVE SOLENOID LEAD (Red lead) to the POSITIVE METER LEAD and the NEGATIVE SOLENOID LEAD (Black lead) to the NEGATIVE METER LEAD.

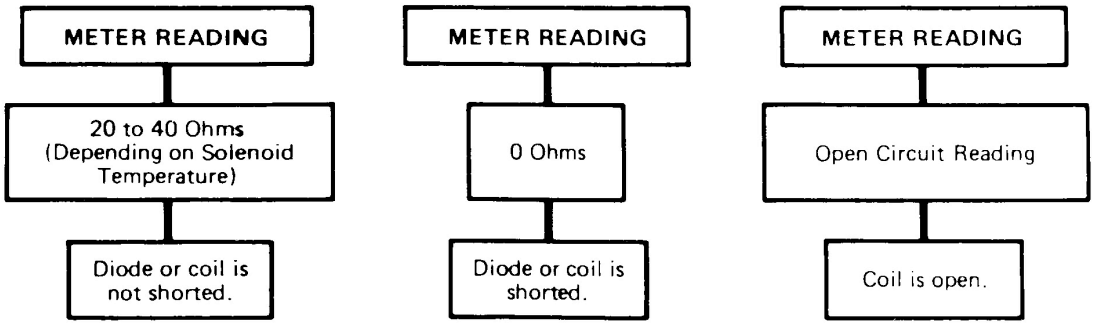

Step 3) Reverse the solenoid lead attachments.

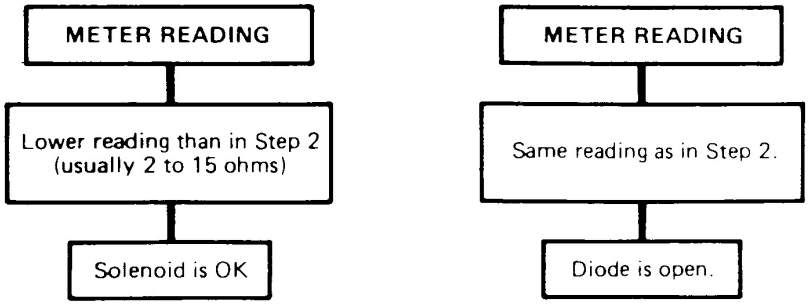

92H03912

Fig. 2: Diode Check & Solenoid Test
Courtesy of GENERAL MOTORS CORP.

QUAD DRIVER TEST

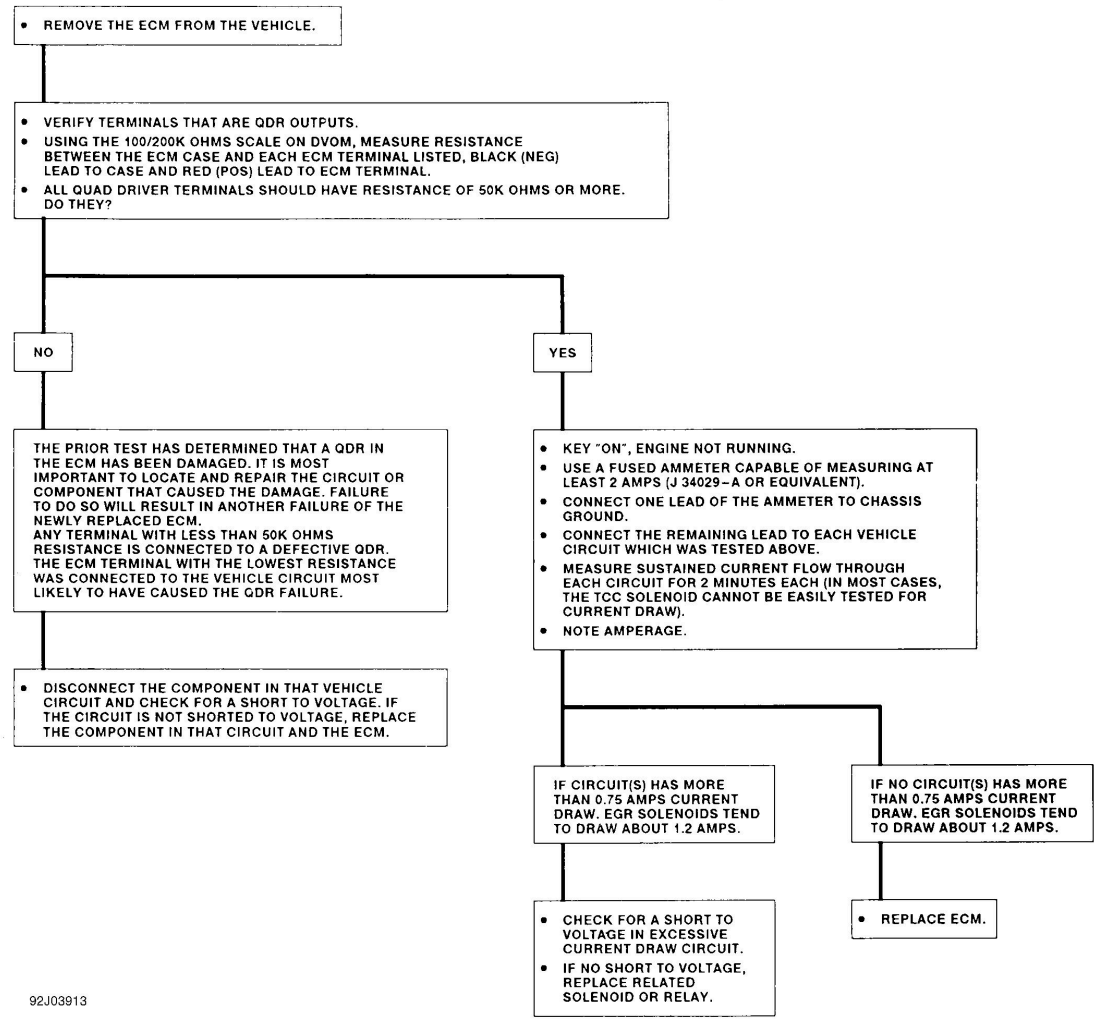

Fig. 3: Quad Driver Test
Courtesy of GENERAL MOTORS CORP.

GENERAL INFORMATION

Symptom Check List Worksheets

* PLEASE READ THIS FIRST *

NOTE: **This article is intended for general information purposes only. It does not apply specifically to one make or model.**

PURPOSE

NOTE: **This article is intended for general information purposes only. It does not apply specifically to one make or model.**

WHY USE THE SYMPTOM CHECK LIST WORKSHEETS?

One of the most difficult and critical lines of communication is between the service customer and the technician. The clearer the technician understands the customer's concerns, the more likely the problem will be "fixed right the first time".

The Symptom Check List Worksheets in this article are designed to improve this communication. When used consistently, they can be helpful in reducing shop comebacks, increasing technician productivity, and producing satisfied customers. They also provide other benefits:

- Reduce "No Trouble Found" problems
- Increase customer involvement
- Customer perceive that "they really care and listen"
- Save time during peak write-up periods
- Reduce recontacting customers for additional information
- Improve night drop information
- Insure all the right questions are asked at write-up

MAKING THE WORKSHEETS A PART OF YOUR NORMAL ROUTINE

The following information contains ideas that may be helpful in forming habits that promote daily use of the Symptom Check Lists:

- HAVE THE SERVICE ADVISER FILL OUT THE FORM(S) WITH THE CUSTOMER WHENEVER POSSIBLE.
- Place them in your night drop for the customer to fill out, along with an instruction sheet to help them understand what to do.
- Hand out the worksheets to customers while they wait in line during the peak morning rush and ask them to fill it out. It will save time for all concerned and improve the quality of information received from the

customer.

- Make sure it is attached to the hard copy when it goes to the technician.
- Place a copy with the final repair papers and review it with the customer at delivery.
- Put a new worksheet in the glovebox of all departing customers.
- Require that you personally see a copy of all worksheets filled out for shop comebacks.
- Hold a shop meeting to get employee buy-in and their ideas on how to make it effective in your shop.

There are many other ways to utilize the concept, but as with every other idea, successful implementation depends on employee involvement and buy-in.

SYMPTOM CHECK LIST WORKSHEETS

CONDENSED VERSION - ALL ON ONE PAGE

NOTE: Have the service adviser fill out this form with the customer whenever possible.

DRIVEABILITY WORKSHEET

(To Be Filled Out By Vehicle Owner)

Name: _____ **Date:** _____ **Make:** _____

Model: _____ **Year:** _____ **Engine:** _____ **Mileage:** _____

FAULT CHARACTERISTICS – SYMPTOMS – DESCRIPTION OF PROBLEM	(Please Check All That Apply In All Categories)
Starting Problems	☐ Will Not Crank ☐ Cranks, But Won't Start ☐ Starts, But Takes A Long Time
Engine Quits/ Running Problems	**Quits:** ☐ Right After Starting ☐ When Put Into Gear ☐ Right After Vehicle Comes To A Stop ☐ During Steady Speed Driving ☐ While Idling ☐ During Acceleration ☐ When Parking
Poor Idling Conditions	**Idle Speed:** ☐ Is Too Slow At All Times ☐ Is Too Slow With A/C On ☐ Is Too Fast ☐ Is Rough Or Uneven ☐ Fluctuates Up and Down
Poor Running Conditions	☐ Runs Rough ☐ Lacks Power ☐ Hesitates Or Stumbles On Acceleration ☐ Bucks and Jerks ☐ Engine Knocks, Pings, Rattles ☐ Backfires ☐ Poor Fuel Economy ☐ Misfires or Cuts Out ☐ Surges and/or Chuggles ☐ Dieseling or Run-On ☐ Engine Light Always On ☐ Engine Light On Sometimes ☐ Fuel, Gas, or Sulfur Smell
Auto. Transmission Problems	☐ Improper Shifting (early/late) ☐ Changes Gear Randomly On Its Own ☐ Vehicle Does Not Move When In Gear
Poor Handling	☐ Pulls To One Side ☐ Hard Steering ☐ Vehicle Shakes and/or Vibrates While Moving
Noise Problems	**Explain:**
Odor Problems	**Explain:**
Problem Frequency	☐ Always ☐ Often ☐ Occasionally
Usually Occurs	☐ Morning ☐ Afternoon ☐ Anytime
Engine Temp.	☐ Cold ☐ Warm ☐ Hot
Vehicle Speed	☐ Low ☐ Cruising ☐ High
Driving Conditions During Occurrence	☐ Short – Less Than 2 Miles ☐ 2-10 Miles ☐ Long – More Than 10 Miles ☐ Stop & Go ☐ While Turning ☐ While Braking ☐ At Gear Engagement ☐ With A/C Operating ☐ With Headlights On ☐ During Acceleration ☐ During Deceleration ☐ Mostly Downhill ☐ Mostly Uphill ☐ Mostly Level ☐ Mostly Curvy ☐ Rough Road
Driving Habits	☐ Drive Hard Before Engine Is Warmed ☐ Allow Engine To Warm ☐ Mostly City Driving ☐ Highway ☐ Park Vehicle Inside ☐ Outside **Drive Per Day:** ☐ Less Than 10 Miles ☐ 10-50 ☐ More Than 50 **Fuel Octane:** ☐ 87 ☐ 89 ☐ 91 ☐ More Than 91 **Brand:** _____ ☐ Gasohol ☐ Propane Conversion
Outside Weather	☐ Cold ☐ Warm ☐ Hot ☐ Wet/Rainy ☐ Fog ☐ Snow/Hail ☐ Dust/Dirt ☐ Dry ☐ Humid

Fig. 1: Entire Vehicle - Symptom Check List For Customer

FULL VERSION - ALL ON FOUR PAGES

NOTE: Have the service adviser fill out these forms with the customer whenever

possible.

Dear Valued Customer:
Our goal is to fix your problem correctly and get you back on the road as soon as possible in the unlikely event you experience a problem with your vehicle. Help us identify the exact nature of the concern by taking a few moments to complete the appropriate section of this diagnostic worksheet. Thank you.

CUSTOMER NAME: **PHONE NO.:** **REPAIR ORDER NO.:**

DIAGNOSTIC WORKSHEET

DRIVEABILITY - ENGINE - AUTOMATIC TRANSMISSION

SYMPTOM (CHECK ALL THAT APPLY)
ENGINE

- ☐ "Service Engine Soon"/"Malfunction Indicator Light" on
- ☐ Hard start/no start (cranks OK)
- ☐ Won't crank
- ☐ Engine stalls
- ☐ Engine miss
- ☐ Miss while driving
- ☐ Hesitates, stumbles or sags
- ☐ Rough idle
- ☐ Idle is too high ☐ Idle is too low
- ☐ Poor power/performance
- ☐ Surge or chuggle, buck - jerk - skip
- ☐ Poor gas mileage ☐ Highway ☐ City
- ☐ Pings, detonates
- ☐ Suphur, rotten egg odor
- ☐ Backfires (popping noise) - underhood/tailpipe
- ☐ Exhaust smoke ☐ Increased oil consumption
- ☐ Runs on after key is turned off
- ☐ Speed fluctuates without moving accelerator
- ☐ Engine noise (explain): _____

_____
_____
(whine, rattle, groan, clunk, etc.)

- ☐ Other: _____

_____
_____

TRANSMISSION

- ☐ Does not shift properly ☐ Hard shift
- ☐ Will not shift ☐ Up ☐ Down
- ☐ Will not shift into overdrive
- ☐ Engine starts in other than "P" or "N"
- ☐ Noise (describe): _____

_____
_____
(whine, rattle, groan, clunk, buzz, etc.)

- ☐ Shifts into gear too early
- ☐ Overdrive doesn't work with speed control, but is otherwise OK
- ☐ Highway speed - shudder, surge, etc.
- ☐ Other: _____

_____
_____

EXPLAIN: _____
_____
_____

OPERATING CONDITIONS (CHECK ALL THAT APPLY)
HOW OFTEN DOES IT OCCUR? (Engine and/or Transmission)

- ☐ Always ☐ Few seconds ☐ Few minutes
- ☐ Few hours ☐ Few days ☐ Few weeks
- ☐ Few months ☐ Variable ☐ Only during event
- ☐ Every _____ to ___ miles ☐ Unknown
- ☐ Other (explain): _____
- ☐ Just started ☐ Getting better ☐ Getting worse
- ☐ Since new

WHEN DOES IT OCCUR? (Engine and/or Transmission)
When Engine Temperature is:

- ☐ Cold ☐ Warm ☐ Hot
- ☐ All the time ☐ Only during warmup

Weather Conditions:

- ☐ Very cold - below 0 degrees F ☐ Cold - 0 to 32 degrees F
- ☐ Cool - 32 to 60 degrees F ☐ Warm - 60 to 80 degrees F
- ☐ Hot - Above 80 degrees F ☐ Any environment
- ☐ Raining ☐ Dry ☐ Humid
- ☐ Snow/ice ☐ Wet roads ☐ Other (explain below)

Driving Conditions:

- ☐ Light throttle ☐ Medium throttle ☐ Hard throttle
- ☐ Starting ☐ At idle ☐ Decelerating
- ☐ Over bumps ☐ When shifting ☐ While turning
- ☐ Cruising steady at _____ MPH ☐ While braking
- ☐ Anytime ☐ Uphill ☐ Downhill
- ☐ Highway ☐ City/town ☐ Stop and go
- ☐ Between _____ MPH and _____ MPH
- ☐ Only with A/C or Defrost on

What Type of Fuel? **What Brand?** _____

- ☐ Regular UL ☐ Mid range UL ☐ Premium Unleaded
- ☐ Gasohol ☐ Ethanol ☐ Methanol
- ☐ Diesel #1 ☐ Diesel #2 ☐ Various brands

When Gear Selector is in:

- ☐ Park/Neutral ☐ Reverse ☐ Overdrive
- ☐ Drive/3 ☐ Drive/2 ☐ Drive/1

Between Gears:

- ☐ Park to R or D ☐ Rev/Drive ☐ First/Second
- ☐ Second/Third ☐ Third/Overdrive

50G15061

Fig. 2: Symptom Check List - Page 1

BRAKES - STEERING - SUSPENSION

SYMPTOM

- ☐ Vehicle pulls right - When _____
- ☐ Vehicle pulls left - When _____
- ☐ Steering wheel vibrates at ____ MPH
- ☐ Excessive play in steering
- ☐ Erratic steering when braking
- ☐ Poor steering wheel return after cornering
- ☐ Suspension bottoms out
- ☐ Leans or sways in corners
- ☐ Brake light on
- ☐ Traction control light on
- ☐ Uneven tire wear
- ☐ Sits uneven
- ☐ "Dog" tracks
- ☐ ABS light on
- ☐ Soft ride

Hard to steer

- ☐ Effort
- ☐ Wanders
- ☐ Steering wheel off center

Shimmy/vibration (check box below for location)

- ☐ Front
- ☐ Rear
- ☐ Don't know
- ☐ Seat
- ☐ Floor
- ☐ Other _____

Brake pedal

- ☐ Noise
- ☐ Pulses
- ☐ Squeaks
- ☐ Hard
- ☐ Mushy
- ☐ Excessive travel

WHEN DOES IT OCCUR?

- ☐ Cold days
- ☐ Hot days
- ☐ Wet/rain
- ☐ All the time
- ☐ Intermittent
- ☐ Parking manuevers
- ☐ At road speed
- ☐ Accelerating
- ☐ Decelerating

EXPLAIN: _____

SQUEAK - RATTLE - NOISE CONDITIONS

AREA OF NOISE

☐ Engine Compartment	☐ Left	☐ Right	☐ Center	☐ Don't know
☐ Front Suspension	☐ Left	☐ Right	☐ Center	☐ Don't know
☐ Rear Suspension	☐ Left	☐ Right	☐ Center	☐ Don't know
☐ Passenger Compartment	☐ Left	☐ Right	☐ Center	☐ Don't know
☐ Instrument Panel	☐ Left	☐ Right	☐ Center	☐ Don't know
☐ Doors	☐ Left	☐ Right	☐ Center	☐ Don't know
☐ Rear seat area	☐ Console	☐ Other _____		

NOISE SOUNDS LIKE

- ☐ Knocks
- ☐ Hard metal
- ☐ Light metal
- ☐ Roars
- ☐ Ticking
- ☐ Whine
- ☐ Squeaks
- ☐ Rattles
- ☐ Scraping
- ☐ Other _____

HOW OFTEN DOES IT OCCUR?

- ☐ Continuous
- ☐ Often
- ☐ Intermittent
- ☐ Just started
- ☐ Since new

WHEN DOES IT OCCUR?

- ☐ All the time
- ☐ Speed
- ☐ RPM
- ☐ Only moving
- ☐ On turns
- ☐ Braking
- ☐ Hard throttle
- ☐ Light throttle
- ☐ Decelerate
- ☐ Steady speed
- ☐ Idle in gear
- ☐ Idle out of gear
- ☐ Hot days
- ☐ Cold days
- ☐ Humid or rainy
- ☐ Temperature _____
- ☐ Heavy bumps
- ☐ Light bumps
- ☐ Smooth pavement

EXPLAIN: _____

CUSTOMER NAME: **PHONE NO.:** **REPAIR ORDER NO:**

SHOP USE ONLY:

VIN#: **MILES:** **TECHNICIAN:** **ADVISOR#:**

50H15062

Fig. 3: Symptom Check List - Page 2

AIR CONDITIONING - HEATER - VENTILATION

SYSTEM OR AREA AFFECTED

☐ Air conditioner ☐ Heater ☐ Defroster ☐ Vent ☐ Bi-Level ☐ Fan/blower
☐ Max A/C ☐ Automatic Temperature Control ☐ Mix/blend ☐ Economy ☐ All

SYMPTOM

☐ Does not work ☐ Blows wrong temperature air ☐ No air comes out of vents ☐ Rapid cycling
☐ Noisy (explain) ☐ Broken ☐ Odor ☐ Air comes from wrong outlets ☐ Blows fuse
☐ Leaks ☐ Insufficient heat or cool ☐ Other (explain below)

WHEN DOES IT OCCUR?

☐ All the time ☐ Hot ☐ Cold ☐ Intermittent ☐ Right after startup
☐ When change controls only ☐ Other (explain below) ☐ Fan blower speed High / Med / Low

EXPLAIN: _____

ELECTRICAL - RADIO - TAPE/CD PLAYER

SYMPTOM - MUSIC SYSTEM

☐ Does not work ☐ Noisy ☐ Static ☐ Won't load ☐ Won't eject ☐ Poor reception
☐ Controls do not work ☐ Blows fuse ☐ Other (explain below)

SYSTEM AFFECTED

☐ Radio only ☐ AM ☐ FM ☐ FM stereo ☐ Graphic equalizer
☐ Tape player ☐ CD player ☐ Whole system ☐ Steering wheel buttons ☐ Phone
☐ Speakers ☐ Front ☐ Rear ☐ Left ☐ Right
☐ Antenna ☐ Clock ☐ Radio or player controls ☐ Rear seat controls

ALL OTHER ELECTRICAL ITEMS OR ACCESSORIES
Please list the complaint accessory or item and check any applicable symptom(s) from the list that follows:

_____ ☐ Inoperable ☐ Noisy ☐ No control ☐ Erratic
☐ Check light on or flashing ☐ Works improperly (explain below)
☐ Blows fuse ☐ Intermittent ☐ Related system affected (explain below)

_____ ☐ Inoperable ☐ Noisy ☐ No control ☐ Erratic
☐ Check light on or flashing ☐ Works improperly (explain below)
☐ Blows fuse ☐ Intermittent ☐ Related system affected (explain below)

_____ ☐ Inoperable ☐ Noisy ☐ No control ☐ Erratic
☐ Check light on or flashing ☐ Works improperly (explain below)
☐ Blows fuse ☐ Intermittent ☐ Related system affected (explain below)

WHEN DOES IT OCCUR?

☐ All the time ☐ Hot ☐ Cold ☐ Just after starting - malfunctions for a while
☐ Intermittent ☐ After runs for _____ minutes ☐ Rough roads or bumps only
☐ Other (explain below)

EXPLAIN: _____

CUSTOMER NAME: **PHONE NO.:** **REPAIR ORDER NO:**

SHOP USE ONLY:
VIN#: **MILES:** **TECHNICIAN:** **ADVISOR#:**

50I15063

Fig. 4: Symptom Check List - Page 3

WATER LEAK - WINDNOISE

WATER LEAK
Leak Occurs When?

☐ Setting level ☐ Any time it rains ☐ While driving in the rain ☐ Car wash only
☐ Back lower than front (facing uphill) ☐ Front lower than back (facing downhill)

Location of Leak (where water appears):

☐ LF Door ☐ RF Door ☐ LR Door ☐ RR Door ☐ Windshield ☐ Rear window
☐ LF window ☐ RF window ☐ LR window ☐ RR window ☐ Side door ☐ Sunroof/T-Top
☐ Under instrument panel ☐ Rear door/rear hatch

WINDNOISE:
Location:

☐ LF Door ☐ RF Door ☐ LR Door ☐ RR Door ☐ Windshield ☐ Rear window
☐ LF window ☐ RF window ☐ LR window ☐ RR window ☐ Side door ☐ Sunroof/T-Top
☐ Under instrument panel ☐ Rear door/rear hatch

EXPLAIN: _____

MANUAL TRANSMISSION - CLUTCH

SYMPTOM - MANUAL GEAR SHIFT

☐ Hard to shift ☐ Doesn't shift
☐ Grinds going into_____ gear
☐ Noisy when in _____ gear or neutral _____
☐ Slips/pops out of gear
☐ Noise (describe): _____

☐ Upshift light stays on
☐ Upshift light doesn't light

WHEN DOES IT OCCUR?

☐ All the time ☐ Light load
☐ Heavy load

SYMPTOM - CLUTCH

☐ Hard to push ☐ Fail to release
☐ Noise when pressing pedal down (describe): _____

☐ Slips ☐ Chattering (grabbing)
☐ Odor present ☐ Pedal stays on the floor
☐ Squealing sound

WHEN DOES IT OCCUR?
When Engine Temperature is:

☐ Cold ☐ Hot
☐ Accelerating ☐ Decelerating

EXPLAIN: _____

COMMENTS:

CUSTOMER NAME: **PHONE NO.:** **REPAIR ORDER NO:**

SHOP USE ONLY:
VIN#: **MILES:** **TECHNICIAN:** **ADVISOR#:**

50J15064

Fig. 5: Symptom Check List - Page 4

INDIVIDUAL SYSTEM-BASED CHECK LISTS

NOTE: **Have the service adviser fill out these forms with the customer whenever possible.**

DRIVEABILITY - ENGINE - AUTOMATIC TRANSMISSION

SYMPTOM (CHECK ALL THAT APPLY)
ENGINE

- ☐ "Service Engine Soon"/Malfunction Indicator Light" on
- ☐ Hard start/no start (cranks OK)
- ☐ Won't crank
- ☐ Engine stalls
- ☐ Engine miss
- ☐ Miss while driving
- ☐ Hesitates, stumbles or sags
- ☐ Rough idle
- ☐ Idle is too high ☐ Idle is too low
- ☐ Poor power/performance
- ☐ Surge or chuggle, buck - jerk - skip
- ☐ Poor gas mileage ☐ Highway ☐ City
- ☐ Ping, detonates
- ☐ Sulphur/rotten egg odor
- ☐ Backfires (popping noise) - underhood/tailpipe
- ☐ Exhaust smoke ☐ Increased oil consumption
- ☐ Runs on after key is turned off
- ☐ Speed fluctuates without moving accelerator
- ☐ Engine noise (explain): _____

(whine, rattle, groan, clunk, etc.)

- ☐ Other: _____

TRANSMISSION

- ☐ Does not shift properly ☐ Hard shift
- ☐ Will not shift ☐ Up ☐ Down
- ☐ Will not shift into overdrive
- ☐ Engine starts in other than "P" or "N"
- ☐ Noise (describe): _____

(whine, rattle, groan, clunk, buzz, etc.)

- ☐ Shifts into next gear too early
- ☐ Overdrive doesn't work with speed control, but is otherwise OK
- ☐ Highway speed - shudder, surge, etc.
- ☐ Other: _____

EXPLAIN: _____

OPERATING CONDITIONS (CHECK ALL THAT APPLY)
HOW OFTEN DOES IT OCCUR? (Engine &/or Transmission)

- ☐ Always ☐ Few Seconds ☐ Few minutes
- ☐ Few hours ☐ Few days ☐ Few weeks
- ☐ Few months ☐ Variable ☐ Only during event
- ☐ Every _____ to ____ miles ☐ Unknown
- ☐ Other (explain): _____
- ☐ Just started ☐ Getting better ☐ Getting worse
- ☐ Since new

WHEN DOES IT OCCUR? (Engine and/or Transmission)
When Engine Temperature is:

- ☐ Cold ☐ Warm ☐ Hot
- ☐ All the time ☐ Only during warmup

Weather Conditions:

- ☐ Very cold - below 0°F ☐ Cold - 0 to 32°F
- ☐ Cool - 32 to 60°F ☐ Warm - 60 to 80°F
- ☐ Hot - above 80°F ☐ Any environment
- ☐ Raining ☐ Dry ☐ Humid
- ☐ Snow/Ice ☐ Wet roads
- ☐ Other (explain): _____

Driving Conditions:

- ☐ Light throttle ☐ Medium throttle ☐ Hard throttle
- ☐ Starting ☐ At idle ☐ Decelerating
- ☐ Over bumps ☐ When shifting ☐ While turning
- ☐ Cruising - steady at MPH ☐ While braking
- ☐ Anytime ☐ Uphill ☐ Downhill
- ☐ Highway ☐ City/town ☐ Stop and go
- ☐ Between ____ MPH and _____ MPH
- ☐ Only with A/C or Defrost on

What Type of Fuel? **What Brand?**

- ☐ Regular UL ☐ Midrange UL ☐ Premium UL
- ☐ Gasohol ☐ Ethanol ☐ Methanol
- ☐ Diesel #1 ☐ Diesel #2 ☐ Various brands

When Gear Selector is in:

- ☐ Park/Neutral ☐ Reverse ☐ Overdrive
- ☐ Drive/3 ☐ Drive/2 ☐ Drive/1

Between Gears:

- ☐ Park to R or D ☐ Reverse/Drive ☐ First/Second
- ☐ Second/Third ☐ Third/Overdrive

CUSTOMER NAME: **PHONE NO.:** **REPAIR ORDER NO:**

SHOP USE ONLY:
VIN#: **MILES:** **TECHNICIAN:** **ADVISOR#:**

50H15054

Fig. 6: Engine Driveability & Automatic Transmission

BRAKES - STEERING - SUSPENSION

SYMPTOM

- ☐ Vehicle pulls right - When _____
- ☐ Vehicle pulls left - When _____
- ☐ Steering wheel vibrates at ____ MPH
- ☐ Excessive play in steering
- ☐ Erratic steering when braking
- ☐ Poor steering wheel return after cornering
- ☐ Suspension bottoms out
- ☐ Leans or sways in corners
- ☐ Brake light on
- ☐ Traction control light on
- ☐ Uneven tire wear
- ☐ Sits uneven
- ☐ "Dog" tracks
- ☐ ABS light on
- ☐ Soft ride

Hard to steer

- ☐ Effort
- ☐ Wanders
- ☐ Steering wheel off center

Shimmy/vibration (check box below for location)

- ☐ Front
- ☐ Rear
- ☐ Don't know
- ☐ Seat
- ☐ Floor
- ☐ Other _____

Brake pedal

- ☐ Noise
- ☐ Pulses
- ☐ Squeaks
- ☐ Hard
- ☐ Mushy
- ☐ Excessive travel

WHEN DOES IT OCCUR?

- ☐ Cold days
- ☐ Hot days
- ☐ Wet/rain
- ☐ All the time
- ☐ Intermittent
- ☐ Parking manuevers
- ☐ At road speed
- ☐ Accelerating
- ☐ Decelerating

EXPLAIN: _____

CUSTOMER NAME: **PHONE NO.:** **REPAIR ORDER NO:**

SHOP USE ONLY:
VIN#: **MILES:** **TECHNICIAN:** **ADVISOR#:**

50C15059

Fig. 7: Brakes, Steering, & Suspension

AIR CONDITIONING - HEATER - VENTILATION

SYSTEM OR AREA AFFECTED

☐ Air conditioner ☐ Heater ☐ Defroster ☐ Vent ☐ Bi-Level ☐ Fan/blower
☐ Max A/C ☐ Automatic Temperature Control ☐ Mix/blend ☐ Economy ☐ All

SYMPTOM

☐ Does not work ☐ Blows wrong temperature air ☐ No air comes out of vents ☐ Rapid cycling
☐ Noisy (explain) ☐ Broken ☐ Odor ☐ Air comes from wrong outlets ☐ Blows fuse
☐ Leaks ☐ Insufficient heat or cool ☐ Other (explain below)

WHEN DOES IT OCCUR?

☐ All the time ☐ Hot ☐ Cold ☐ Intermittent ☐ Right after startup
☐ When change controls only ☐ Other (explain below) ☐ Fan blower speed High / Med / Low

EXPLAIN: _____

CUSTOMER NAME: **PHONE NO.:** **REPAIR ORDER NO:**

SHOP USE ONLY:
VIN#: **MILES:** **TECHNICIAN:** **ADVISOR#:**

50A15057

Fig. 8: Air Conditioning, Heater & Ventilation

ELECTRICAL - RADIO - TAPE/CD PLAYER

SYMPTOM - MUSIC SYSTEM

☐ Does not work ☐ Noisy ☐ Static ☐ Won't load ☐ Won't eject ☐ Poor reception
☐ Controls do not work ☐ Blows fuse ☐ Other (explain below)

SYSTEM AFFECTED

☐ Radio only ☐ AM ☐ FM ☐ FM stereo ☐ Graphic equalizer
☐ Tape player ☐ CD player ☐ Whole system ☐ Steering wheel buttons ☐ Phone
☐ Speakers ☐ Front ☐ Rear ☐ Left ☐ Right
☐ Antenna ☐ Clock ☐ Radio or player controls ☐ Rear seat controls

ALL OTHER ELECTRICAL ITEMS OR ACCESSORIES
Please list the complaint accessory or item and check any applicable symptom(s) from the list that follows:

_____ ☐ Inoperable ☐ Noisy ☐ No control ☐ Erratic
☐ Check light on or flashing ☐ Works improperly (explain below)
☐ Blows fuse ☐ Intermittent ☐ Related system affected (explain below)

_____ ☐ Inoperable ☐ Noisy ☐ No control ☐ Erratic
☐ Check light on or flashing ☐ Works improperly (explain below)
☐ Blows fuse ☐ Intermittent ☐ Related system affected (explain below)

_____ ☐ Inoperable ☐ Noisy ☐ No control ☐ Erratic
☐ Check light on or flashing ☐ Works improperly (explain below)
☐ Blows fuse ☐ Intermittent ☐ Related system affected (explain below)

WHEN DOES IT OCCUR?

☐ All the time ☐ Hot ☐ Cold ☐ Just after starting - malfunctions for a while
☐ Intermittent ☐ After runs for _____ minutes ☐ Rough roads or bumps only
☐ Other (explain below)

EXPLAIN: _____

CUSTOMER NAME: **PHONE NO.:** **REPAIR ORDER NO:**

SHOP USE ONLY:
VIN#: **MILES:** **TECHNICIAN:** **ADVISOR#:**

50B15058

Fig. 9: Electrical, Radio & Tape/CD Player

MANUAL TRANSMISSION - CLUTCH

SYMPTOM - MANUAL GEAR SHIFT

☐ Hard to shift ☐ Doesn't shift
☐ Grinds going into_____ gear
☐ Noisy when in _____ gear or neutral _____
☐ Slips/pops out of gear
☐ Noise (describe): _____
_____
_____
☐ Upshift light stays on
☐ Upshift light doesn't light

WHEN DOES IT OCCUR?

☐ All the time ☐ Light load
☐ Heavy load

SYMPTOM - CLUTCH

☐ Hard to push ☐ Fail to release
☐ Noise when pressing pedal down (describe): _____
_____
_____
☐ Slips ☐ Chattering (grabbing)
☐ Odor present ☐ Pedal stays on the floor
☐ Squealing sound

WHEN DOES IT OCCUR?
When Engine Temperature is:

☐ Cold ☐ Hot
☐ Accelerating ☐ Decelerating

EXPLAIN: _____
_____
_____
_____
_____
_____

CUSTOMER NAME: **PHONE NO.:** **REPAIR ORDER NO:**

SHOP USE ONLY:
VIN#: **MILES:** **TECHNICIAN:** **ADVISOR#:**

50J15056

Fig. 10: Manual Transmission & Clutch

SQUEAK - RATTLE - NOISE CONDITIONS

AREA OF NOISE

☐ Engine Compartment	☐ Left	☐ Right	☐ Center	☐ Don't know
☐ Front Suspension	☐ Left	☐ Right	☐ Center	☐ Don't know
☐ Rear Suspension	☐ Left	☐ Right	☐ Center	☐ Don't know
☐ Passenger Compartment	☐ Left	☐ Right	☐ Center	☐ Don't know
☐ Instrument Panel	☐ Left	☐ Right	☐ Center	☐ Don't know
☐ Doors	☐ Left	☐ Right	☐ Center	☐ Don't know
☐ Rear seat area	☐ Console	☐ Other _____		

NOISE SOUNDS LIKE

☐ Knocks	☐ Hard metal	☐ Light metal	☐ Roars	☐ Ticking	☐ Whine
☐ Squeaks	☐ Rattles	☐ Scraping	☐ Other _____		

HOW OFTEN DOES IT OCCUR?

☐ Continuous ☐ Often ☐ Intermittent ☐ Just started ☐ Since new

WHEN DOES IT OCCUR?

☐ All the time	☐ Speed	☐ RPM	☐ Only moving	☐ On turns	☐ Braking
☐ Hard throttle	☐ Light throttle	☐ Decelerate	☐ Steady speed	☐ Idle in gear	☐ Idle out of gear
☐ Hot days	☐ Cold days	☐ Humid or rainy	☐ Temperature _____		
☐ Heavy bumps	☐ Light bumps	☐ Smooth pavement			

EXPLAIN: _____

CUSTOMER NAME: **PHONE NO.:** **REPAIR ORDER NO:**

SHOP USE ONLY:

VIN#: **MILES:** **TECHNICIAN:** **ADVISOR#:**

50F15060

Fig. 11: Squeak, Rattle, & Noise Conditions

WATER LEAK - WINDNOISE

WATER LEAK
Leak Occurs When?

☐ Setting level ☐ Any time it rains ☐ While driving in the rain ☐ Car wash only
☐ Back lower than front (facing uphill) ☐ Front lower than back (facing downhill)

Location of Leak (where water appears):

☐ LF Door ☐ RF Door ☐ LR Door ☐ RR Door ☐ Windshield ☐ Rear window
☐ LF window ☐ RF window ☐ LR window ☐ RR window ☐ Side door ☐ Sunroof/T-Top
☐ Under instrument panel ☐ Rear door/rear hatch

WINDNOISE:
Location:

☐ LF Door ☐ RF Door ☐ LR Door ☐ RR Door ☐ Windshield ☐ Rear window
☐ LF window ☐ RF window ☐ LR window ☐ RR window ☐ Side door ☐ Sunroof/T-Top
☐ Under instrument panel ☐ Rear door/rear hatch

EXPLAIN: _____

_____

_____

CUSTOMER NAME: **PHONE NO.:** **REPAIR ORDER NO:**

SHOP USE ONLY:
VIN#: **MILES:** **TECHNICIAN:** **ADVISOR#:**

50I15055

Fig. 12: Water Leak & Wind Noise

GENERAL INFORMATION

Trouble Shooting - Basic Procedures

* PLEASE READ THIS FIRST *

NOTE: **This is GENERAL information. This article is not intended to be specific to any unique situation or individual vehicle configuration. The purpose of this Trouble Shooting information is to provide a list of common causes to problem symptoms. For model-specific Trouble Shooting, refer to SUBJECT, DIAGNOSTIC, or TESTING articles available in the section(s) you are accessing.**

ACCESSORIES & ELECTRICAL

CHARGING SYSTEM TROUBLE SHOOTING

NOTE: **This is GENERAL information. This article is not intended to be specific to any unique situation or individual vehicle configuration. The purpose of this Trouble Shooting information is to provide a list of common causes to problem symptoms. For model-specific Trouble Shooting, refer to SUBJECT, DIAGNOSTIC, or TESTING articles available in the section(s) you are accessing.**

NOTE: **This is GENERAL information. This article is not intended to be specific to any unique situation or individual vehicle configuration. The purpose of this Trouble Shooting information is to provide a list of common causes to problem symptoms. For model-specific Trouble Shooting, refer to SUBJECT, DIAGNOSTIC, or TESTING articles available in the section(s) you are accessing.**

BASIC CHARGING SYSTEM TROUBLE SHOOTING CHART

CONDITION & POSSIBLE CAUSE	CORRECTION
Vehicle Will Not Start	
Dead battery	Check battery cells, alternator belt tension and alternator output
Loose or corroded battery connections	Check all charging system connections
Ignition circuit or switch malfunction	Check and replace as necessary
Alternator Light Stays On With Engine Running	
Loose or worn alternator drive belt	Check alternator drive tension and condition, See Belt Adjustment in TUNE-UP article in the TUNE-UP section
Loose alternator wiring connections	Check all charging system connections

Short in alternator light wiring	See Indicator Warning Lights in STANDARD INSTRUMENTS in the ACCESSORIES & EQUIPMENT section
Defective alternator stator or diodes	See Bench Tests in ALTERNATOR article
Defective regulator	See Regulator Check in ALTERNATOR article
Alternator Light Stays Off With Ignition Switch ON	
Blown fuse	See WIRING DIAGRAMS
Defective alternator	See Testing in ALTERNATOR article
Defective indicator light bulb or socket	See Indicator Warning Lights in STANDARD INSTRUMENTS in the ACCESSORIES & EQUIPMENT section
Alternator Light Stays OFF With Ignition Switch ON	
Short in alternator wiring	See On-Vehicle Tests in ALTERNATOR article
Defective rectifier bridge	See Bench Tests in ALTERNATOR article
Lights or Fuses Burn Out Frequently	
Defective alternator wiring	See On-Vehicle Tests in ALTERNATOR article
Defective regulator	See Regulator Check in ALTERNATOR article
Defective battery	Check and replace as necessary
Ammeter Gauge Shows Discharge	
Loose or worn drive belt	Check alternator drive belt tension and condition. See Belt Adjustment in TUNE-UP article in the TUNE-UP section
Defective wiring	Check all wires and wire connections
Defective alternator or regulator	See Bench Tests and On-Vehicle Tests in ALTERNATOR article
Defective ammeter, or improper ammeter wiring connection	See Testing in STANDARD INSTRUMENTS in the ACCESSORIES & EQUIPMENT section
Noisy Alternator	
Loose drive pulley	Tighten drive pulley attaching nut

Loose mounting bolts	Tighten all alternator mounting bolts
Worn or dirty bearings	See Bearing Replacement ALTERNATOR article
Defective diodes or stator	See Bench Test in ALTERNATOR article
Battery Does Stay Charged	
Loose or worn drive belt	Check alternator drive belt tension and condition. See Belt Adjustment in appropriate TUNE-UP article in the TUNE-UP section
Loose or corroded battery connections	Check all charging system connections
Loose alternator connections	Check all charging system connections
Defective alternator or battery	See On-Vehicle Tests and Bench Tests in ALTERNATOR article
Add-on electrical accessories exceeding alternator capacity	Install larger alternator
Battery Overcharged-Uses Too Much Water	
Defective battery	Check alternator output and repair as necessary
Defective alternator	See On-Vehicle Test and Bench Tests in ALTERNATOR article
Excessive alternator voltage	Check alternator output and repair as necessary

IGNITION SYSTEM TROUBLE SHOOTING

NOTE: **This is GENERAL information. This article is not intended to be specific to any unique situation or individual vehicle configuration. The purpose of this Trouble Shooting information is to provide a list of common causes to problem symptoms. For model-specific Trouble Shooting, refer to SUBJECT, DIAGNOSTIC, or TESTING articles available in the section(s) you are accessing.**

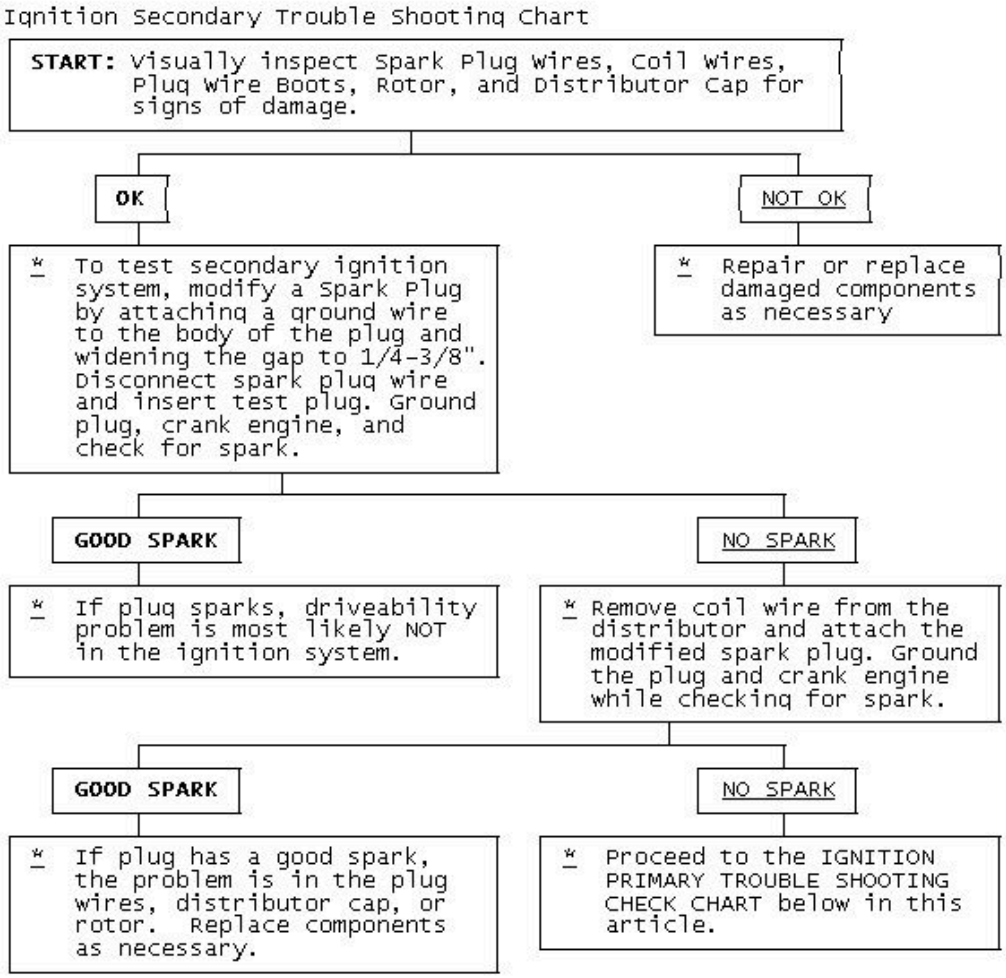

Fig. 1: Ignition Secondary Trouble Shooting Chart

Ignition Primary Trouble Shooting Chart

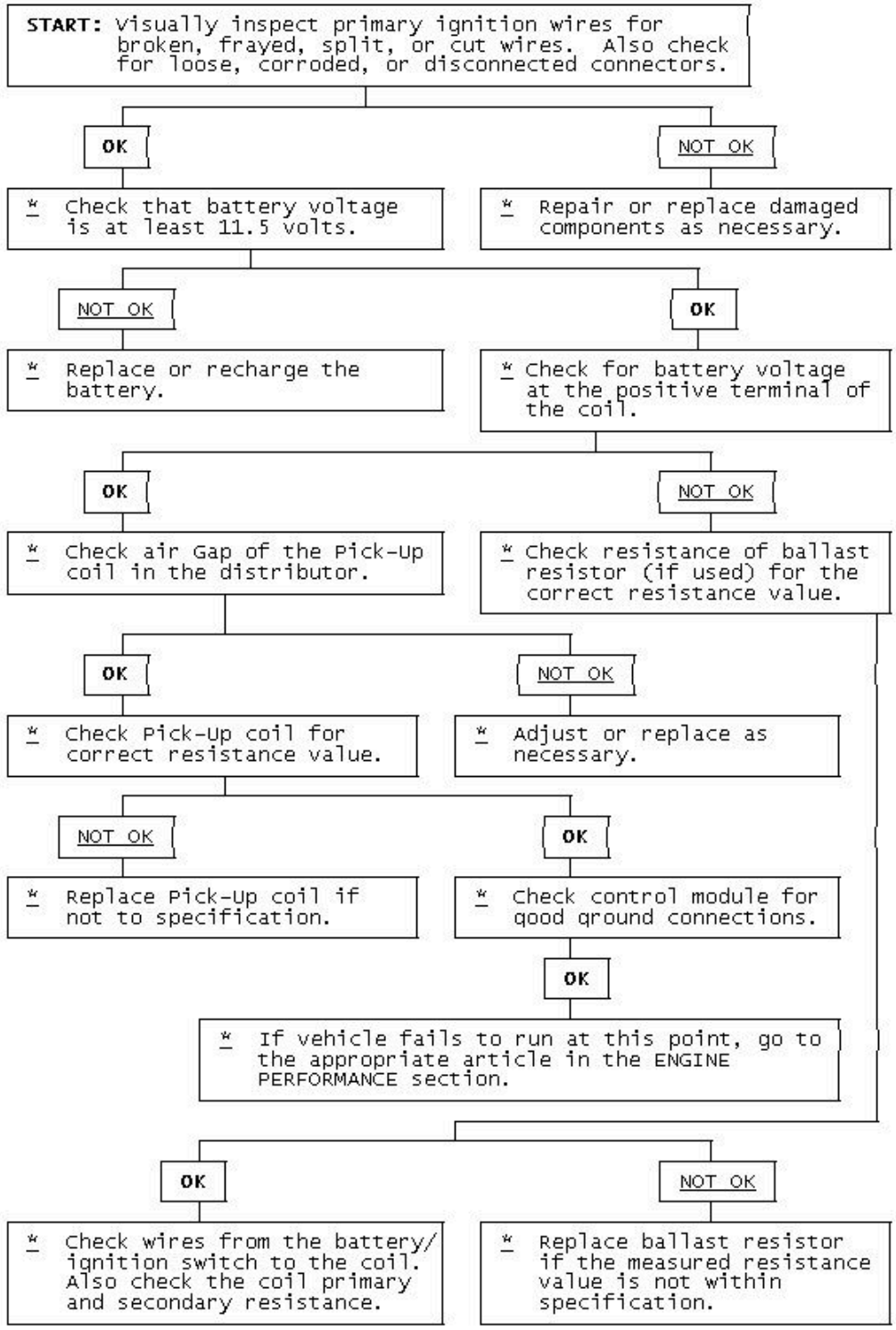

Fig. 2: Ignition Primary Trouble Shooting Chart

STARTER TROUBLE SHOOTING

NOTE: **This is GENERAL information. This article is not intended to be specific to any unique situation or individual vehicle configuration. The purpose of this Trouble Shooting information is to provide a list of common causes to problem symptoms. For model-specific Trouble Shooting, refer to SUBJECT, DIAGNOSTIC, or TESTING articles available in the section(s) you are accessing.**

BASIC STARTER TROUBLE SHOOTING CHART

CONDITION & POSSIBLE CAUSE	CORRECTION
Starter Fails to Operate	
Dead battery or bad connections between starter and battery	Check battery charge and all wires and connections to starter
Ignition switch faulty or misadjusted	Adjust or replace ignition switch
Open circuit between starter switch ignition terminal on starter relay	Check and repair wires and connections as necessary
Starter relay or starter defective	See Testing in STARTER article
Open solenoid pull-in wire	Testing in STARTER article
Starter Does Not Operate and Headlights Dim	
Weak battery or dead cell	Charge or replace battery as necessary
Loose or corroded battery connections	Check that battery connections are clean and tight
Internal ground in starter windings	See Testing in STARTER article
Grounded starter fields	See Testing in STARTERS
Armature rubbing on pole	See STARTER article shoes
Starter Turns but Engine Does Not Rotate	
Starter clutch slipping	See STARTER article
Broken clutch housing	See STARTER article
Pinion shaft rusted or dry	See STARTER article
Engine basic timing incorrect	See Ignition Timing in TUNE-UP article
Broken teeth on engine flywheel	Replace flywheel and check for starter pinion gear damage
Starter Will Not Crank Engine	
Faulty overrunning clutch	See STARTER article
Broken clutch housing	See STARTER article

Broken flywheel teeth	Replace flywheel and check for starter pinion gear damage
Armature shaft sheared or reduction gear teeth stripped	See STARTER article
Weak battery	Charge or replace battery as necessary
Faulty solenoid	See On-Vehicle Tests in STARTER article
Poor grounds	Check all ground connections for tight and clean connections
Ignition switch faulty or misadjusted	Adjust or replace ignition switch as necessary
Starter Cranks Engine Slowly	
Battery weak or defective	Charge or replace battery as necessary
Engine overheated	See ENGINE COOLING SYSTEM article
Engine oil too heavy	Check that proper viscosity oil is used
Poor battery-to-starter connections	Check that all between battery and starter are clean and tight
Current draw too low or too high	See Bench Tests in STARTER article
Bent armature, loose pole shoes screws or worn bearing	See STARTER article
Burned solenoid contacts	Replace solenoid
Faulty starter	Replace starter
Starter Engages Engine Only Momentarily	
Engine timing too far advanced	See Ignition Timing in TUNE-UP article
Overrunning clutch not engaging properly	Replace overrunning clutch. See STARTER article
Broken starter clutch	See STARTER article
Broken teeth on engine flywheel	Replace flywheel and check starter pinion gear for damage
Weak drive assembly thrust spring	See STARTER article
Weak hold-in coil	See Bench Tests in STARTER article
Starter Drive Will Not Engage	
Defective point assembly	See Testing in STARTER article
Poor point assembly ground	See Testing in STARTER article
Defective pull-in coil	Replace starter solenoid
Starter Relay Does Not Close	

Dead battery	Charge or replace battery as necessary
Faulty wiring	Check all wiring and connections leading to relay
Neutral safety switch faulty	Replace neutral safety switch
Starter relay faulty	Replace starter relay
Starter Drive Will Not Disengage	
Starter motor loose on mountings	Tighten starter attach bolts
Worn drive end bushing	See STARTER article
Damaged engine flywheel teeth	Replace flywheel and starter pinion gear for damage
Drive yolk return spring broken or missing	Replace return spring
Faulty ignition switch	Replace ignition switch
Insufficient clearance between winding leads to solenoid terminal and main contact in solenoid	Replace starter solenoid
Starter clutch not disengaging	Replace starter clutch
Ignition starter switch	Replace ignition switch contacts sticking
Starter Relay Operates but Solenoid Does Not	
Faulty solenoid switch, switch connections or relay	Check all wiring between relay and solenoid or replace relay or solenoid as necessary
Broken lead or loose soldered connections	Repair wire or wire connections as necessary
Solenoid Plunger Vibrates When Switch is Engaged	
Weak battery	Charge or replace battery as necessary
Solenoid contacts corroded	Clean contacts or replace solenoid
Faulty wiring	Check all wiring leading to solenoid
Broken connections inside switch cover	Repair connections or replace solenoid
Open hold-in wire	solenoid
Low Current Draw	
Worn brushes or weak brush springs	Replace brushes or brush springs as necessary
High Pitched Whine During Cranking Before Engine Fires but Engine Fires and Cranks Normally	
Distance too great between starter pinion and flywheel	Align starter or check that correct starter and flywheel are being used
High Pitched Whine After Engine Fires With Key released. Engine Fires and Cranks Normally	
Distance too small between starter pinion and flywheel	Flywheel runout contributes to

	the intermittent nature

AIR CONDITIONING & HEAT

AIR CONDITIONING TROUBLE SHOOTING

WARNING: This is GENERAL information. This article is not intended to be specific to any unique situation or individual vehicle configuration. The purpose of this Trouble Shooting information is to provide a list of common causes to problem symptoms. For model-specific Trouble Shooting, refer to SUBJECT, DIAGNOSTIC, or TESTING articles available in the section(s) you are accessing.

BASIC AIR CONDITIONING TROUBLE SHOOTING CHART

CONDITION	POSSIBLE CAUSE
Compressor Not Working	Compressor clutch circuit open.
.....	Compressor clutch coil inoperative.
.....	Poor clutch ground connection.
.....	Fan belts loose.
.....	Thermostatic switch inoperative.
.....	Thermostatic switch not adjusted.
.....	Ambient temperature switch open.
.....	Superheat fuse blown.
Excessive Noise or Vibration	Missing or loose mounting bolts.
.....	Bad idler pulley bearings.
.....	Fan belts not tightened correctly.
.....	Compressor clutch contacting body.
.....	Excessive system pressure.
.....	Compressor oil level low.
.....	Damaged clutch bearings.
.....	Damaged reed valves.
.....	Damaged compressor.
Insufficient or No Cooling; Compressor Working	Expansion valve inoperative.
.....	Heater control valve stuck open.
.....	Low system pressure.
.....	Blocked condenser fins.
.....	Blocked evaporator fins.
.....	Vacuum system leak.
.....	Vacuum motors inoperative.
.....	Control cables improperly adjusted.
.....	Restricted air inlet.

.....	Mode doors binding.
.....	Blower motor inoperative.
.....	Temperature above system capacity.

HEATER SYSTEM TROUBLE SHOOTING

NOTE: **This is GENERAL information. This article is not intended to be specific to any unique situation or individual vehicle configuration. The purpose of this Trouble Shooting information is to provide a list of common causes to problem symptoms. For model-specific Trouble Shooting, refer to DIAGNOSTIC, or TESTING articles available in the section(s) you are accessing.**

BASIC HEATER SYSTEM TROUBLE SHOOTING CHART

CONDITION	POSSIBLE CAUSE
Insufficient, Erratic, or No Heat	Low Coolant Level
.....	Incorrect thermostat.
.....	Restricted coolant flow through core.
.....	Heater hoses plugged.
.....	Misadjusted control cable.
.....	Sticking heater control valve.
.....	Vacuum hose leaking.
.....	Vacuum hose blocked.
.....	Vacuum motors inoperative.
.....	Blocked air inlet.
.....	Inoperative heater blower motor.
.....	Oil residue on heater core fins.
.....	Dirt on heater core fins.
Too Much Heat	Improperly adjusted cables.
.....	Sticking heater control valve.
.....	No vacuum to heater control valve.
.....	Temperature door stuck open.
Air Flow Changes During Acceleration	Vacuum system leak.
.....	Bad check valve or reservoir.
Air From Defroster At All Times	Vacuum system leak.
.....	Improperly adjusted control cables.
.....	Inoperative vacuum motor.
Blower Does Not Operate Correctly	Blown fuse.
.....	Blower motor windings open.
.....	Resistors burned out.
.....	Motor ground connection loose.

.....	Wiring harness connections loose.
.....	Blower motor switch inoperative.
.....	Blower relay inoperative.
.....	Fan binding or foreign object in housing.
.....	Fan blades broken or bent.

BRAKES

BRAKE SYSTEM TROUBLE SHOOTING

NOTE: **This is GENERAL information. This article is not intended to be specific to any unique situation or individual vehicle configuration. The purpose of this Trouble Shooting information is to provide a list of common causes to problem symptoms. For model-specific Trouble Shooting, refer to SUBJECT, DIAGNOSTIC, or TESTING articles available in the section(s) you are accessing.**

BRAKE SYSTEM TROUBLE SHOOTING CHART

CONDITION & POSSIBLE CAUSE	CORRECTION
Brakes Pull Left or Right	
Incorrect tire pressure	Inflate tires to proper pressure
Front end out of alignment	See WHEEL ALIGNMENT
Mismatched tires	Check tires sizes
Restricted brake lines or hoses	Check hose routing
Loose or malfunctioning caliper	See DISC BRAKES or BRAKE SYSTEM
Bent shoe or oily linings	See DRUM BRAKES or BRAKE SYSTEM
Malfunctioning rear brakes	See DRUM, DISC BRAKES or BRAKE SYSTEM
Loose suspension parts	See SUSPENSION
Noises Without Brakes Applied	
Front linings worn out	Replace linings
Dust or oil on drums or rotors	See DRUM, DISC BRAKES or BRAKE SYSTEM
Noises With Brakes Applied	
Insulator on outboard shoe damaged	See DISC BRAKES or BRAKE SYSTEM
Incorrect pads or linings	Replace pads or linings
Brake Rough, Chatters or Pulsates	
Excessive lateral runout	Check rotor runout
Parallelism not to specifications	Reface or replace rotor
Wheel bearings not adjusted	See SUSPENSION

Rear drums out-of-round	Reface or replace drums
Disc pad reversed, steel against rotor	Remove and reinstall pad
Excessive Pedal Effort	
Malfunctioning power unit	See POWER BRAKES or BRAKE SYSTEM
Partial system failure	Check fluid and pipes
Worn disc pad or lining	Replace pad or lining
Caliper piston stuck or sluggish	See DISC BRAKES or BRAKE SYSTEM
Master cylinder piston stuck	See MASTER CYLINDERS or BRAKE SYSTEM
Brake fade due to incorrect pads for linings	Replace pads or linings
Linings or pads glazed	Replace pads or linings
Worn drums	Reface or replace drums
Excessive Pedal Travel	
Partial brake system failure	Check fluid and pipes
Insufficient fluid in master cylinder	See MASTER CYLINDERS or BRAKE SYSTEM
Air trapped in system	See BRAKE BLEEDING or BRAKE SYSTEM
Rear brakes not adjusted	See Adjustments in DRUM BRAKES or BRAKE SYSTEM
Bent shoe or lining	See DRUM BRAKES or BRAKE SYSTEM
Plugged master cylinder cap	See MASTER CYLINDERS or BRAKE SYSTEM
Improper brake fluid	Replace brake fluid
Pedal Travel Decreasing	
Compensating port plugged	See MASTER CYLINDERS or BRAKE SYSTEM
Swollen cup in master cylinder	See MASTER CYLINDERS or BRAKE SYSTEM
Master cylinder piston not returning	See MASTER CYLINDERS or BRAKE SYSTEM
Weak shoe retracting springs	See DRUM BRAKES BRAKE SYSTEM
Wheel cylinder piston sticking	See DRUM BRAKES or BRAKE SYSTEM
Dragging Brakes	
Master cylinder pistons not returning	See MASTER CYLINDERS BRAKE SYSTEM
Restricted brake lines or hoses	Check line routing

Incorrect parking brake adjustment	See DRUM BRAKES BRAKE SYSTEM
Parking Brake cables frozen	See DRUM BRAKES BRAKE SYSTEM
Incorrect installation of inboard disc pad	Remove and replace correctly
Power booster output rod too long	See POWER BRAKE UNITS BRAKE SYSTEM
Brake pedal not returning freely	See DISC, DRUM BRAKES BRAKE SYSTEM
Brakes Grab or Uneven Braking Action	
Malfunction of combination valve	See CONTROL VALVE or BRAKE SYSTEM
Malfunction of power brake unit	See POWER BRAKE UNITS or BRAKE SYSTEM
Binding brake pedal	See DISC, DRUM BRAKES or BRAKE SYSTEM
Pulsation or Roughness	
Uneven pad wear caused by caliper	See DISC BRAKES or BRAKE SYSTEM
Uneven rotor wear	See DISC BRAKES or BRAKE SYSTEM
Drums out-of-round	Reface or replace drums

ENGINE MECHANICAL

COOLING SYSTEM TROUBLE SHOOTING

NOTE: **This is GENERAL information. This article is not intended to be specific to any unique situation or individual vehicle configuration. The purpose of this Trouble Shooting information is to provide a list of common causes to problem symptoms. For model-specific Trouble Shooting, refer to SUBJECT, DIAGNOSTIC, or TESTING articles available in the section(s) you are accessing.**

COOLING SYSTEM TROUBLE SHOOTING

CONDITION & POSSIBLE CAUSE	CORRECTION
Overheating	
Coolant Leak	Fill/Pressure Test System
A/C Condenser Fins Clogged	Remove/Clean Condenser
Radiator Fins Clogged	Remove/Clean Radiator
Thermostat Stuck Closed	Replace Thermostat
Clogged Cooling System Passages	Clean/Flush Cooling System
Water Pump Malfunction	Replace Water Pump
Fan Clutch Malfunction	Replace Fan Clutch

Retarded Ignition Timing	Reset Ignition Timing
Cooling Fan Malfunction	Test Cooling Fan/Circuit
Cooling Fan Motor Malfunction	Test Fan Motor
Cooling Fan Relay Malfunction	Test Fan Relay
Faulty Radiator Cap	Replace Radiator Cap
Broken/Slipping Fan Belt	Replace Fan Belt
Restricted Exhaust	Repair Exhaust System
Corrosion	
Impurities In Coolant	Clean/Flush System
Coolant Leakage	
Damaged hose	Replace Hose
Leaky Water Pump	Replace Water Pump
Damaged Radiator Seam	Replace/Repair Radiator
Leaky Thermostat Cover	Replace Thermostat Cover
Cylinder Head Problem	Check Head/Head Gasket
Leaky Freeze Plugs	Replace Freeze Plugs
Recovery System Inoperative	
Loose and/or Defective Radiator Cap	Replace Radiator Cap
Overflow Tube Clogged and/or Leaking	Repair Tube
Recovery Bottle Vent Restricted	Clean Vent
No Heater Core Flow	
Collapsed Heater Hose	Replace Heater Hose
Plugged Heater Core	Clean/Replace Heater Core
Faulty Heater Valve	Replace Heater Valve

GASOLINE ENGINE - MECHANICAL TROUBLE SHOOTING

NOTE: **This is GENERAL information. This article is not intended to be specific to any unique situation or individual vehicle configuration. The purpose of this Trouble Shooting information is to provide a list of common causes to problem symptoms. For model-specific Trouble Shooting, refer to SUBJECT, DIAGNOSTIC, or TESTING articles available in the section(s) you are accessing.**

BASIC GASOLINE ENGINE - MECHANICAL TROUBLE SHOOTING CHART

CONDITION & POSSIBLE CAUSE	CORRECTION
Engine Lopes At Idle	
Intake manifold-to-head leaks	Replace manifold gasket, See ENGINES
Blown head gasket	Replace head gasket, See ENGINES
Worn timing gears, chain or sprocket	Replace gears, chain or sprocket

Worn camshaft lobes	Replace camshaft, See ENGINES
Overheated engine	Check cooling system, See COOLING
Blocked crankcase vent valve	Remove restriction
Leaking EGR valve	Repair leak and/or replace valve
Faulty fuel pump	Replace fuel pump
Engine Has Low Power	
Leaking fuel pump	Repair leak and/or replace fuel pump
Excessive piston-to-bore clearance	Install larger pistons, See ENGINES
Sticking valves or weak valve springs	Check valve train components, See ENGINES
Incorrect valve timing	Reset valve timing, See ENGINES
Worn camshaft lobes	Replace camshaft, See ENGINES
Blown head gasket	Replace head gasket. See ENGINES.
Clutch slipping	Adjust pedal and/or replace components, See ENGINES
Engine overheating	Check cooling system, See COOLING
Auto. Trans. pressure regulator valve faulty	Replace pressure regulator valve
Auto. Trans. fluid level too low	Add fluid as necessary
Improper vacuum diverter valve operation	Replace vacuum diverter valve
Vacuum leaks	Inspect vacuum system and repair as required
Leaking piston rings	Replace piston rings, See ENGINES
Faulty High Speed Operation	
Low fuel pump volume	Replace fuel pump
Leaking valves or worn	Replace valves and/or springs, See ENGINES
Incorrect valve timing	Reset valve timing,See ENGINES
Intake manifold restricted	Remove restriction
Worn distributor shaft	Replace distributor
Faulty Acceleration	

Improper fuel pump stroke	Remove pump and reset pump stroke
Incorrect ignition timing	Reset ignition timing, See TUNE-UP
Leaking valves	Replace valves, See ENGINES
Worn fuel pump diaphragm or piston	Replace diaphragm or piston
Intake Backfire	
Improper ignition timing	Reset ignition timing, See TUNE-UP
Faulty accelerator pump discharge	Replace accelerator pump
Improper choke operation	Check choke and adjust as required
Defective EGR valve	Replace EGR valve
Fuel mixture too lean	Reset air/fuel mixture, See TUNE-UP
Choke valve initial clearance too large	Reset choke valve initial clearance
Exhaust Backfire	
Vacuum leak	Inspect and repair vacuum system
Faulty vacuum diverter valve	Replace vacuum diverter valve
Faulty choke operation	Check choke and adjust as required
Exhaust system leak	repair exhaust system leak
Engine Detonation	
Ignition timing too far advanced	Reset ignition timing, See TUNE-UP
Faulty ignition system	Check ignition timing, See TUNE-UP
Spark plugs loose or faulty	Retighten or replace plugs
Fuel delivery system clogged	Inspect lines, pump and filter for clog
EGR valve inoperative	Replace EGR valve
PCV system inoperative	Inspect and/or replace hoses or valve
Vacuum leaks	Check vacuum system and repair leaks
Excessive combustion chamber deposits	Remove built-up deposits
Leaking, sticking or broken valves	Inspect and/or replace valves
External Oil Leakage	
Fuel pump improperly seated or worn gasket	Remove pump, replace gasket

	and seat properly
Oil pan gasket broken or pan bent	Straighten pan and replace gasket
Timing chain cover gasket broken	Replace timing chain cover gasket
Rear main oil seal worn	Replace rear main oil seal
Oil pan drain plug not seated properly	Remove and reinstall drain plug
Camshaft bearing drain hole blocked	Remove restriction
Oil pressure sending switch leaking	Remove and reinstall sending switch
Excessive Oil Consumption	
Worn valve stems or guides	Replace stems or guides, See ENGINES
Valve "O" ring seals damaged	Replace "O" ring seals, See ENGINES
Plugged oil drain back holes	Remove restrictions
Improper PCV valve operation	Replace PCV valve
Engine oil level too high	Remove excess oil
Engine oil too thin	Replace thicker oil
Valve stem oil deflectors damaged	Replace oil deflectors
Incorrect piston rings	Replace piston rings, See ENGINES
Piston ring gaps not staggered	Reinstall piston rings, See ENGINES
Insufficient piston ring tension	Replace rings, See ENGINES
Piston ring grooves or oil return	slots clogged Replace piston rings, See ENGINES
Piston rings sticking in grooves	Replace piston rings, See ENGINES
Piston ring grooves excessively worn	Replace piston and rings, See ENGINES
Compression rings installed upside down	Replace compression rings correctly, See ENGINES
Worn or scored cylinder walls	Rebore cylinders or replace block
Mismatched oil ring expander and rail	Replace oil ring expander and rail, See ENGINES
Intake gasket dowels too long	Replace intake gasket dowels
Excessive main or connecting rod bearing clearance	Replace main or connecting rod bearings, See ENGINES
No Oil Pressure	
Low oil level	Add oil to proper level

Oil pressure sender or gauge broken	Replace sender or gauge
Oil pump malfunction	Remove and overhaul oil pump, See ENGINES
Oil pressure relief valve sticking	Remove and reinstall valve
Oil pump passages blocked	Overhaul oil pump, See ENGINES
Oil pickup screen or tube blocked	Remove restriction
Loose oil inlet tube	Tighten oil inlet tube
Loose camshaft bearings	Replace camshaft bearings, See ENGINES
Internal leakage at oil passages	Replace block or cylinder head
Low Oil Pressure	
Low engine oil level	Add oil to proper level
Engine oil too thin	Remove and replace with thicker oil
Excessive oil pump clearance	Reduce oil pump clearance, See ENGINES
Oil pickup tube or screen blocked	Remove restrictions
Main, rod or cam bearing clearance excessive	Replace bearing to reduce clearance, See ENGINES
High Oil Pressure	
Improper grade of oil	Replace with proper oil
Oil pressure relief valve stuck closed	Eliminate binding
Oil pressure sender or gauge faulty	Replace sender or gauge
Noisy Main Bearings	
Inadequate oil supply	Check oil delivery to main bearings
Excessive main bearing clearance	Replace main bearings, See ENGINES
Excessive crankshaft end play	Replace crankshaft, See ENGINES
Loose flywheel or torque converter	Tighten attaching bolts
Loose or damaged vibration damper	Tighten or replace vibration damper
Crankshaft journals out-of-round	Re-grind crankshaft journals
Excessive belt tension	Loosen belt tension
Noisy Connecting Rods	
Excessive bearing clearance or missing bearing	Replace bearing, See ENGINES
Crankshaft rod journal out-of-round	Re-grind crankshaft journal
Misaligned connecting rod or cap	Remove rod or cap and

	realign
Incorrectly tightened rod bolts	Remove and re-tighten rod bolts
Noisy Pistons and Rings	
Excessive piston-to-bore clearance	Install larger pistons, See ENGINES
Bore tapered or out-of-round	Rebore block
Piston ring broken	Replace piston rings, See ENGINES
Piston pin loose or seized	Replace piston pin, See ENGINES
Connecting rods misaligned	Realign connecting rods
Ring side clearance too loose or tight	Replace with larger or smaller rings
Carbon build-up on piston	Remove carbon
Noisy Valve Train	
Worn or bent push rods	Replace push rods, See ENGINES
Worn rocker arms or bridged pivots	Replace push rods, See ENGINES
Dirt or chips in valve lifters	Remove lifters and remove dirt/chips
Excessive valve lifter leak-down	Replace valve lifters, See ENGINES
Valve lifter face worn	Replace valve lifters, See ENGINES
Broken or cocked valve springs	Replace or reposition springs
Too much valve stem-to-guide clearance	Replace valve guides, See ENGINES
Valve bent	Replace valve, See ENGINES
Loose rocker arms	Retighten rocker arms, See ENGINES
Excessive valve seat run-out	Reface valve seats, See ENGINES
Missing valve lock	Install new valve lock
Excessively worn camshaft lobes	Replace camshaft, See ENGINES
Plugged valve lifter oil holes	Eliminate restriction or replace lifter
Faulty valve lifter check ball	Replace lifter check ball, See ENGINES
Rocker arm nut installed upside down	Remove and reinstall correctly
Valve lifter incorrect for engine	Remove and replace valve

	lifters
Faulty push rod seat or lifter plunger	Replace plunger or push rod
Noisy Valves	
Improper valve lash	Re-adjust valve lash, See ENGINES
Worn or dirty valve lifters	Clean and/or replace lifters
Worn valve guides	Replace valve guides, See ENGINES
Excessive valve seat or face run-out	Reface seats or valve face
Worn camshaft lobes	Replace camshaft, See ENGINES
Loose rocker arm studs	Re-tighten rocker arm studs, See ENGINES
Bent push rods	Replace push rods, See ENGINES
Broken valve springs	Replace valve springs, See ENGINES
Burned,Sticking or Broken Valves	
Weak valve springs or warped valves	Replace valves and/or springs, See ENGINES
Improper lifter clearance	Re-adjust clearance or replace lifters
Worn guides or improper guide clearance	Replace valve guides, See ENGINES
Out-of-round valve seats or improper seat width	Re-grind valve seats
Gum deposits on valve stems, seats or guide	Remove deposits
Improper spark timing	Re-adjust spark timing
Broken Pistons/Rings	
Undersize pistons	Replace with larger pistons, See ENGINES
Wrong piston rings	Replace with correct rings, See ENGINES
Out-of-round cylinder bore	Re-bore cylinder bore
Improper connecting rod alignment	Remove and realign connecting rods
Excessively worn ring grooves	Replace pistons, See ENGINES
Improperly assembled piston pins	Re-assemble pin-to-piston, See ENGINES
Insufficient ring gap clearance	Install new rings, See ENGINES
Engine overheating	Check cooling system
Incorrect ignition timing	Re-adjust ignition timing, See

	TUNE-UP
Excessive Exhaust Noise	
Leaks at manifold to head, or to pipe	Replace manifold or pipe gasket
Exhaust manifold cracked or broken	Replace exhaust manifold, See ENGINES

ENGINE PERFORMANCE

CARBURETOR TROUBLE SHOOTING:

NOTE: **This is GENERAL information. This article is not intended to be specific to any unique situation or individual vehicle configuration. The purpose of this Trouble Shooting information is to provide a list of common causes to problem symptoms. For model-specific Trouble Shooting, refer to SUBJECT, DIAGNOSTIC, or TESTING articles available in the section(s) you are accessing.**

BASIC COLD START SYMPTOMS TROUBLE SHOOTING CHART

CONDITION & POSSIBLE CAUSE	CORRECTION
Engine Won't Start	
Choke not closing	Check choke operation, see FUEL SYSTEMS
Choke linkage bent	Check linkage, see FUEL SYSTEM
Engine Starts, Then Dies	
Choke vacuum kick setting too wide	Check setting and adjust see, FUEL SYSTEMS
Fast idle RPM too low	Reset RPM to specification, see TUNE-UP
Fast idle cam index incorrect	Reset fast idle cam index, see FUEL SYSTEMS
Vacuum leak	Inspect vacuum system for leaks
Low fuel pump outlet	Repair or replace pump, see FUEL SYSTEMS
Low carburetor fuel level	Check float setting see FUEL SYSTEM
Engine Quits Under Load	
Choke vacuum kick setting incorrect	Reset vacuum kick setting,see FUEL SYSTEMS
Fast idle cam index incorrect	Reset fast idle cam index, see FUEL SYSTEM
Incorrect hot fast idle speed RPM	Reset fast idle RPM, see

	TUNE-UP
Engine Starts, Runs Up, Then Idles, Slowly With Black Smoke	
Choke vacuum kick set too narrow	Reset vacuum kick, see FUEL SYSTEMS
Fast idle cam index incorrect	Reset fast idle cam index, see FUEL SYSTEMS
Hot fast idle RPM too low	Reset fast idle RPM, see TUNE-UP

BASIC HOT START SYMPTOMS TROUBLE SHOOTING CHART

CONDITION & POSSIBLE CAUSE	CORRECTION
Engine Won't Start	
Engine flooded	Allow fuel to evaporate

BASIC COLD ENGINE DRIVEABILITY SYMPTOMS TROUBLE SHOOTING CHART

CONDITION & POSSIBLE CAUSE	CORRECTION
Engine Stalls in Gear	
Choke vacuum kick setting incorrect	Reset choke vacuum kick, see FUEL SYSTEMS
Fast idle RPM incorrect	Reset fast idle RPM, see TUNE-UP
Fast idle cam index incorrect	Reset fast idle cam see FUEL SYSTEMS
Acceleration Sag or Stall	
Defective choke control switch	Replace choke control switch
Choke vacuum kick setting incorrect	Reset choke vacuum kick see, FUEL SYSTEMS
Float level incorrect (too low)	Adjust float level, FUEL SYSTEMS
Accelerator pump defective	Repair or replace pump see FUEL SYSTEMS
Secondary throttles not closed	Inspect lockout adjustment, see FUEL SYSTEMS
Sag or Stall After Warmup	
Defective choke control switch	Replace choke control switch, see FUEL SYSTEMS
Defective accelerator pump	Replace pump, see FUEL SYSTEMS
Float level incorrect (too low)	Adjust float level, see FUEL SYSTEMS
Backfiring & Black Smoke	
Plugged heat crossover system	Remove restriction

BASIC WARM ENGINE DRIVEABILITY SYMPTOMS TROUBLE SHOOTING CHART

CONDITION & POSSIBLE CAUSE	CORRECTION
Hesitation With Small Amount of Gas Pedal Movement	
Vacuum leak	Inspect vacuum lines
Accelerator pump weak or inoperable	Replace pump, see FUEL SYSTEMS
Float level setting too low	Reset float level, see,FUEL SYSTEMS
Metering rods sticking or binding	Inspect and/or replace rods, see FUEL SYSTEMS
Carburetor idle or transfer system plugged	Inspect system and remove restriction
Frozen or binding heated air inlet	Inspect heated air door for binding
Hesitation With Heavy Gas Pedal Movement	
Defective accelerator pump	Replace pump, see FUEL SYSTEMS
Metering rod carrier sticking or binding	Remove restriction
Large vacuum leak	Inspect vacuum system and repair leak
Float level setting too low	Reset float level, see FUEL SYSTEMS
Defective fuel pump, lines or filter	Inspect pump, lines and filter
Air door setting incorrect	Adjust air door setting, see FUEL

DIESEL ENGINE TROUBLE SHOOTING

NOTE: **This is GENERAL information. This article is not intended to be specific to any unique situation or individual vehicle configuration. The purpose of this Trouble Shooting information is to provide a list of common causes to problem symptoms. For model-specific Trouble Shooting, refer to SUBJECT, DIAGNOSTIC, or TESTING articles available in the section(s) you are accessing.**

NOTE: **Diesel engines mechanical diagnosis is the same as gasoline engines for items such as noisy valves, bearings, pistons, etc. The following trouble shooting covers only items pertaining to diesel engines.**

BASIC DIESEL ENGINE TROUBLE SHOOTING CHART

CONDITION & POSSIBLE CAUSE	CORRECTION
Engine Won't Crank	
Bad battery connections or dead batteries	Check connections and/or replace batteries

Bad starter connections or bad starter	Check connections and/or replace starter
Engine Cranks Slowly, Won't Start	
Bad battery connections or dead batteries	Check connections and/or replace batteries
Engine oil too heavy	Replace engine oil
Engine Cranks Normally, But Will Not Start	
Glow plugs not functioning	Check glow plug system, see FUEL SYSTEMS
Glow plug control not functioning	Check controller, see FUEL SYSTEMS
Fuel not injected into cylinders	Check fuel injectors, see FUEL SYSTEMS
No fuel to injection pump	Check fuel delivery system
Fuel filter blocked	Replace fuel filter
Fuel tank filter blocked	Replace fuel tank filter
Fuel pump not operating	Check pump operation and/or replace pump
Fuel return system blocked	Inspect system and remove restriction
No voltage to fuel solenoid	Check solenoid and connections
Incorrect or contaminated fuel	Replace fuel
Incorrect injection pump timing	Re-adjust pump timing, see FUEL SYSTEMS
Low compression	Check valves, pistons, rings, see ENGINES
Injection pump malfunction	Inspect and/or replace injection pump
Engine Starts, Won't Idle	
Incorrect slow idle adjustment	Reset idle adjustment, see TUNE-UP
Fast idle solenoid malfunctioning	Check solenoid and connections
Fuel return system blocked	Check system and remove restrictions
Glow plugs go off too soon	See glow plug diagnosis in FUEL SYSTEMS
Injection pump timing incorrect	Reset pump timing, see FUEL SYSTEMS
No fuel to injection pump	Check fuel delivery system
Incorrect or contaminated fuel	Replace fuel
Low compression	Check valves, piston, rings,

	see ENGINES
Injection pump malfunction	Replace injection pump, see FUEL SYSTEMS
Fuel solenoid closes in RUN position	Check solenoid and connections
Engines Starts/Idles Rough W/out Smoke or Noise	
Incorrect slow idle adjustment	Reset slow idle, see TUNE-UP
Injection line fuel leaks	Check lines and connections
Fuel return system blocked	Check lines and connections
Air in fuel system	Bleed air from system
Incorrect or contaminated fuel	Replace fuel
Injector nozzle malfunction	Check nozzles, see FUEL SYSTEMS
Engines Starts and Idles Rough W/out Smoke or Noise, But Clears After Warm-Up	
Injection pump timing incorrect	Reset pump timing, see FUEL SYSTEMS
Engine not fully broken in	Put more miles on engine
Air in system	Bleed air from system
Injector nozzle malfunction	Check nozzles, see FUEL SYSTEMS
Engine Idles Correctly, Misfires Above Idle	
Blocked fuel filter	Replace fuel filter
Injection pump timing incorrect	Reset pump timing, see FUEL SYSTEMS
Incorrect or contaminated fuel	Replace fuel
Engine Won't Return To Idle	
Fast idle adjustment incorrect	Reset fast idle, see TUNE-UP
Internal injection pump malfunction	Replace injection pump, see FUEL SYSTEMS
External linkage binding	Check linkage and remove binding
Fuel Leaks On Ground	
Loose or broken fuel line	Check lines and connections
Internal injection pump seal leak	Replace injection pump, see FUEL SYSTEMS
Cylinder Knocking Noise	
Injector nozzles sticking open	Test injectors, see FUEL SYSTEMS
Very low nozzle opening pressure	Test injectors and/or replace
Loss of Engine Power	
Restricted air intake	Remove restriction
EGR valve malfunction	Replace EGR valve

Blocked or damaged exhaust system	Remove restriction and/or replace components
Blocked fuel tank filter	Replace filter
Restricted fuel filter	Remove restriction and/or replace filter
Block vent in gas cap	Remove restriction and/or replace cap
Tank-to-injection pump fuel supply blocked	Check fuel lines and connections
Blocked fuel return system	Remove restriction
Incorrect or contaminated fuel	Replace fuel
Blocked injector nozzles	Check nozzle for blockage, see FUEL SYSTEMS
Low compression	Check valves, rings, pistons, see ENGINES
Loud Engine Noise With Black Smoke	
Basic timing incorrect	Reset timing, see FUEL SYSTEMS
EGR valve malfunction	Replace EGR valve
Internal injection pump malfunction	Replace injection pump, see FUEL SYSTEMS
Incorrect injector pump housing pressure	Check pressure, see FUEL SYSTEMS
Engine Overheating	
Cooling system leaks	Check cooling system and repair leaks
Belt slipping or damaged	Check tension and/or replace belt
Thermostat stuck closed	Remove and replace thermostat, see ENGINE COOLING
Head gasket leaking	Replace head gasket
Oil Light on at Idle	
Low oil pump pressure	Check oil pump operation, see ENGINES
Oil cooler or line restricted	Remove restriction and/or replace cooler
Engine Won't Shut Off	
Injector pump fuel solenoid does not return fuel valve to OFF position	Remove and check solenoid and replace if needed

VACUUM PUMP DIAGNOSIS

CONDITION & POSSIBLE CAUSE	CORRECTION

Excessive Noise	
Loose pump-to-drive assembly screws	Tighten screws
Loose tube on pump assembly	Tighten tube
Valves not functioning properly	Replace valves
Oil Leakage	
Loose end plug	Tighten end plug
Bad seal crimp	Remove and re-crimp seal

FUEL INJECTION TROUBLE SHOOTING

NOTE: **This is GENERAL information. This article is not intended to be specific to any unique situation or individual vehicle configuration. The purpose of this Trouble Shooting information is to provide a list of common causes to problem symptoms. For model-specific Trouble Shooting, refer to SUBJECT, DIAGNOSTIC, or TESTING articles available in the section(s) you are accessing.**

BASIC FUEL INJECTION TROUBLE SHOOTING CHART

CONDITION & POSSIBLE CAUSE	CORRECTION
Engine Won't Start (Cranks Normally)	
Cold start valve inoperative	Test valve and circuit
Poor connection;vacuum or wiring	Check vacuum and electrical connections
Contaminated fuel	Test fuel for water or alcohol
Defective fuel pump relay or circuit	Test relay and wiring
Battery too low	Charge and test battery
Low fuel pressure	Test pressure regulator and fuel pump, check for restricted lines and filters
No distributor reference pulses	Repair ignition system as necessary
Open coolant temperature sensor circuit	Test sensor and wiring
Shorted W.O.T. switch in T.P.S.	Disconnect W.O.T. switch, engine should start
Defective ECM	Replace ECM
Fuel tank residual pressure valve leaks	Test for fuel pressure drop after shut down
Hard Starting	
Disconnected hot air tube to air cleaner	Reconnect tube and test control valve
Defective Idle Air Control (IAC) valve	Test valve operation and circuit
Shorted, open or misadjusted T.P.S.	Test and adjust or replace T.P.S.

EGR valve open	Test EGR valve and control circuit
Poor Oxygen sensor signal	Test for shorted or circuit
Incorrect mixture from PCV system	Test PCV for flow, check sealing of oil filter cap
Poor High Speed Operation	
Low fuel pump volume	Faulty pump or restricted fuel lines or filters
Poor MAP sensor signal	Test MAP sensor, vacuum hose and wiring
Poor Oxygen sensor signal	Test for shorted or open sensor or circuit
Open coolant temperature sensor circuit	Test sensor and wiring
Faulty ignition operation	Check wires for cracks or poor con- nections, test secondary voltage with oscilloscope
Contaminated fuel	Test fuel for water or alcohol
Intermittent ECM ground	Test ECM ground connection for resistance
Restricted air cleaner	Replace air cleaner
Restricted exhaust system	Test for exhaust manifold back pressure
Poor MAF sensor signal	Check leakage between sensor and manifold
Poor VSS signal	If tester for ALCL hook-up is available check that VSS reading matches speedometer
Ping or Knock on Acceleration	
Poor Knock sensor signal	Test for shorted or open sensor or circuit
Poor Baro sensor signal	Test for shorted or open sensor or circuit
Improper ignition timing	See VEHICLE EMISSION CONTROL LABEL (where applicable)
Check for engine overheating problems	Low coolant, loose belts or electric cooling fan inoperative

NOTE: **For additional electronic fuel injection trouble shooting information, see the appropriate article in the ENGINE PERFORMANCE section (not all vehicles have Computer Engine Control articles). Information is provided there for diagnosing fuel system problems on vehicles with electronic fuel injection.**

IGNITION SYSTEM TROUBLE SHOOTING

NOTE: **This is GENERAL information. This article is not intended to be specific to any unique situation or individual vehicle configuration. The purpose of this Trouble Shooting information is to provide a list of common causes to problem symptoms. For model-specific Trouble Shooting, refer to SUBJECT, DIAGNOSTIC, or TESTING articles available in the section(s) you are accessing.**

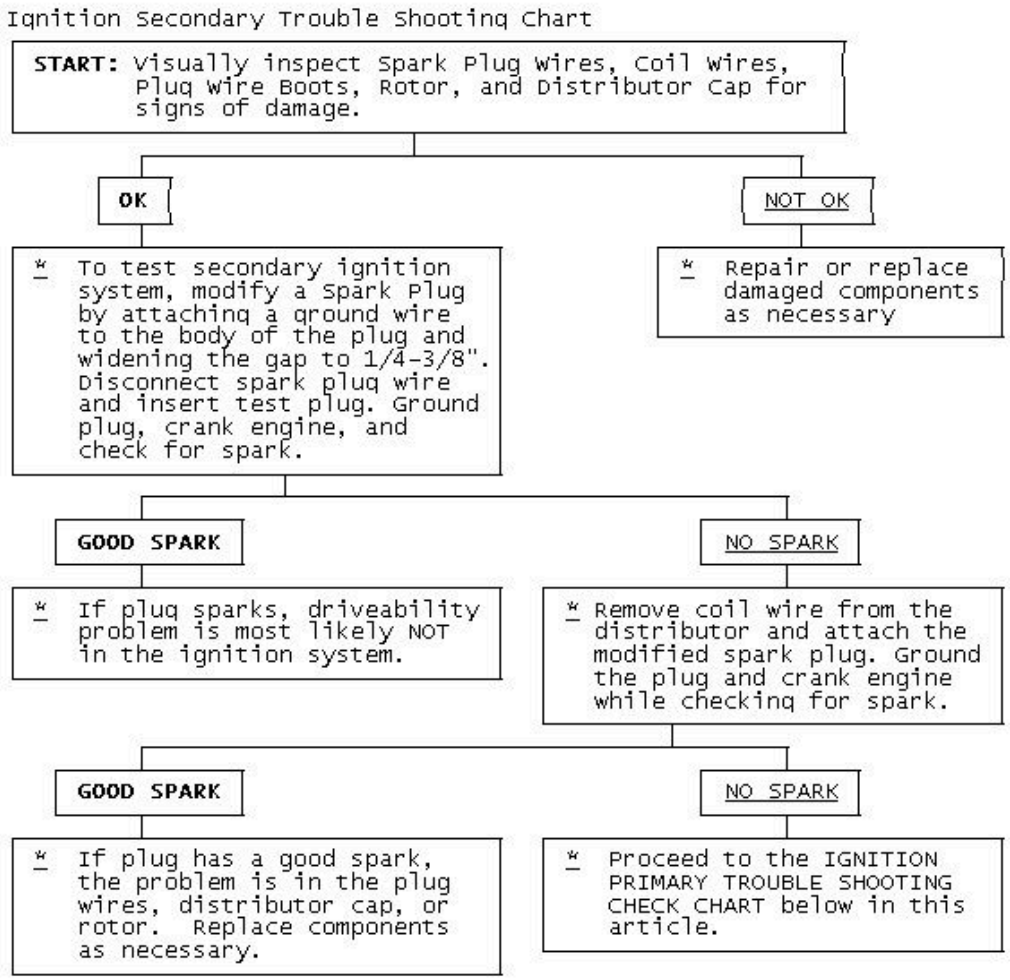

Fig. 3: Ignition Secondary Trouble Shooting Chart

Ignition Primary Trouble Shooting Chart

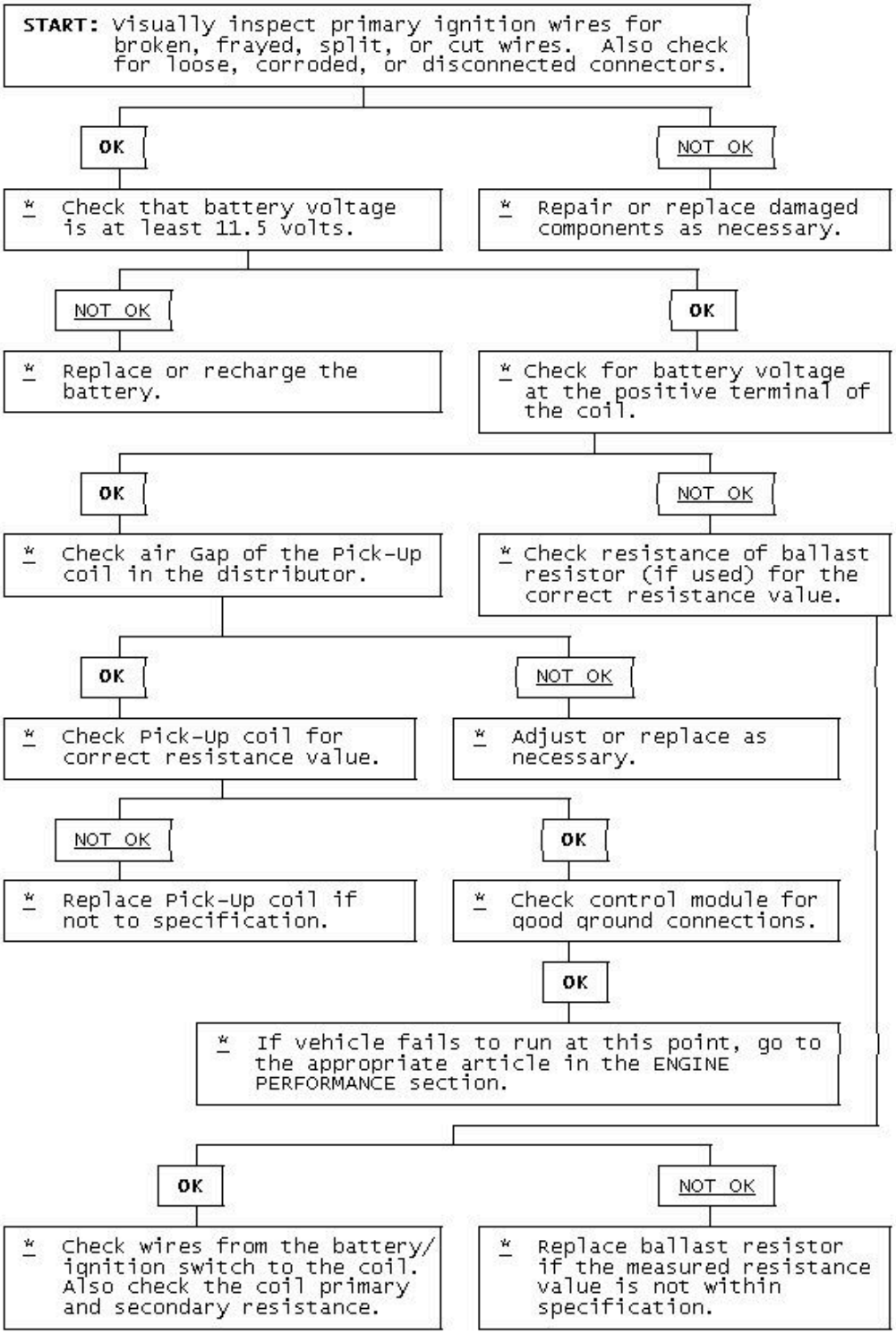

Fig. 4: Ignition Primary Trouble Shooting Chart

STARTER TROUBLE SHOOTING

NOTE: **This is GENERAL information. This article is not intended to be specific to any unique situation or individual vehicle configuration. The purpose of this Trouble Shooting information is to provide a list of common causes to problem symptoms. For model-specific Trouble Shooting, refer to SUBJECT, DIAGNOSTIC, or TESTING articles available in the section(s) you are accessing.**

BASIC STARTER TROUBLE SHOOTING CHART

CONDITION & POSSIBLE CAUSE	CORRECTION
Starter Fails to Operate	
Dead battery or bad connections between starter and battery	Check battery charge and all wires and connections to starter
Ignition switch faulty or misadjusted	Adjust or replace ignition switch
Open circuit between starter switch ignition terminal on starter relay	Check and repair wires and connections as necessary
Starter relay or starter defective	See Testing in STARTER article
Open solenoid pull-in wire	See Testing in STARTER article
Starter Does Not Operate and Headlights Dim	
Weak battery or dead cell	Charge or replace battery as necessary
Loose or corroded battery connections	Check that battery connections are clean and tight
Internal ground in starter windings	See Testing in STARTER article
Grounded starter fields	See Testing in STARTERS
Armature rubbing on pole shoes	See STARTER article
Starter Turns but Engine Does Not Rotate	
Starter clutch slipping	See STARTER article
Broken clutch housing	See STARTER article
Pinion shaft rusted or dry	See STARTER article
Engine basic timing incorrect	See Ignition Timing in TUNE-UP article
Broken teeth on engine flywheel	Replace flywheel and check for starter pinion gear damage
Starter Will Not Crank Engine	

Faulty overrunning clutch	See STARTER article
Broken clutch housing	See STARTER article
Broken flywheel teeth	Replace flywheel and check for starter pinion gear damage
Armature shaft sheared or reduction gear teeth stripped	See STARTER article
Weak battery	Charge or replace battery as necessary
Faulty solenoid	See On-Vehicle Tests in STARTER article
Poor grounds	Check all ground connections for tight and clean connections
Ignition switch faulty or misadjusted	Adjust or replace ignition switch as necessary
Starter Cranks Engine Slowly	
Battery weak or defective	Charge or replace battery as necessary
Engine overheated	See ENGINE COOLING SYSTEM article
Engine oil too heavy	Check that proper viscosity oil is used
Poor battery-to-starter connections	Check that all between battery and starter are clean and tight
Current draw too low or too high	See Bench Tests in STARTER article
Bent armature, loose pole shoes screws or worn bearings	See STARTER article
Burned solenoid contacts	Replace solenoid
Faulty starter	Replace starter
Starter Engages Engine Only Momentarily	
Engine timing too far advanced	See Ignition Timing in TUNE-UP article
Overrunning clutch not engaging properly	Replace overrunning clutch. See STARTER article
Broken starter clutch	See STARTER article
Broken teeth on engine flywheel	Replace flywheel and check starter pinion gear for damage
Weak drive assembly thrust spring	See STARTER article
Weak hold-in coil	See Bench Tests in STARTER article
Starter Drive Will Not Engage	

Defective point assembly	See Testing in STARTER article
Poor point assembly ground	See Testing in STARTER article
Defective pull-in coil	Replace starter solenoid
Starter Relay Does Not Close	
Dead battery	Charge or replace battery as necessary
Faulty wiring	Check all wiring and connections leading to relay
Neutral safety switch faulty	Replace neutral safety switch
Starter relay faulty	Replace starter relay
Starter Drive Will Not Disengage	
Starter motor loose on mountings	Tighten starter attach bolts
Worn drive end bushing	See STARTER article
Damaged engine flywheel teeth	Replace flywheel and starter pinion gear for damage
Drive yolk return spring broken or missing	Replace return spring
Faulty ignition switch	Replace ignition switch
Insufficient clearance between winding leads to solenoid terminal and main contact in solenoid	Replace starter solenoid
Starter clutch not disengaging	Replace starter clutch
Ignition starter switch contacts sticking	Replace ignition switch
Starter Relay Operates but Solenoid Does Not	
Faulty solenoid switch, switch connections or relay	Check all wiring between relay and solenoid or replace relay or solenoid as necessary
Broken lead or loose soldered connections	Repair wire or wire connections as necessary
Solenoid Plunger Vibrates When Switch is Engaged	
Weak battery	Charge or replace battery as necessary
Solenoid contacts corroded	Clean contacts or replace solenoid
Faulty wiring	Check all wiring leading to solenoid
Broken connections inside switch cover	Repair connections or replace solenoid
Open hold-in wire	Replace solenoid
Low Current Draw	
Worn brushes or weak	Replace brushes or brush springs as necessary

High Pitched Whine During Cranking Before Engine Fires but Engine Fires and Cranks Normally	
Distance too great between starter pinion and flywheel	Align starter or check that correct starter and flywheel are being used
High Pitched Whine After Engine Fires With Key released. Engine Fires and Cranks Normally	
Distance too small between starter pinion and flywheel	Flywheel runout contributes to the intermittent nature

TUNE-UP TROUBLE SHOOTING - GAS ENGINE VEHICLES

NOTE: **This is GENERAL information. This article is not intended to be specific to any unique situation or individual vehicle configuration. The purpose of this Trouble Shooting information is to provide a list of common causes to problem symptoms. For model-specific Trouble Shooting, refer to SUBJECT, DIAGNOSTIC, or TESTING articles available in the section(s) you are accessing.**

BASIC SPARK PLUG TROUBLE SHOOTING CHARTS

CONDITION & POSSIBLE CAUSE	CORRECTION
Normal Spark Plug Condition	
Light Tan or Gray deposits	No Action
Electrode not burned or fouled	No Action
Gap tolerance not changed	No Action
Cold Fouling or Carbon Deposits	
Overrich air/fuel mixture	Adjust air/fuel mixture, see ENGINE PERFORMANCE section
Faulty choke	Replace choke assembly, see ENGINE PERFORMANCE section
Clogged air filter	Clean and/or replace air filter
Incorrect idle speed or dirty carburetor	Reset idle speed and/ or clean carburetor
Faulty ignition wires	Replace ignition wiring
Prolonged operation at idle	Shut engine off during long idle
Sticking valves or worn valve guide seals	Check valve train
Wet Fouling or Oil Deposits	
Worn rings and pistons	Install new rings and pistons
Excessive cylinder wear	Rebore or replace block
Excessive valve guide clearance	Worn or loose bearing
Gap Bridged	
Deposits in combustion chamber becoming fused to electrode	Clean combustion chamber of deposits

Blistered Electrode	
Engine overheating	Check cooling system
Wrong type of fuel	Replace with correct fuel
Loose spark plugs	Retighten spark plugs
Over-advanced ignition timing	Reset ignition timing see ENGINE PERFORMANCE
Pre-Ignition or Melted Electrodes	
Incorrect type of fuel	Replace with correct fuel
Incorrect ignition timing	Reset ignition timing see ENGINE PERFORMANCE
Burned valves	Replace valves
Engine Overheating	Check cooling system
Wrong type of spark plug, too hot	Replace with correct spark plug, see ENGINE PERFORMANCE
Chipped Insulators	
Severe detonation	Check for over-advanced timing or combustion
Improper gapping procedure	Re-gap spark plugs
Rust Colored Deposits	
Additives in unleaded fuel	Try different fuel brand
Water In Combustion Chamber	
Blown head gasket or cracked head	Repair or replace head or head gasket

NOTE: **Before diagnosing an electronic ignition system, ensure that all wiring is connected properly between distributor, wiring connector and spark plugs. Ignition problem will show up either as: Engine Will Not Start or Engine Runs Rough.**

BASIC ELECTRONIC IGNITION TROUBLE SHOOTING CHARTS

CONDITION & POSSIBLE CAUSE	CORRECTION
Engine Won't Start	
Open circuit between distributor and bulkhead connector	Repair circuit
Open circuit between bulkhead connector and ignition switch	Repair circuit
Open circuit between ignition switch and starter solenoid	Repair circuit
Engine Runs Rough	
Fuel lines leaking or clogged	Tighten fitting, remove restriction
Initial timing incorrect	Reset ignition timing see ENGINE PERFORMANCE
Centrifugal advance malfunction	Repair distributor advance

Defective spark plugs or wiring	Replace plugs or plug wiring
Component Failure	
Spark arc-over on cap, rotor or coil	Replace cap, rotor or or coil
Defective pick-up coil	Replace pick-up coil
Defective ignition coil	Replace ignition coil
Defective vacuum unit	Replace vacuum unit
Defective control module	Replace control module

BASIC ELECTRONIC IGNITION TROUBLE SHOOTING CHARTS - USING OSCILLOSCOPE PATTERNS

CONDITION & POSSIBLE CAUSE	CORRECTION
Firing Voltage Lines are the Same, but Abnormally High	
Retarded ignition timing	Reset ignition timing, see ENGINE PERFORMANCE section
Fuel mixture too lean	Readjust carburetor, see ENGINE PERFORMANCE
High resistance in coil wire	Replace coil wire
Corrosion in coil tower terminal	Clean and/or replace coil
Corrosion in distributor coil terminal	Clean and/or replace distributor cap
Firing Voltage Lines are the Same but Abnormally Low	
Fuel mixture too rich	Readjust carburetor, see ENGINE PERFORMANCE
Breaks in coil wire causing arcing	Replace coil wire
Cracked coil tower causing arcing	Replace coil
Low coil output	Replace coil
Low engine compression	Determine cause and repair
One or More, But Not All Firing Voltage Lines are Higher Than Others	
Carburetor idle mixture not balanced	Readjust carburetor, see ENGINE PERFORMANCE
EGR valve stuck open	Clean and/or replace valve
High resistance in spark plug wires	Replace spark plug wires
Cracked or broken spark plug insulator	Replace spark plugs
Intake vacuum leak	Repair leak
Defective spark plugs	Replace spark plugs
Corroded spark plug terminals	Replace spark plugs
One or More, But Not All Firing Voltage Lines Are Lower Than Others	
Curb idle mixture not balanced	Readjust carburetor, see ENGINE PERFORMANCE
Breaks in plug wires	Replace plug wires causing arcing

Cracked coil tower causing arcing	Replace coil
Low compression	Determine cause and repair
Defective spark plugs	Replace spark plugs
Corroded spark plugs	Replace spark plugs
Cylinders Not Firing	
Cracked distributor cap terminals	Replace distributor cap
Shorted spark plug wire	Determine cause and repair
Mechanical problem in engine	Determine cause and repair
Defective spark plugs	Replace spark plugs
Spark plugs fouled	Replace spark plugs

BASIC DRIVEABILITY PROBLEMS TROUBLE SHOOTING

CONDITION & POSSIBLE CAUSE	CORRECTION
Hard Starting	
Binding carburetor linkage	Eliminate binding
Binding choke linkage	Eliminate binding
Binding choke piston	Eliminate binding
Restricted choke vacuum	Check vacuum lines for blockage
Worn or dirty needle valve and seat	Clean carburetor, see ENGINE PERFORMANCE
Float sticking	Readjust or replace float see the ENGINE PERFORMANCE section
Incorrect choke adjustment	Reset choke adjustment see ENGINE PERFORMANCE
Defective coil	Replace coil
Improper spark plug gap	Regap spark plugs
Incorrect ignition timing	Reset ignition timing see ENGINE PERFORMANCE
Detonation	
Over-advanced ignition timing	Reset ignition timing see ENGINE PERFORMANCE
Defective spark plugs	Replace spark plugs
Fuel lines clogged	Clean fuel lines
EGR system malfunction	Check and repair EGR system
PCV system malfunction	Repair PCV system
Vacuum leaks	Check and repair vacuum system
Loose fan belts	Tighten or replace fan belts, see ENGINE PERFORMANCE

Restricted airflow	Remove restriction
Vacuum advance malfunction	Check distributor operation
Dieseling	
Binding carburetor linkage	Eliminate binding
Binding throttle linkage	Eliminate blinding
Binding choke linkage or fast idle cam	Eliminate binding
Defective idle solenoid	Replace idle solenoid see ENGINE PERFORMANCE
Improper base idle speed	Reset idle speed, see see ENGINE PERFORMANCE
Incorrect ignition timing	Reset ignition timing see ENGINE PERFORMANCE
Incorrect idle mixture setting	Reset idle mixture, see ENGINE PERFORMANCE
Faulty Acceleration	
Incorrect ignition timing	Reset ignition timing see ENGINE PERFORMANCE
Engine cold and choke too lean	Adjust choke and allow engine to warm-up
Defective spark plugs	Replace spark plugs
Defective coil	Replace coil
Faulty Low Speed Operation	
Clogged idle transfer slots	Clean idle transfer slots, see FUEL
Restricted idle air bleeds and passages	Disassemble and clean carburetor, see FUEL
Clogged air cleaner	Replace air filter
Defective spark plugs	Replace spark plugs
Defective ignition wires	Replace ignition wire see ENGINE PERFORMANCE
Defective distributor cap	Replace distributor cap
Faulty High Speed Operation	
Incorrect ignition timing	Reset ignition timing see ENGINE PERFORMANCE
Defective distributor centrifugal advance	Replace advance mechanism
Defective distributor vacuum advance	Replace advance unit
Incorrect spark plugs or plug gap	Check gap and/or replace spark plugs
Faulty choke operation	Check choke and repair as required
Clogged vacuum passages	Remove restrictions
Improper size or clogged main jet	Check jet size and clean, see

	FUEL
Restricted air cleaner	Check filter and replace as necessary
Defective distributor cap, rotor or coil	Replace cap, rotor or coil
Misfire at All Speeds	
Defective spark plugs	Replace spark plugs
Defective spark plug wires	Replace spark plug wires
Defective distributor cap, rotor, or coil	Replace cap, rotor, or coil
Cracked or broken vacuum hoses	Replace vacuum hoses
Vacuum leaks	Repair vacuum leaks
Fuel lines clogged	Remove restriction
Hesitation	
Cracked or broken vacuum	Replace vacuum hoses hoses
Vacuum leaks	Repair Vacuum leaks
Binding carburetor linkage	Eliminate binding
Binding throttle linkage	Eliminate binding
Binding choke linkage or fast idle cam	Eliminate binding
Improper float setting	Readjust float setting, see FUEL
Cracked or broken ignition wires	Replace ignition wires
Rough Idle, Missing or Stalling	
Incorrect curb idle or fast idle speed	Reset idle speed, see see ENGINE PERFORMANCE
Incorrect basic timing	Reset ignition timing see ENGINE PERFORMANCE
Improper idle mixture adjustment	Reset idle mixture, see ENGINE PERFORMANCE
Improper feedback system operation	Check feedback system see ENGINE PERFORMANCE
Incorrect spark plug gap	Reset spark plug gap, see ENGINE PERFORMANCE
Moisture in ignition components	Dry components
Loose or broken ignition wires	Replace ignition wires
Damaged distributor cap or or rotor	Replace distributor cap or rotor
Faulty ignition coil	Replace ignition coil
Fuel filter clogged or worn	Replace fuel filter
Damaged idle mixture screw	Replace idle mixture screw, see FUEL
Improper fast idle cam adjustment	Reset fast idle cam adjustment, see TUNE- see ENGINE PERFORMANCE

Improper EGR valve operation	Replace EGR valve
Faulty PCV valve air flow	Replace PCV valve
Choke binding or improper choke setting	Reset choke or eliminate binding
Vacuum leak	Repair vacuum leak
Improper float bowl fuel level	Reset float adjustment, see FUEL
Clogged air bleed or idle passages	Clean carburetor passages, see FUEL
Clogged or worn air cleaner filter	Replace air filter
Faulty choke vacuum diaphragm	Replace diaphragm, see ENGINE PERFORMANCE
Exhaust manifold heat valve inoperative	Replace heat valve
Improper distributor spark advance	Check distributor operation
Leaking valves or valve components	Check and repair valvetrain
Improper carburetor mounting	Remove and remount carburetor
Excessive play in distributor shaft	Replace distributor
Loose or corroded wiring connections	Repair or replace as required
Engine Surges	
Improper PCV valve airflow	Replace PCV valve
Vacuum leaks	Repair vacuum leaks
Clogged air bleeds	Remove restriction
EGR valve malfunction	Replace EGR valve
Restricted air cleaner filter	Replace air filter
Cracked or broken vacuum hoses	Replace vacuum hoses
Cracked or broken ignition wires	Replace ignition wires
Vacuum advance malfunction	Check unit and replace as necessary
Defective or fouled spark plugs	Replace spark plugs
Ping or Spark Knock	
Incorrect ignition timing	Reset ignition timing see ENGINE PERFORMANCE
Distributor centrifugal or vacuum advance malfunction	Check operation and replace as necessary
Carburetor setting too lean	Readjust mixture setting, see ENGINE PERFORMANCE
Vacuum leak	Eliminate vacuum leak
EGR valve malfunction	Replace EGR valve
Poor Gasoline Mileage	
Cracked or broken vacuum	Replace vacuum hoses hoses
Vacuum leaks	Repair vacuum leaks

Defective ignition wires	Replace wires
Incorrect choke setting	Readjust setting, see ENGINE PERFORMANCE
Defective vacuum advance	Replace vacuum advance
Defective spark plugs	Replace spark plugs
Binding carburetor power piston	Eliminate binding
Dirt in carburetor jets	Clean and/or replace jets
Incorrect float adjustment	Readjust float setting, see FUEL
Defective power valve	Replace power valve, see ENGINE PERFORMANCE
Incorrect idle speed	Readjust idle speed
Engine Stalls	
Improper float level	Readjust float level
Leaking needle valve and seat	Replace needle valve and seat
Vacuum leaks	Eliminate vacuum leaks

VACUUM PUMP - DIESEL TROUBLE SHOOTING

NOTE: **This is GENERAL information. This article is not intended to be specific to any unique situation or individual vehicle configuration. The purpose of this Trouble Shooting information is to provide a list of common causes to problem symptoms. For model-specific Trouble Shooting, refer to SUBJECT, DIAGNOSTIC, or TESTING articles available in the section(s) you are accessing.**

NOTE: **Diesel engines mechanical diagnosis is the same as gasoline engines for items such as noisy valves, bearings, pistons, etc. The following trouble shooting covers only items pertaining to diesel engines.**

VACUUM PUMP (DIESEL) TROUBLE SHOOTING CHART

CONDITION & POSSIBLE CAUSE	CORRECTION
Excessive Noise	
Loose pump-to-drive assembly screws	Tighten screws
Loose tube on pump assembly	Tighten tube
Valves not functioning properly	Replace valves
Oil Leakage	
Loose end plug	Tighten end plug
Bad seal crimp	Remove and re-crimp seal

MANUAL TRANSMISSION

MANUAL TRANSMISSION TROUBLE SHOOTING

NOTE: **This is GENERAL information. This article is not intended to be specific to any unique situation or individual vehicle configuration. The purpose of this Trouble Shooting information is to provide a list of common causes to problem symptoms. For model-specific Trouble Shooting, refer to SUBJECT, DIAGNOSTIC, or TESTING articles available in the section(s) you are accessing.**

MANUAL TRANSMISSION/TRANSAXLE TROUBLE SHOOTING

Condition	Possible Cause
Noisy In Forward Gears	Low gear oil level, Loose bell housing bolts, Worn bearings or gears
Clunk On Deceleration (FWD Only)	Loose engine mounts, Worn inboard CV joints, Worn differential pinion shaft, Side gear hub counterbore in case worn oversize
Gear Clash When Shifting Forward Gears	Clutch Out Of Adjustment, Shift linkage damaged or out of adjustment, Gears or synchronizers damaged, Low gear oil level
Transmission Noisy When Moving (RWD Only) Quiet In Neutral With Clutch Engaged	Worn rear outputshaft bearing
Gear Rattle	Worn bearings, Wrong gear oil, Low gear oil, Worn gears
Steady Ticking At Idle (Increases With RPM)	Broken tooth on gear
Gear Clash When Shifting Forward Gears	Worn or broken synchronizers
Loud Whine In Reverse	Normal condition (1)
Noise When Stepping On Clutch	Bad release bearing, Worn pilot bearing
Ticking Or Screeching As Clutch Is Engaged	Faulty release bearing, Uneven pressure plate fingers
Click Or Snap When Clutch Is Engaged	Worn clutch fork, Worn or broken front bearing retainer
Transmission Shifts Hard	Clutch not releasing, Shift mechanism binding, Clutch installed backwards
Will Not Shift Into One Gear, Shifts Into All Others	Bent shift fork, Worn detent balls
Locked Into Gear, Cannot Shift	Clutch adjustment, Worn detent balls
Transmission Jumps Out Of Gear	Pilot bearing worn, Bent shift fork, Worn gear teeth or face, Excessive gear train end play, Worn synchronizers, Missing detent ball spring, Shift mechanism worn or out of adjustment, Engine or transmission mount bolts loose or out of adjustment, Transmission not aligned
Shift Lever Rattle	Worn shift lever or detents, Worn shift forks, Worn synchronizers sleeve
Shift Lever Hops Under Acceleration	Worn engine or transmission mounts

(1) Most units use spur cut gears in reverse and are noisy

POWERTRAIN

CLUTCH TROUBLE SHOOTING

NOTE: **This is GENERAL information. This article is not intended to be specific to any unique situation or individual vehicle configuration. The purpose of this Trouble Shooting information is to provide a list of common causes to problem symptoms. For model-specific Trouble Shooting, refer to SUBJECT, DIAGNOSTIC, or TESTING articles available in the section(s) you are accessing.**

BASIC CLUTCH TROUBLE SHOOTING CHART

CONDITION & POSSIBLE CAUSE	CORRECTION
Chattering or Grabbing	
Incorrect clutch adjustment	Adjust clutch
Oil, grease or glaze on facings	Disassemble and clean or replace
Loose "U" joint flange	See DRIVE AXLES article
Worn input shaft spline	Replace input shaft
Binding pressure plate	Replace pressure plate
Binding release lever	See CLUTCH article
Binding clutch disc hub	Replace clutch disc
Unequal pressure plate contact	Replace worn/misaligned components
Loose/bent clutch disc	Replace clutch disc
Incorrect transmission alignment	Realign transmission
Worn pressure plate, disc or flywheel	Replace damaged components
Broken or weak pressure springs	Replace pressure plate
Sticking clutch pedal	Lubricate clutch pedal & linkage
Incorrect clutch disc facing	Replace clutch disc
Engine loose in chassis	Tighten all mounting bolts
Failure to Release	
Oil or grease on clutch facings	Clean or replace clutch clutch disc
Incorrect release lever or pedal adjustment	See CLUTCH article
Worn or broken clutch facings	Replace clutch disc
Bent clutch disc or pressure plate	Replace damaged components
Clutch disc hub binding on input shaft	Clean or replace clutch disc and/or input shaft
Binding pilot bearing	Replace pilot bearing
Sticking release bearing sleeve	Replace release bearing and/or

	sleeve
Binding clutch cable	See CLUTCH article
Defective clutch master	Replace master cylinder
Defective clutch slave	Replace slave cylinder
Air in hydraulic system	Bleed hydraulic system
Rattling	
Weak or broken release lever spring	Replace spring and check alignment
Damaged pressure plate	Replace pressure plate
Broken clutch return spring	Replace return spring
Worn splines on clutch disc or input shaft	Replace clutch disc and/or input shaft
Worn clutch release bearing	Replace release bearing
Dry or worn pilot bearing	Lubricate or replace pilot bearing
Unequal release lever contact	Align or replace release lever
Incorrect pedal free play	Adjust free play
Warped or damaged clutch disc	Replace damaged components
Slipping	
Pressure springs worn or	Release pressure plate
Oily, greasy or worn facings	Clean or replace clutch disc
Incorrect clutch alignment	Realign clutch assembly
Warped clutch disc or pressure plate	Replace damaged components
Binding release levers or clutch pedal	Lubricate and/or replace release components
Squeaking	
Worn or damaged release	Replace release bearing
Dry or worn pilot or release bearing	Lubricate or replace assembly
Pilot bearing turning in crankshaft	Replace pilot bearing and/or crankshaft
Worn input shaft bearing	Replace bearing and seal
Incorrect transmission alignment	Realign transmission
Dry release fork between pivot	Lubricate release fork and pivot
Heavy and/or Stiff Pedal	
Sticking release bearing sleeve	Replace release bearing and/or sleeve
Dry or binding clutch pedal hub	Lubricate and align components
Floor mat interference with pedal	Lay mat flat in proper area
Dry or binding ball/fork pivots	Lubricate and align components
Faulty clutch cable	Replace clutch cable
Noisy Clutch Pedal	
Faulty interlock switch	Replace interlock switch

Self-adjuster ratchet noise	Lubricate or replace self-adjuster
Speed control interlock switch	Lubricate or replace interlock switch
Clutch Pedal Sticks Down	
Binding clutch cable	See CLUTCH article
Springs weak in pressure plate	Replace pressure plate
Binding in clutch linkage	Lubricate and free linkage
Noisy	
Dry release bearing	Lubricate or replace release bearing
Dry or worn pilot bearing	Lubricate or replace bearing
Worn input shaft bearing	Replace bearing
Transmission Click	
Weak springs in pressure	Replace pressure plate plate
Release fork loose on ball stud	Replace release fork and/or ball stud
Oil on clutch disc damper	Replace clutch disc
Broken spring in slave cylinder	Replace slave cylinder

DRIVE AXLE - NOISE DIAGNOSIS

Unrelated Noises

Some driveline trouble symptoms are also common to the engine, transmission, wheel bearings, tires, and other parts of the vehicle. Ensure cause of trouble actually is in the drive axle before adjusting, repairing, or replacing any of its parts.

Non-Drive Axle Noises

A few conditions can sound just like drive axle noise and have to be considered in pre-diagnosis. The 4 most common noises are exhaust, tires, CV/universal joints and wheel trim rings.

In certain conditions, the pitch of the exhaust gases may e gear whine. At other times, it may be mistaken for a wheel bearing rumble.

Tires, especially radial and snow, can have a high-pitched tread whine or roar, similar to gear noise. Also, some non-standard tires with an unusual tread construction may emit a roar or whine.

Defective CV/universal joints may cause clicking noises or excessive driveline play that can be improperly diagnosed as drive axle problems.

Trim and moldings also can cause a whistling or whining noise. Ensure none of these components are causing the noise before disassembling the drive axle.

Gear Noise

A "howling" or "whining" noise from the ring and pinion gear can be caused by an improper gear pattern, gear damage, or improper bearing preload. It can occur at various speeds and driving conditions, or it can be continuous.

Before disassembling axle to diagnose and correct gear ke sure that tires, exhaust, and vehicle trim have been checked as possible causes.

Chuckle

This is a particular rattling noise that sounds like a stick against the spokes of a spinning bicycle wheel. It occurs while decelerating from 40 MPH and usually can be heard until vehicle comes to a complete stop. The frequency varies with the speed of the vehicle.

A chuckle that occurs on the driving phase is usually caused ive clearance due to differential gear wear, or by a damaged tooth on the coast side of the pinion or ring gear. Even a very small tooth nick or a ridge on the edge of a gear tooth is enough the cause the noise.

This condition can be corrected simply by cleaning the gear tooth nick or ridge with a small grinding wheel. If either gear is damaged or scored badly, the gear set must be replaced. If metal has broken loose, the carrier and housing must be cleaned to remove particles that could cause damage.

Knock

This is very similar to a chuckle, though it may be louder, and occur on acceleration or deceleration. Knock can be caused by a gear tooth that is damaged on the drive side of the ring and pinion gears. Ring gear bolts that are hitting the carrier casting can cause knock. Knock can also be due to excessive end play in the axle shafts.

Clunk

Clunk is a metallic noise heard when an automatic transmission is engaged in Reverse or Drive, or when throttle is applied or released. It is caused by backlash somewhere in the driveline, but not necessarily in the axle. To determine whether driveline clunk is caused by the axle, check the total axle backlash as follows:

1. Raise vehicle on a frame or twinpost hoist so that drive wheels are free. Clamp a bar between axle companion flange and a part of the frame or body so that flange cannot move.
2. On conventional drive axles, lock the left wheel to keep it from turning. On all models, turn the right wheel slowly until it is felt to be in Drive condition. Hold a chalk marker on side of tire about 12" from center of wheel. Turn wheel in the opposite direction until it is again felt to be in Drive condition.
3. Measure the length of the chalk mark, which is the total axle backlash. If backlash is one inch or less, drive axle is not the source of clunk noise.

Bearing Whine

Bearing whine is a high-pitched sound similar to a whistle. It is usually caused by malfunctioning pinion bearings. Pinion bearings operate at drive shaft speed. Roller wheel bearings may whine in a similar manner if they run completely dry of lubricant. Bearing noise will occur at all driving speeds. This distinguishes it from gear whine, which usually comes and goes as speed changes.

Bearing Rumble

Bearing rumble sounds like marbles being tumbled. It is usually caused by a malfunctioning wheel bearing. The lower pitch is because the wheel bearing turns at only about 1/3 of drive shaft speed.

Chatter On Turns

This is a condition where the entire front or rear of vehicle vibrates when vehicle is moving. The vibration is plainly felt as well as heard. Extra differential thrust washers installed during axle repair can cause a condition of partial lock-up that creates this chatter.

Axle Shaft Noise

Axle shaft noise is similar to gear noise and pinion bearing whine. Axle shaft bearing noise will normally distinguish itself from gear noise by occurring in all driving modes (Drive, cruise, coast and float), and will persist with transmission in Neutral while vehicle is moving at problem speed.

If vehicle displays this noise condition, remove suspect parts, replace wheel seals and install a new set of bearings. Re-evaluate vehicle for noise before removing any internal components.

Vibration

Vibration is a high-frequency trembling, shaking or grinding condition (felt or heard) that may be constant or variable in level and can occur during the total operating speed range of the vehicle.

The types of vibrations that can be felt in the vehicle can d into 3 main groups:

- Vibrations of various unbalanced rotating parts of the vehicle.
- Resonance vibrations of the body and frame structures caused by rotating of unbalanced parts.
- Tip-in moans of resonance vibrations from stressed engine or exhaust system mounts or driveline flexing modes.

DRIVE AXLE - RWD TROUBLE SHOOTING

NOTE: **This is GENERAL information. This article is not intended to be specific to any unique situation or individual vehicle configuration. The purpose of this Trouble Shooting information is to provide a list of common causes to problem symptoms. For model-specific Trouble Shooting, refer to SUBJECT, DIAGNOSTIC, or TESTING articles available in the section(s) you are accessing. For definitions of listed noises or sounds, see DRIVE AXLE - NOISE DIAGNOSIS under POWERTRAIN.**

DRIVE AXLE (RWD) TROUBLE SHOOTING

CONDITION & POSSIBLE CAUSE	CORRECTION
Knocking or Clunking	
Differential Side Gear Clearance	Check Clearance

Worn Pinion Shaft	Replace Pinion Shaft
Axle Shaft End Play	Check End Play
Missing Gear Teeth	Check Differential/Replace Gear
Wrong Axle Backlash	Check Backlash
Misaligned Driveline	Realign Driveline
Clinking During Engagement	
Side Gear Clearance	Check Clearance
Ring and Pinion Backlash	Check Backlash
Worn/Loose Pinion Shaft	Replace Shaft/Bearing
Bad "U" Joint	Replace "U" Joint
Sticking Slip Yoke	Lube Slip Yoke
Broken Rear Axle Mount	Replace Mount
Loose Drive Shaft Flange	Check Flange
Click/Chatter On Turns	
Differential Side Gear Clearance	Check Clearance
Wrong Turn On Plates (1)	Replace Clutch Plates
Wrong Differential Lubricant (1)	Change Lubricant
Knock Or Click	
Flat Spot on Rear Wheel Bearing	Replace Wheel Bearing
Low Vibration At All Speeds	
Faulty Wheel Bearing	Replace Wheel Bearing
Faulty "U" Joint	Replace "U" Joint
Faulty Drive Shaft	Balance Drive Shaft
Faulty Companion Flange	Replace Flange
Faulty Slip Yoke Flange	Replace Flange
(1) Limited slip differential only.	

FWD AXLE SHAFTS & CV JOINTS TROUBLE SHOOTING

NOTE: **This is GENERAL information. This article is not intended to be specific to any unique situation or individual vehicle configuration. The purpose of this Trouble Shooting information is to provide a list of common causes to problem symptoms. For model-specific Trouble Shooting, refer to SUBJECT, DIAGNOSTIC, or TESTING articles available in the section(s) you are accessing.**

BASIC FWD AXLE SHAFTS & CV JOINTS TROUBLE SHOOTING CHART

CONDITION	POSSIBLE CAUSE
Grease Leaks	CV boot torn or cracked
Clicking Noise on Cornering	Damaged outer CV
Clunk Noise on Acceleration	Damaged inner CV

Vibration or Shudder on Acceleration	Sticking, damaged or worn CV Misalignment or spring height

STEERING & SUSPENSION

MANUAL STEERING GEAR TROUBLE SHOOTING

NOTE: **This is GENERAL information. This article is not intended to be specific to any unique situation or individual vehicle configuration. The purpose of this Trouble Shooting information is to provide a list of common causes to problem symptoms. For model-specific Trouble Shooting, refer to SUBJECT, DIAGNOSTIC, or TESTING articles available in the section(s) you are accessing.**

BASIC MANUAL STEERING GEAR TROUBLE SHOOTING CHART

CONDITION & POSSIBLE CAUSE	CORRECTION
Rattle or Chucking Noise in Rack and Pinion	
Rack and pinion mounting bracket loose	Tighten all mounting bolts
Lack of/or incorrect lubricant	Correct as necessary
Steering gear mounting bolts loose	Tighten all mounting bolts
Excessive Play	
Front wheel bearing improperly adjusted	See FRONT SUSPENSION article
Loose or worn steering linkage	See STEERING LINKAGE article
Loose or worn steering gear shift	See MANUAL STEERING GEAR article
Steering arm loose on gear shaft	See MANUAL STEERING GEAR article
Steering gear housing bolts loose	Tighten all mounting bolts
Steering gear adjustment too loose	See MANUAL STEERING GEAR article
Steering arms loose on knuckles	Tighten and check steering linkage
Rack and pinion mounting loose	Tighten all mounting bolts
Rack and pinion out of adjustment	See adjustment in STEERING article
Tie rod end loose	Tighten and check steering linkage
Excessive Pitman shaft-to-ball nut lash	Repair as necessary
Poor Returnability	
Lack of lubricant in ball joint or linkage	Lubricate and service systems
Binding in linkage or ball joints	See STEERING LINKAGE and SUSPENSION article

Improper front end alignment	See WHEEL ALIGNMENT article
Improper tire pressure	Inflate to proper pressure
Tie rod binding	Inflate to proper pressure
Shaft seal rubbing shaft	See STEERING COLUMN article
Excessive Vertical Motion	
Improper tire pressure	Inflate to proper pressure
Tires, wheels or rotors out of balance	Balance tires then check wheels and rotors
Worn or faulty shock absorbers	Check and replace if necessary
Loose tie rod ends or steering	Tighten or replace if necessary
Loose or worn wheel bearings	See SUSPENSION article
Steering Pulls to One Side	
Improper tire pressure	Inflate to proper pressure
Front tires are different sizes	Rotate or replace if necessary
Wheel bearings not adjusted properly	See FRONT SUSPENSION article
Bent or broken suspension components	See FRONT SUSPENSION article
Improper wheel alignment	See WHEEL ALIGNMENT article
Brakes dragging	See BRAKES article
Instability	
Low or uneven tire pressure	Inflate to proper pressure
Loose or worn wheel bearings	See FRONT SUSPENSION article
Loose or worn idler arm bushing	See FRONT SUSPENSION article
Loose or worn strut bushings	See FRONT SUSPENSION article
Incorrect front wheel alignment	See WHEEL ALIGNMENT article
Steering gear not centered	See MANUAL STEERING GEARS article
Springs or shock	Check and replace if necessary
Improper cross shaft	See MANUAL STEERING GEARS article

POWER STEERING TROUBLE SHOOTING

NOTE: **This is GENERAL information. This article is not intended to be specific to any unique situation or individual vehicle configuration. The purpose of this Trouble**

Shooting information is to provide a list of common causes to problem symptoms. For model-specific Trouble Shooting, refer to SUBJECT, DIAGNOSTIC, or TESTING articles available in the section(s) you are accessing.

BASIC POWER STEERING TROUBLE SHOOTING CHART

CONDITION & POSSIBLE CAUSE	CORRECTION
Rattle or Chucking Noise	
Pressure hoses touching engine parts	Adjust to proper clearance
Loose Pitman shaft	Adjust or replace if necessary
Tie rods ends or Pitman arm loose	Tighten and check system
Rack and pinion mounts loose	Tighten all mounting bolts
Free play in worm gear	See POWER STEERING GEAR article
Loose sector shaft or thrust bearing adjustment	See POWER STEERING GEAR
Free play in pot coupling	See STEERING COLUMN article
Worn shaft serrations	See STEERING COLUMN article
Growl in Steering Pump	
Excessive pressure in hoses	Restricted hoses, see POWER STEERING GEAR article
Scored pressure plates	See POWER STEERING GEAR article
Scored thrust plates or rotor	See POWER STEERING GEAR article
Extreme wear of cam ring	See POWER STEERING GEAR article
Rattle in Steering Pump	
Vanes not installed	See POWER STEERING PUMP article
Vanes sticking in rotor	See POWER STEERING PUMP article
Swish noise in Pump	
Defective flow control valve	See POWER STEERING PUMP article
Groan in Steering Pump	
Air in fluid	See POWER STEERING PUMP article
Poor pressure hose connection	Tighten and check, replace if necessary
Squawk When Turning	
Damper "O" ring on valve spool cut	See POWER STEERING

	PUMP article
Moan or Whine in Pump	
Pump shaft bearing scored	Replace bearing and fluid
Air in fluid or fluid level low	See POWER STEERING PUMP article
Hose or column grounded	Check and replace if necessary
Cover "O" ring missing or damaged	See POWER STEERING PUMP article
Valve cover baffle missing or damaged	See POWER STEERING PUMP article
Interference of components in pump	See POWER STEERING PUMP article
Loose or poor bracket alignment	Correct or replace if necessary
Hissing When Parking	
Internal leakage in steering gear	Check valved assembly first
Chirp in Steering Pump	
Loose or worn power steering belt	Adjust or replace if necessary
Buzzing When Not Steering	
Noisy pump	See POWER STEERING PUMP article
Free play in steering shaft bearing	See STEERING COLUMN article
Bearing loose on shaft serrations	See STEERING COLUMN article
Clicking Noise in Pump	
Pump slippers too long	See POWER STEERING PUMP article
Broken slipper springs	See POWER STEERING PUMP article
Excessive wear or nicked rotors	See POWER STEERING PUMP article
Damaged cam contour	See POWER STEERING PUMP article
Poor Return of Wheel	
Wheel rubbing against turn signal	See STEERING COLUMN SWITCHES article
Flange rubbing steering gear adjuster	See STEERING COLUMN article
Tight or frozen steering shaft bearing	See STEERING COLUMN article
Steering gear out of adjustment	See POWER STEERING GEAR article

Sticking or plugged spool valve	See POWER STEERING PUMP article
Improper front end alignment	See WHEEL ALIGNMENT article
Wheel bearings worn or loose	See FRONT SUSPENSION article
Ties rods or ball joints binding	Check and replace if necessary
Intermediate shaft joints binding	See STEERING COLUMN article
Kinked pressure hoses	Correct or replace if necessary
Loose housing head spanner nut	See POWER STEERING GEAR article
Damaged valve lever	See POWER STEERING GEAR article
Sector shaft adjusted too tight	See ADJUSTMENTS in POWER STEERING GEAR article
Worm thrust bearing adjusted too tight	See ADJUSTMENTS in POWER STEERING GEAR article
Reaction ring sticking in cylinder	See POWER STEERING GEAR article
Reaction ring sticking in housing head	See POWER STEERING GEAR article
Steering pump internal leakage	See POWER STEERING PUMP article
Steering gear-to-column misalignment	See STEERING COLUMN article
Lack of lubrication in linkage	Service front suspension
Lack of lubrication in ball joints	Service front suspension
Increased Effort When Turning Wheel Fast Foaming, Milky Power Steering Fluid, Low Fluid Level or Low Pressure	
High internal pump leakage	See POWER STEERING PUMP article
Power steering pump belt slipping	Adjust or replace if necessary
Low fluid level	Check and fill to proper level
Engine idle speed to low	Adjust to correct setting
Air in pump fluid system	See POWER STEERING PUMP article
Pump output low	See POWER STEERING PUMP article
Steering gear malfunctioning	See POWER STEERING

	GEAR article
Wheel Surges or Jerks	
Low fluid level	Check and fill to proper level
Loose fan belt	Adjust or replace if necessary
Insufficient pump pressure	See POWER STEERING PUMP article
Sticky flow control valve	See POWER STEERING PUMP article
Linkage hitting oil pan at full turn	Replace bent components
Kick Back or Free Play	
Air in pump fluid system	See POWER STEERING PUMP article
Worn poppet valve in steering gear	See POWER STEERING PUMP article
Excessive over center lash	See POWER STEERING GEAR article
Thrust bearing out of adjustment	See POWER STEERING GEAR article
Free play in pot coupling	See POWER STEERING PUMP article
Steering gear coupling loose on shaft	See POWER STEERING PUMP article
Steering disc mounting bolts loose	Tighten or replace if necessary
Coupling loose on worm shaft	Tighten or replace if necessary
Improper sector shaft adjustment	See POWER STEERING GEAR article
Excessive worm piston side play	See POWER STEERING GEAR article
Damaged valve lever	See POWER STEERING GEAR article
Universal joint loose	Tighten or replace if necessary
Defective rotary valve	See POWER STEERING GEAR article
No Power When Parking	
Sticking flow control valve	See POWER STEERING PUMP article
Insufficient pump pressure output	See POWER STEERING PUMP article
Excessive internal pump leakage	See POWER STEERING PUMP article

Excessive internal gear leakage	See POWER STEERING PUMP article
Flange rubs against gear adjust plug	See STEERING COLUMN article
Loose pump belt	Adjust or replace if necessary
Low fluid level	Check and add proper amount of fluid
Engine idle too low	Adjust to correct setting
Steering gear-to-column misaligned	See STEERING COLUMN article
No Power, Left Turn	
Left turn reaction seal "O" ring worn	See POWER STEERING GEAR article
Left turn reaction seal damaged/missing	See POWER STEERING GEAR article
Cylinder head "O" ring damaged	See POWER STEERING PUMP article
No Power, Right Turns	
Column pot coupling bottomed	See STEERING COLUMN article
Right turn reaction seal "O" ring worn	See POWER STEERING GEAR article
Right turn reaction seal damaged	See POWER STEERING GEAR article
Internal leakage through piston end plug	See POWER STEERING GEAR article
Internal leakage through side plugs	See POWER STEERING GEAR article
Lack of Effort in Turning	
Left and/or right reaction seal sticking in cylinder head	Replace, see POWER STEERING GEAR article
Wanders to One Side	
Front end alignment incorrect	See WHEEL ALIGNMENT article
Unbalanced steering gear valve	See POWER STEERING GEAR article
Low Pressure Due to Steering Pump	
Flow control valve stuck or inoperative	See POWER STEERING PUMP article
Pressure plate not flat against cam ring	See POWER STEERING PUMP article
Extreme wear of cam ring	Replace and check adjustments

Scored plate, thrust plate or rotor	See POWER STEERING PUMP article
Vanes not installed properly	See POWER STEERING PUMP article
Vanes sticking in rotor slots	See POWER STEERING PUMP article
Cracked/broken thrust or pressure plate	See POWER STEERING PUMP article

STEERING COLUMN TROUBLE SHOOTING

NOTE: **This is GENERAL information. This article is not intended to be specific to any unique situation or individual vehicle configuration. The purpose of this Trouble Shooting information is to provide a list of common causes to problem symptoms. For model-specific Trouble Shooting, refer to SUBJECT, DIAGNOSTIC, or TESTING articles available in the section(s) you are accessing.**

BASIC STEERING COLUMN TROUBLE SHOOTING CHART

CONDITION & POSSIBLE CAUSE	CORRECTION
Noise in Steering	
Coupling pulled apart	See STEERING COLUMNS article
Column not correctly aligned	See STEERING COLUMNS article
Broken lower joint	Replace joint
Horn contact ring not	See STEERING COLUMN article
Bearing not lubricated	See STEERING COLUMN article
Shaft snap ring not properly seated	Reseat or replace snap ring
Plastic spherical joint not lubricated	See STEERING COLUMN article
Shroud or housing loose	Tighten holding screws
Lock plate retaining ring not seated	See STEERING COLUMN article
Loose sight shield	Tighten holding screws
High Steering Shaft Effort	
Column assembly misaligned	See STEERING COLUMN article
Improperly installed dust shield	Adjust or replace
Tight steering universal joint	See STEERING COLUMN article
High Shift Effort	

Column is out of alignment	See STEERING COLUMN article
Improperly installed dust shield	Adjust or replace
Seals or bearings not lubricated	See STEERING COLUMNS article
Mounting bracket screws too long	Replace with new shorter screws
Burrs on shift tube	Remove burrs or replace tube
Lower bowl bearing assembled wrong	See STEERING COLUMN article
Shift tube bent or broken	Replace as necessary
Improper adjustment of shift levers	See STEERING COLUMN article
Improper Trans. Shifting	
Sheared shift tube joint	Replace as necessary
Sheared lower shaft lever	Replace as necessary
Improper shift lever adjustment	See STEERING COLUMN article
Improper gate plate adjustment	See STEERING COLUMN article
Excess Play in Column	
Instrument panel bracket bolts loose	Tighten bolts and check bracket
Broken weld nut on jacket	See STEERING COLUMN article
Instrument bracket capsule sheared	See STEERING COLUMN article
Column bracket/jacket bolts loose	Tighten bolts and check bracket
Steering Locks in Gear	
Release lever mechanism	See STEERING COLUMN article

SUSPENSION TROUBLE SHOOTING

NOTE: **This is GENERAL information. This article is not intended to be specific to any unique situation or individual vehicle configuration. The purpose of this Trouble Shooting information is to provide a list of common causes to problem symptoms. For model-specific Trouble Shooting, refer to SUBJECT, DIAGNOSTIC, or TESTING articles available in the section(s) you are accessing.**

BASIC SUSPENSION TROUBLE SHOOTING CHART

CONDITION & POSSIBLE CAUSE	CORRECTION

Front End Noise	
Loose or worn wheel	See Wheel Bearing Adjustment in SUSPENSION
Worn shocks or shock mountings	Replace struts or strut mountings
Worn struts or strut mountings	Replace struts or strut mountings
Loose or worn lower control arm	See SUSPENSION
Loose steering gear-to-frame bolts	See STEERING
Worn control arm bushings	See SUSPENSION
Ball joints not lubricated	Lubricate ball joints & see Ball Joint Checking in SUSPENSION
Front Wheel Shake, Shimmy, or Vibration	
Tires or wheels out of balance	Check tire balance
Incorrect wheel alignment	See WHEEL ALIGNMENT
Drive shaft unbalanced	Check drive shaft balance
Loose or worn wheel bearings	See WHEEL ALIGNMENT
Loose or worn tie rod ends	See SUSPENSION
Worn upper ball joints	See Ball Joint Checking in SUSPENSION
Worn shock absorbers	Replace shock absorbers
Worn strut bushings	Replace strut bushings
Car Pulls to One Side	
Mismatched or uneven tires	Check tire condition
Broken or sagging springs	See SUSPENSION
Loose or worn strut bushings	See SUSPENSION
Improper wheel alignment	See WHEEL ALIGNMENT
Improper rear axle alignment	Check rear axle alignment
Power steering gear unbalanced	See STEERING
Front brakes dragging	See BRAKES
Abnormal Tire Wear	
Unbalanced tires	Check tire balance & rotation
Sagging or broken springs	See SUSPENSION
Incorrect front end alignment	See WHEEL ALIGNMENT
Faulty shock absorbers	Replace chock absorbers
Scuffed Tires	
Toe-In incorrect	See WHEEL ALIGNMENT
Suspension arm bent or twisted	See appropriate SUSPENSION article
Springs Bottom or Sag	
Bent or broken springs	See SUSPENSION

Leaking or worn shock absorbers	Replace shock absorbers
Frame misalignment	Check frame for damage
Spring Noises	
Loose "U" Bolts	See SUSPENSION
Loose or worn bushings	See SUSPENSION
Worn or missing interliners	See SUSPENSION
Shock Absorber Noise	
Loose shock mountings	Check & tighten mountings
Worn bushings	Replace bushings
Air in system	Bleed air from system
Undercoating on shocks	Remove undercoating
Car Leans or Sways on Corners	
Loose stabilizer bar	See SUSPENSION
Faulty shocks or mountings	Replace shocks or mountings
Broken or sagging springs	See SUSPENSION
Shock Absorbers Leaking	
Worn seals or reservoir tube crimped	See SUSPENSION
Broken Springs	
Loose "U" bolts	See SUSPENSION
Inoperative shock absorbers	Replace shock absorbers

WHEEL ALIGNMENT TROUBLE SHOOTING

NOTE: **This is GENERAL information. This article is not intended to be specific to any unique situation or individual vehicle configuration. The purpose of this Trouble Shooting information is to provide a list of common causes to problem symptoms. For model-specific Trouble Shooting, refer to SUBJECT, DIAGNOSTIC, or TESTING articles available in the section(s) you are accessing.**

BASIC WHEEL ALIGNMENT TROUBLE SHOOTING CHART

CONDITION & POSSIBLE CAUSE	CORRECTION
Premature Tire Wear	
Improper tire inflation	Check tire pressure
Front alignment out of tolerance	See ALIGNMENT SPECS in WHEEL ALIGNMENT section
Suspension components worn	See SUSPENSION section
Steering system components worn	See STEERING section
Improper standing height	See WHEEL ALIGNMENT
Uneven or sagging springs	See SUSPENSION section
Bent wheel	See WHEEL ALIGNMENT
Improper torsion bar adjustment	See SUSPENSION section

Loose or worn wheel bearings	See WHEEL BEARING ADJ. in SUSPENSION section
Worn or defective shock	Replace shock absorbers
Tires out of balance	Check tire balance
Pulls to One Side	
Improper tire inflation	Check tire pressure
Brake dragging	See BRAKE section
Mismatched tires	See WHEEL ALIGNMENT
Broken or sagging spring	See SUSPENSION section
Broken torsion bar	See SUSPENSION section
Power steering valve not centered	See STEERING section
Front alignment out of tolerance	See WHEEL ALIGNMENT section
Defective wheel bearing	See WHEEL BEARINGS in SUSPENSION section
Uneven sway bar links	See SUSPENSION section
Frame bent	Check for frame damage
Steering system bushing worn	See STEERING section
Hard Steering	
Idler arm bushing too tight	See STEERING LINKAGE in STEERING section
Ball joint tight or seized	See SUSPENSION section
Steering linkage too tight	See STEERING LINKAGE in STEERING section
Power steering fluid low	Add proper amount of fluid
Power steering drive belt loose	See STEERING section
Power steering pump defective	See STEERING section
Steering gear out of adjustment	See STEERING section
Incorrect wheel alignment	See WHEEL ALIGNMENT
Damaged steering gear	See STEERING section
Damaged suspension	See SUSPENSION section
Bent steering knuckle or supports	See SUSPENSION section
Vehicle "Wanders"	
Strut rod or control arm bushing worn	See SUSPENSION section
Loose or worn wheel bearings	See WHEEL BEARINGS in SUSPENSION section
Improper tire inflation	Check tire pressure
Stabilizer bar missing or defective	See SUSPENSION section
Wheel alignment out of tolerance	See Adjustment in WHEEL ALIGNMENT section
Broken spring	See SUSPENSION section
Defective shock absorber	Replace shock absorbers

Worn steering & suspension components	See SUSPENSION section
Front End Shimmy	
Tire out of balance/round	Check tire balance
Excessive wheel runout	See WHEEL ALIGNMENT
Insufficient or improper caster	See WHEEL ALIGNMENT section
Worn suspension or steering components	See SUSPENSION section
Defective shock absorbers	Replace shock absorber
Wheel bearings worn or loose	See WHEEL BEARING ADJ. in SUSPENSION section
Power steering reaction Bracket loose	See STEERING section
Steering gear box (rack) mounting loose	See STEERING section
Steering gear adjustment loose	See STEERING section
Worn spherical joints	See SUSPENSION section
Toe-In Not Adjustable	
Lower control arm bent	See SUSPENSION section
Frame bent	Check frame for damage
Camber Not Adjustable	
Control arm bent	See SUSPENSION section
Frame bent	Check frame for damage
Hub & bearing not seated properly	See SUSPENSION section

GENERAL INFORMATION

TROUBLE SHOOTING

* PLEASE READ THIS FIRST *

NOTE: **This article is generic in nature and all information does not apply to all vehicles. For vehicle specific information, see the appropriate articles in the ENGINE PERFORMANCE category.**

ENGINE PERFORMANCE

NOTE: **This article is generic in nature and all information does not apply to all vehicles. For vehicle specific information, see the appropriate articles in the ENGINE PERFORMANCE category.**

TUNE-UP TROUBLE SHOOTING

Problem & Possible Cause	Action
Carbon Fouled Plugs	
Clogged Air Filter	Replace Air Filter
Incorrect Idle Speed	Reset Idle Speed
Faulty Ignition Wiring	Replace Ignition Wiring
Sticky Valves/Worn Valve Seal	Check Valve Train
Fuel Injection Operation	Check Fuel Injection
Wet/Oil Fouled Plugs	
Worn Rings/Pistons	Overhaul/Replace Engine
Excessive Cylinder Wear	Overhaul/Replace Engine
Plug Gap Bridged	
Combustion Chamber Carbon Deposits	Clean Combustion Chamber
Blistered Electrode	
Engine Overheating	Check Cooling System
Loose Spark Plugs	Clean/Torque Plugs
Over-Advanced Timing	Reset Timing
Wrong Plug Heat Range	Install Correct Plug
Melted Electrodes	
Incorrect Timing	Reset Timing
Burned Valves	Replace Valves
Engine Overheating	Check Cooling System
Wrong Plug Heat Range	Install Correct Plug
Engine Won't Start	
Loose Connections	Check Connections

No Power	Check Fuses/Battery
Loose/Worn Timing Belt/Chain/Gears	Check Belt/Chain/Gears
Engine Runs Rough	
Leaky/Clogged Fuel Injectors	Repair Fuel Injectors
Leaky/Clogged Fuel Lines	Repair Fuel Lines
Clogged Fuel Filter	Replace Fuel Filter
Incorrect Timing	Reset Timing/Check Advance
Faulty Plugs/Wires	Replace Plugs/Wires
Uneven Compression	Overhaul/Replace Engine
Poor Acceleration	
Incorrect Ignition Timing	Reset Timing
Leaky Valves	Check Compression
Component Failure	
Spark Arcing	Replace Faulty Part
Defective Pick-Up Coil	Replace Pick-Up Coil
Defective Ignition Coil	Replace Ignition Coil
Defective Control Unit	Replace Control Unit
Ignition Diagnosis By Scope Pattern	
All Firing Lines Abnormally High	
Retarded Ignition Timing	Reset Ignition Timing
Lean Air/Fuel Mixture	Adjust Fuel Mixture
High Secondary Resistance	Repair Secondary Ignition
All Firing Lines Abnormally Low	
Rich Air/Fuel Mixture	Adjust Air/Fuel Mixture
Arcing Coil Wire	Replace Coil Wire
Cracked Coil	Replace Coil
Low Coil Output	Replace Coil
Low Compression	Check/Repair Engine
Several High Firing Lines	
Fuel Mixture Unbalanced	Check Fuel System
EGR Valve Stuck Open	Clean/Replace EGR Valve
High Plug Wire Resistance	Replace Plug Wire
Cracked/Broken Plugs	Replace Plugs
Intake Vacuum Leak	Repair Leak
Several Low Firing Lines	
Fuel Mixture Unbalanced	Adjust Fuel Mixture
Plug Wires Arcing	Replace Plug Wires
Cracked Coil Arcing	Replace Coil

Uneven Compression	Check/Repair Engine
Faulty Spark Plugs	Replace Plugs
Cylinders Not Firing	
Cracked Distributor Cap	Replace Cap
Shorted Plug Wires	Replace Plug Wires
Mechanical Engine Fault	Check/Repair Engine
Spark Plugs Fouled	Replace Plugs
Carbon Track in Distributor Cap	Replace Cap
Hard Starting	
Defective Ignition Coil(s)	Replace Coil(s)
Fouled Spark Plugs	Replace Plugs
Incorrect Timing	Reset Ignition Timing

NOTE: **This article is generic in nature and all information does not apply to all vehicles. For vehicle specific information, see the appropriate articles in the ENGINE PERFORMANCE category.**

FUEL INJECTION TROUBLE SHOOTING

Problem & Possible Cause	**Action**
Cold Start Valve Inoperative	Test Cold Start Valve
Poor Vacuum/Electrical Connection	Repair Connections
Contaminated Fuel	Test Fuel for Water/Alcohol
Bad Fuel Pump Relay/Circuit	Test Relay/Wiring
Battery Voltage Low	Charge/Test Battery
Low Fuel Pressure	Test Press. Regulator/Pump
No Distributor Reference Pulse	Repair Ignition System
Coolant Temp. Sensor Defective	Test Temp. Sensor/Circuit
No Power To Injectors	Check Injector Fuse/Relay
Hard Starting	
Defective Idle Air Control (IAC)	Test IAC and Circuit
EGR Valve Open	Test EGR Valve/Control Circuit
Restricted Fuel Lines	Inspect/Replace Fuel Lines
Poor MAP Sensor Signal	Test MAP Sensor/Circuit
Engine Stalls During Parking Maneuver	Check P.S. Press. Switch
Rough Idle	
Dirty Fuel Injectors	Clean/Replace Injectors
Poor MAP Sensor Signal	Test MAP Sensor/Circuit
Intermittent Fuel Injector Operation	Check Harness Connectors
Erratic Vehicle Speed Sensor Inputs	Harness Too Close to Plug Wires

Poor O_2 Sensor Signal	Test O_2 Sensor/Circuit
Faulty PCV System	Check PCV Valve and Hoses
Poor Acceleration	
Weak Fuel Pump	Replace Fuel Pump
Dirty Fuel Injectors	Clean/Replace Injectors
Excessive Intake Valve Deposits	Clean Intake System
Poor High Speed Operation	
Low Fuel Pump Volume	Faulty Fuel Pump/Filter
Poor MAP Sensor Signal	Test Speed Sensor/Circuit
Acceleration Ping/Knock	
Faulty EGR System	Check EGR Valve and Hoses
Poor Knock Sensor Signal	Test Knock Sensor/Circuit
Poor Baro Sensor Signal	Test Baro Sensor/Circuit
Improper Ignition Timing	Adjust Timing
Engine Overheating	Check Cooling System
Poor Quality Fuel	Use Different Fuel
Carbon Build-Up	Decarbon Engine

GENERAL INFORMATION

Waveforms - Injector Pattern Tutorial

* PLEASE READ THIS FIRST *

NOTE: **This is GENERAL information. This article is not intended to be specific to any unique situation or individual vehicle configuration. For model-specific information see appropriate articles where available.**

PURPOSE OF THIS ARTICLE

NOTE: **This is GENERAL information. This article is not intended to be specific to any unique situation or individual vehicle configuration. For model-specific information see appropriate articles where available.**

Learning how to interpret injector drive patterns from a Lab Scope can be like learning ignition patterns all over again. This article exists to ease you into becoming a skilled injector pattern interpreter.

You will learn:

- How a DVOM and noid light fall short of a lab scope.
- The two types of injector driver circuits, voltage controlled & current controlled.
- The two ways injector circuits can be wired, constant ground/switched power & constant power/switched ground.
- The two different pattern types you can use to diagnose with, voltage & current.
- All the valuable details injector patterns can reveal.

SCOPE OF THIS ARTICLE

This is NOT a manufacturer specific article. All different types of systems are covered here, regardless of the specific year/make/model/engine.

The reason for such broad coverage is because there are only a few basic ways to operate a solenoid-type injector. By understanding the fundamental principles, you will understand all the major points of injector patterns you encounter. Of course there are minor differences in each specific system, but that is where a waveform library helps out.

If this is confusing, consider a secondary ignition pattern. Even though there are many different implementations, each still has a primary voltage turn-on, firing line, spark line, etc.

If specific waveforms are available in On Demand for the engine and vehicle you are working on, you will find them in the Engine Performance section under the Engine Performance category.

IS A LAB SCOPE NECESSARY?

INTRODUCTION

You probably have several tools at your disposal to diagnose injector circuits. But you might have questioned "Is a lab scope necessary to do a thorough job, or will a set of noid lights and a multifunction DVOM do just as well?"

In the following text, we are going to look at what noid lights and DVOMs do best, do not do very well, and when they can mislead you. As you might suspect, the lab scope, with its ability to look inside an active circuit, comes to the rescue by answering for the deficiencies of these other tools.

OVERVIEW OF NOID LIGHT

The noid light is an excellent "quick and dirty" tool. It can usually be hooked to a fuel injector harness fast and the flashing light is easy to understand. It is a dependable way to identify a no-pulse situation.

However, a noid light can be very deceptive in two cases:

- If the wrong one is used for the circuit being tested. Beware: Just because a connector on a noid light fits the harness does not mean it is the right one.
- If an injector driver is weak or a minor voltage drop is present.

Use the Right Noid Light

In the following text we will look at what can happen if the wrong noid light is used, why there are different types of noid lights (besides differences with connectors), how to identify the types of noid lights, and how to know the right type to use.

First, let's discuss what can happen if the incorrect type of noid light is used. You might see:

- A dimly flashing light when it should be normal.
- A normal flashing light when it should be dim.

A noid light will flash dim if used on a lower voltage circuit than it was designed for. A normally operating circuit would appear underpowered, which could be misinterpreted as the cause of a fuel starvation problem.

Here are the two circuit types that could cause this problem:

- Circuits with external injector resistors. Used predominately on some Asian & European systems, they are used to reduce the available voltage to an injector in order to limit the current flow. This lower voltage can cause a dim flash on a noid light designed for full voltage.
- Circuits with current controlled injector drivers (e.g. "Peak and Hold"). Basically, this type of driver allows a quick burst of voltage/current to flow and then throttles it back significantly for the remainder of the pulse width duration. If a noid light was designed for the other type of driver (voltage controlled, e.g. "Saturated"), it will appear dim because it is expecting full voltage/current to flow for the entire duration

of the pulse width.

Let's move to the other situation where a noid light flashes normally when it should be dim. This could occur if a more sensitive noid light is used on a higher voltage/amperage circuit that was weakened enough to cause problems (but not outright broken). A circuit with an actual problem would thus appear normal.

Let's look at why. A noid light does not come close to consuming as much amperage as an injector solenoid. If there is a partial driver failure or a minor voltage drop in the injector circuit, there can be adequate amperage to fully operate the noid light BUT NOT ENOUGH TO OPERATE THE INJECTOR.

If this is not clear, picture a battery with a lot of corrosion on the terminals. Say there is enough corrosion that the starter motor will not operate; it only clicks. Now imagine turning on the headlights (with the ignition in the RUN position). You find they light normally and are fully bright. This is the same idea as noid light: There is a problem, but enough amp flow exists to operate the headlights ("noid light"), but not the starter motor ("injector").

How do you identify and avoid all these situations? By using the correct type of noid light. This requires that you understanding the types of injector circuits that your noid lights are designed for. There are three. They are:

- Systems with a voltage controlled injector driver. Another way to say it: The noid light is designed for a circuit with a "high" resistance injector (generally 12 ohms or above).
- Systems with a current controlled injector driver. Another way to say it: The noid light is designed for a circuit with a low resistance injector (generally less than 12 ohms) without an external injector resistor.
- Systems with a voltage controlled injector driver and an external injector resistor. Another way of saying it: The noid light is designed for a circuit with a low resistance injector (generally less than 12 ohms) and an external injector resistor.

NOTE: Some noid lights can meet both the second and third categories simultaneously.

If you are not sure which type of circuit your noid light is designed for, plug it into a known good car and check out the results. If it flashes normally during cranking, determine the circuit type by finding out injector resistance and if an external injector resistor is used. You now know enough to identify the type of injector circuit. Label the noid light appropriately.

Next time you need to use a noid light for diagnosis, determine what type of injector circuit you are dealing with and select the appropriate noid light.

Of course, if you suspect a no-pulse condition you could plug in any one whose connector fit without fear of misdiagnosis. This is because it is unimportant if the flashing light is dim or bright. It is only important that it flashes.

In any cases of doubt regarding the use of a noid light, a lab scope will overcome all inherent weaknesses.

OVERVIEW OF DVOM

A DVOM is typically used to check injector resistance and available voltage at the injector. Some techs also use it check injector on-time either with a built-in feature or by using the dwell/duty function.

There are situations where the DVOM performs these checks dependably, and other situations where it can deceive you. It is important to be aware of these strengths and weaknesses. We will cover the topics above in the following text.

Checking Injector Resistance

If a short in an injector coil winding is constant, an ohmmeter will accurately identify the lower resistance. The same is true with an open winding. Unfortunately, an intermittent short is an exception. A faulty injector with an intermittent short will show "good" if the ohmmeter cannot force the short to occur during testing.

Alcohol in fuel typically causes an intermittent short, happening only when the injector coil is hot and loaded by a current high enough to jump the air gap between two bare windings or to break down any oxides that may have formed between them.

When you measure resistance with an ohmmeter, you are only applying a small current of a few milliamps. This is nowhere near enough to load the coil sufficiently to detect most problems. As a result, most resistance checks identify intermittently shorted injectors as being normal.

There are two methods to get around this limitation. The first is to purchase an tool that checks injector coil windings under full load. The Kent-Moore J-39021 is such a tool, though there are others. The Kent-Moore costs around $240 at the time of this writing and works on many different manufacturer's systems.

The second method is to use a lab scope. Remember, a lab scope allows you to see the regular operation of a circuit in real time. If an injector is having an short or intermittent short, the lab scope will show it.

Checking Available Voltage At the Injector

Verifying a fuel injector has the proper voltage to operate correctly is good diagnostic technique. Finding an open circuit on the feed circuit like a broken wire or connector is an accurate check with a DVOM. Unfortunately, finding an intermittent or excessive resistance problem with a DVOM is unreliable.

Let's explore this drawback. Remember that a voltage drop due to excessive resistance will only occur when a circuit is operating? Since the injector circuit is only operating for a few milliseconds at a time, a DVOM will only see a potential fault for a few milliseconds. The remaining 90+% of the time the unloaded injector circuit will show normal battery voltage.

Since DVOMs update their display roughly two to five times a second, all measurements in between are averaged. Because a potential voltage drop is visible for such a small amount of time, it gets "averaged out", causing you to miss it.

Only a DVOM that has a "min-max" function that checks EVERY MILLISECOND will catch this fault consistently (if used in that mode). The Fluke 87 among others has this capability.

A "min-max" DVOM with a lower frequency of checking (100 millisecond) can miss the fault because it will

probably check when the injector is not on. This is especially true with current controlled driver circuits. The Fluke 88, among others fall into this category.

Outside of using a Fluke 87 (or equivalent) in the 1 mS "min-max" mode, the only way to catch a voltage drop fault is with a lab scope. You will be able to see a voltage drop as it happens.

One final note. It is important to be aware that an injector circuit with a solenoid resistor will always show a voltage drop when the circuit is energized. This is somewhat obvious and normal; it is a designed-in voltage drop. What can be unexpected is what we already covered--a voltage drop disappears when the circuit is unloaded. The unloaded injector circuit will show normal battery voltage at the injector. Remember this and do not get confused.

Checking Injector On-Time With Built-In Function

Several DVOMs have a feature that allows them to measure injector on-time (mS pulse width). While they are accurate and fast to hookup, they have three limitations you should be aware of:

- They only work on voltage controlled injector drivers (e.g "Saturated Switch"), NOT on current controlled injector drivers (e.g. "Peak & Hold").
- A few unusual conditions can cause inaccurate readings.
- Varying engine speeds can result in inaccurate readings.

Regarding the first limitation, DVOMs need a well-defined injector pulse in order to determine when the injector turns ON and OFF. Voltage controlled drivers provide this because of their simple switch-like operation. They completely close the circuit for the entire duration of the pulse. This is easy for the DVOM to interpret.

The other type of driver, the current controlled type, start off well by completely closing the circuit (until the injector pintle opens), but then they throttle back the voltage/current for the duration of the pulse. The DVOM understands the beginning of the pulse but it cannot figure out the throttling action. In other words, it cannot distinguish the throttling from an open circuit (de-energized) condition.

Yet current controlled injectors will still yield a millisecond on-time reading on these DVOMs. You will find it is also always the same, regardless of the operating conditions. This is because it is only measuring the initial completely-closed circuit on-time, which always takes the same amount of time (to lift the injector pintle off its seat). So even though you get a reading, it is useless.

The second limitation is that a few erratic conditions can cause inaccurate readings. This is because of a DVOM's slow display rate; roughly two to five times a second. As we covered earlier, measurements in between display updates get averaged. So conditions like skipped injector pulses or intermittent long/short injector pulses tend to get "averaged out", which will cause you to miss important details.

The last limitation is that varying engine speeds can result in inaccurate readings. This is caused by the quickly shifting injector on-time as the engine load varies, or the RPM moves from a state of acceleration to stabilization, or similar situations. It too is caused by the averaging of all measurements in between DVOM display periods. You can avoid this by checking on-time when there are no RPM or load changes.

A lab scope allows you to overcome each one of these limitations.

Checking Injector On-Time With Dwell Or Duty

If no tool is available to directly measure injector millisecond on-time measurement, some techs use a simple DVOM dwell or duty cycle functions as a replacement.

While this is an approach of last resort, it does provide benefits. We will discuss the strengths and weaknesses in a moment, but first we will look at how a duty cycle meter and dwell meter work.

How A Duty Cycle Meter and Dwell Meter Work

All readings are obtained by comparing how long something has been OFF to how long it has been ON in a fixed time period. A dwell meter and duty cycle meter actually come up with the same answers using different scales. You can convert freely between them. See **RELATIONSHIP BETWEEN DWELL & DUTY CYCLE READINGS TABLE**.

The DVOM display updates roughly one time a second, although some DVOMs can be a little faster or slower. All measurements during this update period are tallied inside the DVOM as ON time or OFF time, and then the total ratio is displayed as either a percentage (duty cycle) or degrees (dwell meter).

For example, let's say a DVOM had an update rate of exactly 1 second (1000 milliseconds). Let's also say that it has been measuring/tallying an injector circuit that had been ON a total of 250 mS out of the 1000 mS. That is a ratio of one-quarter, which would be displayed as 25% duty cycle or 15° dwell (six-cylinder scale). Note that most duty cycle meters can reverse the readings by selecting the positive or negative slope to trigger on. If this reading were reversed, a duty cycle meter would display 75%.

Strengths of Dwell/Duty Meter

The obvious strength of a dwell/duty meter is that you can compare injector on-time against a known-good reading. This is the only practical way to use a dwell/duty meter, but requires you to have known-good values to compare against.

Another strength is that you can roughly convert injector mS on-time into dwell reading with some computations.

A final strength is that because the meter averages everything together it does not miss anything (though this is also a severe weakness that we will look at later). If an injector has a fault where it occasionally skips a pulse, the meter registers it and the reading changes accordingly.

Let's go back to figuring out dwell/duty readings by using injector on-time specification. This is not generally practical, but we will cover it for completeness. You NEED to know three things:

- Injector mS on-time specification.
- Engine RPM when specification is valid.
- How many times the injectors fire per crankshaft revolution.

The first two are self-explanatory. The last one may require some research into whether it is a bank-fire type that injects every 360° of crankshaft rotation, a bank-fire that injects every 720°, or an SFI that injects every 720°. Many manufacturers do not release this data so you may have to figure it out yourself with a frequency meter.

Here are the four complete steps to convert millisecond on-time:

1. Determine the injector pulse width and RPM it was obtained at. Let's say the specification is for one millisecond of on-time at a hot idle of 600 RPM.
2. Determine injector firing method for the complete 4 stroke cycle. Let's say this is a 360° bank-fired, meaning an injector fires each and every crankshaft revolution.
3. Determine how many times the injector will fire at the specified engine speed (600 RPM) in a fixed time period. We will use 100 milliseconds because it is easy to use. Six hundred crankshaft Revolutions Per Minute (RPM) divided by 60 seconds equals 10 revolutions per second. Multiplying 10 times .100 yields one; the crankshaft turns one time in 100 milliseconds. With exactly one crankshaft rotation in 100 milliseconds, we know that the injector fires exactly one time.
4. Determine the ratio of injector on-time vs. off-time in the fixed time period, then figure duty cycle and/or dwell. The injector fires one time for a total of one millisecond in any given 100 millisecond period. One hundred minus one equals 99. We have a 99% duty cycle. If we wanted to know the dwell (on 6 cylinder scale), multiple 99% times .6; this equals 59.4° dwell.

Weaknesses of Dwell/Duty Meter

The weaknesses are significant. First, there is no one-to-one correspondence to actual mS on-time. No manufacturer releases dwell/duty data, and it is time-consuming to convert the mS on-time readings. Besides, there can be a large degree of error because the conversion forces you to assume that the injector(s) are always firing at the same rate for the same period of time. This can be a dangerous assumption.

Second, all level of detail is lost in the averaging process. This is the primary weakness. You cannot see the details you need to make a confident diagnosis.

Here is one example. Imagine a vehicle that has a faulty injector driver that occasionally skips an injector pulse. Every skipped pulse means that that cylinder does not fire, thus unburned O2 gets pushed into the exhaust and passes the O2 sensor. The O2 sensor indicates lean, so the computer fattens up the mixture to compensate for the supposed "lean" condition.

A connected dwell/duty meter would see the fattened pulse width but would also see the skipped pulses. It would tally both and likely come back with a reading that indicated the "pulse width" was within specification because the rich mixture and missing pulses offset each other.

This situation is not a far-fetched scenario. Some early GM 3800 engines were suffering from exactly this. The point is that a lack of detail could cause misdiagnosis.

As you might have guessed, a lab scope would not miss this.

RELATIONSHIP BETWEEN DWELL & DUTY CYCLE READINGS

Dwell Meter (2)	Duty Cycle Meter
1°	1%
15°	25%
30°	50%
45°	75%
60°	100%

(1) These are just some examples for your understanding. It is okay to fill in the gaps.

(2) Dwell meter on the six-cylinder scale.

THE TWO TYPES OF INJECTOR DRIVERS

NOTE: **This is GENERAL information. This article is not intended to be specific to any unique situation or individual vehicle configuration. For model-specific information see appropriate articles where available.**

OVERVIEW

There are two types of transistor driver circuits used to operate electric fuel injectors: voltage controlled and current controlled. The voltage controlled type is sometimes called a "saturated switch" driver, while the current controlled type is sometimes known as a "peak and hold" driver.

The basic difference between the two is the total resistance of the injector circuit. Roughly speaking, if a particular leg in an injector circuit has total resistance of 12 or more ohms, a voltage control driver is used. If less than 12 ohms, a current control driver is used.

It is a question of what is going to do the job of limiting the current flow in the injector circuit; the inherent "high" resistance in the injector circuit, or the transistor driver. Without some form of control, the current flow through the injector would cause the solenoid coil to overheat and result in a damaged injector.

VOLTAGE CONTROLLED CIRCUIT ("SATURATED SWITCH")

The voltage controlled driver inside the computer operates much like a simple switch because it does not need to worry about limiting current flow. Recall, this driver typically requires injector circuits with a total leg resistance of 12 or more ohms.

The driver is either ON, closing/completing the circuit (eliminating the voltage-drop), or OFF, opening the circuit (causing a total voltage drop).

Some manufacturers call it a "saturated switch" driver. This is because when switched ON, the driver allows the magnetic field in the injector to build to saturation. This is the same "saturation" property that you are familiar with for an ignition coil.

There are two ways "high" resistance can be built into an injector circuit to limit current flow. One method uses an external solenoid resistor and a low resistance injector, while the other uses a high resistance injector without

the solenoid resistor. See the left side of Fig. **Fig. 1**.

In terms of injection opening time, the external resistor voltage controlled circuit is somewhat faster than the voltage controlled high resistance injector circuit. The trend, however, seems to be moving toward use of this latter type of circuit due to its lower cost and reliability. The ECU can compensate for slower opening times by increasing injector pulse width accordingly.

NOTE: Never apply battery voltage directly across a low resistance injector. This will cause injector damage from solenoid coil overheating.

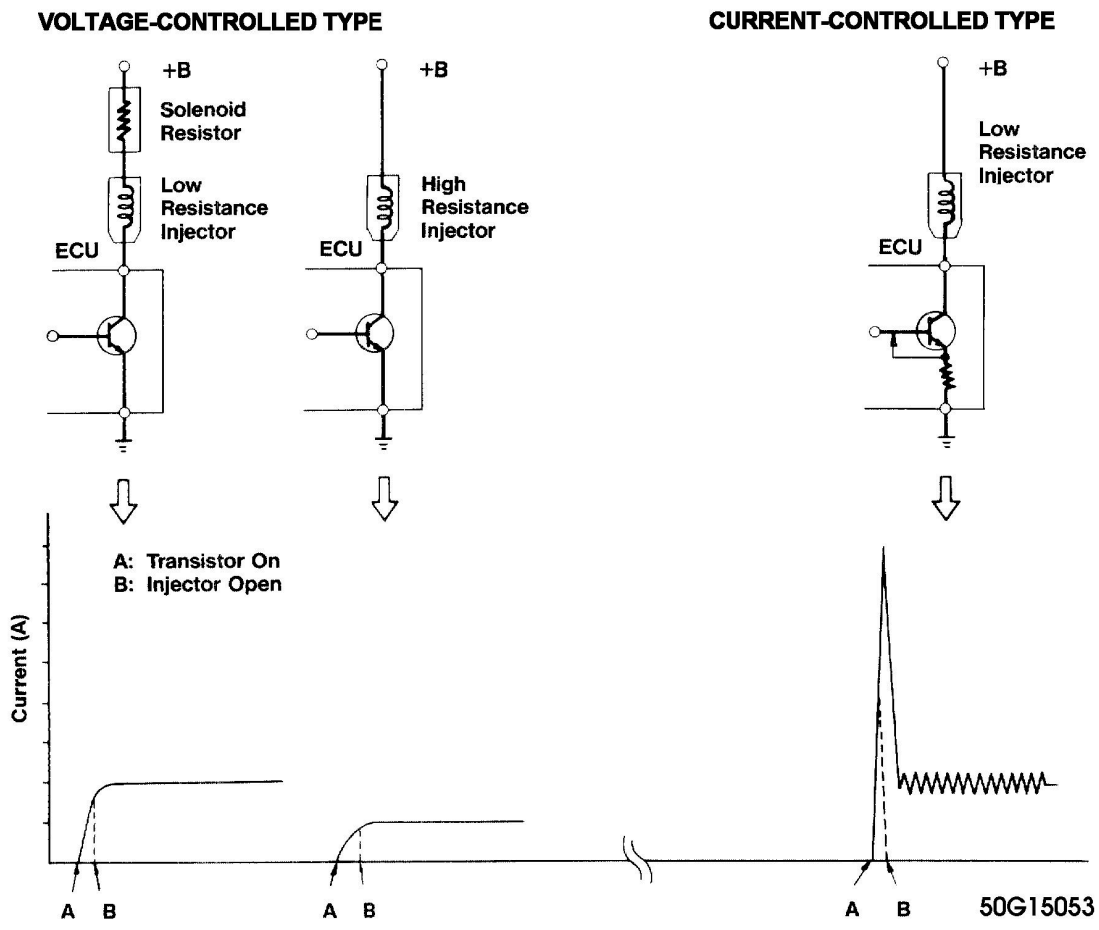

Fig. 1: Injector Driver Types - Current and Voltage

CURRENT CONTROLLED CIRCUIT ("PEAK & HOLD")

The current controlled driver inside the computer is more complex than a voltage controlled driver because as the name implies, it has to limit current flow in addition to its ON-OFF switching function. Recall, this driver typically requires injector circuits with a total leg resistance of less than 12 ohms.

Once the driver is turned ON, it will not limit current flow until enough time has passed for the injector pintle to

open. This period is preset by the particular manufacturer/system based on the amount of current flow needed to open their injector. This is typically between two and six amps. Some manufacturers refer to this as the "peak" time, referring to the fact that current flow is allowed to "peak" (to open the injector).

Once the injector pintle is open, the amp flow is considerably reduced for the rest of the pulse duration to protect the injector from overheating. This is okay because very little amperage is needed to hold the injector open, typically in the area of one amp or less. Some manufacturers refer to this as the "hold" time, meaning that just enough current is allowed through the circuit to "hold" the already-open injector open.

There are a couple methods of reducing the current. The most common trims back the available voltage for the circuit, similar to turning down a light at home with a dimmer.

The other method involves repeatedly cycling the circuit ON-OFF. It does this so fast that the magnetic field never collapses and the pintle stays open, but the current is still significantly reduced. See the right side of Fig. **Fig. 1** for an illustration.

The advantage to the current controlled driver circuit is the short time period from when the driver transistor goes ON to when the injector actually opens. This is a function of the speed with which current flow reaches its peak due to the low circuit resistance. Also, the injector closes faster when the driver turns OFF because of the lower holding current.

NOTE: **Never apply battery voltage directly across a low resistance injector. This will cause injector damage from solenoid coil overheating.**

THE TWO WAYS INJECTOR CIRCUITS ARE WIRED

NOTE: **This is GENERAL information. This article is not intended to be specific to any unique situation or individual vehicle configuration. For model-specific information see appropriate articles where available.**

Like other circuits, injector circuits can be wired in one of two fundamental directions. The first method is to steadily power the injectors and have the computer driver switch the ground side of the circuit. Conversely, the injectors can be steadily grounded while the driver switches the power side of the circuit.

There is no performance benefit to either method. Voltage controlled and current controlled drivers have been successfully implemented both ways.

However, 95% percent of the systems are wired so the driver controls the ground side of the circuit. Only a handful of systems use the drivers on the power side of the circuit. Some examples of the latter are the 1970's Cadillac EFI system, early Jeep 4.0 EFI (Renix system), and Chrysler 1984-87 TBI.

INTERPRETING INJECTOR WAVEFORMS

NOTE: **This is GENERAL information. This article is not intended to be specific to any unique situation or individual vehicle configuration. For model-specific**

information see appropriate articles where available.

INTERPRETING A VOLTAGE CONTROLLED PATTERN

NOTE: Voltage controlled drivers are also known as "Saturated Switch" drivers. They typically require injector circuits with a total leg resistance of 12 ohms or more.

NOTE: This example is based on a constant power/switched ground circuit.

- See **Fig. 2** for pattern that the following text describes.

Point "A" is where system voltage is supplied to the injector. A good hot run voltage is usually 13.5 or more volts. This point, commonly known as open circuit voltage, is critical because the injector will not get sufficient current saturation if there is a voltage shortfall. To obtain a good look at this precise point, you will need to shift your Lab Scope to five volts per division.

You will find that some systems have slight voltage fluctuations here. This can occur if the injector feed wire is also used to power up other cycling components, like the ignition coil(s). Slight voltage fluctuations are normal and are no reason for concern. Major voltage fluctuations are a different story, however. Major voltage shifts on the injector feed line will create injector performance problems. Look for excessive resistance problems in the feed circuit if you see big shifts and repair as necessary.

Note that circuits with external injector resistors will not be any different because the resistor does not affect open circuit voltage.

Point "B" is where the driver completes the circuit to ground. This point of the waveform should be a clean square point straight down with no rounded edges. It is during this period that current saturation of the injector windings is taking place and the driver is heavily stressed. Weak drivers will distort this vertical line.

Point "C" represents the voltage drop across the injector windings. Point "C" should come very close to the ground reference point, but not quite touch. This is because the driver has a small amount of inherent resistance. Any significant offset from ground is an indication of a resistance problem on the ground circuit that needs repaired. You might miss this fault if you do not use the negative battery post for your Lab Scope hook-up, so it is HIGHLY recommended that you use the battery as your hook-up.

The points between "B" and "D" represent the time in milliseconds that the injector is being energized or held open. This line at Point "C" should remain flat. Any distortion or upward bend indicates a ground problem, short problem, or a weak driver. Alert readers will catch that this is exactly opposite of the current controlled type drivers (explained in the next section), because they bend upwards at this point.

How come the difference? Because of the total circuit resistance. Voltage controlled driver circuits have a high resistance of 12+ ohms that slows the building of the magnetic field in the injector. Hence, no counter voltage is built up and the line remains flat.

On the other hand, the current controlled driver circuit has low resistance which allows for a rapid magnetic field build-up. This causes a slight inductive rise (created by the effects of counter voltage) and hence, the

upward bend. You should not see that here with voltage controlled circuits.

Point "D" represents the electrical condition of the injector windings. The height of this voltage spike (inductive kick) is proportional to the number of windings and the current flow through them. The more current flow and greater number of windings, the more potential for a greater inductive kick. The opposite is also true. The less current flow or fewer windings means less inductive kick. Typically you should see a minimum 35 volts at the top of Point "D".

If you do see approximately 35 volts, it is because a zener diode is used with the driver to clamp the voltage. Make sure the beginning top of the spike is squared off, indicating the zener dumped the remainder of the spike. If it is not squared, that indicates the spike is not strong enough to make the zener fully dump, meaning the injector has a weak winding.

If a zener diode is not used in the computer, the spike from a good injector will be 60 or more volts.

Point "E" brings us to a very interesting section. As you can see, the voltage dissipates back to supply value after the peak of the inductive kick. Notice the slight hump? This is actually the mechanical injector pintle closing. Recall that moving an iron core through a magnetic field will create a voltage surge. The pintle is the iron core here.

This pintle hump at Point "E" should occur near the end of the downward slope, and not afterwards. If it does occur after the slope has ended and the voltage has stabilized, it is because the pintle is slightly sticking because of a faulty injector

If you see more than one hump it is because of a distorted pintle or seat. This faulty condition is known as "pintle float".

It is important to realize that it takes a good digital storage oscilloscope or analog lab scope to see this pintle hump clearly. Unfortunately, it cannot always be seen.

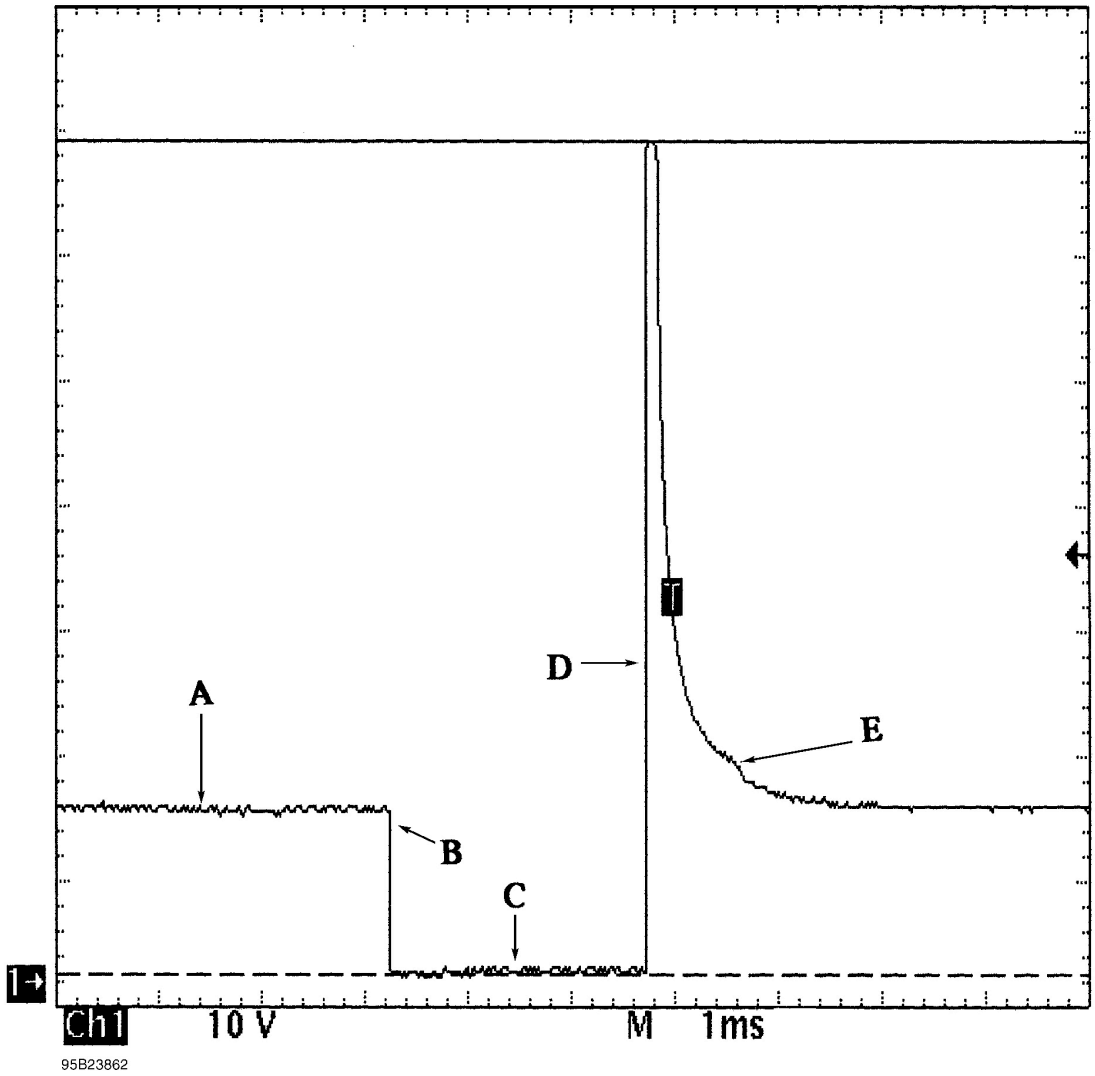

Fig. 2: Identifying Voltage Controlled Type Injector Pattern

INTERPRETING A CURRENT CONTROLLED PATTERN

NOTE: **Current controlled drivers are also known as "Peak and Hold" drivers. They typically require injector circuits with a total leg resistance with less than 12 ohm.**

NOTE: **This example is based on a constant power/switched ground circuit.**

- See **Fig. 3** for pattern that the following text describes.

Point "A" is where system voltage is supplied to the injector. A good hot run voltage is usually 13.5 or more volts. This point, commonly known as open circuit voltage, is critical because the injector will not get sufficient

current saturation if there is a voltage shortfall. To obtain a good look at this precise point, you will need to shift your Lab Scope to five volts per division.

You will find that some systems have slight voltage fluctuations here. This could occur if the injector feed wire is also used to power up other cycling components, like the ignition coil(s). Slight voltage fluctuations are normal and are no reason for concern. Major voltage fluctuations are a different story, however. Major voltage shifts on the injector feed line will create injector performance problems. Look for excessive resistance problems in the feed circuit if you see big shifts and repair as necessary.

Point "B" is where the driver completes the circuit to ground. This point of the waveform should be a clean square point straight down with no rounded edges. It is during this period that current saturation of the injector windings is taking place and the driver is heavily stressed. Weak drivers will distort this vertical line.

Point "C" represents the voltage drop across the injector windings. Point "C" should come very close to the ground reference point, but not quite touch. This is because the driver has a small amount of inherent resistance. Any significant offset from ground is an indication of a resistance problem on the ground circuit that needs repaired. You might miss this fault if you do not use the negative battery post for your Lab Scope hook-up, so it is HIGHLY recommended that you use the battery as your hook-up.

Right after Point "C", something interesting happens. Notice the trace starts a normal upward bend. This slight inductive rise is created by the effects of counter voltage and is normal. This is because the low circuit resistance allowed a fast build-up of the magnetic field, which in turn created the counter voltage.

Point "D" is the start of the current limiting, also known as the "Hold" time. Before this point, the driver had allowed the current to free-flow ("Peak") just to get the injector pintle open. By the time point "D" occurs, the injector pintle has already opened and the computer has just significantly throttled the current back. It does this by only allowing a few volts through to maintain the minimum current required to keep the pintle open.

The height of the voltage spike seen at the top of Point "D" represents the electrical condition of the injector windings. The height of this voltage spike (inductive kick) is proportional to the number of windings and the current flow through them. The more current flow and greater number of windings, the more potential for a greater inductive kick. The opposite is also true. The less current flow or fewer windings means less inductive kick. Typically you should see a minimum 35 volts.

If you see approximately 35 volts, it is because a zener diode is used with the driver to clamp the voltage. Make sure the beginning top of the spike is squared off, indicating the zener dumped the remainder of the spike. If it is not squared, that indicates the spike is not strong enough to make the zener fully dump, meaning there is a problem with a weak injector winding.

If a zener diode is not used in the computer, the spike from a good injector will be 60 or more volts.

At Point "E", notice that the trace is now just a few volts below system voltage and the injector is in the current limiting, or the "Hold" part of the pattern. This line will either remain flat and stable as shown here, or will cycle up and down rapidly. Both are normal methods to limit current flow. Any distortion may indicate shorted windings.

Point "F" is the actual turn-off point of the driver (and injector). To measure the millisecond on-time of the

injector, measure between points "C" and "F". Note that we used cursors to do it for us; they are measuring a 2.56 mS on-time.

The top of Point "F" (second inductive kick) is created by the collapsing magnetic field caused by the final turn-off of the driver. This spike should be like the spike on top of point "D".

Point "G" shows a slight hump. This is actually the mechanical injector pintle closing. Recall that moving an iron core through a magnetic field will create a voltage surge. The pintle is the iron core here.

This pintle hump at Point "E" should occur near the end of the downward slope, and not afterwards. If it does occur after the slope has ended and the voltage has stabilized, it is because the pintle is slightly sticking. Some older Nissan TBI systems suffered from this.

If you see more than one hump it is because of a distorted pintle or seat. This faulty condition is known as "pintle float".

It is important to realize that it takes a good digital storage oscilloscope or analog lab scope to see this pintle hump clearly. Unfortunately, it cannot always be seen.

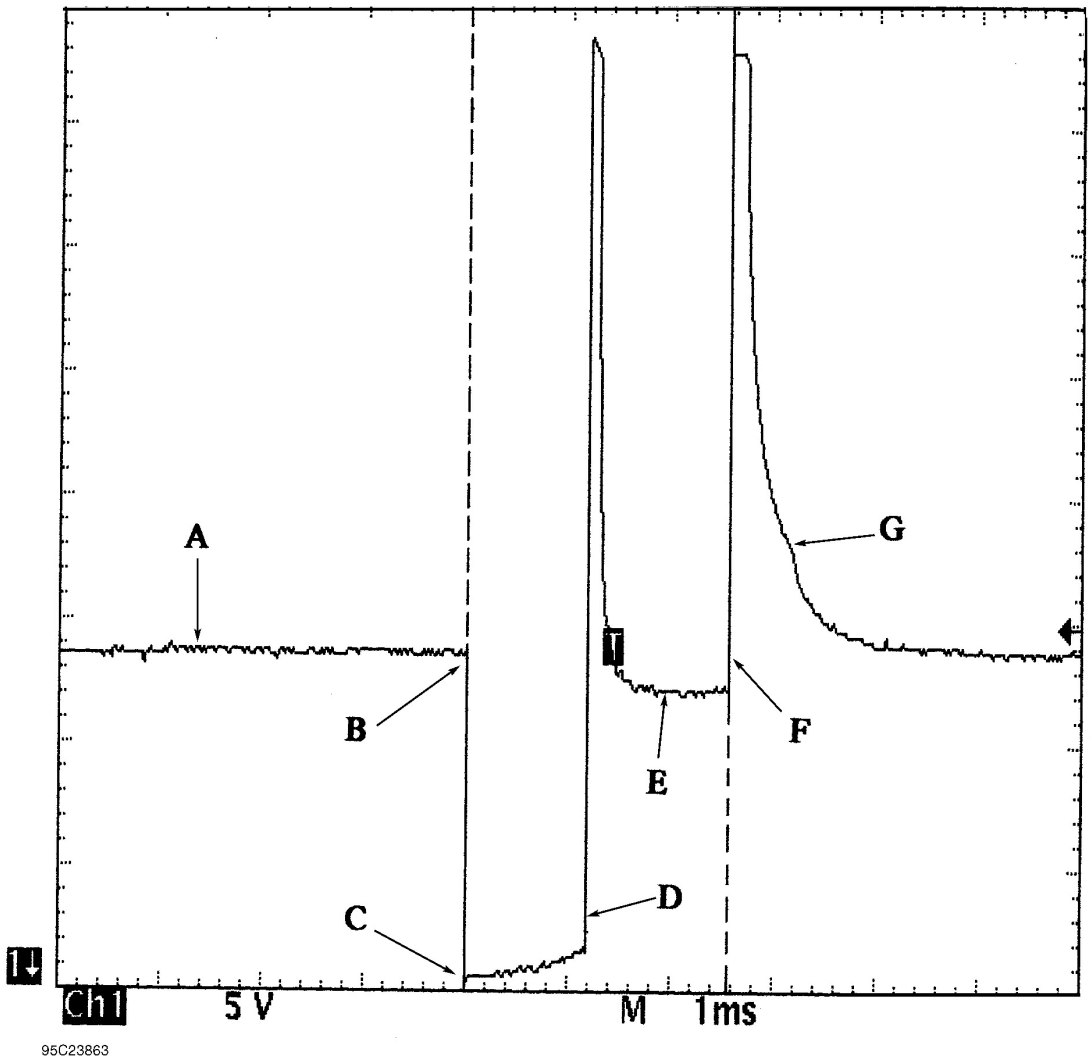

Fig. 3: Identifying Current Controlled Type Injector Pattern

CURRENT WAVEFORM SAMPLES

NOTE: **This is GENERAL information. This article is not intended to be specific to any unique situation or individual vehicle configuration. For model-specific information see appropriate articles where available.**

EXAMPLE #1 - VOLTAGE CONTROLLED DRIVER

The waveform pattern shown in Fig. **Fig. 4** indicate a normal current waveform from a Ford 3.0L V6 VIN [U] engine. This voltage controlled type circuit pulses the injectors in groups of three injectors. Injectors No. 1, 3, and 5 are pulsed together and cylinders 2, 4, and 6 are pulsed together. The specification for an acceptable bank resistance is 4.4 ohms. Using Ohm's Law and assuming a hot run voltage of 14 volts, we determine that the bank would draw a current of 3.2 amps.

However this is not the case because as the injector windings become saturated, counter voltage is created which impedes the current flow. This, coupled with the inherent resistance of the driver's transistor, impedes the current flow even more. So, what is a known good value for a dynamic current draw on a voltage controlled bank of injectors? The waveform pattern shown below indicates a good parallel injector current flow of 2 amps. See **Fig. 4**.

Note that if just one injector has a resistance problem and partially shorts, the entire parallel bank that it belongs to will draw more current. This can damage the injector driver.

The waveform pattern in Fig. **Fig. 5** indicates this type of problem with too much current flow. This is on other bank of injectors of the same vehicle; the even side. Notice the Lab Scope is set on a one amp per division scale. As you can see, the current is at an unacceptable 2.5 amps.

It is easy to find out which individual injector is at fault. All you need to do is inductively clamp onto each individual injector and compare them. To obtain a known-good value to compare against, we used the good bank to capture the waveform in Fig. **Fig. 6**. Notice that it limits current flow to 750 milliamps.

The waveform shown in Fig. **Fig. 7** illustrates the problem injector we found. This waveform indicates an unacceptable current draw of just over one amp as compared to the 750 milliamp draw of the known-good injector. A subsequent check with a DVOM found 8.2 ohms, which is under the 12 ohm specification.

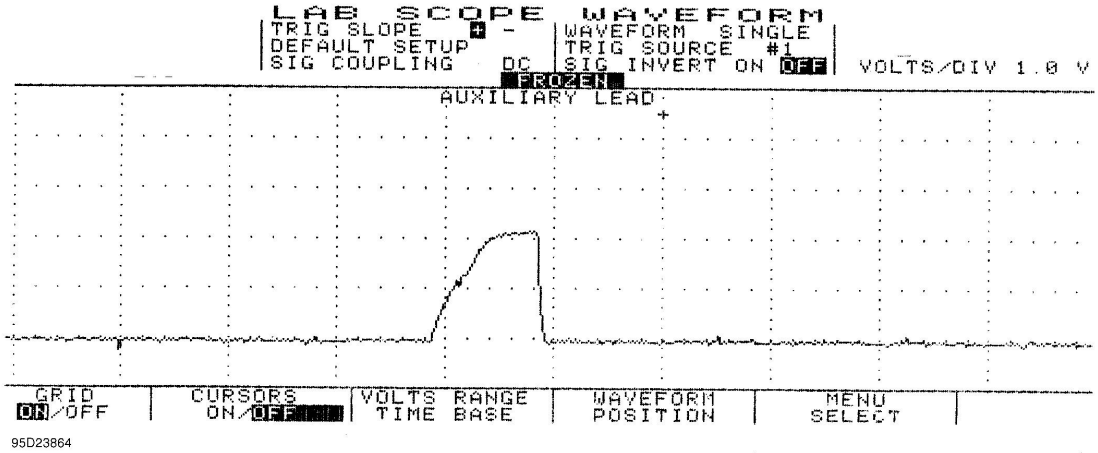

Fig. 4: Injector Bank w/Normal Current Flow - Current Pattern

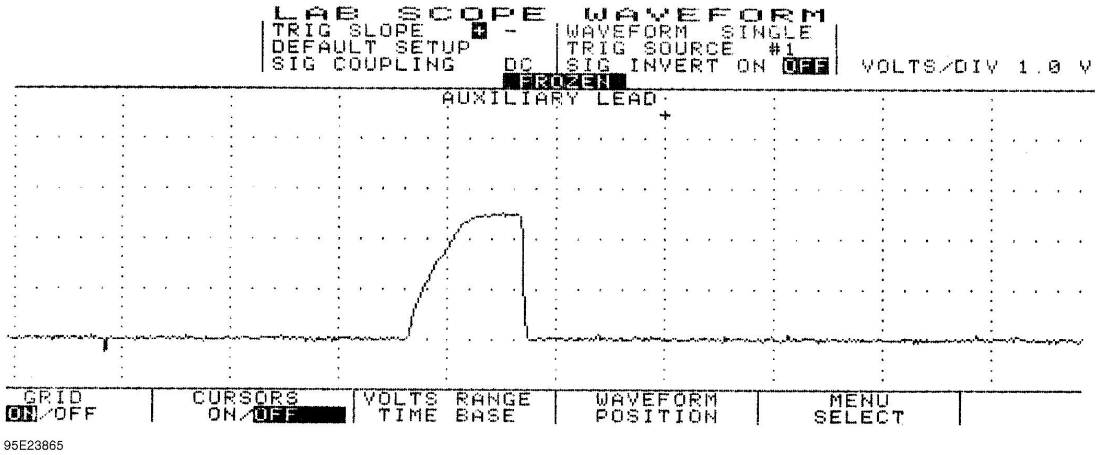

Fig. 5: Injector Bank w/Excessive Current Flow - Current Pattern

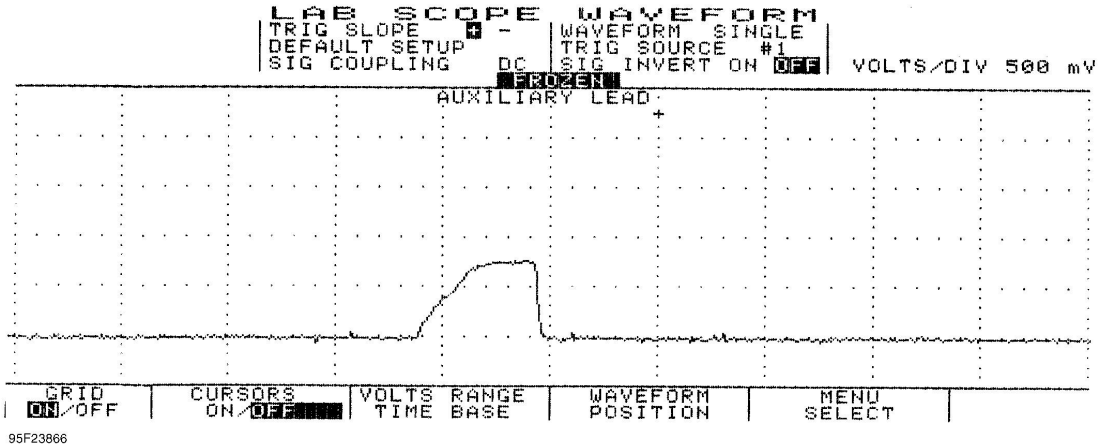

Fig. 6: Single Injector w/Normal Current Flow - Current Pattern

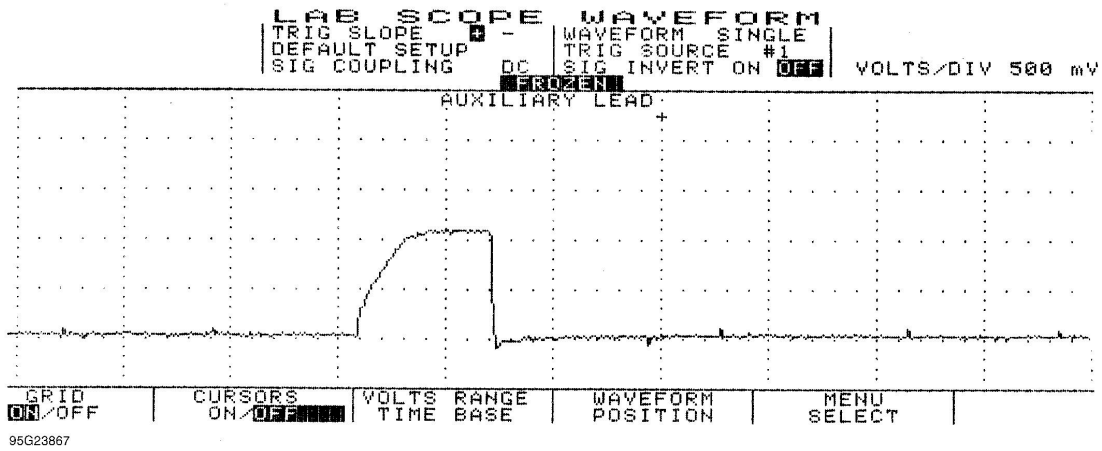

Fig. 7: Single Injector w/Excessive Current Flow - Current Pattern

EXAMPLE #2 - VOLTAGE CONTROLLED DRIVER

This time we will look at a GM 3.1L V6 VIN [T]. Fig. **Fig. 8** shows the 1, 3, 5 (odd) injector bank with the current waveform indicating about a 2.6 amp draw at idle. This pattern, taken from a known good vehicle, correctly stays at or below the maximum 2.6 amps current range. Ideally, the current for each bank should be very close in comparison.

Notice the small dimple on the current flow's rising edge. This is the actual injector opening or what engineers refer to as the "set point." For good idle quality, the set point should be uniform between the banks.

When discussing Ohm's Law as it pertains to this parallel circuit, consider that each injector has specified resistance of 12.2 ohms. Since all three injectors are in parallel the total resistance of this parallel circuit drops to 4.1 ohms. Fourteen volts divided by four ohms would pull a maximum of 3.4 amps on this bank of injectors. However, as we discussed in **EXAMPLE #1** above, other factors knock this value down to roughly the 2.6 amp neighborhood.

Now we are going to take a look at the even bank of injectors; injectors 2, 4, and 6. See **Fig. 9**. Notice this bank peaked at 1.7 amps at idle as compared to the 2.6 amps peak of the odd bank (Fig. **Fig. 8**). Current flow between even and odd injectors banks is not uniform, yet it is not causing a driveability problem. That is because it is still under the maximum amperage we figured out earlier. But be aware this vehicle could develop a problem if the amperage flow increases any more.

Checking the resistance of this even injector group with a DVOM yielded 6.2 ohms, while the odd injector group in the previous example read 4.1 ohms.

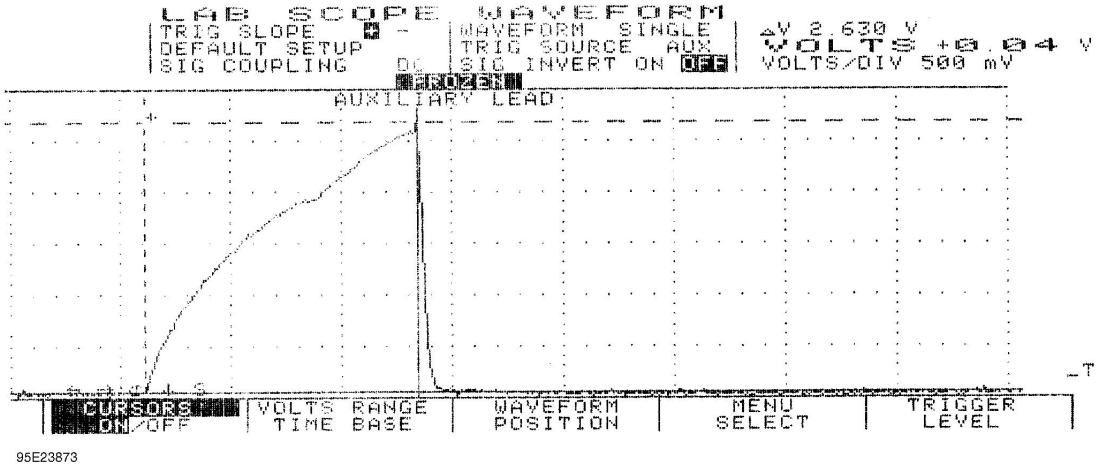

Fig. 8: Injector Odd Bank w/Normal Current Flow - Current Pattern

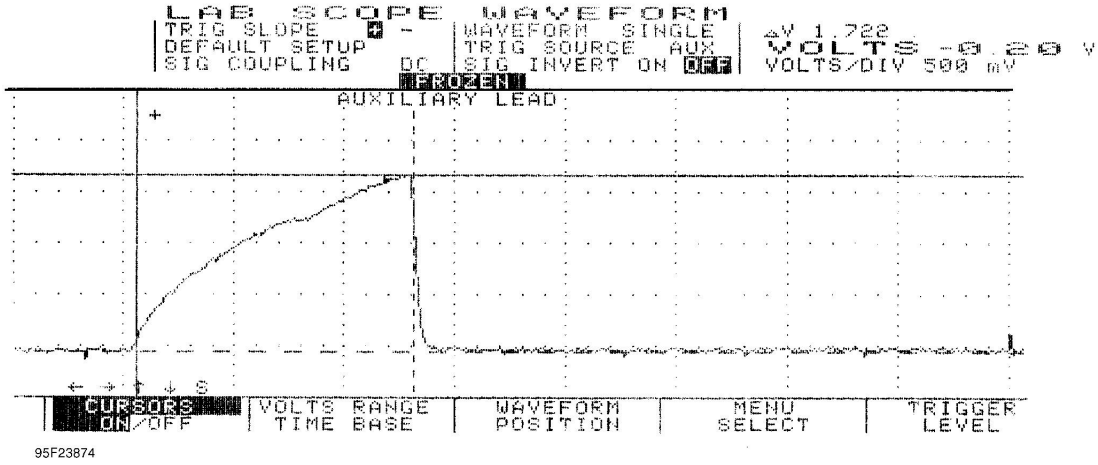

Fig. 9: Injector Even Bank w/Normal Current Flow - Current Pattern

EXAMPLE #3 - VOLTAGE CONTROLLED DRIVER

Example #3 is of a Ford 5.0L V8 SEFI. Fig. **Fig. 10** shows a waveform of an individual injector at idle with the Lab Scope set on 200 milliamps per division. Notice the dimple in the rising edge. This dimple indicates the actual opening of the injector (set point) occurred at 400 milliamps and current peaked at 750 milliamps. This is a good specification for this engine.

The next waveform pattern in Fig. **Fig. 11** shows an abnormality with another injector. With the Lab Scope set on 500 milliamps per division, you can see that the current waveform indicates a 1200 milliamp draw. This is a faulty injector.

Abnormally low resistance injectors create excessive current draw, causing rough idle, and possible computer driver damage.

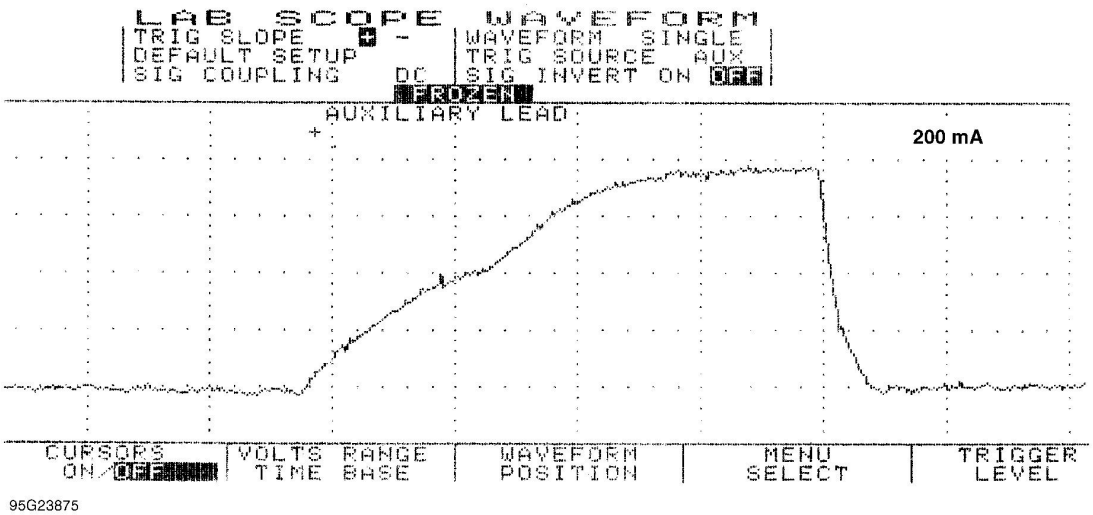

Fig. 10: Single Injector w/Normal Current Flow - Current Pattern

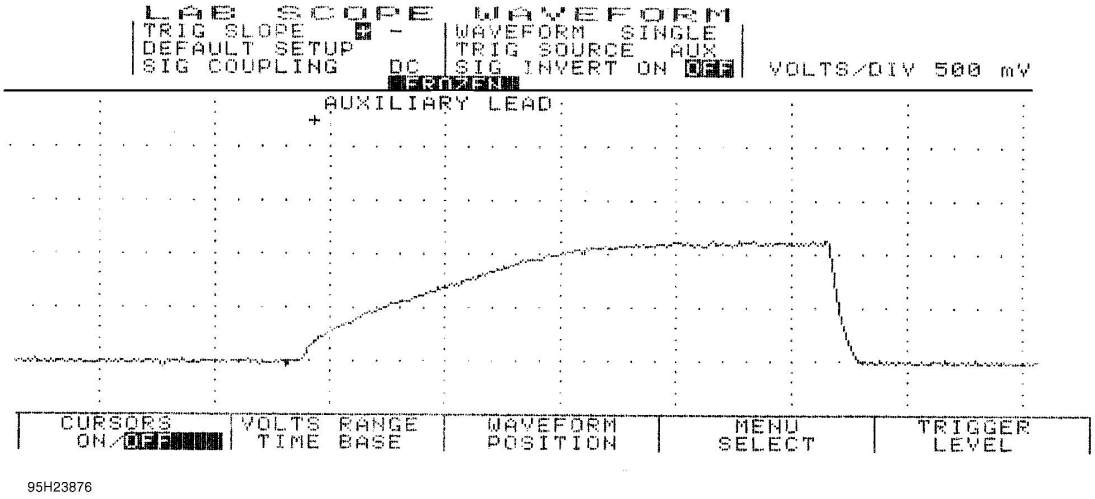

Fig. 11: Single Injector w/Excessive Current Flow - Current Pattern

EXAMPLE #4 - CURRENT CONTROLLED DRIVER

Example #4 is of a Ford 4.6L SEFI VIN [W]. See **Fig. 12** for the known-good waveform pattern. This Ford system is different from the one above in **EXAMPLE #3** as it peaks at 900 milliamps and the actual opening of the injector (set point) is just below 600 milliamps.

This is offered as a comparison against the Ford pattern listed above, as they are both Ford SEFI injectors but with different operating ranges. The point is that you should not make any broad assumptions for any manufacturer.

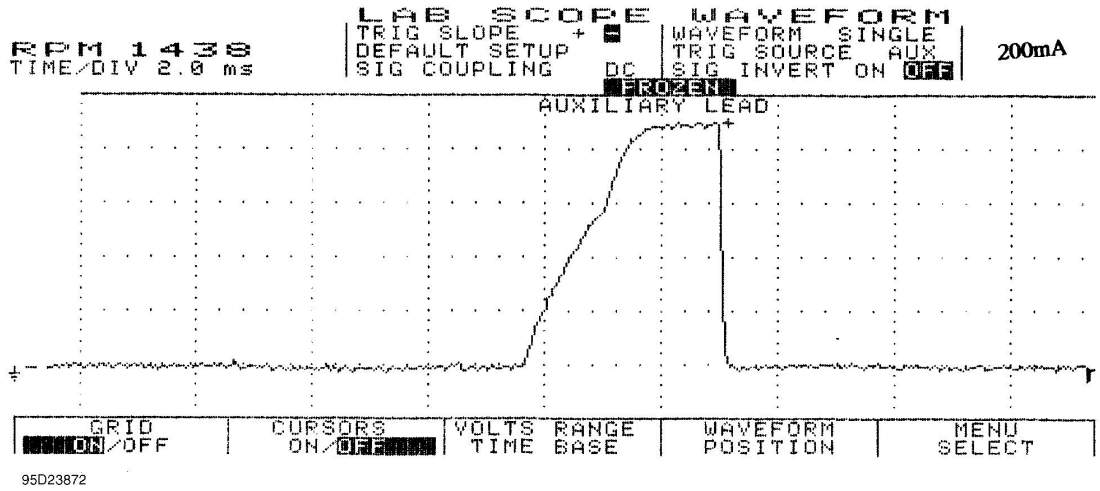

Fig. 12: Single Injector w/Normal Current Flow - Current Pattern

EXAMPLE #5 - CURRENT CONTROLLED DRIVER

The known-good waveform in Fig. **Fig. 13** is from a Chrysler 3.0L V6 PFI VIN [3]. It is a perfect example of the peak and hold theory. The waveform shows a 1-amp per division current flow, ramping to 4 amps and then decreasing to 1-amp to hold the injector open.

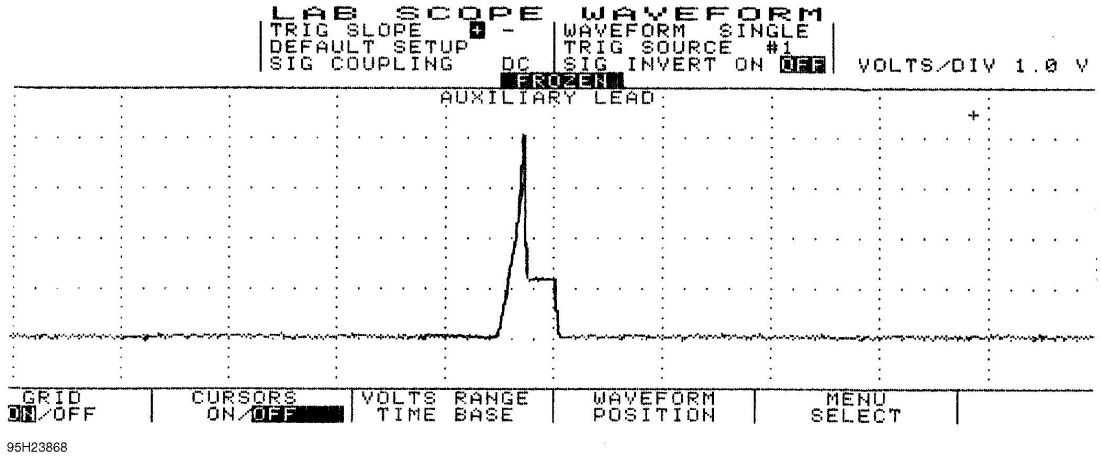

Fig. 13: Injector Bank w/Normal Current Flow - Current Pattern

EXAMPLE #6 - CURRENT CONTROLLED DRIVER

This next known-good waveform is from a Ford 5.0L V8 CFI VIN [F]. See **Fig. 14**. The pattern, which is set on a 250 milliamps scale, indicates a 1.25 amp peak draw and a hold at 350 milliamps.

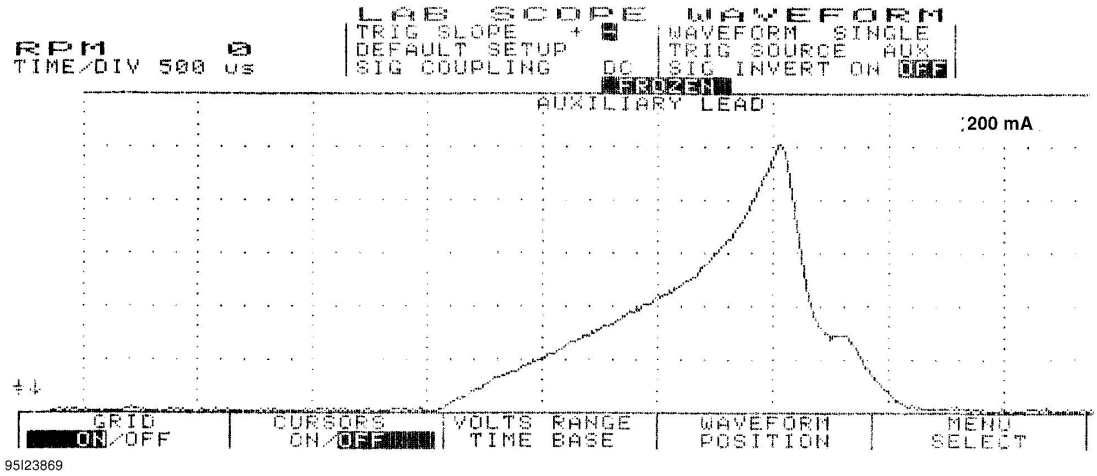

Fig. 14: Single Injector w/Normal Current Flow - Current Pattern

EXAMPLE #7 - CURRENT CONTROLLED DRIVER

The known-good current controlled type waveform in Fig. **Fig. 15** is from a GM 2.0L TBI VIN [1]. With the lab scope set at 2 amps per division, notice that this system peaks at 4 amps and holds at 1 amp.

The next waveform is from the same type of engine, except that it shows a faulty injector. See **Fig. 16**. Notice that the current went to almost 5 amps and stayed at 1 amp during the hold pattern. Excessive amounts of current flow from bad injectors are a common source of intermittent computer shutdown. Using a current waveform pattern is the most accurate method of pinpointing this problem.

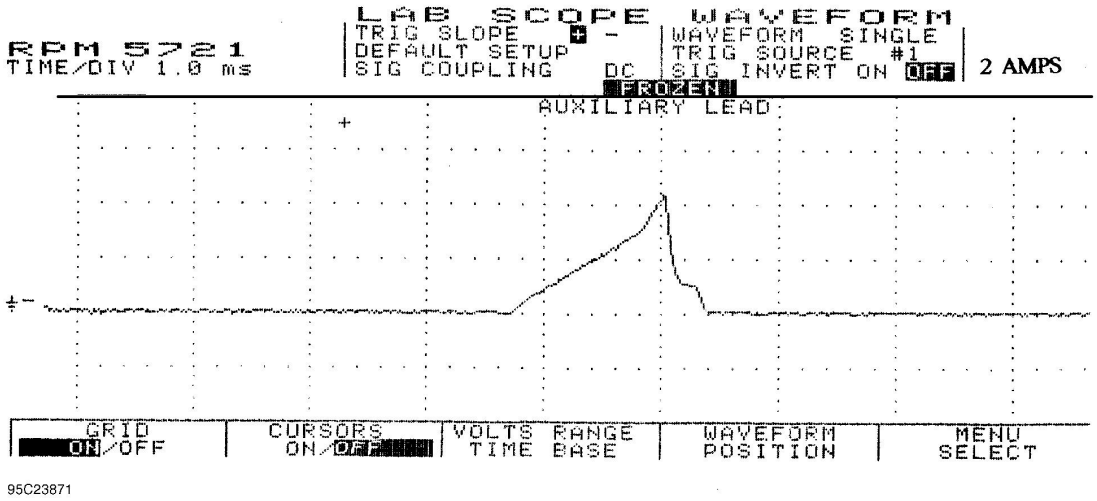

Fig. 15: Single Injector w/Normal Current Flow - Current Pattern

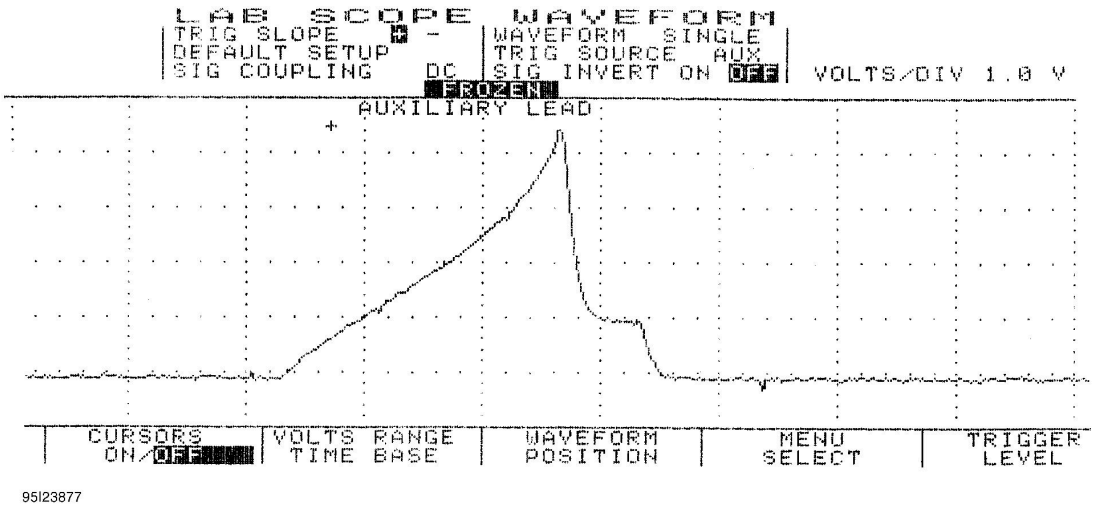

Fig. 16: Single Injector w/Excessive Current Flow - Current Pattern

EXAMPLE #8 - CURRENT CONTROLLED DRIVER

This known-good CPI system waveform from a GM 4.3L V6 CPI VIN [W] peaks at 4 amps and holds at 1-amp. See **Fig. 17** for waveform.

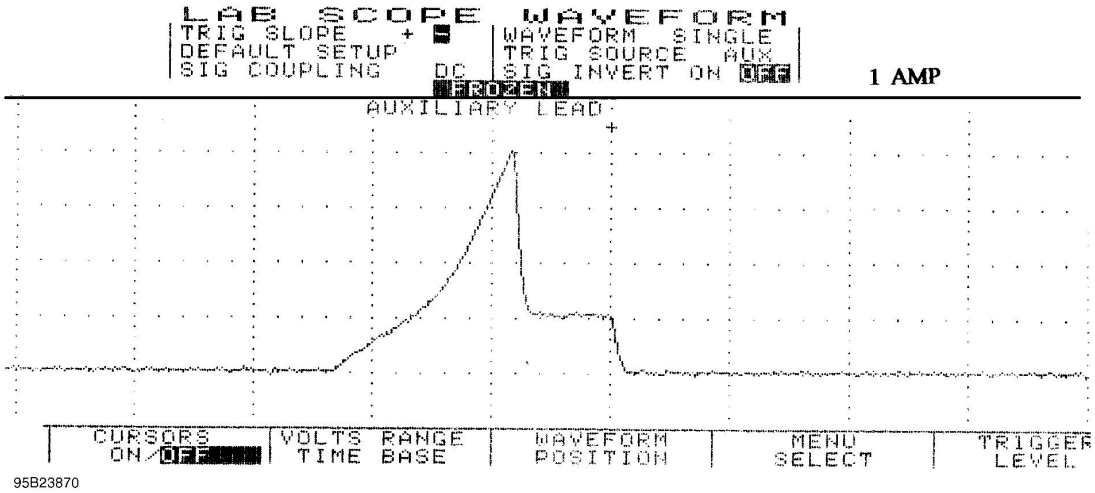

Fig. 17: Single Injector w/Normal Current Flow - Current Pattern

VOLTAGE WAVEFORM SAMPLES

NOTE: **This is GENERAL information. This article is not intended to be specific to any unique situation or individual vehicle configuration. For model-specific information see appropriate articles where available.**

EXAMPLE #1 - VOLTAGE CONTROLLED DRIVER

These two known-good waveform patterns are from a Ford 4.6L V8 VIN [W]. Fig. **Fig. 18** illustrates the 64 volt inductive kick on this engine, indicating no clamping is occurring. The second pattern, Fig. **Fig. 19**, was taken during hot idle, closed loop, and no load.

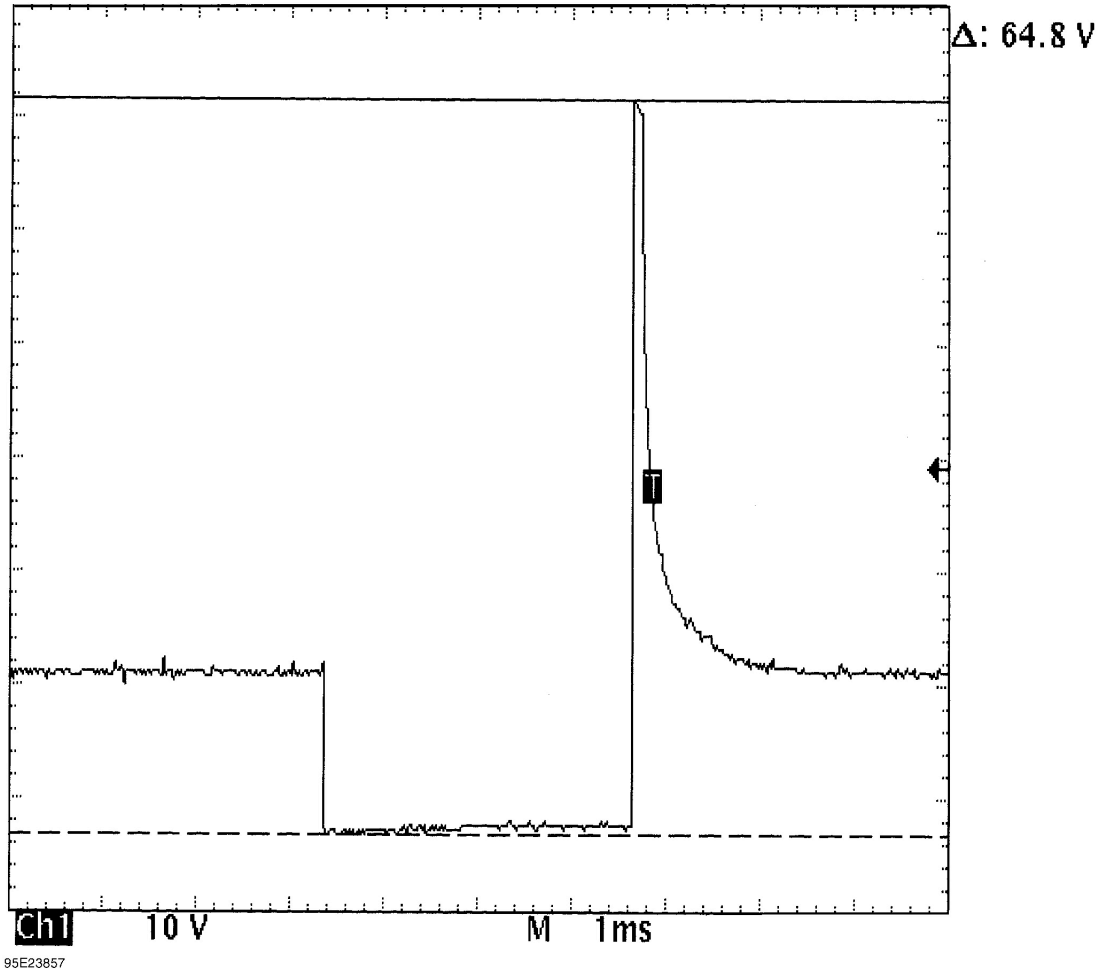

Fig. 18: Injector Bank - Known Good - Voltage Pattern

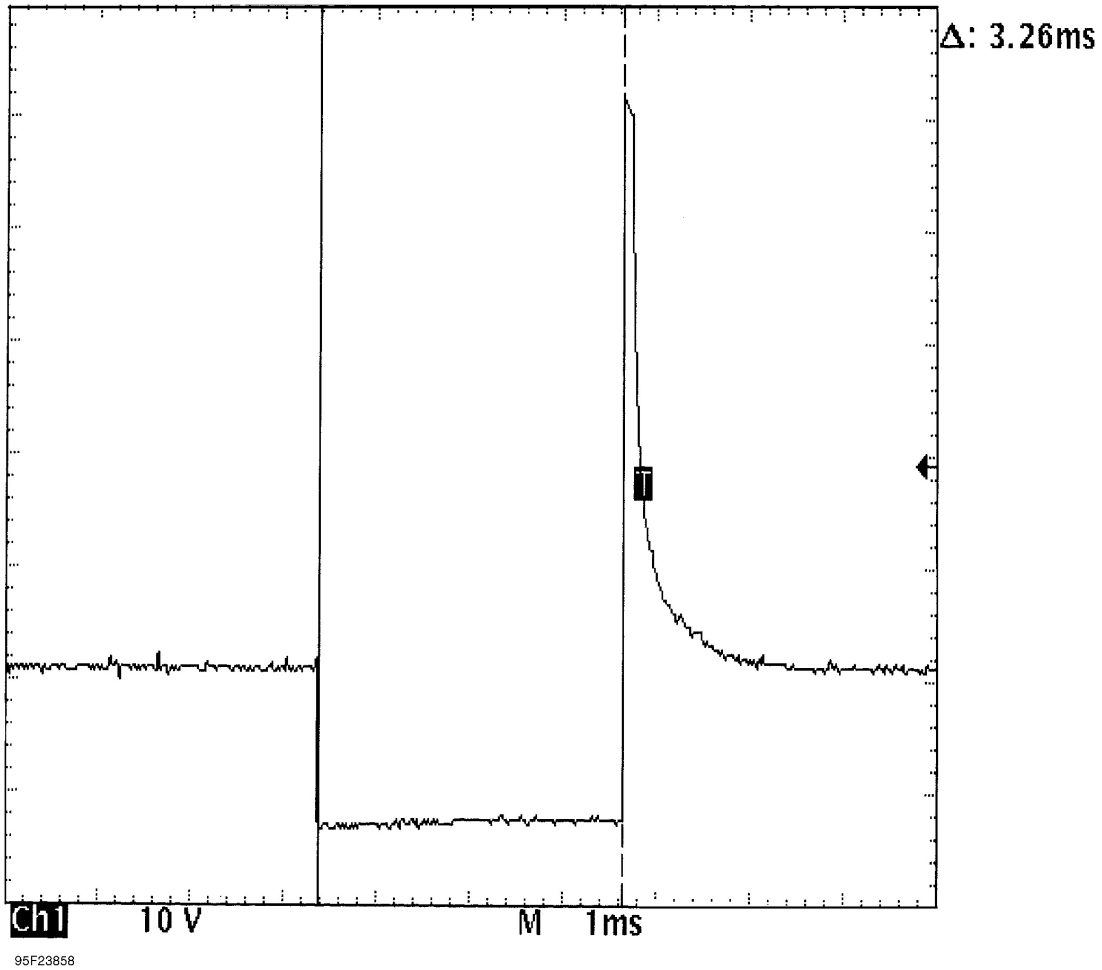

Fig. 19: Injector Bank - Known Good - Voltage Pattern

EXAMPLE #2 - VOLTAGE CONTROLLED DRIVER

The known-good waveform pattern in Fig. **Fig. 20** is from a GM 3.8L V6 PFI VIN [3]. It was taken during hot idle, closed loop and no load.

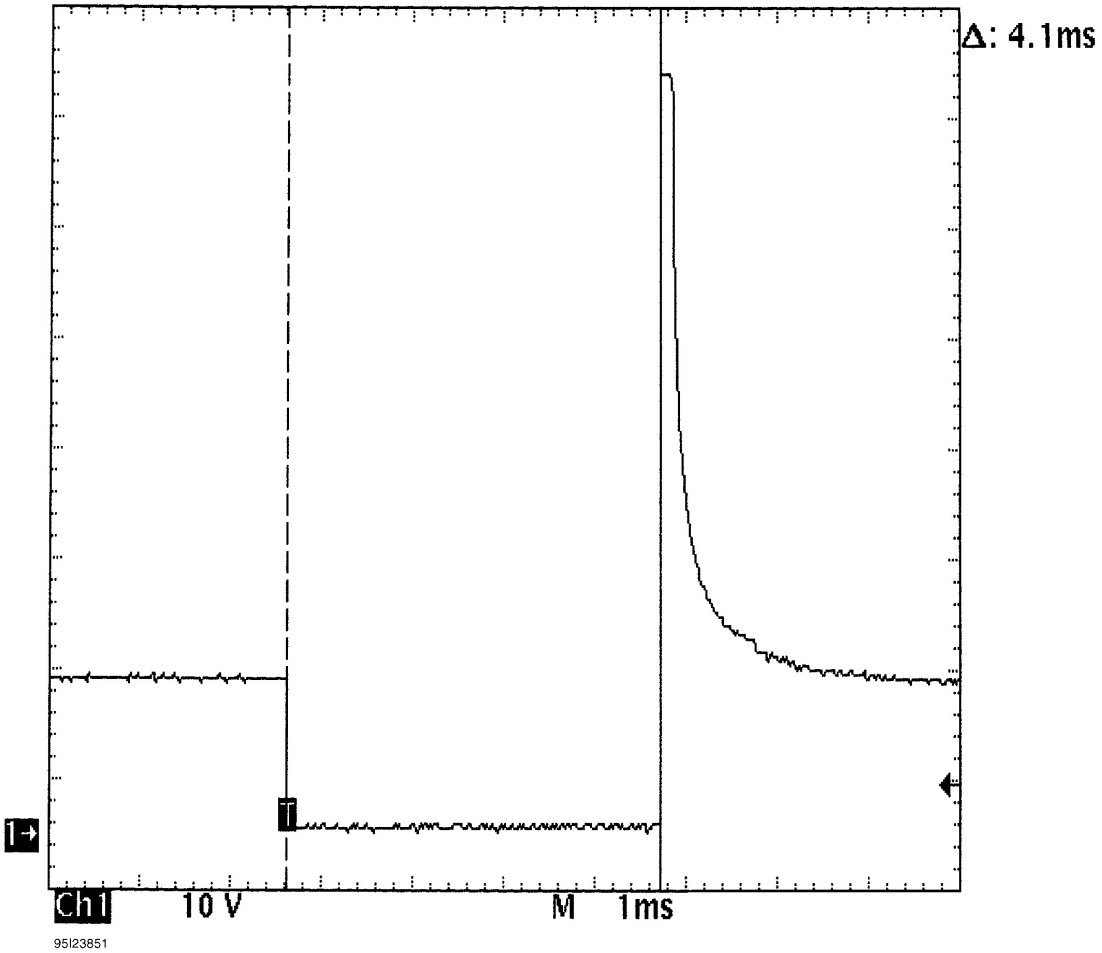

Fig. 20: Injector Bank - Known Good - Voltage Pattern

EXAMPLE #3 - VOLTAGE CONTROLLED DRIVER

This known-good waveform pattern, Fig. **Fig. 21**, is from a GM 5.0L V8 TPI VIN [F]. It was taken during hot idle, closed loop and no load.

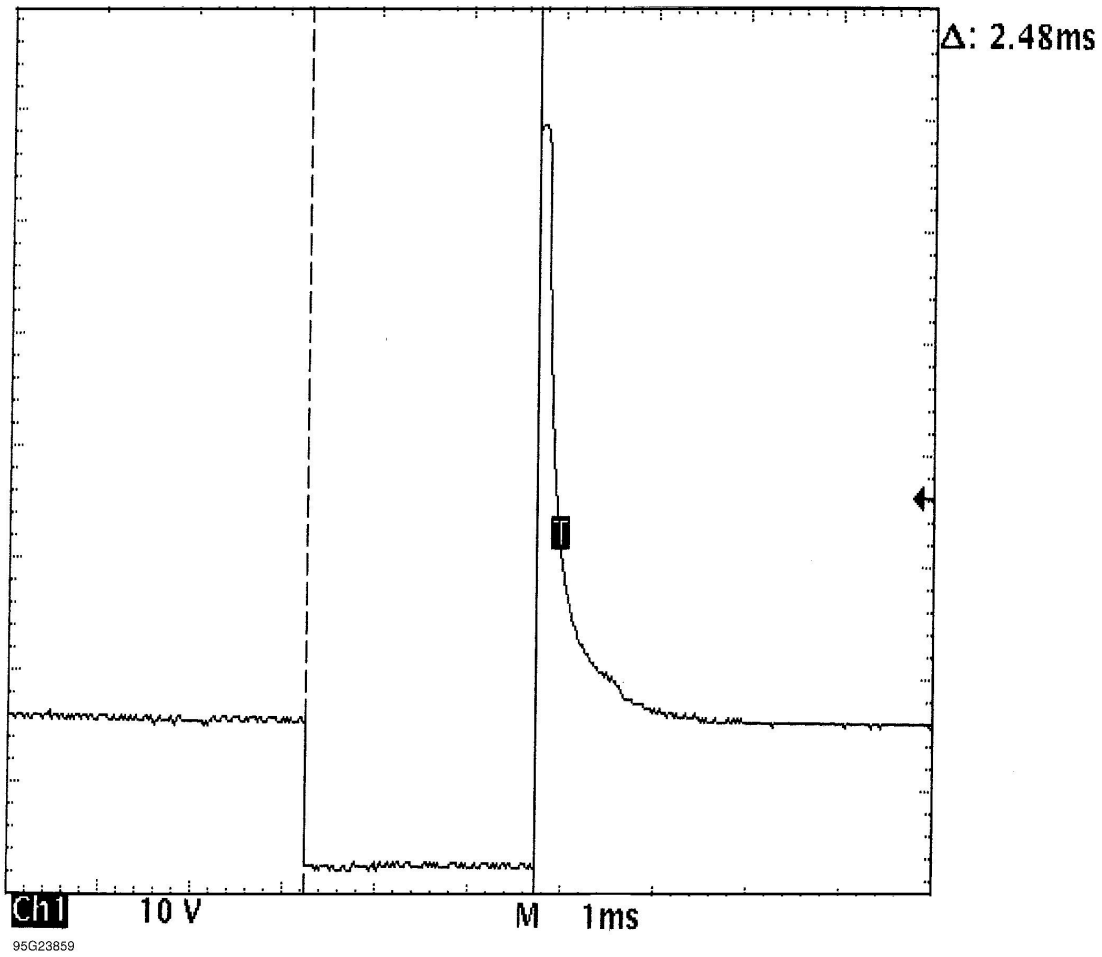

Fig. 21: Injector Bank - Known Good - Voltage Pattern

EXAMPLE #4 - CURRENT CONTROLLED DRIVER

From 1984 to 1987, Chrysler used this type injector drive on their TBI-equipped engines. See **Fig. 22** for a known-good pattern. Instead of the ground side controlling the injector, Chrysler permanently grounds out the injector and switches the power feed side. Most systems do not work this way.

These injectors peak at 6 amps of current flow and hold at 1 amp.

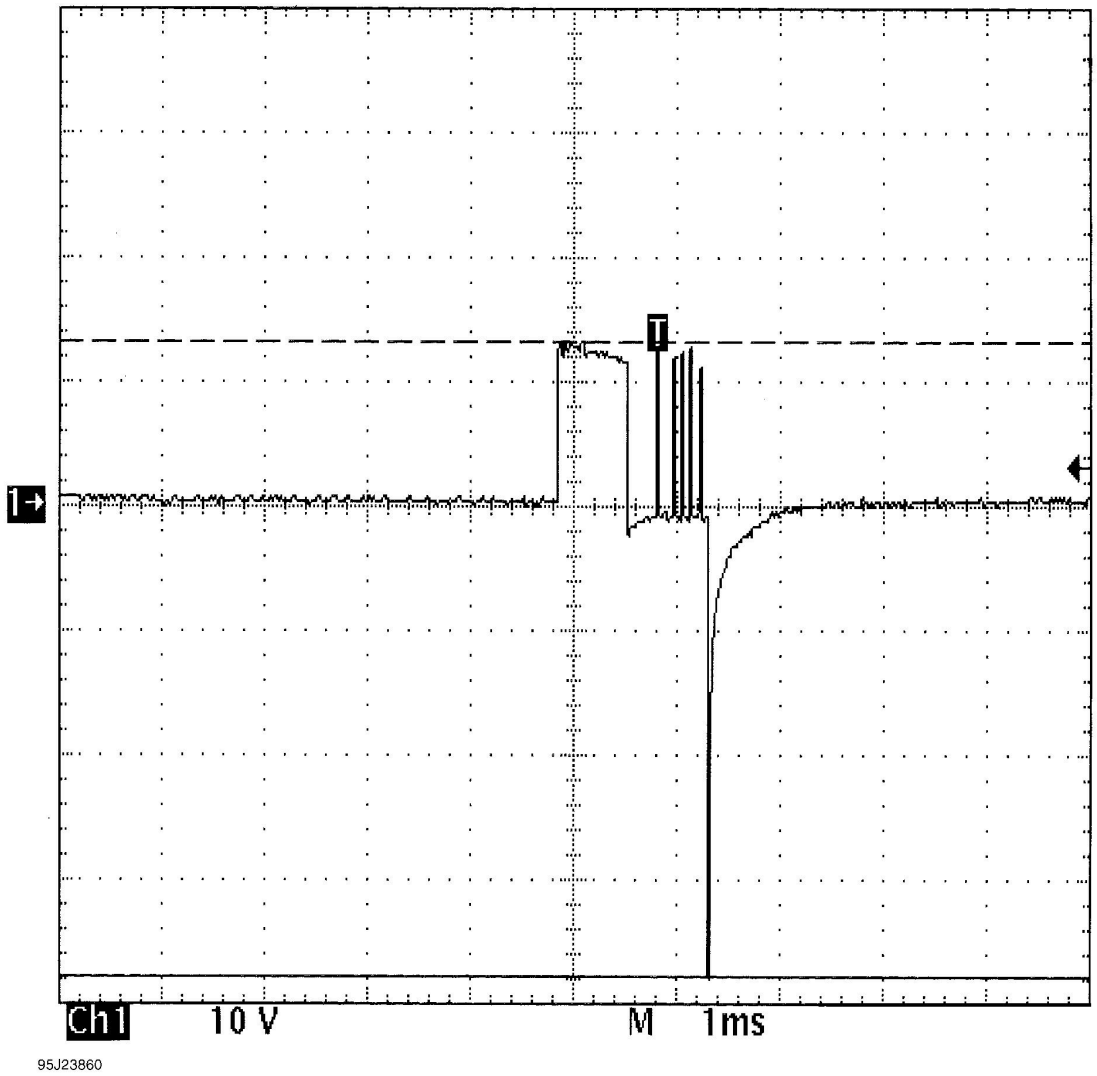

Fig. 22: Single Injector - Known Good - Voltage Pattern

EXAMPLE #5 - CURRENT CONTROLLED DRIVER

These two known-good waveform patterns are from a Chrysler 3.0L V6 VIN [3]. The first waveform, Fig. **Fig. 23**, is a dual trace pattern that illustrates how Chrysler uses the rising edge of the engine speed signal to trigger the injectors. The second waveform, Fig. **Fig. 24**, was taken during hot idle, closed loop, and no load.

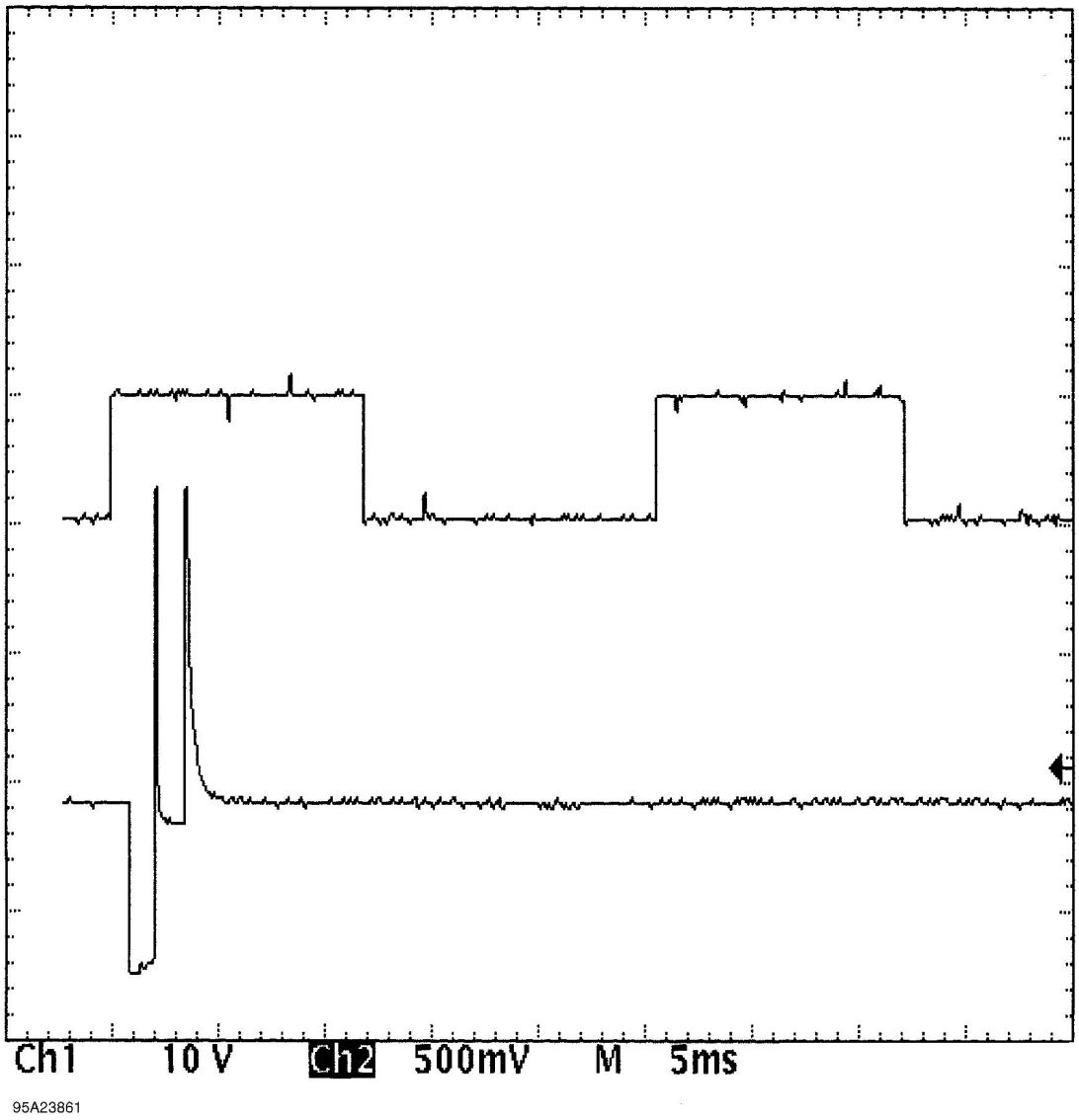

Fig. 23: Injector Bank - Known Good - Voltage Pattern

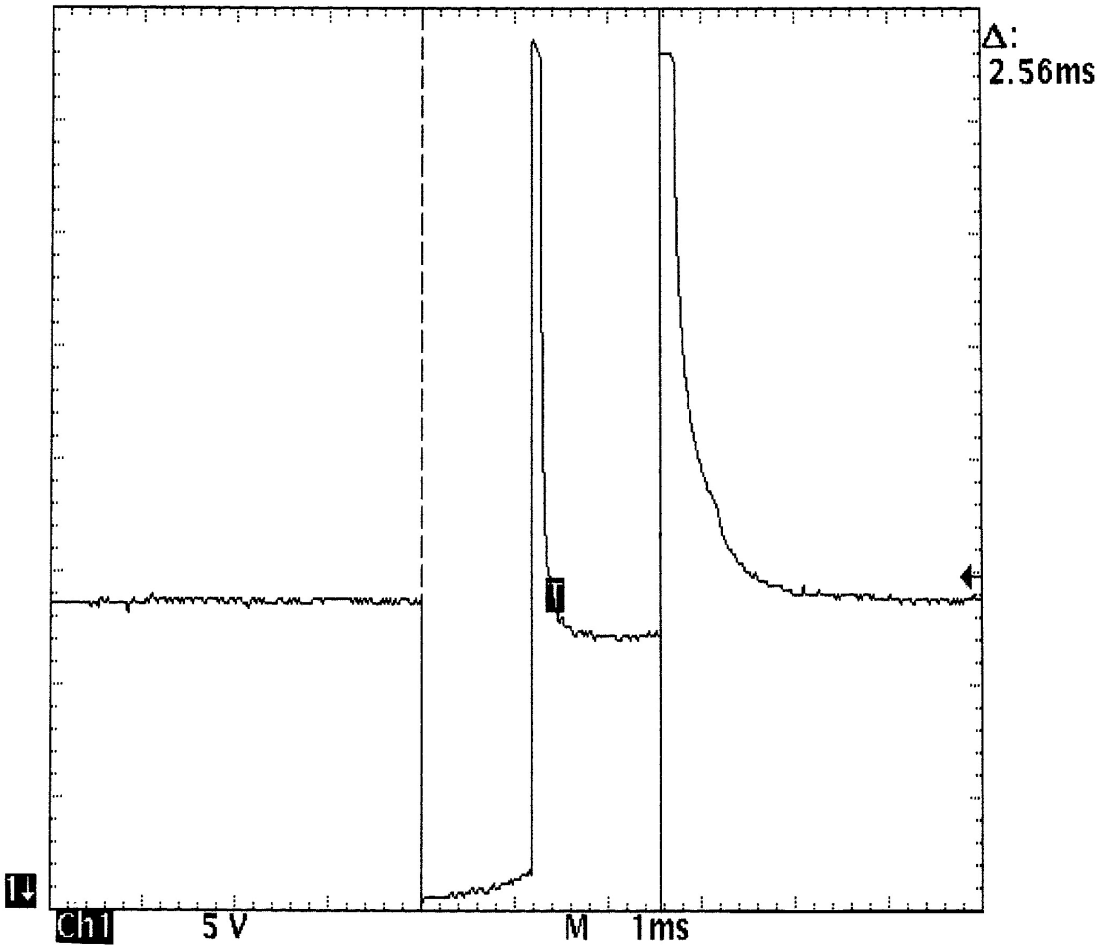

95B23854

Fig. 24: Injector Bank - Known Good - Voltage Pattern

EXAMPLE #6 - CURRENT CONTROLLED DRIVER

This known-good pattern from a Ford 3.0L V6 PFI VIN [U] illustrates that a zener diode inside the computer is used to clamp the injector's inductive kick to 35-volts on this system. See **Fig. 25**.

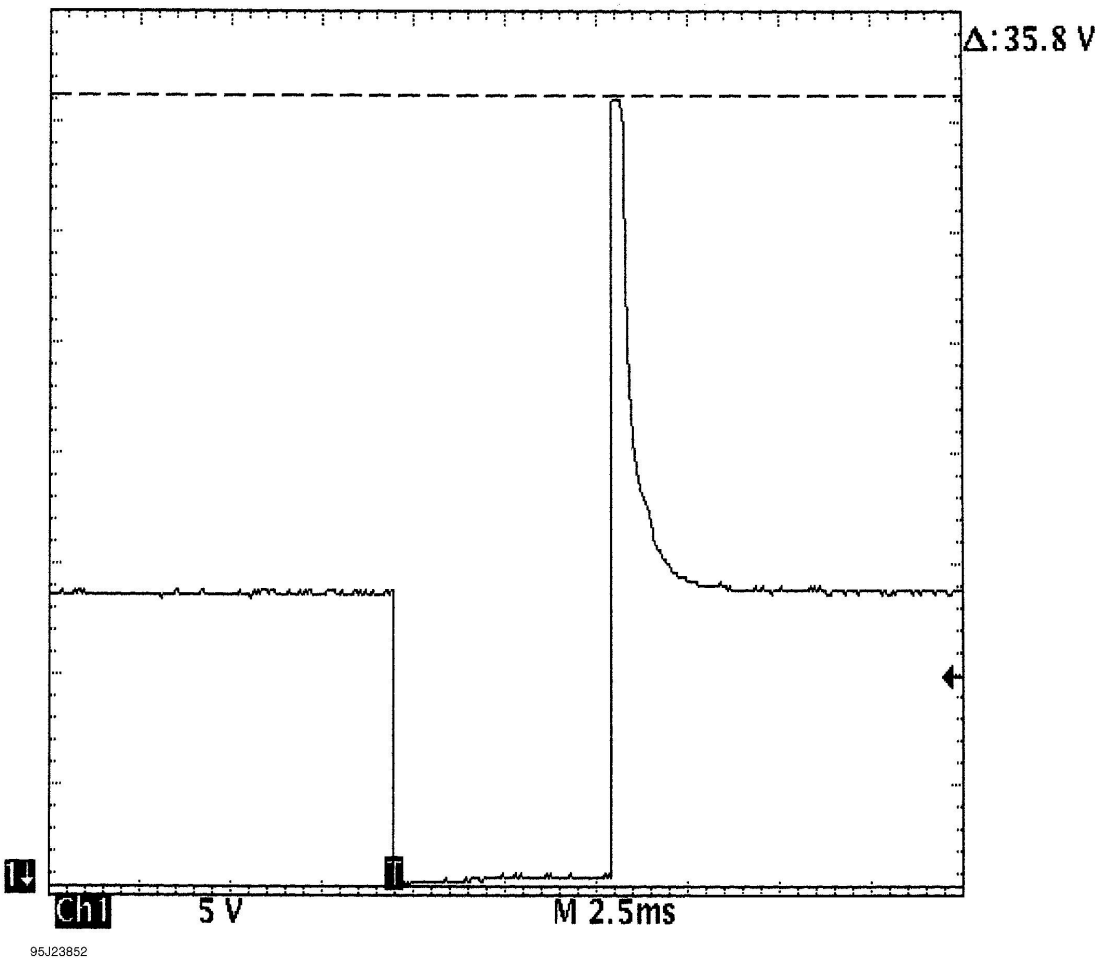

Fig. 25: Injector Bank - Known Good - Voltage Pattern

EXAMPLE #7 - CURRENT CONTROLLED DRIVER

This known-good waveform from a Ford 5.0L V8 CFI VIN [F] was taken during hot idle, closed loop, and no load. See **Fig. 26**.

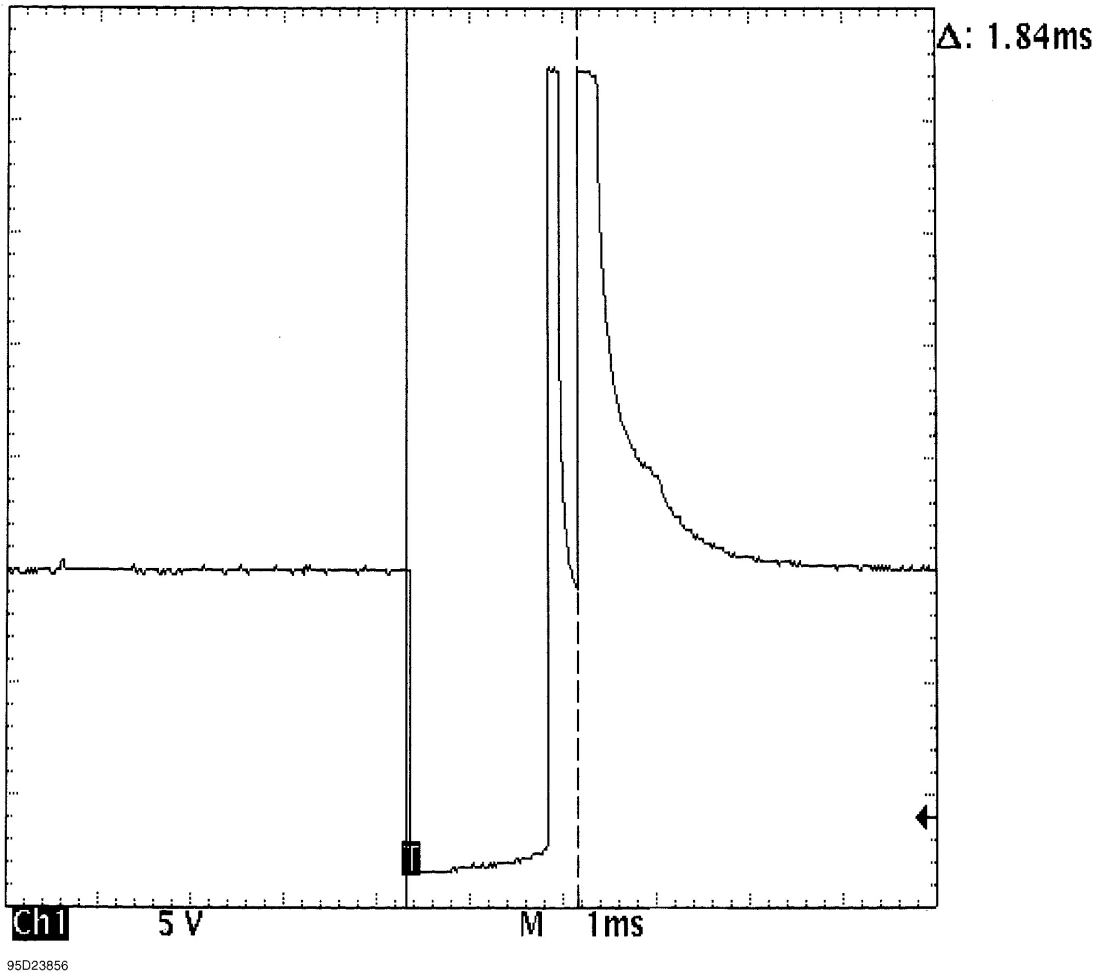

Fig. 26: Single Injector - Known Good - Voltage Pattern

EXAMPLE #8 - CURRENT CONTROLLED DRIVER

These two known-good waveform patterns are from a GM 2.0L In-Line 4 VIN [1]. Fig. **Fig. 27** illustrates the 78 volt inductive spike that indicates a zener diode is not used. The second waveform, Fig. **Fig. 28**, was taken during hot idle, closed loop, and no load.

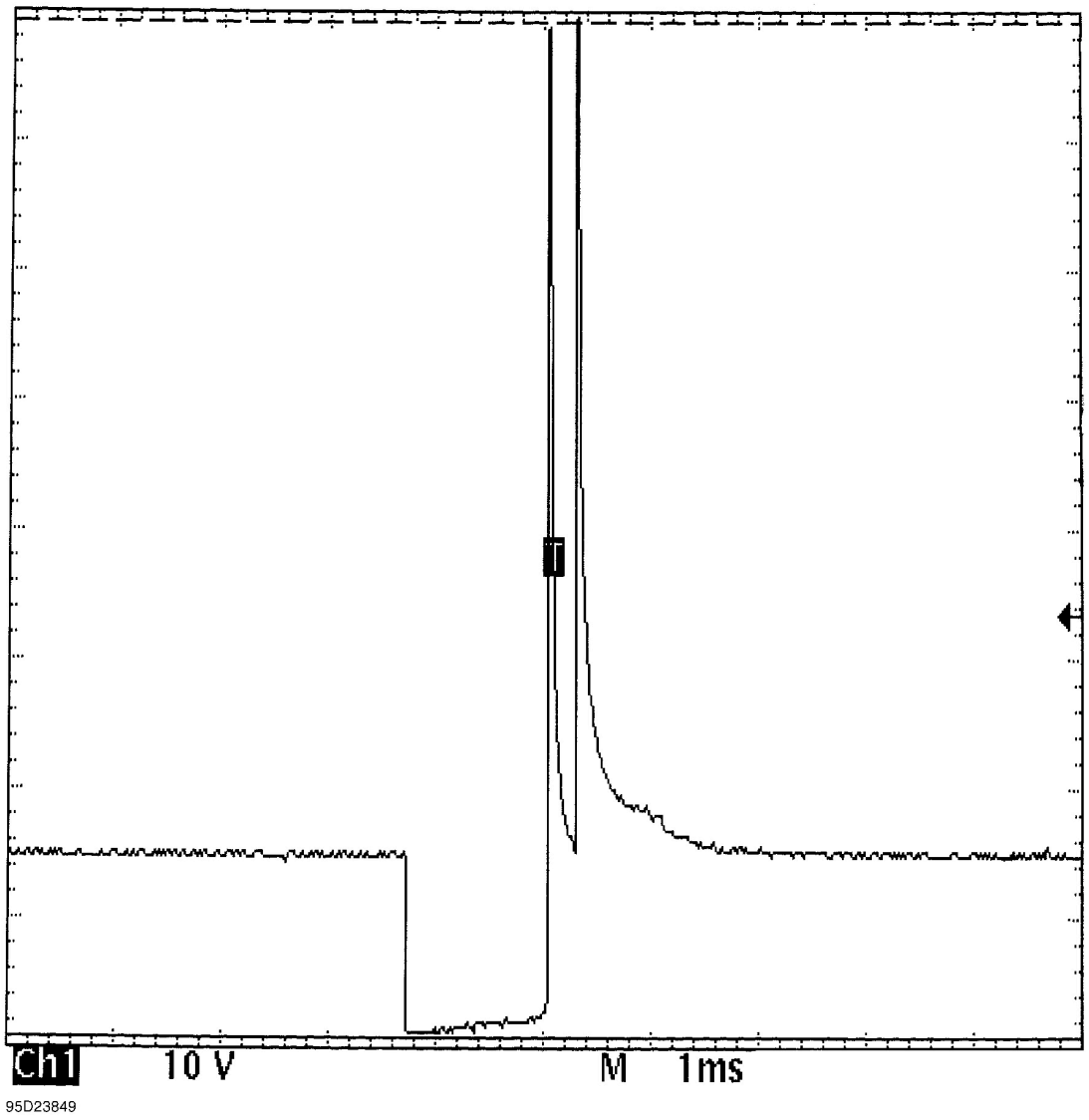

Fig. 27: Single Injector - Known Good - Voltage Pattern

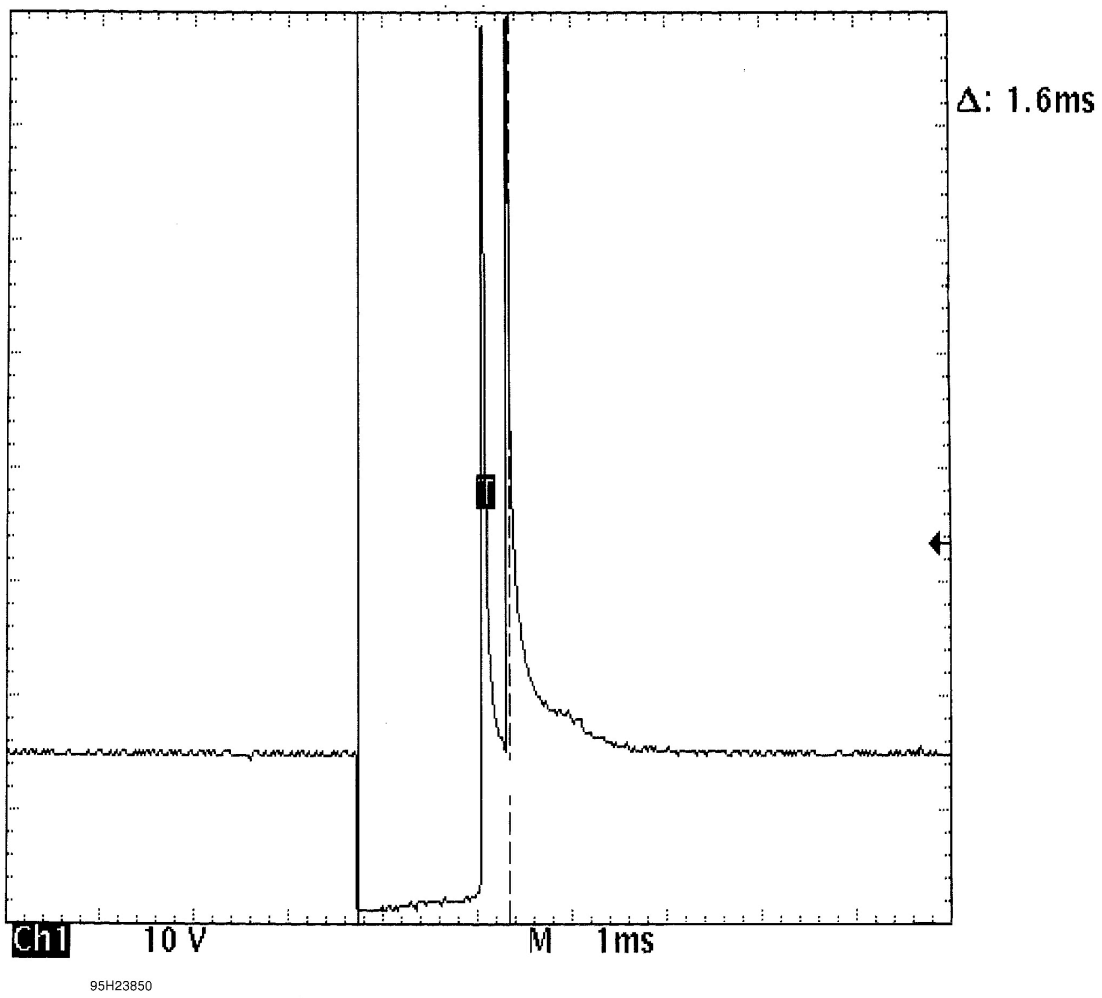

Fig. 28: Single Injector - Known Good - Voltage Pattern

GENERAL INFORMATION

Wheel Alignment Theory & Operation

* PLEASE READ THIS FIRST *

NOTE: **This is GENERAL information. This article is not intended to be specific to any unique situation or individual vehicle configuration. For model-specific information see appropriate articles where available.**

PRE-ALIGNMENT INSTRUCTIONS

NOTE: **This is GENERAL information. This article is not intended to be specific to any unique situation or individual vehicle configuration. For model-specific information see appropriate articles where available.**

GENERAL ALIGNMENT CHECKS

Before adjusting wheel alignment, check the following:

- Each axle uses tires of same construction and tread style, equal in tread wear and overall diameter. Verify that radial and axial runout is not excessive. Inflation should be at manufacturer's specifications.
- Steering linkage and suspension must not have excessive play. Check for wear in tie rod ends and ball joints. Springs must not be sagging. Control arm and strut rod bushings must not have excessive play. See **Fig. 1**.

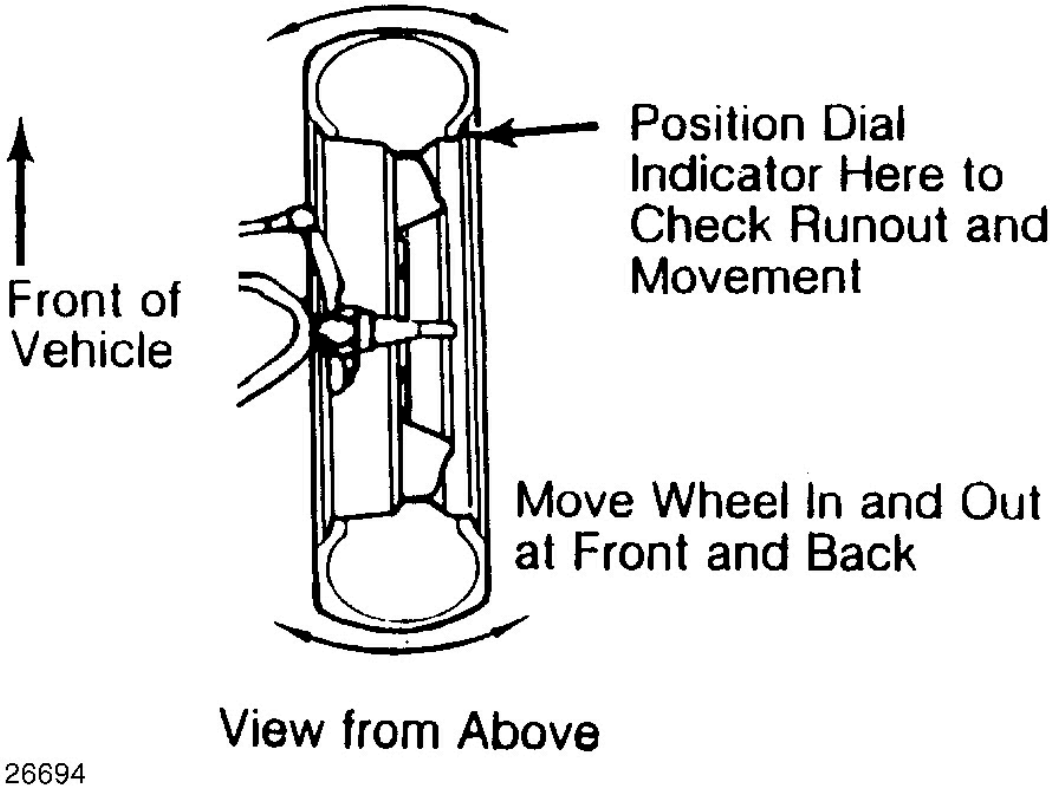

Fig. 1: Checking Steering Linkage

- Vehicle must be on level floor with full fuel tank, no passenger load, spare tire in place and no load in trunk. Bounce front and rear end of vehicle several times. Confirm vehicle is at normal riding height.
- Steering wheel must be centered with wheels in straight ahead position. If required, shorten one tie rod adjusting sleeve and lengthen opposite sleeve (equal amount of turns). See **Fig. 2**.
- Wheel bearings should have the correct preload and lug nuts must be tightened to manufacturer's specifications. Adjust camber, caster and toe-in using this sequence. Follow instructions of the alignment equipment manufacturer.

CAUTION: DO NOT attempt to correct alignment by straightening parts. Damaged parts MUST be replaced.

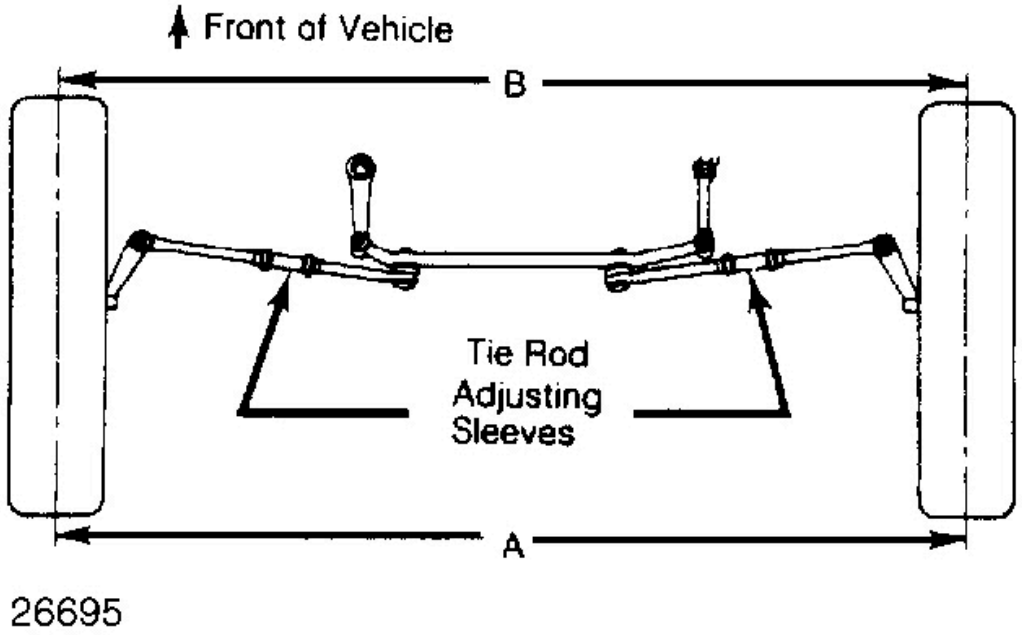

Fig. 2: Adjusting Tie Rod Sleeves (Top View)

ADJUSTMENTS

NOTE: **This is GENERAL information. This article is not intended to be specific to any unique situation or individual vehicle configuration. For model-specific information see appropriate articles where available.**

CAMBER

1. Camber is the tilting of the wheel, outward at either top or bottom, as viewed from front of vehicle. See **Fig. 3**.
2. When wheels tilts outward at the top (from centerline of vehicle), camber is positive. When wheels tilt inward at top, camber is negative. Amount of tilt is measured in degrees from vertical.

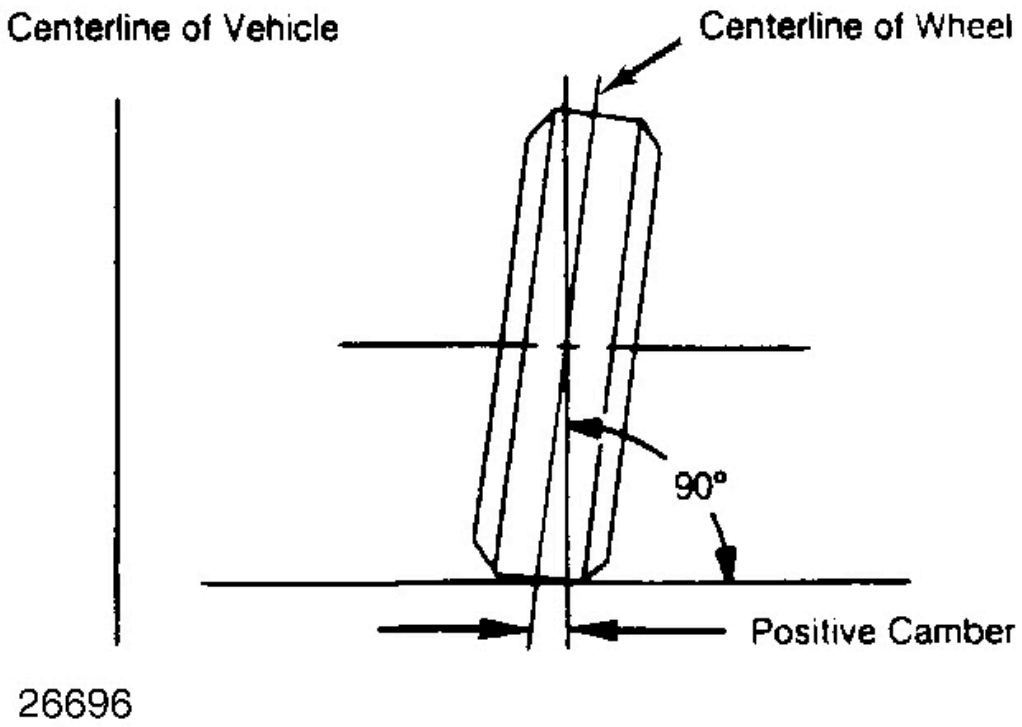

Fig. 3: Determining Camber Angle

CASTER

1. Caster is tilting of front steering axis either forward or backward from vertical, as viewed from side of vehicle. See **Fig. 4**.
2. When axis is tilted backward from vertical, caster is positive. This creates a trailing action on front wheels. When axis is tilted forward, caster is negative, causing a leading action on front wheels.

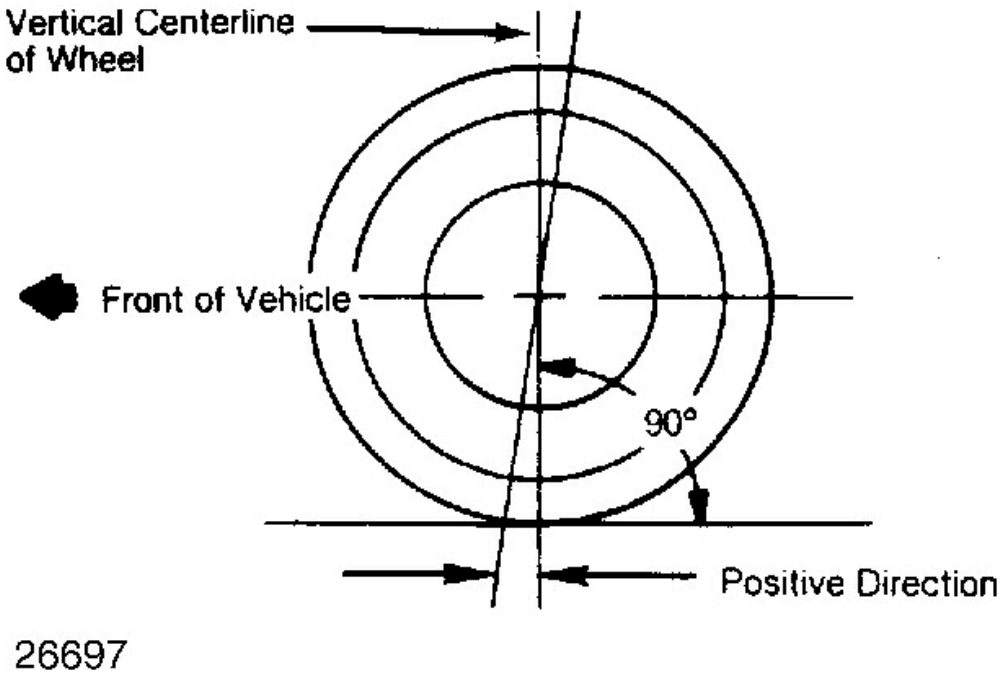

Fig. 4: Determining Caster Angle

TOE-IN ADJUSTMENT

Toe-in is the width measured at the rear of the tires subtracted by the width measured at the front of the tires at about spindle height. A positive figure would indicate toe-in and a negative figure would indicate toe-out. If the distance between the front and rear of the tires is the same, toe measurement would be zero. To adjust:

1) Measure toe-in with front wheels in straight ahead position and steering wheel centered. To adjust toe-in, loosen clamps and turn adjusting sleeve or adjustable end on right and left tie rods. See **Fig. 2** and **Fig. 5** .

2) Turn equally and in opposite directions to maintain steering wheel in centered position. Face of tie rod end must be parallel with machined surface of steering rod end to prevent binding.

3) When tightening clamps, make certain that clamp bolts are positioned so there will be no interference with other parts throughout the entire travel of linkage.

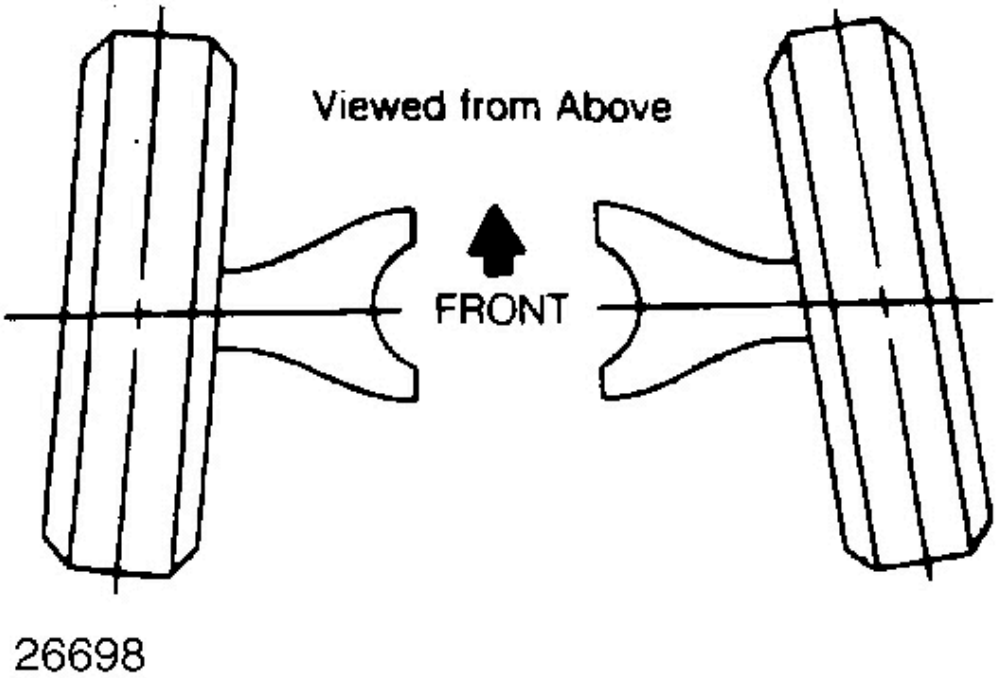

Fig. 5: Wheel Toe-In (Dimension A Less Dimension B)

TOE-OUT ON TURNS

1. Toe-out on turns (turning radius) is a check for bent or damaged parts, and not a service adjustment. With caster, camber, and toe-in properly adjusted, check toe-out with weight of vehicle on wheels.
2. Use a full floating turntable under each wheel, repeating test with each wheel positioned for right and left turns. Incorrect toe-out generally indicates a bent steering arm. Replace arm, if necessary, and recheck wheel alignment.

STEERING AXIS INCLINATION

1. Steering axis inclination is a check for bent or damaged parts, and not a service adjustment. Vehicle must be level and camber should be properly adjusted. See **Fig. 6**.
2. If camber cannot be brought within limits and steering axis inclination is correct, steering knuckle is bent. If camber and steering axis inclination are both incorrect by approximately the same amount, the upper and lower control arms are bent.

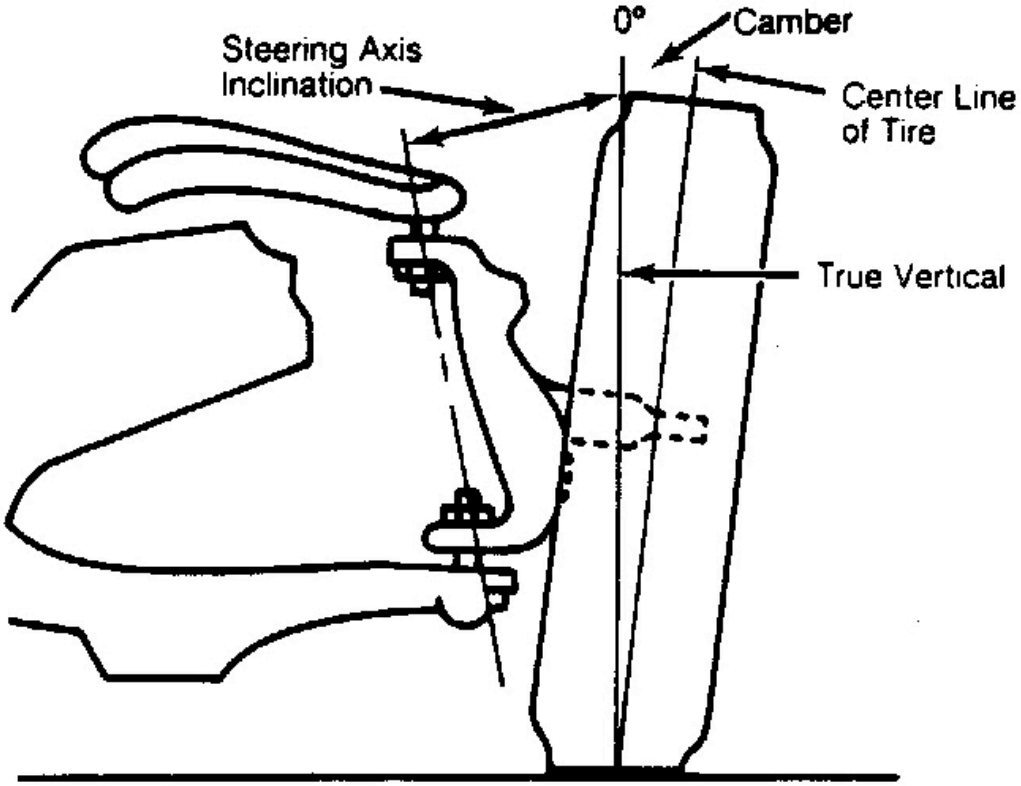

Fig. 6: Checking Steering Axis Inclination

REMINDER INDICATOR RESET PROCEDURES

Jeep - 1988-14

CHANGE OIL/OIL LIFE MONITOR

NOTE: **To determine the appropriate reset procedure, refer to CHANGE OIL/OIL LIFE MONITOR RESET INDEX.**

CHANGE OIL/OIL LIFE MONITOR RESET INDEX

Model & Year	Reset Procedure
Cherokee	
2014	Change Oil/Oil Life Monitor Reset - Procedure 1
Commander	
2008-10	Change Oil/Oil Life Monitor Reset - Procedure 1
Compass	
2008-14	Change Oil/Oil Life Monitor Reset - Procedure 1
Grand Cherokee	
2008-14	Change Oil/Oil Life Monitor Reset - Procedure 1
Liberty	
2008-12	Change Oil/Oil Life Monitor Reset - Procedure 1
Patriot	
2008-14	Change Oil/Oil Life Monitor Reset - Procedure 1
Wrangler	
2008-14	Change Oil/Oil Life Monitor Reset - Procedure 1

CHANGE OIL/OIL LIFE MONITOR RESET - PROCEDURE 1

1. Turn ignition on, with engine off.

   NOTE: **On vehicles with Keyless Enter-N-Go™, push the ENGINE START/STOP button and cycle the ignition to the ON/ RUN position.**

2. Fully depress the accelerator pedal, slowly, 3 times within 10 seconds.
3. Turn ignition switch to OFF/LOCK position.

   NOTE: **On vehicles with Keyless Enter-N-Go™, push the ENGINE START/STOP button once to return the ignition to the OFF/LOCK position.**

4. If indicator message illuminates when engine is started, repeat the reset procedure.

EMISS MAINT INDICATOR LIGHT

NOTE: **To determine the appropriate reset procedure, refer to EMISS MAINT INDICATOR LIGHT RESET INDEX.**

EMISS MAINT INDICATOR LIGHT RESET INDEX

Model & Year	Reset Procedure
Cherokee	
1988-90	Emiss Maint Indicator Light Reset - Procedure 1
Comanche	
1988-90	Emiss Maint Indicator Light Reset - Procedure 1
Wagoneer	
1988-90	Emiss Maint Indicator Light Reset - Procedure 1
Wrangler	
1988-90	Emiss Maint Indicator Light Reset - Procedure 1

EMISS MAINT INDICATOR LIGHT RESET - PROCEDURE 1

1. Vehicles are equipped with a EMISS MAINT indicator light on the instrument cluster. This light will come on one time at 82,500 miles to alert driver that emission service is required. At this time, oxygen sensor and PCV valve must be replaced and all other emission components should be inspected, and serviced or replaced as necessary.
2. The Service Reminder Indicator (SRI) timer is located under dash, near accelerator pedal or to right of steering column. Timer cannot be reset. To turn off light, timer must be replaced or disconnected. Since timer and sensor are interdependent, if timer should fail prematurely, oxygen sensor should be replaced at same time to preserve correct replacement interval.
3. To replace timer on Cherokee, Comanche and Wagoneer models, remove cruise control module (if equipped). Remove timer mounting screws. Disconnect electrical connector. On Wrangler models, remove timer mounting screws. Disconnect electrical connector. To install, reverse removal procedure.

MAINT REQD INDICATOR LIGHT

NOTE: **To determine the appropriate reset procedure, refer to MAINT REQD INDICATOR LIGHT RESET INDEX.**

MAINT REQD INDICATOR LIGHT RESET INDEX

Model & Year	Reset Procedure
Cherokee	
1991-92	Maint Reqd Indicator Light Reset - Procedure 1
Comanche	
1991-92	Maint Reqd Indicator Light Reset - Procedure 1
Grand Cherokee	
1993	Maint Reqd Indicator Light Reset - Procedure 1
Wrangler	

1991-92	**Maint Reqd Indicator Light Reset - Procedure 1**

MAINT REQD INDICATOR LIGHT RESET - PROCEDURE 1

Vehicles may be equipped with a MAINT REQD on the instrument cluster. This light will come on one time at 82,500 miles to alert driver that emission service is required. At this time, oxygen sensor must be replaced and all other emission components should be inspected, and serviced or replaced as necessary. Chrysler's Diagnostic Readout Box (DRB-II) tester is required to reset the service reminder indicator system.

Using DRB-II tester, access SELECT SYSTEMS. Select appropriate engine. Select with or without A/C. Select FUEL & IGNITION. Select ADJUSTMENTS. Select RESET SRI LIGHT. Reset SRI light. When DRB-II is finished resetting light, DRB-II display will read SRI LIGHT IS RESET.

PERFORM SERVICE MESSAGE

NOTE: To determine the appropriate reset procedure, refer to PERFORM SERVICE MESSAGE RESET INDEX.

PERFORM SERVICE MESSAGE RESET INDEX

Model & Year	Reset Procedure
Grand Cherokee	
1994-98	**Perform Service Message Reset - Procedure 1**
1999-07	**Perform Service Message Reset - Procedure 2**
Liberty	
2003-07	**Perform Service Message Reset - Procedure 2**

PERFORM SERVICE MESSAGE RESET - PROCEDURE 1

This vehicle may be equipped with an optional Vehicle Information Center (VIC). A PERFORM SERVICE message is displayed when "miles/kms to service" is zero, indicating that regular service and maintenance is due. To reset counter, turn ignition on, then press SELECT button momentarily, then press and hold SET button for at least 2 seconds.

PERFORM SERVICE MESSAGE RESET - PROCEDURE 2

1. The Electronic Vehicle Information Center (EVIC) displays a PERFORM SERVICE message when distance to service interval has been reached, indicating that regular service and maintenance is due. After performing necessary services, reset service distance by selecting a distance to service interval.
2. To program EVIC, turn ignition switch to ON position. Depress and release MENU push button until SERVICE INTV. = is displayed. Press and release STEP button to step through available options. The last selected distance option displayed becomes the service interval at which the PERFORM SERVICE message will be displayed.
3. If a new distance interval is selected, RESET SERVICE DISTANCE? with a yes or no option. When YES is selected, the accumulated distance since the last previous PERFORM SERVICE message will be

reset to zero because the service interval has been changed. When NO is selected, the distance until the next PERFORM SERVICE message is reduced by the accumulated distance since the last pervious message.

4. EVIC exits programming mode and returns to its normal operation mode when the C/T button is depressed or when the end of the programmable feature menu list is reached, whichever occurs first.

TIRE PRESSURE MONITOR SYSTEM (TPMS)

NOTE: To determine the appropriate reset procedure, refer to TPMS RESET INDEX.

TPMS RESET INDEX

Model & Year	Reset Procedure
Cherokee	
2014	TPMS Reset - Procedure 1
Commander	
2006-10	TPMS Reset - Procedure 1
Compass	
2007-14	TPMS Reset - Procedure 1
Grand Cherokee	
2002-04	TPMS Reset - Procedure 2
2005-14	TPMS Reset - Procedure 1
Liberty	
2002-04	TPMS Reset - Procedure 2
2005-12	TPMS Reset - Procedure 1
Patriot	
2007-14	TPMS Reset - Procedure 1
Wrangler	
2007-14	TPMS Reset - Procedure 1

TPMS RESET - PROCEDURE 1

NOTE: There is no formal retraining procedure necessary. Each sensor transmits tire pressure data approximately once every minute. Each sensor's (transmitter) broadcast is uniquely coded so that the WCM can monitor the state of each of the sensors on the 4 rotating road wheels. The WCM automatically learns and stores the sensor's ID while driving after a sensor has been replaced.

Once the vehicle has remained stationary for more than 20 minutes, drive vehicle for a minimum of 10 minutes while maintaining a continuous speed above 15 mph (24 km/h). During this time, the system will learn the new sensor ID.

TPMS RESET - PROCEDURE 2

NOTE: Use the following procedure to retrain all 4 road wheel tire pressure sensors. No attempt should be made to retrain individual sensors.

1. Retrieve Relearn Magnet (8821).
2. Press MENU Button on EVIC until "RETRAIN TIRE SENSORS - NO" is displayed.
3. Press STEP button to select "YES".

NOTE: There is a 60-second timer for training the first sensor, and a 30-second timer between training the remaining sensors. If either of these timers expire, the EVIC will abort the training procedure.

NOTE: If at any time the EVIC display reads "TRAINING ABORTED", move the vehicle ahead at least one foot and repeat the entire retraining procedure.

4. Press MENU button to start retraining. Display will read "TRAIN LEFT FRONT TIRE". The order for retraining all 5 sensors is:
   - Left Front.
   - Right Front.
   - Right Rear.
   - Left Rear.
   - Spare (if so equipped).
5. Starting at left front tire, place relearn magnet over valve stem. See **Fig. 1**. Within approximately 5 seconds, vehicle horn will chirp indicating training complete at that particular sensor. Remove the magnet.
6. Repeat this step on remaining sensors as indicated by EVIC until all TPM sensors positions are trained.
7. Once EVIC displays "TRAINING COMPLETE", pressing either STEP, C/T, RESET or MENU button will exit training routine.

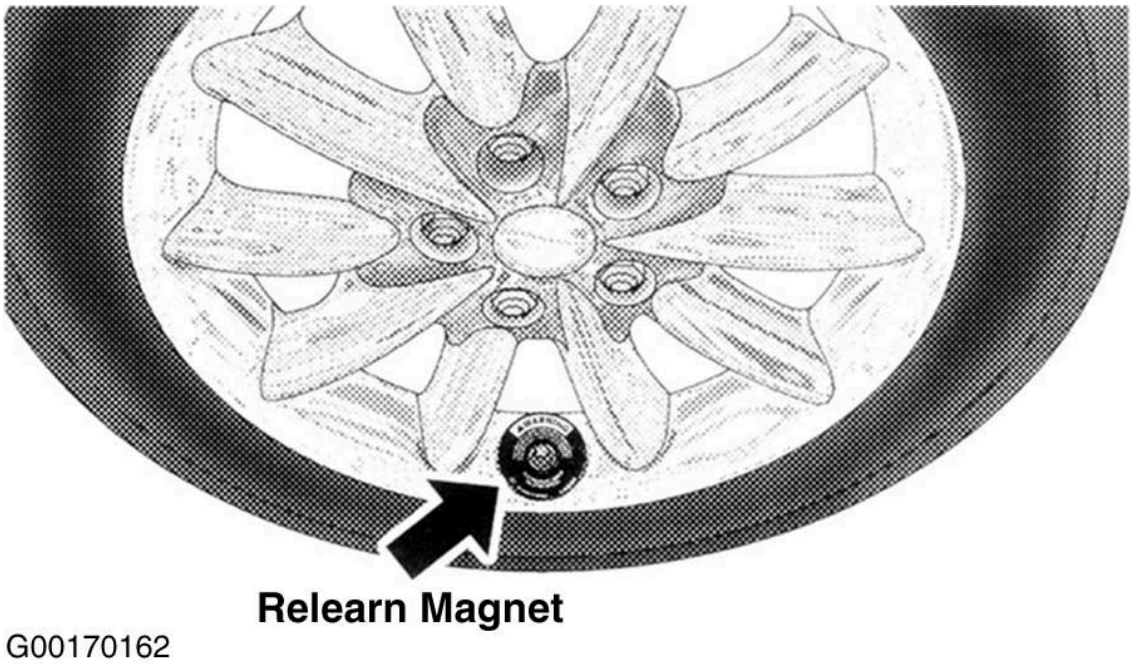

Fig. 1: Placing Training Magnet Around Valve Stem
Courtesy of DAIMLERCHRYSLER CORPORATION

UNIFORM INSPECTION & COMMUNICATION STANDARDS 2010 - 2011

Routine Inspection Reference Guide

ROUTINE INSPECTION REFERENCE GUIDE

These materials are confidential and are not to be disclosed to, or utilized by, any individual or entity other than participants of the Motorist Assurance Program (MAP).

The Automotive Maintenance and Repair Association (AMRA) and MAP do not warrant these materials or guarantee their accuracy, and AMRA and MAP assume no liability for errors.

MAP STANDARDS OF SERVICE

MAP developed standards of service for shops to follow in working with customers. Written from the point of view of customers, and for the use of maintenance and repair shops, the standards expand on the ideas and promises established in MAP's Pledge to Customer

I. Our recommendations are based upon the following definitions.

System Failure - Parts/system indicated are out of manufacturers' specifications, have failed or are unable to perform their normal function as intended or designed by the manufacturers. Service/replacement is required.

Preventive/Scheduled Maintenance - Parts/system are scheduled for service/ replacement per industry standards or are near the end of their useful life and repair/ replacement is recommended in advance of parts/system failure. Service/replacement is suggested.

Improved System Performance - Parts/ system indicated are recommended for repair/ replacement to enhance/improve the vehicle's ability to perform as intended or designed by the manufacturer, or as requested by the customer. Service/replacement is suggested.

II. Training/Criteria Our personnel have acquired auto repair expertise through formal education or work experience. Where appropriate, personnel are moving toward certification (e.g. vehicle manufacturer, ASE, etc.) for the services performed. Continuing education will be supported by all MAP participants.

III. Appropriate Company Approved Inspection

We will perform an appropriate inspection based on MAP Uniform Inspection & Communication Standards.

IV. Written Estimates

Written estimates based on our inspection, in compliance with state and local regulations, will include parts (dollar amount), labor (dollar amount), and the total estimate.

V. Work Authorization

No work will be performed without the customer's prior approval.

VI. Limited Warranty

A minimum limited warranty will be offered of 90 days or 4,000 miles, whichever comes first, covering parts and labor.

VII. Returned Parts

All customers will be entitled to the return of old parts, or if they choose, they may examine the parts prior to leaving the store. Where failed parts are required to be returned to the manufacturer in order to honor the warranty, the customer will be allowed to examine the parts.

VIII. Classification of Parts

Replaced parts will be identified as new, remanufactured, rebuilt or used. MAP participants will inform the customer and indicate on the estimate and invoice whether a part is new, remanufactured, rebuilt or used.

THE MAP PROCESS - OVERVIEW

Repair Association, Inc. (AMRA). Participation in the Motorist Assurance Program comes from retailers, suppliers, independent repair facilities, vehicle manufacturers and industry associations.

Our organization's mission is to strengthen the relationship between the consumer and the auto repair industry. We produce materials that give motorists the information and encouragement to take greater responsibility for their vehicles-through proper, manufacturer / recommended maintenance. We encourage participating service and repair shops (including franchisees and dealers) to adopt (1) a Pledge of Assurance to their Customers and (2) the Motorist Assurance Program Standards of Service. All participating service providers have agreed to subscribe to this Pledge and to adhere to the promulgated Standards of Service demonstrating to their customers that they are serious about customer satisfaction.

These Standards of Service require that an inspection of the vehicle's (problem) system be made and the results communicated to the customer according to industry standards. Given that the industry did not have such standards, the Motorist Assurance Program successfully promulgated industry inspection communication standards in 1994-95 for the following systems: Exhaust, Brakes, ABS, Steering and Suspension, Engine Maintenance and Performance, HVAC, Electrical Systems, and Drive Train and Transmissions. Further, revisions to all of these inspection communication standards are continually re-published. Participating shops utilize these Uniform Inspection & Communication Standards as part of the inspection process and for communicating their findings to their customers.

The Motorist Assurance Program continues to work cooperatively and proactively with government agencies and consumer groups toward solutions that both benefit the customer and are mutually acceptable to both regulators and industry. We maintain the belief that industry must retain control over how we conduct our business, and we must be viewed as part of the solution and not part of the problem. Meetings with state and other government officials (and their representatives), concerned with auto repair and/or consumer protection, are conducted. Feedback from these sessions is brought back to the association, and the program adjusted as needed.

We welcome you to join us as we continue our outreach... with your support, both the automotive repair industry and your customers will reap the benefits. Please visit MAP at our Internet site www.motorist.org or contact us at:

201 Park Washington Court

Falls Church, Virginia 22046

Tel: (703) 532-2027 * Fax: (202) 318-0378

THE MAP PROCESS - OVERVIEW OF SERVICE REQUIREMENTS AND SUGGESTIONS

It is MAP policy that all exhaust, brake, steering, suspension, wheel alignment, drive-train, engine performance and maintenance, and heating, ventilation and air conditioning, and electrical services be offered and performed under the standards and procedures specified in these sections.

Before any service is performed on a vehicle, an inspection of the appropriate system must be performed. The results of this inspection must be explained to the customer and documented on an inspection form. The condition of the vehicle and its components will indicate what services/part replacements may be "Required" or "Suggested". In addition, suggestions may be made to satisfy the requests expressed by the customer.

When a component is suggested or required to be repaired or replaced, the decision to repair or replace must be made in the customer's best interest, and at his or her choice given the options available.

This section lists the various parts and conditions that indicate a required or suggested service or part replacement. Although this list is extensive, it is not fully inclusive. In addition to this list, a technician may make a suggestion. However, any suggestions must be based on substantial and informed experience or the vehicle manufacturer's recommended service interval and must be documented. However, any suggestions must be documented and must be based on substantial and informed experience or the vehicle manufacturer's recommended service interval. NOTE: Vehicle manufacturer service intervals are often categorized as either Normal or Severe. Frequently, motorists are unaware that their driving patterns and habits meet the criteria for following Severe Service schedules. Severe Service is generally defined as, but not limited to one or more of the following conditions: Driving in stop-and-go traffic; frequent short trips; high-speed driving; extreme temperatures; towing or hauling.

Some conditions indicate that service or part replacement is required because the part in question is no longer providing the function for which it is intended, does not meet a vehicle manufacturer's design specification or is missing.

- **Example:** An exhaust pipe has corroded severely and has a hole in it through which exhaust gases are leaking. Replacement of the exhaust pipe in this case is required due to functional failure.
- **Example:** A brake rotor has been worn to the point where it measures less than the vehicle manufacturer's discard specifications. Replacement of the rotor is required because it does not meet design specifications.

Some conditions indicate that a service or part replacement is suggested because the part is close to the end of its useful life or addresses a customer's need, convenience or request. If a customer's vehicle has one of these

conditions, the procedure may be only to suggest service.

- **Example:** An exhaust pipe is rusted, corroded or weak, but no leaks are present. In this case, the exhaust pipe has not failed. However, there is evidence that the pipe may need replacement in the near future. Replacement of the pipe may be suggested for the customer's convenience in avoiding a future problem.
- **Example:** The customer desires improved ride and/or handling, but the vehicle's shocks or struts have not failed. In this case, replacement may be suggested to satisfy the customer's wishes. In this case, replacement of the shocks or struts may not be sold as a requirement.

A customer, of course, has the choice of whether or not a shop will service his or her vehicle. He or she may decide not to follow some of your suggestions. When a repair is required, a MAP shop must refuse partial service on that system if, in the judgment of the service provider, proceeding with the work could create or continue an unsafe condition. When a procedure states that required or suggested repair or replacement is recommended, the customer must be informed of the generally acceptable repair/replacement options whether or not performed by the shop.

The following reasons may be used for required and suggested services. These codes are shown in the "Code" column of the MAP Uniform Inspection & Communications Standards that follow:

Reasons to Require Repair or Replacement	Reasons to Suggest Repair or Replacement
A. Part no longer performs intended purpose B. Part does not meet a design specification (regardless of performance) C. Part is missing	1. Part is close to the end of its useful life B - Part does not meet a design specification (regardless of performance) (just above discard specifications, or weak; failure likely to occur soon, etc.) 2. To address a customer need, convenience, or request (to stiffen ride, enhance performance, eliminate noise, etc.) 3. To comply with maintenance recommended by the vehicle's Original Equipment Manufacturer (OEM) 4. Technician's recommendation based on substantial and informed experience 5. To comply with maintenance recommended by AMRA / MAP
NOTE: **When a repair is required, the shop must refuse partial service to the system in question, if the repair creates or continues an unsafe condition.**	**NOTE:** **Suggested services are *always* optional. When presenting suggested repairs to the customer, you must present the facts, allowing the customer to draw their own conclusions and make an informed decision about how to proceed.**

MAINTENANCE OVERVIEW

ANTIFREEZE/COOLANT

The main function of the Engine Cooling System is to carry heat away from the engine and maintain the desired operating temperature. This is accomplished by circulating antifreeze/coolant through the engine, where heat is generated, and carrying it to the radiator to be cooled.

Over the past decade internal combustion engines have become more fuel efficient; however, most of the energy in the gasoline (perhaps 70%) is converted into heat, and the cooling system keeps the engine from overheating by transferring this heat to the air. But the cooling system also has several other functions.

An automobile engine runs best at a fairly high temperature. When the engine is cold, components wear out faster, and the engine is less efficient and releases more pollutants into the atmosphere. The cooling system is designed to allow the engine to heat up as quickly as possible, and then to keep the engine at a constant temperature.

Modern automobiles operate in a wide variety of ambient temperatures, from well below freezing to well over 100 F. The fluid used to cool the engine must have a very low freezing point, a high boiling point, and it must have the ability to transfer a lot of heat.

An adequate amount of an antifreeze/coolant and water mixture is necessary to reduce the possibility of engine overheating and freezing, and to prevent rust and corrosion in the cooling system.

Water is one of the most effective fluids for holding heat, but water freezes at too high a temperature to be used in car engines. The fluid that most cars use is a mixture of water and ethylene glycol, also known as antifreeze. By adding ethylene glycol to water, the boiling and freezing points are improved significantly.

The temperature of the coolant can sometimes reach 250 to 275 F (121 to 135 C). Even with ethylene glycol added, these temperatures would boil the coolant. The cooling system is pressurized, which further raises the boiling point of the coolant. Most automobiles have around 14 to 15 pounds per square inch (psi), which raises the boiling point approximately 45 F so the coolant can endure the high temperatures produced in the engine.

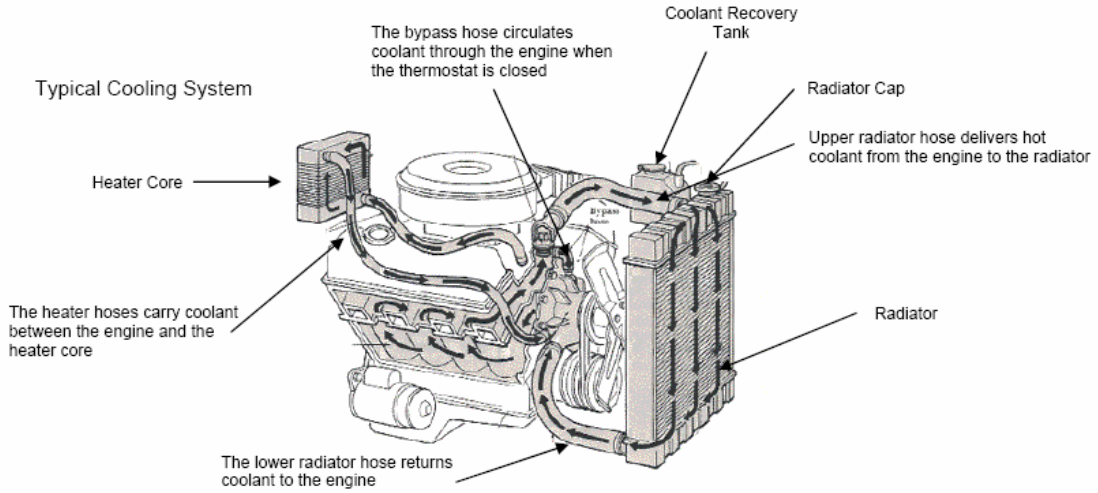

Fig. 1: Typical Cooling System

Hoses showing obvious signs of wear such as cracks, cuts, stiffness, bulges, excessive softness or abrasions should be replaced.

The National Automotive Radiator Service Association (NARSA) recommends a seven (7)-point preventative cooling system maintenance check at least once every two years. The program is designed to identify any areas that need attention, and consists of:

- a visual inspection of all cooling system components, including belts and hoses
- a radiator cap test to check for the recommended system pressure level
- a thermostat check for proper opening and closing
- a pressure test to identify any external leaks to the cooling system parts; including the radiator, water pump, engine coolant passages, radiator and heater hoses and heater core
- an internal leak test to check for combustion gas leakage into the cooling system
- an engine fan test for proper operation h a system power flush and refill with car manufacturer's recommended concentration of coolant

VISUAL INSPECTION

What you are looking for is the condition of the belts and hoses. The radiator hoses and heater hoses are easily inspected just by opening the hood and looking. You want to be sure that the hoses have no cracking or splitting and that there is no bulging or swelling at the ends. If there is any sign of problems, the hose should be replaced with the correct part number for the year, make and model of the vehicle. Never use a universal hose unless it is an emergency and a proper molded hose is not available.

Heater hoses are usually straight runs and are not molded, so a universal hose is fine to use and often is all that is available. Make sure that you use the proper inside diameter for the hose being replaced. For either the radiator hoses or the heater hoses, make sure that you route the replacement hose in the same way that the original hose was running. Position the hose away from any obstruction that can possibly damage it and always use new hose clamps. After you refill the cooling system with coolant, do a pressure test to make sure that there are no leaks.

RADIATOR CAP TEST

A radiator cap is designed to maintain pressure in the cooling system at a certain maximum pressure. If the cooling system exceeds that pressure, a valve in the cap opens to bleed the excessive pressure into the reserve tank. Once the engine has cooled off, a negative pressure begins to develop in the cooling system. When this happens, a second valve in the cap allows the coolant to be siphoned back into the radiator from the coolant reservoir. If the cap should fail, the engine can easily overheat. A pressure test of the radiator cap is a quick way to tell if the cap is doing its job. It should be able to hold its rated pressure for two minutes.

ENGINE FAN

The radiator cooling fan is an important part of the cooling system operation. While a fan is not really needed while a vehicle is traveling down the highway, it is extremely important when driving slowly or stopped with the engine running. In the past, the fan was attached to the engine and was driven by the fan belt. The speed of the fan was directly proportional to the speed of the engine; a viscous fan drive was developed in order to

disengage the fan when it was not needed.

With computer controls, the engine-driven fans gave way to electric fans mounted directly on the radiator. A temperature sensor determined when the engine was beginning to run too hot and turned on the fan to draw air through the radiator to cool the engine. On many cars, there were two fans mounted side by side to make sure that the radiator had a uniform air flow for the width of the unit.

When the car is in motion, the speed of the air entering the grill is usually sufficient to keep the coolant at the proper temperature and the fans shut off. When the vehicle is stopped, there is no air flow and the fan is turned on when the engine reaches a designated temperature.

When the A/C is turned on the fan circuit would power the fans regardless of engine temperature. The air conditioning system always requires a good air flow through the condenser mounted in front of the radiator. If the air flow stopped, the air-conditioned air coming through the dash outlets would immediately start warming up.

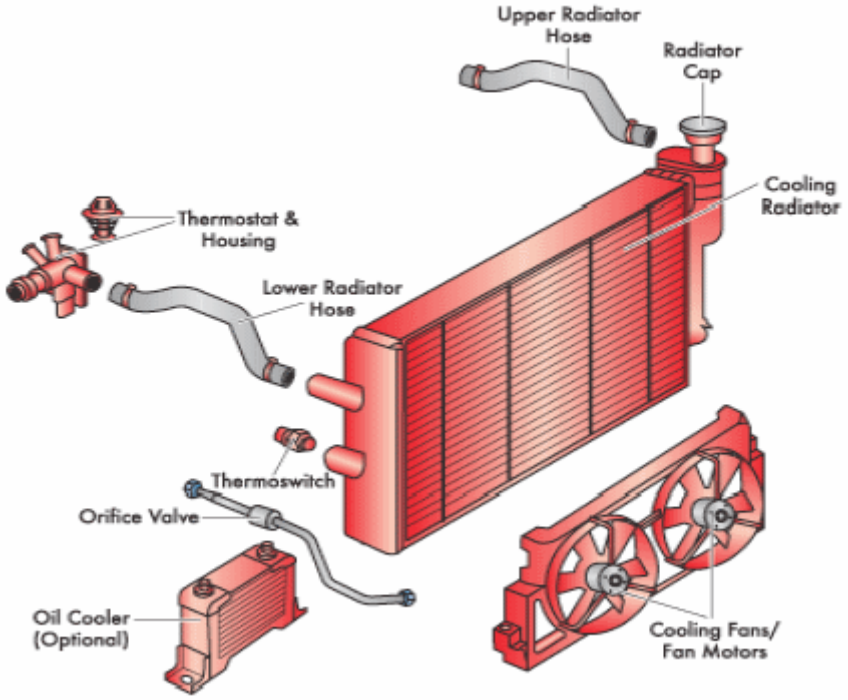

Fig. 2: Typical Cooling Fan

COOLING SYSTEM POWER FLUSH AND REFILL

Old coolant can be replaced by draining it out and replacing it with fresh coolant; however, power flushing will remove all the old coolant and pull out any sediment and scale along with it. Power flushing requires special equipment and generally requires the thermostat to be removed, the lower radiator hose disconnected, and the flush machine connected in line. Water and, sometimes, a cleaning agent are pumped through the cooling system in a reverse path from the normal coolant flow. When completed, the hose is reconnected and a new thermostat is installed. The cooling system is refilled with the appropriate amount of antifreeze to bring the coolant to the proper mixture of antifreeze and water. For most vehicles and most climates, the mixture is 50 /

50. In colder climates, more antifreeze is used, but must never exceed 75 percent antifreeze. Follow the vehicle manufacturers' procedures and recommendations.

BELTS (EXCEPT TIMING BELTS)

On most older vehicles, the water pump is driven by a V belt or serpentine belt on the front of the engine that is also responsible for driving the alternator, power steering pump and air conditioner compressor. These types of belts are easy to inspect and replace if they are worn. You are looking for dry cracking on the inside surface of the belt.

On later vehicles, the water pump is often driven by the timing belt. This belt usually has a specific life expectancy at which time it must be replaced to insure that it does not fail. Since the timing belt is inside the engine and will require partial engine disassembly to inspect, it is very important to replace it at the correct interval.

Low belt tension, contamination and belt vibration are common sources of belt noise. A screeching or squealing noise that occurs when pulling away from a stop normally indicates a lack of tension; check belt tension and automatic tensioners.

A grinding noise can result from damaged bearings, which must be replaced, aligned and lubricated to eliminate the noise and further damage. Vibration and noise can develop over time as drive components such as pulleys and spring tensioners wear, bearings and brackets loosen, or belts wear and stretch.

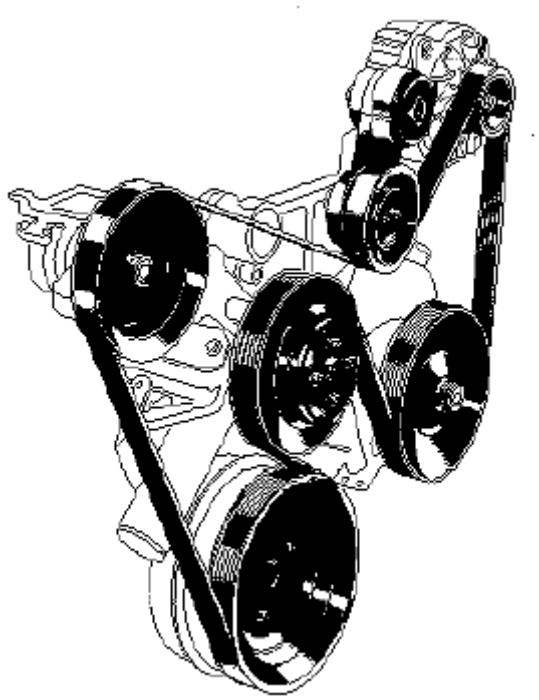

Fig. 3: Typical Accessory Drive Belt

The angle between belt span and pulley is the critical factor responsible for causing the "chirp" associated with

misalignment noise. The presence of high humidity (or a damp belt) often increases the likelihood for misalignment noise to occur. Misalignment angle can result from many different combinations of pulley positions - parallel and angular are two typical examples.

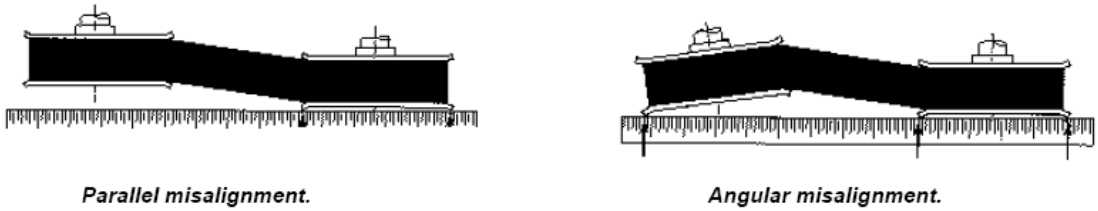

Fig. 4: Accessory Drive Belt Misalignment

Whenever a vehicle owner complains of belt noise, determine the type of noise and under what circumstances it occurs. The correction for a noise problem caused by belt misalignment is not likely to resolve a slip noise problem that may be caused by insufficient tension or other problem. The highest occurrence of belt noise due to misalignment comes from short belt spans entering large diameter pulleys. In the case of severe misalignment, repositioning of drive components may be required. Pulley alignment and tension must be correct for the drive to operate properly.

BELT TENSIONER

Belt tensioners are used to maintain constant tension on the belt, extending both belt and accessory drive bearing life.

NOTE: A tensioner cannot be rebuilt since internal parts are not available. Never try to disassemble a tensioner unit. Injury may result.

Fig. 5: Typical Accessory Dive Belt Tensioner

AUTOMATIC TRANSMISSION FLUID

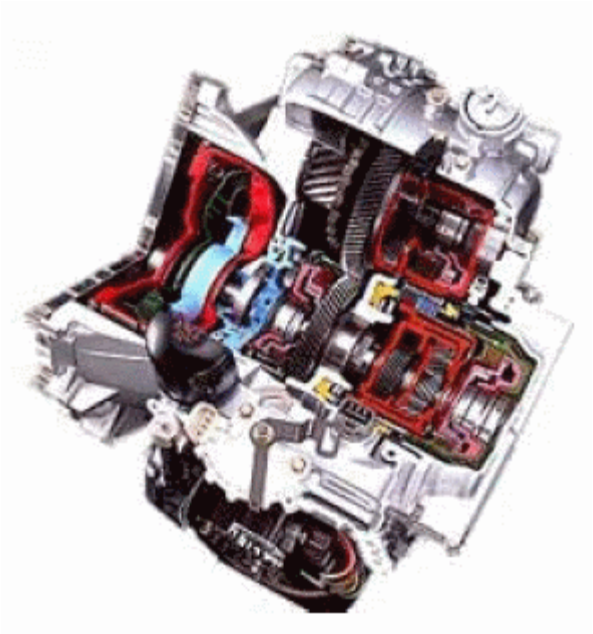

Fig. 6: Crosssection Of Automatic Transmission - Typical

Automatic transmission fluid (ATF) is the fluid used in vehicles with a self-shifting or automatic transmission. It is typically colored red or green to distinguish it from motor oil and other fluids in the vehicle. The fluid is a highly refined mineral oil optimized for the special requirements of an automatic transmission, such as valve operation, clutch and band operation, torque converter and gear lubrication. ATF is also used as a hydraulic medium in some power-assisted steering systems and as a lubricant in some 4WD transfer cases.

ATF usually contains an additive package with anti-foam additives, detergents and dispersants, anti-oxidation compounds, surfactants and petroleum dye. There are many specifications for ATF, such as the DEXRON and MERCON series, and the vehicle manufacturer will identify the ATF specification appropriate for each vehicle. The vehicle's owner's manual will typically list the ATF specification(s) that are recommended by the manufacturer. Some manufacturers will recommend different ATF products for different kinds of vehicle use, such as frequent trailer towing or vehicles that are used for longer periods between routine maintenance.

Overused ATF often has reduced lubrication properties and abrasive friction materials (from clutches and bands) suspended in it; failure to replace such fluid will accelerate transmission wear and could eventually ruin a transmission. Color is not an indication of the service life of an ATF as most ATF products will darken with use. The manufacturer's recommended service interval is a more reliable measure of ATF life.

AUTOMATIC TRANSMISSION FLUID EXCHANGE & FILTER REPLACEMENT

Automatic transmission fluid lubricates, cools and cleans internal components of the transmission. It also helps to maintain the hydraulic pressure necessary for the transmission to function. The additives in the transmission fluid can be depleted over time and should be replaced following the manufacturer's recommended service interval.

ENGINE OIL

The temperature range the oil is exposed to in most vehicles can be wide, ranging from cold ambient temperatures in the winter before the vehicle is started up to hot operating temperatures when the vehicle is fully warmed up in hot summer weather. A "specific" oil will have high viscosity when cold and a low viscosity at the engine's operating temperature. The difference in viscosities for any single-grade oil is too large between the extremes of temperature. To bring the difference in viscosities closer together, additives called viscosity index improvers are added to the oil. This creates "multi-grade" oil which has the viscosity of the first number when cold and the viscosity of the second number when hot. This allows one type of oil to be generally used all year.

In engines, there is inevitably some exposure of the oil to products of internal combustion, and microscopic particles from black soot accumulate in the oil during operation. Also the rubbing of metal engine parts inevitably produces some microscopic metallic particles from the wearing of the surfaces. Such particles could circulate in the oil and grind against the part surfaces causing wear. The oil filter removes many of the particles and sludge, but eventually the oil filter can become clogged, if used for extremely long periods. The motor oil and especially the additives also undergo thermal and mechanical degradation. For these reasons, the oil and the oil filter need to be periodically replaced.

Most vehicle manufacturers utilize a time/mileage-based schedule. Time-based intervals account for both the short trip driver who does fewer miles, but builds up more contaminates, as well as the long highway trips that are much easier on the oil. Many vehicle manufacturers list somewhat higher intervals for changing of oil and filter, with "severe" service requiring more frequent changes. This generally applies to vehicles that are mostly used in "Stopand- Go" driving conditions; experience extended periods of idling; or used for short trips of under 10 miles, where the oil does not get to full operating temperature and other adverse conditions.

Some vehicle manufacturers have installed engine Oil Life Monitors using computer calculations to estimate the oil's condition based on the factors which degrade it. Conditions such as RPMs, temperatures, and trip length are factored in to the equation; and one system adds an optical sensor for determining the clarity of the oil in the engine.

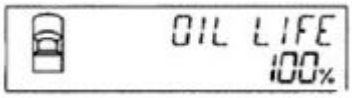

Fig. 7: Engine Oil Life Monitor Display Example

AIR FILTERS

The engine air filter prevents dirt from entering the engine's cylinders, where it would cause mechanical wear and oil contamination. Most fuel injected vehicles use a pleated paper filter element in the form of a flat panel. This filter is usually placed inside a plastic box connected to the throttle body with an intake tube. Older vehicles that use carburetors or throttle body fuel injection typically use a cylindrical air filter, usually a few inches high and between 6 and 16 inches in diameter, positioned above the carburetor or throttle body and may incorporate ducting to provide cool and/or warm inlet air, and secured with a metal or plastic lid.

A Pleated paper filter element is used for most automobile engine air cleaners, because they are efficient, easy to service, and cost-effective. The pleated-paper filter is sized appropriately for the airflow volumes encountered in a particular application and present only minor restriction to air flow until the filter has become clogged with dirt.

CABIN AIR FILTER

The cabin air filter is typically a pleated-paper filter that is placed in the outside-air intake for the vehicle's passenger compartment. Some of these filters are rectangular and similar in shape to the combustion air filter. Others are uniquely shaped to fit the available space of particular vehicles' outside-air intakes. Clogged or dirty cabin air filters can significantly reduce airflow from the cabin vents, as well as introduce allergens into the cabin air stream.

BRAKE FLUID

The purpose of brake fluid is to:

1. Utilize hydraulic pressure to apply force on brake components that use a friction material to slow the vehicle
2. Protect the brake system from corrosion

Motor vehicle brake fluids are hygroscopic and absorb moisture when exposed to the atmosphere and in service. Water contamination from any source, including mechanical or accidental additions of free water, will appreciably lower the original boiling point of the brake fluid and increase its viscosity at low ambient temperatures. Water contamination may cause corrosion of brake cylinder bores and pistons, and may seriously affect the braking efficiency and safety of the brake actuating system. While moisture is definitely an issue with brake fluids, no consistent and accurate measurement identifying the percentage of moisture that is detrimental to brake fluid performance has been found in the literature. In addition, no specification exists for an in-use brake fluid boiling point that can be identified by a testing procedure and therefore no recommendation for replacement based on moisture content can be made with confidence.

It has been demonstrated that corrosion inhibitors in brake fluid deplete over time and can be severely depleted by 36 months. The depletion of corrosion inhibitors results in corrosion. Copper is not found in new brake fluid and is used as a brazing alloy in the brake lines, which represent a high surface area for brake fluid contact. Copper is the first metal to corrode in a brake system, and is a principle contaminate in brake fluid. Copper levels increase slowly and stably over time. The slow and steady increase in copper levels provides a means to predict the age of brake fluid under normal conditions. The age of the brake fluid can help determine when brake fluid should be serviced according to OEM recommendations when applicable. Copper can also directly affect ABS components as it can plate to the valve and valve seats.

Iron levels begin to sharply increase when the copper levels reach 150-250 ppm indicating corrosion of iron components. This also allows copper levels to be used to predict when iron levels will increase or the start of component corrosion and the depletion of corrosion inhibitors. Once iron corrosion begins copper acts as a catalyst to speed corrosion. At this point (iron corrosion) it is evident that the brake fluid no longer performs the intended purpose of protecting the system from corrosion.

A copper content of 200 ppm or greater indicates a depletion of corrosion inhibitors in the brake fluid and Brake Fluid Replacement is Required.

BATTERY

The automotive battery is an electrochemical device that produces voltage and delivers current. In an

automotive battery the electrochemical action can be reversed, recharging the battery, providing many years of service. Batteries emit hydrogen gas while charging and the battery case cannot be completely sealed. Batteries (maintenance free) have small vents on the side forcing the gases to go through baffles to escape. This process allows the liquid to condense and flow back to the bottom of the battery.

The purpose of the battery is to supply current to the starter motor, provide current to the ignition system while cranking, to supply additional current when the demand is higher than the alternator can supply and to act as an electrical reservoir. Batteries are rated in cold cranking amps. This represents the current the battery can produce for 30 seconds at 0 degrees before the battery voltage drops below 7.2 volts.

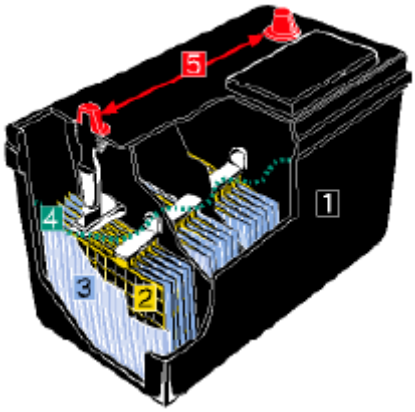

Fig. 8: Typical Battery Components

BATTERY CABLES

Battery cables are large diameter, multi-stranded wire which conveys the high current (250+ amps) necessary to operate the starter motor. Some battery cables will have a smaller wire, soldered to the terminal, which is used to either operate a smaller device or to provide an additional ground. When the smaller cable burns it indicates a high resistance in the heavy cable.

Even maintenance free batteries need periodic inspection and cleaning to insure they stay in good working order. Inspect the battery to see that it is clean and that it is held securely in its carrier. Some corrosion naturally collects around the battery. Electrolyte condensation contains corrosive sulfuric acid, which eats away the metal of battery terminals, cable ends and battery hold-down parts.

POWER STEERING

Power steering is a system for reducing the steering effort on cars by using an external power source to assist in turning the wheels. Most vehicles have power steering and the trend to front wheel drive, greater vehicle mass and wider tires means that modern vehicles would be extremely difficult to maneuver at low speeds (e.g. when parking) without assistance.

POWER STEERING FLUID

Power Steering Fluid is the hydraulic component in power steering systems and is charged with pressure transfer and component protection. It fails when it stops performing one of its tasks. When a fluid becomes

oxidized, its resistance to flow is greater and it decreases its ability to protect components and transfer pressure. The more common failure mode of PSF is internal and external contamination, and excess particles in fluid promote component wear and can lead to component failures, including seals, shafts and gears.

Most power steering systems work by using a belt driven pump to provide hydraulic pressure to the system. This hydraulic pressure is generated by a rotary-vane pump which is driven by the vehicle's engine. As the speed of the engine increases, the pressure in the hydraulic fluid also increases, hence a relief valve is incorporated into the system to allow excess pressure to be bled away. Some of the hydraulic systems also include an electronic pressure valve which can reduce the hydraulic pressure of the power steering lines as the vehicle's speed increases (Variable assist power steering).

Electric Power Steering uses sensors to detect the motion and torque of the steering column and a computer module applies electric motor to provide power assist. This allows variable assist power steering to be applied depending on driving conditions. In the event of component failure, a mechanical linkage such as a rack and pinion serves as a back-up in a manner similar to that of hydraulic systems. Electric power steering is usually limited to smaller vehicles rather than trucks and SUVs. Electric systems have a significant advantage in fuel efficiency because there is no hydraulic pump constantly running, whether assistance is required or not.

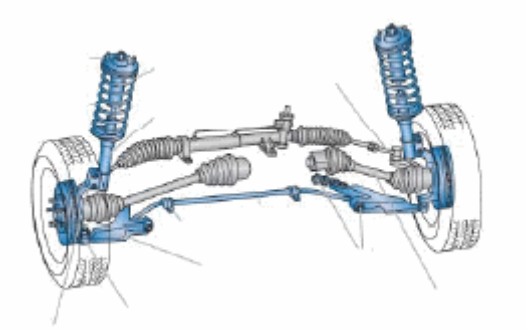

Fig. 9: Typical Front Suspension & Steering Components

WIPER BLADES

Worn wiper blades are dangerous. Ozone, airborne contaminants, oil, sunlight and dirt all act to weaken and reduce your wiper blades' ability to keep your view unobstructed. And exposure to sunlight and ozone cause the wiper blades to age, even if they're not used much. Weather also plays a critical role in your windshield wiper blades' deterioration. Freezing temperatures make the rubber in your wiper blades hard and brittle, which increases their tendency to crack or tear. Hot weather warps the rubber and prevents the blade from wiping your windshield cleanly.

Heavy use is hard on the wipers because dust, abrasives, road grime and bug juice wear away the cutting edge the blade needs to wipe cleanly. Even road dirt acts like an abrasive to wear away the flat surface necessary for a good squeegee effect. Rubber also deteriorates over time. As blades age, they lose their flexibility and are less able to wipe cleanly. They may develop a permanent set or curvature, which prevents full contact with your windshield.

A wiper blades ability to clean the glass depends on:

The slope and area of the windshield: Windshields are sloped for improved aerodynamics and a "cab-

forward" windshield with a lot of surface area directs more wind against the wipers, and can force the blades away from the windshield at high speeds unless the wiper system is designed to resist lift.

The amount of spring tension on the wiper arm: This is important to keep the wiper blade in tight contact with the windshield and provide a squeegee effect.

The number of pressure points or claws holding the blade: The more claws a blade has, the broader the area over which the pressure of the wiper arm is spread. More claws also provide increased flexibility so the blade can more easily follow the curvature of a large, sloping windshield for full side-to-side contact.

ROUTINE INSPECTION CHECKSHEET

MOTORIST ASSURANCE PROGRAM

STANDARDS FOR AUTOMOTIVE REPAIR

ROUTINE INSPECTION CHECKSHEET

Date: _____

Name: _____

Address: _____

City: _____ **State:** _____ **Zip Code:** _____

Year: _____ **Make:** _____ **Model:** _____

Mileage: _____ **License:** _____ **VIN:** _____ **Eng Code:** _____

Customer Interview:

_____

_____

_____

_____

_____

Reason Code Explanation

Code	Reason
	Required
A	*Part No Longer Performs Intended Purpose*
B	*Part Does Not Meet A Design Specification (Regardless Of Performance)*
C	*Part Is Missing*
	Suggested/Optional
1	*Part Is Close To The End Of Its Useful Life*
2	*To Address A Customer Need, Convenience Or Request*
3	*To Comply With Maintenance Recommended By The Vehicle's Original Equipment Manufacturer*
4	*Technician's Recommendation Based On Substantial And Informed Experience*
5	*To Comply With Maintenance Recommended By AMRA/MAP*

Your vehicle has been inspected following the Uniform Inspection and Communication Standards developed by the Motorist Assurance Program. MAP produces materials that give motorists the information and encouragement to take greater responsibility for their vehicles—through proper maintenance. We encourage participating service and repair shops to adopt the MAP Pledge of Assurance to their Customers and the Motorist Assurance Program Standards of Service. All participating service providers have agreed to subscribe to this Pledge and to adhere to the promulgated Standards of Service demonstrating to their customers that they are serious about customer satisfaction. For more information visit: www.motorist.org

DISCLAIMER: This document may be used as a guide when performing vehicle inspection. This form is not to be used as an estimate form and may not comply with Local or State Laws. The Motorist Assurance Program is not responsible for the performance and accuracy of the motor vehicle inspection performed using this document.

Fig. 10: Routine Inspection Checksheet (1 Of 2)

State Inspection Due___/___ **ROUTINE INSPECTION CHECKSHEET**

UNDERHOOD				
Component	**OK**	**S**	**R**	**Condition**
Coolant				
Coolant Hoses				
Belts (Except Timing Belt)				
Tensioner				
Transmission Fluid				
Engine Oil				
Engine Air Filter				
Cabin Air Filter				
Brake Fluid				
Clutch Fluid (M/T)				
Washer Fluid				
Battery				
Battery Hold Down				
Battery Box				
Battery Cables / Ends				
Power Steering Fluid				
Wiper Blades				
UNDER VEHICLE				
Shocks / Struts				
Exhaust				

Notes: _____

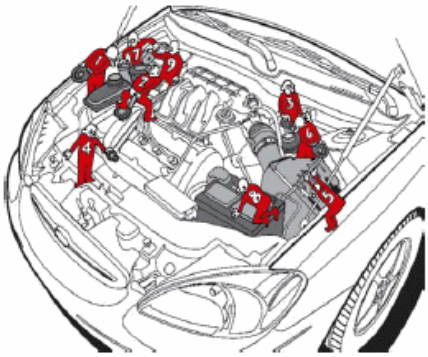

1. Coolant
2. Belts
3. Transmission Fluid
4. Engine Oil
5. Air Filter
6. Brake Fluid
7. Washer Fluid
8. Battery
9. Power Steering Fluid

Lights/Lamps	OK	S	R	Location
Headlights				
Parking				
Turn Signal				
Brake				
License Plate				

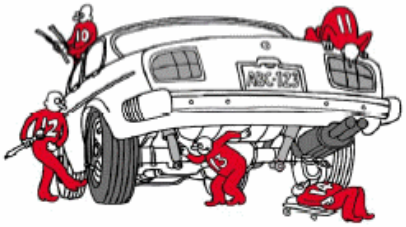

10. Wiper Blades
11. Lights
12. Tire Pressure
13. Shocks / Struts
14. Exhaust

CHECK TIRES

Tire Size (Placard) _____ Actual _____ TPMS Warning On ___ Off ___ n/a___

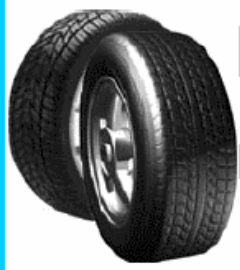

Tire Pressure			Wear Pattern / Damage			
Front Spec: _____	**Before**	**After**	**OK**	**S**	**R**	**Wear Type**
Left Front						
Right Front						
Rear Spec: _____						
Left Rear						
Right Rear						
Spare Tire						

Wear Type
1.) Edge wear
2.) Cupped
3.) Cut
4.) Irregular wear
5.) Other _____

Tread Depth	Left Front	Right Front	Left Rear	Right Rear

OK	Suggested 1, 2, 3, 4, 5	Required A, B, C

Automotive Maintenance & Repair Assn © 2009

Fig. 11: Routine Inspection Checksheet (2 Of 2)

ROUTINE INSPECTION - UICS

BRAKE SYSTEMS

NOTE: **Some states may have specifications that differ from OEM. Check your local/state regulations. Where state or local laws are stricter, they take precedence over these guidelines.**

BRAKE FLUID

NOTE: **Most manufacturers prohibit the use of DOT 5 brake fluid in a system equipped with ABS. DOT 3, DOT 4, and DOT 5.1 brake fluids are clear or light amber in color. DOT 5 brake fluid is violet in color. Correct fluid type is normally stamped on the master cylinder cover.**

NOTE: **Fluid Flush - a process using a sufficient volume of fluid to help remove contaminants and replacing the contaminated fluid with new fluid of the same type and specification. At times a chemical may be used to enhance removal.**

NOTE: **Fluid Exchange/Replace - draining (evacuating) old fluid and replacing it with new fluid of the correct type and specification.**

Condition	Code	Procedure
At or beyond OEM service interval	3	Suggest fluid exchange/replacement
Brake fluid type incorrect	B	Require flushing and refilling
NOTE: **For example, DOT fluid lower than specified for the vehicle or silicone brake fluid (DOT 5) in an ABS system**		
Contaminated, for example, fluid other than brake fluid present	A	Require service
NOTE: **If a fluid other than brake fluid is present in the brake system which DOES affect the rubber parts, the required service is to: 1) remove all components having rubber parts from the system, 2) flush lines, 3) repair or replace all components having rubber parts, and 4) fill with correct brake fluid.**		
Contaminated, for example, fluid other than brake fluid present	B	Require service
NOTE: **If a fluid other than brake fluid is present in the brake system which DOES NOT affect the rubber parts, the required service is to flush and fill with the correct brake fluid.**		
Corrosion inhibitors depleted	B	Require fluid exchange/replacement
NOTE: **A copper content of 200 ppm or greater indicates a depletion of corrosion inhibitors in the brake fluid.**		
Fluid discolored	No Service Suggested or Required	
NOTE:		

Further testing necessary to determine condition of fluid.		
Hydraulic component overhaul or replacement	3	Suggest flushing and refilling
Rubber master cylinder cover gasket distorted and gummy	A	Require replacement of gasket
NOTE: **This condition may indicate contaminated brake fluid. Further inspection required.**		

BULBS AND LEDS

NOTE: Does not include soldered-in components.

Condition	Code	Procedure
Application incorrect	B	Require replacement
NOTE: **Application incorrect includes wrong bulb coating or color.**		
Base burned, affecting performance	A	Require repair or replacement
NOTE: **Determine cause and correct prior to repair or replacement of part.**		
Base burned, not affecting performance	2	Suggest repair or replacement
NOTE: **Determine cause and correct prior to repair or replacement of part.**		
Base corroded, affecting performance	A	Require repair or replacement
Base corroded, not affecting performance	2	Suggest repair or replacement
Base loose, affecting performance	B	Require repair or replacement
Base loose, not affecting performance	1	Suggest repair or replacement
Burned out	A	Require replacement
Intermittent	A	Require replacement
Missing	C	Require replacement
Seized in socket	A	Require repair or replacement
Terminal broken	A	Require repair or replacement
Terminal burned, affecting performance	A	Require repair or replacement
NOTE: **Determine cause and correct prior to repair or replacement of part.**		
Terminal burned, not affecting	2	Suggest repair or replacement

performance		
NOTE: **Determine cause and correct prior to repair or replacement of part.**		
Terminal corroded, affecting performance	A	Require repair or replacement
Terminal corroded, not affecting performance	2	Suggest repair or replacement
Terminal loose, affecting performance	B	Require repair or replacement
Terminal loose, not affecting performance	1	Suggest repair or replacement

HOSES

Condition	Code	Procedure
Attaching hardware broken	A	Require repair or replacement of hardware
Attaching hardware missing	C	Require replacement of hardware
Attaching hardware not functioning	A	Require repair or replacement of hardware
Blistered	B	Require replacement
Expansion affecting performance	A	Require Replacement
Fitting threads damaged	A	Require repair or replacement
Fitting threads stripped (threads missing)	A	Require replacement
Incorrectly secured	B	Require repair
Inner fabric (webbing) cut	B	Require replacement
Leaking	A	Require replacement
Missing	C	Require replacement
Outer covering is cracked to the extent that inner fabric of hose is visible	B	Require replacement
Restricted	A	Require replacement
Routed incorrectly	B	Require repair

LENSES

Condition	Code	Procedure
Application incorrect	A	Require replacement
Attaching hardware broken	A	Require repair or replacement of hardware
Attaching hardware missing	C	Require replacement of hardware
Attaching hardware not	A	Require repair or replacement of

functioning		hardware
Broken, affecting performance	A	Require replacement
Broken, not affecting performance	No Service Suggested or Required	
Cracked	B	Require replacement
Discolored	A	Require replacement
Leaking	B	Require repair or replacement
Melted, affecting performance	A	Require replacement
Melted, not affecting performance	2	Suggest replacement
Missing	C	Require replacement

LUG NUT

Condition	Code	Procedure
Lug nut flats rounded	A	Require replacement of nut
Lug nut installed backward	B	Require repair
Lug nut mating surface dished	A	Require replacement of nut
Lug nut mating type incorrect	B	Require replacement of nut
Lug nut seized	A	Require replacement of nut and/or stud
Stud incorrect	B	Require replacement of stud
Threads damaged	A	Require repair or replacement of component with damaged threads
Threads stripped (threads missing)	A	Require replacement of component with stripped threads

MASTER CYLINDER COVER GASKET

Condition	Code	Procedure
Rubber master cylinder cover gasket distorted and gummy	A	Require replacement of the gasket
NOTE: **This condition may indicate contaminated brake fluid. See Brake Fluid.**		

PARKING BRAKE CABLE

Condition	Code	Procedure
Cable improperly adjusted	B	Require cable adjustment
Cable or individual wires in the cable are broken	A	Require replacement of cable assembly
Cable sticking	A	Require cable lubrication
Cable stuck inside conduit and cannot be lubricated so that	A	Require replacement of cable assembly

parking brake functions properly		

VACUUM HOSES

Condition	Code	Procedure
Attaching hardware broken	A	Require repair or replacement of hardware
Attaching hardware missing	C	Require replacement of hardware
Attaching hardware not functioning	A	Require repair or replacement of hardware
Blistered	B	Require replacement
Fitting threads damaged	A	Require repair or replacement
Fitting threads stripped (threads missing)	A	Require replacement
Incorrectly secured	B	Require repair
Inner fabric (webbing) cut	B	Require replacement
Leaking	A	Require replacement
Missing	C	Require replacement
Outer covering is cracked to the extent that inner fabric of hose is visible	B	Require replacement
Restricted	A	Require replacement
Routed incorrectly	B	Require repair

WHEEL ATTACHMENT HARDWARE

NOTE: **For conditions noted below, also check condition of wheel stud holes. Proper lug nut torque is essential. Follow manufacturer's torque specifications and tightening sequence. DO NOT lubricate threads unless specified by the vehicle manufacturer.**

Condition	Code	Procedure
Bent	A	Require replacement
Broken	A	Require replacement
NOTE: **Some manufacturers require replacement of all studs on any wheel if two or more studs or nuts on the same wheel are broken or missing.**		
Loose	A	Require repair or replacement of affected component
Lug nut flats rounded	A	Require replacement of nut
Lug nut installed backward	B	Require repair
Lug nut mating surface dished	A	Require replacement of nut
Lug nut mating type incorrect	B	Require replacement of nut

Lug nut seized	A	Require replacement of nut and/or stud
Stud incorrect	B	Require replacement of stud
Threads damaged	A	Require repair or replacement of component with damaged threads
Threads stripped (threads missing)	A	Require replacement of component with stripped threads

WHEEL BEARINGS, RACES AND SEALS

NOTE: When replacing or repacking wheel bearings, grease seal replacement is required. You are not required to replace these components in axle sets. Determine the need to replace based upon the individual component conditions.

Condition	Code	Procedure
Axle seal on drive axle leaking	A	Require replacement of seal and inspection of axle, bearing, housing, and vent tube
Bearing end-play exceeds specifications	B	Require adjustment of bearing, if possible If proper adjustment cannot be obtained, require replacement of bearing and race assembly
Bearing rollers, balls or races are worn, pitted, or feel rough when rotated as an assembly or other damage affecting performance.	B	Require replacement of bearing and race assembly
Seal leaking	A	Require replacement of seal and inspection of bearings
NOTE: **Require inspection of mating and sealing surface and repair or replace as necessary. Check vent. A plugged vent may force fluid past the seal.**		
Seal missing	C	Require replacement

DRIVETRAIN AND TRANSMISSION

NOTE: When a procedure states that a required or suggested repair or replacement is recommended, the basis for the recommendation MUST be explained to the customer. If the customer asks whether there are alternatives to the recommendation, generally acceptable repair/replacement options must be explained, whether performed or not by the shop.

NOTE: Whenever transmission or drive-train service is performed that affects the

suspension alignment, for example, removing the engine cradle, it is required that the alignment be checked and corrected if necessary.

NOTE: The conditions listed for the components included in this section assume that the problem has been isolated to the specific component through proper testing.

AUTOMATIC TRANSMISSION FLUID

Condition	Code	Procedure
Additive depletion	A	Require replacement of fluid
Application incorrect	B	Require replacement
NOTE: **Determine and correct cause.**		
Burned	Further inspection required	
NOTE: **Fluid that is burned indicates a serious problem. Determine and correct the cause.**		
Contaminated, for example, fluid other than the specified fluid present	A	Require service
NOTE: **If an incorrect fluid is present in the hydraulic system which DOES affect the rubber parts, the required service is to: 1) remove all components having rubber parts from the system, 2) flush lines, 3) repair or replace all components having rubber parts, and 4) fill with correct fluid.**		
Contaminated, for example, fluid other than the specified fluid present	B	Require service
NOTE: **If a fluid other than the specified fluid is present in the hydraulic system which DOES NOT affect the rubber parts, the required service is to flush and fill following OEM specified procedure with the correct hydraulic fluid.**		
Fluid at or beyond service interval	3	Suggest replacement
Fluid discolored	No Service Suggested or Required	
NOTE: **Further testing necessary to determine condition of fluid.**		
Fluid incorrect	B	Require service
NOTE: **If a fluid other than the correctly specified fluid is present in the hydraulic system, the required service is to flush and fill with the correct fluid.**		
Level incorrect	B	Require correction of fluid level
Oxidized	A	Require replacement of fluid
Varnish deposits present on	Further inspection required	

system components affecting performance	

CLUTCH MASTER CYLINDERS

Condition	Code	Procedure
Cover gasket distorted	A	Require replacement of cover gasket
Cover gasket gummy	A	Require replacement of cover gasket
NOTE: **This condition may indicate contaminated fluid. Further inspection required.**		
Cylinder leaking fluid from rear of bore	A	Require repair or replacement
Cylinder leaking fluid internally	A	Require replacement
Dust boot missing	C	Require replacement of dust boot
Dust boot punctured	A	Require replacement of dust boot
Dust boot torn	A	Require replacement of dust boot
Fluid level incorrect	B	Require fluid level adjustment
Housing damaged, affecting performance	A	Require repair or replacement
Master cylinder has residue in reservoir	2	Further inspection required
NOTE: **Do not replace master cylinder unless it exhibits conditions listed for replacement.**		
Pushrod out of adjustment	B	Require Repair or Replacement
Threads damaged	A	Require repair or replacement
Threads stripped (threads missing)	A	Require replacement

COOLER LINES

Condition	Code	Procedure
Abrasion damage, affecting structural integrity	A	Require repair or replacement
Abrasion damage, not affecting structural integrity	No Service Suggested or Required	
Application incorrect	B	Require replacement
Attaching hardware broken	A	Require repair or replacement of hardware
Attaching hardware missing	C	Require replacement of hardware
Attaching hardware not functioning	A	Require repair or replacement of hardware

Clamp corroded, not reusable	1	Suggest replacement
NOTE: **If clamp removed, require replacement.**		
Connected incorrectly	A	Require repair
Corroded, affecting structural integrity	A	Require replacement
Corroded, not affecting structural integrity	No Service Suggested or Required	
Cracked	B	Require repair or replacement
Fitting type incorrect (such as compression fitting)	B	Require replacement
Flange leaking	A	Require repair or replacement
Insufficient clamping force, allowing hose to leak	A	Require repair or replacement
Leaking	A	Require repair or replacement
Melted	1	Suggest repair or replacement
Missing	C	Require replacement
Outer covering damaged to the extent that the inner fabric is visible	A	Require replacement
Protective sleeves damaged	2	Suggest replacement of sleeves
Protective sleeves missing	C	Require replacement of sleeves
Restricted, affecting performance	A	Require repair or replacement
Routed incorrectly	B	Require repair
Swollen	1	Suggest replacement
Threads damaged	A	Require repair or replacement
Threads stripped (threads missing)	A	Require replacement
Type incorrect	2	Suggest repair or replacement

COOLERS

Condition	Code	Procedure
Air flow obstruction	A	Require repair
Attaching hardware broken	A	Require repair or replacement of hardware
Attaching hardware missing	C	Require replacement of hardware
Attaching hardware not functioning	A	Require repair or replacement of hardware
Connection leaking	A	Require repair or replacement
Contaminated	A	Require repair or replacement
Corroded	1	Suggest repair or replacement
Fins damaged, affecting	A	Require repair or replacement

performance		
Fins damaged, not affecting performance	No Service Suggested or Required	
Internal restrictions	B	Require repair or replacement
Leaking	A	Require repair or replacement
Threads damaged	A	Require repair or replacement
Threads stripped (threads missing)	A	Require repair or replacement
Tubes damaged, affecting performance	A	Require repair or replacement
Tubes damaged, not affecting performance	No Service Suggested or Required	

DIFFERENTIAL FLUID

Condition	Code	Procedure
Additive depletion	A	Require replacement of fluid
Application incorrect	B	Require replacement
NOTE: **Determine and correct cause.**		
Burned	Further inspection required	
NOTE: **Fluid that is burned indicates a serious problem. Determine and correct the cause.**		
Contaminated, for example, fluid other than the specified fluid present	B	Require service
NOTE: **If a fluid other than the specified fluid is present in the hydraulic system which DOES NOT affect the rubber parts, the required service is to flush and fill following OEM specified procedure with the correct hydraulic fluid.**		
Contaminated, for example, fluid other than the specified fluid present	A	Require service
NOTE: **If an incorrect fluid is present in the hydraulic system which DOES affect the rubber parts, the required service is to: 1) remove all components having rubber parts from the system, 2) flush lines, 3) repair or replace all components having rubber parts, and 4) fill with correct fluid.**		
Fluid at or beyond service interval	3	Suggest replacement
Fluid discolored	No Service Suggested or Required	
NOTE: **Further testing necessary to determine condition of fluid.**		
fluid incorrect	B	Require service
NOTE:		

If a fluid other than the correctly specified fluid is present in the hydraulic system, the required service is to flush and fill with the correct hydraulic fluid.		
Level incorrect	B	Require correction of fluid level
Oxidized	A	Require replacement of fluid
Rubber master/ clutch cylinder cover gasket distorted or gummy	A	Require service
NOTE: **If an incorrect fluid is present in the hydraulic system which DOES affect the rubber parts, the required service is to: 1) remove all components having rubber parts from the system, 2) flush lines, 3) repair or replace all components having rubber parts, and 4) fill with correct fluid.**		
Varnish deposits present on system components affecting performance	Further inspection required	

DRAIN PLUGS AND GASKETS

Condition	Code	Procedure
Leaking	A	Require repair or replacement
NOTE: **Require inspection of mating and sealing surface and repair or replace as necessary.**		
Missing	C	Require replacement
Threads Damaged	A	Require repair or replacement

FILTERS AND SCREENS

Condition	Code	Procedure
At service interval	3	Suggest replacement
Bent, affecting performance	A	Require repair or replacement
Exceeding service interval	3	Suggest replacement
Missing	C	Require replacement
Near service interval	3	Suggest replacement
Restricted	A	Require repair or replacement
NOTE: **Further inspection may be required to determine the source of restriction or contamination.**		
Torn	A	Require replacement
Worn, affecting performance (metal or nylon screen type)	A	Require repair or replacement

FLUIDS AND LUBRICANTS

Condition	Code	Procedure
Additive depletion	A	Require replacement of fluid

Application incorrect	B	Require replacement
NOTE: **Determine and correct cause.**		
Burned	Further inspection required	
NOTE: **Fluid that is burned indicates a serious problem. Determine and correct the cause.**		
Contaminated, for example, fluid other than the specified fluid present	A	Require service
NOTE: **If an incorrect fluid is present in the hydraulic system which DOES affect the rubber parts, the required service is to: 1) remove all components having rubber parts from the system, 2) flush lines, 3) repair or replace all components having rubber parts, and 4) fill with correct brake fluid.**		
Contaminated, for example, fluid other than the specified fluid present	B	Require service
NOTE: **If a fluid other than the specified fluid is present in the hydraulic system which DOES NOT affect the rubber parts, the required service is to flush and fill following OEM specified procedure with the correct hydraulic fluid.**		
Fluid at or beyond service interval	3	Suggest replacement
Fluid discolored	No Service Suggested or Required	
NOTE: **Further testing necessary to determine condition of fluid.**		
Fluid incorrect	B	Require service
NOTE: **If a fluid other than the correctly specified fluid is present in the hydraulic system, the required service is to flush and fill with the correct hydraulic fluid.**		
Level incorrect	B	Require correction of fluid level
Oxidized	A	Require replacement of fluid
Rubber master/ clutch cylinder cover gasket distorted or gummy	A	Require service
NOTE: **If an incorrect fluid is present in the hydraulic system which DOES affect the rubber parts, the required service is to: 1) remove all components having rubber parts from the system, 2) flush lines, 3) repair or replace all components having rubber parts, and 4) fill with correct fluid.**		
Varnish deposits present on system components affecting performance	Further inspection required	

HOSES, LINES, AND TUBES

Condition	Code	Procedure

Application incorrect	B	Require replacement
At or beyond service interval	3	Suggest replacement
Connected incorrectly	A	Require repair
Corroded, not reusable	1	Suggest replacement
Cracked line or tube	A	Require replacement
Hard hose	1	Suggest replacement
Inner fabric (webbing) damaged	A	Require replacement
Insufficient clamping force, allowing hose to leak	A	Require repair or replacement
Leaking	A	Require repair or replacement
Melted	1	Suggest repair or replacement
Missing	C	Require replacement
Outer covering damaged	1	Suggest replacement
Outer covering damaged to the extent that the inner fabric is visible	A	Require replacement
Protective sleeves damaged	2	Suggest replacement of sleeves
Protective sleeves missing	2	Suggest replacement of sleeves
Restricted, affecting performance	A	Require repair or replacement
Restricted, not affecting performance	2	Suggest repair or replacement
Routed incorrectly	2	Suggest replacement
Safety clip missing	C	Require replacement
Spongy	1	Suggest repair or replacement
Stripped	A	Require replacement
Surface cracked (weather-checked)	1	Suggest repair or replacement
Swollen	B	Require replacement
Threads damaged	A	Require repair or replacement
Threads stripped (threads missing)	A	Require replacement
Type incorrect	1	Suggest repair or replacement

HYDRAULIC FLUID

Condition	Code	Procedure
Additive depletion	A	Require replacement of fluid
Application incorrect	B	Require replacement
NOTE: **Determine and correct cause.**		
Burned	Further inspection required	
NOTE:		

Fluid that is burned indicates a serious problem. Determine and correct the cause.		
Contaminated, for example, fluid other than the specified fluid present	A	Require service
NOTE: **If an incorrect fluid is present in the hydraulic system which DOES affect the rubber parts, the required service is to: 1) remove all components having rubber parts from the system, 2) flush lines, 3) repair or replace all components having rubber parts, and 4) fill with correct brake fluid.**		
Contaminated, for example, fluid other than the specified fluid present	B	Require service
NOTE: **If a fluid other than the specified fluid is present in the hydraulic system which DOES NOT affect the rubber parts, the required service is to flush and fill following OEM specified procedure with the correct hydraulic fluid.**		
Fluid at or beyond service interval	3	Suggest replacement
Fluid discolored	No Service Suggested or Required	
Fluid incorrect	B	Require service
NOTE: **If a fluid other than the correctly specified fluid is present in the hydraulic system, the required service is to flush and fill with the correct hydraulic fluid.**		
Level incorrect	B	Require correction of fluid level
Oxidized	A	Require replacement of fluid
Rubber master/ clutch cylinder cover gasket distorted or gummy	A	Require service
NOTE: **If an incorrect fluid is present in the hydraulic system which DOES affect the rubber parts, the required service is to: 1) remove all components having rubber parts from the system, 2) flush lines, 3) repair or replace all components having rubber parts, and 4) fill with correct fluid.**		
Varnish deposits present on system components affecting performance	Further inspection required	

LUBRICANTS

Condition	Code	Procedure
Additive Depletion	A	Require replacement of fluid
Application incorrect	B	Require replacement
NOTE: **Determine and correct cause.**		
At service interval	3	Suggest replacement
Beyond service interval	3	Suggest replacement
Burned	Further inspection required	

NOTE: **Fluid that is burned indicates a serious problem. Determine and correct the cause.**		
Contaminated, for example, fluid other than the specified fluid present	B	Require service
NOTE: **If a fluid other than the correctly specified fluid is present in the hydraulic system which DOES NOT affect the rubber parts, the required service is to flush and fill following OEM specified procedure with the correctly specified hydraulic fluid.**		
Fluid incorrect	B	Require service
NOTE: **If a fluid other than the correctly specified fluid is present in the hydraulic system, the required service is to flush and fill with the correct hydraulic fluid.**		
Level incorrect	B	Require correction of fluid level
Near service interval	3	Suggest replacement
Oxidized	A	Require replacement of fluid
Rubber master cylinder cover gasket distorted and gummy	A	Require service
NOTE: **If a fluid other than brake fluid is present in the system which DOES affect the rubber parts, the required service is to: 1) remove all components having rubber parts from the system, 2) flush lines, 3) repair or replace all components having rubber parts, and 4) fill with correct brake fluid.**		

MANUAL TRANSMISSION FLUID

Condition	Code	Procedure
Additive depletion	A	Require replacement of fluid
Application incorrect	B	Require replacement
NOTE: **Determine and correct cause.**		
Burned	Further inspection required	
NOTE: **Fluid that is burned indicates a serious problem. Determine and correct the cause.**		
Contaminated, for example, fluid other than the specified fluid present	A	Require service
NOTE: **If an incorrect fluid is present in the hydraulic system which DOES affect the rubber parts, the required service is to: 1) remove all components having rubber parts from the system, 2) flush lines, 3) repair or replace all components having rubber parts, and 4) fill with correct brake fluid.**		
Contaminated, for example, fluid other than the specified fluid present	B	Require service

NOTE: **If a fluid other than the specified fluid is present in the hydraulic system which DOES NOT affect the rubber parts, the required service is to flush and fill following OEM specified procedure with the correct hydraulic fluid.**		
Fluid at or beyond service interval	3	Suggest replacement
Fluid discolored	No Service Suggested or Required	
NOTE: **Further testing necessary to determine condition of fluid.**		
Fluid discolored	No Service Suggested or Required	
NOTE: **Further testing necessary to determine condition of fluid.**		
Fluid incorrect	B	Require service
NOTE: **If a fluid other than the correctly specified fluid is present in the hydraulic system, the required service is to flush and fill with the correct hydraulic fluid.**		
Level incorrect	B	Require correction of fluid level
Oxidized	A	Require replacement of fluid
Rubber master/ clutch cylinder cover gasket distorted or gummy	A	Require service
NOTE: **If an incorrect fluid is present in the hydraulic system which DOES affect the rubber parts, the required service is to: 1) remove all components having rubber parts from the system, 2) flush lines, 3) repair or replace all components having rubber parts, and 4) fill with correct fluid.**		
Varnish deposits present on system components affecting performance	Further inspection required	

MOUNTS (ENGINE, TRANSAXLE AND TRANSMISSION)

Condition	Code	Procedure
Attaching hardware broken	A	Require repair or replacement of hardware
Attaching hardware missing	C	Require replacement of hardware
Attaching hardware not functioning	A	Require repair or replacement of hardware
Broken	A	Require replacement
Leaking (hydraulic mount)	A	Require replacement
Mounting hole worn, affecting performance	A	Require replacement
Mounting hole worn, not affecting performance	No Service Suggested or Required	
Rubber deteriorated, affecting performance	A	Require replacement

Rubber deteriorated, not affecting performance	No Service Suggested or Required	
Threads damaged	A	Require repair or replacement
Threads stripped (threads missing)	A	Require replacement

TRANSFER CASE FLUID

Condition	Code	Procedure
Additive depletion	A	Require replacement of fluid
Application incorrect	B	Require replacement
NOTE: **Determine and correct cause.**		
Burned	Further inspection required	
NOTE: **Fluid that is burned indicates a serious problem. Determine and correct the cause.**		
Contaminated, for example, fluid other than the specified fluid present	A	Require service
NOTE: **If an incorrect fluid is present in the hydraulic system which DOES affect the rubber parts, the required service is to: 1) remove all components having rubber parts from the system, 2) flush lines, 3) repair or replace all components having rubber parts, and 4) fill with correct brake fluid.**		
Contaminated, for example, fluid other than the specified fluid present	B	Require service
NOTE: **If a fluid other than the specified fluid is present in the hydraulic system which DOES NOT affect the rubber parts, the required service is to flush and fill following OEM specified procedure with the correct hydraulic fluid.**		
Fluid at or beyond service interval	3	Suggest replacement
Fluid discolored	No Service Suggested or Required	
NOTE: **Further testing necessary to determine condition of fluid.**		
Fluid incorrect	B	Require service
NOTE: **If a fluid other than the correctly specified fluid is present in the hydraulic system, the required service is to flush and fill with the correct hydraulic fluid.**		
Level incorrect	B	Require correction of fluid level
Oxidized	A	Require replacement of fluid
Rubber master/ clutch cylinder cover gasket distorted or gummy	A	Require service
NOTE:		

If an incorrect fluid is present in the hydraulic system which DOES affect the rubber parts, the required service is to: 1) remove all components having rubber parts from the system, 2) flush lines, 3) repair or replace all components having rubber parts, and 4) fill with correct fluid.	
Varnish deposits present on system components affecting performance	Further inspection required

VACUUM HOSES

Condition	Code	Procedure
Application incorrect	B	Require replacement
At or beyond service interval	3	Suggest replacement
Connected incorrectly	A	Require repair
Corroded, not reusable	1	Suggest replacement
Cracked line or tube	A	Require replacement
Hard hose	1	Suggest replacement
Inner fabric (webbing) damaged	A	Require replacement
Insufficient clamping force, allowing hose to leak	A	Require repair or replacement
Leaking	A	Require repair or replacement
Melted, affecting performance	B	Require repair or replacement
Missing	C	Require replacement
Outer covering damaged	1	Suggest replacement
Outer covering damaged to the extent that the inner fabric is visible	A	Require replacement
Protective sleeves damaged	2	Suggest replacement of sleeves
Protective sleeves missing	C	Suggest replacement of sleeves
Restricted, affecting performance	A	Require repair or replacement
Restricted, not affecting performance	2	Suggest repair or replacement
Routed incorrectly	B	Suggest replacement
Safety clip missing	C	Require replacement
Spongy	1	Suggest repair or replacement
Stripped	A	Require replacement
Surface cracked (weather-checked)	1	Suggest repair or replacement
Swollen	B	Require replacement
Threads damaged	A	Require repair or replacement
Threads stripped (threads missing)	A	Require replacement
Type incorrect	2	Suggest repair or replacement

ELECTRICAL SYSTEMS

BATTERIES

NOTE: **Proper operation of any electrical system or component can be affected by battery condition. The battery(ies) must meet or exceed minimum specification for vehicle as equipped and test to that specific battery's CCA.**

Definition of Terms

Battery Performance Testing - Testing that determines whether or not a battery meets both vehicle OEM and battery manufacturer's specifications.

Cold Cranking Amp (CCA) Rating - The number of amperes a new, fully charged battery at 0° F (-17.8° C) can deliver for 30 seconds and maintain at least a voltage of 1.2 volts per cell (7.2 volts for a 12-volt battery).

Cranking Amps (CA) - The number of amperes a new, fully charged battery, typically at 32° F (0° C) can deliver for 30 seconds and maintain at least a voltage of 1.2 volts per cell (7.2 volts for a 12volt battery).

OEM Cranking Amps - The minimum CCA required by the original vehicle manufacturer for a specific vehicle.

Condition	Code	Procedure
Battery frozen	Further inspection required	
NOTE: **Do not attempt to charge a frozen battery. Allow battery to warm thoroughly and then performance-test. If battery fails performance test, require replacement.**		
Battery tests near the ""end of its useful life"" utilizing a tester or on-board monitor able to accurately determine this condition	1	Suggest Replacement
Case leaking	A	Require replacement
Casing swollen	A	Further inspection required
NOTE: **No service suggested or required unless the battery fails performance test, in which case, require replacement.**		
Circuit open internally	A	Require replacement
Electrolyte contamination	A	Further inspection required
NOTE: **No service suggested or required unless the battery fails performance test, in which case, require replacement.**		
Electrolyte discoloration	A	Further inspection required
NOTE:		

No service suggested or required unless the battery fails performance test, in which case, require replacement.		
Fails to accept and hold charge	A	Require replacement
NOTE: **This phrase refers to a battery that fails to either accept and/or retain a charge using appropriate times listed in the Battery Charging Guide of the BCI Service Manual, battery charger operating manual, or battery manufacturer's specifications.**		
Fluid level low	B	Further inspection required
NOTE: **Determine cause of low fluid level. Refill to proper level(s) with water (distilled water preferred). Recharge battery and performance-test. If battery does not meet specifications, require replacement. If battery is sealed type (non-removable filler caps), require replacement.**		
Out of performance specification for battery	B	Require replacement
NOTE: **The battery may meet vehicle's OEM specifications for that vehicle but test below the minimum specifications defined by the battery manufacturer.**		
Out of specification for application	B	Require replacement
NOTE: **The battery may meet battery manufacturer's specifications but test below the minimum specification defined by the vehicle's OEM for that vehicle.**		
Post (top or side) burned, affecting performance	A	Require repair or replacement
NOTE: **Determine cause and correct prior to repair or replacement of part.**		
Post (top or side) burned, not affecting performance	2	Suggest repair or replacement
NOTE: **Determine cause and correct prior to repair or replacement of part.**		
Post (top or side) corroded, affecting performance	A	Require repair
Post (top or side) corroded, not affecting performance	2	Suggest repair
Post (top or side) loose	A	Require replacement
Post (top or side) melted, affecting performance	A	Require repair or replacement
NOTE: **Determine cause and correct prior to repair or replacement of part.**		
Post (top or side) melted, not affecting performance	2	Suggest repair or replacement
NOTE:		

Determine cause and correct prior to repair or replacement of part.		
Specific gravity low	B	Further inspection required
NOTE: **Recharge and test to manufacturer's specifications. If battery fails performance test, require replacement.**		
State of charge low	A	Further inspection required
NOTE: **Recharge and test to manufacturer's specifications. If battery fails performance test, require replacement.**		
Top dirty	2	Suggest cleaning battery
Top wet	A	Require cleaning battery Further inspection required
NOTE: **Check fluid level and adjust to manufacturer's specification. Suggest checking charging system for proper operation.**		
Vent cap loose	A	Require repair or replacement of vent cap
Vent cap missing	C	Require replacement of vent cap

BATTERY CABLES

Condition	Code	Procedure
Application incorrect	B	Require repair or replacement
Attaching hardware broken	A	Require repair or replacement of hardware
Attaching hardware missing	C	Require replacement of hardware
Attaching hardware not functioning	A	Require repair or replacement of hardware
Connector broken	A	Require repair or replacement
Connector melted	A	Require repair or replacement
NOTE: **Determine cause and correct prior to repair or replacement of part.**		
Connector missing	C	Require replacement
Insulation damaged, conductors exposed	A	Require repair or replacement
NOTE: **Exposed conductor at replacement (aftermarket) terminal end does not require repair or replacement.**		
Insulation damaged, conductors not exposed	1	Suggest replacement
Open	A	Require repair or replacement
Protective shield (conduit) melted	2	Suggest repair or replacement

NOTE: **Determine cause and correct prior to repair or replacement of part.**		
Protective shield (conduit) missing	C	Suggest repair or replacement
Resistance (voltage drop) out of specification	A	Require repair or replacement
Routed incorrectly	B	Require repair
Secured incorrectly	B	Require repair
Shorted	A	Require repair or replacement
Terminal broken	A	Require repair or replacement
Terminal burned, affecting performance	A	Require repair or replacement
NOTE: **Determine cause and correct prior to repair or replacement of part.**		
Terminal burned, not affecting performance	2	Suggest repair or replacement
Terminal corroded, affecting performance	A	Require repair or replacement
Terminal corroded, not affecting performance	2	Suggest repair or replacement
Terminal loose, affecting performance	B	Require repair or replacement
Terminal loose, not affecting performance	1	Suggest repair or replacement
Voltage drop out of specification	A	Require repair or replacement

BATTERY TRAYS AND HOLD DOWN HARDWARE

Condition	Code	Procedure
Battery improperly secured	2	Suggest repair
Bent, affecting performance	A	Require repair or replacement
Bent, not affecting performance	No Service Suggested or Required	
Broken, affecting performance	A	Require repair or replacement
Broken, not affecting performance	No Service Suggested or Required	
Corroded, affecting performance	A	Require repair or replacement
Corroded, not affecting performance	2	Suggest repair or replacement
Cracked, affecting performance	A	Require repair or replacement
Cracked, not affecting performance	1	Suggest repair or replacement
Missing	C	Require replacement
Threads damaged	A	Require repair or replacement
Water drain clogged	A	Require repair

BULBS, SEALED BEAMS AND LEDS

NOTE: Does not include soldered-in components.

Condition	Code	Procedure
Adjustment out of specification	B	Require repair or replacement
Application incorrect	B	Require replacement
NOTE: **Application incorrect includes wrong bulb coating or color.**		
Attaching hardware broken	A	Require repair or replacement of hardware
Attaching hardware missing	C	Require replacement of hardware
Attaching hardware not functioning	A	Require repair or replacement of hardware
Base burned, affecting performance	A	Require repair or replacement
NOTE: **Determine cause and correct prior to repair or replacement of part.**		
Base burned, not affecting performance	2	Suggest repair or replacement
NOTE: **Determine cause and correct prior to repair or replacement of part.**		
Base corroded, affecting performance	A	Require repair or replacement
Base corroded, not affecting performance	2	Suggest repair or replacement
Base leaking	A	Require repair or replacement
Base loose, affecting performance	B	Require repair or replacement
Base loose, not affecting performance	1	Suggest repair or replacement
Base melted	A	Require replacement
NOTE: **Determine cause and correct prior to replacement of part.**		
Bracket bent, affecting performance	A	Require repair or replacement
Bracket bent, not affecting performance	No Service Suggested or Required	
Bracket broken, affecting performance	A	Require replacement
Bracket broken, not affecting performance	No Service Suggested or Required	
Bracket corroded, affecting	A	Require repair or replacement

performance		
Bracket corroded, not affecting performance	2	Suggest repair or replacement
Bracket cracked, affecting performance	A	Require repair or replacement
Bracket cracked, not affecting performance	1	Suggest repair or replacement
Bracket loose, affecting performance	A	Require repair or replacement
Bracket loose, not affecting performance	1	Suggest repair or replacement
Bracket missing	C	Require replacement
Burned out	A	Require replacement
Connector (Weatherpack type) leaking	A	Require repair or replacement
Connector broken	A	Require repair or replacement
Connector melted	A	Require repair or replacement
NOTE: **Determine cause and correct prior to repair or replacement of part.**		
Connector missing	C	Require replacement
Corroded, affecting performance	A	Require repair or replacement
Corroded, not affecting performance	2	Suggest repair or replacement
Cracked	B	Require replacement
Intermittent	A	Require replacement
Lamp base melted	A	Require replacement
NOTE: **Determine cause and correct prior to replacement of part.**		
Leaking	B	Require repair or replacement
Missing	C	Require replacement
Seized in socket	A	Require repair or replacement
Terminal broken	A	Require repair or replacement
Terminal burned, affecting performance	A	Require repair or replacement
NOTE: **Determine cause and correct prior to repair or replacement of part.**		
Terminal burned, not affecting performance	2	Suggest repair or replacement
NOTE: **Determine cause and correct prior to repair or replacement of part.**		
Terminal corroded, affecting	A	Require repair or replacement

performance		
Terminal corroded, not affecting performance	2	Suggest repair or replacement
Terminal loose, affecting performance	B	Require repair or replacement
Terminal loose, not affecting performance	1	Suggest repair or replacement
Threads damaged	A	Require repair or replacement
Threads stripped (threads missing)	A	Require replacement

FUSES, FUSIBLE LINKS AND CIRCUIT BREAKERS

Condition	Code	Procedure
Application incorrect	B	Require replacement
Blown	A	Require replacement
NOTE: **Determine cause and correct prior to replacement of part.**		
Corroded, affecting performance	A	Require repair or replacement
Corroded, not affecting performance	2	Suggest repair or replacement
Cracked, affecting performance	A	Require repair or replacement
Cracked, not affecting performance	1	Suggest repair or replacement
Inoperative	A	Require replacement
NOTE: **Determine cause and correct prior to replacement of part.**		
Insulation damaged, conductors exposed	A	Require repair or replacement
Insulation damaged, conductors not exposed	1	Suggest replacement
Missing	C	Require replacement
Routed incorrectly	B	Require repair
Secured incorrectly	B	Require repair
Terminal broken	A	Require repair or replacement
Terminal burned, affecting performance	A	Require repair or replacement
NOTE: **Inoperative includes intermittent operation.**		
Terminal burned, not affecting performance	2	Suggest repair or replacement
Terminal corroded, affecting performance	A	Require repair or replacement

Terminal corroded, not affecting performance	2	Suggest repair or replacement
Terminal loose, affecting performance	B	Require repair or replacement

GROUND CABLES AND STRAPS

Condition	Code	Procedure
Attaching hardware broken	A	Require repair or replacement of hardware
Attaching hardware missing	C	Require replacement of hardware
Attaching hardware not functioning	A	Require repair or replacement of hardware
Corroded, affecting performance	A	Require repair or replacement
Corroded, not affecting performance	2	Suggest repair or replacement
Insulation damaged, exposing conductors	2	Suggest replacement
Loose	A	Require repair
Missing	C	Require replacement
Open	A	Require repair or replacement
Resistance high	A	Require repair or replacement
Terminal resistance (voltage drop) is out of specification	B	Require repair or replacement
Voltage drop out of specification	B	Require repair or replacement

GROUND STRAPS

Condition	Code	Procedure
Attaching hardware broken	A	Require repair or replacement of hardware
Attaching hardware missing	C	Require replacement of hardware
Attaching hardware not functioning	A	Require repair or replacement of hardware
Corroded, affecting performance	A	Require repair or replacement
Corroded, not affecting performance	2	Suggest repair or replacement
Insulation damaged, exposing conductors	2	Suggest replacement
Loose	A	Require repair
Missing	C	Require replacement
Open	A	Require repair or replacement
Resistance high	A	Require repair or replacement

Terminal resistance (voltage drop) is out of specification	B	Require repair or replacement
Voltage drop out of specification	B	Require repair or replacement

LENSES

Condition	Code	Procedure
Adjustment out of specification	B	Require repair
Application incorrect	A	Require replacement
Attaching hardware broken	A	Require repair or replacement of hardware
Attaching hardware missing	C	Require replacement of hardware
Attaching hardware not functioning	A	Require repair or replacement of hardware
Broken, affecting performance	A	Require replacement
Broken, not affecting performance	No Service Suggested or Required	
Cracked	B	Require replacement
Discolored	A	Require replacement
Leaking	B	Require repair or replacement
Melted, affecting performance	A	Require replacement
Melted, not affecting performance	2	Suggest replacement
Missing	C	Require replacement

SEALED BEAMS

NOTE: Does not include soldered-in components.

Condition	Code	Procedure
Adjustment out of specification	B	Require repair or replacement
Application incorrect	B	Require replacement
Attaching hardware broken	A	Require repair or replacement of hardware
Attaching hardware missing	C	Require replacement of hardware
Attaching hardware not functioning	A	Require repair or replacement of hardware
Base burned, affecting performance	A	Require repair or replacement
NOTE: **Determine cause and correct prior to repair or replacement of part.**		
Base burned, not affecting performance	2	Suggest repair or replacement
NOTE:		

Determine cause and correct prior to repair or replacement of part.		
Base corroded, affecting performance	A	Require repair or replacement
Base corroded, not affecting performance	2	Suggest repair or replacement
Base leaking	A	Require repair or replacement
Base loose, affecting performance	B	Require repair or replacement
Base loose, not affecting performance	1	Suggest repair or replacement
Base melted	A	Require replacement
NOTE: **Determine cause and correct prior to replacement of part.**		
Bracket bent, affecting performance	A	Require repair or replacement
Bracket bent, not affecting performance	No Service Suggested or Required	
Bracket broken, affecting performance	A	Require replacement
Bracket broken, not affecting performance	No Service Suggested or Required	
Bracket corroded, affecting performance	A	Require repair or replacement
Bracket corroded, not affecting performance	2	Suggest repair or replacement
Bracket cracked, affecting performance	A	Require repair or replacement
Bracket cracked, not affecting performance	1	Suggest repair or replacement
Bracket loose, affecting performance	A	Require repair or replacement
Bracket loose, not affecting performance	1	Suggest repair or replacement
Bracket missing	C	Require replacement
Burned out	A	Require replacement
Connector (Weatherpack type) leaking	A	Require repair or replacement
Connector broken	A	Require repair or replacement
Connector melted	A	Require repair or replacement
NOTE: **Determine cause and correct prior to repair or replacement of part.**		
Connector missing	C	Require replacement
Corroded, affecting performance	A	Require repair or replacement

Corroded, not affecting performance	2	Suggest repair or replacement
Cracked	B	Require replacement
Intermittent	A	Require replacement
Lamp base melted	A	Require replacement
NOTE: **Determine cause and correct prior to replacement of part.**		
Leaking	B	Require repair or replacement
Missing	C	Require replacement
Seized in socket	A	Require repair or replacement
Terminal broken	A	Require repair or replacement
Terminal burned, affecting performance	A	Require repair or replacement
NOTE: **Determine cause and correct prior to repair or replacement of part.**		
Terminal burned, not affecting performance	2	Suggest repair or replacement
NOTE: **Determine cause and correct prior to repair or replacement of part.**		
Terminal corroded, affecting performance	A	Require repair or replacement
Terminal corroded, not affecting performance	2	Suggest repair or replacement
Terminal loose, affecting performance	B	Require repair or replacement
Terminal loose, not affecting performance	1	Suggest repair or replacement
Threads damaged	A	Require repair or replacement
Threads stripped (threads missing)	A	Require replacement

WASHER PUMPS

Condition	Code	Procedure
Attaching hardware broken	A	Require repair or replacement of hardware
Attaching hardware missing	C	Require replacement of hardware
Attaching hardware not functioning	A	Require repair or replacement of hardware
Connector broken	A	Require repair or replacement
Connector melted	A	Require repair or replacement
NOTE: **Determine cause and correct prior to repair or replacement of part.**		

Connector missing	C	Require replacement
Inoperative	A	Require repair or replacement
NOTE: **Inoperative includes intermittent operation.**		
Leaking externally	A	Require repair or replacement
Leaking internally	A	Require repair or replacement
Noisy	2	Suggest repair or replacement
Resistance out of specification	B	Require repair or replacement
Terminal broken	A	Require repair or replacement
Terminal burned, affecting performance	A	Require repair or replacement
NOTE: **Determine cause and correct prior to repair or replacement of part.**		
Terminal burned, not affecting performance	2	Suggest repair or replacement
Terminal corroded, affecting performance	A	Require repair or replacement
Terminal corroded, not affecting performance	2	Suggest repair or replacement
Terminal loose, affecting performance	B	Require repair or replacement
Terminal loose, not affecting performance	1	Suggest repair or replacement
Threads damaged	A	Require repair or replacement
Threads stripped (threads missing)	A	Require replacement
Wire lead conductors exposed	B	Require repair or replacement
Wire lead corroded	A	Require repair or replacement
Wire lead open	A	Require repair or replacement
Wire lead shorted	A	Require repair or replacement

WIPER ARMS AND BLADES

NOTE: Windshield coatings or waxes can cause blades to not function as intended. Clean surface before making final judgment about blade replacement.

Condition	Code	Procedure
Attaching hardware broken	A	Require repair or replacement of hardware
Attaching hardware missing	C	Require replacement of hardware
Attaching hardware not functioning	A	Require repair or replacement of hardware
Attaching socket stripped	A	Require replacement

Bent	A	Require repair or replacement
Loose	2	Suggest repair or replacement
Missing	C	Require replacement
Noisy	2	Suggest repair or replacement
Size incorrect	2	Suggest replacement
Tension insufficient	B	Require repair or replacement
Torn	A	Require replacement
Worn, affecting performance	A	Require replacement
Worn, not affecting performance	1	Suggest replacement

WIPER HOSES AND NOZZLES

Condition	Code	Procedure
Attaching hardware broken	A	Require repair or replacement of hardware
Attaching hardware missing	C	Require replacement of hardware
Attaching hardware not functioning	A	Require repair or replacement of hardware
Blocked	A	Require repair or replacement
Leaking	A	Require repair or replacement
Missing	C	Require replacement
Oil-soaked (spongy)	1	Suggest replacement
Spray pattern incorrect	2	Suggest repair or replacement
Surface cracks (dry-rotted)	1	Suggest replacement

WIPER PUMP RESERVOIRS

Condition	Code	Procedure
Attaching hardware broken	A	Require repair or replacement of hardware
Attaching hardware missing	C	Require replacement of hardware
Attaching hardware not functioning	A	Require repair or replacement of hardware
Cap missing	C	Require replacement
Leaking	A	Require repair or replacement
Missing	C	Require replacement

ENGINE PERFORMANCE AND MAINTENANCE

NOTE: CHEMICAL ENGINE DECARBONIZATION is a process utilizing chemicals to remove soft and semi-hardened gum, varnish, resin and carbon deposits from the air/fuel delivery systems and combustion chambers of gasoline internal

combustion engines, providing benefits that include improved fuel economy, performance and driveability and reduced emissions. This process is performed to remove deposits preferably prior to deposit accumulation and hardening which may require costly mechanical deposit removal or component replacement.

NOTE: SUGGEST Chemical Engine Decarbonization service every 15,000 miles or 12 months.

NOTE: CONTAMINATED OIL SYSTEM SERVICE is an event based process (beyond that of a normal oil and filter change) performed to remove coolant, water or fuel contamination. Contamination increases oil's oxidation rate and has been shown to result in increased engine wear and reduced oil flow. CAUTION: Some OEM's (including GM and Honda) have issued Technical Service Bulletins advising that Chemical Crankcase Flushing may damage some engine components and that such damage will not be covered by the manufacturer's new car warranty.

ACCESSORY BELTS

Condition	Code	Procedure
Alignment incorrect	B	Further inspection required
NOTE: **Determine cause of incorrect alignment and require repair.**		
Cracked	1	Suggest replacement
Frayed	1	Suggest replacement
Missing	C	Require replacement
Noisy	2	Further inspection required
NOTE: **Determine cause of noise and suggest repair.**		
Plies separated	A	Require replacement
Tension out of specification	B	Require adjustment or replacement
Worn beyond adjustment range	B	Require replacement
Worn so it contacts bottom of pulley	A	Require replacement

AIR FILTER ELEMENTS

Condition	Code	Procedure
At or beyond service interval	3	Suggest replacement to comply with vehicle's OEM recommended service intervals

Leaking	A	Require replacement
Melted	A	Required replacement
Missing	C	Require replacement
Paper filter element oil-soaked	A	Require replacement
NOTE: **Further inspection required to determine cause.**		
Restricted, affecting performance	A	Require replacement
Water-contaminated	A	Require replacement
NOTE: **Further inspection required to determine cause.**		

AIR FILTER GASKETS

Condition	Code	Procedure
Attaching hardware broken	A	Require repair or replacement of hardware
Attaching hardware missing	C	Require replacement of hardware
Attaching hardware not functioning	A	Require repair or replacement of hardware
Leaking	A	Require repair or replacement
Missing	C	Require replacement

AIR FILTER HOUSINGS AND GASKETS

Condition	Code	Procedure
Attaching hardware broken	A	Require repair or replacement of hardware
Attaching hardware missing	C	Require replacement of hardware
Attaching hardware not functioning	A	Require repair or replacement of hardware
Leaking	A	Require repair or replacement
Missing	C	Require replacement

AIR PUMP BELTS

Condition	Code	Procedure
Alignment incorrect	B	Further inspection required
NOTE: **Determine cause of incorrect alignment and require repair.**		
At or beyond service interval	3	Suggest replacement to comply with vehicle OEM recommended service intervals

Cracked	1	Suggest replacement
Frayed	1	Suggest replacement
Missing	C	Require replacement
Noisy	2	Further inspection required
NOTE: **Determine cause of noise and suggest repair.**		
Plies separated	A	Require replacement
Tension out of specification	B	Require adjustment or replacement
Worn beyond adjustment range	B	Require replacement
Worn so it contacts bottom of pulley	A	Require replacement

BATTERIES

NOTE: **Proper operation of any electrical system or component can be affected by battery condition. The battery(ies) must meet or exceed minimum specification for vehicle as equipped and test to that specific battery's CCA.**

Definition of Terms

Battery Performance Testing - Testing that determines whether or not a battery meets both vehicle OEM and battery manufacturer's specifications.

Cold Cranking Amp (CCA) Rating - The number of amperes a new, fully charged battery at 0° F (-17.8° C) can deliver for 30 seconds and maintain at least a voltage of 1.2 volts per cell (7.2 volts for a 12-volt battery).

Cranking Amps (CA) - The number of amperes a new, fully charged battery, typically at 32° F (0° C) can deliver for 30 seconds and maintain at least a voltage of 1.2 volts per cell (7.2 volts for a 12volt battery).

OEM Cranking Amps - The minimum CCA required by the original vehicle manufacturer for a specific vehicle.

Condition	Code	Procedure
Battery frozen	Further inspection required	
NOTE: **Do not attempt to charge a frozen battery. Allow battery to warm thoroughly and then performance-test. If battery fails performance test, require replacement.**		
Battery tests near the ""end of its useful life"" utilizing a tester or on-board monitor able to accurately determine this	1	Suggest Replacement

condition		
Case leaking	A	Require replacement
Casing swollen	A	Further inspection required
NOTE: **No service suggested or required unless the battery fails performance test, in which case, require replacement.**		
Circuit open internally	A	Require replacement
Electrolyte contamination	A	Further inspection required
NOTE: **No service suggested or required unless the battery fails performance test, in which case, require replacement.**		
Electrolyte discoloration	A	Further inspection required
NOTE: **No service suggested or required unless the battery fails performance test, in which case, require replacement.**		
Fails to accept and hold charge	A	Require replacement
NOTE: **This phrase refers to a battery that fails to either accept and/or retain a charge using appropriate times listed in the Battery Charging Guide of the BCI Service Manual, battery charger operating manual, or battery manufacturer's specifications.**		
Fluid level low	B	Further inspection required
NOTE: **Determine cause of low fluid level. Refill to proper level(s) with water (distilled water preferred). Recharge battery and performance-test. If battery does not meet specifications, require replacement. If battery is sealed type (non-removable filler caps), require replacement.**		
Out of performance specification for battery	B	Require replacement
NOTE: **The battery may meet vehicle's OEM specifications for that vehicle but test below the minimum specifications defined by the battery manufacturer.**		
Out of specification for application	B	Require replacement
NOTE: **The battery may meet battery manufacturer's specifications but test below the minimum specification defined by the vehicle's OEM for that vehicle.**		
Post (top or side) burned, affecting performance	A	Require repair or replacement
NOTE: **Determine cause and correct prior to repair or replacement of part.**		
Post (top or side) burned, not affecting performance	2	Suggest repair or replacement
NOTE:		

Determine cause and correct prior to repair or replacement of part.		
Post (top or side) corroded, affecting performance	A	Require repair
Post (top or side) corroded, not affecting performance	2	Suggest repair
Post (top or side) loose	A	Require replacement
Post (top or side) melted, affecting performance	A	Require repair or replacement
NOTE: **Determine cause and correct prior to repair or replacement of part.**		
Post (top or side) melted, not affecting performance	2	Suggest repair or replacement
NOTE: **Determine cause and correct prior to repair or replacement of part.**		
Specific gravity low	B	Further inspection required
NOTE: **Recharge and test to manufacturer's specifications. If battery fails performance test, require replacement.**		
State of charge low	A	Further inspection required
NOTE: **Recharge and test to manufacturer's specifications. If battery fails performance test, require replacement.**		
Top dirty	2	Suggest cleaning battery
Top wet	A	Require cleaning battery Further inspection required
NOTE: **Check fluid level and adjust to manufacturer's specification. Suggest checking charging system for proper operation.**		
Vent cap loose	A	Require repair or replacement of vent cap
Vent cap missing	C	Require replacement of vent cap

BATTERY CONNECTORS

Condition	Code	Procedure
Application incorrect	B	Require repair or replacement
Attaching hardware broken	A	Require repair or replacement of hardware
Attaching hardware missing	C	Require replacement of hardware
Attaching hardware not functioning	A	Require repair or replacement of hardware
Connector broken	A	Require repair or replacement

Connector melted	A	Require repair or replacement
NOTE: **Determine cause and correct prior to repair or replacement of part.**		
Connector missing	C	Require replacement
Insulation damaged, conductors exposed	A	Require repair or replacement
Insulation damaged, conductors not exposed	1	Suggest replacement
NOTE: **Exposed conductor at replacement (aftermarket) terminal end does not require repair or replacement.**		
Open	A	Require repair or replacement
Protective shield (conduit) melted	2	Suggest repair or replacement
NOTE: **Determine cause and correct prior to repair or replacement of part.**		
Protective shield (conduit) missing	C	Suggest repair or replacement
Resistance (voltage drop) out of specification	A	Require repair or replacement
Routed incorrectly	B	Require repair
Secured incorrectly	B	Require repair
Shorted	A	Require repair or replacement
Terminal broken	A	Require repair or replacement
Terminal burned, affecting performance	A	Require repair or replacement
NOTE: **Determine cause and correct prior to repair or replacement of part.**		
Terminal burned, not affecting performance	2	Suggest repair or replacement
Terminal corroded, affecting performance	A	Require repair or replacement
Terminal corroded, not affecting performance	2	Suggest repair or replacement
Terminal loose, affecting performance	B	Require repair or replacement
Terminal loose, not affecting performance	1	Suggest repair or replacement
Voltage drop out of specification	A	Require repair or replacement

BELT IDLER ASSEMBLIES (ACCESSORY AND CAM BELTS)

Condition	Code	Procedure
Alignment incorrect	B	Require repair or replacement

Attaching hardware broken	A	Require repair or replacement of hardware
Attaching hardware missing	C	Require replacement of hardware
Attaching hardware not functioning	A	Require repair or replacement of hardware
Bearings worn	1	Suggest replacement
Cracked	2	Suggest replacement
Missing	C	Require replacement
Noisy	2	Suggest replacement
Seized	A	Require repair or replacement

BELT TENSIONERS (ACCESSORY AND CAM BELT)

Condition	Code	Procedure
Alignment incorrect	B	Require repair or replacement
Attaching hardware broken	A	Require repair or replacement of hardware
Attaching hardware missing	C	Require replacement of hardware
Attaching hardware not functioning	A	Require repair or replacement of hardware
Bearings worn	1	Suggest replacement
Belt tension incorrect	B	Require adjustment or repair
Cracked	B	Suggest replacement
Missing	C	Require replacement
Noisy	2	Suggest replacement
Pulley damaged, affecting belt life	A	Require replacement
Seized	A	Require repair or replacement

CHEMICAL ENGINE DECARBONIZATION

NOTE: **Chemical engine decarbonization is a process utilizing chemicals to remove soft and semi-hardened gum, varnish, resin and carbon deposits from the air/fuel delivery systems and combustion chambers of gasoline internal combustion engines, providing benefits that include improved fuel economy, performance and driveability and reduced emissions. This process is performed to remove deposits preferably prior to deposit accumulation and hardening which may require costly mechanical deposit removal or component replacement.**

NOTE: **SUGGEST Chemical Engine Decarbonization service every 15,000 miles or 12 months.**

COMBUSTION CHAMBER CLEANING

NOTE: See **CHEMICAL ENGINE DECARBONIZATION**.

COOLANT RECOVERY TANKS

Condition	Code	Procedure
Attaching hardware broken	A	Require repair or replacement of hardware
Attaching hardware missing	C	Require replacement of hardware
Attaching hardware not functioning	A	Require repair or replacement of hardware
Leaking	A	Require repair or replacement
Missing (if original equipment)	C	Require replacement

COOLANT

Condition	Code	Procedure
Acidity (pH) incorrect	1	Suggest correction or replacement
At or beyond service interval	3	Suggest replacement
NOTE: **The system should be drained and/ or flushed and refilled with correct coolant according to OEM recommended service interval and procedures.**		
Contaminated	B	Require replacement or recycling Further inspection required
NOTE: **Determine source of contamination and require correction prior to coolant replacement.**		
Fluid discolored	No Service Suggested or Required	
NOTE: **Further testing necessary to determine condition of fluid.**		
Level incorrect	B	Require correction of fluid level
NOTE: **Determine source of incorrect level and suggest repair.**		
Mixture incorrect	B	Require correction or replacement
Type incorrect	B	Require replacement

DISTRIBUTOR CAPS

Condition	Code	Procedure
Application incorrect	B	Require replacement
Arcing	A	Require replacement
Attaching hardware broken	A	Require repair or replacement of hardware
Attaching hardware missing	C	Require replacement of hardware

Attaching hardware not functioning	A	Require repair or replacement of hardware
Burned	A	Require replacement
Carbon button missing	A	Require replacement
Carbon button worn, affecting performance	A	Require replacement
Carbon button worn, not affecting performance	1	Suggest replacement
Carbon-tracked	A	Require replacement
Cracked	B	Require replacement
Loose	B	Suggest repair or replacement
Terminal broken	A	Require repair or replacement
Terminal burned, affecting performance	A	Require repair or replacement
NOTE: **Determine cause and correct prior to repair or replacement of part.**		
Terminal burned, not affecting performance	2	Suggest repair or replacement
Terminal corroded, affecting performance	A	Require repair or replacement
Terminal corroded, not affecting performance	2	Suggest repair or replacement
Terminal eroded, affecting performance	A	Require repair or replacement
Terminal eroded, not affecting performance	No Service Suggested or Required	
Terminal loose, affecting performance	B	Require repair or replacement
Terminal loose, not affecting performance	1	Suggest repair or replacement

DISTRIBUTOR ROTORS

Condition	Code	Procedure
Application incorrect	B	Require replacement
Attaching hardware broken	A	Require repair or replacement of hardware
Attaching hardware missing	C	Require replacement of hardware
Carbon-tracked	A	Require replacement
Contact burned	A	Require replacement
Corroded	1	Suggest replacement
Eroded	1	Suggest replacement

Loose	B	Require repair or replacement
Out of specification	B	Require replacement

ENGINE COOLING SYSTEMS

NOTE: **Overheating, poor engine performance, and insufficient cabin heat can be affected by, but are not limited to, all of the components in the engine cooling system.**

ENGINE DECARBONIZATION

NOTE: **See CHEMICAL ENGINE DECARBONIZATION.**

ENGINE OIL DRAIN PLUGS AND GASKETS

Condition	Code	Procedure
Leaking	A	Require repair or replacement
Missing	C	Require replacement
Threads damaged	A	Require repair or replacement
NOTE: **Some OEMs require replacement of drain plug gasket when removing drain plug. Inspect threads in oil pan for damage.**		

ENGINE OIL FILTERS AND CANISTERS

Condition	Code	Procedure
At or beyond service interval	3	Suggest replacement to comply with vehicle's OEM recommended service intervals
Bulged	A	Require replacement. Further inspection required
NOTE: **Inspect pressure relief valve.**		
Canister attaching hardware broken	A	Require repair or replacement of hardware
Canister attaching hardware loose	A	Require repair
Canister attaching hardware missing	C	Require replacement
Canister attaching hardware not functioning	A	Require repair or replacement of hardware
Center tube collapsed	A	Require replacement. Further inspection required
NOTE:		

Inspect bypass.		
Dented	2	Suggest replacement. Further inspection required
NOTE: **Determine cause, such as broken motor mount.**		
Leaking	B	Require repair or replacement

ENGINE OIL

Condition	Code	Procedure
Additive Depletion	A	Require replacement of fluid
At or beyond service interval	3	Suggest replacement to comply with vehicle's OEM recommended service intervals
Contaminated	A	Require replacement of oil and filter; Further Inspection Required
NOTE: **Determine source of contamination, such as engine coolant, fuel, metal particles, or water when changing oil.**		
Fluid discolored	No Service Suggested or Required	
NOTE: **Further testing necessary to determine condition of fluid.**		
Fluid incorrect	B	Require service
Level Incorrect	B	Adjust to correct level. Further Inspection Required.
NOTE: **Determine cause of incorrect level such as leaking gaskets or contamination by engine coolant, fuel or water.**		
Oxidized	A	Require replacement of fluid

FUEL FILTERS

Condition	Code	Procedure
At or beyond service interval	3	Suggest replacement to comply with OEM recommended service interval
Attaching hardware broken	A	Require repair or replacement of hardware
Attaching hardware missing	C	Require replacement of hardware
Attaching hardware not functioning	A	Require repair or replacement of hardware
Leaking	B	Require repair or replacement

Missing	C	Require replacement
Restricted, affecting performance	A	Require replacement
Restricted, not affecting performance	1	Suggest replacement
Water-contaminated	2	Suggest replacement

FUEL INJECTOR CLEANING

NOTE: See CHEMICAL ENGINE DECARBONIZATION.

FUEL INJECTORS

Condition	Code	Procedure
15,000 miles or 12 months beyond most recent Chemical Engine Decarbonization	5	Suggest chemical engine decarbonization
Attaching hardware missing	C	Require replacement of hardware
Attaching hardware threads damaged	A	Require repair or replacement of hardware
Attaching hardware threads stripped (threads missing)	A	Require repair or replacement of hardware
Connector (Weatherpack type) leaking	A	Require repair or replacement
Connector broken	A	Require repair or replacement
Connector melted	A	Require repair or replacement
NOTE: **Determine cause and correct prior to repair or replacement of part.**		
Connector missing	C	Require replacement
Contaminated	A	Require repair or replacement
NOTE: **Determine source of contamination, such as engine coolant, fuel, metal particles, or water. Require repair or replacement.**		
Inoperative	A	Require repair or replacement
NOTE: **Inoperative includes intermittent operation. Some components may be serviceable; check for accepted cleaning procedure.**		
Leaking	A	Require repair or replacement
Missing	C	Require replacement
Resistance out of specification	B	Require repair or replacement
Restricted, affecting performance	A	Require repair or replacement
Restricted, not affecting performance	2	Suggest repair or replacement

Terminal broken	A	Require repair or replacement
Terminal burned, affecting performance	A	Require repair or replacement
NOTE: **Determine cause and correct prior to repair or replacement of part.**		
Terminal burned, not affecting performance	2	Suggest repair or replacement
Terminal corroded, affecting performance	A	Require repair or replacement
Terminal corroded, not affecting performance	2	Suggest repair or replacement
Terminal loose, affecting performance	B	Require repair or replacement
Terminal loose, not affecting performance	1	Suggest repair or replacement
Threads damaged	A	Require repair or replacement
Threads stripped (threads missing)	A	Require replacement
Wire lead conductors exposed	B	Require repair or replacement
Wire lead corroded	A	Require repair or replacement
Wire lead open	A	Require repair or replacement
Wire lead shorted	A	Require repair or replacement

FUEL SYSTEM CLEANING SERVICE

NOTE: See **CHEMICAL ENGINE DECARBONIZATION**.

HOSE CLAMPS

Condition	Code	Procedure
Application incorrect	B	Require replacement
Connected incorrectly	A	Require repair
Corroded, not reusable	1	Suggest replacement
Cracked	A	Require replacement
Insufficient clamping force, allowing hose to leak	A	Require repair or replacement
Missing	C	Require replacement
Safety clip missing (not leaking)	C	Require replacement of safety clip
Stripped	A	Require replacement

HOSE CONNECTORS

Condition	Code	Procedure

Application incorrect	B	Require replacement
Connected incorrectly	A	Require repair
Corroded, not reusable	1	Suggest replacement
Cracked	A	Require replacement
Insufficient clamping force, allowing hose to leak	A	Require repair or replacement
Leaking	A	Require repair or replacement
Missing	C	Require replacement
Safety clip missing (not leaking)	C	Require replacement of safety clip
Stripped	A	Require replacement

HOSE COUPLERS

Condition	Code	Procedure
Application incorrect	B	Require replacement
Connected incorrectly	A	Require repair
Corroded, not reusable	1	Suggest replacement
Cracked	B	Require replacement
Insufficient clamping force, allowing hose to leak	A	Require repair or replacement
Leaking	A	Require repair or replacement
Missing	C	Require replacement
Safety clip missing (not leaking)	C	Require replacement of safety clip
Stripped	A	Require replacement

HOSES AND TUBES (FUEL LINES, RADIATOR, VACUUM, BY-PASS, HEATER, RECOVERY TANK AND OIL COOLERS)

Condition	Code	Procedure
Application incorrect	B	Require replacement
At or beyond service interval	3	Suggest replacement
Connected incorrectly	A	Require repair
Corroded, not reusable	1	Suggest replacement
Cracked	B	Require replacement
Dry-rotted	1	Suggest repair or replacement
Hard	1	Suggest repair or replacement
Inner fabric (webbing) damaged	A	Require replacement
Insufficient clamping force, allowing hose to leak	A	Require repair or replacement
Leaking	A	Require repair or replacement
Melted	1	Suggest repair or replacement
Missing	C	Require replacement
Outer covering damaged	1	Suggest replacement

Outer covering damaged to the extent that the inner fabric is visible	A	Require replacement
Protective sleeves damaged	2	Suggest replacement of sleeves
Protective sleeves missing	C	Require replacement of sleeves
Restricted, affecting performance	A	Require repair or replacement
Restricted, not affecting performance	2	Suggest repair or replacement
Routed incorrectly (where failure is likely to occur)	B	Require repair or replacement
Safety clip missing	C	Require replacement
Spongy	1	Suggest repair or replacement
Stripped	A	Require replacement
Swollen	B	Require replacement
Threads damaged	A	Require repair or replacement
Threads stripped (threads missing)	A	Require replacement
Type incorrect	2	Suggest repair or replacement

IGNITION WIRES (SECONDARY)

Condition	Code	Procedure
Application incorrect	B	Require replacement
Attaching hardware broken	A	Require repair or replacement of hardware
Attaching hardware missing	C	Require replacement of hardware
Attaching hardware not functioning	A	Require repair or replacement of hardware
Carbon-tracked	A	Require replacement
Corroded	1	Suggest repair or replacement
Insulation leaking (shorted)	A	Require repair or replacement
Metal heat shield bent	2	Suggest repair or replacement
Missing	C	Require replacement
Oil-soaked (spongy)	1	Suggest replacement
Resistance incorrect	B	Require replacement
Routed incorrectly	B	Suggest repair
NOTE: **If improper routing affects the performance of other systems, require repair. Proper routing, hardware, heatshields, etc., are intended to prevent premature failure of secondary ignition components.**		
Terminal broken	A	Require repair or replacement
Terminal burned, affecting performance	A	Require repair or replacement

NOTE: **Determine cause and correct prior to repair or replacement of part.**		
Terminal burned, not affecting performance	2	Suggest repair or replacement
Terminal corroded, affecting performance	A	Require repair or replacement
Terminal corroded, not affecting performance	2	Suggest repair or replacement
Terminal loose, affecting performance	B	Require repair or replacement
Terminal loose, not affecting performance	1	Suggest repair or replacement

INTAKE CLEANING

NOTE: **See CHEMICAL ENGINE DECARBONIZATION.**

O2 SENSORS

Condition	Code	Procedure
At or beyond service interval	3	Suggest replacement to comply with vehicle's OEM recommended service intervals
Attaching hardware missing	C	Require replacement of hardware
Attaching hardware threads damaged	A	Require repair or replacement of hardware
Attaching hardware threads stripped (threads missing)	A	Require repair or replacement of hardware
Connector (Weatherpack type) leaking	A	Require repair or replacement
Connector broken	A	Require repair or replacement
Connector melted	A	Require repair or replacement
NOTE: **Determine cause and correct prior to repair or replacement of part.**		
Connector missing	C	Require replacement
Contaminated	A	Require repair or replacement
NOTE: **Determine source of contamination, such as engine coolant, fuel, metal particles, or water. Require repair or replacement.**		
Inoperative	A	Require repair or replacement. Further inspection required
NOTE: **Inoperative includes intermittent operation. Some components may be serviceable; check for**		

accepted cleaning procedure.		
Leaking	A	Require repair or replacement
Missing	C	Require replacement
Resistance out of specification	B	Require repair or replacement
Restricted, affecting performance	A	Require repair or replacement
Terminal broken	A	Require repair or replacement
Terminal burned, affecting performance	A	Require repair or replacement
NOTE: **Determine cause and correct prior to repair or replacement of part.**		
Terminal burned, not affecting performance	2	Suggest repair or replacement
Terminal corroded, affecting performance	A	Require repair or replacement
Terminal corroded, not affecting performance	2	Suggest repair or replacement
Terminal loose, affecting performance	B	Require repair or replacement
Terminal loose, not affecting performance	1	Suggest repair or replacement
Threads damaged	A	Require repair or replacement
Threads stripped (threads missing)	A	Require replacement
Wire lead conductors exposed	B	Require repair or replacement
Wire lead corroded	A	Require repair or replacement
Wire lead open	A	Require repair or replacement
Wire lead shorted	A	Require repair or replacement

PCV BREATHER ELEMENTS

Condition	Code	Procedure
At or beyond service interval	3	Suggest replacement to comply with vehicle's OEM recommended service intervals
Attaching hardware broken	A	Require repair or replacement of hardware
Attaching hardware missing	C	Require replacement of hardware
Attaching hardware not functioning	A	Require repair or replacement of hardware
Leaking	A	Require replacement
Melted	A	Required replacement
Missing	C	Require replacement
Restricted, affecting performance	A	Require replacement

Restricted, not affecting performance	1	Suggest replacement
Water-contaminated	A	Require replacement

PCV VALVES

Condition	Code	Procedure
Application incorrect	B	Require replacement
At or beyond service interval	3	Suggest replacement to comply with vehicle's OEM recommended service intervals
Attaching hardware broken	A	Require repair or replacement of hardware
Attaching hardware missing	C	Require replacement of hardware
Attaching hardware not functioning	A	Require repair or replacement of hardware
Grommet broken	A	Require repair or replacement of grommet
Grommet missing	C	Require replacement of grommet
Grommet not functioning	A	Require repair or replacement of grommet
Inoperative	A	Require replacement
NOTE: **Inoperative includes intermittent operation.**		
Leaking	A	Require replacement
Missing	C	Require replacement
Restricted	A	Require replacement

RADIATOR CAPS AND PRESSURIZED EXPANSION TANK CAPS

Condition	Code	Procedure
Application incorrect	B	Require replacement
Coolant recovery check valve inoperative	A	Require replacement
NOTE: **Inoperative includes intermittent operation.**		
Fails to maintain proper pressure	B	Require replacement
Gasket missing	C	Require replacement of gasket
Missing	C	Require replacement
Seal missing	C	Require replacement of seal

SPARK PLUGS

NOTE: **You are not required to replace spark plugs in sets. However, you may suggest replacement of the other plugs for preventive maintenance.**

Condition	Code	Procedure
Application incorrect	B	Require replacement
At or beyond service interval	3	Suggest replacement
Electrode eroded	1	Suggest replacement
Fouled	A	Require repair or replacement
NOTE: **Determine cause of fouling and suggest repair.**		
Gap incorrect	B	Require repair or replacement
Improperly Indexed	Remove and Reinstall following manufacturers installation requirements	
Insulation broken	A	Require replacement
Insulator cracked	A	Require replacement
Leaking compression	A	Require repair or replacement
Threads damaged	A	Require repair or replacement
Threads stripped (threads missing)	A	Require replacement

THERMOSTATS AND HOUSINGS

Condition	Code	Procedure
Application incorrect	B	Require replacement
Attaching hardware broken	A	Require repair or replacement of hardware
Attaching hardware corroded	A	Require repair or replacement of hardware
Attaching hardware missing	C	Require replacement of hardware
Attaching hardware not functioning	A	Require repair or replacement of hardware
Housing corroded	1	Suggest replacement of housing
Inoperative	A	Require replacement
NOTE: **Inoperative includes intermittent operation.**		
Installation incorrect	B	Require repair or replacement
Leaking	A	Require repair or replacement
Thermostat missing	C	Require replacement of thermostat
Threads damaged	A	Require repair or replacement
Threads stripped (threads missing)	A	Require repair or replacement

THROTTLE BODY CLEANING

NOTE: See **CHEMICAL ENGINE DECARBONIZATION**.

TIMING BELTS

Condition	Code	Procedure
Adjustment incorrect	B	Suggest adjustment
NOTE: **Inspect belt tensioners, pulleys, and cover.**		
Alignment incorrect	B	Further inspection required
NOTE: **Determine cause of incorrect alignment and require repair.**		
At or beyond service interval	3	Suggest replacement to comply with vehicle OEM recommended service intervals
Broken	A	Require replacement
Cam timing out of specification	B	Require repair
Cracked	1	Suggest replacement
Fluid-soaked	1	Suggest replacement. Further inspection required
Frayed	1	Suggest replacement
Missing	C	Require replacement
NOTE: **Internal engine damage may result from timing belt damage/failure.**		
Noisy	2	Further inspection required
NOTE: **Determine cause of noise and suggest repair.**		
Plies separated	A	Require replacement
Teeth missing	A	Require replacement
Tension out of specification	B	Require adjustment or replacement

VACUUM HOSES, TUBES AND CONNECTIONS (NON-METALLIC)

Condition	Code	Procedure
Leaking	A	Require repair or replacement
Melted	A	Require replacement
Missing	C	Require replacement
Oil-soaked (spongy)	1	Suggest replacement
Restricted	A	Require repair or replacement
Surface cracks (dry-rotted)	1	Suggest replacement

EXHAUST SYSTEMS

WARNING: Federal EPA rules prohibit altering an exhaust system in any way that defeats the emission reduction components of a vehicle. Be sure to review and adhere to EPA policy on removing and replacing catalytic converters. Where state or local laws are stricter, they take precedence over these guidelines.

NOTE: Some exhaust systems are of a welded design. It is not required that the entire system be replaced. Determine the need to replace individual components based on conditions of component.

EXHAUST AND TAIL PIPES

Condition	Code	Procedure
Broken bracket	A	Require repair or replacement
Pipe Bent Out Of Position	B	Require repair or replacement
Pipe Broken	A	Require repair or replacement
Pipe Cracked	B	Require repair or replacement
Pipe Leaking	A	Require replacement
Pipe Missing	C	Require replacement
Pipe Plugged	A	Require replacement
Pipe Weak Due To Corrosion, But No Leaks Present	1	Suggest replacement
Weld Broken	A	Require repair or replacement

HEATING, VENTILATION AND AIR CONDITIONING SYSTEMS

NOTE: AIR CONDITIONING SYSTEM FLUSHING utilizes chemicals or refrigerant to remove oil, debris and contaminants from the evaporator, condenser, hoses or metal lines.

NOTE: An INLINE FILTER, both high and low side, protects a/c components from residual debris in the system. An inline filter or suction screen is suggested when a condenser, evaporator, compressor, expansion valve, accumulator/drier, hoses or metal lines is replaced, or if debris is found in the system during an a/c repair. An inline filter is suggested to help prevent future component damage and increase system longevity.

BELTS

Condition	Code	Procedure
Alignment incorrect	B	Further inspection required
NOTE: **Determine cause of incorrect alignment and require repair.**		

Cracked	1	Suggest replacement
Frayed	1	Suggest replacement
Missing	C	Require replacement
Noisy	2	Further inspection required
NOTE: **Determine cause of noise and suggest repair.**		
Plies separated	A	Require replacement
Serpentine belt routed incorrectly	B	Require repair
Tension out of specification	B	Require adjustment or replacement
Worn beyond adjustment range	B	Require replacement
Worn so it contacts bottom of pulley	A	Require replacement

CABIN AIR FILTERS

Condition	Code	Procedure
Air flow obstruction	A	Require cleaning or replacement
At or beyond service interval	3	Suggest replacement
Microbial growth causing odor	A	Require replacement of filter
Missing	C	Require replacement

COOLANT

Condition	Code	Procedure
Acidity (pH) incorrect	1	Suggest correction or replacement
At or beyond service interval	3	Suggest replacement
Contaminated	B	Require replacement or recycling. Further inspection required
NOTE: **Determine source of contamination and require correction prior to coolant replacement.**		
Fluid discolored	No Service Suggested or Required	
NOTE: **Further testing necessary to determine condition of fluid.**		
Level incorrect	B	Require filling to proper level
NOTE: **Determine source of incorrect level and suggest repair.**		
Mixture incorrect	B	Require correction or replacement
Type incorrect	B	Require replacement

EVAPORATOR DRAIN TUBES

Condition	Code	Procedure
Disconnected	A	Require repair
Leaking	A	Require replacement
Missing	C	Require replacement
Restricted	A	Require repair or replacement
Routed incorrectly	B	Require repair

EVAPORATOR FILTERS

Condition	Code	Procedure
Air flow obstruction	A	Require cleaning or replacement
At or beyond service interval	3	Suggest replacement
Microbial growth causing odor	A	Require replacement of filter
Missing	C	Require replacement

IN-LINE FILTERS

Condition	Code	Procedure
Connection leaking	A	Require repair or replacement
Leaking	B	Require repair or replacement
Restricted	A	Require replacement
Threads damaged	A	Require repair or replacement
Threads stripped (threads missing)	A	Require replacement

VACUUM HOSES AND TUBES

Condition	Code	Procedure
Disconnected	A	Require repair
Leaking	A	Require repair or replacement
Leaking	A	Require repair or replacement
Melted	A	Require repair or replacement
Missing	C	Require replacement
Oil-soaked (spongy)	1	Suggest replacement
Restricted	A	Require repair or replacement
Routing incorrect	B	Require repair
Surface cracks (dry-rotted)	1	Suggest replacement

STEERING AND SUSPENSION, WHEEL ALIGNMENT, WHEELS AND TIRES

NOTE: **Steering and Suspension are complex systems made up of a variety of interdependent components and controls. For proper vehicle handling, ride, and tire wear, a thorough inspection is required whenever suspension work is**

being performed.

NOTE: Listed repair conditions assume that the problem has been isolated to the specific component by proper testing procedures. When replacing steering and/or suspension components which may affect an alignment angle, you are required to check and adjust alignment as needed. Refer to the OEM specifications for both ride height and alignment angle tolerances.

NOTE: Improper alignment geometry, and/or improper tire/wheel fitment may affect other systems such as Adaptive Cruise Control, Electronic Stability Control, Electronic Traction Control and Variable Ratio Steering. These systems may require attention after an alignment or suspension service is performed. Care must be taken to identify these vehicles/systems before any repair procedures are performed. Failure to follow OEM guidelines when servicing interrelated systems could result in an unsafe condition.

CAUTION: Do not use ride height altering or load compensating components, such as variable rate springs or coil over shocks on vehicles with height sensing or load sensing proportioning- valve equipped braking systems, unless these components are supplied as original equipment.

HYDRAULIC HOSES

Condition	Code	Procedure
Attaching hardware broken	A	Require repair or replacement of hardware
Attaching hardware missing	C	Require replacement of hardware
Attaching hardware not functioning	A	Require repair or replacement of hardware
Attaching hardware threads damaged	A	Require repair or replacement of hardware
Attaching hardware threads stripped (threads missing)	A	Require replacement of hardware
Blistered	B	Require replacement
Fitting threads damaged	A	Require repair or replacement
Fitting threads stripped (threads missing)	A	Require replacement
Inner fabric (webbing) cut	B	Require replacement
Leaking	A	Require replacement
Missing	C	Require replacement
Outer covering is cracked to the extent that inner fabric of hose is visible	B	Require replacement

Restricted	A	Require replacement
Routed incorrectly (where failure is likely to occur)	B	Require repair or replacement
Secured incorrectly	B	Require repair

POWER STEERING BELTS

Condition	Code	Procedure
Alignment incorrect	B	Further inspection required
NOTE: **Determine cause of incorrect alignment and require repair.**		
Cracked	1	Suggest replacement
Frayed	1	Suggest replacement
Missing	C	Require replacement
Noisy	2	Further inspection required
NOTE: **Determine cause of noise and suggest repair.**		
Plies separated	A	Require replacement
Serpentine belt routed incorrectly	B	Require repair
Tension out of specification	B	Require adjustment or replacement
Worn beyond adjustment range	B	Require replacement
Worn so it contacts bottom of pulley	A	Require replacement

POWER STEERING FLUID

Condition	Code	Procedure
50,000 miles or greater on OE fluid (in absence of published manufacturer interval)	5	Suggest Replacement
NOTE: **One time only fluid exchange**		
Additive Depletion	A	Require replacement of fluid
Fluid at or beyond service interval	3	Suggest fluid replacement
Fluid contaminated (i.e. fluid other than power steering fluid present)	B	Require flushing and refilling of the system
NOTE: **Determine and correct source of contamination. OEM specifications must be followed for fluid type.**		
Fluid discolored	No Service Suggested or Required	

NOTE: **Further testing necessary to determine condition of fluid.**		
Fluid level incorrect	B	Require adjustment of fluid level
Fluid type incorrect	B	Require flushing and refilling with correct fluid
Oxidized	A	Require replacement of fluid

POWER STEERING HOSES

Condition	Code	Procedure
Attaching hardware broken	A	Require repair or replacement of hardware
Attaching hardware missing	C	Require replacement of hardware
Attaching hardware not functioning	A	Require repair or replacement of hardware
Attaching hardware threads damaged	A	Require repair or replacement of hardware
Attaching hardware threads stripped (threads missing)	A	Require replacement of hardware
Blistered	B	Require replacement
Fitting threads damaged	A	Require repair or replacement
Fitting threads stripped (threads missing)	A	Require replacement
Inner fabric (webbing) cut	B	Require replacement
Leaking	A	Require replacement
Missing	C	Require replacement
Outer covering is cracked to the extent that inner fabric of hose is visible	B	Require replacement
Restricted	A	Require replacement
Routed incorrectly (where failure is likely to occur)	B	Require repair or replacement
Secured incorrectly	B	Require repair

SHOCK ABSORBERS, STRUT CARTRIDGES AND STRUT ASSEMBLIES

NOTE: **You are not required to replace shocks or struts in axle sets. However, when replacing a shock or strut due to the conditions that follow, you may suggest replacement of the other shock or strut on the same axle for one or more of the following: improved performance or preventive maintenance; part is close to the end of its useful life; to extend tire life; to balance ride and handling; or to improve stopping distance. When replacing steering and/or suspension components which may affect an alignment angle, you are required to check**

and adjust alignment as needed. Refer to the OEM specifications. Under no circumstances should a technician bend struts or strut housings. A vehicle's load-carrying and handling abilities are limited by its suspension, tires, brakes, and driveline. Installing coil over shocks or any other load assist device does not increase the vehicle's load capacity. See the vehicle owner's manual for more details. If vehicle is equipped with OEM coil over shocks, apply the conditions for coil springs from the Springs: Coil, Leaf, and Torsion Bar section of the Steering and Suspension guidelines. If the vehicle is equipped with add-on coil over shocks, you may suggest replacement with standard shocks for a spring-related condition.

Condition	Code	Procedure
50,000 miles or greater on OEM Shocks or Struts	1	Suggest Replacement
NOTE: **Applies only to OEM hydraulic fluid and/or gas charged shocks and struts, NOT electronically controlled units.**		
Attaching hardware broken	A	Require repair or replacement of hardware
Attaching hardware corroded, affecting structural integrity	A	Require replacement of hardware
Attaching hardware missing	C	Require replacement of hardware
Attaching hardware not functioning	A	Require repair or replacement of hardware
Attaching hardware threads damaged	A	Require repair or replacement of hardware
Attaching hardware threads stripped (threads missing)	A	Require replacement of hardware
Binding	A	Require replacement
Body dented	A	Further inspection required
NOTE: **Require replacement of units where dents restrict shock or strut piston rod movement. If dents don't restrict movement, no service is suggested or required. Especially critical on mono-tube shocks.**		
Body punctured	A	Require replacement
Brake hose bracket bent	B	Require repair or replacement
Brake hose bracket missing	C	Require replacement
Brake hose bracket threads damaged	A	Require repair or replacement
Brake hose bracket threads stripped (threads missing)	C	Require replacement
Compression bumper missing	C	Require replacement of compression bumper
Compression bumper split	1	Suggest replacement of

		compression bumper
Damping (none)	A	Require replacement
Dust boot (bellows) missing	C	Require replacement of boot
NOTE: **If boot is not available as a separate component, suggest replacement of shock or strut (reason code 2). This condition can lead to damage of the piston rod, which causes piston rod seal wear.**		
Dust boot (bellows) split	A	Require replacement of boot
NOTE: **If boot is not available as a separate component, suggest replacement of shock or strut (reason code 2). This condition can lead to damage of the piston rod, which, in turn, causes premature piston rod seal wear.**		
Dust boot (bellows) torn	A	Require replacement of boot
NOTE: **If boot is not available as a separate component, suggest replacement of shock or strut (reason code 2). This condition can lead to damage of the piston rod, which, in turn, causes premature piston rod seal wear.**		
Dust shield broken	2	Suggest replacement
NOTE: **This condition can lead to damage of the piston rod, which, in turn, causes premature piston rod seal wear.**		
Dust shield missing	2	Suggest replacement
NOTE: **This condition can lead to damage of the piston rod, which, in turn, causes premature piston rod seal wear.**		
Gland nut (strut housing cap) is not removable using appropriate tool	A	Require replacement of nut and/or housing
NOTE: **Only required if replacing cartridge.**		
Gland nut (strut housing cap) threads damaged	A	Require repair or replacement of nut
Housing dented	A	Further inspection required
NOTE: **Require replacement of units where dents restrict shock or strut piston rod movement. If dents don't restrict movement, no service is suggested or required. Especially critical on mono-tube shocks.**		
Housing punctured	A	Require replacement
Jounce bumper missing	C	Require replacement of jounce bumper
Jounce bumper split	1	Suggest replacement of jounce bumper
Leaking oil, enough for fluid to be running down the body	A	Require replacement

NOTE: **If the strut cartridge has been replaced previously, the oil on the strut housing may be filler oil. The technician must identify the source of the oil.**		
Noisy	2	Further inspection required
NOTE: **If noise is isolated to shock or strut, suggest replacement.**		
Piston rod bent	A	Require replacement
Piston rod broken	A	Require replacement
Piston rod has surface defect	2	Suggest replacement
Piston rod threads damaged	A	Require repair or replacement
Piston rod threads stripped (threads missing)	A	Require replacement
Seized	A	Require replacement
Shock missing	C	Require replacement
Strut housing bent	A	Require replacement
Strut housing cap (gland nut) is not removable using appropriate tool	A	Require replacement of nut and/or housing
NOTE: **Only required if replacing cartridge.**		
Strut housing cap (gland nut) threads damaged	A	Require repair or replacement of nut
Strut housing cap (gland nut) threads stripped (threads missing)	A	Require replacement of nut
Strut housing severely corroded, affecting structural integrity	A	Require replacement
Strut housing threads damaged	A	Require repair or replacement
Strut housing threads stripped (threads missing)	A	Require replacement
Tire cupping	A	Further inspection required
NOTE: **Although shocks or struts may have contributed to tire cupping, an inspection is needed of the entire suspension system. If the shock or strut is found to be contributing to the tire cupping, require replacement.**		

STRUT RODS

Condition	Code	Procedure
Adjusting nut seized	A	Require repair or replacement of hardware
NOTE: **Only required if an alignment is being performed and adjustment of the strut in question is required.**		

Attaching (mating) hole oversized	A	Require repair or replacement of bracket or frame
Attaching hardware broken	A	Require repair or replacement of hardware
Attaching hardware missing	C	Require replacement of hardware
Attaching hardware not functioning	A	Require repair or replacement of hardware
Attaching hardware threads damaged	A	Require repair or replacement of hardware
Attaching hardware threads stripped (threads missing)	A	Require replacement of hardware
Attaching point on bracket or frame corroded, affecting structural integrity	A	Require repair of bracket or frame
Bent, affecting performance	A	Require replacement
Mating (attaching) hole oversized	A	Require repair or replacement of bracket or frame
Threads damaged	A	Require repair or replacement
Threads stripped (threads missing)	A	Require replacement

TIRE PRESSURE MONITORING SYSTEM

NOTE: **A Tire Pressure Monitoring System (TPMS) is designed to detect and alert the driver should the air pressure level in one or more of the vehicle's tires, up to all four tires, fall below the manufacturer's recommended inflation pressure or another pre-set level.**

NOTE: **NHTSA does not consider installation of an aftermarket or replacement tire or rim that is not compatible with the TPMS to be a "make inoperative" situation under 49 U.S.C. 30122, provided that the entity does not disable the TPMS malfunction indicator.**

TIRE PRESSURE SENSORS

Condition	Code	Procedure
Attaching hardware broken	A	Require repair or replacement of hardware
Attaching hardware missing	C	Require replacement of hardware
Attaching hardware not functioning	A	Require repair or replacement of hardware
Inoperative	A	Require repair or replacement
NOTE: **Inoperative includes intermittent failure.**		

Loose	B	Require repair or replacement
Missing (Non-OE Wheel and/or Tire Applications)	2	Suggest replacement if appropriate sensor is available
Missing (OE Wheel and Tire Applications)	C	Replacement Reqiuired
Not Responding	Further inspection required	

NOTE:
If sensor does not Wake Up, follow manufacturers recommended diagnostic procedure to determine cause

TIRES

NOTE: **These guidelines do not apply to split rims. Some vehicle manufacturers restrict replacement of tires to specific brands, types, or sizes. High pressure temporary compact spare tires should not be used with any other rims or wheels, nor should standard tires, snow tires, wheel covers, or trim rings be used with high pressure compact spare rims or wheels. Attempting to mount a tire of one diameter on a wheel of a different diameter or flange type may result in serious injury or death. Only specially trained persons should de-mount or mount tires. Explosions of tire and wheel assembly can result from improper mounting, possibly causing serious injury or death. Consult the vehicle owner's manual or vehicle placard for correct size, speed rating, designation, and cold inflation pressure of the original tires. Do not exceed the maximum load or inflation capacity of the tire specified by the Tire and Rim Association When replacing tires, it is suggested that the replacement tires match or exceed the OEM speed rating designation. If tires of different speed rating designations are mixed on the same vehicle, the tires may vary in handling characteristics. Do not mix different speed rating designations on the same axle. Do not mix radials with non-radial tires on the same axle, as this may affect vehicle handling and stability. If radial tires and bias or bias-belted ply tires are mixed on the same vehicle, the radials must be on the rear. High-pressure temporary compact spare tires are exempt from this rule. Do not mix size or type (Run Flat, all season, performance, mud and snow) of tires on the same axle. If any flammable emergency tire inflation product has been used on a tire, consult inflation product, manufacturer's product information label for tire deflation procedures to avoid possible serious injury or death. In some vehicles, changing the tire diameter from factory-equipped size can affect drive ability, as well as the performance of ABS and other vehicle systems. Consult the vehicle manufacturer's specifications.**

Condition	Code	Procedure
Air pressure incorrect	B	Require repair
Bead broken	A	Require replacement
Bead leaking, caused by tire	A	Require repair or replacement
Bead wire/cord exposed	A	Require replacement

Cord or belt material exposed	A	Require replacement
Cord ply separations	A	Require replacement
Directional/asymmetrical tires mounted incorrectly	B	Require remounting and/or repositioning
Irregular tread wear, affecting performance	2	Suggest replacement
NOTE: **Determine and correct cause of irregular tire wear.**		
Load ratings less than OEM specifications	B	Require replacement
Mixed tread types (all season, performance, mud and snow) on same axle	A	Require replacement
Number of punctures exceeds manufacturer's limit	B	Require replacement
Out of balance	B	Require rebalance of tire/wheel assembly
Ply separation	A	Require replacement
Pull or lead, caused by tire	A	Require repair or replacement
Radial and bias or bias-belted ply tires on same axle	B	Require repair or replacement
Radials are on the front and not on the rear	B	Require repair or replacement
NOTE: **If radials and bias or bias-belted ply tires are on the same vehicle, the radials must be on the rear axle, except for high-pressure temporary spares.**		
Run flat damage	A	Require replacement
Shoulder cut	A	Require replacement
Shoulder puncture	A	Require replacement
Shoulder with plug	A	Require replacement
Sidewall bulge	A	Require replacement
Sidewall cut	A	Require replacement
Sidewall indentation	No service required or suggested	
Sidewall puncture	A	Require replacement
Sidewall with plug	A	Require replacement
Speed rating designations different on same axle	2	Suggest rotation or replacement
Tire and wheel assembly has excessive run-out	B	Require repair or replacement of appropriate part
NOTE: **Excessive is defined as enough to contribute to performance problems. Match mounting may correct run-out. If not, require replacement of appropriate part. Refer to manufacturer's**		

specifications.		
Tires with excessive diameter difference on an all-wheel drive vehicle or four-wheel drive vehicle	B	Require replacement
NOTE: **Excessive diameter difference is defined as exceeding manufacturer's specifications or, if no manufacturer's specifications exist, with more than 1/4"" diameter difference.**		
Tires with excessive diameter difference on the same side of a dual-wheel application	B	Require replacement
NOTE: **Excessive diameter difference is defined as exceeding manufacturer's specifications or, if no manufacturer's specifications exist, with more than 1/4"" diameter difference.**		
Tread area puncture larger in diameter than manufacturer's specifications	B	Require replacement
Tread missing pieces (chunking), exposing cord	A	Require replacement
Tread missing pieces (chunking), not exposing cord	1	Suggest replacement
Tread separations	A	Require replacement
Tube in tubeless tire	3	Suggest removal of tube
NOTE: **Most manufacturers do not recommend tubes in tubeless tires. Inspect tire and wheel . Assembly to determine the reason for a tube in tubeless tire. Recommendation for repair or replacement should be based upon condition of tires and! Or wheel listed in these guidelines.**		
Weather-checking	No service required or suggested	
Worn to tread wear indicators	B	Require replacement

VALVE STEMS

NOTE: **Most tire manufacturers suggest replacement of non-TPMS valve stems any time a new tire is installed. For TPMS valve stems, the manufacturer may require replacement of the valve stem, o-ring seals, washers, gaskets, valve cores, compression washers and/or locking nut.**

Condition	Code	Procedure
Bent	2	Suggest replacement
Broken	A	Require replacement
Cap seized	A	Require repair or replacement
Cut, but not leaking	1	Suggest replacement
Deteriorated (cracking, dry rot)	1	Suggest replacement

Leaking	A	Require repair or replacement
Missing	C	Require replacement
O-Ring leaking	A	Require replacement of O-Ring
Threads damaged	A	Require repair or replacement
Threads stripped	A	Require replacement
Valve cap missing	C	Require replacement of cap

WHEEL ATTACHMENT HARDWARE

NOTE: For conditions noted below, also check condition of wheel stud holes. Proper lug nut torque is essential. Follow recommended torque specifications and tightening sequence. DO NOT lubricate threads unless specified by the vehicle manufacturer.

Condition	Code	Procedure
Bent	A	Require replacement
Broken	A	Require replacement
NOTE: **Some manufacturers require replacement of all studs on that wheel if two or more studs or nuts on the same wheel are broken or missing.**		
Locking lug nut locking groove damaged	A	Require replacement
Loose	A	Require repair or replacement of affected component
Lug nut installed backward	B	Require repair or replacement
Lug nut mating surface distorted	A	Require replacement of nut
Lug nut mating type incorrect	B	Require replacement of nut
Lug nut missing	C	Require replacement
Lug nut rounded	A	Require replacement of nut
NOTE: **Only required if removing wheel.**		
Lug nut seized	A	Require replacement of nut
NOTE: **Only required if removing wheel.**		
Stud incorrect	B	Require replacement of stud
Stud missing	C	Require replacement
Threads damaged	A	Require repair or replacement of component with damaged threads
Threads stripped	A	Require replacement of component with stripped threads

WHEEL BEARINGS, RACES AND SEALS

NOTE: **When replacing or repacking wheel bearings, grease seal replacement is required. You are not required to replace these components in axle sets. Determine the need to replace based upon the individual component conditions that follow.**

Condition	Code	Procedure
Axle seal on drive axle leaking	A	Require replacement of seal and inspection of axle, bearing, housing, and vent tube
Bearing end-play exceeds specifications	B	Require adjustment of bearing, if possible If proper adjustment cannot be obtained, require replacement of bearing and race assembly
Bearing rollers, balls or races are worn, pitted, or feel rough when rotated as an assembly or other damage affecting performance.	B	Require replacement of bearing and race assembly
Seal leaking	A	Require replacement of seal and inspection of bearings
NOTE: **Require inspection of mating and sealing surface and repair or replace as necessary. Check vent. A plugged vent may force fluid past the seal.**		
Seal missing	C	Require replacement

WHEEL & TIRE SUPPLEMENT

Steering and suspension are complex systems made up of a variety of interdependent components. For proper vehicle handling, ride, and tire wear, a thorough inspection is required whenever suspension work is being performed. Conditions listed assume that the problem has been isolated to the specific component by proper testing procedures.

NOTE: **When replacing steering and/or suspension components that may affect an alignment angle, you are required to check and adjust alignment as needed. Refer to the OEM specifications.**

CAUTION: **Do not use ride height altering or load compensating components, such as variable rate springs and coil over shocks, on vehicles with height or load sensing proportioning valve-equipped braking systems, unless these components are original equipment.**

NOTE: **Depending on the air suspension design, there are some aftermarket products available to eliminate the air ride suspension on certain vehicles. If the system has been eliminated with one of these products, then no service is suggested or**

required.

WARNING: These guidelines do not apply to split rims.

TIRES

When replacing tires, it is suggested that the replacement tires match or exceed the OEM speed rating designation. If tires of different speed rating designations are mixed on the same vehicle, the tires may vary in handling characteristics. Do not mix different speed rating designations on the same axle.

Consult the vehicle owner's manual or vehicle placard for correct tire size, service description, load index, speed rating and cold inflation pressure of the original tires. Do not exceed the maximum load or inflation capacity of the tire specified by the Tire and Rim Association (www.us-tra.org)

When replacing fewer than ALL tires on a vehicle, follow the vehicle manufacturer's recommendations as to the placement of the new tires. If it is not possible to follow the vehicle manufacturer's tire replacement recommendations, remember to replace tires on the same axle with the same size, construction, speed rating, and, if possible, similar tread pattern.

Do not mix radials with non-radial tires on the same axle, as this may affect vehicle handling and stability. If radial tires and non-radial tires are mixed on the same vehicle, the radials must be on the rear. If radial and non-radial tires are used on a vehicle equipped with dual rear tires, radial tires may be used on either axle. High-pressure temporary compact spare tires are exempt from this rule.

Do not mix size or type (all season, performance, mud and snow) of tires on the same axle. When replacing only two tires on front or rear drive vehicles, follow the vehicle manufacturer's recommendations concerning placement. If it is not possible to follow OE recommendations, it is preferable to place the two new tires on the rear for greater stability, greater adhesion affecting steering -- on other than dry pavement -- and overall safety, regardless of whether the vehicle is front or rear wheel drive.

It is particularly important to match all tire sizes and constructions on 4-wheel (4x4) and all-wheel (AWD) drive vehicles unless otherwise specified by vehicle manufacturer. Ideally, all four tires should be replaced at the same time. Some vehicle manufacturers restrict replacement of tires to specific brands, types, or sizes.

MOUNTING TIRES

Only specially trained persons should de-mount or mount tires. Explosions of tire and wheel assembly can result from improper mounting, possibly causing serious injury or death. High pressure temporary compact spare tires should not be used with any other rims or wheels, nor should standard tires, snow tires, wheel covers, or trim rings be used with high pressure compact spare rims or wheels.

Mount tires only on same or approved rim widths.

Attempting to mount a tire of one diameter on a wheel of a different diameter , bead taper or flange type may result in serious injury or death.

If any flammable emergency tire inflation product has been used in a tire, consult inflation product manufacturer's product information label for tire deflation procedures to avoid possible serious injury or death.

VEHICLE TIRE PLACARD

Since 1968, cars and light trucks sold in the United States have been required to have a tire information sticker, called a vehicle tire placard. The vehicle tire placard indicates the size of the original equipment tires (including the spare), cold inflation pressure for the tires on both axles as well as the spare, and load index or range. Depending on the vehicle, the vehicle tire placard will either be located on the edge of any door, the doorpost, glove box, fuel door or inside trunk lid. If the tire placard is missing, consult the owner's manual, vehicle manufacturer, or tire manufacturer regarding applicable tire information.

Always refer to the vehicle manufacturer's recommendations before replacing tires. Tires should always be replaced with the same size designation, or approved options, as recommended. Never choose a smaller size with less load carrying capacity than the size on the tire placard. (Some vehicle manufacturers require different-sized tires for either the front or rear axles.)

NOTE: **It is not always possible to select a replacement tire with exactly the same size as shown on the placard. Consult with a vehicle or tire manufacturer for replacement recommendations.**

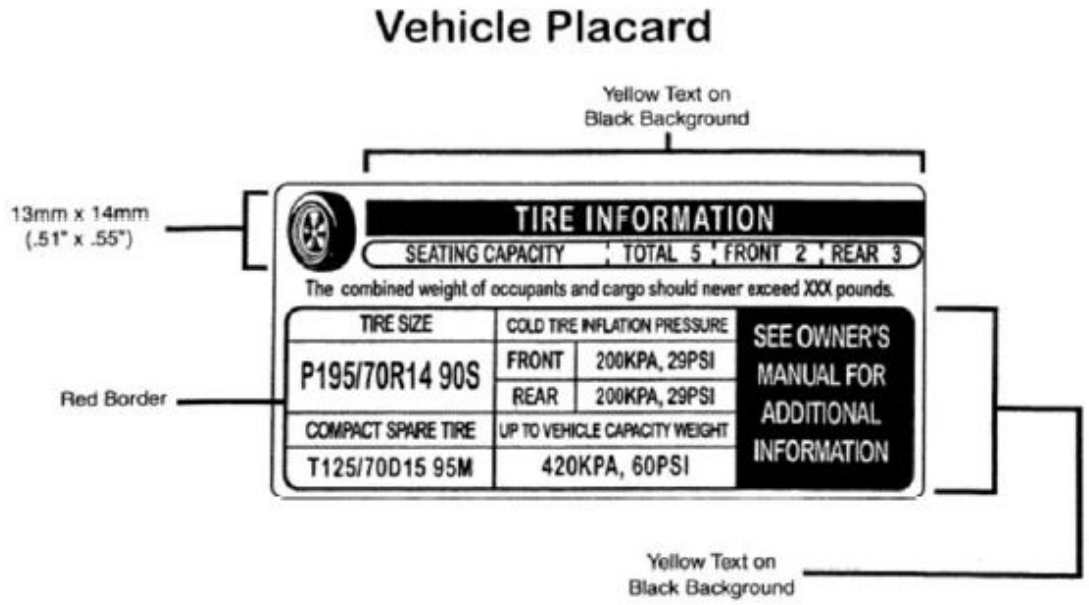

Fig. 12: Vehicle Tire Placard - Typical

TIRE ROTATION

The front tires on most vehicles tend to wear out faster than the rear tires. This is due to the effects of steering the vehicle and the weight transfer that occurs during braking. To ensure that all four tires wear evenly, it is important to rotate them on a regular basis. Tire rotation helps maintain balanced handling because it allows all

four tires to wear at the same rate. Keep in mind, as tire wear reduces tread depth, it increases the tires' response to driver inputs. Consequently, by equalizing tire wear at all four corners, dry road performance is actually enhanced. Another advantage of regular rotation is that it allows the tires to be replaced in complete sets rather than in pairs. This maintains handling continuity. It also enables drivers to take advantage of the latest in tire technology, instead of trying to match a pair of older tires.

Most manufacturers list rotation intervals in the scheduled maintenance section of the vehicle service manual and/or the owner's manual. Tire rotation patterns can also be found in these books. If this information is unavailable for a particular vehicle, rotate the tires every 5-7,000 miles following the appropriate rotation sequence shown in the illustrations. After completing a tire rotation, be sure to reset inflation pressures to the manufacturer's recommended specifications indicated on the vehicle tire placard.

To ensure that the proper amount of clamping force is applied to each fastener, follow these guidelines:

- Make sure the area around the lug holes, as well as the wheel and hub mating surfaces are clean and dry. A wire brush can be used to remove corrosion and other debris. Wipe the areas clean using a shop rag.
- Inspect the bolt holes for damage. Do not use a wheel if the bolt holes are deformed.
- Inspect the wheel studs and lug nuts or lug bolts and bolt holes (depending on the vehicle) for damage. Replace or repair any damaged or worn components.
- Always follow a star pattern when tightening lugs.

WHEEL LUG NUT TORQUE & CLAMPING FORCE

Although proper wheel lug nut torque is important, it does not guarantee that the required clamping force will be achieved. For example, excessive corrosion on the wheel and hub mating surfaces will result in improper clamping force, even when the lugs are tightened with a calibrated torque wrench. Low clamping force can also occur if the threads are dirty. This is because dirt causes interference between the mating threads. As a result, the torque wrench will register the correct reading but the clamping force will be inadequate. To improve the chances of achieving the precise clamping force between the wheel and hub, proper torque must be applied to clean components in good condition. Specifications for wheel lug nut torque can be found in the `Tire and Wheel' section of most vehicle service manuals. When specifications are indicated as a range, adjust the torque wrench to the middle of the range to compensate for normal variations in tool calibration.

POPULAR TIRE ROTATION PATTERNS

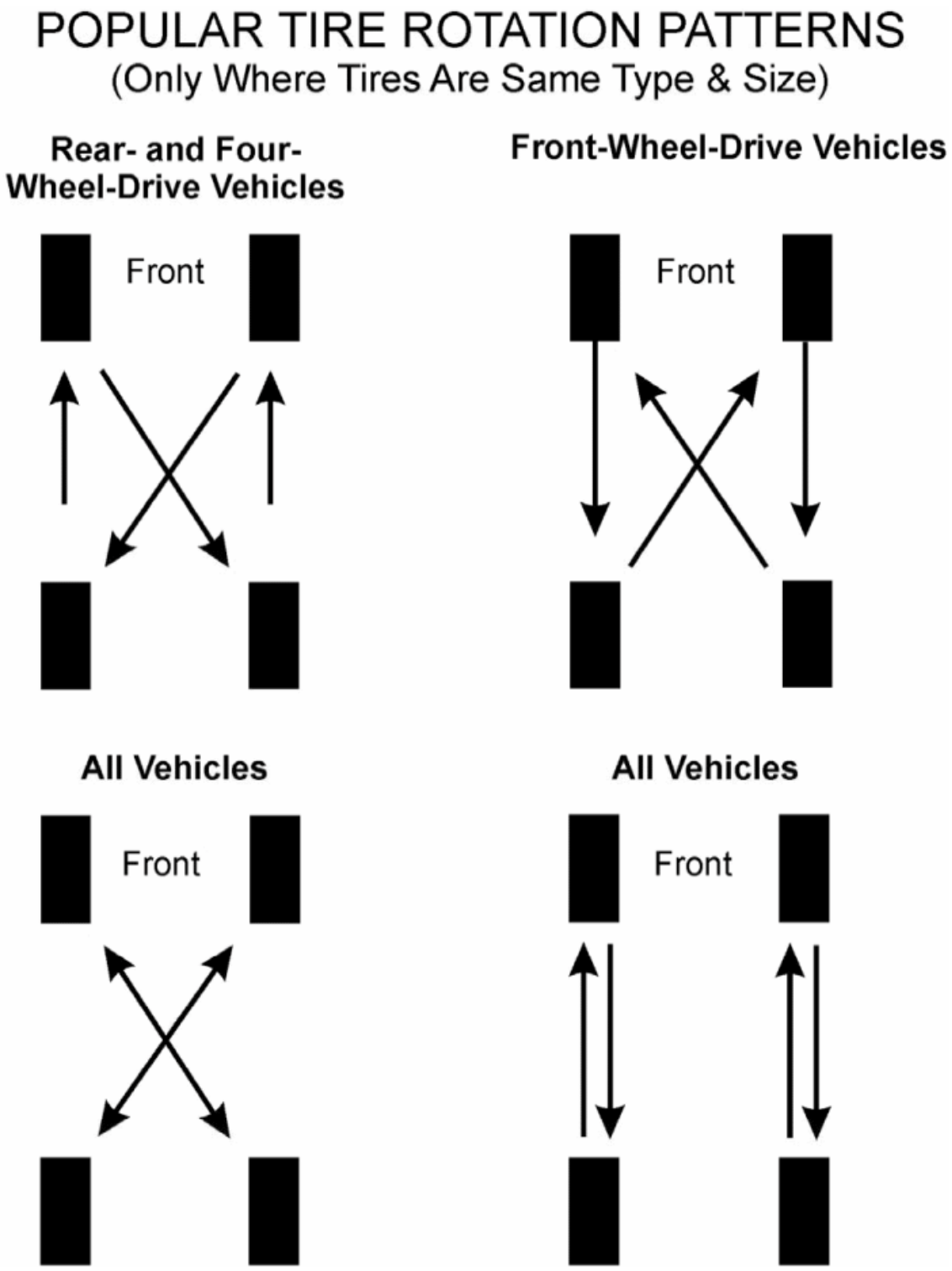

Fig. 13: Popular Tire Rotation Patterns - Without Dual Rear Wheels

Never rotate directional tires from side-to-side since this will reverse their direction of rotation. Directional tires can only be rotated from front to rear or vice versa. Directional tires are typically used on high-performance cars and can be identified by the arrows imprinted on the sidewall.

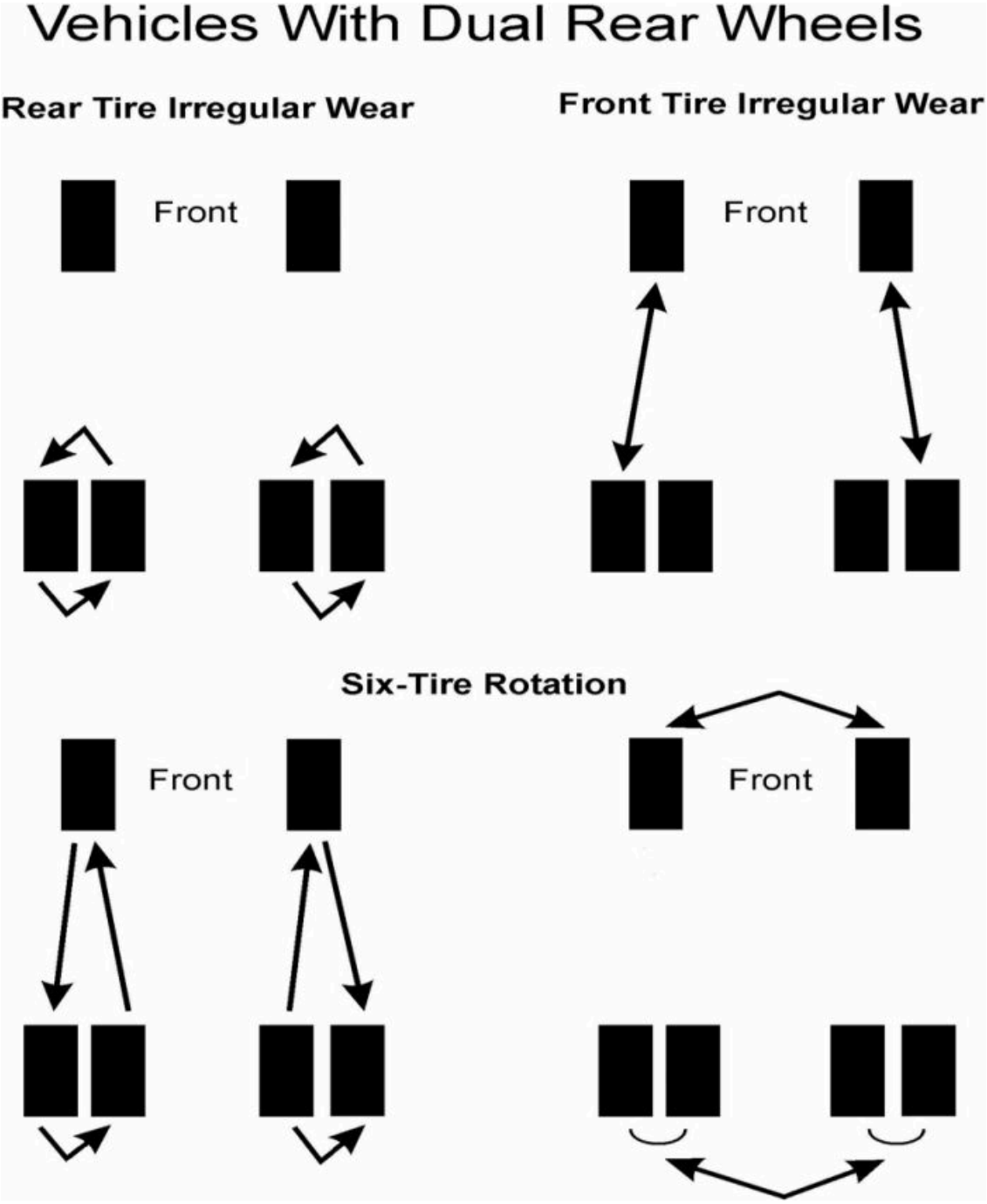

Fig. 14: Popular Tire Rotation Patterns - With Dual Rear Wheels

Some tires cannot be rotated in the manners described. Such tires include uni-directional tires and tires with asymmetric tread designs. Also, some vehicles may have different-sized tires mounted on the front and rear axles, and these different-sized tires also have rotation restrictions. Check your owner's manual or with a tire manufacturer or a tire dealer for proper recommendations for these specific cases.

WHEELS AND RIMS

The wheels on today's vehicles are made of steel, aluminum, or aluminum alloy (a combination of two or more metals). Steel wheels are the least expensive to produce, which is why they come as original equipment on many passenger cars and light trucks. The center section includes the bolt circle, or mounting holes, and is used to attach the wheel to the vehicle. The flange is the outermost lip of the rim, and is the area typically used for attaching wheel (balancing) weights. The rim is formed by rolling a strip of metal and then welding the two ends together. The interior section of the rim has a smaller diameter section called a drop center. This area provides the means for removing and installing a tire, since the bead is not designed to stretch. During removal or installation, most of the tire bead is pushed into the drop center so that the exposed portion can be pulled over the rim. The edges of the rim are flared to form the bead seats, which hold the tire and provide the airtight seal. Many rims include safety humps. These are small elevations on the inside of the bead seats. Safety humps help prevent the tire from falling into the drop center during a blowout. This allows the driver to maintain better directional control of a vehicle running on one or more deflated tires.

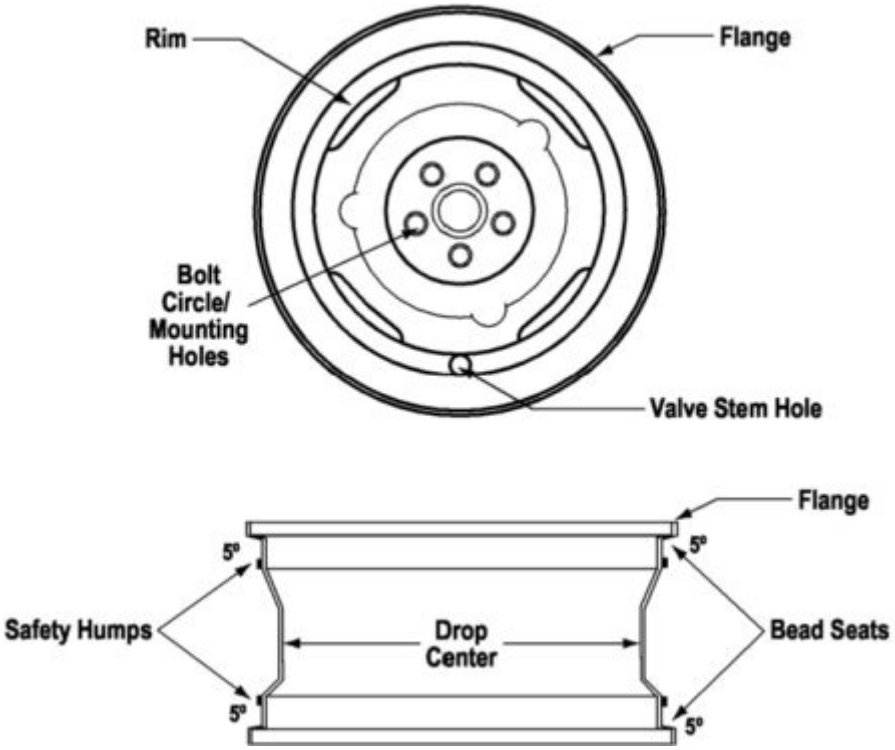

Fig. 15: Steel Wheel

WARNING: Mounting a regular tire on a high-pressure compact spare wheel is not permitted. Attempting to mount a tire of one diameter on a wheel of a different diameter or flange type may result in serious injury or death. Mount tires only on approved rim widths. If the wheel identification stamp is not legible, or cannot be found, do not use the wheel until the size and type have been properly identified. Load, cold inflation pressure, and tire construction forces imposed on the rim/wheel must not exceed the rim/wheel manufacturer's recommendations, even if the tire is approved for a higher load or inflation. Wheels of different diameter, offset, or width cannot be mixed on the same axle. Bead seat tapers cannot be interchanged.

TIRE PRESSURE MONITORING SYSTEMS

To avoid damaging sensors when mounting and demounting tires, it is beneficial to know where the sensors are located. Sensor assemblies are commonly attached to the valve stem, with the valve stem acting as an antenna to assist with transmitting RF signals. They may also be strapped to the drop center of the wheel. If this is the case, the sensor assembly should be located in-line with the valve stem.

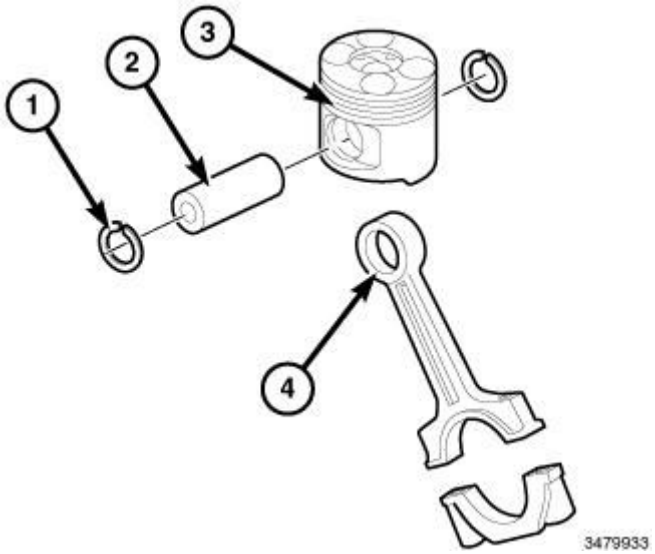

Fig. 16: Valve Stem Mounted Sensor

To avoid damaging sensors when demounting tires, do not break the bead within 45 of either side of sensor assembly locations. Be careful not to damage sensors when mounting tires as well. Sensors are not repairable and require replacement if damaged or when their battery is completely drained. It is recommended that the sensor be carefully "dropped into the tire" prior to demounting to avoid damage.

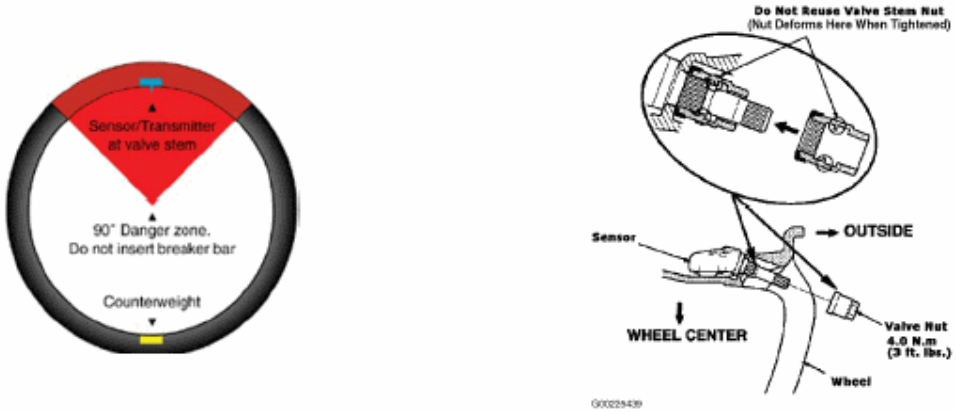

Fig. 17: Mounting Sensor

When reinstalling the sensor, it is suggested that the locknut, gasket and valve stem be replaced and torgued to the proper specification. It is also necessary to use the proper valve cap as it is also an integral part of the system.

It may be necessary to reprogram the TPMS when the tires are rotated, when a new sensor is installed, or after the vehicle loses power. This usually requires a scan tool and may involve the use of a special magnet. Refer to the vehicle service manual to properly reprogram the TPMS.

WHEELS & TIRES CHECKSHEET

MOTORIST ASSURANCE PROGRAM
STANDARDS FOR AUTOMOTIVE REPAIR

WHEELS & TIRES CHECKSHEET

Date: _____

Name: _____

Address: _____

City: _____ State: _____ Zip Code: _____

Year: _____ Make: _____ Model: _____

Mileage: _____ License: _____ VIN: _____ Eng Code: _____

Customer Interview:

_____

_____

_____

_____

_____

Reason Code Explanation

Code	Reason
	Required
A	*Part No Longer Performs Intended Purpose*
B	*Part Does Not Meet A Design Specification (Regardless Of Performance)*
C	*Part Is Missing*
	Suggested/Optional
1	*Part Is Close To The End Of Its Useful Life*
2	*To Address A Customer Need, Convenience Or Request*
3	*To Comply With Maintenance Recommended By The Vehicle's Original Equipment Manufacturer*
4	*Technician's Recommendation Based On Substantial And Informed Experience*
5	*To Comply With Maintenance Recommended By AMRA/MAP*

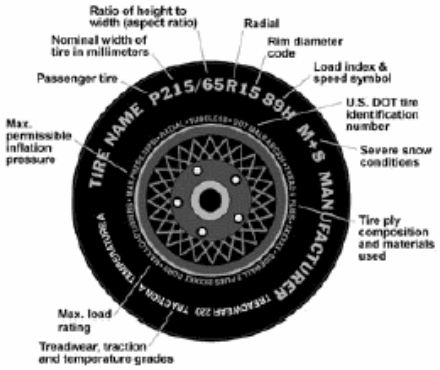

Your vehicle has been inspected following the Uniform Inspection and Communication Standards developed by the Motorist Assurance Program. MAP produces materials that give motorists the information and encouragement to take greater responsibility for their vehicles—through proper maintenance. We encourage participating service and repair shops to adopt the MAP Pledge of Assurance to their Customers and the Motorist Assurance Program Standards of Service. All participating service providers have agreed to subscribe to this Pledge and to adhere to the promulgated Standards of Service demonstrating to their customers that they are serious about customer satisfaction. For more information visit: www.motorist.org

DISCLAIMER: This document may be used as a guide when performing vehicle inspection. This form is not to be used as an estimate form and may not comply with Local or State Laws. The Motorist Assurance Program is not responsible for the performance and accuracy of the motor vehicle inspection performed using this document.

Fig. 18: Wheels & Tires Checksheet (1 Of 2)

WHEELS & TIRES CHECKSHEET

LEFT FRONT

Component	OK	S	R	Condition
Lugs/Studs				
Tire Size Speed Rating _____				Spec_____ Actual_____
Run Flat				Y ____ N ____
Tread Depth				_____/32nds
Tire Pressure Placard _____				Before _____ After _____
TPMS Sensor Nut Valve core / Cap Sensor				
Valve Stem				
Wheel (Condition) Wheel Size				Spec_____ Actual_____

☐Edge wear ☐Cupped ☐Cut ☐Irregular wear

RIGHT FRONT

Component	OK	S	R	Condition
Lugs/Studs				
Tire Size Speed Rating _____				Spec_____ Actual_____
Run Flat				Y ____ N ____
Tread Depth				_____/32nds
Tire Pressure Placard _____				Before _____ After _____
TPMS Sensor Nut Valve core / Cap Sensor				
Valve Stem				
Wheel (Condition) Wheel Size				Spec_____ Actual_____

☐Edge wear ☐Cupped ☐Cut ☐Irregular wear

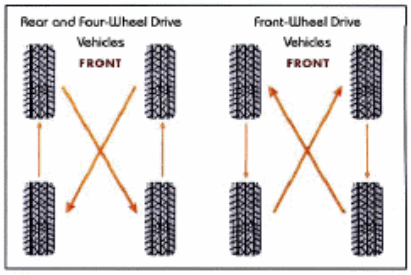

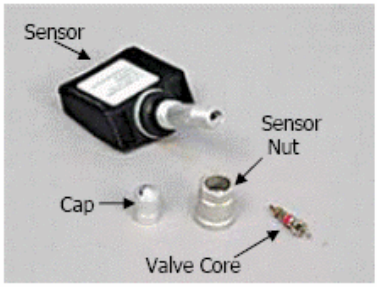

LEFT REAR

Component	OK	S	R	Condition
Lugs/Studs				
Tire Size Speed Rating _____				Spec_____ Actual_____
Run Flat				Y ____ N ____
Tread Depth				_____/32nds
Tire Pressure Placard _____				Before _____ After _____
TPMS Sensor Nut Valve core / Cap Sensor				
Valve Stem				
Wheel (Condition) Wheel Size				Spec_____ Actual_____

☐Edge wear ☐Cupped ☐Cut ☐Irregular wear

RIGHT REAR

Component	OK	S	R	Condition
Lugs/Studs				
Tire Size Speed Rating _____				Spec_____ Actual_____
Run Flat				Y ____ N ____
Tread Depth				_____/32nds
Tire Pressure Placard _____				Before _____ After _____
TPMS Sensor Nut Valve core / Cap Sensor				
Valve Stem				
Wheel (Condition) Wheel Size				Spec_____ Actual_____

☐Edge wear ☐Cupped ☐Cut ☐Irregular wear

OK	Suggested 1, 2, 3, 4, 5	Required A, B, C

Automotive Maintenance & Repair Assn © 2009

Fig. 19: Wheels & Tires Checksheet (2 Of 2)

WHEEL & TIRE - UICS

TIRE PRESSURE MONITORING SYSTEM

NOTE: **A Tire Pressure Monitoring System (TPMS) is designed to detect and alert the driver should the air pressure level in one or more of the vehicle's tires, up to all four tires, fall below the manufacturer's recommended inflation pressure or another pre-set level.**

NOTE: **NHTSA does not consider installation of an aftermarket or replacement tire or rim that is not compatible with the TPMS to be a "make inoperative" situation under 49 U.S.C. 30122, provided that the entity does not disable the TPMS malfunction indicator.**

TIRE PRESSURE SENSORS

Condition	Code	Procedure
Attaching hardware broken	A	Require repair or replacement of hardware
Attaching hardware missing	C	Require replacement of hardware
Attaching hardware not functioning	A	Require repair or replacement of hardware
Inoperative	A	Require repair or replacement
NOTE: **Inoperative includes intermittent failure.**		
Loose	B	Require repair or replacement
Missing (Non-OE Wheel and/or Tire Applications)	2	Suggest replacement if appropriate sensor is available
Missing (OE Wheel and Tire Applications)	C	Replacement Reqiuired
Not Responding		Further inspection required
NOTE: **If sensor does not Wake Up, follow manufacturers recommended diagnostic procedure to determine cause**		

TIRES

NOTE: **These guidelines do not apply to split rims. Some vehicle manufacturers restrict replacement of tires to specific brands, types, or sizes. High pressure temporary compact spare tires should not be used with any other rims or wheels, nor should standard tires, snow tires, wheel covers, or trim rings be used with high pressure compact spare rims or wheels. Attempting to mount a tire of one diameter on a wheel of a different diameter or flange type may result in serious injury or death. Only specially trained persons should de-mount or mount tires. Explosions of tire and wheel assembly can result from improper**

mounting, possibly causing serious injury or death. Consult the vehicle owner's manual or vehicle placard for correct size, speed rating, designation, and cold inflation pressure of the original tires. Do not exceed the maximum load or inflation capacity of the tire specified by the Tire and Rim Association When replacing tires, it is suggested that the replacement tires match or exceed the OEM speed rating designation. If tires of different speed rating designations are mixed on the same vehicle, the tires may vary in handling characteristics. Do not mix different speed rating designations on the same axle. Do not mix radials with non-radial tires on the same axle, as this may affect vehicle handling and stability. If radial tires and bias or bias-belted ply tires are mixed on the same vehicle, the radials must be on the rear. High-pressure temporary compact spare tires are exempt from this rule. Do not mix size or type (Run Flat, all season, performance, mud and snow) of tires on the same axle. If any flammable emergency tire inflation product has been used on a tire, consult inflation product, manufacturer's product information label for tire deflation procedures to avoid possible serious injury or death. In some vehicles, changing the tire diameter from factory-equipped size can affect drive ability, as well as the performance of ABS and other vehicle systems. Consult the vehicle manufacturer's specifications.

Condition	Code	Procedure
Air pressure incorrect	B	Require repair
Bead broken	A	Require replacement
Bead leaking, caused by tire	A	Require repair or replacement
Bead wire/cord exposed	A	Require replacement
Cord or belt material exposed	A	Require replacement
Cord ply separations	A	Require replacement
Directional/asymmetrical tires mounted incorrectly	B	Require remounting and/or repositioning
Irregular tread wear, affecting performance	2	Suggest replacement
NOTE: **Determine and correct cause of irregular tire wear.**		
Load ratings less than OEM specifications	B	Require replacement
Mixed tread types (all season, performance, mud and snow) on same axle	A	Require replacement
Number of punctures exceeds manufacturer's limit	B	Require replacement
Out of balance	B	Require rebalance of tire/wheel assembly
Ply separation	A	Require replacement
Pull or lead, caused by tire	A	Require repair or replacement
Radial and bias or bias-belted ply tires on same axle	B	Require repair or replacement
Radials are on the front and not on the rear	B	Require repair or replacement
NOTE: **If radials and bias or bias-belted ply tires are on the same vehicle, the radials must be on the rear**		

axle, except for high-pressure temporary spares.		
Run flat damage	A	Require replacement
Shoulder cut	A	Require replacement
Shoulder puncture	A	Require replacement
Shoulder with plug	A	Require replacement
Sidewall bulge	A	Require replacement
Sidewall cut	A	Require replacement
Sidewall indentation		No service required or suggested
Sidewall puncture	A	Require replacement
Sidewall with plug	A	Require replacement
Speed rating designations different on same axle	2	Suggest rotation or replacement
Tire and wheel assembly has excessive run-out	B	Require repair or replacement of appropriate part
NOTE: **Excessive is defined as enough to contribute to performance problems. Match mounting may correct run-out. If not, require replacement of appropriate part. Refer to manufacturer's specifications.**		
Tires with excessive diameter difference on an all-wheel drive vehicle or four-wheel drive vehicle	B	Require replacement
NOTE: **Excessive diameter difference is defined as exceeding manufacturer's specifications or, if no manufacturer's specifications exist, with more than 1/4"" diameter difference.**		
Tires with excessive diameter difference on the same side of a dual-wheel application	B	Require replacement
NOTE: **Excessive diameter difference is defined as exceeding manufacturer's specifications or, if no manufacturer's specifications exist, with more than 1/4"" diameter difference.**		
Tread area puncture larger in diameter than manufacturer's specifications	B	Require replacement
Tread missing pieces (chunking), exposing cord	A	Require replacement
Tread missing pieces (chunking), not exposing cord	1	Suggest replacement
Tread separations	A	Require replacement
Tube in tubeless tire	3	Suggest removal of tube
NOTE: **Most manufacturers do not recommend tubes in tubeless tires. Inspect tire and wheel . Assembly to determine the reason for a tube in tubeless tire. Recommendation for repair or replacement should be based upon condition of tires and! Or wheel listed in these guidelines.**		
Weather-checking		No service required or suggested
Worn to tread wear indicators	B	Require replacement

WHEEL ALIGNMENT

NOTE: **Wheel alignment is defined as the measurement, analysis, and adjustment of steering and suspension angles to conform to manufacturer specifications. These angles usually include, but are not limited to: caster, camber, toe, and thrust angle. Where these angles are not adjustable and not in specification, component replacement or correction kits may be required. Errors in set-back and steering axis inclination (SAI) are often attributable to failed or damaged components and must be corrected prior to performing an alignment. Failure to replace or correct suggested parts or service may prevent a proper alignment. Before performing an alignment check, inspect and verify the following: Tire pressure and size . Vehicle loading . Ride height . Steering and suspension parts only if the inspection reveals that all the above are within published specifications, a wheel alignment check and a proper wheel alignment, if needed, may be performed. Under no circumstances should a technician bend or heat any steering or suspension component, unless specified by the vehicle manufacturer. All measurements and specifications must be noted on the inspection report.**

Condition	Code	Procedure
Beyond manufacturer's service interval	3	Suggest alignment check
Dog tracking, shown to be caused by faulty alignment	2	Suggest repair
Drift, shown to be caused by faulty alignment	A	Require alignment
Lead, shown to be caused by faulty alignment	A	Require alignment
Outside manufacturer's specifications	B	Require repair
Part has been changed, affecting alignment	A	Require alignment check
Pull, shown to be caused by faulty alignment	A	Require alignment
Steering wheel off-center	2	Suggest alignment
Tire wear, shown to be caused by faulty alignment	A	Require alignment
Wander, shown to be caused by faulty alignment	A	Require alignment

WHEEL ATTACHMENT HARDWARE

NOTE: **For conditions noted below, also check condition of wheel stud holes. Proper lug nut torque is essential. Follow recommended torque specifications and tightening sequence. DO NOT lubricate threads unless specified by the vehicle manufacturer.**

Condition	Code	Procedure
Bent	A	Require replacement
Broken	A	Require replacement
NOTE: **Some manufacturers require replacement of all studs on that wheel if two or more studs or nuts on the same wheel are broken or missing.**		
Locking lug nut locking groove damaged	A	Require replacement

Loose	A	Require repair or replacement of affected component
Lug nut installed backward	B	Require repair or replacement
Lug nut mating surface distorted	A	Require replacement of nut
Lug nut mating type incorrect	B	Require replacement of nut
Lug nut missing	C	Require replacement
Lug nut rounded	A	Require replacement of nut
NOTE: **Only required if removing wheel.**		
Lug nut seized	A	Require replacement of nut
NOTE: **Only required if removing wheel.**		
Stud incorrect	B	Require replacement of stud
Stud missing	C	Require replacement
Threads damaged	A	Require repair or replacement of component with damaged threads
Threads stripped	A	Require replacement of component with stripped threads

WHEELS (RIMS)

NOTE: **Mounting a regular tire on a high-pressure compact spare wheel is not permitted. Attempting to mount a tire of one diameter on a wheel of a different diameter or flange type may result in serious injury or death. If the wheel identification stamp is not legible, or cannot be found, do not use the wheel until the size and type have been properly identified. Wheels of different diameter, offset, or width cannot be mixed on the same axle. Bead seat tapers cannot be interchanged.**

Condition	Code	Procedure
Bead leaking, caused by wheel	A	Require repair or replacement
NOTE: **Do not attempt to correct a bent rim.**		
Bent hub mounting surface	A	Require replacement
Bent rim, causing vibration	2	Suggest replacement
NOTE: **Do not attempt to correct a bent rim.**		
Broken	A	Require replacement
Cast wheel porous, causing a leak	A	Require repair or replacement
Clip-on balance weight is incorrect type for rim flange	2	Suggest replacement of weight
Corrosion affecting structural integrity	A	Require replacement

Corrosion build-up on wheel mounting surface	A	Require repair
Cracked	B	Require replacement
Directional/asymmetrical wheels mounted incorrectly	B	Require remounting and/or repositioning
Load capacity less than OEM specifications	B	Require replacement
Mating surface distorted	A	Require replacement
Offset mismatched on same axle	B	Require replacement
Rivets leaking	A	Require replacement
Run-out beyond OEM specs	B	Require replacement
NOTE: **Some wire-spoke wheels may be repaired.**		
Stud holes elongated	A	Require replacement
NOTE: **Inspect wheel attaching hardware for damage.**		
Welded or brazed repair	2	Suggest replacement
Welds leaking	A	Require replacement
Wheel centering (pilot) hole incorrect	B	Require replacement

REASON CODE EXPLANATION

Code	Reason
Required	
A	Part No Longer Performs Intended Purpose
B	Part Does Not Meet A Design Specification (Regardless Of Performance)
C	Part Is Missing
Suggested/Optional	
1	Part Is Close To The End Of Its Useful Life
2	To Address A Customer Need, Convenience Or Request
3	To Comply With Maintenance Recommended By The Vehicle's Original Equipment Manufacturer
4	Technician's Recommendation Based On Substantial And Informed Experience
5	To Comply With Maintenance Recommended By AMRA/MAP

AUTOMOTIVE TERMINOLOGY & DEFINITIONS

ABRASIVE CLEANING

removing contaminants using a cleaning agent containing abrasive material. Cleaning that requires physical abrasion (e.g., glass bead blasting, wire brushing).

ADDITIVE

in automotive terminology, a substance added to a liquid, such as engine oil, transmission fluid, gear oil or coolant to enhance its properties.

AEROSOL

a cloud consisting of particles dispersed in a gas or gases

AFTERMARKET

broad term that applies to any change after the original purchase, such as adding equipment. When applied to AFVs, it refers to conversion devices or kits for conventional fuel vehicles.

ALIGNMENT

an adjustment to bring parts or components into a line or proper coordination.

ALTERNATOR

a belt driven device that provides electrical current for the vehicle's charging system.

ANTIFREEZE

a material such as ethylene glycol which is added to water to lower its freezing point; used in an automobile's cooling system.

AQUAPLANING

the loss of traction that results when a tire loses sufficient grip on a wet roadway, the tire actually loses contact with the road surface and rides on a thin film of water.

AUTOMATIC TRANSMISSION FLUID (ATF)

the oil that is used in an automatic transmission.

BATTERY ACID

the sulfuric acid solution used as the electrolyte in a battery.

BATTERY CELL

the part of a battery made from two dissimilar metals and an acid solution. A cell stores chemical energy to be used later as electrical energy.

BATTERY SAVER

the battery saver system is an effective way to prevent complete battery discharge when the engine is shut down. Based on the preset time-limit, the system automatically disconnects the battery load when the battery is not being charged. Depressing the reset push button will enable the battery to be reconnected for additional periods of time. Critical systems can be set up to have battery power maintained.

BATTERY

batteries are the principal energy storage devices for hybrid electric vehicles (HEVs). Desirable attributes of high-power batteries for HEV applications are high-peak and pulse- specific power, high specific energy at pulse power, a high charge acceptance to maximize regenerative braking utilization, and long calendar and cycle life. Developing methods/designs to balance the packs electrically and thermally, developing accurate techniques to determine a battery's state of charge, and developing abuse-tolerant batteries, and recyclability are additional technical challenges.

BEARING RACE

the machined surface of a bearing assembly against which the needles, balls or rollers ride. The outer race is also called a cup.

BEARING

part that supports and reduces friction between a stationary and moving part or two moving parts.

BLEEDER VALVE

a valve located on disc brake calipers, wheel cylinders and some master cylinders that allows air and fluid to be removed from the brake system.

BOILING POINT

the temperature at which a liquid turns to vapor.

BRAKE DRAG

a condition that occurs when brake pads or shoes are in continuous contact with the disc brake rotors or brake drums.

BRAKE FLUSHING

a procedure to clean the brake hydraulic system with fresh, clean fluid that should be performed whenever new parts are installed, if there is any doubt as to the grade of fluid in the system, if a glycol fluid has been mixed with a silicone-based fluid, or if the fluid has been contaminated with petroleum or mineral based fluids.

BRAKE HOSE

flexible hoses that connect the brake lines on the chassis with the calipers or wheel cylinders, or the

junction block on a solid axle.

BRAKE LINE

metal tubing that carries the brake fluid from the master cylinder to other brake system components.

CHARGE

the electrical current that passes through the battery to restore it to full power; to fill, or bring up to the specific level, an A/C system with refrigerant; the required amount of refrigerant for an A/C system.

CHARGING SYSTEM

the system that supplies electrical power for vehicle operation and recharges the battery.

CHEMICAL CLEANING

relies primarily on chemical action to remove dirt, grease, scale, paint or rust.

COLD CRANKING AMPS

the amount of cranking amperes that a battery can deliver in 30 seconds at O°F (- 18°C).

COLD START

difficulty of starting an internal combustion engine in cold weather because of gasoline, which evaporates more slowly when it is cold; oil, which gets thicker in cold weather; and the chemical reactions inside the battery, which progress more slowly in cold weather.

CONDENSER

a device, similar to a radiator, in which the refrigerant loses heat and changes state from a high-pressure gas to a high pressure liquid as it dissipates heat to the surrounding air.

COOLANT

the mixture of water and antifreeze used in an engine's cooling system to maintain the engine's temperature throughout Its operating range.

COOLING FAN

a mechanically or electrically driven propeller that draws air through the radiator.

COOLING SYSTEM

the system used to remove excess heat from an engine and transfer it to the atmosphere. Includes the

radiator, cooling fan, hoses, water pump, thermostat and engine coolant passages.

CORE PLUGS

plugs that fill holes in a block or head left from the casting process. Also called freeze, welsh or expansion plugs.

CORE

in automotive terminology, the main part of a heat exchanger, such as a radiator, evaporator or heater. Usually made of tubes, surrounded by cooling fins, used to transfer heat from the coolant to the air.

CORROSION INHIBITORS

additives used to inhibit corrosion (e.g., rust) in the fuel system.

CROSSFLOW RADIATOR

a radiator in which coolant enters on one side, travels through tubes, and collects on the opposite side (see downflow radiator).

DIFFERENTIAL

gear assembly that transmits power from the driveshaft to the wheels; allows the outside wheel to turn faster than the inside when cornering.

DIGITAL VOLT/OHMMETER (DVOM)

an instrument that measures volts, ohms and amps and displays the results numerically.

DIRECTIONAL TIRE

tire with a tread pattern that is designed to give maximum traction by removing water from under the tread in such a way as to minimize the risk of aquaplaning. Directional tires must be installed to turn in a specific direction.

DOWNFLOW RADIATOR

a radiator in which coolant enters the top of the radiator and is drawn downward by gravity (see crossflow radiator).

DRIVETRAIN

all of the components that generate power and transfer it to the vehicle's wheels.

DUAL MASTER CYLINDER

a master cylinder that has one cylinder bore, but two pistons and two fluid reservoirs. Each piston applies hydraulic pressure to two wheels only. In the event one of the hydraulic circuits fails, the other provides enough braking power to stop the vehicle.

DUO-SERVO DRUM BRAKES

a drum brake design that provides increased stopping power due to the servo or self- energizing action of the brake shoes.

EGR VALVE

see 'exhaust gas recirculation (EGR) valve',

ELECTROLYTE

a material whose atoms become ionized (electrically charged) in solution. In automobiles, the battery electrolyte is a mixture of sulfuric acid and water.

ELECTRONIC AIR SUSPENSION

electronic air suspension provides the comfort of riding on air with adjustable spring rates and capability to change ride height and load-carrying ability. Under normal driving conditions, an electronic air suspension vehicle rides at the same height as a traditionally sprung vehicle. With a heavy load, ride height is increased automatically. On current vehicles, the suspension lowers the ride height by 20 mm at highway speeds for improved aerodynamics, with about 2 percent better fuel economy. Lower ride height also can improve on-center feel of steering due to the change in suspension geometry and increased caster angle.

ENGINE COOLANT TEMPERATURE (ECT) SENSOR

a sensor which works by a negative coefficient thermistor that loses resistance as its temperature goes up (just like the intake air temperature sensor). When the computer applies its 5-volt reference signal to the sensor, this voltage is reduced through a ground circuit by an amount corresponding to the temperature of the engine coolant.

EVAPORATOR

a heat exchanger, in which low-pressure refrigerant flows and changes state, absorbing heat from the surrounding air.

EXHAUST GAS RECIRCULATION (EGR)

component in the EGR system, used to meter a controlled amount of exhaust gas into the intake air stream.

EXHAUST GAS RECIRCULATION (EGR) VALVE

an emissions control technique that reuses engine exhaust gases as part of the intake air supply to help reduce harmful emissions (especially Nox).

FAHRENHEIT

a scale of temperature measurement with the boiling point of water at 212°F. In the metric system, water's boiling point is 100°Celsius.

FAN CLUTCH

a device attached to a mechanically driven cooling fan that allows the fan to freewheel when the engine is cold or the vehicle is driven at speed.

FAN SHROUD

an enclosure that routes air through the radiator cooling fins.

FAN

a mechanically or electrically driven propeller that draws or pushes air through the radiator, condenser, heater core or evaporator core.

FILTER

a screen or filter element that can be made to filter specified sizes of particles from air or liquid.

FLOODING

a condition in which unvaporized fuel in the intake manifold and/or combustion area, prevents the engine from starting.

FOOT POUND

a unit of measurement for torque. One foot pound is the torque obtained by a force of one pound applied to a wrench handle that is 12-in. long; a unit of energy required to raise a weight of one pound, a distance of one foot.

FOUR STROKE CYCLE ENGINE

an engine, either gasoline or diesel that uses four strokes: intake, compression, power and exhaust. A firing impulse occurs every two turns of the crankshaft. When this engine is a gasoline engine it is also called an Otto cycle engine after its inventor. A diesel engine is called a Diesel cycle engine for the same reason.

FREEZE PLUG

another name for core plug.

FRONT WHEEL DRIVE

the entire drivetrain is located at the front of and drives the front wheels of the vehicle.

FUSE

a metal circuit protection device that melts when there is a circuit overload or short.

FUSIBLE LINK

a smaller gauge wire that is included in an electrical circuit to provide circuit protection. The smaller gauge wire will melt when the circuit is overloaded.

GASKET

a material such as artificial rubber, cork, or steel used to seal between parts that would otherwise leak fuel, coolant, lubricants or combustion gases.

GENERATOR

a device that converts mechanical energy into electrical energy; SAE J1930 nomenclature for an alternator; a generating device that uses diode rectifiers to convert ac to dc.

HALFSHAFT

transfers power from the transaxle to the front wheels on a front-wheel drive vehicle. Also used on some vehicles with rear-wheel drive and independent rear suspension to transfer power from the differential to the rear wheels. Consists of a stub shaft that is splined into the differential side gear, another stub shaft that is splined into the wheel hub, an interconnecting shaft, and two CV-joints, which connect the interconnecting shaft to the stub shafts.

HEATER CORE

a radiator-like device used to heat the inside of a vehicle. Hot coolant is pumped through it by the water pump, and heat from the coolant moves from the heater core to the passenger compartment as the blower fan forces air through it.

HUB

mounting point for the wheelan an axle or spindle; the part of the synchronizer assembly that is splined to the transmission shaft; the center part of a wheel, gear, etc., that rides on a shaft.

HYDRAULIC PRESSURE

pressure exerted through a liquid.

HYDROMETER

an instrument used to measure the specific gravity of a solution.

IMPEDANCE

the total resistance of an electrical device measured in ohms.

INCH POUND

one twelfth of a foot pound.

INDEPENDENT SUSPENSION

a suspension in which each wheel can travel up and down without directly affecting the position of the opposite wheel.

INNER BEARING RACE

inner part of a ball or roller bearing that provides a surface for the balls or rollers to rotate.

INTEGRATED CIRCUIT

an electrical circuit containing many interconnected amplifying devices and circuit elements formed on a single body or chip of semiconductor material; diodes, transistors and other electronic components mounted on semiconductor material and able to perform numerous functions.

INTERCOOLER

a component on some turbocharged engines used to cool the compressed intake air.

INTERNAL COMBUSTION ENGINE (ICE)

engine that converts the energy contained in the fuel inside the engine into motion. Combustion engines use the pressure created by the expansion of the gases to do mechanical work.

JAM NUT

a locknut.

KEEP-ALIVE MEMORY

a series of vehicle battery-powered memory locations in the microcomputer that store information on input failure, identified in normal operations for use in diagnostic routines; adapts some calibration

parameters to compensate for changes in the vehicle system.

LEAF SPRING

a suspension spring consisting of a single flat plate made of steel or composite material or several steel plates bundled together.

LIGHT-DUTY VEHICLE

passenger cars and trucks with a gross vehicle weight rating of 8,500 or less.

LIMITED SLIP DIFFERENTIAL

a type of differential that uses clutches to supply a major portion of the drive torque to the wheel that has better traction when one wheel is slipping,

LITER (L)

a metric measurement used to calculate the volume displacement of an engine. One liter is equal to 1,000 cubic centimeters or 61 cubic inches.

LUBRICATION

the process of introducing a friction reducing substance between moving parts to reduce wear.

MACPHERSON STRUT

the principal device in the suspension of the same name, in which the spring, shock absorber and sometimes the steering knuckle are combined in a single unit.

MALFUNCTION INDICATOR LIGHT (MIL)

also known as the CHECK ENGINE or SERVICE ENGINE SOON light on many vehicles. The MIL comes on when the ignition is first turned on (to check the bulb) and then goes out once the engine is started, unless a trouble code is stored in the computer. If the MIL is on when the vehicle is running, there has been a malfunction on one of the sensor or actuator circuits monitored by the computer, and a diagnosis will have to be made by retrieving the code.

MASTER CYLINDER

the primary fluid pressurizing device in some hydraulic systems. In automotive use, it is found in the brake and hydraulic clutch systems and is pedal-activated, either directly or through a vacuum assist unit.

MILLIMETER

the base of metric size measurement. One millimeter equals 0.039370-in. One inch is equal to 25.4 m m.

MULTIVISCOSITY OIL

chemically-modified oil that has been tested for viscosity at cold and hot temperatures.

OFF-ROAD

any non-stationary device, powered by an internal combustion engine or motor, used primarily off the highways to propel, move, or draw persons or property, and used in any of the following applications: marine vessels, construction/farm equipment, locomotives, utility and lawn and garden equipment, off-road motorcycles, and off-highway vehicles.

OHM

a unit of electrical resistance of a circuit in which an electromotive force of one volt maintains a current of one ampere, named after German physicist Georg Ohm.

OHMMETER

an instrument that measures electrical resistance in ohms.

OHM'S LAW

a basic law of electricity expressing the relationship between current, resistance and voltage in any electrical circuit. Ohm's law states that the voltage in a circuit is equal to the current multiplied by the resistance.

OIL COOLER

device used to remove heat from the engine or transmission oil. There are oil-to-air coolers and oil coolers that are incorporated into the vehicle's cooling system.

OIL PAN

the part that encloses the crankcase at the lower end of the block.

OIL PRESSURE

the pressure that results from resistance to flow from the oil pump. As the pump turns faster, it produces more flow. A relief valve limits the amount of pressure it can produce.

ON-CAR BALANCING

the practice of spinning a wheel on the car to balance the wheel and all other rotational components together.

ORIGINAL EQUIPMENT MANUFACTURER (OEM)

the original manufacturer of a vehicle or engine.

OSCILLOSCOPE

an instrument that displays electrical activity in the form of line patterns on a screen.

OUTER BEARING RACE

outer part of a bailor roller bearing that provides a surface for the balls or rollers to rotate. Can be integral with the bearing or a separate part.

OXIDATION

the process of combining with oxygen, resulting in rusting or burning. Rust is slow oxidation; fire is rapid oxidation.

PAG

polyalkyline glycol oil (lubricant) used with A/C systems containing R- 134a refrigerant.

PARALLEL CIRCUIT

a circuit with more than one path for the current to follow.

PARKING BRAKE

a system that applies the brakes mechanically through a series of linkages and cables. Depending on the vehicle, the parking brake system will either be actuated using a foot pedal or a hand-operated lever.

PASCAL'S LAW

the law of physics stating that liquids are noncompressible, and that a force applied to the top of a liquid in a closed container is exerted equally in all directions.

PCV SYSTEM

see 'positive crankcase ventilation system'.

PCV VALVE

a part of the positive crankcase ventilation system. Meters crankcase vapors into the intake manifold.

PLAY

the relative movement between or among parts.

POLARITY

the condition of being positive or negative relative to a reference point or object; the particular state (positive or negative) with reference to the two magnetic poles.

POSITIVE CRANKCASE VENTILATION (PCV) SYSTEM

a system that controls crankcase emissions by using a valve to meter crankcase vapors nto the intake manifold.

POWER BRAKES

a system that uses vacuum or hydraulic pressure to assist the driver with brake application.

PSI

measurement of pressure in pounds per square inch.

RADIAL RUNOUT

the out-of-roundness ot a wheel or tire.

RADIATOR CAP

a device that seals the radiator and maintains a set pressure in the cooling system.

RADIATOR

the part of the cooling system that acts as a heat exchanger, transferring heat to atmosphere. It consists of a core and holding tanks connected to the cooling system by hoses.

REAR WHEEL DRIVE

system where the driveline drives the rear wheels of the vehicle. Most often the engine is located in the front of the vehicle and a transmission and drive shaff connect to a drive axle, however there are also systems where the entire drive line is located toward the rear of the vehicle.

REAR WHEEL STEERING

a system used on a some vehicles to change the toe of the rear wheels to either steepen a sharp turn or enhance cornering on a shallower, faster one.

RESISTOR

an electrical device installed in a circuit to lower voltage and current flow.

RIDE HEIGHT

the dimension between a fixed point on the vehicle and the pavement. The fixed point varies according to vehicle and manufacturer. Also called vehicle height.

RUNOUT

wobble or deflection beyond a rotating part's normal plane of movement.

SCAN TOOL

microprocessor designed to communicate with a vehicle's on-board computer system to perform diagnostic and troubleshooting functions.

SEMICONDUCTOR

a material that is neither a good conductor of electricity nor a good insulator.

SENDING UNIT

a mechanical, electrical, hydraulic or electromechanical device which transmits information to a gauge or other receiving unit.

SERIES CIRCUIT

a circuit that has only one path for current to follow.

SERIES-PARALLEL CIRCUIT

a circuit that combines series and parallel circuits.

SERVO

a device, such as an electric motor or hydraulic piston, that is controlled by an amplified signal from a low power command device.

SHOCK ABSORBER

a device used to dampen the oscillation of the suspension caused by irregularities in the road surface.

SHORT CIRCUIT

a condition that occurs in an electrical circuit when the current bypasses the intended load and takes a path with little or no resistance, such as another circuit or ground.

SPECIFIC GRAVITY

the ratio of the weight or mass of the given volume of a substance to that of an equal volume of another substance, e.g. - water for liquids and solids; air or hydrogen for gases, are used as standards.

SPONGINESS

the feel of a soft or mushy brake pedal usually caused by trapped air in the hydraulic system.

SPRUNG WEIGHT

the weight of all the vehicle components that are supported by the springs; see 'unsprung weight'.

STABILIZER BAR

a torsion-bar spring connecting the suspension on either side of the vehicle. When a vehicle rolls to the side in a turn, the suspension at the outside wheel compresses and the suspension at the inside wheel extends. The stabilizer bar that connects them twists to apply a counteracting force to hold the vehicle closer to level. Also called an anti-roll bar or sway bar.

STARTER

the electric motor that is used to start an engine.

STUD

a fastener that has screw threads at both ends.

TECHNICAL SERVICE BULLETIN (TSB)

information published by vehicle manufacturers that describe updated service procedures and service procedures that should be used to handle vehicle defects.

TENSIONER

a device used with a timing chain or belt to maintain its tension.

THERMOSTAT

a device installed in the cooling system that allows the engine to come to operating temperature quickly and then maintain a minimum operating temperature.

TIMING BELT

a toothed reinforced belt used to drive the camshaft from a sprocket on the crankshaft.

TOLERANCE

the difference between the allowable maximum and minimum dimensions of a mechanical part; the basis for determining the accuracy of a fitting.

TORQUE SEQUENCE

a specified order in which a component's mounting bolts should be tightened

TORQUE WRENCH

a breaker bar or ratchet wrench with an indicator that measure the twisting effort applied to a fastener during tightening.

TORQUE

twisting effort on a shaft or bolt.

TWIN I-BEAM SUSPENSION

a type of independent front suspension and used on light trucks and vans. It consists of two I-beams supported by coil springs, and the steering knuckles/spindles, which are connected by king pins or ball joints. The inner end of the axle connects to the vehicle frame through a rubber bushing. A radius arm also connects to the frame through rubber bushings to control wheelbase and caster.

UNIVERSAL JOINT (U-JOINT)

a joint that allows the drives haft to transmit torque at different angles as the suspension moves up and down.

UNSPRUNG WEIGHT

the components of a vehicle that rest directly on the road surface without being supported by the suspension springs.

VACUUM

a pressure lower than atmospheric.

VOLT

unit of electromotive force. One volt of electromotive force applied steadily to a conductor of one-ohm resistance produces a current of one ampere.

VOLTAGE DROP

voltage lost by the passage of electrical current through resistance.

VOLTMETER

an instrument used to measure voltage in a circuit.

WATER PUMP

a device used to circulate coolant through the engine.

WHEEL ALIGNMENT

the adjustment of suspension and steering components to optimize steering control and minimize tire wear.

WHEEL BALANCE

the condition in which a wheel/tire assembly has equal weight around its center, preventing vibration at high speeds. Wheel balance can be static, such as on a bubble balancer, or dynamic, such as with a spin balancer.

WHEEL WEIGHTS

small weights, usually made of lead, attached either mechanically or by adhesive to a wheel/tire assembly to correct its balance.

UNIFORM INSPECTION & COMMUNICATION STANDARDS 2010 - 2011

Steering & Suspension Systems

STEERING & SUSPENSION SYSTEMS

These materials are confidential and are not to be disclosed to, or utilized by, any individual or entity other than participants of the Motorist Assurance Program (MAP).

The Automotive Maintenance and Repair Association (AMRA) and MAP do not warrant these materials or guarantee their accuracy, and AMRA and MAP assume no liability for errors.

MAP STANDARDS OF SERVICE

MAP developed standards of service for shops to follow in working with customers. Written from the point of view of customers, and for the use of maintenance and repair shops, the standards expand on the ideas and promises established in MAP's Pledge to Customer

I. Our recommendations are based upon the following definitions.

System Failure - Parts/system indicated are out of manufacturers' specifications, have failed or are unable to perform their normal function as intended or designed by the manufacturers. Service/replacement is required.

Preventive/Scheduled Maintenance - Parts/system are scheduled for service/ replacement per industry standards or are near the end of their useful life and repair/ replacement is recommended in advance of parts/system failure. Service/replacement is suggested.

Improved System Performance - Parts/ system indicated are recommended for repair/ replacement to enhance/improve the vehicle's ability to perform as intended or designed by the manufacturer, or as requested by the customer. Service/replacement is suggested.

II. Training/Criteria Our personnel have acquired auto repair expertise through formal education or work experience. Where appropriate, personnel are moving toward certification (e.g. vehicle manufacturer, ASE, etc.) for the services performed. Continuing education will be supported by all MAP participants.

III. Appropriate Company Approved Inspection

We will perform an appropriate inspection based on MAP Uniform Inspection & Communication Standards.

IV. Written Estimates

Written estimates based on our inspection, in compliance with state and local regulations, will include parts (dollar amount), labor (dollar amount), and the total estimate.

V. Work Authorization

No work will be performed without the customer's prior approval.

VI. Limited Warranty

A minimum limited warranty will be offered of 90 days or 4,000 miles, whichever comes first, covering parts and labor.

VII. Returned Parts

All customers will be entitled to the return of old parts, or if they choose, they may examine the parts prior to leaving the store. Where failed parts are required to be returned to the manufacturer in order to honor the warranty, the customer will be allowed to examine the parts.

VIII. Classification of Parts

Replaced parts will be identified as new, remanufactured, rebuilt or used. MAP participants will inform the customer and indicate on the estimate and invoice whether a part is new, remanufactured, rebuilt or used.

THE MAP PROCESS - OVERVIEW

Repair Association, Inc. (AMRA). Participation in the Motorist Assurance Program comes from retailers, suppliers, independent repair facilities, vehicle manufacturers and industry associations.

Our organization's mission is to strengthen the relationship between the consumer and the auto repair industry. We produce materials that give motorists the information and encouragement to take greater responsibility for their vehicles-through proper, manufacturer / recommended maintenance. We encourage participating service and repair shops (including franchisees and dealers) to adopt (1) a Pledge of Assurance to their Customers and (2) the Motorist Assurance Program Standards of Service. All participating service providers have agreed to subscribe to this Pledge and to adhere to the promulgated Standards of Service demonstrating to their customers that they are serious about customer satisfaction.

These Standards of Service require that an inspection of the vehicle's (problem) system be made and the results communicated to the customer according to industry standards. Given that the industry did not have such standards, the Motorist Assurance Program successfully promulgated industry inspection communication standards in 1994-95 for the following systems: Exhaust, Brakes, ABS, Steering and Suspension, Engine Maintenance and Performance, HVAC, Electrical Systems, and Drive Train and Transmissions. Further, revisions to all of these inspection communication standards are continually re-published. Participating shops utilize these Uniform Inspection & Communication Standards as part of the inspection process and for communicating their findings to their customers.

The Motorist Assurance Program continues to work cooperatively and proactively with government agencies and consumer groups toward solutions that both benefit the customer and are mutually acceptable to both regulators and industry. We maintain the belief that industry must retain control over how we conduct our business, and we must be viewed as part of the solution and not part of the problem. Meetings with state and other government officials (and their representatives), concerned with auto repair and/or consumer protection, are conducted. Feedback from these sessions is brought back to the association, and the program adjusted as needed.

We welcome you to join us as we continue our outreach... with your support, both the automotive repair industry and your customers will reap the benefits. Please visit MAP at our Internet site www.motorist.org or contact us at:

201 Park Washington Court

Falls Church, Virginia 22046

Tel: (703) 532-2027 * Fax: (202) 318-0378

THE MAP PROCESS - OVERVIEW OF SERVICE REQUIREMENTS AND SUGGESTIONS

It is MAP policy that all exhaust, brake, steering, suspension, wheel alignment, drive-train, engine performance and maintenance, and heating, ventilation and air conditioning, and electrical services be offered and performed under the standards and procedures specified in these sections.

Before any service is performed on a vehicle, an inspection of the appropriate system must be performed. The results of this inspection must be explained to the customer and documented on an inspection form. The condition of the vehicle and its components will indicate what services/part replacements may be "Required" or "Suggested". In addition, suggestions may be made to satisfy the requests expressed by the customer.

When a component is suggested or required to be repaired or replaced, the decision to repair or replace must be made in the customer's best interest, and at his or her choice given the options available.

This section lists the various parts and conditions that indicate a required or suggested service or part replacement. Although this list is extensive, it is not fully inclusive. In addition to this list, a technician may make a suggestion. However, any suggestions must be based on substantial and informed experience or the vehicle manufacturer's recommended service interval and must be documented. However, any suggestions must be documented and must be based on substantial and informed experience or the vehicle manufacturer's recommended service interval. NOTE: Vehicle manufacturer service intervals are often categorized as either Normal or Severe. Frequently, motorists are unaware that their driving patterns and habits meet the criteria for following Severe Service schedules. Severe Service is generally defined as, but not limited to one or more of the following conditions: Driving in stop-and-go traffic; frequent short trips; high-speed driving; extreme temperatures; towing or hauling.

Some conditions indicate that service or part replacement is required because the part in question is no longer providing the function for which it is intended, does not meet a vehicle manufacturer's design specification or is missing.

- **Example:** An exhaust pipe has corroded severely and has a hole in it through which exhaust gases are leaking. Replacement of the exhaust pipe in this case is required due to functional failure.
- **Example:** A brake rotor has been worn to the point where it measures less than the vehicle manufacturer's discard specifications. Replacement of the rotor is required because it does not meet design specifications.

Some conditions indicate that a service or part replacement is suggested because the part is close to the end of its useful life or addresses a customer's need, convenience or request. If a customer's vehicle has one of these

conditions, the procedure may be only to suggest service.

- **Example:** An exhaust pipe is rusted, corroded or weak, but no leaks are present. In this case, the exhaust pipe has not failed. However, there is evidence that the pipe may need replacement in the near future. Replacement of the pipe may be suggested for the customer's convenience in avoiding a future problem.
- **Example:** The customer desires improved ride and/or handling, but the vehicle's shocks or struts have not failed. In this case, replacement may be suggested to satisfy the customer's wishes. In this case, replacement of the shocks or struts may not be sold as a requirement.

A customer, of course, has the choice of whether or not a shop will service his or her vehicle. He or she may decide not to follow some of your suggestions. When a repair is required, a MAP shop must refuse partial service on that system if, in the judgment of the service provider, proceeding with the work could create or continue an unsafe condition. When a procedure states that required or suggested repair or replacement is recommended, the customer must be informed of the generally acceptable repair/replacement options whether or not performed by the shop.

The following reasons may be used for required and suggested services. These codes are shown in the "Code" column of the MAP Uniform Inspection & Communications Standards that follow:

Reasons to Require Repair or Replacement	Reasons to Suggest Repair or Replacement
A. Part no longer performs intended purpose B. Part does not meet a design specification (regardless of performance) C. Part is missing	1. Part is close to the end of its useful life B - Part does not meet a design specification (regardless of performance) (just above discard specifications, or weak; failure likely to occur soon, etc.) 2. To address a customer need, convenience, or request (to stiffen ride, enhance performance, eliminate noise, etc.) 3. To comply with maintenance recommended by the vehicle's Original Equipment Manufacturer (OEM) 4. Technician's recommendation based on substantial and informed experience 5. To comply with maintenance recommended by AMRA / MAP
NOTE: **When a repair is required, the shop must refuse partial service to the system in question, if the repair creates or continues an unsafe condition.**	**NOTE:** **Suggested services are *always* optional. When presenting suggested repairs to the customer, you must present the facts, allowing the customer to draw their own conclusions and make an informed decision about how to proceed.**

WHEEL AND TIRE

Steering and suspension are complex systems made up of a variety of interdependent components. For proper vehicle handling, ride, and tire wear, a thorough inspection is required whenever suspension work is being performed. Conditions listed assume that the problem has been isolated to the specific component by proper testing procedures.

NOTE: When replacing steering and/or suspension components that may affect an alignment angle, you are required to check and adjust alignment as needed. Refer to the OEM specifications.

CAUTION: Do not use ride height altering or load compensating components, such as variable rate springs and coil over shocks, on vehicles with height or load sensing proportioning valve-equipped braking systems, unless these components are original equipment.

NOTE: Depending on the air suspension design, there are some aftermarket products available to eliminate the air ride suspension on certain vehicles. If the system has been eliminated with one of these products, then no service is suggested or required.

WARNING: These guidelines do not apply to split rims.

TIRES

When replacing tires, it is suggested that the replacement tires match or exceed the OEM speed rating designation. If tires of different speed rating designations are mixed on the same vehicle, the tires may vary in handling characteristics. Do not mix different speed rating designations on the same axle.

Consult the vehicle owner's manual or vehicle placard for correct tire size, service description, load index, speed rating and cold inflation pressure of the original tires. Do not exceed the maximum load or inflation capacity of the tire specified by the Tire and Rim Association (www.us-tra.org)

When replacing fewer than ALL tires on a vehicle, follow the vehicle manufacturer's recommendations as to the placement of the new tires. If it is not possible to follow the vehicle manufacturer's tire replacement recommendations, remember to replace tires on the same axle with the same size, construction, speed rating, and, if possible, similar tread pattern.

Do not mix radials with non-radial tires on the same axle, as this may affect vehicle handling and stability. If radial tires and non-radial tires are mixed on the same vehicle, the radials must be on the rear. If radial and non-radial tires are used on a vehicle equipped with dual rear tires, radial tires may be used on either axle. High-pressure temporary compact spare tires are exempt from this rule.

Do not mix size or type (all season, performance, mud and snow) of tires on the same axle. When replacing only two tires on front or rear drive vehicles, follow the vehicle manufacturer's recommendations concerning placement. If it is not possible to follow OE recommendations, it is preferable to place the two new tires on the

rear for greater stability, greater adhesion affecting steering -- on other than dry pavement -- and overall safety, regardless of whether the vehicle is front or rear wheel drive.

It is particularly important to match all tire sizes and constructions on 4-wheel (4x4) and all-wheel (AWD) drive vehicles unless otherwise specified by vehicle manufacturer. Ideally, all four tires should be replaced at the same time. Some vehicle manufacturers restrict replacement of tires to specific brands, types, or sizes.

MOUNTING TIRES

Only specially trained persons should de-mount or mount tires. Explosions of tire and wheel assembly can result from improper mounting, possibly causing serious injury or death. High pressure temporary compact spare tires should not be used with any other rims or wheels, nor should standard tires, snow tires, wheel covers, or trim rings be used with high pressure compact spare rims or wheels.

Mount tires only on same or approved rim widths.

Attempting to mount a tire of one diameter on a wheel of a different diameter , bead taper or flange type may result in serious injury or death.

If any flammable emergency tire inflation product has been used in a tire, consult inflation product manufacturer's product information label for tire deflation procedures to avoid possible serious injury or death.

VEHICLE TIRE PLACARD

Since 1968, cars and light trucks sold in the United States have been required to have a tire information sticker, called a vehicle tire placard. The vehicle tire placard indicates the size of the original equipment tires (including the spare), cold inflation pressure for the tires on both axles as well as the spare, and load index or range. Depending on the vehicle, the vehicle tire placard will either be located on the edge of any door, the doorpost, glove box, fuel door or inside trunk lid. If the tire placard is missing, consult the owner's manual, vehicle manufacturer, or tire manufacturer regarding applicable tire information.

Always refer to the vehicle manufacturer's recommendations before replacing tires. Tires should always be replaced with the same size designation, or approved options, as recommended. Never choose a smaller size with less load carrying capacity than the size on the tire placard. (Some vehicle manufacturers require different-sized tires for either the front or rear axles.)

NOTE: **It is not always possible to select a replacement tire with exactly the same size as shown on the placard. Consult with a vehicle or tire manufacturer for replacement recommendations.**

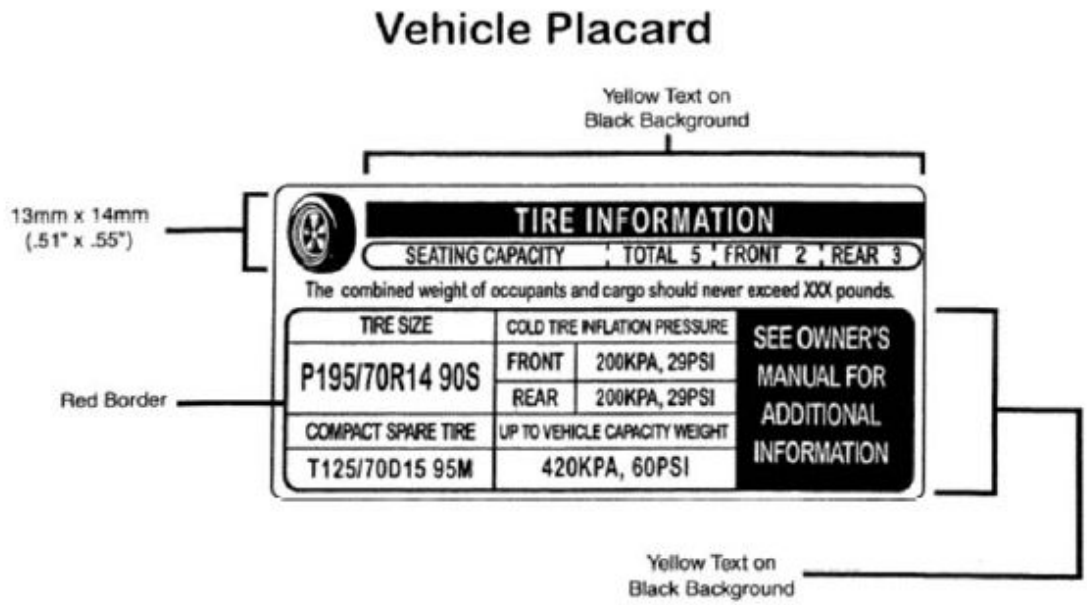

Fig. 1: Vehicle Tire Placard - Typical

TIRE ROTATION

The front tires on most vehicles tend to wear out faster than the rear tires. This is due to the effects of steering the vehicle and the weight transfer that occurs during braking. To ensure that all four tires wear evenly, it is important to rotate them on a regular basis. Tire rotation helps maintain balanced handling because it allows all four tires to wear at the same rate. Keep in mind, as tire wear reduces tread depth, it increases the tires' response to driver inputs. Consequently, by equalizing tire wear at all four corners, dry road performance is actually enhanced. Another advantage of regular rotation is that it allows the tires to be replaced in complete sets rather than in pairs. This maintains handling continuity. It also enables drivers to take advantage of the latest in tire technology, instead of trying to match a pair of older tires.

Most manufacturers list rotation intervals in the scheduled maintenance section of the vehicle service manual and/or the owner's manual. Tire rotation patterns can also be found in these books. If this information is unavailable for a particular vehicle, rotate the tires every 5-7,000 miles following the appropriate rotation sequence shown in the illustrations. After completing a tire rotation, be sure to reset inflation pressures to the manufacturer's recommended specifications indicated on the vehicle tire placard.

To ensure that the proper amount of clamping force is applied to each fastener, follow these guidelines:

- Make sure the area around the lug holes, as well as the wheel and hub mating surfaces are clean and dry. A wire brush can be used to remove corrosion and other debris. Wipe the areas clean using a shop rag.
- Inspect the bolt holes for damage. Do not use a wheel if the bolt holes are deformed.
- Inspect the wheel studs and lug nuts or lug bolts and bolt holes (depending on the vehicle) for damage. Replace or repair any damaged or worn components.
- Always follow a star pattern when tightening lugs.

WHEEL LUG NUT TORQUE & CLAMPING FORCE

Although proper wheel lug nut torque is important, it does not guarantee that the required clamping force will be achieved. For example, excessive corrosion on the wheel and hub mating surfaces will result in improper clamping force, even when the lugs are tightened with a calibrated torque wrench. Low clamping force can also occur if the threads are dirty. This is because dirt causes interference between the mating threads. As a result, the torque wrench will register the correct reading but the clamping force will be inadequate. To improve the chances of achieving the precise clamping force between the wheel and hub, proper torque must be applied to clean components in good condition. Specifications for wheel lug nut torque can be found in the `Tire and Wheel' section of most vehicle service manuals. When specifications are indicated as a range, adjust the torque wrench to the middle of the range to compensate for normal variations in tool calibration.

POPULAR TIRE ROTATION PATTERNS

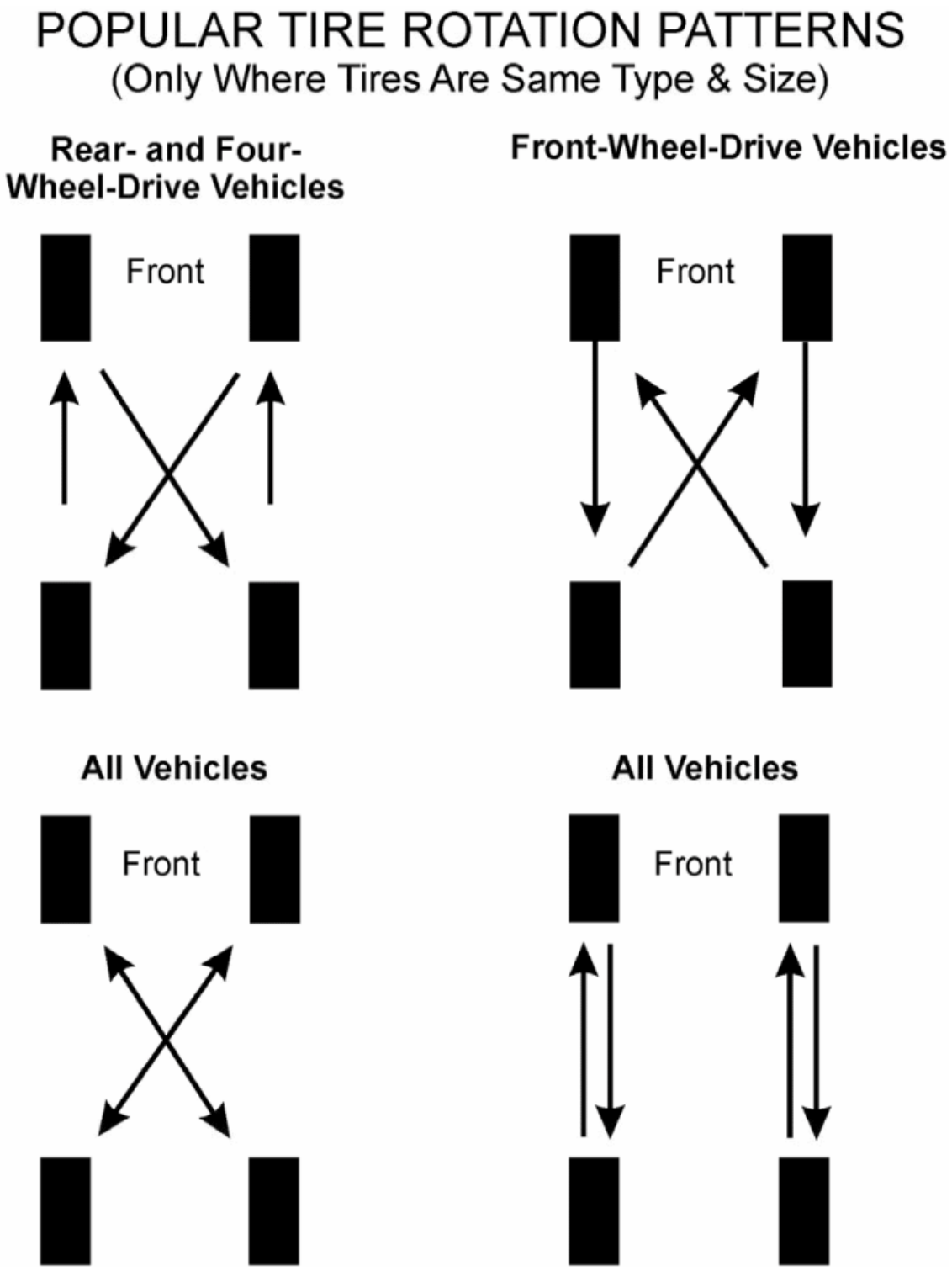

Fig. 2: Popular Tire Rotation Patterns - Without Dual Rear Wheels

Never rotate directional tires from side-to-side since this will reverse their direction of rotation. Directional tires can only be rotated from front to rear or vice versa. Directional tires are typically used on high-performance cars and can be identified by the arrows imprinted on the sidewall.

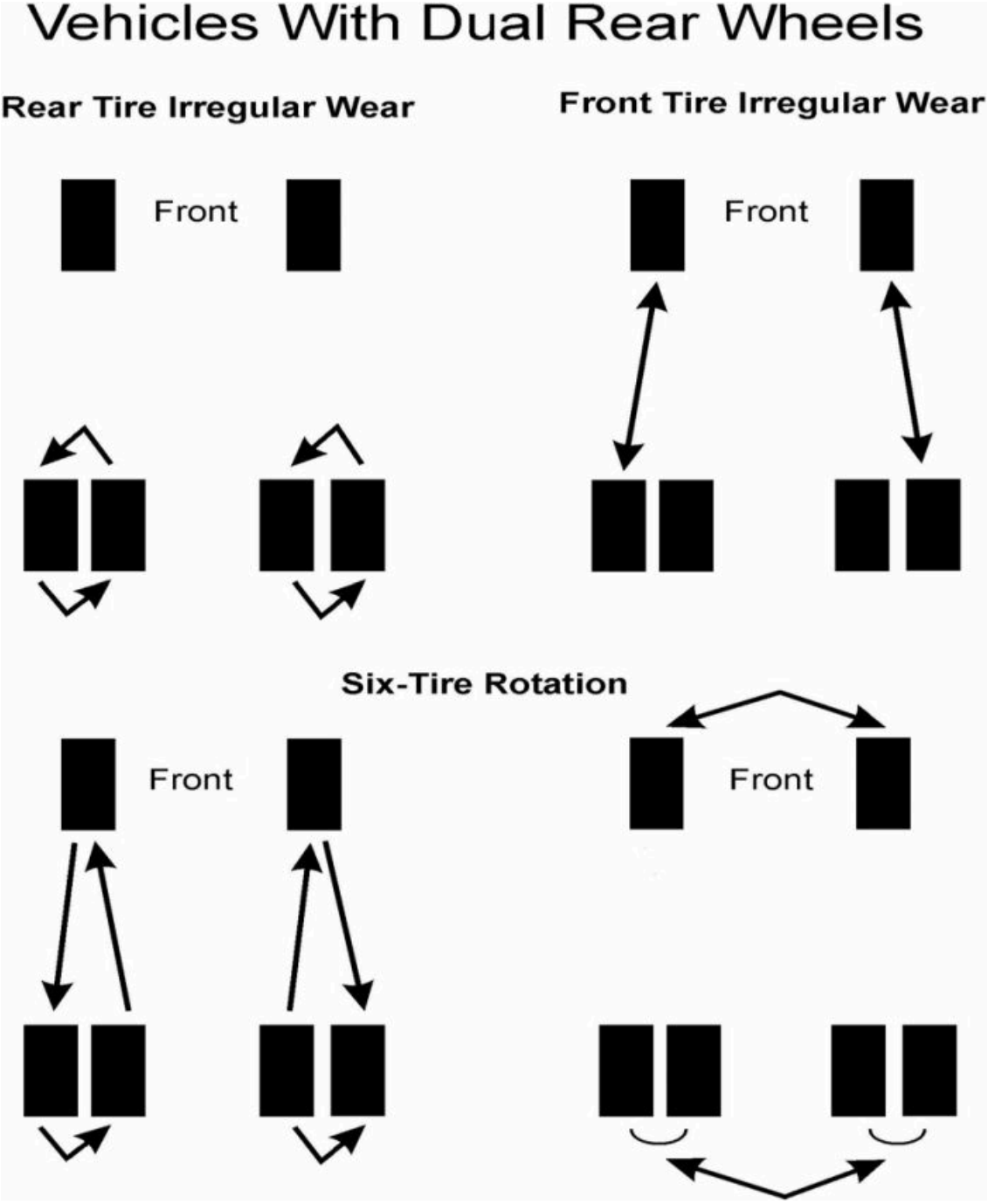

Fig. 3: Popular Tire Rotation Patterns - With Dual Rear Wheels

Some tires cannot be rotated in the manners described. Such tires include uni-directional tires and tires with asymmetric tread designs. Also, some vehicles may have different-sized tires mounted on the front and rear axles, and these different-sized tires also have rotation restrictions. Check your owner's manual or with a tire manufacturer or a tire dealer for proper recommendations for these specific cases.

WHEELS AND RIMS

The wheels on today's vehicles are made of steel, aluminum, or aluminum alloy (a combination of two or more metals). Steel wheels are the least expensive to produce, which is why they come as original equipment on many passenger cars and light trucks. The center section includes the bolt circle, or mounting holes, and is used to attach the wheel to the vehicle. The flange is the outermost lip of the rim, and is the area typically used for attaching wheel (balancing) weights. The rim is formed by rolling a strip of metal and then welding the two ends together. The interior section of the rim has a smaller diameter section called a drop center. This area provides the means for removing and installing a tire, since the bead is not designed to stretch. During removal or installation, most of the tire bead is pushed into the drop center so that the exposed portion can be pulled over the rim. The edges of the rim are flared to form the bead seats, which hold the tire and provide the airtight seal. Many rims include safety humps. These are small elevations on the inside of the bead seats. Safety humps help prevent the tire from falling into the drop center during a blowout. This allows the driver to maintain better directional control of a vehicle running on one or more deflated tires.

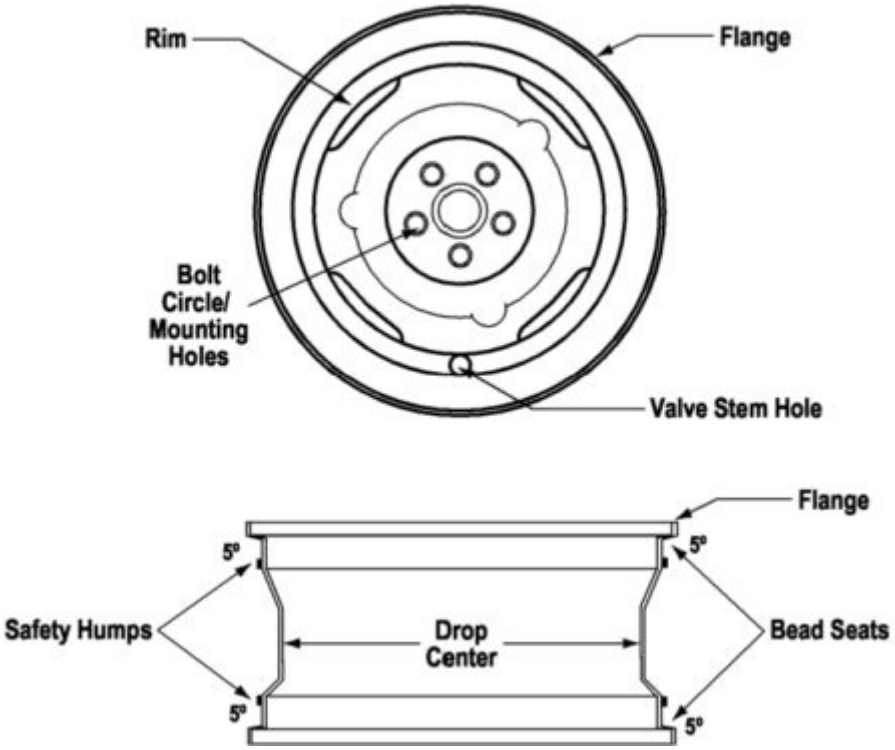

Fig. 4: Steel Wheel

WARNING: Mounting a regular tire on a high-pressure compact spare wheel is not permitted. Attempting to mount a tire of one diameter on a wheel of a different diameter or flange type may result in serious injury or death. Mount tires only on approved rim widths. If the wheel identification stamp is not legible, or cannot be found, do not use the wheel until the size and type have been properly identified. Load, cold inflation pressure, and tire construction forces imposed on the rim/wheel must not exceed the rim/wheel manufacturer's recommendations, even if the tire is approved for a higher load or inflation. Wheels of different diameter, offset, or width cannot be mixed on the same axle. Bead seat tapers cannot be interchanged.

TIRE PRESSURE MONITORING SYSTEMS

To avoid damaging sensors when mounting and demounting tires, it is beneficial to know where the sensors are located. Sensor assemblies are commonly attached to the valve stem, with the valve stem acting as an antenna to assist with transmitting RF signals. They may also be strapped to the drop center of the wheel. If this is the case, the sensor assembly should be located in-line with the valve stem.

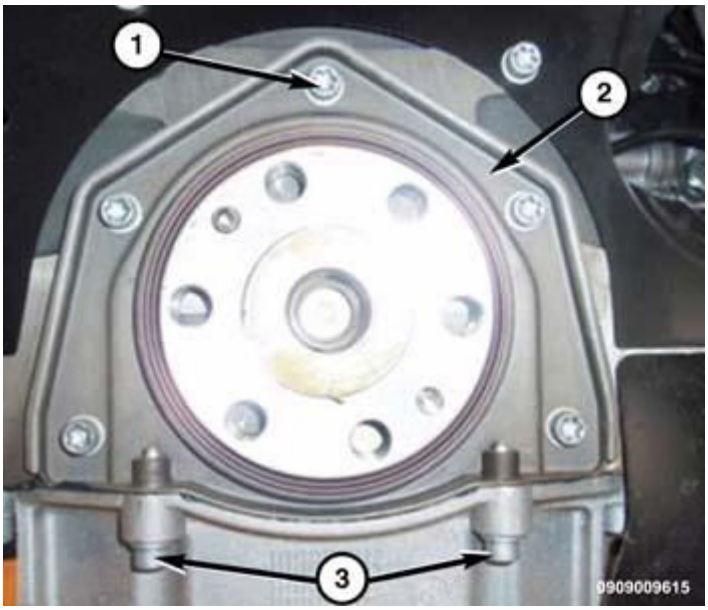

Fig. 5: Valve Stem Mounted Sensor

To avoid damaging sensors when demounting tires, do not break the bead within 45 of either side of sensor assembly locations. Be careful not to damage sensors when mounting tires as well. Sensors are not repairable and require replacement if damaged or when their battery is completely drained. It is recommended that the sensor be carefully "dropped into the tire" prior to demounting to avoid damage.

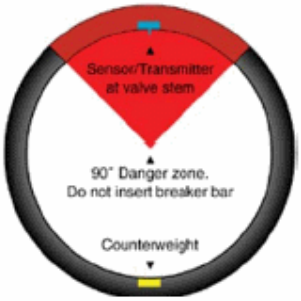

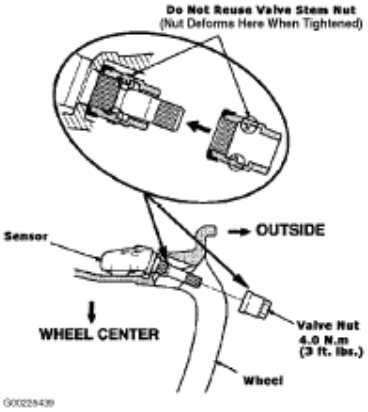

Fig. 6: Mounting Sensor

When reinstalling the sensor, it is suggested that the locknut, gasket and valve stem be replaced and torgued to

the proper specification. It is also necessary to use the proper valve cap as it is also an integral part of the system.

It may be necessary to reprogram the TPMS when the tires are rotated, when a new sensor is installed, or after the vehicle loses power. This usually requires a scan tool and may involve the use of a special magnet. Refer to the vehicle service manual to properly reprogram the TPMS.

STEERING & SUSPENSION CHECKSHEET

MOTORIST ASSURANCE PROGRAM
STANDARDS FOR AUTOMOTIVE REPAIR
QUALIFIED

MOTORIST ASSURANCE PROGRAM
STANDARDS FOR AUTOMOTIVE REPAIR

PARTICIPATING FACILITY

STEERING & SUSPENSION CHECKSHEET

Date: _____

Name: _____

Address: _____

City: _____ State: _____ Zip Code: _____

Year: _____ Make: _____ Model: _____

Mileage: _____ License: _____ VIN: _____ Eng Code: _____

Customer Interview:

_____

_____

_____

_____

_____

Reason Code Explanation

Code	Reason
	Required
A	*Part No Longer Performs Intended Purpose*
B	*Part Does Not Meet A Design Specification (Regardless Of Performance)*
C	*Part Is Missing*
	Suggested/Optional
1	*Part Is Close To The End Of Its Useful Life*
2	*To Address A Customer Need, Convenience Or Request*
3	*To Comply With Maintenance Recommended By The Vehicle's Original Equipment Manufacturer*
4	*Technician's Recommendation Based On Substantial And Informed Experience*
5	*To Comply With Maintenance Recommended By AMRA/MAP*

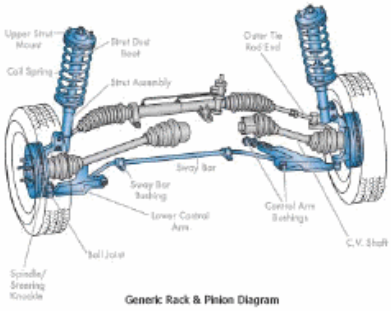

Generic Rack & Pinion Diagram

Your vehicle has been inspected following the Uniform Inspection and Communication Standards developed by the Motorist Assurance Program. MAP produces materials that give motorists the information and encouragement to take greater responsibility for their vehicles—through proper maintenance. We encourage participating service and repair shops to adopt the MAP Pledge of Assurance to their Customers and the Motorist Assurance Program Standards of Service. All participating service providers have agreed to subscribe to this Pledge and to adhere to the promulgated Standards of Service demonstrating to their customers that they are serious about customer satisfaction. For more information visit: www.motorist.org

DISCLAIMER: This document may be used as a guide when performing vehicle inspection. This form is not to be used as an estimate form and may not comply with Local or State Laws. The Motorist Assurance Program is not responsible for the performance and accuracy of the motor vehicle inspection performed using this document.

Fig. 7: Steering & Suspension Checksheet (1 Of 2)

STEERING & SUSPENSION CHECKSHEET

UNDERHOOD/UNDER VEHICLE

Component	OK	S	R	Condition	Component	OK	S	R	Condition
Rack & Pinion Assy					Center / Drag Link				
P/S Pump					Steering Gear				
P/S Hoses					Sway Bar/Bushings				
P/S Fluid					Idler Arm				
P/S Cooler					Pitman Arm				

LEFT FRONT

Component	OK	S	R	Condition
Link Pin / Bushings				
CV Joints				Inner Outer _____
CV Boots				Inner _____ Outer _____
Shock / Strut				_____
Spring / Mount				
Ball Joint Upper				Spec_____
Lower				Actual_____
Control Arm / Shaft				
Bushings				
Tie Rod End				Inner _____ Outer _____
Bearing / Spindle				

RIGHT FRONT

Component	OK	S	R	Condition
Link Pin / Bushings				
CV Joints				Inner Outer _____
CV Boots				Inner _____ Outer _____
Shock / Strut				_____
Spring / Mount				
Ball Joint Upper				Spec_____
Lower				Actual_____
Control Arm / Shaft				
Bushings				
Tie Rod End				Inner _____ Outer _____
Bearing / Spindle				

LEFT REAR

Component	OK	S	R	Condition
Link Pin / Bushings				
CV Joints				Inner _____ Outer _____
CV Boots				Inner _____ Outer _____
Shock / Strut				
Spring / Mount				
Ball Joint Upper				Spec_____
Lower				Actual_____
Control Arm / Shaft				
Bushings				
Tie Rod End				Inner _____ Outer _____
Bearing / Spindle				

RIGHT REAR

Component	OK	S	R	Condition
Link Pin / Bushings				
CV Joints				Inner _____ Outer _____
CV Boots				Inner _____ Outer _____
Shock / Strut				
Spring / Mount				
Ball Joint Upper				Spec_____
Lower				Actual_____
Control Arm / Shaft				
Bushings				
Tie Rod End				Inner _____ Outer _____
Bearing / Spindle				

OK	Suggested 1, 2, 3, 4, 5	Required A, B, C

Automotive Maintenance & Repair Assn © 2009

Fig. 8: Steering & Suspension Checksheet (2 Of 2)

WHEELS & TIRES CHECKSHEET

MOTORIST ASSURANCE PROGRAM

STANDARDS FOR AUTOMOTIVE REPAIR

WHEELS & TIRES CHECKSHEET

Date: _____

Name: _____

Address: _____

City: _____ State: _____ Zip Code: _____

Year: _____ Make: _____ Model: _____

Mileage: _____ License: _____ VIN: _____ Eng Code: _____

Customer Interview:

_____

_____

_____

_____

_____

Reason Code Explanation

Code	Reason
	Required
A	*Part No Longer Performs Intended Purpose*
B	*Part Does Not Meet A Design Specification (Regardless Of Performance)*
C	*Part Is Missing*
	Suggested/Optional
1	*Part Is Close To The End Of Its Useful Life*
2	*To Address A Customer Need, Convenience Or Request*
3	*To Comply With Maintenance Recommended By The Vehicle's Original Equipment Manufacturer*
4	*Technician's Recommendation Based On Substantial And Informed Experience*
5	*To Comply With Maintenance Recommended By AMRA/MAP*

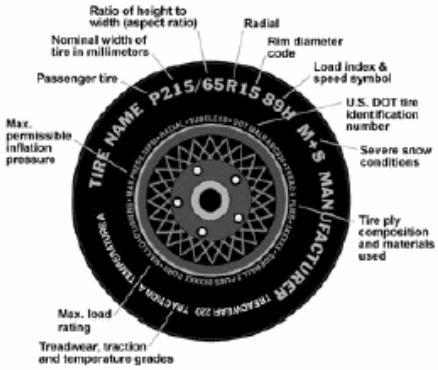

Your vehicle has been inspected following the Uniform Inspection and Communication Standards developed by the Motorist Assurance Program. MAP produces materials that give motorists the information and encouragement to take greater responsibility for their vehicles—through proper maintenance. We encourage participating service and repair shops to adopt the MAP Pledge of Assurance to their Customers and the Motorist Assurance Program Standards of Service. All participating service providers have agreed to subscribe to this Pledge and to adhere to the promulgated Standards of Service demonstrating to their customers that they are serious about customer satisfaction. For more information visit: www.motorist.org

DISCLAIMER: This document may be used as a guide when performing vehicle inspection. This form is not to be used as an estimate form and may not comply with Local or State Laws. The Motorist Assurance Program is not responsible for the performance and accuracy of the motor vehicle inspection performed using this document.

Fig. 9: Wheels & Tires Checksheet (1 Of 2)

WHEELS & TIRES CHECKSHEET

LEFT FRONT

Component	OK	S	R	Condition
Lugs/Studs				
Tire Size Speed Rating _____				Spec_____ Actual_____
Run Flat				Y ____ N ____
Tread Depth				_____/32nds
Tire Pressure Placard _____				Before _____ After _____
TPMS Sensor Nut Valve core / Cap Sensor				
Valve Stem				
Wheel (Condition) Wheel Size				Spec_____ Actual_____

☐Edge wear ☐Cupped ☐Cut ☐Irregular wear

RIGHT FRONT

Component	OK	S	R	Condition
Lugs/Studs				
Tire Size Speed Rating _____				Spec_____ Actual_____
Run Flat				Y ____ N ____
Tread Depth				_____/32nds
Tire Pressure Placard _____				Before _____ After _____
TPMS Sensor Nut Valve core / Cap Sensor				
Valve Stem				
Wheel (Condition) Wheel Size				Spec_____ Actual_____

☐Edge wear ☐Cupped ☐Cut ☐Irregular wear

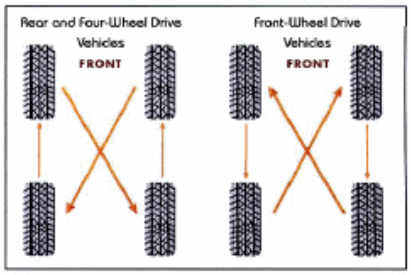

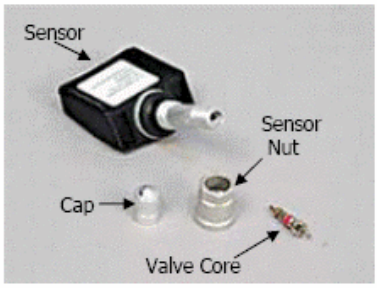

LEFT REAR

Component	OK	S	R	Condition
Lugs/Studs				
Tire Size Speed Rating _____				Spec_____ Actual_____
Run Flat				Y ____ N ____
Tread Depth				_____/32nds
Tire Pressure Placard _____				Before _____ After _____
TPMS Sensor Nut Valve core / Cap Sensor				
Valve Stem				
Wheel (Condition) Wheel Size				Spec_____ Actual_____

☐Edge wear ☐Cupped ☐Cut ☐Irregular wear

RIGHT REAR

Component	OK	S	R	Condition
Lugs/Studs				
Tire Size Speed Rating _____				Spec_____ Actual_____
Run Flat				Y ____ N ____
Tread Depth				_____/32nds
Tire Pressure Placard _____				Before _____ After _____
TPMS Sensor Nut Valve core / Cap Sensor				
Valve Stem				
Wheel (Condition) Wheel Size				Spec_____ Actual_____

☐Edge wear ☐Cupped ☐Cut ☐Irregular wear

OK	Suggested 1, 2, 3, 4, 5	Required A, B, C

Automotive Maintenance & Repair Assn © 2009

Fig. 10: Wheels & Tires Checksheet (2 Of 2)

STEERING AND SUSPENSION, WHEEL ALIGNMENT, WHEELS AND TIRES

NOTE: **Steering and Suspension are complex systems made up of a variety of interdependent components and controls. For proper vehicle handling, ride, and tire wear, a thorough inspection is required whenever suspension work is being performed.**

NOTE: **Listed repair conditions assume that the problem has been isolated to the specific component by proper testing procedures. When replacing steering and/or suspension components which may affect an alignment angle, you are required to check and adjust alignment as needed. Refer to the OEM specifications for both ride height and alignment angle tolerances.**

NOTE: **Improper alignment geometry, and/or improper tire/wheel fitment may affect other systems such as Adaptive Cruise Control, Electronic Stability Control, Electronic Traction Control and Variable Ratio Steering. These systems may require attention after an alignment or suspension service is performed. Care must be taken to identify these vehicles/systems before any repair procedures are performed. Failure to follow OEM guidelines when servicing interrelated systems could result in an unsafe condition.**

CAUTION: **Do not use ride height altering or load compensating components, such as variable rate springs or coil over shocks on vehicles with height sensing or load sensing proportioning- valve equipped braking systems, unless these components are supplied as original equipment.**

ACTIVE HANDLING

NOTE: **An evolution of ABS and Traction Control. It uses the ABS hardware and two additional sensors: a steering-wheel angle sensor, which measures the position and rate of steering wheel input, and a yaw sensor, which measures the rate at which the vehicle is actually turning. By comparing rates, computer determines if the vehicle is oversteering or understeering.**

NOTE: **On slippery surfaces or during aggressive maneuvers, if the vehicle understeers severely, the computer will actuate the brakes on the inside rear wheel, just hard enough and just long enough to correct the steering behavior. When the vehicle oversteers severely, the system will brake the outside front wheel instead.**

NOTE: **When servicing this system, OEM may require steering angle sensor be calibrated to the vehicle thrustline.**

ACTIVE SUSPENSION CONTROL MODULES

Condition	Code	Procedure

Application incorrect	B	Require replacement
Attaching hardware broken	A	Require repair or replacement of hardware
Attaching hardware missing	C	Require replacement of hardware
Attaching hardware not functioning	A	Require repair or replacement of hardware
Attaching hardware threads damaged	A	Require repair or replacement of hardware
Attaching hardware threads stripped (threads missing)	A	Require replacement of hardware
Connector broken	A	Require repair or replacement
Connector melted	A	Require repair or replacement
NOTE: **Determine cause and correct prior to repair or replacement of part.**		
Connector missing	C	Require repair
Contaminated	A	Require repair or replacement
NOTE: **Determine source of contamination, such as engine coolant, fuel, metal particles, or water. Require repair or replacement.**		
Inoperative	B	Require repair or replacement
NOTE: **Inoperative includes intermittent operation. Some components may be serviceable; check for accepted cleaning procedure.**		
Leaking	B	Require repair or replacement
Malfunctioning	A	Require replacement
NOTE: **Includes inoperative, intermittent operation, failure to perform all functions, out of OEM specifications, or out of range.**		
Missing	C	Require replacement
Terminal broken	A	Require repair or replacement
Terminal burned, affecting performance	A	Require repair or replacement
NOTE: **Determine cause and correct prior to repair or replacement of part.**		
Terminal burned, not affecting performance	2	Suggest repair or replacement
Terminal corroded, affecting performance	A	Require repair or replacement
Terminal corroded, not affecting performance	2	Suggest repair or replacement
Terminal loose, affecting performance	B	Require repair or replacement
Terminal loose, not affecting performance	1	Suggest repair or replacement
Threads damaged	A	Require repair or replacement
Threads stripped (threads missing)	A	Require replacement
Wire lead conductors exposed	B	Require repair or replacement
Wire lead corroded	A	Require repair or replacement

Wire lead open	A	Require repair or replacement
Wire lead shorted	A	Require repair or replacement

ACTIVE VARIABLE RATIO STEERING

NOTE: **Besides electronically providing variable steering ratios, the computer is linked with the Vehicle Stability Control system to aid in directional stability. As the vehicle travels down the highway, road surfaces and wind gusts can affect the vehicle's directional stability. The vehicle may wander or dart to one side, (as many who have met a tractor-trailer unit on a windy day have experienced). Sensors on the vehicle detect this sudden, unintentional movement and the computer will stabilize the vehicle by moving the Active Steering electric motor and steering gear, all without the driver turning the steering wheel.**

NOTE: **Additionally, if the driver experiences a skid or slide because of poor road conditions, the Active Steering will react to information from the yaw rate and steering angle sensors to modify the steering angle of the front wheels and stabilize the vehicle. This occurs much faster than the driver can react. If the Active Steering correction is not adequate to control the skid or slide, then the Stability Control system is also activated.**

Condition	Code	Procedure
Improper Operation		
NOTE: **Refer to manufacturers' service information.**		

ACTIVE YAW CONTROL

NOTE: **An evolution of ABS and Traction Control. It uses the ABS hardware and two additional sensors: a steering-wheel angle sensor, which measures the position and rate of steering wheel input, and a yaw sensor, which measures the rate at which the vehicle is actually turning. By comparing rates, computer determines if the vehicle is oversteering or understeering.**

NOTE: **On slippery surfaces or during aggressive maneuvers, if the vehicle understeers severely, the computer will actuate the brakes on the inside rear wheel, just hard enough and just long enough to correct the steering behavior. When the vehicle oversteers severely, the system will brake the outside front wheel instead.**

NOTE: **When servicing this system, OEM may require steering angle sensor be calibrated to the vehicle thrustline.**

ADAPTIVE CRUISE CONTROL

NOTE: **Similar to conventional cruise control. It maintains the vehicle's pre-set speed. However, beyond conventional cruise control, this system automatically adjusts speed to maintain proper distance between vehicles in the same lane. This is achieved through use of a radar or laser headway sensor, a digital signal processor and a longitudinal controller. If the lead vehicle slows down, or another object is detected, the system sends a signal to the engine and/or braking system to decelerate. Then, when the lane is clear, the system will re-accelerate the vehicle back to the set speed. Some OEM's require that the radar or laser headway sensor be calibrated to the thrustline of the vehicle.**

ADVANCE TRAC

NOTE: **An evolution of ABS and Traction Control. It uses the ABS hardware and two additional sensors: a steering-wheel angle sensor, which measures the position and rate of steering wheel input, and a yaw sensor, which measures the rate at which the vehicle is actually turning. By comparing rates, computer determines if the vehicle is oversteering or understeering.**

NOTE: **On slippery surfaces or during aggressive maneuvers, if the vehicle understeers severely, the computer will actuate the brakes on the inside rear wheel, just hard enough and just long enough to correct the steering behavior. When the vehicle oversteers severely, the system will brake the outside front wheel instead.**

NOTE: **When servicing this system, OEM may require steering angle sensor be calibrated to the vehicle thrustline.**

AIR BAGS

Condition	Code	Procedure
Attaching hardware missing	C	Require replacement of hardware
Attaching hardware not functioning	A	Require repair or replacement of hardware
Attaching hardware threads damaged	A	Require repair or replacement of hardware
Attaching hardware threads stripped (threads missing)	A	Require replacement of hardware
Collar cracked	A	Require replacement
End cap cracked	A	Require replacement
Inner fabric of bag damaged	A	Require replacement
Leaking	A	Require repair or replacement
Outer covering of air bag is cracked to the extent that inner fabric of air bag is visible	1	Suggest replacement
Piston cracked	A	Require replacement

AIR RIDE CONTROL MODULES

Condition	Code	Procedure
Application incorrect	B	Require replacement
Attaching hardware broken	A	Require repair or replacement of hardware
Attaching hardware missing	C	Require replacement of hardware
Attaching hardware not functioning	A	Require repair or replacement of hardware
Attaching hardware threads damaged	A	Require repair or replacement of hardware
Attaching hardware threads stripped (threads missing)	A	Require replacement of hardware
Connector broken	A	Require repair or replacement
Connector melted	A	Require repair or replacement
NOTE: **Determine cause and correct prior to repair or replacement of part.**		
Connector missing	C	Require repair
Contaminated	A	Require repair or replacement
NOTE: **Determine source of contamination, such as engine coolant, fuel, metal particles, or water. Require repair or replacement.**		
Inoperative	A	Require repair or replacement
NOTE: **Inoperative includes intermittent operation. Some components may be serviceable; check for accepted cleaning procedure.**		
Leaking	B	Require repair or replacement
Malfunctioning	A	Require replacement
NOTE: **Includes inoperative, intermittent operation, failure to perform all functions, out of OEM specifications, or out of range.**		
Missing	C	Require replacement
Terminal broken	A	Require repair or replacement
Terminal burned, affecting performance	A	Require repair or replacement
NOTE: **Determine cause and correct prior to repair or replacement of part.**		
Terminal burned, not affecting performance	2	Suggest repair or replacement
Terminal corroded, affecting performance	A	Require repair or replacement
Terminal corroded, not affecting performance	2	Suggest repair or replacement
Terminal loose, affecting performance	B	Require repair or replacement
Terminal loose, not affecting performance	1	Suggest repair or replacement
Threads damaged	A	Require repair or replacement

Threads stripped (threads missing)	A	Require replacement
Wire lead conductors exposed	B	Require repair or replacement
Wire lead corroded	A	Require repair or replacement
Wire lead open	A	Require repair or replacement
Wire lead shorted	A	Require repair or replacement

AIR RIDE SUSPENSION TORSION SPRINGS (COUNTER BALANCING)

Condition	Code	Procedure
Attaching hardware broken	A	Require repair or replacement of hardware
Attaching hardware missing	C	Require replacement of hardware
Attaching hardware not functioning	A	Require repair or replacement of hardware
Attaching hardware threads damaged	A	Require repair or replacement of hardware
Attaching hardware threads stripped (threads missing)	A	Require replacement of hardware
Broken	A	Require replacement
Missing	C	Require replacement

AIR RIDE SUSPENSION

NOTE: **Depending on the air suspension design, there are some aftermarket products available to eliminate the air ride suspension on certain vehicles. If the system has been eliminated with one of these products, then no service is suggested or required.**

AIR RIDE TUBES

Condition	Code	Procedure
Application incorrect	B	Require replacement
Attaching hardware broken	A	Require repair or replacement of hardware
Attaching hardware missing	C	Require replacement of hardware
Attaching hardware not functioning	A	Require repair or replacement of hardware
Attaching hardware threads damaged	A	Require repair or replacement of hardware
Attaching hardware threads stripped (threads missing)	A	Require replacement of hardware
Connected incorrectly	A	Require repair
Insufficient clamping force, allowing hose to leak	A	Require repair or replacement
Leaking	A	Require repair or replacement

Melted	1	Suggest repair or replacement
Missing	C	Require replacement
Protective sleeves damaged	2	Suggest replacement of sleeves
Protective sleeves missing	C	Require replacement of sleeves
Restricted, affecting performance	A	Require repair or replacement
Restricted, not affecting performance	2	Suggest repair or replacement
Routed incorrectly (where failure is likely to occur)	B	Require repair or replacement
Safety clip missing	C	Require replacement
Threads damaged	A	Require repair or replacement
Threads stripped (threads missing)	A	Require replacement
Type incorrect	2	Suggest repair or replacement

AIR SHOCKS AND AIR STRUTS

NOTE: **This section covers the air spring portion of the air shock or strut. For damping portion of shock or strut conditions and procedures, refer to the Shock Absorbers, Strut Cartridges, and Strut Assemblies section.**

Condition	Code	Procedure
Inner fabric of air bag damaged	A	Require replacement
Leaking	A	Require repair or replacement
Outer covering of air bag is cracked to the extent that inner fabric of air bag is visible	1	Suggest replacement

AIR SPRING VALVES

Condition	Code	Procedure
Attaching hardware broken	A	Require repair or replacement of hardware
Attaching hardware missing	C	Require replacement of hardware
Attaching hardware not functioning	A	Require repair or replacement of hardware
Attaching hardware threads damaged	A	Require repair or replacement of hardware
Attaching hardware threads stripped (threads missing)	A	Require replacement of hardware
Blocked	A	Require repair or replacement
Connector bent	A	Require repair or replacement
Connector broken	A	Require replacement
Connector loose	A	Require repair or replacement
Inoperative	A	Require repair or replacement
Leaking	B	Require repair or replacement
Restricted	A	Require repair or replacement

AIR SPRINGS

Condition	Code	Procedure
Attaching hardware broken	A	Require repair or replacement of hardware
Attaching hardware missing	C	Require replacement of hardware
Attaching hardware not functioning	A	Require repair or replacement of hardware
Attaching hardware threads damaged	A	Require repair or replacement of hardware
Attaching hardware threads stripped (threads missing)	A	Require replacement of hardware
Collar cracked	A	Require replacement
End cap cracked	A	Require replacement
Inner fabric of bag damaged	A	Require replacement
Leaking	A	Require repair or replacement
Outer covering of air bag is cracked to the extent that inner fabric of air bag is visible	1	Suggest replacement
Piston cracked	A	Require replacement

AIR SUSPENSION CONTROL VALVES

Condition	Code	Procedure
Attaching hardware broken	A	Require repair or replacement of hardware
Attaching hardware missing	C	Require replacement of hardware
Attaching hardware not functioning	A	Require repair or replacement of hardware
Attaching hardware threads damaged	A	Require repair or replacement of hardware
Attaching hardware threads stripped (threads missing)	A	Require replacement of hardware
Connector (Weatherpack type) leaking	A	Require repair or replacement
Connector broken	A	Require repair or replacement
Connector melted	A	Require replacement
NOTE: **Determine cause and correct prior to repair or replacement of part.**		
Connector missing	C	Require replacement
Leaking	B	Require repair or replacement
Output incorrect	B	Require replacement
Terminal burned, affecting performance	A	Require repair or replacement
NOTE: **Determine cause and correct prior to repair or replacement of part.**		
Terminal burned, not affecting performance	2	Suggest repair or replacement

Terminal corroded, affecting performance	A	Require repair or replacement
Terminal corroded, not affecting performance	2	Suggest repair or replacement
Terminal loose, affecting performance	B	Require repair or replacement
Terminal loose, not affecting performance	1	Suggest repair or replacement
Threads damaged	A	Require repair or replacement
Threads stripped (threads missing)	A	Require replacement
Wire lead burned	A	Require repair or replacement
Wire lead conductors exposed	B	Require repair or replacement
Wire lead open	A	Require repair or replacement
Wire lead shorted	A	Require repair or replacement

AIR SUSPENSION DRIERS

Condition	Code	Procedure
Attaching hardware broken	A	Require repair or replacement of hardware
Attaching hardware missing	C	Require replacement of hardware
Attaching hardware not functioning	A	Require repair or replacement of hardware
Attaching hardware threads damaged	A	Require repair or replacement of hardware
Attaching hardware threads stripped (threads missing)	A	Require replacement of hardware
Contaminated, affecting performance	A	Require replacement
Desiccant bag deteriorated	A	Require replacement
NOTE: **Inspect system to determine effects of desiccant bag deterioration.**		
Leaking	B	Require replacement
Restricted	A	Require repair or replacement
Threads damaged	A	Require repair or replacement
Threads stripped (threads missing)	A	Require replacement
Tubing connection leaking	A	Require repair or replacement

AXLE ACCELERATION SENSOR

NOTE: When servicing this system, OEM may require steering angle sensor be calibrated to the vehicle thrustline.

Condition	Code	Procedure
Attaching hardware broken	A	Require repair or replacement of hardware
Attaching hardware corroded, affecting structural integrity	A	Require replacement of hardware

Attaching hardware missing	C	Require replacement of hardware
Attaching hardware not functioning	A	Require repair or replacement of hardware
Attaching hardware threads damaged	A	Require repair or replacement of hardware
Attaching hardware threads stripped (threads missing)	A	Require replacement of hardware
Connector (Weatherpack type) leaking	A	Require repair or replacement
Connector broken	A	Require repair or replacement
Connector melted	A	Require replacement
Connector missing	C	Require replacement
NOTE: **Determine cause and correct prior to replacement of part.**		
Dust boot missing	C	Require replacement of boot
Dust boot split	A	Require replacement of boot
NOTE: **If boot is not available separately, suggest replacement of sensor (reason code 2). This condition can lead to damage of the sliding magnet, which, in turn, causes premature sensor failure**		
Dust boot torn	A	Require replacement of boot
NOTE: **If boot is not available separately, suggest replacement of sensor (reason code 2). This condition can lead to damage of the sliding magnet, which, in turn, causes premature sensor failure.**		
Housing cracked	B	Require replacement
NOTE: **If boot is not available separately, suggest replacement of sensor (reason code 2). This condition can lead to damage of the sliding magnet, which, in turn, causes premature sensor failure.**		
Lead routing incorrect	B	Require rerouting according to vehicle manufacturer's specifications
Loose	B	Require adjustment to vehicle manufacturer's specifications
Missing	C	Require replacement
Output signal incorrect	B	Require repair or replacement
Terminal burned, affecting performance	A	Require repair or replacement
NOTE: **Determine cause and correct prior to repair or replacement of part.**		
Terminal burned, not affecting performance	2	Suggest repair or replacement
Terminal corroded, affecting performance	A	Require repair or replacement
Terminal corroded, not affecting performance	2	Suggest repair or replacement
Terminal loose, affecting performance	B	Require repair or replacement
Terminal loose, not affecting performance	1	Suggest repair or replacement
Wire lead burned	A	Require repair or replacement
Wire lead conductors exposed	B	Require repair or replacement

Wire lead open	A	Require repair or replacement
Wire lead shorted	A	Require repair or replacement

BALL JOINTS

NOTE: **Before requiring or suggesting ball joint replacement, the approved OEM procedure must be used to measure ball joint wear. The measurement(s) obtained, along with the vehicle manufacturer's specifications, must be noted on the inspection report. Some states require that these measurements also appear on the invoice. The term ""perceptible movement,"" defined as any visible movement in any direction, has been the industry standard for determining the need for replacement of follower (non-load carrying) ball joints. Some vehicle manufacturers are now publishing specifications for follower ball joints that were previously diagnosed by the ""perceptible movement"" standard. Before requiring or suggesting any parts be replaced based on ""perceptible movement,"" consult your repair manual to determine if OEM specifications exist. You are not required to replace ball joints in axle sets. However, when replacing a ball joint due to wear exceeding manufacturer's specification, you may suggest replacement of the other ball joint if its measurement shows it is close to the end of its useful life, for preventive maintenance.**

Condition	Code	Procedure
Attaching hardware broken	A	Require repair or replacement of hardware
Attaching hardware corroded, affecting structural integrity	A	Require replacement of hardware
Attaching hardware missing	C	Require replacement of hardware
Attaching hardware not functioning	A	Require repair or replacement of hardware
Attaching hardware threads damaged	A	Require repair or replacement of hardware
Attaching hardware threads stripped (threads missing)	A	Require replacement of hardware
Binding	A	Further inspection required
NOTE: **If greaseable, grease ball joint. If problem persists or joint is non-greaseable, require replacement.**		
Grease boot cracked	2	Suggest replacement
NOTE: **Cracked grease boot will allow contaminants to enter the ball joint and will accelerate wear.**		
Grease boot missing	C	Require replacement
NOTE: **Lack of grease boot will allow contaminants to enter the ball joint and will accelerate wear.**		
Grease boot torn	A	Require replacement

NOTE: **Torn grease boot will allow contaminants to enter the ball joint and will accelerate wear.**		
Grease fitting broken	A	Require replacement of grease fitting
NOTE: **Some vehicles come from the factory with broken fittings. No service is suggested or required on these vehicles.**		
Grease fitting missing	C	Require replacement of grease fitting
Grease fitting won't seal	A	Require replacement of grease fitting
Greaseable ball joint will not take grease	2	Suggest replacement of grease fitting
NOTE: **If the greaseable ball joint still will not take grease after replacing the grease fitting, suggest replacement of ball joint.**		
Nut on ball joint loose	A	Require repair or replacement
NOTE: **Check for bent stud or damaged taper hole.**		
Pre-load adjustment incorrect	B	Require repair or replacement
Seized	A	Require replacement
Stud bent	B	Require replacement
NOTE: **Check for damaged taper hole.**		
Stud broken	A	Require replacement
NOTE: **Check for damaged taper hole.**		
Threads damaged	A	Require repair or replacement
Threads stripped (threads missing)	A	Require replacement
NOTE: **Check for damaged taper hole.**		
Wear exceeds manufacturer's specifications	B	Require replacement

BODY ACCELERATION SENSOR

NOTE: When servicing this system, OEM may require steering angle sensor be calibrated to the vehicle thrustline.

Condition	Code	Procedure
Attaching hardware broken	A	Require repair or replacement of hardware
Attaching hardware corroded, affecting structural integrity	A	Require replacement of hardware
Attaching hardware missing	C	Require replacement of hardware
Attaching hardware not functioning	A	Require repair or replacement of

		hardware
Attaching hardware threads damaged	A	Require repair or replacement of hardware
Attaching hardware threads stripped (threads missing)	A	Require replacement of hardware
Connector (Weatherpack type) leaking	A	Require repair or replacement
Connector broken	A	Require repair or replacement
Connector melted	A	Require replacement
Connector missing	C	Require replacement
NOTE: **Determine cause and correct prior to replacement of part.**		
Dust boot missing	C	Require replacement of boot
Dust boot split	A	Require replacement of boot
NOTE: **If boot is not available separately, suggest replacement of sensor (reason code 2). This condition can lead to damage of the sliding magnet, which, in turn, causes premature sensor failure**		
Dust boot torn	A	Require replacement of boot
NOTE: **If boot is not available separately, suggest replacement of sensor (reason code 2). This condition can lead to damage of the sliding magnet, which, in turn, causes premature sensor failure.**		
Housing cracked	B	Require replacement
NOTE: **If boot is not available separately, suggest replacement of sensor (reason code 2). This condition can lead to damage of the sliding magnet, which, in turn, causes premature sensor failure.**		
Lead routing incorrect	B	Require rerouting according to vehicle manufacturer's specifications
Loose	B	Require adjustment to vehicle manufacturer's specifications
Missing	C	Require replacement
Output signal incorrect	B	Require repair or replacement
Terminal burned, affecting performance	A	Require repair or replacement
NOTE: **Determine cause and correct prior to repair or replacement of part.**		
Terminal burned, not affecting performance	2	Suggest repair or replacement
Terminal corroded, affecting performance	A	Require repair or replacement
Terminal corroded, not affecting performance	2	Suggest repair or replacement
Terminal loose, affecting performance	B	Require repair or replacement
Terminal loose, not affecting performance	1	Suggest repair or replacement
Wire lead burned	A	Require repair or replacement
Wire lead conductors exposed	B	Require repair or replacement
Wire lead open	A	Require repair or replacement
Wire lead shorted	A	Require repair or replacement

BUSHINGS

Condition	Code	Procedure
Attaching hardware broken	A	Require repair or replacement of hardware
Attaching hardware missing	C	Require replacement of hardware
Attaching hardware not functioning	A	Require repair or replacement of hardware
Attaching hardware threads damaged	A	Require repair or replacement of hardware
Attaching hardware threads stripped (threads missing)	A	Require replacement of hardware
Binding	A	Require repair or replacement
Deteriorated, affecting performance	A	Require repair or replacement
NOTE: **If condition is caused by oil-soaking, further inspection is required to determine source of oil.**		
Distorted, affecting performance	A	Require repair or replacement
Leaking (fluid-filled type)	A	Require replacement
Missing	C	Require replacement
Noisy	2	Further inspection required
NOTE: **If noise isolated to bushing, suggest repair or replacement. Use only approved lubricant on rubber bushings. Petroleum-based lubricants may damage rubber bushings.**		
Oil-soaked, affecting performance	A	Require replacement
NOTE: **Further inspection required to determine source of oil.**		
Rubber separating from internal metal sleeve on bonded bushing	A	Require replacement
Seized	A	Require replacement
Shifted (out of position)	B	Require repair or replacement
Split	A	Require replacement
Surface cracking (weather-checked)		No service suggested or required

CENTER LINKS

Condition	Code	Procedure
Attaching hardware broken	A	Require repair or replacement of hardware
Attaching hardware missing	C	Require replacement of hardware
Attaching hardware not functioning	A	Require repair or replacement of hardware
Attaching hardware threads damaged	A	Require repair or replacement of hardware

Attaching hardware threads stripped (threads missing)	A	Require replacement of hardware
Bent, affecting performance	B	Require replacement
Binding	A	Further inspection required
NOTE: **If greaseable, grease joint. If problem persists or joint is non-greaseable, require replacement.**		
Grease boot cracked	2	Require replacement of boot
NOTE: **If boot is not available as a separate component, suggest replacement of center link (reason code 2). Cracked grease boot will allow contaminants to enter the joint and will accelerate wear.**		
Grease boot missing	C	Require replacement of boot
NOTE: **If boot is not available as a separate component, suggest replacement of center link (reason code 2). Lack of grease boot will allow contaminants to enter the joint and will accelerate wear**		
Grease boot torn	A	Require replacement of boot
NOTE: **If boot is not available as a separate component, suggest replacement of center link (reason code 2). Torn grease boot will allow contaminants to enter the joint and will accelerate wear .**		
Grease fitting broken	A	Require replacement of grease fitting
Grease fitting missing	C	Require replacement of grease fitting
Grease fitting won't seal	A	Require replacement of grease fitting
Grease seal missing	C	Require replacement
NOTE: **If seal is not available as a separate component, suggest replacement of center link (reason code 2). Lack of grease seal will allow contaminants to enter the joint and will accelerate wear.**		
Grease seal torn	A	Require replacement
NOTE: **If seal is not available as a separate component, suggest replacement of center link (reason code 2). Torn grease seal will allow contaminants to enter the joint and will accelerate wear.**		
Greaseable center link will not take grease	2	Suggest replacement of grease fitting
NOTE: **If greaseable center link still will not take grease after replacing the grease fitting, suggest replacement of center link.**		
Looseness (perceptible horizontal movement)	1	Suggest replacement
NOTE: **If manufacturer's procedures for inspection exist, use those procedures; otherwise, use an approved inspection method such as the dry park check. Do not use pliers or pry bar to check ball and socket movement. Use only moderate hand pressure.**		
Looseness that is excessive	B	Require replacement
NOTE: **Excessive looseness is defined as being significant enough to affect vehicle handling or structural integrity. If manufacturer's procedures for inspection exist, use those procedures; otherwise, use an approved inspection method such as the dry park check.**		

CAUTION: **Do not use pliers or pry bar to check ball and socket movement. Use only moderate hand pressure.**		
Seized	A	Require replacement
Stud bent	B	Require replacement
NOTE: **Check for damaged taper hole.**		
Stud broken	A	Require replacement
NOTE: **Check for damaged taper hole.**		
Stud loose in taper hole	A	Require repair or replacement
NOTE: **Check for damaged taper hole.**		
Taper hole elongated	A	Require replacement
NOTE: **Check for damaged stud.**		
Threads damaged	A	Require repair or replacement
Threads stripped (threads missing)	A	Require replacement
NOTE: **Check for damaged taper hole.**		
Wear exceeds manufacturer's specifications	B	Require replacement

COMPRESSORS

Condition	Code	Procedure
Attaching hardware broken	A	Require repair or replacement of hardware
Attaching hardware missing	C	Require replacement of hardware
Attaching hardware not functioning	A	Require repair or replacement of hardware
Attaching hardware threads damaged	A	Require repair or replacement of hardware
Attaching hardware threads stripped (threads missing)	A	Require replacement of hardware
Connector bent	A	Require repair or replacement
Connector broken	A	Require replacement
Connector loose	A	Require repair or replacement
Does not build pressure	A	Require replacement
Excessive run time	B	Require replacement
Inoperative	A	Require replacement
NOTE: **Inoperative includes intermittent operation.**		

Leaking	B	Require repair or replacement
Missing	C	Require replacement
Noisy (abnormal)	2	Suggest replacement
Terminal burned, affecting performance	A	Require repair or replacement
NOTE: **Determine cause and correct prior to repair or replacement of part.**		
Terminal burned, not affecting performance	2	Suggest repair or replacement
Terminal corroded, affecting performance	A	Require repair or replacement
Terminal corroded, not affecting performance	2	Suggest repair or replacement
Terminal loose, affecting performance	B	Require repair or replacement
Terminal loose, not affecting performance	1	Suggest repair or replacement
Wire lead burned	A	Require repair or replacement
Wire lead conductors exposed	B	Require repair or replacement
Wire lead open	A	Require repair or replacement
Wire lead shorted	A	Require repair or replacement

CONTINUOUS DAMPING CONTROL

NOTE: **A semi-active suspension system which continuously adjusts damping levels according to road conditions and vehicle dynamics, (such as speed, turning and cornering, as well as driver inputs). An ECU processes driver inputs and data from sensors. The sensors include accelerometers mounted on the vehicle body and suspension position sensors, which feed steering wheel angle, vehicle speed, brake pressure and other chassis control data to the ECU. The ECU processes sensor data and sends signals which adjust the damping level of each shock.**

CONTROL ARM SHAFTS

Condition	Code	Procedure
Attaching hardware broken	A	Require repair or replacement of hardware
Attaching hardware missing	C	Require replacement of hardware
Attaching hardware not functioning	A	Require repair or replacement of hardware
Attaching hardware threads damaged	A	Require repair or replacement of hardware
Attaching hardware threads stripped (threads missing)	A	Require replacement of hardware
Bent, affecting performance	B	Require replacement
Shaft bushing surface undersized (worn)	B	Require replacement
Threads damaged	A	Require repair or replacement
Threads stripped (threads missing)	A	Require replacement

CONTROL ARMS

Condition	Code	Procedure
Attaching hardware broken	A	Require repair or replacement of hardware
Attaching hardware corroded, affecting structural integrity	A	Require replacement of hardware
Attaching hardware missing	C	Require replacement of hardware
Attaching hardware not functioning	A	Require repair or replacement of hardware
Attaching hardware threads damaged	A	Require repair or replacement of hardware
Attaching hardware threads stripped (threads missing)	A	Require replacement of hardware
Ball joint hole oversized (loose interference or press fit)	B	Further inspection required
NOTE: **If oversized ball joint is available, require replacement orb all joint. If oversized ball joint is not available, require replacement of control arm.**		
Bent, affecting performance	B	Require replacement
Bushing hole oversized	B	Require replacement
Corroded, affecting structural integrity	A	Require replacement
Holes distorted	A	Require replacement
Threads damaged	A	Require repair or replacement
Threads stripped (threads missing)	A	Require replacement

CONTROL MODULES

Condition	Code	Procedure
Application incorrect	B	Require replacement
Attaching hardware broken	A	Require repair or replacement of hardware
Attaching hardware missing	C	Require replacement of hardware
Attaching hardware not functioning	A	Require repair or replacement of hardware
Attaching hardware threads damaged	A	Require repair or replacement of hardware
Attaching hardware threads stripped (threads missing)	A	Require replacement of hardware
Connector broken	A	Require repair or replacement
Connector melted	A	Require repair or replacement
NOTE: **Determine cause and correct prior to repair or replacement of part.**		
Connector missing	C	Require repair

Contaminated	A	Require repair or replacement
NOTE: **Determine source of contamination, such as engine coolant, fuel, metal particles, or water. Require repair or replacement.**		
Inoperative	A	Require repair or replacement
NOTE: **Inoperative includes intermittent operation. Some components may be serviceable; check for accepted cleaning procedure.**		
Leaking	B	Require repair or replacement
Malfunctioning	A	Require replacement
NOTE: **Includes inoperative, intermittent operation, failure to perform all functions, out of OEM specifications, or out of range.**		
Missing	C	Require replacement
Terminal broken	A	Require repair or replacement
Terminal burned, affecting performance	A	Require repair or replacement
NOTE: **Determine cause and correct prior to repair or replacement of part.**		
Terminal burned, not affecting performance	2	Suggest repair or replacement
Terminal corroded, affecting performance	A	Require repair or replacement
Terminal corroded, not affecting performance	2	Suggest repair or replacement
Terminal loose, affecting performance	B	Require repair or replacement
Terminal loose, not affecting performance	1	Suggest repair or replacement
Threads damaged	A	Require repair or replacement
Threads stripped (threads missing)	A	Require replacement
Wire lead conductors exposed	B	Require repair or replacement
Wire lead corroded	A	Require repair or replacement
Wire lead open	A	Require repair or replacement
Wire lead shorted	A	Require repair or replacement

DISTANCE REGULATION CONTROL MODULE

Condition	Code	Procedure
Attaching hardware broken	A	Require repair or replacement of hardware
Attaching hardware corroded, affecting structural integrity	A	Require replacement of hardware
Attaching hardware missing	C	Require replacement of hardware
Attaching hardware not functioning	A	Require repair or replacement of hardware
Attaching hardware threads damaged	A	Require repair or replacement of

		hardware
Attaching hardware threads stripped (threads missing)	A	Require replacement of hardware
Connector (Weatherpack type) leaking	A	Require repair or replacement
Connector broken	A	Require repair or replacement
Connector melted	A	Require replacement
NOTE: **Determine cause and correct prior to replacement of part.**		
Connector melted	A	Require repair or replacement
NOTE: **Determine cause and correct prior to repair or replacement of part.**		
Connector missing	C	Require replacement
Contaminated	A	Require repair or replacement
NOTE: **Determine source of contamination, such as engine coolant, fuel, metal particles, or water. Require repair or replacement.**		
Dust boot missing	C	Require replacement of boot
NOTE: **If boot is not available separately, suggest replacement of sensor (reason code 2). This condition can lead to damage of the sliding magnet, which, in turn, causes premature sensor failure**		
Dust boot split	A	Require replacement of boot
NOTE: **If boot is not available separately, suggest replacement of sensor (reason code 2). This condition can lead to damage of the sliding magnet, which, in turn, causes premature sensor failure.**		
Dust boot torn	A	Require replacement of boot
NOTE: **If boot is not available separately, suggest replacement of sensor (reason code 2). This condition can lead to damage of the sliding magnet, which, in turn, causes premature sensor failure.**		
Housing cracked	B	Require replacement
Inoperative	A	Require repair or replacement
NOTE: **Inoperative includes intermittent operation. Some components may be serviceable; check for accepted cleaning procedure.**		
Lead routing incorrect	B	Require rerouting according to vehicle manufacturer's specifications
Loose	B	Require adjustment to vehicle manufacturer's specifications
Malfunctioning	A	Require replacement
NOTE: **includes inoperative, intermittent operation, failure to perform all functions, out of OEM specifications, or out of range.**		
Missing	C	Require replacement

Output signal incorrect	B	Require repair or replacement
Terminal burned, affecting performance	A	Require repair or replacement
NOTE: **Determine cause and correct prior to repair or replacement of part.**		
Terminal burned, affecting performance	A	Require repair or replacement
NOTE: **Determine cause and correct prior to repair or replacement of part.**		
Terminal burned, not affecting performance	2	Suggest repair or replacement
Terminal corroded, affecting performance	A	Require repair or replacement
Terminal corroded, not affecting performance	2	Suggest repair or replacement
Terminal loose, affecting performance	B	Require repair or replacement
Terminal loose, not affecting performance	1	Suggest repair or replacement
Wire lead burned	A	Require repair or replacement
Wire lead conductors exposed	B	Require repair or replacement
Wire lead open	A	Require repair or replacement
Wire lead shorted	A	Require repair or replacement

DISTANCE REGULATION SENSOR

NOTE: OEM may require this sensor be calibrated to the vehicle thrustline.

Condition	Code	Procedure
Attaching hardware broken	A	Require repair or replacement of hardware
Attaching hardware corroded, affecting structural integrity	A	Require replacement of hardware
Attaching hardware missing	C	Require replacement of hardware
Attaching hardware not functioning	A	Require repair or replacement of hardware
Attaching hardware threads damaged	A	Require repair or replacement of hardware
Attaching hardware threads stripped (threads missing)	A	Require replacement of hardware
Connector (Weatherpack type) leaking	A	Require repair or replacement
Connector broken	A	Require repair or replacement
Connector melted	A	Require replacement
Connector missing	C	Require replacement
NOTE: **Determine cause and correct prior to replacement of part.**		
Dust boot missing	C	Require replacement of boot
Dust boot split	A	Require replacement of boot
NOTE:		

If boot is not available separately, suggest replacement of sensor (reason code 2). This condition can lead to damage of the sliding magnet, which, in turn, causes premature sensor failure		
Dust boot torn	A	Require replacement of boot
NOTE: **If boot is not available separately, suggest replacement of sensor (reason code 2). This condition can lead to damage of the sliding magnet, which, in turn, causes premature sensor failure.**		
Housing cracked	B	Require replacement
NOTE: **If boot is not available separately, suggest replacement of sensor (reason code 2). This condition can lead to damage of the sliding magnet, which, in turn, causes premature sensor failure.**		
Lead routing incorrect	B	Require rerouting according to vehicle manufacturer's specifications
Loose	B	Require adjustment to vehicle manufacturer's specifications
Missing	C	Require replacement
Output signal incorrect	B	Require repair or replacement
Terminal burned, affecting performance	A	Require repair or replacement
NOTE: **Determine cause and correct prior to repair or replacement of part.**		
Terminal burned, not affecting performance	2	Suggest repair or replacement
Terminal corroded, affecting performance	A	Require repair or replacement
Terminal corroded, not affecting performance	2	Suggest repair or replacement
Terminal loose, affecting performance	B	Require repair or replacement
Terminal loose, not affecting performance	1	Suggest repair or replacement
Wire lead burned	A	Require repair or replacement
Wire lead conductors exposed	B	Require repair or replacement
Wire lead open	A	Require repair or replacement
Wire lead shorted	A	Require repair or replacement

DRAG LINKS

Condition	Code	Procedure
Attaching hardware broken	A	Require repair or replacement of hardware
Attaching hardware missing	C	Require replacement of hardware
Attaching hardware not functioning	A	Require repair or replacement of hardware
Attaching hardware threads damaged	A	Require repair or replacement of hardware
Attaching hardware threads stripped (threads missing)	A	Require replacement of hardware
Bent, affecting performance	B	Require replacement
Binding	A	Further inspection required

NOTE: **If greaseable, grease joint. If problem persists or joint is non-greaseable, require replacement.**		
Grease boot cracked	2	Require replacement of boot
NOTE: **If boot is not available as a separate component, suggest replacement of drag link (reason code 2). Cracked grease boot will allow contaminants to enter the joint and will accelerate wear.**		
Grease boot missing	C	Require replacement of boot
NOTE: **If boot is not available as a separate component, suggest replacement of drag link (reason code 2). Lack of grease boot will allow contaminants to enter the joint and will accelerate wear.**		
Grease boot torn	A	Require replacement of boot
NOTE: **If boot is not available as a separate component, suggest replacement of drag link (reason code 2). Torn grease boot will allow contaminants to enter the joint and will accelerate wear.**		
Grease fitting broken	A	Require replacement of grease fitting
Grease fitting missing	C	Require replacement of grease fitting
Grease fitting won't seal	A	Require replacement of grease fitting
Grease seal missing	C	Require replacement
NOTE: **If seal is not available as a separate component, suggest replacement of drag link (reason code 2). Lack of grease seal will allow contaminants to enter the joint and will accelerate wear.**		
Grease seal torn	A	Require replacement
NOTE: **If seal is not available as a separate component, suggest replacement of drag link (reason code 2). Torn grease seal will allow contaminants to enter the joint and will accelerate wear.**		
Greaseable drag link will not take grease	2	Suggest replacement of grease fitting
NOTE: **If greaseable center link still will not take grease after replacing the grease fitting, suggest replacement of drag link.**		
Looseness (perceptible horizontal movement)	1	Suggest replacement
NOTE: **If manufacturer's procedures for inspection exist, use those procedures; otherwise, use an approved inspection method such as the dry park check. Do not use pliers or pry bar to check ball and socket movement. Use only moderate hand pressure.**		
Looseness that is excessive	B	Require replacement
NOTE: **Excessive looseness is defined as being significant enough to affect vehicle handling or structural integrity. If manufacturer's procedures for inspection exist, use those procedures; otherwise, use an approved inspection method such as the dry park check.**		
CAUTION: **Do not use pliers or pry bar to check ball and socket movement. Use only moderate hand pressure.**		
Seized	A	Require replacement

Stud bent	B	Require replacement
NOTE: **Check for damaged taper hole.**		
Stud broken	A	Require replacement
NOTE: **Check for damaged taper hole.**		
Stud loose in taper hole	A	Require repair or replacement
NOTE: **Check for damaged taper hole.**		
Taper hole elongated	A	Require replacement
NOTE: **Check for damaged stud.**		
Threads damaged	A	Require repair or replacement
Threads stripped (threads missing)	A	Require replacement
NOTE: **Check for damaged taper hole.**		
Wear exceeds manufacturer's specifications	B	Require replacement

DYNAMIC STABILITY CONTROL

NOTE: **An evolution of ABS and Traction Control. It uses the ABS hardware and two additional sensors: a steering-wheel angle sensor, which measures the position and rate of steering wheel input, and a yaw sensor, which measures the rate at which the vehicle is actually turning. By comparing rates, computer determines if the vehicle is oversteering or understeering.**

Condition	Code	Procedure
NOTE: **On slippery surfaces or during aggressive maneuvers, if the vehicle understeers severely, the computer will actuate the brakes on the inside rear wheel, just hard enough and just long enough to correct the steering behavior. When the vehicle oversteers severely, the system will brake the outside front wheel instead.**		
NOTE: **When servicing this system, OEM may require steering angle sensor be calibrated to the vehicle thrustline.**		

DYNAMIC STABILITY TRACTION CONTROL

NOTE: **An evolution of ABS and Traction Control. It uses the ABS hardware and two additional sensors: a steering-wheel angle sensor, which measures the position and rate of steering wheel input, and a yaw sensor, which measures the rate at which the vehicle is actually turning. By comparing rates, computer determines**

if the vehicle is oversteering or understeering.

NOTE: On slippery surfaces or during aggressive maneuvers, if the vehicle understeers severely, the computer will actuate the brakes on the inside rear wheel, just hard enough and just long enough to correct the steering behavior. When the vehicle oversteers severely, the system will brake the outside front wheel instead.

NOTE: When servicing this system, OEM may require steering angle sensor be calibrated to the vehicle thrustline.

ELECTRONIC RIDE CONTROL SHOCKS AND STRUTS

NOTE: This section covers the electronic damping control portion of the electronic shock or strut. For damping portion of shock or strut conditions and procedures, refer to the Shock Absorbers, Strut Cartridges, and Strut Assemblies section.

Condition	Code	Procedure
Attaching hardware broken	A	Require repair or replacement of hardware
Attaching hardware missing	C	Require replacement of hardware
Attaching hardware not functioning	A	Require repair or replacement of hardware
Attaching hardware threads damaged	A	Require repair or replacement of hardware
Attaching hardware threads stripped (threads missing)	A	Require replacement of hardware
Connector bent	A	Require repair or replacement
Connector broken	A	Require repair or replacement
Connector loose	A	Require repair or replacement
Electronic valve control inoperative	A	Require replacement
NOTE: **It is acceptable to replace with a non-electronically controlled unit, where available.**		
Terminal bent	A	Require repair or replacement
Terminal broken	A	Require repair or replacement
Terminal corroded	A	Require repair or replacement
Terminal loose	A	Require repair or replacement

ELECTRONIC STABILITY CONTROL

NOTE: An evolution of ABS and Traction Control. It uses the ABS hardware and two additional sensors: a steering-wheel angle sensor, which measures the position

and rate of steering wheel input, and a yaw sensor, which measures the rate at which the vehicle is actually turning. By comparing rates, computer determines if the vehicle is oversteering or understeering.

NOTE: **On slippery surfaces or during aggressive maneuvers, if the vehicle understeers severely, the computer will actuate the brakes on the inside rear wheel, just hard enough and just long enough to correct the steering behavior. When the vehicle oversteers severely, the system will brake the outside front wheel instead.**

ELECTRONIC SUSPENSION SYSTEM

NOTE: **(Typical) A semi-active suspension system which continuously adjusts damping levels according to road conditions and vehicle dynamics, (such as speed, turning and cornering, as well as driver inputs). An ECU processes driver inputs and data from sensors. The sensors include accelerometers mounted on the vehicle body and suspension position sensors, which feed steering wheel angle, vehicle speed, brake pressure and other chassis control data to the ECU. The ECU processes sensor data and sends signals which adjust the damping level of each shock.**

FLEX COUPLERS

Condition	Code	Procedure
Attaching hardware broken	A	Require repair or replacement of hardware
Attaching hardware missing	C	Require replacement of hardware
Attaching hardware not functioning	A	Require repair or replacement of hardware
Attaching hardware threads damaged	A	Require repair or replacement of hardware
Attaching hardware threads stripped (threads missing)	A	Require replacement of hardware
Flex coupler binding	A	Require repair or replacement of coupler
Flex coupler loose	A	Require repair or replacement of coupler
Flex coupler missing parts	A	Require repair or replacement of coupler
Flex coupler soft/ spongy	A	Require replacement of coupler
Flex coupler tom	A	Require replacement of coupler
Steering coupler shield cracked	2	Suggest replacement
Steering coupler shield missing	C	Require replacement
Steering coupler shield torn	2	Suggest replacement
U-joint binding	A	Require repair or replacement of joint
U-joint loose	A	Require repair or replacement of joint

GASKETS

Condition	Code	Procedure
Leaking	A	Require repair or replacement
NOTE: **Require inspection of mating and sealing surface and repair or replace as necessary.**		

HEIGHT SENSORS

Condition	Code	Procedure
Attaching hardware broken	A	Require repair or replacement of hardware
Attaching hardware corroded, affecting structural integrity	A	Require replacement of hardware
Attaching hardware missing	C	Require replacement of hardware
Attaching hardware not functioning	A	Require repair or replacement of hardware
Attaching hardware threads damaged	A	Require repair or replacement of hardware
Attaching hardware threads stripped (threads missing)	A	Require replacement of hardware
Connector (Weatherpack type) leaking	A	Require repair or replacement
Connector broken	A	Require repair or replacement
Connector melted	A	Require replacement
NOTE: **Determine cause and correct prior to replacement of part.**		
Connector missing	C	Require replacement
Dust boot missing	C	Require replacement of boot
NOTE: **If boot is not available separately, suggest replacement of sensor (reason code 2). This condition can lead to damage of the sliding magnet, which, in turn, causes premature sensor failure**		
Dust boot split	A	Require replacement of boot
NOTE: **If boot is not available separately, suggest replacement of sensor (reason code 2). This condition can lead to damage of the sliding magnet, which, in turn, causes premature sensor failure.**		
Dust boot torn	A	Require replacement of boot
NOTE: **If boot is not available separately, suggest replacement of sensor (reason code 2). This condition can lead to damage of the sliding magnet, which, in turn, causes premature sensor failure.**		
Housing cracked	B	Require replacement
Lead routing incorrect	B	Require rerouting according to vehicle manufacturer's specifications
Loose	B	Require adjustment to vehicle

		manufacturer's specifications
Missing	C	Require replacement
Output signal incorrect	B	Require repair or replacement
Terminal burned, affecting performance	A	Require repair or replacement
NOTE: **Determine cause and correct prior to repair or replacement of part.**		
Terminal burned, not affecting performance	2	Suggest repair or replacement
Terminal corroded, affecting performance	A	Require repair or replacement
Terminal corroded, not affecting performance	2	Suggest repair or replacement
Terminal loose, affecting performance	B	Require repair or replacement
Terminal loose, not affecting performance	1	Suggest repair or replacement
Wire lead burned	A	Require repair or replacement
Wire lead conductors exposed	B	Require repair or replacement
Wire lead open	A	Require repair or replacement
Wire lead shorted	A	Require repair or replacement

HYDRAULIC HOSES

Condition	Code	Procedure
Attaching hardware broken	A	Require repair or replacement of hardware
Attaching hardware missing	C	Require replacement of hardware
Attaching hardware not functioning	A	Require repair or replacement of hardware
Attaching hardware threads damaged	A	Require repair or replacement of hardware
Attaching hardware threads stripped (threads missing)	A	Require replacement of hardware
Blistered	B	Require replacement
Fitting threads damaged	A	Require repair or replacement
Fitting threads stripped (threads missing)	A	Require replacement
Inner fabric (webbing) cut	B	Require replacement
Leaking	A	Require replacement
Missing	C	Require replacement
Outer covering is cracked to the extent that inner fabric of hose is visible	B	Require replacement
Restricted	A	Require replacement
Routed incorrectly (where failure is likely to occur)	B	Require repair or replacement
Secured incorrectly	B	Require repair

HYDRAULIC POWER STEERING PUMPS

Condition	Code	Procedure
Attaching hardware broken	A	Require repair or replacement of hardware
Attaching hardware missing	C	Require replacement of hardware
Attaching hardware not functioning	A	Require repair or replacement of hardware
Attaching hardware threads damaged	A	Require repair or replacement of hardware
Attaching hardware threads stripped (threads missing)	A	Require replacement of hardware
Binding	A	Require repair or replacement
Connector (Weatherpack type) leaking	A	Require repair or replacement
Connector broken	A	Require repair or replacement
Connector melted	A	Require replacement
NOTE: **Determine cause and correct prior to replacement of part.**		
Connector missing	C	Require replacement
Leaking	B	Require repair or replacement
Noisy	2	Suggest repair or replacement
Pulley bent	A	Require repair or replacement of pulley
Pulley missing	C	Require replacement of pulley
Pump output out of manufacturer's specifications	A	Require repair or replacement
Remote reservoir leaking	A	Require replacement of reservoir
Reservoir cap broken	A	Require replacement of cap
Reservoir cap missing	C	Require replacement of cap
Seized	A	Require replacement
Terminal burned, affecting performance	A	Require repair or replacement
NOTE: **Determine cause and correct prior to repair or replacement of part.**		
Terminal burned, not affecting performance	2	Suggest repair or replacement
Terminal corroded, affecting performance	A	Require repair or replacement
Terminal corroded, not affecting performance	2	Suggest repair or replacement
Terminal loose, affecting performance	B	Require repair or replacement
Terminal loose, not affecting performance	1	Suggest repair or replacement
Threads damaged	A	Require repair or replacement
Threads stripped (threads missing)	A	Require replacement
Wire lead burned	A	Require repair or replacement
Wire lead conductors exposed	B	Require repair or replacement
Wire lead open	A	Require repair or replacement
Wire lead shorted	A	Require repair or replacement

HYDRAULIC SUSPENSION HOSES

Condition	Code	Procedure
Attaching hardware broken	A	Require repair or replacement of hardware
Attaching hardware missing	C	Require replacement of hardware
Attaching hardware not functioning	A	Require repair or replacement of hardware
Attaching hardware threads damaged	A	Require repair or replacement of hardware
Attaching hardware threads stripped (threads missing)	A	Require replacement of hardware
Blistered	B	Require replacement
Fitting threads damaged	A	Require repair or replacement
Fitting threads stripped (threads missing)	A	Require replacement
Inner fabric (webbing) cut	B	Require replacement
Leaking	A	Require replacement
Missing	C	Require replacement
Outer covering is cracked to the extent that inner fabric of hose is visible	B	Require replacement
Restricted	A	Require replacement
Routed incorrectly (where failure is likely to occur)	B	Require repair or replacement
Secured incorrectly	B	Require repair

HYDRAULIC SUSPENSION PUMPS

Condition	Code	Procedure
Attaching hardware broken	A	Require repair or replacement of hardware
Attaching hardware missing	C	Require replacement of hardware
Attaching hardware not functioning	A	Require repair or replacement of hardware
Attaching hardware threads damaged	A	Require repair or replacement of hardware
Attaching hardware threads stripped (threads missing)	A	Require replacement of hardware
Binding	A	Require repair or replacement
Fluid at or beyond service interval	3	Suggest fluid change
Fluid contaminated	B	Require flushing and refilling of the system
NOTE: **Determine and correct source of contamination. OEM specifications must be followed for fluid type.**		
Fluid contaminated	B	Require flushing and refilling of the system
NOTE: **Determine and correct source of contamination. OEM specifications must be followed for fluid type.**		

Fluid level incorrect	B	Require adjustment of fluid level
Leaking	B	Require repair or replacement
Noisy	2	Suggest repair or replacement
Pulley bent	A	Require repair or replacement of pulley
Pulley missing	C	Require replacement of pulley
Pump output out of manufacturer's specifications	A	Require repair or replacement
Remote reservoir leaking	A	Require replacement of reservoir
Reservoir cap broken	A	Require replacement of cap
Reservoir cap missing	C	Require replacement of cap
Seized	A	Require replacement
Threads damaged	A	Require repair or replacement
Threads stripped (threads missing)	A	Require replacement

IDLER ARMS

Condition	Code	Procedure
Attaching hardware broken	A	Require repair or replacement of hardware
Attaching hardware missing	C	Require replacement of hardware
Attaching hardware not functioning	A	Require repair or replacement of hardware
Attaching hardware threads damaged	A	Require repair or replacement of hardware
Attaching hardware threads stripped (threads missing)	A	Require replacement of hardware
Binding	A	Further inspection required
NOTE: **If greaseable, grease joint. If problem persists or joint is non-greaseable, require replacement.**		
Grease boot cracked	B	Require replacement of boot
NOTE: **If boot is not available as a separate component, suggest replacement of idler arm (reason code 2). Cracked grease boot will allow contaminants to enter joint and will accelerate wear.**		
Grease boot missing	C	Require replacement of boot
NOTE: **If boot is not available as a separate component, suggest replacement of idler arm (reason code 2). Lack of grease boot will allow contaminants to enter joint and will accelerate wear.**		
Grease boot torn	A	Require replacement of boot
NOTE: **If boot is not available as a separate component, suggest replacement of idler arm (reason code 2). Torn grease boot will allow contaminants to enter joint and will accelerate wear.**		
Grease fitting broken	A	Require replacement of grease fitting
Grease fitting missing	C	Require replacement of grease fitting

Grease fitting won't seal	A	Require replacement of grease fitting
Grease seal missing	C	Require replacement of seal
NOTE: **If seal is not available as a separate component, suggest replacement of idler arm (reason code 2). Missing grease seal will allow contaminants to enter joint and will accelerate wear.**		
Grease seal torn	A	Require replacement of seal
NOTE: **If seal is not available as a separate component, suggest replacement of idler arm (reason code 2). Torn grease seal will allow contaminants to enter joint and will accelerate wear.**		
Greaseable joint will not take grease	2	Suggest replacement of grease fitting
NOTE: **If greaseable joint will not take grease after replacing the grease fitting, suggest replacement of idler arm.**		
Looseness at frame bracket end	B	Require repair or replacement
NOTE: **If manufacturer's procedures and specifications exist, use those procedures and specifications; otherwise, use an approved inspection method such as the dry park check.**		
NOTE: **Looseness is defined as movement that creates excessive toe change.**		
Looseness at link end (perceptible horizontal movement)	1	Suggest replacement
NOTE: **If manufacturer's procedures for inspection exist, use those procedures; otherwise, use an approved inspection method such as the dry park check. Do not use pliers or pry bar to check ball and socket movement. Use only moderate hand pressure.**		
Looseness at link end that is excessive	B	Require replacement
NOTE: **Excessive looseness is defined as significant enough to affect vehicle handling or structural integrity. If manufacturer's procedures for inspection exist, use those procedures; otherwise, use an approved inspection method such as the dry park check.**		
CAUTION: **Do not use pliers or pry bar to check ball and socket movement. Use only moderate hand pressure.**		
Mounted out of position (center link not parallel)	B	Require repositioning
Nut on stud loose	A	Require repair or replacement
NOTE: **Check for bent stud or damaged taper hole.**		
Seized	A	Require replacement
Stud bent	B	Require replacement
NOTE: **Check for damaged taper hole.**		
Stud broken	A	Require replacement

NOTE: **Check for damaged taper hole.**		
Taper hole elongated	A	Require replacement
NOTE: **Check for damaged stud.**		
Threads damaged	A	Require repair or replacement
Threads stripped (threads missing)	A	Require replacement
NOTE: **Check for damaged taper hole.**		
Wear exceeds manufacturer's specifications	B	Require replacement

INTERMEDIATE SHAFT U-JOINTS

Condition	Code	Procedure
Attaching hardware broken	A	Require repair or replacement of hardware
Attaching hardware missing	C	Require replacement of hardware
Attaching hardware not functioning	A	Require repair or replacement of hardware
Attaching hardware threads damaged	A	Require repair or replacement of hardware
Attaching hardware threads stripped (threads missing)	A	Require replacement of hardware
Flex coupler binding	A	Require repair or replacement of coupler
Flex coupler loose	A	Require repair or replacement of coupler
Flex coupler missing parts	A	Require repair or replacement of coupler
Flex coupler soft/ spongy	A	Require replacement of coupler
Flex coupler tom	A	Require replacement of coupler
Steering coupler shield cracked	2	Suggest replacement
Steering coupler shield missing	C	Require replacement
Steering coupler shield torn	2	Suggest replacement
U-joint binding	A	Require repair or replacement of joint
U-joint loose	A	Require repair or replacement of joint

KING PINS

NOTE: **You are not required to replace king pins in axle sets. However, when replacing a king pin due to wear exceeding manufacturer's specifications, you may suggest replacement of the other king pin on the axle if its measurement shows it is close to the end of its useful life.**

Condition	Code	Procedure

Bearing balls pitted	A	Require replacement
Bearing balls worn	A	Require replacement
Bearing races pitted	A	Require replacement
Bearing races worn	A	Require replacement
Bearing rollers pitted	A	Require replacement
Bearing rollers worn	A	Require replacement
Bearing seal bent	2	Suggest replacement of seal or bearing
Bearing seal missing	C	Require replacement of seal if available separately or bearing and seal together
Bearing seal torn	A	Require replacement of seal if available separately or bearing and seal together
Binding	A	Require repair or replacement of affected parts
End caps missing	C	Require replacement of missing part, if available; otherwise, replace king pin
End play exceeds specifications	B	Require repair
Grease fitting broken	A	Require replacement of grease fitting
Grease fitting missing	C	Require replacement of grease fitting
Grease fitting will not seal	A	Require replacement of grease fitting
Locating pins missing	C	Require replacement of missing part, if available; otherwise, replace king pin
Looseness exceeds manufacturer's specifications	B	Require replacement of worn parts
Seized	A	Require replacement
Threads damaged	A	Require repair or replacement
Threads stripped (threads missing)	A	Require replacement
Will not take grease	2	Suggest replacement of grease fitting

NOTE:
If king pin will not take grease after replacement of grease fitting, suggest replacement of king pin.

MODULES

Condition	Code	Procedure
Application incorrect	B	Require replacement
Attaching hardware broken	A	Require repair or replacement of hardware
Attaching hardware missing	C	Require replacement of hardware
Attaching hardware not functioning	A	Require repair or replacement of hardware
Attaching hardware threads damaged	A	Require repair or replacement of hardware
Attaching hardware threads stripped (threads missing)	A	Require replacement of hardware
Connector broken	A	Require repair or replacement

Connector melted	A	Require repair or replacement
NOTE: **Determine cause and correct prior to repair or replacement of part.**		
Connector missing	C	Require repair
Contaminated	A	Require repair or replacement
NOTE: **Determine source of contamination, such as engine coolant, fuel, metal particles, or water. Require repair or replacement.**		
Inoperative	A	Require repair or replacement
NOTE: **Inoperative includes intermittent operation. Some components may be serviceable; check for accepted cleaning procedure.**		
Leaking	B	Require repair or replacement
Malfunctioning	A	Require replacement
NOTE: **Includes inoperative, intermittent operation, failure to perform all functions, out of OEM specifications, or out of range.**		
Missing	C	Require replacement
Terminal broken	A	Require repair or replacement
Terminal burned, affecting performance	A	Require repair or replacement
NOTE: **Determine cause and correct prior to repair or replacement of part.**		
Terminal burned, not affecting performance	2	Suggest repair or replacement
Terminal corroded, affecting performance	A	Require repair or replacement
Terminal corroded, not affecting performance	2	Suggest repair or replacement
Terminal loose, affecting performance	B	Require repair or replacement
Terminal loose, not affecting performance	1	Suggest repair or replacement
Threads damaged	A	Require repair or replacement
Threads stripped (threads missing)	A	Require replacement
Wire lead conductors exposed	B	Require repair or replacement
Wire lead corroded	A	Require repair or replacement
Wire lead open	A	Require repair or replacement
Wire lead shorted	A	Require repair or replacement

PITMAN ARMS

Condition	Code	Procedure
Attaching hardware broken	A	Require repair or replacement of hardware
Attaching hardware missing	C	Require replacement of hardware
Attaching hardware not functioning	A	Require repair or replacement of

		hardware
Attaching hardware threads damaged	A	Require repair or replacement of hardware
Attaching hardware threads stripped (threads missing)	A	Require replacement of hardware
Bent, affecting performance	B	Require replacement
Binding	A	Further inspection required
NOTE: **If greaseable, grease joint. If problem persists or joint is non-greaseable, require replacement.**		
Grease boot cracked	2	Require replacement of boot
NOTE: **If boot is not available as a separate component, suggest replacement of pitman arm (reason code 2). Cracked grease boot will allow contaminants to enter joint and will accelerate wear.**		
Grease boot missing	C	Require replacement of boot
NOTE: **If boot is not available as a separate component, suggest replacement of pitman arm (reason code 2). Lack of grease boot will allow contaminants to enter joint and will accelerate wear.**		
Grease boot torn	A	Require replacement of boot
NOTE: **If boot is not available as a separate component, suggest replacement of pitman arm (reason code 2). Tom grease boot will allow contaminants to enter joint and will accelerate wear.**		
Grease fitting broken	A	Require replacement grease fitting
Grease fitting missing	C	Require replacement of grease fitting
Grease fitting won't seal	A	Require replacement of grease fitting
Grease seal missing	C	Require replacement of seal
NOTE: **If seal is not available as a separate component, suggest replacement of pitman arm (reason code 2). Lack of grease seal will allow contaminants to enter joint and will accelerate wear.**		
Grease seal torn	A	Require replacement of seal
NOTE: **If seal is not available as a separate component, suggest replacement of pitman arm (reason code 2). Tom grease seal will allow contaminants to enter joint and will accelerate wear.**		
Looseness (perceptible horizontal movement)	1	Suggest replacement
NOTE: **If manufacturer's procedures for inspection exist, use those procedures; otherwise, use an approved inspection method such as the dry park check. Do not use pliers or pry bar to check ball and socket movement. Use only moderate hand pressure.**		
Looseness that is excessive	B	Require replacement
NOTE: **Excessive looseness is defined as being significant enough to affect vehicle handling or structural integrity. If manufacturer's procedures for inspection exist, use those procedures; otherwise, use an approved inspection method such as the dry park check.**		
CAUTION:		

Do not use pliers or pry bar to check ball and socket movement. Use only moderate hand pressure.		
Nut on stud loose	A	Require repair or replacement
NOTE: **Check for bent stud or damaged taper hole.**		
Seized	A	Require replacement
Splines damaged	A	Require repair or replacement
Splines stripped (splines missing)	A	Require replacement
Stud bent	B	Require replacement
NOTE: **Check for damaged taper hole.**		
Stud broken	A	Require replacement
NOTE: **Check for damaged taper hole.**		
Stud loose in taper hole	A	Require repair or replacement
NOTE: **Check for damaged taper hole.**		
Taper hole elongated	A	Require replacement
NOTE: **Check for damaged stud.**		
Threads damaged	A	Require repair or replacement
Threads stripped (threads missing)	A	Require replacement
NOTE: **Check for damaged taper hole.**		

POWER STEERING BELTS

Condition	Code	Procedure
Alignment incorrect	B	Further inspection required
NOTE: **Determine cause of incorrect alignment and require repair.**		
Cracked	1	Suggest replacement
Frayed	1	Suggest replacement
Missing	C	Require replacement
Noisy	2	Further inspection required
NOTE: **Determine cause of noise and suggest repair.**		
Plies separated	A	Require replacement
Serpentine belt routed incorrectly	B	Require repair
Tension out of specification	B	Require adjustment or replacement

Worn beyond adjustment range	B	Require replacement
Worn so it contacts bottom of pulley	A	Require replacement

POWER STEERING COOLERS

Condition	Code	Procedure
Air flow obstruction	A	Require repair
Attaching hardware broken	A	Require repair or replacement of hardware
Attaching hardware missing	C	Require replacement of hardware
Attaching hardware not functioning	A	Require repair or replacement of hardware
Attaching hardware threads damaged	A	Require repair or replacement of hardware
Attaching hardware threads stripped (threads missing)	A	Require replacement of hardware
Connection leaking	A	Require repair or replacement
Contaminated	A	Require repair or replacement
Corroded	1	Suggest repair or replacement
Fins damaged, affecting performance	A	Require repair or replacement
Fins damaged, not affecting performance		No service suggested or required
Internal restrictions	B	Require repair or replacement
Leaking	B	Require repair or replacement
Threads damaged	A	Require repair or replacement
Threads stripped (threads missing)	A	Require repair or replacement
Tubes damaged, affecting performance	A	Require repair or replacement
Tubes damaged, not affecting performance		No service suggested or required

POWER STEERING FLUID

Condition	Code	Procedure
50,000 miles or greater on OE fluid (in absence of published manufacturer interval)	5	Suggest Replacement
NOTE: **One time only fluid exchange**		
Additive Depletion	A	Require replacement of fluid
Fluid at or beyond service interval	3	Suggest fluid replacement
Fluid contaminated (i.e. fluid other than power steering fluid present)	B	Require flushing and refilling of the system
NOTE: **Determine and correct source of contamination. OEM specifications must be followed for fluid type.**		
Fluid discolored		No Service Suggested or Required

NOTE: Further testing necessary to determine condition of fluid.		
Fluid level incorrect	B	Require adjustment of fluid level
Fluid type incorrect	B	Require flushing and refilling with correct fluid
Oxidized	A	Require replacement of fluid

POWER STEERING HOSES

Condition	Code	Procedure
Attaching hardware broken	A	Require repair or replacement of hardware
Attaching hardware missing	C	Require replacement of hardware
Attaching hardware not functioning	A	Require repair or replacement of hardware
Attaching hardware threads damaged	A	Require repair or replacement of hardware
Attaching hardware threads stripped (threads missing)	A	Require replacement of hardware
Blistered	B	Require replacement
Fitting threads damaged	A	Require repair or replacement
Fitting threads stripped (threads missing)	A	Require replacement
Inner fabric (webbing) cut	B	Require replacement
Leaking	A	Require replacement
Missing	C	Require replacement
Outer covering is cracked to the extent that inner fabric of hose is visible	B	Require replacement
Restricted	A	Require replacement
Routed incorrectly (where failure is likely to occur)	B	Require repair or replacement
Secured incorrectly	B	Require repair

POWER STEERING LINES (STEEL)

NOTE: When replacing steel power steering lines, be sure to use a replacement product that meets or exceeds OEM specifications.

Condition	Code	Procedure
Attaching hardware broken	A	Require repair or replacement of hardware
Attaching hardware missing	C	Require replacement of hardware
Attaching hardware not functioning	A	Require repair or replacement of hardware
Attaching hardware threads damaged	A	Require repair or replacement of

		hardware
Attaching hardware threads stripped (threads missing)	A	Require replacement of hardware
Corroded, affecting structural integrity	A	Require replacement
Fitting incorrect (for example, compression fitting)	B	Require replacement
Flare type incorrect	B	Require repair or replacement
Leaking	A	Require repair or replacement
Line material incorrect (copper, etc.)	B	Require replacement
Restricted	A	Require replacement
Routed incorrectly (where failure is likely to occur)	B	Require repair or replacement
Rust-pitted, not affecting structural integrity	1	Suggest replacement
Threads damaged	A	Require repair or replacement
Threads stripped (threads missing)	A	Require replacement

POWER STEERING PUMPS - ELECTRIC

Condition	Code	Procedure
Attaching hardware broken	A	Require repair or replacement of hardware
Attaching hardware missing	C	Require replacement of hardware
Attaching hardware not functioning	A	Require repair or replacement of hardware
Attaching hardware threads damaged	A	Require repair or replacement of hardware
Attaching hardware threads stripped (threads missing)	A	Require replacement of hardware
Binding	A	Require repair or replacement
Connector (Weatherpack type) leaking	A	Require repair or replacement
Connector broken	A	Require repair or replacement
Connector melted	A	Require replacement
NOTE: **Determine cause and correct prior to replacement of part.**		
Connector missing	C	Require replacement
Leaking	B	Require repair or replacement
Noisy	2	Suggest repair or replacement
Pulley bent	A	Require repair or replacement of pulley
Pulley missing	C	Require replacement of pulley
Pump output out of manufacturer's specifications	A	Require repair or replacement
Remote reservoir leaking	A	Require replacement of reservoir
Reservoir cap broken	A	Require replacement of cap
Reservoir cap missing	C	Require replacement of cap
Seized	A	Require replacement
Terminal burned, affecting performance	A	Require repair or replacement

NOTE: **Determine cause and correct prior to repair or replacement of part.**		
Terminal burned, not affecting performance	2	Suggest repair or replacement
Terminal corroded, affecting performance	A	Require repair or replacement
Terminal corroded, not affecting performance	2	Suggest repair or replacement
Terminal loose, affecting performance	B	Require repair or replacement
Terminal loose, not affecting performance	1	Suggest repair or replacement
Threads damaged	A	Require repair or replacement
Threads stripped (threads missing)	A	Require replacement
Wire lead burned	A	Require repair or replacement
Wire lead conductors exposed	B	Require repair or replacement
Wire lead open	A	Require repair or replacement
Wire lead shorted	A	Require repair or replacement

POWER STEERING PUMPS

Condition	Code	Procedure
Attaching hardware broken	A	Require repair or replacement of hardware
Attaching hardware broken	A	Require repair or replacement of hardware
Attaching hardware missing	C	Require replacement of hardware
Attaching hardware missing	C	Require replacement of hardware
Attaching hardware not functioning	A	Require repair or replacement of hardware
Attaching hardware not functioning	A	Require repair or replacement of hardware
Attaching hardware threads damaged	A	Require repair or replacement of hardware
Attaching hardware threads damaged	A	Require repair or replacement of hardware
Attaching hardware threads stripped (threads missing)	A	Require replacement of hardware
Attaching hardware threads stripped (threads missing)	A	Require replacement of hardware
Binding	A	Require repair or replacement
Binding	A	Require repair or replacement
Connector (Weatherpack type) leaking	A	Require repair or replacement
Connector broken	A	Require repair or replacement
Connector melted	A	Require replacement
NOTE: **Determine cause and correct prior to replacement of part.**		
Connector missing	C	Require replacement

Fluid at or beyond service interval	3	Suggest fluid change
Fluid contaminated	B	Require flushing and refilling of the system
Fluid level incorrect	B	Require adjustment of fluid level
Leaking	B	Require repair or replacement
Leaking	A	Require repair or replacement
Noisy	2	Suggest repair or replacement
Noisy	2	Suggest repair or replacement
Pulley bent	A	Require repair or replacement of pulley
Pulley bent	A	Require repair or replacement of pulley
Pulley missing	C	Require replacement of pulley
Pulley missing	C	Require replacement of pulley
Pump output out of manufacturer's specifications	A	Require repair or replacement
Pump output out of manufacturer's specifications	A	Require repair or replacement
Remote reservoir leaking	A	Require replacement of reservoir
Remote reservoir leaking	A	Require replacement of reservoir
Reservoir cap broken	A	Require replacement of cap
Reservoir cap broken	A	Require replacement of cap
Reservoir cap missing	C	Require replacement of cap
Reservoir cap missing	C	Require replacement of cap
Seized	A	Require replacement
Seized	A	Require replacement
Terminal burned, affecting performance	A	Require repair or replacement
NOTE: **Determine cause and correct prior to repair or replacement of part.**		
Terminal burned, not affecting performance	2	Suggest repair or replacement
Terminal corroded, affecting performance	A	Require repair or replacement
Terminal corroded, not affecting performance	2	Suggest repair or replacement
Terminal loose, affecting performance	B	Require repair or replacement
Terminal loose, not affecting performance	1	Suggest repair or replacement
Threads damaged	A	Require repair or replacement
Threads damaged	A	Require repair or replacement
Threads stripped (threads missing)	A	Require replacement
Wire lead burned	A	Require repair or replacement
Wire lead conductors exposed	B	Require repair or replacement
Wire lead open	A	Require repair or replacement
Wire lead shorted	A	Require repair or replacement

RADAR SENSOR

NOTE: OEM may require this sensor be calibrated to the vehicle thrustline.

Condition	Code	Procedure
Attaching hardware broken	A	Require repair or replacement of hardware
Attaching hardware corroded, affecting structural integrity	A	Require replacement of hardware
Attaching hardware missing	C	Require replacement of hardware
Attaching hardware not functioning	A	Require repair or replacement of hardware
Attaching hardware threads damaged	A	Require repair or replacement of hardware
Attaching hardware threads stripped (threads missing)	A	Require replacement of hardware
Connector (Weatherpack type) leaking	A	Require repair or replacement
Connector broken	A	Require repair or replacement
Connector melted	A	Require replacement
Connector missing	C	Require replacement
NOTE: **Determine cause and correct prior to replacement of part.**		
Dust boot missing	C	Require replacement of boot
Dust boot split	A	Require replacement of boot
NOTE: **If boot is not available separately, suggest replacement of sensor (reason code 2). This condition can lead to damage of the sliding magnet, which, in turn, causes premature sensor failure**		
Dust boot torn	A	Require replacement of boot
NOTE: **If boot is not available separately, suggest replacement of sensor (reason code 2). This condition can lead to damage of the sliding magnet, which, in turn, causes premature sensor failure.**		
Housing cracked	B	Require replacement
NOTE: **If boot is not available separately, suggest replacement of sensor (reason code 2). This condition can lead to damage of the sliding magnet, which, in turn, causes premature sensor failure.**		
Lead routing incorrect	B	Require rerouting according to vehicle manufacturer's specifications
Loose	B	Require adjustment to vehicle manufacturer's specifications
Missing	C	Require replacement
Output signal incorrect	B	Require repair or replacement
Terminal burned, affecting performance	A	Require repair or replacement
NOTE: **Determine cause and correct prior to repair or replacement of part.**		
Terminal burned, not affecting performance	2	Suggest repair or replacement
Terminal corroded, affecting performance	A	Require repair or replacement

Terminal corroded, not affecting performance	2	Suggest repair or replacement
Terminal loose, affecting performance	B	Require repair or replacement
Terminal loose, not affecting performance	1	Suggest repair or replacement
Wire lead burned	A	Require repair or replacement
Wire lead conductors exposed	B	Require repair or replacement
Wire lead open	A	Require repair or replacement
Wire lead shorted	A	Require repair or replacement

RADIUS ARMS

Condition	Code	Procedure
Attaching hardware broken	A	Require repair or replacement of hardware
Attaching hardware missing	C	Require replacement of hardware
Attaching hardware not functioning	A	Require repair or replacement of hardware
Attaching hardware threads damaged	A	Require repair or replacement of hardware
Attaching hardware threads stripped (threads missing)	A	Require replacement of hardware
Bent, affecting performance	B	Require replacement
Corroded, affecting structural integrity	a	Require replacement
Holes distorted	A	Require replacement
Threads damaged	A	Require repair or replacement
Threads stripped (threads missing)	A	Require replacement

RELAY RODS

Condition	Code	Procedure
Attaching hardware broken	A	Require repair or replacement of hardware
Attaching hardware missing	C	Require replacement of hardware
Attaching hardware not functioning	A	Require repair or replacement of hardware
Attaching hardware threads damaged	A	Require repair or replacement of hardware
Attaching hardware threads stripped (threads missing)	A	Require replacement of hardware
Bent, affecting performance	B	Require replacement
Binding	A	Further inspection required
NOTE: **If greaseable, grease joint. If problem persists or joint is non-greaseable, require replacement.**		
Grease boot cracked	B	Require replacement of boot

NOTE: **If boot is not available as a separate component, suggest replacement of relay rod (reason code 2). Cracked grease boot will allow contaminants to enter the joint and will accelerate wear.**		
Grease boot missing	C	Require replacement of boot
NOTE: **If boot is not available as a separate component, suggest replacement of relay rod (reason code 2). Lack of grease boot will allow contaminants to enter the joint and will accelerate wear.**		
Grease boot torn	A	Require replacement of boot
NOTE: **If boot is not available as a separate component, suggest replacement of center link (reason code 2). Torn grease boot will allow contaminants to enter the joint and will accelerate wear.**		
Grease fitting broken	A	Require replacement of grease fitting
Grease fitting missing	C	Require replacement of grease fitting
Grease fitting won't seal	A	Require replacement of grease fitting
Grease seal missing	C	Require replacement of seal
NOTE: **If seal is not available as a separate component, suggest replacement of relay rod (reason code 2). Lack of grease seal will allow contaminants to enter the joint and will accelerate wear.**		
Grease seal torn	A	Require replacement of seal
NOTE: **If seal is not available as a separate component, suggest replacement of relay rod (reason code 2). Torn grease seal will allow contaminants to enter the joint and will accelerate wear.**		
Greaseable relay rod will not take grease	2	Suggest replacement of grease fitting
NOTE: **If greaseable relay rod still will not take grease after replacing the grease fitting, suggest replacement of relay rod.**		
Looseness (perceptible horizontal movement)	1	Suggest replacement
NOTE: **If manufacturer's procedures for inspection exist, use those procedures; otherwise, use an approved inspection method such as the dry park check. Do not use pliers or pry bar to check ball and socket movement. Use only moderate hand pressure.**		
Looseness that is excessive	B	Require replacement
NOTE: **Excessive looseness is defined as being significant enough to affect vehicle handling or structural integrity. If manufacturer's procedures for inspection exist, use those procedures; otherwise, use an approved inspection method such as the dry park check.**		
CAUTION: **Do not use pliers or pry bar to check ball and socket movement. Use only moderate hand pressure.**		
Seized	A	Require replacement
Stud bent	B	Require replacement
NOTE: **Check for damaged taper hole.**		

Stud broken	A	Require replacement
NOTE: **Check for damaged taper hole.**		
Stud loose in taper hole	A	Require repair or replacement
NOTE: **Check for damaged taper hole.**		
Taper hole elongated	A	Require replacement
NOTE: **Check for damaged stud.**		
Threads damaged	A	Require repair or replacement
Threads stripped (threads missing)	A	Require replacement
NOTE: **Check for damaged taper hole.**		
Wear exceeds manufacturer's specifications	B	Require replacement

RELAYS

Condition	Code	Procedure
Attaching hardware broken	A	Require repair or replacement of hardware
Attaching hardware missing	C	Require replacement of hardware
Attaching hardware not functioning	A	Require repair or replacement of hardware
Attaching hardware threads damaged	A	Require repair or replacement of hardware
Attaching hardware threads stripped (threads missing)	A	Require replacement of hardware
Housing broken	A	Require replacement
Housing cracked	2	Suggest replacement
Inoperative	A	Require replacement
NOTE: **Inoperative includes intermittent operation.**		
Missing	C	Require replacement
Terminal broken	A	Require repair or replacement
Terminal burned, affecting performance	A	Require repair or replacement
NOTE: **Determine cause and correct prior to repair or replacement of part.**		
Terminal burned, not affecting performance	2	Suggest repair or replacement
Terminal corroded, affecting performance	A	Require repair or replacement
Terminal corroded, not affecting performance	2	Suggest repair or replacement
Terminal loose, affecting performance	B	Require repair or replacement

Terminal loose, not affecting performance	1	Suggest repair or replacement

SENSORS

Condition	Code	Procedure
Attaching hardware broken	A	Require repair or replacement of hardware
Attaching hardware missing	C	Require replacement of hardware
Attaching hardware not functioning	A	Require repair or replacement of hardware
Attaching hardware threads damaged	A	Require repair or replacement of hardware
Attaching hardware threads stripped (threads missing)	A	Require replacement of hardware
Connector (Weatherpack type) leaking	A	Require repair or replacement
Connector broken	A	Require repair or replacement
Connector melted	A	Require repair or replacement
NOTE: **Determine cause and correct prior to repair or replacement of part.**		
Connector missing	C	Require replacement
Inoperative	A	Require repair or replacement
NOTE: **Inoperative includes intermittent operation or out of specification.**		
Leaking (vacuum/fluid/air)	A	Require replacement
Out of adjustment	B	Further inspection required
NOTE: **Follow OEM recommended adjustment procedures. Repair or replace if out of specification.**		
Terminal broken	A	Require repair or replacement
Terminal burned, affecting performance	A	Require repair or replacement
NOTE: **Determine cause and correct prior to repair or replacement of part.**		
Terminal burned, not affecting performance	2	Suggest repair or replacement
Terminal corroded, affecting performance	A	Require repair or replacement
Terminal corroded, not affecting performance	2	Suggest repair or replacement
Terminal loose, affecting performance	B	Require repair or replacement
Terminal loose, not affecting performance	1	Suggest repair or replacement
Threads damaged	A	Require repair or replacement
Threads stripped (threads missing)	A	Require replacement
Wire lead burned	A	Require repair or replacement
Wire lead conductors exposed	B	Require repair or replacement
Wire lead open	A	Require repair or replacement
Wire lead shorted	A	Require repair or replacement

SHOCK ABSORBERS, STRUT CARTRIDGES AND STRUT ASSEMBLIES

NOTE: **You are not required to replace shocks or struts in axle sets. However, when replacing a shock or strut due to the conditions that follow, you may suggest replacement of the other shock or strut on the same axle for one or more of the following: improved performance or preventive maintenance; part is close to the end of its useful life; to extend tire life; to balance ride and handling; or to improve stopping distance. When replacing steering and/or suspension components which may affect an alignment angle, you are required to check and adjust alignment as needed. Refer to the OEM specifications. Under no circumstances should a technician bend struts or strut housings. A vehicle's load-carrying and handling abilities are limited by its suspension, tires, brakes, and driveline. Installing coil over shocks or any other load assist device does not increase the vehicle's load capacity. See the vehicle owner's manual for more details. If vehicle is equipped with OEM coil over shocks, apply the conditions for coil springs from the Springs: Coil, Leaf, and Torsion Bar section of the Steering and Suspension guidelines. If the vehicle is equipped with add-on coil over shocks, you may suggest replacement with standard shocks for a spring-related condition.**

Condition	Code	Procedure
50,000 miles or greater on OEM Shocks or Struts	1	Suggest Replacement
NOTE: **Applies only to OEM hydraulic fluid and/or gas charged shocks and struts, NOT electronically controlled units.**		
Attaching hardware broken	A	Require repair or replacement of hardware
Attaching hardware corroded, affecting structural integrity	A	Require replacement of hardware
Attaching hardware missing	C	Require replacement of hardware
Attaching hardware not functioning	A	Require repair or replacement of hardware
Attaching hardware threads damaged	A	Require repair or replacement of hardware
Attaching hardware threads stripped (threads missing)	A	Require replacement of hardware
Binding	A	Require replacement
Body dented	A	Further inspection required
NOTE: **Require replacement of units where dents restrict shock or strut piston rod movement. If dents don't restrict movement, no service is suggested or required. Especially critical on mono-tube shocks.**		
Body punctured	A	Require replacement
Brake hose bracket bent	B	Require repair or replacement
Brake hose bracket missing	C	Require replacement
Brake hose bracket threads damaged	A	Require repair or replacement

Brake hose bracket threads stripped (threads missing)	C	Require replacement
Compression bumper missing	C	Require replacement of compression bumper
Compression bumper split	1	Suggest replacement of compression bumper
Damping (none)	A	Require replacement
Dust boot (bellows) missing	C	Require replacement of boot
NOTE: **If boot is not available as a separate component, suggest replacement of shock or strut (reason code 2). This condition can lead to damage of the piston rod, which causes piston rod seal wear.**		
Dust boot (bellows) split	A	Require replacement of boot
NOTE: **If boot is not available as a separate component, suggest replacement of shock or strut (reason code 2). This condition can lead to damage of the piston rod, which, in turn, causes premature piston rod seal wear.**		
Dust boot (bellows) torn	A	Require replacement of boot
NOTE: **If boot is not available as a separate component, suggest replacement of shock or strut (reason code 2). This condition can lead to damage of the piston rod, which, in turn, causes premature piston rod seal wear.**		
Dust shield broken	2	Suggest replacement
NOTE: **This condition can lead to damage of the piston rod, which, in turn, causes premature piston rod seal wear.**		
Dust shield missing	2	Suggest replacement
NOTE: **This condition can lead to damage of the piston rod, which, in turn, causes premature piston rod seal wear.**		
Gland nut (strut housing cap) is not removable using appropriate tool	A	Require replacement of nut and/or housing
NOTE: **Only required if replacing cartridge.**		
Gland nut (strut housing cap) threads damaged	A	Require repair or replacement of nut
Housing dented	A	Further inspection required
NOTE: **Require replacement of units where dents restrict shock or strut piston rod movement. If dents don't restrict movement, no service is suggested or required. Especially critical on mono-tube shocks.**		
Housing punctured	A	Require replacement
Jounce bumper missing	C	Require replacement of jounce bumper
Jounce bumper split	1	Suggest replacement of jounce bumper
Leaking oil, enough for fluid to be running down the body	A	Require replacement

NOTE: **If the strut cartridge has been replaced previously, the oil on the strut housing may be filler oil. The technician must identify the source of the oil.**		
Noisy	2	Further inspection required
NOTE: **If noise is isolated to shock or strut, suggest replacement.**		
Piston rod bent	A	Require replacement
Piston rod broken	A	Require replacement
Piston rod has surface defect	2	Suggest replacement
Piston rod threads damaged	A	Require repair or replacement
Piston rod threads stripped (threads missing)	A	Require replacement
Seized	A	Require replacement
Shock missing	C	Require replacement
Strut housing bent	A	Require replacement
Strut housing cap (gland nut) is not removable using appropriate tool	A	Require replacement of nut and/or housing
NOTE: **Only required if replacing cartridge.**		
Strut housing cap (gland nut) threads damaged	A	Require repair or replacement of nut
Strut housing cap (gland nut) threads stripped (threads missing)	A	Require replacement of nut
Strut housing severely corroded, affecting structural integrity	A	Require replacement
Strut housing threads damaged	A	Require repair or replacement
Strut housing threads stripped (threads missing)	A	Require replacement
Tire cupping	A	Further inspection required
NOTE: **Although shocks or struts may have contributed to tire cupping, an inspection is needed of the entire suspension system. If the shock or strut is found to be contributing to the tire cupping, require replacement.**		

SPINDLES

Condition	Code	Procedure
Attaching hardware broken	A	Require repair or replacement of hardware
Attaching hardware missing	C	Require replacement of hardware
Attaching hardware not functioning	A	Require repair or replacement of hardware
Attaching hardware threads damaged	A	Require repair or replacement of hardware
Attaching hardware threads stripped (threads missing)	A	Require replacement of hardware

Bent	B	Require replacement
Broken	A	Require replacement
Pinch bolt bent	B	Require replacement
Pinch bolt incorrect	B	Require replacement with bolt that meets OEM design
Pinch bolt loose	B	Require repair
Pinch bolt missing	C	Require replacement
Pinch bolt tabs deformed (gap closer together than allowed by OEM specification, typically minimum .032"" gap before clamping)	B	Require replacement
NOTE: **Steering knuckle deformation can cause pinch bolt breakage.**		
Race seat area undersized	B	Require replacement
Scored	A	Require repair or replacement
Taper hole elongated	A	Require replacement
NOTE: **Check for damaged stud.**		
Threads damaged	A	Require repair or replacement
Threads stripped (threads missing)	A	Require replacement

SPRINGS, COIL, LEAF AND TORSION BARS

NOTE: **When springs are replaced, it is suggested, but not required, that both springs on an axle be replaced to maintain equal height from side to side and to provide a balanced ride and proper handling. When variable rate springs are installed in place of conventional coil springs, they must be installed in axle sets to ensure proper handling, uniform ride, and proper chassis height. Erroneous height measurements may result from: improper tire inflation, non-standard tire or wheel size, and heavy load in vehicle or trunk.**

Condition	Code	Procedure
Attaching hardware broken	A	Require repair or replacement of hardware
Attaching hardware corroded, affecting structural integrity	A	Require replacement of hardware
Attaching hardware missing	C	Require replacement of hardware
Attaching hardware not functioning	A	Require repair or replacement of hardware
Attaching hardware threads damaged	A	Require repair or replacement of hardware
Attaching hardware threads stripped (threads missing)	A	Require replacement of hardware
Broken (all springs except secondary leave(s) on multi-	A	Require replacement

leaf springs)		
Coil clash		Further inspection required
NOTE: **Require ride height check and inspection of strike out Jounce) bumper. If vehicle is within manufacturer's height specifications, no service is suggested or required.**		
Coil spring insulator deteriorated	2	Suggest replacement of insulator
Coil spring insulator missing	C	Require replacement of insulator
Coil spring insulator split	2	Suggest replacement of insulator
Coil spring plastic coating deteriorated - rust present	A	Refer to manufacturer's service requirements
NOTE: **Some manufacturers require replacement under these conditions.**		
Composite spring damaged		Further inspection required
NOTE: **Check vehicle ride height. If ride height is OK, no service is suggested or required.**		
Cracked (all springs except composite leaf and secondary leave(s) on multileaf springs)	A	Require replacement
Installed incorrectly	B	Require repair
Leaf spring insulators missing	C	Require replacement of insulators
Secondary leaf on multi-leaf spring broken	1	Suggest repair or replacement
Secondary leaf on multi-leaf spring cracked	1	Suggest repair or replacement
Torsion bar adjuster bent	A	Require repair or replacement of adjuster
NOTE: **Only required if ride height needs to be adjusted.**		
Torsion bar adjuster seized	A	Require repair or replacement of adjuster
NOTE: **Only required if ride height needs to be adjusted.**		
Torsion bar adjuster threads damaged	A	Require repair or replacement of part with damaged threads
NOTE: **Only required if ride height needs to be adjusted.**		
Torsion bar adjuster threads stripped (threads missing)	A	Require replacement of part with stripped threads
Vehicle suspension height not within OEM specifications	A	Require adjustment or replacement

STABILITRAC

NOTE: An evolution of ABS and Traction Control. It uses the ABS hardware and two

additional sensors: a steering-wheel angle sensor, which measures the position and rate of steering wheel input, and a yaw sensor, which measures the rate at which the vehicle is actually turning. By comparing rates, computer determines if the vehicle is oversteering or understeering.

NOTE: On slippery surfaces or during aggressive maneuvers, if the vehicle understeers severely, the computer will actuate the brakes on the inside rear wheel, just hard enough and just long enough to correct the steering behavior. When the vehicle oversteers severely, the system will brake the outside front wheel instead.

NOTE: When servicing this system, OEM may require steering angle sensor be calibrated to the vehicle thrustline.

STABILITY MANAGEMENT SYSTEM

NOTE: An evolution of ABS and Traction Control. It uses the ABS hardware and two additional sensors: a steering-wheel angle sensor, which measures the position and rate of steering wheel input, and a yaw sensor, which measures the rate at which the vehicle is actually turning. By comparing rates, computer determines if the vehicle is oversteering or understeering.

NOTE: On slippery surfaces or during aggressive maneuvers, if the vehicle understeers severely, the computer will actuate the brakes on the inside rear wheel, just hard enough and just long enough to correct the steering behavior. When the vehicle oversteers severely, the system will brake the outside front wheel instead.

NOTE: When servicing this system, OEM may require steering angle sensor be calibrated to the vehicle thrustline.

STEERING ANGLE SENSOR

NOTE: OEM may require this sensor be calibrated to the vehicle thrustline. Sensor must be reset when replacing / servicing steering rack assembly.

Condition	Code	Procedure
Attaching hardware broken	A	Require repair or replacement of hardware
Attaching hardware corroded, affecting structural integrity	A	Require replacement of hardware
Attaching hardware missing	C	Require replacement of hardware
Attaching hardware not functioning	A	Require repair or replacement of

		hardware
Attaching hardware threads damaged	A	Require repair or replacement of hardware
Attaching hardware threads stripped (threads missing)	A	Require replacement of hardware
Connector (Weatherpack type) leaking	A	Require repair or replacement
Connector broken	A	Require repair or replacement
Connector melted	A	Require replacement
Connector missing	C	Require replacement
NOTE: **Determine cause and correct prior to replacement of part.**		
Dust boot missing	C	Require replacement of boot
Dust boot split	A	Require replacement of boot
NOTE: **If boot is not available separately, suggest replacement of sensor (reason code 2). This condition can lead to damage of the sliding magnet, which, in turn, causes premature sensor failure**		
Dust boot torn	A	Require replacement of boot
NOTE: **If boot is not available separately, suggest replacement of sensor (reason code 2). This condition can lead to damage of the sliding magnet, which, in turn, causes premature sensor failure.**		
Housing cracked	B	Require replacement
NOTE: **If boot is not available separately, suggest replacement of sensor (reason code 2). This condition can lead to damage of the sliding magnet, which, in turn, causes premature sensor failure.**		
Lead routing incorrect	B	Require rerouting according to vehicle manufacturer's specifications
Loose	B	Require adjustment to vehicle manufacturer's specifications
Missing	C	Require replacement
Output signal incorrect	B	Require repair or replacement
Terminal burned, affecting performance	A	Require repair or replacement
NOTE: **Determine cause and correct prior to repair or replacement of part.**		
Terminal burned, not affecting performance	2	Suggest repair or replacement
Terminal corroded, affecting performance	A	Require repair or replacement
Terminal corroded, not affecting performance	2	Suggest repair or replacement
Terminal loose, affecting performance	B	Require repair or replacement
Terminal loose, not affecting performance	1	Suggest repair or replacement
Wire lead burned	A	Require repair or replacement
Wire lead conductors exposed	B	Require repair or replacement
Wire lead open	A	Require repair or replacement
Wire lead shorted	A	Require repair or replacement

STEERING ARMS

Condition	Code	Procedure
Attaching hardware broken	A	Require repair or replacement of hardware
Attaching hardware missing	C	Require replacement of hardware
Attaching hardware not functioning	A	Require repair or replacement of hardware
Attaching hardware threads damaged	A	Require repair or replacement of hardware
Attaching hardware threads stripped (threads missing)	A	Require replacement of hardware
Bent	B	Require replacement
Broken	A	Require replacement
Pinch bolt bent	B	Require replacement
Pinch bolt incorrect	B	Require replacement with bolt that meets OEM design
Pinch bolt loose	B	Require repair
Pinch bolt missing	C	Require replacement
Pinch bolt tabs deformed (gap closer together than allowed by OEM specification, typically minimum .032"" gap before clamping)	B	Require replacement
NOTE: **Steering knuckle deformation can cause pinch bolt breakage.**		
Race seat area undersized	B	Require replacement
Scored	A	Require repair or replacement
Taper hole elongated	A	Require replacement
NOTE: **Check for damaged stud.**		
Threads damaged	A	Require repair or replacement
Threads stripped (threads missing)	A	Require replacement

STEERING COUPLERS

Condition	Code	Procedure
Attaching hardware broken	A	Require repair or replacement of hardware
Attaching hardware missing	C	Require replacement of hardware
Attaching hardware not functioning	A	Require repair or replacement of hardware
Attaching hardware threads damaged	A	Require repair or replacement of hardware
Attaching hardware threads stripped (threads missing)	A	Require replacement of hardware

Flex coupler binding	A	Require repair or replacement of coupler
Flex coupler loose	A	Require repair or replacement of coupler
Flex coupler missing parts	A	Require repair or replacement of coupler
Flex coupler soft/ spongy	A	Require replacement of coupler
Flex coupler tom	A	Require replacement of coupler
Steering coupler shield cracked	2	Suggest replacement
Steering coupler shield missing	C	Require replacement
Steering coupler shield torn	2	Suggest replacement
U-joint binding	A	Require repair or replacement of joint
U-joint loose	A	Require repair or replacement of joint

STEERING DAMPERS

NOTE: The following procedures are only required if the vehicle was originally equipped from the factory with a steering damper. If the steering damper is an add-on unit, then the unit may be removed (and not replaced), based on customer's informed decision.

Condition	Code	Procedure
Attaching hardware broken	A	Require repair or replacement of hardware
Attaching hardware corroded, affecting structural integrity	A	Require replacement of hardware
Attaching hardware missing	C	Require replacement of hardware
Attaching hardware not functioning	A	Require repair or replacement of hardware
Attaching hardware threads damaged	A	Require repair or replacement of hardware
Attaching hardware threads stripped (threads missing)	A	Require replacement of hardware
Binding	A	Require replacement
Damper body dented	A	Further inspection required
NOTE: **Require replacement of units where dents restrict damper piston rod movement. If dents don't restrict movement, no service is suggested or required. Especially critical on mono-tube dampers.**		
Damper body punctured	A	Require replacement
Damping (none)	A	Require replacement
Dust boot (bellows) missing	C	Require replacement of boot
NOTE: **If boot is not available separately, suggest replacement of steering damper (reason code 2). This condition can lead to damage of the piston rod, which, in turn, causes premature piston rod seal wear.**		
Dust boot (bellows) split	A	Require replacement of boot

NOTE: **If boot is not available separately, suggest replacement of steering damper (reason code 2). This condition can lead to damage of the piston rod, which, in turn, causes premature piston rod seal wear.**		
Dust shield broken	2	Suggest replacement
NOTE: **This condition can lead to damage of the piston rod, which, in turn, causes premature piston rod seal wear.**		
Dust shield missing	2	Suggest replacement
NOTE: **This condition can lead to damage of the piston rod, which, in turn, causes premature piston rod seal wear.**		
Leaking oil, enough for fluid to be running down the body	A	Require replacement
Loose	A	Require repair or replacement
Missing	C	Require replacement
Noise	2	Further inspection required
NOTE: **If noise is isolated to damper, suggest replacement.**		
Piston rod bent	A	Require replacement
Piston rod broken	A	Require replacement
Piston rod has surface defect	2	Suggest replacement
Piston rod threads damaged	A	Require repair or replacement
Piston rod threads stripped (threads missing), affecting performance	A	Require replacement
NOTE: **Only required if condition affects structural integrity or if unit needs to be serviced.**		
Seized	A	Require replacement

STEERING GEARS (EXCEPT RACK AND PINION)

Condition	Code	Procedure
Attaching hardware broken	A	Require repair or replacement of hardware
Attaching hardware missing	C	Require replacement of hardware
Attaching hardware not functioning	A	Require repair or replacement of hardware
Attaching hardware threads damaged	A	Require repair or replacement of hardware
Attaching hardware threads stripped (threads missing)	A	Require replacement of hardware
Binding	A	Require repair or replacement
Connector (Weatherpack type) leaking	A	Require repair or replacement

Connector broken	A	Require repair or replacement
Connector melted	A	Require replacement
NOTE: **Determine cause and correct prior to replacement of part.**		
Fluid contaminated	B	Require flushing and refilling of the system
NOTE: **Determine and correct source of contamination. OEM specifications must be followed for fluid type.**		
Gasket leaking	A	Require repair or replacement of gasket
Housing leaking	A	Require replacement
Hydraulic fittings leaking	A	Require repair or replacement of fittings
Inadequate power assist	A	Further inspection required
NOTE: **If steering gear is source of inadequate assist, require repair or replacement.**		
Lash exceeds manufacturer's specifications	B	Require repair or replacement
Malfunctioning	A	Require repair or replacement
NOTE: **Includes inoperative, intermittent operation, failure to perform all functions, out of OEM specification, or out of range.**		
Seal leaking	A	Require repair or replacement of seal and / or mating part
Splines damaged	A	Require repair or replacement of splines
Splines stripped	A	Require replacement of splines
Steering coupler shield cracked	2	Suggest replacement
Steering coupler shield missing	C	Require replacement
Terminal burned, affecting performance	A	Require repair or replacement
NOTE: **Determine cause and correct prior to repair or replacement of part.**		
Terminal burned, not affecting performance	2	Suggest repair or replacement
Terminal corroded, affecting performance	A	Require repair or replacement
Terminal corroded, not affecting performance	2	Suggest repair or replacement
Terminal loose, affecting performance	B	Require repair or replacement
Terminal loose, not affecting performance	1	Suggest repair or replacement
Threads damaged	A	Require repair or replacement of part with damaged threads
Threads stripped (threads missing)	A	Require replacement of part with stripped threads
Unequal power assist	A	Require repair or replacement
Wire lead burned	A	Require repair or replacement
Wire lead conductors exposed	B	Require repair or replacement
Wire lead open	A	Require repair or replacement

Wire lead shorted	A	Require repair or replacement

STEERING GEARS, RACK AND PINION

Condition	Code	Procedure
Attaching hardware broken	A	Require repair or replacement of hardware
Attaching hardware missing	C	Require replacement of hardware
Attaching hardware not functioning	A	Require repair or replacement of hardware
Attaching hardware threads damaged	A	Require repair or replacement of hardware
Attaching hardware threads stripped (threads missing)	A	Require replacement of hardware
Balance tube blocked	A	Require repair or replacement of balance tube
Balance tube missing	C	Require replacement of balance tube
Balance tube restricted	A	Require repair or replacement of balance tube
Bellows boot clamp missing	C	Require replacement of clamp
Bellows boot cracked (not through)	2	Suggest replacement of bellows boot
Bellows boot missing	C	Require replacement of bellows boot
Bellows boot not sealing	A	Require repair or replacement of bellows boot
Bellows boot torn	A	Require replacement of bellows boot
Bellows boot twisted (from toe adjustment)	B	Require repair
Connector (Weatherpack type) leaking	A	Require repair or replacement
Connector broken	A	Require repair or replacement
Connector melted	A	Require replacement
NOTE: **Determine cause and correct prior to replacement of part.**		
Connector missing	C	Require replacement
Fitting leaking	A	Require repair or replacement
Fitting missing	A	Require replacement of fitting
Fitting threads damaged	A	Require repair or replacement of part with damaged threads
Fitting threads stripped (threads missing)	A	Require replacement of part with stripped threads
Fluid contaminated	B	Require flushing and refilling of the system
NOTE: **Determine and correct source of contamination. OEM specifications must be followed for fluid type.**		
Gasket leaking	A	Require repair or replacement

Housing cracked, affecting structural integrity	B	Require replacement
Housing leaking	A	Require replacement
Inadequate power assist	A	Further inspection required
NOTE: **If steering gear is source of inadequate assist, require repair or replacement.**		
Lash exceeds manufacturer's specifications	B	Require repair or replacement
Malfunctioning	A	Require repair or replacement
NOTE: **Includes inoperative, intermittent operation, failure to perform all functions, out of OEM specification, or out of range.**		
Seal leaking	A	Require repair or replacement
Splines damaged	A	Require repair or replacement
Splines stripped (splines missing)	A	Require replacement
Steel line blocked	A	Require repair or replacement of line
Steel line leaking	A	Require repair or replacement of line
Steel line missing	C	Require replacement of line
Steel line restricted	A	Require repair or replacement of line
Terminal burned, affecting performance	A	Require repair or replacement
NOTE: **Determine cause and correct prior to repair or replacement of part.**		
Terminal burned, not affecting performance	2	Suggest repair or replacement
Terminal corroded, affecting performance	A	Require repair or replacement
Terminal corroded, not affecting performance	2	Suggest repair or replacement
Terminal loose, affecting performance	B	Require repair or replacement
Terminal loose, not affecting performance	1	Suggest repair or replacement
Threads damaged	A	Require repair or replacement of part with damaged threads
Threads stripped (threads missing)	A	Require replacement of part with stripped threads
Unequal power assist	A	Require repair or replacement
Wire lead burned	A	Require repair or replacement
Wire lead conductors exposed	B	Require repair or replacement
Wire lead open	A	Require repair or replacement
Wire lead shorted	A	Require repair or replacement

STEERING KNUCKLES

Condition	Code	Procedure
Attaching hardware broken	A	Require repair or replacement of hardware
Attaching hardware missing	C	Require replacement of hardware

Attaching hardware not functioning	A	Require repair or replacement of hardware
Attaching hardware threads damaged	A	Require repair or replacement of hardware
Attaching hardware threads stripped (threads missing)	A	Require replacement of hardware
Bent	B	Require replacement
Broken	A	Require replacement
Pinch bolt bent	B	Require replacement
Pinch bolt incorrect	B	Require replacement with bolt that meets OEM design
Pinch bolt loose	B	Require repair
Pinch bolt missing	C	Require replacement
Pinch bolt tabs deformed (gap closer together than allowed by OEM specification, typically minimum .032"" gap before clamping)	B	Require replacement
NOTE: **Steering knuckle deformation can cause pinch bolt breakage.**		
Race seat area undersized	B	Require replacement
Scored	A	Require repair or replacement
Taper hole elongated	A	Require replacement
NOTE: **Check for damaged stud.**		
Threads damaged	A	Require repair or replacement
Threads stripped (threads missing)	A	Require replacement

STRIKE OUT BUMPERS

Condition	Code	Procedure
Attaching hardware broken	A	Require repair or replacement of hardware
Attaching hardware corroded, affecting structural integrity	A	Require replacement of hardware
Attaching hardware missing	C	Require replacement of hardware
Attaching hardware not functioning	A	Require repair or replacement of hardware
Attaching hardware threads damaged	A	Require repair or replacement of hardware
Attaching hardware threads stripped (threads missing)	A	Require replacement of hardware
Missing	C	Require replacement
Split	A	Suggest replacement

STRUT BEARING PLATE ASSEMBLIES

NOTE: **When the following guidelines indicate replacement of bearing, only the bearing should be replaced if it is available separately; otherwise, replace the bearing plate assembly.**

Condition	Code	Procedure
Attaching hardware broken	A	Require repair or replacement of hardware
Attaching hardware missing	C	Require replacement of hardware
Attaching hardware not functioning	A	Require repair or replacement of hardware
Attaching hardware threads damaged	A	Require repair or replacement of hardware
Attaching hardware threads stripped (threads missing)	A	Require replacement of hardware
Axial or radial movement exceeds vehicle manufacturer's specifications	B	Require replacement
Bearing binding	A	Require replacement of bearing
Bearing missing	C	Require replacement of bearing
Bearing seized	A	Require replacement of bearing
Bent, affecting performance	B	Require replacement
Corroded, affecting structural integrity	A	Require replacement
Holes distorted	A	Require replacement
Missing	C	Require replacement
Threads damaged	A	Require repair or replacement
Threads stripped (threads missing)	A	Require replacement

STRUT RODS

Condition	Code	Procedure
Adjusting nut seized	A	Require repair or replacement of hardware
NOTE: **Only required if an alignment is being performed and adjustment of the strut in question is required.**		
Attaching (mating) hole oversized	A	Require repair or replacement of bracket or frame
Attaching hardware broken	A	Require repair or replacement of hardware
Attaching hardware missing	C	Require replacement of hardware
Attaching hardware not functioning	A	Require repair or replacement of hardware
Attaching hardware threads damaged	A	Require repair or replacement of hardware
Attaching hardware threads stripped (threads missing)	A	Require replacement of hardware

Attaching point on bracket or frame corroded, affecting structural integrity	A	Require repair of bracket or frame
Bent, affecting performance	A	Require replacement
Mating (attaching) hole oversized	A	Require repair or replacement of bracket or frame
Threads damaged	A	Require repair or replacement
Threads stripped (threads missing)	A	Require replacement

SUSPENSION PUMPS (HYDRAULIC)

Condition	Code	Procedure
Attaching hardware broken	A	Require repair or replacement of hardware
Attaching hardware missing	C	Require replacement of hardware
Attaching hardware not functioning	A	Require repair or replacement of hardware
Attaching hardware threads damaged	A	Require repair or replacement of hardware
Attaching hardware threads stripped (threads missing)	A	Require replacement of hardware
Binding	A	Require repair or replacement
Fluid at or beyond service interval	3	Suggest fluid change
Fluid contaminated	B	Require flushing and refilling of the system
NOTE: **Determine and correct source of contamination. OEM specifications must be followed for fluid type.**		
Fluid level incorrect	B	Require adjustment of fluid level
Leaking	B	Require repair or replacement
Noisy	2	Suggest repair or replacement
Pulley bent	A	Require repair or replacement of pulley
Pulley missing	C	Require replacement of pulley
Pump output out of manufacturer's specifications	A	Require repair or replacement
Remote reservoir leaking	A	Require replacement of reservoir
Reservoir cap broken	A	Require replacement of cap
Reservoir cap missing	C	Require replacement of cap
Seized	A	Require replacement
Threads damaged	A	Require repair or replacement
Threads stripped (threads missing)	A	Require replacement

SWAY BAR LINKS

Condition	Code	Procedure
Attaching (mating) hole distorted	A	Require repair or replacement of bracket

		or control arm
Attaching hardware broken	A	Require repair or replacement of hardware
Attaching hardware missing	C	Require replacement of hardware
Attaching hardware not functioning	A	Require repair or replacement of hardware
Attaching hardware threads damaged	A	Require repair or replacement of hardware
Attaching hardware threads stripped (threads missing)	A	Require replacement of hardware
Ball and socket has looseness (perceptible vertical movement)	1	Suggest replacement
NOTE: **If manufacturer's procedures for inspection exist, use those procedures; otherwise, use an approved inspection method. Do not use pliers or pry bar to check ball and socket movement. Use only moderate hand pressure.**		
Ball and socket has looseness that is excessive	B	Require replacement
NOTE: **Excessive looseness is defined as being significant enough to affect vehicle handling or structural integrity. If manufacturer's procedures for inspection exist, use those procedures; otherwise, use an approved inspection method.**		
CAUTION: **Do not use pliers or pry bar to check ball and socket movement. Use only moderate hand pressure.**		
Bent	B	Require replacement
Broken	A	Require replacement
Bushing cracked	A	Require replacement
Bushing deteriorated, affecting performance	A	Require repair or replacement
NOTE: **If condition is caused by oil-soaking, further inspection is required to determine source of oil.**		
Bushing distorted, affecting performance	A	Require repair or replacement
Bushing missing	C	Require replacement
Bushing oil-soaked, affecting performance	A	Require replacement
NOTE: **Further inspection required to determine source of oil.**		
Bushing shows surface cracking (weather-checked)		No service suggested or required
Bushing split	A	Require replacement
Corroded, affecting structural integrity	A	Require replacement
Grease boot cracked	2	Suggest replacement
NOTE: **Cracked grease boot will allow contaminants to enter the joint and will accelerate wear .**		

Grease boot missing	C	Require replacement of boot
NOTE: **If boot is not available separately, suggest replacement of sway bar link (reason code 2). Lack of grease boot will allow contaminants to enter the joint and will accelerate wear.**		
Grease boot torn	A	Require replacement of boot
NOTE: **If boot is not available separately, suggest replacement of sway bar link (reason code 2). Lack of grease boot will allow contaminants to enter the joint and will accelerate wear.**		
Mating (attaching) hole distorted	A	Require repair or replacement of bracket or control arm
Missing	C	Require replacement
Nut on stud loose	A	Require repair
NOTE: **Check for bent stud or damaged mating hole.**		
Stud bent	B	Require replacement
NOTE: **Check for damaged mating hole.**		
Stud broken	A	Require replacement
NOTE: **Check for damaged mating hole.**		
Threads damaged	A	Require repair or replacement
Threads stripped (threads missing)	A	Require replacement
NOTE: **Check for damaged mating hole.**		

SWAY BAR MOUNTING BUSHINGS

Condition	Code	Procedure
Attaching hardware broken	A	Require repair or replacement of hardware
Attaching hardware missing	C	Require replacement of hardware
Attaching hardware not functioning	A	Require repair or replacement of hardware
Attaching hardware threads damaged	A	Require repair or replacement of hardware
Attaching hardware threads stripped (threads missing)	A	Require replacement of hardware
Binding	A	Require repair or replacement
Deteriorated, affecting performance	A	Require repair or replacement
NOTE: **If condition is caused by oil-soaking, further inspection is required to determine source of oil.**		
Distorted, affecting performance	A	Require repair or replacement

Leaking (fluid-filled type)	A	Require replacement
Missing	C	Require replacement
Noisy	2	Further inspection required
NOTE: **If noise isolated to bushing, suggest repair or replacement. Use only approved lubricant on rubber bushings. Petroleum-based lubricants may damage rubber bushings.**		
Oil-soaked, affecting performance	A	Require replacement
NOTE: **Further inspection required to determine source of oil.**		
Rubber separating from internal metal sleeve on bonded bushing	A	Require replacement
Seized	A	Require replacement
Shifted (out of position)	B	Require repair or replacement
Split	A	Require replacement
Surface cracking (weather-checked)		No service suggested or required

SWAY BARS

Condition	Code	Procedure
Attaching hardware broken	A	Require repair or replacement of hardware
Attaching hardware corroded, affecting structural integrity	A	Require replacement of hardware
Attaching hardware missing	C	Require replacement of hardware
Attaching hardware not functioning	A	Require repair or replacement of hardware
Attaching hardware threads damaged	A	Require repair or replacement of hardware
Attaching hardware threads stripped (threads missing)	A	Require replacement of hardware
Bent	B	Require replacement
Broken	A	Require replacement
Sway bar corroded at point of attachment to frame bushing	A	Require repair or replacement
Threads damaged	A	Require repair or replacement
Threads stripped (threads missing)	A	Require replacement

SWITCHES

Condition	Code	Procedure
Attaching hardware broken	A	Require repair or replacement of hardware
Attaching hardware missing	C	Require replacement of hardware

Attaching hardware not functioning	A	Require repair or replacement of hardware
Binding, affecting performance	A	Require repair or replacement
Binding, not affecting performance	2	Suggest repair or replacement
Broken	A	Require repair or replacement
Burned, affecting performance	2	Suggest repair or replacement
NOTE: **Determine cause and correct prior to repair or replacement of part.**		
Burned, not affecting performance	1	Determine cause and correct prior to repair or replacement of part
Cracked, affecting performance	A	Require repair or replacement
Cracked, not affecting performance	1	Suggest repair or replacement
Leaking	B	Require repair or replacement
Malfunctioning	A	Require repair or replacement
NOTE: **Includes inoperative, intermittent operation, or failure to perform all functions.**		
Melted, affecting performance	A	Require repair or replacement
NOTE: **Determine cause and correct prior to repair or replacement of part.**		
Melted, not affecting performance	2	Determine cause and correct prior to repair or replacement of part
Missing	C	Require replacement
Out of adjustment	B	Require repair or replacement
Terminal broken	A	Require repair or replacement
Terminal burned, affecting performance	A	Require repair or replacement
Terminal burned, not affecting performance	2	Suggest repair or replacement
Terminal corroded, affecting performance	A	Require repair or replacement
Terminal corroded, not affecting performance	2	Suggest repair or replacement
Terminal loose, affecting performance	B	Require repair or replacement
Terminal loose, not affecting performance	1	Suggest repair or replacement
Won't return	A	Require repair or replacement
Worn	1	Suggest replacement

TIE ROD ENDS (INNER AND OUTER)

Condition	Code	Procedure
Adjusting sleeve bent	B	Require replacement of sleeve
Adjusting sleeve clamps out of position	B	Require repair
Adjusting sleeve corroded, affecting structural integrity	A	Require replacement of sleeve
Adjusting sleeve missing	C	Require replacement of sleeve
Adjusting sleeve seized	A	Require repair or replacement

NOTE: **Only required if toe needs to be adjusted.**		
Adjusting sleeve threads damaged	A	Require repair or replacement of sleeve
Adjusting sleeve threads stripped (threads missing)	A	Require replacement of sleeve
Attaching hardware broken	A	Require repair or replacement of hardware
Attaching hardware missing	C	Require replacement of hardware
Attaching hardware not functioning	A	Require repair or replacement of hardware
Attaching hardware threads damaged	A	Require repair or replacement of hardware
Attaching hardware threads stripped (threads missing)	A	Require replacement of hardware
Bent	A	Require replacement
Binding	A	Further inspection required
NOTE: **If greaseable, grease joint. If problem persists or joint is non-greaseable, require replacement.**		
Grease boot cracked	2	Suggest replacement of boot
NOTE: **If boot is not available separately, suggest replacement of tie rod end (reason code 2). Cracked grease boot will allow contaminants to enter joint and will accelerate wear.**		
Grease boot missing	C	Require replacement of boot
NOTE: **If boot is not available separately, suggest replacement of tie rod end (reason code 2). Lack of grease boot will allow contaminants to enter joint and will accelerate wear.**		
Grease boot torn	A	Require replacement of boot
NOTE: **If boot is not available separately, suggest replacement of tie rod end (reason code 2). Torn grease boot will allow contaminants to enter joint and will accelerate wear.**		
Grease fitting broken	A	Require replacement of grease fitting
Grease fitting missing	C	Require replacement of grease fitting
Grease fitting won't seal	A	Require replacement of grease fitting
Grease seal missing	C	Require replacement of seal
NOTE: **If seal is not available separately, suggest replacement of tie rod end (reason code 2). Lack of grease seal will allow contaminants to enter joint and will accelerate wear.**		
Grease seal torn	A	Require replacement of seal
NOTE: **If seal is not available separately, suggest replacement of tie rod end (reason code 2), wear. Torn grease seal will allow contaminants to enter joint and will accelerate wear.**		
Greaseable tie rod end won't take grease	2	Suggest replacement of grease fitting
NOTE:		

If greaseable tie rod end will not take grease after replacing the grease fitting, suggest replacement of tie rod end.		
Looseness (perceptible horizontal movement)	1	Suggest replacement
NOTE: **If manufacturer's procedures for inspection exist, use those procedures; otherwise, use an approved inspection method such as the dry park check. Do not use pliers or pry bar to check ball and socket movement. Use only moderate hand pressure.**		
Looseness exceeds manufacturer's specifications	B	Require replacement
Looseness that is excessive	B	Require replacement
NOTE: **Excessive looseness is defined as being significant enough to affect vehicle handling or structural integrity. If manufacturer's procedures for inspection exist, use those procedures; otherwise, use an approved inspection method such as the dry park check.**		
CAUTION: **Do not use pliers or pry bar to check ball and socket movement. Use only moderate hand pressure.**		
Noisy	2	Further inspection required
NOTE: **If greaseable, grease joint. If problem persists or joint is non-greaseable, suggest replacement.**		
Nut on stud loose	A	Require repair or replacement
NOTE: **Check for bent stud or damaged taper hole.**		
Seized	A	Require replacement
Stud bent	B	Require replacement
NOTE: **Check for damaged taper hole.**		
Stud broken	A	Require replacement
NOTE: **Check for damaged taper hole.**		
Threads damaged	A	Require repair or replacement
Threads stripped (threads missing)	A	Require replacement
NOTE: **Check for damaged taper hole.**		

TIRE PRESSURE MONITORING SYSTEM

NOTE: **A Tire Pressure Monitoring System (TPMS) is designed to detect and alert the driver should the air pressure level in one or more of the vehicle's tires, up to all four tires, fall below the manufacturer's recommended inflation pressure or another pre-set level.**

NOTE: **NHTSA does not consider installation of an aftermarket or replacement tire or**

rim that is not compatible with the TPMS to be a "make inoperative" situation under 49 U.S.C. 30122, provided that the entity does not disable the TPMS malfunction indicator.

TIRE PRESSURE SENSORS

Condition	Code	Procedure
Attaching hardware broken	A	Require repair or replacement of hardware
Attaching hardware missing	C	Require replacement of hardware
Attaching hardware not functioning	A	Require repair or replacement of hardware
Inoperative	A	Require repair or replacement
NOTE: **Inoperative includes intermittent failure.**		
Loose	B	Require repair or replacement
Missing (Non-OE Wheel and/or Tire Applications)	2	Suggest replacement if appropriate sensor is available
Missing (OE Wheel and Tire Applications)	C	Replacement Reqiuired
Not Responding		Further inspection required
NOTE: **If sensor does not Wake Up, follow manufacturers recommended diagnostic procedure to determine cause**		

TIRES

NOTE: **These guidelines do not apply to split rims. Some vehicle manufacturers restrict replacement of tires to specific brands, types, or sizes. High pressure temporary compact spare tires should not be used with any other rims or wheels, nor should standard tires, snow tires, wheel covers, or trim rings be used with high pressure compact spare rims or wheels. Attempting to mount a tire of one diameter on a wheel of a different diameter or flange type may result in serious injury or death. Only specially trained persons should de-mount or mount tires. Explosions of tire and wheel assembly can result from improper mounting, possibly causing serious injury or death. Consult the vehicle owner's manual or vehicle placard for correct size, speed rating, designation, and cold inflation pressure of the original tires. Do not exceed the maximum load or inflation capacity of the tire specified by the Tire and Rim Association When replacing tires, it is suggested that the replacement tires match or exceed the OEM speed rating designation. If tires of different speed rating designations are mixed on the same vehicle, the tires may vary in handling characteristics. Do not mix different speed rating designations on the same axle. Do not mix radials with non-radial tires on the same axle, as this may affect vehicle handling and stability. If radial tires and bias or bias-belted ply tires are mixed on the same**

vehicle, the radials must be on the rear. High-pressure temporary compact spare tires are exempt from this rule. Do not mix size or type (Run Flat, all season, performance, mud and snow) of tires on the same axle. If any flammable emergency tire inflation product has been used on a tire, consult inflation product, manufacturer's product information label for tire deflation procedures to avoid possible serious injury or death. In some vehicles, changing the tire diameter from factory-equipped size can affect drive ability, as well as the performance of ABS and other vehicle systems. Consult the vehicle manufacturer's specifications.

Condition	Code	Procedure
Air pressure incorrect	B	Require repair
Bead broken	A	Require replacement
Bead leaking, caused by tire	A	Require repair or replacement
Bead wire/cord exposed	A	Require replacement
Cord or belt material exposed	A	Require replacement
Cord ply separations	A	Require replacement
Directional/asymmetrical tires mounted incorrectly	B	Require remounting and/or repositioning
Irregular tread wear, affecting performance	2	Suggest replacement
NOTE: **Determine and correct cause of irregular tire wear.**		
Load ratings less than OEM specifications	B	Require replacement
Mixed tread types (all season, performance, mud and snow) on same axle	A	Require replacement
Number of punctures exceeds manufacturer's limit	B	Require replacement
Out of balance	B	Require rebalance of tire/wheel assembly
Ply separation	A	Require replacement
Pull or lead, caused by tire	A	Require repair or replacement
Radial and bias or bias-belted ply tires on same axle	B	Require repair or replacement
Radials are on the front and not on the rear	B	Require repair or replacement
NOTE: **If radials and bias or bias-belted ply tires are on the same vehicle, the radials must be on the rear axle, except for high-pressure temporary spares.**		
Run flat damage	A	Require replacement
Shoulder cut	A	Require replacement
Shoulder puncture	A	Require replacement
Shoulder with plug	A	Require replacement
Sidewall bulge	A	Require replacement
Sidewall cut	A	Require replacement
Sidewall indentation		No service required or suggested
Sidewall puncture	A	Require replacement

Sidewall with plug	A	Require replacement
Speed rating designations different on same axle	2	Suggest rotation or replacement
Tire and wheel assembly has excessive run-out	B	Require repair or replacement of appropriate part
NOTE: **Excessive is defined as enough to contribute to performance problems. Match mounting may correct run-out. If not, require replacement of appropriate part. Refer to manufacturer's specifications.**		
Tires with excessive diameter difference on an all-wheel drive vehicle or four-wheel drive vehicle	B	Require replacement
NOTE: **Excessive diameter difference is defined as exceeding manufacturer's specifications or, if no manufacturer's specifications exist, with more than 1/4"" diameter difference.**		
Tires with excessive diameter difference on the same side of a dual-wheel application	B	Require replacement
NOTE: **Excessive diameter difference is defined as exceeding manufacturer's specifications or, if no manufacturer's specifications exist, with more than 1/4"" diameter difference.**		
Tread area puncture larger in diameter than manufacturer's specifications	B	Require replacement
Tread missing pieces (chunking), exposing cord	A	Require replacement
Tread missing pieces (chunking), not exposing cord	1	Suggest replacement
Tread separations	A	Require replacement
Tube in tubeless tire	3	Suggest removal of tube
NOTE: **Most manufacturers do not recommend tubes in tubeless tires. Inspect tire and wheel . Assembly to determine the reason for a tube in tubeless tire. Recommendation for repair or replacement should be based upon condition of tires and! Or wheel listed in these guidelines.**		
Weather-checking		No service required or suggested
Worn to tread wear indicators	B	Require replacement

TORQUE SENSOR

Condition	Code	Procedure
Attaching hardware broken	A	Require repair or replacement of hardware
Attaching hardware missing	C	Require replacement of hardware
Attaching hardware not functioning	A	Require repair or replacement of hardware
Attaching hardware threads damaged	A	Require repair or replacement of hardware
Attaching hardware threads stripped (threads missing)	A	Require replacement of hardware
Connector (Weatherpack type) leaking	A	Require repair or replacement

Connector broken	A	Require repair or replacement
Connector melted	A	Require repair or replacement
Connector missing	C	Require replacement
Inoperative	A	Require repair or replacement
Leaking (vacuum/fluid/air)	A	Require replacement
Out of adjustment	B	Further inspection required
Terminal broken	A	Require repair or replacement
Terminal burned, affecting performance	A	Require repair or replacement
Terminal burned, not affecting performance	2	Suggest repair or replacement
Terminal corroded, affecting performance	A	Require repair or replacement
Terminal corroded, not affecting performance	2	Suggest repair or replacement
Terminal loose, affecting performance	B	Require repair or replacement
Terminal loose, not affecting performance	1	Suggest repair or replacement
Threads damaged	A	Require repair or replacement
Threads stripped (threads missing)	A	Require replacement
Wire lead burned	A	Require repair or replacement
Wire lead conductors exposed	B	Require repair or replacement
Wire lead open	A	Require repair or replacement
Wire lead shorted	A	Require repair or replacement

TORSION SPRINGS

Condition	Code	Procedure
Attaching hardware broken	A	Require repair or replacement of hardware
Attaching hardware missing	C	Require replacement of hardware
Attaching hardware not functioning	A	Require repair or replacement of hardware
Attaching hardware threads damaged	A	Require repair or replacement of hardware
Attaching hardware threads stripped (threads missing)	A	Require replacement of hardware
Broken	A	Require replacement
Missing	C	Require replacement

TRACK BAR BUSHINGS

Condition	Code	Procedure
Attaching hardware broken	A	Require repair or replacement of hardware
Attaching hardware missing	C	Require replacement of hardware
Attaching hardware not functioning	A	Require repair or replacement of hardware

Attaching hardware threads damaged	A	Require repair or replacement of hardware
Attaching hardware threads stripped (threads missing)	A	Require replacement of hardware
Binding	A	Require repair or replacement
Deteriorated, affecting performance	A	Require repair or replacement
NOTE: **If condition is caused by oil-soaking, further inspection is required to determine source of oil.**		
Distorted, affecting performance	A	Require repair or replacement
Leaking (fluid-filled type)	A	Require replacement
Missing	C	Require replacement
Noisy	2	Further inspection required
NOTE: **If noise isolated to bushing, suggest repair or replacement. Use only approved lubricant on rubber bushings. Petroleum-based lubricants may damage rubber bushings.**		
Oil-soaked, affecting performance	A	Require replacement
NOTE: **Further inspection required to determine source of oil.**		
Rubber separating from internal metal sleeve on bonded bushing	A	Require replacement
Seized	A	Require replacement
Shifted (out of position)	B	Require repair or replacement
Split	A	Require replacement
Surface cracking (weather-checked)		No service suggested or required

TRACK BARS

Condition	Code	Procedure
Attaching (mating) hole distorted	A	Require repair or replacement of bracket or frame
Attaching hardware broken	A	Require repair or replacement of hardware
Attaching hardware missing	C	Require replacement of hardware
Attaching hardware not functioning	A	Require repair or replacement of hardware
Attaching hardware threads damaged	A	Require repair or replacement of hardware
Attaching hardware threads stripped (threads missing)	A	Require replacement of hardware
Bent, affecting performance	B	Require replacement
Corroded, affecting structural integrity	A	Require replacement
Grease boot cracked	2	Suggest replacement of boot
NOTE:		

If boot is not available separately, suggest replacement of tie rod end (reason code 2). Cracked grease boot will allow contaminants to enter joint and will accelerate wear .		
Grease boot missing	C	Require replacement of boot
NOTE: **If boot is not available separately, suggest replacement of track bar (reason code 2). Lack of grease boot will allow contaminants to enter joint and will accelerate wear.**		
Grease boot torn	A	Require replacement of boot
NOTE: **If boot is not available separately, suggest replacement of track bar (reason code 2). Torn grease boot will allow contaminants to enter joint and will accelerate wear.**		
Holes distorted	A	Require replacement
Looseness (perceptible horizontal movement)	1	Suggest replacement
NOTE: **If manufacturer's procedures for inspection exist, use those procedures; otherwise, use an approved inspection method such as the dry park check. Do not use pliers or pry bar to check ball and socket movement. Use only moderate hand pressure.**		
Looseness that is excessive	B	Require replacement
NOTE: **Excessive looseness is defined as being significant enough to affect vehicle handling or structural integrity. If manufacturer's procedures 'for inspection exist, use those procedures; otherwise, use an approved inspection method such as the dry park check.**		
CAUTION: **Do not use pliers or pry bar to check ball and socket movement. Use only moderate hand pressure.**		
Mating (attaching) hole distorted	A	Require repair or replacement of bracket or frame
Nut on stud loose	A	Require repair or replacement of nut
NOTE: **Check for bent stud or damaged mating hole.**		
Seized	A	Require replacement
Stud bent	B	Require replacement
NOTE: **Check for damaged mating hole.**		
Stud broken	A	Require replacement
NOTE: **Check for damaged mating hole.**		
Threads damaged	A	Require repair or replacement
Threads stripped (threads missing)	A	Require replacement
NOTE: **Check for damaged mating hole.**		
Wear exceeds manufacturer's specifications	B	Require replacement

TRAILING ARM BUSHINGS

Condition	Code	Procedure
Attaching hardware broken	A	Require repair or replacement of hardware
Attaching hardware missing	C	Require replacement of hardware
Attaching hardware not functioning	A	Require repair or replacement of hardware
Attaching hardware threads damaged	A	Require repair or replacement of hardware
Attaching hardware threads stripped (threads missing)	A	Require replacement of hardware
Binding	A	Require repair or replacement
Deteriorated, affecting performance	A	Require repair or replacement
NOTE: **If condition is caused by oil-soaking, further inspection is required to determine source of oil.**		
Distorted, affecting performance	A	Require repair or replacement
Leaking (fluid-filled type)	A	Require replacement
Missing	C	Require replacement
Noisy	2	Further inspection required
NOTE: **If noise isolated to bushing, suggest repair or replacement. Use only approved lubricant on rubber bushings. Petroleum-based lubricants may damage rubber bushings.**		
Oil-soaked, affecting performance	A	Require replacement
NOTE: **Further inspection required to determine source of oil.**		
Rubber separating from internal metal sleeve on bonded bushing	A	Require replacement
Seized	A	Require replacement
Shifted (out of position)	B	Require repair or replacement
Split	A	Require replacement
Surface cracking (weather-checked)		No service suggested or required

TRAILING ARMS

Condition	Code	Procedure
Attaching hardware broken	A	Require repair or replacement of hardware
Attaching hardware corroded, affecting structural integrity	A	Require replacement of hardware
Attaching hardware missing	C	Require replacement of hardware
Attaching hardware not functioning	A	Require repair or replacement of hardware

Attaching hardware threads damaged	A	Require repair or replacement of hardware
Attaching hardware threads stripped (threads missing)	A	Require replacement of hardware
Ball joint hole oversized (loose interference or press fit)	B	Further inspection required
NOTE: **If oversized ball joint is available, require replacement of ball joint. If oversized ball joint is not available, require replacement of control arm.**		
Bent, affecting performance	B	Require replacement
Bushing hole oversized	B	Require replacement
Corroded, affecting structural integrity	A	Require replacement
Holes distorted	A	Require replacement
Threads damaged	A	Require repair or replacement
Threads stripped (threads missing)	A	Require replacement

VALVE STEMS

NOTE: **Most tire manufacturers suggest replacement of non-TPMS valve stems any time a new tire is installed. For TPMS valve stems, the manufacturer may require replacement of the valve stem, o-ring seals, washers, gaskets, valve cores, compression washers and/or locking nut.**

Condition	Code	Procedure
Bent	2	Suggest replacement
Broken	A	Require replacement
Cap seized	A	Require repair or replacement
Cut, but not leaking	1	Suggest replacement
Deteriorated (cracking, dry rot)	1	Suggest replacement
Leaking	A	Require repair or replacement
Missing	C	Require replacement
O-Ring leaking	A	Require replacement of O-Ring
Threads damaged	A	Require repair or replacement
Threads stripped	A	Require replacement
Valve cap missing	C	Require replacement of cap

VEHICLE DYNAMICS CONTROL

NOTE: **An evolution of ABS and Traction Control. It uses the ABS hardware and two additional sensors: a steering-wheel angle sensor, which measures the position and rate of steering wheel input, and a yaw sensor, which measures the rate at which the vehicle is actually turning. By comparing rates, computer determines if the vehicle is oversteering or understeering.**

NOTE: **On slippery surfaces or during aggressive maneuvers, if the vehicle understeers severely, the computer will actuate the brakes on the inside rear wheel, just hard enough and just long enough to correct the steering behavior. When the vehicle oversteers severely, the system will brake the outside front wheel instead.**

NOTE: **When servicing this system, OEM may require steering angle sensor be calibrated to the vehicle thrustline.**

VEHICLE SPEED SENSOR

Condition	Code	Procedure
Attaching hardware broken	A	Require repair or replacement of hardware
Attaching hardware corroded, affecting structural integrity	A	Require replacement of hardware
Attaching hardware missing	C	Require replacement of hardware
Attaching hardware not functioning	A	Require repair or replacement of hardware
Attaching hardware threads damaged	A	Require repair or replacement of hardware
Attaching hardware threads stripped (threads missing)	A	Require replacement of hardware
Connector (Weatherpack type) leaking	A	Require repair or replacement
Connector broken	A	Require repair or replacement
Connector melted	A	Require replacement
Connector missing	C	Require replacement
NOTE: **Determine cause and correct prior to replacement of part.**		
Dust boot missing	C	Require replacement of boot
Dust boot split	A	Require replacement of boot
NOTE: **If boot is not available separately, suggest replacement of sensor (reason code 2). This condition can lead to damage of the sliding magnet, which, in turn, causes premature sensor failure**		
Dust boot torn	A	Require replacement of boot
NOTE: **If boot is not available separately, suggest replacement of sensor (reason code 2). This condition can lead to damage of the sliding magnet, which, in turn, causes premature sensor failure.**		
Housing cracked	B	Require replacement
NOTE: **If boot is not available separately, suggest replacement of sensor (reason code 2). This condition can lead to damage of the sliding magnet, which, in turn, causes premature sensor failure.**		
Lead routing incorrect	B	Require rerouting according to vehicle

		manufacturer's specifications
Loose	B	Require adjustment to vehicle manufacturer's specifications
Missing	C	Require replacement
Output signal incorrect	B	Require repair or replacement
Terminal burned, affecting performance	A	Require repair or replacement
NOTE: **Determine cause and correct prior to repair or replacement of part.**		
Terminal burned, not affecting performance	2	Suggest repair or replacement
Terminal corroded, affecting performance	A	Require repair or replacement
Terminal corroded, not affecting performance	2	Suggest repair or replacement
Terminal loose, affecting performance	B	Require repair or replacement
Terminal loose, not affecting performance	1	Suggest repair or replacement
Wire lead burned	A	Require repair or replacement
Wire lead conductors exposed	B	Require repair or replacement
Wire lead open	A	Require repair or replacement
Wire lead shorted	A	Require repair or replacement

VEHICLE STABILITY ASSIST

NOTE: **An evolution of ABS and Traction Control. It uses the ABS hardware and two additional sensors: a steering-wheel angle sensor, which measures the position and rate of steering wheel input, and a yaw sensor, which measures the rate at which the vehicle is actually turning. By comparing rates, computer determines if the vehicle is oversteering or understeering.**

NOTE: **On slippery surfaces or during aggressive maneuvers, if the vehicle understeers severely, the computer will actuate the brakes on the inside rear wheel, just hard enough and just long enough to correct the steering behavior. When the vehicle oversteers severely, the system will brake the outside front wheel instead.**

NOTE: **When servicing this system, OEM may require steering angle sensor be calibrated to the vehicle thrustline.**

VEHICLE STABILITY/SKID CONTROL

NOTE: **An evolution of ABS and Traction Control. It uses the ABS hardware and two additional sensors: a steering-wheel angle sensor, which measures the position and rate of steering wheel input, and a yaw sensor, which measures the rate at which the vehicle is actually turning. By comparing rates, computer determines if the vehicle is oversteering or understeering.**

NOTE: **On slippery surfaces or during aggressive maneuvers, if the vehicle understeers severely, the computer will actuate the brakes on the inside rear wheel, just hard enough and just long enough to correct the steering behavior. When the vehicle oversteers severely, the system will brake the outside front wheel instead.**

NOTE: **When servicing this system, OEM may require steering angle sensor be calibrated to the vehicle thrustline.**

WARNING LAMPS

Condition	Code	Procedure
Bulb burned out	A	Require replacement
Warning light does not come on during bulb check		Further inspection required to determine cause
Warning light flashes		Further inspection required to determine cause
Warning light is intermittent		Further inspection required to determine cause
Warning light stays on after initial bulb check		Further inspection required to determine cause

WHEEL ALIGNMENT

NOTE: **Wheel alignment is defined as the measurement, analysis, and adjustment of steering and suspension angles to conform to manufacturer specifications. These angles usually include, but are not limited to: caster, camber, toe, and thrust angle. Where these angles are not adjustable and not in specification, component replacement or correction kits may be required. Errors in set-back and steering axis inclination (SAI) are often attributable to failed or damaged components and must be corrected prior to performing an alignment. Failure to replace or correct suggested parts or service may prevent a proper alignment. Before performing an alignment check, inspect and verify the following: Tire pressure and size . Vehicle loading . Ride height . Steering and suspension parts only if the inspection reveals that all the above are within published specifications, a wheel alignment check and a proper wheel alignment, if needed, may be performed. Under no circumstances should a technician bend or heat any steering or suspension component, unless specified by the vehicle manufacturer. All measurements and specifications must be noted on the inspection report.**

Condition	Code	Procedure
Beyond manufacturer's service interval	3	Suggest alignment check
Dog tracking, shown to be caused by faulty alignment	2	Suggest repair

Drift, shown to be caused by faulty alignment	A	Require alignment
Lead, shown to be caused by faulty alignment	A	Require alignment
Outside manufacturer's specifications	B	Require repair
Part has been changed, affecting alignment	A	Require alignment check
Pull, shown to be caused by faulty alignment	A	Require alignment
Steering wheel off-center	2	Suggest alignment
Tire wear, shown to be caused by faulty alignment	A	Require alignment
Wander, shown to be caused by faulty alignment	A	Require alignment

WHEEL ATTACHMENT HARDWARE

NOTE: **For conditions noted below, also check condition of wheel stud holes. Proper lug nut torque is essential. Follow recommended torque specifications and tightening sequence. DO NOT lubricate threads unless specified by the vehicle manufacturer.**

Condition	Code	Procedure
Bent	A	Require replacement
Broken	A	Require replacement
NOTE: **Some manufacturers require replacement of all studs on that wheel if two or more studs or nuts on the same wheel are broken or missing.**		
Locking lug nut locking groove damaged	A	Require replacement
Loose	A	Require repair or replacement of affected component
Lug nut installed backward	B	Require repair or replacement
Lug nut mating surface distorted	A	Require replacement of nut
Lug nut mating type incorrect	B	Require replacement of nut
Lug nut missing	C	Require replacement
Lug nut rounded	A	Require replacement of nut
NOTE: **Only required if removing wheel.**		
Lug nut seized	A	Require replacement of nut
NOTE: **Only required if removing wheel.**		
Stud incorrect	B	Require replacement of stud
Stud missing	C	Require replacement
Threads damaged	A	Require repair or replacement of component with damaged threads
Threads stripped	A	Require replacement of component with stripped threads

WHEEL BEARINGS, RACES AND SEALS

NOTE: **When replacing or repacking wheel bearings, grease seal replacement is required. You are not required to replace these components in axle sets. Determine the need to replace based upon the individual component conditions that follow.**

Condition	Code	Procedure
Axle seal on drive axle leaking	A	Require replacement of seal and inspection of axle, bearing, housing, and vent tube
Bearing end-play exceeds specifications	B	Require adjustment of bearing, if possible If proper adjustment cannot be obtained, require replacement of bearing and race assembly
Bearing rollers, balls or races are worn, pitted, or feel rough when rotated as an assembly or other damage affecting performance.	B	Require replacement of bearing and race assembly
Seal leaking	A	Require replacement of seal and inspection of bearings
NOTE: **Require inspection of mating and sealing surface and repair or replace as necessary. Check vent. A plugged vent may force fluid past the seal.**		
Seal missing	C	Require replacement

WHEELS (RIMS)

NOTE: **Mounting a regular tire on a high-pressure compact spare wheel is not permitted. Attempting to mount a tire of one diameter on a wheel of a different diameter or flange type may result in serious injury or death. If the wheel identification stamp is not legible, or cannot be found, do not use the wheel until the size and type have been properly identified. Wheels of different diameter, offset, or width cannot be mixed on the same axle. Bead seat tapers cannot be interchanged.**

Condition	Code	Procedure
Bead leaking, caused by wheel	A	Require repair or replacement
NOTE: **Do not attempt to correct a bent rim.**		
Bent hub mounting surface	A	Require replacement
Bent rim, causing vibration	2	Suggest replacement
NOTE: **Do not attempt to correct a bent rim.**		

Broken	A	Require replacement
Cast wheel porous, causing a leak	A	Require repair or replacement
Clip-on balance weight is incorrect type for rim flange	2	Suggest replacement of weight
Corrosion affecting structural integrity	A	Require replacement
Corrosion build-up on wheel mounting surface	A	Require repair
Cracked	B	Require replacement
Directional/asymmetrical wheels mounted incorrectly	B	Require remounting and/or repositioning
Load capacity less than OEM specifications	B	Require replacement
Mating surface distorted	A	Require replacement
Offset mismatched on same axle	B	Require replacement
Rivets leaking	A	Require replacement
Run-out beyond OEM specs	B	Require replacement
NOTE: **Some wire-spoke wheels may be repaired.**		
Stud holes elongated	A	Require replacement
NOTE: **Inspect wheel attaching hardware for damage.**		
Welded or brazed repair	2	Suggest replacement
Welds leaking	A	Require replacement
Wheel centering (pilot) hole incorrect	B	Require replacement

WIRING HARNESSES AND CONNECTORS

Condition	Code	Procedure
Application incorrect	B	Require repair or replacement
Attaching hardware broken	A	Require repair or replacement of hardware
Attaching hardware missing	C	Require replacement of hardware
Attaching hardware not functioning	A	Require repair or replacement of hardware
Attaching hardware threads damaged	A	Require repair or replacement of hardware
Attaching hardware threads stripped (threads missing)	A	Require replacement of hardware
Connector (Weatherpack type) leaking	A	Require repair or replacement
Connector broken	A	Require repair or replacement
Connector melted	A	Require repair or replacement
NOTE: **Determine cause and correct prior to repair or replacement of part.**		
Connector missing	C	Require replacement
Insulation damaged, conductors exposed	A	Require repair or replacement
Insulation damaged, conductors not exposed	1	Suggest repair or replacement

Open	A	Require repair or replacement
Protective shield (conduit) melted	2	Suggest repair or replacement
NOTE: **Determine cause and correct prior to repair or replacement of part.**		
Protective shield (conduit) missing	C	Require repair or replacement
Resistance (voltage drop) out of specification	A	Require repair or replacement
Routed incorrectly	B	Require repair
Secured incorrectly	B	Require repair
Shorted	A	Require repair or replacement
Terminal broken	A	Require repair or replacement
Terminal burned, affecting performance	A	Require repair or replacement
NOTE: **Determine cause and correct prior to repair or replacement of part.**		
Terminal burned, not affecting performance	2	Suggest repair or replacement
Terminal corroded, affecting performance	A	Require repair or replacement
Terminal corroded, not affecting performance	2	Suggest repair or replacement
Terminal loose, affecting performance	B	Require repair or replacement
Terminal loose, not affecting performance	1	Suggest repair or replacement
Voltage drop out of specification	A	Require repair or replacement

REASON CODE EXPLANATION

Code	Reason
Required	
A	Part No Longer Performs Intended Purpose
B	Part Does Not Meet A Design Specification (Regardless Of Performance)
C	Part Is Missing
Suggested/Optional	
1	Part Is Close To The End Of Its Useful Life
2	To Address A Customer Need, Convenience Or Request
3	To Comply With Maintenance Recommended By The Vehicle's Original Equipment Manufacturer
4	Technician's Recommendation Based On Substantial And Informed Experience
5	To Comply With Maintenance Recommended By AMRA/MAP

AUTOMOTIVE TERMINOLOGY & DEFINITIONS

ACTIVE SUSPENSION SYSTEM

active suspension systems move each wheel up and down to control body motion in response to road abnormalities. The system responds to inputs from the road and the driver. With an active suspension, a vehicle can simultaneously provide the smooth ride of a soft suspension along with the superior handling associated with a firm suspension.

ACTIVE TILT CONTROL

active tilt control winds up the stabilizer bars in the front and rear suspension to resist body lean while cornering. Because active control is used only as needed, vehicle spring rates and stabilizer bar stiffness can be reduced, improving normal ride characteristics. In addition, this system has potential to increase low-speed, off-road traction on 4WD vehicles.

ACTIVE VARIABLE RATIO STEERING

electronically provides variable steering ratios. A computer is linked with the vehicle stability control system to aid in directional stability of the vehicle. As the vehicle travels down the highway, road surfaces and wind gusts can affect the vehicle directional stability. The car may wander a little or dart to one side, as many who have met a tractor-trailer unit on a windy day have experienced. Sensors on the car detect this sudden unintentional movement and the computer will stabilize the car by moving the Active Steering electric motor and steering gear. The driver doesn't turn the steering wheel at all.

AIR SPRING

a suspension device made up of a flexible bladder containing compressed air. The air spring takes the place of a :onvent;onal coil or leaf spring. Air is supplied by an on-board ;ompressor, usually with auxiliary equipment to sense vehicle leight and modify the pressure in the air spring as needed.

AIR SUSPENSION

instead of steel coil or leaf springs, some vehicles have a bellows-like unit at each corner that contains pressurized air. As a rule, air suspensions can produce a softer ride.

ALIGNMENT

an adjustment to bring parts or components into a line or proper coordination.

ALL-WHEEL DRIVE

the method of providing traction to any of the wheels of a vehicle, as conditions require. Depending on the system, it may be full-time or part-time.

ANTI-ROLL BAR

see 'stabilizer bar'.

ASPECT RATIO

the relationship between the height of a tire from bead to tread, and the tread width, usually expressed as a percentage of the tread width.

AUTOMATIC RIDE CONTROL

automatic ride control adjusts vehicle shock absorber resistance (damping) in response to driver inputs such as steering and braking and for changes in road surface. During maneuvers such as hard braking or quick lane changes, the system increases suspension damping to improve dynamic stability. Damping is automatically decreased during steady driving, so that bumps and potholes are absorbed rather than being transmitted to the occupants. Some systems also allow the driver to select suspension settings: soft, normal or firm (sport).

AXIAL LOAD

a type of load placed on a bearing that is parallel to the axis of the rotating shaft.

AXIAL PLAY

movement of a component parallel to the axis of rotation.

AXIAL

round, on or along an axis; having the same direction or being parallel to the axis of rotation.

AXIS

a real or imaginary straight line on which or around which an object rotates.

BALANCE

a condition of equal weight distribution within a component or among components; the act of equalizing the weight distribution, such as balancing a tire or an engine's reciprocating assembly.

BALL JOINT

a suspension component that provides a pivot point, allowing the steering knuckle to move up and down as well as turn. In response to steering input. The ball fits into a socket housing that is attached to the control arm and the stud on the other end of the ball is attached to the steering knuckle. A dust cover is installed over the ball and socket assembly to keep dirt out and lubricant in.

BEAD

the steel reinforced inner edge of a tire, which fits inside and seals against the wheel rim.

BOOT

protective rubber cover with accordion pleats used to contain lubricants and exclude contaminating dirt, water and grime, located at each end of the rack-and- pinion assembly and FWD CV-joints.

BUMP STEER

a steering problem in which a vehicle tends to the left or the right after a bump, without steering wheel input from the driver. This is usually caused by some steering misalignment or damage that permits change of toe when the suspension works up and down.

BUSHING

a liner, usually removable, for a bearing; an anti-friction liner used in place of a bearing; a type of bearing that is used to support rotating shafts.

CAMBER

the attitude of a wheel/tire assembly in which, when viewed from the front, the distance between the tops and bottoms of the tires are different. If the distance between the tops is greater than between the bottoms, positive camber is present. If the distance between the tops is less than between the bottoms, negative camber is present.

CASTER

angle formed between the kingpin axis and a vertical axis as viewed from the side of the vehicle. Caster is considered positive when the top of the kingpin axis is behind the vertical axis, that is, tilted toward the rear of the vehicle.

CENTER LINK

a steering linkage component which attaches the Pitman arm to the idler arm, tie-rod or crosslink.

COIL SPRING

spring steel rod wound into a coil that supports the vehicle's weight while allowing suspension movement.

COLLAPSIBLE STEERING COLUMN

a steering column that is designed to collapse, to prevent the column from heavily impacting the driver during an accident.

CONSTANT VELOCITY (CV) JOINT

a flexible coupling between two shafts that allows each shaft to maintain the same speed regardless of operating angle.

CONTROL ARM

a suspension component that connects the vehicle frame to the steering knuckle or axle housing and allows the up and down movement of the wheels.

COTTER PIN.

a safety component made from soft steel, used to keep a nut from loosening on a bolt or stud. The cotter pin is inserted through a hole in the bolt or stud and through slots in the nut (see 'castellated nut'), then the ends of the cotter pin are spread to lock it in position.

CROSSMEMBER

part of the vehicle frame structure, arranged transversely and attached to the frame rails at each side of the vehicle. Can be removable or welded in place.

DAMPEN

to slow or reduce oscillations or movement.

DEAD AXLE

a load-supporting axle that does not transmit power; an axle that does not rotate, but merely forms a base on which to attach the wheels.

DIRECTIONAL STABILITY

the ability of a car to travel in a straight line on a flat surface with a minimum of driver control.

DIRECTIONAL TIRE

tire with a tread pattern that is designed to give maximum traction by removing water from under the tread in such a way as to minimize the risk of aquaplaning. Directional tires must be installed to turn in a specific direction.

DOWNFORCE

negative aerodynamic lift.

DRAG COEFFICIENT

drag divided by the product of dynamic pressure and projected area. A factor representing the drag acting on a body (as an automobile or airfoil).

DRAG LINK

a steering linkage component that connects the pitman arm and the steering arm.

DRAG

horizontal aerodynamic retarding force on a vehicle parallel to the relative wind direction.

DYNAMIC BALANCING

balancing a part while it is in motion.

ELECTRICALLY POWERED STEERING

electrically powered steering uses an electric motor to drive either the power steering hydraulic pump or the steering linkage directly. The power steering function is therefore independent of engine speed, resulting in significant energy savings.

ELECTRONIC AIR SUSPENSION

electronic air suspension provides the comfort of riding on air with adjustable spring rates and capability to change ride height and load-carrying ability. Under normal driving conditions, an electronic air suspension vehicle rides at the same height as a traditionally sprung vehicle. With a heavy load, ride height is increased automatically. On current vehicles, the suspension lowers the ride height by 20 mm at highway speeds for improved aerodynamics, with about 2 percent better fuel economy. Lower ride height also can improve on-center feel of steering due to the change in suspension geometry and increased caster angle.

ELECTRONIC LEVEL CONTROL.

a suspension system that uses air springs to maintain vehicle ride height. Height sensors are used to signal a control unit when the vehicle is riding low or high. In response to this signal, compressed air is either sent to or vented from the air springs.

HALFSHAFT

transfers power from the transaxle to the front wheels on a front-wheel drive vehicle. Also used on some vehicles with rear-wheel drive and independent rear suspension to transfer power from the differential to the rear wheels. Consists of a stub shaft that is splined into the differential side gear, another stub shaft that is splined into the wheel hub, an interconnecting shaft, and two CV-joints, which connect the interconnecting shaft to the stub shafts.

HARMONIC VIBRATION

periodic motion or vibration along a straight line. The severity depends on the frequency or amplitude.

HEIGHT SENSOR

a component used in an air suspension system to signal a control unit when the vehicle is riding low or

high. In response to this signal, compressed air is either sent to or vented from the air springs.

HUB

mounting point for the wheelan an axle or spindle; the part of the synchronizer assembly that is splined to the transmission shaft; the center part of a wheel, gear, etc., that rides on a shaft.

IDLER ARM

a conventional steering system component consisting of an arm that swivels in a bushing on a shaft, which is attached to the frame. The idler arm is mounted on the right side of the vehicle and is the same length and set at the same angle as the Pitman arm. Its function is to hold the right end of the center link level with the left end, which is moved by the pitman arm, and transfer the steering motion to the right side tie-rod.

INCLUDED ANGLE

the sum of the angle of camber and steering axis inclination; the sum of two intersecting angles.

INDEPENDENT SUSPENSION

a suspension in which each wheel can travel up and down without directly affecting the position of the opposite wheel.

INTEGRAL POWER STEERING

a power steering system in which the power cylinder and control valve are contained in one housing.

INTELLIGENT VEHICLE HIGHWAY SYSTEM (IVHS)

the Intelligent Vehicle Highway System (IVHS) provides a variety of information to the vehicle and driver through cooperation of automotive electronics, communications, controls and systems engineering technologies. IVHS has two areas of interest to car and truck makers: (1)telematics and (2)active safety warning and control systems. Several features are: Telematics: Navigation systems Traffic messaging Emergency messaging and security tracking (e.g. RESCU - Remote Emergency Satellite Cellular Unit) Short range communications/ automatic toll collection Active Safety Warning and Control Systems Collision warning/avoidance - Backup and parking aids - Side vision aid - Vision enhancement - (all weather/night vision) - Adaptive cruise control - Lane departure control

INTERACTIVE VEHICLE DYNAMICS (IVD)

interactive Vehicle Dynamics is designed to minimize loss of vehicle control due to loss of traction. The IVD system could be activated when a vehicle is taking a turn too quickly or when encountering an icy patch.

JAM NUT

a locknut.

KINGPIN

the pivot shaft for the steering knuckle on most early axles and some modern heavy-duty axles.

KNUCKLE

the suspension component that connects the upper and lower control arms or the strut and lower control arm. On rear wheel drive vehicles, it usually incorporates the front wheel spindle and on front wheel drive vehicles it has an opening where the halfshaft passes through. A steering arm is attached to the knuckle, where the tie-rod end is connected. Also called a steering knuckle.

LANE-DEPARTURE WARNING SYSTEM

Issues a warning when the vehicle edges off course and reaches the highway lane markers. Introduced on the 2005 Infiniti FX and available on the 2006 Infiniti M45, the system developed by Iteris can detect lane dividers even in rainy weather. It delivers a noticeable sound when the vehicle starts to move into an adjacent lane, whether due to inattention, drowsiness or distraction.

LATERAL RUNOUT

side-to-side movement or wobble in a wheel or tire.

LEAF SPRING

a suspension spring consisting of a single flat plate made of steel or composite material or several steel plates bundled together.

LOW TIRE PRESSURE WARNING

a low tire pressure warning system alerts the driver if the air pressure in a tire becomes too low. Typically, a light on the instrument panel will be illuminated to warn of the low-pressure condition.

MACPHERSON STRUT

the principal device in the suspension of the same name, in which the spring, shock absorber and sometimes the steering knuckle are combined in a single unit.

MEMORY STEER

a steering condition where the steering wheel and wheels want to return to a position other than center. This can be caused by tightening rubber bonded socket tie-rod ends when the steering wheel is not centered, binding in the upper strut mounts, or binding in a steering component or ball joint.

ON-CAR BALANCING

the practice of spinning a wheel on the car to balance the wheel and all other rotational components together.

PARALLELOGRAM STEERING LINKAGE

a type of conventional steering linkage consisting of a pitman arm, center link, idler arm and tierod assemblies to connect to the steering knuckles. The pitman arm, center link and idler arm form three sides of a parallelogram.

PITMAN ARM

a steering system component mounted on the steering box shaft and transfers the gearbox motion to the steering linkage.

PLUNGER JOINT

the inboard CV-joint on a halfshaft, so called because the joint moves in and out in response to the suspension's up and down movement, which causes the distance between the transaxle and the wheel to change. The movement takes place within the joint, with the tripod rollers or double offset ball bearings moving in and out on elongated grooves in the yoke or outer race.

PRESS FIT

when a part is slightly larger than a hole it must be forced together with a press.

PULL

a steering condition where the vehicle driver has to maintain constant pressure on the steering wheel to keep the vehicle moving straight.

RACK-AND-PINION STEERING

a type of steering mechanism that replaces the pitman arm, center link and idler arm on gearbox steering. The steering column ends in a pinion gear that moves the driven rack to the left and right. The rack ends contain ball studs connected to the outer tie-rod ends and steering knuckles.

RADIAL LOAD

load applied at 90 degrees to an axis of rotation.

RADIAL RUNOUT

the out-of-roundness ot a wheel or tire.

RADIAL

branching out in all directions from a common center; perpendicular to the shaft or bearing bore.

RADIUS ARM

a suspension component that is connected to a twin I-beam or solid axle at one end and to the vehicle frame through bushings at the other. The radius arm braces the I-beam or axle and keeps it at a right angle to the vehicle frame.

REAR WHEEL STEERING

a system used on a some vehicles to change the toe of the rear wheels to either steepen a sharp turn or enhance cornering on a shallower, faster one.

RIDE HEIGHT

the dimension between a fixed point on the vehicle and the pavement. The fixed point varies according to vehicle and manufacturer. Also called vehicle height.

ROLLING RESISTANCE

retarding force, parallel to the direction of travel, caused by tire resistance along the ground.

RUNOUT

wobble or deflection beyond a rotating part's normal plane of movement.

SAI

see 'steering axis inclination',

SCRUB RADIUS

the distance between the point at which the tire's vertical centerpoint intersects the road, and the steering axis inclination (SAI) intersects the road.

SHACKLE

the attachment to the frame for one end of a leaf spring. The shackle allows the spring to change in length as the vehicle encounters uneven road surfaces.

SHIM

thin sheets of material, usually metal, used as spacers to control the distance between parts.

SHOCK ABSORBER

a device used to dampen the oscillation of the suspension caused by irregularities in the road surface.

SHORT AND LONG ARM SUSPENSION

a suspension system in which the upper control arm is shorter than the lower control arm, allowing the wheel to deflect in a vertical direction with minimal change in camber.

SPINDLE

a shaft used to attach the wheel assembly on non-drive axles.

SPRING

a suspension system component that supports the vehicle and absorbs shock caused by uneven road surfaces; a device that returns to its original form after being forced out of shape.

SPROCKET

a toothed wheel used to engage a chain or ribbed belt.

SPRUNG WEIGHT

the weight of all the vehicle components that are supported by the springs; see 'unsprung weight'.

STABILIZER BAR

a torsion-bar spring connecting the suspension on either side of the vehicle. When a vehicle rolls to the side in a turn, the suspension at the outside wheel compresses and the suspension at the inside wheel extends. The stabilizer bar that connects them twists to apply a counteracting force to hold the vehicle closer to level. Also called an anti-roll bar or sway bar.

STATIC BALANCE

balance at rest; still balance; the equal distribution of weight of the wheel and tire around the axis of rotation such that the wheel assembly has no tendency to rotate by itself regardless of its position.

STEERING ARM

the steering system component that links the steering knuckle to the tie-rod assembly.

STEERING AXIS INCLINATION

the angle between true vertical and an imaginary line running through the rotational center of the ball joint(s).

STEERING COLUMN

the housing, steering shaft, bearings and related components between the steering wheel and the steering gear.

STEERING GEAR

the assembly located at the end of the steering column, which contains the gears and other components that multiply the driver turning force.

STEERING KNUCKLE

the suspension component that connects the upper and lower control arms or the strut and lower control arm. On rear wheel drive vehicles, it usually incorporates the front wheel spindle and on front wheel drive vehicles it has an opening where the halfshaft passes through. A steering arm is attached to the steering knuckle, where the tie-rod end is connected.

STEERING LINKAGE

all of the components that connect the steering gear to the front wheels.

STRUT ROD

on vehicles where the lower control arm is attached to the frame at one pivot point, a strut rod is used to brace the control arm against the vehicle frame.

STUD

a fastener that has screw threads at both ends.

SWAY BAR

see 'stabilizer bar',

THRUST ANGLE

the difference between the thrust line and the geometric centerline of the vehicle.

THRUST LINE ALIGNMENT

aligning the front wheels to the thrust line during a wheel alignment, when rear wheel toe cannot be adjusted to specification.

THRUST LINE

an imaginary line that divides the total toe angle of the rear wheels.

THRUST LOAD

load placed on a part that is parallel to the center of the axis.

TIE-ROD END

a ball and socket joint that connects the tie-rod to the steering knuckle arm and to the center link or steering rack.

TIE-ROD

steering linkage member which connects the steering knuckle arm with the centerlink or the steering rack.

TIRE ROTATION

the practice of moving a set of tires to different positions on the vehicle to equalize wear and extend the life of the tires.

TIRE SLIP

see 'wheel slip'.

TOE

the direction in which a wheel tends to roll, a major factor in tire wear.

TOE-IN

a condition that exists if the tire's line of forward direction intersects the extended centerline of the vehicle.

TOE-OUT ON TURNS

the designed angle of the steering arm on the steering knuckle, which causes the inside front wheel to turn at a sharper angle than the outside front wheel during a turn. The specification is checked using the turntables on wheel alignment machine. Toe-out on turns is not an adjustable angle, and if it is incorrect it is most likely due to a bent steering arm.

TOE-OUT

a condition that exists if the tire's line of forward direction and the vehicle centerline are angled apart.

TRACK

the distance between the centers of the treads of parallel wheels.

TRACKING

travel of the rear wheels in a parallel path with the front wheels.

TWIN I-BEAM SUSPENSION

a type of independent front suspension and used on light trucks and vans. It consists of two I-beams supported by coil springs, and the steering knuckles/spindles, which are connected by king pins or ball joints. The inner end of the axle connects to the vehicle frame through a rubber bushing. A radius arm also connects to the frame through rubber bushings to control wheelbase and caster.

UNSPRUNG WEIGHT

the components of a vehicle that rest directly on the road surface without being supported by the suspension springs.

VARIABLE ASSIST POWER STEERING

a power steering system that uses valves and speed sensors to vary the amount of steering assist according to engine or road speed. At slow speeds more steering assist is delivered and steering the wheels is easier; necessary for parking, etc.. At higher speeds, steering assist is reduced and more steering effort is required to steer the car, giving the driver greater feel of the road. Also known as Speed-sensitive power steering.

VEHICLE HEIGHT

see 'ride height'.

WHEEL ALIGNMENT

the adjustment of suspension and steering components to optimize steering control and minimize tire wear.

WHEEL BALANCE

the condition in which a wheel/tire assembly has equal weight around its center, preventing vibration at high speeds. Wheel balance can be static, such as on a bubble balancer, or dynamic, such as with a spin balancer.

WHEEL OFFSET

the dimensional difference between a wheel's centerline and the plane of the axle flange mounting surface.

WHEEL SLIP

a measurement (in percentage) of the friction between the tire and road surface; at zero slip the tire rotates freely, while at 100% slip the tire is locked up and is pushed along the road surface by the moving vehicle. Also called tire slip.

WHEEL SPEED SENSOR

a permanent magnetic sensor that sends information to the computer in an ABS system regarding wheel speed.

WHEEL WEIGHTS

small weights, usually made of lead, attached either mechanically or by adhesive to a wheel/tire assembly to correct its balance.

WORM GEAR

a gear into which teeth are cut, resembling the threads of a screw.

2014 ACCESSORIES AND EQUIPMENT

Active Cruise Control (ACC) Module - Electrical Diagnostics - Cherokee

DIAGNOSTIC CODE INDEX

DIAGNOSTIC CODE INDEX

DTC	Description
B222F-00	FLASH WRITE PERFORMANCE
C0063-9A	YAW RATE SENSOR - COMPONENT OR SYSTEM OPERATING CONDITIONS
C008E-00	ECU INTERNAL PERFORMANCE
C1240-00	STEERING ANGLE SENSOR ANGLE OVERTRAVEL PERFORMANCE
C127A-00	ESP DID NOT RESPOND TO DECELERATION REQUEST
C14A3-00	XBW RULE VIOLATION
C14A4-00	SENSOR ADJUSTMENT REQUIRED
C14A5-00	SENSOR BLINDED
C15D8-00	MISMATCH TIRE SIZE
C2129-16	BATTERY VOLTAGE - CIRCUIT VOLTAGE BELOW THRESHOLD
C2129-17	BATTERY VOLTAGE - CIRCUIT VOLTAGE ABOVE THRESHOLD
C212A-84	SYSTEM VOLTAGE - SIGNAL BELOW ALLOWABLE RANGE
C212A-85	SYSTEM VOLTAGE - SIGNAL ABOVE ALLOWABLE RANGE
C2206-00	VEHICLE CONFIGURATION MISMATCH
C2210-00	ECU OVERTEMPERATURE
C2212-00	ECU IN - PLANT MODE ACTIVE
C2223-00	ECU CONFIGURATION MISMATCH
C2225-00	PCM DISABLED ECU
C2226-00	TCM DISABLED ECU
C2227-00	ABS DISABLED ECU
C2318-76	FRONT CAMERA - WRONG MOUNTING POSITION
P0585-00	SPEED CONTROL SWITCH 1/2 CORRELATION
P1593-2A	SPEED CONTROL SWITCH 1/2 STUCK
P1666-00	CRUISE CONTROL MODULE INTERNAL
U0002-00	CAN C BUS OFF PERFORMANCE
U0100-00	LOST COMMUNICATION WITH ECM/PCM
U0101-00	LOST COMMUNICATION WITH TCM
U0102-00	LOST COMMUNICATION WITH TRANSFER CASE CONTROL MODULE / AWD
U0121-00	LOST COMMUNICATION WITH ANTI-LOCK BRAKE SYSTEM (ABS) CONTROL MODULE
U0140-00	LOST COMMUNICATION WITH BODY CONTROL MODULE
U0151-00	LOST COMMUNICATION WITH OCCUPANT RESTRAINT CONTROLLER

	(ORC)
U0155-00	LOST COMMUNICATION WITH CLUSTER/CCN
U0401-00	IMPLAUSIBLE DATA RECEIVED FROM ECM/PCM
U0402-00	IMPLAUSIBLE DATA RECEIVED FROM TCM
U0403-00	IMPLAUSIBLE DATA RECEIVED FROM T-CASE
U0415-00	IMPLAUSIBLE DATA RECEIVED FROM ABS
U0422-00	IMPLAUSIBLE DATA RECEIVED FROM BODY CONTROL MODULE
U0423-00	IMPLAUSIBLE DATA RECEIVED FROM CLUSTER/CCN
U0429-00	IMPLAUSIBLE DATA RECEIVED FROM SCM
U0452-00	IMPLAUSIBLE DATA RECEIVED FROM RESTRAINTS CONTROL MODULE
U110A-00	LOST COMMUNICATION WITH SCM - CAN-C
U11F9-00	ENGINE DID NOT RESPOND TO ACC TORQUE REQUEST
U1215-00	LOST COMMUNICATION WITH FORWARD FACING CAMERA
U121E-00	LOST COMMUNICATION WITH STEERING WHEEL CRUISE CONTROL SWITCH
U148D-00	IMPLAUSIBLE DATA RECEIVED FROM FORWARD FACING CAMERA
U1600-00	ECU APPLICATION SOFTWARE MISMATCH

DIAGNOSIS AND TESTING

B222F-00-FLASH WRITE PERFORMANCE

For a complete wiring diagram, **refer to appropriate SYSTEM WIRING DIAGRAMS article** .

WHEN MONITORED

With the ignition on.

SET CONDITION

The Adaptive Cruise Control (ACC) Module disables a safety controller when programming the module with new software. The safety controller stops the controller from resetting during a flash update. This DTC indicates that the controller has not reset.

POSSIBLE CAUSES

Possible Causes
ADAPTIVE CRUISE CONTROL (ACC) MODULE

DIAGNOSTIC TEST

1. **REPLACE THE ACC MODULE IF DTC IS ACTIVE**
    1. With the scan tool, erase Adaptive Cruise Control (ACC) DTCs.

2. Cycle the ignition switch from off to on at least five times, leaving the ignition on for a minimum of 90 seconds per cycle.
3. With the scan tool, read ACC DTCs.

   Does the scan tool display this DTC as active?

   Yes

   - With a scan tool, flash the Adaptive Cruise Control (ACC) module with latest software version and align the module in accordance with the Service Information. Refer to **MODULE, ADAPTIVE CRUISE CONTROL, STANDARD PROCEDURE** .
   - After the above procedure, Go To 2

   No

   - Go To 3

2. **CONTINUED ACTIVE CODE AFTER PROGRAMING**
   1. With the scan tool, read ACC DTCs.

      Does the scan tool display this DTC as active after programming?

      Yes

      - Replace and align the Adaptive Cruise Control (ACC) module in accordance with the Service Information. Refer to **MODULE, ADAPTIVE CRUISE CONTROL, REMOVAL** .
      - Perform the ADAPTIVE CRUISE CONTROL VERIFICATION TEST. Refer to **STANDARD PROCEDURE**.

      No

      - Test complete.

3. **CHECK THE WIRING AND CONNECTORS**
   1. The conditions necessary to set the DTC are not present at this time.
   2. Using the schematics as a guide, inspect the wiring and connectors specific to this module. Wiggle the wiring and connectors while checking for shorted and open circuits.
   3. Check all related splices and connectors for signs of water intrusion, corrosion, pushed out or bent terminals, and correct pin tension.
   4. Check Service Bulletins for any possible causes that may apply.

      Were there any problems found?

      Yes

      - Repair as necessary.

- Perform the ADAPTIVE CRUISE CONTROL VERIFICATION TEST. Refer to **STANDARD PROCEDURE**.

No

- Test complete.

C0063-9A-YAW RATE SENSOR - COMPONENT OR SYSTEM OPERATING CONDITIONS

For a complete wiring diagram, **refer to appropriate SYSTEM WIRING DIAGRAMS article** .

WHEN MONITORED

Continuously with the ignition on, engine running.

System voltage between 10.0 and 16.0 volts.

No CAN Bus DTCs present.

Adaptive Cruise Control (ACC) module is not in Plant-Mode.

ESP is not in diagnostic mode.

SET CONDITION

The Adaptive Cruise Control (ACC) module receives over the Can Bus from the Antilock brake System (ABS) module that the yaw rate offset of the Dynamic Sensor is beyond its threshold.

A ready conflict between the ACC Module and the Electronic Stability Program (ESP) system has occurred. The ACC Module will disable the ACC system and a message will be displayed in the Electronic Vehicle Information Center (EVIC) indicating that the Adaptive Cruise Control has been disabled. Once the Diagnostic Trouble Code (DTC) goes to stored, the ACC system will return to normal operation. The DTC will be cleared after a 100 consecutive ignition cycles with no active detection.

POSSIBLE CAUSES

Possible Causes
ANTILOCK BRAKE SYSTEM (ABS) DTCS PRESENT
DYNAMIC SENSOR
ABS MODULE NOT INITIALIZED/PROGRAMED

DIAGNOSTIC TEST

CHECK IF THE DTC IS ACTIVE

NOTE: To help in the service of the Adaptive Cruise Control (ACC) system, it is

recommended to communicate with the customer to obtain the environmental conditions they were driving in when the cruise control concern took place. Heavy rain, snow, ice, and fog can cause the ACC system to become inoperative. This is considered as a normal operational reaction of the ACC system and no repair is necessary.

1. Ignition on, engine not running.
2. With the scan tool, attempt to erase Adaptive Cruise Control (ACC) DTCs.

   Can you erase this DTC?

   Yes

   - If the DTC can be erased without resetting, no further repair is necessary.
   - Test complete.
   - Perform the ADAPTIVE CRUISE CONTROL VERIFICATION TEST. Refer to **STANDARD PROCEDURE**.

   No

   - This DTC is an indication of a malfunction in the ABS module that the Dynamic Sensor is out of its designed parameters.
   - With the scan tool, check for any DTCs in the ABS module and repair as necessary.

     NOTE: It may be necessary to run the initialization routine in the ABS module or change/program the vehicle configuration.

   - If there are no ABS DTCs present, and the DTC cannot be cleared or go into a stored state, replace and program the Adaptive Cruise Control (ACC) module in accordance with the Service Information. Refer to **MODULE, ADAPTIVE CRUISE CONTROL, REMOVAL** .
   - Perform the ADAPTIVE CRUISE CONTROL VERIFICATION TEST. Refer to **STANDARD PROCEDURE**.

C008E-00-ECU INTERNAL PERFORMANCE

For a complete wiring diagram, **refer to appropriate SYSTEM WIRING DIAGRAMS article** .

WHEN MONITORED

Ignition on.

SET CONDITION

The Adaptive Cruise Control (ACC) Module runs a self diagnostic test to validate proper controller operation. This DTC will set if the controller has failed one or more internal test.

POSSIBLE CAUSES

Possible Causes
ADAPTIVE CRUISE CONTROL (ACC) MODULE

DIAGNOSTIC TEST

1. **CHECK FOR AN ACTIVE DTC**
   1. Turn the ignition on.
   2. Using the scan tool, read Adaptive Cruise Control (ACC) module DTCs.

      Does the scan tool display this DTC as active?

      Yes

      - Replace and program the Adaptive Cruise Control (ACC) module in accordance with the Service Information. Refer to **MODULE, ADAPTIVE CRUISE CONTROL, REMOVAL** .
      - Perform the ADAPTIVE CRUISE CONTROL VERIFICATION TEST. Refer to **STANDARD PROCEDURE**.

      No

      - Go To 2
2. **CHECK THE WIRING AND CONNECTORS**
   1. The conditions necessary to set the DTC are not present at this time.
   2. Using the schematics as a guide, inspect the wiring and connectors specific to this module. Wiggle the wiring and connectors while checking for shorted and open circuits.
   3. Check all related splices and connectors for signs of water intrusion, corrosion, pushed out or bent terminals, and correct pin tension.
   4. Check Service Bulletins for any possible causes that may apply.

      Were there any problems found?

      Yes

      - Repair as necessary.
      - Perform the ADAPTIVE CRUISE CONTROL VERIFICATION TEST. Refer to **STANDARD PROCEDURE**.

      No

      - Test complete.

C1240-00-STEERING ANGLE SENSOR ANGLE OVERTRAVEL PERFORMANCE

For a complete wiring diagram, **refer to appropriate SYSTEM WIRING DIAGRAMS article** .

WHEN MONITORED

Continuously with the ignition on, engine running.

System voltage between 10.0 and 16.0 volts.

No CAN Bus DTCs present.

Adaptive Cruise Control (ACC) module is not in Plant-Mode.

ESP is not in diagnostic mode.

SET CONDITION

The Adaptive Cruise Control (ACC) module receives a message over the Can Bus from the Steering Column Control Module (SCCM) that the Steering Angle Sensor (SAS) steering angle offset is beyond an allowable threshold.

A ready conflict between the ACC module and the SCCM has occurred. The ACC Module will disable the ACC system and a message will be displayed in the Electronic Vehicle Information Center (EVIC) indicating that the Adaptive Cruise Control has been disabled. Once the Diagnostic Trouble Code (DTC) goes to stored, the ACC system will return to normal operation. The DTC will be cleared after a 100 consecutive ignition cycles with no active detection.

POSSIBLE CAUSES

Possible Causes
STEERING COLUMN CONTROL MODULE DTCS PRESENT
STEERING ANGLE SENSOR

DIAGNOSTIC TEST

CHECK IF THE DTC IS ACTIVE

NOTE: **To help in the service of the Adaptive Cruise Control (ACC) system, it is recommended to communicate with the customer to obtain the environmental conditions they were driving in when the cruise control concern took place. Heavy rain, snow, ice, and fog can cause the ACC system to become inoperative. This is considered as a normal operational reaction of the ACC system and no repair is necessary.**

1. Ignition on, engine not running.

2. With the scan tool, attempt to erase Adaptive Cruise Control (ACC) DTCs.

   Can you erase this DTC?

   Yes

   - If the DTC can be erased without resetting, no further repair is necessary.
   - Test complete.
   - Perform the ADAPTIVE CRUISE CONTROL VERIFICATION TEST. Refer to **STANDARD PROCEDURE**.

   No

   - This DTC is an indication of a malfunction in Steering Column Control Module (SCCM) that the Steering Angle Sensor (SAS) is out of its designed parameters.
   - With the scan tool, check for any DTCs in the SCCM and repair as necessary.
   - If there are no SCCM DTCs present, and the DTC cannot be cleared or go into a stored state, replace and program the Adaptive Cruise Control (ACC) module in accordance with the Service Information. Refer to **MODULE, ADAPTIVE CRUISE CONTROL, REMOVAL** .
   - Perform the ADAPTIVE CRUISE CONTROL VERIFICATION TEST. Refer to **STANDARD PROCEDURE**.

C127A-00-ESP DID NOT RESPOND TO DECELERATION REQUEST

For a complete wiring diagram, **refer to appropriate SYSTEM WIRING DIAGRAMS article** .

WHEN MONITORED

Continuously with the ignition on, engine running.

System voltage between 10.0 and 16.0 volts.

No CAN Bus DTCs present.

Adaptive Cruise Control (ACC) module is not in Plant-Mode.

ESP is not in diagnostic mode.

SET CONDITION

The Adaptive Cruise Control (ACC) module detects the Antilock Brake System (ABS) module for ESP/ESC does not brake when requested.

The ACC module will disable the ACC system and a message will be displayed in the Electronic Vehicle Information Center (EVIC) indicating that the Adaptive Cruise Control has been disabled. Once the Diagnostic

Trouble Code (DTC) goes to stored, the ACC system will return to normal operation. The DTC will be cleared after a 100 consecutive ignition cycles with no active detection.

POSSIBLE CAUSES

Possible Causes
ANTILOCK BRAKE SYSTEM (ABS) ESP/ESC DTCS PRESENT
CAN MESSAGE CONFLICT
VEHICLE IMPROPERLY CONFIGURED

DIAGNOSTIC TEST

CHECK IF THE DTC IS ACTIVE

NOTE: To help in the service of the Adaptive Cruise Control (ACC) system, it is recommended to communicate with the customer to obtain the environmental conditions they were driving in when the cruise control concern took place. Heavy rain, snow, ice, and fog can cause the ACC system to become inoperative. This is considered as a normal operational reaction of the ACC system and no repair is necessary.

1. Ignition on, engine not running.
2. With the scan tool, attempt to erase Adaptive Cruise Control (ACC) DTCs.

   Can you erase this DTC?

   Yes

   - If the DTC can be erased without resetting, no further repair is necessary.
   - Test complete.

   No

   - This DTC is an indication of a malfunction in the ABS module.
   - With the scan tool, check for any DTCs in the ABS module and repair as necessary.

     NOTE: It may be necessary to run the initialization routine in the ABS module or change/program the vehicle configuration.

   - If there are no ABS DTCs present, and the DTC cannot be cleared or go into a stored state, replace and program the Adaptive Cruise Control (ACC) module in accordance with the Service Information. Refer to **MODULE, ADAPTIVE CRUISE CONTROL, REMOVAL** .
   - Perform the ADAPTIVE CRUISE CONTROL VERIFICATION TEST. Refer to **STANDARD PROCEDURE**.

C14A3-00-XBW RULE VIOLATION

For a complete wiring diagram, **refer to appropriate SYSTEM WIRING DIAGRAMS article** .

WHEN MONITORED

Continuously with the ignition on, engine running.

System voltage between 10.0 and 16.0 volts.

No CAN Bus DTCs present.

Adaptive Cruise Control (ACC) module is not in Plant-Mode.

ESP is not in diagnostic mode.

SET CONDITION

The Adaptive Cruise Control (ACC) module detects an sudden deceleration/acceleration induced externally or a DTC in another module.

A ready conflict of the ACC Module has occurred. The ACC Module will disable the ACC system and a message will be displayed in the Electronic Vehicle Information Center (EVIC) indicating that the Adaptive Cruise Control has been disabled. Once the Diagnostic Trouble Code (DTC) goes to stored, the ACC system will return to normal operation. The DTC will be cleared after a 100 consecutive ignition cycles with no active detection.

POSSIBLE CAUSES

Possible Causes
DTCS IN OTHER MODULE(S)
IGNITION CYCLE
BRAKE SYSTEM FUNCTIONALITY
DRIVING CONDITIONS OR ACCIDENT OCCURRED

DIAGNOSTIC TEST

1. **CHECK FOR DTCS IN OTHER MODULES**
    1. Ignition on, engine not running.
    2. With the scan tool, read DTCs.

    Are any other modules reporting any DTCs?

    Yes

    - If DTCs are set in the PCM or ABS, refer to the **DTC INDEX** article and perform the

appropriate diagnostic procedure first.

No

- Go To2.

2. **CHECK IF THE DTC IS ACTIVE**

NOTE: **To help in the service of the Adaptive Cruise Control (ACC) system, it is recommended to communicate with the customer to obtain the environmental conditions they were driving in when the cruise control concern took place. Heavy rain, snow, ice, and fog can cause the ACC system to become inoperative. This is considered as a normal operational reaction of the ACC system and no repair is necessary.**

1. Ignition on, engine not running.
2. With the scan tool, attempt to erase Adaptive Cruise Control (ACC) DTCs.

Can you erase this DTC?

Yes

- If the DTC can be erased without resetting, no further repair is necessary.
- Test complete.

No

- If there are no DTCs reported in any other module(s), and the DTC cannot be cleared or go into a stored state, replace and program the Adaptive Cruise Control (ACC) module in accordance with the Service Information. Refer to **MODULE, ADAPTIVE CRUISE CONTROL, REMOVAL** .
- Perform the ADAPTIVE CRUISE CONTROL VERIFICATION TEST. Refer to **STANDARD PROCEDURE**.

C14A4-00-SENSOR ADJUSTMENT REQUIRED

For a complete wiring diagram, **refer to appropriate SYSTEM WIRING DIAGRAMS article** .

WHEN MONITORED

Continuously monitored with the ignition in run and the Adaptive Cruise Control (ACC) module in normal mode.

SET CONDITION

When the ACC module detects that it is physically misaligned.

The ACC module will disable the ACC system and a message will be displayed in the Electronic Vehicle Information Center (EVIC) indicating that the Adaptive Cruise Control has been disabled. Once the Diagnostic Trouble Code (DTC) goes to stored, the ACC system will return to normal operation. The DTC will be cleared after a 100 consecutive ignition cycles with no active detection.

POSSIBLE CAUSES

Possible Causes
ADAPTIVE CRUISE CONTROL (ACC) MODULE/LENS MISALIGNED
ADAPTIVE CRUISE CONTROL (ACC) MODULE BRACKET, SECURING CLIPS BROKEN OR BENT
ADAPTIVE CRUISE CONTROL (ACC) MODULE

DIAGNOSTIC TEST

1. **CHECK IF THE DTC IS ACTIVE**

NOTE: **A secure and unmodified mounting location is critical to the proper operation of the Adaptive Cruise Control (ACC) system.**

NOTE: **To help in the service of the Adaptive Cruise Control (ACC) system, it is recommended to communicate with the customer to obtain the environmental conditions they were driving in when the cruise control concern took place. Heavy rain, snow, ice, and fog can cause the ACC system to become inoperative. This is considered as a normal operational reaction of the ACC system and no repair is necessary.**

NOTE: **Vehicles that have had the suspension modified and/or an aftermarket grill installed that blocks the ACC module can cause the ACC system to not function properly.**

1. Using a scan tool, read ACC DTCs.

   Is this DTC active?

   Yes

   - Go To 2

   No

   - No repair is necessary. Make sure the lens is free of dirt, damage, and other obstructions. Clear the DTC and verify proper operation of the ACC system.
   - Perform the ADAPTIVE CRUISE CONTROL VERIFICATION TEST. Refer to **STANDARD PROCEDURE**.

2. **INSPECT ACC MODULE MOUNTING AND LENS ALIGNMENT**

NOTE: Make sure the ACC Sensor lens is free from dirt and debris (mud, dirt, ice, road debris) that would compromise the function of the ACC system.

1. Perform a thorough visual and physical inspect of the ACC module and the mounting bracket and location.
2. Check for:
   - Bent mounting bracket
   - Damage to the ACC module
   - Damaged, obscured, or out of alignment lens
   - ACC module not fully seated or broken/missing securing clips

   Were there any problems found?

   Yes

   - Repair as necessary in accordance with the Service Information.
   - Perform the ADAPTIVE CRUISE CONTROL VERIFICATION TEST. Refer to **STANDARD PROCEDURE**.

   No

   - Align the Adaptive Cruise Control (ACC) module/sensor lens in accordance to the Service Information. Refer to **MODULE, ADAPTIVE CRUISE CONTROL, STANDARD PROCEDURE** . If the alignment is correct, and the DTC continues to set, replace and program the Adaptive Cruise Control (ACC) module in accordance with the Service Information. Refer to **MODULE, ADAPTIVE CRUISE CONTROL, REMOVAL** .
   - Perform the ADAPTIVE CRUISE CONTROL VERIFICATION TEST. Refer to **STANDARD PROCEDURE**.

C14A5-00-SENSOR BLINDED

For a complete wiring diagram, **refer to appropriate SYSTEM WIRING DIAGRAMS article** .

WHEN MONITORED

Continuously with the ignition on, engine running.

System voltage between 10.0 and 16.0 volts.

No CAN Bus off or shorted DTCs present.

Adaptive Cruise Control (ACC) module is not in Plant-Mode.

ESP is not in diagnostic mode.

SET CONDITION

When the Adaptive Cruise Control (ACC) module detects that the lens is damaged or obstructed.

The ACC module will disable the ACC system and a message will be displayed in the Electronic Vehicle Information Center (EVIC) indicating that the Adaptive Cruise Control has been disabled. Once the Diagnostic Trouble Code (DTC) goes to stored, the ACC system will return to normal operation. The DTC will be cleared after a 100 consecutive ignition cycles with no active detection.

POSSIBLE CAUSES

Possible Causes
SENSOR LENS OBSTRUCTION
DAMAGE SENSOR LENS OR MOUNTING LOCATION
ADAPTIVE CRUISE CONTROL (ACC) MODULE

DIAGNOSTIC TEST

1. **CHECK IF THE DTC IS ACTIVE**

NOTE: **A secure and unmodified mounting location is critical to the proper operation of the Adaptive Cruise Control (ACC) system.**

NOTE: **To help in the service of the Adaptive Cruise Control (ACC) system, it is recommended to communicate with the customer to obtain the environmental conditions they were driving in when the cruise control concern took place. Heavy rain, snow, ice, and fog can cause the ACC system to become inoperative. This is considered as a normal operational reaction of the ACC system and no repair is necessary.**

NOTE: **Vehicles that have had the suspension modified and/or an aftermarket grill installed that blocks the ACC module can cause the ACC system to not function properly.**

1. Using a scan tool, read ACC DTCs.

   Is this DTC active?

   Yes

   - Go To 2

   No

- No repair is necessary. Make sure the lens is free of dirt, damage, and other obstructions. Clear the DTC and verify proper operation of the ACC system.
- Perform the ADAPTIVE CRUISE CONTROL VERIFICATION TEST. Refer to **STANDARD PROCEDURE**.

2. **INSPECT ACC MODULE MOUNTING AND LENS ALIGNMENT**

NOTE: Make sure the ACC Sensor lens is free from dirt and debris (mud, dirt, ice, road debris) that would compromise the function of the ACC system.

1. Perform a thorough visual and physical inspect of the ACC module and the mounting bracket and location.
2. Check for:
   - Bent mounting bracket
   - Damage to the ACC module
   - Damaged, obscured, or out of alignment lens
   - ACC module not fully seated or broken/missing securing clips

Were there any problems found?

Yes

- Repair as necessary in accordance with the Service Information.
- Perform the ADAPTIVE CRUISE CONTROL VERIFICATION TEST. Refer to **STANDARD PROCEDURE**.

No

- Align the Adaptive Cruise Control (ACC) module/sensor lens in accordance to the Service Information. Refer to **MODULE, ADAPTIVE CRUISE CONTROL, STANDARD PROCEDURE** . If the alignment is correct, and the DTC continues to set, replace and program the Adaptive Cruise Control (ACC) module in accordance with the Service Information. Refer to **MODULE, ADAPTIVE CRUISE CONTROL, REMOVAL** .
- Perform the ADAPTIVE CRUISE CONTROL VERIFICATION TEST. Refer to **STANDARD PROCEDURE**.

C15D8-00-MISMATCH TIRE SIZE

For a complete wiring diagram, **refer to appropriate SYSTEM WIRING DIAGRAMS article** .

WHEN MONITORED

Continuously with the ignition on, engine running.

System voltage between 10.0 and 16.0 volts.

No CAN Bus off or shorted DTCs present.

Adaptive Cruise Control (ACC) module is not in Plant-Mode.

ESP is not in diagnostic mode.

SET CONDITION

The Adaptive Cruise Control (ACC) detects that the tire size on the vehicle is greater the 10% of the programed size.

POSSIBLE CAUSES

Possible Causes
INCORRECT TIRE SIZE PROGRAMED INTO BODY CONTROL MODULE (BCM) AND/OR ANTILOCK BRAKE SYSTEM (ABS)
ANTILOCK BRAKE SYSTEM (ABS) DTCS PRESENT
WRONG TIRE SIZE INSTALLED ON VEHICLE

DIAGNOSTIC TEST

CHECK THE TIRE SIZE

1. This is an informational Diagnostic Trouble Code (DTC). The Adaptive Cruise Control (ACC) module receives the vehicle configuration information over the Can Bus. Tire size is stored in the Body Control Module (BCM) and also in the Antilock Brake System (ABS).

   Possible causes but not limited too:

   - Wrong tires installed on vehicle.
   - Incorrect tire size written/stored in the BCM and/or ABS.
   - ABS DTCs present.
   - Any Service Bulletins that may apply.

   Were any of the above conditions present?

   Yes

   - Repair/reprogram as necessary.
   - Perform the ADAPTIVE CRUISE CONTROL VERIFICATION TEST. Refer to **STANDARD PROCEDURE**.

   No

   - With the scan tool, perform an ACC Aim Mode - Auto Alignment procedure to relearn a different

tire size in the Adaptive Cruise Control (ACC) module.

- Perform the ADAPTIVE CRUISE CONTROL VERIFICATION TEST. Refer to **STANDARD PROCEDURE**.

C2129-16-BATTERY VOLTAGE - CIRCUIT VOLTAGE BELOW THRESHOLD

For a complete wiring diagram, **refer to appropriate SYSTEM WIRING DIAGRAMS article** .

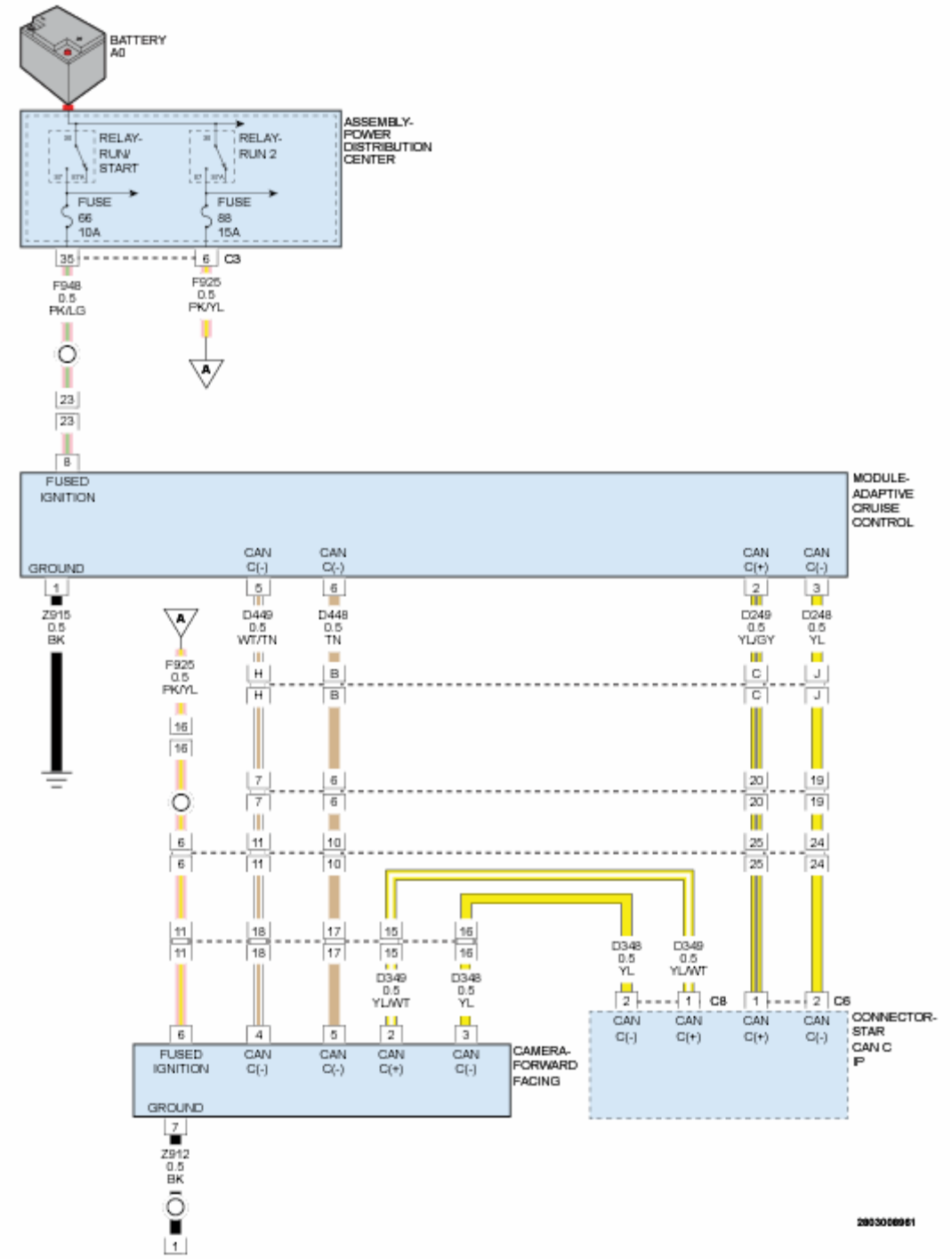

Fig. 1: Adaptive Cruise Control Circuit Diagram
Courtesy of CHRYSLER GROUP, LLC

WHEN MONITORED

Continuously with the ignition on, engine running.

Engine not cranking.

Adaptive Cruise Control (ACC) module is not in Plant-Mode.

ESP is not in diagnostic mode.

SET CONDITION

If the voltage to the Adaptive Cruise Control (ACC) Module is below 9.0 volts.

The ACC module will disable the ACC system and a message will be displayed in the Electronic Vehicle Information Center (EVIC) indicating that the Adaptive Cruise Control has been disabled. Once the Diagnostic Trouble Code (DTC) goes to stored, the ACC system will return to normal operation. The DTC will be cleared after a 100 consecutive ignition cycles with no active detection.

POSSIBLE CAUSES

Possible Causes
RELATED DTCS PRESENT IN PCM
LOW BATTERY VOLTAGE
FUSED IGNITION OPEN OR HIGH RESISTANCE
GROUND CIRCUIT OPEN OR HIGH RESISTANCE
ADAPTIVE CRUISE CONTROL (ACC) MODULE

DIAGNOSTIC TEST

1. **RELATED DTCS PRESENT IN PCM**
    1. Turn the ignition on.
    2. With the scan tool, read Powertrain Control Module (PCM) DTCs.

       Are there any charging system or battery related DTCs present?

       Yes

       - Refer to the **DTC INDEX** article and perform the appropriate diagnostic procedure.

       No

       - Go To 2
2. **CHECK FOR AN ACTIVE DTC**
    1. With the scan tool, read Adaptive Cruise Control (ACC) DTCs.

       Does the scan tool display this DTC as active?

       Yes

- Go To 3

No

- The condition or conditions that originally set this DTC are not present at this time. Using the wiring diagrams as a guide, check all related splices and connectors for signs of water intrusion, corrosion, pushed out or bent terminals, and correct pin tension.
- Perform the ADAPTIVE CRUISE CONTROL VERIFICATION TEST. Refer to **STANDARD PROCEDURE**.

3. **(F948) FUSED IGNITION CIRCUIT OPEN OR SHORTED TO GROUND**
   1. Turn the ignition off.
   2. Disconnect the ACC harness connector.
   3. Turn the ignition on.
   4. Using a 12-volt test light connected to ground, check the (F948) Fused Ignition circuit in the ACC harness connector.

NOTE: The test light must illuminate brightly. Compare the brightness to that of a direct connection to the battery.

Does the test light illuminate brightly?

Yes

- Go To 4

No

- Repair the (F948) Fused Ignition circuit for an open or high resistance.

NOTE: If the fuse is open, make sure to check for a short to ground.

- Perform the ADAPTIVE CRUISE CONTROL VERIFICATION TEST. Refer to **STANDARD PROCEDURE**.

4. **(Z915) GROUND CIRCUIT OPEN OR HIGH RESISTANCE**
   1. Turn the ignition off.
   2. Using a 12-volt test light connected to 12-volts, check the ground and the (Z915) Ground circuit in the ACC harness connector.

Does the test light illuminate brightly?

Yes

- Replace and program the Adaptive Cruise Control (ACC) module in accordance with the

Service Information. Refer to **MODULE, ADAPTIVE CRUISE CONTROL, REMOVAL** .

- Perform the ADAPTIVE CRUISE CONTROL VERIFICATION TEST. Refer to **STANDARD PROCEDURE**.

No

- Repair the (Z915) Ground circuit for an open or high resistance.
- Perform the ADAPTIVE CRUISE CONTROL VERIFICATION TEST. Refer to **STANDARD PROCEDURE**.

C2129-17-BATTERY VOLTAGE - CIRCUIT VOLTAGE ABOVE THRESHOLD

For a complete wiring diagram, **refer to appropriate SYSTEM WIRING DIAGRAMS article** .

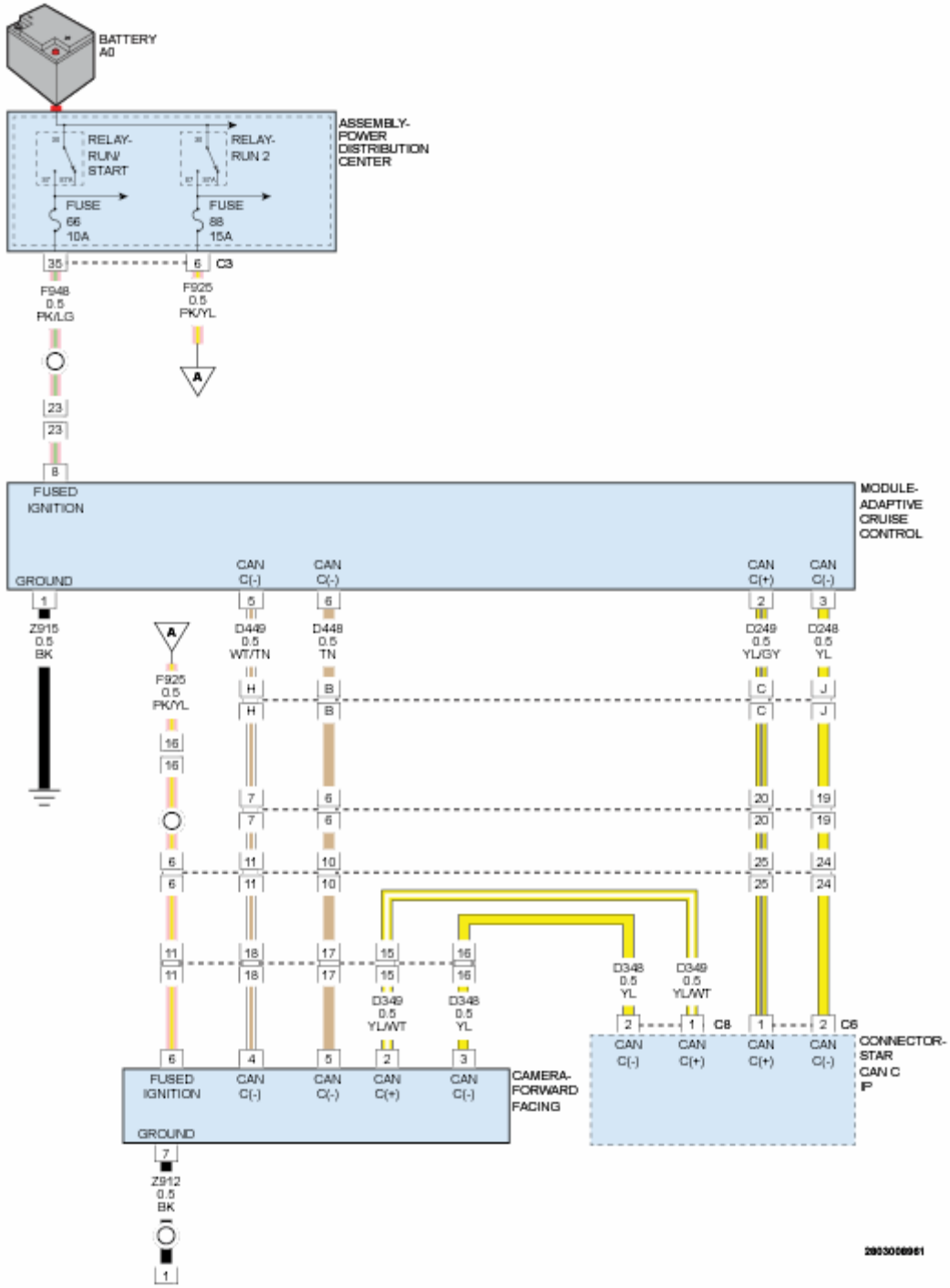

Fig. 2: Adaptive Cruise Control Circuit Diagram
Courtesy of CHRYSLER GROUP, LLC

WHEN MONITORED

Continuously with the ignition on, engine running.

System voltage between 10.0 and 16.0 volts.

Adaptive Cruise Control (ACC) module is not in Plant-Mode.

ESP is not in diagnostic mode.

SET CONDITION

If the voltage to the Adaptive Cruise Control (ACC) module is above 16.0 volts.

The ACC module will disable the ACC system and a message will be displayed in the Electronic Vehicle Information Center (EVIC) indicating that the Adaptive Cruise Control has been disabled. Once the Diagnostic Trouble Code (DTC) goes to stored, the ACC system will return to normal operation. The DTC will be cleared after a 100 consecutive ignition cycles with no active detection.

POSSIBLE CAUSES

Possible Causes
RELATED DTC(S) PRESENT IN THE PCM
HIGH BATTERY VOLTAGE
ADAPTIVE CRUISE CONTROL (ACC) MODULE

DIAGNOSTIC TEST

1. **RELATED DTCS PRESENT IN THE PCM**
    1. Ignition on, engine running.
    2. With the scan tool, read Powertrain Control Module (PCM) DTCs.

    Are there any charging system or battery related DTCs present in the PCM?

    Yes

    - Refer to the **DTC INDEX** article and perform the appropriate diagnostic procedure.

    No

    - Go To 2
2. **CHECK FOR AN ACTIVE DTC**
    1. Ignition on, engine running.
    2. With the scan tool, read DTCs.

    Does the scan tool display this DTC as active?

    Yes

- Replace and program the Adaptive Cruise Control (ACC) module in accordance with the Service Information. Refer to **MODULE, ADAPTIVE CRUISE CONTROL, REMOVAL** .
- Perform the ADAPTIVE CRUISE CONTROL VERIFICATION TEST. Refer to **STANDARD PROCEDURE**.

No

- Go To3

3. **CHECK THE WIRING AND CONNECTORS**
   1. The conditions necessary to set the DTC are not present at this time.
   2. Using the schematics as a guide, inspect the wiring and connectors specific to this module. Wiggle the wiring and connectors while checking for shorted and open circuits.
   3. Check all related splices and connectors for signs of water intrusion, corrosion, pushed out or bent terminals, and correct pin tension.
   4. Check Service Bulletins for any possible causes that may apply.

   Were there any problems found?

   Yes

   - Repair as necessary.
   - Perform the ADAPTIVE CRUISE CONTROL VERIFICATION TEST. Refer to **STANDARD PROCEDURE**.

   No

   - Test complete.

C212A-84-SYSTEM VOLTAGE - SIGNAL BELOW ALLOWABLE RANGE

For a complete wiring diagram, **refer to appropriate SYSTEM WIRING DIAGRAMS article** .

WHEN MONITORED

Continuously with the ignition on, engine running.

Adaptive Cruise Control (ACC) module is not in Plant-Mode.

ESP is not in diagnostic mode.

SET CONDITION

The Adaptive Cruise Control (ACC) module receives a low charging system voltage message over the CAN Bus.

The ACC module will disable the ACC system and a message will be displayed in the Electronic Vehicle Information Center (EVIC) indicating that the Adaptive Cruise Control has been disabled. Once the Diagnostic Trouble Code (DTC) goes to stored, the ACC system will return to normal operation. The DTC will be cleared after a 100 consecutive ignition cycles with no active detection.

POSSIBLE CAUSES

Possible Causes
CHARGING SYSTEM VOLTAGE LOW ADAPTIVE CRUISE CONTROL (ACC) MODULE

DIAGNOSTIC TEST

1. **CHECK PCM FOR CHARGING SYSTEM DTC**
    1. With the scan tool, read the PCM DTCs.

       Are there any Charging System DTCs set in the PCM?

       Yes

       - Refer to the **DTC INDEX** article and perform the appropriate diagnostic procedure.

       No

       - Go To 2
2. **CHECK OTHER MODULES**
    1. Ignition on, engine running.
    2. With the scan tool, read DTCs.

       Does any other modules display this type of DTC as active?

       Yes

       - This is an indication of a charging/battery system malfunction. and check the battery/charging system in accordance with the Service Information. Refer to **DIAGNOSIS AND TESTING** .

       No

       - Go To 3
3. **CHECK FOR AN ACTIVE DTC**
    1. With the scan tool, read ACC DTCs.

       Does the scan tool display this DTC as active?

Yes

- If no other modules are reporting any charging system under voltage DTCs, replace and program the Adaptive Cruise Control (ACC) module in accordance with the Service Information. Refer to **MODULE, ADAPTIVE CRUISE CONTROL, REMOVAL** .
- Perform the ADAPTIVE CRUISE CONTROL VERIFICATION TEST. Refer to **STANDARD PROCEDURE**.

No

- Go To 4

4. **CHECK THE WIRING AND CONNECTORS**
   1. The conditions necessary to set the DTC are not present at this time.
   2. Using the schematics as a guide, inspect the wiring and connectors specific to this module. Wiggle the wiring and connectors while checking for shorted and open circuits.
   3. Check all related splices and connectors for signs of water intrusion, corrosion, pushed out or bent terminals, and correct pin tension.
   4. Check Service Bulletins for any possible causes that may apply.

   Were there any problems found?

   Yes

   - Repair as necessary.
   - Perform the ADAPTIVE CRUISE CONTROL VERIFICATION TEST. Refer to **STANDARD PROCEDURE**.

   No

   - Test complete.

C212A-85-SYSTEM VOLTAGE - SIGNAL ABOVE ALLOWABLE RANGE

For a complete wiring diagram, **refer to appropriate SYSTEM WIRING DIAGRAMS article** .

WHEN MONITORED

Continuously with the ignition on, engine running.

Adaptive Cruise Control (ACC) module is not in Plant-Mode.

ESP is not in diagnostic mode.

SET CONDITION

The Adaptive Cruise Control (ACC) module receives a high charging system voltage message over the Can Bus.

The ACC module will disable the ACC system and a message will be displayed in the Electronic Vehicle Information Center (EVIC) indicating that the Adaptive Cruise Control has been disabled. Once the Diagnostic Trouble Code (DTC) goes to stored, the ACC system will return to normal operation. The DTC will be cleared after a 100 consecutive ignition cycles with no active detection.

POSSIBLE CAUSES

Possible Causes
CHARGING SYSTEM VOLTAGE HIGH ADAPTIVE CRUISE CONTROL (ACC) MODULE

DIAGNOSTIC TEST

1. **CHECK PCM FOR CHARGING SYSTEM DTC**
    1. With the scan tool, read the PCM DTCs.

       Are there any Charging System DTCs set in the PCM?

       Yes

       - Refer to the **DTC INDEX** article and perform the appropriate diagnostic procedure.

       No

       - Go To 2
2. **CHECK OTHER MODULES**
    1. Ignition on, engine running.
    2. With the scan tool, read DTCs.

       Does any other modules display this type of DTC as active?

       Yes

       - This is an indication of a charging/battery system malfunction. and check the battery/charging system in accordance with the Service Information. Refer to **DIAGNOSIS AND TESTING** .

       No

       - Go To 3
3. **CHECK FOR AN ACTIVE DTC**
    1. With the scan tool, read ACC DTCs.

Does the scan tool display this DTC as active?

Yes

- If no other modules are reporting any charging system or over voltage DTCs, replace and program the Adaptive Cruise Control (ACC) module in accordance with the Service Information. Refer to **MODULE, ADAPTIVE CRUISE CONTROL, REMOVAL** .

No

- Go To 4

4. **CHECK THE WIRING AND CONNECTORS**
   1. The conditions necessary to set the DTC are not present at this time.
   2. Using the schematics as a guide, inspect the wiring and connectors specific to this module. Wiggle the wiring and connectors while checking for shorted and open circuits.
   3. Check all related splices and connectors for signs of water intrusion, corrosion, pushed out or bent terminals, and correct pin tension.
   4. Check Service Bulletins for any possible causes that may apply.

   Were there any problems found?

   Yes

   - Repair as necessary.
   - Perform the ADAPTIVE CRUISE CONTROL VERIFICATION TEST. Refer to **STANDARD PROCEDURE**.

   No

   - Test complete.

C2206-00-VEHICLE CONFIGURATION MISMATCH

For a complete wiring diagram, **refer to appropriate SYSTEM WIRING DIAGRAMS article** .

WHEN MONITORED

Continuously with the ignition on, engine running.

System voltage between 10.0 and 16.0 volts.

No CAN Bus off or shorted DTCs present.

Adaptive Cruise Control (ACC) module is not in Plant-Mode.

ESP is not in diagnostic mode.

SET CONDITION

The vehicle configuration does not match what is stored in the ACC module.

The ACC module will disable the ACC system and a message will be displayed in the Electronic Vehicle Information Center (EVIC) indicating that the Adaptive Cruise Control has been disabled. Once the Diagnostic Trouble Code (DTC) goes to stored, the ACC system will return to normal operation. The DTC will be cleared after a 100 consecutive ignition cycles with no active detection.

POSSIBLE CAUSES

Possible Causes
VEHICLE CONFIGURATION ADAPTIVE CRUISE CONTROL (ACC) MODULE

DIAGNOSTIC TEST

ADAPTIVE CRUISE CONTROL MODULE NOT PROGRAMED

1. Perform the horizontal sensor alignment procedure in accordance with the Service Information. Refer to **MODULE, ADAPTIVE CRUISE CONTROL, STANDARD PROCEDURE** .
2. Perform the ADAPTIVE CRUISE CONTROL VERIFICATION TEST. Refer to **STANDARD PROCEDURE**.

   Does this DTC reset?

   Yes

   - Replace and program the Adaptive Cruise Control (ACC) module in accordance with the Service Information. Refer to **MODULE, ADAPTIVE CRUISE CONTROL, REMOVAL** .
   - Perform the ADAPTIVE CRUISE CONTROL VERIFICATION TEST. Refer to **STANDARD PROCEDURE**.

   No

   - Test Complete

C2210-00-ECU OVERTEMPERATURE

For a complete wiring diagram, **refer to appropriate SYSTEM WIRING DIAGRAMS article** .

WHEN MONITORED

Continuously with the ignition on and system voltage between 10.0 and 16.0 volts.

SET CONDITION

The Adaptive Cruise Control (ACC) Module detects an internal temperature greater than 115°C (239°F).

The ACC module will disable the ACC system and a message will be displayed in the Electronic Vehicle Information Center (EVIC) indicating that the Adaptive Cruise Control has been disabled. Once the Diagnostic Trouble Code (DTC) goes to stored, the ACC system will return to normal operation. The DTC will be cleared after a 100 consecutive ignition cycles with no active detection.

POSSIBLE CAUSES

Possible Causes
AMBIENT TEMPERATURE TOO HIGH ADAPTIVE CRUISE CONTROL (ACC) MODULE

DIAGNOSTIC TEST

1. **VERIFY DTC IS ACTIVE**

   NOTE: To help in the service of the ACC System, it is recommended speaking to the customer to find out what type of environment they were driving in when the cruise concern took place. Heavy rain, snow, ice, and fog can cause the ACC system to become unavailable. This should be considered normal operation and no repair is necessary.

   1. Using a scan tool, read ACC DTCs.

      Is the DTC active at this time?

      Yes

      - Go To 2

      No

      - No repair is necessary. Make sure the lens is free of dirt, damage, and other obstructions.
      - Perform the ADAPTIVE CRUISE CONTROL VERIFICATION TEST. Refer to **STANDARD PROCEDURE**.
2. **VERIFY AMBIENT TEMPERATURE READING**
   1. Using a scan tool, read PCM ambient air temperature reading.

      Is the ambient air temperature reading 85°C (185°F)?

      Yes

- The ACC MODULE has detected the ambient temperature above operating range. Once the temperature has decreased below 85°C (185°F), ACC operation will be restored.
- Perform the ADAPTIVE CRUISE CONTROL VERIFICATION TEST. Refer to **STANDARD PROCEDURE**.

No

- Replace and program the Adaptive Cruise Control (ACC) module in accordance with the Service Information. Refer to **MODULE, ADAPTIVE CRUISE CONTROL, REMOVAL** .
- Perform the ADAPTIVE CRUISE CONTROL VERIFICATION TEST. Refer to **STANDARD PROCEDURE**.

C2212-00-ECU IN - PLANT MODE ACTIVE

For a complete wiring diagram, **refer to appropriate SYSTEM WIRING DIAGRAMS article** .

WHEN MONITORED

With the ignition on.

System voltage between 10.0 and 16.0 volts.

No CAN Bus off or shorted DTCs present.

SET CONDITION

The Adaptive Cruise Control (ACC) module is in the In-Plant mode.

The ACC module will disable the ACC system and a message will be displayed in the Electronic Vehicle Information Center (EVIC) indicating that the Adaptive Cruise Control has been disabled. Once the Diagnostic Trouble Code (DTC) goes to stored, the ACC system will return to normal operation. The DTC will be cleared after a 100 consecutive ignition cycles with no active detection.

POSSIBLE CAUSES

Possible Causes
ACC MODULE IN THE IN-PLANT MODE ADAPTIVE CRUISE CONTROL (ACC) MODULE

DIAGNOSTIC TEST

VERIFY DTC IS ACTIVE

1. Using a scan tool, read ACC DTCs.

Is the DTC active at this time?

Yes

- Refer to **MODULE, ADAPTIVE CRUISE CONTROL, STANDARD PROCEDURE** and perform the SENSOR VERTICAL ALIGNMENT procedure.

  NOTE: Running the Alignment Procedure will remove the module from the In-Plant mode.

- Perform the ACC MODULE VERIFICATION TEST. Refer to **STANDARD PROCEDURE**.

No

- No repair is necessary. Make sure the lens is free of dirt, damage, and other obstructions that would hinder the performance of the ACC imager lens. Clear the DTC and verify proper operation of the ACC system.

C2223-00-ECU CONFIGURATION MISMATCH

For a complete wiring diagram, **refer to appropriate SYSTEM WIRING DIAGRAMS article** .

WHEN MONITORED

Continuously with the ignition on, engine running.

System voltage between 10.0 and 16.0 volts.

No CAN Bus off or shorted DTCs present.

Adaptive Cruise Control (ACC) module is not in Plant-Mode.

ESP is not in diagnostic mode.

SET CONDITION

Body Control Module (BCM) does not expect the Adaptive Cruise Control (ACC) module to be present.

The ACC module will disable the ACC system and a message will be displayed in the Electronic Vehicle Information Center (EVIC) indicating that the Adaptive Cruise Control has been disabled. Once the Diagnostic Trouble Code (DTC) goes to stored, the ACC system will return to normal operation. The DTC will be cleared after a 100 consecutive ignition cycles with no active detection.

POSSIBLE CAUSES

Possible Causes

BODY CONTROL MODULE (BCM) DOES NOT DETECT THE ADAPTIVE CRUISE CONTROL (ACC) MODULE AS PRESENT
ADAPTIVE CRUISE CONTROL (ACC) MODULE NOT PROGRAMED

DIAGNOSTIC TEST

ADAPTIVE CRUISE CONTROL MODULE NOT PROGRAMED

This Diagnostic Trouble Code will set if the Body Control Module (BCM) is not configured for Adaptive Cruise Control (ACC).

- Program the BCM with the correct sales code. Refer to **STANDARD PROCEDURE** .
- Perform the ADAPTIVE CRUISE CONTROL VERIFICATION TEST. Refer to **STANDARD PROCEDURE**.

C2225-00-PCM DISABLED ECU

For a complete wiring diagram, **refer to appropriate SYSTEM WIRING DIAGRAMS article** .

WHEN MONITORED

Continuously with the ignition on, engine running.

System voltage between 10.0 and 16.0 volts.

No CAN Bus off or shorted DTCs present.

Adaptive Cruise Control (ACC) module is not in Plant-Mode.

ESP is not in diagnostic mode.

SET CONDITION

When an active Diagnostic Trouble Code (DTC) is set in the Powertrain Control Module (PCM).

The ACC module will disable the ACC system and a message will be displayed in the Electronic Vehicle Information Center (EVIC) indicating that the Adaptive Cruise Control has been disabled. Once the Diagnostic Trouble Code (DTC) goes to stored, the ACC system will return to normal operation. The DTC will be cleared after a 100 consecutive ignition cycles with no active detection.

POSSIBLE CAUSES

Possible Causes
PCM DTC PRESENT

DIAGNOSTIC TEST

CHECK FOR POWERTRAIN CONTROL MODULE (PCM) DTCS

This Diagnostic Trouble Code (DTC) will set if a DTC is detected in the Powertrain Control Module (PCM).

- Refer to the **DTC INDEX** article and perform the appropriate diagnostic procedure.
- Perform the ADAPTIVE CRUISE CONTROL VERIFICATION TEST. Refer to **STANDARD PROCEDURE**.

C2226-00-TCM DISABLED ECU

For a complete wiring diagram, **refer to appropriate SYSTEM WIRING DIAGRAMS article** .

WHEN MONITORED

Continuously with the ignition on, engine running.

System voltage between 10.0 and 16.0 volts.

No CAN Bus off or shorted DTCs present.

Adaptive Cruise Control (ACC) module is not in Plant-Mode.

ESP is not in diagnostic mode.

SET CONDITION

When an active Diagnostic Trouble Code (DTC) is set in the Transmission Control Module (TCM).

The ACC module will disable the ACC system and a message will be displayed in the Electronic Vehicle Information Center (EVIC) indicating that the Adaptive Cruise Control has been disabled. Once the Diagnostic Trouble Code (DTC) goes to stored, the ACC system will return to normal operation. The DTC will be cleared after a 100 consecutive ignition cycles with no active detection.

POSSIBLE CAUSES

Possible Causes
TRANSMISSION CONTROL MODULE (TCM) DTC(S) PRESENT

DIAGNOSTIC TEST

CHECK FOR TRANSMISSION CONTROL MODULE (TCM) DTCS

This Diagnostic Trouble Code (DTC) will set if a DTC is detected in the Transmission Control Module (TCM).

- Refer to the **TRANSMISSION CONTROL MODULE (TCM) - DIAGNOSTIC CODE INDEX** article and perform the appropriate diagnostic procedure.
- Perform the ADAPTIVE CRUISE CONTROL VERIFICATION TEST. Refer to **STANDARD PROCEDURE**.

C2227-00-ABS DISABLED ECU

For a complete wiring diagram, **refer to appropriate SYSTEM WIRING DIAGRAMS article** .

WHEN MONITORED

Continuously with the ignition on, engine running.

System voltage between 10.0 and 16.0 volts.

No CAN Bus off or shorted DTCs present.

Adaptive Cruise Control (ACC) module is not in Plant-Mode.

ESP is not in diagnostic mode.

SET CONDITION

When an active Diagnostic Trouble Code (DTC) is set in the Antilock Brake System (ABS) module.

The ACC module will disable the ACC system and a message will be displayed in the Electronic Vehicle Information Center (EVIC) indicating that the Adaptive Cruise Control has been disabled. Once the Diagnostic Trouble Code (DTC) goes to stored, the ACC system will return to normal operation. The DTC will be cleared after a 100 consecutive ignition cycles with no active detection.

POSSIBLE CAUSES

Possible Causes
ANTILOCK BRAKE SYSTEM (ABS) MODULE DTC(S) PRESENT

DIAGNOSTIC TEST

CHECK FOR ANTILOCK BRAKE SYSTEM (ABS) MODULE DTCS

This Diagnostic Trouble Code (DTC) will set if a DTC is detected in the Antilock Brake System (ABS) module.

- Refer to **DIAGNOSIS AND TESTING** and perform the appropriate diagnostic procedure.
- Perform the ADAPTIVE CRUISE CONTROL VERIFICATION TEST. Refer to **STANDARD PROCEDURE**.

C2318-76-FRONT CAMERA - WRONG MOUNTING POSITION

For a complete wiring diagram, **refer to appropriate SYSTEM WIRING DIAGRAMS article** .

WHEN MONITORED

Continuously with the ignition on, engine running.

System voltage between 10.0 and 16.0 volts.

No CAN Bus off or shorted DTCs present.

Adaptive Cruise Control (ACC) module is not in Plant-Mode.

ESP is not in diagnostic mode.

SET CONDITION

The Adaptive Cruise Control (ACC) module detects that the Forward Facing Camera is out of alignment or improperly mounted.

The ACC module will disable the ACC system and a message will be displayed in the Electronic Vehicle Information Center (EVIC) indicating that the Adaptive Cruise Control has been disabled. Once the Diagnostic Trouble Code (DTC) goes to stored, the ACC system will return to normal operation. The DTC will be cleared after a 100 consecutive ignition cycles with no active detection.

POSSIBLE CAUSES

Possible Causes
FORWARD FACING CAMERA OUT OF ALIGNMENT OR IMPROPERLY MOUNTED FORWARD FACING CAMERA

DIAGNOSTIC TEST

1. **CHECK IF THE DTC IS ACTIVE**
    1. Ignition on, engine not running.
    2. With the scan tool, record and erase Adaptive Cruise Control (ACC) DTCs.
    3. Cycle the ignition switch from off to on.
    4. With the scan tool, read ACC DTCs.

    Does the scan tool display this DTC as active?

    Yes

    - Go To 2

No

- Go To 3

2. **FORWARD FACING CAMERA**
   1. Verify the Forward Facing Camera is mounted properly. Refer to **MODULE, FORWARD FACING CAMERA, INSTALLATION** .
   2. With the scan tool, perform the SERVICE DRIVE ALIGNMENT procedure in accordance with the Service Information. Refer to **MODULE, FORWARD FACING CAMERA, STANDARD PROCEDURE** .
   3. With the scan tool, erase ACC DTCs.
   4. Cycle the ignition switch from off to on.
   5. With the scan tool, read ACC DTCs.

   Does the scan tool display this DTC as active?

   Yes

   - Replace and program the Forward Facing Camera Module (FFCM) in accordance with the Service Information. Refer to **MODULE, FORWARD FACING CAMERA, REMOVAL** .
   - Perform the ADAPTIVE CRUISE CONTROL VERIFICATION TEST. Refer to **STANDARD PROCEDURE**.

   NOTE: If this DTC resets after replacement of the Forward Facing Camera Module and no other problems are found, replace and program the Adaptive Cruise Control (ACC) module in accordance with the Service Information. Refer to MODULE, ADAPTIVE CRUISE CONTROL, REMOVAL .

   No

   - Test Complete.
   - Perform the ADAPTIVE CRUISE CONTROL VERIFICATION TEST. Refer to **STANDARD PROCEDURE**.

3. **CHECK THE WIRING AND CONNECTORS**
   1. The conditions necessary to set the DTC are not present at this time.
   2. Using the schematics as a guide, inspect the wiring and connectors specific to this module and the Forward Facing Camera. Wiggle the wiring and connectors while checking for shorted and open circuits.
   3. Check all related splices and connectors for signs of water intrusion, corrosion, pushed out or bent terminals, and correct pin tension.
   4. Check Service Bulletins for any possible causes that may apply.

   Were there any problems found?

Yes

- Repair as necessary.
- Perform the ADAPTIVE CRUISE CONTROL VERIFICATION TEST. Refer to **STANDARD PROCEDURE**.

No

- Test complete.

P0585-00 SPEED CONTROL SWITCH 1/2 CORRELATION

For a complete wiring diagram, **refer to appropriate SYSTEM WIRING DIAGRAMS article** .

THEORY OF OPERATION

The Speed Control Switch is uses a LIN BUS to communicate to the Steering Column Control Module (SCCM). The SCCM then broadcast the speed control switch status over the Can Bus. The Adaptive Cruise Control (ACC) module monitors the Can Bus for speed control switch status.

WHEN MONITORED

Continuously with the ignition on, engine running.

System voltage between 10.0 and 16.0 volts.

No CAN Bus off or shorted DTCs present.

Adaptive Cruise Control (ACC) module is not in Plant-Mode.

ESP is not in diagnostic mode.

SET CONDITION

The Adaptive Cruise Control Module has received over the Can Bus that the Speed Control Switch is functioning improperly.

The ACC module will disable the ACC system and a message will be displayed in the Electronic Vehicle Information Center (EVIC) indicating that the Adaptive Cruise Control has been disabled. Once the Diagnostic Trouble Code (DTC) goes to stored, the ACC system will return to normal operation. The DTC will be cleared after a 100 consecutive ignition cycles with no active detection.

POSSIBLE CAUSES

Possible Causes
SPEED CONTROL SWITCH

STEERING WHEEL WIRING HARNESS / CONNECTORS
STEERING COLUMN CONTROL MODULE (SCCM)

DIAGNOSTIC TEST

1. **CHECK IF THE DTC IS ACTIVE**
    1. Ignition on, engine not running.
    2. With the scan tool, record and erase Adaptive Cruise Control (ACC) DTCs.
    3. Cycle the ignition switch from off to on.
    4. With the scan tool, read ACC DTCs.

    Does the scan tool display this DTC as active?

    Yes

    - Go To 2

    No

    - Go To 3
2. **CHECK SPEED CONTROL SWITCH OPERATION**
    1. Turn the ignition on.
    2. Using the scan tool, read the Speed Control Switch status under the Steering Column Control Module (SCCM) while pressing multiple switch positions.

    Does the switch positions change correctly in the scan tool?

    Yes

    - If any BCM Bus related DTCs are present, perform those respective diagnostic procedures first and recheck. Inspect the wiring and connectors between the SCCM and the Speed Control Switch and the output to the Body Control Module for any possible problems. If no problems are found, replace and program the SCCM in accordance with the Service Information. Refer to **MODULE, STEERING COLUMN, REMOVAL** .

    No

    - Inspect the wiring and connectors between the SCCM and the Speed Control Switch. If no problems are found, replace the Speed Control Switch in accordance with the Service Information. Refer to **SWITCH, SPEED CONTROL, REMOVAL** .
3. **CHECK THE WIRING AND CONNECTORS**
    1. The conditions necessary to set the DTC are not present at this time.
    2. Using the schematics as a guide, inspect the wiring and connectors specific to this module, Speed Control Switch and the Steering Column Control Module (SCCM). Wiggle the wiring and

connectors while checking for shorted and open circuits.

3. Check all related splices and connectors for signs of water intrusion, corrosion, pushed out or bent terminals, and correct pin tension.
4. Check Service Bulletins for any possible causes that may apply.

Were there any problems found?

Yes

- Repair as necessary.
- Perform the ADAPTIVE CRUISE CONTROL VERIFICATION TEST. Refer to **STANDARD PROCEDURE**.

No

- Test complete.

P1593-2A-SPEED CONTROL SWITCH 1/2 STUCK

For a complete wiring diagram, **refer to appropriate SYSTEM WIRING DIAGRAMS article** .

THEORY OF OPERATION

The Speed Control Switch is uses a LIN BUS to communicate to the Steering Column Control Module (SCCM). The SCCM then broadcast the speed control switch status over the Can Bus. The Adaptive Cruise Control (ACC) module monitors the Can Bus for speed control switch status.

WHEN MONITORED

Continuously with the ignition on, engine running.

System voltage between 10.0 and 16.0 volts.

No CAN Bus off or shorted DTCs present.

Adaptive Cruise Control (ACC) module is not in Plant-Mode.

ESP is not in diagnostic mode.

SET CONDITION

The Adaptive Cruise Control Module has received over the Can Bus that the Speed Control Switch is stuck in an on position.

The ACC module will disable the ACC system and a message will be displayed in the Electronic Vehicle Information Center (EVIC) indicating that the Adaptive Cruise Control has been disabled. Once the Diagnostic

Trouble Code (DTC) goes to stored, the ACC system will return to normal operation. The DTC will be cleared after a 100 consecutive ignition cycles with no active detection.

POSSIBLE CAUSES

Possible Causes
SPEED CONTROL SWITCH STUCK
STEERING WHEEL WIRING HARNESS / CONNECTORS
SPEED CONTROL SWITCH
STEERING COLUMN CONTROL MODULE (SCCM)

DIAGNOSTIC TEST

1. **CHECK IF THE DTC IS ACTIVE**
    1. Ignition on, engine not running.
    2. With the scan tool, record and erase Adaptive Cruise Control (ACC) DTCs.
    3. Cycle the ignition switch from off to on.
    4. With the scan tool, read ACC DTCs.

    Does the scan tool display this DTC as active?

    Yes

    - Go To 2

    No

    - Go To 3
2. **CHECK SPEED CONTROL SWITCH OPERATION**
    1. Turn the ignition on.
    2. Using the scan tool, read the Speed Control Switch status under the Steering Column Control Module (SCCM) while pressing multiple switch positions.

    Does the switch positions change correctly in the scan tool?

    Yes

    - If any BCM Bus related DTCs are present, perform those respective diagnostic procedures first and recheck. Inspect the wiring and connectors between the SCCM and the Speed Control Switch and the output to the Body Control Module for any possible problems. If no problems are found, replace and program the SCCM in accordance with the Service Information. Refer to **MODULE, STEERING COLUMN, REMOVAL** .

    No

- Inspect the wiring and connectors between the SCCM and the Speed Control Switch. If no problems are found, replace the Speed Control Switch in accordance with the Service Information. Refer to **SWITCH, SPEED CONTROL, REMOVAL** .

3. **CHECK THE WIRING AND CONNECTORS**
   1. The conditions necessary to set the DTC are not present at this time.
   2. Using the schematics as a guide, inspect the wiring and connectors specific to this module, Speed Control Switch and the Steering Column Control Module (SCCM). Wiggle the wiring and connectors while checking for shorted and open circuits.
   3. Check all related splices and connectors for signs of water intrusion, corrosion, pushed out or bent terminals, and correct pin tension.
   4. Check Service Bulletins for any possible causes that may apply.

   Were there any problems found?

   Yes

   - Repair as necessary.
   - Perform the ADAPTIVE CRUISE CONTROL VERIFICATION TEST. Refer to **STANDARD PROCEDURE**.

   No

   - Test complete.

P1666-00-CRUISE CONTROL MODULE INTERNAL

For a complete wiring diagram, **refer to appropriate SYSTEM WIRING DIAGRAMS article** .

WHEN MONITORED

Continuously with the ignition on, engine running.

System voltage between 10.0 and 16.0 volts.

SET CONDITION

The Adaptive Cruise Control (ACC) module regularly performs internal controller diagnostic test and an internal hardware failure has been detected.

The ACC module will disable the ACC system and a message will be displayed in the Electronic Vehicle Information Center (EVIC) indicating that the Adaptive Cruise Control has been disabled. Once the Diagnostic Trouble Code (DTC) goes to stored, the ACC system will return to normal operation. The DTC will be cleared after a 100 consecutive ignition cycles with no active detection.

POSSIBLE CAUSES

Possible Causes
ADAPTIVE CRUISE CONTROL (ACC) MODULE

DIAGNOSTIC TEST

VERIFY DTC IS ACTIVE

1. Using a scan tool, read ACC DTCs.

   Is this DTC active?

   Yes

   - Check for any controller updates. If no updates are available, erase DTC and cycle the ignition off then on. If the DTC resets, repeat erasing the DTC and cycling the ignition at least 3 times. If the DTC continues to reset, replace and program the Adaptive Cruise Control (ACC) module in accordance with the Service Information. Refer to **MODULE, ADAPTIVE CRUISE CONTROL, REMOVAL** .
   - Perform the ADAPTIVE CRUISE CONTROL VERIFICATION TEST. Refer to **STANDARD PROCEDURE**.

   No

   - No repair is necessary. Make sure the lens is free of dirt, damage, and other obstructions. Clear the DTC and verify the proper operation of the ACC system.
   - Perform the ADAPTIVE CRUISE CONTROL VERIFICATION TEST. Refer to **STANDARD PROCEDURE**.

U0002-00-CAN C BUS OFF PERFORMANCE

Perform the COMMUNICATION PRE-DIAGNOSTIC PROCEDURE. Refer to **STANDARD PROCEDURE** .

U0100-00-LOST COMMUNICATION WITH ECM/PCM

Perform the COMMUNICATION PRE-DIAGNOSTIC PROCEDURE. Refer to **STANDARD PROCEDURE** .

U0101-00-LOST COMMUNICATION WITH TCM

Perform the COMMUNICATION PRE-DIAGNOSTIC PROCEDURE. Refer to **STANDARD PROCEDURE** .

U0102-00-LOST COMMUNICATION WITH TRANSFER CASE CONTROL MODULE / AWD

Perform the COMMUNICATION PRE-DIAGNOSTIC PROCEDURE. Refer to **STANDARD**

PROCEDURE .

U0121-00-LOST COMMUNICATION WITH ANTI-LOCK BRAKE SYSTEM (ABS) CONTROL MODULE

Perform the COMMUNICATION PRE-DIAGNOSTIC PROCEDURE. Refer to **STANDARD PROCEDURE** .

U0140-00-LOST COMMUNICATION WITH BODY CONTROL MODULE

Perform the COMMUNICATION PRE-DIAGNOSTIC PROCEDURE. Refer to **STANDARD PROCEDURE** .

U0151-00-LOST COMMUNICATION WITH OCCUPANT RESTRAINT CONTROLLER (ORC)

Perform the COMMUNICATION PRE-DIAGNOSTIC PROCEDURE. Refer to **STANDARD PROCEDURE** .

U0155-00-LOST COMMUNICATION WITH CLUSTER/CCN

Perform the COMMUNICATION PRE-DIAGNOSTIC PROCEDURE. Refer to **STANDARD PROCEDURE** .

U0401-00-IMPLAUSIBLE DATA RECEIVED FROM ECM/PCM

For a complete wiring diagram, **refer to appropriate SYSTEM WIRING DIAGRAMS article** .

WHEN MONITORED

Continuously with the ignition on, engine running.

System voltage between 10.0 and 16.0 volts.

No CAN Bus off or shorted DTCs present.

SET CONDITION

When the Adaptive Cruise Control (ACC) module receives an implausible (default/error value, toggle error or parity error) message from the Powertrain Control Module (PCM).

The ACC module will disable the ACC system and a message will be displayed in the Electronic Vehicle Information Center (EVIC) indicating that the Adaptive Cruise Control has been disabled. Once the Diagnostic Trouble Code (DTC) goes to stored, the ACC system will return to normal operation. The DTC will be cleared after a 100 consecutive ignition cycles with no active detection.

POSSIBLE CAUSES

Possible Causes
BODY CONTROL MODULE (BCM) DTCS PRESENT
POWERTRAIN CONTROL MODULE (PCM) DTCS PRESENT
POWERTRAIN CONTROL MODULE (PCM)
ADAPTIVE CRUISE CONTROL (ACC) MODULE

DIAGNOSTIC TEST

1. **VERIFY THE DTC IS ACTIVE**
    1. Turn the ignition on.
    2. With the scan tool, record and erase Adaptive Cruise Control (ACC) DTCs.
    3. Cycle the ignition from off to on.
    4. With the scan tool, read ACC DTCs.

    Does the scan tool display this DTC as active?

    Yes

    - Go To 2

    No

    - Go To 5
2. **CHECK FOR BODY CONTROL MODULE (BCM) DTCS**
    1. With the scan tool, read BCM DTCs.

    Are there any BCM CAN Bus DTCs present?

    Yes

    - Refer to the **BODY CONTROL MODULE (BCM) - DIAGNOSTIC CODE INDEX** article and perform the appropriate diagnostic procedure.

    No

    - Go To 3
3. **CHECK FOR POWERTRAIN CONTROL MODULE (PCM) DTCS**
    1. With the scan tool, read PCM DTCs.

    Are there any PCM DTCs present?

    Yes

    - Refer to the **DTC INDEX** article and perform the appropriate diagnostic procedure.

No

- Go To 4

4. **CHECK OTHER MODULES FOR DTCS**
   1. With the scan tool, read DTCs.

      Are there any other modules reporting implausible communication DTCs against the PCM?

      Yes

      - Replace and program the Powertrain Control Module (PCM) in accordance with the Service Information. Refer to **MODULE, POWERTRAIN CONTROL, REMOVAL** .

      No

      - Using the schematics as a guide, check the ACC module pins, terminals, and connectors for corrosion, damage, or terminal push out. Pay particular attention to all power and ground circuits. If no problems are found, replace and program the Adaptive Cruise Control (ACC) module in accordance with the Service Information. Refer to **MODULE, ADAPTIVE CRUISE CONTROL, REMOVAL** .
      - Perform the ADAPTIVE CRUISE CONTROL VERIFICATION TEST. Refer to **STANDARD PROCEDURE**.

5. **CHECK THE WIRING AND CONNECTORS**
   1. The conditions necessary to set the DTC are not present at this time.
   2. Using the schematics as a guide, inspect the wiring and connectors specific to this module. Wiggle the wiring and connectors while checking for shorted and open circuits.
   3. Check all related splices and connectors for signs of water intrusion, corrosion, pushed out or bent terminals, and correct pin tension.
   4. Check Service Bulletins for any possible causes that may apply.

      Were there any problems found?

      Yes

      - Repair as necessary.
      - Perform the ADAPTIVE CRUISE CONTROL VERIFICATION TEST. Refer to **STANDARD PROCEDURE**.

      No

      - Test complete.

U0402-00-IMPLAUSIBLE DATA RECEIVED FROM TCM

For a complete wiring diagram, **refer to appropriate SYSTEM WIRING DIAGRAMS article** .

WHEN MONITORED

Continuously with the ignition on, engine running.

System voltage between 10.0 and 16.0 volts.

No CAN Bus off or shorted DTCs present.

SET CONDITION

When the Adaptive Cruise Control (ACC) module receives an implausible (default/error value, toggle error or parity error) message from the Transmission Control Module (TCM).

The ACC module will disable the ACC system and a message will be displayed in the Electronic Vehicle Information Center (EVIC) indicating that the Adaptive Cruise Control has been disabled. Once the Diagnostic Trouble Code (DTC) goes to stored, the ACC system will return to normal operation. The DTC will be cleared after a 100 consecutive ignition cycles with no active detection.

POSSIBLE CAUSES

Possible Causes
BODY CONTROL MODULE (BCM) DTCS PRESENT
TRANSMISSION CONTROL MODULE (TCM) DTCS PRESENT
TRANSMISSION CONTROL MODULE (TCM)
ADAPTIVE CRUISE CONTROL (ACC) MODULE

DIAGNOSTIC TEST

1. **VERIFY THE DTC IS ACTIVE**
    1. Turn the ignition on.
    2. With the scan tool, record and erase Adaptive Cruise Control (ACC) DTCs.
    3. Cycle the ignition from off to on.
    4. With the scan tool, read ACC DTCs.

    Does the scan tool display this DTC as active?

    Yes

    - Go To 2

    No

    - Go To 5

2. **CHECK FOR BODY CONTROL MODULE (BCM) DTCS**
   1. With the scan tool, read BCM DTCs.

      Are there any BCM CAN Bus DTCs present?

      Yes

      - Refer to the **BODY CONTROL MODULE (BCM) - DIAGNOSTIC CODE INDEX** article and perform the appropriate diagnostic procedure.

      No

      - Go To 3
3. **CHECK FOR TRANSMISSION CONTROL MODULE (TCM) DTCS**
   1. With the scan tool, read TCM DTCs.

      Are there any TCM DTCs present?

      Yes

      - Refer to the **TRANSMISSION CONTROL MODULE (TCM) - DIAGNOSTIC CODE INDEX** article and perform the appropriate diagnostic procedure.

      No

      - Go To 4
4. **CHECK OTHER MODULES FOR DTCS**
   1. With the scan tool, read DTCs.

      Are there any other modules reporting implausible communication DTCs against the TCM?

      Yes

      - Replace and program the Transmission Control Module (TCM) in accordance with the Service Information.

      No

      - Using the schematics as a guide, check the ACC module pins, terminals, and connectors for corrosion, damage, or terminal push out. Pay particular attention to all power and ground circuits. If no problems are found, replace and program the Adaptive Cruise Control (ACC) module in accordance with the Service Information. Refer to **MODULE, ADAPTIVE CRUISE CONTROL, REMOVAL** .
      - Perform the ADAPTIVE CRUISE CONTROL VERIFICATION TEST. Refer to **STANDARD PROCEDURE**.

5. **CHECK THE WIRING AND CONNECTORS**
    1. The conditions necessary to set the DTC are not present at this time.
    2. Using the schematics as a guide, inspect the wiring and connectors specific to this module. Wiggle the wiring and connectors while checking for shorted and open circuits.
    3. Check all related splices and connectors for signs of water intrusion, corrosion, pushed out or bent terminals, and correct pin tension.
    4. Check Service Bulletins for any possible causes that may apply.

    Were there any problems found?

    Yes

    - Repair as necessary.
    - Perform the ADAPTIVE CRUISE CONTROL VERIFICATION TEST. Refer to **STANDARD PROCEDURE**.

    No

    - Test complete.

U0403-00-IMPLAUSIBLE DATA RECEIVED FROM T-CASE

For a complete wiring diagram, **refer to appropriate SYSTEM WIRING DIAGRAMS article** .

WHEN MONITORED

Continuously with the ignition on, engine running.

System voltage between 10.0 and 16.0 volts.

No CAN Bus off or shorted DTCs present.

SET CONDITION

When the Adaptive Cruise Control (ACC) module receives an implausible (default/error value, toggle error or parity error) message from the Drive Train Control Module (DTCM).

The ACC module will disable the ACC system and a message will be displayed in the Electronic Vehicle Information Center (EVIC) indicating that the Adaptive Cruise Control has been disabled. Once the Diagnostic Trouble Code (DTC) goes to stored, the ACC system will return to normal operation. The DTC will be cleared after a 100 consecutive ignition cycles with no active detection.

POSSIBLE CAUSES

Possible Causes

DRIVE TRAIN CONTROL MODULE (DTCM) DTCS PRESENT
BODY CONTROL MODULE (BCM) DTCS PRESENT
DRIVE TRAIN CONTROL MODULE (DTCM)
ADAPTIVE CRUISE CONTROL (ACC) MODULE

DIAGNOSTIC TEST

1. **VERIFY THE DTC IS ACTIVE**
    1. Turn the ignition on.
    2. With the scan tool, record and erase Adaptive Cruise Control (ACC) DTCs.
    3. Cycle the ignition from off to on.
    4. With the scan tool, read ACC DTCs.

    Does the scan tool display this DTC as active?

    Yes

    - Go To 2

    No

    - Go To 5
2. **CHECK FOR BODY CONTROL MODULE (BCM) DTCS**
    1. With the scan tool, read BCM DTCs.

    Are there any BCM CAN Bus DTCs present?

    Yes

    - Refer to the **BODY CONTROL MODULE (BCM) - DIAGNOSTIC CODE INDEX** article and perform the appropriate diagnostic procedure.

    No

    - Go To 3
3. **CHECK FOR DRIVE TRAIN CONTROL MODULE (DTCM) DTCS**
    1. With the scan tool, read DTCM DTCs.

    Are there any DTCM DTCs present?

    Yes

    - Refer to **DIAGNOSIS AND TESTING** and perform the appropriate diagnostic procedure.

No

- Go To 4

4. **CHECK OTHER MODULES FOR DTCS**
   1. With the scan tool, read DTCs.

      Are there any other modules reporting implausible communication DTCs against the DTCM?

      Yes

      - Replace and program the Drive Train Control Module (DTCM) in accordance with the Service Information. Refer to **MODULE, DRIVETRAIN CONTROL, REMOVAL** .

      No

      - Using the schematics as a guide, check the ACC module pins, terminals, and connectors for corrosion, damage, or terminal push out. Pay particular attention to all power and ground circuits. If no problems are found, replace and program the Adaptive Cruise Control (ACC) module in accordance with the Service Information. Refer to **MODULE, ADAPTIVE CRUISE CONTROL, REMOVAL** .
      - Perform the ADAPTIVE CRUISE CONTROL VERIFICATION TEST. Refer to **STANDARD PROCEDURE**.

5. **CHECK THE WIRING AND CONNECTORS**
   1. The conditions necessary to set the DTC are not present at this time.
   2. Using the schematics as a guide, inspect the wiring and connectors specific to this module. Wiggle the wiring and connectors while checking for shorted and open circuits.
   3. Check all related splices and connectors for signs of water intrusion, corrosion, pushed out or bent terminals, and correct pin tension.
   4. Check Service Bulletins for any possible causes that may apply.

      Were there any problems found?

      Yes

      - Repair as necessary.
      - Perform the ADAPTIVE CRUISE CONTROL VERIFICATION TEST. Refer to **STANDARD PROCEDURE**.

      No

      - Test complete.

U0415-00-IMPLAUSIBLE DATA RECEIVED FROM ABS

For a complete wiring diagram, **refer to appropriate SYSTEM WIRING DIAGRAMS article** .

WHEN MONITORED

Continuously with the ignition on, engine running.

System voltage between 10.0 and 16.0 volts.

No CAN Bus off or shorted DTCs present.

SET CONDITION

When the Adaptive Cruise Control (ACC) module receives an implausible (default/error value, toggle error or parity error) message from the Antilock Brake System (ABS) module.

The ACC module will disable the ACC system and a message will be displayed in the Electronic Vehicle Information Center (EVIC) indicating that the Adaptive Cruise Control has been disabled. Once the Diagnostic Trouble Code (DTC) goes to stored, the ACC system will return to normal operation. The DTC will be cleared after a 100 consecutive ignition cycles with no active detection.

POSSIBLE CAUSES

Possible Causes
BODY CONTROL MODULE (BCM) DTCS PRESENT
ANTILOCK BRAKE SYSTEM (ABS) MODULE DTCS PRESENT
ANTILOCK BRAKE SYSTEM (ABS) MODULE
ADAPTIVE CRUISE CONTROL (ACC) MODULE

DIAGNOSTIC TEST

1. **VERIFY THE DTC IS ACTIVE**
    1. Turn the ignition on.
    2. With the scan tool, record and erase Adaptive Cruise Control (ACC) DTCs.
    3. Cycle the ignition from off to on.
    4. With the scan tool, read ACC DTCs.

    Does the scan tool display this DTC as active?

    Yes

    - Go To 2

    No

    - Go To 5

2. **CHECK FOR BODY CONTROL MODULE (BCM) DTCS**
   1. With the scan tool, read BCM DTCs.

      Are there any BCM CAN Bus DTCs present?

      Yes

      - Refer to the **BODY CONTROL MODULE (BCM) - DIAGNOSTIC CODE INDEX** article and perform the appropriate diagnostic procedure.

      No

      - Go To 3
3. **CHECK FOR ANTILOCK BRAKE SYSTEM (ABS) DTCS**
   1. With the scan tool, read ABS DTCs.

      Are there any ABS DTCs present?

      Yes

      - Refer to **DIAGNOSIS AND TESTING** and perform the appropriate diagnostic procedure.

      No

      - Go To 4
4. **CHECK OTHER MODULES FOR DTCS**
   1. With the scan tool, read DTCs.

      Are there any other modules reporting implausible communication DTCs against the ABS?

      Yes

      - Replace and program the Antilock Brake System (ABS) module in accordance with the Service Information. Refer to **MODULE, ANTI-LOCK BRAKE SYSTEM, REMOVAL** .

      No

      - Using the schematics as a guide, check the ACC module pins, terminals, and connectors for corrosion, damage, or terminal push out. Pay particular attention to all power and ground circuits. If no problems are found, replace and program the Adaptive Cruise Control (ACC) module in accordance with the Service Information. Refer to **MODULE, ADAPTIVE CRUISE CONTROL, REMOVAL** .
      - Perform the ADAPTIVE CRUISE CONTROL VERIFICATION TEST. Refer to **STANDARD PROCEDURE**.

5. **CHECK THE WIRING AND CONNECTORS**
    1. The conditions necessary to set the DTC are not present at this time.
    2. Using the schematics as a guide, inspect the wiring and connectors specific to this module. Wiggle the wiring and connectors while checking for shorted and open circuits.
    3. Check all related splices and connectors for signs of water intrusion, corrosion, pushed out or bent terminals, and correct pin tension.
    4. Check Service Bulletins for any possible causes that may apply.

    Were there any problems found?

    Yes

    - Repair as necessary.
    - Perform the ADAPTIVE CRUISE CONTROL VERIFICATION TEST. Refer to **STANDARD PROCEDURE**.

    No

    - Test complete.

U0422-00-IMPLAUSIBLE DATA RECEIVED FROM BODY CONTROL MODULE

For a complete wiring diagram, **refer to appropriate SYSTEM WIRING DIAGRAMS article** .

WHEN MONITORED

Continuously with the ignition on, engine running.

System voltage between 10.0 and 16.0 volts.

No CAN Bus off or shorted DTCs present.

SET CONDITION

When the Adaptive Cruise Control (ACC) module detects an implausible (default/error value, toggle error or parity error) message from the Body Control Module (BCM).

The ACC module will disable the ACC system and a message will be displayed in the Electronic Vehicle Information Center (EVIC) indicating that the Adaptive Cruise Control has been disabled. Once the Diagnostic Trouble Code (DTC) goes to stored, the ACC system will return to normal operation. The DTC will be cleared after a 100 consecutive ignition cycles with no active detection.

POSSIBLE CAUSES

Possible Causes

BODY CONTROL MODULE (BCM) DTCS PRESENT
BODY CONTROL MODULE
ADAPTIVE CRUISE CONTROL (ACC) MODULE

DIAGNOSTIC TEST

1. **VERIFY IF THE DTC IS ACTIVE**
    1. Turn the ignition on.
    2. With the scan tool, record and erase Adaptive Cruise Control (ACC) DTCs.
    3. Cycle the ignition from off to on.
    4. With the scan tool, read ACC DTCs.

    Does the scan tool display this DTC as active?

    Yes

    - Go To 2

    No

    - Go To 4
2. **CHECK FOR BODY CONTROL MODULE (BCM) DTCS**
    1. With the scan tool, read BCM DTCs.

    Are there any BCM CAN Bus DTCs present?

    Yes

    - Refer to the **BODY CONTROL MODULE (BCM) - DIAGNOSTIC CODE INDEX** article and perform the appropriate diagnostic procedure.

    No

    - Go To 3
3. **CHECK OTHER MODULES FOR DTCS**
    1. With the scan tool, read DTCs.

    Are there any other modules reporting implausible communication DTCs against the BCM?

    Yes

    - Replace and program the Body Control Module (BCM) in accordance with the Service Information. Refer to **MODULE, BODY CONTROL, REMOVAL** .

No

- Using the schematics as a guide, check the ACC module pins, terminals, and connectors for corrosion, damage, or terminal push out. Pay particular attention to all power and ground circuits. If no problems are found, replace and program the Adaptive Cruise Control (ACC) module in accordance with the Service Information. Refer to **MODULE, ADAPTIVE CRUISE CONTROL, REMOVAL** .
- Perform the ADAPTIVE CRUISE CONTROL VERIFICATION TEST. Refer to **STANDARD PROCEDURE**.

4. **CHECK THE WIRING AND CONNECTORS**
   1. The conditions necessary to set the DTC are not present at this time.
   2. Using the schematics as a guide, inspect the wiring and connectors specific to this module. Wiggle the wiring and connectors while checking for shorted and open circuits.
   3. Check all related splices and connectors for signs of water intrusion, corrosion, pushed out or bent terminals, and correct pin tension.
   4. Check Service Bulletins for any possible causes that may apply.

   Were there any problems found?

   Yes

   - Repair as necessary.
   - Perform the ADAPTIVE CRUISE CONTROL VERIFICATION TEST. Refer to **STANDARD PROCEDURE**.

   No

   - Test complete.

U0423-00-IMPLAUSIBLE DATA RECEIVED FROM CLUSTER/CCN

For a complete wiring diagram, **refer to appropriate SYSTEM WIRING DIAGRAMS article** .

WHEN MONITORED

Continuously with the ignition on, engine running.

System voltage between 10.0 and 16.0 volts.

No CAN Bus off or shorted DTCs present.

SET CONDITION

When the Adaptive Cruise Control (ACC) module receives an implausible (default/error value, toggle error or parity error) message from the Instrument Cluster.

The ACC module will disable the ACC system and a message will be displayed in the Electronic Vehicle Information Center (EVIC) indicating that the Adaptive Cruise Control has been disabled. Once the Diagnostic Trouble Code (DTC) goes to stored, the ACC system will return to normal operation. The DTC will be cleared after a 100 consecutive ignition cycles with no active detection.

POSSIBLE CAUSES

Possible Causes
BODY CONTROL MODULE (BCM) DTCS PRESENT
INSTRUMENT CLUSTER DTCS PRESENT
INSTRUMENT CLUSTER
ADAPTIVE CRUISE CONTROL (ACC) MODULE

DIAGNOSTIC TEST

1. **VERIFY THE DTC IS ACTIVE**
    1. Turn the ignition on.
    2. With the scan tool, record and erase Adaptive Cruise Control (ACC) DTCs.
    3. Cycle the ignition from off to on.
    4. With the scan tool, read ACC DTCs.

    Does the scan tool display this DTC as active?

    Yes

    - Go To 2

    No

    - Go To 5
2. **CHECK FOR BODY CONTROL MODULE (BCM) DTCS**
    1. With the scan tool, read BCM DTCs.

    Are there any BCM CAN Bus DTCs present?

    Yes

    - Refer to the **BODY CONTROL MODULE (BCM) - DIAGNOSTIC CODE INDEX** article and perform the appropriate diagnostic procedure.

    No

    - Go To 3
3. **CHECK FOR INSTRUMENT CLUSTER DTCS**

1. With the scan tool, read Instrument Cluster DTCs.

   Are there any Instrument Cluster DTCs present?

   Yes

   - Refer to **DIAGNOSIS AND TESTING** and perform the appropriate diagnostic procedure.

   No

   - Go To 4

4. **CHECK OTHER MODULES FOR DTCS**
   1. With the scan tool, read DTCs.

      Are there any other modules reporting implausible communication DTCs against the IPC?

      Yes

      - Replace and program the Instrument Cluster in accordance with the Service Information. Refer to **REMOVAL** .

      No

      - Using the schematics as a guide, check the ACC module pins, terminals, and connectors for corrosion, damage, or terminal push out. Pay particular attention to all power and ground circuits. If no problems are found, replace and program the Adaptive Cruise Control (ACC) module in accordance with the Service Information. Refer to **MODULE, ADAPTIVE CRUISE CONTROL, REMOVAL** .
      - Perform the ADAPTIVE CRUISE CONTROL VERIFICATION TEST. Refer to **STANDARD PROCEDURE**.

5. **CHECK THE WIRING AND CONNECTORS**
   1. The conditions necessary to set the DTC are not present at this time.
   2. Using the schematics as a guide, inspect the wiring and connectors specific to this module. Wiggle the wiring and connectors while checking for shorted and open circuits.
   3. Check all related splices and connectors for signs of water intrusion, corrosion, pushed out or bent terminals, and correct pin tension.
   4. Check Service Bulletins for any possible causes that may apply.

      Were there any problems found?

      Yes

      - Repair as necessary.
      - Perform the ADAPTIVE CRUISE CONTROL VERIFICATION TEST. Refer to

STANDARD PROCEDURE.

No

- Test complete.

U0429-00-IMPLAUSIBLE DATA RECEIVED FROM SCM

For a complete wiring diagram, **refer to appropriate SYSTEM WIRING DIAGRAMS article** .

WHEN MONITORED

Continuously with the ignition on, engine running.

System voltage between 10.0 and 16.0 volts.

No CAN Bus off or shorted DTCs present.

SET CONDITION

When the Adaptive Cruise Control (ACC) module receives an implausible (default/error value, toggle error or parity error) message from the Steering Column Control Module (SCCM).

The ACC module will disable the ACC system and a message will be displayed in the Electronic Vehicle Information Center (EVIC) indicating that the Adaptive Cruise Control has been disabled. Once the Diagnostic Trouble Code (DTC) goes to stored, the ACC system will return to normal operation. The DTC will be cleared after a 100 consecutive ignition cycles with no active detection.

POSSIBLE CAUSES

Possible Causes
BODY CONTROL MODULE (BCM) DTCS PRESENT
STEERING COLUMN MODULE (SCCM) DTCS PRESENT
STEERING COLUMN CONTROL MODULE (SCCM)
ADAPTIVE CRUISE CONTROL (ACC) MODULE

DIAGNOSTIC TEST

1. **VERIFY THE DTC IS ACTIVE**
    1. Turn the ignition on.
    2. With the scan tool, record and erase Adaptive Cruise Control (ACC) DTCs.
    3. Cycle the ignition from off to on.
    4. With the scan tool, read ACC DTCs.

    Does the scan tool display this DTC as active?

Yes

- Go To 2

No

- Go To 5

2. **CHECK FOR BODY CONTROL MODULE (BCM) DTCS**
   1. With the scan tool, read BCM DTCs.

      Are there any BCM CAN Bus DTCs present?

      Yes

      - Refer to the **BODY CONTROL MODULE (BCM) - DIAGNOSTIC CODE INDEX** article and perform the appropriate diagnostic procedure.

      No

      - Go To 3

3. **CHECK FOR STEERING COLUMN CONTROL MODULE (SCCM) DTCS**
   1. With the scan tool, read SCCM DTCs.

      Are there any SCCM DTCs present?

      Yes

      - Refer to **DIAGNOSIS AND TESTING** and perform the appropriate diagnostic procedure.

      No

      - Go To 4

4. **CHECK OTHER MODULES FOR DTCS**
   1. With the scan tool, read DTCs.

      Are there any other modules reporting implausible communication DTCs against the SCCM?

      Yes

      - Replace and program the Steering Column Control Module (SCCM) in accordance with the Service Information. Refer to **MODULE, STEERING COLUMN, REMOVAL** .

      No

      - Using the schematics as a guide, check the ACC module pins, terminals, and connectors for

corrosion, damage, or terminal push out. Pay particular attention to all power and ground circuits. If no problems are found, replace and program the Adaptive Cruise Control (ACC) module in accordance with the Service Information. Refer to **MODULE, ADAPTIVE CRUISE CONTROL, REMOVAL** .

- Perform the ADAPTIVE CRUISE CONTROL VERIFICATION TEST. Refer to **STANDARD PROCEDURE**.

5. **CHECK THE WIRING AND CONNECTORS**
   1. The conditions necessary to set the DTC are not present at this time.
   2. Using the schematics as a guide, inspect the wiring and connectors specific to this module. Wiggle the wiring and connectors while checking for shorted and open circuits.
   3. Check all related splices and connectors for signs of water intrusion, corrosion, pushed out or bent terminals, and correct pin tension.
   4. Check Service Bulletins for any possible causes that may apply.

   Were there any problems found?

   Yes

   - Repair as necessary.
   - Perform the ADAPTIVE CRUISE CONTROL VERIFICATION TEST. Refer to **STANDARD PROCEDURE**.

   No

   - Test complete.

U0452-00-IMPLAUSIBLE DATA RECEIVED FROM RESTRAINTS CONTROL MODULE

For a complete wiring diagram, **refer to appropriate SYSTEM WIRING DIAGRAMS article** .

WHEN MONITORED

Continuously with the ignition on, engine running.

System voltage between 10.0 and 16.0 volts.

No CAN Bus off or shorted DTCs present.

SET CONDITION

When the Adaptive Cruise Control (ACC) module receives an implausible (default/error value, toggle error or parity error) message from the Occupant Restraint Controller (ORC).

The ACC module will disable the ACC system and a message will be displayed in the Electronic Vehicle Information Center (EVIC) indicating that the Adaptive Cruise Control has been disabled. Once the Diagnostic

Trouble Code (DTC) goes to stored, the ACC system will return to normal operation. The DTC will be cleared after a 100 consecutive ignition cycles with no active detection.

POSSIBLE CAUSES

Possible Causes
BODY CONTROL MODULE (BCM) DTCS PRESENT
OCCUPANT RESTRAINT CONTROLLER (ORC) DTCS PRESENT
OCCUPANT RESTRAINT CONTROLLER (ORC)
ADAPTIVE CRUISE CONTROL (ACC) MODULE

DIAGNOSTIC TEST

1. **VERIFY THE DTC IS ACTIVE**
    1. Turn the ignition on.
    2. With the scan tool, record and erase Adaptive Cruise Control (ACC) DTCs.
    3. Cycle the ignition from off to on.
    4. With the scan tool, read ACC DTCs.

    Does the scan tool display this DTC as active?

    Yes

    - Go To 2

    No

    - Go To 5
2. **CHECK FOR BODY CONTROL MODULE (BCM) DTCS**
    1. With the scan tool, read BCM DTCs.

    Are there any BCM CAN Bus DTCs present?

    Yes

    - Refer to the **BODY CONTROL MODULE (BCM) - DIAGNOSTIC CODE INDEX** article and perform the appropriate diagnostic procedure.

    No

    - Go To 3
3. **CHECK FOR OCCUPANT RESTRAINT CONTROLLER (ORC) DTCS**
    1. With the scan tool, read ORC DTCs.

Are there any ORC DTCs present?

Yes

- Refer to the **OCCUPANT RESTRAINT CONTROLLER (ORC) - DIAGNOSTIC CODE INDEX** article and perform the appropriate diagnostic procedure.

No

- Go To 4

4. **CHECK OTHER MODULES FOR DTCS**
   1. With the scan tool, read DTCs.

   Are there any other modules reporting implausible communication DTCs against the ORC?

   Yes

   - Replace and program the Occupant Restraint Controller (ORC) in accordance with the Service Information.
   - Perform the ADAPTIVE CRUISE CONTROL VERIFICATION TEST. Refer to **STANDARD PROCEDURE**.

   No

   - Using the schematics as a guide, check the ACC module pins, terminals, and connectors for corrosion, damage, or terminal push out. Pay particular attention to all power and ground circuits. If no problems are found, replace and program the Adaptive Cruise Control (ACC) module in accordance with the Service Information. Refer to **MODULE, ADAPTIVE CRUISE CONTROL, REMOVAL** .
   - Perform the ADAPTIVE CRUISE CONTROL VERIFICATION TEST. Refer to **STANDARD PROCEDURE**.

5. **CHECK THE WIRING AND CONNECTORS**
   1. The conditions necessary to set the DTC are not present at this time.
   2. Using the schematics as a guide, inspect the wiring and connectors specific to this module. Wiggle the wiring and connectors while checking for shorted and open circuits.
   3. Check all related splices and connectors for signs of water intrusion, corrosion, pushed out or bent terminals, and correct pin tension.
   4. Check Service Bulletins for any possible causes that may apply.

   Were there any problems found?

   Yes

   - Repair as necessary.

- Perform the ADAPTIVE CRUISE CONTROL VERIFICATION TEST. Refer to **STANDARD PROCEDURE**.

No

- Test complete.

U110A-00-LOST COMMUNICATION WITH SCM - CAN-C

Perform the COMMUNICATION PRE-DIAGNOSTIC PROCEDURE. Refer to **STANDARD PROCEDURE** .

U11F9-00-ENGINE DID NOT RESPOND TO ACC TORQUE REQUEST

For a complete wiring diagram, **refer to appropriate SYSTEM WIRING DIAGRAMS article** .

WHEN MONITORED

Continuously with the ignition on, engine running.

System voltage between 10.0 and 16.0 volts.

No CAN Bus off or shorted DTCs present.

Adaptive Cruise Control (ACC) module is not in Plant-Mode.

ESP is not in diagnostic mode.

SET CONDITION

When the Adaptive Cruise Control (ACC) module detects that the Powertrain Control Module is not responding to ACC torque request.

The ACC module will disable the ACC system and a message will be displayed in the Electronic Vehicle Information Center (EVIC) indicating that the Adaptive Cruise Control has been disabled. Once the Diagnostic Trouble Code (DTC) goes to stored, the ACC system will return to normal operation. The DTC will be cleared after a 100 consecutive ignition cycles with no active detection.

POSSIBLE CAUSES

Possible Causes
BODY CONTROL MODULE (BCM) DTCS PRESENT
POWERTRAIN CONTROL MODULE (PCM) DTCS PRESENT
POWERTRAIN CONTROL MODULE (PCM) IMPROPERLY CONFIGURED

DIAGNOSTIC TEST

CHECK FOR OTHER DTCS

NOTE: To help in the service of the Adaptive Cruise Control (ACC) system, it is recommended to communicate with the customer to obtain the environmental conditions they were driving in when the cruise control concern took place. Heavy rain, snow, ice, and fog can cause the ACC system to become inoperative. This is considered as a normal operational reaction of the ACC system and no repair is necessary.

1. This is an informational Diagnostic Trouble Code (DTC). The Adaptive Cruise Control (ACC) communicates over the CAN Bus with the Powertrain Control Module (PCM) to increase engine speed when needed. If other ACC DTCs are present, perform their respective diagnostic procedures first.

   Check for:

   - PCM DTCs present.
   - PCM improperly configured.
   - BCM DTCs present.
   - BCM improperly configured.
   - Implausible DTCs against the PCM.
   - Any Service Bulletins that may apply.

   Were any of the above conditions present?

   Yes

   - Refer to the appropriate diagnostic procedure repair/reprogram as necessary.
   - Perform the ADAPTIVE CRUISE CONTROL VERIFICATION TEST. Refer to **STANDARD PROCEDURE**.

   No

   - Erase this DTC and perform the ADAPTIVE CRUISE CONTROL VERIFICATION TEST. Refer to **STANDARD PROCEDURE**.
   - If the DTC continues to set, no other modules are reporting any DTCs, and all modules are configured properly, replace and program the Adaptive Cruise Control (ACC) module in accordance with the Service Information. Refer to **MODULE, ADAPTIVE CRUISE CONTROL, REMOVAL** .

U1215-00-LOST COMMUNICATION WITH FORWARD FACING CAMERA

For a complete wiring diagram, **refer to appropriate SYSTEM WIRING DIAGRAMS article** .

WHEN MONITORED

Continuously with the ignition on, engine running.

System voltage between 10.0 and 16.0 volts.

No CAN Bus off or shorted DTCs present.

Adaptive Cruise Control (ACC) module is not in Plant-Mode.

ESP is not in diagnostic mode.

SET CONDITION

The Adaptive Cruise Control (ACC) module communicates with the Forward Facing Camera (FFC) on a dedicated Can C Bus. This DTC will set when the ACC module is unable to communicate with the FFC.

The ACC module will disable the ACC system and a message will be displayed in the Electronic Vehicle Information Center (EVIC) indicating that the Adaptive Cruise Control has been disabled. Once the Diagnostic Trouble Code (DTC) goes to stored, the ACC system will return to normal operation. The DTC will be cleared after a 100 consecutive ignition cycles with no active detection.

POSSIBLE CAUSES

Possible Causes
FUSED IGNITION (RUN) CIRCUIT OPEN
GROUND CIRCUIT OPEN
CAN C BUS CIRCUIT SHORTED TO GROUND
CAN C BUS CIRCUIT OPEN
FORWARD FACING CAMERA

DIAGNOSTIC TEST

1. **CHECK IF THE DTC IS ACTIVE**
    1. Ignition on, engine not running.
    2. With the scan tool, record and erase Adaptive Cruise Control (ACC) DTCs.
    3. Cycle the ignition switch from off to on.
    4. With the scan tool, read ACC DTCs.

    Does the scan tool display this DTC as active?

    Yes

    - Go To 2

    No

- Go To 7

2. **CHECK THE (F925) FUSED IGNITION (RUN) CIRCUIT FOR AN OPEN**
   1. Turn the ignition off.
   2. Disconnect the Forward Facing Camera (FFC) harness connector.
   3. Ignition on, engine running.
   4. Using a 12-volt test light connected to ground, check the (F925) Fused Ignition (Run) circuit in the FFC harness connector.

      NOTE: The test light must illuminate brightly. Compare the brightness to that of a direct connection to the battery.

      Does the test light illuminate brightly?

      Yes

      - Go To 3

      No

      - Repair the (F925) Fused Ignition (Run) circuit for an open or high resistance.

        NOTE: If the fuse is open, make sure to check for a short to ground.

      - Perform the ADAPTIVE CRUISE CONTROL VERIFICATION TEST. Refer to **STANDARD PROCEDURE**.

3. **CHECK THE (Z912) GROUND CIRCUIT FOR AN OPEN**
   1. Turn the ignition off.
   2. Using a 12-volt test light connected to 12-volts, check the (Z912) Ground circuit in the FFC harness connector.

      Does the test light illuminate brightly?

      Yes

      - Go To 4

      No

      - Repair the (Z912) Ground circuit for an open or high resistance.
      - Perform the ADAPTIVE CRUISE CONTROL VERIFICATION TEST. Refer to **STANDARD PROCEDURE**.

4. **CHECK THE (D449) CAN C(+) AND (D448) CAN C(-) CIRCUITS FOR A SHORT TO GROUND**
   1. Disconnect the Adaptive Cruise Control (ACC) module harness connector.

2. Measure the resistance between ground and both (D449) CAN C (+) and (D448) CAN C(-) circuits.

   Is the resistance above 100K Ohms?

   Yes

   - Go To 5

   No

   - Repair the (D449) CAN C (+) and/or the (D448) CAN C(-) circuit(s) for a short to ground.
   - Perform the ADAPTIVE CRUISE CONTROL VERIFICATION TEST. Refer to **STANDARD PROCEDURE**.

5. **CHECK THE (D449) CAN C(+) AND D448 CAN C(-) CIRCUITS FOR AN OPEN**
   1. Measure the resistance of both (D449) CAN C (+) and (D448) CAN C(-) circuits between the ACC harness connector and the FFC harness connector.

      Is the resistance above 2.0 Ohms on either circuit?

      Yes

      - Repair the (D449) CAN C (+) and/or the (D448) CAN C(-) circuit(s) for an open or high resistace.
      - Perform the ADAPTIVE CRUISE CONTROL VERIFICATION TEST. Refer to **STANDARD PROCEDURE**.

      No

      - Go To 6

6. **FORWARD FACING CAMERA**
   1. Replace and program/align the Forward Facing Camera in accordance with the Service Information. Refer to **MODULE, FORWARD FACING CAMERA, REMOVAL** .
   2. Perform the ADAPTIVE CRUISE CONTROL VERIFICATION TEST. Refer to **STANDARD PROCEDURE**.

      Does this DTC reset after replacement of the Forward Facing Camera?

      Yes

      - If this DTC resets after replacement of the Forward Facing Camera and no other problems are found, replace and program the Adaptive Cruise Control (ACC) module in accordance with the Service Information. Refer to **MODULE, ADAPTIVE CRUISE CONTROL, REMOVAL** .

No

- Test Complete.

7. **CHECK THE WIRING AND CONNECTORS**
   1. The conditions necessary to set the DTC are not present at this time.
   2. Using the schematics as a guide, inspect the wiring and connectors specific to this module. Wiggle the wiring and connectors while checking for shorted and open circuits.
   3. Check all related splices and connectors for signs of water intrusion, corrosion, pushed out or bent terminals, and correct pin tension.
   4. Check Service Bulletins for any possible causes that may apply.

   Were there any problems found?

   Yes

   - Repair as necessary.
   - Perform the ADAPTIVE CRUISE CONTROL VERIFICATION TEST. Refer to **STANDARD PROCEDURE**.

   No

   - Test complete.

U121E-00-LOST COMMUNICATION WITH STEERING WHEEL CRUISE CONTROL SWITCH

IF the Body Control Module (BCM), Adaptive Cruise Control (ACC) module, or Steering Column Control Module (SCCM) has any other lost communication DTCs present, perform those respective test first. If no other communication DTCs are set, perform the diagnostic procedure for U121E-00-LOST COMMUNICATION WITH STEERING WHEEL CRUISE CONTROL SWITCH as if the DTC is active. Refer to **DIAGNOSIS AND TESTING** .

U148D-00-IMPLAUSIBLE DATA RECEIVED FROM FORWARD FACING CAMERA

For a complete wiring diagram, **refer to appropriate SYSTEM WIRING DIAGRAMS article** .

WHEN MONITORED

Continuously with the ignition on, engine running.

System voltage between 10.0 and 16.0 volts.

No CAN Bus off or shorted DTCs present.

SET CONDITION

When the Adaptive Cruise Control (ACC) module receives an implausible (default/error value, toggle error or parity error) message from the Forward Facing Camera (FFCM).

The ACC module will disable the ACC system and a message will be displayed in the Electronic Vehicle Information Center (EVIC) indicating that the Adaptive Cruise Control has been disabled. Once the Diagnostic Trouble Code (DTC) goes to stored, the ACC system will return to normal operation. The DTC will be cleared after a 100 consecutive ignition cycles with no active detection.

POSSIBLE CAUSES

Possible Causes
FORWARD FACING CAMERA (FFCM) ADAPTIVE CRUISE CONTROL (ACC) MODULE

DIAGNOSTIC TEST

1. **VERIFY THE DTC IS ACTIVE**
    1. Turn the ignition on.
    2. With the scan tool, record and erase Adaptive Cruise Control (ACC) DTCs.
    3. Cycle the ignition from off to on.
    4. With the scan tool, read ACC DTCs.

    Does the scan tool display this DTC as active?

    Yes

    - Go To 2

    No

    - Go To 3
2. **FORWARD FACING CAMERA**
    1. Replace and program/align the Forward Facing Camera in accordance with the Service Information. Refer to **MODULE, FORWARD FACING CAMERA, REMOVAL** .
    2. Perform the ADAPTIVE CRUISE CONTROL VERIFICATION TEST. Refer to **STANDARD PROCEDURE**.

    Does this DTC reset after replacement of the Forward Facing Camera?

    Yes

    - If this DTC resets after replacement of the Forward Facing Camera and no other problems are found, replace and program the Adaptive Cruise Control (ACC) module in accordance with the Service Information. Refer to **MODULE, ADAPTIVE CRUISE CONTROL,**

REMOVAL .

No

- Test Complete.

3. **CHECK THE WIRING AND CONNECTORS**
   1. The conditions necessary to set the DTC are not present at this time.
   2. Using the schematics as a guide, inspect the wiring and connectors specific to this module. Wiggle the wiring and connectors while checking for shorted and open circuits.
   3. Check all related splices and connectors for signs of water intrusion, corrosion, pushed out or bent terminals, and correct pin tension.
   4. Check Service Bulletins for any possible causes that may apply.

   Were there any problems found?

   Yes

   - Repair as necessary.
   - Perform the ADAPTIVE CRUISE CONTROL VERIFICATION TEST. Refer to **STANDARD PROCEDURE**.

   No

   - Test complete.

U1600-00-ECU APPLICATION SOFTWARE MISMATCH

For a complete wiring diagram, **refer to appropriate SYSTEM WIRING DIAGRAMS article** .

WHEN MONITORED

Continuously with the ignition on.

SET CONDITION

The Adaptive Cruise Control (ACC) module was reprogrammed with a corrupted flash file, or the reprogramming of the ACC was interrupted before it was complete.

The ACC module will disable the ACC system and a message will be displayed in the Electronic Vehicle Information Center (EVIC) indicating that the Adaptive Cruise Control has been disabled. Once the Diagnostic Trouble Code (DTC) goes to stored, the ACC system will return to normal operation. The DTC will be cleared after a 100 consecutive ignition cycles with no active detection.

POSSIBLE CAUSES

Possible Causes
ADAPTIVE CRUISE CONTROL MODULE NOT PROGRAMMED PROPERLY
ADAPTIVE CRUISE CONTROL MODULE

DIAGNOSTIC TEST

1. **CHECK IF THE DTC IS ACTIVE**
   1. Turn the ignition on.
   2. Using the scan tool, read Adaptive Cruise Control (ACC) module DTCs.

      Does the scan tool display this DTC as active?

      Yes

      - This is an indication that the software installed on the vehicle is corrupted, incorrect or the flash procedure was interrupted. Flash the controller, making sure the correct flash file is used. If this DTC continues to set after flashing a at least three times, replace and program the Adaptive Cruise Control (ACC) module in accordance with the Service Information. Refer to **MODULE, ADAPTIVE CRUISE CONTROL, REMOVAL** .
      - Perform the ADAPTIVE CRUISE CONTROL VERIFICATION TEST. Refer to **STANDARD PROCEDURE**.

      No

      - Go To 2
2. **CHECK THE WIRING AND CONNECTORS**
   1. The conditions necessary to set the DTC are not present at this time.
   2. Using the schematics as a guide, inspect the wiring and connectors specific to this module. Wiggle the wiring and connectors while checking for shorted and open circuits.
   3. Check all related splices and connectors for signs of water intrusion, corrosion, pushed out or bent terminals, and correct pin tension.
   4. Check Service Bulletins for any possible causes that may apply.

      Were there any problems found?

      Yes

      - Repair as necessary.
      - Perform the ADAPTIVE CRUISE CONTROL VERIFICATION TEST. Refer to **STANDARD PROCEDURE**.

      No

      - Test complete.

STANDARD PROCEDURE

ADAPTIVE CRUISE CONTROL VERIFICATION TEST

DIAGNOSTIC TEST

ADAPTIVE CRUISE CONTROL VERIFICATION TEST

1. Disconnect all jumper wires and reconnect all previously disconnected components and connectors.
2. With the scan tool, erase Adaptive Cruise Control (ACC) DTCs.
3. Make sure that all accessories are turned off and that the battery is fully charged.
4. If the ACC Module was replaced or moved in any way, the ACC Module must be aligned. Perform the SENSOR VERTICAL ALIGNMENT procedure. Refer to **MODULE, ADAPTIVE CRUISE CONTROL, STANDARD PROCEDURE** .
5. Test drive the vehicle and verify proper operation.
6. With the scan tool, read ACC DTCs.

   Are there any DTCs present in the ACC module?

   Yes

   - Refer to **DIAGNOSIS AND TESTING** and perform the appropriate diagnostic procedure.

   No

   - Repair is complete.

2014 ACCESSORIES AND EQUIPMENT

Amplifier (AMP) - Electrical Diagnostics - Base - Cherokee

DIAGNOSTIC CODE INDEX

DIAGNOSTIC CODE INDEX

DTC	Description
B1460-11	CHANNEL 1 AUDIO SPEAKER OUTPUT - CIRCUIT SHORT TO GROUND
B1460-12	CHANNEL 1 AUDIO SPEAKER OUTPUT - CIRCUIT SHORT TO BATTERY
B1460-13	CHANNEL 1 AUDIO SPEAKER OUTPUT - CIRCUIT OPEN
B1460-92	CHANNEL 1 AUDIO SPEAKER OUTPUT - PERFORMANCE OR INCORRECT OPERATION
B1464-00	CHANNEL 1 AUDIO SPEAKER OUTPUT CIRCUIT SHORTED TOGETHER
B1465-11	CHANNEL 2 AUDIO SPEAKER OUTPUT - CIRCUIT SHORT TO GROUND
B1465-12	CHANNEL 2 AUDIO SPEAKER OUTPUT - CIRCUIT SHORT TO BATTERY
B1465-13	CHANNEL 2 AUDIO SPEAKER OUTPUT - CIRCUIT OPEN
B1465-92	CHANNEL 2 AUDIO SPEAKER OUTPUT - PERFORMANCE OR INCORRECT OPERATION
B1469-00	CHANNEL 2 AUDIO SPEAKER OUTPUT CIRCUIT SHORTED TOGETHER
B146A-11	CHANNEL 3 AUDIO SPEAKER OUTPUT - CIRCUIT SHORT TO GROUND
B146A-12	CHANNEL 3 AUDIO SPEAKER OUTPUT - CIRCUIT SHORT TO BATTERY
B146A-13	CHANNEL 3 AUDIO SPEAKER OUTPUT - CIRCUIT OPEN
B146A-92	CHANNEL 3 AUDIO SPEAKER OUTPUT - PERFORMANCE OR INCORRECT OPERATION
B146E-00	CHANNEL 3 AUDIO SPEAKER OUTPUT CIRCUIT SHORTED TOGETHER
B146F-11	CHANNEL 4 AUDIO SPEAKER OUTPUT - CIRCUIT SHORT TO GROUND
B146F-12	CHANNEL 4 AUDIO SPEAKER OUTPUT - CIRCUIT SHORT TO BATTERY
B146F-13	CHANNEL 4 AUDIO SPEAKER OUTPUT - CIRCUIT OPEN
B146F-92	CHANNEL 4 AUDIO SPEAKER OUTPUT - PERFORMANCE OR INCORRECT OPERATION
B1473-00	CHANNEL 4 AUDIO SPEAKER OUTPUT CIRCUIT SHORTED TOGETHER
B1474-11	CHANNEL 5 AUDIO SPEAKER OUTPUT - CIRCUIT SHORT TO GROUND
B1474-12	CHANNEL 5 AUDIO SPEAKER OUTPUT - CIRCUIT SHORT TO BATTERY
B1474-13	CHANNEL 5 AUDIO SPEAKER OUTPUT - CIRCUIT OPEN
B1474-92	CHANNEL 5 AUDIO SPEAKER OUTPUT - PERFORMANCE OR INCORRECT OPERATION
B1478-00	CHANNEL 5 AUDIO SPEAKER OUTPUT - CIRCUIT SHORTED TOGETHER
B1479-11	CHANNEL 6 AUDIO SPEAKER OUTPUT - CIRCUIT SHORT TO GROUND
B1479-12	CHANNEL 6 AUDIO SPEAKER OUTPUT - CIRCUIT SHORT TO BATTERY
B1479-13	CHANNEL 6 AUDIO SPEAKER OUTPUT - CIRCUIT OPEN
B1479-92	CHANNEL 6 AUDIO SPEAKER OUTPUT - PERFORMANCE OR INCORRECT

	OPERATION
B147D-00	CHANNEL 6 AUDIO SPEAKER OUTPUT - CIRCUIT SHORTED TOGETHER
B147E-11	CHANNEL 7 AUDIO SPEAKER OUTPUT - CIRCUIT SHORT TO GROUND
B147E-12	CHANNEL 7 AUDIO SPEAKER OUTPUT - CIRCUIT SHORT TO BATTERY
B147E-13	CHANNEL 7 AUDIO SPEAKER OUTPUT - CIRCUIT OPEN
B147E-92	CHANNEL 7 AUDIO SPEAKER OUTPUT - PERFORMANCE OR INCORRECT OPERATION
B1482-00	CHANNEL 7 AUDIO SPEAKER OUTPUT CIRCUIT SHORTED TOGETHER
B1483-11	CHANNEL 8 AUDIO SPEAKER OUTPUT - CIRCUIT SHORT TO GROUND
B1483-12	CHANNEL 8 AUDIO SPEAKER OUTPUT - CIRCUIT SHORT TO BATTERY
B1483-13	CHANNEL 8 AUDIO SPEAKER OUTPUT - CIRCUIT OPEN
B1483-92	CHANNEL 8 AUDIO SPEAKER OUTPUT - PERFORMANCE OR INCORRECT OPERATION
B1487-00	CHANNEL 8 AUDIO SPEAKER OUTPUT - CIRCUIT SHORTED TOGETHER
B1488-00	CABIN EQ MISMATCH PERFORMANCE
B14B9-11	CHANNEL 9 AUDIO SPEAKER OUTPUT - CIRCUIT SHORT TO GROUND
B14B9-12	CHANNEL 9 AUDIO SPEAKER OUTPUT - CIRCUIT SHORT TO BATTERY
B14B9-13	CHANNEL 9 AUDIO SPEAKER OUTPUT - CIRCUIT OPEN
B14B9-2B	CHANNEL 9 AUDIO SPEAKER OUTPUT - CIRCUIT SHORTED TOGETHER
B14B9-92	CHANNEL 9 AUDIO SPEAKER OUTPUT - PERFORMANCE OR INCORRECT OPERATION
B14BE-11	CHANNEL 10 AUDIO SPEAKER OUTPUT - CIRCUIT SHORT TO GROUND
B14BE-12	CHANNEL 10 AUDIO SPEAKER OUTPUT - CIRCUIT SHORT TO BATTERY
B14BE-13	CHANNEL 10 AUDIO SPEAKER OUTPUT - CIRCUIT OPEN
B14BE-2B	CHANNEL 10 AUDIO SPEAKER OUTPUT - CIRCUIT SHORTED TOGETHER
B14BE-92	CHANNEL 10 AUDIO SPEAKER OUTPUT - PERFORMANCE OR INCORRECT OPERATION
B14C8-11	CHANNEL 12 AUDIO SPEAKER OUTPUT - CIRCUIT SHORT TO GROUND
B14C8-12	CHANNEL 12 AUDIO SPEAKER OUTPUT - CIRCUIT SHORT TO BATTERY
B14C8-13	CHANNEL 12 AUDIO SPEAKER OUTPUT - CIRCUIT OPEN
B14C8-2B	CHANNEL 12 AUDIO SPEAKER OUTPUT - CIRCUIT SHORTED TOGETHER
B14C8-92	CHANNEL 12 AUDIO SPEAKER OUTPUT - PERFORMANCE OR INCORRECT OPERATION
B2199-16	BATTERY VOLTAGE - CIRCUIT VOLTAGE BELOW THRESHOLD
B2199-17	BATTERY VOLTAGE - CIRCUIT VOLTAGE ABOVE THRESHOLD
B21DD-84	SYSTEM VOLTAGE - SIGNAL BELOW ALLOWABLE RANGE
B21DD-85	SYSTEM VOLTAGE - SIGNAL ABOVE ALLOWABLE RANGE
B221F-00	AMPLIFIER INTERNAL
U0019-00	CAN B BUS
U0020-00	CAN B BUS OFF PERFORMANCE
U0155-00	LOST COMMUNICATION WITH CLUSTER/CCN

U0184-00	LOST COMMUNICATION WITH RADIO
U0422-00	IMPLAUSIBLE DATA RECEIVED FROM BODY CONTROL MODULE
U0423-00	IMPLAUSIBLE DATA RECEIVED FROM CLUSTER/CCN
U0485-00	IMPLAUSIBLE DATA RECEIVED FROM RADIO

DIAGNOSIS AND TESTING

B1460-11-CHANNEL 1 AUDIO SPEAKER OUTPUT - CIRCUIT SHORT TO GROUND

For a complete wiring diagram, **refer to appropriate SYSTEM WIRING DIAGRAMS article** .

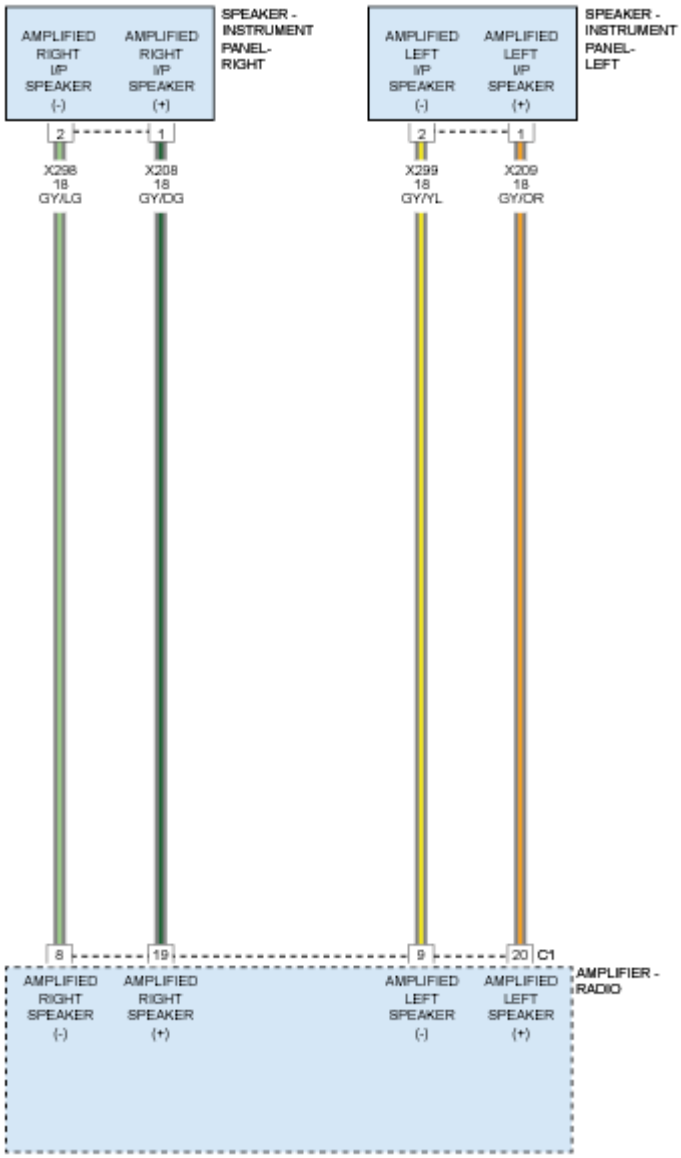

Fig. 1: Identifying Instrument Panel Speaker Circuit Diagram

Courtesy of CHRYSLER GROUP, LLC

WHEN MONITORED

When the ignition is cycled on.

SET CONDITION

The Amplifier detects a shorted to ground condition on the speaker output circuit when the ignition is cycled on.

POSSIBLE CAUSES

Possible Causes
AMPLIFIED LEFT FRONT I/P SPEAKER (+) CIRCUIT SHORTED TO GROUND
AMPLIFIED LEFT FRONT I/P SPEAKER (-) CIRCUIT SHORTED TO GROUND
LEFT FRONT I/P SPEAKER
AMPLIFIER

DIAGNOSTIC TEST

1. **CHECK FOR AN INTERMITTENT CONDITION**
    1. Turn the ignition on.
    2. With the scan tool, record and erase the Amplifier DTCs.
    3. Cycle the ignition switch from on to off, wait five seconds and then back to on.
    4. Turn the Radio.
    5. Adjust the speakers to the front and center.
    6. With the scan tool, read the active Amplifier DTCs.

    Does the scan tool display active: B1460-11-CHANNEL 1 AUDIO SPEAKER OUTPUT - CIRCUIT SHORT TO GROUND?

    Yes

    - Go To 2

    No

    - Test complete, the condition or conditions that originally set this DTC are not present at this time. Using the wiring diagrams as a guide, check all related splices and connectors for signs of water intrusion, corrosion, pushed out or bent terminals and correct pin tension.
    - Perform the BODY VERIFICATION TEST. Refer to **STANDARD PROCEDURE** .
2. **CHECK THE LEFT INSTRUMENT PANEL (I/P) SPEAKER**
    1. With the scan tool, erase the DTCs.
    2. Turn the ignition off.

3. Disconnect the Left I/P Speaker harness connector.
4. Turn the ignition on.
5. Turn the Radio.
6. With the scan tool, read the active Amplifier DTCs.

   Does the scan tool display active: B1460-11-CHANNEL 1 AUDIO SPEAKER OUTPUT - CIRCUIT SHORT TO GROUND?

   Yes

   - Go To 3

   No

   - Replace the Left Instrument Panel Speaker in accordance with the Service Information. Refer to **SPEAKER, REMOVAL** .
   - Perform the BODY VERIFICATION TEST. Refer to **STANDARD PROCEDURE** .

3. **CHECK THE (X209) AMPLIFIED LEFT FRONT I/P SPEAKER (+) CIRCUIT FOR A SHORT TO GROUND**
   1. Turn the ignition off.
   2. Disconnect the Amplifier harness connector.
   3. Measure the resistance between ground and the (X209) Left I/P Speaker (+) circuit.

      Is the resistance below 10K Ohms?

      Yes

      - Repair the (X209) Left I/P Speaker (+) circuit for a short to ground.
      - Perform the BODY VERIFICATION TEST. Refer to **STANDARD PROCEDURE** .

      No

      - Go To 4

4. **CHECK THE (X299) AMPLIFIED LEFT FRONT I/P SPEAKER (-) CIRCUIT FOR A SHORT TO GROUND**
   1. Measure the resistance between ground and the (X299) Left I/P Speaker (-) circuit.

      Is the resistance below 10K Ohms?

      Yes

      - Repair the (X299) Left I/P Speaker (-) circuit for a short to ground.
      - Perform the BODY VERIFICATION TEST. Refer to **STANDARD PROCEDURE** .

No

- Replace the Amplifier in accordance with the Service Information. Refer to **AMPLIFIER, REMOVAL** .
- Perform the BODY VERIFICATION TEST. Refer to **STANDARD PROCEDURE** .

B1460-12-CHANNEL 1 AUDIO SPEAKER OUTPUT - CIRCUIT SHORT TO BATTERY

For a complete wiring diagram, **refer to appropriate SYSTEM WIRING DIAGRAMS article** .

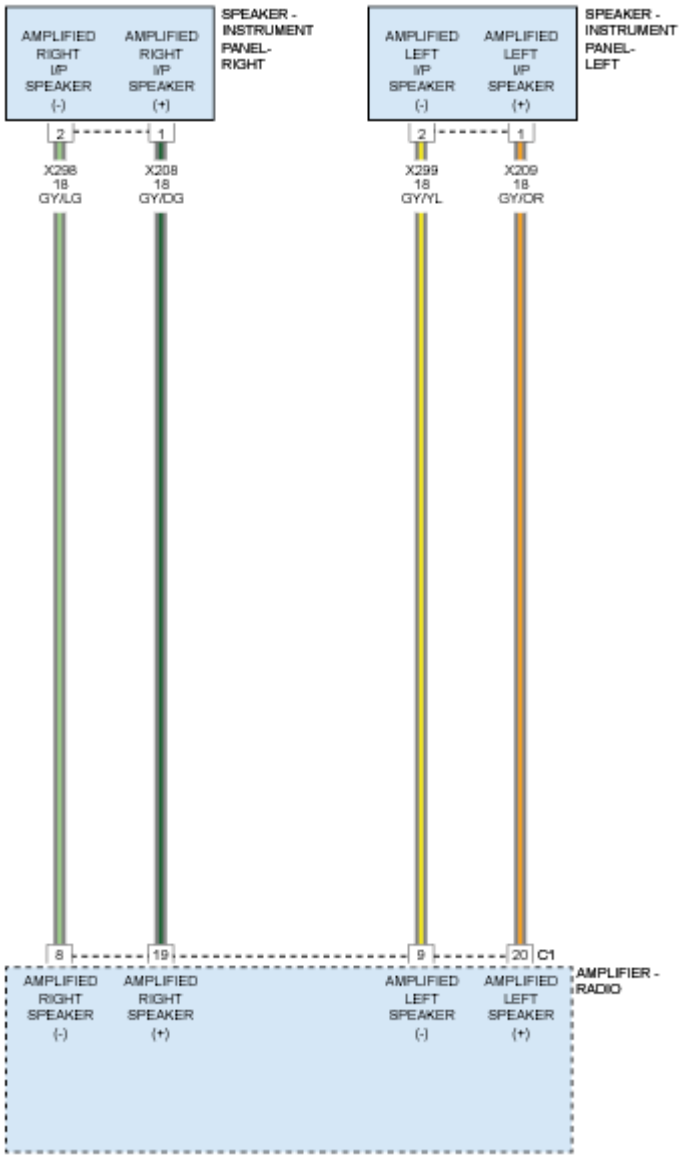

Fig. 2: Identifying Instrument Panel Speaker Circuit Diagram
Courtesy of CHRYSLER GROUP, LLC

WHEN MONITORED

With the ignition on.

SET CONDITION

The Amplifier detects a short to battery condition on the output circuit.

POSSIBLE CAUSES

Possible Causes
AMPLIFIED LEFT I/P SPEAKER (+) CIRCUIT SHORTED TO VOLTAGE
AMPLIFIED LEFT I/P SPEAKER (-) CIRCUIT SHORTED TO VOLTAGE
LEFT I/P SPEAKER
AMPLIFIER

DIAGNOSTIC TEST

1. **CHECK FOR AN INTERMITTENT CONDITION**
    1. Turn the ignition on.
    2. With the scan tool, record and erase the Amplifier DTCs.
    3. Cycle the ignition switch from on to off, wait five seconds and then back to on.
    4. Turn the Radio on and set the volume to 20.
    5. Adjust the speakers to the front and center.
    6. With the scan tool, read the active Amplifier DTCs.

    Does the scan tool display active: B1460-12-CHANNEL 1 AUDIO SPEAKER OUTPUT CIRCUIT HIGH?

    Yes

    - Go To 2

    No

    - Test complete, the condition or conditions that originally set this DTC are not present at this time. Using the wiring diagrams as a guide, check all related splices and connectors for signs of water intrusion, corrosion, pushed out or bent terminals and correct pin tension.
    - Perform the BODY VERIFICATION TEST. Refer to **STANDARD PROCEDURE** .
2. **CHECK FOR VOLTAGE ON THE (X209) LEFT INSTRUMENT PANEL (I/P) SPEAKER (+) CIRCUIT**
    1. Turn the ignition off.
    2. Disconnect the Amplifier C1 harness connector.

3. Disconnect the Amplified Left I/P Speaker harness connector.
4. Turn the ignition on.
5. Measure the voltage between the (X209) Left I/P Speaker (+) circuit and ground.

   Is there any voltage present?

   Yes

   - Repair the (X209) Left I/P Speaker (+) circuit for a short to voltage.
   - Perform the BODY VERIFICATION TEST. Refer to **STANDARD PROCEDURE** .

   No

   - Go To 3

3. **CHECK FOR VOLTAGE ON THE (X299) LEFT I/P SPEAKER (-) CIRCUIT**
   1. Measure the voltage between the (X299) Left I/P Speaker (-) circuit and ground.

      Is there any voltage present?

      Yes

      - Repair the (X299) Left I/P Speaker (-) circuit for a short to voltage.
      - Perform the BODY VERIFICATION TEST. Refer to **STANDARD PROCEDURE** .

      No

      - Replace the Amplifier in accordance with the Service Information.
      - Perform the BODY VERIFICATION TEST. Refer to **STANDARD PROCEDURE** .

B1460-13-CHANNEL 1 AUDIO SPEAKER OUTPUT - CIRCUIT OPEN

For a complete wiring diagram, **refer to appropriate SYSTEM WIRING DIAGRAMS article** .

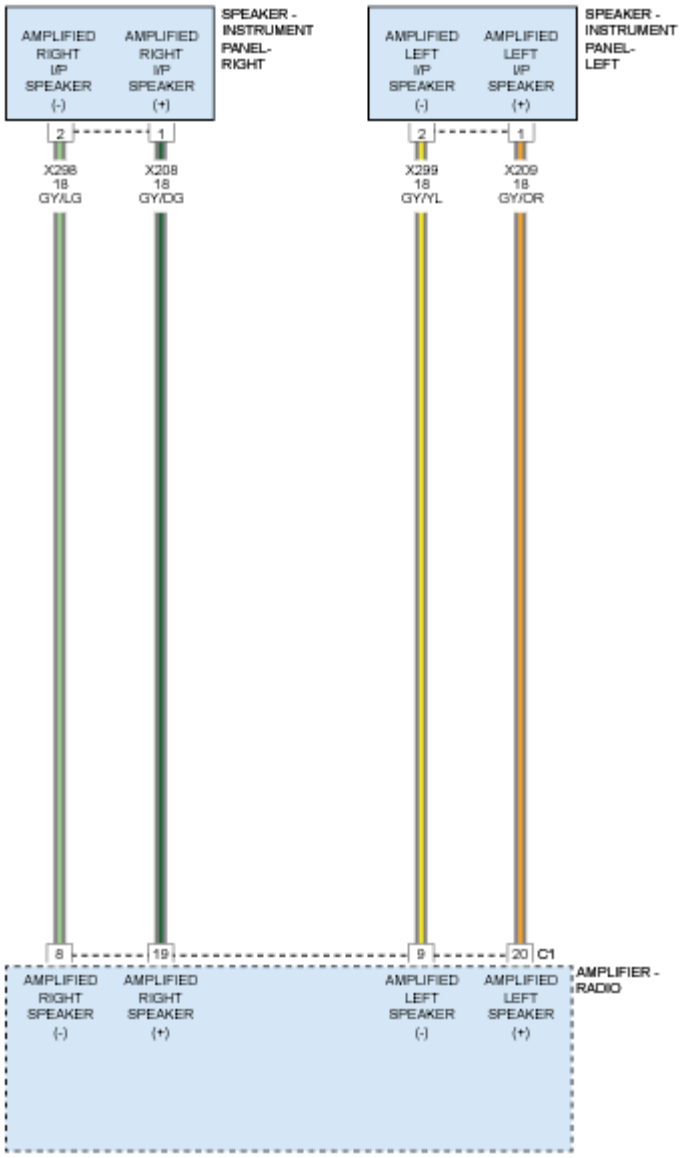

Fig. 3: Identifying Instrument Panel Speaker Circuit Diagram
Courtesy of CHRYSLER GROUP, LLC

WHEN MONITORED

Amplifier Bus wake-up. Amplifier reset with scan tool.

SET CONDITION

The Amplifier detects an open condition on the speaker output circuit.

POSSIBLE CAUSES

Possible Causes
AMPLIFIED LEFT I/P SPEAKER (+) CIRCUIT OPEN
AMPLIFIED LEFT I/P SPEAKER (-) CIRCUIT OPEN
LEFT FRONT I/P SPEAKER
AMPLIFIER

DIAGNOSTIC TEST

1. **CHECK FOR AN INTERMITTENT CONDITION**
    1. Turn the ignition on.
    2. With the scan tool, record and erase the Amplifier DTCs.
    3. Cycle the ignition switch from on to off, wait five seconds and then back to on.
    4. Turn the Radio on and set the volume to 20.
    5. Adjust the speakers to the front and center.
    6. With the scan tool, read the active Amplifier DTCs.

    Does the scan tool display active: B1460-13-CHANNEL 1 AUDIO SPEAKER OUTPUT CIRCUIT OPEN?

    Yes

    - Go To 2

    No

    - Test complete, the condition or conditions that originally set this DTC are not present at this time. Using the wiring diagrams as a guide, check all related splices and connectors for signs of water intrusion, corrosion, pushed out or bent terminals and correct pin tension.
    - Perform the BODY VERIFICATION TEST. Refer to **STANDARD PROCEDURE** .
2. **CHECK THE OPERATION OF THE LEFT FRONT I/P SPEAKER**
    1. Turn the ignition off.
    2. Disconnect the Left I/P Speaker harness connector.
    3. Turn the radio on and turn the volume to 25.
    4. With a voltmeter set to read in A/C voltage, measure the voltage of the Amplified Left I/P Speaker circuits in the Amplified Left I/P Speaker harness connector.

    Is the voltage present greater than 1 volt?

    Yes

    - Replace the Amplified Left I/P Speaker in accordance with the Service Information.
    - Perform the BODY VERIFICATION TEST. Refer to **STANDARD PROCEDURE** .

No

- Go To 3

3. **CHECK THE (X209) AMPLIFIED LEFT I/P SPEAKER (+) CIRCUIT FOR AN OPEN**
   1. Turn the ignition off.
   2. Disconnect the Amplifier C1 harness connector.
   3. Measure the resistance of the (X209) Amplified Left I/P Speaker (+) circuit between the Amplifier C1 harness connector and the Amplified Left I/P Speaker harness connector.

   Is the resistance below 2.0 Ohms?

   Yes

   - Go To 4

   No

   - Repair the (X209) Amplified Left I/P Speaker (+) circuit for an open.
   - Perform the BODY VERIFICATION TEST. Refer to **STANDARD PROCEDURE** .
4. **CHECK THE (X299) AMPLIFIED LEFT I/P SPEAKER (-) CIRCUIT FOR AN OPEN**
   1. Measure the resistance of the (X299) Amplified Left I/P Speaker (-) circuit between the Amplifier C1 harness connector and the Amplified Left I/P Speaker harness connector.

   Is the resistance below 2.0 Ohms?

   Yes

   - Replace the Amplifier in accordance with the Service Information.
   - Perform the BODY VERIFICATION TEST. Refer to **STANDARD PROCEDURE** .

   No

   - Repair the (X299) Amplified Left I/P Speaker (-) circuit for an open.
   - Perform the BODY VERIFICATION TEST. Refer to **STANDARD PROCEDURE** .

B1460-92-CHANNEL 1 AUDIO SPEAKER OUTPUT - PERFORMANCE OR INCORRECT OPERATION

For a complete wiring diagram, **refer to appropriate SYSTEM WIRING DIAGRAMS article** .

WHEN MONITORED

With the ignition on.

SET CONDITION

This Diagnostic Trouble Code (DTC) sets if a Direct Current (DC) offset occurs on the output channel, the amplifier shall set a DTC after a maturity rate of four to six seconds.

POSSIBLE CAUSES

Possible Causes
AMPLIFIER

DIAGNOSTIC TEST

CHECK FOR AN INTERMITTENT CONDITION

1. Turn the ignition on.
2. Using the scan tool, record and erase the Amplifier DTCs.
3. Cycle the ignition switch from on to off, wait five seconds and then back to on.
4. Turn the Radio on and set the volume to 20.
5. Adjust the speakers to the front and center.
6. Using the scan tool, read the active Amplifier DTCs.

   Does the scan tool display this DTC as active?

   Yes

   - Replace the Amplifier in accordance with the Service Information.
   - Perform the BODY VERIFICATION TEST. Refer to **STANDARD PROCEDURE** .

   No

   - Test complete, the condition or conditions that originally set this DTC are not present at this time. Using the wiring diagrams as a guide, check all related splices and connectors for signs of water intrusion, corrosion, pushed out or bent terminals and correct pin tension.
   - Perform the BODY VERIFICATION TEST. Refer to **STANDARD PROCEDURE** .

B1464-00-CHANNEL 1 AUDIO SPEAKER OUTPUT CIRCUIT SHORTED TOGETHER

For a complete wiring diagram, **refer to appropriate SYSTEM WIRING DIAGRAMS article** .

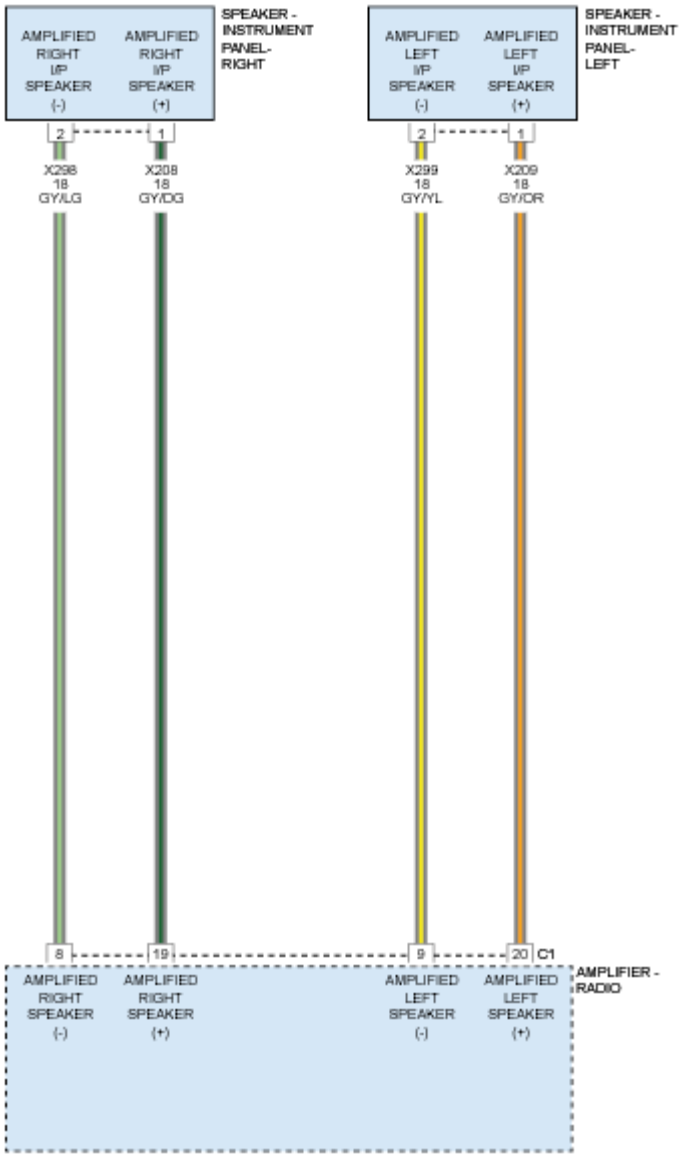

Fig. 4: Identifying Instrument Panel Speaker Circuit Diagram
Courtesy of CHRYSLER GROUP, LLC

WHEN MONITORED

With the ignition on. Radio volume at 25 or higher.

SET CONDITION

The Amplifier detects that the output circuits are shorted together.

POSSIBLE CAUSES

Possible Causes
AMPLIFIED LEFT INSTRUMENT PANEL (I/P) (+) CIRCUIT SHORTED TO THE AMPLIFIED LEFT INSTRUMENT PANEL (I/P) (-) CIRCUIT LEFT INSTRUMENT PANEL (I/P) SPEAKER AMPLIFIER

DIAGNOSTIC TEST

1. **CHECK FOR AN INTERMITTENT CONDITION**
    1. Turn the ignition on.
    2. Using the scan tool, record and erase the Amplifier DTCs.
    3. Cycle the ignition switch from on to off, wait five seconds and then back to on.
    4. Turn the Radio on and set the volume to 20.
    5. Adjust the speakers to the front and center.
    6. Using the scan tool, read the active Amplifier DTCs.

    Does the scan tool display active: B1464-00-CHANNEL 1 AUDIO SPEAKER OUTPUT CIRCUIT SHORTED TOGETHER?

    Yes

    - Go To 2

    No

    - Test complete, the condition or conditions that originally set this DTC are not present at this time. Using the wiring diagrams as a guide, check all related splices and connectors for signs of water intrusion, corrosion, pushed out or bent terminals and correct pin tension.
    - Perform the BODY VERIFICATION TEST. Refer to **STANDARD PROCEDURE** .
2. **CHECK THE OPERATION OF THE AMPLIFIED LEFT I/P SPEAKER**
    1. Turn the ignition off.
    2. Disconnect the Left I/P Speaker harness connector.
    3. Measure the resistance of the speaker between the two terminals.

    Is the resistance of the speaker less than 1 Ohm?

    Yes

    - Replace the Left I/P Speaker in accordance with the Service Information.
    - Perform the BODY VERIFICATION TEST. Refer to **STANDARD PROCEDURE** .

    No

- Go To 3

3. **CHECK THE (X209) AMPLIFIED LEFT I/P SPEAKER (+) CIRCUIT, AND THE (X299) AMPLIFIED LEFT I/P SPEAKER (-) CIRCUITS FOR A SHORT TOGETHER**
   1. Disconnect the Amplifier C1 harness connector.
   2. Measure the resistance between the (X209) Left I/P Speaker (+) circuit and the (X299) Left I/P Speaker (-) circuit.

      Is the resistance below 10K Ohms?

      Yes

      - Repair the (X209) Left I/P Speaker (+) circuit for a short to the (X299) Left I/P Speaker (-) circuit.
      - Perform the BODY VERIFICATION TEST. Refer to **STANDARD PROCEDURE** .

      No

      - Replace the Amplifier in accordance with the Service Information.
      - Perform the BODY VERIFICATION TEST. Refer to **STANDARD PROCEDURE** .

B1465-11-CHANNEL 2 AUDIO SPEAKER OUTPUT - CIRCUIT SHORT TO GROUND

For a complete wiring diagram, **refer to appropriate SYSTEM WIRING DIAGRAMS article** .

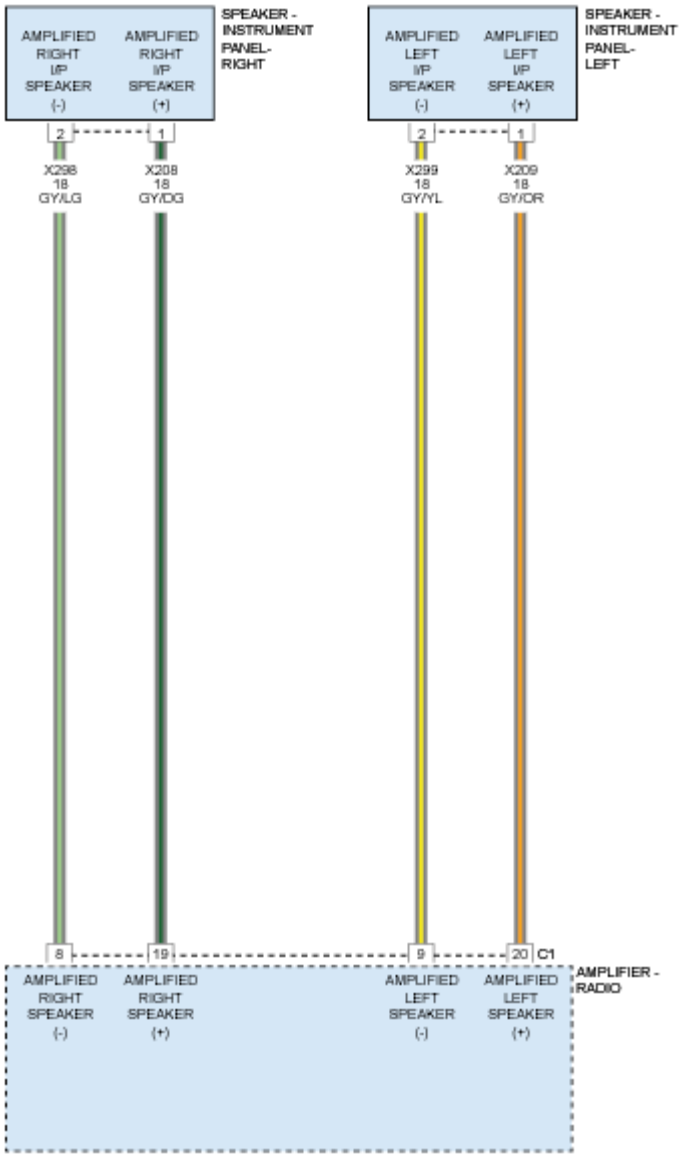

Fig. 5: Identifying Instrument Panel Speaker Circuit Diagram
Courtesy of CHRYSLER GROUP, LLC

WHEN MONITORED

With the ignition on.

SET CONDITION

The Amplifier detects a shorted to ground condition on the speaker output circuit.

POSSIBLE CAUSES

Possible Causes
AMPLIFIED RIGHT I/P SPEAKER (+) CIRCUIT SHORTED TO GROUND
AMPLIFIED RIGHT I/P SPEAKER (-) CIRCUIT SHORTED TO GROUND
RIGHT I/P SPEAKER
AMPLIFIER

DIAGNOSTIC TEST

1. **CHECK FOR AN INTERMITTENT CONDITION**
    1. Turn the ignition on.
    2. Using the scan tool, record and erase the Amplifier DTCs.
    3. Cycle the ignition switch from on to off, wait five seconds and then back to on.
    4. Turn the Radio on and set the volume to 20.
    5. Adjust the speakers to the front and center.
    6. Using the scan tool, read the active Amplifier DTCs.

    Does the scan tool display active: B1465-11-CHANNEL 2 AUDIO SPEAKER OUTPUT - CIRCUIT SHORT TO GROUND?

    Yes

    - Go To 2

    No

    - Test complete, the condition or conditions that originally set this DTC are not present at this time. Using the wiring diagrams as a guide, check all related splices and connectors for signs of water intrusion, corrosion, pushed out or bent terminals and correct pin tension.
    - Perform the BODY VERIFICATION TEST. Refer to **STANDARD PROCEDURE** .
2. **CHECK THE RIGHT INSTRUMENT PANEL (I/P) SPEAKER**
    1. Using the scan tool, erase the DTCs.
    2. Turn the ignition off.
    3. Disconnect the Right I/P Speaker harness connector.
    4. Turn the ignition on.
    5. Turn the radio on and set the volume to 25.
    6. Using the scan tool, read the active Amplifier DTCs.

    Does the scan tool display active: B1465-11-CHANNEL 2 AUDIO SPEAKER OUTPUT - CIRCUIT SHORT TO GROUND?

    Yes

- Go To 3

No

- Replace the Right Instrument Panel Speaker.
- Perform the BODY VERIFICATION TEST. Refer to **STANDARD PROCEDURE** .

3. **CHECK THE (X208) AMPLIFIED RIGHT I/P SPEAKER (+) CIRCUIT FOR A SHORT TO GROUND**
   1. Turn the ignition off.
   2. Disconnect the Amplifier C1 harness connector.
   3. Measure the resistance between ground and the (X208) Right I/P Speaker (+) circuit.

      Is the resistance below 10K Ohms?

      Yes

      - Repair the (X208) Right I/P Speaker (+) circuit for a short to ground.
      - Perform the BODY VERIFICATION TEST. Refer to **STANDARD PROCEDURE** .

      No

      - Go To 4
4. **CHECK THE (X298) AMPLIFIED RIGHT I/P SPEAKER (-) CIRCUIT FOR A SHORT TO GROUND**
   1. Measure the resistance between ground and the (X298) Amplified Right I/P Speaker (-) circuit.

      Is the resistance below 10K Ohms?

      Yes

      - Repair the (X298) Amplified Right I/P Speaker (-) for a short to ground.
      - Perform the BODY VERIFICATION TEST. Refer to **STANDARD PROCEDURE** .

      No

      - Replace the Amplifier in accordance with the Service Information.
      - Perform the BODY VERIFICATION TEST. Refer to **STANDARD PROCEDURE** .

B1465-12-CHANNEL 2 AUDIO SPEAKER OUTPUT - CIRCUIT SHORT TO BATTERY

For a complete wiring diagram, **refer to appropriate SYSTEM WIRING DIAGRAMS article** .

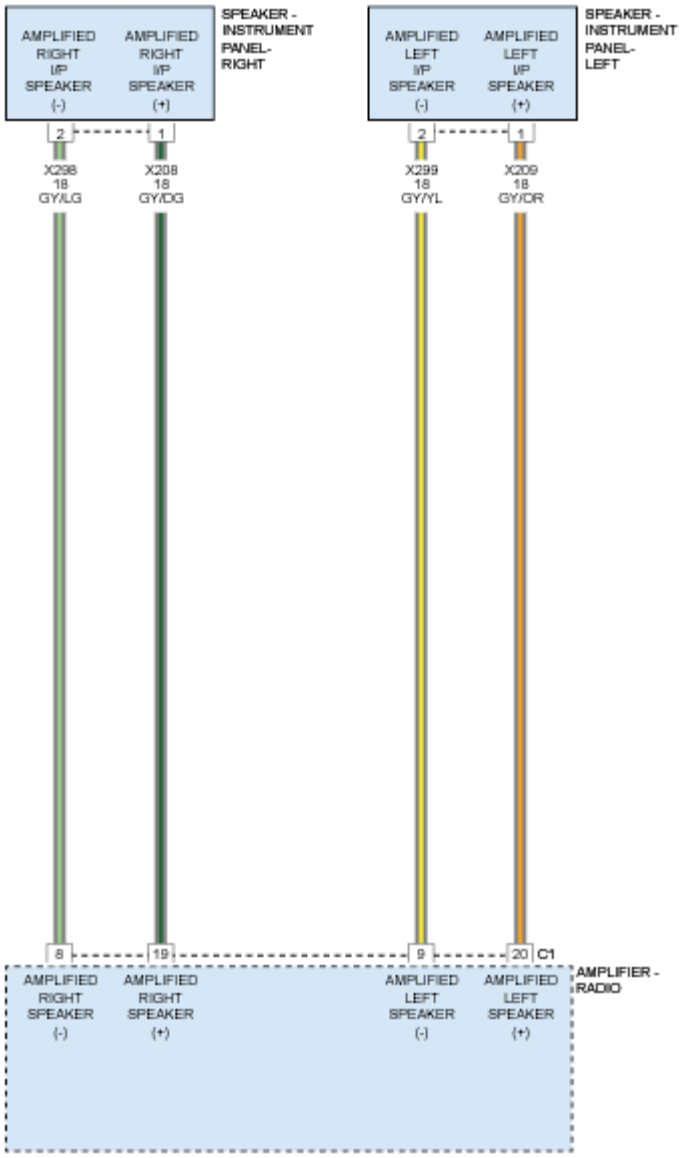

Fig. 6: Identifying Instrument Panel Speaker Circuit Diagram
Courtesy of CHRYSLER GROUP, LLC

WHEN MONITORED

With the ignition on.

SET CONDITION

The Amplifier detects a short to battery condition on the output circuit.

POSSIBLE CAUSES

Possible Causes
AMPLIFIED RIGHT I/P SPEAKER (+) CIRCUIT SHORTED TO VOLTAGE
AMPLIFIED RIGHT I/P SPEAKER (-) CIRCUIT SHORTED TO VOLTAGE
RIGHT I/P SPEAKER
AMPLIFIER

DIAGNOSTIC TEST

1. **CHECK FOR AN INTERMITTENT CONDITION**
    1. Turn the ignition on.
    2. Using the scan tool, record and erase the Amplifier DTCs.
    3. Cycle the ignition switch from on to off, wait five seconds and then back to on.
    4. Turn the Radio on and set the volume to 20.
    5. Adjust the speakers to the front and center.
    6. Using the scan tool, read the active Amplifier DTCs.

    Does the scan tool display active: B1465-12-CHANNEL 2 AUDIO SPEAKER OUTPUT - CIRCUIT SHORT TO BATTERY?

    Yes

    - Go To 2

    No

    - Test complete, the condition or conditions that originally set this DTC are not present at this time. Using the wiring diagrams as a guide, check all related splices and connectors for signs of water intrusion, corrosion, pushed out or bent terminals and correct pin tension.
    - Perform the BODY VERIFICATION TEST. Refer to **STANDARD PROCEDURE** .
2. **CHECK FOR VOLTAGE ON THE (X208) AMPLIFIED RIGHT I/P SPEAKER (+) CIRCUIT**
    1. Turn the ignition off.
    2. Disconnect the Amplifier C1 harness connector.
    3. Disconnect the Amplified Right I/P Speaker harness connector.
    4. Turn the ignition on.
    5. Measure for voltage between the (X208) Amplified Right I/P Speaker (+) circuit and ground.

    Is there any voltage present?

    Yes

    - Repair the (X208) Amplified Right I/P Speaker (+) circuit for a short to voltage.
    - Perform the BODY VERIFICATION TEST. Refer to **STANDARD PROCEDURE** .

No

- Go To 3

3. **CHECK FOR VOLTAGE ON THE (X298) AMPLIFIED RIGHT I/P SPEAKER (-) CIRCUIT**
   1. Measure for voltage on the (X298) Amplified Right I/P Speaker (-) circuit and ground.

      Is there any voltage present?

      Yes

      - Repair the (X298) Amplified Right I/P Speaker (-) circuit for a short to voltage.
      - Perform the BODY VERIFICATION TEST. Refer to **STANDARD PROCEDURE** .

      No

      - Replace the Amplifier in accordance with the Service Information.
      - Perform the BODY VERIFICATION TEST. Refer to **STANDARD PROCEDURE** .

B1465-13-CHANNEL 2 AUDIO SPEAKER OUTPUT - CIRCUIT OPEN

For a complete wiring diagram, **refer to appropriate SYSTEM WIRING DIAGRAMS article** .

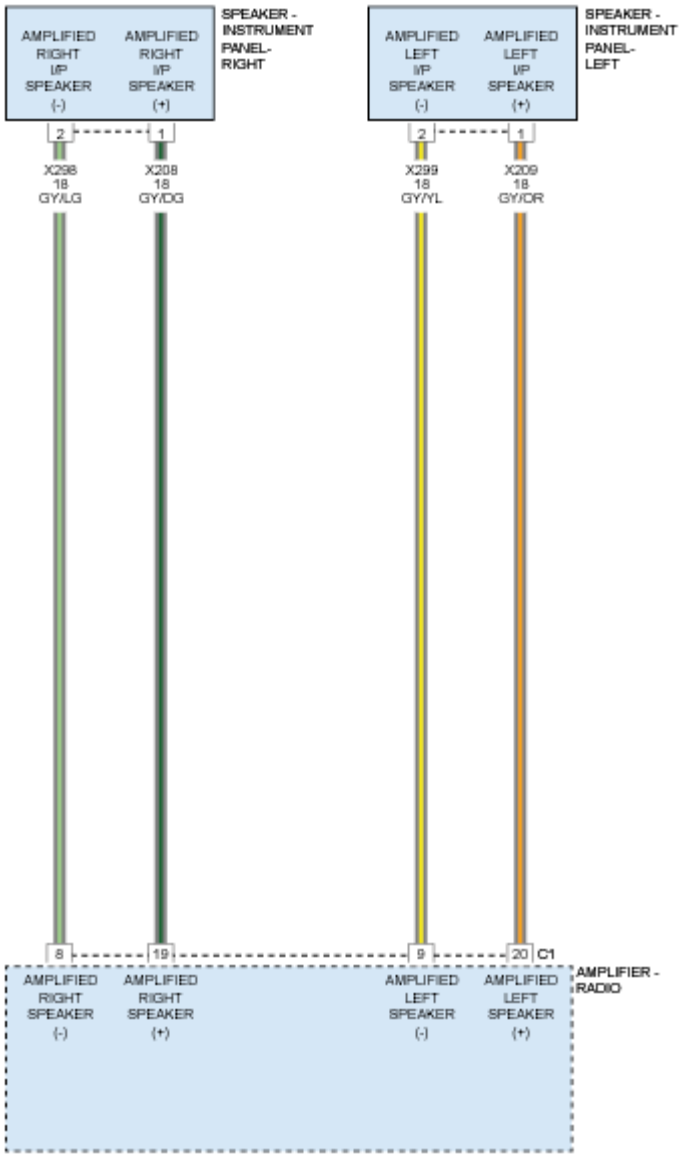

Fig. 7: Identifying Instrument Panel Speaker Circuit Diagram
Courtesy of CHRYSLER GROUP, LLC

WHEN MONITORED

Amplifier Bus wake-up. Amplifier reset with scan tool.

SET CONDITION

The Amplifier detects an open condition on the speaker output circuit.

POSSIBLE CAUSES

Possible Causes
AMPLIFIED RIGHT I/P SPEAKER (+) CIRCUIT OPEN
AMPLIFIED RIGHT I/P SPEAKER (-) CIRCUIT OPEN
RIGHT I/P SPEAKER
AMPLIFIER

DIAGNOSTIC TEST

1. **CHECK FOR AN INTERMITTENT CONDITION**
    1. Turn the ignition on.
    2. With the scan tool, record and erase the Amplifier DTCs.
    3. Cycle the ignition switch from on to off, wait five seconds and then back to on.
    4. Turn the Radio on and set the volume to 20.
    5. Adjust the speakers to the front and center.
    6. With the scan tool, read the active Amplifier DTCs.

    Does the scan tool display active: B1465-13-CHANNEL 2 AUDIO SPEAKER OUTPUT - CIRCUIT OPEN?

    Yes

    - Go To 2

    No

    - Test complete, the condition or conditions that originally set this DTC are not present at this time. Using the wiring diagrams as a guide, check all related splices and connectors for signs of water intrusion, corrosion, pushed out or bent terminals and correct pin tension.
    - Perform the BODY VERIFICATION TEST. Refer to **STANDARD PROCEDURE** .
2. **CHECK THE OPERATION OF THE RIGHT FRONT I/P SPEAKER**
    1. Turn the ignition off.
    2. Disconnect the Right I/P Speaker harness connector.
    3. Turn the radio on and turn the volume to 25.
    4. With a voltmeter set to read in A/C voltage, measure the voltage of the Amplified Right I/P Speaker circuits in the Amplified Right I/P Speaker harness connector.

    Is the voltage present greater than 1 volt?

    Yes

    - Replace the Amplified Right I/P Speaker in accordance with the Service Information.
    - Perform the BODY VERIFICATION TEST. Refer to **STANDARD PROCEDURE** .

No

- Go To 3

3. **CHECK THE (X208) AMPLIFIED RIGHT I/P SPEAKER (+) CIRCUIT FOR AN OPEN**
   1. Turn the ignition off.
   2. Disconnect the Amplifier C1 harness connector.
   3. Measure the resistance of the (X208) Amplified Right I/P Speaker (+) circuit between the Amplifier C1 harness connector and the Amplified Right I/P Speaker harness connector.

   Is the resistance below 2.0 Ohms?

   Yes

   - Go To 4

   No

   - Repair the (X208) Amplified Right I/P Speaker (+) circuit for an open.
   - Perform the BODY VERIFICATION TEST. Refer to **STANDARD PROCEDURE** .

4. **CHECK THE (X298) AMPLIFIED RIGHT I/P SPEAKER (-) CIRCUIT FOR AN OPEN**
   1. Measure the resistance of the (X298) Amplified Right I/P Speaker (-) circuit between the Amplifier C1 harness connector and the Amplified Right I/P Speaker harness connector.

   Is the resistance below 2.0 Ohms?

   Yes

   - Replace the Amplifier in accordance with the Service Information.
   - Perform the BODY VERIFICATION TEST. Refer to **STANDARD PROCEDURE** .

   No

   - Repair the (X298) Amplified Right I/P Speaker (-) circuit for an open.
   - Perform the BODY VERIFICATION TEST. Refer to **STANDARD PROCEDURE** .

B1465-92-CHANNEL 2 AUDIO SPEAKER OUTPUT - PERFORMANCE OR INCORRECT OPERATION

For a complete wiring diagram, **refer to appropriate SYSTEM WIRING DIAGRAMS article** .

WHEN MONITORED

With the ignition on.

SET CONDITION

This Diagnostic Trouble Code (DTC) sets if a Direct Current (DC) offset occurs on the output channel, the amplifier shall set a DTC after a maturity rate of four to six seconds.

POSSIBLE CAUSES

Possible Causes
AMPLIFIER

DIAGNOSTIC TEST

CHECK FOR AN INTERMITTENT CONDITION

1. Turn the ignition on.
2. Using the scan tool, record and erase the Amplifier DTCs.
3. Cycle the ignition switch from on to off, wait five seconds and then back to on.
4. Turn the Radio on and set the volume to 20.
5. Adjust the speakers to the front and center.
6. Using the scan tool, read the active Amplifier DTCs.

   Does the scan tool display this DTC as active?

   Yes

   - Replace the Amplifier in accordance with the Service Information.
   - Perform the BODY VERIFICATION TEST. Refer to **STANDARD PROCEDURE** .

   No

   - Test complete, the condition or conditions that originally set this DTC are not present at this time. Using the wiring diagrams as a guide, check all related splices and connectors for signs of water intrusion, corrosion, pushed out or bent terminals and correct pin tension.
   - Perform the BODY VERIFICATION TEST. Refer to **STANDARD PROCEDURE** .

B1469-00-CHANNEL 2 AUDIO SPEAKER OUTPUT CIRCUIT SHORTED TOGETHER

For a complete wiring diagram, **refer to appropriate SYSTEM WIRING DIAGRAMS article** .

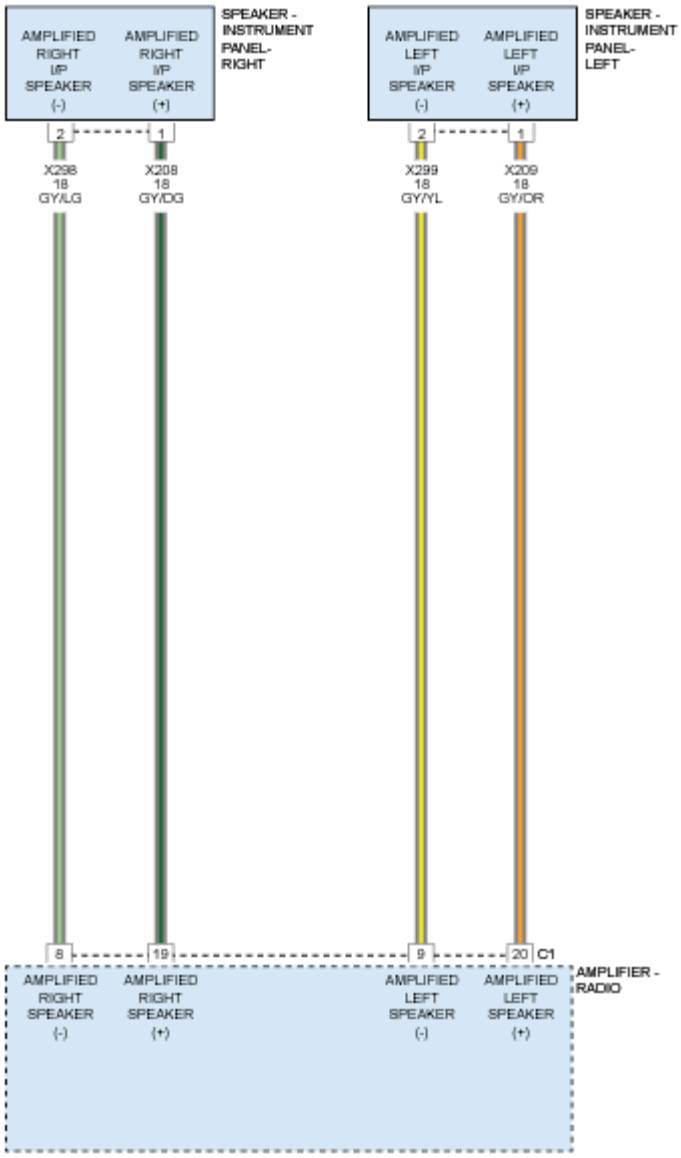

Fig. 8: Identifying Instrument Panel Speaker Circuit Diagram
Courtesy of CHRYSLER GROUP, LLC

WHEN MONITORED

With the ignition on. Radio volume at 25 or higher.

SET CONDITION

The Amplifier detects that the output circuits are shorted together.

POSSIBLE CAUSES

Possible Causes
AMPLIFIED RIGHT I/P SPEAKER (+) CIRCUIT SHORTED TO THE AMPLIFIED RIGHT I/P SPEAKER (-) CIRCUIT AMPLIFIED RIGHT I/P SPEAKER AMPLIFIER

DIAGNOSTIC TEST

1. **CHECK FOR AN INTERMITTENT CONDITION**
    1. Turn the ignition on.
    2. With the scan tool, record and erase the Amplifier DTCs.
    3. Cycle the ignition switch from on to off, wait five seconds and then back to on.
    4. Turn the Radio on and set the volume to 20.
    5. Adjust the speakers to the front and center.
    6. With the scan tool, read the active Amplifier DTCs.

    Does the scan tool display active: B1469-00-CHANNEL 2 AUDIO SPEAKER OUTPUT CIRCUIT SHORTED TOGETHER?

    Yes

    - Go To 2

    No

    - Test complete, the condition or conditions that originally set this DTC are not present at this time. Using the wiring diagrams as a guide, check all related splices and connectors for signs of water intrusion, corrosion, pushed out or bent terminals and correct pin tension.
    - Perform the BODY VERIFICATION TEST. Refer to **STANDARD PROCEDURE** .
2. **CHECK THE OPERATION OF THE AMPLIFIED RIGHT I/P SPEAKER**
    1. Turn the ignition off.
    2. Disconnect the Amplified Right I/P Speaker.
    3. Measure the resistance of the speaker between the two terminals.

    Is the resistance of the speaker less than 1 Ohm?

    Yes

    - Replace the Amplified Right I/P Speaker in accordance with the Service Information.
    - Perform the BODY VERIFICATION TEST. Refer to **STANDARD PROCEDURE** .

    No

- Go To 3

3. **CHECK THE (X208) AMPLIFIED RIGHT I/P SPEAKER (+) CIRCUIT, AND THE (X298) AMPLIFIED RIGHT I/P SPEAKER (-) CIRCUITS FOR A SHORT TOGETHER**
   1. Disconnect the Amplifier C1 harness connector.
   2. Measure the resistance between the (X208) Amplified Right I/P Speaker (+) circuit, and the (X298) Amplified Right I/P Speaker (-) circuit.

      Is the resistance below 10K Ohms?

      Yes

      - Repair the (X208) Amplified Right I/P Speaker (+) circuit, and the (X298) Amplified Right I/P Speaker (-) circuit for a short together.
      - Perform the BODY VERIFICATION TEST. Refer to **STANDARD PROCEDURE** .

      No

      - Replace the Amplifier in accordance with the Service Information.
      - Perform the BODY VERIFICATION TEST. Refer to **STANDARD PROCEDURE** .

B146A-11-CHANNEL 3 AUDIO SPEAKER OUTPUT - CIRCUIT SHORT TO GROUND

For a complete wiring diagram, **refer to appropriate SYSTEM WIRING DIAGRAMS article** .

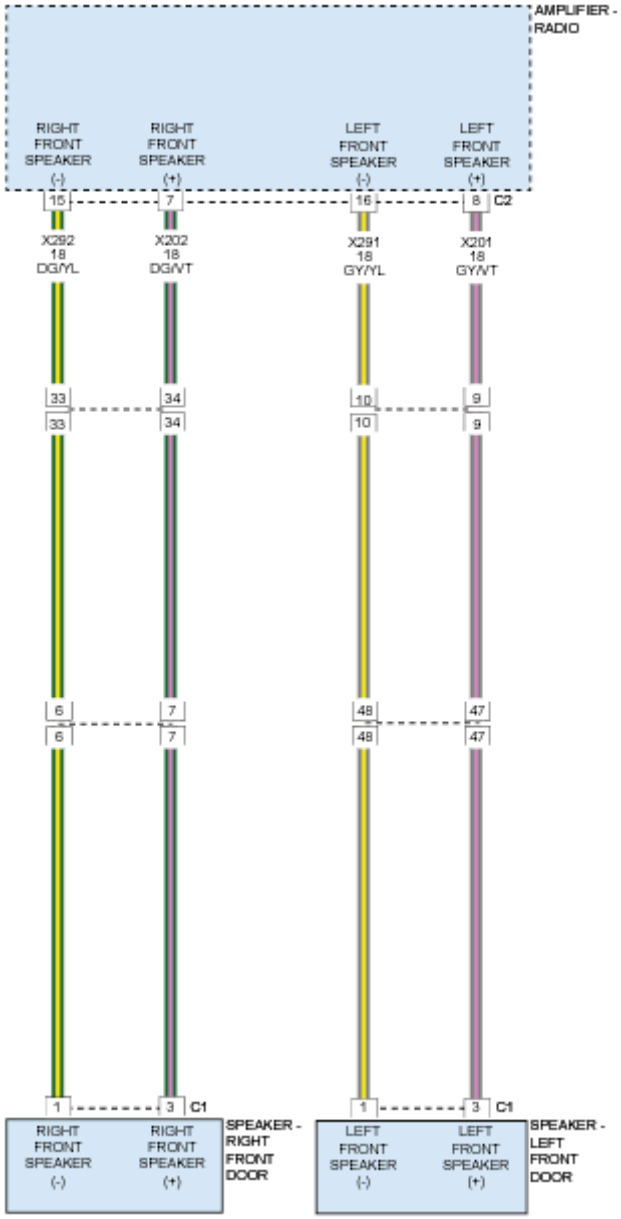

Fig. 9: Identifying Front Door Speaker Circuit Diagram
Courtesy of CHRYSLER GROUP, LLC

THEORY OF OPERATION

The Left Front Door Speaker (+) circuit and the Left Front Door Speaker (-) circuit are outputs of the Amplifier. The Amplifier controls and monitors these circuits for a concern when the ignition is cycled on.

WHEN MONITORED

When the ignition is cycled on.

SET CONDITION

The Amplifier detects a shorted to ground condition on the speaker output circuit when the ignition is cycled on.

POSSIBLE CAUSES

Possible Causes
LEFT FRONT DOOR SPEAKER (+) CIRCUIT SHORTED TO GROUND
LEFT FRONT DOOR SPEAKER (-) CIRCUIT SHORTED TO GROUND
LEFT FRONT DOOR SPEAKER
AMPLIFIER

DIAGNOSTIC TEST

1. **CHECK FOR AN INTERMITTENT CONDITION**
    1. Turn the ignition on.
    2. Using the scan tool, record and erase the Amplifier DTCs.
    3. Cycle the ignition switch from on to off, wait five seconds and then back to on.
    4. Turn the Radio on.
    5. Adjust the speakers to the front and center.
    6. Using the scan tool, read the active Amplifier DTCs.

    Does the scan tool display active: B146A-11-CHANNEL 3 AUDIO SPEAKER OUTPUT - CIRCUIT SHORT TO GROUND?

    Yes

    - Go To 2

    No

    - Test complete, the condition or conditions that originally set this DTC are not present at this time. Using the wiring diagrams as a guide, check all related splices and connectors for signs of water intrusion, corrosion, pushed out or bent terminals and correct pin tension.
    - Perform the BODY VERIFICATION TEST. Refer to **STANDARD PROCEDURE** .
2. **CHECK THE LEFT FRONT DOOR SPEAKER**
    1. Using the scan tool, erase the DTCs.
    2. Turn the ignition off.
    3. Disconnect the Left Front Door Speaker harness connector.
    4. Turn the ignition on.
    5. Turn the radio on.
    6. Using the scan tool, read the active Amplifier DTCs.

Does the scan tool display active: B146A-11-CHANNEL 3 AUDIO SPEAKER OUTPUT - CIRCUIT SHORT TO GROUND?

Yes

- Go To 3

No

- Replace the Left Front Door Speaker in accordance with the Service Information. Refer to **SPEAKER, REMOVAL** .
- Perform the BODY VERIFICATION TEST. Refer to **STANDARD PROCEDURE** .

3. **CHECK THE (X201) LEFT FRONT DOOR SPEAKER (+) CIRCUIT FOR A SHORT TO GROUND**
   1. Turn the ignition off.
   2. Disconnect the Amplifier harness connector.
   3. Measure the resistance between ground and the (X201) Left Front Door Speaker (+) circuit.

   Is the resistance below 10K Ohms?

   Yes

   - Repair the (X201) Left Front Door Speaker (+) circuit for a short to ground.
   - Perform the BODY VERIFICATION TEST. Refer to **STANDARD PROCEDURE** .

   No

   - Go To 4

4. **CHECK THE (X291) LEFT FRONT DOOR SPEAKER (-) CIRCUIT FOR A SHORT TO GROUND**
   1. Measure the resistance between ground and the (X291) Left Front Door Speaker (-) circuit.

   Is the resistance below 10K Ohms?

   Yes

   - Repair the (X291) Left Front Door Speaker (-) for a short to ground.
   - Perform the BODY VERIFICATION TEST. Refer to **STANDARD PROCEDURE** .

   No

   - Replace the Amplifier in accordance with the Service Information. Refer to **AMPLIFIER, REMOVAL** .
   - Perform the BODY VERIFICATION TEST. Refer to **STANDARD PROCEDURE** .

B146A-12-CHANNEL 3 AUDIO SPEAKER OUTPUT - CIRCUIT SHORT TO BATTERY

For a complete wiring diagram, **refer to appropriate SYSTEM WIRING DIAGRAMS article** .

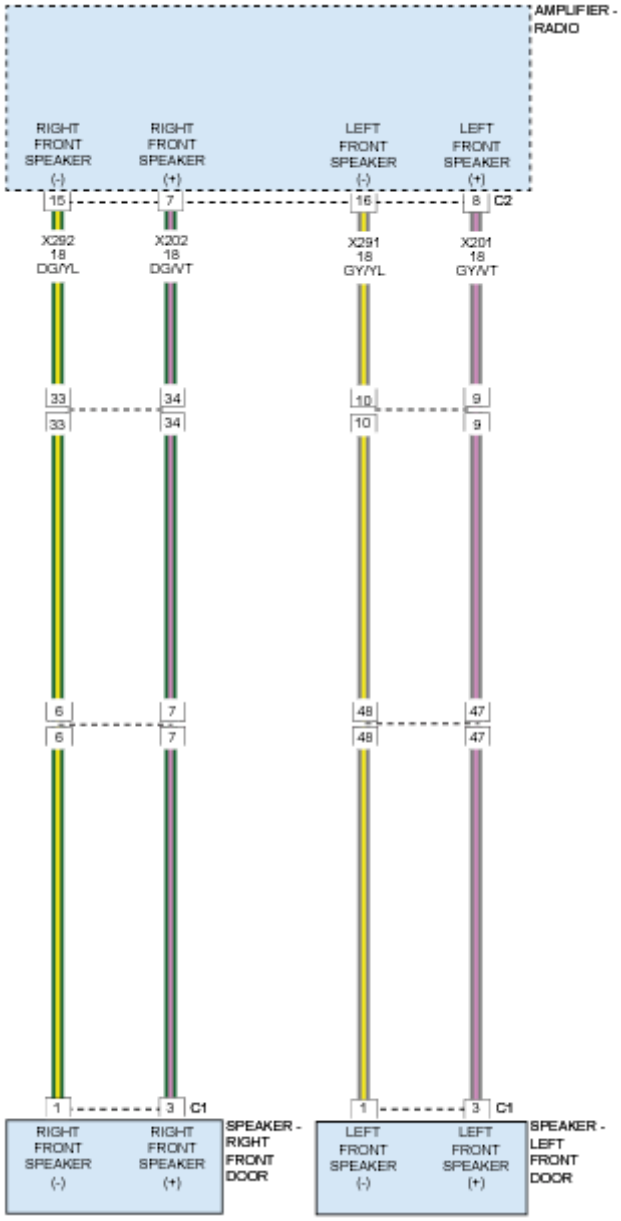

Fig. 10: Identifying Front Door Speaker Circuit Diagram
Courtesy of CHRYSLER GROUP, LLC

WHEN MONITORED

With the ignition on.

SET CONDITION

The Amplifier detects a short to battery condition on the output circuit.

POSSIBLE CAUSES

Possible Causes
LEFT FRONT DOOR SPEAKER (+) CIRCUIT SHORTED TO VOLTAGE LEFT FRONT DOOR SPEAKER (-) CIRCUIT SHORTED TO VOLTAGE AMPLIFIER

DIAGNOSTIC TEST

1. **CHECK FOR AN INTERMITTENT CONDITION**
    1. Turn the ignition on.
    2. With the scan tool, record and erase the Amplifier DTCs.
    3. Cycle the ignition switch from on to off, wait five seconds and then back to on.
    4. Turn the Radio on and set the volume to 20.
    5. Adjust the speakers to the front and center.
    6. With the scan tool, read the active Amplifier DTCs.

    Does the scan tool display active: B146A-12-CHANNEL 3 AUDIO SPEAKER OUTPUT - CIRCUIT SHORT TO BATTERY?

    Yes

    - Go To 2

    No

    - Test complete, the condition or conditions that originally set this DTC are not present at this time. Using the wiring diagrams as a guide, check all related splices and connectors for signs of water intrusion, corrosion, pushed out or bent terminals and correct pin tension.
    - Perform the BODY VERIFICATION TEST. Refer to **STANDARD PROCEDURE** .
2. **CHECK FOR VOLTAGE ON THE (X201) LEFT FRONT DOOR SPEAKER (+) CIRCUIT**
    1. Turn the ignition off.
    2. Disconnect the Amplifier C2 harness connector.
    3. Disconnect the Left Front Door Speaker harness connector.
    4. Turn the ignition on.
    5. Measure for voltage between the (X201) Left Front Door Speaker (+) circuit and ground.

    Is there any voltage present?

Yes

- Repair the (X201) Left Front Door Speaker (+) circuit for a short to voltage.
- Perform the BODY VERIFICATION TEST. Refer to **STANDARD PROCEDURE** .

No

- Go To 3

3. **CHECK FOR VOLTAGE ON THE (X291) LEFT FRONT DOOR SPEAKER (-) CIRCUIT**
   1. Measure for voltage between the (X291) Left Front Door Speaker (-) circuit and ground.

   Is there any voltage present?

   Yes

   - Repair the (X291) Left Front Door Speaker (-) circuit for a short to voltage.
   - Perform the BODY VERIFICATION TEST. Refer to **STANDARD PROCEDURE** .

   No

   - Replace the Amplifier in accordance with the Service Information.
   - Perform the BODY VERIFICATION TEST. Refer to **STANDARD PROCEDURE** .

B146A-13-CHANNEL 3 AUDIO SPEAKER OUTPUT - CIRCUIT OPEN

For a complete wiring diagram, **refer to appropriate SYSTEM WIRING DIAGRAMS article** .

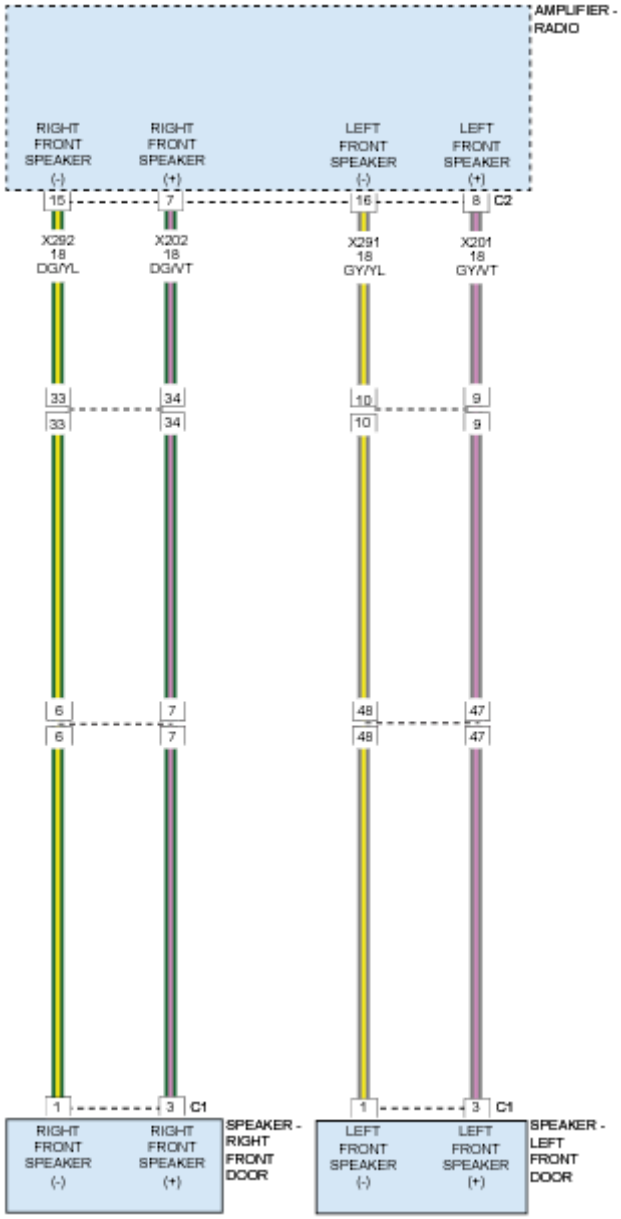

Fig. 11: Identifying Front Door Speaker Circuit Diagram
Courtesy of CHRYSLER GROUP, LLC

WHEN MONITORED

Amplifier Bus wake-up. Amplifier reset with scan tool.

SET CONDITION

The Amplifier detects an open condition on the speaker output circuit.

POSSIBLE CAUSES

Possible Causes
LEFT FRONT DOOR SPEAKER (+) CIRCUIT OPEN
LEFT FRONT DOOR SPEAKER (-) CIRCUIT OPEN
LEFT FRONT DOOR SPEAKER
AMPLIFIER

DIAGNOSTIC TEST

1. **CHECK FOR AN INTERMITTENT CONDITION**
    1. Turn the ignition on.
    2. With the scan tool, record and erase the Amplifier DTCs.
    3. Cycle the ignition switch from on to off, wait five seconds and then back to on.
    4. Turn the Radio on and set the volume to 20.
    5. Adjust the speakers to the front and center.
    6. With the scan tool, read the active Amplifier DTCs.

    Does the scan tool display active: B146A-13-CHANNEL 3 AUDIO SPEAKER OUTPUT - CIRCUIT OPEN?

    Yes

    - Go To 2

    No

    - Test complete, the condition or conditions that originally set this DTC are not present at this time. Using the wiring diagrams as a guide, check all related splices and connectors for signs of water intrusion, corrosion, pushed out or bent terminals and correct pin tension.
    - Perform the BODY VERIFICATION TEST. Refer to **STANDARD PROCEDURE** .
2. **CHECK THE OPERATION OF THE LEFT FRONT DOOR SPEAKER**
    1. Turn the ignition off.
    2. Disconnect the Left Front Door Speaker harness connector.
    3. Turn the ignition on.
    4. Turn the radio on and turn the volume to 25.
    5. Adjust the speakers to the front and center.
    6. With a voltmeter set to read in A/C voltage, measure the voltage of the Left Front Door Speaker circuits in the Left Front Door Speaker harness connector.

    Is the voltage present greater than 1 volt?

Yes

- Replace the Left Front Door Speaker in accordance with the Service Information.
- Perform the BODY VERIFICATION TEST. Refer to **STANDARD PROCEDURE** .

No

- Go To 3

3. **CHECK THE (X201) LEFT FRONT DOOR SPEAKER (+) CIRCUIT FOR AN OPEN**
   1. Turn the ignition off.
   2. Disconnect the Amplifier C2 harness connector.
   3. Measure the resistance of the (X201) Left Front Door Speaker (+) circuit between the Amplifier C2 harness connector and the Left Rear Speaker harness connector.

   Is the resistance below 2.0 Ohms?

   Yes

   - Go To 4

   No

   - Repair the (X201) Left Front Door Speaker (+) circuit for an open.
   - Perform the BODY VERIFICATION TEST. Refer to **STANDARD PROCEDURE** .
4. **CHECK THE (X291) LEFT FRONT DOOR SPEAKER (-) CIRCUIT FOR AN OPEN**
   1. Measure the resistance of the (X291) Left Front Door Speaker (-) circuit between the Amplifier C2 harness connector and the Left Front Door Speaker harness connector.

   Is the resistance below 2.0 Ohms?

   Yes

   - Replace the Amplifier in accordance with the Service Information.
   - Perform the BODY VERIFICATION TEST. Refer to **STANDARD PROCEDURE** .

   No

   - Repair the (X291) Left Front Door Speaker (-) circuit for an open.
   - Perform the BODY VERIFICATION TEST. Refer to **STANDARD PROCEDURE** .

B146A-92-CHANNEL 3 AUDIO SPEAKER OUTPUT - PERFORMANCE OR INCORRECT OPERATION

For a complete wiring diagram, **refer to appropriate SYSTEM WIRING DIAGRAMS article** .

WHEN MONITORED

With the ignition on.

SET CONDITION

This Diagnostic Trouble Code (DTC) sets if a Direct Current (DC) offset occurs on the output channel, the amplifier shall set a DTC after a maturity rate of four to six seconds.

POSSIBLE CAUSES

Possible Causes
AMPLIFIER

DIAGNOSTIC TEST

CHECK FOR AN INTERMITTENT CONDITION

1. Turn the ignition on.
2. Using the scan tool, record and erase the Amplifier DTCs.
3. Cycle the ignition switch from on to off, wait five seconds and then back to on.
4. Turn the Radio on and set the volume to 20.
5. Adjust the speakers to the front and center.
6. Using the scan tool, read the active Amplifier DTCs.

   Does the scan tool display this DTC as active?

   Yes

   - Replace the Amplifier in accordance with the Service Information.
   - Perform the BODY VERIFICATION TEST. Refer to **STANDARD PROCEDURE** .

   No

   - Test complete, the condition or conditions that originally set this DTC are not present at this time. Using the wiring diagrams as a guide, check all related splices and connectors for signs of water intrusion, corrosion, pushed out or bent terminals and correct pin tension.
   - Perform the BODY VERIFICATION TEST. Refer to **STANDARD PROCEDURE** .

B146E-00-CHANNEL 3 AUDIO SPEAKER OUTPUT CIRCUIT SHORTED TOGETHER

For a complete wiring diagram, **refer to appropriate SYSTEM WIRING DIAGRAMS article** .

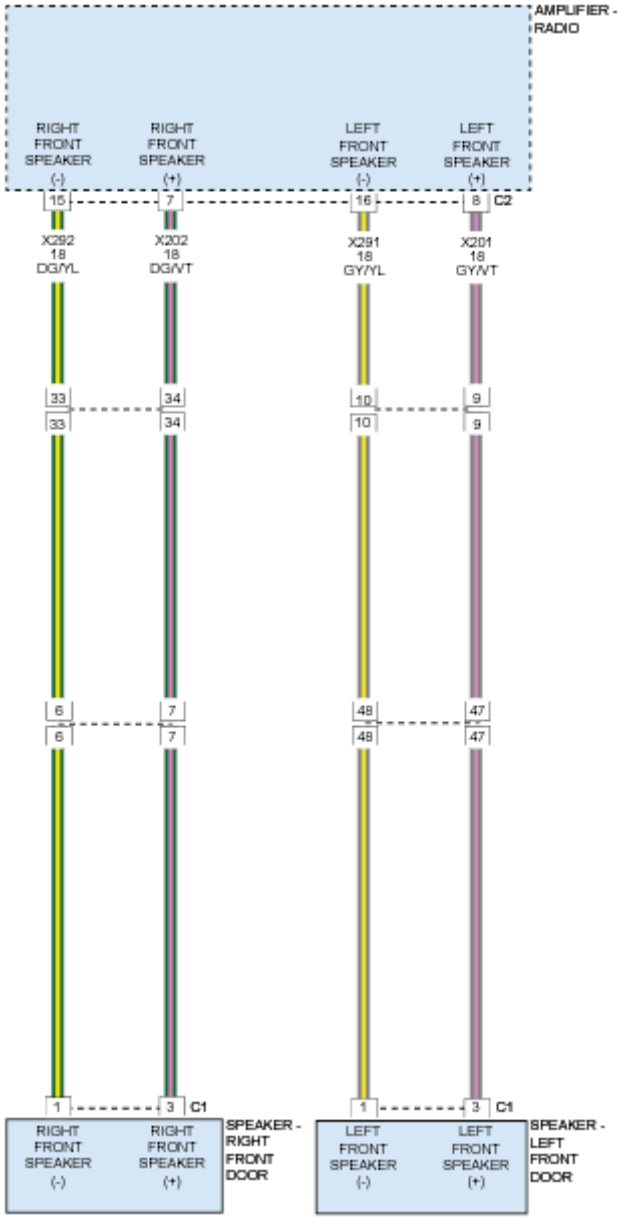

Fig. 12: Identifying Front Door Speaker Circuit Diagram
Courtesy of CHRYSLER GROUP, LLC

WHEN MONITORED

With the ignition on. Radio volume at 25 or higher.

SET CONDITION

The Amplifier detects that the output circuits are shorted together.

POSSIBLE CAUSES

Possible Causes
LEFT FRONT DOOR SPEAKER (+) CIRCUIT SHORTED TO THE LEFT FRONT DOOR SPEAKER (-) CIRCUIT LEFT FRONT DOOR SPEAKER AMPLIFIER

DIAGNOSTIC TEST

1. **CHECK FOR AN INTERMITTENT CONDITION**
    1. Turn the ignition on.
    2. With the scan tool, record and erase the Amplifier DTCs.
    3. Cycle the ignition switch from on to off, wait five seconds and then back to on.
    4. Turn the Radio on and set the volume to 20.
    5. Adjust the speakers to the front and center.
    6. With the scan tool, read the active Amplifier DTCs.

    Does the scan tool display active: B146E-00-CHANNEL 3 AUDIO SPEAKER OUTPUT CIRCUIT SHORTED TOGETHER?

    Yes

    - Go To 2

    No

    - Test complete, the condition or conditions that originally set this DTC are not present at this time. Using the wiring diagrams as a guide, check all related splices and connectors for signs of water intrusion, corrosion, pushed out or bent terminals and correct pin tension.
    - Perform the BODY VERIFICATION TEST. Refer to **STANDARD PROCEDURE** .
2. **CHECK THE OPERATION OF THE LEFT FRONT DOOR SPEAKER**
    1. Turn the ignition off.
    2. Disconnect the Left Front Door Speaker harness connector.
    3. Measure the resistance of the speaker between the two terminals.

    Is the resistance of the speaker less than 1 Ohm?

    Yes

    - Replace the Left Front Door Speaker in accordance with the Service Information.
    - Perform the BODY VERIFICATION TEST. Refer to **STANDARD PROCEDURE** .

No

- Go To 3

3. **CHECK THE (X201) LEFT FRONT DOOR SPEAKER (+) CIRCUIT, AND THE (X291) LEFT FRONT DOOR SPEAKER (-) CIRCUITS FOR A SHORT TOGETHER**
   1. Disconnect the Amplifier C2 harness connector.
   2. Measure the resistance between the (X201) Left Front Door Speaker (+) circuit, and the (X291) Left Front Door Speaker (-) circuit.

   Is the resistance below 10K Ohms?

   Yes

   - Repair the (X201) Left Front Door Speaker (+) circuit, and the (X291) Left Front Door Speaker (-) circuit for a short together.
   - Perform the BODY VERIFICATION TEST. Refer to **STANDARD PROCEDURE** .

   No

   - Replace the Amplifier in accordance with the Service Information.
   - Perform the BODY VERIFICATION TEST. Refer to **STANDARD PROCEDURE** .

B146F-11-CHANNEL 4 AUDIO SPEAKER OUTPUT - CIRCUIT SHORT TO GROUND

For a complete wiring diagram, **refer to appropriate SYSTEM WIRING DIAGRAMS article** .

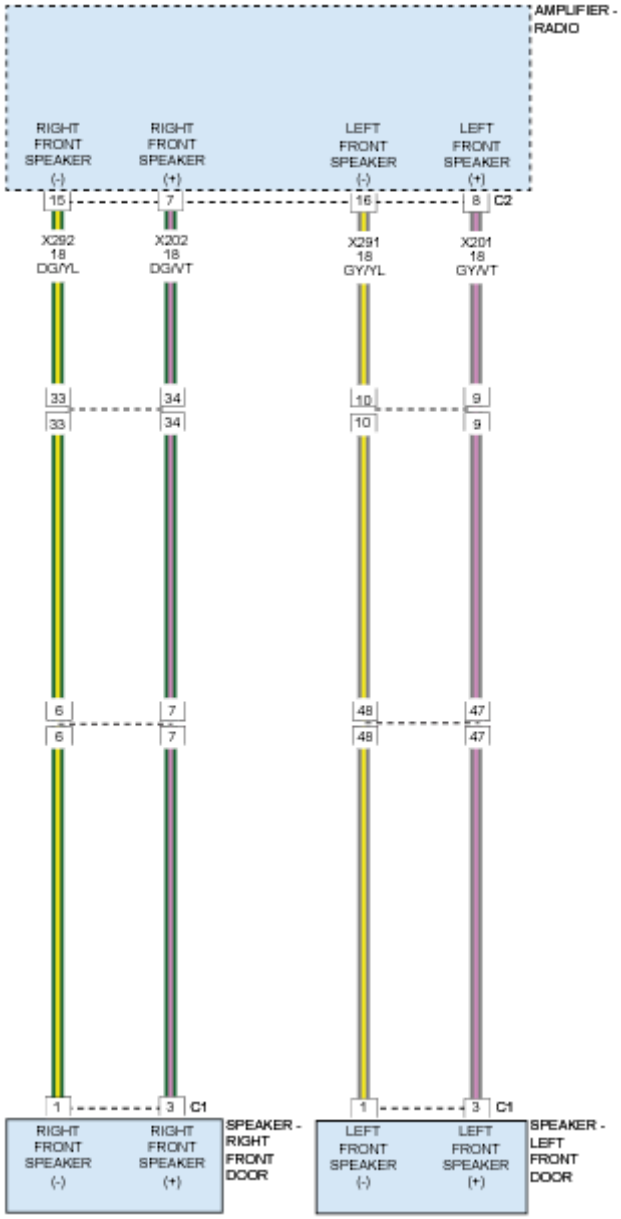

Fig. 13: Identifying Front Door Speaker Circuit Diagram
Courtesy of CHRYSLER GROUP, LLC

WHEN MONITORED

With the ignition on.

SET CONDITION

The Amplifier detects a shorted to ground condition on the speaker output circuit.

POSSIBLE CAUSES

Possible Causes
RIGHT FRONT DOOR SPEAKER (+) CIRCUIT SHORTED TO GROUND
RIGHT FRONT DOOR SPEAKER (-) CIRCUIT SHORTED TO GROUND
RIGHT FRONT DOOR SPEAKER
AMPLIFIER

DIAGNOSTIC TEST

1. **CHECK FOR AN INTERMITTENT CONDITION**
    1. Turn the ignition on.
    2. With the scan tool, record and erase the Amplifier DTCs.
    3. Cycle the ignition switch from on to off, wait five seconds and then back to on.
    4. Turn the Radio on and set the volume to 20.
    5. Adjust the speakers to the front and center.
    6. With the scan tool, read the active Amplifier DTCs.

    Does the scan tool display active: B146F-11-CHANNEL 4 AUDIO SPEAKER OUTPUT - CIRCUIT SHORT TO GROUND?

    Yes

    - Go To 2

    No

    - Test complete, the condition or conditions that originally set this DTC are not present at this time. Using the wiring diagrams as a guide, check all related splices and connectors for signs of water intrusion, corrosion, pushed out or bent terminals and correct pin tension.
    - Perform BODY VERIFICATION TEST. Refer to **STANDARD PROCEDURE** .
2. **CHECK THE RIGHT FRONT DOOR SPEAKER**
    1. With the scan tool, erase the DTCs.
    2. Turn the ignition off.
    3. Disconnect the Right Front Door Speaker harness connector.
    4. Turn the ignition on.
    5. Turn the radio on and set the volume to 25.
    6. With the scan tool, read the active Amplifier DTCs.

    Does the scan tool display active: B146F-11-CHANNEL 4 AUDIO SPEAKER OUTPUT - CIRCUIT SHORT TO GROUND?

Yes

- Go To 3

No

- Replace the Right Front Door Speaker.
- Perform the BODY VERIFICATION TEST. Refer to **STANDARD PROCEDURE** .

3. **CHECK THE (X202) RIGHT FRONT DOOR SPEAKER (+) CIRCUIT FOR A SHORT TO GROUND**
   1. Turn the ignition off.
   2. Disconnect the Amplifier C2 harness connector.
   3. Measure the resistance between ground and the (X202) Right Front Door Speaker (+) circuit.

   Is the resistance below 10K Ohms?

   Yes

   - Repair the (X202) Right Front Door Speaker (+) circuit for a short to ground.
   - Perform BODY VERIFICATION TEST. Refer to **STANDARD PROCEDURE** .

   No

   - Go To 4
4. **CHECK THE (X292) RIGHT FRONT DOOR SPEAKER (-) CIRCUIT FOR A SHORT TO GROUND**
   1. Measure the resistance between ground and the (X292) Right Front Door Speaker (-) circuit.

   Is the resistance below 10K Ohms?

   Yes

   - Repair the (X292) Right Front Door Speaker (-) for a short to ground.
   - Perform BODY VERIFICATION TEST. Refer to **STANDARD PROCEDURE** .

   No

   - Replace the Amplifier in accordance with the Service Information.
   - Perform the BODY VERIFICATION TEST. Refer to **STANDARD PROCEDURE** .

B146F-12-CHANNEL 4 AUDIO SPEAKER OUTPUT - CIRCUIT SHORT TO BATTERY

For a complete wiring diagram, **refer to appropriate SYSTEM WIRING DIAGRAMS article** .

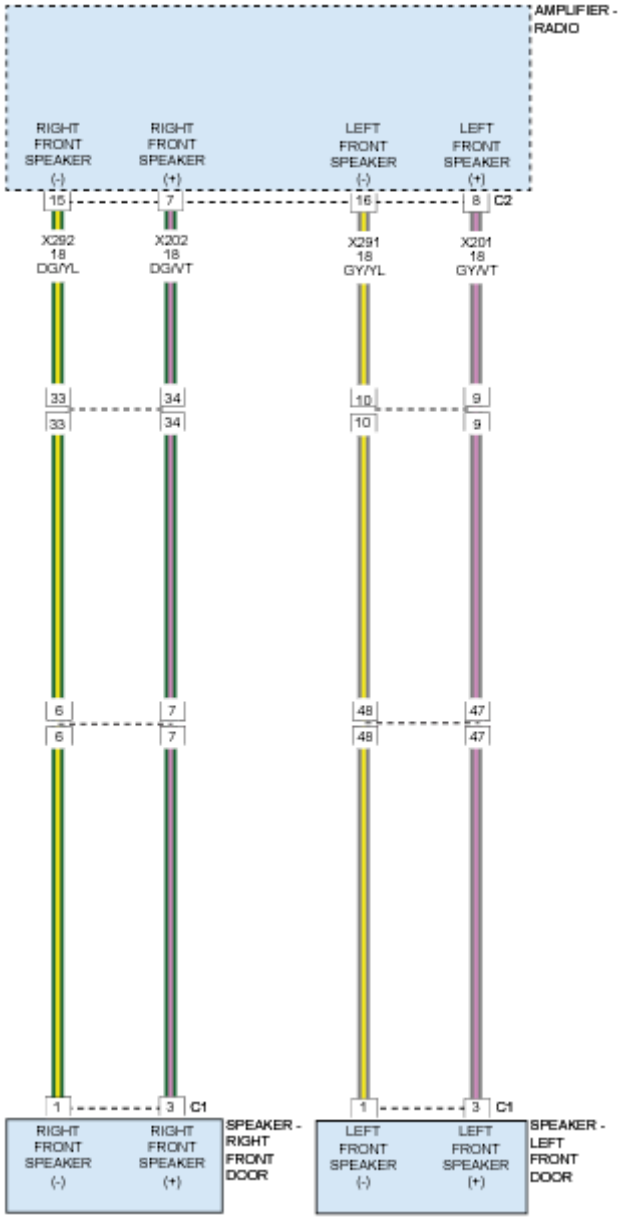

Fig. 14: Identifying Front Door Speaker Circuit Diagram
Courtesy of CHRYSLER GROUP, LLC

WHEN MONITORED

With the ignition on.

SET CONDITION

The Amplifier detects a short to battery condition on the output circuit.

POSSIBLE CAUSES

Possible Causes
RIGHT FRONT DOOR SPEAKER (+) CIRCUIT SHORTED TO VOLTAGE RIGHT FRONT DOOR SPEAKER (-) CIRCUIT SHORTED TO VOLTAGE AMPLIFIER

DIAGNOSTIC TEST

1. **CHECK FOR AN INTERMITTENT CONDITION**
    1. Turn the ignition on.
    2. With the scan tool, record and erase the Amplifier DTCs.
    3. Cycle the ignition switch from on to off, wait five seconds and then back to on.
    4. Turn the Radio on and set the volume to 20.
    5. Adjust the speakers to the front and center.
    6. With the scan tool, read the active Amplifier DTCs.

    Does the scan tool display active: B146F-12-CHANNEL 4 AUDIO SPEAKER OUTPUT - CIRCUIT SHORT TO BATTERY?

    Yes

    - Go To 2

    No

    - Test complete, the condition or conditions that originally set this DTC are not present at this time. Using the wiring diagrams as a guide, check all related splices and connectors for signs of water intrusion, corrosion, pushed out or bent terminals and correct pin tension.
    - Perform the BODY VERIFICATION TEST. Refer to **STANDARD PROCEDURE** .
2. **CHECK FOR VOLTAGE ON THE (X202) RIGHT FRONT DOOR SPEAKER (+) CIRCUIT**
    1. Turn the ignition off.
    2. Disconnect the Amplifier C2 harness connector.
    3. Disconnect the Right Front Door Speaker harness connector.
    4. Turn the ignition on.
    5. Measure the voltage between the (X202) Right Front Door Speaker (+) circuit and ground.

    Is there any voltage present?

    Yes

    - Repair the (X202) Right Front Door Speaker (+) circuit for a short to voltage.

- Perform the BODY VERIFICATION TEST. Refer to **STANDARD PROCEDURE** .

No

- Go To 3

3. **CHECK FOR VOLTAGE ON THE (X292) RIGHT FRONT DOOR SPEAKER (-) CIRCUIT**
   1. Measure the voltage between the (X292) Right Front Door Speaker (-) circuit and ground.

      Is there any voltage present?

      Yes

      - Repair the (X292) Right Front Door Speaker (-) circuit for a short to voltage.
      - Perform the BODY VERIFICATION TEST. Refer to **STANDARD PROCEDURE** .

      No

      - Replace the Amplifier in accordance with the Service Information.
      - Perform the BODY VERIFICATION TEST. Refer to **STANDARD PROCEDURE** .

B146F-13-CHANNEL 4 AUDIO SPEAKER OUTPUT - CIRCUIT OPEN

For a complete wiring diagram, **refer to appropriate SYSTEM WIRING DIAGRAMS article** .

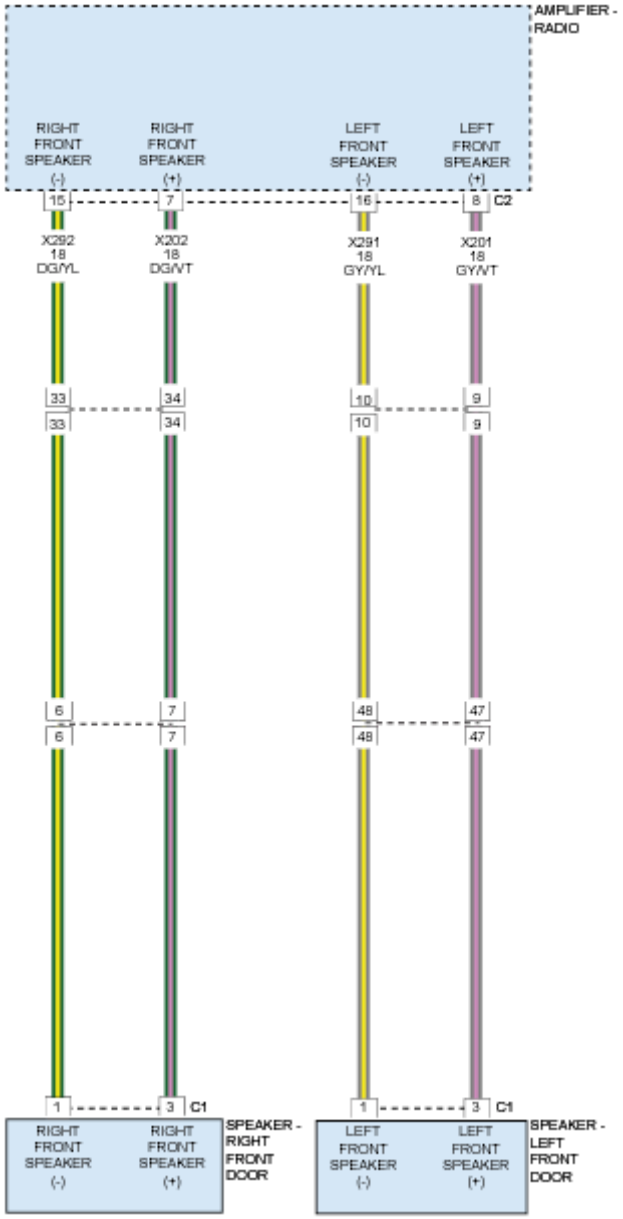

Fig. 15: Identifying Front Door Speaker Circuit Diagram
Courtesy of CHRYSLER GROUP, LLC

WHEN MONITORED

Amplifier Bus wake-up. Amplifier reset with scan tool.

SET CONDITION

The Amplifier detects an open condition on the speaker output circuit.

POSSIBLE CAUSES

Possible Causes
RIGHT FRONT DOOR SPEAKER (+) CIRCUIT OPEN
RIGHT FRONT DOOR SPEAKER (-) CIRCUIT OPEN
RIGHT FRONT DOOR SPEAKER
AMPLIFIER

DIAGNOSTIC TEST

1. **CHECK FOR AN INTERMITTENT CONDITION**
   1. Turn the ignition on.
   2. With the scan tool, record and erase the Amplifier DTCs.
   3. Cycle the ignition switch from on to off, wait five seconds and then back to on.
   4. Turn the Radio on and set the volume to 20.
   5. Adjust the speakers to the front and center.
   6. With the scan tool, read the active Amplifier DTCs.

      Does the scan tool display active: B146F-13-CHANNEL 4 AUDIO SPEAKER OUTPUT - CIRCUIT OPEN?

      Yes

      - Go To 2

      No

      - Test complete, the condition or conditions that originally set this DTC are not present at this time. Using the wiring diagrams as a guide, check all related splices and connectors for signs of water intrusion, corrosion, pushed out or bent terminals and correct pin tension.
      - Perform the BODY VERIFICATION TEST. Refer to **STANDARD PROCEDURE** .
2. **CHECK THE OPERATION OF THE RIGHT FRONT DOOR SPEAKER**
   1. Turn the ignition off.
   2. Disconnect the Right Front Door Speaker harness connector.
   3. Turn the ignition on.
   4. Turn the radio on and turn the volume to 25.
   5. Adjust the speakers to the front and center.
   6. With a voltmeter set to read in A/C voltage, measure the voltage of the Right Front Door Speaker circuits in the Right Front Door Speaker harness connector.

      Is the voltage present greater than 1 volt?

Yes

- Replace the Right Front Door Speaker in accordance with the Service Information.
- Perform the BODY VERIFICATION TEST. Refer to **STANDARD PROCEDURE** .

No

- Go To 3

3. **CHECK THE (X202) RIGHT FRONT DOOR SPEAKER (+) CIRCUIT FOR AN OPEN**
   1. Turn the ignition off.
   2. Disconnect the Amplifier C2 harness connector.
   3. Measure the resistance of the (X202) Right Front Door Speaker (+) circuit between the Amplifier C2 harness connector and the Right Front Door Speaker harness connector.

   Is the resistance below 2.0 Ohms?

   Yes

   - Go To 4

   No

   - Repair the (X202) Right Front Door Speaker (+) circuit for an open.
   - Perform the BODY VERIFICATION TEST. Refer to **STANDARD PROCEDURE** .
4. **CHECK THE (X292) RIGHT FRONT DOOR SPEAKER (-) CIRCUIT FOR AN OPEN**
   1. Measure the resistance of the (X292) Right Front Door Speaker (-) circuit between the Amplifier C2 harness connector and the Right Front Door Speaker harness connector.

   Is the resistance below 2.0 Ohms?

   Yes

   - Replace the Amplifier in accordance with the Service Information.
   - Perform the BODY VERIFICATION TEST. Refer to **STANDARD PROCEDURE** .

   No

   - Repair the (X292) Right Front Door Speaker (-) circuit for an open.
   - Perform the BODY VERIFICATION TEST. Refer to **STANDARD PROCEDURE** .

B146F-92-CHANNEL 4 AUDIO SPEAKER OUTPUT - PERFORMANCE OR INCORRECT OPERATION

For a complete wiring diagram, **refer to appropriate SYSTEM WIRING DIAGRAMS article** .

WHEN MONITORED

With the ignition on.

SET CONDITION

This Diagnostic Trouble Code (DTC) sets if a Direct Current (DC) offset occurs on the output channel, the amplifier shall set a DTC after a maturity rate of four to six seconds.

POSSIBLE CAUSES

Possible Causes
AMPLIFIER

DIAGNOSTIC TEST

CHECK FOR AN INTERMITTENT CONDITION

1. Turn the ignition on.
2. Using the scan tool, record and erase the Amplifier DTCs.
3. Cycle the ignition switch from on to off, wait five seconds and then back to on.
4. Turn the Radio on and set the volume to 20.
5. Adjust the speakers to the front and center.
6. Using the scan tool, read the active Amplifier DTCs.

   Does the scan tool display this DTC as active?

   Yes

   - Replace the Amplifier in accordance with the Service Information.
   - Perform the BODY VERIFICATION TEST. Refer to **STANDARD PROCEDURE** .

   No

   - Test complete, the condition or conditions that originally set this DTC are not present at this time. Using the wiring diagrams as a guide, check all related splices and connectors for signs of water intrusion, corrosion, pushed out or bent terminals and correct pin tension.
   - Perform the BODY VERIFICATION TEST. Refer to **STANDARD PROCEDURE** .

B1473-00-CHANNEL 4 AUDIO SPEAKER OUTPUT CIRCUIT SHORTED TOGETHER

For a complete wiring diagram, **refer to appropriate SYSTEM WIRING DIAGRAMS article** .

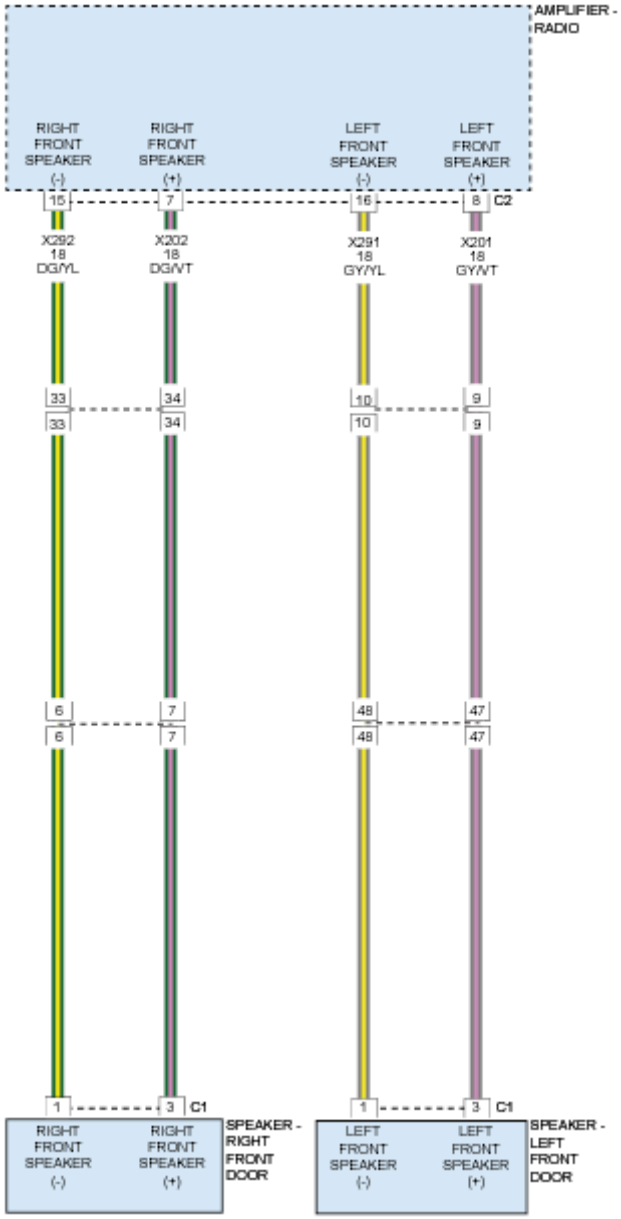

Fig. 16: Identifying Front Door Speaker Circuit Diagram
Courtesy of CHRYSLER GROUP, LLC

WHEN MONITORED

With the ignition on.

Radio volume at 25 or higher.

SET CONDITION

The Amplifier detects that the output circuits are shorted together.

POSSIBLE CAUSES

Possible Causes
RIGHT FRONT DOOR SPEAKER (+) CIRCUIT SHORTED TO THE RIGHT FRONT DOOR SPEAKER (-) CIRCUIT RIGHT FRONT DOOR SPEAKER AMPLIFIER

DIAGNOSTIC TEST

1. **CHECK FOR AN INTERMITTENT CONDITION**
    1. Turn the ignition on.
    2. With the scan tool, record and erase the Amplifier DTCs.
    3. Cycle the ignition switch from on to off, wait five seconds and then back to on.
    4. Turn the Radio on and set the volume to 20.
    5. Adjust the speakers to the front and center.
    6. With the scan tool, read the active Amplifier DTCs.

    Does the scan tool display active: B1473-00-CHANNEL 4 AUDIO SPEAKER OUTPUT CIRCUIT SHORTED TOGETHER?

    Yes

    - Go To 2

    No

    - Test complete, the condition or conditions that originally set this DTC are not present at this time. Using the wiring diagrams as a guide, check all related splices and connectors for signs of water intrusion, corrosion, pushed out or bent terminals and correct pin tension.
    - Perform the BODY VERIFICATION TEST. Refer to **STANDARD PROCEDURE** .
2. **CHECK THE OPERATION OF THE RIGHT FRONT DOOR SPEAKER**
    1. Turn the ignition off.
    2. Disconnect the Right Front Door Speaker.
    3. Measure the resistance of the speaker between the two terminals.

    Is the resistance of the speaker less than 1 Ohm?

    Yes

    - Replace the Right Front Door Speaker in accordance with the Service Information.

- Perform the BODY VERIFICATION TEST. Refer to **STANDARD PROCEDURE** .

No

- Go To 3

3. **CHECK THE (X202) RIGHT FRONT DOOR SPEAKER (+) CIRCUIT, AND THE (X292) RIGHT FRONT DOOR SPEAKER (-) CIRCUITS FOR A SHORT TOGETHER**
   1. Disconnect the Amplifier C2 harness connector.
   2. Measure the resistance between the (X202) Right Front Door Speaker (+) circuit, and the (X292) Right Front Door Speaker (-) circuit.

   Is the resistance below 10K Ohms?

   Yes

   - Repair the (X202) Right Front Door Speaker (+) circuit, and the (X292) Right Front Door Speaker (-) circuit for a short together.
   - Perform the BODY VERIFICATION TEST. Refer to **STANDARD PROCEDURE** .

   No

   - Replace the Amplifier in accordance with the Service Information.
   - Perform the BODY VERIFICATION TEST. Refer to **STANDARD PROCEDURE** .

B1474-11-CHANNEL 5 AUDIO SPEAKER OUTPUT - CIRCUIT SHORT TO GROUND

For a complete wiring diagram, **refer to appropriate SYSTEM WIRING DIAGRAMS article** .

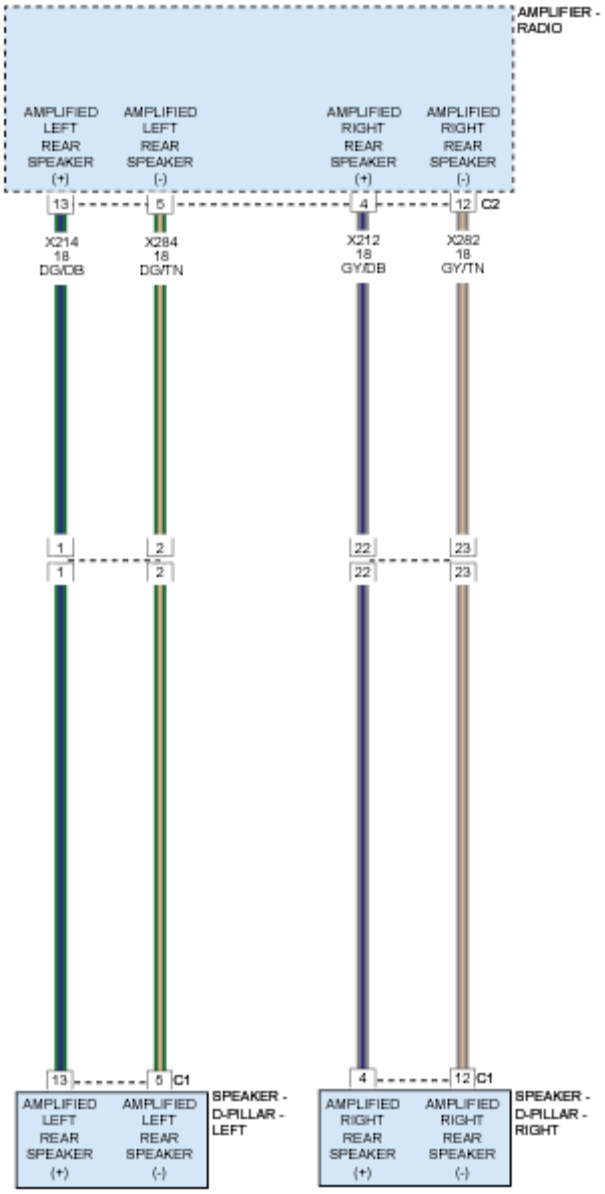

Fig. 17: Identifying D-Pillar Speaker Circuit Diagram
Courtesy of CHRYSLER GROUP, LLC

WHEN MONITORED

With the ignition on.

SET CONDITION

The Amplifier detects a shorted to ground condition on the speaker output circuit.

POSSIBLE CAUSES

Possible Causes
LEFT REAR SPEAKER (+) CIRCUIT SHORTED TO GROUND
LEFT REAR SPEAKER (-) CIRCUIT SHORTED TO GROUND
LEFT REAR SPEAKER
AMPLIFIER

DIAGNOSTIC TEST

1. **CHECK FOR AN INTERMITTENT CONDITION**
    1. Turn the ignition on.
    2. With the scan tool, record and erase the Amplifier DTCs.
    3. Cycle the ignition switch from on to off, wait five seconds and then back to on.
    4. Turn the Radio on and set the volume to 20.
    5. Adjust the speakers to the front and center.
    6. With the scan tool, read the active Amplifier DTCs.

    Does the scan tool display active: B1474-11-CHANNEL 5 AUDIO SPEAKER OUTPUT - CIRCUIT SHORT TO GROUND?

    Yes

    - Go To 2

    No

    - Test complete, the condition or conditions that originally set this DTC are not present at this time. Using the wiring diagrams as a guide, check all related splices and connectors for signs of water intrusion, corrosion, pushed out or bent terminals and correct pin tension.
    - Perform the BODY VERIFICATION TEST. Refer to **STANDARD PROCEDURE** .
2. **CHECK THE LEFT REAR SPEAKER**
    1. With the scan tool, erase the DTCs.
    2. Turn the ignition off.
    3. Disconnect the Left Rear Speaker harness connector.
    4. Turn the ignition on.
    5. Turn the radio on and set the volume to 25.
    6. With the scan tool, read the active Amplifier DTCs.

    Does the scan tool display active: B1474-11-CHANNEL 5 AUDIO SPEAKER OUTPUT - CIRCUIT SHORT TO GROUND?

    Yes

- Go To 3

No

- Replace the Left Rear Speaker.
- Perform the BODY VERIFICATION TEST. Refer to **STANDARD PROCEDURE** .

3. **CHECK THE (X214) LEFT REAR SPEAKER (+) CIRCUIT FOR A SHORT TO GROUND**
   1. Disconnect the Amplifier C2 harness connector.
   2. Disconnect the Left Rear Speaker harness connector.
   3. Measure the resistance between ground and the (X214) Left Rear Speaker (+) circuit.

   Is the resistance below 10K Ohms?

   Yes

   - Repair the (X214) Left Rear Speaker (+) circuit for a short to ground.
   - Perform the BODY VERIFICATION TEST. Refer to **STANDARD PROCEDURE** .

   No

   - Go To 4
4. **CHECK THE (X284) LEFT REAR SPEAKER (-) CIRCUIT FOR A SHORT TO GROUND**
   1. Measure the resistance between ground and the (X284) Left Rear Speaker (-) circuit.

   Is the resistance below 10K Ohms?

   Yes

   - Repair the (X284) Left Rear Speaker (-) for a short to ground.
   - Perform the BODY VERIFICATION TEST. Refer to **STANDARD PROCEDURE** .

   No

   - Replace the Amplifier in accordance with the Service Information.
   - Perform the BODY VERIFICATION TEST. Refer to **STANDARD PROCEDURE** .

B1474-12-CHANNEL 5 AUDIO SPEAKER OUTPUT - CIRCUIT SHORT TO BATTERY

For a complete wiring diagram, **refer to appropriate SYSTEM WIRING DIAGRAMS article** .

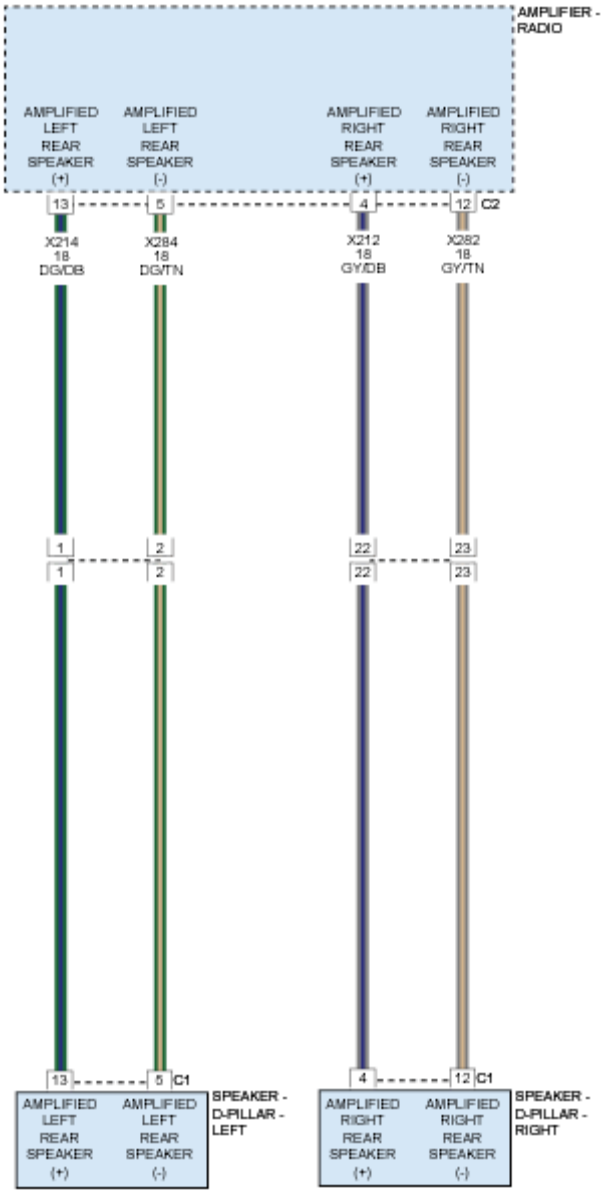

Fig. 18: Identifying D-Pillar Speaker Circuit Diagram
Courtesy of CHRYSLER GROUP, LLC

WHEN MONITORED

With the ignition on.

SET CONDITION

The Amplifier detects a short to battery condition on the output circuit.

POSSIBLE CAUSES

Possible Causes
LEFT REAR SPEAKER (+) CIRCUIT SHORTED TO VOLTAGE LEFT REAR SPEAKER (-) CIRCUIT SHORTED TO VOLTAGE AMPLIFIER

DIAGNOSTIC TEST

1. **CHECK FOR AN INTERMITTENT CONDITION**
    1. Turn the ignition on.
    2. With the scan tool, record and erase the Amplifier DTCs.
    3. Cycle the ignition switch from on to off, wait five seconds and then back to on.
    4. Turn the Radio on and set the volume to 20.
    5. Adjust the speakers to the front and center.
    6. With the scan tool, read the active Amplifier DTCs.

    Does the scan tool display active: B1474-12-CHANNEL 5 AUDIO SPEAKER OUTPUT - CIRCUIT SHORT TO BATTERY?

    Yes

    - Go To 2

    No

    - Test complete, the condition or conditions that originally set this DTC are not present at this time. Using the wiring diagrams as a guide, check all related splices and connectors for signs of water intrusion, corrosion, pushed out or bent terminals and correct pin tension.
    - Perform the BODY VERIFICATION TEST. Refer to **STANDARD PROCEDURE** .
2. **CHECK FOR VOLTAGE ON THE (X214) LEFT REAR SPEAKER (+) CIRCUIT**
    1. Turn the ignition off.
    2. Disconnect the Amplifier C2 harness connector.
    3. Disconnect the Left Rear Speaker harness connector.
    4. Turn the ignition on.
    5. Measure for voltage between the (X214) Left Rear Speaker (+) circuit and ground.

    Is there any voltage present?

    Yes

    - Repair the (X214) Left Rear Speaker (+) circuit for a short to voltage.
    - Perform the BODY VERIFICATION TEST. Refer to **STANDARD PROCEDURE** .

No

- Go To 3

3. **CHECK FOR VOLTAGE ON THE (X284) LEFT REAR SPEAKER (-) CIRCUIT**
   1. Measure for voltage between the (X284) Left Rear Speaker (-) circuit and ground.

      Is there any voltage present?

      Yes

      - Repair the (X284) Left Rear Speaker (-) circuit for a short to voltage.
      - Perform the BODY VERIFICATION TEST. Refer to **STANDARD PROCEDURE** .

      No

      - Replace the Amplifier in accordance with the Service Information.
      - Perform the BODY VERIFICATION TEST. Refer to **STANDARD PROCEDURE** .

B1474-13-CHANNEL 5 AUDIO SPEAKER OUTPUT - CIRCUIT OPEN

For a complete wiring diagram, **refer to appropriate SYSTEM WIRING DIAGRAMS article** .

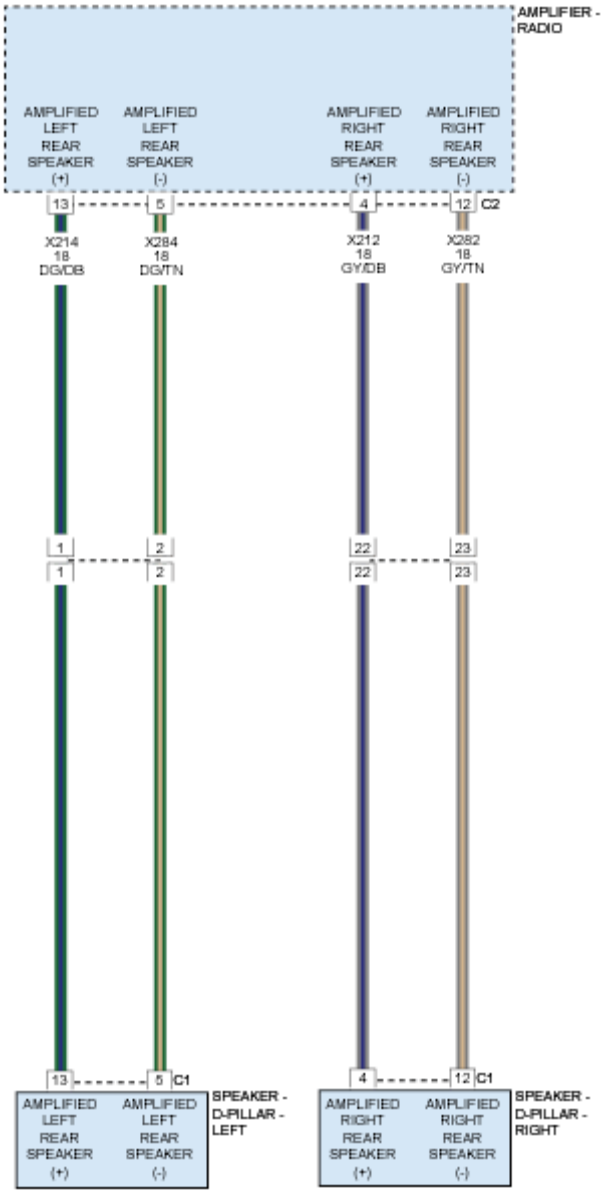

Fig. 19: Identifying D-Pillar Speaker Circuit Diagram
Courtesy of CHRYSLER GROUP, LLC

WHEN MONITORED

Amplifier Bus wake-up. Amplifier reset with scan tool.

SET CONDITION

The Amplifier detects an open condition on the speaker output circuit.

POSSIBLE CAUSES

Possible Causes
LEFT REAR SPEAKER (+) CIRCUIT OPEN
LEFT REAR SPEAKER (-) CIRCUIT OPEN
LEFT REAR SPEAKER
AMPLIFIER

DIAGNOSTIC TEST

1. **CHECK FOR AN INTERMITTENT CONDITION**
    1. Turn the ignition on.
    2. With the scan tool, record and erase the Amplifier DTCs.
    3. Cycle the ignition switch from on to off, wait five seconds and then back to on.
    4. Turn the Radio on and set the volume to 20.
    5. Adjust the speakers to the front and center.
    6. With the scan tool, read the active Amplifier DTCs.

    Does the scan tool display active: B1474-13-CHANNEL 5 AUDIO SPEAKER OUTPUT - CIRCUIT OPEN?

    Yes

    - Go To 2

    No

    - Test complete, the condition or conditions that originally set this DTC are not present at this time. Using the wiring diagrams as a guide, check all related splices and connectors for signs of water intrusion, corrosion, pushed out or bent terminals and correct pin tension.
    - Perform the BODY VERIFICATION TEST. Refer to **STANDARD PROCEDURE** .
2. **CHECK THE OPERATION OF THE LEFT REAR SPEAKER**
    1. Turn the ignition off.
    2. Disconnect the Left Rear Speaker harness connector.
    3. Turn the ignition on.
    4. Turn the radio on and turn the volume to 25.
    5. Adjust the speakers to the rear and center.
    6. With a voltmeter set to read in A/C voltage, measure the voltage of the Left Rear Speaker circuits in the Left Rear Speaker harness connector.

    Is the voltage present greater than 1 volt?

    Yes

- Replace the Left Rear Speaker in accordance with the Service Information.
- Perform the BODY VERIFICATION TEST. Refer to **STANDARD PROCEDURE** .

No

- Go To 3

3. **CHECK THE (X214) LEFT REAR SPEAKER (+) CIRCUIT FOR AN OPEN**
   1. Turn the ignition off.
   2. Disconnect the Amplifier C2 harness connector.
   3. Measure the resistance of the (X214) Left Rear Speaker (+) circuit between the Amplifier C1 harness connector and the Left Rear Speaker harness connector.

      Is the resistance below 2.0 Ohms?

      Yes

      - Go To 4

      No

      - Repair the (X214) Left Rear Speaker (+) circuit for an open.
      - Perform the BODY VERIFICATION TEST. Refer to **STANDARD PROCEDURE** .
4. **CHECK THE (X284) LEFT REAR SPEAKER (-) CIRCUIT FOR AN OPEN**
   1. Measure the resistance of the (X284) Left Rear Speaker (-) circuit between the Amplifier C1 harness connector and the Left Rear Speaker harness connector.

      Is the resistance below 2.0 Ohms?

      Yes

      - Replace the Amplifier in accordance with the Service Information.
      - Perform the BODY VERIFICATION TEST. Refer to **STANDARD PROCEDURE** .

      No

      - Repair the (X284) Left Rear Speaker (-) circuit for an open.
      - Perform the BODY VERIFICATION TEST. Refer to **STANDARD PROCEDURE** .

B1474-92-CHANNEL 5 AUDIO SPEAKER OUTPUT - PERFORMANCE OR INCORRECT OPERATION

For a complete wiring diagram, **refer to appropriate SYSTEM WIRING DIAGRAMS article** .

WHEN MONITORED

With the ignition on.

SET CONDITION

This Diagnostic Trouble Code (DTC) sets if a Direct Current (DC) offset occurs on the output channel, the amplifier shall set a DTC after a maturity rate of four to six seconds.

POSSIBLE CAUSES

Possible Causes
AMPLIFIER

DIAGNOSTIC TEST

CHECK FOR AN INTERMITTENT CONDITION

1. Turn the ignition on.
2. Using the scan tool, record and erase the Amplifier DTCs.
3. Cycle the ignition switch from on to off, wait five seconds and then back to on.
4. Turn the Radio on and set the volume to 20.
5. Adjust the speakers to the front and center.
6. Using the scan tool, read the active Amplifier DTCs.

   Does the scan tool display this DTC as active?

   Yes

   - Replace the Amplifier in accordance with the Service Information.
   - Perform the BODY VERIFICATION TEST. Refer to **STANDARD PROCEDURE** .

   No

   - Test complete, the condition or conditions that originally set this DTC are not present at this time. Using the wiring diagrams as a guide, check all related splices and connectors for signs of water intrusion, corrosion, pushed out or bent terminals and correct pin tension.
   - Perform the BODY VERIFICATION TEST. Refer to **STANDARD PROCEDURE** .

B1478-00-CHANNEL 5 AUDIO SPEAKER OUTPUT - CIRCUIT SHORTED TOGETHER

For a complete wiring diagram, **refer to appropriate SYSTEM WIRING DIAGRAMS article** .

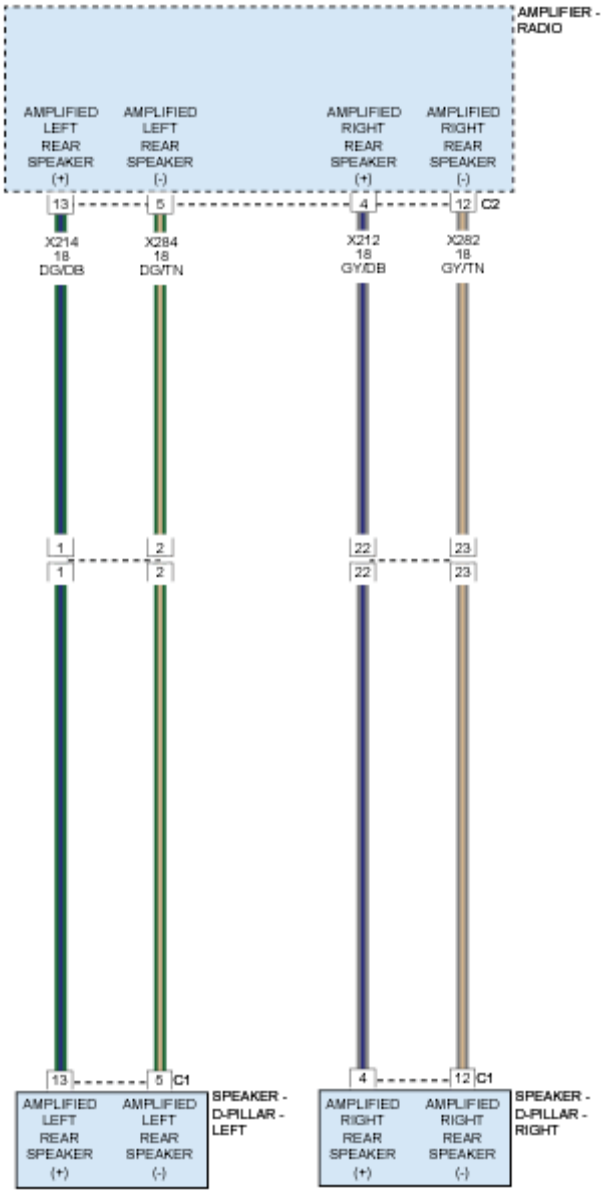

Fig. 20: Identifying D-Pillar Speaker Circuit Diagram
Courtesy of CHRYSLER GROUP, LLC

WHEN MONITORED

With the ignition on. Radio volume at 25 or higher.

SET CONDITION

The Amplifier detects that the output circuits are shorted together.

POSSIBLE CAUSES

Possible Causes
LEFT REAR SPEAKER (+) CIRCUIT SHORTED TO THE LEFT REAR SPEAKER (-) CIRCUIT LEFT REAR SPEAKER AMPLIFIER

DIAGNOSTIC TEST

1. **CHECK FOR AN INTERMITTENT CONDITION**
    1. Turn the ignition on.
    2. With the scan tool, record and erase the Amplifier DTCs.
    3. Cycle the ignition switch from on to off, wait five seconds and then back to on.
    4. Turn the Radio on and set the volume to 20.
    5. Adjust the speakers to the front and center.
    6. With the scan tool, read the active Amplifier DTCs.

    Does the scan tool display active: B1478-00-CHANNEL 5 AUDIO SPEAKER OUTPUT - CIRCUIT SHORTED TOGETHER?

    Yes

    - Go To 2

    No

    - Test complete, the condition or conditions that originally set this DTC are not present at this time. Using the wiring diagrams as a guide, check all related splices and connectors for signs of water intrusion, corrosion, pushed out or bent terminals and correct pin tension.
    - Perform the BODY VERIFICATION TEST. Refer to **STANDARD PROCEDURE** .
2. **CHECK THE OPERATION OF THE LEFT REAR SPEAKER**
    1. Turn the ignition off.
    2. Disconnect the Left Rear Speaker.
    3. Measure the resistance of the speaker between the two terminals.

    Is the resistance of the speaker less than 1 Ohm?

    Yes

    - Replace the Left Rear Speaker in accordance with the Service Information.
    - Perform the BODY VERIFICATION TEST. Refer to **STANDARD PROCEDURE** .

    No

    - Go To 3

3. **CHECK THE (X214) LEFT REAR SPEAKER (+) CIRCUIT, AND THE (X284) LEFT REAR SPEAKER (-) CIRCUITS FOR A SHORT TOGETHER**
   1. Turn the ignition off.
   2. Disconnect the Amplifier C2 harness connector.
   3. Measure the resistance between the (X214) Left Rear Speaker (+) circuit, and the (X284) Left Rear Speaker (-) circuit.

      Is the resistance below 10K Ohms?

      Yes

      - Repair the (X214) Left Rear Speaker (+) circuit, and the (X284) Left Rear Speaker (-) circuit for a short together.
      - Perform the BODY VERIFICATION TEST. Refer to **STANDARD PROCEDURE** .

      No

      - Replace the Amplifier in accordance with the Service Information.
      - Perform the BODY VERIFICATION TEST. Refer to **STANDARD PROCEDURE** .

B1479-11-CHANNEL 6 AUDIO SPEAKER OUTPUT - CIRCUIT SHORT TO GROUND

For a complete wiring diagram, **refer to appropriate SYSTEM WIRING DIAGRAMS article** .

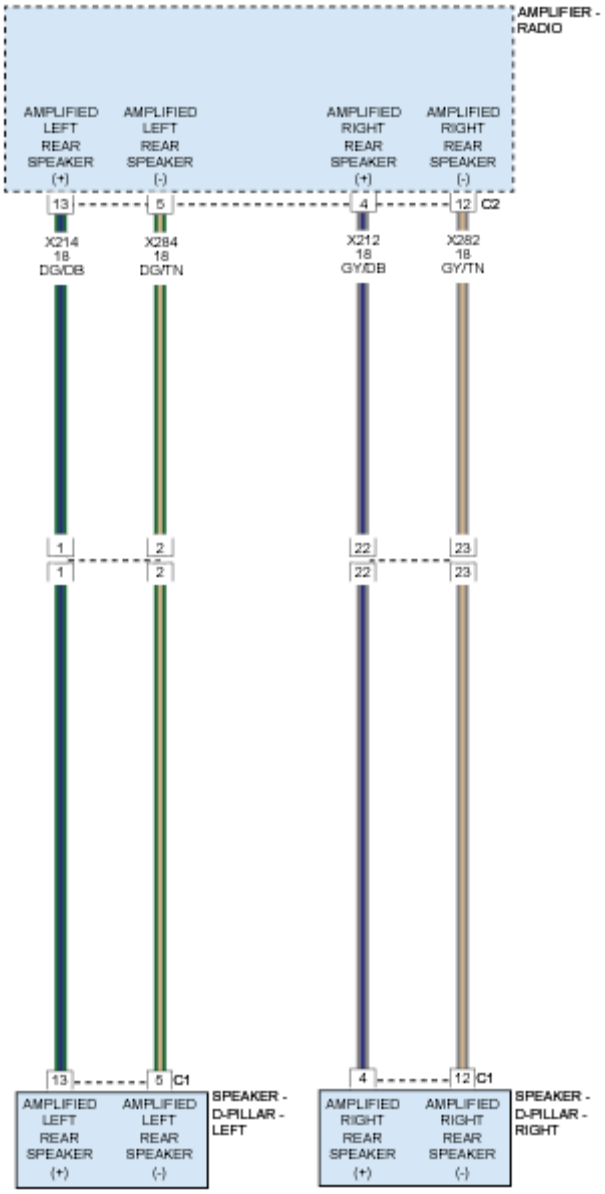

Fig. 21: Identifying D-Pillar Speaker Circuit Diagram
Courtesy of CHRYSLER GROUP, LLC

WHEN MONITORED

With the ignition on.

SET CONDITION

The Amplifier detects a shorted to ground condition on the speaker output circuit.

POSSIBLE CAUSES

Possible Causes
RIGHT REAR SPEAKER (+) CIRCUIT SHORTED TO GROUND
RIGHT REAR SPEAKER (-) CIRCUIT SHORTED TO GROUND
RIGHT REAR SPEAKER
AMPLIFIER

DIAGNOSTIC TEST

1. **CHECK FOR AN INTERMITTENT CONDITION**
    1. Turn the ignition on.
    2. With the scan tool, record and erase the Amplifier DTCs.
    3. Cycle the ignition switch from on to off, wait five seconds and then back to on.
    4. Turn the Radio on and set the volume to 20.
    5. Adjust the speakers to the front and center.
    6. With the scan tool, read the active Amplifier DTCs.

    Does the scan tool display active: B1479-11-CHANNEL 6 AUDIO SPEAKER OUTPUT - CIRCUIT SHORT TO GROUND?

    Yes

    - Go To 2

    No

    - Test complete, the condition or conditions that originally set this DTC are not present at this time. Using the wiring diagrams as a guide, check all related splices and connectors for signs of water intrusion, corrosion, pushed out or bent terminals and correct pin tension.
    - Perform the BODY VERIFICATION TEST. Refer to **STANDARD PROCEDURE** .
2. **CHECK THE RIGHT REAR SPEAKER**
    1.
    2. With the scan tool, erase the DTCs.
    3. Turn the ignition off.
    4. Disconnect the Right Rear Speaker harness connector.
    5. Turn the ignition on.
    6. Turn the radio on and set the volume to 25.
    7. With the scan tool, read the active Amplifier DTCs.

    Does the scan tool display active: B1479-11-CHANNEL 6 AUDIO SPEAKER OUTPUT - CIRCUIT SHORT TO GROUND?

    Yes

- Go To 3

No

- Replace the Right Rear Speaker.
- Perform the BODY VERIFICATION TEST. Refer to **STANDARD PROCEDURE** .

3. **CHECK THE (X212) RIGHT REAR SPEAKER (+) CIRCUIT FOR A SHORT TO GROUND**
   1.
   2. Disconnect the Amplifier C2 harness connector.
   3. Disconnect the Right Rear Speaker harness connector.
   4. Measure the resistance between ground and the (X212) Right Rear Speaker (+) circuit.

   Is the resistance below 10K Ohms?

   Yes

   - Repair the (X212) Right Rear Speaker (+) circuit for a short to ground.
   - Perform the BODY VERIFICATION TEST. Refer to **STANDARD PROCEDURE** .

   No

   - Go To 4
4. **CHECK THE (X282) RIGHT REAR SPEAKER (-) CIRCUIT FOR A SHORT TO GROUND**
   1.
   2. Measure the resistance between ground and the (X282) Right Rear Speaker (-) circuit.

   Is the resistance below 10K Ohms?

   Yes

   - Repair the (X282) Right Rear Speaker (-) for a short to ground.
   - Perform the BODY VERIFICATION TEST. Refer to **STANDARD PROCEDURE** .

   No

   - Replace the Amplifier in accordance with the Service Information.
   - Perform the BODY VERIFICATION TEST. Refer to **STANDARD PROCEDURE** .

B1479-12-CHANNEL 6 AUDIO SPEAKER OUTPUT - CIRCUIT SHORT TO BATTERY

For a complete wiring diagram, **refer to appropriate SYSTEM WIRING DIAGRAMS article** .

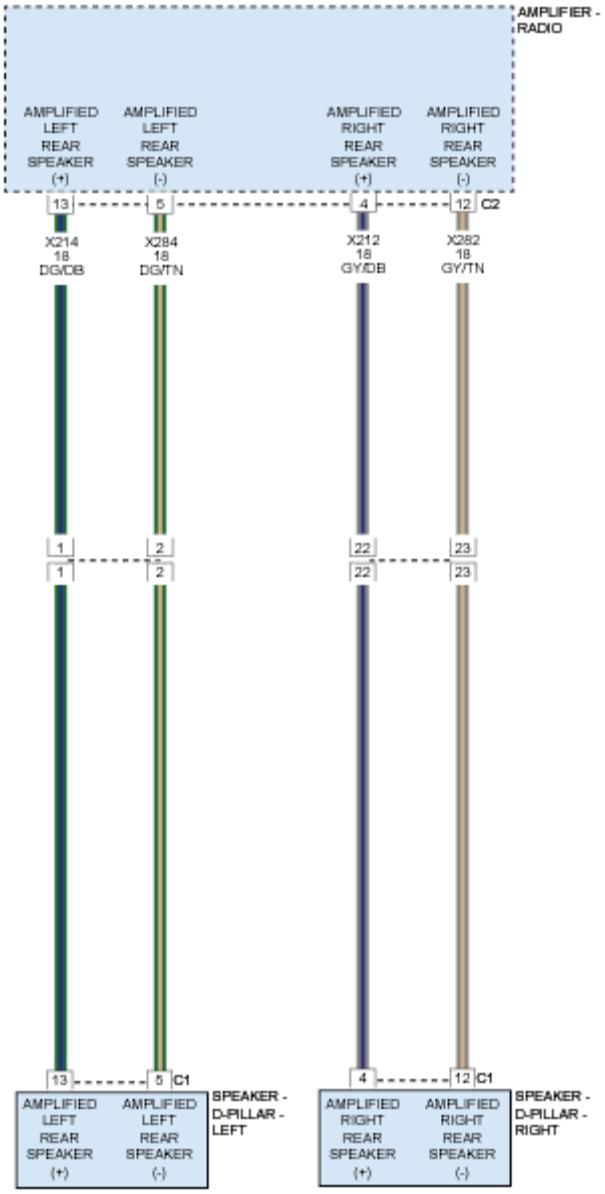

Fig. 22: Identifying D-Pillar Speaker Circuit Diagram
Courtesy of CHRYSLER GROUP, LLC

WHEN MONITORED

With the ignition on.

SET CONDITION

The Amplifier detects a short to battery condition on the output circuit.

POSSIBLE CAUSES

Possible Causes
RIGHT REAR SPEAKER (+) CIRCUIT SHORTED TO VOLTAGE RIGHT REAR SPEAKER (-) CIRCUIT SHORTED TO VOLTAGE AMPLIFIER

DIAGNOSTIC TEST

1. **CHECK FOR AN INTERMITTENT CONDITION**
    1. Turn the ignition on.
    2. With the scan tool, record and erase the Amplifier DTCs.
    3. Cycle the ignition switch from on to off, wait five seconds and then back to on.
    4. Turn the Radio on and set the volume to 20.
    5. Adjust the speakers to the front and center.
    6. With the scan tool, read the active Amplifier DTCs.

    Does the scan tool display active: B1479-12-CHANNEL 6 AUDIO SPEAKER OUTPUT - CIRCUIT SHORT TO BATTERY?

    Yes

    - Go To 2

    No

    - Test complete, the condition or conditions that originally set this DTC are not present at this time. Using the wiring diagrams as a guide, check all related splices and connectors for signs of water intrusion, corrosion, pushed out or bent terminals and correct pin tension.
    - Perform the BODY VERIFICATION TEST. Refer to **STANDARD PROCEDURE** .
2. **CHECK FOR VOLTAGE ON THE (X212) RIGHT REAR SPEAKER (+) CIRCUIT**
    1.
    2. Turn the ignition off.
    3. Disconnect the Amplifier C2 harness connector.
    4. Disconnect the Right Rear Speaker harness connector.
    5. Turn the ignition on.
    6. Measure for voltage on the (X212) Right Rear Speaker (+) circuit and ground.

    Is there any voltage present?

    Yes

    - Repair the (X212) Right Rear Speaker (+) circuit for a short to voltage.
    - Perform the BODY VERIFICATION TEST. Refer to **STANDARD PROCEDURE** .

No

- Go To 3

3. **CHECK FOR VOLTAGE ON THE (X282) RIGHT REAR SPEAKER (-) CIRCUIT**
   1. Measure for voltage on the (X282) Right Rear Speaker (-) circuit and ground.

      Is there any voltage present?

      Yes

      - Repair the (X282) Right Rear Speaker (-) circuit for a short to voltage.
      - Perform the BODY VERIFICATION TEST. Refer to **STANDARD PROCEDURE** .

      No

      - Replace the Amplifier in accordance with the Service Information.
      - Perform the BODY VERIFICATION TEST. Refer to **STANDARD PROCEDURE** .

B1479-13-CHANNEL 6 AUDIO SPEAKER OUTPUT - CIRCUIT OPEN

For a complete wiring diagram, **refer to appropriate SYSTEM WIRING DIAGRAMS article** .

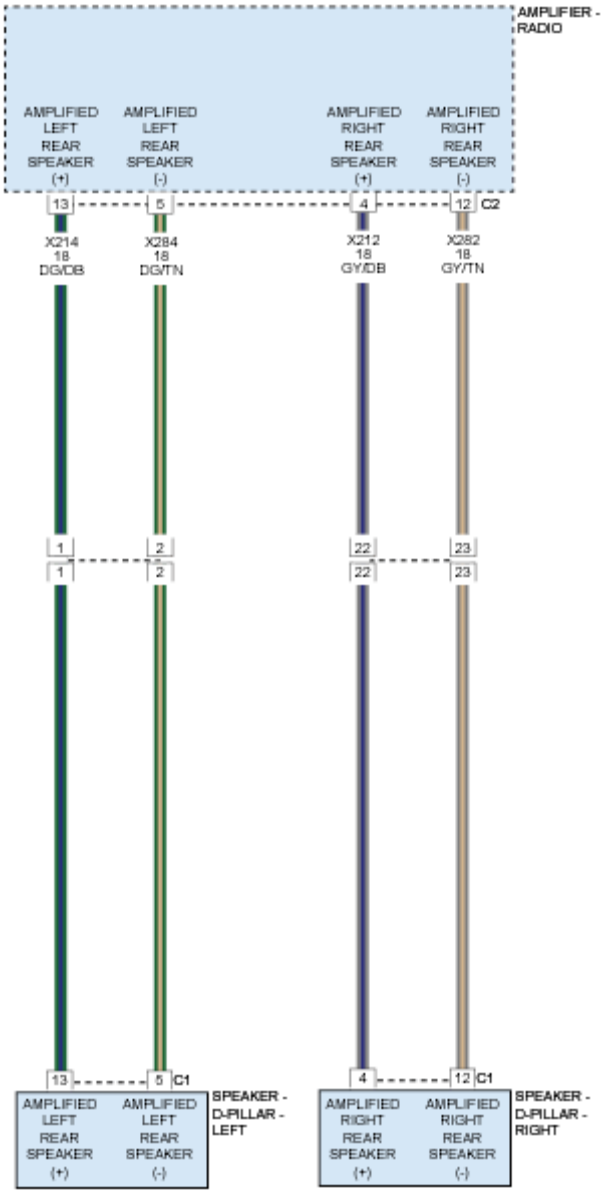

Fig. 23: Identifying D-Pillar Speaker Circuit Diagram
Courtesy of CHRYSLER GROUP, LLC

WHEN MONITORED

Amplifier Bus wake-up. Amplifier reset with scan tool.

SET CONDITION

The Amplifier detects an open condition on the speaker output circuit.

POSSIBLE CAUSES

Possible Causes
RIGHT REAR SPEAKER (+) CIRCUIT OPEN
RIGHT REAR SPEAKER (-) CIRCUIT OPEN
RIGHT REAR SPEAKER
AMPLIFIER

DIAGNOSTIC TEST

1. **CHECK FOR AN INTERMITTENT CONDITION**
    1. Turn the ignition on.
    2. With the scan tool, record and erase the Amplifier DTCs.
    3. Cycle the ignition switch from on to off, wait five seconds and then back to on.
    4. Turn the Radio on and set the volume to 20.
    5. Adjust the speakers to the front and center.
    6. With the scan tool, read the active Amplifier DTCs.

    Does the scan tool display active: B1479-13-CHANNEL 6 AUDIO SPEAKER OUTPUT - CIRCUIT OPEN?

    Yes

    - Go To 2

    No

    - Test complete, the condition or conditions that originally set this DTC are not present at this time. Using the wiring diagrams as a guide, check all related splices and connectors for signs of water intrusion, corrosion, pushed out or bent terminals and correct pin tension.
    - Perform the BODY VERIFICATION TEST. Refer to **STANDARD PROCEDURE** .
2. **CHECK THE OPERATION OF THE RIGHT REAR SPEAKER**
    1. Turn the ignition off.
    2. Disconnect the Right Rear Speaker harness connector.
    3. Turn the ignition on.
    4. Turn the radio on and turn the volume to 25.
    5. Adjust the speakers to the rear and center.
    6. With a voltmeter set to read in A/C voltage, measure the voltage of the Right Rear Speaker circuits in the Right Rear Speaker harness connector.

    Is the voltage present greater than 1 volt?

    Yes

- Replace the Right Rear Speaker in accordance with the Service Information.
- Perform the BODY VERIFICATION TEST. Refer to **STANDARD PROCEDURE** .

No

- Go To 3

3. **CHECK THE (X212) RIGHT REAR SPEAKER (+) CIRCUIT FOR AN OPEN**
   1. Turn the ignition off.
   2. Disconnect the Amplifier C2 harness connector.
   3. Measure the resistance of the (X212) Right Rear Speaker (+) circuit between the Amplifier C2 harness connector and the Right Rear Speaker harness connector.

      Is the resistance below 2.0 Ohms?

      Yes

      - Go To 4

      No

      - Repair the (X212) Right Rear Speaker (+) circuit for an open.
      - Perform the BODY VERIFICATION TEST. Refer to **STANDARD PROCEDURE** .
4. **CHECK THE (X282) RIGHT REAR SPEAKER (-) CIRCUIT FOR AN OPEN**
   1. Turn the ignition off.
   2. Disconnect the Amplifier C2 harness connector.
   3. Measure the resistance of the (X282) Right Rear Speaker (-) circuit between the Amplifier C2 harness connector and the Right Rear Speaker harness connector.

      Is the resistance below 2.0 Ohms?

      Yes

      - Replace the Amplifier in accordance with the Service Information.
      - Perform the BODY VERIFICATION TEST. Refer to **STANDARD PROCEDURE** .

      No

      - Repair the (X282) Right Rear Speaker (-) circuit for an open.
      - Perform the BODY VERIFICATION TEST. Refer to **STANDARD PROCEDURE** .

B1479-92-CHANNEL 6 AUDIO SPEAKER OUTPUT - PERFORMANCE OR INCORRECT OPERATION

For a complete wiring diagram, **refer to appropriate SYSTEM WIRING DIAGRAMS article** .

WHEN MONITORED

With the ignition on.

SET CONDITION

This Diagnostic Trouble Code (DTC) sets if a Direct Current (DC) offset occurs on the output channel, the amplifier shall set a DTC after a maturity rate of four to six seconds.

POSSIBLE CAUSES

Possible Causes
AMPLIFIER

DIAGNOSTIC TEST

CHECK FOR AN INTERMITTENT CONDITION

1. Turn the ignition on.
2. Using the scan tool, record and erase the Amplifier DTCs.
3. Cycle the ignition switch from on to off, wait five seconds and then back to on.
4. Turn the Radio on and set the volume to 20.
5. Adjust the speakers to the front and center.
6. Using the scan tool, read the active Amplifier DTCs.

   Does the scan tool display this DTC as active?

   Yes

   - Replace the Amplifier in accordance with the Service Information.
   - Perform the BODY VERIFICATION TEST. Refer to **STANDARD PROCEDURE** .

   No

   - Test complete, the condition or conditions that originally set this DTC are not present at this time. Using the wiring diagrams as a guide, check all related splices and connectors for signs of water intrusion, corrosion, pushed out or bent terminals and correct pin tension.
   - Perform the BODY VERIFICATION TEST. Refer to **STANDARD PROCEDURE** .

B147D-00-CHANNEL 6 AUDIO SPEAKER OUTPUT - CIRCUIT SHORTED TOGETHER

For a complete wiring diagram, **refer to appropriate SYSTEM WIRING DIAGRAMS article** .

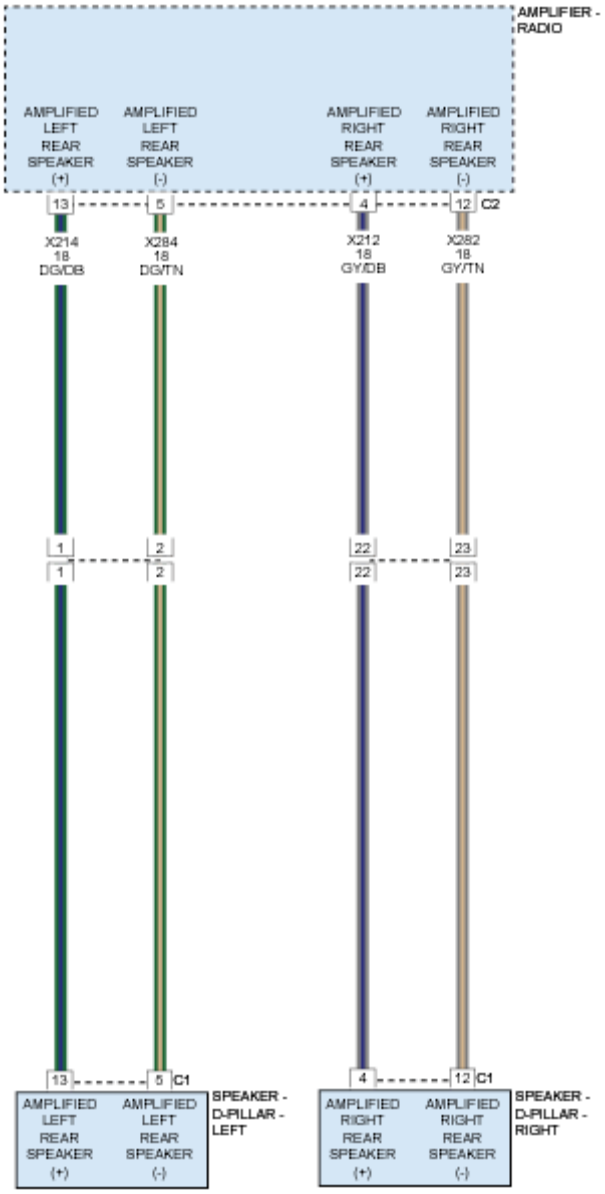

Fig. 24: Identifying D-Pillar Speaker Circuit Diagram
Courtesy of CHRYSLER GROUP, LLC

WHEN MONITORED

With the ignition on. Radio volume at 25 or higher.

SET CONDITION

The Amplifier detects that the output circuits are shorted together.

POSSIBLE CAUSES

Possible Causes
RIGHT REAR SPEAKER (+) CIRCUIT SHORTED TO THE RIGHT REAR SPEAKER (-) CIRCUIT RIGHT REAR SPEAKER AMPLIFIER

DIAGNOSTIC TEST

1. **CHECK FOR AN INTERMITTENT CONDITION**
    1. Turn the ignition on.
    2. With the scan tool, record and erase the Amplifier DTCs.
    3. Cycle the ignition switch from on to off, wait five seconds and then back to on.
    4. Turn the Radio on and set the volume to 20.
    5. Adjust the speakers to the front and center.
    6. With the scan tool, read the active Amplifier DTCs.

    Does the scan tool display active: B147D-00-CHANNEL 6 AUDIO SPEAKER OUTPUT - CIRCUIT SHORTED TOGETHER?

    Yes

    - Go To 2

    No

    - Test complete, the condition or conditions that originally set this DTC are not present at this time. Using the wiring diagrams as a guide, check all related splices and connectors for signs of water intrusion, corrosion, pushed out or bent terminals and correct pin tension.
    - Perform the BODY VERIFICATION TEST. Refer to **STANDARD PROCEDURE** .
2. **CHECK THE OPERATION OF THE RIGHT REAR SPEAKER**
    1. Turn the ignition off.
    2. Disconnect the Right Rear Speaker.
    3. Measure the resistance of the speaker between the two terminals.

    Is the resistance of the speaker less than 1 Ohm?

    Yes

    - Replace the Right Rear Speaker in accordance with the service information.
    - Perform the BODY VERIFICATION TEST. Refer to **STANDARD PROCEDURE** .

    No

    - Go To 3

3. **CHECK THE (X212) RIGHT REAR SPEAKER (+) CIRCUIT, AND THE (X282) RIGHT REAR SPEAKER (-) CIRCUITS FOR A SHORT TOGETHER**
   1. Turn the ignition off.
   2. Disconnect the Amplifier C2 harness connector.
   3. Measure the resistance between the (X212) Right Rear Speaker (+) circuit, and the (X282) Right Rear Speaker (-) circuit.

      Is the resistance below 10K Ohms?

      Yes

      - Repair the (X212) Right Rear Speaker (+) circuit, and the (X282) Right Rear Speaker (-) circuit for a short together.
      - Perform the BODY VERIFICATION TEST. Refer to **STANDARD PROCEDURE** .

      No

      - Replace the Amplifier in accordance with the Service Information.
      - Perform the BODY VERIFICATION TEST. Refer to **STANDARD PROCEDURE** .

B147E-11-CHANNEL 7 AUDIO SPEAKER OUTPUT - CIRCUIT SHORT TO GROUND

For a complete wiring diagram, **refer to appropriate SYSTEM WIRING DIAGRAMS article** .

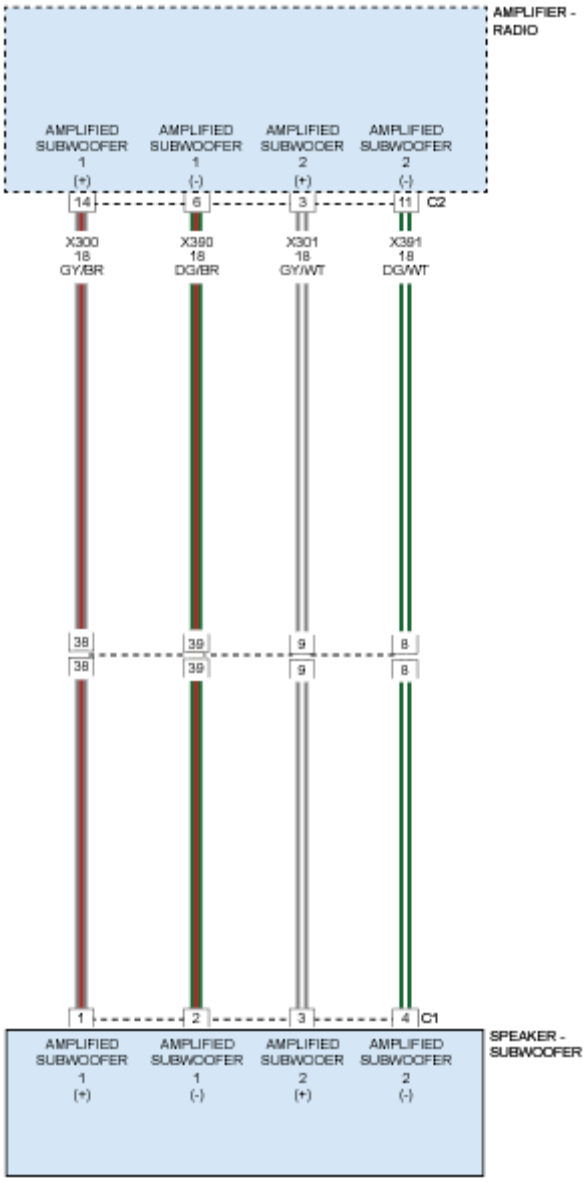

Fig. 25: Identifying Subwoofer Speaker Circuit Diagram
Courtesy of CHRYSLER GROUP, LLC

WHEN MONITORED

With the ignition on.

SET CONDITION

The Amplifier detects a shorted to ground condition on the speaker output circuit.

POSSIBLE CAUSES

Possible Causes
AMPLIFIED SUBWOOFER 1 (+) CIRCUIT SHORTED TO GROUND
AMPLIFIED SUBWOOFER 1 (-) CIRCUIT SHORTED TO GROUND
AMPLIFIED SUBWOOFER SPEAKER
AMPLIFIER

DIAGNOSTIC TEST

1. **CHECK FOR AN INTERMITTENT CONDITION**
    1. Turn the ignition on.
    2. Using the scan tool, record and erase the Amplifier DTCs.
    3. Cycle the ignition switch from on to off, wait five seconds and then back to on.
    4. Turn the Radio on and set the volume to 20.
    5. Adjust the speakers to the rear and center.
    6. Using the scan tool, read the active Amplifier DTCs.

    Does the scan tool display active: B147E-11-CHANNEL 7 AUDIO SPEAKER OUTPUT - CIRCUIT SHORT TO GROUND?

    Yes

    - Go To 2

    No

    - Test complete, the condition or conditions that originally set this DTC are not present at this time. Using the wiring diagrams as a guide, check all related splices and connectors for signs of water intrusion, corrosion, pushed out or bent terminals and correct pin tension.
    - Perform the BODY VERIFICATION TEST. Refer to **STANDARD PROCEDURE** .
2. **CHECK THE SUBWOOFER SPEAKER**
    1. Using the scan tool, erase the DTCs.
    2. Turn the ignition off.
    3. Disconnect the Subwoofer Speaker harness connector.
    4. Turn the ignition on.
    5. Turn the radio on and set the volume to 25.
    6. Using the scan tool, read the active Amplifier DTCs.

    Does the scan tool display active: B147E-11-CHANNEL 7 AUDIO SPEAKER OUTPUT - CIRCUIT SHORT TO GROUND?

    Yes

- Go To 3

No

- Replace the Subwoofer Speaker.
- Perform the BODY VERIFICATION TEST. Refer to **STANDARD PROCEDURE** .

3. **CHECK THE (X300) AMPLIFIED SUBWOOFER 1 (+) CIRCUIT FOR A SHORT TO GROUND**
   1. Disconnect the Amplifier C2 harness connector.
   2. Disconnect the Subwoofer Speaker harness connector.
   3. Measure the resistance between ground and the (X300) Amplified Subwoofer 1 (+) circuit.

   Is the resistance below 10K Ohms?

   Yes

   - Repair the (X300) Amplified Subwoofer 1 (+) circuit for a short to ground.
   - Perform the BODY VERIFICATION TEST. Refer to **STANDARD PROCEDURE** .

   No

   - Go To 4
4. **CHECK THE (X390) AMPLIFIED SUBWOOFER 1 (-) CIRCUIT FOR A SHORT TO GROUND**
   1. Measure the resistance between ground and the (X390) Amplified Subwoofer 1 (-) circuit.

   Is the resistance below 10K Ohms?

   Yes

   - Repair the (X390) Amplified Subwoofer 1 (-) circuit for a short to ground.
   - Perform the BODY VERIFICATION TEST. Refer to **STANDARD PROCEDURE** .

   No

   - Replace the Amplifier in accordance with the Service Information.
   - Perform the BODY VERIFICATION TEST. Refer to **STANDARD PROCEDURE** .

B147E-12-CHANNEL 7 AUDIO SPEAKER OUTPUT - CIRCUIT SHORT TO BATTERY

For a complete wiring diagram, **refer to appropriate SYSTEM WIRING DIAGRAMS article** .

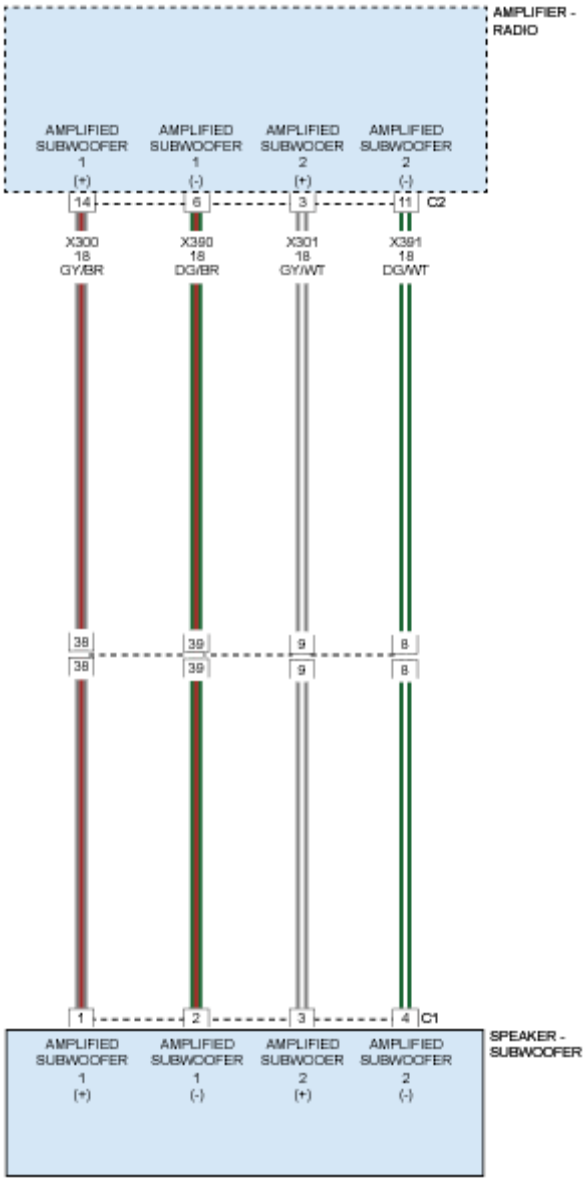

Fig. 26: Identifying Subwoofer Speaker Circuit Diagram
Courtesy of CHRYSLER GROUP, LLC

WHEN MONITORED

With the ignition on.

SET CONDITION

The Amplifier detects a short to battery condition on the output circuit.

POSSIBLE CAUSES

Possible Causes
AMPLIFIED SUBWOOFER 1 (+) CIRCUIT SHORTED TO VOLTAGE AMPLIFIED SUBWOOFER 1 (-) CIRCUIT SHORTED TO VOLTAGE AMPLIFIER

DIAGNOSTIC TEST

1. **CHECK FOR AN INTERMITTENT CONDITION**
    1. Turn the ignition on.
    2. With the scan tool, record and erase the Amplifier DTCs.
    3. Cycle the ignition switch from on to off, wait five seconds and then back to on.
    4. Turn the Radio on and set the volume to 20.
    5. Adjust the speakers to the rear and center.
    6. With the scan tool, read the active Amplifier DTCs.

    Does the scan tool display active: B147E-12-CHANNEL 7 AUDIO SPEAKER OUTPUT - CIRCUIT SHORT TO BATTERY?

    Yes

    - Go To 2

    No

    - Test complete, the condition or conditions that originally set this DTC are not present at this time. Using the wiring diagrams as a guide, check all related splices and connectors for signs of water intrusion, corrosion, pushed out or bent terminals and correct pin tension.
    - Perform the BODY VERIFICATION TEST. Refer to **STANDARD PROCEDURE** .
2. **CHECK FOR VOLTAGE ON THE (X300) AMPLIFIED SUBWOOFER 1 (+) CIRCUIT**
    1. Turn the ignition off.
    2. Disconnect the Amplifier C2 harness connector.
    3. Disconnect the Subwoofer Speaker harness connector.
    4. Turn the ignition on.
    5. Measure the voltage between the (X300) Amplified Subwoofer 1 (+) circuit and ground.

    Is there any voltage present?

    Yes

    - Repair the (X300) Amplified Subwoofer 1 (+) circuit for a short to voltage.
    - Perform the BODY VERIFICATION TEST. Refer to **STANDARD PROCEDURE** .

No

- Go To 3

3. **CHECK FOR VOLTAGE ON THE (X390) AMPLIFIED SUBWOOFER 1 (-) CIRCUIT**
   1. Measure the voltage between the (X390) Amplified Subwoofer 1 (-) circuit and ground.

      Is there any voltage present?

      Yes

      - Repair the (X390) Amplified Subwoofer 1 (-) circuit for a short to voltage.
      - Perform the BODY VERIFICATION TEST. Refer to **STANDARD PROCEDURE** .

      No

      - Replace the Amplifier in accordance with the Service Information.
      - Perform the BODY VERIFICATION TEST. Refer to **STANDARD PROCEDURE** .

B147E-13-CHANNEL 7 AUDIO SPEAKER OUTPUT - CIRCUIT OPEN

For a complete wiring diagram, **refer to appropriate SYSTEM WIRING DIAGRAMS article** .

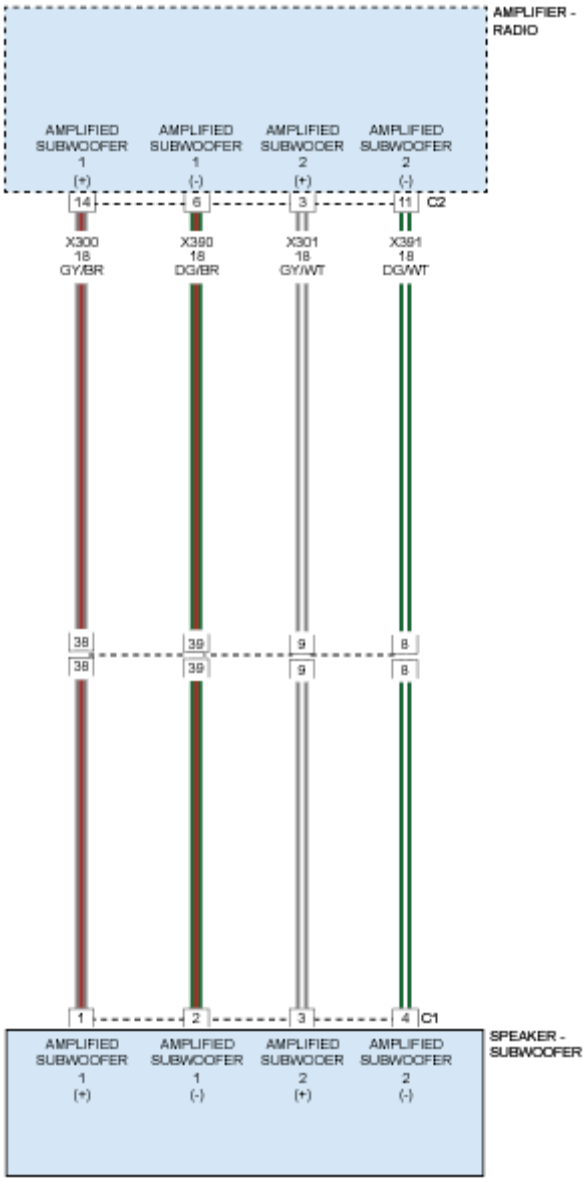

Fig. 27: Identifying Subwoofer Speaker Circuit Diagram
Courtesy of CHRYSLER GROUP, LLC

WHEN MONITORED

Amplifier Bus wake-up. Amplifier reset with scan tool.

SET CONDITION

The Amplifier detects an open condition on the speaker output circuit.

POSSIBLE CAUSES

Possible Causes
REAR AMPLIFIED SUBWOOFER 1 (+) CIRCUIT OPEN REAR AMPLIFIED SUBWOOFER 1 (-) CIRCUIT OPEN REAR AMPLIFIED SUBWOOFER SPEAKER AMPLIFIER

DIAGNOSTIC TEST

1. **CHECK FOR AN INTERMITTENT CONDITION**
    1. Turn the ignition on.
    2. With the scan tool, record and erase the Amplifier DTCs.
    3. Cycle the ignition switch from on to off, wait five seconds and then back to on.
    4. Turn the Radio on and set the volume to 20.
    5. Adjust the speakers to the rear and center.
    6. With the scan tool, read the active Amplifier DTCs.

    Does the scan tool display active: B147E-13-CHANNEL 7 AUDIO SPEAKER OUTPUT - CIRCUIT OPEN?

    Yes

    - Go To 2

    No

    - Test complete, the condition or conditions that originally set this DTC are not present at this time. Using the wiring diagrams as a guide, check all related splices and connectors for signs of water intrusion, corrosion, pushed out or bent terminals and correct pin tension.
    - Perform the BODY VERIFICATION TEST. Refer to **STANDARD PROCEDURE** .
2. **CHECK THE OPERATION OF THE SUBWOOFER SPEAKER**
    1. Turn the ignition off.
    2. Disconnect the Subwoofer Speaker harness connector.
    3. Turn the ignition on.
    4. Turn the radio on and turn the volume to 25.
    5. Adjust the speakers to the rear and center.
    6. With a voltmeter set to read in A/C voltage, measure the voltage of the Subwoofer Speaker circuits in the Subwoofer Speaker harness connector.

    Is the voltage present greater than 1 volt?

    Yes

- Replace the Subwoofer Speaker in accordance with the Service Information.
- Perform the BODY VERIFICATION TEST. Refer to **STANDARD PROCEDURE** .

No

- Go To 3

3. **CHECK THE (X300) AMPLIFIED SUBWOOFER 1 (+) CIRCUIT FOR AN OPEN**
   1. Turn the ignition off.
   2. Disconnect the Amplifier C2 harness connector.
   3. Measure the resistance of the (X300) Amplified Subwoofer 1 (+) circuit between the Amplifier C2 harness connector and the Subwoofer Speaker harness connector.

      Is the resistance below 2.0 Ohms?

      Yes

      - Go To 4

      No

      - Repair the (X300) Amplified Subwoofer 1 (+) circuit for an open.
      - Perform the BODY VERIFICATION TEST. Refer to **STANDARD PROCEDURE** .
4. **CHECK THE (X390) AMPLIFIED SUBWOOFER 1 (-) CIRCUIT FOR AN OPEN**
   1. Measure the resistance of the (X390) Amplified Subwoofer 1 (-) circuit between the Amplifier C2 harness connector and the Subwoofer Speaker harness connector.

      Is the resistance below 2.0 Ohms?

      Yes

      - Replace the Amplifier in accordance with the Service Information.
      - Perform the BODY VERIFICATION TEST. Refer to **STANDARD PROCEDURE** .

      No

      - Repair the (X390) Amplified Subwoofer 1 (-) circuit for an open.
      - Perform the BODY VERIFICATION TEST. Refer to **STANDARD PROCEDURE** .

B147E-92-CHANNEL 7 AUDIO SPEAKER OUTPUT - PERFORMANCE OR INCORRECT OPERATION

For a complete wiring diagram, **refer to appropriate SYSTEM WIRING DIAGRAMS article** .

WHEN MONITORED

With the ignition on.

SET CONDITION

This Diagnostic Trouble Code (DTC) sets if a Direct Current (DC) offset occurs on the output channel, the amplifier shall set a DTC after a maturity rate of four to six seconds.

POSSIBLE CAUSES

Possible Causes
AMPLIFIER

DIAGNOSTIC TEST

CHECK FOR AN INTERMITTENT CONDITION

1. Turn the ignition on.
2. Using the scan tool, record and erase the Amplifier DTCs.
3. Cycle the ignition switch from on to off, wait five seconds and then back to on.
4. Turn the Radio on and set the volume to 20.
5. Adjust the speakers to the front and center.
6. Using the scan tool, read the active Amplifier DTCs.

   Does the scan tool display this DTC as active?

   Yes

   - Replace the Amplifier in accordance with the Service Information.
   - Perform the BODY VERIFICATION TEST. Refer to **STANDARD PROCEDURE** .

   No

   - Test complete, the condition or conditions that originally set this DTC are not present at this time. Using the wiring diagrams as a guide, check all related splices and connectors for signs of water intrusion, corrosion, pushed out or bent terminals and correct pin tension.
   - Perform the BODY VERIFICATION TEST. Refer to **STANDARD PROCEDURE** .

B1482-00-CHANNEL 7 AUDIO SPEAKER OUTPUT CIRCUIT SHORTED TOGETHER

For a complete wiring diagram, **refer to appropriate SYSTEM WIRING DIAGRAMS article** .

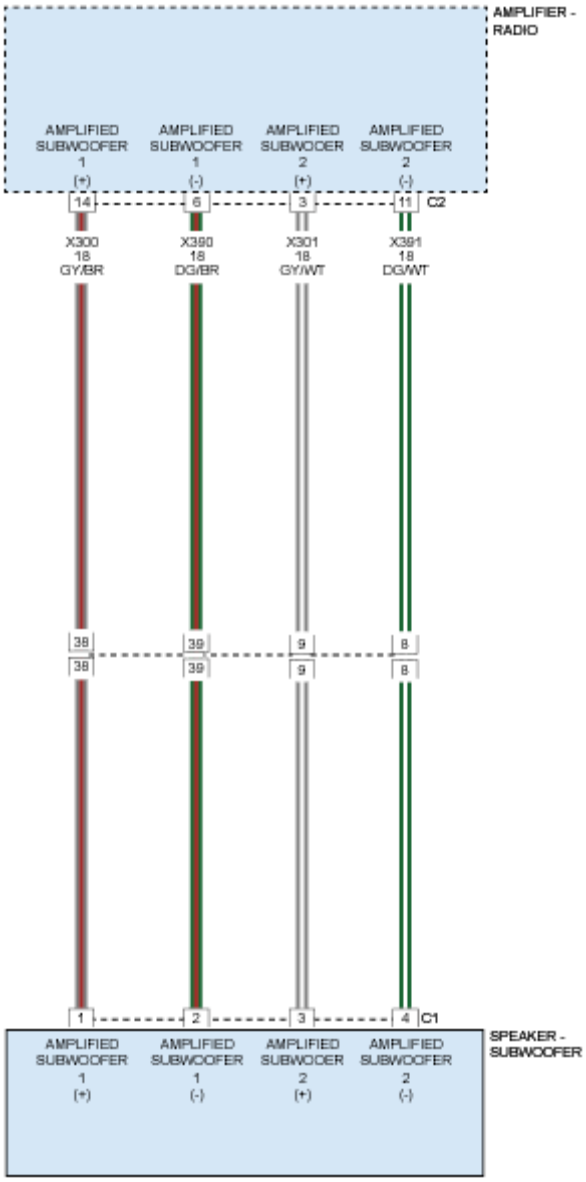

Fig. 28: Identifying Subwoofer Speaker Circuit Diagram
Courtesy of CHRYSLER GROUP, LLC

WHEN MONITORED

With the ignition on. Radio volume at 25 or higher.

SET CONDITION

The Amplifier detects that the output circuits are shorted together.

POSSIBLE CAUSES

Possible Causes
AMPLIFIED SUBWOOFER 1 (+) CIRCUIT SHORTED TO THE AMPLIFIED SUBWOOFER 1 (-) CIRCUIT AMPLIFIED SUBWOOFER SPEAKER AMPLIFIER

DIAGNOSTIC TEST

1. **CHECK FOR AN INTERMITTENT CONDITION**
    1. Turn the ignition on.
    2. With the scan tool, record and erase the Amplifier DTCs.
    3. Cycle the ignition switch from on to off, wait five seconds and then back to on.
    4. Turn the Radio on and set the volume to 20.
    5. Adjust the speakers to the rear and center.
    6. With the scan tool, read the active Amplifier DTCs.

    Does the scan tool display active: B1482-00-CHANNEL 7 AUDIO SPEAKER OUTPUT CIRCUIT SHORTED TOGETHER?

    Yes

    - Go To 2

    No

    - Test complete, the condition or conditions that originally set this DTC are not present at this time. Using the wiring diagrams as a guide, check all related splices and connectors for signs of water intrusion, corrosion, pushed out or bent terminals and correct pin tension.
    - Perform the BODY VERIFICATION TEST. Refer to **STANDARD PROCEDURE** .
2. **CHECK THE OPERATION OF THE SUBWOOFER SPEAKER**
    1. Turn the ignition off.
    2. Disconnect the Subwoofer Speaker.
    3. Measure the resistance of the speaker between the two terminals.

    Is the resistance of the speaker less than 1 Ohm?

    Yes

    - Replace the Subwoofer Speaker in accordance with the Service Information.
    - Perform the BODY VERIFICATION TEST. Refer to **STANDARD PROCEDURE** .

    No

- Go To 3

3. **CHECK THE (X300) AMPLIFIED SUBWOOFER 1 (+) CIRCUIT, AND THE (X390) AMPLIFIED SUBWOOFER 1 (-) CIRCUITS FOR A SHORT TOGETHER**
   1. Turn the ignition off.
   2. Disconnect the Amplifier C2 harness connector.
   3. Measure the resistance between the (X300) Amplified Subwoofer 1 (+) circuit, and the (X390) Amplified Subwoofer 1 (-) circuit.

      Is the resistance below 10K Ohms?

      Yes

      - Repair the (X300) Amplified Subwoofer 1 (+) circuit, and the (X390) Amplified Subwoofer 1 (-) circuit for a short together.
      - Perform the BODY VERIFICATION TEST. Refer to **STANDARD PROCEDURE** .

      No

      - Replace the Amplifier in accordance with the Service Information.
      - Perform the BODY VERIFICATION TEST. Refer to **STANDARD PROCEDURE** .

B1483-11-CHANNEL 8 AUDIO SPEAKER OUTPUT - CIRCUIT SHORT TO GROUND

For a complete wiring diagram, **refer to appropriate SYSTEM WIRING DIAGRAMS article** .

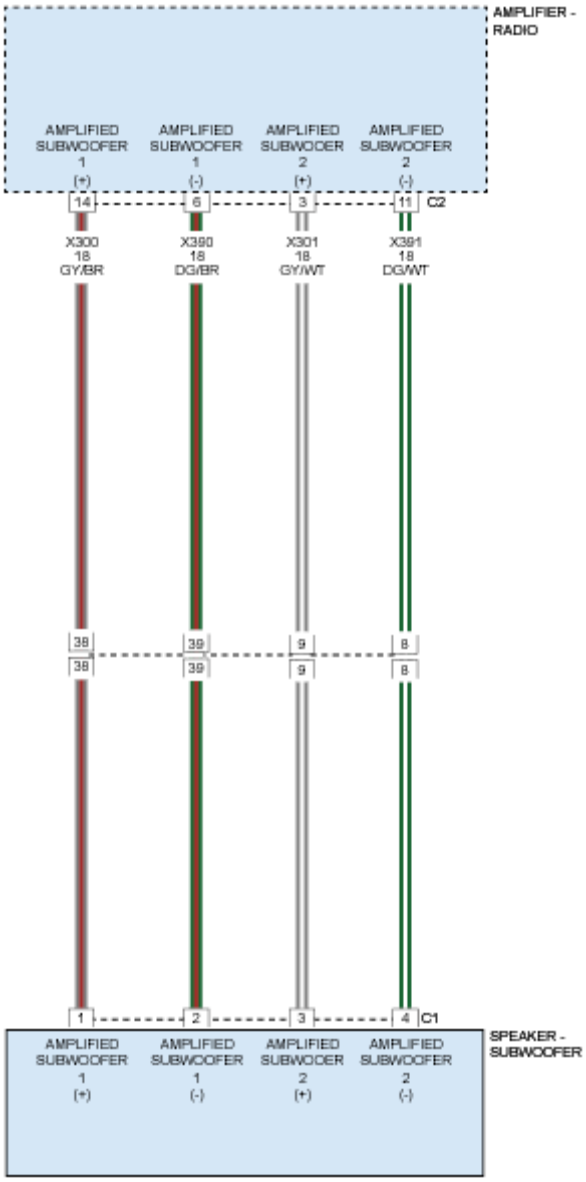

Fig. 29: Identifying Subwoofer Speaker Circuit Diagram
Courtesy of CHRYSLER GROUP, LLC

WHEN MONITORED

With the ignition on.

SET CONDITION

The Amplifier detects a shorted to ground condition on the speaker output circuit.

POSSIBLE CAUSES

Possible Causes
AMPLIFIED SUBWOOFER 2 (+) CIRCUIT SHORTED TO GROUND
AMPLIFIED SUBWOOFER 2 (-) CIRCUIT SHORTED TO GROUND
AMPLIFIED SUBWOOFER SPEAKER
AMPLIFIER

DIAGNOSTIC TEST

1. **CHECK FOR AN INTERMITTENT CONDITION**
    1. Turn the ignition on.
    2. With the scan tool, record and erase the Amplifier DTCs.
    3. Cycle the ignition switch from on to off, wait five seconds and then back to on.
    4. Turn the Radio on and set the volume to 20.
    5. Adjust the speakers to the rear and center.
    6. With the scan tool, read the active Amplifier DTCs.

    Does the scan tool display active: B1483-11-CHANNEL 8 AUDIO SPEAKER OUTPUT - CIRCUIT SHORT TO GROUND?

    Yes

    - Go To 2

    No

    - Test complete, the condition or conditions that originally set this DTC are not present at this time. Using the wiring diagrams as a guide, check all related splices and connectors for signs of water intrusion, corrosion, pushed out or bent terminals and correct pin tension.
    - Perform the BODY VERIFICATION TEST. Refer to **STANDARD PROCEDURE** .
2. **CHECK THE SUBWOOFER SPEAKER**
    1. With the scan tool, erase the DTCs.
    2. Turn the ignition off.
    3. Disconnect the Subwoofer Speaker harness connector.
    4. Turn the ignition on.
    5. Turn the radio on and set the volume to 25.
    6. With the scan tool, read the active Amplifier DTCs.

    Does the scan tool display active: B1483-11-CHANNEL 8 AUDIO SPEAKER OUTPUT - CIRCUIT SHORT TO GROUND?

    Yes

- Go To 3

No

- Replace the Subwoofer Speaker.
- Perform the BODY VERIFICATION TEST. Refer to **STANDARD PROCEDURE** .

3. **CHECK THE (X301) AMPLIFIED SUBWOOFER 2 (+) CIRCUIT FOR A SHORT TO GROUND**
   1. Disconnect the Amplifier C2 harness connector.
   2. Disconnect the Subwoofer Speaker harness connector.
   3. Measure the resistance between ground and the (X301) Amplified Subwoofer 2 (+) circuit.

   Is the resistance below 10K Ohms?

   Yes

   - Repair the (X301) Amplified Subwoofer 2 (+) circuit for a short to ground.
   - Perform the BODY VERIFICATION TEST. Refer to **STANDARD PROCEDURE** .

   No

   - Go To 4
4. **CHECK THE (X391) AMPLIFIED SUBWOOFER 2 (-) CIRCUIT FOR A SHORT TO GROUND**
   1. Measure the resistance between ground and the (X391) Amplified Subwoofer 2 (-) circuit.

   Is the resistance below 10K Ohms?

   Yes

   - Repair the (X391) Amplified Subwoofer 2 (-) circuit for a short to ground.
   - Perform the BODY VERIFICATION TEST. Refer to **STANDARD PROCEDURE** .

   No

   - Replace the Amplifier in accordance with the Service Information.
   - Perform the BODY VERIFICATION TEST. Refer to **STANDARD PROCEDURE** .

B1483-12-CHANNEL 8 AUDIO SPEAKER OUTPUT - CIRCUIT SHORT TO BATTERY

For a complete wiring diagram, **refer to appropriate SYSTEM WIRING DIAGRAMS article** .

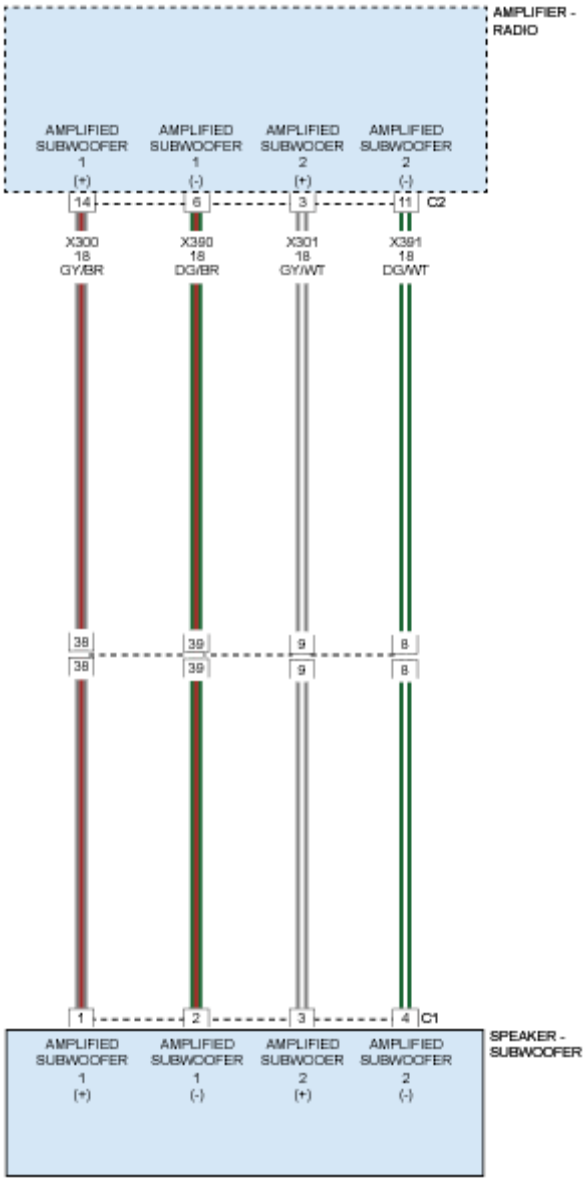

Fig. 30: Identifying Subwoofer Speaker Circuit Diagram
Courtesy of CHRYSLER GROUP, LLC

WHEN MONITORED

With the ignition on.

SET CONDITION

The Amplifier detects a short to battery condition on the output circuit.

POSSIBLE CAUSES

Possible Causes
AMPLIFIED SUBWOOFER 2 (+) CIRCUIT SHORTED TO VOLTAGE AMPLIFIED SUBWOOFER 2 (-) CIRCUIT SHORTED TO VOLTAGE AMPLIFIER

DIAGNOSTIC TEST

1. **CHECK FOR AN INTERMITTENT CONDITION**
    1. Turn the ignition on.
    2. With the scan tool, record and erase the Amplifier DTCs.
    3. Cycle the ignition switch from on to off, wait five seconds and then back to on.
    4. Turn the Radio on and set the volume to 20.
    5. Adjust the speakers to the rear and center.
    6. With the scan tool, read the active Amplifier DTCs.

    Does the scan tool display active: B1483-12-CHANNEL 8 AUDIO SPEAKER OUTPUT - CIRCUIT SHORT TO BATTERY?

    Yes

    - Go To 2

    No

    - Test complete, the condition or conditions that originally set this DTC are not present at this time. Using the wiring diagrams as a guide, check all related splices and connectors for signs of water intrusion, corrosion, pushed out or bent terminals and correct pin tension.
    - Perform the BODY VERIFICATION TEST. Refer to **STANDARD PROCEDURE** .
2. **CHECK FOR VOLTAGE ON THE (X301) AMPLIFIED SUBWOOFER 2 (+) CIRCUIT**
    1. Turn the ignition off.
    2. Disconnect the Amplifier C2 harness connector.
    3. Disconnect the Subwoofer Speaker harness connector.
    4. Turn the ignition on.
    5. Measure the voltage between the (X301) Subwoofer Speaker 2 (+) circuit and ground.

    Is there any voltage present?

    Yes

    - Repair the (X301) Subwoofer Speaker 2 (+) circuit for a short to voltage.
    - Perform the BODY VERIFICATION TEST. Refer to **STANDARD PROCEDURE** .

No

- Go To 3

3. **CHECK FOR VOLTAGE ON THE (X391) AMPLIFIED SUBWOOFER 2 (-) CIRCUIT**
   1. Measure the voltage between the (X391) Subwoofer Speaker 2 (-) circuit and ground.

      Is there any voltage present?

      Yes

      - Repair the (X391) Subwoofer Speaker 2 (-) circuit for a short to voltage.
      - Perform the BODY VERIFICATION TEST. Refer to **STANDARD PROCEDURE** .

      No

      - Replace the Amplifier in accordance with the Service Information.
      - Perform the BODY VERIFICATION TEST. Refer to **STANDARD PROCEDURE** .

B1483-13-CHANNEL 8 AUDIO SPEAKER OUTPUT - CIRCUIT OPEN

For a complete wiring diagram, **refer to appropriate SYSTEM WIRING DIAGRAMS article** .

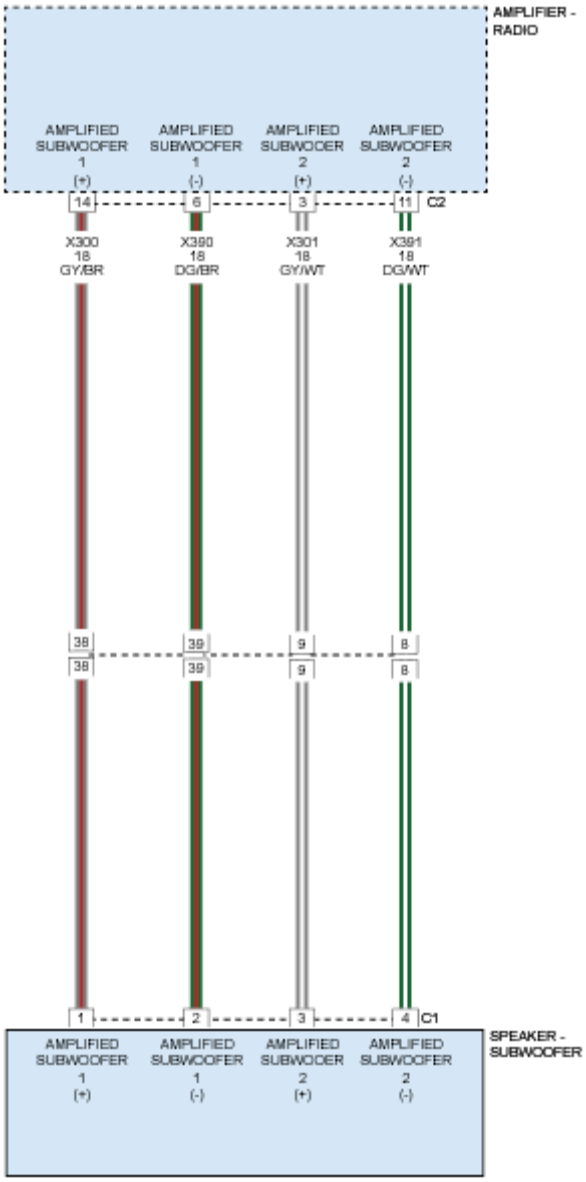

Fig. 31: Identifying Subwoofer Speaker Circuit Diagram
Courtesy of CHRYSLER GROUP, LLC

WHEN MONITORED

Amplifier Bus wake-up. Amplifier reset with scan tool.

SET CONDITION

The Amplifier detects an open condition on the speaker output circuit.

POSSIBLE CAUSES

Possible Causes
AMPLIFIED SUBWOOFER 2 (+) CIRCUIT OPEN
AMPLIFIED SUBWOOFER 2 (-) CIRCUIT OPEN
AMPLIFIED SUBWOOFER SPEAKER
AMPLIFIER

DIAGNOSTIC TEST

1. **CHECK FOR AN INTERMITTENT CONDITION**
    1. Turn the ignition on.
    2. With the scan tool, record and erase the Amplifier DTCs.
    3. Cycle the ignition switch from on to off, wait five seconds and then back to on.
    4. Turn the Radio on and set the volume to 20.
    5. Adjust the speakers to the rear and center.
    6. With the scan tool, read the active Amplifier DTCs.

    Does the scan tool display active: B1483-13-CHANNEL 8 AUDIO SPEAKER OUTPUT - CIRCUIT OPEN?

    Yes

    - Go To 2

    No

    - Test complete, the condition or conditions that originally set this DTC are not present at this time. Using the wiring diagrams as a guide, check all related splices and connectors for signs of water intrusion, corrosion, pushed out or bent terminals and correct pin tension.
    - Perform the BODY VERIFICATION TEST. Refer to **STANDARD PROCEDURE** .
2. **CHECK THE OPERATION OF THE SUBWOOFER SPEAKER**
    1. Turn the ignition off.
    2. Disconnect the Subwoofer Speaker harness connector.
    3. Turn the ignition on.
    4. Turn the radio on and turn the volume to 25.
    5. Adjust the speakers to the rear and center.
    6. With a voltmeter set to read in A/C voltage, measure the voltage of the Subwoofer Speaker circuits in the Subwoofer Speaker harness connector.

    Is the voltage present greater than 1 volt?

    Yes

- Replace the Subwoofer Speaker in accordance with the Service Information.
- Perform the BODY VERIFICATION TEST. Refer to **STANDARD PROCEDURE** .

No

- Go To 3

3. **CHECK THE (X301) AMPLIFIED SUBWOOFER 2 (+) CIRCUIT FOR AN OPEN**
   1. Turn the ignition off.
   2. Disconnect the Amplifier C2 harness connector.
   3. Measure the resistance of the (X301) Amplified Subwoofer 2 (+) circuit between the Amplifier C1 harness connector and the Subwoofer Speaker harness connector.

      Is the resistance below 2.0 Ohms?

      Yes

      - Go To 4

      No

      - Repair the (X301) Amplified Subwoofer 2 (+) circuit for an open.
      - Perform the BODY VERIFICATION TEST. Refer to **STANDARD PROCEDURE** .
4. **CHECK THE (X391) AMPLIFIED SUBWOOFER 2 (-) CIRCUIT FOR AN OPEN**
   1. Measure the resistance of the (X391) Amplified Subwoofer 2 (-) circuit between the Amplifier C1 harness connector and the Subwoofer Speaker harness connector.

      Is the resistance below 2.0 Ohms?

      Yes

      - Replace the Amplifier in accordance with the Service Information.
      - Perform the BODY VERIFICATION TEST. Refer to **STANDARD PROCEDURE** .

      No

      - Repair the (X391) Amplified Subwoofer 2 (-) circuit for an open.
      - Perform the BODY VERIFICATION TEST. Refer to **STANDARD PROCEDURE** .

B1483-92-CHANNEL 8 AUDIO SPEAKER OUTPUT - PERFORMANCE OR INCORRECT OPERATION

For a complete wiring diagram, **refer to appropriate SYSTEM WIRING DIAGRAMS article** .

WHEN MONITORED

With the ignition on.

SET CONDITION

This Diagnostic Trouble Code (DTC) sets if a Direct Current (DC) offset occurs on the output channel, the amplifier shall set a DTC after a maturity rate of four to six seconds.

POSSIBLE CAUSES

Possible Causes
AMPLIFIER

DIAGNOSTIC TEST

CHECK FOR AN INTERMITTENT CONDITION

1. Turn the ignition on.
2. Using the scan tool, record and erase the Amplifier DTCs.
3. Cycle the ignition switch from on to off, wait five seconds and then back to on.
4. Turn the Radio on and set the volume to 20.
5. Adjust the speakers to the front and center.
6. Using the scan tool, read the active Amplifier DTCs.

   Does the scan tool display this DTC as active?

   Yes

   - Replace the Amplifier in accordance with the Service Information.
   - Perform the BODY VERIFICATION TEST. Refer to **STANDARD PROCEDURE** .

   No

   - Test complete, the condition or conditions that originally set this DTC are not present at this time. Using the wiring diagrams as a guide, check all related splices and connectors for signs of water intrusion, corrosion, pushed out or bent terminals and correct pin tension.
   - Perform the BODY VERIFICATION TEST. Refer to **STANDARD PROCEDURE** .

B1487-00-CHANNEL 8 AUDIO SPEAKER OUTPUT - CIRCUIT SHORTED TOGETHER

For a complete wiring diagram, **refer to appropriate SYSTEM WIRING DIAGRAMS article** .

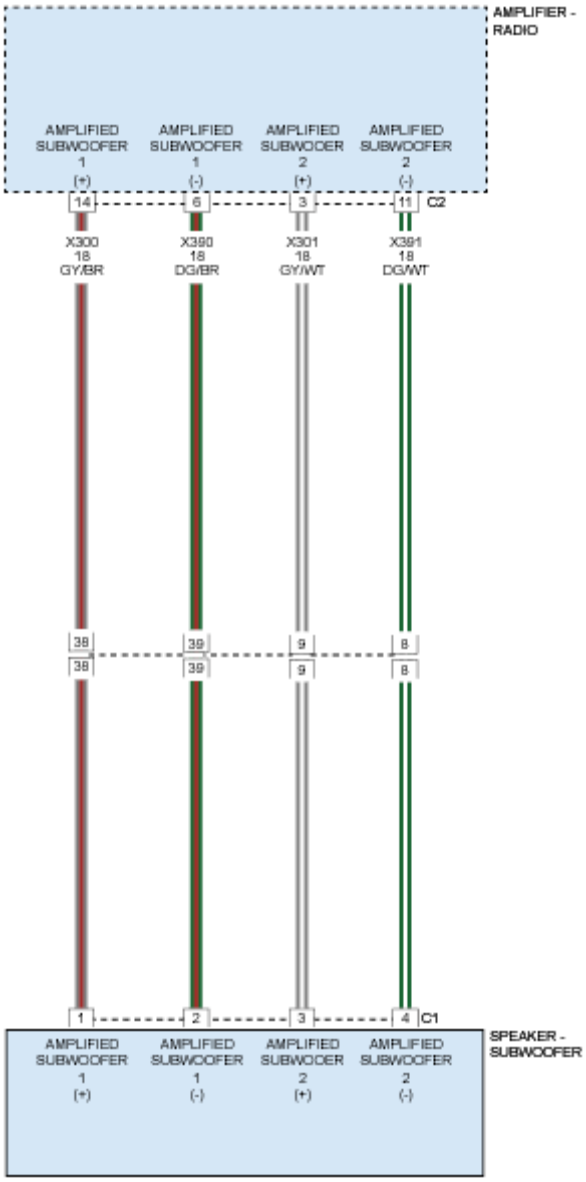

Fig. 32: Identifying Subwoofer Speaker Circuit Diagram
Courtesy of CHRYSLER GROUP, LLC

WHEN MONITORED

With the ignition on. Radio volume at 25 or higher.

SET CONDITION

The Amplifier detects that the output circuits are shorted together.

POSSIBLE CAUSES

Possible Causes
AMPLIFIED SUBWOOFER 2 (+) CIRCUIT SHORTED TO THE AMPLIFIED SUBWOOFER 2 (-) CIRCUIT AMPLIFIED SUBWOOFER SPEAKER AMPLIFIER

DIAGNOSTIC TEST

1. **CHECK FOR AN INTERMITTENT CONDITION**
    1. Turn the ignition on.
    2. With the scan tool, record and erase the Amplifier DTCs.
    3. Cycle the ignition switch from on to off, wait five seconds and then back to on.
    4. Turn the Radio on and set the volume to 20.
    5. Adjust the speakers to the rear and center.
    6. With the scan tool, read the active Amplifier DTCs.

    Does the scan tool display active: B1487-00-CHANNEL 8 AUDIO SPEAKER OUTPUT - CIRCUIT SHORTED TOGETHER?

    Yes

    - Go To 2

    No

    - Test complete, the condition or conditions that originally set this DTC are not present at this time. Using the wiring diagrams as a guide, check all related splices and connectors for signs of water intrusion, corrosion, pushed out or bent terminals and correct pin tension.
    - Perform the BODY VERIFICATION TEST. Refer to **STANDARD PROCEDURE** .
2. **CHECK THE OPERATION OF THE AMPLIFIED SUBWOOFER SPEAKER**
    1. Turn the ignition off.
    2. Disconnect the Subwoofer Speaker.
    3. Measure the resistance of the speaker between the two terminals.

    Is the resistance of the speaker less than 1 Ohm?

    Yes

    - Replace the Subwoofer Speaker in accordance with the Service Information.
    - Perform the BODY VERIFICATION TEST. Refer to **STANDARD PROCEDURE** .

    No

- Go To 3

3. **CHECK THE (X301) AMPLIFIED SUBWOOFER 2 (+) CIRCUIT, AND THE (X391) AMPLIFIED SUBWOOFER 2 (-) CIRCUITS FOR A SHORT TOGETHER**
   1. Turn the ignition off.
   2. Disconnect the Amplifier C2 harness connector.
   3. Measure the resistance between the (X301) Amplified Subwoofer 2 (+) circuit, and the (X391) Amplified Subwoofer 2 (-) circuit.

      Is the resistance below 10K Ohms?

      Yes

      - Repair the (X301) Amplified Subwoofer 2 (+) circuit, and the (X391) Amplified Subwoofer 2(-) circuit for a short together.
      - Perform the BODY VERIFICATION TEST. Refer to **STANDARD PROCEDURE** .

      No

      - Replace the Amplifier in accordance with the Service Information.
      - Perform the BODY VERIFICATION TEST. Refer to **STANDARD PROCEDURE** .

B1488-00-CABIN EQ MISMATCH PERFORMANCE

For a complete wiring diagram, **refer to appropriate SYSTEM WIRING DIAGRAMS article** .

WHEN MONITORED

With the ignition on.

SET CONDITION

If the Cabin Equalization Curve number message from the Body Control Module (BCM) is not the same as the Cabin Equalization Curve number stored in the Amplifier for 10 consecutive cycles, then the Amplifier will set this DTC.

POSSIBLE CAUSES

Possible Causes
NO COMMUNICATION WITH BODY CONTROL MODULE (BCM)
ACTIVE (BCM) DTCs
BODY CONTROL MODULE (BCM)
AMPLIFIER

DIAGNOSTIC TEST

1. **CHECK FOR AN INTERMITTENT CONDITION**
    1. Turn the ignition on.
    2. Turn the radio on.
    3. With the scan tool, erase Amplifier DTCs.
    4. With the scan tool, reset the amplifier.
    5. With the scan tool, read Amplifier DTCs.

    Does the scan tool display active: B1488-00-CABIN EQ MISMATCH PERFORMANCE?

    Yes

    - Go To 2

    No

    - Test complete, the condition or conditions that originally set this DTC are not present at this time. Using the wiring diagrams as a guide, check all related splices and connectors for signs of water intrusion, corrosion, pushed out or bent terminals and correct pin tension.
    - Perform the BODY VERIFICATION TEST. Refer to **STANDARD PROCEDURE** .
2. **CHECK AMPLIFIER BUSSED INPUTS/SENSORS**
    1. With the scan tool in Amplifier Data Display, read the Cabin Equalization Curve number in the Bussed Inputs and Sensors Sections.

    NOTE: The Cabin EQ Curve settings in the Inputs/Sensors section should match one another. The Cabin EQ# in the Inputs section is the information that is received from the BCM. The Cabin EQ in the Sensors section is the information that is Stored in the Amplifier's memory.

    Do the Cabin EQ settings match one another?

    Yes

    - Replace the Amplifier in accordance to the service information.
    - Perform the BODY VERIFICATION TEST. Refer to **STANDARD PROCEDURE** .

    No

    - Go To 3
3. **VERIFY COMMUNICATION WITH BCM**
    1. With the scan tool, read the active modules on the BUS.

    Does the scan tool show the BCM active on the BUS?

Yes

- Go To 4

No

- Refer to **DIAGNOSIS AND TESTING** and perform the NO RESPONSE FROM BCM (BODY CONTROL MODULE) diagnostic procedure.

4. **CHECK BCM FOR ACTIVE DTCs**
   1. With the scan tool, erase BCM DTCs.
   2. Turn the ignition off. Wait approximately 10 seconds.
   3. Turn the ignition on.
   4. With the scan tool, read BCM DTCs.

   Are any active DTCs present?

   Yes

   - Refer to the **BODY CONTROL MODULE (BCM) - DIAGNOSTIC CODE INDEX** article and perform the appropriate diagnostic procedure.

   No

   - Replace the BCM (Body Control Module) in accordance with the Service Information.
   - Perform the BODY VERIFICATION TEST. Refer to **STANDARD PROCEDURE** .

B14B9-11-CHANNEL 9 AUDIO SPEAKER OUTPUT - CIRCUIT SHORT TO GROUND

For a complete wiring diagram, **refer to appropriate SYSTEM WIRING DIAGRAMS article** .

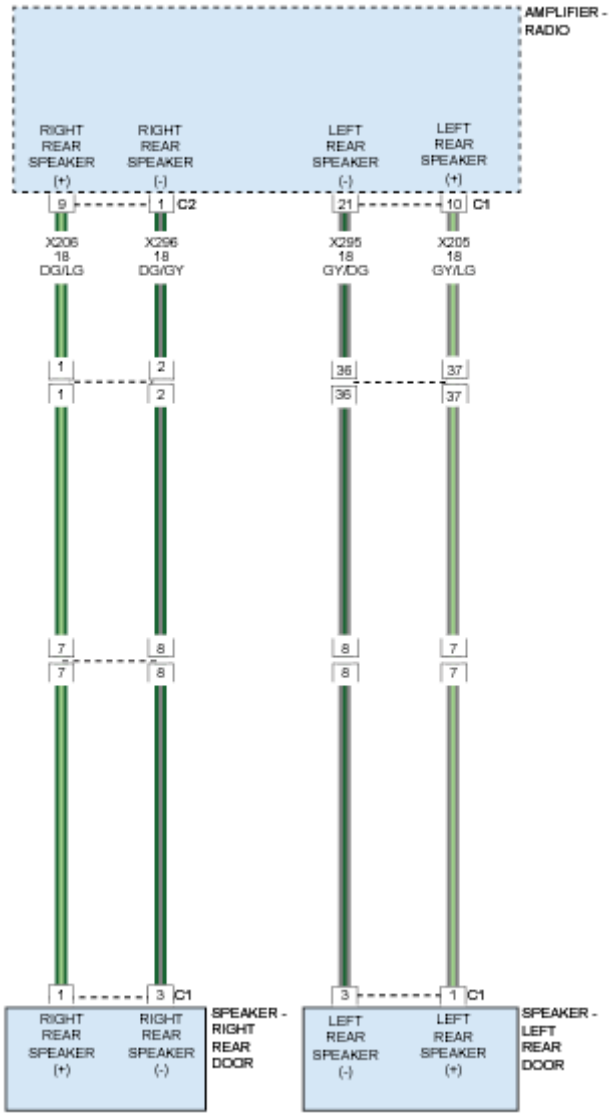

Fig. 33: Identifying Rear Door Speaker Circuit Diagram
Courtesy of CHRYSLER GROUP, LLC

WHEN MONITORED

When the ignition is cycled on.

SET CONDITION

The Amplifier detects a shorted to ground condition on the speaker output circuit when the ignition is cycled on.

POSSIBLE CAUSES

Possible Causes

AMPLIFIED LEFT REAR DOOR SPEAKER (+) CIRCUIT SHORTED TO GROUND
AMPLIFIED LEFT REAR DOOR SPEAKER (-) CIRCUIT SHORTED TO GROUND
LEFT REAR DOOR SPEAKER
AMPLIFIER

DIAGNOSTIC TEST

1. **CHECK FOR AN INTERMITTENT CONDITION**
    1. Turn the ignition on.
    2. With the scan tool, record and erase the Amplifier DTCs.
    3. Cycle the ignition switch from on to off, wait five seconds and then back to on.
    4. Turn the Radio on.
    5. Adjust the speakers to the front and center.
    6. With the scan tool, read the active Amplifier DTCs.

    Does the scan tool display active: B14B9-11-CHANNEL 9 AUDIO SPEAKER OUTPUT - CIRCUIT SHORT TO GROUND?

    Yes

    - Go To 2

    No

    - Test complete, the condition or conditions that originally set this DTC are not present at this time. Using the wiring diagrams as a guide, check all related splices and connectors for signs of water intrusion, corrosion, pushed out or bent terminals and correct pin tension.
    - Perform the BODY VERIFICATION TEST. Refer to **STANDARD PROCEDURE** .
2. **CHECK THE LEFT REAR DOOR SPEAKER**
    1. With the scan tool, erase the DTCs.
    2. Turn the ignition off.
    3. Disconnect the Amplified Left Rear Door Speaker harness connector.
    4. Turn the ignition on.
    5. Turn the Radio on.
    6. With the scan tool, read the active Amplifier DTCs.

    Does the scan tool display active: B14B9-11-CHANNEL 9 AUDIO SPEAKER OUTPUT - CIRCUIT SHORT TO GROUND?

    Yes

    - Go To 3

No

- Replace the Amplified Left Rear Door Speaker in accordance with the Service Information. Refer to **SPEAKER, REMOVAL** .
- Perform the BODY VERIFICATION TEST. Refer to **STANDARD PROCEDURE** .

3. **CHECK THE (X205) AMPLIFIED LEFT REAR DOOR SPEAKER (+) CIRCUIT FOR A SHORT TO GROUND**
   1. Turn the ignition off.
   2. Disconnect the Amplifier C1 harness connector.
   3. Measure the resistance between ground and the (X205) Amplified Left Rear Door Speaker (+) circuit.

      Is the resistance below 10K Ohms?

      Yes

      - Repair the (X205) Amplified Left Rear Door Speaker (+) circuit for a short to ground.
      - Perform the BODY VERIFICATION TEST. Refer to **STANDARD PROCEDURE** .

      No

      - Go To 4
4. **CHECK THE (X295) AMPLIFIED LEFT REAR DOOR SPEAKER (-) CIRCUIT FOR A SHORT TO GROUND**
   1. Measure the resistance between ground and the (X295) Amplified Left Rear Door Speaker (-) circuit.

      Is the resistance below 10K Ohms?

      Yes

      - Repair the (X295) Amplified Left Rear Door Speaker (-) circuit for a short to ground.
      - Perform the BODY VERIFICATION TEST. Refer to **STANDARD PROCEDURE** .

      No

      - Replace the Amplifier in accordance with the Service Information. Refer to **AMPLIFIER, REMOVAL** .
      - Perform the BODY VERIFICATION TEST. Refer to **STANDARD PROCEDURE** .

B14B9-12-CHANNEL 9 AUDIO SPEAKER OUTPUT - CIRCUIT SHORT TO BATTERY

For a complete wiring diagram, **refer to appropriate SYSTEM WIRING DIAGRAMS article** .

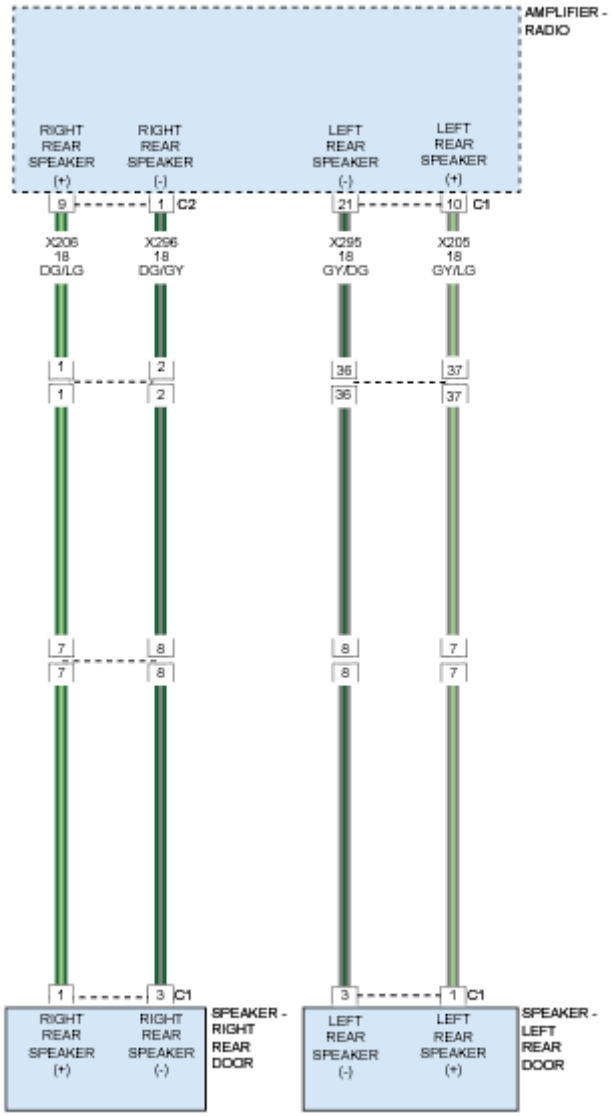

Fig. 34: Identifying Rear Door Speaker Circuit Diagram
Courtesy of CHRYSLER GROUP, LLC

WHEN MONITORED

When the ignition is cycled on.

SET CONDITION

The Amplifier detects a short to battery condition on the speaker output circuit when the ignition is cycled on.

POSSIBLE CAUSES

Possible Causes

AMPLIFIED LEFT REAR DOOR SPEAKER (+) CIRCUIT SHORTED TO VOLTAGE
AMPLIFIED LEFT REAR DOOR SPEAKER (-) CIRCUIT SHORTED TO VOLTAGE
AMPLIFIER

DIAGNOSTIC TEST

1. **CHECK FOR AN INTERMITTENT CONDITION**
    1. Turn the ignition on.
    2. With the scan tool, record and erase the Amplifier DTCs.
    3. Cycle the ignition switch from on to off, wait five seconds and then back to on.
    4. Turn the Radio on.
    5. Adjust the speakers to the front and center.
    6. With the scan tool, read the active Amplifier DTCs.

    Does the scan tool display active: B14B9-12-CHANNEL 9 AUDIO SPEAKER OUTPUT - CIRCUIT SHORT TO BATTERY?

    Yes

    - Go To 2

    No

    - Test complete, the condition or conditions that originally set this DTC are not present at this time. Using the wiring diagrams as a guide, check all related splices and connectors for signs of water intrusion, corrosion, pushed out or bent terminals and correct pin tension.
    - Perform the BODY VERIFICATION TEST. Refer to **STANDARD PROCEDURE** .
2. **CHECK FOR VOLTAGE ON THE (X205) LEFT REAR DOOR SPEAKER (+) CIRCUIT**
    1. Turn the ignition off.
    2. Disconnect the Amplifier C1 harness connector.
    3. Disconnect the Amplified Left Rear Door Speaker harness connector.
    4. Turn the ignition on.
    5. Measure the voltage between the (X205) Amplified Left Rear Door Speaker (+) circuit and ground.

    Is there any voltage present?

    Yes

    - Repair the (X205) Amplified Left Rear Door Speaker (+) circuit for a short to voltage.
    - Perform the BODY VERIFICATION TEST. Refer to **STANDARD PROCEDURE** .

    No

- Go To 3

3. **CHECK FOR VOLTAGE ON THE (X295) LEFT REAR DOOR SPEAKER (-) CIRCUIT**
   1. Measure the voltage between the (X295) Amplified Left Rear Door Speaker (-) circuit and ground.

      Is there any voltage present?

      Yes

      - Repair the (X295) Amplified Left Rear Door Speaker (-) circuit for a short to voltage.
      - Perform the BODY VERIFICATION TEST. Refer to **STANDARD PROCEDURE** .

      No

      - Replace the Amplifier in accordance with the Service Information. Refer to **AMPLIFIER, REMOVAL** .
      - Perform the BODY VERIFICATION TEST. Refer to **STANDARD PROCEDURE** .

B14B9-13-CHANNEL 9 AUDIO SPEAKER OUTPUT - CIRCUIT OPEN

For a complete wiring diagram, **refer to appropriate SYSTEM WIRING DIAGRAMS article** .

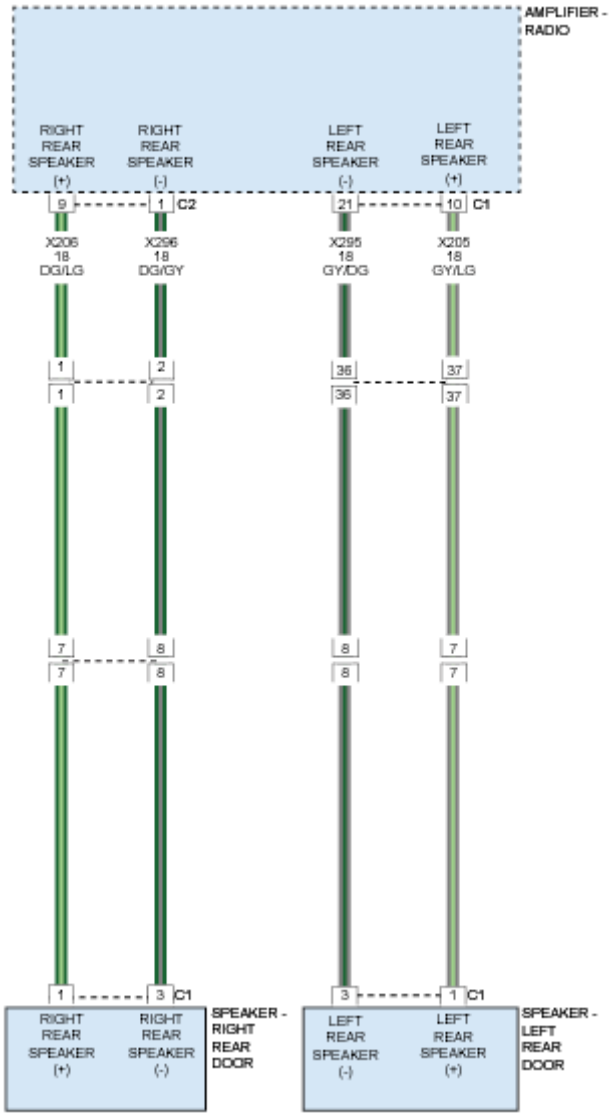

Fig. 35: Identifying Rear Door Speaker Circuit Diagram
Courtesy of CHRYSLER GROUP, LLC

WHEN MONITORED

Amplifier Bus wake-up. Amplifier reset with scan tool.

SET CONDITION

The Amplifier detects an open condition on the speaker output circuit.

POSSIBLE CAUSES

Possible Causes

AMPLIFIED LEFT REAR DOOR SPEAKER (+) CIRCUIT OPEN
AMPLIFIED LEFT REAR DOOR SPEAKER (-) CIRCUIT OPEN
LEFT REAR DOOR SPEAKER
AMPLIFIER

DIAGNOSTIC TEST

1. **CHECK FOR AN INTERMITTENT CONDITION**
   1. Turn the ignition on.
   2. With the scan tool, record and erase the Amplifier DTCs.
   3. Cycle the ignition switch from on to off, wait five seconds and then back to on.
   4. Turn the Radio on and set the volume to 25.
   5. Adjust the speakers to the front and center.
   6. With the scan tool, read the active Amplifier DTCs.

      Does the scan tool display active: B14B9-13-CHANNEL 9 AUDIO SPEAKER OUTPUT - CIRCUIT OPEN?

      Yes

      - Go To 2

      No

      - Test complete, the condition or conditions that originally set this DTC are not present at this time. Using the wiring diagrams as a guide, check all related splices and connectors for signs of water intrusion, corrosion, pushed out or bent terminals and correct pin tension.
      - Perform the BODY VERIFICATION TEST. Refer to **STANDARD PROCEDURE** .
2. **CHECK THE OPERATION OF THE AMPLIFIED LEFT REAR DOOR SPEAKER**
   1. Turn the ignition off.
   2. Disconnect the Amplified Left Rear Door Speaker harness connector.
   3. Turn the ignition on.
   4. Turn the radio on and set the volume to 25.
   5. Adjust the speakers to the front and center.
   6. With a voltmeter set to read in A/C voltage, measure the voltage of the Amplified Left Rear Door Speaker circuits in the Amplified Left Rear Door Speaker harness connector.

      Is the voltage present above 1.0 volt?

      Yes

      - Replace the Amplified Left Rear Door Speaker in accordance with the Service Information.

Refer to **SPEAKER, REMOVAL** .
- Perform the BODY VERIFICATION TEST. Refer to **STANDARD PROCEDURE** .

No

- Go To 3

3. **CHECK THE (X205) AMPLIFIED LEFT REAR DOOR SPEAKER (+) CIRCUIT FOR AN OPEN**
   1. Turn the ignition off.
   2. Disconnect the Amplifier C1 harness connector.
   3. Measure the resistance of the (X205) Amplified Left Rear Door Speaker (+) circuit between the Amplifier C1 harness connector and the Amplified Left Rear Door Speaker harness connector.

   Is the resistance below 2.5 Ohms?

   Yes

   - Go To 4

   No

   - Repair the (X205) Amplified Left Rear Door Speaker (+) circuit for an open.
   - Perform the BODY VERIFICATION TEST. Refer to **STANDARD PROCEDURE** .
4. **CHECK THE (X295) AMPLIFIED LEFT REAR DOOR SPEAKER (-) CIRCUIT FOR AN OPEN**
   1. Measure the resistance of the (X295) Amplified Left Rear Door Speaker (-) circuit between the Amplifier C1 harness connector and the Amplified Left Rear Door Speaker harness connector.

   Is the resistance below 2.5 Ohms?

   Yes

   - Replace the Amplifier in accordance with the Service Information. Refer to **AMPLIFIER, REMOVAL** .
   - Perform the BODY VERIFICATION TEST. Refer to **STANDARD PROCEDURE** .

   No

   - Repair the (X295) Amplified Left Rear Door Speaker (-) circuit for an open.
   - Perform the BODY VERIFICATION TEST. Refer to **STANDARD PROCEDURE** .

B14B9-2B-CHANNEL 9 AUDIO SPEAKER OUTPUT - CIRCUIT SHORTED TOGETHER

For a complete wiring diagram, **refer to appropriate SYSTEM WIRING DIAGRAMS article** .

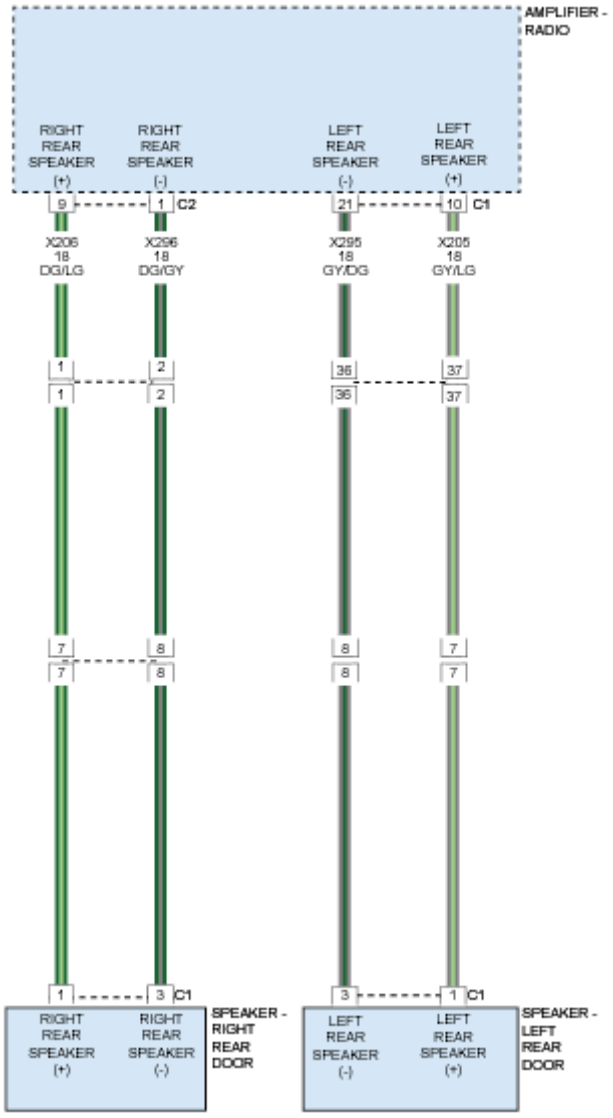

Fig. 36: Identifying Rear Door Speaker Circuit Diagram
Courtesy of CHRYSLER GROUP, LLC

WHEN MONITORED

When the ignition is cycled on.

SET CONDITION

The Amplifier detects that the output circuits are shorted together when the ignition is cycled on.

POSSIBLE CAUSES

Possible Causes

AMPLIFIED LEFT REAR DOOR SPEAKER (+) CIRCUIT SHORTED TO THE AMPLIFIED LEFT REAR DOOR SPEAKER (-) CIRCUIT
AMPLIFIED LEFT REAR DOOR SPEAKER
AMPLIFIER

DIAGNOSTIC TEST

1. **CHECK FOR AN INTERMITTENT CONDITION**
   1. Turn the ignition on.
   2. Using the scan tool, record and erase the Amplifier DTCs.
   3. Cycle the ignition switch from on to off, wait five seconds and then back to on.
   4. Turn the Radio on.
   5. Adjust the speakers to the front and center.
   6. Using the scan tool, read the active Amplifier DTCs.

   Does the scan tool display active: B14B9-2B-CHANNEL 9 AUDIO SPEAKER OUTPUT - CIRCUIT SHORTED TOGETHER?

   Yes

   - Go To 2

   No

   - Test complete, the condition or conditions that originally set this DTC are not present at this time. Using the wiring diagrams as a guide, check all related splices and connectors for signs of water intrusion, corrosion, pushed out or bent terminals and correct pin tension.
   - Perform the BODY VERIFICATION TEST. Refer to **STANDARD PROCEDURE** .
2. **CHECK THE OPERATION OF THE AMPLIFIED LEFT REAR DOOR SPEAKER**
   1. Turn the ignition off.
   2. Disconnect the Amplified Left Rear Door Speaker harness connector.
   3. Measure the resistance of the speaker between the two terminals.

   Is the resistance of the speaker below 1.0 Ohm?

   Yes

   - Replace the Amplified Left Rear Door Speaker in accordance with the Service Information. Refer to **SPEAKER, REMOVAL** .
   - Perform the BODY VERIFICATION TEST. Refer to **STANDARD PROCEDURE** .

   No

- Go To 3

3. **CHECK THE (X205) AMPLIFIED LEFT REAR DOOR SPEAKER (+) CIRCUIT, AND THE (X295) AMPLIFIED LEFT REAR DOOR SPEAKER (-) CIRCUITS FOR A SHORT TOGETHER**
   1. Disconnect the Amplifier C1 harness connector.
   2. Measure the resistance between the (X205) Amplified Left Rear Door Speaker (+) circuit and the (X295) Amplified Left Rear Door Speaker (-) circuit.

      Is the resistance below 10K Ohms?

      Yes

      - Repair the (X205) Amplified Left Rear Door Speaker (+) circuit for a short to the (X295) Amplified Left Rear Door Speaker (-) circuit.
      - Perform the BODY VERIFICATION TEST. Refer to **STANDARD PROCEDURE** .

      No

      - Replace the Amplifier in accordance with the Service Information. Refer to **AMPLIFIER, REMOVAL** .
      - Perform the BODY VERIFICATION TEST. Refer to **STANDARD PROCEDURE** .

B14B9-92-CHANNEL 9 AUDIO SPEAKER OUTPUT - PERFORMANCE OR INCORRECT OPERATION

For a complete wiring diagram, **refer to appropriate SYSTEM WIRING DIAGRAMS article** .

WHEN MONITORED

With the ignition on.

SET CONDITION

This Diagnostic Trouble Code (DTC) sets if a Direct Current (DC) offset occurs on the output channel, the amplifier shall set a DTC after a maturity rate of four to six seconds.

POSSIBLE CAUSES

Possible Causes
AMPLIFIER

DIAGNOSTIC TEST

CHECK FOR AN INTERMITTENT CONDITION

1. Turn the ignition on.

2. Using the scan tool, record and erase the Amplifier DTCs.
3. Cycle the ignition switch from on to off, wait five seconds and then back to on.
4. Turn the Radio on and set the volume to 20.
5. Adjust the speakers to the front and center.
6. Using the scan tool, read the active Amplifier DTCs.

   Does the scan tool display this DTC as active?

   Yes

   - Replace the Amplifier in accordance with the Service Information.
   - Perform the BODY VERIFICATION TEST. Refer to **STANDARD PROCEDURE** .

   No

   - Test complete, the condition or conditions that originally set this DTC are not present at this time. Using the wiring diagrams as a guide, check all related splices and connectors for signs of water intrusion, corrosion, pushed out or bent terminals and correct pin tension.
   - Perform the BODY VERIFICATION TEST. Refer to **STANDARD PROCEDURE** .

B14BE-11-CHANNEL 10 AUDIO SPEAKER OUTPUT - CIRCUIT SHORT TO GROUND

For a complete wiring diagram, **refer to appropriate SYSTEM WIRING DIAGRAMS article** .

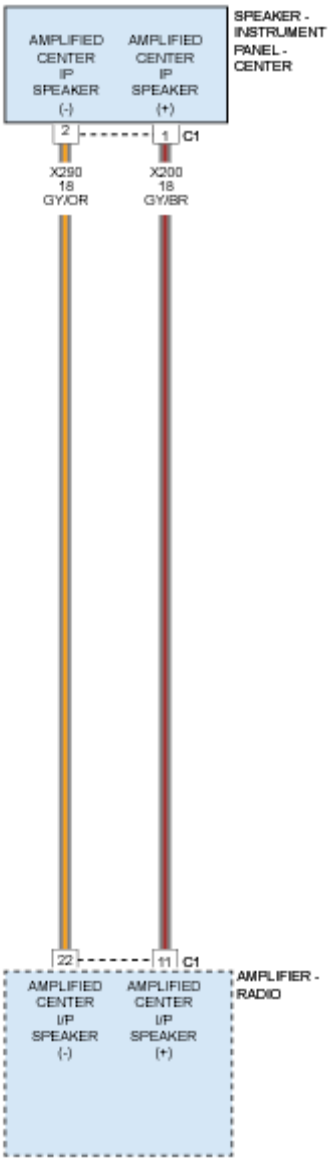

Fig. 37: Identifying Instrument Panel Center Speaker Circuit Diagram
Courtesy of CHRYSLER GROUP, LLC

WHEN MONITORED

When the ignition is cycled on.

SET CONDITION

The Amplifier detects a shorted to ground condition on the speaker output circuit when the ignition is cycled on.

POSSIBLE CAUSES

Possible Causes
CENTER I/P PANEL SPEAKER (+) CIRCUIT SHORTED TO GROUND
CENTER I/P PANEL SPEAKER (-) CIRCUIT SHORTED TO GROUND
CENTER I/P PANEL SPEAKER
AMPLIFIER

DIAGNOSTIC TEST

1. **CHECK FOR AN INTERMITTENT CONDITION**
    1. Turn the ignition on.
    2. Using the scan tool, record and erase the Amplifier DTCs.
    3. Cycle the ignition switch from on to off, wait five seconds and then back to on.
    4. Turn the Radio on.
    5. Adjust the speakers to the rear and center.
    6. Using the scan tool, read the active Amplifier DTCs.

    Does the scan tool display active: B143C-11-CHANNEL 10 AUDIO SPEAKER OUTPUT - CIRCUIT SHORT TO GROUND?

    Yes

    - Go To 2

    No

    - Test complete, the condition or conditions that originally set this DTC are not present at this time. Using the wiring diagrams as a guide, check all related splices and connectors for signs of water intrusion, corrosion, pushed out or bent terminals and correct pin tension.
    - Perform the BODY VERIFICATION TEST. Refer to **STANDARD PROCEDURE** .
2. **CHECK THE CENTER I/P PANEL SPEAKER**
    1. Using the scan tool, erase the DTCs.
    2. Turn the ignition off.
    3. Disconnect the Center I/P Speaker harness connector.
    4. Turn the ignition on.
    5. Turn the Radio on.
    6. Using the scan tool, read the active Amplifier DTCs.

    Does the scan tool display active: B143C-11-CHANNEL 10 AUDIO SPEAKER OUTPUT - CIRCUIT SHORT TO GROUND?

    Yes

- Go To 3

No

- Replace the Center I/P Speaker in accordance with the Service Information. Refer to **SPEAKER, REMOVAL** .
- Perform the BODY VERIFICATION TEST. Refer to **STANDARD PROCEDURE** .

3. **CHECK THE (X200) CENTER I/P PANEL SPEAKER (+) CIRCUIT FOR A SHORT TO GROUND**
   1. Disconnect the Amplifier C1 harness connector.
   2. Disconnect the Center I/P Speaker harness connector.
   3. Measure the resistance between ground and the (X200) Center I/P Speaker (+) circuit.

   Is the resistance below 10K Ohms?

   Yes

   - Repair the (X200) Center I/P Speaker (+) circuit for a short to ground.
   - Perform the BODY VERIFICATION TEST. Refer to **STANDARD PROCEDURE** .

   No

   - Go To 4
4. **CHECK THE (X290) CENTER I/P PANEL SPEAKER (-) CIRCUIT FOR A SHORT TO GROUND**
   1. Measure the resistance between ground and the (X290) Center I/P Speaker (-) circuit.

   Is the resistance below 10K Ohms?

   Yes

   - Repair the (X290) Center I/P Speaker (-) circuit for a short to ground.
   - Perform the BODY VERIFICATION TEST. Refer to **STANDARD PROCEDURE** .

   No

   - Replace the Amplifier in accordance with the Service Information. Refer to **AMPLIFIER, REMOVAL** .
   - Perform the BODY VERIFICATION TEST. Refer to **STANDARD PROCEDURE** .

B14BE-12-CHANNEL 10 AUDIO SPEAKER OUTPUT - CIRCUIT SHORT TO BATTERY

For a complete wiring diagram, **refer to appropriate SYSTEM WIRING DIAGRAMS article** .

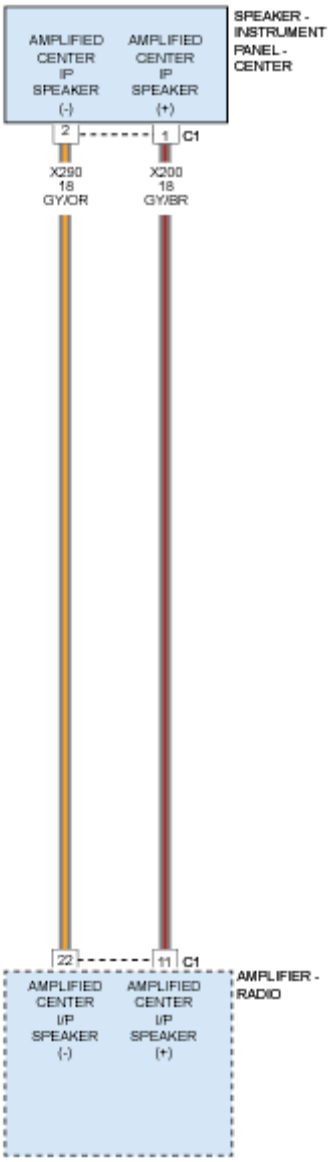

Fig. 38: Identifying Instrument Panel Center Speaker Circuit Diagram
Courtesy of CHRYSLER GROUP, LLC

WHEN MONITORED

When the ignition is cycled on.

SET CONDITION

The Amplifier detects a short to battery condition on the speaker output circuit when the ignition is cycled on.

POSSIBLE CAUSES

Possible Causes
CENTER I/P PANEL SPEAKER (+) CIRCUIT SHORTED TO VOLTAGE CENTER I/P PANEL SPEAKER (-) CIRCUIT SHORTED TO VOLTAGE AMPLIFIER

DIAGNOSTIC TEST

1. **CHECK FOR AN INTERMITTENT CONDITION**
    1. Turn the ignition on.
    2. With the scan tool, record and erase the Amplifier DTCs.
    3. Cycle the ignition switch from on to off, wait five seconds and then back to on.
    4. Turn the Radio on.
    5. Adjust the speakers to the rear and center.
    6. With the scan tool, read the active Amplifier DTCs.

    Does the scan tool display active: B143C-12-CHANNEL 10 AUDIO SPEAKER OUTPUT - CIRCUIT SHORT TO BATTERY?

    Yes

    - Go To 2

    No

    - Test complete, the condition or conditions that originally set this DTC are not present at this time. Using the wiring diagrams as a guide, check all related splices and connectors for signs of water intrusion, corrosion, pushed out or bent terminals and correct pin tension.
    - Perform the BODY VERIFICATION TEST. Refer to **STANDARD PROCEDURE** .
2. **CHECK FOR VOLTAGE ON THE (X200) CENTER I/P PANEL SPEAKER (+) CIRCUIT**
    1. Turn the ignition off.
    2. Disconnect the Amplifier C1 harness connector.
    3. Disconnect the Center I/P Speaker harness connector.
    4. Turn the ignition on.
    5. Measure the voltage between the (X200) Center I/P Speaker (+) circuit and ground.

    Is there any voltage present?

    Yes

    - Repair the (X200) Center I/P Speaker (+) circuit for a short to voltage.
    - Perform the BODY VERIFICATION TEST. Refer to **STANDARD PROCEDURE** .

No

- Go To 3

3. **CHECK FOR VOLTAGE ON THE (X290) CENTER I/P PANEL SPEAKER (-) CIRCUIT**
   1. Measure the voltage between the (X290) Center I/P Speaker (-) circuit and ground.

      Is there any voltage present?

      Yes

      - Repair the (X290) Center I/P Speaker (-) circuit for a short to voltage.
      - Perform the BODY VERIFICATION TEST. Refer to **STANDARD PROCEDURE** .

      No

      - Replace the Amplifier in accordance with the Service Information. Refer to **AMPLIFIER, REMOVAL** .
      - Perform the BODY VERIFICATION TEST. Refer to **STANDARD PROCEDURE** .

B14BE-13-CHANNEL 10 AUDIO SPEAKER OUTPUT - CIRCUIT OPEN

For a complete wiring diagram, **refer to appropriate SYSTEM WIRING DIAGRAMS article** .

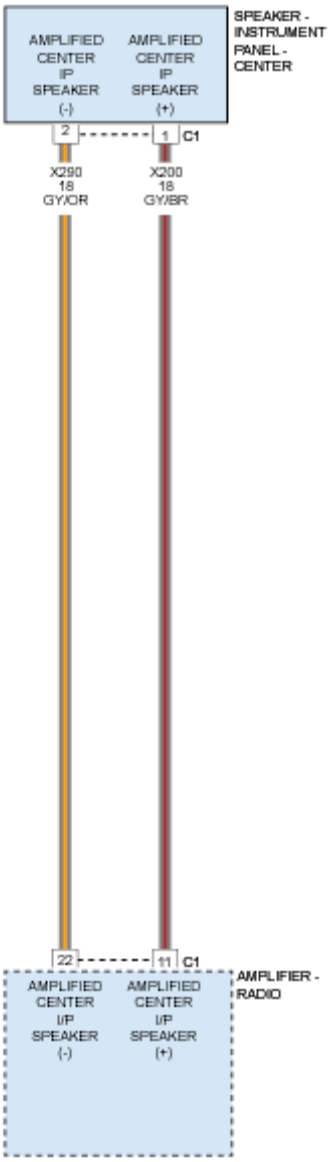

Fig. 39: Identifying Instrument Panel Center Speaker Circuit Diagram
Courtesy of CHRYSLER GROUP, LLC

WHEN MONITORED

When the ignition is cycled on.

SET CONDITION

The Amplifier detects an open condition on the speaker output circuit when the ignition is cycled on.

POSSIBLE CAUSES

Possible Causes
CENTER I/P PANEL SPEAKER (+) CIRCUIT OPEN
CENTER I/P PANEL SPEAKER (-) CIRCUIT OPEN
CENTER I/P PANEL SPEAKER
AMPLIFIER

DIAGNOSTIC TEST

1. **CHECK FOR AN INTERMITTENT CONDITION**
    1. Turn the ignition on.
    2. With the scan tool, record and erase the Amplifier DTCs.
    3. Cycle the ignition switch from on to off, wait five seconds and then back to on.
    4. Turn the Radio on.
    5. Adjust the speakers to the rear and center.
    6. With the scan tool, read the active Amplifier DTCs.

    Does the scan tool display active: B143C-13-CHANNEL 10 AUDIO SPEAKER OUTPUT - CIRCUIT OPEN?

    Yes

    - Go To 2

    No

    - Test complete, the condition or conditions that originally set this DTC are not present at this time. Using the wiring diagrams as a guide, check all related splices and connectors for signs of water intrusion, corrosion, pushed out or bent terminals and correct pin tension.
    - Perform the BODY VERIFICATION TEST. Refer to **DIAGNOSIS AND TESTING** .
2. **CHECK THE OPERATION OF THE CENTER I/P PANEL SPEAKER**
    1. Turn the ignition off.
    2. Disconnect the Center I/P Speaker harness connector.
    3. Turn the ignition on.
    4. Turn the Radio on and turn the volume to 25.
    5. Adjust the speakers to the rear and center.
    6. With a voltmeter set to read in A/C voltage, measure the voltage of the Center I/P Speaker circuits in the Center I/P Speaker harness connector.

    Is the voltage present above 1.0 volt?

    Yes

- Replace the Center I/P Speaker in accordance with the Service Information. Refer to **SPEAKER, REMOVAL** .
- Perform the BODY VERIFICATION TEST. Refer to **STANDARD PROCEDURE** .

No

- Go To 3

3. **CHECK THE (X200) CENTER I/P PANEL SPEAKER (+) CIRCUIT FOR AN OPEN**
   1. Turn the ignition off.
   2. Disconnect the Amplifier C1 harness connector.
   3. Measure the resistance of the (X200) Center I/P Speaker (+) circuit between the Amplifier C1 harness connector and the Center I/P Speaker harness connector.

      Is the resistance below 2.5 Ohms?

      Yes

      - Go To 4

      No

      - Repair the (X200) Center I/P Speaker (+) circuit for an open.
      - Perform the BODY VERIFICATION TEST. Refer to **STANDARD PROCEDURE** .
4. **CHECK THE (X290) CENTER I/P PANEL SPEAKER (-) CIRCUIT FOR AN OPEN**
   1. Measure the resistance of the (X290) Center I/P Speaker (-) circuit between the Amplifier C1 harness connector and the Center I/P Speaker harness connector.

      Is the resistance below 2.5 Ohms?

      Yes

      - Replace the Amplifier in accordance with the Service Information. Refer to **AMPLIFIER, REMOVAL** .
      - Perform the BODY VERIFICATION TEST. Refer to **STANDARD PROCEDURE** .

      No

      - Repair the (X290) Center I/P Speaker (-) circuit for an open.
      - Perform the BODY VERIFICATION TEST. Refer to **STANDARD PROCEDURE** .

B14BE-2B-CHANNEL 10 AUDIO SPEAKER OUTPUT - CIRCUIT SHORTED TOGETHER

For a complete wiring diagram, **refer to appropriate SYSTEM WIRING DIAGRAMS article** .

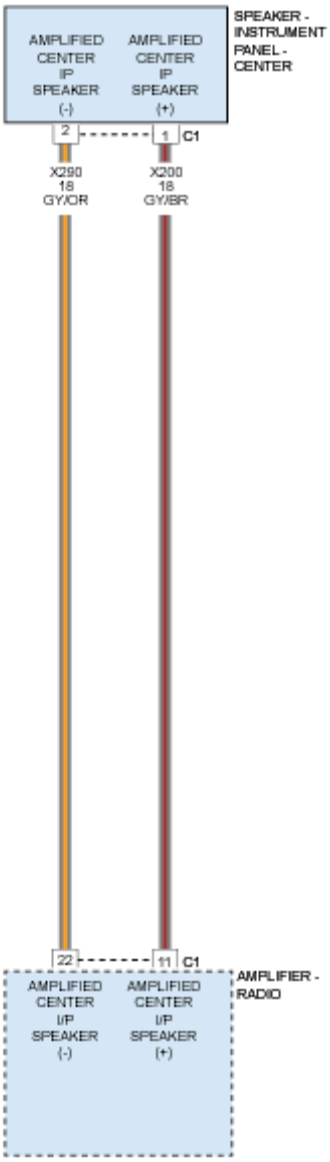

Fig. 40: Identifying Instrument Panel Center Speaker Circuit Diagram
Courtesy of CHRYSLER GROUP, LLC

WHEN MONITORED

When the ignition is cycled on.

SET CONDITION

The Amplifier detects that the output circuits are shorted together when the ignition is cycled on.

POSSIBLE CAUSES

Possible Causes
CENTER I/P PANEL SPEAKER (+) CIRCUIT SHORTED TO THE CENTER I/P PANEL SPEAKER (-) CIRCUIT CENTER I/P PANEL SPEAKER AMPLIFIER

DIAGNOSTIC TEST

1. **CHECK FOR AN INTERMITTENT CONDITION**
    1. Turn the ignition on.
    2. With the scan tool, record and erase the Amplifier DTCs.
    3. Cycle the ignition switch from on to off, wait five seconds and then back to on.
    4. Turn the Radio on.
    5. Adjust the speakers to the rear and center.
    6. With the scan tool, read the active Amplifier DTCs.

    Does the scan tool display active: B143C-2B-CHANNEL 10 AUDIO SPEAKER OUTPUT - CIRCUIT SHORTED TOGETHER?

    Yes

    - Go To 2

    No

    - Test complete, the condition or conditions that originally set this DTC are not present at this time. Using the wiring diagrams as a guide, check all related splices and connectors for signs of water intrusion, corrosion, pushed out or bent terminals and correct pin tension.
    - Perform the BODY VERIFICATION TEST. Refer to **STANDARD PROCEDURE** .
2. **CHECK THE OPERATION OF THE CENTER I/P PANEL SPEAKER**
    1. Turn the ignition off.
    2. Disconnect the Center I/P Speaker.
    3. Measure the resistance of the speaker between the two terminals.

    Is the resistance of the speaker below 1.0 Ohm?

    Yes

    - Replace the Center I/P Speaker in accordance with the Service Information. Refer to **SPEAKER, REMOVAL** .
    - Perform the BODY VERIFICATION TEST. Refer to **STANDARD PROCEDURE** .

    No

- Go To 3

3. **CHECK THE (X200) CENTER I/P PANEL SPEAKER (+) CIRCUIT, AND THE (X290) CENTER I/P PANEL SPEAKER (-) CIRCUITS FOR A SHORT TOGETHER**
   1. Turn the ignition off.
   2. Disconnect the Amplifier C1 harness connector.
   3. Measure the resistance between the (X200) Center I/P Speaker (+) circuit, and the (X290) Center I/P Speaker (-) circuit.

      Is the resistance below 10K Ohms?

      Yes

      - Repair the (X200) Center I/P Speaker (+) circuit, and the (X290) Center I/P Speaker (-) circuit for a short together.
      - Perform the BODY VERIFICATION TEST. Refer to **STANDARD PROCEDURE** .

      No

      - Replace the Amplifier in accordance with the Service Information. Refer to **AMPLIFIER, REMOVAL** .
      - Perform the BODY VERIFICATION TEST. Refer to **STANDARD PROCEDURE** .

B14BE-92-CHANNEL 10 AUDIO SPEAKER OUTPUT - PERFORMANCE OR INCORRECT OPERATION

For a complete wiring diagram, **refer to appropriate SYSTEM WIRING DIAGRAMS article** .

WHEN MONITORED

With the ignition on.

SET CONDITION

This Diagnostic Trouble Code (DTC) sets if a Direct Current (DC) offset occurs on the output channel, the amplifier shall set a DTC after a maturity rate of four to six seconds.

POSSIBLE CAUSES

Possible Causes
AMPLIFIER

DIAGNOSTIC TEST

CHECK FOR AN INTERMITTENT CONDITION

1. Turn the ignition on.
2. Using the scan tool, record and erase the Amplifier DTCs.
3. Cycle the ignition switch from on to off, wait five seconds and then back to on.
4. Turn the Radio on and set the volume to 20.
5. Adjust the speakers to the front and center.
6. Using the scan tool, read the active Amplifier DTCs.

   Does the scan tool display this DTC as active?

   Yes

   - Replace the Amplifier in accordance with the Service Information.
   - Perform the BODY VERIFICATION TEST. Refer to **STANDARD PROCEDURE** .

   No

   - Test complete, the condition or conditions that originally set this DTC are not present at this time. Using the wiring diagrams as a guide, check all related splices and connectors for signs of water intrusion, corrosion, pushed out or bent terminals and correct pin tension.
   - Perform the BODY VERIFICATION TEST. Refer to **STANDARD PROCEDURE** .

B14C8-11-CHANNEL 12 AUDIO SPEAKER OUTPUT - CIRCUIT SHORT TO GROUND

For a complete wiring diagram, **refer to appropriate SYSTEM WIRING DIAGRAMS article** .

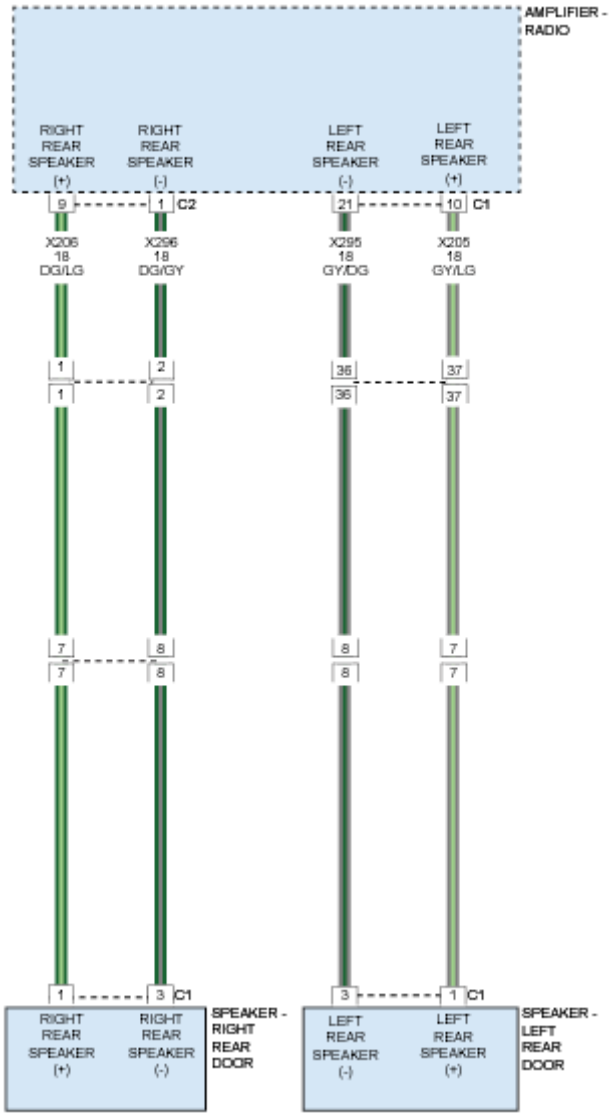

Fig. 41: Identifying Rear Door Speaker Circuit Diagram
Courtesy of CHRYSLER GROUP, LLC

WHEN MONITORED

When the ignition is cycled on.

SET CONDITION

The Amplifier detects a shorted to ground condition on the speaker output circuit when the ignition is cycled on.

POSSIBLE CAUSES

Possible Causes

RIGHT REAR DOOR SPEAKER (+) CIRCUIT SHORTED TO GROUND
RIGHT REAR DOOR SPEAKER (-) CIRCUIT SHORTED TO GROUND
RIGHT REAR DOOR SPEAKER
AMPLIFIER

DIAGNOSTIC TEST

1. **CHECK FOR AN INTERMITTENT CONDITION**
   1. Turn the ignition on.
   2. With the scan tool, record and erase the Amplifier DTCs.
   3. Cycle the ignition switch from on to off, wait five seconds and then back to on.
   4. Turn the Radio on.
   5. Adjust the speakers to the center.
   6. With the scan tool, read the active Amplifier DTCs.

   Does the scan tool display active: B14C8-11-CHANNEL 12 AUDIO SPEAKER OUTPUT - CIRCUIT SHORT TO GROUND?

   Yes

   - Go To 2

   No

   - Test complete, the condition or conditions that originally set this DTC are not present at this time. Using the wiring diagrams as a guide, check all related splices and connectors for signs of water intrusion, corrosion, pushed out or bent terminals and correct pin tension.
   - Perform the BODY VERIFICATION TEST. Refer to **STANDARD PROCEDURE** .
2. **CHECK THE RIGHT REAR DOOR SPEAKER**
   1. With the scan tool, erase the DTCs.
   2. Turn the ignition off.
   3. Disconnect the Right Rear Door Speaker harness connector.
   4. Turn the ignition on.
   5. Turn the Radio on.
   6. With the scan tool, read the active Amplifier DTCs.

   Does the scan tool display active: B14C8-11-CHANNEL 12 AUDIO SPEAKER OUTPUT - CIRCUIT SHORT TO GROUND?

   Yes

   - Go To 3

No

- Replace the Right Rear Door Speaker in accordance with the Service Information. Refer to **SPEAKER, REMOVAL** .
- Perform the BODY VERIFICATION TEST. Refer to **STANDARD PROCEDURE** .

3. **CHECK THE (X206) RIGHT REAR DOOR SPEAKER (+) CIRCUIT FOR A SHORT TO GROUND**
   1. Disconnect the Amplifier C2 harness connector.
   2. Disconnect the Right Rear Door Speaker harness connector.
   3. Measure the resistance between ground and the (X206) Right Rear Door Speaker (+) circuit.

   Is the resistance below 10K Ohms?

   Yes

   - Repair the (X206) Right Rear Door Speaker (+) circuit for a short to ground.
   - Perform the BODY VERIFICATION TEST. Refer to **STANDARD PROCEDURE** .

   No

   - Go To 4
4. **CHECK THE (X296) RIGHT REAR DOOR SPEAKER (-) CIRCUIT FOR A SHORT TO GROUND**
   1. Measure the resistance between ground and the (X296) Right Rear Door Speaker (-) circuit.

   Is the resistance below 10K Ohms?

   Yes

   - Repair the (X296) Right Rear Door Speaker (-) circuit for a short to ground.
   - Perform the BODY VERIFICATION TEST. Refer to **STANDARD PROCEDURE** .

   No

   - Replace the Amplifier in accordance with the Service Information. Refer to **AMPLIFIER, REMOVAL** .
   - Perform the BODY VERIFICATION TEST. Refer to **STANDARD PROCEDURE** .

B14C8-12-CHANNEL 12 AUDIO SPEAKER OUTPUT - CIRCUIT SHORT TO BATTERY

For a complete wiring diagram, **refer to appropriate SYSTEM WIRING DIAGRAMS article** .

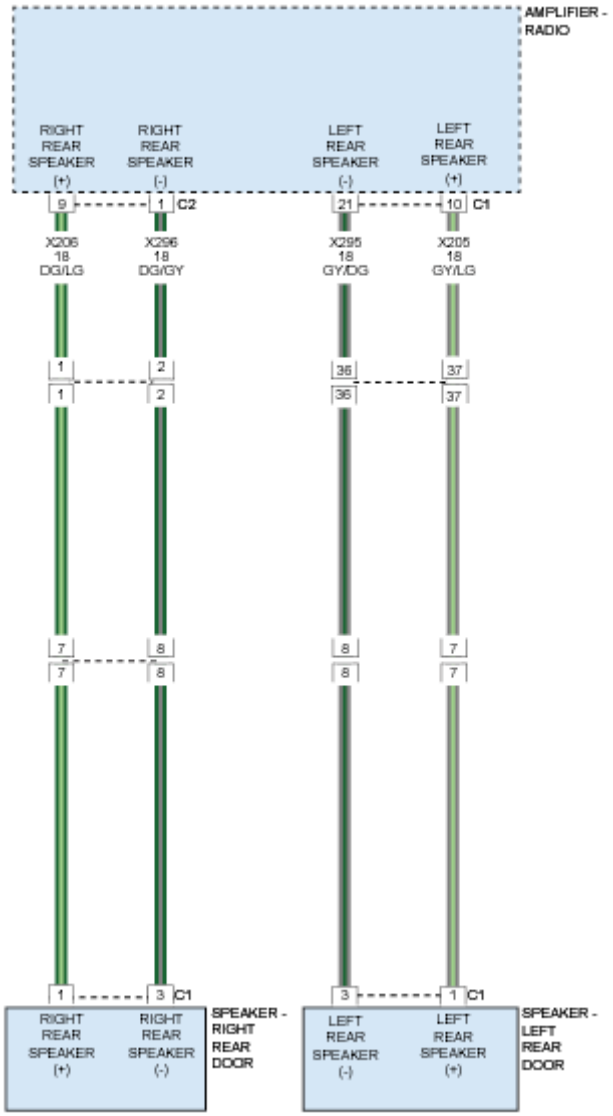

Fig. 42: Identifying Rear Door Speaker Circuit Diagram
Courtesy of CHRYSLER GROUP, LLC

WHEN MONITORED

When the ignition is cycled on.

SET CONDITION

The Amplifier detects a short to battery condition on the speaker output circuit when the ignition is cycled on.

POSSIBLE CAUSES

Possible Causes

RIGHT REAR DOOR SPEAKER (+) CIRCUIT SHORTED TO VOLTAGE
RIGHT REAR DOOR SPEAKER (-) CIRCUIT SHORTED TO VOLTAGE
AMPLIFIER

DIAGNOSTIC TEST

1. **CHECK FOR AN INTERMITTENT CONDITION**
   1. Turn the ignition on.
   2. With the scan tool, record and erase the Amplifier DTCs.
   3. Cycle the ignition switch from on to off, wait five seconds and then back to on.
   4. Turn the Radio on.
   5. Adjust the speakers to the center.
   6. With the scan tool, read the active Amplifier DTCs.

   Does the scan tool display active: B14C8-12-CHANNEL 12 AUDIO SPEAKER OUTPUT - CIRCUIT SHORT TO BATTERY?

   Yes

   - Go To 2

   No

   - Test complete, the condition or conditions that originally set this DTC are not present at this time. Using the wiring diagrams as a guide, check all related splices and connectors for signs of water intrusion, corrosion, pushed out or bent terminals and correct pin tension.
   - Perform the BODY VERIFICATION TEST. Refer to **STANDARD PROCEDURE** .
2. **CHECK FOR VOLTAGE ON THE (X206) RIGHT REAR DOOR SPEAKER (+) CIRCUIT**
   1. Turn the ignition off.
   2. Disconnect the Amplifier C2 harness connector.
   3. Disconnect the Right Rear Door Speaker harness connector.
   4. Turn the ignition on.
   5. Measure the voltage between the (X206) Right Rear Door Speaker (+) circuit and ground.

   Is there any voltage present?

   Yes

   - Repair the (X206) Right Rear Door Speaker (+) circuit for a short to voltage.
   - Perform the BODY VERIFICATION TEST. Refer to **STANDARD PROCEDURE** .

   No

- Go To 3

3. **CHECK FOR VOLTAGE ON THE (X296) RIGHT REAR DOOR SPEAKER (-) CIRCUIT**
   1. Measure the voltage between the (X296) Right Rear Door Speaker (-) circuit and ground.

      Is there any voltage present?

      Yes

      - Repair the (X296) Right Rear Door Speaker (-) circuit for a short to voltage.
      - Perform the BODY VERIFICATION TEST. Refer to **STANDARD PROCEDURE** .

      No

      - Replace the Amplifier in accordance with the Service Information. Refer to **AMPLIFIER, REMOVAL** .
      - Perform the BODY VERIFICATION TEST. Refer to **STANDARD PROCEDURE** .

B14C8-13-CHANNEL 12 AUDIO SPEAKER OUTPUT - CIRCUIT OPEN

For a complete wiring diagram, **refer to appropriate SYSTEM WIRING DIAGRAMS article** .

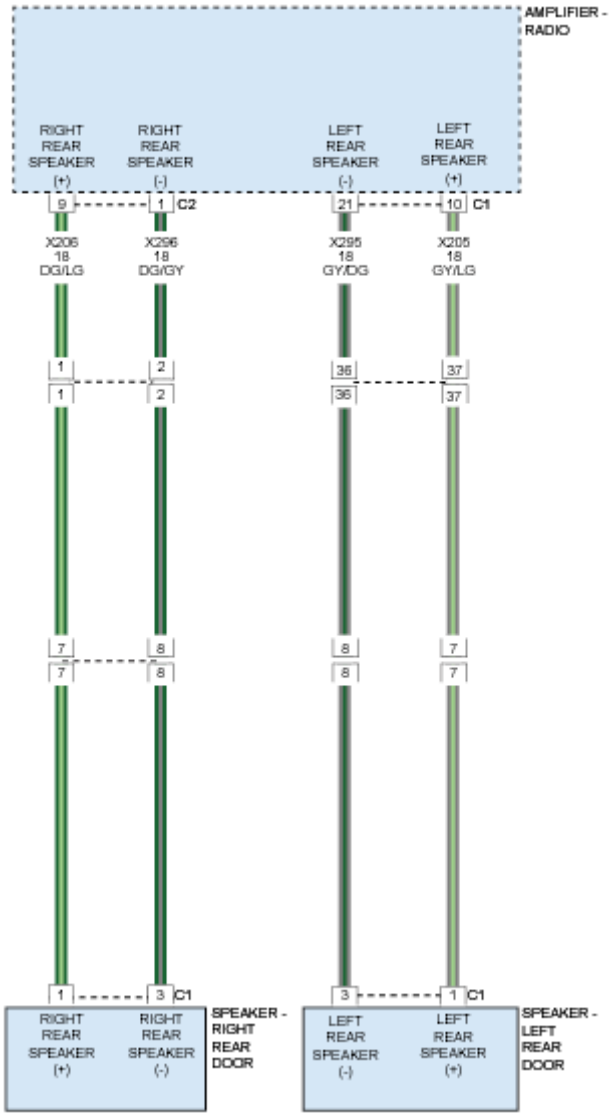

Fig. 43: Identifying Rear Door Speaker Circuit Diagram
Courtesy of CHRYSLER GROUP, LLC

WHEN MONITORED

When the ignition is cycled on.

SET CONDITION

The Amplifier detects an open condition on the speaker output circuit when the ignition is cycled on.

POSSIBLE CAUSES

Possible Causes

RIGHT REAR DOOR SPEAKER (+) CIRCUIT OPEN
RIGHT REAR DOOR SPEAKER (-) CIRCUIT OPEN
RIGHT REAR DOOR SPEAKER
AMPLIFIER

DIAGNOSTIC TEST

1. **CHECK FOR AN INTERMITTENT CONDITION**
    1. Turn the ignition on.
    2. With the scan tool, record and erase the Amplifier DTCs.
    3. Cycle the ignition switch from on to off, wait five seconds and then back to on.
    4. Turn the Radio on.
    5. Adjust the speakers to the rear and center.
    6. With the scan tool, read the active Amplifier DTCs.

    Does the scan tool display active: B14C8-13-CHANNEL 12 AUDIO SPEAKER OUTPUT - CIRCUIT OPEN?

    Yes

    - Go To 2

    No

    - Test complete, the condition or conditions that originally set this DTC are not present at this time. Using the wiring diagrams as a guide, check all related splices and connectors for signs of water intrusion, corrosion, pushed out or bent terminals and correct pin tension.
    - Perform the BODY VERIFICATION TEST. Refer to **STANDARD PROCEDURE** .
2. **CHECK THE OPERATION OF THE RIGHT REAR DOOR SPEAKER**
    1. Turn the ignition off.
    2. Disconnect the Right Rear Door Speaker harness connector.
    3. Turn the ignition on.
    4. Turn the Radio on and turn the volume to 25.
    5. Adjust the speakers to the rear and center.
    6. With a voltmeter set to read in A/C voltage, measure the voltage of the Right Rear Door Speaker circuits in the Right Rear Door Speaker harness connector.

    Is the voltage present above 1.0 volt?

    Yes

    - Replace the Right Rear Door Speaker in accordance with the Service Information. Refer to

SPEAKER, REMOVAL .
- Perform the BODY VERIFICATION TEST. Refer to **STANDARD PROCEDURE** .

No

- Go To 3

3. **CHECK THE (X206) RIGHT REAR DOOR SPEAKER (+) CIRCUIT FOR AN OPEN**
   1. Turn the ignition off.
   2. Disconnect the Amplifier C2 harness connector.
   3. Measure the resistance of the (X206) Right Rear Door Speaker (+) circuit between the Amplifier C1 harness connector and the Right Rear Door Speaker harness connector.

   Is the resistance below 2.5 Ohms?

   Yes

   - Go To 4

   No

   - Repair the (X206) Right Rear Door Speaker (+) circuit for an open.
   - Perform the BODY VERIFICATION TEST. Refer to **STANDARD PROCEDURE** .
4. **CHECK THE (X296) RIGHT REAR DOOR SPEAKER (-) CIRCUIT FOR AN OPEN**
   1. Measure the resistance of the (X296) Right Rear Door Speaker (-) circuit between the Amplifier C1 harness connector and the Right Rear Door Speaker harness connector.

   Is the resistance below 2.5 Ohms?

   Yes

   - Replace the Amplifier in accordance with the Service Information. Refer to **AMPLIFIER, REMOVAL** .
   - Perform the BODY VERIFICATION TEST. Refer to **STANDARD PROCEDURE** .

   No

   - Repair the (X296) Right Rear Door Speaker (-) circuit for an open.
   - Perform the BODY VERIFICATION TEST. Refer to **STANDARD PROCEDURE** .

B14C8-2B-CHANNEL 12 AUDIO SPEAKER OUTPUT - CIRCUIT SHORTED TOGETHER

For a complete wiring diagram, **refer to appropriate SYSTEM WIRING DIAGRAMS article** .

WHEN MONITORED

When the ignition is cycled on.

SET CONDITION

The Amplifier detects that the output circuits are shorted together when the ignition is cycled on.

POSSIBLE CAUSES

Possible Causes
RIGHT REAR DOOR SPEAKER (+) CIRCUIT SHORTED TO THE RIGHT REAR DOOR SPEAKER (-) CIRCUIT RIGHT REAR DOOR SPEAKER AMPLIFIER

DIAGNOSTIC TEST

1. **CHECK FOR AN INTERMITTENT CONDITION**
    1. Turn the ignition on.
    2. With the scan tool, record and erase the Amplifier DTCs.
    3. Cycle the ignition switch from on to off, wait five seconds and then back to on.
    4. Turn the Radio on.
    5. Adjust the speakers to the center.
    6. With the scan tool, read the active Amplifier DTCs.

    Does the scan tool display active: B14C8-2B-CHANNEL 12 AUDIO SPEAKER OUTPUT - CIRCUIT SHORTED TOGETHER?

    Yes

    - Go To 2

    No

    - Test complete, the condition or conditions that originally set this DTC are not present at this time. Using the wiring diagrams as a guide, check all related splices and connectors for signs of water intrusion, corrosion, pushed out or bent terminals and correct pin tension.
    - Perform the BODY VERIFICATION TEST. Refer to **STANDARD PROCEDURE** .
2. **CHECK THE OPERATION OF THE RIGHT REAR DOOR SPEAKER**
    1. Turn the ignition off.
    2. Disconnect the Right Rear Door Speaker harness connector.
    3. Measure the resistance of the speaker between the two terminals.

    Is the resistance of the speaker below 1.0 Ohm?

Yes

- Replace the Right Rear Door Speaker in accordance with the Service Information. Refer to **SPEAKER, REMOVAL** .
- Perform the BODY VERIFICATION TEST. Refer to **STANDARD PROCEDURE** .

No

- Go To 3

3. **CHECK THE (X206) RIGHT REAR DOOR SPEAKER (+) CIRCUIT, AND THE (X296) RIGHT REAR DOOR SPEAKER (-) CIRCUITS FOR A SHORT TOGETHER**
   1. Turn the ignition off.
   2. Disconnect the Amplifier C2 harness connector.
   3. Measure the resistance between the (X206) Right Rear Door Speaker (+) circuit, and the (X296) Right Rear Door Speaker (-) circuit.

   Is the resistance below 10K Ohms?

   Yes

   - Repair the (X206) Right Rear Door Speaker (+) circuit, and the (X296) Right Rear Door Speaker (-) circuit for a short together.
   - Perform the BODY VERIFICATION TEST. Refer to **STANDARD PROCEDURE** .

   No

   - Replace the Amplifier in accordance with the Service Information. Refer to **AMPLIFIER, REMOVAL** .
   - Perform the BODY VERIFICATION TEST. Refer to **STANDARD PROCEDURE** .

B14C8-92-CHANNEL 12 AUDIO SPEAKER OUTPUT - PERFORMANCE OR INCORRECT OPERATION

For a complete wiring diagram, **refer to appropriate SYSTEM WIRING DIAGRAMS article** .

WHEN MONITORED

With the ignition on.

SET CONDITION

This Diagnostic Trouble Code (DTC) sets if a Direct Current (DC) offset occurs on the output channel, the amplifier shall set a DTC after a maturity rate of four to six seconds.

POSSIBLE CAUSES

Possible Causes
AMPLIFIER

DIAGNOSTIC TEST

CHECK FOR AN INTERMITTENT CONDITION

1. Turn the ignition on.
2. Using the scan tool, record and erase the Amplifier DTCs.
3. Cycle the ignition switch from on to off, wait five seconds and then back to on.
4. Turn the Radio on and set the volume to 20.
5. Adjust the speakers to the front and center.
6. Using the scan tool, read the active Amplifier DTCs.

   Does the scan tool display this DTC as active?

   Yes

   - Replace the Amplifier in accordance with the Service Information.
   - Perform the BODY VERIFICATION TEST. Refer to **STANDARD PROCEDURE** .

   No

   - Test complete, the condition or conditions that originally set this DTC are not present at this time. Using the wiring diagrams as a guide, check all related splices and connectors for signs of water intrusion, corrosion, pushed out or bent terminals and correct pin tension.
   - Perform the BODY VERIFICATION TEST. Refer to **STANDARD PROCEDURE** .

B2199-16-BATTERY VOLTAGE - CIRCUIT VOLTAGE BELOW THRESHOLD

For a complete wiring diagram, **refer to appropriate SYSTEM WIRING DIAGRAMS article** .

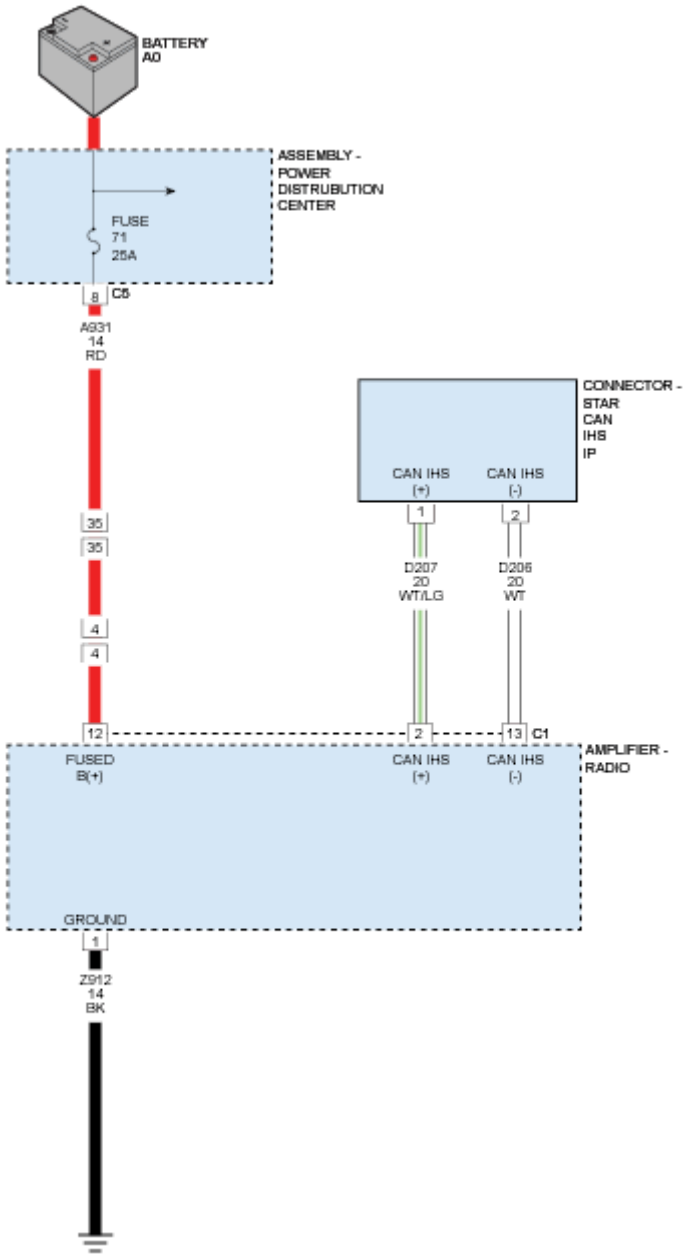

Fig. 44: Amplifier CAN IHS, Fused B+ & Ground Circuit Diagram
Courtesy of CHRYSLER GROUP, LLC

THEORY OF OPERATION

The Amplifier monitors the input circuit voltage. The Amplifier sets a DTC if the input circuit voltage drops below a certain voltage.

For a detailed description of the Audio System. Refer to **DESCRIPTION** .

WHEN MONITORED

With the ignition on.

SET CONDITION

The Amplifier monitors the input voltage. This Diagnostic Trouble Code (DTC) is set when the input voltage is below 9.0 volts for greater than 15.0 seconds.

POSSIBLE CAUSES

Possible Causes
(A931) FUSED B(+) CIRCUIT OPEN OR EXCESSIVE RESISTANCE
(Z912) GROUND CIRCUIT OPEN OR EXCESSIVE RESISTANCE
CHARGING SYSTEM CONCERN
AMPLIFIER

DIAGNOSTIC TEST

1. **CHECK FOR POWERTRAIN CONTROL MODULE (PCM) DTCs**

   NOTE: Make sure the battery is fully charged before proceeding.

   1. Using the scan tool, read the active PCM DTCs.

      Are there any battery or charging system DTCs present?

      Yes

      - Refer to the **DTC INDEX** article and perform the appropriate diagnostic procedure.

      No

      - Go To 2
2. **TEST FOR AN INTERMITTENT CONDITION**
   1. Using the scan tool, record and erase the Amplifier DTCs.
   2. Start the engine.
   3. Allow the engine to idle for two minutes.
   4. Using the scan tool, read the Amplifier DTCs.

      Does the scan tool display: B2199-16-BATTERY VOLTAGE - CIRCUIT VOLTAGE BELOW THRESHOLD?

      Yes

      - Go To 3

No

- Test complete, the condition or conditions that originally set this DTC are not present at this time. Using the wiring diagrams as a guide, check all related splices and connectors for signs of water intrusion, corrosion, pushed out or bent terminals, and correct pin tension.
- Perform the BODY VERIFICATION TEST. Refer to **STANDARD PROCEDURE** .

3. **CHECK THE (A931) FUSED B(+) CIRCUIT FOR AN OPEN OR EXCESSIVE RESISTANCE**

NOTE: Check the fuse for an open. If the fuse is open, make sure to check for a short to ground prior to replacing the fuse.

1. Turn the ignition off.
2. Disconnect the Amplifier C1 harness connector.
3. Ignition on, engine not running.
4. Using a 12-volt test light connected to ground, check the (A931) Fused B(+) circuit in the Amplifier C1 harness connector.
5. The test light must illuminate brightly. Compare the brightness to that of a direct connection to the battery.

Does the test light illuminate brightly?

Yes

- Go To4.

No

- Repair the open or excessive resistance in the (A931) Fused B(+) circuit.
- Perform the BODY VERIFICATION TEST. Refer to **STANDARD PROCEDURE** .

4. **CHECK THE (Z912) GROUND CIRCUIT FOR AN OPEN OR EXCESSIVE RESISTANCE**

1. Using a 12-volt test light connected to 12-volts, check the (Z912) Ground circuit in the Amplifier C1 harness connector.
2. The test light must illuminate brightly. Compare the brightness to that of a direct connection to the battery.

Does the test light illuminate brightly?

Yes

- Replace the Amplifier in accordance with the Service Information. Refer to **AMPLIFIER, REMOVAL** .
- Perform the BODY VERIFICATION TEST. Refer to **STANDARD PROCEDURE** .

No

- Repair the open or excessive resistance in the (Z912) Ground circuit.
- Perform the BODY VERIFICATION TEST. Refer to **STANDARD PROCEDURE** .

B2199-17-BATTERY VOLTAGE - CIRCUIT VOLTAGE ABOVE THRESHOLD

For a complete wiring diagram, **refer to appropriate SYSTEM WIRING DIAGRAMS article** .

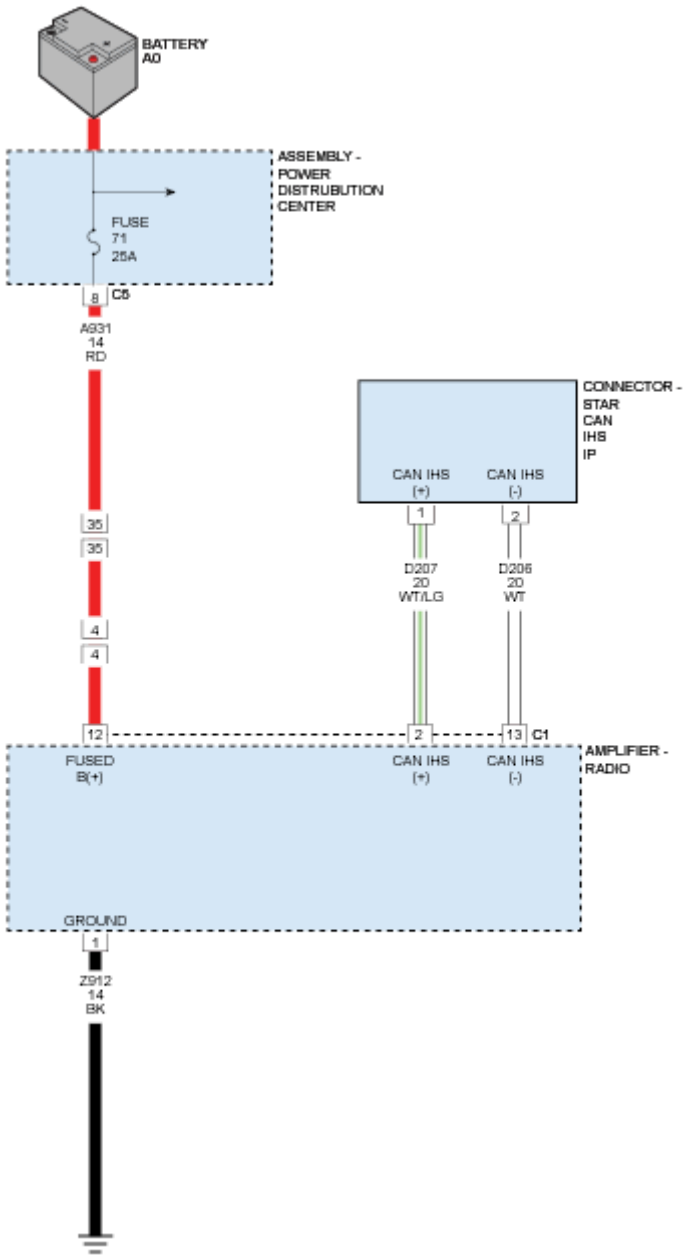

Fig. 45: Amplifier CAN IHS, Fused B+ & Ground Circuit Diagram

Courtesy of CHRYSLER GROUP, LLC

THEORY OF OPERATION

The Amplifier monitors the input circuit voltage. The Amplifier sets a DTC if the input circuit voltage increases above a certain voltage.

For a detailed description of the Audio System. Refer to **DESCRIPTION** .

WHEN MONITORED

With the ignition on.

SET CONDITION

The Amplifier monitors the input voltage. This Diagnostic Trouble Code (DTC) is set when the input voltage is above 16.0 volts for greater than 15.0 seconds.

POSSIBLE CAUSES

Possible Causes
CHARGING SYSTEM CONCERN AMPLIFIER

DIAGNOSTIC TEST

1. **CHECK FOR POWERTRAIN CONTROL MODULE (PCM) DTCS**
    1. Using the scan tool, read the active PCM DTCs.

       Are there any battery or charging system DTCs?

       Yes

       - Refer to the **DTC INDEX** article and perform the appropriate diagnostic procedure.

       No

       - Go To 2
2. **TEST FOR AN INTERMITTENT CONDITION**
    1. Using the scan tool, record and erase the Amplifier DTCs.
    2. Start the engine.
    3. Allow the engine to idle for two minutes.
    4. Using the scan tool, read the Amplifier DTCs.

       Does the scan tool display: B2199-17-BATTERY VOLTAGE - CIRCUIT VOLTAGE ABOVE

THRESHOLD?

Yes

- Replace Amplifier in accordance with the Service Information. Refer to **AMPLIFIER, REMOVAL** .
- Perform the BODY VERIFICATION TEST. Refer to **STANDARD PROCEDURE** .

No

- Test complete, the condition or conditions that originally set this DTC are not present at this time. Using the wiring diagrams as a guide, check all related splices and connectors for signs of water intrusion, corrosion, pushed out or bent terminals, and correct pin tension.
- Perform the BODY VERIFICATION TEST. Refer to **STANDARD PROCEDURE** .

B21DD-84-SYSTEM VOLTAGE - SIGNAL BELOW ALLOWABLE RANGE

For a complete wiring diagram, **refer to appropriate SYSTEM WIRING DIAGRAMS article** .

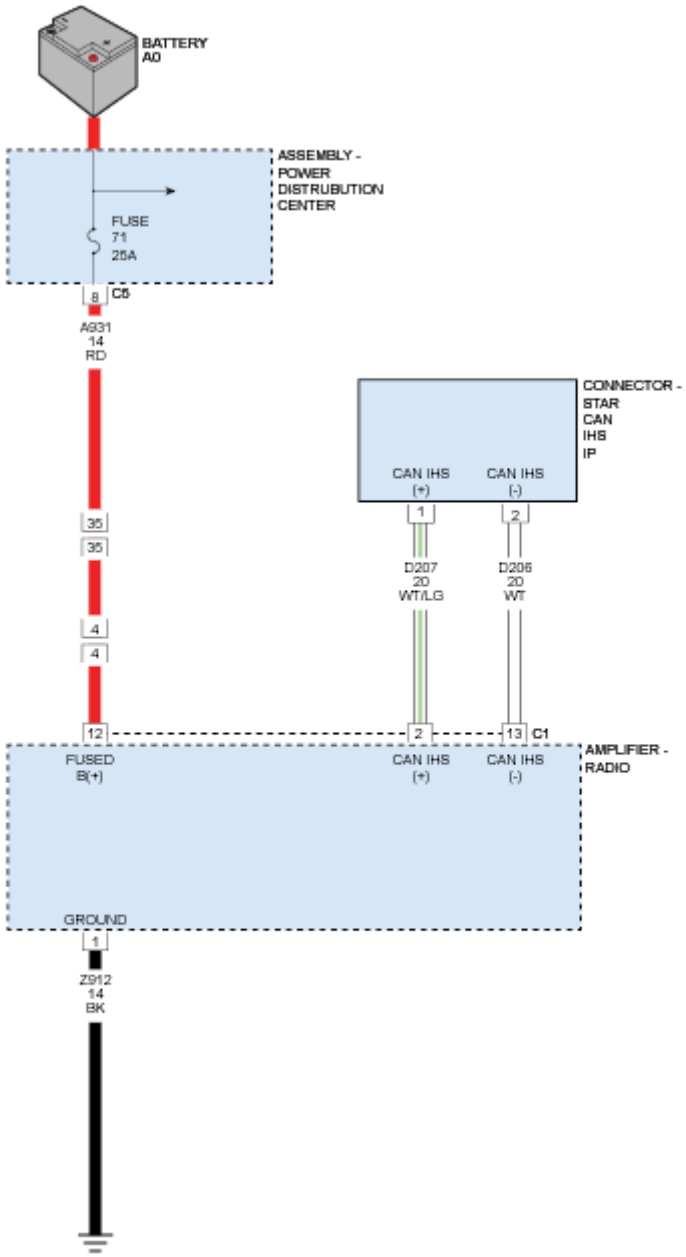

Fig. 46: Amplifier CAN IHS, Fused B+ & Ground Circuit Diagram
Courtesy of CHRYSLER GROUP, LLC

THEORY OF OPERATION

The Amplifier monitors CAN messages. The Amplifier sets a DTC if the module receives a CAN message indicating battery voltage is below a certain voltage.

For a detailed description of the Audio System. Refer to **DESCRIPTION** .

WHEN MONITORED

With the ignition on.

SET CONDITION

This Diagnostic Trouble Code (DTC) is set when the Amplifier receives a CAN message indicating the battery voltage is below 10.0 volts for greater than 15.0 seconds.

POSSIBLE CAUSES

Possible Causes
LOW SYSTEM VOLTAGE BATTERY OR CHARGING SYSTEM

DIAGNOSTIC TEST

CHECK FOR POWERTRAIN CONTROL MODULE (PCM) DTCs

NOTE: Make sure the battery is fully charged before proceeding.

1. Using the scan tool, read the active PCM DTCs.

   Are there any battery or charging system DTCs present?

   Yes

   - Refer to the **DTC INDEX** article and perform the appropriate diagnostic procedure.

   No

   - This DTC is informational only. At some time there was a low battery system voltage. Check the battery and charging system in accordance with the Service Information.

B21DD-85-SYSTEM VOLTAGE - SIGNAL ABOVE ALLOWABLE RANGE

For a complete wiring diagram, **refer to appropriate SYSTEM WIRING DIAGRAMS article** .

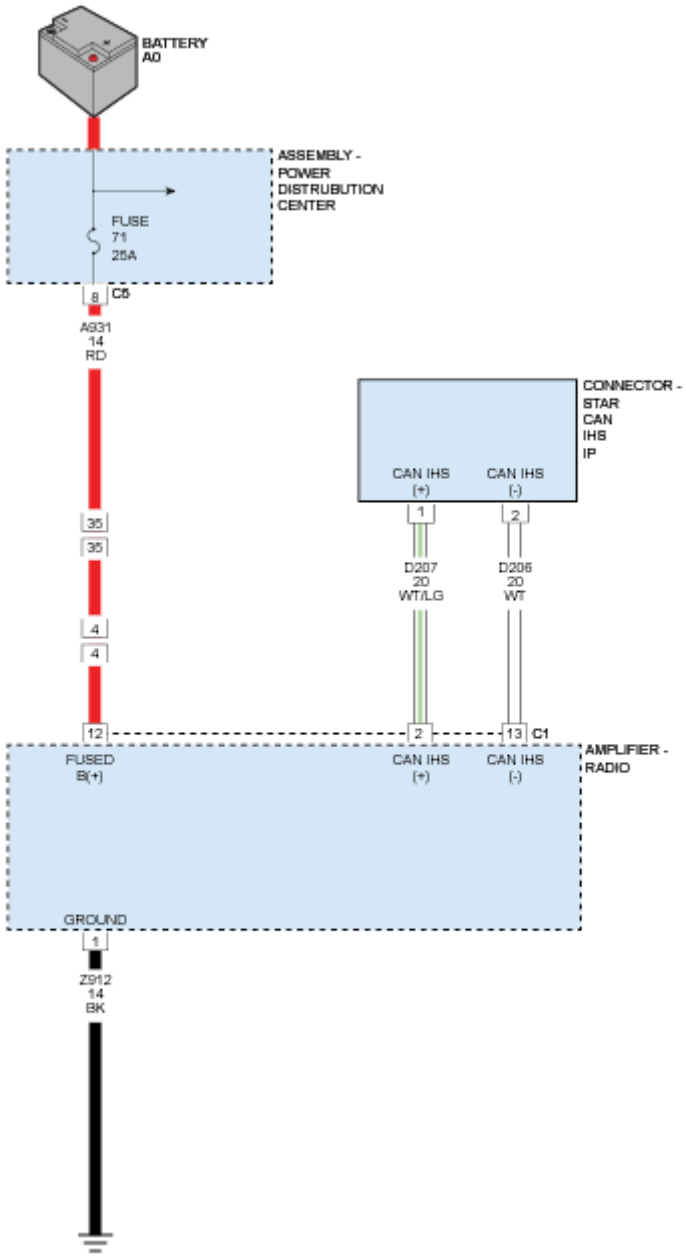

Fig. 47: Amplifier CAN IHS, Fused B+ & Ground Circuit Diagram
Courtesy of CHRYSLER GROUP, LLC

THEORY OF OPERATION

The Amplifier monitors CAN messages. The Amplifier sets a DTC if the module receives a CAN message indicating battery voltage is above a certain voltage.

For a detailed description of the Audio System. Refer to **DESCRIPTION** .

WHEN MONITORED

With the ignition on.

SET CONDITION

This Diagnostic Trouble Code (DTC) is set when the Amplifier receives a CAN message indicating the battery voltage is above 16.0 volts for greater than 15.0 seconds.

POSSIBLE CAUSES

Possible Causes
HIGH BATTERY SYSTEM VOLTAGE CHARGING SYSTEM

DIAGNOSTIC TEST

CHECK FOR POWERTRAIN CONTROL MODULE (PCM) DTCs

1. Using the scan tool, read the active PCM DTCs.

   Are there any battery or charging system DTCs present?

   Yes

   - Refer to the **DTC INDEX** article and perform the appropriate diagnostic procedure.

   No

   - This DTC is informational only. At some time there was a high battery system voltage. Check the charging system in accordance with the Service Information.

B221F-00-AMPLIFIER INTERNAL

For a complete wiring diagram, **refer to appropriate SYSTEM WIRING DIAGRAMS article** .

WHEN MONITORED

With the ignition on.

SET CONDITION

The Amplifier detects an internal failure.

POSSIBLE CAUSES

Possible Causes
RADIO AMPLIFIER

DIAGNOSTIC TEST

REPLACE THE RADIO AMPLIFIER

1. When this DTC is active, replace the Radio Amplifier.

   Repair

   - Replace the Amplifier in accordance with the Service Information. Refer to **AMPLIFIER, REMOVAL** .
   - Perform the BODY VERIFICATION TEST. Refer to **STANDARD PROCEDURE** .

U0019-00-CAN B BUS

For a complete wiring diagram, **refer to appropriate SYSTEM WIRING DIAGRAMS article** .

DIAGNOSTIC TEST

VERIFY IF THE DTC IS ACTIVE

NOTE: Make sure the battery is fully charged before proceeding.

1. Turn the ignition on.
2. With the scan tool, read the active DTCs.

   Does the scan tool display this DTC as active?

   Yes

   - Refer to the **BODY CONTROL MODULE (BCM) - DIAGNOSTIC CODE INDEX** article and perform the U0010-00-CAN INTERIOR BUS diagnostic procedure.

   No

   - Refer to **DIAGNOSIS AND TESTING** and perform the STORED LOST COMMUNICATION DTCs diagnostic procedure.

U0020-00-CAN B BUS OFF PERFORMANCE

For a complete wiring diagram, **refer to appropriate SYSTEM WIRING DIAGRAMS article** .

WHEN MONITORED

Continuously when the ignition is on.

The battery voltage between 10.0 and 16.0 Volts.

Body Control Module (BCM) is configured correctly.

SET CONDITION

Bus messages not received from the Body Control Module (BCM) for approximately two to five seconds.

POSSIBLE CAUSES

Possible Causes
CAN IHS BUS (125K) CIRCUITS OPEN OR SHORTED
DTCS RELATED TO BATTERY VOLTAGE, IGNITION, OR VIN MESSAGES
BODY CONTROL MODULE (BCM) POWER AND GROUND
BCM NOT CONFIGURED CORRECTLY
BODY CONTROL MODULE (BCM)
MODULE THAT SET THIS DTC

DIAGNOSTIC TEST

VERIFY DTC IS ACTIVE

NOTE: Make sure the battery is fully charged before proceeding.

1. Turn the ignition on.
2. With the scan tool, read the active DTCs.

   Does the scan tool display; U0020-00-CAN B BUS OFF PERFORMANCE as active?

   Yes

   - **For this code, perform the U0011-00-CAN INTERIOR BUS OFF PERFORMANCE diagnostic procedure. Refer to the DTC INDEX article .**

   No

   - Refer to **DIAGNOSIS AND TESTING** and perform the STORED LOST COMMUNICATION DTCs diagnostic procedure.

U0155-00-LOST COMMUNICATION WITH CLUSTER/CCN

Perform the COMMUNICATION PRE-DIAGNOSTIC PROCEDURE. Refer to **STANDARD PROCEDURE** .

WHEN MONITORED

Continuously when the ignition is on.

Battery voltage between 10 and 16 volts.

Body Control Module (BCM) is configured correctly.

SET CONDITION

Bus messages not received from the Instrument Cluster (IC) for approximately two to five seconds.

POSSIBLE CAUSES

Possible Causes
CAN BUS (+) CIRCUIT SHORTED TO VOLTAGE
CAN BUS (-) CIRCUIT SHORTED TO GROUND
INSTRUMENT CLUSTER (IPC) POWER AND GROUND
BCM NOT CONFIGURED CORRECTLY
INSTRUMENT CLUSTER (IPC)
MODULE THAT SET THIS DTC

DIAGNOSTIC TEST

VERIFY DTC IS ACTIVE

NOTE: Make sure the battery is fully charged before proceeding.

1. Turn the ignition on.
2. With the scan tool, read the active DTCs.

   Does the scan tool display: U0155-00-LOST COMMUNICATION WITH CLUSTER/CCN?

   Yes

   - Refer to the **BODY CONTROL MODULE (BCM) - DIAGNOSTIC CODE INDEX** article and perform the U0155-87-LOST COMMUNICATION WITH CLUSTER/CCN diagnostic procedure.

   No

   - Refer to **DIAGNOSIS AND TESTING** and perform the STORED LOST COMMUNICATION DTCs diagnostic procedure.

U0184-00-LOST COMMUNICATION WITH RADIO

For a complete wiring diagram, **refer to appropriate SYSTEM WIRING DIAGRAMS article** .

WHEN MONITORED

Continuously when the ignition is on.

The battery voltage is between 10 and 16 volts.

Body Control Module (BCM) is configured correctly.

SET CONDITION

Bus messages not received from the Radio for approximately two to five seconds.

POSSIBLE CAUSES

Possible Causes
CAN BUS CIRCUITS OPEN OR SHORTED
DTCS RELATED TO BATTERY VOLTAGE, IGNITION, OR VIN MESSAGES
RADIO POWER AND GROUND
BCM NOT CONFIGURED CORRECTLY
RADIO
MODULE THAT SET THIS DTC

DIAGNOSTIC TEST

VERIFY THE DIAGNOSTIC TROUBLE CODE (DTC) IS ACTIVE

NOTE: Make sure the battery is fully charged before proceeding.

1. Turn the ignition on.
2. With the scan tool, read the active DTCs.

   Is this DTC active?

   Yes

   - Refer to **DIAGNOSIS AND TESTING** and perform the NO RESPONSE FROM RADIO DIAGNOSTIC procedure.

   No

   - Refer to **DIAGNOSIS AND TESTING** and perform the STORED LOST COMMUNICATION DTCs diagnostic procedure.

U0422-00- IMPLAUSIBLE DATA RECEIVED FROM BODY CONTROL MODULE

For a complete wiring diagram, **refer to appropriate SYSTEM WIRING DIAGRAMS article** .

WHEN MONITORED

At all times with Ignition in Run/Start.

SET CONDITION

Incorrect data received from the Body Control Module (BCM).

POSSIBLE CAUSES

Possible Causes
NO COMMUNICATION WITH THE BODY CONTROL MODULE (BCM)
DTCS STORED OR ACTIVE IN THE BCM
AMPLIFIER

DIAGNOSTIC TEST

1. **CHECK FOR AN ACTIVE DIAGNOSTIC TROUBLE CODE (DTC)**
    1. Turn the ignition on.
    2. With the scan tool, read the active DTCs.

    Does the scan tool display this DTC as active?

    Yes

    - Go To 2

    No

    - The condition that caused this code to set is not present at this time. Check for an intermittent condition by inspecting the related wiring harness for chafed, pierced, pinched, and partially broken wires. Also inspect the related connectors for broken, bent, pushed out, spread, corroded, or contaminated terminals.
    - Perform the BODY VERIFICATION TEST. Refer to **STANDARD PROCEDURE** .
2. **VERIFY THE BCM IS ACTIVE ON THE CAN BUS**
    1. With the scan tool, select ECU View.
    2. Verify that the BCM is active on the bus.

    Is the BCM active on the bus?

    Yes

    - Replace the Amplifier in accordance with the Service Information. Refer to **AMPLIFIER, REMOVAL** .

- Perform the BODY VERIFICATION TEST. Refer to **STANDARD PROCEDURE** .

No

- Refer to **DIAGNOSIS AND TESTING** and perform the NO RESPONSE FROM BCM diagnostic procedure.
- Perform the BODY VERIFICATION TEST. Refer to **STANDARD PROCEDURE** .

U0423-00-IMPLAUSIBLE DATA RECEIVED FROM CLUSTER/CCN

For a complete wiring diagram, **refer to appropriate SYSTEM WIRING DIAGRAMS article** .

WHEN MONITORED

Park Assist Module supply voltage between 9-16 volts. Ignition in Run/Start.

SET CONDITION

Incorrect ignition status received from the Cluster

POSSIBLE CAUSES

Possible Causes
NO COMMUNICATION WITH CLUSTER DTCS STORED OR ACTIVE IN THE CLUSTER ACTIVE COMMUNICATION DTCS IN THE BODY CONTROL MODULE (BCM) AMPLIFIER

DIAGNOSTIC TEST

1. **CHECK FOR AN ACTIVE DIAGNOSTIC TROUBLE CODE (DTC)**
    1. Turn the ignition on.
    2. With the scan tool, read the Amplifier DTCs.

    Does the scan tool display this DTC as active?

    Yes

    - Go To 2

    No

    - The condition that caused this code to set is not present at this time. Check for an intermittent condition by inspecting the related wiring harness for chafed, pierced, pinched, and partially broken wires. Also inspect the related connectors for broken, bent, pushed out, spread,

corroded, or contaminated terminals.
- Perform the BODY VERIFICATION TEST. Refer to **STANDARD PROCEDURE** .

2. **VERIFY CLUSTER IS ACTIVE ON THE CAN BUS**
   1. With the scan tool, select ECU View.
   2. Verify that the Cluster is active on the bus.

   Is the Cluster active on the bus?

   Yes

   - Go To 3.

   No

   - Refer to **DIAGNOSIS AND TESTING** and perform the NO RESPONSE FROM CLUSTER/CCN diagnostic procedure.
   - Perform the BODY VERIFICATION TEST. Refer to **STANDARD PROCEDURE** .

3. **DTCS STORED OR ACTIVE IN THE CLUSTER**
   1. Check for active DTCs in the Cluster.

   Are any DTCs active or stored in the Cluster?

   Yes

   - Refer to **DIAGNOSIS AND TESTING** and perform the appropriate diagnostic procedure.

   No

   - Go To 4

4. **ACTIVE COMMUNICATION DTCS IN THE BCM**
   1. With the scan tool, select ECU View and select BCM.
   2. With the scan tool, read active DTCs.

   Are any Communication DTCs active in the BCM?

   Yes

   - Refer to the **BODY CONTROL MODULE (BCM) - DIAGNOSTIC CODE INDEX** article and perform the appropriate diagnostic procedure.

   No

   - Replace the Amplifier in accordance with the Service Information. Refer to **AMPLIFIER, REMOVAL** .

- Perform the BODY VERIFICATION TEST. Refer to **STANDARD PROCEDURE** .

U0485-00-IMPLAUSIBLE DATA RECEIVED FROM RADIO

For a complete wiring diagram, **refer to appropriate SYSTEM WIRING DIAGRAMS article** .

WHEN MONITORED

With the ignition on.

SET CONDITION

Incorrect data received from the Radio.

POSSIBLE CAUSES

Possible Causes
NO COMMUNICATION WITH THE RADIO
DTCS STORED OR ACTIVE IN THE RADIO
RADIO
MODULE THAT SET THE DTC

DIAGNOSTIC TEST

1. **CHECK FOR AN ACTIVE DIAGNOSTIC TROUBLE CODE (DTC)**

   NOTE: Diagnose and repair any Radio DTCs before proceeding with this diagnostic procedure.

   1. Turn the ignition on.
   2. With the scan tool, read active DTCs.

      Does the scan tool display this DTC as active?

      Yes

      - Go To 2

      No

      - The condition that caused this code to set is not present at this time. Check for an intermittent condition by inspecting the related wiring harness for chafed, pierced, pinched, and partially broken wires. Also inspect the related connectors for broken, bent, pushed out, spread, corroded, or contaminated terminals.
      - Perform the BODY VERIFICATION TEST. Refer to **STANDARD PROCEDURE** .

2. **VERIFY THE RADIO IS ACTIVE ON THE CAN BUS**
   1. With the scan tool, verify that the Radio is active on the bus.

      Is the Radio active on the bus?

      Yes

      - Replace the Amplifier in accordance with the Service Information. Refer to **AMPLIFIER, REMOVAL** .
      - Perform the BODY VERIFICATION TEST. Refer to **STANDARD PROCEDURE** .

      No

      - Refer to **DIAGNOSIS AND TESTING** and perform the NO RESPONSE FROM RADIO diagnostic procedure.
      - Perform the BODY VERIFICATION TEST. Refer to **STANDARD PROCEDURE** .

2014 ACCESSORIES AND EQUIPMENT

Audio (Radio) - Electrical Diagnostics - Cherokee

DIAGNOSTIC CODE INDEX

DIAGNOSTIC CODE INDEX

DTC	Description
B1400-11	FRONT LEFT AUDIO SPEAKER OUTPUT - CIRCUIT SHORT TO GROUND - BASE
B1400-11	FRONT LEFT AUDIO SPEAKER OUTPUT - CIRCUIT SHORT TO GROUND - PREMIUM
B1400-12	FRONT LEFT AUDIO SPEAKER OUTPUT - CIRCUIT SHORT TO BATTERY - BASE
B1400-12	FRONT LEFT AUDIO SPEAKER OUTPUT - CIRCUIT SHORT TO BATTERY - PREMIUM
B1400-13	FRONT LEFT AUDIO SPEAKER OUTPUT - CIRCUIT OPEN - BASE
B1400-13	FRONT LEFT AUDIO SPEAKER OUTPUT - CIRCUIT OPEN - PREMIUM
B1400-1A	FRONT LEFT AUDIO SPEAKER OUTPUT - CIRCUIT RESISTANCE BELOW THRESHOLD - BASE
B1400-1A	FRONT LEFT AUDIO SPEAKER OUTPUT - CIRCUIT RESISTANCE BELOW THRESHOLD - PREMIUM
B1400-92	FRONT LEFT AUDIO SPEAKER OUTPUT - PERFORMANCE OR INCORRECT OPERATION
B1404-11	FRONT RIGHT AUDIO SPEAKER OUTPUT - CIRCUIT SHORT TO GROUND - BASE
B1404-11	FRONT RIGHT AUDIO SPEAKER OUTPUT - CIRCUIT SHORT TO GROUND - PREMIUM
B1404-12	FRONT RIGHT AUDIO SPEAKER OUTPUT - CIRCUIT SHORT TO BATTERY - BASE
B1404-12	FRONT RIGHT AUDIO SPEAKER OUTPUT - CIRCUIT SHORT TO BATTERY - PREMIUM
B1404-13	FRONT RIGHT AUDIO SPEAKER OUTPUT - CIRCUIT OPEN - BASE
B1404-13	FRONT RIGHT AUDIO SPEAKER OUTPUT - CIRCUIT OPEN - PREMIUM
B1404-1A	FRONT RIGHT AUDIO SPEAKER OUTPUT - CIRCUIT RESISTANCE BELOW THRESHOLD - BASE
B1404-1A	FRONT RIGHT AUDIO SPEAKER OUTPUT - CIRCUIT RESISTANCE BELOW THRESHOLD - PREMIUM
B1404-92	FRONT RIGHT AUDIO SPEAKER OUTPUT - PERFORMANCE OR INCORRECT OPERATION

B1408-11	REAR LEFT AUDIO SPEAKER OUTPUT - CIRCUIT SHORT TO GROUND - BASE
B1408-11	REAR LEFT AUDIO SPEAKER OUTPUT - CIRCUIT SHORT TO GROUND - PREMIUM
B1408-12	REAR LEFT AUDIO SPEAKER OUTPUT - CIRCUIT SHORT TO BATTERY- BASE
B1408-12	REAR LEFT AUDIO SPEAKER OUTPUT - CIRCUIT SHORT TO BATTERY- PREMIUM
B1408-13	REAR LEFT AUDIO SPEAKER OUTPUT - CIRCUIT OPEN- BASE
B1408-13	REAR LEFT AUDIO SPEAKER OUTPUT - CIRCUIT OPEN - PREMIUM
B1408-1A	REAR LEFT AUDIO SPEAKER OUTPUT - CIRCUIT RESISTANCE BELOW THRESHOLD- BASE
B1408-1A	REAR LEFT AUDIO SPEAKER OUTPUT - CIRCUIT RESISTANCE BELOW THRESHOLD - PREMIUM
B1408-92	REAR LEFT AUDIO SPEAKER OUTPUT - PERFORMANCE OR INCORRECT OPERATION
B140C-11	REAR RIGHT AUDIO SPEAKER OUTPUT - CIRCUIT SHORT TO GROUND- BASE
B140C-11	REAR RIGHT AUDIO SPEAKER OUTPUT - CIRCUIT SHORT TO GROUND - PREMIUM
B140C-12	REAR RIGHT AUDIO SPEAKER OUTPUT - CIRCUIT SHORT TO BATTERY- BASE
B140C-12	REAR RIGHT AUDIO SPEAKER OUTPUT - CIRCUIT SHORT TO BATTERY - PREMIUM
B140C-13	REAR RIGHT AUDIO SPEAKER OUTPUT - CIRCUIT OPEN - BASE
B140C-13	REAR RIGHT AUDIO SPEAKER OUTPUT - CIRCUIT OPEN - PREMIUM
B140C-1A	REAR RIGHT AUDIO SPEAKER OUTPUT - CIRCUIT RESISTANCE BELOW THRESHOLD - BASE
B140C-1A	REAR RIGHT AUDIO SPEAKER OUTPUT - CIRCUIT RESISTANCE BELOW THRESHOLD - PREMIUM
B140C-92	REAR RIGHT AUDIO SPEAKER OUTPUT - PERFORMANCE OR INCORRECT OPERATION
B142A-4B	RADIO UNIT HIGH TEMPERATURE - OVER TEMPERATURE
B143A-11	MICROPHONE 1 - CIRCUIT SHORT TO GROUND
B143A-12	MICROPHONE 1 - CIRCUIT SHORT TO BATTERY
B143A-13	MICROPHONE 1 - CIRCUIT OPEN
B143A-1A	MICROPHONE 1 - CIRCUIT RESISTANCE BELOW THRESHOLD
B143D-11	MICROPHONE 2 - CIRCUIT SHORT TO GROUND
B143D-12	MICROPHONE 2 - CIRCUIT SHORT TO BATTERY
B143D-13	MICROPHONE 2 - CIRCUIT OPEN

B143D-1A	MICROPHONE 2 - CIRCUIT RESISTANCE BELOW THRESHOLD
B1488-00	CABIN EQ MISMATCH PERFORMANCE
B14DA-2A	HEAD UNIT BUTTON - STUCK
B1560-11	CELLULAR ANTENNA 1 - CIRCUIT SHORT TO GROUND
B1560-13	CELLULAR ANTENNA 1 - CIRCUIT OPEN
B1562-11	GPS ANTENNA - CIRCUIT SHORT TO GROUND
B1562-13	GPS ANTENNA - CIRCUIT OPEN
B156B-13	SATELLITE RADIO ANTENNA - CIRCUIT OPEN
B156B-1A	SATELLITE RADIO ANTENNA - CIRCUIT RESISTANCE BELOW THRESHOLD
B1570-19	USB COMMUNICATION - OVERCURRENT
B1577-13	UNIVERSAL CONSUMER INTERFACE (UCI) - CIRCUIT OPEN
B1578-13	AUDIO ANTENNA - CIRCUIT OPEN
B1578-1A	AUDIO ANTENNA - CIRCUIT RESISTANCE BELOW THRESHOLD
B157E-00	TOUCH SCREEN LOCKED
B210A-16	SYSTEM VOLTAGE LOW - CIRCUIT VOLTAGE BELOW THRESHOLD
B210B-17	SYSTEM VOLTAGE HIGH - CIRCUIT VOLTAGE ABOVE THRESHOLD
B2206-00	CURRENT VIN MISSING / MISMATCH
B221E-00	RADIO INTERNAL
B222C-00	VEHICLE CONFIGURATION NOT PROGRAMMED
U0002-00	CAN C BUS OFF PERFORMANCE
U0010-00	CAN INTERIOR BUS
U0011-00	CAN INTERIOR BUS OFF PERFORMANCE
U0100	LOST COMMUNICATION WITH ECM/PCM
U0101	LOST COMMUNICATION WITH TCM
U0121	LOST COMMUNICATION WITH ANTI-LOCK BRAKE MODULE
U0140-00	LOST COMMUNICATION WITH BODY CONTROL MODULE
U0143-00	LOST COMMUNICATION WITH MULTI-PURPOSE MODULE
U0151-00	LOST COMMUNICATION WITH OCCUPANT RESTRAINT CONTROLLER (ORC)
U0155-00	LOST COMMUNICATION WITH CLUSTER/CCN
U0164-00	LOST COMMUNICATION WITH HVAC CONTROL MODULE
U0186-00	LOST COMMUNICATION WITH AUDIO AMPLIFIER
U0187-00	LOST COMMUNICATION WITH DVD PLAYER
U0199-00	LOST COMMUNICATION WITH DRIVER DOOR MODULE
U0200-00	LOST COMMUNICATION WITH PASSENGER DOOR MODULE
U0208-00	LOST COMMUNICATION WITH HEATED SEAT CONTROL MODULE

U0209-00	LOST COMMUNICATION WITH MEMORY SEAT CONTROL MODULE
U11B8-00	LOST COMMUNICATION WITH INTEGRATED CENTER STACK (ICS)

DIAGNOSIS AND TESTING

B1400-11-FRONT LEFT AUDIO SPEAKER OUTPUT - CIRCUIT SHORT TO GROUND - BASE

For a complete wiring diagram, **refer to appropriate SYSTEM WIRING DIAGRAMS article** .

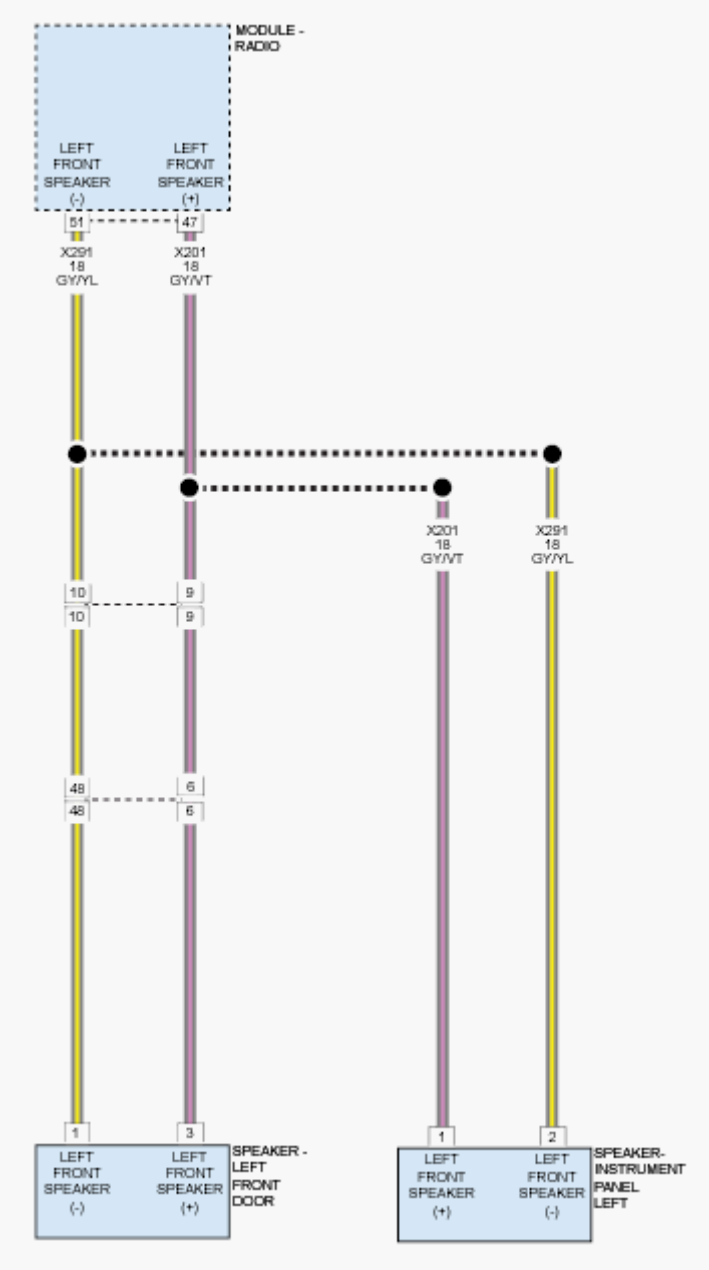

Fig. 1: Front Left Audio Speaker Output - Circuit Diagram (Base)
Courtesy of CHRYSLER GROUP, LLC

THEORY OF OPERATION

NOTE: There are two versions of the B1400-11 DTC test. In order to select the proper test you must know if the vehicle is equipped with an Amplifier. If the vehicle is equipped with an Amplifier use the B1400-11 PREMIUM test. If the vehicle is not equipped with an Amplifier use the B1400-11 BASE test.

The Left Front Speaker (+) circuit and the Left Front Speaker (-) circuit are outputs of the Radio. The Radio controls and monitors these circuits for a concern.

For a detailed description of the Audio System, refer to **DESCRIPTION** .

For additional information regarding the operation of the Audio System, refer to **OPERATION** .

WHEN MONITORED

With the Radio on.

SET CONDITION

The Radio detects a short to ground condition on the speaker output circuit for greater than 2.5 seconds.

POSSIBLE CAUSES

Possible Causes
LEFT FRONT SPEAKER (+) CIRCUIT SHORTED TO GROUND
LEFT FRONT SPEAKER (-) CIRCUIT SHORTED TO GROUND
LEFT FRONT SPEAKER
LEFT FRONT INSTRUMENT PANEL (I/P) SPEAKER
RADIO

DIAGNOSTIC TEST

1. **CHECK FOR AN INTERMITTENT CONDITION**

NOTE: This vehicle has a Front I/P Speaker wired in parallel with the Front Door Speaker.

1. Turn the ignition on.
2. Using the scan tool, record and erase the Radio DTCs.
3. Turn the Radio on.
4. Adjust the speakers to the front and center.

5. Using the scan tool, read the active Radio DTCs.

   Does the scan tool read: B1400-11-FRONT LEFT AUDIO SPEAKER OUTPUT - CIRCUIT SHORT TO GROUND ?

   Yes

   - Go To 2

   No

   - Test complete, the condition or conditions that originally set this DTC are not present at this time. Using the wiring diagrams as a guide, check all related splices and connectors for signs of water intrusion, corrosion, pushed out or bent terminals and correct pin tension.
   - Perform the BODY VERIFICATION TEST. Refer to **STANDARD PROCEDURE** .

2. **CHECK THE LEFT FRONT SPEAKERS**
   1. Using the scan tool, erase the DTCs.
   2. Turn the ignition off.
   3. Disconnect the Left Front Door Speaker harness connector from the Left Front Door Speaker.
   4. Disconnect the Left Front I/P Speaker harness connector from the Left Front I/P Speaker.
   5. Turn the ignition on.
   6. Turn the radio on.
   7. Using the scan tool, read the active Radio DTCs.

      Does the scan tool read: B1400-11-FRONT LEFT AUDIO SPEAKER OUTPUT - CIRCUIT SHORT TO GROUND?

      Yes

      - Go To 4

      No

      - Go To 3

3. **CHECK THE LEFT FRONT I/P SPEAKER**
   1. Make sure one of the front doors is still open.
   2. Using the scan tool, erase the DTCs.
   3. Turn the ignition off.
   4. Re-connect the Left Front Door Speaker harness connector to the Left Front Door Speaker.
   5. Turn the ignition on.
   6. Turn the radio on.
   7. Using the scan tool, read the active Radio DTCs.

Does the scan tool read: B1400-11-FRONT LEFT AUDIO SPEAKER OUTPUT - CIRCUIT SHORT TO GROUND ?

Yes

- Replace the Left Front Door Speaker in accordance with the Service Information.
- Perform the BODY VERIFICATION TEST. Refer to **STANDARD PROCEDURE** .

No

- Replace the Left Front I/P Speaker in accordance with the Service Information.
- Perform the BODY VERIFICATION TEST. Refer to **STANDARD PROCEDURE** .

4. **CHECK THE (X201) LEFT FRONT SPEAKER (+) CIRCUIT FOR A SHORT TO GROUND**
   1. Turn the ignition off.
   2. Disconnect the Radio C1 harness connector.
   3. Measure the resistance between ground and the (X201) Left Front Speaker (+) circuit.

   Is the resistance below 5.0 Ohms?

   Yes

   - Repair the (X201) Left Front Speaker (+) circuit for a short to ground.
   - Perform the BODY VERIFICATION TEST. Refer to **STANDARD PROCEDURE** .

   No

   - Go To 5

5. **CHECK THE (X291) LEFT FRONT SPEAKER (-) CIRCUIT FOR A SHORT TO GROUND**
   1. Measure the resistance between ground and the (X291) Left Front Speaker (-) circuit.

   Is the resistance below 5.0 Ohms?

   Yes

   - Repair the (X291) Left Front Speaker (-) circuit for a short to ground.
   - Perform the BODY VERIFICATION TEST. Refer to **STANDARD PROCEDURE** .

   No

   - Replace the Radio in accordance with the Service Information.
   - Perform the BODY VERIFICATION TEST. Refer to **STANDARD PROCEDURE** .

B1400-11-FRONT LEFT AUDIO SPEAKER OUTPUT - CIRCUIT SHORT TO GROUND - PREMIUM

For a complete wiring diagram, **refer to appropriate SYSTEM WIRING DIAGRAMS article** .

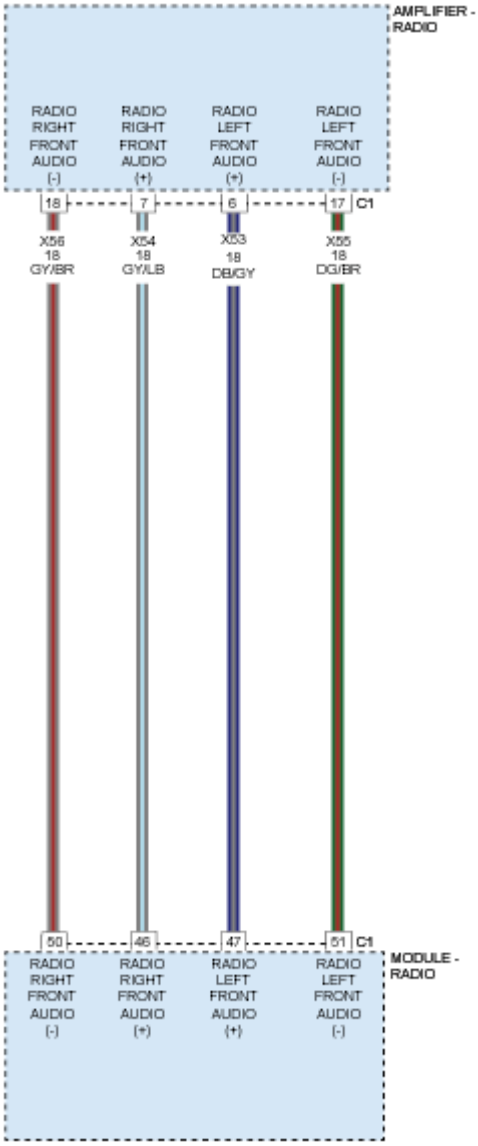

Fig. 2: Front Left/Right Audio Speaker Output - Circuit Diagram (Premium)
Courtesy of CHRYSLER GROUP, LLC

THEORY OF OPERATION

NOTE: **There are two versions of the B1400-11 DTC test. In order to select the proper test you must know if the vehicle is equipped with an Amplifier. If the vehicle is equipped with an Amplifier use the B1400-11 PREMIUM test. If the vehicle is not equipped with an Amplifier use the B1400-11 BASE test.**

The Left Front Audio (+) circuit and the Left Front Audio (-) circuit are outputs of the Radio. The Radio

controls and monitors these circuits for a concern.

For a detailed description of the Audio System, refer to **DESCRIPTION** .

For additional information regarding the operation of the Audio System, refer to **OPERATION** .

WHEN MONITORED

With the Radio on.

SET CONDITION

The Radio detects a short to ground condition on the audio output circuit for greater than 2.5 seconds.

POSSIBLE CAUSES

Possible Causes
LEFT FRONT AUDIO (+) CIRCUIT SHORTED TO GROUND
LEFT FRONT AUDIO (-) CIRCUIT SHORTED TO GROUND
AMPLIFIER
RADIO

DIAGNOSTIC TEST

1. **CHECK FOR AN INTERMITTENT CONDITION**
    1. Turn the ignition on.
    2. Using the scan tool, record and erase the Radio DTCs.
    3. Turn the Radio on.
    4. Adjust the speakers to the front and center.
    5. Using the scan tool, read the active Radio DTCs.

    Does the scan tool read: B1400-11-FRONT LEFT AUDIO SPEAKER OUTPUT - CIRCUIT SHORT TO GROUND?

    Yes

    - Go To 2

    No

    - Test complete, the condition or conditions that originally set this DTC are not present at this time. Using the wiring diagrams as a guide, check all related splices and connectors for signs of water intrusion, corrosion, pushed out or bent terminals and correct pin tension.
    - Perform the BODY VERIFICATION TEST. Refer to **STANDARD PROCEDURE** .

2. **CHECK THE AMPLIFIER**
    1. Using the scan tool, erase the DTCs.
    2. Turn the ignition off.
    3. Disconnect the Amplifier C1 harness connector from the Amplifier.
    4. Turn the ignition on.
    5. Turn the radio on.
    6. Using the scan tool, read the active Radio DTCs.

    Does the scan tool read: B1400-11-FRONT LEFT AUDIO SPEAKER OUTPUT - CIRCUIT SHORT TO GROUND?

    Yes

    - Go To 3

    No

    - Replace the Amplifier in accordance with the Service Information.
    - Perform the BODY VERIFICATION TEST. Refer to **STANDARD PROCEDURE** .
3. **CHECK THE (X53) LEFT FRONT AUDIO (+) CIRCUIT FOR A SHORT TO GROUND**
    1. Turn the ignition off.
    2. Disconnect the Radio C1 harness connector.
    3. Measure the resistance between ground and the (X53) Left Front Audio (+) circuit.

    Is the resistance below 5.0 Ohms?

    Yes

    - Repair the (X53) Left Front Audio (+) circuit for a short to ground.
    - Perform the BODY VERIFICATION TEST. Refer to **STANDARD PROCEDURE** .

    No

    - Go To 4
4. **CHECK THE (X55) LEFT FRONT AUDIO (-) CIRCUIT FOR A SHORT TO GROUND**
    1. Measure the resistance between ground and the (X55) Left Front Audio (-) circuit.

    Is the resistance below 5.0 Ohms?

    Yes

    - Repair the (X55) Left Front Audio (-) circuit for a short to ground.

- Perform the BODY VERIFICATION TEST. Refer to **STANDARD PROCEDURE** .

No

- Replace the Radio in accordance with the Service Information.
- Perform the BODY VERIFICATION TEST. Refer to **STANDARD PROCEDURE** .

B1400-12-FRONT LEFT AUDIO SPEAKER OUTPUT - CIRCUIT SHORT TO BATTERY - BASE

For a complete wiring diagram, **refer to appropriate SYSTEM WIRING DIAGRAMS article** .

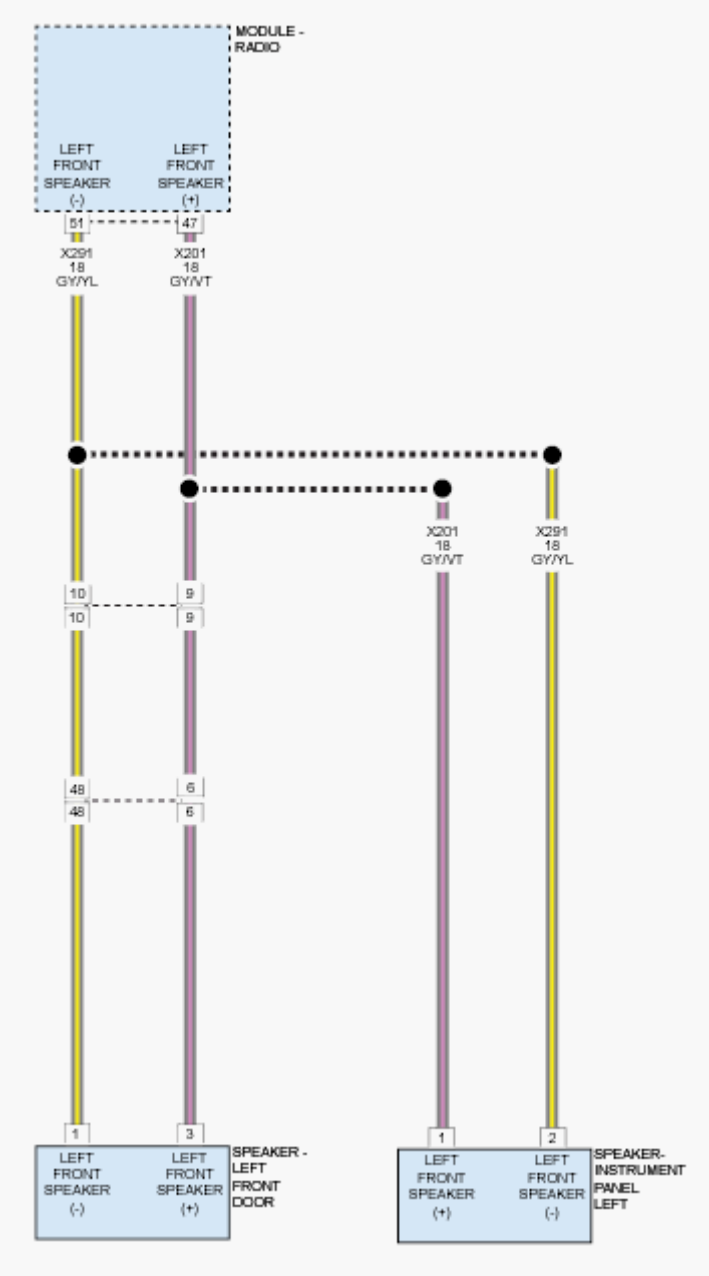

Fig. 3: Front Left Audio Speaker Output - Circuit Diagram (Base)
Courtesy of CHRYSLER GROUP, LLC

THEORY OF OPERATION

NOTE: There are two versions of the B1400-12 DTC test. In order to select the proper test you must know if the vehicle is equipped with an Amplifier. If the vehicle is equipped with an Amplifier use the B1400-12 PREMIUM test. If the vehicle is not equipped with an Amplifier use the B1400-12 BASE test.

The Left Front Speaker (+) circuit and the Left Front Speaker (-) circuit are outputs of the Radio. The Radio controls and monitors these circuits for a concern.

For a detailed description of the Audio System, refer to **DESCRIPTION** .

For additional information regarding the operation of the Audio System, refer to **OPERATION** .

WHEN MONITORED

With the Radio on.

SET CONDITION

The Radio detects a short to battery condition on the speaker output circuit for greater than 2.5 seconds.

POSSIBLE CAUSES

Possible Causes
LEFT FRONT SPEAKER (+) CIRCUIT SHORTED TO VOLTAGE
LEFT FRONT SPEAKER (-) CIRCUIT SHORTED TO VOLTAGE
RADIO

DIAGNOSTIC TEST

1. **CHECK FOR AN INTERMITTENT CONDITION**

NOTE: This vehicle has a Front I/P Speaker wired in parallel with the Front Door Speaker.

1. Turn the ignition on.
2. Using the scan tool, record and erase the Radio DTCs.
3. Turn the Radio on.
4. Adjust the speakers to the front and center.
5. Using the scan tool, read the active Radio DTCs.

Does the scan tool read: B1400-12-FRONT LEFT AUDIO SPEAKER OUTPUT - CIRCUIT SHORT TO BATTERY?

Yes

- Go To 2

No

- Test complete, the condition or conditions that originally set this DTC are not present at this time. Using the wiring diagrams as a guide, check all related splices and connectors for signs of water intrusion, corrosion, pushed out or bent terminals and correct pin tension.
- Perform the BODY VERIFICATION TEST. Refer to **STANDARD PROCEDURE** .

2. **CHECK FOR VOLTAGE ON THE (X201) LEFT FRONT SPEAKER (+) CIRCUIT**
   1. Turn the ignition off.
   2. Disconnect the Radio C1 harness connector.
   3. Disconnect the Left Front Door Speaker harness connector.
   4. Disconnect the Front I/P Speaker harness connector.
   5. Turn the ignition on.
   6. Measure the voltage between ground and the (X201) Left Front Speaker (+) circuit.

   Is there any voltage present?

   Yes

   - Repair the (X201) Left Front Speaker (+) circuit for a short to voltage.
   - Perform the BODY VERIFICATION TEST. Refer to **STANDARD PROCEDURE** .

   No

   - Go To 3

3. **CHECK FOR VOLTAGE ON THE (X291) LEFT FRONT SPEAKER (-) CIRCUIT**
   1. Measure the voltage between ground and the (X291) Left Front Speaker (-) circuit.

   Is there any voltage present?

   Yes

   - Repair the (X291) Left Front Speaker (-) circuit for a short to voltage.
   - Perform the BODY VERIFICATION TEST. Refer to **STANDARD PROCEDURE** .

   No

- Replace the Radio in accordance with the Service Information.
- Perform the BODY VERIFICATION TEST. Refer to **STANDARD PROCEDURE** .

B1400-12-FRONT LEFT AUDIO SPEAKER OUTPUT - CIRCUIT SHORT TO BATTERY - PREMIUM

For a complete wiring diagram, **refer to appropriate SYSTEM WIRING DIAGRAMS article** .

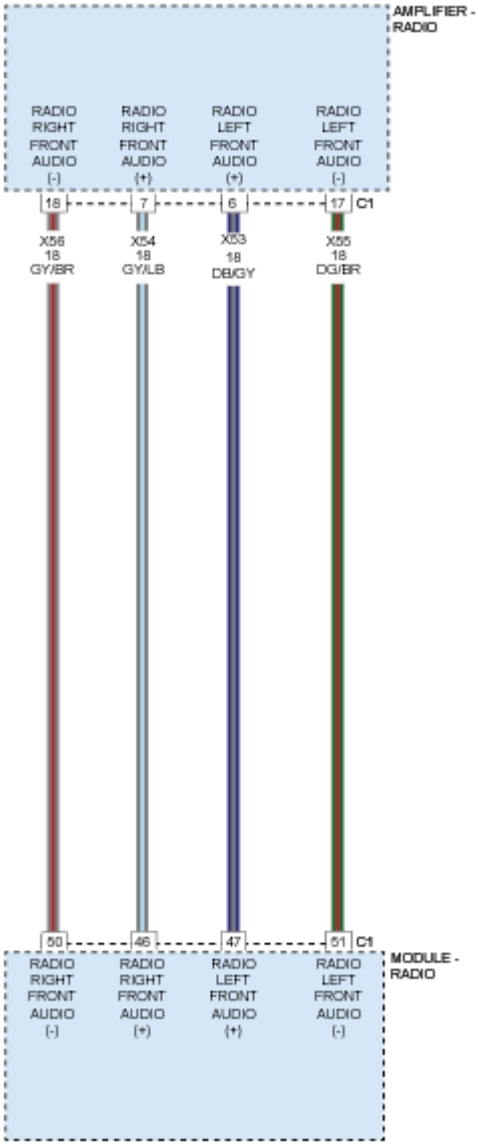

Fig. 4: Front Left/Right Audio Speaker Output - Circuit Diagram (Premium)
Courtesy of CHRYSLER GROUP, LLC

THEORY OF OPERATION

NOTE: **There are two versions of the B1400-12 DTC test. In order to select the proper test you must know if the vehicle is equipped with an Amplifier. If the vehicle is equipped with an Amplifier use the B1400-12 PREMIUM test. If the vehicle is not equipped with an Amplifier use the B1400-12 BASE test.**

The Left Front Audio (+) circuit and the Left Front Audio (-) circuit are outputs of the Radio. The Radio controls and monitors these circuits for a concern.

For a detailed description of the Audio System, refer to **DESCRIPTION** .

For additional information regarding the operation of the Audio System, refer to **OPERATION** .

WHEN MONITORED

With the Radio on.

SET CONDITION

The Radio detects a short to battery condition on the audio output circuit for greater than 2.5 seconds.

POSSIBLE CAUSES

Possible Causes
LEFT FRONT AUDIO (+) CIRCUIT SHORTED TO VOLTAGE
LEFT FRONT AUDIO (-) CIRCUIT SHORTED TO VOLTAGE
AMPLIFIER
RADIO

DIAGNOSTIC TEST

1. **CHECK FOR AN INTERMITTENT CONDITION**
    1. Turn the ignition on.
    2. Using the scan tool, record and erase the Radio DTCs.
    3. Turn the Radio on.
    4. Adjust the speakers to the front and center.
    5. Using the scan tool, read the active Radio DTCs.

    Does the scan tool read: B1400-12-FRONT LEFT AUDIO SPEAKER OUTPUT - CIRCUIT SHORT TO BATTERY?

    Yes

    - Go To 2

No

- Test complete, the condition or conditions that originally set this DTC are not present at this time. Using the wiring diagrams as a guide, check all related splices and connectors for signs of water intrusion, corrosion, pushed out or bent terminals and correct pin tension.
- Perform the BODY VERIFICATION TEST. Refer to **STANDARD PROCEDURE** .

2. **CHECK THE AMPLIFIER**
   1. Using the scan tool, erase the DTCs.
   2. Turn the ignition off.
   3. Disconnect the Amplifier C1 harness connector from the Amplifier.
   4. Turn the ignition on.
   5. Turn the radio on.
   6. Using the scan tool, read the active Radio DTCs.

   Does the scan tool read: B1400-12-FRONT LEFT AUDIO SPEAKER OUTPUT - CIRCUIT SHORT TO BATTERY?

   Yes

   - Go To 3

   No

   - Replace the Amplifier in accordance with the Service Information.
   - Perform the BODY VERIFICATION TEST. Refer to **STANDARD PROCEDURE** .

3. **CHECK FOR VOLTAGE ON THE (X53) LEFT FRONT AUDIO (+) CIRCUIT**
   1. Turn the ignition off.
   2. Disconnect the Radio C1 harness connector.
   3. Turn the ignition on.
   4. Measure the voltage between ground and the (X53) Left Front Audio (+) circuit.

   Is there any voltage present?

   Yes

   - Repair the (X53) Left Front Audio (+) circuit for a short to voltage.
   - Perform the BODY VERIFICATION TEST. Refer to **STANDARD PROCEDURE** .

   No

   - Go To 4

4. **CHECK FOR VOLTAGE ON THE (X55) LEFT FRONT AUDIO (-) CIRCUIT**

1. Measure the voltage between ground and the (X55) Left Front Audio (-) circuit.

   Is there any voltage present?

   Yes

   - Repair the (X55) Left Front Audio (-) circuit for a short to voltage.
   - Perform the BODY VERIFICATION TEST. Refer to **STANDARD PROCEDURE** .

   No

   - Replace the Radio in accordance with the Service Information.
   - Perform the BODY VERIFICATION TEST. Refer to **STANDARD PROCEDURE** .

B1400-13-FRONT LEFT AUDIO SPEAKER OUTPUT - CIRCUIT OPEN - BASE

For a complete wiring diagram, **refer to appropriate SYSTEM WIRING DIAGRAMS article** .

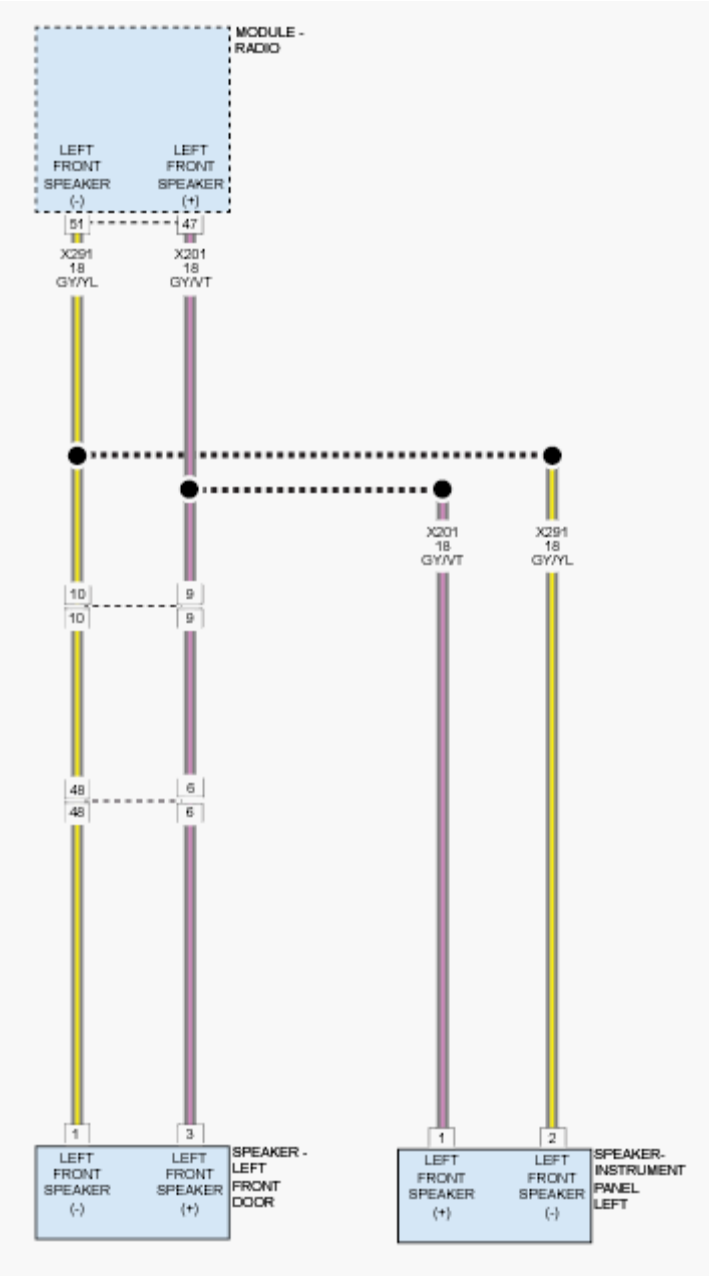

Fig. 5: Front Left Audio Speaker Output - Circuit Diagram (Base)
Courtesy of CHRYSLER GROUP, LLC

THEORY OF OPERATION

NOTE: **There are two versions of the B1400-13 DTC test. In order to select the proper test you must know if the vehicle is equipped with an Amplifier. If the vehicle is equipped with an Amplifier use the B1400-13 PREMIUM test. If the vehicle is not equipped with an Amplifier use the B1400-13 BASE test.**

The Left Front Speaker (+) circuit and the Left Front Speaker (-) circuit are outputs of the Radio. The Radio

controls and monitors these circuits for a concern.

For a detailed description of the Audio System, refer to **DESCRIPTION** .

For additional information regarding the operation of the Audio System, refer to **OPERATION** .

WHEN MONITORED

With the Radio on.

SET CONDITION

The Radio detects an open condition on the speaker output circuit for greater than 2.5 seconds.

POSSIBLE CAUSES

Possible Causes
LEFT FRONT SPEAKER (+) CIRCUIT OPEN
LEFT FRONT SPEAKER (-) CIRCUIT OPEN
LEFT FRONT SPEAKER
LEFT FRONT INSTRUMENT PANEL (I/P) SPEAKER
RADIO

DIAGNOSTIC TEST

1. **CHECK FOR AN INTERMITTENT CONDITION**

   NOTE: This vehicle has a Front I/P Speaker wired in parallel with the Front Door Speaker.

   1. Turn the ignition on
   2. Using the scan tool, record and erase the Radio DTCs.
   3. Turn the Radio on.
   4. Adjust the speakers to the front and center.
   5. Using the scan tool, read the active Radio DTCs.

      Does the scan tool read: B1400-13-FRONT LEFT AUDIO SPEAKER OUTPUT - CIRCUIT OPEN?

      Yes

      - Go To 2

      No

- Test complete, the condition or conditions that originally set this DTC are not present at this time. Using the wiring diagrams as a guide, check all related splices and connectors for signs of water intrusion, corrosion, pushed out or bent terminals and correct pin tension.
- Perform the BODY VERIFICATION TEST. Refer to **STANDARD PROCEDURE** .

2. **CHECK THE LEFT FRONT SPEAKER**
   1. Turn the ignition off.
   2. Disconnect the Left Front Speaker.
   3. Measure the resistance of the speaker between the two terminals.

   Is the resistance above 5.0 Ohms?

   Yes

   - Replace the Left Front Speaker in accordance with the Service Information.
   - Perform the BODY VERIFICATION TEST. Refer to **STANDARD PROCEDURE** .

   No

   - Go To 3

3. **CHECK THE LEFT FRONT I/P SPEAKER**
   1. Turn the ignition off.
   2. Disconnect the Left Front I/P Speaker.
   3. Measure the resistance of the speaker between the two terminals.

   Is the resistance above 5.0 Ohms?

   Yes

   - Replace the Left Front I/P Speaker in accordance with the Service Information.
   - Perform the BODY VERIFICATION TEST. Refer to **STANDARD PROCEDURE** .

   No

   - Go To 4

4. **CHECK THE (X201) LEFT FRONT SPEAKER (+) CIRCUIT FOR AN OPEN**
   1. Turn the ignition off.
   2. Disconnect the Radio C1 harness connector.
   3. Measure the resistance of the (X201) Left Front Speaker (+) circuit between the Radio C1 connector, and the Left Front Speaker harness connector and the Left Front I/P Speaker harness.

   Is the resistance below 5.0 Ohms?

Yes

- Go To 5

No

- Repair an open in the (X201) Left Front Speaker (+) circuit.
- Perform the BODY VERIFICATION TEST. Refer to **STANDARD PROCEDURE** .

5. **CHECK THE (X291) LEFT FRONT SPEAKER (-) CIRCUIT FOR AN OPEN**
   1. Measure the resistance of the (X291) Left Front Speaker (-) circuit between the Radio C1 connector, and the Left Front Speaker harness connector and the Left Front I/P Speaker harness.

      Is the resistance below 5.0 Ohms?

      Yes

      - Replace the Radio in accordance with the Service Information.
      - Perform the BODY VERIFICATION TEST. Refer to **STANDARD PROCEDURE** .

      No

      - Repair an open in the (X291) Left Front Speaker (-) circuit.
      - Perform the BODY VERIFICATION TEST. Refer to **STANDARD PROCEDURE** .

B1400-13-FRONT LEFT AUDIO SPEAKER OUTPUT - CIRCUIT OPEN - PREMIUM

For a complete wiring diagram, **refer to appropriate SYSTEM WIRING DIAGRAMS article** .

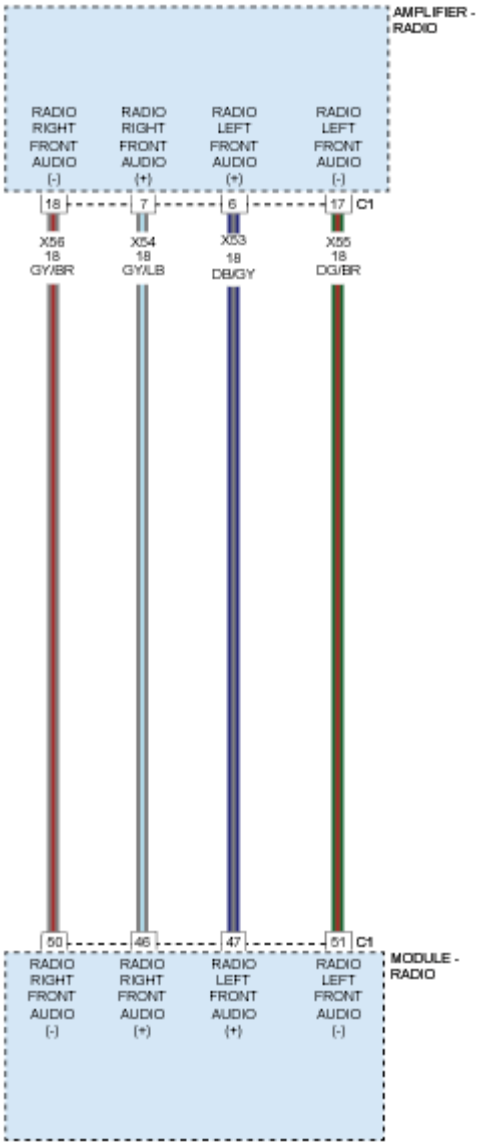

Fig. 6: Front Left/Right Audio Speaker Output - Circuit Diagram (Premium)
Courtesy of CHRYSLER GROUP, LLC

THEORY OF OPERATION

NOTE: **There are two versions of the B1400-13 DTC test. In order to select the proper test you must know if the vehicle is equipped with an Amplifier. If the vehicle is equipped with an Amplifier use the B1400-13 PREMIUM test. If the vehicle is not equipped with an Amplifier use the B1400-13 BASE test.**

The Left Front Audio (+) circuit and the Left Front Audio (-) circuit are outputs of the Radio. The Radio controls and monitors these circuits for a concern.

For a detailed description of the Audio System, refer to **DESCRIPTION** .

For additional information regarding the operation of the Audio System, refer to **OPERATION** .

WHEN MONITORED

With the Radio on.

SET CONDITION

The Radio detects an open condition on the audio output circuit for greater than 2.5 seconds.

POSSIBLE CAUSES

Possible Causes
LEFT FRONT AUDIO (+) CIRCUIT OPEN
LEFT FRONT AUDIO (-) CIRCUIT OPEN
AMPLIFIER
RADIO

DIAGNOSTIC TEST

1. **CHECK FOR AN INTERMITTENT CONDITION**
    1. Turn the ignition on.
    2. Using the scan tool, record and erase the Radio DTCs.
    3. Turn the Radio on.
    4. Adjust the speakers to the front and center.
    5. Using the scan tool, read the active Radio DTCs.

    Does the scan tool read: B1400-13-FRONT LEFT AUDIO SPEAKER OUTPUT - CIRCUIT OPEN?

    Yes

    - Go To 2

    No

    - Test complete, the condition or conditions that originally set this DTC are not present at this time. Using the wiring diagrams as a guide, check all related splices and connectors for signs of water intrusion, corrosion, pushed out or bent terminals and correct pin tension.
    - Perform the BODY VERIFICATION TEST. Refer to **STANDARD PROCEDURE** .
2. **CHECK THE AMPLIFIER**
    1. Turn the ignition off.

2. Disconnect the Amplifier C1 harness connector.
3. Connect a jumper wire between the (X53) Left Front Audio (+) circuit and the (X55) Left Front Audio (-) circuits.
4. Turn the ignition on.
5. Turn the Radio on.
6. Adjust the speakers to the front and center.
7. Using the scan tool, read the active Radio DTCs.

   Does the scan tool read: B1400-13-FRONT LEFT AUDIO SPEAKER OUTPUT - CIRCUIT OPEN?

   Yes

   - Go To 3

   No

   - Replace the Amplifier in accordance with the Service Information.
   - Perform the BODY VERIFICATION TEST. Refer to **STANDARD PROCEDURE** .

3. **CHECK THE (X53) LEFT FRONT AUDIO (+) CIRCUIT FOR AN OPEN**
   1. Turn the ignition off.
   2. Disconnect the Radio C1 harness connector.
   3. Measure the resistance of (X53) Left Front Audio (+) circuit between the Radio C1 connector and the Amplifier C1 harness connector.

      Is the resistance below 5.0 Ohms?

      Yes

      - Go To 4

      No

      - Repair open in the (X53) Left Front Audio (+) circuit.
      - Perform the BODY VERIFICATION TEST. Refer to **STANDARD PROCEDURE** .

4. **CHECK THE (X55) LEFT FRONT AUDIO (-) CIRCUIT FOR AN OPEN**
   1. Measure the resistance of (X55) Left Front Audio (-) circuit between the Radio C1 connector, and the Amplifier C1 harness connector.

      Is the resistance below 5.0 Ohms?

      Yes

- Replace the Radio in accordance with the Service Information.
- Perform the BODY VERIFICATION TEST. Refer to **STANDARD PROCEDURE** .

No

- Repair open in the (X55) Left Front Audio (-) circuit.
- Perform the BODY VERIFICATION TEST. Refer to **STANDARD PROCEDURE** .

B1400-1A-FRONT LEFT AUDIO SPEAKER OUTPUT - CIRCUIT RESISTANCE BELOW THRESHOLD - BASE

For a complete wiring diagram, **refer to appropriate SYSTEM WIRING DIAGRAMS article** .

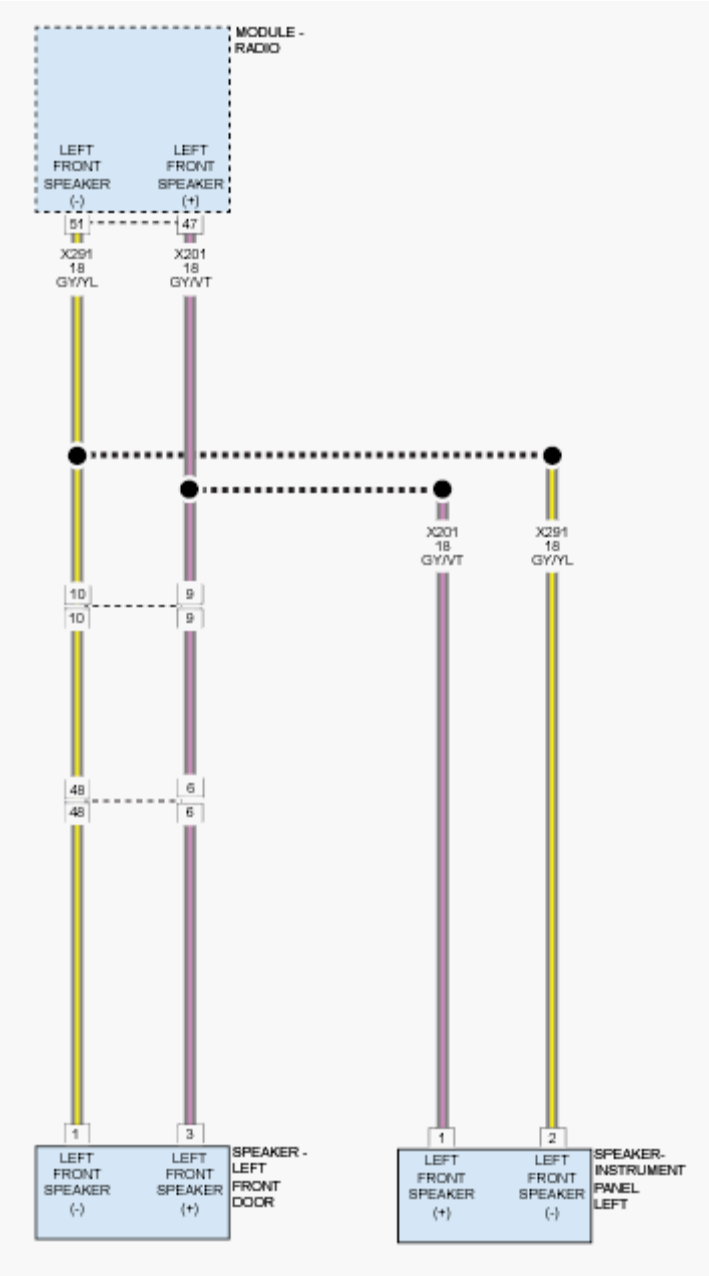

Fig. 7: Front Left Audio Speaker Output - Circuit Diagram (Base)
Courtesy of CHRYSLER GROUP, LLC

THEORY OF OPERATION

NOTE: **There are two versions of the B1400-1A DTC test. In order to select the proper test you must know if the vehicle is equipped with an Amplifier. If the vehicle is equipped with an Amplifier use the B1400-1A PREMIUM test. If the vehicle is not equipped with an Amplifier use the B1400-1A BASE test.**

The Left Front Door Speaker (+) circuit and the Left Front Door Speaker (-) circuit are outputs of the Radio.

The Radio controls and monitors these circuits for a concern.

For a detailed description of the Audio System, refer to **DESCRIPTION** .

For additional information regarding the operation of the Audio System, refer to **OPERATION** .

WHEN MONITORED

With the ignition on.

SET CONDITION

The Radio detects that the output circuits are shorted together for greater than 2.5 seconds.

POSSIBLE CAUSES

Possible Causes
LEFT FRONT DOOR SPEAKER (+) CIRCUIT SHORTED TO THE LEFT FRONT DOOR SPEAKER (-) CIRCUIT
LEFT FRONT DOOR SPEAKER
LEFT FRONT TWEETER
RADIO

DIAGNOSTIC TEST

1. **CHECK FOR AN INTERMITTENT CONDITION**

   NOTE: This vehicle has a Front I/P Speaker wired in parallel with the Front Door Speaker.

   1. Turn the ignition on.
   2. Using the scan tool, record and erase the Radio DTCs.
   3. Turn the Radio on.
   4. Adjust the speakers to the front and center.
   5. Using the scan tool, read the active Radio DTCs.

      Does the scan tool read: B1400-1A-FRONT LEFT AUDIO SPEAKER OUTPUT - CIRCUIT RESISTANCE BELOW THRESHOLD?

      Yes

      - Go To 2

      No

- Test complete, the condition or conditions that originally set this DTC are not present at this time. Using the wiring diagrams as a guide, check all related splices and connectors for signs of water intrusion, corrosion, pushed out or bent terminals and correct pin tension.
- Perform the BODY VERIFICATION TEST. Refer to **STANDARD PROCEDURE** .

2. **CHECK THE LEFT FRONT SPEAKERS**
   1. Using the scan tool, erase the DTCs.
   2. Turn the ignition off.
   3. Disconnect the Left Front Speaker harness connector from the Left Front Speaker.
   4. Disconnect the Front I/P Speaker harness connector from the Front I/P Speaker.
   5. Turn the ignition on.
   6. Turn the radio on.
   7. Using the scan tool, read the active Radio DTCs.

   Does the scan tool read: B1400-1A-FRONT LEFT AUDIO SPEAKER OUTPUT - CIRCUIT RESISTANCE BELOW THRESHOLD?

   Yes

   - Go To 4

   No

   - Go To 3

3. **CHECK THE LEFT FRONT I/P SPEAKER**
   1. Make sure one of the front doors is still open.
   2. Using the scan tool, erase the DTCs.
   3. Turn the ignition off.
   4. Re-connect the Left Front Speaker harness connector to the Left Front Speaker.
   5. Turn the ignition on.
   6. Turn the radio on.
   7. Using the scan tool, read the active Radio DTCs.

   Does the scan tool read: B1400-1A-FRONT LEFT AUDIO SPEAKER OUTPUT - CIRCUIT RESISTANCE BELOW THRESHOLD?

   Yes

   - Replace the Left Front Speaker in accordance with the Service Information.
   - Perform the BODY VERIFICATION TEST. Refer to **STANDARD PROCEDURE** .

   No

- Replace the Front I/P Speaker in accordance with the Service Information.
- Perform the BODY VERIFICATION TEST. Refer to **STANDARD PROCEDURE** .

4. **CHECK THE (X201) LEFT FRONT DOOR SPEAKER (+) CIRCUIT FOR A SHORT TO GROUND**
   1. Turn the ignition off.
   2. Disconnect the Radio C1 harness connector.
   3. Measure the resistance between ground and the (X201) Left Front Door Speaker (+) circuit

      Is the resistance below 5.0 Ohms?

      Yes

      - Repair the (X201) Left Front Door Speaker (+) circuit for a short to ground.
      - Perform the BODY VERIFICATION TEST. Refer to **STANDARD PROCEDURE** .

      No

      - Go To 5
5. **CHECK THE (X291) LEFT FRONT DOOR SPEAKER (-) CIRCUIT FOR A SHORT TO GROUND**
   1. Measure the resistance between ground and the (X291) Left Front Door Speaker (-) circuit.

      Is the resistance below 5.0 Ohms?

      Yes

      - Repair the (X291) Left Front Door Speaker (-) circuit for a short to ground.
      - Perform the BODY VERIFICATION TEST. Refer to **STANDARD PROCEDURE** .

      No

      - Replace the Radio in accordance with the Service Information.
      - Perform the BODY VERIFICATION TEST. Refer to **STANDARD PROCEDURE** .

B1400-1A-FRONT LEFT AUDIO SPEAKER OUTPUT - CIRCUIT RESISTANCE BELOW THRESHOLD - PREMIUM

For a complete wiring diagram, **refer to appropriate SYSTEM WIRING DIAGRAMS article** .

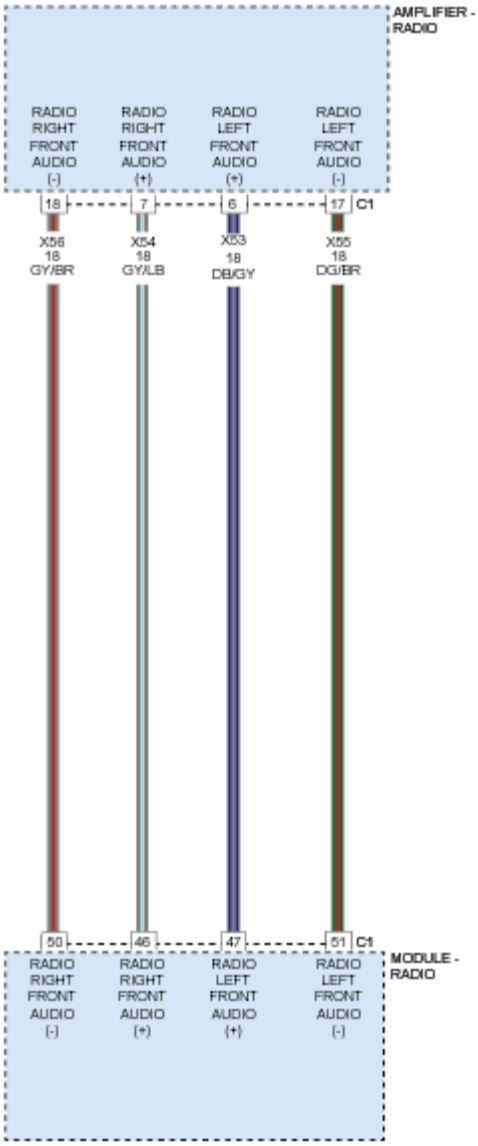

Fig. 8: Front Left/Right Audio Speaker Output - Circuit Diagram (Premium)
Courtesy of CHRYSLER GROUP, LLC

THEORY OF OPERATION

NOTE: **There are two versions of the B1400-1A DTC test. In order to select the proper test you must know if the vehicle is equipped with an Amplifier. If the vehicle is equipped with an Amplifier use the B1400-1A PREMIUM test. If the vehicle is not equipped with an Amplifier use the B1400-1A BASE test.**

The Left Front Audio (+) circuit and the Left Front Audio (-) circuit are outputs of the Radio. The Radio controls and monitors these circuits for a concern.

For a detailed description of the Audio System, refer to **DESCRIPTION** .

For additional information regarding the operation of the Audio System, refer to **OPERATION** .

WHEN MONITORED

With the ignition on.

SET CONDITION

The Radio detects that the output circuits are shorted together for greater than 2.5 seconds.

POSSIBLE CAUSES

Possible Causes
LEFT FRONT AUDIO (+) CIRCUIT SHORTED TO THE LEFT FRONT AUDIO (-) CIRCUIT
AMPLIFIER
RADIO

DIAGNOSTIC TEST

1. **CHECK FOR AN INTERMITTENT CONDITION**
    1. Turn the ignition on.
    2. Using the scan tool, record and erase the Radio DTCs.
    3. Cycle the ignition switch from on to off, wait five seconds and then back to on.
    4. Turn the Radio on and set the volume to 25.
    5. Adjust the speakers to the front and center.
    6. Using the scan tool, read the active Radio DTCs.

    Does the scan tool display active: B1400-1A- FRONT LEFT AUDIO SPEAKER OUTPUT - CIRCUIT RESISTANCE BELOW THRESHOLD - PREMIUM?

    Yes

    - Go To 2

    No

    - Test complete, the condition or conditions that originally set this DTC are not present at this time. Using the wiring diagrams as a guide, check all related splices and connectors for signs of water intrusion, corrosion, pushed out or bent terminals and correct pin tension.
    - Perform the BODY VERIFICATION TEST. Refer to **STANDARD PROCEDURE** .
2. **CHECK THE AMPLIFIER**
    1. Using the scan tool, erase the DTCs.

2. Turn the ignition off.
3. Disconnect the Amplifier harness connector.
4. Turn the ignition on.
5. Turn the radio on and set the volume to 25.
6. Using the scan tool, read the active Radio DTCs.

   Does the scan tool display active: B1400-1A- FRONT LEFT AUDIO SPEAKER OUTPUT - CIRCUIT RESISTANCE BELOW THRESHOLD - PREMIUM?

   Yes

   - Go To 3

   No

   - Replace the Amplifier in accordance with the Service Information. Refer to **AMPLIFIER, REMOVAL** .
   - Perform the BODY VERIFICATION TEST. Refer to **STANDARD PROCEDURE** .

3. **CHECK THE (X53) LEFT FRONT AUDIO (+) CIRCUIT, AND THE (X55) LEFT FRONT AUDIO (-) CIRCUITS FOR A SHORT TOGETHER**
   1. Disconnect the Radio harness connector.
   2. Measure the resistance between the (X53) Left Front AUDIO (+) circuit, and the (X55) Left Front AUDIO (-) circuit.

      Is the resistance below 10K Ohms?

      Yes

      - Repair the (X53) Left Front AUDIO (+) circuit, and the (X55) Left Front AUDIO (-) circuit for a short together.
      - Perform the BODY VERIFICATION TEST. Refer to **STANDARD PROCEDURE** .

      No

      - Replace the Radio in accordance with the Service Information. Refer to **RADIO, REMOVAL** .
      - Perform the BODY VERIFICATION TEST. Refer to **STANDARD PROCEDURE** .

B1400-92-FRONT LEFT AUDIO SPEAKER OUTPUT - PERFORMANCE OR INCORRECT OPERATION

For a complete wiring diagram, **refer to appropriate SYSTEM WIRING DIAGRAMS article** .

THEORY OF OPERATION

Radio monitors the Left Audio output for a Direct Current (DC) offset.

For a detailed description of the Audio System, refer to **DESCRIPTION** .

For additional information regarding the operation of the Audio System, refer to **OPERATION** .

WHEN MONITORED

With the ignition on.

SET CONDITION

This Diagnostic Trouble Code (DTC) sets if a Direct Current (DC) offset occurs on the output channel, the Radio sets a DTC after 2.5 seconds.

POSSIBLE CAUSES

Possible Causes
RADIO

DIAGNOSTIC TEST

CHECK FOR AN INTERMITTENT CONDITION

1. Turn the ignition on.
2. With the scan tool, record and erase the Radio DTCs.
3. Cycle the ignition switch from on to off, wait five seconds and then back to on.
4. Turn the Radio on and set the volume to 25.
5. Adjust the speakers to the front and center.
6. With the scan tool, read the active Radio DTCs.

   Does the scan tool display active: B1400-92 FRONT LEFT AUDIO SPEAKER OUTPUT - PERFORMANCE OR INCORRECT OPERATION?

   Yes

   - Replace the Radio in accordance with the Service Information. Refer to **RADIO, REMOVAL** .
   - Perform the BODY VERIFICATION TEST. Refer to **STANDARD PROCEDURE** .

   No

   - Test complete, the condition or conditions that originally set this DTC are not present at this time. Using the wiring diagrams as a guide, check all related splices and connectors for signs of water intrusion, corrosion, pushed out or bent terminals and correct pin tension.
   - Perform the BODY VERIFICATION TEST. Refer to **STANDARD PROCEDURE** .

B1404-11-FRONT RIGHT AUDIO SPEAKER OUTPUT - CIRCUIT SHORT TO GROUND - BASE

For a complete wiring diagram, **refer to appropriate SYSTEM WIRING DIAGRAMS article** .

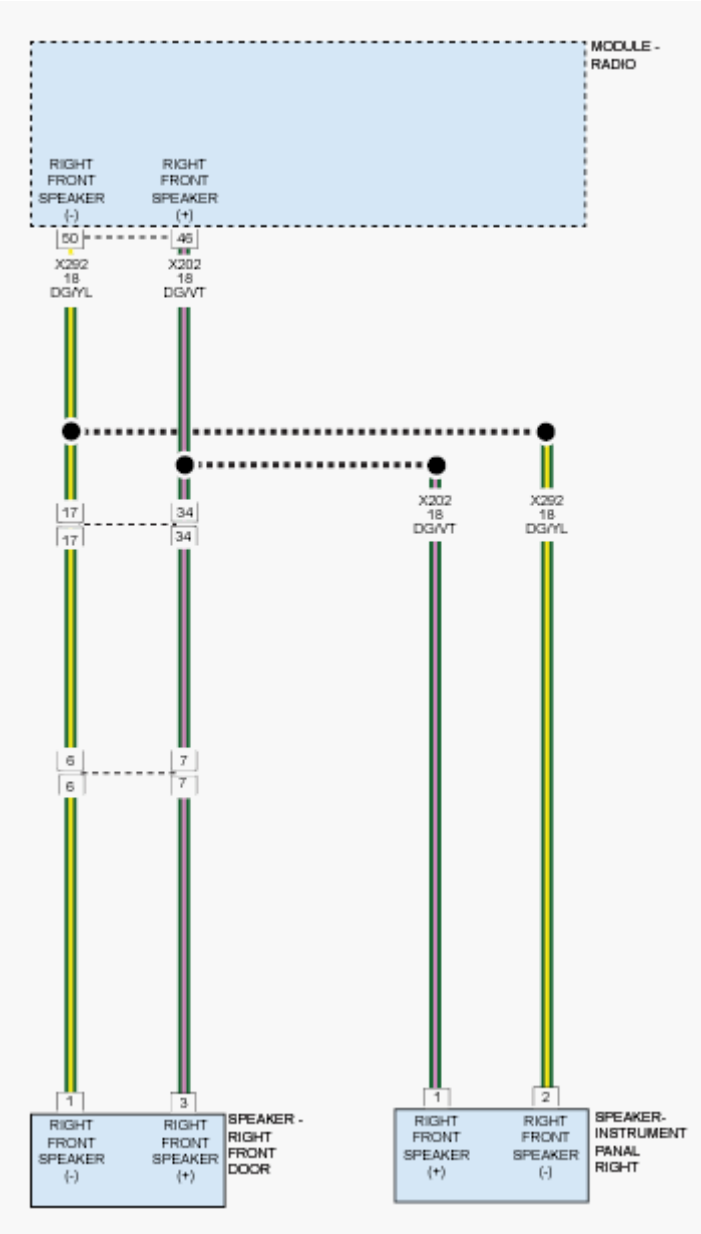

Fig. 9: Front Right Audio Speaker Output - Circuit Diagram (Base)
Courtesy of CHRYSLER GROUP, LLC

THEORY OF OPERATION

NOTE: **There are two versions of the B1404-11 DTC test. In order to select the proper test you must know if the vehicle is equipped with an Amplifier. If the vehicle is equipped with an Amplifier use the B1404-11 PREMIUM test. If the vehicle is not**

equipped with an Amplifier use the B1404-11 BASE test.

The Right Front Speaker (+) circuit and the Right Front Speaker (-) circuit are outputs of the Radio. The Radio controls and monitors these circuits for a concern.

For a detailed description of the Audio System, refer to **DESCRIPTION** .

For additional information regarding the operation of the Audio System, refer to **OPERATION** .

WHEN MONITORED

With the Radio on.

SET CONDITION

The Radio detects a short to ground condition on the speaker output circuit for greater than 2.5 seconds.

POSSIBLE CAUSES

Possible Causes
RIGHT FRONT DOOR SPEAKER (+) CIRCUIT SHORTED TO GROUND
RIGHT FRONT DOOR SPEAKER (-) CIRCUIT SHORTED TO GROUND
RIGHT FRONT SPEAKER
RIGHT FRONT INSTRUMENT PANEL (I/P) SPEAKER
RADIO

DIAGNOSTIC TEST

1. **CHECK FOR AN INTERMITTENT CONDITION**

NOTE: This vehicle has a Front I/P Speaker wired in parallel with the Front Door Speaker.

1. Turn the ignition on.
2. Using the scan tool, record and erase the Radio DTCs.
3. Turn the Radio on.
4. Adjust the speakers to the front and center.
5. Using the scan tool, read the active Radio DTCs.

   Does the scan tool read: B1404-11-FRONT RIGHT AUDIO SPEAKER OUTPUT - CIRCUIT SHORT TO GROUND?

   Yes

- Go To 2

No

- Test complete, the condition or conditions that originally set this DTC are not present at this time. Using the wiring diagrams as a guide, check all related splices and connectors for signs of water intrusion, corrosion, pushed out or bent terminals and correct pin tension.
- Perform the BODY VERIFICATION TEST. Refer to **STANDARD PROCEDURE** .

2. **CHECK THE RIGHT FRONT SPEAKERS**
   1. Using the scan tool, erase the DTCs.
   2. Turn the ignition off.
   3. Disconnect the Right Front Speaker harness connector from the Right Front Speaker.
   4. Disconnect the Right Front I/P Speaker harness connector from the Right Front I/P Speaker.
   5. Turn the ignition on.
   6. Turn the radio on.
   7. Using the scan tool, read the active Radio DTCs.

   Does the scan tool read: B1404-11-FRONT RIGHT AUDIO SPEAKER OUTPUT - CIRCUIT SHORT TO GROUND?

   Yes

   - Go To 4

   No

   - Go To 3
3. **CHECK THE RIGHT FRONT DOOR TWEETER SPEAKER**
   1. Make sure one of the front doors is still open.
   2. Using the scan tool, erase the DTCs.
   3. Turn the ignition off.
   4. Re-connect the Right Front Speaker harness connector to the Right Front Speaker.
   5. Turn the ignition on.
   6. Turn the radio on.
   7. Using the scan tool, read the active Radio DTCs.

   Does the scan tool read: B1405-FRONT RIGHT AUDIO SPEAKER OUTPUT CIRCUIT LOW?

   Yes

   - Replace the Right Front Speaker in accordance with the Service Information.
   - Perform the BODY VERIFICATION TEST. Refer to **STANDARD PROCEDURE** .

No

- Replace the Right Front I/P Speaker in accordance with the Service Information.
- Perform the BODY VERIFICATION TEST. Refer to **STANDARD PROCEDURE** .

4. **CHECK THE (X202) RIGHT FRONT DOOR SPEAKER (+) CIRCUIT FOR A SHORT TO GROUND**
   1. Turn the ignition off.
   2. Disconnect the Radio C1 harness connector.
   3. Measure the resistance between ground and the (X202) Right Front Door Speaker (+) circuit

   Is the resistance below 5.0 Ohms?

   Yes

   - Repair the (X202) Right Front Door Speaker (+) circuit for a short to ground.
   - Perform the BODY VERIFICATION TEST. Refer to **STANDARD PROCEDURE** .

   No

   - Go To 5

5. **CHECK THE (X292) RIGHT FRONT DOOR SPEAKER (-) CIRCUIT FOR A SHORT TO GROUND**
   1. Measure the resistance between ground and the (X292) Right Front Door Speaker (-) circuit.

   Is the resistance below 5.0 Ohms?

   Yes

   - Repair the (X292) Right Front Door Speaker (-) circuit for a short to ground.
   - Perform the BODY VERIFICATION TEST. Refer to **STANDARD PROCEDURE** .

   No

   - Replace the Radio in accordance with the Service Information.
   - Perform the BODY VERIFICATION TEST. Refer to **STANDARD PROCEDURE** .

B1404-11-FRONT RIGHT AUDIO SPEAKER OUTPUT - CIRCUIT SHORT TO GROUND - PREMIUM

For a complete wiring diagram, **refer to appropriate SYSTEM WIRING DIAGRAMS article** .

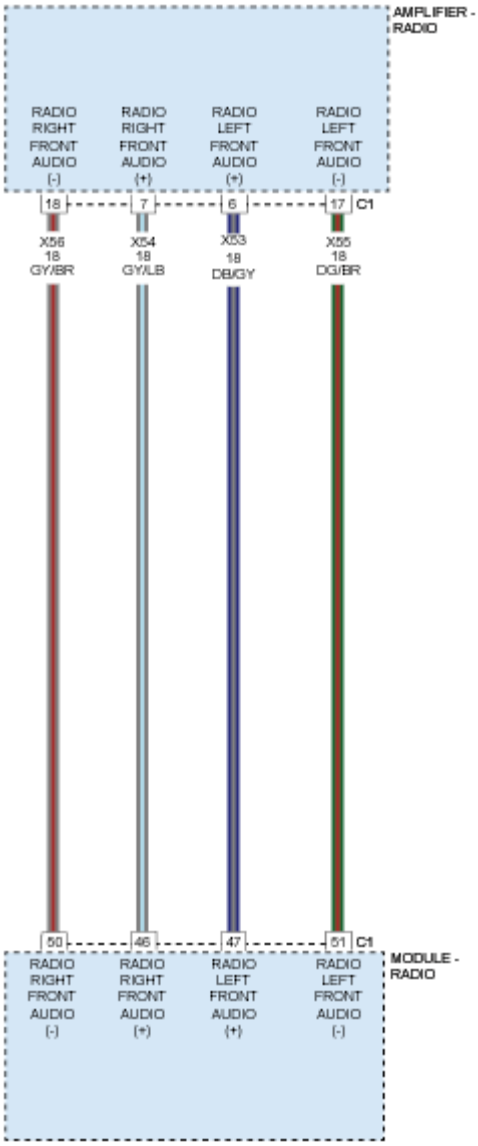

Fig. 10: Front Left/Right Audio Speaker Output - Circuit Diagram (Premium)
Courtesy of CHRYSLER GROUP, LLC

THEORY OF OPERATION

NOTE: **There are two versions of the B1404-11 DTC test. In order to select the proper test you must know if the vehicle is equipped with an Amplifier. If the vehicle is equipped with an Amplifier use the B1404-11 PREMIUM test. If the vehicle is not equipped with an Amplifier use the B1404-11 BASE test.**

The Right Front Audio (+) circuit and the Right Front Audio (-) circuit are outputs of the Radio. The Radio controls and monitors these circuits for a concern.

For a detailed description of the Audio System, refer to **DESCRIPTION** .

For additional information regarding the operation of the Audio System, refer to **OPERATION** .

WHEN MONITORED

With the Radio on.

SET CONDITION

The Radio detects a short to ground condition on the audio output circuit for greater than 2.5 seconds.

POSSIBLE CAUSES

Possible Causes
RIGHT FRONT AUDIO(+) CIRCUIT SHORTED TO GROUND
RIGHT FRONT AUDIO(-) CIRCUIT SHORTED TO GROUND
AMPLIFIER
RADIO

DIAGNOSTIC TEST

1. **CHECK FOR AN INTERMITTENT CONDITION**
    1. Turn the ignition on.
    2. Using the scan tool, record and erase the Radio DTCs.
    3. Turn the Radio on.
    4. Adjust the speakers to the front and center.
    5. Using the scan tool, read the active Radio DTCs.

    Does the scan tool read: B1404-11-FRONT RIGHT AUDIO SPEAKER OUTPUT - CIRCUIT SHORT TO GROUND?

    Yes

    - Go To 2

    No

    - Test complete, the condition or conditions that originally set this DTC are not present at this time. Using the wiring diagrams as a guide, check all related splices and connectors for signs of water intrusion, corrosion, pushed out or bent terminals and correct pin tension.
    - Perform the BODY VERIFICATION TEST. Refer to **STANDARD PROCEDURE** .
2. **CHECK THE AMPLIFIER**
    1. Using the scan tool, erase the DTCs.

2. Turn the ignition off.
3. Disconnect the Amplifier C1 harness connector.
4. Turn the ignition on.
5. Turn the radio on.
6. Using the scan tool, read the active Radio DTCs.

   Does the scan tool read: B1404-11-FRONT RIGHT AUDIO SPEAKER OUTPUT - CIRCUIT SHORT TO GROUND?

   Yes

   - Go To 3

   No

   - Replace the Amplifier in accordance with the Service Information.
   - Perform the BODY VERIFICATION TEST. Refer to **STANDARD PROCEDURE** .

3. **CHECK THE (X54) RIGHT FRONT AUDIO (+) CIRCUIT FOR A SHORT TO GROUND**
   1. Turn the ignition off.
   2. Disconnect the Radio C1 harness connector.
   3. Measure the resistance between ground and the (X54) Right Front Speaker (+) circuit.

      Is the resistance below 5.0 Ohms?

      Yes

      - Repair the (X54) Right Front Audio (+) circuit for a short to ground.
      - Perform the BODY VERIFICATION TEST. Refer to **STANDARD PROCEDURE** .

      No

      - Go To 4

4. **CHECK THE (X56) RIGHT FRONT AUDIO (-) CIRCUIT FOR A SHORT TO GROUND**
   1. Measure the resistance between ground and the (X56) Right Front Audio (-) circuit.

      Is the resistance below 5.0 Ohms?

      Yes

      - Repair the (X56) Right Front Audio (-) circuit for a short to ground.
      - Perform the BODY VERIFICATION TEST. Refer to **STANDARD PROCEDURE** .

      No

- Replace the Radio in accordance with the Service Information.
- Perform the BODY VERIFICATION TEST. Refer to **STANDARD PROCEDURE** .

B1404-12-FRONT RIGHT AUDIO SPEAKER OUTPUT - CIRCUIT SHORT TO BATTERY - BASE

For a complete wiring diagram, **refer to appropriate SYSTEM WIRING DIAGRAMS article** .

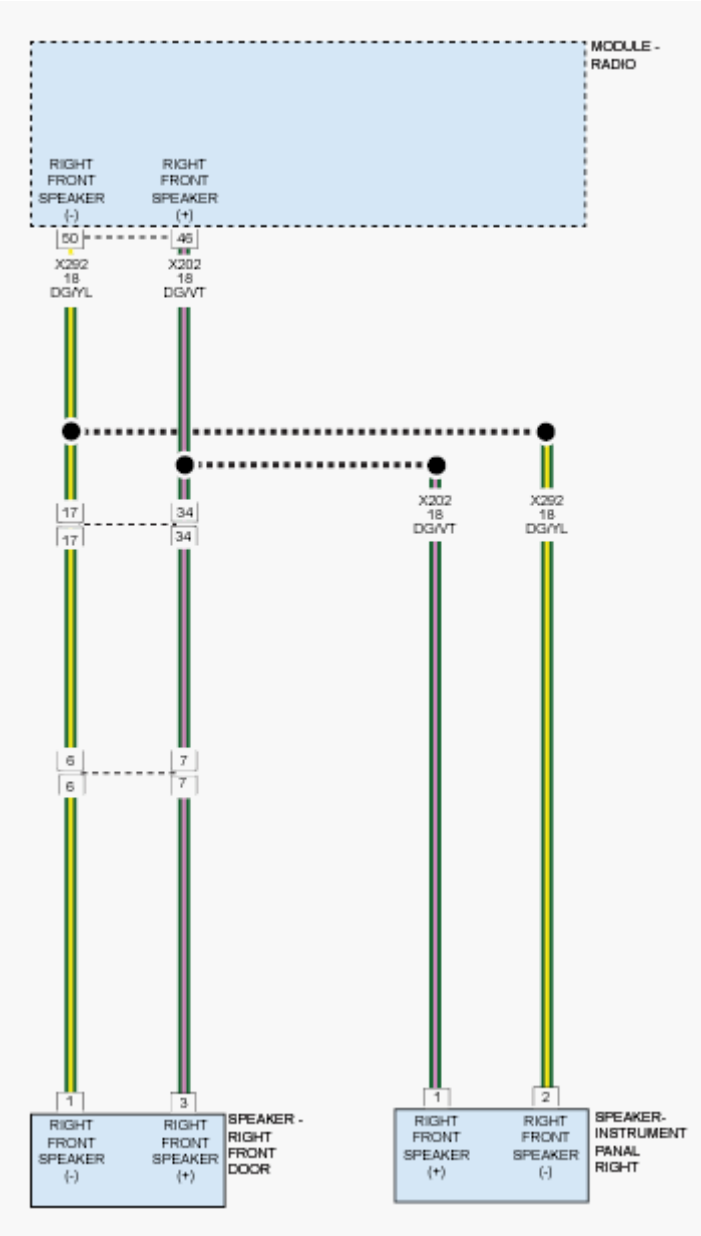

Fig. 11: Front Right Audio Speaker Output - Circuit Diagram (Base)
Courtesy of CHRYSLER GROUP, LLC

THEORY OF OPERATION

NOTE: There are two versions of the B1404-12 DTC test. In order to select the proper test you must know if the vehicle is equipped with an Amplifier. If the vehicle is equipped with an Amplifier use the B1404-12 PREMIUM test. If the vehicle is not equipped with an Amplifier use the B1404-12 BASE test.

The Right Front Speaker (+) circuit and the Right Front Speaker (-) circuit are outputs of the Radio. The Radio controls and monitors these circuits for a concern.

For a detailed description of the Audio System, refer to **DESCRIPTION** .

For additional information regarding the operation of the Audio System, refer to **OPERATION** .

WHEN MONITORED

With the Radio on.

SET CONDITION

The Radio detects a short to battery condition on the speaker output circuit for greater than 2.5 seconds.

POSSIBLE CAUSES

Possible Causes
RIGHT FRONT DOOR SPEAKER (+) SHORTED TO VOLTAGE
RIGHT FRONT DOOR SPEAKER (-) SHORTED TO VOLTAGE
RADIO

DIAGNOSTIC TEST

1. **CHECK FOR AN INTERMITTENT CONDITION**

   NOTE: This vehicle has a Front I/P Speaker wired in parallel with the Front Door Speaker.

   1. Turn the ignition on.
   2. Using the scan tool, record and erase the Radio DTCs.
   3. Turn the Radio on.
   4. Adjust the speakers to the front and center.
   5. Using the scan tool, read the active Radio DTCs.

   Does the scan tool display active: B1404-12-FRONT RIGHT AUDIO SPEAKER OUTPUT - CIRCUIT SHORT TO BATTERY?

   Yes

- Go To 2

No

- Test complete, the condition or conditions that originally set this DTC are not present at this time. Using the wiring diagrams as a guide, check all related splices and connectors for signs of water intrusion, corrosion, pushed out or bent terminals and correct pin tension.
- Perform the BODY VERIFICATION TEST. Refer to **STANDARD PROCEDURE** .

2. **CHECK FOR VOLTAGE ON THE (X202) RIGHT FRONT DOOR SPEAKER (+) CIRCUIT**
   1. Turn the ignition off.
   2. Disconnect the Radio C1 harness connector.
   3. Disconnect the Right Front Door Speaker harness connector.
   4. Disconnect the Right Front I/P Speaker harness connector.
   5. Turn the ignition on.
   6. Measure the voltage between ground and the (X202) Right Front Door Speaker (+) circuit.

   Is there any voltage present?

   Yes

   - Repair the (X202) Right Front Door Speaker (+) circuit for a short to voltage.
   - Perform the BODY VERIFICATION TEST. Refer to **STANDARD PROCEDURE** .

   No

   - Go To 3

3. **CHECK FOR VOLTAGE ON THE (X292) RIGHT FRONT DOOR SPEAKER (-) CIRCUIT**
   1. Measure the voltage between ground and the (X292) Right Front Door Speaker (-) circuit.

   Is there any voltage present?

   Yes

   - Repair the (X292) Right Front Door Speaker (-) circuit for a short to voltage.
   - Perform the BODY VERIFICATION TEST. Refer to **STANDARD PROCEDURE** .

   No

   - Replace the Radio in accordance with the Service Information.
   - Perform the BODY VERIFICATION TEST. Refer to **STANDARD PROCEDURE** .

B1404-12-FRONT RIGHT AUDIO SPEAKER OUTPUT - CIRCUIT SHORT TO BATTERY - PREMIUM

For a complete wiring diagram, **refer to appropriate SYSTEM WIRING DIAGRAMS article** .

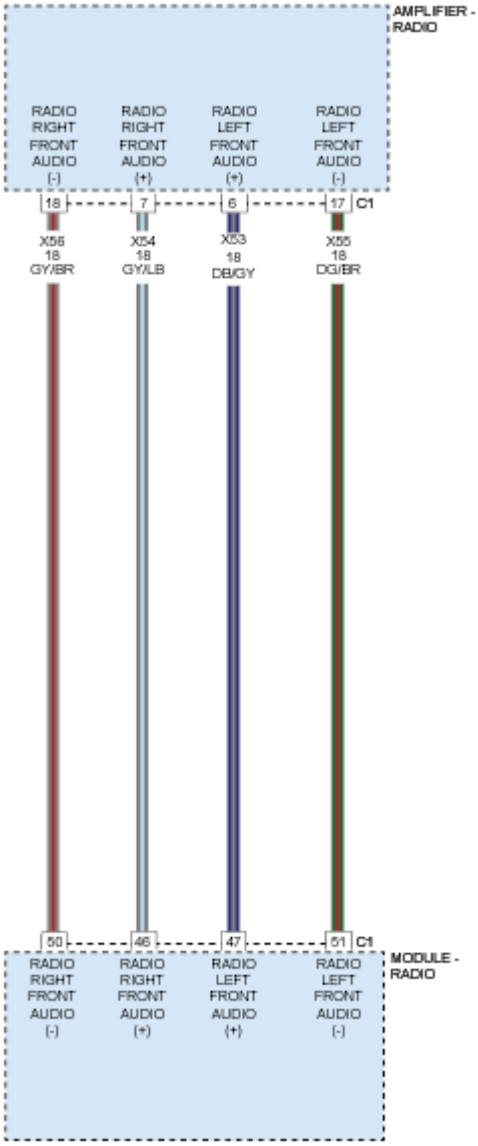

Fig. 12: Front Left/Right Audio Speaker Output - Circuit Diagram (Premium)
Courtesy of CHRYSLER GROUP, LLC

THEORY OF OPERATION

NOTE: **There are two versions of the B1404-12 DTC test. In order to select the proper test you must know if the vehicle is equipped with an Amplifier. If the vehicle is equipped with an Amplifier use the B1404-12 PREMIUM test. If the vehicle is not equipped with an Amplifier use the B1404-12 BASE test.**

The Right Front Audio (+) circuit and the Right Front Audio (-) circuit are outputs of the Radio. The Radio

controls and monitors these circuits for a concern.

For a detailed description of the Audio System, refer to **DESCRIPTION** .

For additional information regarding the operation of the Audio System, refer to **OPERATION** .

WHEN MONITORED

With the Radio on.

SET CONDITION

The Radio detects a short to battery condition on the audio output circuit for greater than 2.5 seconds.

POSSIBLE CAUSES

Possible Causes
RIGHT FRONT AUDIO (+) CIRCUIT SHORTED TO VOLTAGE
RIGHT FRONT AUDIO (-) CIRCUIT SHORTED TO VOLTAGE
RADIO

DIAGNOSTIC TEST

1. **CHECK FOR AN INTERMITTENT CONDITION**
    1. Turn the ignition on.
    2. Using the scan tool, record and erase the Radio DTCs.
    3. Turn the Radio on.
    4. Adjust the speakers to the front and center.
    5. Using the scan tool, read the active Radio DTCs.

    Does the scan tool read: B1404-12-FRONT RIGHT AUDIO SPEAKER OUTPUT - CIRCUIT SHORT TO BATTERY?

    Yes

    - Go To 2

    No

    - Test complete, the condition or conditions that originally set this DTC are not present at this time. Using the wiring diagrams as a guide, check all related splices and connectors for signs of water intrusion, corrosion, pushed out or bent terminals and correct pin tension.
    - Perform the BODY VERIFICATION TEST. Refer to **STANDARD PROCEDURE** .
2. **CHECK THE AMPLIFIER**

1. Using the scan tool, erase the DTCs.
2. Turn the ignition off.
3. Disconnect the Amplifier C1 harness connector from the Amplifier.
4. Turn the ignition on.
5. Turn the radio on.
6. Using the scan tool, read the active Radio DTCs.

   Does the scan tool read: B1404-12-FRONT RIGHT AUDIO SPEAKER OUTPUT - CIRCUIT SHORT TO BATTERY?

   Yes

   - Go To 3

   No

   - Replace the Amplifier in accordance with the Service Information.
   - Perform the BODY VERIFICATION TEST. Refer to **STANDARD PROCEDURE** .

3. **CHECK FOR VOLTAGE ON THE (X54) RIGHT FRONT AUDIO (+) CIRCUIT**
   1. Turn the ignition off.
   2. Disconnect the Radio C1 harness connector.
   3. Turn the ignition on.
   4. Measure the voltage between ground and the (X54) Right Front Audio (+) circuit.

      Is there any voltage present?

      Yes

      - Repair the (X54) Right Front Audio (+) circuit for a short to voltage.
      - Perform the BODY VERIFICATION TEST. Refer to **STANDARD PROCEDURE** .

      No

      - Go To 4

4. **CHECK FOR VOLTAGE ON THE (X56) RIGHT FRONT AUDIO (-) CIRCUIT**
   1. Measure the voltage between ground and the (X56) Right Front Audio (-) circuit.

      Is there any voltage present?

      Yes

      - Repair the (X56) Right Front Audio (-) circuit for a short to voltage.

- Perform the BODY VERIFICATION TEST. Refer to **STANDARD PROCEDURE** .

No

- Replace the Radio in accordance with the Service Information.
- Perform the BODY VERIFICATION TEST. Refer to **STANDARD PROCEDURE** .

B1404-13-FRONT RIGHT AUDIO SPEAKER OUTPUT - CIRCUIT OPEN - BASE

For a complete wiring diagram, **refer to appropriate SYSTEM WIRING DIAGRAMS article** .

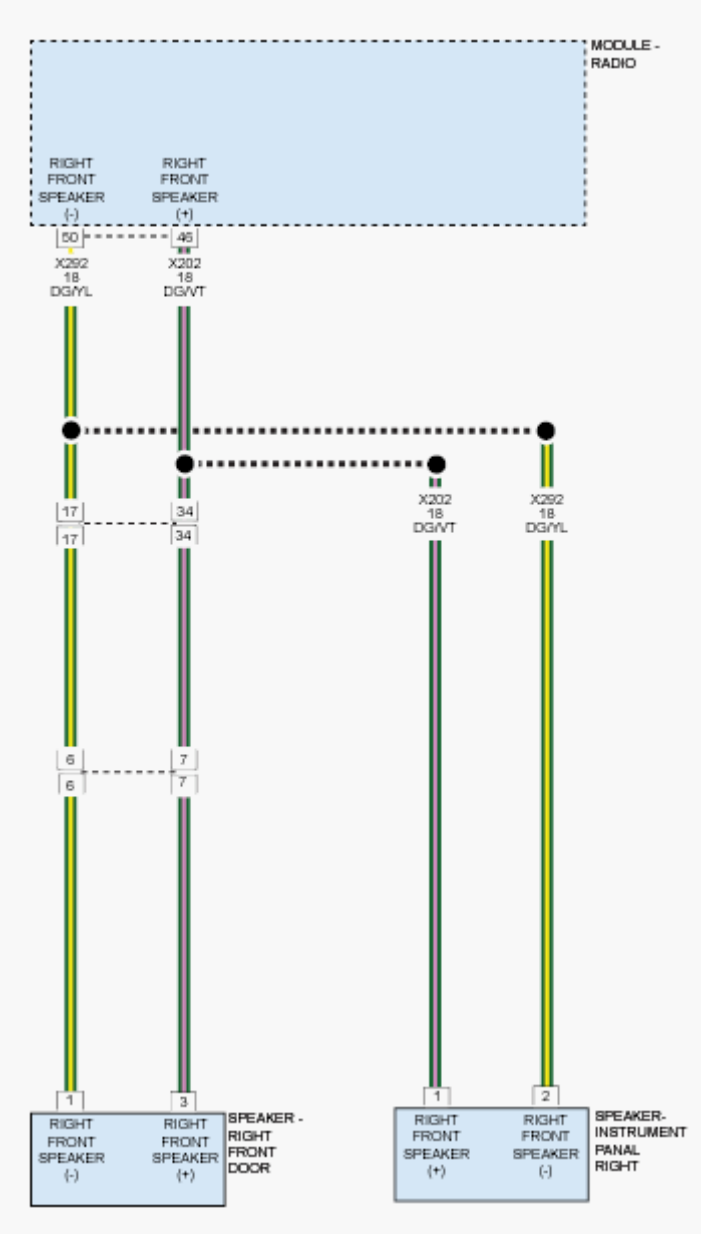

Fig. 13: Front Right Audio Speaker Output - Circuit Diagram (Base)

Courtesy of CHRYSLER GROUP, LLC

THEORY OF OPERATION

NOTE: There are two versions of the B1404-13 DTC test. In order to select the proper test you must know if the vehicle is equipped with an Amplifier. If the vehicle is equipped with an Amplifier use the B1404-13 PREMIUM test. If the vehicle is not equipped with an Amplifier use the B1404-13 BASE test.

The Right Front Speaker (+) circuit and the Right Front Speaker (-) circuit are outputs of the Radio. The Radio controls and monitors these circuits for a concern.

For a detailed description of the Audio System, refer to **DESCRIPTION** .

For additional information regarding the operation of the Audio System, refer to **OPERATION** .

WHEN MONITORED

With the Radio on.

SET CONDITION

The Radio detects an open condition on the speaker output circuit for greater than 2.5 seconds.

POSSIBLE CAUSES

Possible Causes
RIGHT FRONT DOOR SPEAKER (+) CIRCUIT OPEN
RIGHT FRONT DOOR SPEAKER (-) CIRCUIT OPEN
RIGHT FRONT SPEAKER
RIGHT FRONT INSTRUMENT PANEL (I/P) SPEAKER
RADIO

DIAGNOSTIC TEST

1. **CHECK FOR AN INTERMITTENT CONDITION**

NOTE: This vehicle has a Front I/P Speaker wired in parallel with the Front Door Speaker.

1. Turn the ignition on.
2. Using the scan tool, record and erase the Radio DTCs.
3. Turn the Radio on.
4. Adjust the speakers to the front and center.

5. Using the scan tool, read the active Radio DTCs.

   Does the scan tool read: B1404-13-FRONT RIGHT AUDIO SPEAKER OUTPUT - CIRCUIT OPEN?

   Yes

   - Go To 2

   No

   - Test complete, the condition or conditions that originally set this DTC are not present at this time. Using the wiring diagrams as a guide, check all related splices and connectors for signs of water intrusion, corrosion, pushed out or bent terminals and correct pin tension.
   - Perform the BODY VERIFICATION TEST. Refer to **STANDARD PROCEDURE** .

2. **CHECK THE RIGHT FRONT SPEAKER**
   1. Turn the ignition off.
   2. Disconnect the Right Front Speaker.
   3. Measure the resistance of the speaker between the two terminals.

   Is the resistance above 5.0 Ohms?

   Yes

   - Replace the Right Front Speaker in accordance with the Service Information.
   - Perform the BODY VERIFICATION TEST. Refer to **STANDARD PROCEDURE** .

   No

   - Go To 3

3. **CHECK THE RIGHT FRONT I/P SPEAKER**
   1. Turn the ignition off.
   2. Disconnect the Right Front I/P Speaker.
   3. Measure the resistance of the speaker between the two terminals.

   NOTE: The graphic shows the connector for reference only. Measure between the speaker terminals.

   Is the resistance above 5.0 Ohms?

   Yes

   - Replace the Right Front I/P Speaker in accordance with the Service Information.

- Perform the BODY VERIFICATION TEST. Refer to **STANDARD PROCEDURE** .

No

- Go To 4

4. **CHECK THE (X202) RIGHT FRONT DOOR SPEAKER (+) FOR AN OPEN**
   1. Turn the ignition off.
   2. Disconnect the Radio C1 harness connector.
   3. Measure the resistance of the (X202) Right Front Door Speaker (+) circuit between the Radio C1 connector and the Right Front Door Speaker harness connector and the Right Front I/P Speaker harness connector.

      Is the resistance below 5.0 Ohms?

      Yes

      - Go To 5

      No

      - Repair an open in the (X202) Right Front Door Speaker (+) circuit.
      - Perform the BODY VERIFICATION TEST. Refer to **STANDARD PROCEDURE** .
5. **CHECK THE (X292) RIGHT FRONT DOOR SPEAKER (-) CIRCUIT FOR AN OPEN**
   1. Measure the resistance of the (X292) Right Front Door Speaker (-) circuit between the Radio C1 connector and the Right Front Door Speaker harness connector and the Right Front I/P Speaker harness connector.

      Is the resistance below 5.0 Ohms?

      Yes

      - Replace the Radio in accordance with the Service Information.
      - Perform the BODY VERIFICATION TEST. Refer to **STANDARD PROCEDURE** .

      No

      - Repair an open in the (X292) Right Front Door Speaker (-) circuit.
      - Perform the BODY VERIFICATION TEST. Refer to **STANDARD PROCEDURE** .

B1404-13-FRONT RIGHT AUDIO SPEAKER OUTPUT - CIRCUIT OPEN - PREMIUM

For a complete wiring diagram, **refer to appropriate SYSTEM WIRING DIAGRAMS article** .

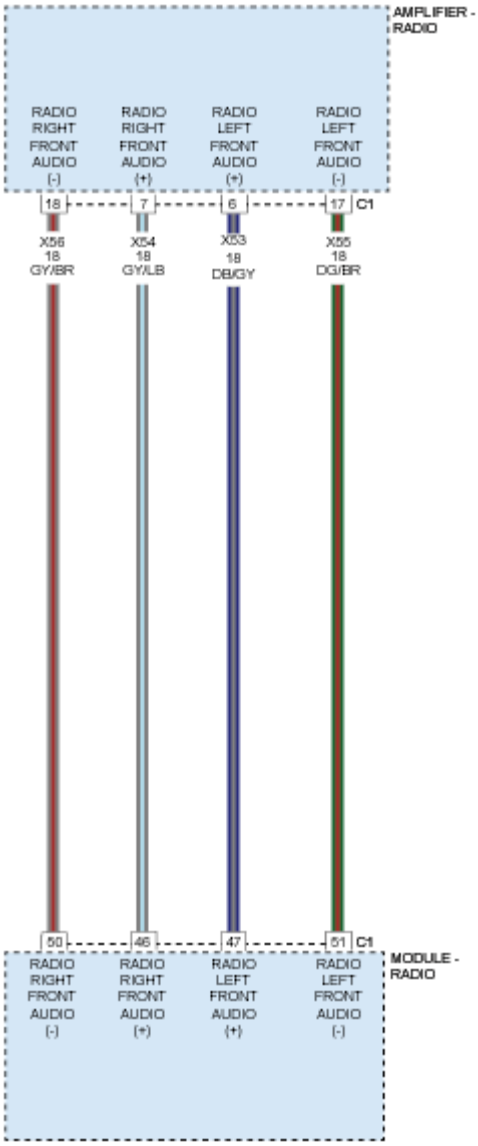

Fig. 14: Front Left/Right Audio Speaker Output - Circuit Diagram (Premium)
Courtesy of CHRYSLER GROUP, LLC

THEORY OF OPERATION

NOTE: **There are two versions of the B1404-13 DTC test. In order to select the proper test you must know if the vehicle is equipped with an Amplifier. If the vehicle is equipped with an Amplifier use the B1404-13 PREMIUM test. If the vehicle is not equipped with an Amplifier use the B1404-13 BASE test.**

The Right Front Audio (+) circuit and the Right Front Audio (-) circuit are outputs of the Radio. The Radio controls and monitors these circuits for a concern.

For a detailed description of the Audio System, refer to **DESCRIPTION** .

For additional information regarding the operation of the Audio System, refer to **OPERATION** .

WHEN MONITORED

With the Radio on.

SET CONDITION

The Radio detects an open condition on the audio output circuit for greater than 2.5 seconds.

POSSIBLE CAUSES

Possible Causes
RIGHT FRONT AUDIO (+) CIRCUIT OPEN
RIGHT FRONT AUDIO (-) CIRCUIT OPEN
AMPLIFIER
RADIO

DIAGNOSTIC TEST

1. **CHECK FOR AN INTERMITTENT CONDITION**
    1. Turn the ignition on.
    2. Using the scan tool, record and erase the Radio DTCs.
    3. Turn the Radio on.
    4. Adjust the speakers to the front and center.
    5. Using the scan tool, read the active Radio DTCs.

    Does the scan tool read: B1404-13-FRONT RIGHT AUDIO SPEAKER OUTPUT - CIRCUIT OPEN?

    Yes

    - Go To 2

    No

    - Test complete, the condition or conditions that originally set this DTC are not present at this time. Using the wiring diagrams as a guide, check all related splices and connectors for signs of water intrusion, corrosion, pushed out or bent terminals and correct pin tension.
    - Perform the BODY VERIFICATION TEST. Refer to **STANDARD PROCEDURE** .
2. **CHECK THE AMPLIFIER**
    1. Turn the ignition off.

2. Disconnect the Amplifier C1 harness connector.
3. Connect a jumper wire between the (X54) Right Front Audio (+) circuit and the (X56) Right Front Audio (-) circuits.
4. Turn the ignition on.
5. Turn the Radio on.
6. Adjust the speakers to the front and center.
7. Using the scan tool, read the active Radio DTCs.

   Does the scan tool read: B1404-13-FRONT RIGHT AUDIO SPEAKER OUTPUT - CIRCUIT OPEN?

   Yes

   - Go To 3

   No

   - Replace the Amplifier in accordance with the Service Information.
   - Perform the BODY VERIFICATION TEST. Refer to **STANDARD PROCEDURE** .

3. **CHECK THE (X54) RIGHT FRONT AUDIO (+) CIRCUIT FOR AN OPEN**
   1. Turn the ignition off.
   2. Disconnect the Radio C1 harness connector.
   3. Measure the resistance of the (X54) Right Front Audio (+) circuit between the Radio C1 connector and the Amplifier C1 harness connector.

      Is the resistance below 5.0 Ohms?

      Yes

      - Go To 4

      No

      - Repair an open in the (X54) Right Front Audio (+) circuit.
      - Perform the BODY VERIFICATION TEST. Refer to **STANDARD PROCEDURE** .

4. **CHECK THE (X56) RIGHT FRONT AUDIO (-) CIRCUIT FOR AN OPEN**
   1. Measure the resistance of the (X56) Right Front Audio (-) circuit between the Radio C1 harness connector, and the Amplifier C1 harness connector.

      Is the resistance below 5.0 Ohms?

      Yes

- Replace the Radio in accordance with the Service Information.
- Perform the BODY VERIFICATION TEST. Refer to **STANDARD PROCEDURE** .

No

- Repair an open in the (X56) Right Front Audio (-) circuit.
- Perform the BODY VERIFICATION TEST. Refer to **STANDARD PROCEDURE** .

B1404-1A-FRONT RIGHT AUDIO SPEAKER OUTPUT - CIRCUIT RESISTANCE BELOW THRESHOLD - BASE

For a complete wiring diagram, **refer to appropriate SYSTEM WIRING DIAGRAMS article** .

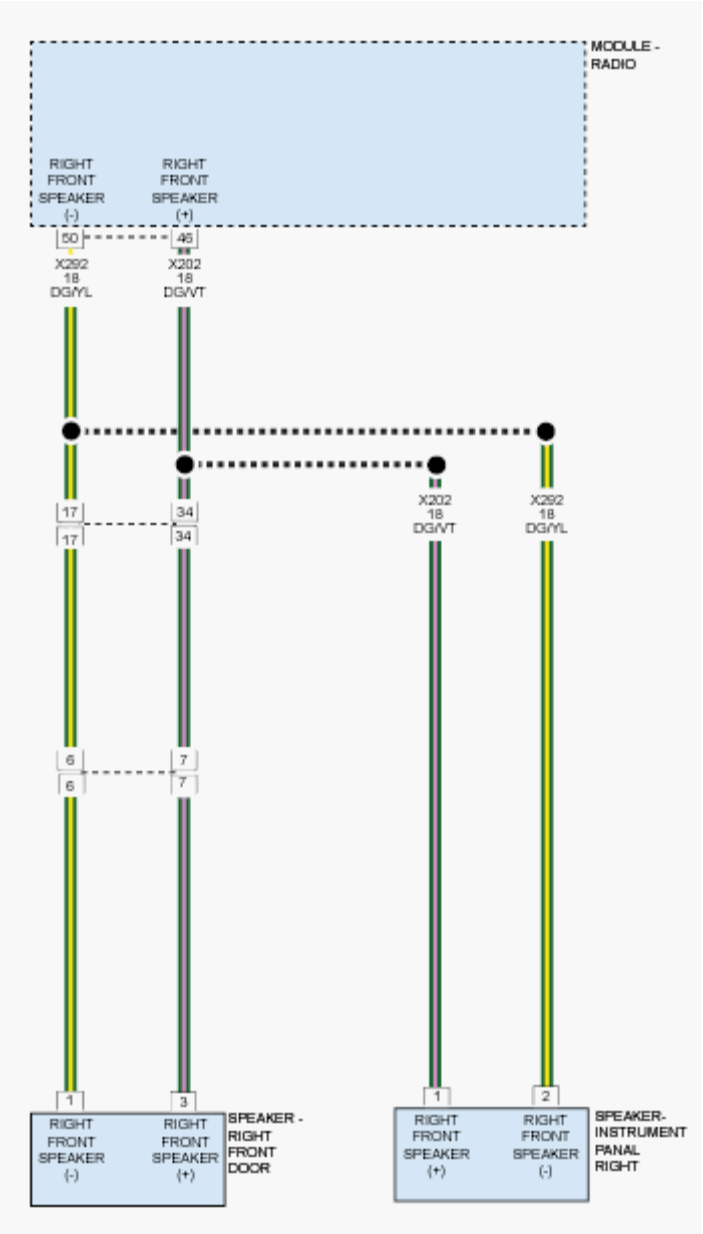

Fig. 15: Front Right Audio Speaker Output - Circuit Diagram (Base)
Courtesy of CHRYSLER GROUP, LLC

THEORY OF OPERATION

NOTE: **There are two versions of the B1404-1A DTC test. In order to select the proper test you must know if the vehicle is equipped with an Amplifier. If the vehicle is equipped with an Amplifier use the B1404-1A PREMIUM test. If the vehicle is not equipped with an Amplifier use the B1404-1A BASE test.**

The Right Front Door Speaker (+) circuit and the Right Front Door Speaker (-) circuit are outputs of the Radio. The Radio controls and monitors these circuits for a concern.

For a detailed description of the Audio System, refer to **DESCRIPTION** .

For additional information regarding the operation of the Audio System, refer to **OPERATION** .

WHEN MONITORED

With the ignition on.

SET CONDITION

The Radio detects that the output circuits are shorted together for greater than 2.5 seconds.

POSSIBLE CAUSES

Possible Causes
RIGHT FRONT DOOR SPEAKER (+) CIRCUIT SHORTED TO THE RIGHT FRONT DOOR SPEAKER (-) CIRCUIT
RIGHT FRONT DOOR SPEAKER
RIGHT FRONT INSTRUMENT PANEL (I/P) SPEAKER
RADIO

DIAGNOSTIC TEST

1. **CHECK FOR AN INTERMITTENT CONDITION**

   NOTE: This vehicle has a Right Front I/P Speaker wired in parallel with the Front Speaker.

   1. Turn the ignition on.
   2. Using the scan tool, record and erase the Radio DTCs.
   3. Cycle the ignition switch from on to off, wait five seconds and then back to on.
   4. Turn the radio on and set the volume to 25.
   5. Adjust the speakers to the front and center.
   6. Using the scan tool, read the active Radio DTCs.

   Does the scan tool display active: B1404-1A-FRONT RIGHT AUDIO SPEAKER OUTPUT - CIRCUIT RESISTANCE BELOW THRESHOLD?

   Yes

   - Go To 2

   No

- Test complete, the condition or conditions that originally set this DTC are not present at this time. Using the wiring diagrams as a guide, check all related splices and connectors for signs of water intrusion, corrosion, pushed out or bent terminals and correct pin tension.
- Perform the BODY VERIFICATION TEST. Refer to **STANDARD PROCEDURE** .

2. **CHECK THE RIGHT FRONT SPEAKERS**
   1. Using the scan tool, erase the DTCs.
   2. Turn the ignition off.
   3. Disconnect the Right Front Door Speaker harness connector.
   4. Disconnect the Right Front I/P Speaker harness connector from the Right Front I/P Speaker.
   5. Turn the ignition on.
   6. Turn the radio on and set the volume to 25.
   7. Using the scan tool, read the active Radio DTCs.

   Does the scan tool display active: B1404-1A-FRONT RIGHT AUDIO SPEAKER OUTPUT - CIRCUIT RESISTANCE BELOW THRESHOLD - BASE?

   Yes

   - Go To 4

   No

   - Go To 3

3. **CHECK THE RIGHT FRONT DOOR SPEAKER**
   1. Make sure one of the front doors is still open.
   2. Using the scan tool, erase the DTCs.
   3. Turn the ignition off.
   4. Re-connect the Right Front I/P Speaker harness connector from the Right Front I/P Speaker.
   5. Turn the ignition on.
   6. Turn the radio on and set the volume to 25.
   7. Using the scan tool, read the active Radio DTCs.

   Does the scan tool display active: B1404-1A-FRONT RIGHT AUDIO SPEAKER OUTPUT - CIRCUIT RESISTANCE BELOW THRESHOLD - BASE?

   Yes

   - Replace the Right Front I/P Speaker in accordance with the Service Information. Refer to **SPEAKER, REMOVAL** .
   - Perform the BODY VERIFICATION TEST. Refer to **STANDARD PROCEDURE** .

   No

- Replace the Right Front Door Speaker in accordance with the Service Information. Refer to **SPEAKER, REMOVAL** .
- Perform the BODY VERIFICATION TEST. Refer to **STANDARD PROCEDURE** .

4. **CHECK THE (X202) RIGHT FRONT DOOR SPEAKER (+) CIRCUIT, AND THE (X292) RIGHT FRONT DOOR SPEAKER (-) CIRCUITS FOR A SHORT TOGETHER**
   1. Disconnect the Radio harness connector.
   2. Measure the resistance between the (X202) Right Front Door Speaker (+) circuit, and the (X292) Right Front Door Speaker (-) circuit.

      Is the resistance below 10K Ohms?

      Yes

      - Repair the (X202) Right Front Door Speaker (+) circuit, and the (X292) Right Front Door Speaker (-) circuit for a short together.
      - Perform the BODY VERIFICATION TEST. Refer to **STANDARD PROCEDURE** .

      No

      - Replace the Radio in accordance with the Service Information. Refer to **RADIO, REMOVAL** .
      - Perform the BODY VERIFICATION TEST. Refer to **STANDARD PROCEDURE** .

B1404-1A-FRONT RIGHT AUDIO SPEAKER OUTPUT - CIRCUIT RESISTANCE BELOW THRESHOLD - PREMIUM

For a complete wiring diagram, **refer to appropriate SYSTEM WIRING DIAGRAMS article** .

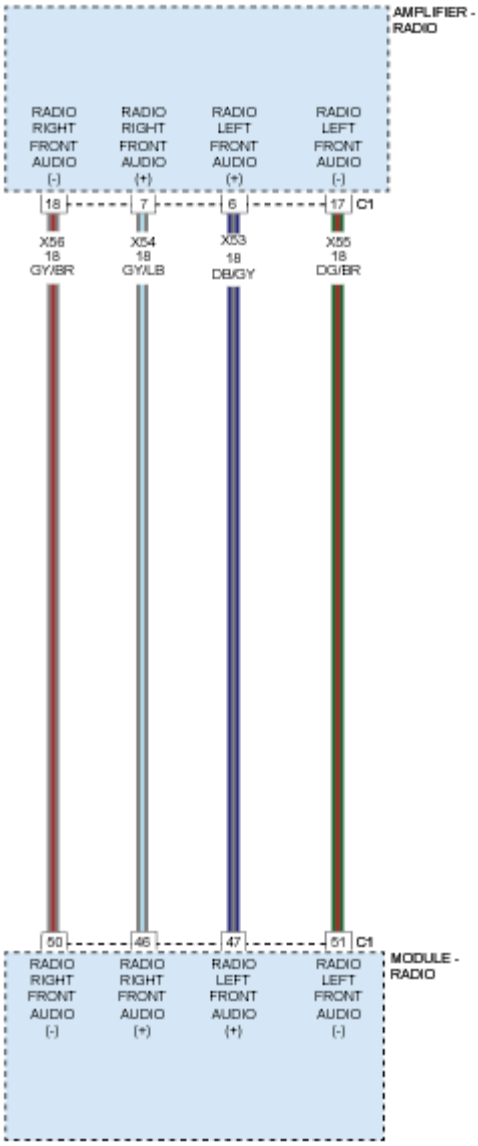

Fig. 16: Front Left/Right Audio Speaker Output - Circuit Diagram (Premium)
Courtesy of CHRYSLER GROUP, LLC

THEORY OF OPERATION

NOTE: **There are two versions of the B1404-1A DTC test. In order to select the proper test you must know if the vehicle is equipped with an Amplifier. If the vehicle is equipped with an Amplifier use the B1404-1A PREMIUM test. If the vehicle is not equipped with an Amplifier use the B1404-1A BASE test.**

The Right Front Audio (+) circuit and the Right Front Audio (-) circuit are outputs of the Radio. The Radio controls and monitors these circuits for a concern.

For a detailed description of the Audio System, refer to **DESCRIPTION** .

For additional information regarding the operation of the Audio System, refer to **OPERATION** .

WHEN MONITORED

With the ignition on.

SET CONDITION

The Radio detects that the output circuits are shorted together for greater than 2.5 seconds.

POSSIBLE CAUSES

Possible Causes
RIGHT FRONT AUDIO (+) CIRCUIT SHORTED TO THE RIGHT FRONT AUDIO (-) CIRCUIT
AMPLIFIER
RADIO

DIAGNOSTIC TEST

1. **CHECK FOR AN INTERMITTENT CONDITION**
    1. Turn the ignition on.
    2. Using the scan tool, record and erase the Radio DTCs.
    3. Cycle the ignition switch from on to off, wait five seconds and then back to on.
    4. Turn the Radio on and set the volume to 25.
    5. Adjust the speakers to the front and center.
    6. Using the scan tool, read the active Radio DTCs.

    Does the scan tool display active: B1404-1A-FRONT RIGHT AUDIO SPEAKER OUTPUT - CIRCUIT RESISTANCE BELOW THRESHOLD?

    Yes

    - Go To 2

    No

    - Test complete, the condition or conditions that originally set this DTC are not present at this time. Using the wiring diagrams as a guide, check all related splices and connectors for signs of water intrusion, corrosion, pushed out or bent terminals and correct pin tension.
    - Perform the BODY VERIFICATION TEST. Refer to **STANDARD PROCEDURE** .
2. **CHECK THE AMPLIFIER**
    1. Using the scan tool, erase the DTCs.

2. Turn the ignition off.
3. Disconnect the Amplifier harness connector.
4. Turn the ignition on.
5. Turn the radio on and set the volume to 25.
6. Using the scan tool, read the active Radio DTCs.

   Does the scan tool display active:B1404-1A-FRONT RIGHT AUDIO SPEAKER OUTPUT - CIRCUIT RESISTANCE BELOW THRESHOLD?

   Yes

   - Go To 3

   No

   - Replace the Amplifier in accordance with the Service Information. Refer to **AMPLIFIER, REMOVAL** .
   - Perform the BODY VERIFICATION TEST. Refer to **STANDARD PROCEDURE** .

3. **CHECK THE (X54) RIGHT FRONT AUDIO (+) CIRCUIT, AND THE (X56) RIGHT FRONT AUDIO (-) CIRCUITS FOR A SHORT TOGETHER**
   1. Disconnect the Radio harness connector.
   2. Measure the resistance between the (X54) Right Front Audio (+) circuit, and the (X56) Right Front Audio (-) circuit.

      Is the resistance below 10K Ohms?

      Yes

      - Repair the (X54) Right Front Audio (+) circuit, and the (X56) Right Front Audio (-) circuit for a short together.
      - Perform the BODY VERIFICATION TEST. Refer to **STANDARD PROCEDURE** .

      No

      - Replace the Radio in accordance with the Service Information. Refer to **RADIO, REMOVAL** .
      - Perform the BODY VERIFICATION TEST. Refer to **STANDARD PROCEDURE** .

B1404-92-FRONT RIGHT AUDIO SPEAKER OUTPUT - PERFORMANCE OR INCORRECT OPERATION

For a complete wiring diagram, **refer to appropriate SYSTEM WIRING DIAGRAMS article** .

THEORY OF OPERATION

The Radio monitors the Front Right Audio output for a Direct Current (DC) offset.

For a detailed description of the Audio System, refer to **DESCRIPTION** .

For additional information regarding the operation of the Audio System, refer to **OPERATION** .

WHEN MONITORED

With the ignition on.

SET CONDITION

This Diagnostic Trouble Code (DTC) sets if a Direct Current (DC) offset occurs on the output channel, the Radio sets a DTC after 2.5 seconds.

POSSIBLE CAUSES

Possible Causes
RADIO

DIAGNOSTIC TEST

CHECK FOR AN INTERMITTENT CONDITION

1. Turn the ignition on.
2. With the scan tool, record and erase the Radio DTCs.
3. Cycle the ignition switch from on to off, wait five seconds and then back to on.
4. Turn the Radio on and set the volume to 25.
5. Adjust the speakers to the front and center.
6. With the scan tool, read the active Radio DTCs.

   Does the scan tool display active: B1404-92-FRONT RIGHT AUDIO SPEAKER OUTPUT - PERFORMANCE OR INCORRECT OPERATION?

   Yes

   - Replace the Radio in accordance with the Service Information. Refer to **RADIO, REMOVAL** .
   - Perform the BODY VERIFICATION TEST. Refer to **STANDARD PROCEDURE** .

   No

   - Test complete, the condition or conditions that originally set this DTC are not present at this time. Using the wiring diagrams as a guide, check all related splices and connectors for signs of water intrusion, corrosion, pushed out or bent terminals and correct pin tension.
   - Perform the BODY VERIFICATION TEST. Refer to **STANDARD PROCEDURE** .

B1408-11-REAR LEFT AUDIO SPEAKER OUTPUT - CIRCUIT SHORT TO GROUND - BASE

For a complete wiring diagram, **refer to appropriate SYSTEM WIRING DIAGRAMS article** .

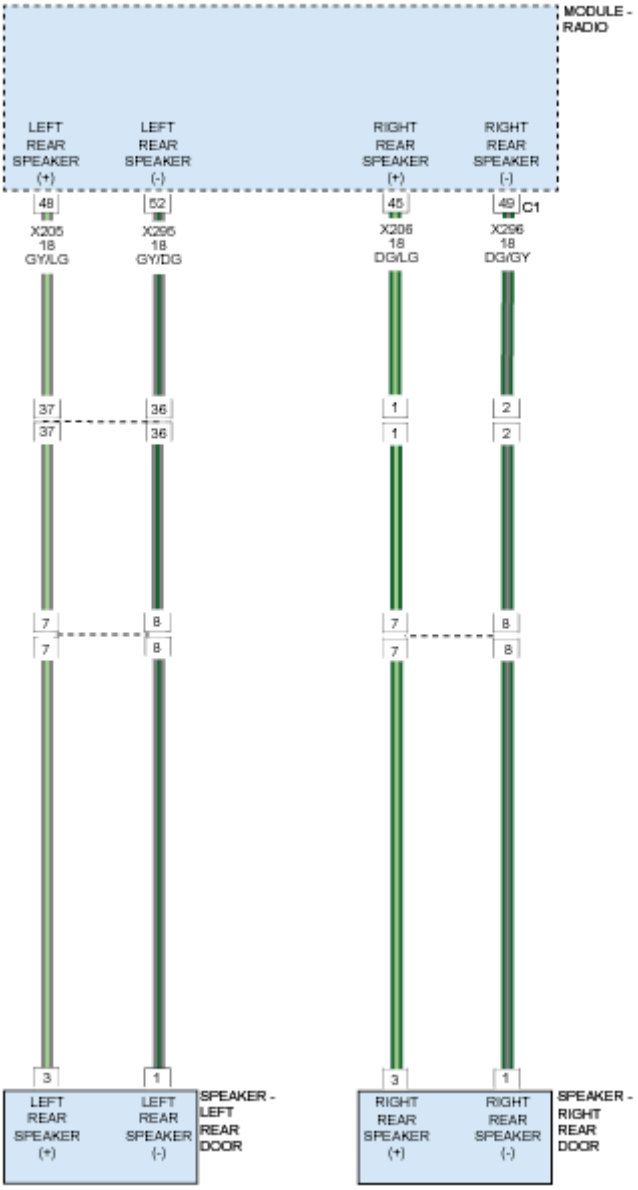

Fig. 17: Rear Left/Right Audio Speaker Output - Circuit Diagram (Base)
Courtesy of CHRYSLER GROUP, LLC

THEORY OF OPERATION

NOTE: **There are two versions of the B1408-11 DTC test. In order to select the proper test you must know if the vehicle is equipped with an Amplifier. If the vehicle is equipped with an Amplifier use the B1408-11 PREMIUM test. If the vehicle is not**

equipped with an Amplifier use the B1408-11 BASE test.

The Left Rear Speaker (+) circuit and the Left Rear Speaker (-) circuit are outputs of the Radio. The Radio controls and monitors these circuits for a concern.

For a detailed description of the Audio System, refer to **DESCRIPTION** .

For additional information regarding the operation of the Audio System, refer to **OPERATION** .

WHEN MONITORED

With the Radio on.

SET CONDITION

The Radio detects a short to ground condition on the speaker output circuit for greater than 2.5 seconds.

POSSIBLE CAUSES

Possible Causes
LEFT REAR SPEAKER (+) CIRCUIT SHORTED TO GROUND
LEFT REAR SPEAKER (-) CIRCUIT SHORTED TO GROUND
LEFT REAR SPEAKER
RADIO

DIAGNOSTIC TEST

1. **CHECK FOR AN INTERMITTENT CONDITION**
    1. Turn the ignition on.
    2. Using the scan tool, record and erase the Radio DTCs.
    3. Turn the Radio on.
    4. Adjust the speakers to the rear and center.
    5. Using the scan tool, read the active Radio DTCs.

    Does the scan tool read: B1408-11-REAR LEFT AUDIO SPEAKER OUTPUT - CIRCUIT SHORT TO GROUND?

    Yes

    - Go To 2

    No

    - Test complete, the condition or conditions that originally set this DTC are not present at this

time. Using the wiring diagrams as a guide, check all related splices and connectors for signs of water intrusion, corrosion, pushed out or bent terminals and correct pin tension.

- Perform the BODY VERIFICATION TEST. Refer to **STANDARD PROCEDURE** .

2. **CHECK LEFT REAR SPEAKER**
   1. Using the scan tool, erase the DTCs.
   2. Turn the ignition off.
   3. Disconnect the Left Rear Speaker harness connector from the Left Rear Speaker.
   4. Turn the ignition on.
   5. Turn the radio on.
   6. Using the scan tool, read the active Radio DTCs.

   Does the scan tool read: B1408-11-REAR LEFT AUDIO SPEAKER OUTPUT - CIRCUIT SHORT TO GROUND?

   Yes

   - Go To 3

   No

   - Replace the Left Rear Speaker in accordance with the Service Information. Refer to **SPEAKER, REMOVAL** .
   - Perform the BODY VERIFICATION TEST. Refer to **STANDARD PROCEDURE** .

3. **CHECK THE (X205) LEFT REAR SPEAKER (+) CIRCUIT FOR A SHORT TO GROUND**
   1. Turn the ignition off.
   2. Disconnect the Radio C1 harness connector.
   3. Measure the resistance between ground and the (X205) Left Rear Speaker (+) circuit.

   Is the resistance below 5.0 Ohms?

   Yes

   - Repair the (X205) Left Rear Speaker (+) circuit for a short to ground.
   - Perform the BODY VERIFICATION TEST. Refer to **STANDARD PROCEDURE** .

   No

   - Go To 4

4. **CHECK THE (X295) LEFT REAR SPEAKER (-) CIRCUIT FOR A SHORT TO GROUND**
   1. Measure the resistance between ground and the (X295) Left Rear Speaker (-) circuit.

   Is the resistance below 5.0 Ohms?

Yes

- Repair the (X295) Left Rear Speaker (-) circuit for a short to ground.
- Perform the BODY VERIFICATION TEST. Refer to **STANDARD PROCEDURE** .

No

- Replace the Radio in accordance with the Service Information.
- Perform the BODY VERIFICATION TEST. Refer to **STANDARD PROCEDURE** .

B1408-11-REAR LEFT AUDIO SPEAKER OUTPUT - CIRCUIT SHORT TO GROUND - PREMIUM

For a complete wiring diagram, **refer to appropriate SYSTEM WIRING DIAGRAMS article** .

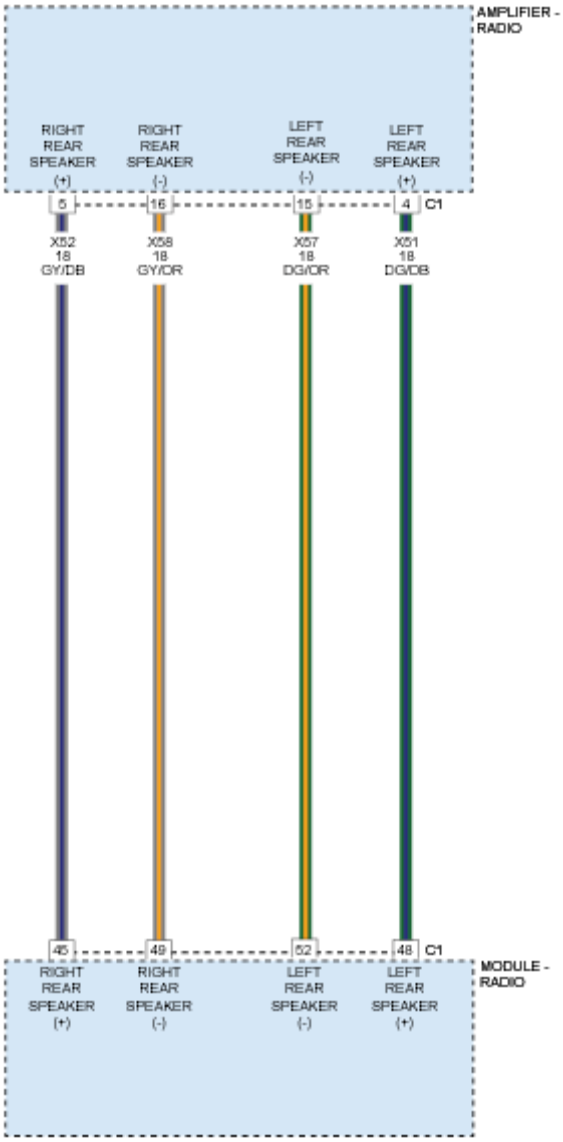

Fig. 18: Rear Left/Right Audio Speaker Output - Circuit Diagram (Premium)
Courtesy of CHRYSLER GROUP, LLC

THEORY OF OPERATION

NOTE: **There are two versions of the B1408-11 DTC test. In order to select the proper test you must know if the vehicle is equipped with an Amplifier. If the vehicle is equipped with an Amplifier use the B1408-11 PREMIUM test. If the vehicle is not equipped with an Amplifier use the B1408-11 BASE test.**

The Left Rear Audio (+) circuit and the Left Rear Audio (-) circuit are outputs of the Radio. The Radio controls and monitors these circuits for a concern.

For a detailed description of the Audio System, refer to **DESCRIPTION** .

For additional information regarding the operation of the Audio System, refer to **OPERATION** .

WHEN MONITORED

With the Radio on.

SET CONDITION

The Radio detects a short to ground condition on the audio output circuit for greater than 2.5 seconds.

POSSIBLE CAUSES

Possible Causes
LEFT REAR AUDIO (+) CIRCUIT SHORTED TO GROUND
LEFT REAR AUDIO (-) CIRCUIT SHORTED TO GROUND
AMPLIFIER
RADIO

DIAGNOSTIC TEST

1. **CHECK FOR AN INTERMITTENT CONDITION**
    1. Turn the ignition on.
    2. Using the scan tool, record and erase the Radio DTCs.
    3. Turn the Radio on.
    4. Adjust the speakers to the rear and center.
    5. Using the scan tool, read the active Radio DTCs.

    Does the scan tool read: B1408-11-REAR LEFT AUDIO SPEAKER OUTPUT - CIRCUIT SHORT TO GROUND ?

    Yes

    - Go To 2

    No

    - Test complete, the condition or conditions that originally set this DTC are not present at this time. Using the wiring diagrams as a guide, check all related splices and connectors for signs of water intrusion, corrosion, pushed out or bent terminals and correct pin tension.
    - Perform the BODY VERIFICATION TEST. Refer to **STANDARD PROCEDURE** .
2. **CHECK THE AMPLIFIER**
    1. Using the scan tool, erase the DTCs.

2. Turn the ignition off.
3. Disconnect the Amplifier C1 harness connector from the Amplifier.
4. Turn the ignition on.
5. Turn the radio on.
6. Using the scan tool, read the active Radio DTCs.

   Does the scan tool read: B1408-11-REAR LEFT AUDIO SPEAKER OUTPUT - CIRCUIT SHORT TO GROUND ?

   Yes

   - Go To 3

   No

   - Replace the Amplifier in accordance with the Service Information.
   - Perform the BODY VERIFICATION TEST. Refer to **STANDARD PROCEDURE** .

3. **CHECK THE (X51) LEFT REAR AUDIO (+) CIRCUIT FOR A SHORT TO GROUND**
   1. Turn the ignition off.
   2. Disconnect the Radio C1 harness connector.
   3. Measure the resistance between ground and the (X51) Left Rear Audio (+) circuit.

      Is the resistance below 5.0 Ohms?

      Yes

      - Repair the (X51) Left Rear Audio (+) circuit for a short to ground.
      - Perform the BODY VERIFICATION TEST. Refer to **STANDARD PROCEDURE** .

      No

      - Go To 4

4. **CHECK THE (X57) LEFT REAR AUDIO (-) CIRCUIT FOR A SHORT TO GROUND**
   1. Measure the resistance between ground and the (X57) Left Rear Audio (-) circuit.

      Is the resistance below 5.0 Ohms?

      Yes

      - Repair the (X57) Left Rear Audio (-) circuit for a short to ground.
      - Perform the BODY VERIFICATION TEST. Refer to **STANDARD PROCEDURE** .

      No

- Replace the Radio in accordance with the Service Information.
- Perform the BODY VERIFICATION TEST. Refer to **STANDARD PROCEDURE** .

B1408-12-REAR LEFT AUDIO SPEAKER OUTPUT - CIRCUIT SHORT TO BATTERY - BASE

For a complete wiring diagram, **refer to appropriate SYSTEM WIRING DIAGRAMS article** .

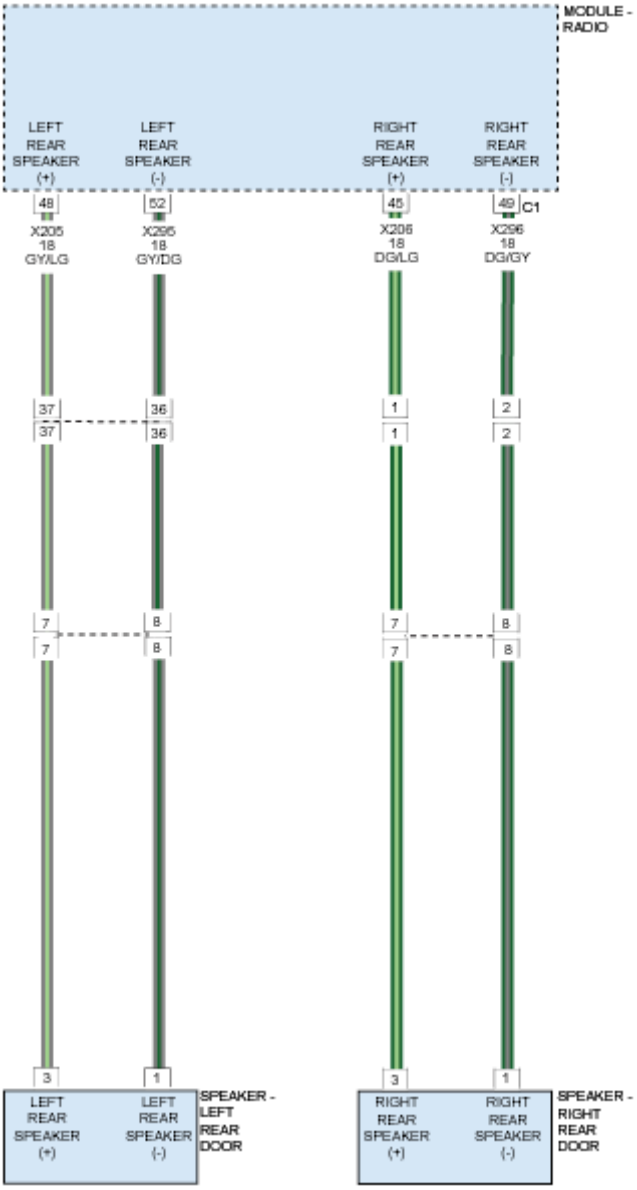

Fig. 19: Rear Left/Right Audio Speaker Output - Circuit Diagram (Base)
Courtesy of CHRYSLER GROUP, LLC

THEORY OF OPERATION

NOTE: **There are two versions of the B1408-12 DTC test. In order to select the proper test you must know if the vehicle is equipped with an Amplifier. If the vehicle is equipped with an Amplifier use the B1408-12 PREMIUM test. If the vehicle is not equipped with an Amplifier use the B1408-12 BASE test.**

The Left Rear Speaker (+) circuit and the Left Rear Speaker (-) circuit are outputs of the Radio. The Radio controls and monitors these circuits for a concern.

For a detailed description of the Audio System, refer to **DESCRIPTION** .

For additional information regarding the operation of the Audio System, refer to **OPERATION** .

WHEN MONITORED

With the Radio on.

SET CONDITION

The Radio detects a short to battery condition on the speaker output circuit for greater than 2.5 seconds.

POSSIBLE CAUSES

Possible Causes
LEFT REAR SPEAKER (+) CIRCUIT SHORTED TO VOLTAGE
LEFT REAR SPEAKER (-) CIRCUIT SHORTED TO VOLTAGE
RADIO

DIAGNOSTIC TEST

1. **CHECK FOR AN INTERMITTENT CONDITION**
    1. Turn the ignition on.
    2. Using the scan tool, record and erase the Radio DTCs.
    3. Turn the Radio on.
    4. Adjust the speakers to the rear and center.
    5. Using the scan tool, read the active Radio DTCs.

    Does the scan tool read: B1408-12-REAR LEFT AUDIO SPEAKER OUTPUT - CIRCUIT SHORT TO BATTERY?

    Yes

    - Go To 2

    No

- Test complete, the condition or conditions that originally set this DTC are not present at this time. Using the wiring diagrams as a guide, check all related splices and connectors for signs of water intrusion, corrosion, pushed out or bent terminals and correct pin tension.
- Perform the BODY VERIFICATION TEST. Refer to **STANDARD PROCEDURE** .

2. **CHECK FOR VOLTAGE ON THE (X205) LEFT REAR SPEAKER (+) CIRCUIT**
   1. Turn the ignition off.
   2. Disconnect the Radio C1 harness connector.
   3. Disconnect the Left Rear Speaker harness connector.
   4. Turn the ignition on.
   5. Measure the voltage between ground and the (X205) Left Rear Speaker (+) circuit.

   Is there any voltage present?

   Yes

   - Repair the (X205) Left Rear Speaker (+) circuit for a short to voltage.
   - Perform the BODY VERIFICATION TEST. Refer to **STANDARD PROCEDURE** .

   No

   - Go To 3

3. **CHECK FOR VOLTAGE ON THE (X295) LEFT REAR SPEAKER (-) CIRCUIT**
   1. Measure the voltage between ground and the (X295) Left Rear Speaker (-) circuit.

   Is there any voltage present?

   Yes

   - Repair the (X295) Left Rear Speaker (-) circuit for a short to voltage.
   - Perform the BODY VERIFICATION TEST. Refer to **STANDARD PROCEDURE** .

   No

   - Replace the Radio in accordance with the Service Information.
   - Perform the BODY VERIFICATION TEST. Refer to **STANDARD PROCEDURE** .

B1408-12-REAR LEFT AUDIO SPEAKER OUTPUT - CIRCUIT SHORT TO BATTERY - PREMIUM

For a complete wiring diagram, **refer to appropriate SYSTEM WIRING DIAGRAMS article** .

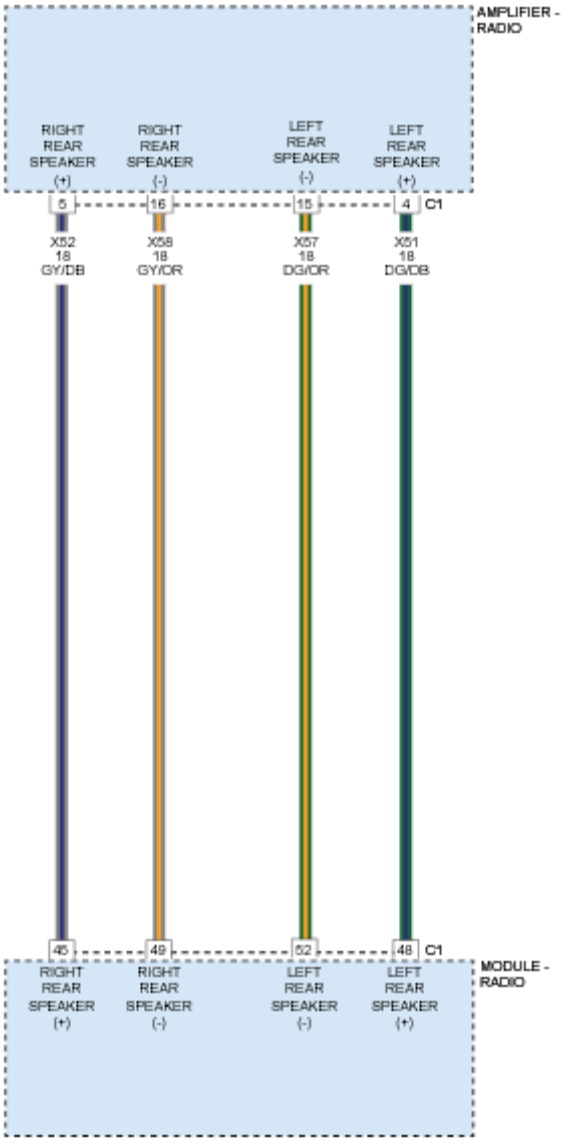

Fig. 20: Rear Left/Right Audio Speaker Output - Circuit Diagram (Premium)
Courtesy of CHRYSLER GROUP, LLC

THEORY OF OPERATION

NOTE: **There are two versions of the B1408-12 DTC test. In order to select the proper test you must know if the vehicle is equipped with an Amplifier. If the vehicle is equipped with an Amplifier use the B1408-12 PREMIUM test. If the vehicle is not equipped with an Amplifier use the B1408-12 BASE test.**

The Left Rear Audio (+) circuit and the Left Rear Audio (-) circuit are outputs of the Radio. The Radio controls and monitors these circuits for a concern.

For a detailed description of the Audio System, refer to **DESCRIPTION** .

For additional information regarding the operation of the Audio System, refer to **OPERATION** .

WHEN MONITORED

With the Radio on.

SET CONDITION

The Radio detects a short to battery condition on the audio output circuit for greater than 2.5 seconds.

POSSIBLE CAUSES

Possible Causes
LEFT REAR AUDIO (+) CIRCUIT SHORTED TO VOLTAGE
LEFT REAR AUDIO (-) CIRCUIT SHORTED TO VOLTAGE
RADIO

DIAGNOSTIC TEST

1. **CHECK FOR AN INTERMITTENT CONDITION**
    1. Turn the ignition on.
    2. Using the scan tool, record and erase the Radio DTCs.
    3. Turn the Radio on.
    4. Adjust the speakers to the rear and center.
    5. Using the scan tool, read the active Radio DTCs.

    Does the scan tool read: B1408-12-REAR LEFT AUDIO SPEAKER OUTPUT - CIRCUIT SHORT TO BATTERY?

    Yes

    - Go To 2

    No

    - Test complete, the condition or conditions that originally set this DTC are not present at this time. Using the wiring diagrams as a guide, check all related splices and connectors for signs of water intrusion, corrosion, pushed out or bent terminals and correct pin tension.
    - Perform the BODY VERIFICATION TEST. Refer to **STANDARD PROCEDURE** .
2. **CHECK THE AMPLIFIER**
    1. Using the scan tool, erase the DTCs.
    2. Turn the ignition off.

3. Disconnect the Amplifier C1 harness connector from the Amplifier.
4. Turn the ignition on.
5. Turn the radio on.
6. Using the scan tool, read the active Radio DTCs.

   Does the scan tool read: B1408-12-REAR LEFT AUDIO SPEAKER OUTPUT - CIRCUIT SHORT TO BATTERY?

   Yes

   - Go To 3

   No

   - Replace the Amplifier in accordance with the Service Information.
   - Perform the BODY VERIFICATION TEST. Refer to **STANDARD PROCEDURE** .

3. **CHECK FOR VOLTAGE ON THE (X51) LEFT REAR AUDIO (+) CIRCUIT**
   1. Turn the ignition off.
   2. Disconnect the Radio C1 harness connector.
   3. Turn the ignition on.
   4. Measure the voltage between ground and the (X51) Left Rear Audio (+) circuit.

      Is there any voltage present?

      Yes

      - Repair the (X51) Left Rear Audio (+) circuit for a short to voltage.
      - Perform the BODY VERIFICATION TEST. Refer to **STANDARD PROCEDURE** .

      No

      - Go To 4

4. **CHECK FOR VOLTAGE ON THE (X57) LEFT REAR AUDIO (-) CIRCUIT**
   1. Measure the voltage between ground and the (X57) Left Rear Audio (-) circuit.

      Is there any voltage present?

      Yes

      - Repair the (X57) Left Rear Audio (-) circuit for a short to voltage.
      - Perform the BODY VERIFICATION TEST. Refer to **STANDARD PROCEDURE** .

      No

- Replace the Radio in accordance with the Service Information.
- Perform the BODY VERIFICATION TEST. Refer to **STANDARD PROCEDURE** .

B1408-13-REAR LEFT AUDIO SPEAKER OUTPUT - CIRCUIT OPEN - BASE

For a complete wiring diagram, **refer to appropriate SYSTEM WIRING DIAGRAMS article** .

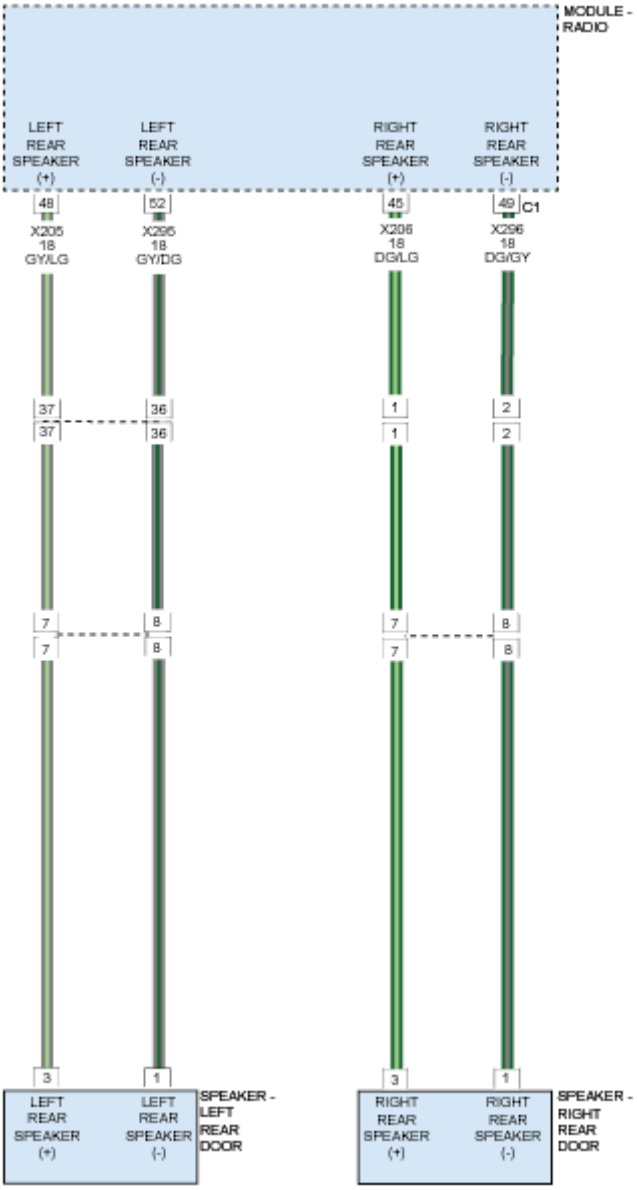

Fig. 21: Rear Left/Right Audio Speaker Output - Circuit Diagram (Base)
Courtesy of CHRYSLER GROUP, LLC

THEORY OF OPERATION

NOTE: **There are two versions of the B1408-13 DTC test. In order to select the proper test you must know if the vehicle is equipped with an Amplifier. If the vehicle is equipped with an Amplifier use the B1408-13 PREMIUM test. If the vehicle is not equipped with an Amplifier use the B1408-13 BASE test.**

The Left Rear Speaker (+) circuit and the Left Rear Speaker (-) circuit are outputs of the Radio. The Radio controls and monitors these circuits for a concern.

For a detailed description of the Audio System, refer to **DESCRIPTION** .

For additional information regarding the operation of the Audio System, refer to **OPERATION** .

WHEN MONITORED

With the Radio on.

SET CONDITION

The Radio detects an open condition on the speaker output circuit for greater than 2.5 seconds.

POSSIBLE CAUSES

Possible Causes
LEFT REAR SPEAKER (+) CIRCUIT OPEN
LEFT REAR SPEAKER (-) CIRCUIT OPEN
LEFT REAR SPEAKER
RADIO

DIAGNOSTIC TEST

1. **CHECK FOR AN INTERMITTENT CONDITION**
    1. Turn the ignition on.
    2. Using the scan tool, record and erase the Radio DTCs.
    3. Turn the Radio on.
    4. Adjust the speakers to the rear and center.
    5. Using the scan tool, read the active Radio DTCs.

    Does the scan tool read: B1408-13-REAR LEFT AUDIO SPEAKER OUTPUT - CIRCUIT OPEN?

    Yes

    - Go To 2

    No

- Test complete, the condition or conditions that originally set this DTC are not present at this time. Using the wiring diagrams as a guide, check all related splices and connectors for signs of water intrusion, corrosion, pushed out or bent terminals and correct pin tension.
- Perform the BODY VERIFICATION TEST. Refer to **STANDARD PROCEDURE** .

2. **CHECK THE LEFT REAR SPEAKER**
   1. Turn the ignition off.
   2. Disconnect the Left Rear Speaker.
   3. Measure the resistance of the speaker between the two terminals.

   Is the resistance above 5.0 Ohms?

   Yes

   - Replace the Left Rear Speaker in accordance with the Service Information.
   - Perform the BODY VERIFICATION TEST. Refer to **STANDARD PROCEDURE** .

   No

   - Go To 3

3. **CHECK THE (X205) LEFT REAR SPEAKER (+) CIRCUIT FOR AN OPEN**
   1. Disconnect the Radio C1 harness connector.
   2. Measure the resistance of (X205) Left Rear Speaker (+) circuit between the Radio C1 connector, and the Left Rear Speaker harness connector.

   Is the resistance below 5.0 Ohms?

   Yes

   - Go To 4

   No

   - Repair an open in the (X205) Left Rear Speaker (+) circuit.
   - Perform the BODY VERIFICATION TEST. Refer to **STANDARD PROCEDURE** .

4. **CHECK THE (X295) LEFT REAR SPEAKER (-) CIRCUIT FOR AN OPEN**
   1. Measure the resistance of (X295) Left Rear Speaker (-) circuit between the Radio C1 connector, and the Left Rear Speaker harness connector.

   Is the resistance below 5.0 Ohms?

   Yes

   - Replace the Radio in accordance with the Service Information.

- Perform the BODY VERIFICATION TEST. Refer to **STANDARD PROCEDURE** .

No

- Repair an open in the (X295) Left Rear Speaker (-) circuit.
- Perform the BODY VERIFICATION TEST. Refer to **STANDARD PROCEDURE** .

B1408-13-REAR LEFT AUDIO SPEAKER OUTPUT - CIRCUIT OPEN - PREMIUM

For a complete wiring diagram, **refer to appropriate SYSTEM WIRING DIAGRAMS article** .

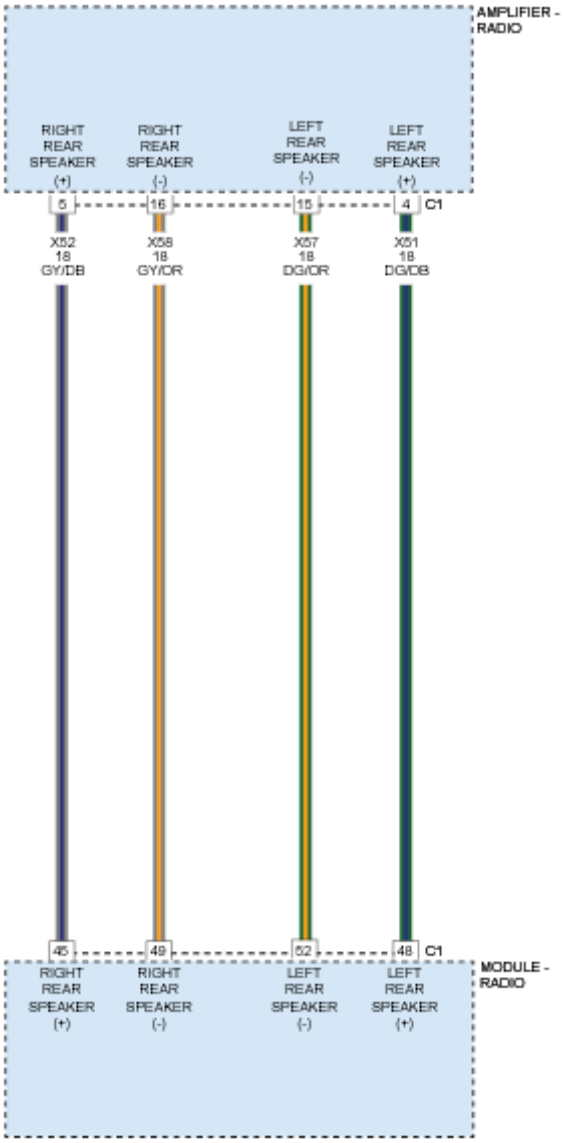

Fig. 22: Rear Left/Right Audio Speaker Output - Circuit Diagram (Premium)
Courtesy of CHRYSLER GROUP, LLC

THEORY OF OPERATION

NOTE: There are two versions of the B1408-13 DTC test. In order to select the proper test you must know if the vehicle is equipped with an Amplifier. If the vehicle is equipped with an Amplifier use the B1408-13 PREMIUM test. If the vehicle is not equipped with an Amplifier use the B1408-13 BASE test.

The Left Rear Audio (+) circuit and the Left Rear Audio (-) circuit are outputs of the Radio. The Radio controls and monitors these circuits for a concern.

For a detailed description of the Audio System, refer to **DESCRIPTION** .

For additional information regarding the operation of the Audio System, refer to **OPERATION** .

WHEN MONITORED

With the Radio on.

SET CONDITION

The Radio detects an open condition on the audio output circuit for greater than 2.5 seconds.

POSSIBLE CAUSES

Possible Causes
LEFT REAR AUDIO (+) CIRCUIT OPEN
LEFT REAR AUDIO (-) CIRCUIT OPEN
AMPLIFIER
RADIO

DIAGNOSTIC TEST

1. **CHECK FOR AN INTERMITTENT CONDITION**
    1. Turn the ignition on.
    2. Using the scan tool, record and erase the Radio DTCs.
    3. Turn the Radio on.
    4. Adjust the speakers to the rear and center.
    5. Using the scan tool, read the active Radio DTCs.

    Does the scan tool read: B1408-13-REAR LEFT AUDIO SPEAKER OUTPUT - CIRCUIT OPEN?

    Yes

    - Go To 2

No

- Test complete, the condition or conditions that originally set this DTC are not present at this time. Using the wiring diagrams as a guide, check all related splices and connectors for signs of water intrusion, corrosion, pushed out or bent terminals and correct pin tension.
- Perform the BODY VERIFICATION TEST. Refer to **STANDARD PROCEDURE** .

2. **CHECK THE AMPLIFIER**
   1. Turn the ignition off.
   2. Disconnect the Amplifier C1 harness connector.
   3. Connect a jumper wire between the (X51) Left Rear Audio (+) circuit and the (X57) Left Rear Audio (-) circuits.
   4. Turn the ignition on.
   5. Turn the Radio on.
   6. Adjust the speakers to the rear and center.
   7. Using the scan tool, read the active Radio DTCs.

   Does the scan tool read: B1408-13-REAR LEFT AUDIO SPEAKER OUTPUT - CIRCUIT OPEN?

   Yes

   - Go To 3

   No

   - Replace the Amplifier in accordance with the Service Information.
   - Perform the BODY VERIFICATION TEST. Refer to **STANDARD PROCEDURE** .

3. **CHECK THE (X51) LEFT REAR AUDIO (+) CIRCUIT FOR AN OPEN**
   1. Turn the ignition off.
   2. Disconnect the Radio C1 harness connector.
   3. Measure the resistance of (X51) Left Rear Audio (+) circuit between the Radio C1 connector and the Amplifier C1 harness connector.

   Is the resistance below 5.0 Ohms?

   Yes

   - Go To 4

   No

   - Repair open in the (X51) Left Rear Audio (+) circuit.
   - Perform the BODY VERIFICATION TEST. Refer to **STANDARD PROCEDURE** .

4. **CHECK THE (X57) LEFT REAR AUDIO (-) CIRCUIT FOR AN OPEN**
    1. Measure the resistance of (X57) Left Rear Audio (-) circuit between the Radio C1 connector, and the Amplifier C1 harness connector.

       Is the resistance below 5.0 Ohms?

       Yes

       - Replace the Radio in accordance with the Service Information.
       - Perform the BODY VERIFICATION TEST. Refer to **STANDARD PROCEDURE** .

       No

       - Repair open in the (X57) Left Rear Audio (-) circuit.
       - Perform the BODY VERIFICATION TEST. Refer to **STANDARD PROCEDURE** .

B1408-1A-REAR LEFT AUDIO SPEAKER OUTPUT - CIRCUIT RESISTANCE BELOW THRESHOLD - BASE

For a complete wiring diagram, **refer to appropriate SYSTEM WIRING DIAGRAMS article** .

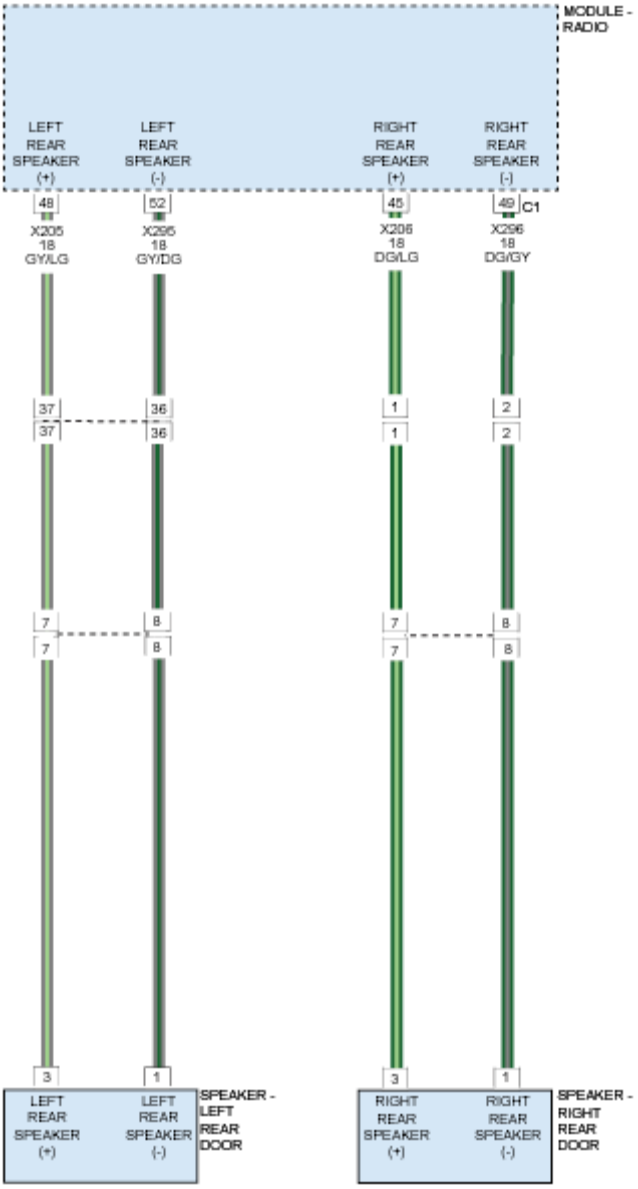

Fig. 23: Rear Left/Right Audio Speaker Output - Circuit Diagram (Base)
Courtesy of CHRYSLER GROUP, LLC

THEORY OF OPERATION

NOTE: **There are two versions of the B1408-1A DTC test. In order to select the proper test you must know if the vehicle is equipped with an Amplifier. If the vehicle is equipped with an Amplifier use the B1408-1A PREMIUM test. If the vehicle is not equipped with an Amplifier use the B1408-1A BASE test.**

The Left Rear Speaker (+) circuit and the Left Rear Speaker (-) circuit are outputs of the Radio. The Radio controls and monitors these circuits for a concern.

For a detailed description of the Audio System, refer to **DESCRIPTION** .

For additional information regarding the operation of the Audio System, refer to **OPERATION** .

WHEN MONITORED

With the ignition on.

SET CONDITION

The Radio detects that the output circuits are shorted together for greater than 2.5 seconds.

POSSIBLE CAUSES

Possible Causes
LEFT REAR SPEAKER (+) CIRCUIT SHORTED TO THE LEFT REAR SPEAKER (-) CIRCUIT
LEFT REAR SPEAKER
RADIO

DIAGNOSTIC TEST

1. **CHECK FOR AN INTERMITTENT CONDITION**
    1. Using the scan tool, record and erase the Radio DTCs.
    2. Cycle the ignition switch from on to off, wait five seconds and then back to on.
    3. Turn the radio on and set the volume to 25.
    4. Adjust the speakers to the Rear and center.
    5. Using the scan tool, read the active Radio DTCs.

    Does the scan tool display active: B1408-1A-REAR LEFT AUDIO SPEAKER OUTPUT - CIRCUIT RESISTANCE BELOW THRESHOLD?

    Yes

    - Go To 2

    No

    - Test complete, the condition or conditions that originally set this DTC are not present at this time. Using the wiring diagrams as a guide, check all related splices and connectors for signs of water intrusion, corrosion, pushed out or bent terminals and correct pin tension.
    - Perform the BODY VERIFICATION TEST. Refer to **STANDARD PROCEDURE** .
2. **CHECK THE LEFT REAR SPEAKERS**
    1. Using the scan tool, erase the DTCs.
    2. Turn the ignition off.

3. Disconnect the Left Rear Speaker harness connector.
4. Turn the ignition on.
5. Turn the radio on and set the volume to 25.
6. Using the scan tool, read the active Radio DTCs.

   Does the scan tool display active: B1408-1A-REAR LEFT AUDIO SPEAKER OUTPUT - CIRCUIT RESISTANCE BELOW THRESHOLD?

   Yes

   - Go To 3

   No

   - Replace the Left Rear Speaker in accordance with the Service Information. Refer to **SPEAKER, REMOVAL** .
   - Perform the BODY VERIFICATION TEST. Refer to **STANDARD PROCEDURE** .

3. **CHECK THE (X205) LEFT REAR SPEAKER (+) CIRCUIT, AND THE (X295) LEFT REAR SPEAKER (-) CIRCUITS FOR A SHORT TOGETHER**
   1. Disconnect the Radio harness connector.
   2. Measure the resistance between the (X205) Left Rear Speaker (+) circuit, and the (X295) Left Rear Speaker (-) circuit.

      Is the resistance below 10K Ohms?

      Yes

      - Repair the (X205) Left Rear Speaker (+) circuit, and the (X295) Left Rear Speaker (-) circuit for a short together.
      - Perform the BODY VERIFICATION TEST. Refer to **STANDARD PROCEDURE** .

      No

      - Replace the Radio in accordance with the Service Information. Refer to **RADIO, REMOVAL** .
      - Perform the BODY VERIFICATION TEST. Refer to **STANDARD PROCEDURE** .

B1408-1A-REAR LEFT AUDIO SPEAKER OUTPUT - CIRCUIT RESISTANCE BELOW THRESHOLD - PREMIUM

For a complete wiring diagram, **refer to appropriate SYSTEM WIRING DIAGRAMS article** .

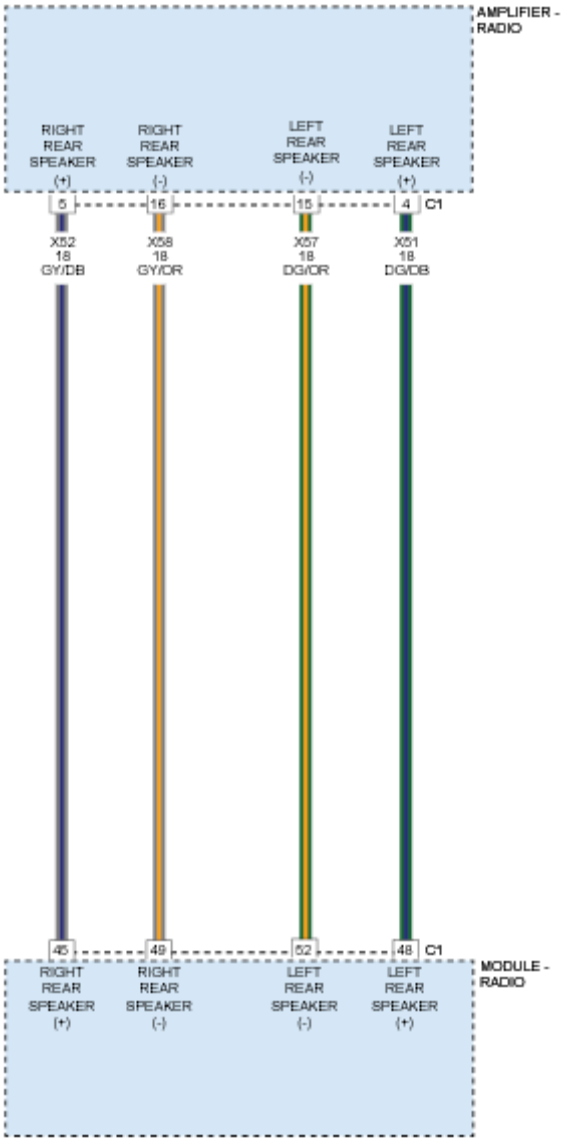

Fig. 24: Rear Left/Right Audio Speaker Output - Circuit Diagram (Premium)
Courtesy of CHRYSLER GROUP, LLC

THEORY OF OPERATION

NOTE: **There are two versions of the B1408-1A DTC test. In order to select the proper test you must know if the vehicle is equipped with an Amplifier. If the vehicle is equipped with an Amplifier use the B1408-1A PREMIUM test. If the vehicle is not equipped with an Amplifier use the B1408-1A BASE test.**

The Left Rear Audio (+) circuit and the Left Rear Audio (-) circuit are outputs of the Radio. The Radio controls and monitors these circuits for a concern.

For a detailed description of the Audio System, refer to **DESCRIPTION** .

For additional information regarding the operation of the Audio System, refer to **OPERATION** .

WHEN MONITORED

With the ignition on.

SET CONDITION

The Radio detects that the output circuits are shorted together for greater than 2.5 seconds.

POSSIBLE CAUSES

Possible Causes
LEFT REAR AUDIO (+) CIRCUIT SHORTED TO THE LEFT REAR AUDIO (-) CIRCUIT
AMPLIFIER
RADIO

DIAGNOSTIC TEST

1. **CHECK FOR AN INTERMITTENT CONDITION**
    1. Turn the ignition on.
    2. Using the scan tool, record and erase the Radio DTCs.
    3. Cycle the ignition switch from on to off, wait five seconds and then back to on.
    4. Turn the Radio on and set the volume to 25.
    5. Adjust the speakers to the Rear and center.
    6. Using the scan tool, read the active Radio DTCs.

    Does the scan tool display active: B1408-1A- REAR LEFT AUDIO SPEAKER OUTPUT - CIRCUIT RESISTANCE BELOW THRESHOLD?

    Yes

    - Go To 2

    No

    - Test complete, the condition or conditions that originally set this DTC are not present at this time. Using the wiring diagrams as a guide, check all related splices and connectors for signs of water intrusion, corrosion, pushed out or bent terminals and correct pin tension.
    - Perform the BODY VERIFICATION TEST. Refer to **STANDARD PROCEDURE** .
2. **CHECK THE AMPLIFIER**
    1. Using the scan tool, erase the DTCs.

2. Turn the ignition off.
3. Disconnect the Amplifier harness connector.
4. Turn the ignition on.
5. Turn the radio on and set the volume to 25.
6. Using the scan tool, read the active Radio DTCs.

   Does the scan tool display active: B1408-1A- REAR LEFT AUDIO SPEAKER OUTPUT - CIRCUIT RESISTANCE BELOW THRESHOLD?

   Yes

   - Go To 3

   No

   - Replace the Amplifier in accordance with the Service Information. Refer to **AMPLIFIER, REMOVAL** .
   - Perform the BODY VERIFICATION TEST. Refer to **STANDARD PROCEDURE** .

3. **CHECK THE (X51) LEFT REAR AUDIO (+) CIRCUIT, AND THE (X57) LEFT REAR AUDIO (-) CIRCUITS FOR A SHORT TOGETHER**
   1. Disconnect the Radio harness connector.
   2. Measure the resistance between the (X51) Left Rear Audio (+) circuit, and the (X57) Left Rear Audio (-) circuit.

      Is the resistance below 10K Ohms?

      Yes

      - Repair the (X51) Left Rear Audio (+) circuit, and the (X57) Left Rear Audio (-) circuit for a short together.
      - Perform the BODY VERIFICATION TEST. Refer to **STANDARD PROCEDURE** .

      No

      - Replace the Radio in accordance with the Service Information. Refer to **RADIO, REMOVAL** .
      - Perform the BODY VERIFICATION TEST. Refer to **STANDARD PROCEDURE** .

B1408-92-REAR LEFT AUDIO SPEAKER OUTPUT - PERFORMANCE OR INCORRECT OPERATION

For a complete wiring diagram, **refer to appropriate SYSTEM WIRING DIAGRAMS article** .

THEORY OF OPERATION

The Radio monitors the Left Audio output for a Direct Current (DC) offset.

For a detailed description of the Audio System, refer to **DESCRIPTION** .

For additional information regarding the operation of the Audio System, refer to **OPERATION** .

WHEN MONITORED

With the ignition on.

SET CONDITION

This Diagnostic Trouble Code (DTC) sets if a Direct Current (DC) offset occurs on the output channel, the Radio sets a DTC after 2.5 seconds.

POSSIBLE CAUSES

Possible Causes
Radio

DIAGNOSTIC TEST

CHECK FOR AN INTERMITTENT CONDITION

1. Turn the ignition on.
2. With the scan tool, record and erase the Radio DTCs.
3. Cycle the ignition switch from on to off, wait five seconds and then back to on.
4. Turn the Radio on and set the volume to 25.
5. Adjust the speakers to the Rear and center.
6. With the scan tool, read the active Radio DTCs.

   Does the scan tool display active: B1408-92-REAR LEFT AUDIO SPEAKER OUTPUT - PERFORMANCE OR INCORRECT OPERATION?

   Yes

   - Replace the Radio in accordance with the Service Information. Refer to **RADIO, REMOVAL** .
   - Perform the BODY VERIFICATION TEST. Refer to **STANDARD PROCEDURE** .

   No

   - Test complete, the condition or conditions that originally set this DTC are not present at this time. Using the wiring diagrams as a guide, check all related splices and connectors for signs of water intrusion, corrosion, pushed out or bent terminals and correct pin tension.
   - Perform the BODY VERIFICATION TEST. Refer to **STANDARD PROCEDURE** .

B140C-11-REAR RIGHT AUDIO SPEAKER OUTPUT - CIRCUIT SHORT TO GROUND - BASE

For a complete wiring diagram, **refer to appropriate SYSTEM WIRING DIAGRAMS article** .

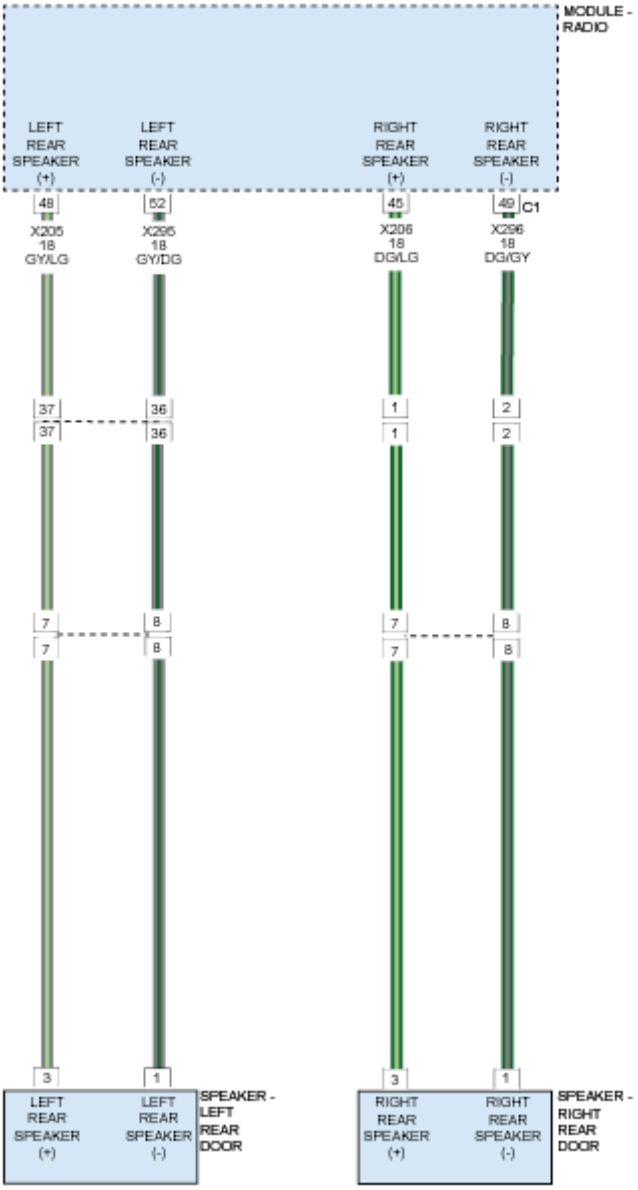

Fig. 25: Rear Left/Right Audio Speaker Output - Circuit Diagram (Base)
Courtesy of CHRYSLER GROUP, LLC

THEORY OF OPERATION

NOTE: **There are two versions of the B140C-11 DTC test. In order to select the proper test you must know if the vehicle is equipped with an Amplifier. If the vehicle is equipped with an Amplifier use the B140C-11 PREMIUM test. If the vehicle is not**

equipped with an Amplifier use the B140C-11 BASE test.

The Right Rear Speaker (+) circuit and the Right Rear Speaker (-) circuit are outputs of the Radio. The Radio controls and monitors these circuits for a concern.

For a detailed description of the Audio System, refer to **DESCRIPTION** .

For additional information regarding the operation of the Audio System, refer to **OPERATION** .

WHEN MONITORED

With the Radio on.

SET CONDITION

The Radio detects a short to ground condition on the speaker output circuit for greater than 2.5 seconds.

POSSIBLE CAUSES

Possible Causes
RIGHT REAR SPEAKER (+) CIRCUIT SHORTED TO GROUND
RIGHT REAR SPEAKER (-) CIRCUIT SHORTED TO GROUND
RIGHT REAR SPEAKER
RADIO

DIAGNOSTIC TEST

1. **CHECK FOR AN INTERMITTENT CONDITION**
    1. Turn the ignition on.
    2. Using the scan tool, record and erase the Radio DTCs.
    3. Turn the Radio on.
    4. Adjust the speakers to the rear and center.
    5. Using the scan tool, read the active Radio DTCs.

    Does the scan tool read: B140C-11-REAR RIGHT AUDIO SPEAKER OUTPUT - CIRCUIT SHORT TO GROUND?

    Yes

    - Go To 2

    No

    - Test complete, the condition or conditions that originally set this DTC are not present at this

time. Using the wiring diagrams as a guide, check all related splices and connectors for signs of water intrusion, corrosion, pushed out or bent terminals and correct pin tension.

- Perform the BODY VERIFICATION TEST. Refer to **STANDARD PROCEDURE** .

2. **CHECK RIGHT REAR SPEAKER**
   1. Using the scan tool, erase the DTCs.
   2. Turn the ignition off.
   3. Disconnect the Right Rear Speaker harness connector from the Right Rear Speaker.
   4. Turn the ignition on.
   5. Turn the radio on.
   6. Using the scan tool, read the active Radio DTCs.

   Does the scan tool read: B140C-11-REAR RIGHT AUDIO SPEAKER OUTPUT - CIRCUIT SHORT TO GROUND?

   Yes

   - Go To 3

   No

   - Replace the Right Rear Speaker in accordance with the Service Information.
   - Perform the BODY VERIFICATION TEST. Refer to **STANDARD PROCEDURE** .

3. **CHECK THE (X206) RIGHT REAR SPEAKER (+) CIRCUIT FOR A SHORT TO GROUND**
   1. Turn the ignition off.
   2. Disconnect the Radio C1 harness connector.
   3. Measure the resistance between ground and the (X206) Right Rear Speaker (+) circuit.

   Is the resistance below 5.0 Ohms?

   Yes

   - Repair the (X206) Right Rear Speaker (+) circuit for a short to ground.
   - Perform the BODY VERIFICATION TEST. Refer to **STANDARD PROCEDURE** .

   No

   - Go To 4

4. **CHECK THE (X296) RIGHT REAR SPEAKER (-) CIRCUIT FOR A SHORT TO GROUND**
   1. Measure the resistance between ground and the (X296) Right Rear Speaker (-) circuit.

   Is the resistance below 5.0 Ohms?

Yes

- Repair the (X296) Right Rear Speaker (-) circuit for a short to ground.
- Perform the BODY VERIFICATION TEST. Refer to **STANDARD PROCEDURE** .

No

- Replace the Radio in accordance with the Service Information.
- Perform the BODY VERIFICATION TEST. Refer to **STANDARD PROCEDURE** .

B140C-11-REAR RIGHT AUDIO SPEAKER OUTPUT - CIRCUIT SHORT TO GROUND - PREMIUM

For a complete wiring diagram, **refer to appropriate SYSTEM WIRING DIAGRAMS article** .

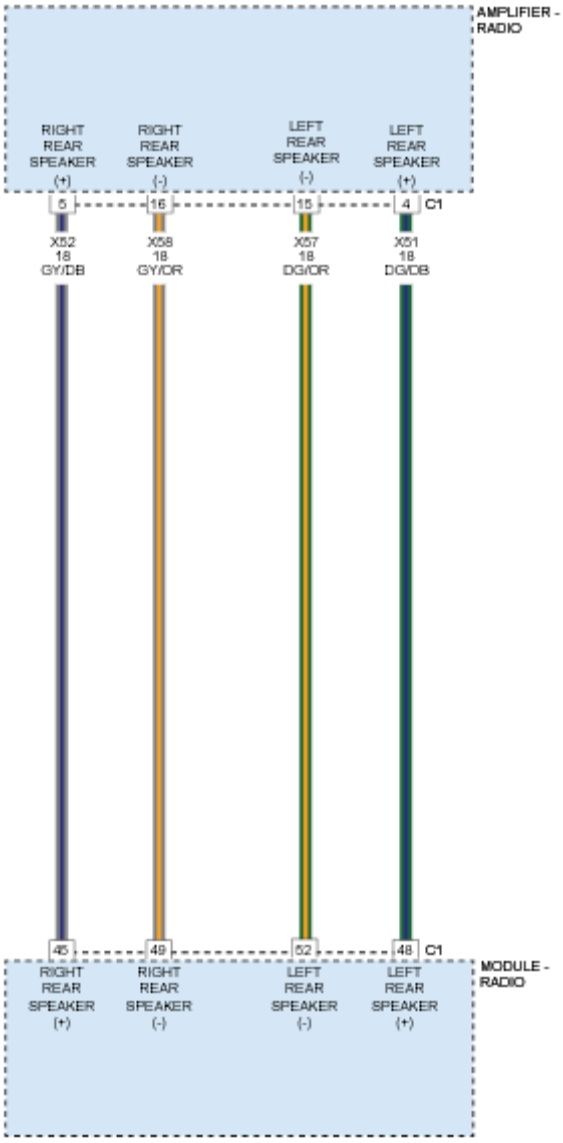

Fig. 26: Rear Left/Right Audio Speaker Output - Circuit Diagram (Premium)
Courtesy of CHRYSLER GROUP, LLC

THEORY OF OPERATION

NOTE: **There are two versions of the B140C-11 DTC test. In order to select the proper test you must know if the vehicle is equipped with an Amplifier. If the vehicle is equipped with an Amplifier use the B140C-11 PREMIUM test. If the vehicle is not equipped with an Amplifier use the B140C-11 BASE test.**

The Right Rear Audio (+) circuit and the Right Rear Audio (-) circuit are outputs of the Radio. The Radio controls and monitors these circuits for a concern.

For a detailed description of the Audio System, refer to **DESCRIPTION** .

For additional information regarding the operation of the Audio System, refer to **OPERATION** .

WHEN MONITORED

With the Radio on.

SET CONDITION

The Radio detects a short to ground condition on the audio output circuit for greater than 2.5 seconds.

POSSIBLE CAUSES

Possible Causes
RIGHT REAR AUDIO(+) CIRCUIT SHORTED TO GROUND
RIGHT REAR AUDIO(-) CIRCUIT SHORTED TO GROUND
AMPLIFIER
RADIO

DIAGNOSTIC TEST

1. **CHECK FOR AN INTERMITTENT CONDITION**
    1. Turn the ignition on.
    2. Using the scan tool, record and erase the Radio DTCs.
    3. Turn the Radio on.
    4. Adjust the speakers to the rear and center.
    5. Using the scan tool, read the active Radio DTCs.

    Does the scan tool read: B140C-11-REAR RIGHT AUDIO SPEAKER OUTPUT - CIRCUIT SHORT TO GROUND ?

    Yes

    - Go To 2

    No

    - Test complete, the condition or conditions that originally set this DTC are not present at this time. Using the wiring diagrams as a guide, check all related splices and connectors for signs of water intrusion, corrosion, pushed out or bent terminals and correct pin tension.
    - Perform the BODY VERIFICATION TEST. Refer to **STANDARD PROCEDURE** .
2. **CHECK THE AMPLIFIER**
    1. Using the scan tool, erase the DTCs.

2. Turn the ignition off.
3. Disconnect the Amplifier C1 harness connector.
4. Turn the ignition on.
5. Turn the radio on.
6. Using the scan tool, read the active Radio DTCs.

   Does the scan tool read: B140C-11-REAR RIGHT AUDIO SPEAKER OUTPUT - CIRCUIT SHORT TO GROUND ?

   Yes

   - Go To 3

   No

   - Replace the Amplifier in accordance with the Service Information.
   - Perform the BODY VERIFICATION TEST. Refer to **STANDARD PROCEDURE** .

3. **CHECK THE (X52) RIGHT REAR AUDIO (+) CIRCUIT FOR A SHORT TO GROUND**
   1. Turn the ignition off.
   2. Disconnect the Radio C1 harness connector.
   3. Measure the resistance between ground and the (X52) Right Rear Speaker (+) circuit.

      Is the resistance below 5.0 Ohms?

      Yes

      - Repair the (X52) Right Rear Audio (+) circuit for a short to ground.
      - Perform the BODY VERIFICATION TEST. Refer to **STANDARD PROCEDURE** .

      No

      - Go To 4

4. **CHECK THE (X58) RIGHT REAR AUDIO (-) CIRCUIT FOR A SHORT TO GROUND**
   1. Measure the resistance between ground and the (X58) Right Rear Audio (-) circuit.

      Is the resistance below 5.0 Ohms?

      Yes

      - Repair the (X58) Right Rear Audio (-) circuit for a short to ground.
      - Perform the BODY VERIFICATION TEST. Refer to **STANDARD PROCEDURE** .

      No

- Replace the Radio in accordance with the Service Information.
- Perform the BODY VERIFICATION TEST. Refer to **STANDARD PROCEDURE** .

B140C-12-REAR RIGHT AUDIO SPEAKER OUTPUT - CIRCUIT SHORT TO BATTERY- BASE

For a complete wiring diagram, **refer to appropriate SYSTEM WIRING DIAGRAMS article** .

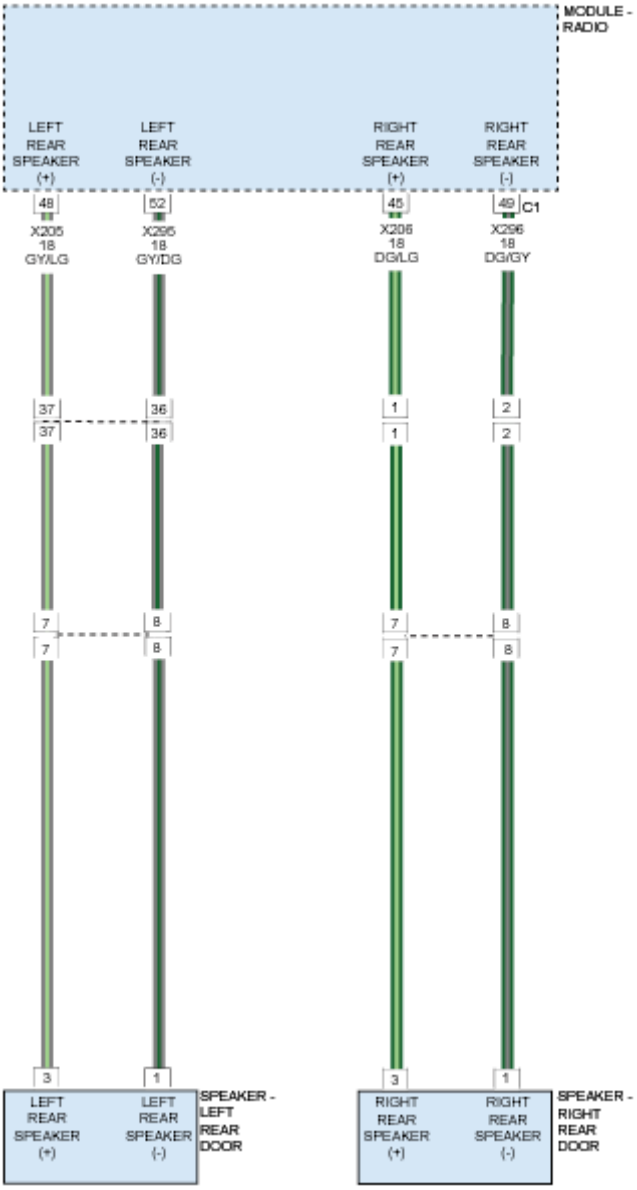

Fig. 27: Rear Left/Right Audio Speaker Output - Circuit Diagram (Base)
Courtesy of CHRYSLER GROUP, LLC

THEORY OF OPERATION

NOTE: **There are two versions of the B140C-12 DTC test. In order to select the proper test you must know if the vehicle is equipped with an Amplifier. If the vehicle is equipped with an Amplifier use the B140C-12 PREMIUM test. If the vehicle is not equipped with an Amplifier use the B140C-12 BASE test.**

The Right Rear Speaker (+) circuit and the Right Rear Speaker (-) circuit are outputs of the Radio. The Radio controls and monitors these circuits for a concern.

For a detailed description of the Audio System, refer to **DESCRIPTION** .

For additional information regarding the operation of the Audio System, refer to **OPERATION** .

WHEN MONITORED

With the Radio on.

SET CONDITION

The Radio detects a short to battery condition on the speaker output circuit for greater than 2.5 seconds.

POSSIBLE CAUSES

Possible Causes
RIGHT REAR SPEAKER (+) CIRCUIT SHORTED TO VOLTAGE
RIGHT REAR SPEAKER (-) CIRCUIT SHORTED TO VOLTAGE
RADIO

DIAGNOSTIC TEST

1. **CHECK FOR AN INTERMITTENT CONDITION**
    1. Turn the ignition on.
    2. Using the scan tool, record and erase the Radio DTCs.
    3. Turn the Radio on.
    4. Adjust the speakers to the rear and center.
    5. Using the scan tool, read the active Radio DTCs.

    Does the scan tool read: B140C-12-REAR RIGHT AUDIO SPEAKER OUTPUT - CIRCUIT SHORT TO BATTERY?

    Yes

    - Go To 2

    No

- Test complete, the condition or conditions that originally set this DTC are not present at this time. Using the wiring diagrams as a guide, check all related splices and connectors for signs of water intrusion, corrosion, pushed out or bent terminals and correct pin tension.
- Perform the BODY VERIFICATION TEST. Refer to **STANDARD PROCEDURE** .

2. **CHECK FOR VOLTAGE ON THE (X206) RIGHT REAR SPEAKER (+) CIRCUIT**
   1. Turn the ignition off.
   2. Disconnect the Radio C1 harness connector.
   3. Turn the ignition on.
   4. Measure the voltage between ground and the (X206) Right Rear Speaker (+) circuit.

      Is there any voltage present?

      Yes

      - Repair the (X206) Right Rear Speaker (+) circuit for a short to voltage.
      - Perform the BODY VERIFICATION TEST. Refer to **STANDARD PROCEDURE** .

      No

      - Go To 3
3. **CHECK FOR VOLTAGE ON THE (X296) RIGHT REAR SPEAKER (-) CIRCUIT**
   1. Measure the voltage between ground and the (X296) Right Rear Speaker (-) circuit.

      Is there any voltage present?

      Yes

      - Repair the (X296) Right Rear Speaker (-) circuit for a short to voltage.
      - Perform the BODY VERIFICATION TEST. Refer to **STANDARD PROCEDURE** .

      No

      - Replace the Radio in accordance with the Service Information.
      - Perform the BODY VERIFICATION TEST. Refer to **STANDARD PROCEDURE** .

B140C-12-REAR RIGHT AUDIO SPEAKER OUTPUT - CIRCUIT SHORT TO BATTERY - PREMIUM

For a complete wiring diagram, **refer to appropriate SYSTEM WIRING DIAGRAMS article** .

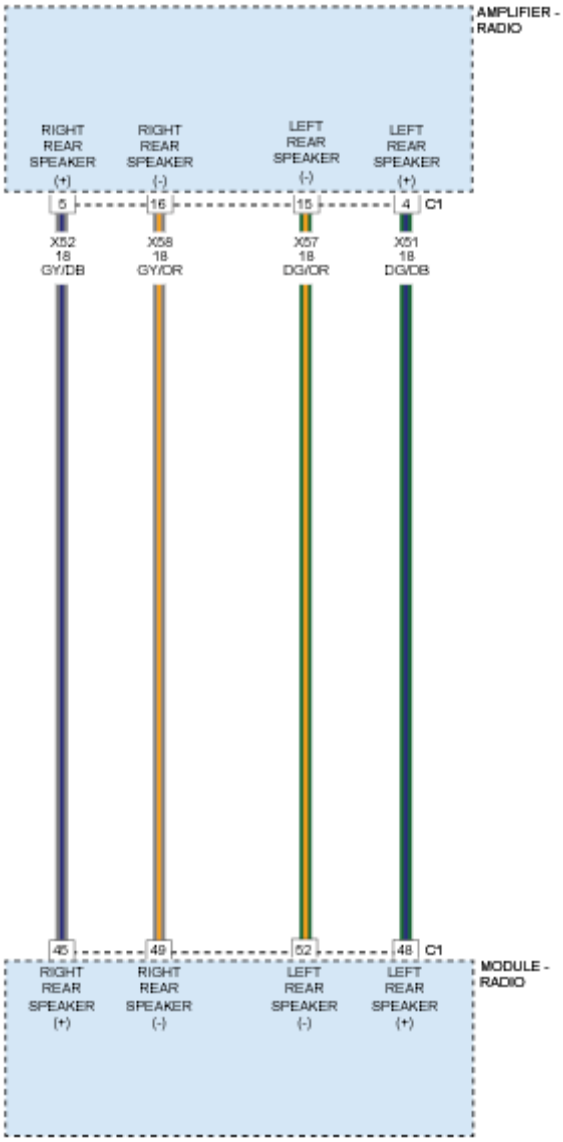

Fig. 28: Rear Left/Right Audio Speaker Output - Circuit Diagram (Premium)
Courtesy of CHRYSLER GROUP, LLC

THEORY OF OPERATION

NOTE: **There are two versions of the B140C-12 DTC test. In order to select the proper test you must know if the vehicle is equipped with an Amplifier. If the vehicle is equipped with an Amplifier use the B140C-12 PREMIUM test. If the vehicle is not equipped with an Amplifier use the B140C-12 BASE test.**

The Right Rear Audio (+) circuit and the Right Rear Audio (-) circuit are outputs of the Radio. The Radio controls and monitors these circuits for a concern.

For a detailed description of the Audio System, refer to **DESCRIPTION** .

For additional information regarding the operation of the Audio System, refer to **OPERATION** .

WHEN MONITORED

With the Radio on.

SET CONDITION

The Radio detects a short to battery condition on the audio output circuit for greater than 2.5 seconds.

POSSIBLE CAUSES

Possible Causes
RIGHT REAR AUDIO (+) CIRCUIT SHORTED TO VOLTAGE
RIGHT REAR AUDIO (-) CIRCUIT SHORTED TO VOLTAGE
RADIO

DIAGNOSTIC TEST

1. **CHECK FOR AN INTERMITTENT CONDITION**
    1. Turn the ignition on.
    2. Using the scan tool, record and erase the Radio DTCs.
    3. Turn the Radio on.
    4. Adjust the speakers to the rear and center.
    5. Using the scan tool, read the active Radio DTCs.

    Does the scan tool read: B140C-12-REAR RIGHT AUDIO SPEAKER OUTPUT - CIRCUIT SHORT TO BATTERY?

    Yes

    - Go To 2

    No

    - Test complete, the condition or conditions that originally set this DTC are not present at this time. Using the wiring diagrams as a guide, check all related splices and connectors for signs of water intrusion, corrosion, pushed out or bent terminals and correct pin tension.
    - Perform the BODY VERIFICATION TEST. Refer to **STANDARD PROCEDURE** .
2. **CHECK THE AMPLIFIER**
    1. Using the scan tool, erase the DTCs.
    2. Turn the ignition off.

3. Disconnect the Amplifier C1 harness connector from the Amplifier.
4. Turn the ignition on.
5. Turn the radio on.
6. Using the scan tool, read the active Radio DTCs.

   Does the scan tool read: B140C-12-REAR RIGHT AUDIO SPEAKER OUTPUT - CIRCUIT SHORT TO BATTERY?

   Yes

   - Go To 3

   No

   - Replace the Amplifier in accordance with the Service Information.
   - Perform the BODY VERIFICATION TEST. Refer to **STANDARD PROCEDURE** .

3. **CHECK FOR VOLTAGE ON THE (X52) RIGHT REAR AUDIO (+) CIRCUIT**
   1. Turn the ignition off.
   2. Disconnect the Radio C1 harness connector.
   3. Turn the ignition on.
   4. Measure the voltage between ground and the (X52) Right Rear Audio (+) circuit.

      Is there any voltage present?

      Yes

      - Repair the (X52) Right Rear Audio (+) circuit for a short to voltage.
      - Perform the BODY VERIFICATION TEST. Refer to **STANDARD PROCEDURE** .

      No

      - Go To 4

4. **CHECK FOR VOLTAGE ON THE (X58) RIGHT REAR AUDIO (-) CIRCUIT**
   1. Measure the voltage between ground and the (X58) Right Rear Audio (-) circuit.

      Is there any voltage present?

      Yes

      - Repair the (X58) Right Rear Audio (-) circuit for a short to voltage.
      - Perform the BODY VERIFICATION TEST. Refer to **STANDARD PROCEDURE** .

      No

- Replace the Radio in accordance with the Service Information.
- Perform the BODY VERIFICATION TEST. Refer to **STANDARD PROCEDURE** .

B140C-13-REAR RIGHT AUDIO SPEAKER OUTPUT - CIRCUIT OPEN - BASE

For a complete wiring diagram, **refer to appropriate SYSTEM WIRING DIAGRAMS article** .

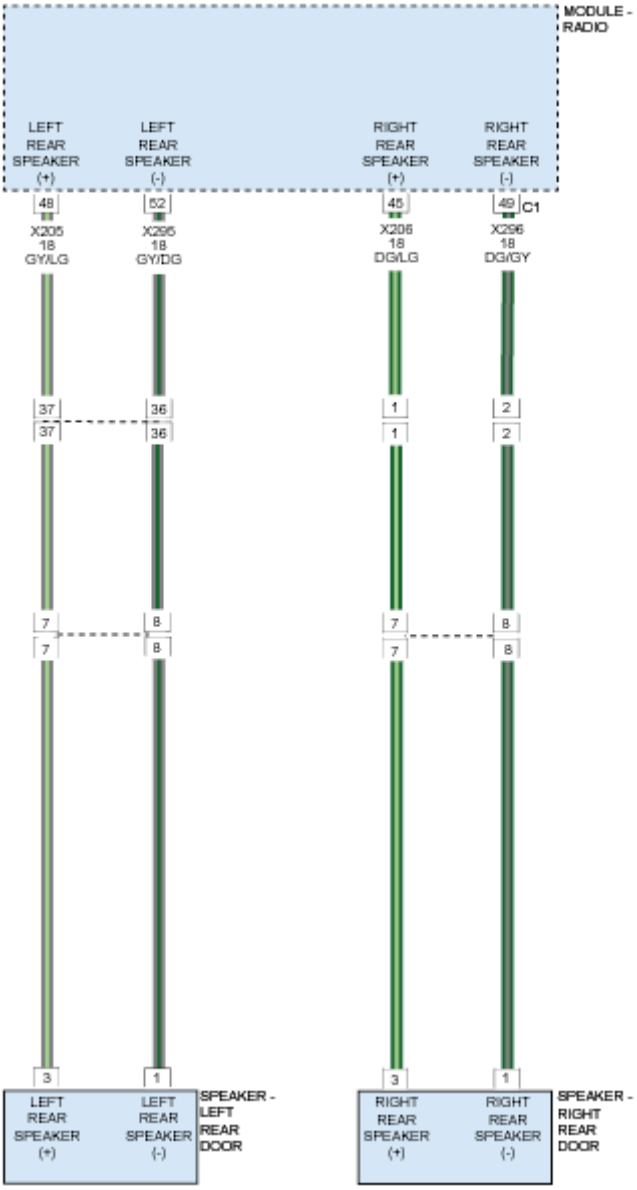

Fig. 29: Rear Left/Right Audio Speaker Output - Circuit Diagram (Base)
Courtesy of CHRYSLER GROUP, LLC

THEORY OF OPERATION

NOTE: **There are two versions of the B140C-13 DTC test. In order to select the proper test you must know if the vehicle is equipped with an Amplifier. If the vehicle is equipped with an Amplifier use the B140C-13 PREMIUM test. If the vehicle is not equipped with an Amplifier use the B140C-13 BASE test.**

The Right Rear Speaker (+) circuit and the Right Rear Speaker (-) circuit are outputs of the Radio. The Radio controls and monitors these circuits for a concern.

For a detailed description of the Audio System, refer to **DESCRIPTION** .

For additional information regarding the operation of the Audio System, refer to **OPERATION** .

WHEN MONITORED

With the Radio on.

SET CONDITION

The Radio detects an open condition on the speaker output circuit for greater than 2.5 seconds.

POSSIBLE CAUSES

Possible Causes
RIGHT REAR SPEAKER (+) CIRCUIT OPEN
RIGHT REAR SPEAKER (-) CIRCUIT OPEN
RIGHT REAR SPEAKER

DIAGNOSTIC TEST

1. **CHECK FOR AN INTERMITTENT CONDITION**
    1. Turn the ignition on.
    2. Using the scan tool, record and erase the Radio DTCs.
    3. Turn the Radio on.
    4. Adjust the speakers to the rear and center.
    5. Using the scan tool, read the active Radio DTCs.

    Does the scan tool read: B140C-13-REAR RIGHT AUDIO SPEAKER OUTPUT - CIRCUIT OPEN ?

    Yes

    - Go To 2

    No

- Test complete, the condition or conditions that originally set this DTC are not present at this time. Using the wiring diagrams as a guide, check all related splices and connectors for signs of water intrusion, corrosion, pushed out or bent terminals and correct pin tension.
- Perform the BODY VERIFICATION TEST. Refer to **STANDARD PROCEDURE** .

2. **CHECK THE RIGHT REAR SPEAKER**
   1. Turn the ignition off.
   2. Disconnect the Right Rear Speaker.
   3. Measure the resistance of the speaker between the two terminals.

   Is the resistance above 5.0 Ohms?

   Yes

   - Replace the Right Rear Speaker in accordance with the Service Information.
   - Perform the BODY VERIFICATION TEST. Refer to **STANDARD PROCEDURE** .

   No

   - Go To 3

3. **CHECK THE (X206) RIGHT REAR SPEAKER (+) CIRCUIT FOR AN OPEN**
   1. Disconnect the Radio C1 harness connector.
   2. Measure the resistance of the (X206) Right Rear Speaker (+) circuit between the Radio C1 connector and the Right Rear Speaker harness connector.

   Is the resistance below 5.0 Ohms?

   Yes

   - Go To 4

   No

   - Repair an open in the (X206) Right Rear Speaker (+) circuit.
   - Perform the BODY VERIFICATION TEST. Refer to **STANDARD PROCEDURE** .

4. **CHECK THE (X296) RIGHT REAR SPEAKER (-) CIRCUIT FOR AN OPEN**
   1. Measure the resistance of the (X296) Right Rear Speaker (-) circuit between the Radio C1 connector, and the Right Rear Speaker harness connector.

   Is the resistance below 5.0 Ohms?

   Yes

   - Replace the Radio in accordance with the Service Information.

- Perform the BODY VERIFICATION TEST. Refer to **STANDARD PROCEDURE** .

No

- Repair an open in the (X296) Right Rear Speaker (-) circuit.
- Perform the BODY VERIFICATION TEST. Refer to **STANDARD PROCEDURE** .

B140C-13-REAR RIGHT AUDIO SPEAKER OUTPUT - CIRCUIT OPEN - PREMIUM

For a complete wiring diagram, **refer to appropriate SYSTEM WIRING DIAGRAMS article** .

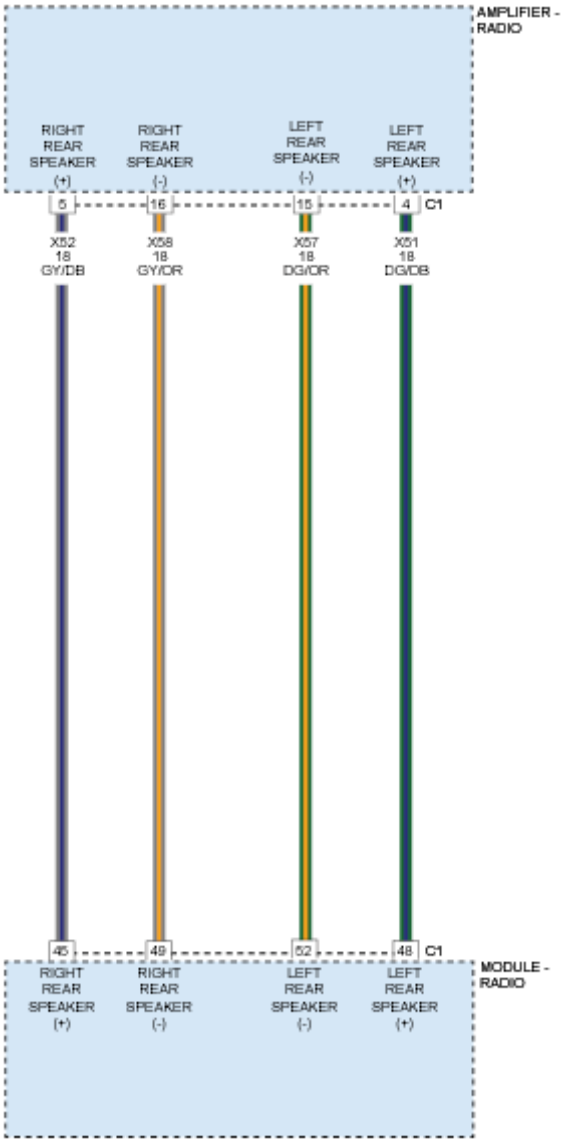

Fig. 30: Rear Left/Right Audio Speaker Output - Circuit Diagram (Premium)
Courtesy of CHRYSLER GROUP, LLC

THEORY OF OPERATION

NOTE: There are two versions of the B140C-13 DTC test. In order to select the proper test you must know if the vehicle is equipped with an Amplifier. If the vehicle is equipped with an Amplifier use the B140C-13 PREMIUM test. If the vehicle is not equipped with an Amplifier use the B140C-13 BASE test.

The Right Rear Audio (+) circuit and the Right Rear Audio (-) circuit are outputs of the Radio. The Radio controls and monitors these circuits for a concern.

For a detailed description of the Audio System, refer to **DESCRIPTION** .

For additional information regarding the operation of the Audio System, refer to **OPERATION** .

WHEN MONITORED

With the Radio on.

SET CONDITION

The Radio detects an open condition on the audio output circuit for greater than 2.5 seconds.

POSSIBLE CAUSES

Possible Causes
RIGHT REAR AUDIO (+) CIRCUIT OPEN
RIGHT REAR AUDIO (-) CIRCUIT OPEN
AMPLIFIER
RADIO

DIAGNOSTIC TEST

1. **CHECK FOR AN INTERMITTENT CONDITION**
    1. Turn the ignition on.
    2. Using the scan tool, record and erase the Radio DTCs.
    3. Turn the Radio on.
    4. Adjust the speakers to the rear and center.
    5. Using the scan tool, read the active Radio DTCs.

    Does the scan tool read: B140C-13-REAR RIGHT AUDIO SPEAKER OUTPUT - CIRCUIT OPEN?

    Yes

    - Go To 2

No

- Test complete, the condition or conditions that originally set this DTC are not present at this time. Using the wiring diagrams as a guide, check all related splices and connectors for signs of water intrusion, corrosion, pushed out or bent terminals and correct pin tension.
- Perform the BODY VERIFICATION TEST. Refer to **STANDARD PROCEDURE** .

2. **CHECK THE AMPLIFIER**
   1. Turn the ignition off.
   2. Disconnect the Amplifier C1 harness connector.
   3. Connect a jumper wire between the (X52) Left Rear Audio (+) circuit and the (X58) Left Rear Audio (-) circuits.
   4. Turn the ignition on.
   5. Turn the Radio on.
   6. Adjust the speakers to the rear and center.
   7. Using the scan tool, read the active Radio DTCs.

   Does the scan tool read: B140C-13-REAR RIGHT AUDIO SPEAKER OUTPUT - CIRCUIT OPEN?

   Yes

   - Go To 3

   No

   - Replace the Amplifier in accordance with the Service Information.
   - Perform the BODY VERIFICATION TEST. Refer to **STANDARD PROCEDURE** .

3. **CHECK THE (X52) RIGHT REAR AUDIO (+) CIRCUIT FOR AN OPEN**
   1. Turn the ignition off.
   2. Disconnect the Radio C1 harness connector.
   3. Measure the resistance of the (X52) Right Rear Audio (+) circuit between the Radio C1 connector and the Amplifier C1 harness connector.

   Is the resistance below 5.0 Ohms?

   Yes

   - Go To 4

   No

   - Repair an open in the (X52) Right Rear Audio (+) circuit.
   - Perform the BODY VERIFICATION TEST. Refer to **STANDARD PROCEDURE** .

4. **CHECK THE (X58) RIGHT REAR AUDIO (-) CIRCUIT FOR AN OPEN**
    1. Measure the resistance of the (X58) Right Rear Audio (-) circuit between the Radio C1 harness connector, and the Amplifier C1 harness connector.

       Is the resistance below 5.0 Ohms?

       Yes

       - Replace the Radio in accordance with the Service Information.
       - Perform the BODY VERIFICATION TEST. Refer to **STANDARD PROCEDURE** .

       No

       - Repair an open in the (X58) Right Rear Audio (-) circuit.
       - Perform the BODY VERIFICATION TEST. Refer to **STANDARD PROCEDURE** .

B140C-1A-REAR RIGHT AUDIO SPEAKER OUTPUT - CIRCUIT RESISTANCE BELOW THRESHOLD - BASE

For a complete wiring diagram, **refer to appropriate SYSTEM WIRING DIAGRAMS article** .

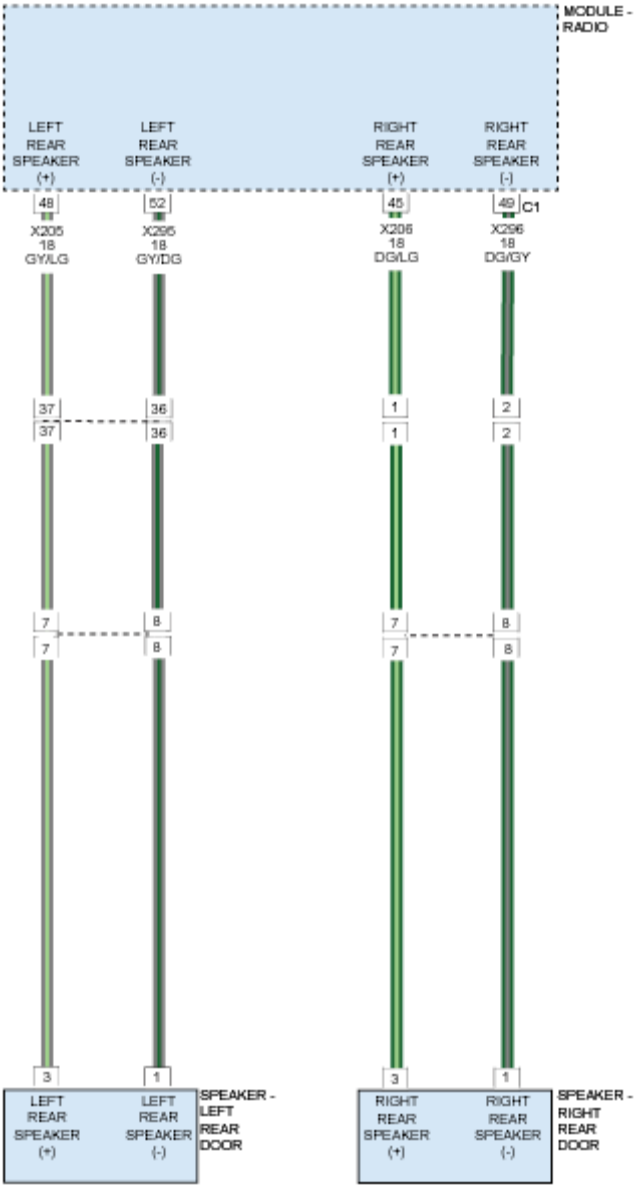

Fig. 31: Rear Left/Right Audio Speaker Output - Circuit Diagram (Base)
Courtesy of CHRYSLER GROUP, LLC

THEORY OF OPERATION

NOTE: **There are two versions of the B140C-1A DTC test. In order to select the proper test you must know if the vehicle is equipped with an Amplifier. If the vehicle is equipped with an Amplifier use the B140C-1A PREMIUM test. If the vehicle is not equipped with an Amplifier use the B140C-1A BASE test.**

The Right Rear Speaker (+) circuit and the Right Rear Speaker (-) circuit are outputs of the Radio. The Radio controls and monitors these circuits for a concern.

For a detailed description of the Audio System, refer to **DESCRIPTION** .

For additional information regarding the operation of the Audio System, refer to **OPERATION** .

WHEN MONITORED

With the ignition on.

SET CONDITION

The Radio detects that the output circuits are shorted together for greater than 2.5 seconds.

POSSIBLE CAUSES

Possible Causes
RIGHT REAR SPEAKER (+) CIRCUIT SHORTED TO THE RIGHT REAR DOOR SPEAKER (-) CIRCUIT
RIGHT REAR SPEAKER
RADIO

DIAGNOSTIC TEST

1. **CHECK FOR AN INTERMITTENT CONDITION**
    1. Using the scan tool, record and erase the Radio DTCs.
    2. Cycle the ignition switch from on to off, wait five seconds and then back to on.
    3. Turn the radio on and set the volume to 25.
    4. Adjust the speakers to the Rear and center.
    5. Using the scan tool, read the active Radio DTCs.

    Does the scan tool display active: B140C-1A-REAR RIGHT AUDIO SPEAKER OUTPUT - CIRCUIT RESISTANCE BELOW THRESHOLD?

    Yes

    - Go To 2

    No

    - Test complete, the condition or conditions that originally set this DTC are not present at this time. Using the wiring diagrams as a guide, check all related splices and connectors for signs of water intrusion, corrosion, pushed out or bent terminals and correct pin tension.
    - Perform the BODY VERIFICATION TEST. Refer to **STANDARD PROCEDURE** .
2. **CHECK THE RIGHT REAR SPEAKERS**
    1. Using the scan tool, erase the DTCs.

2. Turn the ignition off.
3. Disconnect the Right Rear Speaker harness connector.
4. Turn the ignition on.
5. Turn the radio on and set the volume to 25.
6. Using the scan tool, read the active Radio DTCs.

   Does the scan tool display active: B140C-1A-REAR RIGHT AUDIO SPEAKER OUTPUT - CIRCUIT RESISTANCE BELOW THRESHOLD?

   Yes

   - Go To 3

   No

   - Replace the Right Rear Speaker in accordance with the Service Information. Refer to **SPEAKER, REMOVAL** .
   - Perform the BODY VERIFICATION TEST. Refer to **STANDARD PROCEDURE** .

3. **CHECK THE (X206) RIGHT REAR SPEAKER (+) CIRCUIT, AND THE (X296) RIGHT REAR SPEAKER (-) CIRCUITS FOR A SHORT TOGETHER**
   1. Disconnect the Radio harness connector.
   2. Measure the resistance between the (X206) Right Rear Speaker (+) circuit, and the (X296) Right Rear Speaker (-) circuit.

      Is the resistance below 10K Ohms?

      Yes

      - Repair the (X206) Right Rear Speaker (+) circuit, and the (X296) Right Rear Speaker (-) circuit for a short together.
      - Perform the BODY VERIFICATION TEST. Refer to **STANDARD PROCEDURE** .

      No

      - Replace the Radio in accordance with the Service Information. Refer to **RADIO, REMOVAL** .
      - Perform the BODY VERIFICATION TEST. Refer to **STANDARD PROCEDURE** .

B140C-1A-REAR RIGHT AUDIO SPEAKER OUTPUT - CIRCUIT RESISTANCE BELOW THRESHOLD - PREMIUM

For a complete wiring diagram, **refer to appropriate SYSTEM WIRING DIAGRAMS article** .

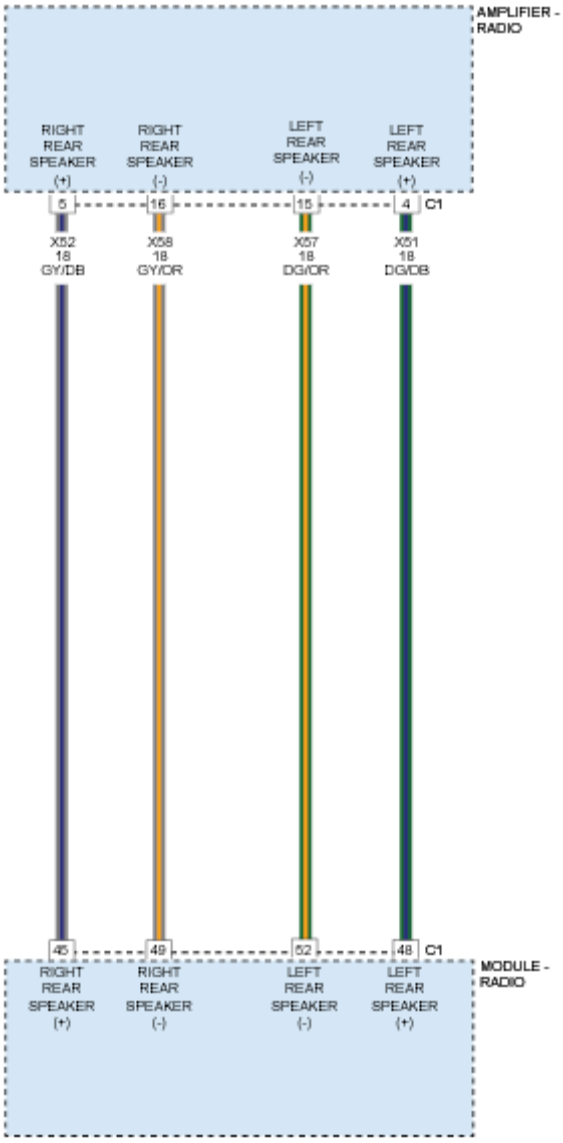

Fig. 32: Rear Left/Right Audio Speaker Output - Circuit Diagram (Premium)
Courtesy of CHRYSLER GROUP, LLC

THEORY OF OPERATION

NOTE: **There are two versions of the B140C-1A DTC test. In order to select the proper test you must know if the vehicle is equipped with an Amplifier. If the vehicle is equipped with an Amplifier use the B140C-1A PREMIUM test. If the vehicle is not equipped with an Amplifier use the B140C-1A BASE test.**

The Right Rear Audio (+) circuit and the Right Rear Audio (-) circuit are outputs of the Radio. The Radio controls and monitors these circuits for a concern.

For a detailed description of the Audio System, refer to **DESCRIPTION** .

For additional information regarding the operation of the Audio System, refer to **OPERATION** .

WHEN MONITORED

With the ignition on.

SET CONDITION

The Radio detects that the output circuits are shorted together for greater than 2.5 seconds.

POSSIBLE CAUSES

Possible Causes
RIGHT REAR AUDIO (+) CIRCUIT SHORTED TO THE RIGHT REAR AUDIO (-) CIRCUIT
AMPLIFIER
RADIO

DIAGNOSTIC TEST

1. **CHECK FOR AN INTERMITTENT CONDITION**
    1. Turn the ignition on.
    2. Using the scan tool, record and erase the Radio DTCs.
    3. Cycle the ignition switch from on to off, wait five seconds and then back to on.
    4. Turn the Radio on and set the volume to 25.
    5. Adjust the speakers to the Rear and center.
    6. Using the scan tool, read the active Radio DTCs.

    Does the scan tool display active: B140C-1A -REAR RIGHT AUDIO SPEAKER OUTPUT - CIRCUIT RESISTANCE BELOW THRESHOLD?

    Yes

    - Go To 2

    No

    - Test complete, the condition or conditions that originally set this DTC are not present at this time. Using the wiring diagrams as a guide, check all related splices and connectors for signs of water intrusion, corrosion, pushed out or bent terminals and correct pin tension.
    - Perform the BODY VERIFICATION TEST. Refer to **STANDARD PROCEDURE** .
2. **CHECK THE AMPLIFIER**
    1. Using the scan tool, erase the DTCs.

2. Turn the ignition off.
3. Disconnect the Amplifier harness connector.
4. Turn the ignition on.
5. Turn the radio on and set the volume to 25.
6. Using the scan tool, read the active Radio DTCs.

   Does the scan tool display active: B140C-1A -REAR RIGHT AUDIO SPEAKER OUTPUT - CIRCUIT RESISTANCE BELOW THRESHOLD?

   Yes

   - Go To 3

   No

   - Replace the Amplifier in accordance with the Service Information. Refer to **AMPLIFIER, REMOVAL** .
   - Perform the BODY VERIFICATION TEST. Refer to **STANDARD PROCEDURE** .

3. **CHECK THE (X52) RIGHT REAR AUDIO (+) CIRCUIT, AND THE (X58) RIGHT REAR AUDIO (-) CIRCUITS FOR A SHORT TOGETHER**
   1. Disconnect the Radio harness connector.
   2. Measure the resistance between the (X52) Right Rear Audio (+) circuit, and the (X58) Right Rear Audio (-) circuit.

      Is the resistance below 10K Ohms?

      Yes

      - Repair the (X52) Right Rear Audio (+) circuit, and the (X58) Right Rear Audio (-) circuit for a short together.
      - Perform the BODY VERIFICATION TEST. Refer to **STANDARD PROCEDURE** .

      No

      - Replace the Radio in accordance with the Service Information. Refer to **RADIO, REMOVAL** .
      - Perform the BODY VERIFICATION TEST. Refer to **STANDARD PROCEDURE** .

B140C-92-REAR RIGHT AUDIO SPEAKER OUTPUT - PERFORMANCE OR INCORRECT OPERATION

For a complete wiring diagram, **refer to appropriate SYSTEM WIRING DIAGRAMS article** .

THEORY OF OPERATION

The Radio monitors the Right Audio output for a Direct Current (DC) offset.

For a detailed description of the Audio System, refer to **DESCRIPTION** .

For additional information regarding the operation of the Audio System, refer to **OPERATION** .

WHEN MONITORED

With the ignition on.

SET CONDITION

This Diagnostic Trouble Code (DTC) sets if a Direct Current (DC) offset occurs on the output channel, the Radio sets a DTC after 2.5 seconds.

POSSIBLE CAUSES

Possible Causes
RADIO

DIAGNOSTIC TEST

CHECK FOR AN INTERMITTENT CONDITION

1. Turn the ignition on.
2. With the scan tool, record and erase the Radio DTCs.
3. Cycle the ignition switch from on to off, wait five seconds and then back to on.
4. Turn the Radio on and set the volume to 25.
5. Adjust the speakers to the Rear and center.
6. With the scan tool, read the active Radio DTCs.

   Does the scan tool display active: B140C-92-REAR RIGHT AUDIO SPEAKER OUTPUT - PERFORMANCE OR INCORRECT OPERATION

   Yes

   - Replace the Radio in accordance with the Service Information. Refer to **RADIO, REMOVAL** .
   - Perform the BODY VERIFICATION TEST. Refer to **STANDARD PROCEDURE** .

   No

   - Test complete, the condition or conditions that originally set this DTC are not present at this time. Using the wiring diagrams as a guide, check all related splices and connectors for signs of water intrusion, corrosion, pushed out or bent terminals and correct pin tension.
   - Perform the BODY VERIFICATION TEST. Refer to **STANDARD PROCEDURE** .

B142A-4B-RADIO UNIT HIGH TEMPERATURE - OVER TEMPERATURE

For a complete wiring diagram, **refer to appropriate SYSTEM WIRING DIAGRAMS article** .

WHEN MONITORED

Continuously with the ignition and Radio on.

SET CONDITION

The code will set if the temperature inside the radio is above 65°C (149°F) for greater than 30 seconds.

POSSIBLE CAUSES

Possible Causes
HIGH TEMPERATURE FAILURE

DIAGNOSTIC TEST

VERIFY THAT DTC B142A-4B-RADIO UNIT HIGH TEMPERATURE - OVER TEMPERATURE.

1. With the scan tool, erase the Audio DTCs.
2. Start the engine and allow the engine to reach normal operating temperature.
3. If the vehicle has been in the hot sunlight or extreme cold, move the vehicle indoors and open the doors to allow the inside temperature to stabilize.
4. The Radio should operate between -23°C and 65°C (-10°F and 149°F).
5. With the scan tool, read the DTCs.

   Does the scan tool display, B142A-4B-RADIO UNIT HIGH TEMPERATURE - OVER TEMPERATURE?

   Yes

   - Replace the Radio in accordance with the Service Information.
   - Perform the BODY VERIFICATION TEST. Refer to **STANDARD PROCEDURE** .

   No

   - Test Complete.

B143A-11-MICROPHONE 1 - CIRCUIT SHORT TO GROUND

For a complete wiring diagram, **refer to appropriate SYSTEM WIRING DIAGRAMS article** .

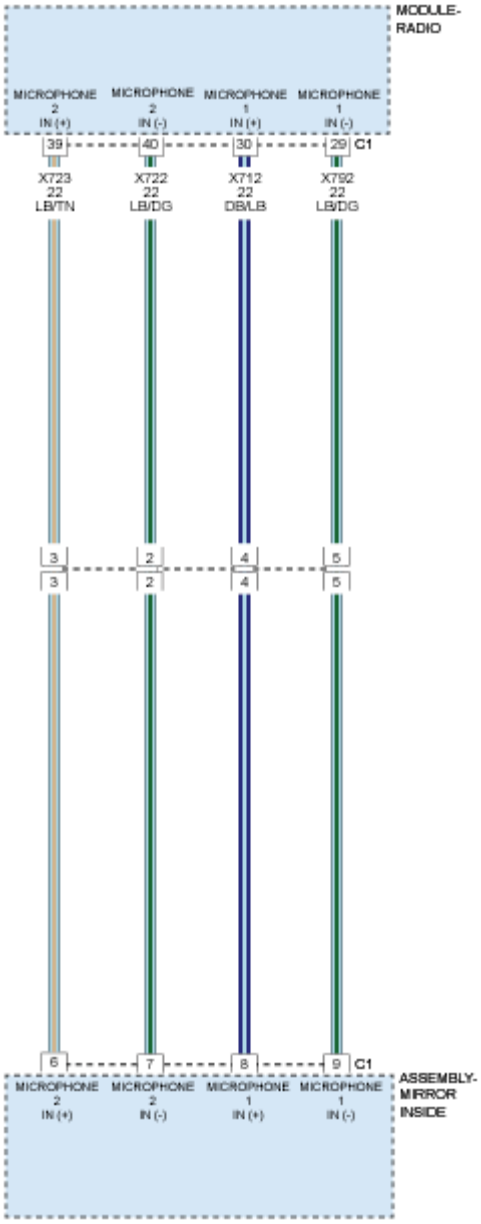

Fig. 33: Microphone 1 & 2 - Circuit Diagram
Courtesy of CHRYSLER GROUP, LLC

WHEN MONITORED

With the ignition on.

SET CONDITION

The Radio detects a short to ground on the Microphone 1 IN (+) circuit or the Microphone 1 IN (-) circuits for greater than 10 seconds.

POSSIBLE CAUSES

Possible Causes
MICROPHONE 1 IN (+) CIRCUIT SHORTED TO GROUND
MICROPHONE 1 IN (-) CIRCUIT SHORTED TO GROUND
INSIDE REARVIEW MIRROR
RADIO

DIAGNOSTIC TEST

1. **CHECK FOR AN ACTIVE DTC**

   NOTE: Verify the connection of the inside rearview mirror harness connector.

   1. Ignition on, engine not running.
   2. With the scan tool, read the DTCs.

      Does the scan tool display: B143A-11-MICROPHONE 1 - CIRCUIT SHORT TO GROUND as active?

      Yes

      - Go To 2

      No

      - Test complete, the condition or conditions that originally set this DTC are not present at this time. Using the wiring diagrams as a guide, check all related splices and connectors for signs of water intrusion, corrosion, pushed out or bent terminals, and correct pin tension.
      - Perform the BODY VERIFICATION TEST. Refer to **STANDARD PROCEDURE** .

2. **CHECK THE INSIDE REARVIEW MIRROR**
   1. Turn the ignition off.
   2. Disconnect the Inside Rearview Mirror harness connector.
   3. Ignition on, engine not running.
   4. Wait 10 seconds.
   5. With the scan tool, read the active DTCs.

      Does the scan tool display: B143A-11-MICROPHONE 1 - CIRCUIT SHORT TO GROUND as active?

      Yes

      - Go To 3

No

- Replace the Inside Rearview Mirror in accordance with the Service Information.
- Perform the BODY VERIFICATION TEST. Refer to **STANDARD PROCEDURE** .

3. **CHECK THE (X712) MICROPHONE 1 IN (+) CIRCUIT FOR A SHORT TO GROUND**
   1. Turn the ignition off.
   2. Disconnect the Radio harness connector.
   3. Ignition on, engine not running.
   4. Measure the resistance between ground and the (X712) Microphone 1 IN (+) circuit.

   Is the resistance below 5 Ohms?

   Yes

   - Repair the short to ground in the (X712) Microphone 1 IN (+) circuit.
   - Perform the BODY VERIFICATION TEST. Refer to **STANDARD PROCEDURE** .

   No

   - Go To 4

4. **CHECK THE (X792) MICROPHONE 1 IN (-) CIRCUIT FOR A SHORT TO GROUND**
   1. Measure the resistance between ground and the (X792) Microphone 1 IN (-) circuit.

   Is the resistance below 5 Ohms?

   Yes

   - Repair the short to ground in the (X792) Microphone 1 IN (-) circuit.
   - Perform the BODY VERIFICATION TEST. Refer to **STANDARD PROCEDURE** .

   No

   - Replace the Radio in accordance with the Service Information.
   - Perform the BODY VERIFICATION TEST. Refer to **STANDARD PROCEDURE** .

B143A-12-MICROPHONE 1 - CIRCUIT SHORT TO BATTERY

For a complete wiring diagram, **refer to appropriate SYSTEM WIRING DIAGRAMS article** .

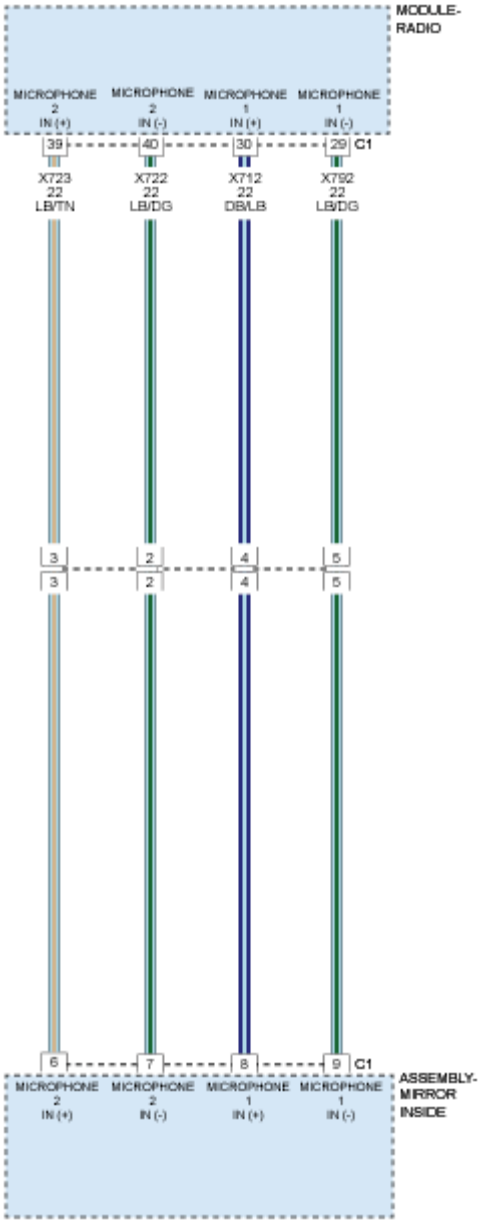

Fig. 34: Microphone 1 & 2 - Circuit Diagram
Courtesy of CHRYSLER GROUP, LLC

THEORY OF OPERATION

The Radio controls and monitors both the microphone 1 input circuit (+) and the microphone 1 input circuit (-) for a concern. The Radio communicates over the CAN-Interior Bus. The microphone is located in the rearview mirror.

WHEN MONITORED

With the ignition on.

SET CONDITION

The Radio detects a short to battery voltage on either the Microphone 1 IN (+) or the Microphone 1 IN (-) circuits for greater than 10 seconds.

POSSIBLE CAUSES

Possible Causes
MICROPHONE 1 IN (+) CIRCUIT SHORTED TO BATTERY VOLTAGE
MICROPHONE 1 IN (-) CIRCUIT SHORTED TO BATTERY VOLTAGE
INSIDE REARVIEW MIRROR
RADIO

DIAGNOSTIC TEST

1. **CHECK FOR AN ACTIVE DTC**

   NOTE: Verify the connection of the inside rearview mirror harness connector.

   1. Ignition on, engine not running.
   2. With the scan tool, read the DTCs.

      Does the scan tool display: B143A-12-MICROPHONE 1 - CIRCUIT SHORT TO BATTERY as active?

      Yes

      - Go To 2

      No

      - Test complete, the condition or conditions that originally set this DTC are not present at this time. Using the wiring diagrams as a guide, check all related splices and connectors for signs of water intrusion, corrosion, pushed out or bent terminals, and correct pin tension.
      - Perform the BODY VERIFICATION TEST. Refer to **STANDARD PROCEDURE** .

2. **CHECK THE INSIDE REARVIEW MIRROR**
   1. Turn the ignition off.
   2. Disconnect the Inside Rearview Mirror harness connector.
   3. Ignition on, engine not running.
   4. Wait 10 seconds.
   5. With the scan tool, read the active DTCs.

Does the scan tool display: B143A-12-MICROPHONE 1 - CIRCUIT SHORT TO BATTERY as active?

Yes

- Go To 3

No

- Replace the Inside Rearview Mirror in accordance with the Service Information.
- Perform the BODY VERIFICATION TEST. Refer to **STANDARD PROCEDURE** .

3. **CHECK THE (X712) MICROPHONE 1 IN (+) CIRCUIT FOR A SHORT TO VOLTAGE**
   1. Turn the ignition off.
   2. Disconnect the Radio connector.
   3. Ignition on, engine not running.
   4. Measure the voltage between the (X712) Microphone 1 IN (+) circuit and ground.

   Is there any voltage present?

   Yes

   - Repair the short to voltage in the (X712) Microphone 1 IN (+) circuit.
   - Perform the BODY VERIFICATION TEST. Refer to **STANDARD PROCEDURE** .

   No

   - Go To 4
4. **CHECK THE (X792) MICROPHONE 1 IN (-) CIRCUIT FOR A SHORT TO VOLTAGE**
   1. Measure the voltage between the (X712) Microphone 1 IN (+) circuit and ground.

   Is there any voltage present?

   Yes

   - Repair the short to voltage in the (X792) Microphone 1 IN (-) circuit.
   - Perform the BODY VERIFICATION TEST. Refer to **STANDARD PROCEDURE** .

   No

   - Replace the Radio in accordance with the Service Information.
   - Perform the BODY VERIFICATION TEST. Refer to **STANDARD PROCEDURE** .

B143A-13-MICROPHONE 1 - CIRCUIT OPEN

For a complete wiring diagram, **refer to appropriate SYSTEM WIRING DIAGRAMS article** .

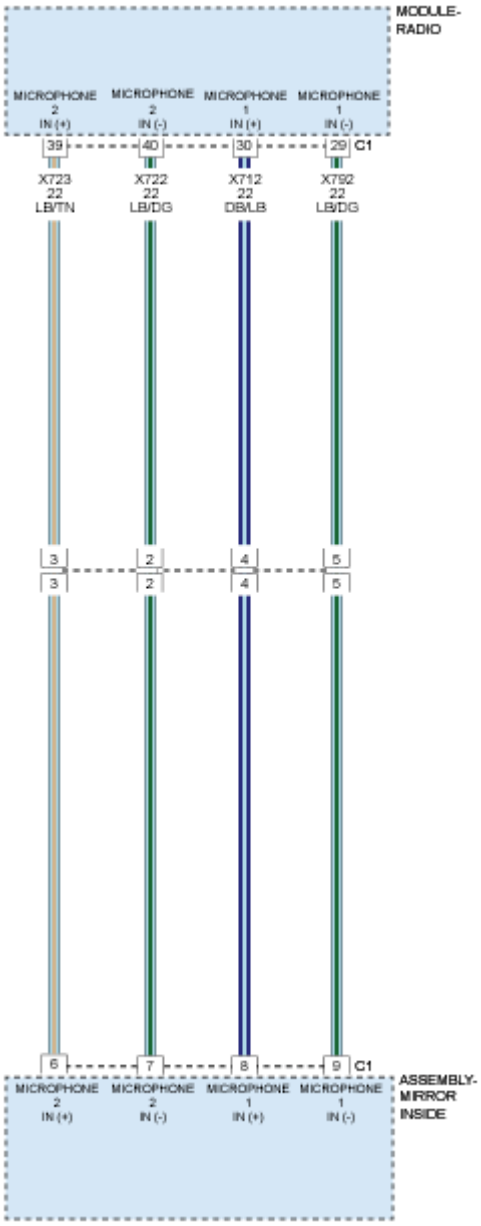

Fig. 35: Microphone 1 & 2 - Circuit Diagram
Courtesy of CHRYSLER GROUP, LLC

THEORY OF OPERATION

The Radio controls and monitors both the microphone 1 input circuit (+) and the microphone 1 input circuit (-) for a concern. The Radio communicates over the CAN-Interior Bus. The microphone is located in the rearview mirror.

WHEN MONITORED

With the ignition on.

SET CONDITION

The Radio detects an open on either the Microphone 1 IN (+) circuit or the Microphone 1 IN (-) circuit for greater than 10 seconds.

POSSIBLE CAUSES

Possible Causes
MICROPHONE 1 IN (+) CIRCUIT OPEN
MICROPHONE 1 IN (-) CIRCUIT OPEN
INSIDE REARVIEW MIRROR
RADIO

DIAGNOSTIC TEST

1. **CHECK FOR AN ACTIVE DTC**

   NOTE: Verify the connection of the Rearview Mirror harness connector.

   1. Turn the ignition on.
   2. With the scan tool, read the active DTCs.

      Does the scan tool display: B143A-13-MICROPHONE 1 - CIRCUIT OPEN as active?

      Yes

      - Go To 2

      No

      - Test complete, the condition or conditions that originally set this DTC are not present at this time. Using the wiring diagrams as a guide, check all related splices and connectors for signs of water intrusion, corrosion, pushed out or bent terminals and correct pin tension.
      - Perform the BODY VERIFICATION TEST. Refer to **STANDARD PROCEDURE** .

2. **CHECK THE INSIDE REARVIEW MIRROR**
   1. Turn the ignition off.
   2. Disconnect the Inside Rearview Mirror harness connector
   3. Connect a jumper wire between the (X792) Microphone 1 IN (-) and the (X712) Microphone 1 IN (+) circuits.
   4. Turn the ignition on.

5. With the scan tool, read the DTCs.

NOTE: B143A-2B-MICROPHONE 1 - WIRES SHORTED TOGETHER should display as active as a result of this test.

Does the scan tool display: B143A-13-MICROPHONE 1 - CIRCUIT OPEN as active?

Yes

- Go To 3

No

- Replace the Inside Rearview Mirror in accordance with the Service Information.
- Perform the BODY VERIFICATION TEST. Refer to **STANDARD PROCEDURE** .

3. **CHECK THE (X712) MICROPHONE 1 IN (+) CIRCUIT FOR AN OPEN**
   1. Turn the ignition off.
   2. Disconnect the RADIO harness connector.
   3. Measure the resistance of the (X712) Microphone 1 IN (+) circuit between the Inside Rearview Mirror and RADIO harness connectors.

   Is the resistance below 5 Ohms?

   Yes

   - Go To 4

   No

   - Repair the (X712) Microphone 1 IN (+) circuit for an open.
   - Perform the BODY VERIFICATION TEST. Refer to **STANDARD PROCEDURE** .

4. **CHECK THE (X792) MICROPHONE 1 IN (-) CIRCUIT FOR AN OPEN**
   1. Measure the resistance of the (X792) Microphone 1 IN (-) circuit between the Inside Rearview Mirror and RADIO harness connectors.

   Is the resistance below 5 Ohms?

   Yes

   - Replace the RADIO in accordance with the Service Information.
   - Perform the BODY VERIFICATION TEST. Refer to **STANDARD PROCEDURE** .

   No

- Repair the (X792) Microphone 1 IN (-) circuit for an open.
- Perform the BODY VERIFICATION TEST. Refer to **STANDARD PROCEDURE** .

B143A-1A-MICROPHONE 1 - CIRCUIT RESISTANCE BELOW THRESHOLD

For a complete wiring diagram, **refer to appropriate SYSTEM WIRING DIAGRAMS article** .

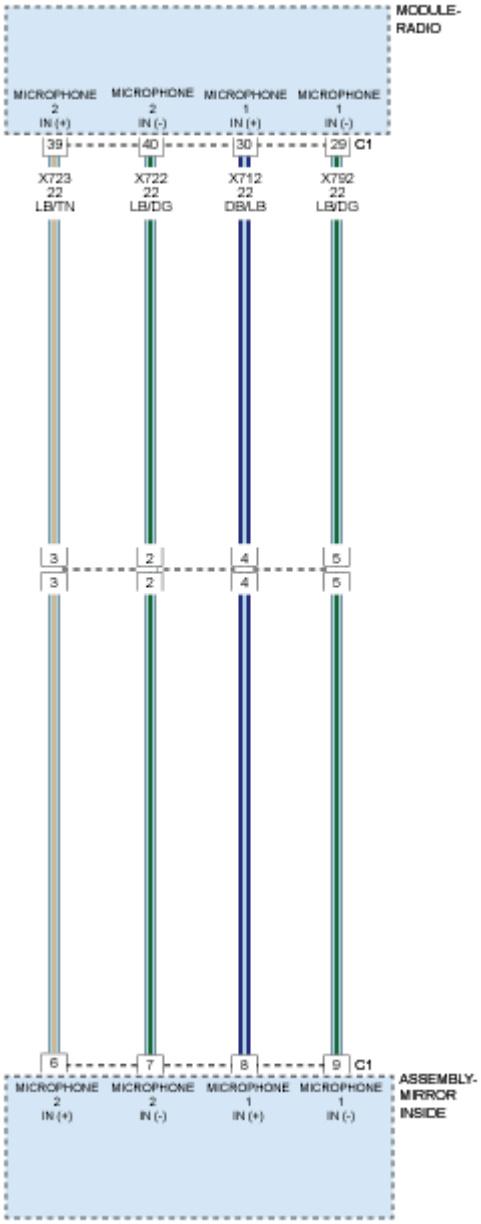

Fig. 36: Microphone 1 & 2 - Circuit Diagram
Courtesy of CHRYSLER GROUP, LLC

THEORY OF OPERATION

The Radio controls and monitors both the microphone 1 input circuit (+) and the microphone 1 input circuit (-) for a concern. The Radio communicates over the CAN-Interior Bus. The microphone is located in the rearview mirror.

WHEN MONITORED

With the ignition on.

SET CONDITION

The Radio detects the Microphone 1 IN (+) circuit is shorted to the Microphone 1 IN (-) circuit for greater than 10 seconds.

POSSIBLE CAUSES

Possible Causes
MICROPHONE 1 IN (+) CIRCUIT SHORTED TO MICROPHONE 1 IN (-) CIRCUIT
INSIDE REARVIEW MIRROR
RADIO

DIAGNOSTIC TEST

1. **CHECK FOR ACTIVE DTC**

   NOTE: Verify the connection of the Rearview Mirror harness connector.

   1. Turn the ignition on.
   2. With the scan tool, read the active DTCs.

      Does the scan tool display: B143A-1A -MICROPHONE 1 - CIRCUIT RESISTANCE BELOW THRESHOLD?

      Yes

      - Go To 2

      No

      - Test complete, the condition or conditions that originally set this DTC are not present at this time. Using the wiring diagrams as a guide, check all related splices and connectors for signs of water intrusion, corrosion, pushed out or bent terminals and correct pin tension.
      - Perform the BODY VERIFICATION TEST. Refer to **STANDARD PROCEDURE** .

2. **CHECK THE INSIDE REARVIEW MIRROR**

1. Turn the ignition off.
2. Disconnect the Inside Rearview Mirror harness connector.
3. Turn the ignition on.
4. With the scan tool, read the active DTCs.

NOTE: B143A-1A -MICROPHONE 1 - CIRCUIT RESISTANCE BELOW THRESHOLD should display as active as a result of this test.

Does the scan tool display: B143A-1A -MICROPHONE 1 - CIRCUIT RESISTANCE BELOW THRESHOLD as active?

Yes

- Go To 3

No

- Replace the Inside Rearview Mirror in accordance with the Service Information.
- Perform the BODY VERIFICATION TEST. Refer to **STANDARD PROCEDURE** .

3. **CHECK THE (X712) MICROPHONE 1 IN (+) AND THE (X792) MICROPHONE 1 IN (-) CIRCUITS FOR A SHORT TOGETHER**
   1. Turn the ignition off.
   2. Disconnect the RADIO harness connector.
   3. Measure the resistance between the (X712) Microphone 1 IN (+) circuit, and the (X792) Microphone 1 IN (-) circuit.

   Is the resistance below 10K Ohms?

   Yes

   - Repair the (X712) Microphone 1 IN (+) and the (X792) Microphone 1 IN (-) circuits for a short together.
   - Perform the BODY VERIFICATION TEST. Refer to **STANDARD PROCEDURE** .

   No

   - Replace the RADIO in accordance with the Service Information.
   - Perform the BODY VERIFICATION TEST. Refer to **STANDARD PROCEDURE** .

B143D-11-MICROPHONE 2 - CIRCUIT SHORT TO GROUND

For a complete wiring diagram, **refer to appropriate SYSTEM WIRING DIAGRAMS article** .

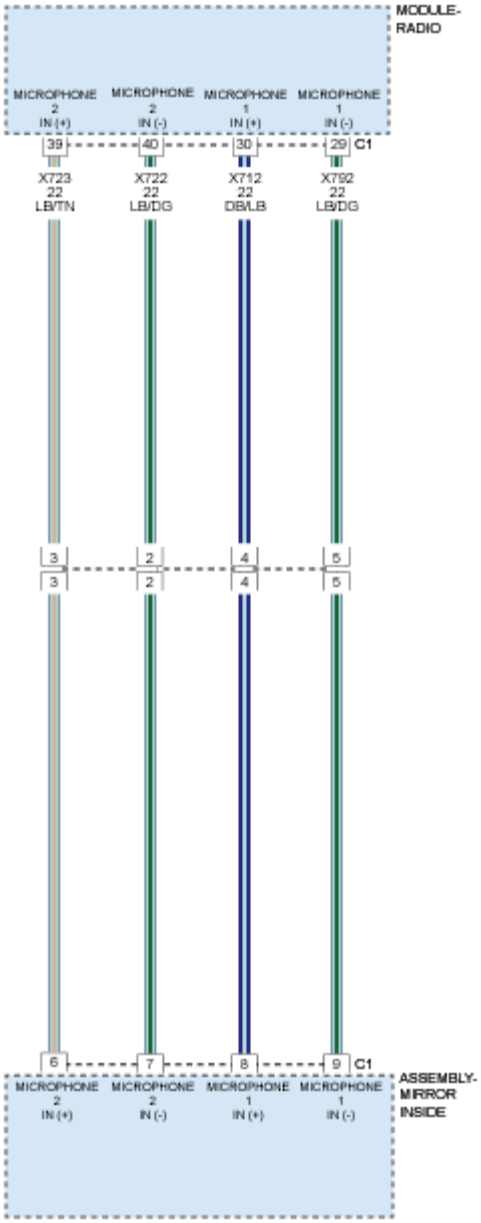

Fig. 37: Microphone 1 & 2 - Circuit Diagram
Courtesy of CHRYSLER GROUP, LLC

THEORY OF OPERATION

The Radio controls and monitors both the microphone 2 input circuit (+) and the microphone 2 input circuit (-) for a concern. The Radio communicates over the CAN-Interior Bus. The microphone is located in the rearview mirror.

WHEN MONITORED

With the ignition on.

SET CONDITION

The Radio detects a short to ground on either the Microphone 2 IN (+) circuit or microphone 2 IN (-) circuit for greater than 10 seconds.

POSSIBLE CAUSES

Possible Causes
MICROPHONE 2 IN (+) CIRCUIT SHORTED TO GROUND
MICROPHONE 2 IN (-) CIRCUIT SHORTED TO GROUND
INSIDE REARVIEW MIRROR
RADIO

DIAGNOSTIC TEST

1. **CHECK FOR AN ACTIVE DTC**

   NOTE: Verify the connection of the inside rearview mirror harness connector.

   1. Ignition on, engine not running.
   2. With the scan tool, read the DTCs.

      Does the scan tool display: B143D-11-MICROPHONE 2 - CIRCUIT SHORT TO GROUND as active?

      Yes

      - Go To 2

      No

      - Test complete, the condition or conditions that originally set this DTC are not present at this time. Using the wiring diagrams as a guide, check all related splices and connectors for signs of water intrusion, corrosion, pushed out or bent terminals, and correct pin tension.
      - Perform the BODY VERIFICATION TEST. Refer to **STANDARD PROCEDURE** .
2. **CHECK THE INSIDE REARVIEW MIRROR**
   1. Turn the ignition off.
   2. Disconnect the Inside Rearview Mirror harness connector.
   3. Ignition on, engine not running.
   4. Wait 10 seconds.
   5. With the scan tool, read the active DTCs.

Does the scan tool display: B143D-11-MICROPHONE 2 - CIRCUIT SHORT TO GROUND as active?

Yes

- Go To 3

No

- Replace the Inside Rearview Mirror in accordance with the Service Information.
- Perform the BODY VERIFICATION TEST. Refer to **STANDARD PROCEDURE** .

3. **CHECK THE (X722) MICROPHONE 2 IN (+) CIRCUIT FOR A SHORT TO GROUND**
   1. Turn the ignition off.
   2. Disconnect the RADIO harness connector.
   3. Ignition on, engine not running.
   4. Measure the resistance between ground and the (X722) Microphone 2 IN (+) circuit.

   Is the resistance below 5 Ohms?

   Yes

   - Repair the short to ground in the (X722) Microphone 2 IN (+) circuit.
   - Perform the BODY VERIFICATION TEST. Refer to **STANDARD PROCEDURE** .

   No

   - Go To 4
4. **CHECK THE (X723) MICROPHONE 2 IN (-) CIRCUIT FOR A SHORT TO GROUND**
   1. Measure the resistance between ground and the (X723) Microphone 2 IN (-) circuit.

   Is the resistance below 5 Ohms?

   Yes

   - Repair the short to ground in the (X723) Microphone 2 IN (-) circuit.
   - Perform the BODY VERIFICATION TEST. Refer to **STANDARD PROCEDURE** .

   No

   - Replace the RADIO in accordance with the Service Information.
   - Perform the BODY VERIFICATION TEST. Refer to **STANDARD PROCEDURE** .

B143D-12-MICROPHONE 2 - CIRCUIT SHORT TO BATTERY

For a complete wiring diagram, **refer to appropriate SYSTEM WIRING DIAGRAMS article** .

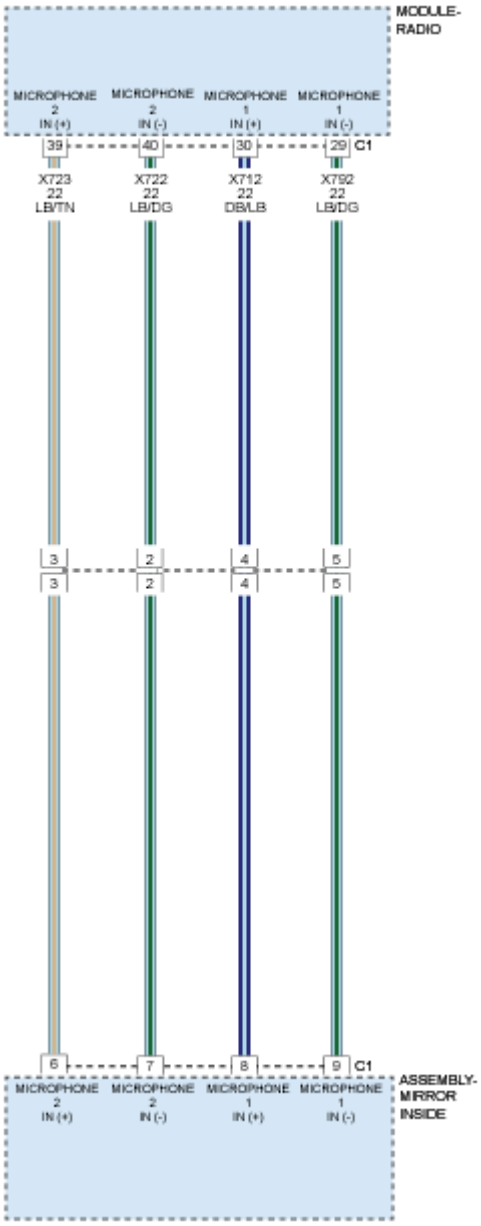

Fig. 38: Microphone 1 & 2 - Circuit Diagram
Courtesy of CHRYSLER GROUP, LLC

THEORY OF OPERATION

The Radio controls and monitors both the microphone 2 input circuit (+) and the microphone 2 input circuit (-) for a concern. The Radio communicates over the CAN-Interior Bus. The microphone is located in the rearview mirror.

WHEN MONITORED

With the ignition on.

SET CONDITION

The Radio detects a short to battery voltage on either the Microphone 2 IN (+) circuit or microphone 2 IN (-) circuit for greater than 10 seconds.

POSSIBLE CAUSES

Possible Causes
MICROPHONE 2 IN (+) CIRCUIT SHORTED TO BATTERY VOLTAGE
MICROPHONE 2 IN (-) CIRCUIT SHORTED TO BATTERY VOLTAGE
INSIDE REARVIEW MIRROR
RADIO

DIAGNOSTIC TEST

1. **CHECK FOR AN ACTIVE DTC**

   NOTE: Verify the connection of the inside rearview mirror harness connector.

   1. Ignition on, engine not running.
   2. With the scan tool, read the DTCs.

      Does the scan tool display: B143D-12-MICROPHONE 2 - CIRCUIT SHORT TO BATTERY as active?

      Yes

      - Go To 2

      No

      - Test complete, the condition or conditions that originally set this DTC are not present at this time. Using the wiring diagrams as a guide, check all related splices and connectors for signs of water intrusion, corrosion, pushed out or bent terminals, and correct pin tension.
      - Perform the BODY VERIFICATION TEST. Refer to **STANDARD PROCEDURE** .

2. **CHECK THE INSIDE REARVIEW MIRROR**
   1. Turn the ignition off.
   2. Disconnect the Inside Rearview Mirror harness connector.
   3. Ignition on, engine not running.
   4. Wait 10 seconds.

5. With the scan tool, read the active DTCs.

   Does the scan tool display: B143D-12-MICROPHONE 2 - CIRCUIT SHORT TO BATTERY as active?

   Yes

   - Go To 3

   No

   - Replace the Inside Rearview Mirror in accordance with the Service Information.
   - Perform the BODY VERIFICATION TEST. Refer to **STANDARD PROCEDURE** .

3. **CHECK THE (X722) MICROPHONE 2 IN (+) CIRCUIT FOR A SHORT TO VOLTAGE**
   1. Turn the ignition off.
   2. Disconnect the Radio harness connector.
   3. Ignition on, engine not running.
   4. Measure the voltage between the (X722) Microphone 2 In (+) circuit and ground.

      Is there any voltage present?

      Yes

      - Repair the short to voltage in the (X722) Microphone 2 In (+) circuit.
      - Perform the BODY VERIFICATION TEST. Refer to **STANDARD PROCEDURE** .

      No

      - Go To 4

4. **CHECK THE (X723) MICROPHONE 2 IN (+) CIRCUIT FOR A SHORT TO VOLTAGE**
   1. Turn the ignition off.
   2. Disconnect the Radio harness connector.
   3. Ignition on, engine not running.
   4. Measure the voltage between the (X723) Microphone 2 IN (-) circuit and ground.

      Is there any voltage present?

      Yes

      - Repair the short to voltage in the (X723) Microphone 2 IN (-) circuit.
      - Perform the BODY VERIFICATION TEST. Refer to **STANDARD PROCEDURE** .

      No

- Replace the Radio in accordance with the Service Information.
- Perform the BODY VERIFICATION TEST. Refer to **STANDARD PROCEDURE** .

B143D-13-MICROPHONE 2 - CIRCUIT OPEN

For a complete wiring diagram, **refer to appropriate SYSTEM WIRING DIAGRAMS article** .

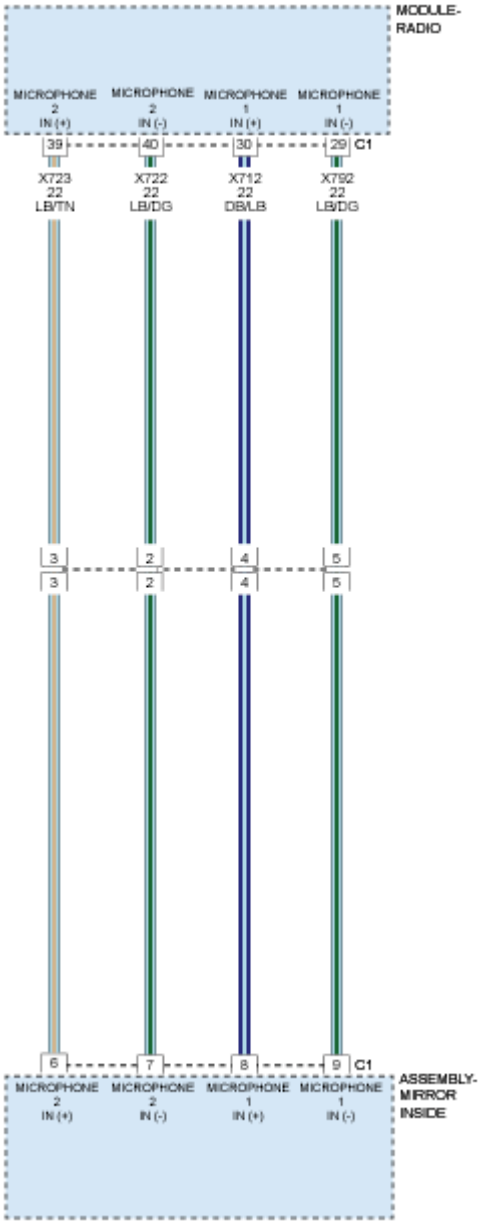

Fig. 39: Microphone 1 & 2 - Circuit Diagram
Courtesy of CHRYSLER GROUP, LLC

THEORY OF OPERATION

The Radio controls and monitors both the microphone 2 input circuit (+) and the microphone 2 input circuit (-) for a concern. The Radio communicates over the CAN-Interior Bus. The microphone is located in the rearview mirror.

WHEN MONITORED

With the ignition on.

SET CONDITION

The Radio detects an open on either the Microphone 2 IN (+) circuit or the Microphone 2 IN (-) circuit for greater than 10 seconds.

POSSIBLE CAUSES

Possible Causes
MICROPHONE 2 IN (+) CIRCUIT OPEN
MICROPHONE 2 IN (-) CIRCUIT OPEN
INSIDE REARVIEW MIRROR
RADIO

DIAGNOSTIC TEST

1. **CHECK FOR AN ACTIVE DTC**

   NOTE: Verify the connection of the Rearview Mirror harness connector.

   1. Turn the ignition on.
   2. With the scan tool, read the active DTCs.

      Does the scan tool display: B143D-13-MICROPHONE 2 - CIRCUIT OPEN as active?

      Yes

      - Go To 2

      No

      - Test complete, the condition or conditions that originally set this DTC are not present at this time. Using the wiring diagrams as a guide, check all related splices and connectors for signs of water intrusion, corrosion, pushed out or bent terminals and correct pin tension.
      - Perform the BODY VERIFICATION TEST. Refer to **STANDARD PROCEDURE** .

2. **CHECK THE INSIDE REARVIEW MIRROR**

1. Turn the ignition off.
2. Disconnect the Inside Rearview Mirror harness connector
3. Connect a jumper wire between the (X722) Microphone 2 IN (+) and the (X723) Microphone 2 IN (-) circuits.
4. Turn the ignition on.
5. With the scan tool, read the DTCs.

NOTE: B143D-2B-MICROPHONE 2 - WIRES SHORTED TOGETHER should display as active as a result of this test.

Does the scan tool display: B143D-13-MICROPHONE 2 - CIRCUIT OPEN as active?

Yes

- Go To 3

No

- Replace the Inside Rearview Mirror in accordance with the Service Information.
- Perform the BODY VERIFICATION TEST. Refer to **STANDARD PROCEDURE** .

3. **CHECK THE (X722) MICROPHONE 2 IN (+) CIRCUIT FOR AN OPEN**
   1. Turn the ignition off.
   2. Disconnect the Radio harness connector.
   3. Measure the resistance of the (X722) Microphone 2 IN (+) circuit between the Inside Rearview Mirror and Radio harness connectors.

   Is the resistance below 5.0 Ohms?

   Yes

   - Repair the (X722) Microphone 2 IN (+) circuit for an open.
   - Perform the BODY VERIFICATION TEST. Refer to **STANDARD PROCEDURE** .

   No

   - Go To 4
4. **CHECK THE (X723) MICROPHONE 2 IN (-) CIRCUIT FOR AN OPEN**
   1. Measure the resistance of the (X723) Microphone 2 IN (-) circuit between the Inside Rearview Mirror and Radio harness connectors.

   Is the resistance below 5.0 Ohms?

   Yes

- Repair the (X723) Microphone 2 IN (-) circuit for an open.
- Perform the BODY VERIFICATION TEST. Refer to **STANDARD PROCEDURE** .

No

- Replace the Radio in accordance with the Service Information.
- Perform the BODY VERIFICATION TEST. Refer to **STANDARD PROCEDURE** .

B143D-1A-MICROPHONE 2 - CIRCUIT RESISTANCE BELOW THRESHOLD

For a complete wiring diagram, **refer to appropriate SYSTEM WIRING DIAGRAMS article** .

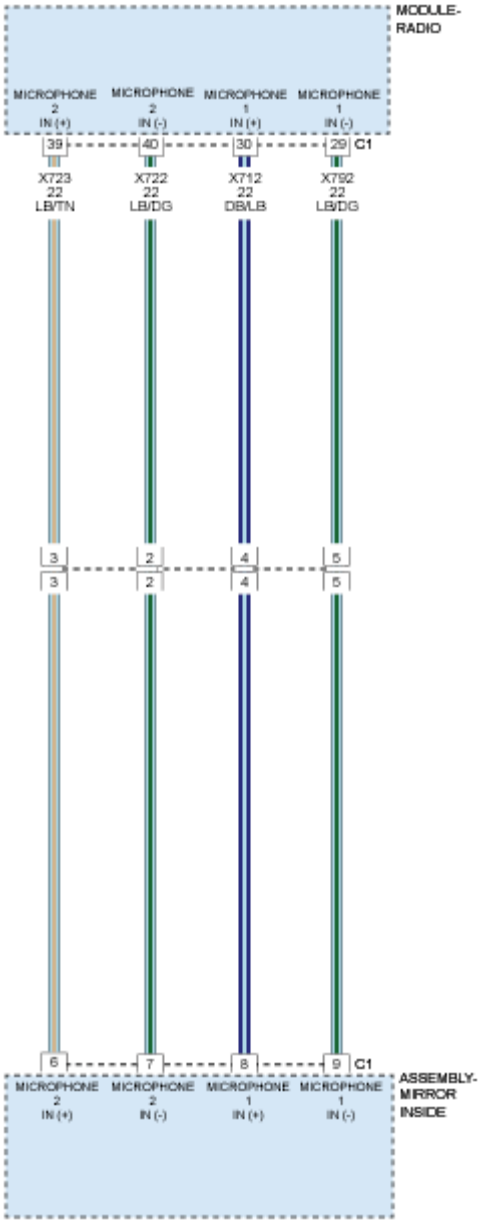

Fig. 40: Microphone 1 & 2 - Circuit Diagram
Courtesy of CHRYSLER GROUP, LLC

THEORY OF OPERATION

The RADIO controls and monitors both the microphone 2 input circuit (+) and the microphone 2 input circuit (-) for a concern. The RADIO communicates over the CAN-Interior Bus. The microphone is located in the rearview mirror.

WHEN MONITORED

With the ignition on.

SET CONDITION

The Radio detects the Microphone 2 IN (+) circuit is shorted to the Microphone 2 IN (-) circuit for greater than 10 seconds.

POSSIBLE CAUSES

Possible Causes
MICROPHONE 2 IN (+) CIRCUIT SHORTED TO MICROPHONE 2 IN (-) CIRCUIT
INSIDE REARVIEW MIRROR
RADIO

DIAGNOSTIC TEST

1. **CHECK FOR AN ACTIVE DTC**

   NOTE: Verify the connection of the Rearview Mirror harness connector.

   1. Turn the ignition on.
   2. With the scan tool, read the active DTCs.

      Does the scan tool display: B143D-1A -MICROPHONE 2-CIRCUIT RESISTANCE BELOW THRESHOLD as active?

      Yes

      - Go To 2

      No

      - Test complete, the condition or conditions that originally set this DTC are not present at this time. Using the wiring diagrams as a guide, check all related splices and connectors for signs of water intrusion, corrosion, pushed out or bent terminals and correct pin tension.
      - Perform the BODY VERIFICATION TEST. Refer to **STANDARD PROCEDURE** .
2. **CHECK THE INSIDE REARVIEW MIRROR**
   1. Turn the ignition off.
   2. Disconnect the Inside Rearview Mirror harness connector.
   3. Turn the ignition on.
   4. With the scan tool, read the active DTCs.

      NOTE: B143D-13-MICROPHONE 2 - CIRCUIT OPEN should display as active as a result of this test.

Does the scan tool display: B143D-1A -MICROPHONE 2-CIRCUIT RESISTANCE BELOW THRESHOLD as active?

Yes

- Go To 3

No

- Replace the Inside Rearview Mirror in accordance with the Service Information.
- Perform the BODY VERIFICATION TEST. Refer to **STANDARD PROCEDURE** .

3. **CHECK THE (X722) MICROPHONE 2 IN (+) AND THE (X723) MICROPHONE 2 IN (-) CIRCUITS FOR A SHORT TOGETHER**
   1. Turn the ignition off.
   2. Disconnect the Radio harness connector.
   3. Measure the resistance between the (X722) Microphone 2 IN (+) circuit, and the (X723) Microphone 2 IN (-) circuit.

   Is the resistance below 10K Ohms?

   Yes

   - Repair the (X722) Microphone 2 IN (+) and the (X723) Microphone 2 IN (-) circuits for a short together.
   - Perform the BODY VERIFICATION TEST. Refer to **STANDARD PROCEDURE** .

   No

   - Replace the Radio in accordance with the Service Information.
   - Perform the BODY VERIFICATION TEST. Refer to **STANDARD PROCEDURE** .

B1488-00-CABIN EQ MISMATCH PERFORMANCE

For a complete wiring diagram, **refer to appropriate SYSTEM WIRING DIAGRAMS article** .

WHEN MONITORED

With the ignition on.

SET CONDITION

If the Cabin Equalization Curve number value from the Body Control Module (BCM) is not the same as the Cabin Equalization Curve number stored in the Radio for 10 consecutive cycles, then the Radio will set this DTC when the concern is present for greater than 10 seconds.

POSSIBLE CAUSES

POSSIBLE CAUSES
NO COMMUNICATION WITH BODY CONTROL MODULE (BCM)
ACTIVE BCM DTCs
BODY CONTROL MODULE (BCM)
RADIO

DIAGNOSTIC TEST

1. **CHECK FOR AN INTERMITTENT CONDITION**
   1. Turn the ignition on.
   2. Turn the radio on.
   3. With the scan tool, erase Radio DTCs.
   4. With the scan tool, reset the Radio.
   5. With the scan tool, read Radio DTCs.

   Does the scan tool display active: B1488-00 CABIN EQ MISMATCH PERFORMANCE?

   Yes

   - Go To 2

   No

   - Test complete, the condition or conditions that originally set this DTC are not present at this time. Using the wiring diagrams as a guide, check all related splices and connectors for signs of water intrusion, corrosion, pushed out or bent terminals and correct pin tension.
   - Perform the BODY VERIFICATION TEST. Refer to **STANDARD PROCEDURE** .
2. **CHECK THE CABIN EQUALIZATION CURVE NUMBER**
   1. With the scan tool in the BCM ECU Details Tab, Configuration button, record the Cabin Equalization Curve number.
   2. With the scan tool in the Radio ECU Details Tab, Configuration button, record the True value.

   NOTE: The Cabin EQ Curve value found in the BCM should match the True value found in the Radio.

   Do the Cabin EQ settings match one another?

   Yes

   - Replace the Radio in accordance to the service information.
   - Perform the BODY VERIFICATION TEST. Refer to **STANDARD PROCEDURE** .

No

- Go To 3

3. **VERIFY COMMUNICATION WITH BCM**
   1. With the scan tool, read the active modules on the BUS.

      Does the scan tool show the BCM active on the BUS?

      Yes

      - Go To 4

      No

      - Refer to **DIAGNOSIS AND TESTING** and perform the No Response From Body Control Module (BCM) diagnostic procedure.

4. **CHECK THE BCM FOR ACTIVE DTCs**
   1. With the scan tool, erase BCM DTCs.
   2. Turn the ignition off. Wait approximately 10 seconds.
   3. Turn the ignition on.
   4. With the scan tool, read BCM DTCs.

      Are any active DTCs present?

      Yes

      - Refer to **DIAGNOSIS AND TESTING** and perform the appropriate diagnostic procedure.

      No

      - Replace the Body Control Module (BCM) in accordance with the Service Information. Refer to **MODULE, BODY CONTROL, REMOVAL** .
      - Perform the BODY VERIFICATION TEST. Refer to **STANDARD PROCEDURE** .

B14DA-2A-HEAD UNIT BUTTON - STUCK

For a complete wiring diagram, **refer to appropriate SYSTEM WIRING DIAGRAMS article** .

WHEN MONITORED

With the ignition on. Radio active.

SET CONDITION

The Radio detects a closed switch for 60 seconds.

POSSIBLE CAUSES

Possible Causes
RADIO

DIAGNOSTIC TEST

VERIFY OPERATION OF THE BUTTON

1. With the scan tool, erase DTCs.
2. Press and release the button three times.
3. Wait 60 seconds.
4. With the scan tool, read DTCs.

   Is DTC: B14DA-2A -HEAD UNIT BUTTON-STUCK active?

   Yes

   - Replace the Radio in accordance with the Service Information.
   - Perform the BODY VERIFICATION TEST. Refer to **STANDARD PROCEDURE** .

   No

   - Test complete.
   - Perform the BODY VERIFICATION TEST. Refer to **STANDARD PROCEDURE** .

B1560-11-CELLULAR ANTENNA 1 - CIRCUIT SHORT TO GROUND

For a complete wiring diagram, **refer to appropriate SYSTEM WIRING DIAGRAMS article** .

WHEN MONITORED

With the ignition on and the Radio in Cellular mode.

SET CONDITION

This DTC sets when the Radio detects a Cellular Antenna connection is shorted to ground for greater than 60 seconds.

POSSIBLE CAUSES

Possible Causes
BAD ANTENNA CONNECTION

CELLULAR ANTENNA CABLE SHORTED TO GROUND
CELLULAR ANTENNA SHORTED TO GROUND
RADIO

DIAGNOSTIC TEST

1. **CHECK THE ANTENNA CONNECTION**

   NOTE: Before performing the diagnostic test, please make sure that 9977-6-CELL-UPD 10K OHM jumper is connected to the 9977-6 test antenna.

   Turn the ignition off.

   1. Disconnect the Antenna connector at the back of the Radio.
   2. Inspect the Antenna connections.

      Are the Antenna connections clean and secure?

      Yes

      - Go To 2

      No

      - Repair the Antenna connection as needed.
      - Perform the BODY VERIFICATION TEST. Refer to **STANDARD PROCEDURE** .

2. **CHECK THE ANTENNA AND CABLE**
   1. Connect the 9977-6-CELL test antenna (special tool #9977-6-CELL, Adapter, Cellular Antenna Diagnostic) to the antenna connection on the back of the Radio.
   2. Make sure one of the front doors is still open.
   3. Using the scan tool, erase the DTCs.
   4. Turn the ignition on.
   5. Turn the Radio on.
   6. Using the scan tool, read the active Radio DTCs.

      Does the scan tool read: B1560-11-CELLULAR ANTENNA 1 - CIRCUIT SHORT TO GROUND as active?

      Yes

      - Replace the Radio in accordance with the Service Information. Refer to **RADIO, REMOVAL** .
      - Perform the BODY VERIFICATION TEST. Refer to **STANDARD PROCEDURE** .

No

- Go To 3

3. **TEST THE ANTENNA CABLE**
   1. Disconnect the Antenna cable at the base.
   2. Connect the appropriate (special tool #9977-6-1, Adapter) or (special tool #9977-6-3, Adapter) to the Antenna cable at the back of the Radio.
   3. Connect the appropriate (special tool #9977-6-4, Jumper) or (special tool #9977-6-2, Jumper) to the Antenna cable at the Antenna base.
   4. Measure the Resistance across the tool terminals.

   Is the resistance below 47.5 Ohms?

   Yes

   - Use the (special tool #9977-6, Kit, Radio Antenna Diagnostic) to locate the short together, repair or replace the Antenna cable as necessary.
   - Perform the BODY VERIFICATION TEST. Refer to **STANDARD PROCEDURE** .

   No

   - Replace the Antenna base in accordance with the Service Information.
   - Perform the BODY VERIFICATION TEST. Refer to **STANDARD PROCEDURE** .

B1560-13-CELLULAR ANTENNA 1 - CIRCUIT OPEN

For a complete wiring diagram, **refer to appropriate SYSTEM WIRING DIAGRAMS article** .

WHEN MONITORED

With the ignition on and the Radio in Cellular mode.

SET CONDITION

This DTC sets when the Radio does not detect a Cellular Antenna connection for greater than 60 seconds.

POSSIBLE CAUSES

Possible Causes
BAD ANTENNA CONNECTION
OPEN CELLULAR ANTENNA CABLE
OPEN CELLULAR RADIO ANTENNA
RADIO

DIAGNOSTIC TEST

1. **CHECK THE ANTENNA CONNECTION**

   NOTE: Before performing the diagnostic test, please make sure that 9977-6-CELL-UPD 10K OHM jumper is connected to the 9977-6 test antenna.

   1. Turn the ignition off.
   2. Disconnect the Antenna connector at the back of the Radio.
   3. Inspect the Antenna connections.

      Are the Antenna connections clean and secure?

      Yes

      - Go To 2

      No

      - Repair the Antenna connection as needed.
      - Perform the BODY VERIFICATION TEST. Refer to **STANDARD PROCEDURE** .

2. **CHECK THE ANTENNA AND CABLE**
   1. Connect the 9977-6-CELL test antenna (special tool #9977-6-CELL, Adapter, Cellular Antenna Diagnostic) to the antenna connection on the back of the Radio.
   2. Make sure one of the front doors is still open.
   3. Using the scan tool, erase the DTCs.
   4. Turn the ignition on.
   5. Turn the Radio on.
   6. Does the system come back up and is the 3G symbol illuminated?

      Yes

      - Go To 3

      No

      - Go To 4

3. **TEST THE ANTENNA CABLE**
   1. Disconnect the Antenna cable at the base.
   2. Connect the appropriate (special tool #9977-6-1, Adapter) or (special tool #9977-6-3, Adapter) to the Antenna cable at the back of the Radio.
   3. Connect the appropriate (special tool #9977-6-4, Jumper) or (special tool #9977-6-2, Jumper) to the Antenna cable at the Antenna base.

4. Measure the Resistance across the tool terminals.

   Is the resistance above 52.5 Ohms?

   Yes

   - Use the (special tool #9977-6, Kit, Radio Antenna Diagnostic) to locate the open circuit, repair or replace the Antenna cable as necessary.
   - Once the repair is complete clear all DTCs.
   - Perform the BODY VERIFICATION TEST. Refer to **STANDARD PROCEDURE** .

   No

   - Replace the Antenna base in accordance with the Service Information.
   - Once the repair is complete clear all DTCs.
   - Perform the BODY VERIFICATION TEST. Refer to **STANDARD PROCEDURE** .

4. **RADIO**
   1. Visually inspect the terminal on the radio.
   2. Ensure the terminal is clean and free of any corrosion or damage.
      - Is the terminal free of corrosion and damage?

      Yes

      - Replace the radio in accordance with the service information.
      - Perform the BODY VERIFICATION TEST. Refer to **STANDARD PROCEDURE** .

      No

      - Repair the terminal as necessary.
      - Perform the BODY VERIFICATION TEST. Refer to **STANDARD PROCEDURE** .

B1562-11-GPS ANTENNA - CIRCUIT SHORT TO GROUND

For a complete wiring diagram, **refer to appropriate SYSTEM WIRING DIAGRAMS article** .

WHEN MONITORED

With the ignition on and the Radio in navigation mode.

SET CONDITION

This DTC sets when the Radio detects a Global Positioning System (GPS) Antenna connection is shorted to ground for greater than 60 seconds.

POSSIBLE CAUSES

Possible Causes
BAD ANTENNA CONNECTION
GPS ANTENNA CABLE SHORTED TO GROUND
GPS ANTENNA SHORTED TO GROUND
RADIO

DIAGNOSTIC TEST

1. **CHECK THE ANTENNA CONNECTION**
    1. Turn the ignition off.
    2. Disconnect the Antenna connector at the back of the Radio.
    3. Inspect the Antenna connections.

    Are the Antenna connections clean and secure?

    Yes

    - Go To 2

    No

    - Repair the Antenna connection as needed.
    - Perform the BODY VERIFICATION TEST. Refer to **STANDARD PROCEDURE** .
2. **CHECK THE ANTENNA AND CABLE**
    1. Connect the 9977-6-GPS test antenna (special tool #9977-6-GPS, Adapter, GPS Antenna Diagnostic) to the antenna connection on the back of the Radio.
    2. Make sure one of the front doors is still open.
    3. Using the scan tool, erase the DTCs.
    4. Turn the ignition on.
    5. Turn the Radio on.
    6. Using the scan tool, read the active Radio DTCs.

    NOTE: While using the 9977-6-GPS test antenna the Satellite radio reception will not be available and Satellite radio faults may occur. The 9977-6-GPS test tool will only enable GPS reception to work. For Satellite Radio reception concerns use test antenna 9977-6-SAT.

    Does the scan tool read: B1562-11-GPS ANTENNA - CIRCUIT SHORT TO GROUND as active?

    Yes

- Replace the Radio in accordance with the Service Information. Refer to **RADIO, REMOVAL** .
- Perform the BODY VERIFICATION TEST. Refer to **STANDARD PROCEDURE** .

No

- Go To 3

3. **TEST THE ANTENNA CABLE**
   1. Disconnect the Antenna cable at the base.
   2. Connect the appropriate (special tool #9977-6-1, Adapter) or (special tool #9977-6-3, Adapter) to the Antenna cable at the back of the Radio.
   3. Connect the appropriate (special tool #9977-6-4, Jumper) or (special tool #9977-6-2, Jumper) to the Antenna cable at the Antenna base.
   4. Measure the Resistance across the tool terminals.

      Is the resistance below 47.5 Ohms?

      Yes

      - Use the (special tool #9977-6, Kit, Radio Antenna Diagnostic) to locate the short together, repair or replace the Antenna cable as necessary.
      - Perform the BODY VERIFICATION TEST. Refer to **STANDARD PROCEDURE** .

      No

      - Replace the Antenna base in accordance with the Service Information.
      - Perform the BODY VERIFICATION TEST. Refer to **STANDARD PROCEDURE** .

B1562-13-GPS ANTENNA - CIRCUIT OPEN

For a complete wiring diagram, **refer to appropriate SYSTEM WIRING DIAGRAMS article** .

WHEN MONITORED

With the ignition on and the Radio in navigation mode.

SET CONDITION

This DTC sets when the Radio does not detect a Global Positioning System (GPS) Antenna connection for greater than 60 seconds.

POSSIBLE CAUSES

Possible Causes

BAD ANTENNA CONNECTION
OPEN GPS ANTENNA CABLE
OPEN GPS RADIO ANTENNA
RADIO

DIAGNOSTIC TEST

1. **CHECK THE ANTENNA CONNECTION**
   1. Turn the ignition off.
   2. Disconnect the Antenna connector at the back of the Radio.
   3. Inspect the Antenna connections.

      Are the Antenna connections clean and secure?

      Yes

      - Go To 2

      No

      - Repair the Antenna connection as needed.
      - Perform the BODY VERIFICATION TEST. Refer to **STANDARD PROCEDURE** .
2. **CHECK THE ANTENNA AND CABLE**
   1. Connect the 9977-6-GPS test antenna(special tool #9977-6-GPS, Adapter, GPS Antenna Diagnostic) to the antenna connection on the back of the Radio.
   2. Make sure one of the front doors is still open.
   3. Using the scan tool, erase the DTCs.
   4. Turn the ignition on.
   5. Turn the Radio on.
   6. Using the scan tool, read the active Radio DTCs.

      NOTE: While using the 9977-6-GPS test antenna the Satellite radio reception will not be available and Satellite radio faults may occur. The 9977-6-GPS test tool will only enable GPS reception to work. For Satellite Radio reception concerns use test antenna 9977-6-SAT

      Does the scan tool read: B1562-13-GPS ANTENNA-CIRCUIT OPEN as active?

      Yes

      - Replace the Radio in accordance with the Service Information. Refer to **RADIO, REMOVAL** .
      - Perform the BODY VERIFICATION TEST. Refer to **STANDARD PROCEDURE** .

No

- Go To 3

3. **TEST THE ANTENNA CABLE**
   1. Disconnect the Antenna cable at the base.
   2. Connect the appropriate (special tool #9977-6-1, Adapter) or (special tool #9977-6-3, Adapter) to the Antenna cable at the back of the Radio.
   3. Connect the appropriate (special tool #9977-6-4, Jumper) or (special tool #9977-6-2, Jumper) to the Antenna cable at the Antenna base.
   4. Measure the Resistance across the tool terminals.

   Is the resistance above 52.5 Ohms?

   Yes

   - Use the (special tool #9977-6, Kit, Radio Antenna Diagnostic) to locate the open circuit, repair or replace the Antenna cable as necessary.
   - Perform the BODY VERIFICATION TEST. Refer to **STANDARD PROCEDURE** .

   No

   - Replace the Antenna base in accordance with the Service Information.
   - Perform the BODY VERIFICATION TEST. Refer to **STANDARD PROCEDURE** .

B156B-13-SATELLITE RADIO ANTENNA - CIRCUIT OPEN

For a complete wiring diagram, **refer to appropriate SYSTEM WIRING DIAGRAMS article** .

WHEN MONITORED

With the ignition on and the Radio in satellite mode.

SET CONDITION

This DTC sets when the Radio does not detect a Satellite Antenna connection for greater than 60 seconds.

POSSIBLE CAUSES

Possible Causes
BAD ANTENNA CONNECTION
OPEN SATELLITE RADIO ANTENNA CABLE
OPEN SATELLITE RADIO ANTENNA
RADIO

DIAGNOSTIC TEST

1. **CHECK THE ANTENNA CONNECTION**
   1. Turn the ignition off.
   2. Disconnect the Satellite Radio Antenna connector at the rear of the Radio.
   3. Inspect the Satellite Radio Antenna connection.

   Was the antenna connection clean and secure?

   Yes

   - Go To 2

   No

   - Clean and secure the antenna connection as necessary.
   - Perform the BODY VERIFICATION TEST. Refer to **STANDARD PROCEDURE** .
2. **CHECK THE ANTENNA AND CABLE**
   1. Connect the Radio Diagnostic Tool (special tool #9977-6-SAT, Antenna) to the Satellite Antenna connection on the back of the Radio.
   2. Make sure one of the front doors is still open.
   3. Using the scan tool, erase the DTCs.
   4. Turn the ignition on.
   5. Turn the Radio on.
   6. Using the scan tool, read the active Radio DTCs.

   NOTE: While using the 9977-6-SAT test antenna the GPS reception will not be available and GPS faults may occur. The 9977-6-SAT test tool will only enable satellite radio reception to work. For GPS reception concerns use test antenna 9977-6-GPS.

   Does the scan tool display: B156B-13-SATELLITE RADIO ANTENNA-CIRCUIT OPEN

   Yes

   - Replace the Satellite Radio in accordance with the Service Information.
   - Perform the BODY VERIFICATION TEST. Refer to **STANDARD PROCEDURE** .

   No

   - Go To 3
3. **TEST THE SATELLITE ANTENNA CABLE**
   1. Disconnect the Satellite Antenna cable at the Satellite Antenna.

2. Connect the appropriate Radio Diagnostic Tool (special tool #9977-6-1, Adapter) or (special tool #9977-6-3, Adapter) to the Satellite Antenna cable at the back of the Radio.
3. Connect the appropriate Radio Diagnostic Tool (special tool #9977-6-4, Jumper) or (special tool #9977-6-2, Jumper) to the Satellite Antenna cable at the Satellite Antenna.
4. Measure the Resistance across the terminals on the tool.

   Is the resistance above 52.5 Ohms?

   No

   - Use the Radio Diagnostic Tool (special tool #9977-6, Kit, Radio Antenna Diagnostic) to locate the open circuit, repair or replace the Satellite Antenna cable as necessary.
   - Perform the BODY VERIFICATION TEST. Refer to **STANDARD PROCEDURE** .

   Yes

   - Replace the Satellite Antenna in accordance with the Service Information.
   - Perform the BODY VERIFICATION TEST. Refer to **STANDARD PROCEDURE** .

B156B-1A-SATELLITE RADIO ANTENNA - CIRCUIT RESISTANCE BELOW THRESHOLD

For a complete wiring diagram, **refer to appropriate SYSTEM WIRING DIAGRAMS article** .

WHEN MONITORED

With the ignition on and the Radio in Satellite mode.

SET CONDITION

This DTC sets when the Radio detects a Satellite Antenna is shorted together for greater than 60 seconds.

POSSIBLE CAUSES

Possible Causes
BAD ANTENNA CONNECTION
SATELLITE RADIO ANTENNA CABLE SHORTED TOGETHER
SATELLITE RADIO ANTENNA SHORTED TOGETHER
RADIO

DIAGNOSTIC TEST

1. **CHECK THE ANTENNA CONNECTION**
   1. Turn the ignition off.
   2. Disconnect the Satellite Radio Antenna connections.

3. Inspect the Satellite Radio Antenna connections.

   Are the Antenna connections clean and secure?

   Yes

   - Go To 2

   No

   - Repair the Antenna connection as needed.
   - Perform the BODY VERIFICATION TEST. Refer to **STANDARD PROCEDURE** .

2. **CHECK THE ANTENNA AND CABLE**
   1. Connect the Radio Diagnostic Tool (special tool #9977-6-SAT, Antenna) to the Satellite Antenna connection on the back of the Radio.
   2. Make sure one of the front doors is still open.
   3. Using the scan tool, erase the DTCs.
   4. Turn the ignition on.
   5. Turn the Radio on.
   6. Using the scan tool, read the active Radio DTCs.

   NOTE: While using the 9977-6-SAT test antenna the GPS reception will not be available and GPS faults may occur. The 9977-6-SAT test tool will only enable satellite radio reception to work. For GPS reception concerns use test antenna 9977-6-GPS.

   Does the scan tool display: B156B-1A -SATELLITE RADIO ANTENNA-CIRCUIT RESISTANCE BELOW THRESHOLD as active?

   Yes

   - Replace the Radio in accordance with the Service Information.
   - Perform the BODY VERIFICATION TEST. Refer to **STANDARD PROCEDURE** .

   No

   - Go To 3

3. **TEST THE SATELLITE ANTENNA CABLE**
   1. Disconnect the Satellite Antenna cable at the Satellite Antenna.
   2. Connect the appropriate Radio Diagnostic Tool (special tool #9977-6-1, Adapter) or (special tool #9977-6-3, Adapter) to the Satellite Antenna cable at the back of the Radio.
   3. Connect the appropriate Radio Diagnostic Tool (special tool #9977-6-4, Jumper) or (special tool #9977-6-2, Jumper) to the Satellite Antenna cable at the Satellite Antenna.

4. Measure the Resistance across the terminals on the tool.

   Is the resistance below 47.5 Ohms?

   Yes

   - Use the Radio Diagnostic Tool (special tool #9977-6, Kit, Radio Antenna Diagnostic) to locate the short together, repair or replace the Satellite Antenna cable as necessary.
   - Perform the BODY VERIFICATION TEST. Refer to **STANDARD PROCEDURE** .

   No

   - Replace the Satellite Antenna in accordance with the Service Information.
   - Perform the BODY VERIFICATION TEST. Refer to **STANDARD PROCEDURE** .

B1570-19-USB COMMUNICATION - OVERCURRENT

For a complete wiring diagram, **refer to appropriate SYSTEM WIRING DIAGRAMS article** .

WHEN MONITORED

With the ignition on.

SET CONDITION

This DTC will set by connecting an unsupported USB device into the USB port for greater than 10 seconds.

POSSIBLE CAUSES

Possible Causes
DAMAGED OR UNSUPPORTED USB DEVICE
DAMAGED OR UNSUPPORTED USB CABLE
RADIO

DIAGNOSTIC TEST

1. **CHECK FOR AN INTERMITTENT CONDITION**

   NOTE:

   - **Before testing inspect the AUX port, USB port and SD slot for damage or debris inside the ports and device connectors that can cause concerns with system operation.**
   - **Use a known good compatible device that works on another same kind system when testing for concerns.**
   - **Verify that no other devices are connected to the system during**

testing.

1. Using the scan tool, record and erase the radio DTCs.
2. Cycle the ignition switch from on to off, wait five seconds and then back to on.
3. Connect a known good USB device into the USB port.
4. Using the scan tool, read the active radio DTCs.

   Does the scan tool display active: B1570-19USB COMMUNICATION-OVERCURRENT?

   Yes

   - Go To 2

   No

   - Test complete.
   - Perform the BODY VERIFICATION TEST. Refer to **STANDARD PROCEDURE** .

2. **CHECK THE CONNECTORS AND HARNESS**
   1. Turn the ignition off.
   2. Disconnect the USB harness connector at the back of the radio.
   3. Inspect the connectors and harness between the USB port and the radio.

      Are there any issues with the harness or connectors?

      Yes

      - Repair or replace as needed.
      - Perform the BODY VERIFICATION TEST. Refer to **STANDARD PROCEDURE** .

      No

      - Replace the radio in accordance with the Service Information. Refer to **RADIO, REMOVAL** .
      - Perform the BODY VERIFICATION TEST. Refer to **STANDARD PROCEDURE** .

B1577-13-UNIVERSAL CONSUMER INTERFACE (UCI) - CIRCUIT OPEN

For a complete wiring diagram, **refer to appropriate SYSTEM WIRING DIAGRAMS article** .

WHEN MONITORED

With the ignition on.

SET CONDITION

The Radio detects that the USB cable is disconnected for greater than 10 seconds.

POSSIBLE CAUSES

Possible Causes
USB CABLE DISCONNECTED OR DAMAGED
USB PORT
AUX PORT
SD CARD SLOT
RADIO

DIAGNOSTIC TEST

1. **CHECK THE CABLE CONNECTION AT THE RADIO**

NOTE:

- **Before testing check the AUX port, USB port and SD slot for damage or debris inside the ports and device connectors that can cause concerns with system operation.**
- **Use a known good compatible device that works on another same kind system when testing for concerns.**
- **Verify that no other devices are connected to the system during testing.**
- **The Media hub (with USB, AUX, SD slot) can be serviced separately from the radio.**

1. Turn the ignition off.
2. Inspect the connectors at the radio and Media Hub.

   Are The connections secure and undamaged?

   Yes

   - Go To 2

   No

   - Repair the cable connection as needed.
   - Perform the BODY VERIFICATION TEST. Refer to **STANDARD PROCEDURE** .

2. **CHECK THE MEDIA HUB CIRCUITS FOR AN OPEN.**
   1. Turn the ignition off.
   2. Disconnect the Radio harness connector and the Media hub connector.
   3. Measure the resistance of the :
      - (X486) Aux Audio Left circuit between the Radio harness connector and the Media Hub

connector.
- (X487) Aux Audio Right circuit between the Radio harness connector and the Media Hub connector.
- (X488) Aux Audio Reference circuit between the Radio harness connector and the Media Hub connector.
- (X489) Aux Connection Detect circuit between the Radio harness connector and the Media Hub connector.

Is the resistance below 5.0 Ohms on all circuits?

Yes

- Check the Media Hub for concerns and replace if needed.
- Perform the BODY VERIFICATION TEST. Refer to **STANDARD PROCEDURE** .

No

- Repair the open circuit that failed the test.
- Perform the BODY VERIFICATION TEST. Refer to **STANDARD PROCEDURE** .

B1578-13-AUDIO ANTENNA - CIRCUIT OPEN

For a complete wiring diagram, **refer to appropriate SYSTEM WIRING DIAGRAMS article** .

WHEN MONITORED

With the ignition on and the Radio in seek mode.

SET CONDITION

With the Radio in seek mode for two minutes and the Radio does not detect an Antenna connection or does not receive a Radio station signal for greater than 10 seconds.

POSSIBLE CAUSES

Possible Causes
BAD ANTENNA CONNECTION
OPEN ANTENNA CABLE
ANTENNA
RADIO

DIAGNOSTIC TEST

1. **CHECK THE ANTENNA CONNECTIONS**
    1. Turn the ignition off.

2. Disconnect the Radio Antenna connector.
3. Inspect the Radio Antenna connection.

   Was the Antenna connection clean and secure?

   Yes

   - Go To 2

   No

   - Repair the Antenna connection as needed.
   - Perform the BODY VERIFICATION TEST. Refer to **STANDARD PROCEDURE** .

2. **CHECK THE ANTENNA AND CABLE**
   1. Connect the Radio Diagnostic Tool (special tool #9977-6-FM, Antenna) to the Antenna connection on the back of the Radio.
   2. Make sure one of the front doors is still open.
   3. Using the scan tool, erase the DTCs.
   4. Turn the ignition on.
   5. Turn the Radio on.
   6. Using the scan tool, read the active Radio DTCs.

      Does this DTC display as active?

      Yes

      - Go To 3

      No

      - Repair or replace the Radio in accordance with the Service Information.
      - Perform the BODY VERIFICATION TEST. Refer to **STANDARD PROCEDURE** .

3. **TEST THE ANTENNA CABLE**
   1. Turn the ignition off.
   2. Disconnect the Antenna cable at the base.
   3. Connect the appropriate Radio Diagnostic Tool (special tool #9977-6-1, Adapter) or (special tool #9977-6-3, Adapter) to the Antenna cable at the back of the Radio.
   4. Connect the appropriate Radio Diagnostic Tool (special tool #9977-6-4, Jumper) or (special tool #9977-6-2, Jumper) to the Antenna cable at the Antenna base.
   5. Measure the Resistance across the tool terminals.

      Is the resistance above 52.5 Ohms?

Yes

- Use the Radio Diagnostic Tool (special tool #9977-6, Kit, Radio Antenna Diagnostic) to locate the open circuit, repair or replace the Antenna cable as necessary.
- Perform the BODY VERIFICATION TEST. Refer to **STANDARD PROCEDURE** .

No

- Replace the Antenna base in accordance with the Service Information.
- Perform the BODY VERIFICATION TEST. Refer to **STANDARD PROCEDURE** .

B1578-1A-AUDIO ANTENNA - CIRCUIT RESISTANCE BELOW THRESHOLD

For a complete wiring diagram, **refer to appropriate SYSTEM WIRING DIAGRAMS article** .

WHEN MONITORED

With the ignition on and the Radio in seek mode.

SET CONDITION

The Radio detects that the Antenna circuit is shorted together for greater than 10 seconds.

POSSIBLE CAUSES

Possible Causes
BAD ANTENNA CONNECTION
ANTENNA CABLE SHORTED TOGETHER
ANTENNA
RADIO

DIAGNOSTIC TEST

1. **CHECK THE ANTENNA CONNECTION**
    1. Turn the ignition off.
    2. Disconnect the Antenna connector at the back of the Radio.
    3. Inspect the Antenna connections.

    Are the Antenna connections clean and secure?

    Yes

    - Go To 2

    No

- Repair the Antenna connection as needed.
- Perform the BODY VERIFICATION TEST. Refer to **STANDARD PROCEDURE** .

2. **CHECK THE ANTENNA AND CABLE**
   1. Connect the (special tool #9977-6-FM, Antenna) to the antenna connection on the back of the Radio.
   2. Make sure one of the front doors is still open.
   3. Using the scan tool, erase the DTCs.
   4. Turn the ignition on.
   5. Turn the Radio on.
   6. Using the scan tool, read the active Radio DTCs.

   Does the scan tool read: B1578-1A -AUDIO ANTENNA - CIRCUIT RESISTANCE BELOW THRESHOLD as active?

   Yes

   - Replace the Radio in accordance with the Service Information. Refer to **RADIO, REMOVAL** .
   - Perform the BODY VERIFICATION TEST. Refer to **STANDARD PROCEDURE** .

   No

   - Go To 3

3. **TEST THE ANTENNA CABLE**
   1. Disconnect the Antenna cable at the base.
   2. Connect the appropriate (special tool #9977-6-1, Adapter) or (special tool #9977-6-3, Adapter) to the Antenna cable at the back of the Radio.
   3. Connect the appropriate (special tool #9977-6-4, Jumper) or (special tool #9977-6-2, Jumper) to the Antenna cable at the Antenna base.
   4. Measure the Resistance across the tool terminals.

   Is the resistance below 47.5 Ohms?

   Yes

   - Use the (special tool #9977-6, Kit, Radio Antenna Diagnostic) to locate the short together, repair or replace the Antenna cable as necessary.
   - Perform the BODY VERIFICATION TEST. Refer to **STANDARD PROCEDURE** .

   No

   - Replace the Antenna base in accordance with the Service Information.

- Perform the BODY VERIFICATION TEST. Refer to **STANDARD PROCEDURE** .

B157E-00-TOUCH SCREEN LOCKED

For a complete wiring diagram, **refer to appropriate SYSTEM WIRING DIAGRAMS article** .

WHEN MONITORED

With the ignition on. Radio active.

SET CONDITION

The Radio detects a closed switch for 60 seconds.

POSSIBLE CAUSES

Possible Causes
RADIO

DIAGNOSTIC TEST

VERIFY OPERATION OF THE BUTTON

1. With the scan tool, erase DTCs.
2. Press and release the button three times.
3. Wait 60 seconds.
4. With the scan tool, read DTCs.

   Is DTC: B157E-00-TOUCH SCREEN LOCKED active?

   Yes

   - Replace the Radio in accordance with the Service Information.
   - Perform the BODY VERIFICATION TEST. Refer to **STANDARD PROCEDURE** .

   No

   - Test complete.
   - Perform the BODY VERIFICATION TEST. Refer to **STANDARD PROCEDURE** .

B210A-16-SYSTEM VOLTAGE LOW - CIRCUIT VOLTAGE BELOW THRESHOLD

For a complete wiring diagram, **refer to appropriate SYSTEM WIRING DIAGRAMS article** .

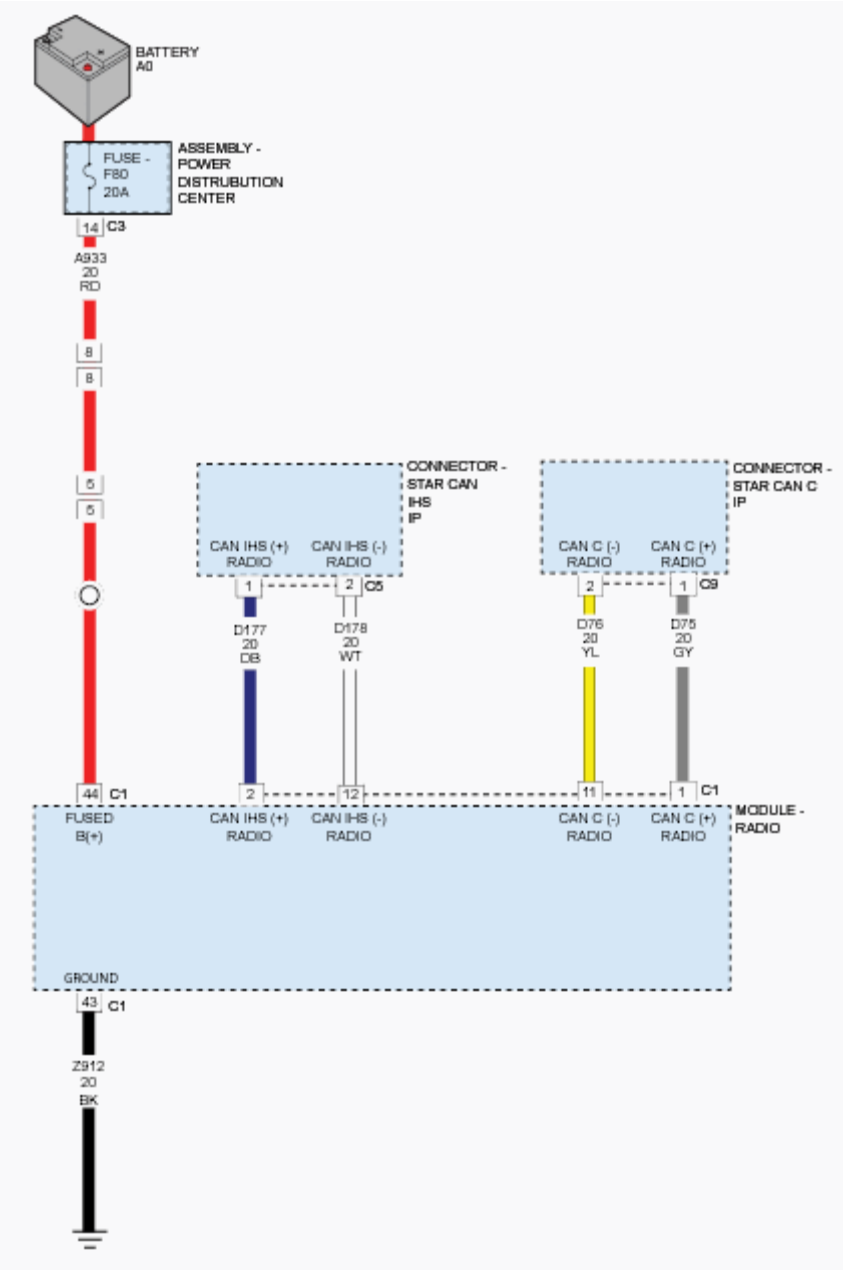

Fig. 41: Identifying Radio Module Circuit Diagram
Courtesy of CHRYSLER GROUP, LLC

WHEN MONITORED

With the ignition on.

SET CONDITION

If the module detects that the battery voltage is less than 9.0 volts for greater than 5 seconds.

POSSIBLE CAUSES

Possible Causes
VEHICLE CHARGING SYSTEM
BATTERY SUPPLY CIRCUIT
CONNECTORS
RADIO

DIAGNOSTIC TEST

1. **CHECK FOR AN INTERMITTENT CONDITION**
    1. Turn the ignition on, then off, and then on again.
    2. With the scan tool, read the Radio DTCs.

    Does the scan tool display active: B210A-16-SYSTEM VOLTAGE LOW - CIRCUIT VOLTAGE BELOW THRESHOLD?

    Yes

    - Go To2

    No

    - The conditions that caused this code to set are not present at this time. Using the wiring diagram/schematic as a guide, inspect the wiring and connectors.
    - Perform the BODY VERIFICATION TEST. Refer to **STANDARD PROCEDURE** .
2. **CHECK THE BATTERY VOLTAGE TO THE RADIO WITH THE SCAN TOOL**
    1. With the scan tool in Data Display, read the Radio battery voltage.

    Is the battery voltage less than 9.0 volts?

    Yes

    - Go To 3

    No

    - Replace the Radio in accordance with the Service Information.
    - Perform the BODY VERIFICATION TEST. Refer to **STANDARD PROCEDURE** .
3. **CHECK THE BATTERY VOLTAGE TO THE RADIO**
    1. Disconnect the Radio harness connector.

    NOTE: Check the Radio harness connector for signs of corrosion, pushed out or bent terminals, and correct pin tension.

2. Measure the voltage of the (A933) Fused B+ circuit at the Radio harness connector.

   Is the battery voltage less than 9.0 volts?

   Yes

   - Go To 4

   No

   - Replace the Radio in accordance with the Service Information.
   - Perform the BODY VERIFICATION TEST. Refer to **STANDARD PROCEDURE** .

4. **CHECK FOR CHARGING SYSTEM RELATED DTCS IN THE POWERTRAIN CONTROL MODULE (PCM)**
   1. With the scan tool in ECU View, select PCM and check for any Charging System related DTCs.

      Does the scan tool display any Charging System related DTCs?

      Yes

      - Refer to **DTC INDEX** and perform the appropriate charging system or battery DTC diagnostic procedure.

      No

      - Check for voltage drop concerns across the (A933) Fused B+ circuit and repair as needed.
      - Perform the BODY VERIFICATION TEST. Refer to **STANDARD PROCEDURE** .

B210B-17-SYSTEM VOLTAGE HIGH - CIRCUIT VOLTAGE ABOVE THRESHOLD

For a complete wiring diagram, **refer to appropriate SYSTEM WIRING DIAGRAMS article** .

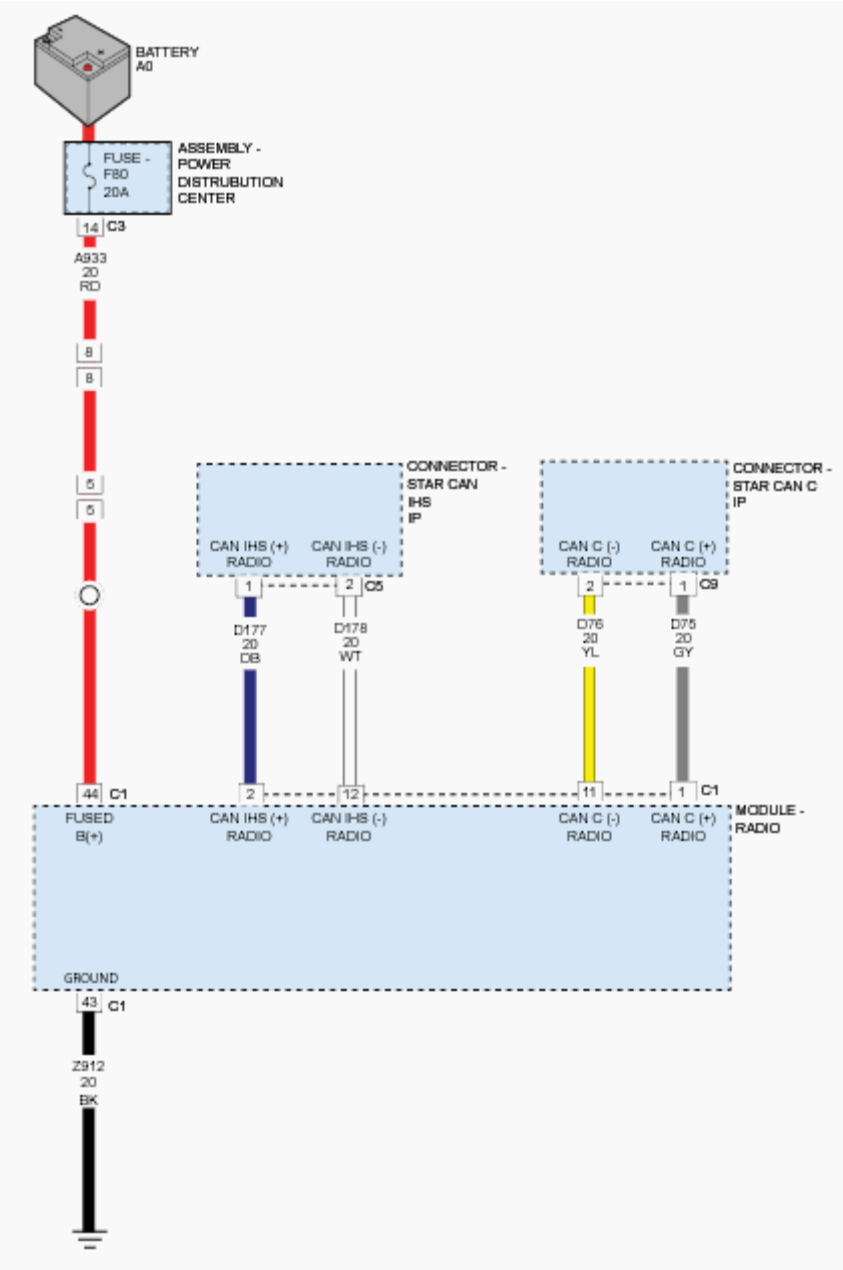

Fig. 42: Identifying Radio Module Circuit Diagram
Courtesy of CHRYSLER GROUP, LLC

WHEN MONITORED

With the ignition on.

SET CONDITION

If the module detects that the battery voltage is greater 16.5 volts for greater than 5 seconds.

POSSIBLE CAUSES

Possible Causes
VEHICLE CHARGING SYSTEM RADIO

DIAGNOSTIC TEST

1. **CHECK FOR AN INTERMITTENT CONDITION**

   NOTE: Make sure the Battery is in good condition. Refer to DIAGNOSIS AND TESTING and perform the Battery System diagnostic procedure.

   1. Turn the ignition on, then off, and then on again.
   2. With the scan tool, read the Radio DTCs.

      Does the scan tool display active: B210B-17-SYSTEM VOLTAGE HIGH - CIRCUIT VOLTAGE ABOVE THRESHOLD?

      Yes

      - Go To 2

      No

      - The conditions that caused this code to set are not present at this time. Using the wiring diagram/schematic as a guide, inspect the wiring and connectors.
      - Perform the BODY VERIFICATION TEST. Refer to **STANDARD PROCEDURE** .

2. **CHECK FOR CHARGING SYSTEM RELATED DTCS IN THE POWERTRAIN CONTROL MODULE (PCM)**

   1. With the scan tool in ECU View, select PCM and check for any Charging System related DTCs.

      Does the scan tool display any Charging System related DTCs?

      Yes

      - Refer to **DTC INDEX** and perform the appropriate charging system or battery DTC diagnostic procedure.

      No

      - Disconnect the Radio harness connector.
      - Measure the battery voltage on the (A933) circuit. If no concerns are found, replace the Radio in accordance with the Service Information.
      - Perform the BODY VERIFICATION TEST. Refer to **STANDARD PROCEDURE** .

B2206-00-CURRENT VIN MISSING / MISMATCH

For a complete wiring diagram, **refer to appropriate SYSTEM WIRING DIAGRAMS article** .

WHEN MONITORED

When the ignition is in the on position.

SET CONDITION

The Vehicle Identification Number (VIN) stored in the Radio does not match the VIN stored in the BCM/ PCM.

POSSIBLE CAUSES

Possible Causes
THE RADIO SWAPPED FROM DIFFERENT VEHICLE

DIAGNOSTIC TEST

CHECK IF THE DTC IS ACTIVE

1. With a scan tool, read and record Radio DTCs.
2. With the scan tool, erase Radio DTCs.
3. Turn the ignition off and remove the key from the ignition.
4. Turn the ignition on, wait one minute.
5. With the scan tool, read Radio DTCs.

   Does the scan tool display this DTC as active?

   Yes

   - Replace the radio in accordance with service information. Refer to **RADIO, REMOVAL** .
   - Perform the BODY VERIFICATION TEST. Refer to **STANDARD PROCEDURE** .

   No

   - Test complete. The DTC is not active at this time.
   - Perform the BODY VERIFICATION TEST. Refer to **STANDARD PROCEDURE** .

B221E-00-RADIO INTERNAL

For a complete wiring diagram, **refer to appropriate SYSTEM WIRING DIAGRAMS article** .

WHEN MONITORED

Continuously with the ignition on and Radio turned on.

SET CONDITION

The code will set if the Radio detects a Radio internal failure.

POSSIBLE CAUSES

Possible Causes
RADIO INTERNAL FAILURE

DIAGNOSTIC TEST

REPLACE THE RADIO

1. When this DTC is active, replace the Radio.

   Repair

   - Replace the Radio in accordance with the Service Information. Refer to **RADIO, REMOVAL** .
   - Perform the BODY VERIFICATION TEST. Refer to **STANDARD PROCEDURE** .

B222C-00-VEHICLE CONFIGURATION NOT PROGRAMMED

For a complete wiring diagram, **refer to appropriate SYSTEM WIRING DIAGRAMS article** .

WHEN MONITORED

With the ignition on.

SET CONDITION

The radio detects that the vehicle configuration information not programmed into the BCM for greater than 5 seconds.

POSSIBLE CAUSES

POSSIBLE CAUSES
NO COMMUNICATION WITH BODY CONTROL MODULE (BCM)
ACTIVE BCM DTCS
BODY CONTROL MODULE (BCM)

DIAGNOSTIC TEST

1. **TEST FOR AN INTERMITTENT CONDITION**

1. Turn the ignition on.
2. Turn the ignition off, wait ten seconds then turn the ignition on.
3. With the scan tool, read DTCs.

   Does the scan tool display: B222C-00-VEHICLE CONFIGURATION NOT PROGRAMMED?

   Yes

   - Go To 2

   No

   - Test complete, the condition or conditions that originally set this DTC are not present at this time. Using the wiring diagrams as a guide, check all related splices and connectors for signs of water intrusion, corrosion, pushed out or bent terminals and correct pin tension.
   - Perform the BODY VERIFICATION TEST. Refer to **STANDARD PROCEDURE** .

2. **VERIFY COMMUNICATION WITH BCM**
   1. With the scan tool, read the active modules on the bus.

      Does the scan tool show the BCM active on the bus?

      Yes

      - Go To 3

      No

      - Refer to **DIAGNOSIS AND TESTING** and perform the No Response From BCM diagnostic procedure.

3. **CHECK BCM FOR ACTIVE DTCS**
   1. With the scan tool, erase BCM DTCs.
   2. Turn the ignition off. Wait approximately ten seconds.
   3. Turn the ignition on.
   4. With the scan tool, read BCM DTCs.

      Are any active DTCs present?

      Yes

      - Refer to **STANDARD PROCEDURE** and perform the appropriate diagnostic procedure.

      No

- Go To 4

4. **CHECK THE VEHICLE CONFIGURATION INFORMATION WITH SCAN TOOL**
   1. With the scan tool run an ECU Details Report, read the Original and Current VINs, and the Body Style of the vehicle.

      Does the information displayed match the vehicle?

      Yes

      - Replace the Body Control Module (BCM) in accordance with the Service Information.
      - Perform the BODY VERIFICATION TEST. Refer to **STANDARD PROCEDURE** .

      No

      - Go To 5

5. **RESTORE THE VEHICLE CONFIGURATION**
   1. With the scan tool, restore the vehicle configuration.
   2. Turn the ignition off, then back on.
   3. With the scan tool, read the active DTCs.

      Does the scan tool display B222C-00-VEHICLE CONFIGURATION NOT PROGRAMMED- as active?

      Yes

      - Replace the Body Control Module (BCM) in accordance with the Service Information.
      - Perform the BODY VERIFICATION TEST. Refer to **STANDARD PROCEDURE** .

      No

      - Test complete, the condition or conditions that originally set this DTC are not present at this time. Using the wiring diagrams as a guide, check all related splices and connectors for signs of water intrusion, corrosion, pushed out or bent terminals and correct pin tension.
      - Perform the BODY VERIFICATION TEST. Refer to **STANDARD PROCEDURE** .

U0002-00-CAN C BUS OFF PERFORMANCE

Perform the COMMUNICATION PRE-DIAGNOSTIC PROCEDURE. Refer to **STANDARD PROCEDURE** .

U0010-00-CAN INTERIOR BUS

Perform the COMMUNICATION PRE-DIAGNOSTIC PROCEDURE. Refer to **STANDARD PROCEDURE** .

U0011-00-CAN INTERIOR BUS OFF PERFORMANCE

Perform the COMMUNICATION PRE-DIAGNOSTIC PROCEDURE. Refer to **STANDARD PROCEDURE** .

U0100-LOST COMMUNICATION WITH ECM/PCM

Perform the COMMUNICATION PRE-DIAGNOSTIC PROCEDURE. Refer to **STANDARD PROCEDURE** .

U0101-LOST COMMUNICATION WITH TCM

Perform the COMMUNICATION PRE-DIAGNOSTIC PROCEDURE. Refer to **STANDARD PROCEDURE** .

U0121-LOST COMMUNICATION WITH ANTI-LOCK BRAKE MODULE

Perform the COMMUNICATION PRE-DIAGNOSTIC PROCEDURE. Refer to **STANDARD PROCEDURE** .

U0140-00-LOST COMMUNICATION WITH BODY CONTROL MODULE

Perform the COMMUNICATION PRE-DIAGNOSTIC PROCEDURE. Refer to **STANDARD PROCEDURE** .

U0143-00-LOST COMMUNICATION WITH MULTI-PURPOSE MODULE

Perform the COMMUNICATION PRE-DIAGNOSTIC PROCEDURE. Refer to **STANDARD PROCEDURE** .

U0151-00-LOST COMMUNICATION WITH OCCUPANT RESTRAINT CONTROLLER (ORC)

Perform the COMMUNICATION PRE-DIAGNOSTIC PROCEDURE. Refer to **STANDARD PROCEDURE** .

U0155-00-LOST COMMUNICATION WITH CLUSTER/CCN

Perform the COMMUNICATION PRE-DIAGNOSTIC PROCEDURE. Refer to **STANDARD PROCEDURE** .

WHEN MONITORED

Continuously when the ignition is on.

Battery voltage between 10 and 16 volts.

Body Control Module (BCM) is configured correctly.

SET CONDITION

Bus messages not received from the Instrument Cluster (IC) for approximately two to five seconds.

POSSIBLE CAUSES

Possible Causes
CAN BUS (+) CIRCUIT SHORTED TO VOLTAGE
CAN BUS (-) CIRCUIT SHORTED TO GROUND
INSTRUMENT CLUSTER (IPC) POWER AND GROUND
BCM NOT CONFIGURED CORRECTLY
INSTRUMENT CLUSTER (IPC)
MODULE THAT SET THIS DTC

DIAGNOSTIC TEST

VERIFY DTC IS ACTIVE

NOTE: Make sure the battery is fully charged before proceeding.

1. Turn the ignition on.
2. With the scan tool, read the active DTCs.

   Does the scan tool display: U0155-00-LOST COMMUNICATION WITH CLUSTER/CCN?

   Yes

   - **Refer to DTC INDEX** and perform the U0155-87-Lost Communication With Cluster/CCN diagnostic procedure.

   No

   - **Refer to DIAGNOSIS AND TESTING** and perform the Stored Lost Communication DTCs diagnostic procedure.

U0164-00-LOST COMMUNICATION WITH HVAC CONTROL MODULE

Perform the COMMUNICATION PRE-DIAGNOSTIC PROCEDURE. Refer to **STANDARD PROCEDURE** .

U0186-00-LOST COMMUNICATION WITH AUDIO AMPLIFIER

For a complete wiring diagram, **refer to appropriate SYSTEM WIRING DIAGRAMS article** .

WHEN MONITORED

Continuously when the ignition is on.

The battery voltage is between 10 and 16 volts.

Body Control Module (BCM) is configured correctly.

SET CONDITION

Bus messages not received from the Audio Amplifier for approximately two to five seconds.

POSSIBLE CAUSES

Possible Causes
CAN BUS CIRCUITS OPEN OR SHORTED
DTCS RELATED TO BATTERY VOLTAGE, IGNITION, OR VIN MESSAGES
AMPLIFIER POWER AND GROUND
BCM NOT CONFIGURED CORRECTLY
AMPLIFIER
MODULE THAT SET THIS DTC

DIAGNOSTIC TEST

VERIFY THE DIAGNOSTIC TROUBLE CODE (DTC) IS ACTIVE

NOTE: Make sure the fuse is installed and the battery is fully charged before proceeding.

1. Turn the ignition on.
2. With the scan tool, read the active DTCs.

   Is this DTC active?

   Yes

   - **Refer to DTC INDEX** and perform the U0186-00 Lost Communication with Audio Amplifier diagnostic procedure.

   No

   - **Refer to DIAGNOSIS AND TESTING** and perform the Stored Lost Communication DTCs diagnostic procedure.

U0187-00-LOST COMMUNICATION WITH DVD PLAYER

Perform the COMMUNICATION PRE-DIAGNOSTIC PROCEDURE. Refer to **STANDARD PROCEDURE** .

U0199-00-LOST COMMUNICATION WITH DRIVER DOOR MODULE

Perform the COMMUNICATION PRE-DIAGNOSTIC PROCEDURE. Refer to **STANDARD PROCEDURE** .

U0200-00-LOST COMMUNICATION WITH PASSENGER DOOR MODULE

Perform the COMMUNICATION PRE-DIAGNOSTIC PROCEDURE. Refer to **STANDARD PROCEDURE** .

U0208-00-LOST COMMUNICATION WITH HEATED SEAT CONTROL MODULE

Perform the COMMUNICATION PRE-DIAGNOSTIC PROCEDURE. Refer to **STANDARD PROCEDURE** .

U0209-00-LOST COMMUNICATION WITH MEMORY SEAT CONTROL MODULE

Perform the COMMUNICATION PRE-DIAGNOSTIC PROCEDURE. Refer to **STANDARD PROCEDURE** .

U11B8-00-LOST COMMUNICATION WITH INTEGRATED CENTER STACK (ICS)

For a complete wiring diagram, **refer to appropriate SYSTEM WIRING DIAGRAMS article** .

WHEN MONITORED

Continuously when the ignition is on.

The battery voltage is between 10 and 16 volts.

SET CONDITION

Bus messages not received from the Integrated Center Stack (ICS) for approximately ten seconds.

POSSIBLE CAUSES

Possible Causes
INTEGRATED CENTER STACK POWER AND GROUND
INTEGRATED CENTER STACK
CAN IHS BUS (+) CIRCUIT OPEN
CAN IHS BUS (-) CIRCUIT OPEN

DIAGNOSTIC TEST

VERIFY THE DTC IS ACTIVE

1. Turn the ignition on.
2. With the scan tool, read active DTCs.

   Is this DTC active?

   Yes

   - **Refer to DIAGNOSIS AND TESTING** and perform the NO RESPONSE FROM ICS (INTEGRATED CENTER STACK) diagnostic procedure.

   No

   - **Refer to DIAGNOSIS AND TESTING** and perform the Stored Lost Communication DTCs diagnostic procedure.

2014 ACCESSORIES AND EQUIPMENT

Audio/Video - Non-DTC Based Diagnostics - Cherokee

DIAGNOSIS AND TESTING

DIAGNOSIS AND TESTING - POOR OR NO AM/FM AUDIO RECEPTION

For a complete wiring diagram, **refer to appropriate SYSTEM WIRING DIAGRAMS article** .

POSSIBLE CAUSES

Possible Causes
ANTENNA CONNECTION
OPEN OR SHORTED ANTENNA CABLE
ANTENNA
RADIO

DIAGNOSTIC TEST

1. **CHECK THE ANTENNA CONNECTION**
    1. Turn the ignition off.
    2. Disconnect the Radio C3 harness connector.
    3. Inspect the Audio Antenna harness connection.

    Is the Antenna connection clean and secure?

    Yes

    - Go To 2

    No

    - Repair the Antenna connection as needed.
    - Perform the BODY VERIFICATION TEST. Refer to **STANDARD PROCEDURE** .
2. **RADIO**
    1. Connect the (special tool #9977-6-FM, Antenna) to the Radio C3 component connector.
    2. Place the test antenna base on the roof of the vehicle.
    3. Turn the ignition on.
    4. Drive the vehicle outside to an un-obstructed area.
    5. Turn the Radio on and select several different known good stations from the AM and FM bands.

    Is the audio reception still poor or not available?

Yes

- Replace the Radio in accordance with the Service Information.
- Perform the BODY VERIFICATION TEST. Refer to **STANDARD PROCEDURE** .

No

- Go To 3

3. **ANTENNA**
   1. Turn the ignition off.
   2. Reconnect the Radio C3 harness connector.
   3. Disconnect the Radio Antenna harness connector.
   4. Connect the (special tool #9977-6-FM, Antenna) to the Radio Antenna harness connector.
   5. Turn the Radio on and select several different known good stations from the AM and FM bands.

   Is the audio reception still poor or not available?

   Yes

   - Go To 4

   No

   - Replace the Radio Antenna in accordance with the Service Information.
   - Perform the BODY VERIFICATION TEST. Refer to **STANDARD PROCEDURE** .
4. **ANTENNA CABLE**

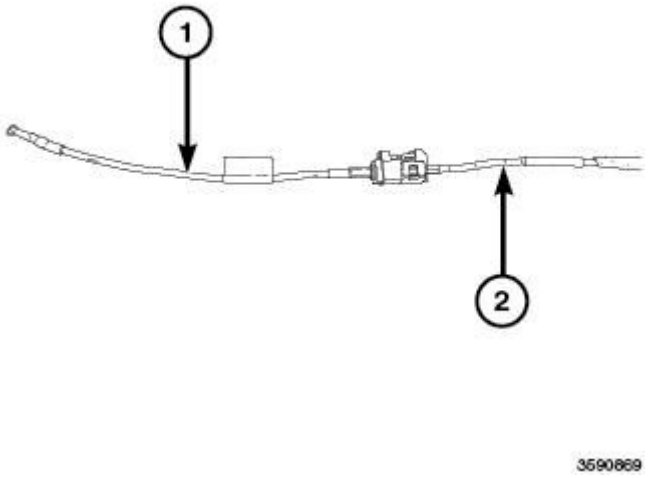

Fig. 1: Special Tool And AM/FM Fakra Connector
Courtesy of CHRYSLER GROUP, LLC

1. Turn the ignition off.
2. Disconnect the (special tool #9977-6-FM, Antenna) from the Radio Antenna harness connector.
3. Connect the appropriate (special tool #9977-6-4, Jumper) (1) or (special tool #9977-6-2, Jumper) (1) to the Radio Antenna harness connector (2) at the Antenna.

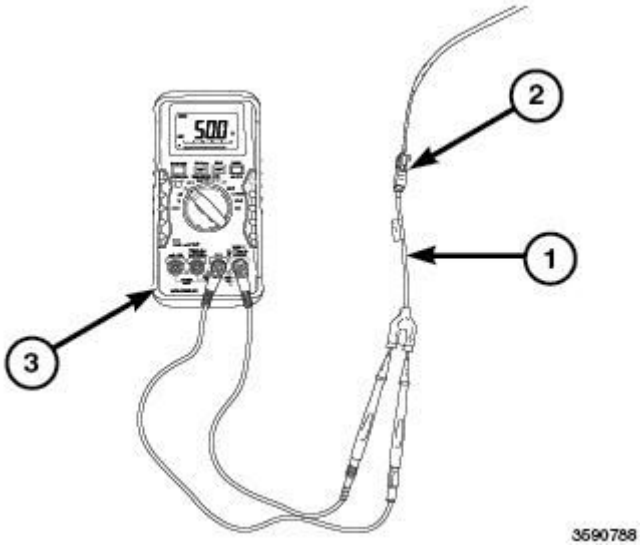

Fig. 2: Special Tool, AM/FM Fakra Connector And DVOM
Courtesy of CHRYSLER GROUP, LLC

4. Disconnect the Radio C3 harness connector.
5. Connect the appropriate (special tool #9977-6-1, Adapter) (1) or (special tool #9977-6-3, Adapter) (1) to the Radio C3 harness connector (2).
6. Measure the resistance across the tool terminals.

   Is the resistance between 47.5 and 52.5 Ohms?

   Yes

   - The source of the poor reception is not caused by the Radio, Antenna Cable or Radio Antenna.
   - Perform the BODY VERIFICATION TEST. Refer to **STANDARD PROCEDURE** .

   No

   - Replace the Antenna Cable in accordance with the Service Information.
   - Perform the BODY VERIFICATION TEST. Refer to **STANDARD PROCEDURE** .

POOR OR NO GPS RECEPTION

For a complete wiring diagram, **refer to appropriate SYSTEM WIRING DIAGRAMS article** .

POSSIBLE CAUSES

Possible Causes
GPS ANTENNA CONNECTION
OPEN OR SHORTED GPS ANTENNA CABLES
OPEN OR SHORTED GPS ANTENNA
GPS ANTENNA
RADIO

DIAGNOSTIC TEST

1. **CHECK THE ANTENNA CONNECTION**
    1. Turn the ignition off.
    2. Disconnect the Radio C6 harness connector.
    3. Inspect the GPS Antenna harness connection.

    Is the Antenna connection clean and secure?

    Yes

    - Go To 2

    No

    - Repair the GPS Antenna connection as needed.
    - Perform the BODY VERIFICATION TEST. Refer to **STANDARD PROCEDURE** .
2. **RADIO**
    1. Connect the (special tool #9977-6-GPS, Adapter, GPS Antenna Diagnostic) (1) to the Radio C6 component connector.
    2. Place the test antenna base on the roof of the vehicle.
    3. Turn the ignition on.
    4. Drive the vehicle outside to an un-obstructed area.
    5. Turn the Satellite Radio on and select several different known good stations.

    Is the reception still poor or not available?

    Yes

    - Replace the Radio in accordance with the Service Information.
    - Perform the BODY VERIFICATION TEST. Refer to **STANDARD PROCEDURE** .

    No

- Go To 3

3. **ANTENNA**
   1. Turn the ignition off.
   2. Reconnect the Radio C6 harness connector.
   3. Disconnect the GPS Antenna harness connector.
   4. Connect the (special tool #9977-6-GPS, Adapter, GPS Antenna Diagnostic) (1) to the Radio C6 component connector.
   5. Turn the Radio on.

   Is the reception still poor or not available?

   Yes

   - Go To 4

   No

   - Replace the GPS Antenna in accordance with the Service Information.
   - Perform the BODY VERIFICATION TEST. Refer to **STANDARD PROCEDURE** .

4. **ANTENNA CABLE**

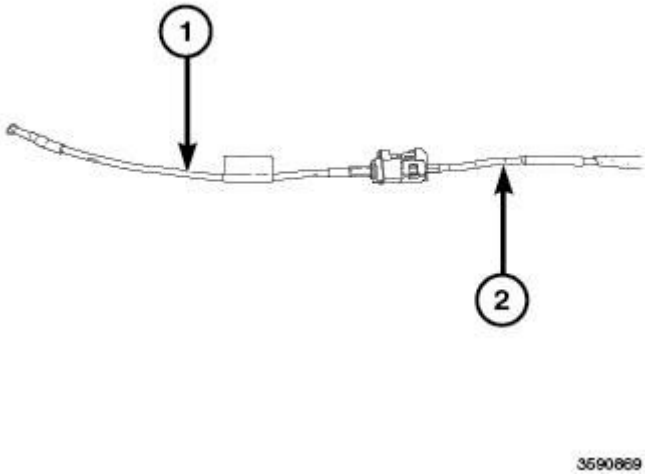

Fig. 3: Special Tool And AM/FM Fakra Connector
Courtesy of CHRYSLER GROUP, LLC

1. Turn the ignition off.
2. Connect the (special tool #9977-6-GPS, Adapter, GPS Antenna Diagnostic) (1) to the Radio C6 component connector.
3. Connect the appropriate (special tool #9977-6-4, Jumper) (1) or (special tool #9977-6-2, Jumper)

(1) to the GPS Antenna harness connector (2) at the Antenna.

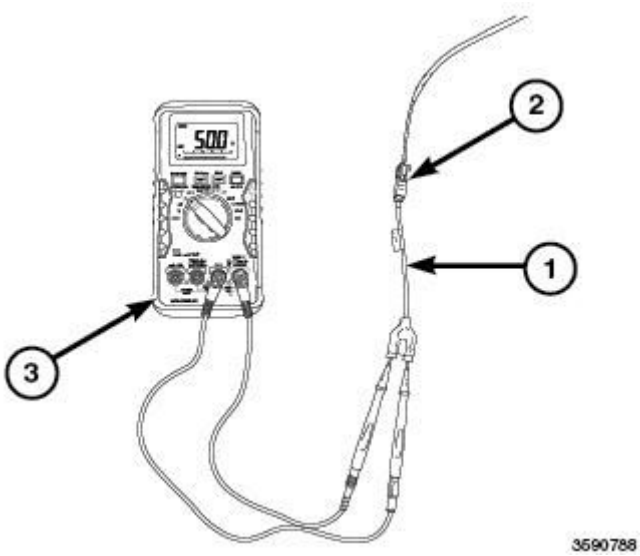

Fig. 4: Special Tool, AM/FM Fakra Connector And DVOM
Courtesy of CHRYSLER GROUP, LLC

4. Connect the appropriate (special tool #9977-6-1, Adapter) (1) or (special tool #9977-6-3, Adapter) (1) to the Radio C6 harness connector (2).
5. Measure the resistance across the tool terminals.

   Is the resistance between 47.5 and 52.5 Ohms?

   Yes

   - The source of the poor reception is not caused by the Radio, Satellite Antenna Cable or Satellite Antenna.
   - Perform the BODY VERIFICATION TEST. Refer to **STANDARD PROCEDURE** .

   No

   - Replace the GPS Antenna Cable in accordance with the Service Information.
   - Perform the BODY VERIFICATION TEST. Refer to **STANDARD PROCEDURE** .

DIAGNOSIS AND TESTING - POOR OR NO SATELLITE AUDIO RECEPTION

For a complete wiring diagram, **refer to appropriate SYSTEM WIRING DIAGRAMS article** .

POSSIBLE CAUSES

Possible Causes
SATELLITE AUDIO ANTENNA CONNECTION

OPEN OR SHORTED SATELLITE AUDIO ANTENNA
SATELLITE AUDIO ANTENNA
RADIO

DIAGNOSTIC TEST

1. **CHECK THE ANTENNA CONNECTION**
    1. Turn the ignition off.
    2. Disconnect the Radio C6 harness connector.
    3. Inspect the Satellite Audio Antenna harness connection.

    Is the Antenna connection clean and secure?

    Yes

    - Go To 2

    No

    - Repair the Satellite Audio Antenna connection as needed.
    - Perform the BODY VERIFICATION TEST. Refer to **STANDARD PROCEDURE** .
2. **RADIO**
    1. Connect the (special tool #9977-6-SAT, Antenna) (1) to the Radio C6 component connector.
    2. Place the test antenna base on the roof of the vehicle.
    3. Turn the ignition on.
    4. Drive the vehicle outside to an un-obstructed area.
    5. Turn the Satellite Radio on and select several different known good stations.

    Is the reception still poor or not available?

    Yes

    - Replace the Radio in accordance with the Service Information.
    - Perform the BODY VERIFICATION TEST. Refer to **STANDARD PROCEDURE** .

    No

    - Go To 3
3. **ANTENNA**
    1. Turn the ignition off.
    2. Reconnect the Radio C6 harness connector.
    3. Disconnect the Satellite Audio Antenna harness connector.

4. Connect the (special tool #9977-6-SAT, Antenna) (1) to the Satellite Audio Antenna harness connector (2).
5. Turn the Satellite Radio on and select several different known good stations.

   Is the reception still poor or not available?

   Yes

   - Go To 4

   No

   - Replace the Satellite Audio Antenna in accordance with the Service Information.
   - Perform the BODY VERIFICATION TEST. Refer to **STANDARD PROCEDURE** .

4. **ANTENNA CABLE**

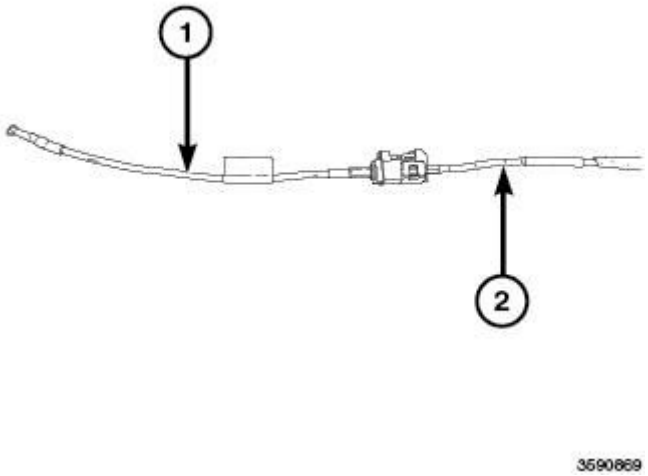

Fig. 5: Special Tool And AM/FM Fakra Connector
Courtesy of CHRYSLER GROUP, LLC

1. Turn the ignition off.
2. Disconnect the (special tool #9977-6-SAT, Antenna) from the Satellite Audio Antenna harness connector.
3. Connect the appropriate (special tool #9977-6-4, Jumper) (1) or (special tool #9977-6-2, Jumper) (1) to the Satellite Audio Antenna harness connector (2) at the Antenna.

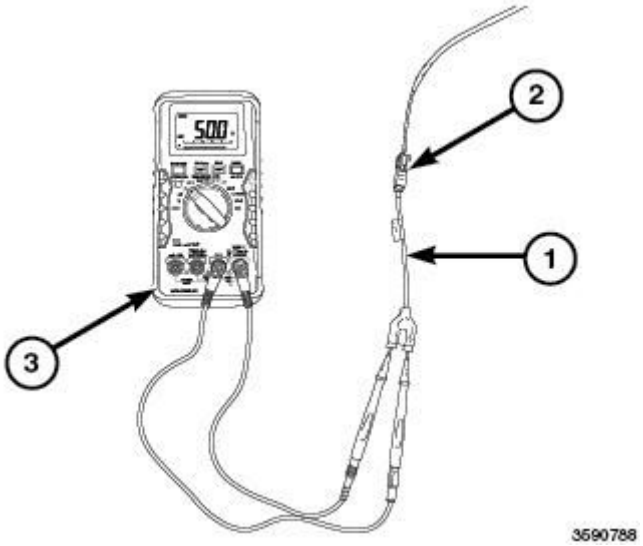

Fig. 6: Special Tool, AM/FM Fakra Connector And DVOM
Courtesy of CHRYSLER GROUP, LLC

4. Connect the appropriate (special tool #9977-6-1, Adapter) (1) or (special tool #9977-6-3, Adapter) (1) to the Radio C6 harness connector (2).
5. Measure the resistance across the tool terminals.

   Is the resistance between 47.5 and 52.5 Ohms?

   Yes

   - The source of the poor reception is not caused by the Radio, Satellite Antenna Cable or Satellite Antenna.
   - Perform the BODY VERIFICATION TEST. Refer to **STANDARD PROCEDURE** .

   No

   - Replace the Satellite Audio Antenna Cable in accordance with the Service Information.
   - Perform the BODY VERIFICATION TEST. Refer to **STANDARD PROCEDURE** .

DIAGNOSIS AND TESTING - AUDIO

Any diagnosis of the Audio system should begin with the use of a scan tool. Check for any Diagnostic Trouble Codes (DTCs) in the AUDIO (RADIO) - ELECTRICAL DIAGNOSTICS article. If there are any DTCs, perform the appropriate diagnostic procedure before proceeding.

Refer to the appropriate wiring information.

WARNING: **Disable the airbag system before attempting any steering wheel, steering column, seat belt tensioner, side airbag or instrument panel component**

diagnosis or service. Disconnect and isolate the negative battery (ground) cable. Wait two minutes for the airbag system capacitor to discharge before performing further diagnosis or service. This is the only sure way to disable the airbag system. Failure to follow these instructions may result in accidental airbag deployment and possible serious or fatal injury.

AUDIO SYSTEM DIAGNOSTIC TABLE

CONDITION	POSSIBLE CAUSES	CORRECTION
RADIO INOPERATIVE	1. Fuse inoperative.	Check radio fuse
	2. Open wiring.	Check "No Response from Radio". Refer to **DIAGNOSIS AND TESTING** .
NO AUDIO - BUT RADIO LIGHTS UP	1. Antenna problem.	Perform the "Poor or No AM/FM Audio Reception" test. Refer to **DIAGNOSIS AND TESTING**.
-	2. Radio or Amplifier (if equipped) connector damaged.	Check for loose or corroded radio/amplifier connector. Repair, as required.
-	3. Wiring damaged.	Check for shorted or open wires. Repair wiring as required.
-	4. Radio or Amplifier (if equipped) ground damaged.	Check for continuity between radio chassis and a known good ground. There should be continuity. Repair ground as required.
-	5. Amplifier (if equipped) inoperative.	Refer to **DIAGNOSIS AND TESTING** .
-	6. Speakers inoperative.	Refer to **DIAGNOSIS AND TESTING** in the Audio (Radio) - Electrical Diagnostics article or if equipped, refer to **DIAGNOSIS AND TESTING** in the Amplifier (AMP) - Electrical Diagnostics article.
NO RADIO DISPLAY	1. Fuse inoperative.	Check radio fuse, Replace fuses as required.
-	2. Radio connector damaged.	Check for loose or corroded radio connector. Repair as required.
-	3. Wiring damaged.	Check for battery voltage at radio connector. Repair wiring as required.
-	4. Radio ground circuit damaged.	Check for continuity between radio chassis and a known good ground. There should be continuity. Repair ground as required.
-	5. Radio inoperative.	Check "NO RESPONSE FROM RADIO". Refer to **DIAGNOSIS AND TESTING** .
POOR AM/FM RADIO RECEPTION	1. Antenna inoperative.	Perform the "Poor or No AM/FM Audio Reception" test. Refer to **DIAGNOSIS AND TESTING**.

	2. Radio ground damaged.	Check for continuity between radio chassis and a known good ground. There should be continuity. Repair ground as required.
	3. Radio inoperative.	Refer to **DIAGNOSIS AND TESTING** in the Audio (Radio) - Electrical Diagnostics article, or refer to **DIAGNOSIS AND TESTING** in the Communication - Non-DTC Based Diagnostics article.
POOR SDAR AUDIO RECEPTION	1. SDAR Antenna Inoperative.	Perform the "Poor or No Satellite Audio Reception" test. Refer to **DIAGNOSIS AND TESTING**.
SOUND DISTORTION (VIBRATION FROM SPEAKER AREA, BUZZING - HUMMING)	1. Door trim panel loose or missing fasteners.	Inspect door trim panel and correct as necessary. Replace any missing fasteners.
-	2. Water shield loose or misaligned.	Inspect water shield and adjust as required.
-	3. Items placed in door trim panel map pockets vibrating or moving from side to side.	Remove items from door trim panel. Ensure that vibration is no longer present.
NO COMPACT DISC OPERATION	1. CD damaged.	Insert known good CD and test operation.
	2. Foreign material on CD.	Clean CD and test operation.
	3. Condensation on CD or optics.	Allow temperature of vehicle interior to stabilize and test operation.
	4. Radio inoperative.	Refer to **DIAGNOSIS AND TESTING** in the Audio (Radio) - Electrical Diagnostics article, or refer to **DIAGNOSIS AND TESTING** in the Communication - Non-DTC Based Diagnostics article.

DIAGNOSIS AND TESTING - REAR CAMERA INOPERATIVE

For a complete wiring diagram, **refer to appropriate SYSTEM WIRING DIAGRAMS article** .

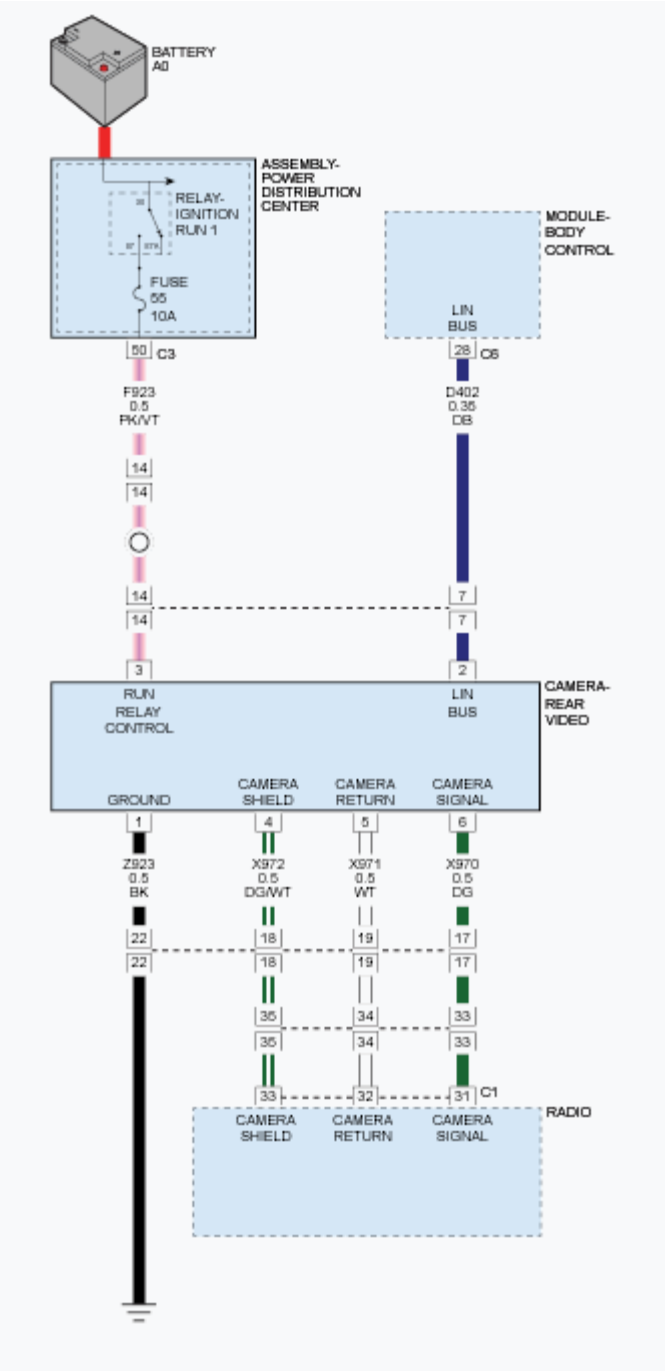

Fig. 7: Rear Video Camera Wiring Diagram
Courtesy of CHRYSLER GROUP, LLC

WHEN MONITORED

Ignition on, vehicle in reverse.

SET CONDITION

No rear picture is displayed on radio with the vehicle in reverse.

POSSIBLE CAUSES

Possible Causes
(F923) FUSED IGNITION RUN CIRCUIT
(Z923) GROUND CIRCUIT
(X970) CAMERA SIGNAL CIRCUIT
(X971) CAMERA RETURN CIRCUIT
CAMERA SHIELD
REAR CAMERA ASSEMBLY

DIAGNOSTIC TEST

1. **VERIFY OPERATION OF THE RADIO AND BACKUP LAMPS**
    1. Verify the operation of the Radio and Backup Lamps.

       Do the Radio and Backup Lamps operate correctly?

       Yes

       - Go To 2

       No

       - Diagnose any problems with the Radio and Backup Lamps.
       - Perform the BODY VERIFICATION TEST. Refer to **STANDARD PROCEDURE** .
2. **CHECK THE (F923) FUSED IGNITION RUN CIRCUIT**
    1. Turn the ignition off.
    2. Apply the parking brake.
    3. Disconnect the Rear Camera Assembly harness connector.
    4. Turn the ignition on.
    5. Shift the vehicle in to reverse.
    6. Measure the voltage of the (F923) Fused Ignition Run circuit.

       Is battery voltage present?

       Yes

       - Go To 3

       No

- Using the wiring diagrams as a guide, repair the (F923) Fused Ignition Run circuit for an open.
- Perform the BODY VERIFICATION TEST. Refer to **STANDARD PROCEDURE** .

3. **CHECK THE (Z923) GROUND CIRCUIT**
   1. Turn the ignition off.
   2. Measure the resistance between ground and the (Z923) Ground circuit.

      Is the resistance below 10.0 Ohms?

      Yes

      - Go To 4

      No

      - Using the wiring diagrams as a guide, repair the (Z923) Ground Circuit for an open.
      - Perform the BODY VERIFICATION TEST. Refer to **STANDARD PROCEDURE** .
4. **CHECK THE CAMERA SIGNAL, RETURN, AND SHIELD CIRCUITS FOR AN OPEN CIRCUIT**
   1. Disconnect the Radio C3 harness connector.
   2. Measure the resistance of the (X970) (X971) and (X972) circuits.

      Is the resistance below 10.0 Ohms on the (X970) (X971) or (X972) circuits?

      Yes

      - Go To 5

      No

      - Using the wiring diagrams as a guide, repair the appropriate circuit for an open.
      - Perform the BODY VERIFICATION TEST. Refer to **STANDARD PROCEDURE** .
5. **CHECK THE CAMERA SIGNAL, RETURN, AND SHIELD CIRCUITS FOR A SHORT TO GROUND**
   1. Measure the resistance between ground and the (X970) (X971) and (X972) circuits.

      Is the resistance below 10.0 Ohms on the (X970) (X971) or (X972) circuits?

      Yes

      - Using the wiring diagrams as a guide, repair the appropriate circuit for a short to ground.
      - Perform the BODY VERIFICATION TEST. Refer to **STANDARD PROCEDURE** .

No

- Replace the Rear Camera Assembly in accordance with the Service Information.
- Perform the BODY VERIFICATION TEST. Refer to **STANDARD PROCEDURE** .

DIAGNOSIS AND TESTING - SPEAKER

Any diagnosis of the Audio system should begin with the use of the scan tool. For information on the use of the scan tool, refer to the appropriate Diagnostic Service information.

For complete circuit diagrams, refer to the appropriate wiring information.

WARNING: **Disable the airbag system before attempting any steering wheel, steering column, seat belt tensioner, side airbag or instrument panel component diagnosis or service. Disconnect and isolate the negative battery (ground) cable. Wait two minutes for the airbag system capacitor to discharge before performing further diagnosis or service. This is the only sure way to disable the airbag system. Failure to follow these instructions may result in accidental airbag deployment and possible serious or fatal injury.**

CAUTION: **The speaker output of the radio is a "floating ground" system. Do not allow any speaker lead to short to ground, as damage to the radio may result.**

1. If all speakers are inoperative, check the radio fuses. If OK, go to Step 2. If not OK, repair the shorted circuit or component as required and replace the faulty fuse.
2. Check the amplifier fuse (if equipped). If OK, go to Step 3. If not OK, repair the shorted circuit or component as required and replace the faulty fuse.
3. Turn the ignition switch to the ON position. Turn the radio receiver ON. Adjust the balance and fader control controls to check the performance of each individual speaker. Note the speaker locations that are not performing correctly. Go to Step 4.
4. Turn the radio receiver OFF. Turn the ignition OFF. Disconnect and isolate the battery negative cable. If vehicle is **not** equipped with a amplifier, remove the radio receiver. If vehicle is equipped with an amplifier, disconnect wire harness connector at output side of amplifier. Go to Step 5.
5. Check both the speaker feed (+) circuit and return (-) circuit cavities for the inoperative speaker at the radio receiver wire harness connector for continuity to ground. There should be no continuity. If OK, go to Step 6. If not OK, repair the shorted speaker feed (+) and/or return (-) circuit(s) to the speaker as required.
6. Disconnect wire harness connector at the inoperative speaker. Check for continuity between the speaker feed (+) circuit cavities of the radio receiver wire harness connector or if equipped, the amplifier wire harness connector and the speaker wire harness connector. Repeat the check between the speaker return (-) circuit cavities of the radio receiver wire harness connector and the speaker wire harness connector. In each case, there should be continuity. If OK, replace the faulty speaker. If not OK, repair the open speaker feed (+) and/or return (-) circuit(s) as required.

MIT019 MULTI-MEDIA TESTER

YouTube	A multimedia supplement to the instructions contained in this article is available. To view the multimedia example of the condition described go to; **http://www.youtube.com/user/Mitchell1Tips** **then type "A00641426.vid1" into the "Search Channel" box.**

MIT019 MULTI-MEDIA TEST KIT

The MIT019 Multi-Media Test kit includes the tester, power outlet adaptor and a set of test tip cards. The MIT019 can be updated by connecting to any computer using the USB connector on the tester. The updates are supported through DealerConnect tech support. If the test cards are lost, a new set can be downloaded from the tool by connecting to any supporting computer. The test card information in the tool can be downloaded in one of 3 languages: English, Spanish or French.

TO DOWNLOAD THE TEST CARD INFORMATION:

1. Connect the MIT019 to a USB port on a computer (which will power the tool and display the current software version).
2. Press the USB button on the MIT019.
3. Once the computer recognizes the MIT019, it will display 3 files available.
4. Select the file named "MANUAL".
5. Download the section required to create the test cards needed.

FOR UPDATES:

1. While holding down the zero button on the MIT019, connect the MIT019 to a USB port on a computer (which will power the tool and display the current software version).
2. If you are a Chrysler Group LLC Dealership, visit: https://dealerconnect.chrysler.com.
3. If you are a Non-Chrysler Group LLC Dealership, visit: www.techauthority.com.
4. Locate the MIT019 software update page (verify that a newer software version is available).
5. Download the update file and run the.exe file.
6. Follow the on-screen instructions to install the update.
7. Disconnect the MIT019 USB connection from the computer and the tool is ready to use.

MIT019 MULTI-MEDIA TESTER FUNCTIONALITY

The MIT019 Multi-Media Test kit was developed to help diagnose customer concerns with features of the Multi-Media systems in their vehicles. The purpose of this tool is to simulate the following:

- A known good cell phone
- A known good media source (Ipod®, Ipad®, or MP3 players)

Using this tester will determine if the cause of concern is related to a vehicle system concern or the customer`s device being used.

The MIT019 can be used to perform 7 different tests of specific operations:

1. Operation of the AUX port
2. Operation of the USB port for both power and Audio input concerns
3. Bluetooth phone pairing
4. Bluetooth hands free calling (send & receive) phone book push test
5. Bluetooth streaming audio
6. Bluetooth SMS messaging - send
7. Bluetooth SMS messaging - receive

NOTE: **When testing functions of the audio/media system, it is important to verify whether or not the vehicle is equipped with an internal or external Hands Free Module. In some cases the external Hands Free Module controls the operation of the external AUX and USB ports along with the Uconnect functions.**

It is important to determine what system features are supported by the audio system in the customer's vehicle and device. For information on the operation and supported features of the vehicle's media system, refer to the flowing websites:

Vehicle websites available to customers and dealership personnel:

- http://www.dodge.com/en/uconnect
- http://www.chrysler.com/en/uconnect
- http://www.jeep.com/en/uconnect
- http://www.ramtrucks.com/en/uconnect
- http://www.fiatusa.com/en/BlueAndMe
- http://www.driveuconnect.com

Vehicle information support websites for dealership personnel only:

- DealerConnect
- STAR cases
- Technical Service Bulletins
- wiTECH for radio updates

The MIT019 was designed to test the following Radio/Multi-Media systems:

- 2010 - present NTG4 Radio/Multi-Media systems
- 2011 - present PowerNet Radio/Multi-Media systems

- 2013 - present RRM Radio/Multi-Media systems

MIT019 FUNCTIONALITY TESTS

1. **BELOW ARE THE 7 FUNCTIONALITY TESTS AVAILABLE USING THE MIT019 MULTI-MEDIA TESTER:**
    1. AUXILIARY INPUT JACK TEST
        - Go To 2
    2. USB INPUT/OUTPUT TEST
        - Go To 3
    3. BLUETOOTH PAIRING
        - Go To 4
    4. BLUETOOTH HANDS FREE CALLING/PHONEBOOK PUSH TEST
        - Go To 5
    5. BLUETOOTH STREAMING AUDIO TEST
        - Go To 6
    6. BLUETOOTH SMS MESSAGING - SEND
        - Go To 7
    7. BLUETOOTH SMS MESSAGING - RECEIVE
        - Go To 8
2. **AUXILIARY INPUT JACK TEST**

NOTE: **This test is designed to validate the ability of the Audio/Media system to play audio from a customer's device that has been connected to the AUX port on the radio or externally through a UCI (Universal Customer Interface/Multi-Media) port.**

NOTE: **The AUX port cannot supply power to a connected device.**

1. Connect the USB and Auxiliary Cable into the vehicle's audio ports.
2. Verify the MIT019 is in AUX Mode.
3. Using the vehicle controls, place the audio system into AUX (Line In) Mode. (Audio system may automatically enter into AUX Mode.)

   Does the Radio play audio from the MIT019?

   Yes

   - **Audio playback confirms that the Auxiliary Input is working correctly, no system repairs are needed at this time.**
   - Check the condition of the customer`s cords and device being used.

- Check to make sure the customer`s device and cables are compatible with the vehicle system.
- Check the customer`s device for output and volume setting concerns.
- Check for updates for the customer`s device relating to the customer`s concern.

No

- **If Audio playback does not occur, refer to the appropriate Service Information.**
- Check the Multi-Media ports for damaged connection points or debris in the ports.
- Check wiring circuits and connections to the AUX port for concerns.
- Check for vehicle related system updates, STAR cases and TSBs related to the customer`s concern.
- If no updates are available for the concern, replace the Radio or Hands Free Module in accordance with the Service Information.

3. **USB INPUT/OUTPUT TEST**

NOTE: **This test is designed to validate the ability of the Audio/Media system to play audio from a customer's device that has been connected to the USB port on the radio or the external USB port (Universal Customer Interface (UCI)/Multi- Media port). By connecting the MIT019 to the USB ports it will also determine if the USB port can provide power to a connected device.**

1. Connect the USB Cable into the vehicle's USB port.
2. Place the MIT019 into USB Mode.
3. Using the vehicle controls, place the audio system into USB Mode. (Audio system may automatically enter into USB Mode.)

   Does the Radio play audio from the MIT019?

   Yes

   - **Audio playback confirms that the USB Input is working correctly, no system repairs are needed at this time.**
   - Check the condition of the customer`s cords and device being used.
   - Check to make sure the customer`s device and cables are compatible with the vehicle system.
   - Check the customer`s device for output and volume setting concerns.
   - Check for updates for the customer device relating to the customer`s concern.

   No

   - **If Audio playback does not occur, refer to the appropriate Service Information.**
   - Check the Multi-Media ports for damaged connection points or debris in the ports.
   - Check wiring circuits and connections to the USB port for concerns.

- Check for vehicle related system updates, Star online cases and TSBs related to the customers concern.
- If no updates are available for the concern, replace the Radio or Hands Free Module in accordance with the Service Information.

NOTE: **The radio and external USB ports can only supply 5 volts at 500 mAs. Check to see what the customer's device requires for operation or charging. Some vehicles are equipped with a standalone USB charging port that can supply 5 volts at 1.5 amps. For more information on system operation and supported features see the vehicle supporting website "For Owners Page" or the http://www.driveuconnect.com.**

4. **BLUETOOTH PAIRING**

NOTE: **This test is designed to validate the pairing ability of the vehicles Audio/Media system. Pairing the MIT019 to the vehicle system will simulate the use of a known good compatible phone to test the system operation.**

NOTE: **Before testing it is important to check the total number of devices paired to the vehicles system. Each system has a limit to the number of items that can be paired to the system. For more information on system operation and supported features see the vehicle supporting website "For Owners Page" or the Driveuconnect website at http://www.driveuconnect.com.**

NOTE: **If the customer`s concern is the vehicle system was working with their device but then stopped working correctly, verify and perform the following:**

- **Check to see if the device was recently updated.**
- **Clear the device pairing from the system.**
- **Reboot the customer`s device.**
- **Repair the device to the vehicle system.**
- **Check the operation.**

At times, cell providers will update the software or firmware in the customer`s device (without the customer knowing) causing it to become out of sync with the vehicle`s system.

NOTE: **During this test, use the power outlet adaptor supplied with the MIT019 Multi-Media Test kit to supply the power and ground to the tester. This will**

confirm and demonstrate the Bluetooth connection without anything connected to the Audio/Media system ports.

NOTE: In order for the tool to function correctly, first plug the MIT019 power supply adapter into the 12 volt power outlet receptacle and confirm adapter power LED illuminates. Then connect the MIT019 to the power supply adapter.

1. Connect the power outlet power adapter into the 12 volt receptacle.
2. Connect the USB Cable into the Power Outlet Power Adapter. (This assists in showing the customer that the tool is utilizing a Bluetooth connection.)
3. Place the MIT019 into Bluetooth Mode.
4. Use the vehicle audio controls to place the audio system into ready to PAIR Mode. (Audio system may automatically enter into Bluetooth Mode.)
5. Press the PAIR button on the MIT019 the unit will identify the Vehicle Audio System.
6. When prompted, enter the Pairing Pin number on the MIT019 then press enter. The MIT019 will Pair and Connect to the vehicle audio system.

   Does the MIT019 pair to the Audio/Media system?

   Yes

   - **If the MIT019 pairs to the system, the Hands Free connection is working correctly, no part replacement is needed** .
   - Check the total number of devices paired to the customer`s device.
   - Check to make sure the customer`s device and cables are compatible with the vehicle system.
   - Check to see if the customer`s device supports the vehicle feature being tested.
   - Check the customer`s device for concerns related to password locks, phone book transfer settings and data transfer locks/settings.
   - For more information on system operation and supported features see the vehicle supporting website "For Owners Page" or the Driveuconnect website at http://www.driveuconnect.com.

   No

   - **If Pairing does not occur, refer to the appropriate Service Information.** Refer to **DIAGNOSIS AND TESTING** .
   - Check for vehicle related system updates, STAR cases and TSBs related to the customers concern.
   - If no updates are available for the concern, replace the Radio or Hands Free Module in accordance with the Service Information.

5. **BLUETOOTH HANDS FREE CALLING/PHONE BOOK PUSH TEST**

NOTE: **This test is designed to validate the ability of the Audio/Media system to place and receive phone calls. The MIT019 will change the radio display to show "MULTI-MEDIA TESTER" to confirm the phone-book-push was successful.**

NOTE: **Before testing it is important to check the total number of devices paired to the vehicles system. Each system has a limit to the number of items that can be paired to the system. For more information on system operation and supported features see the vehicle supporting website "For Owners Page" or the Driveuconnect website at http://www.driveuconnect.com.**

NOTE: **If the customer`s concern is the vehicle system was working with their device but then stopped working correctly, verify and perform the following:**

- **Check to see if the device was recently updated.**
- **Clear the device pairing from the system.**
- **Reboot the customer`s device.**
- **Repair the device to the vehicle system.**
- **Check the operation.**

At times, cell providers will update the software or firmware in the customer`s device (without the customer knowing) causing it to become out of sync with the vehicle`s system.

NOTE: **During this test use the Power outlet adaptor supplied with the MIT019 Multi-Media Test kit to supply the power and ground to the tester. This will confirm and demonstrate the Bluetooth connection without anything connected to the Audio/Media system ports.**

NOTE: **In order for the tool to function correctly, first plug the MIT019 power supply adapter into the 12 volt power outlet receptacle and confirm adapter power LED illuminates. Then connect the MIT019 to the power supply adapter.**

1. Be sure the MIT019 is properly paired.
2. From MIT019 in Bluetooth Mode, press the CALL button.
3. The vehicle should announce an incoming call.
4. The media system will display "MULTI-MEDIA TESTER", confirming successful push of the phone book.
5. Using the vehicle controls, answer the call.
6. Audio playback will confirm the Hands Free connection is working correctly, no system part

replacement is needed.

7. Using the vehicle controls, end the call.

   Does the Media system playback the incoming audio and display "MULTI-MEDIA TESTER"?

   Yes

   - **If Audio playback occurs and the system displays "MULTI-MEDIA TESTER", the system is working correctly; no part replacement is needed.**
   - Check the total number of devices paired to the customer`s device.
   - Check to make sure the customer`s device and cables are compatible with the vehicle system.
   - Check to see if the customer`s device supports the feature that the customer is trying to use.
   - Check the customer`s device for concerns related to password locks, phone book transfer settings and data transfer locks/settings.
   - For more information on system operation and supported features see the vehicle supporting website "For Owners Page" or the Driveuconnect website at http://www.driveuconnect.com.

   No

   - **If Audio playback does not occur, reference appropriate Service Information.** Refer to **DIAGNOSIS AND TESTING** .
   - Check for vehicle related system updates, STAR cases and TSBs related to the customers concern.
   - If no updates are available for the concern, replace the Radio or Hands Free Module in accordance with the Service Information.

6. **BLUETOOTH STREAMING AUDIO TEST**

NOTE: **This test is designed to validate the ability of the Audio/Media system to play streamed audio by a Bluetooth connected device.**

NOTE: **Before testing it is important to check the total number of devices paired to the vehicles system. Each system has a limit to the number of items that can be paired to the system. For more information on system operation and supported features see the vehicle supporting website "For Owners Page" or the Driveuconnect website at http://www.driveuconnect.com.**

NOTE: **If the customer`s concern is the vehicle system was working with their device but then stopped working correctly, verify and perform the following:**

- **Check to see if the device was recently updated.**
- **Clear the device pairing from the system.**

- **Reboot the customer`s device.**
- **Repair the device to the vehicle system.**
- **Check the operation.**

At times, cell providers will update the software or firmware in the customer`s device (without the customer knowing) causing it to become out of sync with the vehicle`s system.

NOTE: **During this test use the Power outlet adaptor supplied with the MIT019 Multi-Media Test kit to supply the power and ground to the tester. This will confirm and demonstrate the Bluetooth connection without anything connected to the Audio/Media system ports.**

NOTE: **In order for the tool to function correctly, first plug the MIT019 power supply adapter into the 12 volt power outlet receptacle and confirm adapter power LED illuminates. Then connect the MIT019 to the power supply adapter.**

1. Connect the power outlet power adapter into the 12 volt receptacle.
2. Connect the USB Cable into the Power Outlet Power Adapter. (This assists in showing the customer that the tool is utilizing a Bluetooth connection.)
3. Be sure the MIT019 is properly paired.
4. Leave the MIT019 in Bluetooth Audio Mode after pairing is complete.
5. Using the vehicle controls, place the audio system into Bluetooth Audio.

Does the Radio play audio from the MIT019?

Yes

- **Audio playback will confirm that the Bluetooth Streaming Audio is working correctly, no system part replacement is needed.**
- Check the total number of devices paired to the customer`s device.
- Check to make sure the customer`s device and cables are compatible with the vehicle system.
- Check to see if the customer`s device supports the vehicle feature being tested.
- Check the customer`s device for concerns related to password locks, phone book transfer settings and data transfer locks/settings.
- For more information on system operation and supported features see the vehicle supporting website "For Owners Page" or the Driveuconnect website at http://www.driveuconnect.com.

No

- **If Audio playback does not occur, refer to the appropriate Service Information.** Refer to **DIAGNOSIS AND TESTING .**

- Check for vehicle related system updates, STAR cases and TSBs related to the customers concern.
- If no updates are available for the concern, replace the Radio or Hands Free Module in accordance with the Service Information.

7. **BLUETOOTH SMS MESSAGING- RECEIVE**

NOTE: **This test is designed to validate the ability of the Audio/Media system to receive a SMS message.**

NOTE: **Before testing it is important to check the total number of devices paired to the vehicles system. Each system has a limit to the number of items that can be paired to the system. For more information on system operation and supported features see the vehicle supporting website "For Owners Page" or the Driveuconnect website at http://www.driveuconnect.com.**

NOTE: **If the customer`s concern is the vehicle system was working with their device but then stopped working correctly, verify and perform the following:**

- **Check to see if the device was recently updated.**
- **Clear the device pairing from the system.**
- **Reboot the customer`s device.**
- **Repair the device to the vehicle system.**
- **Check the operation.**

At times, cell providers will update the software or firmware in the customer`s device (without the customer knowing) causing it to become out of sync with the vehicle`s system.

NOTE: **During this test use the Power outlet adaptor supplied with the MIT019 Multi-Media Test kit to supply the power and ground to the tester. This will confirm and demonstrate the Bluetooth connection without anything connected to the Audio/Media system ports.**

NOTE: **In order for the tool to function correctly, first plug the MIT019 power supply adapter into the 12 volt power outlet receptacle and confirm adapter power LED illuminates. Then connect the MIT019 to the power supply adapter.**

1. Connect the Power outlet Power Adapter into the 12 volt receptacle.
2. Connect the USB Cable into the Power Outlet Power Adapter. (This assists in showing the customer that the tool is utilizing a Bluetooth connection.)

3. Be sure the MIT019 is properly paired.
4. From Bluetooth Mode, press the SMS button.
5. MIT019 will send a new message to the vehicle audio system.
6. The vehicle audio system will confirm the receipt of a new message.
7. Using the vehicle controls, retrieve the message to verify proper functionality.

   Does the Radio display the message "MULTI-MEDIA TESTER" from the MIT019?

   Yes

   - **If functioning correctly, no system part replacement is needed.**
   - Check the total number of devices paired to the customer`s device.
   - Check to make sure the customer`s device and cables are compatible with the vehicle system.
   - Check to see if the customer`s device supports the vehicle feature being tested.
   - Check the customer`s device for concerns related to password locks, phone book transfer settings and data transfer locks/settings.
   - For more information on system operation and supported features see the vehicle supporting website "For Owners Page" or the Driveuconnect website at http://www.driveuconnect.com.

   No

   - **If the Audio system does not display the new message, reference the appropriate Service Information on system operation and supported features. See the vehicle supporting website "For Owners Page" or the Driveuconnect website at** http://www.driveuconnect.com.
   - Check for vehicle related system updates, STAR cases and TSBs related to the customers concern.
   - If no updates are available for the concern, replace the Radio or Hands Free Module in accordance with the Service Information.

8. **BLUETOOTH SMS MESSAGING-SEND**

NOTE: **This test is designed to validate the ability of the Audio/Media system to send a SMS message from the list of preset messages.**

NOTE: **Before testing it is important to check the total number of devices paired to the vehicles system. Each system has a limit to the number of items that can be paired to the system. For more information on system operation and supported features see the vehicle supporting website "For Owners Page" or the Driveuconnect website at http://www.driveuconnect.com.**

NOTE: **If the customer`s concern is the vehicle system was working with their**

device but then stopped working correctly, verify the following:

- **Check to see if the device was recently updated.**
- **Clear the device pairing from the system.**
- **Reboot the customer`s device.**
- **Repair the device to the vehicle system.**
- **Check the operation.**

At times, cell providers will update the software or firmware in the customer`s device (without the customer knowing) causing it to become out of sync with the vehicle`s system.

NOTE: **During this test use the Power outlet adaptor supplied with the MIT019 Multi-Media Test kit to supply the power and ground to the tester. This will confirm and demonstrate the Bluetooth connection without anything connected to the Audio/Media system ports.**

NOTE: **In order for the tool to function correctly, first plug the MIT019 power supply adapter into the 12 volt power outlet receptacle and confirm adapter power LED illuminates. Then connect the MIT019 to the power supply adapter.**

1. Connect the power outlet power adapter into the 12 volt receptacle.
2. Connect the USB Cable into the Power Outlet Power Adapter. (This assists in showing the customer that the tool is utilizing a Bluetooth connection.)
3. Be sure the MIT019 is properly paired.
4. Using the vehicle controls, send a text message.
5. The MIT019 will display the chosen message.

   Does the MIT019 Multi-Media Tester display on the tool the message sent by the Multi-Media system?

   Yes

   - **If functioning correctly, no system part replacement is needed.**
   - Check the total number of devices paired to the customer`s device.
   - Check to make sure the customer`s device and cables are compatible with the vehicle system.
   - Check to see if the customer`s device supports the vehicle feature being tested.
   - Check the customer`s device for concerns related to password locks, phone book transfer settings and data transfer locks/settings.
   - For more information on system operation and supported features see the vehicle supporting website "For Owners Page" or the Driveuconnect website at http://www.driveuconnect.com.

No

- **If the MIT019 does not display the new message, reference the appropriate Service Information on system operation and supported features. See the vehicle supporting website "For Owners Page" or the Driveuconnect website at** http://www.driveuconnect.com.
- Check for vehicle related system updates, STAR cases and TSBs related to the customers concern.
- If no updates are available for the concern, replace the Radio or Hands Free Module in accordance with the Service Information.

2014 ACCESSORIES AND EQUIPMENT

Audio/Video/Entertainment/Connectivity - Service Information - Cherokee

DESCRIPTION

DESCRIPTION

Several combinations of radio receivers and speaker configurations are offered. The audio system uses an ignition switched source of battery current so that the system will only operate when the ignition switch is in the RUN or ACCESSORY positions.

The radios can be identified by sales code RA1, RA2, RA3, and RA4. An optional navigation radio (RA4) is available on this vehicle. Refer to **DESCRIPTION** for more information.

The RA2, RA3, and RA4 radios all have an internal Hands Free Module (HFM). There is no external HFM because all hands free functions are integrated into the head unit.

NOTE: The Uconnect system with an RA1 radio does not include or support hands-free phone connectivity.

The audio system includes the following components:

- Antenna (radio, satellite, GPS, cellular)
- Media Hub - Refer to **MEDIA HUB, DESCRIPTION**.
- Power amplifier (with premium audio systems only) - Refer to **AMPLIFIER, DESCRIPTION**.
- Radio noise suppression components - Refer to **COMPONENTS, RADIO NOISE SUPPRESSION, DESCRIPTION**.
- Radio - Refer to **RADIO, DESCRIPTION**.
- Remote radio switches (if equipped) - Refer to **SWITCH, REMOTE RADIO, OPERATION**.
- Speakers - Refer to **SPEAKER, DESCRIPTION**.
- External CD player

Certain functions and features of the audio system rely upon resources shared with other electronic modules in the vehicle over the Controller Area Network (CAN-IHS) bus network. The data bus network allows the sharing of sensor information. For diagnosis of these electronic modules or of the data bus network, the use of a scan tool and the proper Diagnostic Procedures information is recommended.

OPERATION

OPERATION

The audio system components are designed to provide audio entertainment and information through the reception, tuning and amplification of locally broadcast or satellite, (if equipped) radio signals in both the

Amplitude Modulating (AM) and Frequency Modulating (FM) commercial frequency ranges.

The audio system components operate on battery current received through a fuse in the Power Distribution Center (PDC) on a fused ignition switch output (run-acc) circuit so that the system will only operate when the ignition switch is in the Run or Accessory positions.

The optional navigation radio system receives GPS signals from up to eight satellites to display the position and direction of the vehicle. An electronic gyro-sensor and the vehicle's speed sensor enable the system to display the present vehicle position even in locations where GPS signals may be blocked.

When a destination is selected, the navigation system uses information from the map to quickly calculate a route. As the vehicle is driven along the chosen route, the operator is guided with pictorial displays and voice prompts.

On vehicles that are equipped with the optional remote radio switches, the Body Control Module (BCM) receives the input from the SCCM. The inputs are sent over the LIN from the remote radio switches to the SCCM. The programming in the BCM allows it to process those inputs and send the proper messages to the radio receiver over the CAN IHS network to control the radio volume up or down, station seek up or down, preset station advance, and mode advance functions.

DIAGNOSIS AND TESTING

DIAGNOSIS AND TESTING - AUDIO

Any diagnosis of the Audio system should begin with the use of a scan tool. Check for any Diagnostic Trouble Codes (DTCs) in DTC INDEX . If there are any DTCs, perform the appropriate diagnostic procedure before proceeding in this Service Information .

Refer to the appropriate wiring information.

WARNING: **Disable the airbag system before attempting any steering wheel, steering column, seat belt tensioner, side airbag or instrument panel component diagnosis or service. Disconnect and isolate the negative battery (ground) cable. Wait two minutes for the airbag system capacitor to discharge before performing further diagnosis or service. This is the only sure way to disable the airbag system. Failure to follow these instructions may result in accidental airbag deployment and possible serious or fatal injury.**

AUDIO SYSTEM DIAGNOSTIC TABLE

CONDITION	POSSIBLE CAUSES	CORRECTION
RADIO INOPERATIVE	1. Fuse inoperative.	Check radio fuse
	2. Open wiring.	Check "No Response from Radio". Refer to **DIAGNOSIS AND TESTING** .
NO AUDIO - BUT RADIO LIGHTS UP	1. Antenna problem.	Perform the "Poor or No AM/FM Audio

		Reception" test. Refer to **DIAGNOSIS AND TESTING** .
	2. Radio or Amplifier (if equipped) connector damaged.	Check for loose or corroded radio/amplifier connector. Repair, as required.
	3. Wiring damaged.	Check for shorted or open wires. Repair wiring as required.
	4. Radio or Amplifier (if equipped) ground damaged.	Check for continuity between radio chassis and a known good ground. There should be continuity. Repair ground as required.
	5. Amplifier (if equipped) inoperative.	Refer to **DIAGNOSIS AND TESTING** .
	6. Speakers inoperative.	Refer to **DIAGNOSIS AND TESTING** .
NO RADIO DISPLAY	1. Fuse inoperative.	Check radio fuse, Replace fuses as required.
	2. Radio connector damaged.	Check for loose or corroded radio connector. Repair as required.
	3. Wiring damaged.	Check for battery voltage at radio connector. Repair wiring as required.
	4. Radio ground circuit damaged.	Check for continuity between radio chassis and a known good ground. There should be continuity. Repair ground as required.
	5. Radio inoperative.	Check "No Response from Radio". Refer to **DIAGNOSIS AND TESTING** .
POOR AM/FM RADIO RECEPTION	1. Antenna inoperative.	Perform the "Poor or No AM/FM Audio Reception" test. Refer to **DIAGNOSIS AND TESTING** .
	2. Radio ground damaged.	Check for continuity between radio chassis and a known good ground. There should be continuity. Repair ground as required.
	3. Radio inoperative.	Refer to **DIAGNOSIS AND TESTING** or **DIAGNOSIS AND TESTING** .
POOR SDAR AUDIO RECEPTION	1. SDAR Antenna Inoperative.	Perform the "Poor or No Satellite Audio Reception" test. Refer to **DIAGNOSIS AND TESTING** .
SOUND DISTORTION (VIBRATION FROM SPEAKER AREA, BUZZING - HUMMING)	1. Door trim panel loose or missing fasteners.	Inspect door trim panel and correct as necessary. Replace any missing fasteners.
	2. Water shield loose or misaligned.	Inspect water shield and adjust as required.
	3. Items placed in door trim panel map pockets vibrating or moving from side to side.	Remove items from door trim panel. Ensure that vibration is no longer present.

AMPLIFIER

DESCRIPTION

DESCRIPTION

The optional premium speaker system includes a separate audio power amplifier. The amplifier is an 12 channel matrix surround unit. The amplifier is located inside the instrument panel, above the glove box and toward the outside of the vehicle.

REMOVAL

REMOVAL

1. Disconnect and isolate the negative battery cable.
2. Remove the glove box. Refer to **GLOVE BOX, INSTRUMENT PANEL, REMOVAL** .

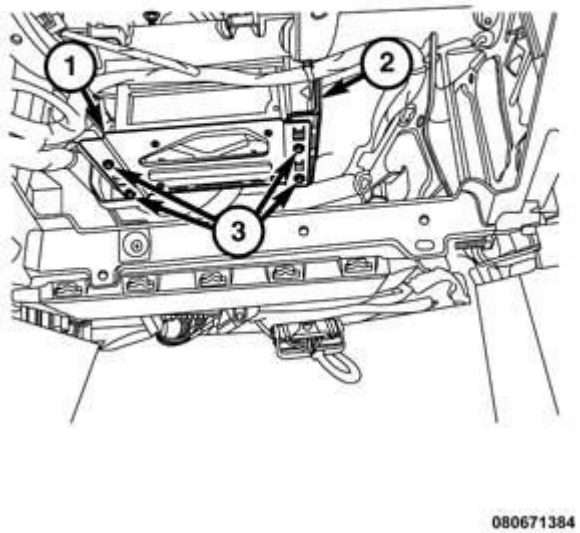

Fig. 1: Instrument Panel, Bracket & Screws
Courtesy of CHRYSLER GROUP, LLC

3. Remove the four amplifier (2) mounting fasteners (3).
4. Disconnect the wire harness connectors (2) from the amplifier.
5. Remove the amplifier.

INSTALLATION

INSTALLATION

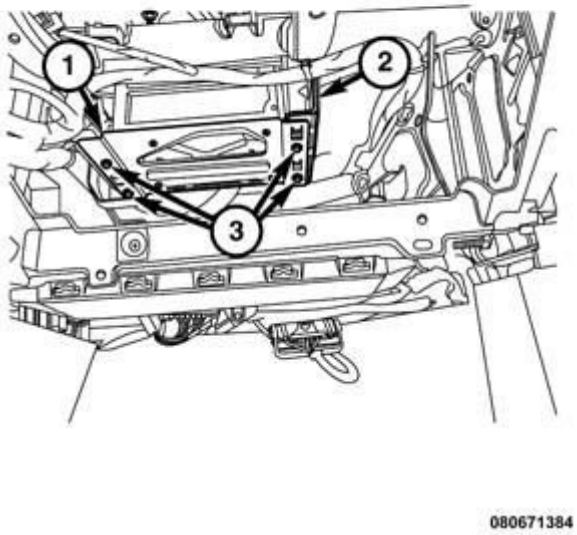

Fig. 2: Instrument Panel, Bracket & Screws
Courtesy of CHRYSLER GROUP, LLC

1. Connect the wire harness connectors (2) to the amplifier (1).
2. Install the amplifier.
3. Install the four amplifier mounting fasteners (3).
4. Install the glove box. Refer to **GLOVE BOX, INSTRUMENT PANEL, INSTALLATION** .
5. Connect the negative battery cable.

ANTENNA, SATELLITE, AUDIO

DESCRIPTION

DESCRIPTION

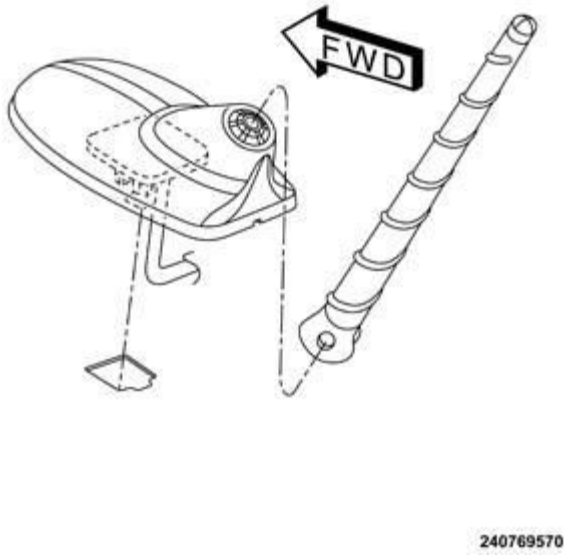

Fig. 3: Satellite Antenna
Courtesy of CHRYSLER GROUP, LLC

On vehicles equipped with satellite audio, a combined antenna for satellite and navigation is used.

For information on diagnosing the satellite navigation system, refer to **DIAGNOSIS AND TESTING** .

For information on diagnosing the antenna and cables, refer to **DIAGNOSIS AND TESTING** using the perform the "Poor or No Satellite Audio Reception" test.

REMOVAL

REMOVAL

1. Disconnect and isolate the battery negative cable.
2. Remove the antenna mast.
3. Lower the headliner. Refer to **HEADLINER, REMOVAL** .

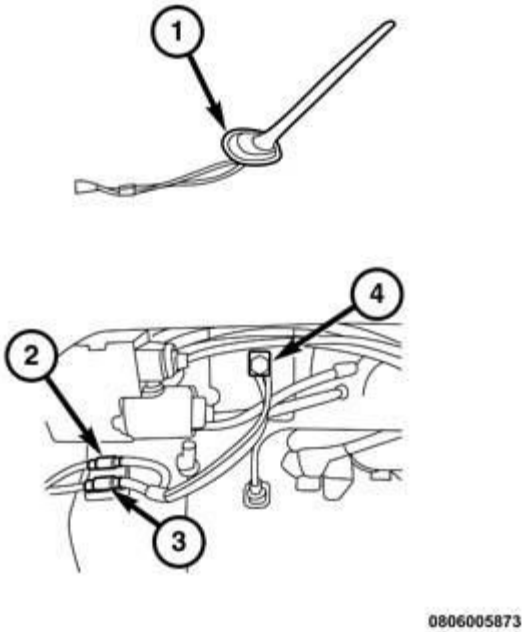

Fig. 4: Antenna, Connectors & Nut
Courtesy of CHRYSLER GROUP, LLC

4. Disconnect the antenna wiring harness connectors (2 and 3).
5. Remove the nut (4) securing the antenna.
6. Pull the antenna assembly (1) from the roof of the vehicle.

INSTALLATION

INSTALLATION

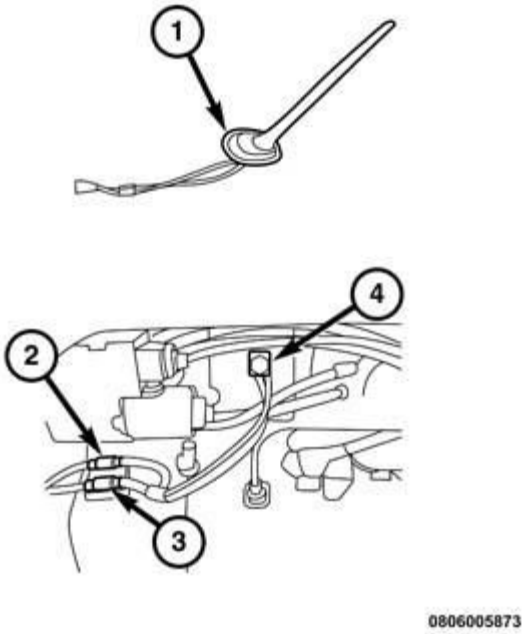

Fig. 5: Antenna, Connectors & Nut
Courtesy of CHRYSLER GROUP, LLC

1. Install the antenna (1) into the antenna mount opening on the roof.
2. Install the antenna mounting retaining nut (4) and securely tighten.
3. Connect the antenna wire harness connectors (2 and 3).
4. Install the headliner. Refer to **HEADLINER, INSTALLATION** .
5. Install the antenna mast.
6. Connect the negative battery cable.
7. Verify operation outside with a clear line of sight not obstructed by trees or buildings.

CAMERA

DESCRIPTION

DESCRIPTION

The Rear View Camera (RVC) (4) (also known as ParkView™), is a camera on chip device utilizing Complementary Metal Oxide Semiconductor (CMOS) technology. CMOS technology is used for a wide variety of digital or analog circuits. In this application, it supports the analog image sensor of the RVC. The RVC function is to provide a wide angle video image of the area behind the vehicle, including areas that might not be normally visible from the seated position of the vehicle operator, only while the transaxle gear selector is in the Reverse position or the camera delay is enabled and the gear selector goes from Reverse to Neutral or Drive. This video image then displays to the vehicle operator within the display screen of the audio system receiver unit near the center of the instrument panel. The image includes guideline overlay to aid operator the perception of distance. The active guidelines change direction with the steering wheel position to indicate the path of the

vehicle to aid in parking. The guideline pattern also includes a center line to assist in trailer alignment. Static guidelines do not change direction with steering wheel position. Active and static guidelines can be selected by the user.

The RVC is intended to be an auxiliary viewing aid and is not promoted as an obstacle detection or safety device. It does not remove vehicle operator responsibility to recognize and obey official traffic laws or regulations or to take sensible precautions and care to avoid pedestrians, other vehicle traffic or both fixed and moving obstacles through the habitual use of safe and defensive driving techniques.

The RVC is mounted to a bezel, which is then mounted to the liftgate. The camera lens is visible on the vehicle center line, while the body of the camera and the camera connections are concealed within the liftgate. A wire harness routes into the interior of the liftgate where it connects the RVC to the vehicle electrical system.

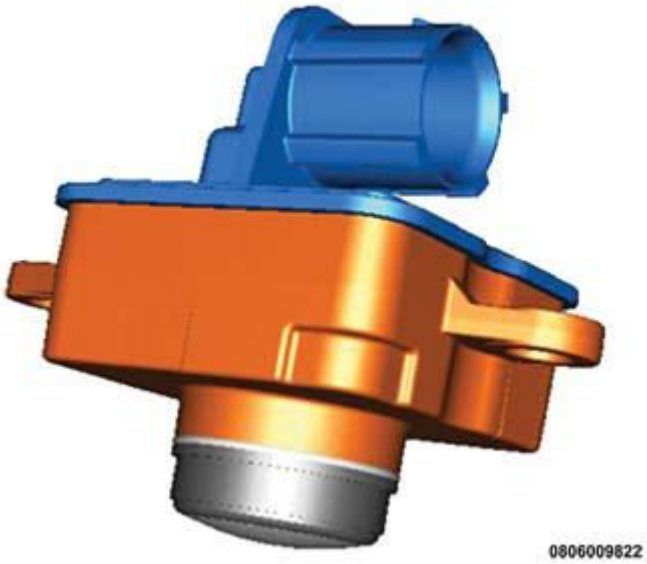

Fig. 6: Rear View Camera (RVC)
Courtesy of CHRYSLER GROUP, LLC

Hardwired circuitry connects the RVC to the electrical system of the vehicle. These hardwired circuits are integral to several wire harnesses, which routes throughout the vehicle and retained by many different methods. These circuits may be connected to each other and to the vehicle electrical system through the use of a combination of soldered splices, splice block connectors, and many different types of wire harness terminal connectors and insulators. Refer to the appropriate wiring information. The wiring information includes wiring diagrams, proper wire and connector repair procedures, further details on wire harness routing and retention, as well as pin-out and location views for the various wire harness connectors, splices and grounds.

The RVC cannot be adjusted or repaired. If the RVC is damaged or ineffective, it must be replaced.

OPERATION

OPERATION

The Rear View Camera (RVC) is powered by an ignition feed received through the backup lamp switch output circuit from the Body Control Module (BCM) so that is only active when the transmission is shifted into the Reverse position or with the camera delay feature on, the image will remain on while in the Neutral and Drive position for 10 seconds, up to 8 MPH or until the user defeats the image by pressing the screen. In addition, the radio receiver monitors messages on the Controller Area Network (CAN) data bus to determine the selected gear and overrides any other display to show the RVC video output, whenever it detects that the transmission is in Reverse. A momentary blank video display screen immediately following the gearshift transition into the Reverse position is considered normal operation. The camera electronics receive a path to ground at all times.

The output of the camera is a video signal compatible to the National Television System Committee (NTSC) standard composite video M format, or NTSC-M. The video signal is delivered to the radio video display unit through the entire length of the vehicle by camera signal and the camera return circuits that are arranged as a twisted pair, with an additional grounded foil jacket to protect the video signal from corruption due to stray radiated signals within the vehicle environment. The ground shield is terminated only at the video display (radio) end, not at the camera. Portions of these video signal wires are contained within the body wire harness and a jumper harness located between the radio and the body harness connector below the instrument panel at the right cowl side inner panel.

DIAGNOSIS AND TESTING

DIAGNOSIS AND TESTING - REAR CAMERA

The hardwired circuits of the Rear View Camera (RVC) and those between the RVC and the Radio may be diagnosed using conventional diagnostic tools and procedures. Refer to the appropriate wiring information. The wiring information includes wiring diagrams, proper wire and connector repair procedures, details of wire harness routing and retention, connector pin-out information and location views for the various wire harness connectors, splices and grounds.

However, conventional diagnostic methods will not prove conclusive in the diagnosis of the RVC or the radio. The most reliable, efficient and accurate means to diagnose the electronic controls and communication related to radio operation, as well as the retrieval or erasure of a DTC requires the use of a diagnostic scan tool. Refer to the appropriate diagnostic information.

WARNING: **To avoid serious or fatal injury on vehicles equipped with airbags, disable the Supplemental Restraint System (SRS) before attempting any steering wheel, steering column, airbag, seat belt tensioner, impact sensor, or instrument panel component diagnosis or service. Disconnect and isolate the battery negative (ground) cable, then wait two minutes for the system capacitor to discharge before performing further diagnosis or service. This is the only sure way to disable the SRS. Failure to take the proper precautions could result in accidental airbag deployment.**

NOTE: **Be certain to confirm the following prior to attempting any further diagnosis or testing of the RVC. Use a diagnostic scan tool to confirm the rear view camera is setup in the vehicle configuration.**

NOTE: **Before proceeding with the diagnostic steps below, use the scan tool to check the Body Control Module (BCM) for any camera or LIN bus related Diagnostic Trouble Codes (DTC). Repair as necessary.**

CONDITION	POSSIBLE CAUSES	CORRECTION
VIDEO IMAGE IS BLURRY OR OBSTRUCTIVE	1. Dirt, smear, fingerprints on RVC lens.	1. Inspect lens for foreign material, and clean lens as required, using the lens cleaning procedure.
	2. Ineffective camera shield circuit.	2. Check for loose or damaged wiring connections at the camera, light bar, upper liftgate opening header, right cowl side inner panel and radio. Test and repair the open or shorted camera shield circuit if required.
	3. Moisture buildup on the inside of the lens.	3. Replace the ineffective camera as required.
NO VIDEO DISPLAY IN RADIO - DOES NOT DISPLAY **CHECK ENTIRE SURROUNDINGS** MESSAGE BRIEFLY AFTER SHIFTING INTO REVERSE	1. Incorrect radio software.	1. Check to be certain that the radio has the latest software update installed. Install the radio software update if required.
	2. Ineffective radio fuse.	2. Test and replace the radio fuses if required.
	3. Ineffective radio ground circuit.	3. Check for loose or damaged wiring connections at the radio. Test and repair the open radio ground circuit if required.
	4. Ineffective radio feed circuit.	4. Check for loose or damaged wiring connections at the radio. Test and repair the open radio feed circuit if required.
	5. Ineffective radio inputs or outputs.	5. Use a diagnostic scan tool to test the radio inputs and outputs including those received over the CAN bus. Refer to the appropriate diagnostic information.
	6. Ineffective radio.	6. Use a diagnostic scan tool to test the radio. Refer to the appropriate diagnostic information.
NO CAMERA IMAGE IN RADIO VIDEO DISPLAY - DOES DISPLAY **CHECK ENTIRE SURROUNDINGS**	1. Ineffective camera ground circuit.	1. Check for loose or damaged wiring connections at the camera, light bar and liftgate. Test and repair the open camera ground circuit if required.

MESSAGE BRIEFLY AFTER SHIFTING INTO REVERSE AND BACKUP LAMPS DO OPERATE	2. Ineffective camera feed (Run relay) circuit.	2. Check for loose or damaged wiring connections at the camera, light bar and upper liftgate opening header. Test and repair the open camera feed (Run relay) circuit if required.
	3. Ineffective camera return circuit.	3. Check for loose or damaged wiring connections at the camera, light bar, upper liftgate opening header, right cowl side inner panel and radio. Test and repair the open or shorted camera feed circuit if required.
	4. Ineffective camera signal circuit.	4. Check for loose or damaged wiring connections at the camera, light bar, upper liftgate opening header, right cowl side inner panel and radio. Test and repair the open or shorted camera signal circuit if required.
	5. Ineffective camera.	5. Replace the ineffective camera if required.
NO GRIDLINES BEING OVERLAID ON IMAGE	1. Setting is not checked in the radio settings screen.	1. Adjust setting in radio settings screen.
	2. Message be received is incorrect.	2. Use a diagnostic scan tool to check for DTC's within other modules. Refer to appropriate diagnostic information for that DTC.
	3. LIN connection is broken.	3. Refer to wiring diagrams and repair wiring as necessary.

REMOVAL

REMOVAL

1. Disconnect and isolate the negative battery cable.

Fig. 7: Rear Camera Trim Cover
Courtesy of CHRYSLER GROUP, LLC

2. Remove the rear camera trim cover (1) from the liftgate.

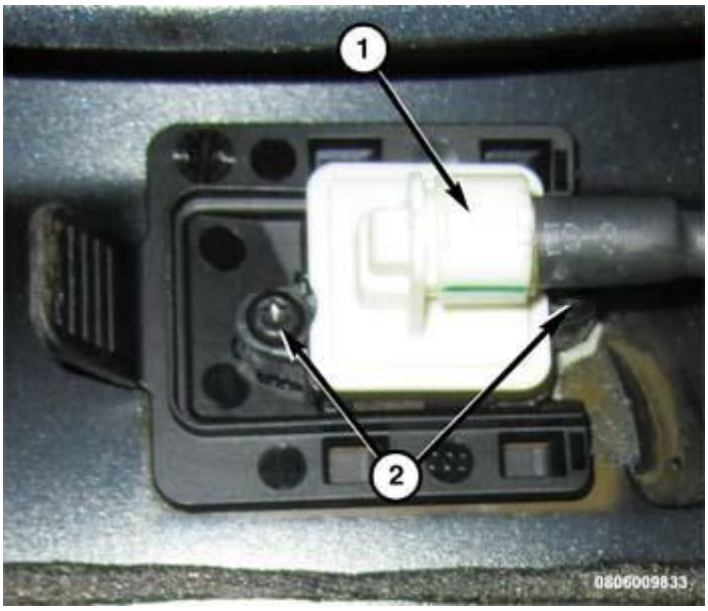

Fig. 8: Camera Mounting Fasteners & Connector
Courtesy of CHRYSLER GROUP, LLC

3. Disconnect the electrical harness connector (1).
4. Remove the camera mounting fasteners (2).

INSTALLATION

INSTALLATION

NOTE: Use caution when installing camera as to not scratch the lens surface.

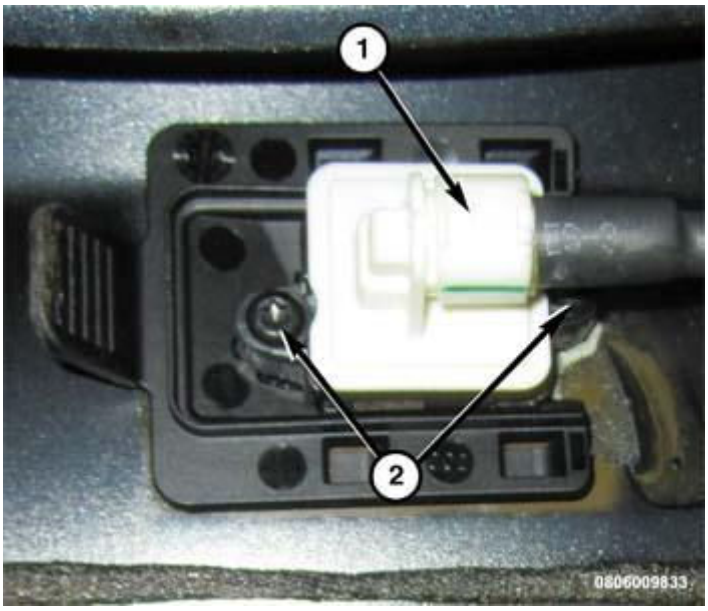

Fig. 9: Camera Mounting Fasteners & Connector
Courtesy of CHRYSLER GROUP, LLC

1. Place the camera on the mounting bosses and verify proper alignment before installing the mounting fasteners.
2. Install the camera mounting fasteners (2). Torque the mounting fasteners to 9 IN. LBS.
3. Connect the electrical harness connector (1).

Fig. 10: Rear Camera Trim Cover
Courtesy of CHRYSLER GROUP, LLC

4. Install the rear camera trim cover (1).
5. Connect the negative battery cable.
6. Inspect the camera lens and clean if necessary.

REAR CAMERA CLEANING

NOTE: The use of nylon gloves prevent oils and debris from your hands from being transferred to the camera body or lens surface. While wearing the gloves, care should be taken not to contact exposed body parts such as the forehead, nose and arms. If contact is made accidentally, gloves should be changed to mitigate the risk of contaminant transfer from the surface of the gloves.

1. Using compressed air, blow diagonally on the lens.
2. Use a microfiber lens tissue to gently wipe the lens.
3. Examine lens to verify the cleaning process, proceed to step **4** if the lens still shows signs of oils or debris.
4. Apply a lens cleaning solution to a section of an unused lens tissue.
5. Slowly wipe in a circular motion around the edges of the lens to remove any dirt or contamination from the periphery of the lens before cleaning the center.
6. Let the lens air dry.
7. Examine the lens to verify the cleaning process.

COMPONENTS, RADIO NOISE SUPPRESSION

DESCRIPTION

DESCRIPTION

Radio noise suppression devices are factory-installed standard equipment on this vehicle. Radio Frequency Interference (RFI) and ElectroMagnetic Interference (EMI) can be produced by any on-board or external source of electromagnetic energy. These electromagnetic energy sources can radiate electromagnetic signals through the air, or conduct them through the vehicle electrical system.

When the audio system converts RFI or EMI to an audible acoustic wave form, it is referred to as radio noise. This undesirable radio noise is generally manifested in the form of "buzzing," "hissing," "popping," "clicking," "crackling," and/or "whirring" sounds. In most cases, RFI and EMI radio noise can be suppressed using a combination of vehicle and component grounding, filtering and shielding techniques. This vehicle is equipped with factory-installed radio noise suppression devices that were designed to minimize exposure to typical sources of RFI and EMI; thereby, minimizing radio noise complaints.

Factory-installed radio noise suppression is accomplished primarily through circuitry or devices that are integral

to the factory-installed radios, audio power amplifiers and other on-board electrical components such as generators, wiper motors, blower motors, and fuel pumps that have been found to be potential sources of RFI or EMI.

OPERATION

OPERATION

There are two common strategies that can be used to suppress Radio Frequency Interference (RFI) and ElectroMagnetic Interference (EMI) radio noise. The first suppression strategy involves preventing the production of RFI and EMI electromagnetic signals at their sources. The second suppression strategy involves preventing the reception of RFI and EMI electromagnetic signals by the audio system components.

The use of braided ground straps in key locations is part of the RFI and EMI prevention strategy. These ground straps ensure adequate ground paths, particularly for high current components such as many of those found in the starting, charging, ignition, engine control and transmission control systems. An insufficient ground path for any of these high current components may result in radio noise caused by induced voltages created as the high current seeks alternative ground paths through components or circuits intended for use by, or in close proximity to the audio system components or circuits.

Preventing the reception of RFI and EMI is accomplished by ensuring that the audio system components are correctly installed in the vehicle. Loose, corroded or improperly soldered wire harness connections, improperly routed wiring and inadequate audio system component grounding can all contribute to the reception of RFI and EMI. A properly grounded antenna body and radio chassis, as well as a shielded antenna coaxial cable with clean and tight connections will each help reduce the potential for reception of RFI and EMI.

MEDIA HUB

DESCRIPTION

DESCRIPTION

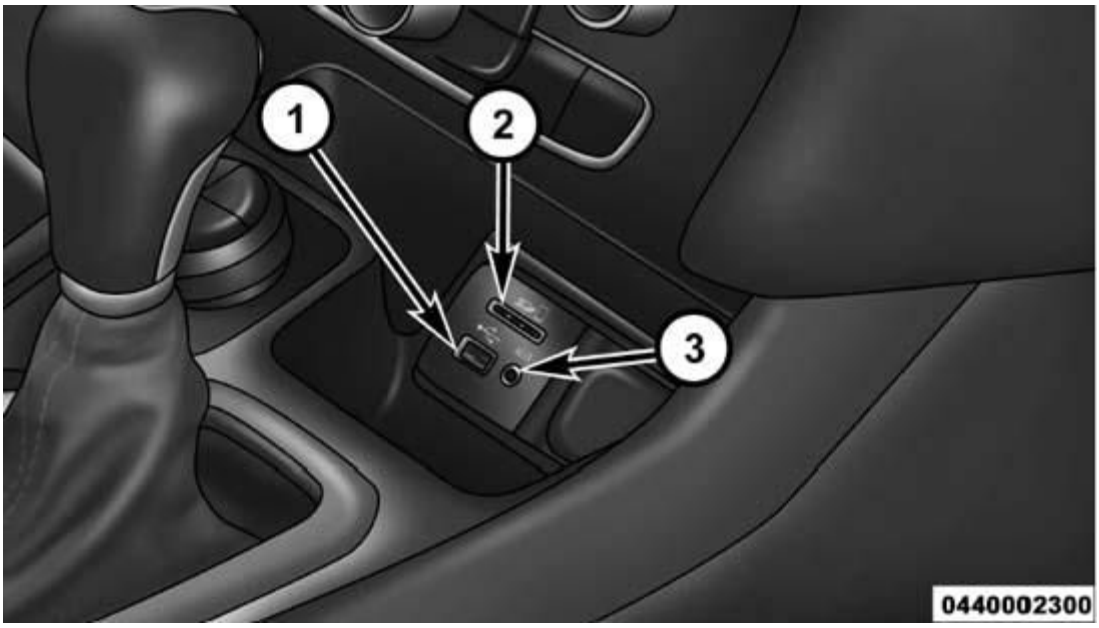

Fig. 11: USB Port, SD Card Reader & 3.5 Auxiliary Input Jack
Courtesy of CHRYSLER GROUP, LLC

The Media Hub is located in the front of the center console, below the HVAC control.

The media Hub is a centralized connection point on the vehicle that contains:

- USB port (1)
- SD card reader (2)
- 3.5 mm auxiliary input jack (3)

NOTE: The USB port provides 5 volts at 1.5 amps to charge the media device battery.

For further information, refer to the Uconnect Access Users's Manual.

REMOVAL

REMOVAL

1. Disconnect and isolate the negative battery cable.
2. Remove the shifter bezel. Refer to **BEZEL, SHIFTER, REMOVAL** .

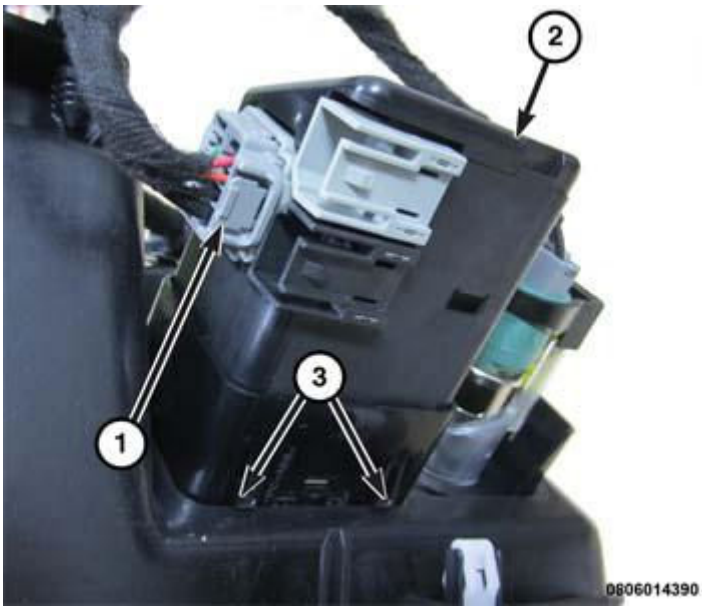

Fig. 12: Media Hub, Retaining Clips & Connectors
Courtesy of CHRYSLER GROUP, LLC

3. Disconnect the electrical connectors (1).
4. Compress the retaining clips (3) to release the media hub (2) from the shifter bezel.

INSTALLATION

INSTALLATION

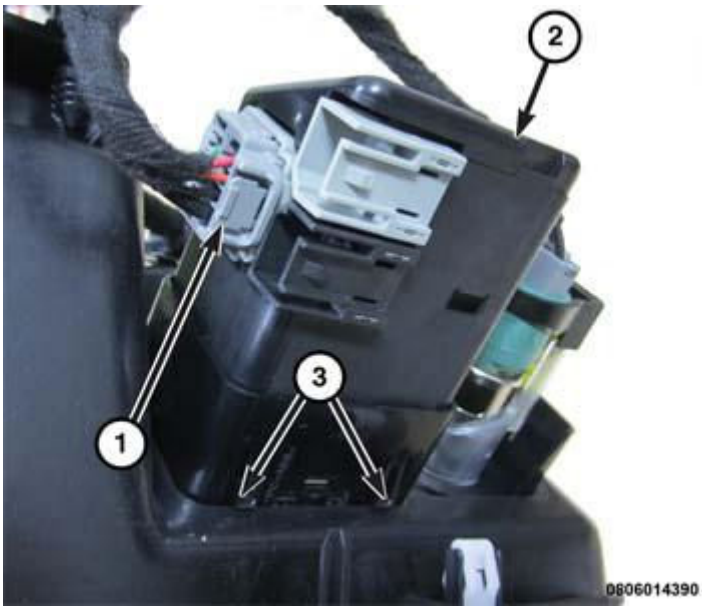

Fig. 13: Media Hub, Retaining Clips & Connectors
Courtesy of CHRYSLER GROUP, LLC

1. Insert the media hub (2) into the shifter bezel.
2. Securely engage the plastic retaining tabs (3).
3. Connect the electrical connectors (1).
4. Install the shifter bezel. Refer to **BEZEL, SHIFTER, INSTALLATION** .
5. Connect the negative battery cable.

MODULE, EXTERNAL DISC

DESCRIPTION

DESCRIPTION

The External Disc Module (EDM) will play one 12 cm Compact Audio disc. It will not play DVDs.

The disc must be loaded with the label side of the disc facing the rear of the vehicle.

The module operating temperature range is between -20°C and +65°C (-04°F and 149°F). Any continuous operation above 65°C (149°F) may shorten the operating life of the laser diode.

The CD mechanism will go into thermo shutdown at temperatures above +70°C (158°F). Normal function will resume when the near optics temperature goes below 65°C (149°F).

OPERATION

OPERATION

The External Disc Module (EDM) will play one 12 cm Compact Audio disc. It will not play DVDs.

The disc must be loaded with the label side of the disc facing the rear of the vehicle.

The module operating temperature range is between -20°C and +65°C (-04°F and 149°F). Any continuous operation above 65°C (149°F) may shorten the operating life of the laser diode.

The CD mechanism will go into thermo shutdown at temperatures above +70°C (158°F). Normal function will resume when the near optics temperature goes below 65°C (149°F).

RADIO

DESCRIPTION

DESCRIPTION

The radio, also referred to as the Radio Receiver Module (RRM), and head unit, can be identified by sales codes RA2, RA3, and RA4. There are two distinct chassis designs for the radio. The radio manufactured by Continental has the chassis attached to the face plate like the similar traditional radio design. The radio

manufactured by Harman has the electronics mounted parallel to the face plate in an aluminum chassis. The connection points for all systems are the same regardless of configuration.

Fig. 14: RA2 Radio Without Integrated Center Stack (ICS)
Courtesy of CHRYSLER GROUP, LLC

The RA2 radio without Integrated Center Stack (ICS) uses a 5" touchscreen display with hard keys around the panel and a remote mounted media hub with an auxiliary input jack. If equipped, the CD player is externally mounted. The rear of the radio will have one antenna connector for AM/FM and one for satellite radio, if equipped.

- AM/FM radio
- Satellite radio (optional)
- Remote CD player (optional)

Fig. 15: RA2 Radio With ICS
Courtesy of CHRYSLER GROUP, LLC

The RA2 radio with ICS uses a 5 inch touchscreen with hard keys on the faceplate. RA2 radios with control knobs have an integrated center stack that allows the HVAC system to be controlled with the touchscreen, or the redundant controls. There is no external hands free module, all hands free functions are integrated into the radio. Some vehicles are equipped with a version of the RA2 radio that includes an optional remote CD player and AUX port. A remote mounted media port contains access for USB media players and an SD card slot, if equipped.

- 5 inch touchscreen
- AM/FM radio
- Satellite radio (optional)
- Bluetooth Connectivity for hands-free phone; streaming audio; voice commands
- Remote CD player (optional)

Fig. 16: RA3 & RA4 Radios
Courtesy of CHRYSLER GROUP, LLC

The RA3 and RA4 radios are identified by the 8.4 inch color touch screen display. There are no visible differences between the RA3 and RA4 with the unit turned off. However, on vehicles sold in the US, the RA4 offers high definition radio and can be identified by the HD symbol located on the screen when the radio, is in radio mode. If the radio will not power up then the only way to identify the system is direct VIN inquiry through Dealer Connect.

- 8.4 inch color touchscreen display
- AM/FM/Aux/Remote USB/SD
- Satellite radio (optional)
- Dealer activated navigation (RA3 only)
- Navigation (RA4)
- iPod support via USB
- Steering wheel controls
- Bluetooth Connectivity for hands-free phone; streaming audio; voice commands
- HVAC control integration
- EVIC personalization (optional)
- 3G Wi-Fi / Hot Spot (subscription required)
- Free Form SMS Dictation (subscription required)
- HD Radio (RA4 only)
- 911/ASSIST Calling
- Remote CD player (optional)
- Remote services - door lock/unlock, remote start, panic (subscription required)

OPERATION

OPERATION

The radio becomes operational when it receives a wake up signal over the Controller Area Network - Interior High Speed (CAN-HIS) data bus indicating the status of the ignition switch is On or Accessory. For further information on the operation of the vehicles radio/media system in the vehicle, see the heading for the appropriate audio system option in the User Guide or the Owner Manual. See the Uconnect web site (http://www.driveuconnect.com/) for more information, or refer to the Owner's link on the vehicle brand web site (http://ramtrucks.com/en/) for copies of those publications.

The radio uses a rear quarter glass antenna for AM/FM signal reception and, depending upon vehicle optional equipment, a roof mounted combination antenna that can receive Global Positioning System (GPS), satellite radio and cellular telephone signals.

Depending upon the audio system options, a radio can play music from many different media sources. The media can be played by connecting the source to the audio system via a 3.5 millimeter auxiliary (AUX) port, a Universal Serial Bus (USB) port, a remote Secure Data (SD) card slot, a external Compact Disc (CD) player or through wireless bluetooth streaming, refer to the Uconnect web site (http://www.driveuconnect.com/) for compatibility.

NOTE: USB devices (e.g., camera memory USB adaptors, etc. excluding Apple products) must comply with the MSD (Mass Storage Device) standard. This remote USB port can provide power to the inserted device.

REMOVAL

REMOVAL

NOTE: For RA3 radios with Navigation activated and RA4 radios, if possible, the version of the map and Point Of Interest (POI) data should be noted before the original radio is replaced with a new unit. If the version of the map and POI data found on the new radio is not equal to or newer than the version that is found, updated data will need to be downloaded and installed to the new radio at the expense of the dealer. For the Navigation system restore and update procedures, refer to STANDARD PROCEDURE .

1.
2. Disconnect the negative battery cable.
3. Remove the center trim bezel from the instrument panel, (Refer to **REMOVAL**).

CAUTION: Pulling the antenna cable straight out of the radio without pulling on the locking antenna connector could damage the cable or radio.

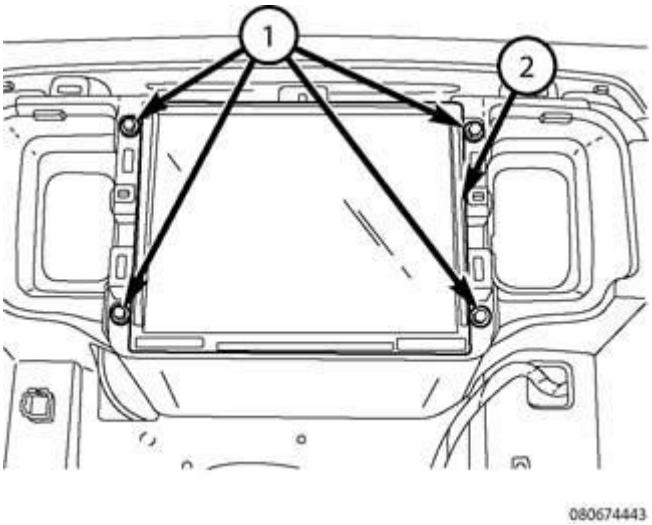

Fig. 17: Removing/Installing Radio Receiver Module (RRM)
Courtesy of CHRYSLER GROUP, LLC

4. Remove the four fasteners (1) securing the radio (2) to the instrument panel.
5. Pull the radio out far enough to access the back of the radio.

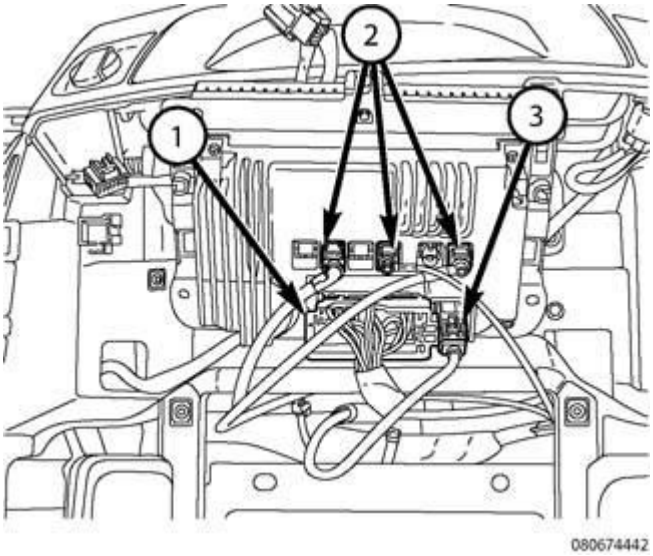

Fig. 18: Disconnecting/Connecting Antennas And Electrical Connector
Courtesy of CHRYSLER GROUP, LLC

6. Disconnect the antennas (2), and electrical connector (1).
7. If equipped, disconnect the USB connector (3).
8. Remove the radio from the instrument panel.

INSTALLATION

INSTALLATION

1. Position the radio near the instrument panel.

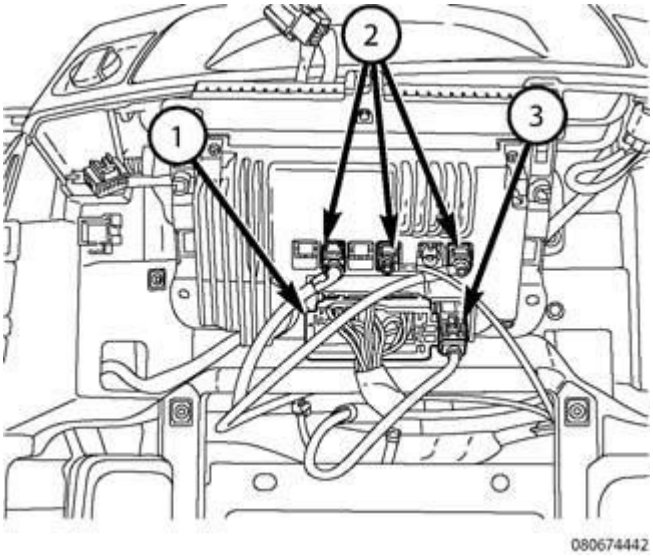

Fig. 19: Disconnecting/Connecting Antennas And Electrical Connector
Courtesy of CHRYSLER GROUP, LLC

2. Connect the antennas (2) and electrical connector (1).
3. If equipped, connect the USB connectors (3).

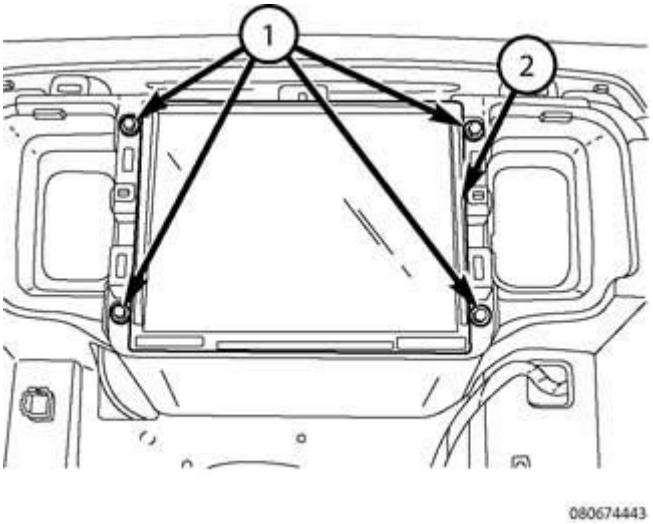

Fig. 20: Removing/Installing Radio Receiver Module (RRM)
Courtesy of CHRYSLER GROUP, LLC

4. Seat the radio into the cavity in the instrument panel.
5. Install the four fasteners (1) securing the radio (2) to the instrument panel. Tighten the fasteners securely.
6. Install the instrument panel center bezel, (Refer to **INSTALLATION**).
7. Connect the negative battery cable.

8. Turn the ignition to the ON position for two minutes. During this cycle you may notice the radio screen wallpaper (background of display image) to display non-vehicle specific images, a radio locked screen, or you may get a possible pending EQ mismatch fault. These will be corrected on the 2nd ignition cycle.
9. Allow the radio to go fully asleep (CAN bus off), then perform a 2nd ignition cycle.

NOTE: **Uconnect Access Applications and WiFi hotspot will be automatically updated in the replacement radio through the radio's embedded cellular phone based on the customers present subscription status. This update process may take up to an hour, depending upon the number of apps and adequate cellular services accessibility. The dealer is not expected to perform this process or to oversee it, but may need to explain to the vehicle owner or operator that some features and applications may not be fully restored and overall system response may be slowed until the process has completed.**

NOTE: **For RA3 radio only: If the radio has had the Navigation feature activated, any factory replacement radio for the same vehicle will be provided with the Navigation system already activated. Refer to DESCRIPTION for more information .**

SPEAKER

DESCRIPTION

BASE (RCG)

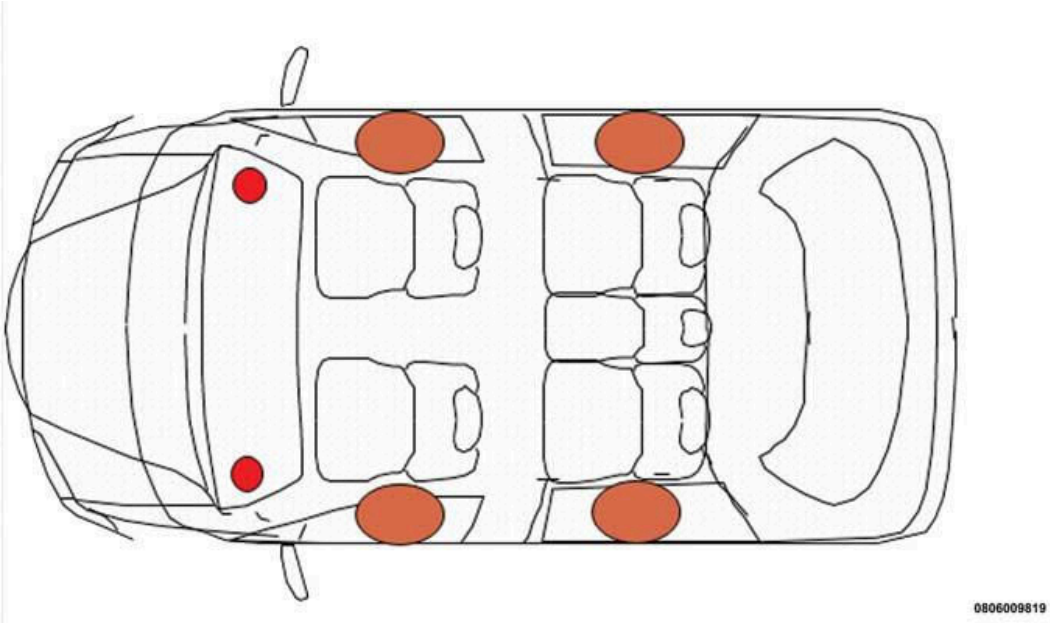

Fig. 21: Base System (RCG)
Courtesy of CHRYSLER GROUP, LLC

The base system (RCG) includes the following six speakers.

- Two 3.5 inch Instrument Panel Speakers
- Two 6X9 inch Front Door Speakers
- Two 6X9 inch Rear Door Speakers

PREMIUM (RC3)

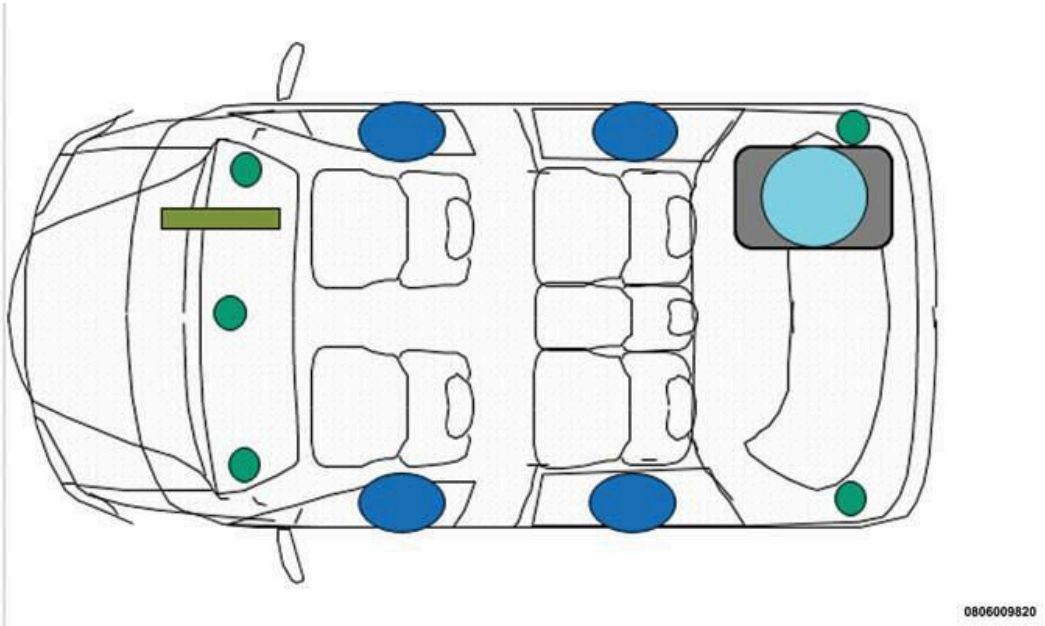

Fig. 22: Premium System (RC3)
Courtesy of CHRYSLER GROUP, LLC

The optional premium speaker system features nine speakers and a sub woofer, listed below. The premium speaker system also includes a power amplifier mounted behind the glove box. The amplifier is a Alpine twelve Channel rated at five hundred and six watts.

- Three 3.5 inch instrument panel speakers
- Two 6X9 inch front door speakers
- Two 6X9 rear door speakers
- Two 2.5 inch headliner speakers
- One 8 inch rear sub woofer

DIAGNOSIS AND TESTING

DIAGNOSIS AND TESTING - SPEAKER

Any diagnosis of the Audio system should begin with the use of the scan tool. For information on the use of the scan tool, refer to the appropriate Diagnostic Service Information.

For complete circuit diagrams, refer to SYSTEM WIRING DIAGRAMS .

WARNING: Disable the airbag system before attempting any steering wheel, steering column, seat belt tensioner, side airbag or instrument panel component diagnosis or service. Disconnect and isolate the negative battery (ground) cable. Wait two minutes for the airbag system capacitor to discharge before performing further diagnosis or service. This is the only sure way to disable the airbag system. Failure to follow these instructions may result in accidental airbag deployment and possible serious or fatal injury.

CAUTION: The speaker output of the radio is a "floating ground" system. Do not allow any speaker lead to short to ground, as damage to the radio may result.

1. If all speakers are inoperative, inspect all related radio fuses. If OK, go to Step 2. If not OK, repair the shorted circuit or component as required and replace the faulty fuse.
2. Check the amplifier fuse (if equipped). If OK, go to Step 3. If not OK, repair the shorted circuit or component as required and replace the faulty fuse.
3. Turn the ignition switch to the ON position. Turn the radio receiver ON. Adjust the balance and fader control controls to check the performance of each individual speaker. Note the speaker locations that are not performing correctly. Go to Step 4.
4. Turn the radio receiver OFF. Turn the ignition OFF. Disconnect and isolate the battery negative cable. If vehicle is **not** equipped with a amplifier, remove the radio receiver. If vehicle is equipped with an amplifier, disconnect wire harness connector at output side of amplifier. Go to Step 5.
5. Check both the speaker feed (+) circuit and return (-) circuit cavities for the inoperative speaker at the radio receiver wire harness connector for continuity to ground. There should be no continuity. If OK, go to Step 6. If not OK, repair the shorted speaker feed (+) and/or return (-) circuit(s) to the speaker as required.
6. Disconnect wire harness connector at the inoperative speaker. Check for continuity between the speaker feed (+) circuit cavities of the radio receiver wire harness connector or if equipped, the amplifier wire harness connector and the speaker wire harness connector. Repeat the check between the speaker return (-) circuit cavities of the radio receiver wire harness connector and the speaker wire harness connector. In each case, there should be continuity. If OK, replace the faulty speaker. If not OK, repair the open speaker feed (+) and/or return (-) circuit(s) as required.

REMOVAL

INSTRUMENT PANEL

1. Disconnect and isolate the negative battery cable.
2. Using (special tool #C-4755, Trim Stick), remove the speaker grille from the top of the instrument panel.

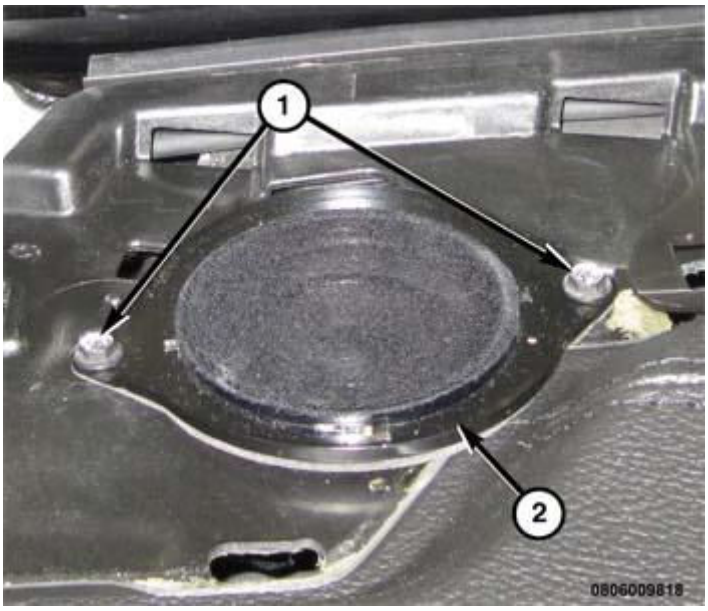

Fig. 23: Speaker & Fasteners
Courtesy of CHRYSLER GROUP, LLC

3. Remove the two fasteners (1) securing the speaker (2) to the instrument panel.
4. Lift the speaker up and disconnect the wiring harness.
5. Remove the speaker from the vehicle.

SUBWOOFER

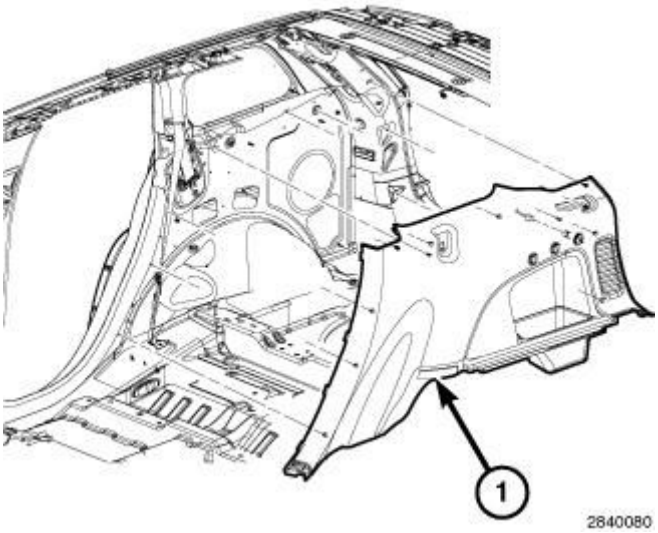

Fig. 24: Passenger Side Quarter Trim Panel
Courtesy of CHRYSLER GROUP, LLC

1. Disconnect the negative battery cable.

NOTE: Without subwoofer shown, with subwoofer similar.

2. Remove the passenger side quarter trim panel. Refer to **PANEL, QUARTER TRIM, REMOVAL** .

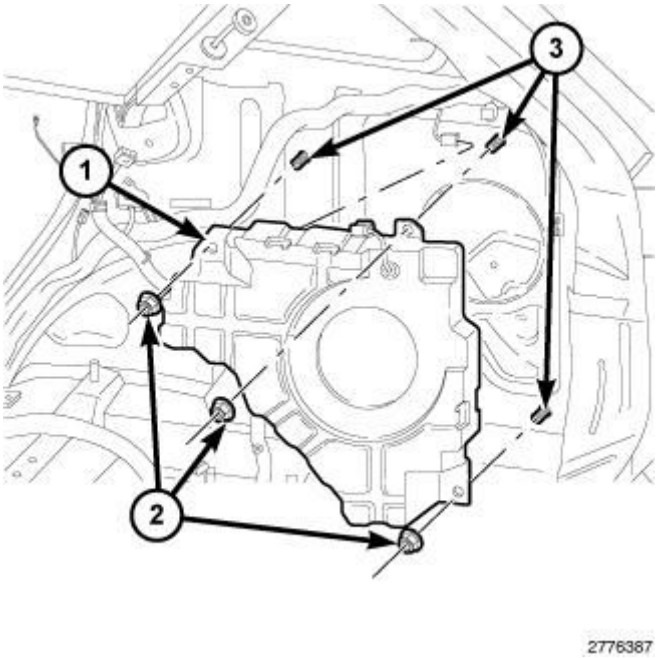

Fig. 25: Subwoofer & Mounting Retainers
Courtesy of CHRYSLER GROUP, LLC

3. Disconnect the subwoofer electrical connector.
4. Remove the three subwoofer mounting retainers (2).
5. Remove the subwoofer (1).

FRONT DOOR

1. Disconnect and isolate the negative battery cable.
2. Remove the front door trim panel. Refer to **PANEL, DOOR TRIM, REMOVAL** .

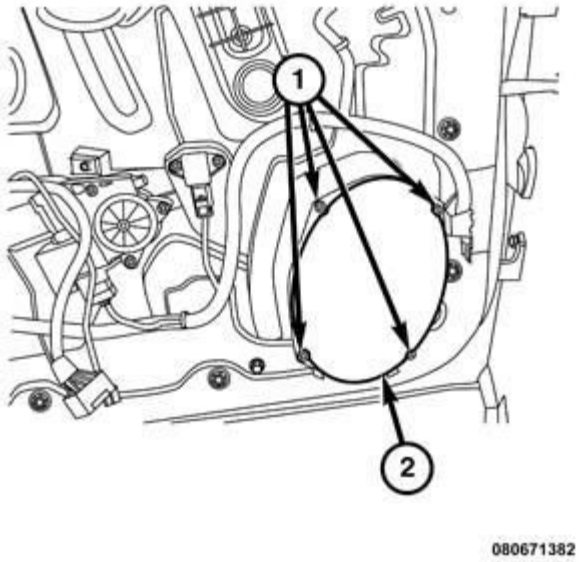

Fig. 26: Front Door Speaker & Fasteners
Courtesy of CHRYSLER GROUP, LLC

3. Remove the mounting fasteners (1).
4. Remove the speaker (2) from the door.

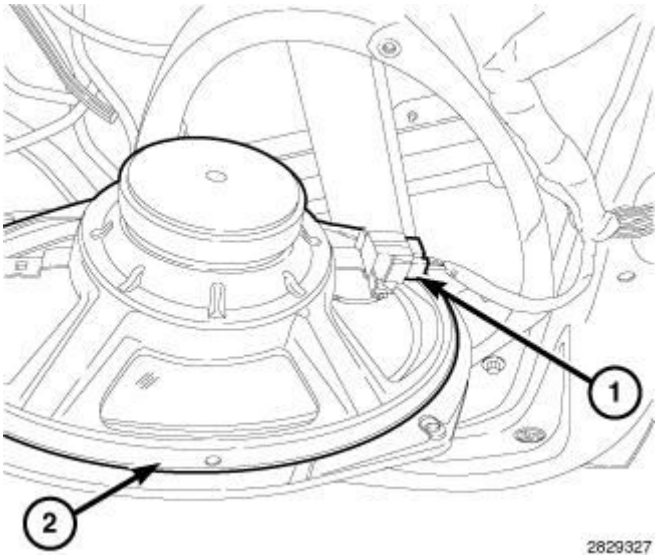

Fig. 27: Wire Harness Connector & Speaker
Courtesy of CHRYSLER GROUP, LLC

5. Disconnect the wire harness connector (1) from the speaker (2).

REAR DOOR

1. Disconnect and isolate the negative battery cable.
2. Remove the rear door trim panel. Refer to **PANEL, REAR DOOR TRIM, REMOVAL** .

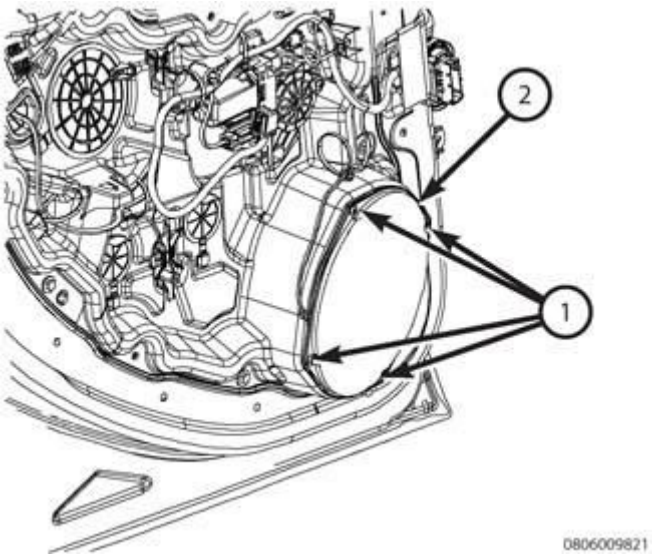

Fig. 28: Speaker & Fasteners
Courtesy of CHRYSLER GROUP, LLC

3. Remove the mounting fasteners (1).
4. Remove the speaker from door (2).
5. Disconnect wire harness connector from the speaker.

INSTALLATION

INSTRUMENT PANEL

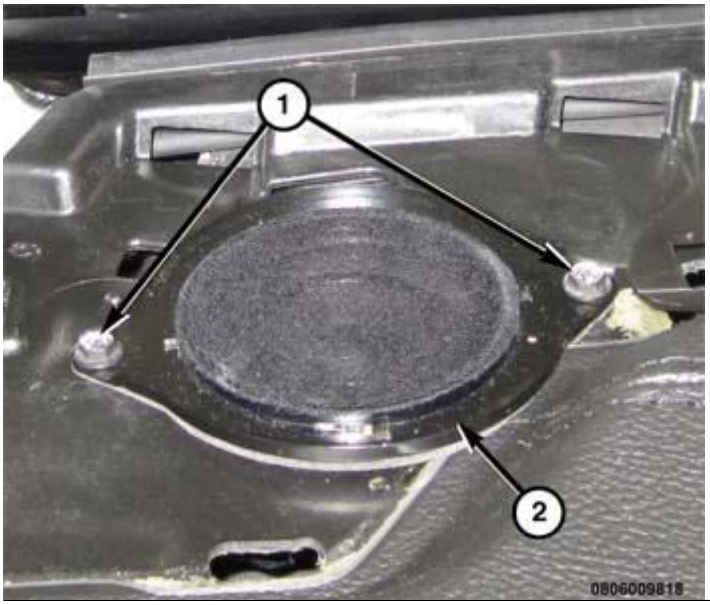

Fig. 29: Speaker & Fasteners
Courtesy of CHRYSLER GROUP, LLC

1. Connect the wire harness to the speaker (2).
2. Install the two fasteners (1) that secure the speaker to the instrument panel and tighten to the proper (Torque Specifications).
3. Align and install the speaker grille to the instrument panel.
4. Connect the negative battery cable.

SUBWOOFER

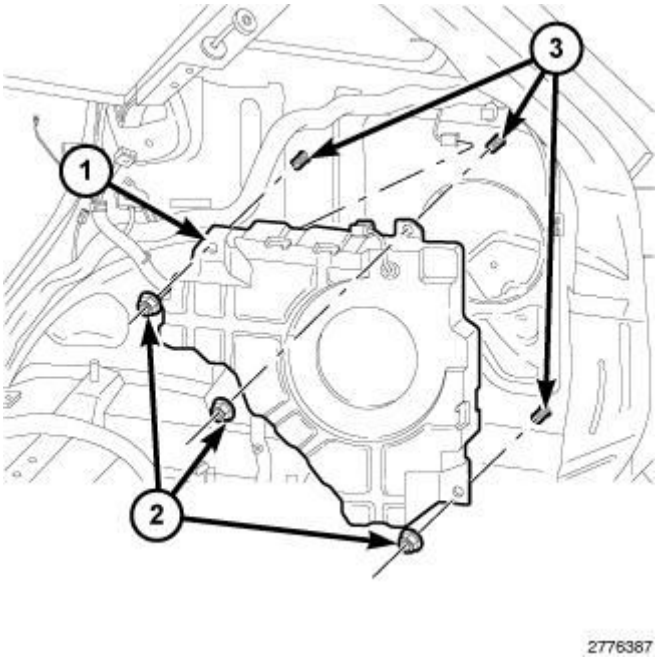

Fig. 30: Subwoofer & Mounting Retainers
Courtesy of CHRYSLER GROUP, LLC

1. Install the subwoofer (1).
2. Install the subwoofer retainers (2).
3. Connect the subwoofer electrical connector.

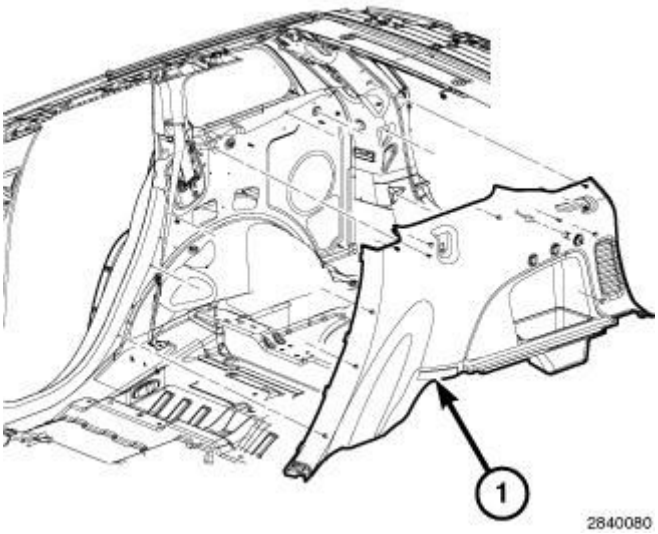

Fig. 31: Passenger Side Quarter Trim Panel
Courtesy of CHRYSLER GROUP, LLC

NOTE: Without subwoofer shown, with subwoofer similar.

4. Install the passenger side quarter trim panel. Refer to **PANEL, QUARTER TRIM, INSTALLATION** .
5. Connect the negative battery cable.

FRONT DOOR

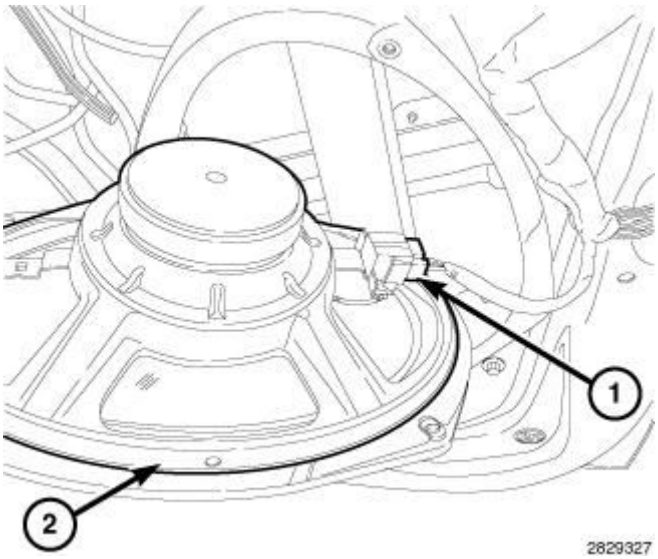

Fig. 32: Wire Harness Connector & Speaker
Courtesy of CHRYSLER GROUP, LLC

1. Connect the wire harness (1) connector to the speaker (2).

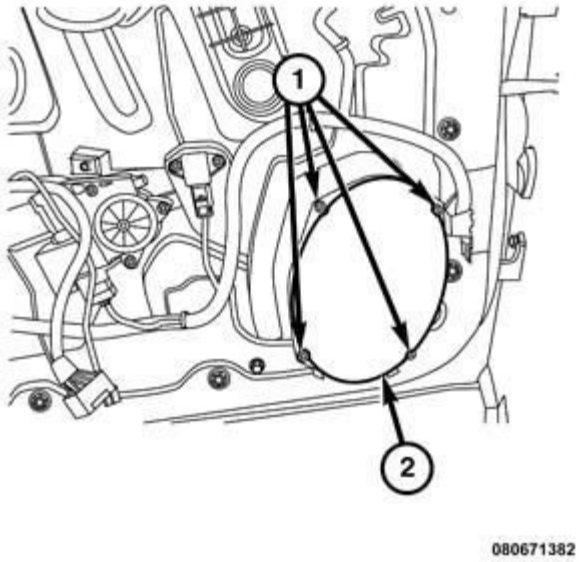

Fig. 33: Front Door Speaker & Fasteners
Courtesy of CHRYSLER GROUP, LLC

2. Position the speaker (2) to the door.
3. Install the mounting fasteners (1) and tighten to the proper (Torque Specifications).
4. Install the front door trim panel. Refer to **PANEL, DOOR TRIM, INSTALLATION** .
5. Connect the negative battery cable.

REAR DOOR

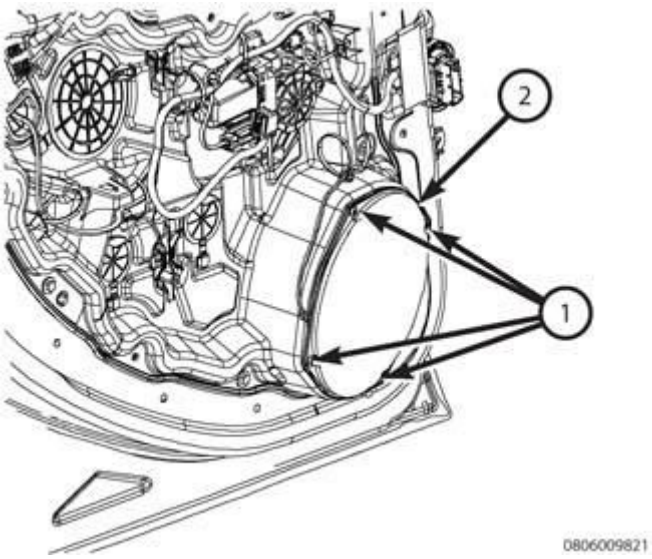

Fig. 34: Speaker & Fasteners

Courtesy of CHRYSLER GROUP, LLC

1. Connect the wire harness connector to the speaker (2).
2. Position the speaker to the door.
3. Install and tighten the mounting fasteners (1).
4. Install the rear door trim panel. Refer to **PANEL, REAR DOOR TRIM, INSTALLATION** .
5. Connect the negative battery cable.

SWITCH, REMOTE RADIO

DESCRIPTION

REMOTE RADIO SWITCH

Fig. 35: Remote Radio Switches
Courtesy of CHRYSLER GROUP, LLC

The remote radio switches are mounted to the back of the steering wheel.

The right switch consists of the following functions:

- Volume "UP"
- Mode
- Volume "DOWN"

The left switch consists of the following functions:

- Seek "UP"
- Preset
- Seek "DOWN"

For information on the operation of the remote radio switches, refer to **SWITCH, REMOTE RADIO, OPERATION**.

OPERATION

OPERATION

The six switches in the two remote radio switch units are normally open, resistor multiplexed momentary switches that are hard wired to the Body Control Module (BCM) through the clockspring. The BCM sends a five volt reference signal to both switch units on one circuit, and senses the status of all of the switches by reading the voltage drop on a second circuit.

When the BCM senses an input (voltage drop) from any one of the remote radio switches, it sends the proper switch status messages on the Controller Area Network (CAN) data bus network to the radio receiver module. The electronic circuitry within the radio receiver module is programmed to respond to these remote radio switch status messages by adjusting the radio settings as requested. For diagnosis of the BCM or the CAN data bus, the use of a scan tool and the proper Diagnostic Procedures information is recommended.

REMOVAL

REMOVAL

WARNING: **To avoid serious or fatal injury on vehicles equipped with airbags, disable the Supplemental Restraint System (SRS) before attempting any steering wheel, steering column, airbag, seat belt tensioner, impact sensor or instrument panel component diagnosis or service. Disconnect and isolate the battery negative (ground) cable, then wait two minutes for the system capacitor to discharge before performing further diagnosis or service. This is the only sure way to disable the SRS. Failure to take the proper precautions could result in accidental airbag deployment.**

1. Disconnect and isolate the negative battery cable.
2. Remove the driver air bag. Refer to **AIR BAG, DRIVER, REMOVAL** .

Fig. 36: Radio Switch Unit Cover, Switch & Slot
Courtesy of CHRYSLER GROUP, LLC

3. From the back of the steering wheel, remove the left and right remote radio switch unit cover (2) from the switch (1) by inserting a small flat screwdriver or equivalent into the slot (3) and prying outward.

Fig. 37: Left/Right Switch & Retaining Screw
Courtesy of CHRYSLER GROUP, LLC

4. Remove the left and right switch (1) retaining screw (2).

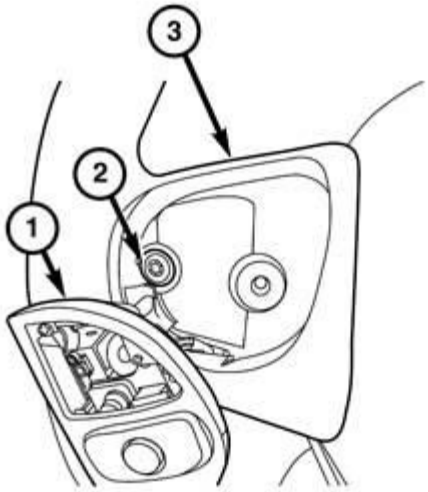

0806007479

Fig. 38: Left/Right Switch, Steering Wheel & Retaining Screw
Courtesy of CHRYSLER GROUP, LLC

5. Gently remove the left and right switch (1) from the steering wheel (3), to gain access to the steering wheel bezel retaining screw (2).
6. Remove the left and right steering wheel bezel retaining screw.

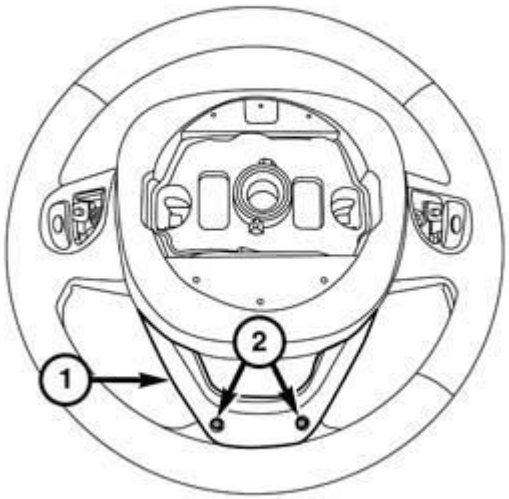

0806007480

Fig. 39: Steering Wheel Bezel & Retaining Screws
Courtesy of CHRYSLER GROUP, LLC

7. From the back of the steering wheel, remove the two retaining screws that secure the steering wheel bezel (1).

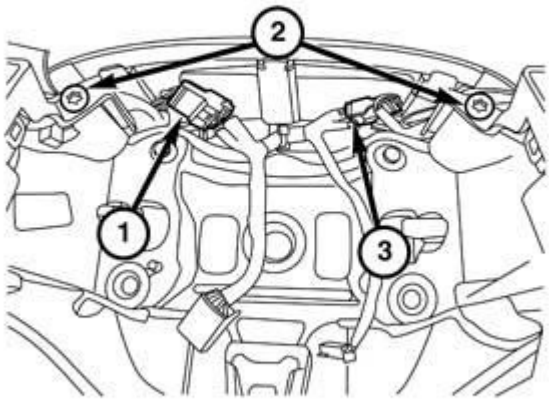

Fig. 40: EVIC, Speed Control Switch Electrical Connector & Retaining Screws
Courtesy of CHRYSLER GROUP, LLC

8. From the front of the steering wheel, remove the two retaining screws (2) that secure the steering wheel bezel.
9. Disconnect the Electronic Vehicle Information Center (EVIC) switch electrical connector (1).
10. Disconnect the speed control switch electrical connector (3) and remove the steering wheel bezel.

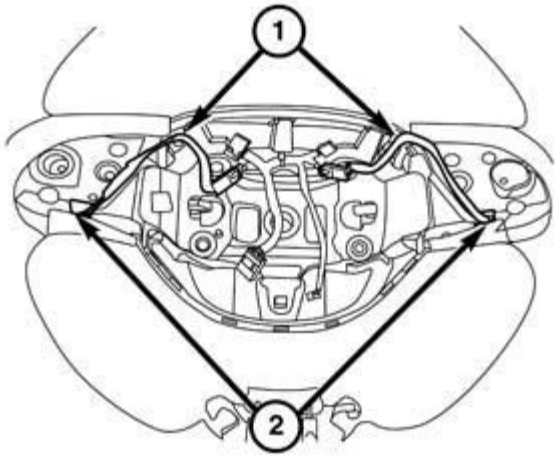

0806007484

Fig. 41: Left/Right Harness Connectors & Slots
Courtesy of CHRYSLER GROUP, LLC

Disconnect the left and or right wire harness connectors (1) and route the harness through the slots (2) within the steering wheel, removing the switch from the steering wheel.

INSTALLATION

INSTALLATION

WARNING: To avoid serious or fatal injury on vehicles equipped with airbags, disable the Supplemental Restraint System (SRS) before attempting any steering wheel, steering column, airbag, seat belt tensioner, impact sensor or instrument panel component diagnosis or service. Disconnect and isolate the battery negative (ground) cable, then wait two minutes for the system capacitor to discharge before performing further diagnosis or service. This is the only sure way to disable the SRS. Failure to take the proper precautions could result in accidental airbag deployment.

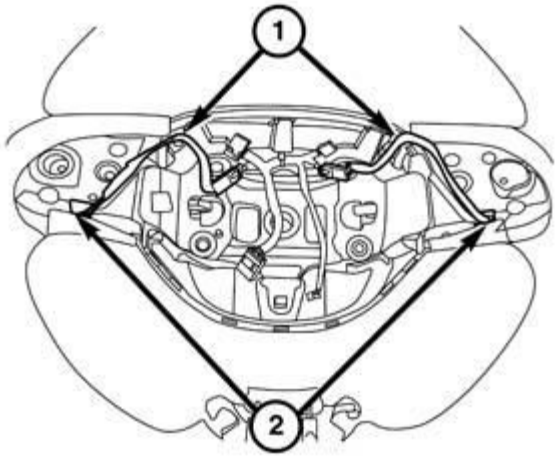

0806007484

Fig. 42: Left/Right Harness Connectors & Slots
Courtesy of CHRYSLER GROUP, LLC

1. Route the wire harness through the slot (2) in the steering wheel and connect the wire harness connector (1).

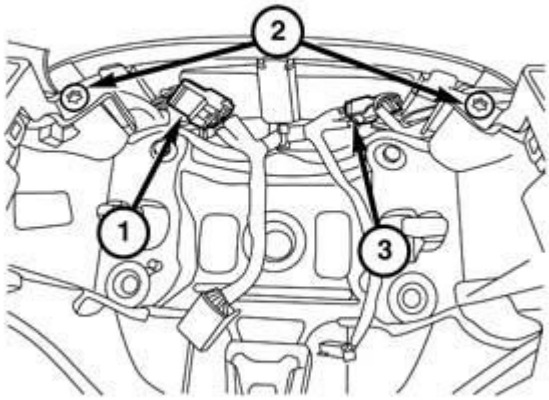

0806007481

Fig. 43: EVIC, Speed Control Switch Electrical Connector & Retaining Screws
Courtesy of CHRYSLER GROUP, LLC

2. Position the steering wheel bezel onto the steering wheel.
3. Connect the speed control switch electrical connector (3).
4. Connect the Electronic Vehicle Information Center (EVIC) switch electrical connector (1).
5. Install the two steering wheel bezel retaining screws (2) and securely tighten.

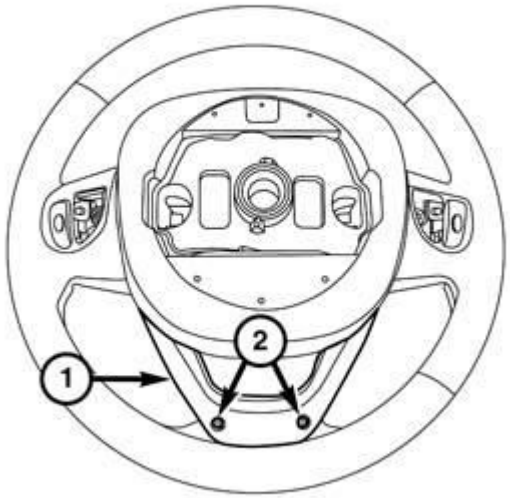

0806007480

Fig. 44: Steering Wheel Bezel & Retaining Screws
Courtesy of CHRYSLER GROUP, LLC

6. From the back of the steering wheel, install the two retaining screws (2) that secure the steering wheel bezel (1) and securely tighten.

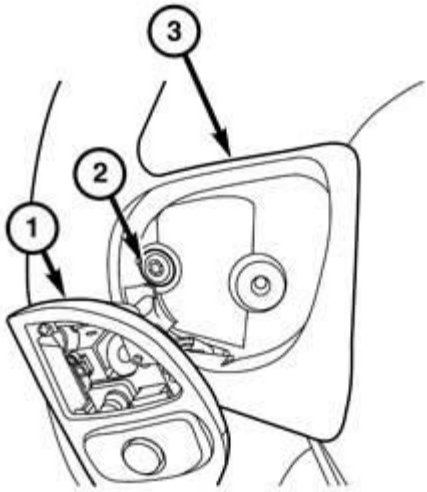

0806007479

Fig. 45: Left/Right Switch, Steering Wheel & Retaining Screw
Courtesy of CHRYSLER GROUP, LLC

7. Install the left and right steering wheel bezel retaining screw (2).
8. Install the left and right switch (1) into the steering wheel opening (3).

Fig. 46: Left/Right Switch & Retaining Screw
Courtesy of CHRYSLER GROUP, LLC

9. Install the left and right switch (1) retaining screw (2) and securely tighten.

Fig. 47: Radio Switch Unit Cover, Switch & Slot
Courtesy of CHRYSLER GROUP, LLC

10. Install the left and right remote radio switch unit cover (1).
11. Install the driver air bag. Refer to **AIR BAG, DRIVER, INSTALLATION** .
12. Connect the negative battery cable.

2014 ACCESSORIES AND EQUIPMENT

Automatic Headlamp Leveling Module (AHLM) - Electrical Diagnostics - Cherokee

DIAGNOSTIC CODE INDEX

DIAGNOSTIC CODE INDEX

DTC	Description
B1684-96	LEFT HEADLAMP LEVELING MOTOR CONTROL - COMPONENT INTERNAL FAILURE
B1689-96	RIGHT HEADLAMP LEVELING CONTROL-COMPONENT INTERNAL FAILURE
B2128-1C	SENSOR SUPPLY VOLTAGE - CIRCUIT VOLTAGE OUT OF RANGE
B2283-00	AUTO HEADLAMP LEVELING MODULE - AHLM INTERNAL
U0001-00	CAN C BUS
U0002-00	CAN C BUS OFF PERFORMANCE
U0037-88	LIN BUS - BUS OFF
U0100-00	LOST COMMUNICATION WITH ECM/PCM
U0129-00	LOST COMMUNICATION WITH BRAKE SYSTEM CONTROL MODULE
U0140-00	LOST COMMUNICATION WITH BODY CONTROL MODULE
U0418-00	IMPLAUSIBLE DATA RECEIVED FROM BRAKE SYSTEM CONTROL MODULE
U0422-00	IMPLAUSIBLE DATA RECEIVED FROM THE BODY CONTROL MODULE
U1102-00	LOST COMMUNICATION WITH LEFT HEADLAMP LEVELING CONTROL MODULE
U1103-00	LOST COMMUNICATION WITH RIGHT HEADLAMP LEVELING CONTROL MODULE
U1501-00	IMPLAUSIBLE MESSAGE DATA LENGTH RECEIVED FROM ECM/PCM

DIAGNOSIS AND TESTING

B1684-96-LEFT HEADLAMP LEVELING MOTOR CONTROL - COMPONENT INTERNAL FAILURE

For a complete wiring diagram, **refer to appropriate SYSTEM WIRING DIAGRAMS article** .

THEORY OF OPERATION

The Left and Right Headlamp Leveling Control Modules (Headlamp Leveling Motors) are used to control the levels of the Front Headlamps. The Automatic Headlamp Leveling Module (AHLM) communicates with these Control Modules via a LIN BUS circuit. The Headlamp Leveling Motors are integrated into both the Left and Right Headlamp Housings. If a motor is defective, the entire assembly must be replaced.

WHEN MONITORED

With the ignition on.

SET CONDITION

When the Automatic Headlamp Leveling Module (AHLM) detects a fault in the Left Headlamp Leveling Motor.

POSSIBLE CAUSES

Possible Causes
LEFT HEADLAMP LEVELING MOTOR

DIAGNOSTIC TEST

CHECK FOR AN ACTIVE DTC

1. Turn the ignition on.
2. With the scan tool, read DTCs.

   Does the scan tool display this DTC as active?

   Yes

   - Replace the Left Headlamp Assembly in accordance with the Service Information. Refer to **UNIT, FRONT LAMP, REMOVAL** .
   - Perform the BODY VERIFICATION TEST. Refer to **STANDARD PROCEDURE** .

   No

   - Test complete. The condition or conditions that originally set this DTC are not present at this time. Using the wiring diagrams as a guide, check all related splices and connectors for signs of water intrusion, corrosion, pushed out or bent terminals, and correct pin tension.
   - Perform the BODY VERIFICATION TEST. Refer to **STANDARD PROCEDURE** .

B1689-96-RIGHT HEADLAMP LEVELING CONTROL-COMPONENT INTERNAL FAILURE

For a complete wiring diagram, **refer to appropriate SYSTEM WIRING DIAGRAMS article** .

THEORY OF OPERATION

The Left and Right Headlamp Leveling Control Modules (Headlamp Leveling Motors) are used to control the levels of the Front Headlamps. The Automatic Headlamp Leveling Module (AHLM) communicates with these Control Modules via a LIN BUS circuit. The Headlamp Leveling Motors are integrated into both the Left and Right Headlamp Housings. If a motor is defective, the entire assembly must be replaced.

WHEN MONITORED

With the ignition on.

SET CONDITION

When the Automatic Headlamp Leveling Module (AHLM) detects a fault in the Right Headlamp Leveling Motor.

POSSIBLE CAUSES

Possible Causes
RIGHT HEADLAMP LEVELING MOTOR

DIAGNOSTIC TEST

CHECK FOR AN ACTIVE DTC

1. Turn the ignition on.
2. With the scan tool, read DTCs.

   Does the scan tool display this DTC as active?

   Yes

   - Replace the Right Headlamp Assembly in accordance with the Service Information. Refer to **UNIT, FRONT LAMP, REMOVAL** .
   - Perform the BODY VERIFICATION TEST. Refer to **STANDARD PROCEDURE** .

   No

   - Test complete. The condition or conditions that originally set this DTC are not present at this time. Using the wiring diagrams as a guide, check all related splices and connectors for signs of water intrusion, corrosion, pushed out or bent terminals, and correct pin tension.
   - Perform the BODY VERIFICATION TEST. Refer to **STANDARD PROCEDURE** .

B2128-1C-SENSOR SUPPLY VOLTAGE - CIRCUIT VOLTAGE OUT OF RANGE

For a complete wiring diagram, **refer to appropriate SYSTEM WIRING DIAGRAMS article** .

WHEN MONITORED

With the ignition on.

SET CONDITION

The Automatic Headlamp Leveling Module (AHLM) detects the Headlamp Leveling Sensor Front Signal circuit is out of range.

POSSIBLE CAUSES

Possible Causes
(L961) HEADLAMP LEVELING SENSOR 5 VOLT SUPPLY CIRCUIT SHORTED TO VOLTAGE
(L961) HEADLAMP LEVELING SENSOR 5 VOLT SUPPLY CIRCUIT SHORTED TO GROUND
(L961) HEADLAMP LEVELING SENSOR 5 VOLT SUPPLY CIRCUIT OPEN OR HIGH RESISTANCE
(L962) HEADLAMP LEVELING SENSOR RETURN CIRCUIT SHORTED TO VOLTAGE
(L962) HEADLAMP LEVELING SENSOR RETURN CIRCUIT SHORTED TO GROUND
(L962) HEADLAMP LEVELING SENSOR RETURN CIRCUIT OPEN OR HIGH RESISTANCE
(L963) HEADLAMP LEVELING SENSOR REAR SIGNAL SHORTED TO VOLTAGE
(L963) HEADLAMP LEVELING SENSOR REAR SIGNAL SHORTED TO GROUND
(L963) HEADLAMP LEVELING SENSOR REAR SIGNAL OPEN OR HIGH RESISTANCE
(L960) HEADLAMP LEVELING SENSOR FRONT SIGNAL SHORTED TO VOLTAGE
(L960) HEADLAMP LEVELING SENSOR FRONT SIGNAL SHORTED TO GROUND
(L960) HEADLAMP LEVELING SENSOR FRONT SIGNAL OPEN OR HIGH RESISTANCE
FRONT HEADLAMP LEVEL SENSOR
REAR HEADLAMP LEVEL SENSOR
AUTOMATIC HEADLAMP LEVELING MODULE (AHLM)

DIAGNOSTIC TEST

1. **CHECK FOR AN ACTIVE DTC**
   1. Turn the ignition on.
   2. With the scan tool, read DTCs.

      Does the scan tool display this DTC as active?

      Yes

      - Go To 2

      No

      - Test complete. The condition or conditions that originally set this DTC are not present at this time. Using the wiring diagrams as a guide, check all related splices and connectors for signs of water intrusion, corrosion, pushed out or bent terminals, and correct pin tension.
      - Perform the BODY VERIFICATION TEST. Refer to **STANDARD PROCEDURE** .
2. **CHECK FOR AN ACTIVE DTC WITH THE HEADLAMP LEVEL SENSORS DISCONNECTED**
   1. Turn the ignition off.
   2. Disconnect the Front Headlamp Level Sensor harness connector.
   3. Turn the ignition on.

4. With the scan tool, read DTCs.

   Does the scan tool still display this DTC as active?

   Yes

   - Repeat this step for the Rear Headlamp Level Sensor. If both headlamp level sensors are disconnected and the DTC is still active, go To 3

   No

   - Replace the headlamp level sensor, that when disconnected allowed the DTC to go to stored, in accordance with the Service Information.
   - Perform the BODY VERIFICATION TEST. Refer to **STANDARD PROCEDURE** .

3. **CHECK THE (L962) HEADLAMP LEVELING SENSOR RETURN CIRCUIT FOR A SHORT TO VOLTAGE**
   1. Turn the ignition off.
   2. Disconnect the Automatic Headlamp Leveling Module (AHLM) harness connector.
   3. Turn the ignition on.
   4. Measure the voltage of the (L962) Headlamp Leveling Sensor Return circuit.

      Is there any voltage present?

      Yes

      - Repair the (L962) Headlamp Leveling Sensor Return circuit for a short to voltage.
      - Perform the BODY VERIFICATION TEST. Refer to **STANDARD PROCEDURE** .

      No

      - Go To 4

4. **(L961) HEADLAMP LEVELING SENSOR 5 VOLT SUPPLY CIRCUIT SHORTED TO VOLTAGE**
   1. Measure the voltage of the (L961) Headlamp Leveling Sensor 5 Volt Supply circuit.

      Is there any voltage present?

      Yes

      - Repair the (L961) Headlamp Leveling Sensor 5 Volt Supply circuit for a short to voltage.
      - Perform the BODY VERIFICATION TEST. Refer to **STANDARD PROCEDURE** .

      No

- Go To 5

5. **(L960) HEADLAMP LEVELING SENSOR FRONT SIGNAL CIRCUIT SHORTED TO VOLTAGE**
   1. Measure the voltage of the (L960) Headlamp Leveling Sensor Front Signal circuit.

      Is there any voltage present?

      Yes

      - Repair the (L960) Headlamp Leveling Sensor Front Signal circuit for a short to voltage.
      - Perform the BODY VERIFICATION TEST. Refer to **STANDARD PROCEDURE** .

      No

      - Go To 6

6. **(L963) HEADLAMP LEVELING SENSOR REAR SIGNAL CIRCUIT SHORTED TO VOLTAGE**
   1. Measure the voltage of the (L963) Headlamp Leveling Sensor Rear Signal circuit.

      Is there any voltage present?

      Yes

      - Repair the (L963) Headlamp Leveling Sensor Rear Signal circuit for a short to voltage.
      - Perform the BODY VERIFICATION TEST. Refer to **STANDARD PROCEDURE** .

      No

      - Go To 7

7. **(L962) HEADLAMP LEVELING SENSOR RETURN CIRCUIT SHORTED TO GROUND**
   1. Turn the ignition off.
   2. Measure the resistance between ground and the (L962) Headlamp Leveling Sensor Return circuit.

      Is the resistance below 5.0 Ohms?

      Yes

      - Repair the (L962) Headlamp Leveling Sensor Return circuit for a short to ground.
      - Perform the BODY VERIFICATION TEST. Refer to **STANDARD PROCEDURE** .

      No

      - Go To 8

8. **(L961) HEADLAMP LEVELING SENSOR 5 VOLT SUPPLY CIRCUIT SHORTED TO GROUND**
   1. Measure the resistance between ground and the (L961) Headlamp Leveling Sensor 5 Volt Supply circuit.

      Is the resistance below 5.0 Ohms?

      Yes

      - Repair the (L961) Headlamp Leveling Sensor 5 Volt Supply circuit for a short to ground.
      - Perform the BODY VERIFICATION TEST. Refer to **STANDARD PROCEDURE** .

      No

      - Go To 9
9. **(L960) HEADLAMP LEVELING SENSOR FRONT SIGNAL CIRCUIT SHORTED TO GROUND**
   1. Measure the resistance between ground and the (L960) Headlamp Leveling Sensor Front Signal circuit.

      Is the resistance below 5.0 Ohms?

      Yes

      - Repair the (L960) Headlamp Leveling Sensor Front Signal circuit for a short to ground.
      - Perform the BODY VERIFICATION TEST. Refer to **STANDARD PROCEDURE** .

      No

      - Go To 10
10. **(L963) HEADLAMP LEVELING SENSOR REAR SIGNAL CIRCUIT SHORTED TO GROUND**
    1. Measure the resistance between ground and the (L963) Headlamp Leveling Sensor Rear Signal circuit.

       Is the resistance below 5.0 Ohms?

       Yes

       - Repair the (L963) Headlamp Leveling Sensor Rear Signal circuit for a short to ground.
       - Perform the BODY VERIFICATION TEST. Refer to **STANDARD PROCEDURE** .

       No

       - Go To 11

11. **(L962) HEADLAMP LEVELING SENSOR RETURN CIRCUIT OPEN OR HIGH RESISTANCE**
    1. Measure the resistance of the (L962) Headlamp Leveling Sensor Return circuit.

       Is the resistance above 5.0 Ohms?

       Yes

       - Repair the (L962) Headlamp Leveling Sensor Return circuit for an open or high resistance.
       - Perform the BODY VERIFICATION TEST. Refer to **STANDARD PROCEDURE** .

       No

       - Go To 12
12. **(L961) HEADLAMP LEVELING SENSOR 5 VOLT SUPPLY CIRCUIT OPEN OR HIGH RESISTANCE**
    1. Measure the resistance of the (L961) Headlamp Leveling Sensor 5 Volt Supply circuit.

       Is the resistance above 5.0 Ohms?

       Yes

       - Repair the (L961) Headlamp Leveling Sensor 5 Volt Supply circuit for an open or high resistance.
       - Perform the BODY VERIFICATION TEST. Refer to **STANDARD PROCEDURE** .

       No

       - Go To 13
13. **(L960) HEADLAMP LEVELING SENSOR FRONT SIGNAL CIRCUIT OPEN OR HIGH RESISTANCE**
    1. Measure the resistance of the (L960) Headlamp Leveling Sensor Front Signal circuit.

       Is the resistance above 5.0 Ohms?

       Yes

       - Repair the (L960) Headlamp Leveling Sensor Front Signal circuit for an open or high resistance.
       - Perform the BODY VERIFICATION TEST. Refer to **STANDARD PROCEDURE** .

       No

       - Go To 14
14. **(L963) HEADLAMP LEVELING SENSOR REAR SIGNAL CIRCUIT OPEN OR HIGH**

RESISTANCE

1. Measure the resistance of the (L963) Headlamp Leveling Sensor Rear Signal circuit.

   Is the resistance above 5.0 Ohms?

   Yes

   - Repair the (L963) Headlamp Leveling Sensor Rear Signal circuit for an open or high resistance.
   - Perform the BODY VERIFICATION TEST. Refer to **STANDARD PROCEDURE** .

   No

   - Replace the Automatic Headlamp Leveling Module (AHLM) in accordance with the Service Information. Refer to **MODULE, HEADLAMP LEVELING, REMOVAL** .
   - Perform the BODY VERIFICATION TEST. Refer to **STANDARD PROCEDURE** .

B2283-00-AUTO HEADLAMP LEVELING MODULE - AHLM INTERNAL

For a complete wiring diagram, **refer to appropriate SYSTEM WIRING DIAGRAMS article** .

WHEN MONITORED

With the ignition on.

SET CONDITION

The Automatic Headlamp Leveling Module (AHLM) detects an internal failure.

POSSIBLE CAUSES

Possible Causes
AUTOMATIC HEADLAMP LEVELING MODULE (AHLM)

DIAGNOSTIC TEST

CHECK FOR AN ACTIVE DTC

1. Turn the ignition on.
2. With the scan tool, read DTCs.

   Does the scan tool display this DTC as active?

   Yes

- Replace the AHLM in accordance with the Service Information. Refer to **MODULE, HEADLAMP LEVELING, REMOVAL** .
- Perform the BODY VERIFICATION TEST. Refer to **STANDARD PROCEDURE** .

No

- Test complete. The condition or conditions that originally set this DTC are not present at this time. Using the wiring diagrams as a guide, check all related splices and connectors for signs of water intrusion, corrosion, pushed out or bent terminals and correct pin tension.
- Perform the BODY VERIFICATION TEST. Refer to **STANDARD PROCEDURE** .

U0001-00-CAN C BUS

For a complete wiring diagram, **refer to appropriate SYSTEM WIRING DIAGRAMS article** .

WHEN MONITORED

With the ignition on.

Battery voltage between 10 and 16 volts.

SET CONDITION

The controller detects an open, short to ground or a short to voltage on the CAN C Bus circuit.

POSSIBLE CAUSES

Possible Causes
CAN C BUS CIRCUITS OPEN OR SHORTED
DTCS RELATED TO BATTERY VOLTAGE, IGNITION, OR VIN MESSAGES
BODY CONTROL MODULE (BCM) POWER AND GROUND
BODY CONTROL MODULE (BCM)
MODULE THAT SET THIS DTC

DIAGNOSTIC TEST

VERIFY DIAGNOSTIC TROUBLE CODE (DTC) IS ACTIVE

NOTE: Make sure the battery voltage is between 10 and 16 volts before proceeding.

1. Turn the ignition on.
2. With the scan tool, read the active DTCs.

   Does the scan tool display this DTC as active?

Yes

- Refer to the **DTC INDEX** article and perform the CAN C SIGNAL MISSING - BUS OFF Performance diagnostic procedure.

No

- Refer to **DIAGNOSIS AND TESTING** and perform the STORED LOST COMMUNICATION DTCs diagnostic procedure.

U0002-00-CAN C BUS OFF PERFORMANCE

For a complete wiring diagram, **refer to appropriate SYSTEM WIRING DIAGRAMS article** .

WHEN MONITORED

With the ignition on.

Battery voltage between 9 and 16 volts.

SET CONDITION

The Automatic Headlamp Leveling Module (AHLM) detects a short condition on one of the CAN C Bus circuits.

POSSIBLE CAUSES

Possible Causes
CAN C BUS (+) CIRCUIT SHORTED TO GROUND
CAN C BUS (-) CIRCUIT SHORTED TO VOLTAGE
CAN C BUS (+) CIRCUIT SHORTED TO THE CAN C BUS (-) CIRCUIT
STAR CONNECTOR
ANY MODULE CONNECTED TO THE CAN C BUS

DIAGNOSTIC TEST

ACTIVE DTC

NOTE: **For vehicle communication problems, use the scan tool to refer to the Network Review Screen. The screen depicts a high level view of the vehicle network. Fault and problem areas appear in red. Selecting any of the network components allows access to the source of the problem.**

1. Turn the ignition on.
2. With a scan tool, read the active DTCs.

Does the scan tool display this DTC as active?

Yes

- Refer to the **DTC INDEX** article and perform the CAN C SIGNAL MISSING - BUS OFF diagnostic procedure.

No

- Refer to **DIAGNOSIS AND TESTING** and perform the STORED LOST COMMUNICATION DTCs diagnostic procedure.

U0037-88-LIN BUS - BUS OFF

For a complete wiring diagram, **refer to appropriate SYSTEM WIRING DIAGRAMS article** .

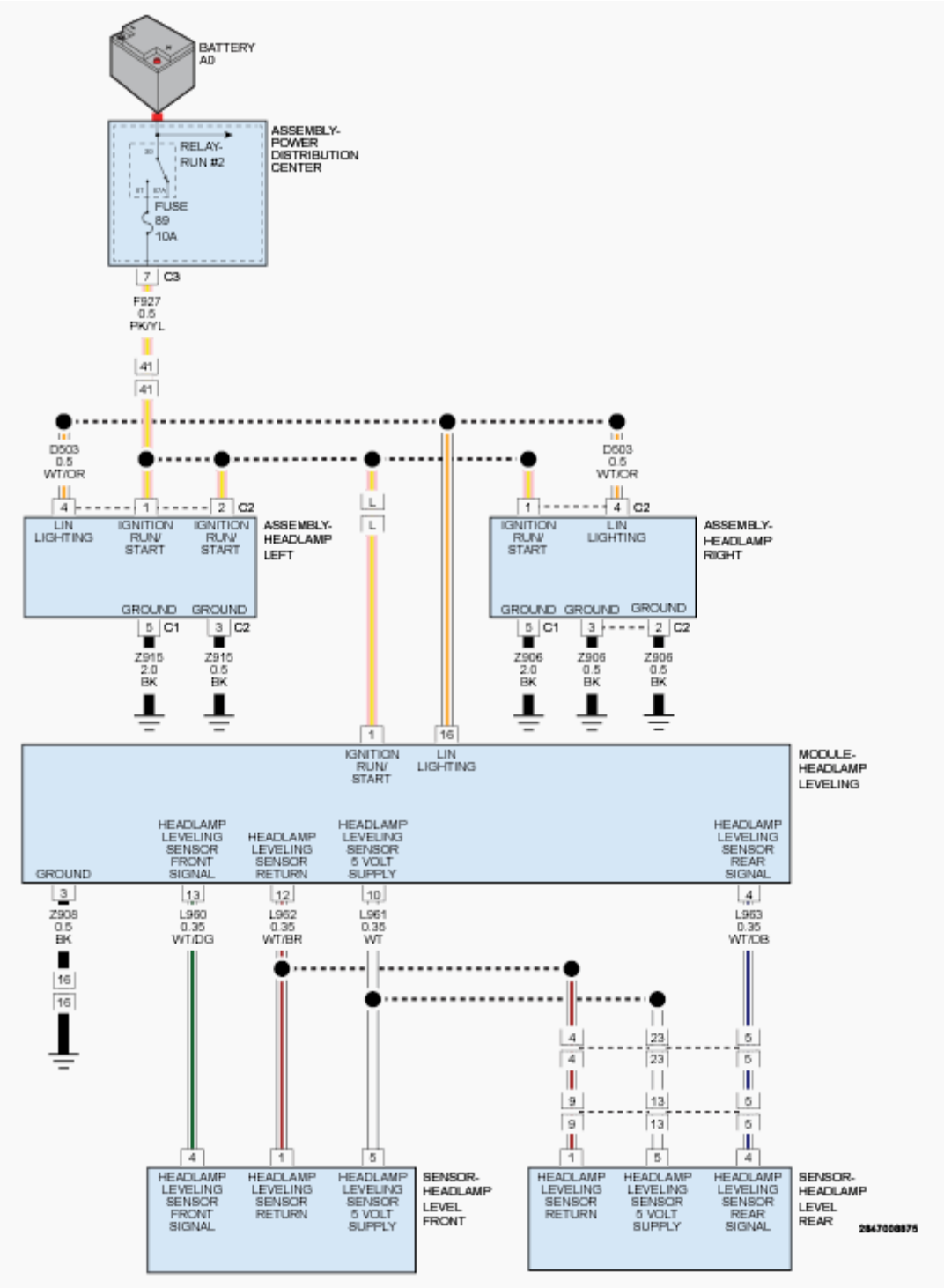

Fig. 1: Headlamp Leveling Module Circuit Diagram
Courtesy of CHRYSLER GROUP, LLC

WHEN MONITORED

Continuously, with the ignition on.

SET CONDITION

When the Automatic Headlamp Leveling Module (AHLM) detects an open, short to ground or battery voltage on the LIN Bus.

POSSIBLE CAUSES

Possible Causes
LIN BUS CIRCUIT OPEN
LIN BUS CIRCUIT SHORTED TO GROUND
LIN BUS CIRCUIT SHORTED TO VOLTAGE
LEFT OR RIGHT HEADLAMP LEVELING MOTOR (INTEGRAL TO THE HEADLAMP ASSEMBLY)
AUTOMATIC HEADLAMP LEVELING MODULE (AHLM)

DIAGNOSTIC TEST

1. **CHECK FOR AN ACTIVE DTC**
    1. Turn the ignition on.
    2. With the scan tool, read DTCs.

    Does the scan tool display this DTC as active?

    Yes

    - Go To 2

    No

    - Test complete. The condition or conditions that originally set this DTC are not present at this time. Using the wiring diagrams as a guide, check all related splices and connectors for signs of water intrusion, corrosion, pushed out or bent terminals and correct pin tension.
    - Perform the BODY VERIFICATION TEST. Refer to **STANDARD PROCEDURE** .
2. **CHECK FOR AN ACTIVE DTC WITH THE LEFT HEADLAMP ASSEMBLY DISCONNECTED**
    1. Turn the ignition off.
    2. Disconnect the Left Headlamp Assembly C2 harness connector.
    3. Turn the ignition on.
    4. Wait 10 seconds.
    5. With the scan tool, read DTCs.

    Does the scan tool display this DTC as active?

    Yes

- Repeat this step for the Right Headlamp Assembly. If both headlamps assemblies are disconnected and the DTC is still active, Go To 3

No

- Replace the headlamp assembly, that when disconnected allowed the DTC to go to stored, in accordance with the Service Information. Refer to **UNIT, FRONT LAMP, REMOVAL** .
- Perform the BODY VERIFICATION TEST. Refer to **STANDARD PROCEDURE** .

3. **CHECK THE (D503) LIN BUS CIRCUIT FOR A SHORT TO VOLTAGE**
   1. Turn the ignition off.
   2. Disconnect the Automatic Headlamp Leveling Module (AHLM) harness connector.
   3. Turn the ignition on.
   4. Measure the voltage between ground and the (D503) LIN Bus circuit.

   Is there any voltage present?

   Yes

   - Repair the short to voltage on the (D503) LIN Bus circuit.
   - Perform the BODY VERIFICATION TEST. Refer to **STANDARD PROCEDURE** .

   No

   - Go To 4
4. **CHECK THE (D503) LIN BUS CIRCUIT FOR A SHORT TO GROUND**
   1. Measure the resistance between ground and the (D503) LIN Bus circuit.

   Is the resistance below 10k Ohms?

   Yes

   - Repair the short to ground in the (D503) LIN Bus circuit.
   - Perform the BODY VERIFICATION TEST. Refer to **STANDARD PROCEDURE** .

   No

   - Go To 5
5. **CHECK THE (D503) LIN BUS CIRCUIT FOR AN OPEN**
   1. Turn the ignition off.
   2. Measure the resistance of the (D503) LIN Bus circuit between the Left and Right Headlamp Assembly C2 harness connectors.

   Is the resistance above 5 Ohms?

Yes

- Repair the open in the (D503) LIN Bus circuit.
- Perform the BODY VERIFICATION TEST. Refer to **STANDARD PROCEDURE** .

No

- Replace the AHLM in accordance with the Service Information. Refer to **MODULE, HEADLAMP LEVELING, REMOVAL** .
- Perform the BODY VERIFICATION TEST. Refer to **STANDARD PROCEDURE** .

U0100-87-LOST COMMUNICATION WITH ECM/PCM

For a complete wiring diagram, **refer to appropriate SYSTEM WIRING DIAGRAMS article** .

WHEN MONITORED

With the ignition on.

The battery voltage between 10 and 16 Volts.

Body Control Module (BCM) is configured correctly.

SET CONDITION

Bus messages not received from the Powertrain Control Module (PCM).

POSSIBLE CAUSES

Possible Causes
CAN BUS CIRCUITS OPEN OR SHORTED
DTCS RELATED TO BATTERY VOLTAGE, IGNITION, OR VIN MESSAGES
POWERTRAIN CONTROL MODULES POWER AND GROUND
BCM NOT CONFIGURED CORRECTLY
POWERTRAIN CONTROL MODULE (PCM)
ANY MODULE THAT SET THIS DTC

DIAGNOSTIC TEST

VERIFY THE DIAGNOSTIC TROUBLE CODE (DTC) IS ACTIVE

NOTE: Make sure the battery is fully charged before proceeding.

1. Turn the ignition on.
2. Using the scan tool, read the active DTCs.

Does the scan tool display this DTC as active?

Yes

- Refer to the **BODY CONTROL MODULE (BCM) - DIAGNOSTIC CODE INDEX** article and perform the U0100-87-LOST COMMUNICATION WITH ECM/PCM diagnostic procedure.

No

- Refer to **DIAGNOSIS AND TESTING** and perform the STORED LOST COMMUNICATION DTCs diagnostic procedure.

U0129-00-LOST COMMUNICATION WITH BRAKE SYSTEM CONTROL MODULE

For a complete wiring diagram, **refer to appropriate SYSTEM WIRING DIAGRAMS article** .

WHEN MONITORED

With the ignition on.

The battery voltage between 10 and 16 volts.

Body Control Module (BCM) is configured correctly.

SET CONDITION

Bus messages not received from the Anti-lock Brake System (ABS) Module.

POSSIBLE CAUSES

Possible Causes
CAN C BUS CIRCUITS OPEN OR SHORTED
DTCS RELATED TO BATTERY VOLTAGE, IGNITION, OR VIN MESSAGES
ANTI LOCK BRAKE MODULE (ABS) POWER AND GROUND
BCM NOT CONFIGURED CORRECTLY
ANTI LOCK BRAKE MODULE (ABS)
MODULE THAT SET THIS DTC

DIAGNOSTIC TEST

VERIFY DTC IS ACTIVE

NOTE: Make sure the battery is fully charged before proceeding.

1. Turn the ignition on.

2. With the scan tool, read the active DTCs.

   Does the scan tool display this DTC as active?

   Yes

   - Refer to the **BODY CONTROL MODULE (BCM) - DIAGNOSTIC CODE INDEX** article and perform the U0121-87-LOST COMMUNICATION WITH ANTI-LOCK BRAKE SYSTEM (ABS) CONTROL MODULE diagnostic procedure.

   No

   - Refer to **DIAGNOSIS AND TESTING** and perform the STORED LOST COMMUNICATION DTCs diagnostic procedure.

U0140-00-LOST COMMUNICATION WITH BODY CONTROL MODULE

For a complete wiring diagram, **refer to appropriate SYSTEM WIRING DIAGRAMS article** .

WHEN MONITORED

With the ignition on.

The battery voltage between 10 and 16 Volts.

Body Control Module (BCM) is configured correctly.

SET CONDITION

Bus messages not received from the Body Control Module (BCM).

POSSIBLE CAUSES

Possible Causes
CAN BUS CIRCUITS OPEN OR SHORTED
DTCS RELATED TO BATTERY VOLTAGE, IGNITION, OR VIN MESSAGES
BODY CONTROL MODULE (BCM) POWER AND GROUND
BCM NOT CONFIGURED CORRECTLY
BODY CONTROL MODULE (BCM)
MODULE THAT SET THIS DTC

DIAGNOSTIC TEST

VERIFY DTC IS ACTIVE

1. Turn the ignition on.

2. With the scan tool, read the active DTCs.

   Does the scan tool display this DTC as active?

   Yes

   - Refer to **DIAGNOSIS AND TESTING** and perform the NO RESPONSE FROM BCM (BODY CONTROL MODULE) diagnostic procedure.

   No

   - Refer to **DIAGNOSIS AND TESTING** and perform the STORED LOST COMMUNICATION DTCs diagnostic procedure.

U0418-00-IMPLAUSIBLE DATA RECEIVED FROM BRAKE SYSTEM CONTROL MODULE

For a complete wiring diagram, **refer to appropriate SYSTEM WIRING DIAGRAMS article** .

WHEN MONITORED

With the ignition on.

SET CONDITION

When the Automatic Headlamp Leveling Module (AHLM) receives an implausible (default/error value, toggle error or parity error) message from the Antilock Brake System (ABS) Module.

POSSIBLE CAUSES

Possible Causes
ANTILOCK BRAKE SYSTEM (ABS) MODULE DTCS PRESENT
BODY CONTROL MODULE (BCM) DTCS PRESENT
ANTILOCK BRAKE SYSTEM (ABS) MODULE
AUTOMATIC HEADLAMP LEVELING MODULE (AHLM)

DIAGNOSTIC TEST

1. **VERIFY THE DTC IS ACTIVE**
   1. Turn the ignition on.
   2. With the scan tool, record and erase Automatic Headlamp Leveling Module (AHLM) DTCs.
   3. Cycle the ignition from off to on.
   4. With the scan tool, read AHLM DTCs.

      Does the scan tool display this DTC as active?

Yes

- Go To 2

No

- Go To 5

2. **CHECK FOR BODY CONTROL MODULE (BCM) DTCS**
   1. With the scan tool, read BCM DTCs.

      Are there any BCM CAN Bus DTCs present?

      Yes

      - Refer to the **BODY CONTROL MODULE (BCM) - DIAGNOSTIC CODE INDEX** article and perform the appropriate diagnostic procedure.

      No

      - Go To 3

3. **CHECK FOR ANTILOCK BRAKE SYSTEM (ABS) MODULE DTCS**
   1. With the scan tool, read ABS DTCs.

      Are there any ABS DTCs present?

      Yes

      - Refer to **DIAGNOSIS AND TESTING** and perform the appropriate diagnostic procedure.

      No

      - Go To 4

4. **CHECK OTHER MODULES FOR DTCS**
   1. With the scan tool, read DTCs.

      Are there any other modules reporting implausible communication DTCs against the ABS?

      Yes

      - Replace and program the Antilock Brake System (ABS) Module in accordance with the Service Information. Refer to **MODULE, ANTI-LOCK BRAKE SYSTEM, REMOVAL** .
      - Perform the BODY VERIFICATION TEST. Refer to **STANDARD PROCEDURE** .

      No

- Using the schematics as a guide, check the AHLM pins, terminals, and connectors for corrosion, damage, or terminal push out. Pay particular attention to all power and ground circuits. If no problems are found, replace the Automatic Headlamp Leveling Module (AHLM) in accordance with the Service Information. Refer to **MODULE, HEADLAMP LEVELING, REMOVAL** .
- Perform the BODY VERIFICATION TEST. Refer to **STANDARD PROCEDURE** .

5. **CHECK THE WIRING AND CONNECTORS**
   1. The conditions necessary to set the DTC are not present at this time.
   2. Using the schematics as a guide, inspect the wiring and connectors specific to this module. Wiggle the wiring and connectors while checking for shorted and open circuits.
   3. Check all related splices and connectors for signs of water intrusion, corrosion, pushed out or bent terminals, and correct pin tension.
   4. Check Service Bulletins for any possible causes that may apply.

   Were there any problems found?

   Yes

   - Repair as necessary.
   - Perform the BODY VERIFICATION TEST. Refer to **STANDARD PROCEDURE** .

   No

   - Test complete.

U0422-00-IMPLAUSIBLE DATA RECEIVED FROM THE BODY CONTROL MODULE

For a complete wiring diagram, **refer to appropriate SYSTEM WIRING DIAGRAMS article** .

WHEN MONITORED

With the ignition on.

SET CONDITION

When the Automatic Headlamp Leveling Module (AHLM) receives an implausible message from the Body Control Module (BCM).

POSSIBLE CAUSES

Possible Causes
NO COMMUNICATION WITH THE BODY CONTROL MODULE (BCM)
DTCS STORED OR ACTIVE IN THE BCM
AUTOMATIC HEADLAMP LEVELING MODULE (AHLM)

DIAGNOSTIC TEST

1. **CHECK FOR AN ACTIVE DIAGNOSTIC TROUBLE CODE (DTC)**
    1. Turn the ignition on.
    2. With the scan tool, read the active DTCs.

    Does the scan tool display this DTC as active?

    Yes

    - Go To 2

    No

    - The condition that caused this code to set is not present at this time. Check for an intermittent condition by inspecting the related wiring harness for chafed, pierced, pinched, and partially broken wires. Also inspect the related connectors for broken, bent, pushed out, spread, corroded or contaminated terminals.
    - Perform the BODY VERIFICATION TEST. Refer to **STANDARD PROCEDURE** .
2. **VERIFY THE BCM IS ACTIVE ON THE CAN BUS**
    1. With the scan tool, select ECU View.
    2. Verify that the BCM is active on the bus.

    Is the BCM active on the bus?

    Yes

    - Replace the AHLM in accordance with the Service Information. Refer to **MODULE, HEADLAMP LEVELING, REMOVAL** .
    - Perform the BODY VERIFICATION TEST. Refer to **STANDARD PROCEDURE** .

    No

    - Refer to **DIAGNOSIS AND TESTING** and perform the NO RESPONSE FROM BCM diagnostic procedure.
    - Perform the BODY VERIFICATION TEST. Refer to **STANDARD PROCEDURE** .

U1102-00-LOST COMMUNICATION WITH LEFT HEADLAMP LEVELING CONTROL MODULE

For a complete wiring diagram, **refer to appropriate SYSTEM WIRING DIAGRAMS article** .

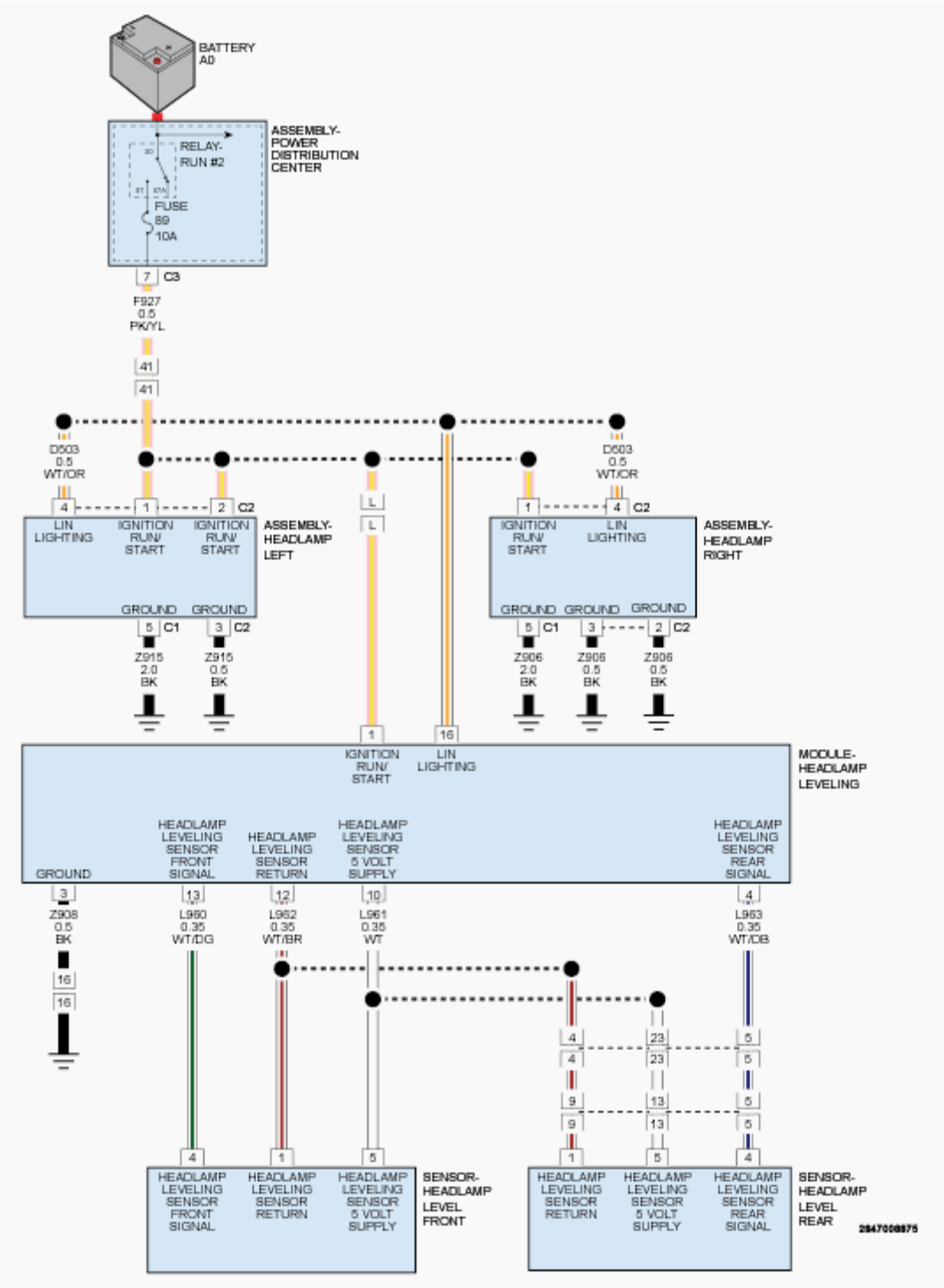

Fig. 2: Headlamp Leveling Module Circuit Diagram
Courtesy of CHRYSLER GROUP, LLC

THEORY OF OPERATION

The Left and Right Headlamp Leveling Control Modules (Headlamp Leveling Motors) are used to control the

levels of the Front Headlamps. The Automatic Headlamp Leveling Module (AHLM) communicates with these Control Modules via a LIN BUS circuit. The Headlamp Leveling Motors are integrated into both the Left and Right Headlamp Housings. If a motor is defective, the entire assembly must be replaced.

WHEN MONITORED

With the ignition on.

SET CONDITION

LIN Lighting messages not received from the Left Headlamp Leveling Motor.

POSSIBLE CAUSES

Possible Causes
(F927) FUSED RUN RELAY OUTPUT CIRCUIT OPEN OR SHORTED TO GROUND
(D503) LIN LIGHTING CIRCUIT OPEN OR SHORTED TO GROUND
(Z915) GROUND CIRCUIT OPEN
HEADLAMP LEVELING MOTOR (LEFT HEADLAMP ASSEMBLY)
AUTOMATIC HEADLAMP LEVELING MODULE (AHLM)

DIAGNOSTIC TEST

1. **CHECK FOR AN ACTIVE DTC**
    1. Turn the ignition on.
    2. With the scan tool, read DTCs.

    Does the scan tool display this DTC as active?

    Yes

    - Go To 2

    No

    - Test complete. The condition or conditions that originally set this DTC are not present at this time. Using the wiring diagrams as a guide, check all related splices and connectors for signs of water intrusion, corrosion, pushed out or bent terminals and correct pin tension.
    - Perform the BODY VERIFICATION TEST. Refer to **STANDARD PROCEDURE** .
2. **CHECK THE (F927) FUSED RUN RELAY OUTPUT CIRCUIT FOR AN OPEN OR SHORT TO GROUND**
    1. Turn the ignition off.
    2. Disconnect the Left Front Lamp Assembly C2 harness connector.
    3. Turn the ignition on.

4. Measure the voltage of the (F927) Fused Run Relay Output circuit.

   Is the voltage greater than 10.0 volts?

   Yes

   - Go To 3

   No

   - Repair the (F927) Fused Run Relay Output circuit for an open or short to ground.
   - Perform the BODY VERIFICATION TEST. Refer to **STANDARD PROCEDURE** .

3. **CHECK THE (Z915) GROUND CIRCUITS FOR AN OPEN**
   1. Turn the ignition off.
   2. Measure the resistance between ground and the (Z915) Ground circuits.

      Is the resistance below 5.0 Ohms?

      Yes

      - Go To 4

      No

      - Repair the open in the (Z915) Ground circuits.
      - Perform the BODY VERIFICATION TEST. Refer to **STANDARD PROCEDURE** .

4. **CHECK THE (D503) LIN LIGHTING CIRCUIT FOR A SHORT TO VOLTAGE**
   1. Disconnect the Right Front Headlamp Assembly C2 harness connector.
   2. Turn the ignition on.
   3. Measure the voltage of the (D503) LIN Lighting circuit.

      Is voltage present?

      Yes

      - Replace the Left Headlamp Assembly in accordance with the Service Information. Refer to **UNIT, FRONT LAMP, REMOVAL** .
      - Perform the BODY VERIFICATION TEST. Refer to **STANDARD PROCEDURE** .

      No

      - Go To 5

5. **CHECK THE (D503) LIN LIGHTING CIRCUIT FOR A SHORT TO GROUND**

1. Turn the ignition off.
2. Measure the resistance between ground and the (D503) LIN Lighting circuit.

   Is the resistance below 10K Ohms?

   Yes

   - Repair the short to ground in the (D503) LIN Lighting circuit.
   - Perform the BODY VERIFICATION TEST. Refer to **STANDARD PROCEDURE** .

   No

   - Go To 6

6. **CHECK THE (D503) LIN LIGHTING CIRCUIT FOR AN OPEN**
   1. Measure the resistance of the (D503) LIN Lighting circuit.

      Is the resistance below 5.0 Ohms?

      Yes

      - Replace the AHLM in accordance with the Service Information. Refer to **MODULE, HEADLAMP LEVELING, REMOVAL** .
      - Perform the BODY VERIFICATION TEST. Refer to **STANDARD PROCEDURE** .

      No

      - Repair the open in the (D503) LIN Lighting circuit.
      - Perform the BODY VERIFICATION TEST. Refer to **STANDARD PROCEDURE** .

U1103-00-LOST COMMUNICATION WITH RIGHT HEADLAMP LEVELING CONTROL MODULE

For a complete wiring diagram, **refer to appropriate SYSTEM WIRING DIAGRAMS article** .

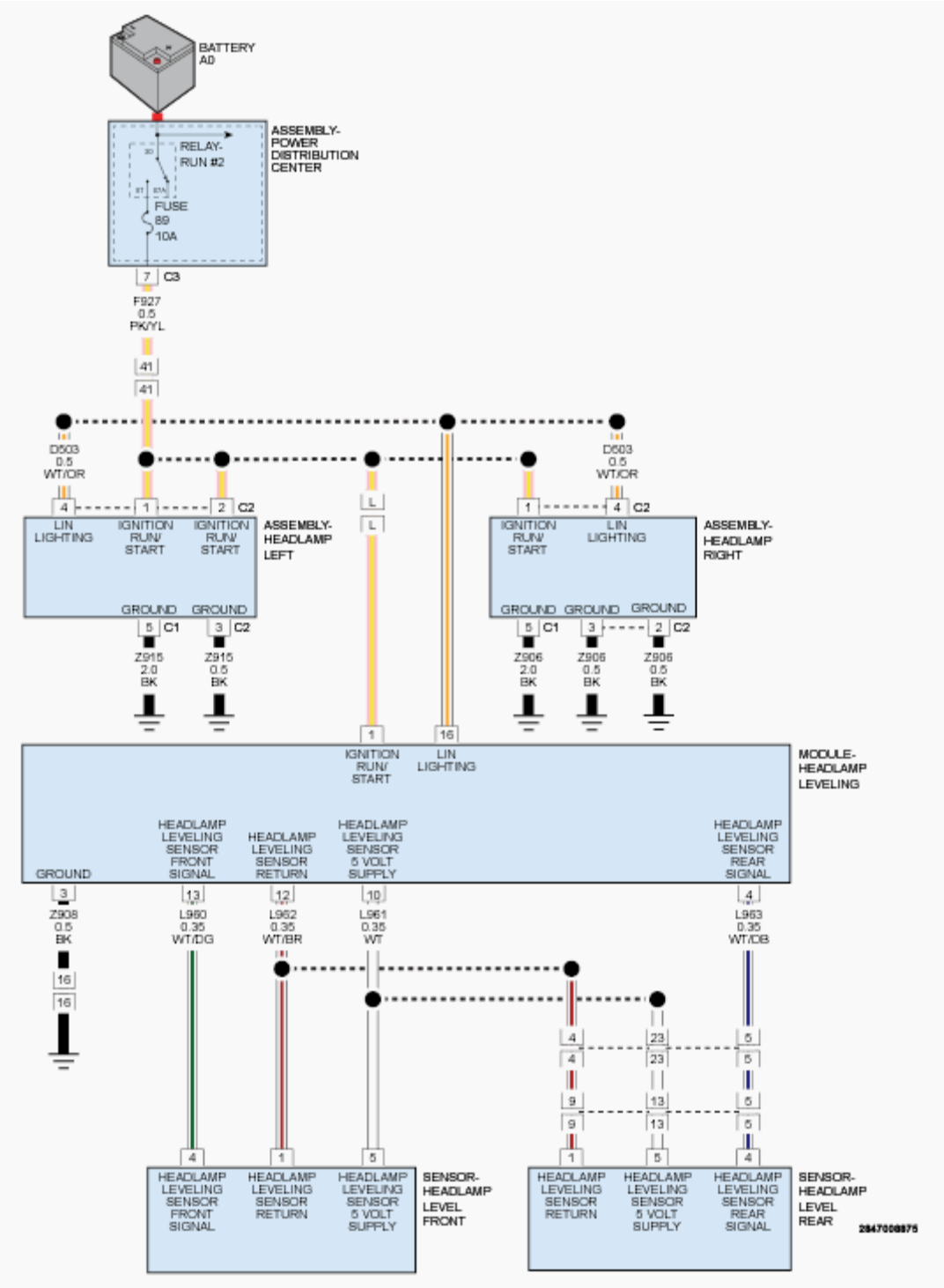

Fig. 3: Headlamp Leveling Module Circuit Diagram
Courtesy of CHRYSLER GROUP, LLC

THEORY OF OPERATION

The Left and Right Headlamp Leveling Control Modules (Headlamp Leveling Motors) are used to control the

levels of the Front Headlamps. The Automatic Headlamp Leveling Module (AHLM) communicates with these Control Modules via a LIN BUS circuit. The Headlamp Leveling Motors are integrated into both the Left and Right Headlamp Housings. If a motor is defective, the entire assembly must be replaced.

WHEN MONITORED

With the ignition on.

SET CONDITION

LIN Lighting messages not received from the Right Headlamp Leveling Motor.

POSSIBLE CAUSES

Possible Causes
(F927) FUSED RUN RELAY OUTPUT CIRCUIT OPEN OR SHORTED TO GROUND
(D503) LIN LIGHTING CIRCUIT OPEN OR SHORTED TO GROUND
(Z906) GROUND CIRCUIT OPEN
HEADLAMP LEVELING MOTOR (RIGHT HEADLAMP ASSEMBLY)
AUTOMATIC HEADLAMP LEVELING MODULE (AHLM)

DIAGNOSTIC TEST

1. **CHECK FOR AN ACTIVE DTC**
    1. Turn the ignition on.
    2. With the scan tool, read DTCs.

    Does the scan tool display this DTC as active?

    Yes

    - Go To 2

    No

    - Test complete. The condition or conditions that originally set this DTC are not present at this time. Using the wiring diagrams as a guide, check all related splices and connectors for signs of water intrusion, corrosion, pushed out or bent terminals and correct pin tension.
    - Perform the BODY VERIFICATION TEST. Refer to **STANDARD PROCEDURE** .
2. **CHECK THE (F927) FUSED RUN RELAY OUTPUT CIRCUIT FOR AN OPEN OR SHORT TO GROUND**
    1. Turn the ignition off.
    2. Disconnect the Right Front Lamp Assembly C2 harness connector.
    3. Turn the ignition on.

4. Measure the voltage of the (F927) Fused Run Relay Output circuit.

   Is the voltage greater than 10.0 volts?

   Yes

   - Go To 3

   No

   - Repair the (F927) Fused Run Relay Output circuit for an open or short to ground.
   - Perform the BODY VERIFICATION TEST. Refer to **STANDARD PROCEDURE** .

3. **CHECK THE (Z906) GROUND CIRCUITS FOR AN OPEN**
   1. Turn the ignition off.
   2. Measure the resistance between ground and the (Z906) Ground circuits.

      Is the resistance below 5.0 Ohms?

      Yes

      - Go To 4

      No

      - Repair the open in the (Z906) Ground circuits.
      - Perform the BODY VERIFICATION TEST. Refer to **STANDARD PROCEDURE** .

4. **CHECK THE (D503) LIN LIGHTING CIRCUIT FOR A SHORT TO VOLTAGE**
   1. Disconnect the Left Front Headlamp Assembly C2 harness connector.
   2. Turn the ignition on.
   3. Measure the voltage of the (D503) LIN Lighting circuit.

      Is voltage present?

      Yes

      - Replace the Right Headlamp Assembly in accordance with the Service Information. Refer to **UNIT, FRONT LAMP, REMOVAL** .
      - Perform the BODY VERIFICATION TEST. Refer to **STANDARD PROCEDURE** .

      No

      - Go To 5

5. **CHECK THE (D503) LIN LIGHTING CIRCUIT FOR A SHORT TO GROUND**

1. Turn the ignition off.
2. Measure the resistance between ground and the (D503) LIN Lighting circuit.

   Is the resistance below 10K Ohms?

   Yes

   - Repair the short to ground in the (D503) LIN Lighting circuit.
   - Perform the BODY VERIFICATION TEST. Refer to **STANDARD PROCEDURE** .

   No

   - Go To 6

6. **CHECK THE (D503) LIN LIGHTING CIRCUIT FOR AN OPEN**
   1. Measure the resistance of the (D503) LIN Lighting circuit.

      Is the resistance below 5.0 Ohms?

      Yes

      - Replace the AHLM in accordance with the Service Information. Refer to **MODULE, HEADLAMP LEVELING, REMOVAL** .
      - Perform the BODY VERIFICATION TEST. Refer to **STANDARD PROCEDURE** .

      No

      - Repair the open in the (D503) LIN Lighting circuit.
      - Perform the BODY VERIFICATION TEST. Refer to **STANDARD PROCEDURE** .

U1501-00-IMPLAUSIBLE MESSAGE DATA LENGTH RECEIVED FROM ECM/PCM

For a complete wiring diagram, **refer to appropriate SYSTEM WIRING DIAGRAMS article** .

WHEN MONITORED

Continuously, with ignition on.

SET CONDITION

If the Automatic Headlamp Leveling Module (AHLM) detects bus messages from the Powertrain Control Module (PCM) are of improper data length.

POSSIBLE CAUSES

Possible Causes
WIRING HARNESS, TERMINAL, CONNECTOR DAMAGE
DTCs RELATED TO BATTERY VOLTAGE, IGNITION, OR VIN MESSAGES
CAN C BUS CIRCUITS OPEN OR SHORTED
PCM DTCs PRESENT
PCM
AUTOMATIC HEADLAMP LEVELING MODULE (AHLM)

DIAGNOSTIC TEST

1. **CHECK FOR AN ACTIVE DTC**
   1. Turn the ignition on.
   2. With the scan tool, read the DTCs.

      Does the scan tool display this DTC as active?

      Yes

      - Go To 2

      No

      - The condition that caused this code to set is not present at this time. Check for an intermittent condition by inspecting the related wiring harness for chafed, pierced, pinched, and partially broken wires. Also inspect the related connectors for broken, bent, pushed out, spread, corroded or contaminated terminals.
      - Perform the BODY VERIFICATION TEST. Refer to **STANDARD PROCEDURE** .
2. **CHECK FOR ANY OF THE FOLLOWING ACTIVE DTCs**
   1. With the scan tool, read all active DTCs from all CAN C Bus modules.

      NOTE: Check for CAN C hardware electrical, VIN Missing/Mismatch, battery or ignition related DTCs.

      Does the scan tool display any active DTCs related to the conditions listed above?

      Yes

      - Diagnose and repair the DTC(s). Refer to the **DTC INDEX** article .

      No

      - Go To 3
3. **CHECK IF PCM DTCs ARE PRESENT**

1. With the scan tool, read PCM DTCs.

   Are any DTCs present?

   Yes

   - Diagnose and repair the DTC(s). Refer to the **DTC INDEX** article .

   No

   - Go To 4

4. **CHECK FOR ADDITIONAL COMMUNICATION RELATED DTCs**
   1. With the scan tool, select Network View and select Advanced.

      Is there more than one module with active DTCs "Logged Against" the PCM?

      Yes

      - Replace/update the PCM in accordance with the service information.
      - Perform PCM VERIFICATION TEST. Refer to **STANDARD PROCEDURE** for 2.0L diesel engine, **STANDARD PROCEDURE** for 2.4L gasoline engine or **STANDARD PROCEDURE** for 3.2L gasoline engine.

      No

      - Using the schematics as a guide, check the Automatic Headlamp Leveling Module (AHLM) pins, terminals, and connectors for corrosion, damage, and terminal push out. Pay particular attention to all Communication circuits. If no problems are found, replace the Automatic Headlamp Leveling Module (AHLM) in accordance with the Service Information. Refer to **MODULE, HEADLAMP LEVELING, REMOVAL** .
      - Perform the BODY VERIFICATION TEST. Refer to **STANDARD PROCEDURE** .

2014 ACCESSORIES AND EQUIPMENT

Body - Interior & Exterior - Cherokee

WARNING

USE OF HEAT DURING REPAIR

WARNING: Chrysler Group LLC engineering's position on the use of heat during collision repair is as follows:

- **Any body panel or frame component damaged which is to be repaired and reused, must be repaired using the "cold straightening" method. No heat may be used during the straightening process.**
- **During rough straightening prior to panel replacement, damaged panels or frame components may be heated to assist in body/frame realignment. The application of heat must be constrained to the parts which will be replaced and not allowed to affect any other components.**

This "no heat" recommendation is due to the extensive use of high strength and advanced high strength steels in Chrysler Group LLC products. High-strength materials can be substantially and negatively affected from heat input which will not be obviously known to the repairer or consumer.

Ignoring these recommendations may lead to serious compromises in the ability to protect occupants in a future collision event, reduce the engineered qualities and attributes, or decrease the durability and reliability of the vehicle.

This statement supersedes any previously released information by the Chrysler Group LLC.

Failure to follow these instructions may result in serious or fatal injury.

WARNINGS

WARNING: Use an Occupational Safety and Health Administration (OSHA) approved breathing filter, when spraying paint or solvents in a confined area. Failure to follow these instructions may result in possible serious or fatal injury.

- **avoid prolonged skin contact with petroleum or alcohol based**

cleaning solvents.

- **do not stand under a hoisted vehicle that is not properly supported on safety stands. Failure to follow these instructions may result in possible serious or fatal injury.**

CAUTION: When holes are drilled or punched in an inner body panel, verify the depth of space to the outer body panel, electrical wiring or other components. Damage to the vehicle can result.

- **do not weld exterior panels unless combustible material on the interior of vehicle is removed from the repair area. Fire or hazardous conditions, can result.**
- **always have a fire extinguisher ready for use when welding.**
- **disconnect the negative (-) cable clamp from the battery when servicing electrical components that are live when the ignition is off. Damage to electrical system can result.**
- **do not use abrasive chemicals or compounds on painted surfaces. Damage to finish can result.**
- **do not use harsh alkaline based cleaning solvents on painted or upholstered surfaces. Damage to finish or color can result.**
- **do not hammer or pound on plastic trim panel when servicing interior trim. Plastic panels can break.**

RESTRAINT WARNINGS

WARNING: To avoid potential physical injury, or damage to sensitive electronic circuits and systems, always disconnect and isolate the battery negative (ground) cable and the positive cable, then ground the positive cable to discharge the ORC capacitor before performing any welding operations on the vehicle. Failure to take the proper precautions could result in accidental airbag deployment, possible damage to the Supplemental Restraint System (SRS) circuits and components, and possible damage to other electronic circuits and components. Whenever a welding process is being performed within 30 cm (12 in) of an electronic module/harness, then that module/harness should be relocated out of the way, or disconnected. Always protect against component or vehicle damage from weld spatter by using weld blankets and screens. Failure to follow these instructions may result in serious or fatal injury.

WARNING: To avoid serious or fatal injury on vehicles equipped with the Supplemental Restraint System (SRS), never attempt to repair the electrically conductive circuits or wiring components related to the SRS for which there is no MOPAR wiring repair kit. It is important to use ONLY the recommended splicing kit and procedure. For applicable and available

MOPAR wiring repair kits, please visit the MOPAR Connector Web Site at the following address on the internet: (http://dto.vftis.com/mopar/disclaimer.asp). Inappropriate repairs can compromise the conductivity and current carrying capacity of those critical electrical circuits, which may cause SRS components not to deploy when required, or to deploy when not required. Only minor cuts or abrasions of wire and terminal insulation where the conductive material has not been damaged, or connector insulators where the integrity of the latching and locking mechanisms have not been compromised may be repaired using appropriate methods.

WARNING: **To avoid serious or fatal injury during and following any seat belt or child restraint anchor service, carefully inspect all seat belts, buckles, mounting hardware, retractors, tether straps, and anchors for proper installation, operation, or damage. Replace any belt that is cut, frayed, or torn. Straighten any belt that is twisted. Tighten any loose fasteners. Replace any belt that has a damaged or ineffective buckle or retractor. Replace any belt that has a bent or damaged latch plate or anchor plate. Replace any child restraint anchor or the unit to which the anchor is integral that has been bent or damaged. Never attempt to repair a seat belt or child restraint component. Always replace damaged or ineffective seat belt and child restraint components with the correct, new and unused replacement parts listed in the Chrysler Mopar® Parts Catalog. Failure to follow these instructions may result in possible serious or fatal injury.**

WARNING: **To avoid serious or fatal injury on vehicles equipped with airbags, disable the Supplemental Restraint System (SRS) before attempting any steering wheel, steering column, airbag, Occupant Classification System (OCS), seat belt tensioner, impact sensor or instrument panel component diagnosis or service. Disconnect and isolate the battery negative (ground) cable, then wait two minutes for the system capacitor to discharge before performing further diagnosis or service. This is the only sure way to disable the SRS. Failure to follow these instructions may result in accidental airbag deployment.**

WARNING: **To avoid potential physical injury or damage to sensitive electronic circuits and systems, always disconnect and isolate the battery negative (ground) cable and the positive cable, then ground the positive cable to discharge the Occupant Restraint Controller (ORC) capacitor before performing any welding operations on the vehicle. Failure to take the proper precautions could result in accidental airbag deployment, possible damage to the Supplemental Restraint System (SRS) circuits and components, and possible damage to other electronic circuits and components. Whenever a welding process is being performed within 12 inches (30 centimeters) of an electronic module or wiring harness, then**

that module or harness should be relocated out of the way, or disconnected. Always protect against component or vehicle damage from weld spatter by using weld blankets and screens.

WARNING: **To avoid serious or fatal injury, do not attempt to dismantle an airbag unit or tamper with its inflator. Do not puncture, incinerate or bring into contact with electricity. Do not store at temperatures exceeding 93° C (200° F). An airbag inflator unit may contain sodium azide and potassium nitrate. These materials are poisonous and extremely flammable. Contact with acid, water, or heavy metals may produce harmful and irritating gases (sodium hydroxide is formed in the presence of moisture) or combustible compounds. An airbag inflator unit may also contain a gas canister pressurized to over 17.24 kPa (2500 psi). Failure to follow these instructions may result in possible serious or fatal injury.**

WARNING: **To avoid serious or fatal injury when handling a seat belt tensioner retractor. Exercise proper care to keep fingers out from under the retractor cover and away from the seat belt webbing where it exits from the retractor cover. Failure to follow these instructions may result in possible serious or fatal injury.**

WARNING: **To avoid serious or fatal injury, replace all Supplemental Restraint System (SRS) components only with parts specified in the Chrysler Mopar® Parts Catalog. Substitute parts may appear interchangeable, but internal differences may result in inferior occupant protection.**

WARNING: **To avoid serious or fatal injury, the fasteners, screws, and bolts originally used for the Supplemental Restraint System (SRS) components must never be replaced with any substitutes. These fasteners have special coatings and are specifically designed for the SRS. Anytime a new fastener is needed, replace it with the correct fasteners provided in the service package or specified in the Chrysler Mopar® Parts Catalog.**

WARNING: **To avoid serious or fatal injury when a steering column has an airbag unit attached, never place the column on the floor or any other surface with the steering wheel or airbag unit face down. Failure to follow these instructions may result in possible serious or fatal injury.**

USE OF HEAT DURING REPAIR

WARNING: **Chrysler Group LLC engineering's position on the use of heat during collision repair is as follows:**

- **Any body panel or frame component damaged which is to be repaired and reused, must be repaired using the "cold**

straightening" method. No heat may be used during the straightening process.

- **During rough straightening prior to panel replacement, damaged panels or frame components may be heated to assist in body/frame realignment. The application of heat must be constrained to the parts which will be replaced and not allowed to affect any other components.**

This "no heat" recommendation is due to the extensive use of high strength and advanced high strength steels in Chrysler Group LLC products. High-strength materials can be substantially and negatively affected from heat input which will not be obviously known to the repairer or consumer.

Ignoring these recommendations may lead to serious compromises in the ability to protect occupants in a future collision event, reduce the engineered qualities and attributes, or decrease the durability and reliability of the vehicle.

This statement supersedes any previously released information by the Chrysler Group LLC.

Failure to follow these instructions may result in serious or fatal injury.

DIAGNOSIS AND TESTING

GENERAL WATER LEAKS

Water leaks can be caused by poor sealing, improper body component alignment, body seam porosity, missing plugs, or blocked drain holes. Centrifugal and gravitational force can cause water to drip from a location away from the actual leak point, making leak detection difficult. All body sealing points should be water tight in normal wet-driving conditions. Water flowing downward from the front of the vehicle should not enter the passenger or luggage compartment. Moving sealing surfaces will not always seal water tight under all conditions. At times, side glass or door seals will allow water to enter the passenger compartment during high pressure washing or hard driving rain (severe) conditions. Overcompensating on door or glass adjustments to stop a water leak that occurs under severe conditions can cause premature seal wear and excessive closing or latching effort. After completing a repair, water test vehicle to verify leak has stopped before returning vehicle to use.

VISUAL INSPECTION BEFORE WATER LEAK TESTS

Verify that floor and body plugs are in place, body drains are clear, and body components are properly aligned and sealed. If component alignment or sealing is necessary, refer to the appropriate information for proper procedures.

WATER LEAK TESTS

WARNING: Do not use electric shop lights or tools in water test area. Serious or fatal injury can result.

When the conditions causing a water leak have been determined, simulate the conditions as closely as possible.

- If a leak occurs with the vehicle parked in a steady light rain, flood the leak area with an open-ended garden hose.
- If a leak occurs while driving at highway speeds in a steady rain, test the leak area with a reasonable velocity stream or fan spray of water. Direct the spray in a direction comparable to actual conditions.
- If a leak occurs when the vehicle is parked on an incline, hoist the end or side of the vehicle to simulate this condition. This method can be used when the leak occurs when the vehicle accelerates, stops or turns. If the leak occurs on acceleration, hoist the front of the vehicle. If the leak occurs when braking, hoist the back of the vehicle. If the leak occurs on left turns, hoist the left side of the vehicle. If the leak occurs on right turns, hoist the right side of the vehicle. For hoisting recommendations, refer to **HOISTING, STANDARD PROCEDURE** .

WATER LEAK DETECTION

To detect a water leak point-of-entry, do a water test and watch for water tracks or droplets forming on the inside of the vehicle. If necessary, remove interior trim covers or panels to gain visual access to the leak area. If the hose cannot be positioned without being held, have someone help do the water test.

Some water leaks must be tested for a considerable length of time to become apparent. When a leak appears, find the highest point of the water track or drop. The highest point usually will show the point of entry. After leak point has been found, repair the leak and water test to verify that the leak has stopped.

Locating the entry point of water that is leaking into a cavity between panels can be difficult. The trapped water may splash or run from the cavity, often at a distance from the entry point. Most water leaks of this type become apparent after accelerating, stopping, turning, or when on an incline.

MIRROR INSPECTION METHOD

When a leak point area is visually obstructed, use a suitable mirror to gain visual access. A mirror can also be used to deflect light to a limited-access area to assist in locating a leak point.

BRIGHT LIGHT LEAK TEST METHOD

Some water leaks in the luggage compartment can be detected without water testing. Position the vehicle in a brightly lit area. From inside the darkened luggage compartment inspect around seals and body seams. If necessary, have a helper direct a drop light over the suspected leak areas around the luggage compartment. If light is visible through a normally sealed location, water could enter through the opening.

PRESSURIZED LEAK TEST METHOD

When a water leak into the passenger compartment cannot be detected by water testing, pressurize the passenger compartment and soap test exterior of the vehicle. To pressurize the passenger compartment, close all

doors and windows, start engine, and set heater control to high blower in HEAT position. If engine cannot be started, connect a charger to the battery to ensure adequate voltage to the blower. With interior pressurized, apply dish detergent solution to suspected leak area on the exterior of the vehicle. Apply detergent solution with spray device or soft bristle brush. If soap bubbles occur at a body seam, joint, seal or gasket, the leak entry point could be at that location.

TRACING POWDER LEAK TEST METHOD

Tracing powder can be used to help aid in pinpointing the area of the leak. It is available through many aftermarket automotive suppliers. Apply the tracing powder along weatherstrips, body seams and other areas where the water leak is suspected of coming from. Perform a water leak test in the in the suspected area. Refer to **WATER LEAK TESTS**. When the water passes over the tracing powder the leak should be pinpointed by the displacement of the tracing powder. Follow the tracing powder's manufacturer restrictions, guidelines and directions.

WIND NOISE

Wind noise is the result of most air leaks. Air leaks can be caused by poor sealing, improper body component alignment, body seam porosity, or missing plugs in the engine compartment or door hinge pillar areas. All body sealing points should be airtight in normal driving conditions. Moving sealing surfaces will not always seal airtight under all conditions. At times, side glass or door seals will allow wind noise to be noticed in the passenger compartment during high cross winds. Over compensating door or glass adjustments to stop wind noise that occurs under severe conditions can cause premature seal wear and excessive closing or latching effort. After a repair procedure has been performed, test vehicle to verify noise has stopped before returning vehicle to use.

VISUAL INSPECTION BEFORE TESTS

Verify that floor and body plugs are in place and body components are aligned and sealed. If component alignment or sealing is necessary, refer to the appropriate information for proper procedures.

ROAD TESTING WIND NOISE

1. Drive the vehicle to verify the general location of the wind noise.
2. Apply 50 mm (2 in.) masking tape in 150 mm (6 in.) lengths along weatherstrips, weld seams or moldings. After each length is applied, drive the vehicle. If noise goes away after a piece of tape is applied, remove tape, locate, and repair defect.

POSSIBLE CAUSE OF WIND NOISE

- Moldings standing away from body surface can catch wind and whistle.
- Gaps in sealed areas behind overhanging body flanges can cause wind-rushing sounds.
- Misaligned movable components.
- Missing or improperly installed plugs in pillars.
- Weld burn through holes.

STANDARD PROCEDURE

BUZZ, SQUEAKS AND RATTLES

Buzz, Squeaks and Rattles (BSR's) may be caused by any one or more of the following and may be corrected as indicated:

- Loose fasteners should be tightened to specifications.
- Damaged or missing clips should be replaced.
- Damaged trim panels should be replaced.
- Incorrectly installed trim panels should be reinstalled properly.

Many BSR complaints such as loose trim, can be serviced using various tapes or lubricants. Tapes including foam, flock and anti-squeak, can be used to eliminate noises caused by metal, plastic and vinyl components. Long life lubricants and greases can also be used on a variety of components. Refer to the table for materials and usage. Refer to **BUZZ, SQUEAKS AND RATTLES**.

BUZZ, SQUEAKS AND RATTLES

ITEM	FEATURES	APPLICATIONS	SERVICE TEMP
ITCH AND SQUEAK TAPE	An abrasion resistant material thin enough to conform to most irregular surfaces. Stops most itches and squeaks.	Between metal and metal, metal and plastic, metal and vinyl, vinyl and plastic. Interior. Examples: Trim panels and bezels.	-40° to 107° C (-40° to 225° F)
BLACK NYLON FLOCK	Nylon Flock with an aggressive acrylic adhesive. Provides for cushioning and compression fit, also isolates components. Water-resistant.	Between metal and metal, metal and plastic, vinyl and plastic. Examples: Pull cups, bezels, clips, ducts, top cover to glass, cowl panel.	-40° to 82° C (-40° to 180° F)
HIGH DENSITY URETHANE FOAM	Tear resistant, highly resilient and durable.	Between metal and metal, metal and plastic. Water-resistant. Examples: I/P, heavy metal rattles, isolating brackets.	-40° to 82° C (-40° to 180° F)
OPEN CELL FOAM TAPE	Soft foam conforms to irregular surfaces.	Wire harness and connector wrap. Examples: Seals, gasket, wiring, heat ducts.	-40° to 82° C (-40° to 180° F)
CLOSED CELL LOW DENSITY FOAM TAPE	Soft, conformable. Water-resistant.	Wherever bulk is needed. Prevents closing flutters and rattles when applied to door watershield. Examples: Door, I/P.	-40° to 82° C (-40° to 180° F)
NYE® GREASE 880	Long life.	Suspensions. Examples: Strut bushings, sway	-40° to 200° C (-40° to 390° F)

		bars.	
KRYTOX® OIL	Long life. Will not dry out or harm plastics or rubber.	When access is not possible, oil will migrate to condition. Vinyl, rubber, plastic, metal. Examples: Convertible top bushings, pull cups trim panel inserts.	-34° to 205° C (-30° to 400° F)
KRYTOX® GREASE	Long life. Will not dry out or harm plastics or rubber.	Vinyl, rubber, plastic, metal, glass. Examples: Weather-strips, backlite and windshield moldings.	-34° to 205° C (-30° to 400° F)

HEAT STAKING

1. Remove trim panel.
2. Bend or move the trim panel components at the heat staked joints. Observe the heat staked locations and/or component seams for looseness.
3. Heat stake the components.
   a. If the heat staked or component seam location is loose, hold the two components tightly together and using a soldering gun with a flat tip, melt the material securing the components together. Do not over heat the affected area, damage to the exterior of the trim panel may occur.
   b. If the heat staked material is broken or missing, use a hot glue gun to apply new material to the area to be repaired. The panels that are being heat staked must be held together while applying the glue. Once the new material is in place, it may be necessary to use a soldering gun to melt the newly applied material. Do not over heat the affected area, damage to the exterior of the trim panel may occur.
4. Allow the repaired area to cool and verify the repair.
5. Install trim panel.

PLASTIC BODY PANEL REPAIR

There are many different types of plastics used in today's automotive environment. We group plastics in three different categories: Rigid, Semi-Rigid, and Flexible. Any of these plastics may require the use of an adhesion promoter for repair. These types of plastic are used extensively on Chrysler Motors vehicles. Always follow repair material manufacturer's plastic identification and repair procedures.

RIGID PLASTICS:

Examples of rigid plastic use: Fascias, Hoods, Doors, and other Body Panels, which include SMC, ABS, and Polycarbonates.

SEMI-RIGID PLASTICS:

Examples of semi-rigid plastic use: Interior Panels, Under Hood Panels, and other Body Trim Panels.

FLEXIBLE PLASTICS:

Examples of flexible plastic use: Fascias, Body Moldings, and upper and lower Fascia Covers.

REPAIR PROCEDURE:

The repair procedure for all three categories of plastics is basically the same. The one difference is the material used for the repair. The materials must be specific for each substrate, rigid repair material for rigid plastic repair, semi-rigid repair material for semi-rigid plastic repair and flexible repair material for flexible plastic repair.

ADHESION PROMOTER/SURFACE MODIFIER:

Adhesion Promoters/Surface Modifiers are required for certain plastics. All three categories may have plastics that require the use of adhesion promoter/surface modifiers. Always follow repair material manufacturer's plastic identification and repair procedures.

SAFETY PRECAUTION AND WARNINGS

WARNING:

- **Eye protection should be used when servicing components. Personal injury can result.**
- **Use an OSHA approved breathing mask when mixing epoxy, grinding, and spraying paint or solvents in a confined area. Personal injury can result.**
- **Avoid prolonged skin contact with resin, petroleum, or alcohol based solvents. Personal injury can result.**
- **Do not venture under a hoisted vehicle that is not properly supported on safety stands. Personal injury can result.**

NOTE:

- **When holes must be drilled or cut in body panels, verify locations of internal body components and electrical wiring. Damage to vehicle can result.**
- **Do not use abrasive chemicals or compounds on undamaged painted surfaces around repair areas. Damage to finish can result.**

RIGID, SEMI-RIGID, AND FLEXIBLE PLASTIC PARTS TYPES

CODE	FAMILY NAME	COMMON TRADE NAME	TYPICAL APPLICATION
ASA	Acrylonitrile Styrene Acrylite	Lurans	Consoles, Grilles
ABS	Acrylonitrile Butadiene Styrene	Terluran	"A" Pillars, Consoles, Grilles
ABS/PC	ABS/PC Alloy	Pulse, Proloy, Bayblend	Doors, Instrument Panels
ABS/PVC	ABS/PV Alloy	Proloy, Pulse, Lustran,	Door Panels, Grilles, Trim

		Cyclovin	
BMC	Bulk Molding Compound	BMC	Fender Extensions
EMA	Ehtylene Methyl Acrylate/Ionomer	Surlyn, EMA, Ionomer	Bumper Guards, Pads
METTON	Metton	Metton	Grilles, Kick Panels, Running Boards
MPPO	Modified Polyphenylene Oxide	MPPO	Spoiler Assembly
PA	Polyamid	Zytel, Vydyne, PA, Minlon	Fenders, Quarter Panels
PET	Thermoplastic Polyester	Rynite	Trim
PBT/PPO	PBT/PPO Alloy	Germax	Claddings
PBTP	Polybutylene Therepthalate	PBT, PBTP, Pocan, Valox	Wheel Covers, Fenders, Grilles
PBTP/EEBC	Polybutylene Therepthalate/EEBC Alloy	Bexloy, "M", PBTP/EEBC	Fascias, Rocker Panel, Moldings
PC	Polycarbonate	Lexan, Merlon, Calibre, Makrolon PC	Tail Light Lenses, I/P Trim, Valance Panels
PC/ABS	PC/ABS Alloy	Germax, Bay Blends, Pulse	Doors, Instrument Panels
PPO	Polyphenylene Oxide	Azdel, Hostalen, Marlex, Prfax, Noryl, GTX, PPO	Interior Trim, Door Panels, Splash Shields, Steering Column Shroud
PPO/PA	Polyphenylene/Polyamid	PPO/PA, GTX 910	Fenders, Quarter Panels
PR/FV	Fiberglass Reinforced Plastic	Fiberglass, FV, PR/FV	Body Panels
PS	Polystyrene	Lustrex, Styron, PS	Door Panels, Dash Panels
RTM	Resin Transfer Molding Compound	RTM	Body Panels
SMC	Sheet Molded Compound	SMC	Body Panels
TMC	Transfer Molding Compound	TMC	Grilles
UP	Unsaturated Polyester (Thermosetting)	SMC, BMC, TMC, ZMC, IMC, XSMC, UP	Grille Opening Panel, Liftgates, Flareside Fenders, Fender Extensions
EEBC	Ether/Ester Blocked Co-Polymer	EEBC	Bumpers
EEBC/PBTP	EEBC/Polybutylene Terepthalate	EEBC, PBTP, BEXLOY	Bumper, Rocker Panels
EMPP	Ethylene Modified Polypropylene	EMPP	Bumper Covers
EPDM	Ethylene/Propropylene Diene Monomer	EPDM, Nordel, Vistalon	Bumpers
EPM	Ethylene/Propropylene Co-Polymer	EPM	Fenders
MPU	Foam Polyurethane	MPU	Spoilers
PE	Polyethylene	Alathon, Dylan, Lupolen, Marlex	-

PP	Polypropylene (Blends)	Noryl, Azdel, Marlox, Dylon, Pravex	Inner Fender, Spoilers, Kick Panels, A-Pillars, Door Panels, B-Pillars, Quarter Panels, Sport Bar Trim, Liftgate Trim, Decklid Trim Scuff Plates, Kick Panels, Consoles
PP/EPDM	PP/EPDM Alloy	PP/EPDM	Spoilers, Grilles
PUR	Polyurethane	Colonels, PUR, PU	Fascias, Bumpers
PUR/PC	PUR/PC Alloy	Texin	Bumpers
PVC	Polyvinyl Chloride	Apex, Geon, Vinylite	Body Moldings, Wire Insulation, Steering Wheels
RIM	Reaction Injected Molded Polyurethane	RIM, Bayflex	Front Fascias, Modular Windows
RRIM	Reinforced Reaction Injected Molded	PUR, RRIM	Fascias, Body Panels, Body Trims
TPE	Thermo Polyethylene	TPE, Hytrel, Bexloy-V	Fascias, Bumpers, Claddings
TPO	Thermopolyolefin	Polytrope, Renflex, Santoprene, Visaflex, ETA, Apex, TPO, Shields, Claddings	Bumpers, End Caps, Telcar, Rubber, Strips, Sight, Interior B-Pillar
TPP	Thermo-Polypropylene	TPP	Bumpers
TPU	Thermopolyurethane, Polyester	TPU, Hytrel, Texin, Estane	Bumpers, Body Side, Moldings, Fenders, Fascias

PANEL SECTIONING

If it is required to section a large panel for a plastic repair, it will be necessary to reinforce the panel. To bond two plastic panels together, a reinforcement must overlap both panels. The panels must be "V'd" at a 20 degree angle. The area to be reinforced should be washed, then sanded. Be sure to wipe off any excess soap and water when finished. Lightly sand or abrade the plastic with an abrasive pad or sandpaper. Blow off any dust with compressed air or wipe with a clean dry rag.

When bonding plastic panels, Follow repair material manufacturers recommendations. Be sure that enough adhesive has been applied to allow squeeze out and to fill the full bond line. Once the pieces have been brought together, do not move them until the adhesive is cured. The assembly can be held together with clamps, rivets, etc. A faster cure can be obtained by heating with a heat lamp or heat gun. After the parts have been bonded and have had time to cure, rough sand the seam and apply the final adhesive filler to the area being repaired. Smooth the filler with a spreader, wooden tongue depressor, or squeegee. For fine texturing, a small amount of water can be applied to the filler surface while smoothing. The cured filler can be sanded as necessary and, as a final step, cleanup can be done with soapy water. Wipe the surface clean with a dry cloth allowing time for the panel to dry before moving on with the repair.

PANEL REINFORCEMENT

Structural repair procedures for rigid panels with large cracks and holes will require a reinforcement backing. Reinforcements can be made with several applications of glass cloth saturated with structural adhesive. Semi-rigid or flexible repair materials should be used for semi-rigid or flexible backing reinforcement. Open meshed fiberglass dry wall tape can be used to form a reinforcement. The dry wall tape allows the resin to penetrate through and make a good bond between the panel and the adhesive. Structurally, the more dry wall tape used, the stronger the repair.

Another kind of repair that can be done to repair large cracks and holes is to use a scrap piece of similar plastic and bond with structural adhesive. The reinforcement should cover the entire break and should have a generous amount of overlap on either side of the cracked or broken area.

When repairing plastic, the damaged area is first "V'd" out, or beveled. Large bonding areas are desirable when repairing plastic because small repairs are less likely to hold permanently. Beveling the area around a crack at a 20 degree angle will increase the bonding surface for a repair. It is recommended that sharp edges be avoided because the joint may show through after the panel is refinished.

- Panel repair for both flexible and rigid panels are basically the same. The primary difference between flexible panel repair and rigid panel repair is in the adhesive materials used.
- The technician should first decide what needs to be done when working on any type of body panel. One should determine if it is possible to return the damage part to its original strength and appearance without exceeding the value of the replacement part.
- When plastic repairs are required, it is recommended that the part be left on the vehicle when ever possible. That will save time, and the panel will remain stationary during the repair. Misalignment can cause stress in the repair areas and can result in future failure.

VISUAL INSPECTION

Composite materials can mask the severity of an accident. Adhesive bond lines, interior structure of the doors, and steel structures need to be inspected carefully to get a true damage assessment. Close inspection may require partial removal of interior trim or inner panels.

Identify the type of repair: Puncture or Crack - Damage that has penetrated completely through the panel. Damage is confined to one general area; a panel section is not required. However, a backer panel, open fiberglass tape, or matted material must be bonded from behind.

PANEL SURFACE PREPARATION

If a body panel has been punctured, cracked, or crushed, the damaged area must be removed from the panel to achieve a successful repair. All spider web cracks leading away from a damaged area must be stopped or removed. To stop a running crack in a panel, drill a 6 mm (0.250 in.) hole at the end of the crack farthest away from the damage. If spider web cracks can not be stopped, the panel would require replacement. The surfaces around the damaged area should be stripped of paint and freed from wax and oil. Scuff surfaces around repair area with 360 grit wet/dry sandpaper, or equivalent, to assure adhesion of repair materials.

PATCHING PANELS

An panel that has extensive puncture type damage can be repaired by cutting out the damaged material. Use a

suitable reciprocating saw or cut off wheel to remove the section of the panel that is damaged. The piece cut out can be used as a template to shape the new patch. It is not necessary to have access to the back of the panel to install a patch. Bevel edges of cutout at 20 degrees to expose a larger bonding area on the outer side. This will allow for an increased reinforcement areas.

PANEL PATCH FABRICATIONS

A patch can be fabricated from any rigid fiberglass panel that has comparable contour with the repair area. Lift gates and fenders can be used to supply patch material. If existing material is not available or compatible, a patch can be constructed with adhesive and reinforcement mesh (dry wall tape). Perform the following operation if required:

1. Cover waxed paper or plastic with adhesive backed nylon mesh (dry wall tape) larger than the patch required.
2. Tape waxed paper or plastic sheet with mesh to a surface that has a compatible contour to the repair area.
3. Apply a liberal coat of adhesive over the reinforcement mesh. If necessary apply a second or third coat of adhesive and mesh after first coat has cured. The thickness of the patch should be the same as the repair area.
4. After patch has cured, peel waxed paper or plastic from the back of the patch.
5. If desired, a thin film coat of adhesive can be applied to the back of the patch to cover mesh for added strength.

PANEL PATCH INSTALLATION

1. Make a paper or cardboard pattern the size and shape of the cutout hole in the panel.
2. Trim 3 mm (0.125 in.) from edges of pattern so patch will have a gap between connecting surfaces.
3. Using the pattern as a guide, cut the patch to size.
4. Cut scrap pieces of patch material into 50 mm (2 in.) squares to use as patch supports to sustain the patch in the cutout.
5. Drill 4 mm (0.160 in.) holes 13 mm (0.5 in.) in from edge of cutout hole.
6. Drill 4 mm (0.160 in.) holes 13 mm (0.5 in.) away from edge of patch across from holes drilled around cutout.
7. Drill 3 mm (0.125 in.) holes in the support squares 13 mm (0.5 in.) from the edge in the center of one side.
8. Scuff the backside of the body panel around the cutout hole with a scuff pad or sandpaper.
9. Mix enough adhesive to cover one side of all support squares.
10. Apply adhesive to cover one side of all support squares.
11. Using number 8 sheet metal screws, secure support squares to back side of body panel with adhesive sandwiched between the panel and squares.
12. Position patch in cutout against support squares and adjust patch until the gap is equal along all sides.
13. Drill 3 mm (0.125 in.) holes in the support squares through the pre-drilled holes in the patch.
14. Apply a coat of adhesive to the exposed ends of the support squares.

15. Install screws to hold the patch to support squares. Tighten screws until patch surface is flush with panel surface.
16. Allow adhesive to cure, and remove all screws.
17. Using a 125 mm (5 in.) 24 grit disc grinder, grind a 50 mm (2 in.) to 75 mm (3 in.) wide and 2 mm (0.080 in.) deep path across the gaps around the patch. With compressed air, blow dust from around patch.
18. Apply adhesive backed nylon mesh (dry wall tape) over gaps around patch.
19. Mix enough adhesive to cover the entire patch area.
20. Apply adhesive over the mesh around patch, and smooth epoxy with a wide spreader to reduce finish grinding. Use two to three layers of mesh and adhesive to create a stronger repair.

PATCHED PANEL SURFACING

After patch panel is installed, the patch area can be finished using the same methods as finishing other types of body panels. If mesh material is exposed in the patched area, grind surface down, and apply a coat of high quality rigid plastic body filler. Prime, block sand, and paint as required.

SPECIFICATIONS

TORQUE SPECIFICATIONS

TORQUE SPECIFICATIONS

Description	N.m	Ft Lbs	In Lbs
Coolant bottle fasteners	10	7	89
Fender to body fasteners	9	7	80
Front door carrier plate fasteners	8	6	71
Front door carrier plate to outside handle fastener	8	6	71
Front door check to A-pillar fastener	30	22	266
Front door exterior handle fastener	2	1	18
Front door glass to regulator fasteners	13	10	115
Front door hinge pivot bolts	24	18	212
Front door hinge to body fasteners	43	32	381
Front door hinge to door fasteners	43	32	381
Front door latch fasteners	8	6	71
Front door striker bolts	30	22	266
Front end module lower bolts	26	19	230
Front end module upper bolts	16	12	142
Front seat mounting bolts	40	30	354
Hood hinge to body bolts	9	7	80
Hood hinge to hood bolts	21	15	186
Hood latch fasteners	9	7	80
Hood striker fasteners	21	15	186
Instrument panel to cowl side bolts *			

The instrument panel side support bolts need to be rechecked at least five minutes after installation.	27	20	239
Instrument panel to cowl upper bolts	20	15	177
Liftgate hinge bolts	28	21	248
Liftgate hinge to header nut	63	46	558
Liftgate latch bolts	9	7	80
Liftgate striker bolts	28	21	248
Passenger air bag fasteners	9	7	80
Rear door carrier plate fasteners	8	6	71
Rear door carrier plate to outside handle fastener	8	6	71
Rear door check to B-pillar fasteners	30	22	266
Rear door glass to regulator fasteners	13	10	115
Rear door hinge pivot bolts	24	18	212
Rear door hinge to B-pillar fasteners	43	32	381
Rear door hinge to door fasteners	43	32	381
Rear door striker bolts	30	22	266
Rear seat armrest pivot bolt	25	18	221
Rear seat back mounting bolts	25	18	221
Rear seat mounting fasteners	85	63	752
Roof rack fasteners	6	4	53
Spoiler bolts	6	4	53
Sunroof glass fasteners, front glass panel	4.5	3	40
Sunroof glass fasteners, rear glass panel	4.5	3	40
Sunroof motor fasteners	4	3	35
Sunroof mounting bolts	9	7	80
Washer bottle fasteners	7	5	62

BODY LUBRICATION

LUBRICATION REQUIREMENTS

Body mechanisms and linkages should be inspected, cleaned, and lubricated, as required, to maintain ease of operation and to provide protection against rust and wear. When performing other under hood services, the hood latch release mechanism and safety catch should be inspected, cleaned, and lubricated. During the winter season, external door lock cylinders should be lubricated to assure proper operation when exposed to water and ice.

Prior to the application of any lubricant, the parts concerned should be wiped clean to remove dust and grit. If necessary, a suitable solvent can be used to clean the item to be lubricated. After lubricating a component, any excess oil or grease should be removed.

LUBRICANT APPLICATION

DOOR LOCK CYLINDERS

1. Apply a small amount of lubricant directly into the lock cylinder.
2. Apply a small amount of lubricant to the key.
3. Insert key into lock cylinder and cycle the mechanism from the locked to the unlocked position.

NOTE: Do not add more lubricant.

4. Cycle the lock cylinder mechanism several times to allow the lubricant to flow throughout the cylinder.
5. Wipe all lubricant from exterior of lock cylinder and key.

ALL OTHER BODY MECHANISMS

1. Clean component as described above.
2. Apply specified lubricant to all pivoting and sliding contact areas of component.

LUBRICANT USAGE

ENGINE OIL

- Door Hinges - Hinge Pin and Pivot Contact Areas
- Hood Hinges - Pivot Points
- Liftgate Hinges

MOPAR® SPRAY WHITE LUBE OR EQUIVALENT

- Door Check Straps
- Liftgate Latches
- Liftgate Prop Pivots
- Ash Receiver
- Fuel Filler Door Remote Control Latch Mechanism
- Parking Brake Mechanism
- Sliding Seat Tracks
- Liftgate Latch

MOPAR® MULTIPURPOSE GREASE OR EQUIVALENT

- All Other Hood Mechanisms

MOPAR® LOCK CYLINDER LUBRICANT OR EQUIVALENT

- Door Lock Cylinders
- Liftgate Lock Cylinder

SPECIAL TOOLS

SPECIAL TOOLS

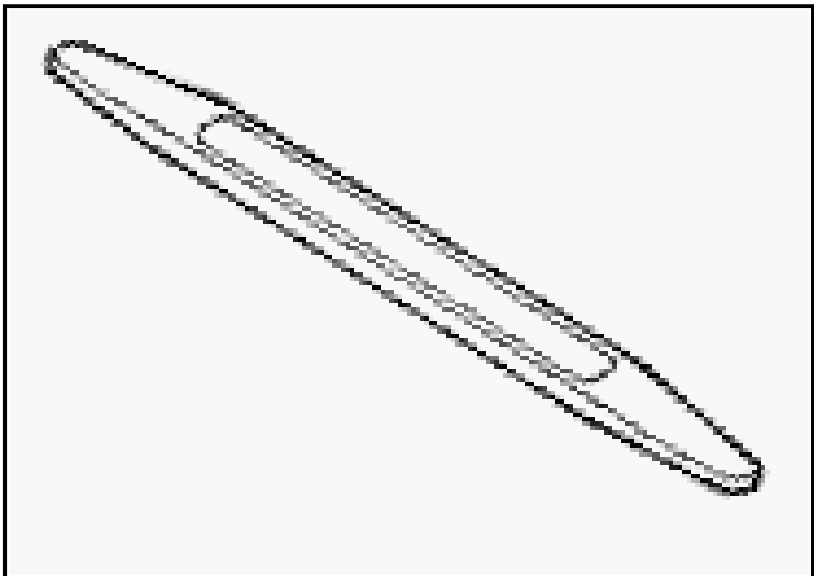	C-4755 - Trim Stick (Originally Shipped In Kit Number(s) 9299, 9299CC, 9299CC, 9300A-CAN.)
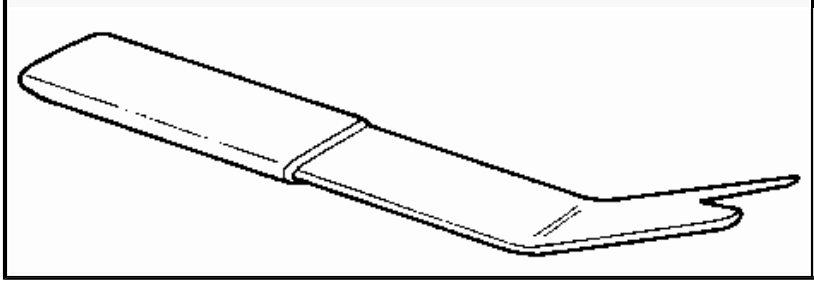	C-4829A - Remover, Trim

DECKLID/HATCH/LIFTGATE/TAILGATE

HINGE, LIFTGATE

REMOVAL

REMOVAL

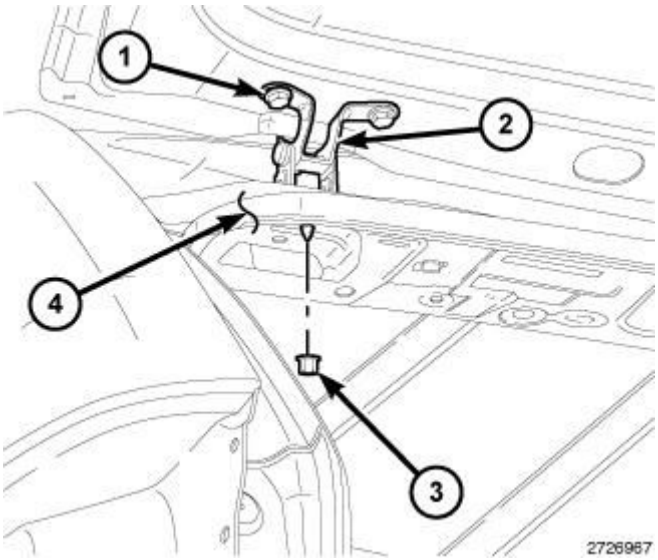

Fig. 1: Nuts, Header, Bolts & Hinges
Courtesy of CHRYSLER GROUP, LLC

1. Remove the spoiler (1). Refer to **SPOILER, REMOVAL**.

NOTE: **It is not necessary to remove the liftgate to replace one or both hinges. The hinges can be replaced one at a time.**

2. Open and support the liftgate with a suitable prop or block.
3. If the liftgate is being replaced, remove the liftgate support struts (2) at the liftgate. Refer to **PROP ASSEMBLY, POWER, REMOVAL**.
4. Remove the upper quarter trim panels. Refer to **PANEL, QUARTER TRIM, REMOVAL**.
5. Lower the rear of the headliner to gain access to the hinge fasteners.
6. Remove the bolts (1) that secure the hinge to the liftgate.
7. Remove the hinges (2) from the vehicle.

INSTALLATION

INSTALLATION

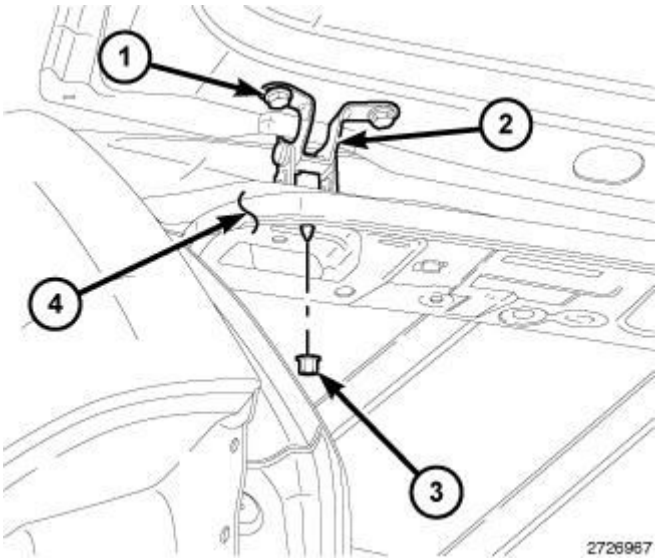

Fig. 2: Nuts, Header, Bolts & Hinges
Courtesy of CHRYSLER GROUP, LLC

1. It is not necessary to remove the liftgate to replace one or both hinges. The hinges can be replaced one at a time.

NOTE: Use a suitable body sealer on the hinge to body mating surfaces prior to installation.

2. Position the liftgate hinge (2) to the upper liftgate opening header (4) on the vehicle.
3. Carefully pull the upper edge of the side panels downward from the header far enough to install and tighten the nut (3) to 63 N.m (46 ft. lbs.).
4. Position the liftgate to the liftgate half of the hinge (1) on the vehicle.
5. Install and tighten the two fasteners (1) that secure the hinge to the liftgate.
6. Tighten the fasteners to 28 N.m (21 ft. lbs.).
7. Install the support struts. Refer to **PROP ASSEMBLY, POWER, INSTALLATION**.
8. Install the spoiler to the liftgate. Refer to **SPOILER, INSTALLATION**.
9. Check the liftgate for proper alignment and operation. Refer to **GAP AND FLUSH, SPECIFICATIONS**.
10. Install the upper quarter trim panels. Refer to **PANEL, QUARTER TRIM, INSTALLATION**.

LATCH, LIFTGATE

REMOVAL

REMOVAL

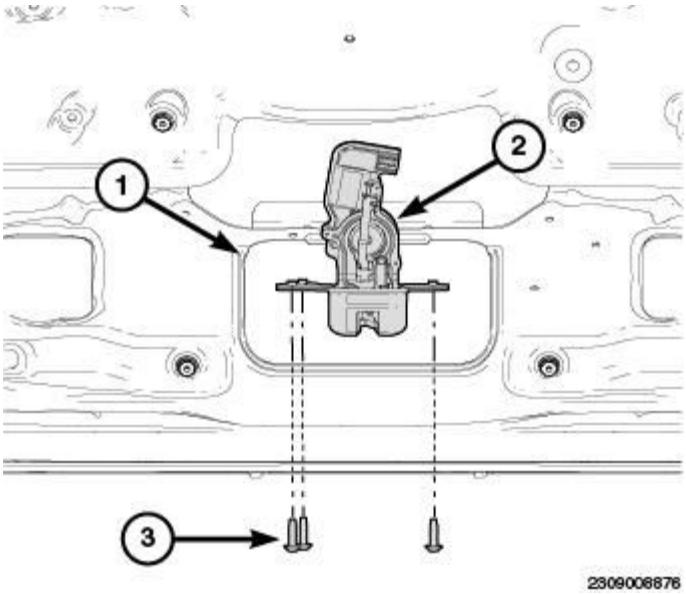

Fig. 3: Identifying Liftgate, Hatch & Bolts
Courtesy of CHRYSLER GROUP, LLC

1. Remove the trim panel from the lift gate. Refer to **PANEL, TRIM, REMOVAL**.
2. Remove the three bolts (3) from the lift gate latch (2).
3. Disconnect the electrical connectors.
4. Remove the lift gate latch (2) from the lift gate (1).

INSTALLATION

INSTALLATION

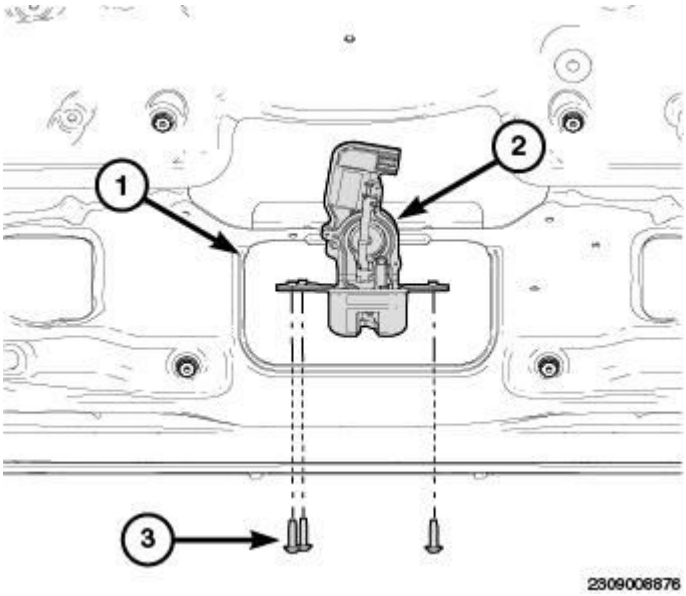

Fig. 4: Identifying Liftgate, Hatch & Bolts

Courtesy of CHRYSLER GROUP, LLC

1. Install the latch (2) to the lift gate (1).
2. Install the three bolts (3) to the lift gate latch (2) and tighten the bolts to 9 N.m (80 in. lbs.).
3. Connect the electrical connectors.
4. Install the liftgate trim panel. Refer to **PANEL, TRIM, INSTALLATION**.

LIFTGATE

ADJUSTMENTS

ADJUSTMENTS

IN/OUT

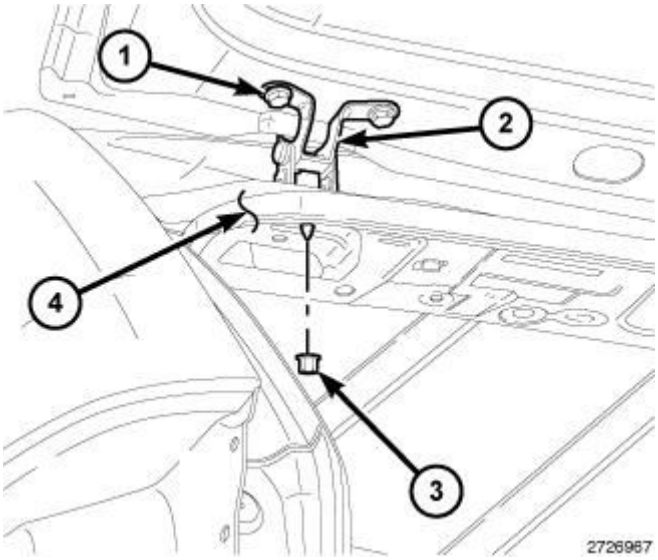

Fig. 5: Nuts, Header, Bolts & Hinges
Courtesy of CHRYSLER GROUP, LLC

NOTE: **The position of the lift gate can be adjusted upward or downward by the use of slots in the hinge. An inward or outward adjustment is achieved by use of slots in the body. If an inward or outward adjustment is needed, use a body sealer on the hinge to body mating surface.**

1. Remove the upper quarter trim panels and lower the rear of the headliner to access the hinge fasteners. Refer to **PANEL, QUARTER TRIM, REMOVAL**.
2. For the upper lift gate adjustments, loosen the six hinge to header fasteners (2 and 3) and adjust to specifications. Refer to **GAP AND FLUSH, SPECIFICATIONS**.
3. Tighten the hinge bolts to 28 N.m (21 ft. lbs.).

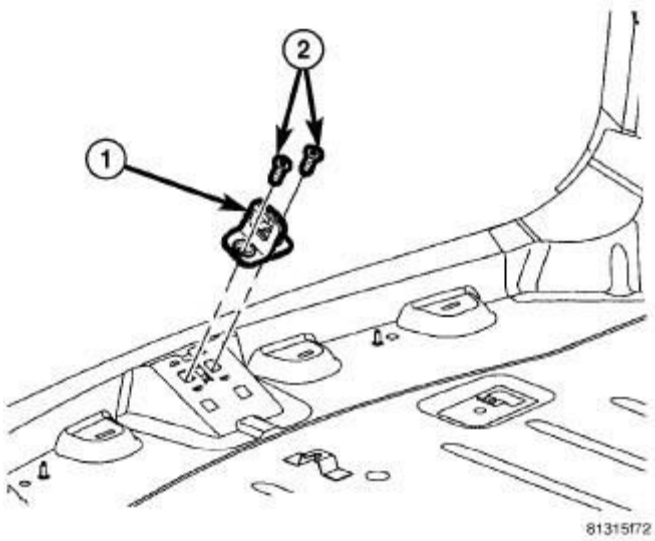

Fig. 6: Identifying Striker & Screws
Courtesy of CHRYSLER GROUP, LLC

4. For the lower lift gate adjustments, remove liftgate scuff trim. Refer to **PLATE, SCUFF, DOOR SILL, INSTALLATION**.
5. Loosen the striker screws (2) and adjust to specifications. Refer to **GAP AND FLUSH, SPECIFICATIONS**.
6. Tighten the striker screws to 28 N.m (21 ft. lbs.).
7. Position the upper rear headliner trim and seat fully.
8. Position liftgate scuff plate trim and seat fully.
9. Install the upper quarter trim panels. Refer to **PANEL, QUARTER TRIM, INSTALLATION**.

UP/DOWN AND LEFT/RIGHT

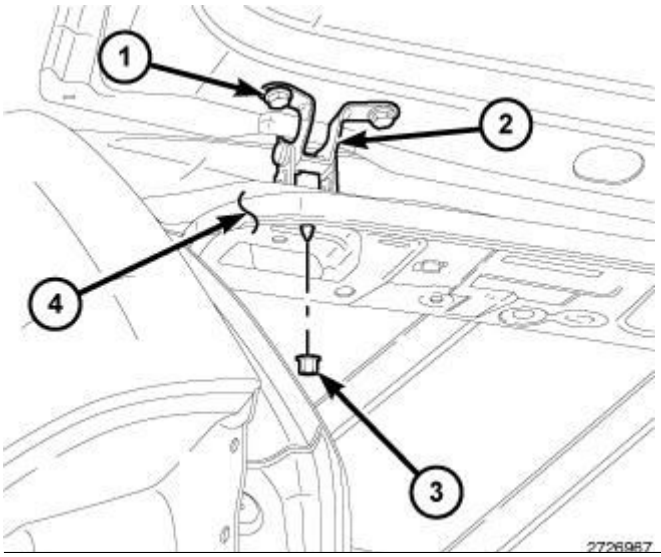

Fig. 7: Nuts, Header, Bolts & Hinges
Courtesy of CHRYSLER GROUP, LLC

1. Remove the upper quarter trim panels and lower the rear of the headliner to access the hinge fasteners. Refer to **PANEL, QUARTER TRIM, REMOVAL**.
2. Remove liftgate scuff trim. Refer to **PLATE, SCUFF, DOOR SILL, REMOVAL**.
3. Loosen the hinge to liftgate bolts (1).

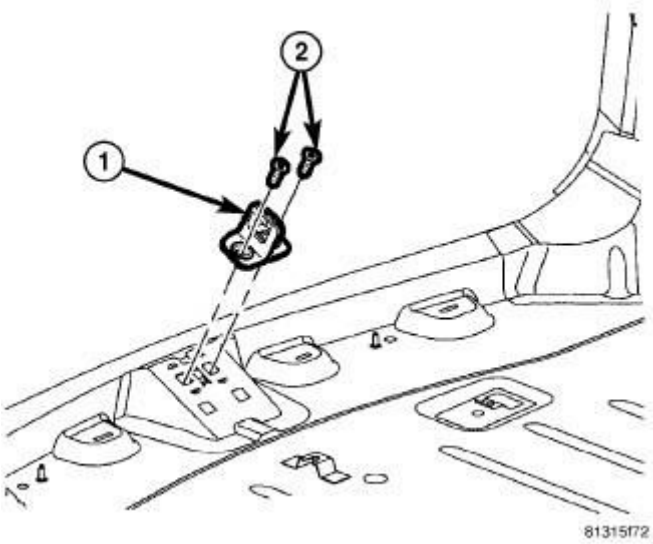

Fig. 8: Identifying Striker & Screws
Courtesy of CHRYSLER GROUP, LLC

4. Loosen the striker screws (1).
5. Adjust the liftgate up/down position and tighten the hinge bolts to 28 N.m (21 ft. lbs.). Refer to **GAP AND FLUSH, SPECIFICATIONS**.
6. Confirm the lower liftgate in/out position and tighten the striker screws to 28 N.m (21 ft. lbs.).
7. Install liftgate scuff plate trim. Refer to **PLATE, SCUFF, DOOR SILL, INSTALLATION**.
8. Install the upper quarter trim panels. Refer to **PANEL, QUARTER TRIM, INSTALLATION**.

REMOVAL

REMOVAL

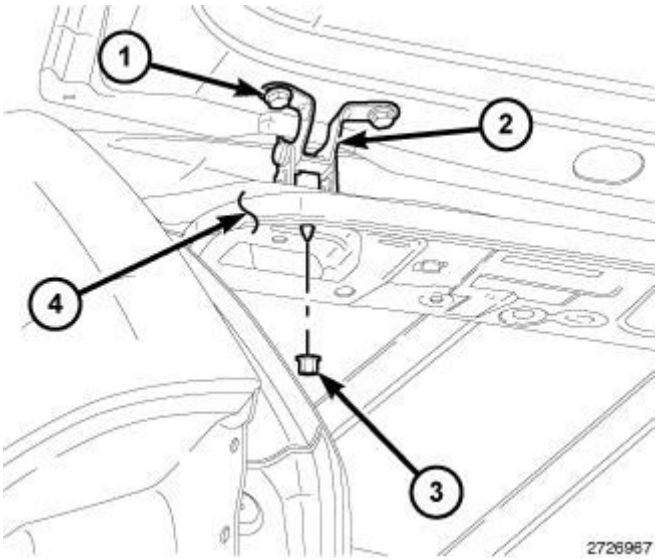

Fig. 9: Nuts, Header, Bolts & Hinges
Courtesy of CHRYSLER GROUP, LLC

1. Remove the upper quarter trim panels and lower the rear of the headliner to access the hinge fasteners. Refer to **PANEL, QUARTER TRIM, REMOVAL**.

WARNING: **Do not disconnect the support rod cylinders with the liftgate closed. The support rod pistons are operated by high pressure gas. This pressure could cause damage and/or personal injury if they are removed while the pistons are compressed.**

WARNING: **Failure to follow these instructions may result in possible serious or fatal injury.**

2. Open and support the liftgate.
3. Remove the support struts (2) from the liftgate (1). Refer to **PROP ASSEMBLY, POWER, REMOVAL**.
4. Disconnect the wire harnesses.
5. Using a grease pencil or equivalent, mark the hinge location.
6. Remove the liftgate to body fasteners (3) and remove liftgate from vehicle.

INSTALLATION

INSTALLATION

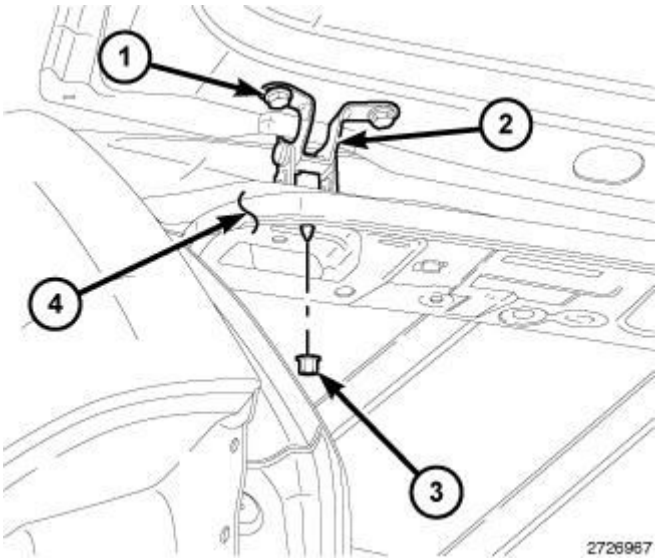

Fig. 10: Nuts, Header, Bolts & Hinges
Courtesy of CHRYSLER GROUP, LLC

NOTE: With assistance, support the lift gate while the hinges are being installed.

NOTE: A suitable body sealant should be used when removing or moving the hinges.

1. Position the liftgate onto the vehicle.
2. Install the four hinge to liftgate bolts (1) and tighten the to 28 N.m (21 ft. lbs.).
3. Install two hinge to header nuts (3) and tighten to 63 N.m (46 in. lbs.).

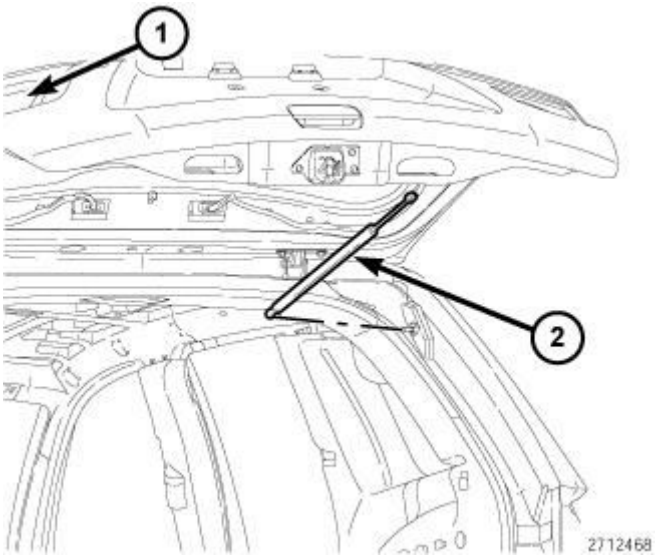

Fig. 11: Liftgate & Support Struts
Courtesy of CHRYSLER GROUP, LLC

4. Install the support struts (2). Refer to **PROP ASSEMBLY, POWER, INSTALLATION**.
5. Connect wiring harnesses and washer hose.
6. Check and adjust the liftgate if necessary. Refer to **LIFTGATE, ADJUSTMENTS**.
7. Install the upper quarter trim panels. Refer to **PANEL, QUARTER TRIM, INSTALLATION**.

PANEL, TRIM

REMOVAL

REMOVAL

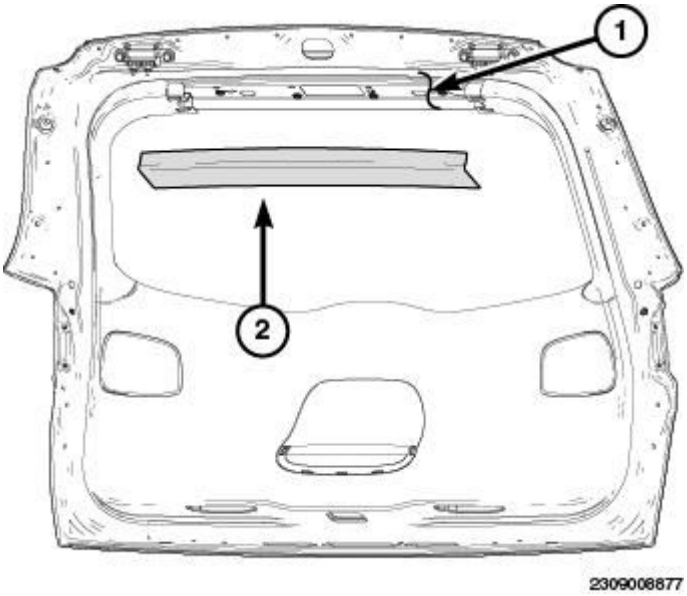

Fig. 12: Identifying Liftgate & Upper Trim Panel
Courtesy of CHRYSLER GROUP, LLC

1. Disconnect and isolate the battery negative cable.
2. Remove the upper trim panel (2) using a trim stick or another suitable wide flat-bladed tool, carefully pry the trim panel away from the inside of the liftgate (1) to release the fasteners that secure the panel to the liftgate.

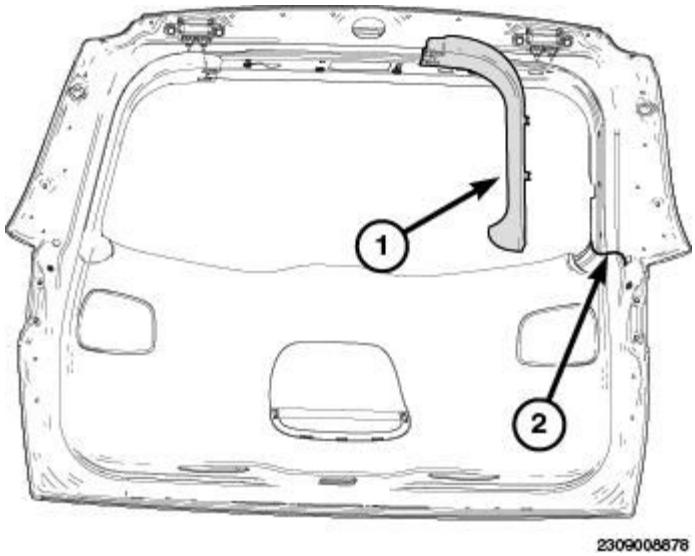

Fig. 13: Identifying Liftgate & Side Trim Panel
Courtesy of CHRYSLER GROUP, LLC

3. Remove the side trim panels (1) using a trim stick or another suitable wide flat-bladed tool, carefully pry the trim panel away from the inside of the liftgate (2) to release the fasteners that secure the panel to the liftgate.

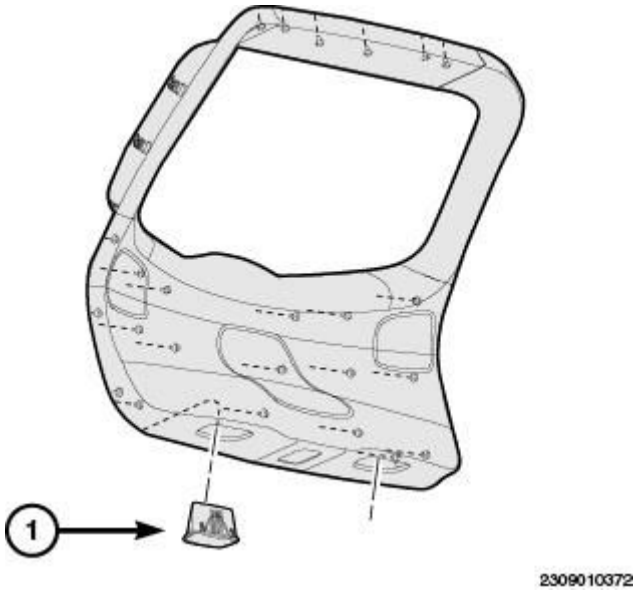

Fig. 14: Identifying Pull Cups
Courtesy of CHRYSLER GROUP, LLC

4. using a trim stick or another suitable wide flat-bladed tool, remove the pull cups (1)

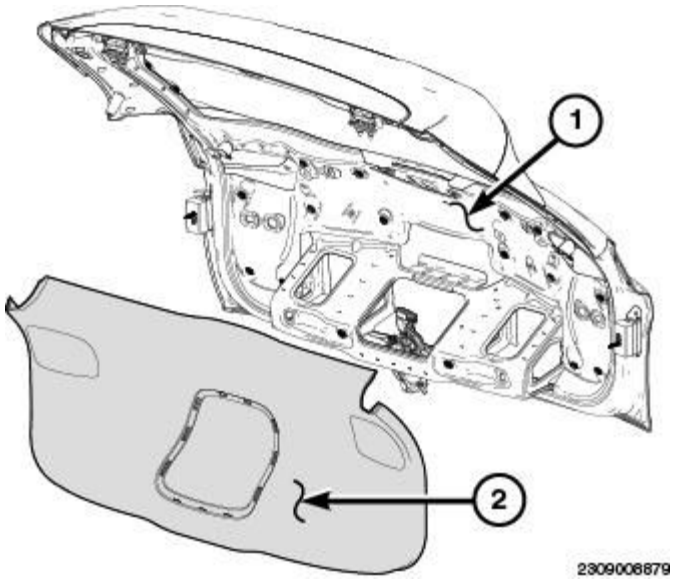

Fig. 15: Identifying Liftgate & Trim Panel
Courtesy of CHRYSLER GROUP, LLC

5. Carefully release the retaining clips and separate the trim panel (2) completely from the liftgate (1).
6. Disconnect the trim panel lighting connectors.
7. Remove the liftgate lower trim panel from the vehicle.

INSTALLATION

INSTALLATION

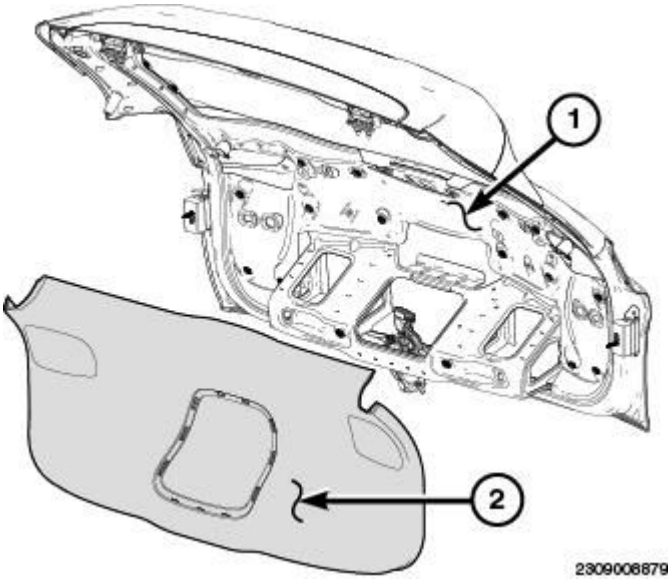

Fig. 16: Identifying Liftgate & Trim Panel
Courtesy of CHRYSLER GROUP, LLC

1. Position the trim panel (2) back onto the liftgate (1) and Using hand pressure, press firmly and evenly on the trim panel over each of the retaining clip locations until the clips are seated fully in the holes on the inside of the liftgate.

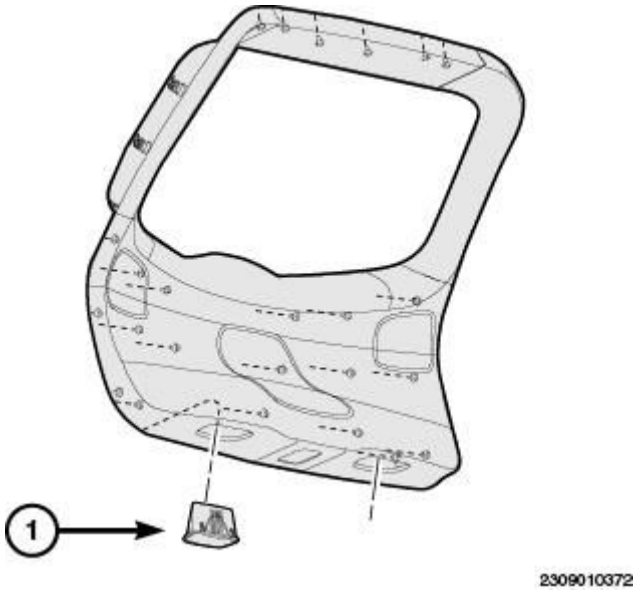

Fig. 17: Identifying Pull Cups
Courtesy of CHRYSLER GROUP, LLC

2. Install the pull cups (1).
3. Secure the trim panel (2) to the inside of the liftgate.

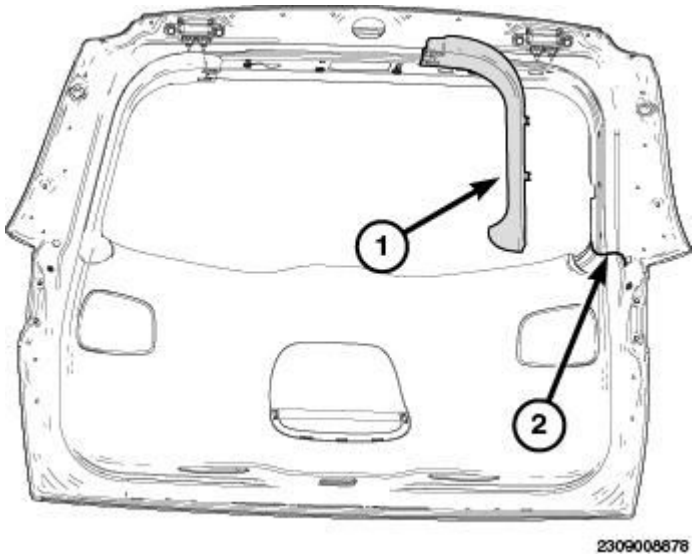

Fig. 18: Identifying Liftgate & Side Trim Panel
Courtesy of CHRYSLER GROUP, LLC

4. Position the trim panel (1) back onto the liftgate (2) and Using hand pressure, press firmly and evenly on

the upper trim panel over each of the fastener locations until the fasteners are fully seated in the holes on the inside of the liftgate.

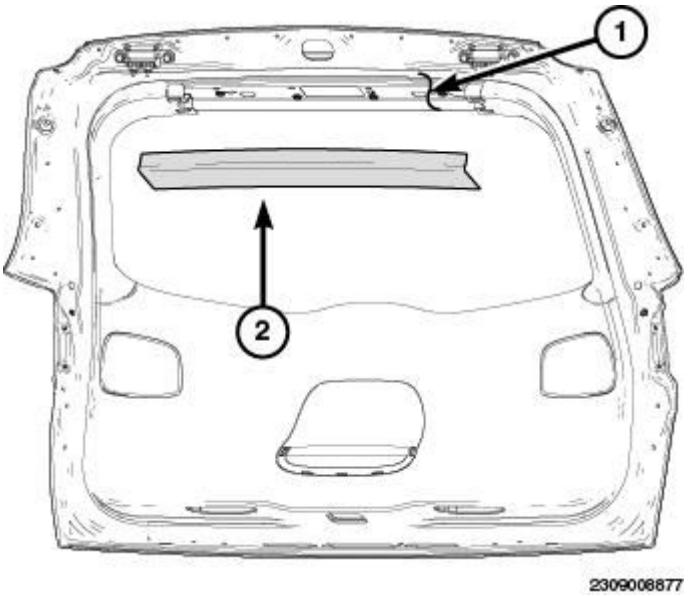

Fig. 19: Identifying Liftgate & Upper Trim Panel
Courtesy of CHRYSLER GROUP, LLC

5. Position the top liftgate trim (2) onto the liftgate and seat the upper retaining clips fully.

PROP ASSEMBLY, POWER

REMOVAL

REMOVAL

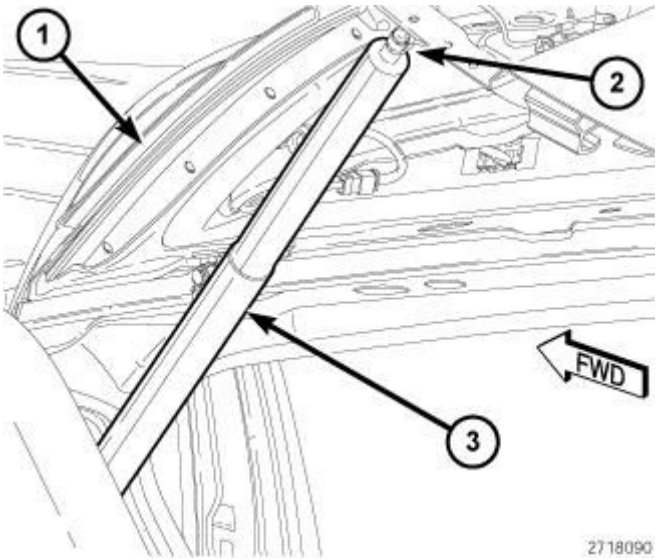

Fig. 20: Mount, Liftgate Strut & Liftgate

Courtesy of CHRYSLER GROUP, LLC

1. Open and support the liftgate with a suitable prop or block.
2. Locate the mount (2) for the liftgate strut (3) on the liftgate (1).

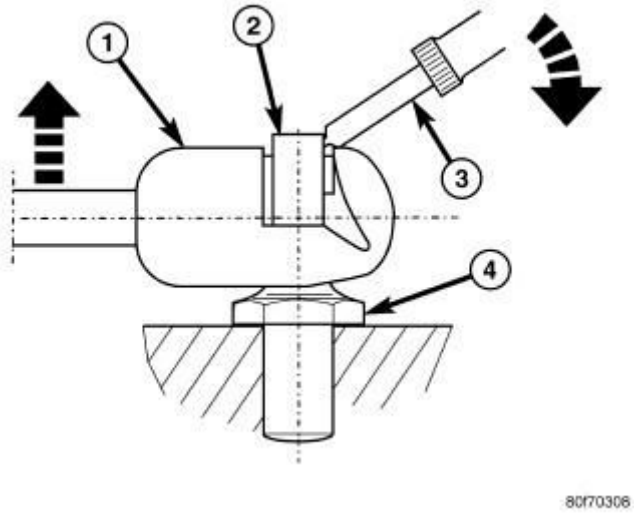

Fig. 21: Removing Support Cylinder
Courtesy of CHRYSLER GROUP, LLC

3. Using a small flat bladed tool (3), or equivalent, release the retaining clips (2) while pulling the ball socket (1) away from the ball stud (4).

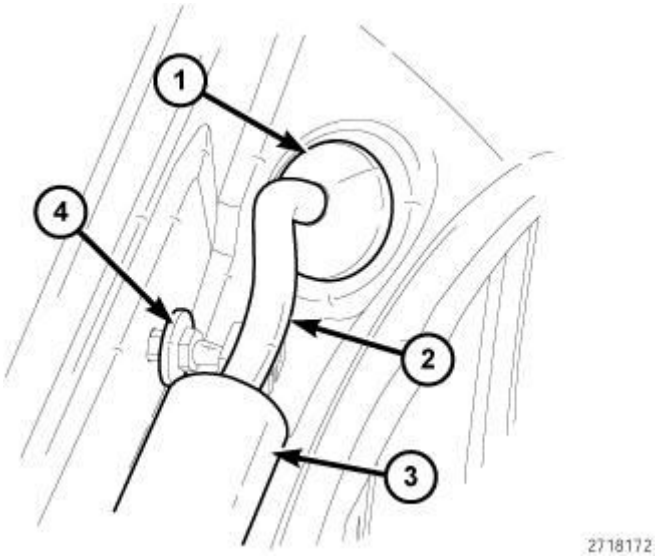

Fig. 22: Rubber Grommet & Liftgate Strut
Courtesy of CHRYSLER GROUP, LLC

4. Remove the rubber grommet (1) to gain access to the liftgate strut (3) connector.

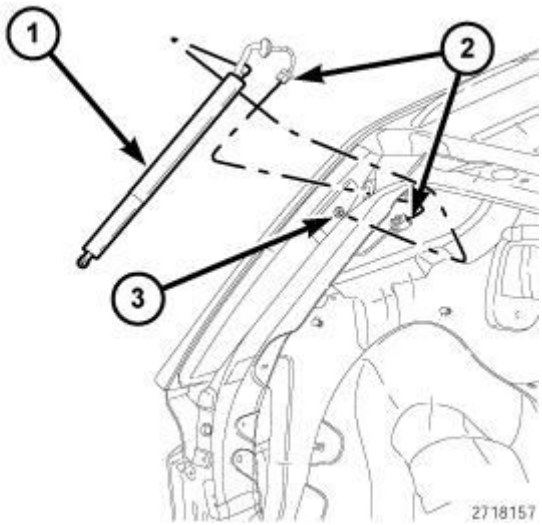

Fig. 23: Connector & Strut
Courtesy of CHRYSLER GROUP, LLC

5. Disconnect the connector (2).
6. Remove the strut (1) from the vehicle.

INSTALLATION

INSTALLATION

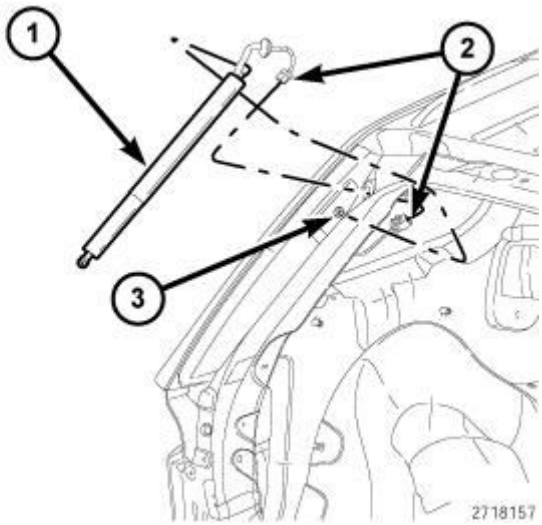

Fig. 24: Connector & Strut
Courtesy of CHRYSLER GROUP, LLC

1. Open and support the liftgate with a suitable prop or block.
2. Locate the ball mount (3) for mounting the strut (1) onto the vehicle.
3. Install the liftgate strut onto the vehicle by pressing into place until clip is seated fully.
4. Route the wiring harness through the access hole on body and connect the connectors (2).

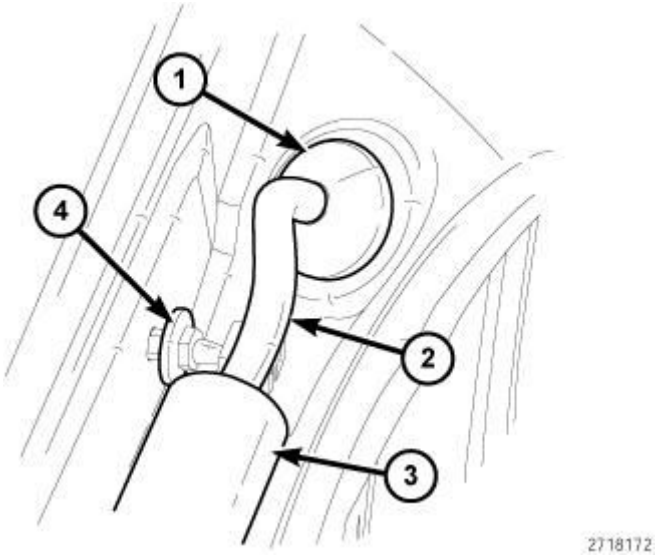

Fig. 25: Rubber Grommet & Liftgate Strut
Courtesy of CHRYSLER GROUP, LLC

5. Install the rubber grommet (1) into the access hole.

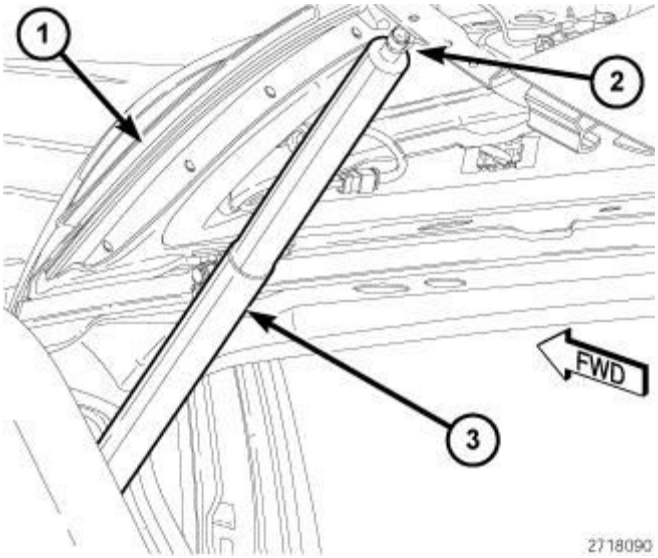

Fig. 26: Mount, Liftgate Strut & Liftgate
Courtesy of CHRYSLER GROUP, LLC

6. Locate the mount (2) on the liftgate, to mount the strut.

7. Install the strut (3) onto the liftgate (1) by applying moderate hand pressure until clip is seated fully.
8. Test strut for proper operation.

SPOILER

REMOVAL

REMOVAL

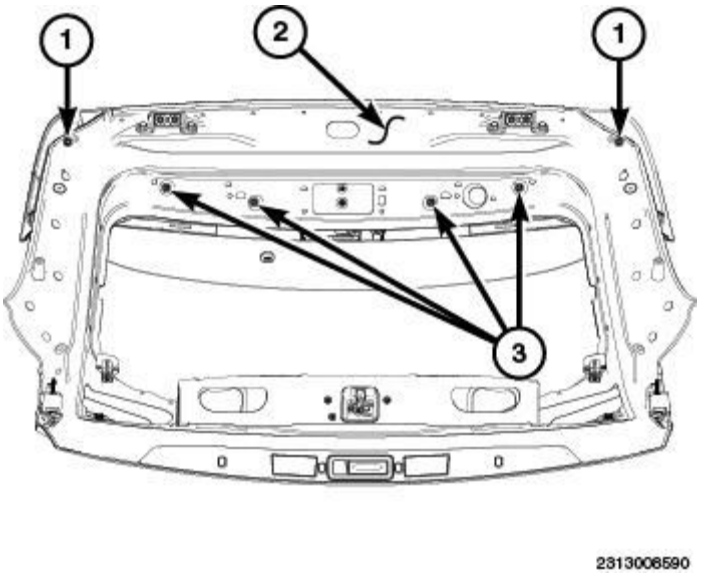

Fig. 27: Identifying Liftgate, Trim & Fasteners
Courtesy of CHRYSLER GROUP, LLC

1. Remove liftgate trim as necessary. Refer to **PANEL, TRIM, REMOVAL**.
2. Remove the bolts at each outboard lower attachment (1).
3. Remove the six nuts (3).

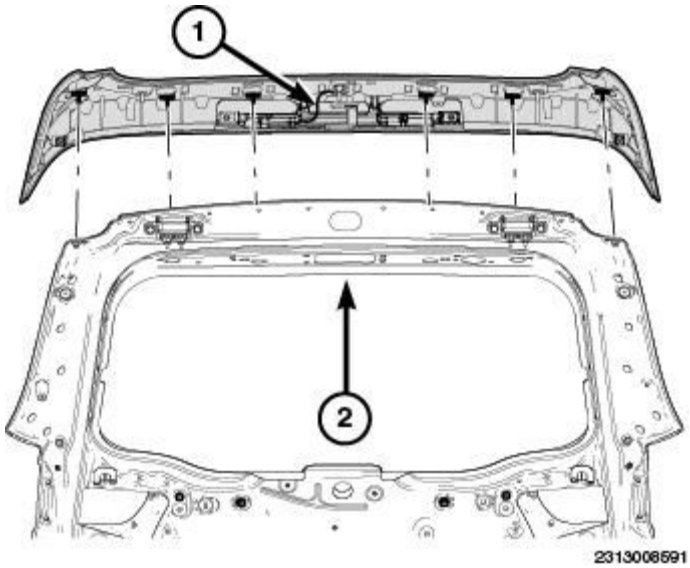

Fig. 28: Identifying Liftgate & Spoiler
Courtesy of CHRYSLER GROUP, LLC

4. Lower the liftgate.
5. Separate the spoiler from the liftgate (2) and pivot the spoiler (1) towards the front of the vehicle.
6. Disconnect the washer hose from the washer nozzle. Disconnect the wiring connector from the CHMSL. Remove wiring clips (2 total).
7. Remove spoiler from vehicle.

INSTALLATION

INSTALLATION

NOTE: When the spoiler is removed for repair or replacement, the gaskets at the spoiler attachment locations should be replaced.

NOTE: The following components are serviceable on the rear spoiler

- **CHMSL**
- **Washer Nozzle**
- **Spoiler center support bracket**
- **W-attaching clip and seals**
- **Seal kit for attaching locations**
- **Mounting Studs**
- **Mounting Nuts**

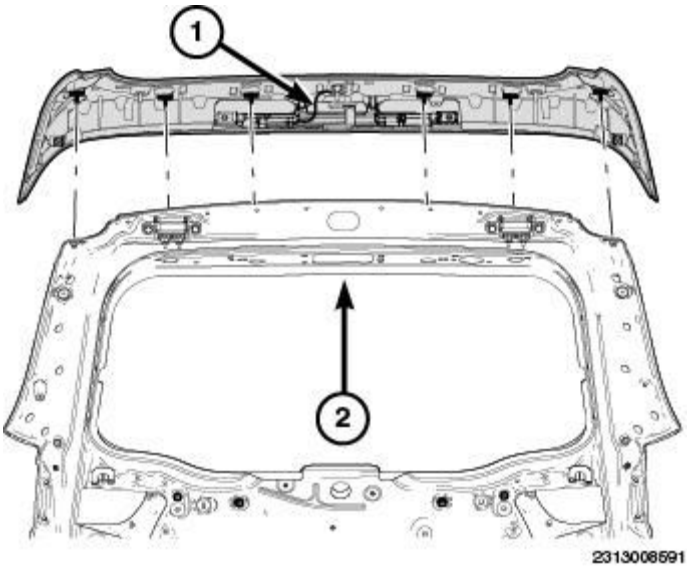

Fig. 29: Identifying Liftgate & Spoiler
Courtesy of CHRYSLER GROUP, LLC

1. Lift spoiler (1) into place and pivot towards the front of the vehicle.
2. Connect the washer hose to the washer nozzle. Connect the wiring connector to the CHMSL. Install wiring clips (2 total).
3. Lower spoiler into position.

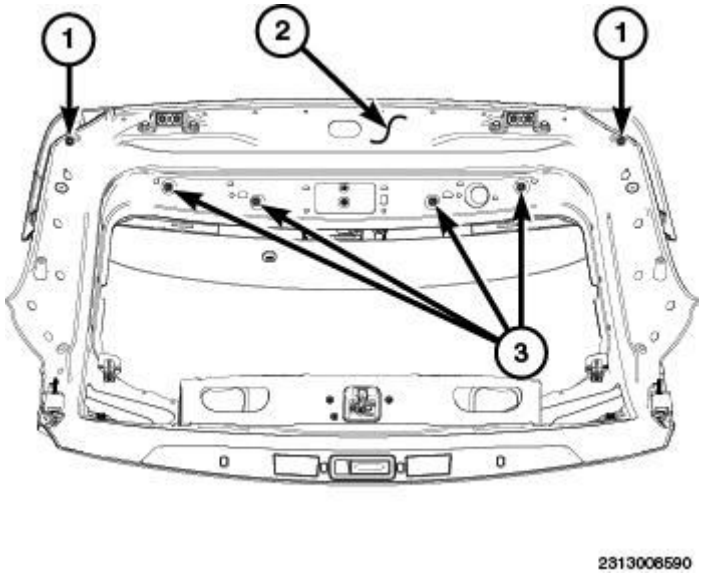

Fig. 30: Identifying Liftgate, Trim & Fasteners
Courtesy of CHRYSLER GROUP, LLC

4. Install the bolts (1) and tighten 6 N.m (53 in. lbs.).
5. Install the six nuts (3) and tighten 6 N.m (53 in. lbs.). Start in the center and work your way out to the ends when tightening the nuts.

6. Install the liftgate trim panels. Refer to **PANEL, TRIM, INSTALLATION**.

STRIKER, LATCH

ADJUSTMENTS

ADJUSTMENTS

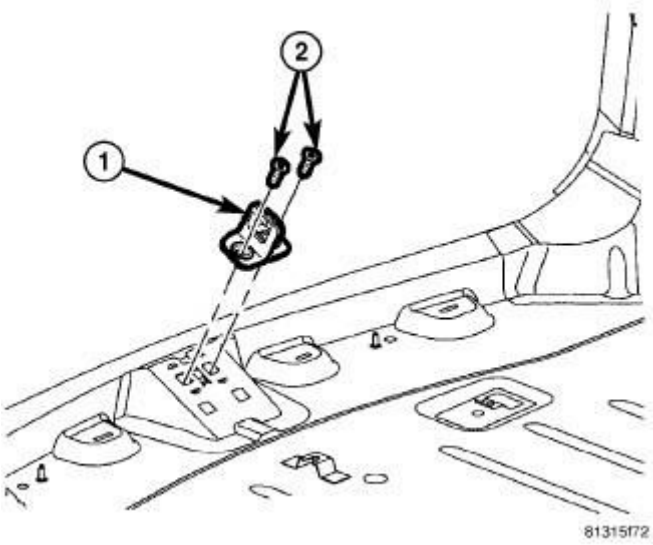

Fig. 31: Identifying Striker & Screws
Courtesy of CHRYSLER GROUP, LLC

1. Remove liftgate scuff trim. Refer to **PLATE, SCUFF, DOOR SILL, REMOVAL**.
2. Using a grease pencil or equivalent, mark the position of the striker (1) to aid in adjustment.
3. Loosen the striker bolts (2).
4. Change the striker position to adjust the lower liftgate gap and flush measurement. Refer to **GAP AND FLUSH, SPECIFICATIONS**.
5. Tighten the bolts to 28 N.m (21 ft. lbs.).

REMOVAL

REMOVAL

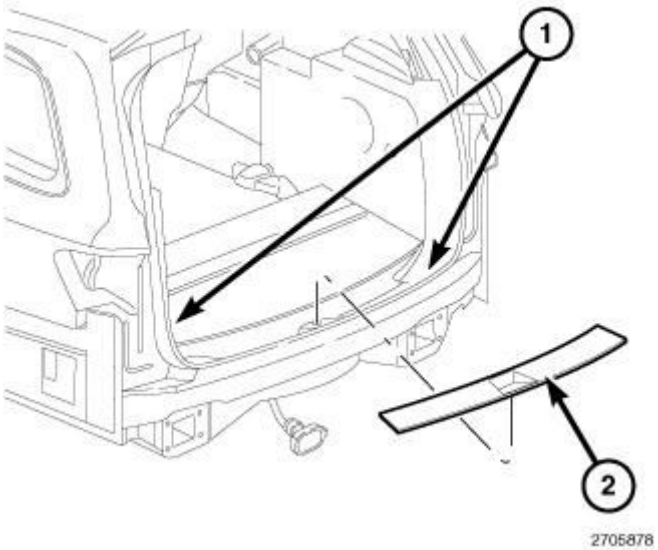

Fig. 32: Scuff Plate Trim Panel
Courtesy of CHRYSLER GROUP, LLC

1. Remove the scuff plate trim panel (2) from the inside of the liftgate opening lower panel. Refer to **PLATE, SCUFF, DOOR SILL, REMOVAL**.

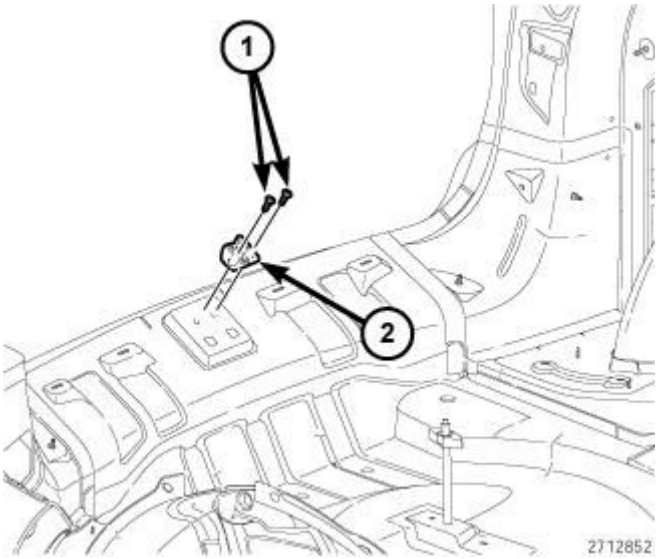

Fig. 33: Liftgate Latch Striker & Two Fasteners
Courtesy of CHRYSLER GROUP, LLC

2. Mark the latch striker (2) location on the inside of the liftgate opening with a grease pencil to aid reinstallation.
3. Remove the two fasteners (1) that secure the latch striker to the inside of the liftgate opening lower panel.
4. Remove the latch striker from the vehicle.

INSTALLATION

INSTALLATION

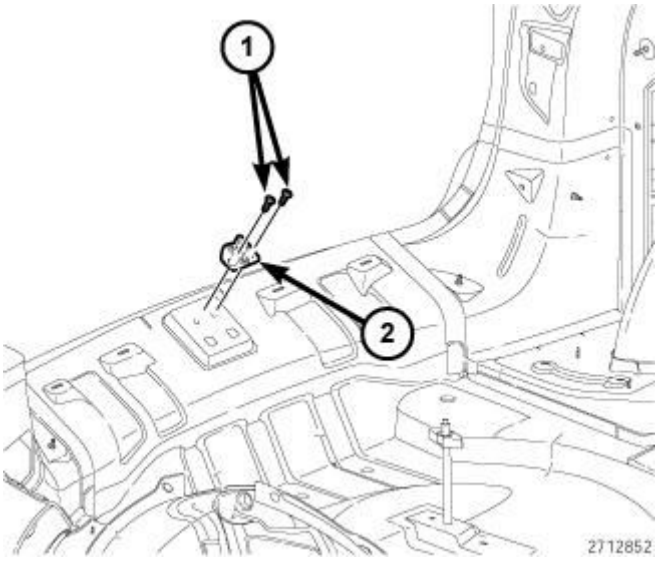

Fig. 34: Liftgate Latch Striker & Two Fasteners
Courtesy of CHRYSLER GROUP, LLC

1. Position the liftgate latch striker (2) to the inside of the liftgate opening lower panel and align using the marks made during removal.
2. Install and tighten the two screws (1) that secure the latch striker to the liftgate opening lower panel. Tighten the screws to 28 N.m (21 ft. lbs.).
3. Adjust the latch striker position as necessary to achieve proper liftgate latch operation.

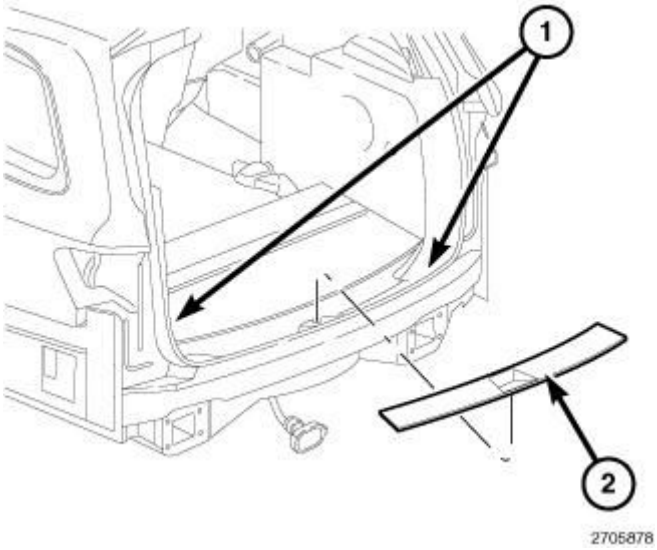

Fig. 35: Scuff Plate Trim Panel
Courtesy of CHRYSLER GROUP, LLC

4. Install the scuff plate (2). Refer to **PLATE, SCUFF, DOOR SILL, INSTALLATION**.

5. Check and adjust the striker if necessary. Refer to **STRIKER, LATCH, ADJUSTMENTS**.

DOOR - FRONT

APPLIQUE

REMOVAL

REMOVAL

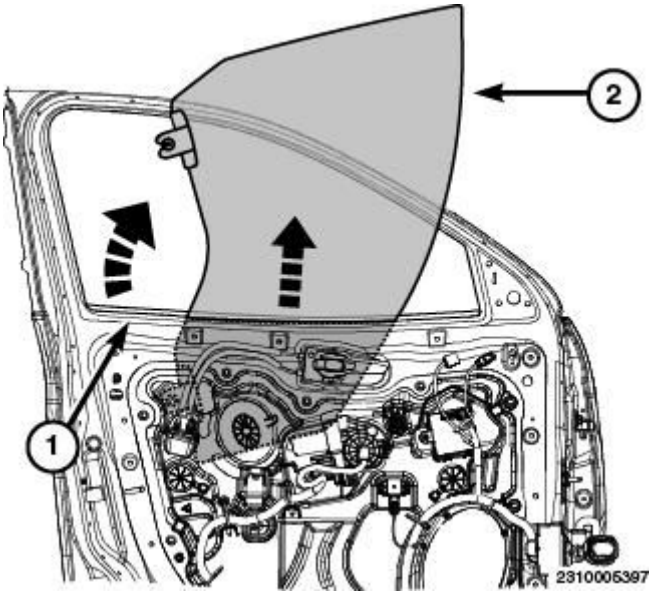

Fig. 36: Removing Door Glass From Door
Courtesy of CHRYSLER GROUP, LLC

1. Remove the door glass (2) from the door (1). Refer to **GLASS, DOOR, REMOVAL**.
2. Remove the outside mirror. Refer to **MIRROR, OUTSIDE REARVIEW, REMOVAL** and **MIRROR, OUTSIDE REARVIEW, GLASS, REMOVAL**.

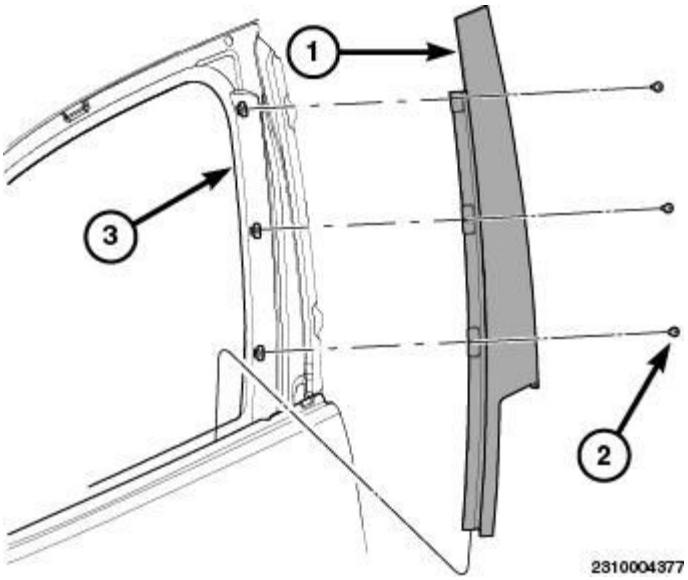

Fig. 37: Identifying Door Glass Run, Door Applique & Fasteners
Courtesy of CHRYSLER GROUP, LLC

3. Remove the rear portion of the door glass run.
4. Remove the three door applique fasteners (2).
5. Remove the door applique (1).

INSTALLATION

INSTALLATION

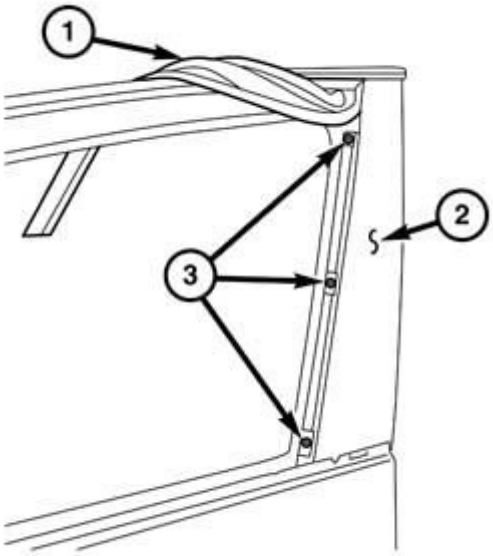

Fig. 38: Door Glass Run, Applique & Fasteners
Courtesy of CHRYSLER GROUP, LLC

1. Position the door applique.
2. Install the three door applique (2) fasteners (3) and tighten securely.
3. Insert the rear portion of the door glass run (1) and verify it is seated fully.

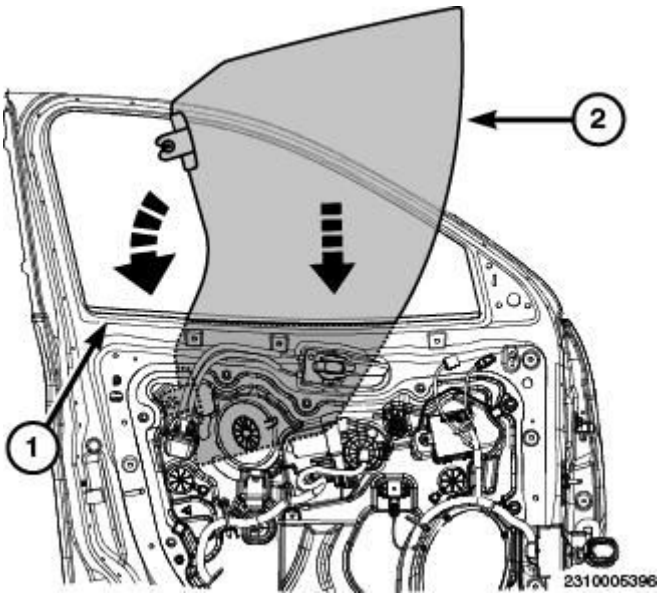

Fig. 39: Installing Door Glass Into Door
Courtesy of CHRYSLER GROUP, LLC

4. Install the door glass (2) into the door (1). Refer to **GLASS, DOOR, INSTALLATION**.

DOOR

ADJUSTMENTS

ADJUSTMENTS

NOTE: **It is recommended that you adjust the rear door before adjusting the front door. Refer to DOOR, REAR, ADJUSTMENTS.**

- **Door adjustment measurements should be taken from stationary or welded body panels like the roof, rocker or quarter panels.**
- **During adjustment procedures, it is recommended that all the hinge fasteners be loosened except for the upper most fasteners. Adjustments can be made using the upper bolts to hold the door with final torque of the fasteners occurring after correct door positioning is achieved.**
- **A suitable body sealant should be used when removing or moving the hinges and striker.**

FORE/AFT

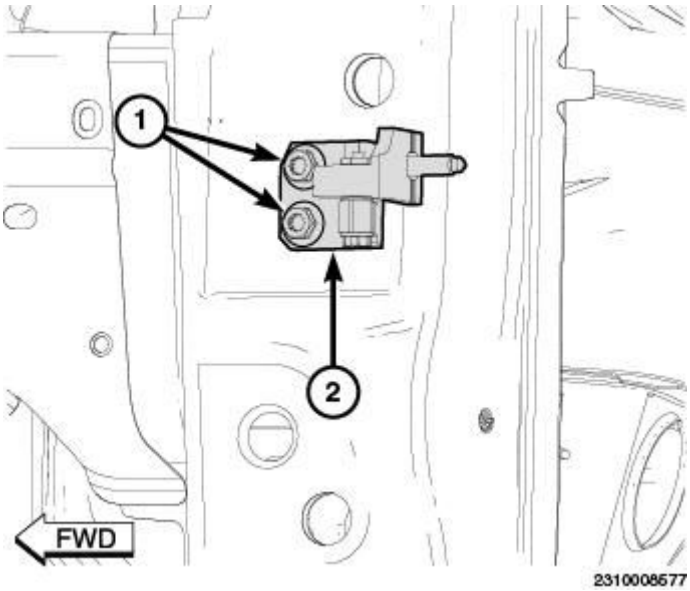

Fig. 40: Identifying Front Door Hinges & Bolts
Courtesy of CHRYSLER GROUP, LLC

NOTE: Fore/aft (lateral) door adjustment is done by loosening the hinge to the body fasteners (1) one hinge at a time and moving the door to the correct position.

1. Support the front door with a suitable lifting device.
2. Loosen the bolts (1) that secure the front door hinges (2) to the A-pillar.
3. Adjust the front door to the correct position. Refer to **GAP AND FLUSH, SPECIFICATIONS**.
4. Tighten the upper bolt of the upper hinge to the A-pillar to 43 N.m (32 ft. lbs.).
5. Tighten the upper bolt of the lower hinge to 43 N.m (32 ft. lbs.).
6. Tighten the remaining hinge bolts to 43 N.m (32 ft. lbs.).

UP/DOWN

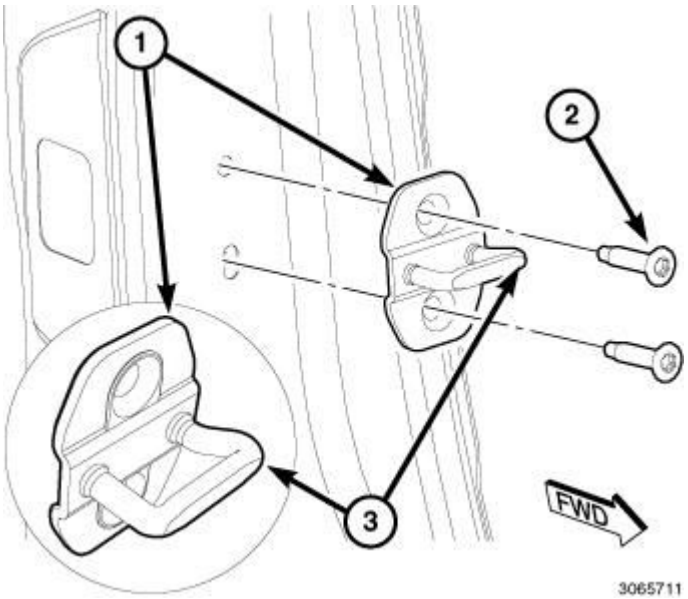

Fig. 41: Two Bolts & Striker
Courtesy of CHRYSLER GROUP, LLC

NOTE: Up/down door adjustment is done by loosening either the hinge to the body fasteners or the hinge to door fasteners and moving the door to the correct position.

1. Support the front door with a suitable lifting device.
2. Loosen the two bolts (2) that secure the striker (1) to the B-pillar.

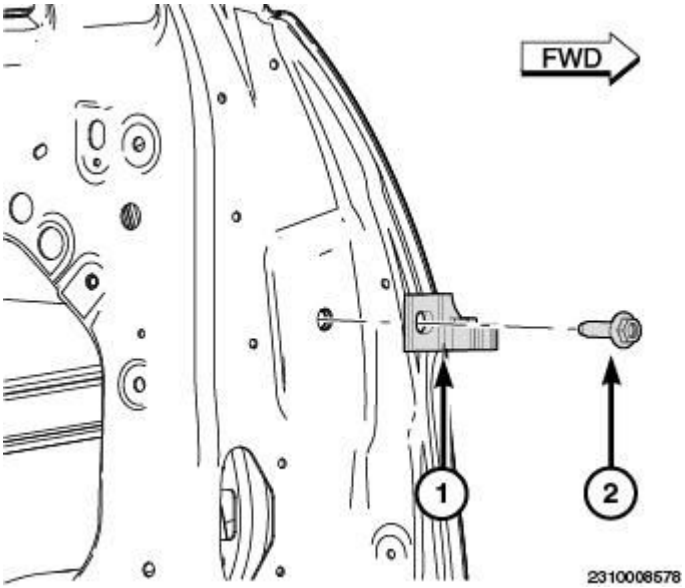

Fig. 42: Identifying Door Hinges & Bolts
Courtesy of CHRYSLER GROUP, LLC

3. If necessary, loosen the bolts (2) that secure the door hinges (1) to the front door.

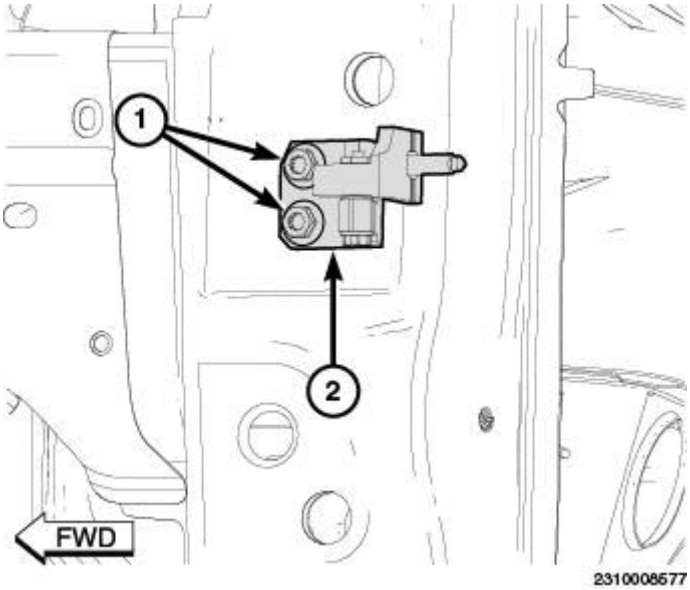

Fig. 43: Identifying Front Door Hinges & Bolts
Courtesy of CHRYSLER GROUP, LLC

4. If necessary, loosen the bolts (1) that secure the front door hinges (2) to the A-pillar.

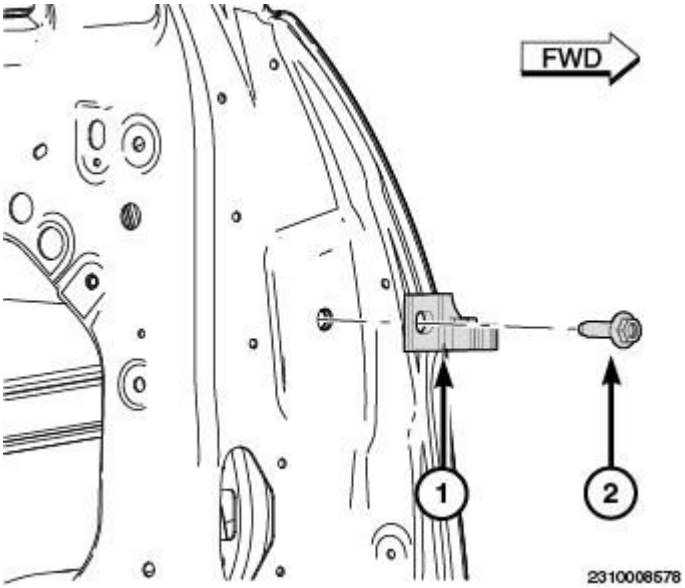

Fig. 44: Identifying Door Hinges & Bolts
Courtesy of CHRYSLER GROUP, LLC

5. Adjust the front door to the correct position. Refer to **GAP AND FLUSH, SPECIFICATIONS**.
6. Tighten the bolts (2) that secure the door hinges (1) to the front door to 43 N.m (32 ft. lbs.).

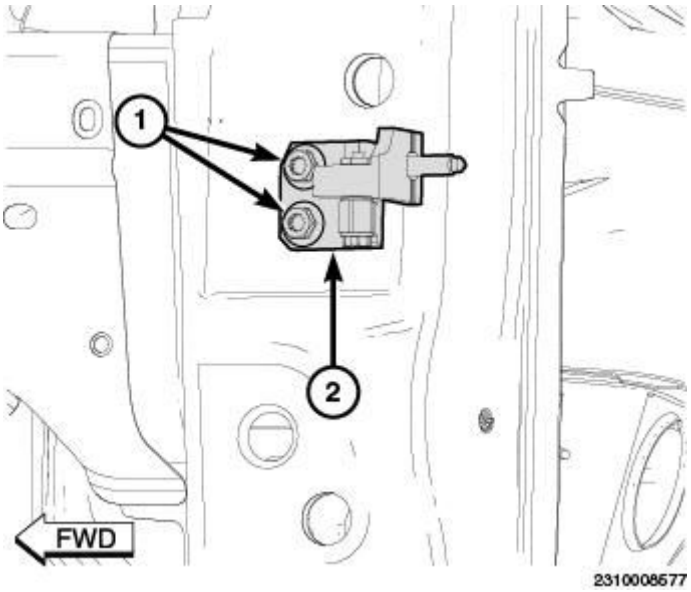

Fig. 45: Identifying Front Door Hinges & Bolts
Courtesy of CHRYSLER GROUP, LLC

7. Tighten the bolts (1) that secure the door hinges (2) to the A-pillar to 43 N.m (32 ft. lbs.) using the following sequence.
    1. Tighten the upper bolt on the upper hinge.
    2. Tighten the lower bolt on the lower hinge.
    3. Tighten the remaining hinge bolts to 43 N.m (32 ft. lbs.).

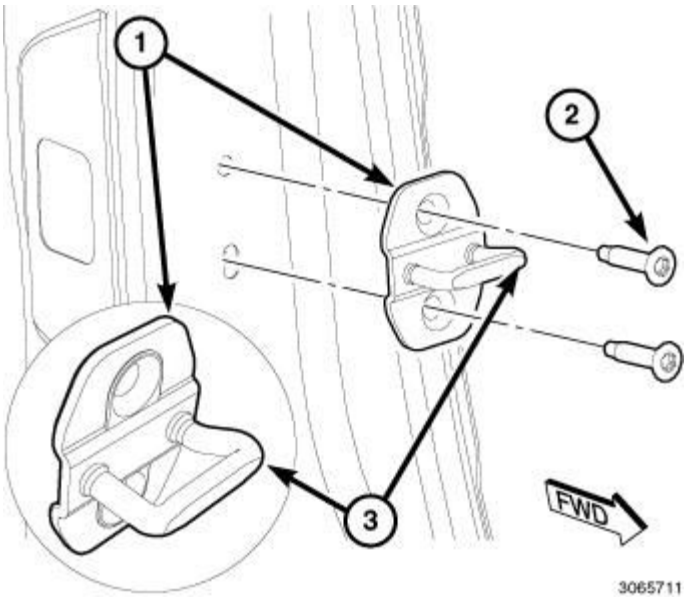

Fig. 46: Two Bolts & Striker
Courtesy of CHRYSLER GROUP, LLC

NOTE: Make sure the protrusion (3) is orientated towards the interior of the

vehicle.

8.
9. Tighten the two bolts (2) that secure the striker (1) to the B-pillar to 30 N.m (22 ft. lbs.).

IN/OUT

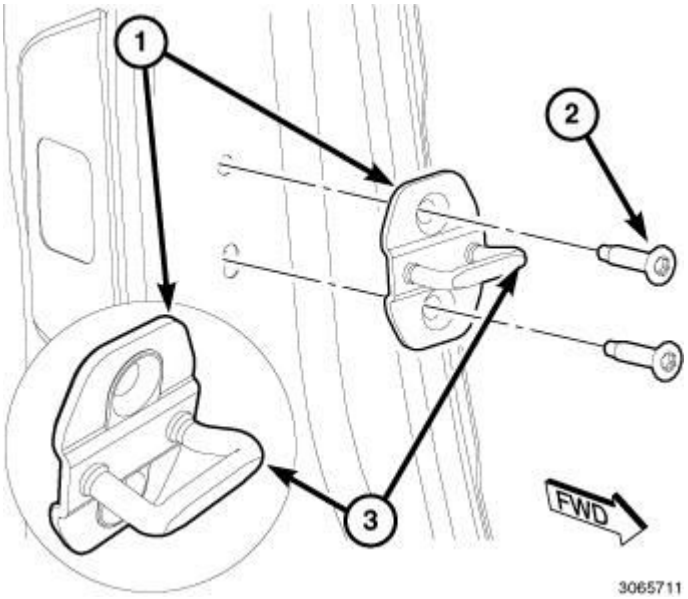

Fig. 47: Two Bolts & Striker
Courtesy of CHRYSLER GROUP, LLC

NOTE: In/out door adjustment is done by loosening the hinge to door fasteners one hinge at a time and moving the door to the correct position.

1. Support the front door with a suitable lifting device.
2. Loosen the two bolts (2) that secure the striker (1) to the B-pillar.

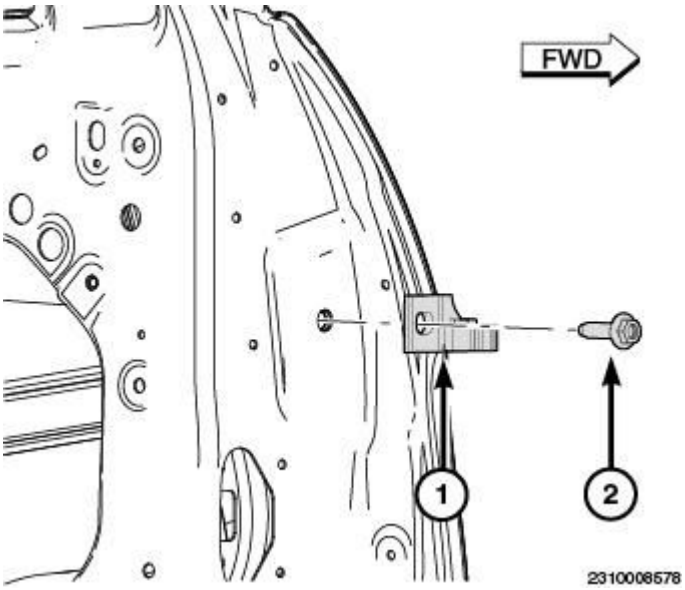

Fig. 48: Identifying Door Hinges & Bolts
Courtesy of CHRYSLER GROUP, LLC

3. Loosen the bolts (2) that secure the door hinges (1) to the front door.
4. Adjust the front door to the correct position. Refer to **GAP AND FLUSH, SPECIFICATIONS**.
5. Tighten the bolts (2) that secure the door hinges (1) to the front door to 43 N.m (32 ft. lbs.).

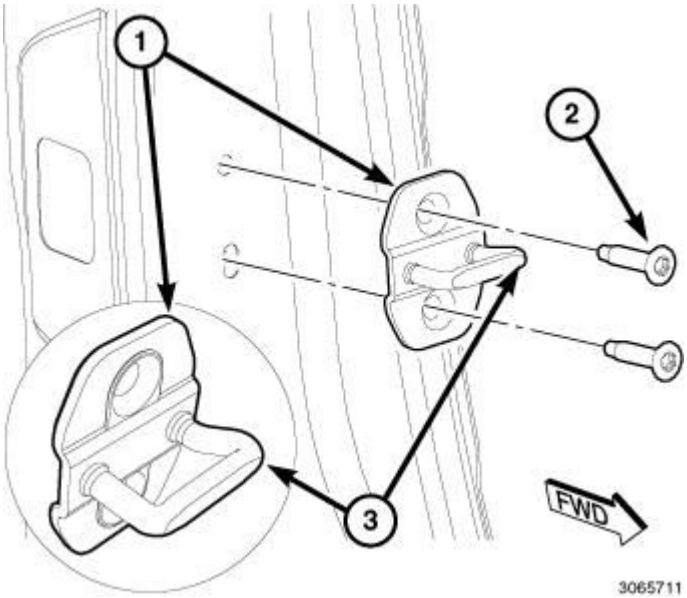

Fig. 49: Two Bolts & Striker
Courtesy of CHRYSLER GROUP, LLC

NOTE: **Make sure the protrusion (3) is orientated towards the interior of the vehicle.**

6. Tighten the two bolts (2) that secure the striker (1) to the B-pillar to 30 N.m (22 ft. lbs.).

REMOVAL

REMOVAL

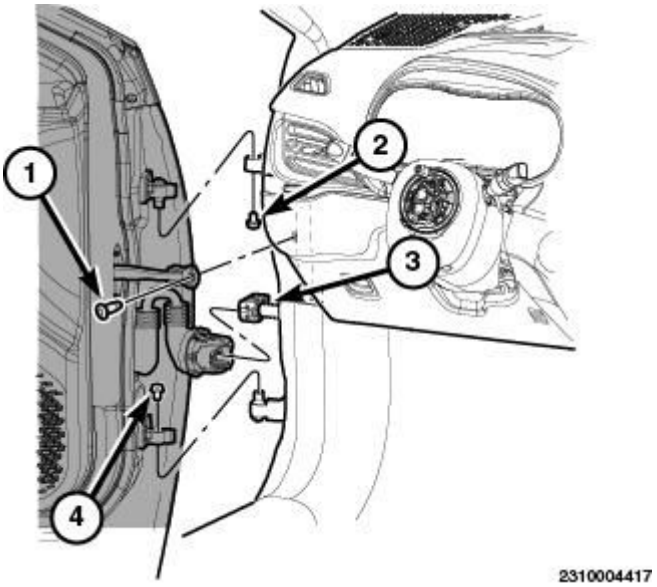

Fig. 50: Identifying Door Check Strap & Fasteners
Courtesy of CHRYSLER GROUP, LLC

NOTE: Do not reuse the door half hinge to body side half hinge fasteners (2) and (4), replace with new, readily available through Mopar parts.

NOTE: Driver side door shown, passenger side similar.

1. Open and support the door on a suitable lifting device.
2. Disconnect and isolate the negative battery cable.
3. Remove the fastener securing the door check strap (1).
4. Remove the fastener (2) securing the upper door hinges half to the A-pillar hinge half.
5. Remove the fastener (4) securing the lower door hinge half to the A-pillar half.
6. With the use a suitable lifting device, remove the door from the vehicle.
7. Disconnect the front door harness wire connector (3) from the body harness.

INSTALLATION

INSTALLATION

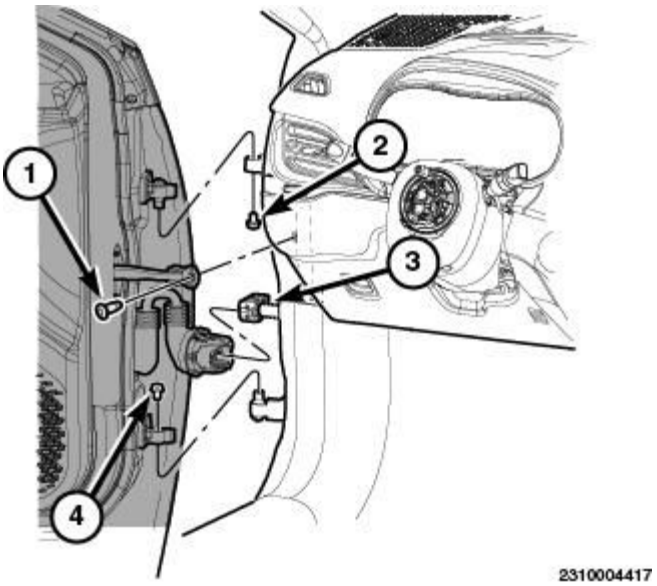

Fig. 51: Identifying Door Check Strap & Fasteners
Courtesy of CHRYSLER GROUP, LLC

NOTE: Do not reuse the door half hinge to body side half hinge fasteners (2) and (4), replace with new readily available through Mopar parts.

NOTE: Driver side door shown, passenger side similar.

1. With the use of a suitable lifting device, position the door near the vehicle.
2. Position the door upper hinge half and lower hinge half onto the A-pillar upper hinge half and lower hinge half.
3. Lower and remove the support from the door.
4. Install the new fasteners (2, 4) securing the door hinge halves to the A-pillar hinge halves. Tighten the fasteners to 24 N.m (18 ft. lbs.).
5. Align the door's check strap and install the fastener (1) securing the check strap to the A-pillar. Tighten the fastener to 30 N.m (22 ft. lbs.).
6. Connect the front door harness wire connector (3) to the body harness.
7. Verify door fit and operation. Adjust the door for flushness and parallel gaps as necessary. Refer to **DOOR, ADJUSTMENTS**.
8. Connect the negative battery cable.
9. Perform the Clear/Relearn procedure. Refer to **STANDARD PROCEDURE** .

GLASS, DOOR

REMOVAL

REMOVAL

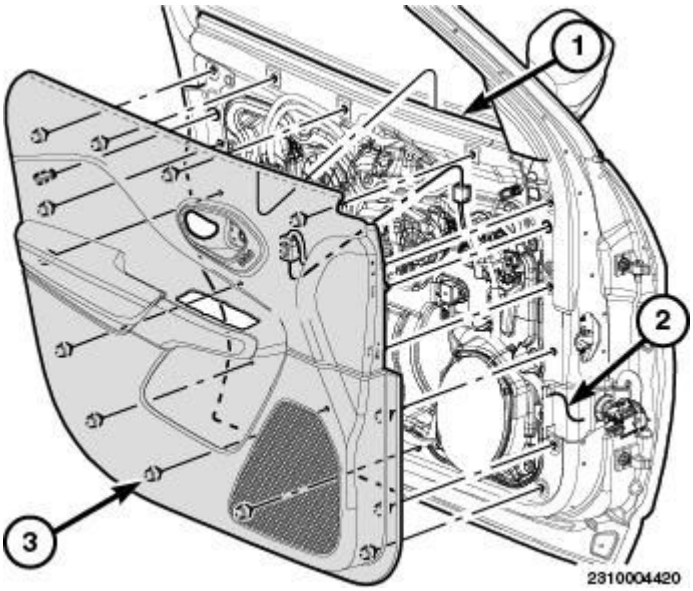

Fig. 52: Identifying Inner Door Belt Weatherstrip, Door Glass & Fasteners
Courtesy of CHRYSLER GROUP, LLC

1. Disconnect and isolate the negative battery cable.
2. Remove the door trim panel. Refer to **PANEL, DOOR TRIM, REMOVAL**.

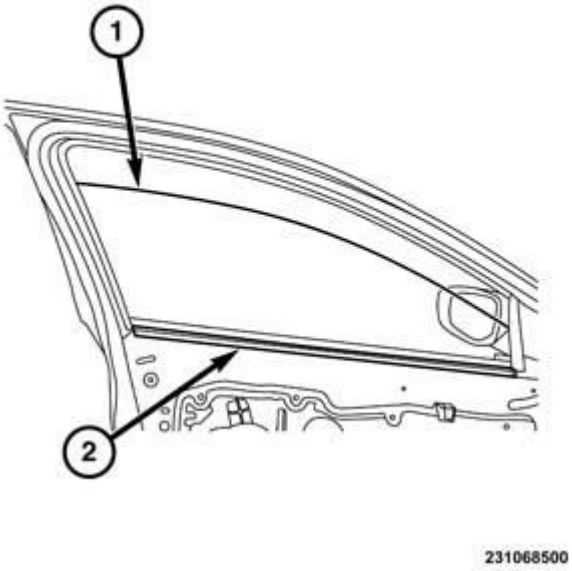

Fig. 53: Front Door Glass & Inner Door Belt Weatherstrip
Courtesy of CHRYSLER GROUP, LLC

3. Using a trim stick or equivalent, pry upward to remove the inner door belt weatherstrip (2) to allow the door glass (1) clearance.

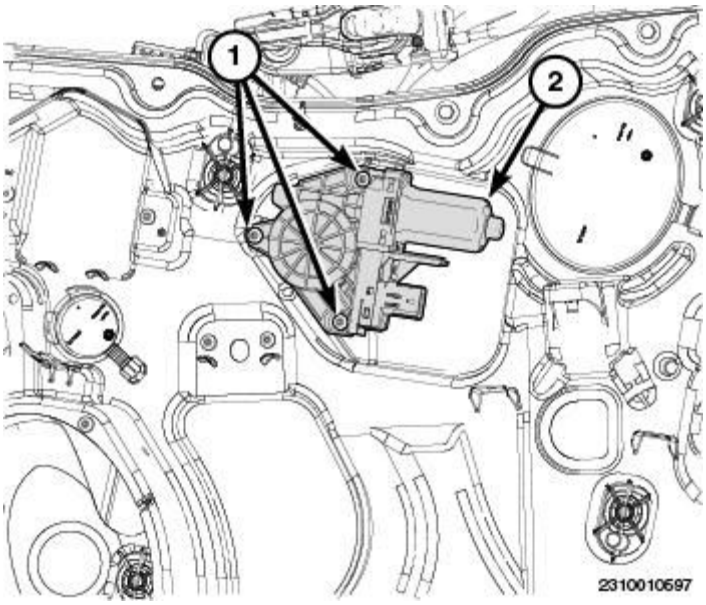

Fig. 54: Identifying Window Motor & Fasteners
Courtesy of CHRYSLER GROUP, LLC

4. Disconnect the window motor (2) wiring connector.
5. Remove the three window motor (2) fasteners.
6. Remove the window motor (2) from the carrier plate.

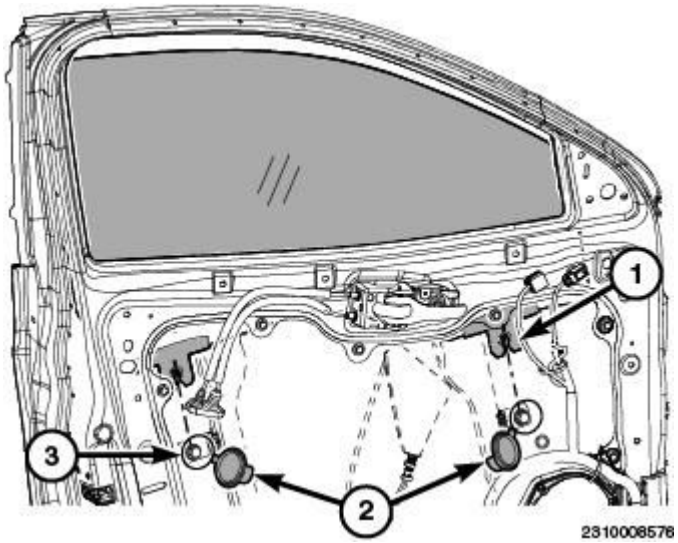

Fig. 55: Identifying Access Plugs & Glass Fasteners
Courtesy of CHRYSLER GROUP, LLC

7. Open the access plugs (2) to expose the glass fasteners (3).
8. Lower the glass by hand until the glass fasteners (3) line up in the access holes.
9. Remove the glass fasteners (1).

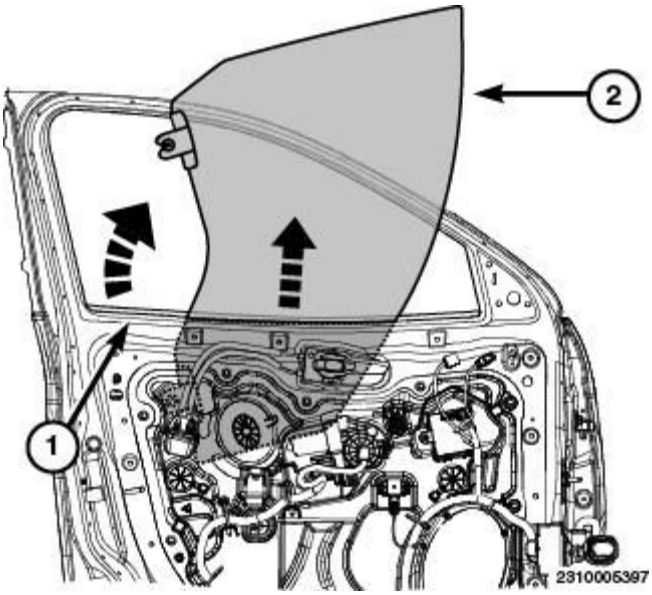

Fig. 56: Removing Door Glass From Door
Courtesy of CHRYSLER GROUP, LLC

10. Lift up on the rear portion of the glass (2) to tilt.
11. Remove the glass (2) from the door (1).

INSTALLATION

INSTALLATION

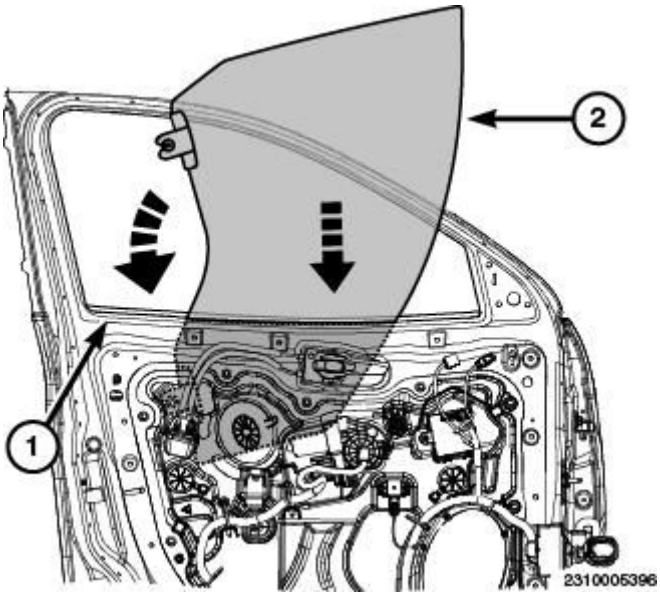

Fig. 57: Installing Door Glass Into Door
Courtesy of CHRYSLER GROUP, LLC

1. Insert the front of the door glass (2) into the door (1).

2. Rotate the rear of the door glass into the door until fully seated into the front and rear run channels.

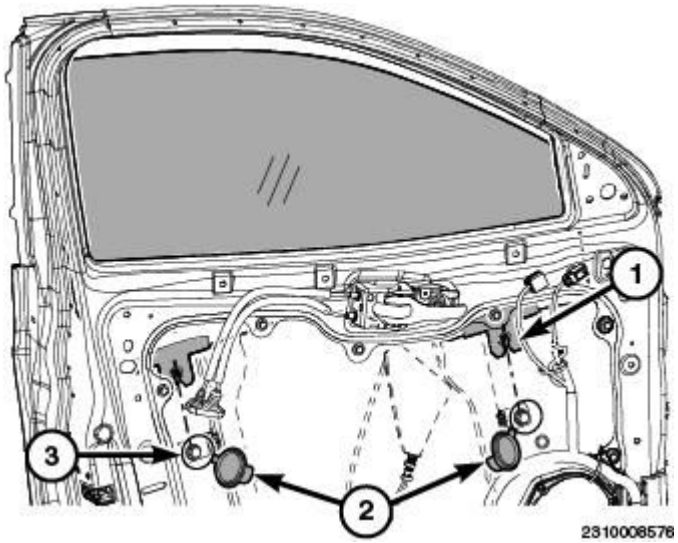

Fig. 58: Identifying Access Plugs & Glass Fasteners
Courtesy of CHRYSLER GROUP, LLC

3. Align the door glass mounts to the window regulator within the access holes (1).
4. Apply a medium grade threadlocker adhesive to the glass fastener threads per manufacture recommendations.
5. Install the glass fasteners and tighten to 13 N.m (10 ft. lbs.).
6. Close the access plugs. (2)

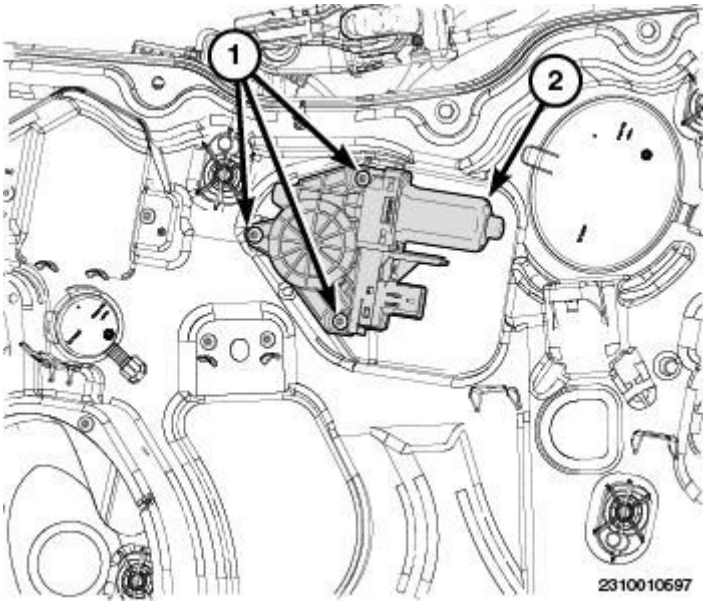

Fig. 59: Identifying Window Motor & Fasteners
Courtesy of CHRYSLER GROUP, LLC

7. Align the window motor (2) onto the carrier plate.
8. Install the window motor (2) fasteners (1) and tighten securely.
9. Connect the window motor (2) wiring connector.

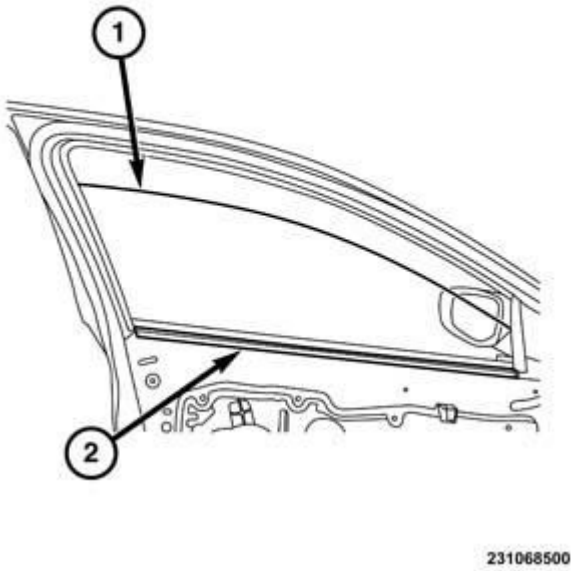

Fig. 60: Front Door Glass & Inner Door Belt Weatherstrip
Courtesy of CHRYSLER GROUP, LLC

10. Install the inner door belt weatherstrip (2).

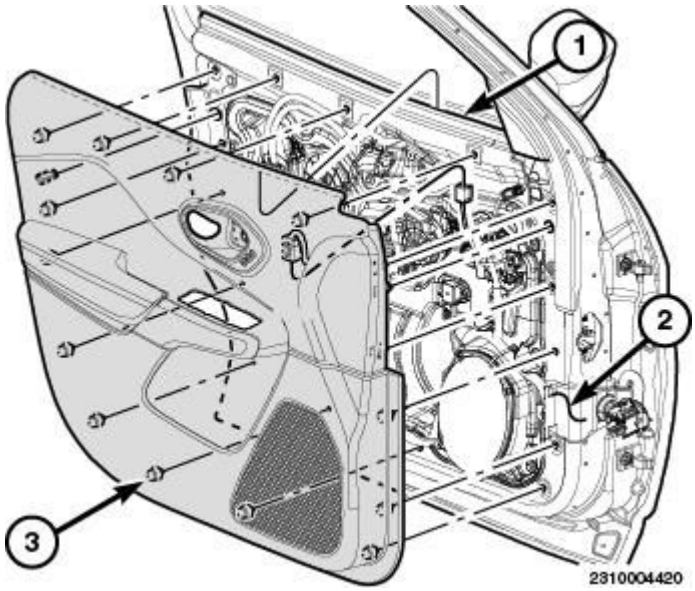

Fig. 61: Identifying Inner Door Belt Weatherstrip, Door Glass & Fasteners

Courtesy of CHRYSLER GROUP, LLC

11. Install the door trim panel (1). Refer to **PANEL, DOOR TRIM, INSTALLATION**.
12. Connect the negative battery cable.
13. Perform the Clear/Relearn procedure. Refer to **STANDARD PROCEDURE** .

HANDLE, EXTERIOR

REMOVAL

REMOVAL

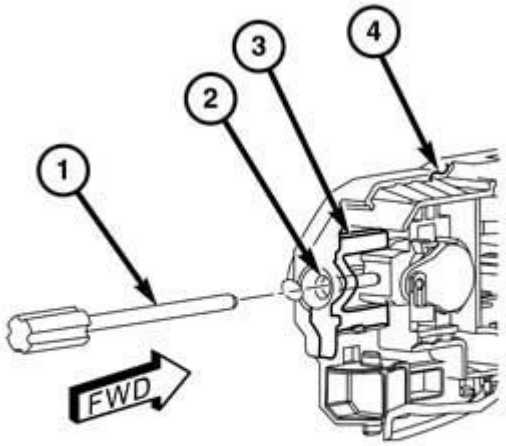

231068506

Fig. 62: Torx Bit, Fastener, Slide Plate & Outside Door Handle Bracket
Courtesy of CHRYSLER GROUP, LLC

NOTE: Passenger side doors not equipped with a lock cylinder. Refer to HANDLE, EXTERIOR, REMOVAL.

1. With a small flat bladed tool, remove the outside handle access plug from inner door jamb.
2. Using a T-20 torx bit (1), turn the fastener (2) counter clockwise to move the slide plate (3) rearward in the outside door handle bracket (4).

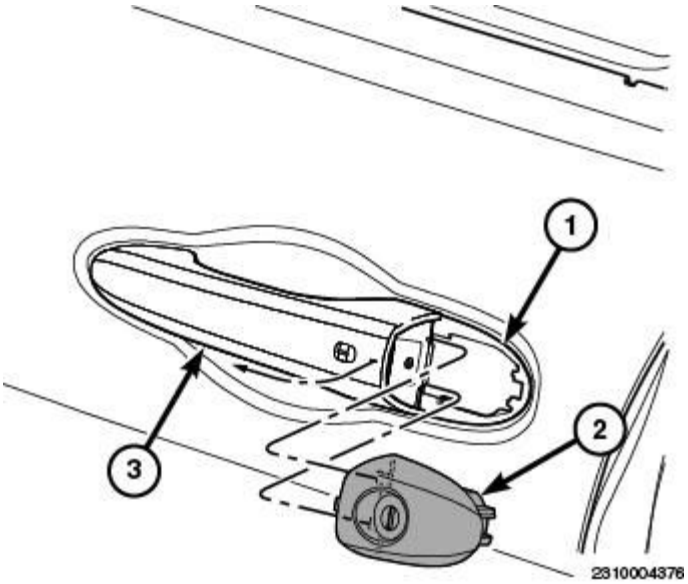

Fig. 63: Identifying Exterior Door Handle, Door Handle Cap & Lock Cylinder
Courtesy of CHRYSLER GROUP, LLC

3. Lift the exterior door handle (3) outward.
4. Continue holding the exterior handle out and remove the door handle cap and lock cylinder (2).

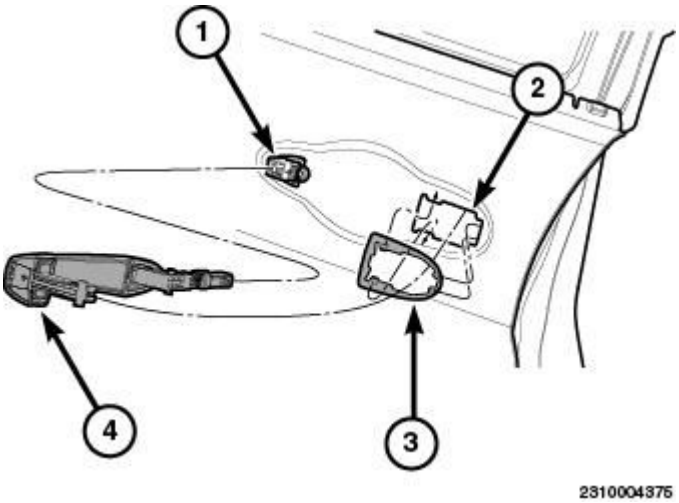

Fig. 64: Sliding Exterior Door Handle Out Of Door
Courtesy of CHRYSLER GROUP, LLC

5. Slide the exterior door handle (1) rearward and rotate out of the door.
6. If so equipped, disconnect the wiring connector.

INSTALLATION

INSTALLATION

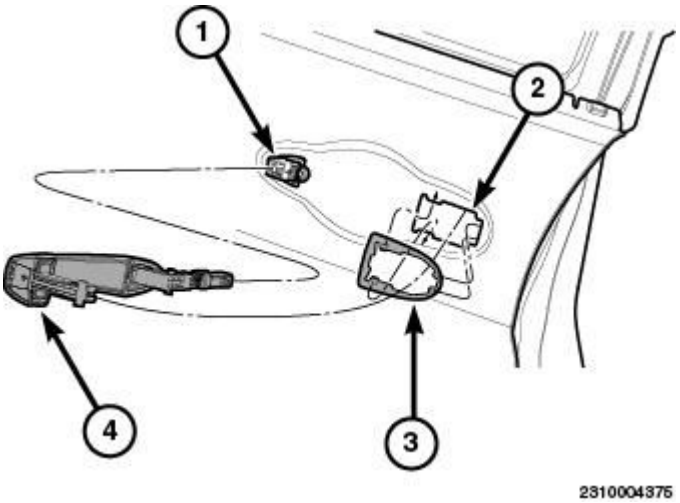

Fig. 65: Sliding Exterior Door Handle Out Of Door
Courtesy of CHRYSLER GROUP, LLC

NOTE: Passenger side doors not equipped with a lock cylinder.

1. If equipped, connect the harness connector to the exterior door handle (1). Refer to **HANDLE, EXTERIOR, INSTALLATION**.
2. Rotate the front of the exterior handle (4) into the door until it is flush with the door.
3. Slide the exterior door handle (1) forward until seated fully.

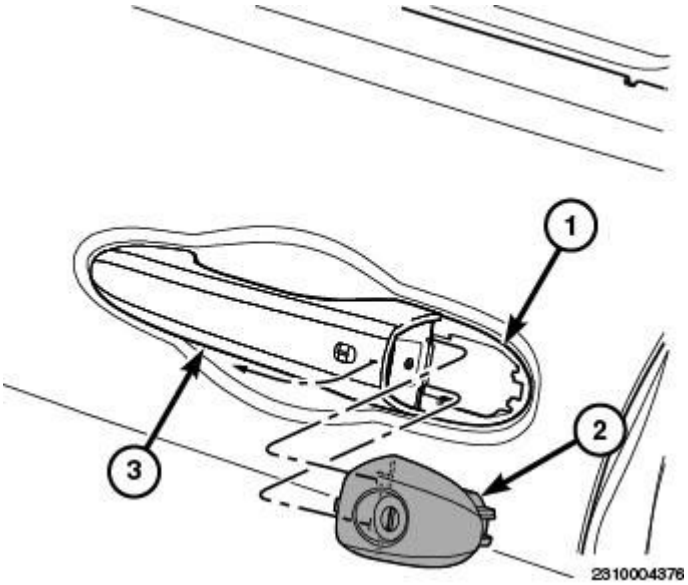

Fig. 66: Identifying Exterior Door Handle, Door Handle Cap & Lock Cylinder
Courtesy of CHRYSLER GROUP, LLC

4. Lift the exterior door handle (3) to the open position.
5. While holding the exterior handle (3) in the open position, inert the door handle cap (2).

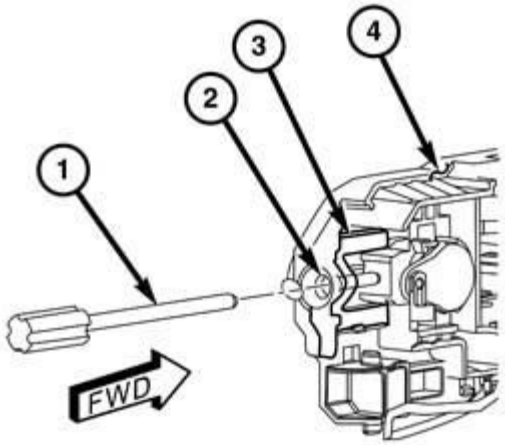

231068506

Fig. 67: Torx Bit, Fastener, Slide Plate & Outside Door Handle Bracket
Courtesy of CHRYSLER GROUP, LLC

6. Using a T-20 torx bit (1), turn the fastener (2) clockwise to move the slide plate (3) forward into the outside door handle bracket (4).
7. Tighten the fastener (2) to 2 N.m (18 in. lbs.).

HANDLE, INTERIOR

REMOVAL

REMOVAL

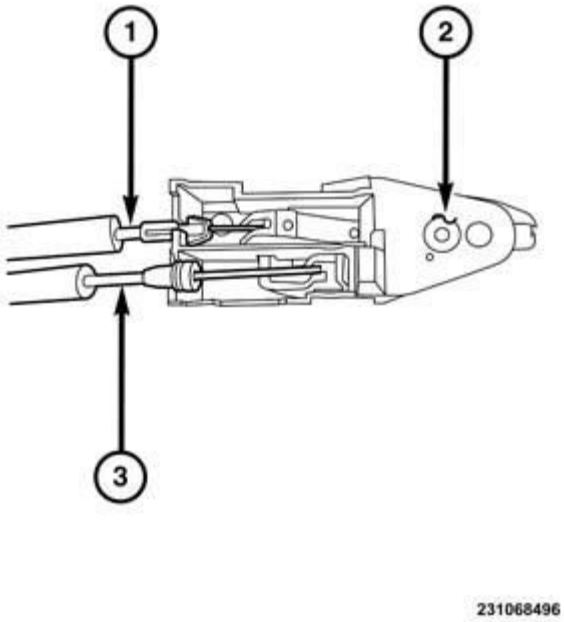

Fig. 68: Inside Release Handle & Cables
Courtesy of CHRYSLER GROUP, LLC

1. Remove rear door trim panel. Refer to **PANEL, DOOR TRIM, REMOVAL**.
2. With the use of a flat bladed tool or equivalent, remove the lock cable from the inside release handle housing (2).
3. Place the lock button in the unlocked position and remove the lock cable (3) barrel end.
4. With the use of pliers or equivalent, depress the tabs on the handle cable (3) and remove from the inside release handle housing (2).
5. Place the pull handle in the open position and remove the handle cable (3) barrel end.
6. Remove the inside handle from the vehicle.

INSTALLATION

INSTALLATION

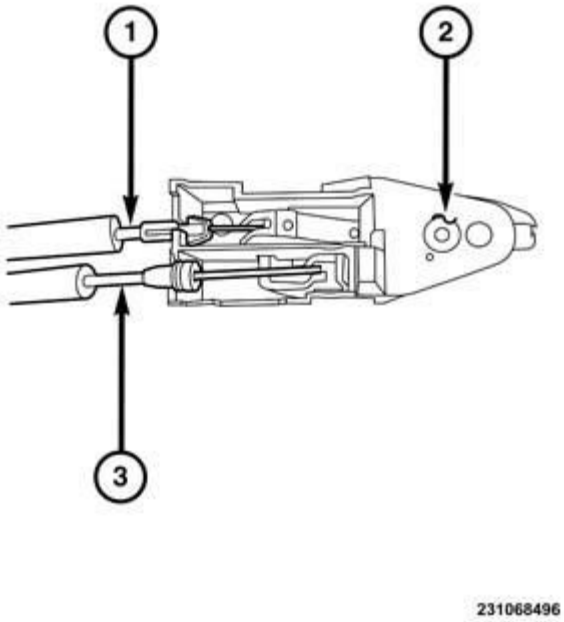

Fig. 69: Inside Release Handle & Cables
Courtesy of CHRYSLER GROUP, LLC

1. Place the pull handle in the open position and install the handle cable (3) barrel end.
2. Insert the handle cable (3) into the inside release handle housing (2) and seat tabs fully.
3. Place the lock button in the unlocked position and install the lock cable (3) barrel end.
4. Insert the lock cable (3) into the inside release handle housing (2).
5. Install the rear door trim panel. Refer to **PANEL, DOOR TRIM, INSTALLATION**.

HINGE, DOOR

REMOVAL

REMOVAL

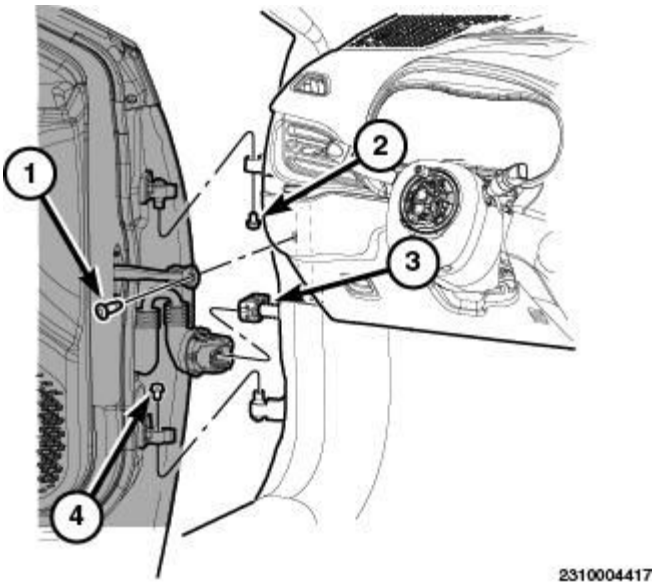

Fig. 70: Identifying Door Check Strap & Fasteners
Courtesy of CHRYSLER GROUP, LLC

NOTE: **Do not reuse the door half hinge to body side half hinge fasteners (2) and (4), replace with new readily available through Mopar parts.**

NOTE: **Driver side door shown, passenger side similar.**

Remove the door-

1. Disconnect and isolate the negative battery cable.
2. Open and support door on a suitable lifting device.
3. Disconnect wire connector (3).
4. Remove check strap fastener (1) from the body side.
5. Remove fasteners (2) and (4) and discard.
6. Remove the door from the vehicle.
7. Transfer the door to a bench.

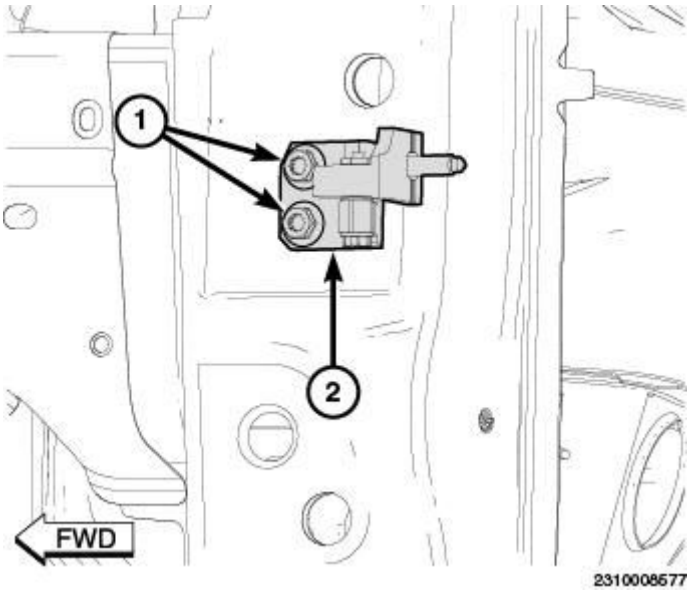

Fig. 71: Identifying Front Door Hinges & Bolts
Courtesy of CHRYSLER GROUP, LLC

Body side hinge half-

NOTE: Upper and lower hinge halves are serviced exactly the same

1. Mark position of the hinge half (2) and/or lower hinge on the upper A-pillar and lower A-pillar with a grease pencil or other suitable device to ease installation.
2. Remove bolts (1) attaching hinge to door the upper A-pillar and/or lower A-pillar frame and remove the hinge.

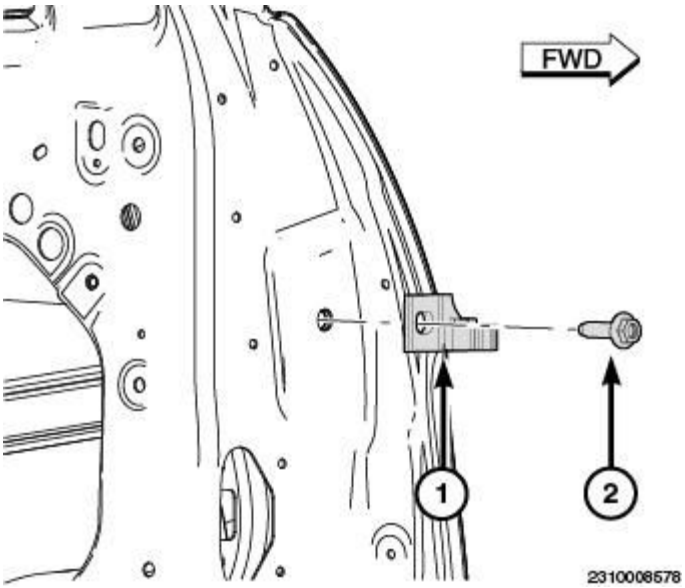

Fig. 72: Identifying Door Hinges & Bolts

Courtesy of CHRYSLER GROUP, LLC

Door side hinge half-

NOTE: Upper and lower hinge halves are serviced exactly the same

1. Mark position of upper hinge (1) and/or lower hinge on the upper door and/or lower door with a grease pencil or other suitable device to ease installation.
2. Remove bolt (2) attaching hinge to the upper door and/or the lower door and remove the hinge.

INSTALLATION

INSTALLATION

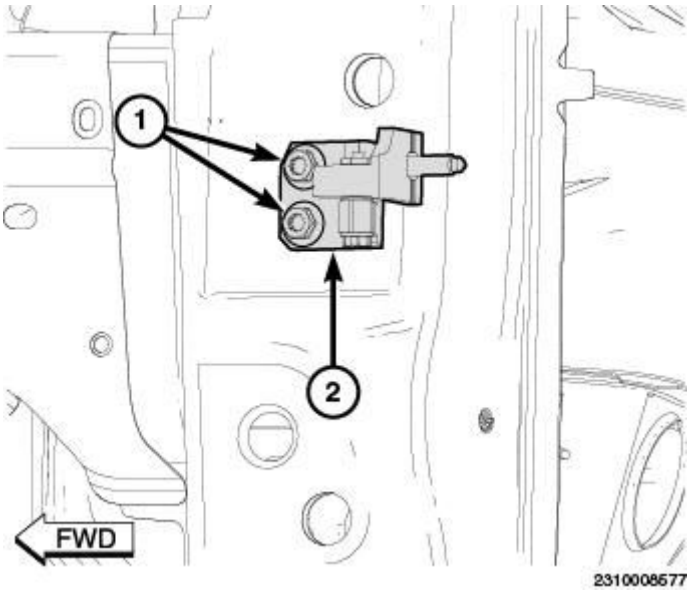

Fig. 73: Identifying Front Door Hinges & Bolts
Courtesy of CHRYSLER GROUP, LLC

NOTE: Do not reuse the door half hinge to body side half hinge fasteners, replace with new readily available through Mopar parts.

NOTE: If necessary, paint new door hinge prior to installation.

NOTE: Left upper shown, all other hinges on this model typical

Body side hinge half-

NOTE: A suitable body sealant should be used when moving or replacing hinges.

NOTE: Upper and lower hinge halves are serviced exactly the same

1. Align the upper hinge and/or the lower hinge to the upper A-pillar and/or the lower A-pillar to the marks previously made.
2. Install bolts (2) attaching the hinge (1) to the upper A-pillar and/or lower A-pillar frame and tighten to 43 N.m (32 ft. lbs.).

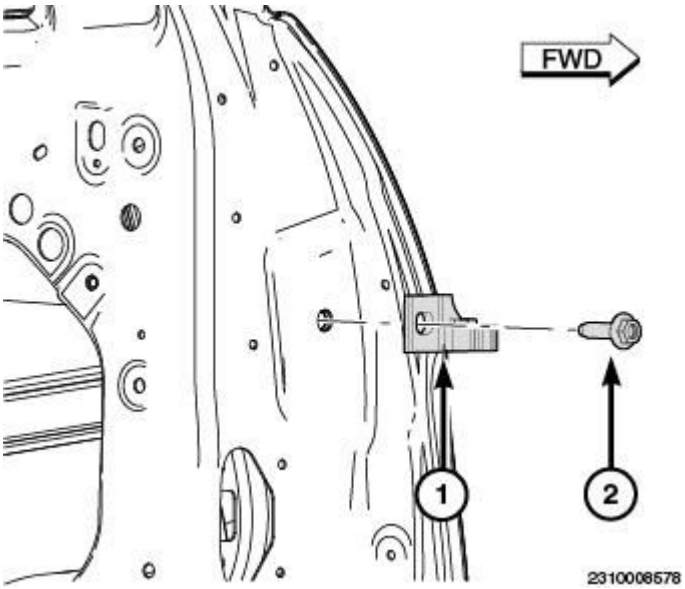

Fig. 74: Identifying Door Hinges & Bolts
Courtesy of CHRYSLER GROUP, LLC

Door side hinge half-

NOTE: A suitable body sealant should be used when moving or replacing hinges.

NOTE: Upper and lower hinge halves are serviced exactly the same

1. Align the upper hinge and/or the lower hinge to the upper door and lower door to the marks previously made.
2. Install bolt (2) attaching the hinge to the door and tighten to 43 N.m (32 ft. lbs.).

Install the door-

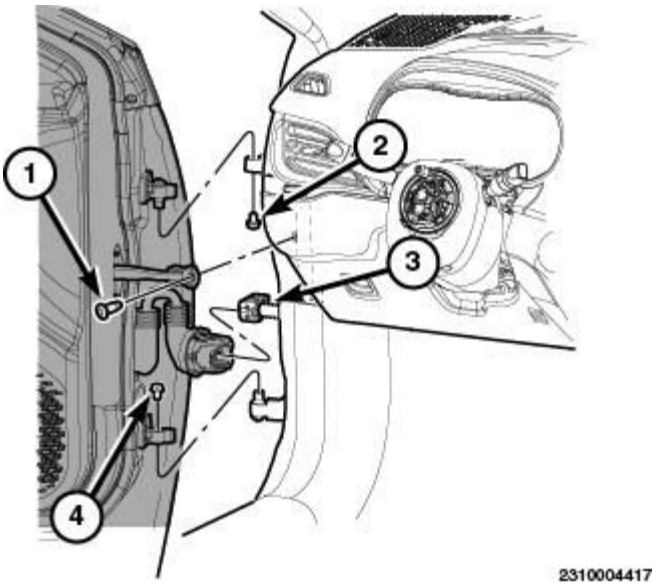

Fig. 75: Identifying Door Check Strap & Fasteners
Courtesy of CHRYSLER GROUP, LLC

1. Install the door. Refer to **DOOR, INSTALLATION**.

LATCH, DOOR

REMOVAL

REMOVAL

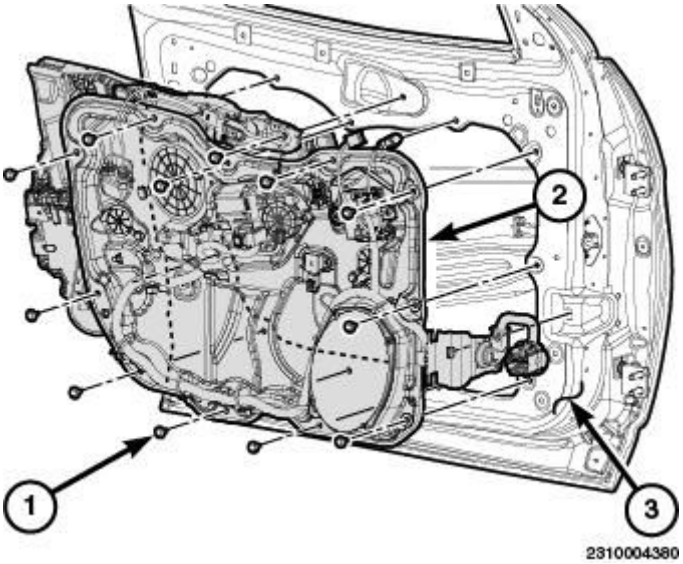

Fig. 76: Identifying Latch Door Components
Courtesy of CHRYSLER GROUP, LLC

1. Disconnect and isolate the negative battery cable.

2. Remove the carrier plate. Refer to **PLATE, CARRIER, REMOVAL**.

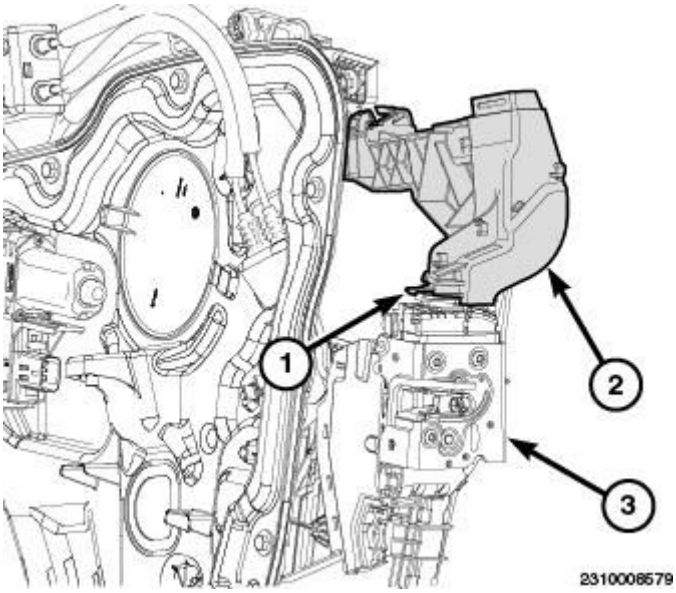

Fig. 77: Identifying Tab, Latch & Presenter Bracket
Courtesy of CHRYSLER GROUP, LLC

3. With the use of a flat bladed tool or equivalent, gently pry up on tab (1) and slide the latch (3) off of the presenter bracket (2).

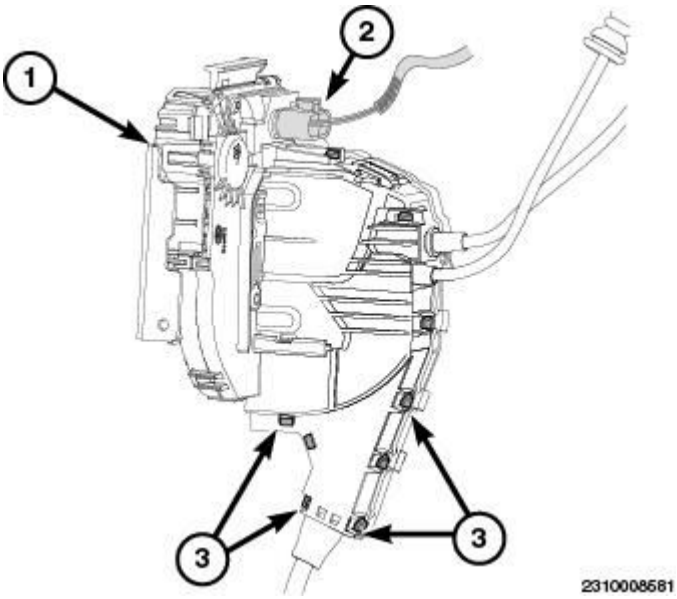

Fig. 78: Identifying Lock Cables, Latch Assembly, Electrical Connector & Cover Tabs
Courtesy of CHRYSLER GROUP, LLC

4. Disconnect the electrical connector (2).
5. Release the latch cover tabs (3) and remove the latch cover.

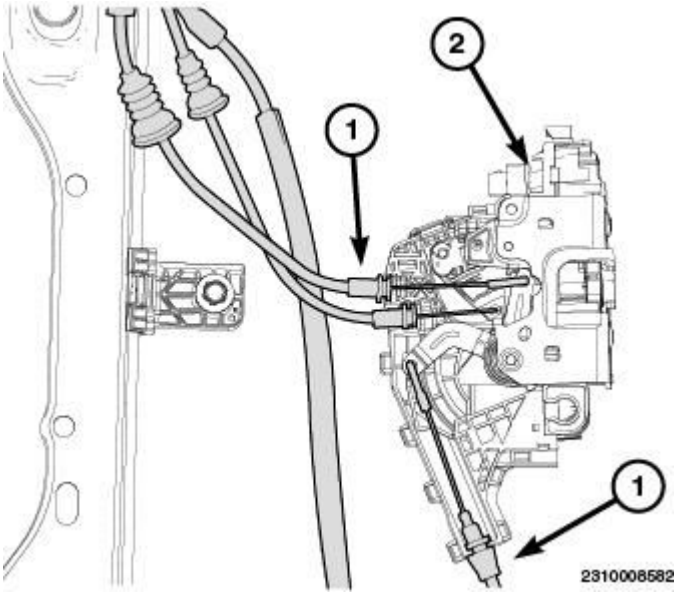

Fig. 79: Identifying Handle/Lock Cables & Latch Assembly
Courtesy of CHRYSLER GROUP, LLC

6. Disconnect handle and lock cables (1) and remove the latch assembly (2).

INSTALLATION

INSTALLATION

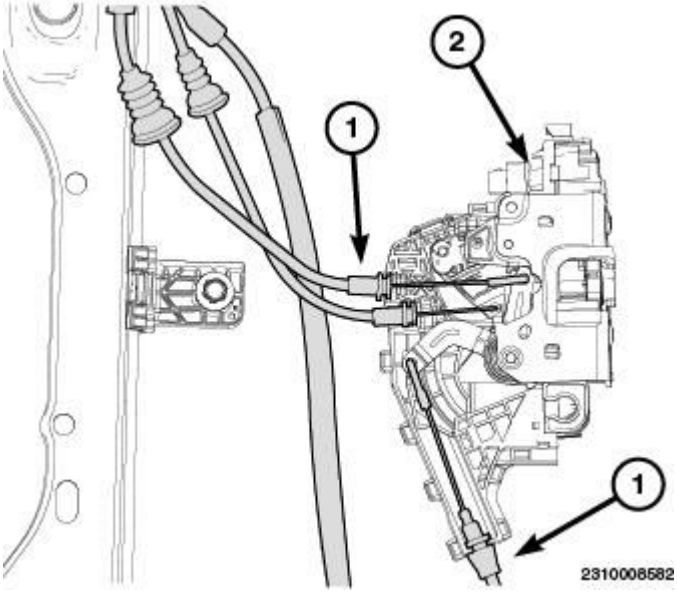

Fig. 80: Identifying Handle/Lock Cables & Latch Assembly
Courtesy of CHRYSLER GROUP, LLC

1. Connect the handle and lock cables (1).

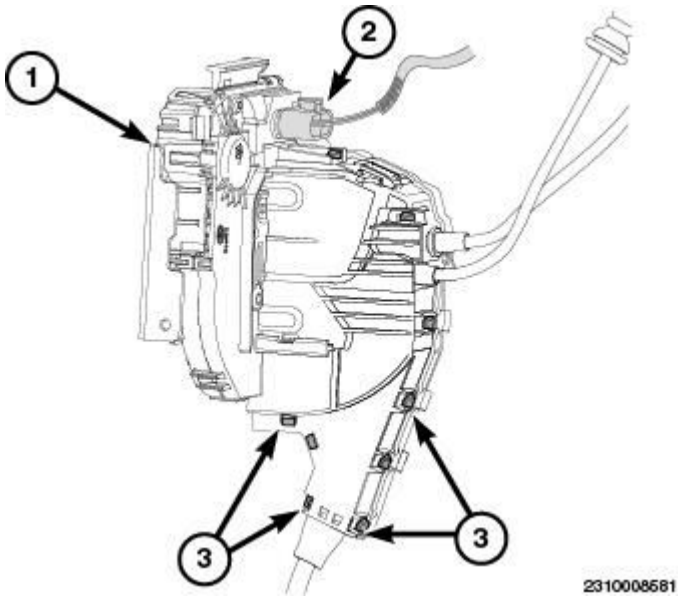

Fig. 81: Identifying Lock Cables, Latch Assembly, Electrical Connector & Cover Tabs
Courtesy of CHRYSLER GROUP, LLC

2. Connect the electrical connector (2) and install the latch cover.
3. Seat the latch cover retaining tabs (3) fully.

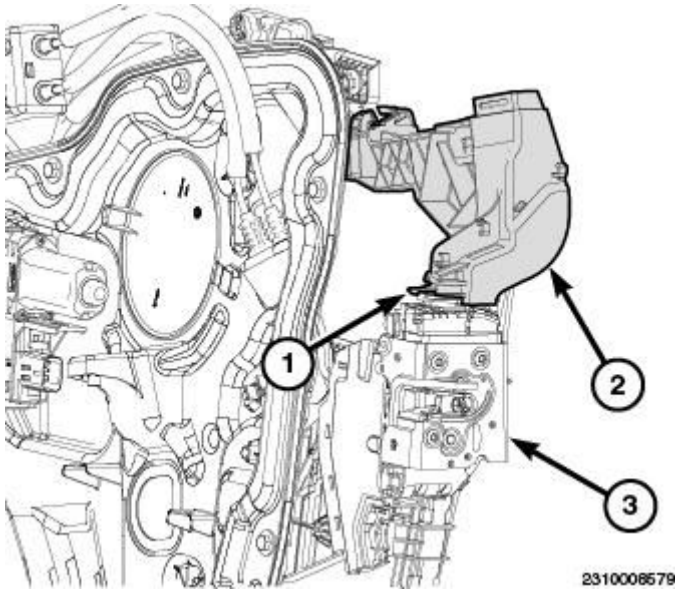

Fig. 82: Identifying Tab, Latch & Presenter Bracket
Courtesy of CHRYSLER GROUP, LLC

4. Install the latch (3) onto the presenter bracket (2) and seat the clip (1) fully.

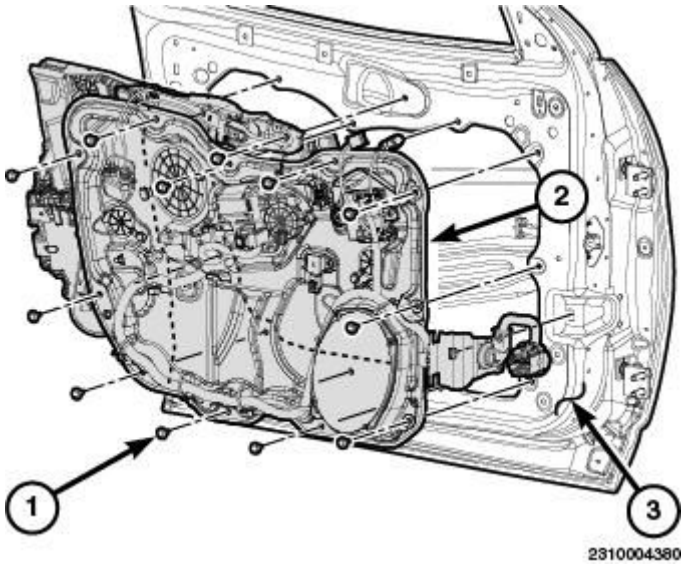

Fig. 83: Identifying Latch Door Components
Courtesy of CHRYSLER GROUP, LLC

5. Install the carrier plate. Refer to **PLATE, CARRIER, INSTALLATION**.
6. Connect the negative battery cable.
7. Perform the Clear/Relearn procedure. Refer to **STANDARD PROCEDURE** .

MOLDING, OUTER BELT

REMOVAL

REMOVAL

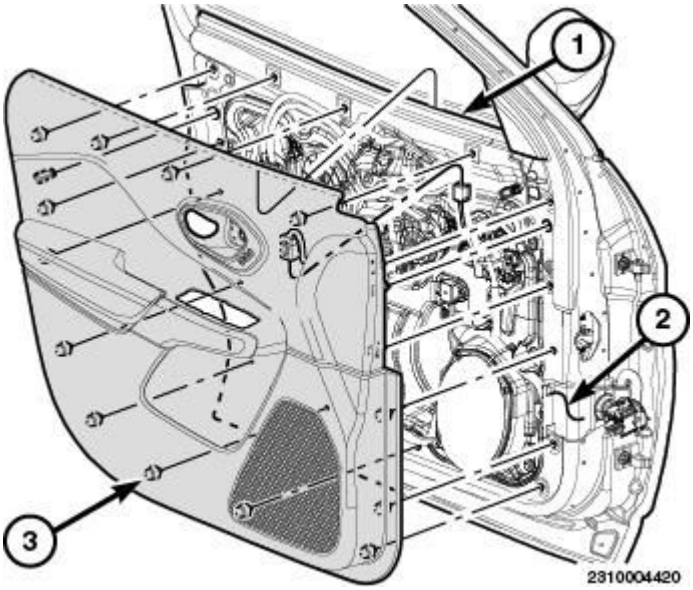

Fig. 84: Identifying Inner Door Belt Weatherstrip, Door Glass & Fasteners

Courtesy of CHRYSLER GROUP, LLC

1. Remove the door trim panel. Refer to **PANEL, DOOR TRIM, REMOVAL**.

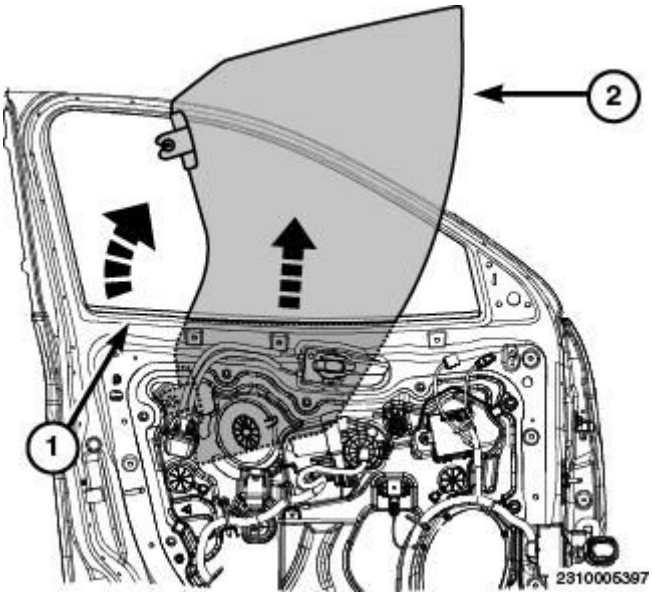

Fig. 85: Removing Door Glass From Door
Courtesy of CHRYSLER GROUP, LLC

2. Remove the door glass (1) from the door (2). Refer to **GLASS, DOOR, REMOVAL**.
3. Remove the outside mirror. Refer to **MIRROR, OUTSIDE REARVIEW, REMOVAL** and **MIRROR, OUTSIDE REARVIEW, GLASS, REMOVAL**.

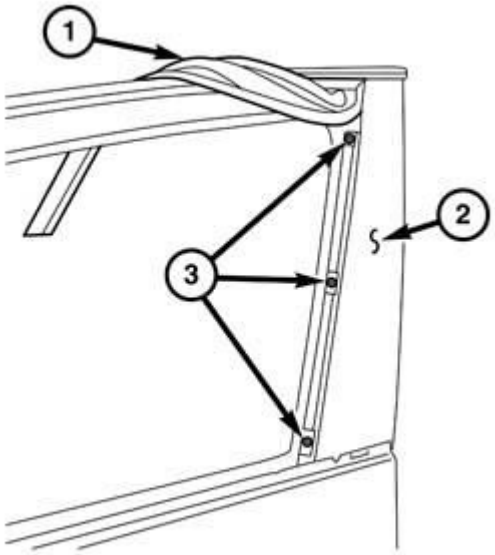

231068501

Fig. 86: Door Glass Run, Applique & Fasteners
Courtesy of CHRYSLER GROUP, LLC

4. Remove the rear portion of the door glass run (1).
5. Remove the three door applique (2) fasteners (3).
6. Remove the door applique (2).

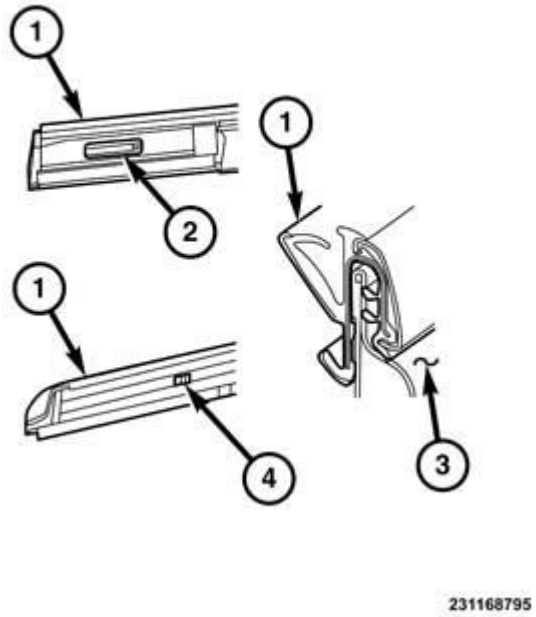

Fig. 87: Belt Molding, Notch & Door Edge
Courtesy of CHRYSLER GROUP, LLC

7. Locate the notch (1) on the belt molding (1) inner edge B-pillar end.
8. Insert a small flat bladed tool or equivalent, into the notch (2) of the inner side of the belt molding (1).
9. Pry inboard to clear the tab on the door.
10. Continue to hold the notch inboard and using trim stick (special tool #C-4755, Trim Stick) or equivalent, gently pry up on outer belt molding, lifting the belt molding (1) upward approximately 25 mm (1 in.), it will be tight as it is raised over the door edge (3)
11. Lift the belt molding (1) upward 25 mm (1 in.).
12. Locate the notch (1) on the belt molding inner edge outside mirror end.
13. Insert a small flat bladed tool or equivalent, into the notch (2) of the inner side of the belt molding (1).
14. Pry inboard to clear the tab on the door.

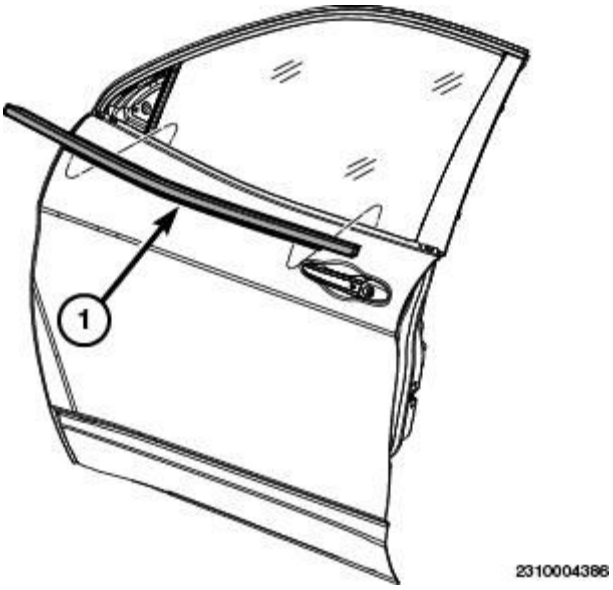

Fig. 88: Identifying Belt Molding
Courtesy of CHRYSLER GROUP, LLC

15. Using trim stick or equivalent, gently pry up on outer belt molding
16. Remove the belt molding (1) from the door (2).

INSTALLATION

INSTALLATION

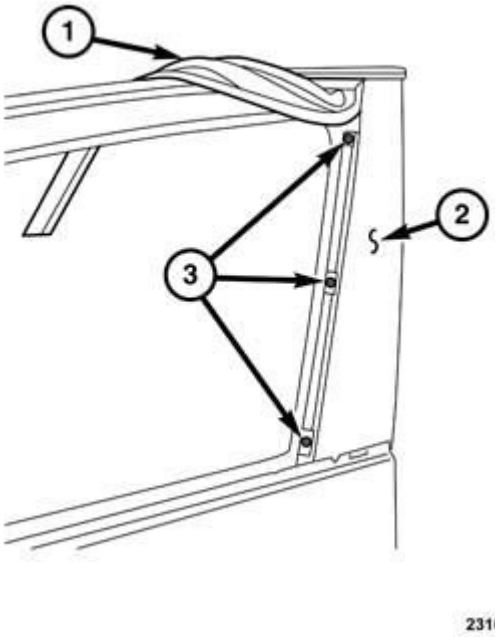

Fig. 89: Door Glass Run, Applique & Fasteners

Courtesy of CHRYSLER GROUP, LLC

1. Position the door applique.
2. Install the three door applique (2) fasteners (3) and tighten securely.
3. Insert the rear portion of the door glass run (1) and verify it is seated fully.

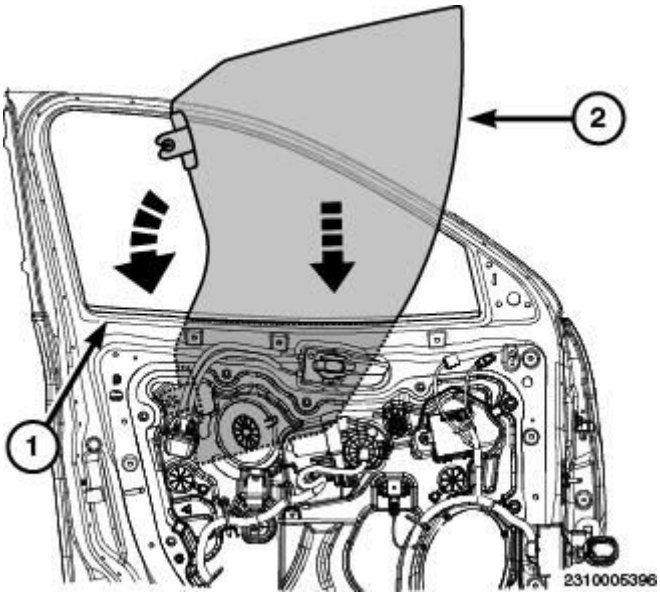

Fig. 90: Installing Door Glass Into Door
Courtesy of CHRYSLER GROUP, LLC

4. Install the door glass (2) into the door (1). Refer to **GLASS, DOOR, INSTALLATION**.

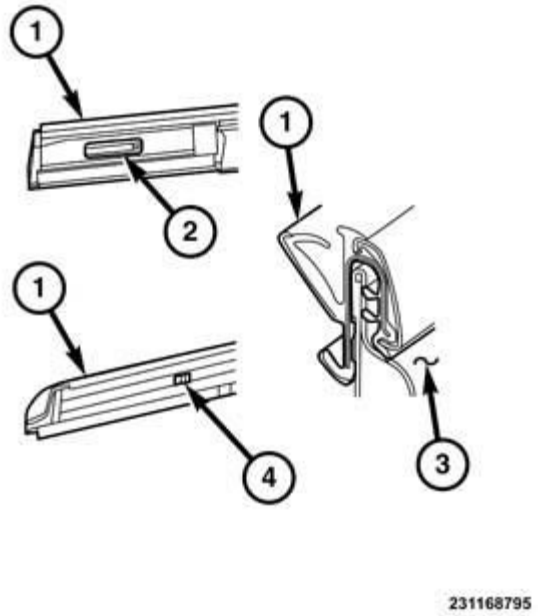

Fig. 91: Belt Molding, Notch & Door Edge
Courtesy of CHRYSLER GROUP, LLC

5. Align the tab (4) on the inner edge of belt molding (1) to the indentations on the door.
6. With firm hand pressure push down until belt molding (1) has seated fully onto the door (3) and the notches on the ends (2).

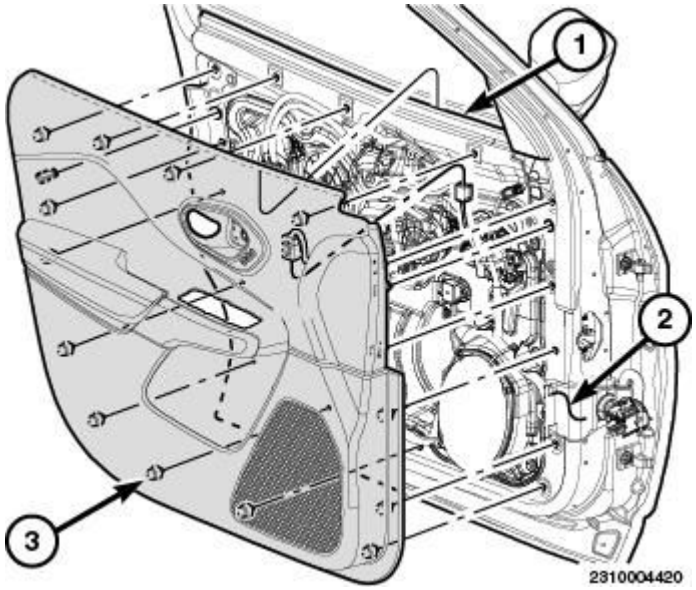

Fig. 92: Identifying Inner Door Belt Weatherstrip, Door Glass & Fasteners
Courtesy of CHRYSLER GROUP, LLC

7. Install the outside mirror. Refer to **MIRROR, OUTSIDE REARVIEW, INSTALLATION** and

MIRROR, OUTSIDE REARVIEW, GLASS, INSTALLATION.

8. Install the door trim panel. Refer to **PANEL, DOOR TRIM, INSTALLATION**.

PANEL, DOOR TRIM

REMOVAL

REMOVAL

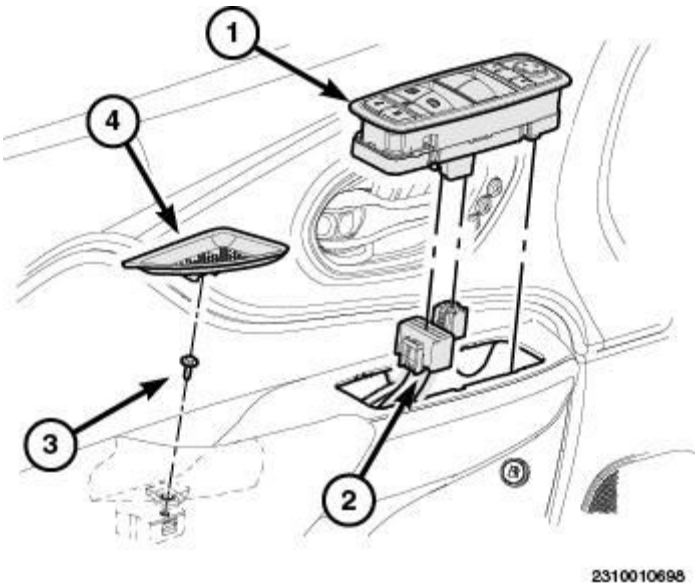

Fig. 93: Identifying Window Switch, Liner & Fasteners
Courtesy of CHRYSLER GROUP, LLC

1. Disconnect and isolate the negative battery cable.
2. Using (special tool #C-4755, Trim Stick) or equivalent, remove and disconnect the window switch (2) from the door.
3. Using a trim stick or equivalent, remove the liner (4) from the door trim pull handle.
4. Remove the fastener (3) securing the door trim panel to the carrier plate.

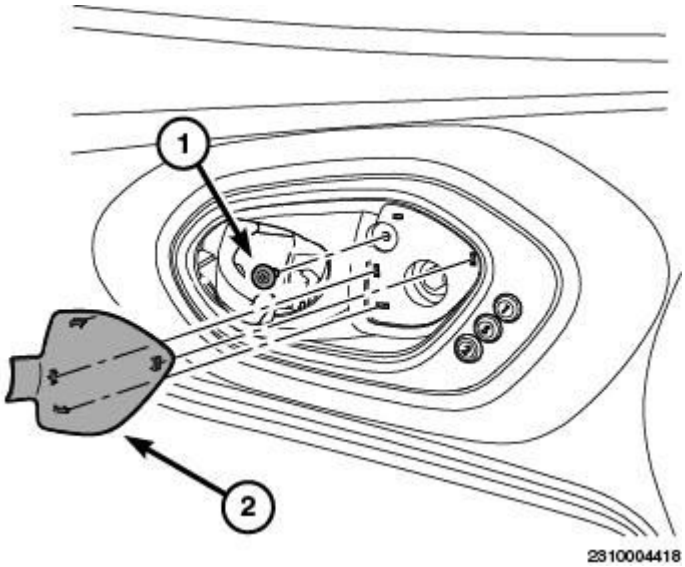

Fig. 94: Identifying Bezel & Fastener
Courtesy of CHRYSLER GROUP, LLC

5. Using a trim stick or equivalent, pull out on the interior door handle and remove the bezel (2) located in the cavity.
6. Remove the fastener (1) and the fastener securing the door trim panel to the carrier plate.

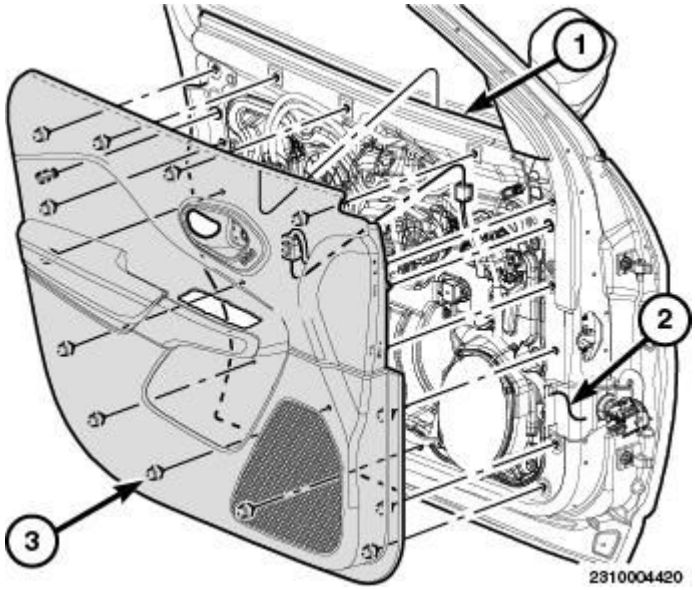

Fig. 95: Identifying Inner Door Belt Weatherstrip, Door Glass & Fasteners
Courtesy of CHRYSLER GROUP, LLC

7. Using a trim stick or equivalent, pry the door trim panel away, starting along the lower edge and working around the perimeter to disengage the retaining clips (3).
8. Lift the door trim panel up and out.**Position the door trim panel slightly away, do not remove.**

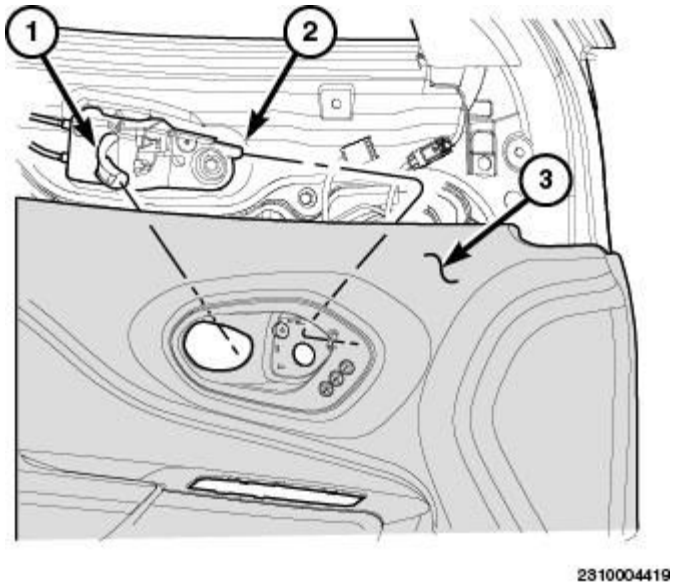

Fig. 96: Identifying Interior Handle, Notch & Trim Panel
Courtesy of CHRYSLER GROUP, LLC

9. Pull the interior handle (1) out fully from the notch (2) to detach from the trim panel (3).
10. Disconnect electrical connectors and remove the door trim panel (3).

INSTALLATION

INSTALLATION

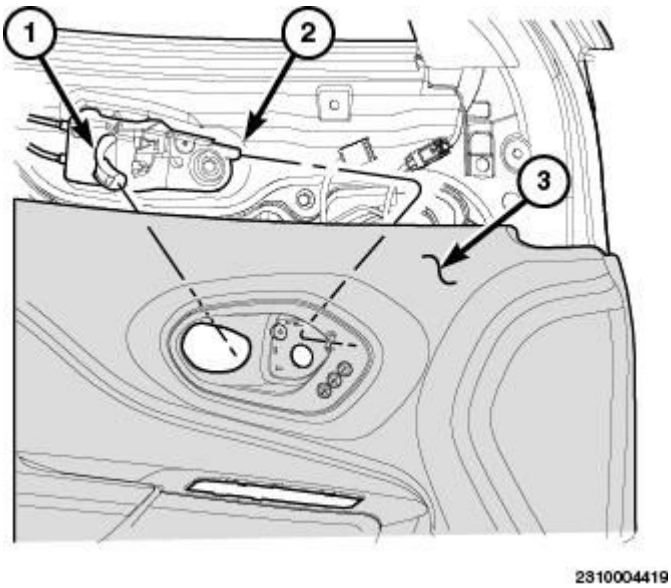

Fig. 97: Identifying Interior Handle, Notch & Trim Panel
Courtesy of CHRYSLER GROUP, LLC

1. Position the door trim panel (3) near the door.

2. Connect any electrical connectors as necessary except for the window switch. Feed the window switch harness through the cavity in the door trim panel.
3. Raise the trim panel and position the backside of the upper trim edge to be engaged with inner belt molding.
4. Feed the interior door handle (1) and the tab (2) through the back of the door trim panel and clip into place.

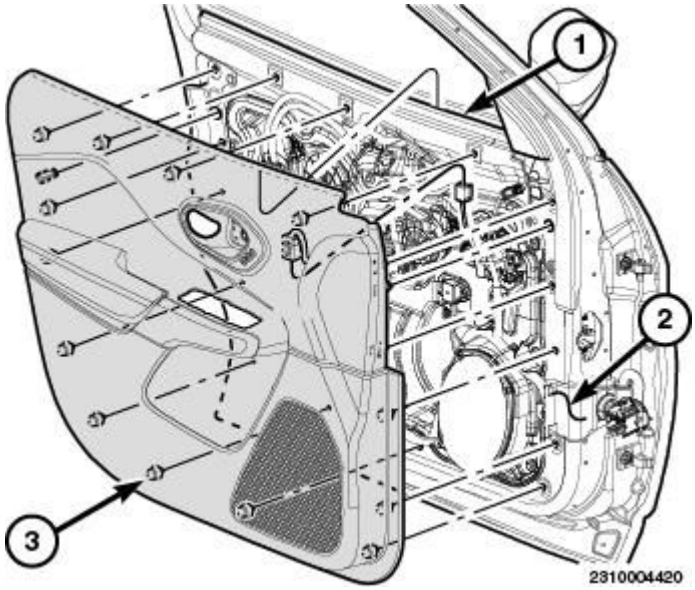

Fig. 98: Identifying Inner Door Belt Weatherstrip, Door Glass & Fasteners
Courtesy of CHRYSLER GROUP, LLC

5. Align the door trim panel retaining clips (3) to the door.
6. Once aligned, engage the upper trim edge with the inner belt molding (1).
7. Hand tap the door trim panel to secure the retaining clips.

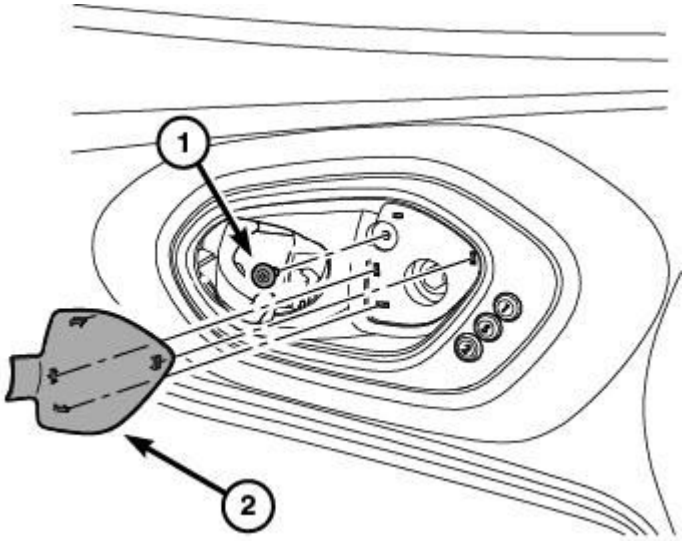

Fig. 99: Identifying Bezel & Fastener
Courtesy of CHRYSLER GROUP, LLC

8. Install the fasteners (1) into the interior door handle pocket, securing the door trim panel to the carrier plate. Tighten the fasteners securely.
9. Install the interior door handle (2) bezel.

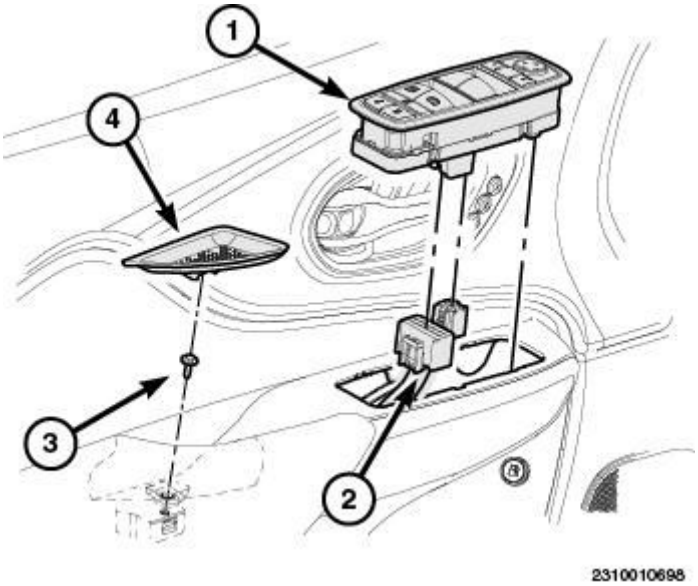

Fig. 100: Identifying Window Switch, Liner & Fasteners
Courtesy of CHRYSLER GROUP, LLC

10. Connect the electrical connector (2) and install the window switch (1) to the door.
11. Install the fastener (3) securing the door trim panel to the carrier plate. Tighten the fastener securely.
12. Install the liner (4) into the door trim pull handle cavity.
13. Connect the negative battery cable.

PLATE, CARRIER

REMOVAL

REMOVAL

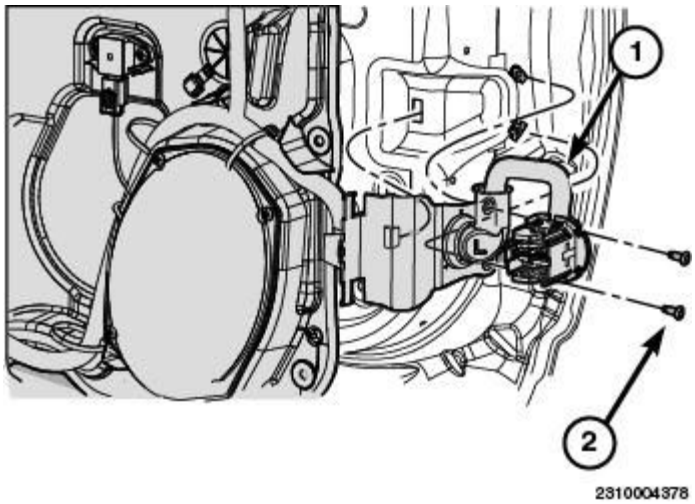

Fig. 101: Identifying Wire Harness & Fasteners
Courtesy of CHRYSLER GROUP, LLC

1. Disconnect and isolate the negative battery cable.
2. Remove trim panel. Refer to **PANEL, DOOR TRIM, REMOVAL**.
3. Remove the fasteners (2) and separate the wire harness (1) from the carrier plate.
4. Disconnect the door glass from the window regulator and secure in the full up position using tape or other suitable tool. Refer to **GLASS, DOOR, REMOVAL**.

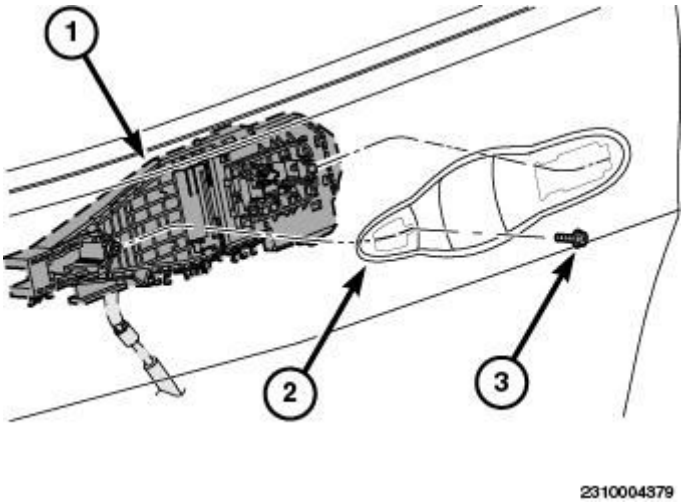

Fig. 102: Identifying Exterior Door Handle & Fastener
Courtesy of CHRYSLER GROUP, LLC

5. Remove the exterior door handle. Refer to **HANDLE, EXTERIOR, REMOVAL** and **HANDLE, INTERIOR, REMOVAL**.
6. Remove the fastener (3) located beneath the exterior door handle.

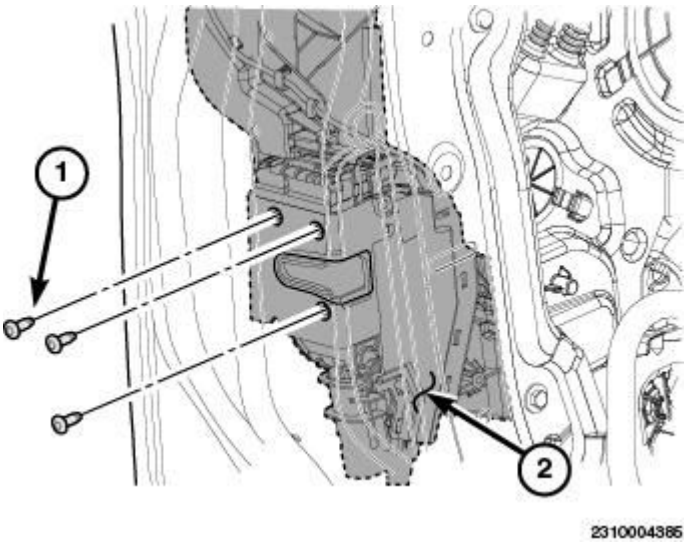

Fig. 103: Identifying Inner Door & Door Latch Fasteners
Courtesy of CHRYSLER GROUP, LLC

7. Remove the door latch fasteners (1) from the inner door (2).

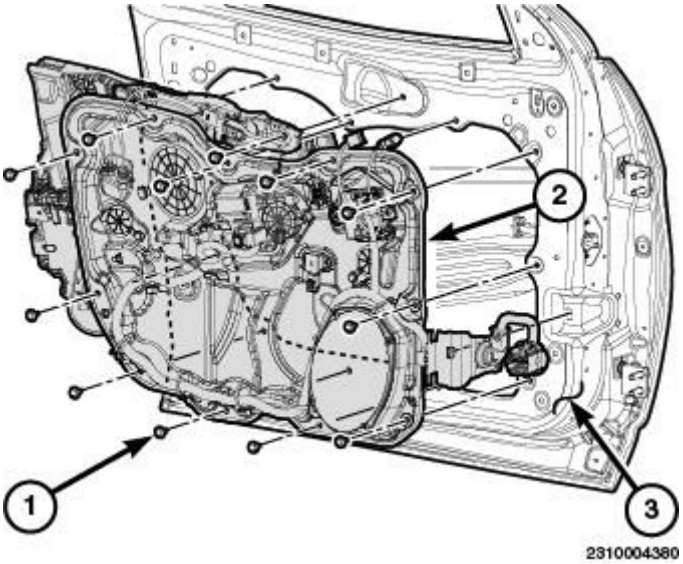

Fig. 104: Identifying Latch Door Components
Courtesy of CHRYSLER GROUP, LLC

8. Disconnect the exterior mirror wiring connector.
9. Separate the wire harness from the carrier plate as necessary to gain enough slack in the harness to remove the carrier plate from the door.
10. Remove the carrier plate fasteners (1).
11. Remove the carrier plate from the door (1).
12. Disconnect and release the remaining harness connectors.

INSTALLATION

INSTALLATION

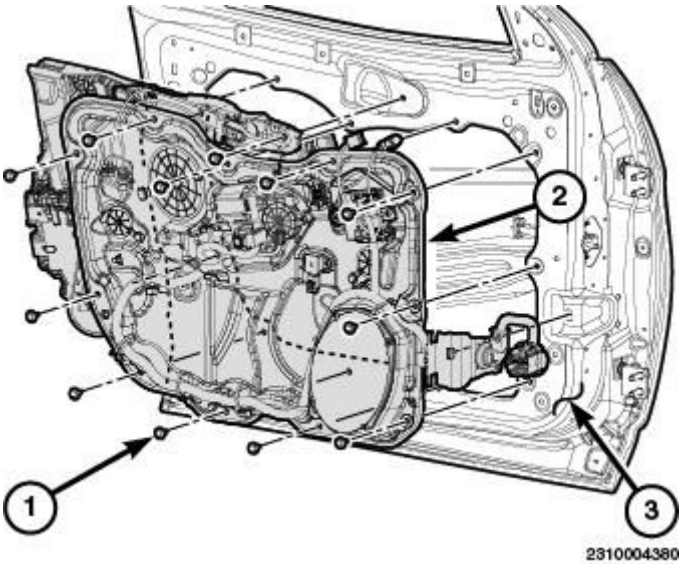

Fig. 105: Identifying Latch Door Components
Courtesy of CHRYSLER GROUP, LLC

1. Move the carrier plate into the door opening until position allows for routing of the rear door wiring harness.
2. Route and fasten the wiring harness guides into the carrier plate and the latch presenter.
3. Insert latch inside and the outer handle bracket into the inner sheet metal.
4. Move carrier plate into opening until position of module aligns with surrounding sheet metal.
5. Install carrier plate fasteners (1) and tighten to 8 N.m (71 in. lbs.).
6. Connect wire harness to mirror connector.

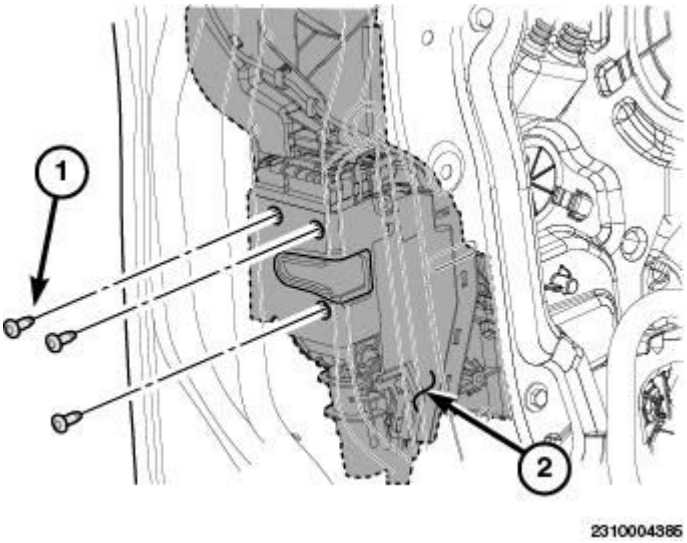

Fig. 106: Identifying Inner Door & Door Latch Fasteners
Courtesy of CHRYSLER GROUP, LLC

7. Install the door latch fasteners (1) into the inner door (2).
8. Tighten the latch fasteners to 8 N.m (71 in. lbs.).

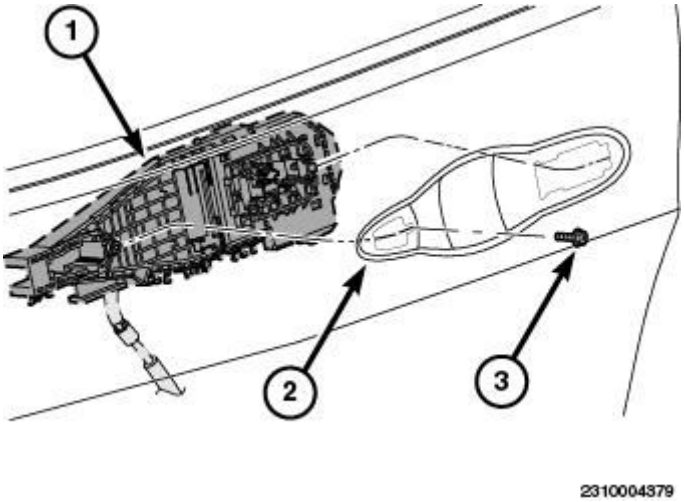

Fig. 107: Identifying Exterior Door Handle & Fastener
Courtesy of CHRYSLER GROUP, LLC

9. Align the outer door handle bracket (1).
10. Install the outer door handle bracket fastener (3) and tighten securely.
11. Install the exterior door handle. Refer to **HANDLE, EXTERIOR, INSTALLATION** and **HANDLE, INTERIOR, INSTALLATION**.

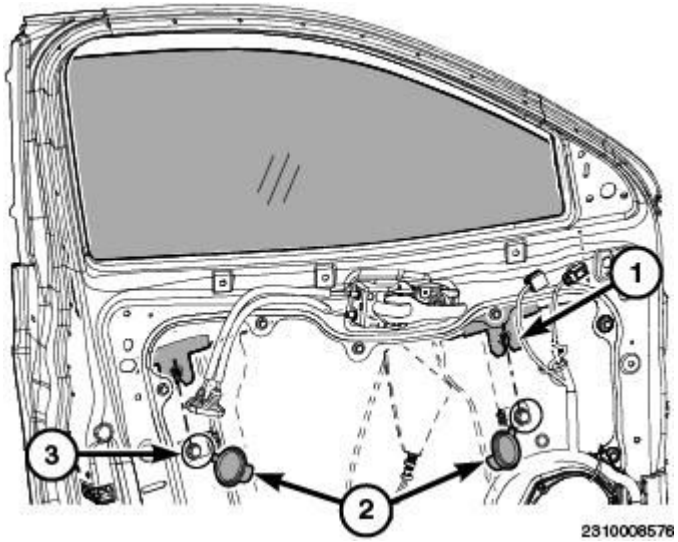

Fig. 108: Identifying Access Plugs & Glass Fasteners
Courtesy of CHRYSLER GROUP, LLC

12. Release glass and lower into position onto regulator.
13. Align the door glass mounts (1) to the window regulator within the access holes (3).
14. Apply a medium grade threadlocker adhesive to the glass fastener threads per manufacture recommendations.
15. Install the glass fasteners and tighten to 13 N.m (10 ft. lbs.).

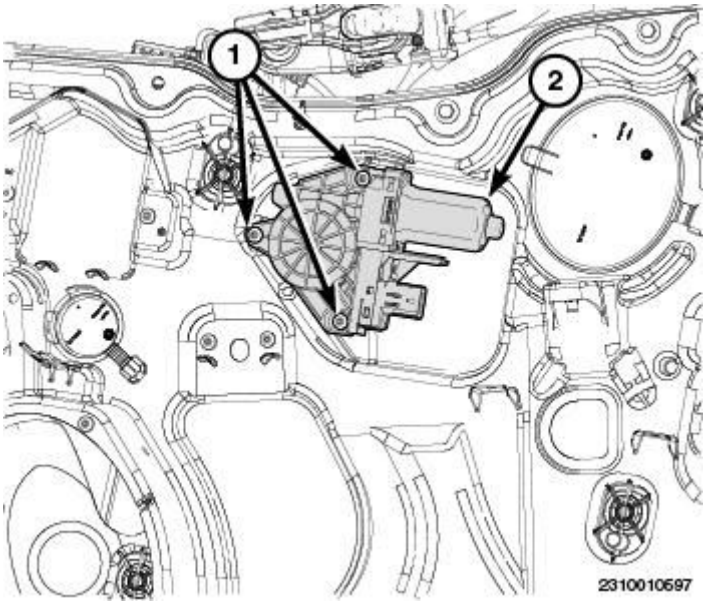

Fig. 109: Identifying Window Motor & Fasteners
Courtesy of CHRYSLER GROUP, LLC

16. Align the window motor (2) onto the carrier plate.
17. Install the window motor fasteners (1) and tighten to and tighten securely.
18. Connect the window motor (2) wiring connector.
19. Close the access plugs.

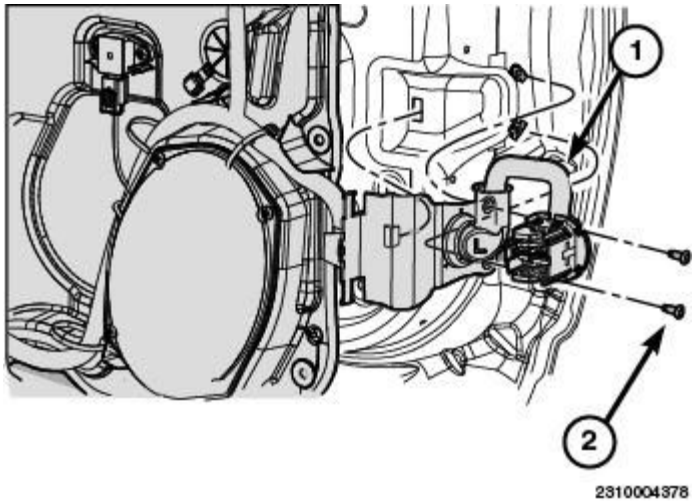

Fig. 110: Identifying Wire Harness & Fasteners
Courtesy of CHRYSLER GROUP, LLC

20. Position the harness (1) back into place and install the screws (2).
21. Install trim panel. Refer to **PANEL, DOOR TRIM, INSTALLATION**.
22. Connect the battery.
23. Perform the Clear/Relearn procedure. Refer to **STANDARD PROCEDURE** .

REGULATOR, WINDOW

REMOVAL

REMOVAL

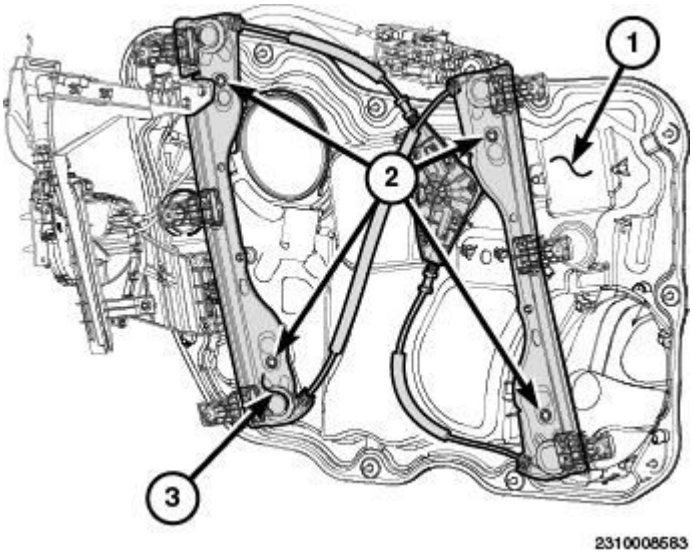

Fig. 111: Identifying Carrier Plate, Window Regulator & Fasteners
Courtesy of CHRYSLER GROUP, LLC

1. Remove the carrier plate (1). Refer to **PLATE, CARRIER, REMOVAL**.
2. Remove fasteners (2) from the window regulator (3).
3. Remove window regulator (3) from the carrier plate (1).

INSTALLATION

INSTALLATION

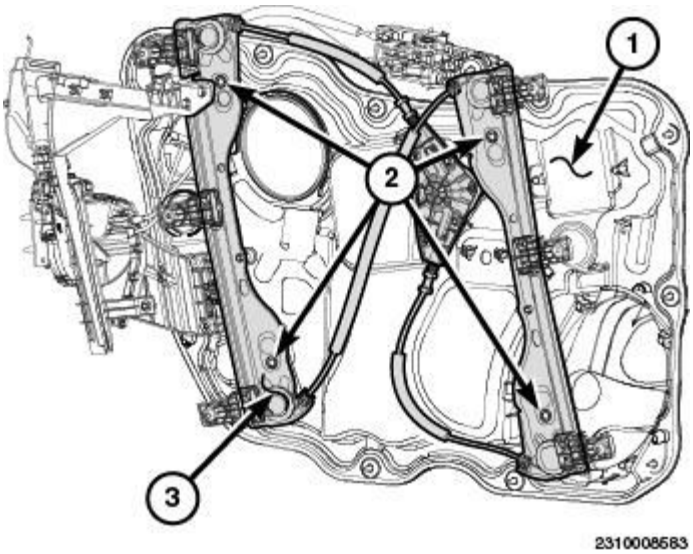

Fig. 112: Identifying Carrier Plate, Window Regulator & Fasteners
Courtesy of CHRYSLER GROUP, LLC

1. Align the window regulator (3) onto the carrier plate (1).
2. Insert the window regulator drive mechanism tabs into the carrier plate until clips engage fully.
3. Install the four window regulator fasteners (2) and tighten securely.
4. Install the carrier plate. Refer to **PLATE, CARRIER, INSTALLATION**.
5. Perform the Clear/Relearn procedure. Refer to **STANDARD PROCEDURE** .

STRIKER, DOOR LATCH

REMOVAL

REMOVAL

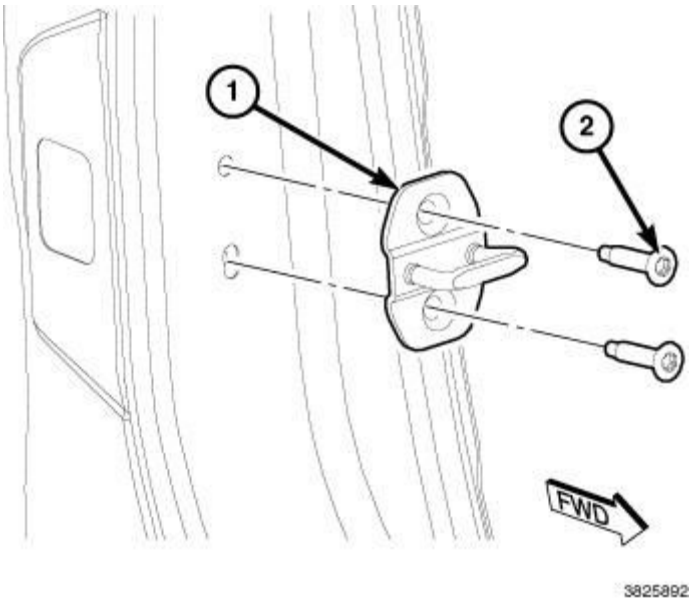

Fig. 113: Door Latch Striker & Screws
Courtesy of CHRYSLER GROUP, LLC

NOTE: Right hand shown, left hand typical.

1. Using a grease pencil or equivalent, mark the location of the door latch striker (1) on the B-pillar.
2. Remove the two bolts (2) that secure the striker to the B-pillar and remove the striker.
3. Be sure to check for any shims between door latch striker and B-pillar. If any shims are found, they must be reinstalled with the new door latch striker to maintain proper door operation.

INSTALLATION

INSTALLATION

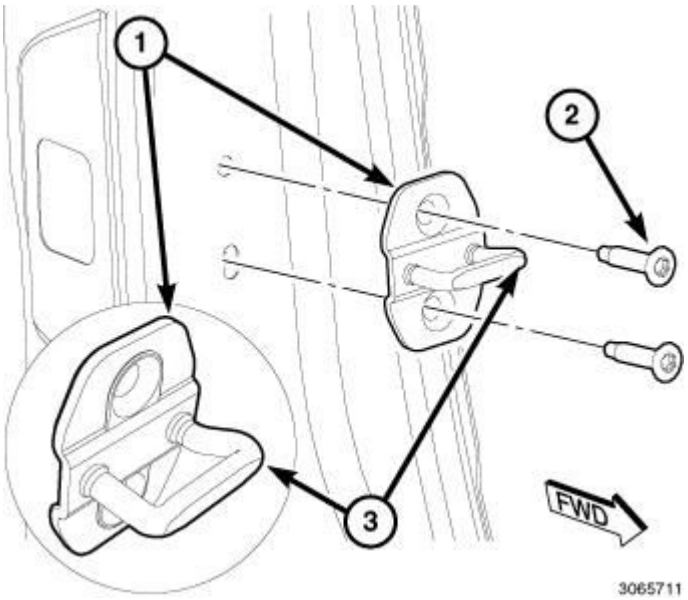

Fig. 114: Two Bolts & Striker
Courtesy of CHRYSLER GROUP, LLC

NOTE: The striker needs to be properly orientated to the B-pillar. The striker loop (3) must be installed to the inboard side of the B-pillar.

1. Position the door latch striker (1) onto the B-pillar and loosely install the two bolts (2).
2. Align the door latch striker to the B-pillar using the reference marks made during the removal procedure and tighten the bolts to 30 N.m (22 ft. lbs.).

DOORS - REAR

APPLIQUE

REMOVAL

REMOVAL

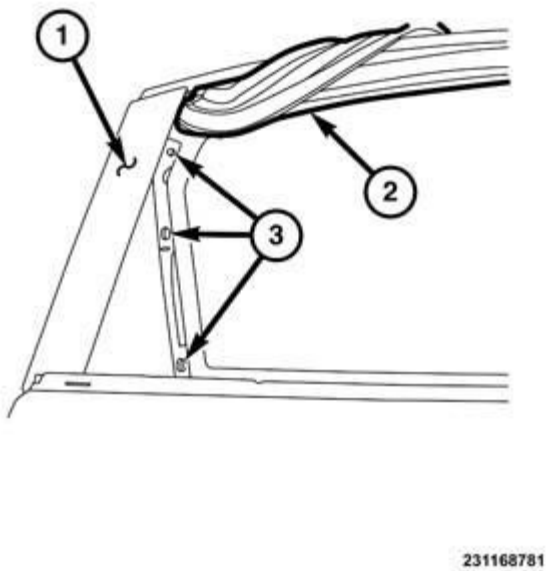

Fig. 115: Door Glass Weatherstrip, C-Pillar Applique & Fasteners
Courtesy of CHRYSLER GROUP, LLC

1. Lower window fully.
2. Remove the door trim panel. Refer to **PANEL, REAR DOOR TRIM, REMOVAL**.
3. Partially remove the rear portion of the door glass weatherstrip (2).
4. Remove the three C-pillar applique (1) fasteners (3).
5. Remove the C-pillar applique (1) from the vehicle.

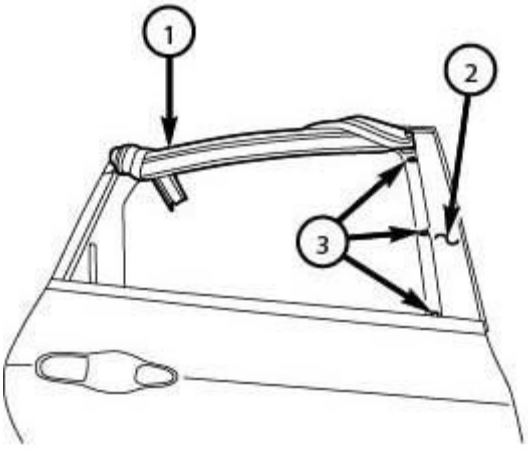

231168784

Fig. 116: Door Glass Weatherstrip, B-Pillar Applique & Fasteners
Courtesy of CHRYSLER GROUP, LLC

B-Pillar Applique-

1. Lower window fully.
2. Remove the door trim panel. Refer to **PANEL, REAR DOOR TRIM, REMOVAL**.
3. Partially remove the front portion of the door glass weatherstrip (1).
4. Remove the three B-pillar applique (2) fasteners (3).

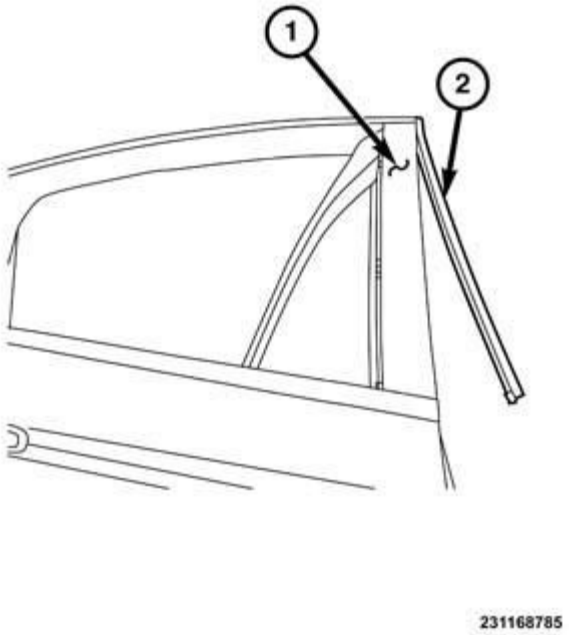

Fig. 117: B-Pillar Applique & Weatherstrip
Courtesy of CHRYSLER GROUP, LLC

5. Untuck the front edge of the weatherstrip (2) from the applique (1) and the door edge.
6. Remove the B-pillar applique (1) from the vehicle.

INSTALLATION

INSTALLATION

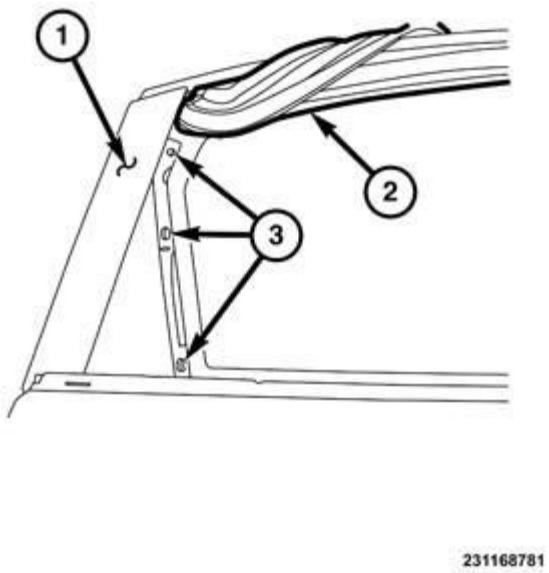

Fig. 118: Door Glass Weatherstrip, C-Pillar Applique & Fasteners
Courtesy of CHRYSLER GROUP, LLC

C-Pillar Applique-

1. Install the three C-pillar applique (1) fasteners (3) and tighten securely.
2. Insert the rear portion of the door glass weatherstrip (2) into the glass run channel and verify it is seated fully.
3. Install the door trim panel. Refer to **PANEL, REAR DOOR TRIM, INSTALLATION**.
4. Raise the door glass fully.

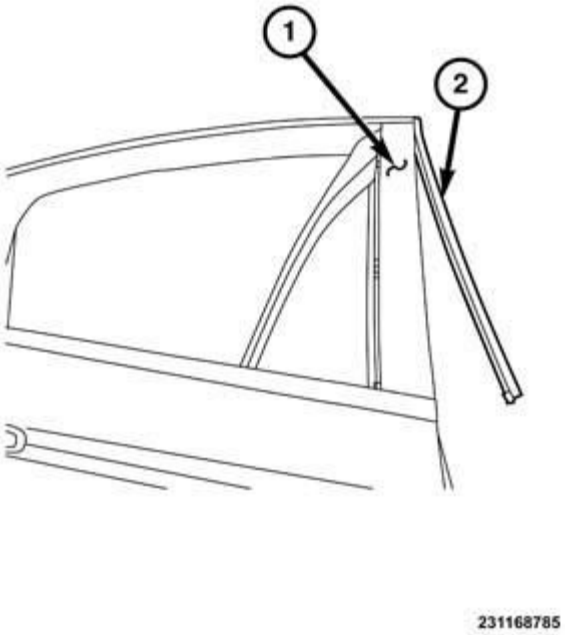

Fig. 119: B-Pillar Applique & Weatherstrip
Courtesy of CHRYSLER GROUP, LLC

B-Pillar Applique-

1. Align the B-pillar applique (1) onto the door frame.
2. Insert the front edge of the weatherstrip (2) onto the applique (1) and the door edge.

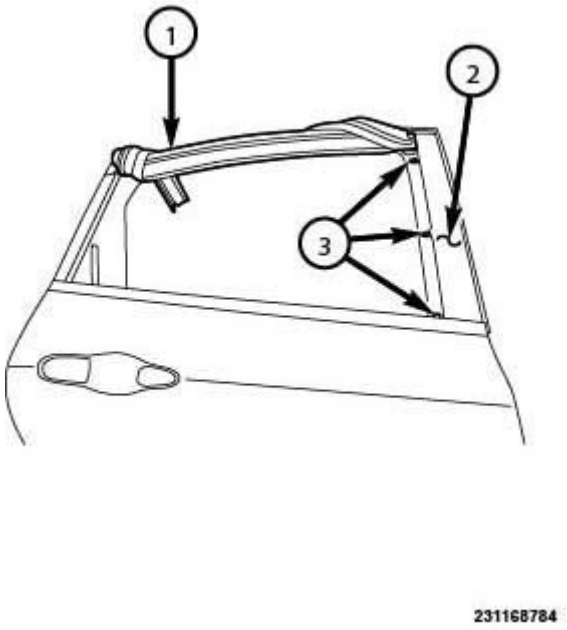

Fig. 120: Door Glass Weatherstrip, B-Pillar Applique & Fasteners
Courtesy of CHRYSLER GROUP, LLC

3. Install the three B-pillar applique (2) fasteners (3) and tighten securely.
4. Insert the front portion of the door glass weatherstrip (1) into the glass run channel) and verify it is seated fully.
5. Install the door trim panel. Refer to **PANEL, REAR DOOR TRIM, INSTALLATION**.
6. Raise the door glass fully.

DOOR, REAR

ADJUSTMENTS

ADJUSTMENTS

NOTE: **Door adjustment measurements should be taken from stationary or welded body panels like the roof, rocker or quarter panels.**

- **During adjustment procedures, it is recommended that all the hinge fasteners be loosened except for the upper most fasteners. Adjustments can be made using the upper bolts to hold the door with final torque of the fasteners occurring after correct door positioning is achieved.**
- **A suitable body sealant should be used when removing or moving the hinges.**

FORE/AFT

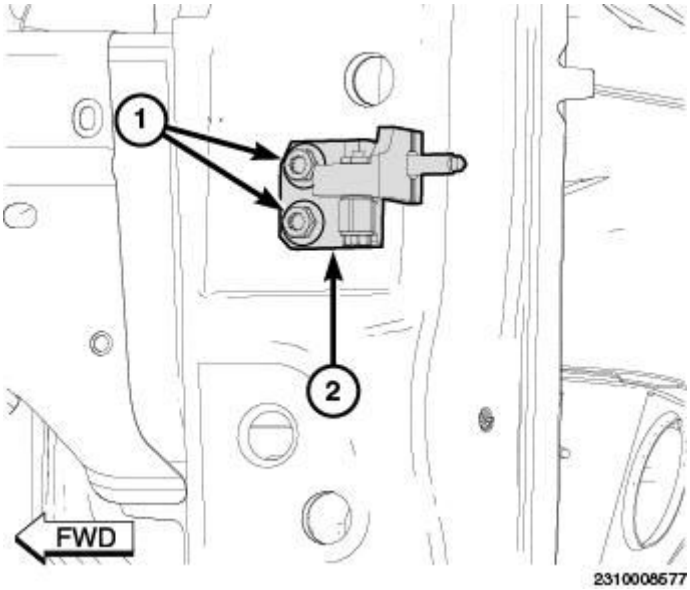

Fig. 121: Identifying Front Door Hinges & Bolts
Courtesy of CHRYSLER GROUP, LLC

NOTE: Fore/aft (lateral) door adjustment is done by loosening the hinge to the body fasteners (1) one hinge at a time and moving the door to the correct position.

1. Support the rear door with a suitable lifting device.
2. Loosen the bolts (1) that secure the front door hinges (2) to the B-pillar.
3. Adjust the rear door to the correct position. Refer to **GAP AND FLUSH, SPECIFICATIONS**.
4. Tighten the upper bolt of the upper hinge to the B-pillar to 43 N.m (32 ft. lbs.).
5. Tighten the upper bolt of the lower hinge to 43 N.m (32 ft. lbs.).
6. Tighten the remaining hinge bolts to 43 N.m (32 ft. lbs.).

UP/DOWN

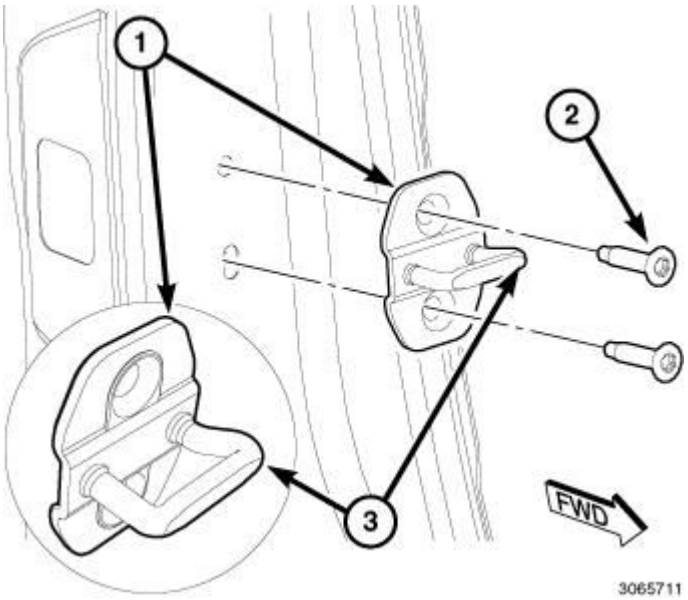

Fig. 122: Two Bolts & Striker
Courtesy of CHRYSLER GROUP, LLC

NOTE: Up/down door adjustment is done by loosening either the hinge to the body fasteners or the hinge to door fasteners and moving the door to the correct position.

1. Support the rear door with a suitable lifting device.
2. Loosen the two bolts (2) that secure the striker (1) to the C-pillar.

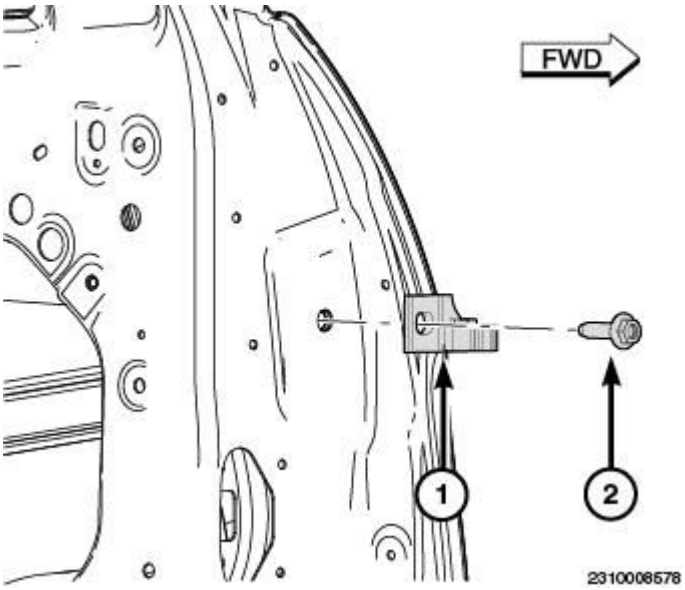

Fig. 123: Identifying Door Hinges & Bolts
Courtesy of CHRYSLER GROUP, LLC

3. If necessary, loosen the bolts (2) that secure the door hinges (1) to the rear door.

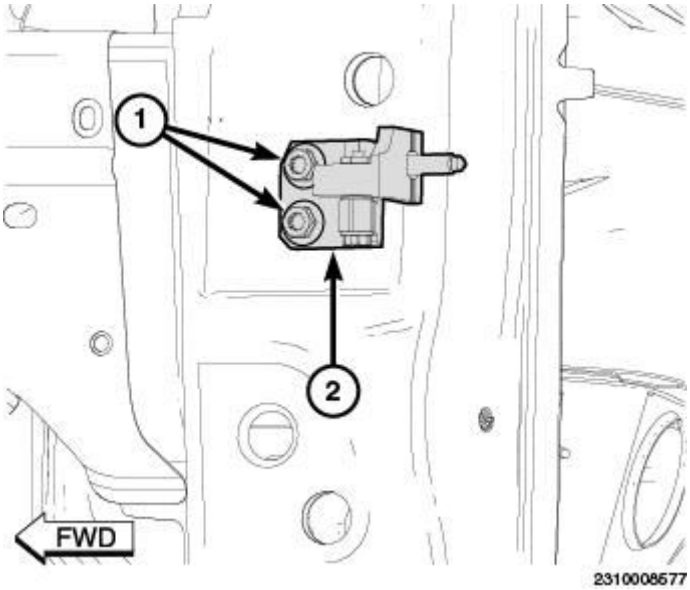

Fig. 124: Identifying Front Door Hinges & Bolts
Courtesy of CHRYSLER GROUP, LLC

4. If necessary, loosen the bolts (1) that secure the front door hinges (2) to the B-pillar.

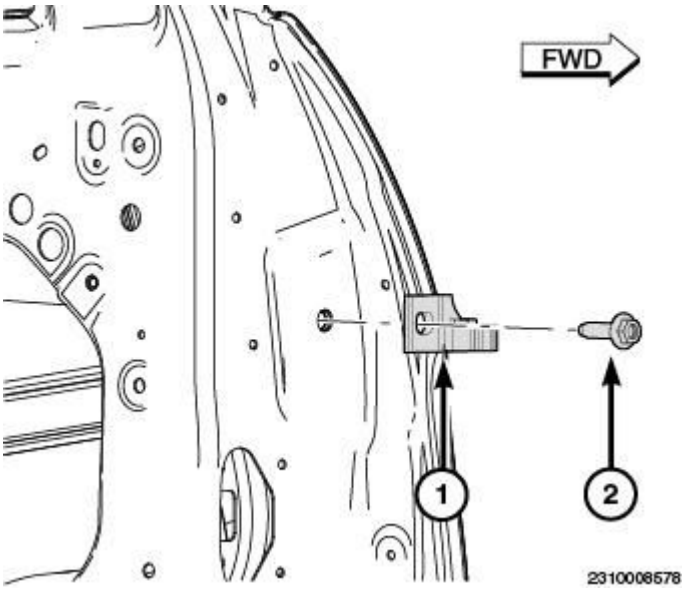

Fig. 125: Identifying Door Hinges & Bolts
Courtesy of CHRYSLER GROUP, LLC

5. Adjust the rear door to the correct position. Refer to **GAP AND FLUSH, SPECIFICATIONS**.
6. Tighten the bolts (2) that secure the door hinges (1) to the rear door to 43 N.m (32 ft. lbs.).

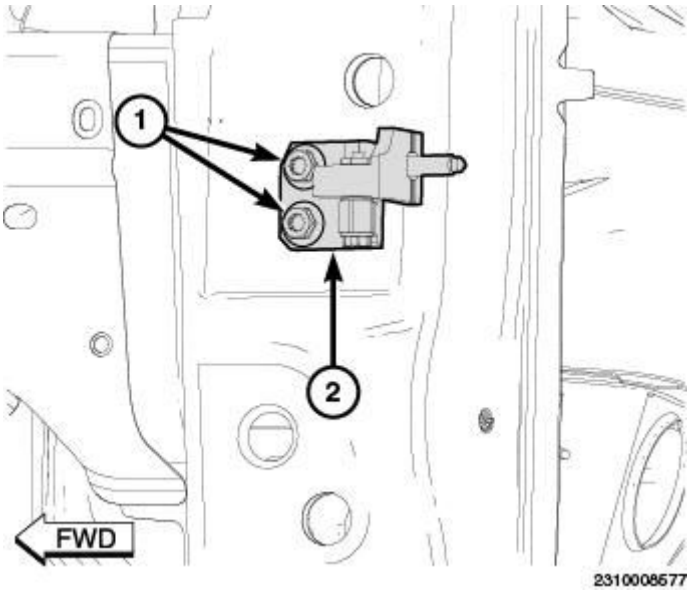

Fig. 126: Identifying Front Door Hinges & Bolts
Courtesy of CHRYSLER GROUP, LLC

7. Tighten the bolts (1) that secure the door hinges (2) to the B-pillar to 43 N.m (32 ft. lbs.) using the following sequence.
    1. Tighten the upper bolt on the upper hinge.
    2. Tighten the lower bolt on the lower hinge.

3. Tighten the remaining hinge bolts to 43 N.m (32 ft. lbs.).

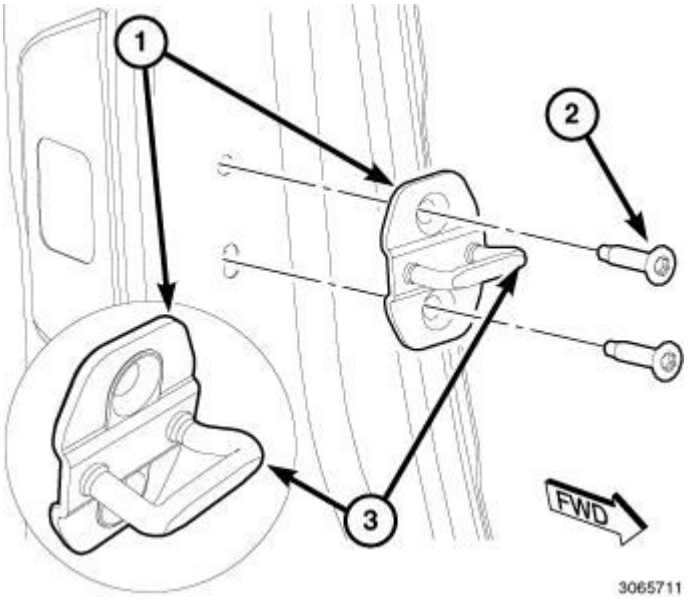

Fig. 127: Two Bolts & Striker
Courtesy of CHRYSLER GROUP, LLC

NOTE: Make sure the protrusion (3) is orientated towards the interior of the vehicle.

8.
9. Tighten the two bolts (2) that secure the striker (1) to the C-pillar to 30 N.m (22 ft. lbs.).

IN/OUT

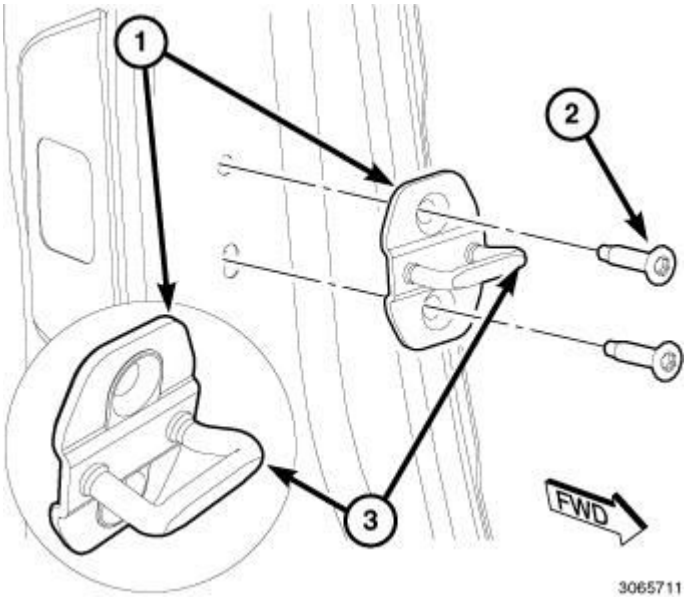

Fig. 128: Two Bolts & Striker
Courtesy of CHRYSLER GROUP, LLC

NOTE: In/out door adjustment is done by loosening the hinge to door fasteners one hinge at a time and moving the door to the correct position.

1. Support the rear door with a suitable lifting device.
2. Loosen the two bolts (2) that secure the striker (1) to the C-pillar.

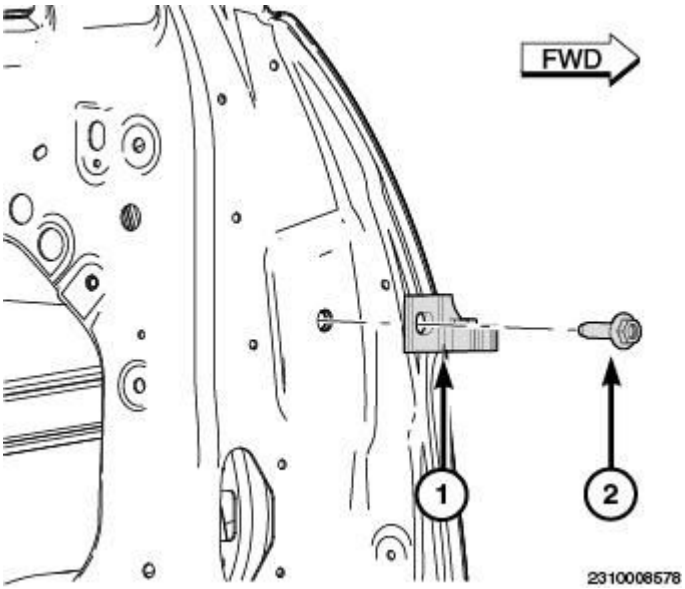

Fig. 129: Identifying Door Hinges & Bolts
Courtesy of CHRYSLER GROUP, LLC

3. Loosen the bolts (2) that secure the door hinges (1) to the rear door.
4. Adjust the rear door to the correct position. Refer to **GAP AND FLUSH, SPECIFICATIONS**.
5. Tighten the bolts (2) that secure the door hinges (1) to the front door to 43 N.m (32 ft. lbs.).

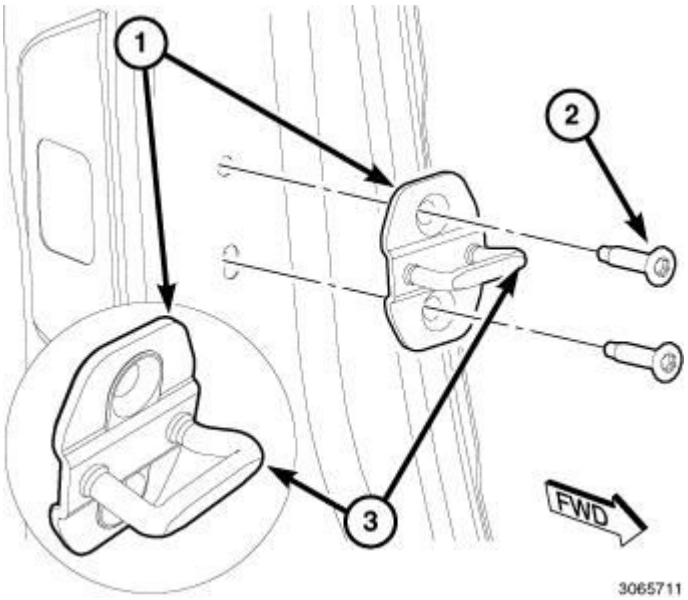

Fig. 130: Two Bolts & Striker
Courtesy of CHRYSLER GROUP, LLC

NOTE: Make sure the protrusion (3) is orientated towards the interior of the vehicle.

6. Tighten the two bolts (2) that secure the striker (1) to the C-pillar to 30 N.m (22 ft. lbs.).

REMOVAL

REMOVAL

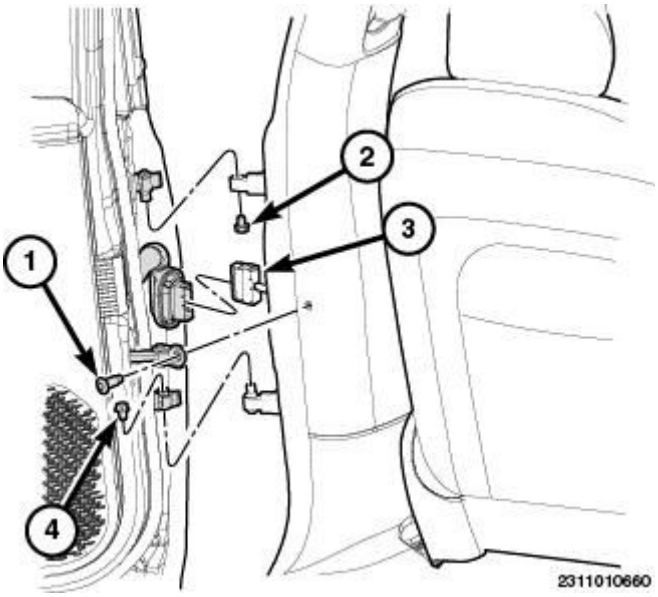

Fig. 131: Identifying Rear Door Wiring Harness Connector & Fasteners
Courtesy of CHRYSLER GROUP, LLC

NOTE: Do not reuse the door half hinge to body side half hinge fasteners, replace with new readily available through Mopar parts.

NOTE: Passenger side door shown, drivers side similar.

1. Disconnect and isolate the negative battery cable.
2. Disconnect the rear door wiring harness connector from the body harness (3) located on the B-pillar.
3. With the rear door open, remove the fastener (1) securing the door check strap.
4. On the upper door hinge, remove the fastener (2) that secures the door half hinge to body side half hinge and discard.
5. Repeat on the lower hinge.
6. With the use of a suitable lifting device, remove the door from the vehicle.

INSTALLATION

INSTALLATION

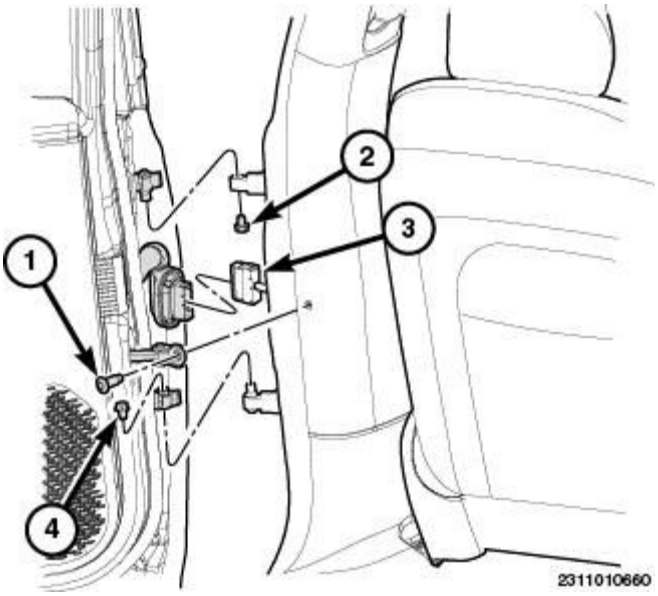

Fig. 132: Identifying Rear Door Wiring Harness Connector & Fasteners
Courtesy of CHRYSLER GROUP, LLC

NOTE: Do not reuse the door half hinge to body side half hinge fasteners, replace with new readily available through Mopar parts.

NOTE: Passenger side door shown, drivers side similar.

1. With the use of a suitable lifting device, position the door to the vehicle.
2. Align the door side hinge halves to the B-pillar hinge halves.

3. Insert the door upper half hinge body side upper half hinge and at the same time the lower hinges.
4. Install new fasteners (2, 4) to both the upper and lower hinges and tighten 24 N.m (18 ft. lbs.).
5. With the rear door (2) open, install the fastener (1) securing the door check strap and tighten 30 N.m (22 ft. lbs.).
6. Connect the rear door wiring harness connector (3) to the body harness located on the B-pillar (1).
7. Connect the negative battery cable.
8. Perform the Clear/Relearn procedure. Refer to **STANDARD PROCEDURE** .

GLASS, DOOR

REMOVAL

REMOVAL

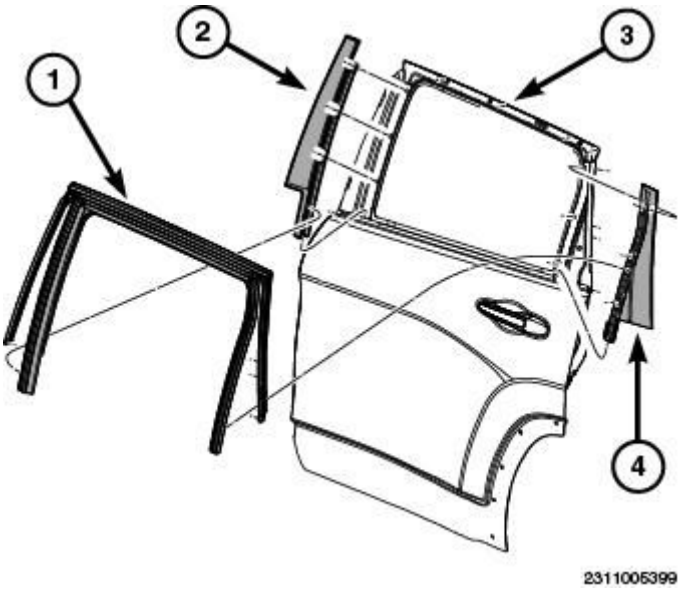

Fig. 133: Identifying Rear Door Trim & C-Pillar Applique
Courtesy of CHRYSLER GROUP, LLC

1. Disconnect and isolate the negative battery cable.
2. Remove the trim panel. Refer to **PANEL, REAR DOOR TRIM, REMOVAL**.
3. Remove the C-pillar applique (4). Refer to **APPLIQUE, REMOVAL**.

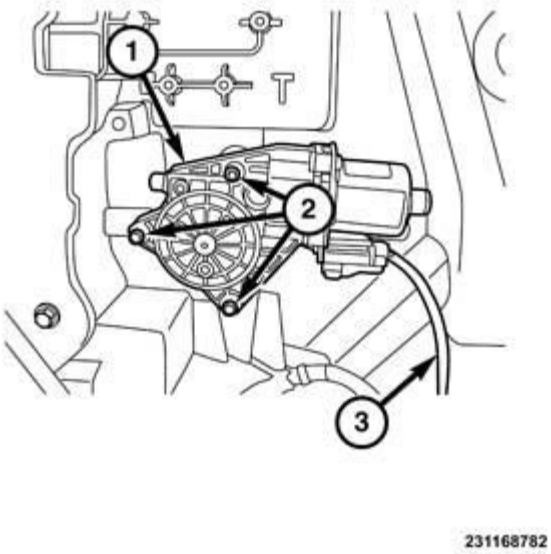

Fig. 134: Window Motor, Fasteners & Harness
Courtesy of CHRYSLER GROUP, LLC

4. Disconnect the window motor (1) wiring harness (3).
5. Remove the three fasteners (2) from the window motor (1).
6. Remove the window motor (1) from the carrier plate.

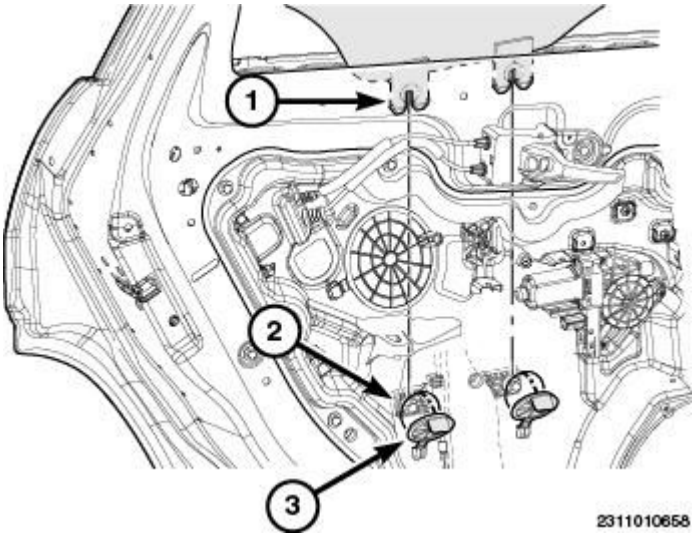

Fig. 135: Identifying Access Plugs, Carrier Plate & Fasteners
Courtesy of CHRYSLER GROUP, LLC

7. Open the access plugs (3) on the carrier plate.
8. Position the glass by hand until the glass fasteners lines up in the access hole (3).

9. Remove the glass fastener.

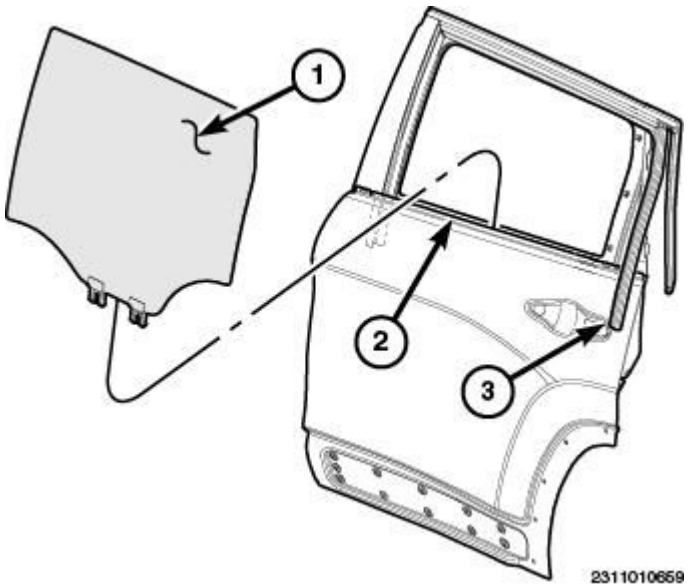

Fig. 136: Removing/Installing Glass From Vehicle
Courtesy of CHRYSLER GROUP, LLC

10. Remove the glass from the vehicle.

INSTALLATION

INSTALLATION

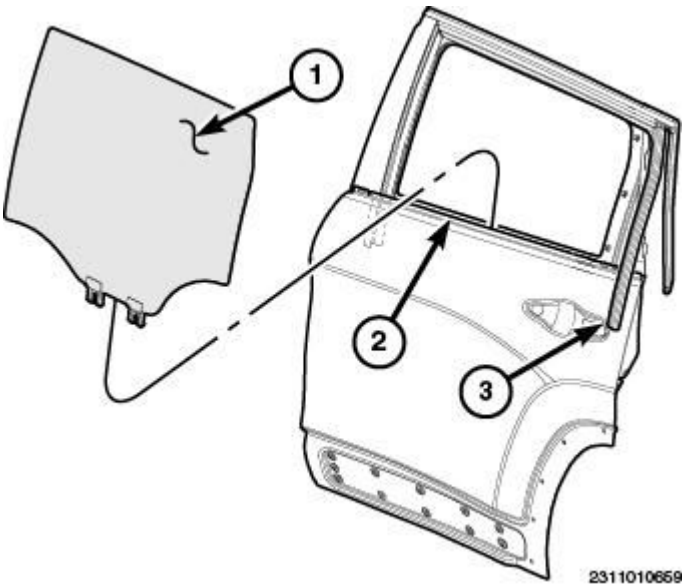

Fig. 137: Removing/Installing Glass From Vehicle
Courtesy of CHRYSLER GROUP, LLC

1. Lower glass (1) down into the opening at top of door (2).

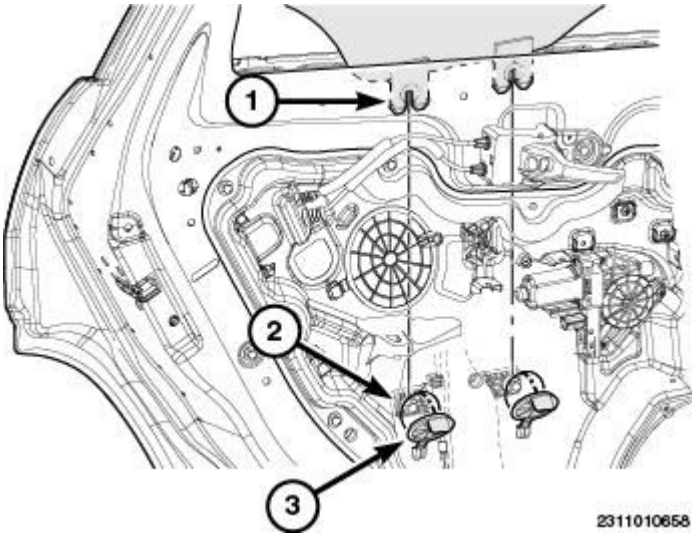

Fig. 138: Identifying Access Plugs, Carrier Plate & Fasteners
Courtesy of CHRYSLER GROUP, LLC

2. Position the glass (1) by hand until the glass fasteners lines up in the access hole (2)
3. Apply a medium grade threadlocker adhesive to the glass fastener threads per manufacture recommendations.
4. Install the glass fastener and tighten to 13 N.m (10 ft. lbs.).
5. Close the access plug on the carrier plate (3).

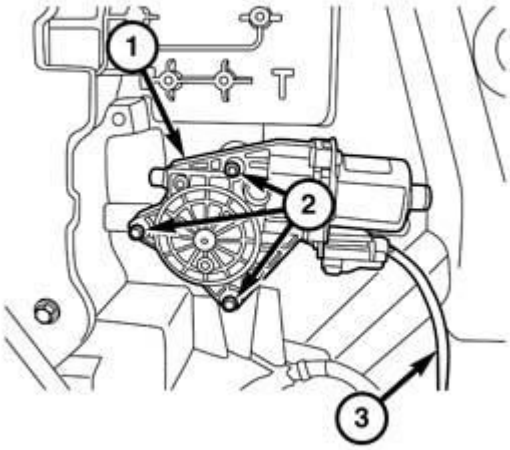

Fig. 139: Window Motor, Fasteners & Harness
Courtesy of CHRYSLER GROUP, LLC

6. Align the window motor (1) onto the carrier plate.
7. Install the three fasteners (2) to the window motor (1) and tighten securely.
8. Connect the window motor (3) wiring harness.

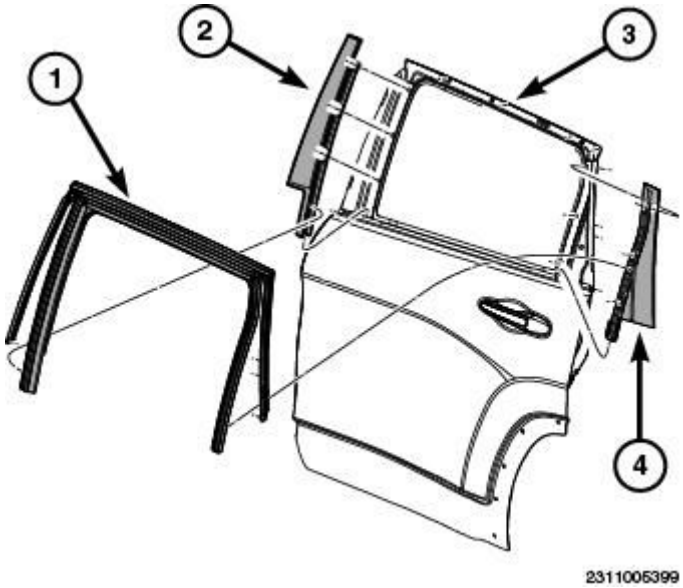

Fig. 140: Identifying Rear Door Trim & C-Pillar Applique
Courtesy of CHRYSLER GROUP, LLC

9. Install the C-pillar applique (4). Refer to **APPLIQUE, INSTALLATION**.
10. Install the trim panel. Refer to **PANEL, REAR DOOR TRIM, INSTALLATION**.
11. Connect the negative battery cable.
12. Perform the Clear/Relearn procedure. Refer to **STANDARD PROCEDURE** .

HANDLE, EXTERIOR

REMOVAL

REMOVAL

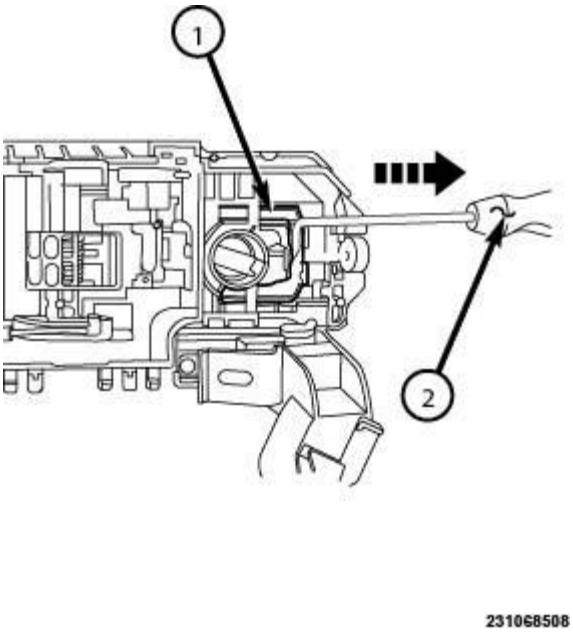

Fig. 141: Disengaging Slide Plate
Courtesy of CHRYSLER GROUP, LLC

NOTE: Left hand shown, right side typical.

1. With a small flat bladed tool, remove the outside handle access plug from inner door jamb.
2. Using a right angled pick (2) or equivalent, hook the slide plate (1) and pull rearward to disengage.

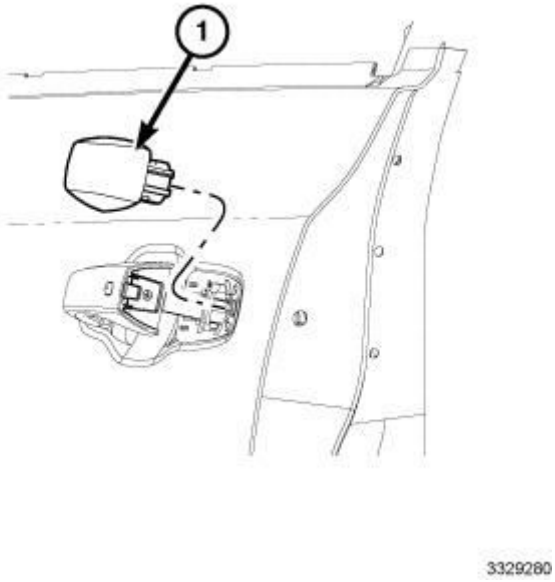

Fig. 142: Door Handle Cap
Courtesy of CHRYSLER GROUP, LLC

3. Lift the exterior door handle to the open position.

4. Continue holding the exterior handle in the open position and remove the door handle cap (1).

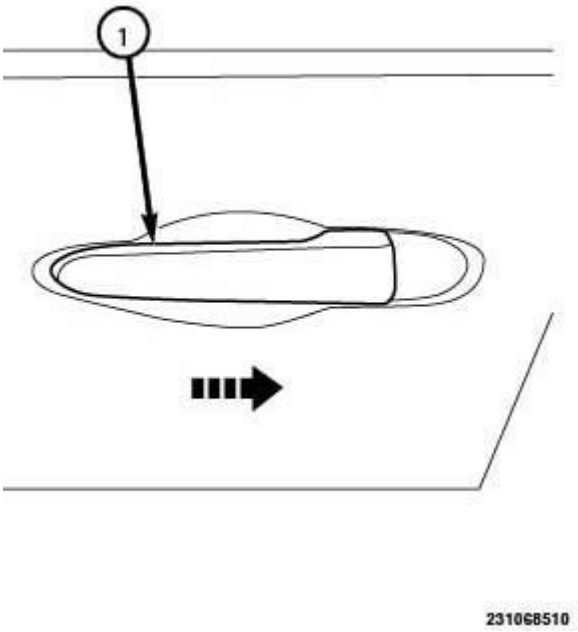

Fig. 143: Removing Exterior Door Handle
Courtesy of CHRYSLER GROUP, LLC

5. Slide the exterior door handle (1) rearward and rotate out of the door.
6. Remove the handle from the vehicle.

INSTALLATION

INSTALLATION

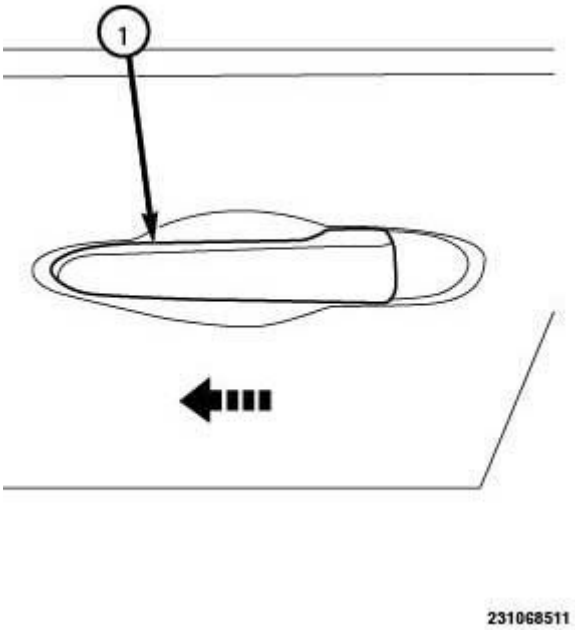

Fig. 144: Installing Exterior Door Handle
Courtesy of CHRYSLER GROUP, LLC

NOTE: Left hand shown, right side typical.

1. Rotate the front of the exterior handle (1) into the door until it is flush with the door.
2. Slide the exterior door handle (1) forward until seated fully.

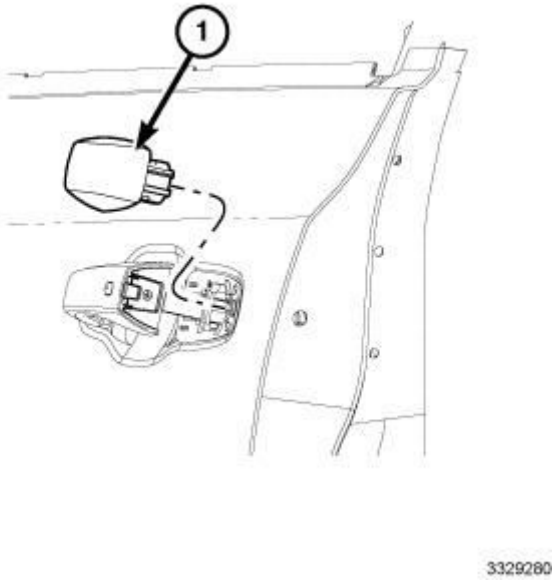

Fig. 145: Door Handle Cap
Courtesy of CHRYSLER GROUP, LLC

3. Lift the exterior door handle to the open position.
4. While holding the exterior handle in the open position, inert the door handle cap (1).

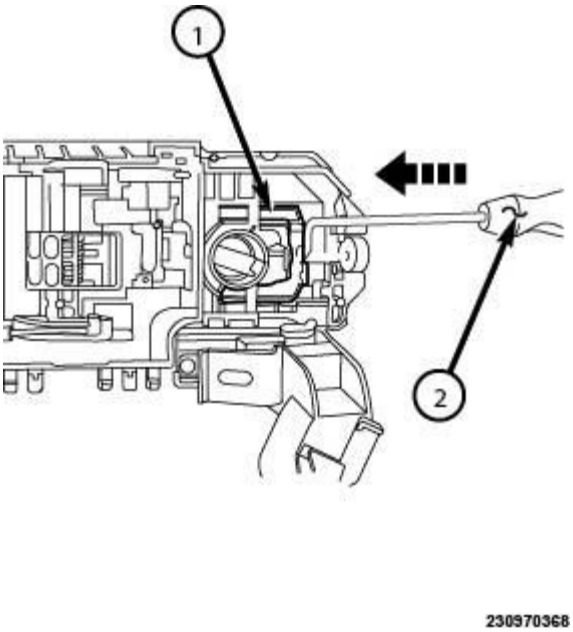

Fig. 146: Engaging Slide Plate
Courtesy of CHRYSLER GROUP, LLC

5. Using a right angled pick (2) or equivalent, push the slide plate (1) forward to engage.
6. Insert the outside handle access plug from inner door jamb.

HANDLE, INTERIOR

REMOVAL

REMOVAL

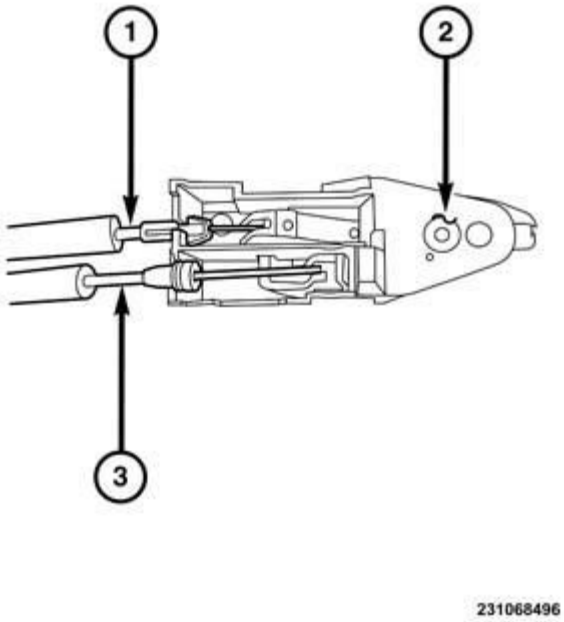

Fig. 147: Inside Release Handle & Cables
Courtesy of CHRYSLER GROUP, LLC

1. Remove rear door trim panel. Refer to **PANEL, REAR DOOR TRIM, REMOVAL**.
2. With the use of a flat bladed tool or equivalent, remove the lock cable from the inside release handle housing (2).
3. Place the lock button in the unlocked position and remove the lock cable (3) barrel end.
4. With the use of pliers or equivalent, depress the tabs on the handle cable (3) and remove from the inside release handle housing (2).
5. Place the pull handle in the open position and remove the handle cable (3) barrel end.
6. Remove the inside handle from the vehicle.

INSTALLATION

INSTALLATION

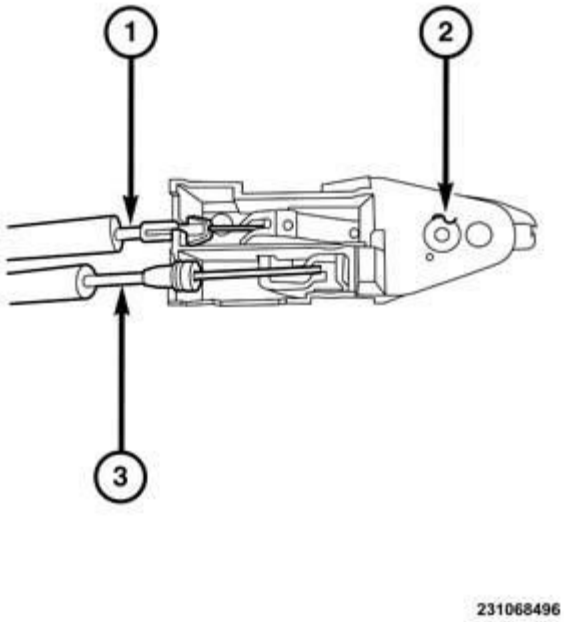

Fig. 148: Inside Release Handle & Cables
Courtesy of CHRYSLER GROUP, LLC

1. Place the pull handle in the open position and install the handle cable (3) barrel end.
2. Insert the handle cable (3) into the inside release handle housing (2) and seat tabs fully.
3. Place the lock button in the unlocked position and install the lock cable (3) barrel end.
4. Insert the lock cable (3) into the inside release handle housing (2).
5. Install the rear door trim panel. Refer to **PANEL, REAR DOOR TRIM, INSTALLATION**.

HINGE, DOOR

REMOVAL

REMOVAL

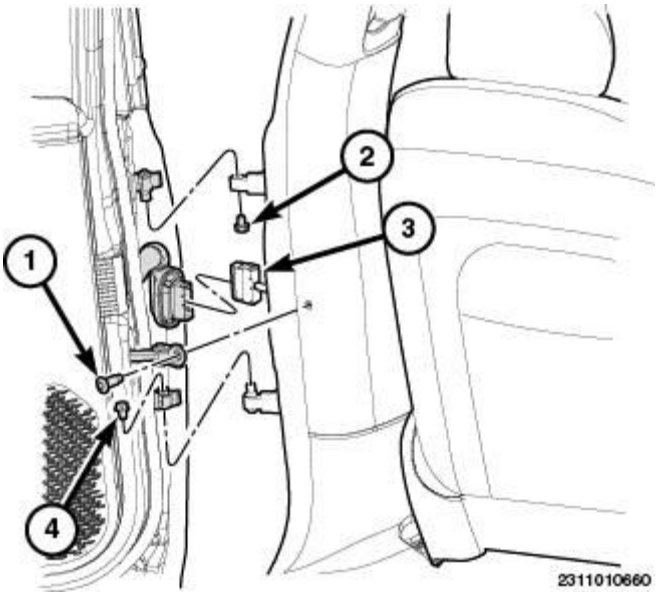

Fig. 149: Identifying Rear Door Wiring Harness Connector & Fasteners
Courtesy of CHRYSLER GROUP, LLC

NOTE: **Do not reuse the door half hinge to body side half hinge fasteners (2, 4), replace with new readily available through Mopar parts.**

NOTE: **Left upper shown, all other hinges on this model typical**

Remove the door-

1. Remove the door. Refer to **DOOR, REAR, REMOVAL**.
2. Transfer the door to a bench.

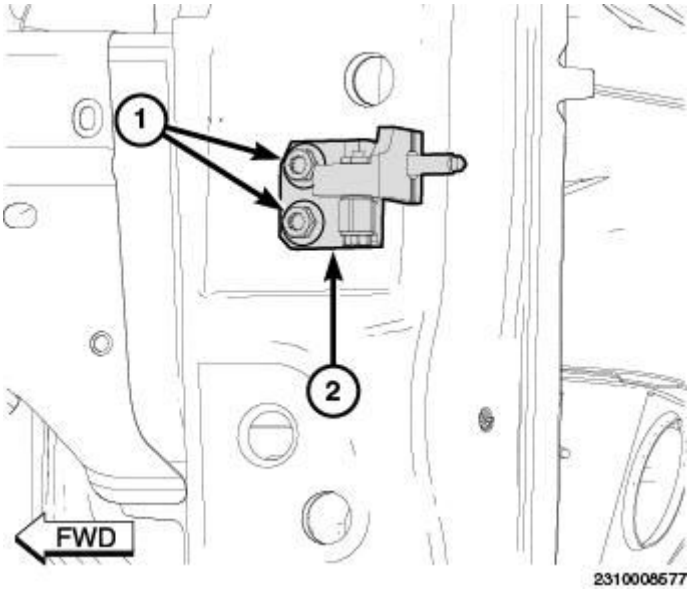

Fig. 150: Identifying Front Door Hinges & Bolts
Courtesy of CHRYSLER GROUP, LLC

Body side hinge half-

NOTE: Upper and lower hinge halves are serviced exactly the same

1. Mark position of the body side half hinge (2) with a grease pencil or other suitable device to ease installation.
2. Remove the bolts (1) attaching the body side half hinge (2) to the body side.
3. Remove the body side half hinge (2) from the vehicle.

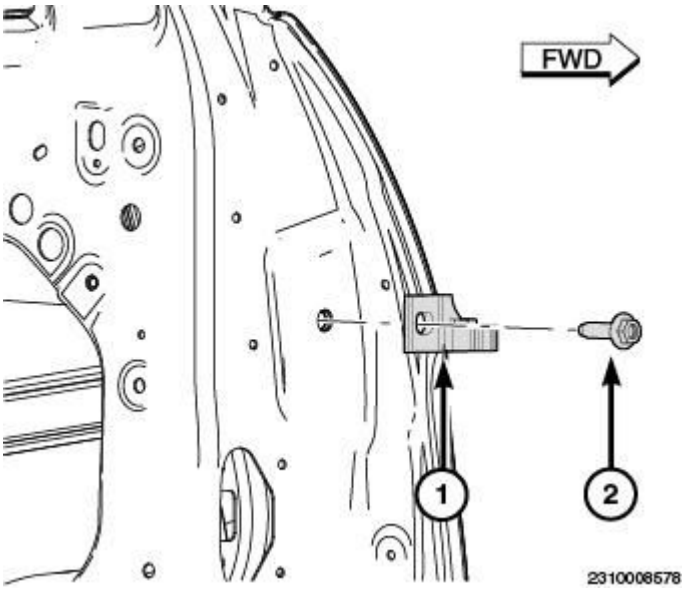

Fig. 151: Identifying Door Hinges & Bolts
Courtesy of CHRYSLER GROUP, LLC

Door side hinge half-

NOTE: Upper and lower hinge halves are serviced exactly the same

1. Mark position of the door side half hinge (1) with a grease pencil or other suitable device to ease installation.
2. Remove the bolt attaching the door side half hinge (1) to the body side.
3. Remove the door side half hinge (1) from the vehicle.

INSTALLATION

INSTALLATION

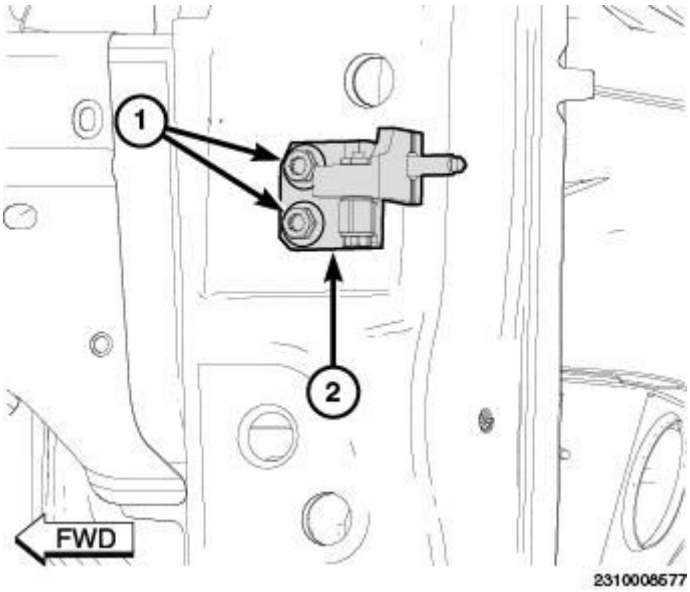

Fig. 152: Identifying Front Door Hinges & Bolts
Courtesy of CHRYSLER GROUP, LLC

NOTE: **Do not reuse the door half hinge to body side half hinge fasteners, replace with new readily available through Mopar parts. If necessary, paint new door hinge prior to installation.**

NOTE: **If necessary, paint new door hinge prior to installation.**

NOTE: **Left upper shown, all other hinges on this model typical**

Body side hinge half-

NOTE: **A suitable body sealant should be used when moving or replacing hinges.**

NOTE: **Upper and lower hinge halves are serviced exactly the same**

1. Align the upper hinge and/or the lower hinge to the upper B-pillar and/or the lower B-pillar to the marks previously made.
2. Install bolts (2) attaching the hinge (1) to the upper B-pillar and/or lower B-pillar frame and tighten to 43 N.m (32 ft. lbs.).

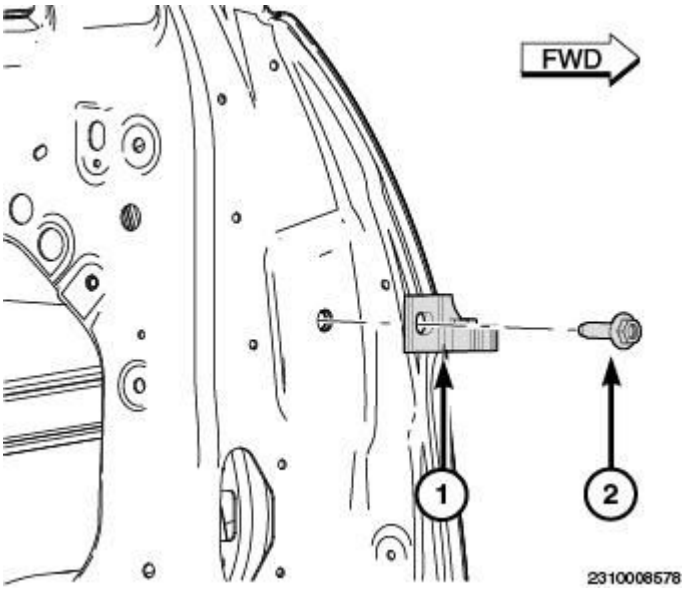

Fig. 153: Identifying Door Hinges & Bolts
Courtesy of CHRYSLER GROUP, LLC

Door side hinge half-

NOTE: A suitable body sealant should be used when moving or replacing hinges.

NOTE: Upper and lower hinge halves are serviced exactly the same

1. Align the upper hinge and/or the lower hinge to the upper door and lower door to the marks previously made.
2. Install bolt (2) attaching the hinge to the door and tighten to 43 N.m (32 ft. lbs.).

Install the door -

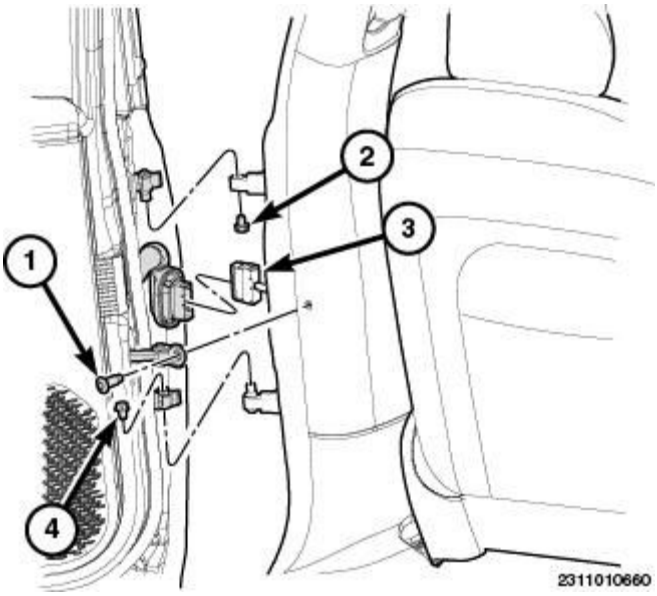

Fig. 154: Identifying Rear Door Wiring Harness Connector & Fasteners
Courtesy of CHRYSLER GROUP, LLC

1. Install the door. Refer to **DOOR, REAR, INSTALLATION**.

LATCH, DOOR

REMOVAL

REMOVAL

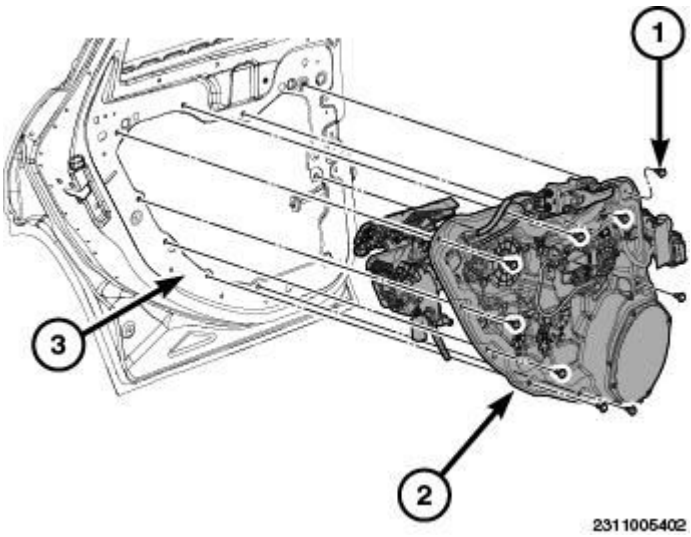

Fig. 155: Identifying Rear Door Carrier Plate & Fasteners
Courtesy of CHRYSLER GROUP, LLC

1. Disconnect and isolate the negative battery cable.

2. Remove the rear door carrier plate (2). Refer to **PLATE, CARRIER, REMOVAL**.

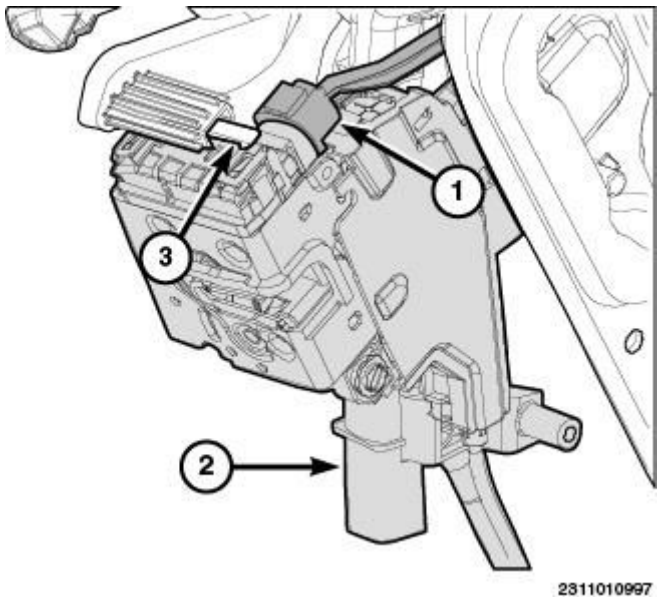

Fig. 156: Identifying Latch, Pry Tab & Electrical Connector
Courtesy of CHRYSLER GROUP, LLC

3. Disconnect the electrical connector (1).
4. With the use of a small flat bladed tool or equivalent, gently pry tab (3) and slide the latch (2) off of the presenter bracket.

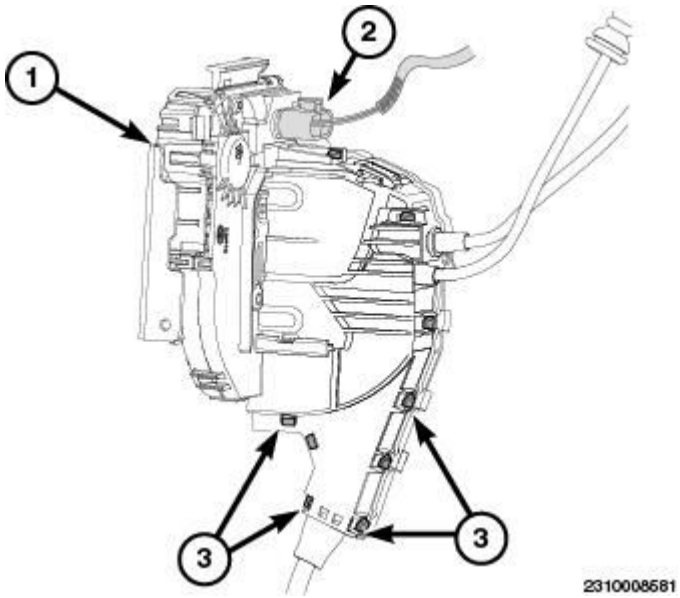

Fig. 157: Identifying Lock Cables, Latch Assembly, Electrical Connector & Cover Tabs
Courtesy of CHRYSLER GROUP, LLC

NOTE: Front door latch shown, rear door latch similar.

5. Disconnect the electrical connector (2).
6. Release the latch cover tabs (3) and remove the latch cover.

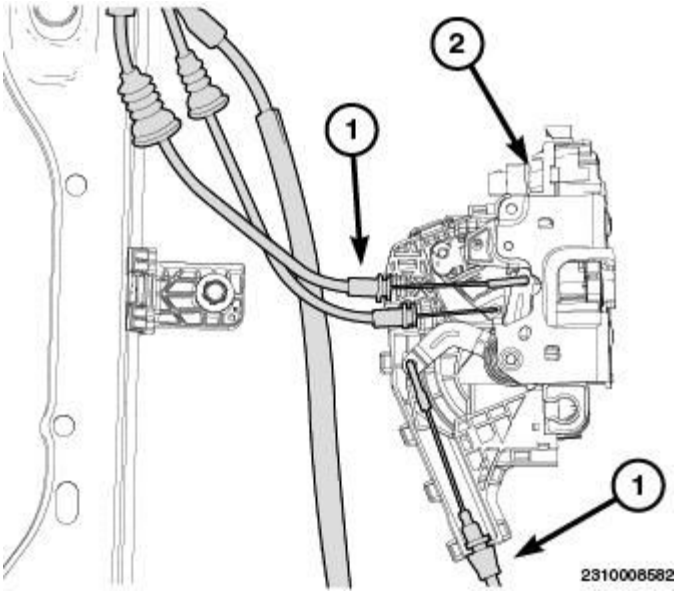

Fig. 158: Identifying Handle/Lock Cables & Latch Assembly
Courtesy of CHRYSLER GROUP, LLC

NOTE: Front door latch shown, rear door latch similar.

7. Disconnect handle and lock cables (1) and remove the latch assembly (2).

INSTALLATION

INSTALLATION

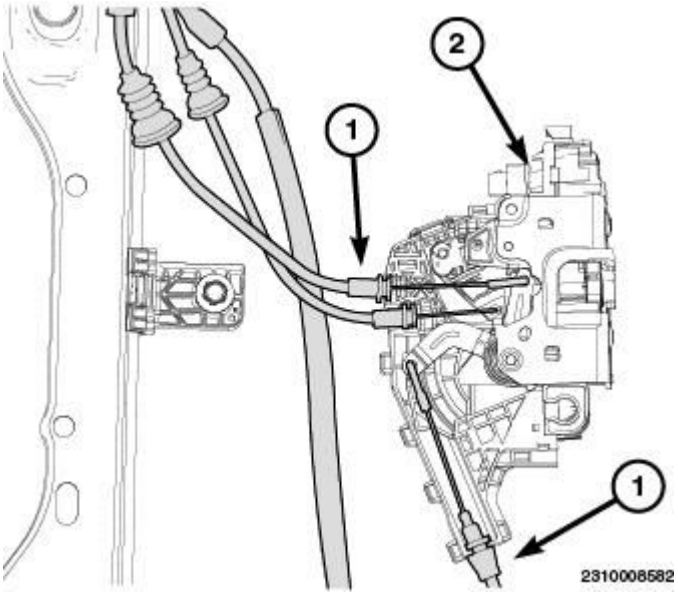

Fig. 159: Identifying Handle/Lock Cables & Latch Assembly
Courtesy of CHRYSLER GROUP, LLC

NOTE: Front door latch shown, rear door latch similar.

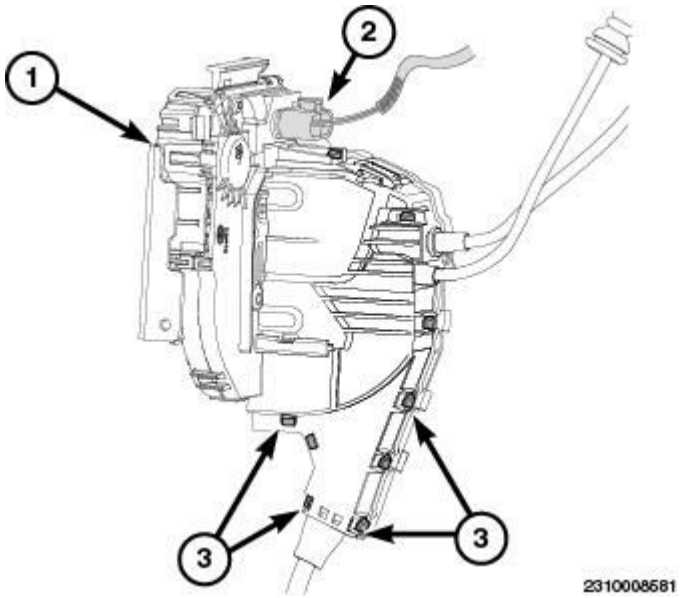

Fig. 160: Identifying Lock Cables, Latch Assembly, Electrical Connector & Cover Tabs
Courtesy of CHRYSLER GROUP, LLC

1. Connect the handle and lock cables (1).

NOTE: Front door latch shown, rear door latch similar.

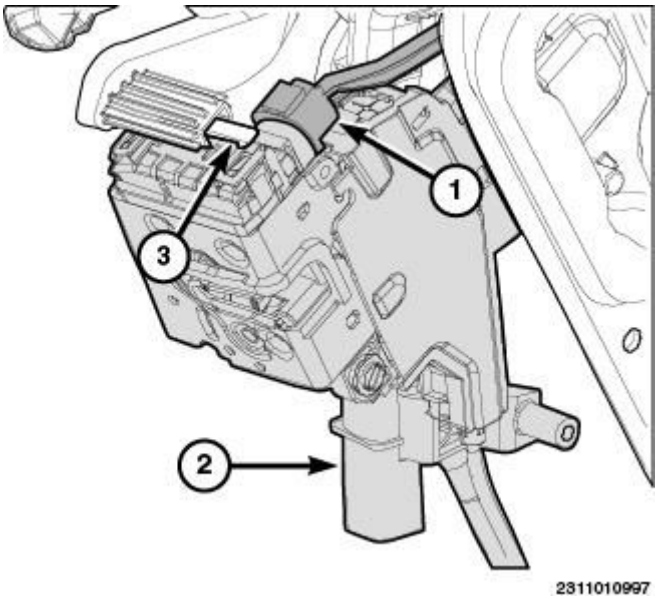

Fig. 161: Identifying Latch, Pry Tab & Electrical Connector
Courtesy of CHRYSLER GROUP, LLC

2. Install the cover and seat the latch cover retaining tabs (3) fully.
3. Install the latch (2) onto the presenter bracket and seat the clip (3) fully.
4. Connect the electrical connector (1).

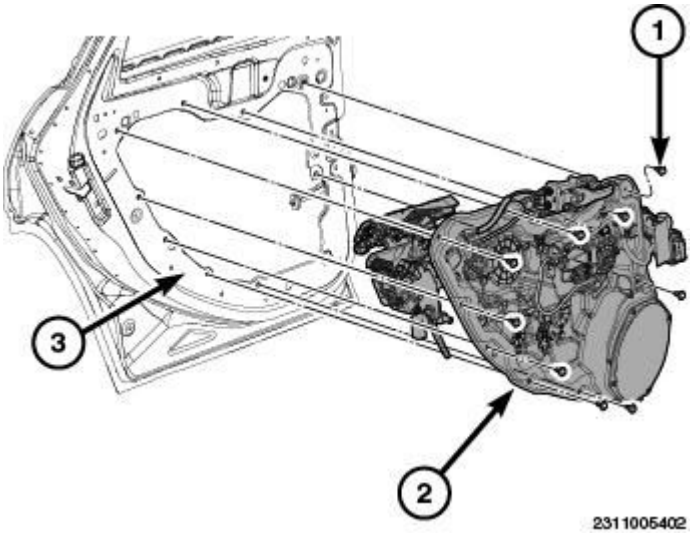

Fig. 162: Identifying Rear Door Carrier Plate & Fasteners
Courtesy of CHRYSLER GROUP, LLC

5. Install the rear door carrier plate (2). Refer to **PLATE, CARRIER, INSTALLATION**.
6. Connect the negative battery cable.
7. Perform the Clear/Relearn procedure. Refer to **STANDARD PROCEDURE** .

MOLDING, REAR DOOR

REMOVAL

REMOVAL

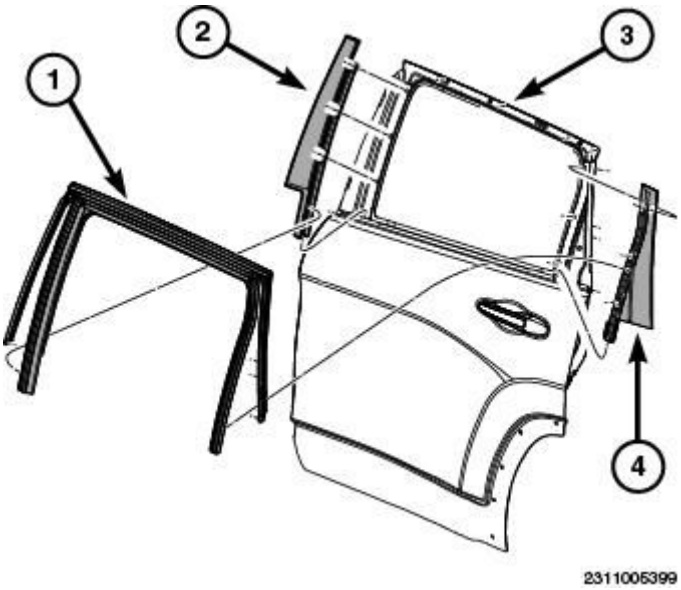

Fig. 163: Identifying Rear Door Trim & C-Pillar Applique
Courtesy of CHRYSLER GROUP, LLC

1. Remove the B-pillar (2) and C-pillar rear door appliques (4). Refer to **APPLIQUE, REMOVAL**.

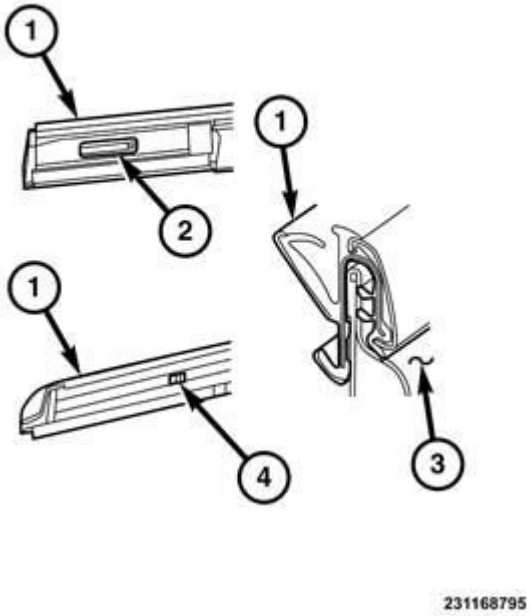

Fig. 164: Belt Molding, Notch & Door Edge
Courtesy of CHRYSLER GROUP, LLC

2. Locate the notch (2) on the belt molding (1) inner edge on the B-pillar end.
3. Insert a small flat bladed tool or equivalent, into the notch (2) of the inner side of the belt molding (1).
4. Pry inboard to clear the tab on the door sheet metal.
5. Continue to hold the notch (2) inboard and lift the belt molding (1), it will be tight as it is raised over the door edge (3).
6. Using trim stick (special tool #C-4755, Trim Stick) or equivalent, gently pry up on outer belt molding, lifting the belt molding (1) upward approximately 25 mm (1 in.).
7. Locate the notch (1) on the belt molding inner edge of the C-pillar end.
8. Insert a small flat bladed tool or equivalent, into the notch (2) of the inner side of the belt molding (1).
9. Pry inboard to clear the tab on the door sheet metal.
10. Using a trim stick or equivalent, gently pry up on outer belt molding.
11. Remove the belt molding from the door.

INSTALLATION

INSTALLATION

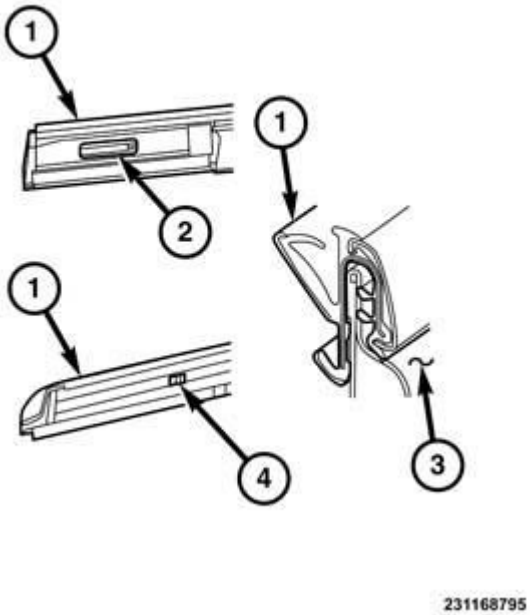

Fig. 165: Belt Molding, Notch & Door Edge
Courtesy of CHRYSLER GROUP, LLC

1. Align the tab (4) on the inner edge of belt molding (1) to the indentations on the door sheet metal edge.
2. With firm hand pressure push down until belt molding (1) has seated fully onto the door (3) and the

notches on the ends (2).

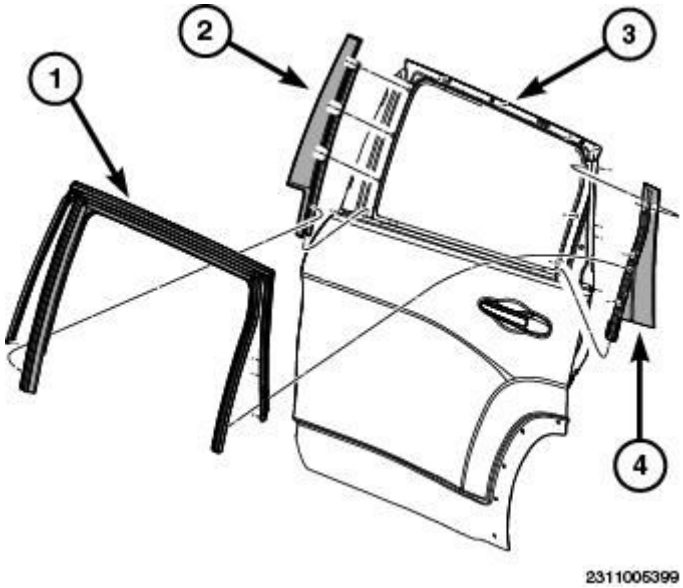

Fig. 166: Identifying Rear Door Trim & C-Pillar Applique
Courtesy of CHRYSLER GROUP, LLC

3. Install the rear door B-pillar (2) and C-pillar appliques (4). Refer to **APPLIQUE, INSTALLATION**.

PANEL, REAR DOOR TRIM

REMOVAL

REMOVAL

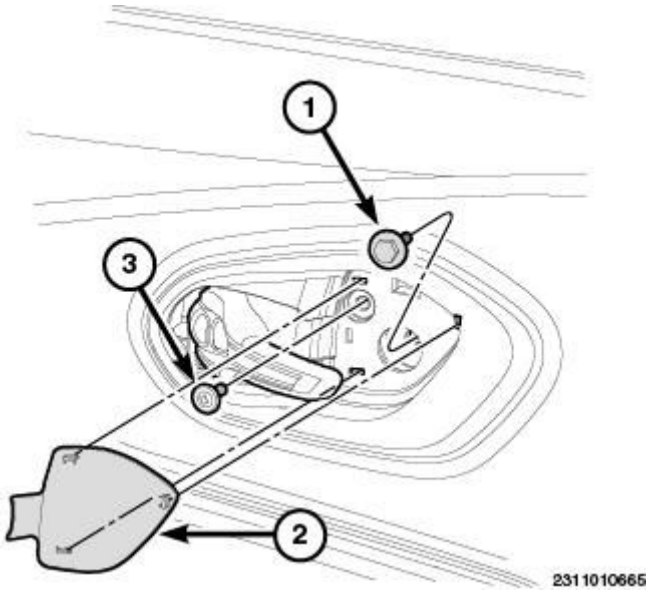

Fig. 167: Identifying Bezel & Fasteners

Courtesy of CHRYSLER GROUP, LLC

1. Disconnect and isolate the negative battery cable.
2. Pull out on the interior door handle (1) and using a (special tool #C-4755, Trim Stick) or equivalent, remove the bezel (2) located in the cavity.
3. Remove the fastener (1) and fastener (3) securing the door trim panel to the carrier plate.

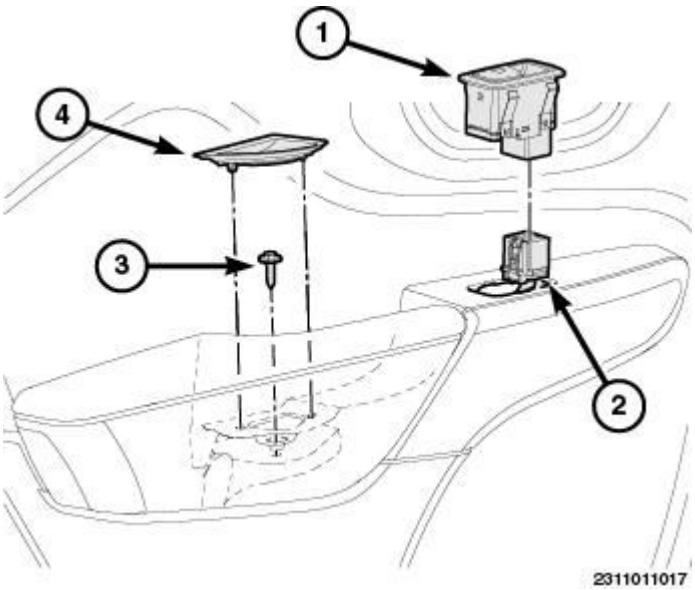

Fig. 168: Identifying Window Switch, Electrical Connector, Liner & Fastener
Courtesy of CHRYSLER GROUP, LLC

4. Using a trim stick or equivalent, remove the window switch (1) from the door and disconnect the electrical connector (2).
5. Using a trim stick or equivalent, remove the liner (4) from the door trim pull handle.
6. Remove the fastener (3) securing the door trim panel to the carrier plate.

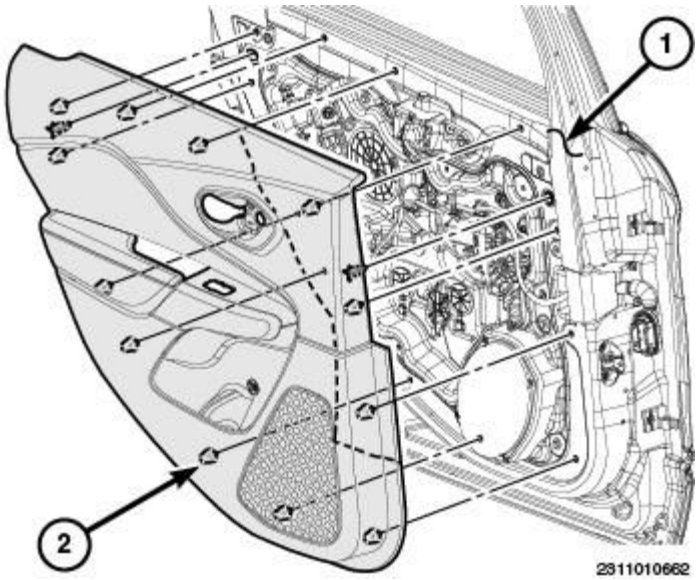

Fig. 169: Identifying Door Trim Panel & Retaining Clips
Courtesy of CHRYSLER GROUP, LLC

7. Using a trim stick or equivalent, pry the door trim panel away from the door (1), starting on the bottom edge and working around the perimeter, to release the retaining clips (2).

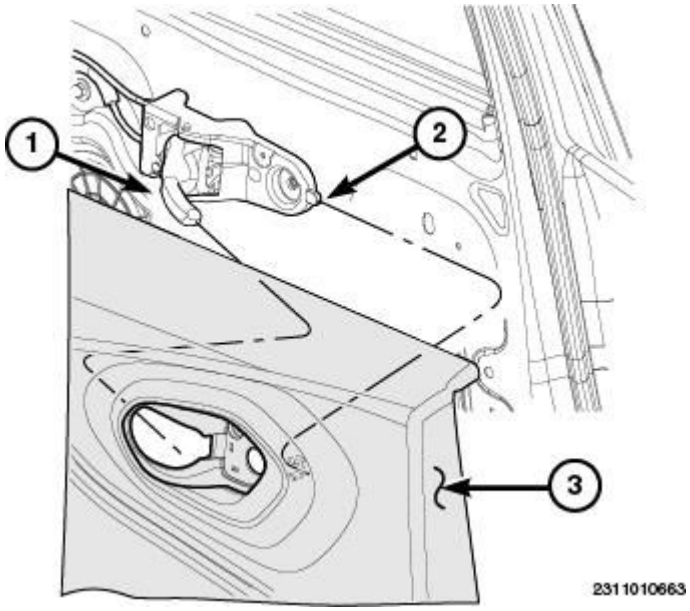

Fig. 170: Identifying Interior Handle, Notch & Trim Panel
Courtesy of CHRYSLER GROUP, LLC

8. Lift the door trim panel (1) up and out.

   Position the door trim panel slightly away, do not remove.

9. Pull the interior handle (2) out fully from the notch (3) to detach from the trim panel (1).

10. Remove the door trim panel from the vehicle.

INSTALLATION

INSTALLATION

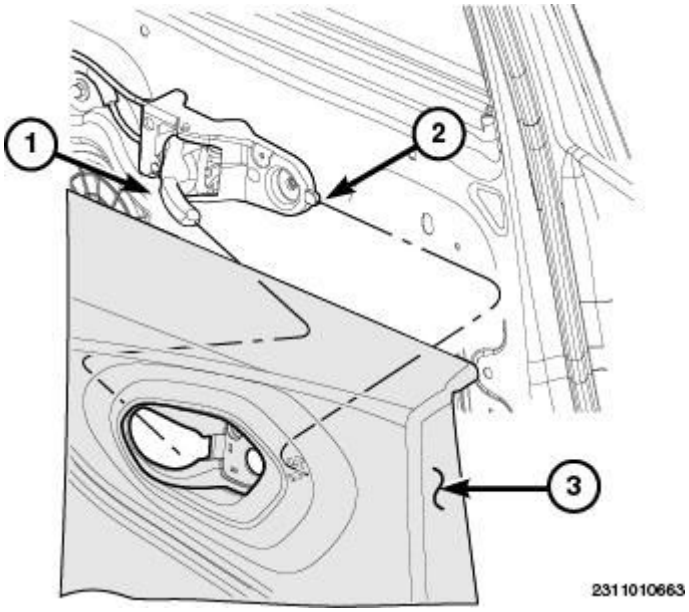

Fig. 171: Identifying Interior Handle, Notch & Trim Panel
Courtesy of CHRYSLER GROUP, LLC

1. Position the door trim panel (3) near the door.
2. Feed the interior door handle (1) into the notch on the back of the door trim panel (3) and clip into place (2).

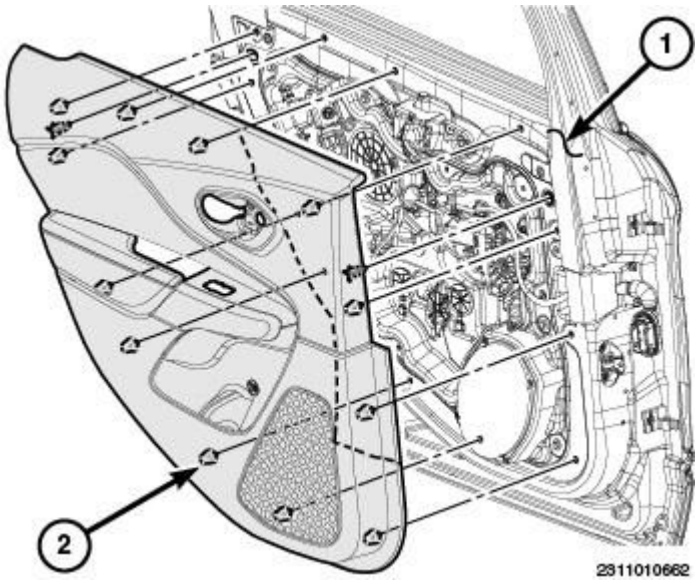

Fig. 172: Identifying Door Trim Panel & Retaining Clips
Courtesy of CHRYSLER GROUP, LLC

3. Feed the window switch harness through the cavity in the door trim panel.
4. Align the door trim panel retaining clips (2) to the door (1).
5. Once aligned, engage the upper trim edge with the inner belt molding.
6. Hand tap the door trim panel to seat the retaining clips fully.

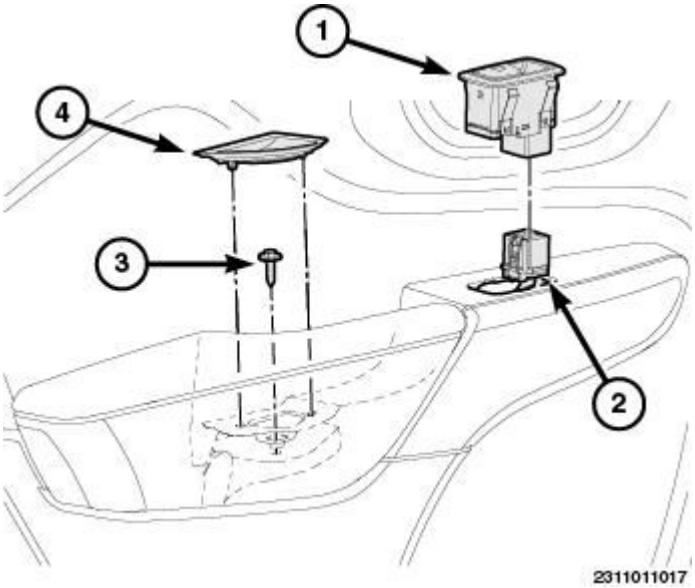

Fig. 173: Identifying Window Switch, Electrical Connector, Liner & Fastener
Courtesy of CHRYSLER GROUP, LLC

7. Install the fastener (3) securing the door trim panel to the carrier plate. Tighten the fastener securely.
8. Install the liner (4) into the door trim pull handle pocket.
9. Connect the window switch wiring connector (2) and install the switch (1) into the door trim panel.

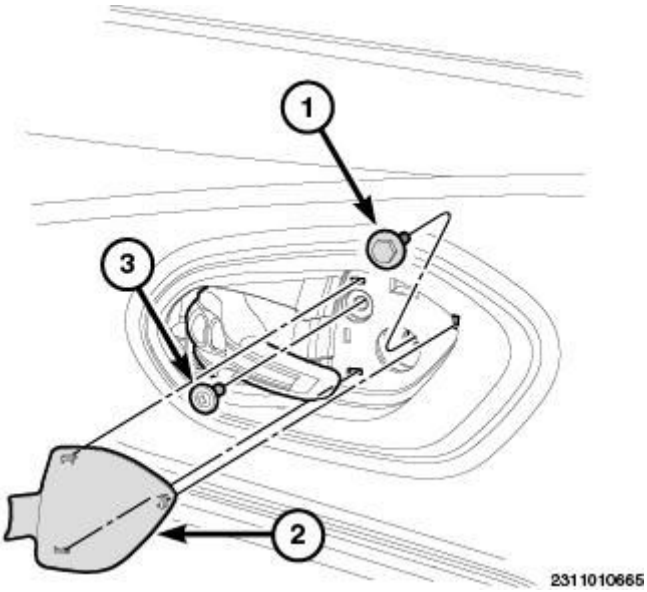

Fig. 174: Identifying Bezel & Fasteners
Courtesy of CHRYSLER GROUP, LLC

10. Install fastener (1) and fastener (3) securing the door trim panel to the carrier plate.
11. Tighten fasteners securely.
12. Install the interior door handle (2) bezel.
13. Connect the negative battery cable.

PLATE, CARRIER

REMOVAL

REMOVAL

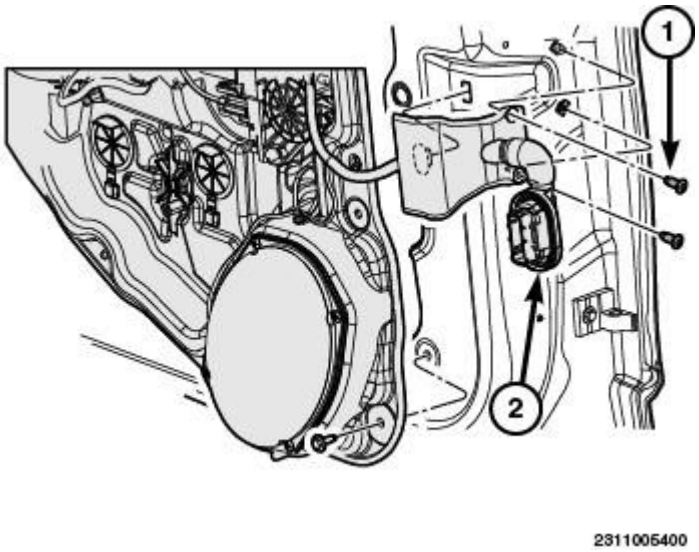

Fig. 175: Identifying Wire Harness & Fasteners

Courtesy of CHRYSLER GROUP, LLC

1. Disconnect and isolate the negative battery cable.
2. Remove the door trim panel. Refer to **PANEL, REAR DOOR TRIM, REMOVAL**.
3. Remove the fasteners (1) and separate the wire harness (2) from the carrier plate.
4. Disconnect the door glass from the window regulator and secure in the full up position using tape or other suitable tool. Refer to **GLASS, DOOR, REMOVAL**.

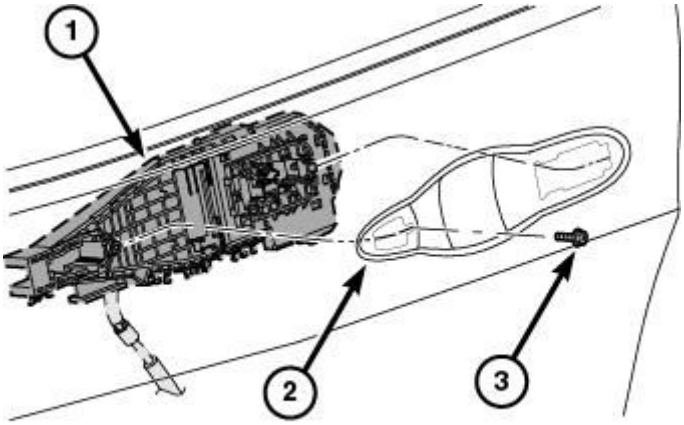

2310004379

Fig. 176: Identifying Exterior Door Handle & Fastener
Courtesy of CHRYSLER GROUP, LLC

NOTE: Front door shown, rear door similar.

5. Remove the exterior door handle. Refer to **HANDLE, EXTERIOR, REMOVAL**.
6. Remove the fastener (3) located beneath the exterior door handle.

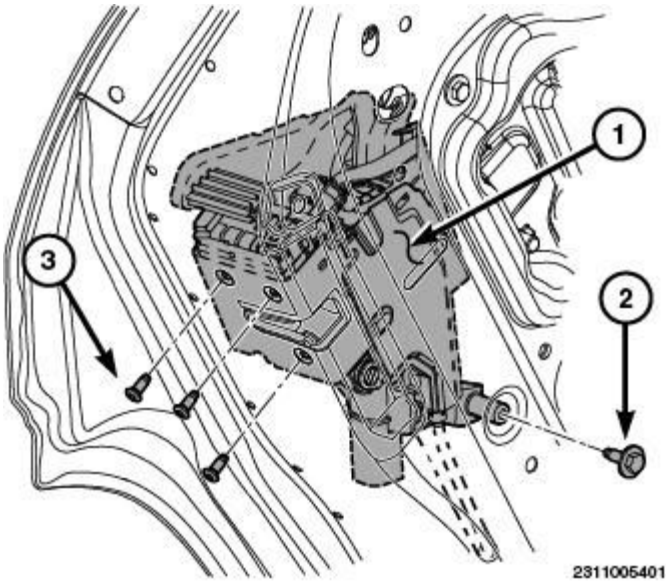

Fig. 177: Identifying Latch & Fasteners
Courtesy of CHRYSLER GROUP, LLC

7. Remove the latch fasteners (3), located on the inner face of the door and the fastener (2) located on the inner door surface.

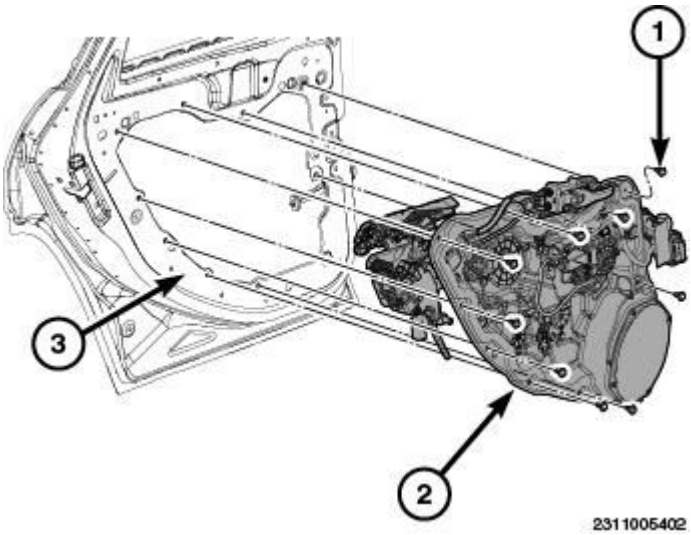

Fig. 178: Identifying Rear Door Carrier Plate & Fasteners
Courtesy of CHRYSLER GROUP, LLC

8. Separate the wire harness from the carrier plate as necessary to gain enough slack in the harness to remove the carrier plate from the door.
9. Remove the carrier plate fasteners (1).
10. Remove the carrier plate from the door (1).
11. Disconnect the latch wiring connector (3).
12. Disconnect and release the remaining harness connectors.

13. Remove the carrier (1) plate from the vehicle.

INSTALLATION

INSTALLATION

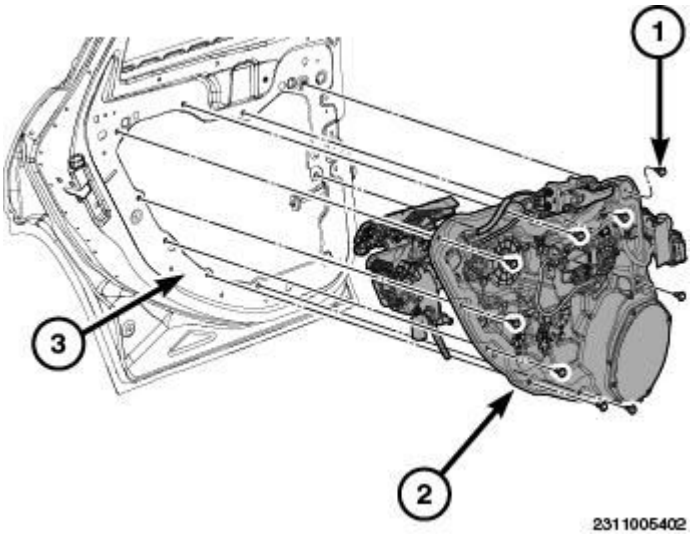

Fig. 179: Identifying Rear Door Carrier Plate & Fasteners
Courtesy of CHRYSLER GROUP, LLC

1. Move the carrier plate into the door opening until position allows for routing of the rear door wiring harness.
2. Route and fasten the wiring harness guides into the carrier plate (1) and the latch presenter.
3. Insert latch inside and the outer handle bracket into the inner sheet metal.
4. Move carrier plate into opening until position of module aligns with surrounding sheet metal.
5. Install the carrier plate fasteners (1) tighten to and 8 N.m (71 in. lbs.).

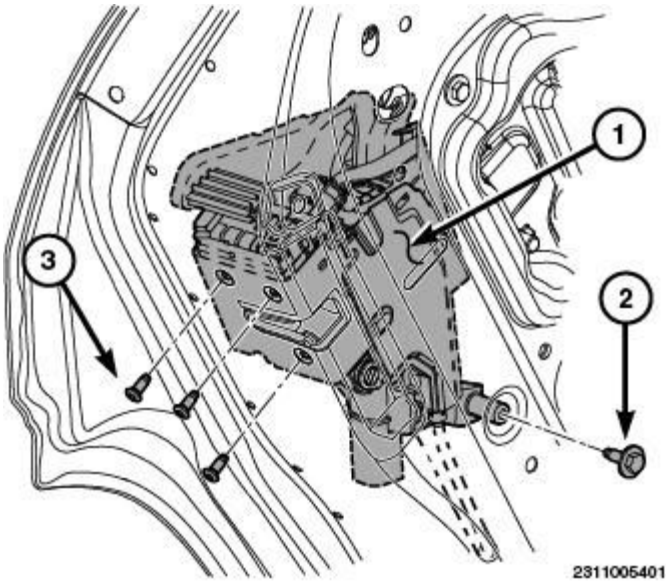

Fig. 180: Identifying Latch & Fasteners
Courtesy of CHRYSLER GROUP, LLC

6. Install the latch fasteners (3), located on the inner face of the door and the fastener (2) located on the inner door surface.
7. Tighten the fasteners (2) to 8 N.m (71 in. lbs.).

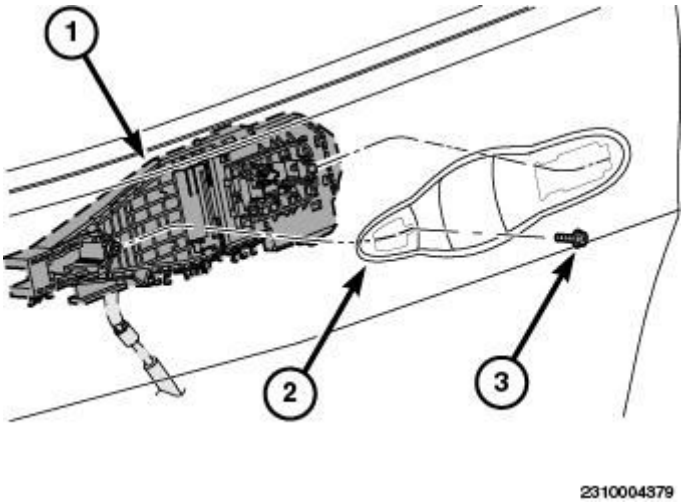

Fig. 181: Identifying Exterior Door Handle & Fastener
Courtesy of CHRYSLER GROUP, LLC

8. Install the outside handle bracket fastener (3) and tighten securely.
9. Install the exterior handle. Refer to **HANDLE, EXTERIOR, INSTALLATION**.

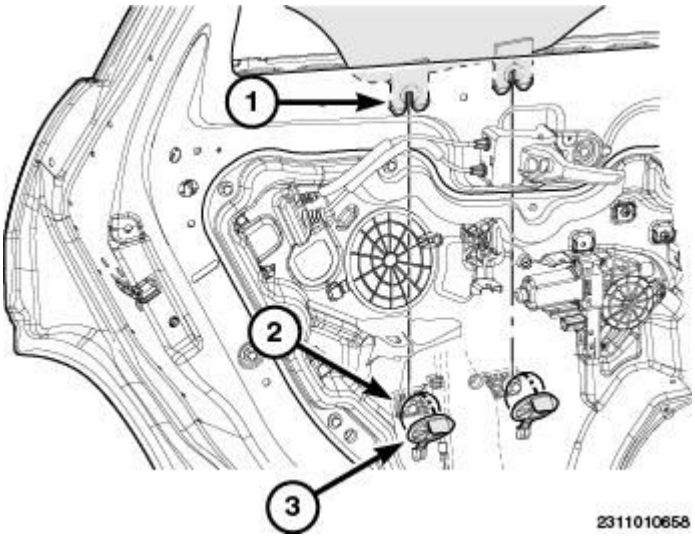

Fig. 182: Identifying Access Plugs, Carrier Plate & Fasteners
Courtesy of CHRYSLER GROUP, LLC

10. Release glass and lower into position onto regulator.
11. Apply a medium grade threadlocker adhesive to the glass fastener threads per manufacture recommendations.
12. Install the glass to regulator fastener (2) and tighten to 13 N.m (10 ft. lbs.).
13. Close the access plug on the carrier plate (3).

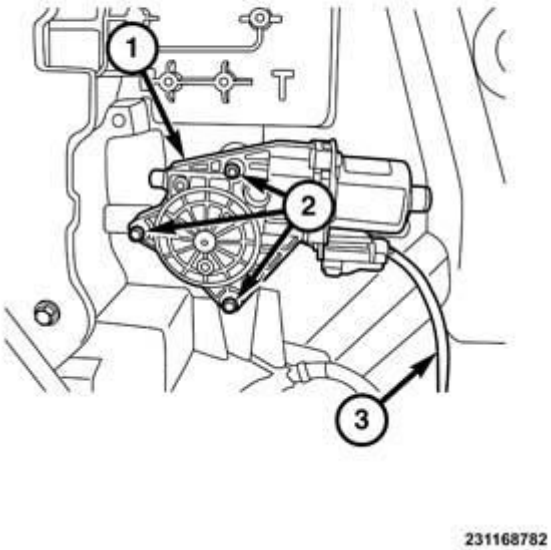

Fig. 183: Window Motor, Fasteners & Harness
Courtesy of CHRYSLER GROUP, LLC

14. Align the window motor (1) onto the carrier plate.
15. Install the three fasteners (2) to the window motor (1) and tighten securely.
16. Connect the window motor (3) wiring connector.

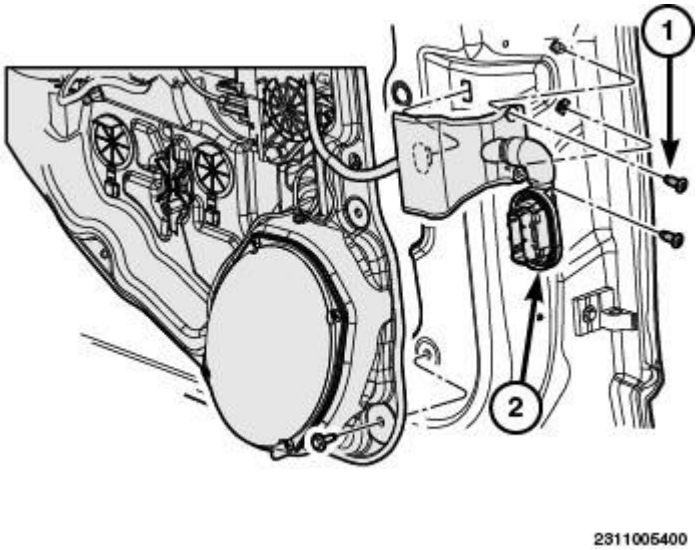

Fig. 184: Identifying Wire Harness & Fasteners
Courtesy of CHRYSLER GROUP, LLC

17. Position the harness (2) back into place and install the screws (1).
18. Install trim panel. Refer to **PANEL, REAR DOOR TRIM, INSTALLATION**.
19. Connect the battery.
20. Perform the Clear/Relearn procedure. Refer to **STANDARD PROCEDURE** .

REGULATOR, WINDOW

REMOVAL

REMOVAL

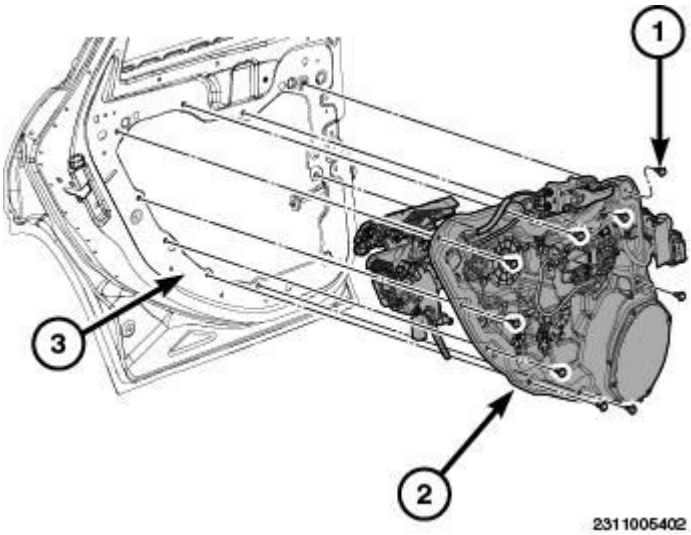

Fig. 185: Identifying Rear Door Carrier Plate & Fasteners
Courtesy of CHRYSLER GROUP, LLC

1. Remove carrier plate (2) from rear door. Refer to **PLATE, CARRIER, REMOVAL**.

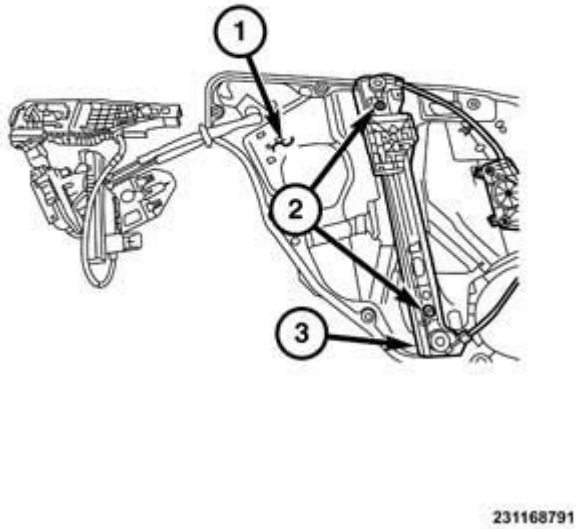

Fig. 186: Carrier Plate, Window Regulator & Fasteners
Courtesy of CHRYSLER GROUP, LLC

2. Remove two window regulator fasteners (2) and remove from the rear of the carrier plate (1).

INSTALLATION

INSTALLATION

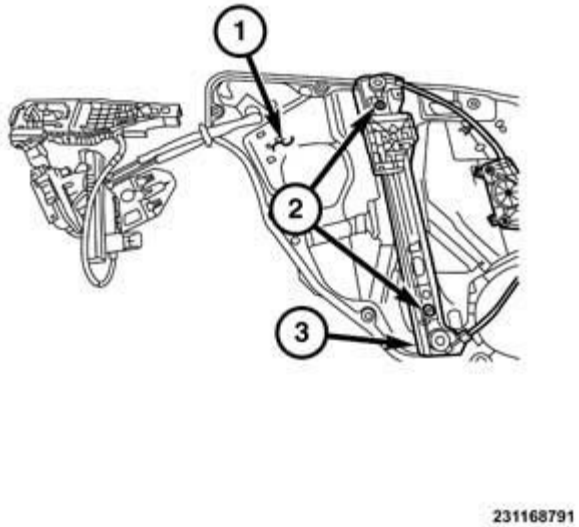

Fig. 187: Carrier Plate, Window Regulator & Fasteners
Courtesy of CHRYSLER GROUP, LLC

1. Position regulator (3) on carrier plate (1) and install the two fasteners (2) and tighten securely.

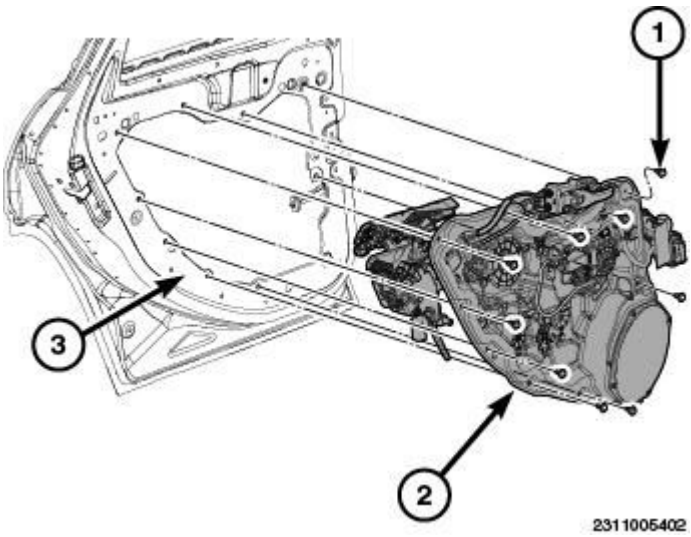

Fig. 188: Identifying Rear Door Carrier Plate & Fasteners
Courtesy of CHRYSLER GROUP, LLC

2. Install the carrier plate in door panel. Refer to **PLATE, CARRIER, INSTALLATION**.
3. Perform the Clear/Relearn procedure. Refer to **STANDARD PROCEDURE** .

STRIKER, DOOR LATCH

REMOVAL

REMOVAL

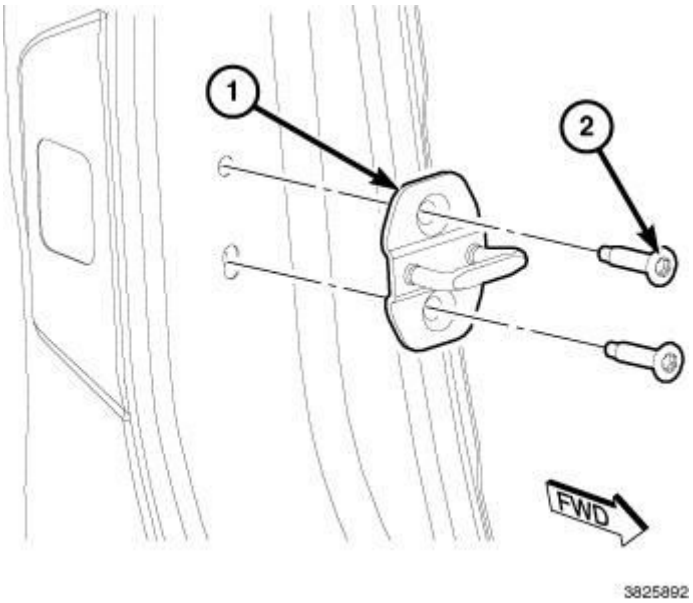

Fig. 189: Door Latch Striker & Screws
Courtesy of CHRYSLER GROUP, LLC

NOTE: Right hand shown, left hand typical.

NOTE: The front and rear door latch strikers are mounted and adjusted the exact same way.

1. Using a china marker or equivalent, mark the outline of the door latch striker (1) on the C-pillar.
2. Remove the bolts (2) attaching the door latch striker to C-pillar.
3. Remove the door latch striker (1) from vehicle.

NOTE: Be sure to check for any shims between door latch striker and C-pillar. If any shims are found, they must be reinstalled with the new door latch striker to maintain proper door operation.

INSTALLATION

INSTALLATION

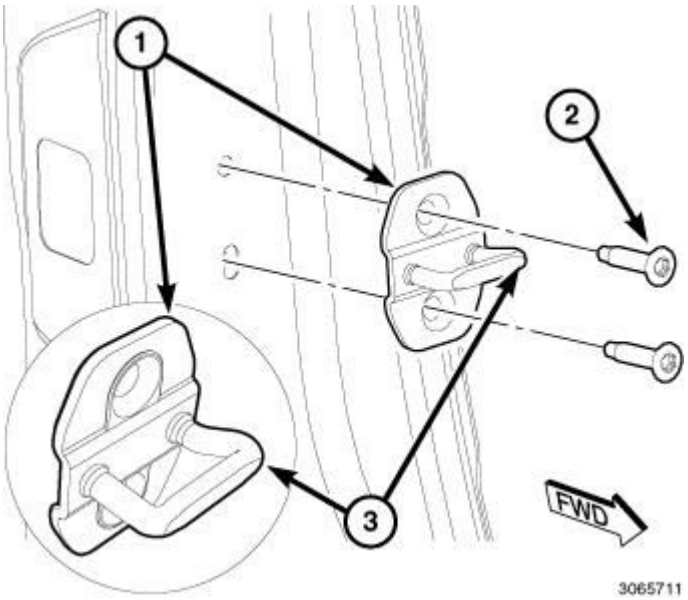

Fig. 190: Two Bolts & Striker
Courtesy of CHRYSLER GROUP, LLC

NOTE: **Right hand shown, left hand typical.**

NOTE: **Front door striker shown, rear door striker similar.**

NOTE: **The front and rear door latch strikers are mounted and adjusted the exact same way.**

NOTE: **Be sure to check for any shims between door latch striker and C-pillar. If any shims are found, they must be reinstalled with the new door latch striker to maintain proper door operation.**

NOTE: **The striker needs to be properly orientated to the C-pillar. The striker loop (3) must be installed to the inboard side of the C-pillar.**

1. Position door latch striker (1) and any shims on vehicle.
2. Loosely install the bolts (2) attaching latch striker to C-pillar.
3. Using the reference marks made during removal, align the latch striker to marks on C-pillar and tighten bolts to 30 N.m (22 ft. lbs.).
4. Verify door fit and operation. Adjust door latch striker as necessary.

EXTERIOR

COVER, COWL PANEL

REMOVAL

REMOVAL

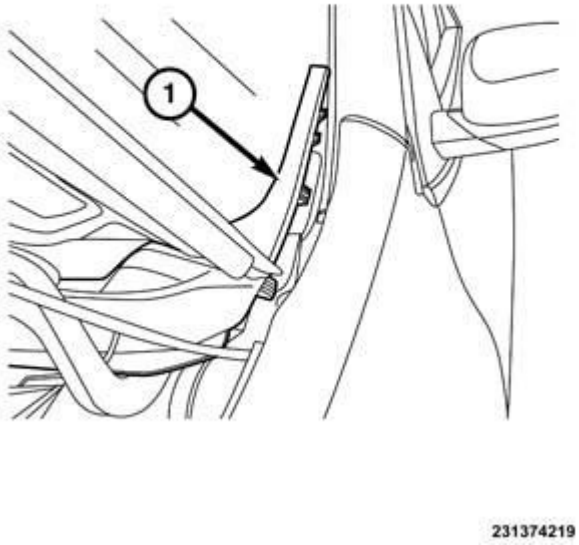

Fig. 191: Cowl Mucket
Courtesy of CHRYSLER GROUP, LLC

COWL PANEL COVER

1. Release hood latch and open hood.
2. Remove the fender to cowl mucket (1) by pulling up at the end of the fender to cowl mucket (1) to cowl panel joint and then pulling the fender to cowl mucket (1) out of the fender.
3. Remove the driver's side wiper cover by pulling up on the cover.
4. Remove windshield wiper arms. Refer to **ARM, WIPER, REMOVAL** .

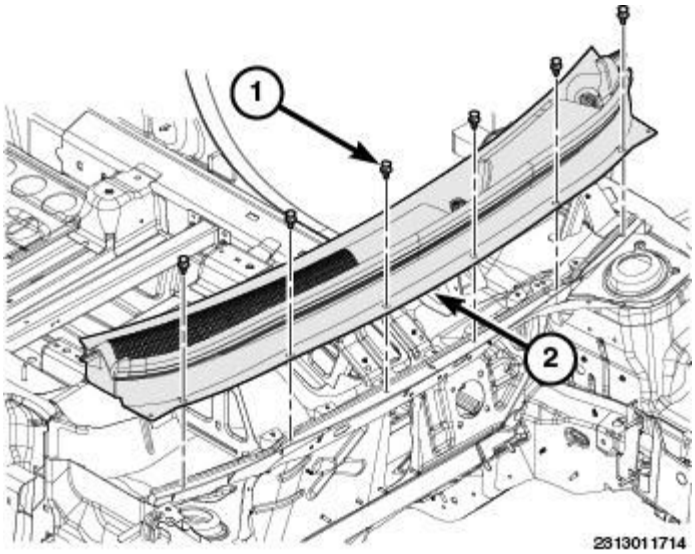

Fig. 192: Identifying Cowl Panel & Push Pins
Courtesy of CHRYSLER GROUP, LLC

5. With the use of (special tool #C-4755, Trim Stick) or equivalent, remove the push pins (1) attaching cowl panel (2) to the cowl plenum extension.

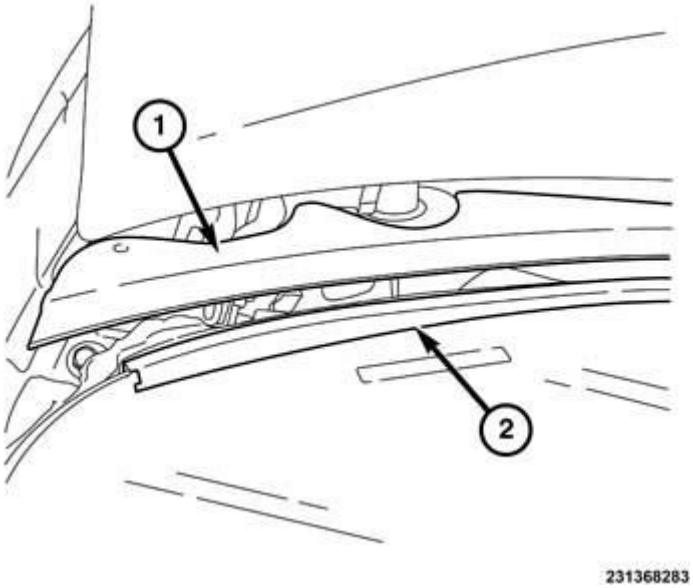

Fig. 193: Cowl Panel & Cowl Cover
Courtesy of CHRYSLER GROUP, LLC

CAUTION: Use care when removing the cowl screen from the retainer on the windshield. If the retainer on the windshield is broken/damaged the windshield will require replacement.

6. Starting at the driver's side pull up on the back edge of the cowl panel (1) and work cross car to release

the tab from the backside of the cowl panel (1) from the groove in the lower windshield channel (2).

7. Remove cowl cover (1) from vehicle.

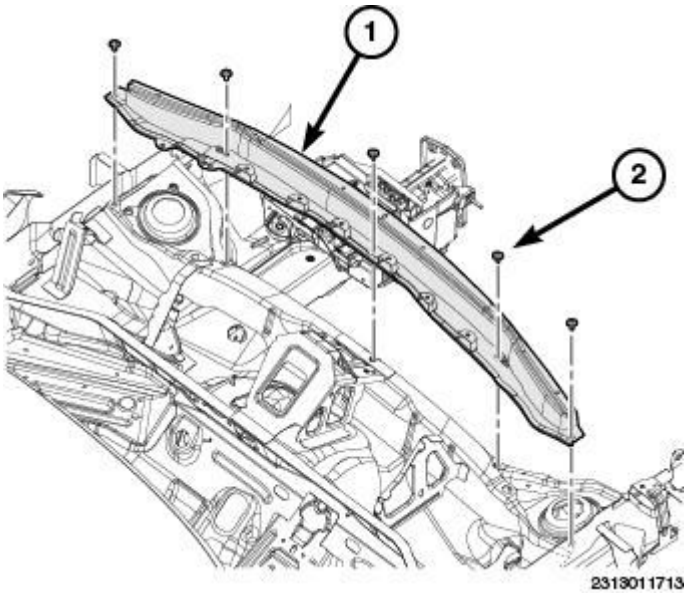

Fig. 194: Installing Cowl Panel
Courtesy of CHRYSLER GROUP, LLC

COWL PLENUM PANEL

1. Remove the screws (2) and remove the panel (1).

INSTALLATION

INSTALLATION

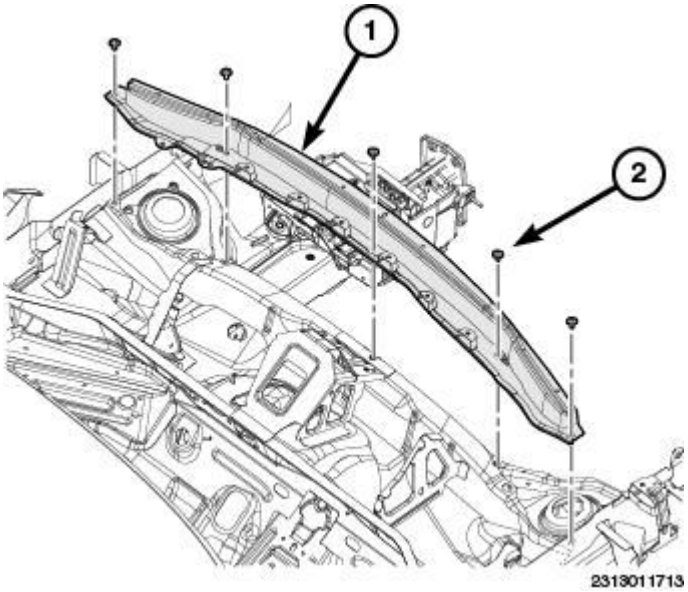

Fig. 195: Installing Cowl Panel
Courtesy of CHRYSLER GROUP, LLC

COWL PLENUM PANEL

1. Install the cowl plenum panel (1) and install the screws (2).

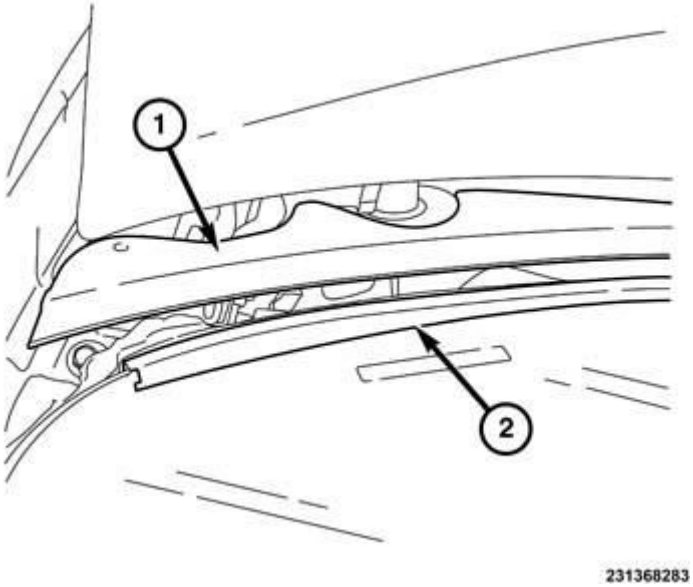

Fig. 196: Cowl Panel & Cowl Cover
Courtesy of CHRYSLER GROUP, LLC

COWL PANEL COVER

CAUTION: Use care when removing the cowl screen from the retainer on the windshield. If the retainer on the windshield is broken/damaged the windshield will require replacement.

1. Position cowl panel cover (2) to vehicle.
2. Starting in the center of the back edge of the cowl panel (1) and working out to the edges, align the tab on the backside of the cowl panel (1) into the groove in the lower windshield channel (2).

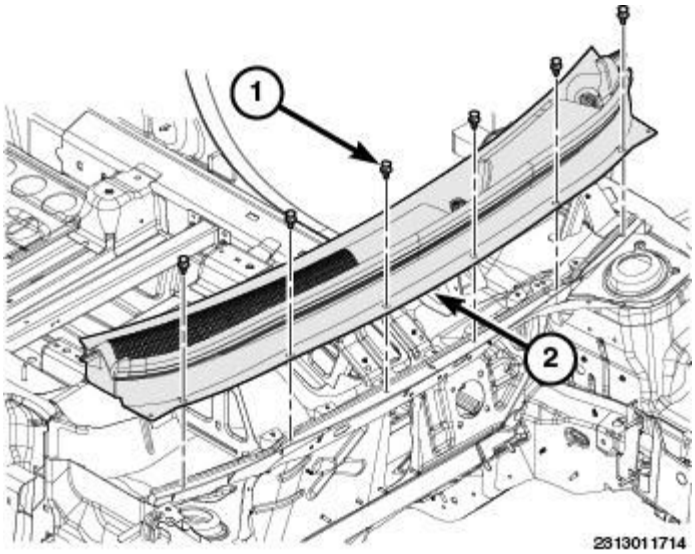

Fig. 197: Identifying Cowl Panel & Push Pins
Courtesy of CHRYSLER GROUP, LLC

3. Using hand pressure fully insert cowl panel tab (1) into windshield insert (2).
4. Install push pins (1) attaching cowl cover to cowl.
5. Install windshield wiper arms. Refer to **ARM, WIPER, INSTALLATION** .
6. Align the clips on the driver's side wiper cover and engage clips with hand pressure.

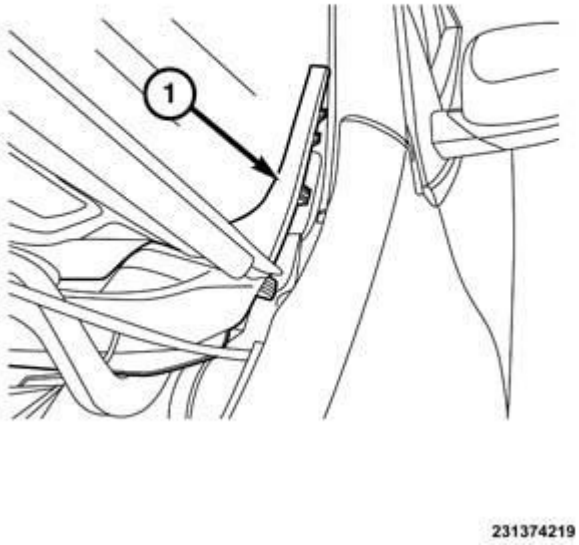

Fig. 198: Cowl Mucket
Courtesy of CHRYSLER GROUP, LLC

7. Align the clips on the right and left fender to cowl mucket (1) and engage with hand pressure.
8. Install the clips attaching cowl plenum under hood to cowl bulb seal to cowl panel.

DOOR, FUEL FILL

REMOVAL

REMOVAL

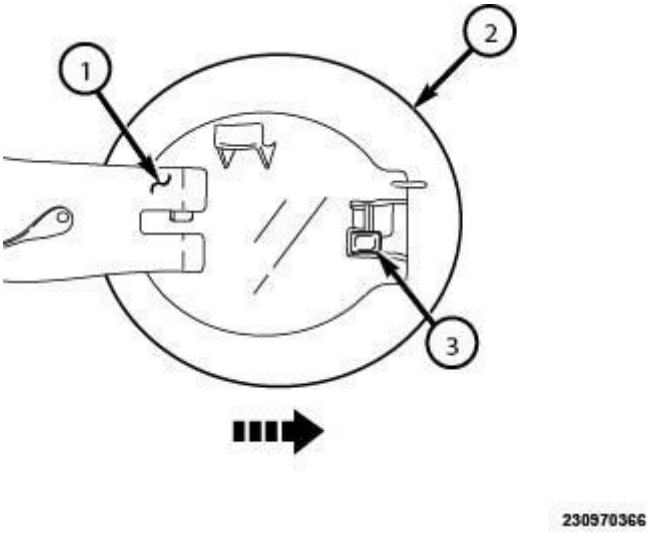

Fig. 199: Removing Fuel Fill Door
Courtesy of CHRYSLER GROUP, LLC

1. Open the fuel fill door (2).
2. Insert a pick or equivalent to lift the fuel door retaining tab (3).
3. Slide the gas door (2) outward to release from fuel filler housing (1).
4. Remove fuel fill door.

INSTALLATION

INSTALLATION

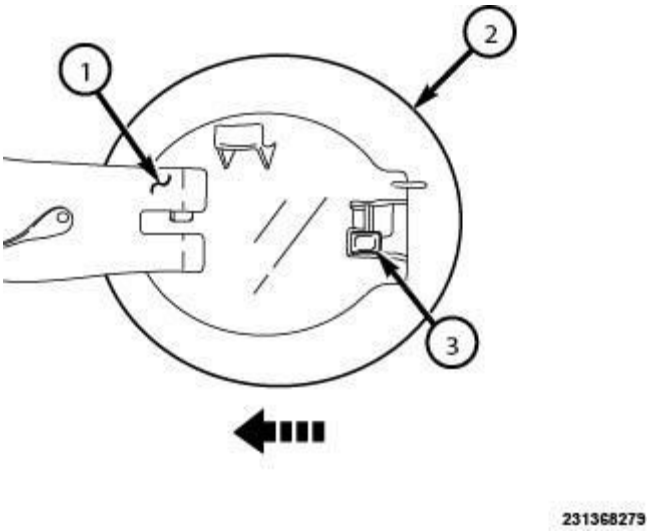

Fig. 200: Installing Fuel Fill Door
Courtesy of CHRYSLER GROUP, LLC

1. Align fuel door (2) onto the fuel filler housing (1).
2. Slide fuel fill door (2) inward until retaining tab (3) is engaged fully.
3. Close the fuel door (2).

FENDER, FRONT

REMOVAL

REMOVAL

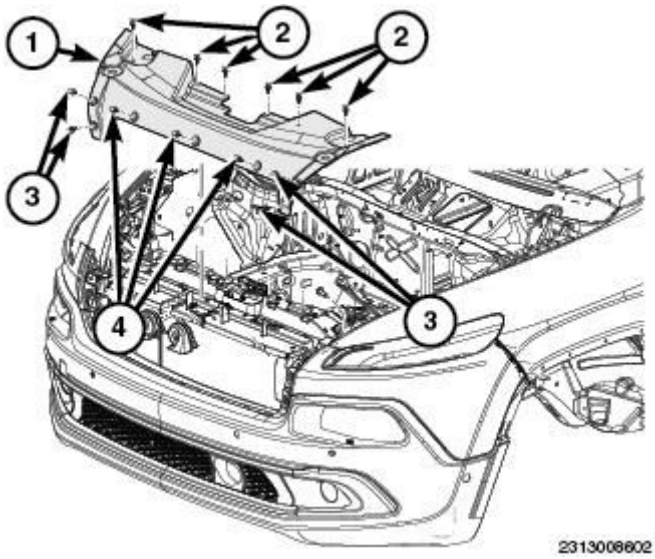

Fig. 201: Upper Close Out Panel Cover Components
Courtesy of CHRYSLER GROUP, LLC

1. Disconnect and isolate the negative battery cable.
2. Remove the front wheelhouse splash shield. Refer to **SHIELD, SPLASH, FRONT WHEELHOUSE, REMOVAL** .
3. Remove the eight fasteners (2) from the upper fascia closeout panel (1).
4. Remove the upper fascia closeout panel (1) from the vehicle.

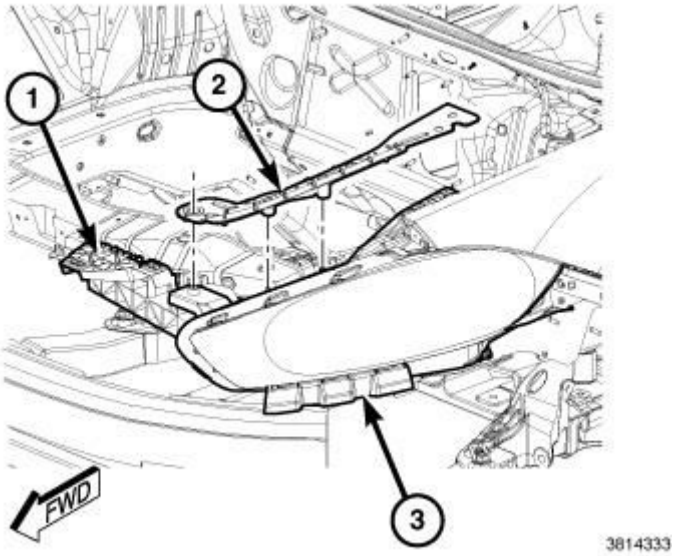

Fig. 202: Front Fascia Support Bracket
Courtesy of CHRYSLER GROUP, LLC

5. Remove the fasteners from the front fascia support bracket (2).
6. Position the bracket to allow access to the front fender fastener.

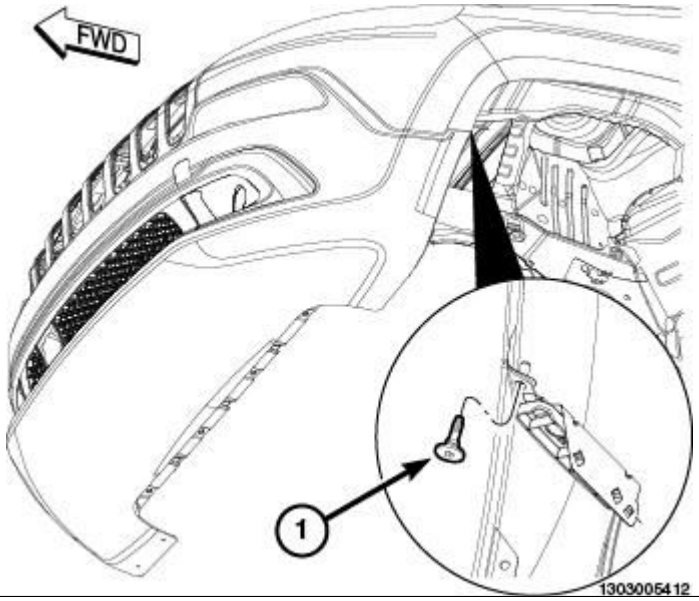

Fig. 203: Identifying Fender To Fascia Fastener
Courtesy of CHRYSLER GROUP, LLC

7. Accessing from within the wheelhouse, remove the fascia to fender fastener (1).
8. Carefully pull out on the upper and lower fascia sides to disengage the fascia retaining tabs.

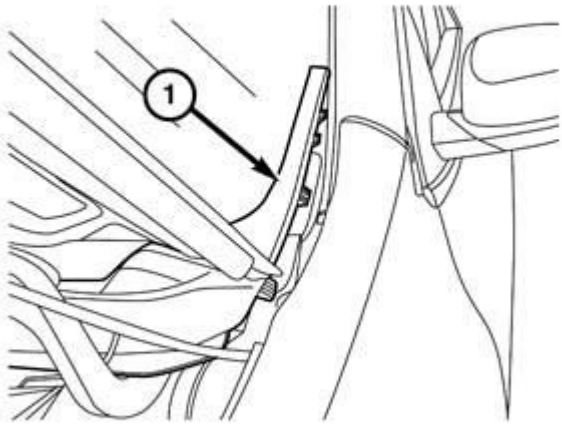

231374219

Fig. 204: Cowl Mucket
Courtesy of CHRYSLER GROUP, LLC

9. Remove the fender to cowl mucket by pulling up at the end of the fender to cowl mucket at the cowl panel joint and then pulling the fender to cowl mucket out of the fender.

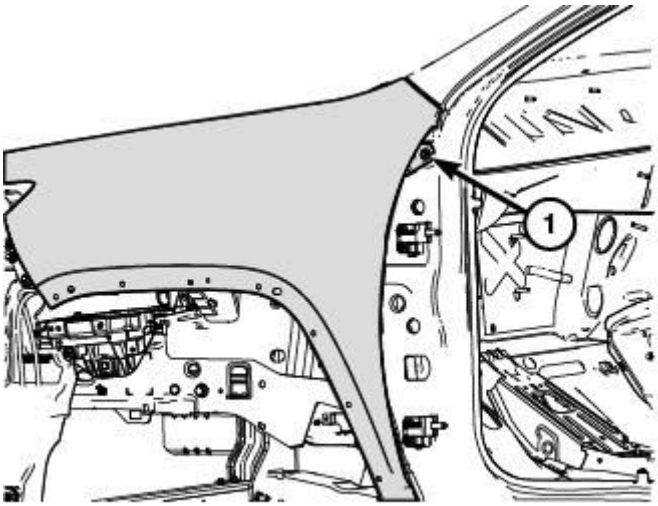

2313006657

Fig. 205: Identifying Fender
Courtesy of CHRYSLER GROUP, LLC

10. Remove the fasteners (1) from the fender.

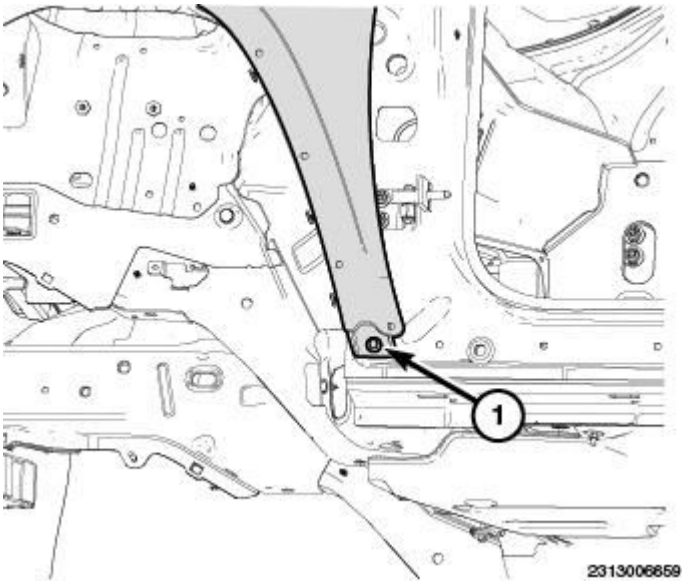

Fig. 206: Identifying Fender Fastener
Courtesy of CHRYSLER GROUP, LLC

11. Remove the fasteners (1) from the fender.

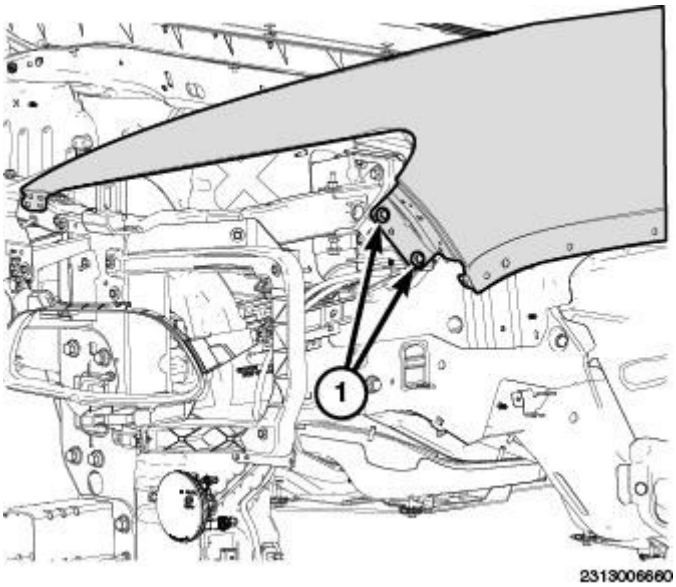

Fig. 207: Identifying Fender Fasteners
Courtesy of CHRYSLER GROUP, LLC

12. Remove the fasteners (1) from the fender.

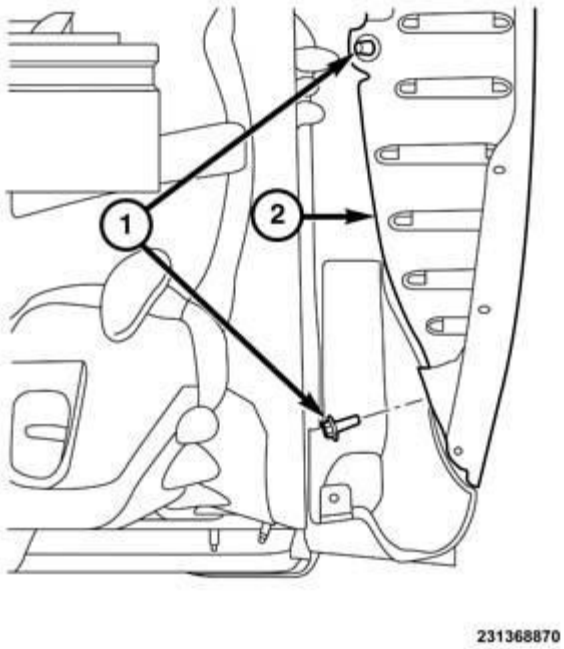

Fig. 208: Fender Seal & Fasteners
Courtesy of CHRYSLER GROUP, LLC

13. From within the rear area of the wheel house, remove the two fasteners (1) from the fender seal (2).

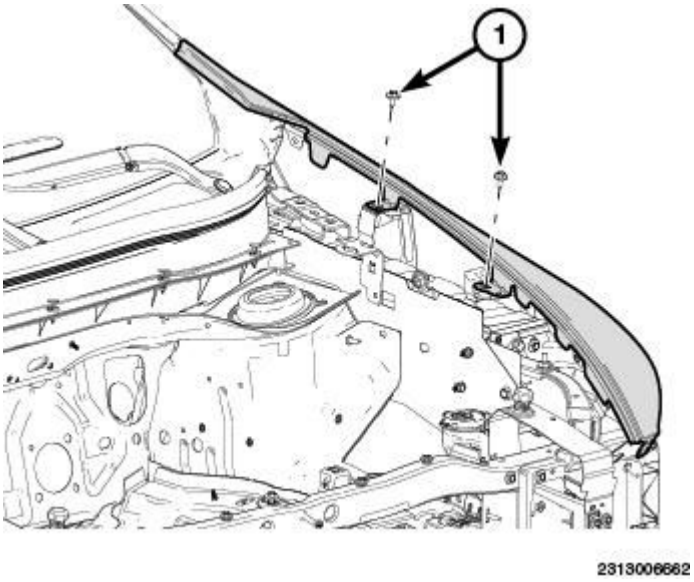

Fig. 209: Identifying Fender Fasteners
Courtesy of CHRYSLER GROUP, LLC

14. Remove the fasteners (1) securing the fender to the outer load path beam.

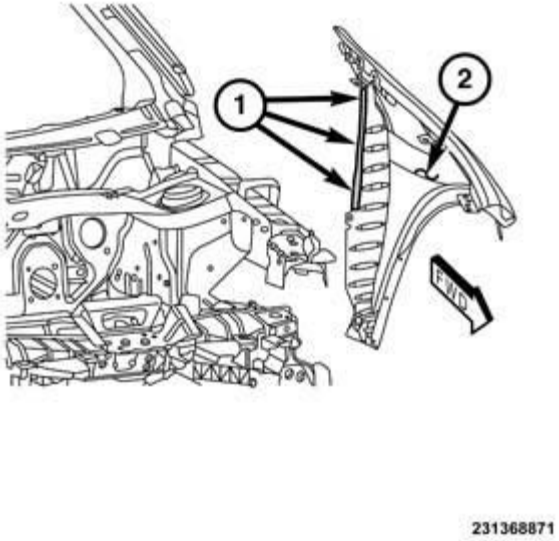

Fig. 210: Fender & Adhesive
Courtesy of CHRYSLER GROUP, LLC

15. With the use of a plastic putty knife or equivalent, separate the adhesive (1) between the fender (2) and the hinge pillar.
16. Remove the fender (1) from the vehicle.

INSTALLATION

INSTALLATION

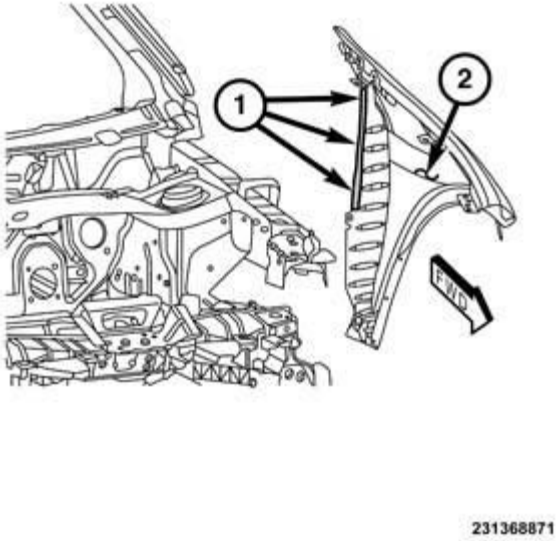

Fig. 211: Fender & Adhesive
Courtesy of CHRYSLER GROUP, LLC

1. Apply thin bead of seam sealer along the flange (1) of the fender (2).
2. Align the fender to the vehicle.

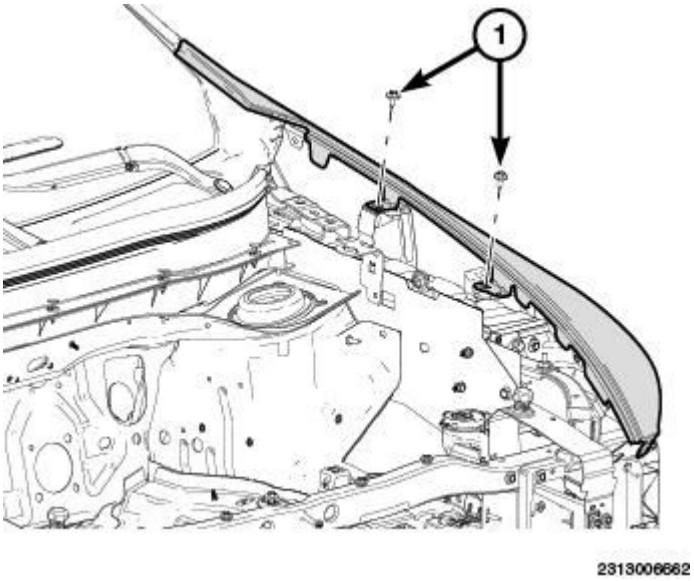

Fig. 212: Identifying Fender Fasteners
Courtesy of CHRYSLER GROUP, LLC

3. Install the fasteners (1) securing the fender to the outer load path beam.
4. Tighten the fasteners to 9 N.m. (80 in. lbs.).

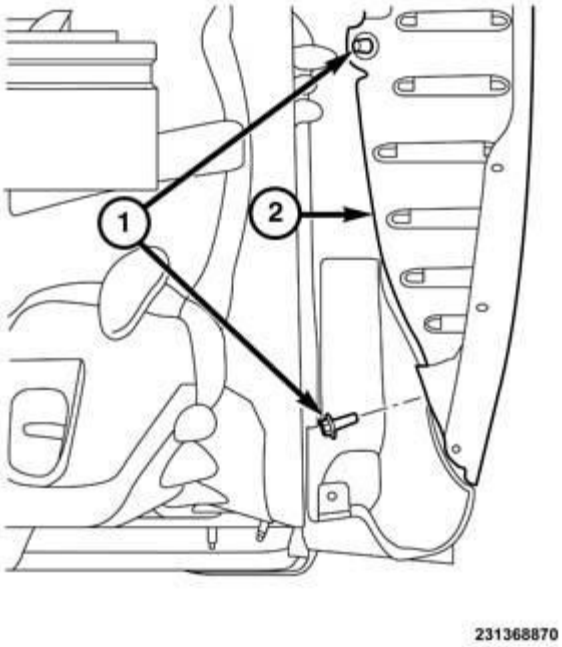

Fig. 213: Fender Seal & Fasteners
Courtesy of CHRYSLER GROUP, LLC

5. From within the rear area of the wheel house, install the two fasteners (1) into the fender seal (2).
6. Tighten the fasteners to 9 N.m. (80 in. lbs.).

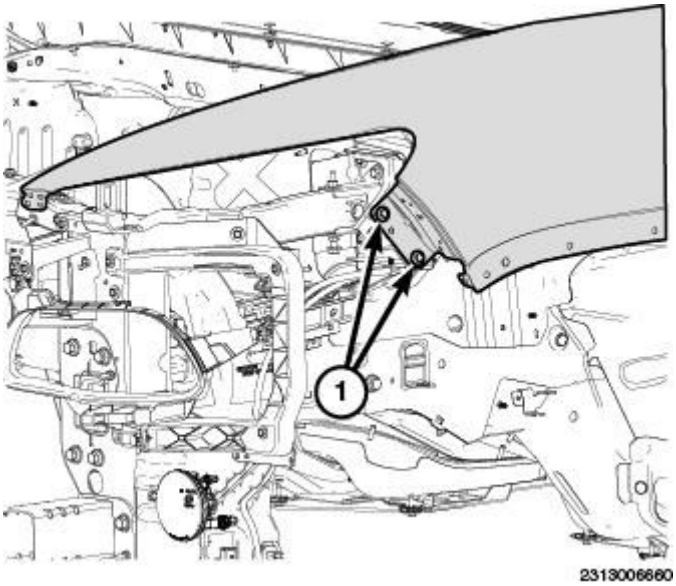

Fig. 214: Identifying Fender Fasteners
Courtesy of CHRYSLER GROUP, LLC

7. Install the fasteners (1) into the fender.

8. Tighten the fasteners to 9 N.m. (80 in. lbs.).
9. Align the upper and lower fascia sides and hand tap to engage the fascia retaining tabs.

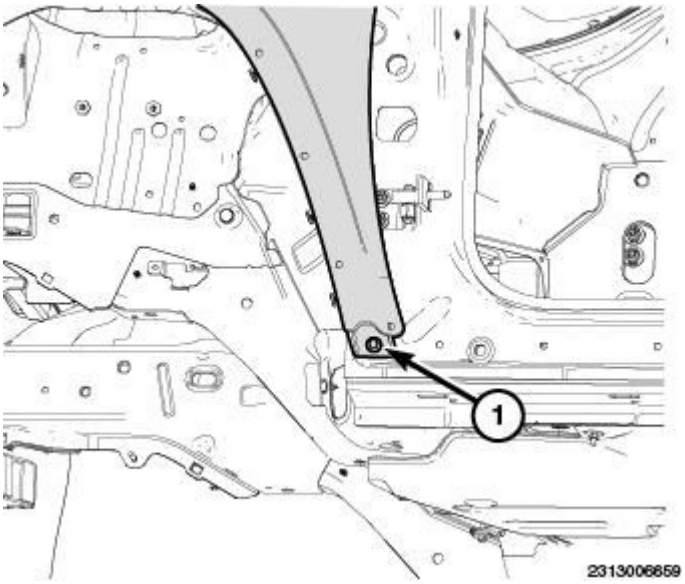

Fig. 215: Identifying Fender Fastener
Courtesy of CHRYSLER GROUP, LLC

10. Install the fastener (1).

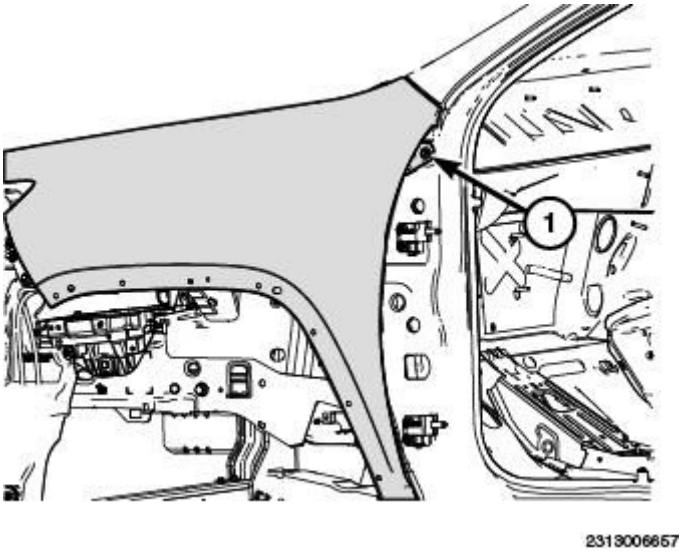

Fig. 216: Identifying Fender
Courtesy of CHRYSLER GROUP, LLC

11. Install the fasteners (1) from the fender.

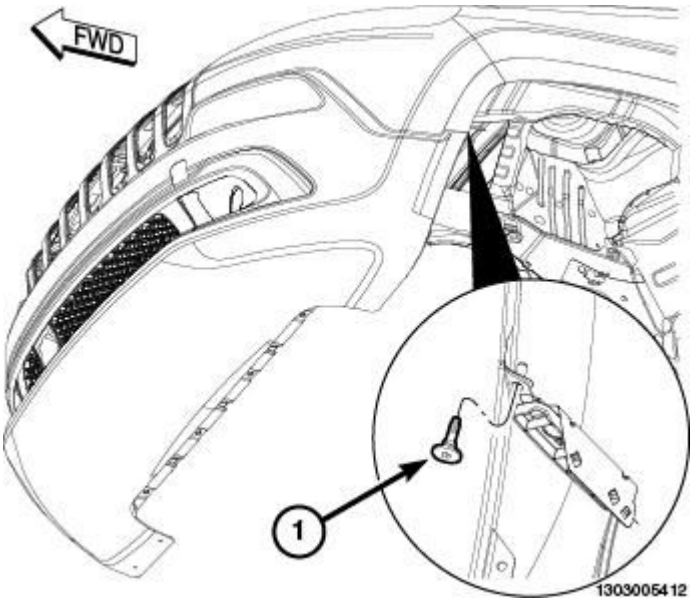

Fig. 217: Identifying Fender To Fascia Fastener
Courtesy of CHRYSLER GROUP, LLC

12.
13. Accessing from within the wheelhouse, install the fender to fascia fastener (1). Tighten the fastener securely.

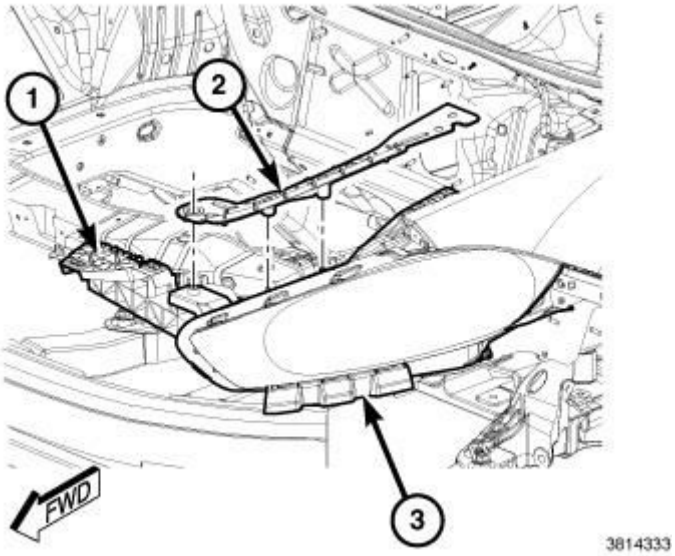

Fig. 218: Front Fascia Support Bracket
Courtesy of CHRYSLER GROUP, LLC

14. Position the front fascia support bracket (2).
15. Install the fasteners into the front fascia support bracket (2) and tighten securely.

16. Verify proper gap and flush dimension. Refer to **GAP AND FLUSH, SPECIFICATIONS**.
17. Adjust as necessary.
18. Install the front wheel house splash shield. Refer to **SHIELD, SPLASH, FRONT WHEELHOUSE, INSTALLATION**.

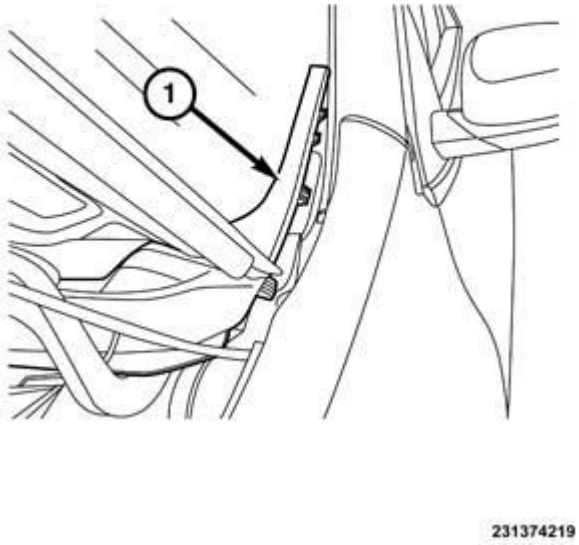

Fig. 219: Cowl Mucket
Courtesy of CHRYSLER GROUP, LLC

19. Align the clips on the fender to cowl mucket and engage with hand pressure.

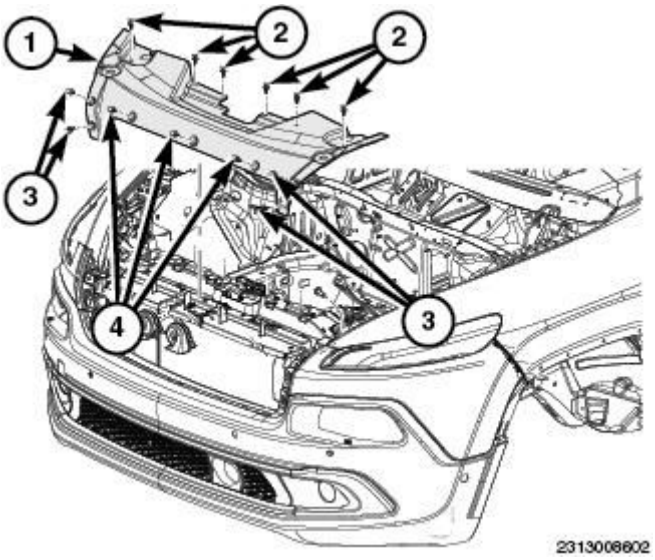

Fig. 220: Upper Close Out Panel Cover Components

Courtesy of CHRYSLER GROUP, LLC

20. Position the fascia closeout panel (1).
21. Install the eight push pin fasteners (2).
22. Connect the negative battery cable.

GRILLE

REMOVAL

REMOVAL

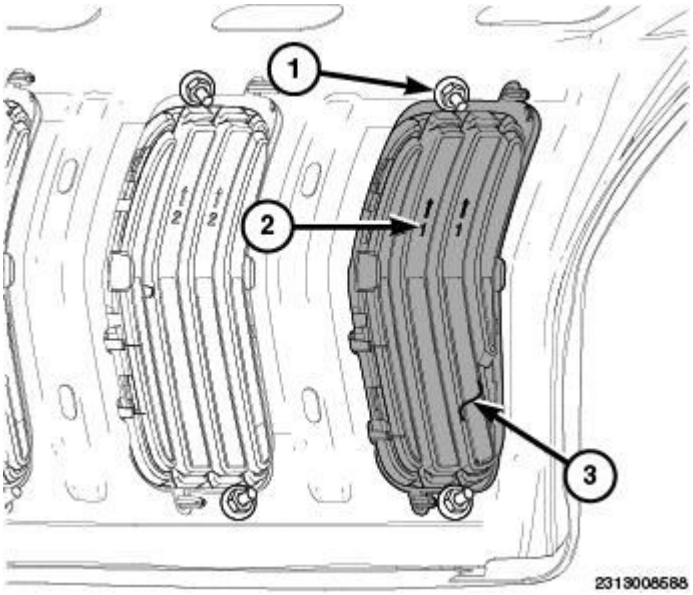

Fig. 221: Identifying Grille Insert & Nuts
Courtesy of CHRYSLER GROUP, LLC

NOTE: Each grille insert (3) is unique to it's spot on the hood and is numbered accordingly (2). Make sure the correct grille inserts are installed in the original position.

1. Remove the nuts (1).

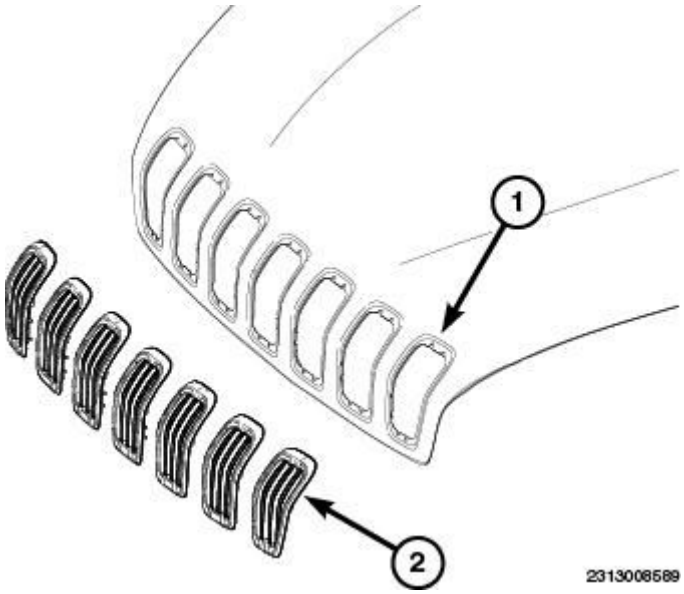

Fig. 222: Identifying Grille Inserts & Hood
Courtesy of CHRYSLER GROUP, LLC

2. Remove the grille inserts (2) from the hood (1) as needed.

INSTALLATION

INSTALLATION

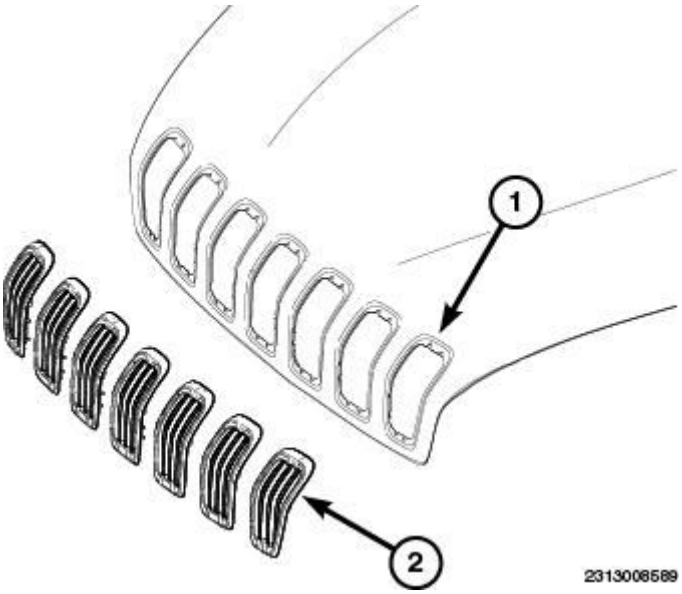

Fig. 223: Identifying Grille Inserts & Hood
Courtesy of CHRYSLER GROUP, LLC

1. Position the grille inserts (2) onto the hood (1).

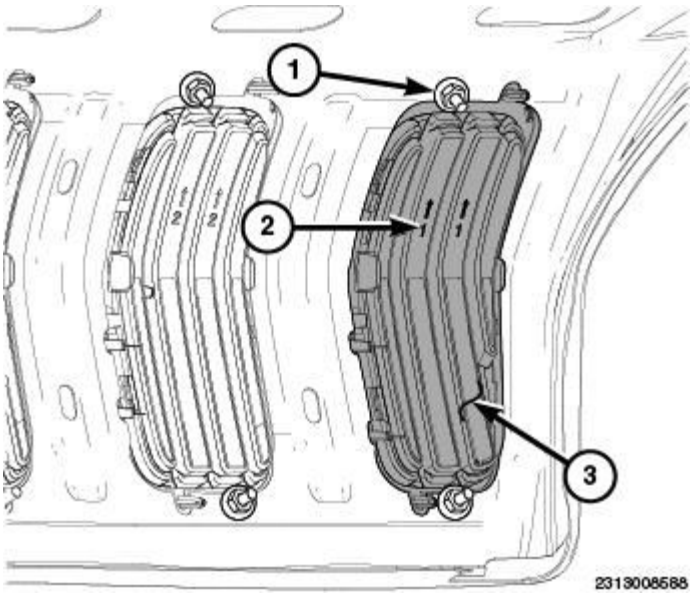

Fig. 224: Identifying Grille Insert & Nuts
Courtesy of CHRYSLER GROUP, LLC

NOTE: Each grille insert (3) is unique to it's spot on the hood and is numbered accordingly (2). Make sure the correct grille inserts are installed in the original position.

2. Install the nuts (1).

GRILLE, ACTIVE SHUTTER

DESCRIPTION

DESCRIPTION

This vehicle features an Active Grille Shutter (AGS) system. The AGS is located behind the front lower portion of the grill and in front of the radiator.

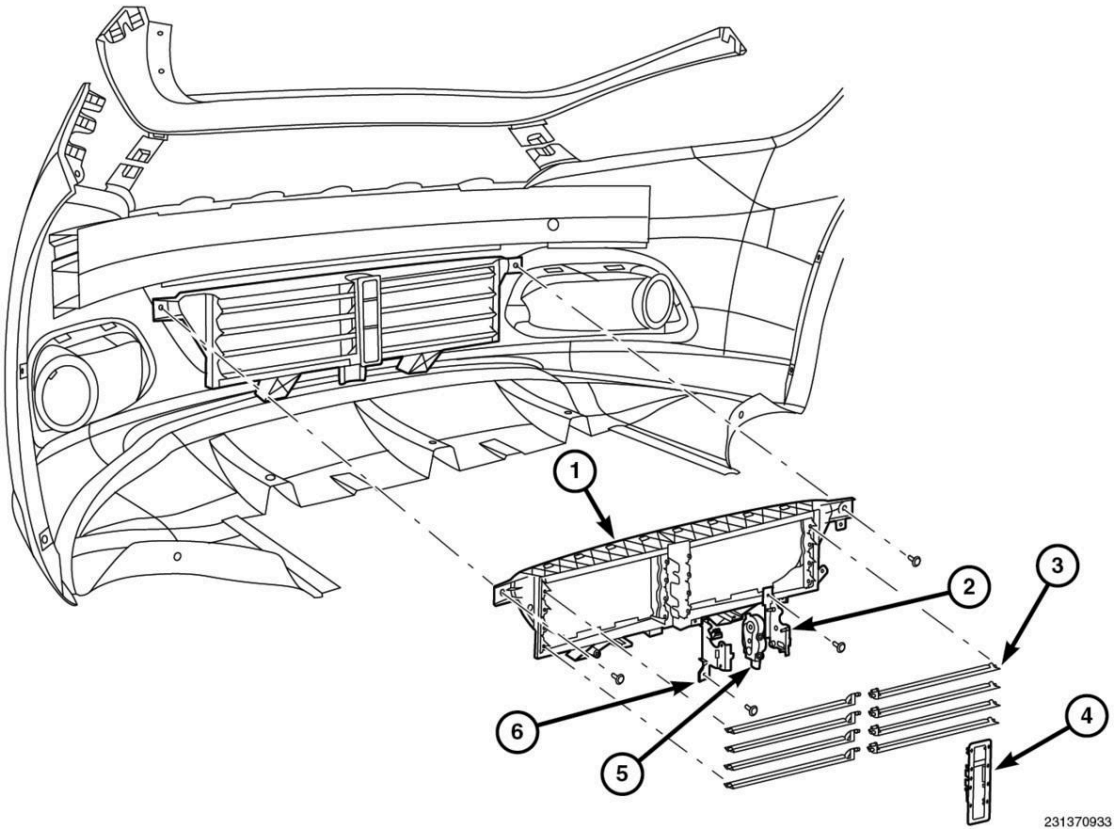

Fig. 225: Active Grille Shutter Components
Courtesy of CHRYSLER GROUP, LLC

The AGS system consist of an electric motor, shutter vanes, linkage, and seals that are located behind the front grille. The AGS components include:

1. Frame
2. Right Side Actuator Housing
3. Vanes
4. Linkage
5. Actuator
6. Left Side Actuator Housing

Aerodynamics plays an important role in regards to fuel efficiency. Aerodynamic drag increases as vehicle speed increases. With the vehicle traveling at highway speeds, engine power requirements increase in order to overcome wind drag across the front of the vehicle. Reducing the wind drag coefficient across the front of the vehicle is directly proportional to an improvement in fuel efficiency.

OPERATION

OPERATION

The AGS system is controlled by the powertrain control module (PCM) over a dedicated network LIN bus. When the ambient air and engine coolant temperatures are below a specified threshold, airflow across the radiator is not required. When airflow across the radiator is not required and vehicle speeds reach a calibrated threshold, the PCM will command the shutter vanes to close.

Closing the grille shutter vanes creates an improved drag coefficient across the front of the vehicle. If additional cooling is required due to increasing engine coolant temperatures, the PCM commands the grille shutter vanes to open. In cold climates, the active grille shutter system may be used to improve engine coolant warm-up times further increasing fuel economy.

To aid with diagnosis, the grille shutter vanes can be commanded to the open or closed positions with a scan tool. The active grille shutters perform an initialization each time the vehicle is started. The initialization can be used as a quick way to validate the operation of the AGS. To perform the AGS validation, start the engine and observe the grille shutters, the shutters will cycle to the fully open position and then to the fully closed positions to initialize and learn the hard stops on the grille shutter frame for that key cycle.

If the AGS smart module detects the grille shutters are jammed, it will attempt to free them by cycling the shutters from the open to close positions 3 times. If this condition is detected when the ambient air temperature is greater than 4.4° C (40° F) the MIL will illuminate and a diagnostic trouble code (DTC) will set. If the ambient air temperature is below 4.4° C (40° F) and a jammed condition is detected, the smart module will assume the shutters are frozen and will not illuminate the MIL or set a DTC.

The active grille shutter assembly contains an integral smart module, the module receives a command position signal from the PCM to properly position the shutter vanes. The AGS module reports the position to the PCM on the LIN bus. The AGS module four-pin connector also contains a battery voltage, ignition voltage, and a ground circuit.

REMOVAL

REMOVAL

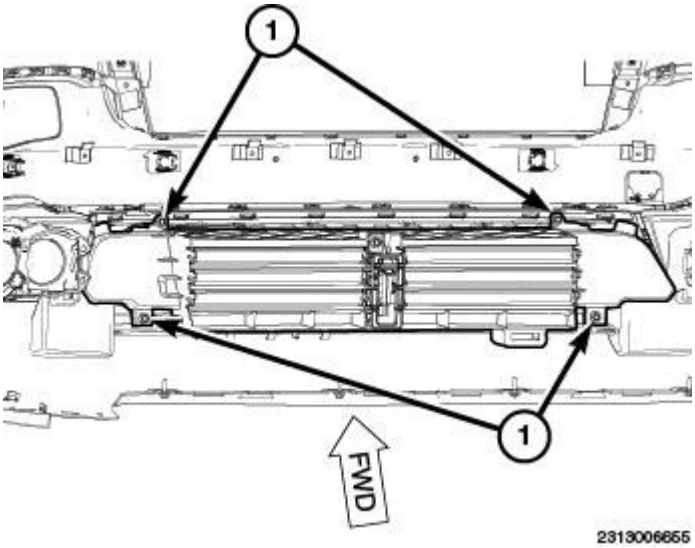

Fig. 226: Identifying Active Grill Shutter Assembly & Fasteners

Courtesy of CHRYSLER GROUP, LLC

NOTE: When replacing the active grill shutter assembly or active grill shutter actuator with a service part it will be necessary to perform a counter reset with a scan tool. Follow the scan tool prompts as located under PCM/Misc. Functions/Active Grill Shutter Replace.

1. Remove the front fascia and place on a workbench. Refer to **FASCIA, FRONT, REMOVAL** .
2. Accessing from the rear of the fascia, remove the fasteners (1) securing the active grille shutter to the fascia.
3. Remove the active grille shutter from the fascia.

DISASSEMBLY

DISASSEMBLY

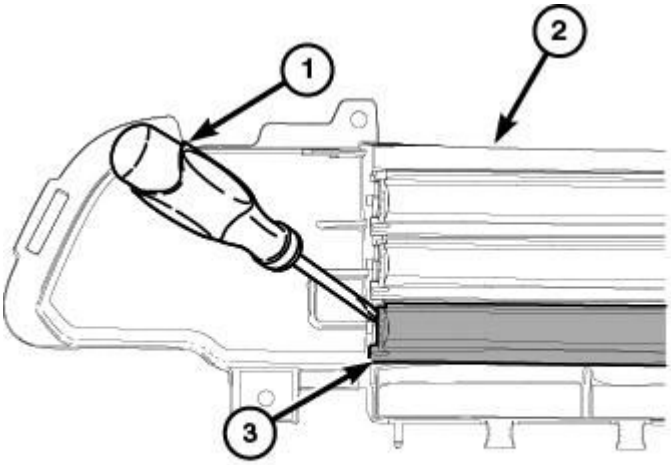

2313006647

Fig. 227: Identifying Flat Bladed Tool, Active Grill Shutter Frame & Vane Outer End
Courtesy of CHRYSLER GROUP, LLC

NOTE: When replacing the active grill shutter assembly or active grill shutter actuator with a service part it will be necessary to perform a counter reset with a scan tool. Follow the scan tool prompts as located under PCM/Misc. Functions/Active Grill Shutter Replace.

1. Place an appropriate sized flat bladed tool (1), or equivalent between the active grill shutter frame (2) and the vane (3) outer end.
2. Gently pry until the vane (3) tab is released from the frame (2).

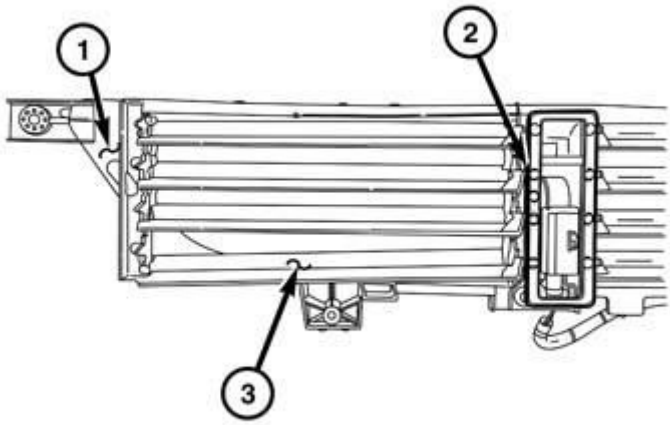

231368337

Fig. 228: Identifying Frame, Linkage & Vane
Courtesy of CHRYSLER GROUP, LLC

3. Upper and lower vanes will need to be unclipped from the linkage (2), center vanes sit in the slot guides.
4. Move vane outward (3) to release it from the frame (1).

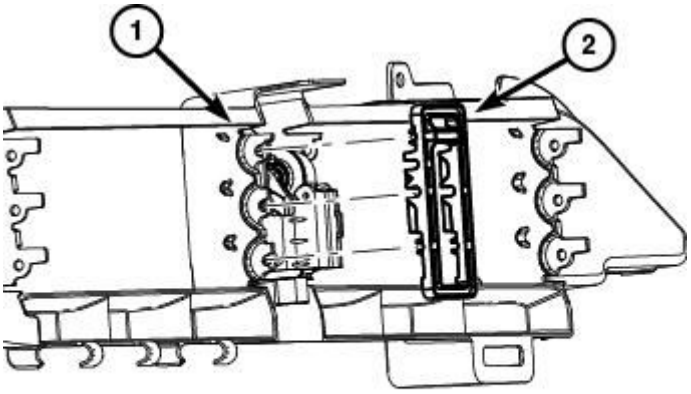

2313006648

Fig. 229: Identifying Frame & Linkage
Courtesy of CHRYSLER GROUP, LLC

5. Remove the linkage (2).
6. Disconnect the wiring connector for the active grill shutter actuator.

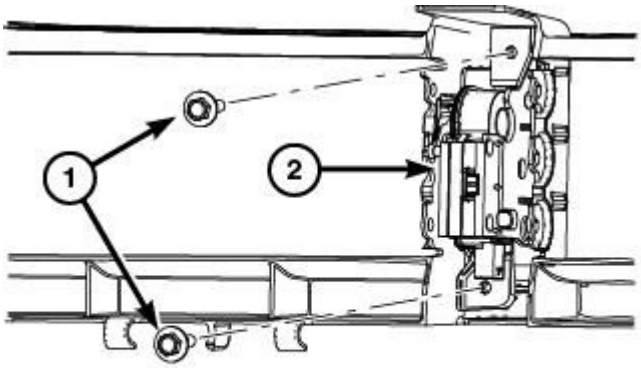

2313006650

Fig. 230: Identifying Active Grill Shutter Actuator & Fasteners
Courtesy of CHRYSLER GROUP, LLC

7. Remove the two fasteners (1).
8. Remove the active grill shutter actuator (2) from the active grill shutter frame.

ASSEMBLY

ASSEMBLY

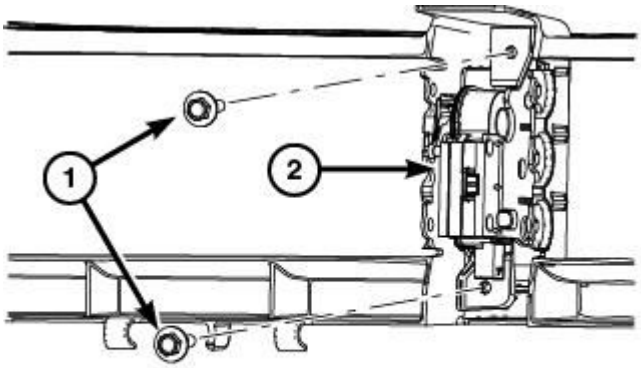

2313006650

Fig. 231: Identifying Active Grill Shutter Actuator & Fasteners
Courtesy of CHRYSLER GROUP, LLC

1. Place the active grill shutter actuator (2) into the active grill shutter frame.
2. Install the two actuator fasteners (1) and tighten securely.

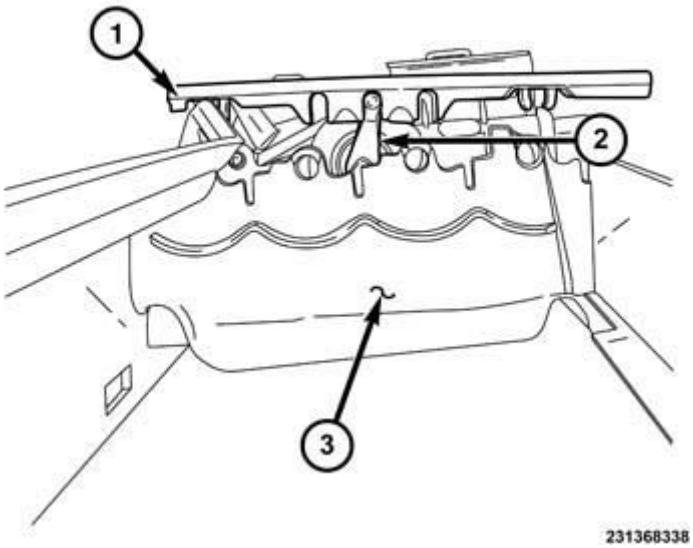

Fig. 232: Linkage, Actuator Arm And Frame
Courtesy of CHRYSLER GROUP, LLC

3. Rotate the linkage (1) onto the frame (3).
4. Align the actuator arm (2) to the center notch on the linkage (1).

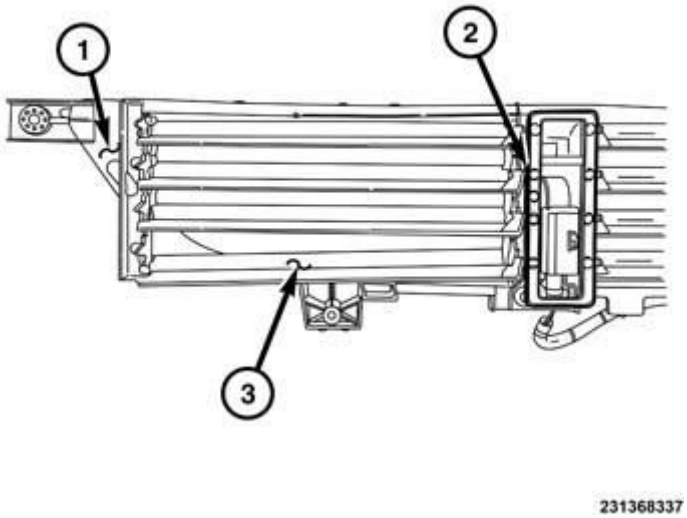

Fig. 233: Identifying Frame, Linkage & Vane
Courtesy of CHRYSLER GROUP, LLC

5. The vane (3) has two inner tabs, guide one into the appropriate hole in center of the frame (1).
6. Guide the second inner tab into the appropriate slot on the linkage (2). The linkage (2) will clip onto the vane tab on the upper and lower shutters, center shutters will sit in the center piece slots.

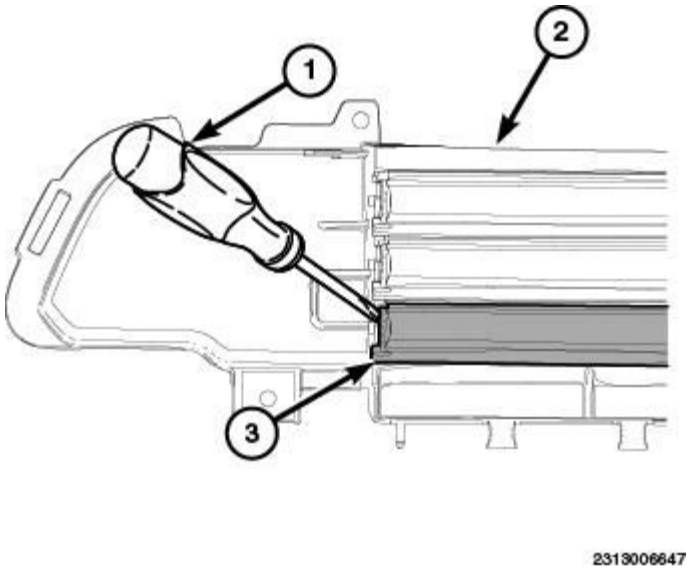

Fig. 234: Identifying Flat Bladed Tool, Active Grill Shutter Frame & Vane Outer End
Courtesy of CHRYSLER GROUP, LLC

7. Place an appropriate sized flat bladed tool (1) or equivalent, between the active grill shutter frame (2) and the vane (3) outer end.
8. Gently pry until the vane (3) tab can be inserted into the appropriate hole in the frame (2).
9. Repeat until all vanes have been placed.
10. When replacing the active grill shutter assembly or active grill shutter actuator with a service part it will be necessary to perform a counter reset with a scan tool. Follow the scan tool prompts as located under PCM/Misc. Functions/Active Grill Shutter Replace.

INSTALLATION

INSTALLATION

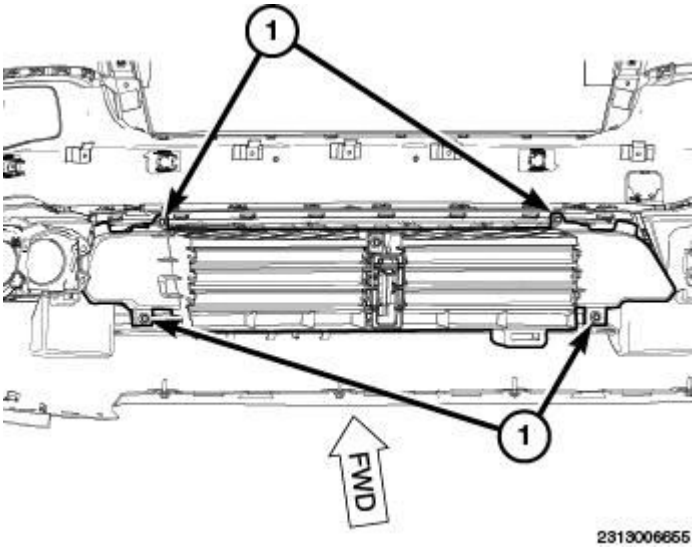

Fig. 235: Identifying Active Grill Shutter Assembly & Fasteners
Courtesy of CHRYSLER GROUP, LLC

1. Align and position the active grille shutter to the fascia.
2. Accessing from the rear of the fascia, install the fasteners (1) securing the active grille shutter (1) to the fascia. Tighten the fastener securely.
3. Install the front fascia. Refer to **FASCIA, FRONT, INSTALLATION** .
4. When replacing the active grill shutter assembly or active grill shutter actuator with a service part it will be necessary to perform a counter reset with a scan tool. Follow the scan tool prompts as located under PCM/Misc. Functions/Active Grill Shutter Replace.

MIRROR, OUTSIDE REARVIEW

REMOVAL

REMOVAL

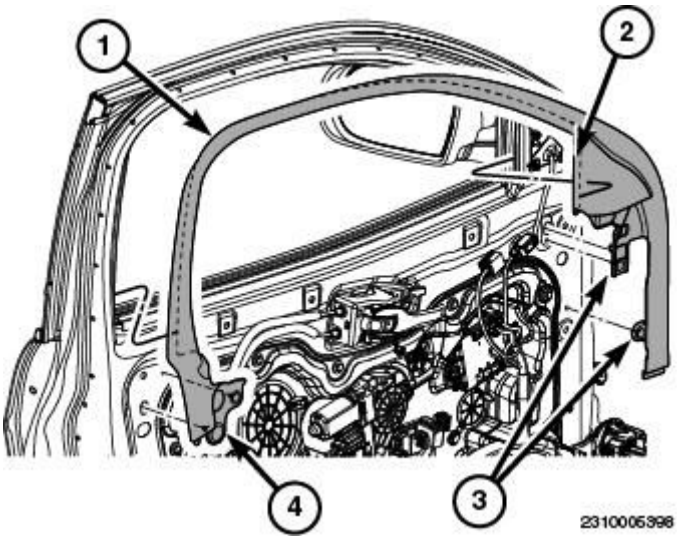

Fig. 236: Identifying Upper Door Trim & Fasteners
Courtesy of CHRYSLER GROUP, LLC

1. Disconnect and isolate the negative battery cable.
2. Using a (special tool #C-4755, Trim Stick), remove the upper door trim. Refer to **PANEL, DOOR TRIM, REMOVAL**.

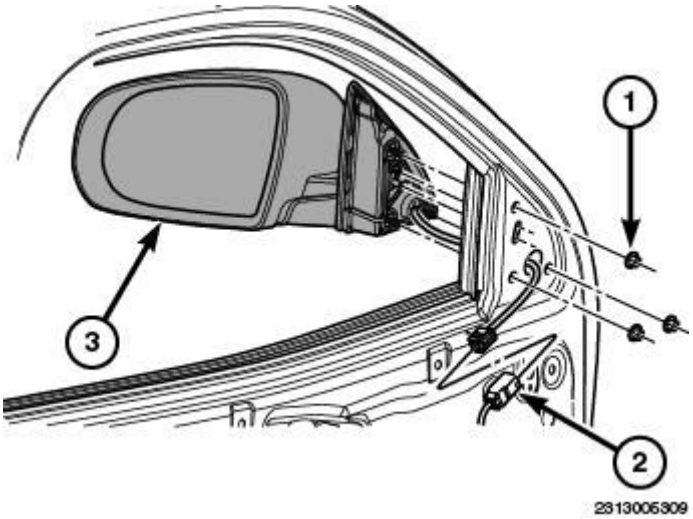

Fig. 237: Identifying Exterior Mirror, Wire Harness & Fasteners
Courtesy of CHRYSLER GROUP, LLC

3. If equipped, disconnect the power mirror accessory wire harness (2).
4. Remove the fasteners (1) securing the exterior mirror (3).
5. If equipped with power mirror accessory features, detach the wire harness grommet located in the mirror flag area.
6. Remove the exterior mirror (3) from vehicle, feed the wire harness (2) and the grommet through the hole in the mirror flag area.

INSTALLATION

INSTALLATION

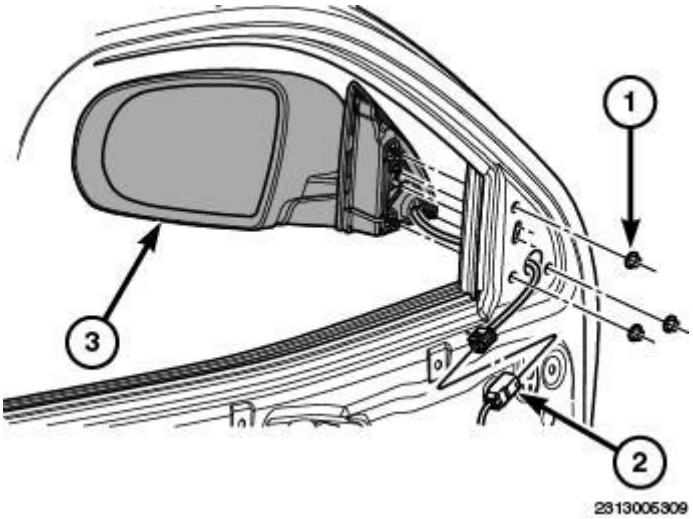

Fig. 238: Identifying Exterior Mirror, Wire Harness & Fasteners
Courtesy of CHRYSLER GROUP, LLC

1. Position the exterior mirror (3) near the vehicle.
2. If equipped with power mirror accessory features, feed the wire harness (2) through the hole in the mirror flag and seat the grommet. **Do not pull on the wire harness to seat the grommet.**
3. Align and position the exterior mirror (3) into the mirror flag area of the door.
4. Install the fasteners (1) securing the exterior mirror to the door. Tighten the fasteners securely.

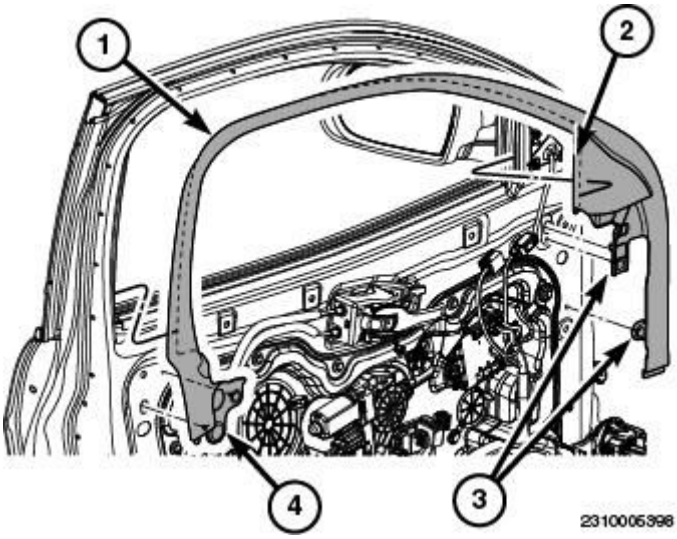

Fig. 239: Identifying Upper Door Trim & Fasteners
Courtesy of CHRYSLER GROUP, LLC

5. Align, position and install the upper trim panel (1). Refer to **PANEL, DOOR TRIM, INSTALLATION**.

MIRROR, OUTSIDE REARVIEW, GLASS

REMOVAL

REMOVAL

GLASS

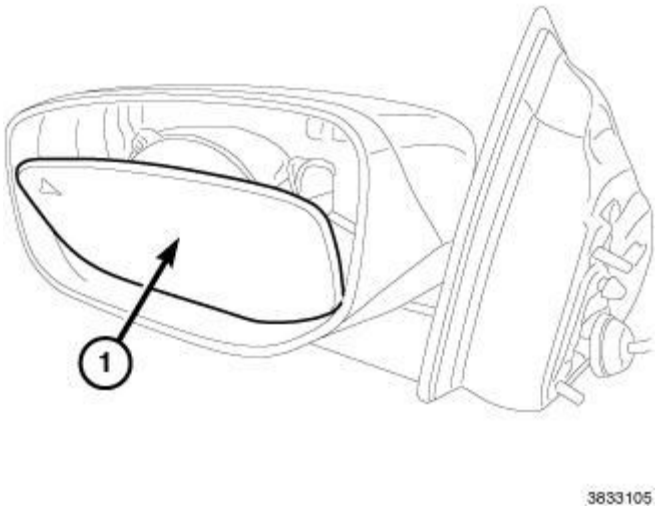

Fig. 240: Mirror Glass
Courtesy of CHRYSLER GROUP, LLC

WARNING: **Always wear eye and hand protection when servicing the mirror assembly. Failure to observe these warnings may result in personal injury from broken glass.**

1. Push mirror glass case (2) into full down position
2. Disconnect and isolate the negative battery cable.
3. Place thumbs behind mirror glass case (2) and push out from the mirror assembly (1). This will disengage the mirror glass case's snap attachment feature.

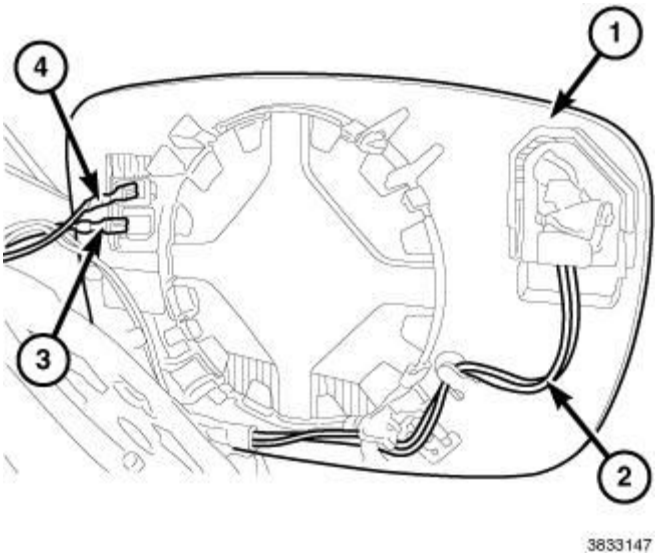

Fig. 241: Mirror Glass & Electrical Harnesses
Courtesy of CHRYSLER GROUP, LLC

4. If equipped, disconnect any accessory electrical harnesses (2, 3 & 4) from the mirror glass (1).

MIRROR CAP

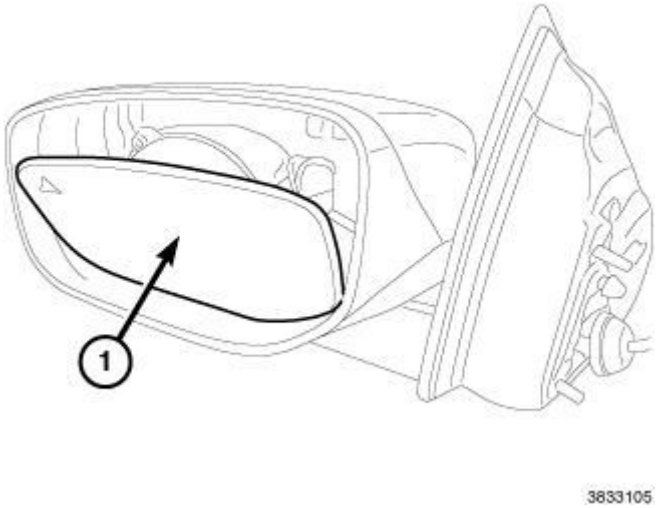

Fig. 242: Mirror Glass
Courtesy of CHRYSLER GROUP, LLC

WARNING: **Always wear eye and hand protection when servicing the mirror assembly. Failure to observe these warnings may result in personal injury from broken glass.**

1. Disconnect and isolate the negative battery cable.
2. Remove the exterior mirror from the vehicle. Refer to **MIRROR, OUTSIDE REARVIEW, REMOVAL** and **MIRROR, OUTSIDE REARVIEW, GLASS, REMOVAL**.
3. Push mirror glass case (2) into full down position
4. Place thumbs behind mirror glass case (2) and push out from the mirror assembly (1). This will disengage the mirror glass case's snap attachment feature.

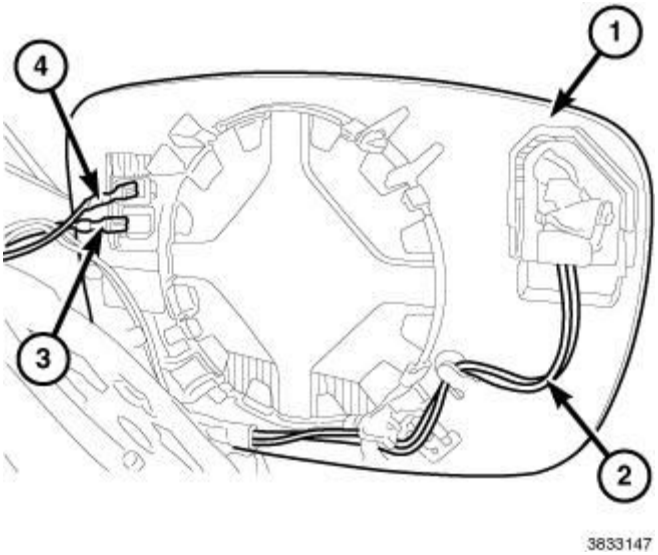

Fig. 243: Mirror Glass & Electrical Harnesses
Courtesy of CHRYSLER GROUP, LLC

5. If equipped, disconnect any accessory electrical harnesses (2, 3 & 4) from the mirror glass (1).
6. Remove the mirror glass (1).

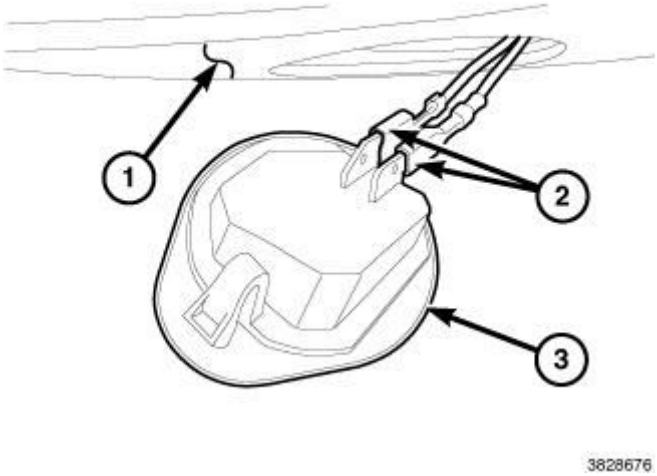

Fig. 244: Puddle Lamp & Connectors
Courtesy of CHRYSLER GROUP, LLC

7. If equipped, remove and disconnect the puddle lamp. Refer to **LAMP, MIRROR, REMOVAL** .

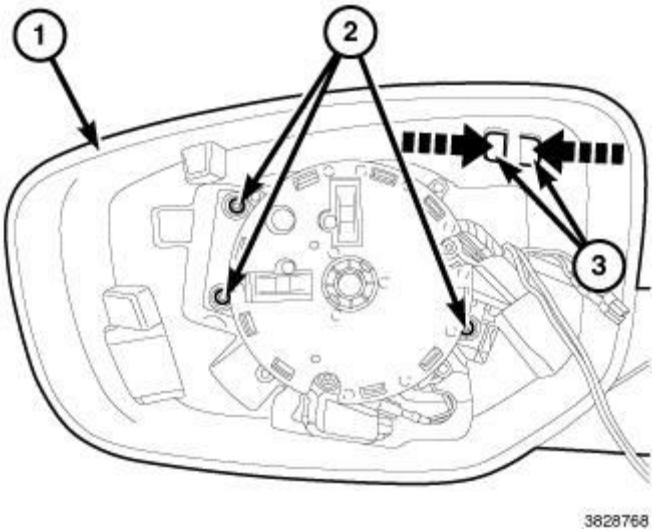

Fig. 245: Mirror Housing, Fasteners & Retaining Tabs
Courtesy of CHRYSLER GROUP, LLC

8. Remove the fasteners (2) securing the mirror housing bezel (1).
9. Using needle nose pliers, two flat head screwdrivers or equivalent, disengage the retaining tabs (3) located in the upper inboard corner.

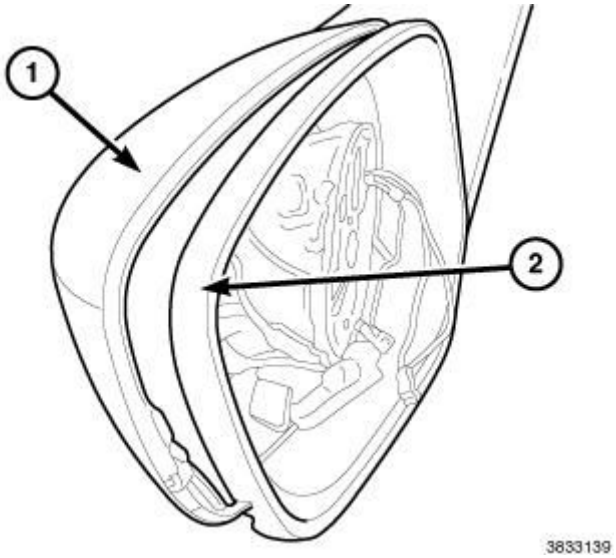

Fig. 246: Mirror Cap/Mirror Assembly & Bezel
Courtesy of CHRYSLER GROUP, LLC

10. Separate the mirror housing bezel (2) from the mirror cap/mirror assembly (1).
11. If equipped with turn signal, separate the mirror housing bezel (2) from the mirror cap/mirror assembly (1).

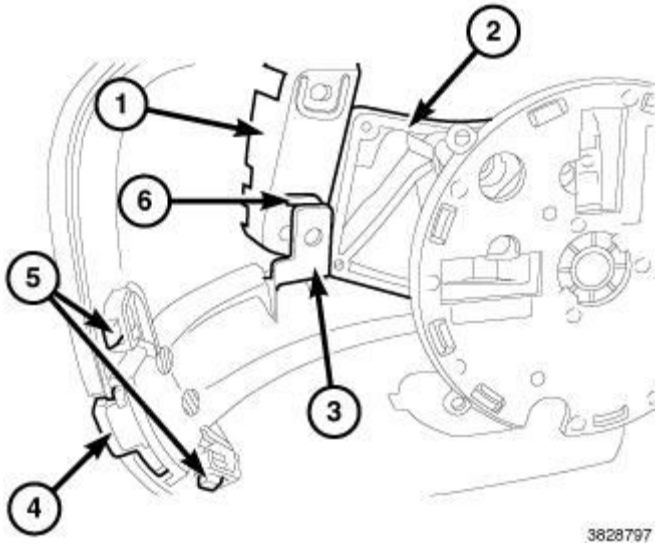

Fig. 247: Turn Signal Retaining Tabs
Courtesy of CHRYSLER GROUP, LLC

12. If equipped with turn signal, disengage the turn signal retaining tabs (3, 4 & 5) and separate the mirror housing bezel from the mirror cap/mirror assembly. Refer to **LAMP, MIRROR, REMOVAL** .

INSTALLATION

INSTALLATION

GLASS

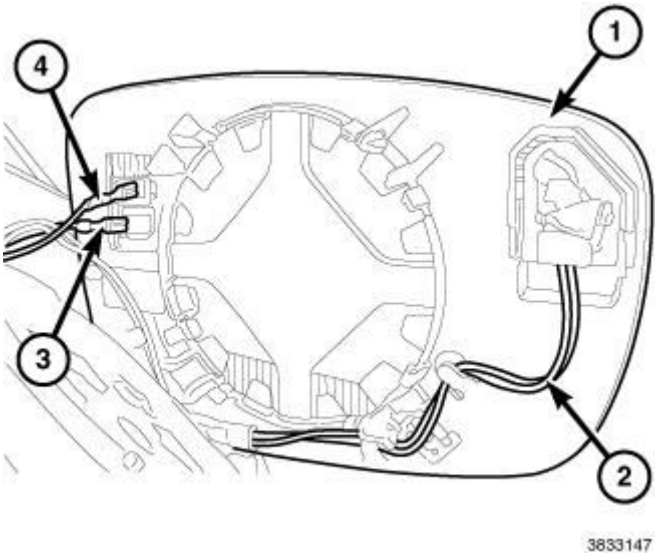

Fig. 248: Mirror Glass & Electrical Harnesses
Courtesy of CHRYSLER GROUP, LLC

WARNING: Always wear eye and hand protection when servicing the mirror

assembly. Failure to observe these warnings may result in personal injury from broken glass.

1. If equipped, connect any accessory electrical harnesses (2, 3 & 4) to the mirror glass (1).

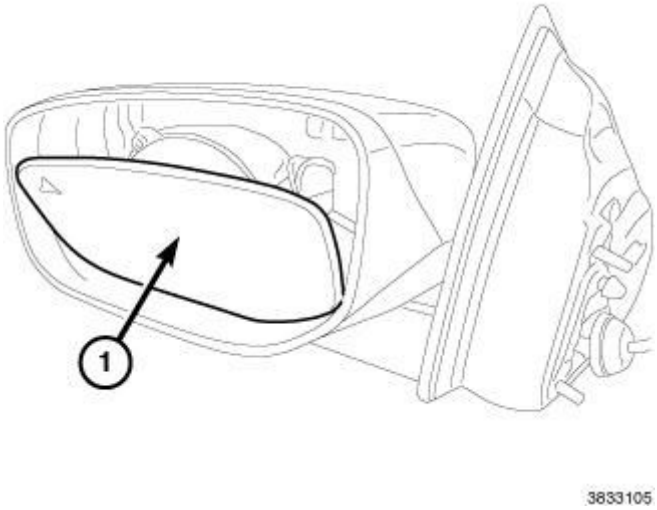

Fig. 249: Mirror Glass
Courtesy of CHRYSLER GROUP, LLC

2. Align and position the mirror glass (1) to the mirror motor.
3. Push the glass (1) forward until the glass case snaps are fully seated on motor.

NOTE: An audible snap is normal.

4. Connect the negative battery cable.

MIRROR CAP

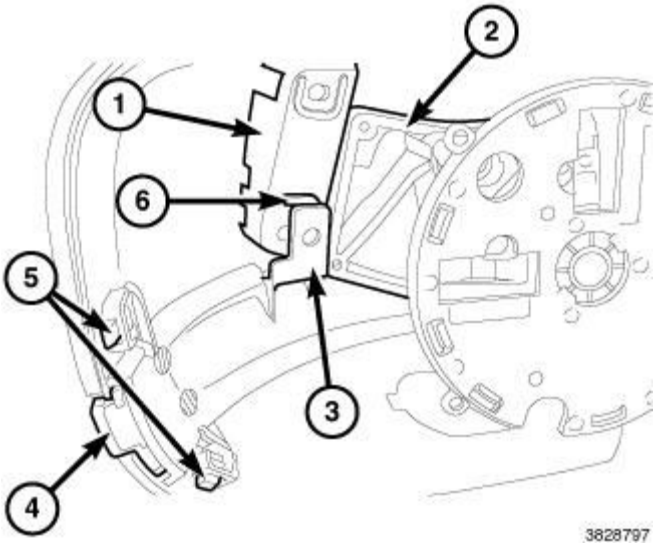

Fig. 250: Turn Signal Retaining Tabs
Courtesy of CHRYSLER GROUP, LLC

WARNING: **Always wear eye and hand protection when servicing the mirror assembly. Failure to observe these warnings may result in personal injury from broken glass.**

1. If equipped with turn signal, position and engage the turn signal retaining tabs (3, 4 & 5) to the mirror cap/mirror assembly. Refer to **LAMP, MIRROR, INSTALLATION** .

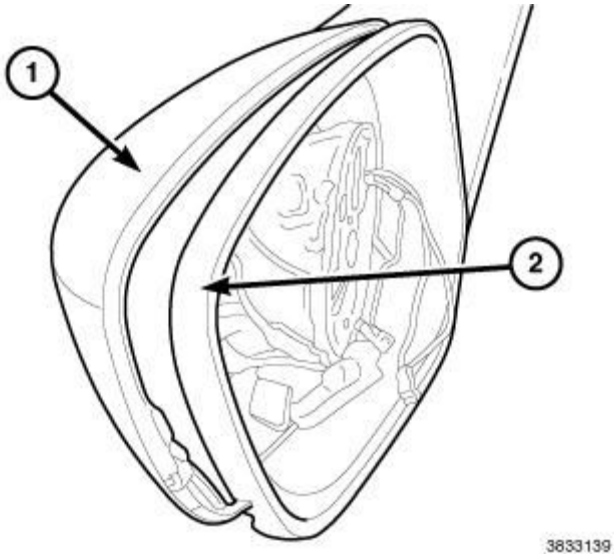

Fig. 251: Mirror Cap/Mirror Assembly & Bezel
Courtesy of CHRYSLER GROUP, LLC

2. Align and position the mirror housing bezel (2) to the mirror cap/mirror assembly (1). Push the mirror housing bezel into the mirror cap to engage the retaining tabs.

NOTE: An audible snap is normal.

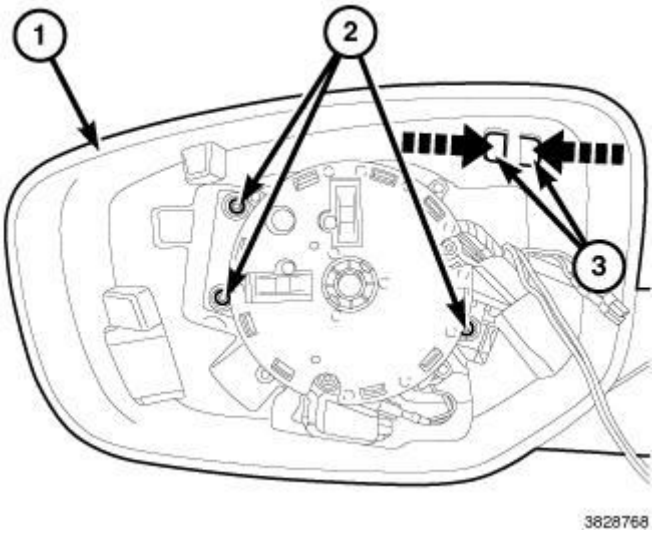

Fig. 252: Mirror Housing, Fasteners & Retaining Tabs
Courtesy of CHRYSLER GROUP, LLC

3. Install the fasteners (2) securing the mirror housing bezel (1). Tighten the fasteners securely.

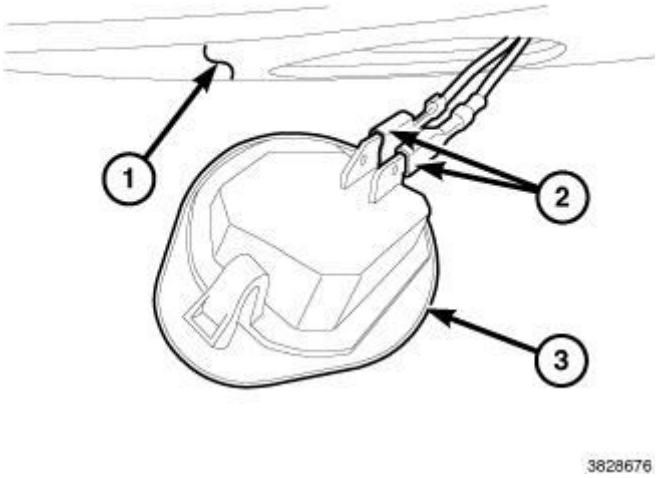

Fig. 253: Puddle Lamp & Connectors
Courtesy of CHRYSLER GROUP, LLC

4. If equipped, connect and install the puddle lamp. Refer to **LAMP, MIRROR, INSTALLATION** .

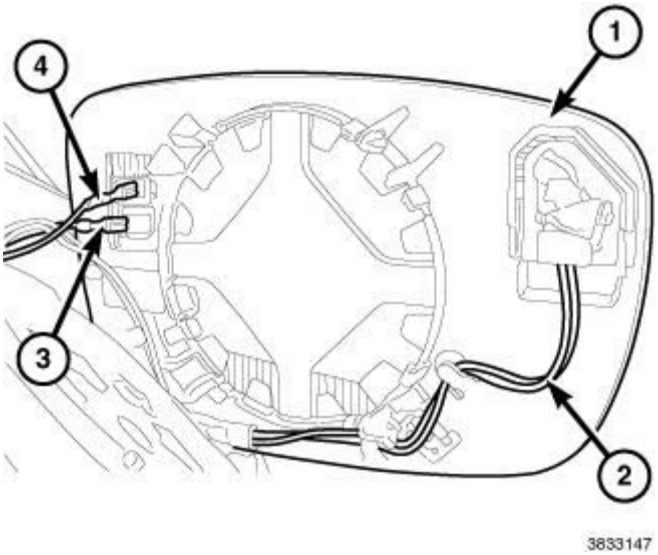

Fig. 254: Mirror Glass & Electrical Harnesses
Courtesy of CHRYSLER GROUP, LLC

5. If equipped, connect any accessory electrical harnesses (2, 3 & 4) to the mirror glass (1).

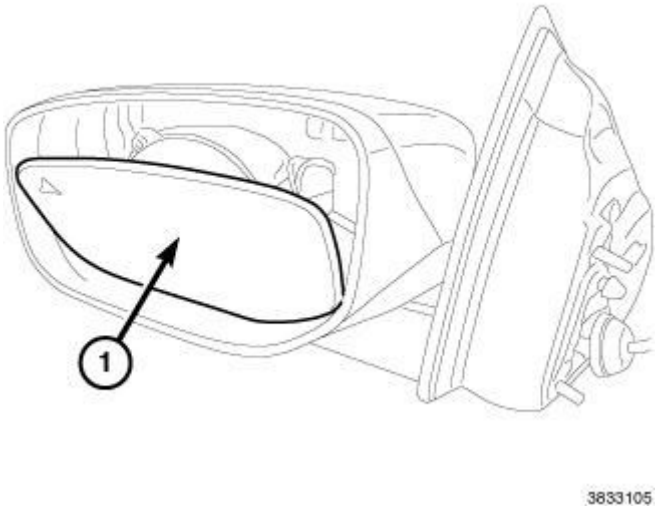

Fig. 255: Mirror Glass
Courtesy of CHRYSLER GROUP, LLC

6. Align and position the mirror glass (1) to the mirror motor.
7. Push the glass (1) forward until the glass case snaps are fully seated on motor.

NOTE: An audible snap is normal.

8. Connect the negative battery cable.

MOLDING, FRONT WHEEL OPENING

REMOVAL

REMOVAL - FRONT FASCIA

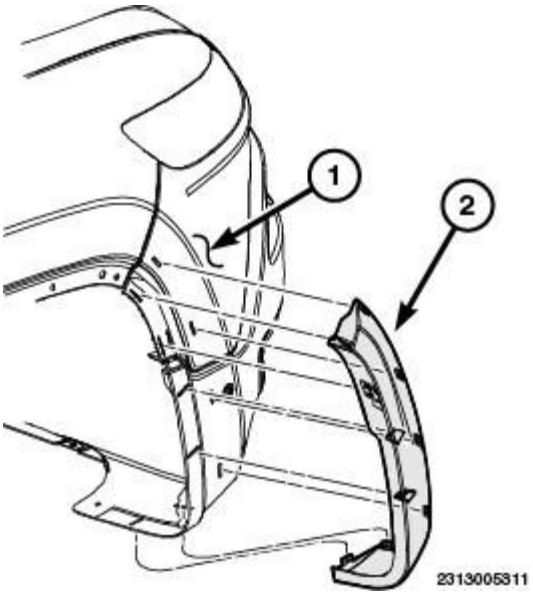

Fig. 256: Identifying Front Wheelhouse Splash Shield, Flare Molding & Clip Fasteners
Courtesy of CHRYSLER GROUP, LLC

1. Remove the front wheelhouse splash shield. Refer to **SHIELD, SPLASH, FRONT WHEELHOUSE, REMOVAL**.
2. Release the clip fasteners and remove the flare molding (2).

REMOVAL - FRONT FENDER

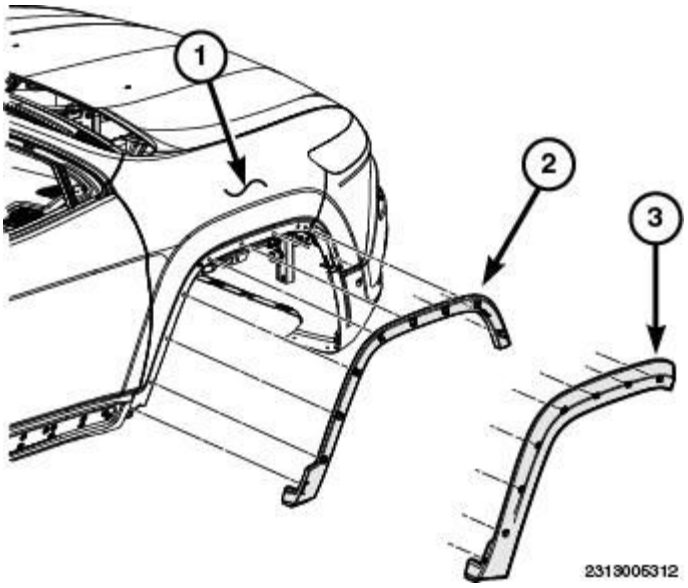

Fig. 257: Identifying Wheel Flare, Fender & Protective Cover
Courtesy of CHRYSLER GROUP, LLC

1. If the wheel flare is to be reused
   a. Remove two sided tape residue from the flare.
   b. Clean back of the flare with Mopar® Super Kleen solvent, or equivalent.
   c. Wipe dry with lint free cloth.
   d. Apply new two sided adhesive tape to back of flare.
2. Clean the painted surface with Mopar® Super Kleen solvent, or equivalent. Wipe surface dry with lint free cloth.
3. Remove the protective cover (1) from the tape on back of the wheel flare (2).
4. Align the spring retainers on the wheel flare (2) to the appropriate slots on the fender (1) and with the use of hand pressure seat the clips fully.
5. Using a roller tool or equivalent, roll along the wheel flare where the two sided tape is applied with enough force to guarantee adhesion.

INSTALLATION

INSTALLATION - FRONT FASCIA

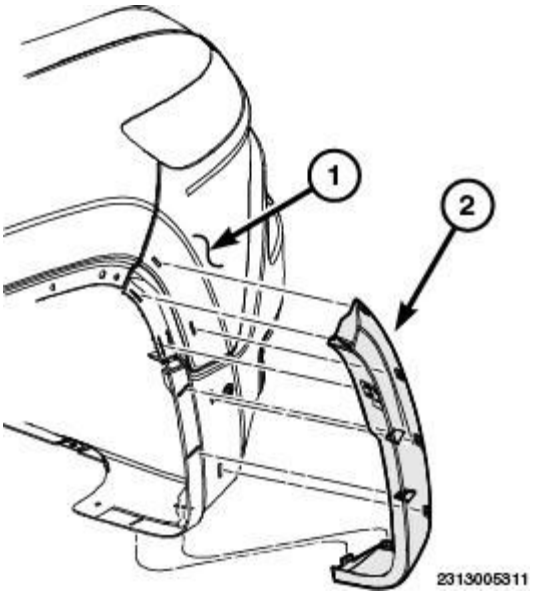

Fig. 258: Identifying Front Wheelhouse Splash Shield, Flare Molding & Clip Fasteners
Courtesy of CHRYSLER GROUP, LLC

1. Position the flare molding (2) onto the fascia (1) and seat the clip fasteners fully.
2. Install the front wheelhouse splash shields. Refer to **SHIELD, SPLASH, FRONT WHEELHOUSE, INSTALLATION** .

INSTALLATION - FRONT FENDER

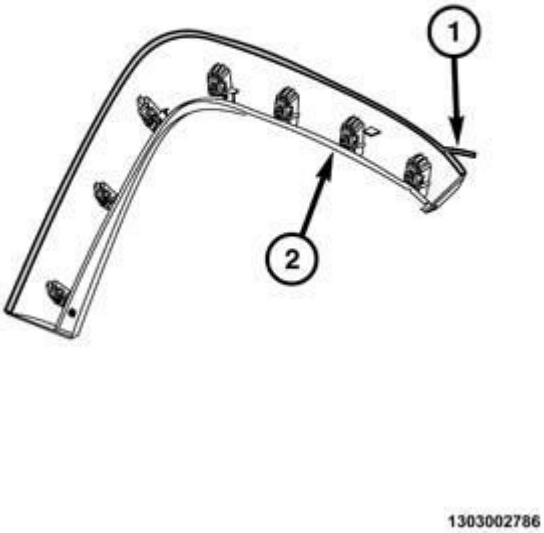

Fig. 259: Fender Flare & Spring Clips
Courtesy of CHRYSLER GROUP, LLC

1. If the wheel flare is to be reused
   a. Remove two sided tape residue from the flare.
   b. Clean back of the flare with Mopar® Super Kleen solvent, or equivalent.
   c. Wipe dry with lint free cloth.
   d. Apply new two sided adhesive tape to back of flare.
2. Clean the painted surface with Mopar® Super Kleen solvent, or equivalent. Wipe surface dry with lint free cloth.
3. Remove the protective cover (1) from the tape on back of the wheel flare (2).

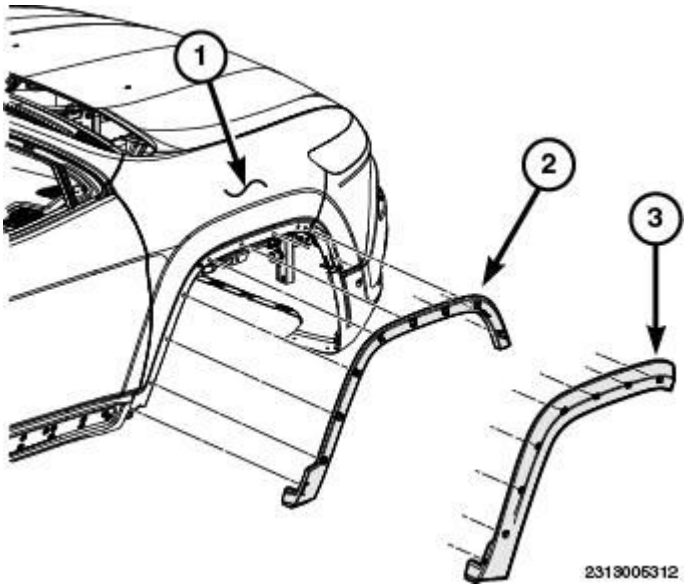

Fig. 260: Identifying Wheel Flare, Fender & Protective Cover
Courtesy of CHRYSLER GROUP, LLC

4. Align the spring retainers on the wheel flare (2) to the appropriate slots on the fender (1) and with the use of hand pressure seat the clips fully.
5. Using a roller tool or equivalent, roll along the wheel flare where the two sided tape is applied with enough force to guarantee adhesion.

MOLDING, REAR WHEEL OPENING

REMOVAL

REMOVAL

REMOVAL - REAR DOOR

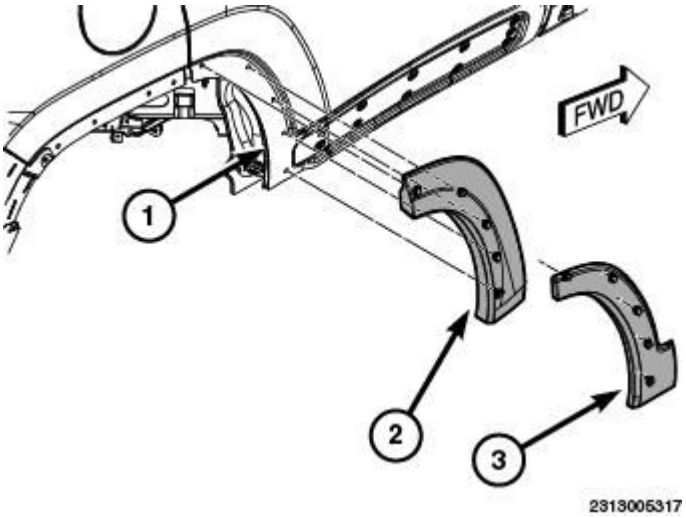

Fig. 261: Identifying Molding & Wheel Flares
Courtesy of CHRYSLER GROUP, LLC

The wheel flares are set with two sided adhesive tape and plastic spring clips. The temperature in the work area and the vehicle should be at least 21° C (70° F) to avoid damaging the flare.

1. Use a plastic putty knife (1) or equivalent, along the edges of the flare (2) to cut the two sided tape.

NOTE: A small socket or pliers should be used to help release the spring retainers from the back side.

2. Use trim tool (special tool #C-4829A, Remover, Trim), or equivalent to release the spring retainers.
3. Remove the flare.
4. Remove adhesive tape residue from painted surface of vehicle. Use a 3M Scotch-Brite™ Molding Adhesive and Stripe Removal Discs, or equivalent, to clean adhesive residue from painted surfaces. The adhesive removal discs are available from automotive paint suppliers. Refer to instructions supplied with the discs for proper usage.

REMOVAL - QUARTER PANEL

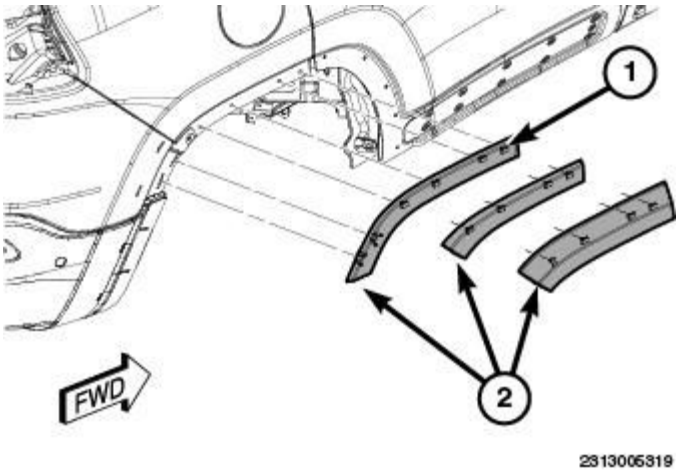

Fig. 262: Identifying Quarter Panel & Flares
Courtesy of CHRYSLER GROUP, LLC

The wheel flares are set with two sided adhesive tape and plastic spring clips. The temperature in the work area and the vehicle should be at least 21° C (70° F) to avoid damaging the flare.

1. Use a plastic putty knife or equivalent, along the edges of the flare (2) to cut the two sided tape.
2. Use an 8 mm socket to release the spring retainers from the back side.
3. Remove the flare
4. Remove adhesive tape residue from painted surface of vehicle. Use a 3M Scotch-Brite™ Molding Adhesive and Stripe Removal Discs, or equivalent, to clean adhesive residue from painted surfaces. The adhesive removal discs are available from automotive paint suppliers. Refer to instructions supplied with the discs for proper usage.

REMOVAL - FASCIA

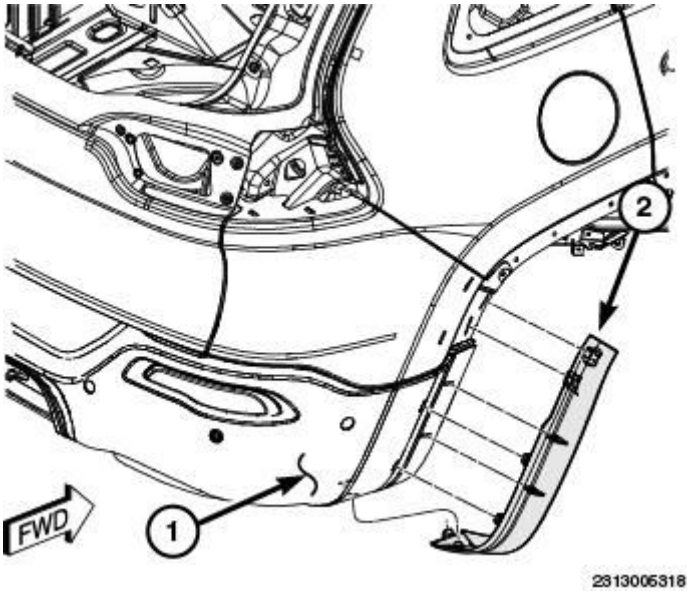

Fig. 263: Identifying Flare & Fasteners

Courtesy of CHRYSLER GROUP, LLC

The wheel flares are secured with plastic spring clips. The temperature in the work area and the vehicle should be at least 21° C (70° F) to avoid damaging the flare.

1. Remove the rear wheelhouse splash shield. Refer to **SHIELD, SPLASH, REAR WHEELHOUSE, REMOVAL**.
2. Use trim tool (special tool #C-4829A, Remover, Trim), or equivalent to release the spring retainers.
3. Remove the flare

INSTALLATION

INSTALLATION

INSTALLATION - REAR DOOR

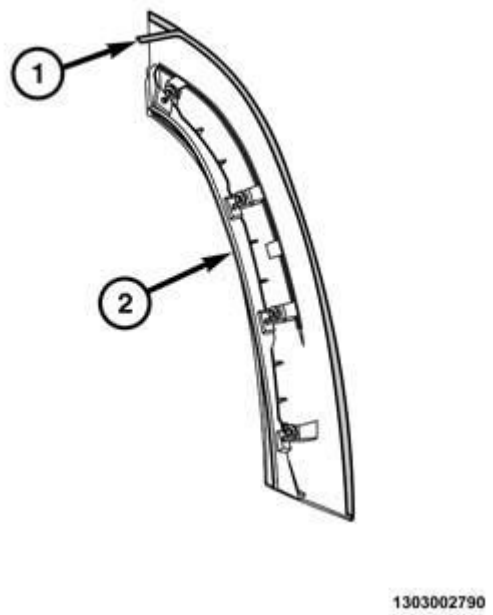

Fig. 264: Wheel Flare & Spring Clips
Courtesy of CHRYSLER GROUP, LLC

1. If the wheel flare is to be reused
   a. Remove two sided tape residue from the flare.
   b. Clean back of the flare with Mopar® Super Kleen solvent, or equivalent.
   c. Wipe dry with lint free cloth.
   d. Apply new two sided adhesive tape to back of flare.
2. Clean the painted surface with Mopar® Super Kleen solvent, or equivalent. Wipe surface dry with lint free cloth.

3. Remove the protective cover (1) from the tape on back of the wheel flare (2).

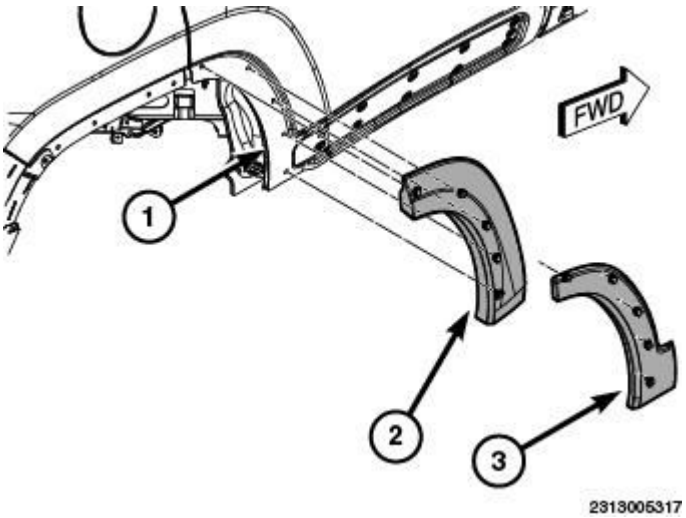

Fig. 265: Identifying Molding & Wheel Flares
Courtesy of CHRYSLER GROUP, LLC

4. Align the spring retainers on the wheel flare (2) to the appropriate slots on the rear door (1) and with the use of hand pressure seat the clips fully.
5. Using a roller tool or equivalent, roll along the wheel flare where the two sided tape is applied with enough force to guarantee adhesion.

INSTALLATION - QUARTER PANEL

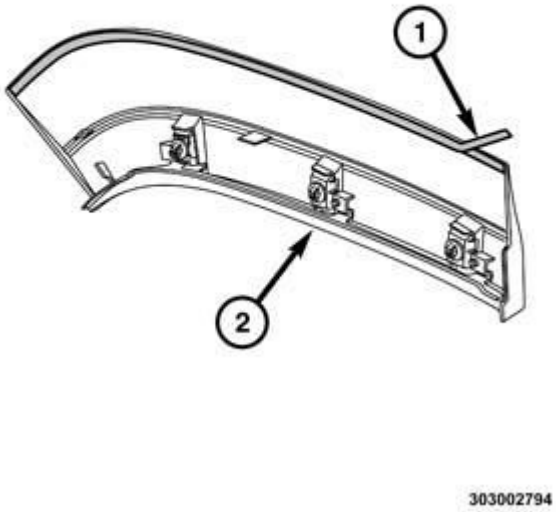

Fig. 266: Wheel Flare & Spring Clips
Courtesy of CHRYSLER GROUP, LLC

1. If the wheel flare is to be reused
   a. Remove two sided tape residue from the flare.
   b. Clean back of the flare with Mopar® Super Kleen solvent, or equivalent.
   c. Wipe dry with lint free cloth.
   d. Apply new two sided adhesive tape to back of flare.
2. Clean the painted surface with Mopar® Super Kleen solvent, or equivalent. Wipe surface dry with lint free cloth.
3. Remove the protective cover (1) from the tape on back of the wheel flare (2).

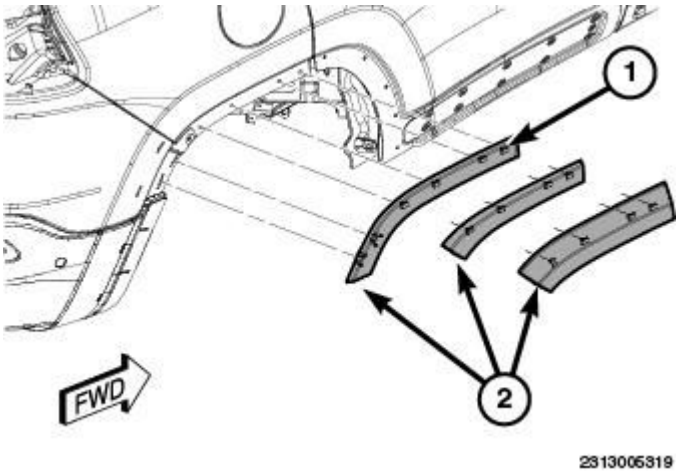

Fig. 267: Identifying Quarter Panel & Flares
Courtesy of CHRYSLER GROUP, LLC

4. Align the spring retainers on the wheel flare (1) to the appropriate slots on the quarter panel and with the use of hand pressure seat the clips fully.
5. Using a roller tool or equivalent, roll along the wheel flare where the two sided tape is applied with enough force to guarantee adhesion.

INSTALLATION - REAR FASCIA

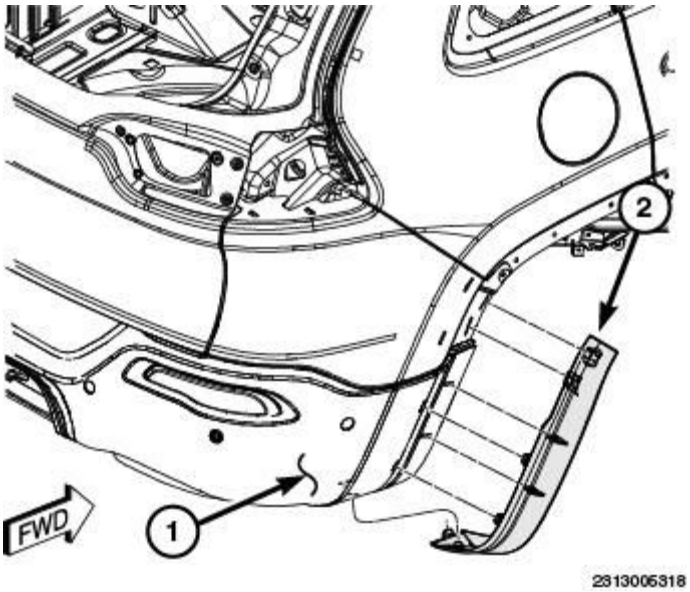

Fig. 268: Identifying Flare & Fasteners
Courtesy of CHRYSLER GROUP, LLC

1. Align the spring retainers on the wheel flare (2) to the appropriate slots on the fascia (1) and with the use of hand pressure seat the clips fully.
2. Install the wheel house splash shield. Refer to **SHIELD, SPLASH, REAR WHEELHOUSE, INSTALLATION**.

PANEL, CLOSURE, RADIATOR

REMOVAL

REMOVAL

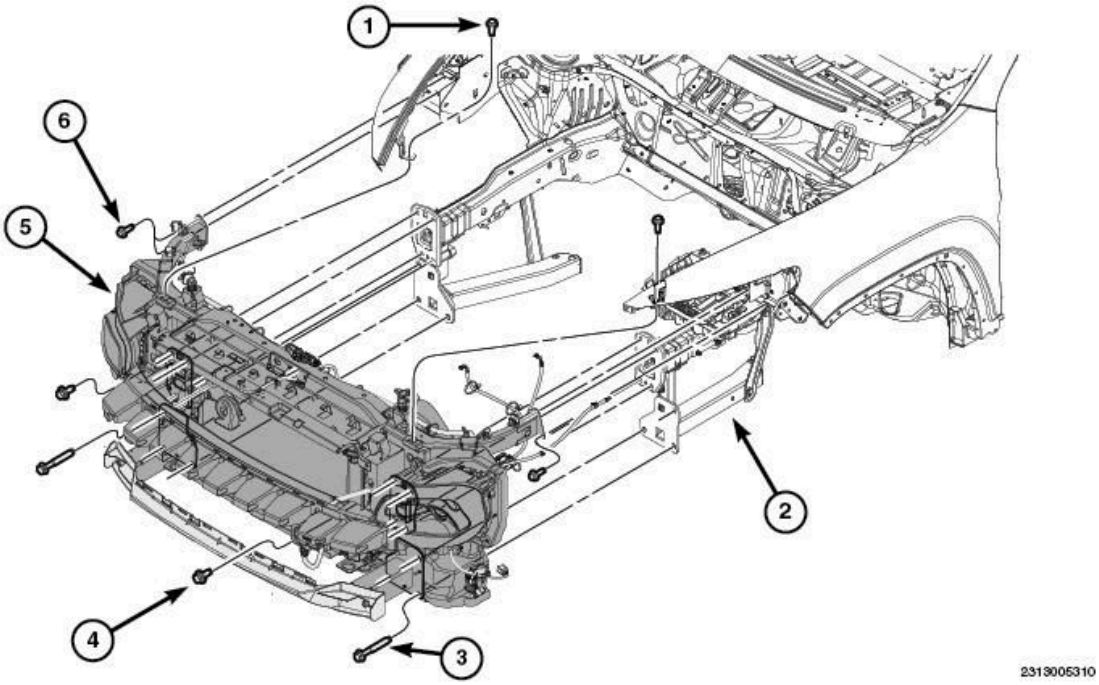

Fig. 269: Identifying Radiator, Closure, Panel & Fasteners
Courtesy of CHRYSLER GROUP, LLC

1. Disconnect and isolate negative battery cable.
2. Remove the bolts securing the hood latch assembly and position the latch aside.
3. Remove the radiator assembly. Refer to **RADIATOR, ENGINE COOLING, REMOVAL** .
4. Remove the charge air cooler, if equipped. Refer to **REMOVAL** .
5. Remove both headlamp assemblies. Refer to **UNIT, FRONT LAMP, REMOVAL** .
6. Remove the washer bottle. Refer to **RESERVOIR, WINDSHIELD WASHER, REMOVAL** .
7. Remove the coolant bottle. Refer to **BOTTLE, PRESSURIZED COOLANT, REMOVAL** .
8. Release the clips to remove the headlamp harness and position the harness aside.
9. Remove the wheel house splash shields. Refer to **SHIELD, SPLASH, FRONT WHEELHOUSE, REMOVAL** and **SHIELD, SPLASH, REAR WHEELHOUSE, REMOVAL**.
10. Remove the shotgun bracket bolt (2) from both sides.
11. Remove the three bolts (1) on both side securing the radiator closure panel (2) to the fenders and upper body.
12. Remove the lower two lower bolts (1) on both sides that secure the closure panel (2) to the front of the vehicle body.
13. Carefully remove the closure making sure the paint on the front edge of the fenders is protected from damage.

INSTALLATION

INSTALLATION

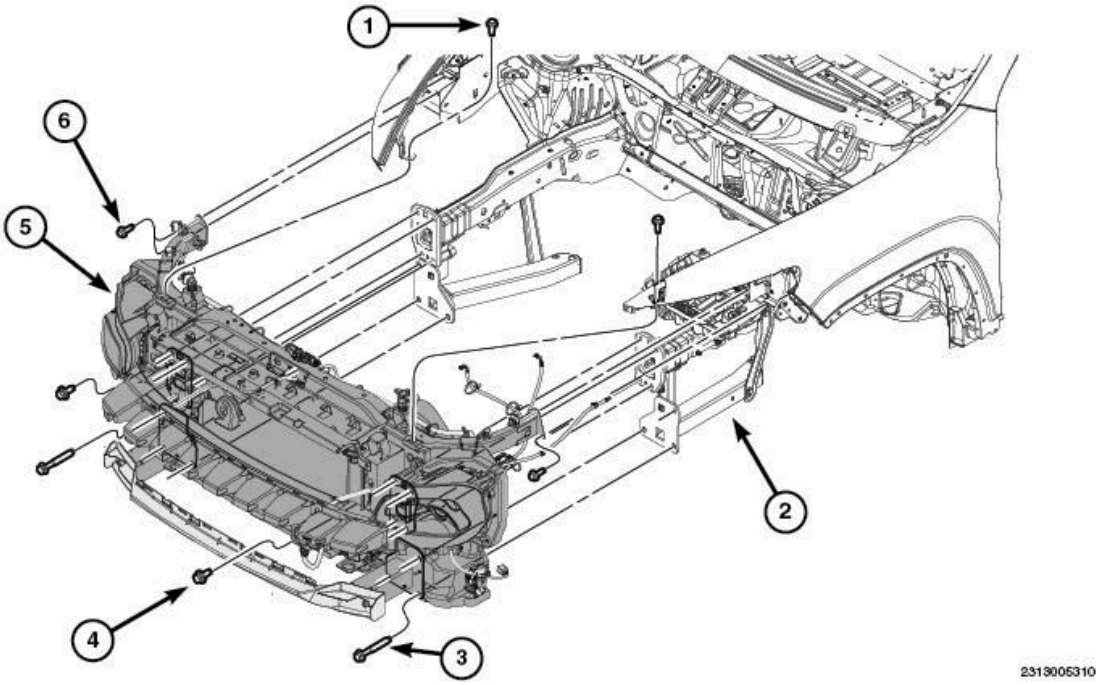

Fig. 270: Identifying Radiator, Closure, Panel & Fasteners
Courtesy of CHRYSLER GROUP, LLC

1. Carefully position the closure assembly up onto the front end sheet metal mounting and avoid damaging the front edges of the fenders.
2. Loosely install the two lower bolts on both sides but do not tighten at this time.
3. Install the three upper bolts on both sides, and tighten to 16 N.m (12 ft. lbs.).
4. Tighten the four lower bolts to 26 N.m (19 ft. lbs.).
5. Install the shotgun bracket bolts from inside the wheel wells and tighten to 16 N.m (12 ft. lbs.).
6. Position wheel liners and install the push-pin type retainers as needed. Install the front bumper beam assembly. Refer to **REINFORCEMENT, BUMPER, FRONT, INSTALLATION** .
7. Route the headlamp harness and secure as needed.
8. Position the coolant bottle, install the three bolts and secure. Tighten the bolts to 10 N.m (89 in. lbs.).
9. Install both the left and right headlamp assemblies. Refer to **UNIT, FRONT LAMP, INSTALLATION** .
10. Position the washer bottle, install the three fasteners and secure. Tighten the bolts to 7 N.m (60 in. lbs.).
11. Position the radiator back and install. Refer to **RADIATOR, ENGINE COOLING, INSTALLATION** .
12. Install the charge air cooler, if equipped. Refer to **INSTALLATION** .
13. Install the hood latch assembly and tighten the bolts to 9 N.m (80 in lbs).
14. Install the grille. Refer to **GRILLE, INSTALLATION**.
15. Connect the negative battery cable.

PANEL, PLENUM

REMOVAL

REMOVAL

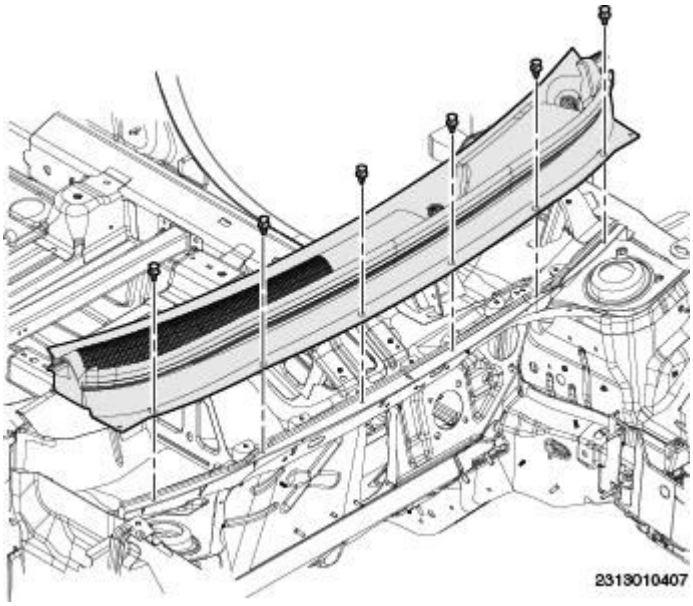

Fig. 271: Cowl Panel & Push Pins
Courtesy of CHRYSLER GROUP, LLC

1. Release hood latch and open hood.
2. Remove the clips attaching the cowl bulb seal to the cowl panel.
3. Remove the cowl panel end caps by pulling up at the end cap to cowl panel joint and then pulling the end cap out of the fender.
4. Remove the driver's side wiper cover by pulling up on the cover.
5. Remove windshield wiper arms. Refer to **ARM, WIPER, REMOVAL** .
6. With the use of (special tool #C-4755, Trim Stick) or equivalent, remove the seven push pins (1) attaching cowl panel (2) to the cowl plenum extension.

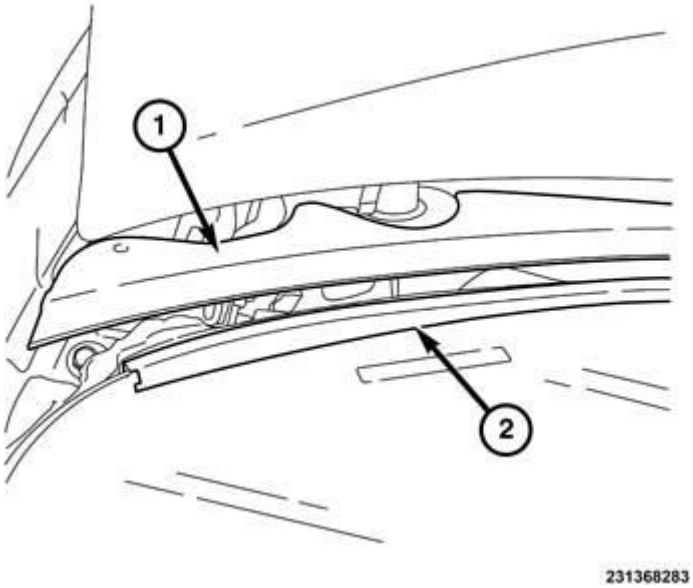

Fig. 272: Cowl Panel & Cowl Cover
Courtesy of CHRYSLER GROUP, LLC

NOTE: **It will be necessary to use care when removing the cowl screen from the retainer on the windshield. If the retainer on the windshield is broken/damaged the windshield will require replacement.**

7. Starting at the driver's side pull up on the back edge of the cowl panel (1) and work cross car to release the tab from the backside of the cowl panel (1) from the groove in the lower windshield channel (2).
8. Remove cowl cover (1) from vehicle.

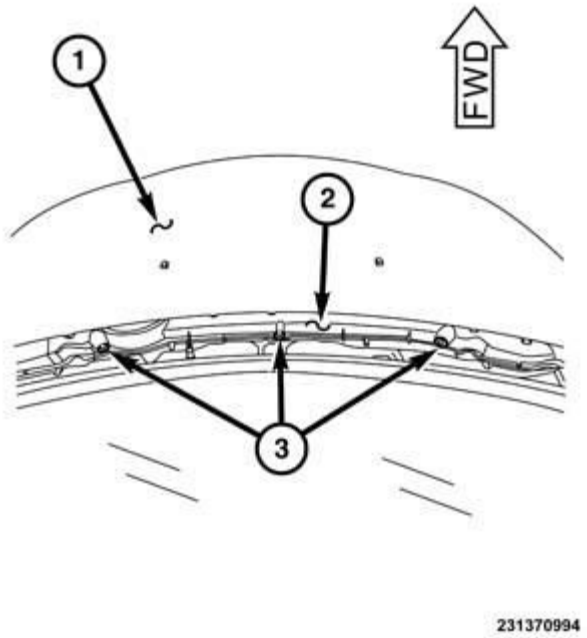

Fig. 273: Hood, Plenum Panel & Fasteners
Courtesy of CHRYSLER GROUP, LLC

NOTE: Shown with hood (1) closed to show fastener location. Access the fasteners (3) with the hood (1) open.

9. Remove the three fasteners (3) from the plenum panel (2).

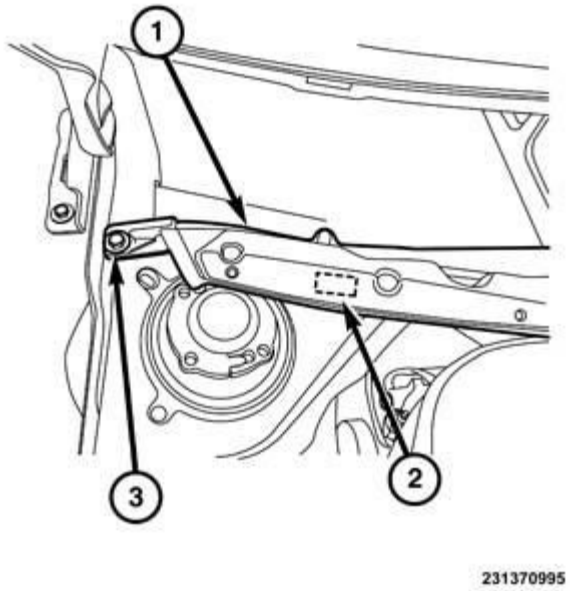

Fig. 274: Plenum Panel, Alignment Block & Fastener
Courtesy of CHRYSLER GROUP, LLC

NOTE: Right side shown, left side typical.

10. Remove fasteners (3) from the right and left sides of the plenum panel.
11. Locate the plenum panel (1) alignment block (2) located beneath cowl plenum lower panel.
12. Press the tab on the alignment block and lift up to disengage the tab.
13. Repeat on the opposite side.

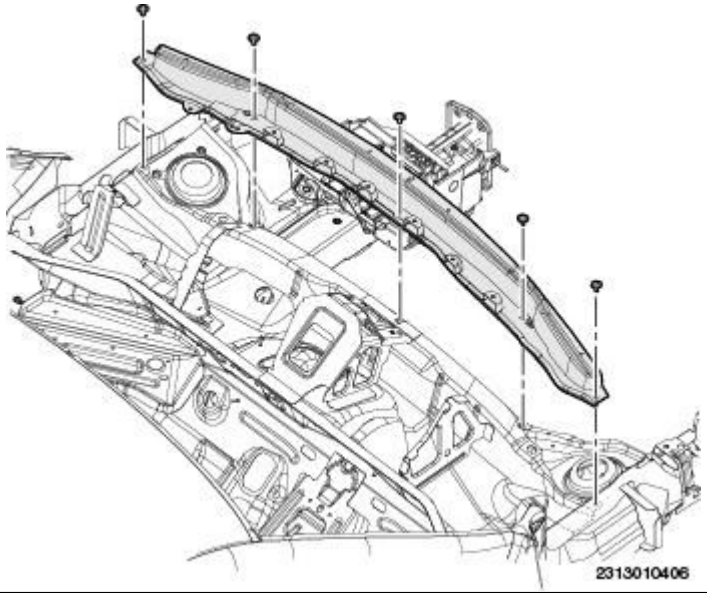

Fig. 275: Plenum Panel
Courtesy of CHRYSLER GROUP, LLC

14. Remove plenum panel from the vehicle.

INSTALLATION

INSTALLATION

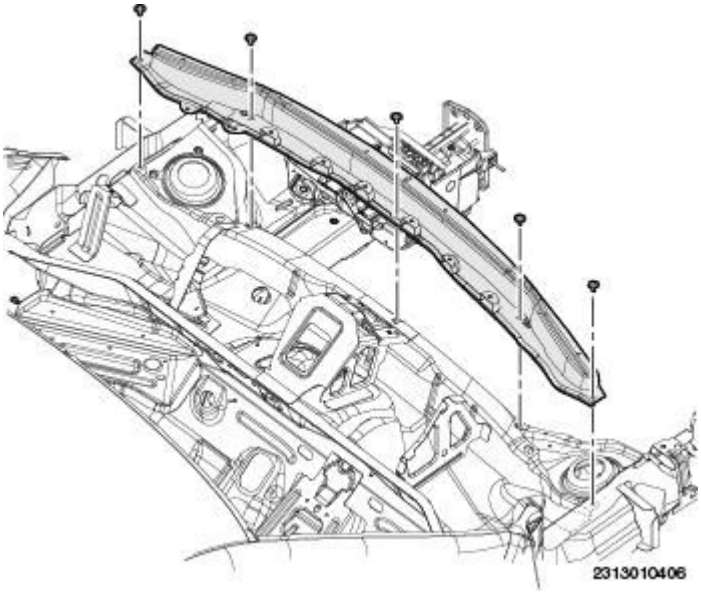

Fig. 276: Plenum Panel
Courtesy of CHRYSLER GROUP, LLC

NOTE: Right side shown, left side typical.

1. Align the plenum panel to the vehicle.

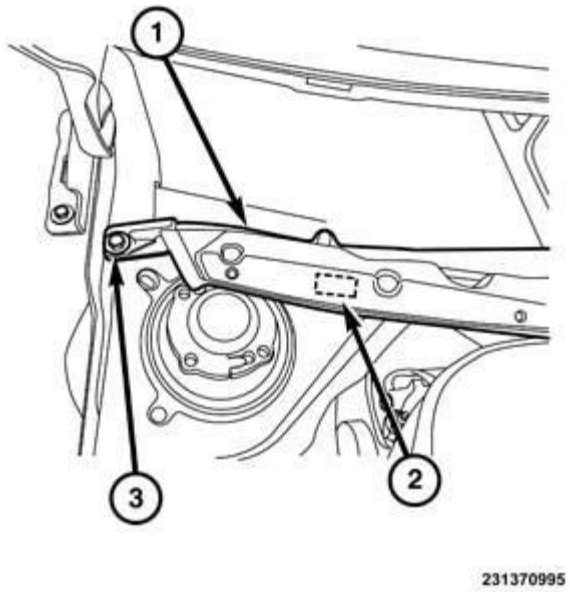

Fig. 277: Plenum Panel, Alignment Block & Fastener
Courtesy of CHRYSLER GROUP, LLC

2. Insert the plenum panel alignment blocks (2) into the appropriate holes in the cowl plenum lower panel on the right and left sides.
3. Install fasteners (3) on the right and left sides of the plenum panel.
4. Tighten the fasteners (3) securely.

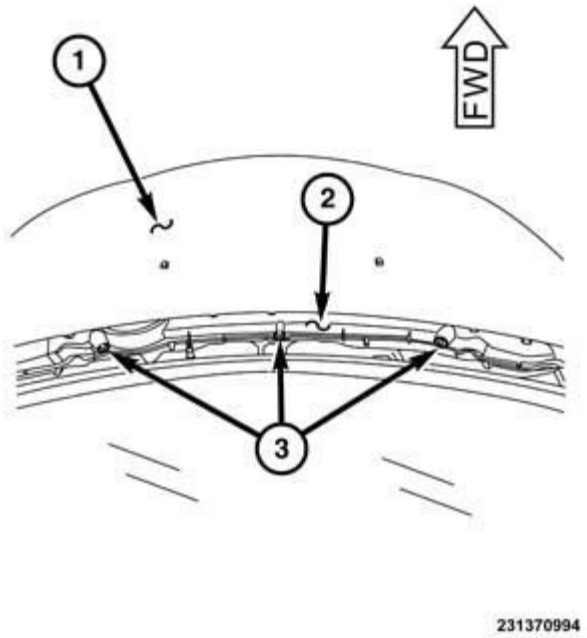

Fig. 278: Hood, Plenum Panel & Fasteners
Courtesy of CHRYSLER GROUP, LLC

NOTE: Shown with hood (1) closed to show fasteners (3) locations. Access the fasteners (3) with the hood (1) open.

5. Install the three fasteners (3) into the plenum panel (2).
6. Tighten the fasteners (3) securely.

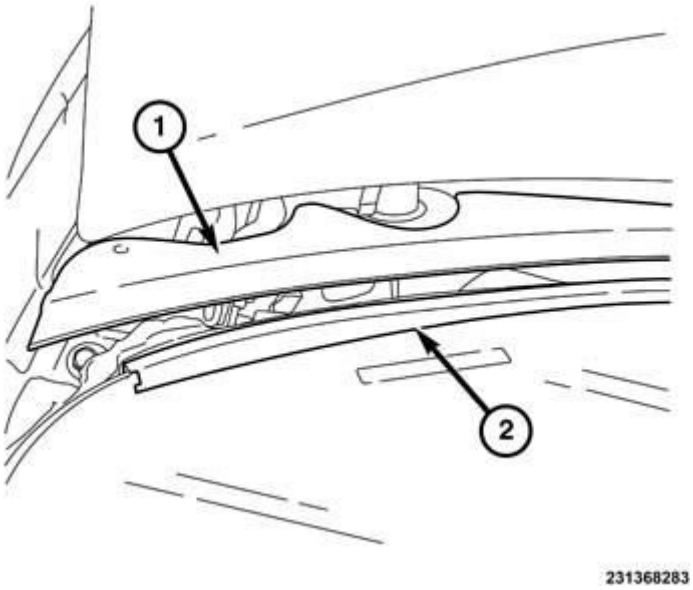

Fig. 279: Cowl Panel & Cowl Cover

Courtesy of CHRYSLER GROUP, LLC

7. Position cowl panel cover (2) to vehicle.
8. Starting in the center of the back edge of the cowl panel (1) and working out to the edges, align the tab on the backside of the cowl panel (1) into the groove in the lower windshield channel (2).

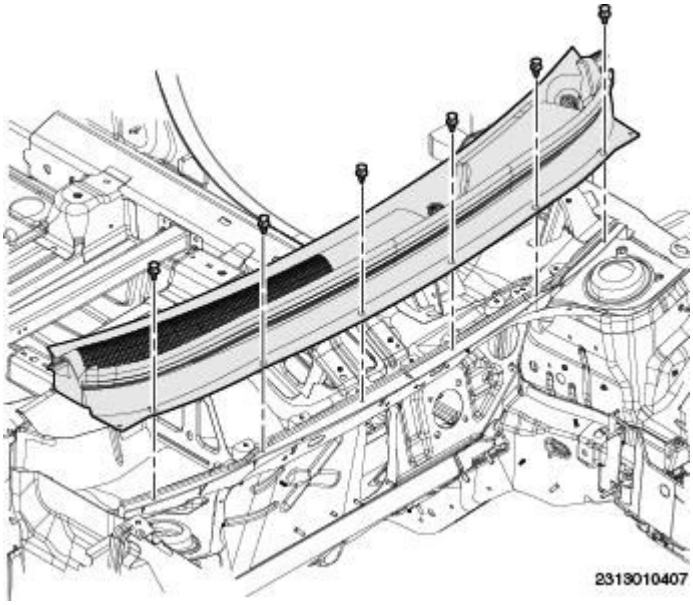

Fig. 280: Cowl Panel & Push Pins
Courtesy of CHRYSLER GROUP, LLC

9. Using hand pressure fully insert cowl panel tab (1) into windshield insert (2).
10. Install push pins (1) attaching cowl cover to cowl.
11. Install windshield wiper arms. Refer to **ARM, WIPER, INSTALLATION** .
12. Align the clips on the driver's side wiper cover and engage clips with hand pressure.
13. Align the clips on the right and left cowl panel end caps and engage with hand pressure.
14. Install the clips attaching cowl plenum under hood to cowl bulb seal to cowl panel.

NAMEPLATE

REMOVAL

REMOVAL

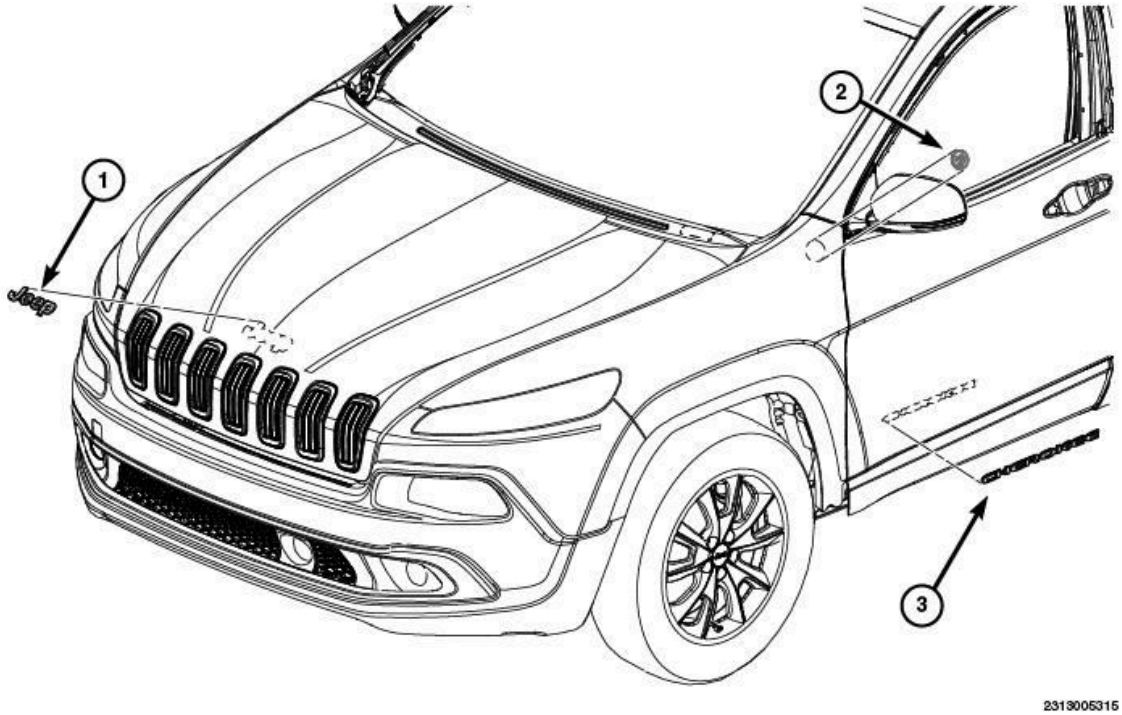

Fig. 281: Identifying Front/Side Nameplates
Courtesy of CHRYSLER GROUP, LLC

FRONT/SIDE NAMEPLATES

1 - JEEP
2 - TRAIL RATED
3 - CHEROKEE

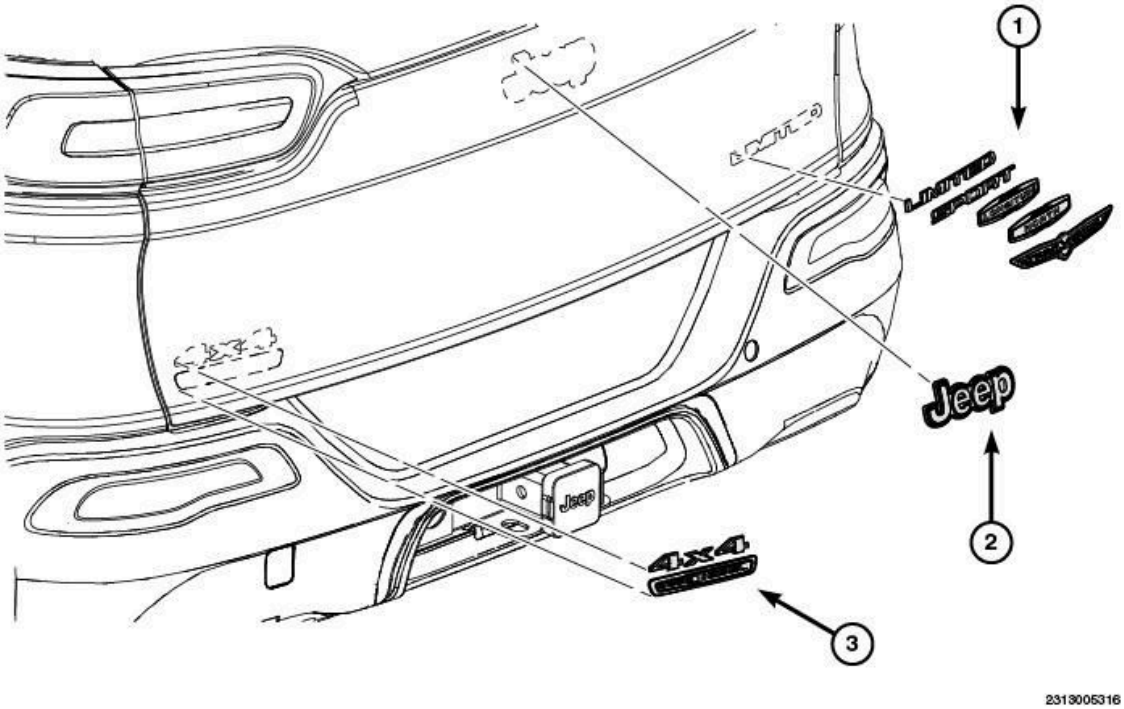

Fig. 282: Identifying Rear Nameplates
Courtesy of CHRYSLER GROUP, LLC

REAR NAMEPLATES

1 - LIMITED, SPORT, LONGITUDE, NORTH, TRAIL HAWK
2 - JEEP
3 - 4x4, ECO DIESEL

NOTE: Exterior nameplates are attached to body panels with adhesive tape.

1. Apply a length of masking tape on the body, parallel to the top edge of the nameplate to use as a guide, if necessary.
2. If temperature is below 21°C (70°F) warm emblem with a heat lamp or gun. Do not exceed 52°C (120°F) when heating emblem.
3. Insert a plastic trim stick or a hard wood wedge behind the emblem to separate the adhesive backing from the body.
4. Clean adhesive residue from body with MOPAR® Super Kleen solvent or equivalent.

INSTALLATION

INSTALLATION

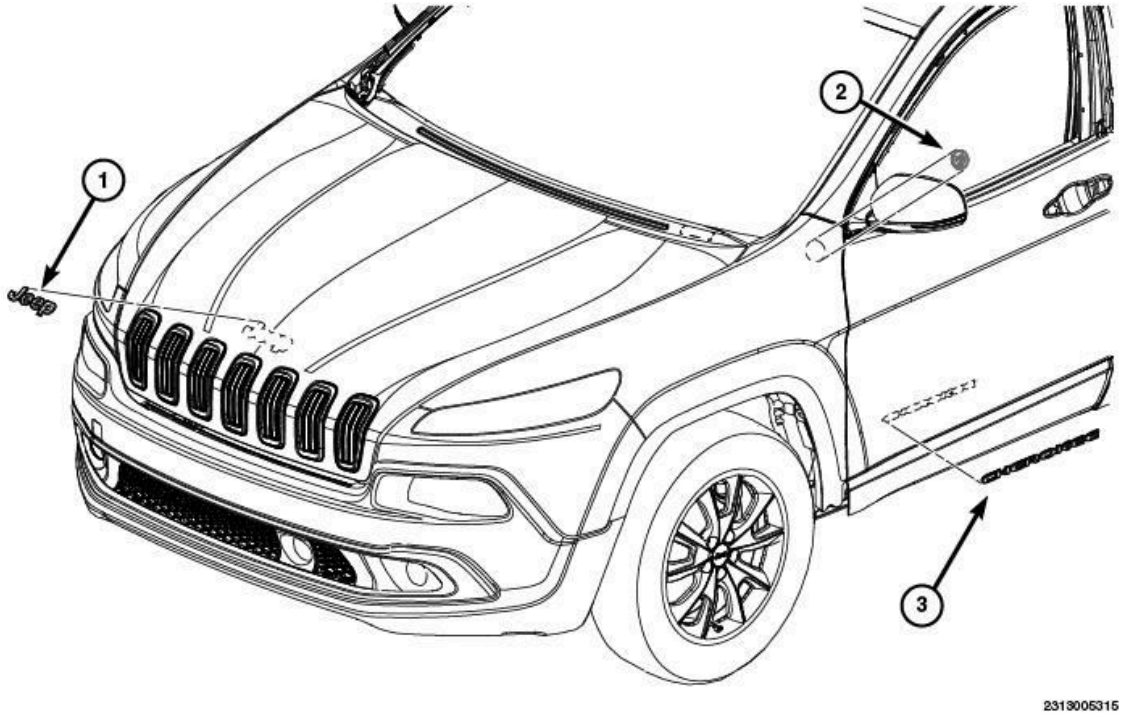

Fig. 283: Identifying Front/Side Nameplates
Courtesy of CHRYSLER GROUP, LLC

FRONT/SIDE NAMEPLATES

1 - JEEP
2 - TRAIL RATED
3 - CHEROKEE

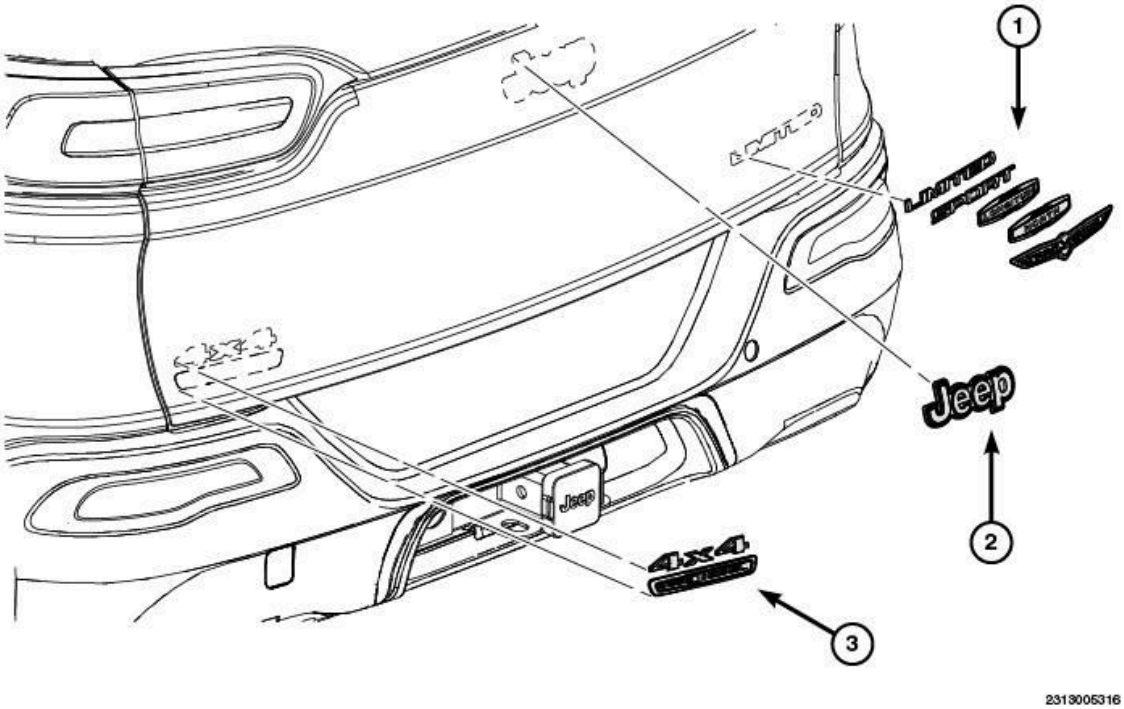

Fig. 284: Identifying Rear Nameplates
Courtesy of CHRYSLER GROUP, LLC

REAR NAMEPLATES

1 - LIMITED, SPORT, LONGITUDE, NORTH, TRAIL HAWK
2 - JEEP
3 - 4x4, ECO DIESEL

1. Remove carrier from adhesive tape on back of emblem.
2. Position emblem properly on body.
3. Press emblem firmly to body with palm of hand.
4. If temperature is below 21°C (70°F) warm emblem with a heat lamp or gun to assure adhesion. Do not exceed 52°C (120°F) when heating emblem.

RACK, LUGGAGE

STANDARD PROCEDURE

RIVET NUT PROCEDURE

CAUTION: Failure to follow these recommendations could result in damage to the vehicle

Rivet nuts are used on the roof to mount the roof rack. Rivet nuts are used for parts installations, when access to the back mounting area is limited or boxed in. It is important to achieve a full seat on the first attempt due to the lack of accessibility on the back side of the rivet nut. Poor seating of the rivet nut will result in part failure, loose parts and possible water leaks.

The use of a commercially available threaded insert tool will be necessary. There are several styles and types readily available. Examples of multi fit choices are the Matco® 203F and the Snap On® HP650M, or you may select one with equivalent capabilities. If a multi fit option is not chosen, it must be capable of a thread size of **M6 X 1.00** . Follow the tool manufacturer recommended directions for proper installation.

REMOVAL

REMOVAL

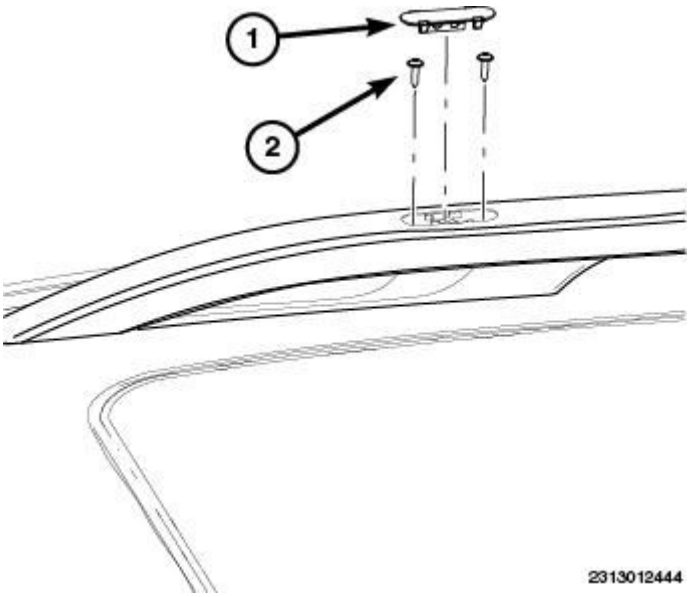

Fig. 285: Identifying Fastener Covers & Fasteners
Courtesy of CHRYSLER GROUP, LLC

NOTE: If any of the four tabs are broken during removal, the cover must be replaced.

1. Using a small flat bladed tool or equivalent, remove the two fastener covers (1).
2. Remove the two fasteners (2) at the front and rear of the rail.

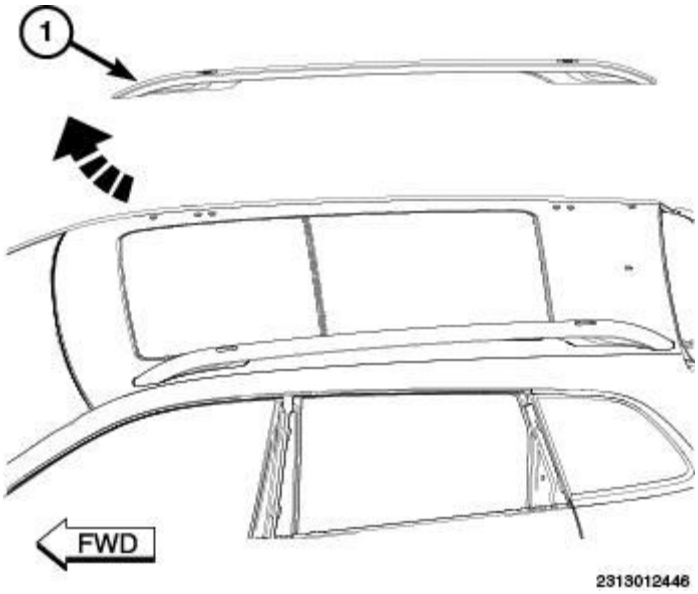

Fig. 286: Removing Roof Rack Rail
Courtesy of CHRYSLER GROUP, LLC

3. Slide the roof rack rail (1) forward and remove.

INSTALLATION

INSTALLATION

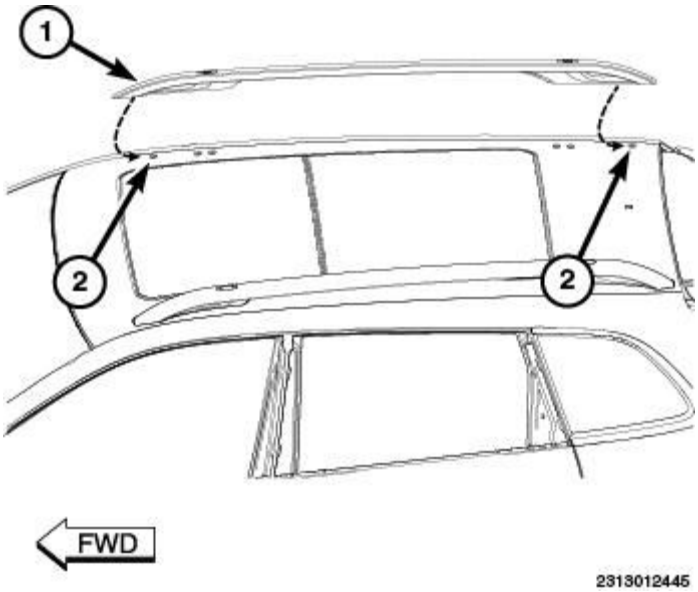

Fig. 287: Identifying Roof Rack Rail & Fasteners
Courtesy of CHRYSLER GROUP, LLC

1. Place roof rack rail (1) just forward of the rivnut fasteners (2) and slide rearward until fully engaged.

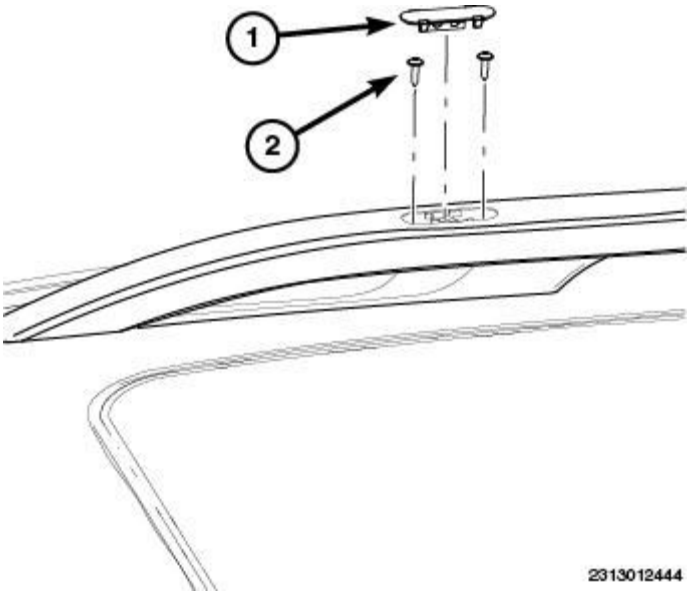

Fig. 288: Identifying Fastener Covers & Fasteners
Courtesy of CHRYSLER GROUP, LLC

2. Install the four fasteners (2) and tighten to 6 N.m (53 in. lbs.)
3. Install the fastener covers (1) and seat fully.

NOTE: Make sure the two retention clips snap fully below the rail. Cover should be flush to the top of the rail.

SHIELD, SPLASH, FRONT WHEELHOUSE

REMOVAL

REMOVAL

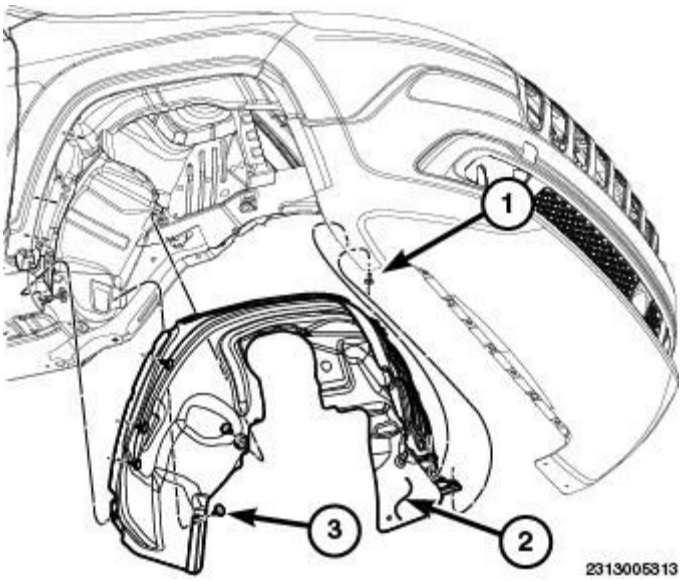

Fig. 289: Identifying Front Wheelhouse Splash Shield & Fasteners
Courtesy of CHRYSLER GROUP, LLC

1. Raise and support the vehicle.
2. Remove the wheel from the side of the vehicle being serviced. Refer to **REMOVAL** .
3. Remove the five push pins (3) from the rear area of the splash shield (2).

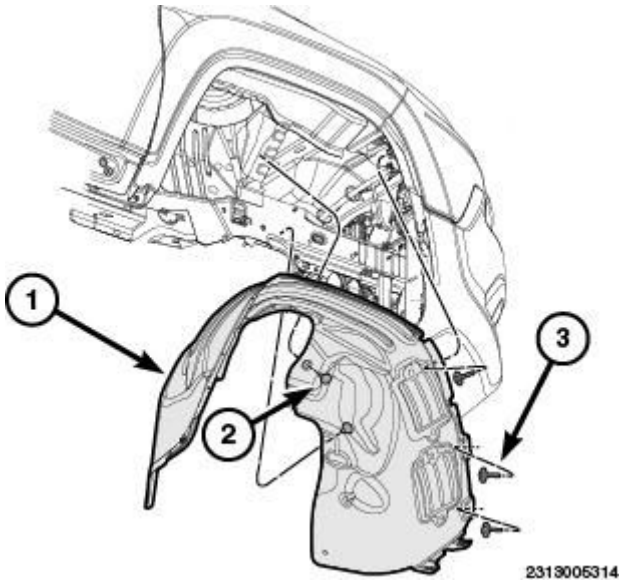

Fig. 290: Identifying Inner Wheel Splash Shield & Fasteners
Courtesy of CHRYSLER GROUP, LLC

4. Remove the push pin fasteners (2) from the front of the splash shield (1).
5. Remove the fasteners (3) securing the splash shield (1) to the fascia.
6. Release the outboard edge of the splash shield (1) from the fender flange.

7. Remove the splash shield (1) from the vehicle.

INSTALLATION

INSTALLATION

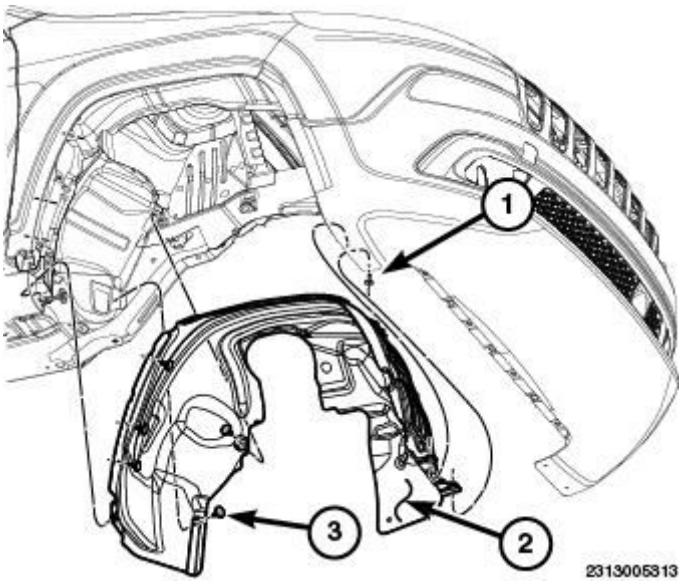

Fig. 291: Identifying Front Wheelhouse Splash Shield & Fasteners
Courtesy of CHRYSLER GROUP, LLC

1. Position the front wheelhouse splash shield (2) into the front fender well.
2. Install the five push pins (3) into the rear area of the splash shield.

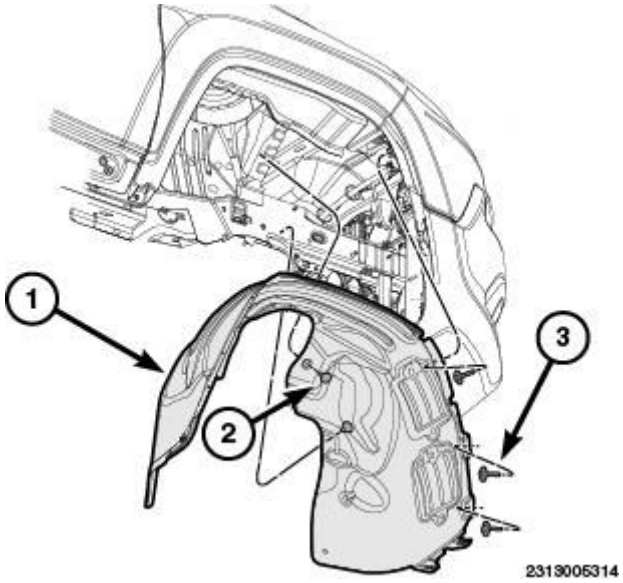

Fig. 292: Identifying Inner Wheel Splash Shield & Fasteners
Courtesy of CHRYSLER GROUP, LLC

3. Install the push pin fasteners (2) into the front of the splash shield (1).
4. Install the fasteners (3) securing the shield to the fascia and tighten securely.
5. Install the front wheel to the side of the vehicle being serviced. Refer to **INSTALLATION** .
6. Lower the vehicle.

SHIELD, SPLASH, REAR WHEELHOUSE

REMOVAL

REMOVAL

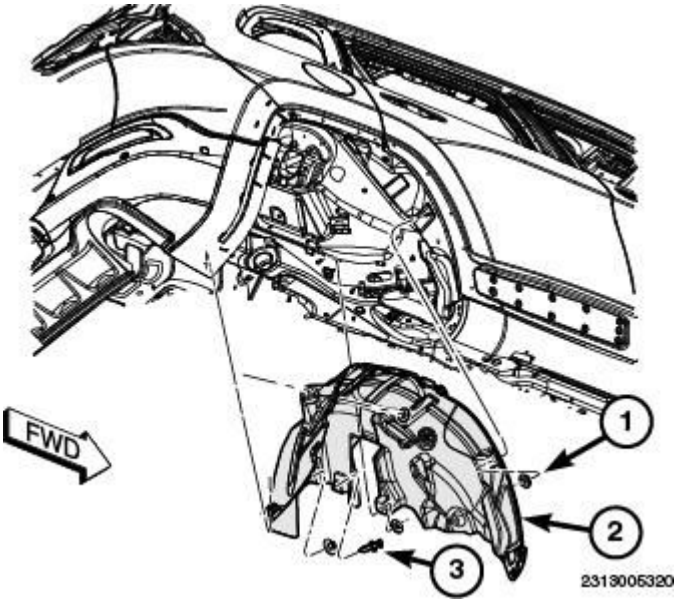

Fig. 293: Identifying Rear Wheelhouse Splash Shield & Fasteners
Courtesy of CHRYSLER GROUP, LLC

1. Raise and support the vehicle.
2. Remove the wheel from the side of the vehicle being serviced. Refer to **REMOVAL** .
3. Remove the push pins (3) from the splash shield (2).
4. Remove the fasteners (1) securing the splash shield (2) to the fascia and wheelhouse.
5. Release the outboard edge of the splash shield (2) from the body side flange.
6. Remove the splash shield (2) from the vehicle.

INSTALLATION

INSTALLATION

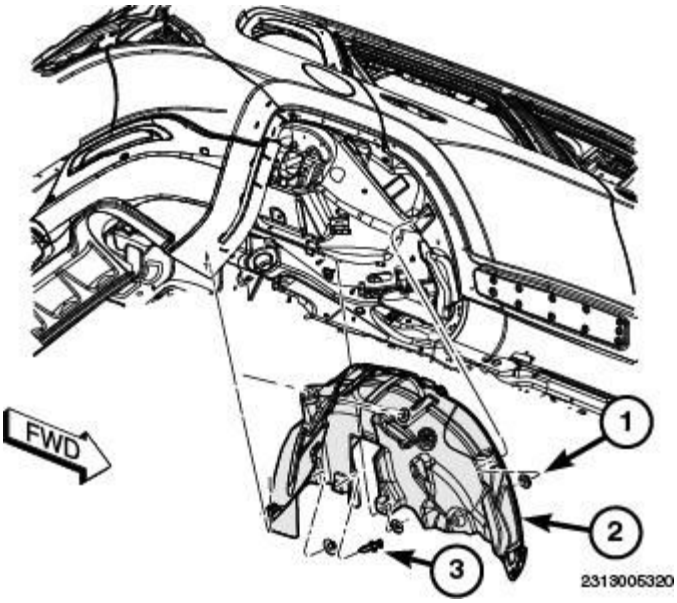

Fig. 294: Identifying Rear Wheelhouse Splash Shield & Fasteners
Courtesy of CHRYSLER GROUP, LLC

1. Position the rear wheelhouse splash shield (2) into the rear body side opening.
2. Install the fasteners (1) securing the shield to the fascia and wheelhouse.
3. Tighten the fasteners securely
4. Install the push pin fasteners (3) into the splash shield (1).
5. Install the front wheel to the side of the vehicle being serviced. Refer to **INSTALLATION** .
6. Lower the vehicle.

HOUSING, FUEL FILL

REMOVAL

REMOVAL

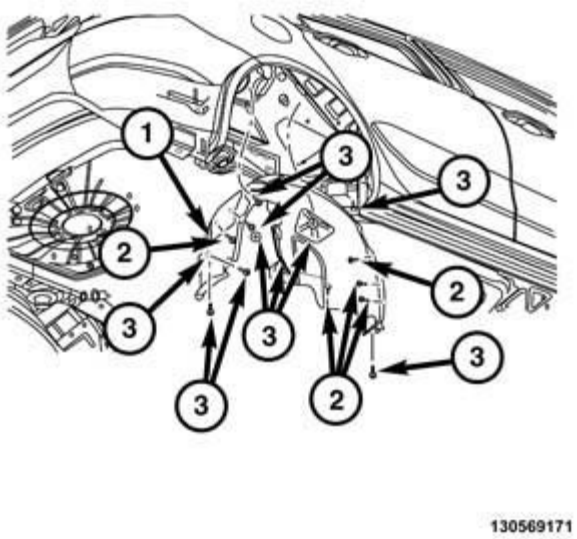

Fig. 295: Splash Shield, Push Pins & Fasteners
Courtesy of CHRYSLER GROUP, LLC

1. Open the fuel filler door.
2. Disconnect and isolate the negative battery cable.
3. Remove right rear wheel. Refer to **REMOVAL** .
4. Remove right rear wheelhouse splash shield. Refer to **SHIELD, SPLASH, REAR WHEELHOUSE, REMOVAL**.

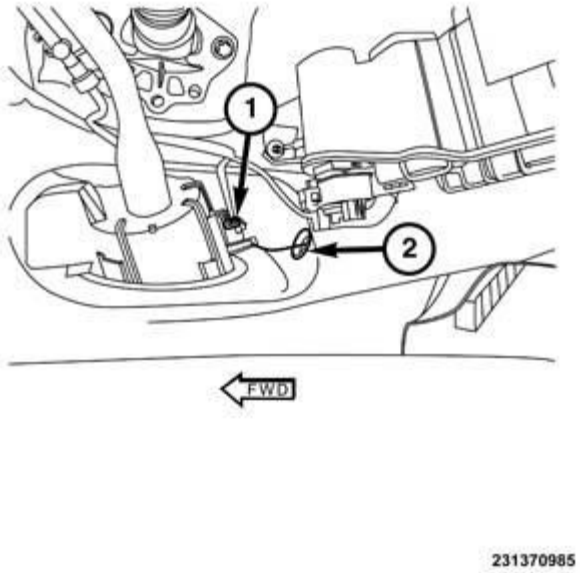

Fig. 296: Cable Grommet & Actuator Wiring Connector
Courtesy of CHRYSLER GROUP, LLC

5. From within the wheelhouse, disconnect actuator wiring connector (1).

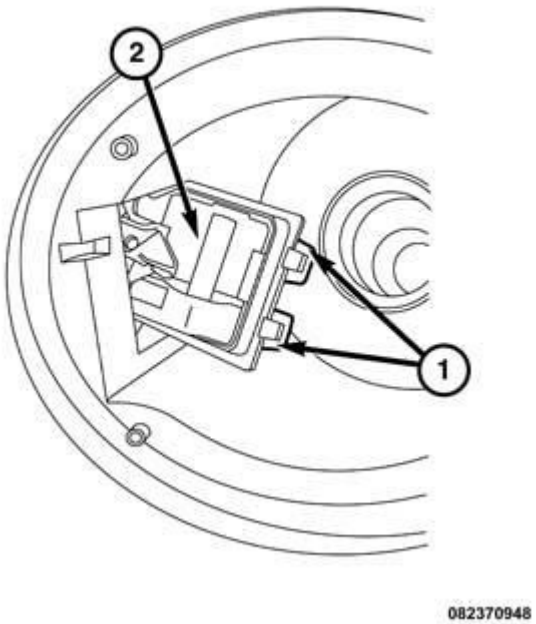

Fig. 297: Lock Tabs & Fuel Door Actuator
Courtesy of CHRYSLER GROUP, LLC

6. With the use of a small flat bladed tool or equivalent, gently pry the two tabs (1) on the outside of the actuator (2) to release the top portion from the fuel filler housing.
7. Move the top of the actuator (1) forward.
8. Lift up slightly to release the bottom of the actuator from the fuel filler housing.

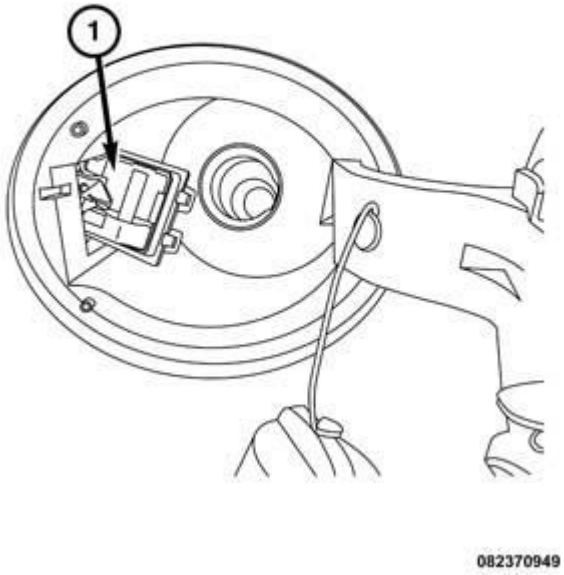

Fig. 298: Actuator
Courtesy of CHRYSLER GROUP, LLC

9. Rotate and angle the actuator (1) so that it will fit through the hole in the fuel filler housing.

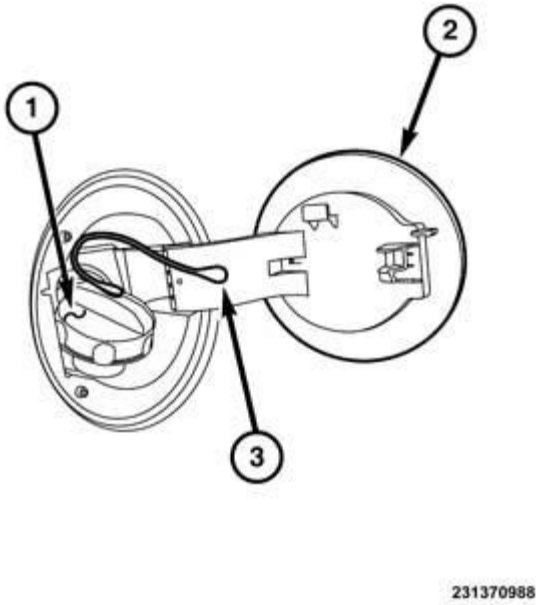

Fig. 299: Gas Cap, Fuel Door & Gas Cap Tether
Courtesy of CHRYSLER GROUP, LLC

10. Remove fuel fill door (2). Refer to **DOOR, FUEL FILL, REMOVAL**.
11. With the use of a (special tool #C-4829A, Remover, Trim) remove the gas cap tether (3) from the fuel filler housing.

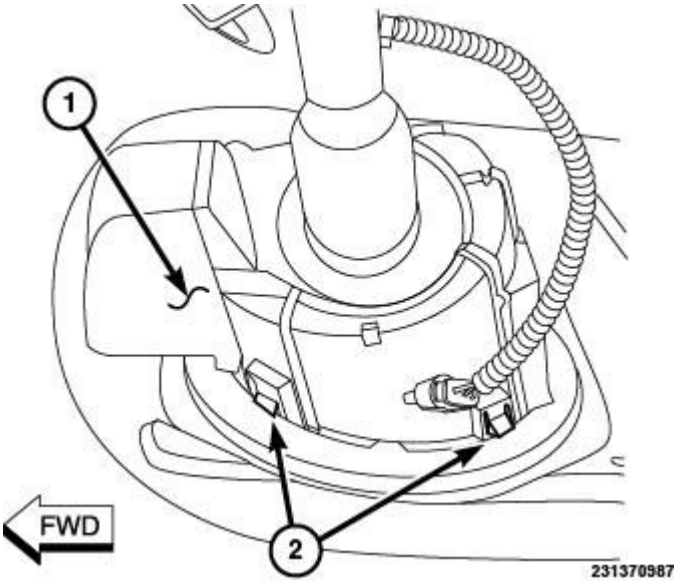

Fig. 300: Fuel Filler Housing & Mounting Tabs
Courtesy of CHRYSLER GROUP, LLC

12. On the back of the fuel filler housing, use hand pressure to release the rear lower mounting tab (2) and the

rear upper mounting tab located above and move the rear lower portion of the fuel filler housing (1) slightly outward.

13. Press in the rear upper tab to release on the fuel filler housing.

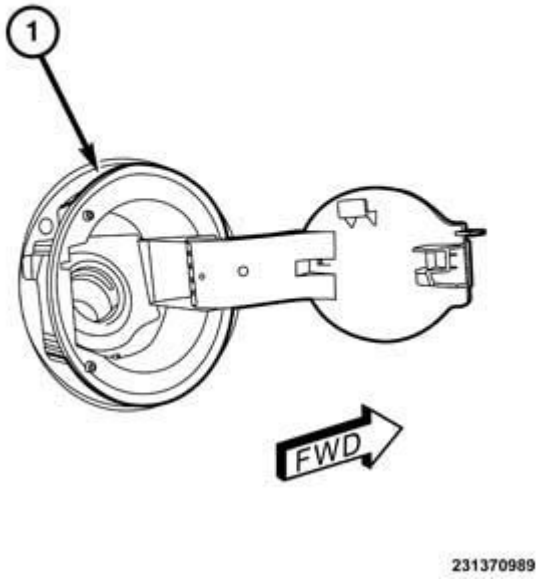

Fig. 301: Fuel Filler Housing
Courtesy of CHRYSLER GROUP, LLC

14. With the rear portion of the fuel filler housing (1) released from the vehicle, press the upper and lower front tabs on the back of the fuel filler housing.
15. Move the rear portion of the fuel filler out further to get the seal over the fuel filler tube.
16. Remove the fuel filler housing from the vehicle.

INSTALLATION

INSTALLATION

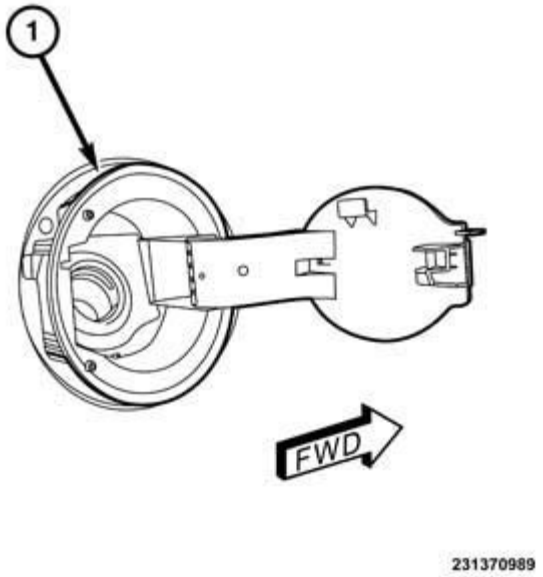

Fig. 302: Fuel Filler Housing
Courtesy of CHRYSLER GROUP, LLC

1. Position the front portion of the fuel filler housing (1) behind the quarter panel.
2. Insert fuel filler tube through center seal of the fuel filler housing (1).
3. Push inward to seat the four mounting tabs located on the back of the fuel filler housing.
4. Verify the four tabs have seated fully.

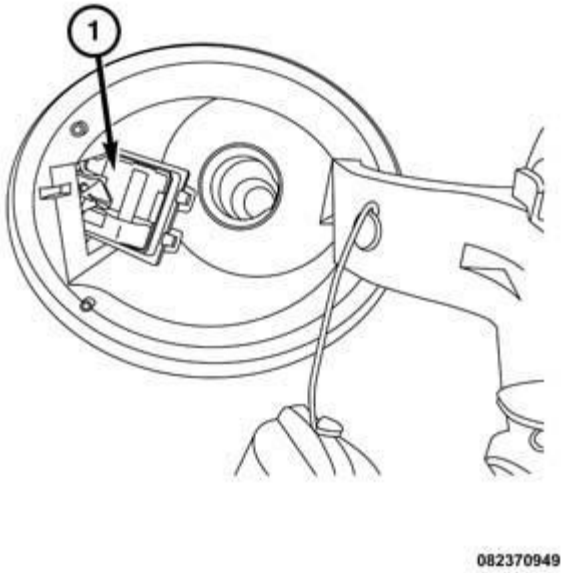

Fig. 303: Actuator
Courtesy of CHRYSLER GROUP, LLC

5. Angle the fuel door latch actuator (1) so that it fits through the hole in the fuel filler housing and slide the actuator into the fuel filler housing pocket.

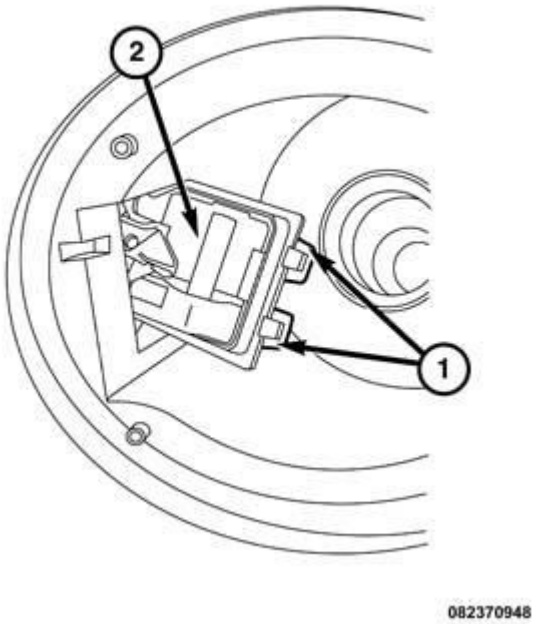

Fig. 304: Lock Tabs & Fuel Door Actuator
Courtesy of CHRYSLER GROUP, LLC

6. Insert the bottom of the fuel door latch actuator (2) into the notch on the bottom of the fuel filler housing.
7. Push the upper portion of the actuator back to engage the two upper tabs (1).

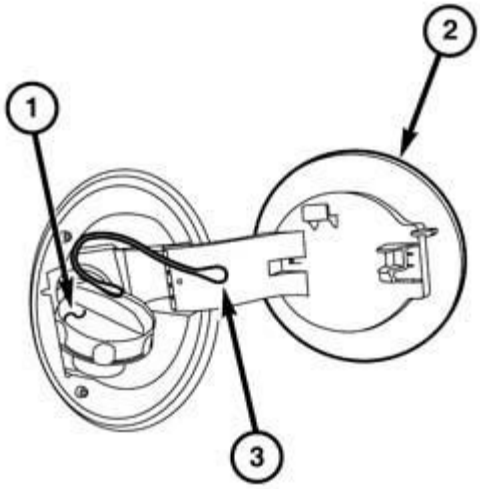

231370988

Fig. 305: Gas Cap, Fuel Door & Gas Cap Tether
Courtesy of CHRYSLER GROUP, LLC

8. Install the gas cap (1).
9. Align the gas cap tether retaining clip (3) into the appropriate hole in the fuel filler housing and insert fully.
10. Install the fuel filler door (2). Refer to **DOOR, FUEL FILL, INSTALLATION**.

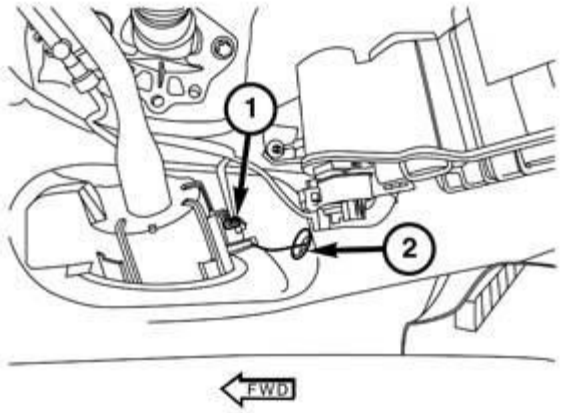

231370985

Fig. 306: Cable Grommet & Actuator Wiring Connector
Courtesy of CHRYSLER GROUP, LLC

11. From within the wheelhouse, connect the wiring connector to the actuator (1).
12. Inspect to be certain the manual release cable grommet (2) is seated properly.
13. If not seated properly, insert into wheel house fully.

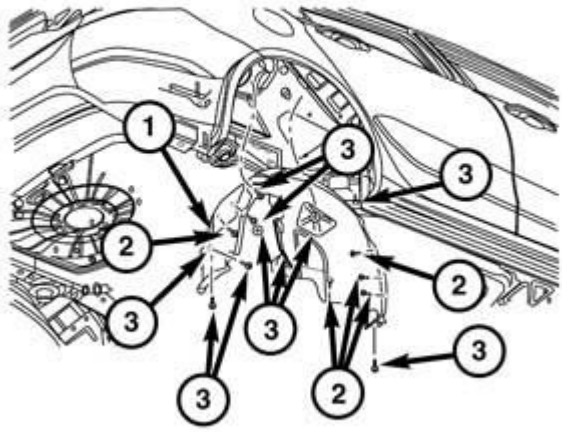

130569171

Fig. 307: Splash Shield, Push Pins & Fasteners
Courtesy of CHRYSLER GROUP, LLC

14. Install the rear wheelhouse splash shield (1). Refer to **SHIELD, SPLASH, REAR WHEELHOUSE, INSTALLATION**.
15. Install the wheel. Refer to **INSTALLATION** .
16. Connect the battery negative cable.

HOOD

CABLE, HOOD RELEASE

REMOVAL

REMOVAL

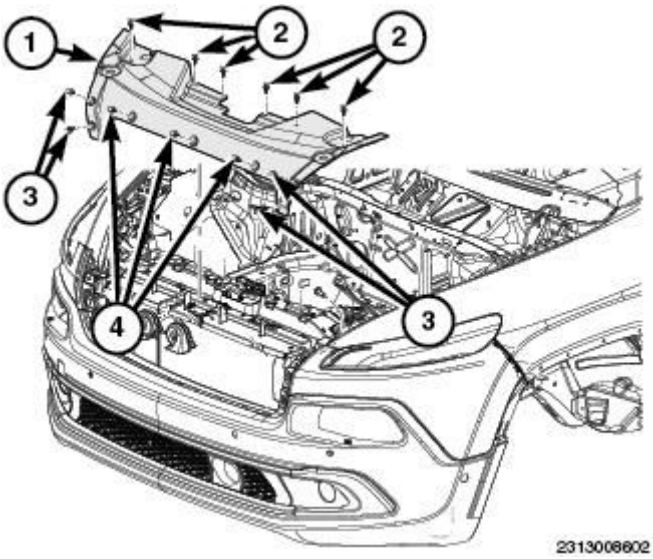

Fig. 308: Upper Close Out Panel Cover Components
Courtesy of CHRYSLER GROUP, LLC

1. Remove the push pins and remove the radiator closeout panel.

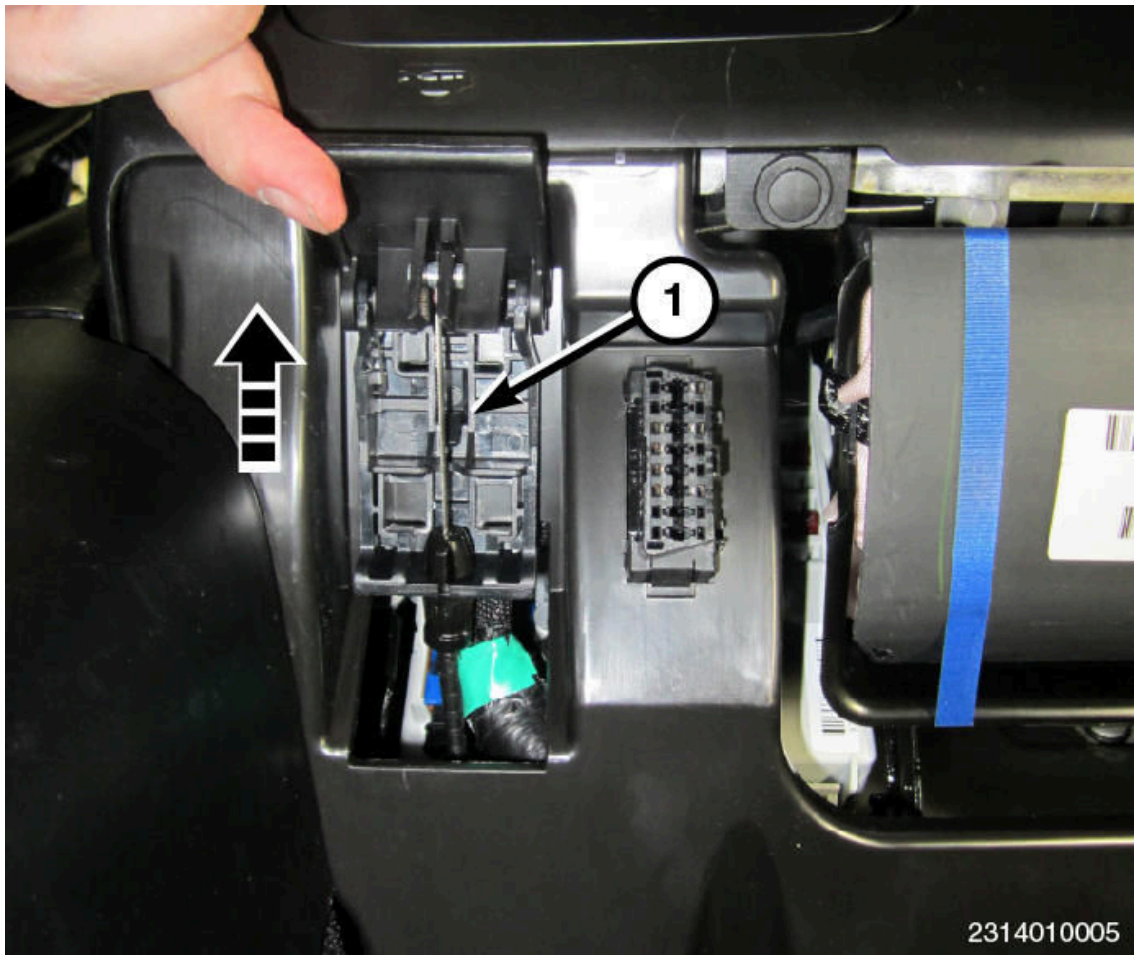

Fig. 309: Removing Hood Release Handle
Courtesy of CHRYSLER GROUP, LLC

2. Remove the hood release handle by pushing up on the release (1) to disengage and then pulling rearward on the handle.

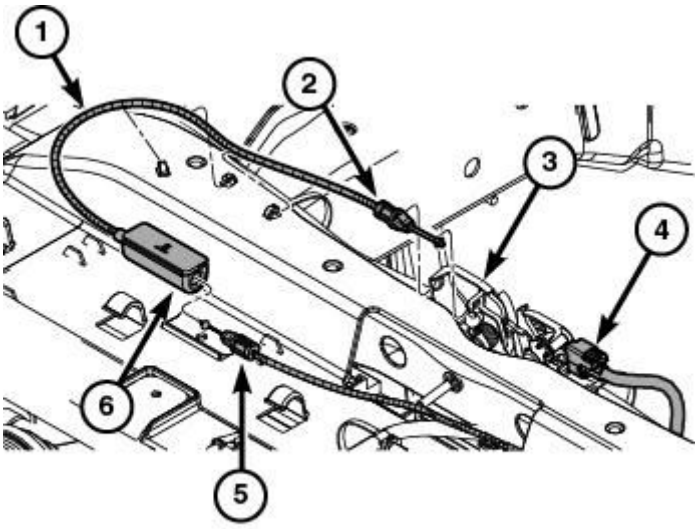

2314004730

Fig. 310: Identifying Hood Latch Cable & Retaining Clips/Tabs
Courtesy of CHRYSLER GROUP, LLC

3. Disengage the cable (2) from the hood latch (3).

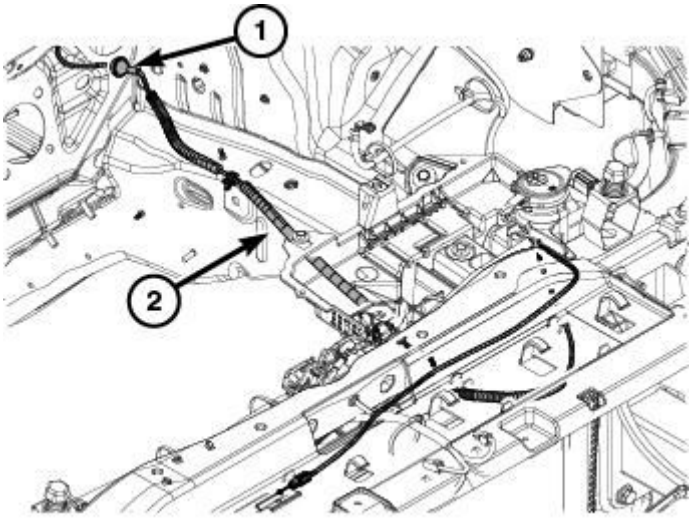

2314004731

Fig. 311: Identifying Grommet & Cable
Courtesy of CHRYSLER GROUP, LLC

4. Release retaining clips/tabs attaching the hood release cable (1) to the left inner frame rail.

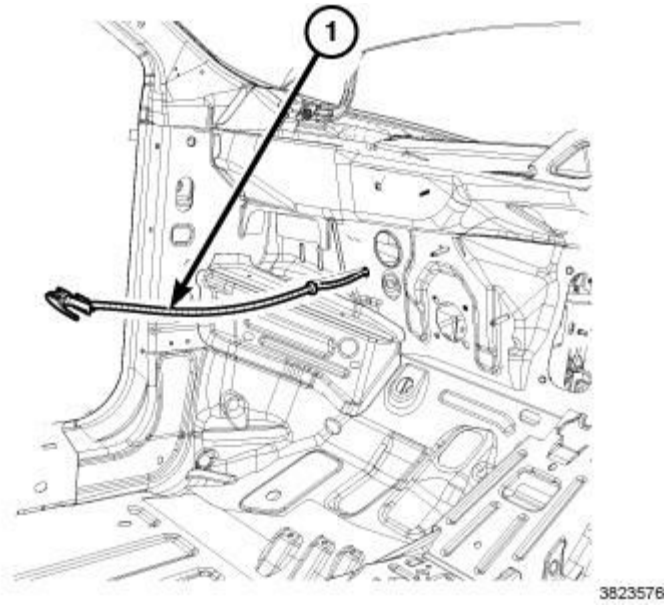

Fig. 312: Hood Release Cable Inside Vehicle
Courtesy of CHRYSLER GROUP, LLC

5. Disengage rubber grommet at lower dash panel.
6. From the vehicle interior pull the cable assembly (1) rearward.
7. Remove the hood release cable (1) from vehicle.

INSTALLATION

INSTALLATION

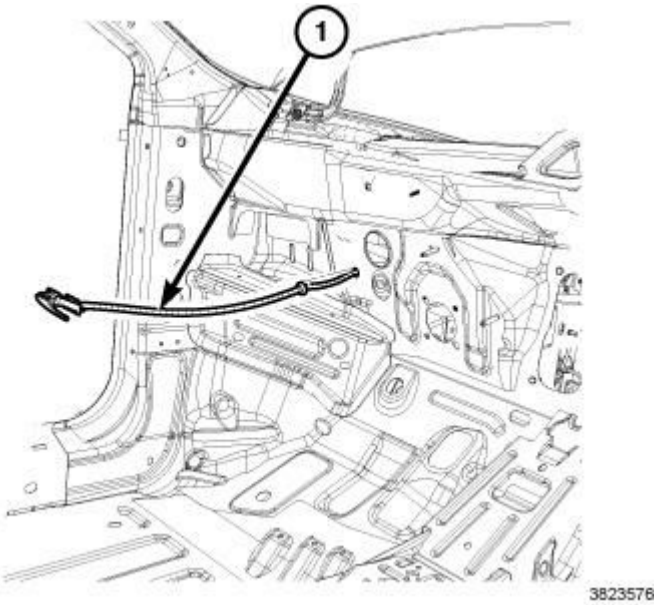

Fig. 313: Hood Release Cable Inside Vehicle
Courtesy of CHRYSLER GROUP, LLC

1. Route the hood release cable (1) through the hole located in the lower dash panel.
2. Engage the rubber grommet into the lower dash panel.

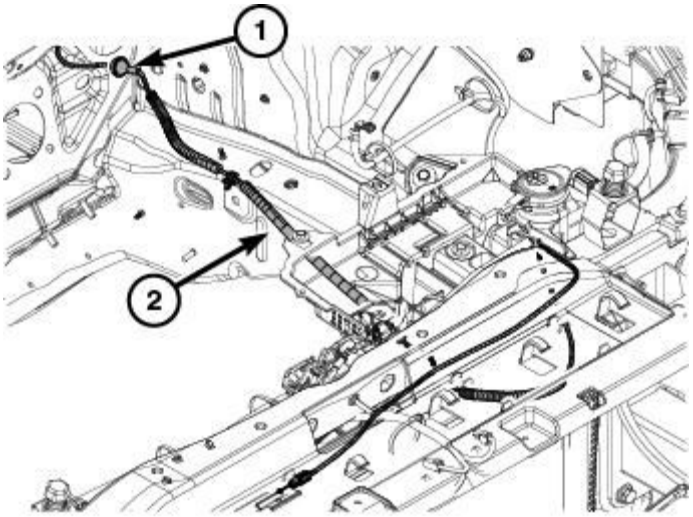

2314004731

Fig. 314: Identifying Grommet & Cable
Courtesy of CHRYSLER GROUP, LLC

3. Route the hood latch cable (1) along the inner frame rail.
4. Engage the hood release cable retaining clips/tabs along the inner frame rail.

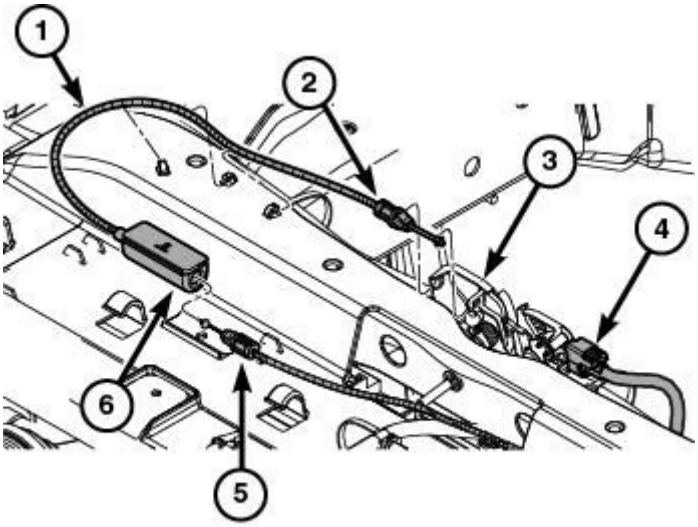

2314004730

Fig. 315: Identifying Hood Latch Cable & Retaining Clips/Tabs
Courtesy of CHRYSLER GROUP, LLC

5. Route the hood latch cable under the headlamp, along the side of the front end module and across the upper radiator support towards the hood latch.

6. Engage the cable (2) to the hood latch (3).

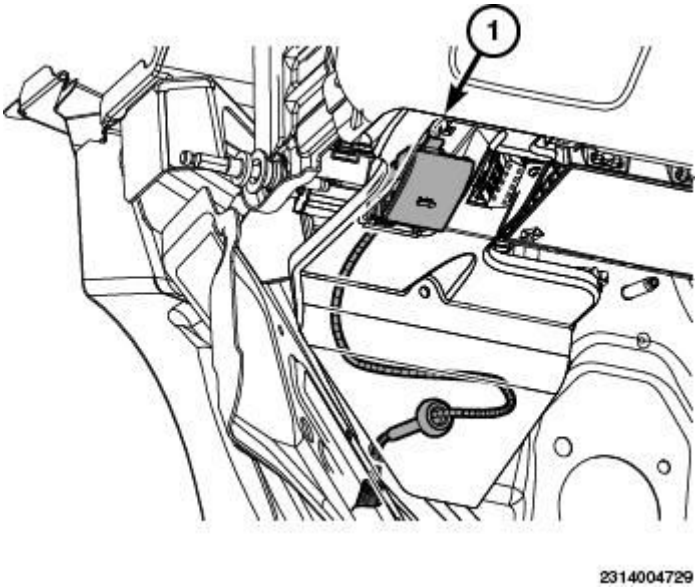

Fig. 316: Identifying Steering Column Opening Cover/Knee Blocker Trim
Courtesy of CHRYSLER GROUP, LLC

7. Install the hood release handle (2) to the steering column opening cover/knee blocker trim (1) by aligning, pushing in to engage and then pushing upward on the handle.

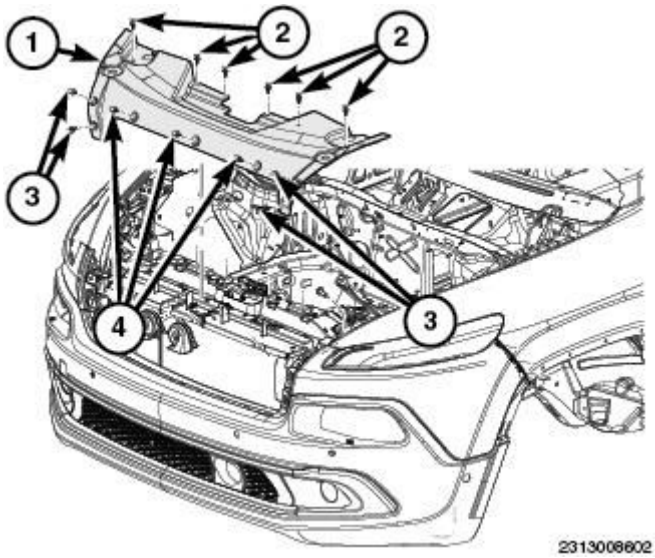

Fig. 317: Upper Close Out Panel Cover Components
Courtesy of CHRYSLER GROUP, LLC

8. Install the radiator closeout panel (1) and install the push pin fasteners.

HINGE, HOOD

REMOVAL

REMOVAL

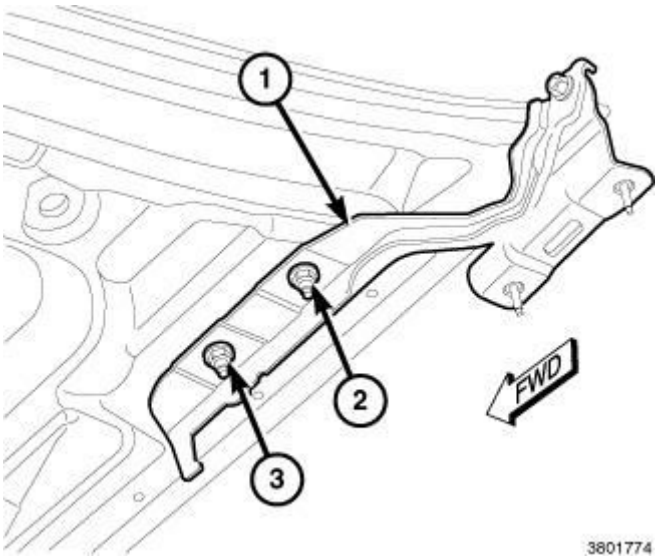

Fig. 318: Hood Hinge & Bolts
Courtesy of CHRYSLER GROUP, LLC

1. Support the hood on the side that requires hinge replacement and disconnect the support cylinder from the upper hinge. Refer to **PROP, GAS, REMOVAL**.
2. Mark the hinge (1) attachment locations at the hood with a grease pencil or other suitable device to aid installation.
3. Remove the cowl cover. Refer to **COVER, COWL PANEL, REMOVAL**.
4. Remove the bolts (2) attaching the hood to the hinge (1).

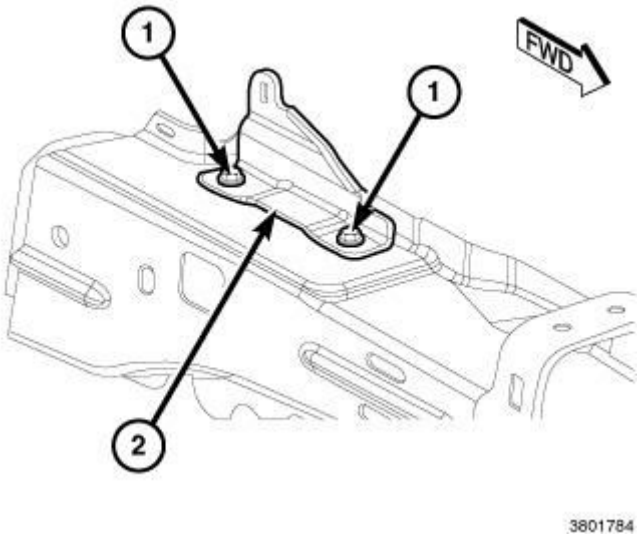

Fig. 319: Hood Hinge & Bolts At Load Beam

Courtesy of CHRYSLER GROUP, LLC

5. Mark the hinge (2) attachment locations at the load beam inner with a grease pencil or other suitable device to aid installation.
6. Remove the bolts (1) attaching the hood hinge (2) to the load beam inner and remove the hinge from vehicle.

INSTALLATION

INSTALLATION

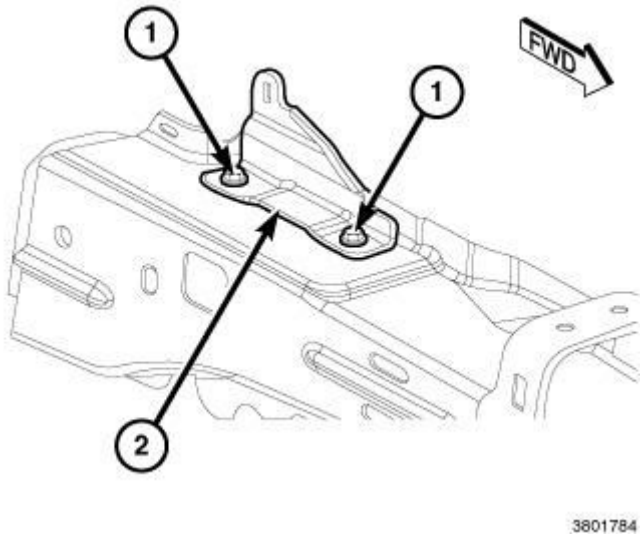

Fig. 320: Hood Hinge & Bolts At Load Beam
Courtesy of CHRYSLER GROUP, LLC

1. If necessary, paint the new hinge (2) before installation.
2. Using the reference marks made in removal, align and position the hood hinge (2) on the vehicle.
3. Install the bolts (2) to attach hood hinge to load beam inner. Tighten the bolts to 9 N.m (7 ft. lbs.) torque.

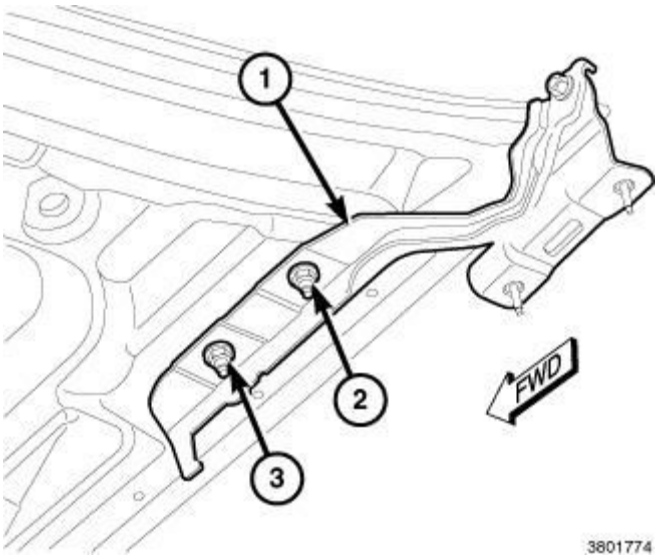

Fig. 321: Hood Hinge & Bolts
Courtesy of CHRYSLER GROUP, LLC

4. Align the hood with the reference marks made during removal.
5. Install the bolts (2, 3) to attach the hood to the hinge.
6. Align all marks and secure bolts.
7. Tighten the bolts to 21 N.m (16 ft. lbs.) torque.
8. Install the support cylinder back onto the hinge. Refer to **PROP, GAS, INSTALLATION**.
9. If necessary, adjust the hood hinge positions and the hood adjuster bumpers to achieve proper spacing and operation. Refer to **GAP AND FLUSH, SPECIFICATIONS**. Shims can be added or removed under hood hinge to achieve proper hood height.
10. Install cowl cover. Refer to **COVER, COWL PANEL, INSTALLATION**.
11. Verify hood latch operation. Adjust as necessary.

HOOD

REMOVAL

REMOVAL

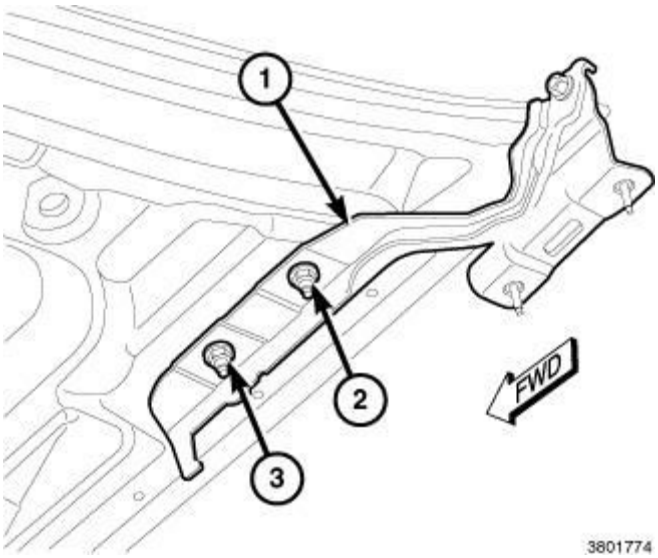

Fig. 322: Hood Hinge & Bolts
Courtesy of CHRYSLER GROUP, LLC

NOTE: Right hand shown, left hand similar.

1. Open the hood.
2. Mark the outline of the hinges (1) on the inside of hood to aid installation.
3. Disconnect the windshield washer hose from hood.
4. Disconnect the under hood lamp wire connector to the engine compartment wire harness if equipped.
5. Remove the top bolts (3) attaching the hood to the hinge (1) and loosen the bottom bolts (2) until they can be removed by hand.
6. With assistance from a helper at the opposite side of the vehicle to support the hood, remove the bottom bolts (2) attaching the hood to hinge.
7. Remove the hood from the vehicle.
8. Transfer parts as necessary.

INSTALLATION

INSTALLATION

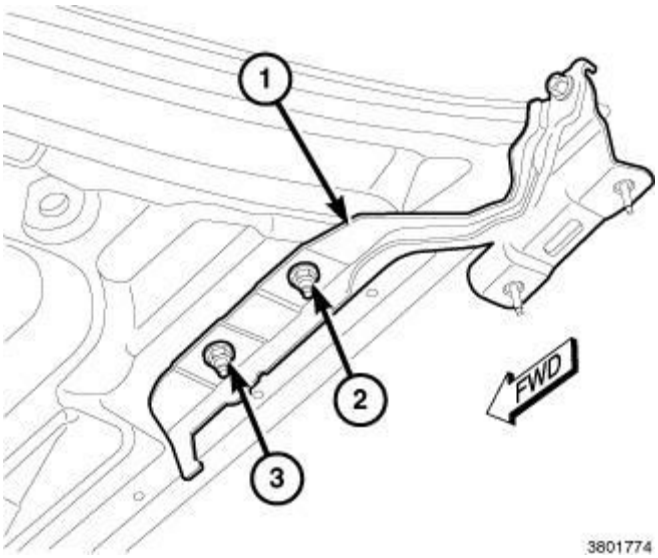

Fig. 323: Hood Hinge & Bolts
Courtesy of CHRYSLER GROUP, LLC

NOTE: The Vehicle Emission Control Information (VECI) label(s) must be in place for the life of the vehicle. When replacing the component in which the VECI label is adhered, a new VECI label must also be adhered to the new component.

NOTE: Right hand shown, left hand similar.

1. With assistance from a helper, place the hood in position on vehicle.
2. Align the hood with the reference mark made during removal.
3. Install the bottom bolts (2) securing the hood to the hinge. Tighten the bolts finger tight.
4. Install the top bolts (3) securing the hood to the hinge. Tighten the bolts finger tight.
5. Position bolts at outline marks and tighten bolts (2, 3) to 21 N.m (16 ft. lbs.).
6. Connect under hood lamp wire connector to engine compartment wire harness, if equipped.
7. Route and connect windshield washer hose to hood.
8. Verify proper hood latch operation and alignment.
9. If necessary, adjust the hood hinge positions and the hood adjuster bumpers to achieve proper spacing and operation. Refer to **GAP AND FLUSH, SPECIFICATIONS**.

LATCH, HOOD

REMOVAL

REMOVAL

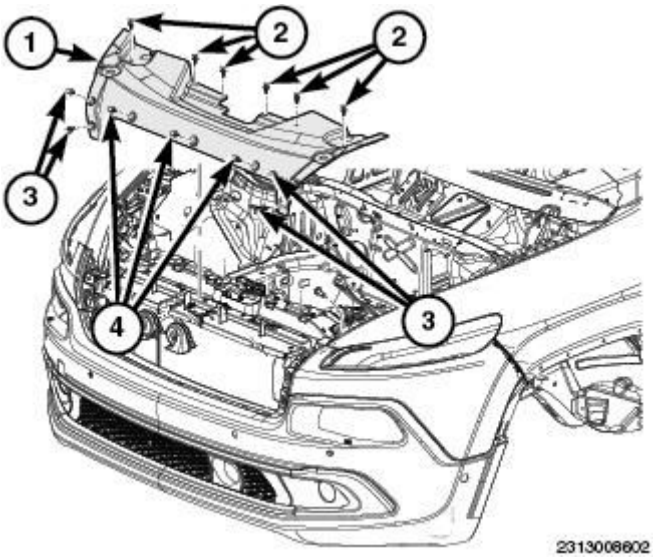

Fig. 324: Upper Close Out Panel Cover Components
Courtesy of CHRYSLER GROUP, LLC

1. Remove the push pins and remove the radiator closeout panel.

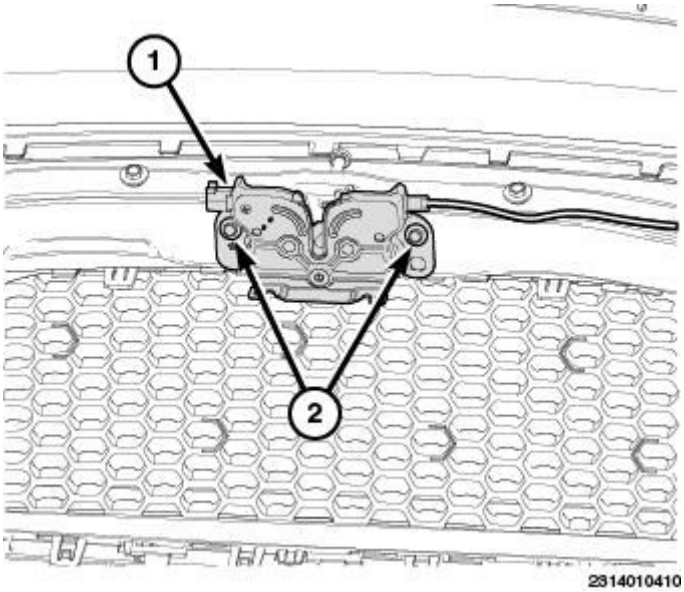

Fig. 325: Identifying Hood Latch & Fasteners
Courtesy of CHRYSLER GROUP, LLC

2. If equipped, disconnect the hood ajar switch harness (1).
3. Mark an outline of the hood latch on radiator support crossmember with a grease pencil or other suitable device to aid installation.
4. Remove the fasteners (2) attaching the hood latch to the upper radiator support crossmember.

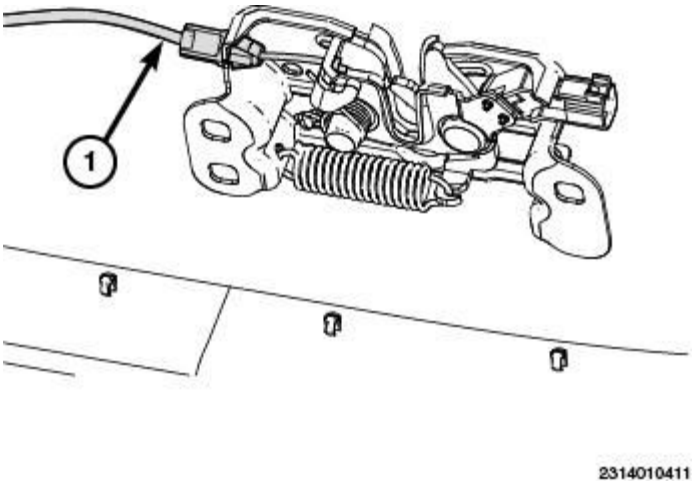

Fig. 326: Identifying Hood Latch Release Cable
Courtesy of CHRYSLER GROUP, LLC

5. Position the hood latch away from the from vehicle.
6. Disconnect the release cable (1) from the latch.
7. Remove the latch.

INSTALLATION

INSTALLATION

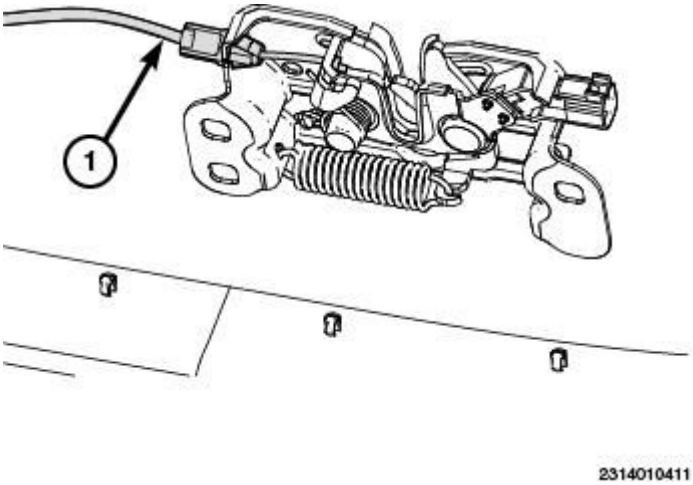

Fig. 327: Identifying Hood Latch Release Cable
Courtesy of CHRYSLER GROUP, LLC

1. Connect the release cable (1) into the hood latch.

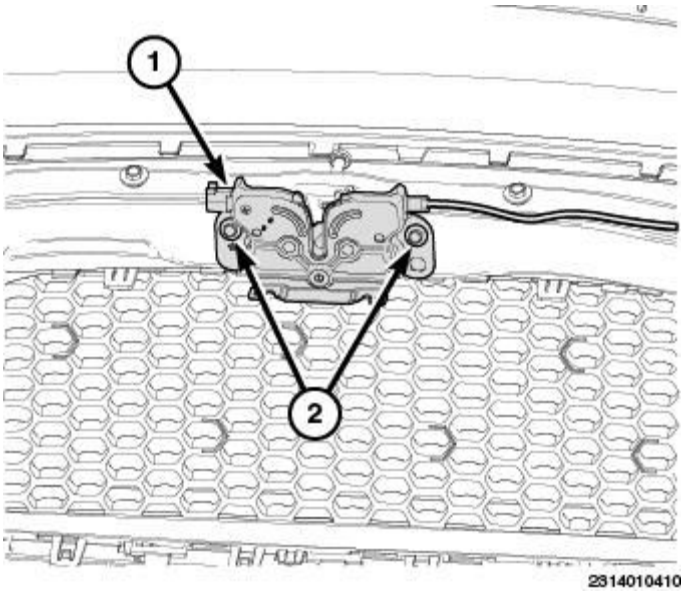

Fig. 328: Identifying Hood Latch & Fasteners
Courtesy of CHRYSLER GROUP, LLC

2. Position the latch on radiator support crossmember and loosely install the fasteners (2).
3. Using the reference marks made during removal, align the hood latch.
4. Tighten the fasteners to 9 N.m (80 in. lbs.).
5. If equipped, connect the electrical connector (1).
6. Close the hood to verify operation. Adjust as necessary.

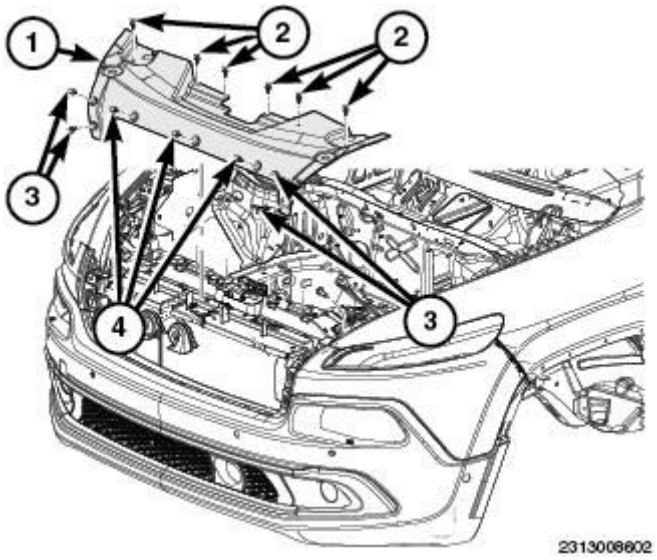

Fig. 329: Upper Close Out Panel Cover Components
Courtesy of CHRYSLER GROUP, LLC

7. Install the radiator closeout panel (1) and install the push pin fasteners.

LATCH, SAFETY

REMOVAL

REMOVAL

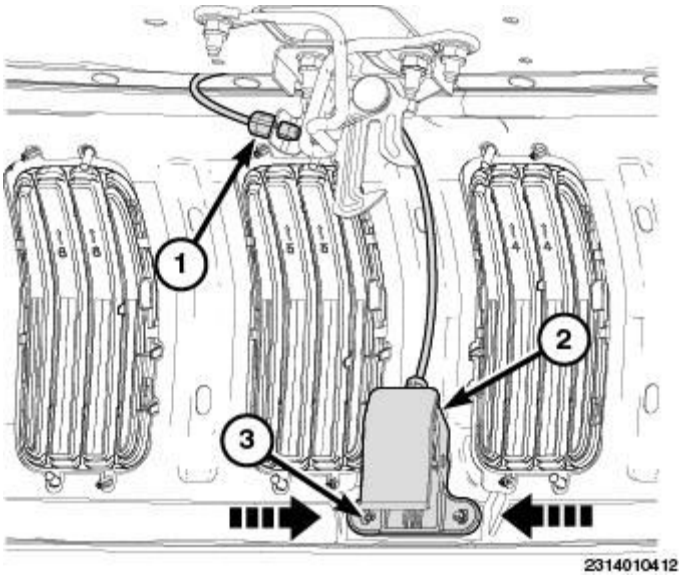

Fig. 330: Identifying Safety Latch, Handle & Nuts
Courtesy of CHRYSLER GROUP, LLC

1. Open the hood squeeze the tabs (3) together and separate the handle (2) from the hood.

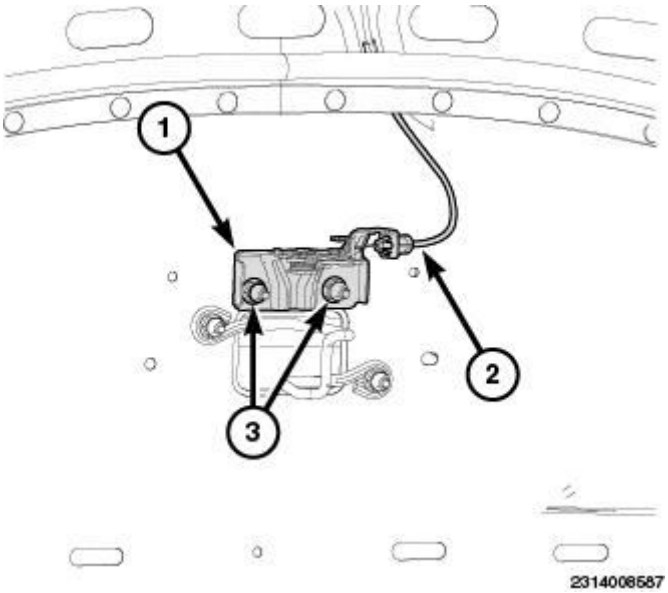

Fig. 331: Identifying Safety Latch, Nuts & Cable
Courtesy of CHRYSLER GROUP, LLC

2. Remove the nuts (3) and remove the safety latch (1).

3. Disconnect the cable (2).

INSTALLATION

INSTALLATION

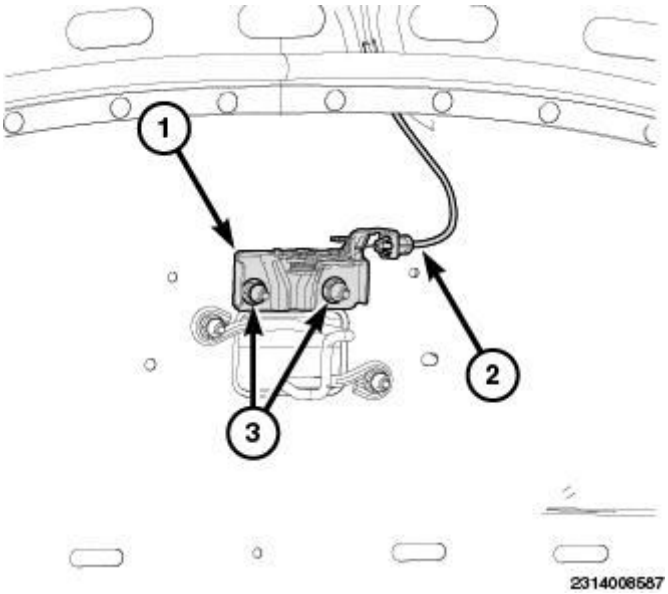

Fig. 332: Identifying Safety Latch, Nuts & Cable
Courtesy of CHRYSLER GROUP, LLC

1. Connect the release cable (2).
2. Install the safety latch (1) and install the nuts (3)

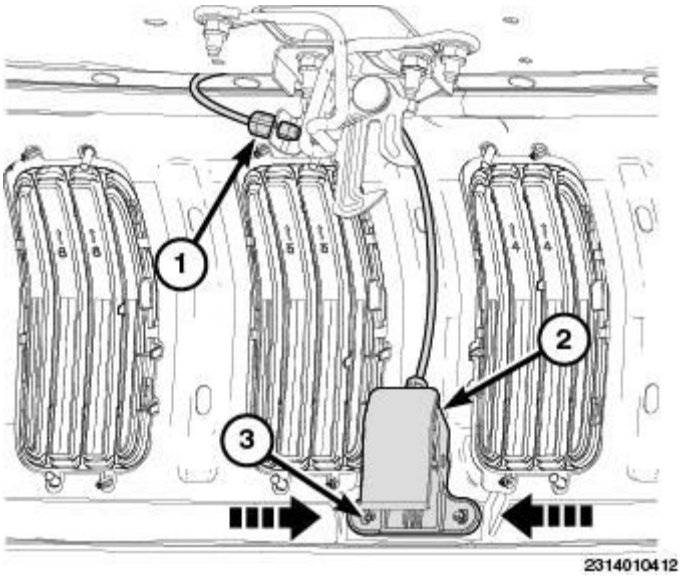

Fig. 333: Identifying Safety Latch, Handle & Nuts
Courtesy of CHRYSLER GROUP, LLC

3. Position the handle assembly (2) onto the hood and seat the clips (3) fully.

PROP, GAS

REMOVAL

REMOVAL

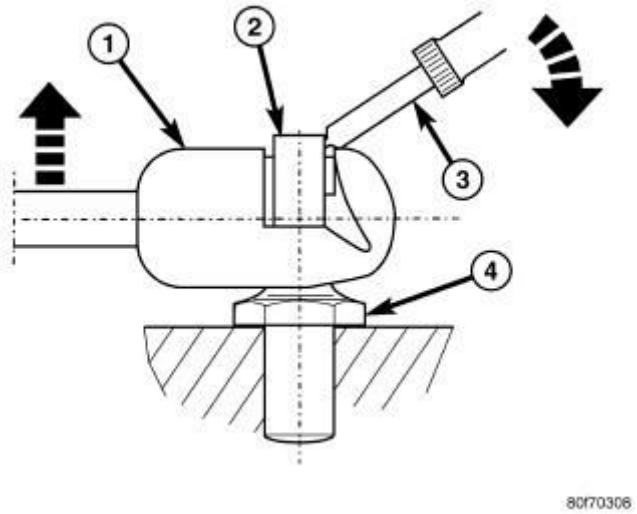

Fig. 334: Support Cylinder-Ball Socket-Typical
Courtesy of CHRYSLER GROUP, LLC

NOTE: Use a support to hold the hood while working on removing the hood strut.

1. Open and support the hood.

CAUTION: Do not pull on the hood support cylinders at the middle of the support cylinder during removal. Failure to follow this caution can result in damage to the hood support cylinders.

2. Using a small flat bladed tool, or equivalent (3), release the retaining clip (2) at each end of the support cylinder while carefully pulling the ball socket (1) away from the ball stud (4).

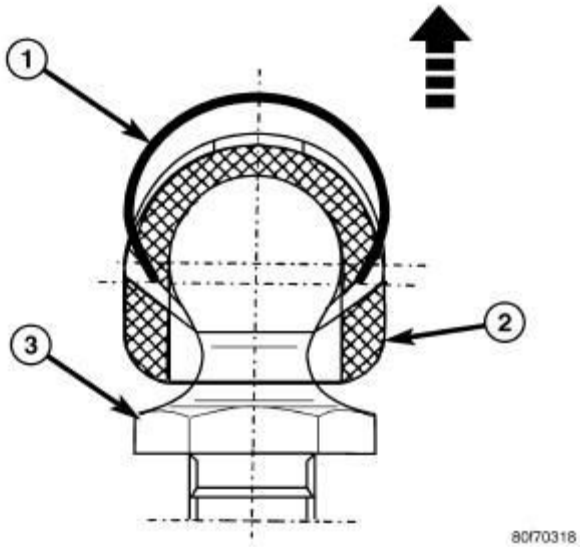

Fig. 335: Support Cylinder Retaining Clip
Courtesy of CHRYSLER GROUP, LLC

1 - RETAINING CLIP
2 - BALL SOCKET
3 - BALL STUD

NOTE: Lift the clips (1) only enough to release the ball studs (3).

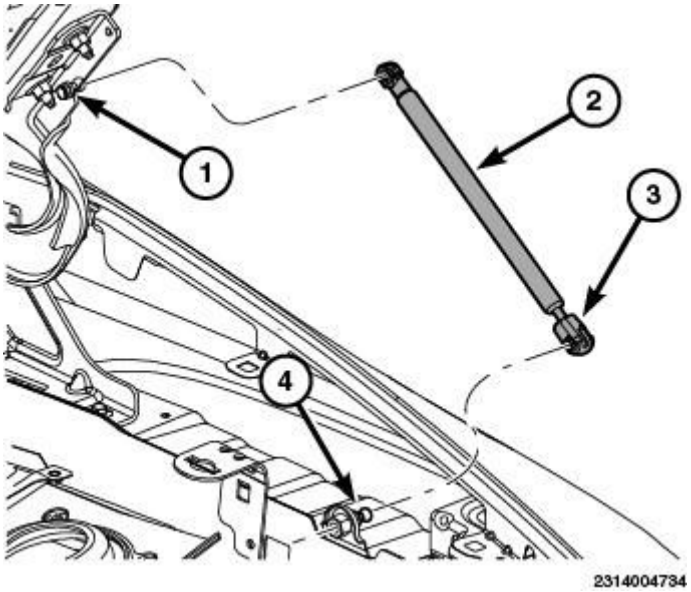

Fig. 336: Identifying Hood Support Cylinder & Ball Studs
Courtesy of CHRYSLER GROUP, LLC

3. Disconnect the hood support cylinder (2) from the hood ball stud (1) and the ball stud on the strut tower (4).

INSTALLATION

INSTALLATION

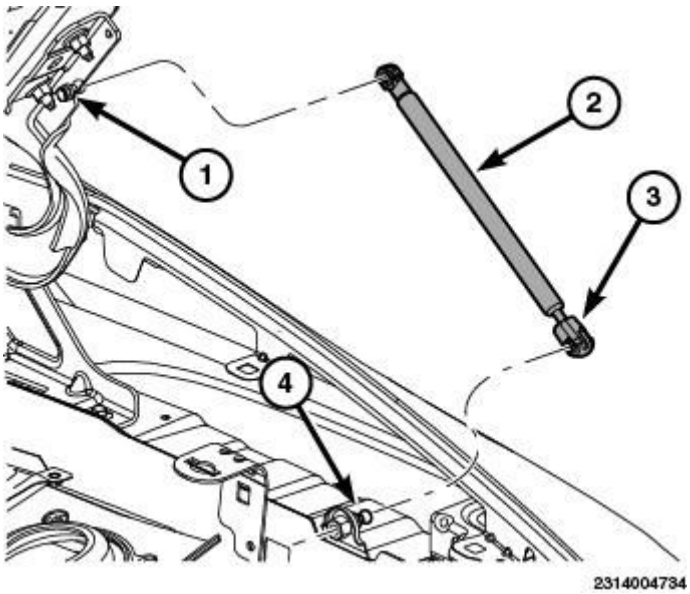

Fig. 337: Identifying Hood Support Cylinder & Ball Studs
Courtesy of CHRYSLER GROUP, LLC

1. If removed, install the upper ball stud (1) onto the hood and the lower ball stud (4) onto the strut tower. Install the ball studs securely.

CAUTION: Do not push on the hood support cylinders at the middle of the support cylinder during installation. Failure to follow this caution can result in damage to the hood support cylinders.

NOTE: Install the hood support cylinders with the cylinder end connected to the hood as shown.

NOTE: If required, only release each retaining clip enough to install the ball socket onto the ball stud.

2. Install the hood support cylinder (2) over the upper (1) and lower ball studs (4) and fully engage the retaining clips.

STRIKER, HOOD

REMOVAL

REMOVAL

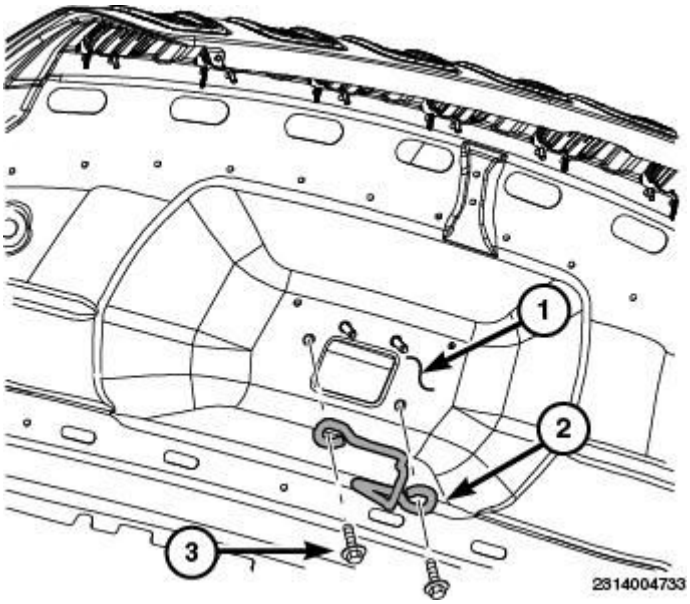

Fig. 338: Identifying Hood, Striker & Fasteners
Courtesy of CHRYSLER GROUP, LLC

1. Open the hood.
2. Using a china marker or equivalent, mark the outline of the striker (1) to assist with installation.
3. Remove the fasteners (3) securing the striker (2) to the hood.
4. Remove the striker (2) from the hood.

INSTALLATION

INSTALLATION

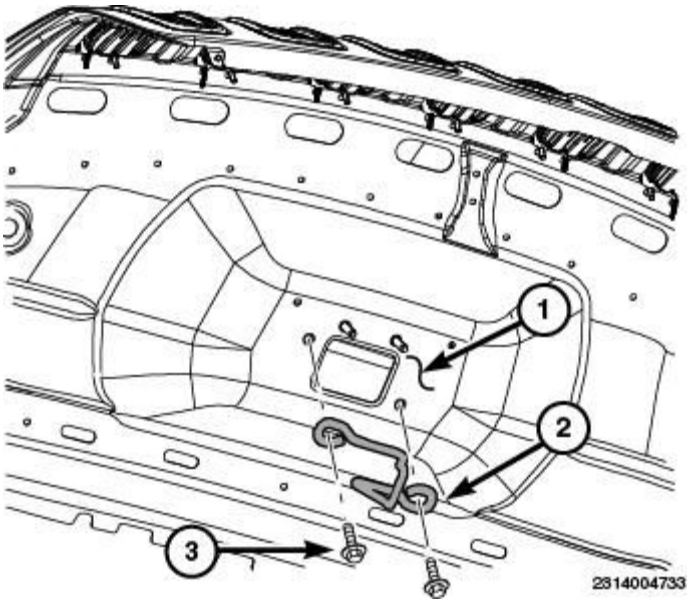

Fig. 339: Identifying Hood, Striker & Fasteners
Courtesy of CHRYSLER GROUP, LLC

1. Using reference marks made previously, align the striker (2) with holes in hood.
2. Install the fasteners (3) securing the striker (2). Tighten the fasteners to 21 N.m (16 ft. lbs.)
3. Verify fit of the hood striker (1) and operation of the latch. Adjust as necessary.

INSTRUMENT PANEL

WARNING

WARNING

WARNING: To avoid serious or fatal injury on vehicles equipped with the Supplemental Restraint System (SRS), never attempt to repair the electrically conductive circuits or wiring components related to the SRS for which there is no MOPAR wiring repair kit. It is important to use ONLY the recommended splicing kit and procedure. For applicable and available MOPAR wiring repair kits, please visit the MOPAR® Connector Web Site at the following address on the internet: (http://dto.vftis.com/mopar/disclaimer.asp). Inappropriate repairs can compromise the conductivity and current carrying capacity of those critical electrical circuits, which may cause SRS components not to deploy when required, or to deploy when not required. Only minor cuts or abrasions of wire and terminal insulation where the conductive material has not been damaged, or connector insulators where the integrity of the latching and locking mechanisms have not been compromised may be repaired using appropriate methods.

WARNING: To avoid serious or fatal injury during and following any seat belt or child restraint anchor service, carefully inspect all seat belts, buckles, mounting hardware, retractors, tether straps, and anchors for proper installation, operation, or damage. Replace any belt that is cut, frayed, or torn. Straighten any belt that is twisted. Tighten any loose fasteners. Replace any belt that has a damaged or ineffective buckle or retractor. Replace any belt that has a bent or damaged latch plate or anchor plate. Replace any child restraint anchor or the unit to which the anchor is integral that has been bent or damaged. Never attempt to repair a seat belt or child restraint component. Always replace damaged or ineffective seat belt and child restraint components with the correct, new and unused replacement parts listed in the Chrysler Mopar® Parts Catalog. Failure to follow these instructions may result in possible serious or fatal injury.

WARNING: To avoid serious or fatal injury on vehicles equipped with airbags, disable the Supplemental Restraint System (SRS) before attempting any steering wheel, steering column, airbag, Occupant Classification System (OCS), seat belt tensioner, impact sensor or instrument panel component diagnosis or service. Disconnect and isolate the battery negative (ground) cable, then wait two minutes for the system capacitor to discharge before performing further diagnosis or service. This is the only sure way to disable the SRS. Failure to follow these instructions may result in accidental airbag deployment.

WARNING: To avoid potential physical injury or damage to sensitive electronic circuits and systems, always disconnect and isolate the battery negative (ground) cable and the positive cable, then ground the positive cable to discharge the Occupant Restraint Controller (ORC) capacitor before performing any welding operations on the vehicle. Failure to take the proper precautions could result in accidental airbag deployment, possible damage to the Supplemental Restraint System (SRS) circuits and components, and possible damage to other electronic circuits and components. Whenever a welding process is being performed within 12 inches (30 centimeters) of an electronic module or wiring harness, then that module or harness should be relocated out of the way, or disconnected. Always protect against component or vehicle damage from weld spatter by using weld blankets and screens.

WARNING: To avoid serious or fatal injury, do not attempt to dismantle an airbag unit or tamper with its inflator. Do not puncture, incinerate or bring into contact with electricity. Do not store at temperatures exceeding 93° C (200° F). An airbag inflator unit may contain sodium azide and potassium nitrate. These materials are poisonous and extremely flammable. Contact with acid, water, or heavy metals may produce harmful and irritating gases (sodium hydroxide is formed in the presence of moisture) or

combustible compounds. An airbag inflator unit may also contain a gas canister pressurized to over 17.24 kPa (2500 psi). Failure to follow these instructions may result in possible serious or fatal injury.

WARNING: To avoid serious or fatal injury when handling a seat belt tensioner retractor or buckle, proper care should be exercised to keep fingers out from under the retractor or buckle cover and away from the seat belt webbing or cable where it exits from the retractor or buckle cover.

WARNING: To avoid serious or fatal injury, replace all Supplemental Restraint System (SRS) components only with parts specified in the Chrysler Mopar® Parts Catalog. Substitute parts may appear interchangeable, but internal differences may result in inferior occupant protection.

WARNING: To avoid serious or fatal injury, the fasteners, screws, and bolts originally used for the Supplemental Restraint System (SRS) components must never be replaced with any substitutes. These fasteners have special coatings and are specifically designed for the SRS. Anytime a new fastener is needed, replace it with the correct fasteners provided in the service package or specified in the Chrysler Mopar® Parts Catalog.

WARNING: To avoid serious or fatal injury when a steering column has an airbag unit attached, never place the column on the floor or any other surface with the steering wheel or airbag unit face down. Failure to follow these instructions may result in possible serious or fatal injury.

BEZEL, INSTRUMENT CLUSTER

REMOVAL

REMOVAL

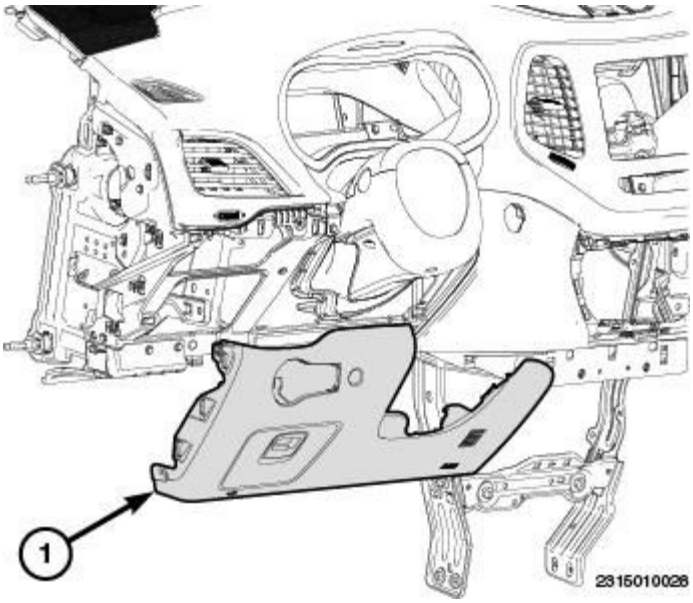

Fig. 340: Identifying Steering Column Opening Cover
Courtesy of CHRYSLER GROUP, LLC

1. Remove the steering column opening cover. Refer to **COVER, STEERING COLUMN OPENING, REMOVAL**.

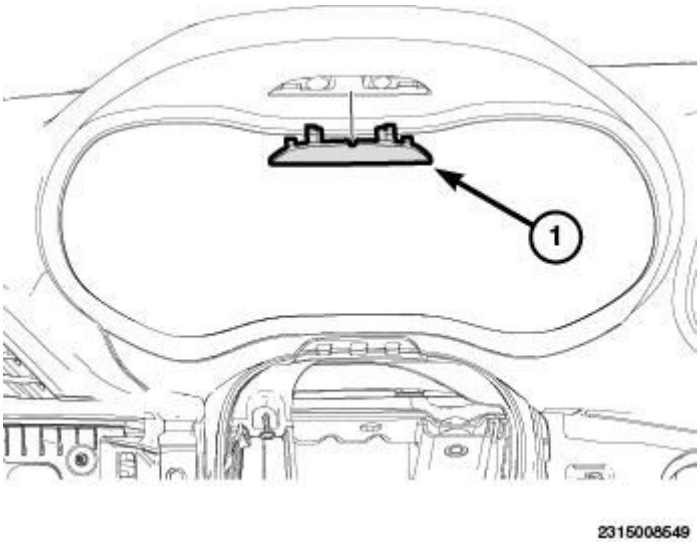

Fig. 341: Identifying Trim Cover
Courtesy of CHRYSLER GROUP, LLC

2. Using a small flat bladed tool, or equivalent, remove the trim cover (1).

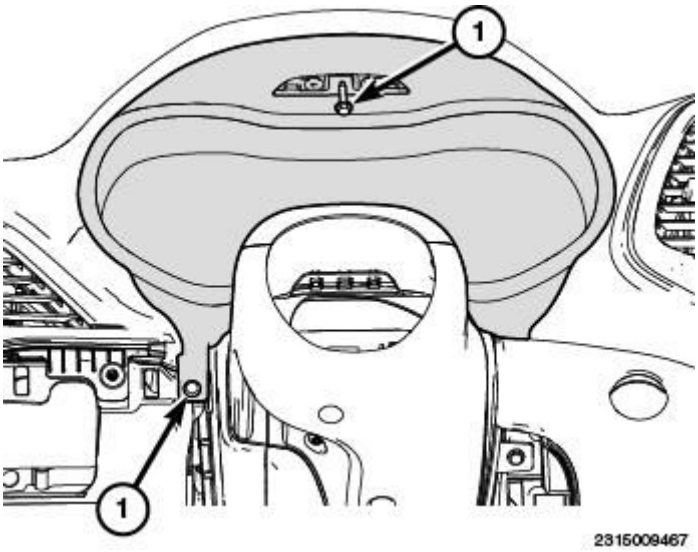

Fig. 342: Identifying Trim Cover Fasteners
Courtesy of CHRYSLER GROUP, LLC

3. Remove the fasteners (1).

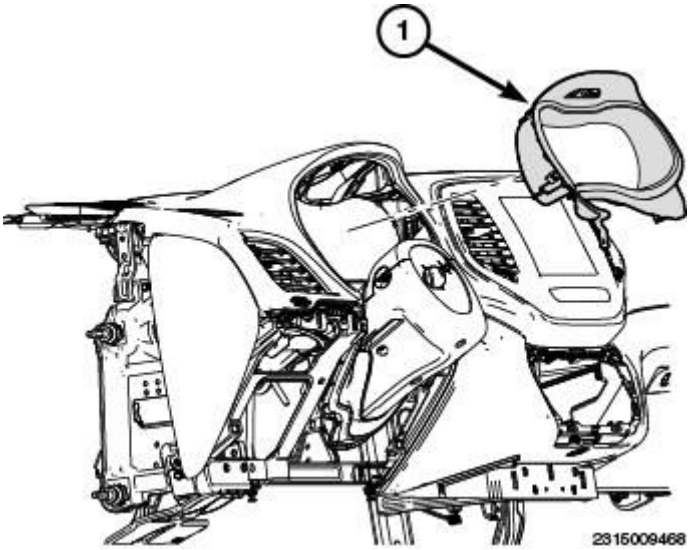

Fig. 343: Identifying Cluster Bezel
Courtesy of CHRYSLER GROUP, LLC

4. Remove the cluster bezel (1) from the vehicle

INSTALLATION

INSTALLATION

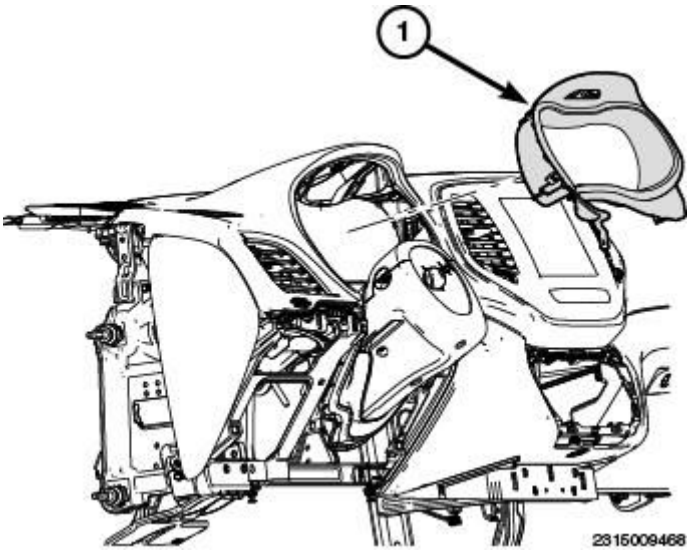

Fig. 344: Identifying Cluster Bezel
Courtesy of CHRYSLER GROUP, LLC

1. Position the bezel (1) over the cluster and seat fully.

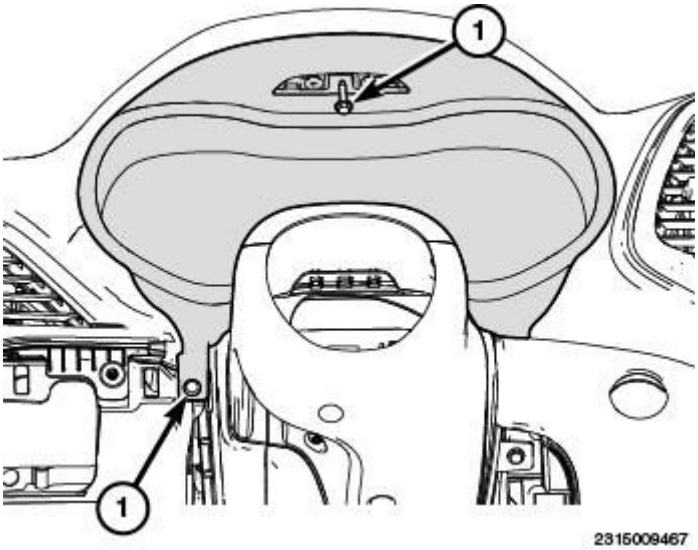

Fig. 345: Identifying Trim Cover Fasteners
Courtesy of CHRYSLER GROUP, LLC

2. Install the fasteners (1).

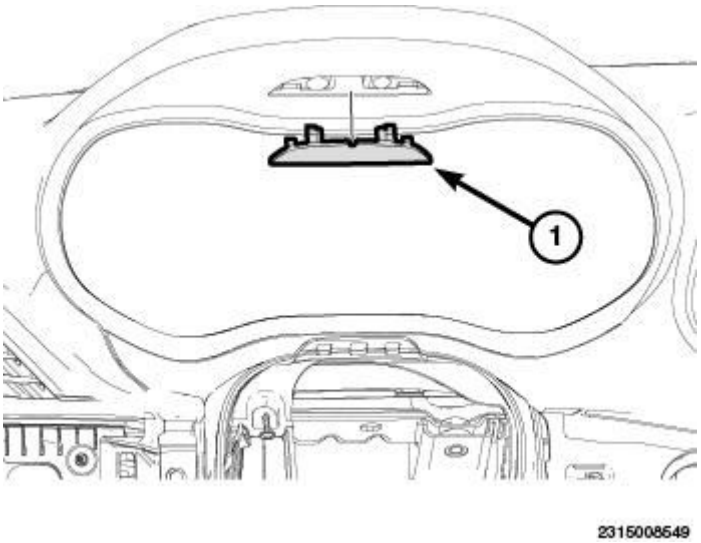

Fig. 346: Identifying Trim Cover
Courtesy of CHRYSLER GROUP, LLC

3. Install the trim cover (1).

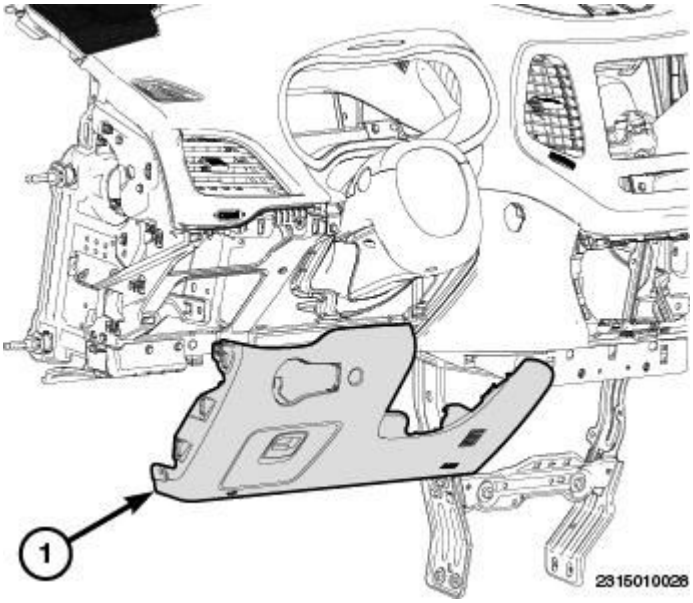

Fig. 347: Identifying Steering Column Opening Cover
Courtesy of CHRYSLER GROUP, LLC

4. Install the steering column opening cover (1). Refer to **COVER, STEERING COLUMN OPENING, INSTALLATION**.

BEZEL, INSTRUMENT PANEL, CENTER

REMOVAL

REMOVAL

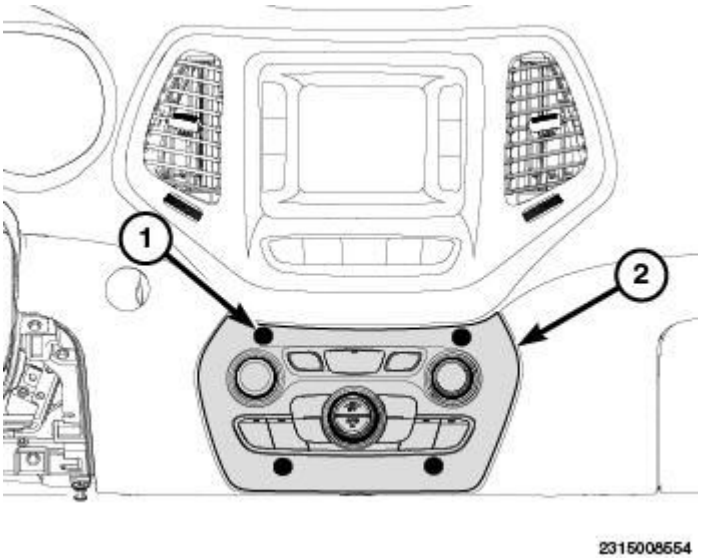

Fig. 348: Identifying HVAC Control Head & Clips
Courtesy of CHRYSLER GROUP, LLC

1. Using a trim stick or equivalent, separate the four clips (1) and remove the HVAC control head (2).
2. Disconnect the control head electrical connector.

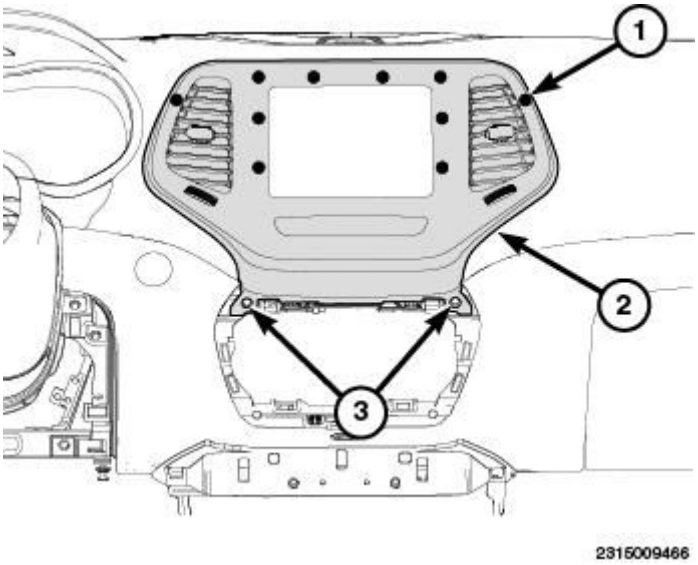

Fig. 349: Identifying Center Bezel & Fasteners
Courtesy of CHRYSLER GROUP, LLC

3. Remove the fasteners (3).
4. Locate the clips (1) and using a (special tool #C-4755, Trim Stick) or equivalent, release the clips and remove the center bezel (2).
5. Disconnect the electrical connector.

INSTALLATION

INSTALLATION

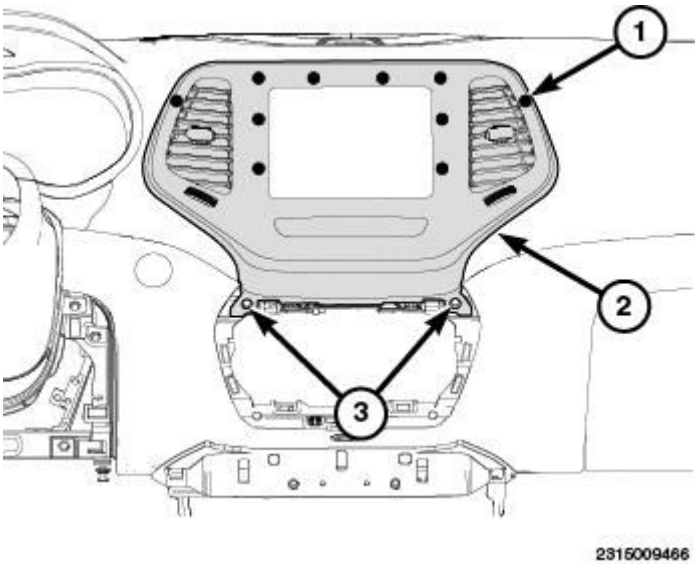

Fig. 350: Identifying Center Bezel & Fasteners
Courtesy of CHRYSLER GROUP, LLC

1. Connect the electrical connector.
2. Install the center bezel (2) and seat the clips (1) fully.
3. Install the fasteners (3).

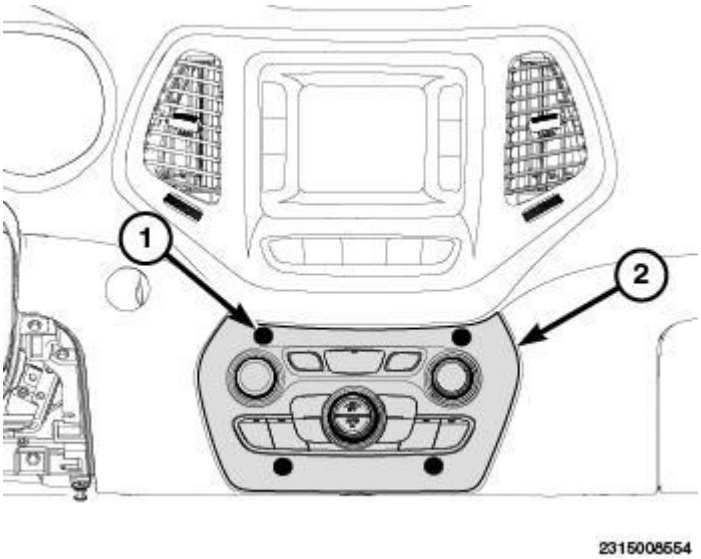

Fig. 351: Identifying HVAC Control Head & Clips
Courtesy of CHRYSLER GROUP, LLC

4. Connect the HVAC control head (2) electrical connectors.

5. Install the control head and seat the clips (1) fully.

CAP, INSTRUMENT PANEL END

REMOVAL

REMOVAL

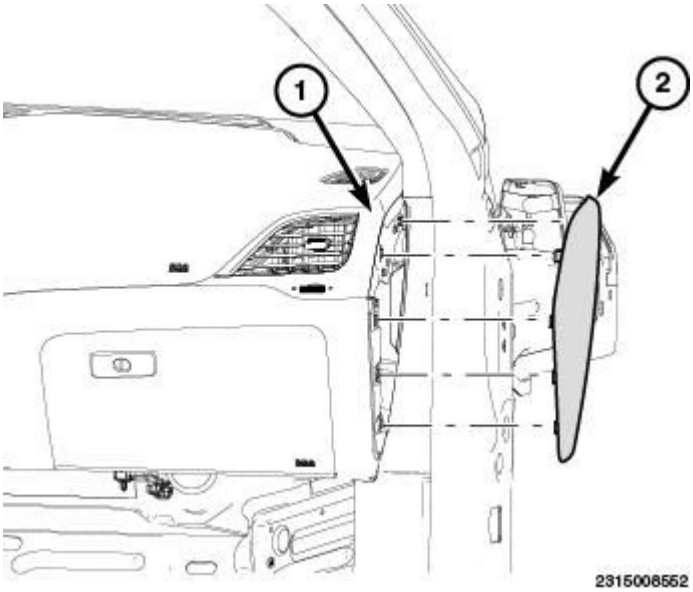

Fig. 352: Identifying Instrument Panel & End Cap
Courtesy of CHRYSLER GROUP, LLC

NOTE: Right side shown, left side similar.

1. Using a (special tool #C-4755, Trim Stick) or equivalent, release the clips holding end cap (2) to instrument panel (1).
2. Remove the end cap (2).

INSTALLATION

INSTALLATION

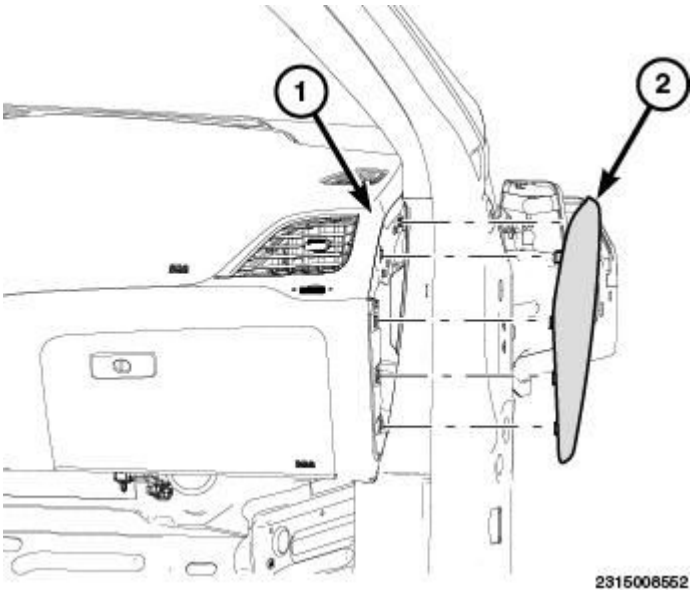

Fig. 353: Identifying Instrument Panel & End Cap
Courtesy of CHRYSLER GROUP, LLC

NOTE: Right side shown, left side similar.

1. Position end cover (2) over retaining slots and firmly snap into place.

COVER, STEERING COLUMN OPENING

REMOVAL

REMOVAL

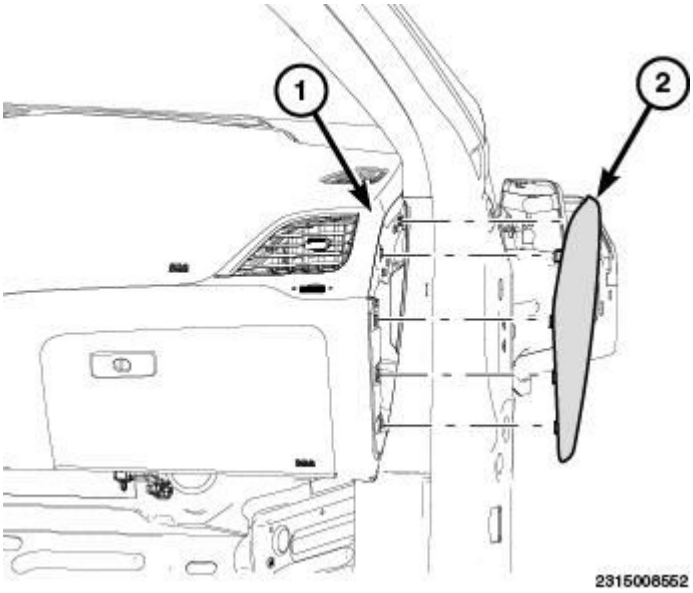

Fig. 354: Identifying Instrument Panel & End Cap

Courtesy of CHRYSLER GROUP, LLC

1. Disconnect and isolate battery negative cable.
2. Using a trim stick (special tool #C-4755, Trim Stick) or equivalent, remove the drivers side end cap.

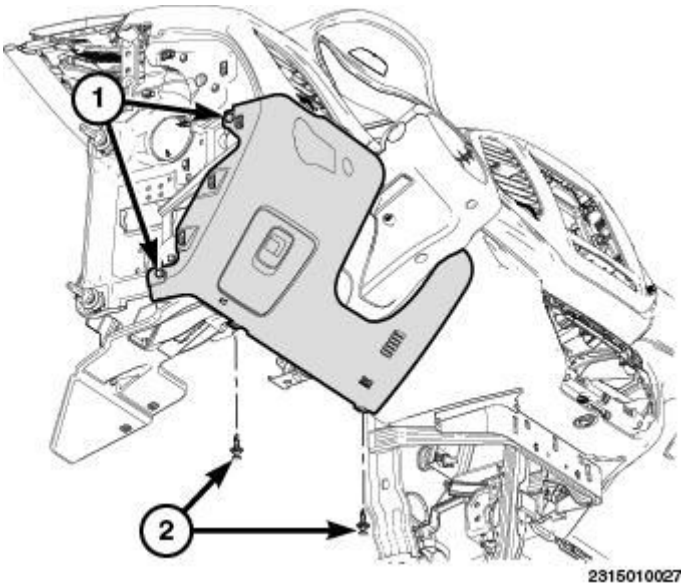

Fig. 355: Identifying Screws & Push Pin Fasteners
Courtesy of CHRYSLER GROUP, LLC

3. Remove the screws (1) and push pin fasteners (2).

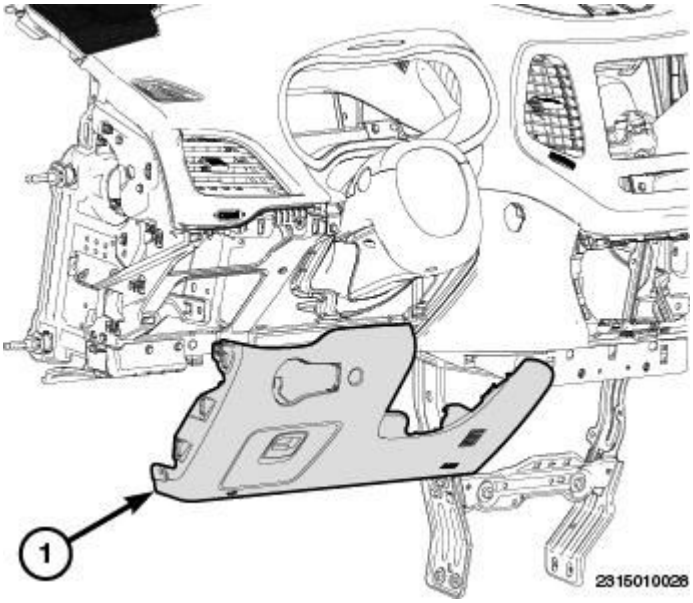

Fig. 356: Identifying Steering Column Opening Cover
Courtesy of CHRYSLER GROUP, LLC

4. Using a trim stick or equivalent, separate the retaining clips and remove the cover (1).
5. Disconnect the headlight electrical connector.

INSTALLATION

INSTALLATION

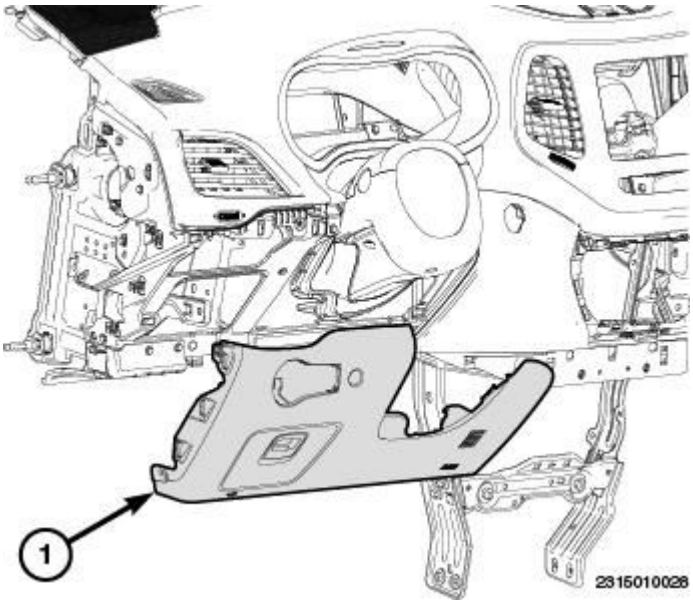

Fig. 357: Identifying Steering Column Opening Cover
Courtesy of CHRYSLER GROUP, LLC

1. Connect the headlight electrical connector.
2. Position the steering column opening cover (1) back into place and seat the retaining clips fully.

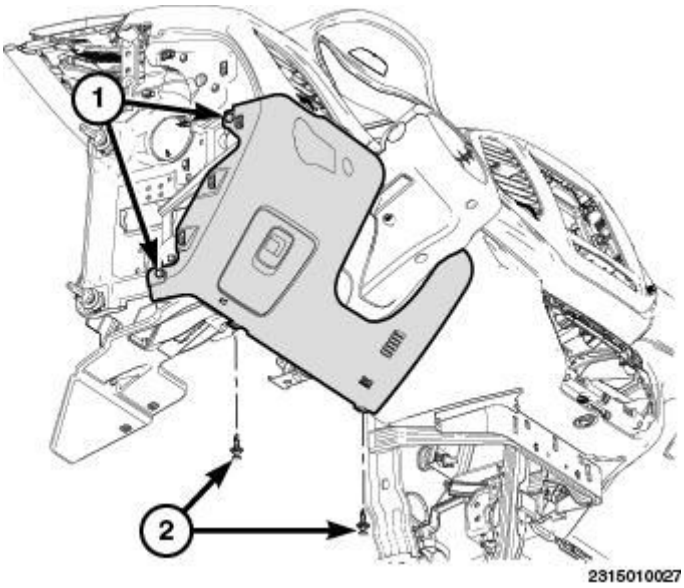

Fig. 358: Identifying Screws & Push Pin Fasteners
Courtesy of CHRYSLER GROUP, LLC

3. Install the screws (1) and install the push pin fasteners (2).

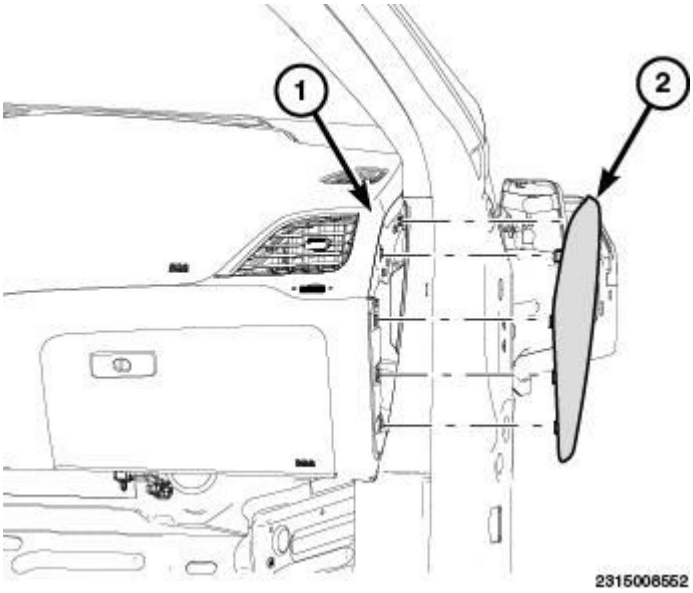

Fig. 359: Identifying Instrument Panel & End Cap
Courtesy of CHRYSLER GROUP, LLC

NOTE: Passenger side end cap shown (2), driver side similar.

4. Install the end cap (2) and seat the retaining clips fully.

GLOVE BOX, INSTRUMENT PANEL

REMOVAL

REMOVAL

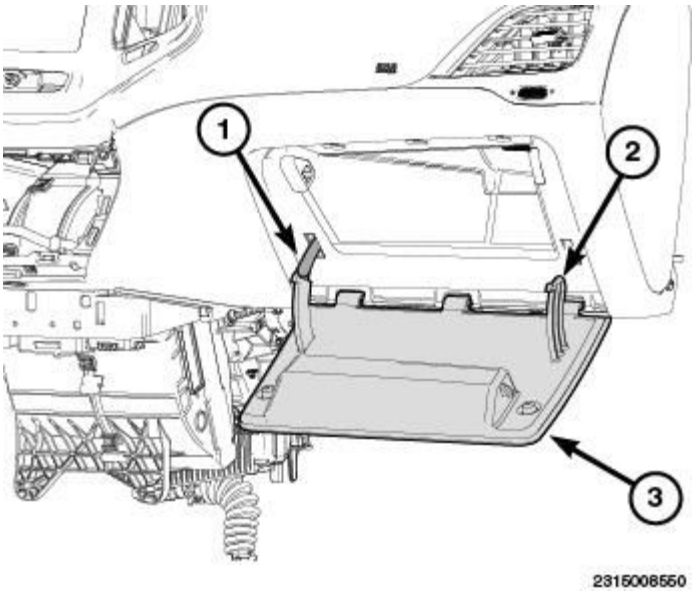

Fig. 360: Identifying Glove Box Doors & Support Arms
Courtesy of CHRYSLER GROUP, LLC

1. Open the glove box door and release the support arms (2) by pressing down and pulling out of the box assembly.
2. Release the damper arm (1) and remove the door.

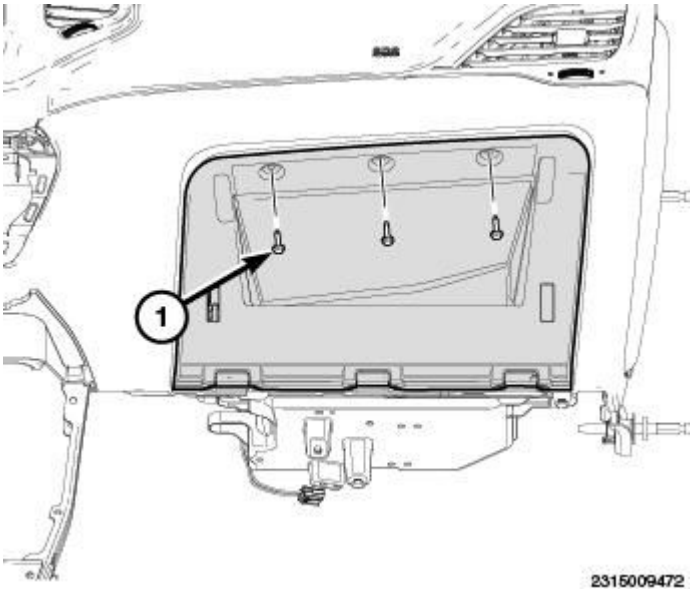

Fig. 361: Identifying Front Fasteners
Courtesy of CHRYSLER GROUP, LLC

3. Remove the front fasteners (1) and remove the rear fastener from under the IP and at the front of the box.

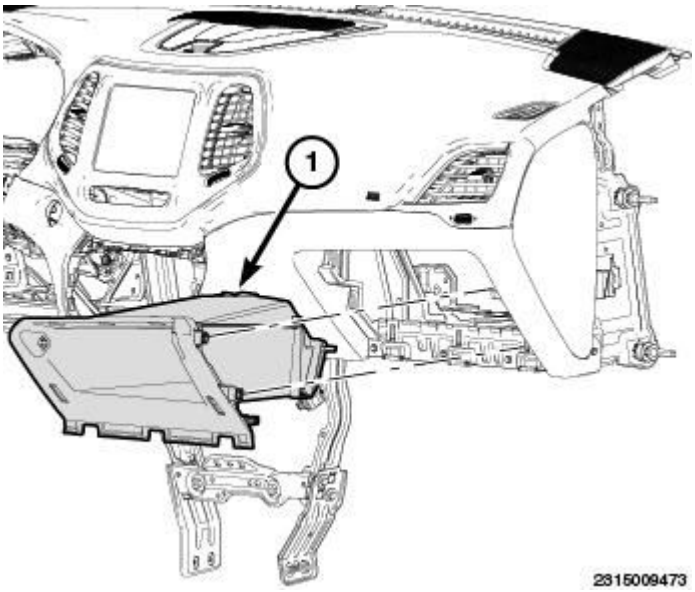

Fig. 362: Identifying Box
Courtesy of CHRYSLER GROUP, LLC

4. Release the side retaining clips and remove the box (1) from the instrument panel.

INSTALLATION

INSTALLATION

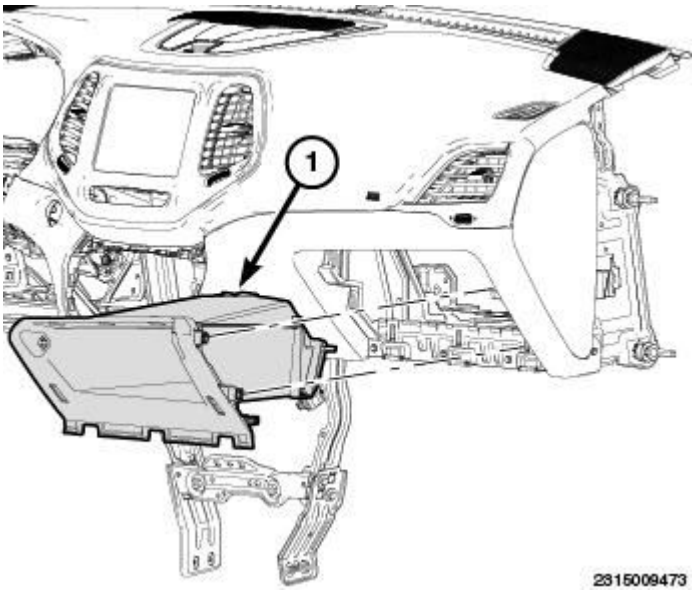

Fig. 363: Identifying Box
Courtesy of CHRYSLER GROUP, LLC

1. Position the glove box assembly (1) back into the instrument panel and seat the retaining clips fully.

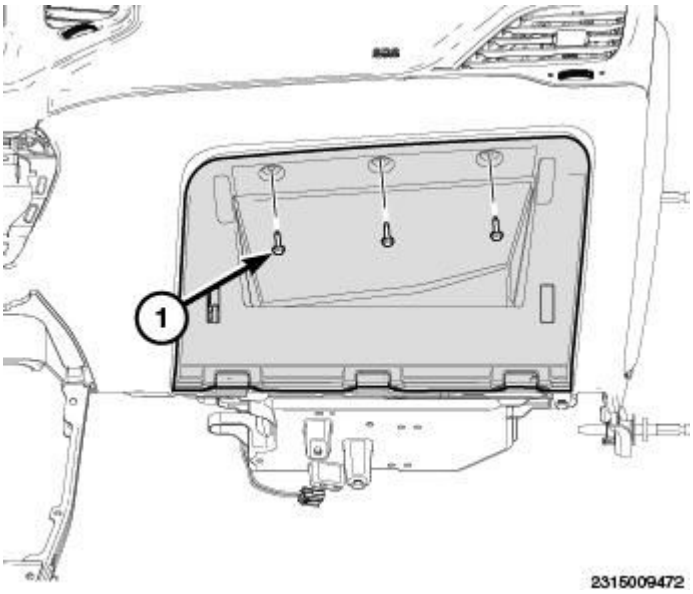

Fig. 364: Identifying Front Fasteners
Courtesy of CHRYSLER GROUP, LLC

2. Install the screws (1) at the front of the box and install the screw at the front of the box from under the instrument panel.

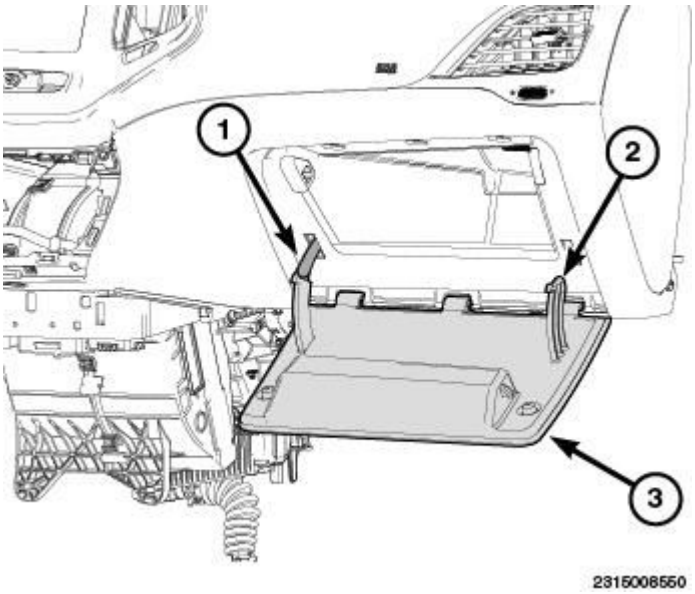

Fig. 365: Identifying Glove Box Doors & Support Arms
Courtesy of CHRYSLER GROUP, LLC

3. Install the glove box door (3) hinges onto the instrument panel and connect the damper arm (1).
4. insert the support arms (2) into the box slots and check door for operation.

GRILLE, DEFROSTER

REMOVAL

REMOVAL

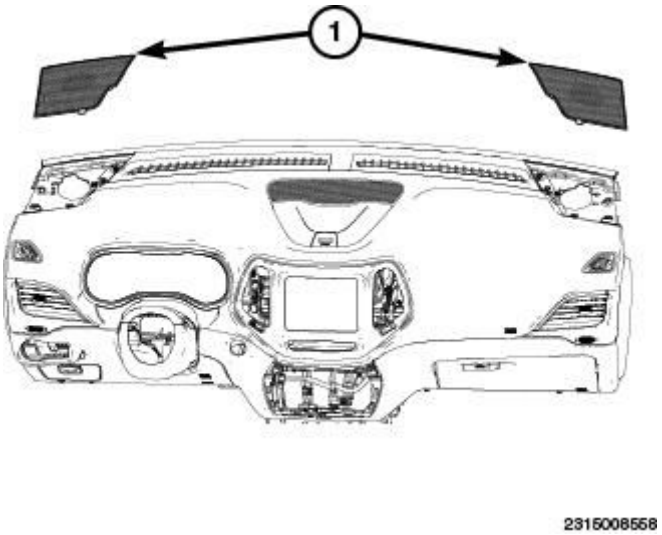

Fig. 366: Identifying Speaker Covers
Courtesy of CHRYSLER GROUP, LLC

1. Using a (special tool #C-4755, Trim Stick) or equivalent, remove the speaker covers (1).

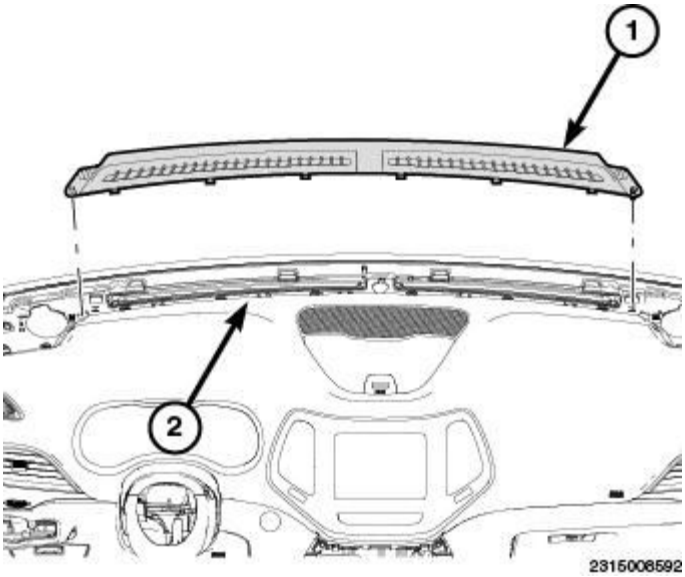

Fig. 367: Identifying Defroster Grille & Sun Sensor Electrical Connector
Courtesy of CHRYSLER GROUP, LLC

2. Using a trim stick or equivalent, remove the defroster grille (1).
3. Disconnect the sun sensor electrical connector, if equipped.

INSTALLATION

INSTALLATION

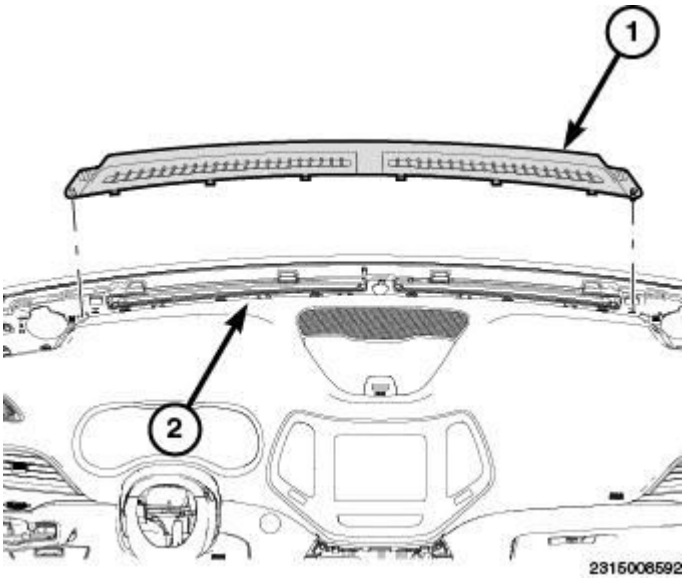

Fig. 368: Identifying Defroster Grille & Sun Sensor Electrical Connector
Courtesy of CHRYSLER GROUP, LLC

1. Position the grille (1) back and connect the sun sensor electrical connector, if equipped.
2. Seat the retaining clips fully.

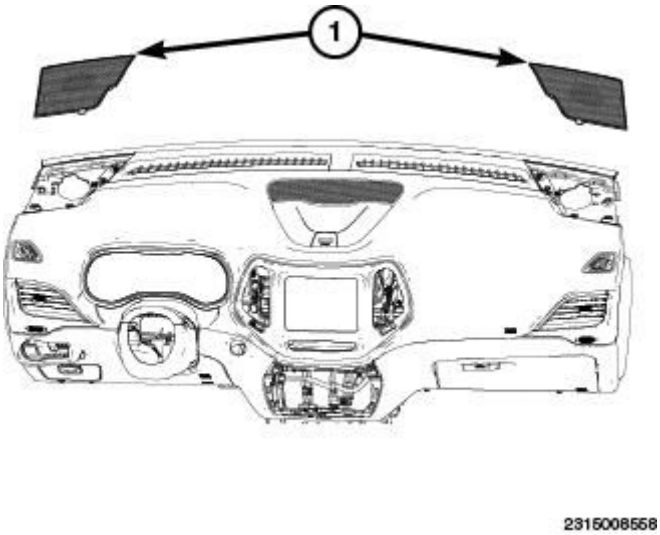

Fig. 369: Identifying Speaker Covers
Courtesy of CHRYSLER GROUP, LLC

3. Position the speaker grilles (1) back into place and seat the retaining clips fully.

PAD, INSTRUMENT PANEL

REMOVAL

REMOVAL

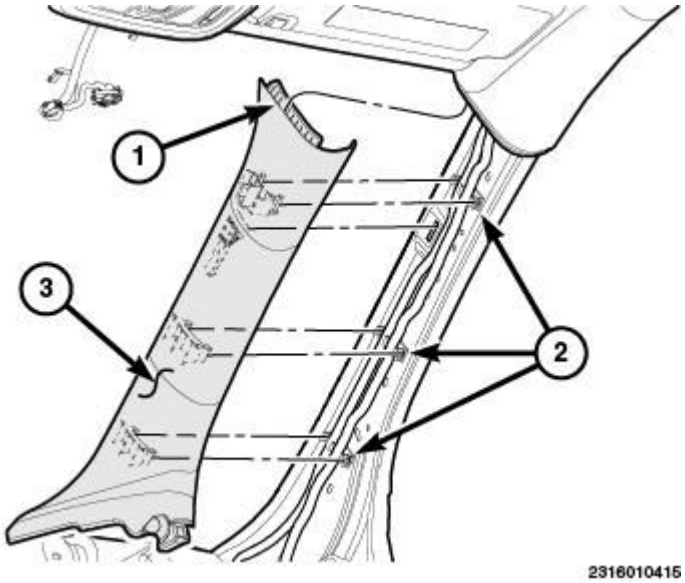

Fig. 370: Identifying A-Pillar Trim, Tab & Fasteners
Courtesy of CHRYSLER GROUP, LLC

WARNING: To avoid serious or fatal injury on vehicles equipped with airbags, disable the Supplemental Restraint System (SRS) before attempting any steering wheel, steering column, airbag, Occupant Classification System (OCS), seat belt tensioner, impact sensor or instrument panel component diagnosis or service. Disconnect and isolate the battery negative (ground) cable, then wait two minutes for the system capacitor to discharge before performing further diagnosis or service. This is the only sure way to disable the SRS. Failure to follow these instructions may result in accidental airbag deployment.

WARNING: To avoid serious or fatal injury when removing a deployed airbag, rubber gloves, eye protection, and a long-sleeved shirt should be worn. There may be deposits on the airbag unit and other interior surfaces. In large doses, these deposits may cause irritation to the skin and eyes.

1. Disconnect and isolate the negative battery cable.
2. Remove the a-pillar trim (3). Refer to **PANEL, A-PILLAR TRIM, REMOVAL**.

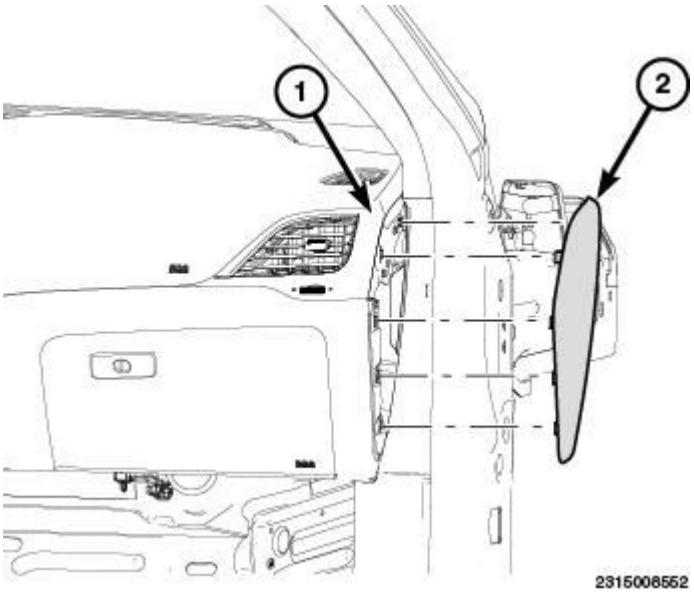

Fig. 371: Identifying Instrument Panel & End Cap
Courtesy of CHRYSLER GROUP, LLC

3. Using a (special tool #C-4755, Trim Stick) or equivalent, remove the end caps (2) from the instrument panel (1). Refer to **CAP, INSTRUMENT PANEL END, REMOVAL**.

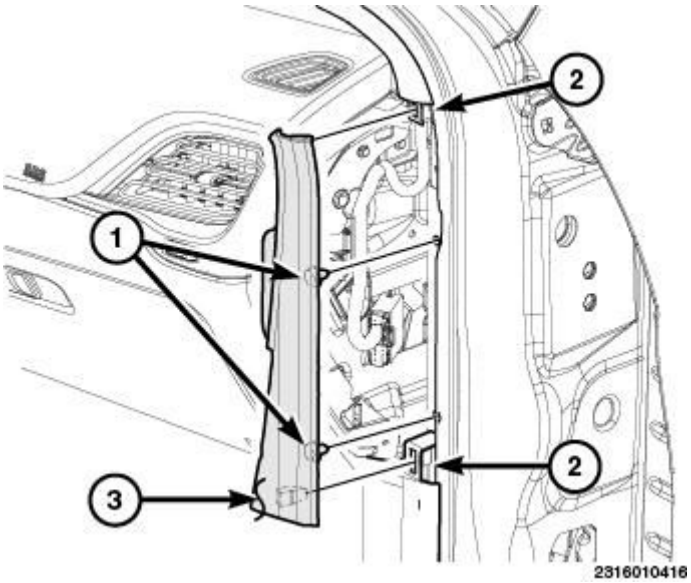

Fig. 372: Identifying Closeout Panel & Fasteners
Courtesy of CHRYSLER GROUP, LLC

4. Using a trim stick or equivalent, release the push pin fasteners (1) and the retaining tabs (2) and remove closeout panel (3) located between the A-pillar trim and the front scuff plate.

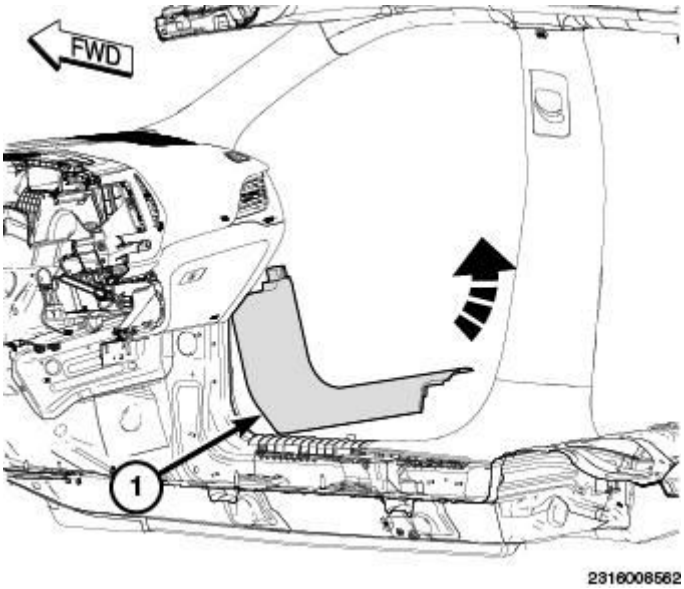

Fig. 373: Removing Front Door Sill Scuff Panel
Courtesy of CHRYSLER GROUP, LLC

5. Using a trim stick or equivalent, disengage the retaining clips securing the front door sill scuff panel (1) to the door sill and lower B-pillar.
6. Remove the front door sill scuff panel (1).

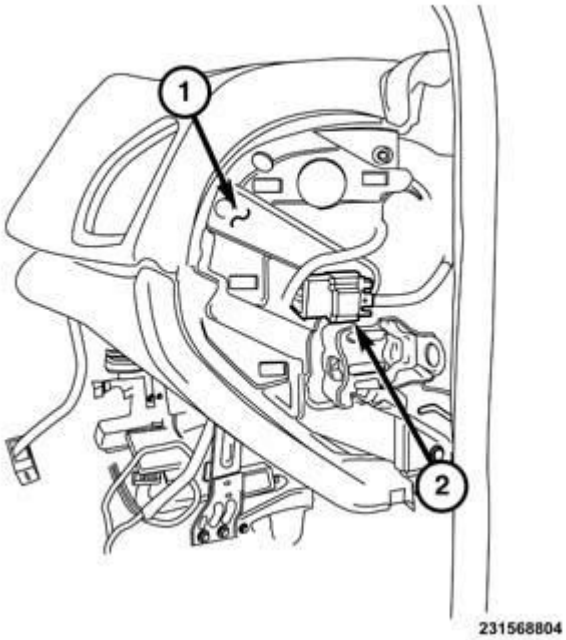

Fig. 374: Dash Side & Connector
Courtesy of CHRYSLER GROUP, LLC

7. Unclip the harness and connector (2) from the dash side (1) on both sides of the vehicle.

8. Disconnect the a-pillar wiring connectors.
9. Repeat on the opposite side of the vehicle.

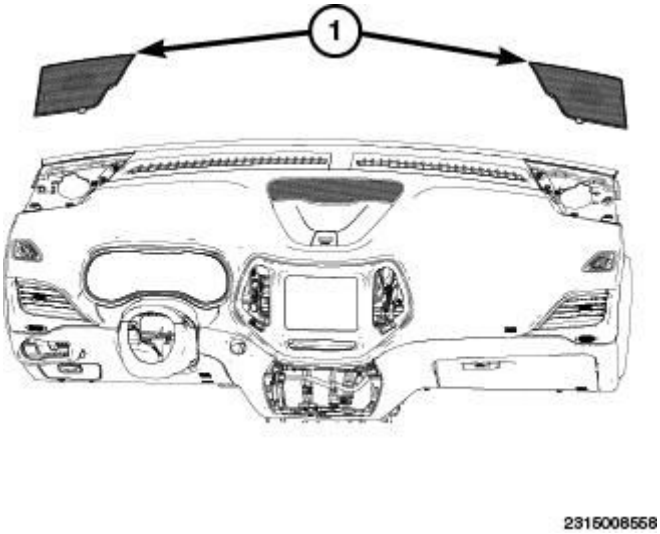

Fig. 375: Identifying Speaker Covers
Courtesy of CHRYSLER GROUP, LLC

10. Using a trim stick or equivalent, remove the speaker covers (1).

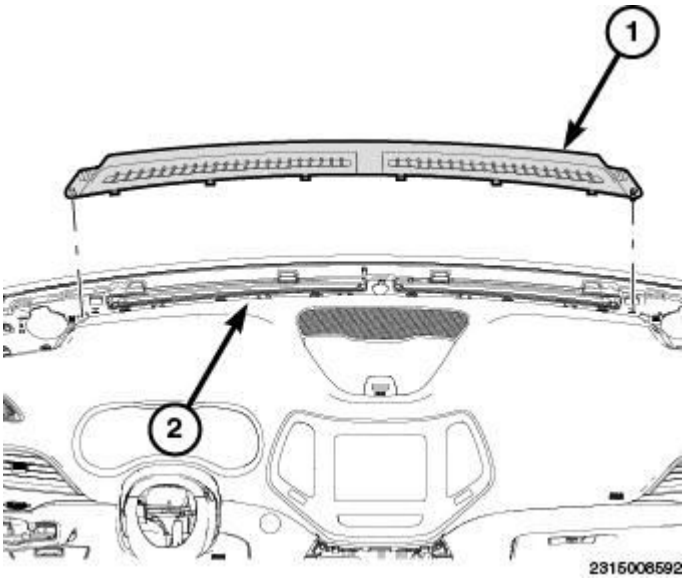

Fig. 376: Identifying Defroster Grille & Sun Sensor Electrical Connector
Courtesy of CHRYSLER GROUP, LLC

11. Remove defroster grill (1). Refer to **GRILLE, DEFROSTER, REMOVAL**.

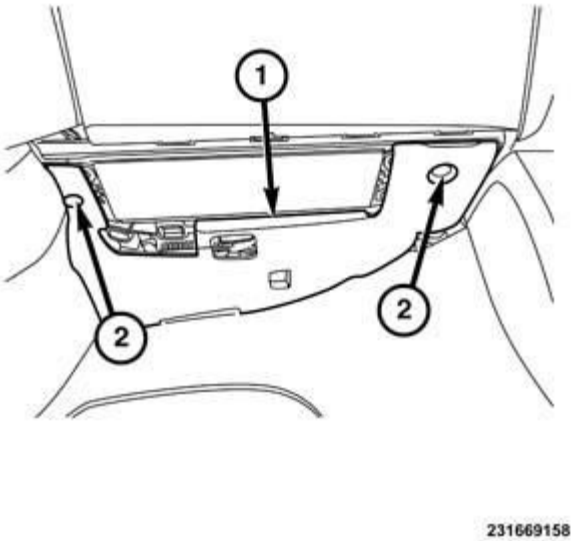

Fig. 377: Hush Panel & Push Pin Fasteners
Courtesy of CHRYSLER GROUP, LLC

12. Remove push pin fasteners (2) and remove the lower dash silencer panels (1).
13. Remove the floor console. Refer to **CONSOLE, FLOOR, REMOVAL**.
14. Remove the steering column (1). Refer to **COLUMN, REMOVAL** .
15. Remove the cluster (1). Refer to **REMOVAL** .
16. Remove glove box assembly. Refer to **GLOVE BOX, INSTRUMENT PANEL, REMOVAL**.

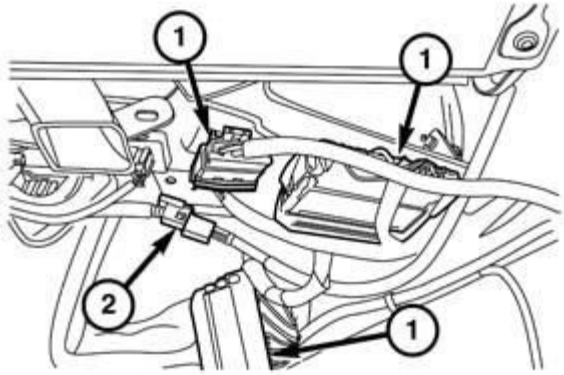

231568798

Fig. 378: Dash Wiring Harnesses & Coaxial Connector
Courtesy of CHRYSLER GROUP, LLC

17. Located under the passenger side of dash, disconnect the body to dash wiring harnesses (1).
18. Disconnect the coaxial connectors (2), if so equipped.

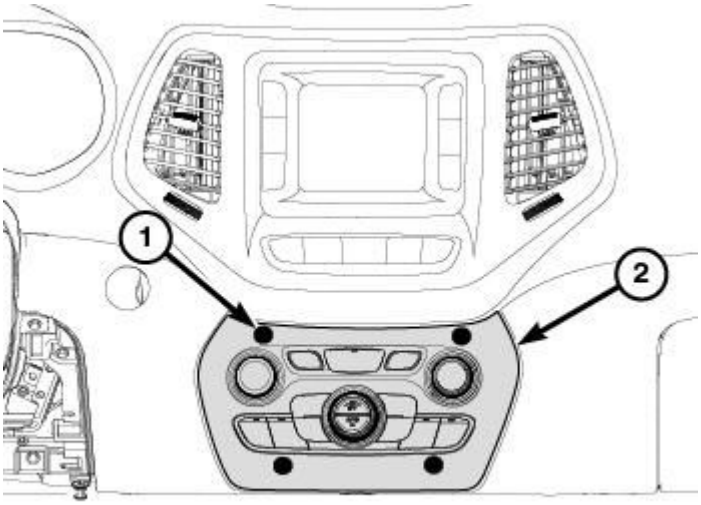

2315008554

Fig. 379: Identifying HVAC Control Head & Clips
Courtesy of CHRYSLER GROUP, LLC

19. Using a trim stick or equivalent, separate the four clips (1) and remove the HVAC control head (2).
20. Disconnect the control head electrical connector.

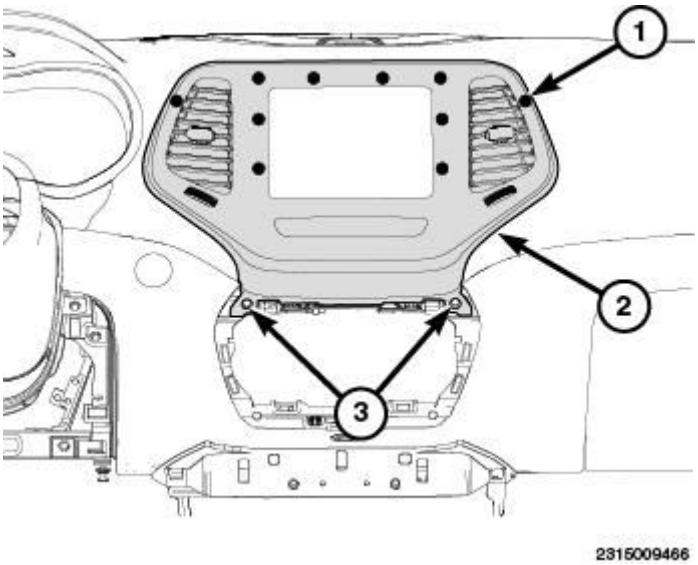

Fig. 380: Identifying Center Bezel & Fasteners
Courtesy of CHRYSLER GROUP, LLC

21. Remove the center bezel (2). Refer to **BEZEL, INSTRUMENT PANEL, CENTER, REMOVAL**.
22. Remove the radio module. Refer to **RADIO, REMOVAL** .

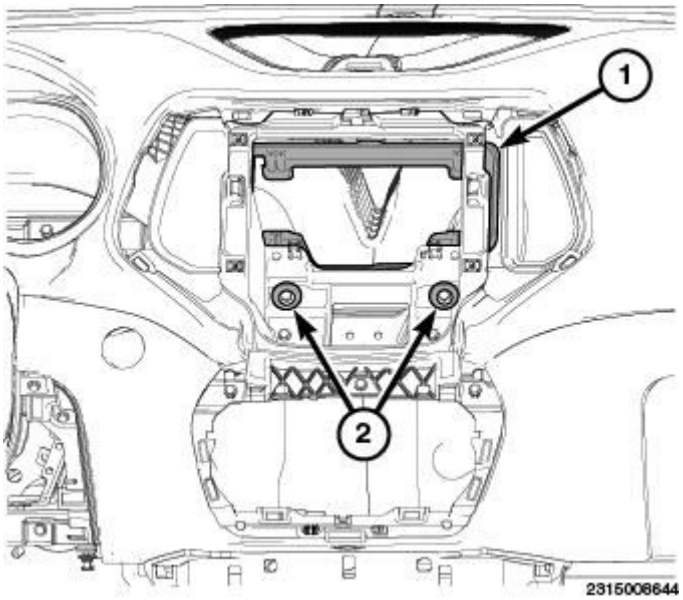

Fig. 381: Identifying Radio Support Bracket & Bolts
Courtesy of CHRYSLER GROUP, LLC

23. Remove the bolts (2) and remove the radio support bracket (1).

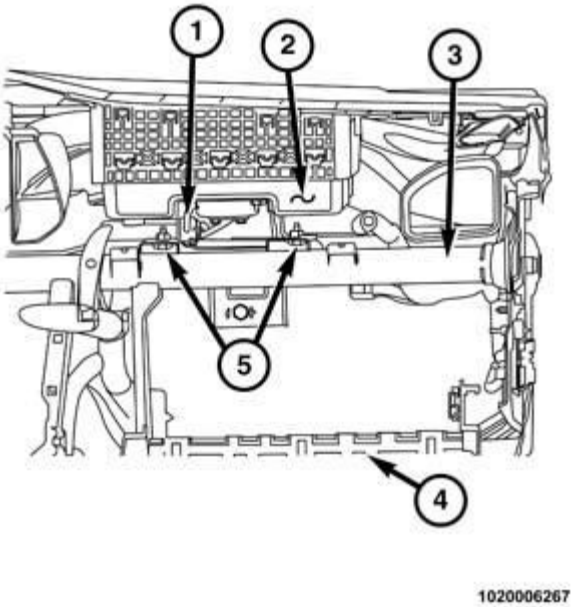

Fig. 382: Removing/Installing Passenger AirBag (PAB)
Courtesy of CHRYSLER GROUP, LLC

24. Reach through and above the glove box opening (4) of the instrument panel to access and remove the two screws (5) that secure the Passenger AirBag (PAB) (2) lower mounting bracket to the instrument panel structural support (3).
25. Still reaching through the glove box opening, disconnect the instrument panel wire harness connector from the PAB pigtail wire harness connector (1).

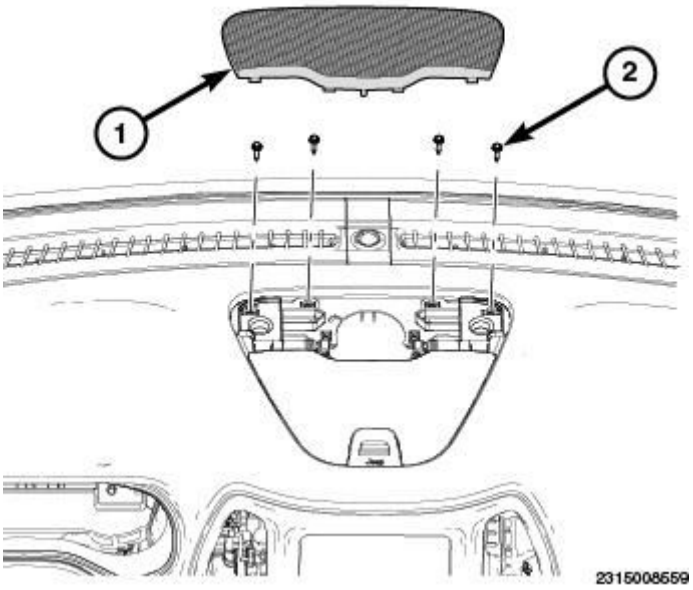

Fig. 383: Identifying Center Speaker Cover & Screws

Courtesy of CHRYSLER GROUP, LLC

26. Using a trim stick or equivalent, remove the center speaker cover (1).
27. Remove the screws (2).

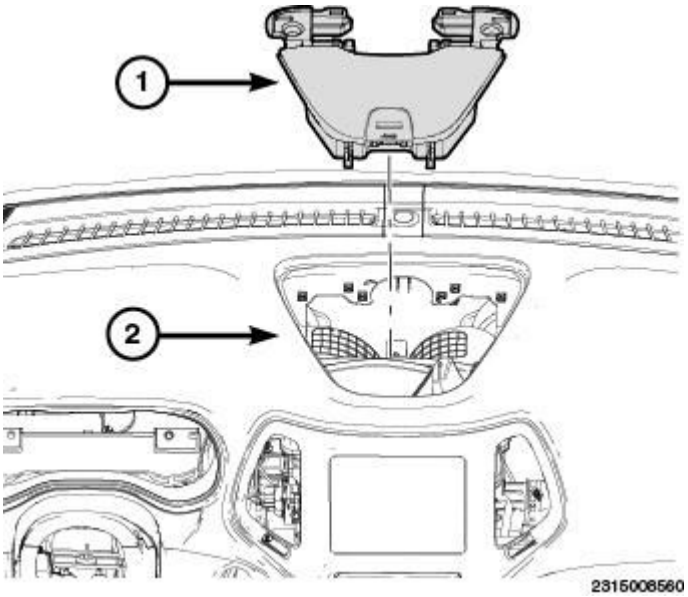

Fig. 384: Identifying Upper Storage Bin & Instrument Panel Top Cover
Courtesy of CHRYSLER GROUP, LLC

28. Remove the upper storage bin (1) from the instrument panel top cover (2).

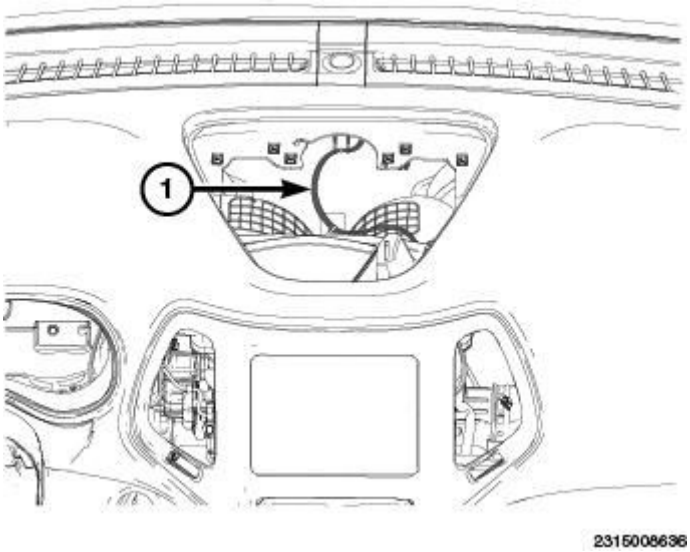

Fig. 385: Identifying Harness
Courtesy of CHRYSLER GROUP, LLC

29. Separate the harness (1), if equipped.

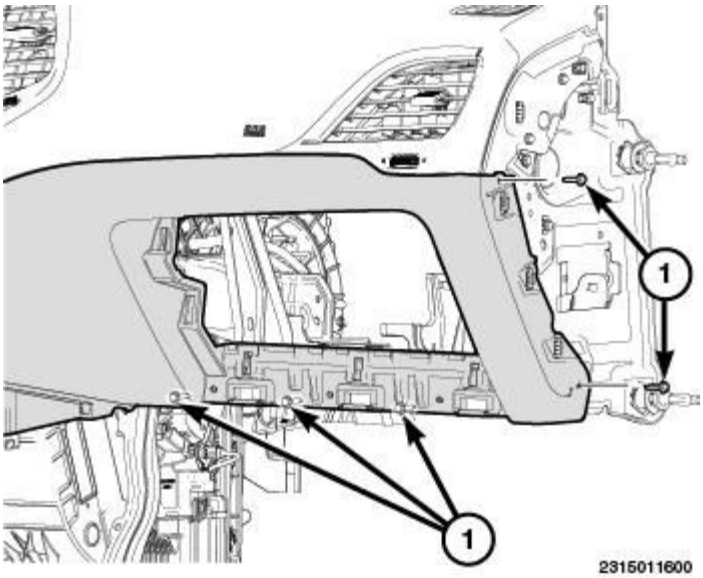

Fig. 386: Identifying Lower Surround Panel & Fasteners
Courtesy of CHRYSLER GROUP, LLC

30. Remove the lower surround panel fasteners (1).

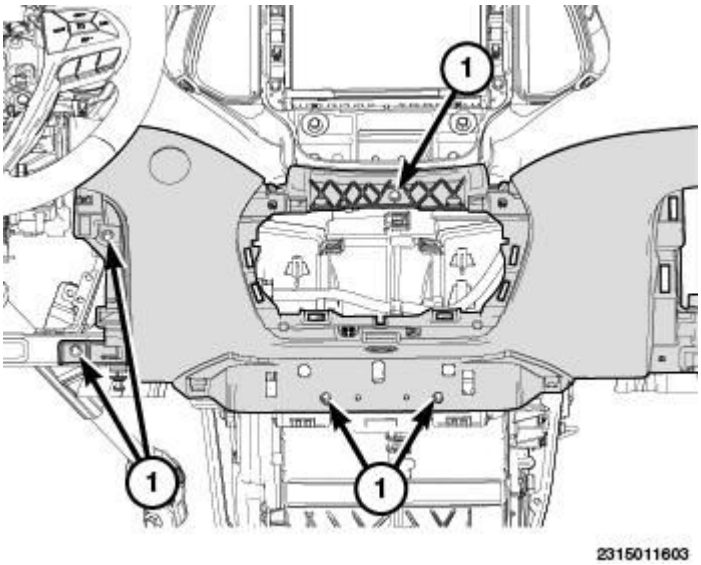

Fig. 387: Identifying Lower Surround Panel & Fasteners
Courtesy of CHRYSLER GROUP, LLC

31. Remove the lower surround panel fasteners (1).

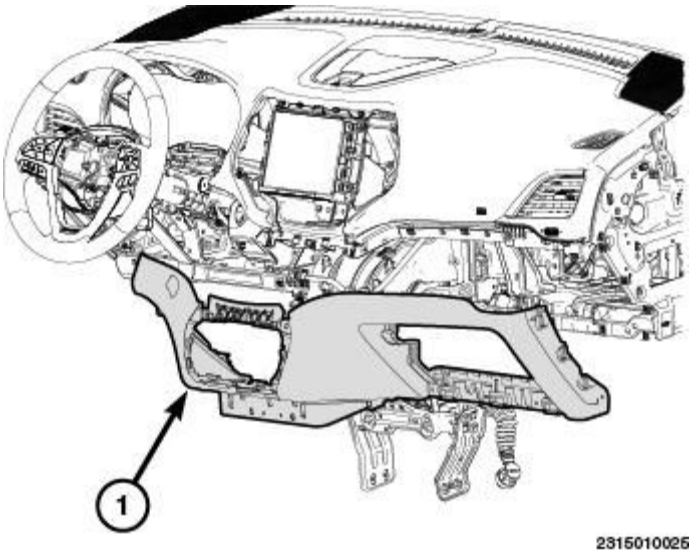

Fig. 388: Identifying Lower Instrument Panel Surround Panel
Courtesy of CHRYSLER GROUP, LLC

32. Using a trim stick or equivalent, separate the retaining clips and remove the lower instrument panel surround panel (1).

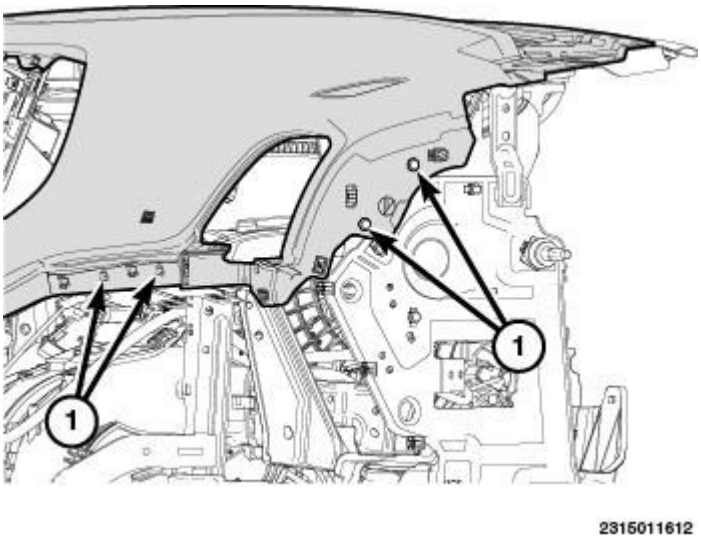

Fig. 389: Identifying Trim Fasteners
Courtesy of CHRYSLER GROUP, LLC

33. Remove the fasteners (1).

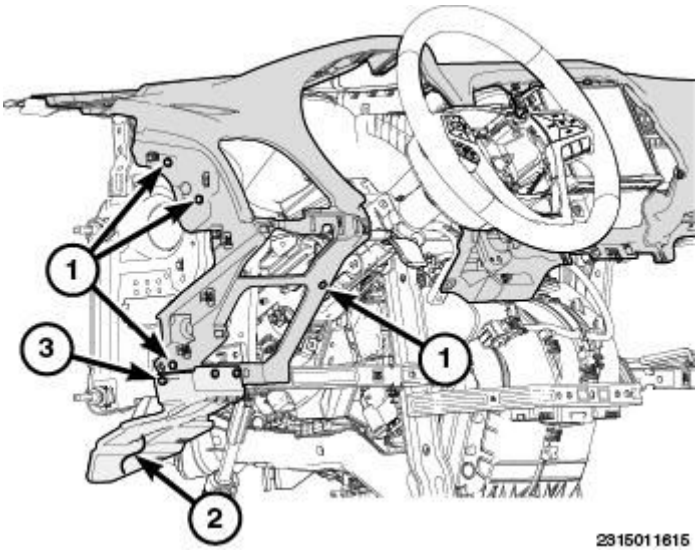

Fig. 390: Identifying Trim Fasteners
Courtesy of CHRYSLER GROUP, LLC

34. Remove the trim fasteners (3) and remove the trim panel (2).
35. Remove the fasteners (1).

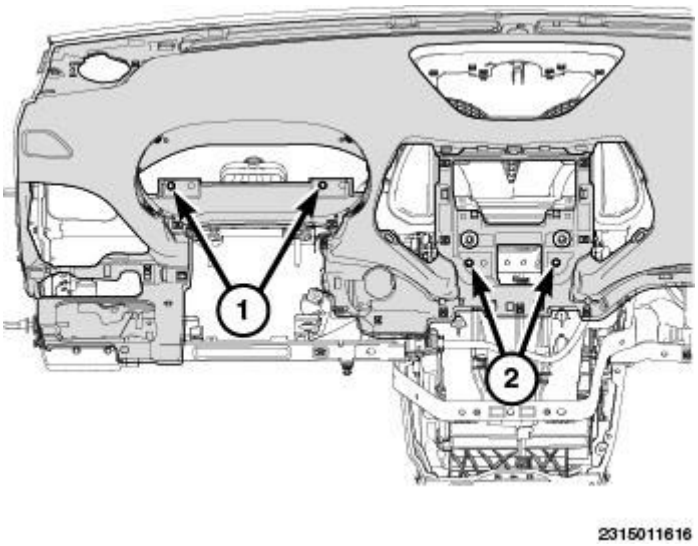

Fig. 391: Identifying Trim Fasteners
Courtesy of CHRYSLER GROUP, LLC

36. Remove the fasteners (1) in the cluster opening and the fasteners (2) from the center opening.

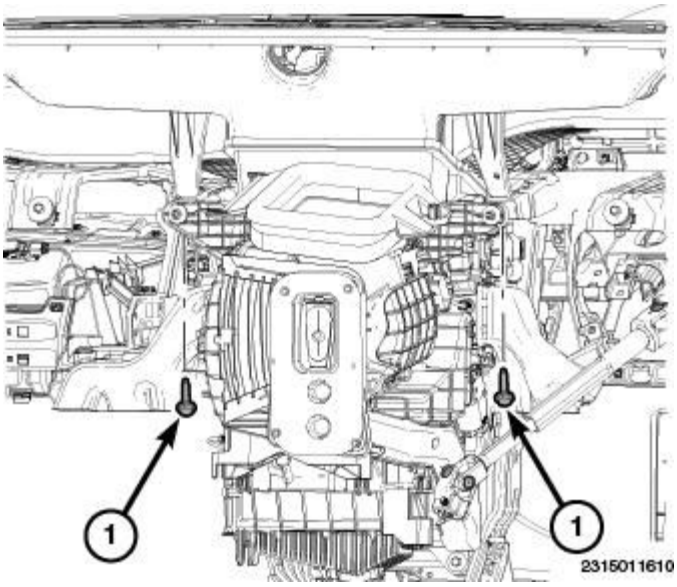

Fig. 392: Identifying HVAC Housing & Fasteners
Courtesy of CHRYSLER GROUP, LLC

37. From under the instrument panel remove the fasteners (1) securing the duct work to the HVAC housing.

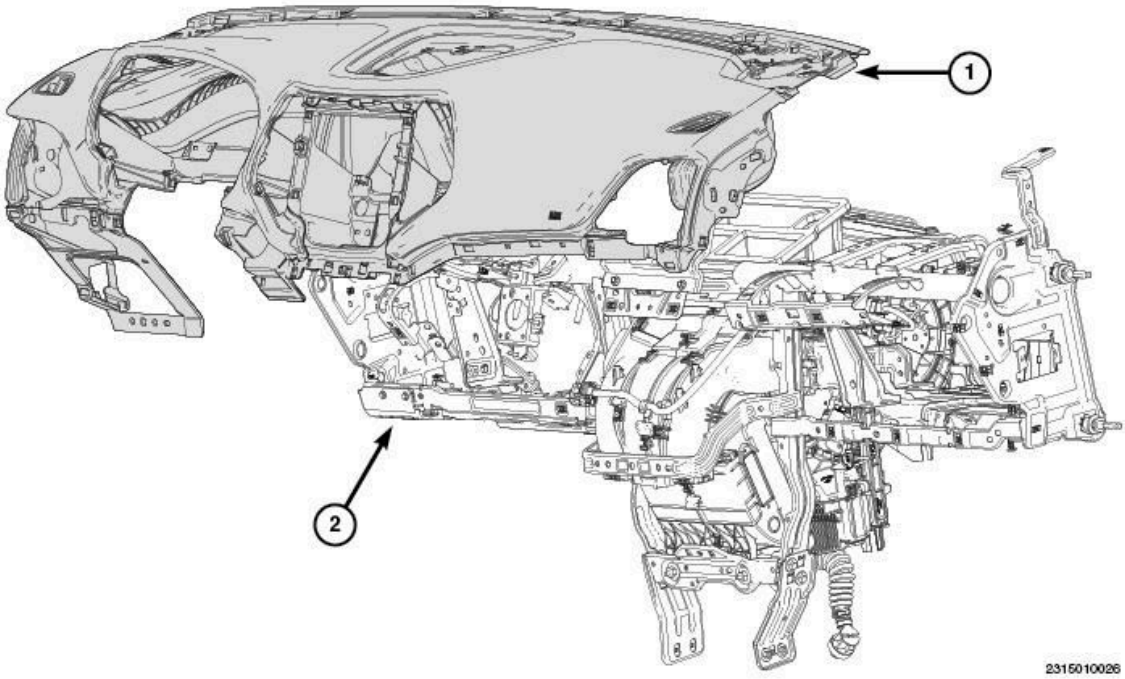

Fig. 393: Identifying Instrument Panel Top Pad Assembly & Support Structure
Courtesy of CHRYSLER GROUP, LLC

38. Remove the instrument panel top pad assembly (1) from the support structure (2).

INSTALLATION

INSTALLATION

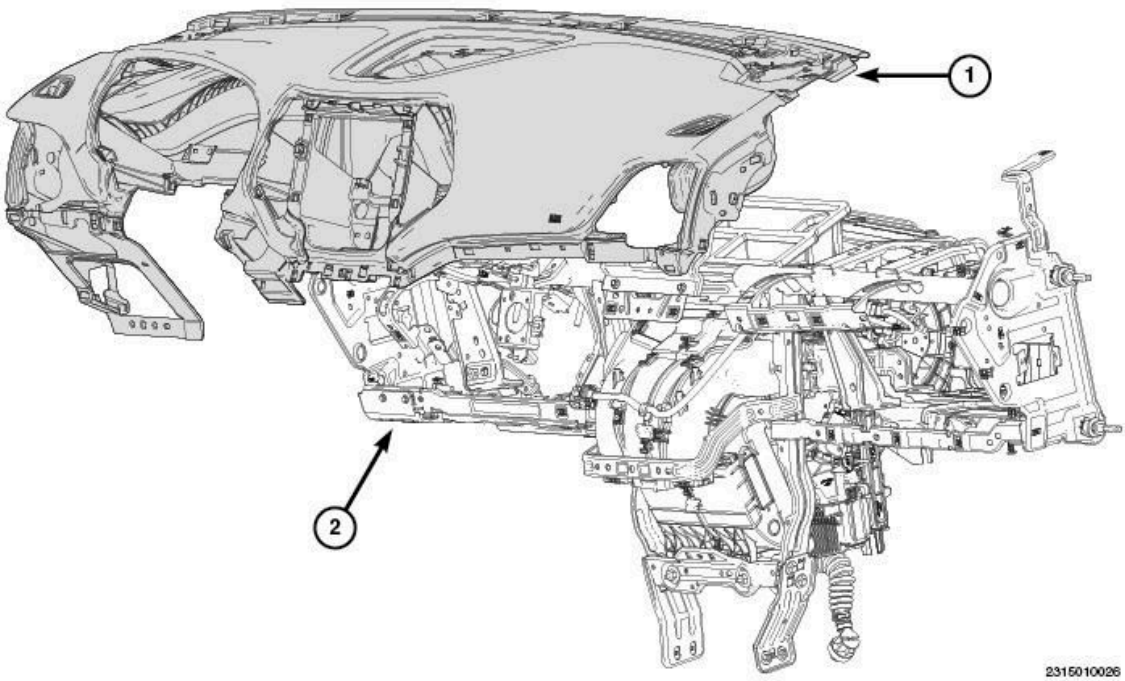

Fig. 394: Identifying Instrument Panel Top Pad Assembly & Support Structure
Courtesy of CHRYSLER GROUP, LLC

WARNING: To avoid serious or fatal injury on vehicles equipped with airbags, disable the Supplemental Restraint System (SRS) before attempting any steering wheel, steering column, airbag, Occupant Classification System (OCS), seat belt tensioner, impact sensor or instrument panel component diagnosis or service. Disconnect and isolate the battery negative (ground) cable, then wait two minutes for the system capacitor to discharge before performing further diagnosis or service. This is the only sure way to disable the SRS. Failure to follow these instructions may result in accidental airbag deployment.

WARNING: To avoid serious or fatal injury when removing a deployed airbag, rubber gloves, eye protection, and a long-sleeved shirt should be worn. There may be deposits on the airbag unit and other interior surfaces. In large doses, these deposits may cause irritation to the skin and eyes.

WARNING: To avoid serious or fatal injury, use extreme care to prevent any foreign material from entering the passenger airbag, or becoming entrapped between the passenger airbag cushion and the instrument panel top pad. Failure to observe this warning could result in occupant injuries upon airbag deployment.

1. Position the dash pad (1) into the vehicle.

2. Connect sun sensor and center stack wiring retainers into the dash pad (1).
3. Position the dash pad onto the dash carrier fully.

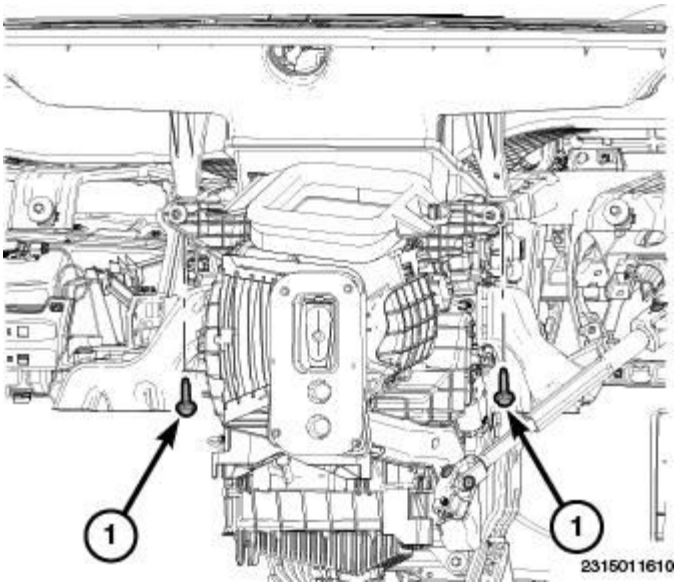

Fig. 395: Identifying HVAC Housing & Fasteners
Courtesy of CHRYSLER GROUP, LLC

4. From under the instrument panel install the fasteners (1) securing the duct work to the HVAC housing and tighten securely.

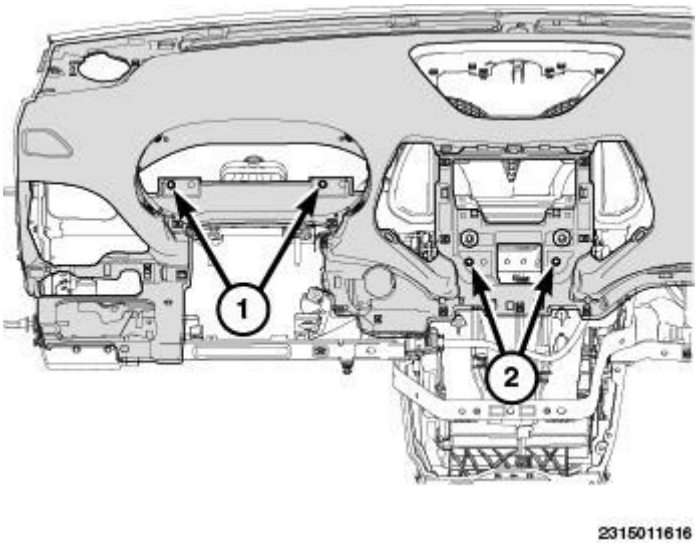

Fig. 396: Identifying Trim Fasteners
Courtesy of CHRYSLER GROUP, LLC

5. Install the fasteners (1) in the cluster opening and the fasteners (2) at the center opening.

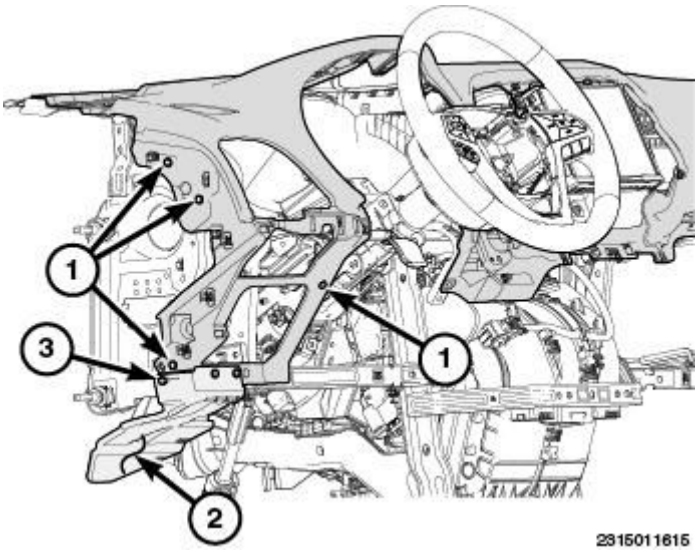

Fig. 397: Identifying Trim Fasteners
Courtesy of CHRYSLER GROUP, LLC

6. Install the fasteners (1).
7. Install the trim panel (2) and trim fasteners (3).

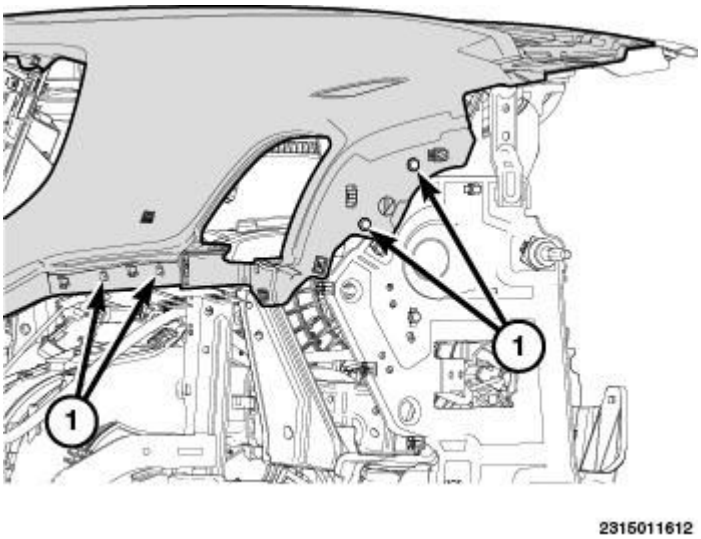

Fig. 398: Identifying Trim Fasteners
Courtesy of CHRYSLER GROUP, LLC

8. Install the fasteners (1).

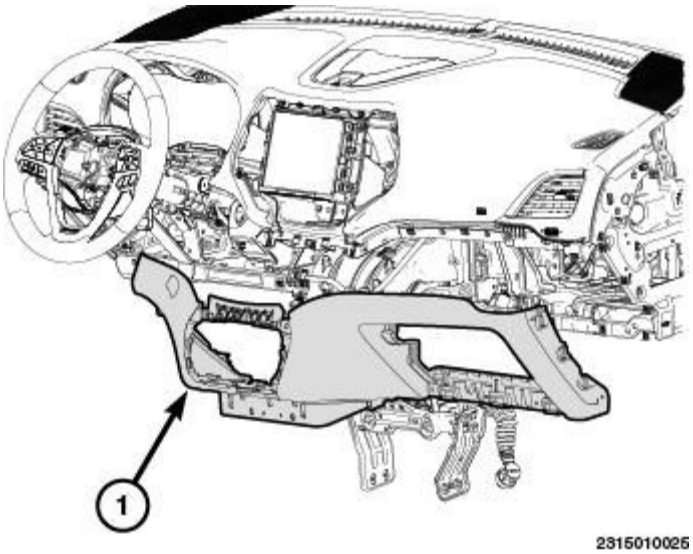

Fig. 399: Identifying Lower Instrument Panel Surround Panel
Courtesy of CHRYSLER GROUP, LLC

9. Position the lower surround panel (1) back into place and seat the retaining clips fully.

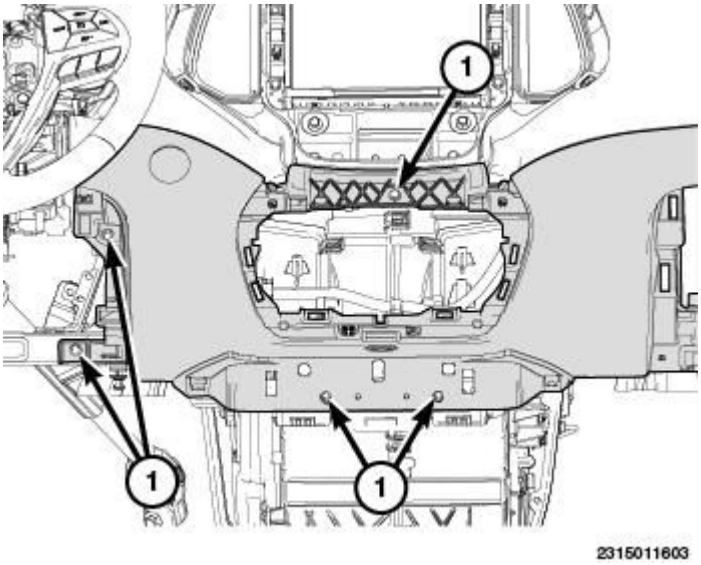

Fig. 400: Identifying Lower Surround Panel & Fasteners
Courtesy of CHRYSLER GROUP, LLC

10. Install the lower surround panel fasteners (1).

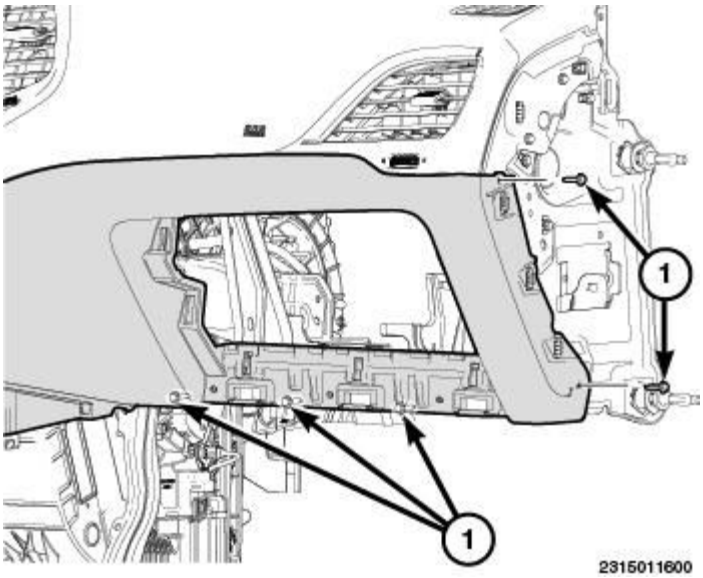

Fig. 401: Identifying Lower Surround Panel & Fasteners
Courtesy of CHRYSLER GROUP, LLC

11. Install the lower surround panel fasteners (1).

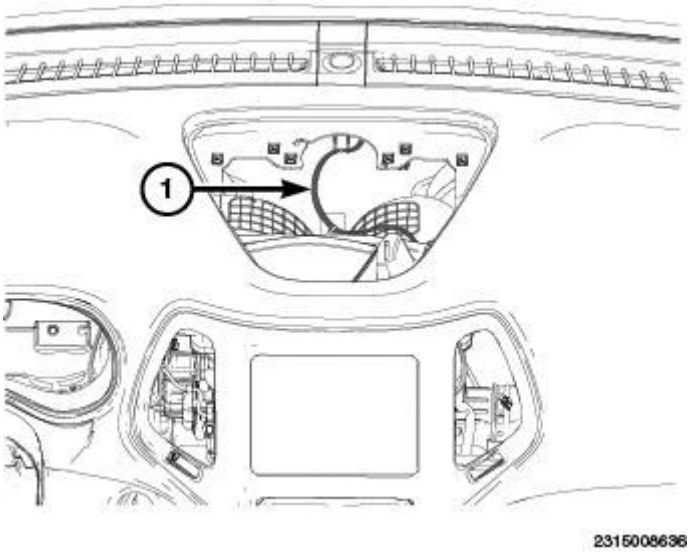

Fig. 402: Identifying Harness
Courtesy of CHRYSLER GROUP, LLC

12. Position the harness (1), if equipped, back and secure fully.

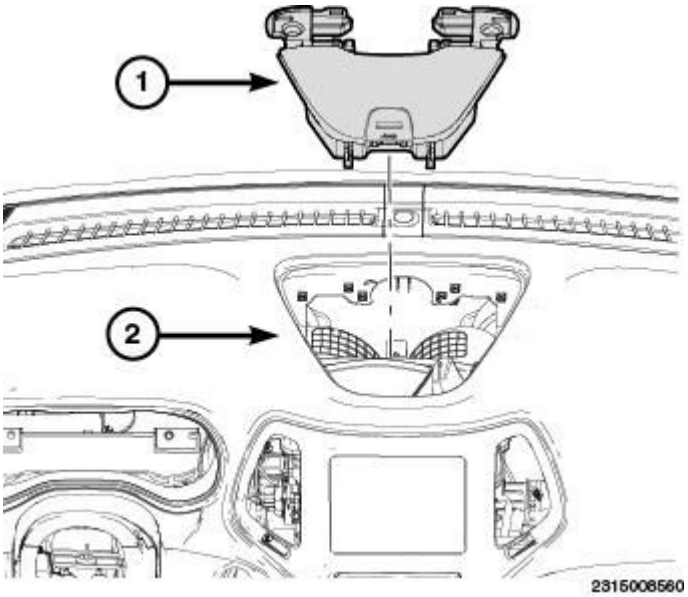

Fig. 403: Identifying Upper Storage Bin & Instrument Panel Top Cover
Courtesy of CHRYSLER GROUP, LLC

13. Position the storage bin (1) back into place onto the instrument panel top cover (2) and seat fully.

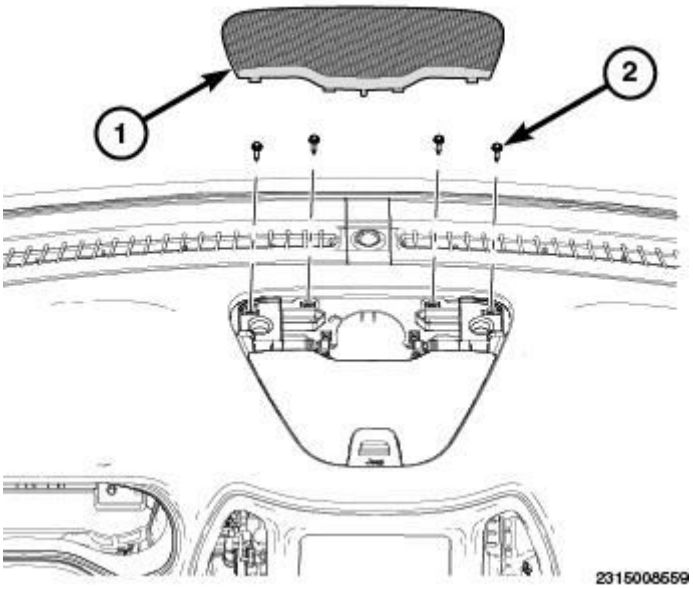

Fig. 404: Identifying Center Speaker Cover & Screws
Courtesy of CHRYSLER GROUP, LLC

14. Install the fasteners (2).
15. Install the speaker, if equipped.
16. Install center speaker cover (1) and seat fully.

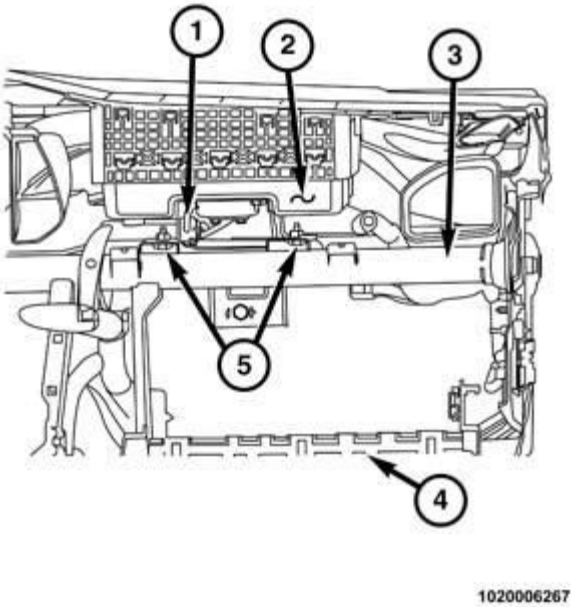

Fig. 405: Removing/Installing Passenger AirBag (PAB)
Courtesy of CHRYSLER GROUP, LLC

17. Reach through and above the glove box opening (4) of the instrument panel to reconnect the instrument panel wire harness connector to the PAB pigtail wire harness connector (1). Be certain that the connector is fully engaged and locked.
18. Still reaching through the glove box opening, install and tighten the two screws (5) that secure the PAB (2) lower mounting bracket to the instrument panel structural support (3). Tighten the screws to 9 N.m (80 in. lbs.).

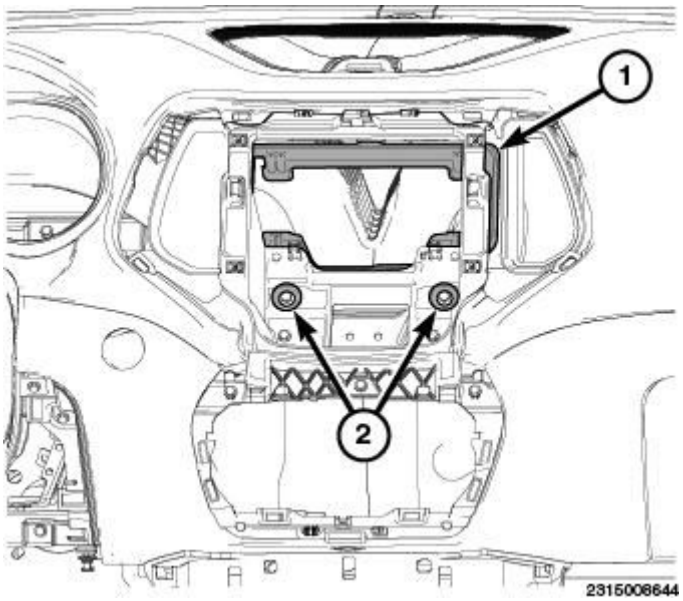

Fig. 406: Identifying Radio Support Bracket & Bolts
Courtesy of CHRYSLER GROUP, LLC

19. Install the radio support bracket (1) and install the bolts (2).

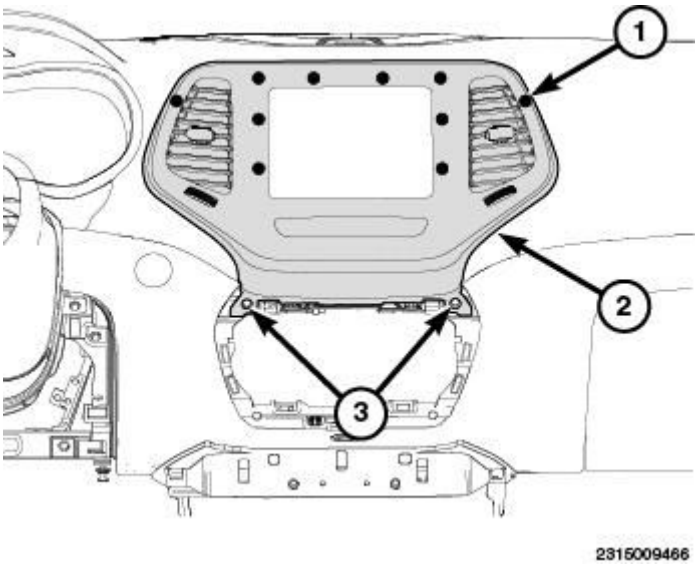

Fig. 407: Identifying Center Bezel & Fasteners
Courtesy of CHRYSLER GROUP, LLC

20. Install the radio module. Refer to **RADIO, INSTALLATION** .
21. Connect the electrical connectors and install the center bezel (2).
22. Seat the clips (1) fully.
23. Install the fasteners (3).

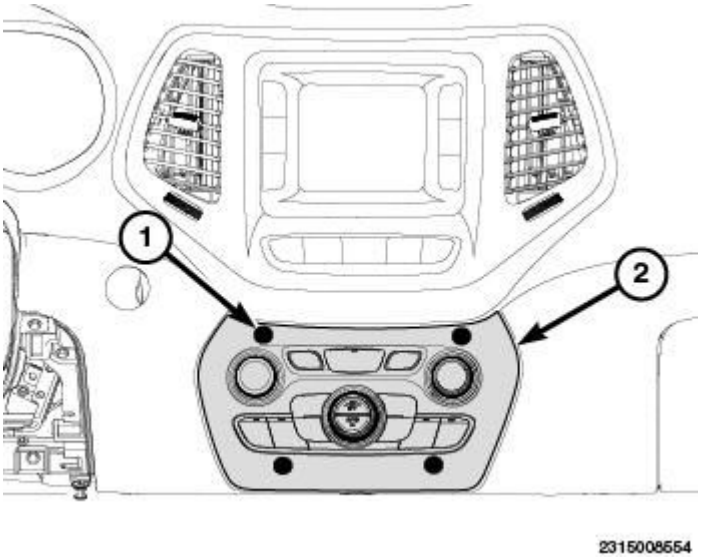

Fig. 408: Identifying HVAC Control Head & Clips
Courtesy of CHRYSLER GROUP, LLC

24. Connect the HVAC control head electrical connectors and install the control head (2).
25. Seat the four control head fastener clips (1) fully.

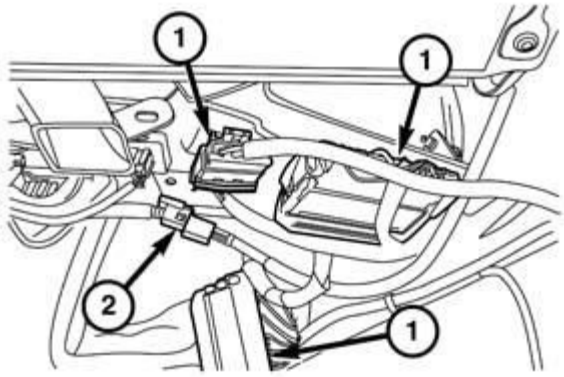

231568798

Fig. 409: Dash Wiring Harnesses & Coaxial Connector
Courtesy of CHRYSLER GROUP, LLC

26. Located under the passenger side of dash, connect the body to dash wiring harnesses (1).
27. Connect the coaxial connectors (2), if so equipped.

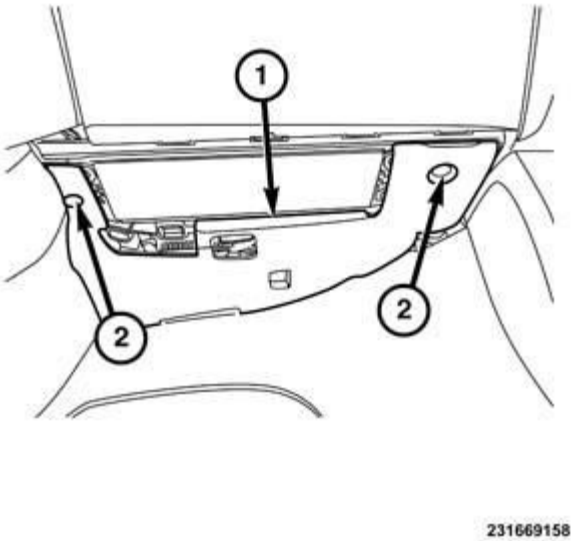

Fig. 410: Hush Panel & Push Pin Fasteners
Courtesy of CHRYSLER GROUP, LLC

28. Install the silencer panel (1) and install the push pin fasteners (2).

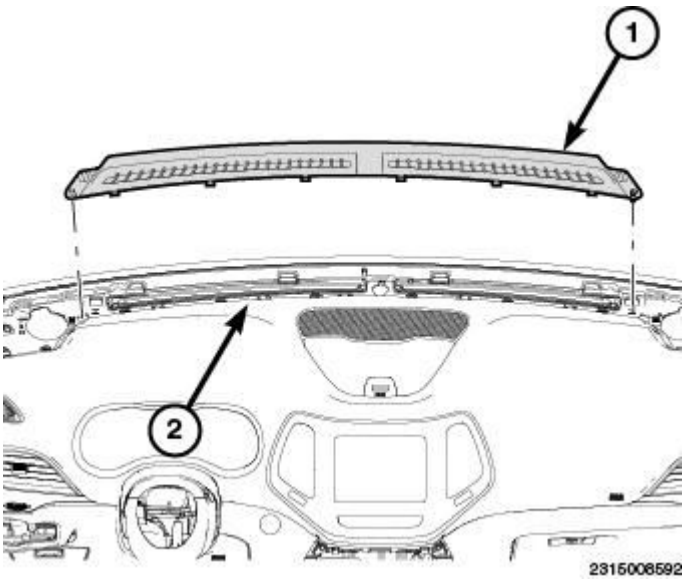

Fig. 411: Identifying Defroster Grille & Sun Sensor Electrical Connector
Courtesy of CHRYSLER GROUP, LLC

29. Install the defroster grille (1). Refer to **GRILLE, DEFROSTER, INSTALLATION**.
30. Install the floor console. Refer to **CONSOLE, FLOOR, INSTALLATION**.
31. Install the steering column. Refer to **COLUMN, INSTALLATION** .

32. Install the instrument cluster. Refer to **INSTALLATION** .
33. Install the glove box assembly. Refer to **GLOVE BOX, INSTRUMENT PANEL, INSTALLATION**.

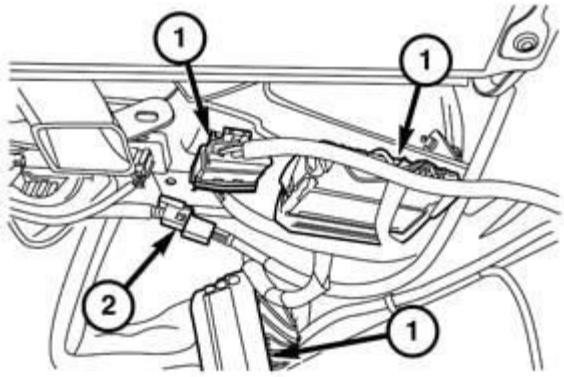

231568798

Fig. 412: Dash Wiring Harnesses & Coaxial Connector
Courtesy of CHRYSLER GROUP, LLC

34. Located under the passenger side of dash, connect the body to dash wiring harnesses (1).
35. Connect the coaxial connectors (2), if so equipped.

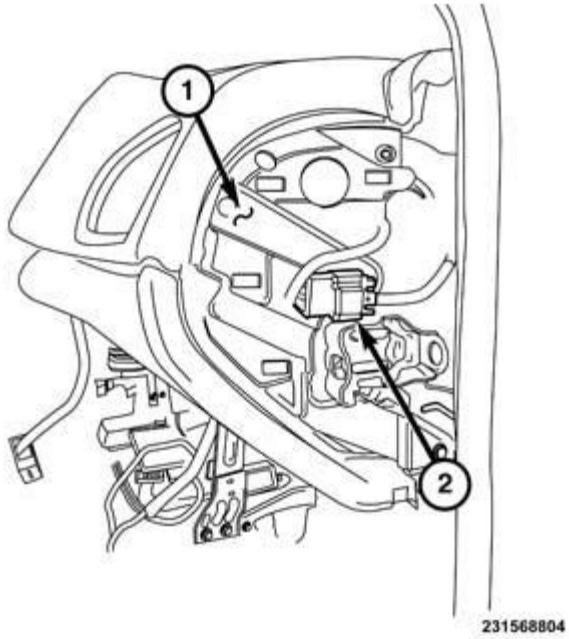

Fig. 413: Dash Side & Connector
Courtesy of CHRYSLER GROUP, LLC

36. Connect the a-pillar wiring connectors.
37. Fasten the harness and connector (2) into the dash side (1) on both sides of the vehicle.

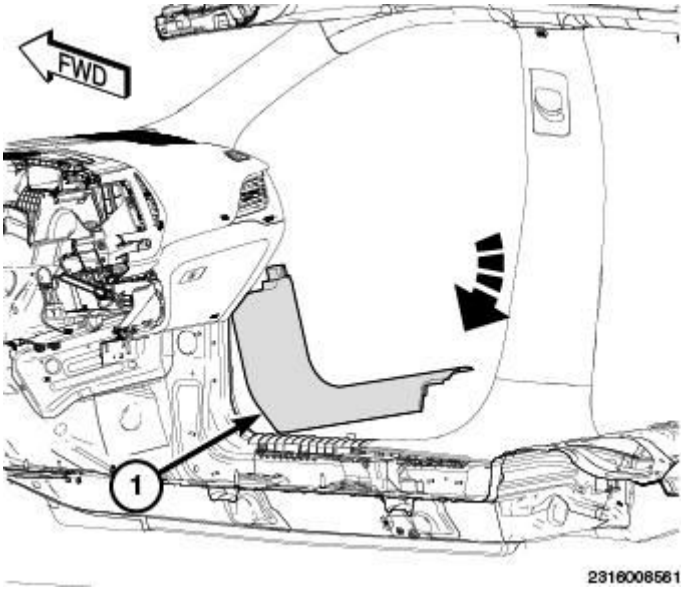

Fig. 414: Installing Front Door Sill Scuff Panel
Courtesy of CHRYSLER GROUP, LLC

38. Position the front door sill scuff panel (1).

39. Hand tap to engage the retaining clips securing the front door sill scuff panel (1) to the door sill and lower B-pillar.

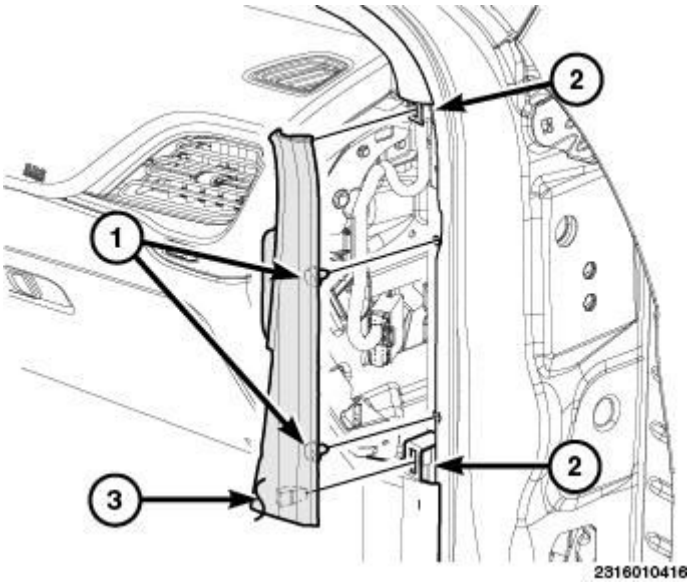

Fig. 415: Identifying Closeout Panel & Fasteners
Courtesy of CHRYSLER GROUP, LLC

40. Position the closeout trim panel (3) located between the A-pillar trim and the front scuff plate.
41. Seat the retaining clips (1 and 2) fully.

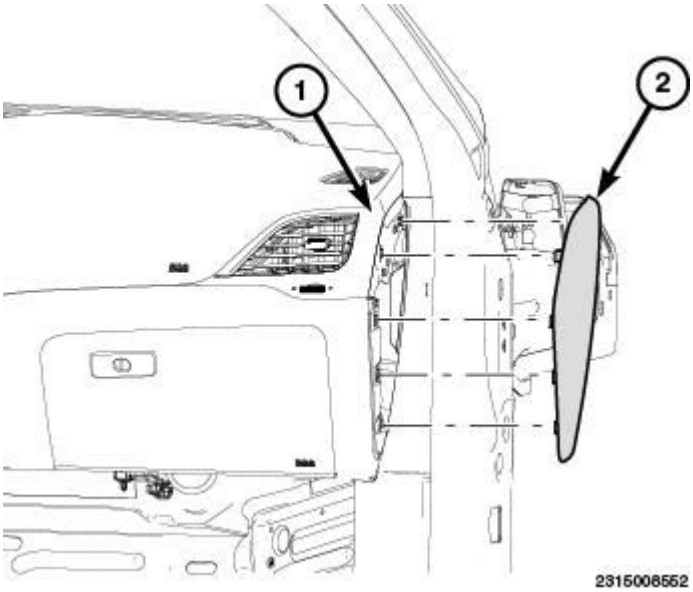

Fig. 416: Identifying Instrument Panel & End Cap
Courtesy of CHRYSLER GROUP, LLC

42. Install the end caps (1). Refer to **CAP, INSTRUMENT PANEL END, INSTALLATION**.

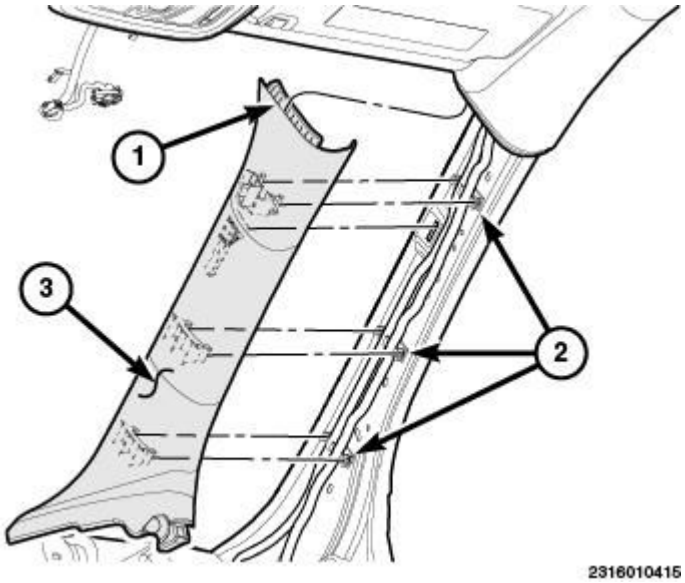

Fig. 417: Identifying A-Pillar Trim, Tab & Fasteners
Courtesy of CHRYSLER GROUP, LLC

43. Install the A-pillar trim. Refer to **PANEL, A-PILLAR TRIM, INSTALLATION**.
44. Do not reconnect the negative cable to the battery at this time. The Supplemental Restraint System (SRS) Verification Test procedure should be performed following service of any SRS component. Refer to **STANDARD PROCEDURE** .

PANEL, INSTRUMENT

REMOVAL

REMOVAL

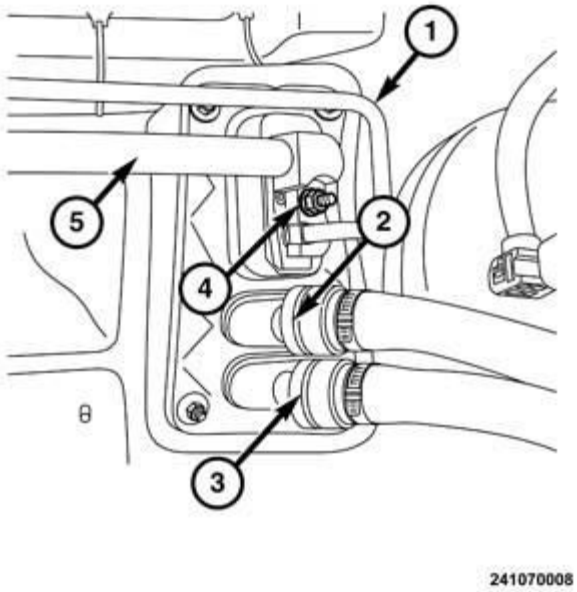

Fig. 418: Refrigerant Lines, Heater Core Hoses & Fastener
Courtesy of CHRYSLER GROUP, LLC

1. Partially drain the cooling system. Refer to **STANDARD PROCEDURE** .
2. Evacuate the air conditioning system. Refer to **STANDARD PROCEDURE** .
3. Disconnect the heater core hoses (2) and (3) to the HVAC housing. Refer to **CORE, HEATER, REMOVAL** .
4. Install plugs in, or tape over the opened heater core tubes to prevent coolant spillage during housing removal.
5. Remove fastener (4) and disconnect the air conditioning refrigerant lines (1) and (5) from the HVAC housing (2).
6. Install plugs in, or tape over the opened refrigerant lines fitting.
7. Remove the front doors (1). Refer to **DOOR, REMOVAL**.
8. Remove the floor console. Refer to **CONSOLE, FLOOR, REMOVAL**.
9. Remove the shifter assembly. Refer to **SHIFTER, FLOOR CONSOLE, REMOVAL** .

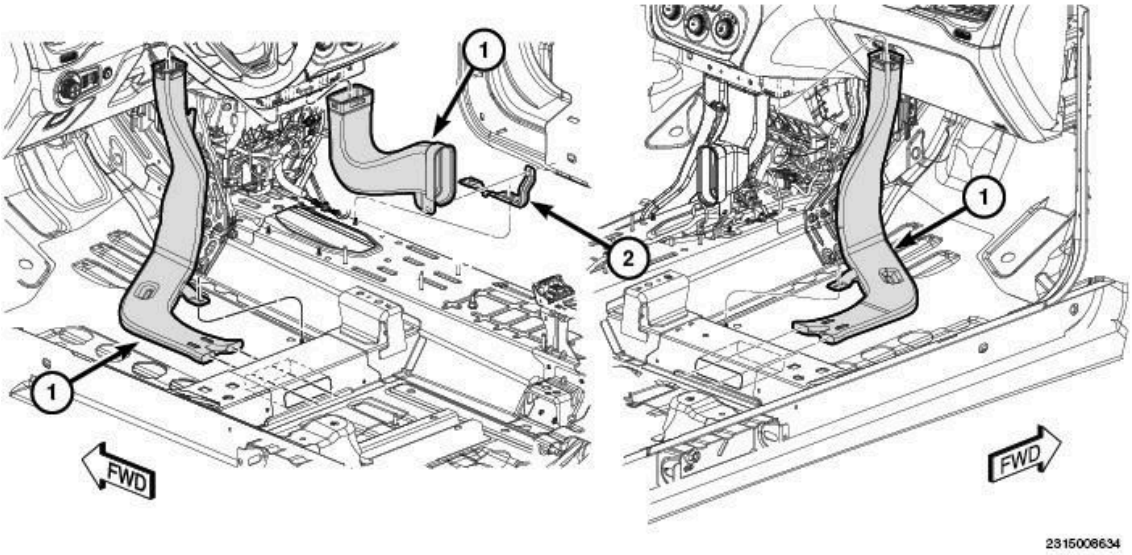

Fig. 419: Identifying HVAC Floor Ducts, Bracket & Fasteners
Courtesy of CHRYSLER GROUP, LLC

10. Remove the bracket (2) and remove the HVAC floor ducts (1). Refer to **DUCT, FLOOR DISTRIBUTION, REMOVAL** .

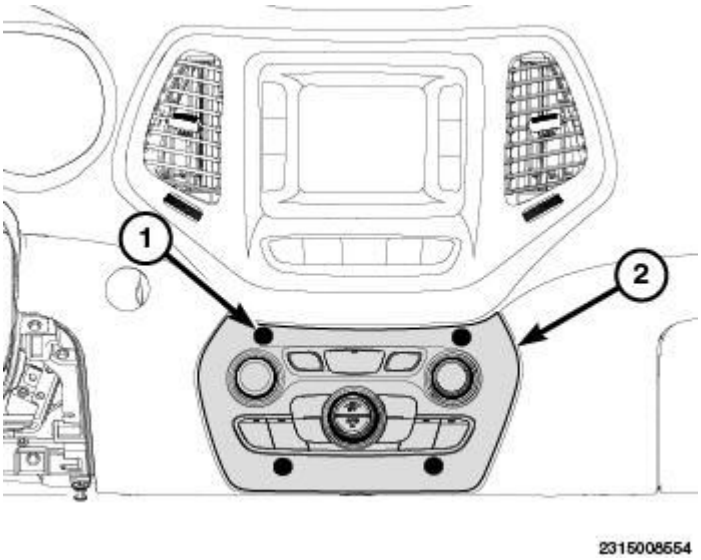

Fig. 420: Identifying HVAC Control Head & Clips
Courtesy of CHRYSLER GROUP, LLC

11. Using a (special tool #C-4755, Trim Stick) or equivalent, separate the four clips (1) and remove the HVAC control head (2).
12. Disconnect the control head electrical connector.

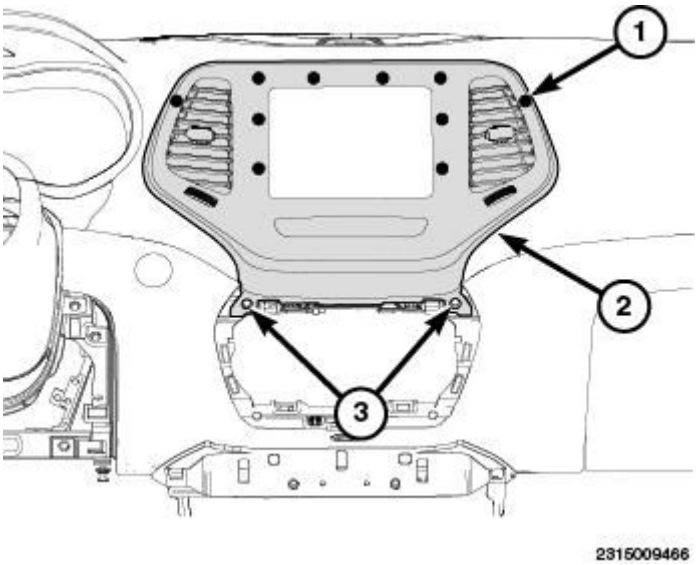

Fig. 421: Identifying Center Bezel & Fasteners
Courtesy of CHRYSLER GROUP, LLC

13. Remove the center bezel (2). Refer to **BEZEL, INSTRUMENT PANEL, CENTER, REMOVAL**.

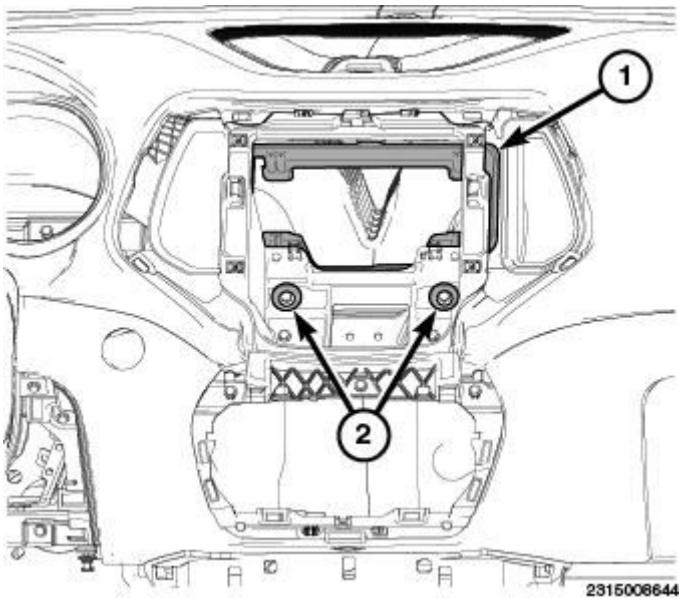

Fig. 422: Identifying Radio Support Bracket & Bolts
Courtesy of CHRYSLER GROUP, LLC

14. Remove the bolts and remove the radio support bracket.

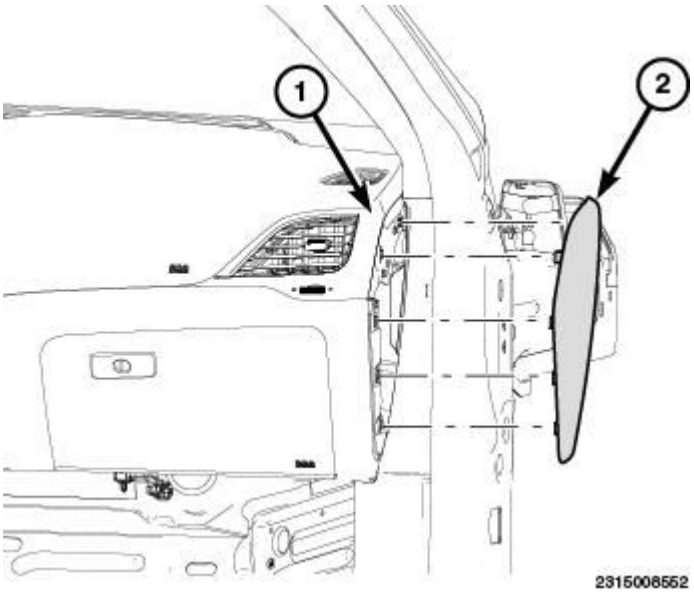

Fig. 423: Identifying Instrument Panel & End Cap
Courtesy of CHRYSLER GROUP, LLC

15. Using a trim stick or equivalent, remove the end caps (2) from the instrument panel (1). Refer to **CAP, INSTRUMENT PANEL END, REMOVAL**.

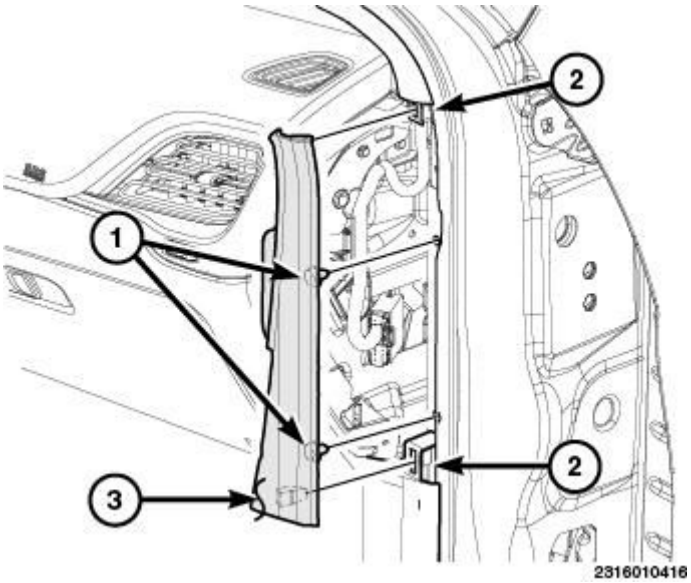

Fig. 424: Identifying Closeout Panel & Fasteners
Courtesy of CHRYSLER GROUP, LLC

16. Using a trim stick or equivalent, release the push pin fasteners (1) and the retaining tabs (2) and remove closeout panel (3) located between the A-pillar trim and the front scuff plate.

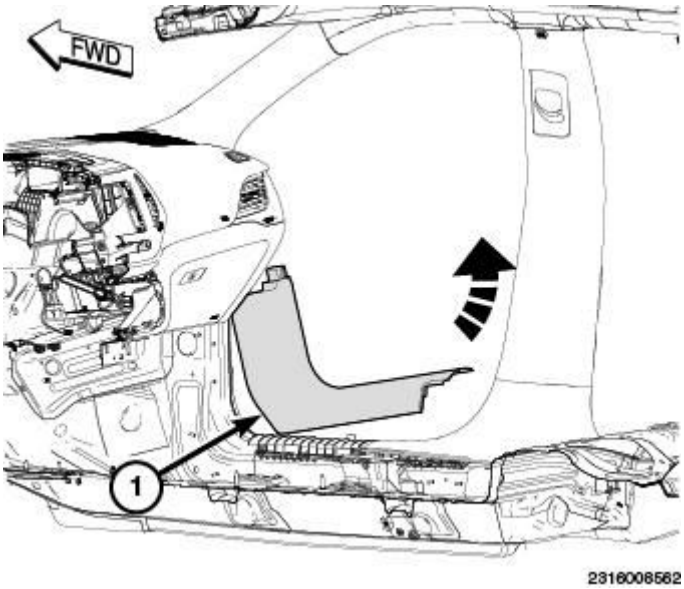

Fig. 425: Removing Front Door Sill Scuff Panel
Courtesy of CHRYSLER GROUP, LLC

17. Using a trim stick or equivalent, disengage the retaining clips securing the front door sill scuff panel (1) to the door sill and lower B-pillar.
18. Remove the front door sill scuff panel (1).

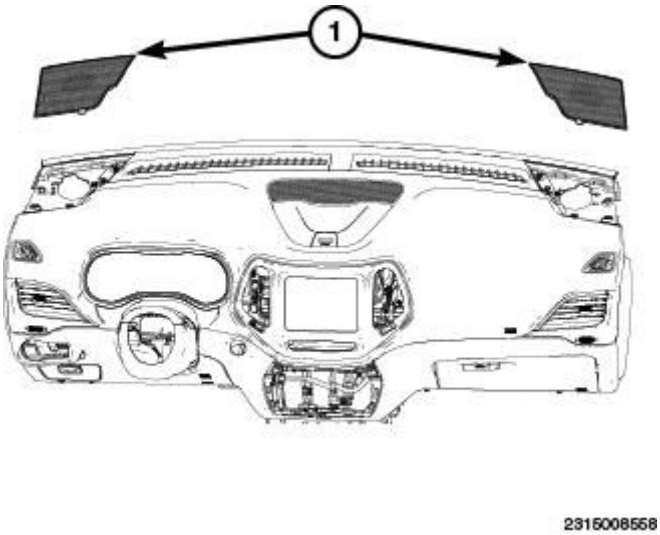

Fig. 426: Identifying Speaker Covers
Courtesy of CHRYSLER GROUP, LLC

19. Using a trim stick or equivalent, remove the speaker covers (1).

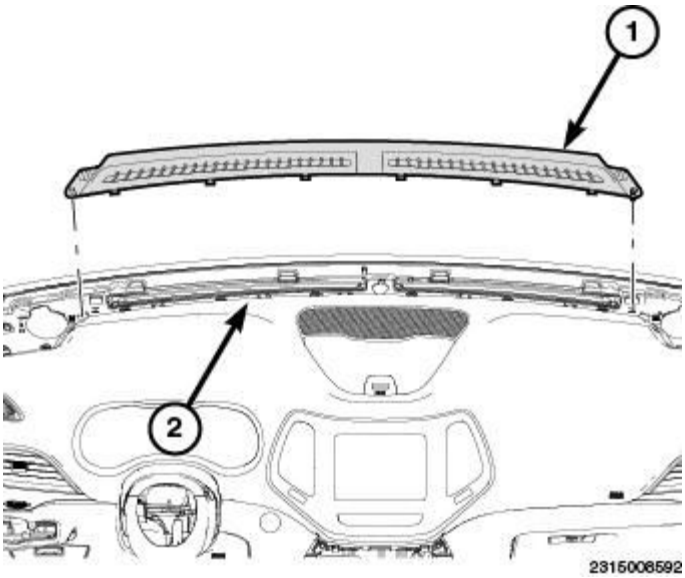

Fig. 427: Identifying Defroster Grille & Sun Sensor Electrical Connector
Courtesy of CHRYSLER GROUP, LLC

20. Remove defroster grill. Refer to **GRILLE, DEFROSTER, REMOVAL**.

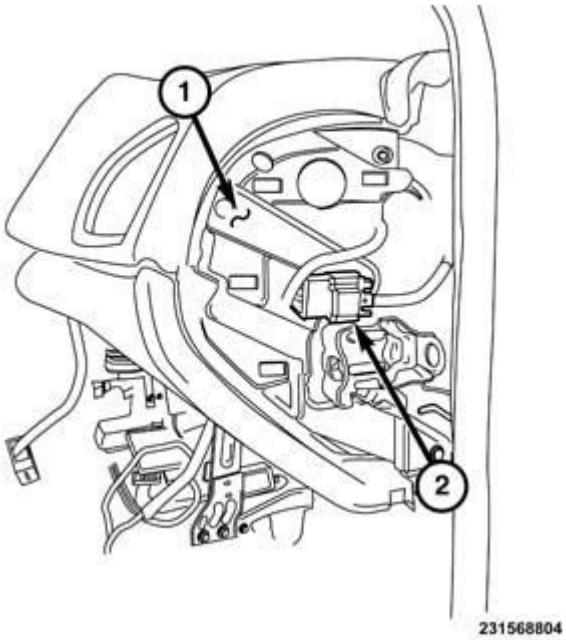

Fig. 428: Dash Side & Connector
Courtesy of CHRYSLER GROUP, LLC

21. Remove the a-pillar trim. Refer to **PANEL, A-PILLAR TRIM, REMOVAL**.
22. Unclip the harness and connector (2) from the dash side (1).
23. Disconnect the A-pillar wiring connector (1).

24. Remove lower dash silencer panels. Refer to **PANEL, SILENCER, LOWER, REMOVAL**.

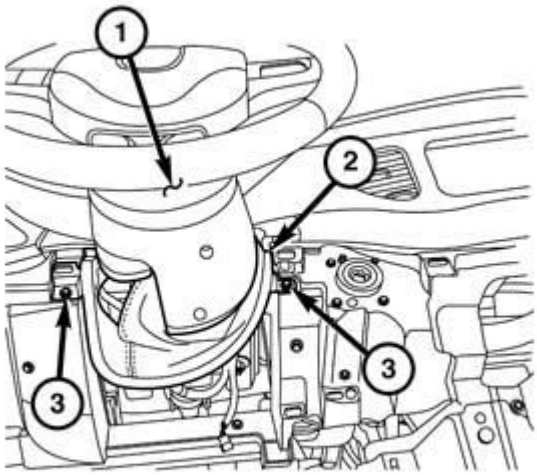

231568800

Fig. 429: Steering Column, Gap Hider & Fasteners
Courtesy of CHRYSLER GROUP, LLC

25. Remove steering column opening closeout. Refer to **PANEL, SILENCER, LOWER, REMOVAL**.
26. Remove the steering column gap hider (2) fasteners (3).
27. Remove the steering column (1). Refer to **COLUMN, REMOVAL** .

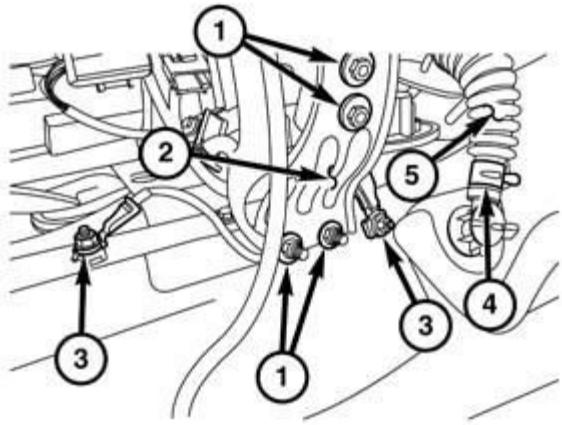

231568802

Fig. 430: Floor Pan Bracket Fasteners, Ground Wiring, Drain Tube & Clamp
Courtesy of CHRYSLER GROUP, LLC

28. Remove the lower instrument panel to floor pan bracket fasteners (1).
29. Unfasten the ground wiring to the floor (3).
30. Repeat on the opposite side.
31. With the use of pliers or equivalent disconnect the air conditioning drain tube clamp (4).
32. Remove the drain tube from the floor valve.
33. Remove the glove box. Refer to **GLOVE BOX, INSTRUMENT PANEL, REMOVAL**.

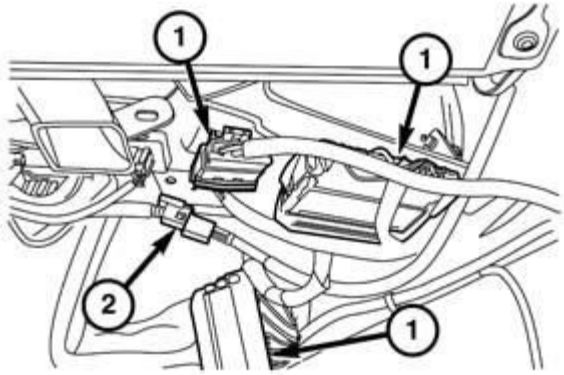

231568798

Fig. 431: Dash Wiring Harnesses & Coaxial Connector
Courtesy of CHRYSLER GROUP, LLC

34. From under the passenger side of dash, disconnect the body to dash wiring harnesses (1).
35. Disconnect the coaxial connectors (2), if so equipped.

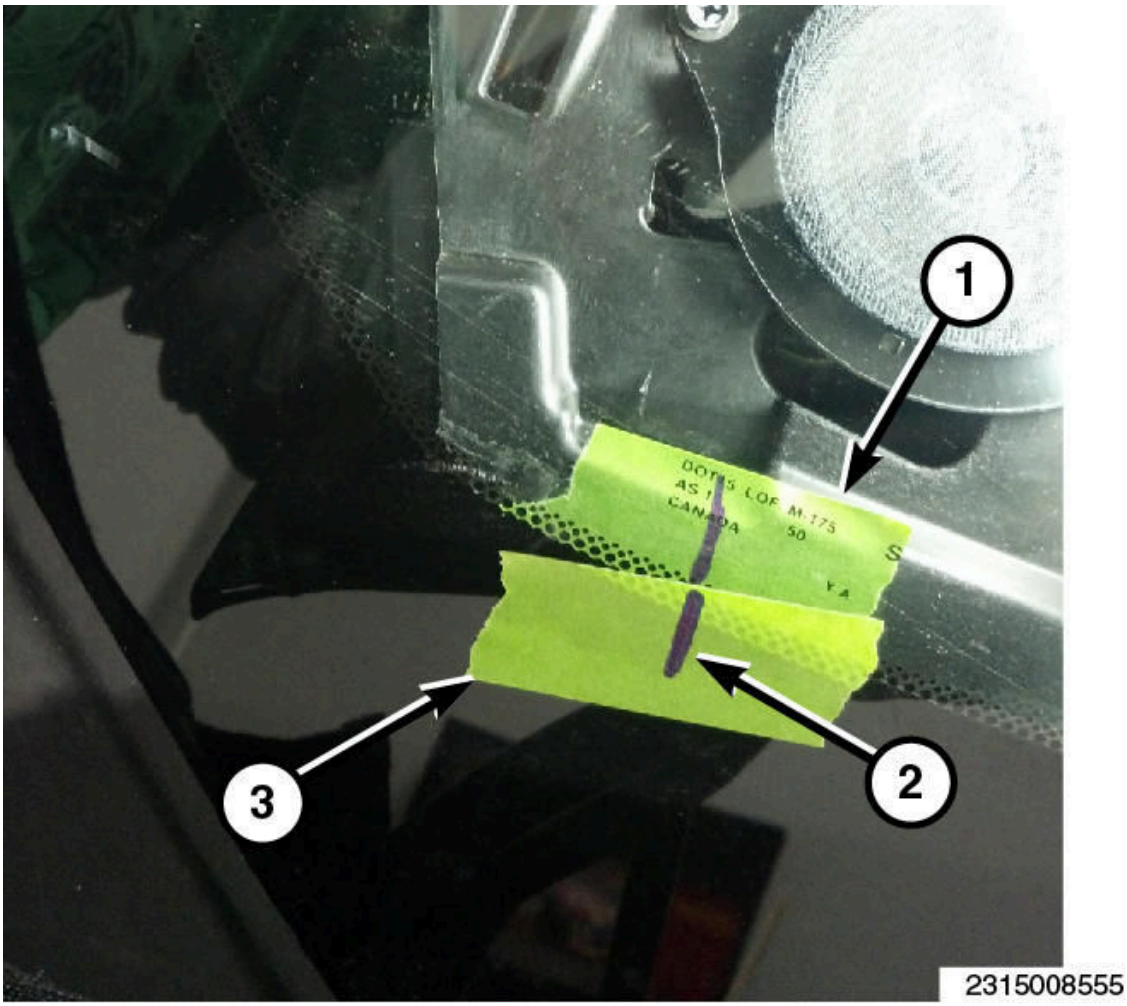

Fig. 432: Identifying Tape On Instrument Panel & Outside Of Windshield
Courtesy of CHRYSLER GROUP, LLC

36. Place tape along the top of the instrument panel (1) and onto the outside of the windshield (3) as indicated and mark with felt tip pen or equivalent (2), to aid during the installation.

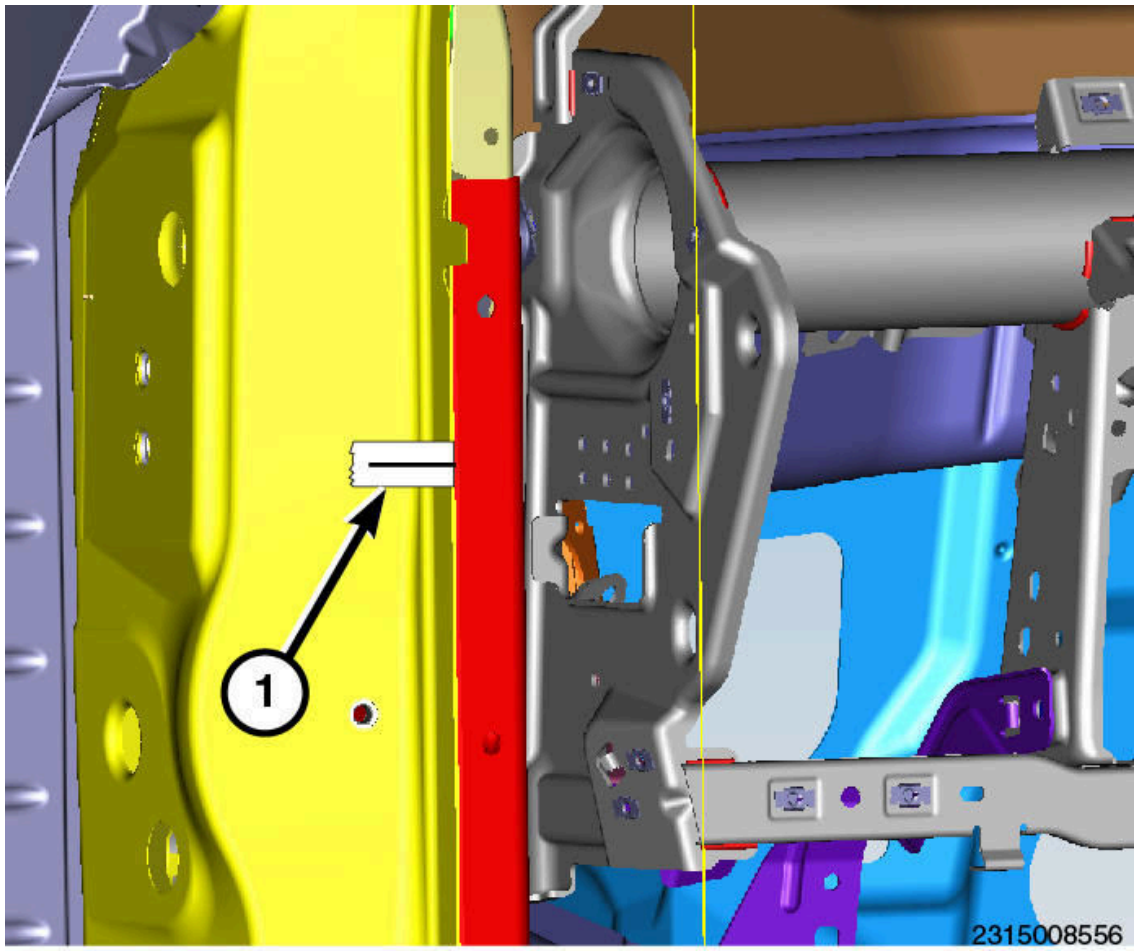

Fig. 433: Identifying Tape On Door Sill Flanges
Courtesy of CHRYSLER GROUP, LLC

37. Place tape along the door sill flanges (1) as indicated and mark with felt tip pen or equivalent (2), to aid during the installation.

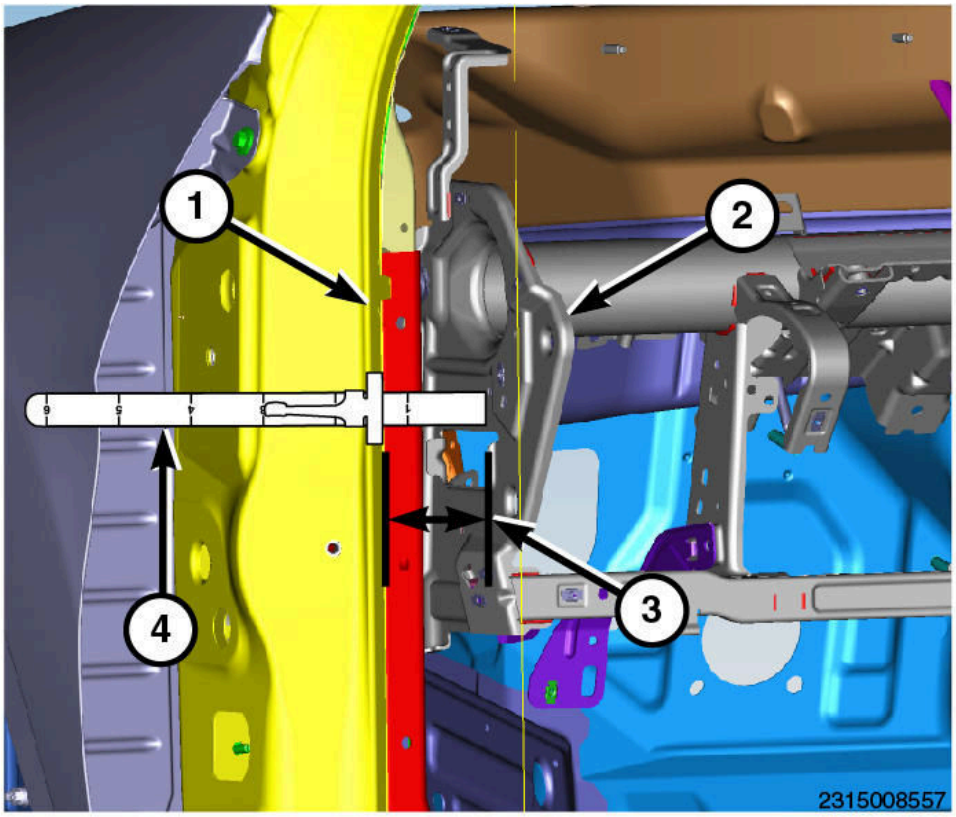

Fig. 434: Identifying Pocket Ruler & Distance Measurements
Courtesy of CHRYSLER GROUP, LLC

38. Using a pocket ruler (4) or equivalent, measure and record the distance (3) from the door sill flanges (1) to the instrument panel support beam (2) on both sides of the instrument panel to aid installation.

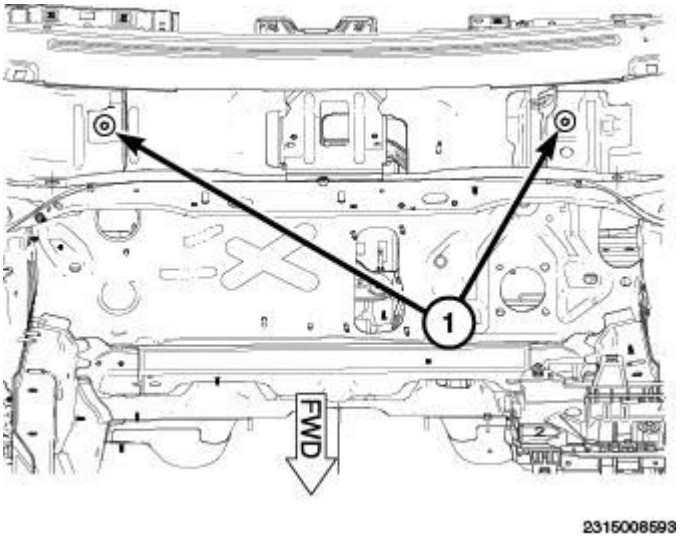

Fig. 435: Identifying Lower Plenum Fasteners
Courtesy of CHRYSLER GROUP, LLC

39. Remove the wiper arms. Refer to **ARM, WIPER, REMOVAL** .
40. Remove the cowl vent panel. Refer to **COVER, COWL PANEL, REMOVAL**.
41. Remove the wiper linkage. Refer to **LINKAGE, WIPER ARM, REMOVAL** .
42. Remove the dash carrier to the lower plenum fasteners (1).

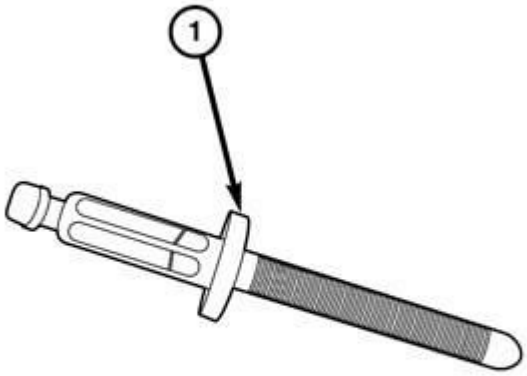

231568797

Fig. 436: Hinge Pillar Fastener
Courtesy of CHRYSLER GROUP, LLC

NOTE: **Use a 9 mm deep well socket with a full cut to remove the dash carrier side bolts (1). The carrier bolts design will not allow a partial cut socket to access.**

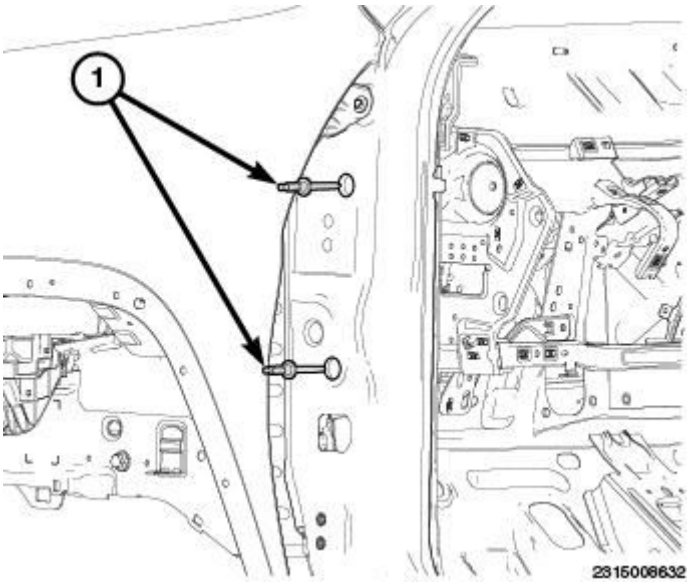

Fig. 437: Identifying Dash Carrier Bolts
Courtesy of CHRYSLER GROUP, LLC

NOTE: Removal of the dash will require the use of three people. One on each end and one in the middle.

43. Place assistant at the center of the dash to help support and assist with removal.
44. With the use of a small flat bladed tool or equivalent, remove the fastener covers located on the hinge pillar (1) of both sides of the vehicle.
45. Remove the four dash carrier bolts (2), two on each side.
46. Remove the dash from vehicle.

INSTALLATION

INSTALLATION

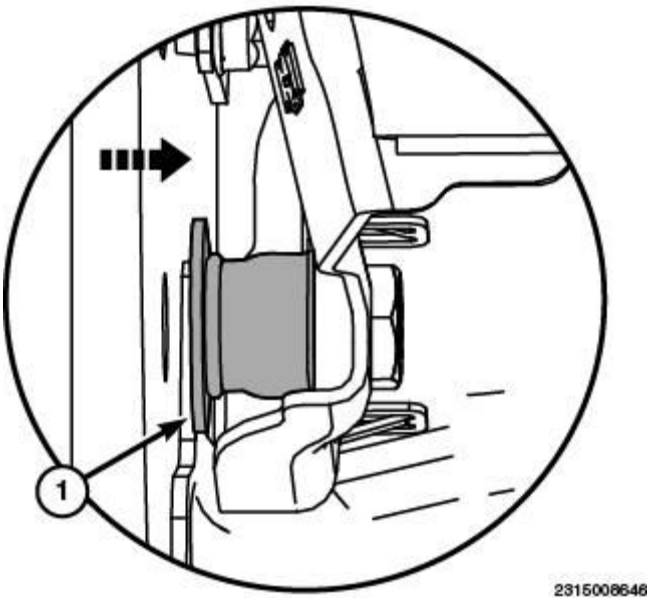

Fig. 438: Identifying Mounting Bushings
Courtesy of CHRYSLER GROUP, LLC

NOTE: Installation of the dash will require the use of three people. One on each end and one in the middle.

1. Verify that the six mounting bushings (1) are fully retracted and rotate freely.

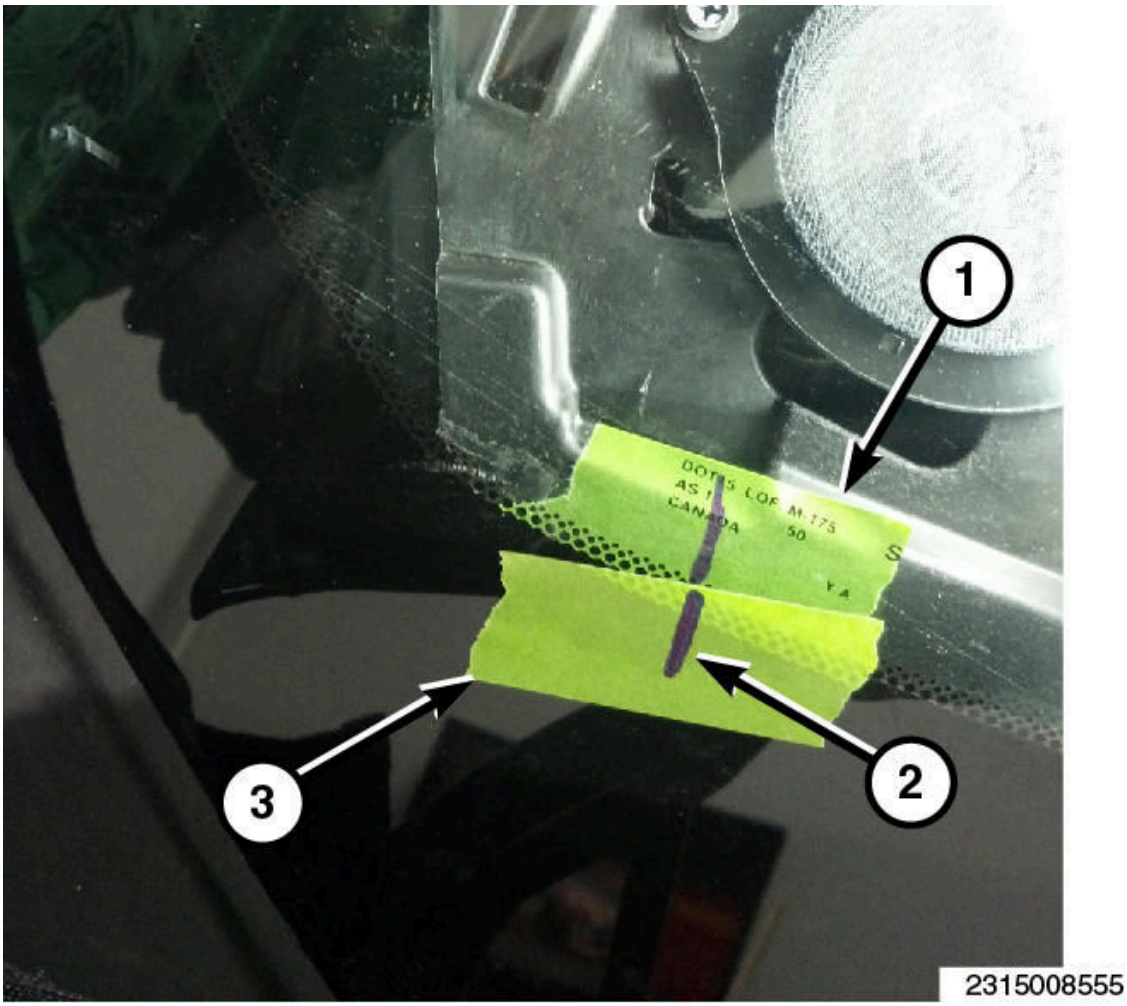

Fig. 439: Identifying Tape On Instrument Panel & Outside Of Windshield
Courtesy of CHRYSLER GROUP, LLC

2. Place the instrument panel into the vehicle
3. Line up the marks on the tape made during removal to aid installation.

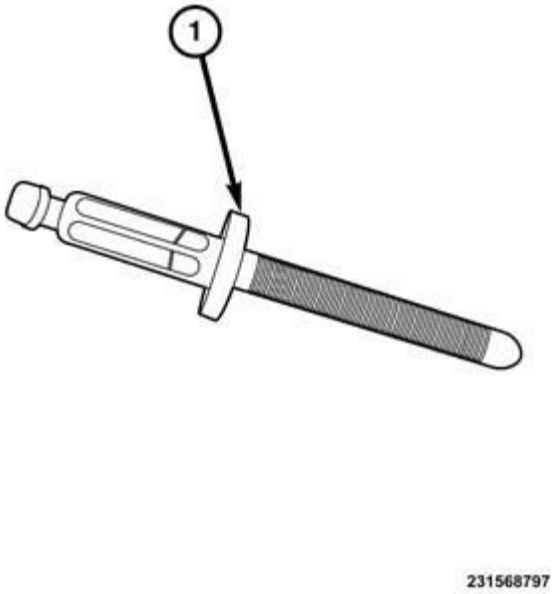

Fig. 440: Hinge Pillar Fastener
Courtesy of CHRYSLER GROUP, LLC

NOTE: **Use a 9 mm deep well socket with a full cut to install the dash carrier hinge pillar fasteners. The carrier bolts design will not allow a partial cut socket to access.**

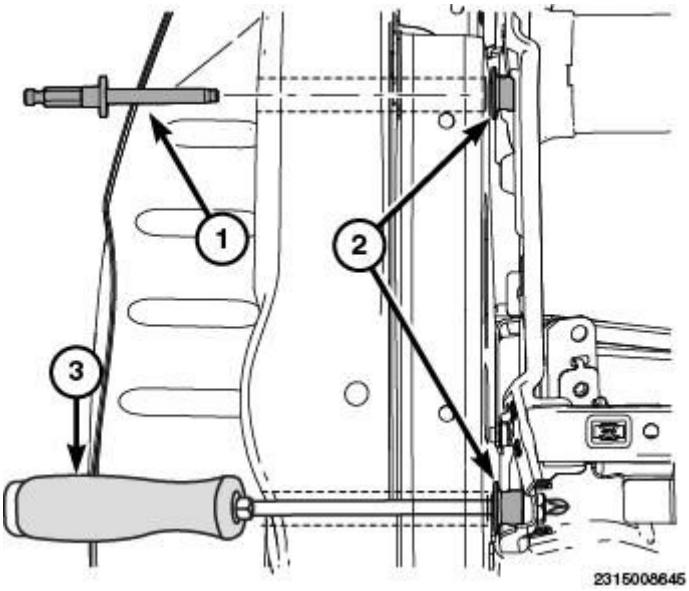

Fig. 441: Identifying Round Bladed Tool & Upper Fastener
Courtesy of CHRYSLER GROUP, LLC

4. Place round bladed tools (3) or equivalent, into the lower dash mounting holes located in the hinge pillar on both sides of the vehicle.
5. Start the upper fastener (1) on both sides of the vehicle.

Fig. 442: Identifying HVAC Housing Seal
Courtesy of CHRYSLER GROUP, LLC

6. Have the center person push the dash forward to load the HVAC housing seal (1) against the vehicle steel dash panel. Continue to load the seal until the four dash carrier hinge pillar fasteners and dash carrier to lower plenum fastener has been installed and torqued to specifications.

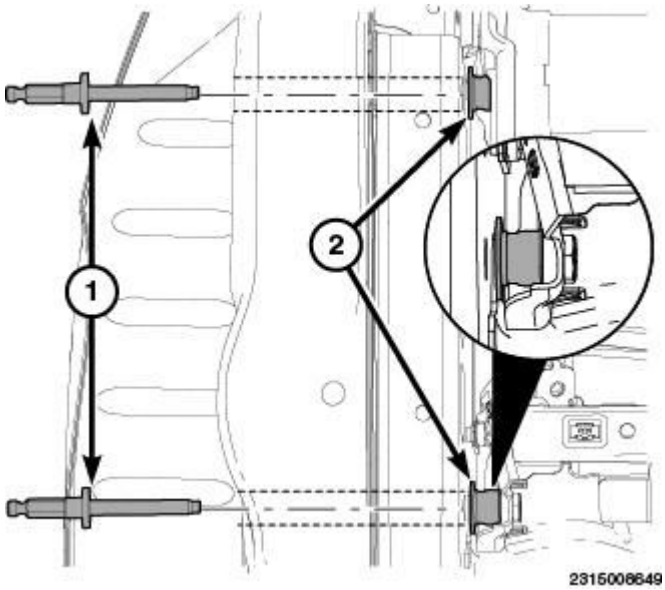

Fig. 443: Identifying Upper Dash Carrier To Hinge Pillar Fasteners
Courtesy of CHRYSLER GROUP, LLC

7. Verify that proper alignment is still being maintained. Adjust as necessary.
8. Install the upper dash carrier to hinge pillar fasteners (1) and tighten to 27 N.m (20 ft lbs).
9. Remove the alignment punch or equivalent, from both sides.

NOTE: **It will be necessary to wait at least five minutes and recheck the torque on the side support bolts.**

10. Install the lower dash carrier hinge pillar fasteners (1) and tighten to 27 N.m (20 ft lbs).

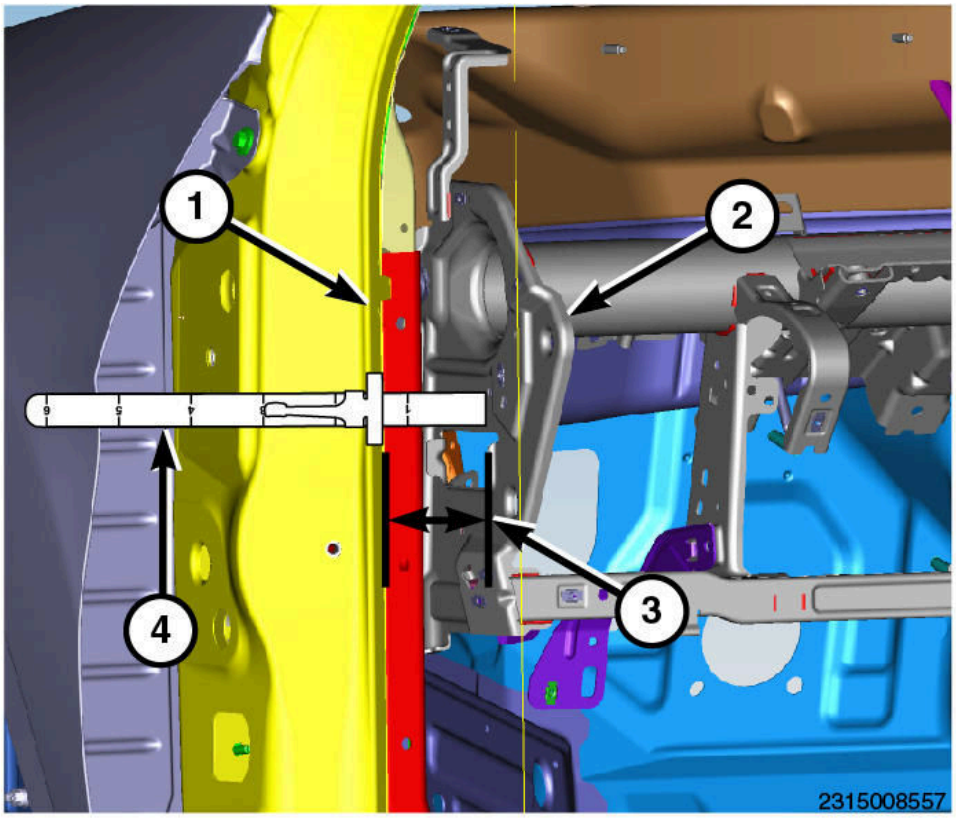

Fig. 444: Identifying Pocket Ruler & Distance Measurements
Courtesy of CHRYSLER GROUP, LLC

11. Using a pocket ruler (4) or equivalent, verify that the side to side instrument panel measurements (3) are the same as during removal.
12. If necessary, loosen the instrument panel side fasteners and repeat steps 6 through 10 until correct instrument panel positioning is maintained.

NOTE: **If the instrument panel position is incorrect it may interfere with proper door operation.**

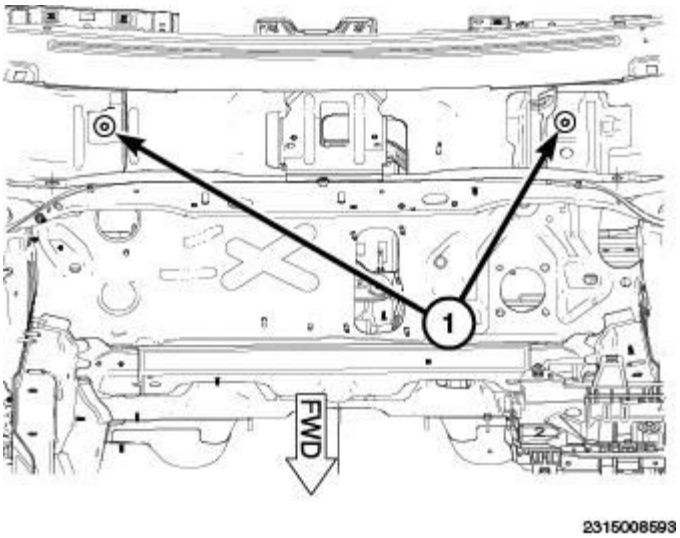

Fig. 445: Identifying Lower Plenum Fasteners
Courtesy of CHRYSLER GROUP, LLC

13. Install the instrument panel to plenum fasteners (1) and tighten to 20 N.m (15 ft lbs).
14. The center assistant may now stop loading the dash forward.
15. Install the access plug covers into the dash carrier to hinge pillar fastener holes.
16. Install the wiper linkage. Refer to **LINKAGE, WIPER ARM, INSTALLATION** .
17. Install the cowl panel cover. Refer to **COVER, COWL PANEL, INSTALLATION**.
18. Install the wiper arms. Refer to **ARM, WIPER, INSTALLATION** .

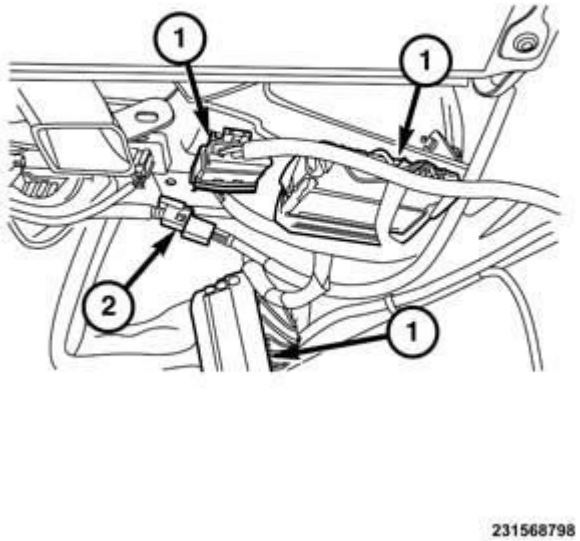

Fig. 446: Dash Wiring Harnesses & Coaxial Connector

Courtesy of CHRYSLER GROUP, LLC

19. From under the passenger side of the dash, connect the body to dash wiring harnesses (1).
20. Connect the coaxial connectors (2), if equipped.
21. Install the glove box. Refer to **GLOVE BOX, INSTRUMENT PANEL, INSTALLATION**.

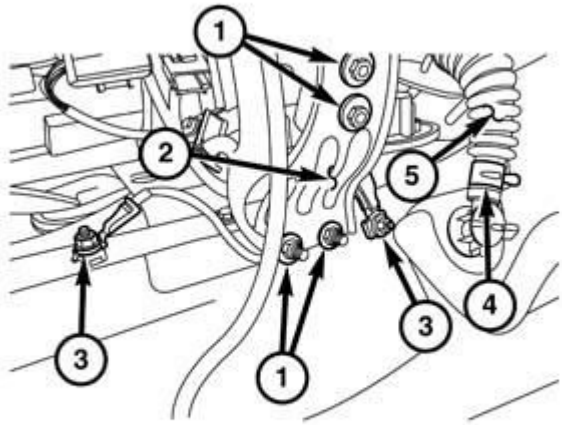

Fig. 447: Floor Pan Bracket Fasteners, Ground Wiring, Drain Tube & Clamp
Courtesy of CHRYSLER GROUP, LLC

22. Insert the air conditioning drain tube onto the floor valve.
23. With the use of pliers or equivalent, connect the air conditioning drain tube clamp (4).
24. Fasten the ground wiring (3) to the floor, and tighten securely.
25. Install the instrument panel to floor bracket fasteners (1) and tighten securely.

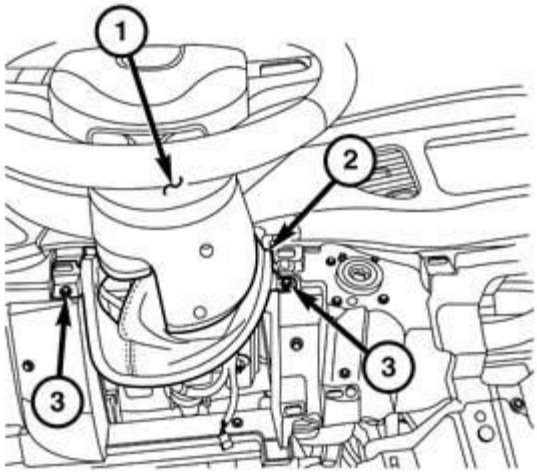

231568800

Fig. 448: Steering Column, Gap Hider & Fasteners
Courtesy of CHRYSLER GROUP, LLC

26. Install the steering column (1). Refer to **COLUMN, INSTALLATION** .
27. Install the steering column gap hider (3) fasteners (2), and tighten securely.
28. Install the steering column opening closeout.
29. Install the lower dash silencer panels. Refer to **PANEL, SILENCER, LOWER, INSTALLATION**.

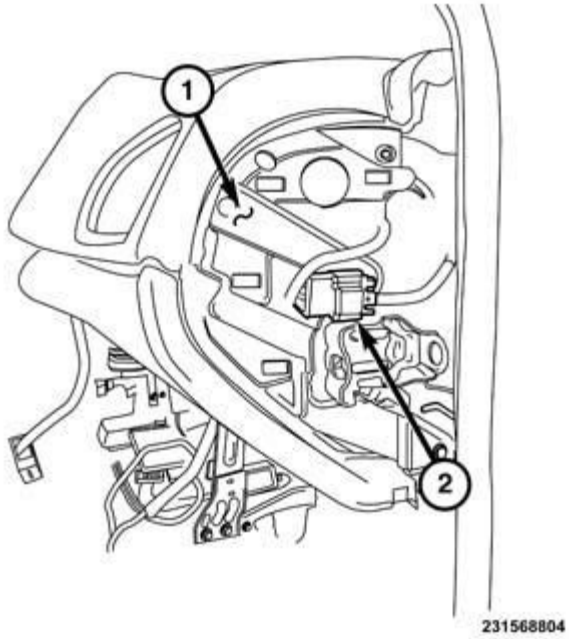

Fig. 449: Dash Side & Connector
Courtesy of CHRYSLER GROUP, LLC

30. Connect the a-pillar wiring connectors (2) on both sides of the vehicle.
31. Clip the wiring connectors (1) to the side of the dash panel (1).

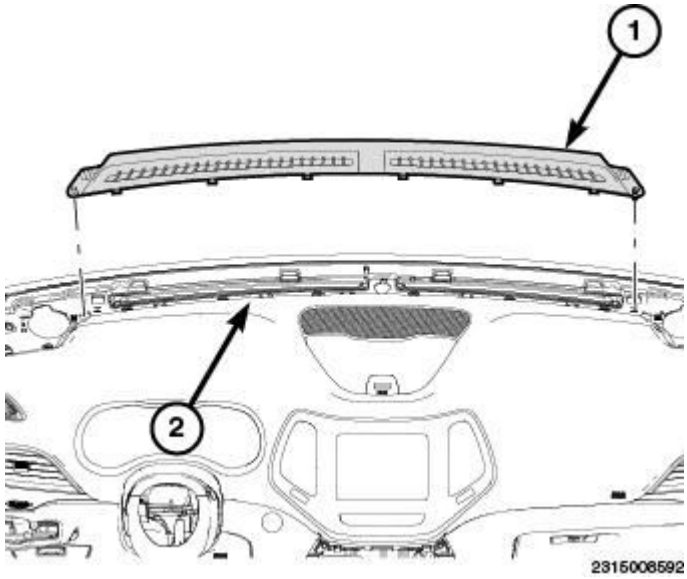

Fig. 450: Identifying Defroster Grille & Sun Sensor Electrical Connector
Courtesy of CHRYSLER GROUP, LLC

32. Install the a-pillar trim. Refer to **PANEL, A-PILLAR TRIM, INSTALLATION**.
33. Install the defroster grill, and seat fully. Refer to **GRILLE, DEFROSTER, INSTALLATION**.

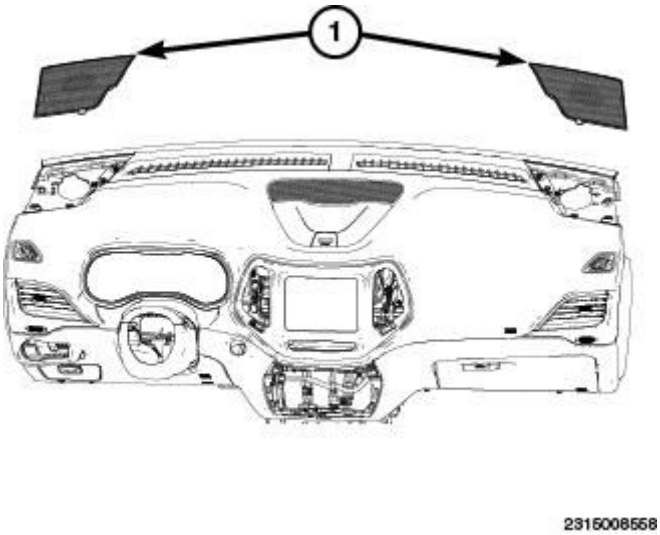

Fig. 451: Identifying Speaker Covers
Courtesy of CHRYSLER GROUP, LLC

34. Position the speaker covers (1) back into place and seat fully.

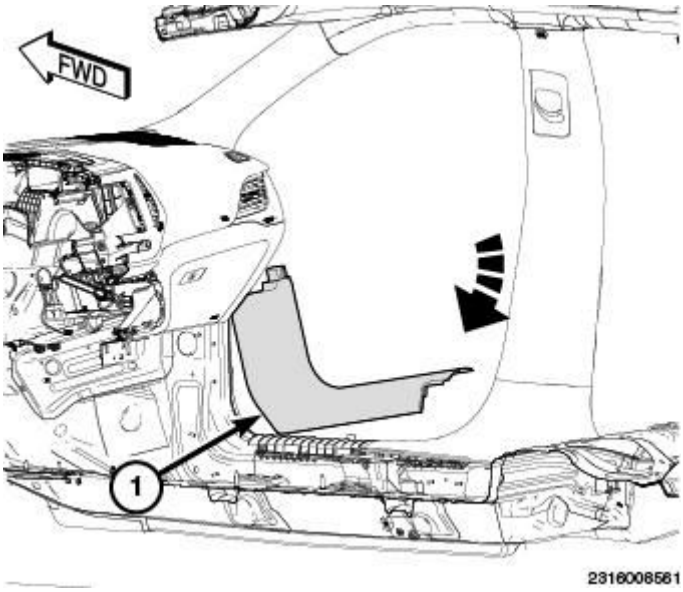

Fig. 452: Installing Front Door Sill Scuff Panel
Courtesy of CHRYSLER GROUP, LLC

35. Position the front door sill scuff panel (1).
36. Hand tap to engage the retaining clips securing the front door sill scuff panel (1) to the door sill and lower B-pillar.

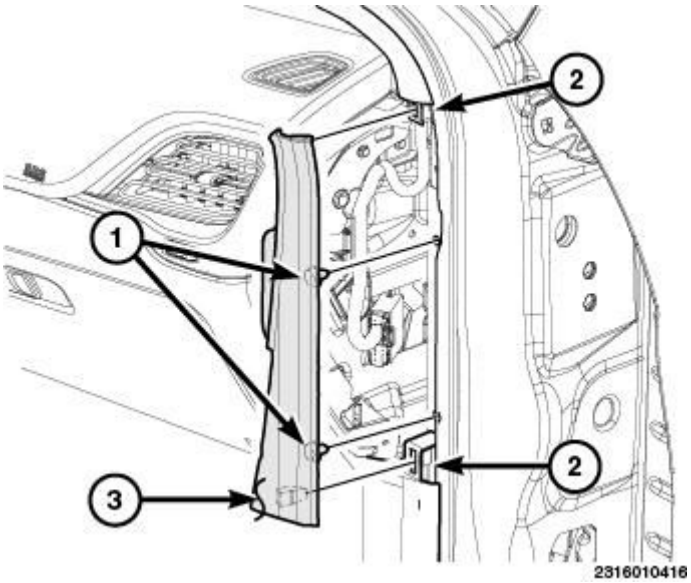

Fig. 453: Identifying Closeout Panel & Fasteners
Courtesy of CHRYSLER GROUP, LLC

37. Position the closeout trim panel (3) located between the A-pillar trim and the front scuff plate.
38. Seat the retaining clips (1 and 2) fully.

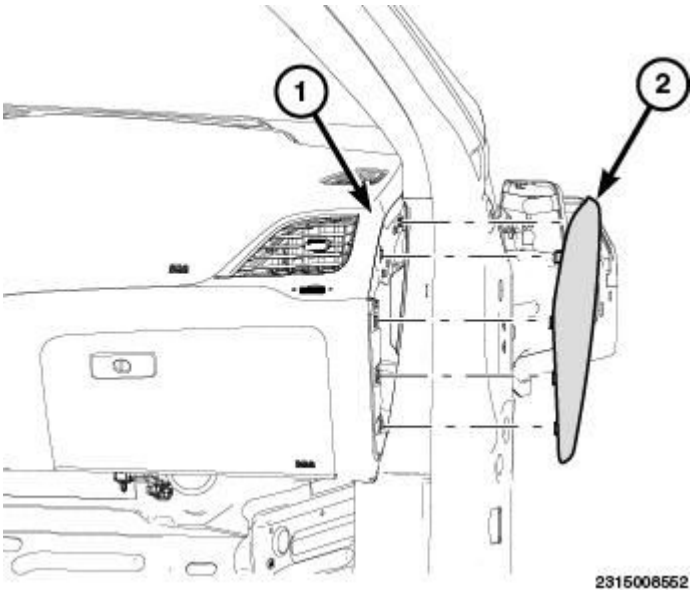

Fig. 454: Identifying Instrument Panel & End Cap
Courtesy of CHRYSLER GROUP, LLC

39. Install the end caps (1). Refer to **CAP, INSTRUMENT PANEL END, INSTALLATION**.

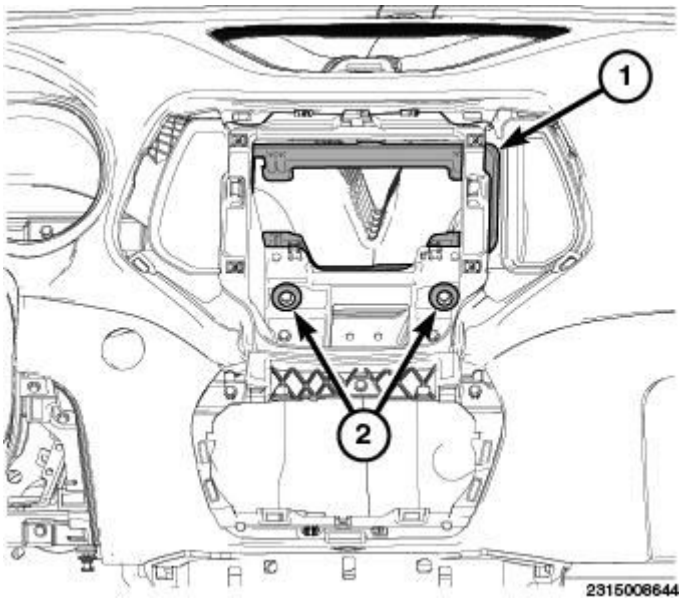

Fig. 455: Identifying Radio Support Bracket & Bolts
Courtesy of CHRYSLER GROUP, LLC

40. Install the radio support bracket (1) and install the fasteners (2).

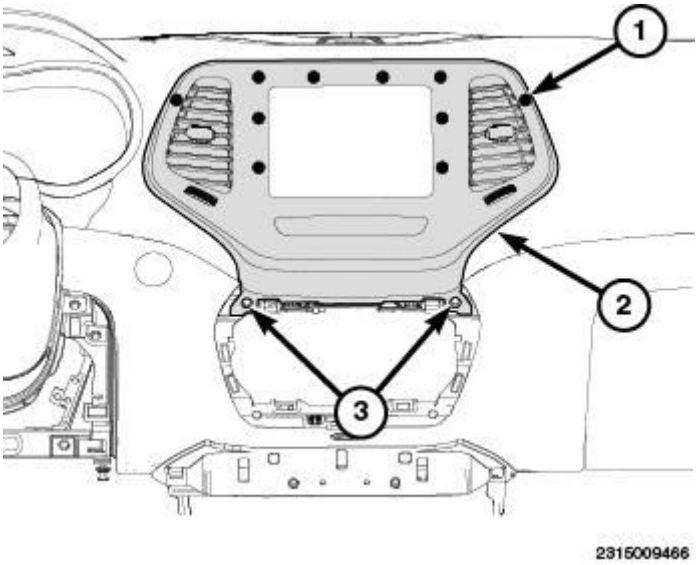

Fig. 456: Identifying Center Bezel & Fasteners
Courtesy of CHRYSLER GROUP, LLC

41. Install the center bezel (2) and seat the clips (1) fully.
42. Install the center bezel fasteners (3).

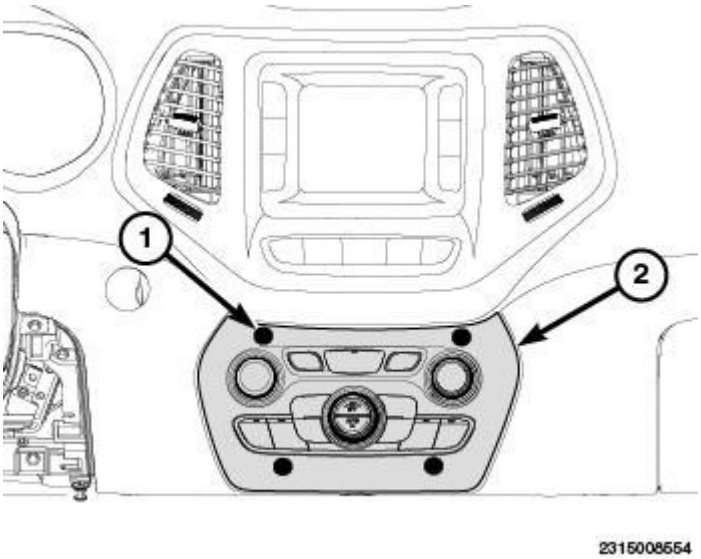

Fig. 457: Identifying HVAC Control Head & Clips
Courtesy of CHRYSLER GROUP, LLC

43. Connect the HVAC control head electrical connectors and install the control head (2).
44. Seat the four control head fastener clips (1) fully.

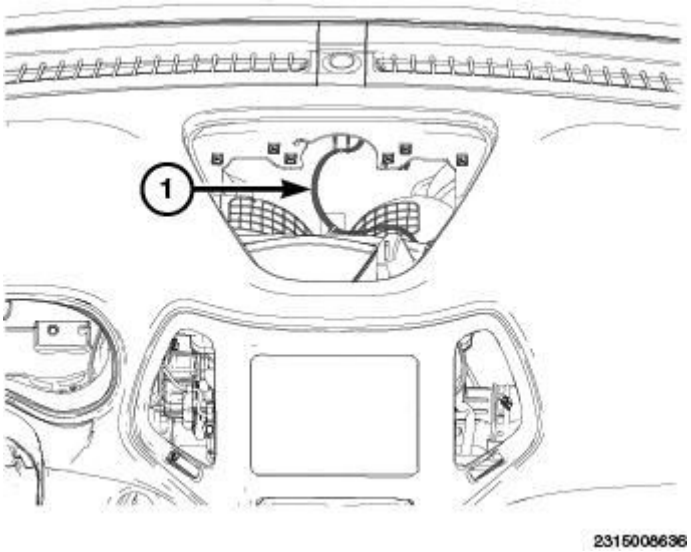

Fig. 458: Identifying Harness
Courtesy of CHRYSLER GROUP, LLC

45. Position the harness (1) back into place and seat the retainers fully.

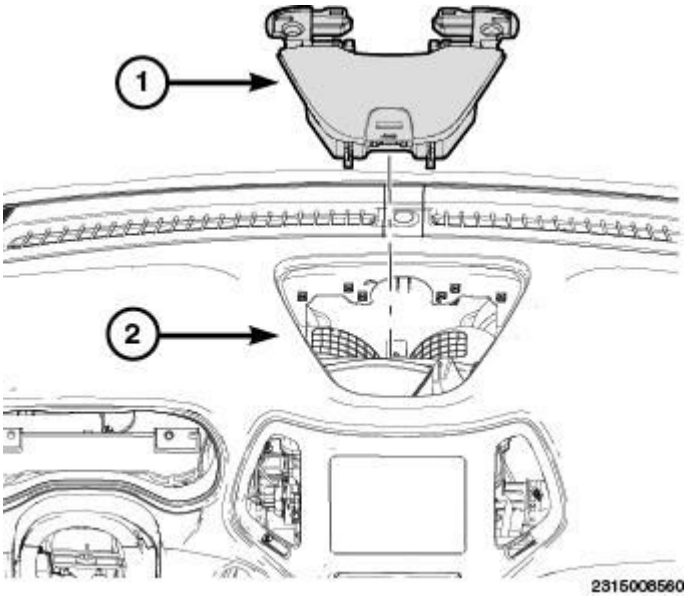

Fig. 459: Identifying Upper Storage Bin & Instrument Panel Top Cover
Courtesy of CHRYSLER GROUP, LLC

46. Position the storage bin (1) back into place onto the instrument panel top cover (2) and seat fully.

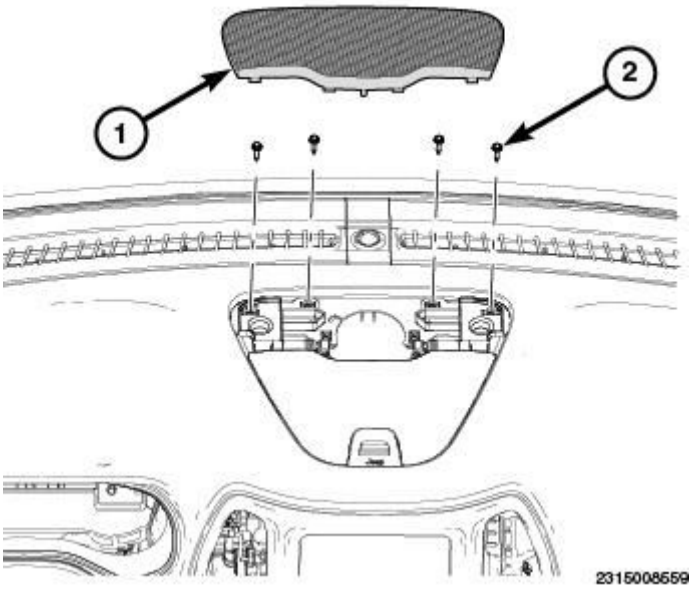

Fig. 460: Identifying Center Speaker Cover & Screws
Courtesy of CHRYSLER GROUP, LLC

47. Install the fasteners (2).
48. Install center speaker cover (1) and seat fully.

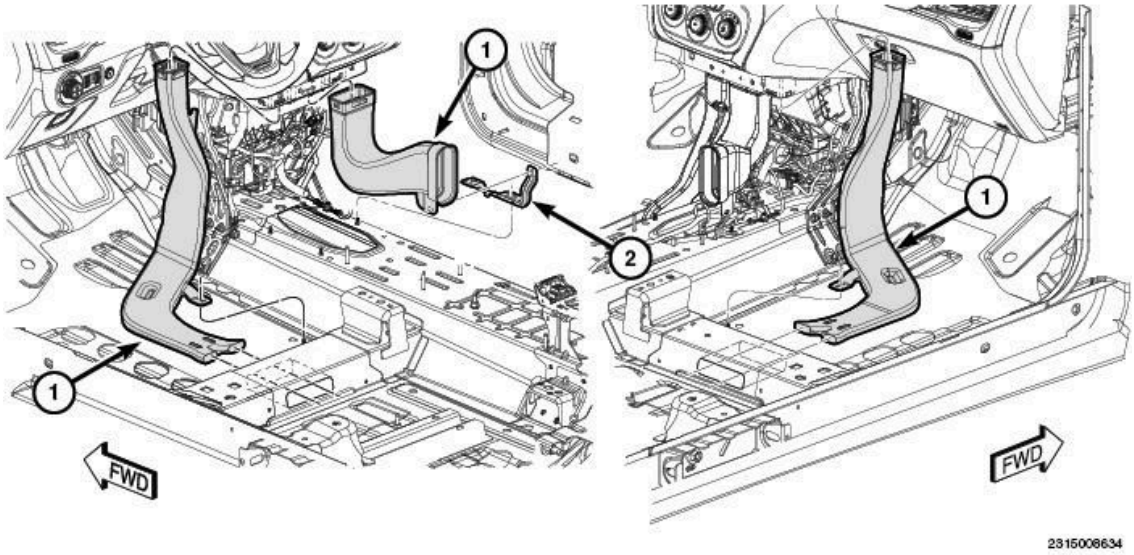

Fig. 461: Identifying HVAC Floor Ducts, Bracket & Fasteners
Courtesy of CHRYSLER GROUP, LLC

49. Install the HVAC floor ducts (1) and install the bracket (2). Refer to **DUCT, FLOOR DISTRIBUTION, INSTALLATION** .
50. Install the transmission shifter. Refer to **SHIFTER, FLOOR CONSOLE, INSTALLATION** .
51. Install the floor console. Refer to **CONSOLE, FLOOR, INSTALLATION**.

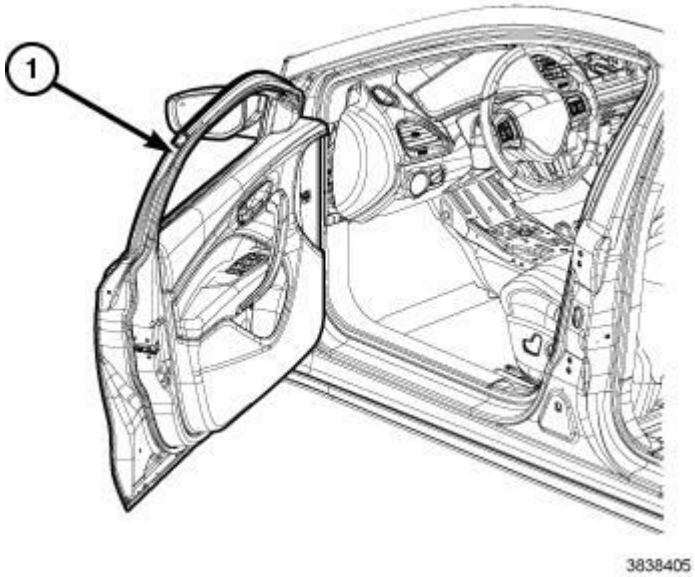

Fig. 462: Front Door
Courtesy of CHRYSLER GROUP, LLC

52. Check the dash carrier hinge pillar fasteners and tighten to 27 N.m (20 ft lbs).
53. Install the front doors (1). Refer to **DOOR, INSTALLATION**.

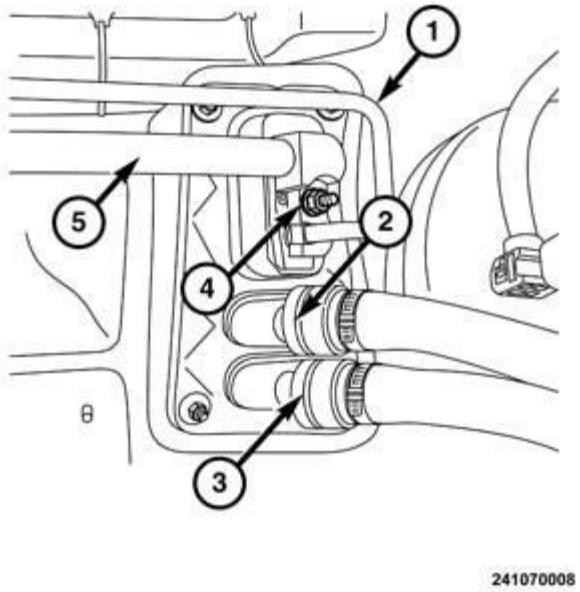

Fig. 463: Refrigerant Lines, Heater Core Hoses & Fastener
Courtesy of CHRYSLER GROUP, LLC

54. Remove plugs, or tape that was placed over the open refrigerant lines (1) and (5) during removal.
55. Connect the air conditioning refrigerant lines (1) and (5) to the HVAC housing.
56. Install fastener (4) and tighten to 20 N.m (15 ft lbs).
57. Remove the plugs, or tape that was placed over the open heater core tubes to prevent coolant during removal.
58. Connect the heater core hoses (2) and (3) to the HVAC housing.
59. Charge the air conditioning system. Refer to **PLUMBING, STANDARD PROCEDURE** .
60. Fill the cooling system. Refer to **STANDARD PROCEDURE** .

PANEL, SILENCER, LOWER

REMOVAL

REMOVAL

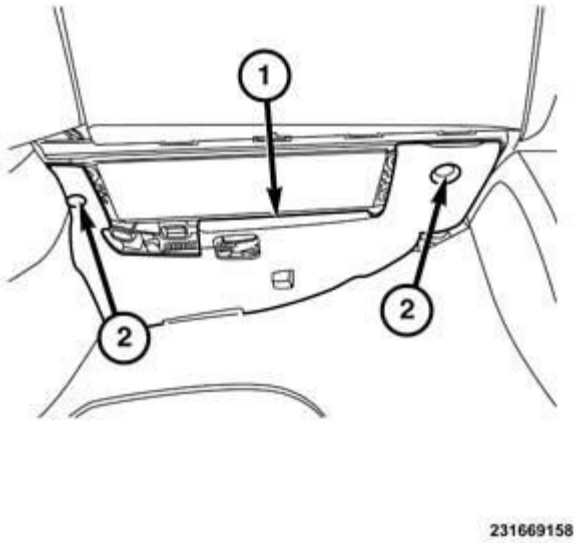

Fig. 464: Hush Panel & Push Pin Fasteners
Courtesy of CHRYSLER GROUP, LLC

Passenger Side

1. Remove push pin fasteners (2).
2. Disconnect light wiring connector.
3. Remove hush panel (1) from the vehicle.

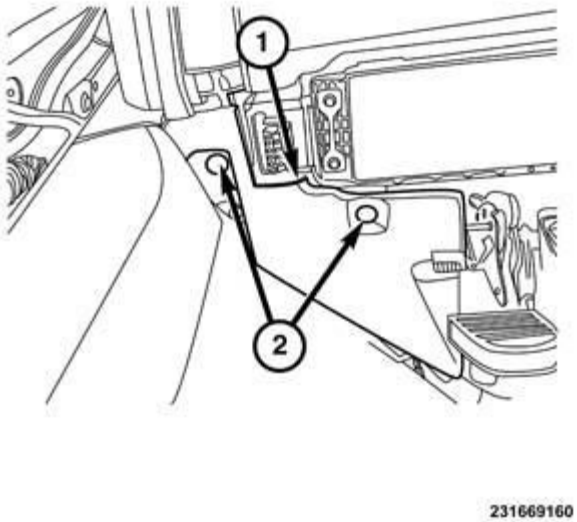

Fig. 465: Hush Panel & Push Pin Fasteners (Drivers)
Courtesy of CHRYSLER GROUP, LLC

Driver side

1. Remove push pin fasteners (2).
2. Remove hush panel (1) from the vehicle

INSTALLATION

INSTALLATION

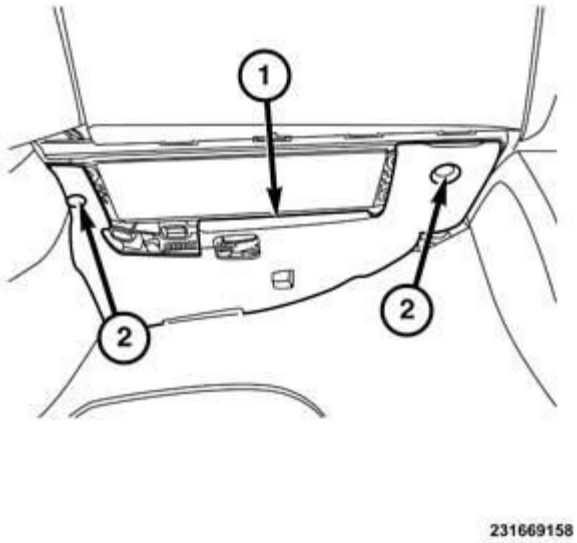

Fig. 466: Hush Panel & Push Pin Fasteners
Courtesy of CHRYSLER GROUP, LLC

Passenger Side

1. Align passenger side hush panel (1) into the vehicle.
2. Connect wiring connector for the light.
3. Insert the push pins (2), fully.
4. Tuck the edges hush panel (1) under the surrounding components.

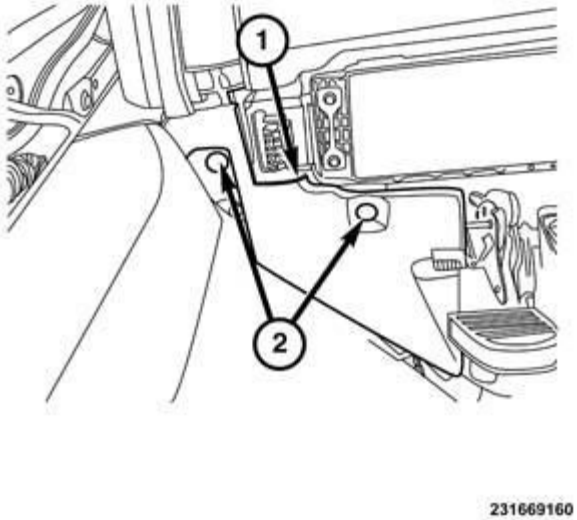

Fig. 467: Hush Panel & Push Pin Fasteners (Drivers)
Courtesy of CHRYSLER GROUP, LLC

Drivers Side

1. Align driver side hush panel (1) into the vehicle.
2. Insert the push pins (2), fully.
3. Tuck the edges of the hush panel (1) under the surrounding component.

INTERIOR

BEZEL, SHIFTER

REMOVAL

REMOVAL

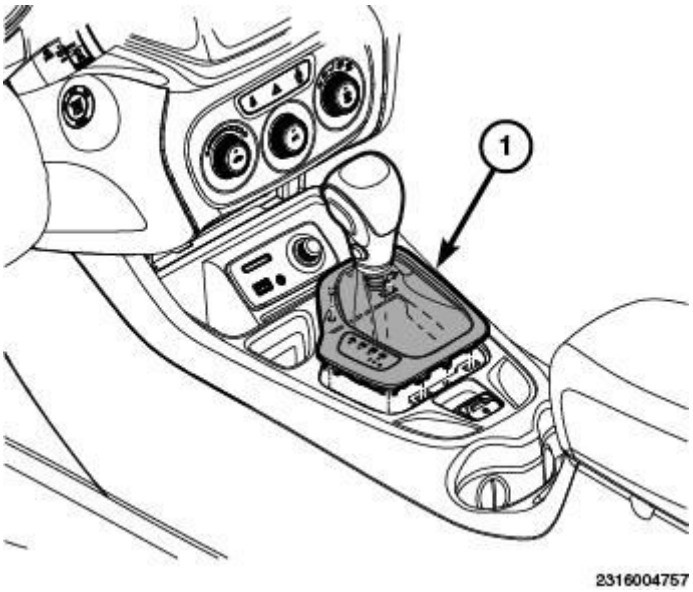

Fig. 468: Shifter Bezel & Console Bezel
Courtesy of CHRYSLER GROUP, LLC

1. Remove the shifter knob.
2. Using trim stick (special tool #C-4755, Trim Stick) or equivalent, pry up on bezel (1) and remove along with the shifter boot.

INSTALLATION

INSTALLATION

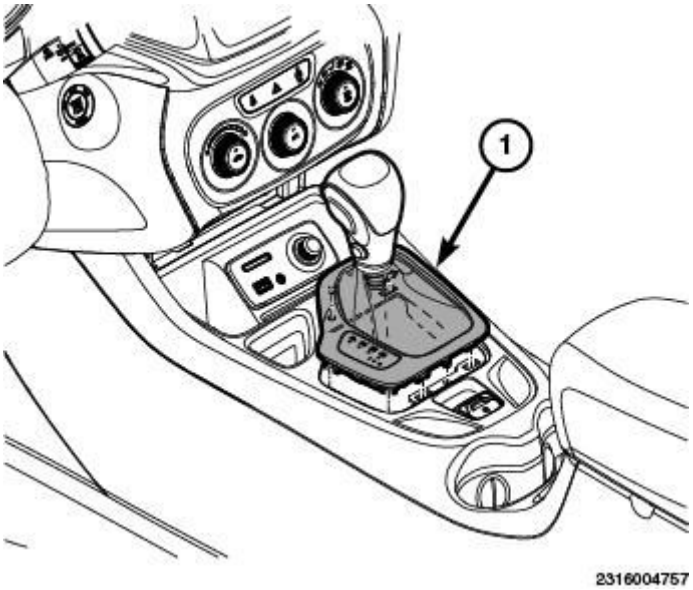

Fig. 469: Shifter Bezel & Console Bezel
Courtesy of CHRYSLER GROUP, LLC

1. Align and position bezel (1) and shifter boot over the shifter shaft.
2. Install by applying hand pressure until the bezel clips are seated.
3. Install the gear shift knob.

CARPET, FLOOR

REMOVAL

REMOVAL

FRONT CARPET

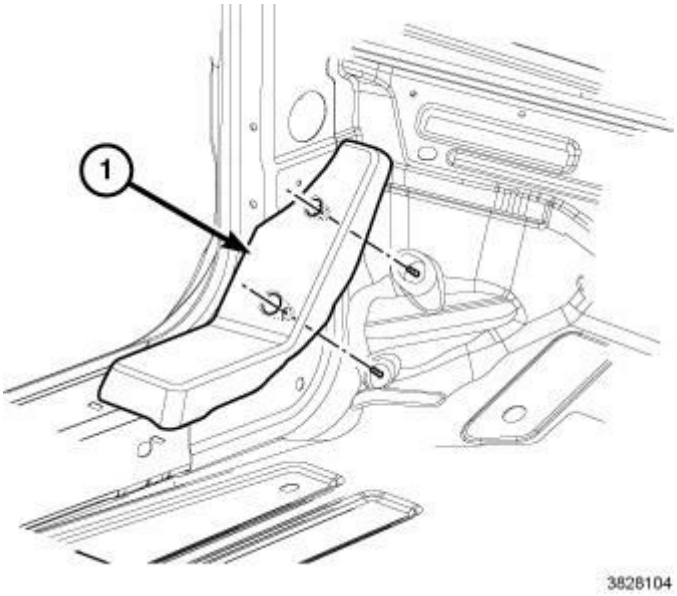

Fig. 470: Driver Side Kick Panel
Courtesy of CHRYSLER GROUP, LLC

NOTE: Procedure is written for removing both sides of the front carpet.

1. Disconnect and isolate the negative battery cable.
2. If equipped, remove both front floor mats.
3. Remove both front seats. Refer to **SEAT, REMOVAL** .
4. Remove the floor console. Refer to **CONSOLE, FLOOR, REMOVAL**.
5. Remove the front door sill/cowl trim panels. Refer to **PLATE, SCUFF, DOOR SILL, REMOVAL**.
6. Remove the lower B-pillar trim panels. Refer to **PANEL, B-PILLAR TRIM, REMOVAL**.
7. Remove the fasteners securing the driver side kick panel (1) and remove the kick panel.

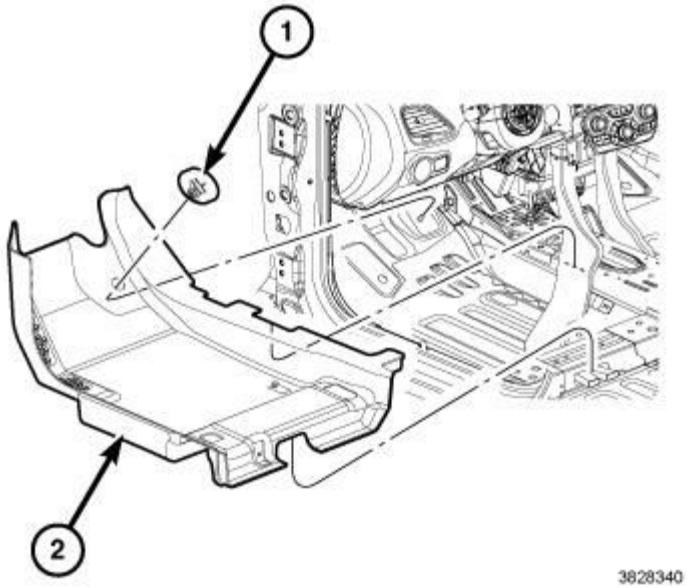

Fig. 471: Front Carpet & Trim Plate
Courtesy of CHRYSLER GROUP, LLC

8. Using (special tool #C-4755, Trim Stick), remove the trim plate (1) located below the accelerator pedal.
9. Pull the driver side carpet from behind the brake pedal, accelerator pedal and HVAC.
10. Remove the carpet (1) from the vehicle through the driver door opening.

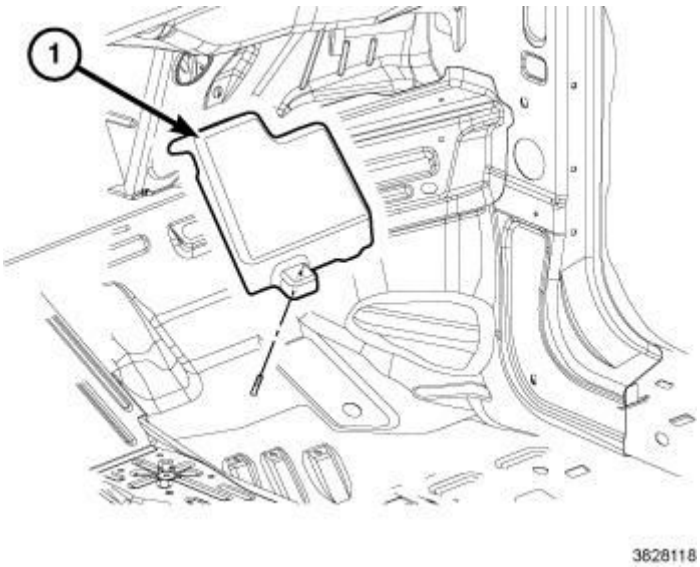

Fig. 472: Passenger Side Kick Panel
Courtesy of CHRYSLER GROUP, LLC

11. Remove the fasteners securing the passenger side kick panel (1) and remove the kick panel.

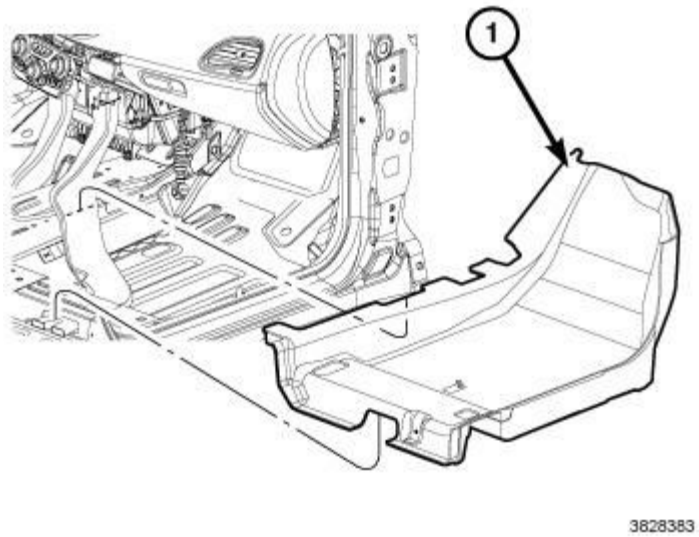

Fig. 473: Passenger Side Carpet
Courtesy of CHRYSLER GROUP, LLC

12. Pull the passenger side carpet from behind the instrument panel and HVAC.
13. Remove the carpet (1) from the vehicle through the passenger door opening.

REAR CARPET

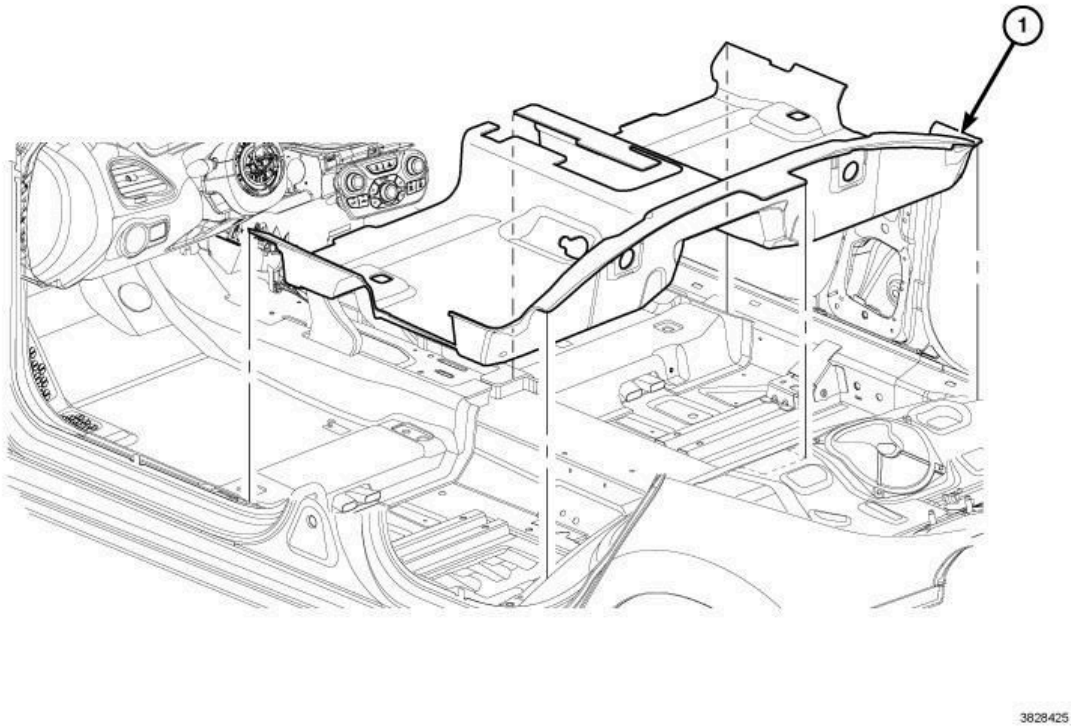

Fig. 474: Rear Carpet

Courtesy of CHRYSLER GROUP, LLC

1. Disconnect and isolate the negative battery cable.
2. Remove both front seats. Refer to **SEAT, REMOVAL** .
3. Remove the rear seat. Refer to **SEAT, REAR, REMOVAL**.
4. Remove the floor console. Refer to **CONSOLE, FLOOR, REMOVAL**.
5. Remove the front and rear door sill/cowl trim panels. Refer to **PLATE, SCUFF, DOOR SILL, REMOVAL**.
6. Remove/reposition the lower B-pillar trim panels. Refer to **PANEL, B-PILLAR TRIM, REMOVAL**.
7. Lift the carpet (1) up and remove.

INSTALLATION

INSTALLATION

FRONT CARPET

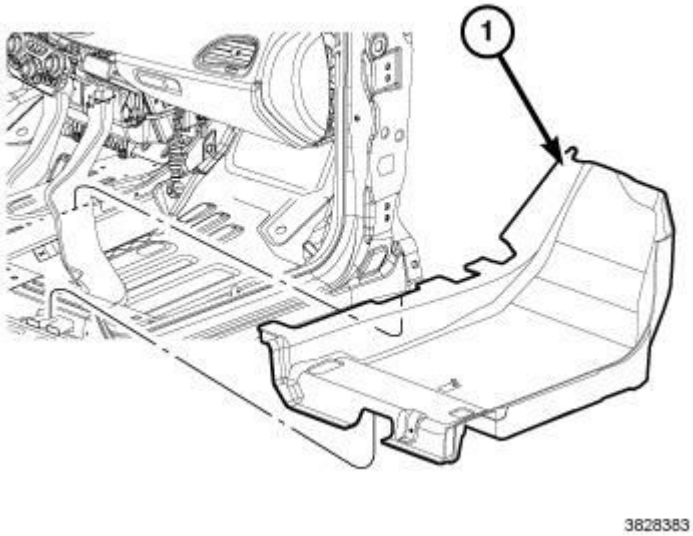

Fig. 475: Passenger Side Carpet
Courtesy of CHRYSLER GROUP, LLC

NOTE: Procedure is written for installing both sides of the front carpet.

1. Position the carpet (1) into the vehicle through the passenger door opening.
2. Tuck the passenger side carpet into position behind the instrument panel and HVAC.

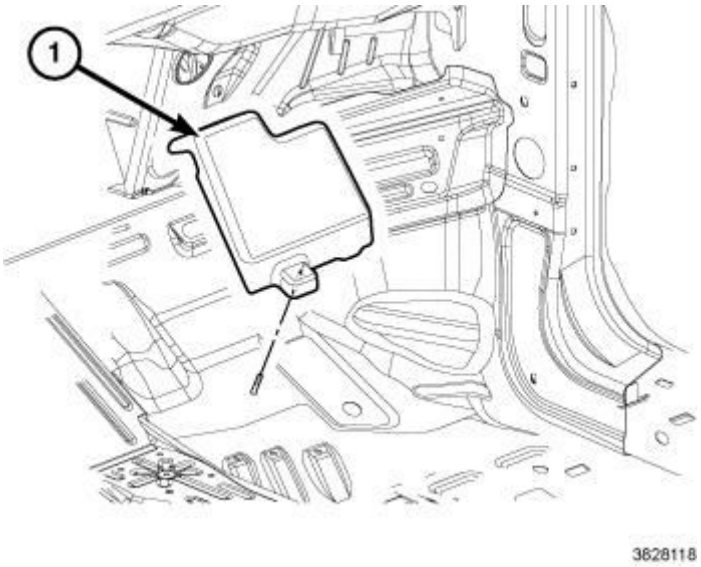

Fig. 476: Passenger Side Kick Panel
Courtesy of CHRYSLER GROUP, LLC

3. Position the passenger side kick panel (1) and install the fasteners securing the passenger side kick panel.

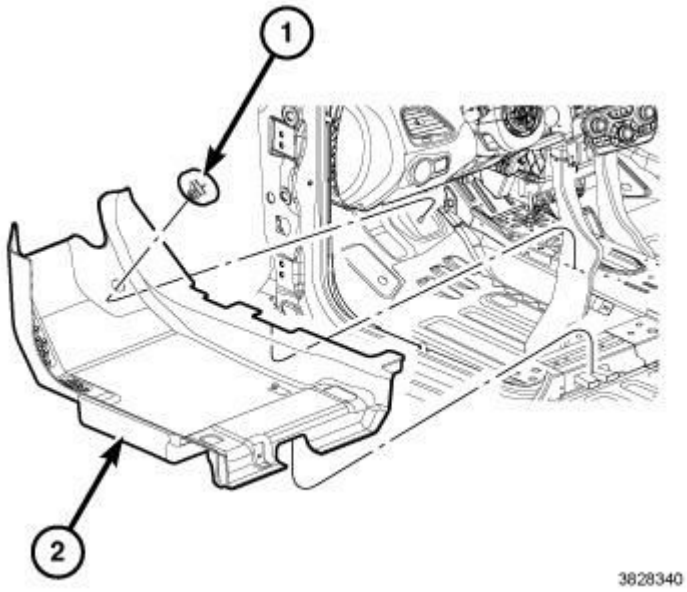

Fig. 477: Front Carpet & Trim Plate
Courtesy of CHRYSLER GROUP, LLC

4. Position the carpet (2) into the vehicle through the driver door opening.
5. Tuck the driver side carpet into position behind the brake pedal, accelerator pedal and HVAC.
6. Install the trim plate (1) located below the accelerator pedal. Hand tap to engage the retaining clip.

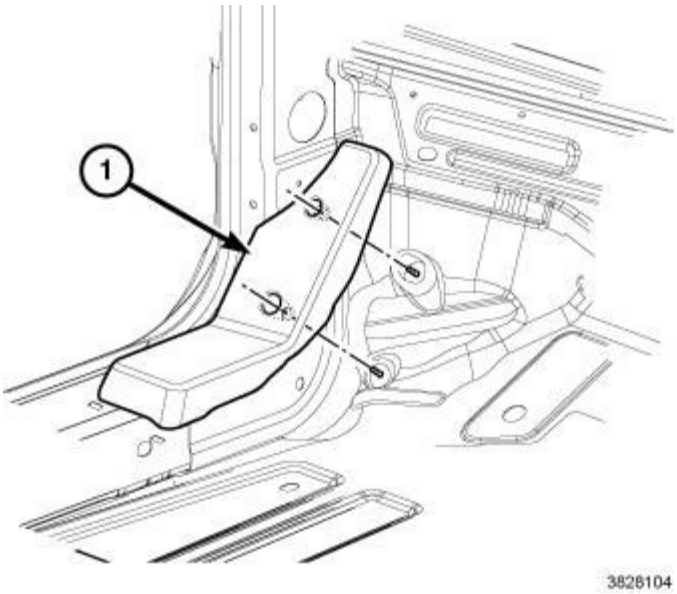

Fig. 478: Driver Side Kick Panel
Courtesy of CHRYSLER GROUP, LLC

7. Position the driver side kick panel (1) and install the fasteners securing the driver side kick panel.
8. Install the lower B-pillar trim panels. Refer to **PANEL, B-PILLAR TRIM, INSTALLATION**.
9. Install the front door sill/cowl trim panels. Refer to **PLATE, SCUFF, DOOR SILL, INSTALLATION**.
10. Install the floor console. Refer to **CONSOLE, FLOOR, INSTALLATION**.
11. Install both front seats. Refer to **SEAT, INSTALLATION** .
12. Connect the negative battery cable.
13. If equipped, install both front floor mats.

REAR CARPET

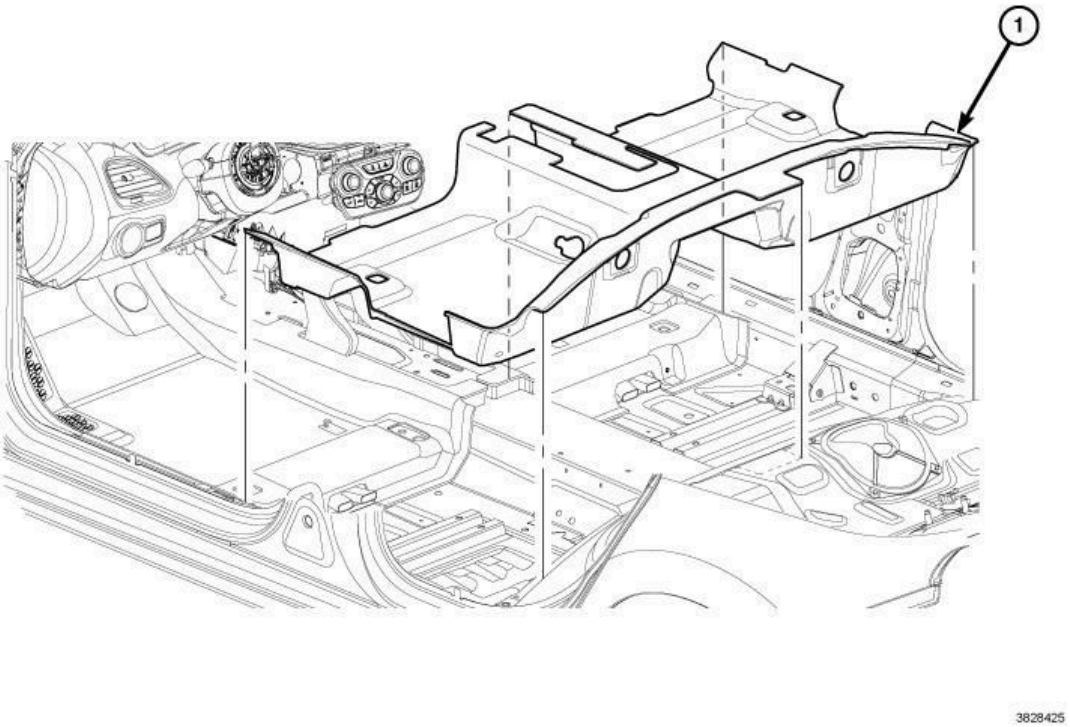

Fig. 479: Rear Carpet
Courtesy of CHRYSLER GROUP, LLC

1. Position the carpet (1) back into the vehicle.
2. Install/position the lower B-pillar trim panels. Refer to **PANEL, B-PILLAR TRIM, INSTALLATION**.
3. Install the front and rear door sill/cowl trim panels. Refer to **PLATE, SCUFF, DOOR SILL, INSTALLATION**.
4. Install the floor console. Refer to **CONSOLE, FLOOR, INSTALLATION**.
5. Install both front seats. Refer to **SEAT, INSTALLATION** .
6. Install the rear seat. Refer to **SEAT, REAR, INSTALLATION**.
7. Connect the negative battery cable.

CONSOLE, FLOOR

REMOVAL

REMOVAL

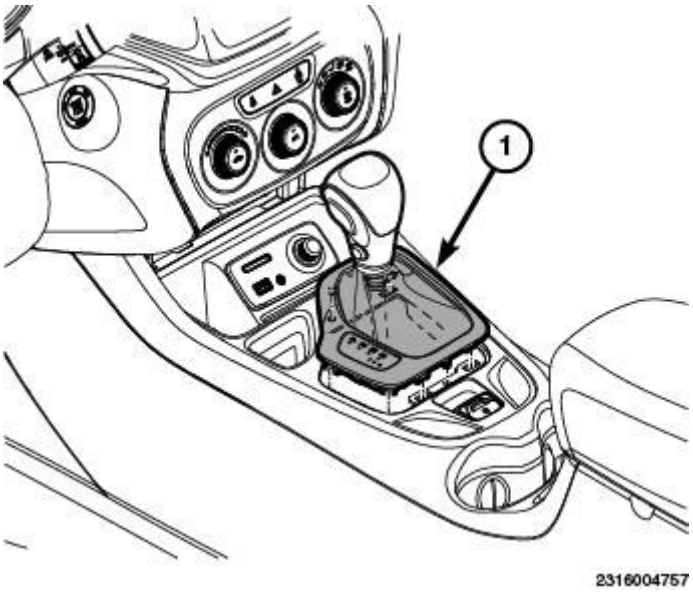

Fig. 480: Shifter Bezel & Console Bezel
Courtesy of CHRYSLER GROUP, LLC

1. Disconnect and isolate the negative battery cable.
2. Unclip the shifter bezel (1). Refer to **BEZEL, SHIFTER, REMOVAL**.

NOTE: Do not remove the shifter bezel, as it will fit through the opening once the bezel has been removed.

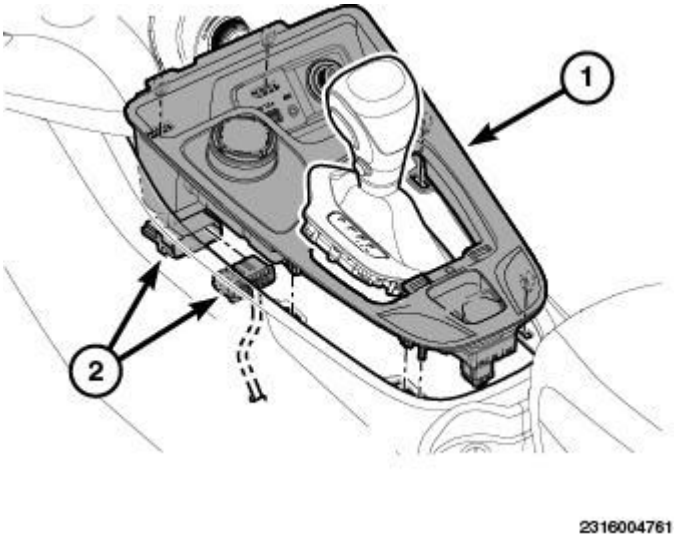

Fig. 481: Shifter Bezel, Console Bezel & Electrical Connectors
Courtesy of CHRYSLER GROUP, LLC

3. Using a (special tool #C-4755, Trim Stick) or equivalent, separate the console bezel (1) and disconnect the electrical connector (2).

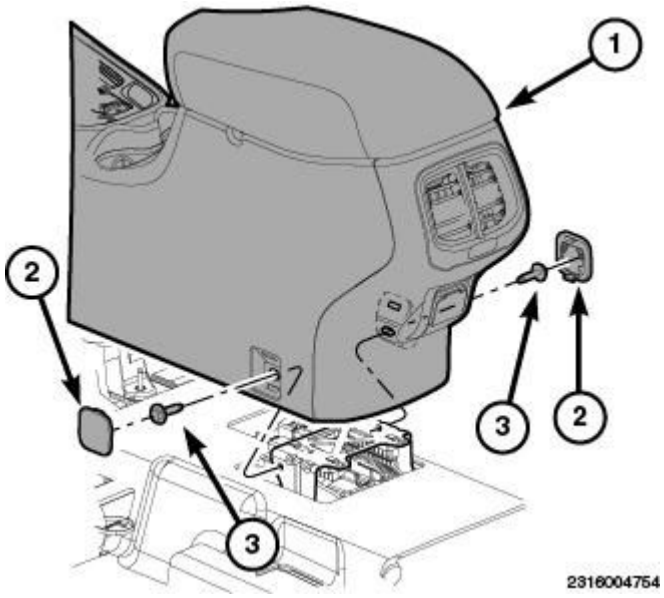

Fig. 482: Identifying Console Bezel, Covers & Fasteners
Courtesy of CHRYSLER GROUP, LLC

4. Position the seat fully forward.
5. Using a small pick/pry tool or equivalent, remove the fastener covers (2) located near the lower rear of the console. Remove the fasteners (3) behind the covers.
6. Using, disengage the retaining tabs/clips securing the switch pod (2) to the instrument panel.

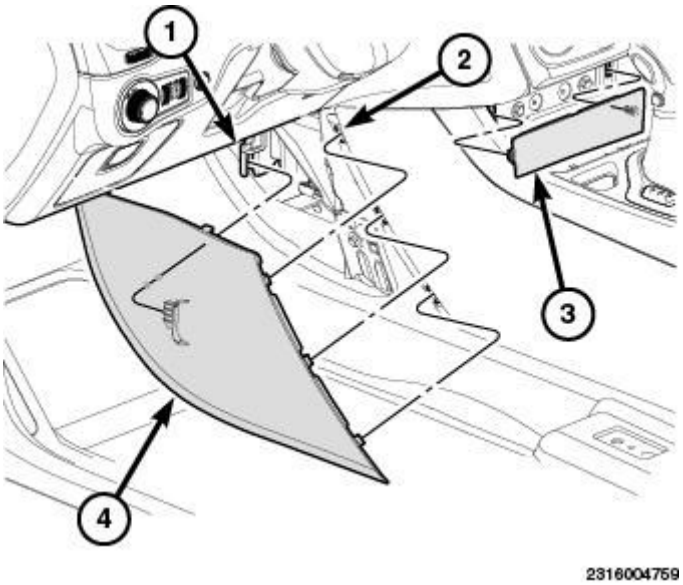

Fig. 483: Console Trim Pieces
Courtesy of CHRYSLER GROUP, LLC

7. Using a trim stick or equivalent, remove the front trim (3) covering the console fasteners.
8. Accessing from the front of the floor console (1) and using a trim stick, disengage the retaining tabs for

the front gap hiders (2) and remove the gap hiders (4).

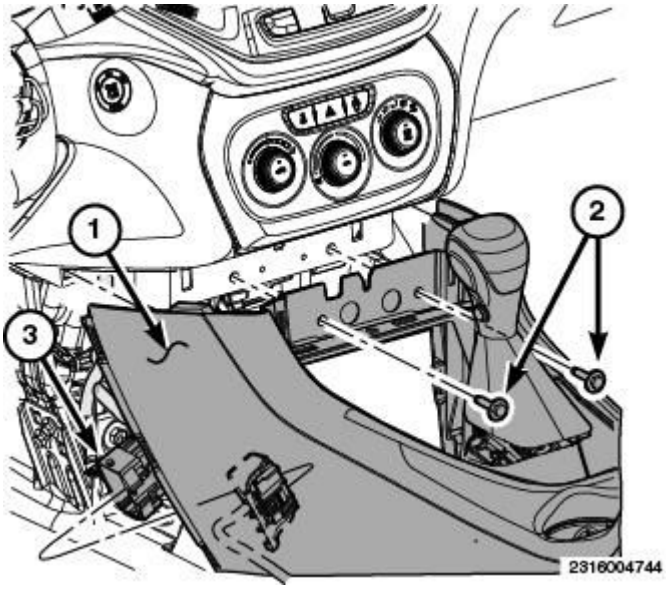

Fig. 484: Identifying Floor Console, Electrical Connectors & Fasteners
Courtesy of CHRYSLER GROUP, LLC

9. Remove the two fasteners (1) from the floor console (2).
10. Disconnect the electrical connectors (3).

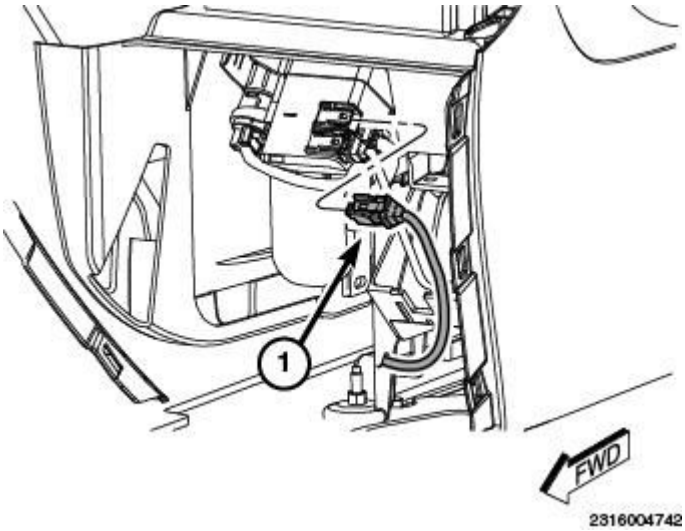

Fig. 485: Identifying Electrical Connectors
Courtesy of CHRYSLER GROUP, LLC

11. Disconnect the electrical connectors (1).
12. Lift the console up at the rear and remove from the vehicle.

INSTALLATION

INSTALLATION

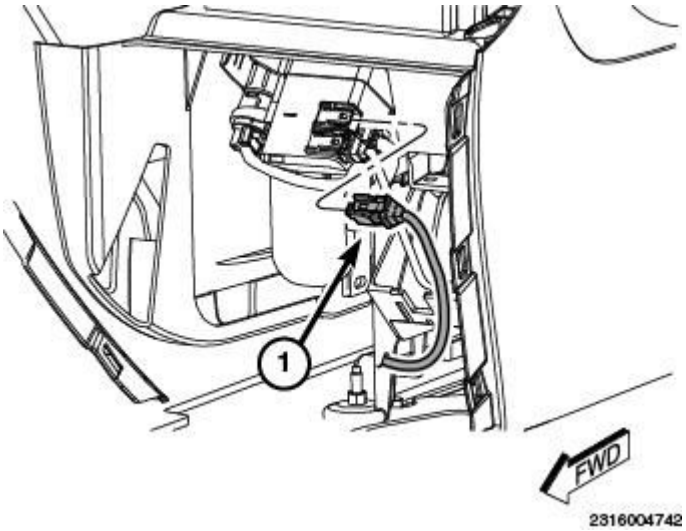

Fig. 486: Identifying Electrical Connectors
Courtesy of CHRYSLER GROUP, LLC

1. Position the console into the vehicle and connect the electrical connectors (1).

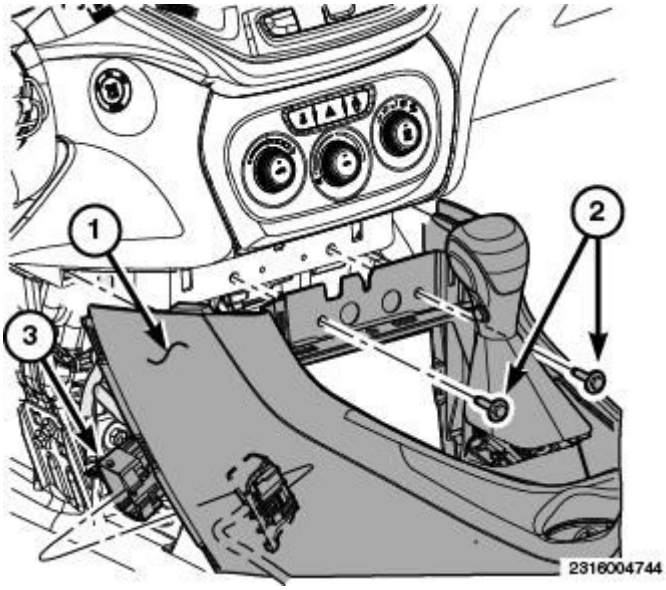

Fig. 487: Identifying Floor Console, Electrical Connectors & Fasteners
Courtesy of CHRYSLER GROUP, LLC

2. Connect the electrical connectors (3).
3. Install the two fasteners (2) into the floor console (1) and tighten securely.

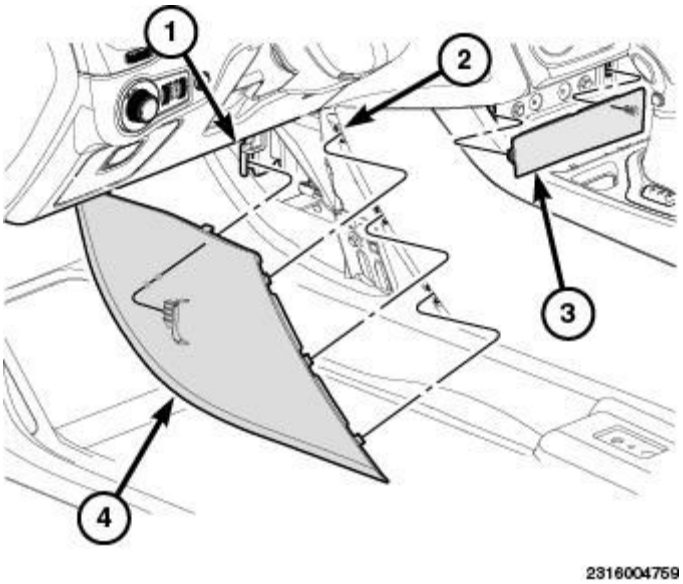

Fig. 488: Console Trim Pieces
Courtesy of CHRYSLER GROUP, LLC

4. Position the trim panel (3) back into place over the front console fasteners and seat the clips fully.
5. Accessing from the front of the floor console (1), align and position the gap hiders (2).
6. Hand tap to engage the retaining tabs securing the front gap hiders (4).

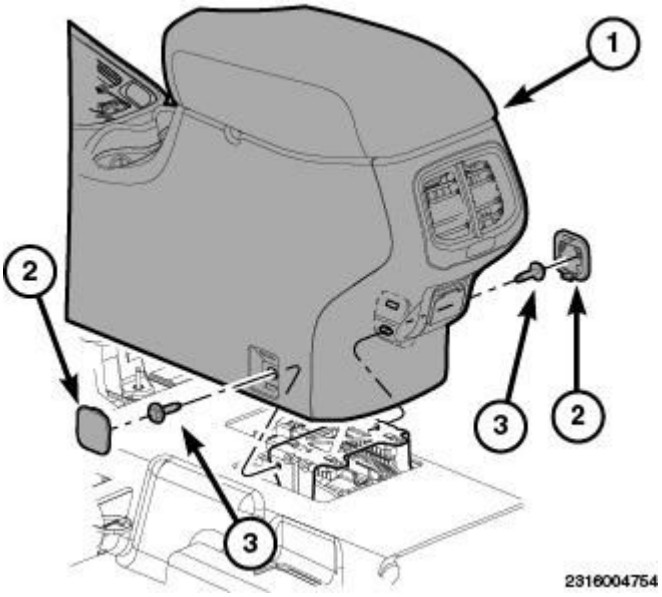

Fig. 489: Identifying Console Bezel, Covers & Fasteners
Courtesy of CHRYSLER GROUP, LLC

7. Install the rear fasteners (3) securing the console. Tighten the fastener securely. Repeat on the opposite side.
8. Install the fastener cover (2) located near the lower rear of the console. Repeat on the other side.

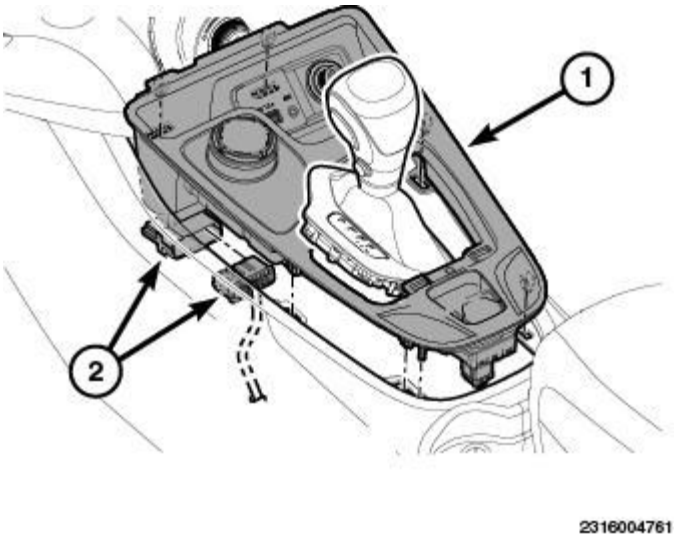

Fig. 490: Shifter Bezel, Console Bezel & Electrical Connectors
Courtesy of CHRYSLER GROUP, LLC

9. Connect the electrical connector (2) and seat the console bezel (1) fully.

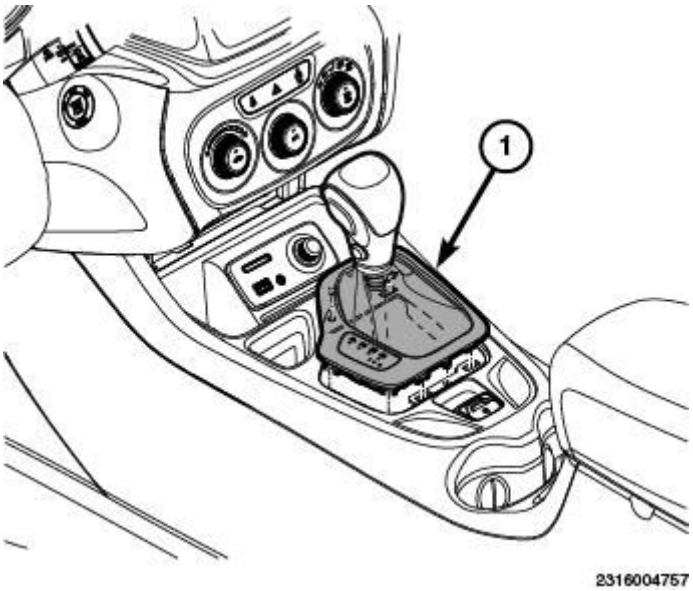

Fig. 491: Shifter Bezel & Console Bezel
Courtesy of CHRYSLER GROUP, LLC

10. Position the shifter bezel (1) back in place and seat fully.
11. Connect the negative battery cable.

CONSOLE, OVERHEAD, FRONT

DESCRIPTION

DESCRIPTION

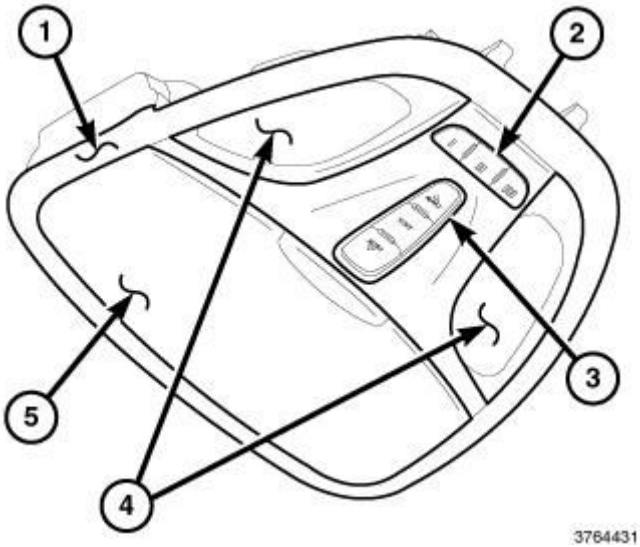

Fig. 492: Overhead Console Components
Courtesy of CHRYSLER GROUP, LLC

Vehicles equipped with a power sunroof have a power sunroof switch (3) integral to the overhead console (1) located in the headliner just forward of the sunroof opening. The switch buttons are centered between the two map/reading lamps (4), forward of the sunglasses storage bin (5) and, if equipped, rearward of the universal transmitter (Homelink®) push buttons (2). This switch has three momentary push buttons clearly identified by either text or icons indicating their functions. The three functions are from front-to-back: AUTO (CLOSE), VENT and AUTO (OPEN). The switch push buttons also have instrument panel dimmer controlled Light Emitting Diode (LED) units that provide back lighting for visibility at night.

The power sunroof switch is connected to the vehicle electrical system through the printed circuit board of the overhead console, which is connected to a dedicated take out and connector of the overhead wire harness. If the switch is ineffective or damaged, the entire overhead console must be replaced.

REMOVAL

REMOVAL

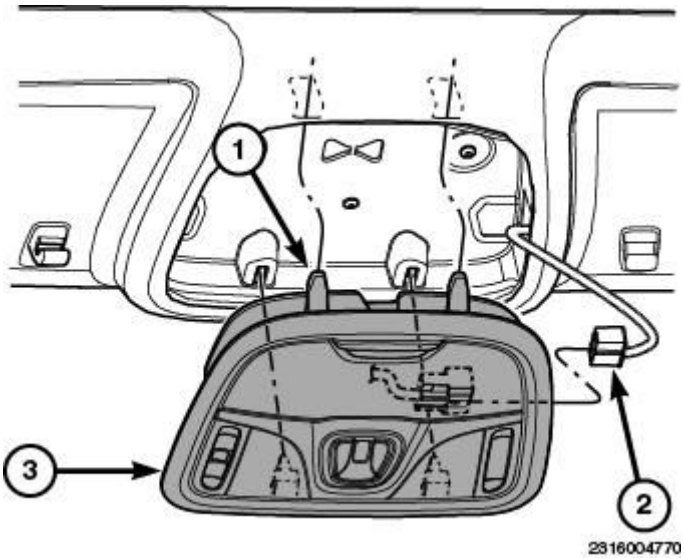

Fig. 493: Identifying Overhead Console, Clips & Wiring Connector
Courtesy of CHRYSLER GROUP, LLC

1. Place a trim stick or equivalent, between the headliner and the overhead console (1) front center.
2. Pry gently until the retaining clips are released.
3. Disconnect the overhead console (1) wiring connector (2).
4. Remove the overhead console (1) from the vehicle.

INSTALLATION

INSTALLATION

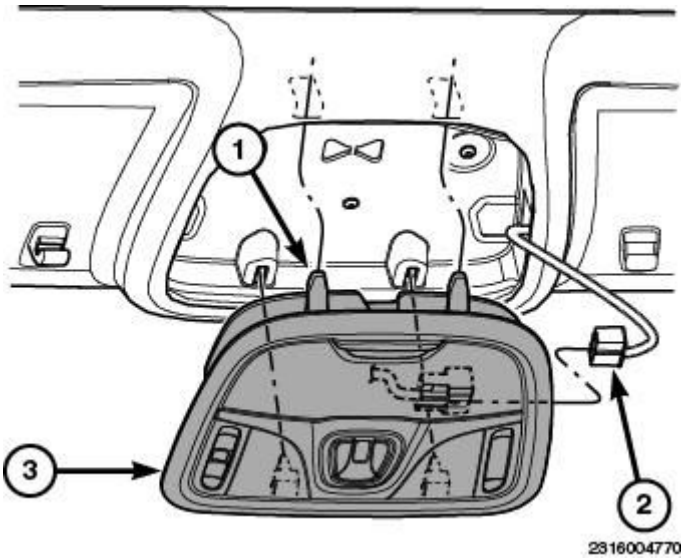

Fig. 494: Identifying Overhead Console, Clips & Wiring Connector
Courtesy of CHRYSLER GROUP, LLC

1. Connect the overhead console (3) wiring connector (2).
2. Align the rear tabs of the overhead console (1) into the retaining bracket.
3. Align the overhead console (1) retaining clips and apply hand pressure to insert fully.
4. Connect the negative battery cable.

HANDLE, GRAB

REMOVAL

REMOVAL

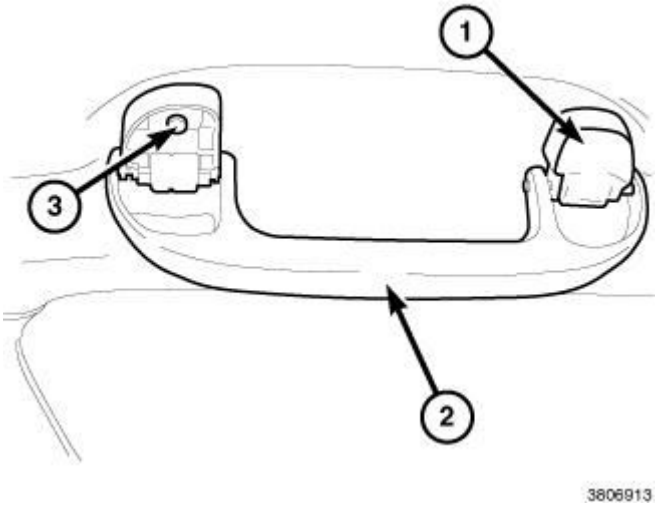

Fig. 495: Grab Handle, Fastener & Cover
Courtesy of CHRYSLER GROUP, LLC

NOTE: Rear grab handle shown, front grab handle similar.

1. Using a small pick/pry tool, remove the grab handle fastener cover (1). Repeat on the other side of the grab handle (2).
2. Remove the fastener (3) securing the grab handle (2). Repeat on the other side of the grab handle (2).
3. Remove the grab handle (2).

INSTALLATION

INSTALLATION

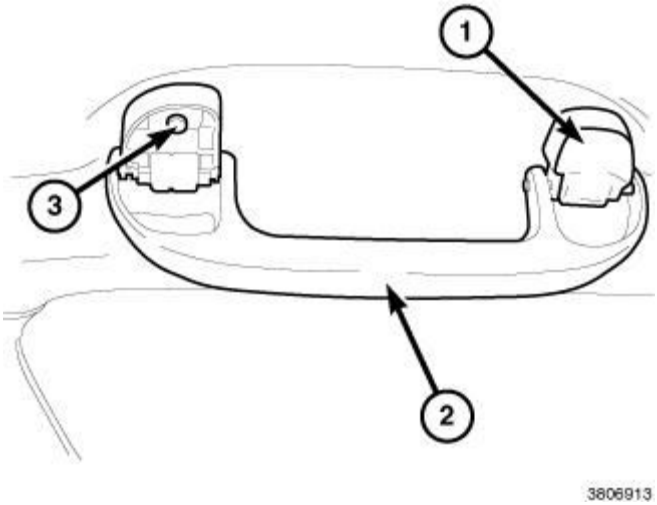

Fig. 496: Grab Handle, Fastener & Cover
Courtesy of CHRYSLER GROUP, LLC

NOTE: Rear grab handle shown, front grab handle similar.

1. Position the grab handle (2).
2. Install the fastener (3) securing the grab handle (2). Tighten the fastener securely. Repeat on the other side of the grab handle (2).
3. Install the grab handle fastener cover (1). Repeat on the other side of the grab handle (2).

HEADLINER

REMOVAL

REMOVAL

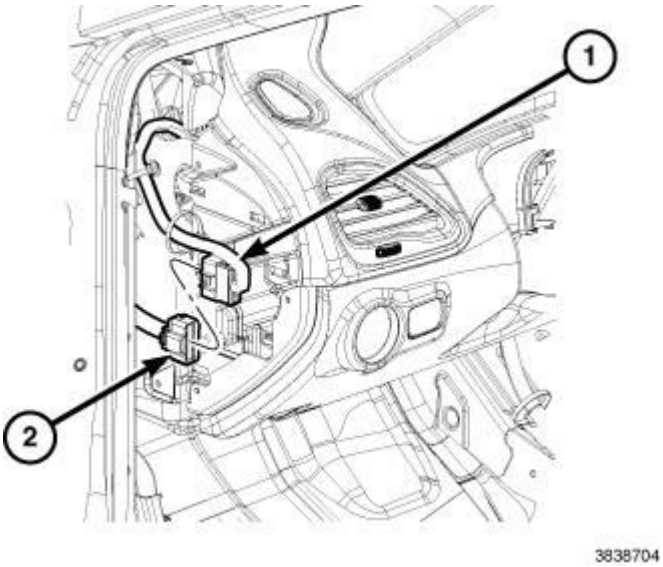

Fig. 497: Headliner Wire Harness & Connector
Courtesy of CHRYSLER GROUP, LLC

NOTE: In the event the headliner is damaged or creased during removal, it will need to be replaced with a new headliner.

NOTE: Please use clean gloves or ensure hands are clean before removing the headliner.

1. Disconnect and isolate the negative battery cable.
2. Support the headliner with a clean and suitable prop.
3. Remove the right and left end caps from the instrument panel. Refer to **CAP, INSTRUMENT PANEL END, REMOVAL**.
4. Disconnect the headliner wire harness (2) from the vehicle harness (1) on both sides.

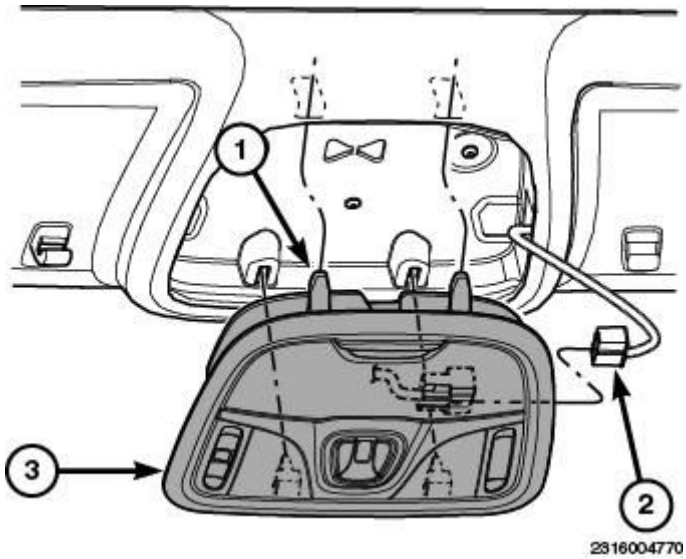

Fig. 498: Identifying Overhead Console, Clips & Wiring Connector
Courtesy of CHRYSLER GROUP, LLC

5. If equipped, remove the overhead console (3). Refer to **CONSOLE, OVERHEAD, FRONT, REMOVAL**.
6. Remove both sided visors and visor supports. Refer to **SUPPORT, VISOR, REMOVAL** and **VISOR, REMOVAL**.

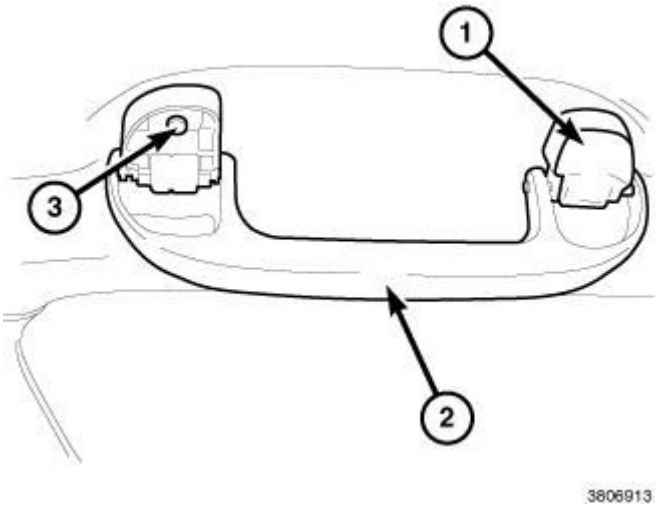

Fig. 499: Grab Handle, Fastener & Cover
Courtesy of CHRYSLER GROUP, LLC

7. Remove the front and rear grab handles. Refer to **HANDLE, GRAB, REMOVAL**.
8. Remove the A-pillar trim panels. Refer to **PANEL, A-PILLAR TRIM, REMOVAL**.

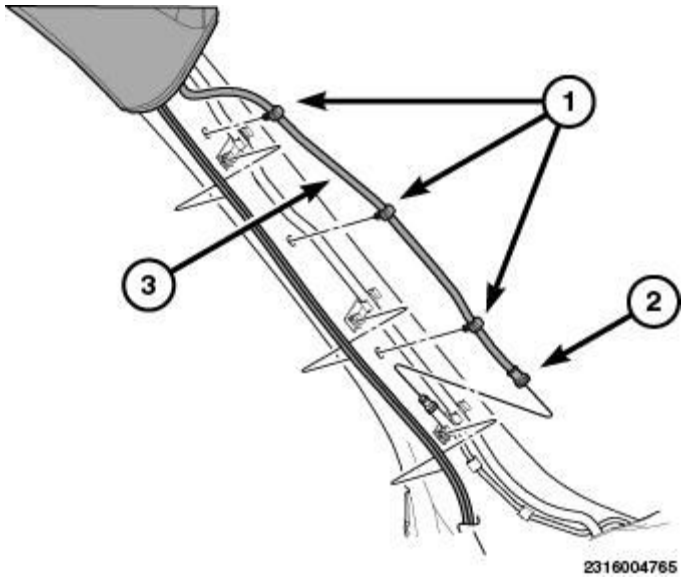

Fig. 500: Identifying Headliner Wire Harness & Rear Washer Hose
Courtesy of CHRYSLER GROUP, LLC

9.
10. Detach the headliner wire harness (1) from the A-pillar.
11. Disconnect the rear washer hose (2).
12. Remove the B-pillar trim panels. Refer to **PANEL, B-PILLAR TRIM, REMOVAL**.
13. Remove the upper quarter trim panels. Refer to **PANEL, QUARTER TRIM, REMOVAL**.

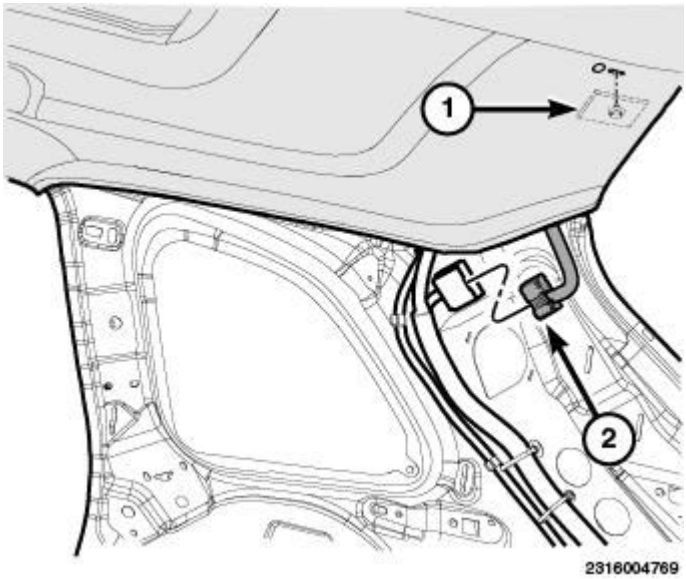

Fig. 501: Identifying Electrical Connector & Clips
Courtesy of CHRYSLER GROUP, LLC

14. Disconnect the electrical connector (2) and separate the rear support clips (1).

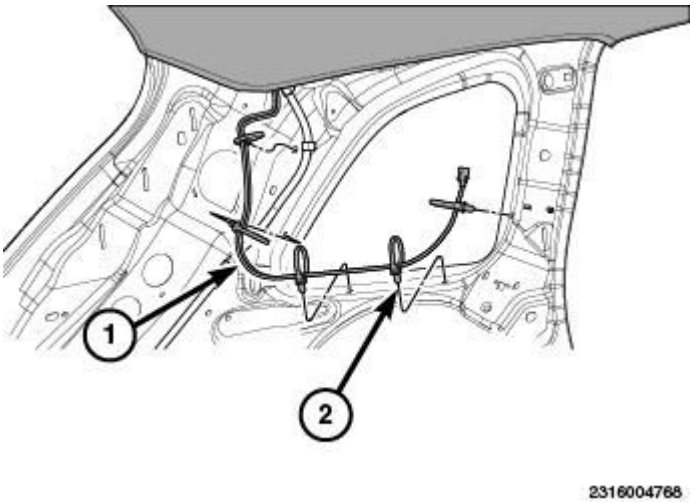

Fig. 502: Identifying Support Clips & Wire
Courtesy of CHRYSLER GROUP, LLC

15. Release the support clips (2) and separate the wire (1).

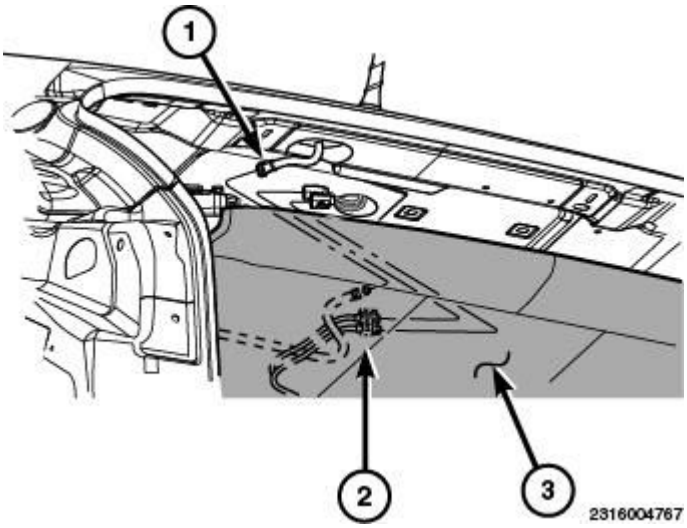

Fig. 503: Identifying Rear Washer Hose & Electrical Connectors
Courtesy of CHRYSLER GROUP, LLC

16. Disconnect the rear washer hose (1) and electrical connectors (2).

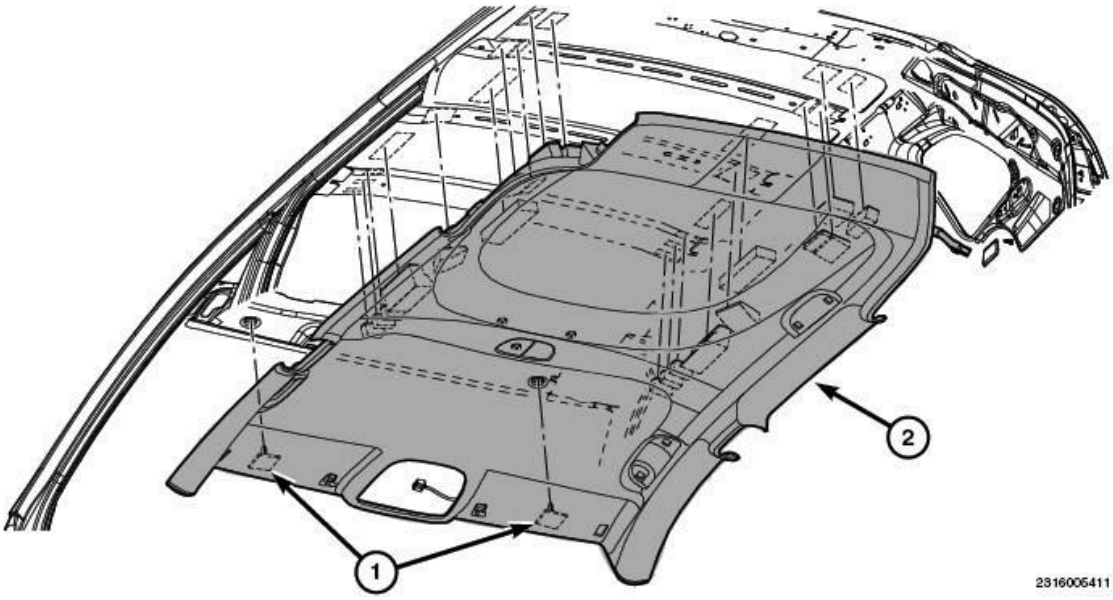

Fig. 504: Identifying Headliner & Front Clips
Courtesy of CHRYSLER GROUP, LLC

17. Release the front clips (1) and with the help of an assistant, remove the headliner (2) through the liftgate door opening.

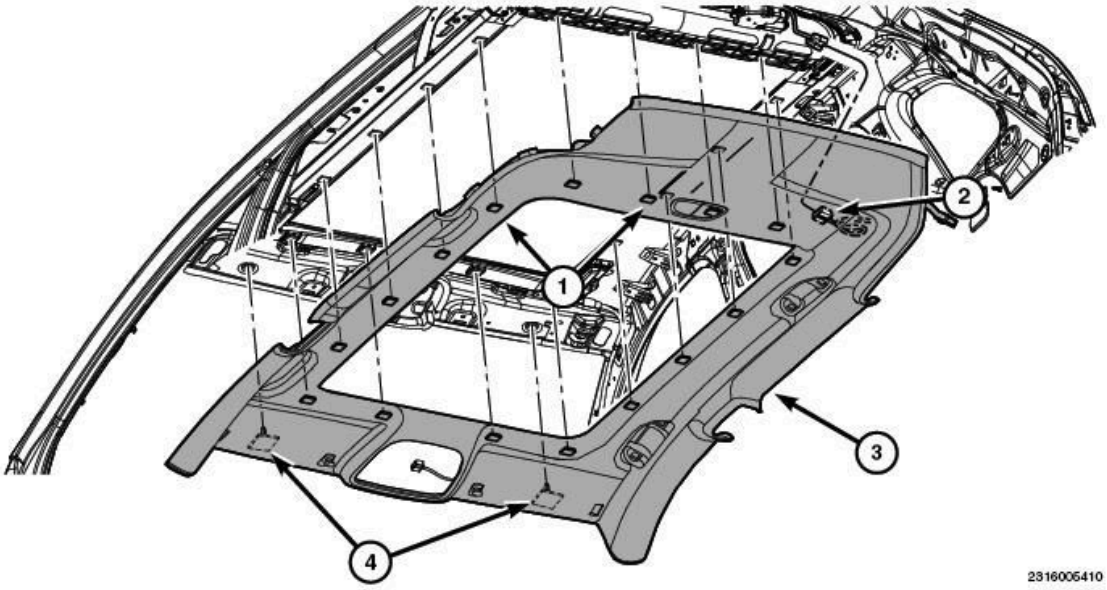

Fig. 505: Identifying Headliner, Front Clips, Dual Lock Fasteners, Sunroof Opening & Electrical Connectors
Courtesy of CHRYSLER GROUP, LLC

18. On sunroof models, release the front clips (4), release the dual lock fasteners (1) around the sunroof opening, and disconnect the electrical connector (2).
19. Remove the headliner (3) through the liftgate door opening.

20. If reinstalling the same headliner, place in a clean area free from dirt and debris.

INSTALLATION

INSTALLATION

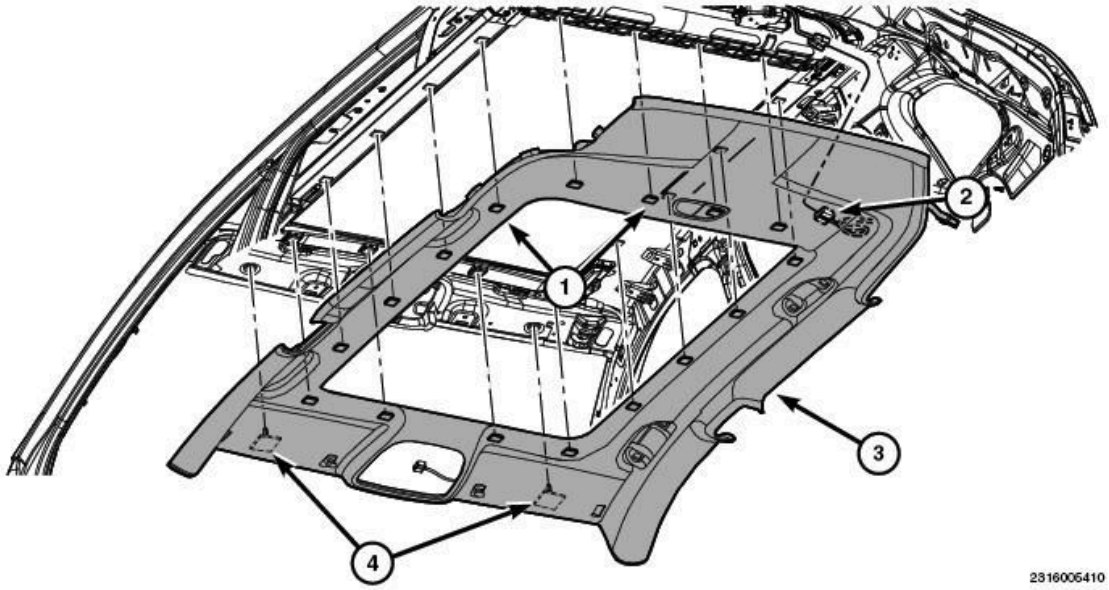

Fig. 506: Identifying Headliner, Front Clips, Dual Lock Fasteners, Sunroof Opening & Electrical Connectors
Courtesy of CHRYSLER GROUP, LLC

NOTE: In the event the headliner is damaged or creased during removal, it will need to be replaced with a new headliner.

NOTE: Please use clean gloves or ensure hands are clean before installing.

1. With the help of an assistant, align and position the headliner (3) through the liftgate opening.
2. Support the headliner with a clean and suitable prop.
3. Properly align the headliner (3) into position.
4. On sunroof models seat the dual lock fasteners (1) around the sunroof opening fully.
5. Connect the electrical connector (2)
6. Seat the front support clips (4) fully.

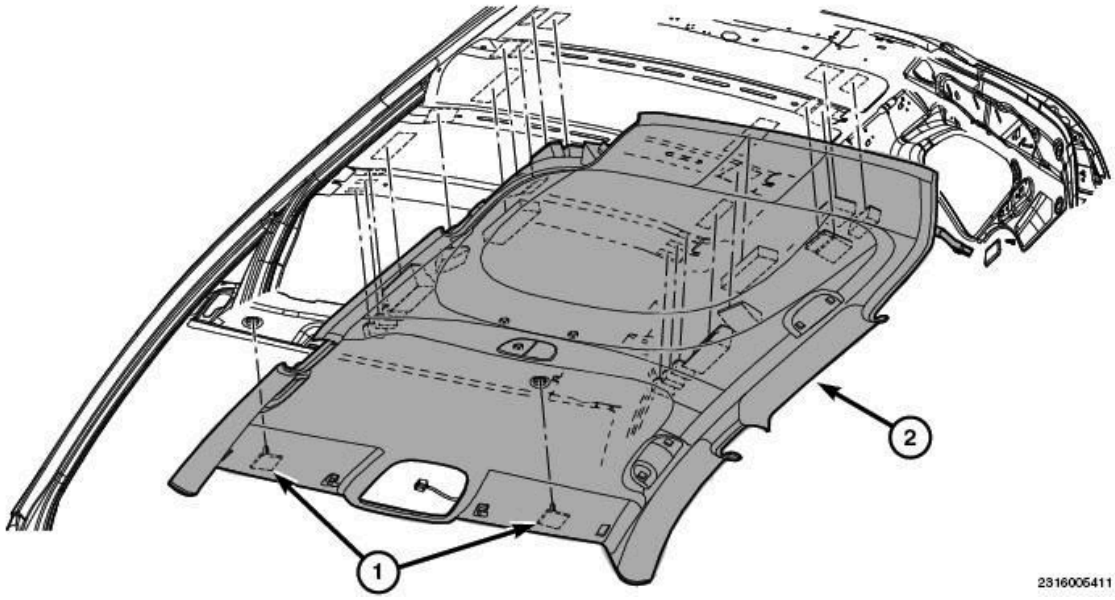

Fig. 507: Identifying Headliner & Front Clips
Courtesy of CHRYSLER GROUP, LLC

7. On non sunroof models position the headliner back and seat the front support clips fully.
8. Support the headliner with a clean and suitable prop.

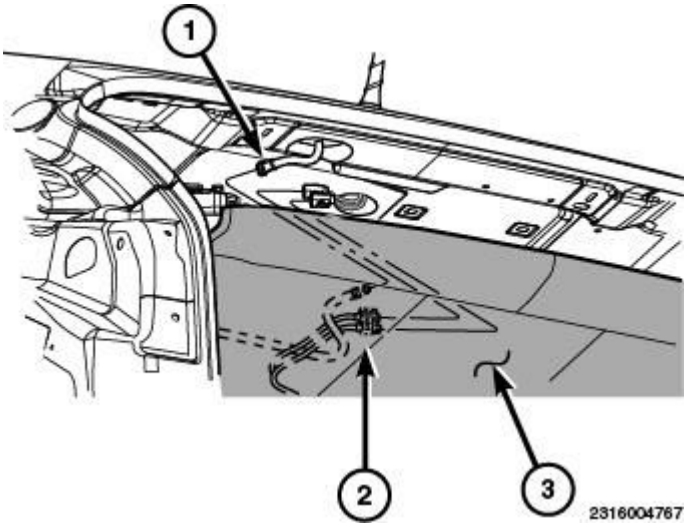

Fig. 508: Identifying Rear Washer Hose & Electrical Connectors
Courtesy of CHRYSLER GROUP, LLC

9. Connect the rear electrical connectors (2) and connect the rear washer hose (1).

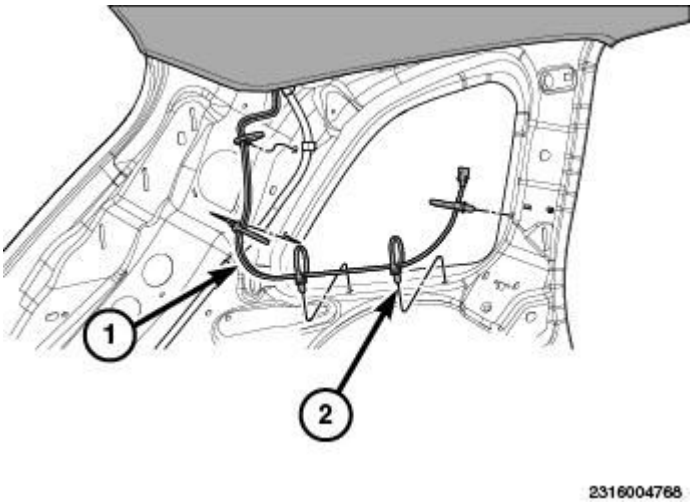

Fig. 509: Identifying Support Clips & Wire
Courtesy of CHRYSLER GROUP, LLC

10. Position the harness (1) back and sear the support clips (2) fully.

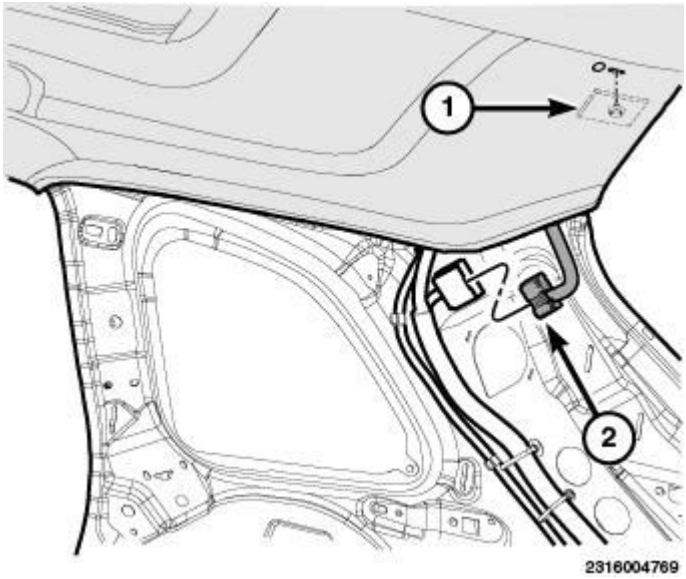

Fig. 510: Identifying Electrical Connector & Clips
Courtesy of CHRYSLER GROUP, LLC

11. Connect the electrical connector (2) and seat the rear support clips (1) fully.

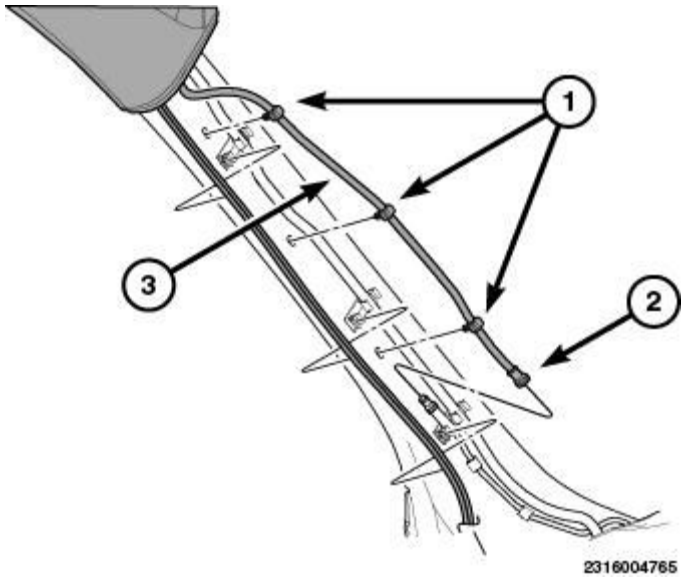

Fig. 511: Identifying Headliner Wire Harness & Rear Washer Hose
Courtesy of CHRYSLER GROUP, LLC

12. Connect the washer hose (3) at the A-pillar.
13. Route and attach the headliner wire harness (1) to the A-pillar.

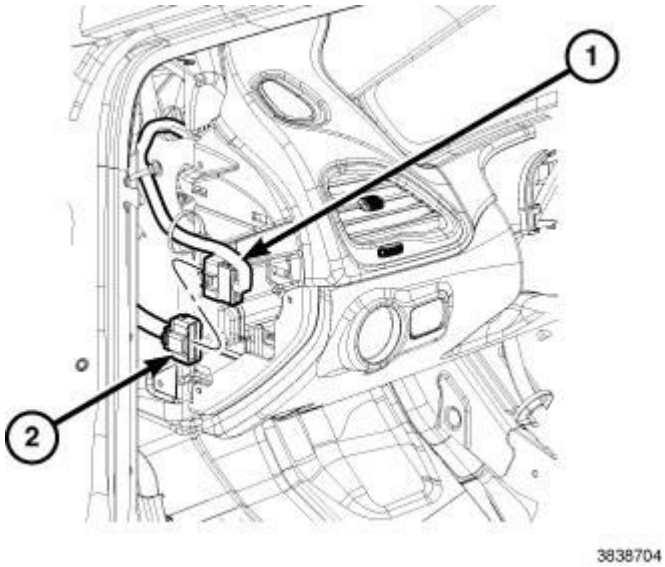

Fig. 512: Headliner Wire Harness & Connector
Courtesy of CHRYSLER GROUP, LLC

14. Connect the right and left headliner wire harness (2) into the vehicle harness (1).

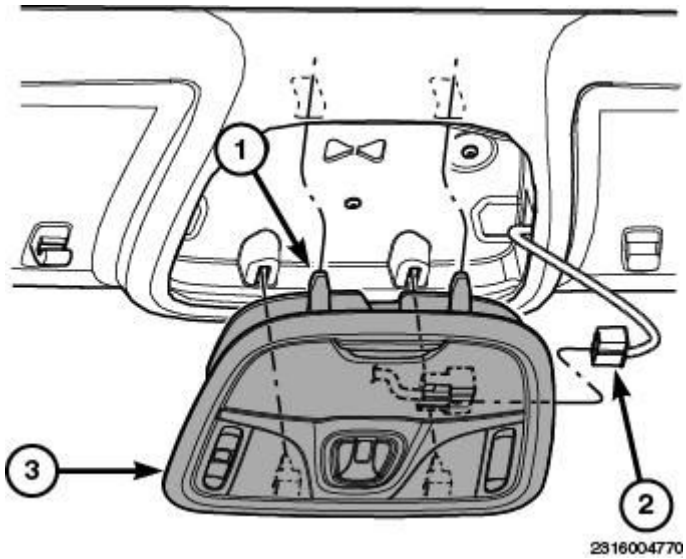

Fig. 513: Identifying Overhead Console, Clips & Wiring Connector
Courtesy of CHRYSLER GROUP, LLC

15. If equipped, install the overhead console. Refer to **CONSOLE, OVERHEAD, FRONT, INSTALLATION**.
16. Install the upper quarter trim panels. Refer to **PANEL, QUARTER TRIM, INSTALLATION**.
17. Install the B-pillar trim panels. Refer to **PANEL, B-PILLAR TRIM, INSTALLATION**.
18. Install the A-pillar trim panels. Refer to **PANEL, A-PILLAR TRIM, INSTALLATION**.

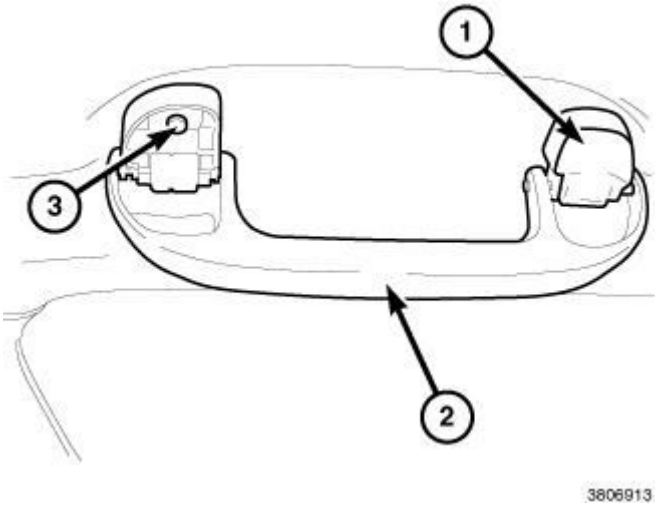

Fig. 514: Grab Handle, Fastener & Cover
Courtesy of CHRYSLER GROUP, LLC

19. Install the grab handles. Refer to **HANDLE, GRAB, INSTALLATION**.
20. Install both visors and visor supports. Refer to **SUPPORT, VISOR, INSTALLATION** and **VISOR, INSTALLATION**.

21. Install the end caps onto the instrument panel. Refer to **CAP, INSTRUMENT PANEL END, INSTALLATION**.
22. Connect the negative battery cable.

LATCH, CONSOLE LID, FLOOR

REMOVAL

REMOVAL

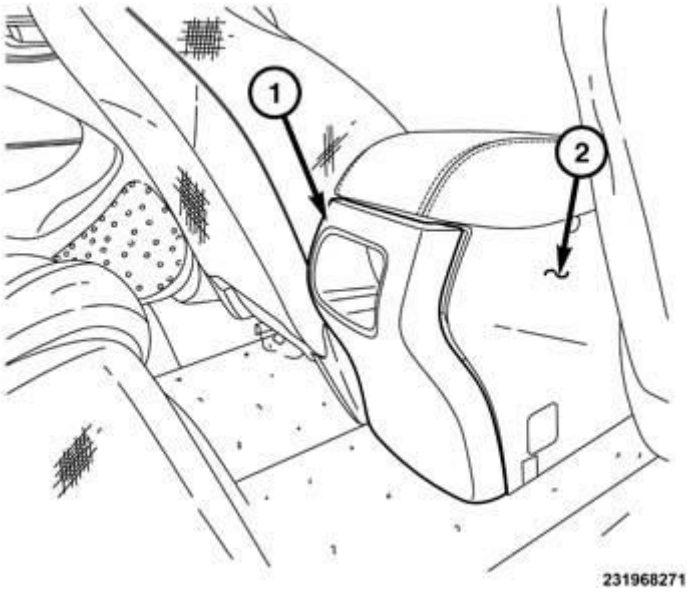

Fig. 515: Console & End Cap Bezel
Courtesy of CHRYSLER GROUP, LLC

1. With the use of a (special tool #C-4755, Trim Stick) or equivalent, remove the console rear end cap bezel (1) from the console (2).
2. Open the armrest assembly fully.

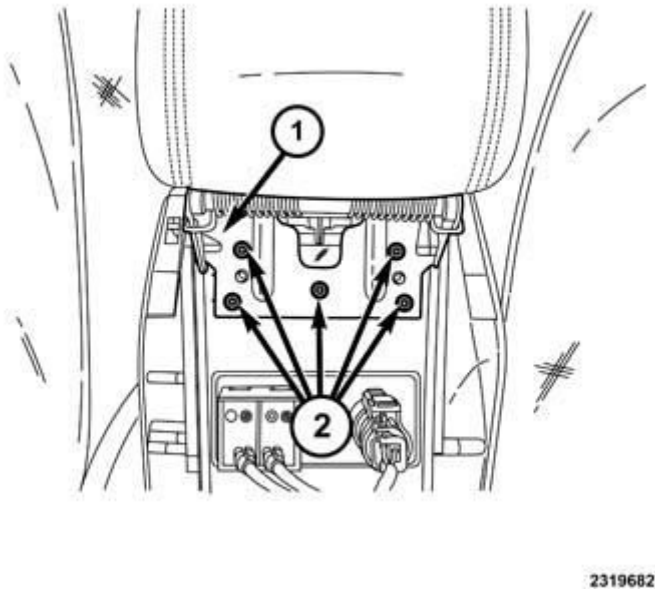

Fig. 516: Armrest Hinge & Fasteners
Courtesy of CHRYSLER GROUP, LLC

3. Remove the five fasteners (2) from the armrest hinge (1) to the storage bin.
4. Remove armrest assembly.

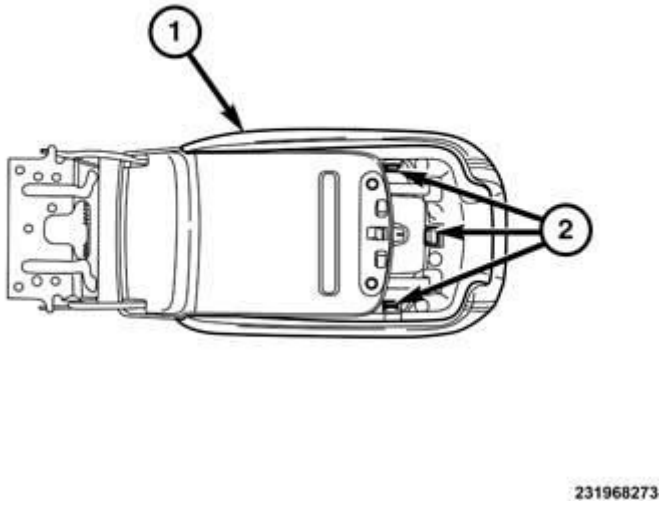

Fig. 517: Armrest & Retaining Tabs
Courtesy of CHRYSLER GROUP, LLC

5. Slide the armrest (1) forward to expose the front three retainer tabs (2).
6. With a small flat bladed, or equivalent tool gently pry to release the tabs (2).
7. It will be necessary to leave a small flat bladed or equivalent, in place to keep the tab from resetting while

the other two tabs are released.

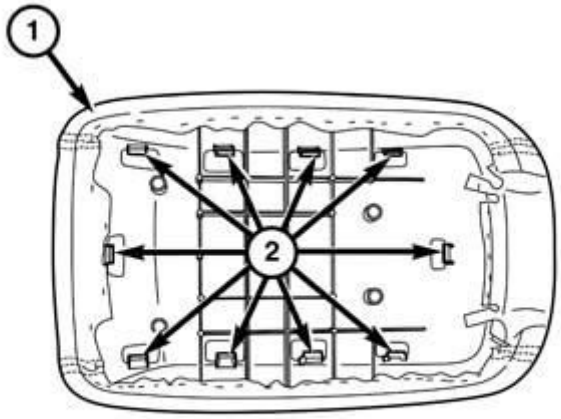

231968274

Fig. 518: Armrest (1) shown without the closeout to show the tab locations (2).
Courtesy of CHRYSLER GROUP, LLC

8. Work toward the back, using a pick tool or equivalent, releasing the tabs along the sides.
9. Slide the armrest back to access the rear tab.
10. Unclip the rear tab.
11. Separate the armrest from the sliding closeout.

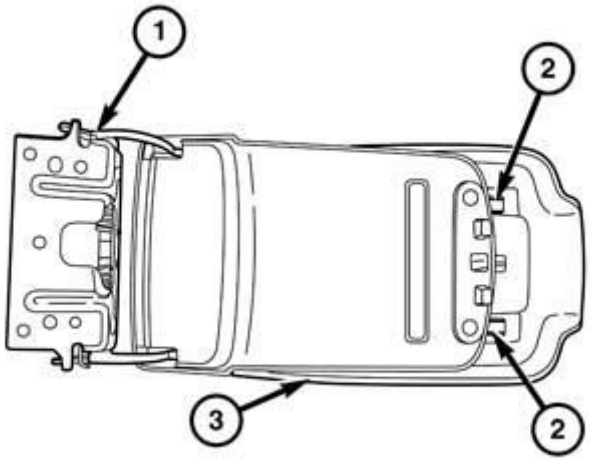

231968276

Fig. 519: Hinge, Slider Rods & Closeout
Courtesy of CHRYSLER GROUP, LLC

12. Move the slide plate forward.
13. Lift up on the hinge (1) and then pull back to release the slider rods (2) from the closeout (3).
14. Separate the slider plate from the closeout.

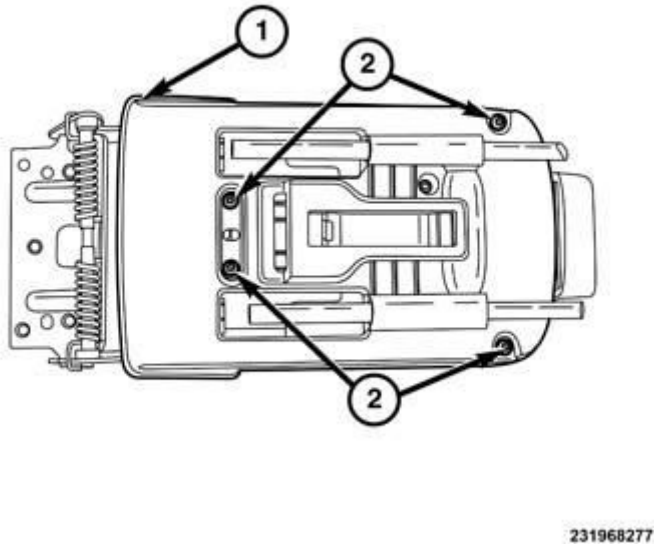

Fig. 520: Upper Slider Plate & Fasteners
Courtesy of CHRYSLER GROUP, LLC

15. Remove the four fasteners (2) from the lower side plate bezel.
16. Separate the upper slider plate (1) from the lower slider plate bezel.

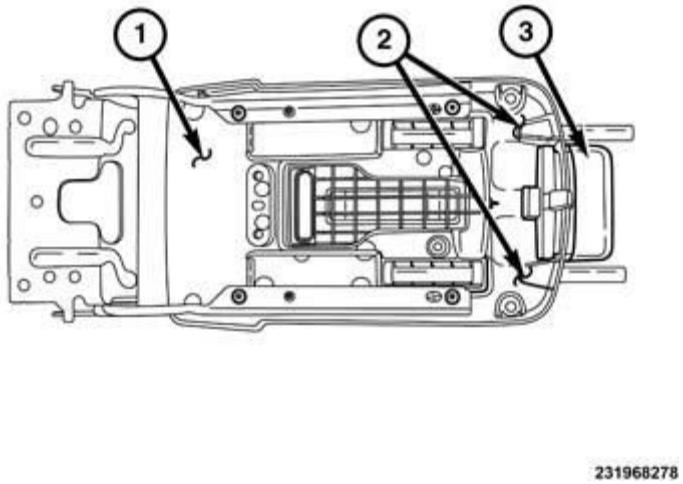

Fig. 521: Grasp Handle, Lower Bezel & Tabs
Courtesy of CHRYSLER GROUP, LLC

17. Pull the latch grasp handle (3) forward to remove.
18. With a small flat bladed tool, press in tabs (2) on each side of the latch.
19. Remove the latch from slider plate lower bezel (1).

INSTALLATION

INSTALLATION

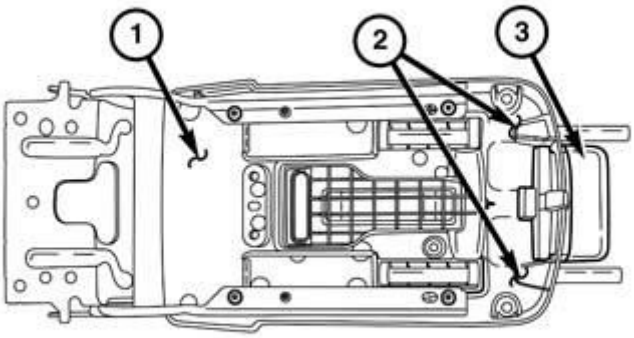

231968278

Fig. 522: Grasp Handle, Lower Bezel & Tabs
Courtesy of CHRYSLER GROUP, LLC

1. With the latch grasp handle (3) removed, place latch in the slider plate lower bezel (1).
2. Slide forward to engage the latch into the side tabs (2).
3. Insert the grab handle (3) onto the latch until the tab engages.

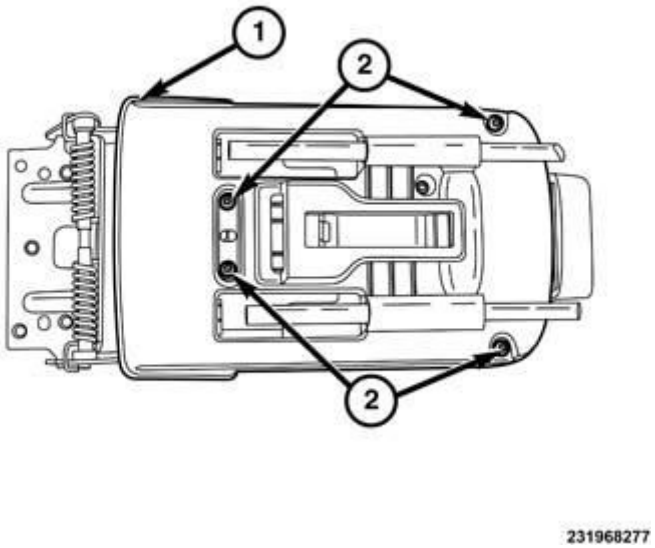

Fig. 523: Upper Slider Plate & Fasteners
Courtesy of CHRYSLER GROUP, LLC

4. Place the upper slider plate into the lower slider plate bezel (1).
5. Install the four fasteners (2) into the slider plate bezel and tighten securely.

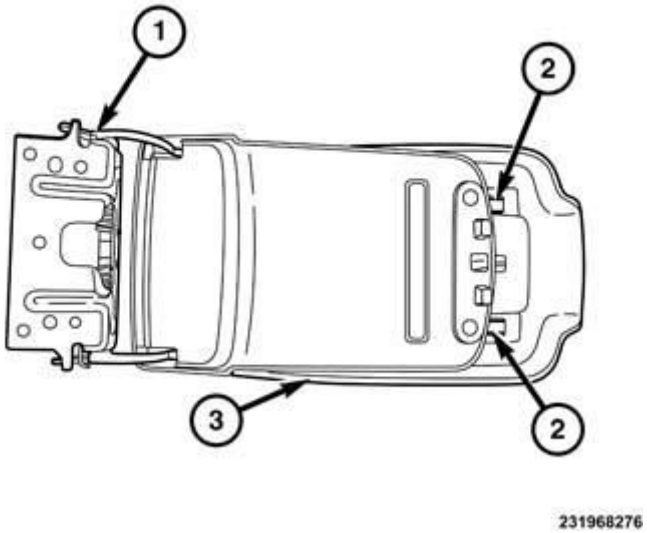

Fig. 524: Hinge, Slider Rods & Closeout
Courtesy of CHRYSLER GROUP, LLC

6. Insert slider rods (2) into the closeout at an angle.
7. Set the slider plate (3) into the closeout.
8. Slide rearward until the slider plate stop tabs are inserted into the slots on the closeout.

9. Push the slide rods inward until both rest against the stop tabs.
10. Place the sliding closeout assembly into the armrest.

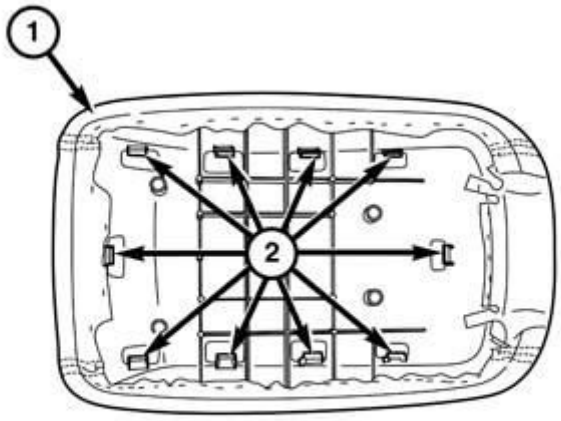

231968274

Fig. 525: Armrest Tab Locations
Courtesy of CHRYSLER GROUP, LLC

11. Verify tabs (2) are aligned.
12. With hand pressure, push the closeout assembly into the armrest (1) until all ten tabs (2) have engaged fully.

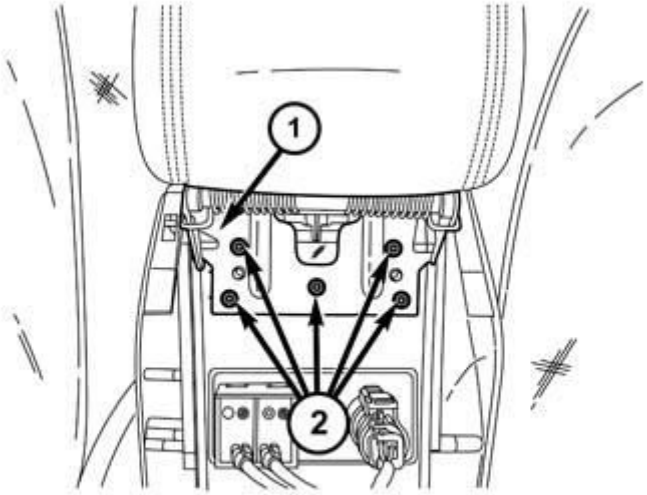

231968272

Fig. 526: Armrest Hinge & Fasteners
Courtesy of CHRYSLER GROUP, LLC

13. Align the armrest hinge (1) onto the console storage bin alignment studs.
14. Install the five fasteners (2) and tighten securely.

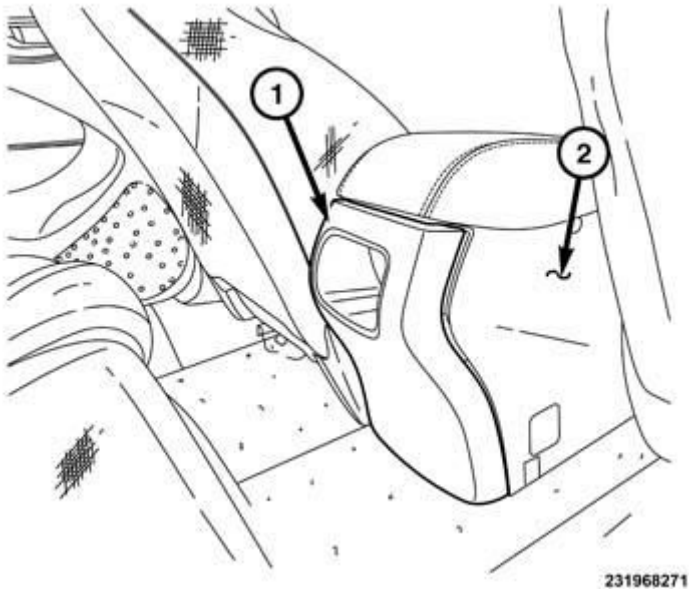

Fig. 527: Console & End Cap Bezel
Courtesy of CHRYSLER GROUP, LLC

15. Align the console rear end cap bezel (1) with the console base (2) and with the use of hand pressure engage the clips.

LOAD FLOOR, CARGO

REMOVAL

REMOVAL

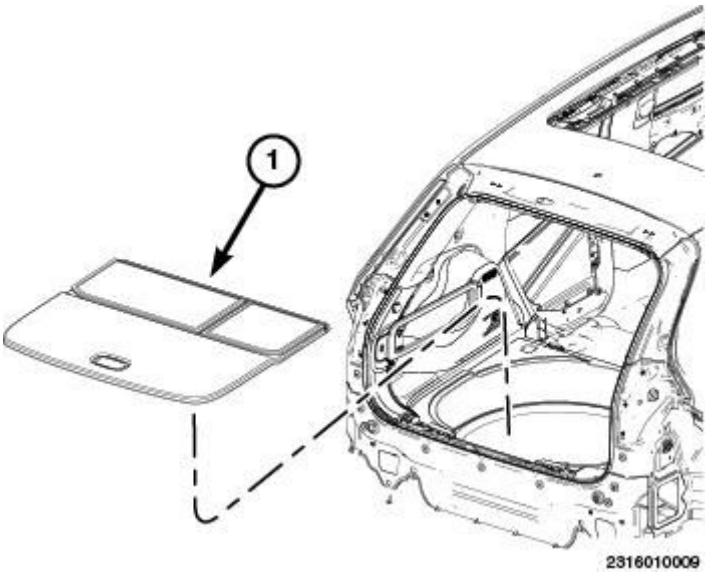

Fig. 528: Identifying Load Floor Lid
Courtesy of CHRYSLER GROUP, LLC

1. Open and remove the load floor lid (1).

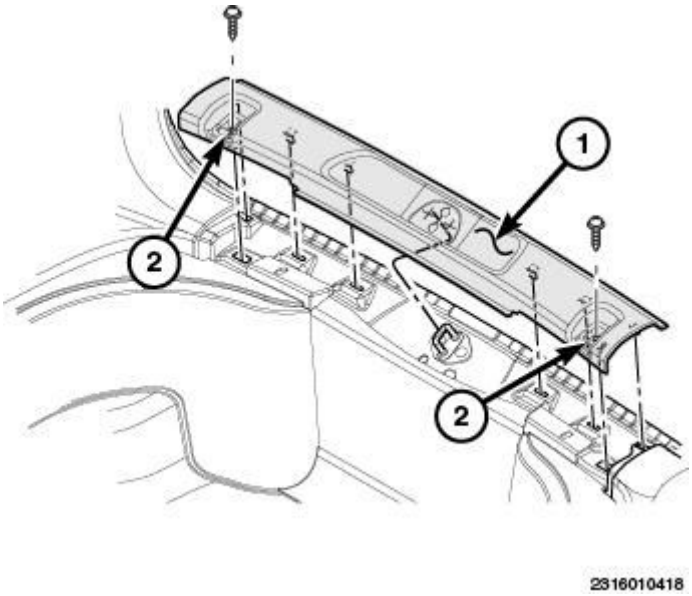

Fig. 529: Identifying Liftgate Scuff Plate & Fasteners
Courtesy of CHRYSLER GROUP, LLC

2. Remove the screws (2).
3. Using trim stick (special tool #C-4755, Trim Stick) or equivalent, separate the retaining clips and remove the liftgate scuff plate (1).

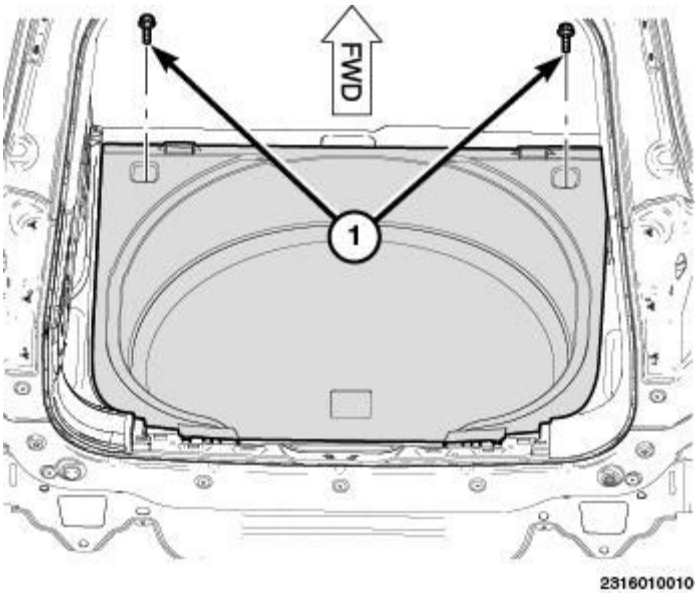

Fig. 530: Identifying Front Screws
Courtesy of CHRYSLER GROUP, LLC

4. Remove the two front screws (1).

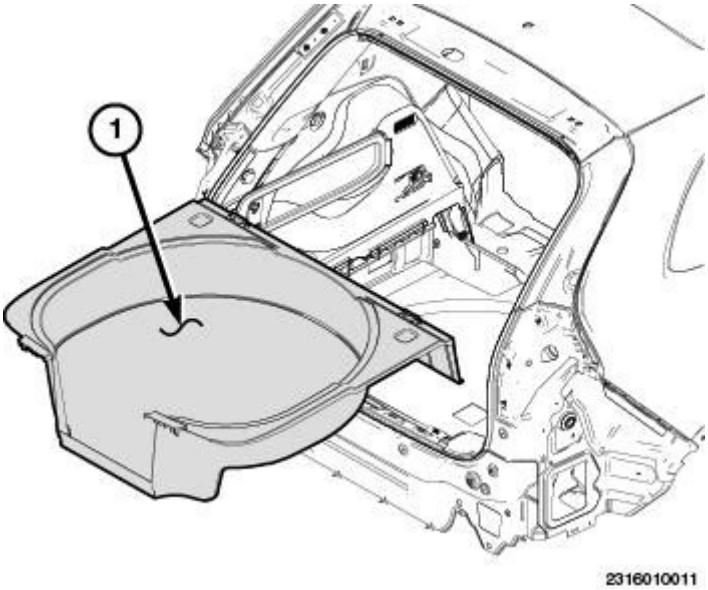

Fig. 531: Identifying Load Floor Bin
Courtesy of CHRYSLER GROUP, LLC

5. Remove the load floor bin (1).

INSTALLATION

INSTALLATION

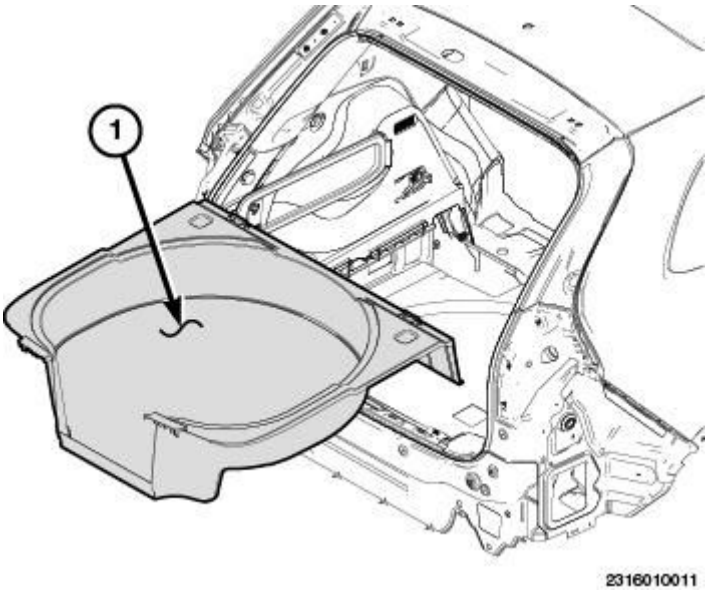

Fig. 532: Identifying Load Floor Bin
Courtesy of CHRYSLER GROUP, LLC

1. Install the load floor bin (1).

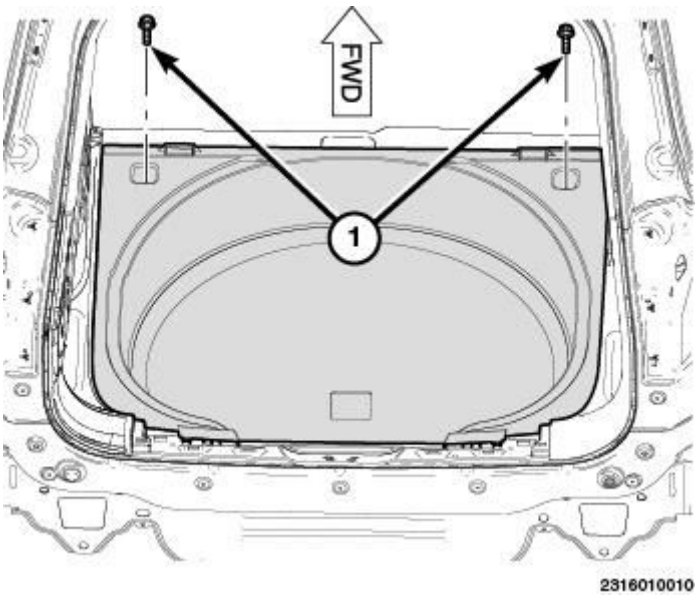

Fig. 533: Identifying Front Screws
Courtesy of CHRYSLER GROUP, LLC

2. Install the screws (1).

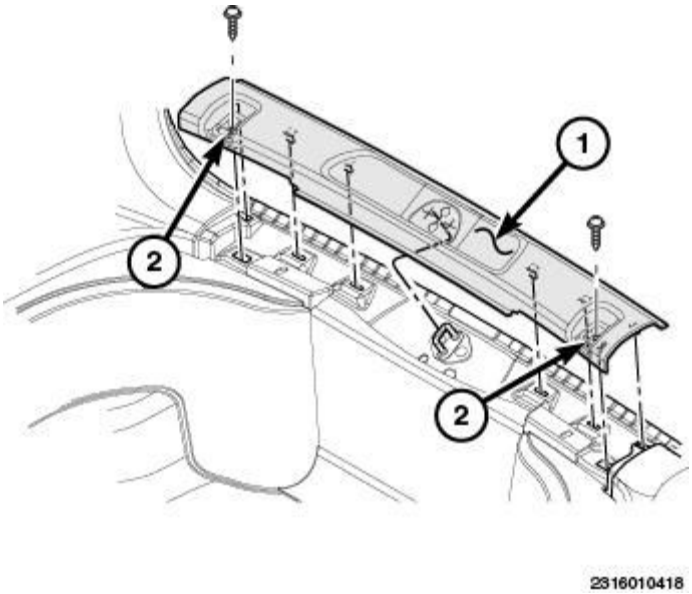

Fig. 534: Identifying Liftgate Scuff Plate & Fasteners
Courtesy of CHRYSLER GROUP, LLC

3. Position the liftgate scuff plate (1) back into the vehicle and seat the retaining clips fully.
4. Install the cargo loop screws (2).

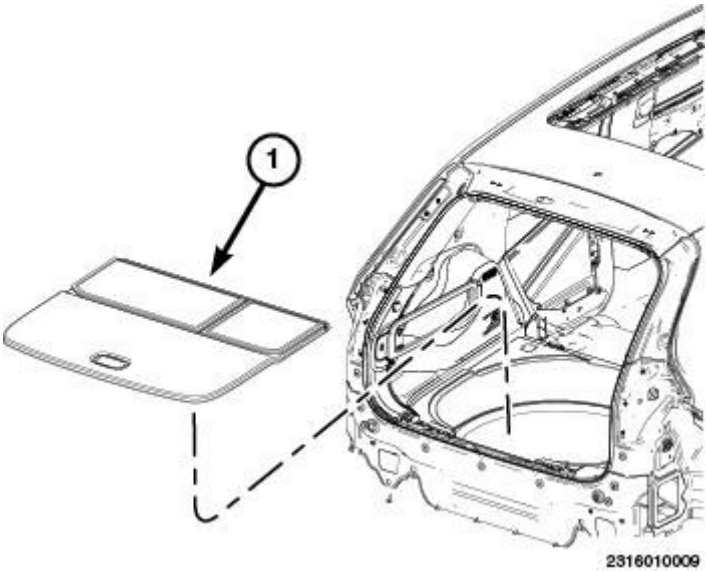

Fig. 535: Identifying Load Floor Lid
Courtesy of CHRYSLER GROUP, LLC

5. Install the load floor lid (1).

MIRROR, REARVIEW

REMOVAL

REMOVAL

PRISMATIC MIRROR

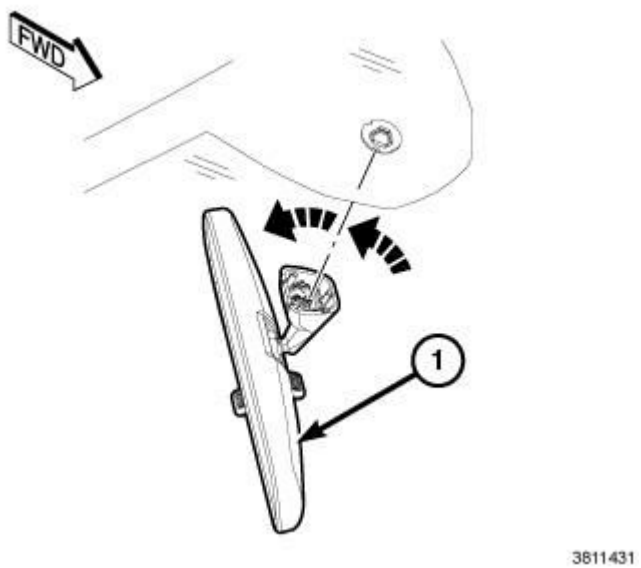

Fig. 536: Removing Prismatic Mirror
Courtesy of CHRYSLER GROUP, LLC

NOTE: View shown from exterior of the vehicle.

1. Accessing through the vehicle interior, twist the mirror assembly (2) clockwise and release the mirror from the aluminum button attached to the windshield.

TELEMATICS MIRROR

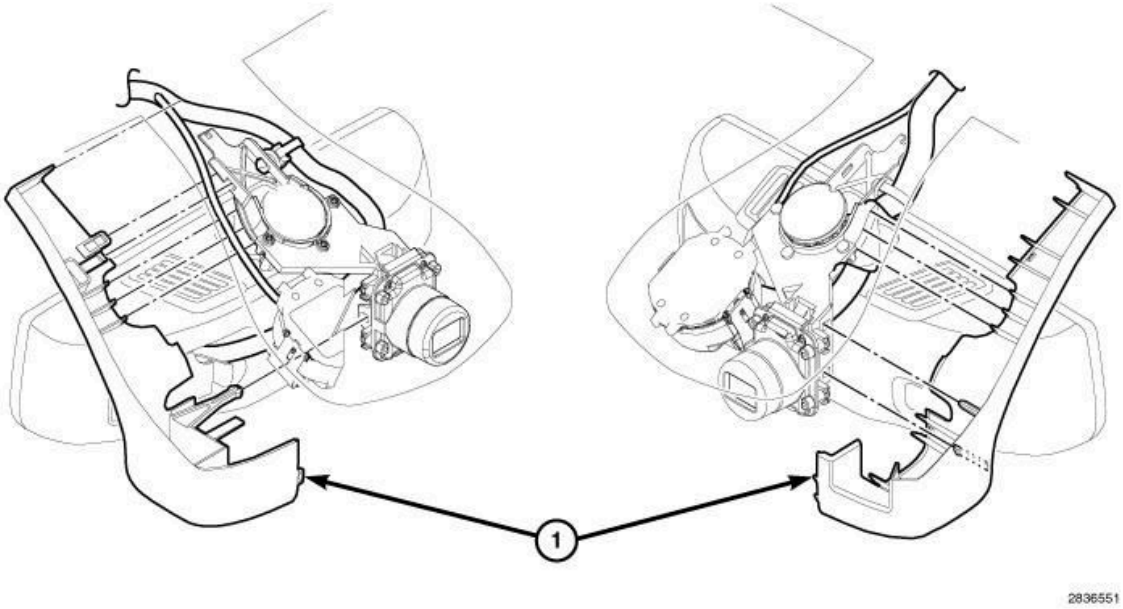

Fig. 537: Mirror Trim Covers
Courtesy of CHRYSLER GROUP, LLC

NOTE: View shown from exterior of the vehicle.

1. Using a (special tool #C-4755, Trim Stick) or equivalent, separate the mirror trim covers (1) and remove.

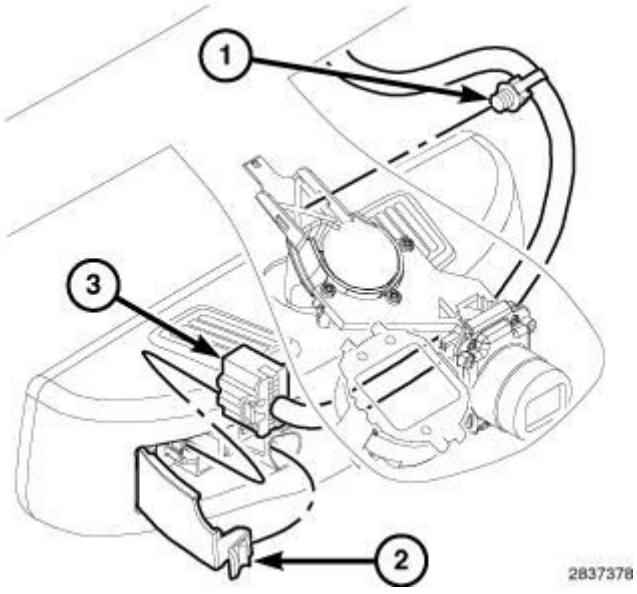

Fig. 538: Access Panel & Mirror Harness Connector
Courtesy of CHRYSLER GROUP, LLC

2. Open the access panel (2) and disconnect the mirror harness connector (3).

3. Release the harness push pin fastener (1) and position the wire harness aside.

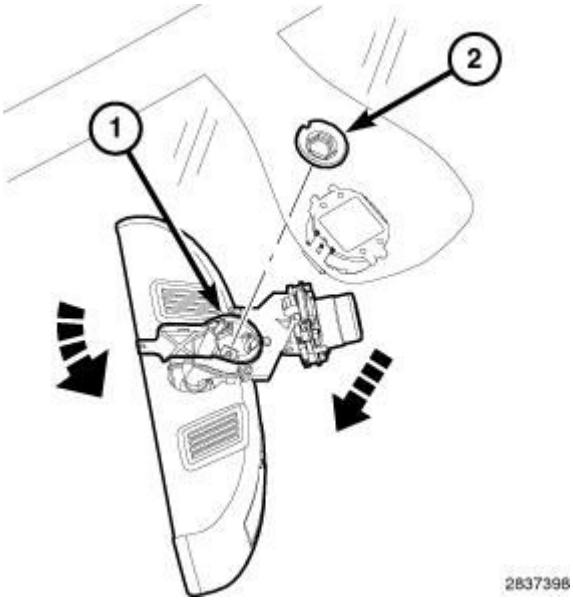

Fig. 539: Mirror Assembly & Aluminum Button
Courtesy of CHRYSLER GROUP, LLC

4. Twist the mirror assembly (1) clockwise and release the mirror from the aluminum button (2) attached to the windshield.

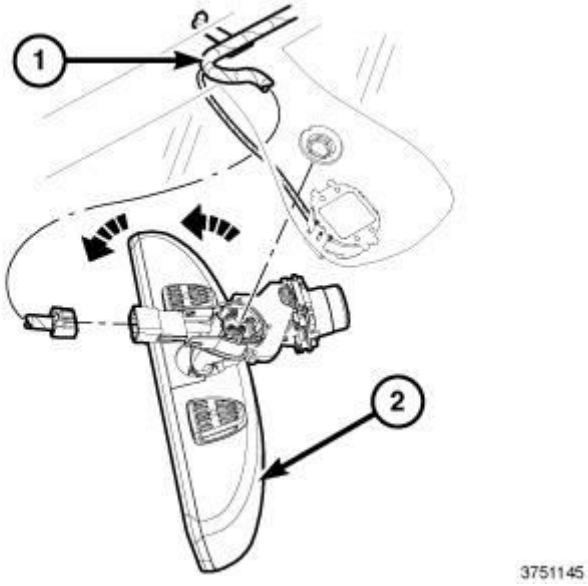

Fig. 540: Removing Telematics Mirror
Courtesy of CHRYSLER GROUP, LLC

INSTALLATION

INSTALLATION

PRISMATIC MIRROR

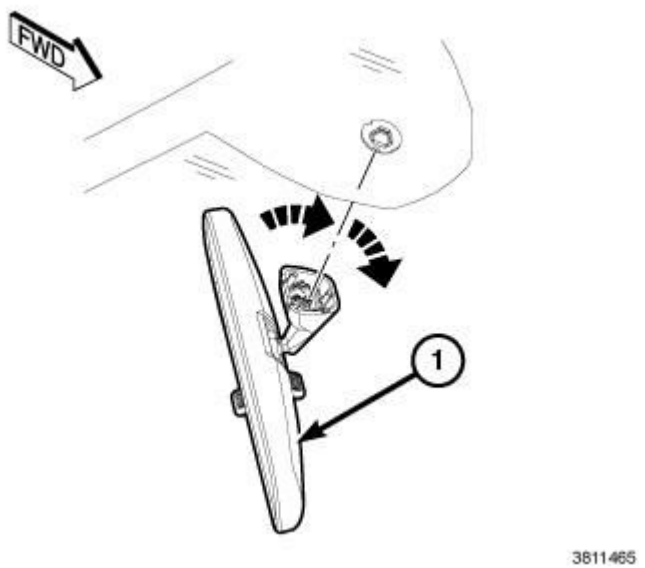

Fig. 541: Installing Prismatic Mirror
Courtesy of CHRYSLER GROUP, LLC

NOTE: View shown from exterior of the vehicle.

1. Place the rearview mirror over the aluminum button in the upper center of the windshield.
2. Accessing through the vehicle interior, twist the mirror assembly (2) counter clockwise to install the mirror on the aluminum button attached to the windshield.

NOTE: Mirror must be fully seated or wedged onto the button before rotating.

TELEMATICS MIRROR

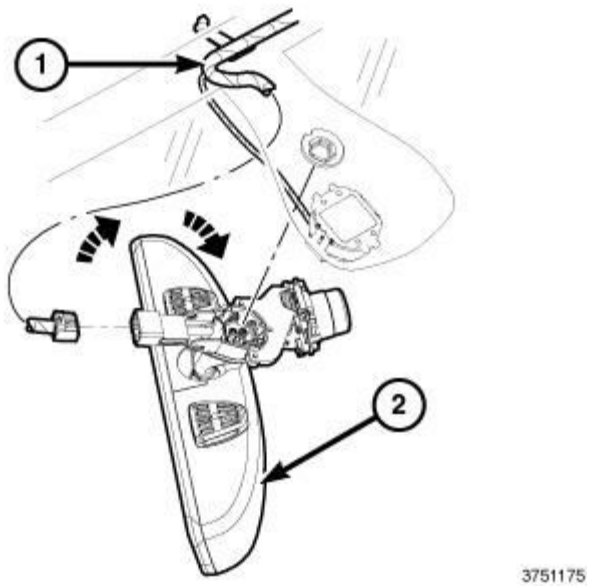

Fig. 542: Mirror Electrical Connector (Telematics)
Courtesy of CHRYSLER GROUP, LLC

1. Place the rearview mirror over the aluminum button in the upper center of the windshield.
2. Twist the mirror base onto the button in a counter clockwise direction to attach the mirror.

NOTE: Mirror must be fully seated or wedged onto the button before rotating.

NOTE: Mirror must be rotated in a counter clockwise direction to prevent the mirror from touching the rain sensor.

3. Position the rain sensor wire harness back into place and secure accordingly.
4. Connect the electrical connector (1) and install the trim cover.

NOTE: Rain sensor connection should be verified prior to install the mirror trim covers.

5. Install the mirror trim and harness trim covers
6. Connect the negative battery cable.

REAR VIEW MIRROR BUTTON

NOTE: The rear view mirror button is permanently bonded to the inside of the windshield glass. If the button should become separated from the glass, it may be re-bonded using the following procedure. This procedure requires the use of a Rear View Mirror Adhesive kit that is available through Mopar® in single application packages that include a two-part adhesive and an accelerant with applicator.

1. Mark the proper position for the mirror button on the outside of the windshield glass with a wax pencil. The residual adhesive on the inside of the glass from the prior mirror button installation can be used as a guide.
2. Clean the button contact area on the inside of the glass. Use a mild powdered cleanser on a cloth saturated with rubbing alcohol. Finally, clean the glass with a paper towel dampened with alcohol.
3. Sand the bonding surface (the smaller side) of the support button with fine grit-sandpaper. Wipe the button surface clean with a paper towel.
4. Apply accelerant to the bonding surface of the button according to the following instructions:
   - Crush the accelerant vial to saturate the felt applicator.
   - Remove the paper sleeve.
   - Apply accelerant to the bonding surface of the button.
   - Allow the accelerant to dry for five minutes.
   - Do not touch the button bonding surface after the accelerant has been applied.
5. Apply adhesive accelerant to the button contact area on the inside of the windshield glass. Allow the accelerant to dry for one minute. Do not touch the button contact area of the glass after the accelerant has been applied.
6. Install the button according to the following instructions:
   - Apply one drop of adhesive at the center of the button contact area on the inside of the windshield glass.
   - Apply an even coat of adhesive to the bonding surface of the button.
   - Align the button with the marked position on the windshield glass.
   - Press and hold the button in place for at least one minute.

NOTE: Verify that the mirror button is correctly aligned, because the adhesive will cure rapidly.

7. Allow the adhesive to cure for 8-10 minutes. Remove any excess adhesive with an alcohol-dampened cloth.
8. Allow the adhesive to cure for an additional 8-10 minutes before reinstalling the mirror.

PANEL, A-PILLAR TRIM

REMOVAL

REMOVAL

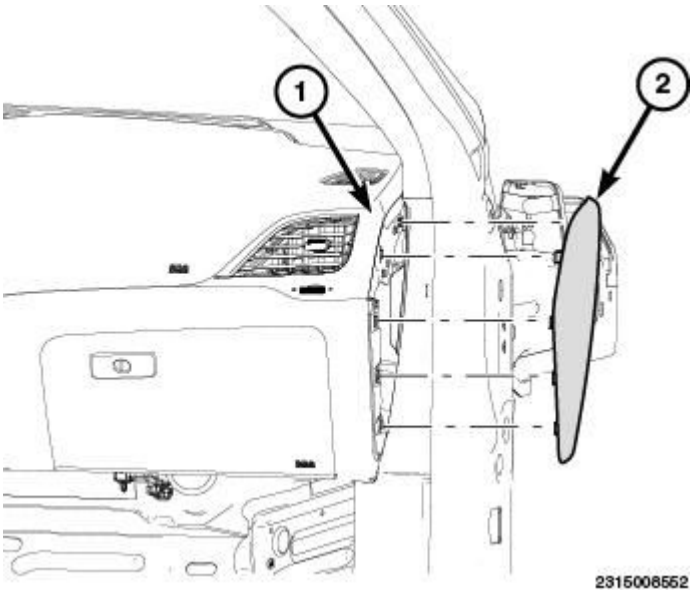

Fig. 543: Identifying Instrument Panel & End Cap
Courtesy of CHRYSLER GROUP, LLC

1. Apply protective tape to lower a-pillar trim and to defroster grill, to prevent scaring of either surfaces.
2. Remove instrument panel end cap by using a (special tool #C-4755, Trim Stick) or equivalent, to disengage clips holding end cover (1) to instrument panel.

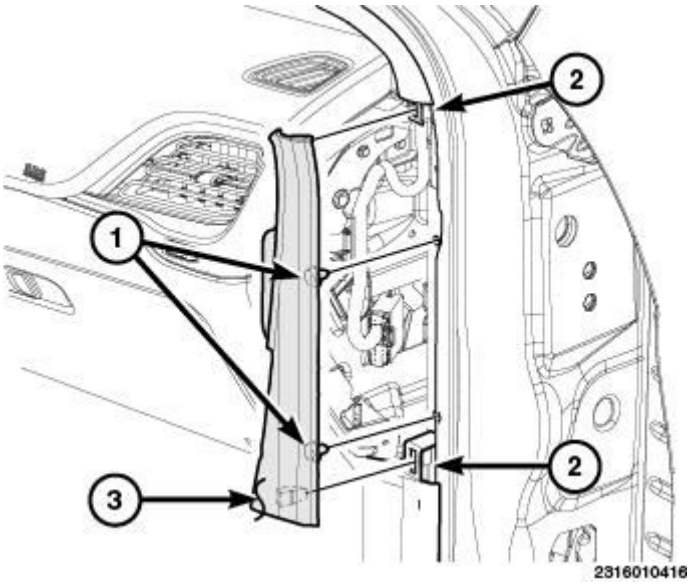

Fig. 544: Identifying Closeout Panel & Fasteners
Courtesy of CHRYSLER GROUP, LLC

3. Using a trim stick or equivalent, release the push pin fasteners (1) and the retaining tabs (2) and remove closeout panel (3) located between the A-pillar trim and the front scuff plate.

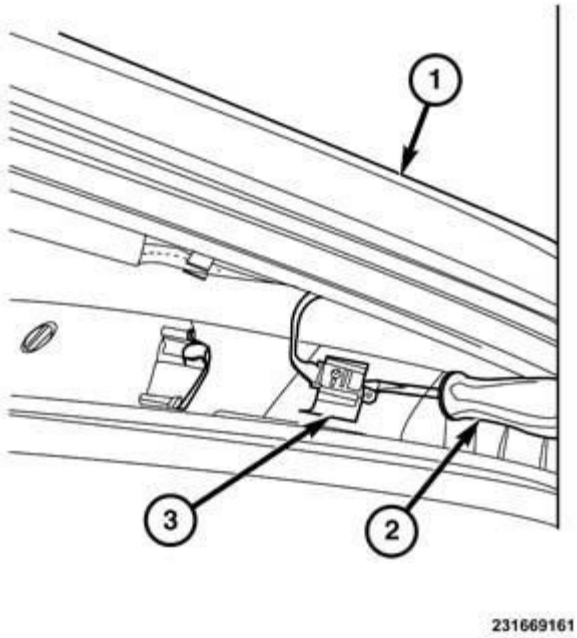

Fig. 545: Disengaging Tether Clip From Housing
Courtesy of CHRYSLER GROUP, LLC

4. Using a trim stick or equivalent, starting at the bottom and working up, pry the A-pillar trim pane retaining clips out from the vehicle A-pillar (1). **Do not remove the A-pillar trim.**
5. Using a screwdriver (2) or equivalent, press downward disengaging tether clip and slide from housing (3).

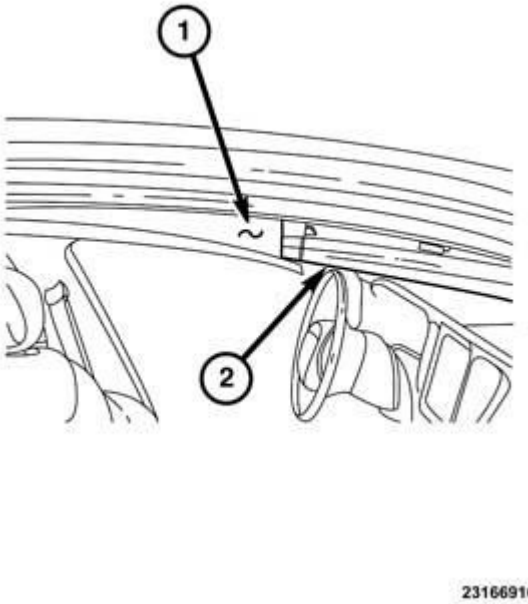

Fig. 546: A-Pillar Trim & Headliner
Courtesy of CHRYSLER GROUP, LLC

CAUTION: Be careful not to crease the headliner.

6.
7. Lower the top of the A-pillar trim (2) to release the headliner (1) from the pocket of the A-pillar trim.

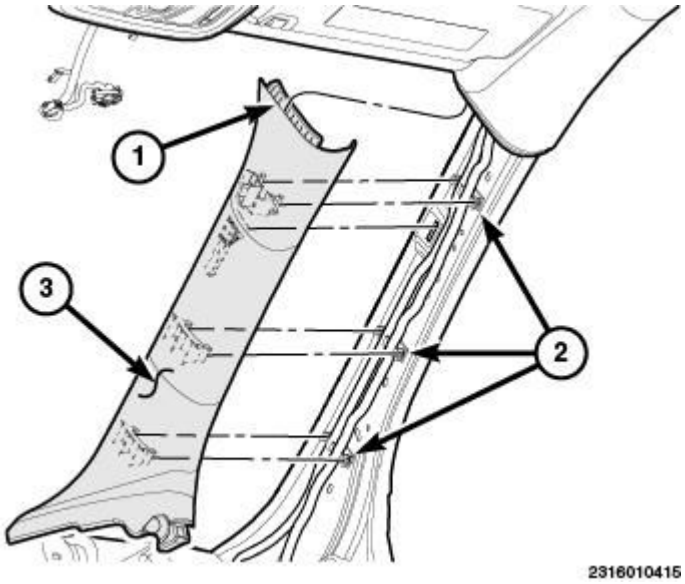

Fig. 547: Identifying A-Pillar Trim, Tab & Fasteners
Courtesy of CHRYSLER GROUP, LLC

8. Remove the A-pillar trim (3) from vehicle.

INSTALLATION

INSTALLATION

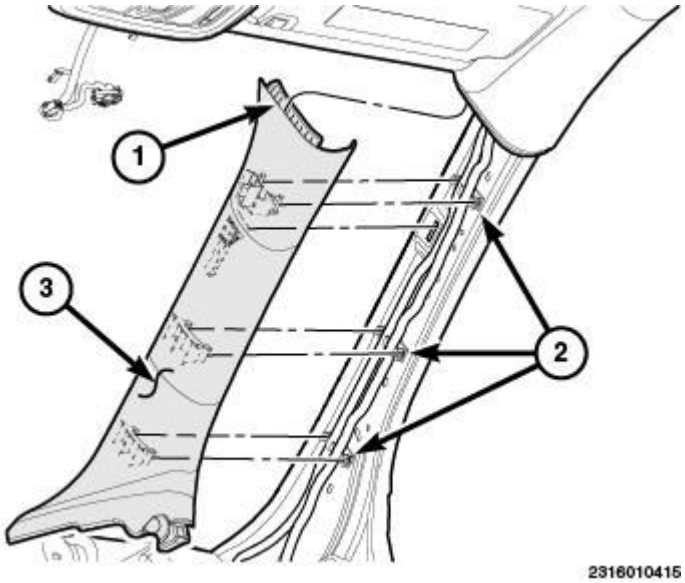

Fig. 548: Identifying A-Pillar Trim, Tab & Fasteners
Courtesy of CHRYSLER GROUP, LLC

1. Position the A-pillar trim near the A-pillar.

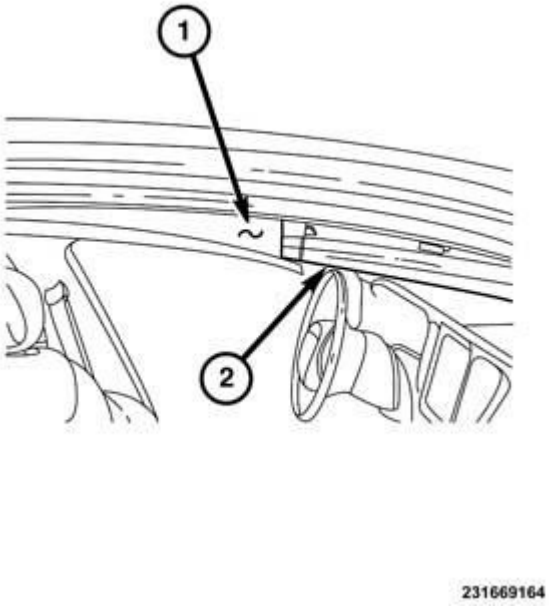

Fig. 549: A-Pillar Trim & Headliner
Courtesy of CHRYSLER GROUP, LLC

2. Position the top of the A-pillar trim (2) behind the headliner (1).
3. Insert the lower portion of the A-pillar trim (2) into the dash pocket.

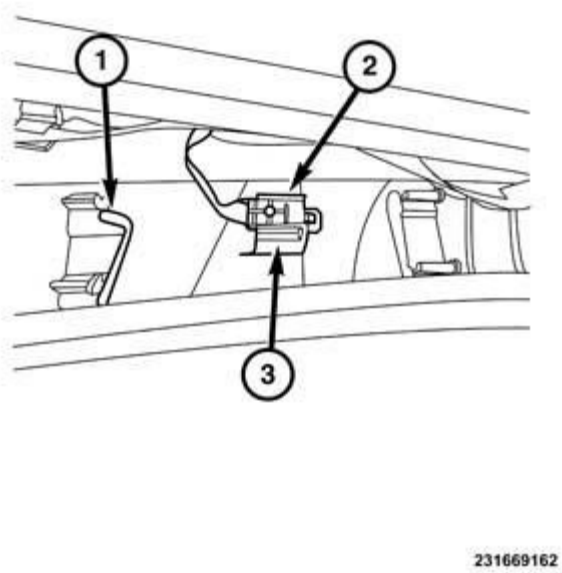

Fig. 550: A-Pillar Trim Tether
Courtesy of CHRYSLER GROUP, LLC

4. Slide the A-pillar trim tether (2) into the tether pocket (3), and clip into place.
5. Verify the A-pillar trim tether (2) is clipped in fully.

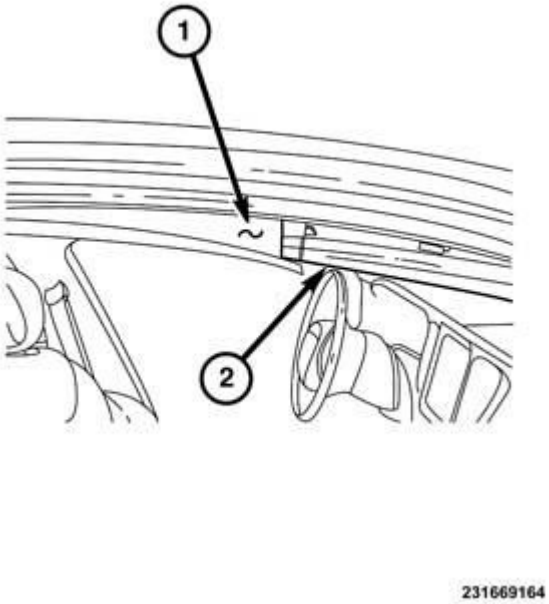

Fig. 551: A-Pillar Trim & Headliner

Courtesy of CHRYSLER GROUP, LLC

6. Move the top of the A-pillar trim (2) down just far enough to insert the headliner (1) into the A-pillar trim (2) pocket.
7. It may be necessary to use a (special tool #C-4755, Trim Stick) or equivalent, to inset the headliner into the A-pillar trim channel.

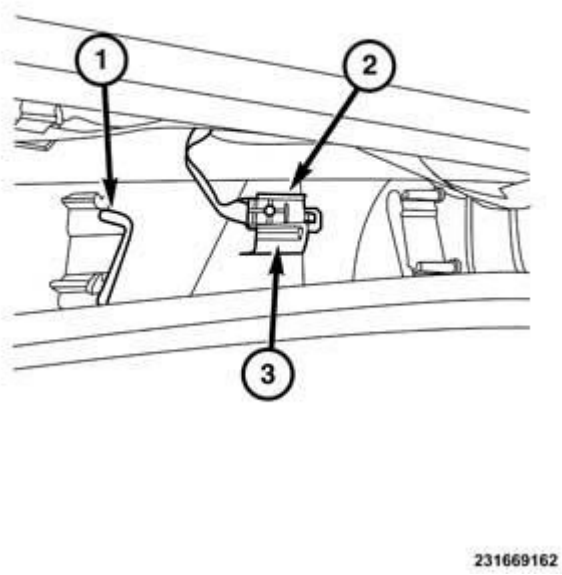

Fig. 552: A-Pillar Trim Tether
Courtesy of CHRYSLER GROUP, LLC

8. Locate the four way locator pin (1) on the A-pillar trim.

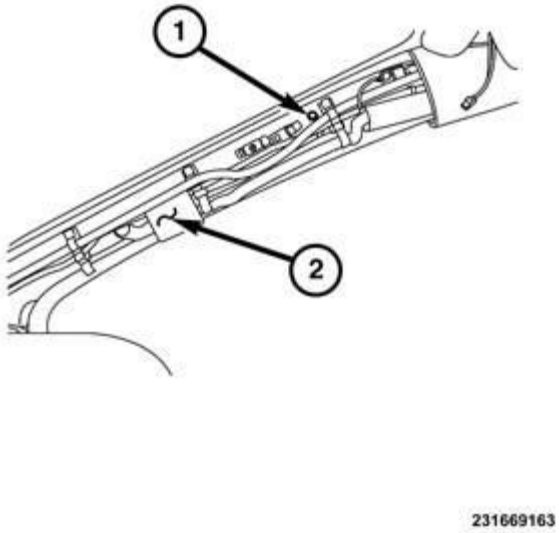

Fig. 553: Alignment Hole & A-Pillar
Courtesy of CHRYSLER GROUP, LLC

9. Verify, if so equipped, all drain tubes, wiring and tethers are routed properly and clipped fully.
10. Align the A-pillar four way locator pin to the alignment hole (1) on the A-pillar (2).
11. Guide the locator pin into the locator hole (1).
12. Firmly seat the lower portion of the A-pillar trim into position and hand tap to engage the retaining clips.

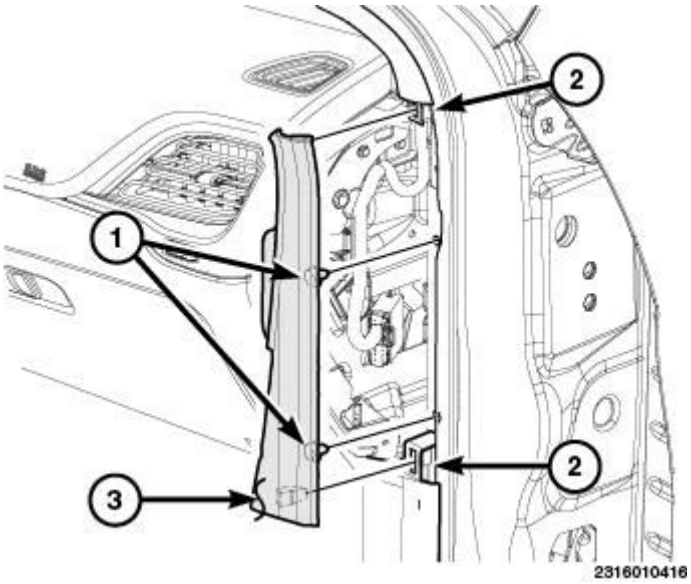

Fig. 554: Identifying Closeout Panel & Fasteners
Courtesy of CHRYSLER GROUP, LLC

13. Position the closeout trim panel (3) located between the A-pillar trim and the front scuff plate.
14. Seat the retaining clips (1 and 2) fully.

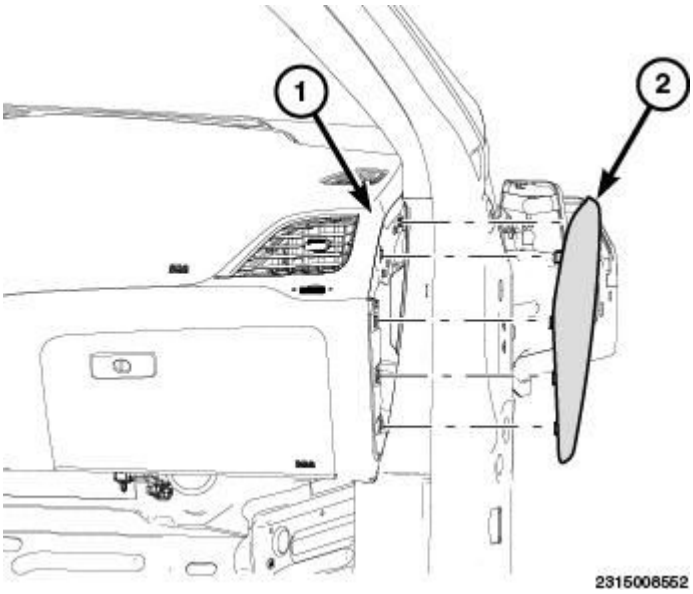

Fig. 555: Identifying Instrument Panel & End Cap
Courtesy of CHRYSLER GROUP, LLC

15. Position end cover (2) over retaining slots and firmly snap into place.

PANEL, B-PILLAR TRIM

REMOVAL

REMOVAL

UPPER

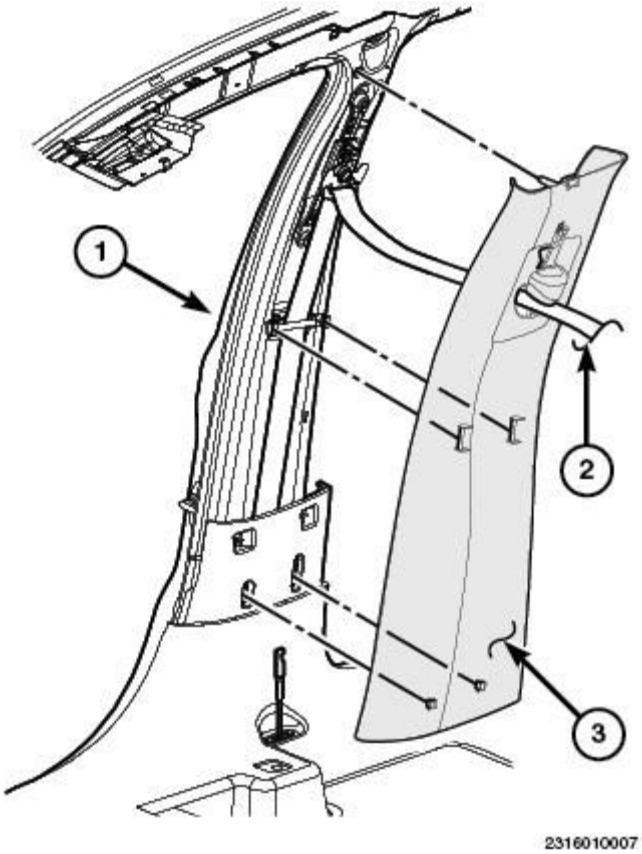

Fig. 556: Identifying B-Pillar Trim, Upper B-Pillar Trim & Fasteners
Courtesy of CHRYSLER GROUP, LLC

1. Disconnect the negative battery cable.
2. Release the front seat belt anchor. Refer to **BUCKLE, SEAT BELT, REMOVAL** .
3. Using (special tool #C-4755, Trim Stick), pry the lower portion of the B-pillar trim (1) to disengage the retaining clips and route seat belt through B-pillar trim.
4. Remove the upper B-pillar trim (1).

LOWER

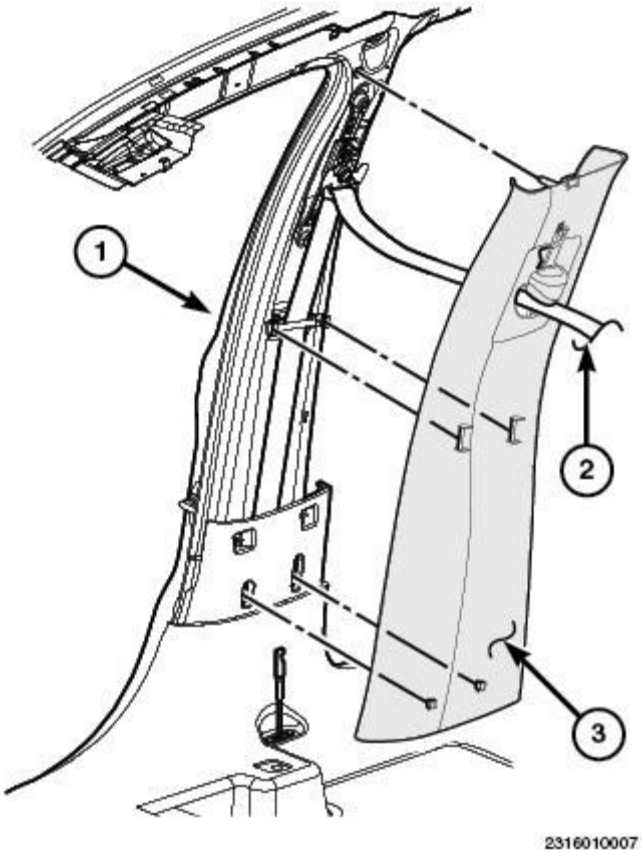

Fig. 557: Identifying B-Pillar Trim, Upper B-Pillar Trim & Fasteners
Courtesy of CHRYSLER GROUP, LLC

1. Disconnect the negative battery cable.
2. Remove sill trim panel, Refer to **PLATE, SCUFF, DOOR SILL, REMOVAL**.
3. Remove the upper B-pillar trim (1).

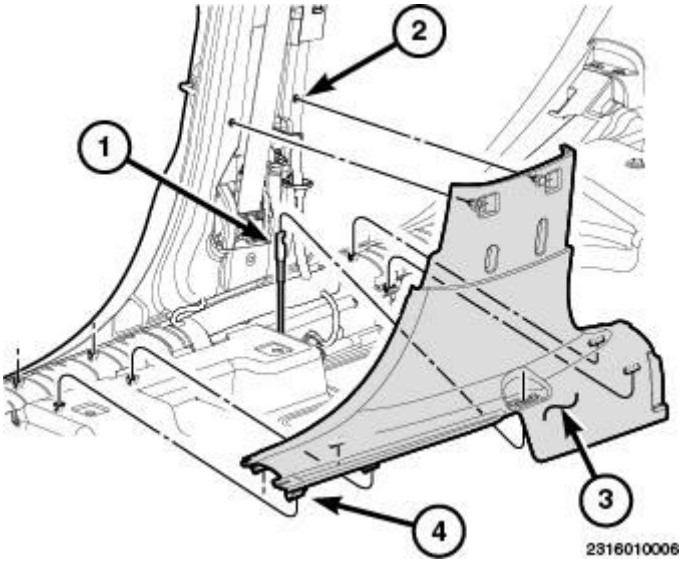

Fig. 558: Identifying Lower B-Pillar Trim & Fasteners
Courtesy of CHRYSLER GROUP, LLC

4. Using (special tool #C-4755, Trim Stick), pry the upper portion of the lower B-pillar trim (1) to disengage the retaining clips.
5. Using trim stick, pry up on the lower portion of the B-pillar trim (1) and remove from the vehicle.

INSTALLATION

INSTALLATION

UPPER

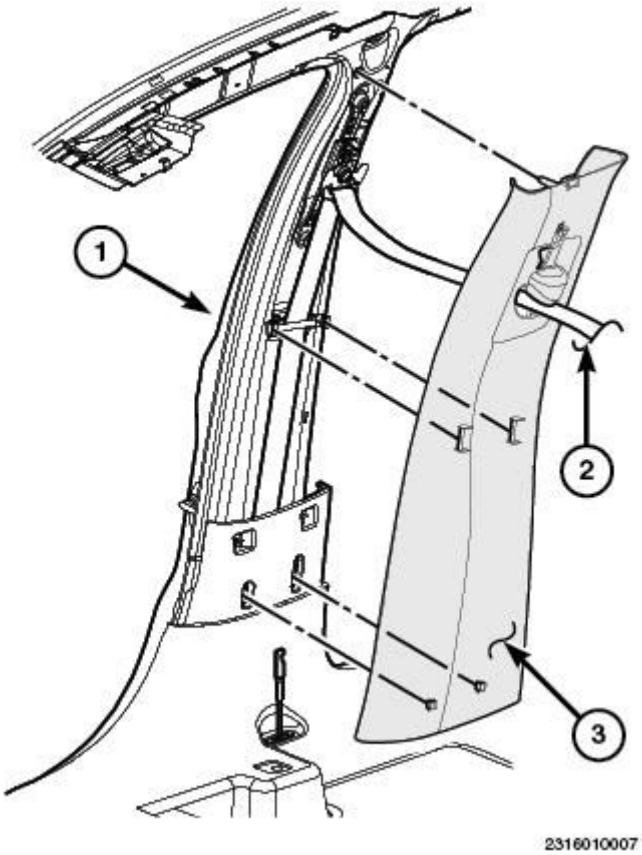

Fig. 559: Identifying B-Pillar Trim, Upper B-Pillar Trim & Fasteners
Courtesy of CHRYSLER GROUP, LLC

1. Position the upper portion of the upper B-pillar trim (1) into the retaining clips located in the bodyside.
2. Route the seat belt through B-pillar trim.
3. Position the lower portion of the upper B-pillar trim (1) and hand tap to engage the retaining clips.
4. Install the seat belt buckle anchor. Refer to **BUCKLE, SEAT BELT, INSTALLATION** .
5. Connect the negative battery cable.

LOWER

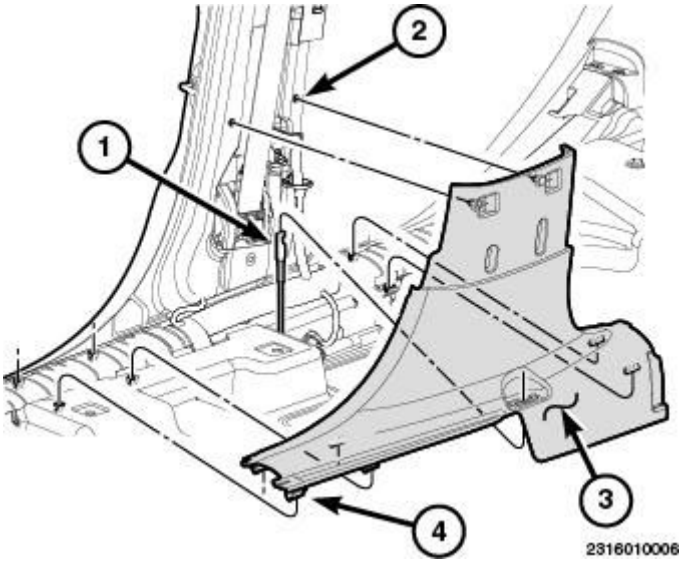

Fig. 560: Identifying Lower B-Pillar Trim & Fasteners
Courtesy of CHRYSLER GROUP, LLC

1. Align and position the lower B-pillar trim (1), hand tap to engage the retaining clips.

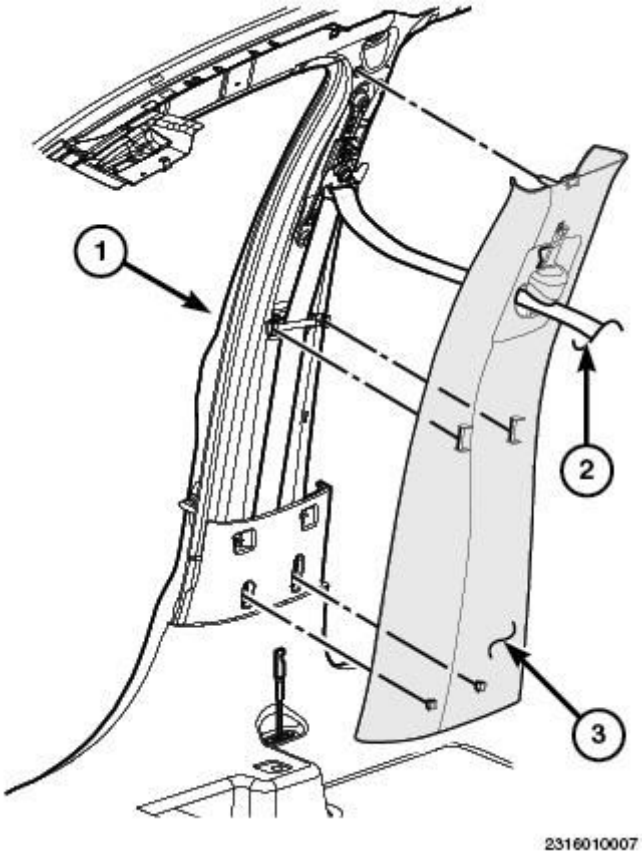

Fig. 561: Identifying B-Pillar Trim, Upper B-Pillar Trim & Fasteners

Courtesy of CHRYSLER GROUP, LLC

2. Install the upper B-pillar trim (1).
3. Install the sill/scuff trim panel. Refer to **PLATE, SCUFF, DOOR SILL, INSTALLATION**.
4. Connect the negative battery cable.

PANEL, QUARTER TRIM

REMOVAL

REMOVAL

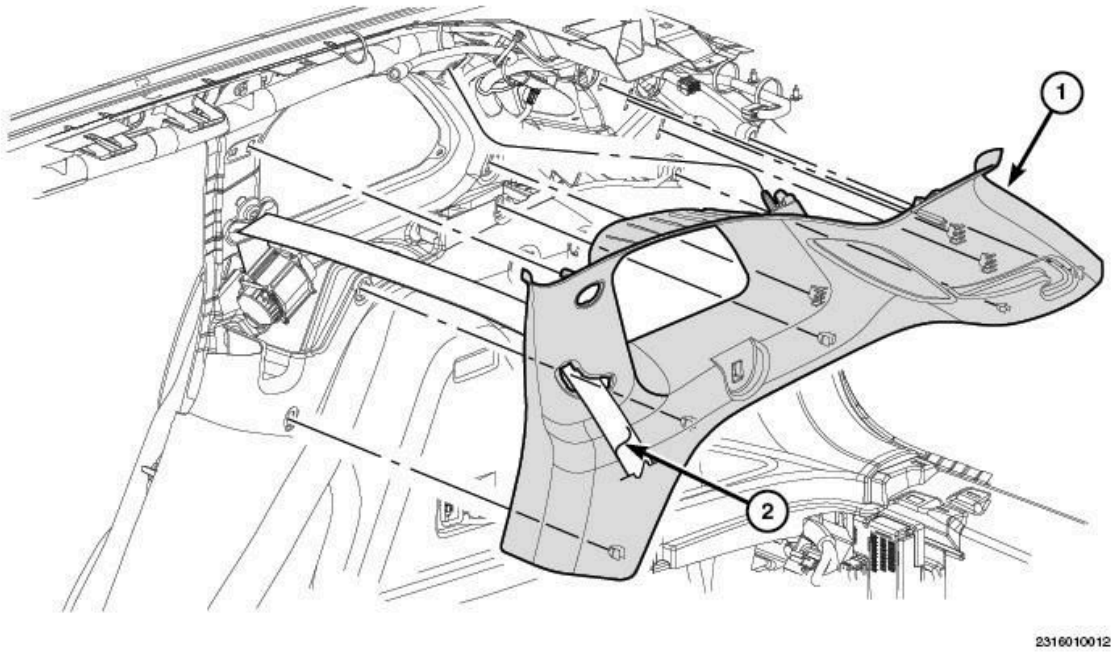

Fig. 562: Identifying Quarter Trim Panel & Seat Belt Anchor
Courtesy of CHRYSLER GROUP, LLC

UPPER

1. Separate the seat belt anchor (2). Refer to **BUCKLE, SEAT BELT, REMOVAL** .
2. Position the door seal aside.
3. Using a trim stick (special tool #C-4755, Trim Stick) or equivalent, disengage the retaining fasteners (3) that secure the quarter trim panel to the quarter panel.
4. Pull the quarter trim panel away from the quarter panel.
5. If equipped, disconnect the power outlet wire harness connector (1).
6. Remove the quarter trim panel (1).

LOWER

1. Remove the load floor. Refer to **LOAD FLOOR, CARGO, REMOVAL**.
2. Remove the upper quarter trim. Refer to **PANEL, QUARTER TRIM, REMOVAL**.
3. Remove the rear door scuff plate. Refer to **PLATE, SCUFF, DOOR SILL, REMOVAL**.
4. Position the door seal (1) aside.

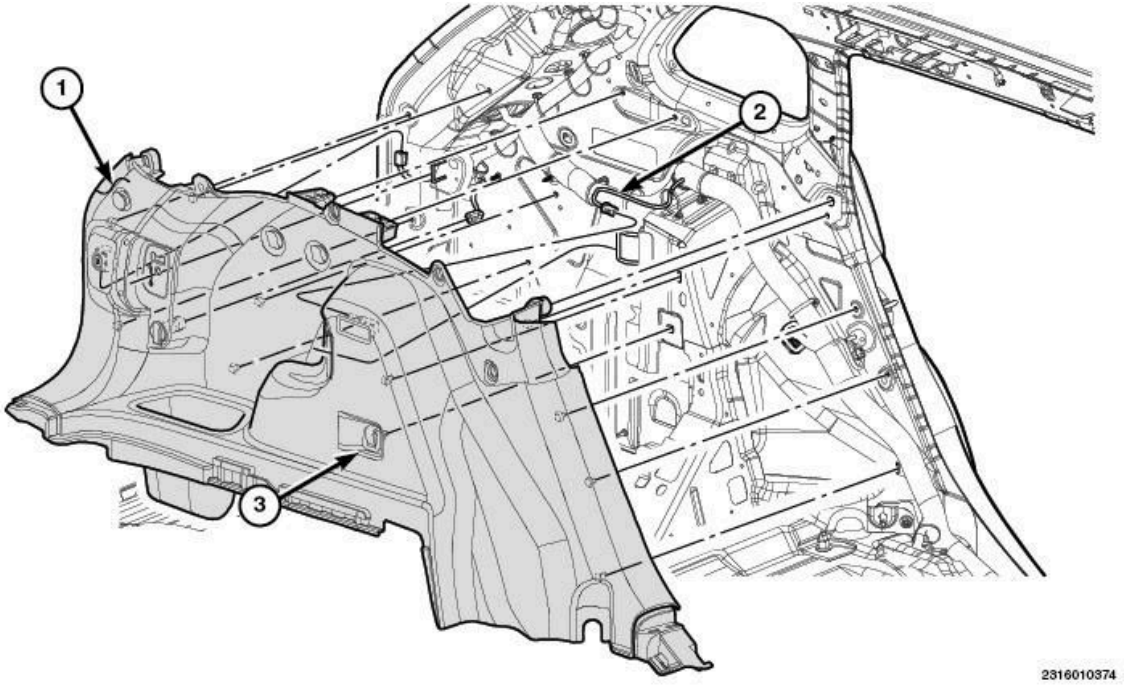

Fig. 563: Identifying Quarter Trim Panel, Electrical Connectors & Fasteners
Courtesy of CHRYSLER GROUP, LLC

5. Remove the screws (3).
6. Using a trim stick (special tool #C-4755, Trim Stick) or equivalent, disengage the retaining fasteners that secure the quarter trim panel to the quarter panel.
7. Pull the quarter trim panel away from the quarter panel.
8. If equipped, disconnect the electrical connectors (2).
9. Remove the quarter trim panel (1).

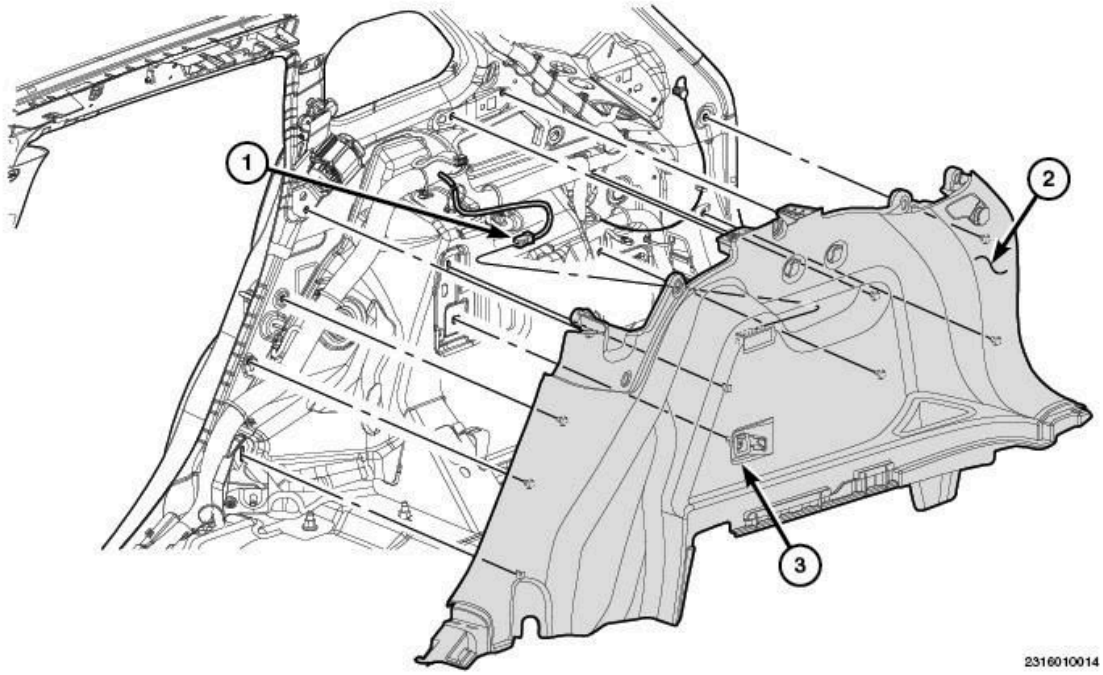

Fig. 564: Identifying Quarter Trim Panel, Electrical Connectors & Fasteners
Courtesy of CHRYSLER GROUP, LLC

10. Remove the screws (3).
11. Using a trim stick or equivalent, disengage the retaining fasteners that secure the quarter trim panel to the quarter panel.
12. Pull the quarter trim panel away from the quarter panel.
13. If equipped, disconnect the electrical connectors (1).
14. Remove the quarter trim panel (2).

INSTALLATION

INSTALLATION

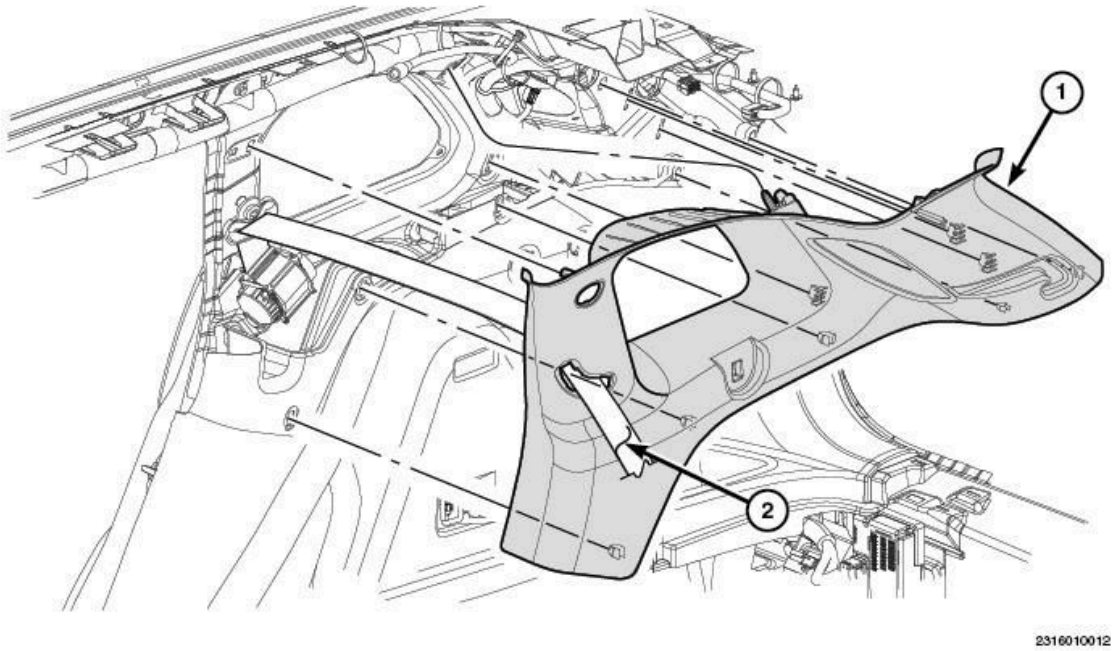

Fig. 565: Identifying Quarter Trim Panel & Seat Belt Anchor
Courtesy of CHRYSLER GROUP, LLC

NOTE: Right side shown, left side similar.

UPPER

1. Position the seat belt (2) through the trim (1).
2. Position the trim back in place and seat the retaining clips fully.
3. Install the seat belt anchor. Refer to **BUCKLE, SEAT BELT, INSTALLATION** .

LOWER

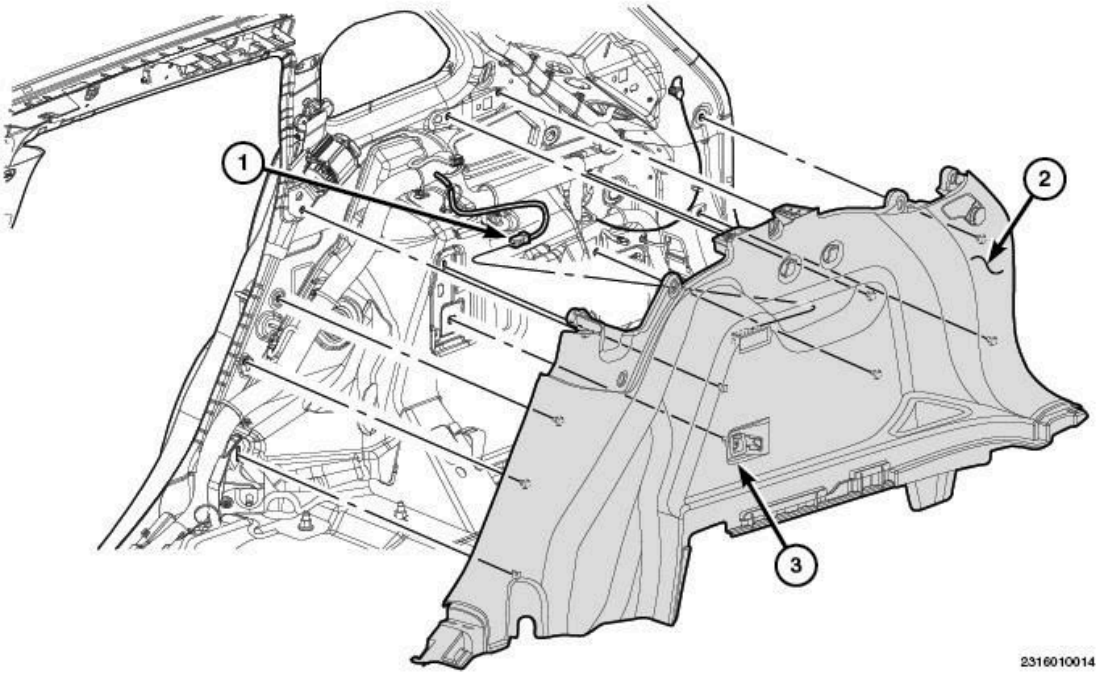

Fig. 566: Identifying Quarter Trim Panel, Electrical Connectors & Fasteners
Courtesy of CHRYSLER GROUP, LLC

NOTE: Right side shown, left side similar.

1. Position the quarter trim panel (2) back into the vehicle.
2. Position the front locating pin into the body and seat the push pin near the location pin fully.
3. Seat the clip at the top of the trim panel into the C-pillar first.
4. For the right side, seat the three front push pins.
5. For the left side, seat the two front push pins.
6. Seat the push pin at the rear of the quarter glass.
7. For the right side, connect the power outlet electrical connector (1).
8. For the left side, connect the flash light electrical connector and the power liftgate switch, if equipped.
9. Position the rear locating pin into the body and seat the remaining push pins.
10. Install the screw (3).
11. Position the door weatherstrip (1) back and seat fully.
12. Install the rear door scuff plate. Refer to **PLATE, SCUFF, DOOR SILL, INSTALLATION**.
13. Install the upper quarter trim. Refer to **PANEL, QUARTER TRIM, INSTALLATION**.
14. Install the load floor. Refer to **LOAD FLOOR, CARGO, INSTALLATION**.

PLATE, SCUFF, DOOR SILL

REMOVAL

REMOVAL

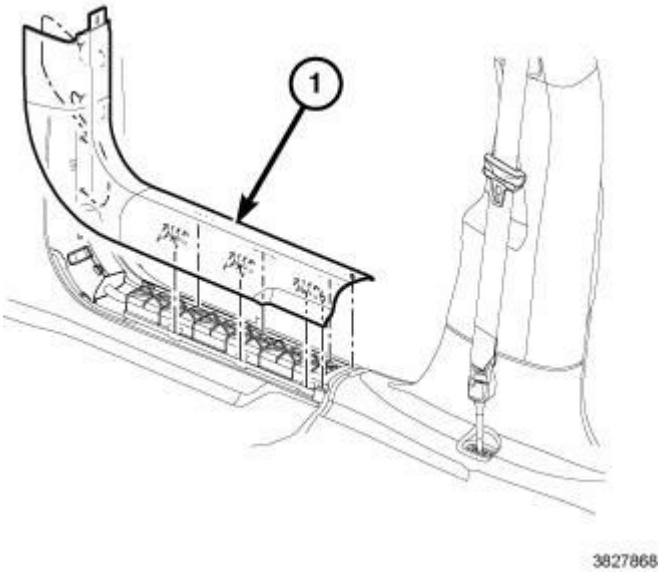

Fig. 567: Front Door Sill Scuff Panel
Courtesy of CHRYSLER GROUP, LLC

1. Using (special tool #C-4755, Trim Stick), disengage the retaining clips securing the front door sill scuff panel (1) to the door sill and lower B-pillar.
2. Remove the front door sill scuff panel (1).

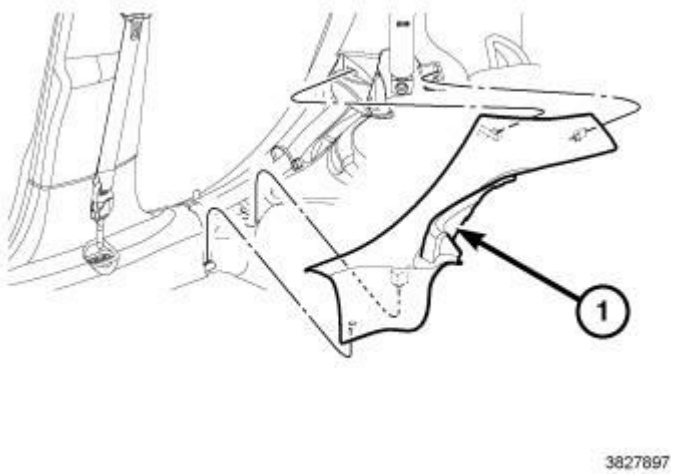

Fig. 568: Rear Door Sill Scuff Panel
Courtesy of CHRYSLER GROUP, LLC

3. Using (special tool #C-4755, Trim Stick), disengage the retaining clips securing the door sill scuff panel (1) to the door sill, lower B-pillar and lower C-pillar.
4. Remove the rear door sill scuff panel (1).

INSTALLATION

INSTALLATION

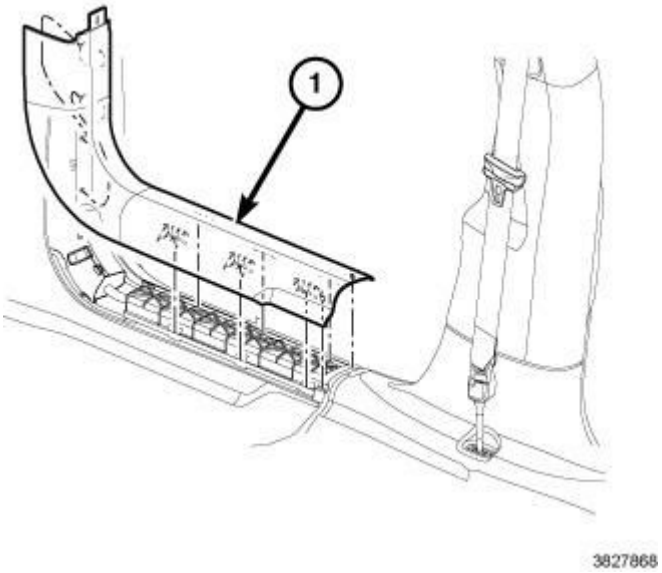

Fig. 569: Front Door Sill Scuff Panel
Courtesy of CHRYSLER GROUP, LLC

1. Position the front door sill scuff panel (1).
2. Hand tap to engage the retaining clips securing the front door sill scuff panel (1) to the door sill and lower B-pillar.

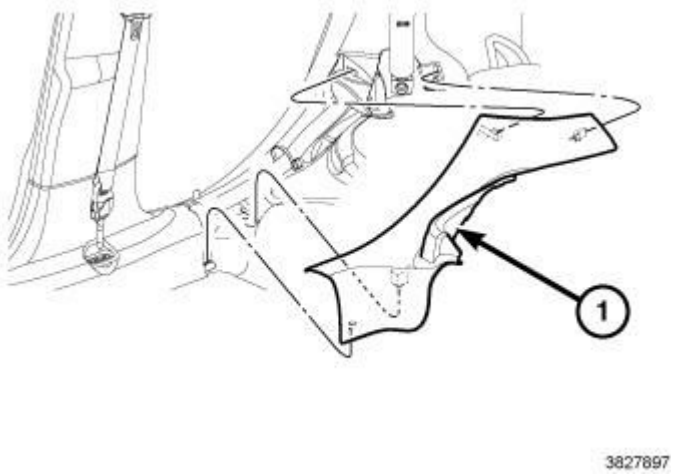

Fig. 570: Rear Door Sill Scuff Panel
Courtesy of CHRYSLER GROUP, LLC

3. Position the rear door sill scuff panel (1).
4. Hand tap to engage the retaining clips securing the front door sill scuff panel (1) to the door sill, lower B-pillar and lower C-pillar.

SUPPORT, VISOR

REMOVAL

REMOVAL

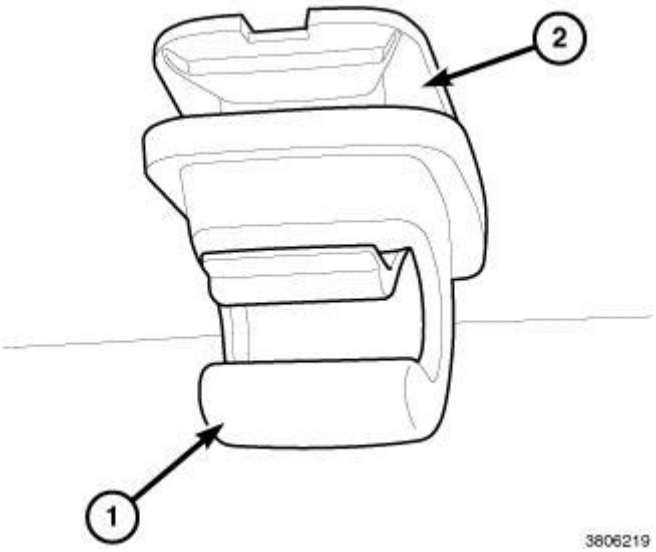

Fig. 571: Sun Visor Support & Cover
Courtesy of CHRYSLER GROUP, LLC

1. Disengage the sun visor from the sun visor support (1).
2. Using a small pick/pry too, remove the cover (1) from the sun visor support (2).
3. Remove the screw that secures the support (2) to the roof panel and remove the support from the headliner.

INSTALLATION

INSTALLATION

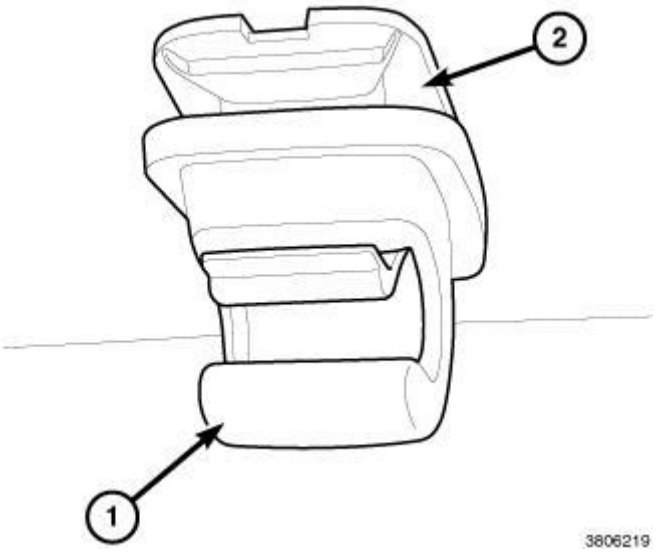

Fig. 572: Sun Visor Support & Cover
Courtesy of CHRYSLER GROUP, LLC

1. Position the sun visor support (2) on the headliner and install the screw that secures the support to the roof panel. Tighten the screw securely.
2. Install the cover (1) to the sun visor support (2).
3. Engage the sun visor to sun visor support (2).

VISOR

REMOVAL

REMOVAL

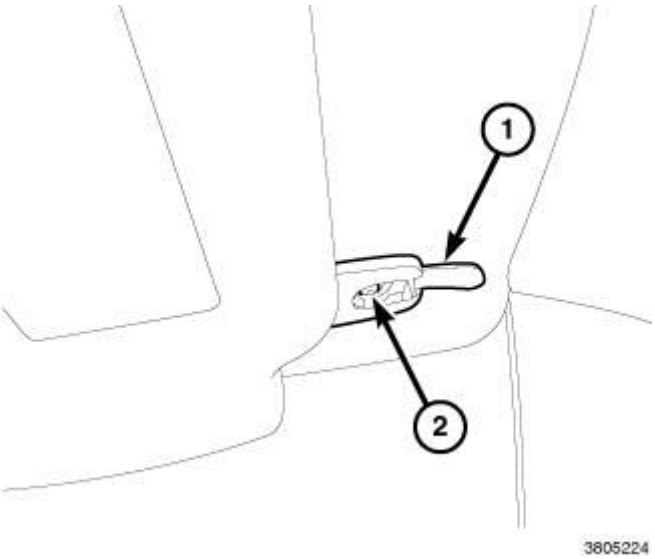

Fig. 573: Sun Visor Base Bracket Cover & Fastener
Courtesy of CHRYSLER GROUP, LLC

1. Disconnect the negative battery cable.
2. Disengage the sun visor from the sun visor support.
3. Open the sun visor base bracket cover (1). If necessary, use a small pick/pry tool to open the cover.
4. Remove the fastener (2) that secures the sun visor bracket to the roof panel.

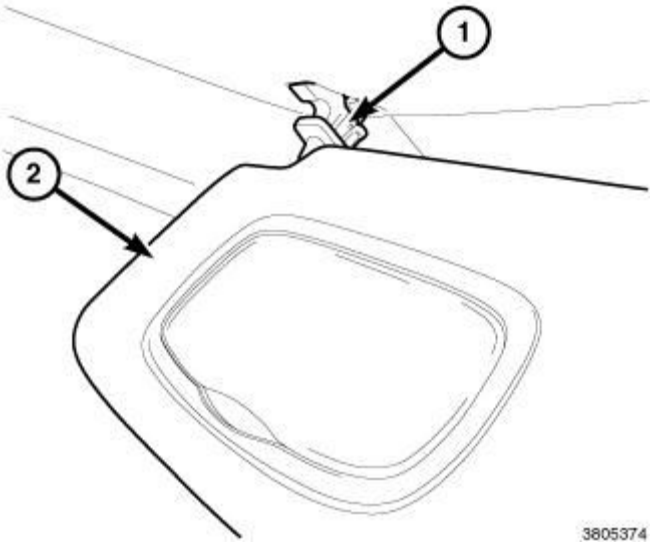

Fig. 574: Visor & Base Bracket
Courtesy of CHRYSLER GROUP, LLC

5. Simultaneously pull the visor (2) down and forward to disengage the base bracket (1) hook feature.
6. Position the visor (2) away from the headliner.
7. If equipped, disconnect the illuminated vanity mirror wire harness connector.
8. Remove the visor (2) from the vehicle.

INSTALLATION

INSTALLATION

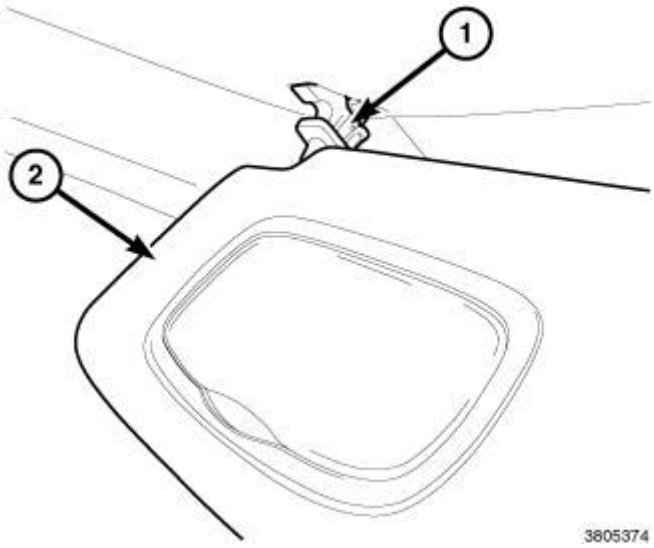

Fig. 575: Visor & Base Bracket
Courtesy of CHRYSLER GROUP, LLC

1. If equipped, connect the illuminated vanity mirror wire harness connector.
2. Position the sun visor (2) on the headliner and seat the sun visor bracket (1) into the cavity by pushing up and rearward.

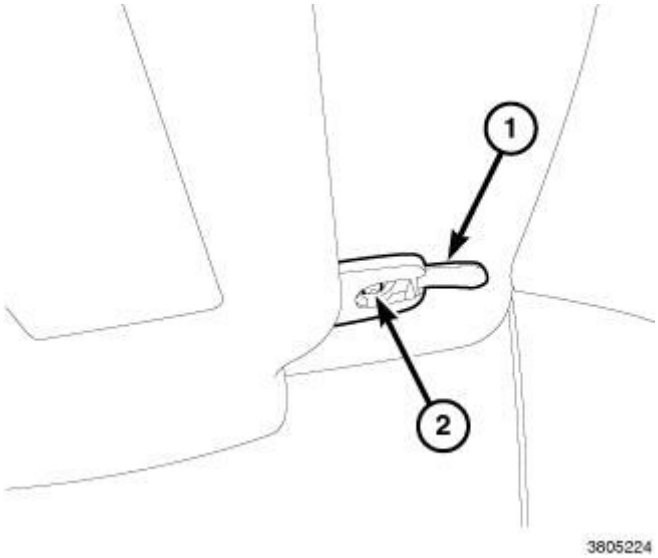

Fig. 576: Sun Visor Base Bracket Cover & Fastener
Courtesy of CHRYSLER GROUP, LLC

3. Install the fastener (2) that secures the sun visor to the roof panel. Tighten the fastener securely.
4. Close the sun visor base bracket cover (1).
5. Engage the sun visor to the sun visor support.
6. Connect the negative battery cable.

PAINT

SPECIFICATIONS

SPECIFICATIONS

NOTE: Because of late model changes to the available paint colors for each vehicle the current color codes can be found on the Vehicle Certification Label. Refer to VEHICLE CERTIFICATION LABEL, DESCRIPTION .

EXTERIOR COLORS

EXTERIOR COLOR	CHRYSLER CODE
Brilliant Black Pearl Coat	AXR
Bright White	GW7
Mango Tango/Toxic Orange Pearl Coat	HVG
Sage Brush/Eco Green Pearl Coat	JGX

Deep Cherry Red Crystal Pearl Coat	JRP
Billet Silver Met. Clear Coat	JSC
True Blue Pearl Coat	KBU
Western Brown/Deep Auburn Pearl Coat	KEP
Cashmere/Sandstone Pearl Coat	KFS
Granite Crystal Clear Coat	LAU
Anvil Clear Coat	LDS
Hydro Blue Pearl Coat	MBJ
Flame Red Clear Coat	PR4

INTERIOR COLORS

INTERIOR COLOR	CHRYSLER CODE
Black/Iceland Gray	A9
Indigo/Jeep Brown	UC
Jeep Brown	U5
Black	X9

SEATS, FRONT

WARNING

WARNING

WARNING: To avoid serious or fatal injury on vehicles equipped with the Supplemental Restraint System (SRS), never attempt to repair the electrically conductive circuits or wiring components related to the SRS for which there is no MOPAR wiring repair kit. It is important to use ONLY the recommended splicing kit and procedure. For applicable and available MOPAR wiring repair kits, please visit the MOPAR® Connector Web Site at the following address on the internet: (http://dto.vftis.com/mopar/disclaimer.asp). Inappropriate repairs can compromise the conductivity and current carrying capacity of those critical electrical circuits, which may cause SRS components not to deploy when required, or to deploy when not required. Only minor cuts or abrasions of wire and terminal insulation where the conductive material has not been damaged, or connector insulators where the integrity of the latching and locking mechanisms have not been compromised may be repaired using appropriate methods.

WARNING: To avoid serious or fatal injury during and following any seat belt or child restraint anchor service, carefully inspect all seat belts, buckles, mounting hardware, retractors, tether straps, and anchors for proper installation, operation, or damage. Replace any belt that is cut, frayed, or torn. Straighten any belt that is twisted. Tighten any loose fasteners.

Replace any belt that has a damaged or ineffective buckle or retractor. Replace any belt that has a bent or damaged latch plate or anchor plate. Replace any child restraint anchor or the unit to which the anchor is integral that has been bent or damaged. Never attempt to repair a seat belt or child restraint component. Always replace damaged or ineffective seat belt and child restraint components with the correct, new and unused replacement parts listed in the Chrysler Mopar® Parts Catalog. Failure to follow these instructions may result in possible serious or fatal injury.

WARNING: **To avoid serious or fatal injury on vehicles equipped with airbags, disable the Supplemental Restraint System (SRS) before attempting any steering wheel, steering column, airbag, Occupant Classification System (OCS), seat belt tensioner, impact sensor or instrument panel component diagnosis or service. Disconnect and isolate the battery negative (ground) cable, then wait two minutes for the system capacitor to discharge before performing further diagnosis or service. This is the only sure way to disable the SRS. Failure to follow these instructions may result in accidental airbag deployment.**

WARNING: **To avoid potential physical injury or damage to sensitive electronic circuits and systems, always disconnect and isolate the battery negative (ground) cable and the positive cable, then ground the positive cable to discharge the Occupant Restraint Controller (ORC) capacitor before performing any welding operations on the vehicle. Failure to take the proper precautions could result in accidental airbag deployment, possible damage to the Supplemental Restraint System (SRS) circuits and components, and possible damage to other electronic circuits and components. Whenever a welding process is being performed within 12 inches (30 centimeters) of an electronic module or wiring harness, then that module or harness should be relocated out of the way, or disconnected. Always protect against component or vehicle damage from weld spatter by using weld blankets and screens.**

WARNING: **To avoid serious or fatal injury, do not attempt to dismantle an airbag unit or tamper with its inflator. Do not puncture, incinerate or bring into contact with electricity. Do not store at temperatures exceeding 93° C (200° F). An airbag inflator unit may contain sodium azide and potassium nitrate. These materials are poisonous and extremely flammable. Contact with acid, water, or heavy metals may produce harmful and irritating gases (sodium hydroxide is formed in the presence of moisture) or combustible compounds. An airbag inflator unit may also contain a gas canister pressurized to over 17.24 kPa (2500 psi). Failure to follow these instructions may result in possible serious or fatal injury.**

WARNING: To avoid serious or fatal injury when handling a seat belt tensioner retractor or buckle, proper care should be exercised to keep fingers out from under the retractor or buckle cover and away from the seat belt webbing or cable where it exits from the retractor or buckle cover.

WARNING: To avoid serious or fatal injury, replace all Supplemental Restraint System (SRS) components only with parts specified in the Chrysler Mopar® Parts Catalog. Substitute parts may appear interchangeable, but internal differences may result in inferior occupant protection.

WARNING: To avoid serious or fatal injury, the fasteners, screws, and bolts originally used for the Supplemental Restraint System (SRS) components must never be replaced with any substitutes. These fasteners have special coatings and are specifically designed for the SRS. Anytime a new fastener is needed, replace it with the correct fasteners provided in the service package or specified in the Chrysler Mopar® Parts Catalog.

WARNING: To avoid serious or fatal injury when a steering column has an airbag unit attached, never place the column on the floor or any other surface with the steering wheel or airbag unit face down. Failure to follow these instructions may result in possible serious or fatal injury.

BIN, UNDER SEAT STORAGE

REMOVAL

REMOVAL - PASSENGER STORAGE BIN

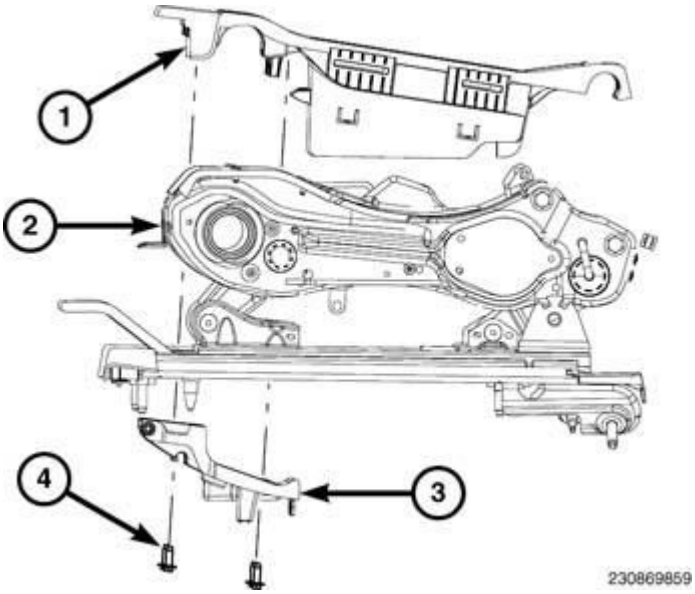

Fig. 577: Storage Bin, Seat Track Assembly, Storage Bin Support & Bolts

Courtesy of CHRYSLER GROUP, LLC

1. Remove the seat cushion and cover. Refer to **COVER, SEAT CUSHION, REMOVAL** and **COVER, SEAT CUSHION, REMOVAL**.
2. Remove the bolts (4) and remove the storage bin support (3).
3. Remove the storage bin (1) from the seat track assembly (2).

INSTALLATION

INSTALLATION - PASSENGER STORAGE BIN

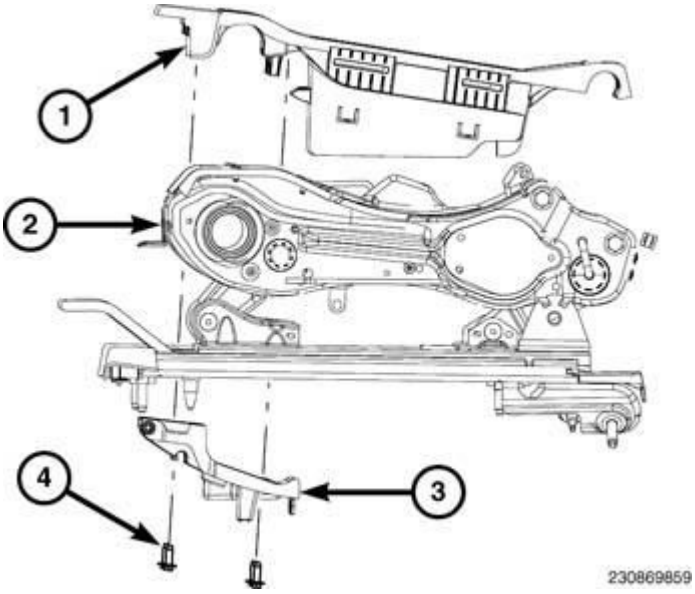

Fig. 578: Storage Bin, Seat Track Assembly, Storage Bin Support & Bolts
Courtesy of CHRYSLER GROUP, LLC

1. Install the storage bin (1) onto the seat track assembly (2).
2. Install the storage bin support (3) and install the bolts (4).
3. Tighten the bolts to (5.5 N.m 49 in. lbs.).
4. Install the seat cushion and cover. Refer to **COVER, SEAT CUSHION, INSTALLATION** and **COVER, SEAT CUSHION, INSTALLATION**.

COVER, SEAT CUSHION

REMOVAL

REMOVAL

PASSENGER SIDE WITH STORAGE

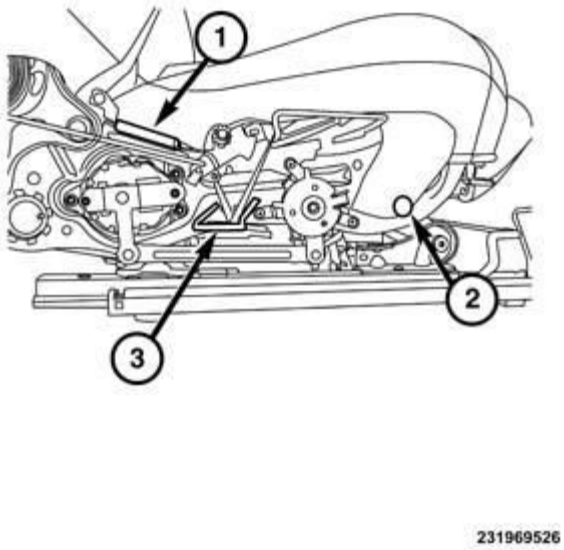

Fig. 579: Push Pin & Attachment Clips
Courtesy of CHRYSLER GROUP, LLC

1. Remove the seat back assembly. Refer to **SEAT BACK, FRONT, REMOVAL**.
2. Separate the attachment clips (1, 3) and remove the push pin (2).

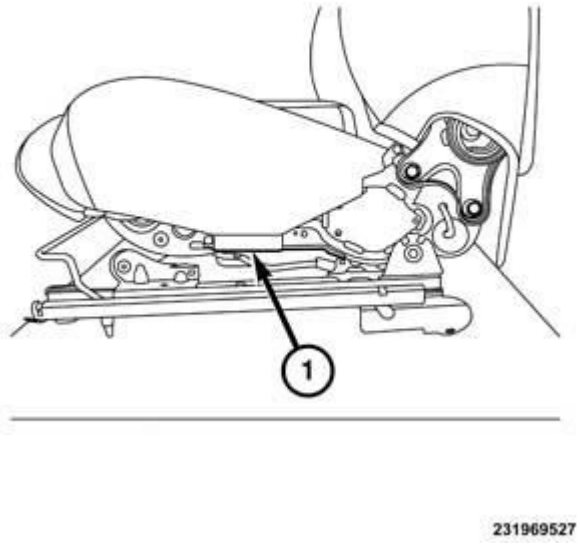

Fig. 580: Attachment Clip

Courtesy of CHRYSLER GROUP, LLC

3. Separate the attachment clip (1).

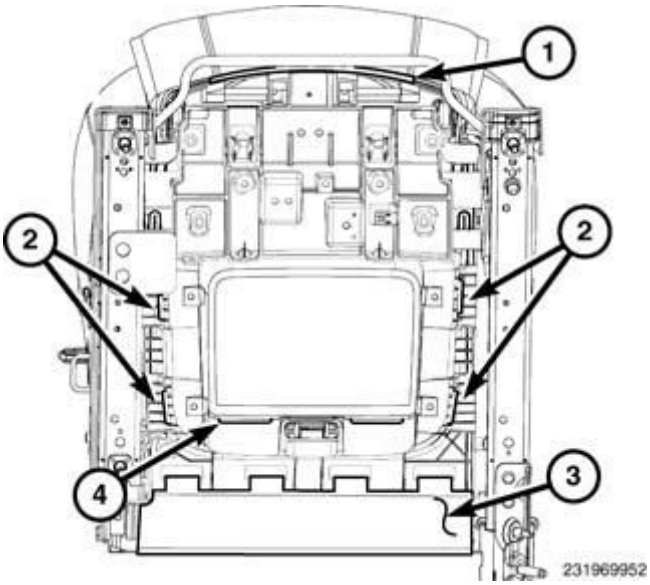

Fig. 581: Storage seat shown, without storage similar.
Courtesy of CHRYSLER GROUP, LLC

4. From under the seat separate the front attachment clips (1).
5. Separate the rear bolster cover attachment clips (3).
6. Separate the bolster cover clips (2, 4) attaching the cover to the storage bin.

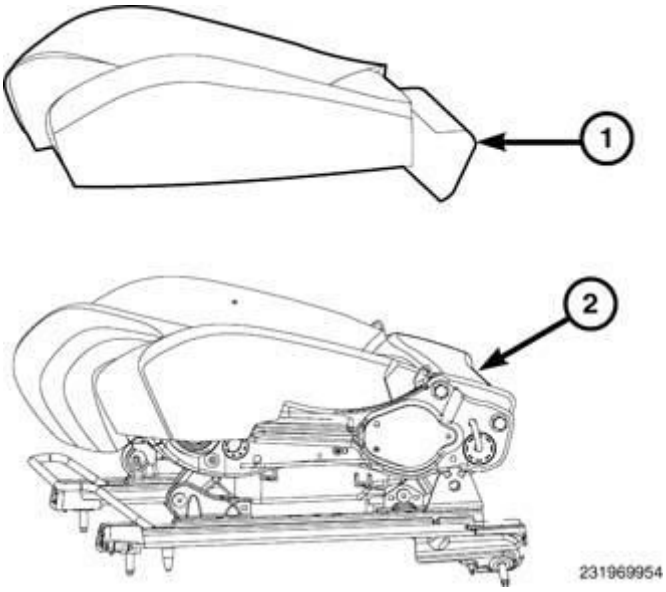

Fig. 582: Bolster Cushion & Cover
Courtesy of CHRYSLER GROUP, LLC

7. Separate and remove the bolster cushion cover (1) from the bolster cushion (2).

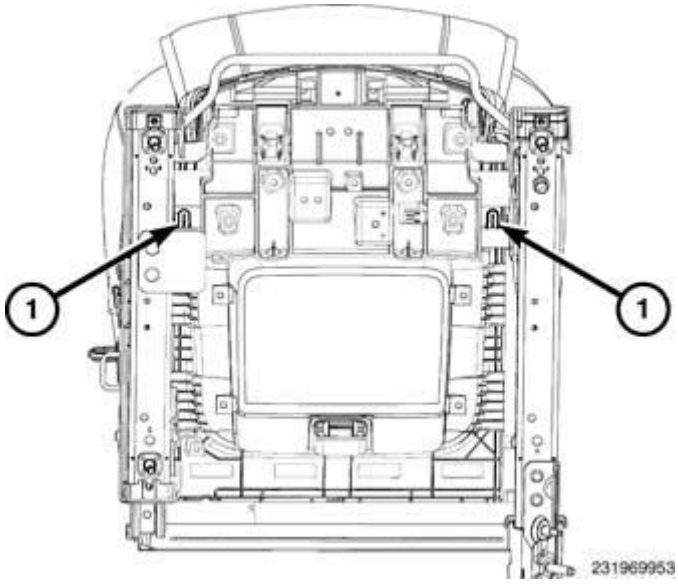

Fig. 583: Cushion Hooks
Courtesy of CHRYSLER GROUP, LLC

8. Lift the bolster cushion off of the seat track assembly and release the cushion hooks (1) from the underside of the seat track assembly.

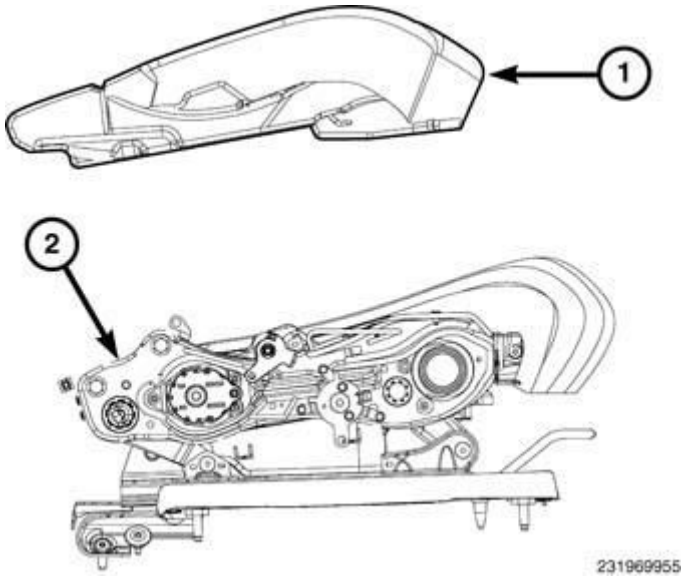

Fig. 584: Bolster Cushion & Seat Track Assembly
Courtesy of CHRYSLER GROUP, LLC

9. Remove the bolster cushion (1) from the seat track assembly (2).

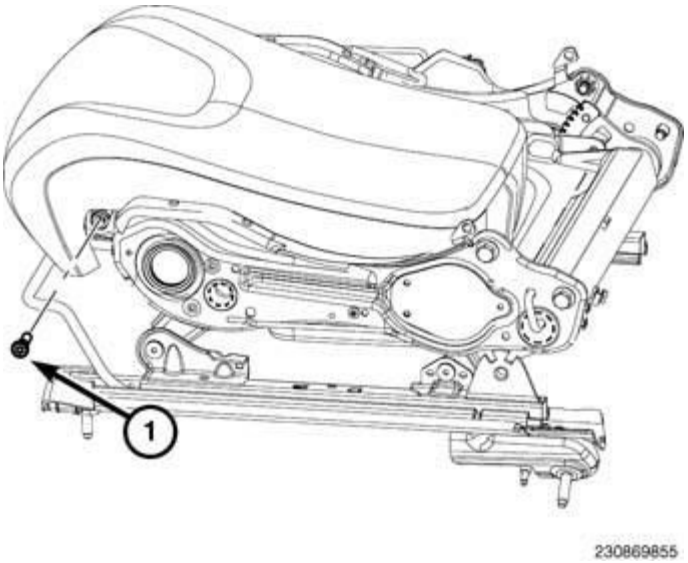

Fig. 585: Storage Bin Lid Pivot Bolt
Courtesy of CHRYSLER GROUP, LLC

10. Remove the storage bin lid pivot bolts (1) and remove the storage bin lid from the seat cushion assembly.

Fig. 586: Storage Bin Lid Cover Attachment Clips
Courtesy of CHRYSLER GROUP, LLC

11. Separate the attachment clips (1) from around the outside edge of the storage bin lid cover.

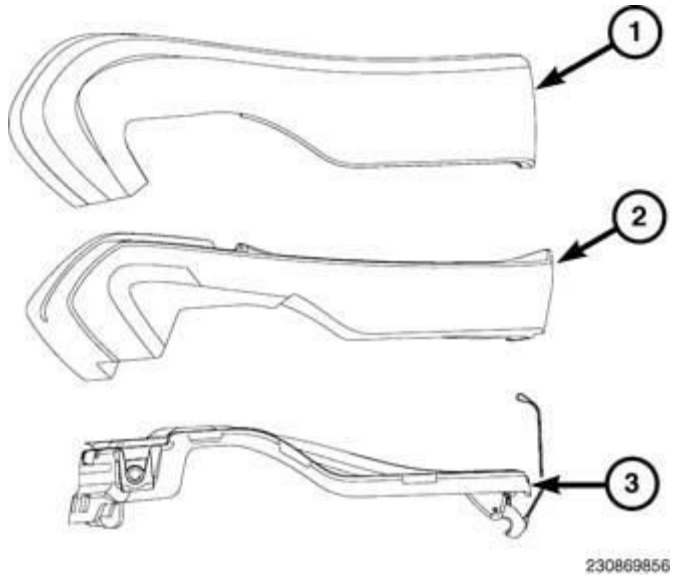

Fig. 587: Storage Bin Lid Cover, Cushion & Storage Bin Lid
Courtesy of CHRYSLER GROUP, LLC

12. Remove the storage bin lid cover (1) and the cushion (2) from the storage bin lid (3).

PASSENGER AND DRIVER WITHOUT STORAGE

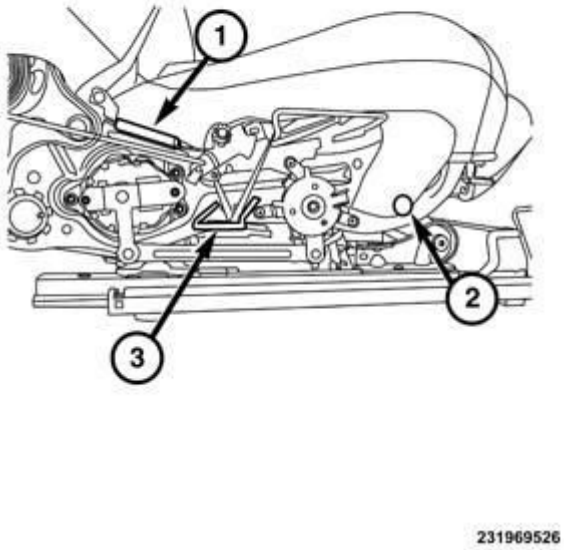

Fig. 588: Push Pin & Attachment Clips
Courtesy of CHRYSLER GROUP, LLC

1. Remove the seat back assembly. Refer to **SEAT BACK, FRONT, REMOVAL**.

2. Separate the attachment clips (1, 3) and remove the push pin (2).

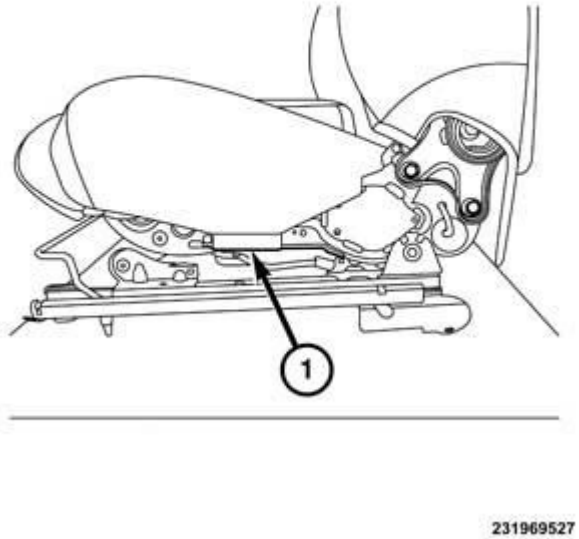

Fig. 589: Attachment Clip
Courtesy of CHRYSLER GROUP, LLC

3. Separate the attachment clip (1).

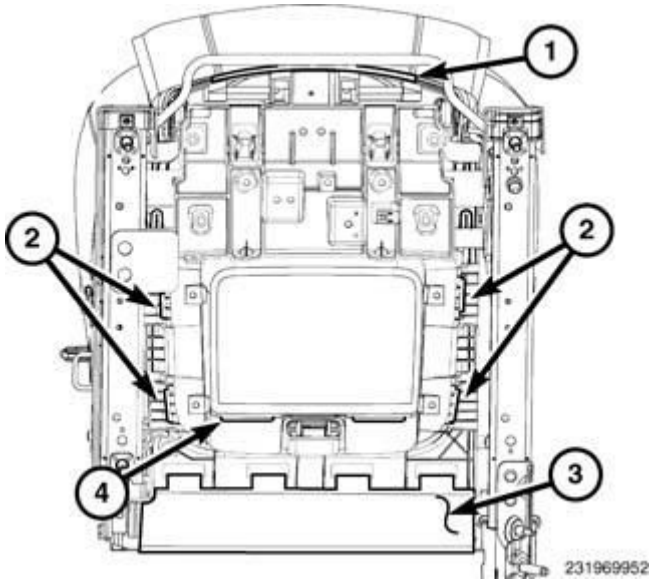

Fig. 590: Storage seat shown, without storage similar.
Courtesy of CHRYSLER GROUP, LLC

4. From under the seat separate the front attachment clips (1).

5. Separate the rear cover attachment clips (3).

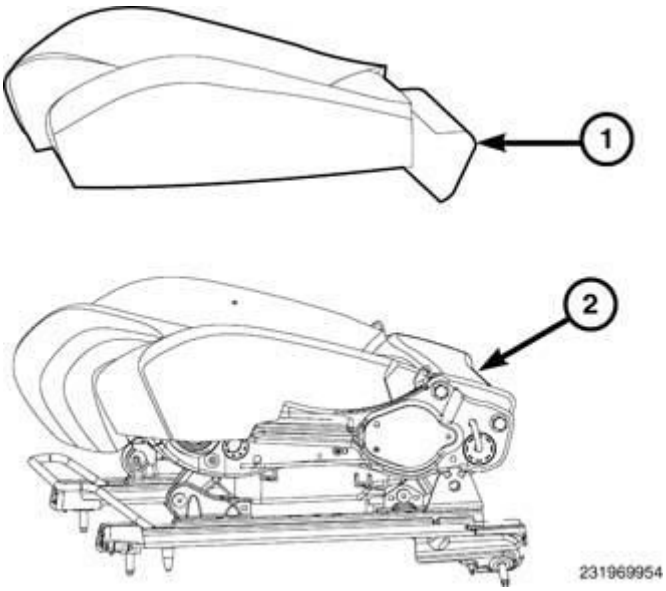

Fig. 591: Bolster Cushion & Cover
Courtesy of CHRYSLER GROUP, LLC

6. Separate the seat cushion cover (1) and the seat cushion (2) from the seat track assembly.

INSTALLATION

INSTALLATION

PASSENGER SIDE WITH STORAGE

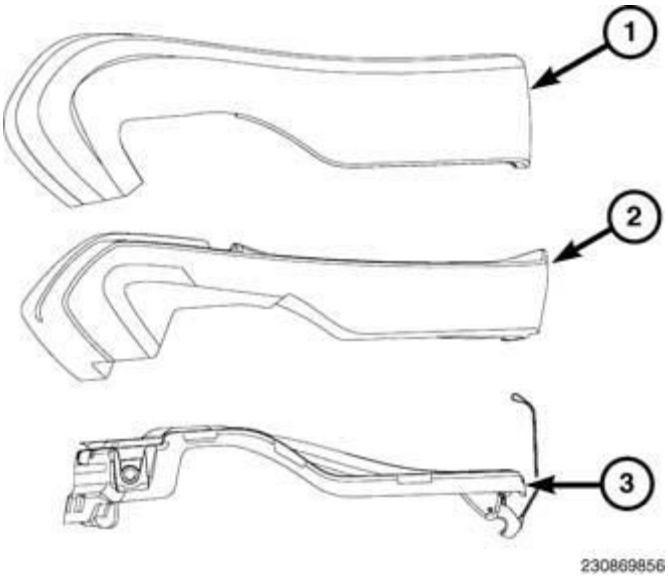

Fig. 592: Storage Bin Lid Cover, Cushion & Storage Bin Lid
Courtesy of CHRYSLER GROUP, LLC

1. Place the storage bin lid cushion (2) and cover (1) onto the storage bin lid (3) fully.

Fig. 593: Storage Bin Lid Cover Attachment Clips
Courtesy of CHRYSLER GROUP, LLC

2. Secure the attachment clips (1) around the outside edge of the storage bin lid cover.

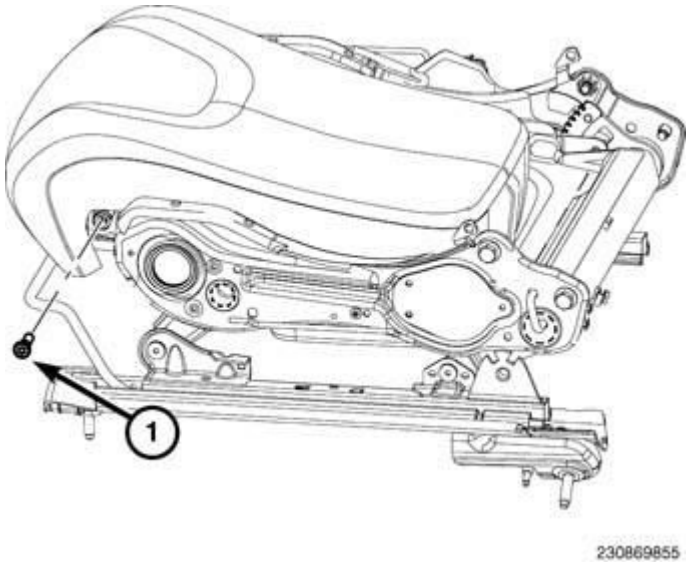

Fig. 594: Storage Bin Lid Pivot Bolt
Courtesy of CHRYSLER GROUP, LLC

3. Install the storage bin lid pivot bolts (1) and tighten to (12 N.m 9 ft. lbs.).

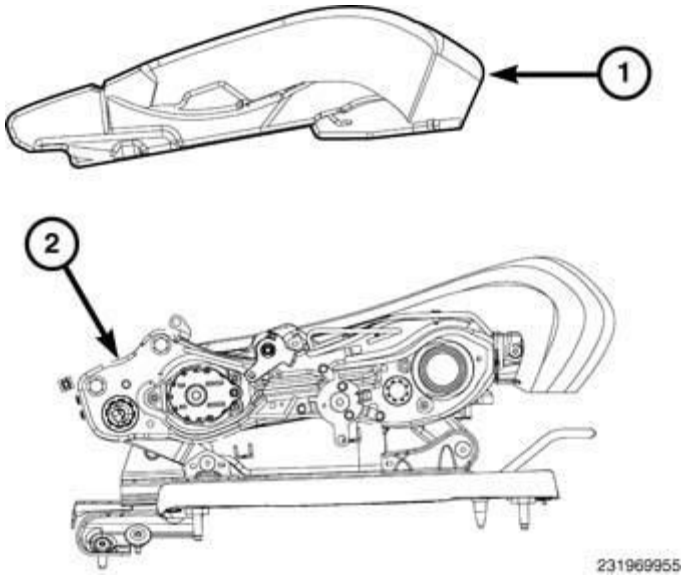

Fig. 595: Bolster Cushion & Seat Track Assembly
Courtesy of CHRYSLER GROUP, LLC

4. Install the bolster cushion (1) onto the seat track assembly (2).

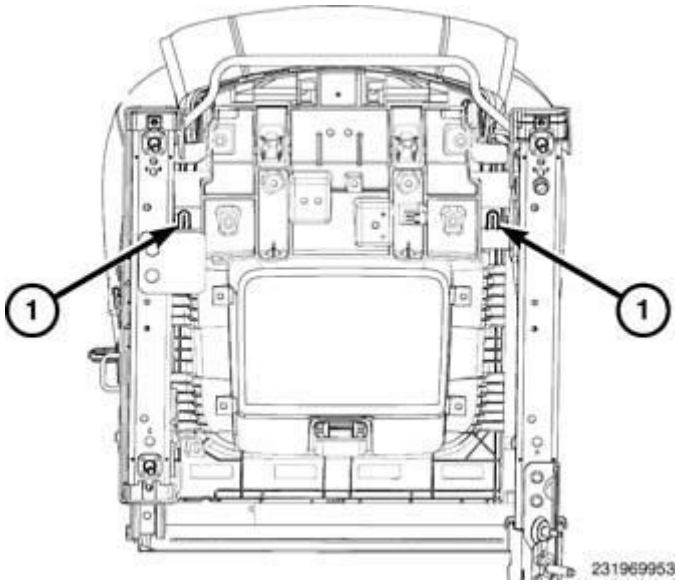

Fig. 596: Cushion Hooks
Courtesy of CHRYSLER GROUP, LLC

5. From the underside of the seat, secure the lower bolster cushion hooks (1) fully.

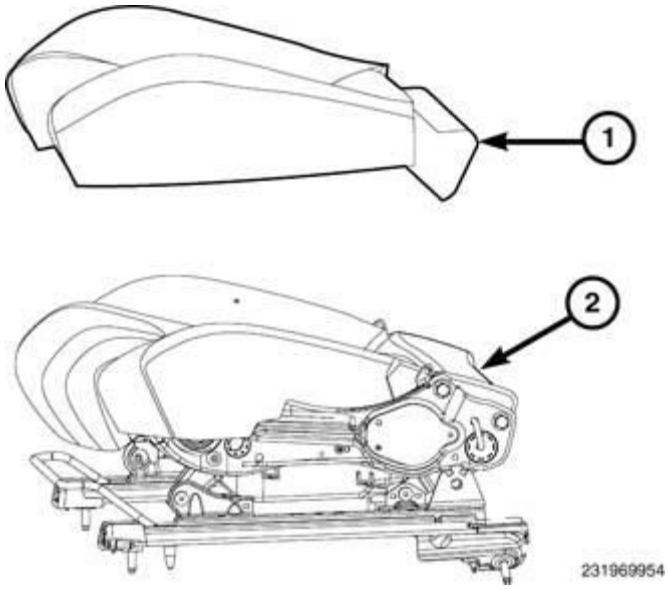

Fig. 597: Bolster Cushion & Cover
Courtesy of CHRYSLER GROUP, LLC

6. Position the bolster cushion cover (1) onto the bolster cushion (2).

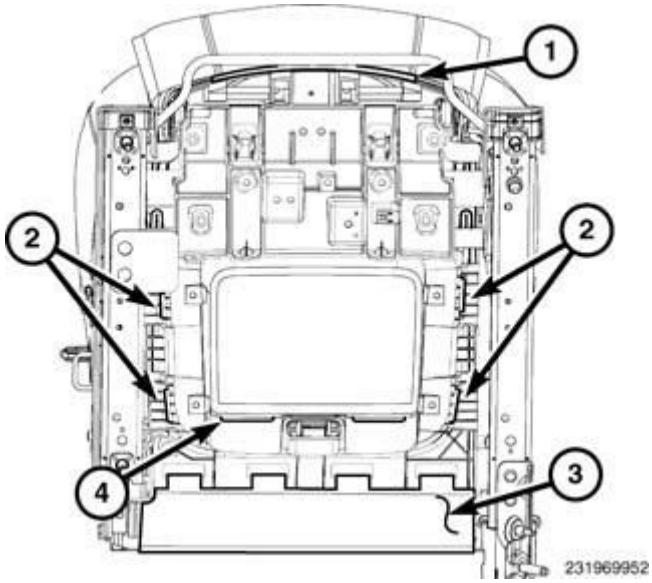

Fig. 598: Storage seat shown, without storage similar.
Courtesy of CHRYSLER GROUP, LLC

7. Attach the bolster cushion attachment clips (2, 4) to the storage bin and seat fully.
8. Attach the front (1) and rear clips (3) to the seat track assembly and seat fully.

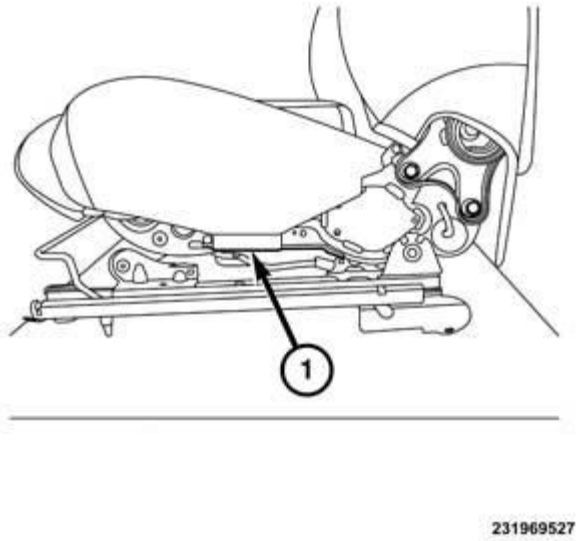

Fig. 599: Attachment Clip
Courtesy of CHRYSLER GROUP, LLC

9. Attach the bolster cover side clip (1) and seat fully.

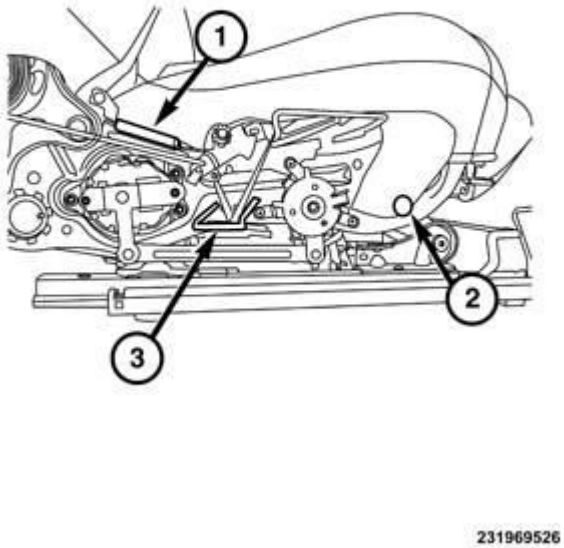

Fig. 600: Push Pin & Attachment Clips
Courtesy of CHRYSLER GROUP, LLC

10. Attach the bolster cover side clips (1, 3) and install the push pin (2).
11. Install the seat back assembly. Refer to **SEAT BACK, FRONT, INSTALLATION**.

PASSENGER AND DRIVER WITHOUT STORAGE

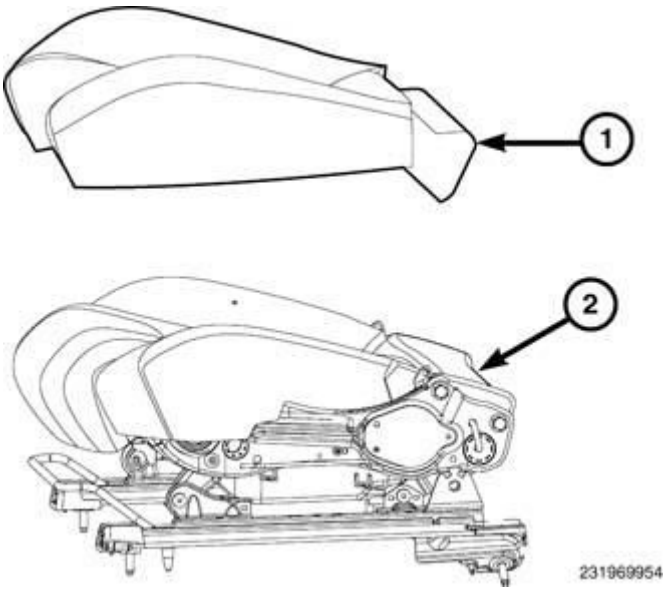

Fig. 601: Bolster Cushion & Cover
Courtesy of CHRYSLER GROUP, LLC

1. Position the seat cushion (2) and the seat cushion cover (1) onto the seat track assembly and seat fully.

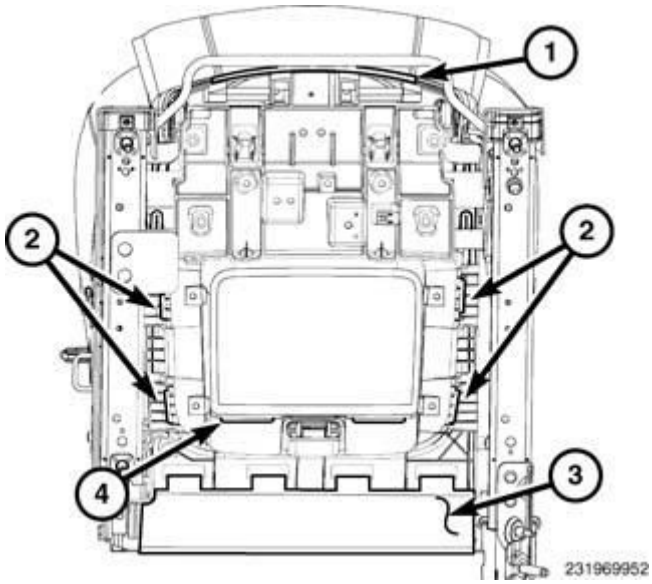

Fig. 602: Storage seat shown, without storage similar.
Courtesy of CHRYSLER GROUP, LLC

2. Secure the front clips (1).

3. Secure the rear clips (3) fully.

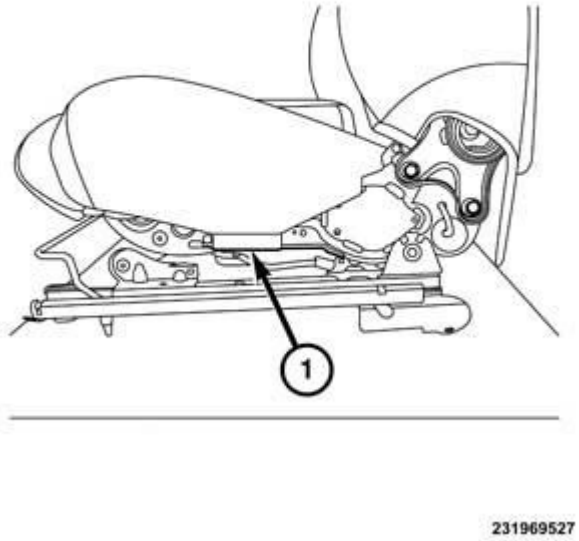

Fig. 603: Attachment Clip
Courtesy of CHRYSLER GROUP, LLC

4. Seat the attachment clip (1) fully.

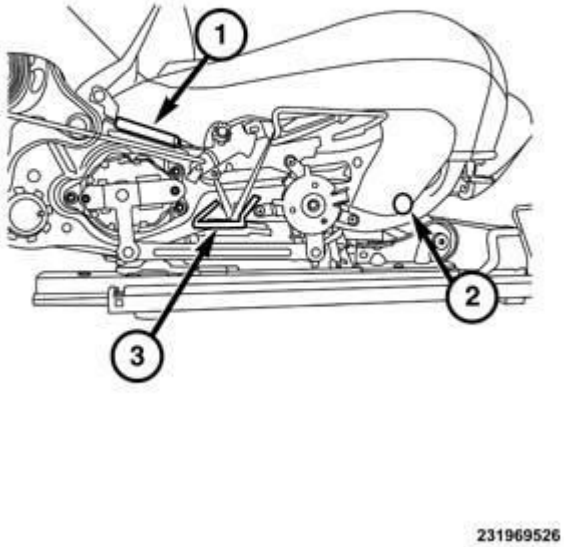

Fig. 604: Push Pin & Attachment Clips
Courtesy of CHRYSLER GROUP, LLC

5. Seat the attachment clips (1, 3) and install the push pin (2) fully.
6. Install the seat back assembly. Refer to **SEAT BACK, FRONT, INSTALLATION**.

HANDLE, FRONT RECLINER

REMOVAL

REMOVAL

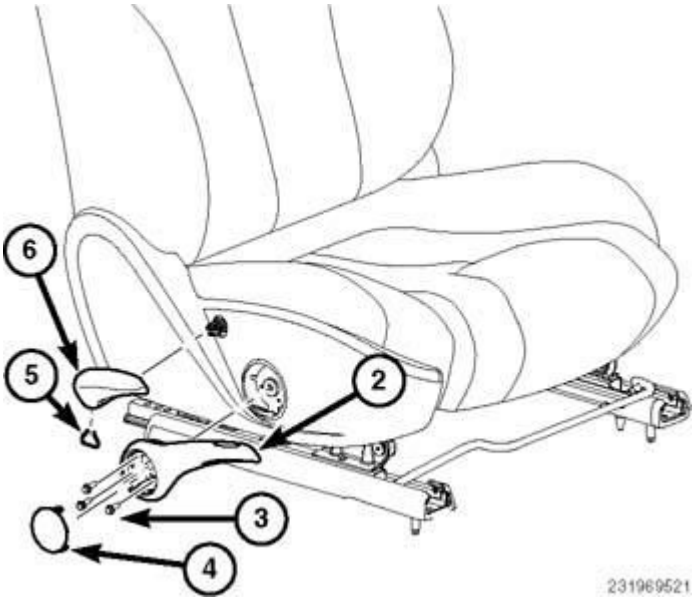

Fig. 605: Lift Handle, Recliner Handle, Clip, Fasteners & Cap
Courtesy of CHRYSLER GROUP, LLC

1. Using a small flat bladed tool or equivalent, remove the lift handle trip cap (4).
2. Remove the fasteners (3) and remove the lift handle (2).
3. Using a small hook type tool or equivalent, release the clip (5) and remove the recliner handle (6).

INSTALLATION

INSTALLATION

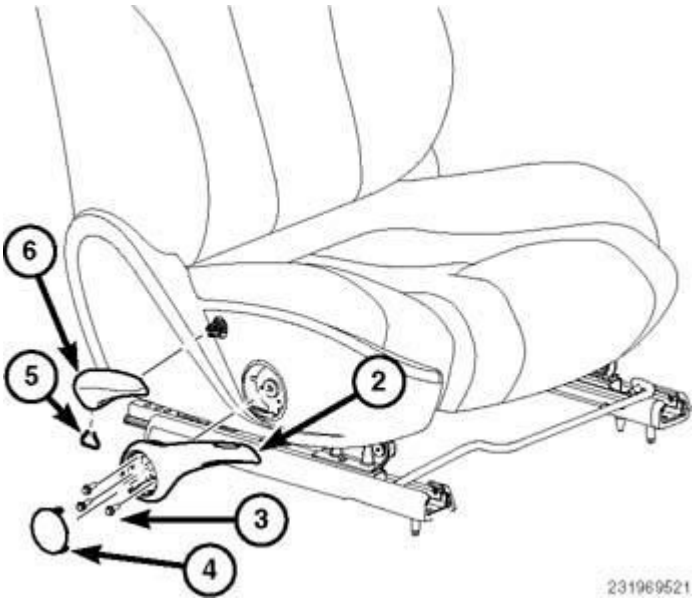

Fig. 606: Lift Handle, Recliner Handle, Clip, Fasteners & Cap
Courtesy of CHRYSLER GROUP, LLC

1. Install the clip (5) onto the recliner handle (6) and seat the handle onto the recliner shaft fully.
2. Install the lift handle (2) and install the fasteners (3).
3. Tighten the fasteners (3) to (5.5 N.m 49 in. lbs.) and install the trim cap (4).

HEADREST

REMOVAL

REMOVAL

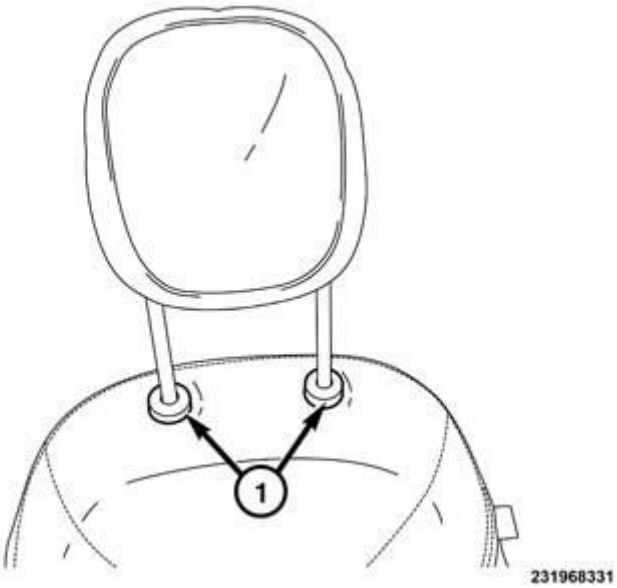

Fig. 607: Head Restraint Sleeves
Courtesy of CHRYSLER GROUP, LLC

1. Press the release tab on the two head restraint sleeves (1) and pull the head restraint straight upward.

INSTALLATION

INSTALLATION

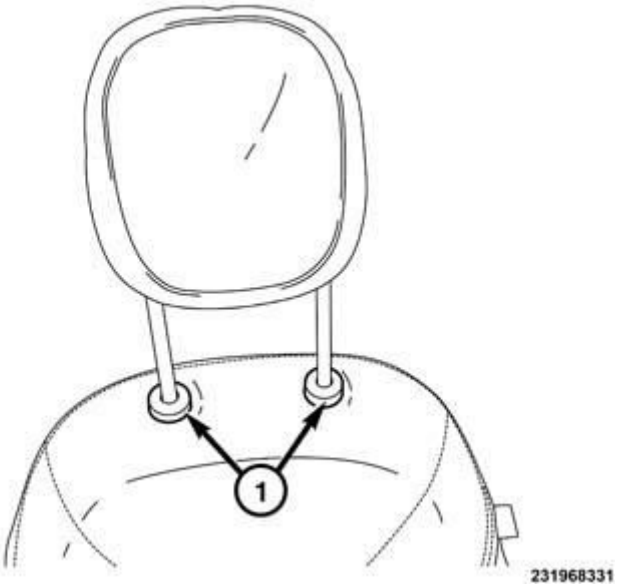

Fig. 608: Head Restraint Sleeves
Courtesy of CHRYSLER GROUP, LLC

1. Press the release tab on the two head restraint sleeves (1) and push the head restraint straight downward.

SEAT BACK, FRONT

REMOVAL

REMOVAL

1. Remove the seat. Refer to **SEAT, REMOVAL** .
2. Remove the side shields. Refer to **SIDE SHIELDS, SEAT CUSHION, FRONT, REMOVAL**.

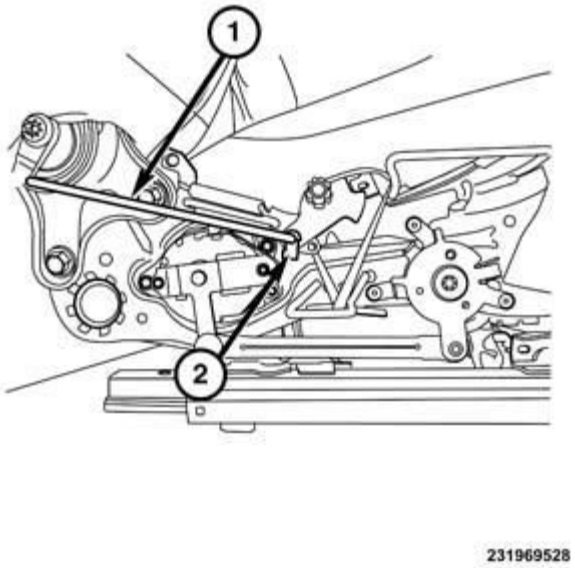

Fig. 609: Recliner Link & Clip
Courtesy of CHRYSLER GROUP, LLC

3. Release the clip (2) and disconnect the recliner link (1), if equipped.

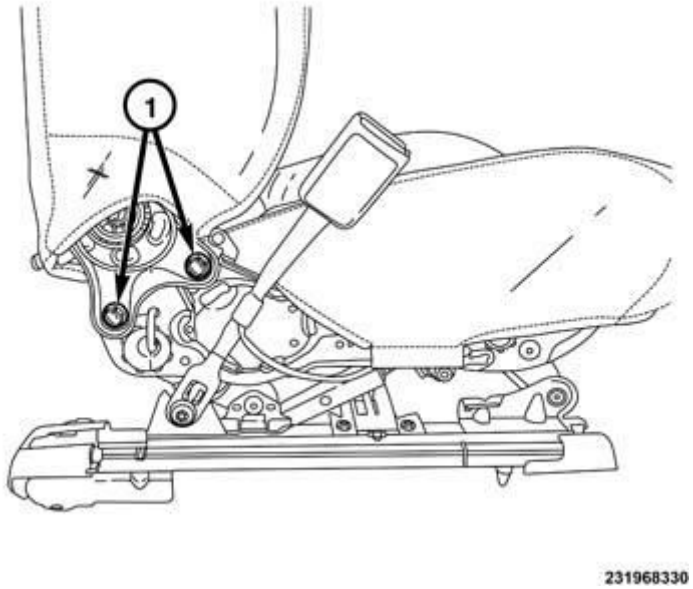

Fig. 610: Seat Back Bolts
Courtesy of CHRYSLER GROUP, LLC

4. Remove the bolts (1) and disconnect the electrical connectors to the seat back accessories, if equipped.
5. Remove the seat back.

DISASSEMBLY

DISASSEMBLY

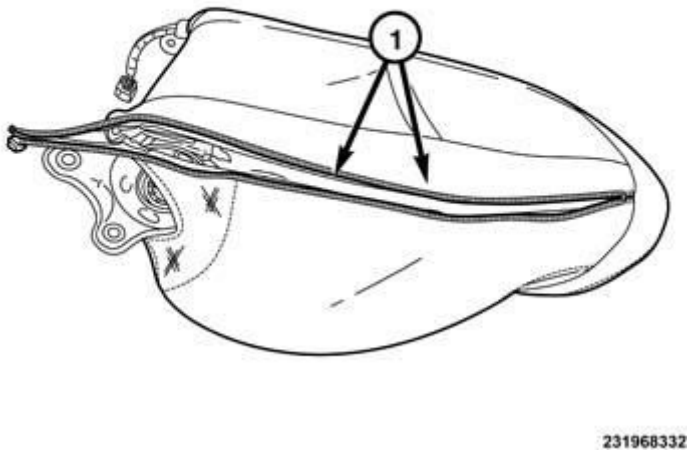

Fig. 611: Rear Zippers
Courtesy of CHRYSLER GROUP, LLC

1. Remove the seat back. Refer to **SEAT BACK, FRONT, REMOVAL**.
2. Unzip the two rear zippers (1).

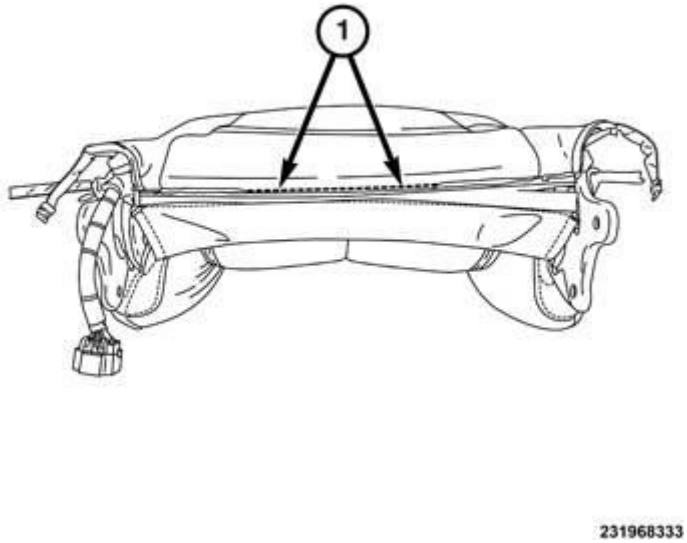

Fig. 612: Lower Zip Strips
Courtesy of CHRYSLER GROUP, LLC

3. Release the lower zip strips (1).

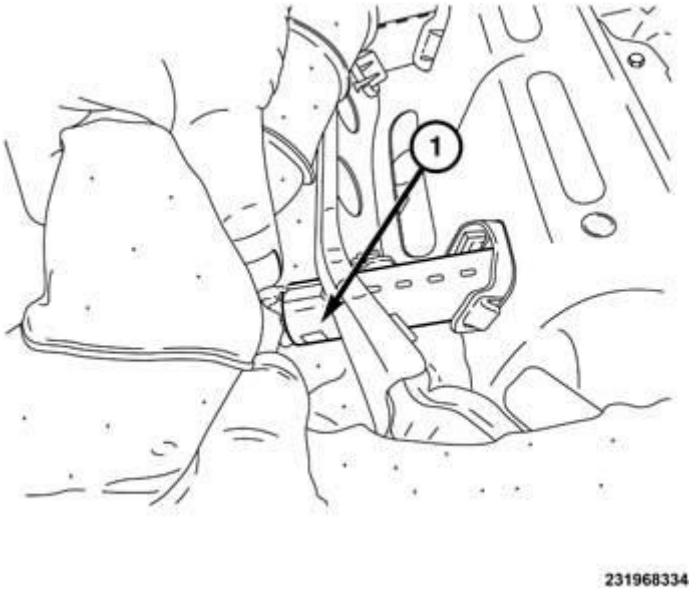

Fig. 613: Headrest Sleeves Tab
Courtesy of CHRYSLER GROUP, LLC

4. Pull the foam up far enough to expose the headrest sleeves and depress the tab (1) while removing the headrest sleeve.

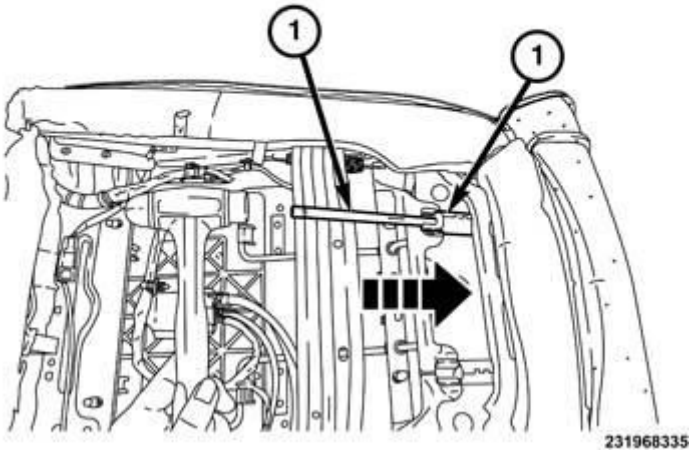

Fig. 614: Tapping Bottom Of Head Restraint Sleeve
Courtesy of CHRYSLER GROUP, LLC

5. Using a hammer and drift pin (1), tap the bottom of the head restraint sleeve.

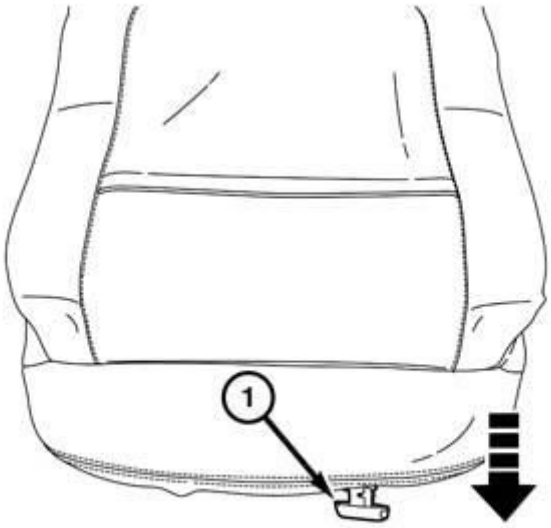

231968317

Fig. 615: Removing Head Restraint Sleeve
Courtesy of CHRYSLER GROUP, LLC

6. Remove the head restraint sleeve (1) from the seat back.

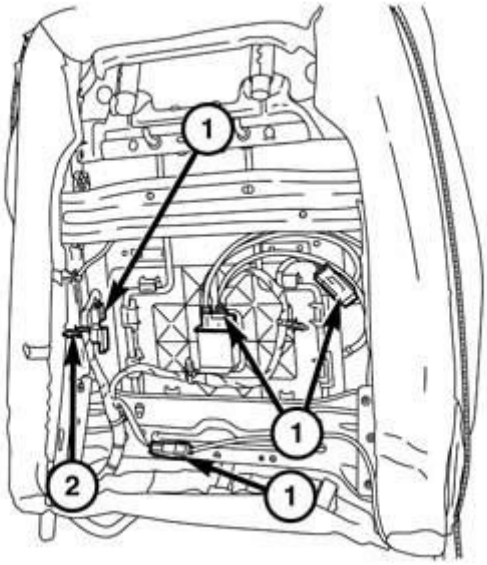

231968319

Fig. 616: Wire Guides & Connectors
Courtesy of CHRYSLER GROUP, LLC

7. Disconnect the electrical connectors (1) and disconnect the two wire guides (2) from the seat back frame.

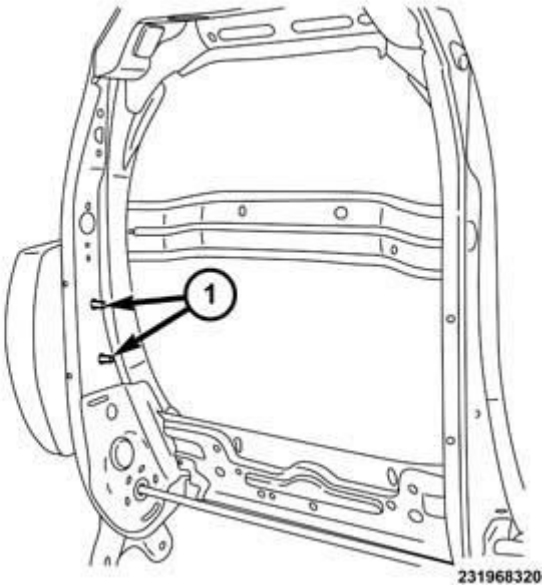

Fig. 617: Seat Air Bag Fasteners
Courtesy of CHRYSLER GROUP, LLC

8. Remove the two fasteners (1) for the seat air bag located on the inside of the seat back frame.

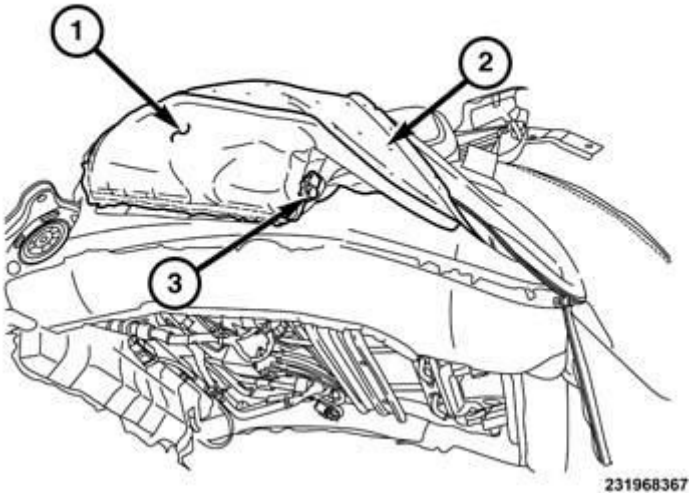

Fig. 618: Seat Air Bag, Cushion Pocket & Connector
Courtesy of CHRYSLER GROUP, LLC

9. Remove the seat air bag (1) from frame and cushion pocket (2).
10. Disconnect squib wiring connector (3) from the seat air bag.
11. Route the seat air bag out of the seat cover pocket (2).

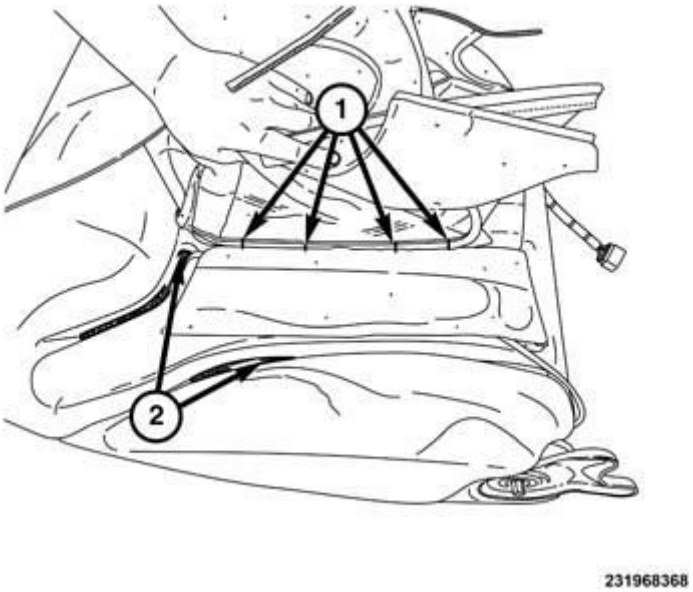

Fig. 619: Hog Rings & Hook And Loop Fasteners
Courtesy of CHRYSLER GROUP, LLC

12. Disconnect the hook and loop fasteners (2) along both sides and the center of the front of the seat cover and cushion.
13. Cut the hog rings (1) that connect the seat back cover to the seat back foam and remove the seat cover from the seat back cushion.
14. Disconnect the heated seat pad wiring connector from the back of the seat frame, if equipped and remove the seat back cushion from the seat back frame assembly.

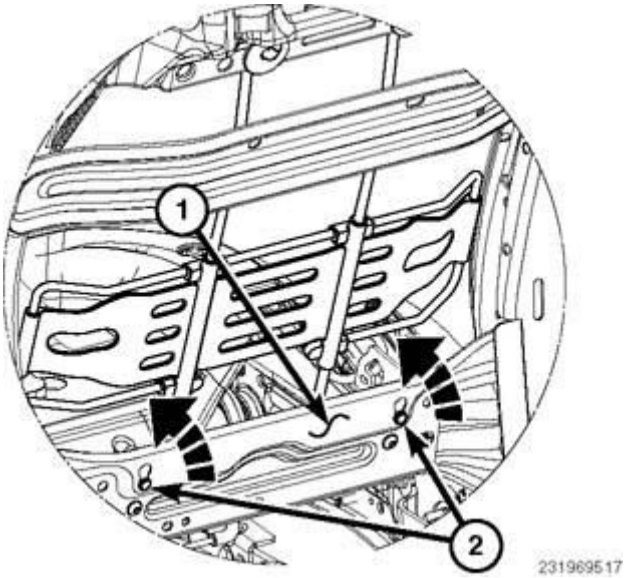

Fig. 620: Disconnecting Lower Lumbar Anchors From Seat Back Frame Assembly
Courtesy of CHRYSLER GROUP, LLC

15. Disconnect the lower lumbar anchors (2) from the seat back frame assembly (1).

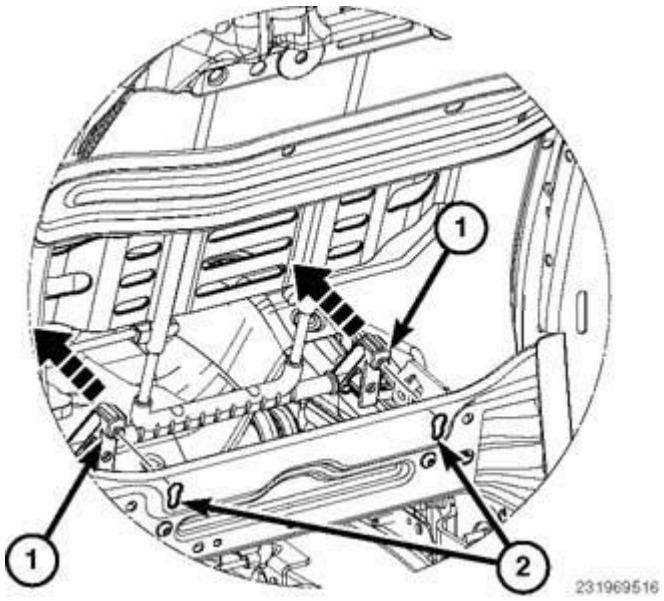

Fig. 621: Releasing Lower Lumbar From Keyhole Slots
Courtesy of CHRYSLER GROUP, LLC

16. Release the lower lumbar (1) from keyhole slots (2).

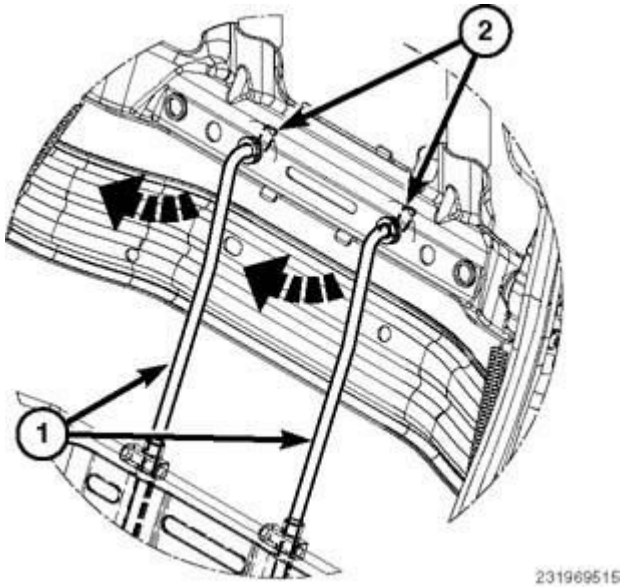

Fig. 622: Rotating Lumbar Upward And Disconnecting Upper Lumbar Support Rods From Grommets
Courtesy of CHRYSLER GROUP, LLC

17. Rotate the lumbar upward and disconnect the upper lumbar support rods (1) from the grommets (2).

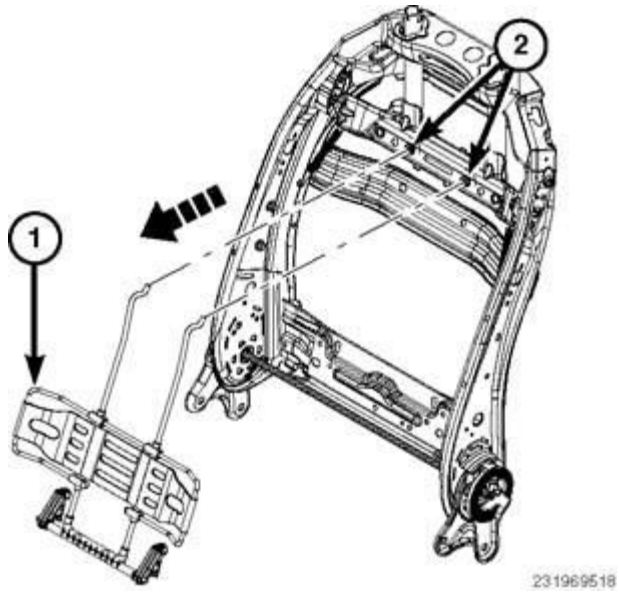

Fig. 623: Removing Lumbar From Seat Back Frame
Courtesy of CHRYSLER GROUP, LLC

18. Remove the lumbar (1) from the seat back frame (2).

ASSEMBLY

ASSEMBLY

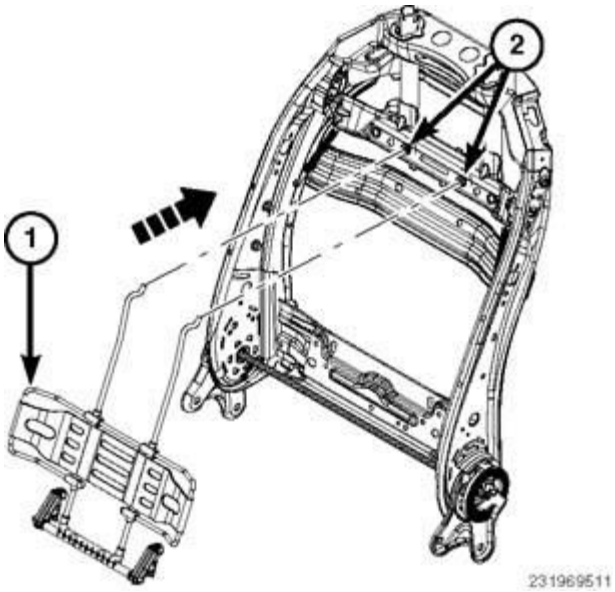

Fig. 624: Installing Lumbar Assembly Onto Seat Back Frame Assembly
Courtesy of CHRYSLER GROUP, LLC

1. Install the lumbar assembly (1) onto the seat back frame assembly (2).

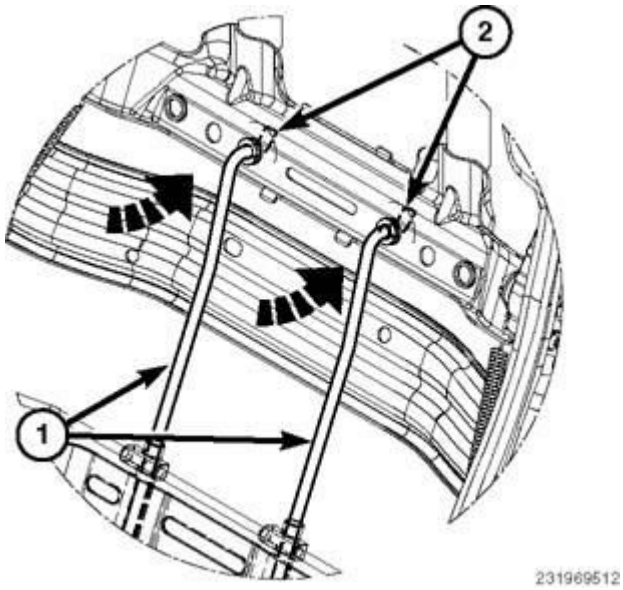

Fig. 625: Positioning Upper Lumbar Support Rods Into Grommets And Rotating Lumbar Down Into Seat Frame Assembly
Courtesy of CHRYSLER GROUP, LLC

2. Position the upper lumbar support rods (1) into the grommets (2) and rotate the lumbar down into the seat frame assembly.

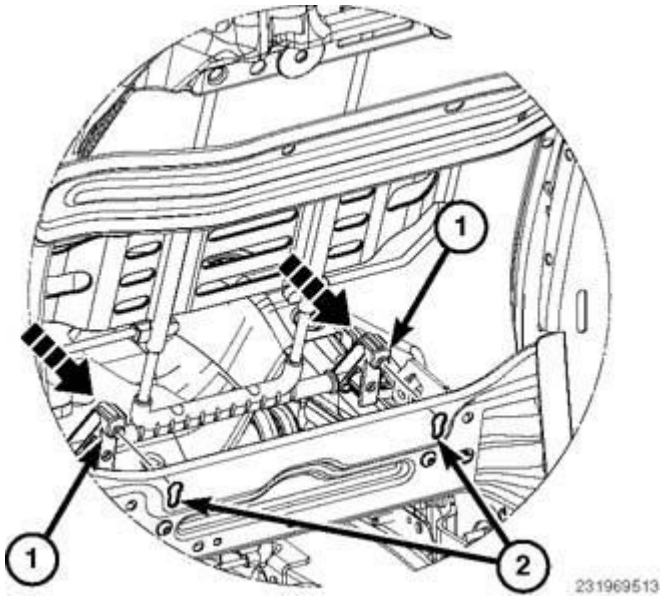

Fig. 626: Positioning Lower Lumbar Assembly Into Keyhole Slots
Courtesy of CHRYSLER GROUP, LLC

3. Position the lower lumbar assembly (1) into the keyhole slots (2).

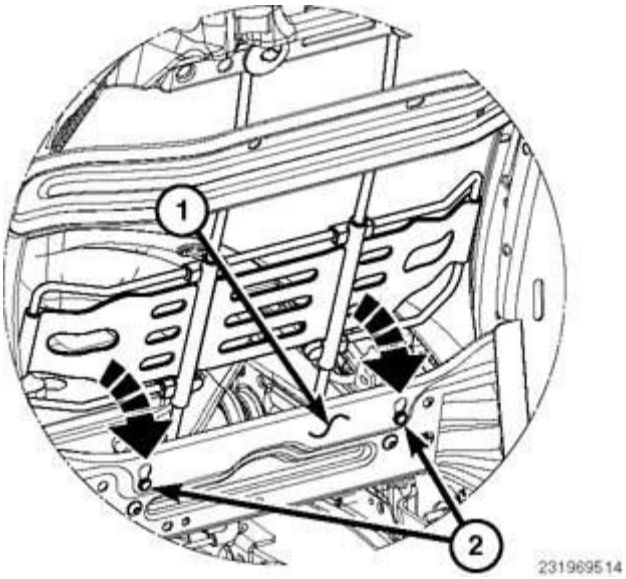

Fig. 627: Securing Lower Lumbar Anchors Fully Into Seat Back Assembly
Courtesy of CHRYSLER GROUP, LLC

4. Secure the lower lumbar anchors (2) fully into the seat back assembly (1).

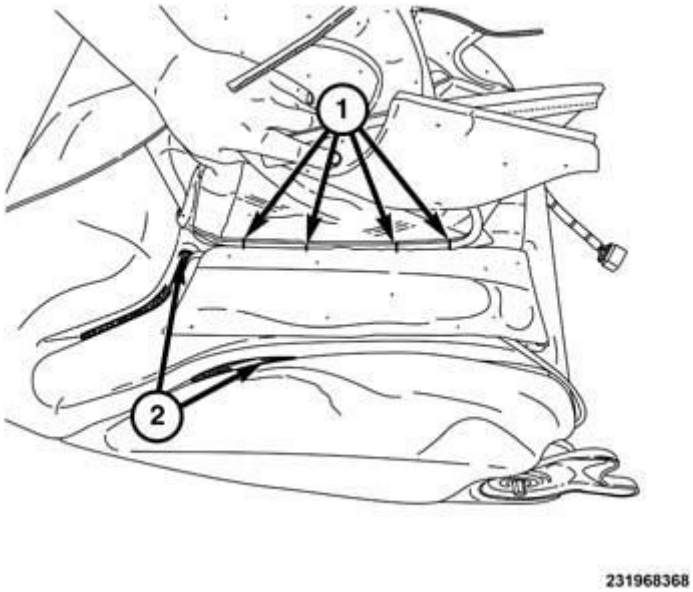

Fig. 628: Hog Rings & Hook And Loop Fasteners
Courtesy of CHRYSLER GROUP, LLC

5. Install the seat back cushion assembly onto the seat frame and connect the heated seat pad wiring connector, if equipped.
6. Position the seat cover assembly onto the cushion and install new hog rings (1).
7. Connect the hook and loop fasteners (2) along both sides and the center of the front of the seat cover and cushion.

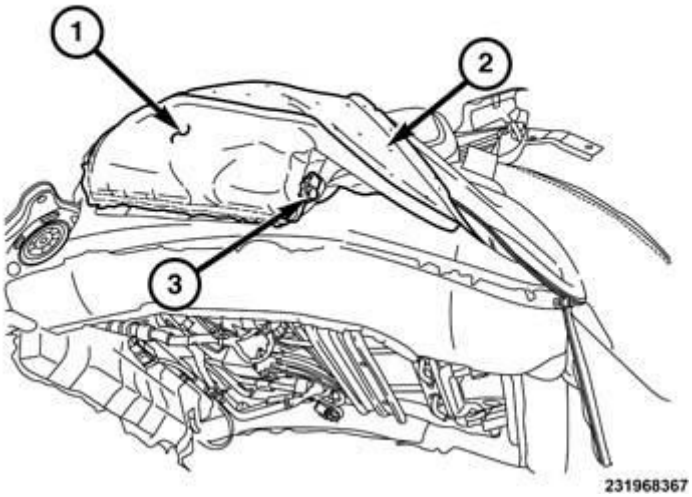

Fig. 629: Seat Air Bag, Cushion Pocket & Connector
Courtesy of CHRYSLER GROUP, LLC

8. Position the seat air bag (1) into the seat cover pocket (2).
9. Connect the squib wiring electrical connector (3).
10. Install the seat air bag (1) onto the frame and into the cushion pocket (2).

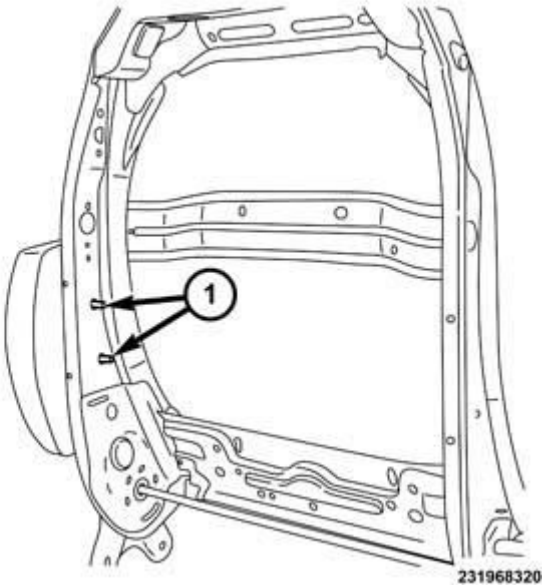

Fig. 630: Seat Air Bag Fasteners
Courtesy of CHRYSLER GROUP, LLC

11. Located on the inside of the seat back frame, install the two fasteners (1) and tighten to (10 N.m 89 in. lbs.).

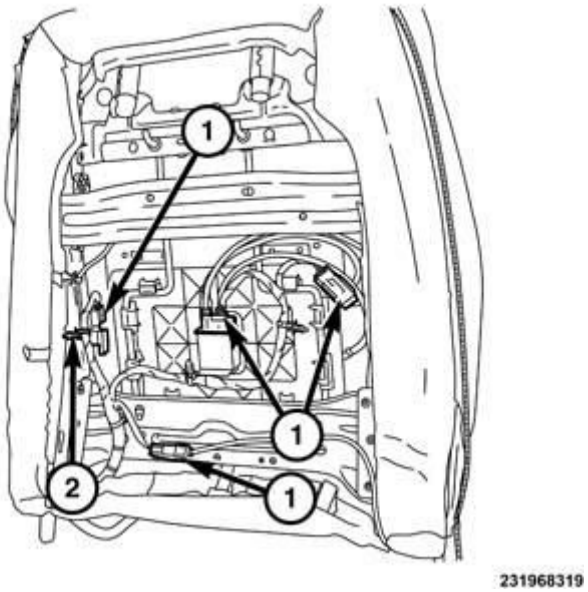

Fig. 631: Wire Guides & Connectors
Courtesy of CHRYSLER GROUP, LLC

12. Connect the electrical connectors (1) and connect the two wire guides (2) to the seat back frame.

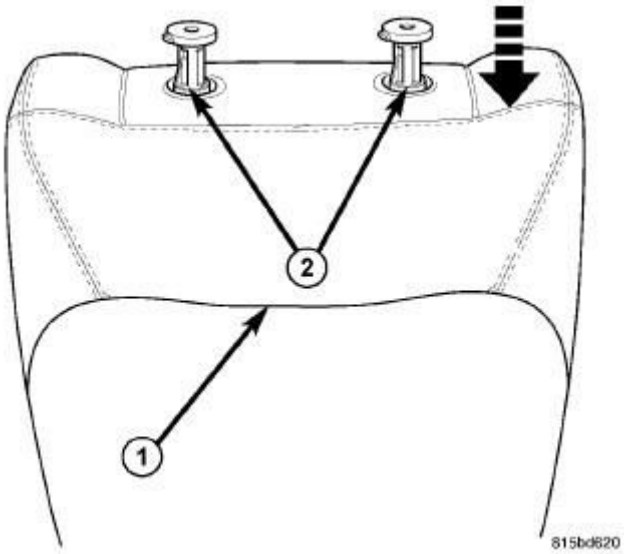

Fig. 632: Headrest Sleeve Install
Courtesy of CHRYSLER GROUP, LLC

NOTE: Typical front seat back and head restraint sleeves shown.

13. Position the seat back cover and cushion (1) onto the seat back frame.
14. Install the headrest sleeves (2) by pushing down on the sleeve.

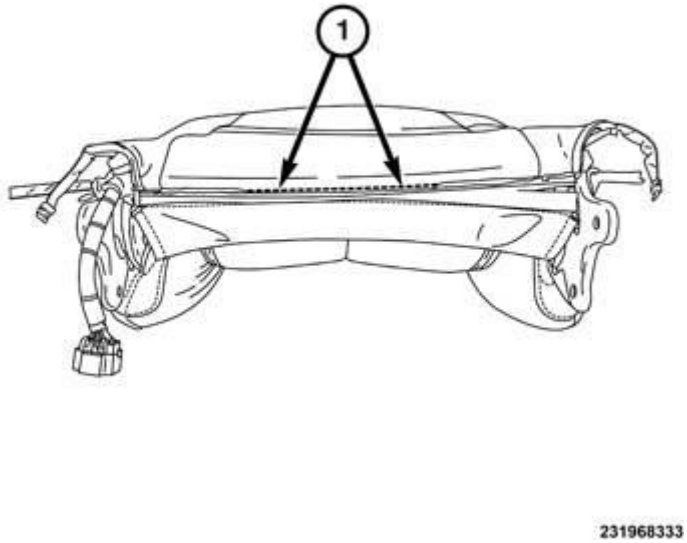

Fig. 633: Lower Zip Strips
Courtesy of CHRYSLER GROUP, LLC

15. Secure the lower zip strips (1), fully.

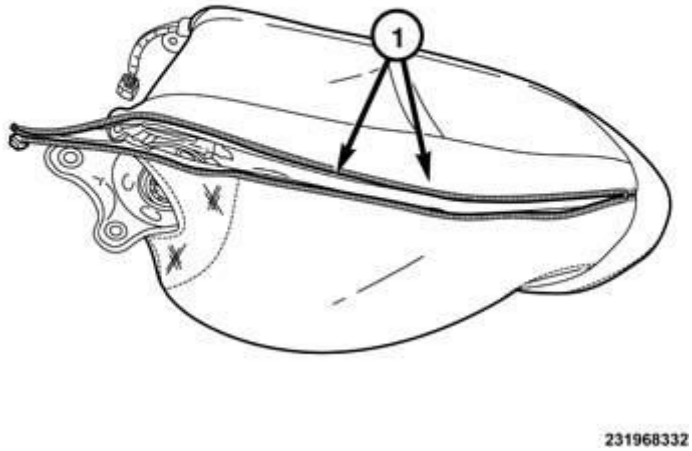

Fig. 634: Rear Zippers
Courtesy of CHRYSLER GROUP, LLC

16. Close the side zippers (1) fully and tuck the zipper up into the seat back cover.
17. Install the seat back. Refer to **SEAT BACK, FRONT, INSTALLATION**.

INSTALLATION

INSTALLATION

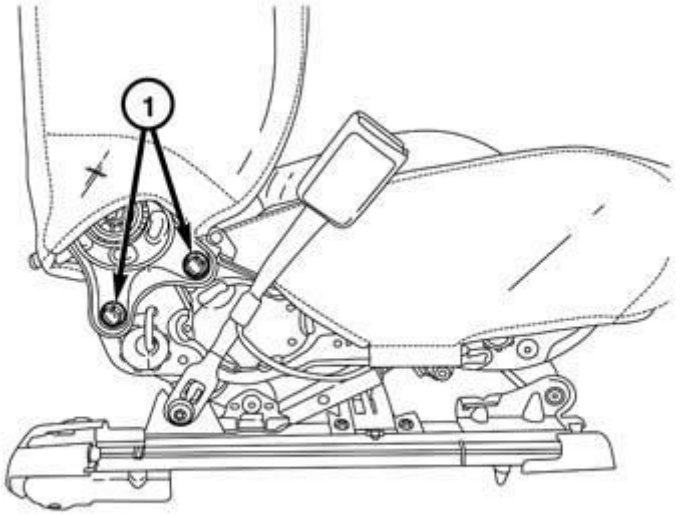

Fig. 635: Seat Back Bolts
Courtesy of CHRYSLER GROUP, LLC

1. Position the seat back assembly back onto the seat track assembly and install the bolts (1).
2. Tighten the bolts (1) to (50 N.m 37 ft. lbs.)
3. Connect the electrical connectors to the seat back accessories, if equipped.

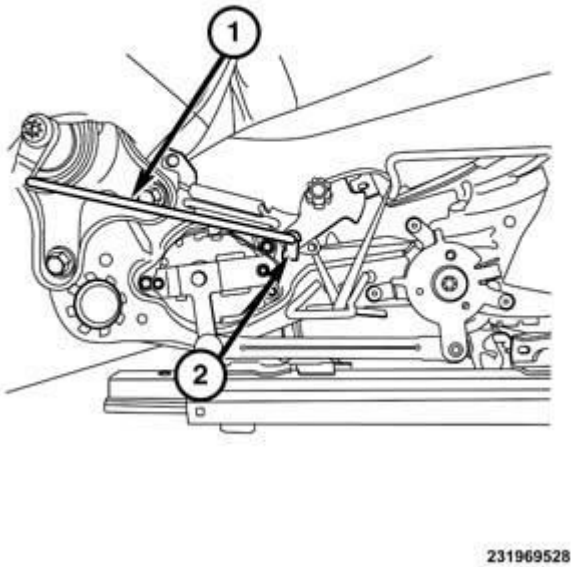

Fig. 636: Recliner Link & Clip

Courtesy of CHRYSLER GROUP, LLC

4. Connect the recliner link (1) and secure the clip (2) fully, if equipped.
5. Install the side shields. Refer to **SIDE SHIELDS, SEAT CUSHION, FRONT, INSTALLATION**.
6. Install the seat. Refer to **SEAT, INSTALLATION** .

SEAT

REMOVAL

REMOVAL

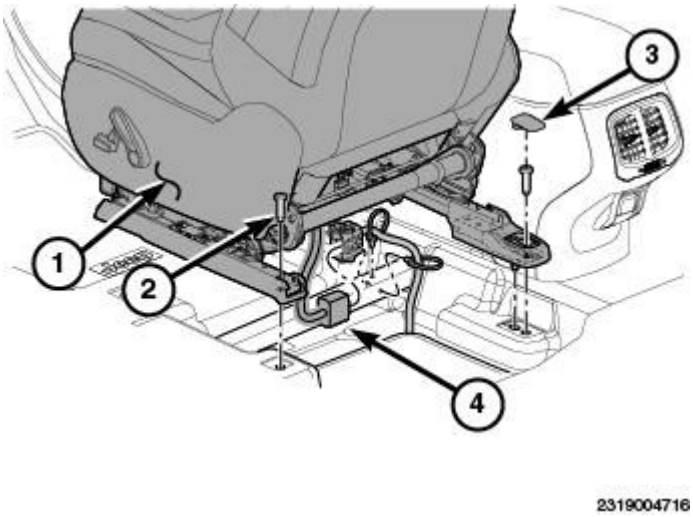

Fig. 637: Identifying Driver Seat, Harness Connector & Fasteners
Courtesy of CHRYSLER GROUP, LLC

NOTE: Passenger seat shown, driver seat similar.

NOTE: Upon completion of the seat installation it will be necessary to use a scan tool to configure the occupant classification module.

1. Slide seat (1) forward.
2. Using trim stick (special tool #C-4755, Trim Stick), pry open the inboard rear seat adjuster cover.
3. Remove the rear seat adjuster bolts (2).

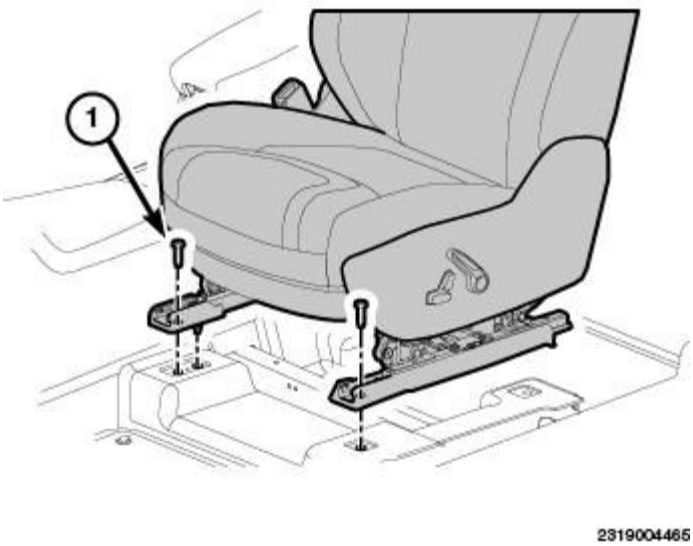

Fig. 638: Identifying Front Seat & Adjuster Bolts
Courtesy of CHRYSLER GROUP, LLC

4. Slide seat rearward.
5. Remove both front seat adjuster bolts (1).
6. Disconnect and isolate the negative battery cable.
7. Disconnect all electrical connectors.

CAUTION: Do not use the adjuster release bar as a handle when removing or installing the front seat.

8. Remove the front seat from the vehicle.

INSTALLATION

INSTALLATION

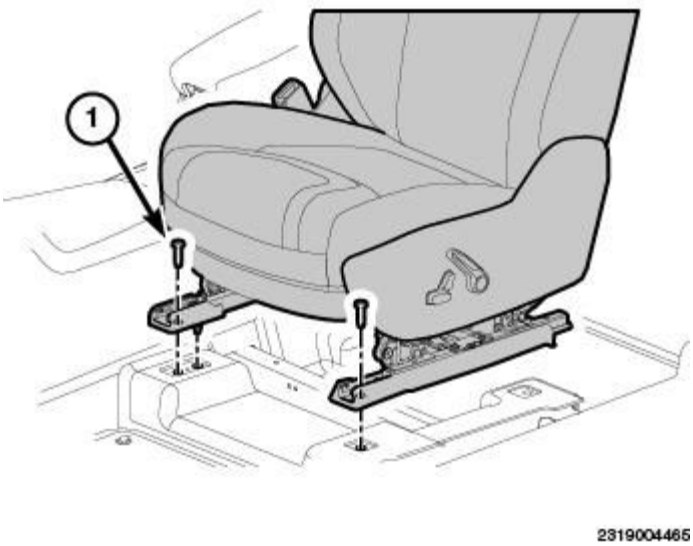

Fig. 639: Identifying Front Seat & Adjuster Bolts
Courtesy of CHRYSLER GROUP, LLC

NOTE: Passenger seat shown, driver seat similar.

NOTE: Upon completion of the seat installation it will be necessary to use a scan tool to configure the occupant classification module.

1. Position the front seat Into the vehicle.

CAUTION: Do not use the adjuster release bar as a handle when removing or installing the front seat.

2. Connect all electrical connectors.
3. Connect the negative battery cable.
4. Slide seat (1) rearward.
5. Install both front seat adjuster bolts (1). Tighten to 40 N.m (30 ft. lbs.).

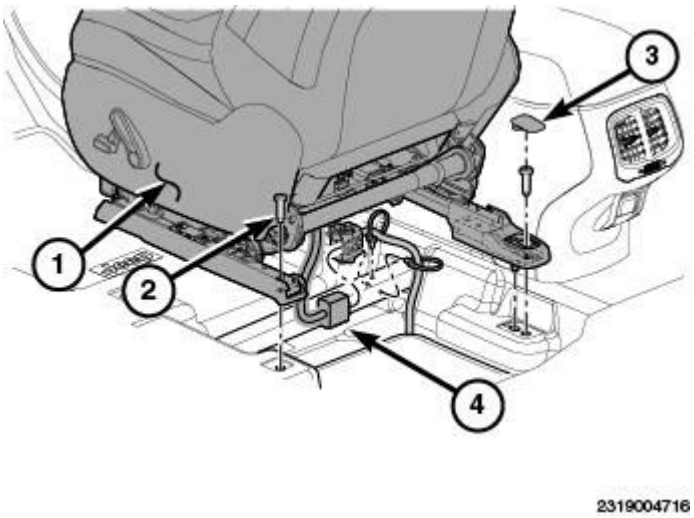

Fig. 640: Identifying Driver Seat, Harness Connector & Fasteners
Courtesy of CHRYSLER GROUP, LLC

6. Slide seat (1) forward.
7. Install the rear seat adjuster bolts (2). Tighten to 40 N.m (30 ft. lbs.).
8. Close the cover on the inboard rear seat adjuster cover.
9. With the use of a scan tool, configure the occupant classification module.

SIDE SHIELDS, SEAT CUSHION, FRONT

REMOVAL

REMOVAL

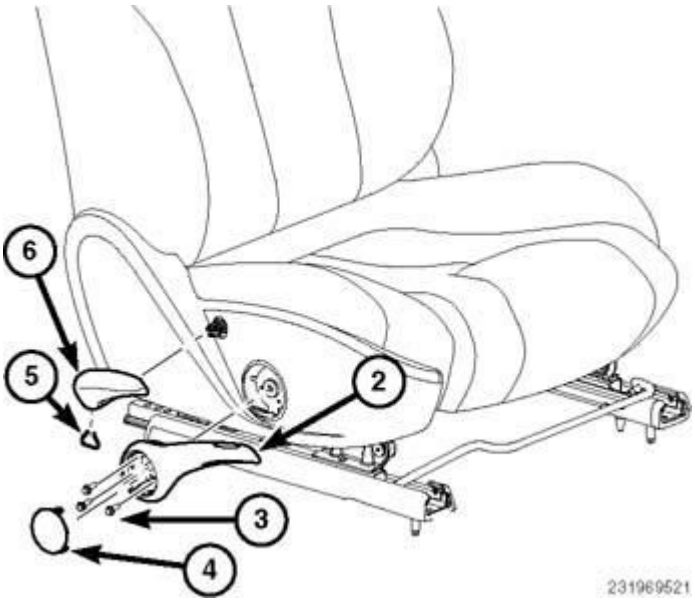

Fig. 641: Lift Handle, Recliner Handle, Clip, Fasteners & Cap

Courtesy of CHRYSLER GROUP, LLC

1. Remove the adjustment handles (2, 6), if equipped. Refer to **HANDLE, FRONT RECLINER, REMOVAL**.

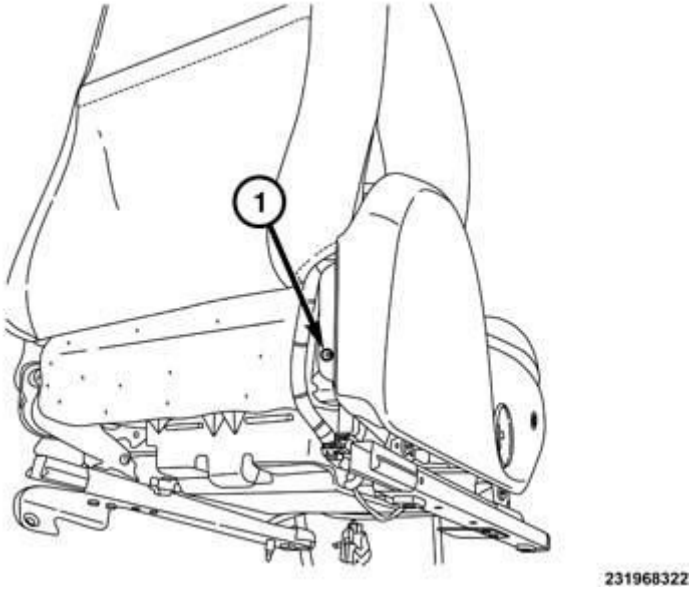

Fig. 642: Rear Screw
Courtesy of CHRYSLER GROUP, LLC

2. Remove the rear screw (1).

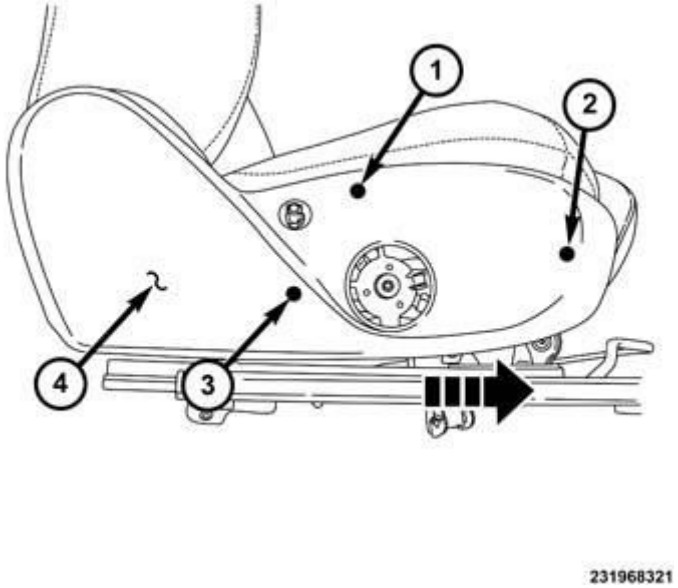

Fig. 643: Side Shield, Retaining Clip & Retaining Tabs
Courtesy of CHRYSLER GROUP, LLC

3. Release the retaining clip (3).
4. Lift up on the side shield (4) slightly and release the retaining tab (1).
5. Push forward on the side shield (4) and release the retaining tab (2).
6. Remove the side shield and disconnect the electrical connectors, if equipped.

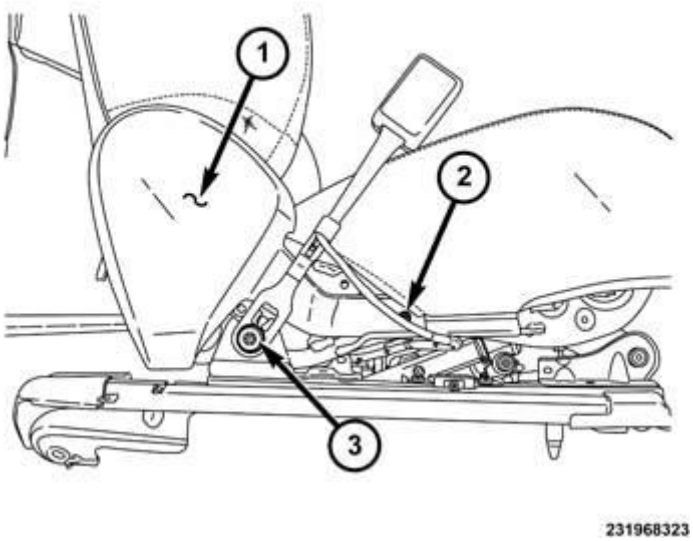

Fig. 644: Side Shield, Screw & Bolt
Courtesy of CHRYSLER GROUP, LLC

7. Remove the seat belt buckle bolt (3) and remove the buckle.
8. Remove the screw (2) and remove the side shield (1).

INSTALLATION

INSTALLATION

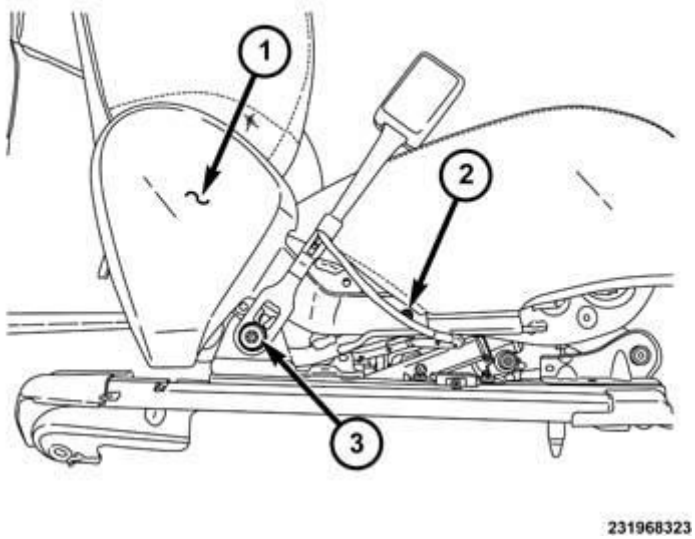

Fig. 645: Side Shield, Screw & Bolt
Courtesy of CHRYSLER GROUP, LLC

1. Install the side shield (1) and install the screw (2).
2. Install the buckle and install the bolt (3).
3. Tighten the seat belt buckle retaining bolt to (45 N.m 33 ft. lbs.).

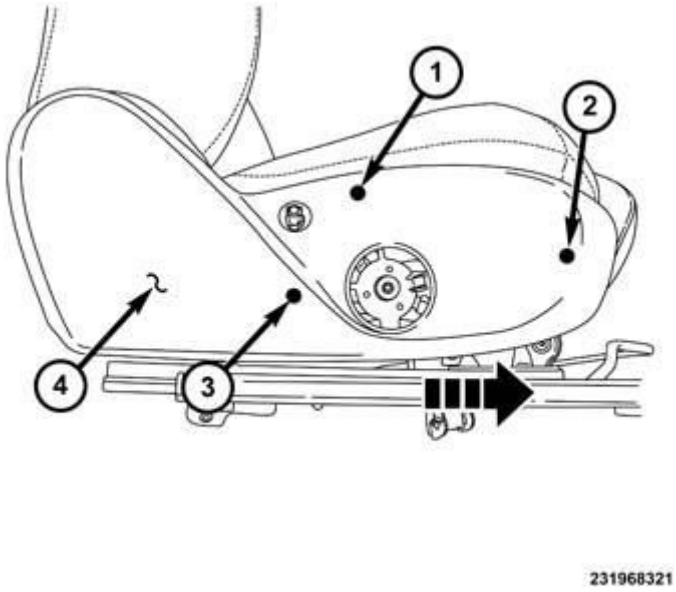

Fig. 646: Side Shield, Retaining Clip & Retaining Tabs
Courtesy of CHRYSLER GROUP, LLC

4. Position the side shield (4) back onto the seat assembly and secure the front retaining tab (2).
5. Push back on the side shield and secure the retaining tab (1).

6. Secure the retaining clip (3) fully.

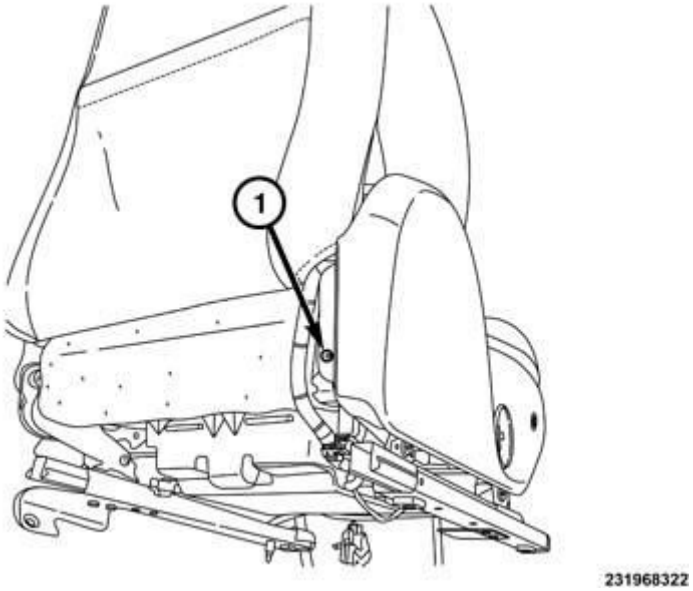

Fig. 647: Rear Screw
Courtesy of CHRYSLER GROUP, LLC

7. Install the rear screws (1).

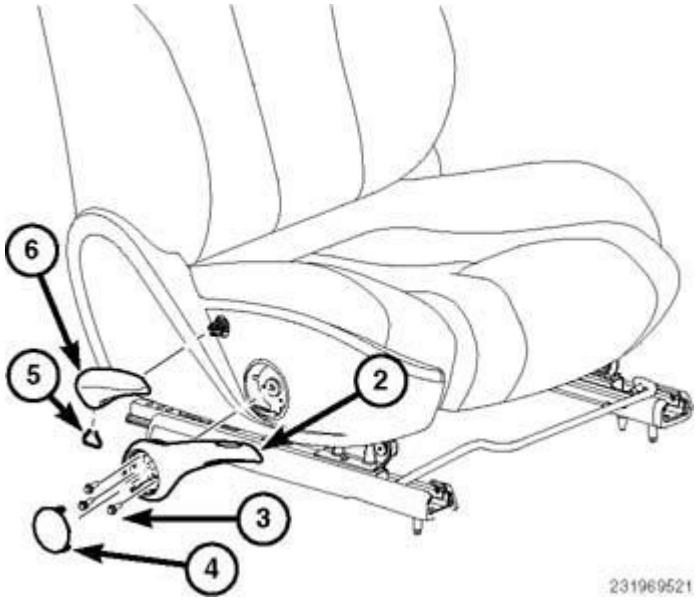

Fig. 648: Lift Handle, Recliner Handle, Clip, Fasteners & Cap
Courtesy of CHRYSLER GROUP, LLC

8. Install the adjustment handles (2, 6), if equipped. Refer to **HANDLE, FRONT RECLINER, INSTALLATION**.

SEATS, REAR

WARNING

WARNING

WARNING: To avoid serious or fatal injury on vehicles equipped with the Supplemental Restraint System (SRS), never attempt to repair the electrically conductive circuits or wiring components related to the SRS for which there is no MOPAR wiring repair kit. It is important to use ONLY the recommended splicing kit and procedure. For applicable and available MOPAR wiring repair kits, please visit the MOPAR® Connector Web Site at the following address on the internet: (http://dto.vftis.com/mopar/disclaimer.asp). Inappropriate repairs can compromise the conductivity and current carrying capacity of those critical electrical circuits, which may cause SRS components not to deploy when required, or to deploy when not required. Only minor cuts or abrasions of wire and terminal insulation where the conductive material has not been damaged, or connector insulators where the integrity of the latching and locking mechanisms have not been compromised may be repaired using appropriate methods.

WARNING: To avoid serious or fatal injury during and following any seat belt or child restraint anchor service, carefully inspect all seat belts, buckles, mounting hardware, retractors, tether straps, and anchors for proper installation, operation, or damage. Replace any belt that is cut, frayed, or torn. Straighten any belt that is twisted. Tighten any loose fasteners. Replace any belt that has a damaged or ineffective buckle or retractor. Replace any belt that has a bent or damaged latch plate or anchor plate. Replace any child restraint anchor or the unit to which the anchor is integral that has been bent or damaged. Never attempt to repair a seat belt or child restraint component. Always replace damaged or ineffective seat belt and child restraint components with the correct, new and unused replacement parts listed in the Chrysler Mopar® Parts Catalog. Failure to follow these instructions may result in possible serious or fatal injury.

WARNING: To avoid serious or fatal injury on vehicles equipped with airbags, disable the Supplemental Restraint System (SRS) before attempting any steering wheel, steering column, airbag, Occupant Classification System (OCS), seat belt tensioner, impact sensor or instrument panel component diagnosis or service. Disconnect and isolate the battery negative (ground) cable, then wait two minutes for the system capacitor to discharge before performing further diagnosis or service. This is the only sure way to disable the SRS. Failure to follow these instructions may result in accidental airbag deployment.

WARNING: To avoid potential physical injury or damage to sensitive electronic circuits and systems, always disconnect and isolate the battery negative (ground) cable and the positive cable, then ground the positive cable to discharge the Occupant Restraint Controller (ORC) capacitor before performing any welding operations on the vehicle. Failure to take the proper precautions could result in accidental airbag deployment, possible damage to the Supplemental Restraint System (SRS) circuits and components, and possible damage to other electronic circuits and components. Whenever a welding process is being performed within 12 inches (30 centimeters) of an electronic module or wiring harness, then that module or harness should be relocated out of the way, or disconnected. Always protect against component or vehicle damage from weld spatter by using weld blankets and screens.

WARNING: To avoid serious or fatal injury, do not attempt to dismantle an airbag unit or tamper with its inflator. Do not puncture, incinerate or bring into contact with electricity. Do not store at temperatures exceeding 93° C (200° F). An airbag inflator unit may contain sodium azide and potassium nitrate. These materials are poisonous and extremely flammable. Contact with acid, water, or heavy metals may produce harmful and irritating gases (sodium hydroxide is formed in the presence of moisture) or combustible compounds. An airbag inflator unit may also contain a gas canister pressurized to over 17.24 kPa (2500 psi). Failure to follow these instructions may result in possible serious or fatal injury.

WARNING: To avoid serious or fatal injury when handling a seat belt tensioner retractor or buckle, proper care should be exercised to keep fingers out from under the retractor or buckle cover and away from the seat belt webbing or cable where it exits from the retractor or buckle cover.

WARNING: To avoid serious or fatal injury, replace all Supplemental Restraint System (SRS) components only with parts specified in the Chrysler Mopar® Parts Catalog. Substitute parts may appear interchangeable, but internal differences may result in inferior occupant protection.

WARNING: To avoid serious or fatal injury, the fasteners, screws, and bolts originally used for the Supplemental Restraint System (SRS) components must never be replaced with any substitutes. These fasteners have special coatings and are specifically designed for the SRS. Anytime a new fastener is needed, replace it with the correct fasteners provided in the service package or specified in the Chrysler Mopar® Parts Catalog.

WARNING: To avoid serious or fatal injury when a steering column has an airbag unit attached, never place the column on the floor or any other surface with the steering wheel or airbag unit face down. Failure to follow these

instructions may result in possible serious or fatal injury.

SEAT, REAR

REMOVAL

REMOVAL

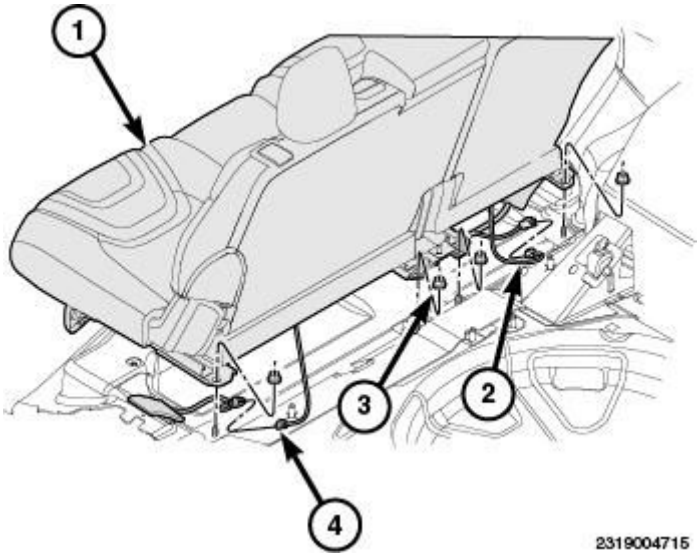

Fig. 649: Identifying Rear Seat, Electrical Connectors & Fasteners
Courtesy of CHRYSLER GROUP, LLC

1. Fold the rear seat backs down and remove the rear nuts (3).
2. Disconnect the electrical connectors (4) and (2).

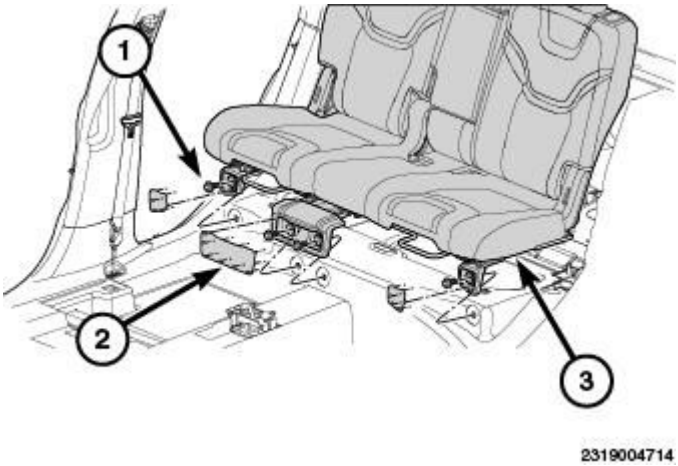

Fig. 650: Identifying Rear Seat, Electrical Connectors & Fasteners
Courtesy of CHRYSLER GROUP, LLC

3. Fold the seat backs up.

4. Open the fasteners covers (2).
5. Remove the bolts (1).
6. Disconnect the electrical connectors, if equipped, and remove the seat assembly.

INSTALLATION

INSTALLATION

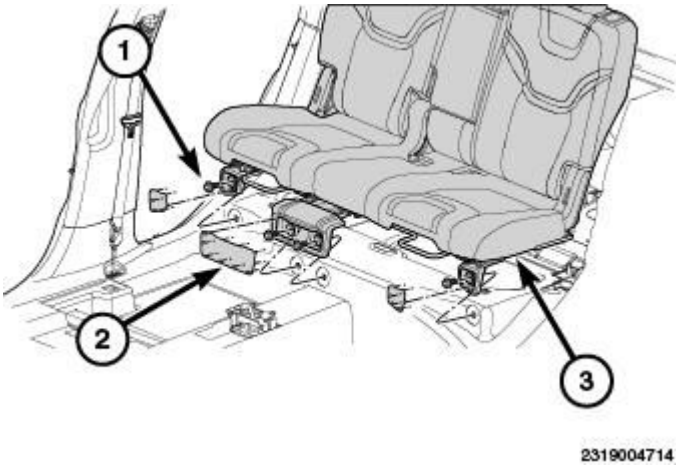

Fig. 651: Identifying Rear Seat, Electrical Connectors & Fasteners
Courtesy of CHRYSLER GROUP, LLC

1. Position the seat assembly (3) back into the vehicle.
2. Install the bolts (1) and tighten to 85 N.m (63 ft. lbs.).
3. Install the trim covers (2) and seat fully.

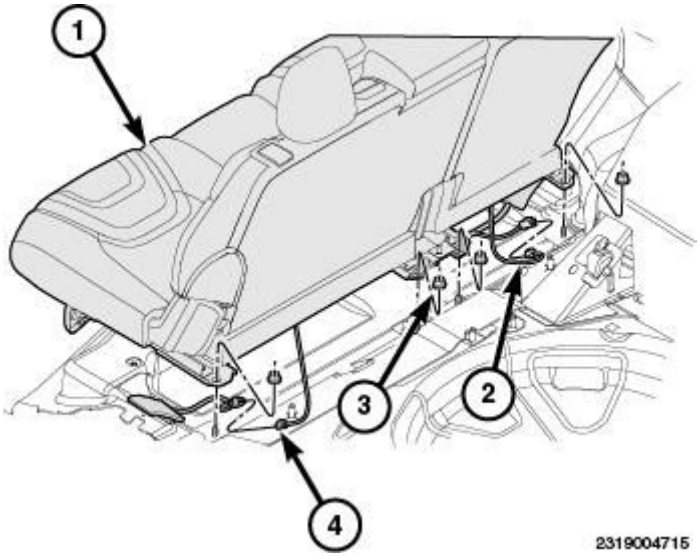

Fig. 652: Identifying Rear Seat, Electrical Connectors & Fasteners
Courtesy of CHRYSLER GROUP, LLC

4. Connect the electrical connectors (2) and (4).
5. Install the nuts and tighten to 85 N.m (63 ft. lbs.).

COVER, SEAT BACK

REMOVAL

REMOVAL

REMOVAL - BENCH SEAT

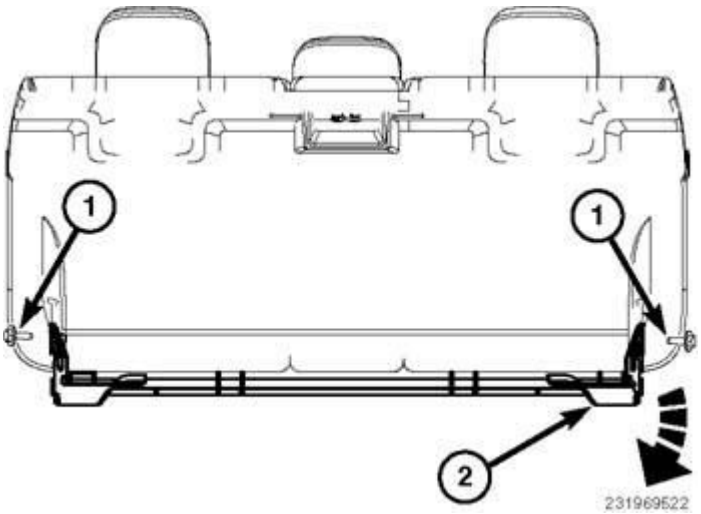

Fig. 653: Seat Back Mounting Bracket & Bolts
Courtesy of CHRYSLER GROUP, LLC

1. Remove the rear seat back assembly. Refer to **SEATS, REAR** .
2. Remove the bolts (1) and remove the seat back mounting bracket (2).

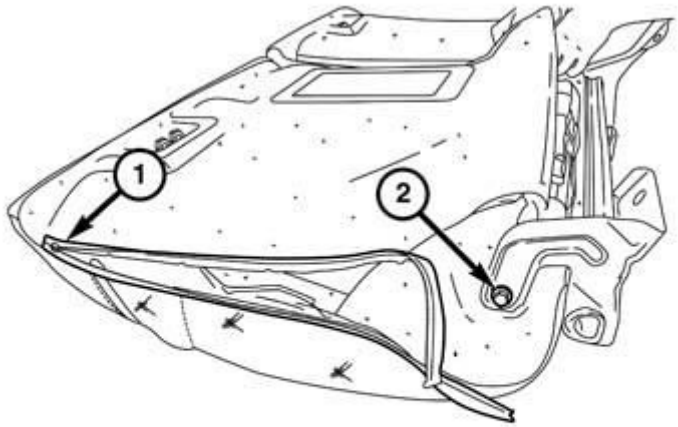

231968328

Fig. 654: Seat Back Cover
Courtesy of CHRYSLER GROUP, LLC

3. Unzip the seat back cover (1).

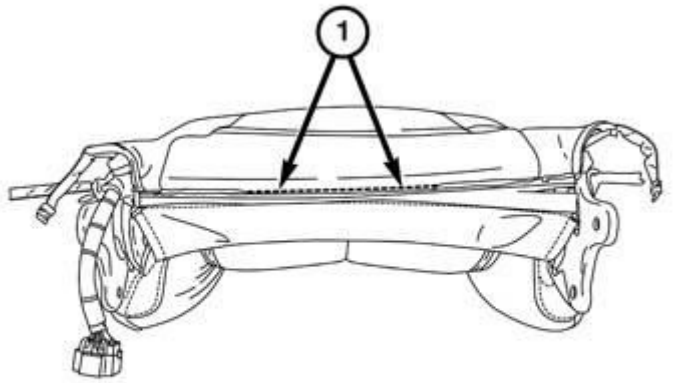

231968333

Fig. 655: Lower Zip Strips
Courtesy of CHRYSLER GROUP, LLC

4. Release the lower zip strips (1).

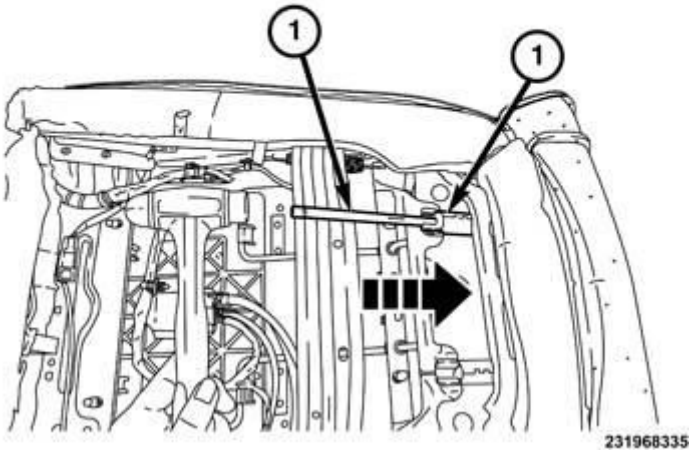

Fig. 656: Tapping Bottom Of Head Restraint Sleeve
Courtesy of CHRYSLER GROUP, LLC

NOTE: Front seat headrest sleeve removal shown, rear seat is similar.

5. Using a hammer and drift pin (1), tap the bottom of the head restraint sleeve.

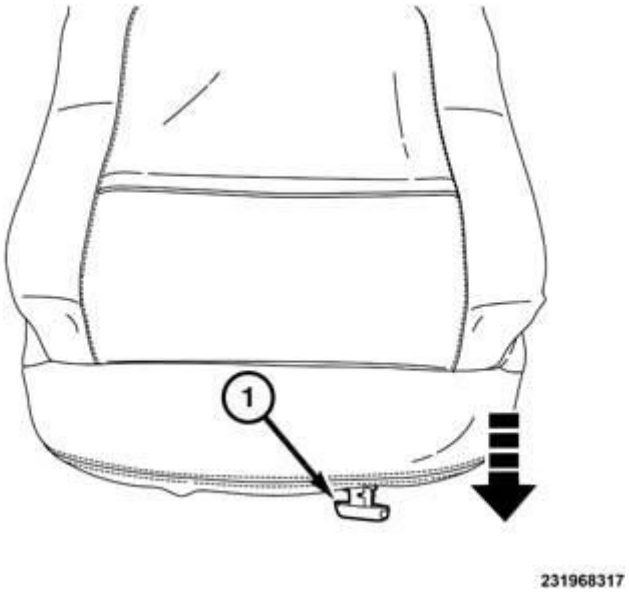

Fig. 657: Removing Head Restraint Sleeve
Courtesy of CHRYSLER GROUP, LLC

NOTE: Front seat headrest sleeve removal shown, rear seat is similar.

6. Remove the head restraint sleeve (1) from the seat back.

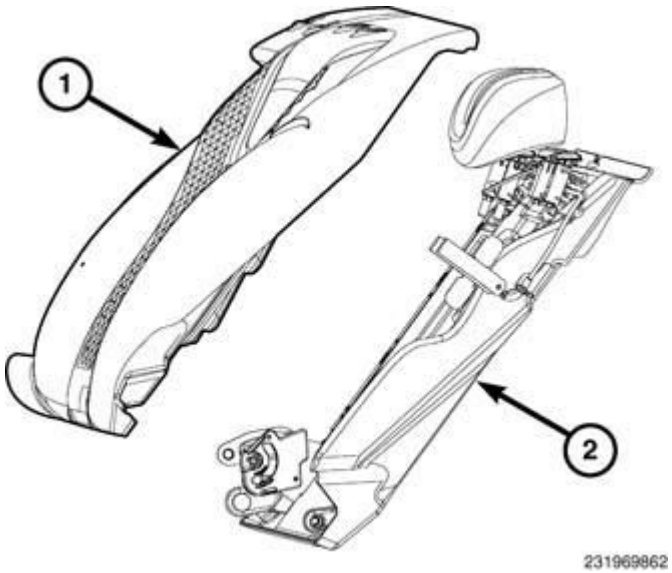

Fig. 658: Seat Back Cushion And Cover Assembly
Courtesy of CHRYSLER GROUP, LLC

7. Remove the seat cushion cover and cushion (1) from the seat back frame assembly.

REMOVAL - SPLIT SEAT

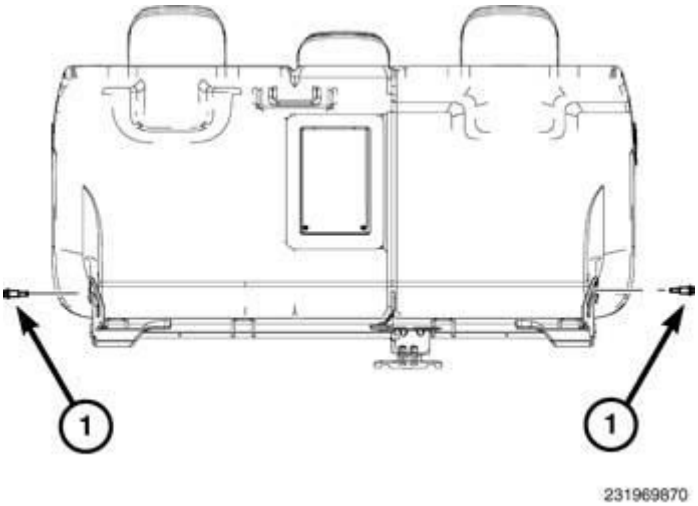

Fig. 659: Seat Back Support Bolts
Courtesy of CHRYSLER GROUP, LLC

NOTE: 40% seat back service is similar to the 60% seat back unless otherwise noted.

1. Remove the rear seat back assembly. Refer to **SEATS, REAR** .
2. Remove the seat back support bolts (1).

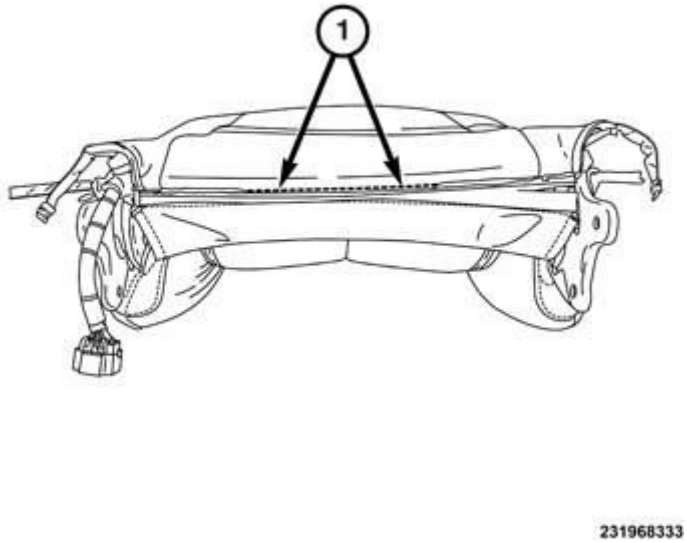

Fig. 660: Lower Zip Strips
Courtesy of CHRYSLER GROUP, LLC

3. Release the lower zip strips (1).

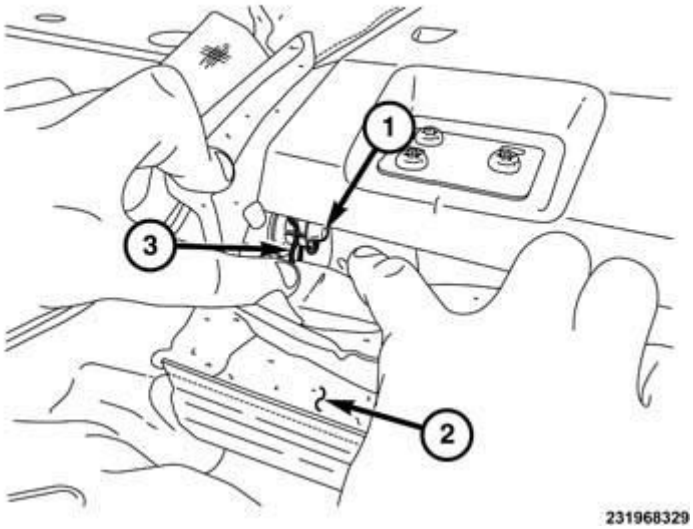

Fig. 661: Lower Cover, Retaining Clip & Pivot Pin
Courtesy of CHRYSLER GROUP, LLC

4. Position aside the 40% section lower cover (2) and remove the retaining clip (3) from the 60% lower pivot pin (1).

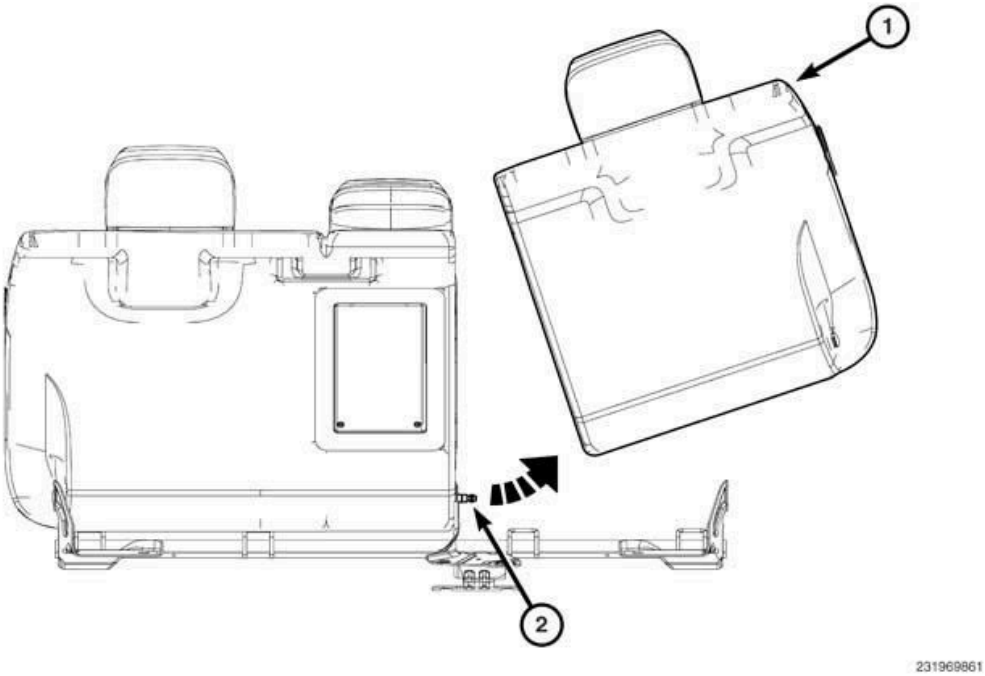

Fig. 662: Removing 40% Seat Back Assembly From Rear Support Bracket
Courtesy of CHRYSLER GROUP, LLC

5. Remove the 40% seat back assembly (1) from the rear support bracket and off of the pivot pin (2).

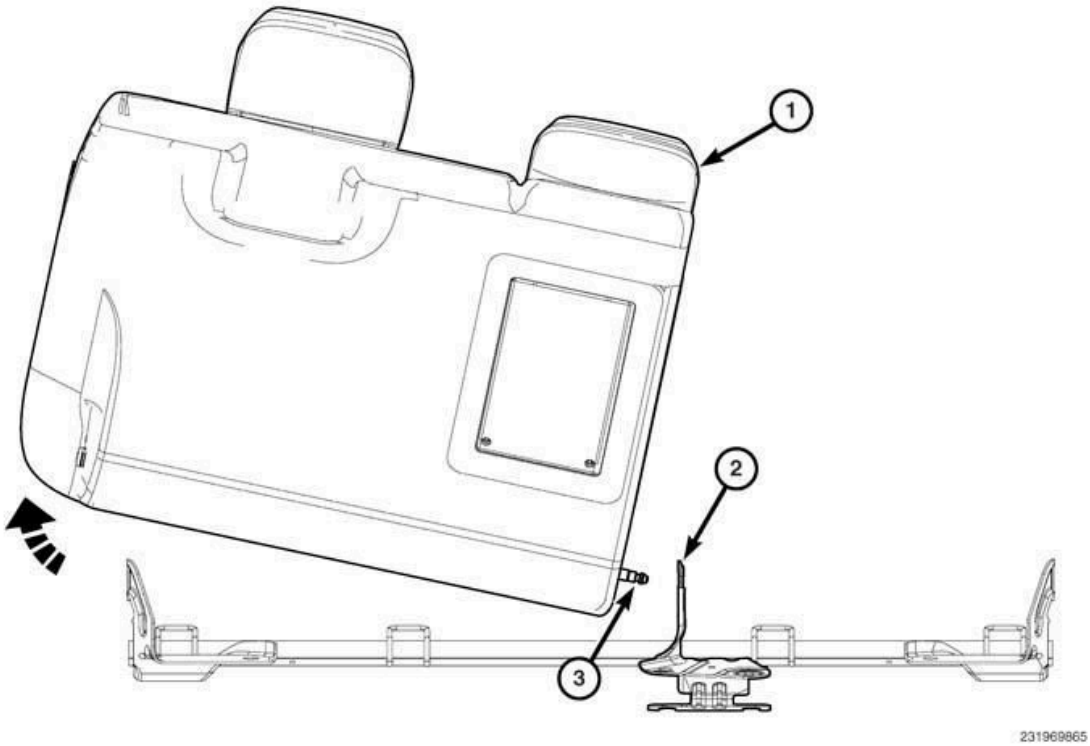

Fig. 663: Removing 60% Seat Back Assembly From Rear Support Bracket
Courtesy of CHRYSLER GROUP, LLC

6. Remove the 60% seat back assembly (1) from the support bracket (2) and release the pivot pin (3).

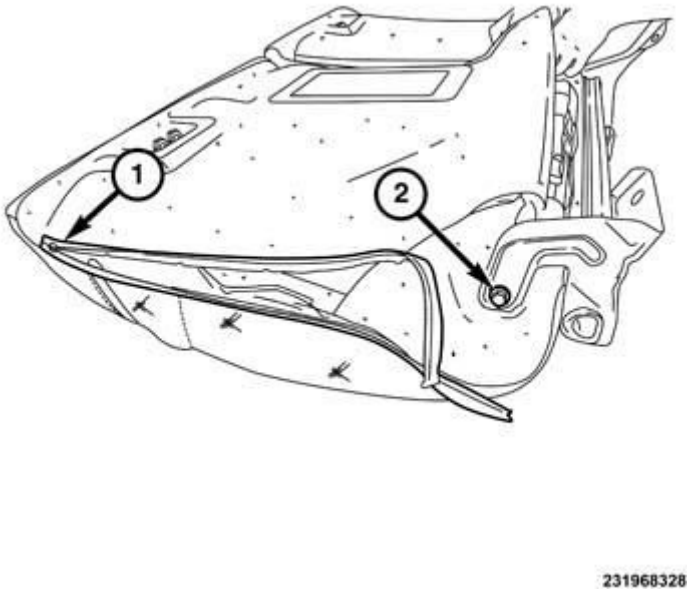

Fig. 664: Seat Back Cover
Courtesy of CHRYSLER GROUP, LLC

7. Unzip the seat back covers (1).

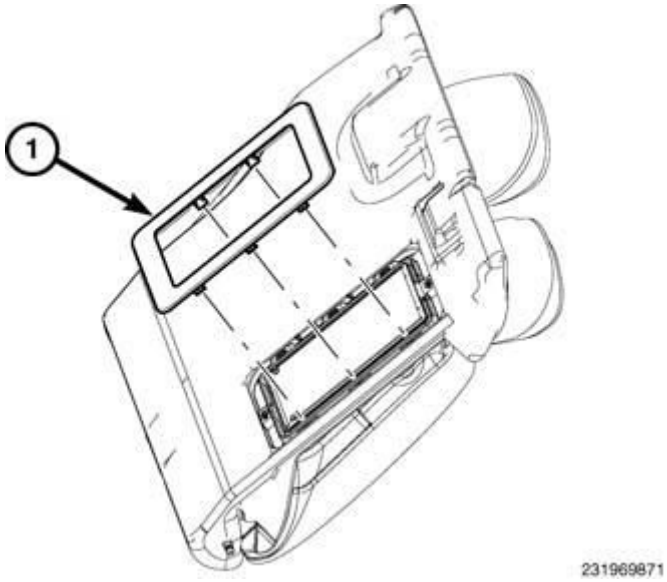

Fig. 665: Pass Through Door Trim Ring
Courtesy of CHRYSLER GROUP, LLC

8. Using a (special tool #C-4755, Trim Stick) or equivalent, remove the pass through door trim ring (1).

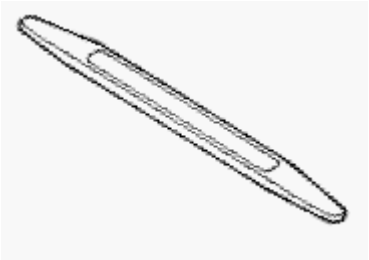

Fig. 666: Trim Stick
Courtesy of CHRYSLER GROUP, LLC

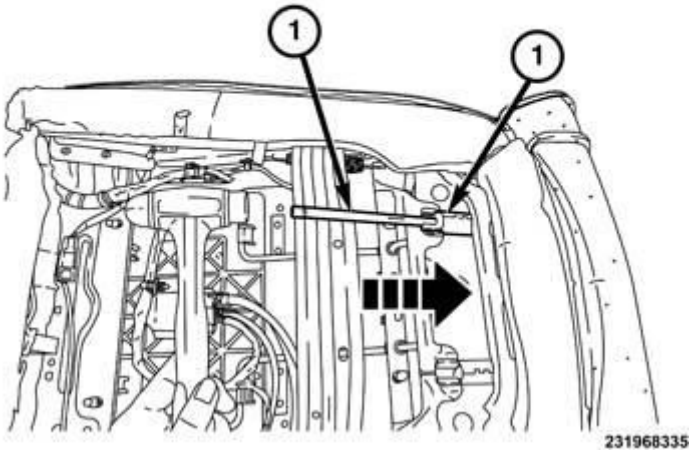

Fig. 667: Tapping Bottom Of Head Restraint Sleeve
Courtesy of CHRYSLER GROUP, LLC

NOTE: Front seat headrest sleeve removal shown, rear seat is similar.

9. Using a hammer and drift pin (1), tap the bottom of the head restraint sleeve.

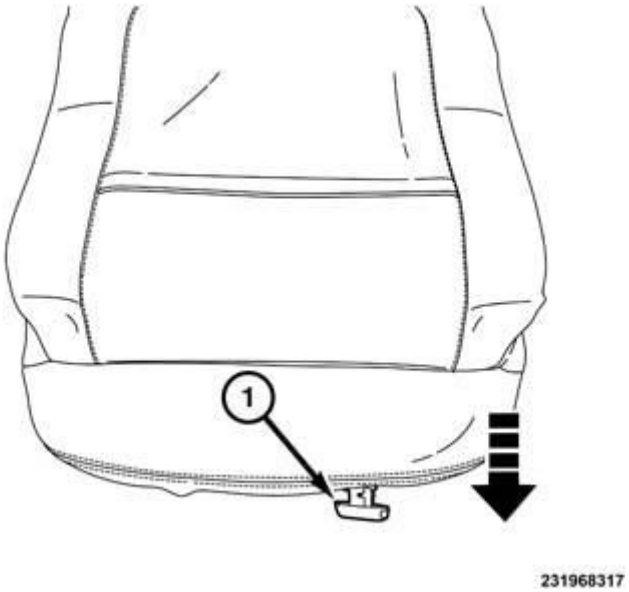

Fig. 668: Removing Head Restraint Sleeve
Courtesy of CHRYSLER GROUP, LLC

NOTE: Front seat headrest sleeve removal shown, rear seat is similar.

10. Remove the head restraint sleeves (1) from the seat back.

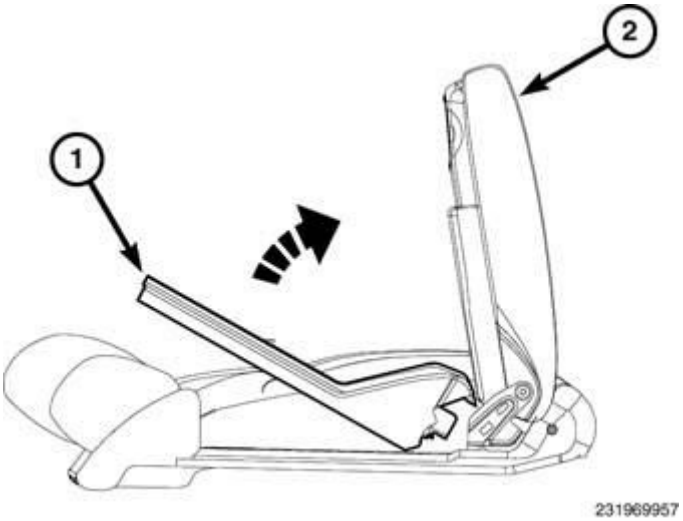

Fig. 669: Removing Pass Through Trim
Courtesy of CHRYSLER GROUP, LLC

11. Open the pass through lid/armrest (2) and using a (special tool #C-4755, Trim Stick) or equivalent, remove the pass through trim (1).

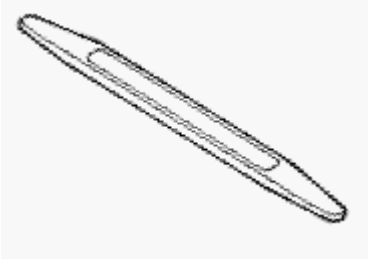

Fig. 670: Trim Stick
Courtesy of CHRYSLER GROUP, LLC

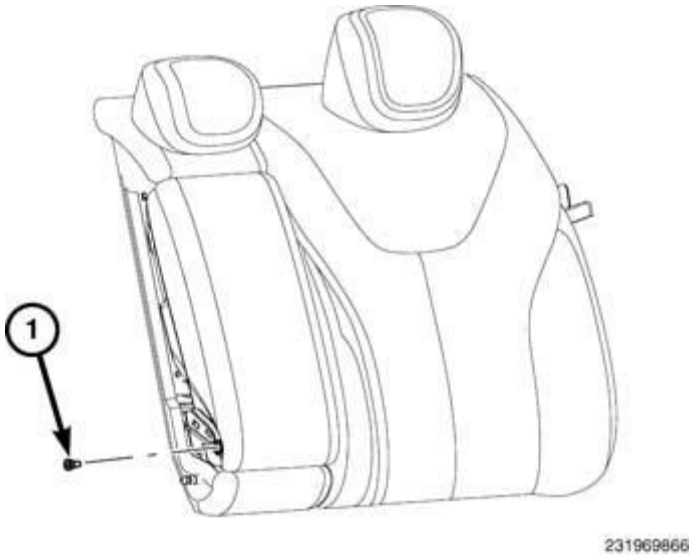

Fig. 671: Arm Rest Pivot Bolt
Courtesy of CHRYSLER GROUP, LLC

12. Remove the arm rest pivot bolt (1).

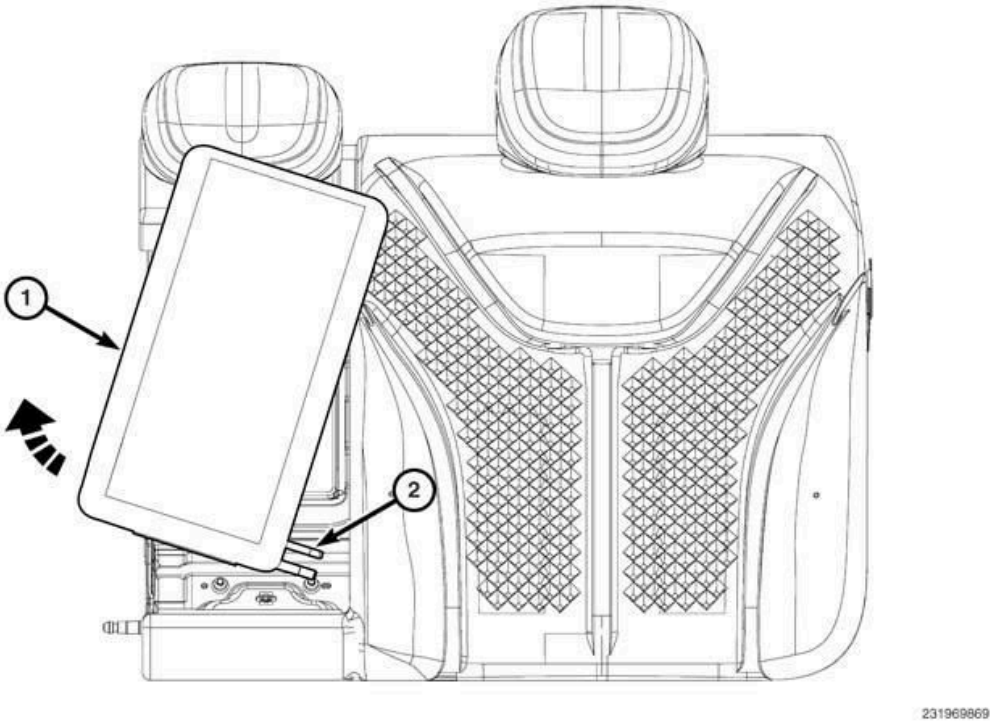

Fig. 672: Pivoting Armrest Assembly Out Of Support Bracket
Courtesy of CHRYSLER GROUP, LLC

13. Pivot the armrest assembly (1) out of the support bracket and off of the pivot and detent pins (2) and remove the armrest.

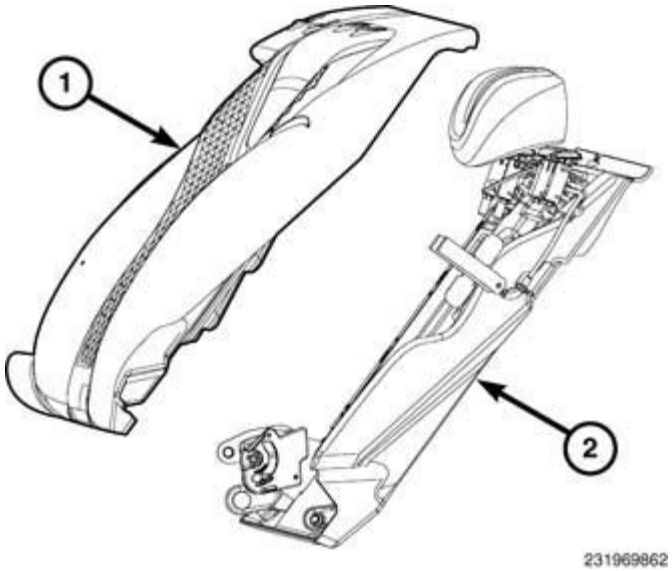

Fig. 673: Seat Back Cushion And Cover Assembly
Courtesy of CHRYSLER GROUP, LLC

14. Remove the seat cushion cover and cushion (1) from the seat back frame assembly.

INSTALLATION

INSTALLATION

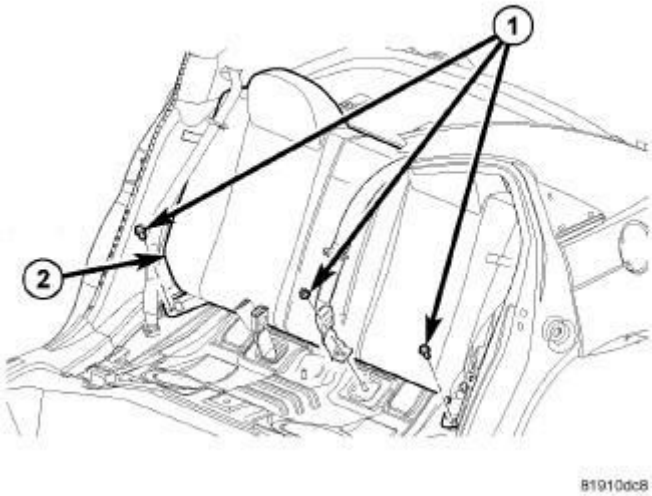

Fig. 674: Rear Seat Back
Courtesy of CHRYSLER GROUP, LLC

1. Carefully install the seat back cover to the foam, installing the hog rings.
2. Engage the J-hook at the bottom of the seat back cover.

3. Install the seat back to the frame.
4. Install the fastener to the side of the appropriate seat back.
5. Install the seat back to the vehicle. Refer to **SEATS, REAR** .

INSTALLATION - BENCH SEAT

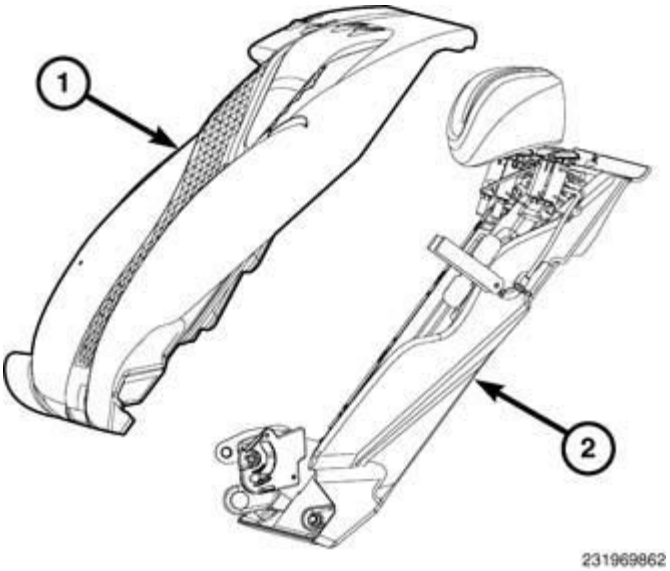

Fig. 675: Seat Back Cushion And Cover Assembly
Courtesy of CHRYSLER GROUP, LLC

1. Position the seat back cushion and cover assembly (1) onto the seat back assembly.

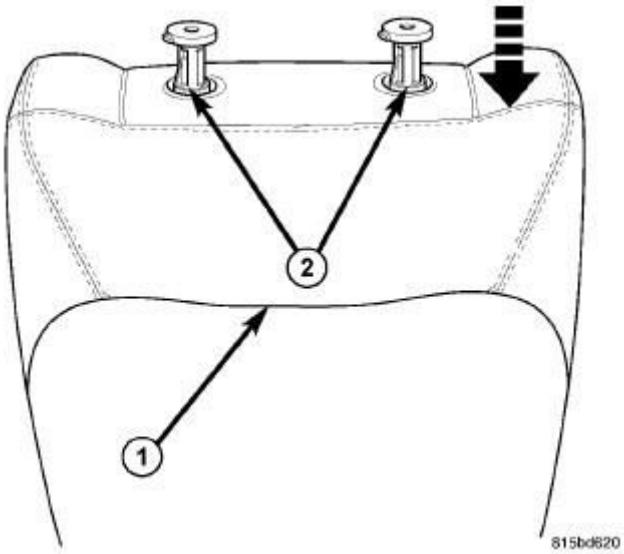

Fig. 676: Headrest Sleeve Install
Courtesy of CHRYSLER GROUP, LLC

NOTE: **Typical front seat back and headrest sleeves shown, rear seat headrest sleeves typical.**

2. Install the headrest sleeves (2) by pushing down on the sleeve.

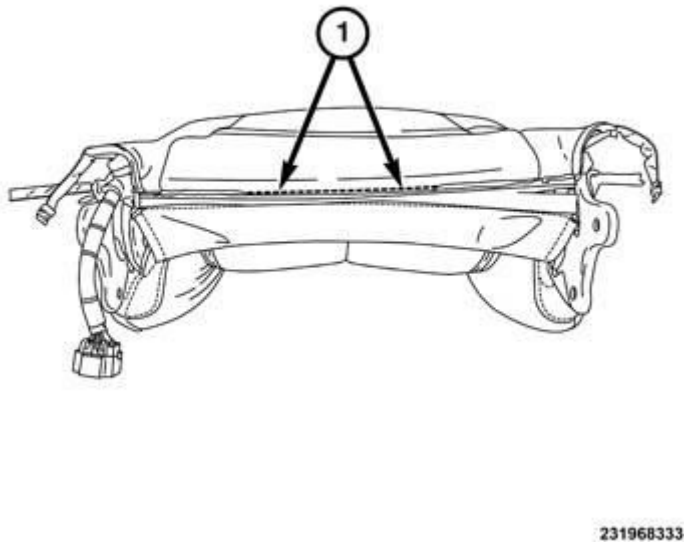

Fig. 677: Lower Zip Strips
Courtesy of CHRYSLER GROUP, LLC

3. Secure the lower zip strips (1), fully.

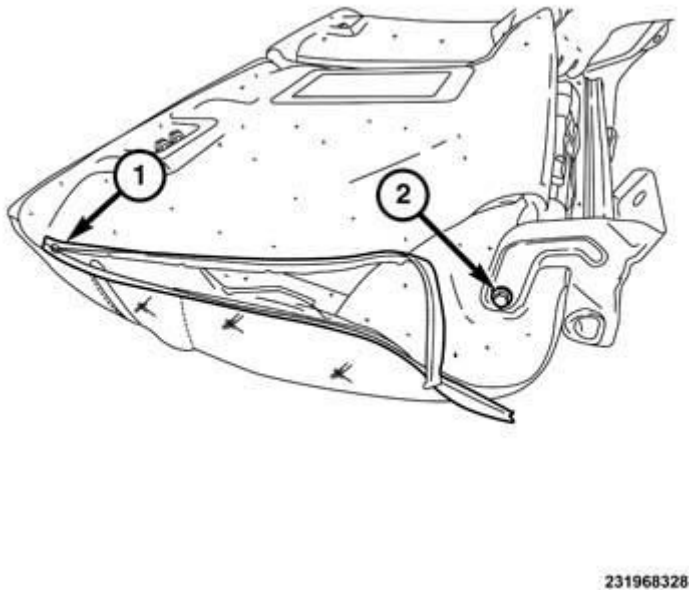

Fig. 678: Seat Back Cover
Courtesy of CHRYSLER GROUP, LLC

4. Close the side zippers (1) fully and tuck the zipper up into the seat back cover.

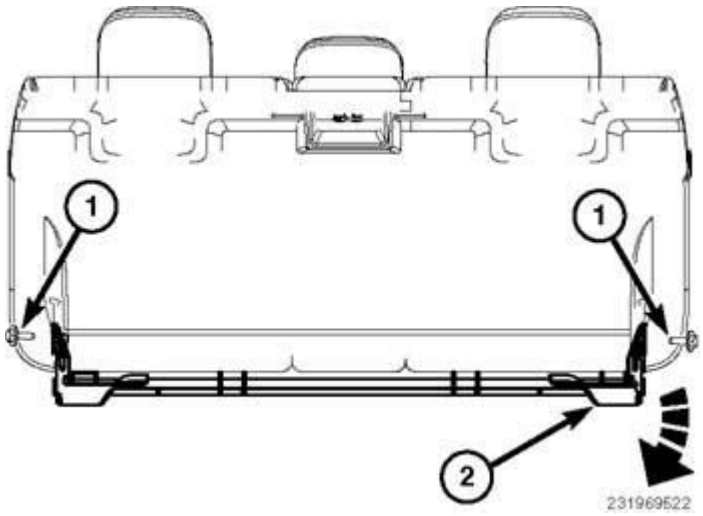

Fig. 679: Seat Back Mounting Bracket & Bolts
Courtesy of CHRYSLER GROUP, LLC

5. Install the rear seat back mounting bracket (2) onto the seat back assembly and install the bolts (1).
6. Tighten the bolts to (25 N.m 18 ft. lbs.).
7. Install the rear seat back assembly back into the vehicle. Refer to **SEATS, REAR** .

INSTALLATION - SPLIT SEAT

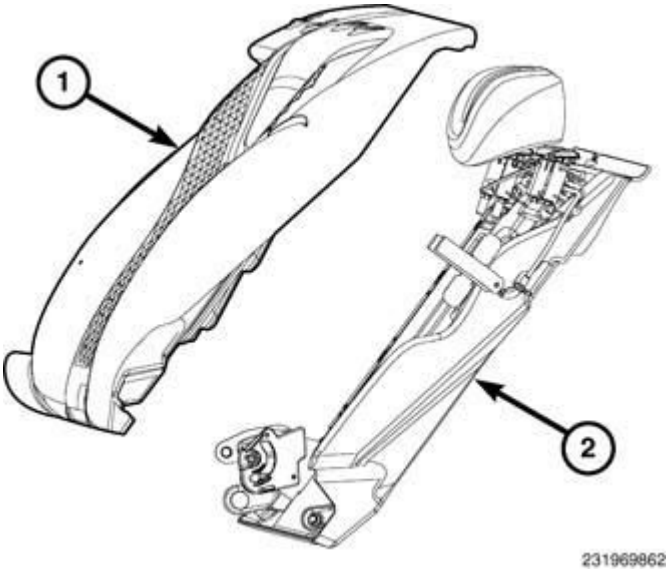

Fig. 680: Seat Back Cushion And Cover Assembly
Courtesy of CHRYSLER GROUP, LLC

NOTE: 40% seat back service is similar to the 60% seat back unless otherwise noted.

1. Position the seat back cushion and cover assembly (1) onto the seat back assembly.

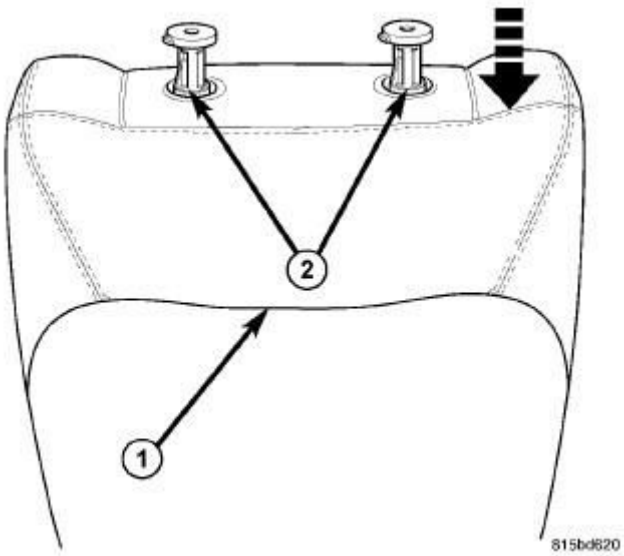

Fig. 681: Headrest Sleeve Install
Courtesy of CHRYSLER GROUP, LLC

NOTE: Typical front seat back and headrest sleeves shown, rear seat headrest sleeves typical.

2. Install the headrest sleeves (2) by pushing down on the sleeve.

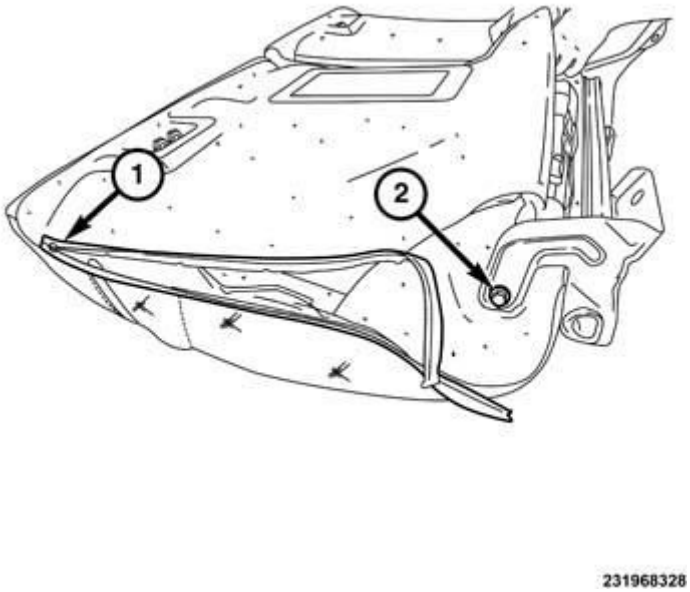

Fig. 682: Seat Back Cover
Courtesy of CHRYSLER GROUP, LLC

3. Close the side zippers (1) fully and tuck the zipper up into the seat back cover.

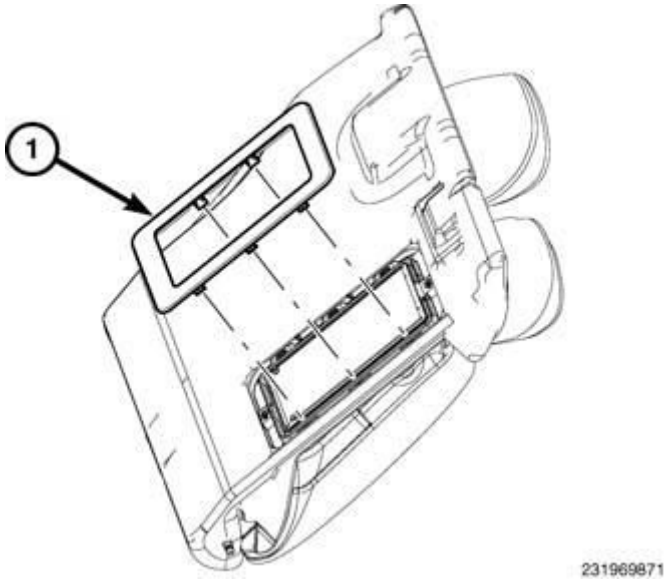

Fig. 683: Pass Through Door Trim Ring
Courtesy of CHRYSLER GROUP, LLC

4. Position the pass through trim ring (1) onto the seat back and seat fully.

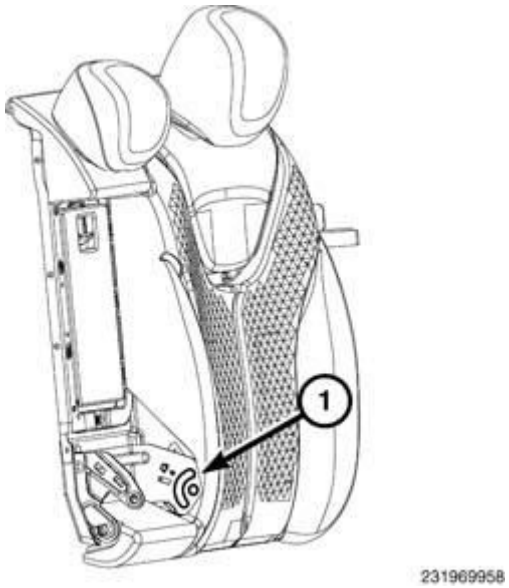

Fig. 684: Detent Slotted Guide
Courtesy of CHRYSLER GROUP, LLC

5. Locate the detent slotted guide (1) in the 60% seat back assembly.

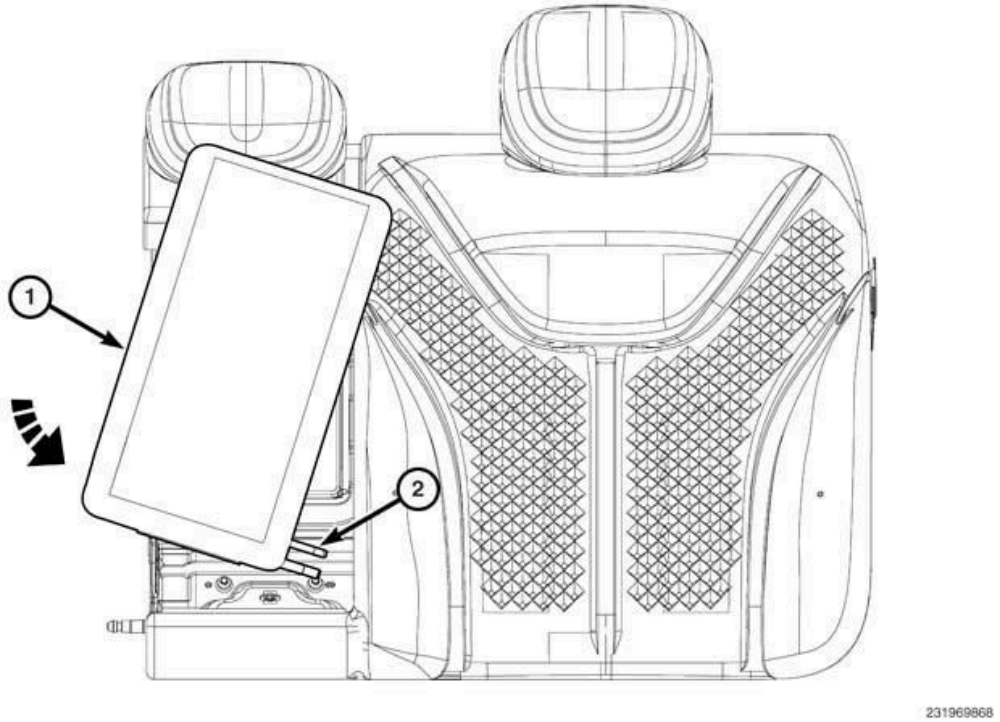

Fig. 685: Positioning Armrest Assembly Back Into Place
Courtesy of CHRYSLER GROUP, LLC

6. Position the armrest assembly (1) back into place with the pivot pins (2) inserted into the detent slotted guide from the previous step and pivot the armrest down into the support bracket.

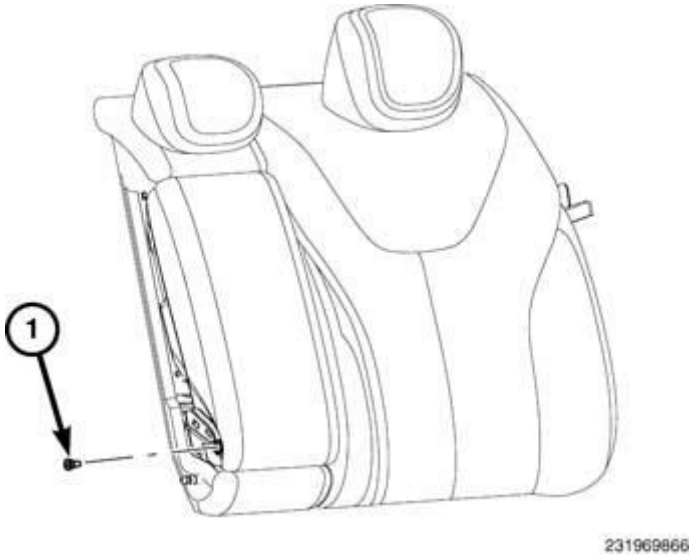

Fig. 686: Arm Rest Pivot Bolt
Courtesy of CHRYSLER GROUP, LLC

7. Install the armrest pivot bolt (1) and tighten to (25 N.m 18 ft. lbs.).

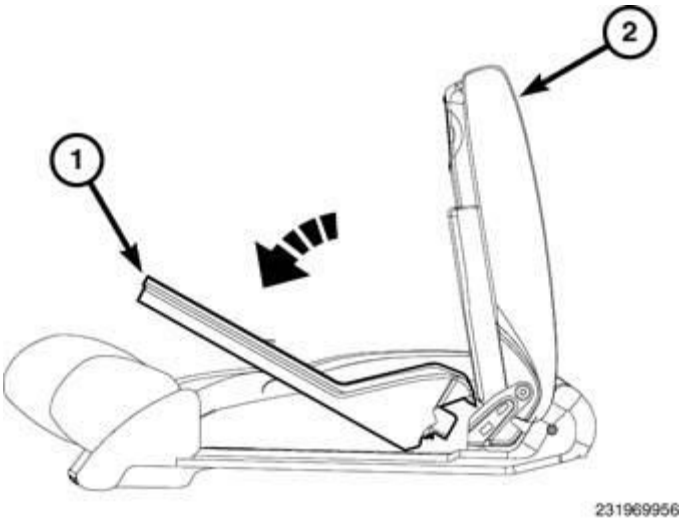

Fig. 687: Installing Pass Through Trim
Courtesy of CHRYSLER GROUP, LLC

8. Open the pass through lid/armrest (2) and install the trim panel (1).
9. Seat the trim panel (1), fully.

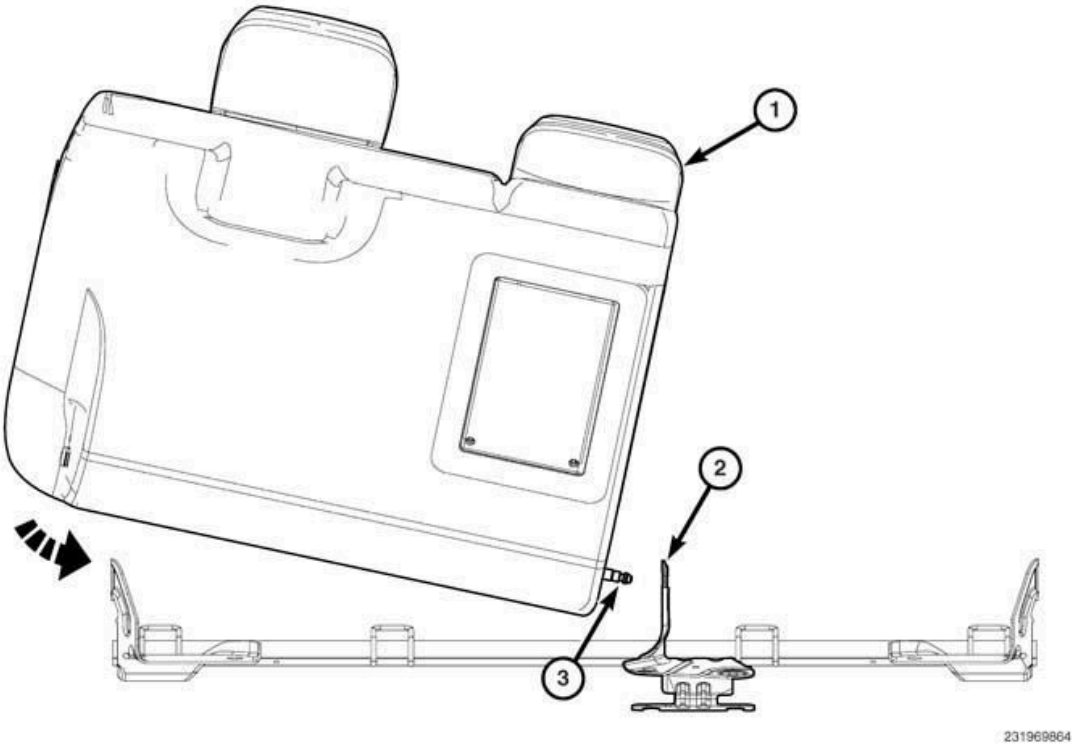

Fig. 688: Installing 60% Seat Back Assembly Into Support Bracket
Courtesy of CHRYSLER GROUP, LLC

10. Install the 60% seat back assembly (1) pivot pin (3) into the support bracket (2) and pivot down into the support bracket fully.

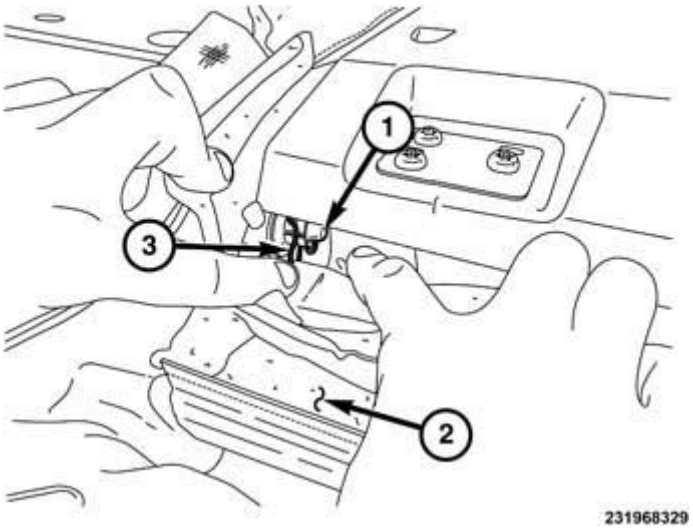

Fig. 689: Lower Cover, Retaining Clip & Pivot Pin
Courtesy of CHRYSLER GROUP, LLC

11. Verify that the retaining clip (3) is installed fully onto the 40% seat back pivot (1).

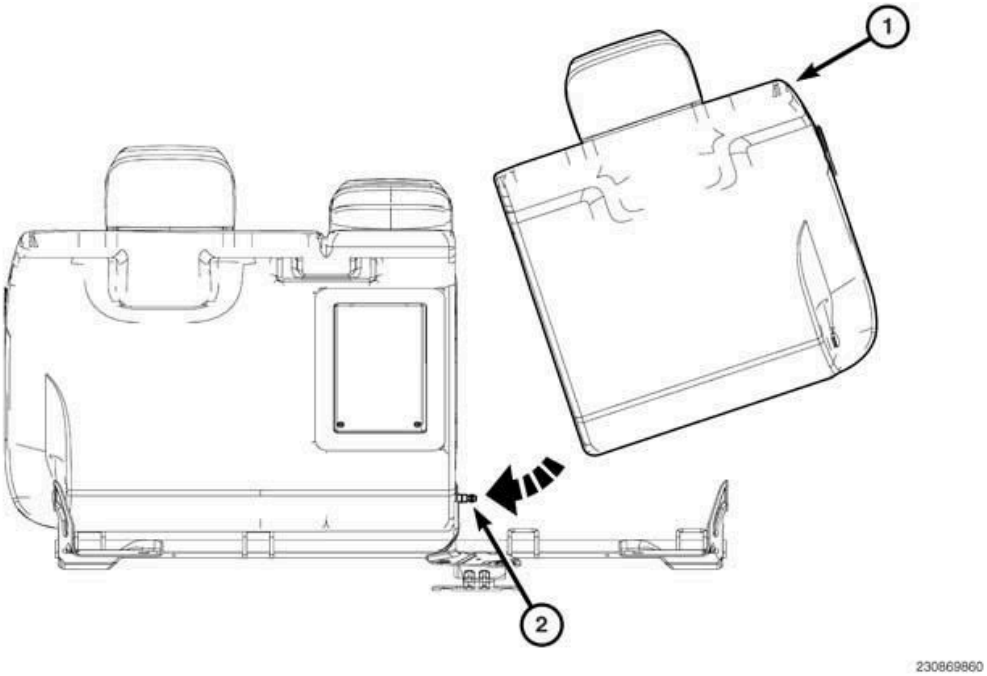

Fig. 690: Installing 40% Seat Back Assembly Into Support Bracket
Courtesy of CHRYSLER GROUP, LLC

12. Install the 40% seat back assembly (1) onto the pivot pin (2) and onto the support bracket fully.

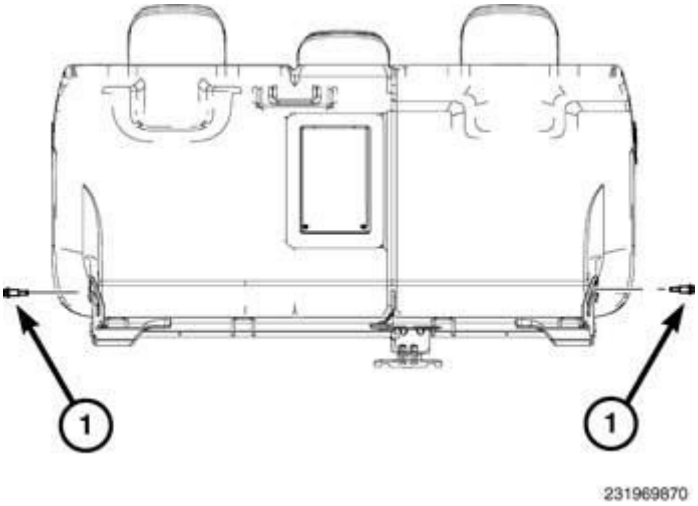

Fig. 691: Seat Back Support Bolts
Courtesy of CHRYSLER GROUP, LLC

13. Install the seat back pivot bolts (1) and tighten to (25 N.m 18 ft. lbs.)

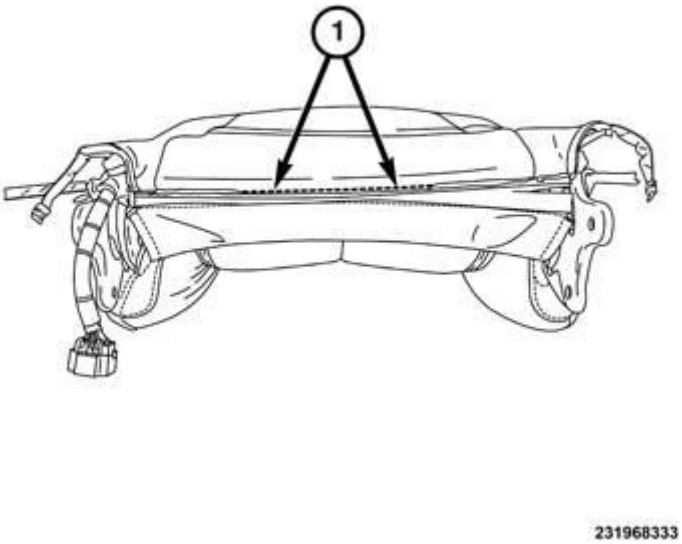

Fig. 692: Lower Zip Strips
Courtesy of CHRYSLER GROUP, LLC

14. Secure the lower zip strips (1), fully.
15. Install the rear seat back assembly back into the vehicle. Refer to **SEATS, REAR** .

COVER, SEAT CUSHION

REMOVAL

REMOVAL

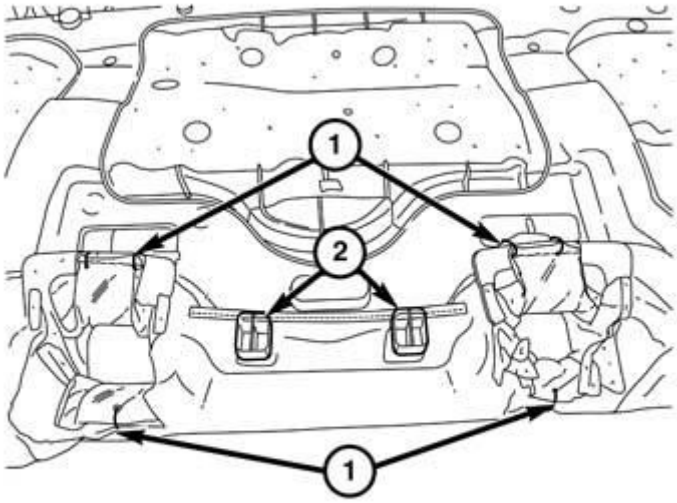

231968324

Fig. 693: Hog Rings & Hooks
Courtesy of CHRYSLER GROUP, LLC

1. Remove the rear seat cushion. Refer to **COVER, SEAT CUSHION** .
2. Remove the hog rings (1) and separate the fabric from the hooks (2).

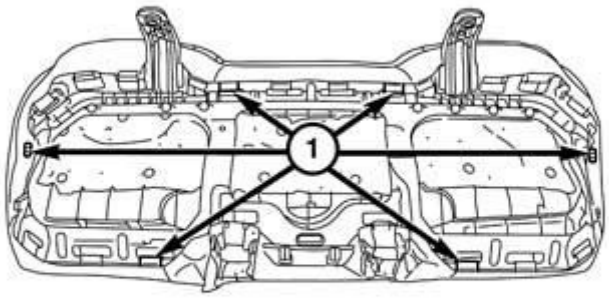

231968325

Fig. 694: J-Straps
Courtesy of CHRYSLER GROUP, LLC

3. Release the remaining j-straps (1) and separate the cushion and cover from the seat cushion frame.

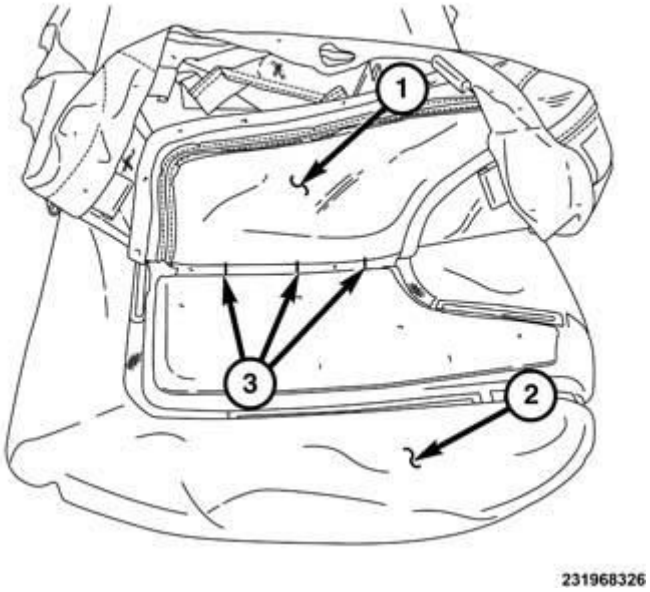

Fig. 695: Cover, Cushion & Hog Rings
Courtesy of CHRYSLER GROUP, LLC

4. Position aside the cover (1) and expose the hogs (3).
5. Remove the hog rings (3) and separate the cover (1) from the cushion (2).

INSTALLATION

INSTALLATION

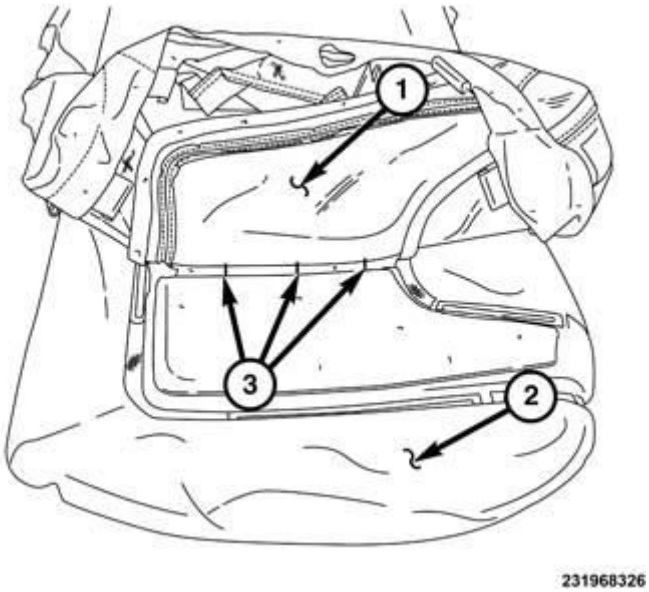

Fig. 696: Cover, Cushion & Hog Rings

Courtesy of CHRYSLER GROUP, LLC

1. Position the cover (1) onto the cushion (2) and install new hog rings (3).
2. Install the cover (1) over the cushion (2) and secure the hook and loop fasteners fully.

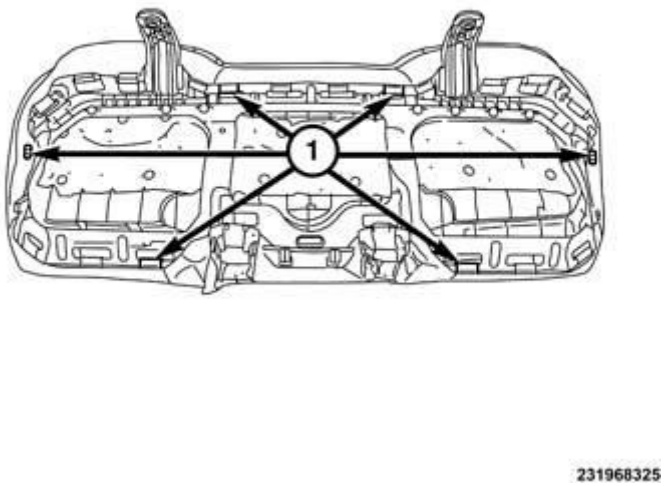

Fig. 697: J-Straps
Courtesy of CHRYSLER GROUP, LLC

3. Fasten the j-straps (1) around the perimeter of the seat frame.

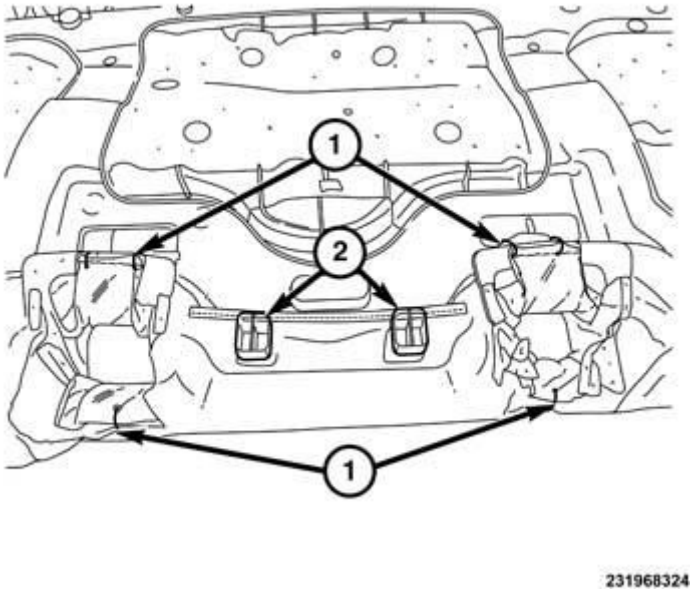

Fig. 698: Hog Rings & Hooks
Courtesy of CHRYSLER GROUP, LLC

4. Fasten the cover over the hooks (2) and install new hog rings (1).
5. Install the seat cushion assembly. Refer to **INSTALLATION** .

HEADREST

REMOVAL

REMOVAL

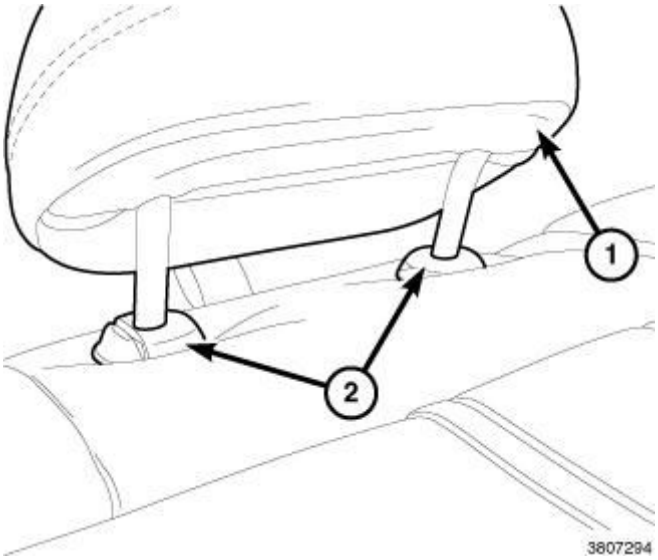

Fig. 699: Head Restraint & Guides
Courtesy of CHRYSLER GROUP, LLC

1. Raise the head restraint (1) slightly.
2. At the same time, press both buttons on the head restraint guides (2) and pull upward to release the head restraint (1).
3. Remove the head restraint (1) from the seat back.

INSTALLATION

INSTALLATION

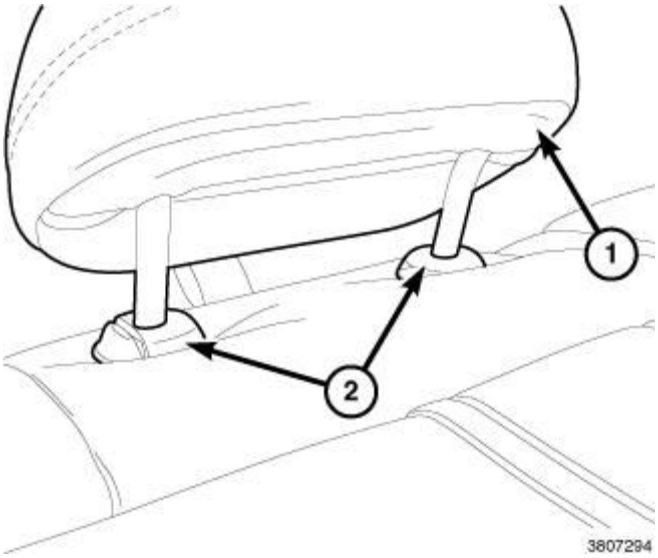

Fig. 700: Head Restraint & Guides
Courtesy of CHRYSLER GROUP, LLC

1. Place the head restraint (1) in position.
2. Push the head restraint (1) down into the lock position.
3. Raise the head restraint (1) to ensure it locks at the last stop.

STATIONARY GLASS

WARNING

WARNING

WARNING: Do not operate the vehicle within 24 hours of windshield installation. It takes at least 24 hours for urethane adhesive to cure. If it is not cured, the windshield may not perform properly in an accident.

- **Urethane adhesives are applied as a system. Use glass cleaner, glass prep solvent, glass primer, PVC (vinyl) primer and pinch weld (fence) primer provided by the adhesive manufacturer. If not, structural integrity could be compromised.**
- **Chrysler does not recommend glass adhesive by brand. Technicians should review product labels and technical data sheets, and use only adhesives that their manufactures warrant will restore a vehicle to the requirements of FMVSS 212. Technicians should also insure that primers and cleaners are compatible with the particular adhesive used.**
- **Be sure to refer to the urethane manufacturer's directions for curing time specifications, and do not use adhesive after its expiration date.**

- **Vapors that are emitted from the urethane adhesive or primer could cause personal injury. Use them in a well-ventilated area.**
- **Skin contact with urethane adhesive should be avoided. Personal injury may result.**
- **Always wear eye and hand protection when working with glass.**

Failure to follow these instructions may result in possible serious or fatal injury.

CAUTION: Protect all painted and trimmed surfaces from coming in contact with urethane or primers.

Be careful not to damage painted surfaces when removing moldings or cutting urethane around windshield.

GLASS, LIFTGATE

REMOVAL

REMOVAL

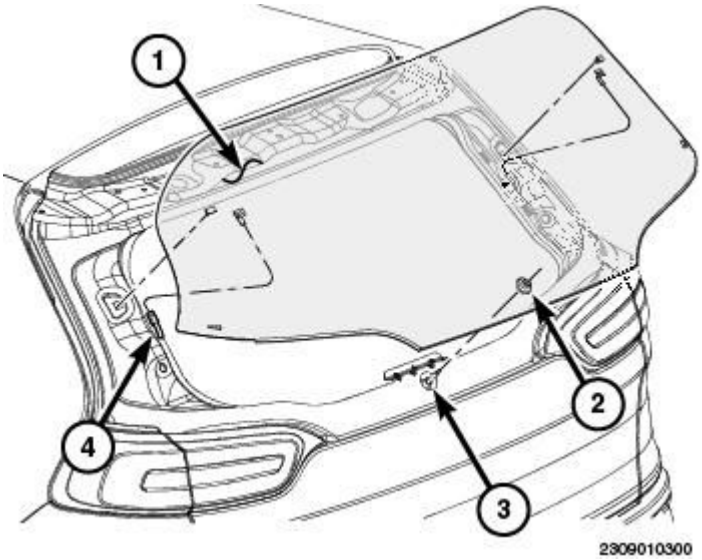

Fig. 701: Identifying Liftgate Glass, Rear Wiper Arm, Heated Backlite Electrical Connector & Fasteners
Courtesy of CHRYSLER GROUP, LLC

1. Before proceeding with the following repair procedure, review all warnings and cautions. Refer to **STATIONARY GLASS, WARNING**.
2. Remove liftgate trim panels. Refer to **PANEL, TRIM, REMOVAL**.
3. Remove the spoiler. Refer to **SPOILER, REMOVAL**.
4. Remove rear window wiper arm (4), if equipped. Refer to **ARM, WIPER, REMOVAL** .

5. Disconnect the heated backlite electrical connectors (1), if equipped.

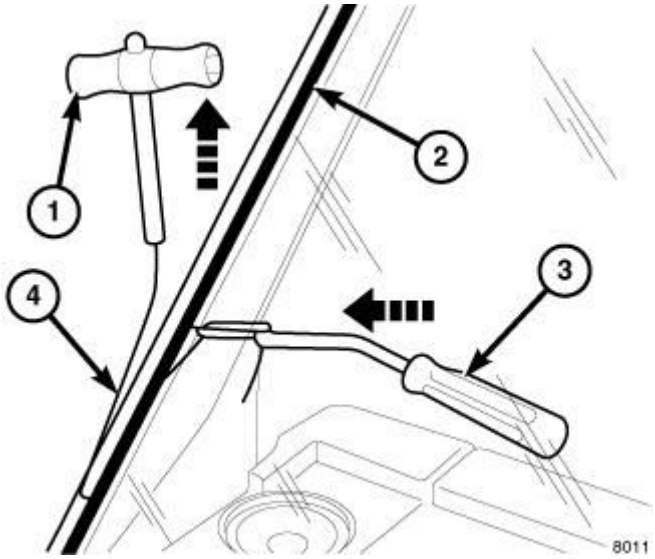

Fig. 702: Adhesive Separation
Courtesy of CHRYSLER GROUP, LLC

1 - T-HANDLE
2 - WINDSHIELD ADHESIVE
3 - COUNTER SUPPORT
4 - CUTTING WIRE

NOTE: Windshield removal shown, backlite similar.

6. Using a windshield cut-out wire or other suitable tool, separate the adhesive.
7. Carefully remove backlite.

INSTALLATION

INSTALLATION

WARNING: Allow the urethane at least 24 hours to cure before returning the vehicle to use.

CAUTION: Roll down the left and right front door glass and open the rear glass slider (if available) before installing backlite to avoid pressurizing the passenger compartment if a door is slammed before urethane is cured. Water leaks can result.

NOTE: The backlite fence should be cleaned of most of its old urethane bonding material. A small amount of old urethane, approximately 1-2 mm in height,

should remain on the fence. Do not grind off or completely remove all old urethane from the fence, the paint finish and bonding strength will be adversely affected. Support spacers should be replaced with new parts. Replace any missing or damaged spacers around the perimeter of the liftgate opening.

GLASS PREPARATION - INSTALLING A PREVIOUSLY INSTALLED BACKLITE

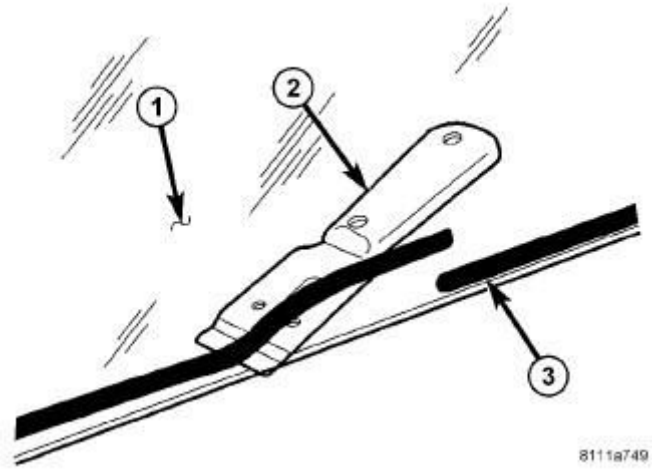

Fig. 703: Glass Adhesive Preparation
Courtesy of CHRYSLER GROUP, LLC

1 - WINDSHIELD
2 - SCRAPER
3 - OLD ADHESIVE

1. Before proceeding with the following repair procedure, review all warnings and cautions. Refer to **STATIONARY GLASS, WARNING**.
2. Level old bead of backlite adhesive (3) to a thickness of approximately 1 mm (0.04 in.) and remove loose adhesive.

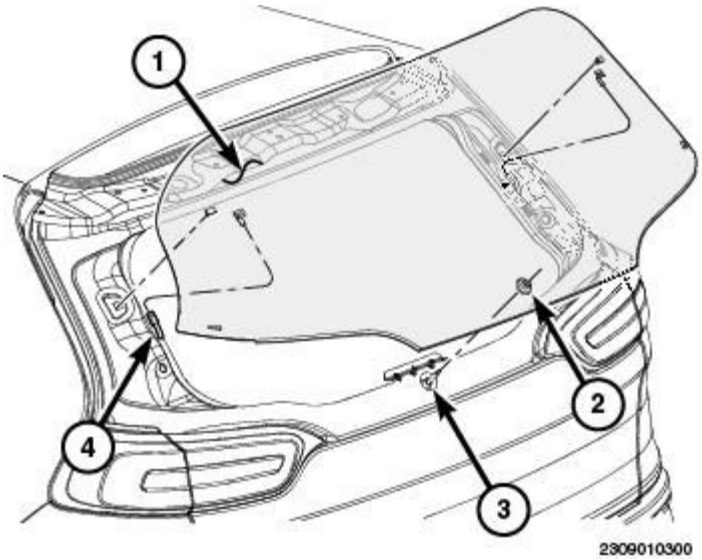

Fig. 704: Identifying Liftgate Glass, Rear Wiper Arm, Heated Backlite Electrical Connector & Fasteners
Courtesy of CHRYSLER GROUP, LLC

3. Position the backlite glass over the wiper shaft (5) and onto the liftgate.
4. Position backlite in center of liftgate opening and resting on the guide pins (2)

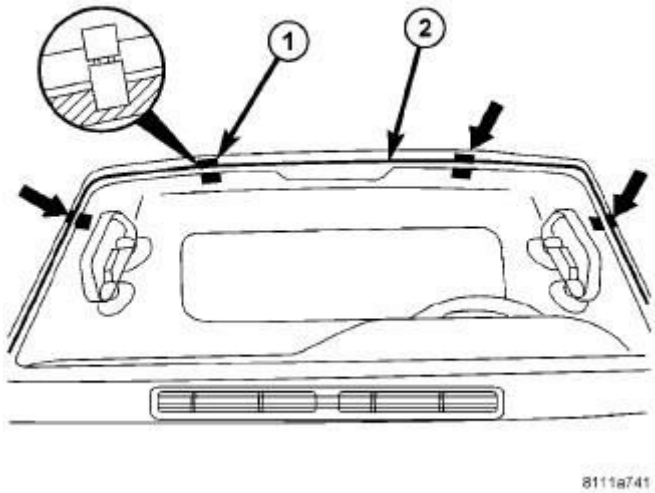

Fig. 705: Applying Adhesive Tape To Windshield
Courtesy of CHRYSLER GROUP, LLC

1 - TAPE 2 - WINDSHIELD FRAME

5. Apply adhesive tape strips (1) around the perimeter of the liftgate opening to aid in installation.

NOTE: Windshield installation shown, backlite similar.

6. Verify the backlite gap is parallel to with the liftgate opening.
7. Cut tape with a sharp knife and remove backlite.

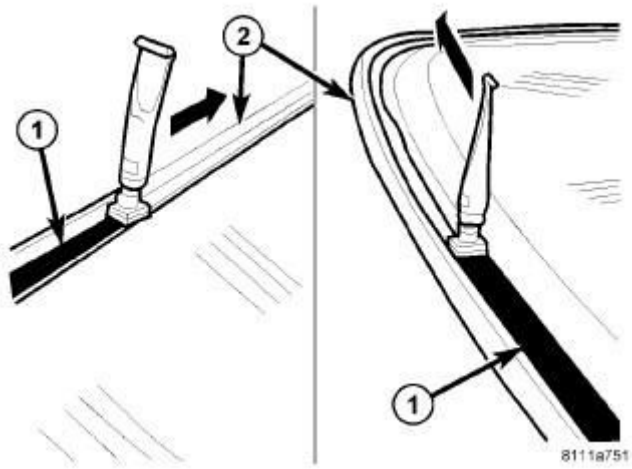

Fig. 706: Windshield Primer
Courtesy of CHRYSLER GROUP, LLC

1 - PRIMER
2 - WINDSHIELD SEAL

NOTE: Typical primer installation shown.

8. Clean and dry area of glass (2) to be re-glued with a suitable glass preparation solvent and rag.
9. Using a flash light, verify that glass primer is without damage.
10. Re-prime any damaged area. If old adhesive has been exposed for more than 12 hours, entire adhesive area needs to be re-primed.

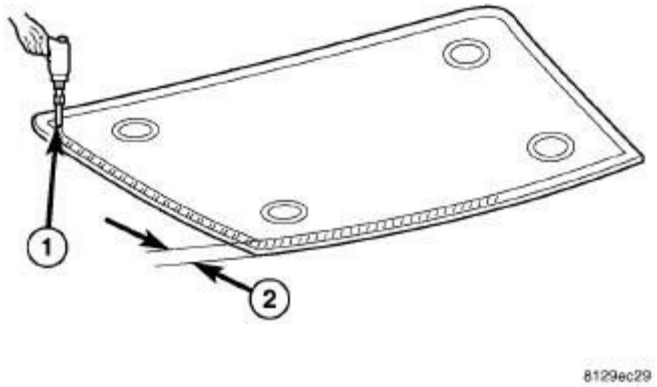

Fig. 707: Applying Primer
Courtesy of CHRYSLER GROUP, LLC

11. Apply primer (1) around the perimeter of the glass to a width of 15 mm (0.5 in.) (2).
12. Allow primer to air dry for at least 10 minutes.
13. Using a flash light, verify that glass primer is without damage.

GLASS PREPARATION - INSTALLING A NEW BACKLITE

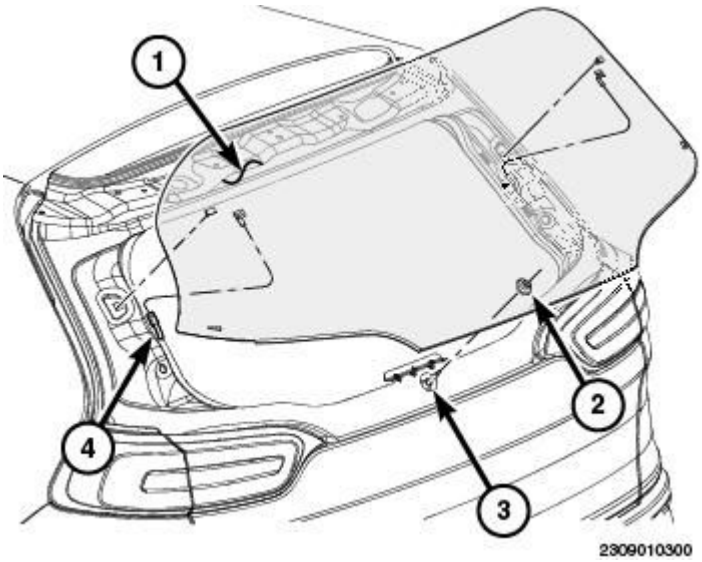

Fig. 708: Identifying Liftgate Glass, Rear Wiper Arm, Heated Backlite Electrical Connector & Fasteners
Courtesy of CHRYSLER GROUP, LLC

1. Position the backlite glass over the wiper shaft (5) and onto the liftgate.
2. Position backlite in center of liftgate opening and resting on the guide pins (2)

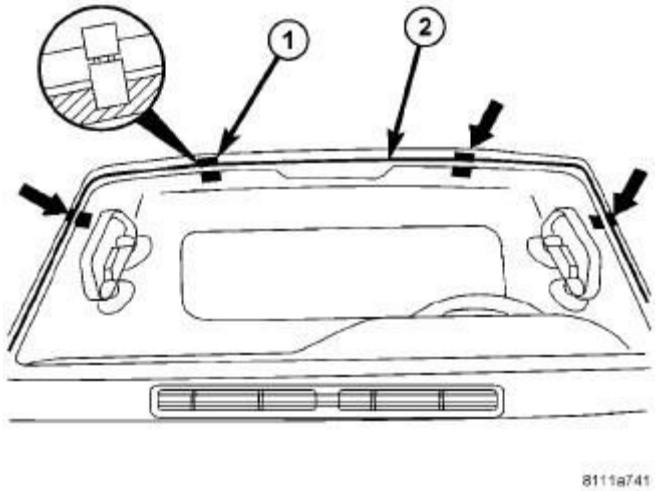

Fig. 709: Applying Adhesive Tape To Windshield
Courtesy of CHRYSLER GROUP, LLC

1 - TAPE 2 - WINDSHIELD FRAME

3. Apply adhesive tape strips (1) around the perimeter of the liftgate opening to aid in installation.

NOTE: Windshield installation shown, backlite similar.

4. Verify the backlite gap is parallel to with the liftgate opening.
5. Cut tape with a sharp knife and remove backlite.

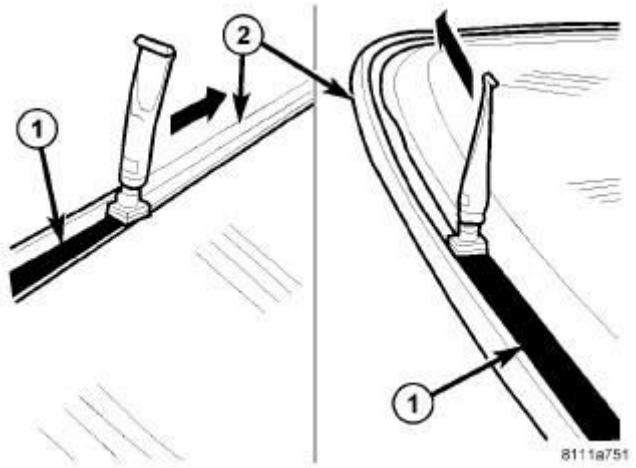

Fig. 710: Windshield Primer
Courtesy of CHRYSLER GROUP, LLC

1 - PRIMER 2 - WINDSHIELD SEAL

NOTE: Typical primer installation shown.

6. Clean and dry area of glass (2) to be re-glued with a suitable glass preparation solvent and rag.
7. Apply primer to gluing surface at backlite seal.

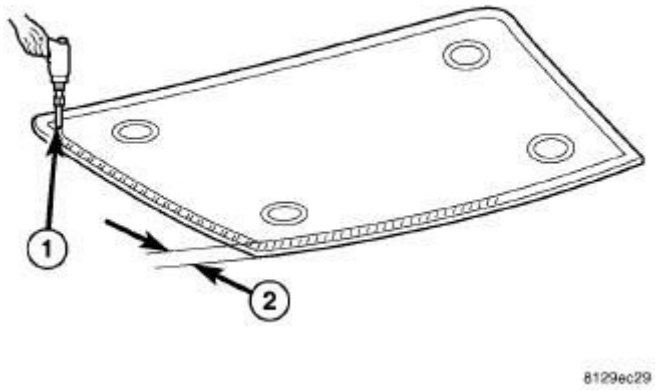

Fig. 711: Applying Primer
Courtesy of CHRYSLER GROUP, LLC

8. Apply primer (1) around the perimeter of the glass to a width of 15 mm (0.5 in.) (2).
9. Allow primer to air dry for at least 10 minutes.
10. Using a flash light, verify that glass primer is without damage.

LIFTGATE OPENING PREPARATION

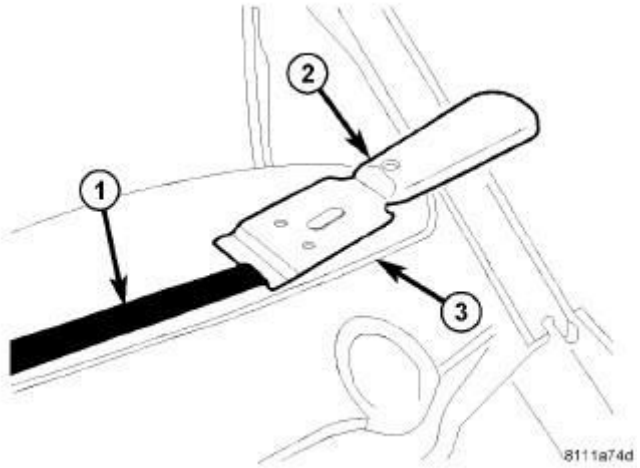

Fig. 712: Smoothing Windshield Adhesive
Courtesy of CHRYSLER GROUP, LLC

1 - OLD ADHESIVE
2 - SCRAPER
3 - WINDSHIELD OPENING

NOTE: Windshield opening shown, liftgate opening similar.

1. Clean and vacuum liftgate opening.
2. Level old bead of liftgate opening adhesive (1) to a thickness of approximately 1 mm (0.04 in.) and remove loose adhesive.

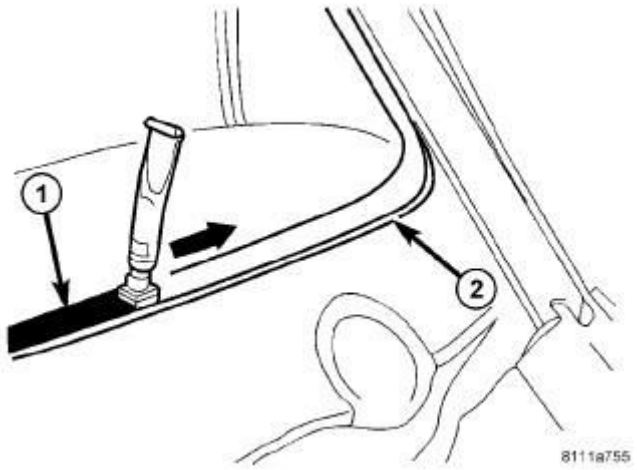

Fig. 713: Applying Windshield Primer
Courtesy of CHRYSLER GROUP, LLC

1 - PRIMER
2 - WINDSHIELD OPENING

NOTE: Windshield opening shown, liftgate opening similar.

3. Clean and dry area of liftgate opening to be re-glued with a suitable glass preparation solvent and rag.
4. Re-prime any damaged area. If old adhesive has been exposed for more than 12 hours, entire adhesive area needs to be re-primed.
5. Allow primer to air dry for at least 10 minutes.

BACKLITE INSTALLATION

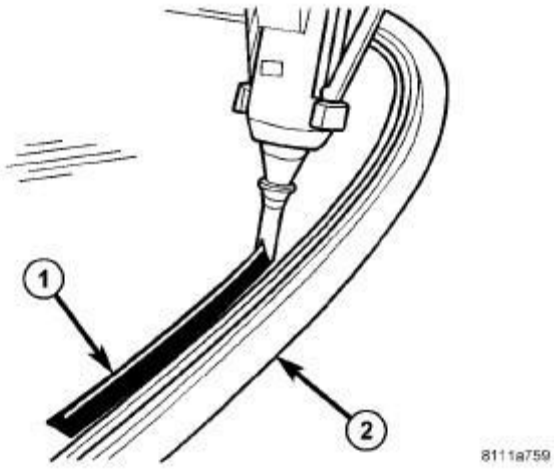

Fig. 714: Applying Windshield Adhesive
Courtesy of CHRYSLER GROUP, LLC

1 - ADHESIVE BEAD
2 - WINDSHIELD SEAL

1. Apply bead of adhesive (1) with a triangular nozzle directly to the backlite seal starting at bottom in center of the backlite.

CAUTION: Always apply bead of adhesive to the backlite. Always install the backlite within 5 minutes after applying adhesive.

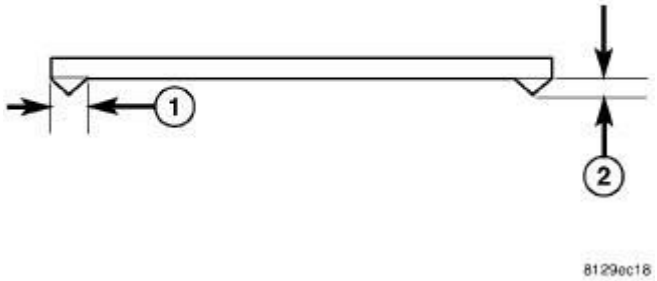

Fig. 715: Identifying Adhesive Bead Dimensions
Courtesy of CHRYSLER GROUP, LLC

1 - ADHESIVE WIDTH 9.5 mm (0.375 in)
2 - ADHESIVE HEIGHT 12.7 mm (0.50 in)

2. Bead dimensions should be approximately 9.5 mm wide (1) by 12.7 mm in height (2).

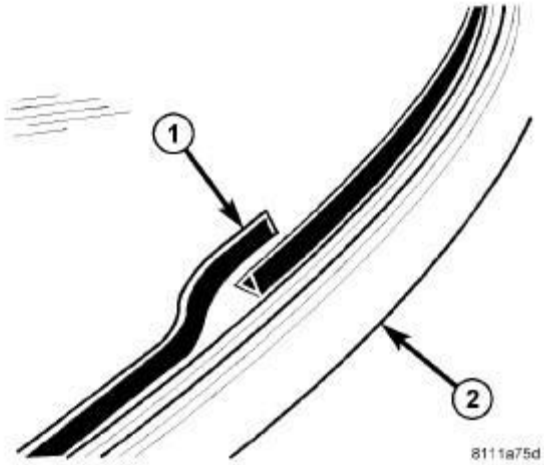

Fig. 716: Identifying Windshield Adhesive Overlap
Courtesy of CHRYSLER GROUP, LLC

1 - ADHESIVE BEAD 2 - WINDSHIELD SEAL

3. Allow end of adhesive bead (1) to run out parallel to the start of the bead and smooth ends flush.

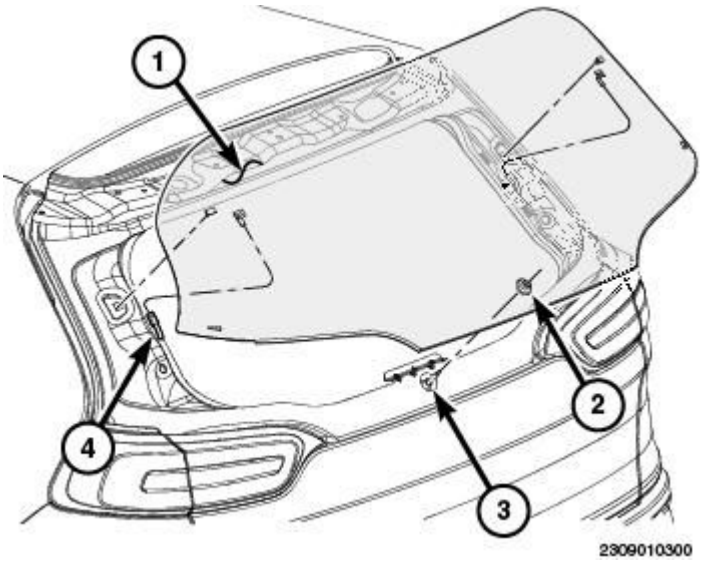

Fig. 717: Identifying Liftgate Glass, Rear Wiper Arm, Heated Backlite Electrical Connector & Fasteners
Courtesy of CHRYSLER GROUP, LLC

4. Position the backlite glass over the wiper shaft (5) and onto the liftgate.
5. Position backlite in center of liftgate opening and resting on the guide pins (2).
6. Use the tape as a guide to aid installation of the backlite into the center of the cutout.
7. Carefully lay down the backlite and press on.

CAUTION: It is no longer possible to move the backlite after installation. The backlite should never be pressed into place by more than one person, because the backlite can break if pressed simultaneously on both sides.

CAUTION: Roll down the left and right front door glass and open the rear glass slider (if available) before installing backlite to avoid pressurizing the passenger compartment if a door is slammed before urethane is cured. Water leaks can result.

8. Install the rear wiper arm, if equipped. Refer to **ARM, WIPER, INSTALLATION** .
9. Install the liftgate trim panels. Refer to **PANEL, TRIM, INSTALLATION**.
10. Install the spoiler. Refer to **SPOILER, INSTALLATION**.

GLASS, QUARTER

REMOVAL

REMOVAL

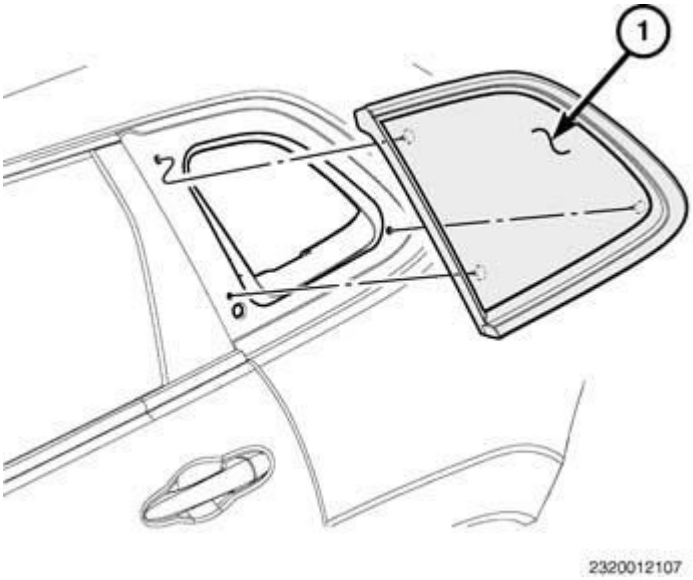

Fig. 718: Identifying Quarter Glass
Courtesy of CHRYSLER GROUP, LLC

1. Before proceeding with the following repair procedure, review all warnings and cautions. Refer to **STATIONARY GLASS, WARNING**.
2. Remove the upper quarter trim from the side of the vehicle being serviced. Refer to **PANEL, QUARTER TRIM, REMOVAL**.
3. Reposition the headliner on the side of the vehicle being serviced as necessary.

CAUTION: Be careful not to damage painted surfaces when removing moldings or cutting urethane around the fixed glass/windshield.

4. Using a razor knife, cut the urethane adhesive that secures the quarter glass (1) to window fence (2).
5. Carefully push the quarter window glass (1) from the opening.

INSTALLATION

INSTALLATION

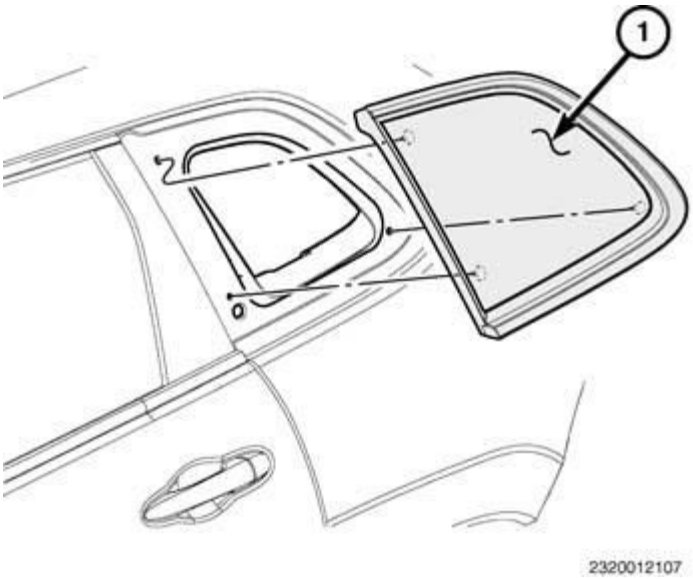

Fig. 719: Identifying Quarter Glass
Courtesy of CHRYSLER GROUP, LLC

WARNING: Do not operate the vehicle within 24 hours of quarter glass installation. It takes at least 24 hours for urethane adhesive to cure. If it is not cured, the quarter glass may not perform properly if the vehicle is in an accident.

CAUTION: To help prevent water leaks, partially roll down the left and right door glass before installing the quarter glass. This avoids pressurizing the passenger compartment if a door is slammed before the urethane is cured.

CAUTION: Protect all painted and trimmed surfaces from coming in contact with urethane or primers.

NOTE: To prevent corrosion, do not damage paint on the quarter glass fence when removing original urethane.

NOTE: The quarter glass fence should be cleaned of most of its old urethane adhesive.

A small amount of old urethane, approximately 1 mm (.04 in.) in height should remain on the fence. Do not completely remove all old urethane from the fence, the paint finish and bonding strength will be adversely affected.

1. Using a razor knife, level the original bead of urethane on the fence to a thickness of approximately 1 mm (0.04 in.).
2. If the quarter glass (1) is being reused, remove as much of the original urethane as possible from the glass surface using a razor knife.

WARNING: **Do not use solvent based glass cleaners to clean the quarter glass before applying glass prep and primer or poor glass adhesion may result.**

3. Clean the inside of the quarter glass (1) with an ammonia based glass cleaner and a lint-free cloth.
4. Apply glass prep adhesion promoter 25 mm (1 in.) wide around the perimeter of the glass and 5 mm (0.2 in.) from the edge of the glass and wipe dry with a clean lint-free cloth until no streaks are visible.
5. Apply glass primer 25 mm (1 in.) wide around the perimeter of the glass and 5 mm (0.2 in.) from the edge of the glass. Allow at least three minutes drying time.
6. Using a flashlight, verify that the primer is completely and evenly installed along the perimeter of the quarter glass.
7. Re-prime any area that is not fully and evenly primed.
8. Clean the quarter glass fence with an ammonia based glass cleaner and a lint-free cloth.
9. Apply pinch weld primer 15 mm (0.75 in.) wide around the quarter glass fence. Allow at least three minutes drying time.
10. Using a flashlight, verify that the primer is completely and evenly installed along the quarter glass fence.
11. Re-prime any area that is not fully and evenly primed.

CAUTION: **Always apply the bead of adhesive to the quarter glass. Always install the quarter glass within 5 minutes after applying the adhesive.**

NOTE: **If the original urethane adhesive has been exposed for more than 12 hours, the entire adhesive area will need to be re-primed prior to installing new adhesive.**

12. Apply approximately a 10 mm (0.4 in.) wide bead of adhesive with a triangular nozzle approximately 6 mm (0.230 in.) from the edge of the glass starting at the bottom center of the quarter glass.
13. Run the end of the adhesive bead on the quarter glass parallel to the start of the bead and smooth the ends flush.
14. Place the quarter glass (1) into the window opening (2) and insert mounting studs through the holes in the window fence.
15. Position the headliner as necessary.
16. Install the quarter trim. Refer to **PANEL, QUARTER TRIM, INSTALLATION**.

WINDSHIELD

REMOVAL

REMOVAL

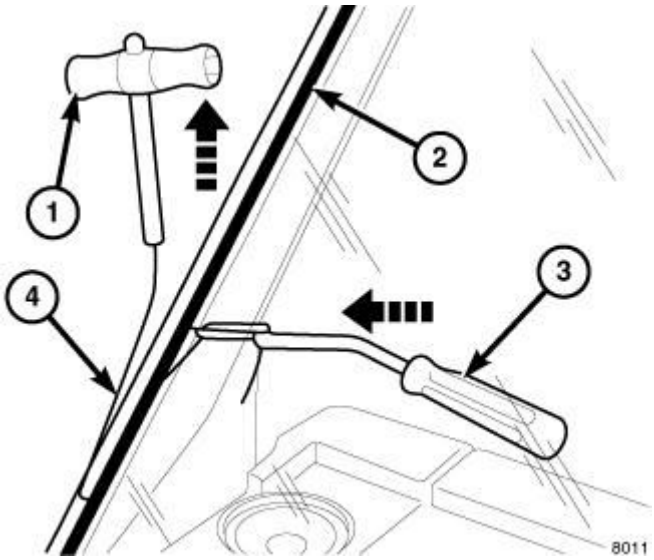

Fig. 720: Adhesive Separation
Courtesy of CHRYSLER GROUP, LLC

1. Before proceeding with the following repair procedure, review all warnings and cautions.
2. Disconnect and isolate the negative battery cable.
3. Remove the rear view mirror. Refer to **MIRROR, REARVIEW, REMOVAL**.
4. Remove the exterior cowl panel. Refer to **COVER, COWL PANEL, REMOVAL**.

CAUTION: Be careful not to damage painted surfaces when removing moldings or cutting urethane around the windshield.

5. Remove the molding from the top of the windshield.
6. Using an assistant and a wire-type windshield cut-out tool (1, 3 and 4), cut and separate the urethane adhesive (2) securing the windshield to the windshield fence.

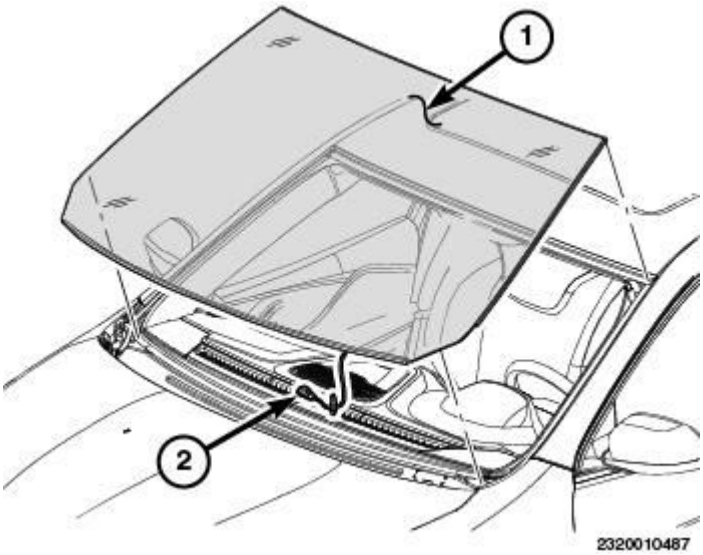

Fig. 721: Identifying Windshield & Harness Connector
Courtesy of CHRYSLER GROUP, LLC

7. Using appropriate tools, carefully remove the windshield (1) from the vehicle.

INSTALLATION

INSTALLATION

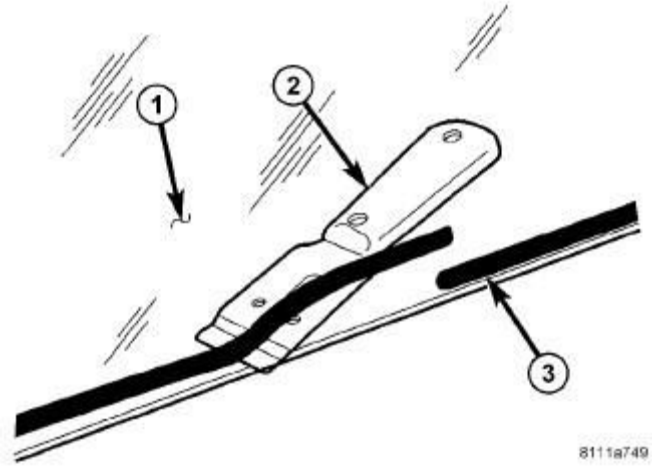

Fig. 722: Removing Old Windshield Adhesive
Courtesy of CHRYSLER GROUP, LLC

WARNING: Do not operate the vehicle within 24 hours of windshield installation. It takes at least 24 hours for urethane adhesive to cure. If it is not cured, the windshield may not perform properly if the vehicle is in an accident.

CAUTION: To help prevent water leaks, partially roll down the left and right door

glass before installing the windshield. This avoids pressurizing the passenger compartment if a door is slammed before the urethane is cured.

CAUTION: Protect all painted and trimmed surfaces from coming in contact with urethane or primers.

1. If the windshield (1) is being reused, remove as much of the original urethane (3) as possible from the glass surface using a razor knife (2).

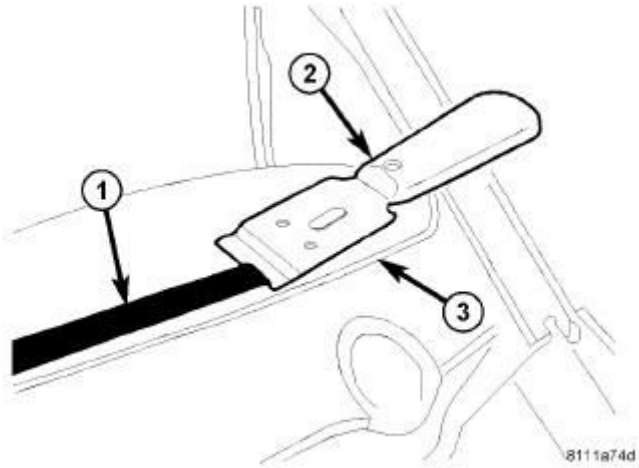

Fig. 723: Leveling Windshield Adhesive
Courtesy of CHRYSLER GROUP, LLC

NOTE: To prevent corrosion, do not damage paint on windshield fence when removing original urethane.

NOTE: The windshield fence should be cleaned of most of its old urethane adhesive. A small amount of old urethane, approximately 1 mm (.04 in.) in height should remain on the fence. Do not completely remove all old urethane from the fence, the paint finish and bonding strength will be adversely affected. Support spacers located near the cowl at the bottom of the windshield fence should be replaced with new spacers. Replace any missing or damaged spacers around the perimeter of the windshield fence.

2. Using a razor knife (2), level the original bead of urethane (1) on the windshield fence (3) to a thickness of approximately 1 mm (0.04 in.) and remove any damaged adhesive backed spacers.

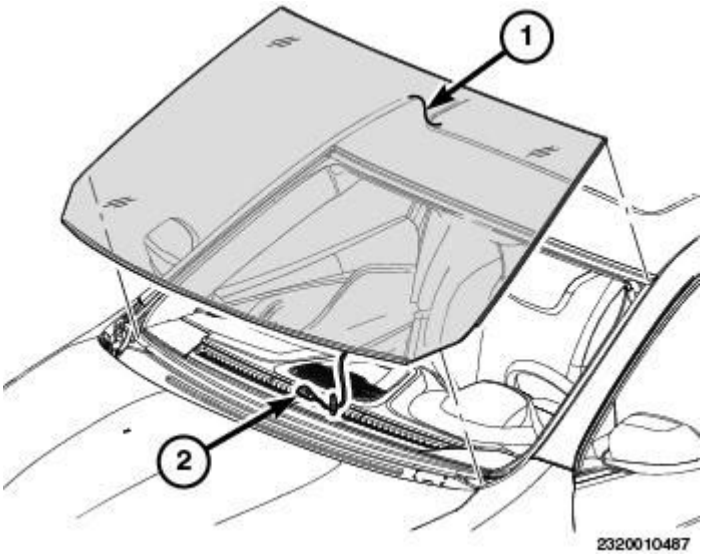

Fig. 724: Identifying Windshield & Harness Connector
Courtesy of CHRYSLER GROUP, LLC

3. Install new adhesive backed spacers (2) along the windshield fence as required.
4. Install a new rubber seal along the top of the windshield (1).
5. Using an assistant, position the windshield into the windshield opening and against the windshield fence and spacers (2).
6. Verify the windshield lays evenly against the fence at the top, bottom and sides of the opening. If not, the fence must be formed to the shape of the windshield.
7. Mark the windshield and the windshield fence with a grease pencil or pieces of masking tape to use as a reference for installation.
8. Using an assistant, remove the windshield from the windshield opening and place it on a suitable padded work surface.

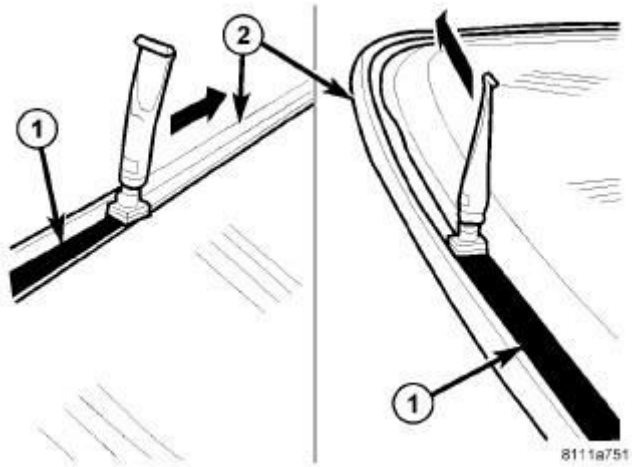

Fig. 725: Applying Primer To Gluing Surface Of Windshield Seal
Courtesy of CHRYSLER GROUP, LLC

WARNING: Do not use solvent based glass cleaners to clean the windshield before applying glass prep and primer or poor glass adhesion may result.

9. Clean the inside of the windshield with an ammonia based glass cleaner and a lint-free cloth.
10. Apply glass prep adhesion promoter 25 mm (1 in.) wide (1) around the perimeter of the windshield (2) and 5 mm (0.2 in.) from the edge of the glass and wipe dry with a clean lint-free cloth until no streaks are visible.
11. Apply glass primer 25 mm (1 in.) wide (1) around the perimeter of the windshield (2) and 5 mm (0.2 in.) from the edge of the glass. Allow at least three minutes drying time.
12. Using a flashlight, verify that the primer is completely and evenly installed along the perimeter of the windshield.
13. Re-prime any area that is not fully and evenly primed.

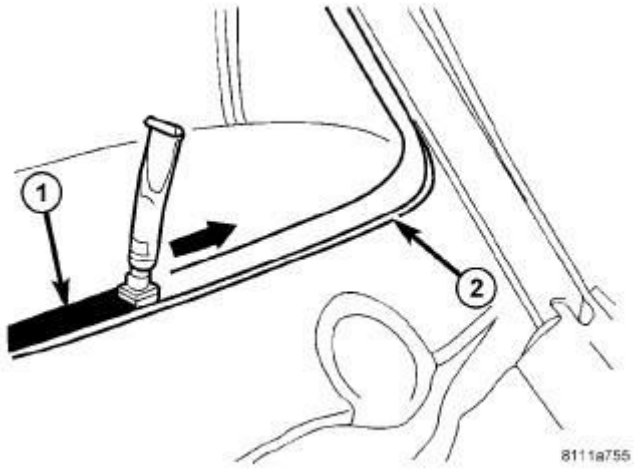

Fig. 726: Applying Windshield Primer
Courtesy of CHRYSLER GROUP, LLC

14. Clean the windshield fence with an ammonia based glass cleaner and a lint-free cloth.
15. Apply pinch weld primer 15 mm (0.75 in.) wide (1) around the windshield fence (2). Allow at least three minutes drying time.
16. Using a flashlight, verify that the primer is completely and evenly installed along the windshield fence.
17. Re-prime any area that is not fully and evenly primed.

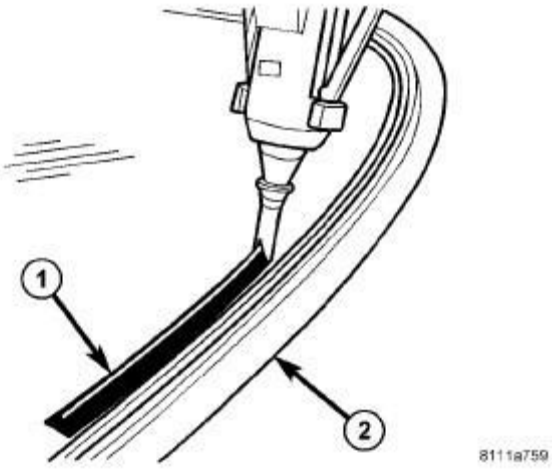

Fig. 727: Applying Windshield Adhesive
Courtesy of CHRYSLER GROUP, LLC

CAUTION: Always apply the bead of adhesive to the windshield. Always install the windshield within 5 minutes after applying the adhesive.

NOTE: If the original urethane adhesive has been exposed for more than 12 hours, the entire adhesive area will need to be re-primed prior to installing new adhesive.

18. Apply approximately a 10 mm (0.4 in.) wide bead of adhesive (1) with a triangular nozzle approximately 6 mm (0.230 in.) from the edge of the glass (2) starting at the bottom center of the windshield.

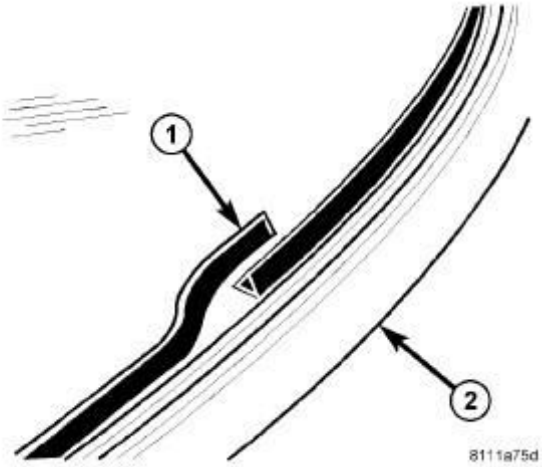

Fig. 728: Windshield Adhesive Overlap
Courtesy of CHRYSLER GROUP, LLC

19. Run the end of the adhesive bead (1) on the windshield (2) parallel to the start of the bead and smooth the ends flush.

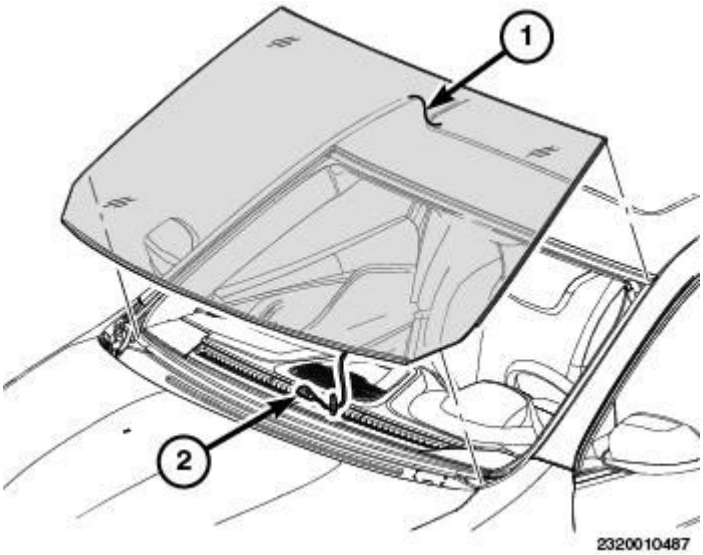

Fig. 729: Identifying Windshield & Harness Connector
Courtesy of CHRYSLER GROUP, LLC

20. Using an assistant, position the windshield (1) over the windshield opening.
21. Using the grease pencil marks or tape as reference points, align the windshield to the windshield opening.
22. Carefully lower the windshield into the windshield opening. Guide the windshield and the rubber seal at the top the windshield into its proper location.

CAUTION: It is not possible to move the windshield after installation. The windshield should never be pressed into place by more than one person, because the windshield can break if pressed simultaneously on both sides.

23. Push the windshield inward until the windshield comes into contact with the spacers (2) located on the windshield fence.
24. Install the cowl grill. Refer to **COVER, COWL PANEL, INSTALLATION**.
25. Install the rear view mirror onto the windshield. Refer to **MIRROR, REARVIEW, INSTALLATION**.
26. Connect the negative battery cable.

SUNROOF, DUAL PANE

DESCRIPTION

DESCRIPTION

The power sunroof system allows the sunroof to be opened, closed or placed in the vent position electrically by actuating a switch in the overhead console. The sunroof system receives battery feed through a fuse in the Power Distribution Center (PDC). The sunroof will operate normally with the key in any position while the Accessory Delay system is active.

The front sunroof glass panel tilts upward at the rear for ventilation and slides rearward under the fixed rear glass panel when open. The panel seals flush with the roof in the closed position to eliminate wind noise. The sunroof includes an electric rolling sunshade to cover the deep-tinted glass panel.

In addition to the standard power sunroof operation, this vehicle offers several additional features. There is an express (one-touch) opening and closing feature as well as Excessive Force Limitation (EFL). The EFL function detects obstacles trapped between the glass and the vehicle roof during a closing motion. Upon sensing an obstacle the EFL function will reverse direction of the glass to allow removal of the obstacle.

The main components of the power sunroof system are:

- The motor/module assembly
- The power sunroof glass and frame assembly
- The power sunroof switch
- The electric rolling sunshade

PARTS LIST

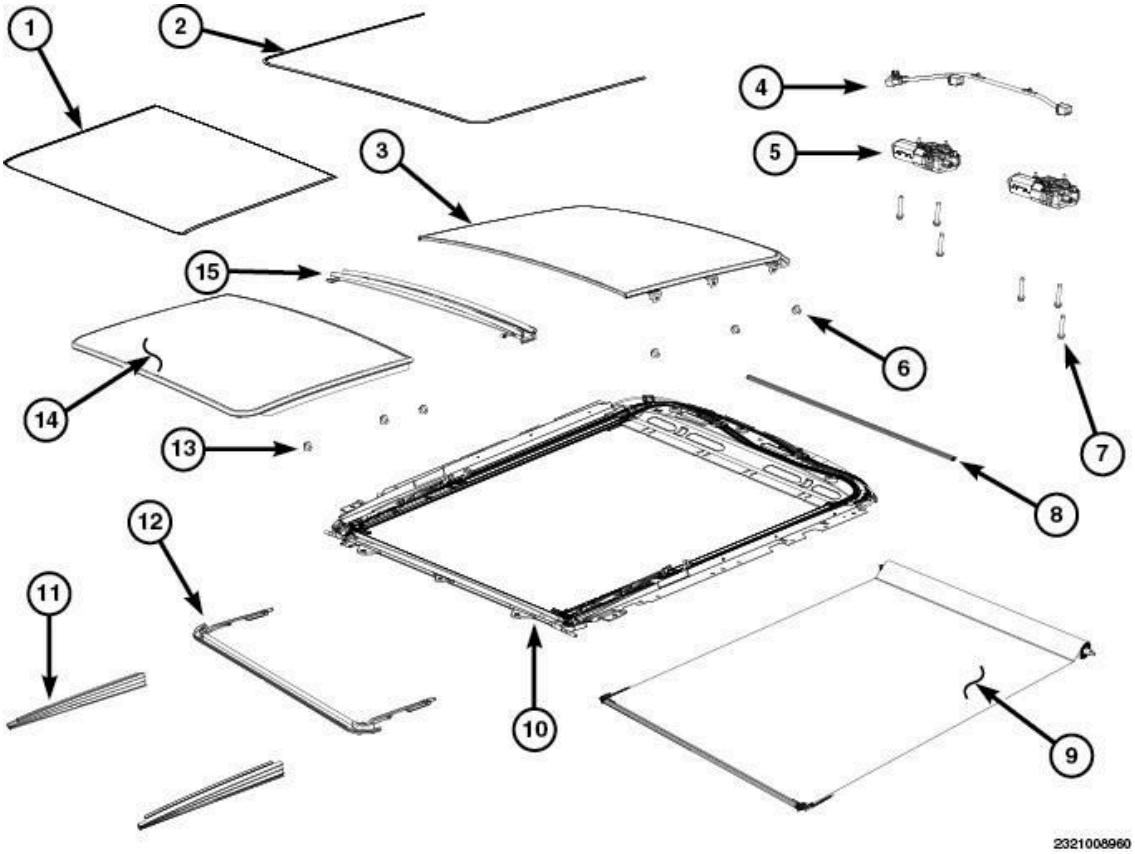

Fig. 730: Exploded View Of Dual Pane Sunroof
Courtesy of CHRYSLER GROUP, LLC

PARTS LIST

1 - FRONT GLASS PANEL SEAL	9 - ROLLER SUNSHADE
2 - REAR GLASS PANEL SEAL	10 - SUNROOF FRAME ASSEMBLY
3 - REAR GLASS PANEL	11 - MECHANISM COVERS
4 - WIRE HARNESS	12 - WIND DEFLECTOR
5 - MOTORS	13 - FRONT GLASS FASTENERS (6) 4.5 N.m (40 in. lbs.)
6 - REAR GLASS FASTENERS (6) 4.5 N.m (40 in. lbs.)	14 - FRONT GLASS PANEL
7 - MOTOR SCREWS 4 N.m (35 in. lbs.)	15 - DRAIN TROUGH
8 - TENSION BAR	

OPERATION

OPERATION

This vehicle has a vent, tilt and slide power sunroof system with express (one-touch) open and closing feature. The sunroof system receives constant battery feed through a fuse in the Power Distribution Center (PDC). The sunroof will operate normally with the key in the "RUN" or "ACCESSORY" position. If the sunroof is moving when the key is turned to the START position (crank engine), all motions will stop. The sunroof will also stop a requested motion if the key is turned "OFF".

A combination push-button and rocker switch module mounted in the overhead console controls sunroof operation. The sunroof switch is a rocker design with a push button in the center of the two halves of the rocker. Pressing the rocker towards the front of the car commands the sunroof closed. Pressing the rocker towards the rear of the car commands the sunroof open. Pressing the center push button commands the front sunroof glass panel up into the vent position (Rear of the front sunroof glass raises above the vehicle roof with glass still covering the sunroof opening). All switch commands operate with the glass starting in any position. Refer to **SWITCH, SUNROOF, OPERATION** for additional information.

An electronic control system, integral to the motor/module assembly, provides the express open and close functions. Pressing the "close" end of the rocker switch moves the sunroof glass panel to the full closed position. During express closing, anytime an obstacle is detected in the way of the glass, the motor will stop and reverse travel to avoid pinching an occupant's finger, ice in the track, etc. This function is called Excessive Force Limitation (EFL). There are two methods of overriding the EFL function.

1. When three EFL events occur without the glass being allowed to fully close, the next close attempt will only move while the close switch is continuously actuated. This allows the sunroof to be forced closed if multiple close attempts fail.
2. If the sunroof close switch is continuously actuated during an EFL event, through the reversal, and during a two second wait time, then continuing to hold the close switch will cause the roof to move towards close with the EFL protection disabled. This allows the sunroof to be forced closed if it is known that a reversal will occur. This secondary EFL override may be necessary when known debris (ice blockage for example) is preventing the glass panel from closing.

While in EFL override, the closing motion will cease if the sunroof switch is released at any time.

DIAGNOSIS AND TESTING

DIAGNOSIS AND TESTING - SUNROOF

For sunroof electrical system diagnosis and testing procedures, refer to **DIAGNOSIS AND TESTING** .

WATER DRAINAGE AND WIND NOISE DIAGNOSIS

The sliding glass panel is designed to seal water entry with a snug fit between the roof and the seal. The fit can be checked by inserting a business card or equivalent, between the roof and the seal. The piece of paper should have some resistance when pulled out when the glass panel is in the closed position. The sunroof housing will drain off a minimum amount of water. Excessive wind noise could result if the gap clearances are exceeded. The sunroof glass panel may need to be adjusted. Refer to **ADJUSTMENTS** and **ADJUSTMENTS** .

Adequate drainage is provided by a drain trough in the sunroof housing which encircles the sliding glass panel and leads to drain hoses. If a wet headliner or other water leak complaints are encountered, before performing any adjustments, first ensure that the drainage system is not plugged or disconnected. Use a pint container to pour water into the sunroof housing drain trough. If water flow is restricted, use compressed air to blow out any material plugging the drain system. Retest system again.

To further check for a disconnected drain hose:

NOTE: Care must be taken not to fold or kink the headliner upon removal.

1. Lower headliner as necessary to gain access to sunroof housing drain tubes. Refer to **HEADLINER, REMOVAL**.
2. Repair as necessary.

HIGH OPERATIONAL NOISE

If a scratching noise is observed as the sunroof glass is cycled from open to closed and closed to open this could be caused by dust and debris accumulation in the guide tracks. To correct this issue, refer to **SUNROOF, DUAL PANE, STANDARD PROCEDURE**.

STANDARD PROCEDURE

STANDARD PROCEDURE - NEW INITIALIZE AND TEACH

The following steps are necessary initialize and teach a module that has never been initialized (newly reflashed).

1. Press and hold the glass close switch until the glass moves to the full vent up position and then bounces back to vent up.
2. The shade will then move to flush, bounces back and stop at the halfway position.
3. Once both the shade and glass have stopped, release the glass close switch and press it again within five seconds.

4. The shade moves to full open, and the glass will move to full open.
5. The glass will move to full flush.
6. The shade will move to flush. Hold the switch until the glass and shade have completed their movements.
7. Release the glass close switch. Glass and shade are now initialized and taught.

STANDARD PROCEDURE - RE-INITIALIZE AND RE-TEACH

The following steps are necessary initialize and teach a module that has been previously initialized and taught.

1. With the glass at flush, press and hold the glass close switch for 10 seconds.
2. Continue to press and hold the glass close switch until the glass moves to full vent up and bounces back to vent up.
3. The shade will then move to flush, bounce back, and stops at the halfway position.
4. Once both the shade and glass have stopped, release the glass close switch and press it again within 5 seconds.
5. The shade moves to full open, and the glass will move to full open.
6. The glass will move to flush.
7. The shade will move to flush. Hold the switch until the glass and shade have completed their movements.
8. Release the glass close switch. Glass and shade are now initialized and taught.

STANDARD PROCEDURE - CLEAN AND RE-GREASE SUNROOF GUIDE TRACKS

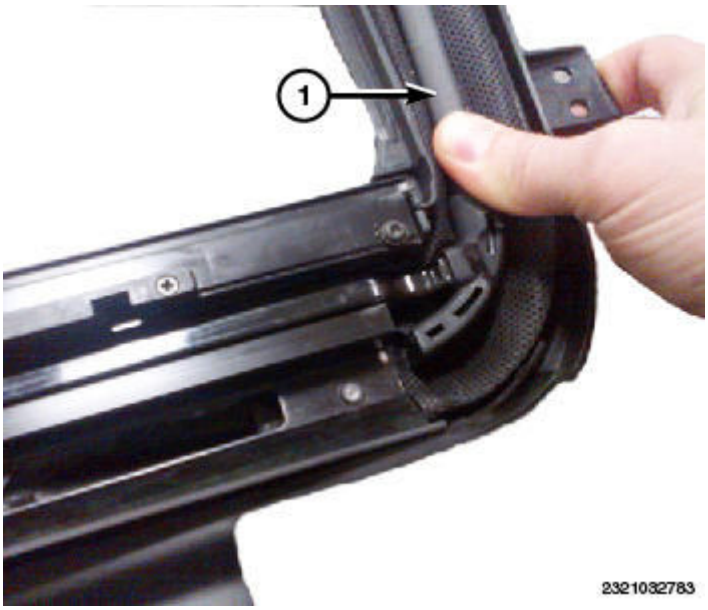

Fig. 731: Identifying Wind Deflector
Courtesy of CHRYSLER GROUP, LLC

1. Open glass fully to expose the guide tracks.
2. Hold down the wind deflector (1).

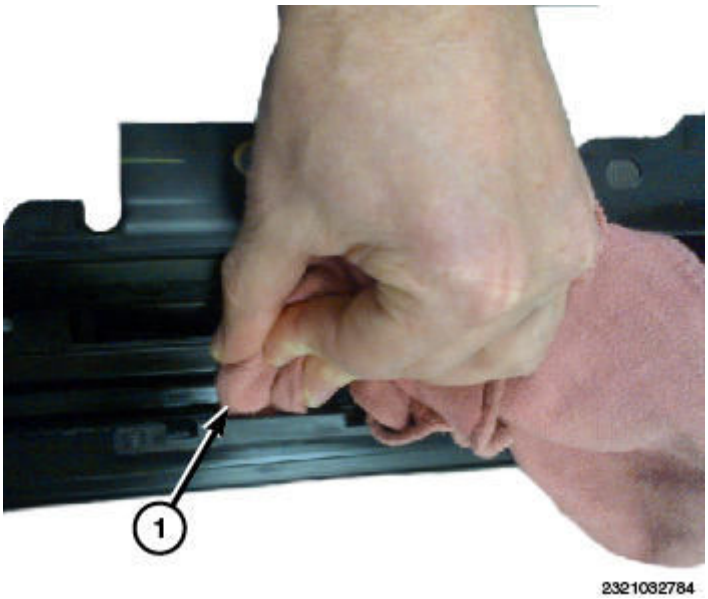

Fig. 732: Identifying Channels
Courtesy of CHRYSLER GROUP, LLC

3. Wipe out the channels (1) and remove any accumulated dust and debris.

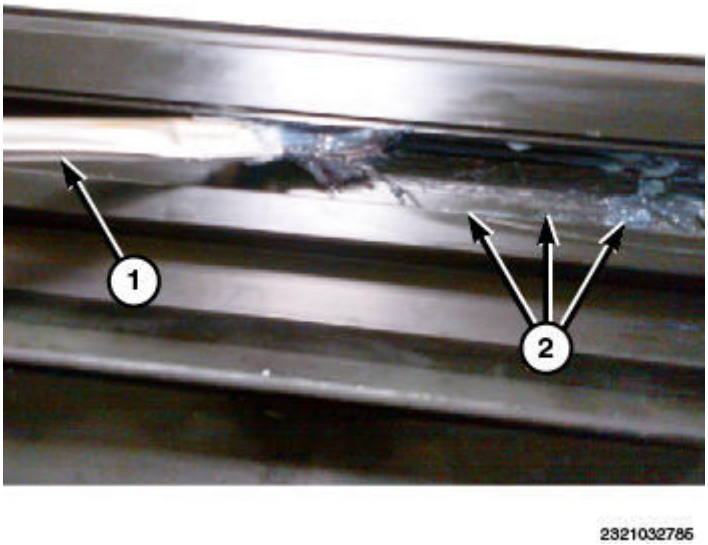

Fig. 733: Applying Mopar Grease To Tracks
Courtesy of CHRYSLER GROUP, LLC

4. Using Mopar Grease P/N 68079674AA with a small brush (1), apply grease (2) to the tracks as shown.
5. Cycle the glass open and close to verify high operating noise no longer exists. Repeat process if necessary.

REMOVAL

REMOVAL

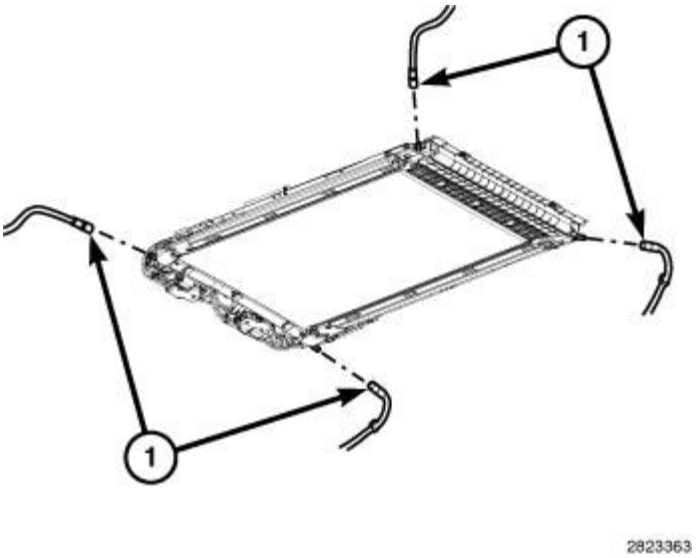

Fig. 734: Four Drain Tubes
Courtesy of CHRYSLER GROUP, LLC

NOTE: For exploded view and call outs, refer to SUNROOF, DUAL PANE, DESCRIPTION.

1. Move glass panel to the fully closed position.
2. Disconnect and isolate the battery negative cable.
3. Lower the headliner in the vehicle enough to gain access to the sunroof assembly. Refer to **HEADLINER, REMOVAL**.
4. Disconnect the four drain tubes (1) from sunroof housing.
5. Disconnect the sunroof wire harness electrical connector.

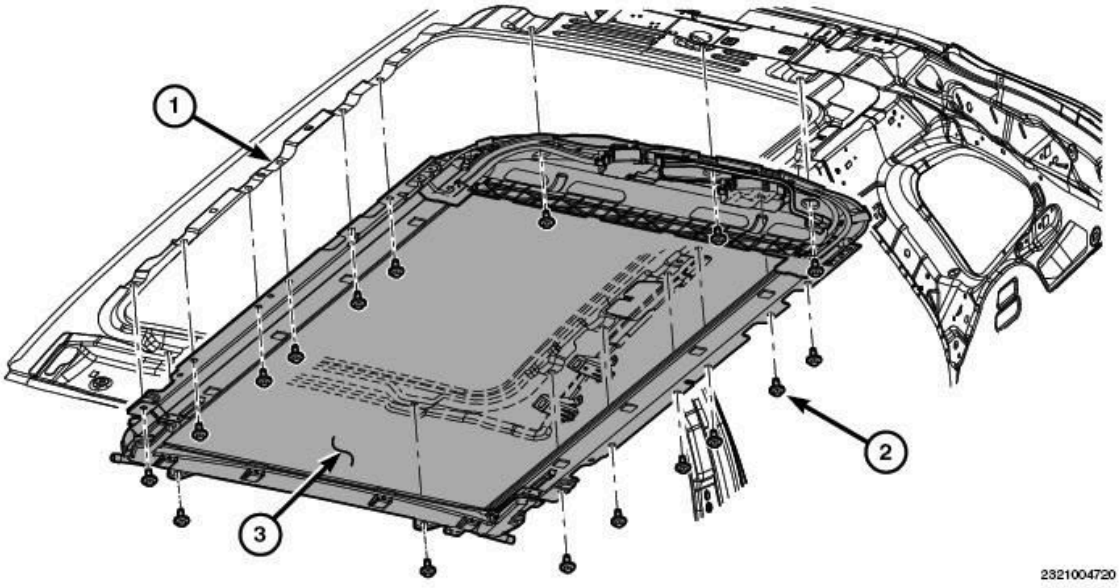

Fig. 735: Identifying Sunroof Assembly, Roof Panel & Fasteners
Courtesy of CHRYSLER GROUP, LLC

6. Loosen the 14 bolts (3) attaching sunroof assembly.
7. With the help of an assistant, support the sunroof and remove the 17 bolts attaching sunroof assembly (2) to roof panel.
8. Remove the sunroof assembly (2) from vehicle.

INSTALLATION

INSTALLATION

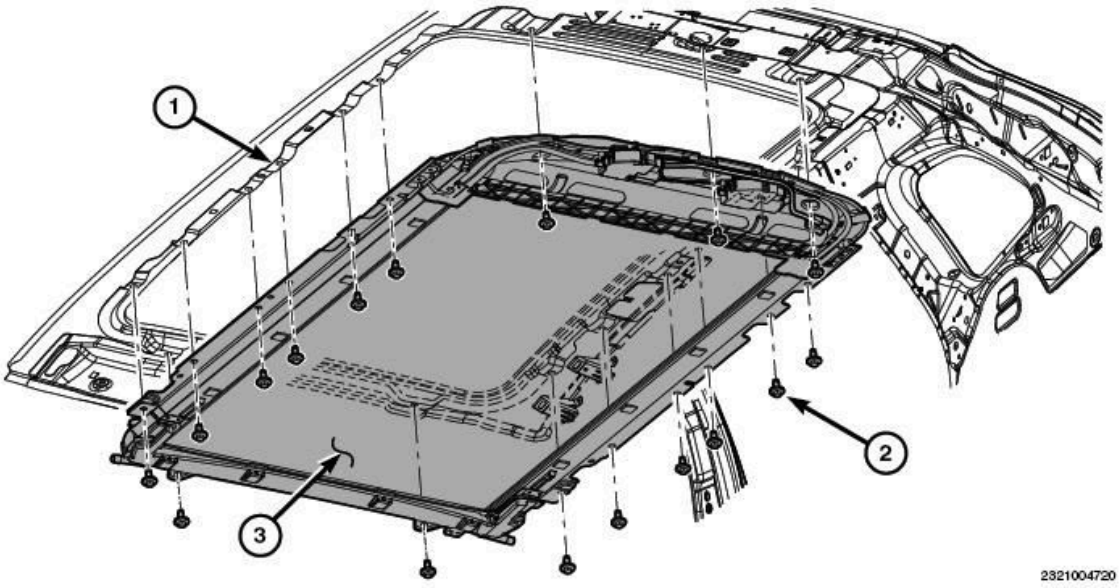

Fig. 736: Identifying Sunroof Assembly, Roof Panel & Fasteners
Courtesy of CHRYSLER GROUP, LLC

NOTE: After installation the sunroof motors will need to be initialized.

1. Verify that glass panel is fully closed.
2. Locate the alignment holes along the sides of the module assembly and position the holes so that they line up with the holes located in sunroof frame (1).
3. Raise sunroof module assembly (2) and guide it carefully into position.
4. While supporting the sunroof assembly Install the 17 bolts (2).

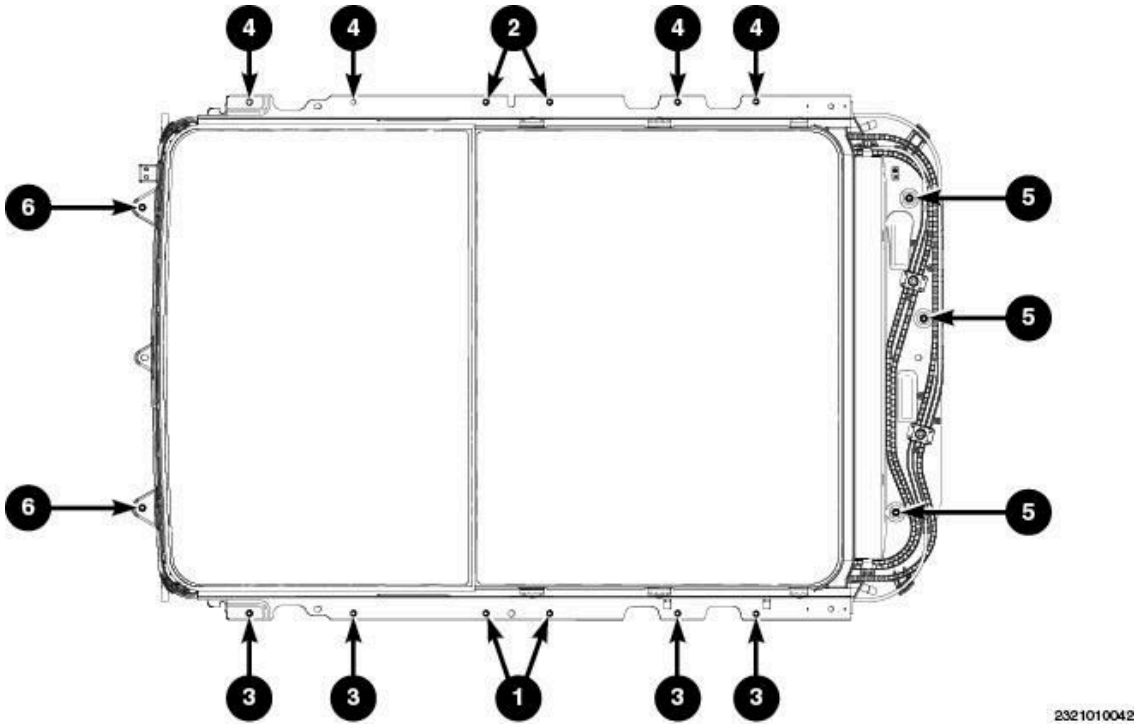

Fig. 737: Identifying Sunroof Assembly Frame Alignment Holes
Courtesy of CHRYSLER GROUP, LLC

5. Tighten the bolts to 9 N.m (80 in. lbs.) using the sequence shown.

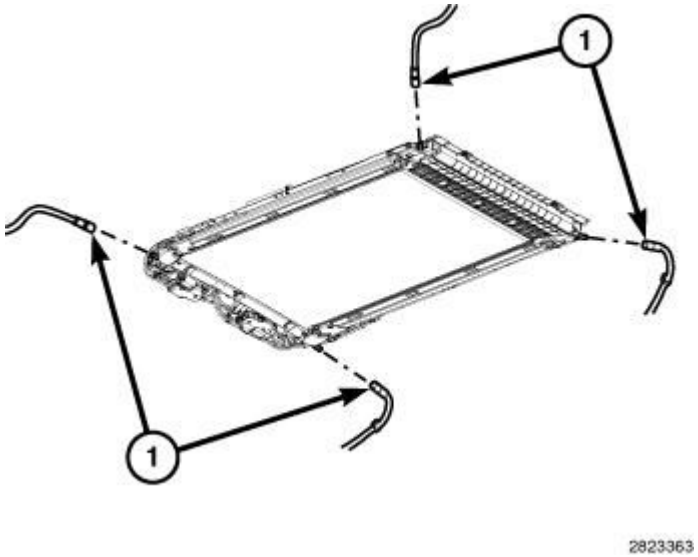

Fig. 738: Four Drain Tubes
Courtesy of CHRYSLER GROUP, LLC

6. Connect the electrical connector.
7. Connect the drain tubes (1) to the sunroof.
8. Connect the battery negative cable.

9. Test sunroof operation, adjust if necessary. Refer to **ADJUSTMENTS** and **ADJUSTMENTS** .
10. Install the headliner. Refer to **HEADLINER, INSTALLATION**.
11. Initialize sunroof motor. Refer to **SUNROOF, DUAL PANE, STANDARD PROCEDURE**.

COVER, SUNROOF MECHANISM

REMOVAL

REMOVAL

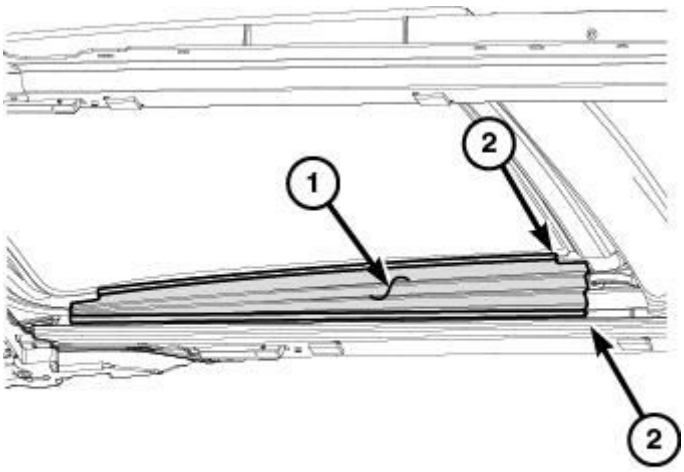

2321010035

Fig. 739: Identifying Sunroof Mechanism Cover & Mounting Flanges
Courtesy of CHRYSLER GROUP, LLC

1. Move the front glass into the full closed position.
2. Open the sunshade into the full open position.

CAUTION: Separate the mechanism covers by pulling on the metal flanges only. Pulling on the cover membrane may result in tearing of the membrane.

3. Separate the mechanism cover (1) from the tabs on the glass panel and frame assembly by pulling on the mounting flanges (2) only.

INSTALLATION

INSTALLATION

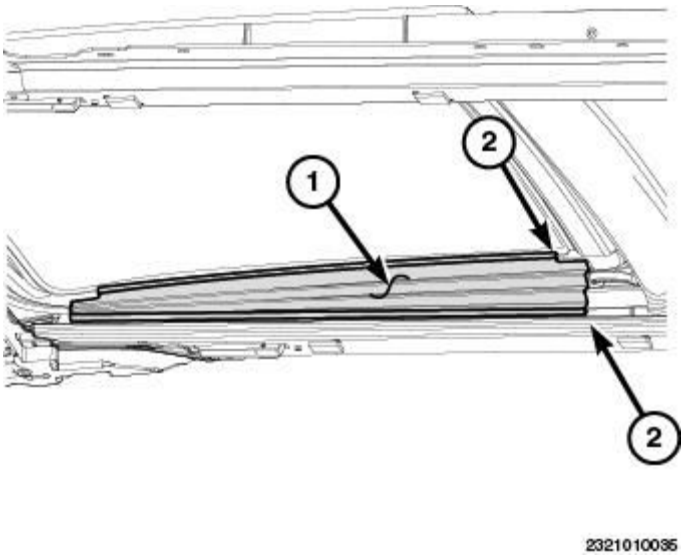

Fig. 740: Identifying Sunroof Mechanism Cover & Mounting Flanges
Courtesy of CHRYSLER GROUP, LLC

1. With the sunroof in the open position, snap the mechanism cover (1) into the lower guide channel and the glass panel and seat the flanges (2) fully.

DEFLECTOR, WIND

REMOVAL

REMOVAL

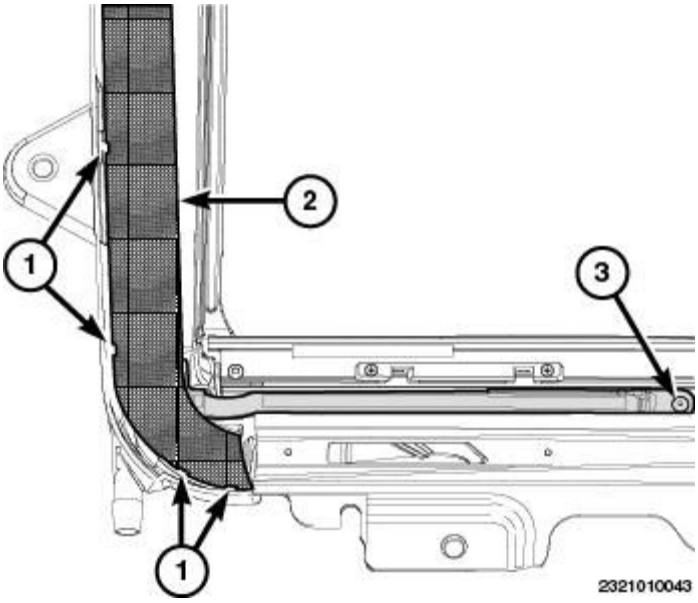

Fig. 741: Identifying Wind Deflector Cloth & Fasteners
Courtesy of CHRYSLER GROUP, LLC

1. Move the front glass into the full open position.
2. Lower the headliner as necessary to catch any debris that falls while removing the wind deflector rivets (3). Refer to **HEADLINER, REMOVAL**.
3. Separate the front of the wind deflector cloth from the clips (1) in the frame assembly.
4. Remove the rivet (3) securing the wind deflector assembly to the side rails.

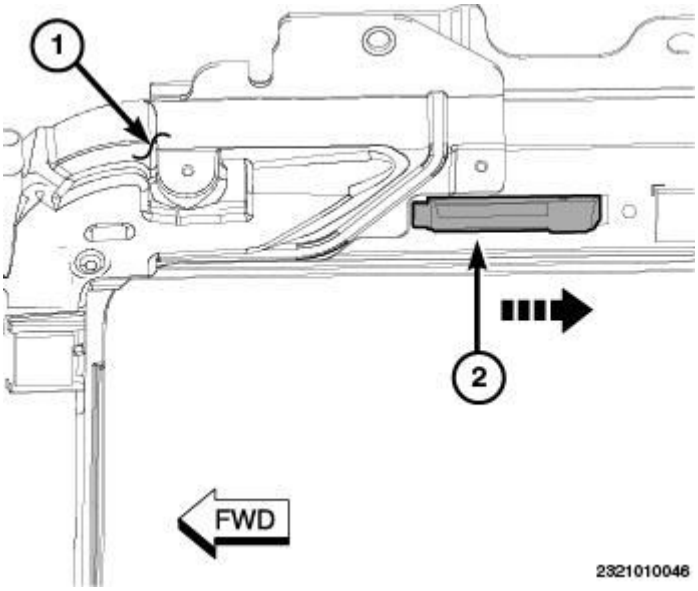

Fig. 742: Identifying Rear Deflector Bases & Slide Rail Assembly
Courtesy of CHRYSLER GROUP, LLC

5. Slide the rear deflector bases (2) rearward and remove from the side rail assembly (1).
6. Remove the wind deflector.

INSTALLATION

INSTALLATION

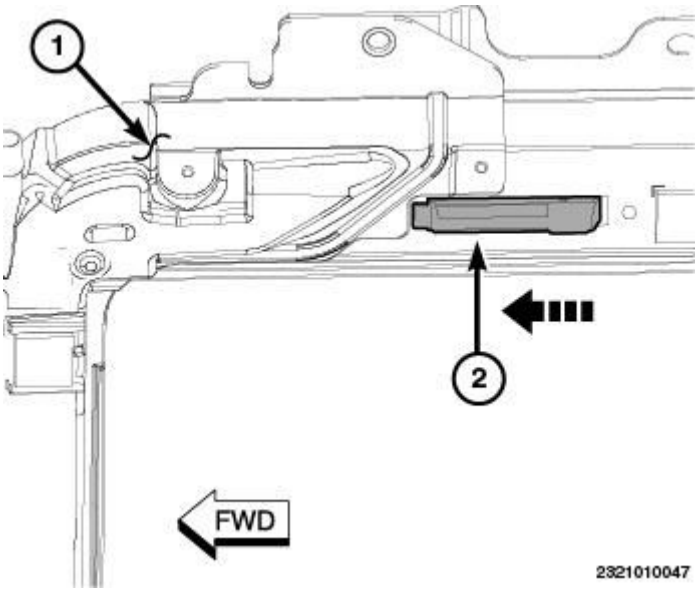

Fig. 743: Identifying Deflector Swing Arm Bases & Slots Of Side Rails
Courtesy of CHRYSLER GROUP, LLC

1. Remove all debris created during removal from the hole in the sunroof frame.
2. Position the deflector swing arm bases (2) into the slots of the side rails (1) and slide forward.

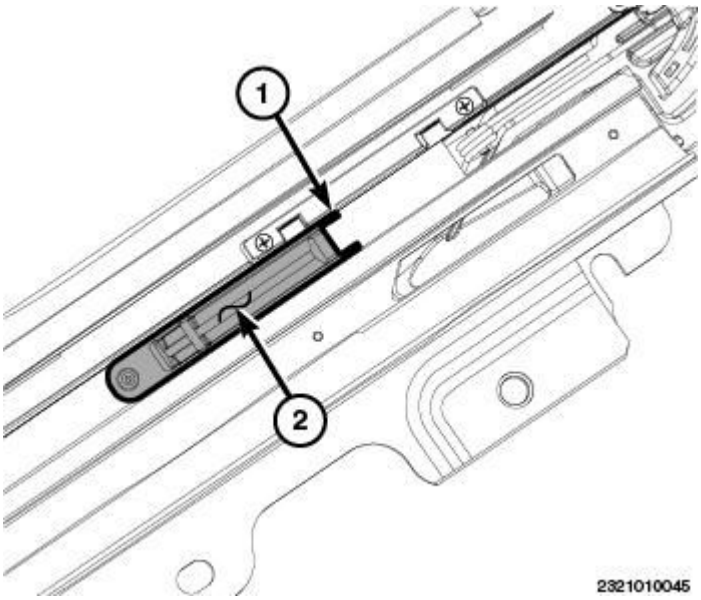

Fig. 744: Identifying Front Tabs & Swing Arm Bases
Courtesy of CHRYSLER GROUP, LLC

3. Make sure the front tabs (1) of the swing arm bases (2) are positioned above the rail.

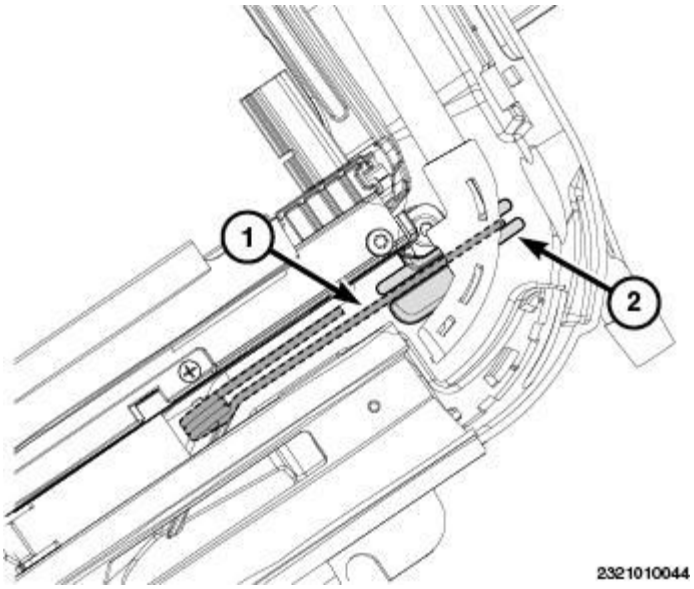

Fig. 745: Identifying Lift Springs & Slots
Courtesy of CHRYSLER GROUP, LLC

4. Make sure the lift springs (1) are correctly positioned into the slots (2) on the side rails and the swing arms.

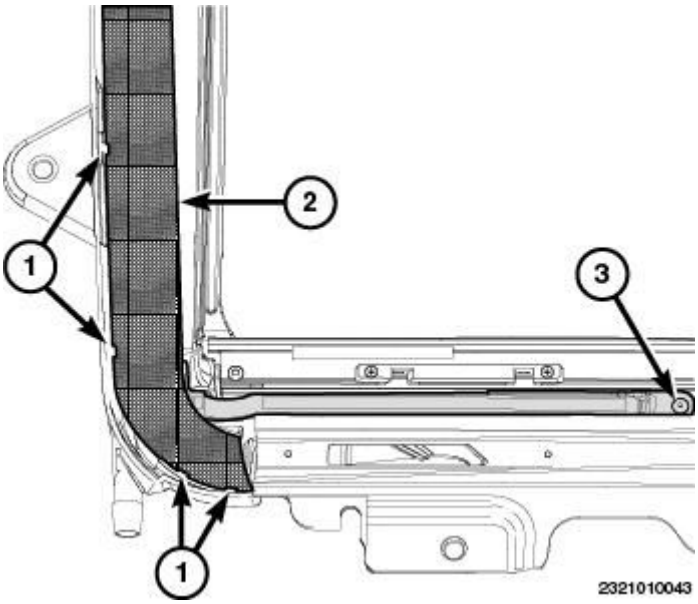

Fig. 746: Identifying Wind Deflector Cloth & Fasteners
Courtesy of CHRYSLER GROUP, LLC

5. Install new rivets (3).
6. Starting at the center notch, seat the front of the fabric into the front clips (1) fully.
7. Install the headliner. Refer to **HEADLINER, INSTALLATION**.

GLASS, SUNROOF, FRONT

ADJUSTMENTS

ADJUSTMENTS

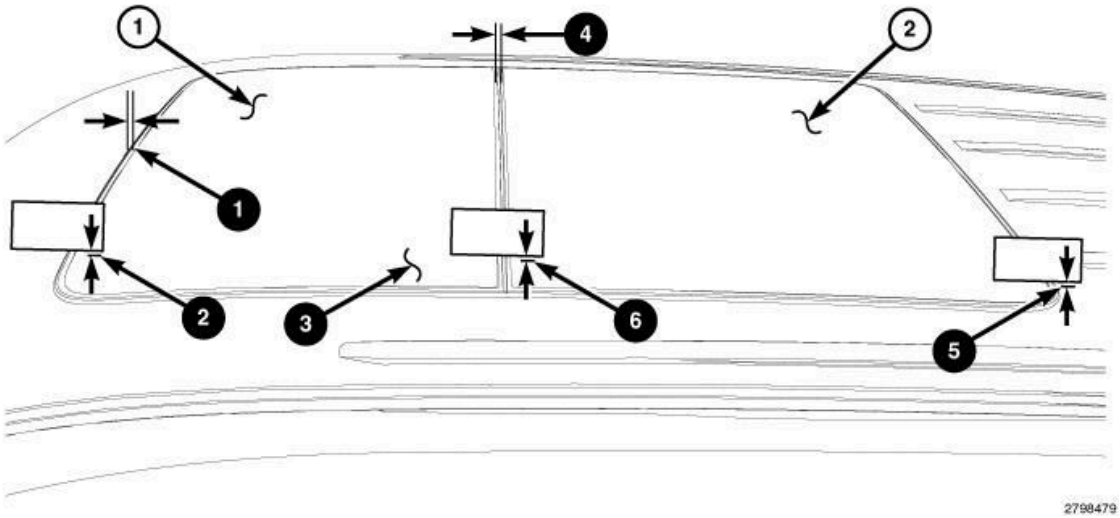

Fig. 747: Dual Pane Sunroof Glass Adjustment
Courtesy of CHRYSLER GROUP, LLC

1 - FRONT GLASS PANEL
2 - REAR GLASS PANEL
GLASS ADJUSTMENT SEQUENCE
1 - SET THE FRONT GLASS PANEL FRONT GAP TO 3 mm (0.12 in.)
2 - SET THE FRONT OF THE FRONT GLASS PANEL FLUSH TO UNDER FLUSH 2.5 mm (0.10 in.)
3 - SET THE REAR OF THE FRONT GLASS PANEL FLUSH WITH THE ROOF
4 - SET THE FRONT OF THE REAR GLASS PANEL GAP TO 3.5 mm TO 4 mm (0.14 in. to 0.16 in)
5 - SET THE REAR OF THE REAR GLASS PANEL OVER FLUSH 0 mm TO 2.5 mm (0.0 in. to 0.10 in)
6 - SET THE FRONT OF THE REAR GLASS PANEL FLUSH TO UNDER FLUSH 2.5 mm (0.10 in.)

1. Initialize sunroof motor. Refer to **SUNROOF, DUAL PANE, STANDARD PROCEDURE**.
2. Open the sunshade fully.
3. Verify the sunroof glass panel is in the fully closed position.
4. Separate the mechanism covers from the tabs on the glass panel.
5. Loosen the attaching screws on each side of the rear glass panel enough to permit adjustment of the glass gap and flush.
6. Loosen the attaching screws on each side of the front glass panel enough to permit adjustment of the glass gap and flush.

NOTE: Use shims to maintain gap during the flush adjustments.

7. Adjust the front edge of the front glass gap to 3 mm (0.12 in.).
8. Adjust the front surface of the front sunroof glass panel 0.00 mm to 2.5 mm (0.00 in. to 0.10 in.) below the top surface of the roof.
9. Tighten the front glass panel attaching screws to 4.5 N.m (40 in. lbs.).
10. Adjust the rear surface of the front sunroof glass panel flush with the top surface of the roof.
11. Tighten the remaining front glass panel attaching screws to 4.5 N.m (40 in. lbs.).

NOTE: Use shims to maintain gap during the flush adjustments.

12. Adjust the front edge of the rear glass gap 3.5 mm (0.12 in.) minimum to 4.0 mm (35.5 in.) maximum.
13. Adjust the rear surface of the rear sunroof glass panel 0.00 mm to 2.5 mm (0.00 in. to 0.10 in.) above the top surface of the roof.
14. Tighten the rear screws of the rear glass panel to 4.5 N.m (40 in. lbs.).
15. Adjust the front surface of the rear sunroof glass panel 0.00 mm to 2.5 mm (0.00 in. to 0.10 in.) below the top surface of the front glass panel.
16. Tighten the remaining rear glass panel attaching screws to 4.5 N.m (40 in. lbs.).
17. Check for proper fit. If not OK, repeat glass panel adjustment.
18. Position the mechanism covers over the glass tabs between the locating features and seat fully.
19. Verify sunroof operation and alignment.

REMOVAL

REMOVAL

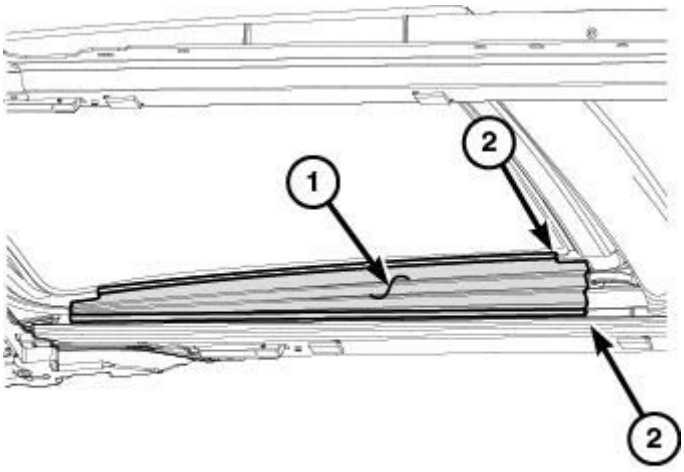

2321010035

Fig. 748: Identifying Sunroof Mechanism Cover & Mounting Flanges
Courtesy of CHRYSLER GROUP, LLC

1. Open the sunshade fully.

2. Open the front glass to the vent position and remove the mechanism covers (1). Refer to **COVER, SUNROOF MECHANISM, REMOVAL**.

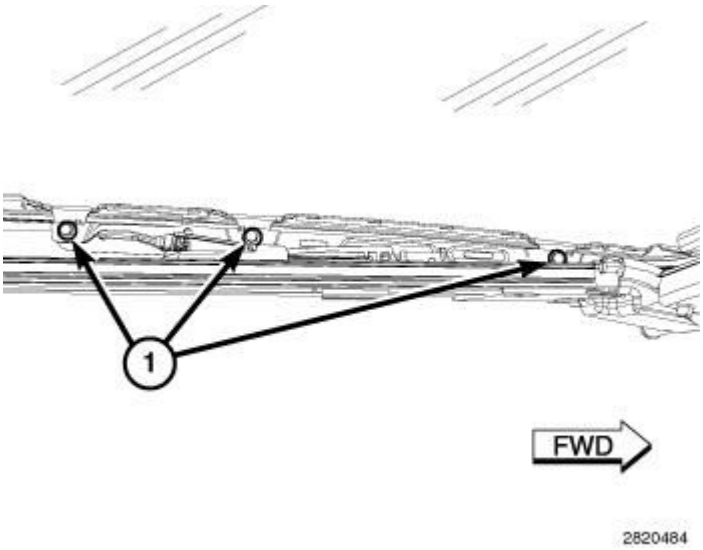

Fig. 749: Six Glass Panel Screws
Courtesy of CHRYSLER GROUP, LLC

3. Remove the six glass panel screws (1).

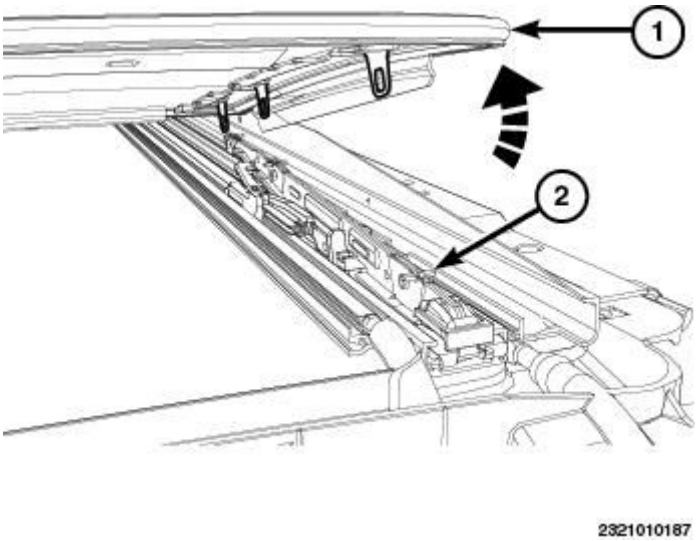

Fig. 750: Identifying Glass Panel & Guide Mechanisms
Courtesy of CHRYSLER GROUP, LLC

4. Lift off the glass panel (1) from the guide mechanisms (2) and remove from vehicle.

INSTALLATION

INSTALLATION

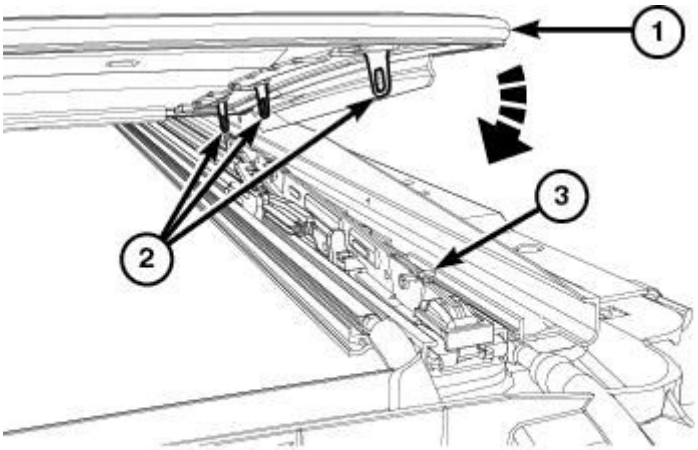

2321010188

Fig. 751: Identifying Glass Panel & Guide Mechanism/Lift Arms
Courtesy of CHRYSLER GROUP, LLC

1. Position the glass panel (1) onto the guide mechanism/lift arms (3).

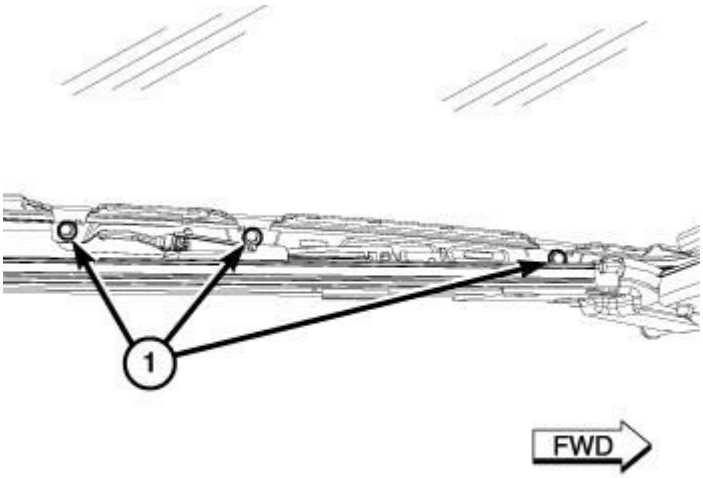

2820484

Fig. 752: Six Glass Panel Screws
Courtesy of CHRYSLER GROUP, LLC

2. Start the six attaching screws (1).

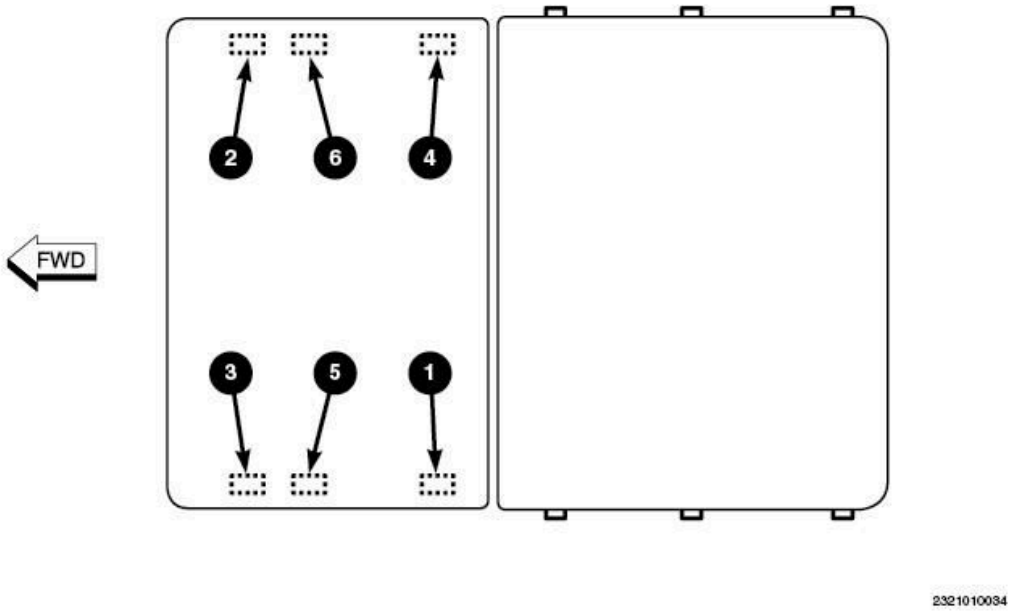

Fig. 753: Identifying Glass Panel Screws
Courtesy of CHRYSLER GROUP, LLC

3. Connect a 12v power supply and verify that the sunroof is in the closed position.
4. Initialize sunroof motor. Refer to **SUNROOF, DUAL PANE, STANDARD PROCEDURE**.
5. Adjust the sunroof glass. Refer to **ADJUSTMENTS** and **ADJUSTMENTS** .
6. Tighten the six screws to 4.5 N.m (40 in. lbs.) using the sequence shown.

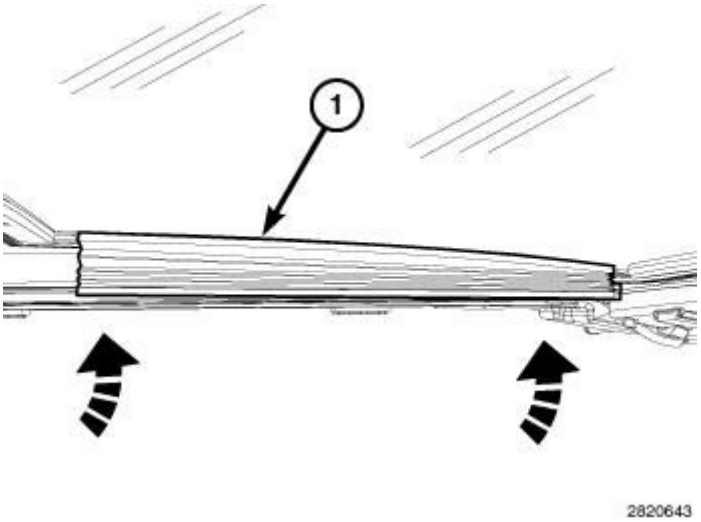

Fig. 754: Mechanism Covers
Courtesy of CHRYSLER GROUP, LLC

7. Position the mechanism covers (1) over the glass tabs between the locating features and seat fully.

8. Verify sunroof operation and alignment.

GLASS, SUNROOF, REAR

ADJUSTMENTS

ADJUSTMENTS

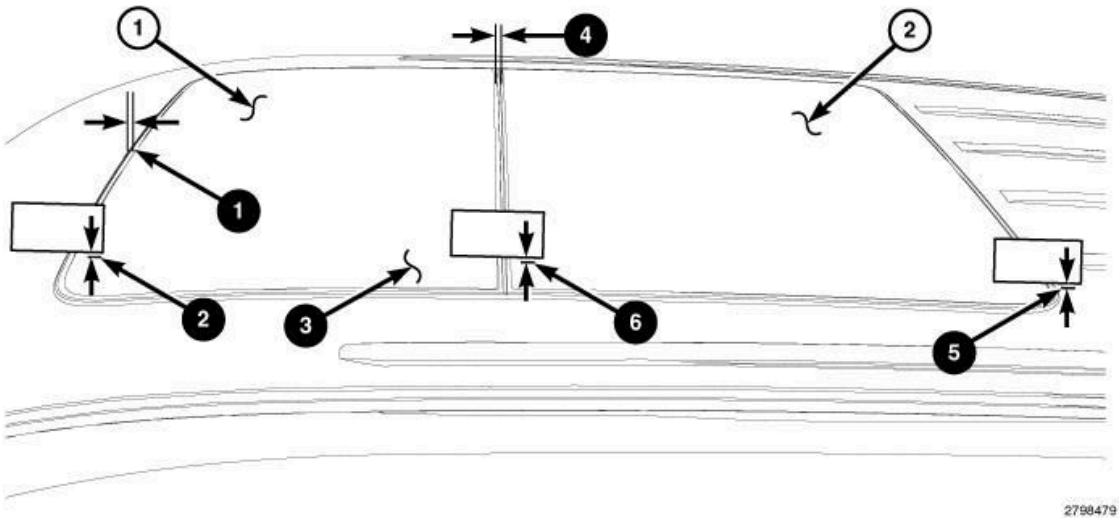

Fig. 755: Dual Pane Sunroof Glass Adjustment
Courtesy of CHRYSLER GROUP, LLC

1 - FRONT GLASS PANEL
2 - REAR GLASS PANEL
GLASS ADJUSTMENT SEQUENCE
1 - SET THE FRONT GLASS PANEL FRONT GAP TO 3 mm (0.12 in.)
2 - SET THE FRONT OF THE FRONT GLASS PANEL FLUSH TO UNDER FLUSH 2.5 mm (0.10 in.)
3 - SET THE REAR OF THE FRONT GLASS PANEL FLUSH WITH THE ROOF
4 - SET THE FRONT OF THE REAR GLASS PANEL GAP TO 3.5 mm TO 4 mm (0.14 in. to 0.16 in)
5 - SET THE REAR OF THE REAR GLASS PANEL OVER FLUSH 0 mm TO 2.5 mm (0.0 in. to 0.10 in)
6 - SET THE FRONT OF THE REAR GLASS PANEL FLUSH TO UNDER FLUSH 2.5 mm (0.10 in.)

1. Initialize sunroof motor. Refer to **SUNROOF, DUAL PANE, STANDARD PROCEDURE**.
2. Open the sunshade fully.
3. Verify the sunroof glass panel is in the fully closed position.
4. Separate the mechanism covers from the tabs on the glass panel.
5. Loosen the attaching screws on each side of the rear glass panel enough to permit adjustment of the glass gap and flush.
6. Loosen the attaching screws on each side of the front glass panel enough to permit adjustment of the glass gap and flush.

NOTE: Use shims to maintain gap during the flush adjustments.

7. Adjust the front edge of the front glass gap to 3 mm (0.12 in.).
8. Adjust the front surface of the front sunroof glass panel 0.00 mm to 2.5 mm (0.00 in. to 0.10 in.) below the top surface of the roof.
9. Tighten the front glass panel attaching screws to 4.5 N.m (40 in. lbs.).
10. Adjust the rear surface of the front sunroof glass panel flush with the top surface of the roof.
11. Tighten the remaining front glass panel attaching screws to 4.5 N.m (40 in. lbs.).

NOTE: Use shims to maintain gap during the flush adjustments.

12. Adjust the front edge of the rear glass gap 3.5 mm (0.12 in.) minimum to 4.0 mm (35.5 in.) maximum.
13. Adjust the rear surface of the rear sunroof glass panel 0.00 mm to 2.5 mm (0.00 in. to 0.10 in.) above the top surface of the roof.
14. Tighten the rear screws of the rear glass panel to 4.5 N.m (40 in. lbs.).
15. Adjust the front surface of the rear sunroof glass panel 0.00 mm to 2.5 mm (0.00 in. to 0.10 in.) below the top surface of the front glass panel.
16. Tighten the remaining rear glass panel attaching screws to 4.5 N.m (40 in. lbs.).
17. Check for proper fit. If not OK, repeat glass panel adjustment.
18. Position the mechanism covers over the glass tabs between the locating features and seat fully.
19. Verify sunroof operation and alignment.

REMOVAL

REMOVAL

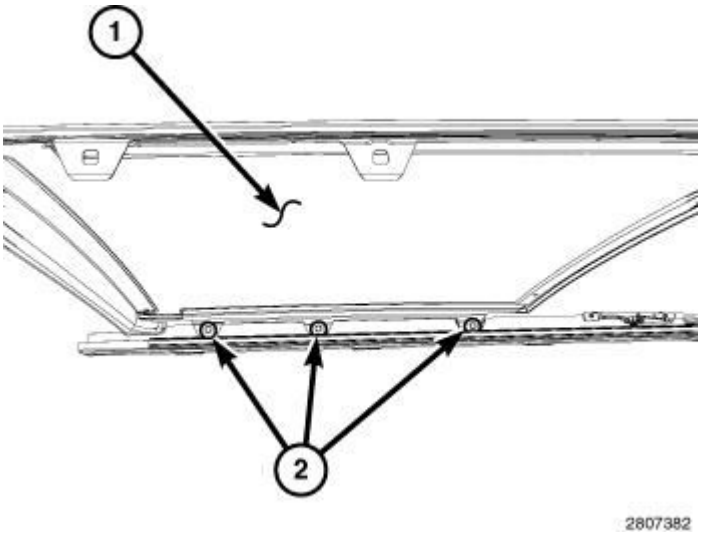

Fig. 756: Six Bolts & Glass Panel
Courtesy of CHRYSLER GROUP, LLC

1. Close the front glass panel and open the sunshade fully.
2. Remove the sunroof assembly. Refer to **SUNROOF, DUAL PANE, REMOVAL**.
3. Remove the six bolts (2) and remove the glass panel (1).

INSTALLATION

INSTALLATION

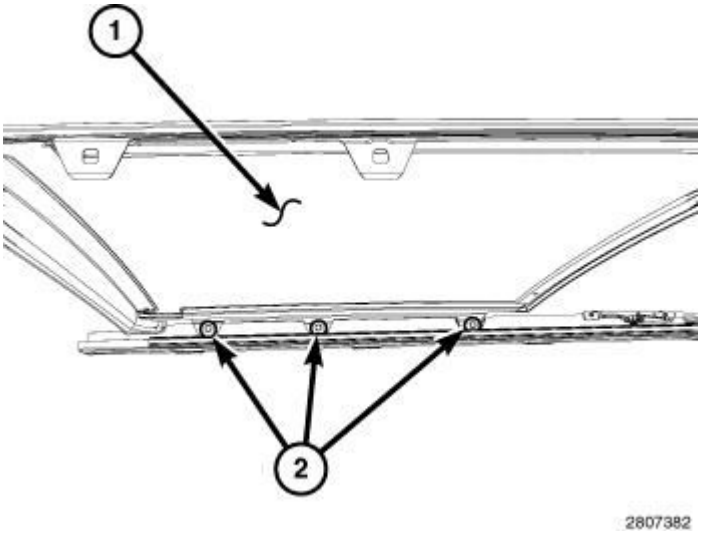

Fig. 757: Six Bolts & Glass Panel
Courtesy of CHRYSLER GROUP, LLC

1. Install the glass (1) and install the six bolts (2).

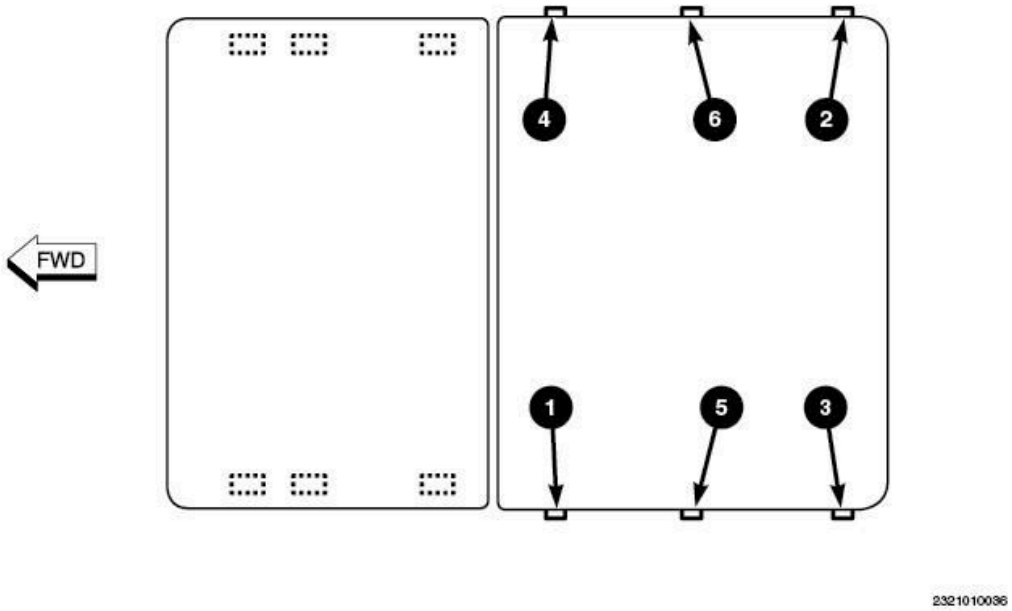

Fig. 758: Identifying Sunroof Bolts
Courtesy of CHRYSLER GROUP, LLC

2. Tighten the bolts to 4.5 N.m (40 in. lbs.) using the sequence shown.
3. Install the sunroof assembly. Refer to **SUNROOF, DUAL PANE, INSTALLATION**.
4. Check and adjust the sunroof glass panels. Refer to **ADJUSTMENTS** and **ADJUSTMENTS** .
5. Verify sunroof operation and alignment.

MOTOR, SUNROOF

DESCRIPTION

DESCRIPTION

For service information, refer to **DESCRIPTION** .

SUNSHADE, SUNROOF

REMOVAL

REMOVAL

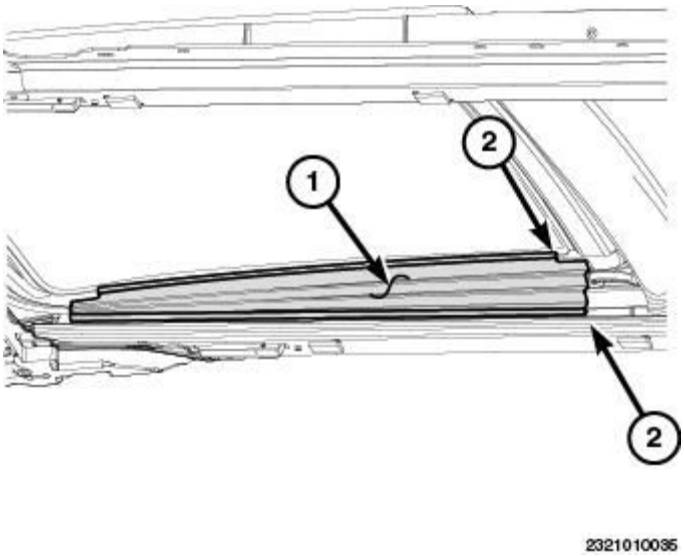

Fig. 759: Identifying Sunroof Mechanism Cover & Mounting Flanges
Courtesy of CHRYSLER GROUP, LLC

1. Open the sunshade fully.
2. Open the front glass into the vent position.

CAUTION: Separate the mechanism covers by pulling on the metal flanges only. Pulling on the cover membrane may result in tearing of the membrane.

3. Separate the mechanism cover (1) from the tabs on the glass panel by pulling on the mounting flanges (2) only.
4. Close the front glass fully.

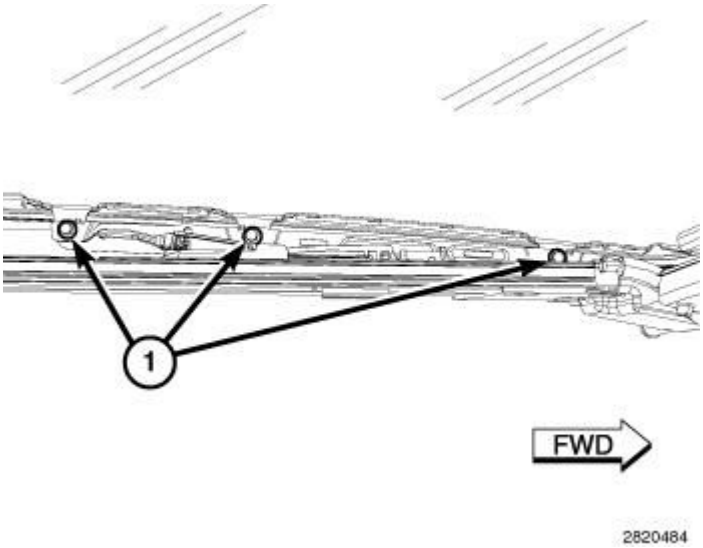

Fig. 760: Six Glass Panel Screws

Courtesy of CHRYSLER GROUP, LLC

5. Remove the six glass panel screws (1).

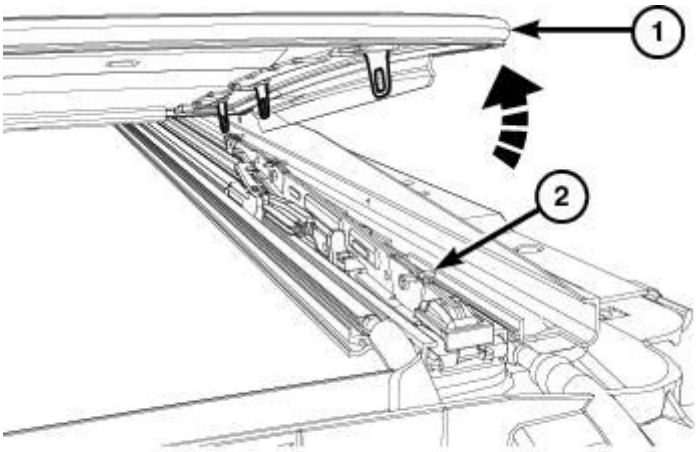

2321010187

Fig. 761: Identifying Glass Panel & Guide Mechanisms
Courtesy of CHRYSLER GROUP, LLC

6. Lift off the glass panel (1) from the guide mechanisms (2) and remove from vehicle.

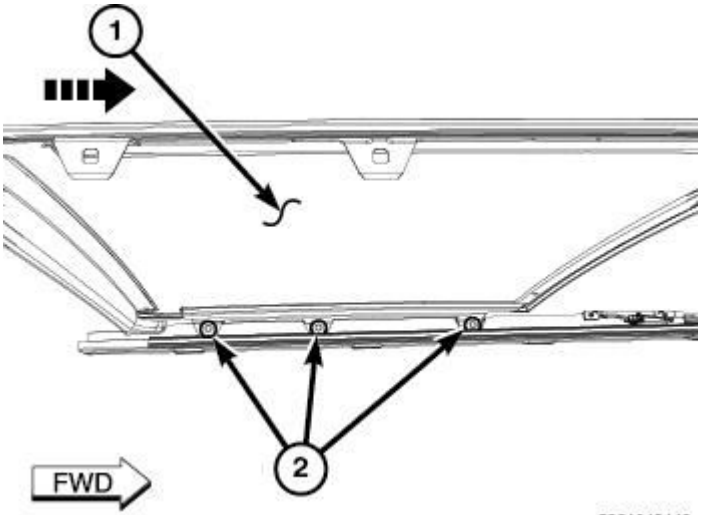

2321012149

Fig. 762: Identifying Rear Glass & Fasteners
Courtesy of CHRYSLER GROUP, LLC

7. Remove the rear glass fasteners (2) and carefully slide the rear glass (1) panel forward to gain access to the sunshade.

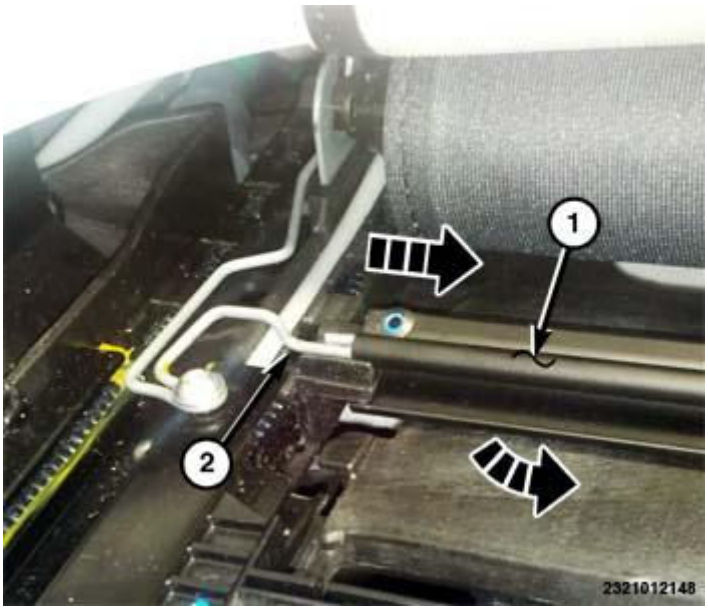

Fig. 763: Releasing Tension Bar Using Small Flat Bladed Tool
Courtesy of CHRYSLER GROUP, LLC

8. Using a small flat bladed tool or equivalent, release the tension bar (1) then slide off the clip (2) and remove.

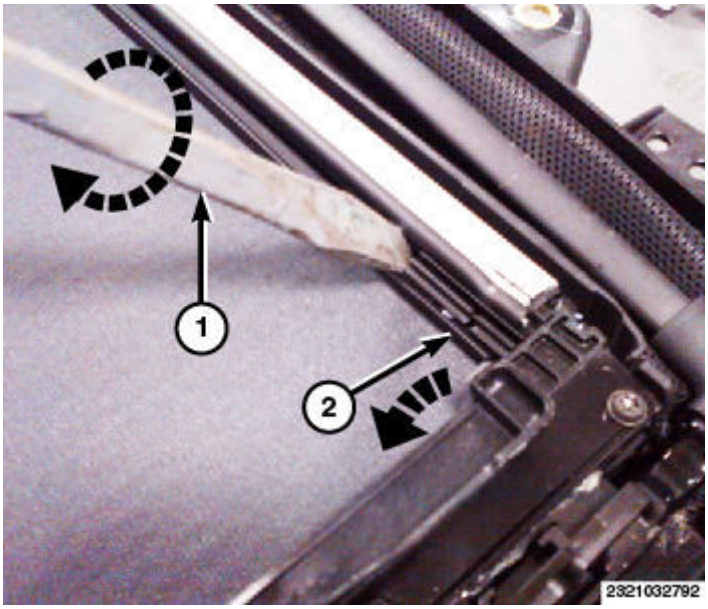

Fig. 764: Removing Shade From Overmolds Using Large Flat Bladed Tool
Courtesy of CHRYSLER GROUP, LLC

NOTE: **The sunshade retraction spring force is significant. Firmly hold onto the sunshade while releasing the shade from the overmolds in the following steps.**

9. Insert a large flat bladed tool (1) into the slot on the overmold brackets.
10. Twist the tool (1) and release the sunshade beam (2) by rotating the tool down and back.
11. Repeat on each side.
12. Allow the spring to retract remaining fabric into the roll.

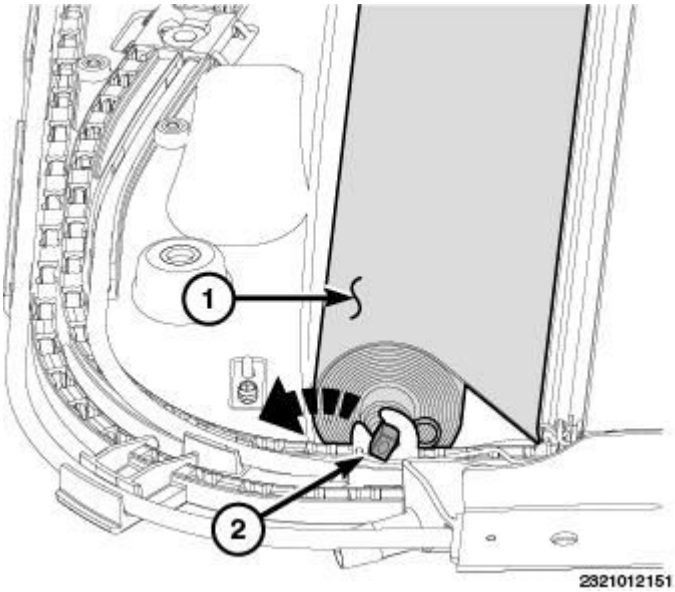

Fig. 765: Removing Sunshade Assembly From Frame Assembly
Courtesy of CHRYSLER GROUP, LLC

13. Twist the sunshade axle (2) and release the sunshade assembly (1) from the frame assembly and position toward the rear of the bracket.

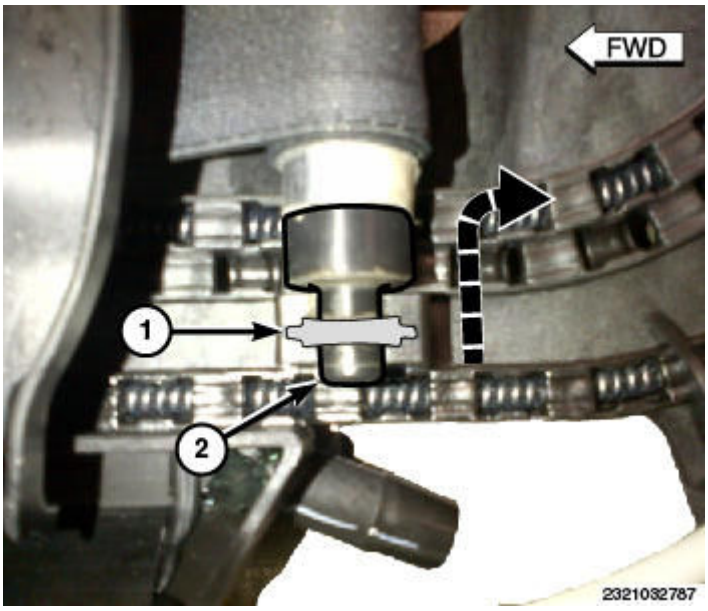

Fig. 766: Removing Support Pin (2) From Support Bracket

Courtesy of CHRYSLER GROUP, LLC

14. Separate the support pin (2) from the support bracket (1) and position behind the bracket.

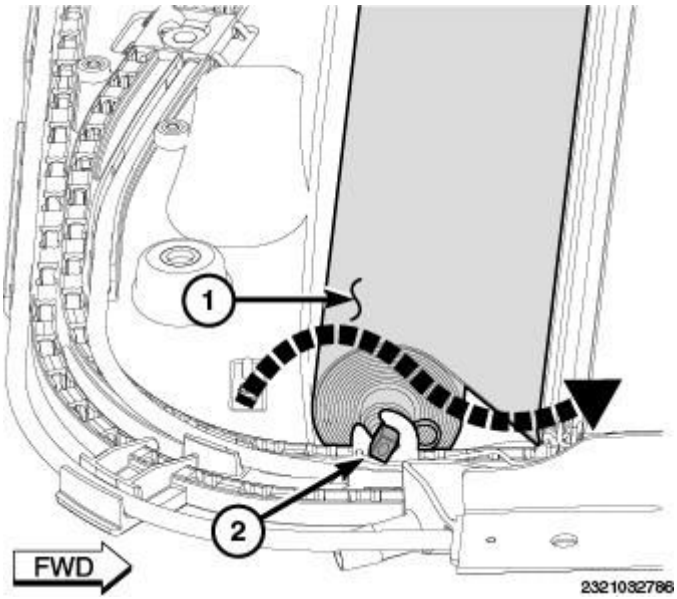

Fig. 767: Lifting Axle From Frame Bracket & Removing Sunshade Out Of Sunroof Opening
Courtesy of CHRYSLER GROUP, LLC

15. Lift the axle (2) up and over the frame bracket then remove the sunshade (1) out of the sunroof opening.

INSTALLATION

INSTALLATION

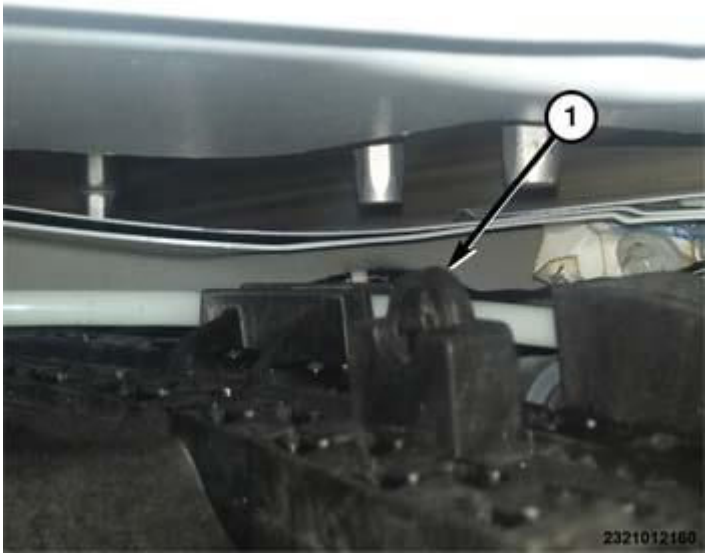

Fig. 768: Identifying Support Bracket

Courtesy of CHRYSLER GROUP, LLC

1. Position the sunshade back into the vehicle with the support pin behind the support bracket (1).

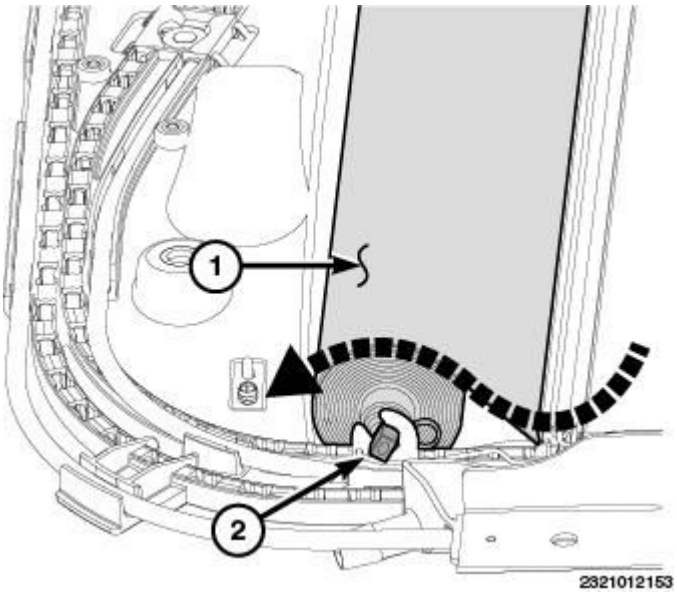

Fig. 769: Identifying Flattened Steel Rod & Shade Assembly
Courtesy of CHRYSLER GROUP, LLC

2. Locate the flattened steel rod (2) on the right hand side of the shade assembly (1) and position behind the steel support plate.

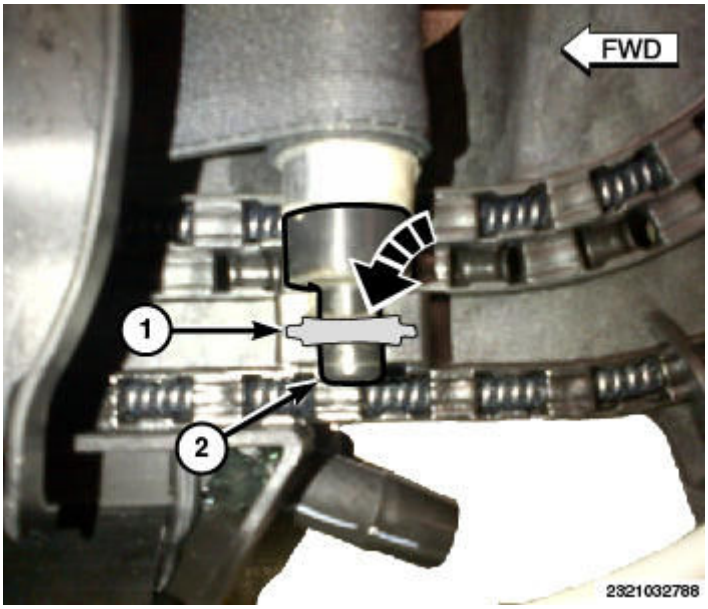

Fig. 770: Identifying Support Pin & Support Bracket
Courtesy of CHRYSLER GROUP, LLC

3. Position the support pin (2) back into the support bracket (1).

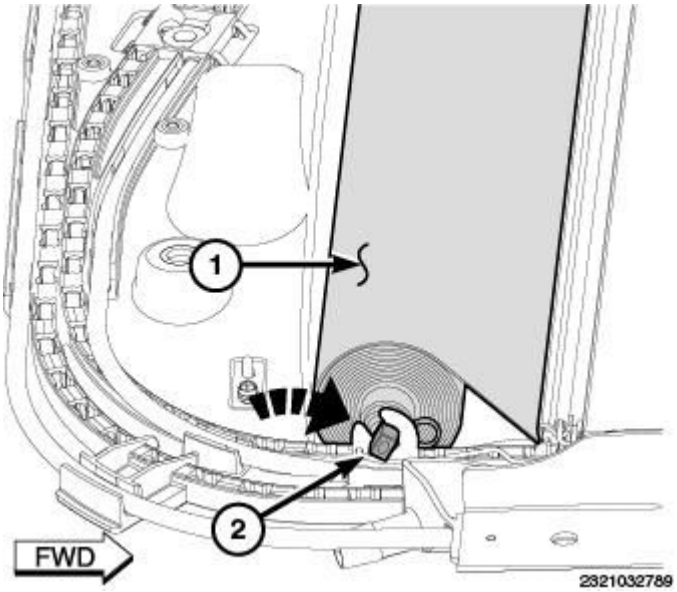

Fig. 771: Installing Flattened Steel Rod Into Slot In Steel Support Plate
Courtesy of CHRYSLER GROUP, LLC

4. Insert the flattened steel rod (2) into the slot in the steel support plate in the rear beam.

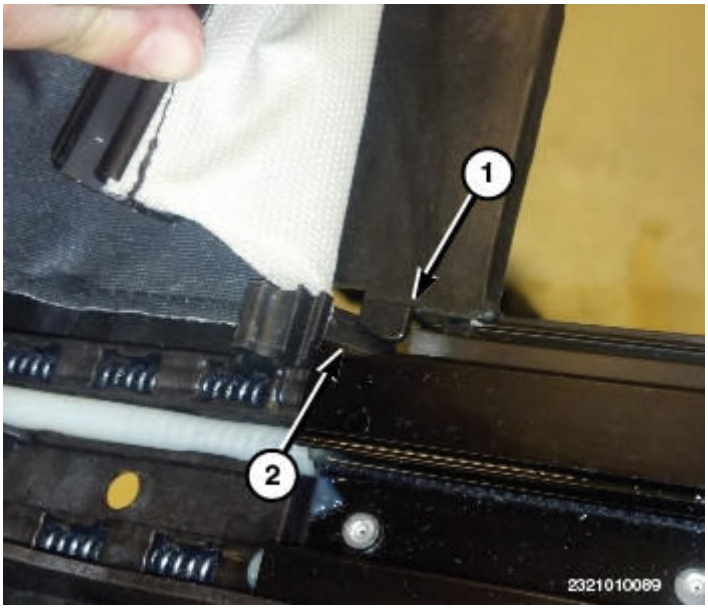

Fig. 772: Identifying Plastic Support Runner & Tab
Courtesy of CHRYSLER GROUP, LLC

NOTE: **The sunshade retraction spring force is significant. Firmly hold onto the sunshade while securing the shade to the overmolds in the following steps.**

5. Pull the sunshade fabric toward the front of the assembly and guide it under the tension bar mounting brackets.
6. While lifting up on the fabric, expose the plastic support runners (2) and guide them under the tabs (1) at each side of the opening.

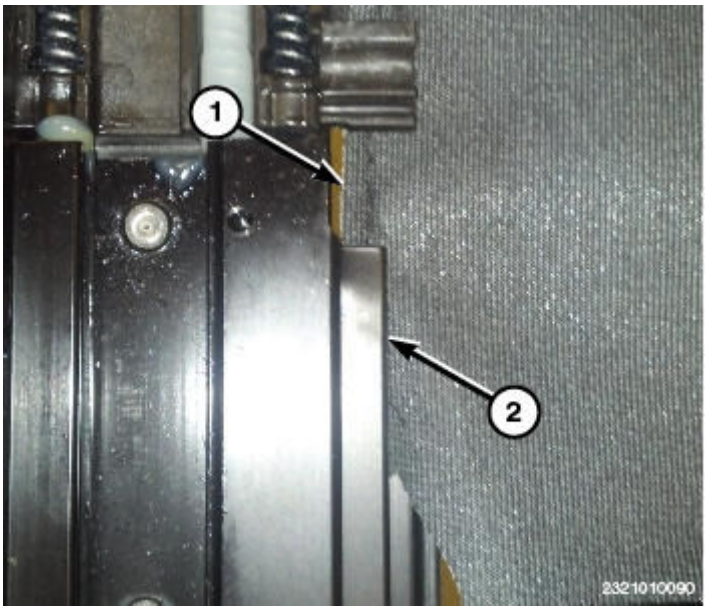

Fig. 773: Identifying Sunshade Fabric & Side Rails
Courtesy of CHRYSLER GROUP, LLC

7. Guide the sunshade fabric (1) under the flanges along the side rails (2) and extend the sunshade toward the overmolds.

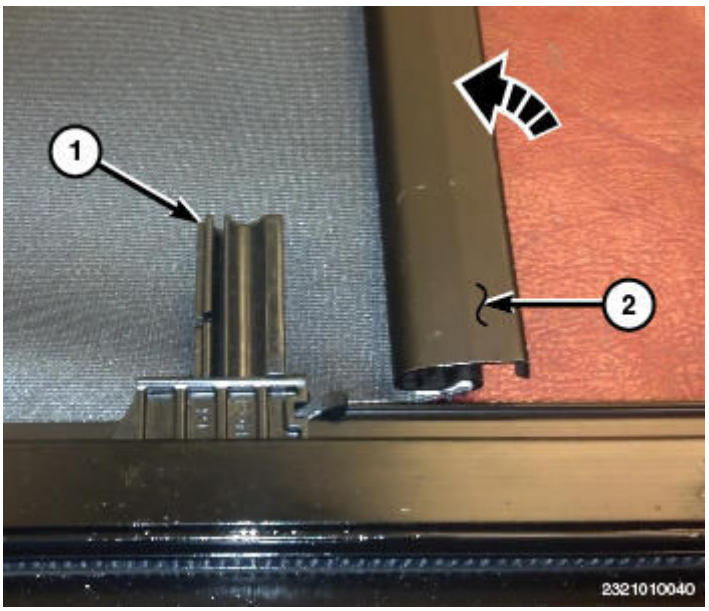

Fig. 774: Identifying Front Aluminum Beam & Overmolds
Courtesy of CHRYSLER GROUP, LLC

8. With the front aluminum beam (2) pulled out in front of the overmolds (1), roll the beam back.

Fig. 775: Identifying Beam & Overmolds
Courtesy of CHRYSLER GROUP, LLC

9. With the beam (1) rolled over and positioned over the overmolds (2), complete rolling the beam over until it snaps into the overmolds fully.

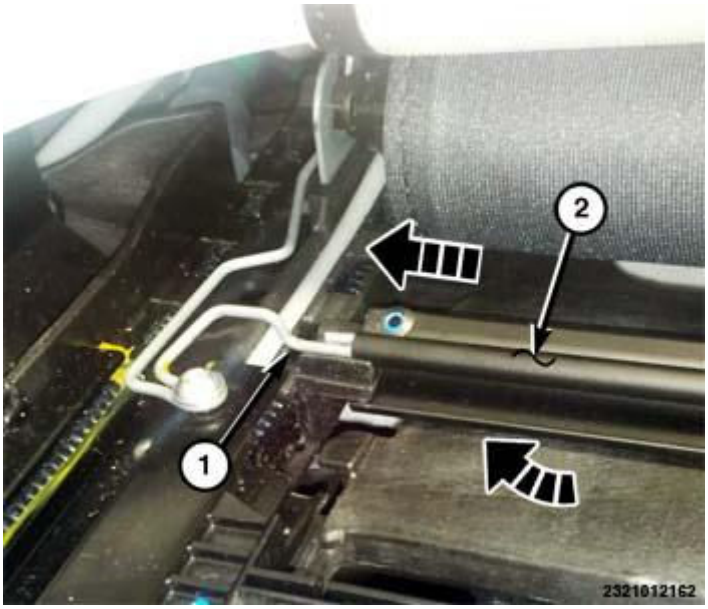

Fig. 776: Identifying Tension Bar & Clip
Courtesy of CHRYSLER GROUP, LLC

10. Position the tension bar (2) back into place and slide onto the clip (1).
11. Rotate the bar (2) up and seat onto the brackets fully.

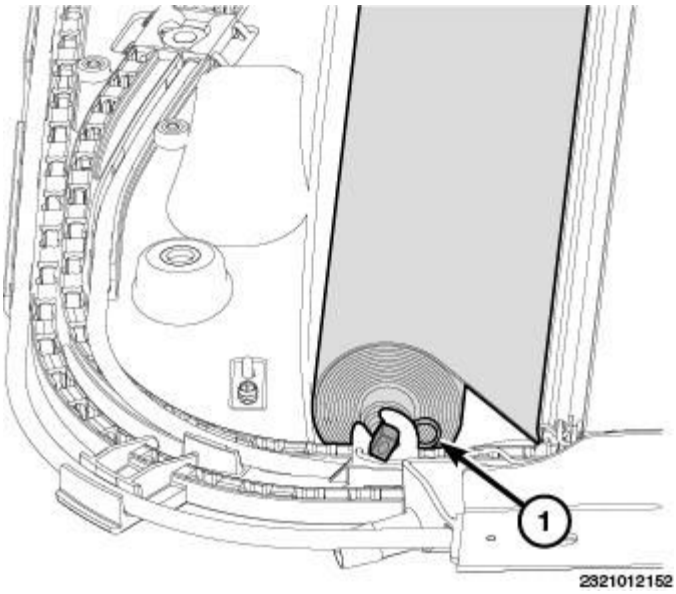

Fig. 777: Identifying Pin
Courtesy of CHRYSLER GROUP, LLC

12. Pull out the pin (1) and release the tension on the retraction spring.

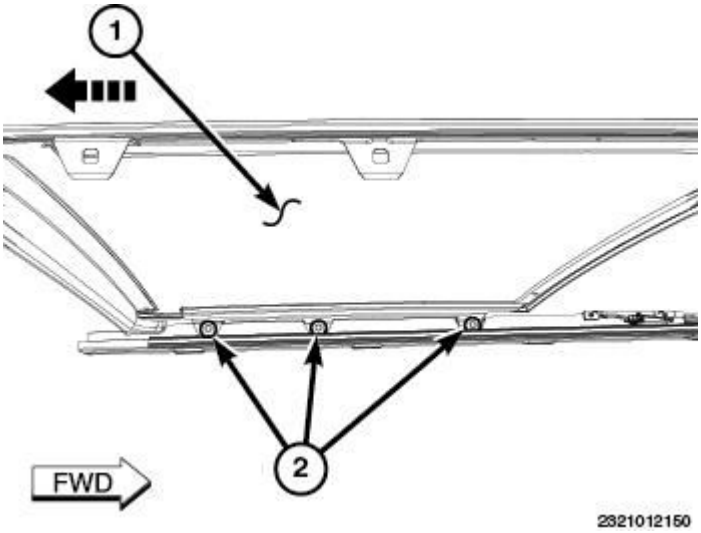

Fig. 778: Identifying Rear Glass & Fasteners
Courtesy of CHRYSLER GROUP, LLC

13. Position the rear glass (1) back and install the six rear bolts (2).

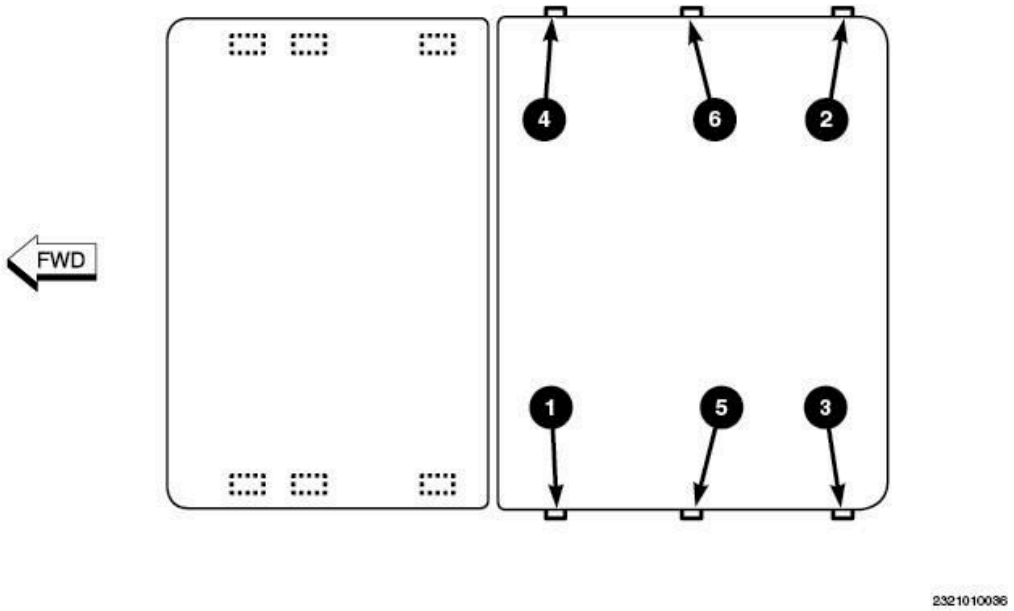

Fig. 779: Identifying Sunroof Bolts
Courtesy of CHRYSLER GROUP, LLC

Tighten the bolts to 4.5 N.m (40 in. lbs.) using the sequence shown.

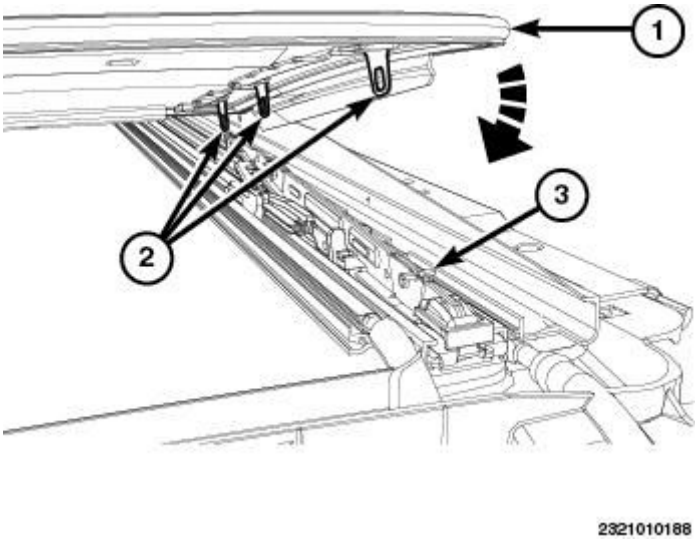

Fig. 780: Identifying Glass Panel & Guide Mechanism/Lift Arms
Courtesy of CHRYSLER GROUP, LLC

14. Position the glass panel (1) onto the guide mechanism/lift arms (3).

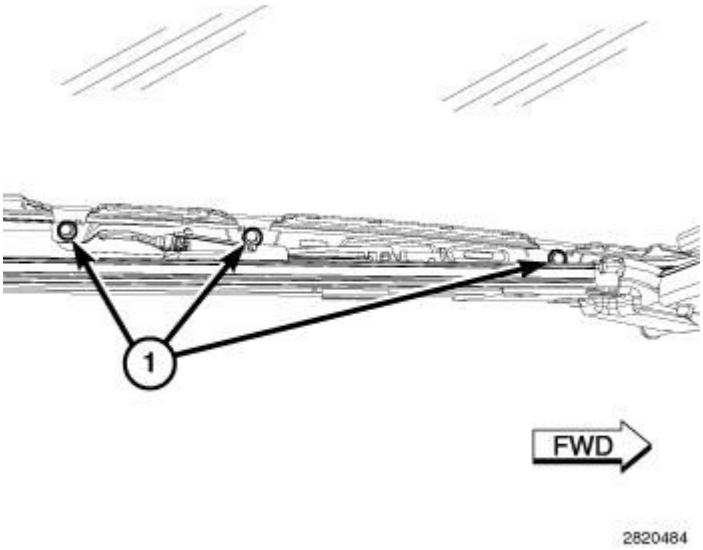

Fig. 781: Six Glass Panel Screws
Courtesy of CHRYSLER GROUP, LLC

15. Start the six attaching screws (1).

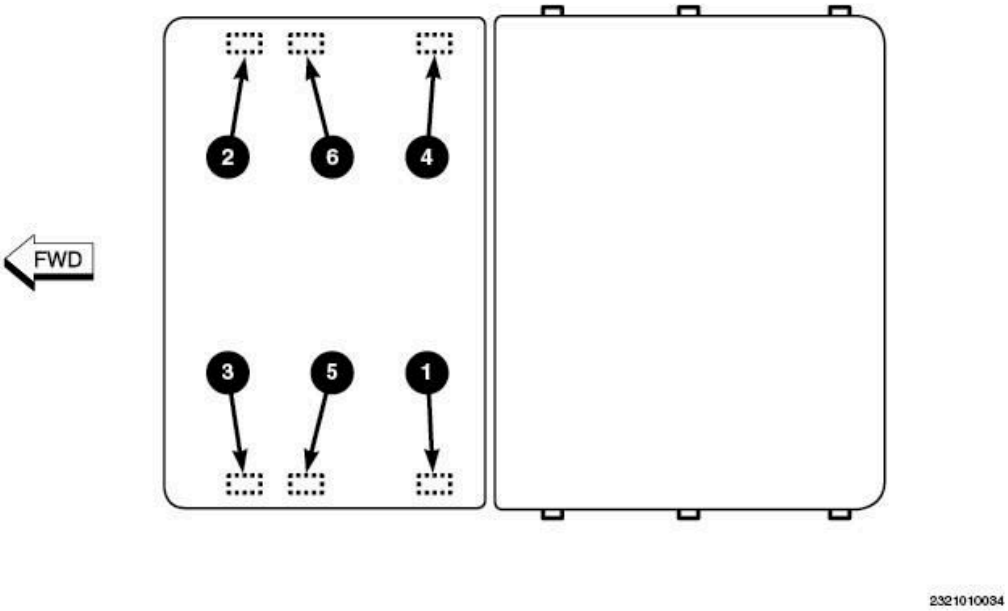

Fig. 782: Identifying Glass Panel Screws
Courtesy of CHRYSLER GROUP, LLC

16. Connect a 12v power supply and verify that the sunroof is in the closed position.
17. Adjust the sunroof glass. Refer to **ADJUSTMENTS** and **ADJUSTMENTS** .
18. Tighten the six screws to 4.5 N.m (40 in. lbs.) using the sequence shown.

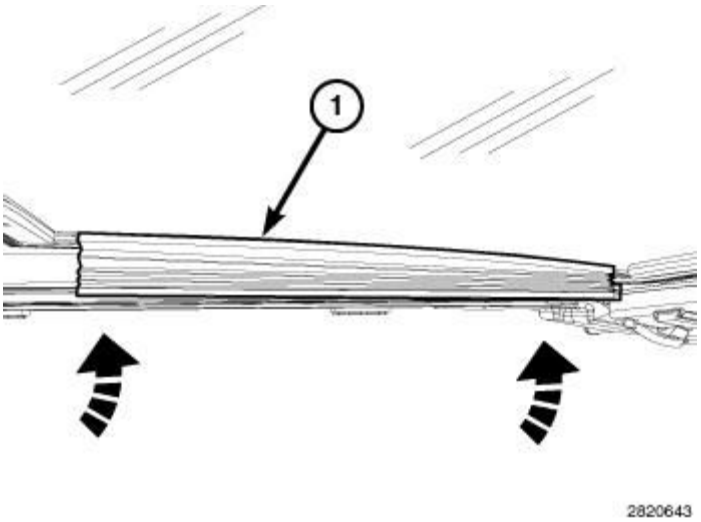

Fig. 783: Mechanism Covers
Courtesy of CHRYSLER GROUP, LLC

19. Position the mechanism covers (1) over the glass tabs between the locating features and seat fully.
20. Initialize sunroof motor. Refer to **SUNROOF, DUAL PANE, STANDARD PROCEDURE**.
21. Verify sunroof operation and alignment.

TROUGH, SUNROOF

REMOVAL

REMOVAL

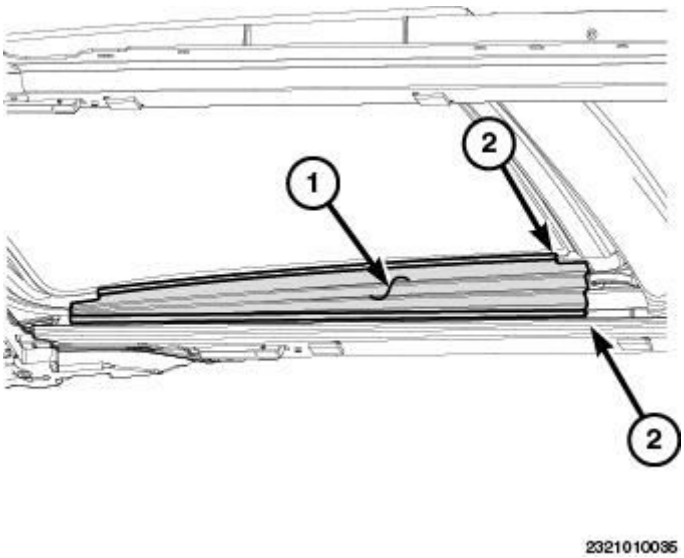

Fig. 784: Identifying Sunroof Mechanism Cover & Mounting Flanges
Courtesy of CHRYSLER GROUP, LLC

1. Open the front glass to the vent position and remove the mechanism covers (1). Refer to **COVER, SUNROOF MECHANISM, REMOVAL**.

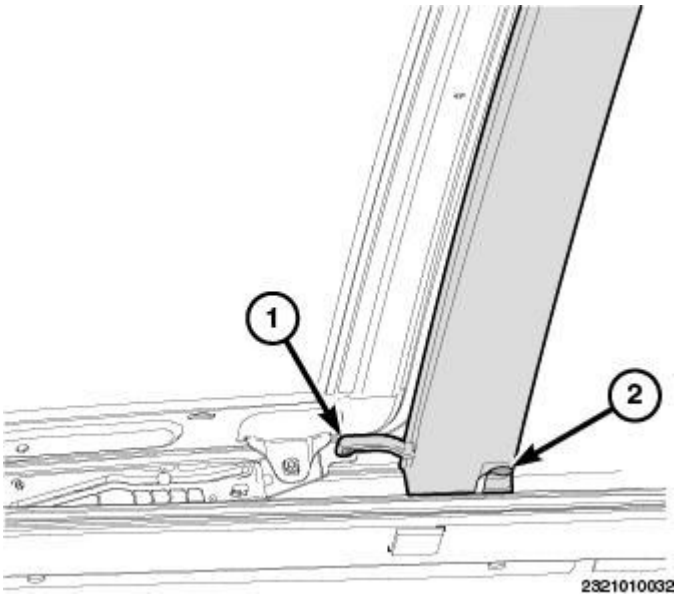

Fig. 785: Identifying Trough Arm
Courtesy of CHRYSLER GROUP, LLC

2. Release the trough arm (1) from the mechanisms and slide the drain trough rearward.

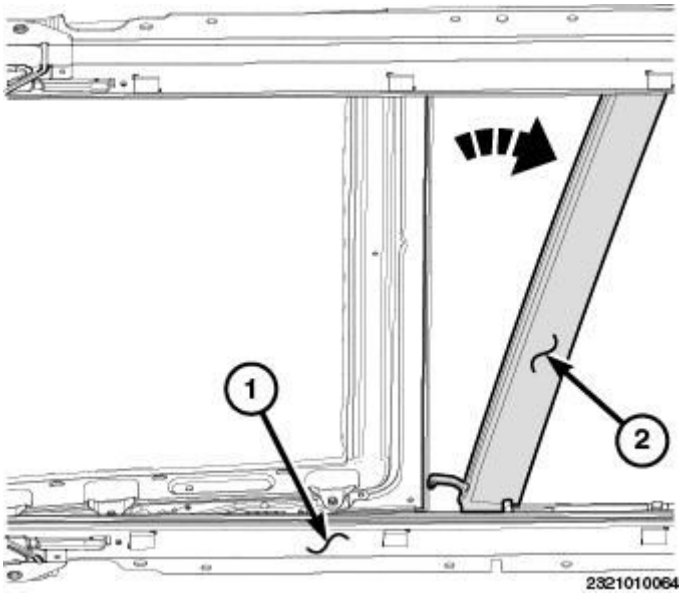

Fig. 786: Identifying Drain Trough & Frame Assembly
Courtesy of CHRYSLER GROUP, LLC

3. Twist the drain trough (2) in the frame assembly (1) and remove.

INSTALLATION

INSTALLATION

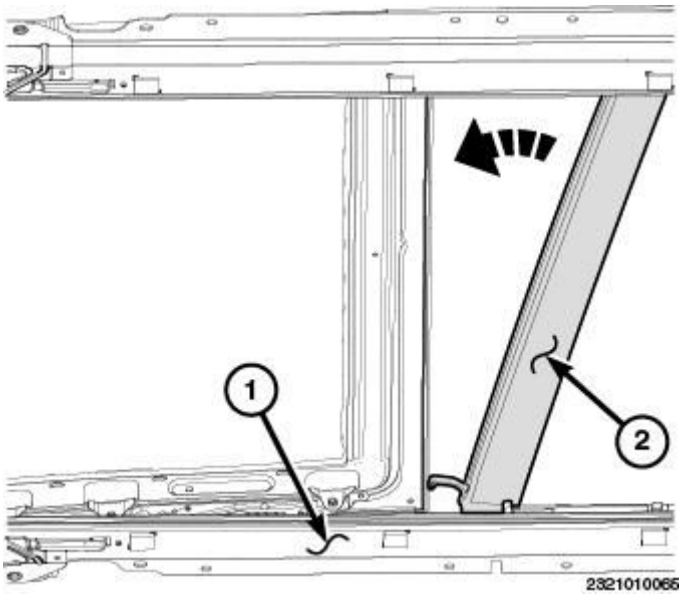

Fig. 787: Identifying Drain Trough & Sunroof Frame Assembly
Courtesy of CHRYSLER GROUP, LLC

1. Position the drain trough (2) up into the sunroof frame assembly (1).

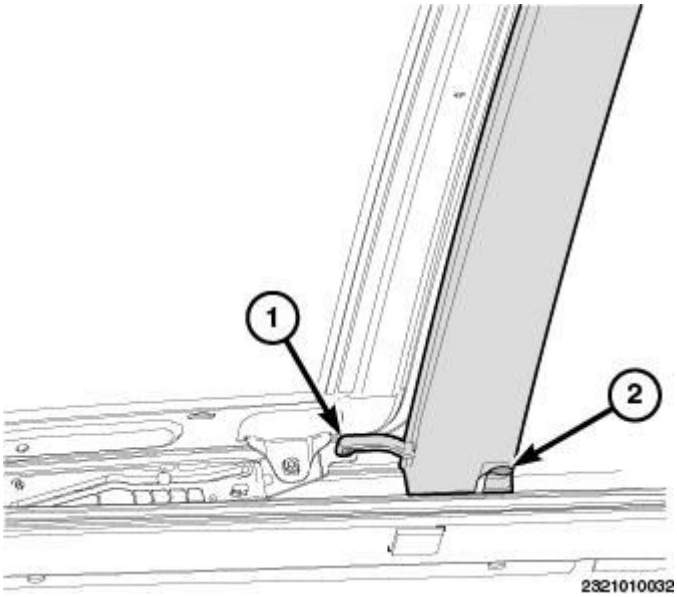

Fig. 788: Identifying Trough Arm
Courtesy of CHRYSLER GROUP, LLC

2. Slide the trough forward over the support spring (2) and connect the arms (1) to the mechanisms.

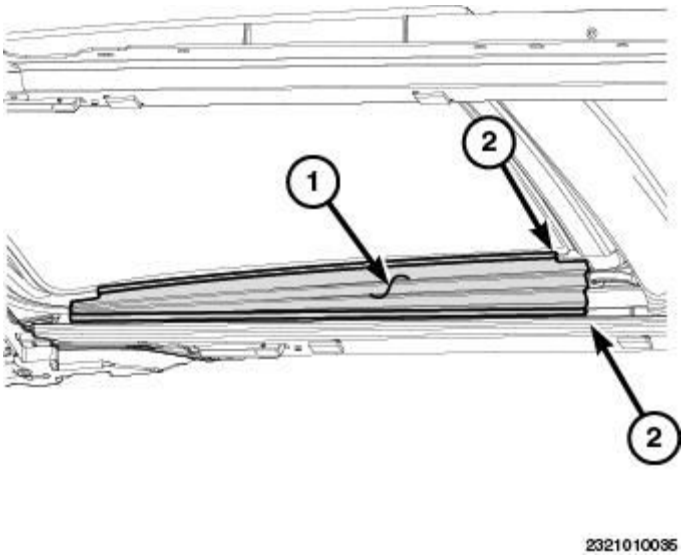

Fig. 789: Identifying Sunroof Mechanism Cover & Mounting Flanges
Courtesy of CHRYSLER GROUP, LLC

3. Install the mechanism covers (1). Refer to **COVER, SUNROOF MECHANISM, INSTALLATION**.

TUBE, SUNROOF DRAIN

REMOVAL

REMOVAL

FRONT

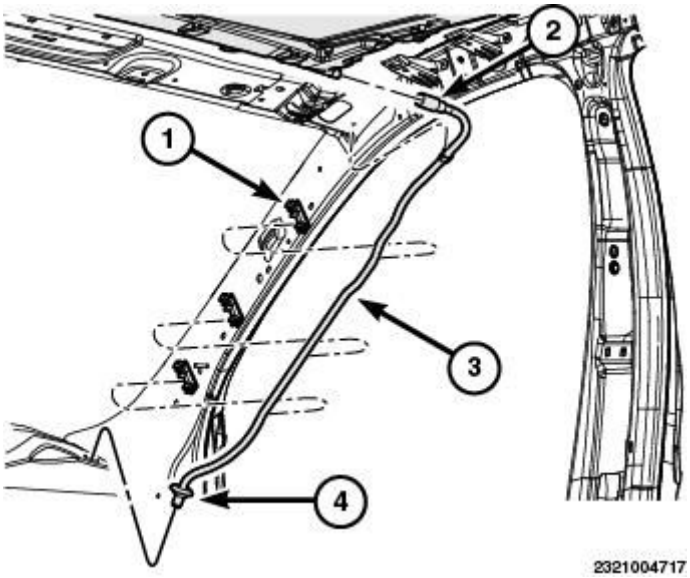

Fig. 790: Identifying Sunroof, Support Clips, Tube & Floor Grommet
Courtesy of CHRYSLER GROUP, LLC

1. Remove the A-pillar trim. Refer to **PANEL, A-PILLAR TRIM, REMOVAL**.
2. Remove the instrument panel speakers as necessary. Refer to **SPEAKER, REMOVAL** .
3. Lower the headliner as necessary to gain access to the drain tube. Refer to **HEADLINER, REMOVAL**.
4. Separate the drain tube from the support clips (1).
5. Disconnect the drain tube from the floor grommet (4).
6. Disconnect the tube from the sunroof (2) and pull the tube (3) up through the instrument panel.

REAR

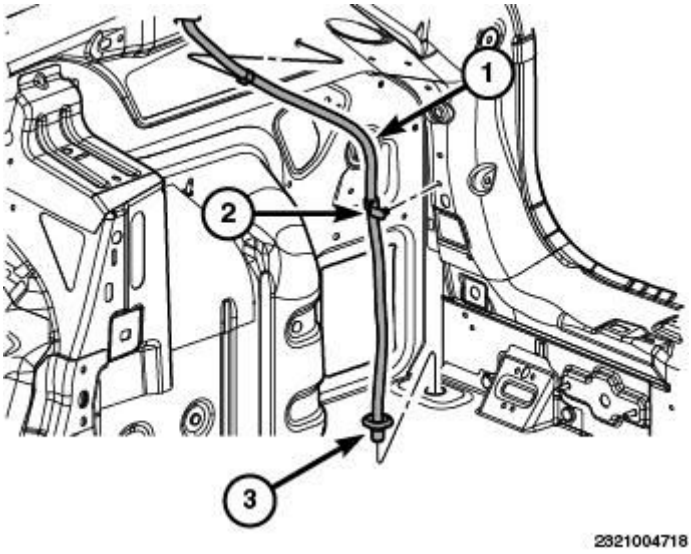

Fig. 791: Identifying Drain Tube, Support Clips & Floor Grommet
Courtesy of CHRYSLER GROUP, LLC

1. Remove the upper B-pillar trim. Refer to **PANEL, B-PILLAR TRIM, REMOVAL**.
2. Remove the rear grab handles. Refer to **HANDLE, GRAB, REMOVAL**.
3. Remove the quarter trim panel. Refer to **PANEL, QUARTER TRIM, REMOVAL**.
4. Lower the headliner as necessary to gain access to the drain tube. Refer to **HEADLINER, REMOVAL**.
5. Separate the drain tube support clips (2).
6. Disconnect the drain tube from the floor grommet (3).

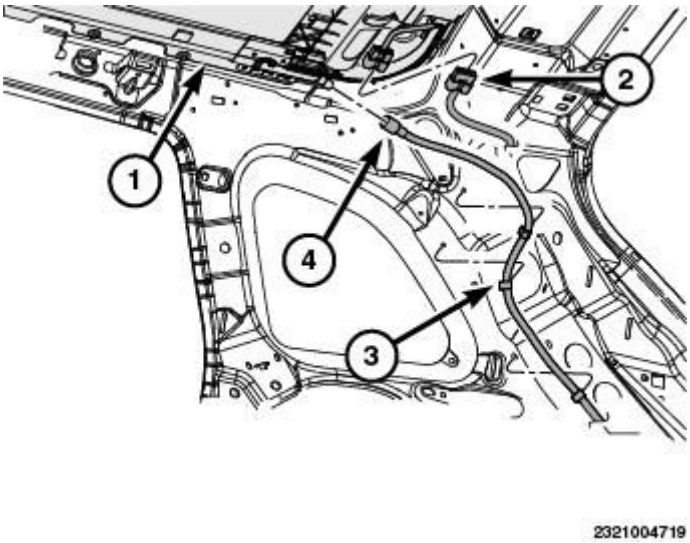

Fig. 792: Identifying Sunroof, Tube & Clips
Courtesy of CHRYSLER GROUP, LLC

7. Disconnect the tube (4) from the sunroof (1) and remove the tube (3).

INSTALLATION

INSTALLATION

FRONT

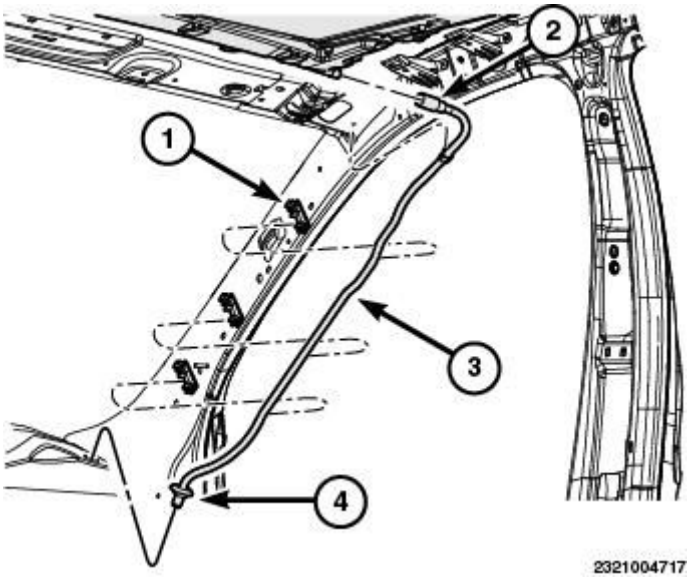

Fig. 793: Identifying Sunroof, Support Clips, Tube & Floor Grommet
Courtesy of CHRYSLER GROUP, LLC

1. Install the front tube (3) and seat into the support fasteners (1) fully.
2. Position the lower portion through the grommet (4) in the body.

3. Connect the new drain tube to the sunroof housing (2) and test drainage.
4. Install the headliner. Refer to **HEADLINER, INSTALLATION**.
5. Install the instrument panel speaker. Refer to **SPEAKER, INSTALLATION** .
6. Install the A-pillar trim. Refer to **PANEL, A-PILLAR TRIM, INSTALLATION**.

REAR

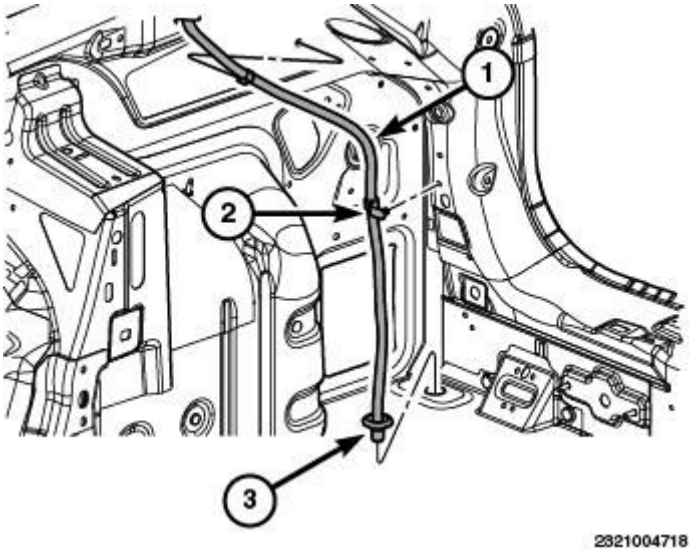

Fig. 794: Identifying Drain Tube, Support Clips & Floor Grommet
Courtesy of CHRYSLER GROUP, LLC

1. Install the rear tube and seat the push pin fasteners (2) fully.
2. Position the lower portion (3) through the grommet in the body.

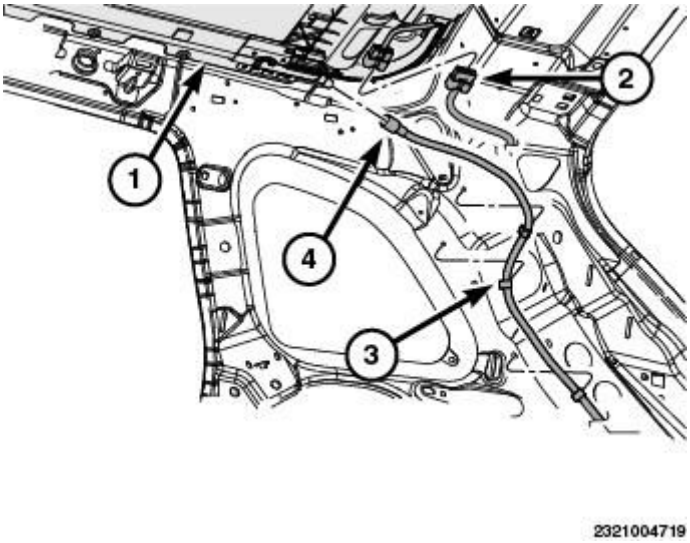

Fig. 795: Identifying Sunroof, Tube & Clips
Courtesy of CHRYSLER GROUP, LLC

3. Connect the new drain tube (4) to the sunroof housing (1) and test drainage.
4. Install the headliner. Refer to **HEADLINER, INSTALLATION**.
5. Install the quarter trim panel. Refer to **PANEL, QUARTER TRIM, INSTALLATION**.
6. Install the grab handles. Refer to **HANDLE, GRAB, INSTALLATION**.
7. Install the upper B-pillar trim. Refer to **PANEL, B-PILLAR TRIM, INSTALLATION**.

BODY STRUCTURE

GAP AND FLUSH

SPECIFICATIONS

BODY GAP AND FLUSH MEASUREMENTS

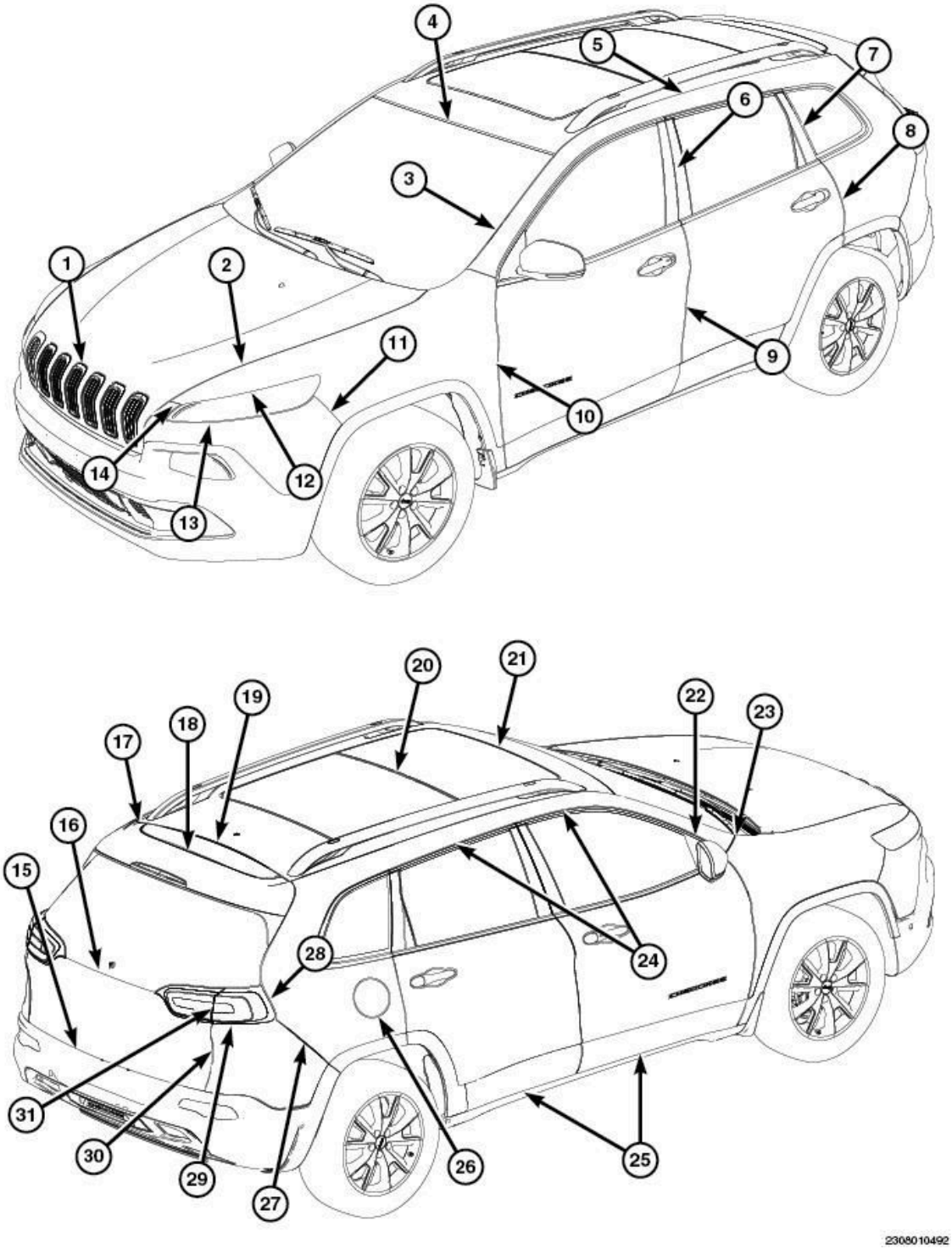

Fig. 796: Identifying Body Gap And Flush Measurements
Courtesy of CHRYSLER GROUP, LLC

NOTE: All measurements are in millimeters.

- **O/F = Over Flush**
- **U/D = Up/Down**
- **U/F = Under Flush**
- **F/A = Fore/Aft**

BODY GAP AND FLUSH MEASUREMENTS TABLE

DIMENSION	DESCRIPTION	GAP	FLUSH
1	Grille Ring to Hood	1.0 +/- 0.5	-
2	Hood to Fender	3.5 +/- 1.5 Parallel within 1.0 Side to side within 2.0	0.0 +/- 1.5 0.0 +/- 1.0 Hood U/D within 1.0 of curve
3	Windshield to A-pillar	4.0 +/- 2.0	-
4	Windshield to Roof	6.5 +/- 2.0	Windshield U/F 2.0 +/- 1.5
5	Roof to Body Side Aperture	-	Roof U/F 6.5 +/- 1.5 Transition to 8.0 in rear
6	Front Door Applique to Rear Door Applique	4.0 +/- 2.0 Parallel within 1.5	0.0 +/- 1.5
7	Quarter Glass to Rear Door Applique	4.0 +/- 1.5 Parallel within 1.0	Quarter Glass O/F 1.0 +/- 1.5
8	Rear Door to Body Side Aperture	3.5 +/- 1.0 Parallel within 1.0	0.0 +/- 1.0
9	Front Door to Rear Door	3.5 +/- 1.0 Parallel within 1.0	Front Door O/F 0.5 +/- 1.0
10	Fender to Front Door Feature Line U/D 0.0 +/- 1.0	3.5 +/- 1.0 Parallel within 1.0	Fender O/F 0.5 +/- 1.0
11	Upper Fascia to Fender	0.0 +/- 0.5	0.0 +/- 0.5
12	Daylight Running Lamp to Fender	1.0 +/- 1.0	Lamp U/F 1.0+/- 0.5
13	Daylight Running Lamp to Fascia	1.0 +/- 1.0	Lamp U/F 1.5+/- 1.0
14	Upper Fascia to Fender	0.0 +/- 1.0	Fascia O/F 0.5 +/- 0.5 Cross Car 0.0 +/- 1.0
15	Fascia to Liftgate	5.5 +/- 1.5 Parallel within 1.5	0.0 +/- inboard transitioning to O/F 4.0 outboard

16	Liftgate to Liftgate Glass	4.0 +/- 1.5	Liftgate U/F 0.5 +/- 1.5
17	Spoiler to Body Side Aperture	5.0 +/- 1.5 Parallel within 1.5	Spoiler U/F 3.0 +/- 1.5 Consistent within 1.5
18	Spoiler to Roof	6.0 +/- 1.5 Parallel within 1.5	Spoiler U/F 2.0 +/- 1.5 Consistent within 1.5
19	Liftgate to Roof	6.0 +/- 1.0 Parallel within 0.5	Liftgate U/F 2.0 +/- 1.0 Consistent within 1.0
20	Rear Sunroof Glass to Front Sunroof Glass	0.0 +/- 0.0	Rear Sunroof Glass 0.0 to U/F 2.5 Consistent within 1.5
21	Sunroof Glass to Front Roof	0.0 +/- 0.0	Sunroof Front 0.0 to U/F 2.5 Sunroof Rear 0.0 to O/F 2.5 Consistent within 1.5
22	Door Molding to Mirror Flag	0.0 +/- 0.5	Flag O/F 2.0 +/- 1.5 transitioning to 3.5 at top
23	Fender to A-pillar	2.0 +/- 1.0 Parallel within 1.0 Side to side within 1.0	0.0 +/- 1.0 Cross Car within 1.0
24	Door Molding to Body Side Aperture	4.5 +/- 1.5 Parallel within 1.5	Molding U/F 1.5 +/- 1.5
25	Sill Moldings to Door Cladding	6.0 +/- 2.0	Cross car varies +/- 2.0
26	Fuel Door to Body Side Aperture	2.5 +/- 0.5	Door U/F 0.5 +/- 0.5
27	Body Side Aperture to Rear Fascia	1.0 +/- 1.0	Fascia U/F 0.5+/- 0.5 transitioning to flush at Lamp and Flare
28	Body Side Aperture Lamp to Body Side Aperture	0.0 + 0.5 Parallel within 1.0	Lamp U/F 0.5+/- 1.0 transitioning to 0.0 at top
29	Body Side Aperture Lamp to Body Side Fascia	1.0 +/- 1.0 Side to side within 1.0	Varies +/- 1.0
30	Liftgate to Fascia	4.0 +/- 1.5	Fascia (top) O/F 2.0+/- 1.5 transitioning to 1.5 at bottom

		Side to side within 1.5	Consistent within 1.5
31	Body Side Aperture Lamp to Liftgate Lamp	4.0 +/- 1.5 Parallel within 1.5 Side to side within 2.0	Varies +/- 1.5 Consistent within 1.5 Side to Side within 2.0

2014 ACCESSORIES AND EQUIPMENT

Body Control Module (BCM) - Electrical Diagnostics - Cherokee

STANDARD PROCEDURE

BODY VERIFICATION TEST

BODY VERIFICATION TEST

1. Disconnect all jumper wires and reconnect all previously disconnected components and connectors.
2. Make sure all accessories are turned off.
3. Make sure the battery is fully charged.
4. Turn the ignition on.
5. With the scan tool, record and erase Diagnostic Trouble Codes (DTC)s from all modules.
6. If any repairs were performed to the Radio Frequency Hub (RF-Hub) system, with the scan tool, select "Diagnostic Procedures", "Reset ECU", "RFH" and perform the routine.
7. If an electronic control module was replaced, select the applicable module from the scan tool. If the module has programmable features, program as necessary.
8. Turn the ignition off, wait 10 seconds, and then turn the ignition on.
9. Operate all functions of the system that caused the original concern.
10.
    - If a repair or module replacement was done to the power windows, denormalize the module by lowering the window all the way down and stall it for two seconds.

      Press and release the down switch once again.

    - Operate the motor to the full up position and stall it for two seconds.
11. With the scan tool, view all the modules and check for DTCs.

Are DTCs present in any of the modules or is the original condition still present?

Yes

- The repair is not complete. Perform the appropriate diagnostic procedure for the DTC or symptom that is still present. Refer to **DTC INDEX** .

No

- The repair is complete.

COMMUNICATION PRE-DIAGNOSTIC PROCEDURE

COMMUNICATION PRE-DIAGNOSTIC PROCEDURE

NOTE: Verify that the battery is fully charged before attempting any diagnostic procedure.

1. Check for any Service Bulletins/Recalls that may apply.
2. With the scan tool, read all active DTCs from all modules.
3. Check for BCM configuration, CAN Bus, VIN Missing/Mismatch, battery or ignition related DTCs. If any DTCs are present, perform the appropriate diagnostic procedure before proceeding. Refer to **DTC INDEX** .

   If none of the above apply, pick the one below that best describes your situation:

   If you were referred to this procedure from another module diagnosis and testing article and no other modules are reporting a lost communication DTC against that module:

   - Refer to **BODY CONTROL MODULE (BCM) - DIAGNOSTIC CODE INDEX** and perform the Lost Communication procedure for the module that was referenced.

     NOTE: Some DTC numbers and naming may not match exactly to those listed in the BCM. Select the DTC that matches the closest.

   If more than one module is reporting a communication DTC against one module:

   - This is an indication of a communication problem with that module. Perform the No Response from the module that is being reported from the other modules. Refer to **DIAGNOSIS AND TESTING** .

   If the reported DTC is not Active:

   - Refer to **DIAGNOSIS AND TESTING** and perform the STORED LOST COMMUNICATION DTCS diagnostic procedure.

2014 ACCESSORIES AND EQUIPMENT

Body Control Module (BCM) - Electrical Diagnostics - Cherokee

DIAGNOSIS AND TESTING

B106A-12-REAR DEFROST (EBL) CONTROL CIRCUIT - CIRCUIT SHORT TO BATTERY

For a complete wiring diagram, **refer to appropriate SYSTEM WIRING DIAGRAMS article** .

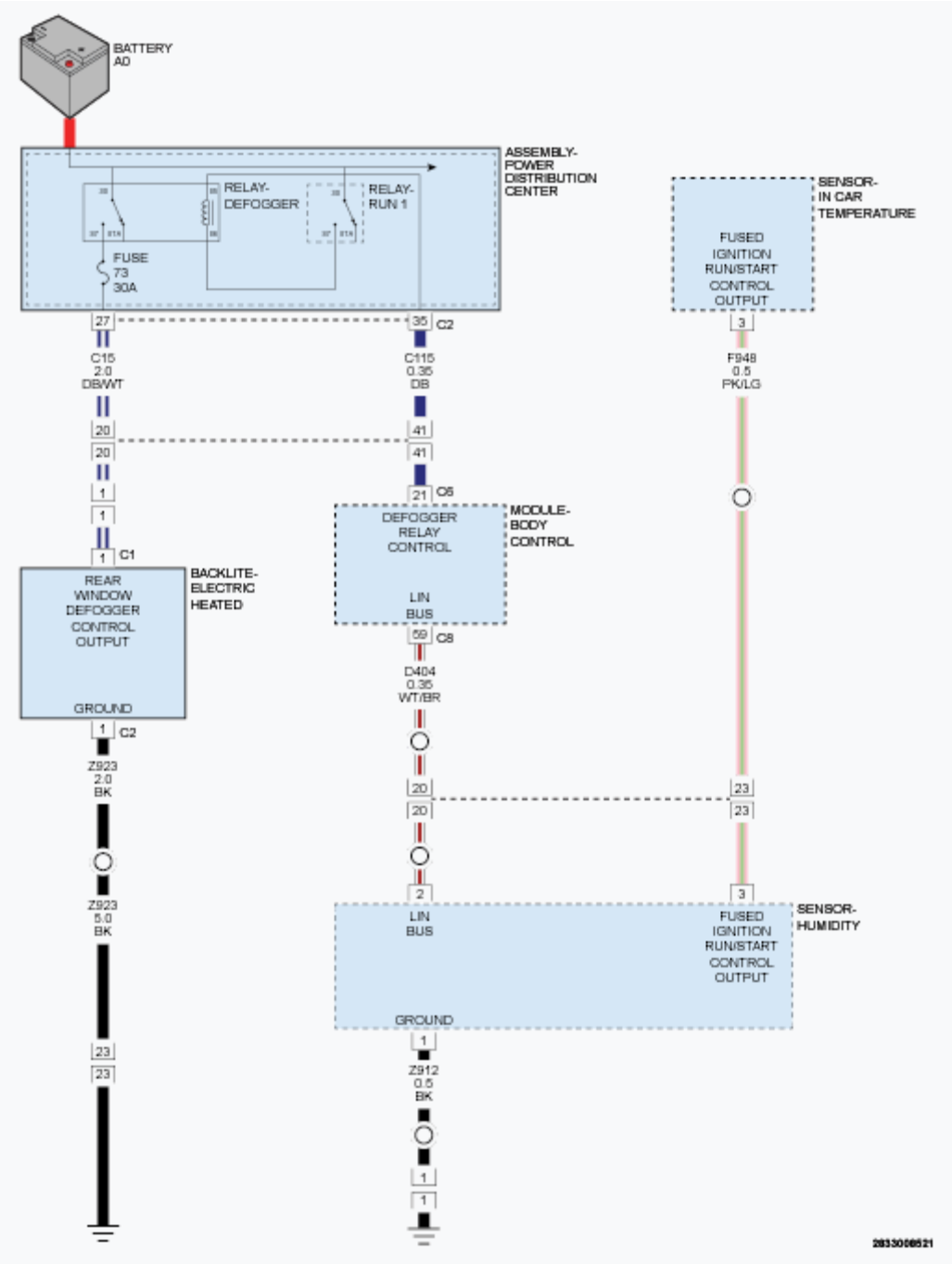

Fig. 1: Rear Defrost Control Circuit Diagram
Courtesy of CHRYSLER GROUP, LLC

WHEN MONITORED

With the ignition on.

SET CONDITION

The Body Control Module (BCM) detects a short to voltage on the Defogger Relay Control circuit.

POSSIBLE CAUSES

Possible Causes
DEFOGGER RELAY CONTROL CIRCUIT SHORTED TO VOLTAGE
REAR WINDOW DEFOGGER RELAY
BODY CONTROL MODULE (BCM)

DIAGNOSTIC TEST

1. **CHECK FOR AN ACTIVE DTC**
    1. Turn the ignition on.
    2. With the scan tool, read DTCs.

    Does the scan tool display this DTC as active?

    Yes

    - Go To 2

    No

    - Test complete. The condition or conditions that originally set this DTC are not present at this time. Using the wiring diagrams as a guide, check all related splices and connectors for signs of water intrusion, corrosion, pushed out or bent terminals and correct pin tension.
    - Perform the BODY VERIFICATION TEST. Refer to **STANDARD PROCEDURE** .
2. **CHECK THE REAR WINDOW DEFOGGER RELAY IN THE UNDERHOOD PDC**
    1. Turn the ignition off.
    2. Remove the Rear Window Defogger Relay from the Underhood PDC.
    3. Replace the relay with a known good relay.
    4. Turn the ignition on.
    5. With the scan tool, read DTCs.

    Does the scan tool display this DTC as active?

    Yes

    - Go To 3

    No

    - Replace the Rear Window Defogger Relay.

- Perform the BODY VERIFICATION TEST. Refer to **STANDARD PROCEDURE** .

3. **CHECK THE (C115) DEFOGGER RELAY CONTROL CIRCUIT FOR A SHORT TO VOLTAGE**
   1. Turn the ignition off.
   2. Remove the Rear Window Defogger Relay from the Underhood PDC.
   3. Disconnect the BCM C6 harness connector.
   4. Turn the ignition on.
   5. Measure the voltage of the (C115) Defogger Relay Control circuit.

   Is there any voltage present?

   Yes

   - Repair the short to voltage in the (C115) Defogger Relay Control circuit.
   - Perform the BODY VERIFICATION TEST. Refer to **STANDARD PROCEDURE** .

   No

   - Replace the BCM in accordance with the Service Information. Refer to **MODULE, BODY CONTROL, REMOVAL** .
   - Perform the BODY VERIFICATION TEST. Refer to **STANDARD PROCEDURE** .

B106A-14-REAR DEFROST (EBL) CONTROL CIRCUIT-CIRCUIT SHORT TO GROUND OR OPEN

For a complete wiring diagram, **refer to appropriate SYSTEM WIRING DIAGRAMS article** .

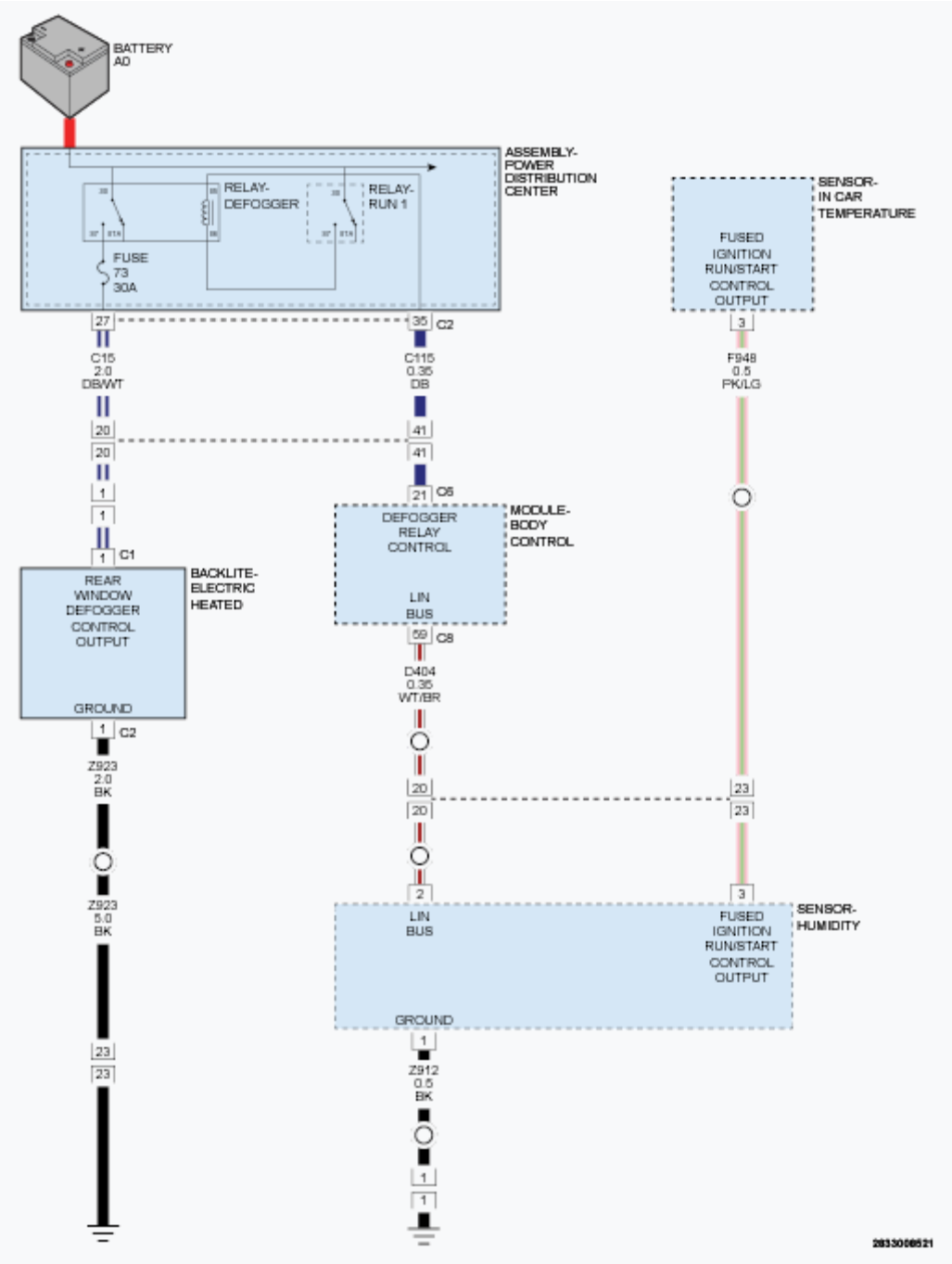

Fig. 2: Rear Defrost Control Circuit Diagram
Courtesy of CHRYSLER GROUP, LLC

WHEN MONITORED

With the ignition on.

SET CONDITION

The Body Control Module (BCM) detects a short to ground or open in the Defogger Relay Control circuit.

POSSIBLE CAUSES

Possible Causes
(C115) DEFOGGER RELAY CONTROL CIRCUIT SHORTED TO GROUND
(C115) DEFOGGER RELAY CONTROL CIRCUIT OPEN
REAR WINDOW DEFOGGER RELAY
BODY CONTROL MODULE (BCM)

DIAGNOSTIC TEST

1. **CHECK FOR AN ACTIVE DTC**
    1. Turn the ignition on.
    2. With the scan tool, read DTCs.

    Does the scan tool display this DTC as active?

    Yes

    - Go To 2

    No

    - Test complete. The condition or conditions that originally set this DTC are not present at this time. Using the wiring diagrams as a guide, check all related splices and connectors for signs of water intrusion, corrosion, pushed out or bent terminals and correct pin tension.
    - Perform the BODY VERIFICATION TEST. Refer to **STANDARD PROCEDURE** .
2. **CHECK THE REAR WINDOW DEFOGGER RELAY IN THE UNDERHOOD PDC**
    1. Turn the ignition off.
    2. Remove the Rear Window Defogger Relay from the Underhood PDC.
    3. Replace the relay with a known good relay.
    4. Turn the ignition on.
    5. With the scan tool, read DTCs.

    Does the scan tool display this DTC as active?

    Yes

    - Go To 3

    No

- Replace the Rear Window Defogger Relay.
- Perform the BODY VERIFICATION TEST. Refer to **STANDARD PROCEDURE** .

3. **CHECK THE (C115) DEFOGGER RELAY CONTROL CIRCUIT FOR A SHORT TO GROUND**
   1. Turn the ignition off.
   2. Disconnect the BCM C6 harness connector.
   3. Measure the resistance between ground and the (C115) Defogger Relay Control circuit.

      Is the resistance below 10K Ohms?

      Yes

      - Repair the short to ground on the (C115) Defogger Relay Control circuit.
      - Perform the BODY VERIFICATION TEST. Refer to **STANDARD PROCEDURE** .

      No

      - Go To 4
4. **CHECK THE (C115) DEFOGGER RELAY CONTROL CIRCUIT FOR AN OPEN**
   1. Measure the resistance of the (C115) Defogger Relay Control circuit between the BCM C6 and the Rear Window Defogger Relay in the Underhood PDC.

      Is the resistance below 5.0 Ohms?

      Yes

      - Replace the BCM in accordance with the Service Information. Refer to **MODULE, BODY CONTROL, REMOVAL** .
      - Perform the BODY VERIFICATION TEST. Refer to **STANDARD PROCEDURE** .

      No

      - Repair the open in the (C115) Defogger Relay Control circuit.
      - Perform the BODY VERIFICATION TEST. Refer to **STANDARD PROCEDURE** .

B1609-11-PANEL DIMMER INPUT - CIRCUIT SHORT TO GROUND

For a complete wiring diagram, **refer to appropriate SYSTEM WIRING DIAGRAMS article** .

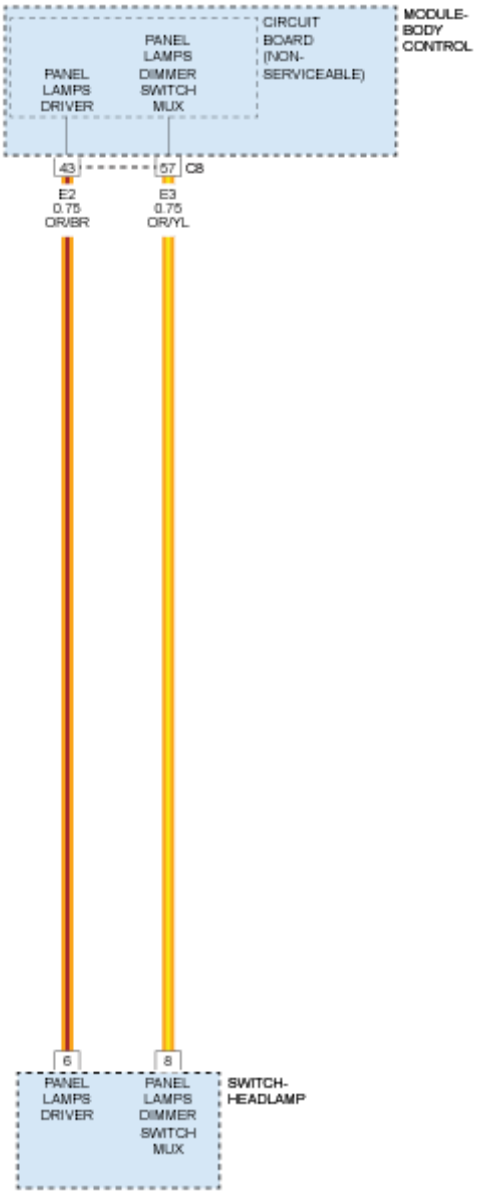

Fig. 3: Dimmer Switch Circuit Diagram
Courtesy of CHRYSLER GROUP, LLC

WHEN MONITORED

With the ignition on.

SET CONDITION

The Body Control Module (BCM) detects that the Panel Dimmer Input signal is less than 0.5 of a volt for more than one second.

POSSIBLE CAUSES

Possible Causes
(E2) PANEL LAMPS DIMMER SIGNAL CIRCUIT SHORTED TO GROUND
DIMMER SWITCH
BODY CONTROL MODULE (BCM)

DIAGNOSTIC TEST

1. **CHECK FOR AN ACTIVE DTC**
    1. Turn the ignition on.
    2. With the scan tool, read DTCs.

    Does the scan tool display this DTC as active?

    Yes

    - Go To 2

    No

    - Test complete. The condition that caused this code to set is not present at this time. Check for an intermittent condition by inspecting the related wiring harness for chafed, pierced, pinched and partially broken wires. Also inspect the related connectors for broken, bent, pushed out, spread, corroded or contaminated terminals.
    - Perform the BODY VERIFICATION TEST. Refer to **STANDARD PROCEDURE** .
2. **CHECK THE OPERATION OF DIMMER SWITCH**
    1. Turn the ignition off.
    2. Disconnect the Dimmer Switch harness connector.
    3. Turn the ignition on.
    4. With the scan tool, read DTCs.

    Does the scan tool display DTC: B1609-15-PANEL DIMMER INPUT - CIRCUIT SHORT TO BATTERY OR OPEN as active?

    Yes

    - Replace the Dimmer Switch in accordance with the Service Information.
    - Perform the BODY VERIFICATION TEST. Refer to **STANDARD PROCEDURE** .

    No

    - Go To 3

3. **CHECK THE (E2) PANEL LAMPS DIMMER SIGNAL CIRCUIT FOR A SHORT TO GROUND**
   1. Turn the ignition off.
   2. Disconnect the BCM C8 harness connector.
   3. Measure the resistance between ground and the (E2) Panel Lamps Dimmer Signal circuit.

      Is the resistance below 10K Ohms?

      Yes

      - Repair the short to ground in the (E2) Panel Lamps Dimmer Signal circuit.
      - Perform the BODY VERIFICATION TEST. Refer to **STANDARD PROCEDURE** .

      No

      - Replace the BCM in accordance with the Service Information. Refer to **MODULE, BODY CONTROL, REMOVAL** .
      - Perform the BODY VERIFICATION TEST. Refer to **STANDARD PROCEDURE** .

B1609-15-PANEL DIMMER INPUT - CIRCUIT SHORT TO BATTERY OR OPEN

For a complete wiring diagram, **refer to appropriate SYSTEM WIRING DIAGRAMS article** .

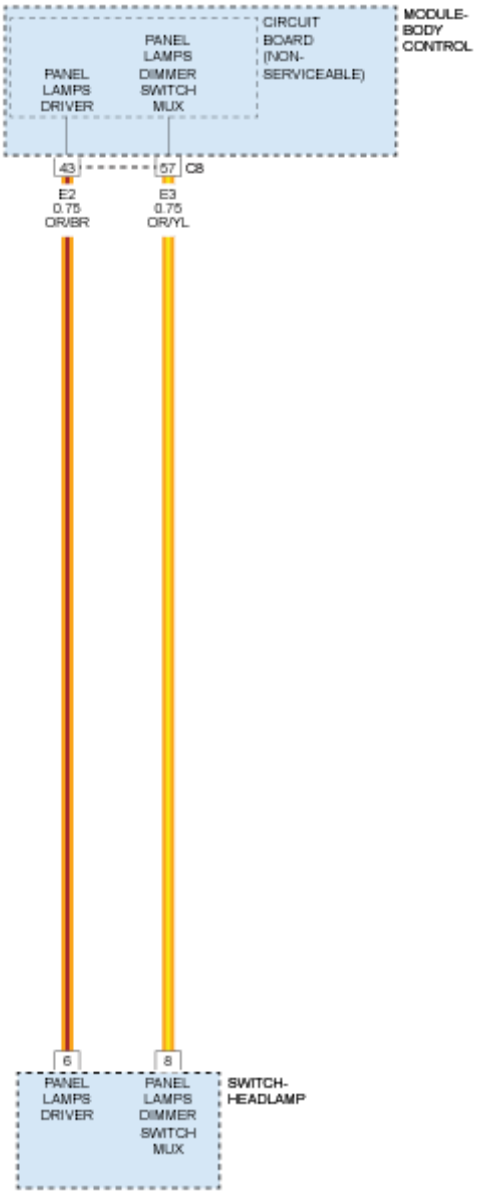

Fig. 4: Dimmer Switch Circuit Diagram
Courtesy of CHRYSLER GROUP, LLC

WHEN MONITORED

With the ignition on.

SET CONDITION

The Body Control Module (BCM) detects that the Panel Dimmer Input signal is greater than 4.8 volts for more than one second.

POSSIBLE CAUSES

Possible Causes
(E2) PANEL LAMPS DIMMER SIGNAL CIRCUIT SHORTED TO VOLTAGE
(E2) PANEL LAMPS DIMMER SIGNAL CIRCUIT OPEN
DIMMER SWITCH
BODY CONTROL MODULE (BCM)

DIAGNOSTIC TEST

1. **CHECK FOR AN ACTIVE DTC**

   NOTE: If there are any Headlamp Switch DTCs set with this DTC, diagnose those DTCs first.

   1. Turn the ignition on.
   2. With the scan tool, read DTCs.

   Does the scan tool display this DTC as active?

   Yes

   - Go To 2

   No

   - Test complete. The condition or conditions that originally set this DTC are not present at this time. Using the wiring diagrams as a guide, check all related splices and connectors for signs of water intrusion, corrosion, pushed out or bent terminals and correct pin tension.
   - Perform the BODY VERIFICATION TEST. Refer to **STANDARD PROCEDURE** .

2. **CHECK THE (E2) PANEL LAMPS DIMMER SIGNAL CIRCUIT FOR A SHORT TO VOLTAGE**
   1. Turn the ignition off.
   2. Disconnect the Dimmer Switch harness connector.
   3. Disconnect the BCM C8 harness connector.
   4. Turn the ignition on.
   5. Measure the voltage on the (E2) Panel Lamps Dimmer Signal circuit.

   Is there any voltage present?

   Yes

   - Repair the short to voltage in (E2) Panel Lamps Dimmer Signal circuit.

- Perform the BODY VERIFICATION TEST. Refer to **STANDARD PROCEDURE** .

No

- Go To 3

3. **CHECK THE (E2) PANEL LAMPS DIMMER SIGNAL CIRCUIT FOR AN OPEN**
   1. Turn the ignition off.
   2. Measure the resistance of the (E2) Panel Lamps Dimmer Signal circuit between the Dimmer Switch harness connector and the BCM C8 harness connector.

      Is the resistance below 5.0 Ohms?

      Yes

      - Go To 4

      No

      - Repair the open in the (E2) Panel Lamps Dimmer Signal circuit.
      - Perform the BODY VERIFICATION TEST. Refer to **STANDARD PROCEDURE** .
4. **CHECK THE OPERATION OF THE PANEL LAMPS DIMMER SWITCH**
   1. Reconnect the BCM C8 harness connector.
   2. Connect a jumper wire at the Dimmer Switch harness connector between the (E2) Panel Lamps Dimmer Signal circuit and ground.
   3. Turn the ignition on.
   4. With the scan tool, read DTCs.

      Does the scan tool display DTC: B1609-11-PANEL DIMMER INPUT - CIRCUIT SHORT TO GROUND as active?

      Yes

      - Replace the Dimmer Switch in accordance with the Service Information.
      - Perform the BODY VERIFICATION TEST. Refer to **STANDARD PROCEDURE** .

      No

      - Replace the BCM in accordance with the Service Information. Refer to **MODULE, BODY CONTROL, REMOVAL** .
      - Perform the BODY VERIFICATION TEST. Refer to **STANDARD PROCEDURE** .

B1620-12-FRONT READING LAMP - CIRCUIT SHORT TO BATTERY

For a complete wiring diagram, **refer to appropriate SYSTEM WIRING DIAGRAMS article** .

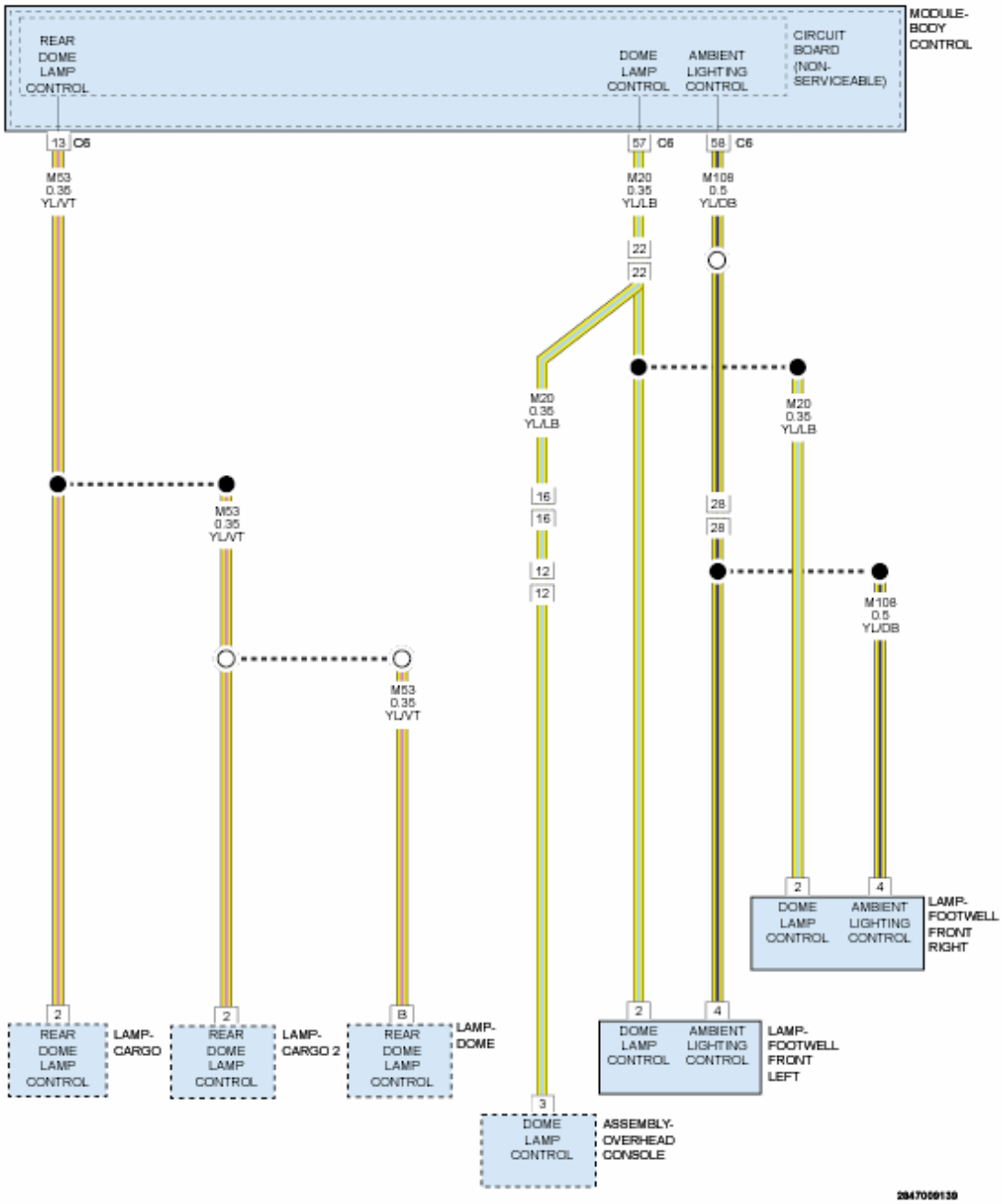

Fig. 5: Dome Lamp Control Circuit Diagram
Courtesy of CHRYSLER GROUP, LLC

WHEN MONITORED

With the ignition on and the Front Reading Lamp activated.

SET CONDITION

This DTC will set when the Body Control Module (BCM) detects a short to voltage on the Dome Lamp Control Circuit.

POSSIBLE CAUSES

Possible Causes
DOME LAMP CONTROL CIRCUIT SHORTED TO VOLTAGE
BODY CONTROL MODULE (BCM)

DIAGNOSTIC TEST

1. **CHECK FOR AN ACTIVE DTC**
    1. Turn the ignition on.
    2. With the scan tool, read DTCs.

    Does the scan tool display this DTC as active?

    Yes

    - Go To 2

    No

    - Test complete. The condition or conditions that originally set this DTC are not present at this time. Using the wiring diagrams as a guide, check all related splices and connectors for signs of water intrusion, corrosion, pushed out or bent terminals and correct pin tension.
    - Perform the BODY VERIFICATION TEST. Refer to **STANDARD PROCEDURE** .
2. **CHECK THE (M20) DOME LAMP CONTROL CIRCUIT FOR A SHORT TO VOLTAGE**
    1. Turn the ignition off.
    2. Disconnect the Electronic Overhead Module harness connector.
    3. Disconnect the Left and Right Front Footwell Lamp harness connectors.
    4. Disconnect the BCM C6 harness connector.
    5. Turn the Ignition on.
    6. Measure the voltage of the (M20) Dome Lamp Control circuit.

    Is the voltage above 10 volts?

    Yes

    - Repair the (M20) Dome Lamp Control circuit for a short to voltage.
    - Perform the BODY VERIFICATION TEST. Refer to **STANDARD PROCEDURE** .

No

- Replace the Body Control Module in accordance with the Service Information. Refer to **MODULE, BODY CONTROL, REMOVAL** .
- Perform the BODY VERIFICATION TEST. Refer to **STANDARD PROCEDURE** .

B1621-12-REAR READING LAMP - CIRCUIT SHORT TO BATTERY

For a complete wiring diagram, **refer to appropriate SYSTEM WIRING DIAGRAMS article** .

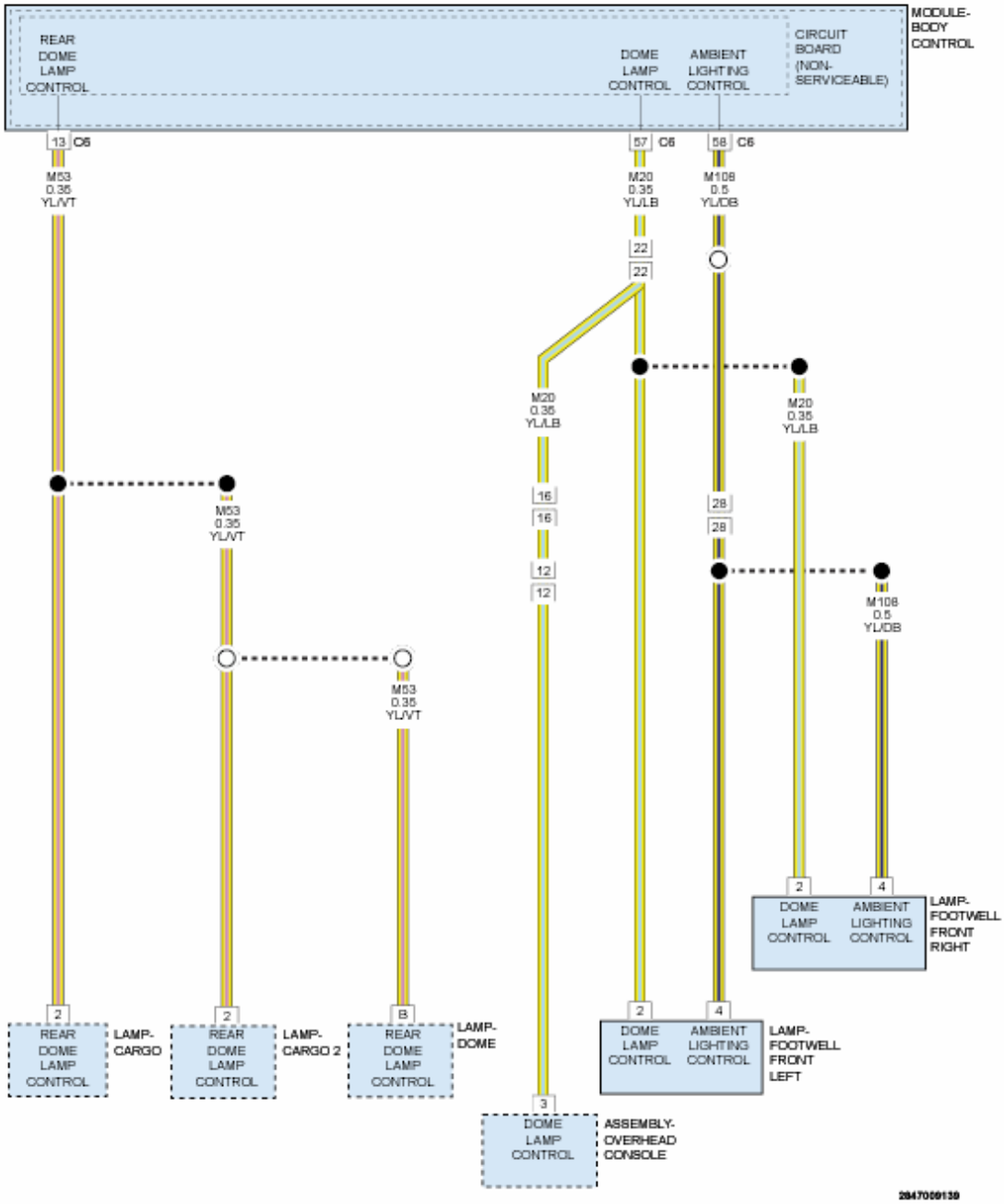

Fig. 6: Dome Lamp Control Circuit Diagram
Courtesy of CHRYSLER GROUP, LLC

WHEN MONITORED

With the ignition on and the Rear Reading Lamp activated.

SET CONDITION

This DTC will set when the Body Control Module (BCM) detects a short to voltage on the Rear Dome Lamp Control circuit.

POSSIBLE CAUSES

Possible Causes
REAR DOME LAMP CONTROL CIRCUIT SHORTED TO VOLTAGE
BODY CONTROL MODULE (BCM)

DIAGNOSTIC TEST

1. **CHECK FOR AN ACTIVE DTC**
    1. Turn the ignition on.
    2. With the scan tool, read DTCs.

    Does the scan tool display this DTC as active?

    Yes

    - Go To 2

    No

    - Test complete. The condition or conditions that originally set this DTC are not present at this time. Using the wiring diagrams as a guide, check all related splices and connectors for signs of water intrusion, corrosion, pushed out or bent terminals and correct pin tension.
    - Perform the BODY VERIFICATION TEST. Refer to **STANDARD PROCEDURE** .
2. **CHECK THE (M53) REAR DOME LAMP CONTROL CIRCUIT FOR A SHORT TO VOLTAGE**
    1. Turn the ignition off.
    2. Disconnect the Rear Dome Lamp harness connectors.
    3. Disconnect the BCM C6 harness connector.
    4. Turn the Ignition on.
    5. Measure the voltage of the (M53) Rear Dome Lamp Control circuit.

    Is the voltage above 10 volts?

    Yes

    - Repair the (M53) Rear Dome Lamp Control circuit for a short to voltage.
    - Perform the BODY VERIFICATION TEST. Refer to **STANDARD PROCEDURE** .

    No

- Replace the Body Control Module in accordance with the Service Information. Refer to **MODULE, BODY CONTROL, REMOVAL** .
- Perform the BODY VERIFICATION TEST. Refer to **STANDARD PROCEDURE** .

B162A-18-LEFT LOW BEAM CONTROL - UNDER CURRENT

For a complete wiring diagram, **refer to appropriate SYSTEM WIRING DIAGRAMS article** .

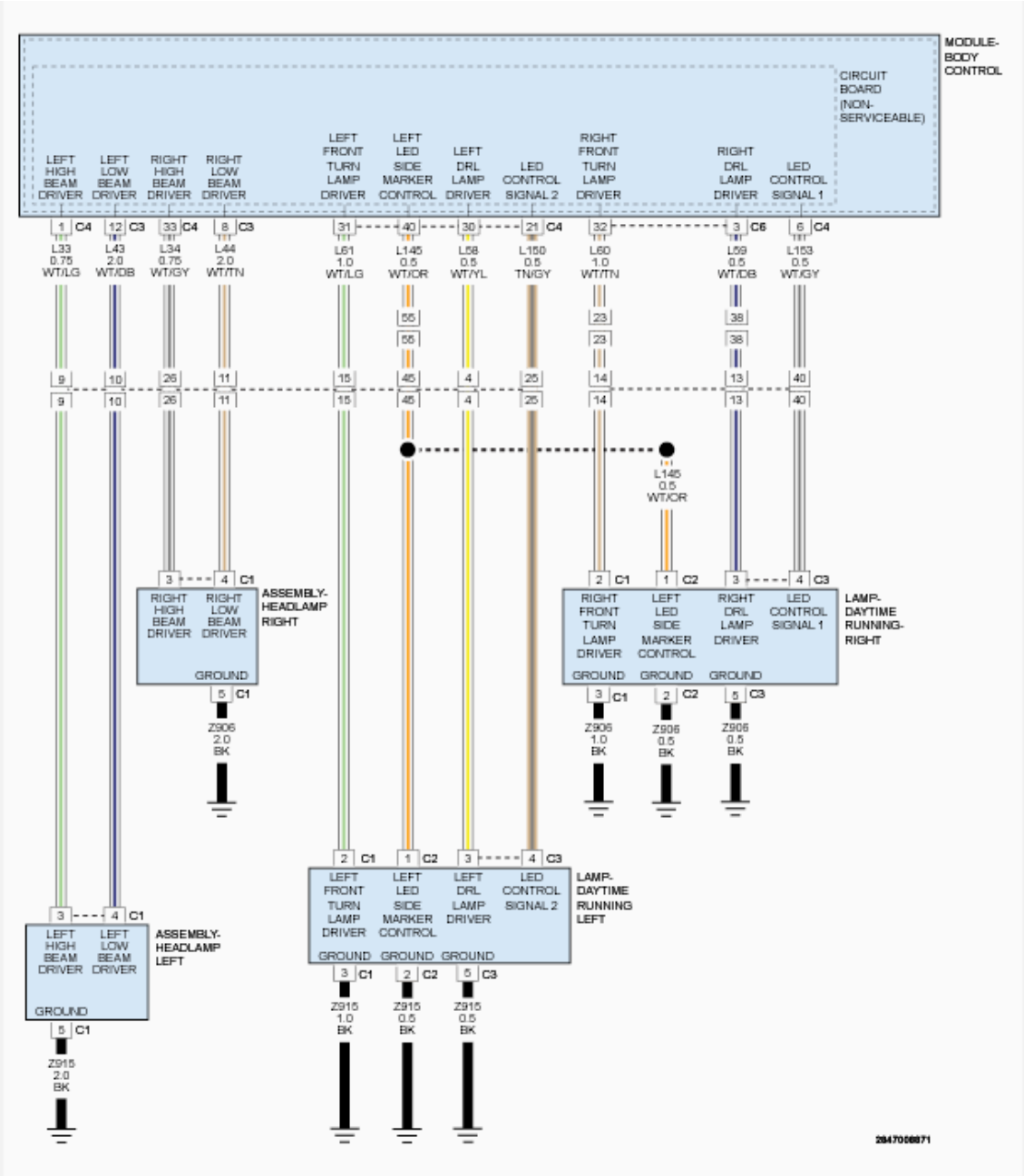

Fig. 7: Headlamp & Daytime Running Lamp Circuit Diagram
Courtesy of CHRYSLER GROUP, LLC

THEORY OF OPERATION

The Body Control Module (BCM) receives the input from the headlamp switch requesting low beam lamp illumination. The BCM provides a pulse width modulated (PWM) voltage output through the low beam driver circuit, which connects to the Low Beam Lamp. A common ground circuit is used for the Low and High Beam Lamps. For additional information on the Headlamp operation, refer to **OPERATION** .

WHEN MONITORED

With the low beam headlamps active.

SET CONDITION

When the Body Control Module (BCM) detects a high condition on the (L43) Left Low Beam Driver circuit.

POSSIBLE CAUSES

Possible Causes
(L43) LEFT LOW BEAM DRIVER CIRCUIT OPEN
(L43) LEFT LOW BEAM DRIVER CIRCUIT SHORTED TO VOLTAGE
(Z915) GROUND CIRCUIT OPEN
LEFT LOW BEAM BULB
BODY CONTROL MODULE (BCM)

DIAGNOSTIC TEST

1. **CHECK FOR AN ACTIVE DTC**
    1. Turn the ignition on.
    2. Turn the Headlamps on.
    3. With the scan tool, read DTCs.

    Does the scan tool display this DTC as active?

    Yes

    - Go To 2

    No

    - Test complete. The condition or conditions that originally set this DTC are not present at this time. Using the wiring diagrams as a guide, check all related splices and connectors for signs of water intrusion, corrosion, pushed out or bent terminals and correct pin tension.
    - Perform the BODY VERIFICATION TEST. Refer to **STANDARD PROCEDURE** .
2. **CHECK THE (L43) LEFT LOW BEAM DRIVER CIRCUIT FOR A SHORT TO VOLTAGE IN THE HARNESS**

1. Turn the Headlamps off.
2. Turn the ignition off.
3. Disconnect the Left Front Lamp Assembly C1 harness connector.
4. Disconnect the BCM C3 harness connector.
5. Turn the ignition on.
6. Measure the voltage between ground and the (L43) Left Low Beam Driver circuit.

   Is there any voltage present?

   Yes

   - Repair the short to voltage in the (L43) Left Low Beam Driver circuit.
   - Perform the BODY VERIFICATION TEST. Refer to **STANDARD PROCEDURE** .

   No

   - Go To 3

3. **CHECK THE (L43) LEFT LOW BEAM DRIVER CIRCUIT FOR AN OPEN IN THE HARNESS**
   1. Turn the ignition off.
   2. Measure the resistance of the (L43) Left Low Beam Driver circuit between the Left Front Lamp Assembly C1 harness connector and the BCM C3 harness connector.

      Is the resistance below 5.0 Ohms?

      Yes

      - Go To 4

      No

      - Repair the open in the (L43) Left Low Beam Driver circuit.
      - Perform the BODY VERIFICATION TEST. Refer to **STANDARD PROCEDURE** .

4. **CHECK THE (Z915) GROUND CIRCUIT FOR AN OPEN IN THE HARNESS**
   1. Using a 12-volt test light connected to 12-volts, check the (Z915) Ground circuit at the Left Front Lamp Assembly C1 harness connector.

      Does the test light illuminate brightly?

      Yes

      - Go To 5

      No

- Repair the open in the (Z915) Ground circuit.
- Perform the BODY VERIFICATION TEST. Refer to **STANDARD PROCEDURE** .

5. **CHECK THE BCM FOR CORRECT OPERATION**
   1. Reconnect the BCM C3 harness connector.
   2. Connect a 12-volt test light between the (L43) Left Low Beam Driver circuit and the (Z915) Ground circuit in the Left Front Lamp Assembly C1 harness connector.
   3. Turn the ignition on.
   4. Turn the Headlamps on.

   Does the test light illuminate brightly?

   Yes

   - Replace the Left Low Beam Bulb in accordance with the Service Information. Refer to **UNIT, FRONT LAMP, REMOVAL** .
   - Perform the BODY VERIFICATION TEST. Refer to **STANDARD PROCEDURE** .

   No

   - Replace the Body Control Module (BCM) in accordance with the Service Information. Refer to **MODULE, BODY CONTROL, REMOVAL** .
   - Perform the BODY VERIFICATION TEST. Refer to **STANDARD PROCEDURE** .

B162A-18-LEFT LOW BEAM CONTROL - UNDER CURRENT - EXPORT

For a complete wiring diagram, **refer to appropriate SYSTEM WIRING DIAGRAMS article** .

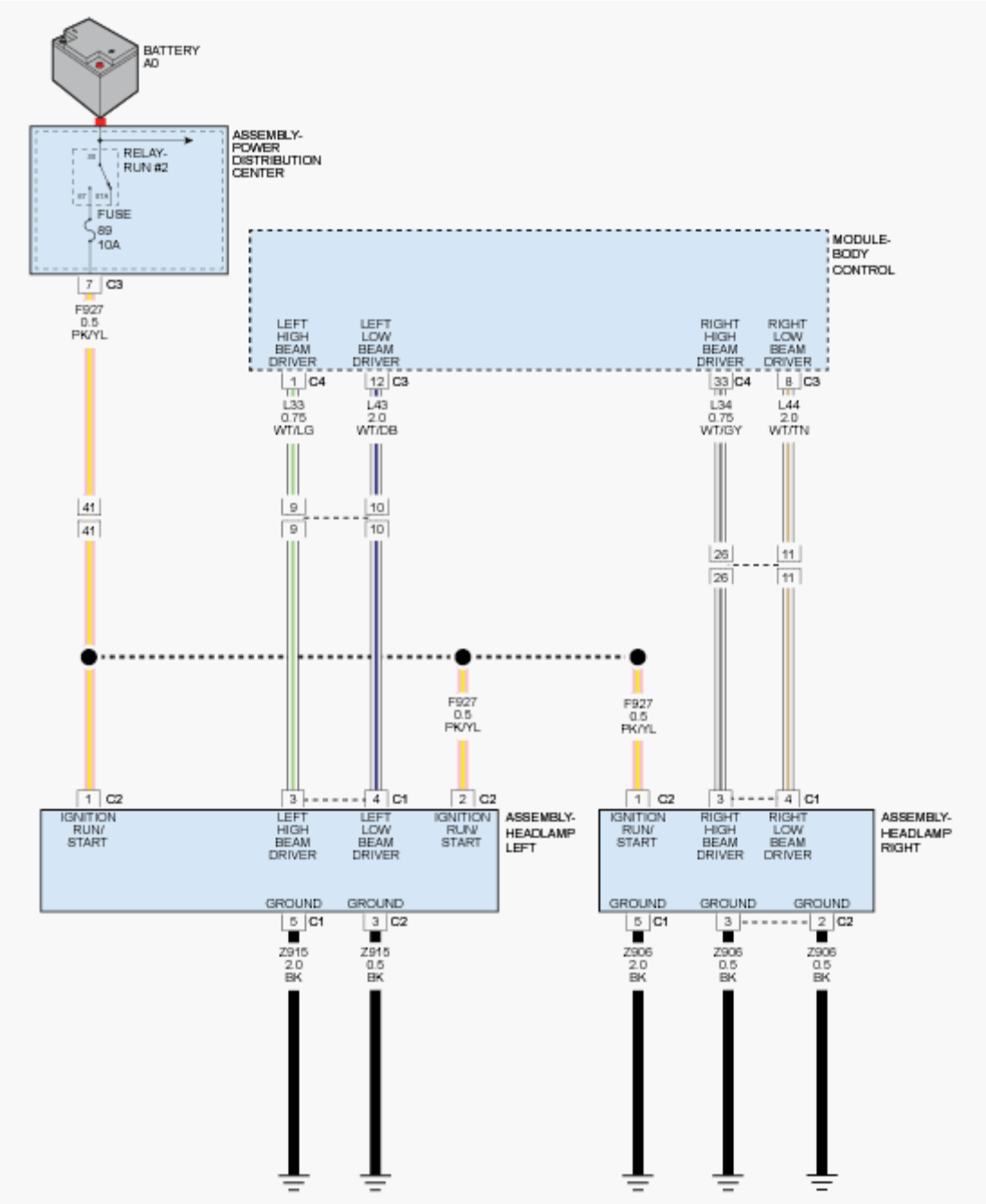

Fig. 8: Headlamp Assembly Circuit Diagram
Courtesy of CHRYSLER GROUP, LLC

THEORY OF OPERATION

The Body Control Module (BCM) receives the input from the headlamp switch requesting low beam lamp illumination. The BCM provides a pulse width modulated (PWM) voltage output through the low beam driver circuit, which connects to the Low Beam Lamp. A common ground circuit is used for the Low and High Beam Lamps. For additional information on the Headlamp operation, refer to **OPERATION** .

WHEN MONITORED

With the low beam headlamps active.

SET CONDITION

When the Body Control Module (BCM) detects a high condition on the (L43) Left Low Beam Driver circuit.

POSSIBLE CAUSES

Possible Causes
(L43) LEFT LOW BEAM DRIVER CIRCUIT OPEN
(L43) LEFT LOW BEAM DRIVER CIRCUIT SHORTED TO VOLTAGE
(Z915) GROUND CIRCUIT OPEN
LEFT LOW BEAM BULB
BODY CONTROL MODULE (BCM)

DIAGNOSTIC TEST

1. **CHECK FOR AN ACTIVE DTC**
    1. Turn the ignition on.
    2. Turn the Headlamps on.
    3. With the scan tool, read DTCs.

    Does the scan tool display this DTC as active?

    Yes

    - Go To 2

    No

    - Test complete. The condition or conditions that originally set this DTC are not present at this time. Using the wiring diagrams as a guide, check all related splices and connectors for signs of water intrusion, corrosion, pushed out or bent terminals and correct pin tension.
    - Perform the BODY VERIFICATION TEST. Refer to **STANDARD PROCEDURE** .
2. **CHECK THE (L43) LEFT LOW BEAM DRIVER CIRCUIT FOR A SHORT TO VOLTAGE IN THE HARNESS**
    1. Turn the Headlamps off.
    2. Turn the ignition off.
    3. Disconnect the Left Front Lamp Assembly C1 harness connector.
    4. Disconnect the BCM C3 harness connector.
    5. Turn the ignition on.

6. Measure the voltage between ground and the (L43) Left Low Beam Driver circuit.

   Is there any voltage present?

   Yes

   - Repair the short to voltage in the (L43) Left Low Beam Driver circuit.
   - Perform the BODY VERIFICATION TEST. Refer to **STANDARD PROCEDURE** .

   No

   - Go To 3

3. **CHECK THE (L43) LEFT LOW BEAM DRIVER CIRCUIT FOR AN OPEN IN THE HARNESS**
   1. Turn the ignition off.
   2. Measure the resistance of the (L43) Left Low Beam Driver circuit between the Left Front Lamp Assembly C1 harness connector and the BCM C3 harness connector.

      Is the resistance below 5.0 Ohms?

      Yes

      - Go To 4

      No

      - Repair the open in the (L43) Left Low Beam Driver circuit.
      - Perform the BODY VERIFICATION TEST. Refer to **STANDARD PROCEDURE** .

4. **CHECK THE (Z915) GROUND CIRCUIT FOR AN OPEN IN THE HARNESS**
   1. Disconnect the Left Front Lamp Assembly C2 harness connector.
   2. Using a 12-volt test light connected to 12-volts, check the (Z915) Ground circuit at the Left Front Lamp Assembly C1 and C2 harness connectors.

      Does the test light illuminate brightly for both circuits?

      Yes

      - Go To 5

      No

      - Repair the open in the (Z915) Ground circuit.
      - Perform the BODY VERIFICATION TEST. Refer to **STANDARD PROCEDURE** .

5. **CHECK THE BCM FOR CORRECT OPERATION**

1. Reconnect the Left Front Lamp Assembly C2 harness connector.
2. Reconnect the BCM C3 harness connector.
3. Connect a 12-volt test light between the (L43) Left Low Beam Driver circuit and the (Z915) Ground circuit in the Left Front Lamp Assembly C1 harness connector.
4. Turn the ignition on.
5. Turn the Headlamps on.

   Does the test light illuminate brightly?

   Yes

   - Replace the Left Low Beam Bulb in accordance with the Service Information. Refer to **UNIT, FRONT LAMP, REMOVAL** .
   - Perform the BODY VERIFICATION TEST. Refer to **STANDARD PROCEDURE** .

   No

   - Replace the Body Control Module (BCM) in accordance with the Service Information. Refer to **MODULE, BODY CONTROL, REMOVAL** .
   - Perform the BODY VERIFICATION TEST. Refer to **STANDARD PROCEDURE** .

B162A-19-LEFT LOW BEAM CONTROL - OVER CURRENT

For a complete wiring diagram, **refer to appropriate SYSTEM WIRING DIAGRAMS article** .

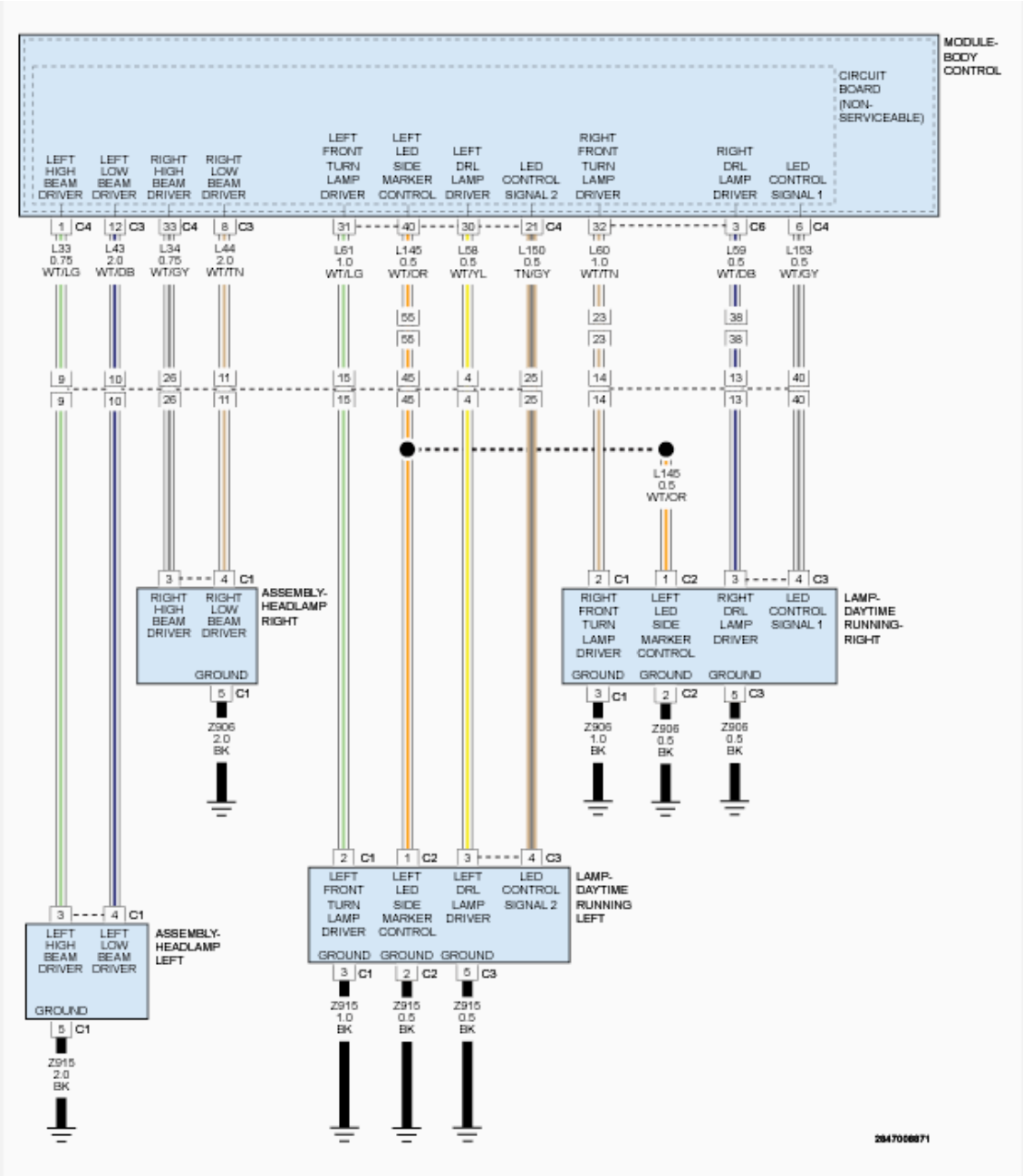

Fig. 9: Headlamp & Daytime Running Lamp Circuit Diagram
Courtesy of CHRYSLER GROUP, LLC

THEORY OF OPERATION

The Body Control Module (BCM) receives the input from the headlamp switch requesting low beam lamp illumination. The BCM provides a pulse width modulated (PWM) voltage output through the low beam driver circuit, which connects to the Low Beam Lamp. A common ground circuit is used for the Low and High Beam Lamps. For additional information on the Headlamp operation, refer to **OPERATION** .

WHEN MONITORED

With the low beam headlamps active.

SET CONDITION

When the Body Control Module (BCM) detects a low condition on the (L43) Left Low Beam Driver circuit.

POSSIBLE CAUSES

Possible Causes
(L43) LEFT LOW BEAM DRIVER CIRCUIT SHORTED TO GROUND LEFT LOW BEAM BULB BODY CONTROL MODULE (BCM)

DIAGNOSTIC TEST

1. **CHECK FOR AN ACTIVE DTC**
    1. Turn the ignition on.
    2. Turn the Headlamps on.
    3. With the scan tool, read DTCs.

    Does the scan tool display this DTC as active?

    Yes

    - Go To 2

    No

    - Test complete. The condition or conditions that originally set this DTC are not present at this time. Using the wiring diagrams as a guide, check all related splices and connectors for signs of water intrusion, corrosion, pushed out or bent terminals and correct pin tension.
    - Perform the BODY VERIFICATION TEST. Refer to **STANDARD PROCEDURE** .
2. **ATTEMPT TO SET THE OPPOSITE DTC**
    1. Turn the ignition off.
    2. Disconnect the Left Front Lamp Assembly C1 harness connector.
    3. Turn the ignition on.
    4. Turn the Headlamps on.
    5. With the scan tool, read DTCs.

    Does the scan tool display DTC: B162A-18-LEFT LOW BEAM CONTROL - UNDER CURRENT?

    Yes

- Replace the Left Low Beam Bulb in accordance with the Service Information. Refer to **UNIT, FRONT LAMP, REMOVAL** .
- Perform the BODY VERIFICATION TEST. Refer to **STANDARD PROCEDURE** .

No

- Go To 3

3. **CHECK THE (L43) LEFT LOW BEAM DRIVER CIRCUIT FOR A SHORT TO GROUND**
   1. Turn the ignition off.
   2. Disconnect the BCM C3 harness connector.
   3. Measure the resistance between ground and the (L43) Left Low Beam Driver circuit.

   Is the resistance above 10K Ohms?

   Yes

   - Replace the Body Control Module (BCM) in accordance with the Service Information. Refer to **MODULE, BODY CONTROL, REMOVAL** .
   - Perform the BODY VERIFICATION TEST. Refer to **STANDARD PROCEDURE** .

   No

   - Repair the short to ground in the (L43) Left Low Beam Driver circuit.
   - Perform the BODY VERIFICATION TEST. Refer to **STANDARD PROCEDURE** .

B162A-19-LEFT LOW BEAM CONTROL-OVER CURRENT - EXPORT

For a complete wiring diagram, **refer to appropriate SYSTEM WIRING DIAGRAMS article** .

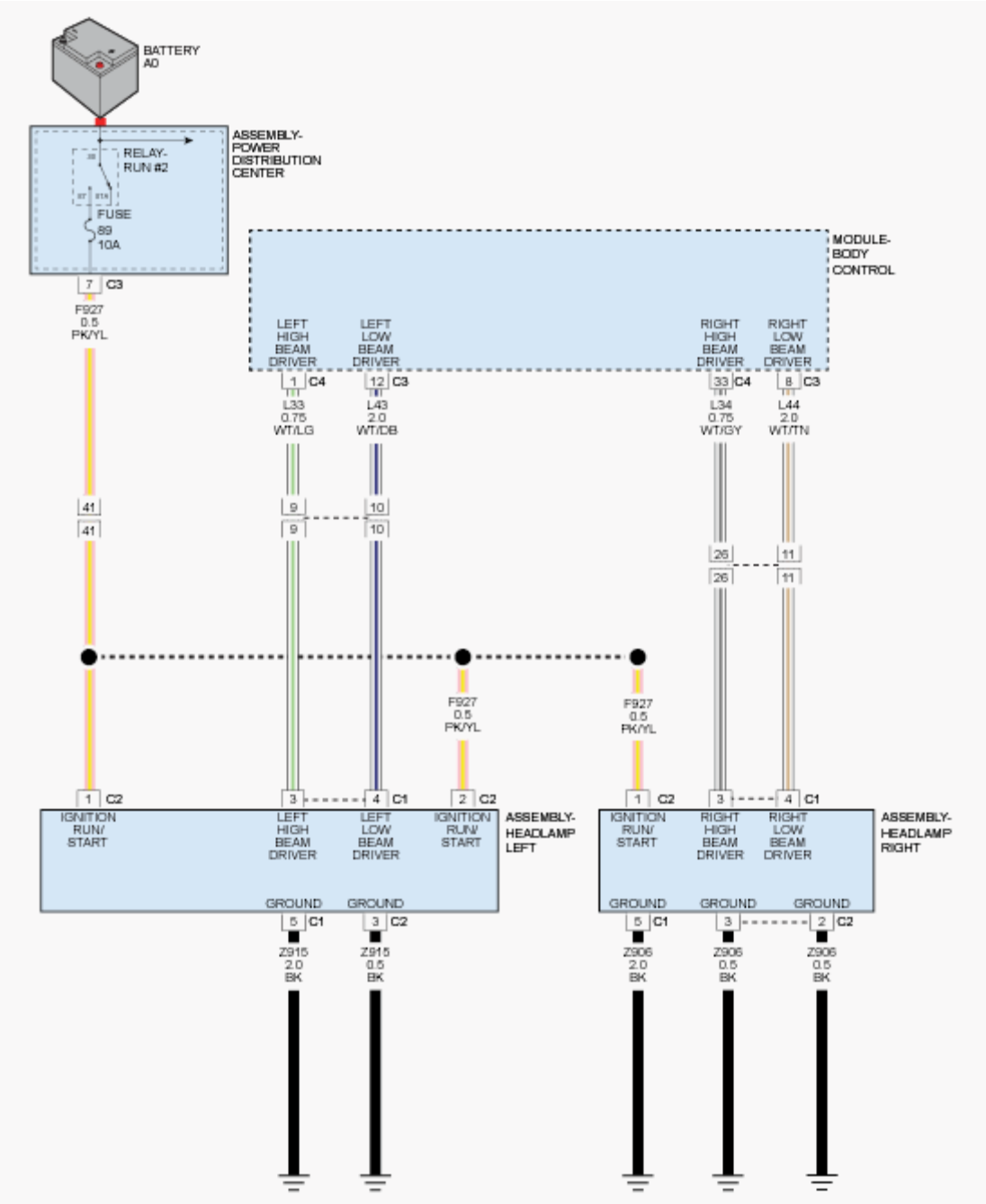

Fig. 10: Headlamp Assembly Circuit Diagram
Courtesy of CHRYSLER GROUP, LLC

THEORY OF OPERATION

The Body Control Module (BCM) receives the input from the headlamp switch requesting low beam lamp illumination. The BCM provides a pulse width modulated (PWM) voltage output through the low beam driver circuit, which connects to the Low Beam Lamp. A common ground circuit is used for the Low and High Beam Lamps. For additional information on the Headlamp operation, refer to **OPERATION** .

WHEN MONITORED

With the low beam headlamps active.

SET CONDITION

When the Body Control Module (BCM) detects a low condition on the (L43) Left Low Beam Driver circuit.

POSSIBLE CAUSES

Possible Causes
(L43) LEFT LOW BEAM DRIVER CIRCUIT SHORTED TO GROUND
LEFT LOW BEAM BULB
BODY CONTROL MODULE (BCM)

DIAGNOSTIC TEST

1. **CHECK FOR AN ACTIVE DTC**
    1. Turn the ignition on.
    2. Turn the Headlamps on.
    3. With the scan tool, read DTCs.

    Does the scan tool display this DTC as active?

    Yes

    - Go To 2

    No

    - Test complete. The condition or conditions that originally set this DTC are not present at this time. Using the wiring diagrams as a guide, check all related splices and connectors for signs of water intrusion, corrosion, pushed out or bent terminals and correct pin tension.
    - Perform the BODY VERIFICATION TEST. Refer to **STANDARD PROCEDURE** .
2. **ATTEMPT TO SET THE OPPOSITE DTC**
    1. Turn the ignition off.
    2. Disconnect the Left Front Lamp Assembly C1 harness connector.
    3. Turn the ignition on.
    4. Turn the Headlamps on.
    5. With the scan tool, read DTCs.

    Does the scan tool display DTC: B162A-18-LEFT LOW BEAM CONTROL - UNDER CURRENT?

Yes

- Replace the Left Low Beam Bulb in accordance with the Service Information. Refer to **UNIT, FRONT LAMP, REMOVAL** .
- Perform the BODY VERIFICATION TEST. Refer to **STANDARD PROCEDURE** .

No

- Go To 3

3. **CHECK THE (L43) LEFT LOW BEAM DRIVER CIRCUIT FOR A SHORT TO GROUND**
   1. Turn the ignition off.
   2. Disconnect the BCM C3 harness connector.
   3. Measure the resistance between ground and the (L43) Left Low Beam Driver circuit.

   Is the resistance above 10K Ohms?

   Yes

   - Replace the Body Control Module (BCM) in accordance with the Service Information. Refer to **MODULE, BODY CONTROL, REMOVAL** .
   - Perform the BODY VERIFICATION TEST. Refer to **STANDARD PROCEDURE** .

   No

   - Repair the short to ground in the (L43) Left Low Beam Driver circuit.
   - Perform the BODY VERIFICATION TEST. Refer to **STANDARD PROCEDURE** .

B162E-18-RIGHT LOW BEAM CONTROL - UNDER CURRENT

For a complete wiring diagram, **refer to appropriate SYSTEM WIRING DIAGRAMS article** .

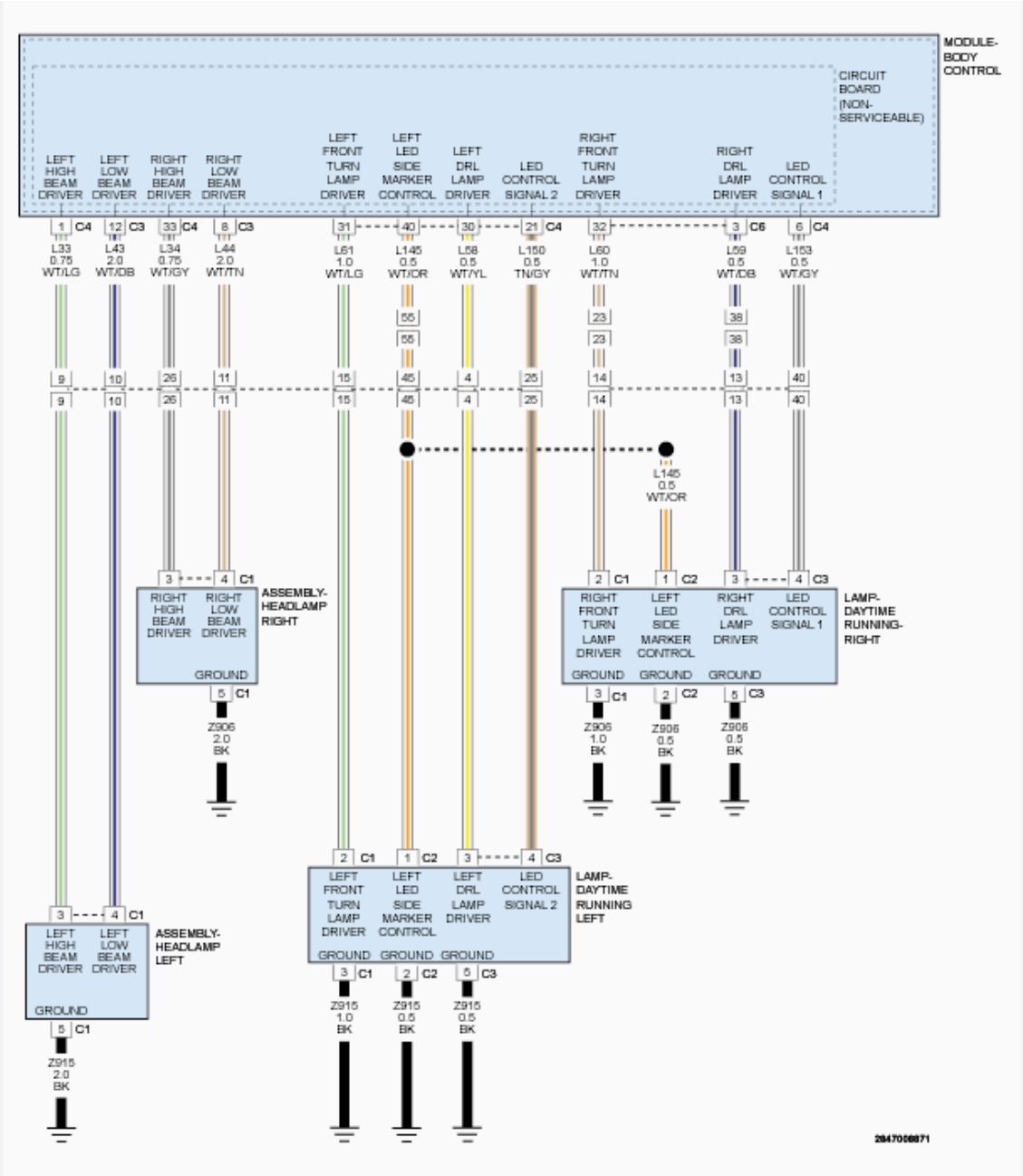

Fig. 11: Headlamp & Daytime Running Lamp Circuit Diagram
Courtesy of CHRYSLER GROUP, LLC

THEORY OF OPERATION

The Body Control Module (BCM) receives the input from the headlamp switch requesting low beam lamp illumination. The BCM provides a pulse width modulated (PWM) voltage output through the low beam driver circuit, which connects to the Low Beam Lamp. A common ground circuit is used for the Low and High Beam Lamps. For additional information on the Headlamp operation, refer to **OPERATION** .

WHEN MONITORED

With the low beam headlamps active.

SET CONDITION

When the Body Control Module (BCM) detects a high condition on the (L44) Right Low Beam Driver circuit.

POSSIBLE CAUSES

Possible Causes
(L44) RIGHT LOW BEAM DRIVER CIRCUIT OPEN
(L44) RIGHT LOW BEAM DRIVER CIRCUIT SHORTED TO VOLTAGE
(Z906) GROUND CIRCUIT OPEN
RIGHT LOW BEAM BULB
BODY CONTROL MODULE (BCM)

DIAGNOSTIC TEST

1. **CHECK FOR AN ACTIVE DTC**
    1. Turn the ignition on.
    2. Turn the Headlamps on.
    3. With the scan tool, read DTCs.

    Does the scan tool display this DTC as active?

    Yes

    - Go To 2

    No

    - Test complete. The condition or conditions that originally set this DTC are not present at this time. Using the wiring diagrams as a guide, check all related splices and connectors for signs of water intrusion, corrosion, pushed out or bent terminals and correct pin tension.
    - Perform the BODY VERIFICATION TEST. Refer to **STANDARD PROCEDURE** .
2. **CHECK THE (L44) RIGHT LOW BEAM DRIVER CIRCUIT FOR A SHORT TO VOLTAGE IN THE HARNESS**
    1. Turn the Headlamps off.
    2. Turn the ignition off.
    3. Disconnect the Right Front Lamp Assembly C1 harness connector.
    4. Disconnect the BCM C3 harness connector.
    5. Turn the ignition on.
    6. Measure the voltage between ground and the (L44) Right Low Beam Driver circuit.

Is there any voltage present?

Yes

- Repair the short to voltage in the (L44) Right Low Beam Driver circuit.
- Perform the BODY VERIFICATION TEST. Refer to **STANDARD PROCEDURE** .

No

- Go To 3

3. **CHECK THE (L44) RIGHT LOW BEAM DRIVER CIRCUIT FOR AN OPEN IN THE HARNESS**
   1. Turn the ignition off.
   2. Measure the resistance of the (L44) Right Low Beam Driver circuit between the Right Front Lamp Assembly C1 harness connector and the BCM C3 harness connector.

   Is the resistance below 5.0 Ohms?

   Yes

   - Go To 4

   No

   - Repair the open in the (L44) Right Low Beam Driver circuit.
   - Perform the BODY VERIFICATION TEST. Refer to **STANDARD PROCEDURE** .

4. **CHECK THE (Z906) GROUND CIRCUIT FOR AN OPEN IN THE HARNESS**
   1. Using a 12-volt test light connected to 12-volts, check the (Z906) Ground circuit at the Right Front Lamp Assembly C1 harness connector.

   Does the test light illuminate brightly?

   Yes

   - Go To 5

   No

   - Repair the open in the (Z906) Ground circuit.
   - Perform the BODY VERIFICATION TEST. Refer to **STANDARD PROCEDURE** .

5. **CHECK THE BCM FOR CORRECT OPERATION**
   1. Reconnect the BCM C3 harness connector.
   2. Connect a 12-volt test light between the (L44) Right Low Beam Driver circuit and (Z906) Ground circuit in the Right Front Lamp Assembly C1 harness connector.

3. Turn the ignition on.
4. Turn the Headlamps on.

   Does the test light illuminate brightly?

   Yes

   - Replace the Right Low Beam Bulb in accordance with the Service Information. Refer to **UNIT, FRONT LAMP, REMOVAL** .
   - Perform the BODY VERIFICATION TEST. Refer to **STANDARD PROCEDURE** .

   No

   - Replace the Body Control Module (BCM) in accordance with the Service Information. Refer to **MODULE, BODY CONTROL, REMOVAL** .
   - Perform the BODY VERIFICATION TEST. Refer to **STANDARD PROCEDURE** .

B162E-18-RIGHT LOW BEAM CONTROL - UNDER CURRENT - EXPORT

For a complete wiring diagram, **refer to appropriate SYSTEM WIRING DIAGRAMS article** .

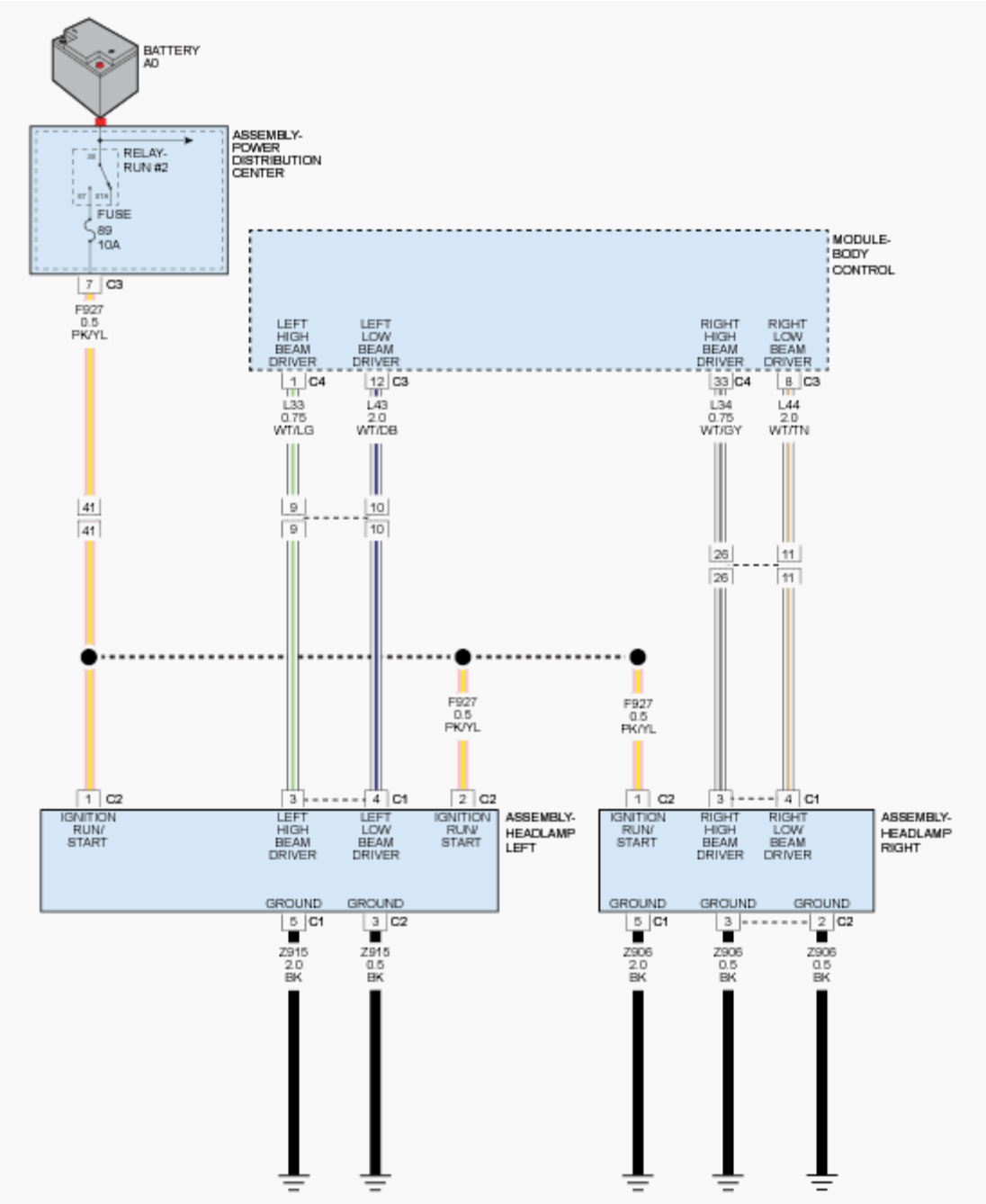

Fig. 12: Headlamp Assembly Circuit Diagram
Courtesy of CHRYSLER GROUP, LLC

THEORY OF OPERATION

The Body Control Module (BCM) receives the input from the headlamp switch requesting low beam lamp illumination. The BCM provides a pulse width modulated (PWM) voltage output through the low beam driver circuit, which connects to the Low Beam Lamp. A common ground circuit is used for the Low and High Beam Lamps. For additional information on the Headlamp operation, refer to **OPERATION** .

WHEN MONITORED

With the low beam headlamps active.

SET CONDITION

When the Body Control Module (BCM) detects a high condition on the (L44) Right Low Beam Driver circuit.

POSSIBLE CAUSES

Possible Causes
(L44) RIGHT LOW BEAM DRIVER CIRCUIT OPEN
(L44) RIGHT LOW BEAM DRIVER CIRCUIT SHORTED TO VOLTAGE
(Z906) GROUND CIRCUIT OPEN
RIGHT LOW BEAM BULB
BODY CONTROL MODULE (BCM)

DIAGNOSTIC TEST

1. **CHECK FOR AN ACTIVE DTC**
    1. Turn the ignition on.
    2. Turn the Headlamps on.
    3. With the scan tool, read DTCs.

    Does the scan tool display this DTC as active?

    Yes

    - Go To 2

    No

    - Test complete. The condition or conditions that originally set this DTC are not present at this time. Using the wiring diagrams as a guide, check all related splices and connectors for signs of water intrusion, corrosion, pushed out or bent terminals and correct pin tension.
    - Perform the BODY VERIFICATION TEST. Refer to **STANDARD PROCEDURE** .
2. **CHECK THE (L44) RIGHT LOW BEAM DRIVER CIRCUIT FOR A SHORT TO VOLTAGE IN THE HARNESS**
    1. Turn the Headlamps off.
    2. Turn the ignition off.
    3. Disconnect the Right Front Lamp Assembly C1 harness connector.
    4. Disconnect the BCM C3 harness connector.
    5. Turn the ignition on.

6. Measure the voltage between ground and the (L44) Right Low Beam Driver circuit.

   Is there any voltage present?

   Yes

   - Repair the short to voltage in the (L44) Right Low Beam Driver circuit.
   - Perform the BODY VERIFICATION TEST. Refer to **STANDARD PROCEDURE** .

   No

   - Go To 3

3. **CHECK THE (L44) RIGHT LOW BEAM DRIVER CIRCUIT FOR AN OPEN IN THE HARNESS**
   1. Turn the ignition off.
   2. Measure the resistance of the (L44) Right Low Beam Driver circuit between the Right Front Lamp Assembly C1 harness connector and the BCM C3 harness connector.

      Is the resistance below 5.0 Ohms?

      Yes

      - Go To 4

      No

      - Repair the open in the (L44) Right Low Beam Driver circuit.
      - Perform the BODY VERIFICATION TEST. Refer to **STANDARD PROCEDURE** .

4. **CHECK THE (Z906) GROUND CIRCUIT FOR AN OPEN IN THE HARNESS**
   1. Disconnect the Right Front Lamp Assembly C2 harness connector.
   2. Using a 12-volt test light connected to 12-volts, check the (Z906) Ground circuit at the Right Front Lamp Assembly C1 and C2 harness connectors

      Does the test light illuminate brightly?

      Yes

      - Go To 5

      No

      - Repair the open in the (Z906) Ground circuit.
      - Perform the BODY VERIFICATION TEST. Refer to **STANDARD PROCEDURE** .

5. **CHECK THE BCM FOR CORRECT OPERATION**
    1. Reconnect the Right Front Lamp Assembly C2 harness connector.
    2. Reconnect the BCM C3 harness connector.
    3. Connect a 12-volt test light between the (L44) Right Low Beam Driver circuit and (Z906) Ground circuit in the Right Front Lamp Assembly C1 harness connector.
    4. Turn the ignition on.
    5. Turn the Headlamps on.

    Does the test light illuminate brightly?

    Yes

    - Replace the Right Low Beam Bulb in accordance with the Service Information. Refer to **UNIT, FRONT LAMP, REMOVAL** .
    - Perform the BODY VERIFICATION TEST. Refer to **STANDARD PROCEDURE** .

    No

    - Replace the Body Control Module (BCM) in accordance with the Service Information. Refer to **MODULE, BODY CONTROL, REMOVAL** .
    - Perform the BODY VERIFICATION TEST. Refer to **STANDARD PROCEDURE** .

B162E-19-RIGHT LOW BEAM CONTROL - OVER CURRENT

For a complete wiring diagram, **refer to appropriate SYSTEM WIRING DIAGRAMS article** .

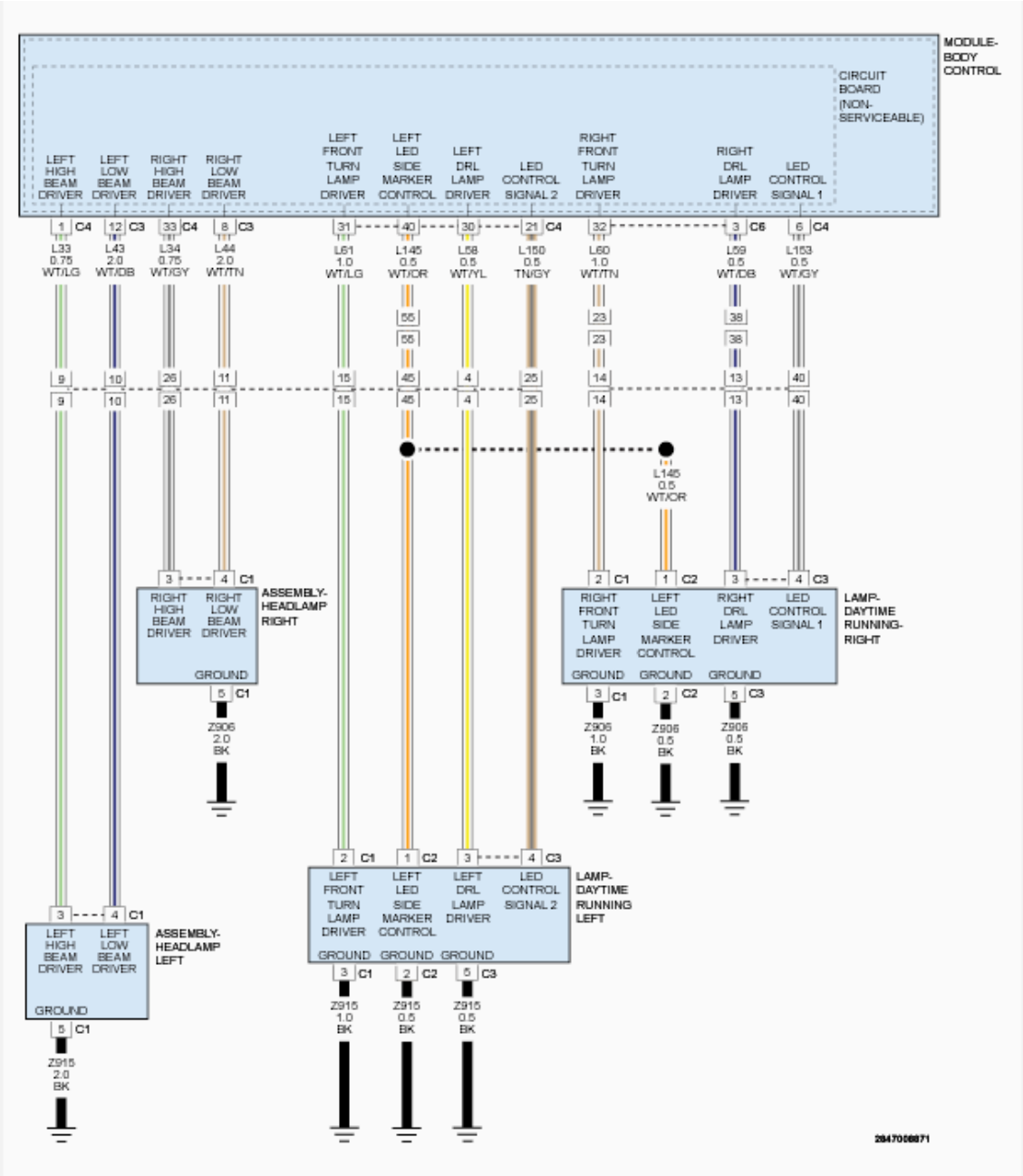

Fig. 13: Headlamp & Daytime Running Lamp Circuit Diagram
Courtesy of CHRYSLER GROUP, LLC

THEORY OF OPERATION

The Body Control Module (BCM) receives the input from the headlamp switch requesting low beam lamp illumination. The BCM provides a pulse width modulated (PWM) voltage output through the low beam driver circuit, which connects to the Low Beam Lamp. A common ground circuit is used for the Low and High Beam Lamps. For additional information on the Headlamp operation, refer to **OPERATION** .

WHEN MONITORED

With the low beam headlamps active.

SET CONDITION

When the Body Control Module (BCM) detects a low condition on the (L44) Right Low Beam Driver circuit.

POSSIBLE CAUSES

Possible Causes
(L44) RIGHT LOW BEAM DRIVER CIRCUIT SHORTED TO GROUND
RIGHT LOW BEAM BULB
BODY CONTROL MODULE (BCM)

DIAGNOSTIC TEST

1. **CHECK FOR AN ACTIVE DTC**
    1. Turn the ignition on.
    2. Turn the Headlamps on.
    3. With the scan tool, read DTCs.

    Does the scan tool display this DTC as active?

    Yes

    - Go To 2

    No

    - Test complete. The condition or conditions that originally set this DTC are not present at this time. Using the wiring diagrams as a guide, check all related splices and connectors for signs of water intrusion, corrosion, pushed out or bent terminals and correct pin tension.
    - Perform the BODY VERIFICATION TEST. Refer to **STANDARD PROCEDURE** .
2. **ATTEMPT TO SET THE OPPOSITE DTC**
    1. Turn the ignition off.
    2. Disconnect the Right Front Lamp Assembly C1 harness connector.
    3. Turn the ignition on.
    4. Turn the Headlamps on.
    5. With the scan tool, read DTCs.

    Does the scan tool display DTC: B162E-18-RIGHT LOW BEAM CONTROL - UNDER CURRENT?

    Yes

- Replace the Right Low Beam Bulb in accordance with the Service Information. Refer to **UNIT, FRONT LAMP, REMOVAL** .
- Perform the BODY VERIFICATION TEST. Refer to **STANDARD PROCEDURE** .

No

- Go To 3

3. **CHECK THE (L44) RIGHT LOW BEAM DRIVER CIRCUIT FOR A SHORT TO GROUND**
   1. Turn the ignition off.
   2. Disconnect the BCM C3 harness connector.
   3. Measure the resistance between ground and the (L44) Right Low Beam Driver circuit.

   Is the resistance above 10K Ohms?

   Yes

   - Replace the Body Control Module (BCM) in accordance with the Service Information. Refer to **MODULE, BODY CONTROL, REMOVAL** .
   - Perform the BODY VERIFICATION TEST. Refer to **STANDARD PROCEDURE** .

   No

   - Repair the short to ground in the (L44) Right Low Beam Driver circuit.
   - Perform the BODY VERIFICATION TEST. Refer to **STANDARD PROCEDURE** .

B162E-19-RIGHT LOW BEAM CONTROL-OVER CURRENT - EXPORT

For a complete wiring diagram, **refer to appropriate SYSTEM WIRING DIAGRAMS article** .

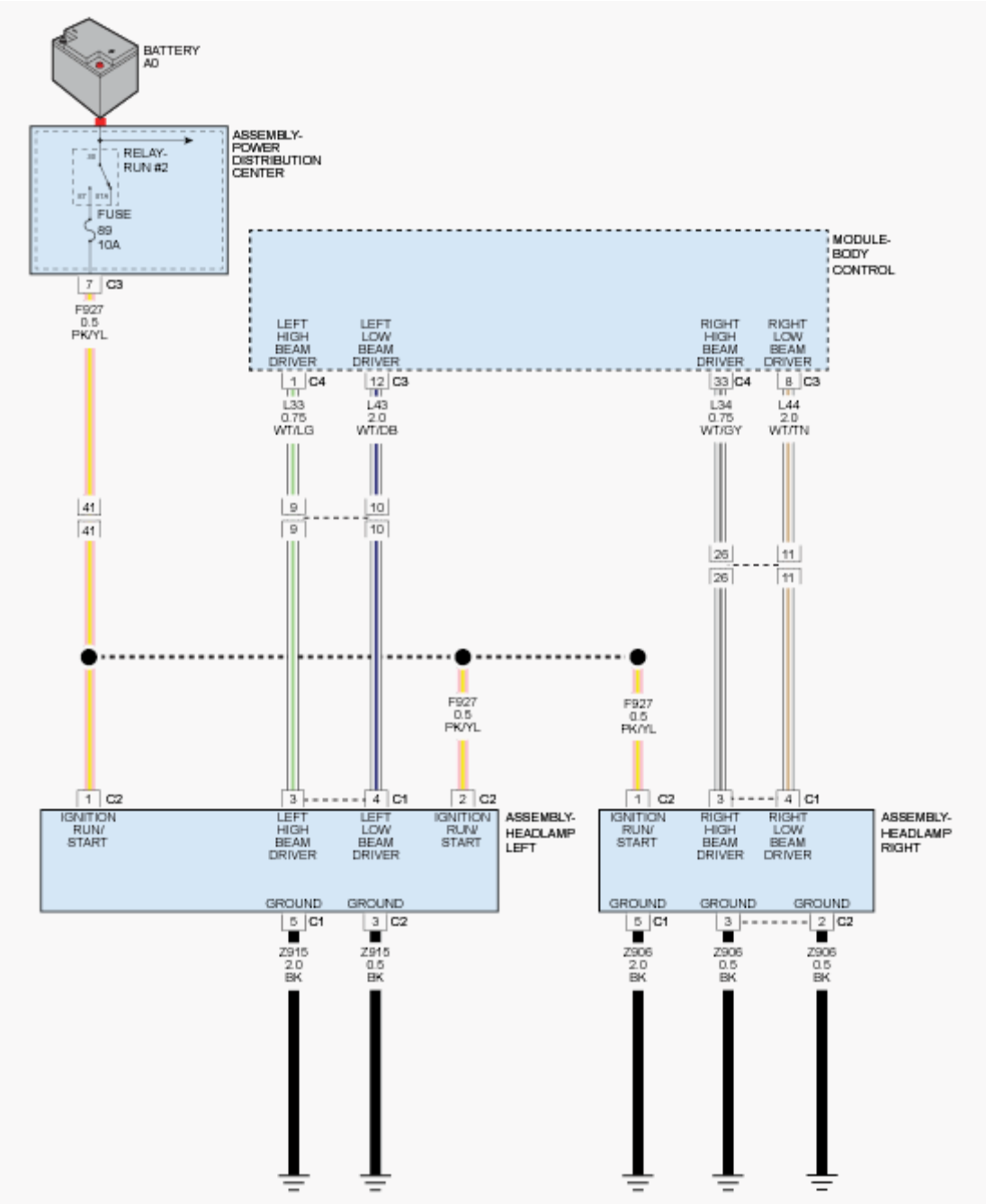

Fig. 14: Headlamp Assembly Circuit Diagram
Courtesy of CHRYSLER GROUP, LLC

THEORY OF OPERATION

The Body Control Module (BCM) receives the input from the headlamp switch requesting low beam lamp illumination. The BCM provides a pulse width modulated (PWM) voltage output through the low beam driver circuit, which connects to the Low Beam Lamp. A common ground circuit is used for the Low and High Beam Lamps. For additional information on the Headlamp operation, refer to **OPERATION** .

WHEN MONITORED

With the low beam headlamps active.

SET CONDITION

When the Body Control Module (BCM) detects a low condition on the (L44) Right Low Beam Driver circuit.

POSSIBLE CAUSES

Possible Causes
(L44) RIGHT LOW BEAM DRIVER CIRCUIT SHORTED TO GROUND
RIGHT LOW BEAM BULB
BODY CONTROL MODULE (BCM)

DIAGNOSTIC TEST

1. **CHECK FOR AN ACTIVE DTC**
    1. Turn the ignition on.
    2. Turn the Headlamps on.
    3. With the scan tool, read DTCs.

    Does the scan tool display this DTC as active?

    Yes

    - Go To 2

    No

    - Test complete. The condition or conditions that originally set this DTC are not present at this time. Using the wiring diagrams as a guide, check all related splices and connectors for signs of water intrusion, corrosion, pushed out or bent terminals and correct pin tension.
    - Perform the BODY VERIFICATION TEST. Refer to **STANDARD PROCEDURE** .
2. **ATTEMPT TO SET THE OPPOSITE DTC**
    1. Turn the ignition off.
    2. Disconnect the Right Front Lamp Assembly C1 harness connector.
    3. Turn the ignition on.
    4. Turn the Headlamps on.
    5. With the scan tool, read DTCs.

    Does the scan tool display DTC: B162E-18-RIGHT LOW BEAM CONTROL - UNDER CURRENT?

Yes

- Replace the Right Low Beam Bulb in accordance with the Service Information. Refer to **UNIT, FRONT LAMP, REMOVAL** .
- Perform the BODY VERIFICATION TEST. Refer to **STANDARD PROCEDURE** .

No

- Go To 3

3. **CHECK THE (L44) RIGHT LOW BEAM DRIVER CIRCUIT FOR A SHORT TO GROUND**
   1. Turn the ignition off.
   2. Disconnect the BCM C3 harness connector.
   3. Measure the resistance between ground and the (L44) Right Low Beam Driver circuit.

   Is the resistance above 10K Ohms?

   Yes

   - Replace the Body Control Module (BCM) in accordance with the Service Information. Refer to **MODULE, BODY CONTROL, REMOVAL** .
   - Perform the BODY VERIFICATION TEST. Refer to **STANDARD PROCEDURE** .

   No

   - Repair the short to ground in the (L44) Right Low Beam Driver circuit.
   - Perform the BODY VERIFICATION TEST. Refer to **STANDARD PROCEDURE** .

B1632-18-LEFT HIGH BEAM CONTROL - UNDER CURRENT

For a complete wiring diagram, **refer to appropriate SYSTEM WIRING DIAGRAMS article** .

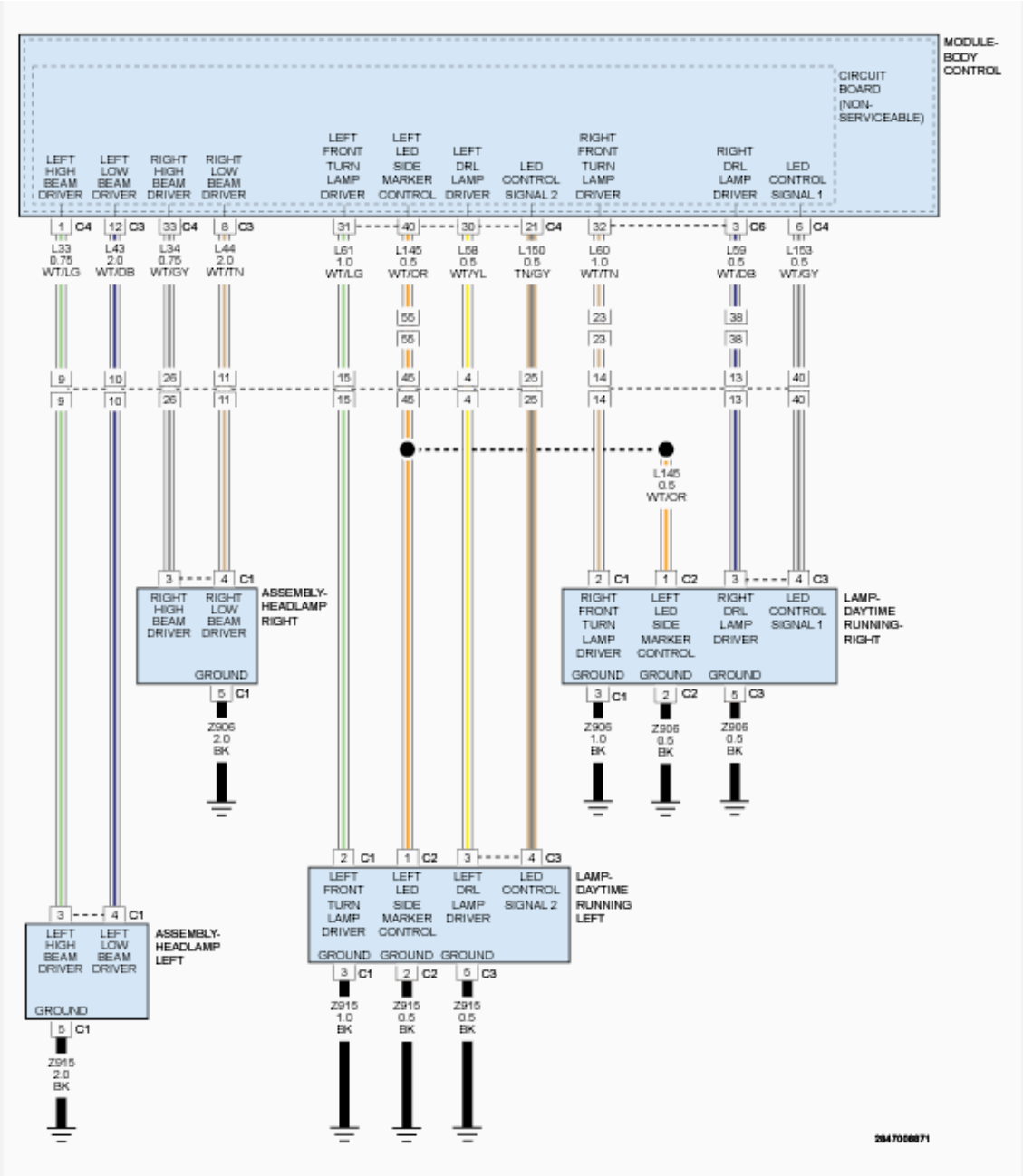

Fig. 15: Headlamp & Daytime Running Lamp Circuit Diagram
Courtesy of CHRYSLER GROUP, LLC

THEORY OF OPERATION

The Body Control Module (BCM) receives a communication network message from the Steering Column Control Module (SCCM) requesting high beam lamp illumination. When this message is received, the BCM provides a Pulse Width Modulated (PWM) voltage output through the high beam driver circuit which connects to the Right and Left High Beam Lamps. A common ground circuit is used for the Low and High Beam Lamps. For additional information on the Headlamp operation, refer to **OPERATION** .

WHEN MONITORED

With the high beam headlamps active.

SET CONDITION

When the Body Control Module (BCM) detects a high condition on the (L33) Left High Beam Driver circuit.

POSSIBLE CAUSES

Possible Causes
(L33) LEFT HIGH BEAM DRIVER CIRCUIT OPEN
(L33) LEFT HIGH BEAM DRIVER CIRCUIT SHORTED TO VOLTAGE
(Z915) GROUND CIRCUIT OPEN
LEFT HIGH BEAM BULB
BODY CONTROL MODULE (BCM)

DIAGNOSTIC TEST

1. **CHECK FOR AN ACTIVE DTC**
    1. Turn the ignition on.
    2. Turn the Headlamps on.
    3. With the scan tool, read DTCs.

    Does the scan tool display this DTC as active?

    Yes

    - Go To 2

    No

    - Test complete. The condition or conditions that originally set this DTC are not present at this time. Using the wiring diagrams as a guide, check all related splices and connectors for signs of water intrusion, corrosion, pushed out or bent terminals and correct pin tension.
    - Perform the BODY VERIFICATION TEST. Refer to **STANDARD PROCEDURE** .
2. **CHECK THE (L33) LEFT HIGH BEAM DRIVER CIRCUIT FOR A SHORT TO VOLTAGE IN THE HARNESS**
    1. Turn the Headlamps off.
    2. Turn the ignition off.
    3. Disconnect the Left Front Lamp Assembly C1 harness connector.
    4. Disconnect the BCM C4 harness connector.
    5. Turn the ignition on.

6. Measure the voltage between ground and the (L33) Left High Beam Driver circuit.

   Is there any voltage present?

   Yes

   - Repair the short to voltage in the (L33) Left High Beam Driver circuit.
   - Perform the BODY VERIFICATION TEST. Refer to **STANDARD PROCEDURE** .

   No

   - Go To 3

3. **CHECK THE (L33) LEFT HIGH BEAM DRIVER CIRCUIT FOR AN OPEN IN THE HARNESS**
   1. Turn the ignition off.
   2. Measure the resistance of the (L33) Left High Beam Driver circuit between the Left Front Lamp Assembly C1 harness connector and the BCM C4 harness connector.

      Is the resistance below 5.0 Ohms?

      Yes

      - Go To 4

      No

      - Repair the open in the (L33) Left High Beam Driver circuit.
      - Perform the BODY VERIFICATION TEST. Refer to **STANDARD PROCEDURE** .

4. **CHECK THE (Z915) GROUND CIRCUIT FOR AN OPEN IN THE HARNESS**
   1. Using a 12-volt test light connected to 12-volts, check the (Z915) Ground circuit at the Left Front Lamp Assembly C1 harness connector.

      Does the test light illuminate brightly?

      Yes

      - Go To 5

      No

      - Repair the open in the (Z915) Ground circuit.
      - Perform the BODY VERIFICATION TEST. Refer to **STANDARD PROCEDURE** .

5. **CHECK THE BCM FOR CORRECT OPERATION**
   1. Reconnect the BCM C4 harness connector.

2. Connect a 12-volt test light between the (L33) Left High Beam Driver circuit and the (Z915) Ground circuit in the Left Front Lamp Assembly C1 harness connector.
3. Turn the ignition on.
4. Turn the Headlamps on.

   Does the test light illuminate brightly?

   Yes

   - Replace the Left High Beam Bulb in accordance with the Service Information. Refer to **UNIT, FRONT LAMP, REMOVAL** .
   - Perform the BODY VERIFICATION TEST. Refer to **STANDARD PROCEDURE** .

   No

   - Replace the Body Control Module (BCM) in accordance with the Service Information. Refer to **MODULE, BODY CONTROL, REMOVAL** .
   - Perform the BODY VERIFICATION TEST. Refer to **STANDARD PROCEDURE** .

B1632-18-LEFT HIGH BEAM CONTROL - UNDER CURRENT - EXPORT

For a complete wiring diagram, **refer to appropriate SYSTEM WIRING DIAGRAMS article** .

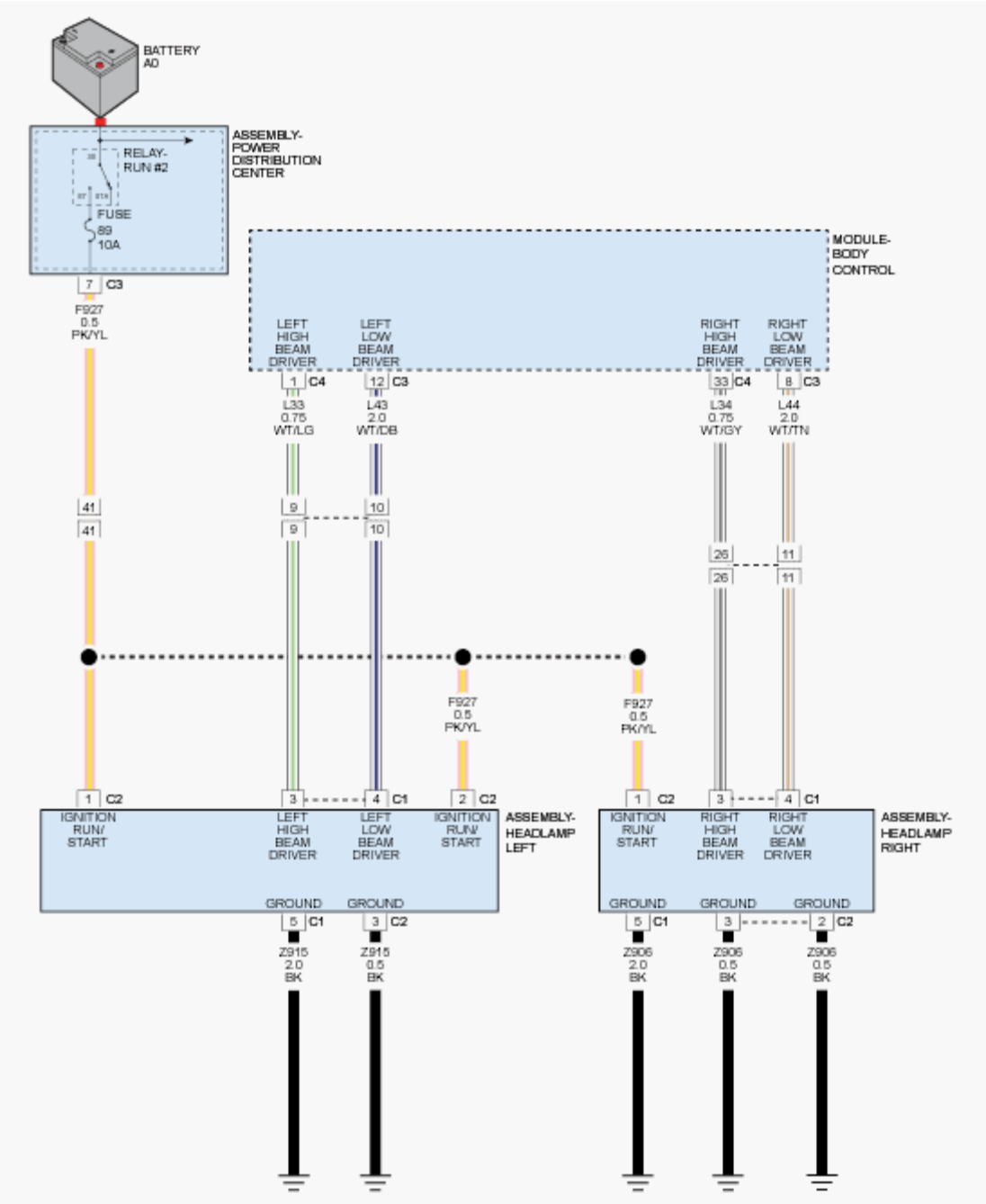

Fig. 16: Headlamp Assembly Circuit Diagram
Courtesy of CHRYSLER GROUP, LLC

THEORY OF OPERATION

The Body Control Module (BCM) receives a communication network message from the Steering Column Control Module (SCCM) requesting high beam lamp illumination. When this message is received, the BCM provides a Pulse Width Modulated (PWM) voltage output through the high beam driver circuit which connects to the Right and Left High Beam Lamps. A common ground circuit is used for the Low and High Beam Lamps. For additional information on the Headlamp operation, refer to **OPERATION** .

WHEN MONITORED

With the high beam headlamps active.

SET CONDITION

When the Body Control Module (BCM) detects a high condition on the (L33) Left High Beam Driver circuit.

POSSIBLE CAUSES

Possible Causes
(L33) LEFT HIGH BEAM DRIVER CIRCUIT OPEN
(L33) LEFT HIGH BEAM DRIVER CIRCUIT SHORTED TO VOLTAGE
(Z915) GROUND CIRCUIT OPEN
LEFT HIGH BEAM BULB
BODY CONTROL MODULE (BCM)

DIAGNOSTIC TEST

1. **CHECK FOR AN ACTIVE DTC**
    1. Turn the ignition on.
    2. Turn the Headlamps on.
    3. With the scan tool, read DTCs.

    Does the scan tool display this DTC as active?

    Yes

    - Go To 2

    No

    - Test complete. The condition or conditions that originally set this DTC are not present at this time. Using the wiring diagrams as a guide, check all related splices and connectors for signs of water intrusion, corrosion, pushed out or bent terminals and correct pin tension.
    - Perform the BODY VERIFICATION TEST. Refer to **STANDARD PROCEDURE** .
2. **CHECK THE (L33) LEFT HIGH BEAM DRIVER CIRCUIT FOR A SHORT TO VOLTAGE IN THE HARNESS**
    1. Turn the Headlamps off.
    2. Turn the ignition off.
    3. Disconnect the Left Front Lamp Assembly C1 harness connector.
    4. Disconnect the BCM C4 harness connector.
    5. Turn the ignition on.

6. Measure the voltage between ground and the (L33) Left High Beam Driver circuit.

   Is there any voltage present?

   Yes

   - Repair the short to voltage in the (L33) Left High Beam Driver circuit.
   - Perform the BODY VERIFICATION TEST. Refer to **STANDARD PROCEDURE** .

   No

   - Go To 3

3. **CHECK THE (L33) LEFT HIGH BEAM DRIVER CIRCUIT FOR AN OPEN IN THE HARNESS**
   1. Turn the ignition off.
   2. Measure the resistance of the (L33) Left High Beam Driver circuit between the Left Front Lamp Assembly C1 harness connector and the BCM C4 harness connector.

      Is the resistance below 5.0 Ohms?

      Yes

      - Go To 4

      No

      - Repair the open in the (L33) Left High Beam Driver circuit.
      - Perform the BODY VERIFICATION TEST. Refer to **STANDARD PROCEDURE** .

4. **CHECK THE (Z915) GROUND CIRCUIT FOR AN OPEN IN THE HARNESS**
   1. Disconnect the Left Front Lamp Assembly C2 harness connector.
   2. Using a 12-volt test light connected to 12-volts, check the (Z915) Ground circuit at the Left Front Lamp Assembly C1 and C2 harness connectors.

      Does the test light illuminate brightly?

      Yes

      - Go To 5

      No

      - Repair the open in the (Z915) Ground circuit.
      - Perform the BODY VERIFICATION TEST. Refer to **STANDARD PROCEDURE** .

5. **CHECK THE BCM FOR CORRECT OPERATION**

1. Reconnect the Left Front Lamp Assembly C2 harness connector.
2. Reconnect the BCM C4 harness connector.
3. Connect a 12-volt test light between the (L33) Left High Beam Driver circuit and the (Z915) Ground circuit in the Left Front Lamp Assembly C1 harness connector.
4. Turn the ignition on.
5. Turn the Headlamps on.

   Does the test light illuminate brightly?

   Yes

   - Replace the Left High Beam Bulb in accordance with the Service Information. Refer to **UNIT, FRONT LAMP, REMOVAL** .
   - Perform the BODY VERIFICATION TEST. Refer to **STANDARD PROCEDURE** .

   No

   - Replace the Body Control Module (BCM) in accordance with the Service Information. Refer to **MODULE, BODY CONTROL, REMOVAL** .
   - Perform the BODY VERIFICATION TEST. Refer to **STANDARD PROCEDURE** .

B1632-19-LEFT HIGH BEAM CONTROL - OVER CURRENT

For a complete wiring diagram, **refer to appropriate SYSTEM WIRING DIAGRAMS article** .

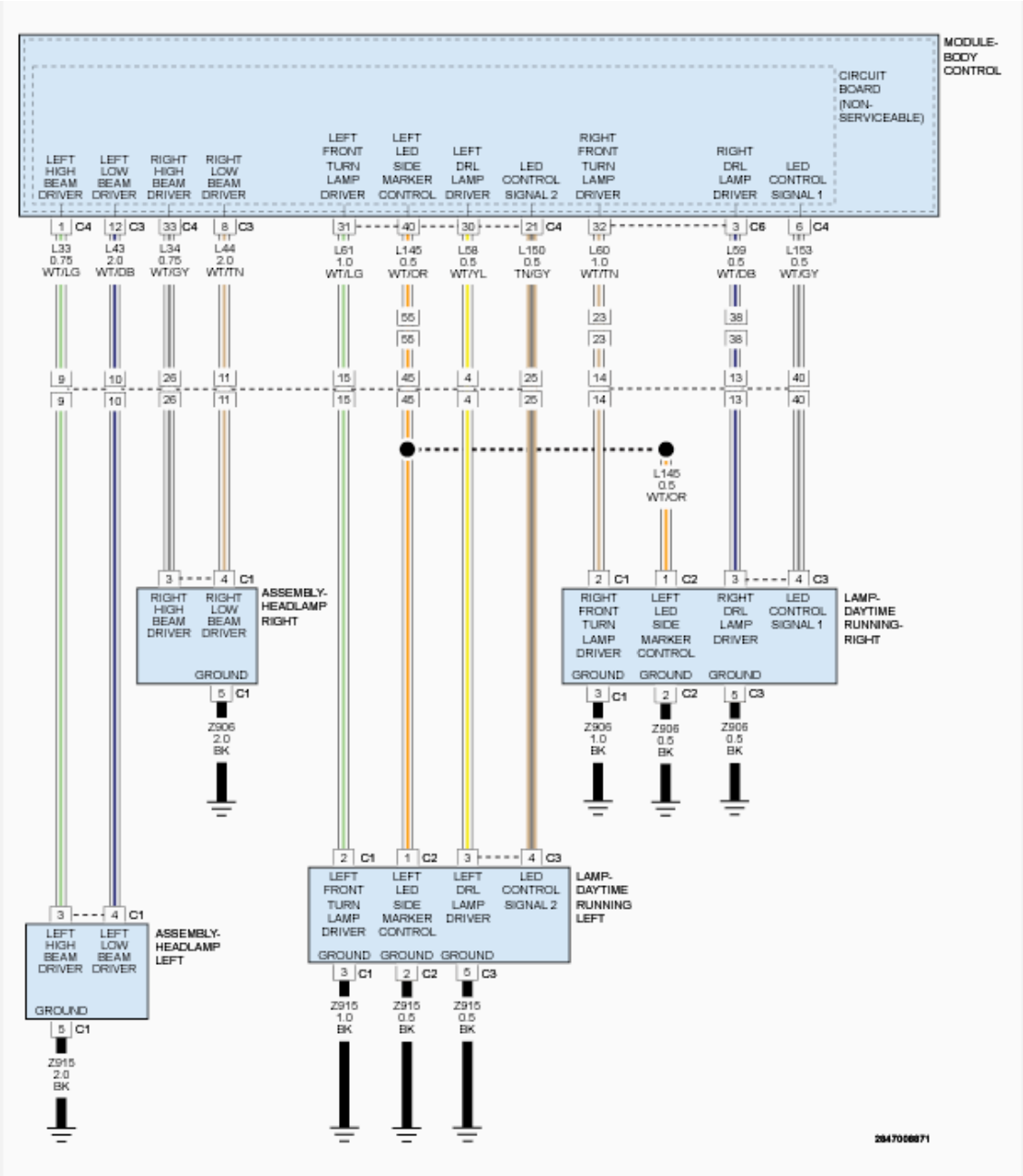

Fig. 17: Headlamp & Daytime Running Lamp Circuit Diagram
Courtesy of CHRYSLER GROUP, LLC

THEORY OF OPERATION

The Body Control Module (BCM) receives a communication network message from the Steering Column Control Module (SCCM) requesting high beam lamp illumination. When this message is received, the BCM provides a Pulse Width Modulated (PWM) voltage output through the high beam driver circuit which connects to the Right and Left High Beam Lamps. A common ground circuit is used for the Low and High Beam Lamps. For additional information on the Headlamp operation, refer to **OPERATION** .

WHEN MONITORED

With the high beam headlamps active.

SET CONDITION

When the Body Control Module (BCM) detects a low condition on the (L33) Left High Beam Driver circuit.

POSSIBLE CAUSES

Possible Causes
(L33) LEFT HIGH BEAM DRIVER CIRCUIT SHORTED TO GROUND
LEFT HIGH BEAM BULB
BODY CONTROL MODULE (BCM)

DIAGNOSTIC TEST

1. **CHECK FOR AN ACTIVE DTC**
    1. Turn the ignition on.
    2. Turn the High Beam Headlamps on.
    3. With the scan tool, read DTCs.

    Does the scan tool display this DTC as active?

    Yes

    - Go To 2

    No

    - Test complete. The condition or conditions that originally set this DTC are not present at this time. Using the wiring diagrams as a guide, check all related splices and connectors for signs of water intrusion, corrosion, pushed out or bent terminals and correct pin tension.
    - Perform the BODY VERIFICATION TEST. Refer to **STANDARD PROCEDURE** .
2. **ATTEMPT TO SET THE OPPOSITE DTC BY DISCONNECTING THE LEFT FRONT LAMP ASSEMBLY**
    1. Turn the ignition off.
    2. Disconnect the Left Front Lamp Assembly C1 harness connector.
    3. Turn the ignition on.
    4. Turn the High Beam Headlamps on.
    5. With the scan tool, read DTCs.

    Does the scan tool display this DTC as active?

Yes

- Go To 3

No

- Replace the Left High Beam Bulb in accordance with the Service Information. Refer to **UNIT, FRONT LAMP, REMOVAL** .
- Perform the BODY VERIFICATION TEST. Refer to **STANDARD PROCEDURE** .

3. **CHECK THE (L33) LEFT HIGH BEAM DRIVER CIRCUIT FOR A SHORT TO GROUND**
   1. Turn the ignition off.
   2. Disconnect the BCM C4 harness connector.
   3. Measure the resistance between ground and the (L33) Left High Beam Driver circuit.

   Is the resistance above 10K Ohms?

   Yes

   - Replace the BCM in accordance with the Service Information. Refer to **MODULE, BODY CONTROL, REMOVAL** .
   - Perform the BODY VERIFICATION TEST. Refer to **STANDARD PROCEDURE** .

   No

   - Repair the short to ground in the (L33) Left High Beam Driver circuit.
   - Perform the BODY VERIFICATION TEST. Refer to **STANDARD PROCEDURE** .

B1632-19-LEFT HIGH BEAM CONTROL - OVER CURRENT - EXPORT

For a complete wiring diagram, **refer to appropriate SYSTEM WIRING DIAGRAMS article** .

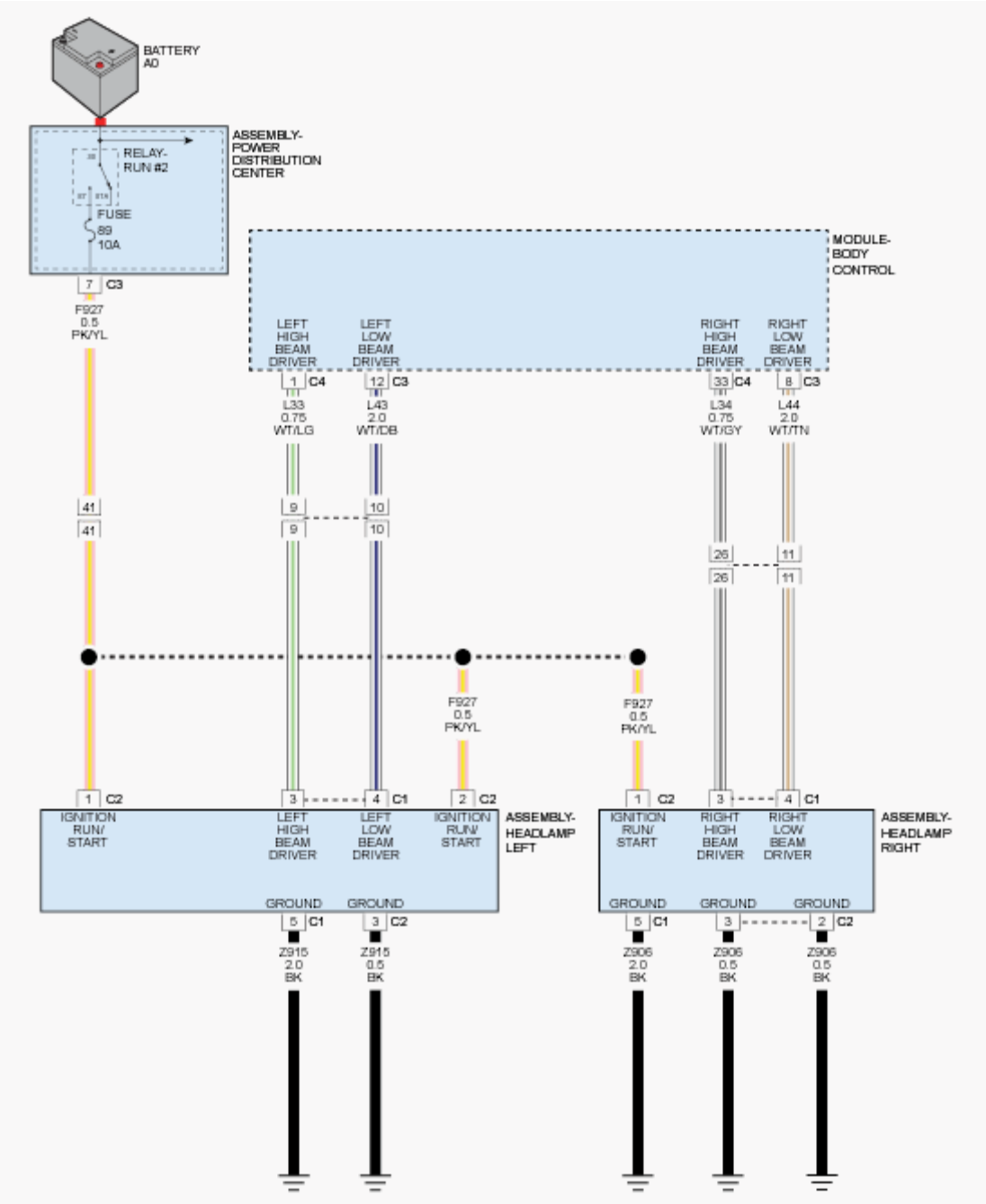

Fig. 18: Headlamp Assembly Circuit Diagram
Courtesy of CHRYSLER GROUP, LLC

THEORY OF OPERATION

The Body Control Module (BCM) receives a communication network message from the Steering Column Control Module (SCCM) requesting high beam lamp illumination. When this message is received, the BCM provides a Pulse Width Modulated (PWM) voltage output through the high beam driver circuit which connects to the Right and Left High Beam Lamps. A common ground circuit is used for the Low and High Beam Lamps. For additional information on the Headlamp operation, refer to **OPERATION** .

WHEN MONITORED

With the high beam headlamps active.

SET CONDITION

When the Body Control Module (BCM) detects a low condition on the (L33) Left High Beam Driver circuit.

POSSIBLE CAUSES

Possible Causes
(L33) LEFT HIGH BEAM DRIVER CIRCUIT SHORTED TO GROUND
LEFT HIGH BEAM BULB
BODY CONTROL MODULE (BCM)

DIAGNOSTIC TEST

1. **CHECK FOR AN ACTIVE DTC**
    1. Turn the ignition on.
    2. Turn the High Beam Headlamps on.
    3. With the scan tool, read DTCs.

    Does the scan tool display this DTC as active?

    Yes

    - Go To 2

    No

    - Test complete. The condition or conditions that originally set this DTC are not present at this time. Using the wiring diagrams as a guide, check all related splices and connectors for signs of water intrusion, corrosion, pushed out or bent terminals and correct pin tension.
    - Perform the BODY VERIFICATION TEST. Refer to **STANDARD PROCEDURE** .
2. **ATTEMPT TO SET THE OPPOSITE DTC BY DISCONNECTING THE LEFT FRONT LAMP ASSEMBLY**
    1. Turn the ignition off.
    2. Disconnect the Left Front Lamp Assembly C1 harness connector.
    3. Turn the ignition on.
    4. Turn the High Beam Headlamps on.
    5. With the scan tool, read DTCs.

    Does the scan tool display this DTC as active?

Yes

- Go To 3

No

- Replace the Left High Beam Bulb in accordance with the Service Information. Refer to **UNIT, FRONT LAMP, REMOVAL** .
- Perform the BODY VERIFICATION TEST. Refer to **STANDARD PROCEDURE** .

3. **CHECK THE (L33) LEFT HIGH BEAM DRIVER CIRCUIT FOR A SHORT TO GROUND**
   1. Turn the ignition off.
   2. Disconnect the BCM C4 harness connector.
   3. Measure the resistance between ground and the (L33) Left High Beam Driver circuit.

   Is the resistance above 10K Ohms?

   Yes

   - Replace the BCM in accordance with the Service Information. Refer to **MODULE, BODY CONTROL, REMOVAL** .
   - Perform the BODY VERIFICATION TEST. Refer to **STANDARD PROCEDURE** .

   No

   - Repair the short to ground in the (L33) Left High Beam Driver circuit.
   - Perform the BODY VERIFICATION TEST. Refer to **STANDARD PROCEDURE** .

B1636-18-RIGHT HIGH BEAM CONTROL - UNDER CURRENT

For a complete wiring diagram, **refer to appropriate SYSTEM WIRING DIAGRAMS article** .

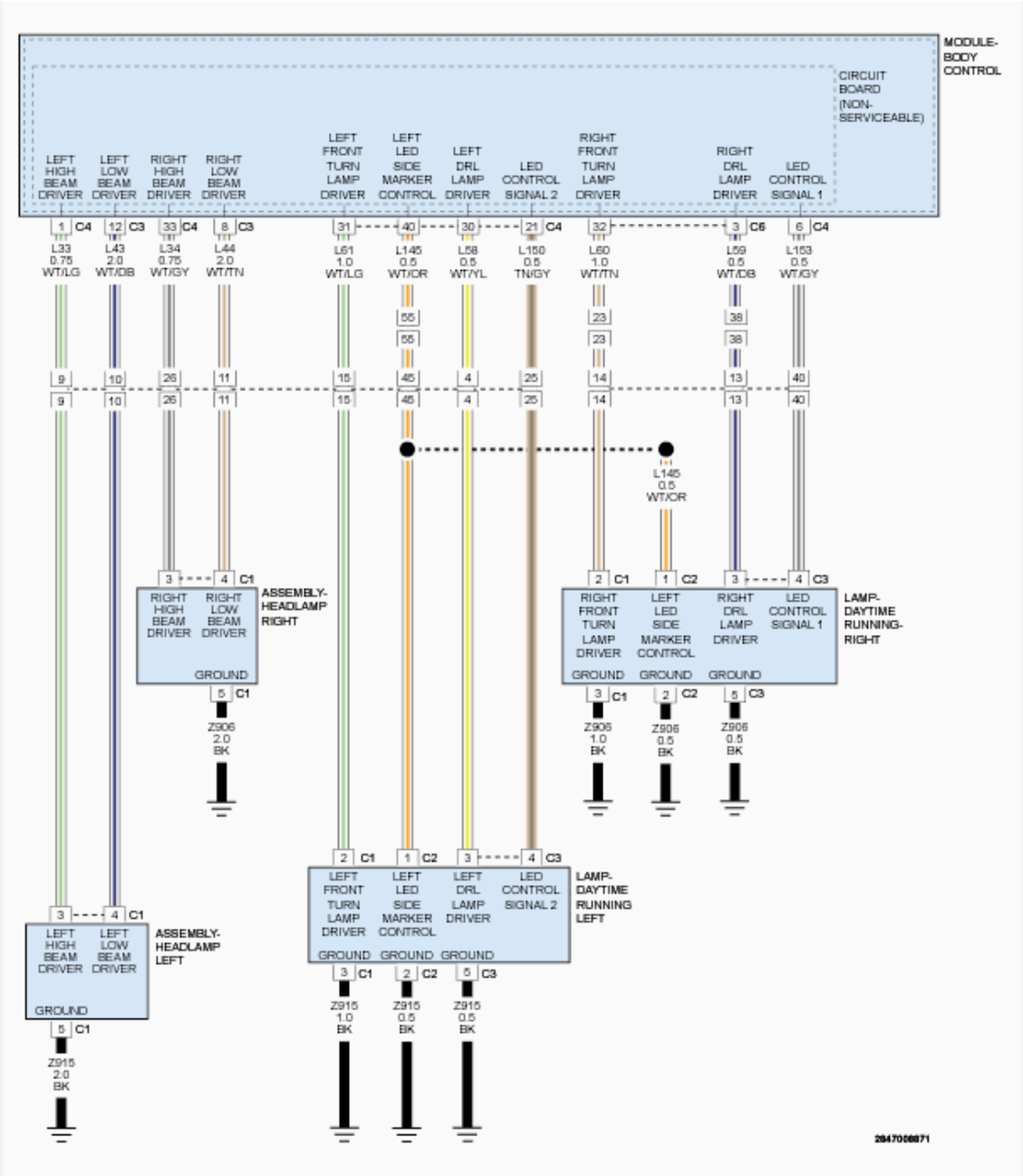

Fig. 19: Headlamp & Daytime Running Lamp Circuit Diagram
Courtesy of CHRYSLER GROUP, LLC

THEORY OF OPERATION

The Body Control Module (BCM) receives a communication network message from the Steering Column Control Module (SCCM) requesting high beam lamp illumination. When this message is received, the BCM provides a Pulse Width Modulated (PWM) voltage output through the high beam driver circuit which connects to the Right and Left High Beam Lamps. A common ground circuit is used for the Low and High Beam Lamps. For additional information on the Headlamp operation, refer to **OPERATION** .

WHEN MONITORED

With the high beam headlamps active.

SET CONDITION

When the Body Control Module (BCM) detects a high condition on the (L34) Right High Beam Driver circuit.

POSSIBLE CAUSES

Possible Causes
(L34) RIGHT HIGH BEAM DRIVER CIRCUIT OPEN
(L34) RIGHT HIGH BEAM DRIVER CIRCUIT SHORTED TO VOLTAGE
(Z906) GROUND CIRCUIT OPEN
RIGHT HIGH BEAM BULB
BODY CONTROL MODULE (BCM)

DIAGNOSTIC TEST

1. **CHECK FOR AN ACTIVE DTC**
    1. Turn the ignition on.
    2. Turn the Headlamps on.
    3. With the scan tool, read DTCs.

    Does the scan tool display this DTC as active?

    Yes

    - Go To 2

    No

    - Test complete. The condition or conditions that originally set this DTC are not present at this time. Using the wiring diagrams as a guide, check all related splices and connectors for signs of water intrusion, corrosion, pushed out or bent terminals and correct pin tension.
    - Perform the BODY VERIFICATION TEST. Refer to **STANDARD PROCEDURE** .
2. **CHECK THE (L34) RIGHT HIGH BEAM DRIVER CIRCUIT FOR A SHORT TO VOLTAGE IN THE HARNESS**
    1. Turn the Headlamps off.
    2. Turn the ignition off.
    3. Disconnect the Right Front Lamp Assembly C1 harness connector.
    4. Disconnect the BCM C4 harness connector.
    5. Turn the ignition on.

6. Measure the voltage between ground and the (L34) Right High Beam Driver circuit.

   Is there any voltage present?

   Yes

   - Repair the short to voltage in the (L34) Right High Beam Driver circuit.
   - Perform the BODY VERIFICATION TEST. Refer to **STANDARD PROCEDURE** .

   No

   - Go To 3

3. **CHECK THE (L34) RIGHT HIGH BEAM DRIVER CIRCUIT FOR AN OPEN IN THE HARNESS**
   1. Turn the ignition off.
   2. Measure the resistance of the (L34) Right High Beam Driver circuit between the Right Front Lamp Assembly C1 harness connector and the BCM C4 harness connector.

      Is the resistance below 5.0 Ohms?

      Yes

      - Go To 4

      No

      - Repair the open in the (L34) Right High Beam Driver circuit.
      - Perform the BODY VERIFICATION TEST. Refer to **STANDARD PROCEDURE** .

4. **CHECK THE (Z906) GROUND CIRCUIT FOR AN OPEN IN THE HARNESS**
   1. Using a 12-volt test light connected to 12-volts, check the (Z906) Ground circuit at the Left Front Lamp Assembly C1 harness connector.

      Does the test light illuminate brightly?

      Yes

      - Go To 5

      No

      - Repair the open in the (Z906) Ground circuit.
      - Perform the BODY VERIFICATION TEST. Refer to **STANDARD PROCEDURE** .

5. **CHECK THE BCM FOR CORRECT OPERATION**

1. Reconnect the BCM C4 harness connector.
2. Connect a 12-volt test light between the (L34) Right High Beam Driver circuit and the (Z906) Ground circuit in the Right Front Lamp Assembly C1 harness connector.
3. Turn the ignition on.
4. Turn the Headlamps on.

   Does the test light illuminate brightly?

   Yes

   - Replace the Right High Beam Bulb in accordance with the Service Information. Refer to **UNIT, FRONT LAMP, REMOVAL** .
   - Perform the BODY VERIFICATION TEST. Refer to **STANDARD PROCEDURE** .

   No

   - Replace the Body Control Module (BCM) in accordance with the Service Information. Refer to **MODULE, BODY CONTROL, REMOVAL** .
   - Perform the BODY VERIFICATION TEST. Refer to **STANDARD PROCEDURE** .

B1636-18-RIGHT HIGH BEAM CONTROL - UNDER CURRENT - EXPORT

For a complete wiring diagram, **refer to appropriate SYSTEM WIRING DIAGRAMS article** .

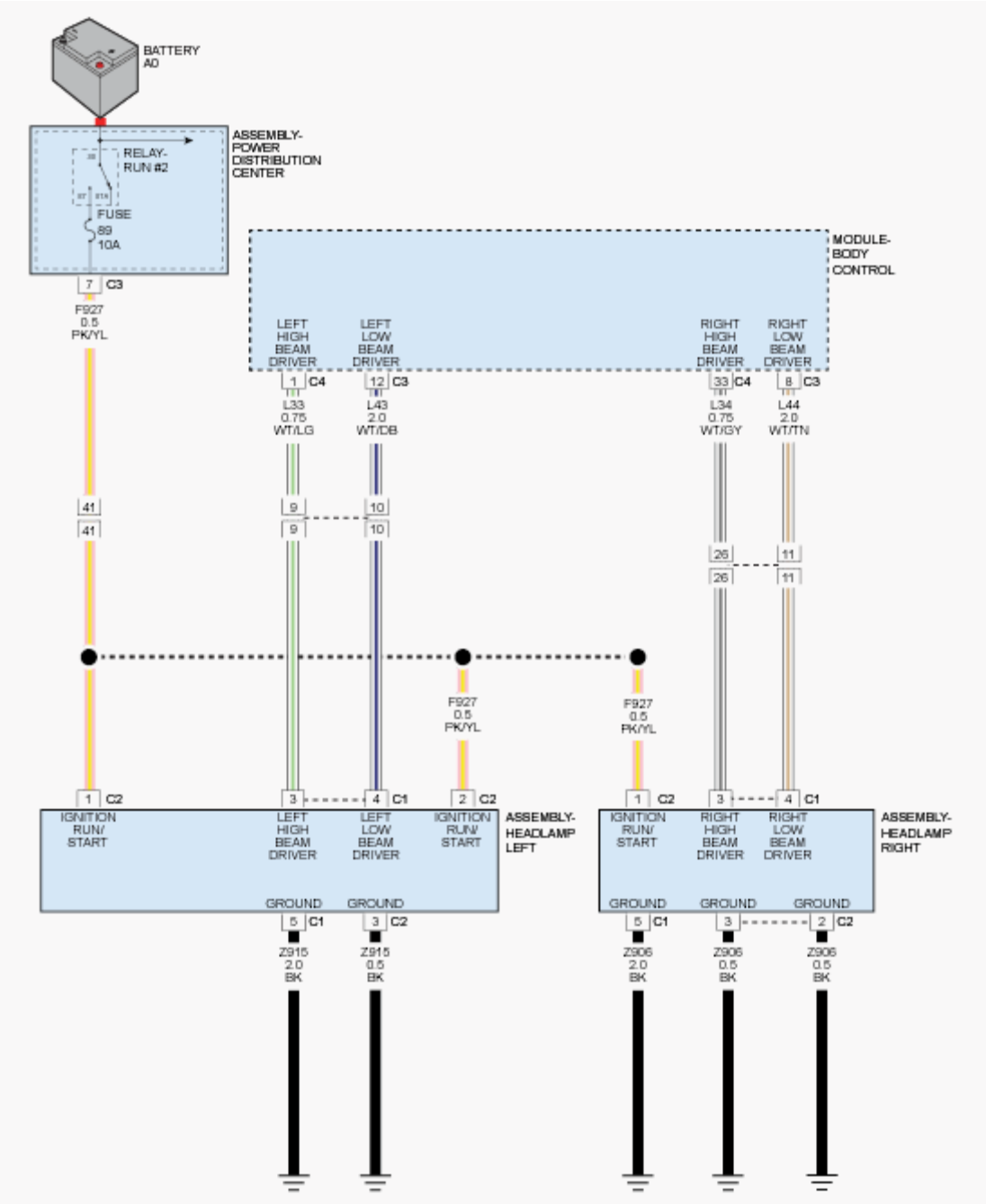

Fig. 20: Headlamp Assembly Circuit Diagram
Courtesy of CHRYSLER GROUP, LLC

THEORY OF OPERATION

The Body Control Module (BCM) receives a communication network message from the Steering Column Control Module (SCCM) requesting high beam lamp illumination. When this message is received, the BCM provides a Pulse Width Modulated (PWM) voltage output through the high beam driver circuit which connects to the Right and Left High Beam Lamps. A common ground circuit is used for the Low and High Beam Lamps. For additional information on the Headlamp operation, refer to **OPERATION** .

WHEN MONITORED

With the high beam headlamps active.

SET CONDITION

When the Body Control Module (BCM) detects a high condition on the (L34) Right High Beam Driver circuit.

POSSIBLE CAUSES

Possible Causes
(L34) RIGHT HIGH BEAM DRIVER CIRCUIT OPEN
(L34) RIGHT HIGH BEAM DRIVER CIRCUIT SHORTED TO VOLTAGE
(Z906) GROUND CIRCUIT OPEN
RIGHT HIGH BEAM BULB
BODY CONTROL MODULE (BCM)

DIAGNOSTIC TEST

1. **CHECK FOR AN ACTIVE DTC**
    1. Turn the ignition on.
    2. Turn the Headlamps on.
    3. With the scan tool, read DTCs.

    Does the scan tool display this DTC as active?

    Yes

    - Go To 2

    No

    - Test complete. The condition or conditions that originally set this DTC are not present at this time. Using the wiring diagrams as a guide, check all related splices and connectors for signs of water intrusion, corrosion, pushed out or bent terminals and correct pin tension.
    - Perform the BODY VERIFICATION TEST. Refer to **STANDARD PROCEDURE** .
2. **CHECK THE (L34) RIGHT HIGH BEAM DRIVER CIRCUIT FOR A SHORT TO VOLTAGE IN THE HARNESS**
    1. Turn the Headlamps off.
    2. Turn the ignition off.
    3. Disconnect the Right Front Lamp Assembly C1 harness connector.
    4. Disconnect the BCM C4 harness connector.
    5. Turn the ignition on.

6. Measure the voltage between ground and the (L34) Right High Beam Driver circuit.

   Is there any voltage present?

   Yes

   - Repair the short to voltage in the (L34) Right High Beam Driver circuit.
   - Perform the BODY VERIFICATION TEST. Refer to **STANDARD PROCEDURE** .

   No

   - Go To 3

3. **CHECK THE (L34) RIGHT HIGH BEAM DRIVER CIRCUIT FOR AN OPEN IN THE HARNESS**
   1. Turn the ignition off.
   2. Measure the resistance of the (L34) Right High Beam Driver circuit between the Right Front Lamp Assembly C1 harness connector and the BCM C4 harness connector.

      Is the resistance below 5.0 Ohms?

      Yes

      - Go To 4

      No

      - Repair the open in the (L34) Right High Beam Driver circuit.
      - Perform the BODY VERIFICATION TEST. Refer to **STANDARD PROCEDURE** .

4. **CHECK THE (Z906) GROUND CIRCUIT FOR AN OPEN IN THE HARNESS**
   1. Disconnect the Right Front Lamp Assembly C2 harness connector.
   2. Using a 12-volt test light connected to 12-volts, check the (Z906) Ground circuit at the Left Front Lamp Assembly C1 and C2 harness connectors.

      Does the test light illuminate brightly?

      Yes

      - Go To 5

      No

      - Repair the open in the (Z906) Ground circuit.
      - Perform the BODY VERIFICATION TEST. Refer to **STANDARD PROCEDURE** .

5. **CHECK THE BCM FOR CORRECT OPERATION**
    1. Reconnect the Right Front Lamp Assembly C2 harness connector.
    2. Reconnect the BCM C4 harness connector.
    3. Connect a 12-volt test light between the (L34) Right High Beam Driver circuit and the (Z906) Ground circuit in the Right Front Lamp Assembly C1 harness connector.
    4. Turn the ignition on.
    5. Turn the Headlamps on.

    Does the test light illuminate brightly?

    Yes

    - Replace the Right High Beam Bulb in accordance with the Service Information. Refer to **UNIT, FRONT LAMP, REMOVAL** .
    - Perform the BODY VERIFICATION TEST. Refer to **STANDARD PROCEDURE** .

    No

    - Replace the Body Control Module (BCM) in accordance with the Service Information. Refer to **MODULE, BODY CONTROL, REMOVAL** .
    - Perform the BODY VERIFICATION TEST. Refer to **STANDARD PROCEDURE** .

B1636-19-RIGHT HIGH BEAM CONTROL - OVER CURRENT

For a complete wiring diagram, **refer to appropriate SYSTEM WIRING DIAGRAMS article** .

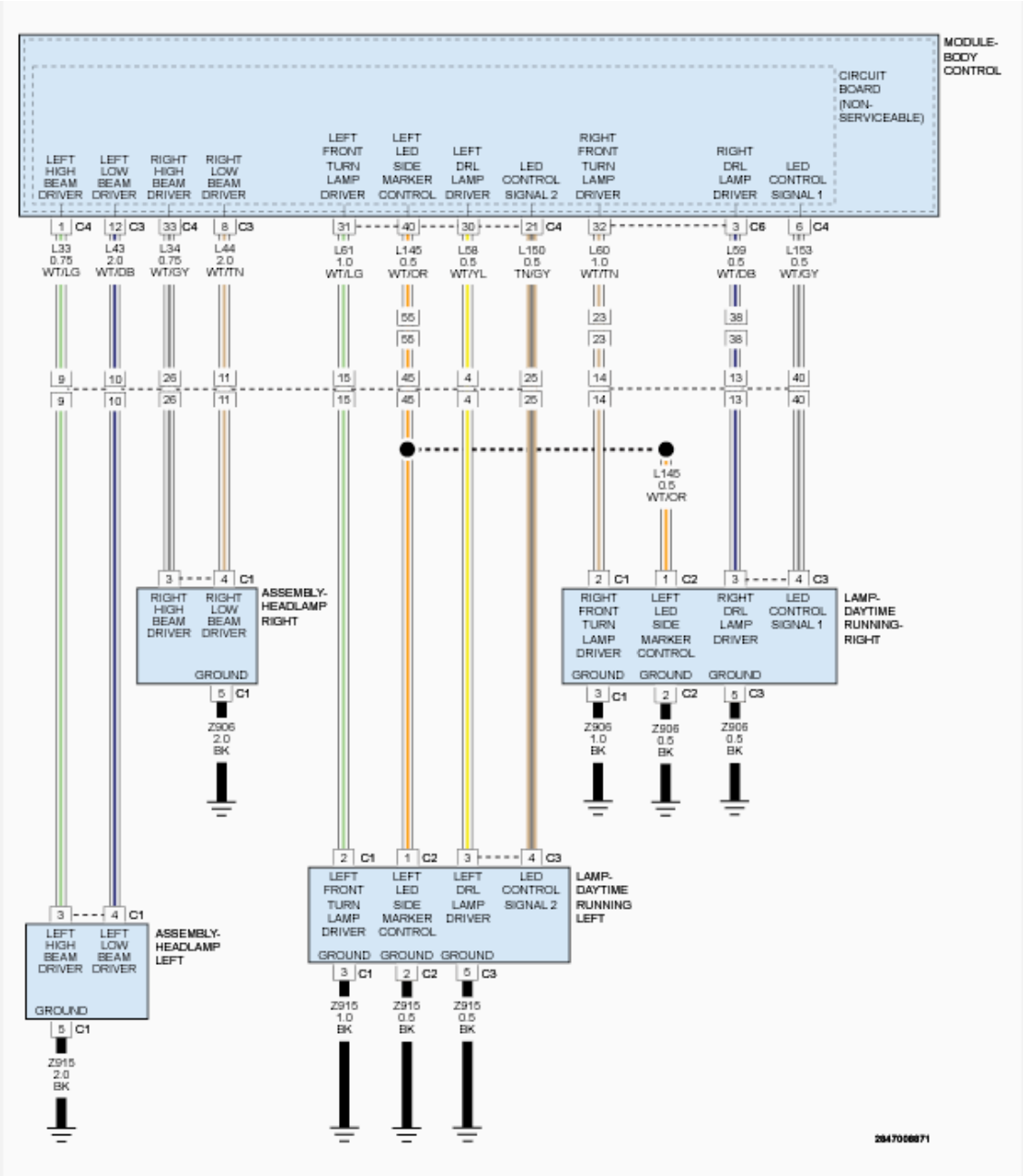

Fig. 21: Headlamp & Daytime Running Lamp Circuit Diagram
Courtesy of CHRYSLER GROUP, LLC

THEORY OF OPERATION

The Body Control Module (BCM) receives a communication network message from the Steering Column Control Module (SCCM) requesting high beam lamp illumination. When this message is received, the BCM provides a Pulse Width Modulated (PWM) voltage output through the high beam driver circuit which connects to the Right and Left High Beam Lamps. A common ground circuit is used for the Low and High Beam Lamps. For additional information on the Headlamp operation, refer to **OPERATION** .

WHEN MONITORED

With the high beam headlamps active.

SET CONDITION

When the Body Control Module (BCM) detects a low condition on the (L34) Right High Beam Driver circuit.

POSSIBLE CAUSES

Possible Causes
(L34) RIGHT HIGH BEAM DRIVER CIRCUIT SHORTED TO GROUND
RIGHT HIGH BEAM BULB
BODY CONTROL MODULE (BCM)

DIAGNOSTIC TEST

1. **CHECK FOR AN ACTIVE DTC**
    1. Turn the ignition on.
    2. Turn the High Beam Headlamps on.
    3. With the scan tool, read DTCs.

    Does the scan tool display this DTC as active?

    Yes

    - Go To 2

    No

    - Test complete. The condition or conditions that originally set this DTC are not present at this time. Using the wiring diagrams as a guide, check all related splices and connectors for signs of water intrusion, corrosion, pushed out or bent terminals and correct pin tension.
    - Perform the BODY VERIFICATION TEST. Refer to **STANDARD PROCEDURE** .
2. **ATTEMPT TO SET THE OPPOSITE DTC BY DISCONNECTING THE RIGHT FRONT LAMP ASSEMBLY**
    1. Turn the ignition off.
    2. Disconnect the Right Front Lamp Assembly C1 harness connector.
    3. Turn the ignition on.
    4. Turn the High Beam Headlamps on.
    5. With the scan tool, read DTCs.

    Does the scan tool display this DTC as active?

Yes

- Go To 3

No

- Replace the Right High Beam Bulb in accordance with the Service Information. Refer to **UNIT, FRONT LAMP, REMOVAL** .
- Perform the BODY VERIFICATION TEST. Refer to **STANDARD PROCEDURE** .

3. **CHECK THE (L34) RIGHT HIGH BEAM DRIVER CIRCUIT FOR A SHORT TO GROUND**
   1. Turn the ignition off.
   2. Disconnect the BCM C4 harness connector.
   3. Measure the resistance between ground and the (L34) Right High Beam Driver circuit.

   Is the resistance above 10K Ohms?

   Yes

   - Replace the BCM in accordance with the Service Information. Refer to **MODULE, BODY CONTROL, REMOVAL** .
   - Perform the BODY VERIFICATION TEST. Refer to **STANDARD PROCEDURE** .

   No

   - Repair the short to ground in the (L34) Right High Beam Driver circuit.
   - Perform the BODY VERIFICATION TEST. Refer to **STANDARD PROCEDURE** .

B1636-19-RIGHT HIGH BEAM CONTROL - OVER CURRENT - EXPORT

For a complete wiring diagram, **refer to appropriate SYSTEM WIRING DIAGRAMS article** .

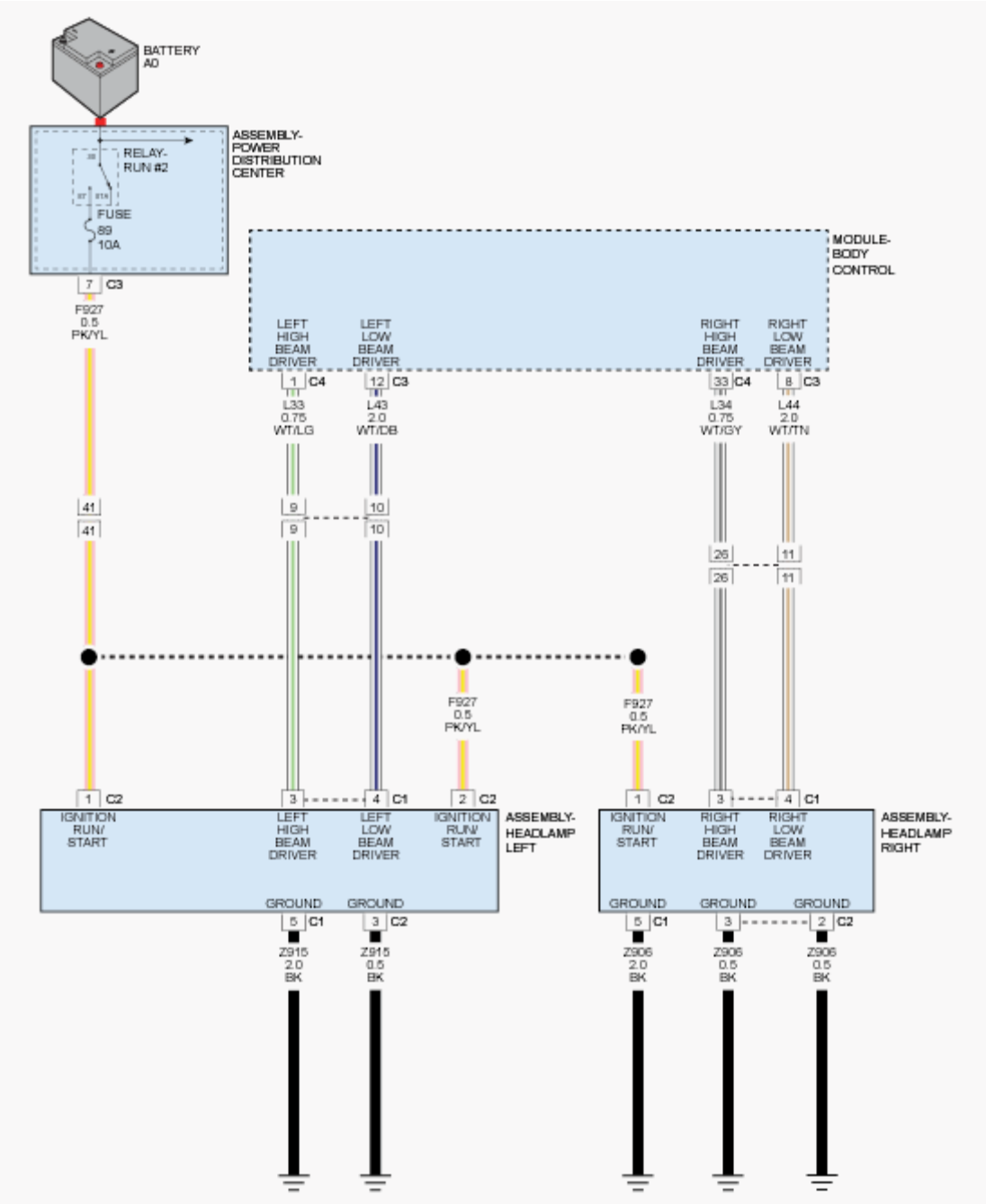

Fig. 22: Headlamp Assembly Circuit Diagram
Courtesy of CHRYSLER GROUP, LLC

THEORY OF OPERATION

The Body Control Module (BCM) receives a communication network message from the Steering Column Control Module (SCCM) requesting high beam lamp illumination. When this message is received, the BCM provides a Pulse Width Modulated (PWM) voltage output through the high beam driver circuit which connects to the Right and Left High Beam Lamps. A common ground circuit is used for the Low and High Beam Lamps. For additional information on the Headlamp operation, refer to **OPERATION** .

WHEN MONITORED

With the high beam headlamps active.

SET CONDITION

When the Body Control Module (BCM) detects a low condition on the (L34) Right High Beam Driver circuit.

POSSIBLE CAUSES

Possible Causes
(L34) RIGHT HIGH BEAM DRIVER CIRCUIT SHORTED TO GROUND
RIGHT HIGH BEAM BULB
BODY CONTROL MODULE (BCM)

DIAGNOSTIC TEST

1. **CHECK FOR AN ACTIVE DTC**
    1. Turn the ignition on.
    2. Turn the High Beam Headlamps on.
    3. With the scan tool, read DTCs.

    Does the scan tool display this DTC as active?

    Yes

    - Go To 2

    No

    - Test complete. The condition or conditions that originally set this DTC are not present at this time. Using the wiring diagrams as a guide, check all related splices and connectors for signs of water intrusion, corrosion, pushed out or bent terminals and correct pin tension.
    - Perform the BODY VERIFICATION TEST. Refer to **STANDARD PROCEDURE** .
2. **ATTEMPT TO SET THE OPPOSITE DTC BY DISCONNECTING THE RIGHT FRONT LAMP ASSEMBLY**
    1. Turn the ignition off.
    2. Disconnect the Right Front Lamp Assembly C1 harness connector.
    3. Turn the ignition on.
    4. Turn the High Beam Headlamps on.
    5. With the scan tool, read DTCs.

    Does the scan tool display this DTC as active?

Yes

- Go To 3

No

- Replace the Right High Beam Bulb in accordance with the Service Information. Refer to **UNIT, FRONT LAMP, REMOVAL** .
- Perform the BODY VERIFICATION TEST. Refer to **STANDARD PROCEDURE** .

3. **CHECK THE (L34) RIGHT HIGH BEAM DRIVER CIRCUIT FOR A SHORT TO GROUND**
   1. Turn the ignition off.
   2. Disconnect the BCM C4 harness connector.
   3. Measure the resistance between ground and the (L34) Right High Beam Driver circuit.

   Is the resistance above 10K Ohms?

   Yes

   - Replace the BCM in accordance with the Service Information. Refer to **MODULE, BODY CONTROL, REMOVAL** .
   - Perform the BODY VERIFICATION TEST. Refer to **STANDARD PROCEDURE** .

   No

   - Repair the short to ground in the (L34) Right High Beam Driver circuit.
   - Perform the BODY VERIFICATION TEST. Refer to **STANDARD PROCEDURE** .

B163A-18-FRONT LEFT TURN LAMP CONTROL - UNDER CURRENT

For a complete wiring diagram, **refer to appropriate SYSTEM WIRING DIAGRAMS article** .

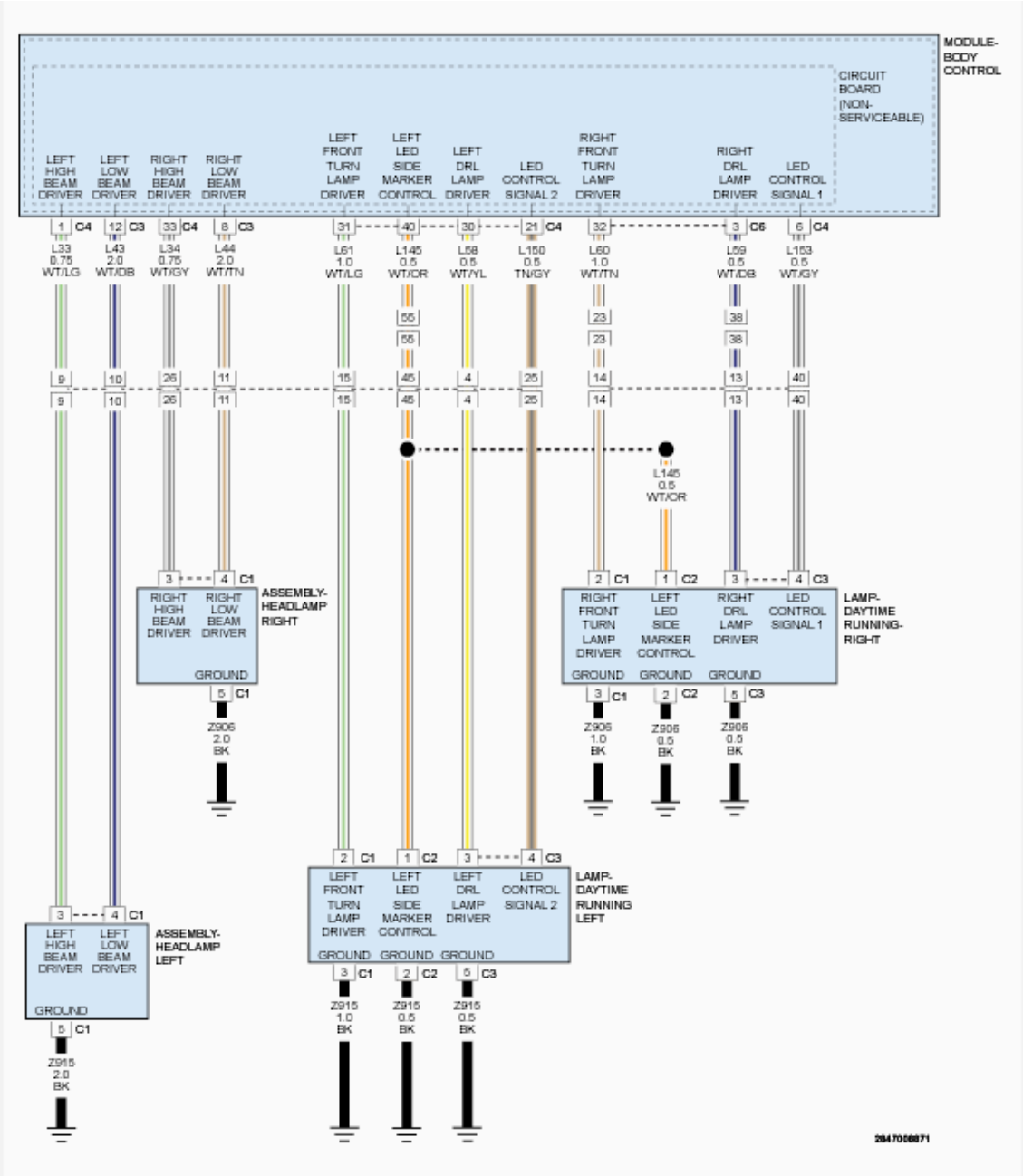

Fig. 23: Headlamp & Daytime Running Lamp Circuit Diagram
Courtesy of CHRYSLER GROUP, LLC

THEORY OF OPERATION

The BCM provides a pulsed voltage output through the front turn signal control circuit. The front turn signal control circuit connects to the Turn Signal Lamp. A ground path for the lamps is present through the harness to the sheet metal. For additional information on the Turn Signal Lamps operation, refer to **OPERATION** .

WHEN MONITORED

With the ignition on and the turn signal active.

SET CONDITION

When the Body Control Module (BCM) detects a high condition on the (L61) Left Front Turn Signal Control circuit.

POSSIBLE CAUSES

Possible Causes
(L61) LEFT FRONT TURN SIGNAL CONTROL CIRCUIT OPEN
(L61) LEFT FRONT TURN SIGNAL CONTROL CIRCUIT SHORTED TO VOLTAGE
(Z915) GROUND CIRCUIT OPEN
TURN SIGNAL BULB
BODY CONTROL MODULE (BCM)

DIAGNOSTIC TEST

1. **CHECK FOR AN ACTIVE DTC**
    1. Turn the ignition on.
    2. Turn the Left Turn Signal on.
    3. With the scan tool, read DTCs.

    Does the scan tool display this DTC as active?

    Yes

    - Go To 2

    No

    - Test complete. The condition or conditions that originally set this DTC are not present at this time. Using the wiring diagrams as a guide, check all related splices and connectors for signs of water intrusion, corrosion, pushed out or bent terminals and correct pin tension.
    - Perform the BODY VERIFICATION TEST. Refer to **STANDARD PROCEDURE** .
2. **CHECK THE (L61) LEFT FRONT TURN SIGNAL CONTROL CIRCUIT FOR A SHORT TO VOLTAGE IN THE HARNESS**
    1. Turn the Left Turn Signal off.
    2. Turn the ignition off.
    3. Disconnect the Left Front Lamp Assembly C1 harness connector.
    4. Disconnect the BCM C4 harness connector.
    5. Turn the ignition on.
    6. Measure the voltage between ground and the (L61) Left Front Turn Signal Control circuit.

Is there any voltage present?

Yes

- Repair the short to voltage in the (L61) Left Front Turn Signal Control circuit.
- Perform the BODY VERIFICATION TEST. Refer to **STANDARD PROCEDURE** .

No

- Go To 3

3. **CHECK THE (L61) LEFT FRONT TURN SIGNAL CONTROL CIRCUIT FOR AN OPEN IN THE HARNESS**
   1. Turn the ignition off.
   2. Measure the resistance of the (L61) Left Front Turn Signal Control circuit between the Left Front Lamp Assembly C1 harness connector and the BCM C4 harness connector.

   Is the resistance below 5.0 Ohms?

   Yes

   - Go To 4

   No

   - Repair the open in the (L61) Left Front Turn Signal Control circuit.
   - Perform the BODY VERIFICATION TEST. Refer to **STANDARD PROCEDURE** .
4. **CHECK THE (Z915) GROUND CIRCUIT FOR AN OPEN IN THE HARNESS**
   1. Disconnect the Left Front Lamp Assembly C2 and C3 harness connectors.
   2. Using a 12-volt test light connected to 12-volts, check the (Z915) Ground circuits.

   Does the test light illuminate brightly?

   Yes

   - Go To 5

   No

   - Repair the open in the (Z915) Ground circuit.
   - Perform the BODY VERIFICATION TEST. Refer to **STANDARD PROCEDURE** .
5. **CHECK THE BCM FOR CORRECT OPERATION**
   1. Turn the ignition off.
   2. Reconnect the Left Front Lamp Assembly C2 and C3 harness connectors.

3. Reconnect the BCM C4 harness connector.
4. Connect a 12-volt test light between the (L61) Left Front Turn Signal Control circuit and the (Z915) Ground circuit at the Left Front Lamp Assembly C1 harness connector.
5. Turn the ignition on.
6. Turn the Left Turn Signal on.

   Does the test light blink on and off?

   Yes

   - Replace the Park and Turn Signal Bulb in accordance with the Service Information. Refer to **UNIT, FRONT LAMP, REMOVAL** .
   - Perform the BODY VERIFICATION TEST. Refer to **STANDARD PROCEDURE** .

   No

   - Replace the BCM in accordance with the Service Information. Refer to **MODULE, BODY CONTROL, REMOVAL** .
   - Perform the BODY VERIFICATION TEST. Refer to **STANDARD PROCEDURE** .

B163A-18-FRONT LEFT TURN LAMP CONTROL - UNDER CURRENT - EXPORT

For a complete wiring diagram, **refer to appropriate SYSTEM WIRING DIAGRAMS article** .

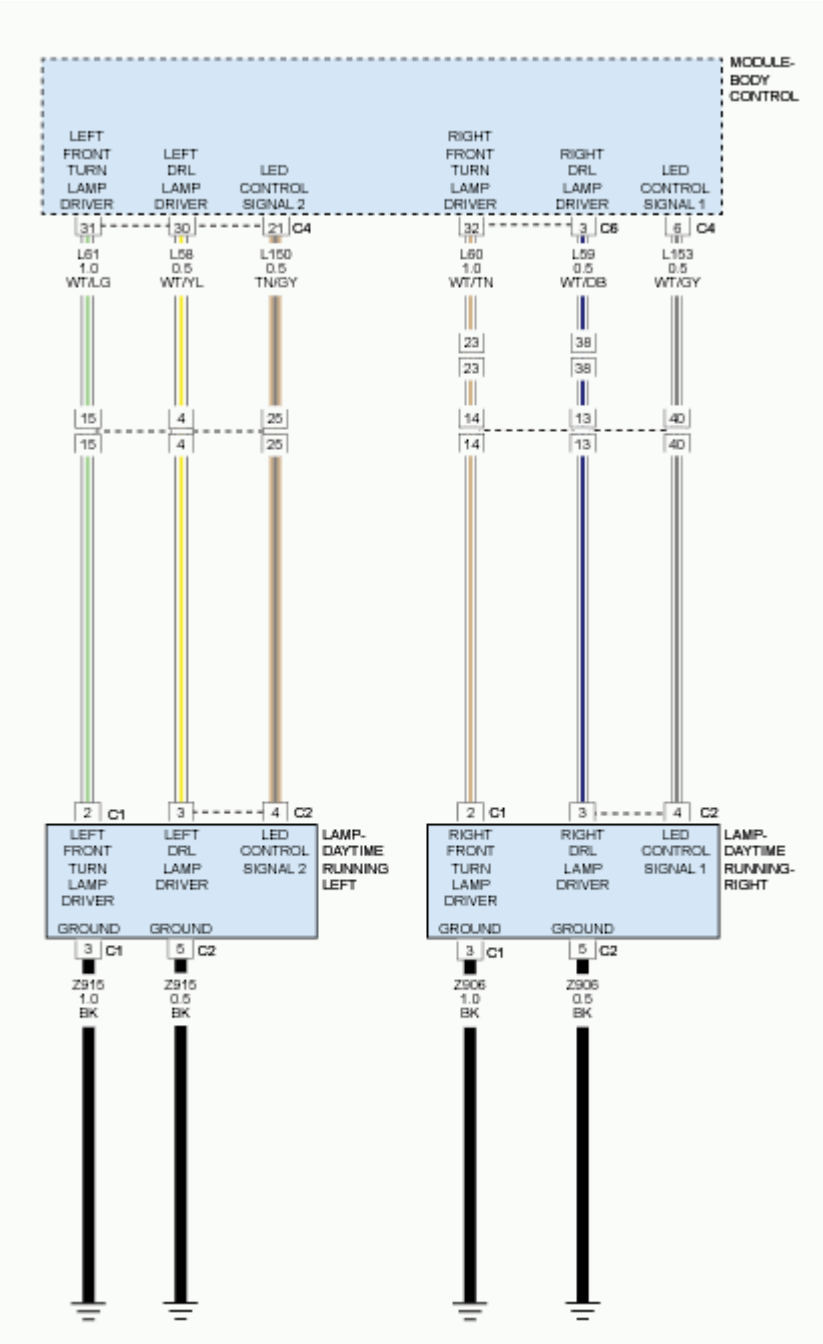

Fig. 24: Daytime Running Lamp Circuit Diagram
Courtesy of CHRYSLER GROUP, LLC

THEORY OF OPERATION

The BCM provides a pulsed voltage output through the front turn signal control circuit. The front turn signal control circuit connects to the Turn Signal Lamp. A ground path for the lamps is present through the harness to the sheet metal. For additional information on the Turn Signal Lamps operation, refer to **OPERATION** .

WHEN MONITORED

With the ignition on and the turn signal active.

SET CONDITION

When the Body Control Module (BCM) detects a high condition on the (L61) Left Front Turn Signal Control circuit.

POSSIBLE CAUSES

Possible Causes
(L61) LEFT FRONT TURN SIGNAL CONTROL CIRCUIT OPEN
(L61) LEFT FRONT TURN SIGNAL CONTROL CIRCUIT SHORTED TO VOLTAGE
(Z915) GROUND CIRCUIT OPEN
TURN SIGNAL BULB
BODY CONTROL MODULE (BCM)

DIAGNOSTIC TEST

1. **CHECK FOR AN ACTIVE DTC**
    1. Turn the ignition on.
    2. Turn the Left Turn Signal on.
    3. With the scan tool, read DTCs.

    Does the scan tool display this DTC as active?

    Yes

    - Go To 2

    No

    - Test complete. The condition or conditions that originally set this DTC are not present at this time. Using the wiring diagrams as a guide, check all related splices and connectors for signs of water intrusion, corrosion, pushed out or bent terminals and correct pin tension.
    - Perform the BODY VERIFICATION TEST. Refer to **STANDARD PROCEDURE** .
2. **CHECK THE (L61) LEFT FRONT TURN SIGNAL CONTROL CIRCUIT FOR A SHORT TO VOLTAGE IN THE HARNESS**
    1. Turn the Left Turn Signal off.
    2. Turn the ignition off.
    3. Disconnect the Left Front Lamp Assembly C1 harness connector.
    4. Disconnect the BCM C4 harness connector.
    5. Turn the ignition on.
    6. Measure the voltage between ground and the (L61) Left Front Turn Signal Control circuit.

Is there any voltage present?

Yes

- Repair the short to voltage in the (L61) Left Front Turn Signal Control circuit.
- Perform the BODY VERIFICATION TEST. Refer to **STANDARD PROCEDURE** .

No

- Go To 3

3. **CHECK THE (L61) LEFT FRONT TURN SIGNAL CONTROL CIRCUIT FOR AN OPEN IN THE HARNESS**
   1. Turn the ignition off.
   2. Measure the resistance of the (L61) Left Front Turn Signal Control circuit between the Left Front Lamp Assembly C1 harness connector and the BCM C4 harness connector.

   Is the resistance below 5.0 Ohms?

   Yes

   - Go To 4

   No

   - Repair the open in the (L61) Left Front Turn Signal Control circuit.
   - Perform the BODY VERIFICATION TEST. Refer to **STANDARD PROCEDURE** .
4. **CHECK THE (Z915) GROUND CIRCUIT FOR AN OPEN IN THE HARNESS**
   1. Disconnect the Left Front Lamp Assembly C2 harness connector.
   2. Using a 12-volt test light connected to 12-volts, check the (Z915) Ground circuits.

   Does the test light illuminate brightly?

   Yes

   - Go To 5

   No

   - Repair the open in the (Z915) Ground circuit.
   - Perform the BODY VERIFICATION TEST. Refer to **STANDARD PROCEDURE** .
5. **CHECK THE BCM FOR CORRECT OPERATION**
   1. Turn the ignition off.
   2. Reconnect the Left Front Lamp Assembly C2 harness connector.

3. Reconnect the BCM C4 harness connector.
4. Connect a 12-volt test light between the (L61) Left Front Turn Signal Control circuit and the (Z915) Ground circuit at the Left Front Lamp Assembly C1 harness connector.
5. Turn the ignition on.
6. Turn the Left Turn Signal on.

   Does the test light blink on and off?

   Yes

   - Replace the Turn Signal Bulb in accordance with the Service Information. Refer to **UNIT, FRONT LAMP, REMOVAL** .
   - Perform the BODY VERIFICATION TEST. Refer to **STANDARD PROCEDURE** .

   No

   - Replace the BCM in accordance with the Service Information. Refer to **MODULE, BODY CONTROL, REMOVAL** .
   - Perform the BODY VERIFICATION TEST. Refer to **STANDARD PROCEDURE** .

B163A-19-FRONT LEFT TURN LAMP CONTROL - OVER CURRENT

For a complete wiring diagram, **refer to appropriate SYSTEM WIRING DIAGRAMS article** .

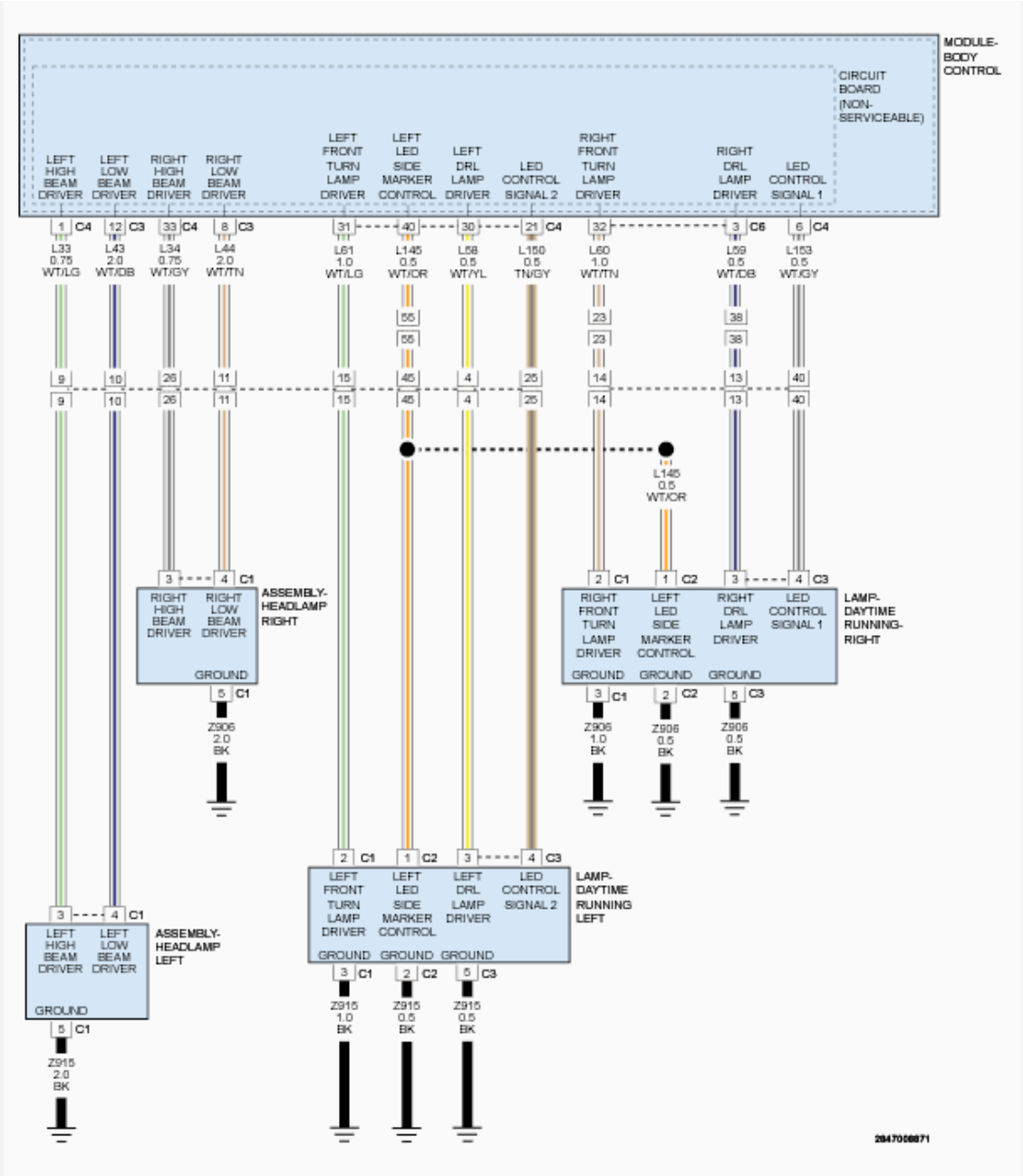

Fig. 25: Headlamp & Daytime Running Lamp Circuit Diagram
Courtesy of CHRYSLER GROUP, LLC

THEORY OF OPERATION

The BCM provides a pulsed voltage output through the front turn signal control circuit. The front turn signal control circuit connects to the Turn Signal Lamp. A ground path for the lamps is present through the harness to the sheet metal. For additional information on the Turn Signal Lamps operation, refer to **OPERATION** .

WHEN MONITORED

With the ignition on and the turn signal active.

SET CONDITION

When the Body Control Module (BCM) detects a low condition on the (L61) Left Front Turn Signal Control circuit.

POSSIBLE CAUSES

Possible Causes
(L61) LEFT FRONT TURN SIGNAL CONTROL CIRCUIT SHORTED TO GROUND TURN SIGNAL BULB BODY CONTROL MODULE (BCM)

DIAGNOSTIC TEST

1. **CHECK FOR AN ACTIVE DTC**
    1. Turn the ignition on.
    2. Turn the Left Turn Signal on.
    3. With the scan tool, read DTCs.

    Does the scan tool display this DTC as active?

    Yes

    - Go To 2

    No

    - Test complete. The condition or conditions that originally set this DTC are not present at this time. Using the wiring diagrams as a guide, check all related splices and connectors for signs of water intrusion, corrosion, pushed out or bent terminals and correct pin tension.
    - Perform the BODY VERIFICATION TEST. Refer to **STANDARD PROCEDURE** .
2. **ATTEMPT TO SET THE OPPOSITE DTC**
    1. Turn the Left Turn Signal off.
    2. Turn the ignition off.
    3. Disconnect the Left Front Lamp Assembly C1 harness connector.
    4. Turn the ignition on.
    5. Turn the Left Turn Signal on.
    6. With the scan tool, read DTCs.

    Does the scan tool display DTC: B163A-18-FRONT LEFT TURN LAMP CONTROL - UNDER CURRENT?

Yes

- Replace the Left Turn Signal Bulb in accordance with the Service Information. Refer to **UNIT, FRONT LAMP, REMOVAL** .
- Perform the BODY VERIFICATION TEST. Refer to **STANDARD PROCEDURE** .

No

- Go To 3

3. **CHECK THE (L61) LEFT FRONT TURN SIGNAL CONTROL CIRCUIT FOR A SHORT TO GROUND**
   1. Turn the ignition off.
   2. Disconnect the BCM C4 harness connector.
   3. Measure the resistance between ground and the (L61) Left Front Turn Signal Control circuit.

   Is the resistance above 10K Ohms?

   Yes

   - Replace the BCM in accordance with the Service Information. Refer to **MODULE, BODY CONTROL, REMOVAL** .
   - Perform the BODY VERIFICATION TEST. Refer to **STANDARD PROCEDURE** .

   No

   - Repair the short to ground in the (L61) Left Front Turn Signal Control circuit.
   - Perform the BODY VERIFICATION TEST. Refer to **STANDARD PROCEDURE** .

B163A-19-FRONT LEFT TURN LAMP CONTROL - OVER CURRENT - EXPORT

For a complete wiring diagram, **refer to appropriate SYSTEM WIRING DIAGRAMS article** .

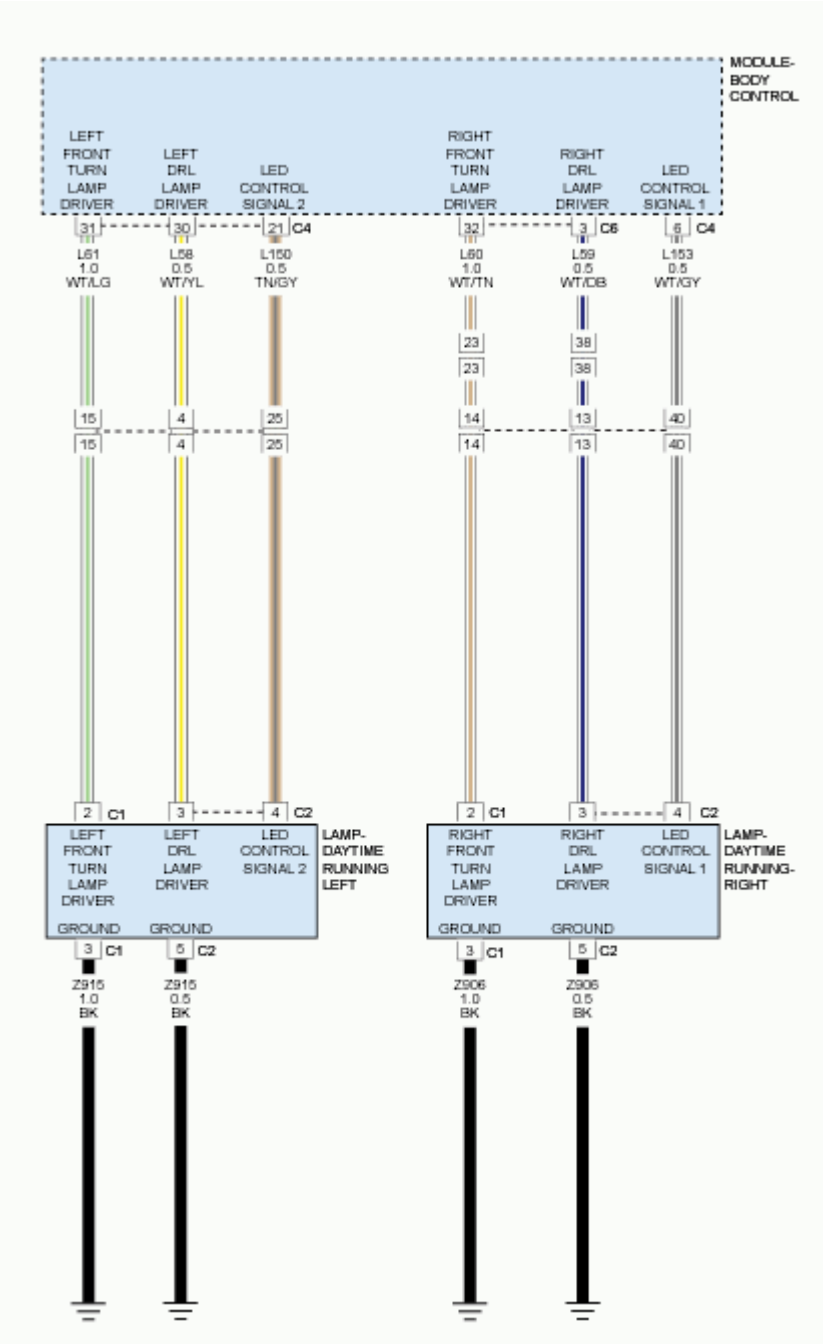

Fig. 26: Daytime Running Lamp Circuit Diagram
Courtesy of CHRYSLER GROUP, LLC

THEORY OF OPERATION

The BCM provides a pulsed voltage output through the front turn signal control circuit. The front turn signal control circuit connects to the Turn Signal Lamp. A ground path for the lamps is present through the harness to the sheet metal. For additional information on the Turn Signal Lamps operation, refer to **OPERATION** .

WHEN MONITORED

With the ignition on and the turn signal active.

SET CONDITION

When the Body Control Module (BCM) detects a low condition on the (L61) Left Front Turn Signal Control circuit.

POSSIBLE CAUSES

Possible Causes
(L61) LEFT FRONT TURN SIGNAL CONTROL CIRCUIT SHORTED TO GROUND TURN SIGNAL BULB BODY CONTROL MODULE (BCM)

DIAGNOSTIC TEST

1. **CHECK FOR AN ACTIVE DTC**
    1. Turn the ignition on.
    2. Turn the Left Turn Signal on.
    3. With the scan tool, read DTCs.

    Does the scan tool display this DTC as active?

    Yes

    - Go To 2

    No

    - Test complete. The condition or conditions that originally set this DTC are not present at this time. Using the wiring diagrams as a guide, check all related splices and connectors for signs of water intrusion, corrosion, pushed out or bent terminals and correct pin tension.
    - Perform the BODY VERIFICATION TEST. Refer to **STANDARD PROCEDURE** .
2. **ATTEMPT TO SET THE OPPOSITE DTC**
    1. Turn the Left Turn Signal off.
    2. Turn the ignition off.
    3. Disconnect the Left Front Lamp Assembly C1 harness connector.
    4. Turn the ignition on.
    5. Turn the Left Turn Signal on.
    6. With the scan tool, read DTCs.

    Does the scan tool display DTC: B163A-18-FRONT LEFT TURN LAMP CONTROL - UNDER CURRENT?

Yes

- Replace the Left Turn Signal Bulb in accordance with the Service Information. Refer to **UNIT, FRONT LAMP, REMOVAL** .
- Perform the BODY VERIFICATION TEST. Refer to **STANDARD PROCEDURE** .

No

- Go To 3

3. **CHECK THE (L61) LEFT FRONT TURN SIGNAL CONTROL CIRCUIT FOR A SHORT TO GROUND**
   1. Turn the ignition off.
   2. Disconnect the BCM C4 harness connector.
   3. Measure the resistance between ground and the (L61) Left Front Turn Signal Control circuit.

   Is the resistance above 10K Ohms?

   Yes

   - Replace the BCM in accordance with the Service Information. Refer to **MODULE, BODY CONTROL, REMOVAL** .
   - Perform the BODY VERIFICATION TEST. Refer to **STANDARD PROCEDURE** .

   No

   - Repair the short to ground in the (L61) Left Front Turn Signal Control circuit.
   - Perform the BODY VERIFICATION TEST. Refer to **STANDARD PROCEDURE** .

B163E-18-FRONT RIGHT TURN LAMP CONTROL - UNDER CURRENT

For a complete wiring diagram, **refer to appropriate SYSTEM WIRING DIAGRAMS article** .

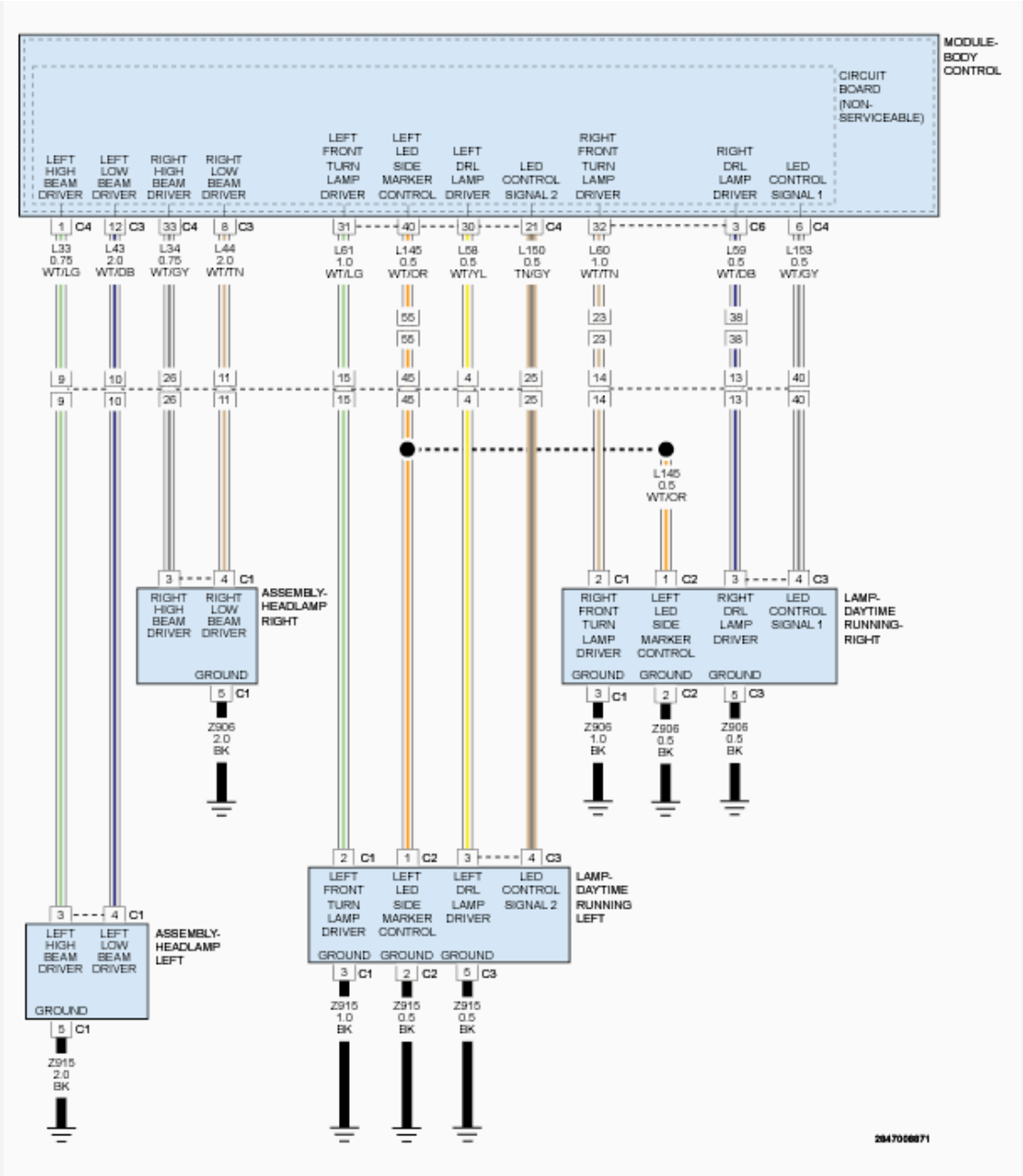

Fig. 27: Headlamp & Daytime Running Lamp Circuit Diagram
Courtesy of CHRYSLER GROUP, LLC

THEORY OF OPERATION

The BCM provides a pulsed voltage output through the front turn signal control circuit. The front turn signal control circuit connects to the Turn Signal Lamp. A ground path for the lamps is present through the harness to the sheet metal. For additional information on the Turn Signal Lamps operation, refer to **OPERATION** .

WHEN MONITORED

With the ignition on and the turn signal active.

SET CONDITION

When the Body Control Module (BCM) detects a high condition on the (L60) Right Front Turn Signal Driver circuit.

POSSIBLE CAUSES

Possible Causes
(L60) RIGHT FRONT TURN SIGNAL DRIVER CIRCUIT OPEN
(L60) RIGHT FRONT TURN SIGNAL DRIVER CIRCUIT SHORTED TO VOLTAGE
(Z906) GROUND CIRCUIT OPEN
TURN SIGNAL BULB
BODY CONTROL MODULE (BCM)

DIAGNOSTIC TEST

1. **CHECK FOR AN ACTIVE DTC**
    1. Turn the ignition on.
    2. Turn the Right Turn Signal on.
    3. With the scan tool, read DTCs.

    Does the scan tool display this DTC as active?

    Yes

    - Go To 2

    No

    - Test complete. The condition or conditions that originally set this DTC are not present at this time. Using the wiring diagrams as a guide, check all related splices and connectors for signs of water intrusion, corrosion, pushed out or bent terminals and correct pin tension.
    - Perform the BODY VERIFICATION TEST. Refer to **STANDARD PROCEDURE** .
2. **CHECK THE (L60) RIGHT FRONT TURN SIGNAL DRIVER CIRCUIT FOR A SHORT TO VOLTAGE IN THE HARNESS**
    1. Turn the Right Turn Signal off.
    2. Turn the ignition off.
    3. Disconnect the Right Front Lamp Assembly C1 harness connector.
    4. Disconnect the BCM C4 harness connector.
    5. Turn the ignition on.
    6. Measure the voltage between ground and the (L60) Right Front Turn Signal Driver circuit.

Is there any voltage present?

Yes

- Repair the short to voltage in the (L60) Right Front Turn Signal Driver circuit.
- Perform the BODY VERIFICATION TEST. Refer to **STANDARD PROCEDURE** .

No

- Go To 3

3. **CHECK THE (L60) RIGHT FRONT TURN SIGNAL DRIVER CIRCUIT FOR AN OPEN IN THE HARNESS**
   1. Turn the ignition off.
   2. Measure the resistance of the (L60) Right Front Turn Signal Driver circuit between the Right Front Lamp Assembly C1 harness connector and the BCM C4 harness connector.

   Is the resistance below 5.0 Ohms?

   Yes

   - Go To 4

   No

   - Repair the open in the (L60) Right Front Turn Signal Driver circuit.
   - Perform the BODY VERIFICATION TEST. Refer to **STANDARD PROCEDURE** .
4. **CHECK THE (Z906) GROUND CIRCUIT FOR AN OPEN IN THE HARNESS**
   1. Disconnect the Right Front Lamp Assembly C2 and C3 harness connectors.
   2. Using a 12-volt test light connected to 12-volts, check the (Z906) Ground circuits.

   Does the test light illuminate brightly?

   Yes

   - Go To 5

   No

   - Repair the open in the (Z906) Ground circuit.
   - Perform the BODY VERIFICATION TEST. Refer to **STANDARD PROCEDURE** .
5. **CHECK THE BCM FOR CORRECT OPERATION**
   1. Turn the ignition off.
   2. Reconnect the Right Front Lamp Assembly C2 and C3 harness connectors.

3. Reconnect the BCM C4 harness connector.
4. Connect a 12-volt test light between the (L60) Right Front Turn Signal Driver circuit and the (Z906) Ground circuit at the Right Front Lamp Assembly C1 harness connector.
5. Turn the ignition on.
6. Turn the Right Turn Signal on.

   Does the test light blink on and off?

   Yes

   - Replace the Turn Signal Bulb in accordance with the Service Information. Refer to **UNIT, FRONT LAMP, REMOVAL** .
   - Perform the BODY VERIFICATION TEST. Refer to **STANDARD PROCEDURE** .

   No

   - Replace the BCM in accordance with the Service Information. Refer to **MODULE, BODY CONTROL, REMOVAL** .
   - Perform the BODY VERIFICATION TEST. Refer to **STANDARD PROCEDURE** .

B163E-18-FRONT RIGHT TURN LAMP CONTROL - UNDER CURRENT - EXPORT

For a complete wiring diagram, **refer to appropriate SYSTEM WIRING DIAGRAMS article** .

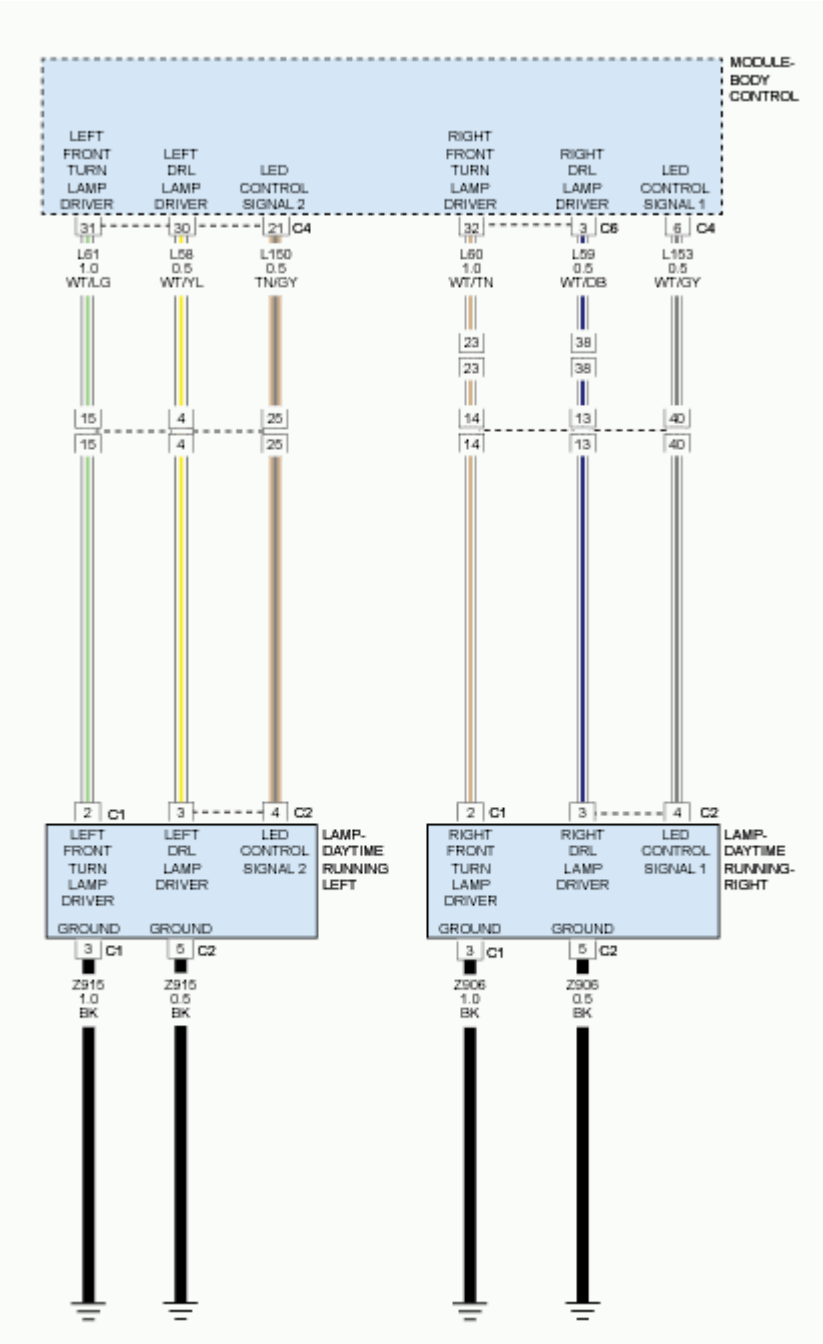

Fig. 28: Daytime Running Lamp Circuit Diagram
Courtesy of CHRYSLER GROUP, LLC

THEORY OF OPERATION

The BCM provides a pulsed voltage output through the front turn signal control circuit. The front turn signal control circuit connects to the Turn Signal Lamp. A ground path for the lamps is present through the harness to the sheet metal. For additional information on the Turn Signal Lamps operation, refer to **OPERATION** .

WHEN MONITORED

With the ignition on and the turn signal active.

SET CONDITION

When the Body Control Module (BCM) detects a high condition on the (L60) Right Front Turn Signal Driver circuit.

POSSIBLE CAUSES

Possible Causes
(L60) RIGHT FRONT TURN SIGNAL DRIVER CIRCUIT OPEN
(L60) RIGHT FRONT TURN SIGNAL DRIVER CIRCUIT SHORTED TO VOLTAGE
(Z906) GROUND CIRCUIT OPEN
TURN SIGNAL BULB
BODY CONTROL MODULE (BCM)

DIAGNOSTIC TEST

1. **CHECK FOR AN ACTIVE DTC**
    1. Turn the ignition on.
    2. Turn the Right Turn Signal on.
    3. With the scan tool, read DTCs.

    Does the scan tool display this DTC as active?

    Yes

    - Go To 2

    No

    - Test complete. The condition or conditions that originally set this DTC are not present at this time. Using the wiring diagrams as a guide, check all related splices and connectors for signs of water intrusion, corrosion, pushed out or bent terminals and correct pin tension.
    - Perform the BODY VERIFICATION TEST. Refer to **STANDARD PROCEDURE** .
2. **CHECK THE (L60) RIGHT FRONT TURN SIGNAL DRIVER CIRCUIT FOR A SHORT TO VOLTAGE IN THE HARNESS**
    1. Turn the Right Turn Signal off.
    2. Turn the ignition off.
    3. Disconnect the Right Front Lamp Assembly C1 harness connector.
    4. Disconnect the BCM C4 harness connector.
    5. Turn the ignition on.
    6. Measure the voltage between ground and the (L60) Right Front Turn Signal Driver circuit.

Is there any voltage present?

Yes

- Repair the short to voltage in the (L60) Right Front Turn Signal Driver circuit.
- Perform the BODY VERIFICATION TEST. Refer to **STANDARD PROCEDURE** .

No

- Go To 3

3. **CHECK THE (L60) RIGHT FRONT TURN SIGNAL DRIVER CIRCUIT FOR AN OPEN IN THE HARNESS**
   1. Turn the ignition off.
   2. Measure the resistance of the (L60) Right Front Turn Signal Driver circuit between the Right Front Lamp Assembly C1 harness connector and the BCM C4 harness connector.

   Is the resistance below 5.0 Ohms?

   Yes

   - Go To 4

   No

   - Repair the open in the (L60) Right Front Turn Signal Driver circuit.
   - Perform the BODY VERIFICATION TEST. Refer to **STANDARD PROCEDURE** .
4. **CHECK THE (Z906) GROUND CIRCUIT FOR AN OPEN IN THE HARNESS**
   1. Disconnect the Right Front Lamp Assembly C2 harness connector.
   2. Using a 12-volt test light connected to 12-volts, check the (Z906) Ground circuits.

   Does the test light illuminate brightly?

   Yes

   - Go To 5

   No

   - Repair the open in the (Z906) Ground circuit.
   - Perform the BODY VERIFICATION TEST. Refer to **STANDARD PROCEDURE** .
5. **CHECK THE BCM FOR CORRECT OPERATION**
   1. Turn the ignition off.
   2. Reconnect the Right Front Lamp Assembly C2 harness connector.

3. Reconnect the BCM C4 harness connector.
4. Connect a 12-volt test light between the (L60) Right Front Turn Signal Driver circuit and the (Z906) Ground circuit at the Right Front Lamp Assembly C1 harness connector.
5. Turn the ignition on.
6. Turn the Right Turn Signal on.

   Does the test light blink on and off?

   Yes

   - Replace the Turn Signal Bulb in accordance with the Service Information. Refer to **UNIT, FRONT LAMP, REMOVAL** .
   - Perform the BODY VERIFICATION TEST. Refer to **STANDARD PROCEDURE** .

   No

   - Replace the BCM in accordance with the Service Information. Refer to **MODULE, BODY CONTROL, REMOVAL** .
   - Perform the BODY VERIFICATION TEST. Refer to **STANDARD PROCEDURE** .

B163E-19-FRONT RIGHT TURN LAMP CONTROL - OVER CURRENT

For a complete wiring diagram, **refer to appropriate SYSTEM WIRING DIAGRAMS article** .

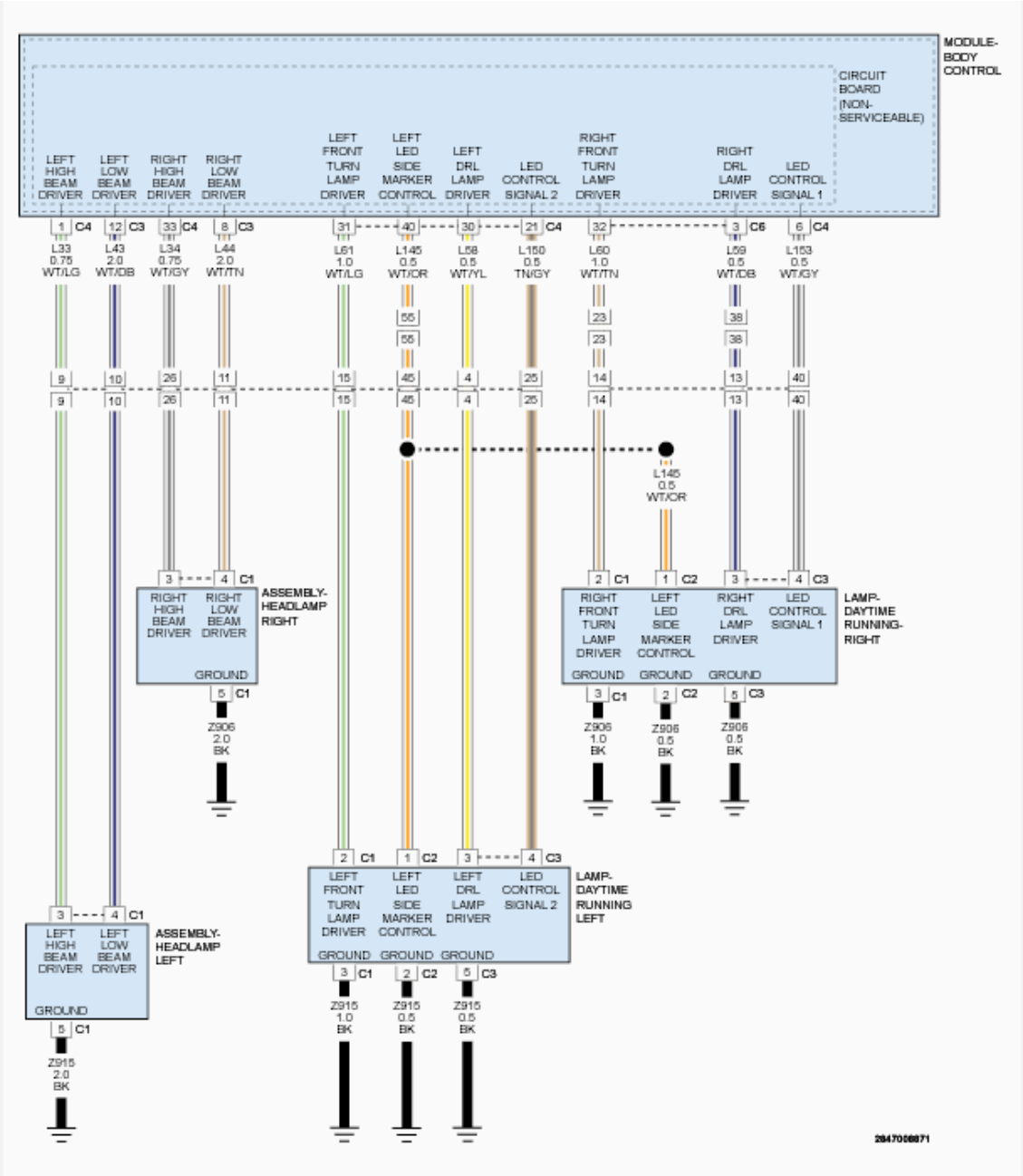

Fig. 29: Headlamp & Daytime Running Lamp Circuit Diagram
Courtesy of CHRYSLER GROUP, LLC

THEORY OF OPERATION

The BCM provides a pulsed voltage output through the front turn signal control circuit. The front turn signal control circuit connects to the Turn Signal Lamp. A ground path for the lamps is present through the harness to the sheet metal. For additional information on the Turn Signal Lamps operation, refer to **OPERATION** .

WHEN MONITORED

With the ignition on and the turn signal active.

SET CONDITION

When the Body Control Module (BCM) detects a low condition on the (L60) Right Front Turn Signal Control circuit.

POSSIBLE CAUSES

Possible Causes
(L60) RIGHT FRONT TURN SIGNAL CONTROL CIRCUIT SHORTED TO GROUND TURN SIGNAL BULB BODY CONTROL MODULE (BCM)

DIAGNOSTIC TEST

1. **CHECK FOR AN ACTIVE DTC**
    1. Turn the ignition on.
    2. Turn the Right Turn Signal on.
    3. With the scan tool, read DTCs.

    Does the scan tool display this DTC as active?

    Yes

    - Go To 2

    No

    - Test complete. The condition or conditions that originally set this DTC are not present at this time. Using the wiring diagrams as a guide, check all related splices and connectors for signs of water intrusion, corrosion, pushed out or bent terminals and correct pin tension.
    - Perform the BODY VERIFICATION TEST. Refer to **STANDARD PROCEDURE** .
2. **ATTEMPT TO SET THE OPPOSITE DTC**
    1. Turn the ignition off.
    2. Disconnect the Right Front Lamp Assembly C1 harness connector.
    3. Turn the ignition on.
    4. Turn the Right Turn Signal on.
    5. With the scan tool, read DTCs.

    Does the scan tool display DTC: B163E-18-FRONT RIGHT TURN LAMP CONTROL - UNDER CURRENT?

    Yes

- Replace the Right Turn Signal Bulb in accordance with the Service Information. Refer to **UNIT, FRONT LAMP, REMOVAL** .
- Perform the BODY VERIFICATION TEST. Refer to **STANDARD PROCEDURE** .

No

- Go To 3

3. **CHECK THE (L60) RIGHT FRONT TURN SIGNAL CONTROL CIRCUIT FOR A SHORT TO GROUND**
   1. Turn the ignition off.
   2. Disconnect the BCM C4 harness connector.
   3. Measure the resistance between ground and the (L60) Right Front Turn Signal Control circuit.

   Is the resistance above 10K Ohms?

   Yes

   - Replace the BCM in accordance with the Service Information. Refer to **MODULE, BODY CONTROL, REMOVAL** .
   - Perform the BODY VERIFICATION TEST. Refer to **STANDARD PROCEDURE** .

   No

   - Repair the short to ground in the (L60) Right Front Turn Signal Control circuit.
   - Perform the BODY VERIFICATION TEST. Refer to **STANDARD PROCEDURE** .

B163E-19-FRONT RIGHT TURN LAMP CONTROL - OVER CURRENT - EXPORT

For a complete wiring diagram, **refer to appropriate SYSTEM WIRING DIAGRAMS article** .

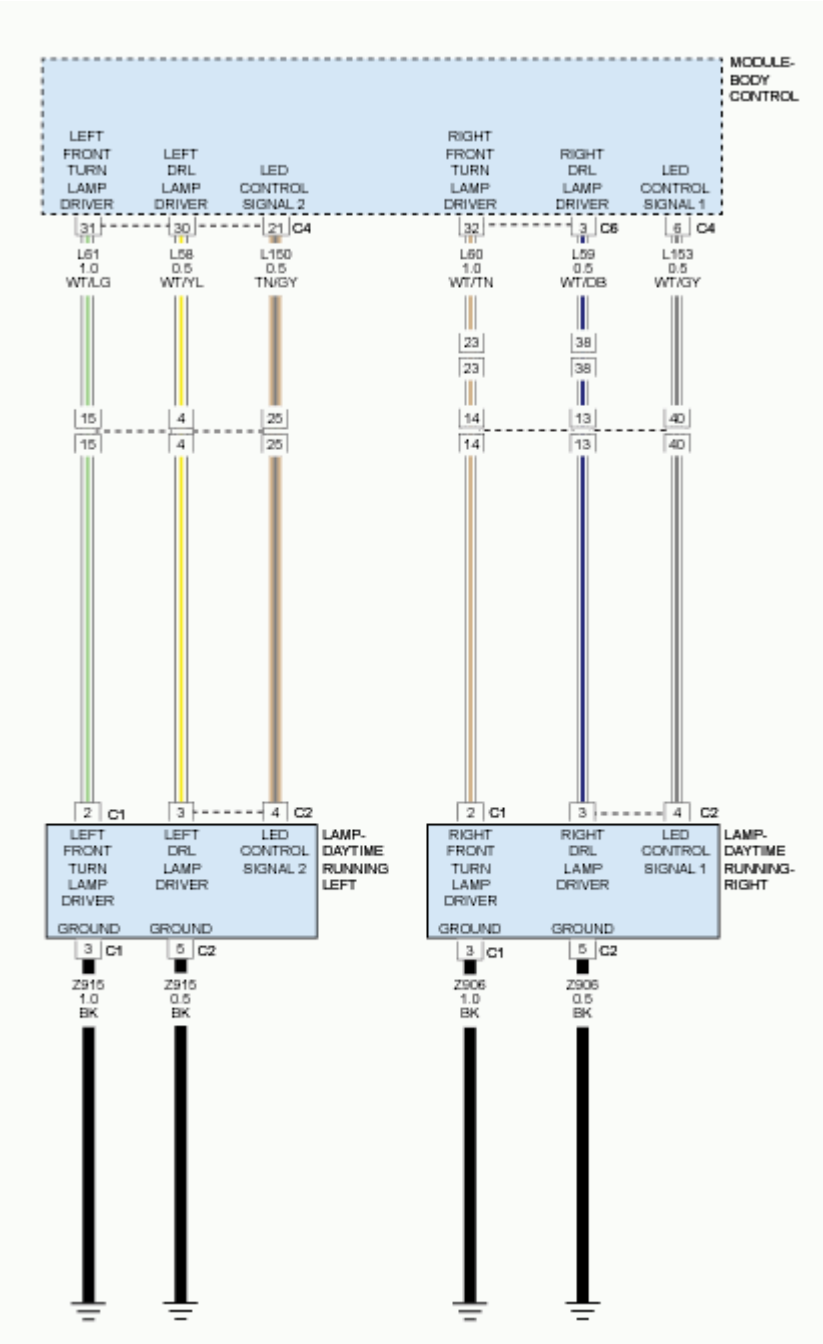

Fig. 30: Daytime Running Lamp Circuit Diagram
Courtesy of CHRYSLER GROUP, LLC

THEORY OF OPERATION

The BCM provides a pulsed voltage output through the front turn signal control circuit. The front turn signal control circuit connects to the Turn Signal Lamp. A ground path for the lamps is present through the harness to the sheet metal. For additional information on the Turn Signal Lamps operation, refer to **OPERATION** .

WHEN MONITORED

With the ignition on and the turn signal active.

SET CONDITION

When the Body Control Module (BCM) detects a low condition on the (L60) Right Front Turn Signal Control circuit.

POSSIBLE CAUSES

Possible Causes
(L60) RIGHT FRONT TURN SIGNAL CONTROL CIRCUIT SHORTED TO GROUND TURN SIGNAL BULB BODY CONTROL MODULE (BCM)

DIAGNOSTIC TEST

1. **CHECK FOR AN ACTIVE DTC**
    1. Turn the ignition on.
    2. Turn the Right Turn Signal on.
    3. With the scan tool, read DTCs.

    Does the scan tool display this DTC as active?

    Yes

    - Go To 2

    No

    - Test complete. The condition or conditions that originally set this DTC are not present at this time. Using the wiring diagrams as a guide, check all related splices and connectors for signs of water intrusion, corrosion, pushed out or bent terminals and correct pin tension.
    - Perform the BODY VERIFICATION TEST. Refer to **STANDARD PROCEDURE** .
2. **ATTEMPT TO SET THE OPPOSITE DTC**
    1. Turn the ignition off.
    2. Disconnect the Right Front Lamp Assembly C1 harness connector.
    3. Turn the ignition on.
    4. Turn the Right Turn Signal on.
    5. With the scan tool, read DTCs.

    Does the scan tool display DTC: B163E-18-FRONT RIGHT TURN LAMP CONTROL - UNDER CURRENT?

    Yes

- Replace the Right Turn Signal Bulb in accordance with the Service Information. Refer to **UNIT, FRONT LAMP, REMOVAL** .
- Perform the BODY VERIFICATION TEST. Refer to **STANDARD PROCEDURE** .

No

- Go To 3

3. **CHECK THE (L60) RIGHT FRONT TURN SIGNAL CONTROL CIRCUIT FOR A SHORT TO GROUND**
   1. Turn the ignition off.
   2. Disconnect the BCM C4 harness connector.
   3. Measure the resistance between ground and the (L60) Right Front Turn Signal Control circuit.

   Is the resistance above 10K Ohms?

   Yes

   - Replace the BCM in accordance with the Service Information. Refer to **MODULE, BODY CONTROL, REMOVAL** .
   - Perform the BODY VERIFICATION TEST. Refer to **STANDARD PROCEDURE** .

   No

   - Repair the short to ground in the (L60) Right Front Turn Signal Control circuit.
   - Perform the BODY VERIFICATION TEST. Refer to **STANDARD PROCEDURE** .

B1642-19-REAR LEFT TURN LAMP CONTROL - OVER CURRENT

For a complete wiring diagram, **refer to appropriate SYSTEM WIRING DIAGRAMS article** .

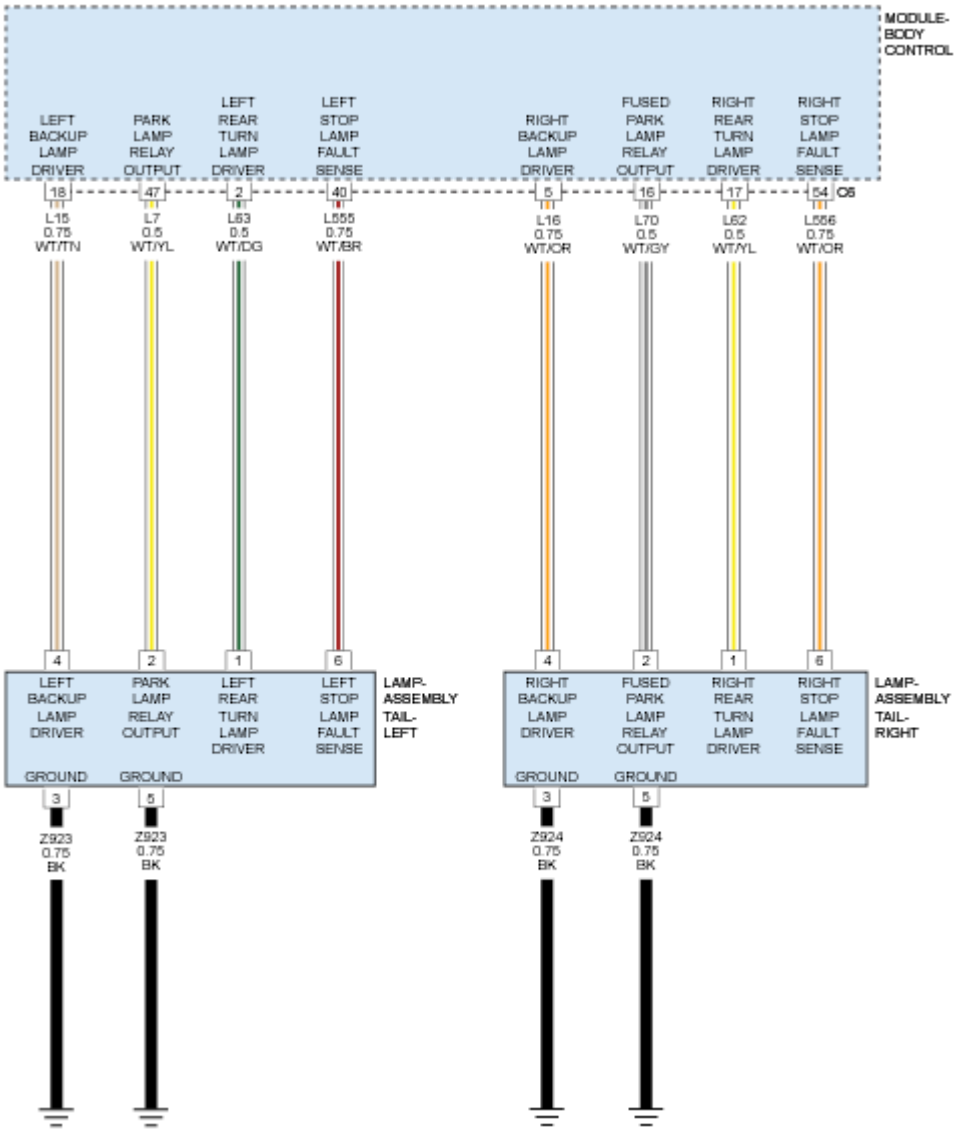

Fig. 31: Tail Lamp/Backup Lamp Assembly Circuit Diagram
Courtesy of CHRYSLER GROUP, LLC

THEORY OF OPERATION

The BCM provides a pulsed voltage output through the rear turn signal control circuit. The rear turn signal control circuit connects to the Turn Signal Lamp. A ground path for the lamps is present through the harness to the sheet metal. For additional information on the Turn Signal Lamps operation, refer to **OPERATION** .

WHEN MONITORED

With the ignition on and the turn signal active.

SET CONDITION

When the Body Control Module (BCM) detects a low condition on the (L63) Left Rear Turn Lamp Driver circuit.

POSSIBLE CAUSES

Possible Causes
(L63) LEFT REAR TURN LAMP DRIVER CIRCUIT SHORTED TO GROUND
LEFT REAR TURN SIGNAL BULB
BODY CONTROL MODULE (BCM)

DIAGNOSTIC TEST

1. **CHECK FOR AN ACTIVE DTC**
    1. Turn the ignition on.
    2. Turn the Left Turn Signal on.
    3. With the scan tool, read DTCs.

    Does the scan tool display this DTC as active?

    Yes

    - Go To 2

    No

    - Test complete. The condition or conditions that originally set this DTC are not present at this time. Using the wiring diagrams as a guide, check all related splices and connectors for signs of water intrusion, corrosion, pushed out or bent terminals and correct pin tension.
    - Perform the BODY VERIFICATION TEST. Refer to **STANDARD PROCEDURE** .
2. **ATTEMPT TO SET THE OPPOSITE DTC**
    1. Turn the Left Turn Signal off.
    2. Turn the ignition off.
    3. Disconnect the Left Tail Lamp Assembly harness connector.
    4. Turn the ignition on.
    5. Turn the Left Turn Signal on.
    6. With the scan tool, read DTCs.

    Does the scan tool display this DTC as active?

    Yes

    - Go To 3

No

- Replace the Left Rear Turn Signal Bulb in accordance with the Service Information. Refer to **LAMP, TAIL STOP TURN, REMOVAL** .
- Perform the BODY VERIFICATION TEST. Refer to **STANDARD PROCEDURE** .

3. **CHECK THE (L63) LEFT REAR TURN LAMP DRIVER CIRCUIT FOR A SHORT TO GROUND**
   1. Turn the ignition off.
   2. Disconnect the BCM C6 harness connector.
   3. Measure the resistance between ground and the (L63) Left Rear Turn Lamp Driver circuit.

   Is the resistance above 10K Ohms?

   Yes

   - Replace the BCM in accordance with the Service Information. Refer to **MODULE, BODY CONTROL, REMOVAL** .
   - Perform the BODY VERIFICATION TEST. Refer to **STANDARD PROCEDURE** .

   No

   - Repair the short to ground in the (L63) Left Rear Turn Lamp Driver circuit.
   - Perform the BODY VERIFICATION TEST. Refer to **STANDARD PROCEDURE** .

B1642-19-REAR LEFT TURN LAMP CONTROL - OVER CURRENT - EXPORT

For a complete wiring diagram, **refer to appropriate SYSTEM WIRING DIAGRAMS article** .

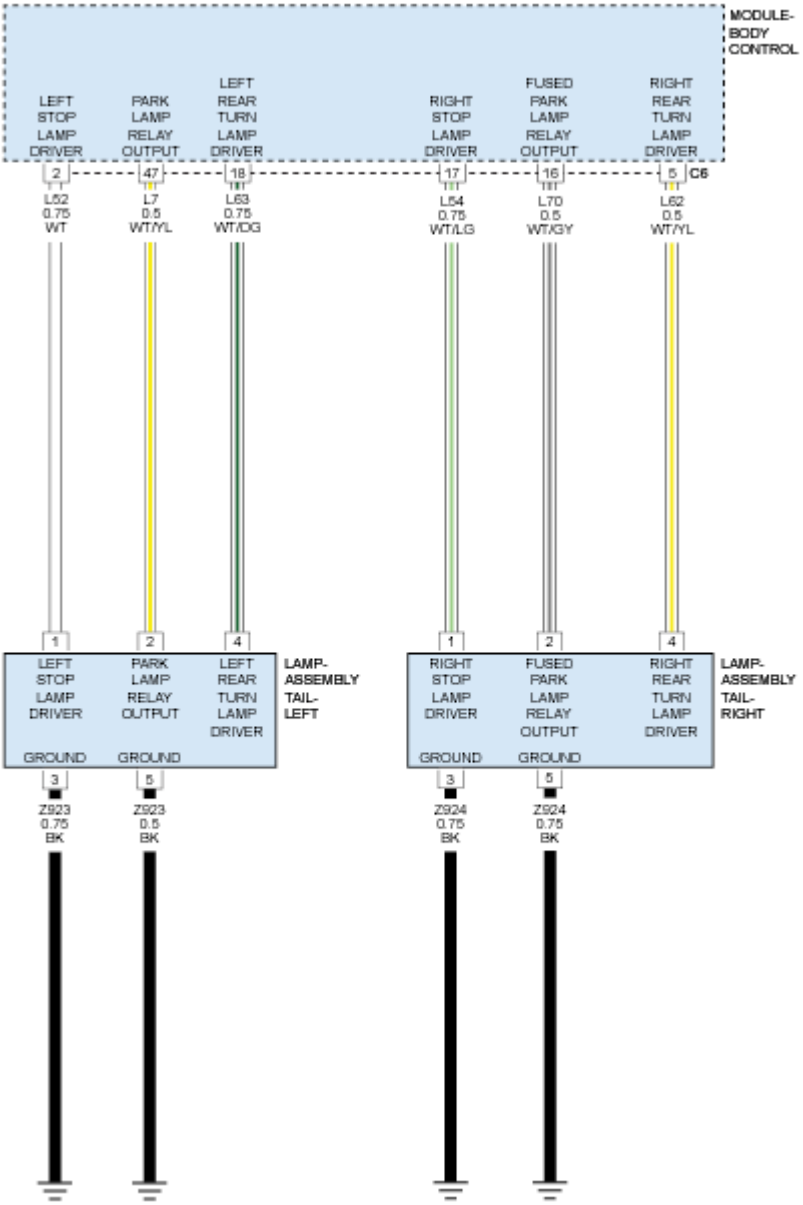

Fig. 32: Tail Lamp Assembly Circuit Diagram
Courtesy of CHRYSLER GROUP, LLC

THEORY OF OPERATION

The BCM provides a pulsed voltage output through the rear turn signal control circuit. The rear turn signal control circuit connects to the Turn Signal Lamp. A ground path for the lamps is present through the harness to the sheet metal. For additional information on the Turn Signal Lamps operation, refer to **OPERATION** .

WHEN MONITORED

With the ignition on and the turn signal active.

SET CONDITION

When the Body Control Module (BCM) detects a low condition on the (L63) Left Rear Turn Lamp Driver circuit.

POSSIBLE CAUSES

Possible Causes
(L63) LEFT REAR TURN LAMP DRIVER CIRCUIT SHORTED TO GROUND
LEFT REAR TURN SIGNAL BULB
BODY CONTROL MODULE (BCM)

DIAGNOSTIC TEST

1. **CHECK FOR AN ACTIVE DTC**
    1. Turn the ignition on.
    2. Turn the Left Turn Signal on.
    3. With the scan tool, read DTCs.

    Does the scan tool display this DTC as active?

    Yes

    - Go To 2

    No

    - Test complete. The condition or conditions that originally set this DTC are not present at this time. Using the wiring diagrams as a guide, check all related splices and connectors for signs of water intrusion, corrosion, pushed out or bent terminals and correct pin tension.
    - Perform the BODY VERIFICATION TEST. Refer to **STANDARD PROCEDURE** .
2. **ATTEMPT TO SET THE OPPOSITE DTC**
    1. Turn the Left Turn Signal off.
    2. Turn the ignition off.
    3. Disconnect the Left Tail Lamp Assembly harness connector.
    4. Turn the ignition on.
    5. Turn the Left Turn Signal on.
    6. With the scan tool, read DTCs.

    Does the scan tool display this DTC as active?

    Yes

- Go To 3

No

- Replace the Left Rear Turn Signal Bulb in accordance with the Service Information. Refer to **LAMP, TAIL STOP TURN, REMOVAL** .
- Perform the BODY VERIFICATION TEST. Refer to **STANDARD PROCEDURE** .

3. **CHECK THE (L63) LEFT REAR TURN LAMP DRIVER CIRCUIT FOR A SHORT TO GROUND**
   1. Turn the ignition off.
   2. Disconnect the BCM C6 harness connector.
   3. Measure the resistance between ground and the (L63) Left Rear Turn Lamp Driver circuit.

   Is the resistance above 10K Ohms?

   Yes

   - Replace the BCM in accordance with the Service Information. Refer to **MODULE, BODY CONTROL, REMOVAL** .
   - Perform the BODY VERIFICATION TEST. Refer to **STANDARD PROCEDURE** .

   No

   - Repair the short to ground in the (L63) Left Rear Turn Lamp Driver circuit.
   - Perform the BODY VERIFICATION TEST. Refer to **STANDARD PROCEDURE** .

B1646-19-REAR RIGHT TURN LAMP CONTROL-OVER CURRENT

For a complete wiring diagram, **refer to appropriate SYSTEM WIRING DIAGRAMS article** .

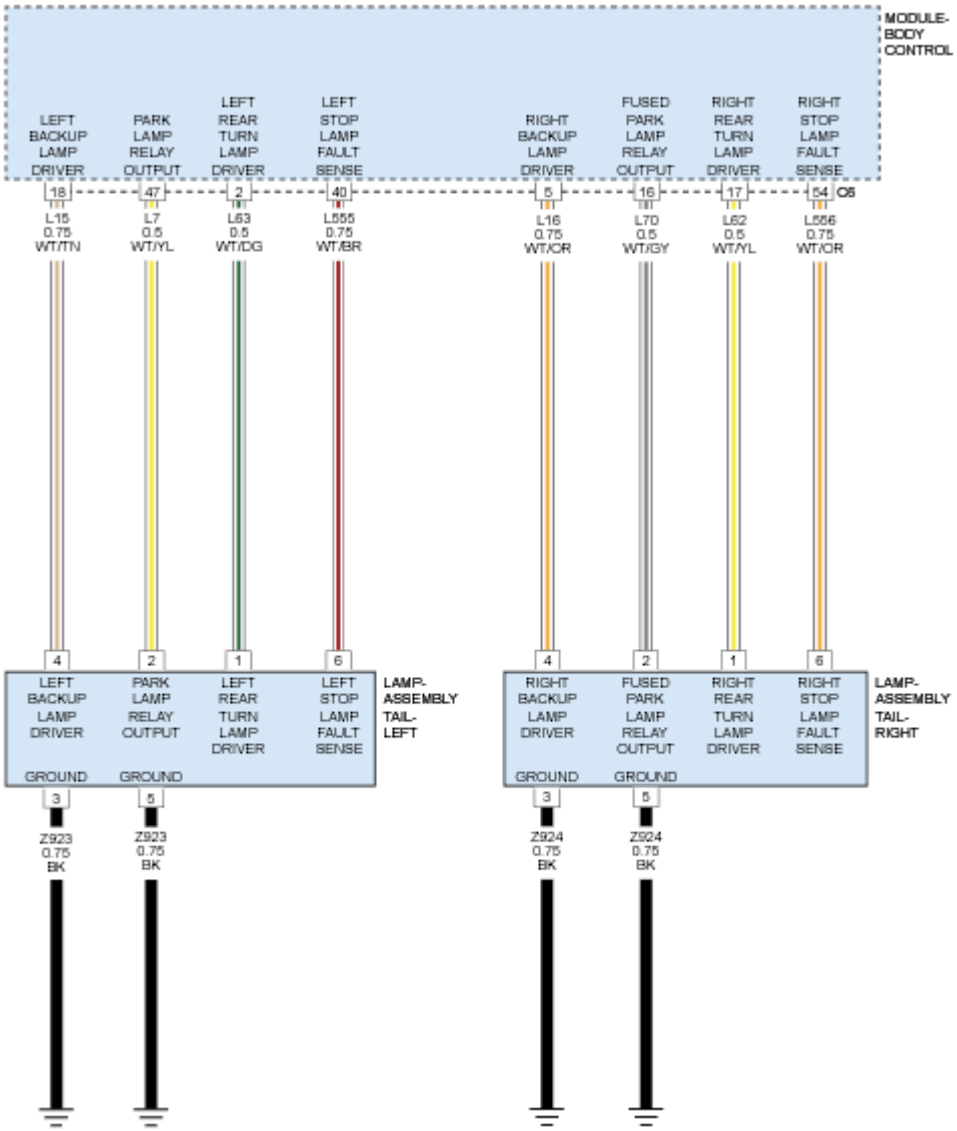

Fig. 33: Tail Lamp/Backup Lamp Assembly Circuit Diagram
Courtesy of CHRYSLER GROUP, LLC

THEORY OF OPERATION

The BCM provides a pulsed voltage output through the rear turn signal control circuit. The rear turn signal control circuit connects to the Turn Signal Lamp. A ground path for the lamps is present through the harness to the sheet metal. For additional information on the Turn Signal Lamps operation, refer to **OPERATION** .

WHEN MONITORED

With the ignition on and the turn signal active.

SET CONDITION

When the Body Control Module (BCM) detects a low condition on the (L62) Right Rear Turn Lamp Driver circuit.

POSSIBLE CAUSES

Possible Causes
(L62) RIGHT REAR TURN LAMP DRIVER CIRCUIT SHORTED TO GROUND
RIGHT REAR TURN SIGNAL BULB
BODY CONTROL MODULE (BCM)

DIAGNOSTIC TEST

1. **CHECK FOR AN ACTIVE DTC**
    1. Turn the ignition on.
    2. Turn the Right Turn Signal on.
    3. With the scan tool, read DTCs.

    Does the scan tool display this DTC as active?

    Yes

    - Go To 2

    No

    - Test complete. The condition or conditions that originally set this DTC are not present at this time. Using the wiring diagrams as a guide, check all related splices and connectors for signs of water intrusion, corrosion, pushed out or bent terminals and correct pin tension.
    - Perform the BODY VERIFICATION TEST. Refer to **STANDARD PROCEDURE** .
2. **ATTEMPT TO SET THE OPPOSITE DTC**
    1. Turn the Right Turn Signal off.
    2. Turn the ignition off.
    3. Disconnect the Right Tail Lamp Assembly harness connector.
    4. Turn the ignition on.
    5. Turn the Right Turn Signal on.
    6. With the scan tool, read DTCs.

    Does the scan tool display this DTC as active?

    Yes

    - Replace the Right Rear Turn Signal Bulb in accordance with the Service Information. Refer to **LAMP, TAIL STOP TURN, REMOVAL** .

- Perform the BODY VERIFICATION TEST. Refer to **STANDARD PROCEDURE** .

No

- Go To 3

3. **CHECK THE (L62) RIGHT REAR TURN LAMP DRIVER CIRCUIT FOR A SHORT TO GROUND**
   1. Turn the ignition off.
   2. Disconnect the BCM C6 harness connector.
   3. Measure the resistance between ground and the (L62) Right Rear Turn Lamp Driver circuit.

   Is the resistance above 10K Ohms?

   Yes

   - Replace the BCM in accordance with the Service Information. Refer to **MODULE, BODY CONTROL, REMOVAL** .
   - Perform the BODY VERIFICATION TEST. Refer to **STANDARD PROCEDURE** .

   No

   - Repair the short to ground in the (L62) Right Rear Turn Lamp Driver circuit.
   - Perform the BODY VERIFICATION TEST. Refer to **STANDARD PROCEDURE** .

B1646-19-REAR RIGHT TURN LAMP CONTROL-OVER CURRENT - EXPORT

For a complete wiring diagram, **refer to appropriate SYSTEM WIRING DIAGRAMS article** .

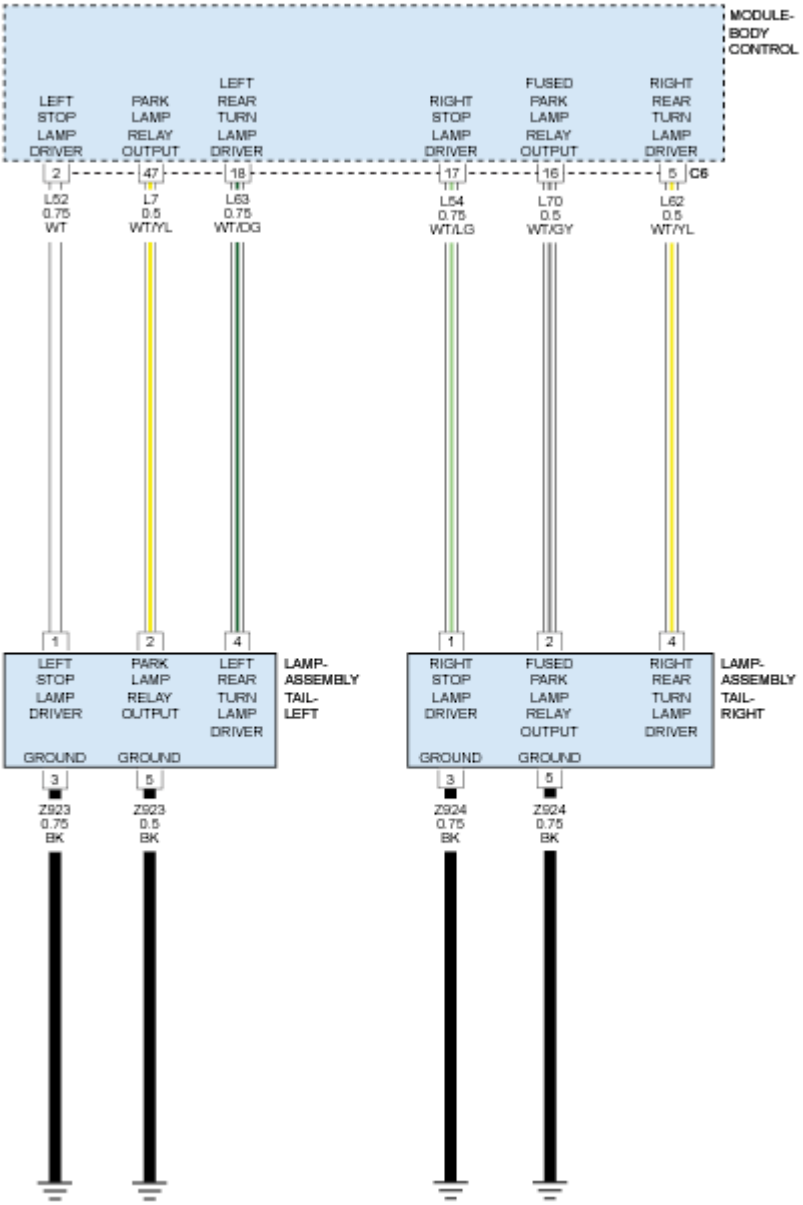

Fig. 34: Tail Lamp Assembly Circuit Diagram
Courtesy of CHRYSLER GROUP, LLC

THEORY OF OPERATION

The BCM provides a pulsed voltage output through the rear turn signal control circuit. The rear turn signal control circuit connects to the Turn Signal Lamp. A ground path for the lamps is present through the harness to the sheet metal. For additional information on the Turn Signal Lamps operation, refer to **OPERATION** .

WHEN MONITORED

With the ignition on and the turn signal active.

SET CONDITION

When the Body Control Module (BCM) detects a low condition on the (L62) Right Rear Turn Lamp Driver circuit.

POSSIBLE CAUSES

Possible Causes
(L62) RIGHT REAR TURN LAMP DRIVER CIRCUIT SHORTED TO GROUND
RIGHT REAR TURN SIGNAL BULB
BODY CONTROL MODULE (BCM)

DIAGNOSTIC TEST

1. **CHECK FOR AN ACTIVE DTC**
    1. Turn the ignition on.
    2. Turn the Right Turn Signal on.
    3. With the scan tool, read DTCs.

    Does the scan tool display this DTC as active?

    Yes

    - Go To 2

    No

    - Test complete. The condition or conditions that originally set this DTC are not present at this time. Using the wiring diagrams as a guide, check all related splices and connectors for signs of water intrusion, corrosion, pushed out or bent terminals and correct pin tension.
    - Perform the BODY VERIFICATION TEST. Refer to **STANDARD PROCEDURE** .
2. **ATTEMPT TO SET THE OPPOSITE DTC**
    1. Turn the Right Turn Signal off.
    2. Turn the ignition off.
    3. Disconnect the Right Tail Lamp Assembly harness connector.
    4. Turn the ignition on.
    5. Turn the Right Turn Signal on.
    6. With the scan tool, read DTCs.

    Does the scan tool display this DTC as active?

    Yes

- Replace the Right Rear Turn Signal Bulb in accordance with the Service Information. Refer to **LAMP, TAIL STOP TURN, REMOVAL** .
- Perform the BODY VERIFICATION TEST. Refer to **STANDARD PROCEDURE** .

No

- Go To 3

3. **CHECK THE (L62) RIGHT REAR TURN LAMP DRIVER CIRCUIT FOR A SHORT TO GROUND**
   1. Turn the ignition off.
   2. Disconnect the BCM C6 harness connector.
   3. Measure the resistance between ground and the (L62) Right Rear Turn Lamp Driver circuit.

   Is the resistance above 10K Ohms?

   Yes

   - Replace the BCM in accordance with the Service Information. Refer to **MODULE, BODY CONTROL, REMOVAL** .
   - Perform the BODY VERIFICATION TEST. Refer to **STANDARD PROCEDURE** .

   No

   - Repair the short to ground in the (L62) Right Rear Turn Lamp Driver circuit.
   - Perform the BODY VERIFICATION TEST. Refer to **STANDARD PROCEDURE** .

B165B-18-PARK LAMP CONTROL - UNDER CURRENT

For a complete wiring diagram, **refer to appropriate SYSTEM WIRING DIAGRAMS article** .

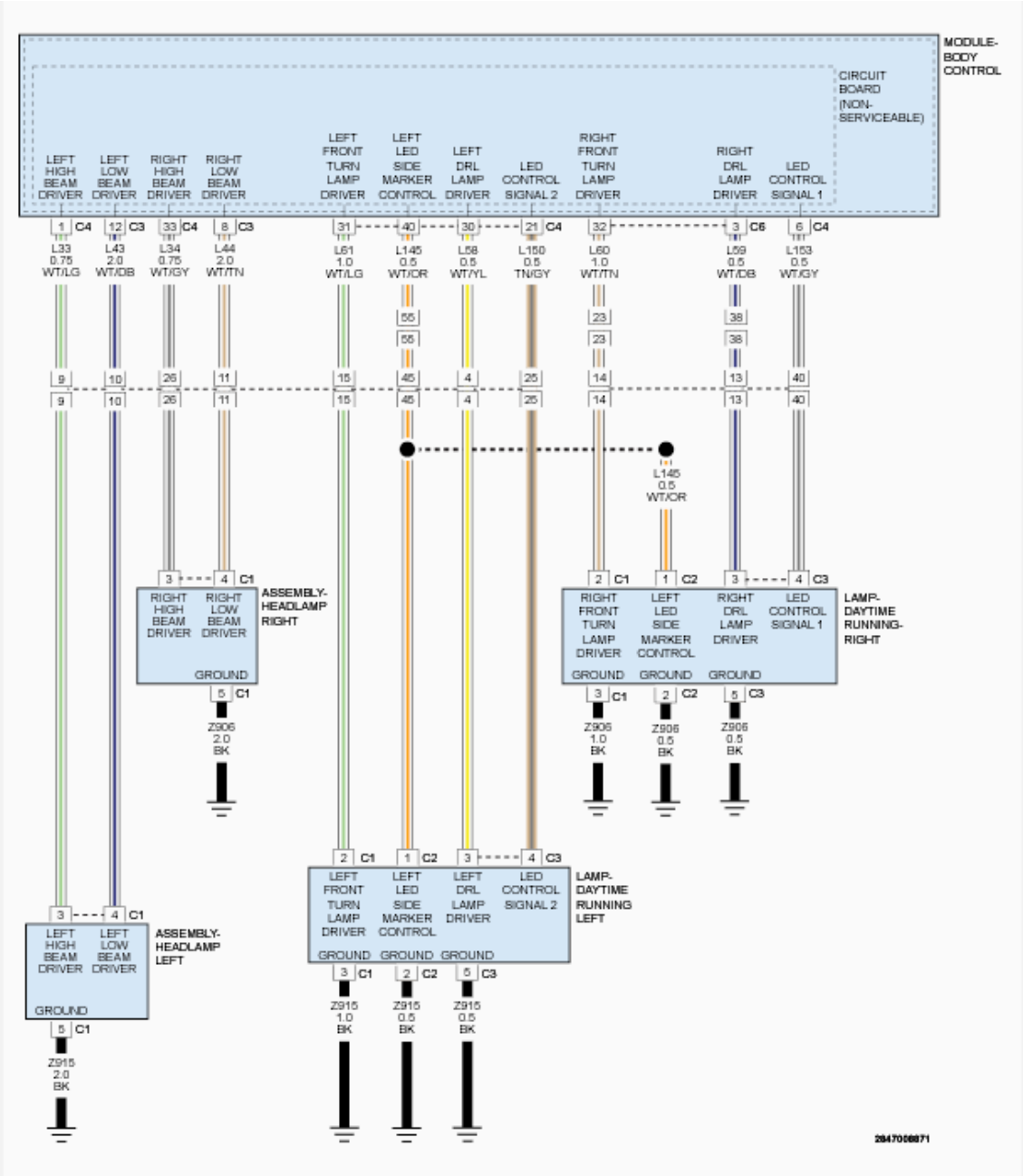

Fig. 35: Headlamp & Daytime Running Lamp Circuit Diagram
Courtesy of CHRYSLER GROUP, LLC

THEORY OF OPERATION

The Body Control Module (BCM) receives the input from the headlamp switch requesting park lamp illumination. The BCM provides a Pulse Width Modulated (PWM) voltage to the Side Marker Lamps. A ground path for the lamps is present through the harness to the body sheet metal. For additional information on the Side Marker Lamps operation, refer to **OPERATION** .

WHEN MONITORED

With the park lamps active.

SET CONDITION

When the Body Control Module (BCM) detects a short to battery or an open on the (L145) Side Marker Lamp Control circuit.

POSSIBLE CAUSES

Possible Causes
(L145) SIDE MARKER LAMP CONTROL CIRCUIT SHORTED TO BATTERY
(L145) SIDE MARKER LAMP CONTROL CIRCUIT OPEN
(Z915) GROUND CIRCUIT OPEN
(Z906) GROUND CIRCUIT OPEN
LEFT FRONT SIDE MARKER LAMP
RIGHT FRONT SIDE MARKER LAMP
BODY CONTROL MODULE (BCM)

DIAGNOSTIC TEST

1. **CHECK FOR AN ACTIVE DTC**
    1. Turn the ignition on.
    2. Turn the park lamps on.
    3. With the scan tool, read DTCs.

    Does the scan tool display this DTC as active?

    Yes

    - Go To 2

    No

    - Test complete. The condition or conditions that originally set this DTC are not present at this time. Using the wiring diagrams as a guide, check all related splices and connectors for signs of water intrusion, corrosion, pushed out or bent terminals and correct pin tension.
    - Perform the BODY VERIFICATION TEST. Refer to **STANDARD PROCEDURE** .
2. **CHECK THE (L145) SIDE MARKER LAMP CONTROL CIRCUIT FOR A SHORT TO VOLTAGE IN THE HARNESS**
    1. Turn the park lamps off.
    2. Turn the ignition off.
    3. Disconnect the Left and Right Daytime Running Lamp harness connectors.
    4. Disconnect the BCM C4 harness connector.

5. Turn the ignition on.
6. Measure the voltage between ground and the (L145) Side Marker Lamp Control circuit.

   Is there any voltage present?

   Yes

   - Repair the short to voltage in the (L145) Side Marker Lamp Control circuit.
   - Perform the BODY VERIFICATION TEST. Refer to **STANDARD PROCEDURE** .

   No

   - Go To 3

3. **CHECK THE (L145) SIDE MARKER LAMP CONTROL CIRCUIT FOR AN OPEN IN THE HARNESS**
   1. Turn the ignition off.
   2. Measure the resistance of the (L145) Side Marker Lamp Control circuit between the Left and Right Daytime Running Lamp harness connectors and the BCM C4 harness connector.

      Is the resistance below 5.0 Ohms for both connections?

      Yes

      - Go To 4

      No

      - Repair the open in the (L145) Side Marker Lamp Control circuit.
      - Perform the BODY VERIFICATION TEST. Refer to **STANDARD PROCEDURE** .
4. **CHECK THE (Z915) GROUND CIRCUIT FOR AN OPEN IN THE HARNESS**
   1. Check the resistance of the (Z915) Ground circuit between the Left Daytime Running Lamp harness connector and ground.

      Is the resistance greater than 10K Ohms?

      Yes

      - Go To 5

      No

      - Repair the open in the (Z915) Ground circuit.
      - Perform the BODY VERIFICATION TEST. Refer to **STANDARD PROCEDURE** .

5. **CHECK THE (Z906) GROUND CIRCUIT FOR AN OPEN IN THE HARNESS**
   1. Measure the resistance of the (Z906) Ground circuit between the Right Daytime Running Lamp harness connector and ground.

      Is the resistance greater than 10K Ohms?

      Yes

      - Go To 6

      No

      - Repair the open in the (Z906) Ground circuit.
      - Perform the BODY VERIFICATION TEST. Refer to **STANDARD PROCEDURE** .
6. **CHECK THE BCM FOR CORRECT OPERATION**
   1. Turn the ignition off.
   2. Reconnect the BCM C4 harness connector.
   3. Turn the ignition on.
   4. Turn the park lamps on.
   5. Measure the voltage between ground and the (L145) Side Marker Lamp Control circuit.

      Is the voltage above 4 volts at both connections?

      Yes

      - Replace the appropriate Backup Lamp in accordance with the Service Information. Refer to **LAMP, TAIL STOP TURN, REMOVAL** .
      - Perform the BODY VERIFICATION TEST. Refer to **STANDARD PROCEDURE** .

      No

      - Replace the BCM in accordance with the Service Information. Refer to **MODULE, BODY CONTROL, REMOVAL** .
      - Perform the BODY VERIFICATION TEST. Refer to **STANDARD PROCEDURE** .

B165B-19-PARK LAMP CONTROL-OVER CURRENT

For a complete wiring diagram, **refer to appropriate SYSTEM WIRING DIAGRAMS article** .

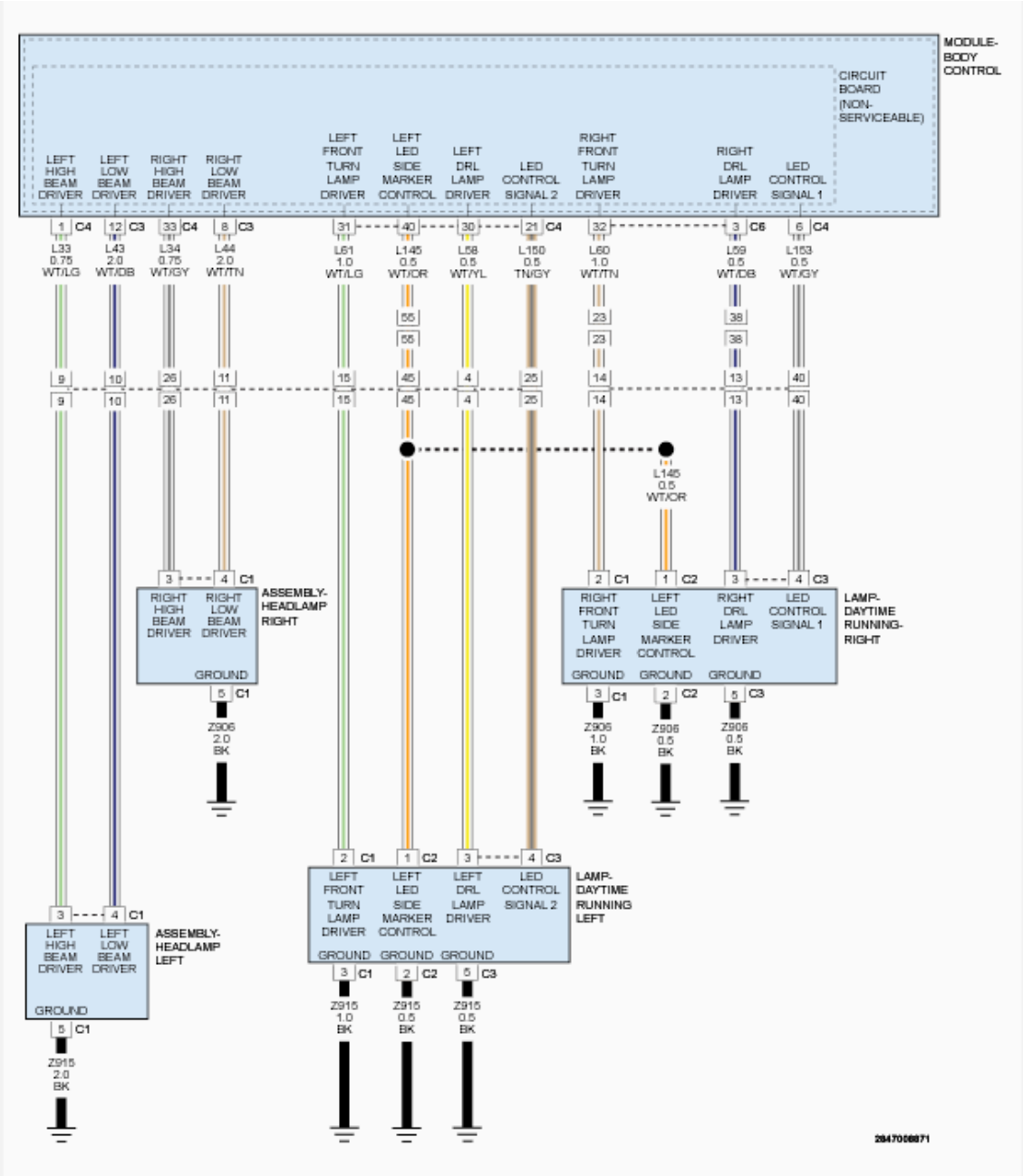

Fig. 36: Headlamp & Daytime Running Lamp Circuit Diagram
Courtesy of CHRYSLER GROUP, LLC

THEORY OF OPERATION

The Body Control Module (BCM) receives the input from the headlamp switch requesting park lamp illumination. The BCM provides a Pulse Width Modulated (PWM) voltage to the Side Marker Lamps. A ground path for the lamps is present through the harness to the body sheet metal. For additional information on the Side Marker Lamps operation, refer to **OPERATION** .

WHEN MONITORED

With the park lamps active.

SET CONDITION

When the Body Control Module (BCM) detects a low condition on the (L145) Side Marker Lamp Control circuit.

POSSIBLE CAUSES

Possible Causes
(L145) SIDE MARKER LAMP CONTROL CIRCUIT SHORTED TO GROUND
LEFT FRONT SIDE MARKER LAMP BULB
RIGHT FRONT SIDE MARKER LAMP BULB
BODY CONTROL MODULE (BCM)

DIAGNOSTIC TEST

1. **CHECK FOR AN ACTIVE DTC**
    1. Turn the ignition on.
    2. With the scan tool, read DTCs.

    Does the scan tool display this DTC as active?

    Yes

    - Go To 2

    No

    - Test complete. The condition or conditions that originally set this DTC are not present at this time. Using the wiring diagrams as a guide, check all related splices and connectors for signs of water intrusion, corrosion, pushed out or bent terminals and correct pin tension.
    - Perform the BODY VERIFICATION TEST. Refer to **STANDARD PROCEDURE** .
2. **CHECK THE LEFT SIDE MARKER LAMP**
    1. Turn the Park Lamps off.
    2. Turn the ignition off.
    3. Disconnect the Left Daytime Running Lamp harness connector.
    4. Turn the ignition on.
    5. Turn the Park Lamps on.
    6. With the scan tool, read DTCs.

    Does the scan tool display this DTC as active?

Yes

- Go To 3

No

- Replace the Left Side Marker Lamp in accordance with the Service Information.
- Perform the BODY VERIFICATION TEST. Refer to **STANDARD PROCEDURE** .

3. **CHECK THE RIGHT SIDE MARKER LAMP**
   1. Turn the Park Lamps off.
   2. Turn the ignition off.
   3. Disconnect the Right Daytime Running Lamp harness connector.
   4. Turn the ignition on.
   5. Turn the Park Lamps on.
   6. With the scan tool, read DTCs.

   Does the scan tool display this DTC as active?

   Yes

   - Go To 4

   No

   - Replace the Right Side Marker Lamp in accordance with the Service Information.
   - Perform the BODY VERIFICATION TEST. Refer to **STANDARD PROCEDURE** .

4. **CHECK THE (L145) SIDE MARKER LAMP CONTROL CIRCUIT FOR A SHORT TO GROUND**
   1. Disconnect the BCM C4 harness connector.
   2. Measure the resistance between ground and the (L145) Side Marker Lamp Control circuit.

   Is the resistance below 10K Ohms?

   Yes

   - Repair the short to ground in the (L145) Side Marker Lamp Control circuit.
   - Perform the BODY VERIFICATION TEST. Refer to **STANDARD PROCEDURE** .

   No

   - Replace the BCM in accordance with the Service Information. Refer to **MODULE, BODY CONTROL, REMOVAL** .
   - Perform the BODY VERIFICATION TEST. Refer to **STANDARD PROCEDURE** .

B1666-18-LEFT REVERSE LAMP CONTROL - UNDER CURRENT

For a complete wiring diagram, **refer to appropriate SYSTEM WIRING DIAGRAMS article** .

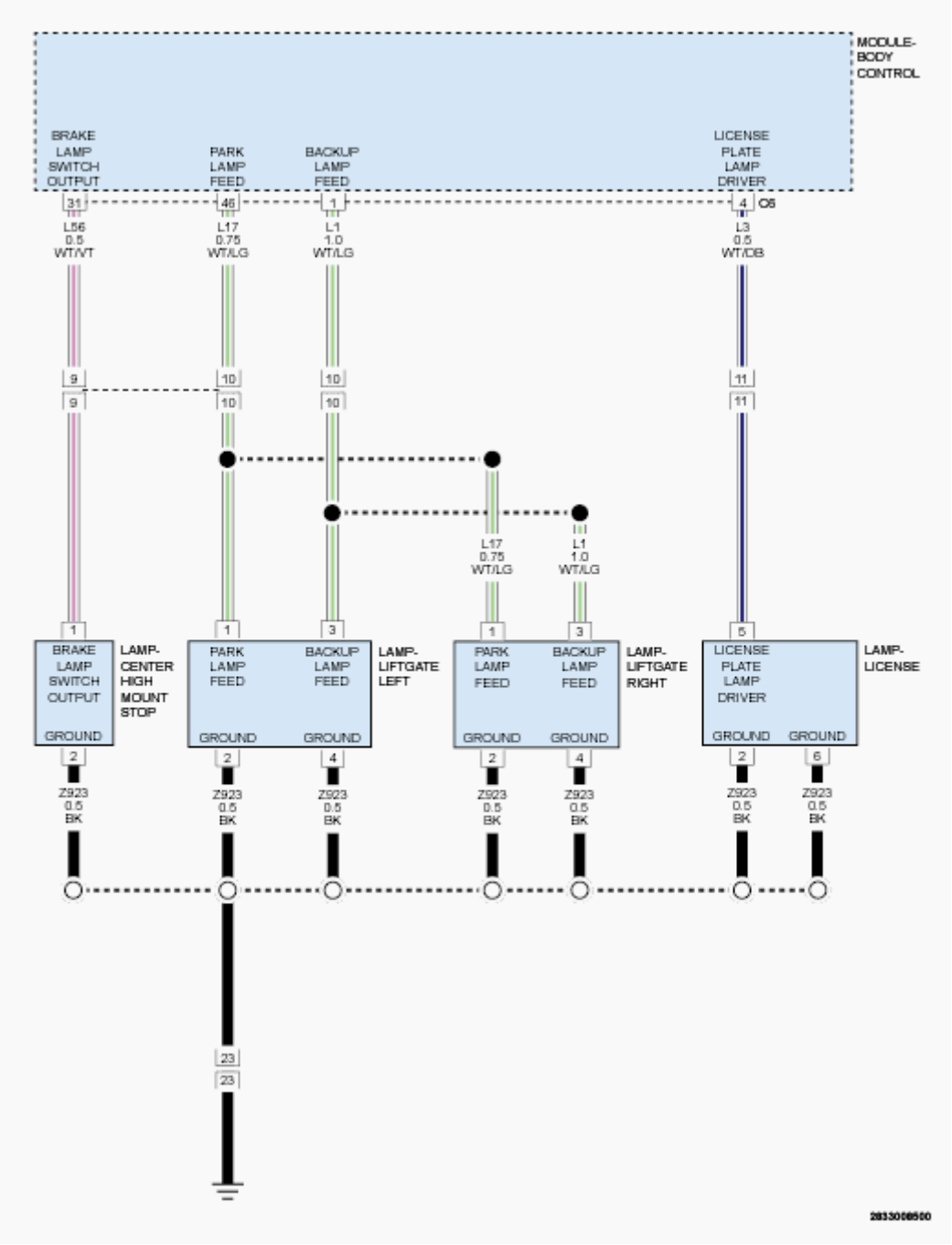

Fig. 37: Center Stop, Park, Backup & License Plate Lights Circuit Diagram
Courtesy of CHRYSLER GROUP, LLC

THEORY OF OPERATION

The BCM provides a Pulse Width Modulated (PWM) voltage output through the backup lamp driver circuit. The driver circuit connects to the Backup Lamp. A ground path for the lamps is present through the harness to the body sheet metal. For additional information on the Backup Lamps operation, refer to **OPERATION** .

WHEN MONITORED

With the backup lamps active.

SET CONDITION

When the Body Control Module (BCM) detects a high condition on the (L1) Backup Lamp Driver circuit.

POSSIBLE CAUSES

Possible Causes
(L1) BACKUP LAMP DRIVER CIRCUIT OPEN
(L1) BACKUP LAMP DRIVER CIRCUIT SHORTED TO VOLTAGE
(Z923) GROUND CIRCUIT OPEN
BACKUP LAMP
BODY CONTROL MODULE (BCM)

DIAGNOSTIC TEST

1. **CHECK FOR AN ACTIVE DTC**
    1. Turn the ignition on.
    2. With the brakes firmly applied, shift the gear selector into REVERSE.
    3. With the scan tool, read DTCs.

    Does the scan tool display this DTC as active?

    Yes

    - Go To 2

    No

    - Test complete. The condition or conditions that originally set this DTC are not present at this time. Using the wiring diagrams as a guide, check all related splices and connectors for signs of water intrusion, corrosion, pushed out or bent terminals and correct pin tension.
    - Perform the BODY VERIFICATION TEST. Refer to **STANDARD PROCEDURE** .
2. **CHECK THE (L1) BACKUP LAMP DRIVER CIRCUIT FOR A SHORT TO VOLTAGE IN THE HARNESS**
    1. Shift the gear selector into PARK.
    2. Turn the ignition off.

3. Disconnect the Left and Right Liftgate Lamp harness connectors.
4. Disconnect the BCM C6 harness connector.
5. Turn the ignition on.
6. Measure the voltage between ground and the (L1) Backup Lamp Driver circuit.

   Is there any voltage present?

   Yes

   - Repair the short to voltage in the (L1) Backup Lamp Driver circuit.
   - Perform the BODY VERIFICATION TEST. Refer to **STANDARD PROCEDURE** .

   No

   - Go To 3

3. **CHECK THE (L1) BACKUP LAMP DRIVER CIRCUIT FOR AN OPEN IN THE HARNESS**
   1. Turn the ignition off.
   2. Measure the resistance of the (L1) Backup Lamp Driver circuit between the Left and Right Liftgate Lamp harness connectors and the BCM C6 harness connector.

      Is the resistance below 5.0 Ohms for both connections?

      Yes

      - Go To 4

      No

      - Repair the open in the (L1) Backup Lamp Driver circuit.
      - Perform the BODY VERIFICATION TEST. Refer to **STANDARD PROCEDURE** .

4. **CHECK THE (Z923) GROUND CIRCUIT FOR AN OPEN IN THE HARNESS**
   1. Using a 12-volt test light connected to 12-volts, check the (Z923) Ground circuit.

      Does the test light illuminate brightly?

      Yes

      - Go To 5

      No

      - Repair the open in the (Z923) Ground circuit.
      - Perform the BODY VERIFICATION TEST. Refer to **STANDARD PROCEDURE** .

5. **CHECK THE BCM FOR CORRECT OPERATION**
    1. Turn the ignition off.
    2. Reconnect the BCM C6 harness connector.
    3. Connect a 12-volt test light between the (L1) Backup Lamp Driver circuit and the (Z923) Ground circuit at the Left and Right Liftgate Lamp harness connectors.
    4. Turn the ignition on.
    5. With the brakes firmly applied, shift the gear selector into REVERSE.

    Does the test light illuminate brightly at both connections?

    Yes

    - Replace the appropriate Backup Lamp in accordance with the Service Information. Refer to **LAMP, TAIL STOP TURN, REMOVAL** .
    - Perform the BODY VERIFICATION TEST. Refer to **STANDARD PROCEDURE** .

    No

    - Replace the BCM in accordance with the Service Information. Refer to **MODULE, BODY CONTROL, REMOVAL** .
    - Perform the BODY VERIFICATION TEST. Refer to **STANDARD PROCEDURE** .

B1666-19-LEFT REVERSE LAMP CONTROL - OVER CURRENT

For a complete wiring diagram, **refer to appropriate SYSTEM WIRING DIAGRAMS article** .

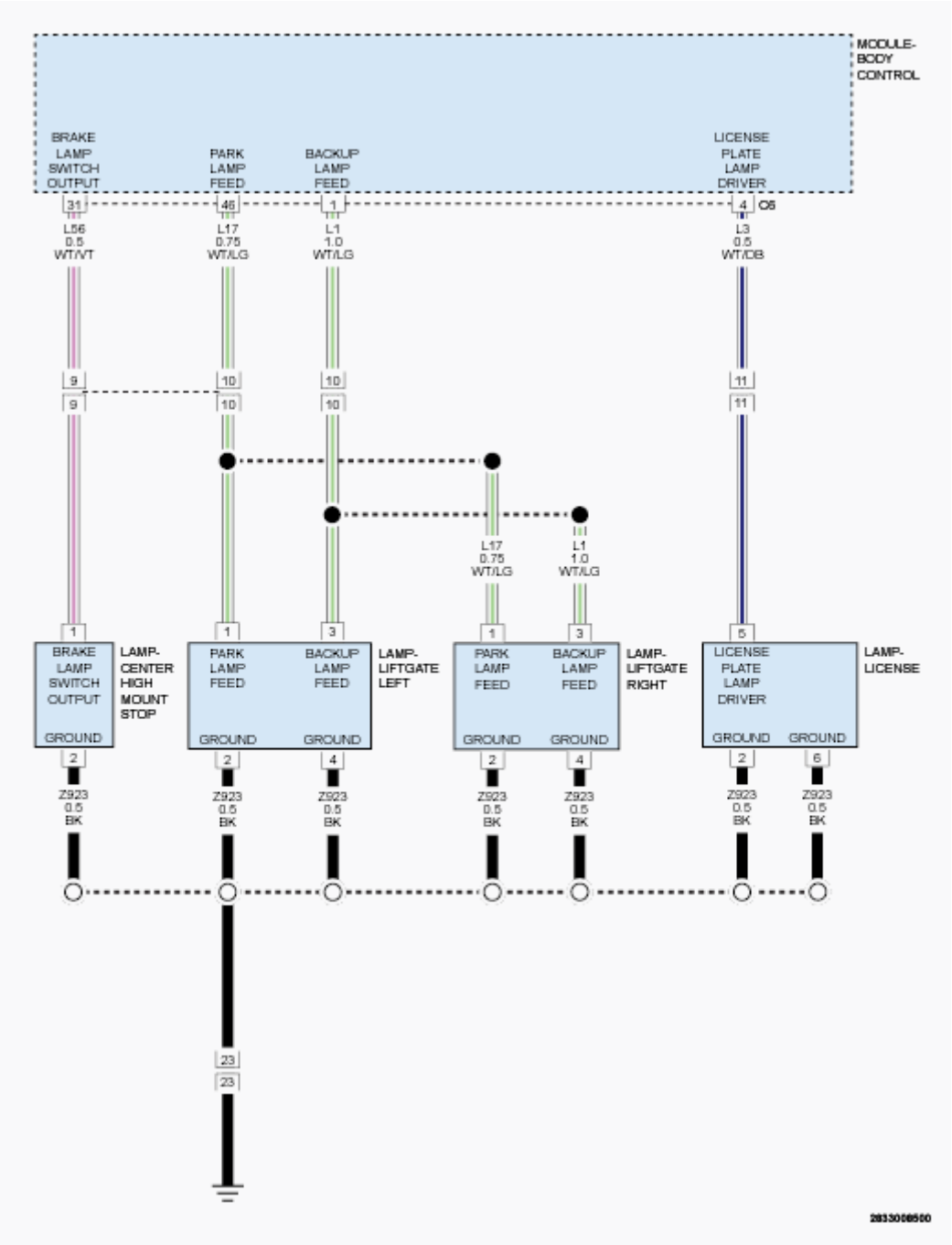

Fig. 38: Center Stop, Park, Backup & License Plate Lights Circuit Diagram
Courtesy of CHRYSLER GROUP, LLC

THEORY OF OPERATION

The BCM provides a Pulse Width Modulated (PWM) voltage output through the backup lamp driver circuit. The driver circuit connects to the Backup Lamp. A ground path for the lamps is present through the harness to the body sheet metal. For additional information on the Backup Lamps operation, refer to **OPERATION** .

WHEN MONITORED

With the backup lamps active.

SET CONDITION

When the Body Control Module (BCM) detects a low condition on the (L1) Backup Lamp Driver circuit.

POSSIBLE CAUSES

Possible Causes
(L1) BACKUP LAMP DRIVER CIRCUIT SHORTED TO GROUND
BACKUP LAMP
BODY CONTROL MODULE (BCM)

DIAGNOSTIC TEST

1. **CHECK FOR AN ACTIVE DTC**
    1. Turn the ignition on.
    2. With the brakes firmly applied, shift the gear selector into REVERSE.
    3. With the scan tool, read DTCs.

    Does the scan tool display this DTC as active?

    Yes

    - Go To 2

    No

    - Test complete. The condition or conditions that originally set this DTC are not present at this time. Using the wiring diagrams as a guide, check all related splices and connectors for signs of water intrusion, corrosion, pushed out or bent terminals and correct pin tension.
    - Perform the BODY VERIFICATION TEST. Refer to **STANDARD PROCEDURE** .
2. **ATTEMPT TO SET THE OPPOSITE DTC**
    1. Shift the gear selector into PARK.
    2. Turn the ignition off.
    3. Disconnect the Left and Right Liftgate Lamp harness connectors.
    4. Turn the ignition on.
    5. With the brakes firmly applied, shift the gear selector into REVERSE.
    6. With the scan tool, read DTCs.

    Does the scan tool display DTC: B1707-18-LEFT REVERSE LAMP CONTROL - UNDER

CURRENT?

Yes

- Replace the Backup Lamp in accordance with the Service Information. Refer to **LAMP, TAIL STOP TURN, REMOVAL** .
- Perform the BODY VERIFICATION TEST. Refer to **STANDARD PROCEDURE** .

No

- Go To 3

3. **CHECK THE (L1) BACKUP LAMP DRIVER CIRCUIT FOR A SHORT TO GROUND**
   1. Turn the ignition off.
   2. Disconnect the BCM C6 harness connector.
   3. Measure the resistance between ground and the (L1) Backup Lamp Driver circuit.

   Is the resistance above 10K Ohms?

   Yes

   - Replace the Body Control Module (BCM) in accordance with the Service Information. Refer to **MODULE, BODY CONTROL, REMOVAL** .
   - Perform the BODY VERIFICATION TEST. Refer to **STANDARD PROCEDURE** .

   No

   - Repair the short to ground in the (L1) Backup Lamp Driver circuit.
   - Perform the BODY VERIFICATION TEST. Refer to **STANDARD PROCEDURE** .

B166A-12-LEFT TRAILER TOW LAMP CONTROL - CIRCUIT SHORT TO BATTERY

For a complete wiring diagram, **refer to appropriate SYSTEM WIRING DIAGRAMS article** .

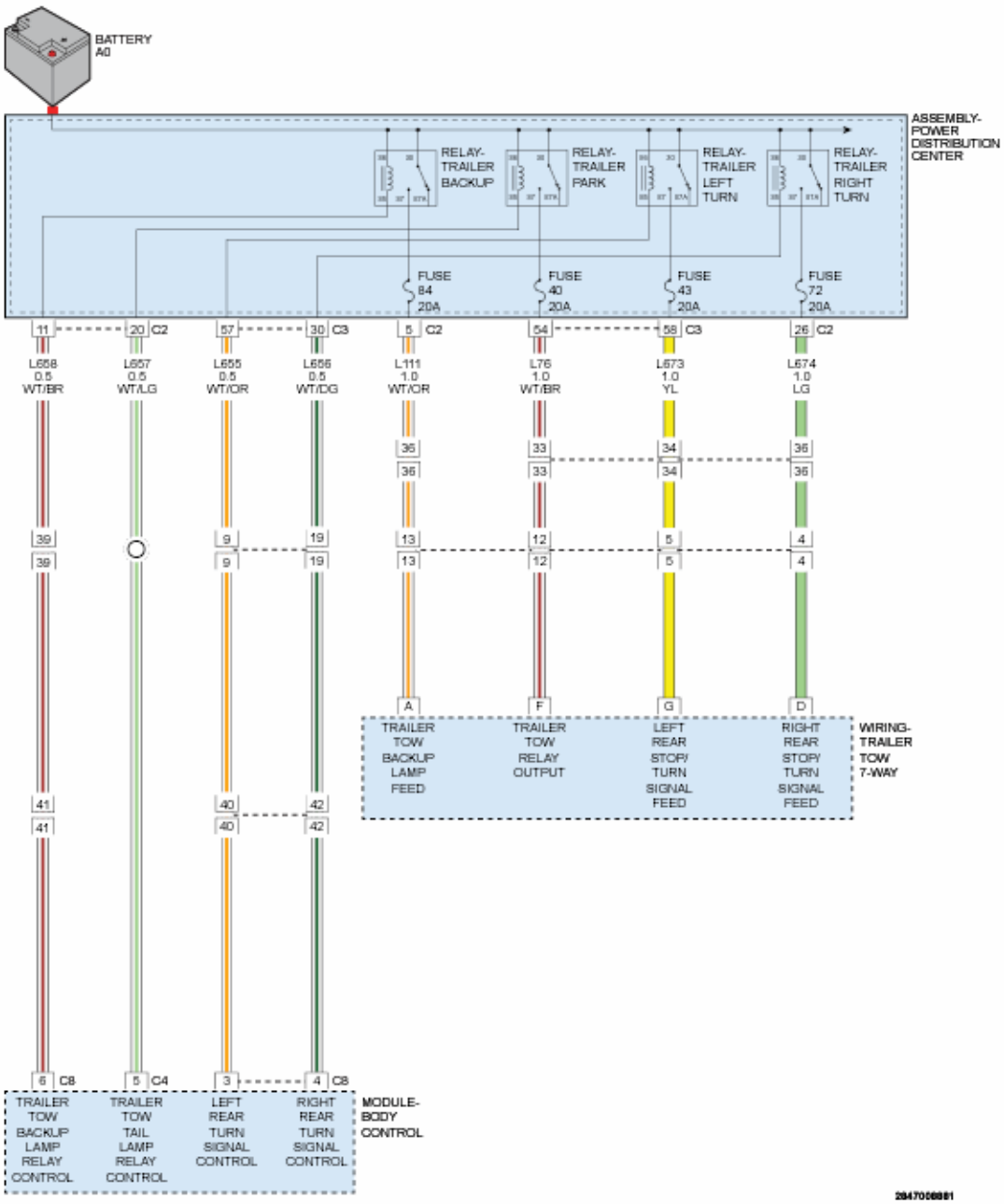

Fig. 39: Trailer Tow Lamp Control Circuit Diagram
Courtesy of CHRYSLER GROUP, LLC

THEORY OF OPERATION

Four relays are used to provide voltage to the Trailer Tow connector. The trailer tow relays are used to switch fused battery voltage directly to the Trailer Tow connector when requested. The trailer tow relays are activated through a ground path provided by the Body Control Module (BCM).

WHEN MONITORED

With the ignition on, turn signal active.

SET CONDITION

The Body Control Module (BCM) detects a short to voltage on the Left Rear Trailer Turn Lamp Control circuit.

POSSIBLE CAUSES

Possible Causes
LEFT REAR TRAILER TURN LAMP CONTROL CIRCUIT SHORTED TO BATTERY
BODY CONTROL MODULE (BCM)

DIAGNOSTIC TEST

1. **VERIFY THE DTC IS ACTIVE**
   1. Turn the ignition on.
   2. With the scan tool, read DTCs.

      Does the scan tool display this DTC as active?

      Yes

      - Go To 2

      No

      - Test complete. The condition or conditions that originally set this DTC are not present at this time. Using the wiring diagrams as a guide, check all related splices and connectors for signs of water intrusion, corrosion, pushed out or bent terminals and correct pin tension.
      - Perform the BODY VERIFICATION TEST. Refer to **STANDARD PROCEDURE** .
2. **CHECK THE (L655) LEFT REAR TRAILER TURN LAMP CONTROL CIRCUIT FOR A SHORT TO VOLTAGE IN THE HARNESS**
   1. Turn the ignition off.
   2. Disconnect the PDC C3 harness connector.
   3. Turn the ignition on.
   4. Measure the voltage between ground and the (L655) Left Rear Trailer Turn Lamp Control circuit at the PDC C3 harness connector.

      Is there any voltage present?

      Yes

      - Using the wiring diagrams as a guide, repair the short to voltage in the (L655) Left Rear Turn Signal Control circuit.

- Perform the BODY VERIFICATION TEST. Refer to **STANDARD PROCEDURE** .

No

- Go To 3

3. **INSPECT RELATED WIRING AND CHECK FOR TSBs**
   1. Turn the ignition off.
   2. Using the wiring diagram/schematic as a guide, inspect the wiring and connectors between the PDC and the BCM.
   3. Look for any chafed, pierced, pinched, or partially broken wires.
   4. Look for broken, bent, pushed out or corroded terminals.
   5. Perform any Technical Service Bulletins that may apply.

   Were any problems found?

   Yes

   - Repair as necessary.
   - Perform the BODY VERIFICATION TEST. Refer to **STANDARD PROCEDURE** .

   No

   - Replace the BCM in accordance with the Service Information. Refer to **MODULE, BODY CONTROL, REMOVAL** .
   - Perform the BODY VERIFICATION TEST. Refer to **STANDARD PROCEDURE** .

B166A-14-LEFT TRAILER TOW LAMP CONTROL - CIRCUIT SHORT TO GROUND OR OPEN

For a complete wiring diagram, **refer to appropriate SYSTEM WIRING DIAGRAMS article** .

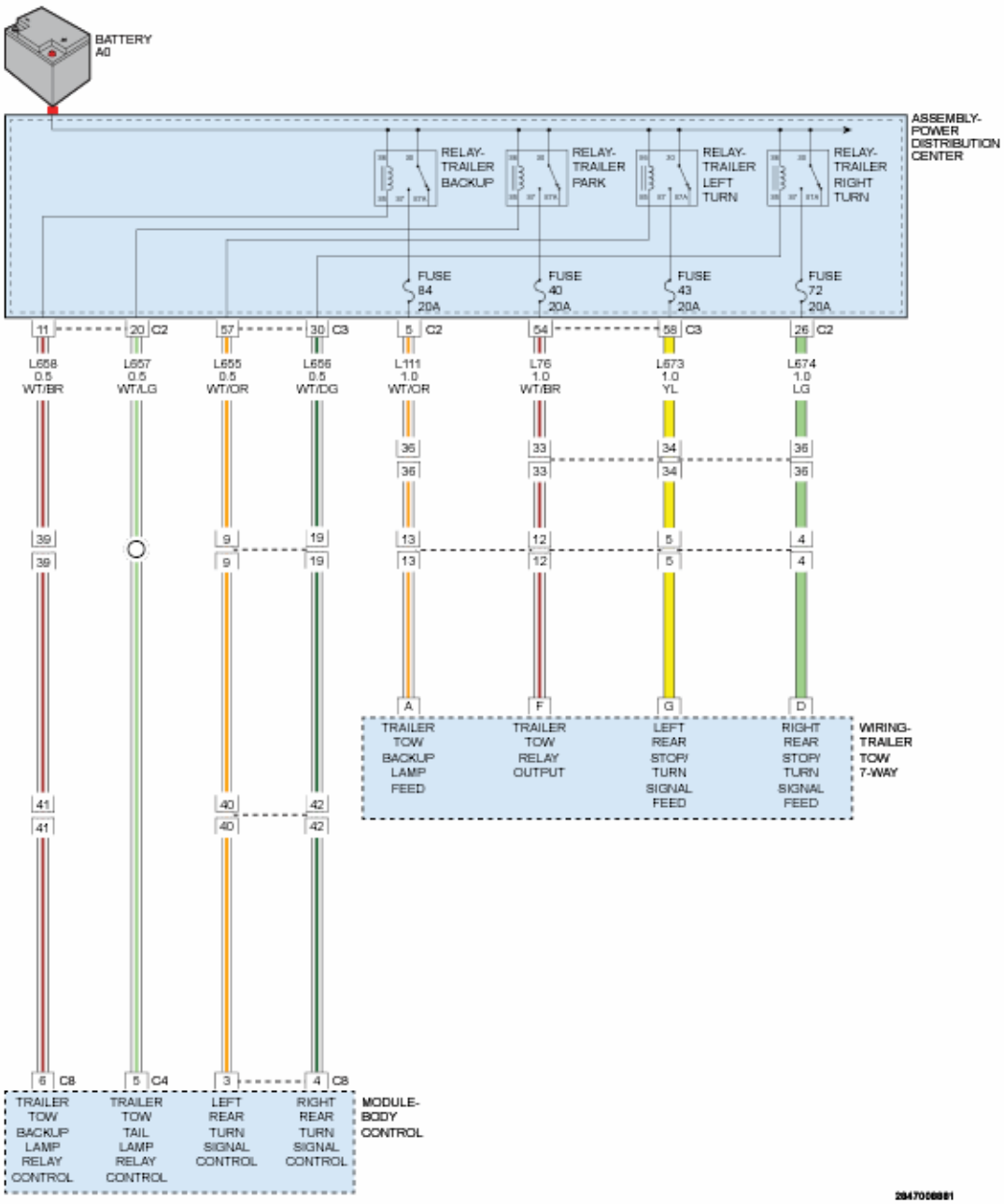

Fig. 40: Trailer Tow Lamp Control Circuit Diagram
Courtesy of CHRYSLER GROUP, LLC

THEORY OF OPERATION

Four relays are used to provide voltage to the Trailer Tow connector. The trailer tow relays are used to switch fused battery voltage directly to the Trailer Tow connector when requested. The trailer tow relays are activated through a ground path provided by the Body Control Module (BCM).

WHEN MONITORED

With the ignition on.

With the turn signal inactive.

SET CONDITION

If the Body Control Module (BCM) detects less than expected voltage on the (L655) Left Rear Turn Signal Control circuit.

POSSIBLE CAUSES

Possible Causes
(L655) LEFT REAR TURN SIGNAL CONTROL CIRCUIT OPEN
(L655) LEFT REAR TURN SIGNAL CONTROL CIRCUIT SHORTED TO GROUND
TRAILER TOW LEFT TURN RELAY
BODY CONTROL MODULE (BCM)

DIAGNOSTIC TEST

1. **VERIFY THE DTC IS ACTIVE**
    1. Turn the ignition on.
    2. With the scan tool, clear all DTCs.
    3. Wait 10 seconds.
    4. With the scan tool, read DTCs.

    Does the scan tool display this DTC as active?

    Yes

    - Go To 2

    No

    - Test complete. The condition or conditions that originally set this DTC are not present at this time. Using the wiring diagrams as a guide, check all related splices and connectors for signs of water intrusion, corrosion, pushed out or bent terminals and correct pin tension.
    - Perform the BODY VERIFICATION TEST. Refer to **STANDARD PROCEDURE** .
2. **CHECK THE TRAILER TOW LEFT TURN RELAY**
    1. Turn the ignition off.
    2. Remove the Trailer Tow Left Turn Relay and substitute it with a known good relay.
    3. Turn the ignition on and wait 10 seconds.
    4. With the scan tool, read DTCs.

Is the status Active for this DTC?

Yes

- Go To 3

No

- Replace the Trailer Tow Left Turn Relay.
- Perform the BODY VERIFICATION TEST. Refer to **STANDARD PROCEDURE** .

3. **CHECK THE (L655) LEFT REAR TURN SIGNAL CONTROL CIRCUIT FOR A SHORT TO GROUND**
   1. Turn the ignition off.
   2. Remove the Trailer Tow Left Turn Relay.
   3. Disconnect the BCM C8 harness connector.
   4. Measure the resistance between ground and the (L655) Left Rear Turn Signal Control circuit.

   Is the resistance above 10k Ohms?

   Yes

   - Go To 4

   No

   - Repair the short to ground in the (L655) Left Rear Turn Signal Control circuit.
   - Perform the BODY VERIFICATION TEST. Refer to **STANDARD PROCEDURE** .
4. **CHECK THE (L655) LEFT REAR TURN SIGNAL CONTROL CIRCUIT FOR AN OPEN**
   1. Measure the resistance of the (L655) Left Rear Turn Signal Control circuit between the Trailer Tow Left Turn Relay harness connector and the BCM C8 harness connector.

   Is the resistance below 5.0 Ohms?

   Yes

   - Go To 5

   No

   - Repair the open in the (L655) Left Rear Turn Signal Control circuit.
   - Perform the BODY VERIFICATION TEST. Refer to **STANDARD PROCEDURE** .
5. **INSPECT RELATED WIRING AND CHECK FOR TSBs**
   1. Turn the ignition off.

2. Using the wiring diagram/schematic as a guide, inspect the wiring and connectors between the Trailer Tow Left Turn Relay and the BCM.
3. Look for any chafed, pierced, pinched, or partially broken wires.
4. Look for broken, bent, pushed out or corroded terminals.
5. Perform any Technical Service Bulletins that may apply.

Were any problems found?

Yes

- Repair as necessary.
- Perform the BODY VERIFICATION TEST. Refer to **STANDARD PROCEDURE** .

No

- Replace the BCM in accordance with the Service Information. Refer to **MODULE, BODY CONTROL, REMOVAL** .
- Perform the BODY VERIFICATION TEST. Refer to **STANDARD PROCEDURE** .

B166E-12-RIGHT TRAILER TOW LAMP CONTROL - CIRCUIT SHORT TO BATTERY

For a complete wiring diagram, **refer to appropriate SYSTEM WIRING DIAGRAMS article** .

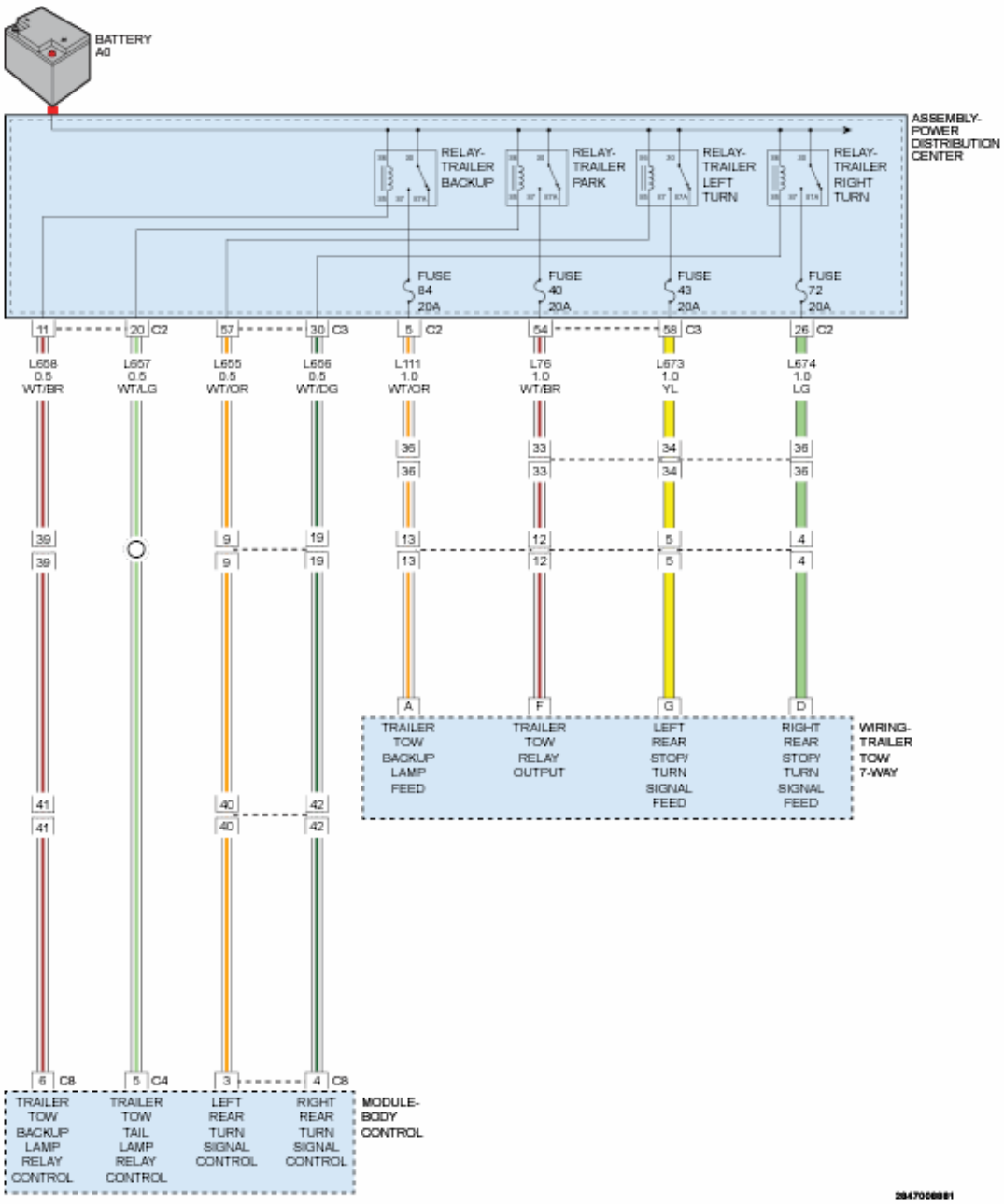

Fig. 41: Trailer Tow Lamp Control Circuit Diagram
Courtesy of CHRYSLER GROUP, LLC

THEORY OF OPERATION

Four relays are used to provide voltage to the Trailer Tow connector. The trailer tow relays are used to switch fused battery voltage directly to the Trailer Tow connector when requested. The trailer tow relays are activated through a ground path provided by the Body Control Module (BCM).

WHEN MONITORED

With the ignition on, turn signal active.

SET CONDITION

The Body Control Module (BCM) detects a short to voltage on the Right Rear Trailer Turn Lamp Control circuit.

POSSIBLE CAUSES

Possible Causes
RIGHT REAR TRAILER TURN LAMP CONTROL CIRCUIT SHORTED TO BATTERY
BODY CONTROL MODULE (BCM)

DIAGNOSTIC TEST

1. **VERIFY THE DTC IS ACTIVE**
   1. Turn the ignition on.
   2. With the scan tool, read DTCs.

      Does the scan tool display this DTC as active?

      Yes

      - Go To 2

      No

      - Test complete. The condition or conditions that originally set this DTC are not present at this time. Using the wiring diagrams as a guide, check all related splices and connectors for signs of water intrusion, corrosion, pushed out or bent terminals and correct pin tension.
      - Perform the BODY VERIFICATION TEST. Refer to **STANDARD PROCEDURE** .
2. **CHECK THE (L656) RIGHT REAR TRAILER TURN LAMP CONTROL CIRCUIT FOR A SHORT TO VOLTAGE IN THE HARNESS**
   1. Turn the ignition off.
   2. Disconnect the PDC C3 harness connector.
   3. Turn the ignition on.
   4. Measure the voltage between ground and the (L656) Right Rear Trailer Turn Lamp Control circuit at the PDC C3 harness connector.

      Is there any voltage present?

      Yes

      - Using the wiring diagrams as a guide, repair the short to voltage in the (L656) Right Rear

Turn Signal Control circuit.

- Perform the BODY VERIFICATION TEST. Refer to **STANDARD PROCEDURE** .

No

- Go To 3

3. **INSPECT RELATED WIRING AND CHECK FOR TSBs**
   1. Turn the ignition off.
   2. Using the wiring diagram/schematic as a guide, inspect the wiring and connectors between the PDC and the BCM.
   3. Look for any chafed, pierced, pinched, or partially broken wires.
   4. Look for broken, bent, pushed out or corroded terminals.
   5. Perform any Technical Service Bulletins that may apply.

   Were any problems found?

   Yes

   - Repair as necessary.
   - Perform the BODY VERIFICATION TEST. Refer to **STANDARD PROCEDURE** .

   No

   - Replace the BCM in accordance with the Service Information. Refer to **MODULE, BODY CONTROL, REMOVAL** .
   - Perform the BODY VERIFICATION TEST. Refer to **STANDARD PROCEDURE** .

B166E-14-RIGHT TRAILER TOW LAMP CONTROL - CIRCUIT SHORT TO GROUND OR OPEN

For a complete wiring diagram, **refer to appropriate SYSTEM WIRING DIAGRAMS article** .

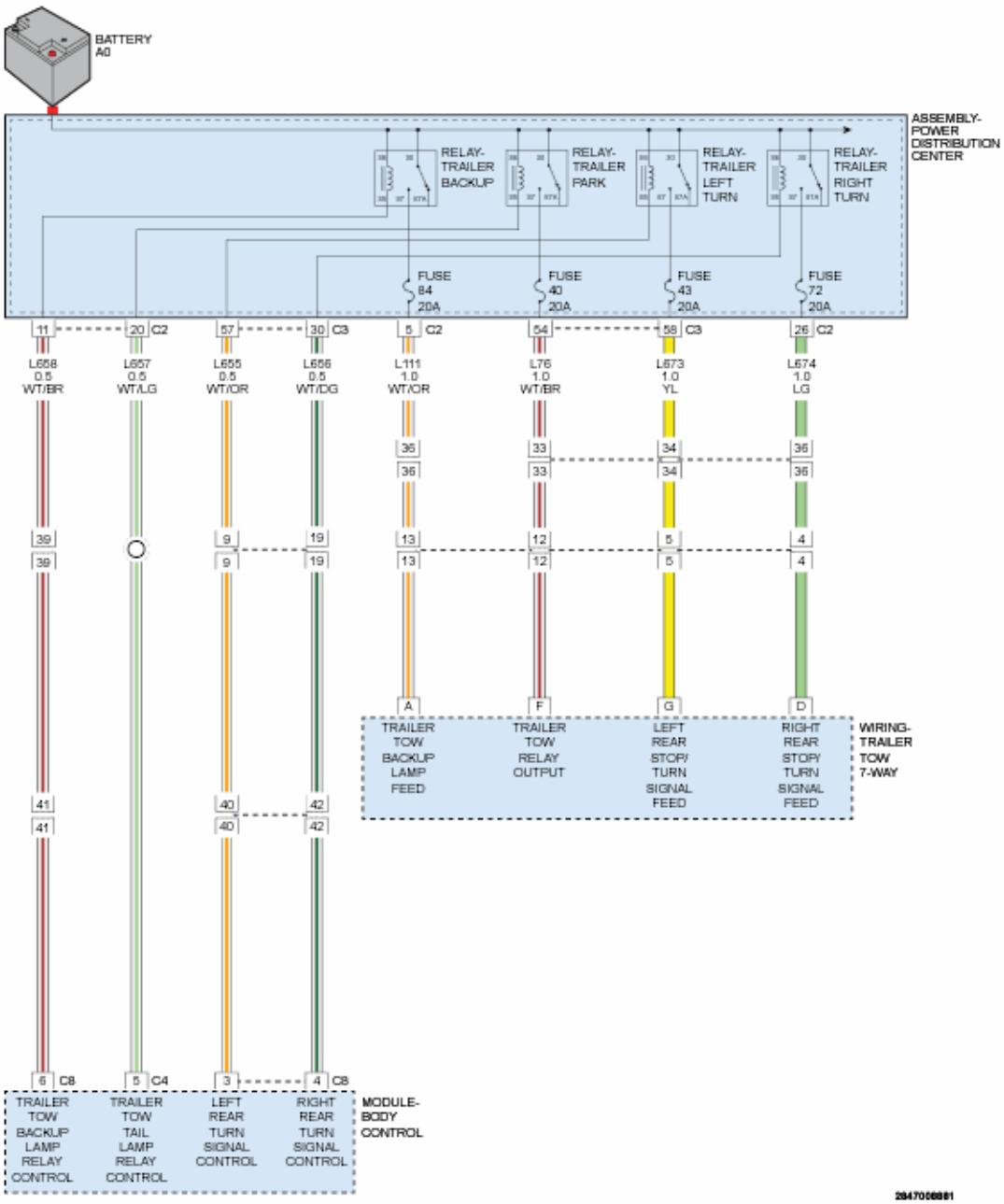

Fig. 42: Trailer Tow Lamp Control Circuit Diagram
Courtesy of CHRYSLER GROUP, LLC

THEORY OF OPERATION

Four relays are used to provide voltage to the Trailer Tow connector. The trailer tow relays are used to switch fused battery voltage directly to the Trailer Tow connector when requested. The trailer tow relays are activated through a ground path provided by the Body Control Module (BCM).

WHEN MONITORED

With the ignition on.

With the turn signal inactive.

SET CONDITION

If the Body Control Module (BCM) detects less than expected voltage on the (L656) Right Rear Turn Signal Control circuit.

POSSIBLE CAUSES

Possible Causes
(L656) RIGHT REAR TURN SIGNAL CONTROL CIRCUIT OPEN
(L656) RIGHT REAR TURN SIGNAL CONTROL CIRCUIT SHORTED TO GROUND
TRAILER TOW RIGHT TURN RELAY
BODY CONTROL MODULE (BCM)

DIAGNOSTIC TEST

1. **VERIFY THE DTC IS ACTIVE**
    1. Turn the ignition on.
    2. With the scan tool, clear all DTCs.
    3. Wait 10 seconds.
    4. With the scan tool, read DTCs.

    Does the scan tool display this DTC as active?

    Yes

    - Go To 2

    No

    - Test complete. The condition or conditions that originally set this DTC are not present at this time. Using the wiring diagrams as a guide, check all related splices and connectors for signs of water intrusion, corrosion, pushed out or bent terminals and correct pin tension.
    - Perform the BODY VERIFICATION TEST. Refer to **STANDARD PROCEDURE** .
2. **CHECK THE TRAILER TOW RIGHT TURN RELAY**
    1. Turn the ignition off.
    2. Remove the Trailer Tow Right Turn Relay and substitute it with a known good relay.
    3. Turn the ignition on and wait 10 seconds.
    4. With the scan tool, read DTCs.

Is the status Active for this DTC?

Yes

- Go To 3

No

- Replace the Trailer Tow Right Turn Relay.
- Perform the BODY VERIFICATION TEST. Refer to **STANDARD PROCEDURE** .

3. **CHECK THE (L656) RIGHT REAR TURN SIGNAL CONTROL CIRCUIT FOR A SHORT TO GROUND**
   1. Turn the ignition off.
   2. Remove the Trailer Tow Right Turn Relay.
   3. Disconnect the BCM C8 harness connector.
   4. Measure the resistance between ground and the (L656) Right Rear Turn Signal Control circuit.

   Is the resistance above 10k Ohms?

   Yes

   - Go To 4

   No

   - Repair the short to ground in the (L656) Right Rear Turn Signal Control circuit.
   - Perform the BODY VERIFICATION TEST. Refer to **STANDARD PROCEDURE** .
4. **CHECK THE (L656) RIGHT REAR TURN SIGNAL CONTROL CIRCUIT FOR AN OPEN**
   1. Measure the resistance of the (L656) Right Rear Turn Signal Control circuit between the Trailer Tow Right Turn Relay harness connector and the BCM C8 harness connector.

   Is the resistance below 5.0 Ohms?

   Yes

   - Go To 5

   No

   - Repair the open in the (L656) Right Rear Turn Signal Control circuit.
   - Perform the BODY VERIFICATION TEST. Refer to **STANDARD PROCEDURE** .
5. **INSPECT RELATED WIRING AND CHECK FOR TSBs**
   1. Turn the ignition off.

2. Using the wiring diagram/schematic as a guide, inspect the wiring and connectors between the Trailer Tow Right Turn Relay and the BCM.
3. Look for any chafed, pierced, pinched, or partially broken wires.
4. Look for broken, bent, pushed out or corroded terminals.
5. Perform any Technical Service Bulletins that may apply.

Were any problems found?

Yes

- Repair as necessary.
- Perform the BODY VERIFICATION TEST. Refer to **STANDARD PROCEDURE** .

No

- Replace the BCM in accordance with the Service Information. Refer to **MODULE, BODY CONTROL, REMOVAL** .
- Perform the BODY VERIFICATION TEST. Refer to **STANDARD PROCEDURE** .

B168E-2A-FRONT FOG LAMP SWITCH CIRCUIT-STUCK

For a complete wiring diagram, **refer to appropriate SYSTEM WIRING DIAGRAMS article** .

THEORY OF OPERATION

The Body Control Module (BCM) receives an input voltage from the Headlamp switch. The BCM monitors the headlamp switch voltage and controls the exterior lighting functions based on the switch input. For additional information on Headlamp Switch operation, refer to **SWITCH, HEADLAMP, OPERATION** .

WHEN MONITORED

With the ignition on.

SET CONDITION

The BCM detects that the Fog Lamp switch is active for an extended amount of time.

POSSIBLE CAUSES

Possible Causes
HEADLAMP SWITCH

DIAGNOSTIC TEST

CHECK FOR AN ACTIVE DTC

1. Turn the ignition on.
2. Turn the Headlamps on.
3. Operate the Fog Lamp Switch several times.
4. With the scan tool, read DTCs.

   Does the scan tool display this DTC as active?

   Yes

   - Replace the Headlamp Switch in accordance with the Service Information. Refer to **SWITCH, HEADLAMP, REMOVAL** .
   - Perform the BODY VERIFICATION TEST. Refer to **STANDARD PROCEDURE** .

   No

   - Test complete. The condition or conditions that originally set this DTC are not present at this time. Using the wiring diagrams as a guide, check all related splices and connectors for signs of water intrusion, corrosion, pushed out or bent terminals and correct pin tension.
   - Perform the BODY VERIFICATION TEST. Refer to **STANDARD PROCEDURE** .

B16AF-09-LEFT STOP LAMP CONTROL - COMPONENT FAILURES

For a complete wiring diagram, **refer to appropriate SYSTEM WIRING DIAGRAMS article** .

THEORY OF OPERATION

The Body Control Module (BCM) receives a hardwired brake signal from the Anti-lock Brake System (ABS) module indicating that the Brake Pedal is applied. When this signal is received, the BCM provides a voltage output through the rear park lamp control circuit. On the liftgate, the park lamp control circuit connects to the dual filament Park and Stop Lamp. The same ground circuit is used for both the Park and Stop Lamp filaments in a dual filament lamp. For additional information on the Brake Lamp operation, refer to **OPERATION** .

WHEN MONITORED

With the ignition on and the Brake Pedal applied.

SET CONDITION

When the Body Control Module (BCM) detects an outage in the Tail Lamp Assembly.

POSSIBLE CAUSES

Possible Causes
LEFT TAIL LAMP ASSEMBLY

DIAGNOSTIC TEST

CHECK FOR AN ACTIVE DTC

1. Turn the ignition on.
2. Apply the Brake Pedal.
3. With the scan tool, read DTCs.

   Does the scan tool display this DTC as active?

   Yes

   - Replace the Left Tail Lamp Assembly in accordance with the Service Information. Refer to **LAMP, TAIL STOP TURN, REMOVAL** .

   No

   - Test complete. The condition or conditions that originally set this DTC are not present at this time. Using the wiring diagrams as a guide, check all related splices and connectors for signs of water intrusion, corrosion, pushed out or bent terminals, and correct pin tension.
   - Perform the BODY VERIFICATION TEST. Refer to **STANDARD PROCEDURE** .

B16B3-09-RIGHT STOP LAMP CONTROL - COMPONENT FAILURES

For a complete wiring diagram, **refer to appropriate SYSTEM WIRING DIAGRAMS article** .

THEORY OF OPERATION

The Body Control Module (BCM) receives a hardwired brake signal from the Anti-lock Brake System (ABS) module indicating that the Brake Pedal is applied. When this signal is received, the BCM provides a voltage output through the rear park lamp control circuit. On the liftgate, the park lamp control circuit connects to the dual filament Park and Stop Lamp. The same ground circuit is used for both the Park and Stop Lamp filaments in a dual filament lamp. For additional information on the Brake Lamp operation, refer to **OPERATION** .

WHEN MONITORED

With the Brake Pedal applied.

SET CONDITION

When the Body Control Module (BCM) detects an outage on the Tail Lamp Assembly.

POSSIBLE CAUSES

Possible Causes
RIGHT TAIL LAMP ASSEMBLY

DIAGNOSTIC TEST

CHECK FOR AN ACTIVE DTC

1. Turn the ignition on.
2. Apply the Brake Pedal.
3. With the scan tool, read DTCs.

   Does the scan tool display this DTC as active?

   Yes

   - Replace the Right Tail Lamp Assembly in accordance with the Service Information. Refer to **LAMP, TAIL STOP TURN, REMOVAL** .

   No

   - Test complete. The condition or conditions that originally set this DTC are not present at this time. Using the wiring diagrams as a guide, check all related splices and connectors for signs of water intrusion, corrosion, pushed out or bent terminals, and correct pin tension.
   - Perform the BODY VERIFICATION TEST. Refer to **STANDARD PROCEDURE** .

B16B7-18-CENTER STOP LAMP CONTROL - UNDER CURRENT

For a complete wiring diagram, **refer to appropriate SYSTEM WIRING DIAGRAMS article** .

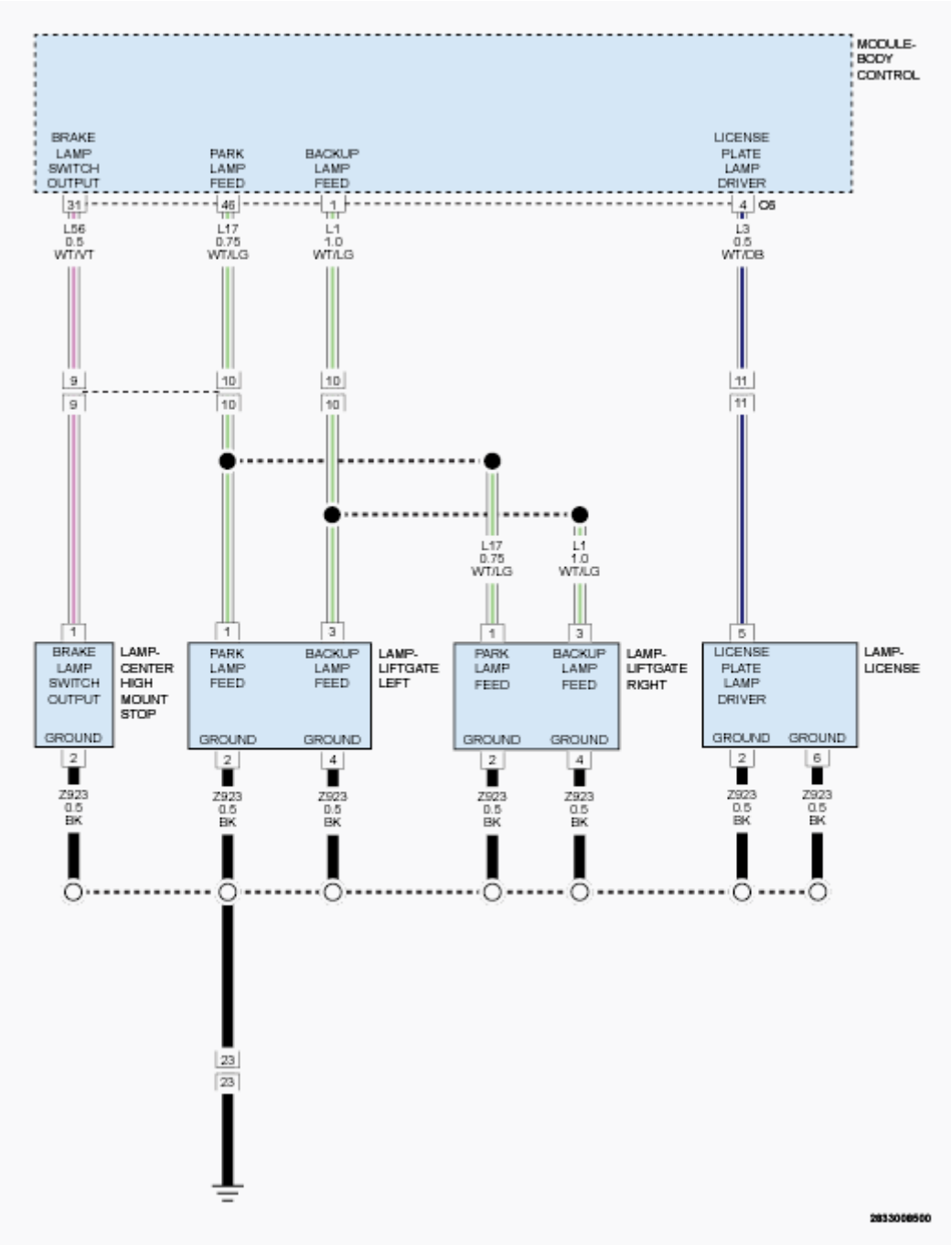

Fig. 43: Center Stop, Park, Backup & License Plate Lights Circuit Diagram
Courtesy of CHRYSLER GROUP, LLC

THEORY OF OPERATION

The Body Control Module (BCM) receives a hardwired brake signal from the Anti-lock Brake System (ABS) module indicating that the Brake Pedal is applied. When this signal is received, the BCM provides a voltage output through the Center High Mounted Stop Lamp (CHMSL) control circuit. For additional information on the Brake Lamp operation, refer to **OPERATION** .

WHEN MONITORED

With the ignition on and the Brake Pedal applied.

SET CONDITION

When the Body Control Module (BCM) detects a high condition on the (L56) CHMSL Driver circuit.

POSSIBLE CAUSES

Possible Causes
(L56) CHMSL DRIVER CIRCUIT OPEN
(L56) CHMSL DRIVER CIRCUIT SHORTED TO VOLTAGE
(Z923) GROUND CIRCUIT OPEN
CENTER HIGH MOUNTED STOP LAMP (CHMSL)
BODY CONTROL MODULE (BCM)

DIAGNOSTIC TEST

1. **CHECK FOR AN ACTIVE DTC**
    1. Turn the ignition on.
    2. Apply the Brake Pedal.
    3. With the scan tool, read DTCs.

    Does the scan tool display this DTC as active?

    Yes

    - Go To 2

    No

    - Test complete. The condition or conditions that originally set this DTC are not present at this time. Using the wiring diagrams as a guide, check all related splices and connectors for signs of water intrusion, corrosion, pushed out or bent terminals and correct pin tension.
    - Perform the BODY VERIFICATION TEST. Refer to **STANDARD PROCEDURE** .
2. **CHECK THE (L56) CHMSL DRIVER CIRCUIT FOR A SHORT TO VOLTAGE IN THE HARNESS**
    1. Turn the ignition off.
    2. Disconnect the Center High Mounted Stop Lamp harness connector.
    3. Disconnect the BCM C6 harness connector.
    4. Turn the ignition on.
    5. Measure the voltage between ground and the (L56) CHMSL Driver circuit.

Is there any voltage present?

Yes

- Repair the short to voltage in the (L56) CHMSL Driver circuit.
- Perform the BODY VERIFICATION TEST. Refer to **STANDARD PROCEDURE** .

No

- Go To 3

3. **CHECK THE (L56) CHMSL DRIVER CIRCUIT FOR AN OPEN IN THE HARNESS**
   1. Turn the ignition off.
   2. Measure the resistance of the (L56) CHMSL Driver circuit between the Center High Mounted Stop Lamp harness connector and the BCM C6 harness connector.

   Is the resistance below 5.0 Ohms?

   Yes

   - Go To 4

   No

   - Repair the open in the (L56) CHMSL Driver circuit.
   - Perform the BODY VERIFICATION TEST. Refer to **STANDARD PROCEDURE** .

4. **CHECK THE (Z923) GROUND CIRCUIT FOR AN OPEN IN THE HARNESS**
   1. Using a 12-volt test light connected to 12-volts, check the (Z923) Ground circuit.

   Does the test light illuminate brightly?

   Yes

   - Go To 5

   No

   - Repair the open in the (Z923) Ground circuit.
   - Perform the BODY VERIFICATION TEST. Refer to **STANDARD PROCEDURE** .

5. **CHECK THE BCM FOR CORRECT OPERATION**
   1. Turn the ignition off.
   2. Reconnect the BCM C6 harness connector.
   3. Connect a 12-volt test light between the (L56) CHMSL Driver circuit and the (Z923) Ground circuit at the Center High Mounted Stop Lamp harness connector.

4. Turn the ignition on.
5. Apply the Brake Pedal.

   Does the test light illuminate brightly?

   Yes

   - Replace the Center High Mounted Stop Lamp in accordance with the Service Information. Refer to **LAMP, CENTER HIGH MOUNTED STOP, REMOVAL** .
   - Perform the BODY VERIFICATION TEST. Refer to **STANDARD PROCEDURE** .

   No

   - Replace the BCM in accordance with the Service Information. Refer to **MODULE, BODY CONTROL, REMOVAL** .
   - Perform the BODY VERIFICATION TEST. Refer to **STANDARD PROCEDURE** .

B16B7-19-CENTER STOP LAMP CONTROL - OVER CURRENT

For a complete wiring diagram, **refer to appropriate SYSTEM WIRING DIAGRAMS article** .

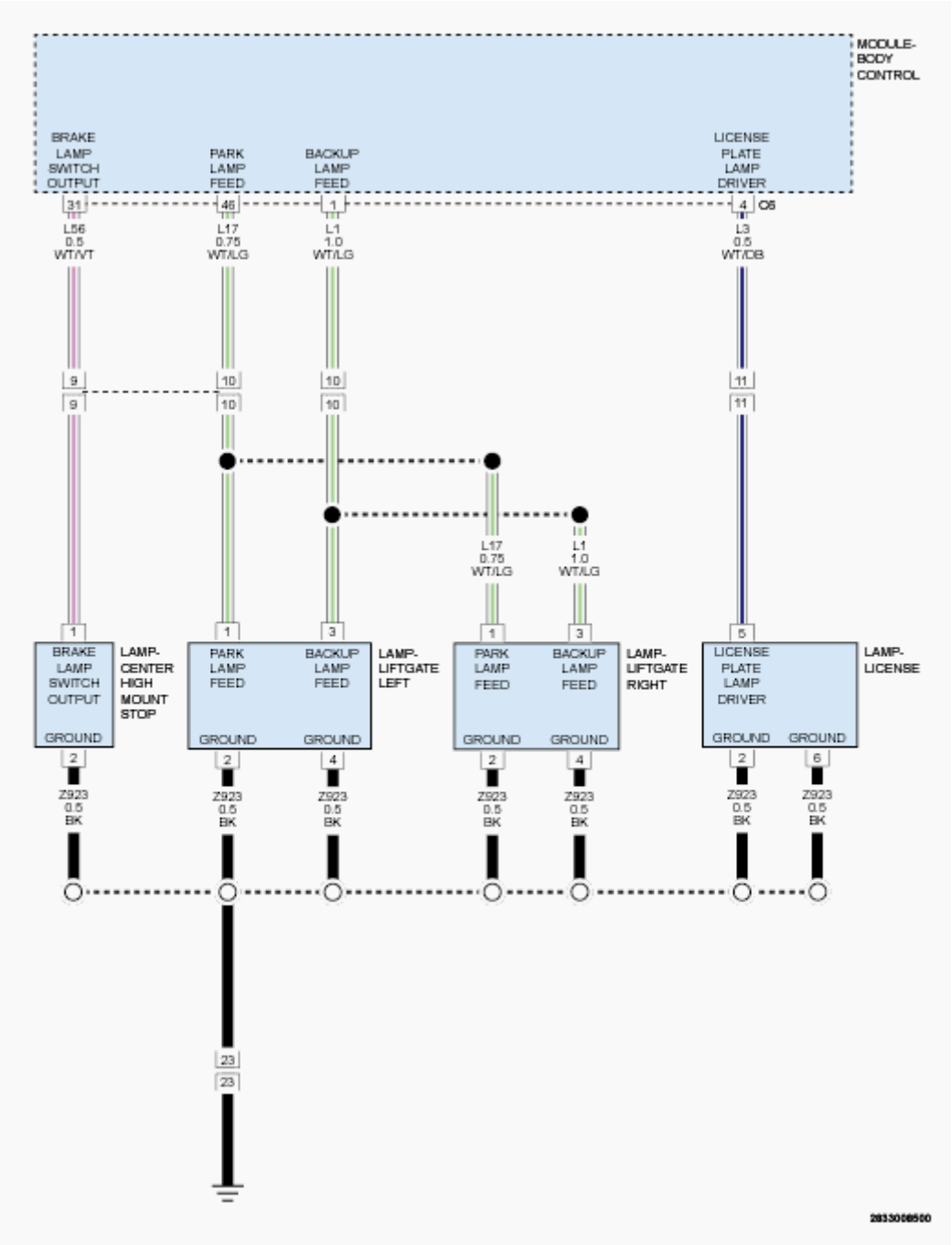

Fig. 44: Center Stop, Park, Backup & License Plate Lights Circuit Diagram
Courtesy of CHRYSLER GROUP, LLC

THEORY OF OPERATION

The Body Control Module (BCM) receives a hardwired brake signal from the Anti-lock Brake System (ABS) module indicating that the Brake Pedal is applied. When this signal is received, the BCM provides a voltage output through the Center High Mounted Stop Lamp (CHMSL) control circuit. For additional information on the Brake Lamp operation, refer to **OPERATION** .

WHEN MONITORED

With the ignition on and the Brake Pedal applied.

SET CONDITION

When the Body Control Module (BCM) detects a low condition on the (L56) CHMSL Driver circuit.

POSSIBLE CAUSES

Possible Causes
(L56) CHMSL DRIVER CIRCUIT SHORTED TO GROUND
CENTER HIGH MOUNTED STOP LAMP (CHMSL)
BODY CONTROL MODULE (BCM)

DIAGNOSTIC TEST

1. **CHECK FOR AN ACTIVE DTC**
    1. Turn the ignition on.
    2. Apply the Brake Pedal.
    3. With the scan tool, read DTCs.

    Does the scan tool display this DTC as active?

    Yes

    - Go To 2

    No

    - Test complete. The condition or conditions that originally set this DTC are not present at this time. Using the wiring diagrams as a guide, check all related splices and connectors for signs of water intrusion, corrosion, pushed out or bent terminals and correct pin tension.
    - Perform the BODY VERIFICATION TEST. Refer to **STANDARD PROCEDURE** .
2. **ATTEMPT TO SET THE OPPOSITE DTC**
    1. Turn the ignition off.
    2. Disconnect the Center High Mounted Stop Lamp harness connector.
    3. Turn the ignition on.
    4. Apply the Brake Pedal.
    5. With the scan tool, read DTCs.

    Does the scan tool display DTC: B16B7-18-CENTER STOP LAMP CONTROL - UNDER CURRENT?

Yes

- Replace the Center High Mounted Stop Lamp in accordance with the Service Information. Refer to **LAMP, CENTER HIGH MOUNTED STOP, REMOVAL** .
- Perform the BODY VERIFICATION TEST. Refer to **STANDARD PROCEDURE** .

No

- Go To 3

3. **CHECK THE (L56) CHMSL DRIVER CIRCUIT FOR A SHORT TO GROUND**
   1. Turn the ignition off.
   2. Disconnect the BCM C6 harness connector.
   3. Measure the resistance between ground and the (L56) CHMSL Driver circuit.

   Is the resistance above 10K Ohms?

   Yes

   - Replace the BCM in accordance with the Service Information. Refer to **MODULE, BODY CONTROL, REMOVAL** .
   - Perform the BODY VERIFICATION TEST. Refer to **STANDARD PROCEDURE** .

   No

   - Repair the short to ground in the (L56) CHMSL Driver circuit.
   - Perform the BODY VERIFICATION TEST. Refer to **STANDARD PROCEDURE** .

B16BB-12-TRAILER STOP LAMP CONTROL - CIRCUIT SHORT TO BATTERY

For a complete wiring diagram, **refer to appropriate SYSTEM WIRING DIAGRAMS article** .

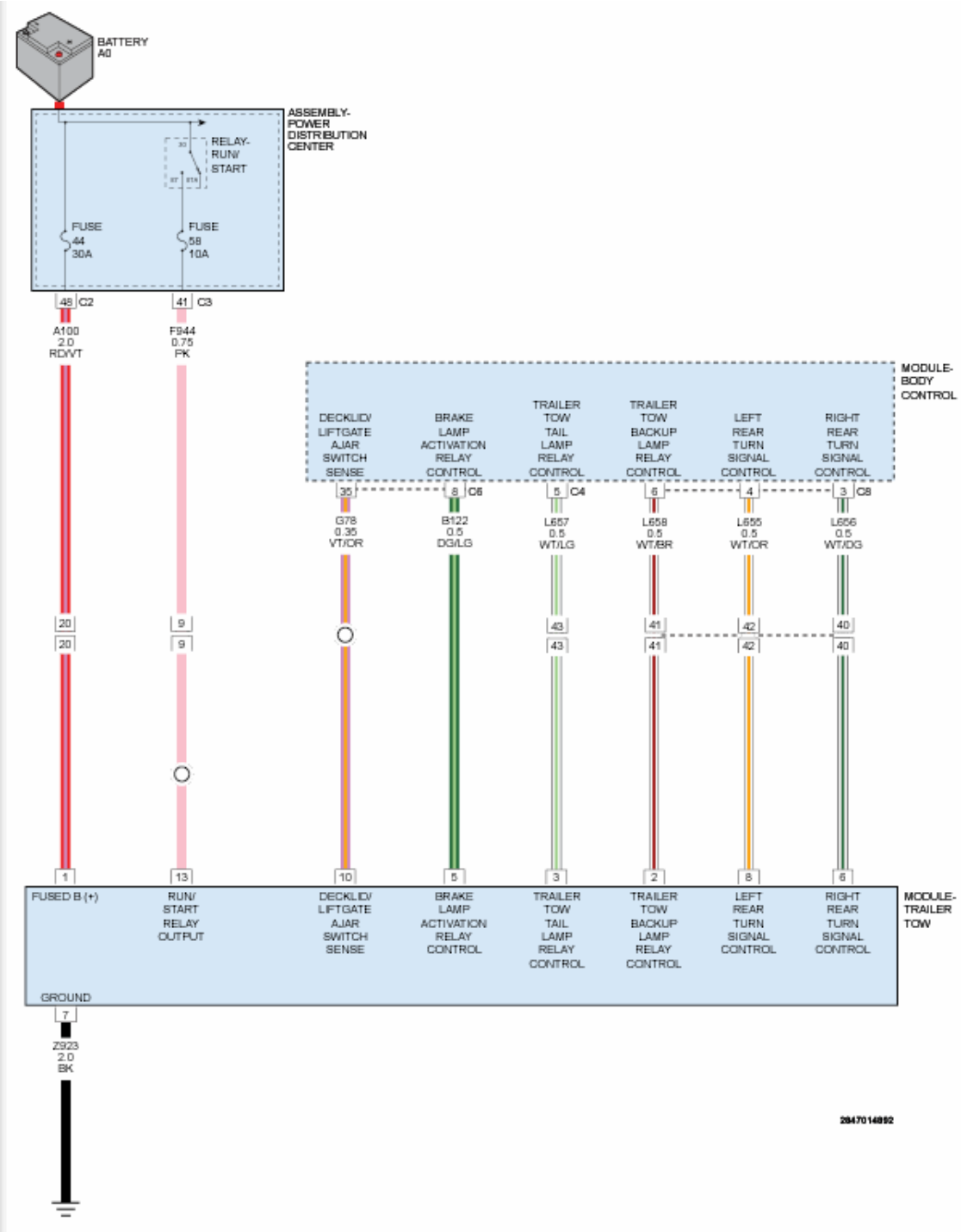

Fig. 45: Trailer Tow Module Circuit Diagram
Courtesy of CHRYSLER GROUP, LLC

WHEN MONITORED

With the ignition on, turn signal active.

SET CONDITION

The Body Control Module (BCM) detects a short to voltage on the Trailer Stop Lamp Control circuit.

POSSIBLE CAUSES

Possible Causes
TRAILER STOP LAMP CONTROL CIRCUIT SHORTED TO VOLTAGE
BODY CONTROL MODULE (BCM)

DIAGNOSTIC TEST

1. **VERIFY THE DTC IS ACTIVE**
   1. Turn the ignition on.
   2. With the scan tool, read DTCs.

      Does the scan tool display this DTC as active?

      Yes

      - Go To 2

      No

      - Test complete. The condition or conditions that originally set this DTC are not present at this time. Using the wiring diagrams as a guide, check all related splices and connectors for signs of water intrusion, corrosion, pushed out or bent terminals and correct pin tension.
      - Perform the BODY VERIFICATION TEST. Refer to **STANDARD PROCEDURE** .
2. **CHECK THE (B122) TRAILER STOP LAMP CONTROL CIRCUIT FOR A SHORT TO VOLTAGE IN THE HARNESS**
   1. Turn the ignition off.
   2. Disconnect the BCM C6 harness connector.
   3. Turn the ignition on.
   4. Measure the voltage between ground and the (B122) Trailer Stop Lamp Control circuit at the BCM C6 harness connector.

      Is there any voltage present?

      Yes

      - Using the wiring diagrams as a guide, repair the short to voltage in the (B122) Trailer Stop Lamp Control circuit.
      - Perform the BODY VERIFICATION TEST. Refer to **STANDARD PROCEDURE** .

No

- Go To 3

3. **INSPECT RELATED WIRING AND CHECK FOR TSBs**
   1. Turn the ignition off.
   2. Using the wiring diagram/schematic as a guide, inspect the wiring and connectors between the PDC and the BCM.
   3. Look for any chafed, pierced, pinched, or partially broken wires.
   4. Look for broken, bent, pushed out or corroded terminals.
   5. Perform any Technical Service Bulletins that may apply.

   Were any problems found?

   Yes

   - Repair as necessary.
   - Perform the BODY VERIFICATION TEST. Refer to **STANDARD PROCEDURE** .

   No

   - Replace the BCM in accordance with the Service Information. Refer to **MODULE, BODY CONTROL, REMOVAL** .
   - Perform the BODY VERIFICATION TEST. Refer to **STANDARD PROCEDURE** .

B16BB-14-TRAILER STOP LAMP CONTROL - CIRCUIT SHORT TO GROUND OR OPEN

For a complete wiring diagram, **refer to appropriate SYSTEM WIRING DIAGRAMS article** .

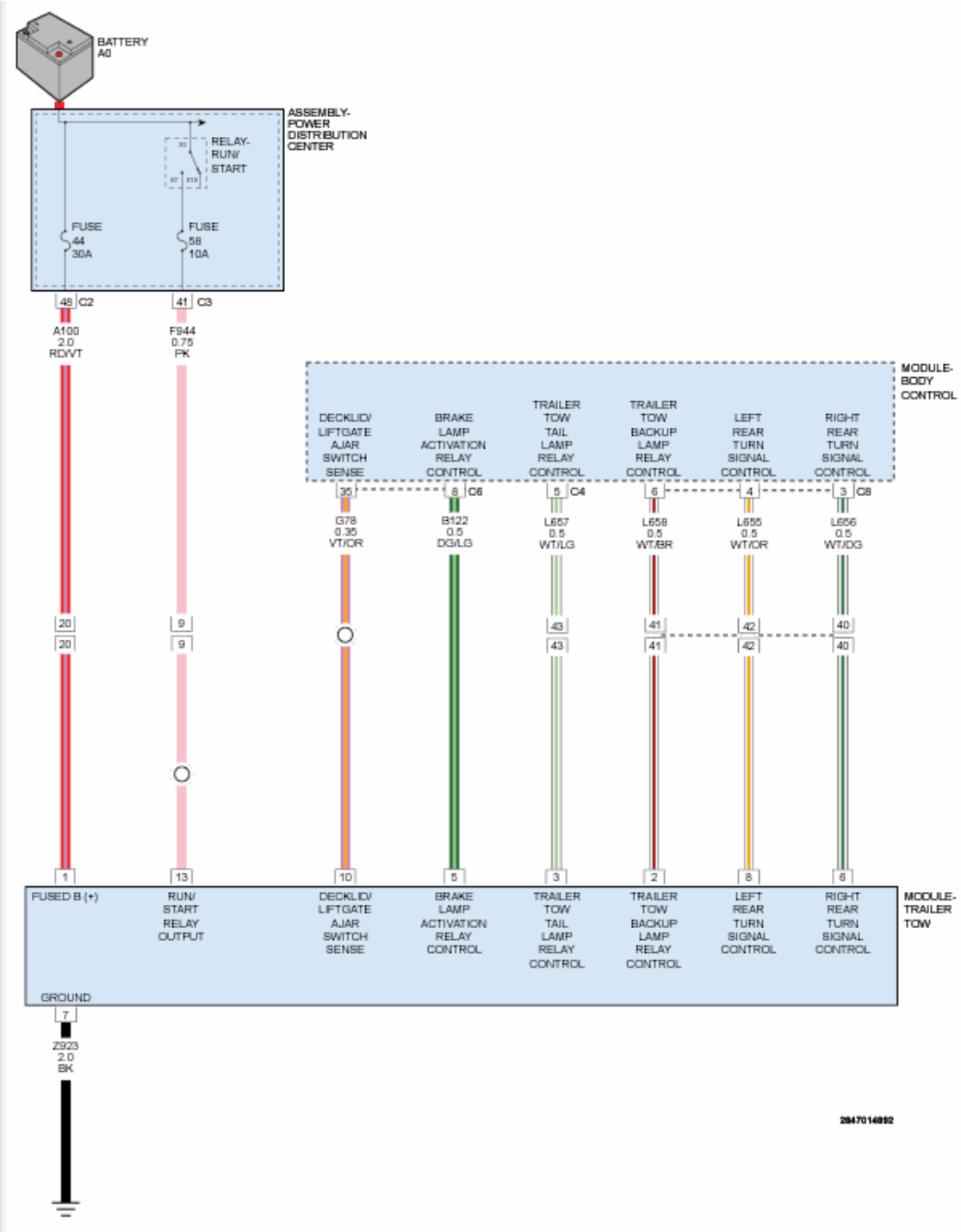

Fig. 46: Trailer Tow Module Circuit Diagram
Courtesy of CHRYSLER GROUP, LLC

WHEN MONITORED

With the ignition on.

With the stop lamps inactive.

SET CONDITION

If the Body Control Module (BCM) detects less than expected voltage on the (B122) Trailer Tow Stop Lamp Relay Control circuit.

POSSIBLE CAUSES

Possible Causes
(B122) TRAILER TOW STOP LAMP RELAY CONTROL CIRCUIT OPEN
(B122) TRAILER TOW STOP LAMP RELAY CONTROL CIRCUIT SHORTED TO GROUND
STOP LAMP TRAILER TOW RELAY
BODY CONTROL MODULE (BCM)

DIAGNOSTIC TEST

1. **VERIFY THE DTC IS ACTIVE**
    1. Turn the ignition on.
    2. With the scan tool, clear all DTCs.
    3. Wait 10 seconds.
    4. With the scan tool, read DTCs.

    Does the scan tool display this DTC as active?

    Yes

    - Go To 2

    No

    - Test complete. The condition or conditions that originally set this DTC are not present at this time. Using the wiring diagrams as a guide, check all related splices and connectors for signs of water intrusion, corrosion, pushed out or bent terminals and correct pin tension.
    - Perform the BODY VERIFICATION TEST. Refer to **STANDARD PROCEDURE** .
2. **CHECK THE STOP LAMP TRAILER TOW RELAY**
    1. Turn the ignition off.
    2. Remove the Stop Lamp Trailer Tow Relay and substitute it with a known good relay.
    3. Turn the ignition on and wait 10 seconds.
    4. With the scan tool, read DTCs.

    Is the status Active for this DTC?

Yes

- Go To 3

No

- Replace the Stop Lamp Trailer Tow Relay.
- Perform the BODY VERIFICATION TEST. Refer to **STANDARD PROCEDURE** .

3. **CHECK THE (B122) TRAILER TOW STOP LAMP RELAY CONTROL CIRCUIT FOR A SHORT TO GROUND**
   1. Turn the ignition off.
   2. Remove the Stop Lamp Trailer Tow Relay.
   3. Disconnect the BCM C6 harness connector.
   4. Measure the resistance between ground and the (B122) Trailer Tow Stop Lamp Relay Control circuit.

      Is the resistance above 10k Ohms?

      Yes

      - Go To 4

      No

      - Repair the short to ground in the (B122) Trailer Tow Stop Lamp Relay Control circuit.
      - Perform the BODY VERIFICATION TEST. Refer to **STANDARD PROCEDURE** .
4. **CHECK THE (B122) TRAILER TOW STOP LAMP RELAY CONTROL CIRCUIT FOR AN OPEN**
   1. Measure the resistance of the (B122) Trailer Tow Stop Lamp Relay Control circuit between the Stop Lamp Trailer Tow Relay harness connector and the BCM C6 harness connector.

      Is the resistance below 5.0 Ohms?

      Yes

      - Go To 5

      No

      - Repair the open in the (B122) Trailer Tow Stop Lamp Relay Control circuit.
      - Perform the BODY VERIFICATION TEST. Refer to **STANDARD PROCEDURE** .
5. **INSPECT RELATED WIRING AND CHECK FOR TSBs**
   1. Turn the ignition off.

2. Using the wiring diagram/schematic as a guide, inspect the wiring and connectors between the Stop Lamp Trailer Tow Relay and the BCM.
3. Look for any chafed, pierced, pinched, or partially broken wires.
4. Look for broken, bent, pushed out or corroded terminals.
5. Perform any Technical Service Bulletins that may apply.

   Were any problems found?

   Yes

   - Repair as necessary.
   - Perform the BODY VERIFICATION TEST. Refer to **STANDARD PROCEDURE** .

   No

   - Replace the BCM in accordance with the Service Information. Refer to **MODULE, BODY CONTROL, REMOVAL** .
   - Perform the BODY VERIFICATION TEST. Refer to **STANDARD PROCEDURE** .

B16CF-09-LEFT DRL LAMP CONTROL - COMPONENT FAILURES

For a complete wiring diagram, **refer to appropriate SYSTEM WIRING DIAGRAMS article** .

WHEN MONITORED

With the ignition on.

SET CONDITION

When the Body Control Module (BCM) detects an outage in the Left Daytime Running Lamp (DRL).

POSSIBLE CAUSES

Possible Causes
LEFT DAYTIME RUNNING LAMP (DRL)

DIAGNOSTIC TEST

CHECK FOR AN ACTIVE DTC

1. Turn the ignition on.
2. With the scan tool, read DTCs.

   Does the scan tool display this DTC as active?

Yes

- Replace the Left Daytime Running Lamp in accordance with the Service Information.

No

- Test complete. The condition or conditions that originally set this DTC are not present at this time. Using the wiring diagrams as a guide, check all related splices and connectors for signs of water intrusion, corrosion, pushed out or bent terminals, and correct pin tension.
- Perform the BODY VERIFICATION TEST. Refer to **STANDARD PROCEDURE** .

B16CF-19-LEFT DRL LAMP CONTROL - OVER CURRENT

For a complete wiring diagram, **refer to appropriate SYSTEM WIRING DIAGRAMS article** .

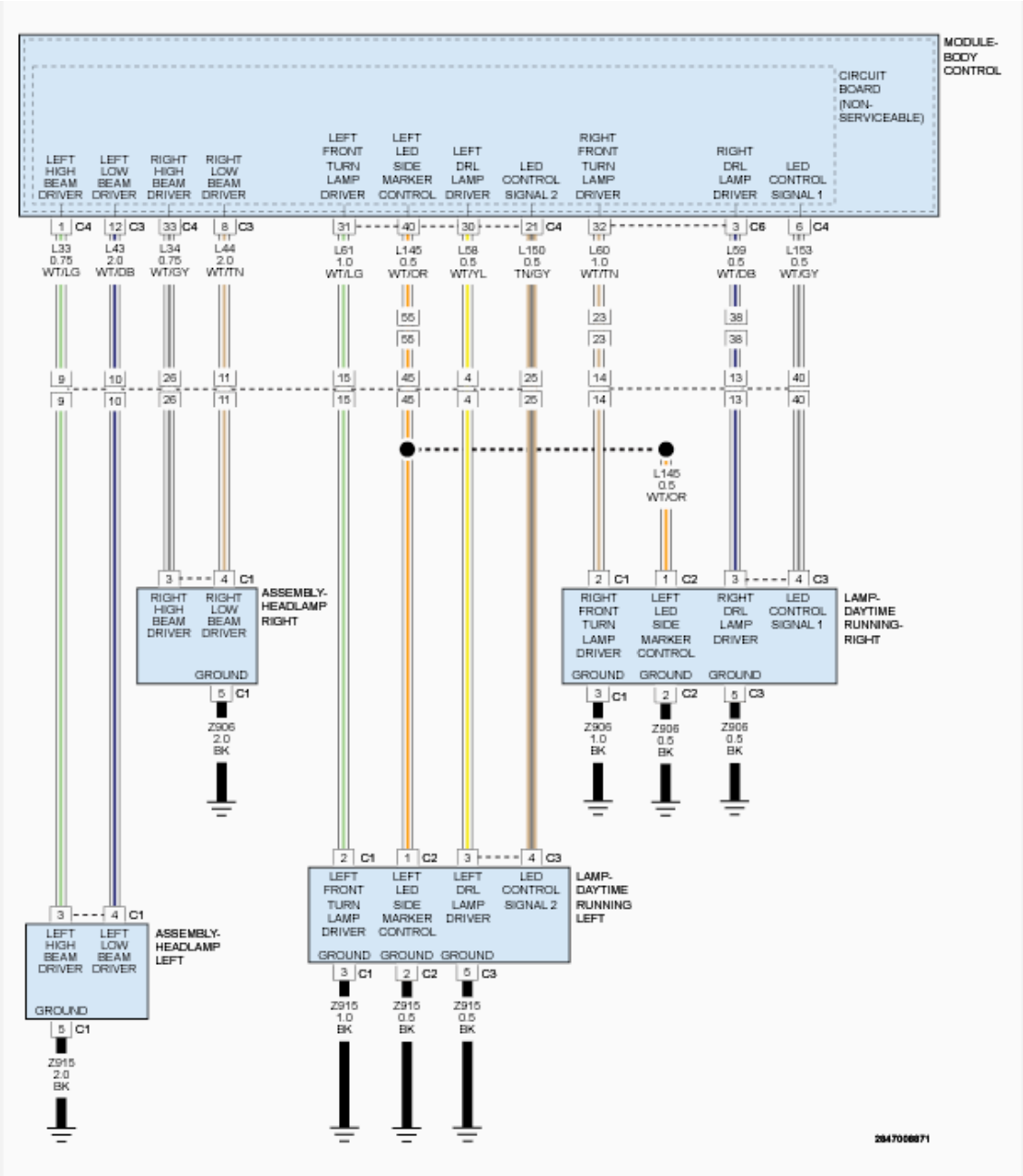

Fig. 47: Headlamp & Daytime Running Lamp Circuit Diagram
Courtesy of CHRYSLER GROUP, LLC

WHEN MONITORED

With the DRL active.

SET CONDITION

When the Body Control Module (BCM) detects a low condition on the Left Daytime Running Lamp Driver circuit.

POSSIBLE CAUSES

Possible Causes
(L58) LEFT DAYTIME RUNNING LAMP DRIVER CIRCUIT SHORTED TO GROUND LEFT DAYTIME RUNNING LAMP BODY CONTROL MODULE (BCM)

DIAGNOSTIC TEST

1. **CHECK FOR AN ACTIVE DIAGNOSTIC TROUBLE CODE (DTC)**
    1. Turn the ignition on.
    2. With the scan tool, read DTCs.

    Does the scan tool display this DTC as active?

    Yes

    - Go To 2

    No

    - Test complete. The condition or conditions that originally set this DTC are not present at this time. Using the wiring diagrams as a guide, check all related splices and connectors for signs of water intrusion, corrosion, pushed out or bent terminals and correct pin tension.
    - Perform the BODY VERIFICATION TEST. Refer to **STANDARD PROCEDURE** .
2. **CHECK THE LEFT DAYTIME RUNNING LAMP**
    1. Turn the ignition off.
    2. Disconnect the Left Daytime Running Lamp C3 harness connector.
    3. With the scan tool, read DTCs.

    Does the scan tool display this DTC as active?

    Yes

    - Go To 3

    No

    - Replace the Left Daytime Running Lamp in accordance with the Service Information. Refer to **UNIT, FRONT LAMP, REMOVAL** .
    - Perform the BODY VERIFICATION TEST. Refer to **STANDARD PROCEDURE** .
3. **CHECK THE (L58) LEFT DAYTIME RUNNING LAMP DRIVER CIRCUIT FOR A SHORT TO GROUND**

1. Turn the ignition off.
2. Disconnect the BCM C4 harness connector.
3. Measure the resistance between ground and the (L58) Left Daytime Running Lamp Driver circuit.

   Is the resistance above 10K Ohms?

   Yes

   - Replace the Body Control Module (BCM) in accordance with the Service Information. Refer to **MODULE, BODY CONTROL, REMOVAL** .
   - Perform the BODY VERIFICATION TEST. Refer to **STANDARD PROCEDURE** .

   No

   - Repair the short to ground in the (L58) Left Daytime Running Lamp Driver circuit.
   - Perform the BODY VERIFICATION TEST. Refer to **STANDARD PROCEDURE** .

B16CF-19-LEFT DRL LAMP CONTROL - OVER CURRENT - EXPORT

For a complete wiring diagram, **refer to appropriate SYSTEM WIRING DIAGRAMS article** .

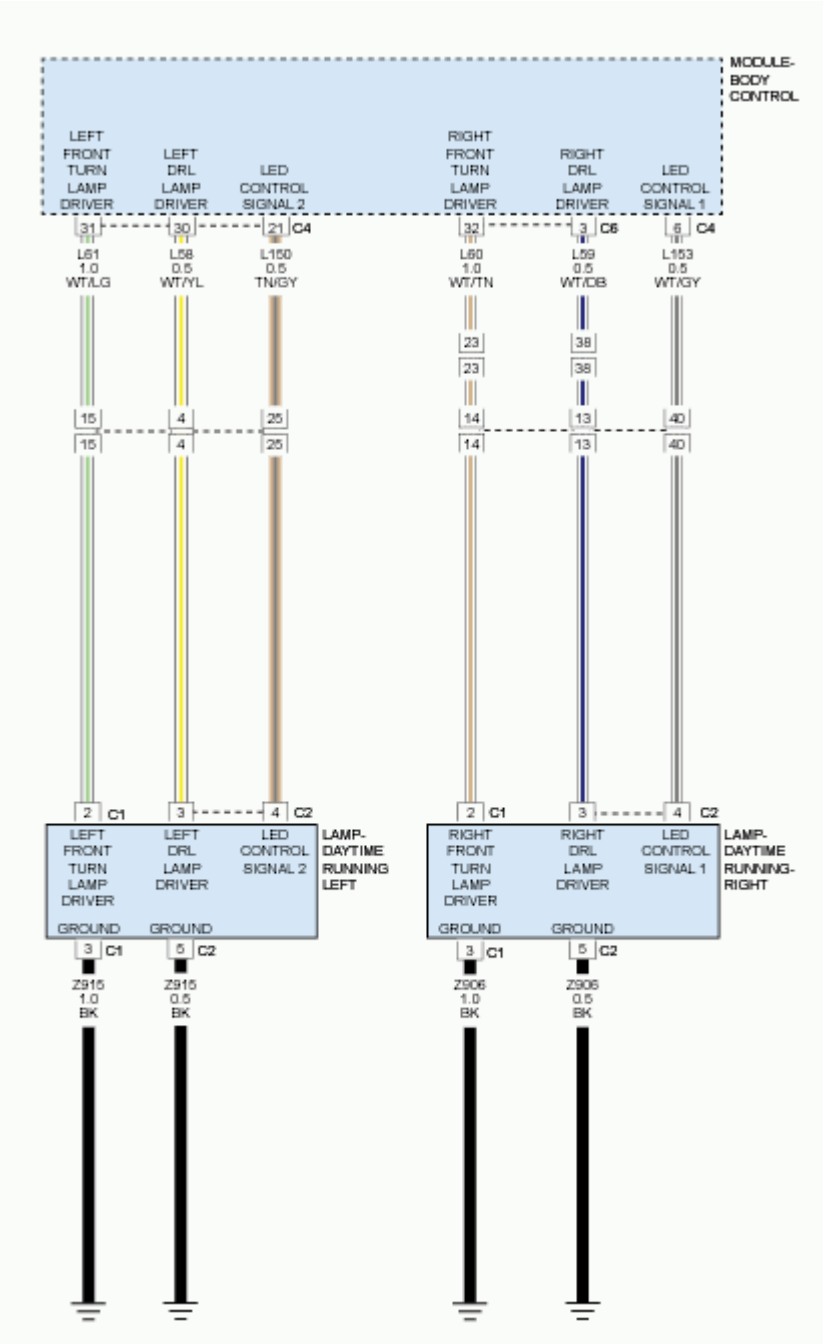

Fig. 48: Daytime Running Lamp Circuit Diagram
Courtesy of CHRYSLER GROUP, LLC

WHEN MONITORED

With the DRL active.

SET CONDITION

When the Body Control Module (BCM) detects a low condition on the Left Daytime Running Lamp Driver

circuit.

POSSIBLE CAUSES

Possible Causes
(L58) LEFT DAYTIME RUNNING LAMP DRIVER CIRCUIT SHORTED TO GROUND LEFT DAYTIME RUNNING LAMP BODY CONTROL MODULE (BCM)

DIAGNOSTIC TEST

1. **CHECK FOR AN ACTIVE DIAGNOSTIC TROUBLE CODE (DTC)**
   1. Turn the ignition on.
   2. With the scan tool, read DTCs.

      Does the scan tool display this DTC as active?

      Yes

      - Go To 2

      No

      - Test complete. The condition or conditions that originally set this DTC are not present at this time. Using the wiring diagrams as a guide, check all related splices and connectors for signs of water intrusion, corrosion, pushed out or bent terminals and correct pin tension.
      - Perform the BODY VERIFICATION TEST. Refer to **STANDARD PROCEDURE** .
2. **CHECK THE LEFT DAYTIME RUNNING LAMP**
   1. Turn the ignition off.
   2. Disconnect the Left Daytime Running Lamp C2 harness connector.
   3. With the scan tool, read DTCs.

      Does the scan tool display this DTC as active?

      Yes

      - Go To 3

      No

      - Replace the Left Daytime Running Lamp in accordance with the Service Information. Refer to **UNIT, FRONT LAMP, REMOVAL** .
      - Perform the BODY VERIFICATION TEST. Refer to **STANDARD PROCEDURE** .
3. **CHECK THE (L58) LEFT DAYTIME RUNNING LAMP DRIVER CIRCUIT FOR A SHORT TO**

GROUND

1. Turn the ignition off.
2. Disconnect the BCM C4 harness connector.
3. Measure the resistance between ground and the (L58) Left Daytime Running Lamp Driver circuit.

   Is the resistance above 10K Ohms?

   Yes

   - Replace the Body Control Module (BCM) in accordance with the Service Information. Refer to **MODULE, BODY CONTROL, REMOVAL** .
   - Perform the BODY VERIFICATION TEST. Refer to **STANDARD PROCEDURE** .

   No

   - Repair the short to ground in the (L58) Left Daytime Running Lamp Driver circuit.
   - Perform the BODY VERIFICATION TEST. Refer to **STANDARD PROCEDURE** .

B16D3-09-RIGHT DRL LAMP CONTROL - COMPONENT FAILURES

For a complete wiring diagram, **refer to appropriate SYSTEM WIRING DIAGRAMS article** .

WHEN MONITORED

With the ignition on.

SET CONDITION

When the Body Control Module (BCM) detects an outage in the Right Daytime Running Lamp (DRL).

POSSIBLE CAUSES

Possible Causes
RIGHT DAYTIME RUNNING LAMP (DRL)

DIAGNOSTIC TEST

CHECK FOR AN ACTIVE DTC

1. Turn the ignition on.
2. With the scan tool, read DTCs.

   Does the scan tool display this DTC as active?

   Yes

- Replace the Right Daytime Running Lamp in accordance with the Service Information.

No

- Test complete. The condition or conditions that originally set this DTC are not present at this time. Using the wiring diagrams as a guide, check all related splices and connectors for signs of water intrusion, corrosion, pushed out or bent terminals, and correct pin tension.
- Perform the BODY VERIFICATION TEST. Refer to **STANDARD PROCEDURE** .

B16D3-19-RIGHT DRL LAMP CONTROL - OVER CURRENT

For a complete wiring diagram, **refer to appropriate SYSTEM WIRING DIAGRAMS article** .

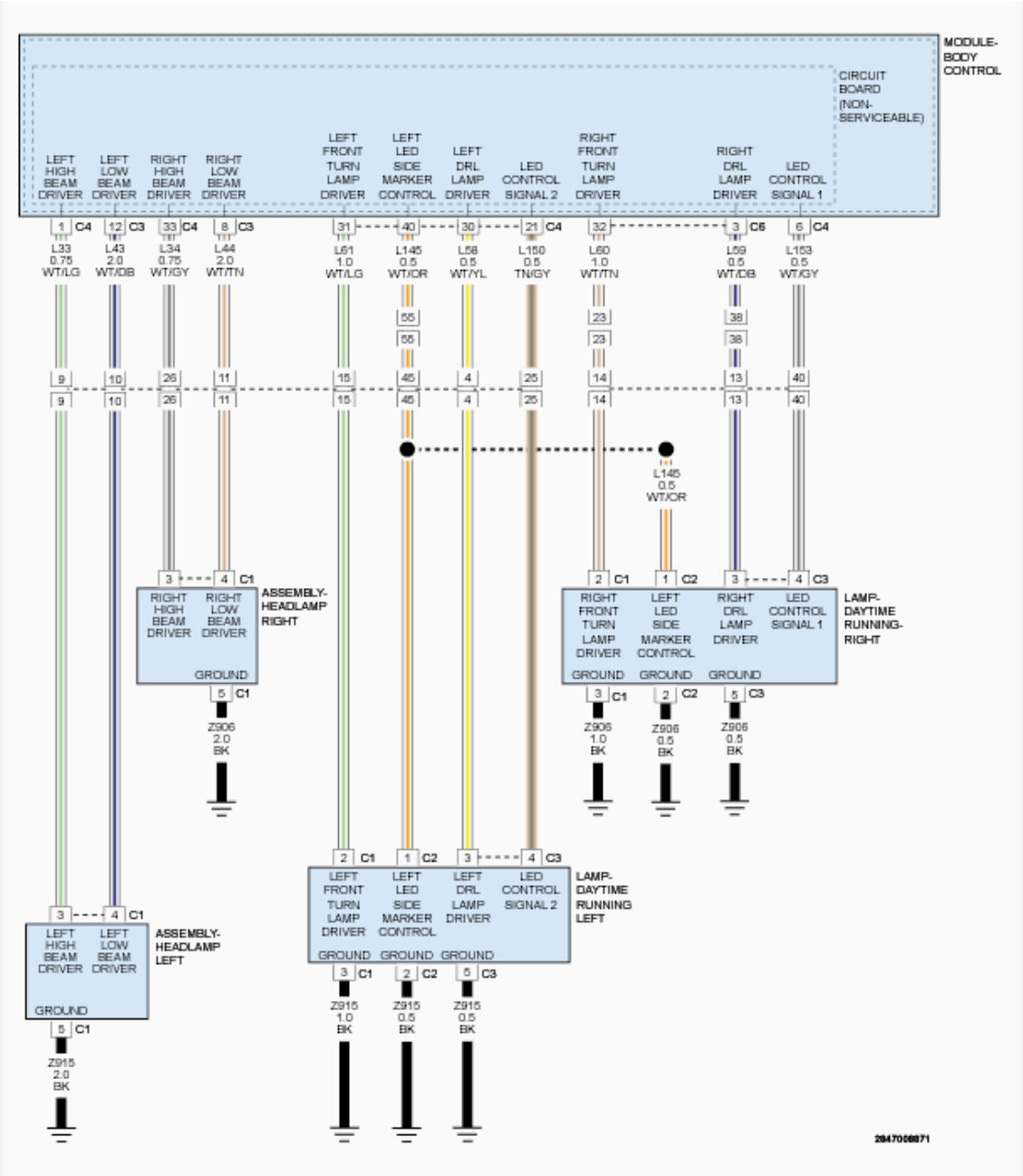

Fig. 49: Headlamp & Daytime Running Lamp Circuit Diagram
Courtesy of CHRYSLER GROUP, LLC

WHEN MONITORED

With the DRL active.

SET CONDITION

When the Body Control Module (BCM) detects a low condition on the Right Daytime Running Lamp Driver circuit.

POSSIBLE CAUSES

Possible Causes
(L59) RIGHT DAYTIME RUNNING LAMP DRIVER CIRCUIT SHORTED TO GROUND RIGHT DAYTIME RUNNING LAMP BODY CONTROL MODULE (BCM)

DIAGNOSTIC TEST

1. **CHECK FOR AN ACTIVE DIAGNOSTIC TROUBLE CODE (DTC)**
    1. Turn the ignition on.
    2. With the scan tool, read DTCs.

    Does the scan tool display this DTC as active?

    Yes

    - Go To 2

    No

    - Test complete. The condition or conditions that originally set this DTC are not present at this time. Using the wiring diagrams as a guide, check all related splices and connectors for signs of water intrusion, corrosion, pushed out or bent terminals and correct pin tension.
    - Perform the BODY VERIFICATION TEST. Refer to **STANDARD PROCEDURE** .
2. **CHECK THE RIGHT DAYTIME RUNNING LAMP**
    1. Turn the ignition off.
    2. Disconnect the Right Daytime Running Lamp C3 harness connector.
    3. With the scan tool, read DTCs.

    Does the scan tool display this DTC as active?

    Yes

    - Go To 3

    No

    - Replace the Right Daytime Running Lamp in accordance with the Service Information. Refer to **UNIT, FRONT LAMP, REMOVAL** .
    - Perform the BODY VERIFICATION TEST. Refer to **STANDARD PROCEDURE** .
3. **CHECK THE (L59) RIGHT DAYTIME RUNNING LAMP DRIVER CIRCUIT FOR A SHORT TO GROUND**

1. Turn the ignition off.
2. Disconnect the BCM C6 harness connector.
3. Measure the resistance between ground and the (L59) Right Daytime Running Lamp Driver circuit.

   Is the resistance above 10K Ohms?

   Yes

   - Replace the Body Control Module (BCM) in accordance with the Service Information. Refer to **MODULE, BODY CONTROL, REMOVAL** .
   - Perform the BODY VERIFICATION TEST. Refer to **STANDARD PROCEDURE** .

   No

   - Repair the short to ground in the (L59) Right Daytime Running Lamp Driver circuit.
   - Perform the BODY VERIFICATION TEST. Refer to **STANDARD PROCEDURE** .

B16D3-19-RIGHT DRL LAMP CONTROL - OVER CURRENT - EXPORT

For a complete wiring diagram, **refer to appropriate SYSTEM WIRING DIAGRAMS article** .

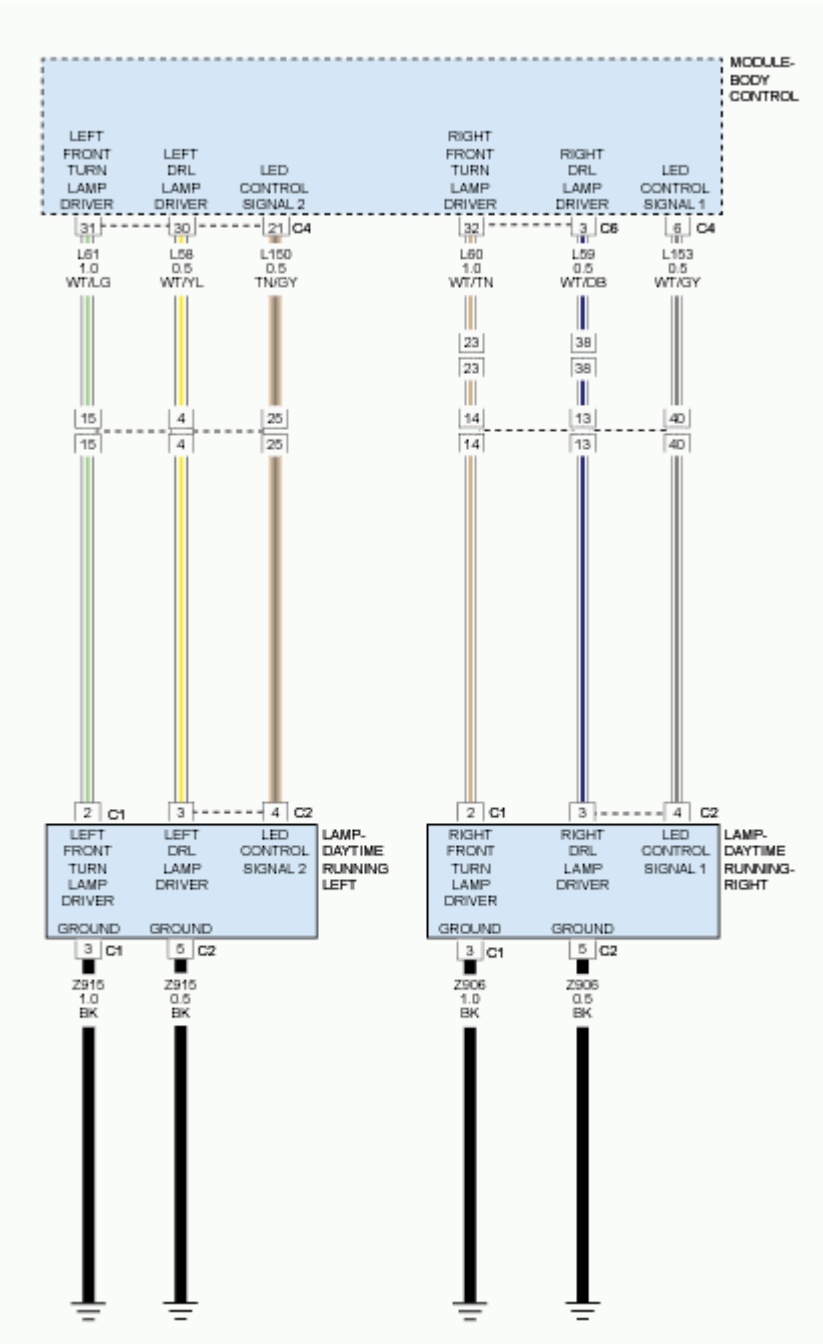

Fig. 50: Daytime Running Lamp Circuit Diagram
Courtesy of CHRYSLER GROUP, LLC

WHEN MONITORED

With the DRL active.

SET CONDITION

When the Body Control Module (BCM) detects a low condition on the Right Daytime Running Lamp Driver

circuit.

POSSIBLE CAUSES

Possible Causes
(L59) RIGHT DAYTIME RUNNING LAMP DRIVER CIRCUIT SHORTED TO GROUND RIGHT DAYTIME RUNNING LAMP BODY CONTROL MODULE (BCM)

DIAGNOSTIC TEST

1. **CHECK FOR AN ACTIVE DIAGNOSTIC TROUBLE CODE (DTC)**
    1. Turn the ignition on.
    2. With the scan tool, read DTCs.

    Does the scan tool display this DTC as active?

    Yes

    - Go To 2

    No

    - Test complete. The condition or conditions that originally set this DTC are not present at this time. Using the wiring diagrams as a guide, check all related splices and connectors for signs of water intrusion, corrosion, pushed out or bent terminals and correct pin tension.
    - Perform the BODY VERIFICATION TEST. Refer to **STANDARD PROCEDURE** .
2. **CHECK THE RIGHT DAYTIME RUNNING LAMP**
    1. Turn the ignition off.
    2. Disconnect the Right Daytime Running Lamp C2 harness connector.
    3. With the scan tool, read DTCs.

    Does the scan tool display this DTC as active?

    Yes

    - Go To 3

    No

    - Replace the Right Daytime Running Lamp in accordance with the Service Information. Refer to **UNIT, FRONT LAMP, REMOVAL** .
    - Perform the BODY VERIFICATION TEST. Refer to **STANDARD PROCEDURE** .
3. **CHECK THE (L59) RIGHT DAYTIME RUNNING LAMP DRIVER CIRCUIT FOR A SHORT**

TO GROUND

1. Turn the ignition off.
2. Disconnect the BCM C6 harness connector.
3. Measure the resistance between ground and the (L59) Right Daytime Running Lamp Driver circuit.

   Is the resistance above 10K Ohms?

   Yes

   - Replace the Body Control Module (BCM) in accordance with the Service Information. Refer to **MODULE, BODY CONTROL, REMOVAL** .
   - Perform the BODY VERIFICATION TEST. Refer to **STANDARD PROCEDURE** .

   No

   - Repair the short to ground in the (L59) Right Daytime Running Lamp Driver circuit.
   - Perform the BODY VERIFICATION TEST. Refer to **STANDARD PROCEDURE** .

B16E7-18-LICENSE PLATE LAMP CONTROL - UNDER CURRENT

For a complete wiring diagram, **refer to appropriate SYSTEM WIRING DIAGRAMS article** .

THEORY OF OPERATION

The Body Control Module (BCM) receives the input from the headlamp switch requesting lamp illumination. The BCM provides a Pulse Width Modulated (PWM) voltage output through the license plate lamp control circuit. The control circuit connects to the License Plate Lamps, which are part of the Park Lamp lighting system. A ground path for the lamps is present through the harness to the body sheet metal. For additional information on the Park Lamps operation, refer to **OPERATION** .

WHEN MONITORED

With the ignition on and the park lamps active.

SET CONDITION

When the Body Control Module (BCM) detects a high condition on the (L3) License Plate Lamp Driver circuit.

POSSIBLE CAUSES

Possible Causes
(L3) LICENSE PLATE LAMP DRIVER CIRCUIT OPEN
(L3) LICENSE PLATE LAMP DRIVER CIRCUIT SHORTED TO VOLTAGE
(Z924) GROUND CIRCUIT OPEN
LICENSE PLATE LAMP

BODY CONTROL MODULE (BCM)

DIAGNOSTIC TEST

1. **CHECK FOR AN ACTIVE DTC**
   1. Turn the ignition on.
   2. Turn the Park Lamps on.
   3. With the scan tool, read DTCs.

   Does the scan tool display this DTC as active?

   Yes

   - Go To 2

   No

   - Test complete. The condition or conditions that originally set this DTC are not present at this time. Using the wiring diagrams as a guide, check all related splices and connectors for signs of water intrusion, corrosion, pushed out or bent terminals and correct pin tension.
   - Perform the BODY VERIFICATION TEST. Refer to **STANDARD PROCEDURE** .
2. **CHECK THE (L3) LICENSE PLATE LAMP DRIVER CIRCUIT FOR A SHORT TO VOLTAGE**
   1. Turn the Park Lamps off.
   2. Turn the ignition off.
   3. Disconnect the License Plate Lamp harness connector.
   4. Disconnect the BCM C6 harness connector.
   5. Turn the ignition on.
   6. Measure the voltage between ground and the (L3) License Plate Lamp Driver circuit.

   Is there any voltage present?

   Yes

   - Repair the short to voltage in the (L3) License Plate Lamp Driver circuit.
   - Perform the BODY VERIFICATION TEST. Refer to **STANDARD PROCEDURE** .

   No

   - Go To 3
3. **CHECK THE (L3) LICENSE PLATE LAMP DRIVER CIRCUIT FOR AN OPEN**
   1. Turn the ignition off.
   2. Measure the resistance of the (L3) License Plate Lamp Driver circuit between the License Plate

Lamp harness connector and the BCM C6 harness connector.

Is the resistance below 5.0 Ohms?

Yes

- Go To 4

No

- Repair the open in the (L3) License Plate Lamp Driver circuit.
- Perform the BODY VERIFICATION TEST. Refer to **STANDARD PROCEDURE** .

4. **CHECK THE (Z924) GROUND CIRCUIT FOR AN OPEN**
   1. Using a 12-volt test light connected to 12-volts, check the (Z924) Ground circuit.

   Does the test light illuminate brightly?

   Yes

   - Go To 5

   No

   - Repair the open in the (Z924) Ground circuit.
   - Perform the BODY VERIFICATION TEST. Refer to **STANDARD PROCEDURE** .

5. **CHECK THE BCM FOR CORRECT OPERATION**
   1. Turn the ignition off.
   2. Reconnect the BCM C6 harness connector.
   3. Connect a 12-volt test light between the (L3) License Plate Lamp Driver circuit and the (Z924) Ground circuit at the License Plate Lamp harness connector.
   4. Turn the ignition on.
   5. Turn the Park Lamps on.

   Does the test light illuminate brightly?

   Yes

   - Replace the License Plate Lamp in accordance with the Service Information. Refer to **LAMP, LICENSE PLATE, REMOVAL** .
   - Perform the BODY VERIFICATION TEST. Refer to **STANDARD PROCEDURE** .

   No

- Replace the BCM in accordance with the Service Information. Refer to **MODULE, BODY CONTROL, REMOVAL** .
- Perform the BODY VERIFICATION TEST. Refer to **STANDARD PROCEDURE** .

B16E7-19-LICENSE PLATE LAMP CONTROL - OVER CURRENT

For a complete wiring diagram, **refer to appropriate SYSTEM WIRING DIAGRAMS article** .

THEORY OF OPERATION

The Body Control Module (BCM) receives the input from the headlamp switch requesting lamp illumination. The BCM provides a Pulse Width Modulated (PWM) voltage output through the license plate lamp control circuit. The control circuit connects to the License Plate Lamps, which are part of the Park Lamp lighting system. A ground path for the lamps is present through the harness to the body sheet metal. For additional information on the Park Lamps operation, refer to **OPERATION** .

WHEN MONITORED

With the ignition on and the park lamps active.

SET CONDITION

When the Body Control Module (BCM) detects a low condition on the (L3) License Plate Lamp Driver circuit.

POSSIBLE CAUSES

Possible Causes
(L3) LICENSE PLATE LAMP DRIVER CIRCUIT SHORTED TO GROUND
LICENSE PLATE LAMP
BODY CONTROL MODULE (BCM)

DIAGNOSTIC TEST

1. **CHECK FOR AN ACTIVE DTC**
    1. Turn the ignition on.
    2. Turn the Park Lamps on.
    3. With the scan tool, read DTCs.

    Does the scan tool display this DTC as active?

    Yes

    - Go To 2

    No

- Test complete. The condition or conditions that originally set this DTC are not present at this time. Using the wiring diagrams as a guide, check all related splices and connectors for signs of water intrusion, corrosion, pushed out or bent terminals and correct pin tension.
- Perform the BODY VERIFICATION TEST. Refer to **STANDARD PROCEDURE** .

2. **ATTEMPT TO SET THE OPPOSITE DTC**
   1. Turn the Park Lamps off.
   2. Turn the ignition off.
   3. Disconnect the License Plate Lamp harness connector.
   4. Turn the ignition on.
   5. Turn the Park Lamps on.
   6. With the scan tool, read DTCs.

   Does the scan tool display DTC: B16E7-18-LICENSE PLATE LAMP CONTROL- UNDER CURRENT?

   Yes

   - Replace the License Plate Lamp in accordance with the Service Information. Refer to **LAMP, LICENSE PLATE, REMOVAL** .
   - Perform the BODY VERIFICATION TEST. Refer to **STANDARD PROCEDURE** .

   No

   - Go To 3

3. **CHECK THE (L3) LICENSE PLATE LAMP DRIVER CIRCUIT FOR A SHORT TO GROUND**
   1. Turn the ignition off.
   2. Disconnect the BCM C6 harness connector.
   3. Measure the resistance between ground and the (L3) License Plate Lamp Driver circuit.

   Is the resistance above 10K Ohms?

   Yes

   - Replace the BCM in accordance with the Service Information. Refer to **MODULE, BODY CONTROL, REMOVAL** .
   - Perform the BODY VERIFICATION TEST. Refer to **STANDARD PROCEDURE** .

   No

   - Repair the short to ground in the (L3) License Plate Lamp Driver circuit.
   - Perform the BODY VERIFICATION TEST. Refer to **STANDARD PROCEDURE** .

B1751-12-COURTESY LAMP CONTROL - CIRCUIT SHORT TO BATTERY

For a complete wiring diagram, **refer to appropriate SYSTEM WIRING DIAGRAMS article** .

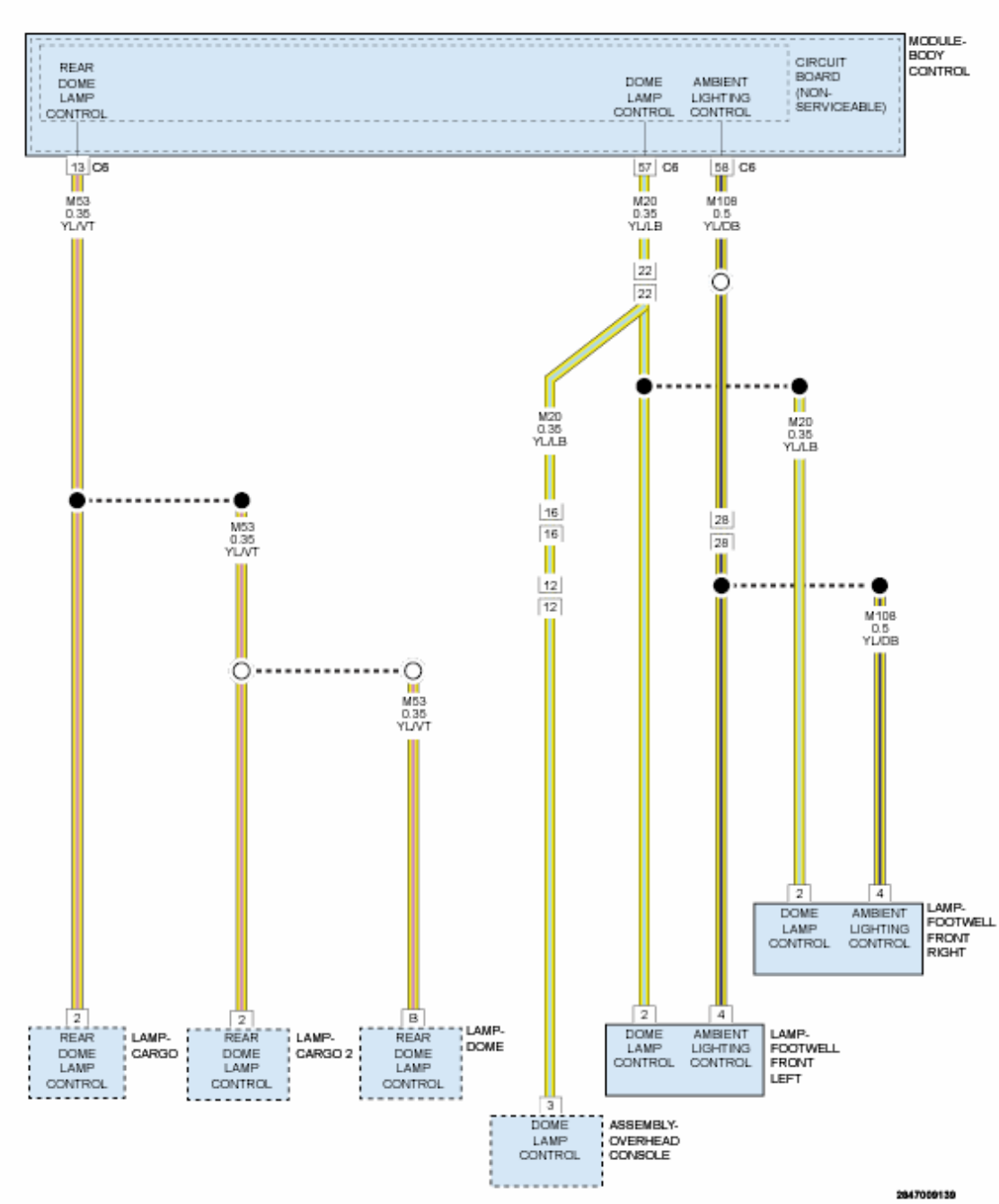

Fig. 51: Dome Lamp Control Circuit Diagram
Courtesy of CHRYSLER GROUP, LLC

WHEN MONITORED

With the ignition on and the Courtesy Lamps on.

SET CONDITION

This DTC will set when the Body Control Module (BCM) detects a short to voltage on the Ambient Lighting Control circuit.

POSSIBLE CAUSES

Possible Causes
AMBIENT LIGHTING CONTROL CIRCUIT SHORTED TO VOLTAGE BODY CONTROL MODULE (BCM)

DIAGNOSTIC TEST

1. **CHECK FOR AN ACTIVE DTC**
    1. Turn the ignition on.
    2. With the scan tool, read DTCs.

    Does the scan tool display this DTC as active?

    Yes

    - Go To 2

    No

    - Test complete. The condition or conditions that originally set this DTC are not present at this time. Using the wiring diagrams as a guide, check all related splices and connectors for signs of water intrusion, corrosion, pushed out or bent terminals and correct pin tension.
    - Perform the BODY VERIFICATION TEST. Refer to **STANDARD PROCEDURE** .
2. **CHECK THE (M108) AMBIENT LIGHTING CONTROL FOR A SHORT TO VOLTAGE**
    1. Turn the ignition off.
    2. Disconnect the BCM C6 harness connector.
    3. Disconnect the Left and Right Front Footwell Lamp harness connectors.
    4. Measure the voltage of the (M108) Ambient Lighting Control circuit.

    Is the voltage above 5.0 volts?

    Yes

    - Repair the (M108) Ambient Lighting Control circuit for a short to voltage.
    - Perform the BODY VERIFICATION TEST. Refer to **STANDARD PROCEDURE** .

No

- Replace the Body Control Module in accordance with the Service Information. Refer to **MODULE, BODY CONTROL, REMOVAL** .
- Perform the BODY VERIFICATION TEST. Refer to **STANDARD PROCEDURE** .

B1783-18-STOP LAMP CONTROL - UNDER CURRENT

For a complete wiring diagram, **refer to appropriate SYSTEM WIRING DIAGRAMS article** .

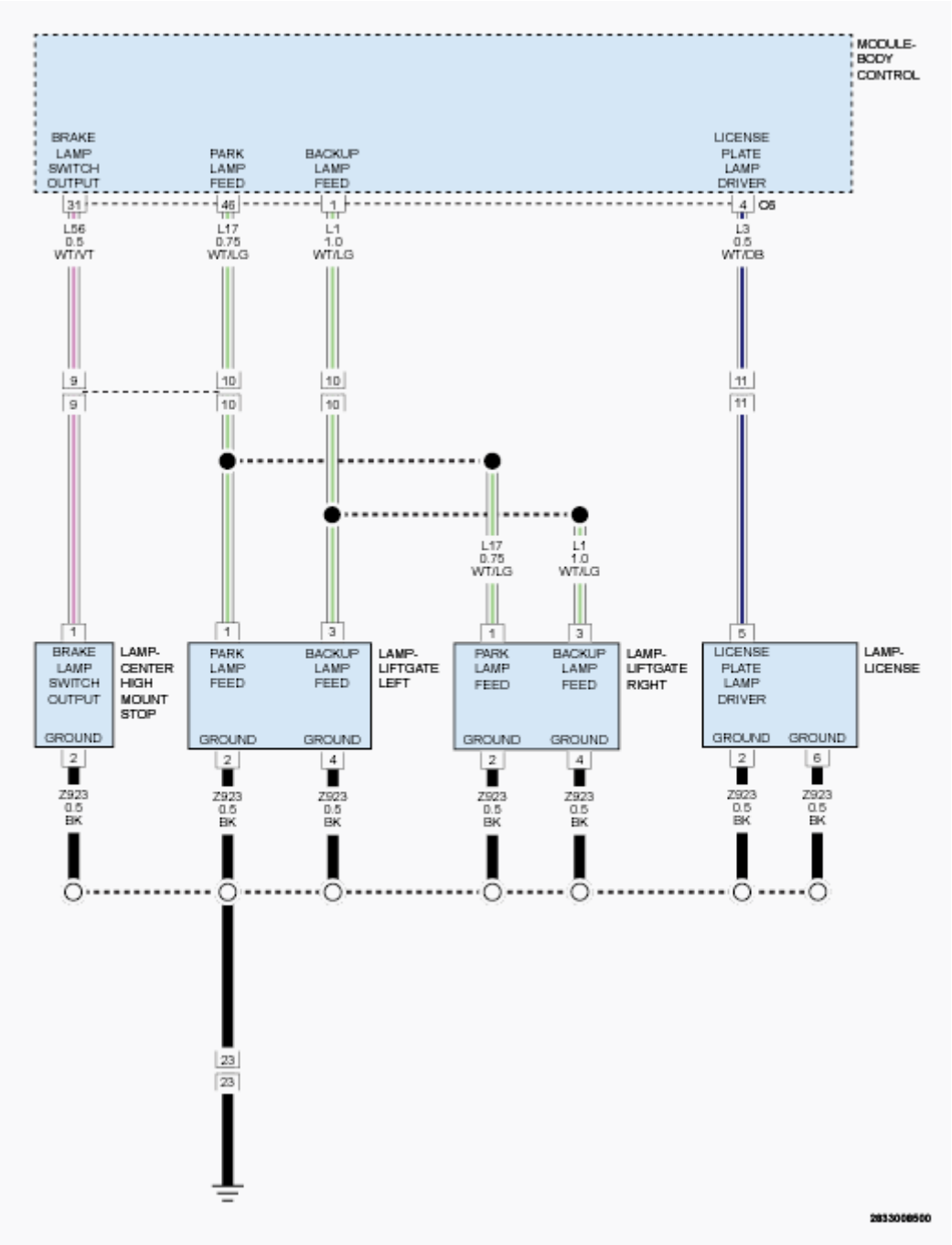

Fig. 52: Center Stop, Park, Backup & License Plate Lights Circuit Diagram
Courtesy of CHRYSLER GROUP, LLC

THEORY OF OPERATION

The Body Control Module (BCM) receives the input from the headlamp switch requesting park lamp illumination. The BCM provides a Pulse Width Modulated (PWM) voltage to the Park Lamps. A ground path for the lamps is present through the harness to the body sheet metal. For additional information on the Park Lamps operation, refer to **OPERATION** .

WHEN MONITORED

With the park lamps active.

SET CONDITION

When the Body Control Module (BCM) detects a short to battery or an open on the (L17) Park Lamp Driver circuit.

POSSIBLE CAUSES

Possible Causes
(L17) PARK LAMP DRIVER CIRCUIT SHORTED TO BATTERY
(L17) PARK LAMP DRIVER CIRCUIT OPEN
(Z923) GROUND CIRCUIT OPEN
LEFT LIFTGATE PARK LAMP
RIGHT LIFTGATE PARK LAMP
BODY CONTROL MODULE (BCM)

DIAGNOSTIC TEST

1. **CHECK FOR AN ACTIVE DTC**
    1. Turn the ignition on.
    2. Turn the park lamps on.
    3. With the scan tool, read DTCs.

    Does the scan tool display this DTC as active?

    Yes

    - Go To 2

    No

    - Test complete. The condition or conditions that originally set this DTC are not present at this time. Using the wiring diagrams as a guide, check all related splices and connectors for signs of water intrusion, corrosion, pushed out or bent terminals and correct pin tension.
    - Perform the BODY VERIFICATION TEST. Refer to **STANDARD PROCEDURE** .
2. **CHECK THE (L17) PARK LAMP DRIVER CIRCUIT FOR A SHORT TO VOLTAGE IN THE HARNESS**
    1. Turn the ignition off.
    2. Disconnect the Left and Right Liftgate Lamp harness connectors.
    3. Disconnect the BCM C6 harness connector.
    4. Turn the ignition on.

5. Measure the voltage between ground and the (L17) Park Lamp Driver circuit.

   Is there any voltage present?

   Yes

   - Repair the short to voltage in the (L17) Park Lamp Driver circuit.
   - Perform the BODY VERIFICATION TEST. Refer to **STANDARD PROCEDURE** .

   No

   - Go To 3

3. **CHECK THE (L17) PARK LAMP DRIVER CIRCUIT FOR AN OPEN IN THE HARNESS**
   1. Turn the ignition off.
   2. Measure the resistance of the (L17) Park Lamp Driver circuit between the Left and Right Liftgate Lamp harness connectors and the BCM C6 harness connector.

      Is the resistance below 5.0 Ohms for both connections?

      Yes

      - Go To 4

      No

      - Repair the open in the (L17) Park Lamp Driver circuit.
      - Perform the BODY VERIFICATION TEST. Refer to **STANDARD PROCEDURE** .

4. **CHECK THE (Z923) GROUND CIRCUIT FOR AN OPEN IN THE HARNESS**
   1. Using a 12-volt test light connected to 12-volts, check the (Z923) Ground circuit at the Left and Right Liftgate Lamp harness connectors.

      Does the test light illuminate brightly for both connections?

      Yes

      - Go To 5

      No

      - Repair the open in the (Z923) Ground circuit.
      - Perform the BODY VERIFICATION TEST. Refer to **STANDARD PROCEDURE** .

5. **CHECK THE BCM FOR CORRECT OPERATION**
   1. Turn the ignition off.

2. Reconnect the BCM C6 harness connector.
3. Turn the ignition on.
4. Turn the park lamps on.
5. Connect a 12-volt test light between ground and the (L17) Park Lamp Driver circuit at the Left and Right Liftgate Lamp harness connectors.

   Does the test light illuminate brightly at both connections?

   Yes

   - Replace the appropriate Liftgate Park Lamp in accordance with the Service Information.
   - Perform the BODY VERIFICATION TEST. Refer to **STANDARD PROCEDURE** .

   No

   - Replace the BCM in accordance with the Service Information. Refer to **MODULE, BODY CONTROL, REMOVAL** .
   - Perform the BODY VERIFICATION TEST. Refer to **STANDARD PROCEDURE** .

B1783-19-STOP LAMP CONTROL - OVER CURRENT

For a complete wiring diagram, **refer to appropriate SYSTEM WIRING DIAGRAMS article** .

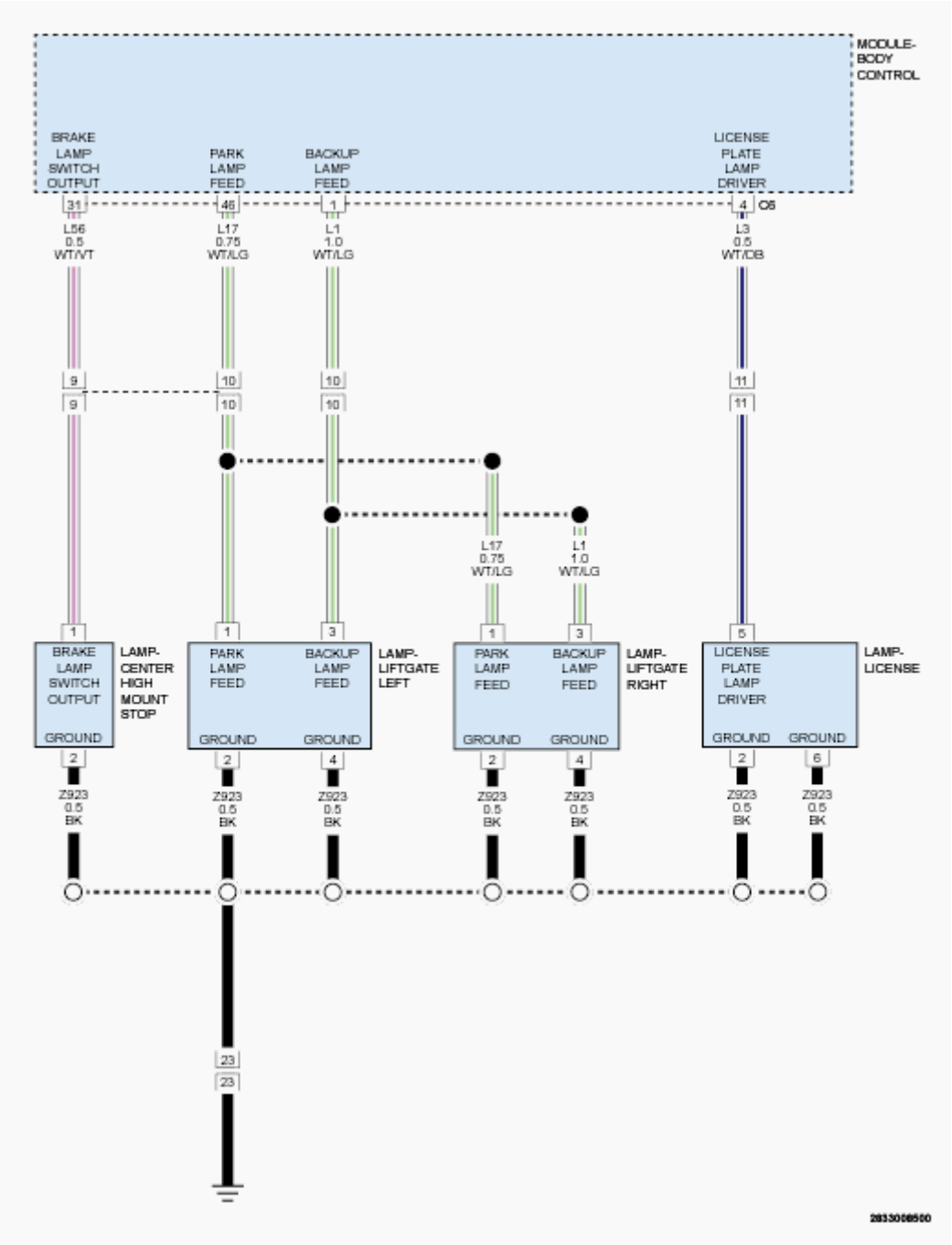

Fig. 53: Center Stop, Park, Backup & License Plate Lights Circuit Diagram
Courtesy of CHRYSLER GROUP, LLC

THEORY OF OPERATION

The Body Control Module (BCM) receives the input from the headlamp switch requesting park lamp illumination. The BCM provides a Pulse Width Modulated (PWM) voltage to the Park Lamps. A ground path for the lamps is present through the harness to the body sheet metal. For additional information on the Park Lamps operation, refer to **OPERATION** .

WHEN MONITORED

With the park lamps active.

SET CONDITION

When the Body Control Module (BCM) detects a low condition on the (L17) Park Lamp Driver circuit.

POSSIBLE CAUSES

Possible Causes
(L17) PARK LAMP DRIVER CIRCUIT SHORTED TO GROUND
LEFT LIFTGATE PARK LAMP
RIGHT LIFTGATE PARK LAMP
BODY CONTROL MODULE (BCM)

DIAGNOSTIC TEST

1. **CHECK FOR AN ACTIVE DTC**
    1. Turn the ignition on.
    2. With the scan tool, read DTCs.

    Does the scan tool display this DTC as active?

    Yes

    - Go To 2

    No

    - Test complete. The condition or conditions that originally set this DTC are not present at this time. Using the wiring diagrams as a guide, check all related splices and connectors for signs of water intrusion, corrosion, pushed out or bent terminals and correct pin tension.
    - Perform the BODY VERIFICATION TEST. Refer to **STANDARD PROCEDURE** .
2. **CHECK THE LEFT LIFTGATE STOP LAMP**
    1. Turn the ignition off.
    2. Disconnect the Left Liftgate Lamp harness connector.
    3. Turn the ignition on.
    4. With the scan tool, read DTCs.

    Does the scan tool display this DTC as active?

    Yes

- Go To 3

No

- Replace the Left Liftgate Lamp in accordance with the Service Information.
- Perform the BODY VERIFICATION TEST. Refer to **STANDARD PROCEDURE** .

3. **CHECK THE RIGHT LIFTGATE STOP LAMP**
   1. Turn the ignition off.
   2. Disconnect the Right Liftgate Lamp harness connector.
   3. Turn the ignition on.
   4. With the scan tool, read DTCs.

   Does the scan tool display this DTC as active?

   Yes

   - Go To 4

   No

   - Replace the Right Liftgate Lamp in accordance with the Service Information.
   - Perform the BODY VERIFICATION TEST. Refer to **STANDARD PROCEDURE** .
4. **CHECK THE (L17) PARK LAMP DRIVER CIRCUIT FOR A SHORT TO GROUND**
   1. Disconnect the BCM C6 harness connector.
   2. Measure the resistance between ground and the (L17) Park Lamp Driver circuit.

   Is the resistance below 10K Ohms?

   Yes

   - Repair the short to ground in the (L17) Park Lamp Driver circuit.
   - Perform the BODY VERIFICATION TEST. Refer to **STANDARD PROCEDURE** .

   No

   - Replace the BCM in accordance with the Service Information. Refer to **MODULE, BODY CONTROL, REMOVAL** .
   - Perform the BODY VERIFICATION TEST. Refer to **STANDARD PROCEDURE** .

B178E-11-HEADLAMP SWITCH INPUT CIRCUIT - SHORT TO GROUND

For a complete wiring diagram, **refer to appropriate SYSTEM WIRING DIAGRAMS article** .

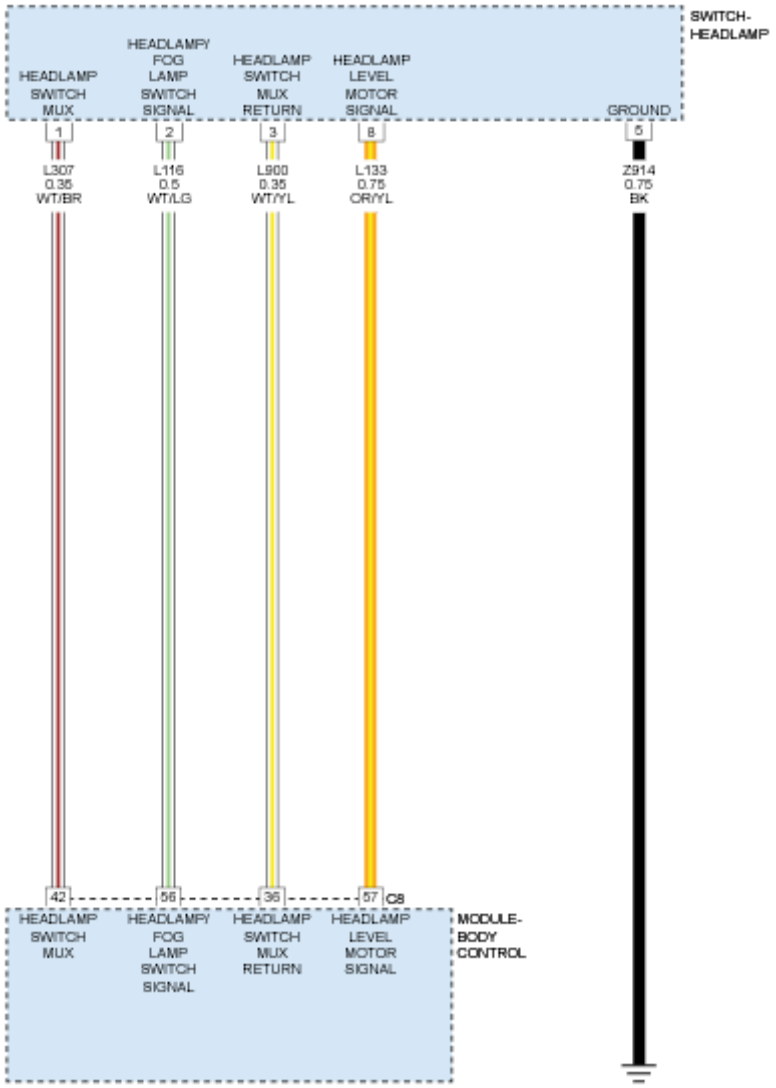

Fig. 54: Headlamp Switch Circuit Diagram
Courtesy of CHRYSLER GROUP, LLC

THEORY OF OPERATION

The Body Control Module (BCM) receives an input voltage from the headlamp switch. The BCM monitors the headlamp switch voltage and controls the exterior lighting functions based on the switch input. For additional information on Headlamp Switch operation, refer to **SWITCH, HEADLAMP, OPERATION** .

WHEN MONITORED

With the ignition on.

SET CONDITION

The BCM detects a low condition on the (L307) Headlamp Switch MUX circuit.

POSSIBLE CAUSES

Possible Causes
(L307) HEADLAMP SWITCH MUX CIRCUIT SHORTED TO GROUND
(L307) HEADLAMP SWITCH MUX CIRCUIT SHORTED TO THE (L900) HEADLAMP SWITCH MUX RETURN CIRCUIT
HEADLAMP SWITCH
BODY CONTROL MODULE (BCM)

DIAGNOSTIC TEST

1. **CHECK FOR ACTIVE DTC**
    1. Turn the ignition on.
    2. With the scan tool, read the DTCs.

    Does the scan tool display this DTC as active?

    Yes

    - Go To 2

    No

    - Test complete. The condition or conditions that originally set this DTC are not present at this time. Using the wiring diagrams as a guide, check all related splices and connectors for signs of water intrusion, corrosion, pushed out or bent terminals and correct pin tension.
    - Perform the BODY VERIFICATION TEST. Refer to **STANDARD PROCEDURE** .
2. **CHECK THE HEADLAMP SWITCH FOR AN INTERNAL SHORT TO GROUND**
    1. Turn the ignition off.
    2. Disconnect the Headlamp Switch harness connector.
    3. Turn the ignition on.
    4. With the scan tool, read the DTCs.

    Does the scan tool display this DTC as active?

    Yes

    - Go To 3

    No

    - Replace the Headlamp Switch in accordance with the Service Information. Refer to

SWITCH, HEADLAMP, REMOVAL .
- Perform the BODY VERIFICATION TEST. Refer to **STANDARD PROCEDURE** .

3. **CHECK THE (L307) HEADLAMP SWITCH MUX CIRCUIT FOR A SHORT TO GROUND**
   1. Turn the ignition off.
   2. Disconnect the BCM C8 harness connector.
   3. Measure the resistance between ground and the (L307) Headlamp Switch MUX circuit.

      Is the resistance above 10K Ohms?

      Yes

      - Go To 4

      No

      - Repair the short to ground on the (L307) Headlamp Switch MUX circuit.
      - Perform the BODY VERIFICATION TEST. Refer to **STANDARD PROCEDURE** .
4. **CHECK THE (L307) HEADLAMP SWITCH MUX CIRCUIT FOR A SHORT TO THE (L900) HEADLAMP SWITCH MUX RETURN CIRCUIT**
   1. Measure the resistance between the (L307) Headlamp Switch MUX circuit and the (L900) Headlamp Switch MUX Return circuit.

      Is the resistance above 10K Ohms?

      Yes

      - Replace the BCM in accordance with the Service Information. Refer to **MODULE, BODY CONTROL, REMOVAL** .
      - Perform the BODY VERIFICATION TEST. Refer to **STANDARD PROCEDURE** .

      No

      - Repair the short between the (L307) Headlamp Switch MUX circuit and the (L900) Headlamp Switch MUX Return circuit.
      - Perform the BODY VERIFICATION TEST. Refer to **STANDARD PROCEDURE** .

B178E-15-HEADLAMP SWITCH INPUT - CIRCUIT SHORT TO BATTERY OR OPEN

For a complete wiring diagram, **refer to appropriate SYSTEM WIRING DIAGRAMS article** .

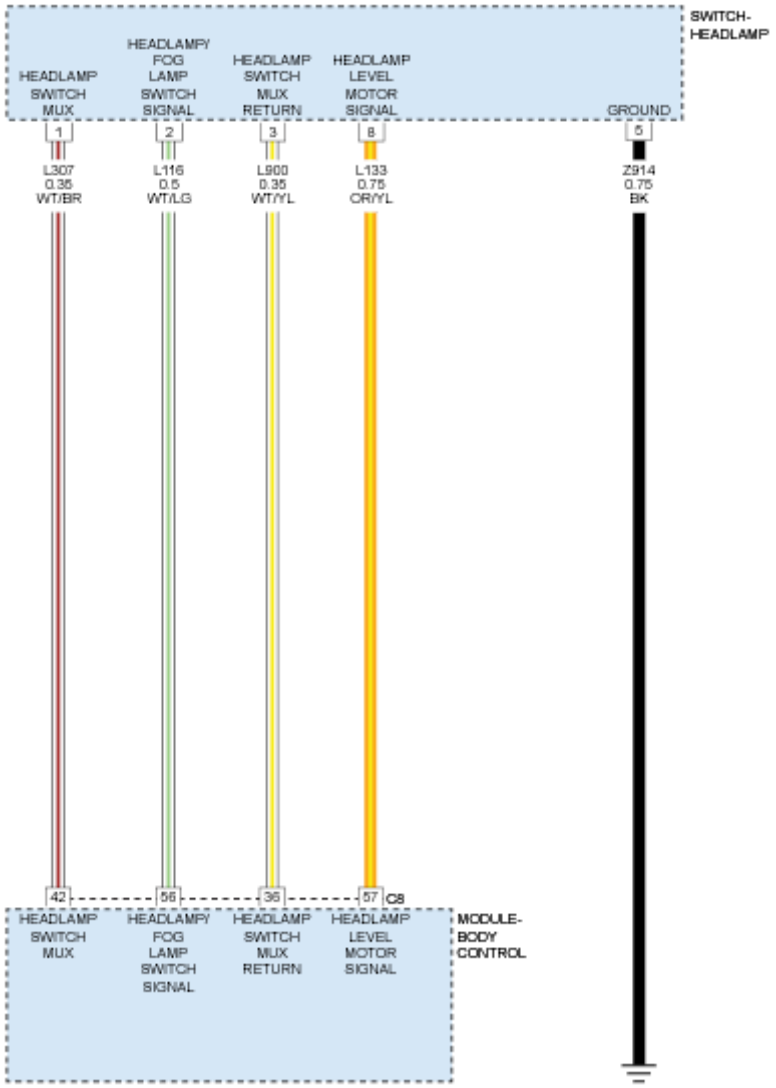

Fig. 55: Headlamp Switch Circuit Diagram
Courtesy of CHRYSLER GROUP, LLC

THEORY OF OPERATION

The Body Control Module (BCM) receives an input voltage from the headlamp switch. The BCM monitors the headlamp switch voltage and controls the exterior lighting functions based on the switch input. For additional information on Headlamp Switch operation, refer to **SWITCH, HEADLAMP, OPERATION** .

WHEN MONITORED

With the ignition on.

SET CONDITION

The BCM detects a short to voltage or an open on the (L307) Headlamp Switch MUX circuit.

POSSIBLE CAUSES

Possible Causes
(L307) HEADLAMP SWITCH MUX CIRCUIT SHORTED TO VOLTAGE
(L307) HEADLAMP SWITCH MUX CIRCUIT OPEN
(L900) HEADLAMP SWITCH MUX RETURN CIRCUIT OPEN
HEADLAMP SWITCH
BODY CONTROL MODULE (BCM)

DIAGNOSTIC TEST

1. **CHECK FOR AN ACTIVE DIAGNOSTIC TROUBLE CODE (DTC)**
    1. Turn the ignition on.
    2. Turn the Headlamps on.
    3. With the scan tool, read the DTCs.

    Does the scan tool display this DTC as active?

    Yes

    - Go To 2

    No

    - Test complete. The condition or conditions that originally set this DTC are not present at this time. Using the wiring diagrams as a guide, check all related splices and connectors for signs of water intrusion, corrosion, pushed out or bent terminals and correct pin tension.
    - Perform the BODY VERIFICATION TEST. Refer to **STANDARD PROCEDURE** .
2. **CHECK (L307) HEADLAMP SWITCH MUX CIRCUIT FOR A SHORT TO VOLTAGE**
    1. Turn the ignition off.
    2. Disconnect the Headlamp Switch harness connector.
    3. Turn the ignition on.
    4. Measure the voltage of the (L307) Headlamp Switch MUX circuit.

    Is the voltage above 5.0 volts?

    Yes

    - Repair the (L307) Headlamp Switch MUX circuit for a short to voltage.
    - Perform the BODY VERIFICATION TEST. Refer to **STANDARD PROCEDURE** .

No

- Go To 3

3. **CHECK THE HEADLAMP SWITCH**
   1. Turn the ignition off.
   2. Connect a jumper wire between ground and the (L307) Headlamp Switch MUX circuit at the Headlamp Switch harness connector.
   3. Turn the ignition on.
   4. With the scan tool, read the DTCs.

   Does the scan tool display DTC: B178E-11-HEADLAMP SWITCH INPUT - CIRCUIT SHORT TO GROUND?

   Yes

   - Replace the Headlamp Switch in accordance with the Service Information. Refer to **SWITCH, HEADLAMP, REMOVAL** .
   - Perform the BODY VERIFICATION TEST. Refer to **STANDARD PROCEDURE** .

   No

   - Go To 4

4. **CHECK (L307) HEADLAMP SWITCH MUX CIRCUIT FOR AN OPEN**
   1. Turn the ignition off.
   2. Disconnect the BCM C8 harness connector.
   3. Measure the resistance of the (L307) Headlamp Switch MUX circuit.

   Is the resistance below 5.0 Ohms?

   Yes

   - Go To 5

   No

   - Repair the (L307) Headlamp Switch MUX circuit for an open.
   - Perform the BODY VERIFICATION TEST. Refer to **STANDARD PROCEDURE** .

5. **CHECK (L900) HEADLAMP SWITCH MUX RETURN CIRCUIT FOR AN OPEN**
   1. Measure the resistance of the (L900) Headlamp Switch MUX Return circuit.

   Is the resistance below 5.0 Ohms?

   Yes

- Replace the BCM in accordance with the Service Information. Refer to **MODULE, BODY CONTROL, REMOVAL** .
- Perform the BODY VERIFICATION TEST. Refer to **STANDARD PROCEDURE** .

No

- Repair the (L307) Headlamp Switch MUX Return circuit for an open.
- Perform the BODY VERIFICATION TEST. Refer to **STANDARD PROCEDURE** .

B178E-64-HEADLAMP SWITCH INPUT SIGNAL - PLAUSIBILITY FAILURE

For a complete wiring diagram, **refer to appropriate SYSTEM WIRING DIAGRAMS article** .

WHEN MONITORED

With the ignition on.

SET CONDITION

This DTC will set if the incorrect Headlamp Switch is installed on the vehicle.

POSSIBLE CAUSES

Possible Causes
INCORRECT HEADLAMP SWITCH INSTALLED

DIAGNOSTIC TEST

CHECK FOR ACTIVE DTC

1. Turn the ignition on.
2. With the scan tool, read the DTCs.

   Does the scan tool display this DTC as active?

   Yes

   - Replace the Headlamp Switch in accordance with the Service Information. Refer to **SWITCH, HEADLAMP, REMOVAL** .
   - Perform the BODY VERIFICATION TEST. Refer to **STANDARD PROCEDURE** .

   No

   - Test complete. The condition or conditions that originally set this DTC are not present at this time. Using the wiring diagrams as a guide, check all related splices and connectors for signs of water

intrusion, corrosion, pushed out or bent terminals and correct pin tension.
- Perform the BODY VERIFICATION TEST. Refer to **STANDARD PROCEDURE** .

B179F-2A-REAR FOG LAMP SWITCH - STUCK

For a complete wiring diagram, **refer to appropriate SYSTEM WIRING DIAGRAMS article** .

THEORY OF OPERATION

The Body Control Module (BCM) receives the input from the headlamp switch requesting fog lamp illumination. The BCM provides a pulse width modulated (PWM) voltage output through the fog lamp driver circuit, which connects to the Fog Lamp. A ground path for the lamps is present through the harness.

WHEN MONITORED

With the fog lamps active.

SET CONDITION

The BCM detects that the Rear Fog Lamp switch is active for an extended amount of time.

POSSIBLE CAUSES

Possible Causes
HEADLAMP SWITCH

DIAGNOSTIC TEST

CHECK FOR AN ACTIVE DTC

1. Turn the ignition on.
2. Turn the Rear Fog Lamps on.
3. With the scan tool, read DTCs.

   Does the scan tool display this DTC as active?

   Yes

   - Replace the Headlamp Switch in accordance with the Service Information. Refer to **SWITCH, HEADLAMP, REMOVAL** .
   - Perform the BODY VERIFICATION TEST. Refer to **STANDARD PROCEDURE** .

   No

   - Test complete. The condition or conditions that originally set this DTC are not present at this time.

Using the wiring diagrams as a guide, check all related splices and connectors for signs of water intrusion, corrosion, pushed out or bent terminals and correct pin tension.

- Perform the BODY VERIFICATION TEST. Refer to **STANDARD PROCEDURE** .

B17C5-12-TRAILER TOW REVERSE LAMP CONTROL - CIRCUIT SHORT TO BATTERY

For a complete wiring diagram, **refer to appropriate SYSTEM WIRING DIAGRAMS article** .

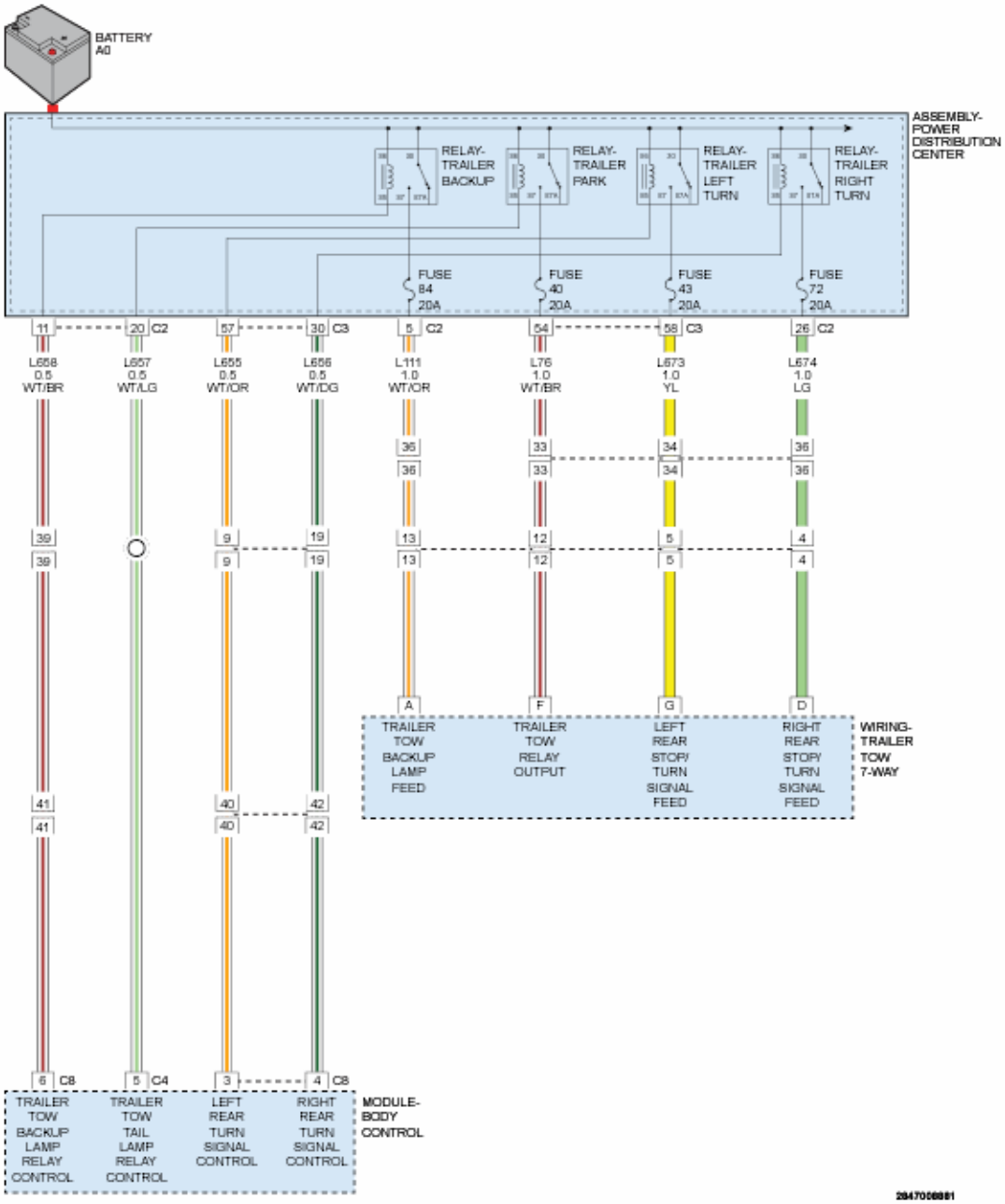

Fig. 56: Trailer Tow Lamp Control Circuit Diagram
Courtesy of CHRYSLER GROUP, LLC

THEORY OF OPERATION

Four relays are used to provide voltage to the Trailer Tow connector. The trailer tow relays are used to switch fused battery voltage directly to the Trailer Tow connector when requested. The trailer tow relays are activated through a ground path provided by the Body Control Module (BCM).

WHEN MONITORED

With the ignition on, turn signal active.

SET CONDITION

The Body Control Module (BCM) detects a short to voltage on the Trailer Reverse Lamp Control circuit.

POSSIBLE CAUSES

Possible Causes
TRAILER REVERSE LAMP CONTROL CIRCUIT SHORTED TO VOLTAGE
BODY CONTROL MODULE (BCM)

DIAGNOSTIC TEST

1. **VERIFY THE DTC IS ACTIVE**
    1. Turn the ignition on.
    2. With the scan tool, read DTCs.

    Does the scan tool display this DTC as active?

    Yes

    - Go To 2

    No

    - Test complete. The condition or conditions that originally set this DTC are not present at this time. Using the wiring diagrams as a guide, check all related splices and connectors for signs of water intrusion, corrosion, pushed out or bent terminals and correct pin tension.
    - Perform the BODY VERIFICATION TEST. Refer to **STANDARD PROCEDURE** .
2. **CHECK THE (L658) TRAILER REVERSE LAMP CONTROL CIRCUIT FOR A SHORT TO VOLTAGE IN THE HARNESS**
    1. Turn the ignition off.
    2. Disconnect the PDC C2 harness connector.
    3. Turn the ignition on.
    4. Measure the voltage between ground and the (L658) Trailer Reverse Lamp Control circuit at the

PDC C2 harness connector.

Is there any voltage present?

Yes

- Using the wiring diagrams as a guide, repair the short to voltage in the (L658) Trailer Reverse Lamp Control circuit.
- Perform the BODY VERIFICATION TEST. Refer to **STANDARD PROCEDURE** .

No

- Go To 3

3. **INSPECT RELATED WIRING AND CHECK FOR TSBs**
   1. Turn the ignition off.
   2. Using the wiring diagram/schematic as a guide, inspect the wiring and connectors between the PDC and the BCM.
   3. Look for any chafed, pierced, pinched, or partially broken wires.
   4. Look for broken, bent, pushed out or corroded terminals.
   5. Perform any Technical Service Bulletins that may apply.

   Were any problems found?

   Yes

   - Repair as necessary.
   - Perform the BODY VERIFICATION TEST. Refer to **STANDARD PROCEDURE** .

   No

   - Replace the BCM in accordance with the Service Information. Refer to **MODULE, BODY CONTROL, REMOVAL** .
   - Perform the BODY VERIFICATION TEST. Refer to **STANDARD PROCEDURE** .

B17C5-14-TRAILER TOW REVERSE LAMP CONTROL - CIRCUIT SHORT TO GROUND OR OPEN

For a complete wiring diagram, **refer to appropriate SYSTEM WIRING DIAGRAMS article** .

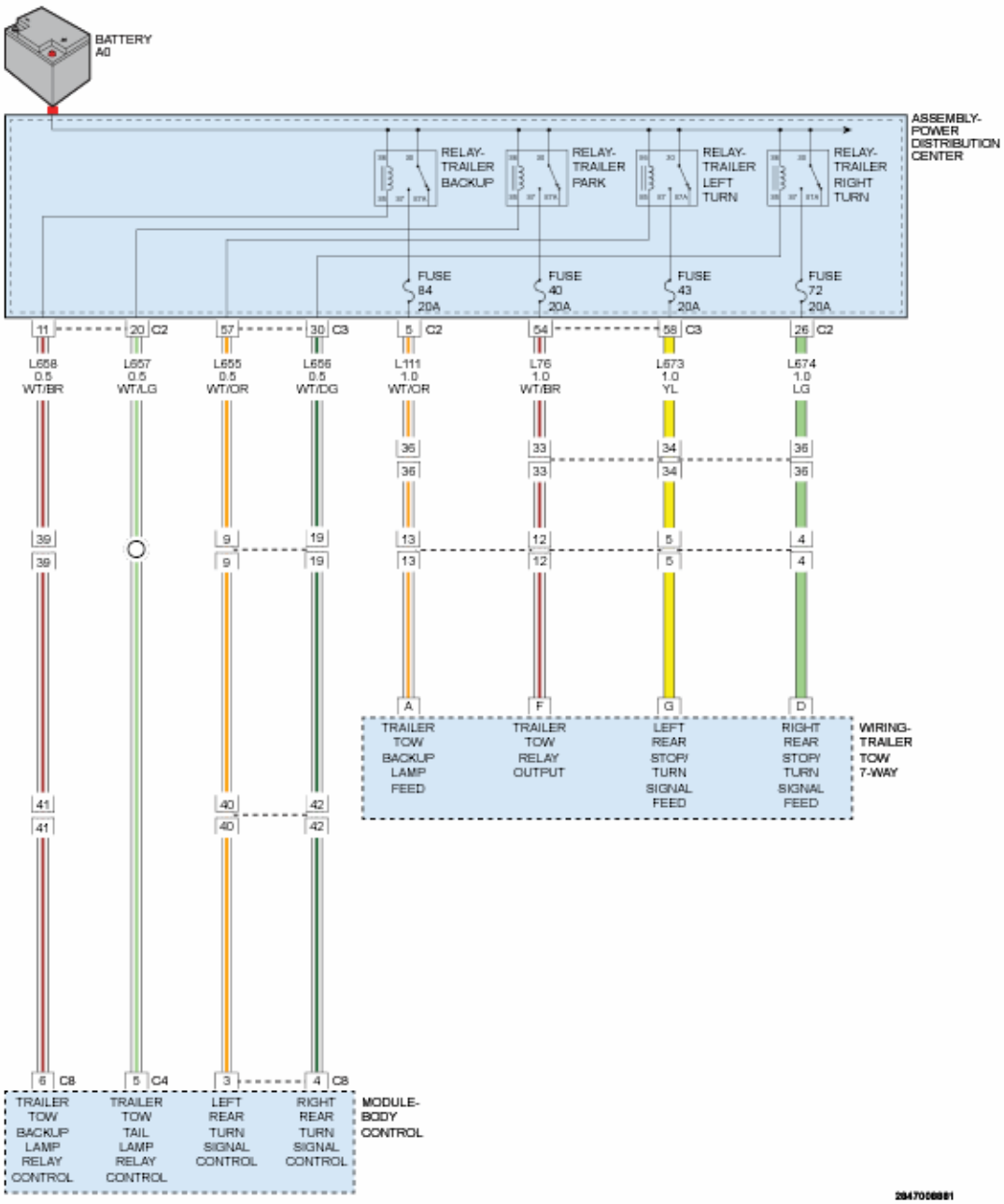

Fig. 57: Trailer Tow Lamp Control Circuit Diagram
Courtesy of CHRYSLER GROUP, LLC

THEORY OF OPERATION

Four relays are used to provide voltage to the Trailer Tow connector. The trailer tow relays are used to switch fused battery voltage directly to the Trailer Tow connector when requested. The trailer tow relays are activated through a ground path provided by the Body Control Module (BCM).

WHEN MONITORED

With the ignition on.

With the reverse lamps inactive.

SET CONDITION

If the Body Control Module (BCM) detects less than expected voltage on the (L658) Trailer Tow Reverse Lamp Relay Control circuit.

POSSIBLE CAUSES

Possible Causes
(L658) TRAILER TOW REVERSE LAMP RELAY CONTROL CIRCUIT OPEN
(L658) TRAILER TOW REVERSE LAMPS RELAY CONTROL CIRCUIT SHORTED TO GROUND
TRAILER TOW BACKUP RELAY
BODY CONTROL MODULE (BCM)

DIAGNOSTIC TEST

1. **VERIFY THE DTC IS ACTIVE**
    1. Turn the ignition on.
    2. With the scan tool, clear all DTCs.
    3. Wait 10 seconds.
    4. With the scan tool, read DTCs.

    Does the scan tool display this DTC as active?

    Yes

    - Go To 2

    No

    - Test complete. The condition or conditions that originally set this DTC are not present at this time. Using the wiring diagrams as a guide, check all related splices and connectors for signs of water intrusion, corrosion, pushed out or bent terminals and correct pin tension.
    - Perform the BODY VERIFICATION TEST. Refer to **STANDARD PROCEDURE** .
2. **CHECK THE TRAILER TOW BACKUP RELAY**
    1. Turn the ignition off.
    2. Remove the Trailer Tow Backup Relay and substitute it with a known good relay.
    3. Turn the ignition on and wait 10 seconds.
    4. With the scan tool, read DTCs.

Is the status Active for this DTC?

Yes

- Go To 3

No

- Replace the Trailer Tow Backup Relay.
- Perform the BODY VERIFICATION TEST. Refer to **STANDARD PROCEDURE** .

3. **CHECK THE (L658) TRAILER TOW REVERSE LAMP RELAY CONTROL CIRCUIT FOR A SHORT TO GROUND**
   1. Turn the ignition off.
   2. Remove the Trailer Tow Backup Relay.
   3. Disconnect the BCM C8 harness connector.
   4. Measure the resistance between ground and the (L658) Trailer Tow Reverse Lamp Relay Control circuit.

   Is the resistance above 10k Ohms?

   Yes

   - Go To 4

   No

   - Repair the short to ground in the (L658) Trailer Tow Reverse Lamp Relay Control circuit.
   - Perform the BODY VERIFICATION TEST. Refer to **STANDARD PROCEDURE** .

4. **CHECK THE (L658) TRAILER TOW REVERSE LAMP RELAY CONTROL CIRCUIT FOR AN OPEN**
   1. Measure the resistance of the (L658) Trailer Tow Reverse Lamp Relay Control circuit between the Trailer Tow Backup Relay harness connector and the BCM C8 harness connector.

   Is the resistance below 5.0 Ohms?

   Yes

   - Go To 5

   No

   - Repair the open in the (L658) Trailer Tow Reverse Lamp Relay Control circuit.
   - Perform the BODY VERIFICATION TEST. Refer to **STANDARD PROCEDURE** .

5. **INSPECT RELATED WIRING AND CHECK FOR TSBs**

1. Turn the ignition off.
2. Using the wiring diagram/schematic as a guide, inspect the wiring and connectors between the Trailer Tow Backup Relay and the BCM.
3. Look for any chafed, pierced, pinched, or partially broken wires.
4. Look for broken, bent, pushed out or corroded terminals.
5. Perform any Technical Service Bulletins that may apply.

Were any problems found?

Yes

- Repair as necessary.
- Perform the BODY VERIFICATION TEST. Refer to **STANDARD PROCEDURE** .

No

- Replace the BCM in accordance with the Service Information. Refer to **MODULE, BODY CONTROL, REMOVAL** .
- Perform the BODY VERIFICATION TEST. Refer to **STANDARD PROCEDURE** .

B17F3-8F-AUTO HIGH BEAM SYSTEM AIM - ERRATIC

For a complete wiring diagram, **refer to appropriate SYSTEM WIRING DIAGRAMS article** .

WHEN MONITORED

With the ignition on.

SET CONDITION

The DTC will be set if the target light source is not within the correctable limits of the mirror.

POSSIBLE CAUSES

Possible Causes
SMART BEAM CALIBRATION

DIAGNOSTIC TEST

CHECK FOR AN ACTIVE DTC

1. Turn the ignition on.
2. Using the scan tool, read DTCs.

Does the scan tool display this DTC as active?

Yes

- Perform the Smart Beam Calibration in accordance with the Service Information.

No

- Test complete. The condition or conditions that originally set this DTC are not present at this time. Using the wiring diagrams as a guide, check all related splices and connectors for signs of water intrusion, corrosion, pushed out or bent terminals and correct pin tension.
- Perform the BODY VERIFICATION TEST. Refer to **STANDARD PROCEDURE** .

B17F6-12-TRAILER TAILLAMP CONTROL - CIRCUIT SHORT TO BATTERY

For a complete wiring diagram, **refer to appropriate SYSTEM WIRING DIAGRAMS article** .

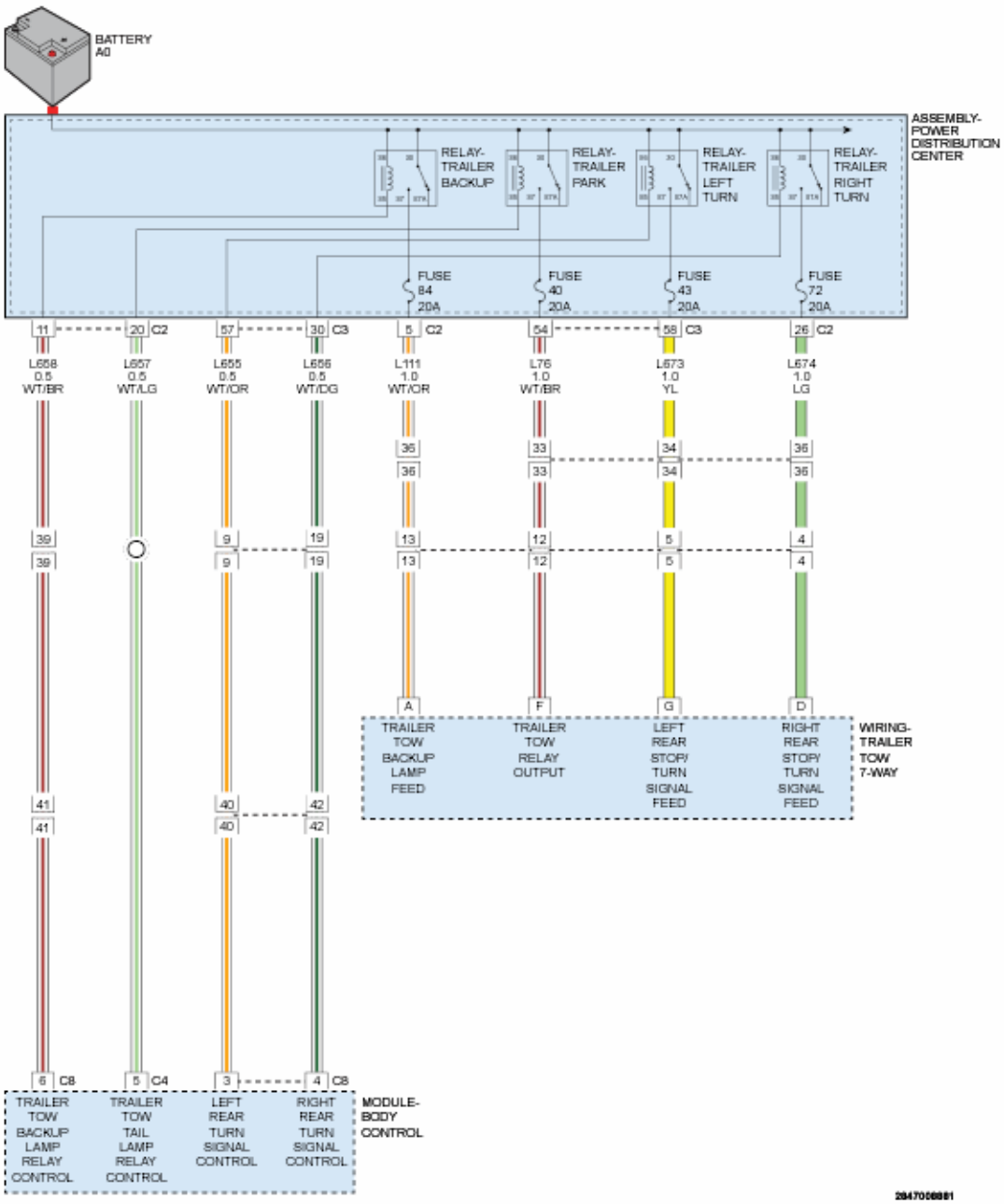

Fig. 58: Trailer Tow Lamp Control Circuit Diagram
Courtesy of CHRYSLER GROUP, LLC

THEORY OF OPERATION

Four relays are used to provide voltage to the Trailer Tow connector. The trailer tow relays are used to switch fused battery voltage directly to the Trailer Tow connector when requested. The trailer tow relays are activated through a ground path provided by the Body Control Module (BCM).

WHEN MONITORED

With the ignition on, park lamps active.

SET CONDITION

The Body Control Module (BCM) detects a short to voltage on the Trailer Tow Park Lamps Relay Control circuit.

POSSIBLE CAUSES

Possible Causes
(L657) TRAILER TOW PARK LAMPS RELAY CONTROL CIRCUIT SHORTED TO VOLTAGE
BODY CONTROL MODULE (BCM)

DIAGNOSTIC TEST

1. **VERIFY THE DTC IS ACTIVE**
   1. Turn the ignition on.
   2. With the scan tool, read DTCs.

      Does the scan tool display this DTC as active?

      Yes

      - Go To 2

      No

      - Test complete. The condition or conditions that originally set this DTC are not present at this time. Using the wiring diagrams as a guide, check all related splices and connectors for signs of water intrusion, corrosion, pushed out or bent terminals and correct pin tension.
      - Perform the BODY VERIFICATION TEST. Refer to **STANDARD PROCEDURE** .
2. **CHECK THE (L657) TRAILER PARK LAMP CONTROL CIRCUIT FOR A SHORT TO VOLTAGE IN THE HARNESS**
   1. Turn the ignition off.
   2. Disconnect the PDC C2 harness connector.
   3. Turn the ignition on.
   4. Measure the voltage between ground and the (L657) Trailer Park Lamp Control circuit at the PDC C2 harness connector.

      Is there any voltage present?

      Yes

      - Using the wiring diagrams as a guide, repair the short to voltage in the (L657) Trailer Park

Lamp Control circuit.

- Perform the BODY VERIFICATION TEST. Refer to **STANDARD PROCEDURE** .

No

- Go To 3

3. **INSPECT RELATED WIRING AND CHECK FOR TSBs**
   1. Turn the ignition off.
   2. Using the wiring diagram/schematic as a guide, inspect the wiring and connectors between the PDC and the BCM.
   3. Look for any chafed, pierced, pinched, or partially broken wires.
   4. Look for broken, bent, pushed out or corroded terminals.
   5. Perform any Technical Service Bulletins that may apply.

   Were any problems found?

   Yes

   - Repair as necessary.
   - Perform the BODY VERIFICATION TEST. Refer to **STANDARD PROCEDURE** .

   No

   - Replace the BCM in accordance with the Service Information. Refer to **MODULE, BODY CONTROL, REMOVAL** .
   - Perform the BODY VERIFICATION TEST. Refer to **STANDARD PROCEDURE** .

B17F6-14-TRAILER TAILLAMP CONTROL - CIRCUIT SHORT TO GROUND OR OPEN

For a complete wiring diagram, **refer to appropriate SYSTEM WIRING DIAGRAMS article** .

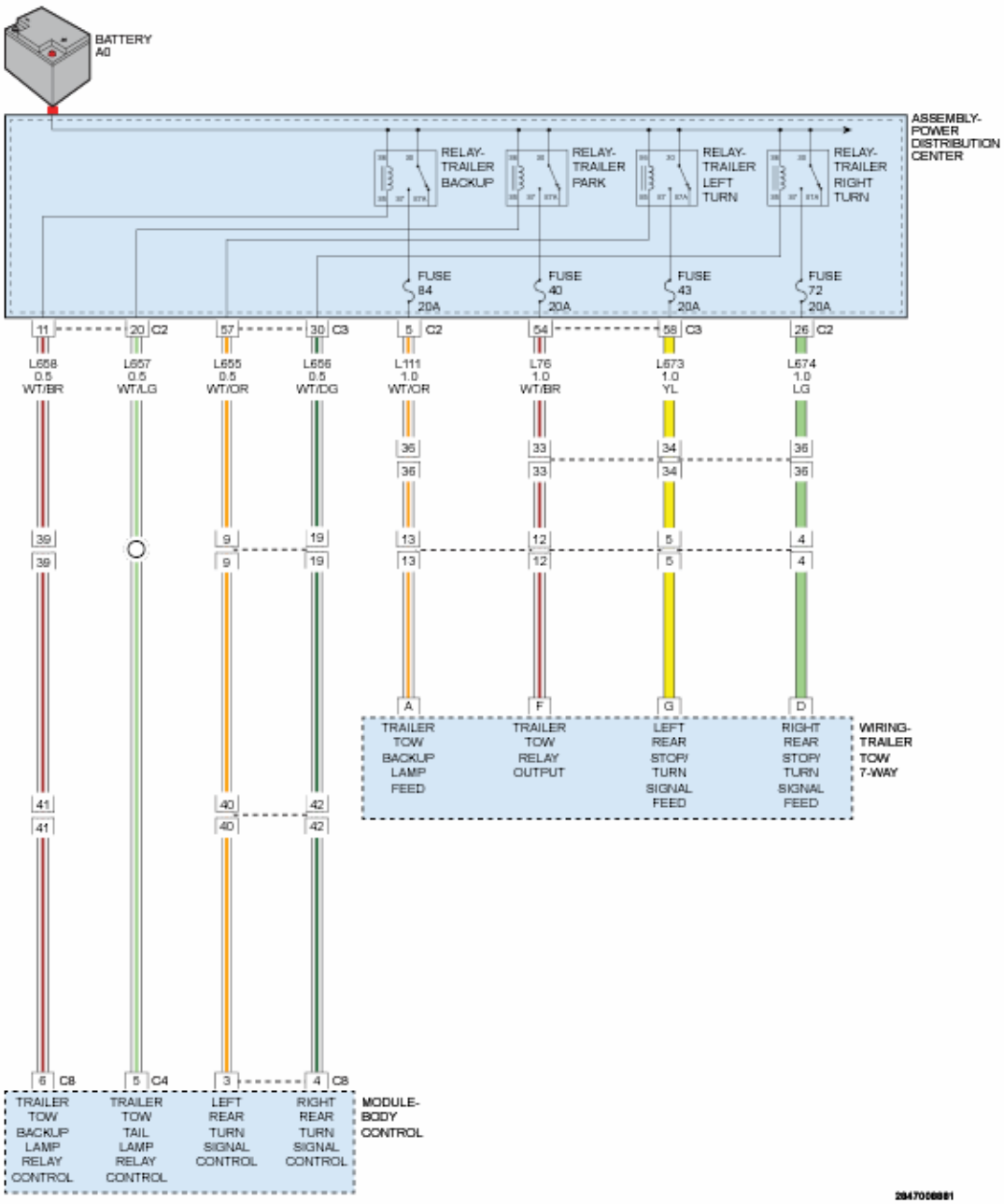

Fig. 59: Trailer Tow Lamp Control Circuit Diagram
Courtesy of CHRYSLER GROUP, LLC

THEORY OF OPERATION

Four relays are used to provide voltage to the Trailer Tow connector. The trailer tow relays are used to switch fused battery voltage directly to the Trailer Tow connector when requested. The trailer tow relays are activated through a ground path provided by the Body Control Module (BCM).

WHEN MONITORED

With the ignition on.

With the park lamps inactive.

SET CONDITION

If the Body Control Module (BCM) detects less than expected voltage on the (L657) Trailer Tow Park Lamps Relay Control circuit.

POSSIBLE CAUSES

Possible Causes
(L657) TRAILER TOW PARK LAMPS RELAY CONTROL CIRCUIT OPEN
(L657) TRAILER TOW PARK LAMPS RELAY CONTROL CIRCUIT SHORTED TO GROUND
TRAILER TOW PARK RELAY
BODY CONTROL MODULE (BCM)

DIAGNOSTIC TEST

1. **VERIFY THE DTC IS ACTIVE**
    1. Turn the ignition on.
    2. With the scan tool, clear all DTCs.
    3. Wait 10 seconds.
    4. With the scan tool, read DTCs.

    Does the scan tool display this DTC as active?

    Yes

    - Go To 2

    No

    - Test complete. The condition or conditions that originally set this DTC are not present at this time. Using the wiring diagrams as a guide, check all related splices and connectors for signs of water intrusion, corrosion, pushed out or bent terminals and correct pin tension.
    - Perform the BODY VERIFICATION TEST. Refer to **STANDARD PROCEDURE** .
2. **CHECK THE TRAILER TOW PARK RELAY**
    1. Turn the ignition off.
    2. Remove the Trailer Tow Park Relay and substitute it with a known good relay.
    3. Turn the ignition on and wait 10 seconds.
    4. With the scan tool, read DTCs.

Is the status Active for this DTC?

Yes

- Go To 3

No

- Replace the Trailer Tow Park Relay.
- Perform the BODY VERIFICATION TEST. Refer to **STANDARD PROCEDURE** .

3. **CHECK THE (L657) TRAILER TOW PARK LAMPS RELAY CONTROL CIRCUIT FOR A SHORT TO GROUND**
   1. Turn the ignition off.
   2. Remove the Trailer Tow Park Relay.
   3. Disconnect the BCM C4 harness connector.
   4. Measure the resistance between ground and the (L657) Trailer Tow Park Lamps Relay Control circuit.

   Is the resistance above 10k Ohms?

   Yes

   - Go To 4

   No

   - Repair the short to ground in the (L657) Trailer Tow Park Lamps Relay Control circuit.
   - Perform the BODY VERIFICATION TEST. Refer to **STANDARD PROCEDURE** .
4. **CHECK THE (L657) TRAILER TOW PARK LAMPS RELAY CONTROL CIRCUIT FOR AN OPEN**
   1. Measure the resistance of the (L657) Trailer Tow Park Lamps Relay Control circuit between the Trailer Tow Park Relay harness connector and the BCM C4 harness connector.

   Is the resistance below 5.0 Ohms?

   Yes

   - Go To 5

   No

   - Repair the open in the (L657) Trailer Tow Park Lamps Relay Control circuit.
   - Perform the BODY VERIFICATION TEST. Refer to **STANDARD PROCEDURE** .
5. **INSPECT RELATED WIRING AND CHECK FOR TSBs**

1. Turn the ignition off.
2. Using the wiring diagram/schematic as a guide, inspect the wiring and connectors between the Trailer Tow Park Relay and the BCM.
3. Look for any chafed, pierced, pinched, or partially broken wires.
4. Look for broken, bent, pushed out or corroded terminals.
5. Perform any Technical Service Bulletins that may apply.

Were any problems found?

Yes

- Repair as necessary.
- Perform the BODY VERIFICATION TEST. Refer to **STANDARD PROCEDURE** .

No

- Replace the BCM in accordance with the Service Information. Refer to **MODULE, BODY CONTROL, REMOVAL** .
- Perform the BODY VERIFICATION TEST. Refer to **STANDARD PROCEDURE** .

B17FB-8F-AUTO HIGH BEAM CAMERA VIEW BLOCK - ERRATIC

For a complete wiring diagram, **refer to appropriate SYSTEM WIRING DIAGRAMS article** .

WHEN MONITORED

With the ignition on.

SET CONDITION

The DTC will be set if the target light source is not within the correctable limits of the mirror.

POSSIBLE CAUSES

Possible Causes
SMART BEAM CALIBRATION

DIAGNOSTIC TEST

CHECK FOR AN ACTIVE DTC

1. Turn the ignition on.
2. With the scan tool, read DTCs.

Does the scan tool display this DTC as active?

Yes

- Perform the Smart Beam Calibration in accordance with the Service Information.

No

- Test complete. The condition or conditions that originally set this DTC are not present at this time. Using the wiring diagrams as a guide, check all related splices and connectors for signs of water intrusion, corrosion, pushed out or bent terminals and correct pin tension.
- Perform the BODY VERIFICATION TEST. Refer to **STANDARD PROCEDURE** .

B17FF-11-AMBIENT CABIN LIGHT DIMMER SWITCH - CIRCUIT SHORT TO GROUND

For a complete wiring diagram, **refer to appropriate SYSTEM WIRING DIAGRAMS article** .

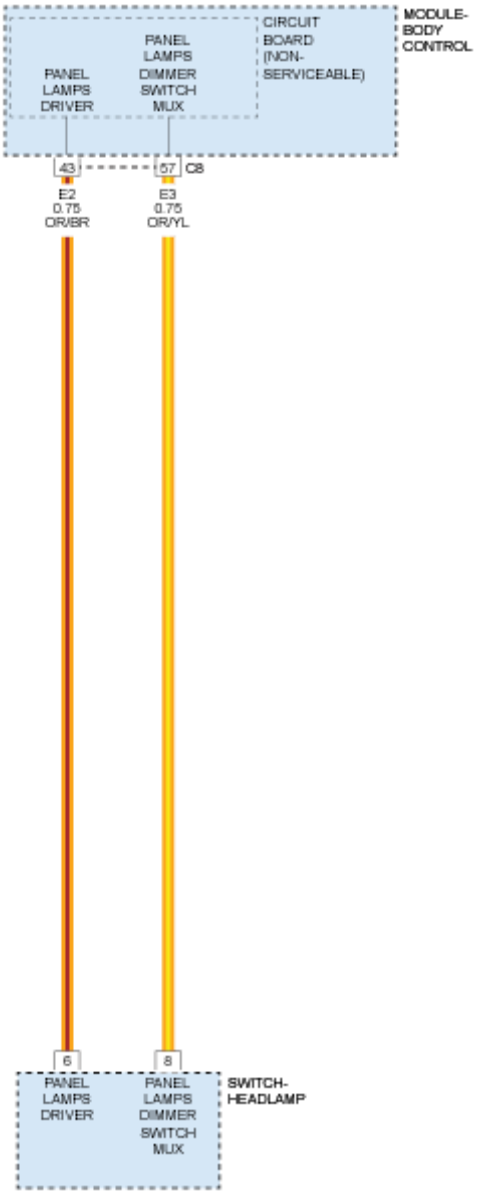

Fig. 60: Dimmer Switch Circuit Diagram
Courtesy of CHRYSLER GROUP, LLC

WHEN MONITORED

With the ignition on.

SET CONDITION

The Body Control Module (BCM) detects a short to ground on the (E3) Ambient Lamps Dimmer Signal circuit.

POSSIBLE CAUSES

Possible Causes
(E3) AMBIENT LAMPS DIMMER SIGNAL CIRCUIT SHORTED TO GROUND
DIMMER SWITCH
BODY CONTROL MODULE (BCM)

DIAGNOSTIC TEST

1. **CHECK FOR AN ACTIVE DTC**
   1. Turn the ignition on.
   2. With the scan tool, read DTCs.

   Does the scan tool display this DTC as active?

   Yes

   - Go To 2

   No

   - Test complete. The condition that caused this code to set is not present at this time. Check for an intermittent condition by inspecting the related wiring harness for chafed, pierced, pinched and partially broken wires. Also inspect the related connectors for broken, bent, pushed out, spread, corroded or contaminated terminals.
   - Perform the BODY VERIFICATION TEST. Refer to **STANDARD PROCEDURE** .
2. **CHECK THE OPERATION OF DIMMER SWITCH**
   1. Turn the ignition off.
   2. Disconnect the Dimmer Switch harness connector.
   3. Turn the ignition on.
   4. With the scan tool, read DTCs.

   Does the scan tool display DTC: B17FF-15-AMBIENT CABIN LIGHT DIMMER SWITCH - CIRCUIT SHORT TO BATTERY OR OPEN as active?

   Yes

   - Replace the Dimmer Switch in accordance with the Service Information.
   - Perform the BODY VERIFICATION TEST. Refer to **STANDARD PROCEDURE** .

   No

   - Go To 3
3. **CHECK THE (E3) AMBIENT LAMPS DIMMER SIGNAL CIRCUIT FOR A SHORT TO GROUND**

1. Turn the ignition off.
2. Disconnect the BCM C8 harness connector.
3. Measure the resistance between ground and the (E3) Ambient Lamps Dimmer Signal circuit.

   Is the resistance below 10K Ohms?

   Yes

   - Repair the short to ground in the (E3) Ambient Lamps Dimmer Signal circuit.
   - Perform the BODY VERIFICATION TEST. Refer to **STANDARD PROCEDURE** .

   No

   - Replace the BCM in accordance with the Service Information. Refer to **MODULE, BODY CONTROL, REMOVAL** .
   - Perform the BODY VERIFICATION TEST. Refer to **STANDARD PROCEDURE** .

B17FF-15-AMBIENT CABIN LIGHT DIMMER SWITCH - CIRCUIT SHORT TO BATTERY OR OPEN

For a complete wiring diagram, **refer to appropriate SYSTEM WIRING DIAGRAMS article** .

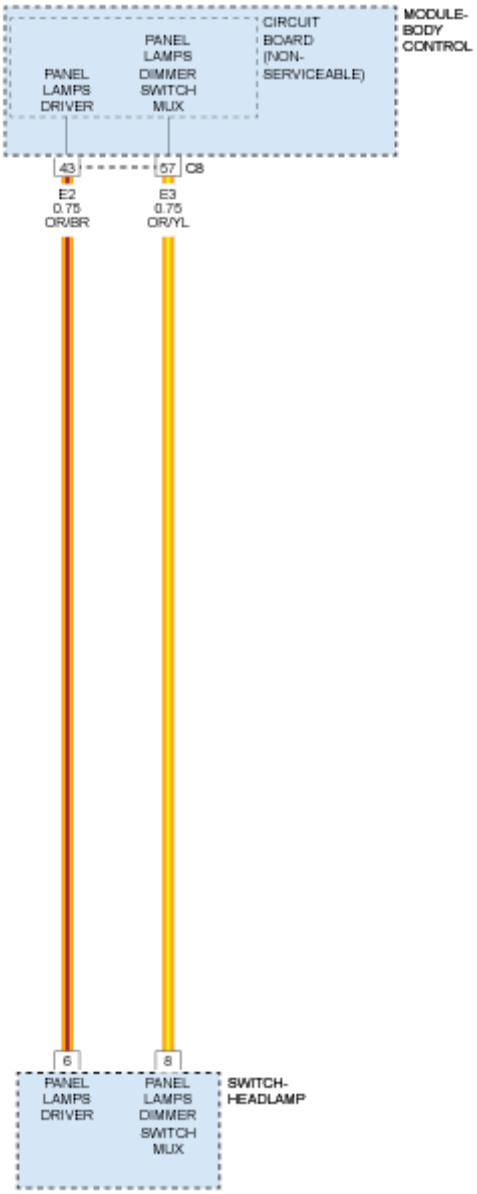

Fig. 61: Dimmer Switch Circuit Diagram
Courtesy of CHRYSLER GROUP, LLC

WHEN MONITORED

With the ignition on.

SET CONDITION

The Body Control Module (BCM) detects a short to voltage or an open on the (E3) Ambient Lamps Dimmer Signal is greater than expected for more than one second.

POSSIBLE CAUSES

Possible Causes
(E3) AMBIENT LAMPS DIMMER SIGNAL CIRCUIT SHORTED TO VOLTAGE
(E3) AMBIENT LAMPS DIMMER SIGNAL CIRCUIT OPEN
DIMMER SWITCH
BODY CONTROL MODULE (BCM)

DIAGNOSTIC TEST

1. **CHECK FOR AN ACTIVE DTC**
   1. Turn the ignition on.
   2. With the scan tool, read DTCs.

      Does the scan tool display this DTC as active?

      Yes

      - Go To 2

      No

      - Test complete. The condition or conditions that originally set this DTC are not present at this time. Using the wiring diagrams as a guide, check all related splices and connectors for signs of water intrusion, corrosion, pushed out or bent terminals and correct pin tension.
      - Perform the BODY VERIFICATION TEST. Refer to **STANDARD PROCEDURE** .
2. **CHECK THE (E3) AMBIENT LAMPS DIMMER SIGNAL CIRCUIT FOR A SHORT TO VOLTAGE**
   1. Turn the ignition off.
   2. Disconnect the Dimmer Switch harness connector.
   3. Disconnect the BCM C8 harness connector.
   4. Turn the ignition on.
   5. Measure the voltage on the (E3) Ambient Lamps Dimmer Signal circuit.

      Is there any voltage present?

      Yes

      - Repair the short to voltage in (E3) Ambient Lamps Dimmer Signal circuit.
      - Perform the BODY VERIFICATION TEST. Refer to **STANDARD PROCEDURE** .

      No

- Go To 3

3. **CHECK THE (E3) AMBIENT LAMPS DIMMER SIGNAL CIRCUIT FOR AN OPEN**
   1. Turn the ignition off.
   2. Measure the resistance of the (E3) Ambient Lamps Dimmer Signal circuit between the Dimmer Switch harness connector and the BCM C8 harness connector.

      Is the resistance below 5.0 Ohms?

      Yes

      - Go To 4

      No

      - Repair the open in the (E3) Ambient Lamps Dimmer Signal circuit.
      - Perform the BODY VERIFICATION TEST. Refer to **STANDARD PROCEDURE** .
4. **CHECK THE OPERATION OF THE PANEL LAMPS DIMMER SWITCH**
   1. Reconnect the BCM C8 harness connector.
   2. Connect a jumper wire at the Dimmer Switch harness connector between the (E3) Ambient Lamps Dimmer Signal circuit and ground.
   3. Turn the ignition on.
   4. With the scan tool, read DTCs.

      Does the scan tool display DTC: B17FF-11-AMBIENT CABIN LIGHT DIMMER SWITCH - CIRCUIT SHORT TO GROUND as active?

      Yes

      - Replace the Dimmer Switch in accordance with the Service Information.
      - Perform the BODY VERIFICATION TEST. Refer to **STANDARD PROCEDURE** .

      No

      - Replace the BCM in accordance with the Service Information. Refer to **MODULE, BODY CONTROL, REMOVAL** .
      - Perform the BODY VERIFICATION TEST. Refer to **STANDARD PROCEDURE** .

B1800-2A-DRIVER DOOR LOCK/UNLOCK SWITCH-STUCK

For a complete wiring diagram, **refer to appropriate SYSTEM WIRING DIAGRAMS article** .

WHEN MONITORED

With the ignition on.

SET CONDITION

This DTC will set if the BCM detects the Driver Door Lock/Unlock Switch stuck in the LOCK or UNLOCK position.

POSSIBLE CAUSES

Possible Causes
DRIVER WINDOW/DOOR LOCK SWITCH

DIAGNOSTIC TEST

CHECK FOR AN ACTIVE DTC

1. Turn the ignition on.
2. With the scan tool, read DTCs.

   Does the scan tool display this DTC as active?

   Yes

   - Replace the Driver Window/Door Lock Switch in accordance with the Service Information. Refer to **SWITCH, POWER WINDOW, REMOVAL** .
   - Perform the BODY VERIFICATION TEST. Refer to **STANDARD PROCEDURE** .

   No

   - Test complete, the condition or conditions that originally set this DTC are not present at this time. Using the wiring diagrams as a guide, check all related splices and connectors for signs of water intrusion, corrosion, pushed out or bent terminals, and correct pin tension.
   - Perform the BODY VERIFICATION TEST. Refer to **STANDARD PROCEDURE** .

B1805-2A-PASSENGER DOOR LOCK/UNLOCK SWITCH-STUCK

For a complete wiring diagram, **refer to appropriate SYSTEM WIRING DIAGRAMS article** .

WHEN MONITORED

With the ignition on.

SET CONDITION

This DTC will set if the BCM detects the Passenger Door Lock/Unlock Switch stuck in the LOCK or UNLOCK position.

POSSIBLE CAUSES

Possible Causes
PASSENGER WINDOW/DOOR LOCK SWITCH

DIAGNOSTIC TEST

CHECK FOR AN ACTIVE DTC

1. Turn the ignition on.
2. With the scan tool, read DTCs.

   Does the scan tool display this DTC as active?

   Yes

   - Replace the Passenger Window/Door Lock Switch in accordance with the Service Information. Refer to **SWITCH, POWER WINDOW, REMOVAL** .
   - Perform the BODY VERIFICATION TEST. Refer to **STANDARD PROCEDURE** .

   No

   - Test complete, the condition or conditions that originally set this DTC are not present at this time. Using the wiring diagrams as a guide, check all related splices and connectors for signs of water intrusion, corrosion, pushed out or bent terminals, and correct pin tension.
   - Perform the BODY VERIFICATION TEST. Refer to **STANDARD PROCEDURE** .

B181C-23-TRUNK/LIFTGATE INPUT - SIGNAL STUCK LOW

For a complete wiring diagram, **refer to appropriate SYSTEM WIRING DIAGRAMS article** .

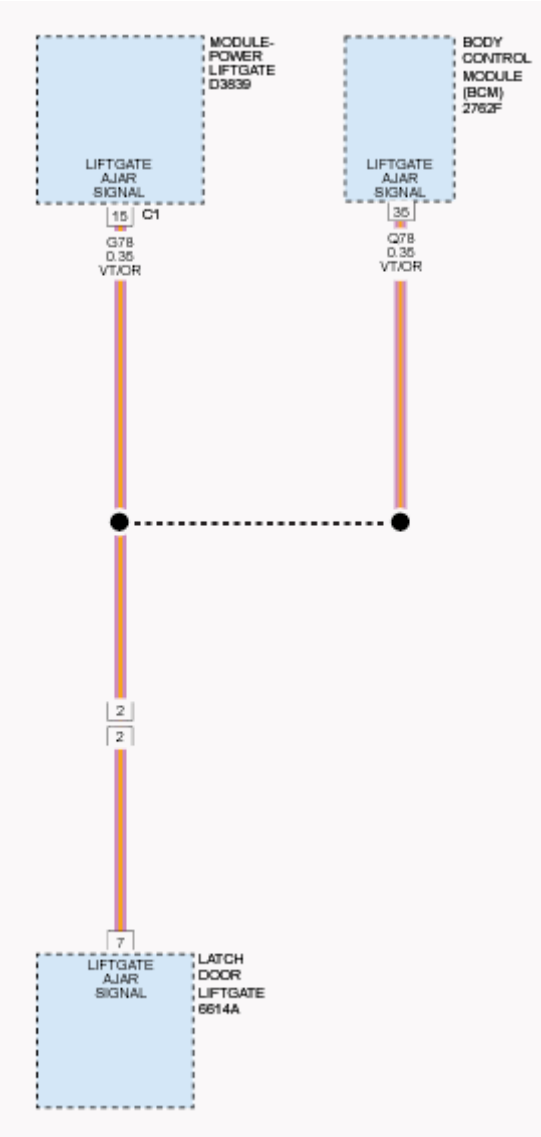

Fig. 62: Trunk/Liftgate Latch Switch Circuit Diagram
Courtesy of CHRYSLER GROUP, LLC

WHEN MONITORED

With the ignition on.

SET CONDITION

This DTC will set when the Body Control Module (BCM) detects the Liftgate Release Switch is stuck in the ON position.

POSSIBLE CAUSES

Possible Causes

(P223) LIFTGATE RELEASE SWITCH SENSE CIRCUIT SHORTED TO GROUND
LIFTGATE RELEASE SWITCH
BODY CONTROL MODULE (BCM)

DIAGNOSTIC TEST

1. **CHECK FOR AN ACTIVE DTC**
   1. Turn the ignition on.
   2. Press the Liftgate Release Switch several times.
   3. With the scan tool, read DTCs.

      Does the scan tool display this DTC as active?

      Yes

      - Go To 2

      No

      - Test complete. The condition or conditions that originally set this DTC are not present at this time. Using the wiring diagrams as a guide, check all related splices and connectors for signs of water intrusion, corrosion, pushed out or bent terminals and correct pin tension.
      - Perform the BODY VERIFICATION TEST. Refer to **STANDARD PROCEDURE** .
2. **CHECK FOR A STUCK LIFTGATE RELEASE SWITCH**
   1. Turn the ignition off.
   2. Disconnect the Liftgate Release Switch harness connector.
   3. Turn the ignition on.
   4. With the scan tool, read DTCs.

      Does the scan tool display this DTC as active?

      Yes

      - Go To 3

      No

      - Replace the Liftgate Release Switch in accordance with the Service Information.
      - Perform the BODY VERIFICATION TEST. Refer to **STANDARD PROCEDURE** .
3. **CHECK THE (P223) LIFTGATE RELEASE SWITCH SENSE CIRCUIT FOR A SHORT TO GROUND**
   1. Turn the ignition off.
   2. Disconnect the BCM C8 harness connector.

3. Measure the resistance between ground and the (P223) Liftgate Release Switch Sense circuit at the Liftgate Release Switch harness connector.

   Is the resistance below 10K Ohms?

   Yes

   - Repair the (P223) Liftgate Release Switch Sense circuit for a short to ground.
   - Perform the BODY VERIFICATION TEST. Refer to **STANDARD PROCEDURE** .

   No

   - Replace the Body Control Module in accordance with the Service Information. Refer to **MODULE, BODY CONTROL, REMOVAL** .
   - Perform the BODY VERIFICATION TEST. Refer to **STANDARD PROCEDURE** .

B181E-11-HOOD AJAR INPUT - CIRCUIT SHORT TO GROUND

For a complete wiring diagram, **refer to appropriate SYSTEM WIRING DIAGRAMS article** .

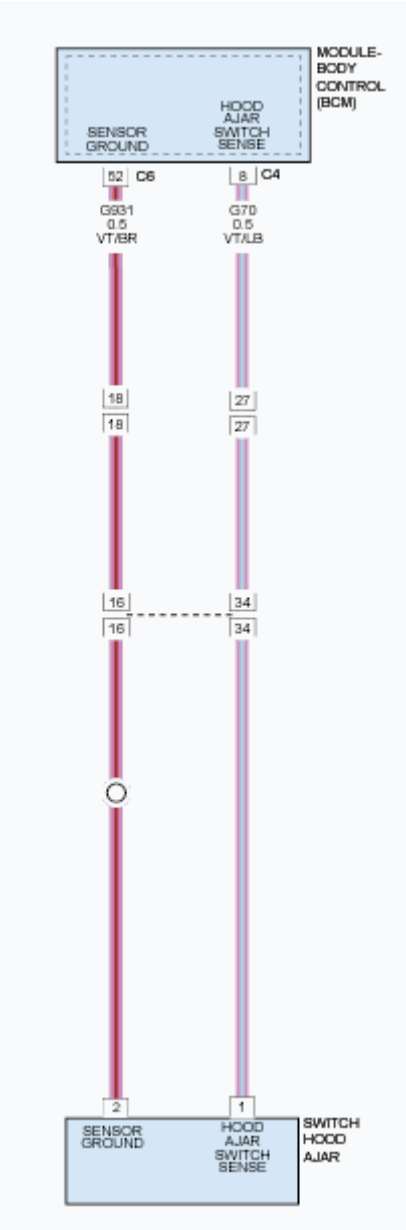

Fig. 63: Hood Ajar Switch Circuit Diagram
Courtesy of CHRYSLER GROUP, LLC

THEORY OF OPERATION

The Body Control Module (BCM) provides a reference voltage on the hood ajar switch sense circuit through a pull-up resistor that is connected to battery voltage. The Hood Ajar Switch switches the hood ajar switch sense circuit to ground when the hood is open. A diagnostic resistor internal to the switch is placed in parallel with the switch.

WHEN MONITORED

With the ignition on.

SET CONDITION

This DTC will set when the Body Control Module (BCM) detects a short to ground in the Hood Ajar Switch Sense circuit.

POSSIBLE CAUSES

Possible Causes
(G70) HOOD AJAR SWITCH SENSE CIRCUIT SHORTED TO GROUND
HOOD AJAR SWITCH
BODY CONTROL MODULE (BCM)

DIAGNOSTIC TEST

1. **CHECK FOR AN ACTIVE DTC**
    1. Turn the ignition on.
    2. Press down on the Hood Ajar Switch several times.
    3. With the scan tool, read DTCs.

    Does the scan tool display this DTC as active?

    Yes

    - Go To 2

    No

    - Test complete. The condition or conditions that originally set this DTC are not present at this time. Using the wiring diagrams as a guide, check all related splices and connectors for signs of water intrusion, corrosion, pushed out or bent terminals and correct pin tension.
    - Perform the BODY VERIFICATION TEST. Refer to **STANDARD PROCEDURE** .
2. **CHECK FOR A STUCK HOOD AJAR SWITCH**
    1. Turn the ignition off.
    2. Disconnect the Hood Ajar Switch harness connector.
    3. Turn the ignition on.
    4. With the scan tool, read DTCs.

    Does the scan tool display this DTC as active?

    Yes

    - Go To 3

    No

- Replace the Hood Ajar Switch in accordance with the Service Information.
- Perform the BODY VERIFICATION TEST. Refer to **STANDARD PROCEDURE** .

3. **CHECK THE (G70) HOOD AJAR SWITCH SENSE CIRCUIT FOR A SHORT TO GROUND**
   1. Turn the ignition off.
   2. Disconnect the BCM C4 harness connector.
   3. Measure the resistance between ground and the (G70) Hood Ajar Switch Sense circuit at the Liftgate Release Switch harness connector.

      Is the resistance below 10K Ohms?

      Yes

      - Repair the (G70) Hood Ajar Switch Sense circuit for a short to ground.
      - Perform the BODY VERIFICATION TEST. Refer to **STANDARD PROCEDURE** .

      No

      - Replace the Body Control Module in accordance with the Service Information. Refer to **MODULE, BODY CONTROL, REMOVAL** .
      - Perform the BODY VERIFICATION TEST. Refer to **STANDARD PROCEDURE** .

B181E-15-HOOD AJAR INPUT - CIRCUIT SHORT TO BATTERY OR OPEN

For a complete wiring diagram, **refer to appropriate SYSTEM WIRING DIAGRAMS article** .

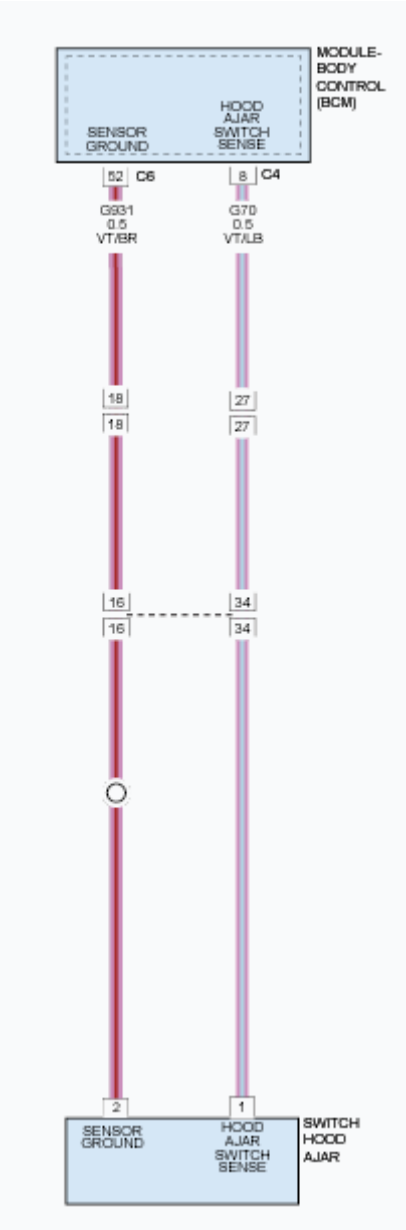

Fig. 64: Hood Ajar Switch Circuit Diagram
Courtesy of CHRYSLER GROUP, LLC

THEORY OF OPERATION

The Body Control Module (BCM) provides a reference voltage on the hood ajar switch sense circuit through a pull-up resistor that is connected to battery voltage. The Hood Ajar Switch switches the hood ajar switch sense circuit to ground when the hood is open. A diagnostic resistor internal to the switch is placed in parallel with the switch.

WHEN MONITORED

Continuously

SET CONDITION

When the BCM detects that the parallel resistor is not detected in the circuit and the switch is not closed.

POSSIBLE CAUSES

Possible Causes
(G70) HOOD AJAR SWITCH SENSE CIRCUIT SHORT TO VOLTAGE
(G70) HOOD AJAR SWITCH SENSE CIRCUIT OPEN
(G931) GROUND CIRCUIT OPEN
HOOD AJAR SWITCH
BODY CONTROL MODULE (BCM)

DIAGNOSTIC TEST

1. **CHECK FOR AN ACTIVE DTC**
    1. Turn the ignition on.
    2. With the scan tool, read DTCs.

    Does the scan tool display this DTC as active?

    Yes

    - Go To 2

    No

    - Test complete. The condition or conditions that originally set this DTC are not present at this time. Using the wiring diagrams as a guide, check all related splices and connectors for signs of water intrusion, corrosion, pushed out or bent terminals and correct pin tension.
    - Perform the BODY VERIFICATION TEST. Refer to **STANDARD PROCEDURE** .
2. **CHECK THE HOOD AJAR SWITCH FOR AN OPEN**
    1. Turn the ignition off.
    2. Disconnect the Hood Ajar Switch harness connector.
    3. Depress the plunger of the hood ajar switch and measure the resistance between the two terminals of the switch.

    Is the resistance approximately 1K Ohms?

    Yes

    - Go To 3

    No

- Replace the Hood Ajar Switch in accordance with the Service Information. Refer to **SWITCH, HOOD AJAR, REMOVAL** .
- Perform the BODY VERIFICATION TEST. Refer to **STANDARD PROCEDURE** .

3. **CHECK THE (G70) HOOD AJAR SWITCH SENSE CIRCUIT FOR A SHORT TO BATTERY**
   1. Disconnect the BCM C4 harness connector.
   2. Turn the ignition on.
   3. Measure the voltage of the (G70) Hood Ajar Switch Sense circuit.

      Is the voltage present?

      Yes

      - Repair the short to voltage on the (G70) Hood Ajar Switch Sense circuit.
      - Perform the BODY VERIFICATION TEST. Refer to **STANDARD PROCEDURE** .

      No

      - Go To 4
4. **CHECK THE (G70) HOOD AJAR SWITCH SENSE CIRCUIT FOR AN OPEN**
   1. Turn the ignition off.
   2. Measure the resistance of the (G70) Hood Ajar Switch Sense circuit between the BCM C4 and Hood Ajar Switch harness connectors.

      Is the resistance above 5.0 Ohms?

      Yes

      - Repair the open in the (G70) Hood Ajar Switch Sense circuit.
      - Perform the BODY VERIFICATION TEST. Refer to **STANDARD PROCEDURE** .

      No

      - Go To 5
5. **CHECK THE (G931) GROUND CIRCUIT FOR AN OPEN**
   1. Measure the resistance of the (G931) Ground circuit between the BCM C4 and Hood Ajar Switch harness connectors.

      Is the resistance above 5.0 Ohms?

      Yes

      - Repair the open in the (G931) Ground circuit.
      - Perform the BODY VERIFICATION TEST. Refer to **STANDARD PROCEDURE** .

No

- Replace the BCM in accordance with the Service Information. Refer to **MODULE, BODY CONTROL, REMOVAL** .
- Perform the BODY VERIFICATION TEST. Refer to **STANDARD PROCEDURE** .

B182C-64-ALL DOOR LOCK CONTROL SIGNAL - PLAUSIBILITY FAILURE

For a complete wiring diagram, **refer to appropriate SYSTEM WIRING DIAGRAMS article** .

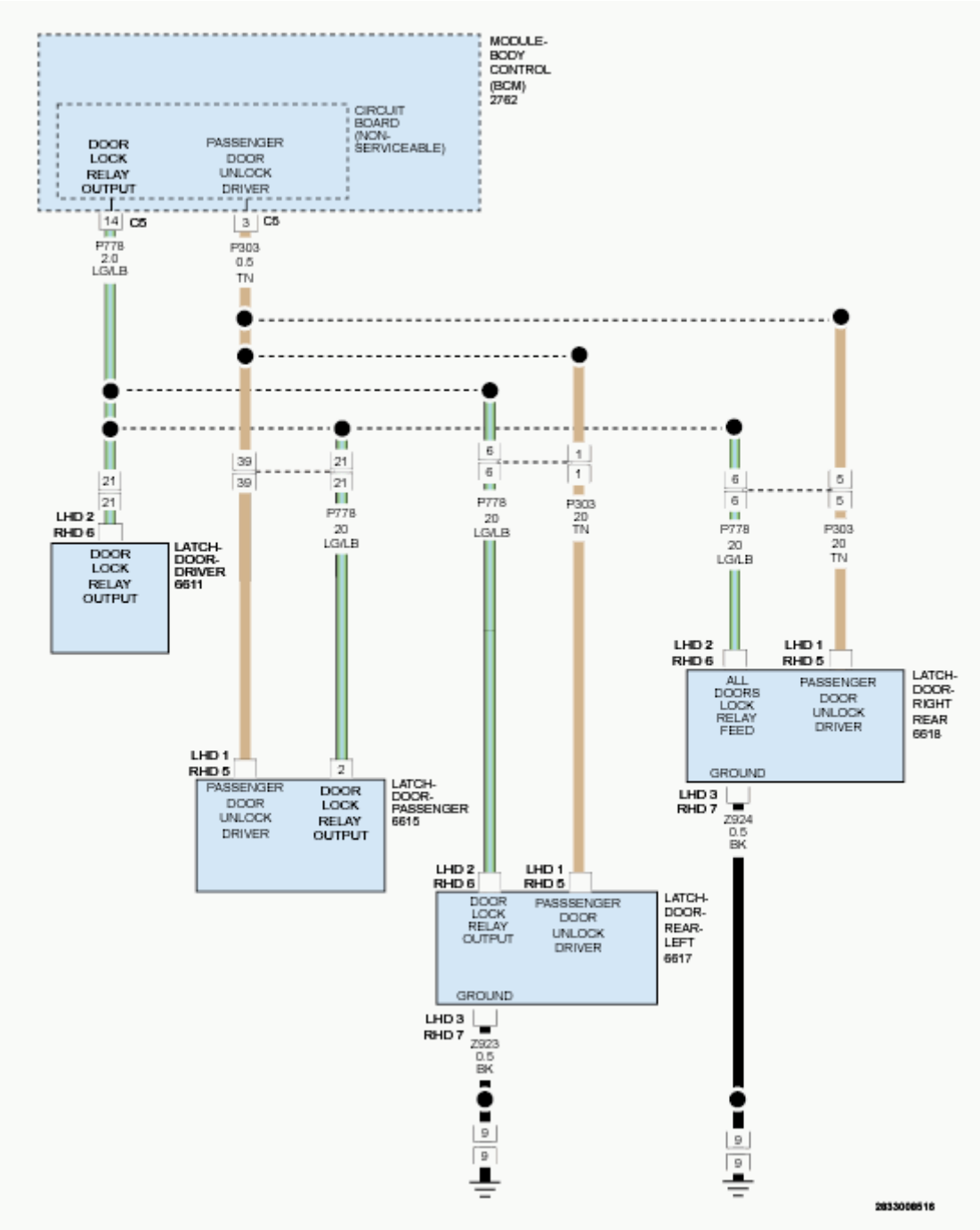

Fig. 65: Passenger Door Lock Control Circuit Diagram
Courtesy of CHRYSLER GROUP, LLC

WHEN MONITORED

With the ignition on.

SET CONDITION

The Body Control Module will set this DTC if voltage is detected on the Door Lock Relay Output circuit with the Door Lock Relay inactive.

POSSIBLE CAUSES

Possible Causes
DOOR LOCK RELAY OUTPUT CIRCUIT SHORTED TO VOLTAGE BODY CONTROL MODULE (BCM)

DIAGNOSTIC TEST

1. **CHECK FOR AN ACTIVE DTC**
    1. Turn the ignition on.
    2. With the scan tool, read DTCs.

    Does the scan tool display this DTC as active?

    Yes

    - Go To 2

    No

    - Test complete, the condition or conditions that originally set this DTC are not present at this time. Using the wiring diagrams as a guide, check all related splices and connectors for signs of water intrusion, corrosion, pushed out or bent terminals, and correct pin tension.
    - Perform the BODY VERIFICATION TEST. Refer to **STANDARD PROCEDURE** .
2. **CHECK THE (P778) DOOR LOCK RELAY OUTPUT CIRCUIT FOR A SHORT TO VOLTAGE**
    1. Turn the ignition off.
    2. Disconnect the BCM C5 harness connector.
    3. Turn the ignition on.
    4. Measure the voltage of the (P778) Door Lock Relay Output circuit.

    Is voltage present?

    Yes

    - Repair the short to voltage on the (P778) Door Lock Relay Output circuit.
    - Perform the BODY VERIFICATION TEST. Refer to **STANDARD PROCEDURE** .

    No

    - Replace the Body Control Module in accordance with the Service Information. Refer to **MODULE, BODY CONTROL, REMOVAL** .

- Perform the BODY VERIFICATION TEST. Refer to **STANDARD PROCEDURE** .

2014 ACCESSORIES AND EQUIPMENT

Body Control Module (BCM) - Electrical Diagnostics - Cherokee

DIAGNOSIS AND TESTING

B186E-64-ALL DOOR SECONDARY LOCK CONTROL - SIGNAL PLAUSIBILITY FAILURE

For a complete wiring diagram, **refer to appropriate SYSTEM WIRING DIAGRAMS article** .

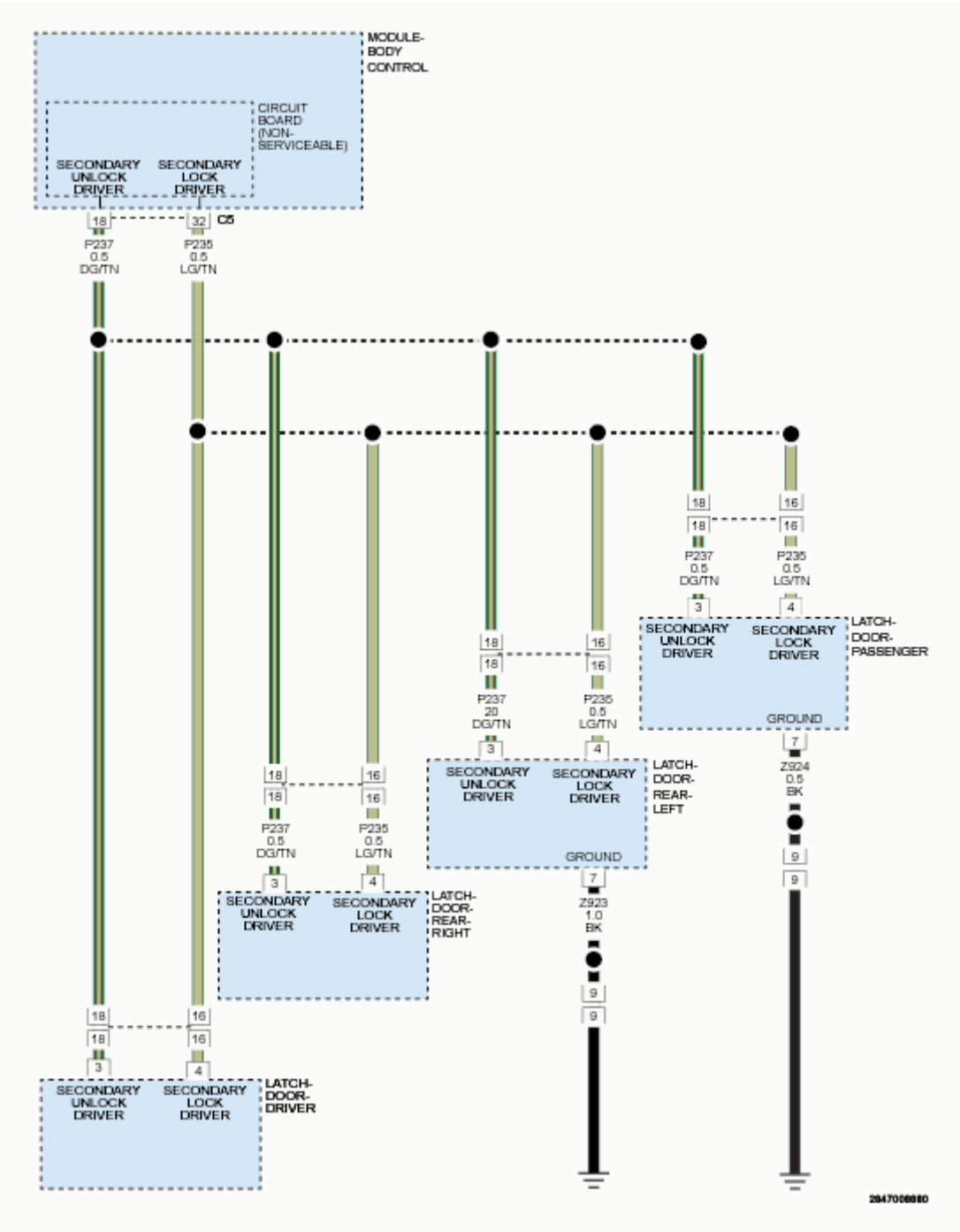

Fig. 1: Secondary Lock Control Circuit Diagram
Courtesy of CHRYSLER GROUP, LLC

WHEN MONITORED

With the ignition on.

SET CONDITION

The Body Control Module will set this DTC if voltage is detected on the (P235) Dead Bolt Lock Relay Output circuit.

POSSIBLE CAUSES

Possible Causes
(P235) DEAD BOLT LOCK RELAY OUTPUT CIRCUIT SHORTED TO VOLTAGE BODY CONTROL MODULE (BCM)

DIAGNOSTIC TEST

1. **CHECK FOR AN ACTIVE DTC**
   1. Turn the ignition on.
   2. With the scan tool, read DTCs.

      Does the scan tool display this DTC as active?

      Yes

      - Go To 2

      No

      - Test complete. The condition or conditions that originally set this DTC are not present at this time. Using the wiring diagrams as a guide, check all related splices and connectors for signs of water intrusion, corrosion, pushed out or bent terminals and correct pin tension.
      - Perform the BODY VERIFICATION TEST. Refer to **STANDARD PROCEDURE** .
2. **CHECK THE (P235) DEAD BOLT LOCK RELAY OUTPUT CIRCUIT FOR A SHORT TO VOLTAGE**
   1. Turn the ignition off.
   2. Disconnect the BCM C5 harness connector.
   3. Turn the ignition on.
   4. Measure the voltage of the (P235) Dead Bolt Lock Relay Output circuit.

      Is voltage present?

      Yes

      - Repair the short to voltage on the (P235) Dead Bolt Lock Relay Output circuit.
      - Perform the BODY VERIFICATION TEST. Refer to **STANDARD PROCEDURE** .

      No

      - Replace the Body Control Module in accordance with the Service Information. Refer to

MODULE, BODY CONTROL, REMOVAL .

- Perform the BODY VERIFICATION TEST. Refer to **STANDARD PROCEDURE** .

B1989-64-ALL DOOR SECONDARY UNLOCK CONTROL - SIGNAL PLAUSIBILITY FAILURE

For a complete wiring diagram, **refer to appropriate SYSTEM WIRING DIAGRAMS article** .

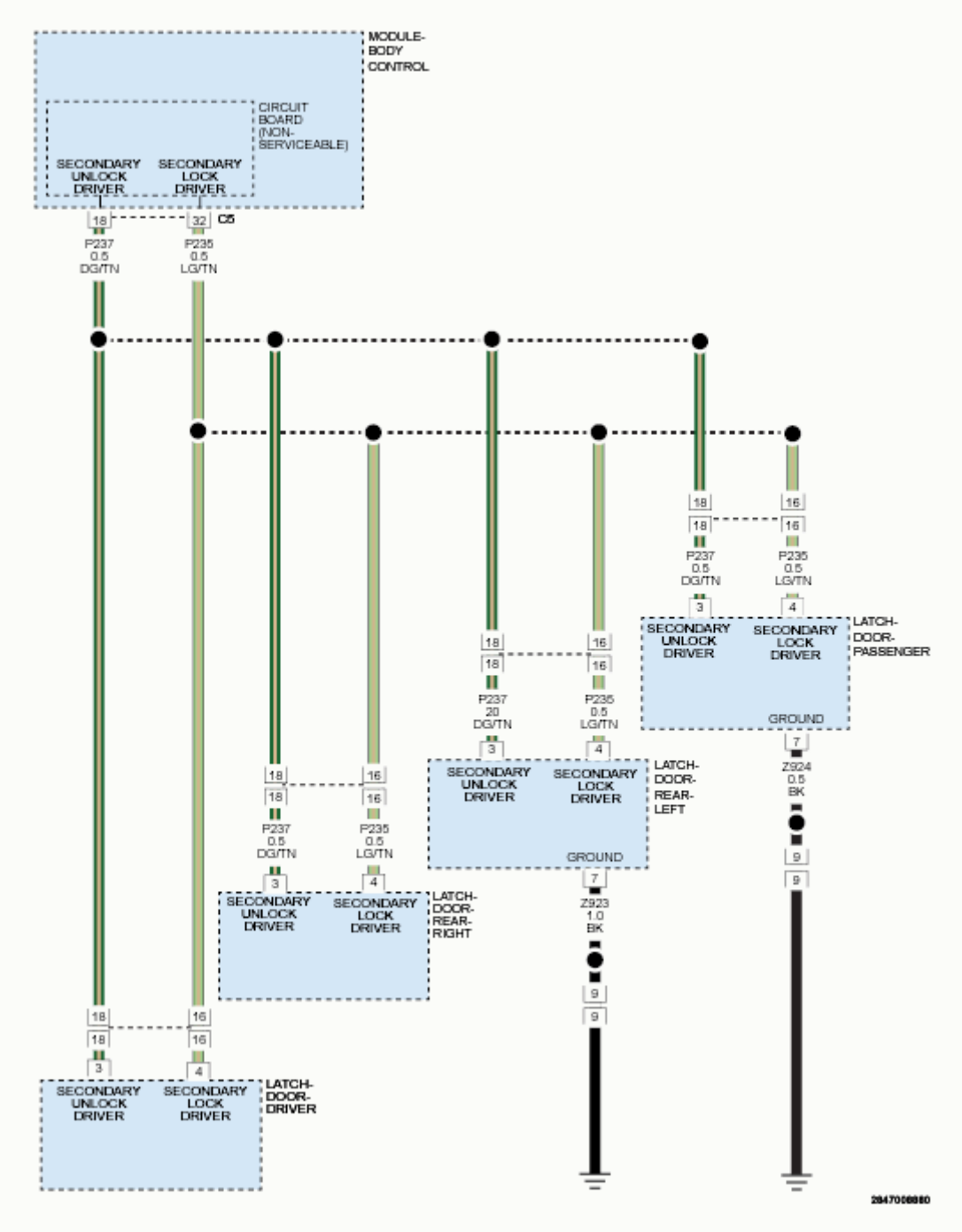

Fig. 2: Secondary Lock Control Circuit Diagram

Courtesy of CHRYSLER GROUP, LLC

WHEN MONITORED

With the ignition on.

SET CONDITION

The Body Control Module will set this DTC if voltage is detected on the (P237) Dead Bolt Unlock Relay Output circuit.

POSSIBLE CAUSES

Possible Causes
(P237) DEAD BOLT UNLOCK RELAY OUTPUT CIRCUIT SHORTED TO VOLTAGE BODY CONTROL MODULE (BCM)

DIAGNOSTIC TEST

1. **CHECK FOR AN ACTIVE DTC**
    1. Turn the ignition on.
    2. With the scan tool, read DTCs.

    Does the scan tool display this DTC as active?

    Yes

    - Go To 2

    No

    - Test complete. The condition or conditions that originally set this DTC are not present at this time. Using the wiring diagrams as a guide, check all related splices and connectors for signs of water intrusion, corrosion, pushed out or bent terminals and correct pin tension.
    - Perform the BODY VERIFICATION TEST. Refer to **STANDARD PROCEDURE** .
2. **CHECK THE (P237) DEAD BOLT UNLOCK RELAY OUTPUT CIRCUIT FOR A SHORT TO VOLTAGE**
    1. Turn the ignition off.
    2. Disconnect the BCM C5 harness connector.
    3. Turn the ignition on.
    4. Measure the voltage of the (P237) Dead Bolt Unlock Relay Output circuit.

    Is voltage present?

Yes

- Repair the short to voltage on the (P237) Dead Bolt Unlock Relay Output circuit.
- Perform the BODY VERIFICATION TEST. Refer to **STANDARD PROCEDURE** .

No

- Replace the Body Control Module in accordance with the Service Information. Refer to **MODULE, BODY CONTROL, REMOVAL** .
- Perform the BODY VERIFICATION TEST. Refer to **STANDARD PROCEDURE** .

B1A90-51-SECRET KEY NOT STORED IN BCM - NOT PROGRAMMED

For a complete wiring diagram, **refer to appropriate SYSTEM WIRING DIAGRAMS article** .

WHEN MONITORED

With the ignition on.

SET CONDITION

Error is detected if the BCM still has the default Secret Key (BCM has not received a new Secret Key from the RFHM).

POSSIBLE CAUSES

Possible Causes
BODY CONTROL MODULE NOT PROGRAMMED

DIAGNOSTIC TEST

CHECK FOR AN ACTIVE DTC

1. Turn the ignition on.
2. With the scan tool, read DTCs.

   Does the scan tool display this DTC as active?

   Yes

   - Refer to **STANDARD PROCEDURE** and perform the PROGRAM THE BCM (Body Control Module) procedure.

   No

- Test complete. The condition or conditions that originally set this DTC are not present at this time. Using the wiring diagrams as a guide, check all related splices and connectors for signs of water intrusion, corrosion, pushed out or bent terminals and correct pin tension.
- Perform the BODY VERIFICATION TEST. Refer to **STANDARD PROCEDURE** .

B2100-12-IGNITION RUN/START INPUT-CIRCUIT SHORT TO BATTERY

For a complete wiring diagram, **refer to appropriate SYSTEM WIRING DIAGRAMS article** .

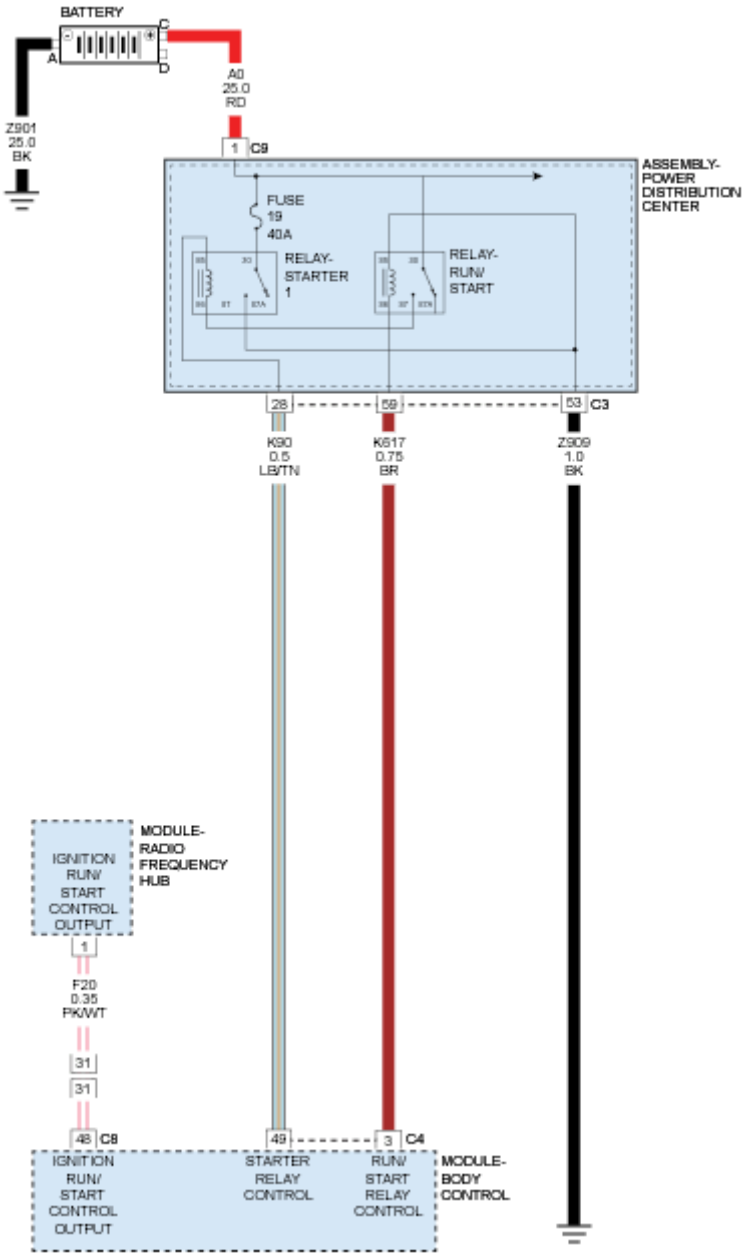

Fig. 3: Ignition Run/Start Input Circuit Diagram

Courtesy of CHRYSLER GROUP, LLC

THEORY OF OPERATION

The Body Control Module (BCM) receives an ignition feed from the Radio Frequency (RF) Hub indicating run/start operation is requested. The BCM provides a voltage output through the run/start relay control circuit, which connects to the coil side of the Run/Start Relay. The Body Control Module (BCM) monitors the ignition switch status message received over the Controller Area Network (CAN) bus.

WHEN MONITORED

With the Ignition Run/Start Relay off.

SET CONDITION

When the Body Control Module (BCM) detects voltage on the (F20) Ignition Run/Start Control Output circuit when the RF Hub indicates the ignition is off.

POSSIBLE CAUSES

Possible Causes
(F20) IGNITION RUN/START CONTROL OUTPUT CIRCUIT SHORTED TO VOLTAGE RADIO FREQUENCY (RF) HUB BODY CONTROL MODULE (BCM)

DIAGNOSTIC TEST

1. **CHECK FOR AN ACTIVE DTC**
    1. Turn the ignition on.
    2. With the scan tool, read DTCs.

    Does the scan tool display this DTC as active?

    Yes

    - Go To 2

    No

    - Test complete. The condition or conditions that originally set this DTC are not present at this time. Using the wiring diagrams as a guide, check all related splices and connectors for signs of water intrusion, corrosion, pushed out or bent terminals and correct pin tension.
    - Perform the BODY VERIFICATION TEST. Refer to **STANDARD PROCEDURE** .
2. **CHECK THE BCM FOR CORRECT OPERATION**
    1. Turn the ignition off.

2. Disconnect the BCM C8 harness connector.
3. Measure the voltage of the (F20) Ignition Run/Start Control Output circuit at the BCM C8 harness connector.

   Is voltage present?

   Yes

   - Go To 3

   No

   - Replace the BCM in accordance with the Service Information. Refer to **MODULE, BODY CONTROL, REMOVAL** .
   - Perform the BODY VERIFICATION TEST. Refer to **STANDARD PROCEDURE** .

3. **CHECK THE (F20) IGNITION RUN/START CONTROL OUTPUT CIRCUIT FOR A SHORT TO VOLTAGE**
   1. Disconnect the RF Hub C1 harness connector.
   2. Measure the voltage of the (F20) Ignition Run/Start Control Output circuit at the RF Hub C1 harness connector.

      Is voltage present?

      Yes

      - Repair the short to voltage in the (F20) Ignition Run/Start Control Output circuit.
      - Perform the BODY VERIFICATION TEST. Refer to **STANDARD PROCEDURE** .

      No

      - Replace the RF Hub in accordance with the Service Information. Refer to **MODULE, RADIO FREQUENCY (RF HUB), REMOVAL** .
      - Perform the BODY VERIFICATION TEST. Refer to **STANDARD PROCEDURE** .

B2100-14-IGNITION RUN/START INPUT - CIRCUIT SHORT TO GROUND OR OPEN

For a complete wiring diagram, **refer to appropriate SYSTEM WIRING DIAGRAMS article** .

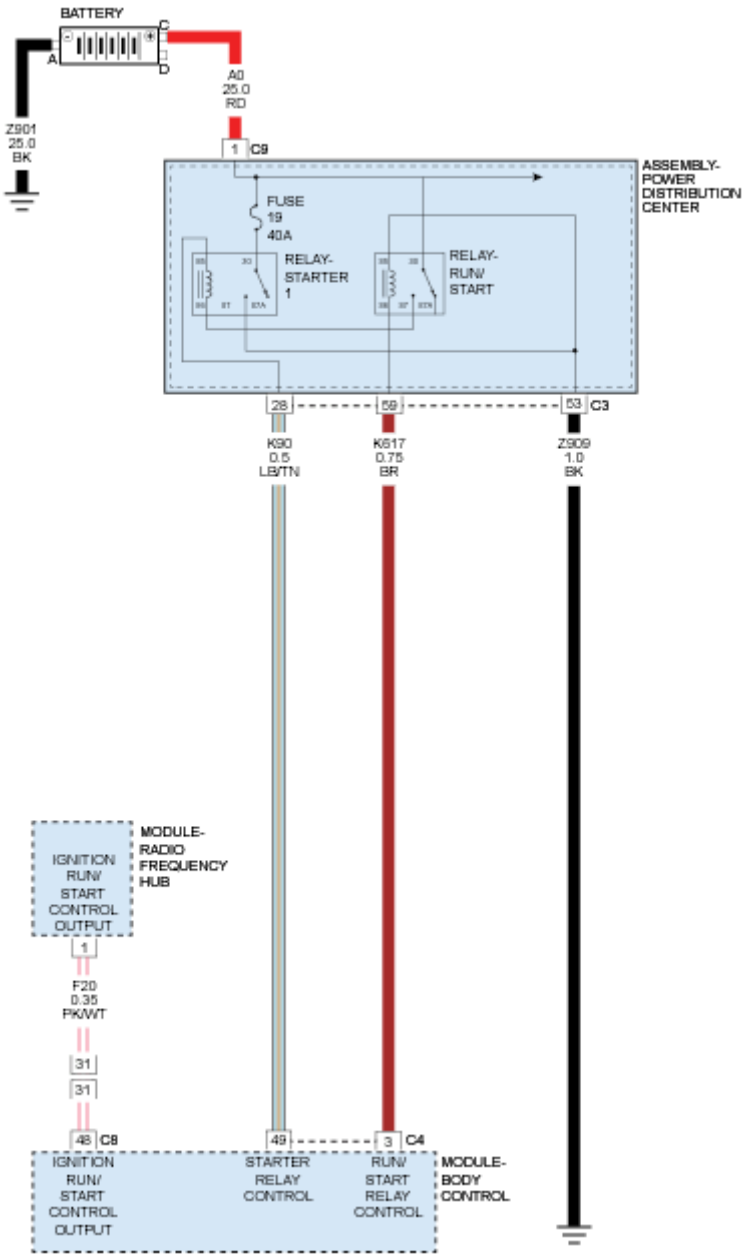

Fig. 4: Ignition Run/Start Input Circuit Diagram
Courtesy of CHRYSLER GROUP, LLC

THEORY OF OPERATION

The Body Control Module (BCM) receives an ignition feed from the Radio Frequency (RF) Hub indicating run/start operation is requested. The BCM provides a voltage output through the run/start relay control circuit, which connects to the coil side of the Run/Start Relay. The Body Control Module (BCM) monitors the ignition switch status message received over the Controller Area Network (CAN) bus.

WHEN MONITORED

With the Ignition Run/Start Relay off.

SET CONDITION

When the Body Control Module (BCM) detects no voltage on the (F20) Ignition Run/Start Control Output circuit when the RF Hub indicates the ignition is on.

POSSIBLE CAUSES

Possible Causes
(F20) IGNITION RUN/START CONTROL OUTPUT CIRCUIT SHORTED TO GROUND OR OPEN RADIO FREQUENCY (RF) HUB BODY CONTROL MODULE (BCM)

DIAGNOSTIC TEST

1. **CHECK FOR AN ACTIVE DTC**
    1. Turn the ignition on.
    2. With the scan tool, read DTCs.

    Does the scan tool display this DTC as active?

    Yes

    - Go To 2

    No

    - Test complete. The condition or conditions that originally set this DTC are not present at this time. Using the wiring diagrams as a guide, check all related splices and connectors for signs of water intrusion, corrosion, pushed out or bent terminals and correct pin tension.
    - Perform the BODY VERIFICATION TEST. Refer to **STANDARD PROCEDURE** .
2. **CHECK THE BCM FOR CORRECT OPERATION**
    1. Turn the ignition off.
    2. Disconnect the BCM C8 harness connector.
    3. Turn the ignition on.
    4. Measure the voltage of the (F20) Ignition Run/Start Control Output circuit at the BCM C8 harness connector.

    Is the voltage greater than 10 volts?

    Yes

    - Replace the BCM in accordance with the Service Information. Refer to **MODULE, BODY**

CONTROL, REMOVAL .
- Perform the BODY VERIFICATION TEST. Refer to **STANDARD PROCEDURE** .

No

- Go To 3

3. **CHECK THE (F20) IGNITION RUN/START CONTROL OUTPUT CIRCUIT FOR A SHORT TO GROUND**
   1. Turn the ignition off.
   2. Disconnect the RF Hub C1 harness connector.
   3. Measure the resistance between ground and the (F20) Ignition Run/Start Control Output circuit at the RF Hub C1 harness connector.

   Is the resistance below 10K Ohms?

   Yes

   - Repair the short to ground on the (F20) Ignition Run/Start Control Output circuit.
   - Perform the BODY VERIFICATION TEST. Refer to **STANDARD PROCEDURE** .

   No

   - Go To 4

4. **CHECK THE (F20) IGNITION RUN/START CONTROL OUTPUT CIRCUIT FOR AN OPEN**
   1. Measure the resistance of the (F20) Ignition Run/Start Control Output circuit between the RF Hub C1 and BCM C8 harness connectors.

   Is the resistance above 5.0 Ohms?

   Yes

   - Repair the open in the (F20) Ignition Run/Start Control Output circuit.
   - Perform the BODY VERIFICATION TEST. Refer to **STANDARD PROCEDURE** .

   No

   - Replace the RF Hub in accordance with the Service Information. Refer to **MODULE, RADIO FREQUENCY (RF HUB), REMOVAL** .
   - Perform the BODY VERIFICATION TEST. Refer to **STANDARD PROCEDURE** .

B2103-18-IGNITION RUN/START 1 CONTROL-UNDER CURRENT

For a complete wiring diagram, **refer to appropriate SYSTEM WIRING DIAGRAMS article** .

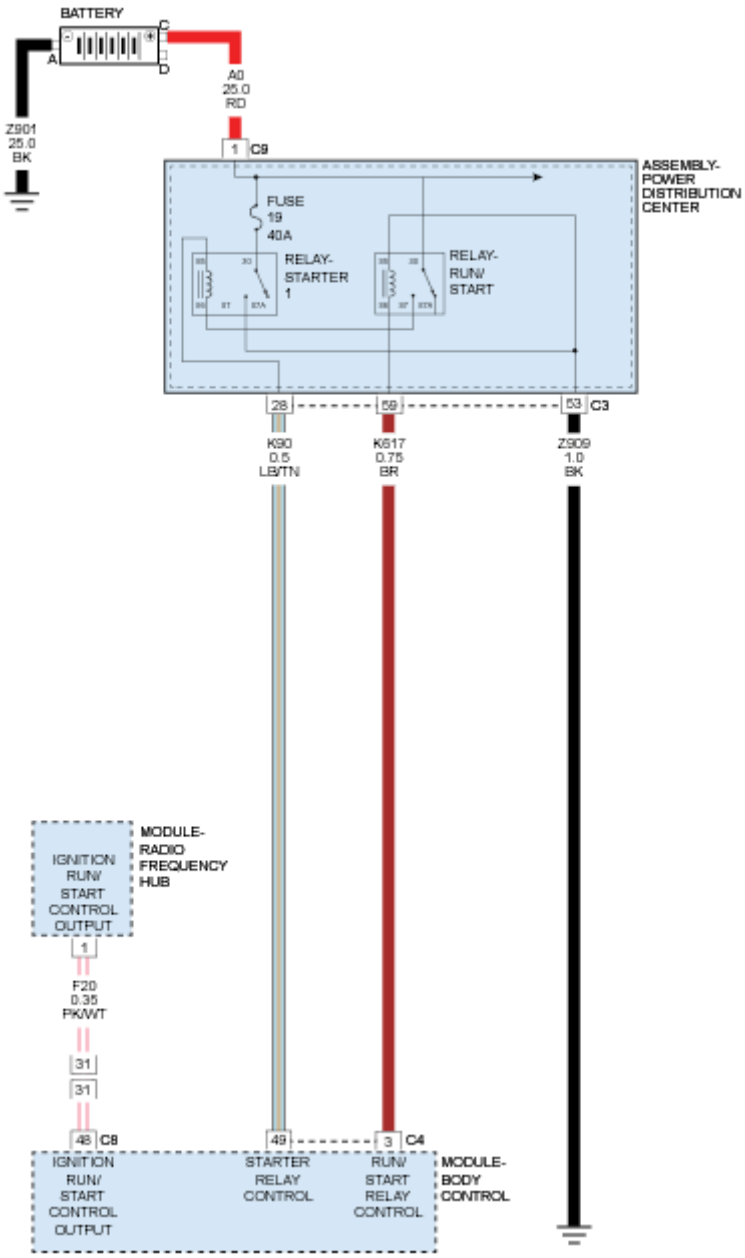

Fig. 5: Ignition Run/Start Input Circuit Diagram
Courtesy of CHRYSLER GROUP, LLC

WHEN MONITORED

With the ignition on.

SET CONDITION

This DTC will set if the Body Control Module (BCM) detects an open or short to voltage on the Run/Start Relay Control circuit.

POSSIBLE CAUSES

Possible Causes
GROUND CIRCUIT OPEN
RUN/START RELAY CONTROL CIRCUIT OPEN OR SHORT TO VOLTAGE
RUN/START RELAY
BODY CONTROL MODULE (BCM)

DIAGNOSTIC TEST

1. **CHECK FOR AN ACTIVE DTC**
    1. Turn the ignition on.
    2. With the scan tool, read DTCs.

    Does the scan tool display this DTC as active?

    Yes

    - Go To 2

    No

    - Test complete. The condition or conditions that originally set this DTC are not present at this time. Using the wiring diagrams as a guide, check all related splices and connectors for signs of water intrusion, corrosion, pushed out or bent terminals and correct pin tension.
    - Perform the BODY VERIFICATION TEST. Refer to **STANDARD PROCEDURE** .
2. **CHECK THE RUN/START RELAY FOR CORRECT OPERATION**
    1. Turn the ignition off.
    2. Replace the Run/Start Relay with a known good relay.
    3. Turn the ignition on.
    4. With the scan tool, read DTCs.

    Does the scan tool display this DTC as active?

    Yes

    - Go To 3

    No

    - Replace the Run/Start Relay.
    - Perform the BODY VERIFICATION TEST. Refer to **STANDARD PROCEDURE** .
3. **CHECK THE (Z909) GROUND CIRCUIT FOR AN OPEN**

1. Turn the ignition off.
2. Remove the Run/Start Relay from the PDC.
3. Measure the resistance between ground and the (Z909) Ground circuit at the Run/Start Relay cavity in the PDC.

   Is the resistance above 5.0 Ohms?

   Yes

   - Repair the (Z909) Ground circuit for an open circuit.
   - Perform the BODY VERIFICATION TEST. Refer to **STANDARD PROCEDURE** .

   No

   - Go To 4

4. **CHECK THE (K617) RUN/START RELAY CONTROL CIRCUIT FOR A SHORT TO VOLTAGE**
   1. Turn the ignition off.
   2. Disconnect the BCM C4 harness connector.
   3. Turn the ignition on.
   4. Measure the voltage of the (K617) Run/Start Relay circuit at the Run/Start Relay cavity in the PDC.

      Is voltage present?

      Yes

      - Repair the (K617) Run/Start Relay circuit for a short to voltage.
      - Perform the BODY VERIFICATION TEST. Refer to **STANDARD PROCEDURE** .

      No

      - Go To 5

5. **CHECK THE (K617) RUN/START RELAY CONTROL CIRCUIT FOR AN OPEN**
   1. Turn the ignition off.
   2. Measure the resistance of the (K617) Run/Start Relay circuit between the BCM C4 harness connector and the Run/Start Relay cavity in the PDC.

      Is the resistance above 5.0 Ohms?

      Yes

      - Repair the (K617) Run/Start Relay circuit for an open circuit.

- Perform the BODY VERIFICATION TEST. Refer to **STANDARD PROCEDURE** .

No

- Replace the Body Control Module in accordance with the Service Information. Refer to **MODULE, BODY CONTROL, REMOVAL** .
- Perform the BODY VERIFICATION TEST. Refer to **STANDARD PROCEDURE** .

B2103-19-IGNITION RUN/START 1 CONTROL - OVER CURRENT

For a complete wiring diagram, **refer to appropriate SYSTEM WIRING DIAGRAMS article** .

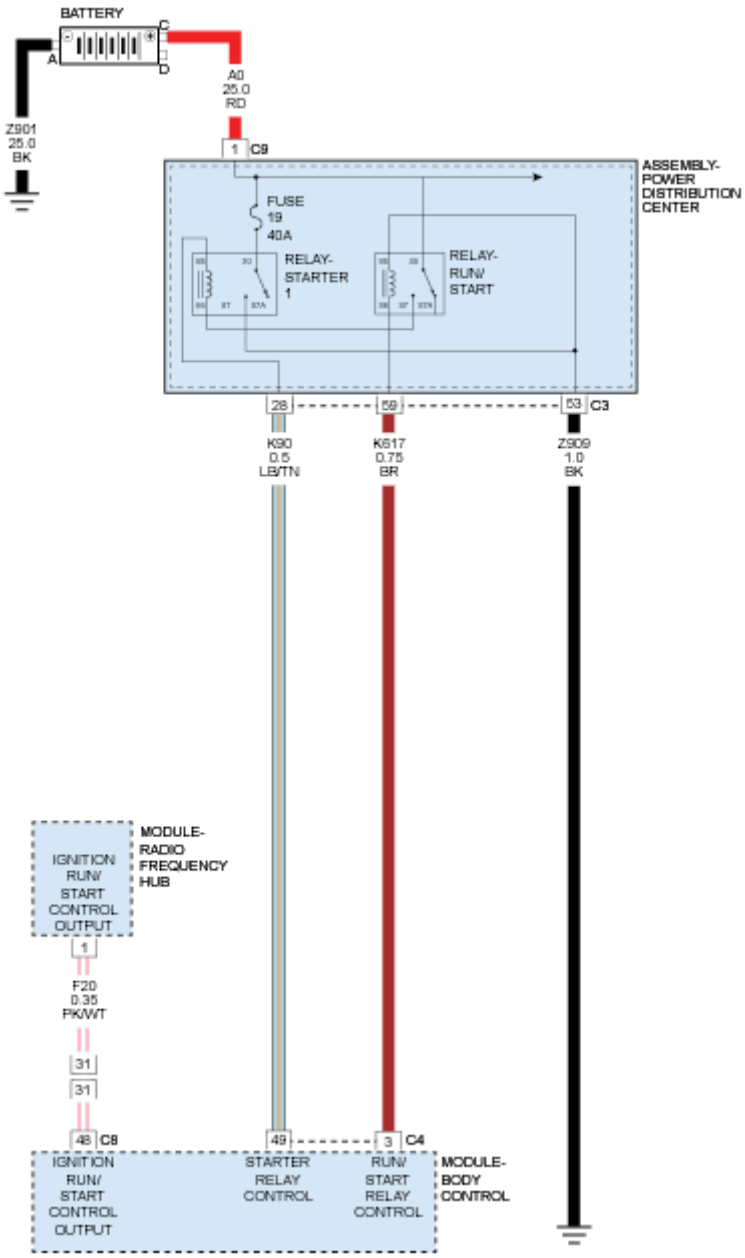

Fig. 6: Ignition Run/Start Input Circuit Diagram
Courtesy of CHRYSLER GROUP, LLC

WHEN MONITORED

With the ignition on.

SET CONDITION

This DTC will set if the Body Control Module (BCM) detects a short to ground on the Run/Start Relay Control circuit.

POSSIBLE CAUSES

Possible Causes
RUN/START RELAY CONTROL CIRCUIT SHORT TO GROUND
RUN/START RELAY
BODY CONTROL MODULE (BCM)

DIAGNOSTIC TEST

1. **CHECK FOR AN ACTIVE DTC**
    1. Turn the ignition on.
    2. With the scan tool, read DTCs.

    Does the scan tool display this DTC as active?

    Yes

    - Go To 2

    No

    - Test complete. The condition or conditions that originally set this DTC are not present at this time. Using the wiring diagrams as a guide, check all related splices and connectors for signs of water intrusion, corrosion, pushed out or bent terminals and correct pin tension.
    - Perform the BODY VERIFICATION TEST. Refer to **STANDARD PROCEDURE** .
2. **CHECK THE RUN/START RELAY FOR CORRECT OPERATION**
    1. Turn the ignition off.
    2. Replace the Run/Start Relay with a known good relay.
    3. Turn the ignition on.
    4. With the scan tool, read DTCs.

    Does the scan tool display this DTC as active?

    Yes

    - Go To 3

    No

    - Replace the Run/Start Relay.
    - Perform the BODY VERIFICATION TEST. Refer to **STANDARD PROCEDURE** .
3. **CHECK THE (K617) RUN/START RELAY CONTROL CIRCUIT FOR A SHORT TO GROUND**
    1. Turn the ignition off.

2. Remove the Run/Start Relay from the PDC.
3. Disconnect the BCM C4 harness connector.
4. Measure the resistance between ground and the (K617) Run/Start Relay circuit at the Run/Start Relay cavity in the PDC.

   Is the resistance below 10K Ohms?

   Yes

   - Repair the (K617) Run/Start Relay circuit for a short to ground.
   - Perform the BODY VERIFICATION TEST. Refer to **STANDARD PROCEDURE** .

   No

   - Replace the Body Control Module in accordance with the Service Information. Refer to **MODULE, BODY CONTROL, REMOVAL** .
   - Perform the BODY VERIFICATION TEST. Refer to **STANDARD PROCEDURE** .

B2121-12-IGNITION RUN CONTROL 1 - CIRCUIT SHORT TO BATTERY

For a complete wiring diagram, **refer to appropriate SYSTEM WIRING DIAGRAMS article** .

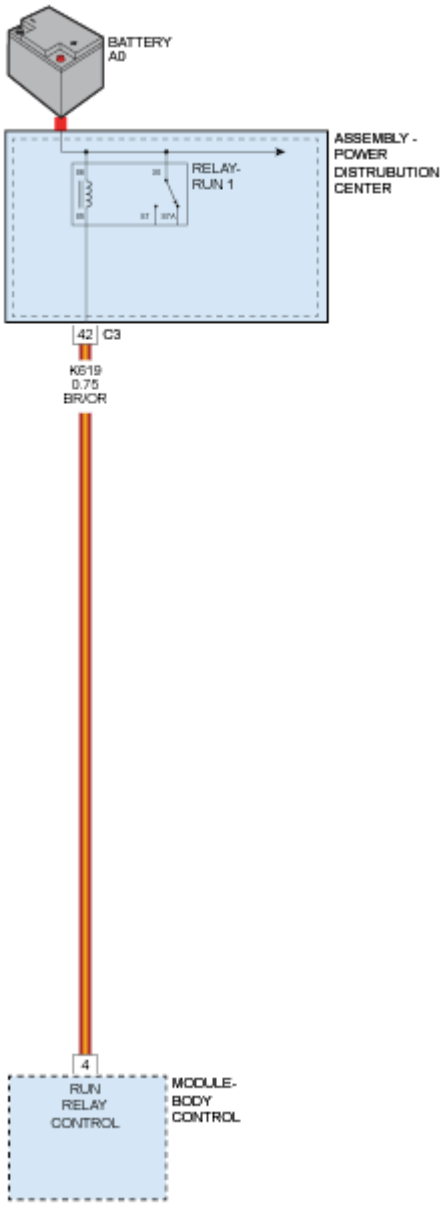

Fig. 7: Ignition Run Control Circuit Diagram
Courtesy of CHRYSLER GROUP, LLC

THEORY OF OPERATION

The Body Control Module (BCM) receives the network communication message from the Radio Frequency (RF) Hub indicating run operation is requested. The BCM provides a ground to the ignition run relay control circuit, which connects to the coil side of the Ignition Run Relay.

WHEN MONITORED

With the Ignition Run Relay off.

SET CONDITION

When the Body Control Module (BCM) detects a high condition on the Ignition Run Control Output circuit.

POSSIBLE CAUSES

Possible Causes
IGNITION RUN CONTROL OUTPUT CIRCUIT SHORTED TO VOLTAGE RUN RELAY BODY CONTROL MODULE (BCM)

DIAGNOSTIC TEST

1. **CHECK FOR AN ACTIVE DTC**
    1. Turn the ignition on.
    2. With the scan tool, read DTCs.

    Does the scan tool display this DTC as active?

    Yes

    - Go To 2

    No

    - Test complete, the condition or conditions that originally set this DTC are not present at this time. Using the wiring diagrams as a guide, check all related splices and connectors for signs of water intrusion, corrosion, pushed out or bent terminals, and correct pin tension.
    - Perform the BODY VERIFICATION TEST. Refer to **STANDARD PROCEDURE** .
2. **CHECK THE IGNITION RUN RELAY FOR CORRECT OPERATION**
    1. Turn the ignition off.
    2. Remove the Run Relay and substitute it with a known good relay.
    3. Turn the ignition on.
    4. With the scan tool, read DTCs.

    Does the scan tool display this DTC as active?

    Yes

    - Go To 3

    No

    - Replace the Run Relay.

- Perform the BODY VERIFICATION TEST. Refer to **STANDARD PROCEDURE** .

3. **CHECK THE (K619) IGNITION RUN CONTROL OUTPUT CIRCUIT FOR A SHORT TO VOLTAGE**
   1. Turn the ignition off.
   2. Remove the Ignition Run Relay.
   3. Turn the ignition on.
   4. Using a 12-volt test light connected to ground, check the (K619) Ignition Run Control Output circuit.

      Does the test light illuminate brightly?

      Yes

      - Repair the short to voltage in the (K619) Ignition Run Control Output circuit.
      - Perform the BODY VERIFICATION TEST. Refer to **STANDARD PROCEDURE** .

      No

      - Replace the Body Control Module (BCM) in accordance with the Service Information. Refer to **MODULE, BODY CONTROL, REMOVAL** .
      - Perform the BODY VERIFICATION TEST. Refer to **STANDARD PROCEDURE** .

B2121-14-IGNITION RUN CONTROL 1 - CIRCUIT SHORT TO GROUND OR OPEN

For a complete wiring diagram, **refer to appropriate SYSTEM WIRING DIAGRAMS article** .

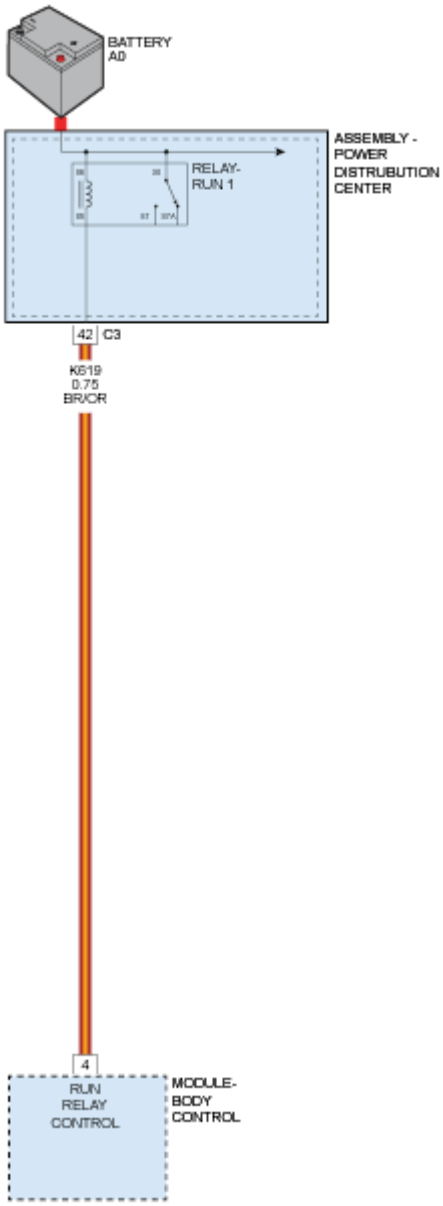

Fig. 8: Ignition Run Control Circuit Diagram
Courtesy of CHRYSLER GROUP, LLC

THEORY OF OPERATION

The Body Control Module (BCM) receives the network communication message from the Radio Frequency (RF) Hub indicating run operation is requested. The BCM provides a ground to the ignition run relay control circuit, which connects to the coil side of the Ignition Run Relay.

WHEN MONITORED

With the Ignition Run Relay active.

SET CONDITION

When the Body Control Module (BCM) detects a low condition on the Ignition Run Relay Control circuit.

POSSIBLE CAUSES

Possible Causes
IGNITION RUN RELAY CONTROL CIRCUIT SHORTED TO GROUND OR OPEN RUN RELAY BODY CONTROL MODULE (BCM)

DIAGNOSTIC TEST

1. **CHECK FOR AN ACTIVE DTC**
    1. Turn the ignition on.
    2. With the scan tool, read DTCs.

    Does the scan tool display this DTC as active?

    Yes

    - Go To 2

    No

    - Test complete, the condition or conditions that originally set this DTC are not present at this time. Using the wiring diagrams as a guide, check all related splices and connectors for signs of water intrusion, corrosion, pushed out or bent terminals, and correct pin tension.
    - Perform the BODY VERIFICATION TEST. Refer to **STANDARD PROCEDURE** .
2. **CHECK THE RUN RELAY FOR CORRECT OPERATION**
    1. Turn the ignition off.
    2. Remove the Run Relay and substitute it with a known good relay.
    3. Turn the ignition on.
    4. With the scan tool, read DTCs.

    Does the scan tool display this DTC as active?

    Yes

    - Go To 3

    No

    - Replace the Run Relay.

- Perform the BODY VERIFICATION TEST. Refer to **STANDARD PROCEDURE** .

3. **CHECK THE (K619) IGNITION RUN RELAY CONTROL CIRCUIT FOR A SHORT TO GROUND**
   1. Turn the ignition off.
   2. Remove the Run Relay.
   3. Disconnect the BCM C4 harness connector.
   4. Measure the resistance between ground and the (K619) Ignition Run Relay Control circuit.

      Is the resistance below 10K Ohms?

      Yes

      - Repair the short to ground in the (K619) Ignition Run Relay Control circuit.
      - Perform the BODY VERIFICATION TEST. Refer to **STANDARD PROCEDURE** .

      No

      - Go To 4
4. **CHECK THE (K619) IGNITION RUN RELAY CONTROL CIRCUIT FOR AN OPEN**
   1. Measure the resistance of the (K619) Ignition Run Relay Control circuit between the BCM C4 harness connector and the Ignition Run Relay.

      Is the resistance above 5.0 Ohms?

      Yes

      - Repair the open in the (K619) Ignition Run Relay Control circuit.
      - Perform the BODY VERIFICATION TEST. Refer to **STANDARD PROCEDURE** .

      No

      - Replace the Body Control Module (BCM) in accordance with the Service Information. Refer to **MODULE, BODY CONTROL, REMOVAL** .
      - Perform the BODY VERIFICATION TEST. Refer to **STANDARD PROCEDURE** .

B212E-12-IGNITION RUN/ACC CONTROL - CIRCUIT SHORT TO BATTERY

For a complete wiring diagram, **refer to appropriate SYSTEM WIRING DIAGRAMS article** .

THEORY OF OPERATION

The Body Control Module (BCM) receives the network communication message from the Radio Frequency (RF) Hub indicating run or accessory operation is requested. The BCM provides a ground through the accessory delay relay control circuit, which connects to the coil side of the Ignition Run/Acc Relay.

WHEN MONITORED

With the Run/Acc Relay off.

SET CONDITION

When the Body Control Module (BCM) detects a high condition on the Accessory Delay Relay Control circuit.

POSSIBLE CAUSES

Possible Causes
ACCESSORY DELAY RELAY CONTROL CIRCUIT SHORTED TO VOLTAGE RUN/ACC RELAY BODY CONTROL MODULE (BCM)

DIAGNOSTIC TEST

1. **CHECK FOR AN ACTIVE DTC**
    1. Turn the ignition on.
    2. With the scan tool, read DTCs.

    Does the scan tool display this DTC as active?

    Yes

    - Go To 2

    No

    - Test complete. The condition or conditions that originally set this DTC are not present at this time. Using the wiring diagrams as a guide, check all related splices and connectors for signs of water intrusion, corrosion, pushed out or bent terminals and correct pin tension.
    - Perform the BODY VERIFICATION TEST. Refer to **STANDARD PROCEDURE** .
2. **CHECK THE RUN/ACC RELAY FOR CORRECT OPERATION**
    1. Turn the ignition off.
    2. Remove the Run/Acc Relay and substitute it with a known good relay.
    3. Turn the ignition on.
    4. With the scan tool, read DTCs.

    Does the scan tool display this DTC as active?

    Yes

    - Go To 3

No

- Replace the Run/Acc Relay.
- Perform the BODY VERIFICATION TEST. Refer to **STANDARD PROCEDURE** .

3. **CHECK THE (P305) ACCESSORY DELAY RELAY CONTROL CIRCUIT FOR A SHORT TO VOLTAGE**
   1. Turn the ignition off.
   2. Disconnect the BCM C4 harness connector.
   3. Turn the ignition on.
   4. Using a 12-volt test light connected to ground, check the (P305) Accessory Delay Relay Control circuit.

   Does the test light illuminate brightly?

   Yes

   - Repair the short to voltage in the (P305) Accessory Delay Relay Control circuit.
   - Perform the BODY VERIFICATION TEST. Refer to **STANDARD PROCEDURE** .

   No

   - Replace the Body Control Module (BCM) in accordance with the Service Information. Refer to **MODULE, BODY CONTROL, REMOVAL** .
   - Perform the BODY VERIFICATION TEST. Refer to **STANDARD PROCEDURE** .

B212E-14-IGNITION RUN/ACC CONTROL - CIRCUIT SHORT TO GROUND OR OPEN

For a complete wiring diagram, **refer to appropriate SYSTEM WIRING DIAGRAMS article** .

THEORY OF OPERATION

The Body Control Module (BCM) receives the network communication message from the Radio Frequency (RF) Hub indicating run or accessory operation is requested. The BCM provides a ground through the accessory delay relay control circuit, which connects to the coil side of the Ignition Run/Acc Relay.

WHEN MONITORED

With the Run/Acc Relay active.

SET CONDITION

When the Body Control Module (BCM) detects a low condition on the Accessory Delay Relay Control circuit.

POSSIBLE CAUSES

Possible Causes
ACCESSORY DELAY RELAY CONTROL CIRCUIT SHORTED TO GROUND OR OPEN RUN/ACC RELAY BODY CONTROL MODULE (BCM)

DIAGNOSTIC TEST

1. **CHECK FOR AN ACTIVE DTC**
    1. Turn the ignition on.
    2. With the scan tool, read DTCs.

    Does the scan tool display this DTC as active?

    Yes

    - Go To 2

    No

    - Test complete. The condition or conditions that originally set this DTC are not present at this time. Using the wiring diagrams as a guide, check all related splices and connectors for signs of water intrusion, corrosion, pushed out or bent terminals and correct pin tension.
    - Perform the BODY VERIFICATION TEST. Refer to **STANDARD PROCEDURE** .
2. **CHECK THE RUN/ACC RELAY FOR CORRECT OPERATION**
    1. Turn the ignition off.
    2. Remove the Run/Acc Relay and substitute it with a known good relay.
    3. Turn the ignition on.
    4. With the scan tool, read DTCs.

    Does the scan tool display this DTC as active?

    Yes

    - Go To 3

    No

    - Replace the Run/Acc Relay.
    - Perform the BODY VERIFICATION TEST. Refer to **STANDARD PROCEDURE** .
3. **CHECK THE (P305) ACCESSORY DELAY RELAY CONTROL CIRCUIT FOR A SHORT TO GROUND**
    1. Turn the ignition off.
    2. Disconnect the BCM C4 harness connector.

3. Turn the ignition on.
4. Measure the resistance between ground and the (P305) Accessory Delay Relay Control circuit.

   Is the resistance below 10K Ohms?

   Yes

   - Repair the short to ground in the (P305) Accessory Delay Relay Control circuit.
   - Perform the BODY VERIFICATION TEST. Refer to **STANDARD PROCEDURE** .

   No

   - Go To 4

4. **CHECK THE (P305) ACCESSORY DELAY RELAY CONTROL CIRCUIT FOR AN OPEN**
   1. Measure the resistance of the (P305) Accessory Delay Relay Control circuit between the BCM C4 harness connector and the Run/Acc Relay.

      Is the resistance above 5.0 Ohms?

      Yes

      - Repair the open in the (P305) Accessory Delay Relay Control circuit.
      - Perform the BODY VERIFICATION TEST. Refer to **STANDARD PROCEDURE** .

      No

      - Replace the Body Control Module (BCM) in accordance with the Service Information. Refer to **MODULE, BODY CONTROL, REMOVAL** .
      - Perform the BODY VERIFICATION TEST. Refer to **STANDARD PROCEDURE** .

B2143-12-UGDO ENABLE CONTROL - CIRCUIT SHORT TO BATTERY

For a complete wiring diagram, **refer to appropriate SYSTEM WIRING DIAGRAMS article** .

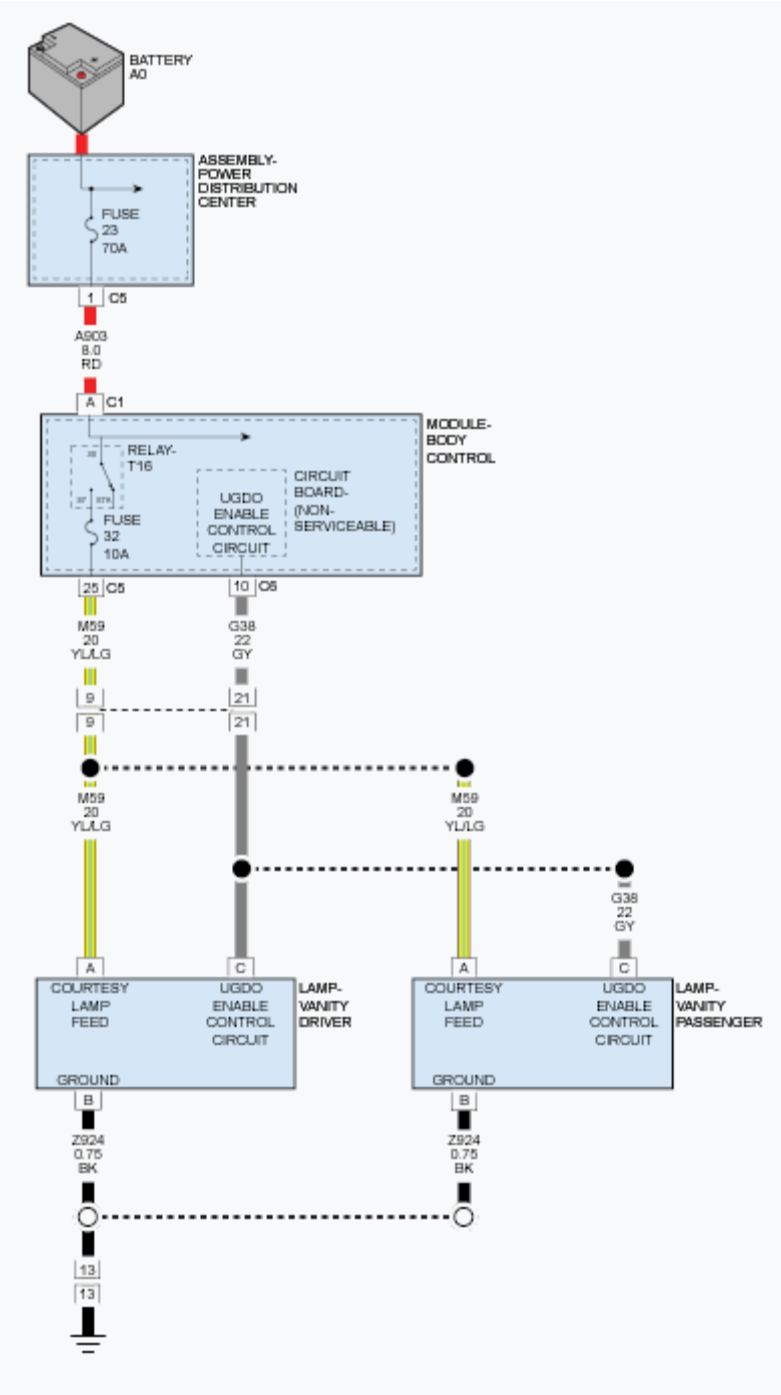

Fig. 9: UGDO Enable Control Circuit Diagram
Courtesy of CHRYSLER GROUP, LLC

THEORY OF OPERATION

The Body Control Module (BCM) provides voltage to the Universal Garage Door Opener (UGDO) located in the Vanity Mirror. When the anti-theft alarm is active, the BCM disables the power feed to the UGDO.

WHEN MONITORED

UGDO enable is active.

SET CONDITION

The Body Control Module detects a short to battery condition on the UGDO Enable Control circuit.

POSSIBLE CAUSES

Possible Causes
UGDO ENABLE CONTROL CIRCUIT SHORTED TO VOLTAGE
VANITY MIRROR
BODY CONTROL MODULE (BCM)

DIAGNOSTIC TEST

1. **CHECK FOR AN ACTIVE DTC**
    1. Turn the ignition on.
    2. With the scan tool, read DTCs.

    Does the scan tool display this DTC as active?

    Yes

    - Go To 2

    No

    - Test complete. The condition or conditions that originally set this DTC are not present at this time. Using the wiring diagrams as a guide, check all related splices and connectors for signs of water intrusion, corrosion, pushed out or bent terminals and correct pin tension.
    - Perform the BODY VERIFICATION TEST. Refer to **STANDARD PROCEDURE** .
2. **CHECK THE VANITY MIRROR FOR AN INTERNAL SHORT**
    1. Turn the ignition off.
    2. Disconnect the Vanity Mirror harness connector.
    3. Turn the ignition on.
    4. With the scan tool, read DTCs.

    Does the scan tool display DTC: B2143-12-UGDO ENABLE CONTROL - CIRCUIT SHORT TO BATTERY?

    Yes

- Go To 3

No

- Replace the Vanity Mirror in accordance with the Service Information.
- Perform the BODY VERIFICATION TEST. Refer to **STANDARD PROCEDURE** .

3. **CHECK THE (G38) UGDO ENABLE CONTROL CIRCUIT FOR A SHORT TO BATTERY**
   1. Turn the ignition off.
   2. Disconnect the BCM C6 harness connector.
   3. Turn the ignition on.
   4. Measure the voltage of the (G38) UGDO Enable Control circuit.

   Is voltage present?

   Yes

   - Repair the short to voltage on the (G38) UGDO Enable Control circuit.
   - Perform the BODY VERIFICATION TEST. Refer to **STANDARD PROCEDURE** .

   No

   - Replace the Body Control Module (BCM) in accordance with the Service Information. Refer to **MODULE, BODY CONTROL, REMOVAL** .
   - Perform the BODY VERIFICATION TEST. Refer to **STANDARD PROCEDURE** .

B2143-14-UGDO ENABLE CONTROL - CIRCUIT SHORT TO GROUND OR OPEN

For a complete wiring diagram, **refer to appropriate SYSTEM WIRING DIAGRAMS article** .

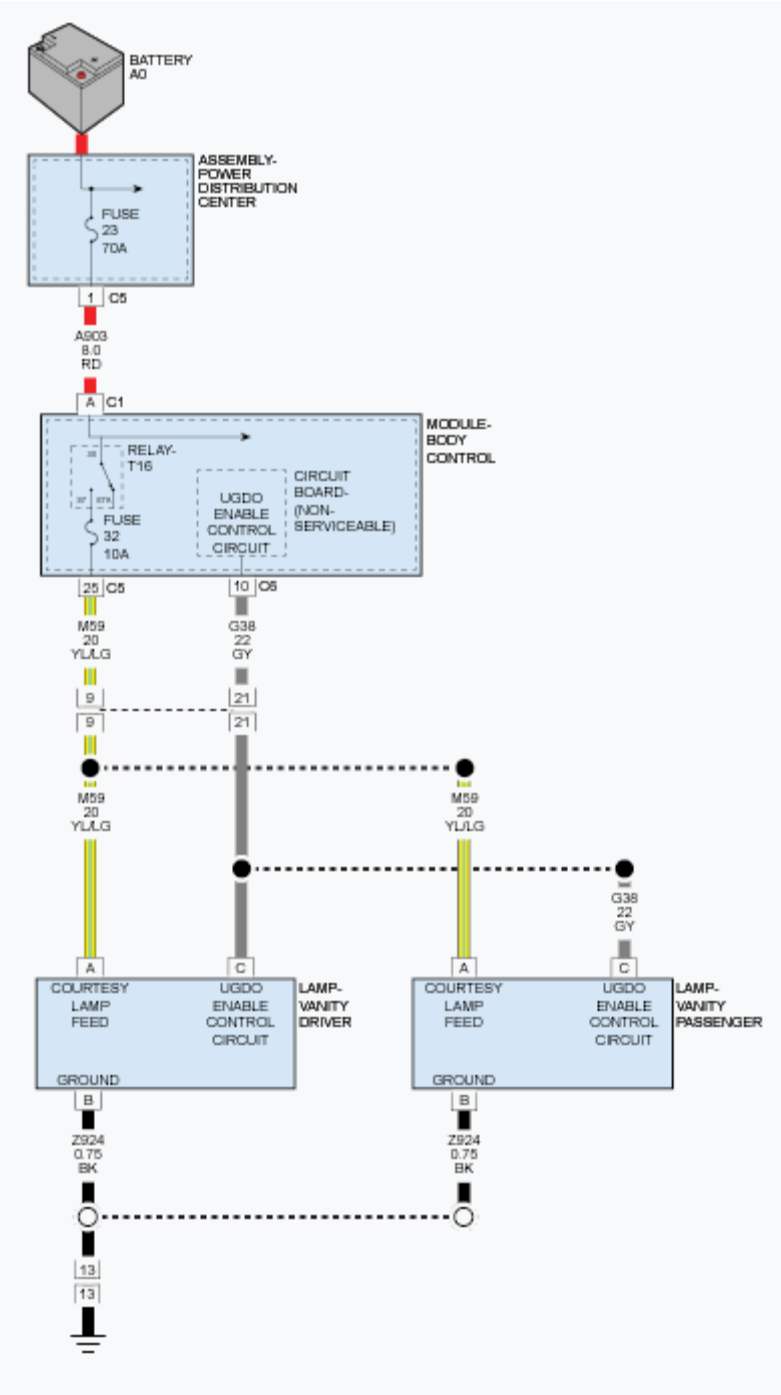

Fig. 10: UGDO Enable Control Circuit Diagram
Courtesy of CHRYSLER GROUP, LLC

THEORY OF OPERATION

The Body Control Module (BCM) provides voltage to the Universal Garage Door Opener (UGDO) located in the Vanity Mirror. When the anti-theft alarm is active, the BCM disables the power feed to the UGDO.

WHEN MONITORED

UGDO enable is active.

SET CONDITION

The Body Control Module detects a low condition or an open on the UGDO Enable Control circuit.

POSSIBLE CAUSES

Possible Causes
UGDO ENABLE CONTROL CIRCUIT SHORTED TO GROUND
UGDO ENABLE CONTROL CIRCUIT OPEN
BODY CONTROL MODULE (BCM)

DIAGNOSTIC TEST

1. **CHECK FOR AN ACTIVE DTC**
    1. Turn the ignition on.
    2. With the scan tool, read DTCs.

    Does the scan tool display this DTC as active?

    Yes

    - Go To 2

    No

    - Test complete. The condition or conditions that originally set this DTC are not present at this time. Using the wiring diagrams as a guide, check all related splices and connectors for signs of water intrusion, corrosion, pushed out or bent terminals and correct pin tension.
    - Perform the BODY VERIFICATION TEST. Refer to **STANDARD PROCEDURE** .
2. **CHECK THE (G38) UGDO ENABLE CONTROL CIRCUIT FOR A SHORT TO GROUND**
    1. Turn the ignition off.
    2. Disconnect the BCM C6 harness connector.
    3. Disconnect the Vanity Mirror harness connector.
    4. Measure the resistance between ground and the (G38) UGDO Enable Control circuit.

    Is the resistance below 10K Ohms?

    Yes

    - Repair the short to ground in the (G38) UGDO Enable Control circuit.

- Perform the BODY VERIFICATION TEST. Refer to **STANDARD PROCEDURE** .

No

- Go To 3

3. **CHECK THE (G38) UGDO ENABLE CONTROL CIRCUIT FOR AN OPEN**
   1. Measure the resistance of the (G38) UGDO Enable Control circuit between the BCM C6 and Vanity Mirror harness connectors.

      Is the resistance above 5.0 Ohms?

      Yes

      - Repair the open in the (G38) UGDO Enable Control circuit.
      - Perform the BODY VERIFICATION TEST. Refer to **STANDARD PROCEDURE** .

      No

      - Replace the Body Control Module (BCM) in accordance with the Service Information. Refer to **MODULE, BODY CONTROL, REMOVAL** .
      - Perform the BODY VERIFICATION TEST. Refer to **STANDARD PROCEDURE** .

B215B-18-IGNITION RUN START 2 - CONTROL UNDER CURRENT

For a complete wiring diagram, **refer to appropriate SYSTEM WIRING DIAGRAMS article** .

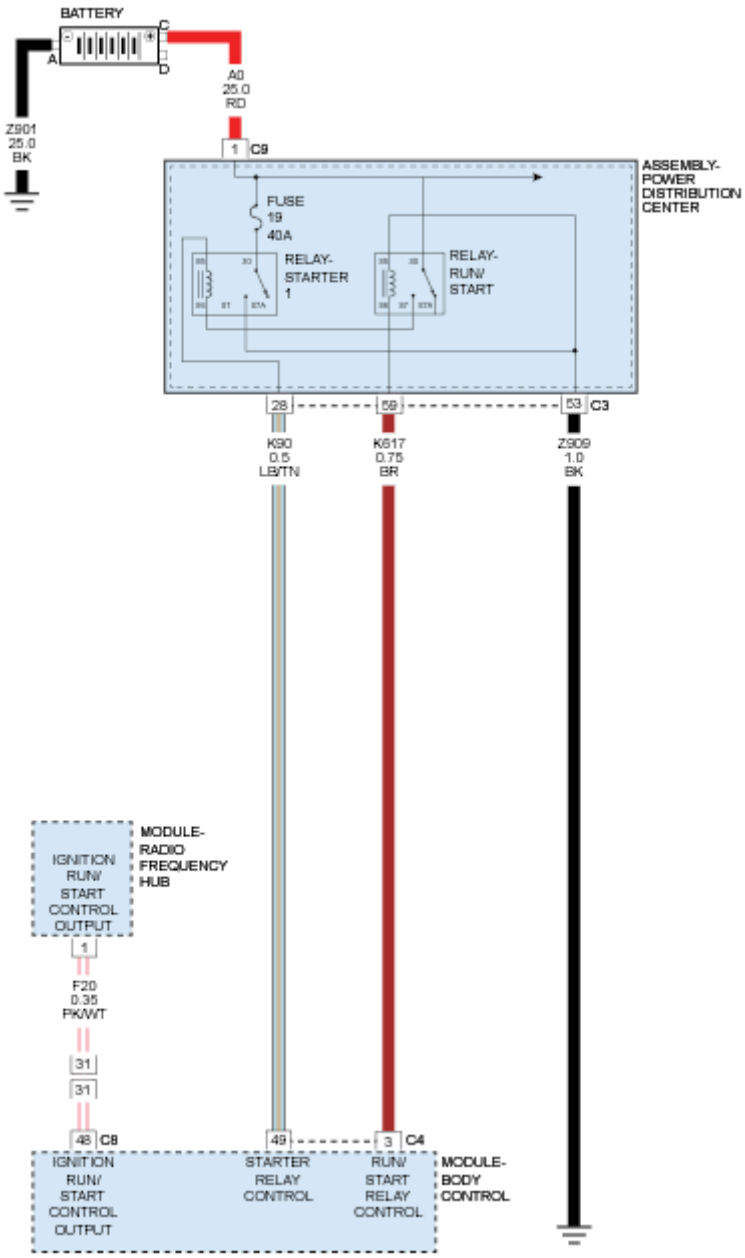

Fig. 11: Ignition Run/Start Input Circuit Diagram
Courtesy of CHRYSLER GROUP, LLC

WHEN MONITORED

With the ignition on.

SET CONDITION

This DTC will set if the Body Control Module (BCM) detects an open or short to voltage on the Run/Start Relay Control circuit.

POSSIBLE CAUSES

Possible Causes
GROUND CIRCUIT OPEN
RUN/START RELAY CONTROL CIRCUIT OPEN OR SHORT TO VOLTAGE
RUN/START RELAY
BODY CONTROL MODULE (BCM)

DIAGNOSTIC TEST

1. **CHECK FOR AN ACTIVE DTC**
    1. Turn the ignition on.
    2. With the scan tool, read DTCs.

    Does the scan tool display this DTC as active?

    Yes

    - Go To 2

    No

    - Test complete. The condition or conditions that originally set this DTC are not present at this time. Using the wiring diagrams as a guide, check all related splices and connectors for signs of water intrusion, corrosion, pushed out or bent terminals and correct pin tension.
    - Perform the BODY VERIFICATION TEST. Refer to **STANDARD PROCEDURE** .
2. **CHECK THE RUN/START RELAY FOR CORRECT OPERATION**
    1. Turn the ignition off.
    2. Replace the Run/Start Relay with a known good relay.
    3. Turn the ignition on.
    4. With the scan tool, read DTCs.

    Does the scan tool display this DTC as active?

    Yes

    - Go To 3

    No

    - Replace the Run/Start Relay.
    - Perform the BODY VERIFICATION TEST. Refer to **STANDARD PROCEDURE** .
3. **CHECK THE (Z909) GROUND CIRCUIT FOR AN OPEN**

1. Turn the ignition off.
2. Remove the Run/Start Relay from the PDC.
3. Measure the resistance between ground and the (Z909) Ground circuit at the Run/Start Relay cavity in the PDC.

   Is the resistance above 5.0 Ohms?

   Yes

   - Repair the (Z909) Ground circuit for an open circuit.
   - Perform the BODY VERIFICATION TEST. Refer to **STANDARD PROCEDURE** .

   No

   - Go To 4

4. **CHECK THE (K617) RUN/START RELAY CONTROL CIRCUIT FOR A SHORT TO VOLTAGE**
   1. Turn the ignition off.
   2. Disconnect the BCM C4 harness connector.
   3. Turn the ignition on.
   4. Measure the voltage of the (K617) Run/Start Relay circuit at the Run/Start Relay cavity in the PDC.

      Is voltage present?

      Yes

      - Repair the (K617) Run/Start Relay circuit for a short to voltage.
      - Perform the BODY VERIFICATION TEST. Refer to **STANDARD PROCEDURE** .

      No

      - Go To 5

5. **CHECK THE (K617) RUN/START RELAY CONTROL CIRCUIT FOR AN OPEN**
   1. Turn the ignition off.
   2. Measure the resistance of the (K617) Run/Start Relay circuit between the BCM C4 harness connector and the Run/Start Relay cavity in the PDC.

      Is the resistance above 5.0 Ohms?

      Yes

      - Repair the (K617) Run/Start Relay circuit for an open circuit.

- Perform the BODY VERIFICATION TEST. Refer to **STANDARD PROCEDURE** .

No

- Replace the Body Control Module in accordance with the Service Information. Refer to **MODULE, BODY CONTROL, REMOVAL** .
- Perform the BODY VERIFICATION TEST. Refer to **STANDARD PROCEDURE** .

B215B-19-IGNITION RUN START 2 CONTROL OVER CURRENT

For a complete wiring diagram, **refer to appropriate SYSTEM WIRING DIAGRAMS article** .

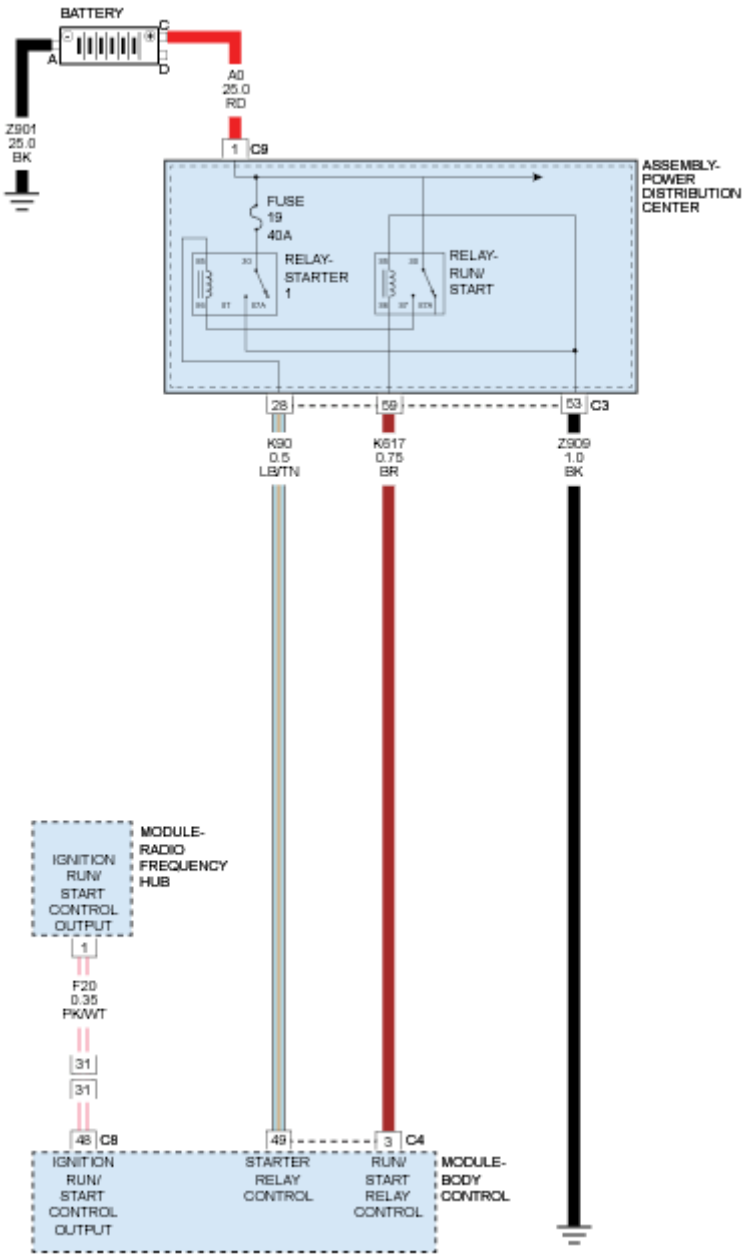

Fig. 12: Ignition Run/Start Input Circuit Diagram
Courtesy of CHRYSLER GROUP, LLC

WHEN MONITORED

With the ignition on.

SET CONDITION

This DTC will set if the Body Control Module (BCM) detects a short to ground on the Run/Start Relay Control circuit.

POSSIBLE CAUSES

Possible Causes
RUN/START RELAY CONTROL CIRCUIT SHORT TO GROUND
RUN/START RELAY
BODY CONTROL MODULE (BCM)

DIAGNOSTIC TEST

1. **CHECK FOR AN ACTIVE DTC**
    1. Turn the ignition on.
    2. With the scan tool, read DTCs.

    Does the scan tool display this DTC as active?

    Yes

    - Go To 2

    No

    - Test complete. The condition or conditions that originally set this DTC are not present at this time. Using the wiring diagrams as a guide, check all related splices and connectors for signs of water intrusion, corrosion, pushed out or bent terminals and correct pin tension.
    - Perform the BODY VERIFICATION TEST. Refer to **STANDARD PROCEDURE** .
2. **CHECK THE RUN/START RELAY FOR CORRECT OPERATION**
    1. Turn the ignition off.
    2. Replace the Run/Start Relay with a known good relay.
    3. Turn the ignition on.
    4. With the scan tool, read DTCs.

    Does the scan tool display this DTC as active?

    Yes

    - Go To 3

    No

    - Replace the Run/Start Relay.
    - Perform the BODY VERIFICATION TEST. Refer to **STANDARD PROCEDURE** .
3. **CHECK THE (K617) RUN/START RELAY CONTROL CIRCUIT FOR A SHORT TO GROUND**
    1. Turn the ignition off.

2. Remove the Run/Start Relay from the PDC.
3. Disconnect the BCM C4 harness connector.
4. Measure the resistance between ground and the (K617) Run/Start Relay circuit at the Run/Start Relay cavity in the PDC.

   Is the resistance below 10K Ohms?

   Yes

   - Repair the (K617) Run/Start Relay circuit for a short to ground.
   - Perform the BODY VERIFICATION TEST. Refer to **STANDARD PROCEDURE** .

   No

   - Replace the Body Control Module in accordance with the Service Information. Refer to **MODULE, BODY CONTROL, REMOVAL** .
   - Perform the BODY VERIFICATION TEST. Refer to **STANDARD PROCEDURE** .

B2199-16-BATTERY VOLTAGE - CIRCUIT VOLTAGE BELOW THRESHOLD

For a complete wiring diagram, **refer to appropriate SYSTEM WIRING DIAGRAMS article** .

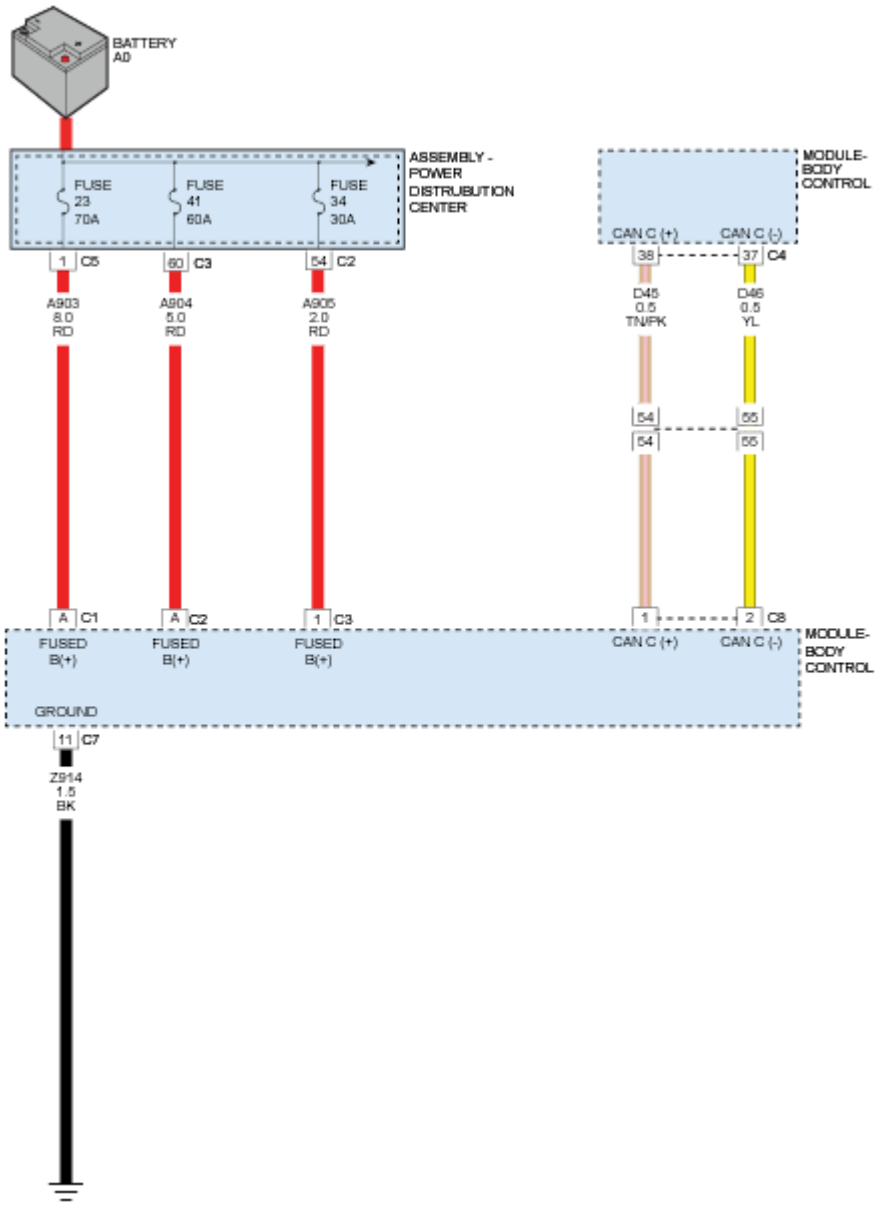

Fig. 13: Battery Voltage Circuit Diagram
Courtesy of CHRYSLER GROUP, LLC

WHEN MONITORED

Continuously.

SET CONDITION

When the Body Control Module (BCM) detects a low voltage condition on both Fused B(+) circuits, where the voltage input is below 9.0 volts for more than one second.

POSSIBLE CAUSES

POSSIBLE CAUSES
LOW BATTERY VOLTAGE
CHARGING SYSTEM CONCERN
FUSED B(+) CIRCUITS HIGH RESISTANCE
GROUND CIRCUITS HIGH RESISTANCE
BODY CONTROL MODULE (BCM)

DIAGNOSTIC TEST

1. **CHECK FOR ANY POWERTRAIN DTCS**

   NOTE: Make sure the Battery is in good condition and perform the Battery System diagnostic procedure. Refer to DIAGNOSIS AND TESTING .

   NOTE: Inspect the vehicle for after market accessories that may exceed the Generator System output.

   NOTE: Make sure the generator drive belt is in good operating condition.

   NOTE: Inspect the fuses in the Power Distribution Center (PDC). If an open fuse is found, use the wire diagram/schematic as a guide, inspect the wiring and connectors for damage.

   1. With the scan tool, read PCM DTCs.

      Are there any Battery or Charging System DTCs?

      Yes

      - Refer to **DTC INDEX** and perform the appropriate diagnostic procedure for the charging system DTCs.

      No

      - Go To 2

2. **TEST FOR INTERMITTENT CONDITION**
   1. Start the engine and run for two minutes.
   2. With the scan tool, read the Active DTCs.

      Does the scan tool display this DTC as active?

      Yes

- Go To 3

No

- Test complete. The condition or conditions that originally set this DTC are not present at this time. Using the wiring diagrams as a guide, check all related splices and connectors for signs of water intrusion, corrosion, pushed out or bent terminals and correct pin tension.
- Perform the BODY VERIFICATION TEST. Refer to **STANDARD PROCEDURE** .

3. **CHECK THE (A903), (A904) AND (905) FUSED B(+) CIRCUITS FOR HIGH RESISTANCE**
   1. Disconnect the BCM C1, C2 and C3 harness connectors.
   2. Using a 12-volt test light connected to ground, check the (A903) Fused B(+) circuit in the BCM C1 harness connector.
   3. Using a 12-volt test light connected to ground, check the (A904) Fused B(+) circuit in the BCM C2 harness connector.
   4. Using a 12-volt test light connected to ground, check the (A905) Fused B(+) circuit in the BCM C3 harness connector.

   NOTE: Compare the brightness to that of a direct connection to the battery.

   Does the test light illuminate brightly for both circuits?

   Yes

   - Go To 4

   No

   - Repair the (A903), (A904) or (A905) Fused B(+) circuits for high resistance.
   - Perform the BODY VERIFICATION TEST. Refer to **STANDARD PROCEDURE** .

4. **CHECK THE (Z914) GROUND CIRCUITS FOR HIGH RESISTANCE**
   1. Using a 12-volt test light connected to 12-volts, check the (Z914) Ground circuits in the BCM C7 harness connector.

   NOTE: Compare the brightness to that of a direct connection to the battery.

   Does the test light illuminate brightly?

   Yes

   - Replace the Body Control Module (BCM) in accordance with the Service Information. Refer to **MODULE, BODY CONTROL, REMOVAL** .
   - Perform the BODY VERIFICATION TEST. Refer to **STANDARD PROCEDURE** .

No

- Repair the (Z914) Ground circuits for high resistance.
- Perform the BODY VERIFICATION TEST. Refer to **STANDARD PROCEDURE** .

B2199-17-BATTERY VOLTAGE - CIRCUIT VOLTAGE ABOVE THRESHOLD

For a complete wiring diagram, **refer to appropriate SYSTEM WIRING DIAGRAMS article** .

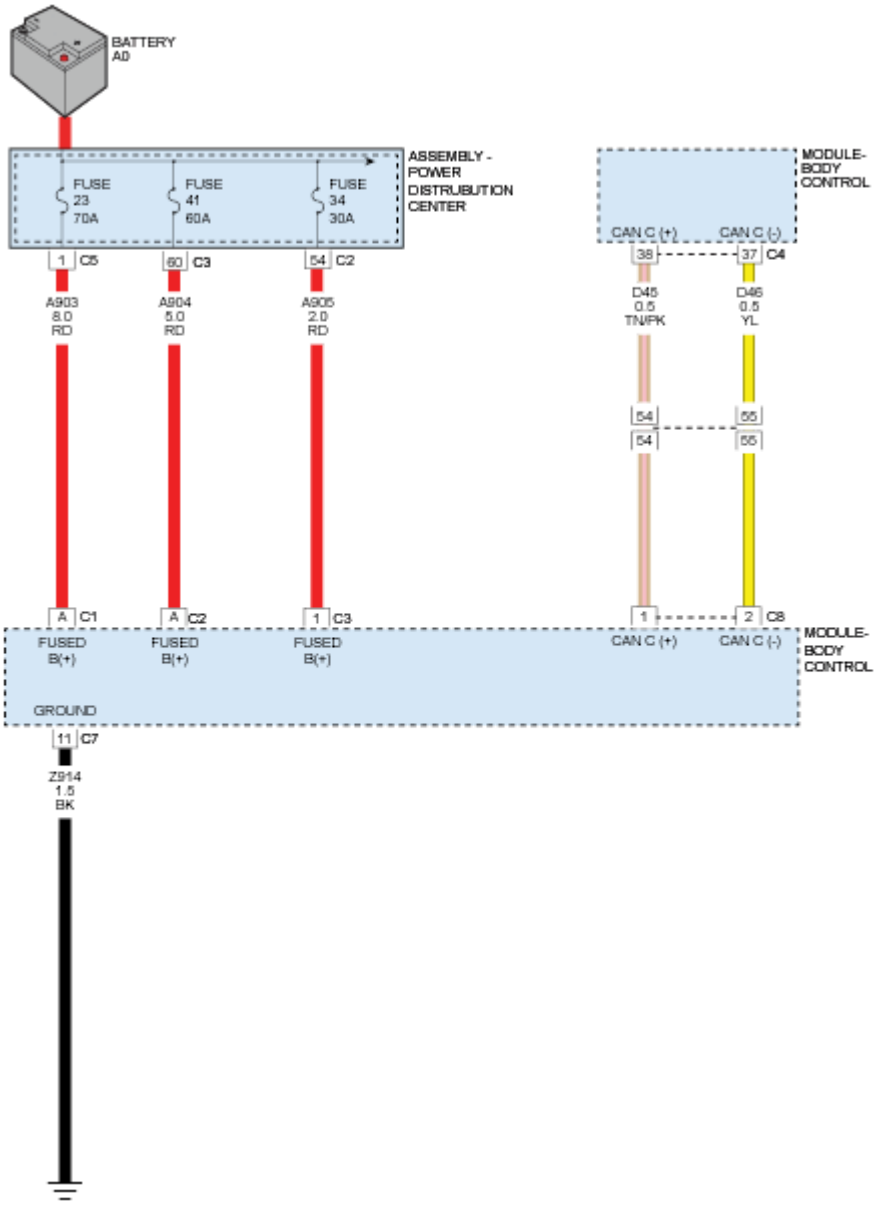

Fig. 14: Battery Voltage Circuit Diagram
Courtesy of CHRYSLER GROUP, LLC

WHEN MONITORED

Continuously.

SET CONDITION

When the Body Control Module (BCM) detects a high voltage condition on either the Fused B(+) circuits, where the voltage input is above 16.0 volts for more than one second.

POSSIBLE CAUSES

POSSIBLE CAUSES
GENERATOR OPERATION POWERTRAIN CONTROL MODULE (PCM)

DIAGNOSTIC TEST

CHECK FOR ANY POWERTRAIN CONTROL MODULES DTCS

NOTE: Make sure the Battery is in good condition and perform the Battery System diagnostic procedure. Refer to DIAGNOSIS AND TESTING .

1. Turn the ignition on.
2. With the scan tool, read active PCM DTCs.

   Does the scan tool display any active PCM DTCs?

   Yes

   - Refer to **DTC INDEX** and perform the appropriate diagnostic test procedure.

   No

   - Check the above conditions that can cause a high voltage condition. Repair as necessary.
   - Perform the BODY VERIFICATION TEST. Refer to **STANDARD PROCEDURE** .

B2204-55-ECU CONFIGURATION MISMATCH - NOT CONFIGURED

For a complete wiring diagram, **refer to appropriate SYSTEM WIRING DIAGRAMS article** .

THEORY OF OPERATION

When replacing a module, a PROXI procedure may need to be completed for that module. The PROXI Alignment Procedure is needed to learn the PROXI Configuration from the BCM. This PROXI information configures the modules based on the content of the vehicle. Refer to the information below for each module

requirement.

WHEN MONITORED

One time whenever the ignition is turned on.

SET CONDITION

The Body Control Module (BCM) PROXI configuration has not been completed.

The PROXI configuration alignment has not been completed on one or more PROXI user module(s).

POSSIBLE CAUSES

Possible Causes
BCM REPLACED AND RESTORE PROXI CONFIGURATION ROUTINE HAS NOT BEEN COMPLETED PROXI USER MODULE MISMATCH OR PROXI CONFIGURATION ALIGNMENT ROUTINE HAS NOT BEEN COMPLETED

DIAGNOSTIC TEST

1. **CHECK FOR AN ACTIVE DTC**
    1. Turn the ignition on.
    2. With the scan tool, read DTCs.

    Does the scan tool display this DTC as active?

    Yes

    - Go To 2

    No

    - Test complete. The condition or conditions that originally set this DTC are not present at this time. Using the wiring diagrams as a guide, check all related splices and connectors for signs of water intrusion, corrosion, pushed out or bent terminals and correct pin tension.
    - Perform the BODY VERIFICATION TEST. Refer to **STANDARD PROCEDURE** .
2. **CHECK FOR BCM REPLACEMENT**

    Has the BCM been replaced?

    Yes

    - With the scan tool, perform the Restore BCM PROXI Configuration Routine in the BCM,

Miscellaneous Functions. Follow the on-screen instructions.
- Once routine is complete, cycle the ignition.
- With the scan tool, read DTCs.
- If the DTC is still active, Go To 3.
- If DTC is not active, test complete.

No

- Go To 3

3. **PERFORM THE PROXI CONFIGURATION ALIGNMENT ROUTINE IN THE BCM**
   1. With the scan tool, perform the PROXI Configuration Alignment Routine in the BCM, Miscellaneous Functions.
   2. Follow the on-screen instructions.
   3. Cycle the ignition.
   4. With the scan tool, read DTCs.

   Does the scan tool display this DTC as active?

   Yes

   - Using the wiring diagrams as a guide, check all related splices and connectors for signs of water intrusion, corrosion, pushed out or bent terminals, and correct pin tension. If all connections are OK, replace the BCM in accordance with the Service Information. Refer to **MODULE, BODY CONTROL, REMOVAL** .
   - Perform the BODY VERIFICATION TEST. Refer to **STANDARD PROCEDURE** .

   No

   - Test complete. The condition or conditions that originally set this DTC are not present at this time. Using the wiring diagrams as a guide, check all related splices and connectors for signs of water intrusion, corrosion, pushed out or bent terminals and correct pin tension.
   - Perform the BODY VERIFICATION TEST. Refer to **STANDARD PROCEDURE** .

B221D-29-(RSM) RAIN SENSOR MODULE INTERNAL - SIGNAL INVALID

For a complete wiring diagram, **refer to appropriate SYSTEM WIRING DIAGRAMS article** .

WHEN MONITORED

With the ignition on.

SET CONDITION

The Light/Rain Sensing Module (LRSM) detects an internal failure.

POSSIBLE CAUSES

Possible Causes
LIGHT/RAIN SENSING MODULE (LRSM)

DIAGNOSTIC TEST

CHECK FOR AN ACTIVE DTC

1. Turn the ignition on.
2. With the scan tool, read DTCs.

   Does the scan tool display this DTC as active?

   Yes

   - Replace the LRSM in accordance with the Service Information. Refer to **MODULE, LIGHT RAIN SENSOR, REMOVAL** .
   - Perform the BODY VERIFICATION TEST. Refer to **STANDARD PROCEDURE** .

   No

   - Test complete. The condition or conditions that originally set this DTC are not present at this time. Using the wiring diagrams as a guide, check all related splices and connectors for signs of water intrusion, corrosion, pushed out or bent terminals and correct pin tension.
   - Perform the BODY VERIFICATION TEST. Refer to **STANDARD PROCEDURE** .

B223A-8F-AUTO HIGH BEAM ECU INTERNAL - ERRATIC

For a complete wiring diagram, **refer to appropriate SYSTEM WIRING DIAGRAMS article** .

WHEN MONITORED

With the ignition on.

SET CONDITION

The Automatic High Beam Module (AHBM) reports an internal failure to the Body Control Module (BCM).

POSSIBLE CAUSES

Possible Causes
AUTOMATIC HIGH BEAM MODULE (AHBM)

DIAGNOSTIC TEST

CHECK FOR AN ACTIVE DTC

1. Turn the ignition on.
2. With the scan tool, read DTCs.

   Does the scan tool display this DTC as active?

   Yes

   - Replace the Automatic High Beam Module (AHBM) in accordance with the Service Information. Refer to **MIRROR, REARVIEW, REMOVAL** .
   - Perform the BODY VERIFICATION TEST. Refer to **STANDARD PROCEDURE** .

   No

   - Test complete. The condition or conditions that originally set this DTC are not present at this time. Using the wiring diagrams as a guide, check all related splices and connectors for signs of water intrusion, corrosion, pushed out or bent terminals and correct pin tension.
   - Perform the BODY VERIFICATION TEST. Refer to **STANDARD PROCEDURE** .

B225C-29-COMPASS MODULE INTERNAL - SIGNAL INVALID

For a complete wiring diagram, **refer to appropriate SYSTEM WIRING DIAGRAMS article** .

WHEN MONITORED

With the ignition on.

SET CONDITION

The Compass Module detects an internal failure.

POSSIBLE CAUSES

Possible Causes
COMPASS MODULE

DIAGNOSTIC TEST

CHECK FOR AN ACTIVE DTC

1. Turn the ignition on.
2. With the scan tool, read DTCs.

   Does the scan tool display: B225C-29-COMPASS MODULE INTERNAL - SIGNAL INVALID?

Yes

- Replace the Compass Module in accordance with the Service Information.
- Perform the BODY VERIFICATION TEST. Refer to **STANDARD PROCEDURE** .

No

- Test complete. The condition or conditions that originally set this DTC are not present at this time. Using the wiring diagrams as a guide, check all related splices and connectors for signs of water intrusion, corrosion, pushed out or bent terminals and correct pin tension.
- Perform the BODY VERIFICATION TEST. Refer to **STANDARD PROCEDURE** .

B2267-8F-ELECTRO CHROMATIC MIRROR MODULE INTERNAL - ERRATIC

For a complete wiring diagram, **refer to appropriate SYSTEM WIRING DIAGRAMS article** .

WHEN MONITORED

With the ignition on.

SET CONDITION

This DTC will set when the Rearview Mirror detects an internal failure.

POSSIBLE CAUSES

Possible Causes
REARVIEW MIRROR

DIAGNOSTIC TEST

CHECK FOR AN ACTIVE DTC

1. Turn the ignition on.
2. With the scan tool, read DTCs.

   Does the scan tool display this DTC as active?

   Yes

   - Replace the Rearview Mirror in accordance with the Service Information. Refer to **MIRROR, REARVIEW, REMOVAL** .

   No

- Test complete. The condition or conditions that originally set this DTC are not present at this time. Using the wiring diagrams as a guide, check all related splices and connectors for signs of water intrusion, corrosion, pushed out or bent terminals and correct pin tension.
- Perform the BODY VERIFICATION TEST. Refer to **STANDARD PROCEDURE** .

B22A9-44-ECU INTERNAL PERFORMANCE - DATA MEMORY FAILURE

For a complete wiring diagram, **refer to appropriate SYSTEM WIRING DIAGRAMS article** .

WHEN MONITORED

Continuously.

SET CONDITION

The Body Control Module (BCM) detects an internal Random Access Memory (RAM) failure.

POSSIBLE CAUSES

Possible Causes
BODY CONTROL MODULE (BCM)

DIAGNOSTIC TEST

CHECK FOR AN ACTIVE DIAGNOSTIC TROUBLE CODE (DTC)

1. Turn the ignition on.
2. With the scan tool, read DTCs.

   Does the scan tool display this DTC as active?

   Yes

   - Replace the BCM in accordance with the Service Information. Refer to **MODULE, BODY CONTROL, REMOVAL** .
   - Perform the BODY VERIFICATION TEST. Refer to **STANDARD PROCEDURE** .

   No

   - Test complete. The condition or conditions that originally set this DTC are not present at this time. Using the wiring diagrams as a guide, check all related splices and connectors for signs of water intrusion, corrosion, pushed out or bent terminals and correct pin tension.

B22A9-45-ECU INTERNAL PERFORMANCE - PROGRAM MEMORY FAILURE

For a complete wiring diagram, **refer to appropriate SYSTEM WIRING DIAGRAMS article** .

WHEN MONITORED

Continuously.

SET CONDITION

The Body Control Module (BCM) detects internal FLASH/Read Only Memory (ROM) failure.

POSSIBLE CAUSES

Possible Causes
BODY CONTROL MODULE (BCM)

DIAGNOSTIC TEST

CHECK FOR AN ACTIVE DIAGNOSTIC TROUBLE CODE (DTC)

1. Turn the ignition on.
2. With the scan tool, read DTCs.

   Does the scan tool display this DTC as active?

   Yes

   - Replace the BCM in accordance with the Service Information. Refer to **MODULE, BODY CONTROL, REMOVAL** .
   - Perform the BODY VERIFICATION TEST. Refer to **STANDARD PROCEDURE** .

   No

   - Test complete. The condition or conditions that originally set this DTC are not present at this time. Using the wiring diagrams as a guide, check all related splices and connectors for signs of water intrusion, corrosion, pushed out or bent terminals and correct pin tension.

B22A9-46-ECU INTERNAL PERFORMANCE - CALIBRATION/PARAMETER MEMORY FAILURE

For a complete wiring diagram, **refer to appropriate SYSTEM WIRING DIAGRAMS article** .

WHEN MONITORED

Continuously.

SET CONDITION

The Body Control Module (BCM) detects internal EEPROM failure.

POSSIBLE CAUSES

Possible Causes
BODY CONTROL MODULE (BCM)

DIAGNOSTIC TEST

CHECK FOR AN ACTIVE DIAGNOSTIC TROUBLE CODE (DTC)

1. Turn the ignition on.
2. With the scan tool, read DTCs.

   Does the scan tool display this DTC as active?

   Yes

   - Replace the BCM in accordance with the Service Information. Refer to **MODULE, BODY CONTROL, REMOVAL** .
   - Perform the BODY VERIFICATION TEST. Refer to **STANDARD PROCEDURE** .

   No

   - Test complete. The condition or conditions that originally set this DTC are not present at this time. Using the wiring diagrams as a guide, check all related splices and connectors for signs of water intrusion, corrosion, pushed out or bent terminals and correct pin tension.

B22A9-47-ECU INTERNAL PERFORMANCE - WATCHDOG/SAFETY FAILURE

For a complete wiring diagram, **refer to appropriate SYSTEM WIRING DIAGRAMS article** .

WHEN MONITORED

Continuously.

SET CONDITION

The Body Control Module (BCM) detects an internal failure.

POSSIBLE CAUSES

Possible Causes
BODY CONTROL MODULE (BCM)

DIAGNOSTIC TEST

CHECK FOR AN ACTIVE DIAGNOSTIC TROUBLE CODE (DTC)

1. Turn the ignition on.
2. With the scan tool, read DTCs.

   Does the scan tool display this DTC as active?

   Yes

   - Replace the BCM in accordance with the Service Information. Refer to **MODULE, BODY CONTROL, REMOVAL** .
   - Perform the BODY VERIFICATION TEST. Refer to **STANDARD PROCEDURE** .

   No

   - Test complete. The condition or conditions that originally set this DTC are not present at this time. Using the wiring diagrams as a guide, check all related splices and connectors for signs of water intrusion, corrosion, pushed out or bent terminals and correct pin tension.

B2303-64-WIPER PARK SWITCH INPUT - SIGNAL PLAUSIBILITY FAILURE

For a complete wiring diagram, **refer to appropriate SYSTEM WIRING DIAGRAMS article** .

THEORY OF OPERATION

The Body Control Module (BCM) provides a reference voltage on the wiper park switch sense circuit through a pull-up resistor that is connected to battery voltage. The Wiper Park Switch switches the signal circuit to ground when the wiper motor is in the park position.

WHEN MONITORED

With the ignition on.

Front Wiper is off or Front Wiper is on following a timeout period.

SET CONDITION

The Body Control Module (BCM) detects an internal failure with the Park Switch in the Front Wiper Motor.

POSSIBLE CAUSES

Possible Causes
FRONT WIPER MOTOR

DIAGNOSTIC TEST

CHECK FOR AN ACTIVE DTC

1. Turn the ignition on.
2. Cycle the Wiper Switch on and off three times.
3. With the scan tool, read DTCs.

   Does the scan tool display this DTC as active?

   Yes

   - Replace the Front Wiper Motor in accordance with the Service Information. Refer to **MOTOR, WIPER, REMOVAL** .
   - Perform the BODY VERIFICATION TEST. Refer to **STANDARD PROCEDURE** .

   No

   - Test complete. The condition or conditions that originally set this DTC are not present at this time. Using the wiring diagrams as a guide, check all related splices and connectors for signs of water intrusion, corrosion, pushed out or bent terminals and correct pin tension.
   - Perform the BODY VERIFICATION TEST. Refer to **STANDARD PROCEDURE** .

B2303-71-WIPER PARK SWITCH INPUT - ACTUATOR STUCK

For a complete wiring diagram, **refer to appropriate SYSTEM WIRING DIAGRAMS article** .

THEORY OF OPERATION

The Body Control Module (BCM) provides a reference voltage on the wiper park switch sense circuit through a pull-up resistor that is connected to battery voltage. The Wiper Park Switch switches the signal circuit to ground when the wiper motor is in the park position.

WHEN MONITORED

With the ignition on.

Front Wiper is active.

SET CONDITION

The Body Control Module (BCM) detects an internal failure in the Front Wiper Motor.

POSSIBLE CAUSES

Possible Causes

FRONT WIPER MOTOR

DIAGNOSTIC TEST

CHECK FOR AN ACTIVE DTC

1. Turn the ignition on.
2. Cycle the Wiper Switch on and off three times.
3. With the scan tool, read DTCs.

   Does the scan tool display this DTC as active?

   Yes

   - Replace the Front Wiper Motor in accordance with the Service Information. Refer to **MOTOR, WIPER, REMOVAL** .
   - Perform the BODY VERIFICATION TEST. Refer to **STANDARD PROCEDURE** .

   No

   - Test complete. The condition or conditions that originally set this DTC are not present at this time. Using the wiring diagrams as a guide, check all related splices and connectors for signs of water intrusion, corrosion, pushed out or bent terminals and correct pin tension.
   - Perform the BODY VERIFICATION TEST. Refer to **STANDARD PROCEDURE** .

B2309-2A-REAR WIPER SWITCH - STUCK

For a complete wiring diagram, **refer to appropriate SYSTEM WIRING DIAGRAMS article** .

THEORY OF OPERATION

The Body Control Module (BCM) provides a reference voltage on the rear wiper park switch sense circuit through a pull-up resistor that is connected to battery voltage. The Rear Wiper Park Switch switches the signal circuit to ground when the wiper motor is in the park position.

WHEN MONITORED

With the ignition on.

Rear Wiper is active.

SET CONDITION

The Body Control Module (BCM) detects an internal failure in the Rear Wiper Motor.

POSSIBLE CAUSES

Possible Causes
REAR WIPER MOTOR

DIAGNOSTIC TEST

CHECK FOR AN ACTIVE DTC

1. Turn the ignition on.
2. Cycle the Rear Wiper Switch on and off three times.
3. With the scan tool, read DTCs.

   Does the scan tool display this DTC as active?

   Yes

   - Replace the Rear Wiper Motor in accordance with the Service Information.
   - Perform the BODY VERIFICATION TEST. Refer to **STANDARD PROCEDURE** .

   No

   - Test complete. The condition or conditions that originally set this DTC are not present at this time. Using the wiring diagrams as a guide, check all related splices and connectors for signs of water intrusion, corrosion, pushed out or bent terminals and correct pin tension.
   - Perform the BODY VERIFICATION TEST. Refer to **STANDARD PROCEDURE** .

B2322-12-HEADLAMP WASHER MOTOR CONTROL - CIRCUIT SHORT TO BATTERY

For a complete wiring diagram, **refer to appropriate SYSTEM WIRING DIAGRAMS article** .

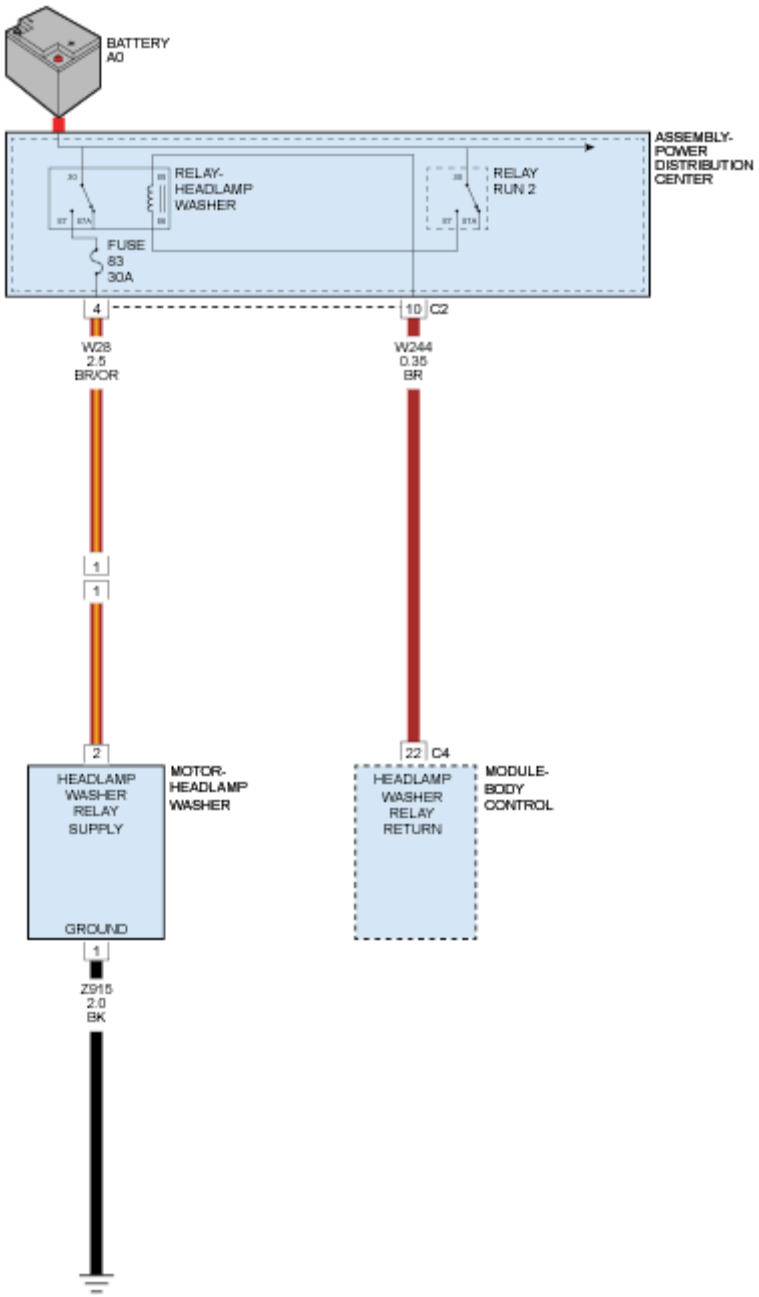

Fig. 15: Headlamp Washer Motor Control Circuit Diagram
Courtesy of CHRYSLER GROUP, LLC

WHEN MONITORED

Headlamp Washers are active.

SET CONDITION

The Body Control Module detects a short to battery condition on the Headlamp Washer Relay Control circuit.

POSSIBLE CAUSES

Possible Causes
HEADLAMP WASHER RELAY CONTROL CIRCUIT SHORTED TO VOLTAGE
HEADLAMP WASHER RELAY
BODY CONTROL MODULE (BCM)

DIAGNOSTIC TEST

1. **CHECK FOR AN ACTIVE DTC**
    1. Turn the ignition on.
    2. With the scan tool, read DTCs.

    Does the scan tool display this DTC as active?

    Yes

    - Go To 2

    No

    - Test complete. The condition or conditions that originally set this DTC are not present at this time. Using the wiring diagrams as a guide, check all related splices and connectors for signs of water intrusion, corrosion, pushed out or bent terminals and correct pin tension.
    - Perform the BODY VERIFICATION TEST. Refer to **STANDARD PROCEDURE** .
2. **CHECK THE HEADLAMP WASHER RELAY FOR CORRECT OPERATION**
    1. Turn the ignition off.
    2. Replace the Headlamp Washer Relay with a known good relay.
    3. Turn the ignition on.
    4. With the scan tool, read DTCs.

    Does the scan tool display this DTC as active?

    Yes

    - Go To 3

    No

    - Replace the Headlamp Washer Relay.
    - Perform the BODY VERIFICATION TEST. Refer to **STANDARD PROCEDURE** .
3. **CHECK THE (W244) HEADLAMP WASHER RELAY CONTROL CIRCUIT FOR A SHORT TO VOLTAGE**

1. Turn the ignition off.
2. Disconnect the BCM C4 harness connector.
3. Turn the ignition on.
4. Measure the voltage of the (W244) Headlamp Washer Relay circuit at the Headlamp Washer Relay cavity in the PDC.

   Is voltage present?

   Yes

   - Repair the (W244) Headlamp Washer Relay circuit for a short to voltage.
   - Perform the BODY VERIFICATION TEST. Refer to **STANDARD PROCEDURE** .

   No

   - Replace the Body Control Module in accordance with the Service Information. Refer to **MODULE, BODY CONTROL, REMOVAL** .
   - Perform the BODY VERIFICATION TEST. Refer to **STANDARD PROCEDURE** .

B2322-14-HEADLAMP WASHER MOTOR CONTROL - CIRCUIT SHORT TO GROUND OR OPEN

For a complete wiring diagram, **refer to appropriate SYSTEM WIRING DIAGRAMS article** .

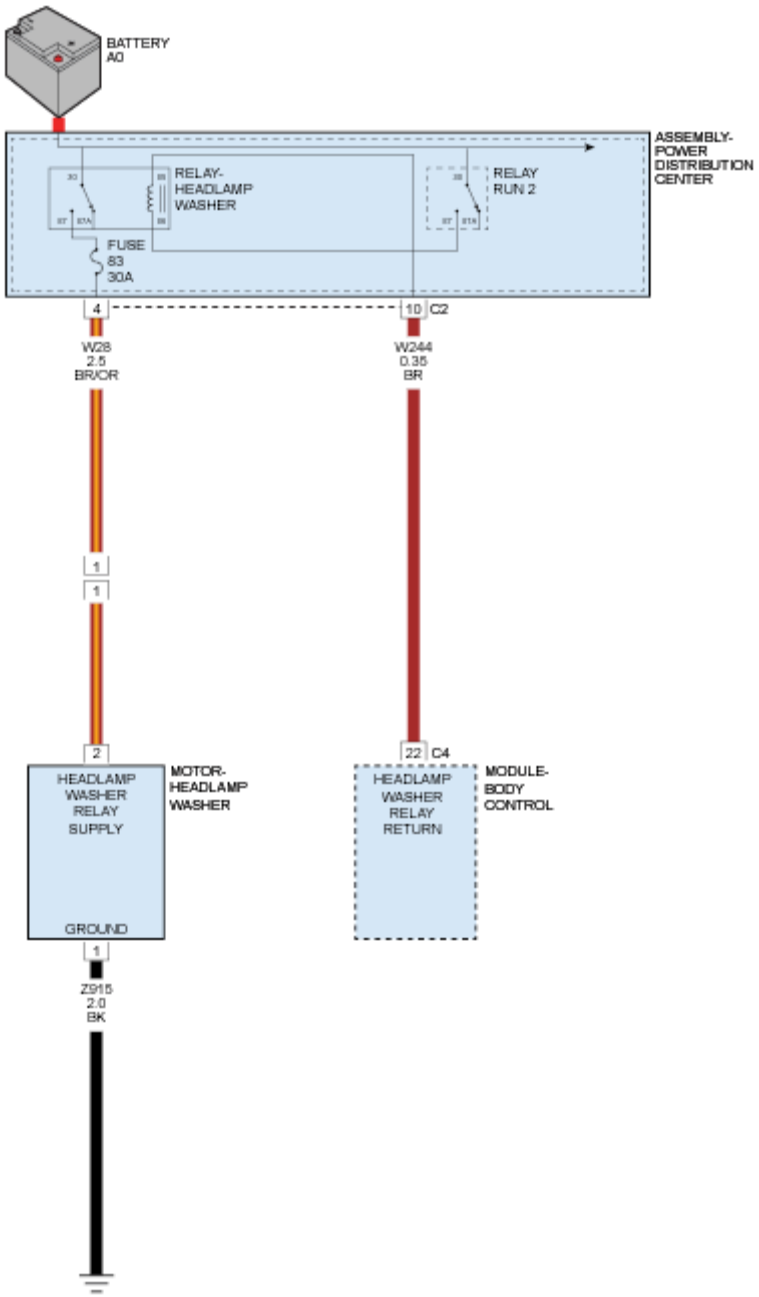

Fig. 16: Headlamp Washer Motor Control Circuit Diagram
Courtesy of CHRYSLER GROUP, LLC

WHEN MONITORED

With the ignition on.

SET CONDITION

This DTC will set if the Body Control Module (BCM) detects a short to ground on the Headlamp Washer Relay

Control circuit.

POSSIBLE CAUSES

Possible Causes
HEADLAMP WASHER RELAY CONTROL CIRCUIT OPEN OR SHORT TO GROUND HEADLAMP WASHER RELAY BODY CONTROL MODULE (BCM)

DIAGNOSTIC TEST

1. **CHECK FOR AN ACTIVE DTC**
    1. Turn the ignition on.
    2. With the scan tool, read DTCs.

    Does the scan tool display this DTC as active?

    Yes

    - Go To 2

    No

    - Test complete. The condition or conditions that originally set this DTC are not present at this time. Using the wiring diagrams as a guide, check all related splices and connectors for signs of water intrusion, corrosion, pushed out or bent terminals and correct pin tension.
    - Perform the BODY VERIFICATION TEST. Refer to **STANDARD PROCEDURE** .
2. **CHECK THE HEADLAMP WASHER RELAY FOR CORRECT OPERATION**
    1. Turn the ignition off.
    2. Replace the Headlamp Washer Relay with a known good relay.
    3. Turn the ignition on.
    4. With the scan tool, read DTCs.

    Does the scan tool display this DTC as active?

    Yes

    - Go To 3

    No

    - Replace the Headlamp Washer Relay.
    - Perform the BODY VERIFICATION TEST. Refer to **STANDARD PROCEDURE** .

3. **CHECK THE (W244) HEADLAMP WASHER RELAY CONTROL CIRCUIT FOR A SHORT TO GROUND**
   1. Turn the ignition off.
   2. Remove the Headlamp Washer Relay from the PDC.
   3. Disconnect the BCM C4 harness connector.
   4. Measure the resistance between ground and the (W244) Headlamp Washer Relay circuit at the Headlamp Washer Relay cavity in the PDC.

      Is the resistance below 10K Ohms?

      Yes

      - Repair the (W244) Headlamp Washer Relay circuit for a short to ground.
      - Perform the BODY VERIFICATION TEST. Refer to **STANDARD PROCEDURE** .

      No

      - Go To 4
4. **CHECK THE (W244) HEADLAMP WASHER RELAY CONTROL CIRCUIT FOR AN OPEN**
   1. Turn the ignition off.
   2. Measure the resistance of the (W244) Headlamp Washer Relay circuit between the BCM C4 harness connector and the Headlamp Washer Relay cavity in the PDC.

      Is the resistance above 5.0 Ohms?

      Yes

      - Repair the (W244) Headlamp Washer Relay circuit for an open circuit.
      - Perform the BODY VERIFICATION TEST. Refer to **STANDARD PROCEDURE** .

      No

      - Replace the Body Control Module in accordance with the Service Information. Refer to **MODULE, BODY CONTROL, REMOVAL** .
      - Perform the BODY VERIFICATION TEST. Refer to **STANDARD PROCEDURE** .

B2345-18-WIPER MOTOR LOW SPEED CONTROL - UNDER CURRENT

For a complete wiring diagram, **refer to appropriate SYSTEM WIRING DIAGRAMS article** .

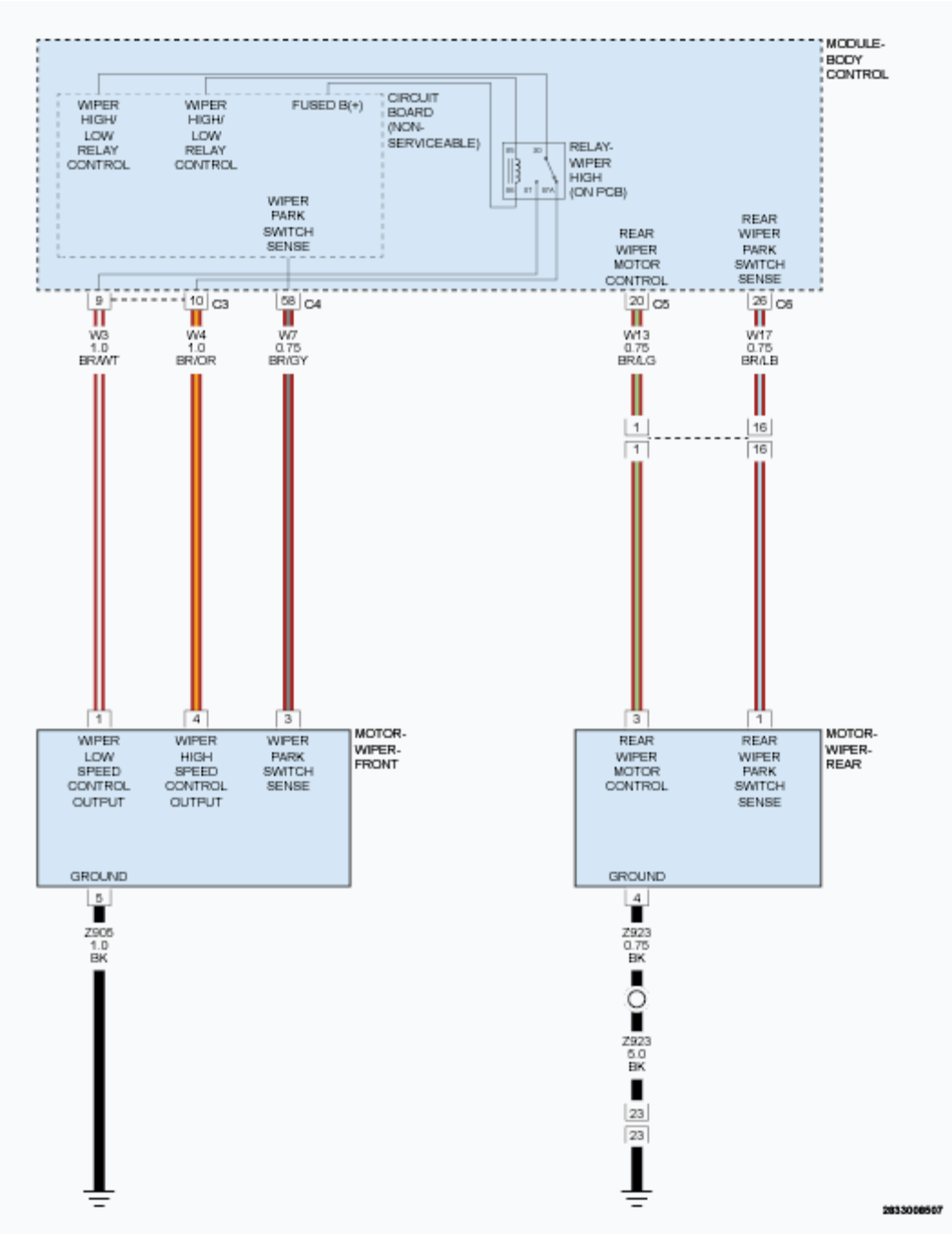

Fig. 17: Wiper Motor Speed Control Circuit Diagram
Courtesy of CHRYSLER GROUP, LLC

WHEN MONITORED

With the ignition on.

SET CONDITION

The Body Control Module (BCM) detects a short to voltage or open in the Wiper Low Speed Control Output circuit.

POSSIBLE CAUSES

Possible Causes
WIPER LOW SPEED CONTROL OUTPUT CIRCUIT OPEN
WIPER LOW SPEED CONTROL OUTPUT CIRCUIT SHORTED TO VOLTAGE
FRONT WIPER MOTOR
BODY CONTROL MODULE (BCM)

DIAGNOSTIC TEST

1. **CHECK FOR AN ACTIVE DTC**
    1. Turn the ignition on.
    2. With the scan tool, read DTCs.

    Does the scan tool display this DTC as active?

    Yes

    - Go To 2

    No

    - Test complete. The condition or conditions that originally set this DTC are not present at this time. Using the wiring diagrams as a guide, check all related splices and connectors for signs of water intrusion, corrosion, pushed out or bent terminals and correct pin tension.
    - Perform the BODY VERIFICATION TEST. Refer to **STANDARD PROCEDURE** .
2. **CHECK THE (W3) WIPER LOW SPEED CONTROL OUTPUT CIRCUIT FOR A SHORT TO VOLTAGE**
    1. Turn the ignition off.
    2. Disconnect the Front Wiper Motor harness connector.
    3. Turn the ignition on.
    4. Measure the voltage of the (W3) Wiper Low Speed Control Output circuit.

    Is voltage present?

    Yes

    - Repair the short to voltage in the (W3) Wiper Low Speed Control Output circuit.
    - Perform the BODY VERIFICATION TEST. Refer to **STANDARD PROCEDURE** .

No

- Go To 3

3. **CHECK FOR VOLTAGE ON THE (W3) WIPER LOW SPEED CONTROL OUTPUT CIRCUIT WITH LOW SPEED WIPERS TURNED ON**
   1. Turn the Low Speed Wipers on.
   2. Measure the voltage of the (W3) Wiper Low Speed Control Output circuit.

   Is the voltage greater than 10.0 volts?

   Yes

   - Replace the Front Wiper Motor in accordance with the Service Information. Refer to **MOTOR, WIPER, REMOVAL** .
   - Perform the BODY VERIFICATION TEST. Refer to **STANDARD PROCEDURE** .

   No

   - Go To 4

4. **CHECK THE (W3) WIPER LOW SPEED CONTROL OUTPUT CIRCUIT FOR AN OPEN**
   1. Turn the ignition off.
   2. Disconnect the BCM C3 harness connector.
   3. Measure the resistance of the (W3) Wiper Low Speed Control Output circuit between the BCM C3 and Front Wiper Motor harness connectors.

   Is the resistance above 5.0 Ohms?

   Yes

   - Repair the open in the (W3) Wiper Low Speed Control Output circuit.
   - Perform the BODY VERIFICATION TEST. Refer to **STANDARD PROCEDURE** .

   No

   - Replace the Body Control Module in accordance with the Service Information. Refer to **MODULE, BODY CONTROL, REMOVAL** .
   - Perform the BODY VERIFICATION TEST. Refer to **STANDARD PROCEDURE** .

B2345-19-WIPER MOTOR LOW SPEED CONTROL - OVERCURRENT

For a complete wiring diagram, **refer to appropriate SYSTEM WIRING DIAGRAMS article** .

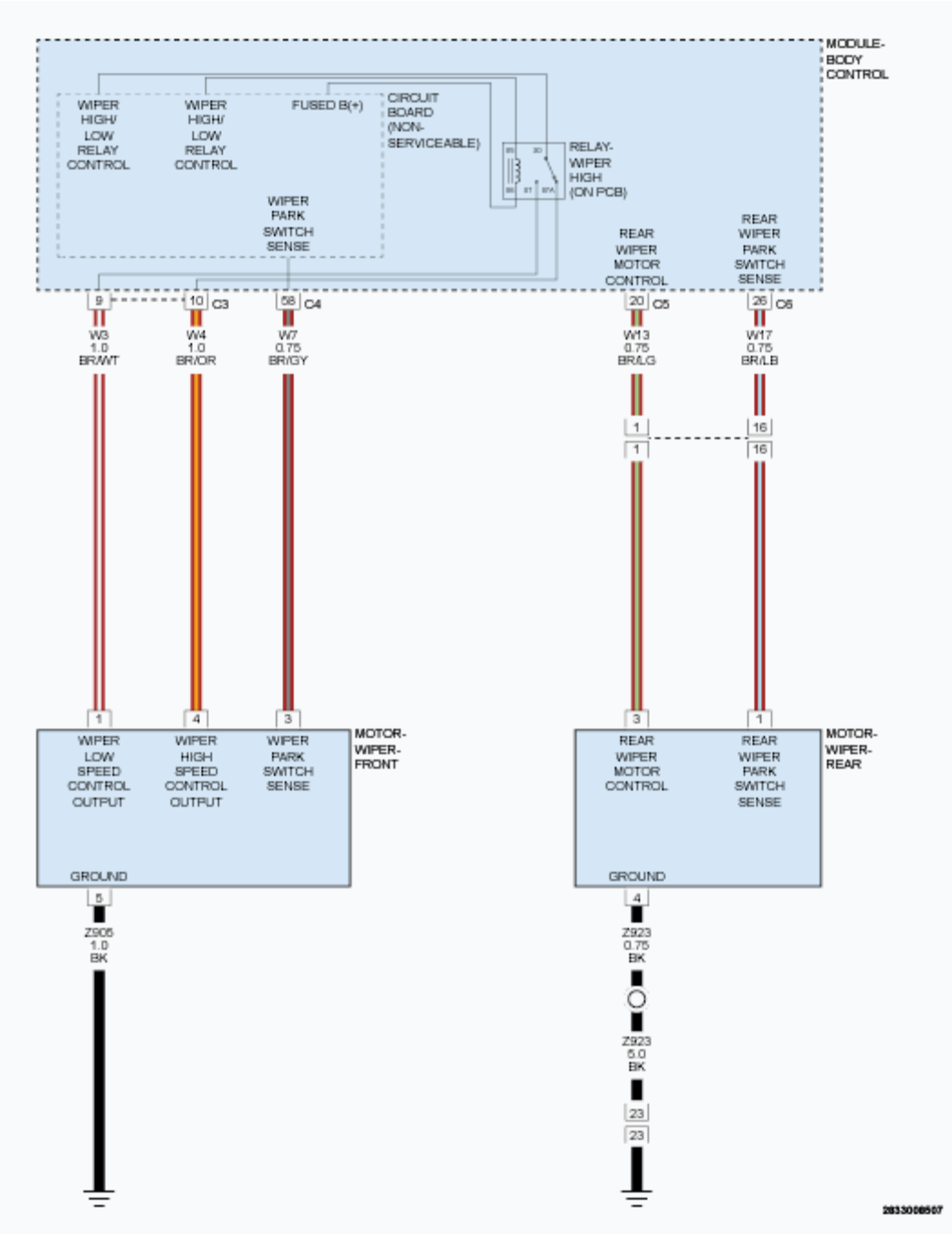

Fig. 18: Wiper Motor Speed Control Circuit Diagram
Courtesy of CHRYSLER GROUP, LLC

WHEN MONITORED

With the low speed windshield wipers on.

SET CONDITION

The Body Control Module (BCM) detects the Wiper Low Speed Control Output circuit is shorted to ground.

POSSIBLE CAUSES

Possible Causes
WIPER LOW SPEED CONTROL OUTPUT CIRCUIT SHORTED TO GROUND
FRONT WIPER MOTOR
BODY CONTROL MODULE (BCM)

DIAGNOSTIC TEST

1. **CHECK FOR AN ACTIVE DTC**
    1. Turn the ignition on.
    2. Turn the low wipers on.
    3. With the scan tool, read DTCs.

    Does the scan tool display this DTC as active?

    Yes

    - Go To 2

    No

    - Test complete. The condition or conditions that originally set this DTC are not present at this time. Using the wiring diagrams as a guide, check all related splices and connectors for signs of water intrusion, corrosion, pushed out or bent terminals and correct pin tension.
    - Perform the BODY VERIFICATION TEST. Refer to **STANDARD PROCEDURE** .
2. **CHECK THE FRONT WIPER MOTOR FOR AN INTERNAL SHORT TO GROUND**
    1. Turn the ignition off.
    2. Disconnect the Front Wiper Motor harness connector.
    3. Turn the ignition on.
    4. With the scan tool, read DTCs.

    Does the scan tool display this DTC as active?

    Yes

    - Go To 3

    No

    - Replace the Front Wiper Motor in accordance with the Service Information. Refer to **MOTOR, WIPER, REMOVAL** .

- Perform the BODY VERIFICATION TEST. Refer to **STANDARD PROCEDURE** .

3. **CHECK THE (W3) WIPER LOW SPEED CONTROL OUTPUT CIRCUIT FOR A SHORT TO GROUND**
   1. Turn the ignition off.
   2. Disconnect the BCM C3 harness connector.
   3. Measure the resistance between ground and the (W3) Wiper Low Speed Control Output circuit.

      Is the resistance above 10K Ohms?

      Yes

      - Replace the Body Control Module (BCM) in accordance with the Service Information. Refer to **MODULE, BODY CONTROL, REMOVAL** .
      - Perform the BODY VERIFICATION TEST. Refer to **STANDARD PROCEDURE** .

      No

      - Repair the short to ground on the (W3) Wiper Low Speed Control Output circuit.
      - Perform the BODY VERIFICATION TEST. Refer to **STANDARD PROCEDURE** .

B2349-18-WIPER MOTOR HI SPEED CONTROL - UNDER CURRENT

For a complete wiring diagram, **refer to appropriate SYSTEM WIRING DIAGRAMS article** .

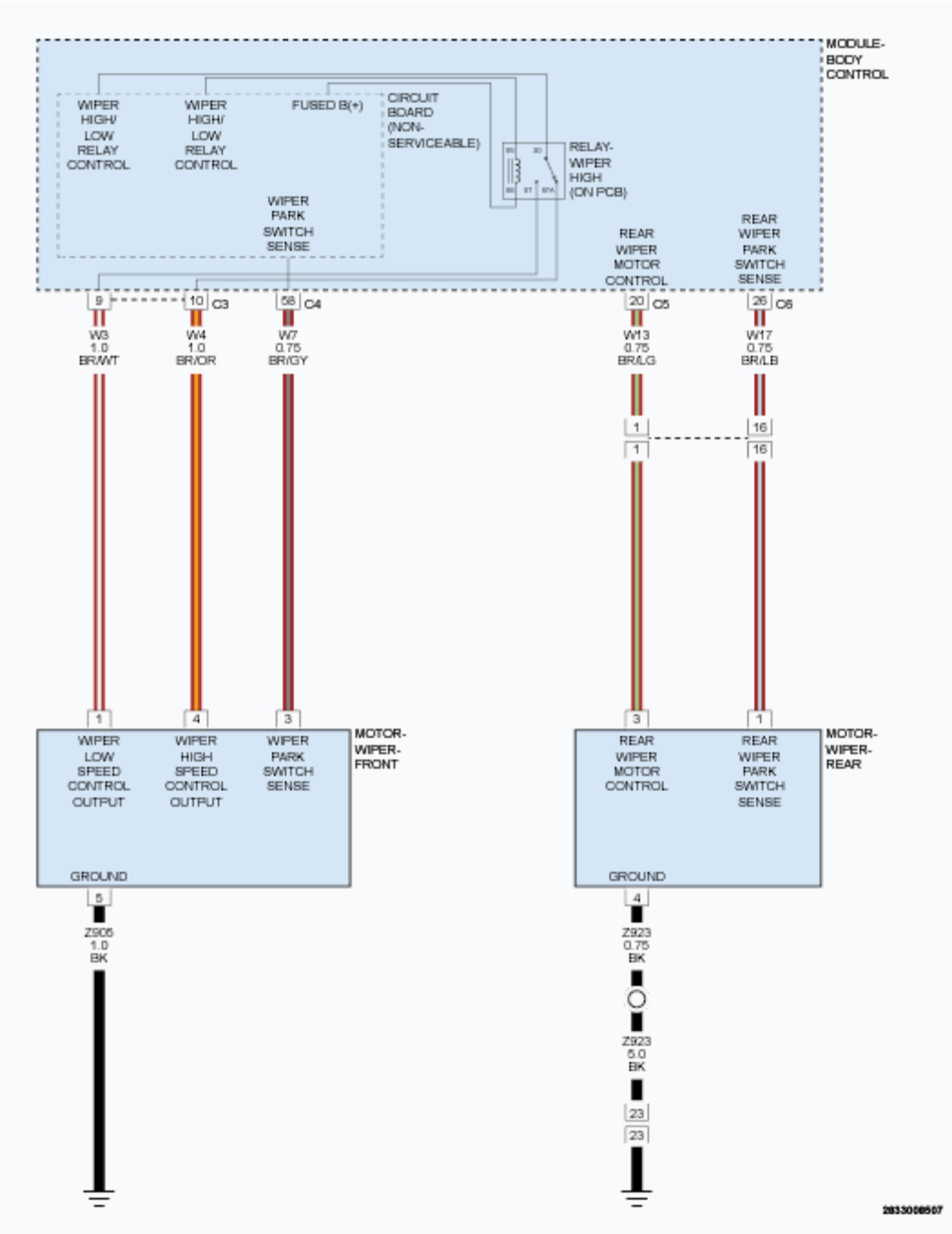

Fig. 19: Wiper Motor Speed Control Circuit Diagram
Courtesy of CHRYSLER GROUP, LLC

WHEN MONITORED

With the ignition on.

SET CONDITION

The Body Control Module (BCM) detects a short to voltage or open in the Wiper High Speed Control Output circuit.

POSSIBLE CAUSES

Possible Causes
WIPER HIGH SPEED CONTROL OUTPUT CIRCUIT OPEN
WIPER HIGH SPEED CONTROL OUTPUT CIRCUIT SHORTED TO VOLTAGE
FRONT WIPER MOTOR
BODY CONTROL MODULE (BCM)

DIAGNOSTIC TEST

1. **CHECK FOR AN ACTIVE DTC**
   1. Turn the ignition on.
   2. With the scan tool, read DTCs.

      Does the scan tool display this DTC as active?

      Yes

      - Go To 2

      No

      - Test complete. The condition or conditions that originally set this DTC are not present at this time. Using the wiring diagrams as a guide, check all related splices and connectors for signs of water intrusion, corrosion, pushed out or bent terminals and correct pin tension.
      - Perform the BODY VERIFICATION TEST. Refer to **STANDARD PROCEDURE** .
2. **CHECK THE (W4) WIPER HIGH SPEED CONTROL OUTPUT CIRCUIT FOR A SHORT TO VOLTAGE**
   1. Turn the ignition off.
   2. Disconnect the Front Wiper Motor harness connector.
   3. Turn the ignition on.
   4. Measure the voltage of the (W4) Wiper High Speed Control Output circuit.

      Is voltage present?

      Yes

      - Repair the short to voltage in the (W4) Wiper High Speed Control Output circuit.
      - Perform the BODY VERIFICATION TEST. Refer to **STANDARD PROCEDURE** .

No

- Go To 3

3. **CHECK FOR VOLTAGE ON THE (W4) WIPER HIGH SPEED CONTROL OUTPUT CIRCUIT WITH HIGH SPEED WIPERS TURNED ON**
   1. Turn the High Speed Wipers on.
   2. Measure the voltage of the (W4) Wiper High Speed Control Output circuit.

   Is the voltage greater than 10.0 volts?

   Yes

   - Replace the Front Wiper Motor in accordance with the Service Information. Refer to **MOTOR, WIPER, REMOVAL** .
   - Perform the BODY VERIFICATION TEST. Refer to **STANDARD PROCEDURE** .

   No

   - Go To 4

4. **CHECK THE (W4) WIPER HIGH SPEED CONTROL OUTPUT CIRCUIT FOR AN OPEN**
   1. Turn the ignition off.
   2. Disconnect the BCM C3 harness connector.
   3. Measure the resistance of the (W4) Wiper High Speed Control Output circuit between the BCM C3 and Front Wiper Motor harness connectors.

   Is the resistance above 5.0 Ohms?

   Yes

   - Repair the open in the (W4) Wiper High Speed Control Output circuit.
   - Perform the BODY VERIFICATION TEST. Refer to **STANDARD PROCEDURE** .

   No

   - Replace the Body Control Module in accordance with the Service Information. Refer to **MODULE, BODY CONTROL, REMOVAL** .
   - Perform the BODY VERIFICATION TEST. Refer to **STANDARD PROCEDURE** .

B2349-19-WIPER MOTOR HI SPEED CONTROL - OVERCURRENT

For a complete wiring diagram, **refer to appropriate SYSTEM WIRING DIAGRAMS article** .

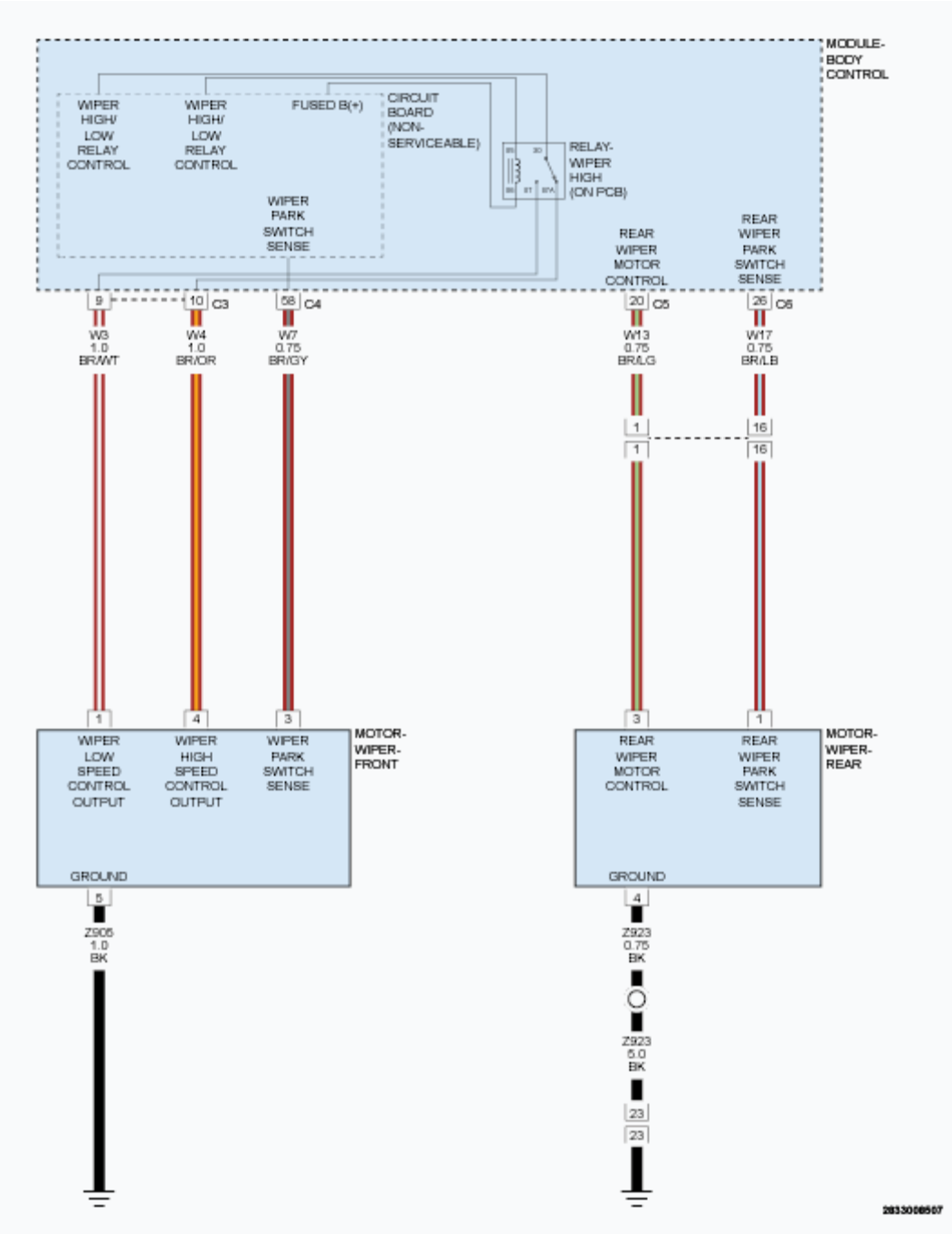

Fig. 20: Wiper Motor Speed Control Circuit Diagram
Courtesy of CHRYSLER GROUP, LLC

WHEN MONITORED

With the high speed windshield wipers on.

SET CONDITION

The Body Control Module (BCM) detects the Wiper High Speed Control Output circuit is shorted to ground.

POSSIBLE CAUSES

Possible Causes
WIPER HIGH SPEED CONTROL OUTPUT CIRCUIT SHORTED TO GROUND
FRONT WIPER MOTOR
BODY CONTROL MODULE (BCM)

DIAGNOSTIC TEST

1. **CHECK FOR AN ACTIVE DTC**
    1. Turn the ignition on.
    2. Turn the low wipers on.
    3. With the scan tool, read DTCs.

    Does the scan tool display this DTC as active?

    Yes

    - Go To 2

    No

    - Test complete. The condition or conditions that originally set this DTC are not present at this time. Using the wiring diagrams as a guide, check all related splices and connectors for signs of water intrusion, corrosion, pushed out or bent terminals and correct pin tension.
    - Perform the BODY VERIFICATION TEST. Refer to **STANDARD PROCEDURE** .
2. **CHECK THE FRONT WIPER MOTOR FOR AN INTERNAL SHORT TO GROUND**
    1. Turn the ignition off.
    2. Disconnect the Front Wiper Motor harness connector.
    3. Turn the ignition on.
    4. With the scan tool, read DTCs.

    Does the scan tool display this DTC as active?

    Yes

    - Go To 3

    No

    - Replace the Front Wiper Motor in accordance with the Service Information. Refer to **MOTOR, WIPER, REMOVAL** .

- Perform the BODY VERIFICATION TEST. Refer to **STANDARD PROCEDURE** .

3. **CHECK THE (W4) WIPER HIGH SPEED CONTROL OUTPUT CIRCUIT FOR A SHORT TO GROUND**
   1. Turn the ignition off.
   2. Disconnect the BCM C3 harness connector.
   3. Measure the resistance between ground and the (W4) Wiper High Speed Control Output circuit.

      Is the resistance above 10K Ohms?

      Yes

      - Replace the Body Control Module (BCM) in accordance with the Service Information. Refer to **MODULE, BODY CONTROL, REMOVAL** .
      - Perform the BODY VERIFICATION TEST. Refer to **STANDARD PROCEDURE** .

      No

      - Repair the short to ground on the (W4) Wiper High Speed Control Output circuit.
      - Perform the BODY VERIFICATION TEST. Refer to **STANDARD PROCEDURE** .

B23B9-18-REAR WIPER CONTROL - UNDER CURRENT

For a complete wiring diagram, **refer to appropriate SYSTEM WIRING DIAGRAMS article** .

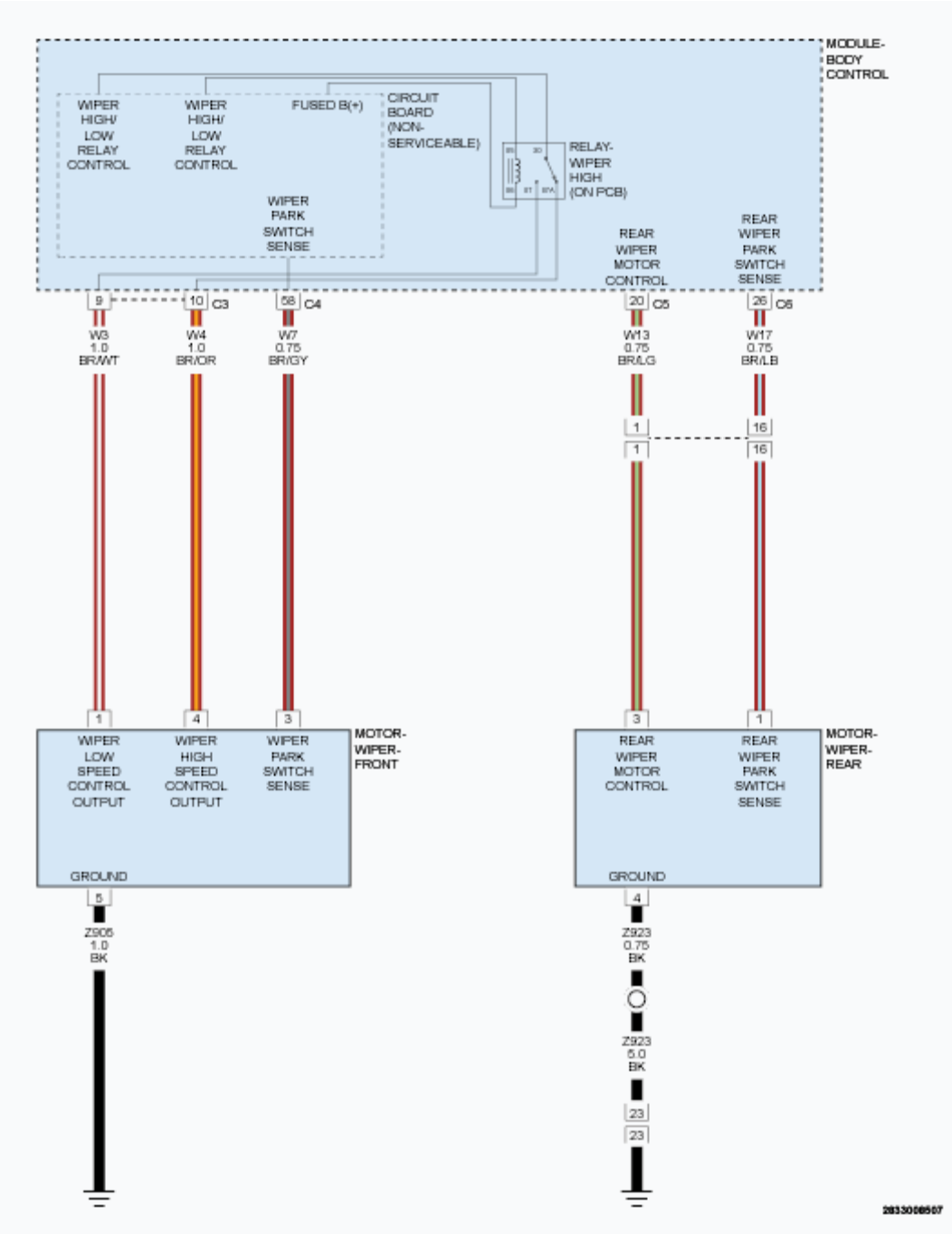

Fig. 21: Wiper Motor Speed Control Circuit Diagram
Courtesy of CHRYSLER GROUP, LLC

WHEN MONITORED

With the ignition on.

SET CONDITION

The Body Control Module (BCM) detects a short to voltage or open in the Rear Wiper Motor Control circuit.

POSSIBLE CAUSES

Possible Causes
REAR WIPER MOTOR CONTROL OUTPUT CIRCUIT OPEN
REAR WIPER MOTOR CONTROL OUTPUT CIRCUIT SHORTED TO VOLTAGE
REAR WIPER MOTOR
BODY CONTROL MODULE (BCM)

DIAGNOSTIC TEST

1. **CHECK FOR AN ACTIVE DTC**
   1. Turn the ignition on.
   2. With the scan tool, read DTCs.

      Does the scan tool display this DTC as active?

      Yes

      - Go To 2

      No

      - Test complete. The condition or conditions that originally set this DTC are not present at this time. Using the wiring diagrams as a guide, check all related splices and connectors for signs of water intrusion, corrosion, pushed out or bent terminals and correct pin tension.
      - Perform the BODY VERIFICATION TEST. Refer to **STANDARD PROCEDURE** .
2. **CHECK THE (W13) REAR WIPER MOTOR CONTROL CIRCUIT FOR A SHORT TO VOLTAGE**
   1. Turn the ignition off.
   2. Disconnect the Rear Wiper Motor harness connector.
   3. Turn the ignition on.
   4. Measure the voltage of the (W13) Rear Wiper Motor Control circuit.

      Is voltage present?

      Yes

      - Repair the short to voltage in the (W13) Rear Wiper Motor Control circuit.
      - Perform the BODY VERIFICATION TEST. Refer to **STANDARD PROCEDURE** .

      No

- Go To 3

3. **CHECK FOR VOLTAGE ON THE (W13) REAR WIPER MOTOR CONTROL CIRCUIT WITH WIPER TURNED ON**
   1. Turn the Rear Wiper on.
   2. Measure the voltage of the (W13) Rear Wiper Motor Control circuit.

      Is the voltage greater than 10.0 volts?

      Yes

      - Replace the Rear Wiper Motor in accordance with the Service Information.
      - Perform the BODY VERIFICATION TEST. Refer to **STANDARD PROCEDURE** .

      No

      - Go To 4

4. **CHECK THE (W13) REAR WIPER MOTOR CONTROL CIRCUIT FOR AN OPEN**
   1. Turn the ignition off.
   2. Disconnect the BCM C5 harness connector.
   3. Measure the resistance of the (W13) Rear Wiper Motor Control circuit between the BCM C5 and Rear Wiper Motor harness connectors.

      Is the resistance above 5.0 Ohms?

      Yes

      - Repair the open in the (W13) Rear Wiper Motor Control circuit.
      - Perform the BODY VERIFICATION TEST. Refer to **STANDARD PROCEDURE** .

      No

      - Replace the Body Control Module in accordance with the Service Information. Refer to **MODULE, BODY CONTROL, REMOVAL** .
      - Perform the BODY VERIFICATION TEST. Refer to **STANDARD PROCEDURE** .

B23B9-19-REAR WIPER CONTROL - OVERCURRENT

For a complete wiring diagram, **refer to appropriate SYSTEM WIRING DIAGRAMS article** .

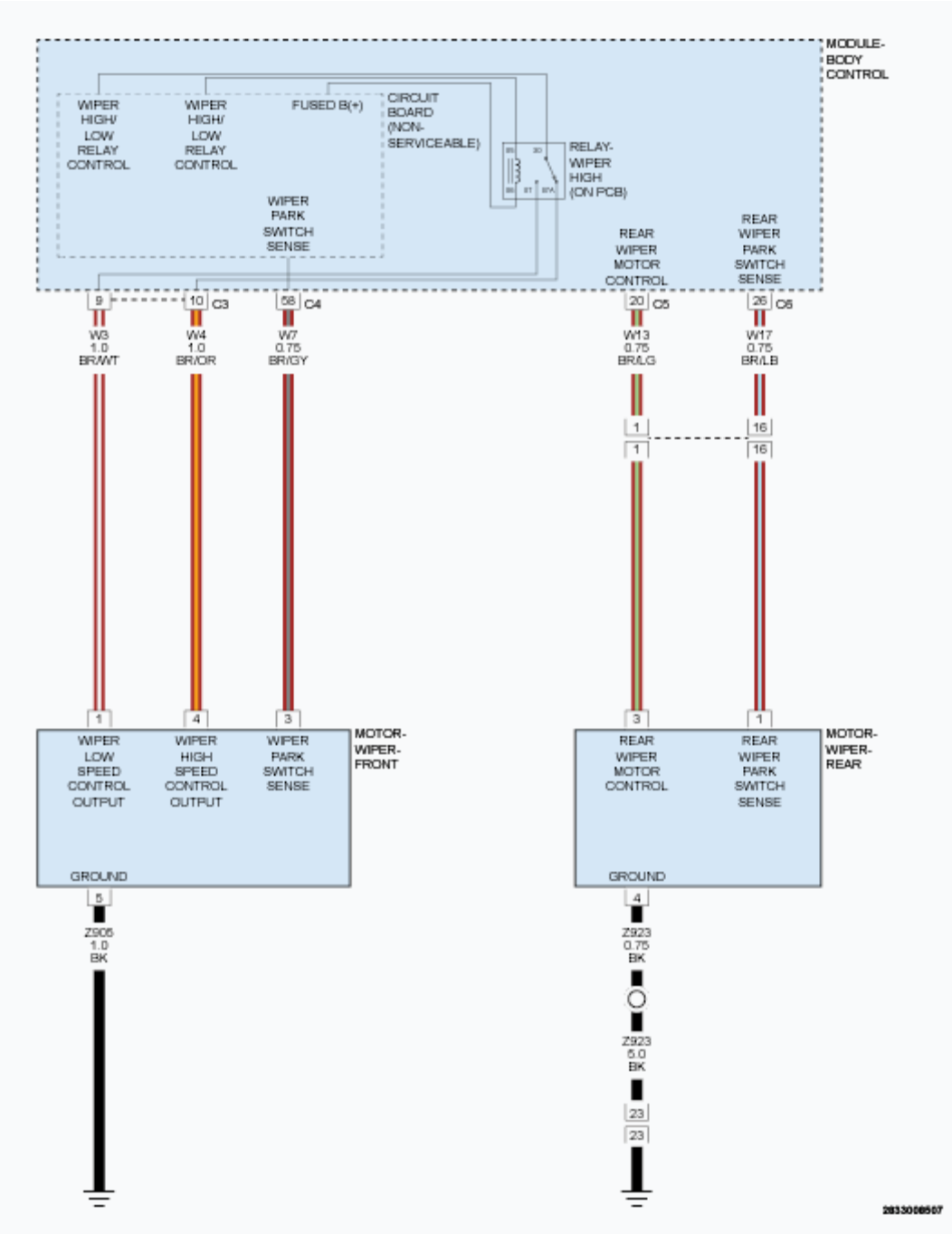

Fig. 22: Wiper Motor Speed Control Circuit Diagram
Courtesy of CHRYSLER GROUP, LLC

WHEN MONITORED

With the Rear Wiper on.

SET CONDITION

The Body Control Module (BCM) detects the Rear Wiper Motor Control circuit is shorted to ground.

POSSIBLE CAUSES

Possible Causes
REAR WIPER MOTOR CONTROL CIRCUIT SHORTED TO GROUND
REAR WIPER MOTOR
BODY CONTROL MODULE (BCM)

DIAGNOSTIC TEST

1. **CHECK FOR AN ACTIVE DTC**
    1. Turn the ignition on.
    2. Turn the rear wiper on.
    3. With the scan tool, read DTCs.

    Does the scan tool display this DTC as active?

    Yes

    - Go To 2

    No

    - Test complete. The condition or conditions that originally set this DTC are not present at this time. Using the wiring diagrams as a guide, check all related splices and connectors for signs of water intrusion, corrosion, pushed out or bent terminals and correct pin tension.
    - Perform the BODY VERIFICATION TEST. Refer to **STANDARD PROCEDURE** .
2. **CHECK THE REAR WIPER MOTOR FOR AN INTERNAL SHORT TO GROUND**
    1. Turn the ignition off.
    2. Disconnect the Rear Wiper Motor harness connector.
    3. Turn the ignition on.
    4. With the scan tool, read DTCs.

    Does the scan tool display this DTC as active?

    Yes

    - Go To 3

    No

    - Replace the Rear Wiper Motor in accordance with the Service Information.

- Perform the BODY VERIFICATION TEST. Refer to **STANDARD PROCEDURE** .

3. **CHECK THE (W13) REAR WIPER MOTOR CONTROL CIRCUIT FOR A SHORT TO GROUND**
   1. Turn the ignition off.
   2. Disconnect the BCM C5 harness connector.
   3. Measure the resistance between ground and the (W13) Rear Wiper Motor Control circuit.

      Is the resistance above 10K Ohms?

      Yes

      - Replace the Body Control Module (BCM) in accordance with the Service Information. Refer to **MODULE, BODY CONTROL, REMOVAL** .
      - Perform the BODY VERIFICATION TEST. Refer to **STANDARD PROCEDURE** .

      No

      - Repair the short to ground on the (W13) Rear Wiper Motor Control circuit.
      - Perform the BODY VERIFICATION TEST. Refer to **STANDARD PROCEDURE** .

B25B3-64-PASSENGER DOOR LOCK/UNLOCK RELAY SIGNAL - PLAUSIBILITY FAILURE

For a complete wiring diagram, **refer to appropriate SYSTEM WIRING DIAGRAMS article** .

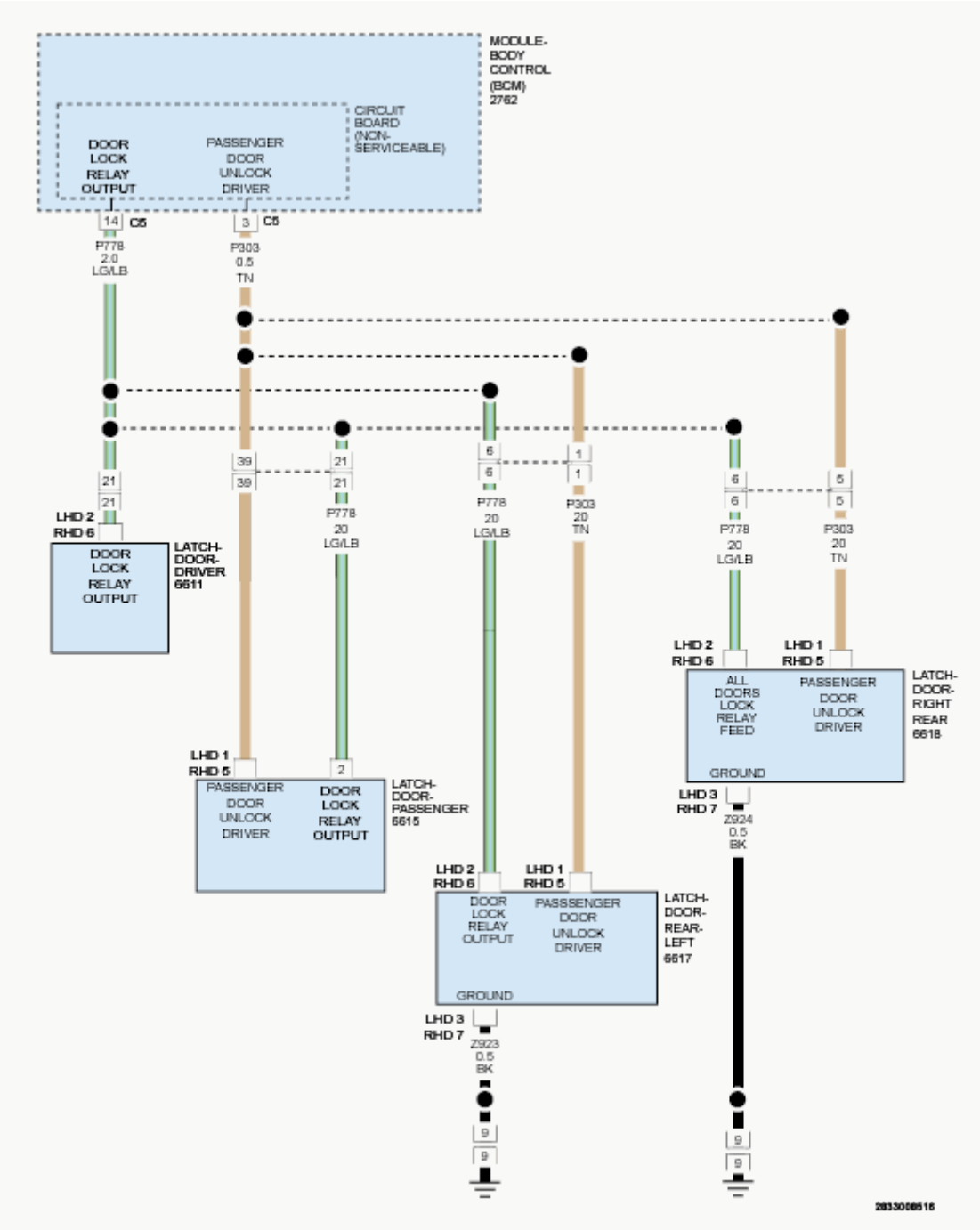

Fig. 23: Passenger Door Lock Control Circuit Diagram
Courtesy of CHRYSLER GROUP, LLC

WHEN MONITORED

With the ignition on.

SET CONDITION

The Body Control Module will set this DTC if voltage is detected on the (P303) Passenger Door Unlock Driver circuit with the Passenger Unlock Door Relay inactive.

POSSIBLE CAUSES

Possible Causes
(P303) PASSENGER DOOR UNLOCK DRIVER CIRCUIT SHORTED TO VOLTAGE BODY CONTROL MODULE (BCM)

DIAGNOSTIC TEST

1. **CHECK FOR AN ACTIVE DTC**
    1. Turn the ignition on.
    2. With the scan tool, read DTCs.

    Does the scan tool display this DTC as active?

    Yes

    - Go To 2

    No

    - Test complete, the condition or conditions that originally set this DTC are not present at this time. Using the wiring diagrams as a guide, check all related splices and connectors for signs of water intrusion, corrosion, pushed out or bent terminals, and correct pin tension.
    - Perform the BODY VERIFICATION TEST. Refer to **STANDARD PROCEDURE** .
2. **CHECK THE (P303) PASSENGER DOOR UNLOCK DRIVER CIRCUIT FOR A SHORT TO VOLTAGE**
    1. Turn the ignition off.
    2. Disconnect the BCM C5 harness connector.
    3. Turn the ignition on.
    4. Measure the voltage of the (P303) Passenger Door Unlock Driver circuit.

    Is voltage present?

    Yes

    - Repair the short to voltage on the (P303) Passenger Door Unlock Driver circuit.
    - Perform the BODY VERIFICATION TEST. Refer to **STANDARD PROCEDURE** .

    No

    - Replace the Body Control Module in accordance with the Service Information. Refer to

MODULE, BODY CONTROL, REMOVAL .

- Perform the BODY VERIFICATION TEST. Refer to **STANDARD PROCEDURE** .

B2880-11-FOG LAMP CONTROL - CIRCUIT SHORT TO GROUND

For a complete wiring diagram, **refer to appropriate SYSTEM WIRING DIAGRAMS article** .

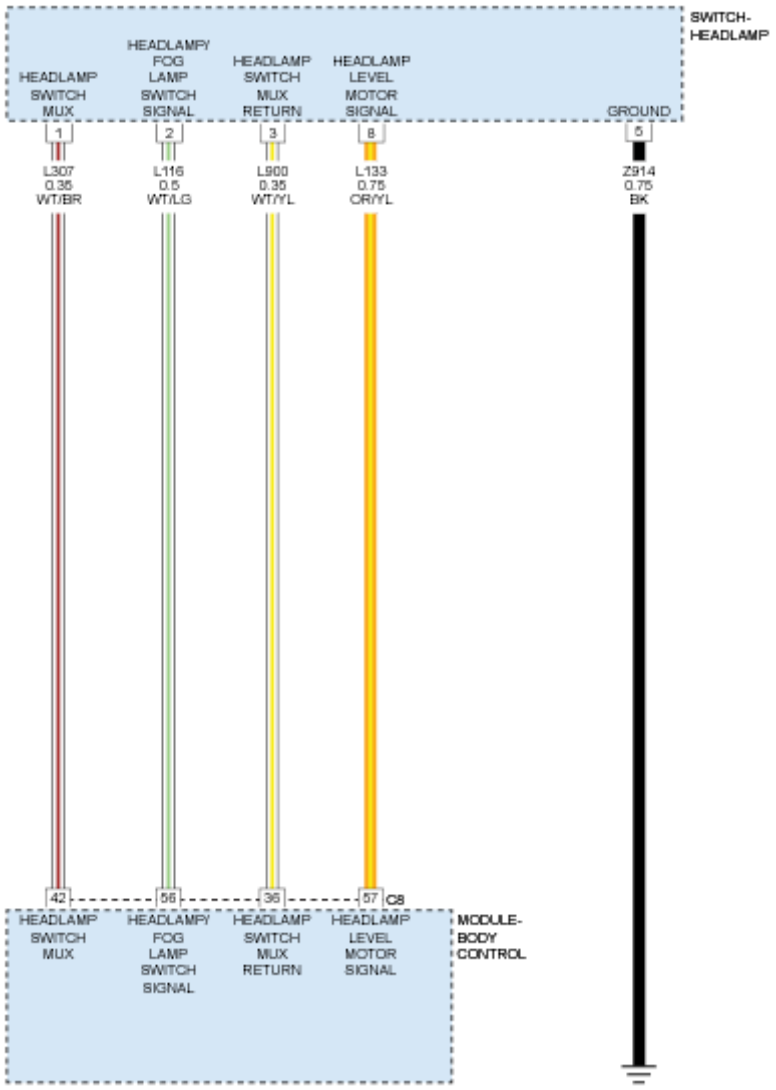

Fig. 24: Headlamp Switch Circuit Diagram
Courtesy of CHRYSLER GROUP, LLC

THEORY OF OPERATION

The Body Control Module (BCM) receives an input voltage from the Headlamp switch. The BCM monitors the headlamp switch voltage and controls the exterior lighting functions based on the switch input. For additional information on Headlamp Switch operation, refer to **SWITCH, HEADLAMP, OPERATION** .

WHEN MONITORED

With the ignition on.

SET CONDITION

When the Body Control Module (BCM) detects a low condition on the (L116) Front Fog Lamp Switch Signal circuit.

POSSIBLE CAUSES

Possible Causes
(L116) FRONT FOG LAMP SWITCH SIGNAL CIRCUIT SHORTED TO GROUND HEADLAMP SWITCH BODY CONTROL MODULE (BCM)

DIAGNOSTIC TEST

1. **CHECK FOR AN ACTIVE DTC**
    1. Turn the ignition on.
    2. With the scan tool, read DTCs.

    Does the scan tool display this DTC as active?

    Yes

    - Go To 2

    No

    - Test complete. The condition or conditions that originally set this DTC are not present at this time. Using the wiring diagrams as a guide, check all related splices and connectors for signs of water intrusion, corrosion, pushed out or bent terminals and correct pin tension.
    - Perform the BODY VERIFICATION TEST. Refer to **STANDARD PROCEDURE** .
2. **CHECK THE HEADLAMP SWITCH FOR AN INTERNAL SHORT TO GROUND**
    1. Turn the ignition off.
    2. Disconnect the Headlamp Switch harness connector.
    3. Turn the ignition on.
    4. With the scan tool, read the DTCs.

    Does the scan tool display this DTC as active?

    Yes

- Go To 3

No

- Replace the Headlamp Switch in accordance with the Service Information. Refer to **SWITCH, HEADLAMP, REMOVAL** .
- Perform the BODY VERIFICATION TEST. Refer to **STANDARD PROCEDURE** .

3. **CHECK THE (L116) FOG LAMP SWITCH SIGNAL CIRCUIT FOR A SHORT TO GROUND**
   1. Disconnect the BCM C8 harness connector.
   2. Measure the resistance between ground and the (L116) Fog Lamp Switch Signal circuit.

   Is the resistance below 10K Ohms?

   Yes

   - Repair the short to ground in the (L116) Fog Lamp Switch Signal circuit.
   - Perform the BODY VERIFICATION TEST. Refer to **STANDARD PROCEDURE** .

   No

   - Replace the BCM in accordance with the Service Information. Refer to **MODULE, BODY CONTROL, REMOVAL** .
   - Perform the BODY VERIFICATION TEST. Refer to **STANDARD PROCEDURE** .

B2880-15-FOG LAMP CONTROL - CIRCUIT SHORT TO BATTERY OR OPEN

For a complete wiring diagram, **refer to appropriate SYSTEM WIRING DIAGRAMS article** .

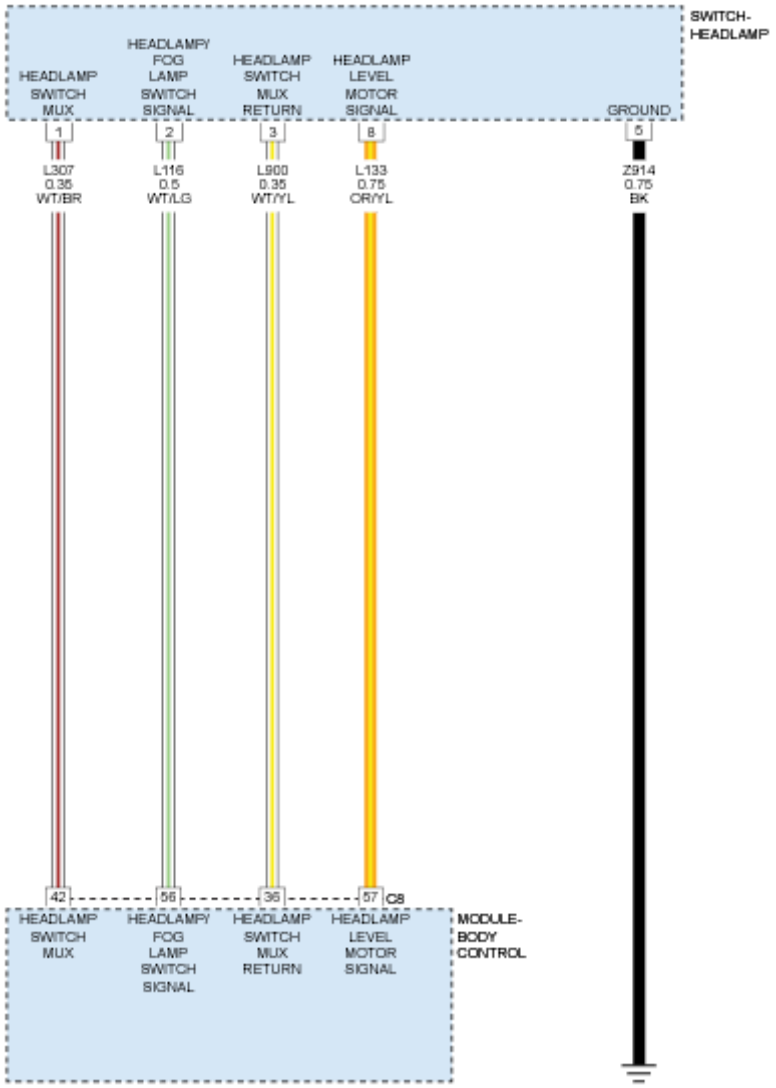

Fig. 25: Headlamp Switch Circuit Diagram
Courtesy of CHRYSLER GROUP, LLC

THEORY OF OPERATION

The Body Control Module (BCM) receives an input voltage from the Headlamp switch. The BCM monitors the headlamp switch voltage and controls the exterior lighting functions based on the switch input. For additional information on Headlamp Switch operation, refer to **SWITCH, HEADLAMP, OPERATION** .

WHEN MONITORED

With the fog lamps on.

SET CONDITION

The BCM detects a short to voltage or an open on the (L116) Fog Lamp Switch Signal circuit.

POSSIBLE CAUSES

Possible Causes
(L116) FOG LAMP SWITCH SIGNAL CIRCUIT SHORTED TO VOLTAGE
(L116) FOG LAMP SWITCH SIGNAL CIRCUIT OPEN
HEADLAMP SWITCH
BODY CONTROL MODULE (BCM)

DIAGNOSTIC TEST

1. **CHECK FOR AN ACTIVE DIAGNOSTIC TROUBLE CODE (DTC)**
    1. Turn the ignition on.
    2. Turn the Headlamps on.
    3. With the scan tool, read the DTCs.

    Does the scan tool display this DTC as active?

    Yes

    - Go To 2

    No

    - Test complete. The condition or conditions that originally set this DTC are not present at this time. Using the wiring diagrams as a guide, check all related splices and connectors for signs of water intrusion, corrosion, pushed out or bent terminals and correct pin tension.
    - Perform the BODY VERIFICATION TEST. Refer to **STANDARD PROCEDURE** .
2. **CHECK (L116) FOG LAMP SWITCH SIGNAL CIRCUIT FOR A SHORT TO VOLTAGE**
    1. Turn the ignition off.
    2. Disconnect the Headlamp Switch harness connector.
    3. Disconnect the BCM C8 harness connector.
    4. Turn the ignition on.
    5. Measure the voltage of the (L116) Fog Lamp Switch Signal circuit.

    Is there any voltage present?

    Yes

    - Repair the (L116) Fog Lamp Switch Signal circuit for a short to voltage.
    - Perform the BODY VERIFICATION TEST. Refer to **STANDARD PROCEDURE** .

No

- Go To 3

3. **CHECK THE (L116) FOG LAMP SWITCH SIGNAL CIRCUIT FOR AN OPEN IN THE HARNESS**
   1. Turn the ignition off.
   2. Measure the resistance of the (L116) Fog Lamp Switch Signal circuit between the Headlamp harness connector and the BCM C8 harness connector.

      Is the resistance below 5.0 Ohms?

      Yes

      - Go To 4

      No

      - Repair the open in the (L116) Fog Lamp Switch Signal circuit.
      - Perform the BODY VERIFICATION TEST. Refer to **STANDARD PROCEDURE** .
4. **CHECK THE HEADLAMP SWITCH**
   1. Connect the BCM C8 harness connector.
   2. Connect a jumper wire between ground and the (L116) Fog Lamp Switch Signal circuit at the Headlamp Switch harness connector.
   3. Turn the ignition on.
   4. With the scan tool, read the DTCs.

      Does the scan tool display DTC: B2880-11-FOG LAMP CONTROL-CIRCUIT SHORT TO GROUND?

      Yes

      - Replace the Headlamp Switch in accordance with the Service Information. Refer to **SWITCH, HEADLAMP, REMOVAL** .
      - Perform the BODY VERIFICATION TEST. Refer to **STANDARD PROCEDURE** .

      No

      - Replace the BCM in accordance with the Service Information. Refer to **MODULE, BODY CONTROL, REMOVAL** .
      - Perform the BODY VERIFICATION TEST. Refer to **STANDARD PROCEDURE** .

B2881-19-LEFT REAR PARK LAMP CONTROL - OVERCURRENT

For a complete wiring diagram, **refer to appropriate SYSTEM WIRING DIAGRAMS article** .

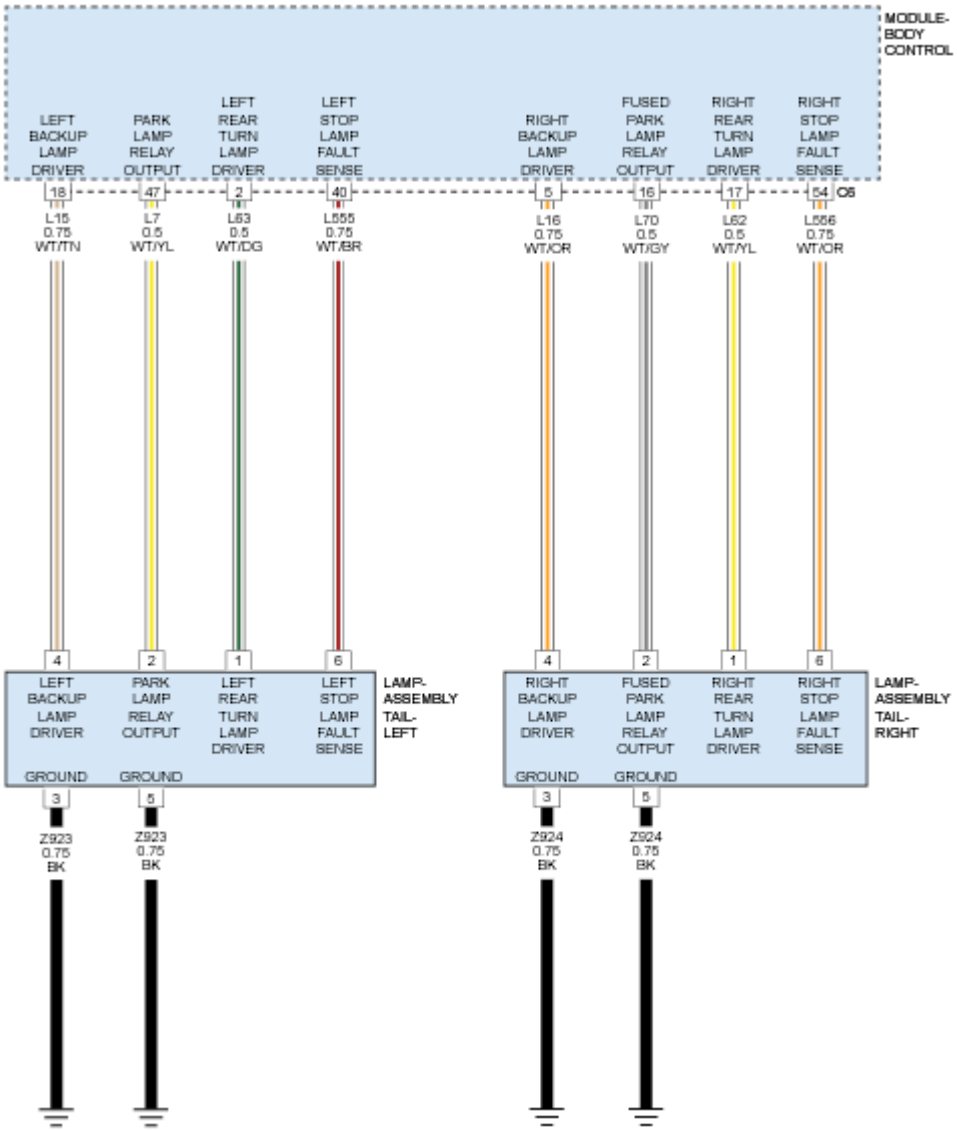

Fig. 26: Tail Lamp/Backup Lamp Assembly Circuit Diagram
Courtesy of CHRYSLER GROUP, LLC

THEORY OF OPERATION

The Body Control Module (BCM) receives the input from the headlamp switch requesting park lamp illumination. The BCM provides a Pulse Width Modulated (PWM) voltage to the Park Lamps. A ground path for the lamps is present through the harness to the body sheet metal. For additional information on the Park Lamps operation, refer to **OPERATION** .

WHEN MONITORED

With the park lamps active.

SET CONDITION

When the Body Control Module (BCM) detects a low condition on the Left Park Lamp Driver circuit.

POSSIBLE CAUSES

Possible Causes
LEFT PARK LAMP DRIVER CIRCUIT SHORTED TO GROUND
LEFT PARK LAMP BULB
BODY CONTROL MODULE (BCM)

DIAGNOSTIC TEST

1. **CHECK FOR AN ACTIVE DTC**
    1. Turn the ignition on.
    2. With the scan tool, read DTCs.

    Does the scan tool display this DTC as active?

    Yes

    - Go To 2

    No

    - Test complete. The condition or conditions that originally set this DTC are not present at this time. Using the wiring diagrams as a guide, check all related splices and connectors for signs of water intrusion, corrosion, pushed out or bent terminals and correct pin tension.
    - Perform the BODY VERIFICATION TEST. Refer to **STANDARD PROCEDURE** .
2. **CHECK THE PARK LAMP BULB**
    1. Turn the Park Lamps off.
    2. Turn the ignition off.
    3. Disconnect the Left Tail Lamp Assembly harness connector.
    4. Turn the ignition on.
    5. Turn the Park Lamps on.
    6. With the scan tool, read DTCs.

    Does the scan tool display this DTC as active?

    Yes

    - Go To 3

No

- Replace the Left Park Lamp in accordance with the Service Information.
- Perform the BODY VERIFICATION TEST. Refer to **STANDARD PROCEDURE** .

3. **CHECK THE (L7) LEFT PARK LAMP DRIVER CIRCUIT FOR A SHORT TO GROUND**
   1. Disconnect the BCM C6 harness connector.
   2. Measure the resistance between ground and the (L7) Left Park Lamp Driver circuit.

   Is the resistance below 10K Ohms?

   Yes

   - Repair the short to ground in the (L7) Left Park Lamp Driver circuit.
   - Perform the BODY VERIFICATION TEST. Refer to **STANDARD PROCEDURE** .

   No

   - Replace the BCM in accordance with the Service Information. Refer to **MODULE, BODY CONTROL, REMOVAL** .
   - Perform the BODY VERIFICATION TEST. Refer to **STANDARD PROCEDURE** .

B2881-19-LEFT REAR PARK LAMP CONTROL - OVERCURRENT - EXPORT

For a complete wiring diagram, **refer to appropriate SYSTEM WIRING DIAGRAMS article** .

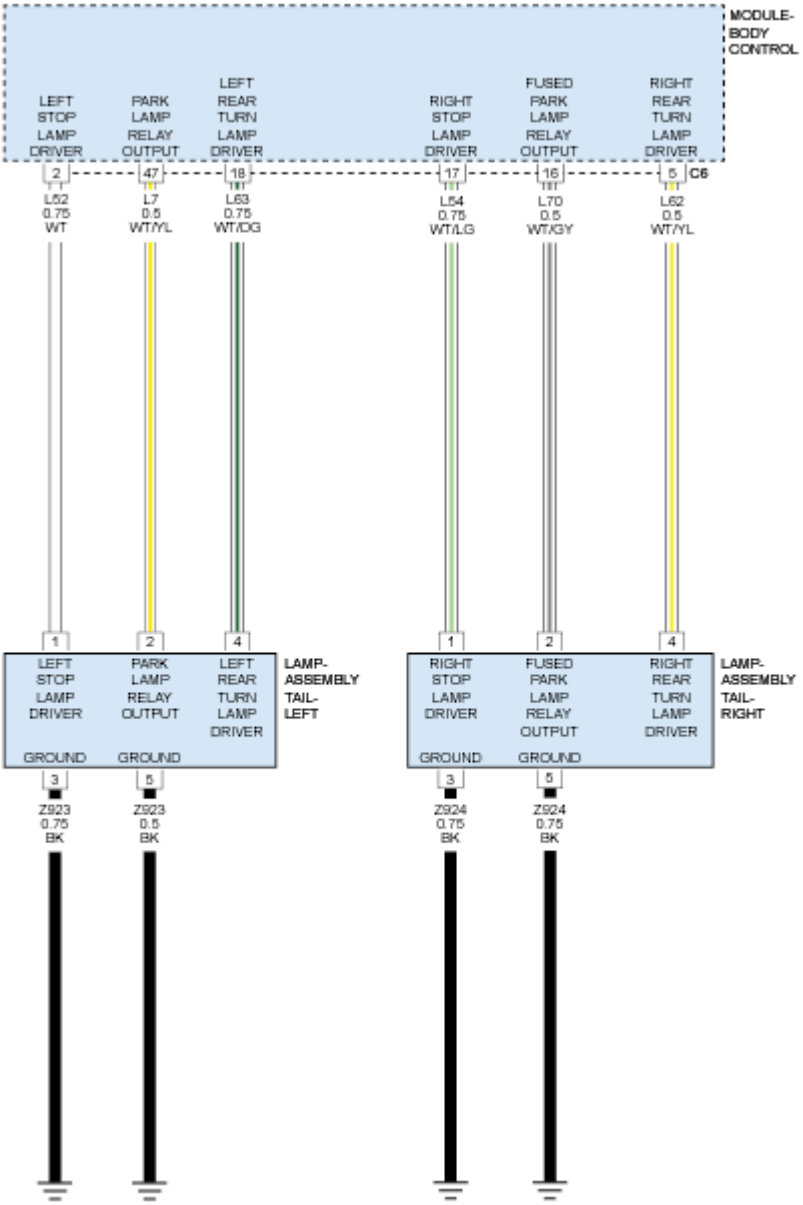

Fig. 27: Tail Lamp Assembly Circuit Diagram
Courtesy of CHRYSLER GROUP, LLC

THEORY OF OPERATION

The Body Control Module (BCM) receives the input from the headlamp switch requesting park lamp illumination. The BCM provides a Pulse Width Modulated (PWM) voltage to the Park Lamps. A ground path for the lamps is present through the harness to the body sheet metal. For additional information on the Park Lamps operation, refer to **OPERATION** .

WHEN MONITORED

With the park lamps active.

SET CONDITION

When the Body Control Module (BCM) detects a low condition on the Left Park Lamp Driver circuit.

POSSIBLE CAUSES

Possible Causes
LEFT PARK LAMP DRIVER CIRCUIT SHORTED TO GROUND
LEFT PARK LAMP BULB
BODY CONTROL MODULE (BCM)

DIAGNOSTIC TEST

1. **CHECK FOR AN ACTIVE DTC**
    1. Turn the ignition on.
    2. With the scan tool, read DTCs.

    Does the scan tool display this DTC as active?

    Yes

    - Go To 2

    No

    - Test complete. The condition or conditions that originally set this DTC are not present at this time. Using the wiring diagrams as a guide, check all related splices and connectors for signs of water intrusion, corrosion, pushed out or bent terminals and correct pin tension.
    - Perform the BODY VERIFICATION TEST. Refer to **STANDARD PROCEDURE** .
2. **CHECK THE PARK LAMP BULB**
    1. Turn the Park Lamps off.
    2. Turn the ignition off.
    3. Disconnect the Left Tail Lamp Assembly harness connector.
    4. Turn the ignition on.
    5. Turn the Park Lamps on.
    6. With the scan tool, read DTCs.

    Does the scan tool display this DTC as active?

    Yes

- Go To 3

No

- Replace the Left Park Lamp in accordance with the Service Information.
- Perform the BODY VERIFICATION TEST. Refer to **STANDARD PROCEDURE** .

3. **CHECK THE (L7) LEFT PARK LAMP DRIVER CIRCUIT FOR A SHORT TO GROUND**
   1. Disconnect the BCM C6 harness connector.
   2. Measure the resistance between ground and the (L7) Left Park Lamp Driver circuit.

   Is the resistance below 10K Ohms?

   Yes

   - Repair the short to ground in the (L7) Left Park Lamp Driver circuit.
   - Perform the BODY VERIFICATION TEST. Refer to **STANDARD PROCEDURE** .

   No

   - Replace the BCM in accordance with the Service Information. Refer to **MODULE, BODY CONTROL, REMOVAL** .
   - Perform the BODY VERIFICATION TEST. Refer to **STANDARD PROCEDURE** .

B2882-19-RIGHT REAR PARK LAMP CONTROL - OVERCURRENT

For a complete wiring diagram, **refer to appropriate SYSTEM WIRING DIAGRAMS article** .

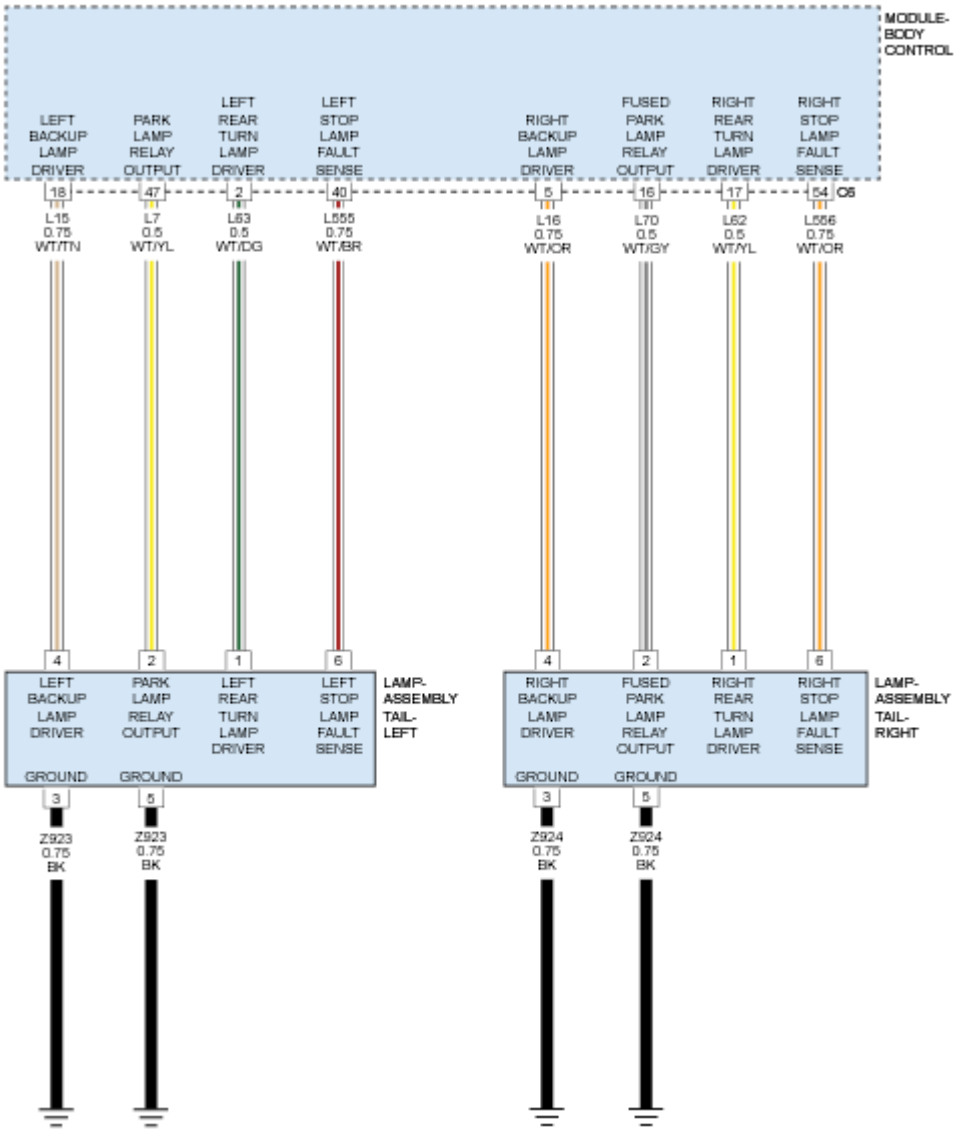

Fig. 28: Tail Lamp/Backup Lamp Assembly Circuit Diagram
Courtesy of CHRYSLER GROUP, LLC

THEORY OF OPERATION

The Body Control Module (BCM) receives the input from the headlamp switch requesting park lamp illumination. The BCM provides a Pulse Width Modulated (PWM) voltage to the Park Lamps. A ground path for the lamps is present through the harness to the body sheet metal. For additional information on the Park Lamps operation, refer to **OPERATION** .

WHEN MONITORED

With the park lamps active.

SET CONDITION

When the Body Control Module (BCM) detects a low condition on the Right Park Lamp Driver circuit.

POSSIBLE CAUSES

Possible Causes
RIGHT PARK LAMP DRIVER CIRCUIT SHORTED TO GROUND
RIGHT PARK LAMP BULB
BODY CONTROL MODULE (BCM)

DIAGNOSTIC TEST

1. **CHECK FOR AN ACTIVE DTC**
   1. Turn the ignition on.
   2. With the scan tool, read DTCs.

      Does the scan tool display this DTC as active?

      Yes

      - Go To 2

      No

      - Test complete. The condition or conditions that originally set this DTC are not present at this time. Using the wiring diagrams as a guide, check all related splices and connectors for signs of water intrusion, corrosion, pushed out or bent terminals and correct pin tension.
      - Perform the BODY VERIFICATION TEST. Refer to **STANDARD PROCEDURE** .
2. **CHECK THE PARK LAMP BULB**
   1. Turn the Park Lamps off.
   2. Turn the ignition off.
   3. Disconnect the Right Tail Lamp Assembly harness connector.
   4. Turn the ignition on.
   5. Turn the Park Lamps on.
   6. With the scan tool, read DTCs.

      Does the scan tool display this DTC as active?

      Yes

      - Go To 3

No

- Replace the Right Park Lamp in accordance with the Service Information.
- Perform the BODY VERIFICATION TEST. Refer to **STANDARD PROCEDURE** .

3. **CHECK THE (L70) RIGHT PARK LAMP DRIVER CIRCUIT FOR A SHORT TO GROUND**
   1. Disconnect the BCM C6 harness connector.
   2. Measure the resistance between ground and the (L70) Right Park Lamp Driver circuit.

   Is the resistance below 10K Ohms?

   Yes

   - Repair the short to ground in the (L70) Right Park Lamp Driver circuit.
   - Perform the BODY VERIFICATION TEST. Refer to **STANDARD PROCEDURE** .

   No

   - Replace the BCM in accordance with the Service Information. Refer to **MODULE, BODY CONTROL, REMOVAL** .
   - Perform the BODY VERIFICATION TEST. Refer to **STANDARD PROCEDURE** .

B2882-19-RIGHT REAR PARK LAMP CONTROL - OVERCURRENT - EXPORT

For a complete wiring diagram, **refer to appropriate SYSTEM WIRING DIAGRAMS article** .

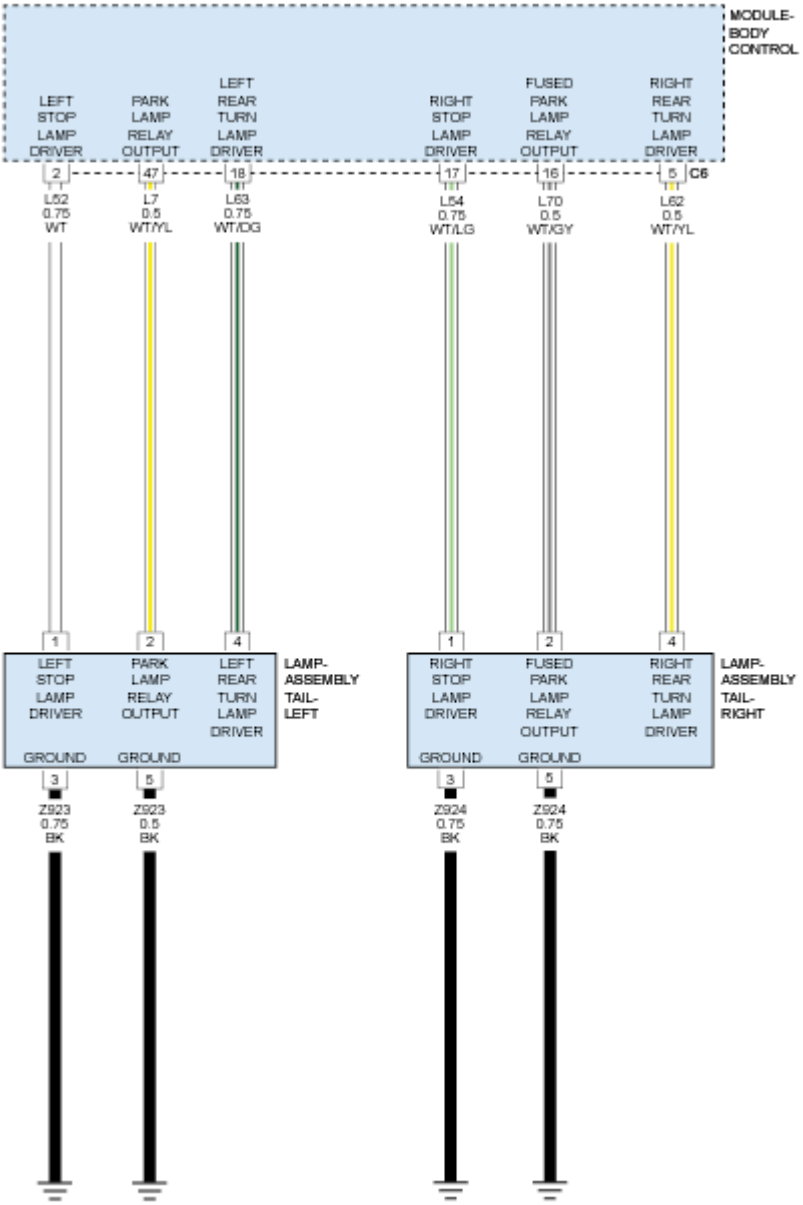

Fig. 29: Tail Lamp Assembly Circuit Diagram
Courtesy of CHRYSLER GROUP, LLC

THEORY OF OPERATION

The Body Control Module (BCM) receives the input from the headlamp switch requesting park lamp illumination. The BCM provides a Pulse Width Modulated (PWM) voltage to the Park Lamps. A ground path for the lamps is present through the harness to the body sheet metal. For additional information on the Park Lamps operation, refer to **OPERATION** .

WHEN MONITORED

With the park lamps active.

SET CONDITION

When the Body Control Module (BCM) detects a low condition on the Right Park Lamp Driver circuit.

POSSIBLE CAUSES

Possible Causes
RIGHT PARK LAMP DRIVER CIRCUIT SHORTED TO GROUND
RIGHT PARK LAMP BULB
BODY CONTROL MODULE (BCM)

DIAGNOSTIC TEST

1. **CHECK FOR AN ACTIVE DTC**
    1. Turn the ignition on.
    2. With the scan tool, read DTCs.

    Does the scan tool display this DTC as active?

    Yes

    - Go To 2

    No

    - Test complete. The condition or conditions that originally set this DTC are not present at this time. Using the wiring diagrams as a guide, check all related splices and connectors for signs of water intrusion, corrosion, pushed out or bent terminals and correct pin tension.
    - Perform the BODY VERIFICATION TEST. Refer to **STANDARD PROCEDURE** .
2. **CHECK THE PARK LAMP BULB**
    1. Turn the Park Lamps off.
    2. Turn the ignition off.
    3. Disconnect the Right Tail Lamp Assembly harness connector.
    4. Turn the ignition on.
    5. Turn the Park Lamps on.
    6. With the scan tool, read DTCs.

    Does the scan tool display this DTC as active?

    Yes

- Go To 3

No

- Replace the Right Park Lamp in accordance with the Service Information.
- Perform the BODY VERIFICATION TEST. Refer to **STANDARD PROCEDURE** .

3. **CHECK THE (L70) RIGHT PARK LAMP DRIVER CIRCUIT FOR A SHORT TO GROUND**
   1. Disconnect the BCM C6 harness connector.
   2. Measure the resistance between ground and the (L70) Right Park Lamp Driver circuit.

   Is the resistance below 10K Ohms?

   Yes

   - Repair the short to ground in the (L70) Right Park Lamp Driver circuit.
   - Perform the BODY VERIFICATION TEST. Refer to **STANDARD PROCEDURE** .

   No

   - Replace the BCM in accordance with the Service Information. Refer to **MODULE, BODY CONTROL, REMOVAL** .
   - Perform the BODY VERIFICATION TEST. Refer to **STANDARD PROCEDURE** .

B2883-18-LEFT REVERSE/BUX TURN SIGNAL CONTROL - UNDER CURRENT

For a complete wiring diagram, **refer to appropriate SYSTEM WIRING DIAGRAMS article** .

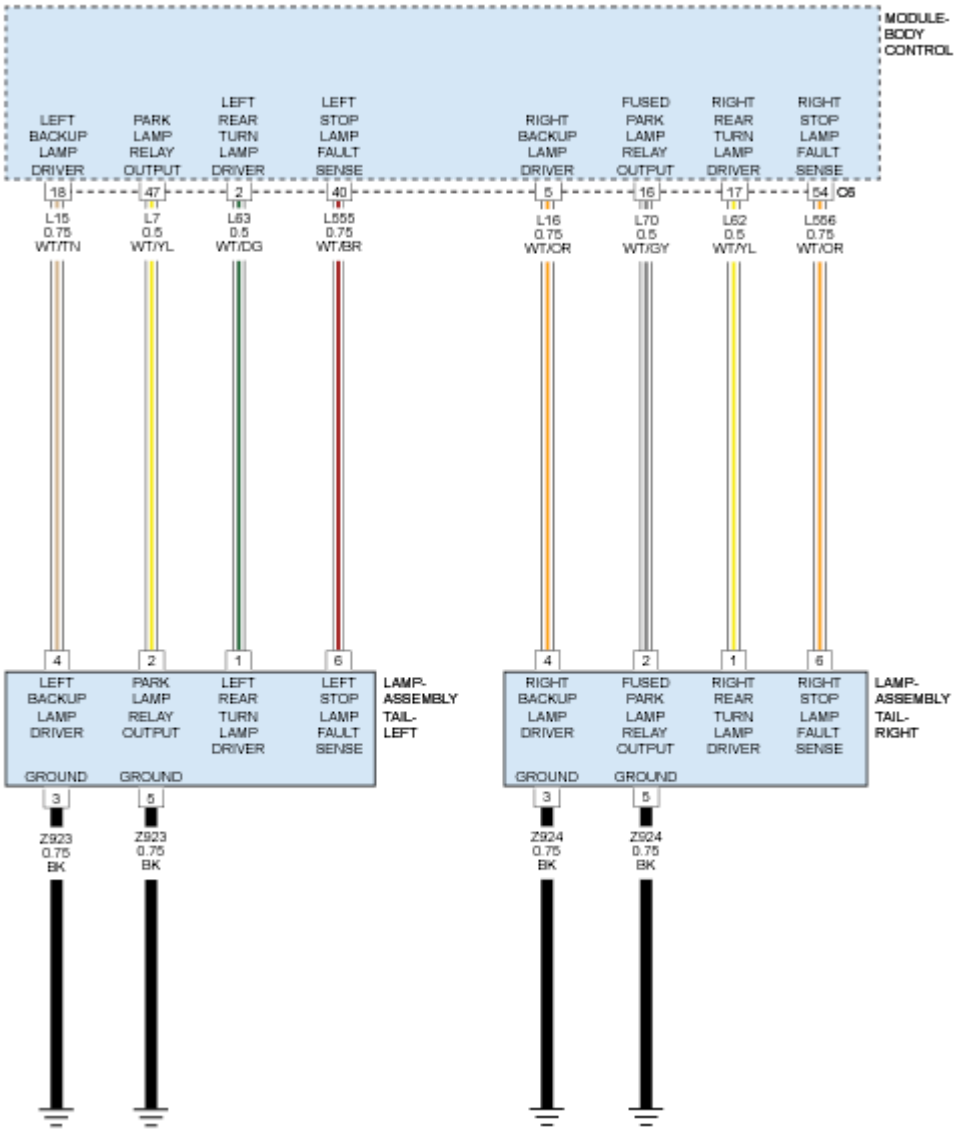

Fig. 30: Tail Lamp/Backup Lamp Assembly Circuit Diagram
Courtesy of CHRYSLER GROUP, LLC

THEORY OF OPERATION

The BCM provides a Pulse Width Modulated (PWM) voltage output through the backup lamp driver circuit. The driver circuit connects to the Backup Lamp. A ground path for the lamps is present through the harness to the body sheet metal. For additional information on the Backup Lamps operation, refer to **OPERATION** .

WHEN MONITORED

With the backup lamps active.

SET CONDITION

When the Body Control Module (BCM) detects a high condition on the (L15) Left Backup Lamp Driver circuit.

POSSIBLE CAUSES

Possible Causes
(L15) LEFT BACKUP LAMP DRIVER CIRCUIT OPEN
(L15) LEFT BACKUP LAMP DRIVER CIRCUIT SHORTED TO VOLTAGE
(Z923) GROUND CIRCUIT OPEN
LEFT BACKUP LAMP
BODY CONTROL MODULE (BCM)

DIAGNOSTIC TEST

1. **CHECK FOR AN ACTIVE DTC**
   1. Turn the ignition on.
   2. With the brakes firmly applied, shift the gear selector into REVERSE.
   3. With the scan tool, read DTCs.

      Does the scan tool display this DTC as active?

      Yes

      - Go To 2

      No

      - Test complete. The condition or conditions that originally set this DTC are not present at this time. Using the wiring diagrams as a guide, check all related splices and connectors for signs of water intrusion, corrosion, pushed out or bent terminals and correct pin tension.
      - Perform the BODY VERIFICATION TEST. Refer to **STANDARD PROCEDURE** .
2. **CHECK THE (L15) LEFT BACKUP LAMP DRIVER CIRCUIT FOR A SHORT TO VOLTAGE IN THE HARNESS**
   1. Shift the gear selector into PARK.
   2. Turn the ignition off.
   3. Disconnect the Left Tail Lamp harness connector.
   4. Disconnect the BCM C6 harness connector.
   5. Turn the ignition on.
   6. Measure the voltage between ground and the (L15) Left Backup Lamp Driver circuit.

      Is there any voltage present?

      Yes

- Repair the short to voltage in the (L15) Left Backup Lamp Driver circuit.
- Perform the BODY VERIFICATION TEST. Refer to **STANDARD PROCEDURE** .

No

- Go To 3

3. **CHECK THE (L15) LEFT BACKUP LAMP DRIVER CIRCUIT FOR AN OPEN IN THE HARNESS**
   1. Turn the ignition off.
   2. Measure the resistance of the (L15) Left Backup Lamp Driver circuit between the Left Tail Lamp harness connectors and the BCM C6 harness connector.

      Is the resistance below 5.0 Ohms for both connections?

      Yes

      - Go To 4

      No

      - Repair the open in the (L15) Left Backup Lamp Driver circuit.
      - Perform the BODY VERIFICATION TEST. Refer to **STANDARD PROCEDURE** .
4. **CHECK THE (Z923) GROUND CIRCUIT FOR AN OPEN IN THE HARNESS**
   1. Using a 12-volt test light connected to 12-volts, check the (Z923) Ground circuit.

      Does the test light illuminate brightly?

      Yes

      - Go To 5

      No

      - Repair the open in the (Z923) Ground circuit.
      - Perform the BODY VERIFICATION TEST. Refer to **STANDARD PROCEDURE** .
5. **CHECK THE BCM FOR CORRECT OPERATION**
   1. Turn the ignition off.
   2. Reconnect the BCM C6 harness connector.
   3. Connect a 12-volt test light between the (L15) Left Backup Lamp Driver circuit and the (Z923) Ground circuit at the Left Tail Lamp harness connectors.
   4. Turn the ignition on.
   5. With the brakes firmly applied, shift the gear selector into REVERSE.

Does the test light illuminate brightly at both connections?

Yes

- Replace the Left Backup Lamp in accordance with the Service Information.
- Perform the BODY VERIFICATION TEST. Refer to **STANDARD PROCEDURE** .

No

- Replace the BCM in accordance with the Service Information. Refer to **MODULE, BODY CONTROL, REMOVAL** .
- Perform the BODY VERIFICATION TEST. Refer to **STANDARD PROCEDURE** .

B2883-19-LEFT REVERSE/BUX TURN SIGNAL CONTROL - OVERCURRENT

For a complete wiring diagram, **refer to appropriate SYSTEM WIRING DIAGRAMS article** .

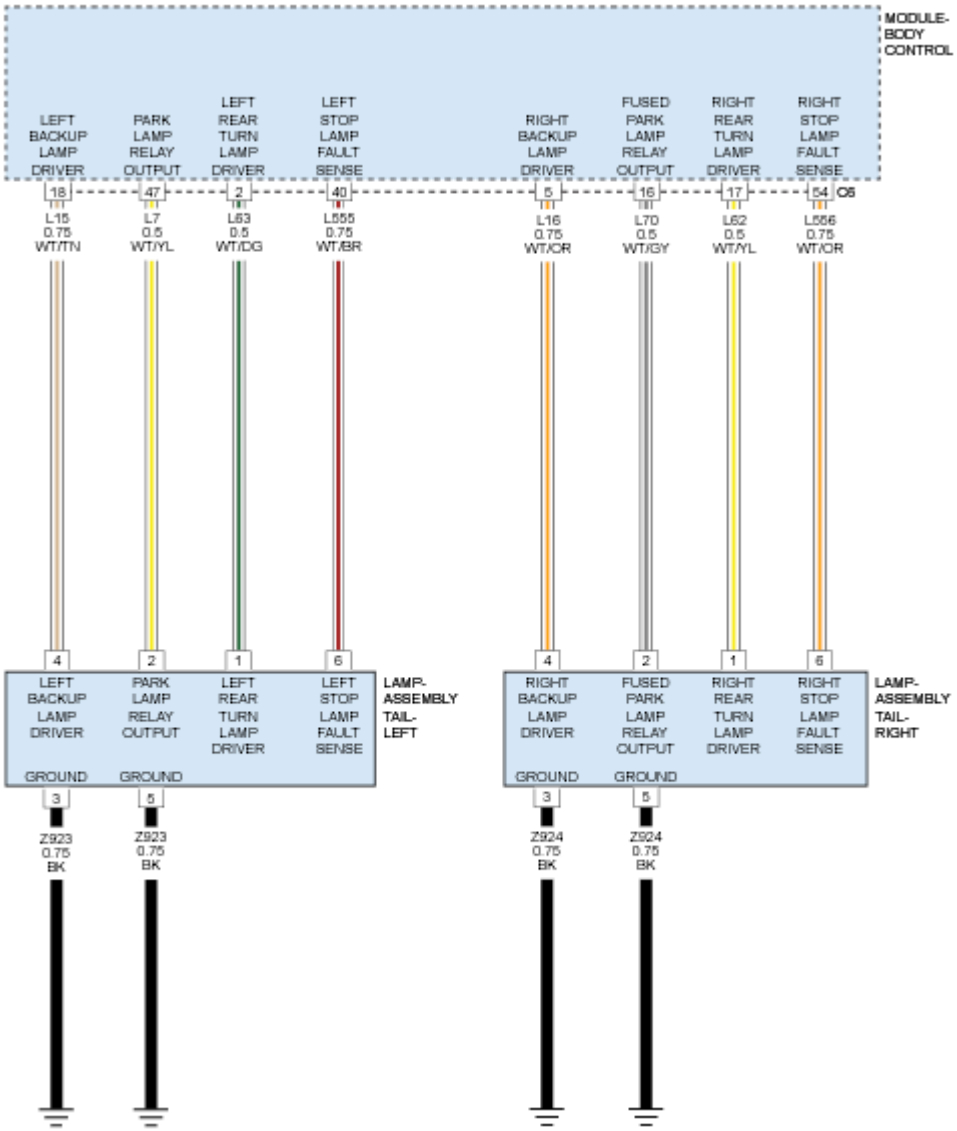

Fig. 31: Tail Lamp/Backup Lamp Assembly Circuit Diagram
Courtesy of CHRYSLER GROUP, LLC

THEORY OF OPERATION

The BCM provides a Pulse Width Modulated (PWM) voltage output through the backup lamp driver circuit. The driver circuit connects to the Backup Lamp. A ground path for the lamps is present through the harness to the body sheet metal. For additional information on the Backup Lamps operation, refer to **OPERATION** .

WHEN MONITORED

With the backup lamps active.

SET CONDITION

When the Body Control Module (BCM) detects a low condition on the (L15) Left Backup Lamp Driver circuit.

POSSIBLE CAUSES

Possible Causes
(L15) LEFT BACKUP LAMP DRIVER CIRCUIT SHORTED TO GROUND
LEFT BACKUP LAMP
BODY CONTROL MODULE (BCM)

DIAGNOSTIC TEST

1. **CHECK FOR AN ACTIVE DTC**
    1. Turn the ignition on.
    2. With the brakes firmly applied, shift the gear selector into REVERSE.
    3. With the scan tool, read DTCs.

    Does the scan tool display this DTC as active?

    Yes

    - Go To 2

    No

    - Test complete. The condition or conditions that originally set this DTC are not present at this time. Using the wiring diagrams as a guide, check all related splices and connectors for signs of water intrusion, corrosion, pushed out or bent terminals and correct pin tension.
    - Perform the BODY VERIFICATION TEST. Refer to **STANDARD PROCEDURE** .
2. **ATTEMPT TO SET THE OPPOSITE DTC**
    1. Shift the gear selector into PARK.
    2. Turn the ignition off.
    3. Disconnect the Left Tail Lamp harness connector.
    4. Turn the ignition on.
    5. With the brakes firmly applied, shift the gear selector into REVERSE.
    6. With the scan tool, read DTCs.

    Does the scan tool display DTC: B1707-18-LEFT REVERSE LAMP CONTROL - UNDER CURRENT?

    Yes

    - Replace the Left Backup Lamp in accordance with the Service Information. Refer to **LAMP, TAIL STOP TURN, REMOVAL** .

- Perform the BODY VERIFICATION TEST. Refer to **STANDARD PROCEDURE** .

No

- Go To 3

3. **CHECK THE (L15) LEFT BACKUP LAMP DRIVER CIRCUIT FOR A SHORT TO GROUND**
   1. Turn the ignition off.
   2. Disconnect the BCM C6 harness connector.
   3. Measure the resistance between ground and the (L15) Left Backup Lamp Driver circuit.

   Is the resistance above 10K Ohms?

   Yes

   - Replace the Body Control Module (BCM) in accordance with the Service Information. Refer to **MODULE, BODY CONTROL, REMOVAL** .
   - Perform the BODY VERIFICATION TEST. Refer to **STANDARD PROCEDURE** .

   No

   - Repair the short to ground in the (L15) Left Backup Lamp Driver circuit.
   - Perform the BODY VERIFICATION TEST. Refer to **STANDARD PROCEDURE** .

B2884-18-RIGHT REVERSE/BUX TURN SIGNAL CONTROL-UNDER CURRENT

For a complete wiring diagram, **refer to appropriate SYSTEM WIRING DIAGRAMS article** .

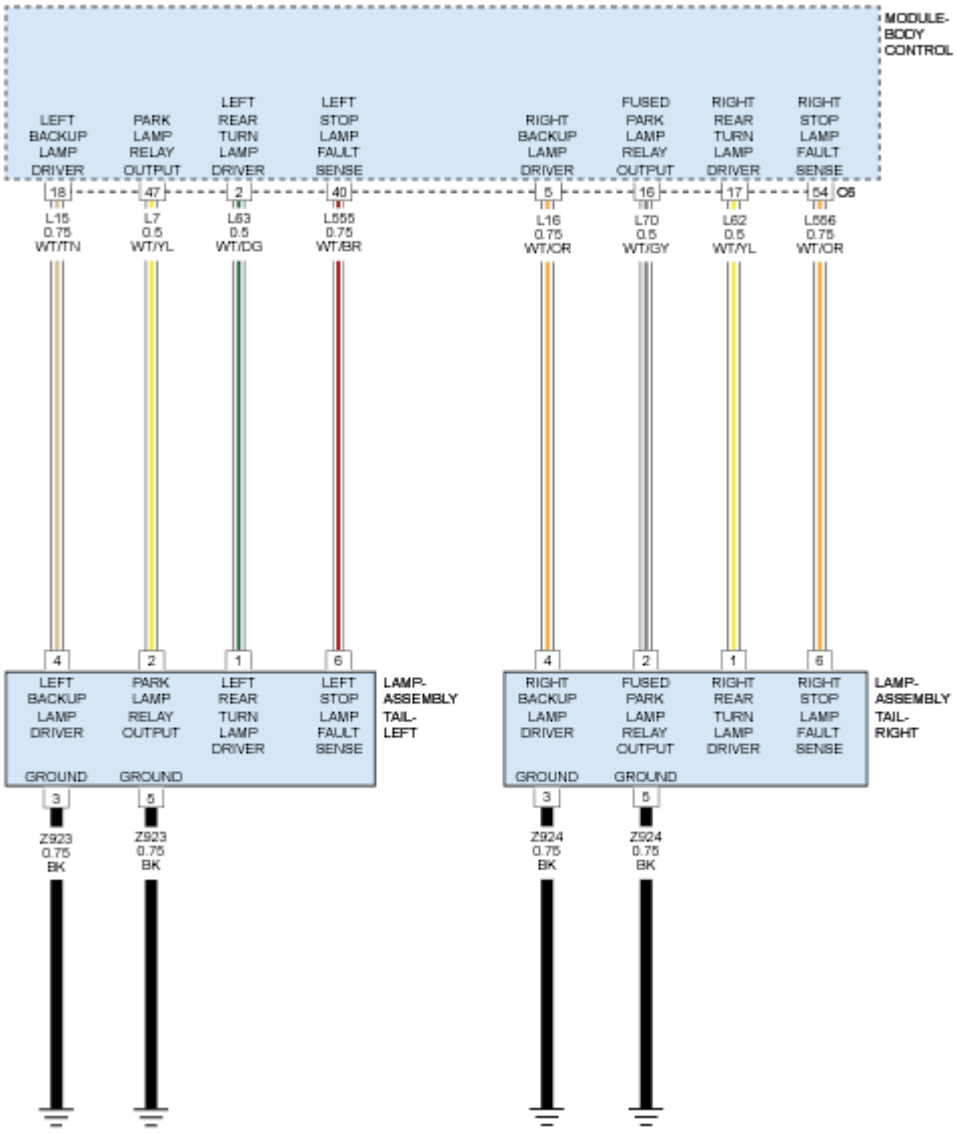

Fig. 32: Tail Lamp/Backup Lamp Assembly Circuit Diagram
Courtesy of CHRYSLER GROUP, LLC

THEORY OF OPERATION

The BCM provides a Pulse Width Modulated (PWM) voltage output through the backup lamp driver circuit. The driver circuit connects to the Backup Lamp. A ground path for the lamps is present through the harness to the body sheet metal. For additional information on the Backup Lamps operation, refer to **OPERATION** .

WHEN MONITORED

With the backup lamps active.

SET CONDITION

When the Body Control Module (BCM) detects a high condition on the (L16) Right Backup Lamp Driver circuit.

POSSIBLE CAUSES

Possible Causes
(L16) RIGHT BACKUP LAMP DRIVER CIRCUIT OPEN
(L16) RIGHT BACKUP LAMP DRIVER CIRCUIT SHORTED TO VOLTAGE
(Z923) GROUND CIRCUIT OPEN
RIGHT BACKUP LAMP
BODY CONTROL MODULE (BCM)

DIAGNOSTIC TEST

1. **CHECK FOR AN ACTIVE DTC**
    1. Turn the ignition on.
    2. With the brakes firmly applied, shift the gear selector into REVERSE.
    3. With the scan tool, read DTCs.

    Does the scan tool display this DTC as active?

    Yes

    - Go To 2

    No

    - Test complete. The condition or conditions that originally set this DTC are not present at this time. Using the wiring diagrams as a guide, check all related splices and connectors for signs of water intrusion, corrosion, pushed out or bent terminals and correct pin tension.
    - Perform the BODY VERIFICATION TEST. Refer to **STANDARD PROCEDURE** .
2. **CHECK THE (L16) RIGHT BACKUP LAMP DRIVER CIRCUIT FOR A SHORT TO VOLTAGE IN THE HARNESS**
    1. Shift the gear selector into PARK.
    2. Turn the ignition off.
    3. Disconnect the Right Tail Lamp harness connector.
    4. Disconnect the BCM C6 harness connector.
    5. Turn the ignition on.
    6. Measure the voltage between ground and the (L16) Right Backup Lamp Driver circuit.

    Is there any voltage present?

    Yes

- Repair the short to voltage in the (L16) Right Backup Lamp Driver circuit.
- Perform the BODY VERIFICATION TEST. Refer to **STANDARD PROCEDURE** .

No

- Go To 3

3. **CHECK THE (L16) RIGHT BACKUP LAMP DRIVER CIRCUIT FOR AN OPEN IN THE HARNESS**
   1. Turn the ignition off.
   2. Measure the resistance of the (L16) Right Backup Lamp Driver circuit between the Right Tail Lamp harness connectors and the BCM C6 harness connector.

      Is the resistance below 5.0 Ohms for both connections?

      Yes

      - Go To 4

      No

      - Repair the open in the (L16) Right Backup Lamp Driver circuit.
      - Perform the BODY VERIFICATION TEST. Refer to **STANDARD PROCEDURE** .
4. **CHECK THE (Z923) GROUND CIRCUIT FOR AN OPEN IN THE HARNESS**
   1. Using a 12-volt test light connected to 12-volts, check the (Z923) Ground circuit.

      Does the test light illuminate brightly?

      Yes

      - Go To 5

      No

      - Repair the open in the (Z923) Ground circuit.
      - Perform the BODY VERIFICATION TEST. Refer to **STANDARD PROCEDURE** .
5. **CHECK THE BCM FOR CORRECT OPERATION**
   1. Turn the ignition off.
   2. Reconnect the BCM C6 harness connector.
   3. Connect a 12-volt test light between the (L16) Right Backup Lamp Driver circuit and the (Z923) Ground circuit at the Right Tail Lamp harness connectors.
   4. Turn the ignition on.
   5. With the brakes firmly applied, shift the gear selector into REVERSE.

Does the test light illuminate brightly at both connections?

Yes

- Replace the Right Backup Lamp in accordance with the Service Information.
- Perform the BODY VERIFICATION TEST. Refer to **STANDARD PROCEDURE** .

No

- Replace the BCM in accordance with the Service Information. Refer to **MODULE, BODY CONTROL, REMOVAL** .
- Perform the BODY VERIFICATION TEST. Refer to **STANDARD PROCEDURE** .

B2884-19-RIGHT REVERSE/BUX TURN SIGNAL CONTROL - OVERCURRENT

For a complete wiring diagram, **refer to appropriate SYSTEM WIRING DIAGRAMS article** .

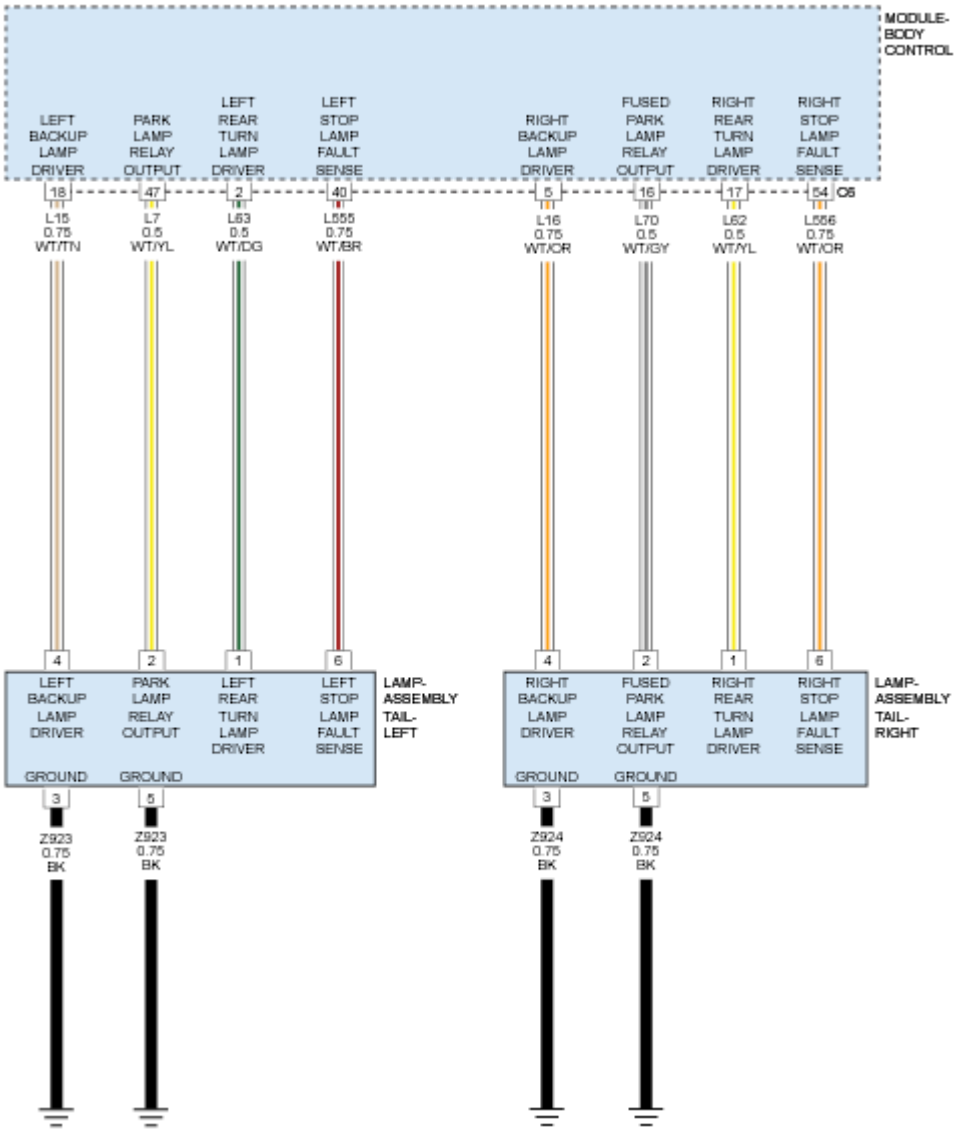

Fig. 33: Tail Lamp/Backup Lamp Assembly Circuit Diagram
Courtesy of CHRYSLER GROUP, LLC

THEORY OF OPERATION

The BCM provides a Pulse Width Modulated (PWM) voltage output through the backup lamp driver circuit. The driver circuit connects to the Backup Lamp. A ground path for the lamps is present through the harness to the body sheet metal. For additional information on the Backup Lamps operation, refer to **OPERATION** .

WHEN MONITORED

With the backup lamps active.

SET CONDITION

When the Body Control Module (BCM) detects a low condition on the (L16) Right Backup Lamp Driver circuit.

POSSIBLE CAUSES

Possible Causes
(L16) RIGHT BACKUP LAMP DRIVER CIRCUIT SHORTED TO GROUND
RIGHT BACKUP LAMP
BODY CONTROL MODULE (BCM)

DIAGNOSTIC TEST

1. **CHECK FOR AN ACTIVE DTC**
    1. Turn the ignition on.
    2. With the brakes firmly applied, shift the gear selector into REVERSE.
    3. With the scan tool, read DTCs.

    Does the scan tool display this DTC as active?

    Yes

    - Go To 2

    No

    - Test complete. The condition or conditions that originally set this DTC are not present at this time. Using the wiring diagrams as a guide, check all related splices and connectors for signs of water intrusion, corrosion, pushed out or bent terminals and correct pin tension.
    - Perform the BODY VERIFICATION TEST. Refer to **STANDARD PROCEDURE** .
2. **ATTEMPT TO SET THE OPPOSITE DTC**
    1. Shift the gear selector into PARK.
    2. Turn the ignition off.
    3. Disconnect the Right Tail Lamp harness connector.
    4. Turn the ignition on.
    5. With the brakes firmly applied, shift the gear selector into REVERSE.
    6. With the scan tool, read DTCs.

    Does the scan tool display DTC: B1707-18-LEFT REVERSE LAMP CONTROL - UNDER CURRENT?

    Yes

    - Replace the Right Backup Lamp in accordance with the Service Information. Refer to

LAMP, TAIL STOP TURN, REMOVAL .

- Perform the BODY VERIFICATION TEST. Refer to **STANDARD PROCEDURE** .

No

- Go To 3

3. **CHECK THE (L16) RIGHT BACKUP LAMP DRIVER CIRCUIT FOR A SHORT TO GROUND**
   1. Turn the ignition off.
   2. Disconnect the BCM C6 harness connector.
   3. Measure the resistance between ground and the (L16) Right Backup Lamp Driver circuit.

   Is the resistance above 10K Ohms?

   Yes

   - Replace the Body Control Module (BCM) in accordance with the Service Information. Refer to **MODULE, BODY CONTROL, REMOVAL** .
   - Perform the BODY VERIFICATION TEST. Refer to **STANDARD PROCEDURE** .

   No

   - Repair the short to ground in the (L16) Right Backup Lamp Driver circuit.
   - Perform the BODY VERIFICATION TEST. Refer to **STANDARD PROCEDURE** .

C1006-15-BRAKE FLUID LEVEL INPUT - CIRCUIT SHORT TO BATTERY OR OPEN

For a complete wiring diagram, **refer to appropriate SYSTEM WIRING DIAGRAMS article** .

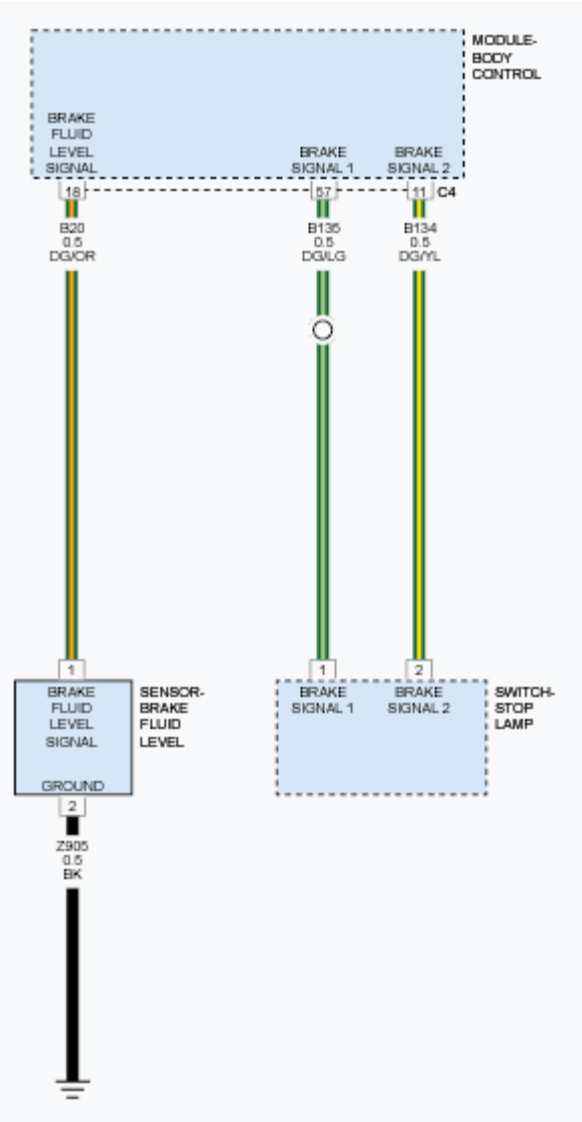

Fig. 34: Brake Fluid Level Sensor & Stop Lamp Switch Circuit Diagram
Courtesy of CHRYSLER GROUP, LLC

THEORY OF OPERATION

The Body Control Module (BCM) provides a reference voltage on the brake fluid level signal circuit through a pull-up resistor that is connected to battery voltage. The Brake Fluid Level Switch switches the brake fluid level signal circuit to ground when the fluid level is low. A diagnostic resistor internal to the switch is placed in parallel with the switch.

WHEN MONITORED

With the ignition on.

SET CONDITION

When the BCM detects a short to voltage or an open in the Brake Fluid Level Signal circuit.

POSSIBLE CAUSES

Possible Causes
(B20) BRAKE FLUID LEVEL SIGNAL CIRCUIT SHORT TO VOLTAGE
(B20) BRAKE FLUID LEVEL SIGNAL CIRCUIT OPEN
(Z905) GROUND CIRCUIT OPEN
BRAKE FLUID LEVEL SWITCH
BODY CONTROL MODULE (BCM)

DIAGNOSTIC TEST

1. **CHECK FOR AN ACTIVE DTC**
    1. Turn the ignition on.
    2. With the scan tool, read DTCs.

    Does the scan tool display this DTC as active?

    Yes

    - Go To 2

    No

    - Test complete. The condition or conditions that originally set this DTC are not present at this time. Using the wiring diagrams as a guide, check all related splices and connectors for signs of water intrusion, corrosion, pushed out or bent terminals and correct pin tension.
    - Perform the BODY VERIFICATION TEST. Refer to **STANDARD PROCEDURE** .
2. **CHECK THE (B20) BRAKE FLUID LEVEL SIGNAL CIRCUIT FOR A SHORT TO VOLTAGE**
    1. Turn the ignition off.
    2. Disconnect the Brake Fluid Level Switch harness connector.
    3. Disconnect the BCM C4 harness connector.
    4. Turn the ignition on.
    5. Measure the voltage between ground and the (B20) Brake Fluid Level Signal circuit.

    Is the voltage present?

    Yes

    - Repair the short to voltage on the (B20) Brake Fluid Level Signal circuit.
    - Perform the BODY VERIFICATION TEST. Refer to **STANDARD PROCEDURE** .

No

- Go To 3

3. **CHECK THE (B20) BRAKE FLUID LEVEL SIGNAL CIRCUIT FOR AN OPEN**
   1. Turn the ignition off.
   2. Measure the resistance of the (B20) Brake Fluid Level Signal circuit between the BCM C4 and Brake Fluid Level Switch harness connectors.

      Is the resistance above 5.0 Ohms?

      Yes

      - Repair the open in the (B20) Brake Fluid Level Signal circuit.
      - Perform the BODY VERIFICATION TEST. Refer to **STANDARD PROCEDURE** .

      No

      - Go To 4

4. **CHECK THE (Z905) GROUND CIRCUIT FOR AN OPEN**
   1. Using a 12-volt test light connected to 12-volts, check the (Z905) Ground circuit at the Brake Fluid Level Switch harness connector.

      Does the test light illuminate brightly?

      Yes

      - Go To 5

      No

      - Repair the open in the (Z905) Ground circuit.
      - Perform the BODY VERIFICATION TEST. Refer to **STANDARD PROCEDURE** .

5. **CHECK THE BCM FOR CORRECT OPERATION**
   1. Turn the ignition off.
   2. Connect a jumper wire between the (B20) Brake Fluid Level Signal circuit and the (Z905) Ground circuit at the Brake Fluid Level Switch harness connector.
   3. Turn the ignition on.
   4. With the scan tool, read the Brake Fluid Level.

      Does the Brake Fluid Level display Low?

      Yes

- Replace the Brake Fluid Level Switch in accordance with the Service Information. Refer to **SWITCH, BRAKE FLUID LEVEL** .
- Perform the BODY VERIFICATION TEST. Refer to **STANDARD PROCEDURE** .

No

- Replace the BCM in accordance with the Service Information. Refer to **MODULE, BODY CONTROL, REMOVAL** .
- Perform the BODY VERIFICATION TEST. Refer to **STANDARD PROCEDURE** .

C107D-67-BRAKE PEDAL SWITCH 1/2 CORRELATION - SIGNAL INCORRECT AFTER EVENT

For a complete wiring diagram, **refer to appropriate SYSTEM WIRING DIAGRAMS article** .

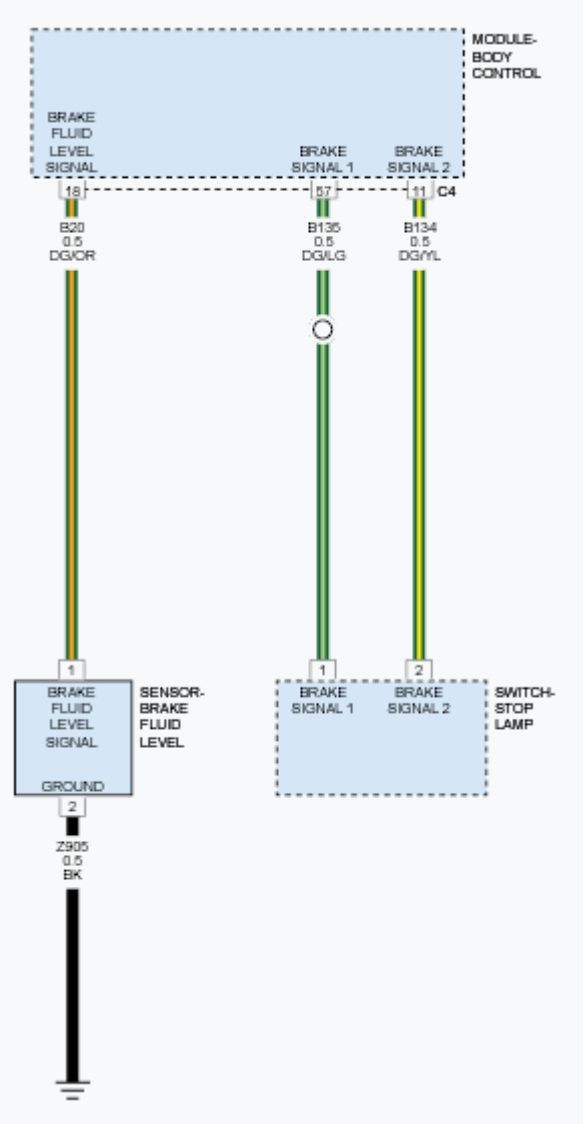

Fig. 35: Brake Fluid Level Sensor & Stop Lamp Switch Circuit Diagram

Courtesy of CHRYSLER GROUP, LLC

WHEN MONITORED

With the ignition on.

SET CONDITION

This DTC will set if the Body Control Module (BCM) detects incorrect voltage inputs from the two Brake Switch Signals.

POSSIBLE CAUSES

Possible Causes
BRAKE SIGNAL 1 CIRCUIT OPEN OR SHORTED TO GROUND
BRAKE SIGNAL 2 CIRCUIT OPEN OR SHORTED TO GROUND
BRAKE SWITCH
BODY CONTROL MODULE (BCM)

DIAGNOSTIC TEST

1. **CHECK FOR AN ACTIVE DTC**

   NOTE: Verify that the Brake Switch is installed correctly on the vehicle before proceeding.

   1. Turn the ignition on.
   2. With the scan tool, read DTCs.

      Does the scan tool display this DTC as active?

      Yes

      - Go To 2

      No

      - Test complete. The condition or conditions that originally set this DTC are not present at this time. Using the wiring diagrams as a guide, check all related splices and connectors for signs of water intrusion, corrosion, pushed out or bent terminals and correct pin tension.
      - Perform the BODY VERIFICATION TEST. Refer to **STANDARD PROCEDURE** .

2. **CHECK THE (B135) BRAKE SIGNAL 1 CIRCUIT FOR A SHORT TO GROUND OR OPEN**

   NOTE: The (B135) Brake Signal 1 circuit is normally OPEN when the brake pedal

is NOT PRESSED.

1. Turn the ignition off.
2. Disconnect the BCM C4 harness connector.
3. With the Brake Pedal PRESSED, measure the voltage of the (B135) Brake Signal 1 circuit at the BCM C4 harness connector.

   Is the voltage above 10 volts?

   Yes

   - Go To 3

   No

   - Using the wiring diagrams as a guide, repair the (B135) Brake Signal 1 circuit for an open or short to ground.
   - Perform the BODY VERIFICATION TEST. Refer to **STANDARD PROCEDURE** .

3. **CHECK THE (B134) BRAKE SIGNAL 2 CIRCUIT FOR A SHORT TO GROUND OR OPEN**

NOTE: The (B134) Brake Signal 2 circuit is normally CLOSED when the brake pedal is NOT PRESSED.

1. Turn the ignition on.
2. With the Brake Pedal NOT PRESSED, measure the voltage of the (B135) Brake Signal 1 circuit at the BCM C4 harness connector.

   Is the voltage above 10 volts?

   Yes

   - Replace the Body Control Module (BCM) in accordance with the Service Information.
   - Perform the BODY VERIFICATION TEST. Refer to **STANDARD PROCEDURE** .

   No

   - Using the wiring diagrams as a guide, repair the (B134) Brake Signal 2 circuit for an open or short to ground.
   - Perform the BODY VERIFICATION TEST. Refer to **STANDARD PROCEDURE** .

P0070-11-AMBIENT AIR TEMPERATURE SENSOR CIRCUIT - CIRCUIT SHORT TO GROUND

For a complete wiring diagram, **refer to appropriate SYSTEM WIRING DIAGRAMS article** .

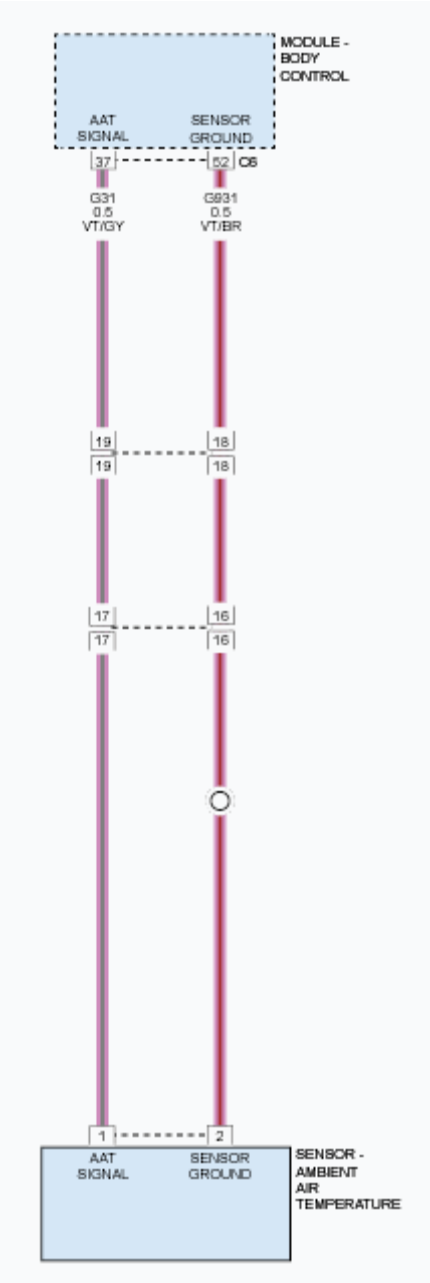

Fig. 36: Ambient Air Temperature Sensor Circuit Diagram
Courtesy of CHRYSLER GROUP, LLC

WHEN MONITORED

With the ignition on.

Battery voltage greater than 10.4 volts.

SET CONDITION

The Body Control Module (BCM) detects the Ambient Air Temperature Sensor input voltage is below the minimum acceptable value.

POSSIBLE CAUSES

Possible Causes
(G31) AAT SENSOR SIGNAL CIRCUIT SHORTED TO GROUND
(G31) AAT SENSOR SIGNAL CIRCUIT SHORTED TO THE (G931) SENSOR RETURN CIRCUIT
AMBIENT AIR TEMPERATURE (AAT) SENSOR
BODY CONTROL MODULE (BCM)

DIAGNOSTIC TEST

1. **VERIFY THE DTC IS ACTIVE**
   1. Turn the ignition on.
   2. With the scan tool, read DTCs.

      Does the scan tool display this DTC as active?

      Yes

      - Go To 2

      No

      - Test complete. The condition or conditions that originally set this DTC are not present at this time. Using the wiring diagrams as a guide, check all related splices and connectors for signs of water intrusion, corrosion, pushed out or bent terminals and correct pin tension.
      - Perform the BODY VERIFICATION TEST. Refer to **STANDARD PROCEDURE** .
2. **CHECK THE AMBIENT AIR TEMPERATURE SENSOR**
   1. Turn the ignition off.
   2. Disconnect the Ambient Air Temperature Sensor harness connector.
   3. Turn the ignition on.
   4. With the scan tool, read the DTCs.

      Does the scan tool display DTC: P0070-15-AMBIENT AIR TEMPERATURE SENSOR CIRCUIT - CIRCUIT SHORT TO BATTERY OR OPEN?

      Yes

      - Verify there is good pin to terminal contact in the AAT Sensor and BCM harness connectors. Replace the Ambient Temperature Sensor if no problems were found with the connectors in accordance with the Service Information. Refer to **SENSOR, AMBIENT TEMPERATURE, REMOVAL** .

- Perform the BODY VERIFICATION TEST. Refer to **STANDARD PROCEDURE** .

No

- Go To 3

3. **CHECK THE (G31) AAT SENSOR SIGNAL CIRCUIT FOR A SHORT TO GROUND**
   1. Turn the ignition off.
   2. Disconnect the BCM C6 harness connector.
   3. Measure the resistance between ground and the (G31) AAT Sensor Signal circuit in the Ambient Air Temperature Sensor harness connector.

      Is the resistance above 10K Ohms?

      Yes

      - Go To 4

      No

      - Repair the short to ground in the (G31) AAT Sensor Signal circuit.
      - Perform the BODY VERIFICATION TEST. Refer to **STANDARD PROCEDURE** .
4. **CHECK THE (G31) AAT SENSOR SIGNAL CIRCUIT FOR A SHORT TO THE (G931) SENSOR RETURN CIRCUIT**
   1. Measure the resistance between the (G31) AAT Sensor Signal circuit and the (G931) Sensor Return circuit in the Ambient Air Temperature Sensor harness connector.

      Is the resistance above 10K Ohms?

      Yes

      - Go To 5

      No

      - Repair the short between the (G31) AAT Sensor Signal circuit and the (G931) Sensor Return circuit.
      - Perform the BODY VERIFICATION TEST. Refer to **STANDARD PROCEDURE** .
5. **BODY CONTROL MODULE (BCM)**
   1. Using the wiring diagram/schematic as a guide, inspect the wiring and connectors between the Ambient Air Temperature Sensor and the BCM.
   2. Look for any chafed, pierced, pinched, or partially broken wires.
   3. Look for broken, bent, pushed out or corroded terminals.
   4. Verify that there is good pin to terminal contact in the AAT Sensor and BCM connectors.

5. Monitor the scan tool data relative to this circuit and wiggle test the wiring and connectors.
6. Look for the data to change or for the DTC to reset during the wiggle test.
7. Perform any Technical Service Bulletins (TSB)s that may apply.

Were any problems found?

Yes

- Repair as necessary.
- Perform the BODY VERIFICATION TEST. Refer to **STANDARD PROCEDURE** .

No

- Replace the BCM in accordance with the Service Information. Refer to **MODULE, BODY CONTROL, REMOVAL** .
- Perform the BODY VERIFICATION TEST. Refer to **STANDARD PROCEDURE** .

P0070-15-AMBIENT AIR TEMPERATURE SENSOR CIRCUIT - CIRCUIT SHORT TO BATTERY OR OPEN

For a complete wiring diagram, **refer to appropriate SYSTEM WIRING DIAGRAMS article** .

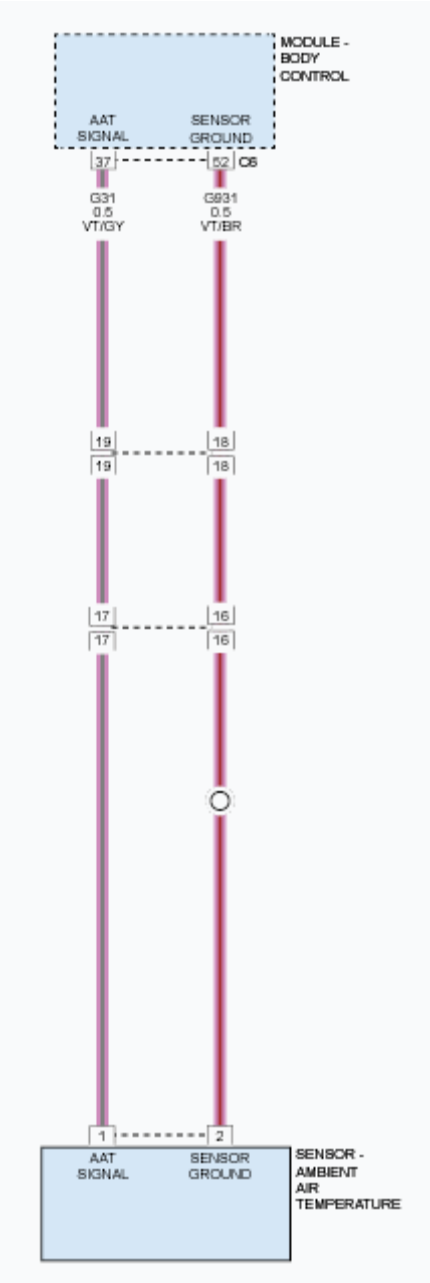

Fig. 37: Ambient Air Temperature Sensor Circuit Diagram
Courtesy of CHRYSLER GROUP, LLC

WHEN MONITORED

With the ignition on.

Battery voltage greater than 10.4 volts.

SET CONDITION

The Body Control Module (BCM) detects the Ambient Air Temperature Sensor input voltage is above the maximum acceptable value.

POSSIBLE CAUSES

Possible Causes
(G31) AAT SENSOR SIGNAL CIRCUIT SHORTED TO VOLTAGE
(G31) AAT SENSOR SIGNAL CIRCUIT OPEN
(G931) SENSOR RETURN CIRCUIT OPEN
AMBIENT AIR TEMPERATURE (AAT) SENSOR
BODY CONTROL MODULE (BCM)

DIAGNOSTIC TEST

1. **VERIFY THE DTC IS ACTIVE**
    1. Turn the ignition on.
    2. With the scan tool, read DTCs.

    Does the scan tool display this DTC as active?

    Yes

    - Go To 2

    No

    - Test complete. The condition or conditions that originally set this DTC are not present at this time. Using the wiring diagrams as a guide, check all related splices and connectors for signs of water intrusion, corrosion, pushed out or bent terminals and correct pin tension.
    - Perform the BODY VERIFICATION TEST. Refer to **STANDARD PROCEDURE** .
2. **CHECK THE (G31) AAT SENSOR SIGNAL CIRCUIT FOR A SHORT TO VOLTAGE**
    1. Turn the ignition off.
    2. Disconnect the Ambient Air Temperature Sensor harness connector.
    3. Disconnect the BCM C6 harness connector.
    4. Turn the ignition on.
    5. Measure the voltage of the (G31) AAT Sensor Signal circuit in the Ambient Air Temperature Sensor harness connector.

    Is there any voltage present?

    Yes

    - Repair the short to voltage in the (G31) AAT Sensor Signal circuit.

- Perform the BODY VERIFICATION TEST. Refer to **STANDARD PROCEDURE** .

No

- Go To 3

3. **CHECK THE AMBIENT AIR TEMPERATURE SENSOR**
   1. Turn the ignition off.
   2. Reconnect the BCM C6 harness connector.
   3. Connect a jumper wire between the (G31) AAT Sensor Signal circuit and the (G931) Sensor Return in the Ambient Air Temperature Sensor harness connector.
   4. Turn the ignition on.
   5. With the scan tool, read the DTCs.

   Does the scan tool display DTC: P0070-11-AMBIENT AIR TEMPERATURE SENSOR CIRCUIT - CIRCUIT SHORT TO GROUND?

   Yes

   - Verify there is good pin to terminal contact in the AAT Sensor and BCM harness connectors. Replace the Ambient Temperature Sensor if no problems were found with the connectors in accordance with the Service Information. Refer to **SENSOR, AMBIENT TEMPERATURE, REMOVAL** .
   - Perform the BODY VERIFICATION TEST. Refer to **STANDARD PROCEDURE** .

   No

   - Go To 4

4. **CHECK THE (G31) AAT SENSOR SIGNAL CIRCUIT FOR AN OPEN**
   1. Turn the ignition off.
   2. Disconnect the BCM C6 harness connector.
   3. Measure the resistance of the (G31) AAT Sensor Signal circuit between the Ambient Air Temperature Sensor harness connector and the BCM C6 harness connector.

   Is the resistance below 5.0 Ohms?

   Yes

   - Go To 5

   No

   - Repair the open in the (G31) AAT Sensor Signal circuit.
   - Perform the BODY VERIFICATION TEST. Refer to **STANDARD PROCEDURE** .

5. **CHECK THE (G931) SENSOR RETURN CIRCUIT FOR AN OPEN**
    1. Measure the resistance of the (G931) Sensor Return circuit between the Ambient Air Temperature Sensor harness connector and the BCM C6 harness connector.

       Is the resistance below 5.0 Ohms?

       Yes

       - Go To 6

       No

       - Repair the open in the (G931) Sensor Return circuit.
       - Perform the BODY VERIFICATION TEST. Refer to **STANDARD PROCEDURE** .
6. **BODY CONTROL MODULE (BCM)**
    1. Using the wiring diagram/schematic as a guide, inspect the wiring and connectors between the Ambient Air Temperature Sensor and the Body Control Module (BCM).
    2. Look for any chafed, pierced, pinched, or partially broken wires.
    3. Look for broken, bent, pushed out or corroded terminals.
    4. Verify that there is good pin to terminal contact in the AAT Sensor and BCM connectors.
    5. Monitor the scan tool data relative to this circuit and wiggle test the wiring and connectors.
    6. Look for the data to change or for the DTC to reset during the wiggle test.
    7. Perform any Technical Service Bulletins (TSB)s that may apply.

       Were any problems found?

       Yes

       - Repair as necessary.
       - Perform the BODY VERIFICATION TEST. Refer to **STANDARD PROCEDURE** .

       No

       - Replace the BCM in accordance with the Service Information. Refer to **MODULE, BODY CONTROL, REMOVAL** .
       - Perform the BODY VERIFICATION TEST. Refer to **STANDARD PROCEDURE** .

P0460-11-FUEL LEVEL SENSOR 1 - CIRCUIT SHORT TO GROUND

For a complete wiring diagram, **refer to appropriate SYSTEM WIRING DIAGRAMS article** .

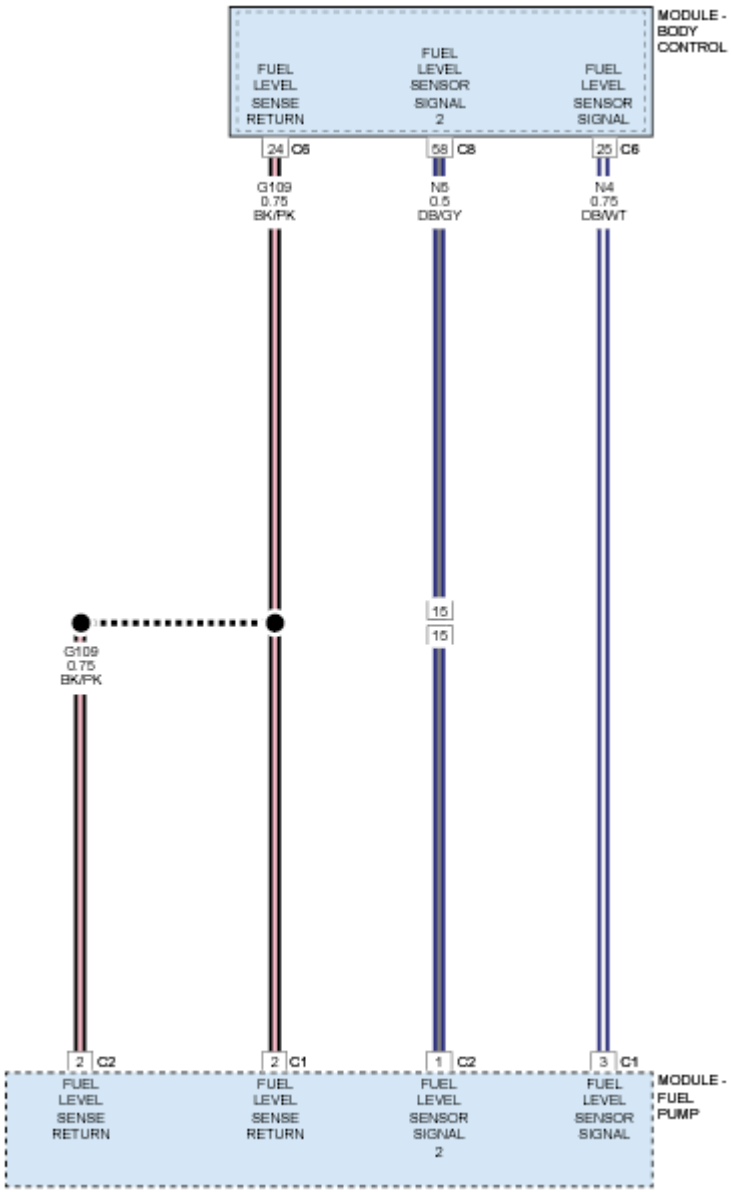

Fig. 38: Fuel Level Sensor Circuit Diagram
Courtesy of CHRYSLER GROUP, LLC

THEORY OF OPERATION

The Body Control Module (BCM) provides a switched reference voltage on the fuel level signal circuit through a pull-up resistor that is connected to battery voltage. The BCM monitors the voltage on the fuel level signal circuit. The fuel level signal is adjusted for changes in battery voltage. The voltage value is then transmitted as a network message on the communication network.

WHEN MONITORED

With the ignition on.

Battery voltage greater than 10.4 volts.

SET CONDITION

The Body Control Module (BCM) detects that the Fuel Level Sensor input voltage is below the minimum acceptable value.

POSSIBLE CAUSES

Possible Causes
(N4) FUEL LEVEL SENSOR SIGNAL CIRCUIT SHORTED TO GROUND
(N4) FUEL LEVEL SENSOR SIGNAL CIRCUIT SHORTED TO THE (G109) FUEL LEVEL SENSE RETURN CIRCUIT
FUEL LEVEL SENSOR
BODY CONTROL MODULE (BCM)

DIAGNOSTIC TEST

1. **CHECK FOR AN ACTIVE DTC**
    1. Turn the ignition on.
    2. With the scan tool, read DTCs.

    Does the scan tool display this DTC as active?

    Yes

    - Go To 2

    No

    - Test complete, the condition or conditions that originally set this DTC are not present at this time. Using the wiring diagrams as a guide, check all related splices and connectors for signs of water intrusion, corrosion, pushed out or bent terminals, and correct pin tension.
    - Perform the BODY VERIFICATION TEST. Refer to **STANDARD PROCEDURE** .
2. **ATTEMPT TO SET THE OPPOSITE DTC**
    1. Turn the ignition off.
    2. Disconnect the Fuel Pump Module C1 harness connector.
    3. Turn the ignition on.
    4. With the scan tool, read DTCs.

    Does the scan tool display DTC: P0460-15-FUEL LEVEL SENSOR 1 - CIRCUIT SHORT TO BATTERY OR OPEN?

Yes

- Replace the Fuel Level Sending Unit in accordance with the Service Information.
- Perform the BODY VERIFICATION TEST. Refer to **STANDARD PROCEDURE** .

No

- Go To 3

3. **CHECK THE (N4) FUEL LEVEL SENSOR SIGNAL CIRCUIT FOR A SHORT TO GROUND**
   1. Turn the ignition off.
   2. Disconnect the BCM C6 harness connector.
   3. Measure the resistance between ground and the (N4) Fuel Level Sensor Signal circuit at the Fuel Pump Module harness connector.

      Is the resistance above 10K Ohms?

      Yes

      - Go To 4

      No

      - Repair the short to ground in the (N4) Fuel Level Sensor Signal circuit.
      - Perform the BODY VERIFICATION TEST. Refer to **STANDARD PROCEDURE** .
4. **CHECK THE (N4) FUEL LEVEL SENSOR SIGNAL CIRCUIT FOR A SHORT TO THE (G109) FUEL LEVEL SENSE RETURN CIRCUIT**
   1. Measure the resistance between the (G109) Fuel Level Sense Return circuit and the (N4) Fuel Level Sensor Signal circuit at the Fuel Pump Module harness connector.

      Is the resistance above 10K Ohms?

      Yes

      - Go To 5

      No

      - Repair the short between the (G109) Fuel Level Sense Return circuit and the (N4) Fuel Level Sensor Signal circuit.
      - Perform the BODY VERIFICATION TEST. Refer to **STANDARD PROCEDURE** .
5. **BODY CONTROL MODULE (BCM)**
   1. Using the wiring diagram/schematic as a guide, inspect the wiring and connectors between the Fuel Pump Module and the BCM.

2. Look for any chafed, pierced, pinched, or partially broken wires.
3. Look for broken, bent, pushed out or corroded terminals. Verify that there is good pin to terminal contact in the Fuel Pump Module and the BCM harness connectors.
4. Perform any Technical Service Bulletins (TSB)s that may apply.

   Were any problems found?

   Yes

   - Repair as necessary.
   - Perform the BODY VERIFICATION TEST. Refer to **STANDARD PROCEDURE** .

   No

   - Replace the BCM in accordance with the Service Information. Refer to **MODULE, BODY CONTROL, REMOVAL** .
   - Perform the BODY VERIFICATION TEST. Refer to **STANDARD PROCEDURE** .

P0460-15-FUEL LEVEL SENSOR 1 - CIRCUIT SHORT TO BATTERY OR OPEN

For a complete wiring diagram, **refer to appropriate SYSTEM WIRING DIAGRAMS article** .

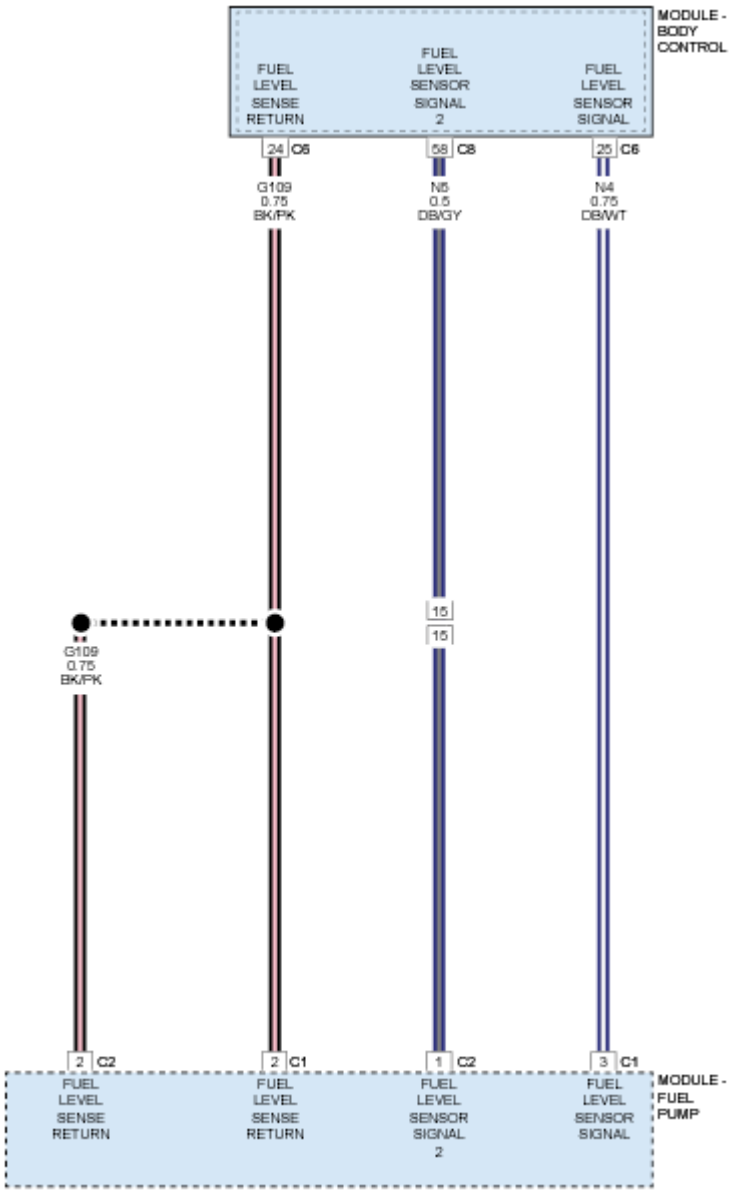

Fig. 39: Fuel Level Sensor Circuit Diagram
Courtesy of CHRYSLER GROUP, LLC

THEORY OF OPERATION

The Body Control Module (BCM) provides a switched reference voltage on the fuel level signal circuit through a pull-up resistor that is connected to battery voltage. The BCM monitors the voltage on the fuel level signal circuit. The fuel level signal is adjusted for changes in battery voltage. The voltage value is then transmitted as a network message on the communication network.

WHEN MONITORED

With the ignition on.

Battery voltage greater than 10.4 volts.

SET CONDITION

The Body Control Module (BCM) detects that the Fuel Level Sensor input voltage is above the maximum acceptable value.

POSSIBLE CAUSES

Possible Causes
(N4) FUEL LEVEL SENSOR SIGNAL CIRCUIT OPEN
(N4) FUEL LEVEL SENSOR SIGNAL CIRCUIT SHORTED TO VOLTAGE
(G109) FUEL LEVEL SENSE RETURN CIRCUIT OPEN
FUEL LEVEL SENSOR
BODY CONTROL MODULE (BCM)

DIAGNOSTIC TEST

1. **CHECK FOR AN ACTIVE DTC**
    1. Turn the ignition on.
    2. With the scan tool, read DTCs.

    Does the scan tool display this DTC as active?

    Yes

    - Go To 2

    No

    - Test complete, the condition or conditions that originally set this DTC are not present at this time. Using the wiring diagrams as a guide, check all related splices and connectors for signs of water intrusion, corrosion, pushed out or bent terminals, and correct pin tension.
    - Perform the BODY VERIFICATION TEST. Refer to **STANDARD PROCEDURE** .
2. **CHECK THE (N4) FUEL LEVEL SENSOR SIGNAL CIRCUIT FOR A SHORT TO VOLTAGE**
    1. Turn the ignition off.
    2. Disconnect the Fuel Pump Module C1 harness connector.
    3. Disconnect the BCM C6 harness connector.
    4. Turn the ignition on.
    5. Measure the voltage between ground and the (N4) Fuel Level Sensor Signal circuit at the Fuel Pump Module harness connector.

Is there any voltage present?

Yes

- Repair the short to voltage in the (N4) Fuel Level Sensor Signal circuit.
- Perform the BODY VERIFICATION TEST. Refer to **STANDARD PROCEDURE** .

No

- Go To 3

3. **CHECK THE FUEL LEVEL SENSOR FOR CORRECT OPERATION**
   1. Turn the ignition off.
   2. Reconnect the BCM C6 harness connector.
   3. Connect a jumper wire between the (N4) Fuel Level Sensor Signal circuit and the (G109) Fuel Level Sense Return circuit at the Fuel Pump Module harness connector.
   4. Turn the ignition on.
   5. With the scan tool, read DTCs.

   Does the scan tool display DTC: P0460-11-FUEL LEVEL SENSOR 1 - CIRCUIT SHORT TO GROUND?

   Yes

   - Replace the Fuel Level Sending Unit in accordance with the Service Information.
   - Perform the BODY VERIFICATION TEST. Refer to **STANDARD PROCEDURE** .

   No

   - Go To 4

4. **CHECK THE (N4) FUEL LEVEL SENSOR SIGNAL CIRCUIT FOR AN OPEN**
   1. Turn the ignition off.
   2. Disconnect the BCM C6 harness connector.
   3. Measure the resistance of the (N4) Fuel Level Sensor Signal circuit between the Fuel Pump Module harness connector and the BCM C6 harness connector.

   Is the resistance below 5.0 Ohms?

   Yes

   - Go To 5

   No

- Repair the open in the (N4) Fuel Level Sensor Signal circuit.
- Perform the BODY VERIFICATION TEST. Refer to **STANDARD PROCEDURE** .

5. **CHECK THE (G109) FUEL LEVEL SENSE RETURN CIRCUIT FOR AN OPEN**
   1. Measure the resistance of the (G109) Fuel Level Sense Return circuit between the Fuel Pump Module harness connector and the BCM C6 harness connector.

      Is the resistance below 5.0 Ohms?

      Yes

      - Go To 6

      No

      - Repair the open in the (G109) Fuel Level Sense Return circuit.
      - Perform the BODY VERIFICATION TEST. Refer to **STANDARD PROCEDURE** .
6. **BODY CONTROL MODULE (BCM)**
   1. Using the wiring diagram/schematic as a guide, inspect the wiring and connectors between the Fuel Pump Module and the BCM.
   2. Look for any chafed, pierced, pinched, or partially broken wires.
   3. Look for broken, bent, pushed out or corroded terminals. Verify that there is good pin to terminal contact in the Fuel Pump Module and the BCM harness connectors.
   4. Perform any Technical Service Bulletins (TSB)s that may apply.

      Were any problems found?

      Yes

      - Repair as necessary.
      - Perform the BODY VERIFICATION TEST. Refer to **STANDARD PROCEDURE** .

      No

      - Replace the BCM in accordance with the Service Information. Refer to **MODULE, BODY CONTROL, REMOVAL** .
      - Perform the BODY VERIFICATION TEST. Refer to **STANDARD PROCEDURE** .

P0615-12-STARTER CONTROL CIRCUIT-CIRCUIT SHORT TO BATTERY

For a complete wiring diagram, **refer to appropriate SYSTEM WIRING DIAGRAMS article** .

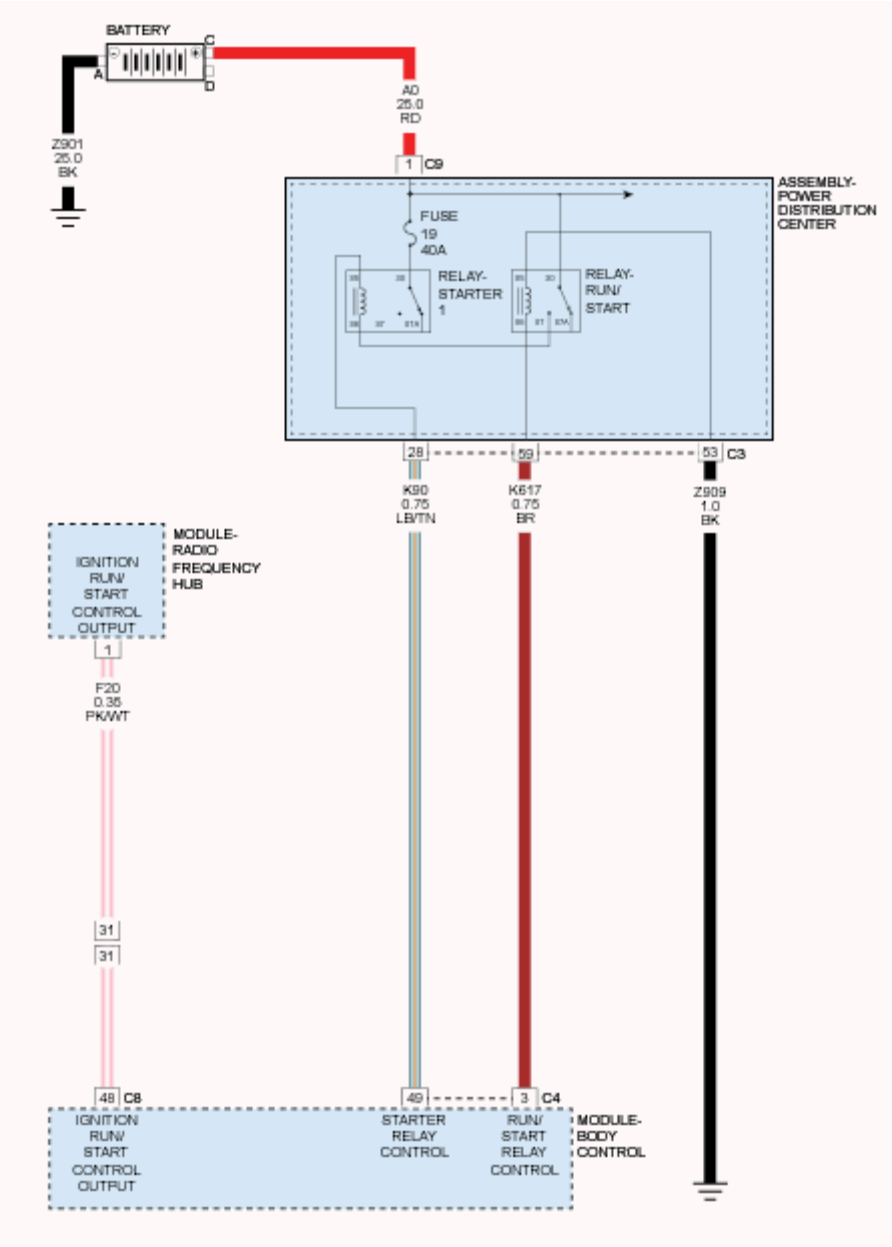

Fig. 40: Ignition Run/Start Input Circuit Diagram
Courtesy of CHRYSLER GROUP, LLC

WHEN MONITORED

With the ignition on.

Battery voltage greater than 10.4 volts.

SET CONDITION

This DTC will set if the Body Control Module (BCM) detects a short to voltage on the Starter Relay Control

circuit.

POSSIBLE CAUSES

Possible Causes
STARTER RELAY CONTROL CIRCUIT SHORTED TO VOLTAGE
STARTER SOLENOID RELAY
BODY CONTROL MODULE (BCM)

DIAGNOSTIC TEST

1. **CHECK FOR AN ACTIVE DTC**
   1. Turn the ignition on.
   2. With the scan tool, read DTCs.

      Does the scan tool display this DTC as active?

      Yes

      - Go To 2

      No

      - Test complete. The condition or conditions that originally set this DTC are not present at this time. Using the wiring diagrams as a guide, check all related splices and connectors for signs of water intrusion, corrosion, pushed out or bent terminals and correct pin tension.
      - Perform the BODY VERIFICATION TEST. Refer to **STANDARD PROCEDURE** .
2. **CHECK THE STARTER SOLENOID RELAY FOR CORRECT OPERATION**
   1. Turn the ignition off.
   2. Replace the Starter Solenoid Relay with a known good relay.
   3. Turn the ignition on. Start the vehicle.
   4. Turn the ignition off and back on again.
   5. With the scan tool, read DTCs.

      Does the scan tool display this DTC as active?

      Yes

      - Go To 3

      No

      - Replace the Starter Solenoid Relay.

- Perform the BODY VERIFICATION TEST. Refer to **STANDARD PROCEDURE** .

3. **CHECK THE (K90) STARTER RELAY CONTROL CIRCUIT FOR A SHORT TO VOLTAGE**
   1. Turn the ignition off.
   2. Remove the Starter Solenoid Relay from the PDC.
   3. Disconnect the BCM C4 harness connector.
   4. Turn the ignition on.
   5. Measure the voltage of the (K90) Starter Relay Control circuit.

   Is voltage Present?

   Yes

   - Repair the (K90) Starter Relay Control circuit for a short to voltage.
   - Perform the BODY VERIFICATION TEST. Refer to **STANDARD PROCEDURE** .

   No

   - Test complete. The condition or conditions that originally set this DTC are not present at this time. Using the wiring diagrams as a guide, check all related splices and connectors for signs of water intrusion, corrosion, pushed out or bent terminals and correct pin tension.
   - Perform the BODY VERIFICATION TEST. Refer to **STANDARD PROCEDURE** .

P2065-11-FUEL LEVEL SENSOR 2 - CIRCUIT SHORT TO GROUND

For a complete wiring diagram, **refer to appropriate SYSTEM WIRING DIAGRAMS article** .

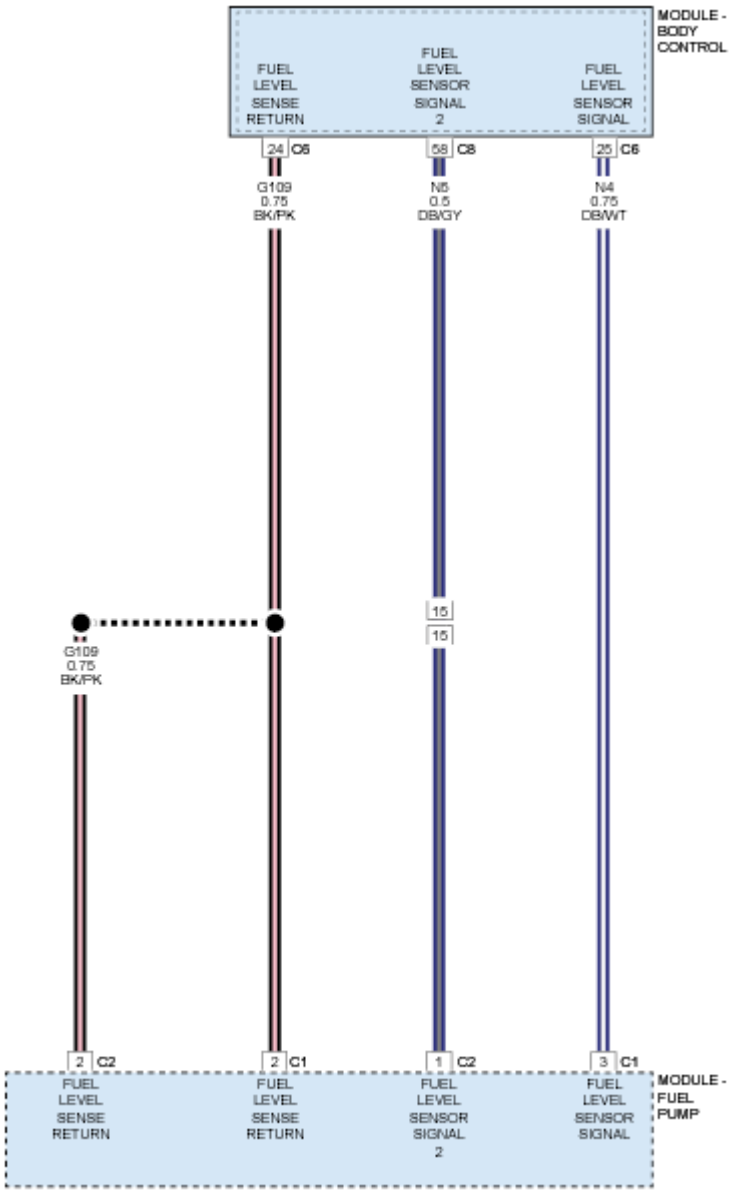

Fig. 41: Fuel Level Sensor Circuit Diagram
Courtesy of CHRYSLER GROUP, LLC

THEORY OF OPERATION

The Body Control Module (BCM) provides a switched reference voltage on the fuel level signal circuit through a pull-up resistor that is connected to battery voltage. The BCM monitors the voltage on the fuel level signal 2 circuit. The fuel level signal is adjusted for changes in battery voltage. The voltage value is then transmitted as a network message on the communication network.

WHEN MONITORED

With the ignition on.

Battery voltage greater than 10.4 volts.

SET CONDITION

The Body Control Module (BCM) detects that the Fuel Level Signal 2 input voltage is below the minimum acceptable value.

POSSIBLE CAUSES

Possible Causes
FUEL LEVEL SIGNAL 2 CIRCUIT SHORTED TO GROUND
FUEL LEVEL SIGNAL 2 CIRCUIT SHORTED TO THE FUEL LEVEL SENSE RETURN CIRCUIT
FUEL LEVEL SENSOR
BODY CONTROL MODULE (BCM)

DIAGNOSTIC TEST

1. **CHECK FOR AN INTERMITTENT CONDITION**
    1. Turn the ignition on.
    2. With the scan tool, read DTCs.

    Does the scan tool display this DTC as active?

    Yes

    - Go To 2

    No

    - Test complete. The condition or conditions that originally set this DTC are not present at this time. Using the wiring diagrams as a guide, check all related splices and connectors for signs of water intrusion, corrosion, pushed out or bent terminals and correct pin tension.
    - Perform the BODY VERIFICATION TEST. Refer to **STANDARD PROCEDURE** .
2. **CHECK THE FUEL LEVEL SENDING UNIT**
    1. Turn the ignition off.
    2. Disconnect the Fuel Tank Assembly in-line harness connector.
    3. Turn the ignition on.
    4. With the scan tool, read DTCs.

    Does the scan tool display DTC: P2065-15-FUEL LEVEL SENSOR 2 - CIRCUIT SHORT TO BATTERY OR OPEN with the connector unplugged?

Yes

- Check the Fuel Tank Assembly harness for any signs of damage which could cause an open or shorted circuit. If the harness checks good, replace the Fuel Tank Pressure Sensor in accordance with the service information.
- Perform the BODY VERIFICATION TEST. Refer to **STANDARD PROCEDURE** .

No

- Go To 3

3. **CHECK THE (N5) FUEL LEVEL SIGNAL 2 CIRCUIT FOR A SHORT TO GROUND**
   1. Turn the ignition off.
   2. Disconnect the BCM C8 harness connector.
   3. Measure the resistance between ground and the (N5) Fuel Level Signal 2 circuit at the Fuel Tank Assembly in-line harness connector.

   Is the resistance above 10k Ohms?

   Yes

   - Go To 4

   No

   - Repair the short to ground in the (N5) Fuel Level Signal 2 circuit.
   - Perform the BODY VERIFICATION TEST. Refer to **STANDARD PROCEDURE** .

4. **CHECK THE (N5) FUEL LEVEL SIGNAL 2 CIRCUIT FOR A SHORT TO THE (G109) FUEL LEVEL SENSE RETURN CIRCUIT**
   1. Measure the resistance between the (G109) Fuel Level Sense Return circuit and the (N5) Fuel Level Signal 2 circuit at the Fuel Tank Assembly in-line harness connector.

   Is the resistance above 10k Ohms?

   Yes

   - Go To 5

   No

   - Repair the short between the (G109) Fuel Level Sense Return circuit and the (N5) Fuel Level Signal 2 circuit.
   - Perform the BODY VERIFICATION TEST. Refer to **STANDARD PROCEDURE** .

5. **BODY CONTROL MODULE (BCM)**
   1. Using the wiring diagram/schematic as a guide, inspect the wiring and connectors at the Fuel Tank

Assembly in-line, Fuel Pump Module and the BCM.

2. Look for any chafed, pierced, pinched, or partially broken wires.
3. Look for broken, bent, pushed out or corroded terminals. Verify that there is good pin to terminal contact in the Fuel Pump Module and the BCM harness connectors.
4. Perform any Technical Service Bulletins (TSB)s that may apply.

Were any problems found?

Yes

- Repair as necessary.
- Perform the BODY VERIFICATION TEST. Refer to **STANDARD PROCEDURE** .

No

- Replace the BCM in accordance with the Service Information. Refer to **MODULE, BODY CONTROL, REMOVAL** .
- Perform the BODY VERIFICATION TEST. Refer to **STANDARD PROCEDURE** .

P2065-15-FUEL LEVEL SENSOR 2 - CIRCUIT SHORT TO BATTERY OR OPEN

For a complete wiring diagram, **refer to appropriate SYSTEM WIRING DIAGRAMS article** .

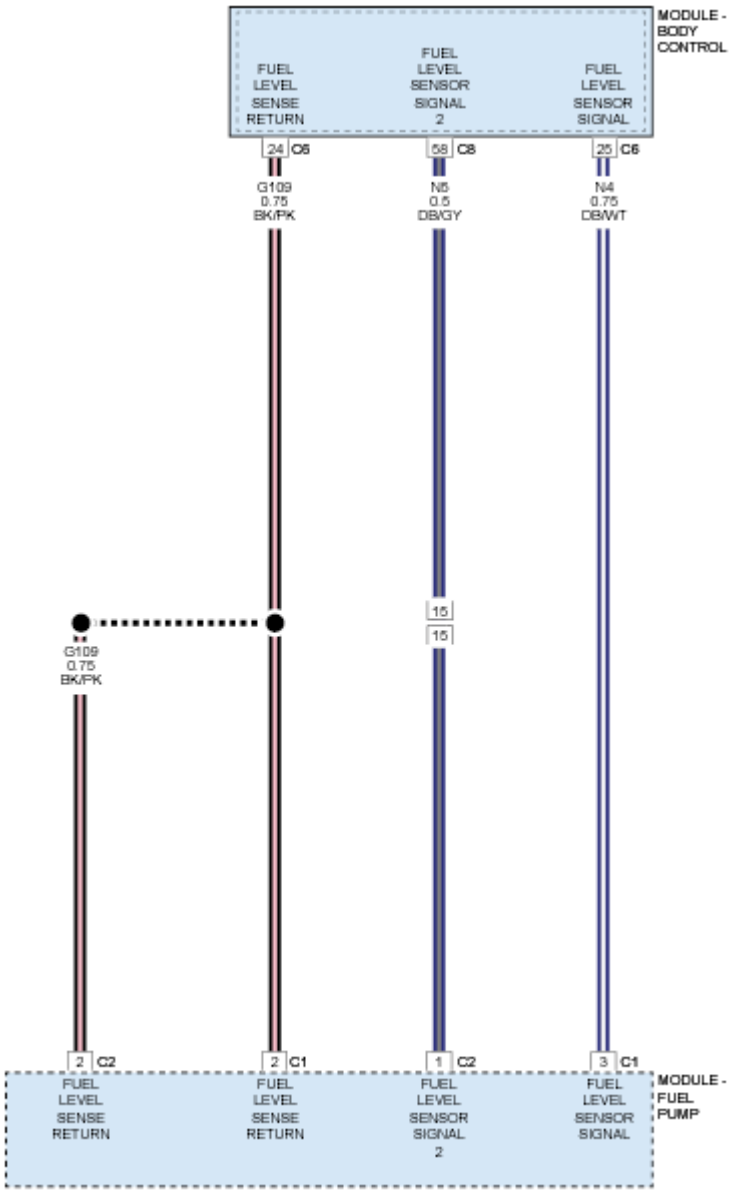

Fig. 42: Fuel Level Sensor Circuit Diagram
Courtesy of CHRYSLER GROUP, LLC

THEORY OF OPERATION

The Body Control Module (BCM) provides a switched reference voltage on the fuel level signal circuit through a pull-up resistor that is connected to battery voltage. The BCM monitors the voltage on the fuel level signal 2 circuit. The fuel level signal is adjusted for changes in battery voltage. The voltage value is then transmitted as a network message on the communication network.

WHEN MONITORED

With the ignition on.

Battery voltage greater than 10.4 volts.

SET CONDITION

The Body Control Module (BCM) detects that the Fuel Level Signal 2 input voltage is above the maximum acceptable value.

POSSIBLE CAUSES

Possible Causes
FUEL LEVEL SIGNAL 2 CIRCUIT OPEN
FUEL LEVEL SIGNAL 2 CIRCUIT SHORTED TO VOLTAGE
FUEL LEVEL SENSOR
BODY CONTROL MODULE (BCM)

DIAGNOSTIC TEST

1. **CHECK FOR AN ACTIVE DTC**
    1. Turn the ignition on.
    2. With the scan tool, read DTCs.

    Does the scan tool display this DTC as active?

    Yes

    - Go To 2

    No

    - Test complete. The condition or conditions that originally set this DTC are not present at this time. Using the wiring diagrams as a guide, check all related splices and connectors for signs of water intrusion, corrosion, pushed out or bent terminals and correct pin tension.
    - Perform the BODY VERIFICATION TEST. Refer to **STANDARD PROCEDURE** .
2. **CHECK THE (N5) FUEL LEVEL SIGNAL 2 CIRCUIT FOR A SHORT TO VOLTAGE**
    1. Turn the ignition off.
    2. Disconnect the Fuel Tank Assembly in-line harness connector.
    3. Turn the ignition on.
    4. Measure the voltage between ground and the (N5) Fuel Level Signal 2 circuit at the Fuel Tank Assembly in-line harness connector.

    Is the voltage above 5.2 volts?

Yes

- Repair the short to voltage in the (N5) Fuel Level Signal 2 circuit.
- Perform the BODY VERIFICATION TEST. Refer to **STANDARD PROCEDURE** .

No

- Go To 3

3. **CHECK THE FUEL LEVEL SENSOR FOR CORRECT OPERATION**
   1. Connect a jumper between ground and the (N5) Fuel Level Signal 2 circuit at the Fuel Tank Assembly in-line harness connector.
   2. Turn the ignition on.
   3. With the scan tool, read DTCs.

   Does the scan tool display DTC: P2065-11-FUEL LEVEL SENSOR 2 - CIRCUIT SHORT TO GROUND with the jumper in place?

   Yes

   - Check the Fuel Tank Assembly harness for any signs of damage which could cause an open or shorted circuit. If the harness checks good, replace the Fuel Tank Pressure Sensor in accordance with the service information.
   - Perform the BODY VERIFICATION TEST. Refer to **STANDARD PROCEDURE** .

   No

   - Go To 4

4. **CHECK THE (N5) FUEL LEVEL SIGNAL 2 CIRCUIT FOR AN OPEN**
   1. Turn the ignition off.
   2. Disconnect the BCM C8 harness connector.
   3. Measure the resistance of the (N5) Fuel Level Signal 2 circuit between the Fuel Tank Assembly in-line harness connector and the BCM C8 harness connector.

   Is the resistance below 5.0 Ohms?

   Yes

   - Go To 5

   No

   - Repair the open in the (N5) Fuel Level Signal 2 circuit.
   - Perform the BODY VERIFICATION TEST. Refer to **STANDARD PROCEDURE** .

5. **BODY CONTROL MODULE (BCM)**
    1. Using the wiring diagram/schematic as a guide, inspect the wiring and connectors at the Fuel Tank Assembly in-line, Fuel Pump Module and the BCM.
    2. Look for any chafed, pierced, pinched, or partially broken wires.
    3. Look for broken, bent, pushed out or corroded terminals. Verify that there is good pin to terminal contact in the Fuel Tank Assembly in-line and the BCM harness connectors.
    4. Perform any Technical Service Bulletins (TSB)s that may apply.

    Were any problems found?

    Yes

    - Repair as necessary.
    - Perform the BODY VERIFICATION TEST. Refer to **STANDARD PROCEDURE** .

    No

    - Replace the BCM in accordance with the Service Information. Refer to **MODULE, BODY CONTROL, REMOVAL** .
    - Perform the BODY VERIFICATION TEST. Refer to **STANDARD PROCEDURE** .

P2687-12-FUEL SUPPLY HEATER CONTROL - CIRCUIT SHORT TO BATTERY

For a complete wiring diagram, **refer to appropriate SYSTEM WIRING DIAGRAMS article** .

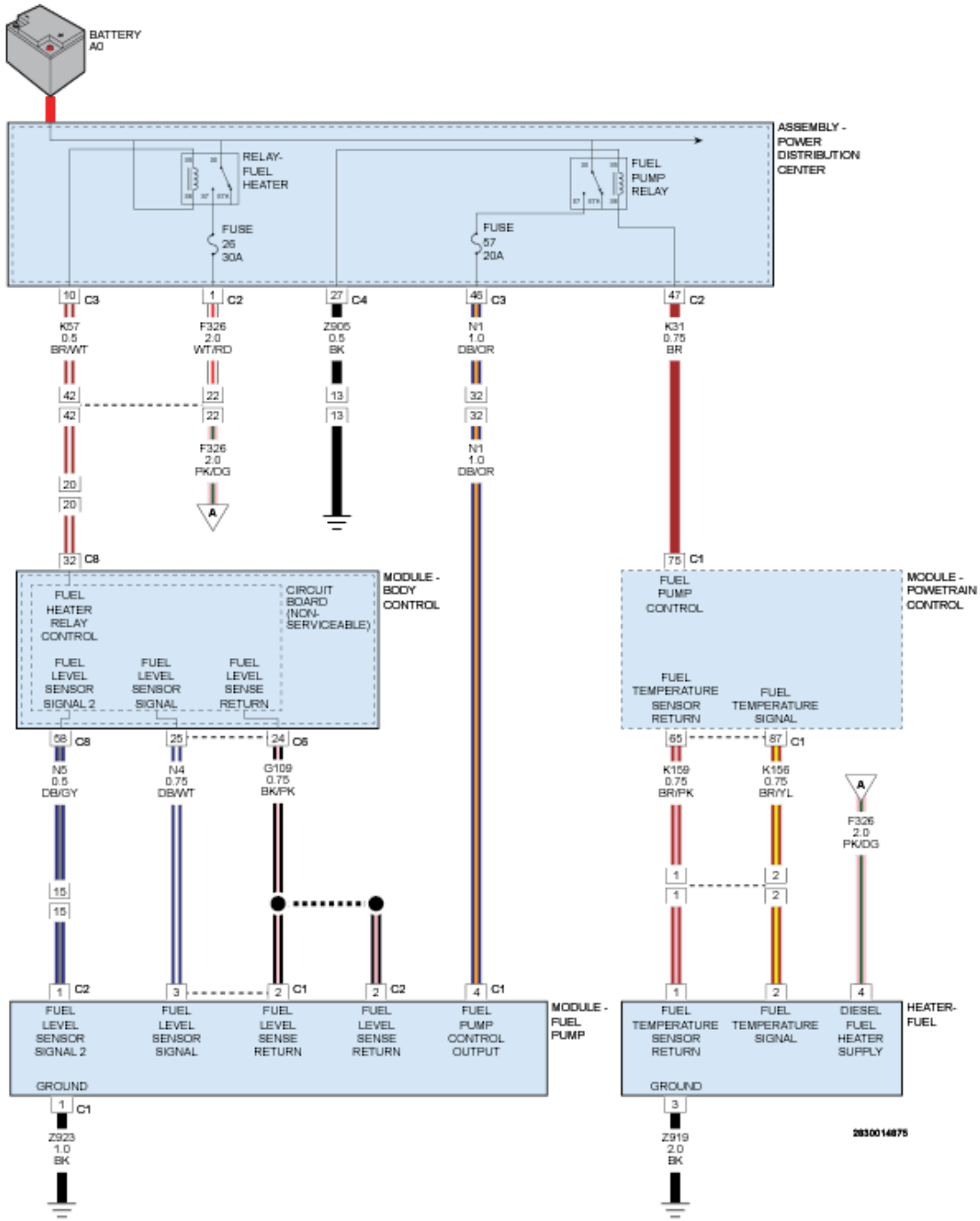

Fig. 43: Fuel Pump Module & Fuel Heater Circuit Diagram
Courtesy of CHRYSLER GROUP, LLC

WHEN MONITORED

With the ignition on and the fuel heater active.

SET CONDITION

The Body Control Module (BCM) detects a short to voltage on the (K37) Fuel Heater Relay Control circuit.

POSSIBLE CAUSES

Possible Causes
(K37) FUEL HEATER RELAY CONTROL CIRCUIT SHORTED TO VOLTAGE
BODY CONTROL MODULE (BCM)

DIAGNOSTIC TEST

1. **VERIFY THE DTC IS ACTIVE**
   1. Turn the ignition on.
   2. With the scan tool, read DTCs.

      Does the scan tool display this DTC as active?

      Yes

      - Go To 2

      No

      - Test complete. The condition or conditions that originally set this DTC are not present at this time. Using the wiring diagrams as a guide, check all related splices and connectors for signs of water intrusion, corrosion, pushed out or bent terminals and correct pin tension.
      - Perform the BODY VERIFICATION TEST. Refer to **STANDARD PROCEDURE** .
2. **CHECK THE (K37) FUEL HEATER RELAY CONTROL CIRCUIT FOR A SHORT TO VOLTAGE IN THE HARNESS**
   1. Turn the ignition off.
   2. Remove the Fuel Heater Relay.
   3. Turn the ignition on.
   4. Measure the voltage between ground and the (K37) Fuel Heater Relay Control circuit.

      Is there any voltage present?

      Yes

      - Using the wiring diagrams as a guide, repair the short to voltage in the (K37) Fuel Heater Relay Control circuit.
      - Perform the BODY VERIFICATION TEST. Refer to **STANDARD PROCEDURE** .

      No

      - Go To 3

3. **INSPECT RELATED WIRING AND CHECK FOR TSBS**
    1. Turn the ignition off.
    2. Using the wiring diagram/schematic as a guide, inspect the wiring and connectors between the Fuel Heater Relay and the BCM.
    3. Look for any chafed, pierced, pinched, or partially broken wires.
    4. Look for broken, bent, pushed out or corroded terminals.
    5. Perform any Technical Service Bulletins that may apply.

    Were any problems found?

    Yes

    - Repair as necessary.
    - Perform the BODY VERIFICATION TEST. Refer to **STANDARD PROCEDURE** .

    No

    - Replace the BCM in accordance with the Service Information. Refer to **MODULE, BODY CONTROL, REMOVAL** .
    - Perform the BODY VERIFICATION TEST. Refer to **STANDARD PROCEDURE** .

P2687-14-FUEL SUPPLY HEATER CONTROL - CIRCUIT SHORT TO GROUND OR OPEN

For a complete wiring diagram, **refer to appropriate SYSTEM WIRING DIAGRAMS article** .

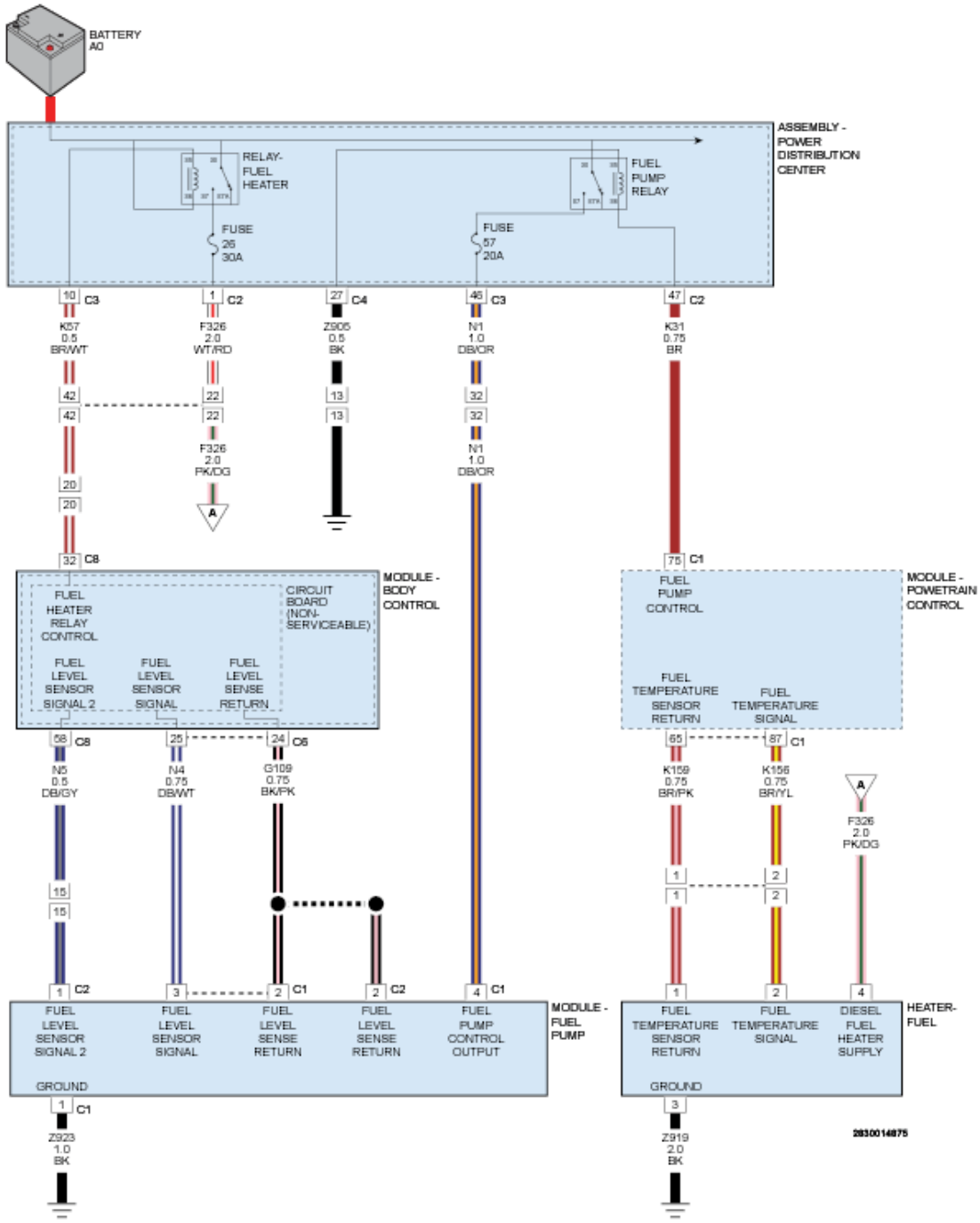

Fig. 44: Fuel Pump Module & Fuel Heater Circuit Diagram
Courtesy of CHRYSLER GROUP, LLC

WHEN MONITORED

With the ignition on.

With the fuel heater inactive.

SET CONDITION

If the Body Control Module (BCM) detects less than expected voltage on the (K37) Fuel Heater Relay Control circuit.

POSSIBLE CAUSES

Possible Causes
(K37) FUEL HEATER RELAY CONTROL CIRCUIT OPEN
(K37) FUEL HEATER RELAY CONTROL CIRCUIT SHORTED TO GROUND
FUEL HEATER RELAY
BODY CONTROL MODULE (BCM)

DIAGNOSTIC TEST

1. **VERIFY THE DTC IS ACTIVE**
    1. Turn the ignition on.
    2. With the scan tool, clear all DTCs.
    3. Wait 10 seconds.
    4. With the scan tool, read DTCs.

    Does the scan tool display this DTC as active?

    Yes

    - Go To 2

    No

    - Test complete. The condition or conditions that originally set this DTC are not present at this time. Using the wiring diagrams as a guide, check all related splices and connectors for signs of water intrusion, corrosion, pushed out or bent terminals and correct pin tension.
    - Perform the BODY VERIFICATION TEST. Refer to **STANDARD PROCEDURE** .
2. **CHECK THE FUEL HEATER RELAY**
    1. Turn the ignition off.
    2. Remove the Fuel Heater Relay and substitute it with a known good relay.
    3. Turn the ignition on and wait 10 seconds.
    4. With the scan tool, read DTCs.

    Does the scan tool display this DTC as active?

Yes

- Go To 3

No

- Replace the Fuel Heater Relay.
- Perform the BODY VERIFICATION TEST. Refer to **STANDARD PROCEDURE** .

3. **CHECK THE (K37) FUEL HEATER RELAY CONTROL CIRCUIT FOR A SHORT TO GROUND**
   1. Turn the ignition off.
   2. Remove the Fuel Heater Relay.
   3. Disconnect the BCM C8 harness connector.
   4. Measure the resistance between ground and the (K37) Fuel Heater Relay Control circuit.

      Is the resistance above 10k Ohms?

      Yes

      - Go To 4

      No

      - Repair the short to ground in the (K37) Fuel Heater Relay Control circuit.
      - Perform the BODY VERIFICATION TEST. Refer to **STANDARD PROCEDURE** .
4. **CHECK THE (K37) FUEL HEATER RELAY CONTROL CIRCUIT FOR AN OPEN**
   1. Measure the resistance of the (K37) Fuel Heater Relay Control circuit between the Fuel Heater Relay and the BCM C8 harness connector.

      Is the resistance below 5.0 Ohms?

      Yes

      - Go To 5

      No

      - Repair the open in the (K37) Fuel Heater Relay Control circuit.
      - Perform the BODY VERIFICATION TEST. Refer to **STANDARD PROCEDURE** .
5. **INSPECT RELATED WIRING AND CHECK FOR TSBS**
   1. Turn the ignition off.
   2. Using the wiring diagram/schematic as a guide, inspect the wiring and connectors between the Fuel Heater Relay and the BCM.

3. Look for any chafed, pierced, pinched, or partially broken wires.
4. Look for broken, bent, pushed out or corroded terminals.
5. Perform any Technical Service Bulletins that may apply.

Were any problems found?

Yes

- Repair as necessary.
- Perform the BODY VERIFICATION TEST. Refer to **STANDARD PROCEDURE** .

No

- Replace the BCM in accordance with the Service Information. Refer to **MODULE, BODY CONTROL, REMOVAL** .
- Perform the BODY VERIFICATION TEST. Refer to **STANDARD PROCEDURE** .

U0010-87-CAN INTERIOR BUS - MISSING MESSAGE

For a complete wiring diagram, **refer to appropriate SYSTEM WIRING DIAGRAMS article** .

THEORY OF OPERATION

The primary communication network between electronic control modules is the Controller Area Network (CAN) data bus system. The Controller Area Network (CAN) data bus allows all electronic modules connected to the bus to share information with each other. Regardless of whether a message originates from a module on the higher speed CAN C (500K) Bus or on the lower speed bus, CAN Interior High Speed (IHS) (125K) Bus, the message structure and layout is similar, which allows the Body Control Module (BCM) to process and transfer messages between the CAN buses. The BCM stores Diagnostic Trouble Codes (DTCs) for certain bus network faults on the CAN C (500K) Bus and CAN IHS (125K) Bus.

All modules transmit and receive messages over one of these buses. Data exchange between the modules is achieved by serial transmission of encoded data messages (a form of transmission in which data bits are sent sequentially, one at a time, over a single line). Each module can both send and receive serial data simultaneously. Each data bit of a CAN Bus message is carried over the bus as a voltage differential between the two bus circuits which, when strung together, form a message. Each module uses arbitration to sort the message priority if two competing messages are attempting to be broadcast at the same time. Corruption of a single bit within a message will corrupt the entire message. Each message contains a Cyclic Redundancy Check (CRC) which specifies the message size exactly. If the message detected conflicts with the CRC the ECU receiving it will determine the message to be an error and consider that communication has not been possible. Diagnosis of this condition using a lab scope may reveal activity that appears to be Bus data messages even if no actual communication is possible. Communication problems that affect the whole bus, as a result of opens and terminal push outs are more likely to occur on data busses that operate at a high speed than a data bus that operates at a lower speed.

When an open circuit or terminal push out occurs one or more modules can become isolated from the remainder

of the bus. The isolated module will attempt to communicate, but will not be able to receive messages or determine arbitration from other modules. Each time the isolated module attempts to communicate it alters the bus voltage on the intact bus circuit. Without functioning arbitration the isolated module alters the bus voltage while other bus messages are being sent thereby corrupting the messages on the remainder of the bus.

The CAN bus modules are connected in parallel to the two-wire bus using a twisted pair, where the wires are wrapped around each other to provide shielding from unwanted electromagnetic induction, thus preventing interference with the relatively low voltage signals being carried through them. While the CAN bus is operating (active), one of the bus wires will carry a higher voltage and is referred to as the CAN High or CAN bus (+) wire, while the other bus wire will carry a lower voltage and is referred to as the CAN Low or CAN bus (-) wire.

For additional information on the communication network and star connector locations, refer to **COMMUNICATION, DESCRIPTION** .

WHEN MONITORED

With the ignition on.

SET CONDITION

The Body Control Module (BCM) detects that the CAN IHS Bus has been off for more than five seconds when activity was expected.

POSSIBLE CAUSES

Possible Causes
CAN IHS BUS (125K) (+) CIRCUIT SHORTED TO GROUND
CAN IHS BUS (125K) (-) CIRCUIT SHORTED TO VOLTAGE
CAN IHS BUS (125K) (+) CIRCUIT SHORTED TO THE CAN IHS BUS (125K) (-) CIRCUIT
ANY CAN IHS BUS MODULE
BODY CONTROL MODULE (BCM)

DIAGNOSTIC TEST

1. **TEST FOR INTERMITTENT CONDITION**
    1. Turn the ignition on.
    2. With the scan tool, record and erase DTCs.
    3. Cycle the ignition from on to off three times.
    4. Turn the ignition on and wait 10 seconds.
    5. With the scan tool, read active DTCs.

    Does the scan tool display this DTC as active?

    Yes

- Go To 2

No

- Test complete. The condition or conditions that originally set this DTC are not present at this time. Using the wiring diagrams as a guide, check all related splices and connectors for signs of water intrusion, corrosion, pushed out or bent terminals and correct pin tension.
- Perform the BODY VERIFICATION TEST. Refer to **STANDARD PROCEDURE** .

2. **CHECK THE CAN IHS BUS CIRCUITS FOR THE CAN IHS BUS (125K) MODULES**

NOTE: When performing this step, turn the ignition off (wait one minute) before disconnecting any module. When the module is disconnected turn the ignition on.

NOTE: This step is to determine if the fault is a module or the circuits between the module and the Star Connector.

1. While monitoring the scan tool, disconnect each CAN IHS Bus (125K) module at the Front CAN IHS Star Connector (except for the BCM and DLC), one at a time.
2. Check for this DTC to become stored after disconnecting each CAN IHS Bus (125K) module the vehicle is equipped with.

NOTE: If the DTC becomes stored when a particular module is disconnected, that module or related circuits are causing the DTC to set.

With all the CAN IHS Bus modules disconnected at the Star Connector (except for BCM and DLC), does the scan tool display this DTC as active?

Yes

- Go To 3

No

- Diagnose the wiring and connectors between the Front CAN IHS Star Connector and the module that when disconnected caused this DTC to become stored for damage or shorted circuits. If OK, replace the module that when disconnected caused this DTC to become stored in accordance with the Service Information.
- Perform the BODY VERIFICATION TEST. Refer to **STANDARD PROCEDURE** .

3. **CHECK THE (D158) CAN IHS BUS (125K) (-) CIRCUIT FOR A SHORT TO VOLTAGE**

Fig. 45: Checking CAN IHS BUS (125K) (-) Circuit For A Short To Voltage
Courtesy of CHRYSLER GROUP, LLC

1. Turn the ignition off.
2. Disconnect the scan tool.
3. Disconnect the Front CAN IHS Star Connector for the DLC.
4. Turn the ignition on.
5. Measure the voltage between ground and the (D158) CAN IHS Bus (125K) (-) circuit.

   Is there any voltage present?

   Yes

   - Repair the short to voltage in the (D158) CAN IHS Bus (-) circuit.
   - Perform the BODY VERIFICATION TEST. Refer to **STANDARD PROCEDURE** .

   No

- Go To 4

4. **CHECK THE (D157) CAN IHS BUS (125K) (+) CIRCUIT FOR A SHORT TO GROUND**

Fig. 46: Checking CAN IHS BUS (125K) (+) Circuit For A Short To Ground
Courtesy of CHRYSLER GROUP, LLC

1. Turn the ignition off.
2. Measure the resistance between ground and the (D157) CAN IHS Bus (125K) (+) circuit.

   Is the resistance above 10k Ohms?

   Yes

   - Go To 5

   No

   - Repair the short to ground in the (D157) CAN IHS Bus (125K) (+) circuit.
   - Perform the BODY VERIFICATION TEST. Refer to **STANDARD PROCEDURE** .

5. **CHECK FOR A SHORT BETWEEN THE (D157) CAN IHS BUS (125K) (+) CIRCUIT AND (D158) CAN IHS BUS (125K) (-) CIRCUIT**

Fig. 47: Checking For A Short Between The CAN IHS BUS (125K) (+) Circuit And CAN IHS BUS (125K) (-) Circuit
Courtesy of CHRYSLER GROUP, LLC

1. Measure the resistance between the (D158) CAN IHS Bus (125K) (-) and the (D157) CAN IHS Bus (125K) (+) circuits.

   Is the resistance above 10k Ohms?

   Yes

   - Go To 6

   No

   - Repair the short between the (D157) CAN IHS Bus (125K) (+) circuit and the (D158) CAN

IHS Bus (125K) (-) circuit.
- Perform the BODY VERIFICATION TEST. Refer to **STANDARD PROCEDURE** .

6. **CHECK THE CAN IHS BUS CIRCUITS FOR BCM**
   1. Disconnect the Front CAN IHS Star Connector for the BCM.
   2. Reconnect all other connectors.
   3. Cycle the ignition from on to off three times.
   4. Turn the ignition on and wait 10 seconds.
   5. With the scan tool, read all DTCs.

   Do any modules on the CAN IHS BUS (125K) display this DTC as active?

   Yes

   - Reconnect all the connectors and retest. If the concern is still present, replace the Star Connector.
   - Perform the BODY VERIFICATION TEST. Refer to **STANDARD PROCEDURE** .

   No

   - Diagnose the wiring and connectors between the Front CAN IHS Star Connector and the BCM. If OK, replace the Body Control Module (BCM) in accordance with the Service Information. Refer to **MODULE, BODY CONTROL, REMOVAL** .
   - Perform the BODY VERIFICATION TEST. Refer to **STANDARD PROCEDURE** .

U0010-88-CAN INTERIOR BUS - BUS OFF

For a complete wiring diagram, **refer to appropriate SYSTEM WIRING DIAGRAMS article** .

THEORY OF OPERATION

The primary communication network between electronic control modules is the Controller Area Network (CAN) data bus system. The Controller Area Network (CAN) data bus allows all electronic modules connected to the bus to share information with each other. Regardless of whether a message originates from a module on the higher speed CAN C (500K) Bus or on the lower speed bus, CAN Interior High Speed (IHS) (125K) Bus, the message structure and layout is similar, which allows the Body Control Module (BCM) to process and transfer messages between the CAN buses. The BCM stores Diagnostic Trouble Codes (DTCs) for certain bus network faults on the CAN C (500K) Bus and CAN IHS (125K) Bus.

All modules transmit and receive messages over one of these buses. Data exchange between the modules is achieved by serial transmission of encoded data messages (a form of transmission in which data bits are sent sequentially, one at a time, over a single line). Each module can both send and receive serial data simultaneously. Each data bit of a CAN Bus message is carried over the bus as a voltage differential between the two bus circuits which, when strung together, form a message. Each module uses arbitration to sort the message priority if two competing messages are attempting to be broadcast at the same time. Corruption of a single bit within a message will corrupt the entire message. Each message contains a Cyclic Redundancy Check

(CRC) which specifies the message size exactly. If the message detected conflicts with the CRC the ECU receiving it will determine the message to be an error and consider that communication has not been possible. Diagnosis of this condition using a lab scope may reveal activity that appears to be Bus data messages even if no actual communication is possible. Communication problems that affect the whole bus, as a result of opens and terminal push outs are more likely to occur on data busses that operate at a high speed than a data bus that operates at a lower speed.

When an open circuit or terminal push out occurs one or more modules can become isolated from the remainder of the bus. The isolated module will attempt to communicate, but will not be able to receive messages or determine arbitration from other modules. Each time the isolated module attempts to communicate it alters the bus voltage on the intact bus circuit. Without functioning arbitration the isolated module alters the bus voltage while other bus messages are being sent thereby corrupting the messages on the remainder of the bus.

The CAN bus modules are connected in parallel to the two-wire bus using a twisted pair, where the wires are wrapped around each other to provide shielding from unwanted electromagnetic induction, thus preventing interference with the relatively low voltage signals being carried through them. While the CAN bus is operating (active), one of the bus wires will carry a higher voltage and is referred to as the CAN High or CAN bus (+) wire, while the other bus wire will carry a lower voltage and is referred to as the CAN Low or CAN bus (-) wire.

For additional information on the communication network and star connector locations, refer to **COMMUNICATION, DESCRIPTION** .

WHEN MONITORED

With the ignition on.

SET CONDITION

The Body Control Module (BCM) detects a short condition in one of the CAN IHS Bus (125K) circuits for less than one second.

POSSIBLE CAUSES

Possible Causes
CAN IHS BUS (125K) (+) CIRCUIT SHORTED TO GROUND
CAN IHS BUS (125K) (-) CIRCUIT SHORTED TO VOLTAGE
CAN IHS BUS (125K) (+) CIRCUIT SHORTED TO THE CAN IHS BUS (125K) (-) CIRCUIT
ANY CAN IHS BUS MODULE
BODY CONTROL MODULE (BCM)

DIAGNOSTIC TEST

1. **TEST FOR INTERMITTENT CONDITION**
    1. Turn the ignition on.
    2. With the scan tool, record and erase DTCs.

3. Cycle the ignition from on to off three times.
4. Turn the ignition on and wait 10 seconds.
5. With the scan tool, read active DTCs.

   Does the scan tool display this DTC as active?

   Yes

   - Go To 2

   No

   - Test complete. The condition or conditions that originally set this DTC are not present at this time. Using the wiring diagrams as a guide, check all related splices and connectors for signs of water intrusion, corrosion, pushed out or bent terminals and correct pin tension.
   - Perform the BODY VERIFICATION TEST. Refer to **STANDARD PROCEDURE** .

2. **CHECK THE CAN IHS BUS CIRCUITS FOR THE CAN IHS BUS (125K) MODULES**

NOTE: **When performing this step, turn the ignition off (wait one minute) before disconnecting any module. When the module is disconnected turn the ignition on.**

NOTE: **This step is to determine if the fault is a module or the circuits between the module and the Star Connector.**

1. While monitoring the scan tool, disconnect each CAN IHS Bus (125K) module at the Front CAN IHS Star Connector (except for the BCM and DLC), one at a time.
2. Check for this DTC to become stored after disconnecting each CAN IHS Bus (125K) module the vehicle is equipped with.

   NOTE: **If the DTC becomes stored when a particular module is disconnected, that module or related circuits are causing the DTC to set.**

   With all the CAN IHS Bus modules disconnected at the Star Connector (except for BCM and DLC), does the scan tool display this DTC as active?

   Yes

   - Go To 3

   No

   - Diagnose the wiring and connectors between the Front CAN IHS Star Connector and the module that when disconnected caused this DTC to become stored for damage or shorted

circuits. If OK, replace the module that when disconnected caused this DTC to become stored in accordance with the Service Information.

- Perform the BODY VERIFICATION TEST. Refer to **STANDARD PROCEDURE** .

3. **CHECK THE (D158) CAN IHS BUS (125K) (-) CIRCUIT FOR A SHORT TO VOLTAGE**

Fig. 48: Checking CAN IHS BUS (125K) (-) Circuit For A Short To Voltage
Courtesy of CHRYSLER GROUP, LLC

1. Turn the ignition off.
2. Disconnect the scan tool.
3. Disconnect the Front CAN IHS Star Connector for the DLC.
4. Turn the ignition on.
5. Measure the voltage between ground and the (D158) CAN IHS Bus (125K) (-) circuit.

   Is there any voltage present?

   Yes

- Repair the short to voltage in the (D158) CAN IHS Bus (-) circuit.
- Perform the BODY VERIFICATION TEST. Refer to **STANDARD PROCEDURE** .

No

- Go To 4

4. **CHECK THE (D157) CAN IHS BUS (125K) (+) CIRCUIT FOR A SHORT TO GROUND**

Fig. 49: Checking CAN IHS BUS (125K) (+) Circuit For A Short To Ground
Courtesy of CHRYSLER GROUP, LLC

1. Turn the ignition off.
2. Measure the resistance between ground and the (D157) CAN IHS Bus (125K) (+) circuit.

   Is the resistance above 10k Ohms?

   Yes

   - Go To 5

No

- Repair the short to ground in the (D157) CAN IHS Bus (125K) (+) circuit.
- Perform the BODY VERIFICATION TEST. Refer to **STANDARD PROCEDURE** .

5. **CHECK FOR A SHORT BETWEEN THE (D157) CAN IHS BUS (125K) (+) CIRCUIT AND (D158) CAN IHS BUS (125K) (-) CIRCUIT**

Fig. 50: Checking For A Short Between The CAN IHS BUS (125K) (+) Circuit And CAN IHS BUS (125K) (-) Circuit
Courtesy of CHRYSLER GROUP, LLC

1. Measure the resistance between the (D158) CAN IHS Bus (125K) (-) and the (D157) CAN IHS Bus (125K) (+) circuits.

   Is the resistance above 10k Ohms?

   Yes

   - Go To 6

No

- Repair the short between the (D157) CAN IHS Bus (125K) (+) circuit and the (D158) CAN IHS Bus (125K) (-) circuit.
- Perform the BODY VERIFICATION TEST. Refer to **STANDARD PROCEDURE** .

6. **CHECK THE CAN IHS BUS CIRCUITS FOR A BCM CONCERN**
   1. Disconnect the Front CAN IHS Star Connector for the BCM.
   2. Reconnect all other connectors.
   3. Cycle the ignition from on to off three times.
   4. Turn the ignition on and wait 10 seconds.
   5. With the scan tool, read all DTCs.

   Do any modules on the CAN IHS BUS (125K) display this DTC or U0010-00-CAN INTERIOR BUS as active?

   Yes

   - Reconnect all the connectors and retest. If the concern is still present, replace the Star Connector.
   - Perform the BODY VERIFICATION TEST. Refer to **STANDARD PROCEDURE** .

   No

   - Diagnose the wiring and connectors between the Front CAN IHS Star Connector and the BCM. If OK, replace the Body Control Module (BCM) in accordance with the Service Information. Refer to **MODULE, BODY CONTROL, REMOVAL** .
   - Perform the BODY VERIFICATION TEST. Refer to **STANDARD PROCEDURE** .

U0100-87-LOST COMMUNICATION WITH ECM/PCM - MISSING MESSAGE

For a complete wiring diagram, **refer to appropriate SYSTEM WIRING DIAGRAMS article** .

THEORY OF OPERATION

The primary communication network between electronic control modules is the Controller Area Network (CAN) data bus system. The Controller Area Network (CAN) data bus allows all electronic modules connected to the bus to share information with each other. Regardless of whether a message originates from a module on the higher speed CAN C (500K) Bus or on the lower speed bus, CAN Interior High Speed (IHS) (125K) Bus, the message structure and layout is similar, which allows the Body Control Module (BCM) to process and transfer messages between the CAN buses. The BCM stores Diagnostic Trouble Codes (DTCs) for certain bus network faults on the CAN C (500K) Bus and CAN IHS (125K) Bus.

All modules transmit and receive messages over one of these buses. Data exchange between the modules is achieved by serial transmission of encoded data messages (a form of transmission in which data bits are sent

sequentially, one at a time, over a single line). Each module can both send and receive serial data simultaneously. Each data bit of a CAN Bus message is carried over the bus as a voltage differential between the two bus circuits which, when strung together, form a message. Each module uses arbitration to sort the message priority if two competing messages are attempting to be broadcast at the same time. Corruption of a single bit within a message will corrupt the entire message. Each message contains a Cyclic Redundancy Check (CRC) which specifies the message size exactly. If the message detected conflicts with the CRC the ECU receiving it will determine the message to be an error and consider that communication has not been possible. Diagnosis of this condition using a lab scope may reveal activity that appears to be Bus data messages even if no actual communication is possible. Communication problems that affect the whole bus, as a result of opens and terminal push outs are more likely to occur on data busses that operate at a high speed than a data bus that operates at a lower speed.

When an open circuit or terminal push out occurs one or more modules can become isolated from the remainder of the bus. The isolated module will attempt to communicate, but will not be able to receive messages or determine arbitration from other modules. Each time the isolated module attempts to communicate it alters the bus voltage on the intact bus circuit. Without functioning arbitration the isolated module alters the bus voltage while other bus messages are being sent thereby corrupting the messages on the remainder of the bus.

The CAN bus modules are connected in parallel to the two-wire bus using a twisted pair, where the wires are wrapped around each other to provide shielding from unwanted electromagnetic induction, thus preventing interference with the relatively low voltage signals being carried through them. While the CAN bus is operating (active), one of the bus wires will carry a higher voltage and is referred to as the CAN High or CAN bus (+) wire, while the other bus wire will carry a lower voltage and is referred to as the CAN Low or CAN bus (-) wire.

For additional information on the communication network and star connector locations, refer to **COMMUNICATION, DESCRIPTION** .

WHEN MONITORED

With the ignition on for at least five seconds.

Battery voltage between 10 and 16 volts.

Body Control Module (BCM) is configured correctly.

SET CONDITION

Bus messages not received from the Powertrain Control Module (PCM) for approximately two to five seconds.

POSSIBLE CAUSES

Possible Causes
CAN C BUS (+) CIRCUIT SHORTED TO VOLTAGE
CAN C BUS (-) CIRCUIT SHORTED TO GROUND
DTCS RELATED TO BATTERY VOLTAGE, IGNITION, OR VIN MESSAGES

BCM NOT CONFIGURED CORRECTLY
PCM POWER AND GROUND
POWERTRAIN CONTROL MODULE (PCM)
MODULE THAT SET THIS DTC

DIAGNOSTIC TEST

1. **VERIFY DTC IS ACTIVE**

   NOTE: Make sure the battery voltage is between 10 and 16 volts before proceeding.

   1. With the scan tool, read active DTCs.

      Is this DTC active?

      Yes

      - Go To 2

      No

      - Refer to **DIAGNOSIS AND TESTING** and perform the STORED LOST COMMUNICATION DTCS diagnostic procedure.
2. **CHECK FOR ANY OF THE FOLLOWING ACTIVE DTCS**
   1. With the scan tool, read all active DTCs from all modules.

      NOTE: Check for BCM configuration, CAN C hardware electrical, VIN Missing/Mismatch, battery or ignition related DTCs.

      Does the scan tool display any active DTCs to the conditions listed above?

      Yes

      - Go to the **DTC INDEX** and perform the appropriate diagnostic procedure.

      No

      - Go To 3
3. **VERIFY THE PCM IS ACTIVE ON THE BUS**
   1. Turn the ignition on.
   2. With the scan tool, verify the PCM is active on the bus.

      Is the PCM active on the bus?

Yes

- Go To 4

No

- Refer to **DIAGNOSIS AND TESTING** and perform the NO RESPONSE FROM PCM (POWERTRAIN CONTROL MODULE) diagnostic procedure.

4. **CHECK FOR ADDITIONAL COMMUNICATION RELATED DTCS**
   1. With the scan tool, read all the DTCs.

   Is there more than one module with active DTCs "Logged Against" the PCM?

   Yes

   - Replace/update the PCM in accordance with the Service Information. Refer to **MODULE, POWERTRAIN CONTROL, REMOVAL** .
   - Perform the POWERTRAIN VERIFICATION TEST. Refer to the appropriate diagnosis and testing article in engine performance .

   No

   - Go To 5

5. **CLEAR DTC IN MODULE SETTING FAULT**
   1. With the scan tool, select the module setting the DTC against the PCM.
   2. Clear active DTCs.

   Is this DTC still active?

   Yes

   - Replace/update the module that set this DTC in accordance with the Service Information.
   - Perform the appropriate verification test for the module being replaced. If there is no verification test for the associated module perform the BODY VERIFICATION TEST. Refer to **STANDARD PROCEDURE** .

   No

   - Go To 6

6. **CYCLE IGNITION**
   1. Cycle the ignition from RUN to OFF three times ending with the key in the RUN position.

   Does this DTC become active?

Yes

- Go To 7

No

- The condition is not present at this time. Using the wiring diagram/schematic as a guide, inspect the wiring for chafed, pierced, pinched and partially broken wires and the wiring harness connectors for broken, bent, pushed out and corroded terminals.
- Perform the appropriate verification test for the module. If there is no verification test for the associated module perform the BODY VERIFICATION TEST. Refer to **STANDARD PROCEDURE** .

7. **CHECK FOR ADDITIONAL LOST COMMUNICATION FAULTS**
   1. With the scan tool, view the modules.

      Does the BCM and other CAN C BUS modules show Lost Communication with the remaining CAN C BUS modules?

      Yes

      - Go To 8

      No

      - Replace/update the module that set this DTC in accordance with the Service Information.
      - Perform the appropriate verification test for the module being replaced. If there is no verification test for the associated module perform the BODY VERIFICATION TEST. Refer to **STANDARD PROCEDURE** .

8. **CHECK THE CAN C BUS (+) CIRCUIT FOR A SHORT TO VOLTAGE**

Fig. 51: Checking CAN C BUS (+) Circuit For A Short To Voltage
Courtesy of CHRYSLER GROUP, LLC

1. Measure the voltage between the (D57) CAN C Bus (+) circuit and ground.

   Is the voltage above 5.0 volts?

   Yes

   - Repair the short to voltage in the CAN C Bus (+) circuit. The short to voltage is present in one of the CAN C Bus circuits. Use the Star Connectors to isolate portions of the CAN C Bus in order to locate the concern.
   - Perform the BODY VERIFICATION TEST. Refer to **STANDARD PROCEDURE** .

   No

   - Go To 9

9. **CHECK THE CAN C BUS (-) CIRCUIT FOR A SHORT TO GROUND**

Fig. 52: Checking CAN C BUS (-) Circuit For A Short To Ground
Courtesy of CHRYSLER GROUP, LLC

1. Turn the ignition off.
2. Measure the resistance between ground and the (D58) CAN C Bus (-) circuit.

   Is the resistance below 10k Ohms?

   Yes

   - Repair the short to ground in the CAN C Bus (-) circuit. The short to ground is present in one of the CAN C Bus circuits. Use the Star Connectors to isolate portions of the CAN C Bus in order to locate the concern.
   - Perform the BODY VERIFICATION TEST. Refer to **STANDARD PROCEDURE** .

   No

- Replace/update the module that set this DTC in accordance with the Service Information.
- Perform the appropriate verification test for the module being replaced. If there is no verification test for the associated module perform the BODY VERIFICATION TEST. Refer to **STANDARD PROCEDURE** .

U0101-87-LOST COMMUNICATION WITH TCM - MISSING MESSAGE

For a complete wiring diagram, **refer to appropriate SYSTEM WIRING DIAGRAMS article** .

THEORY OF OPERATION

The primary communication network between electronic control modules is the Controller Area Network (CAN) data bus system. The Controller Area Network (CAN) data bus allows all electronic modules connected to the bus to share information with each other. Regardless of whether a message originates from a module on the higher speed CAN C (500K) Bus or on the lower speed bus, CAN Interior High Speed (IHS) (125K) Bus, the message structure and layout is similar, which allows the Body Control Module (BCM) to process and transfer messages between the CAN buses. The BCM stores Diagnostic Trouble Codes (DTCs) for certain bus network faults on the CAN C (500K) Bus and CAN IHS (125K) Bus.

All modules transmit and receive messages over one of these buses. Data exchange between the modules is achieved by serial transmission of encoded data messages (a form of transmission in which data bits are sent sequentially, one at a time, over a single line). Each module can both send and receive serial data simultaneously. Each data bit of a CAN Bus message is carried over the bus as a voltage differential between the two bus circuits which, when strung together, form a message. Each module uses arbitration to sort the message priority if two competing messages are attempting to be broadcast at the same time. Corruption of a single bit within a message will corrupt the entire message. Each message contains a Cyclic Redundancy Check (CRC) which specifies the message size exactly. If the message detected conflicts with the CRC the ECU receiving it will determine the message to be an error and consider that communication has not been possible. Diagnosis of this condition using a lab scope may reveal activity that appears to be Bus data messages even if no actual communication is possible. Communication problems that affect the whole bus, as a result of opens and terminal push outs are more likely to occur on data busses that operate at a high speed than a data bus that operates at a lower speed.

When an open circuit or terminal push out occurs one or more modules can become isolated from the remainder of the bus. The isolated module will attempt to communicate, but will not be able to receive messages or determine arbitration from other modules. Each time the isolated module attempts to communicate it alters the bus voltage on the intact bus circuit. Without functioning arbitration the isolated module alters the bus voltage while other bus messages are being sent thereby corrupting the messages on the remainder of the bus.

The CAN bus modules are connected in parallel to the two-wire bus using a twisted pair, where the wires are wrapped around each other to provide shielding from unwanted electromagnetic induction, thus preventing interference with the relatively low voltage signals being carried through them. While the CAN bus is operating (active), one of the bus wires will carry a higher voltage and is referred to as the CAN High or CAN bus (+) wire, while the other bus wire will carry a lower voltage and is referred to as the CAN Low or CAN bus (-) wire.

For additional information on the communication network and star connector locations, refer to

COMMUNICATION, DESCRIPTION .

WHEN MONITORED

With the ignition on for at least five seconds.

Battery voltage between 10 and 16 volts.

Body Control Module (BCM) is configured correctly.

SET CONDITION

Bus messages not received from the Transmission Control Module (TCM) for approximately two to five seconds.

POSSIBLE CAUSES

Possible Causes
CAN C BUS (+) CIRCUIT SHORTED TO VOLTAGE
CAN C BUS (-) CIRCUIT SHORTED TO GROUND
DTCS RELATED TO BATTERY VOLTAGE, IGNITION, OR VIN MESSAGES
BCM NOT CONFIGURED CORRECTLY
TCM POWER AND GROUND
TRANSMISSION CONTROL MODULE (TCM)
MODULE THAT SET THIS DTC

DIAGNOSTIC TEST

1. **VERIFY DTC IS ACTIVE**

NOTE: Make sure the battery voltage is between 10 and 16 volts before proceeding.

1. With the scan tool, read active DTCs.

   Is this DTC active?

   Yes

   - Go To 2

   No

   - Refer to **DIAGNOSIS AND TESTING** and perform the STORED LOST COMMUNICATION DTCS diagnostic procedure.

2. **CHECK FOR ANY OF THE FOLLOWING ACTIVE DTCS**
   1. With the scan tool, read all active DTCs from all modules.

      NOTE: Check for BCM configuration, CAN C hardware electrical, VIN Missing/Mismatch, battery or ignition related DTCs.

      Does the scan tool display any active DTCs to the conditions listed above?

      Yes

      - Go to the **DTC INDEX** and perform the appropriate diagnostic procedure.

      No

      - Go To 3
3. **VERIFY THE TCM IS ACTIVE ON THE BUS**
   1. Turn the ignition on.
   2. With the scan tool, verify the TCM is active on the bus.

      Is the TCM active on the bus?

      Yes

      - Go To 4

      No

      - Refer to **DIAGNOSIS AND TESTING** and perform the NO RESPONSE FROM TCM diagnostic procedure.
4. **CHECK FOR ADDITIONAL COMMUNICATION RELATED DTCS**
   1. With the scan tool, read all the DTCs.

      Is there more than one module with active DTCs "Logged Against" the TCM?

      Yes

      - Replace/update the TCM in accordance with the Service Information.
      - Perform the TRANSMISSION VERIFICATION TEST. Refer to **TRANSMISSION VERIFICATION TEST-948TE** .

      No

      - Go To 5
5. **CLEAR DTC IN MODULE SETTING FAULT**

1. With the scan tool, select the module setting the DTC against the TCM.
2. Clear active DTCs.

   Is this DTC still active?

   Yes

   - Replace/update the module that set this DTC in accordance with the Service Information.
   - Perform the appropriate verification test for the module being replaced. If there is no verification test for the associated module perform the BODY VERIFICATION TEST. Refer to **STANDARD PROCEDURE** .

   No

   - Go To 6

6. **CYCLE IGNITION**
   1. Cycle the ignition from RUN to OFF three times ending with the key in the RUN position.

      Does this DTC become active?

      Yes

      - Go To 7

      No

      - The condition is not present at this time. Using the wiring diagram/schematic as a guide, inspect the wiring for chafed, pierced, pinched, and partially broken wires and the wiring harness connectors for broken, bent, pushed out, and corroded terminals.
      - Perform the appropriate verification test for the module. If there is no verification test for the associated module perform the BODY VERIFICATION TEST. Refer to **STANDARD PROCEDURE** .

7. **CHECK FOR ADDITIONAL LOST COMMUNICATION FAULTS**
   1. With the scan tool, view the modules.

      Does the BCM and other CAN C BUS modules show Lost Communication with the remaining CAN C BUS modules?

      Yes

      - Go To 8

      No

- Replace/update the module that set this DTC in accordance with the Service Information.
- Perform the appropriate verification test for the module being replaced. If there is no verification test for the associated module perform the BODY VERIFICATION TEST. Refer to **STANDARD PROCEDURE** .

8. **CHECK THE CAN C BUS (+) CIRCUIT FOR A SHORT TO VOLTAGE**

Fig. 53: Checking CAN C BUS (+) Circuit For A Short To Voltage
Courtesy of CHRYSLER GROUP, LLC

1. Measure the voltage between the (D57) CAN C Bus (+) circuit and ground.

   Is the voltage above 5.0 volts?

   Yes

   - Repair the short to voltage in the CAN C Bus (+) circuit. The short to voltage is present in one of the CAN C Bus circuits. Use the Star Connectors to isolate portions of the CAN C Bus in order to locate the concern.
   - Perform the BODY VERIFICATION TEST. Refer to **STANDARD PROCEDURE** .

   No

   - Go To 9

9. **CHECK THE CAN C BUS (-) CIRCUIT FOR A SHORT TO GROUND**

Fig. 54: Checking CAN C BUS (-) Circuit For A Short To Ground
Courtesy of CHRYSLER GROUP, LLC

1. Turn the ignition off.
2. Measure the resistance between ground and the (D58) CAN C Bus (-) circuit.

   Is the resistance below 10k Ohms?

   Yes

   - Repair the short to ground in the CAN C Bus (-) circuit. The short to ground is present in one of the CAN C Bus circuits. Use the Star Connectors to isolate portions of the CAN C Bus in order to locate the concern.
   - Perform the BODY VERIFICATION TEST. Refer to **STANDARD PROCEDURE** .

No

- Replace/update the module that set this DTC in accordance with the Service Information.
- Perform the appropriate verification test for the module being replaced. If there is no verification test for the associated module perform the BODY VERIFICATION TEST. Refer to **STANDARD PROCEDURE** .

U0102-87-LOST COMMUNICATION WITH TRANSFER CASE CONTROL MODULE/AWD - MISSING MESSAGE

For a complete wiring diagram, **refer to appropriate SYSTEM WIRING DIAGRAMS article** .

THEORY OF OPERATION

The primary communication network between electronic control modules is the Controller Area Network (CAN) data bus system. The Controller Area Network (CAN) data bus allows all electronic modules connected to the bus to share information with each other. Regardless of whether a message originates from a module on the higher speed CAN C (500K) Bus or on the lower speed bus, CAN Interior High Speed (IHS) (125K) Bus, the message structure and layout is similar, which allows the Body Control Module (BCM) to process and transfer messages between the CAN buses. The BCM stores Diagnostic Trouble Codes (DTCs) for certain bus network faults on the CAN C (500K) Bus and CAN IHS (125K) Bus.

All modules transmit and receive messages over one of these buses. Data exchange between the modules is achieved by serial transmission of encoded data messages (a form of transmission in which data bits are sent sequentially, one at a time, over a single line). Each module can both send and receive serial data simultaneously. Each data bit of a CAN Bus message is carried over the bus as a voltage differential between the two bus circuits which, when strung together, form a message. Each module uses arbitration to sort the message priority if two competing messages are attempting to be broadcast at the same time. Corruption of a single bit within a message will corrupt the entire message. Each message contains a Cyclic Redundancy Check (CRC) which specifies the message size exactly. If the message detected conflicts with the CRC the ECU receiving it will determine the message to be an error and consider that communication has not been possible. Diagnosis of this condition using a lab scope may reveal activity that appears to be Bus data messages even if no actual communication is possible. Communication problems that affect the whole bus, as a result of opens and terminal push outs are more likely to occur on data busses that operate at a high speed than a data bus that operates at a lower speed.

When an open circuit or terminal push out occurs one or more modules can become isolated from the remainder of the bus. The isolated module will attempt to communicate, but will not be able to receive messages or determine arbitration from other modules. Each time the isolated module attempts to communicate it alters the bus voltage on the intact bus circuit. Without functioning arbitration the isolated module alters the bus voltage while other bus messages are being sent thereby corrupting the messages on the remainder of the bus.

The CAN bus modules are connected in parallel to the two-wire bus using a twisted pair, where the wires are wrapped around each other to provide shielding from unwanted electromagnetic induction, thus preventing interference with the relatively low voltage signals being carried through them. While the CAN bus is operating (active), one of the bus wires will carry a higher voltage and is referred to as the CAN High or CAN bus (+) wire, while the other bus wire will carry a lower voltage and is referred to as the CAN Low or CAN bus (-)

wire.

For additional information on the communication network and star connector locations, refer to **COMMUNICATION, DESCRIPTION** .

WHEN MONITORED

With the ignition on for at least five seconds.

Battery voltage between 10 and 16 volts.

Body Control Module (BCM) is configured correctly.

SET CONDITION

Bus messages not received from the Drive Train Control Module (DTCM) for approximately two to five seconds.

POSSIBLE CAUSES

Possible Causes
CAN C BUS (+) CIRCUIT SHORTED TO VOLTAGE
CAN C BUS (-) CIRCUIT SHORTED TO GROUND
DTCS RELATED TO BATTERY VOLTAGE, IGNITION, OR VIN MESSAGES
BCM NOT CONFIGURED CORRECTLY
DRIVE TRAIN CONTROL MODULE (DTCM) POWER AND GROUND
DRIVE TRAIN CONTROL MODULE (DTCM)
MODULE THAT SET THIS DTC

DIAGNOSTIC TEST

1. **VERIFY DTC IS ACTIVE**

   NOTE: Make sure the battery voltage is between 10 and 16 volts before proceeding.

   1. With the scan tool, read active DTCs.

      Is this DTC active?

      Yes

      - Go To 2

      No

- Refer to **DIAGNOSIS AND TESTING** and perform the STORED LOST COMMUNICATION DTCS diagnostic procedure.

2. **CHECK FOR ANY OF THE FOLLOWING ACTIVE DTCS**
   1. With the scan tool, read all active DTCs from all modules.

      NOTE: Check for BCM configuration, CAN C hardware electrical, VIN Missing/Mismatch, battery or ignition related DTCs.

      Does the scan tool display any active DTCs to the conditions listed above?

      Yes

      - Go to the **DTC INDEX** and perform the appropriate diagnostic procedure.

      No

      - Go To 3

3. **VERIFY THE DRIVE TRAIN CONTROL MODULE (DTCM) IS ACTIVE ON THE BUS**
   1. Turn the ignition on.
   2. With the scan tool, verify the Drive Train Control Module (DTCM) is active on the bus.

      Is the Transfer Case Control Module active on the bus?

      Yes

      - Go To 4

      No

      - Refer to **DIAGNOSIS AND TESTING** and perform the NO RESPONSE FROM DTCM diagnostic procedure.

4. **CHECK FOR ADDITIONAL COMMUNICATION RELATED DTCS**
   1. With the scan tool, read all the DTCs.

      Is there more than one module with active DTCs "Logged Against" the DTCM?

      Yes

      - Replace/update the DTCM in accordance with the Service Information.
      - Perform the BODY VERIFICATION TEST. Refer to **STANDARD PROCEDURE** .

      No

      - Go To 5

5. **CLEAR DTC IN MODULE SETTING FAULT**
   1. With the scan tool, select the module setting the DTC against the DTCM.
   2. Clear active DTCs.

      Is this DTC still active?

      Yes

      - Replace/update the module that set this DTC in accordance with the Service Information.
      - Perform the appropriate verification test for the module being replaced. If there is no verification test for the associated module perform the BODY VERIFICATION TEST. Refer to **STANDARD PROCEDURE** .

      No

      - Go To 6
6. **CYCLE IGNITION**
   1. Cycle the ignition from RUN to OFF three times ending with the key in the RUN position.

      Does this DTC become active?

      Yes

      - Go To 7

      No

      - The condition is not present at this time. Using the wiring diagram/schematic as a guide, inspect the wiring for chafed, pierced, pinched, and partially broken wires and the wiring harness connectors for broken, bent, pushed out, and corroded terminals.
      - Perform the appropriate verification test for the module. If there is no verification test for the associated module perform the BODY VERIFICATION TEST. Refer to **STANDARD PROCEDURE** .
7. **CHECK FOR ADDITIONAL LOST COMMUNICATION FAULTS**
   1. With the scan tool, view the modules.

      Does the BCM and other CAN C BUS modules show Lost Communication with the remaining CAN C BUS modules?

      Yes

      - Go To 8

      No

- Replace/update the module that set this DTC in accordance with the Service Information.
- Perform the appropriate verification test for the module being replaced. If there is no verification test for the associated module perform the BODY VERIFICATION TEST. Refer to **STANDARD PROCEDURE** .

8. **CHECK THE CAN C BUS (+) CIRCUIT FOR A SHORT TO VOLTAGE**

Fig. 55: Checking CAN C BUS (+) Circuit For A Short To Voltage
Courtesy of CHRYSLER GROUP, LLC

1. Measure the voltage between the (D57) CAN C Bus (+) circuit and ground.

   Is the voltage above 5.0 volts?

   Yes

   - Repair the short to voltage in the CAN C Bus (+) circuit. The short to voltage is present in one of the CAN C Bus circuits. Use the Star Connectors to isolate portions of the CAN C Bus in order to locate the concern.
   - Perform the BODY VERIFICATION TEST. Refer to **STANDARD PROCEDURE** .

   No

   - Go To 9

9. **CHECK THE CAN C BUS (-) CIRCUIT FOR A SHORT TO GROUND**

Fig. 56: Checking CAN C BUS (-) Circuit For A Short To Ground
Courtesy of CHRYSLER GROUP, LLC

1. Turn the ignition off.
2. Measure the resistance between ground and the (D58) CAN C Bus (-) circuit.

   Is the resistance below 10k Ohms?

   Yes

   - Repair the short to ground in the CAN C Bus (-) circuit. The short to ground is present in one of the CAN C Bus circuits. Use the Star Connectors to isolate portions of the CAN C Bus in order to locate the concern.
   - Perform the BODY VERIFICATION TEST. Refer to **STANDARD PROCEDURE** .

No

- Replace/update the module that set this DTC in accordance with the Service Information.
- Perform the appropriate verification test for the module being replaced. If there is no verification test for the associated module perform the BODY VERIFICATION TEST. Refer to **STANDARD PROCEDURE** .

U0103-87-LOST COMMUNICATION WITH ELECTRIC GEAR SHIFT MODULE - MISSING MESSAGE

For a complete wiring diagram, **refer to appropriate SYSTEM WIRING DIAGRAMS article** .

THEORY OF OPERATION

The primary communication network between electronic control modules is the Controller Area Network (CAN) data bus system. The Controller Area Network (CAN) data bus allows all electronic modules connected to the bus to share information with each other. Regardless of whether a message originates from a module on the higher speed CAN C (500K) Bus or on the lower speed bus, CAN Interior High Speed (IHS) (125K) Bus, the message structure and layout is similar, which allows the Body Control Module (BCM) to process and transfer messages between the CAN buses. The BCM stores Diagnostic Trouble Codes (DTCs) for certain bus network faults on the CAN C (500K) Bus and CAN IHS (125K) Bus.

All modules transmit and receive messages over one of these buses. Data exchange between the modules is achieved by serial transmission of encoded data messages (a form of transmission in which data bits are sent sequentially, one at a time, over a single line). Each module can both send and receive serial data simultaneously. Each data bit of a CAN Bus message is carried over the bus as a voltage differential between the two bus circuits which, when strung together, form a message. Each module uses arbitration to sort the message priority if two competing messages are attempting to be broadcast at the same time. Corruption of a single bit within a message will corrupt the entire message. Each message contains a Cyclic Redundancy Check (CRC) which specifies the message size exactly. If the message detected conflicts with the CRC the ECU receiving it will determine the message to be an error and consider that communication has not been possible. Diagnosis of this condition using a lab scope may reveal activity that appears to be Bus data messages even if no actual communication is possible. Communication problems that affect the whole bus, as a result of opens and terminal push outs are more likely to occur on data busses that operate at a high speed than a data bus that operates at a lower speed.

When an open circuit or terminal push out occurs one or more modules can become isolated from the remainder of the bus. The isolated module will attempt to communicate, but will not be able to receive messages or determine arbitration from other modules. Each time the isolated module attempts to communicate it alters the bus voltage on the intact bus circuit. Without functioning arbitration the isolated module alters the bus voltage while other bus messages are being sent thereby corrupting the messages on the remainder of the bus.

The CAN bus modules are connected in parallel to the two-wire bus using a twisted pair, where the wires are wrapped around each other to provide shielding from unwanted electromagnetic induction, thus preventing interference with the relatively low voltage signals being carried through them. While the CAN bus is operating (active), one of the bus wires will carry a higher voltage and is referred to as the CAN High or CAN bus (+) wire, while the other bus wire will carry a lower voltage and is referred to as the CAN Low or CAN bus (-)

wire.

For additional information on the communication network and star connector locations, refer to **COMMUNICATION, DESCRIPTION** .

WHEN MONITORED

With the ignition on for at least five seconds.

Battery voltage between 10 and 16 volts.

Body Control Module (BCM) is configured correctly.

SET CONDITION

Bus messages not received from the Electronic Shift Module (ESM) for approximately two to five seconds.

POSSIBLE CAUSES

Possible Causes
CAN C BUS (+) CIRCUIT SHORTED TO VOLTAGE
CAN C BUS (-) CIRCUIT SHORTED TO GROUND
DTCS RELATED TO BATTERY VOLTAGE, IGNITION, OR VIN MESSAGES
BCM NOT CONFIGURED CORRECTLY
ESM POWER AND GROUND
ELECTRONIC SHIFT MODULE (ESM)
MODULE THAT SET THIS DTC

DIAGNOSTIC TEST

1. **VERIFY DTC IS ACTIVE**

   NOTE: Make sure the battery voltage is between 10 and 16 volts before proceeding.

   1. With the scan tool, read active DTCs.

      Is this DTC active?

      Yes

      - Go To 2

      No

- Refer to **DIAGNOSIS AND TESTING** and perform the STORED LOST COMMUNICATION DTCS diagnostic procedure.

2. **CHECK FOR ANY OF THE FOLLOWING ACTIVE DTCS**
   1. With the scan tool, read all active DTCs from all modules.

      NOTE: Check for BCM configuration, CAN C hardware electrical, VIN Missing/Mismatch, battery or ignition related DTCs.

      Does the scan tool display any active DTCs to the conditions listed above?

      Yes

      - Go to the **DTC INDEX** and perform the appropriate diagnostic procedure.

      No

      - Go To 3

3. **VERIFY THE ESM IS ACTIVE ON THE BUS**
   1. Turn the ignition on.
   2. With the scan tool, verify the ESM is active on the bus.

      Is the ESM active on the bus?

      Yes

      - Go To 4

      No

      - Refer to **DIAGNOSIS AND TESTING** and perform the NO RESPONSE FROM ESM (POWERTRAIN CONTROL MODULE) diagnostic procedure.

4. **CHECK FOR ADDITIONAL COMMUNICATION RELATED DTCS**
   1. With the scan tool, read all the DTCs.

      Is there more than one module with active DTCs "Logged Against" the ESM?

      Yes

      - Replace/update the ESM in accordance with the Service Information.
      - Perform the appropriate verification test for the module being replaced. If there is no verification test for the associated module perform the BODY VERIFICATION TEST. Refer to **STANDARD PROCEDURE** .

      No

- Go To 5

5. **CLEAR DTC IN MODULE SETTING FAULT**
   1. With the scan tool, select the module setting the DTC against the ESM.
   2. Clear active DTCs.

      Is this DTC still active?

      Yes

      - Replace/update the module that set this DTC in accordance with the Service Information.
      - Perform the appropriate verification test for the module being replaced. If there is no verification test for the associated module perform the BODY VERIFICATION TEST. Refer to **STANDARD PROCEDURE** .

      No

      - Go To 6
6. **CYCLE IGNITION**
   1. Cycle the ignition from RUN to OFF three times ending with the key in the RUN position.

      Does this DTC become active?

      Yes

      - Go To 7

      No

      - The condition is not present at this time. Using the wiring diagram/schematic as a guide, inspect the wiring for chafed, pierced, pinched and partially broken wires and the wiring harness connectors for broken, bent, pushed out and corroded terminals.
      - Perform the appropriate verification test for the module. If there is no verification test for the associated module perform the BODY VERIFICATION TEST. Refer to **STANDARD PROCEDURE** .
7. **CHECK FOR ADDITIONAL LOST COMMUNICATION FAULTS**
   1. With the scan tool, view the modules.

      Does the BCM and other CAN C BUS modules show Lost Communication with the remaining CAN C BUS modules?

      Yes

      - Go To 8

No

- Replace/update the module that set this DTC in accordance with the Service Information.
- Perform the appropriate verification test for the module being replaced. If there is no verification test for the associated module perform the BODY VERIFICATION TEST. Refer to **STANDARD PROCEDURE** .

8. **CHECK THE CAN C BUS (+) CIRCUIT FOR A SHORT TO VOLTAGE**

Fig. 57: Checking CAN C BUS (+) Circuit For A Short To Voltage
Courtesy of CHRYSLER GROUP, LLC

1. Measure the voltage between the (D57) CAN C Bus (+) circuit and ground.

   Is the voltage above 5.0 volts?

   Yes

   - Repair the short to voltage in the CAN C Bus (+) circuit. The short to voltage is present in one of the CAN C Bus circuits. Use the Star Connectors to isolate portions of the CAN C Bus in order to locate the concern.
   - Perform the BODY VERIFICATION TEST. Refer to **STANDARD PROCEDURE** .

   No

- Go To 9

9. **CHECK THE CAN C BUS (-) CIRCUIT FOR A SHORT TO GROUND**

Fig. 58: Checking CAN C BUS (-) Circuit For A Short To Ground
Courtesy of CHRYSLER GROUP, LLC

1. Turn the ignition off.
2. Measure the resistance between ground and the (D58) CAN C Bus (-) circuit.

   Is the resistance below 10k Ohms?

   Yes

   - Repair the short to ground in the CAN C Bus (-) circuit. The short to ground is present in one of the CAN C Bus circuits. Use the Star Connectors to isolate portions of the CAN C Bus in order to locate the concern.

- Perform the BODY VERIFICATION TEST. Refer to **STANDARD PROCEDURE** .

No

- Replace/update the module that set this DTC in accordance with the Service Information.
- Perform the appropriate verification test for the module being replaced. If there is no verification test for the associated module perform the BODY VERIFICATION TEST. Refer to **STANDARD PROCEDURE** .

U0121-87-LOST COMMUNICATION WITH ANTI-LOCK BRAKE SYSTEM (ABS) CONTROL MODULE - MISSING MESSAGE

For a complete wiring diagram, **refer to appropriate SYSTEM WIRING DIAGRAMS article** .

THEORY OF OPERATION

The primary communication network between electronic control modules is the Controller Area Network (CAN) data bus system. The Controller Area Network (CAN) data bus allows all electronic modules connected to the bus to share information with each other. Regardless of whether a message originates from a module on the higher speed CAN C (500K) Bus or on the lower speed bus, CAN Interior High Speed (IHS) (125K) Bus, the message structure and layout is similar, which allows the Body Control Module (BCM) to process and transfer messages between the CAN buses. The BCM stores Diagnostic Trouble Codes (DTCs) for certain bus network faults on the CAN C (500K) Bus and CAN IHS (125K) Bus.

All modules transmit and receive messages over one of these buses. Data exchange between the modules is achieved by serial transmission of encoded data messages (a form of transmission in which data bits are sent sequentially, one at a time, over a single line). Each module can both send and receive serial data simultaneously. Each data bit of a CAN Bus message is carried over the bus as a voltage differential between the two bus circuits which, when strung together, form a message. Each module uses arbitration to sort the message priority if two competing messages are attempting to be broadcast at the same time. Corruption of a single bit within a message will corrupt the entire message. Each message contains a Cyclic Redundancy Check (CRC) which specifies the message size exactly. If the message detected conflicts with the CRC the ECU receiving it will determine the message to be an error and consider that communication has not been possible. Diagnosis of this condition using a lab scope may reveal activity that appears to be Bus data messages even if no actual communication is possible. Communication problems that affect the whole bus, as a result of opens and terminal push outs are more likely to occur on data busses that operate at a high speed than a data bus that operates at a lower speed.

When an open circuit or terminal push out occurs one or more modules can become isolated from the remainder of the bus. The isolated module will attempt to communicate, but will not be able to receive messages or determine arbitration from other modules. Each time the isolated module attempts to communicate it alters the bus voltage on the intact bus circuit. Without functioning arbitration the isolated module alters the bus voltage while other bus messages are being sent thereby corrupting the messages on the remainder of the bus.

The CAN bus modules are connected in parallel to the two-wire bus using a twisted pair, where the wires are wrapped around each other to provide shielding from unwanted electromagnetic induction, thus preventing interference with the relatively low voltage signals being carried through them. While the CAN bus is operating

(active), one of the bus wires will carry a higher voltage and is referred to as the CAN High or CAN bus (+) wire, while the other bus wire will carry a lower voltage and is referred to as the CAN Low or CAN bus (-) wire.

For additional information on the communication network and star connector locations, refer to **COMMUNICATION, DESCRIPTION** .

WHEN MONITORED

With the ignition on for at least five seconds.

Battery voltage between 10 and 16 volts.

Body Control Module (BCM) is configured correctly.

SET CONDITION

Bus messages not received from the Anti-Lock Brake Module (ABS) for approximately two to five seconds.

POSSIBLE CAUSES

Possible Causes
CAN C BUS (+) CIRCUIT SHORTED TO VOLTAGE
CAN C BUS (-) CIRCUIT SHORTED TO GROUND
DTCS RELATED TO BATTERY VOLTAGE, IGNITION, OR VIN MESSAGES
BCM NOT CONFIGURED CORRECTLY
ABS POWER AND GROUND
ANTI-LOCK BRAKE MODULE (ABS)
MODULE THAT SET THIS DTC

DIAGNOSTIC TEST

1. **VERIFY DTC IS ACTIVE**

   NOTE: Make sure the battery voltage is between 10 and 16 volts before proceeding.

   1. With the scan tool, read active DTCs.

      Is this DTC active?

      Yes

      - Go To 2

No

- Refer to **DIAGNOSIS AND TESTING** and perform the STORED LOST COMMUNICATION DTCS diagnostic procedure.

2. **CHECK FOR ANY OF THE FOLLOWING ACTIVE DTCS**
   1. With the scan tool, read all active DTCs from all modules.

      NOTE: Check for BCM configuration, CAN C hardware electrical, VIN Missing/Mismatch, battery or ignition related DTCs.

      Does the scan tool display any active DTCs to the conditions listed above?

      Yes

      - Go to the **DTC INDEX** and perform the appropriate diagnostic procedure.

      No

      - Go To 3

3. **VERIFY THE ABS IS ACTIVE ON THE BUS**
   1. Turn the ignition on.
   2. With the scan tool, verify the ABS is active on the bus.

      Is the ABS active on the bus?

      Yes

      - Go To 4

      No

      - Refer to **DIAGNOSIS AND TESTING** and perform the NO RESPONSE FROM ABS diagnostic procedure.

4. **CHECK FOR ADDITIONAL COMMUNICATION RELATED DTCS**
   1. With the scan tool, read all the DTCs.

      Is there more than one module with active DTCs "Logged Against" the ABS?

      Yes

      - Replace/update the ABS module in accordance with the Service Information. Refer to **MODULE, ANTI-LOCK BRAKE SYSTEM, REMOVAL** .
      - Perform the ABS VERIFICATION TEST. Refer to **STANDARD PROCEDURE** .

No

- Go To 5

5. **CLEAR DTC IN MODULE SETTING FAULT**
   1. With the scan tool, select the module setting the DTC against the ABS.
   2. Clear active DTCs.

   Is this DTC still active?

   Yes

   - Replace/update the module that set this DTC in accordance with the Service Information.
   - Perform the appropriate verification test for the module being replaced. If there is no verification test for the associated module perform the BODY VERIFICATION TEST. Refer to **STANDARD PROCEDURE** .

   No

   - Go To 6

6. **CYCLE IGNITION**
   1. Cycle the ignition from RUN to OFF three times ending with the key in the RUN position.

   Does this DTC become active?

   Yes

   - Go To 7

   No

   - The condition is not present at this time. Using the wiring diagram/schematic as a guide, inspect the wiring for chafed, pierced, pinched, and partially broken wires and the wiring harness connectors for broken, bent, pushed out, and corroded terminals.
   - Perform the appropriate verification test for the module. If there is no verification test for the associated module perform the BODY VERIFICATION TEST. Refer to **STANDARD PROCEDURE** .

7. **CHECK FOR ADDITIONAL LOST COMMUNICATION FAULTS**
   1. With the scan tool, view the modules.

   Does the BCM and other CAN C BUS modules show Lost Communication with the remaining CAN C BUS modules?

   Yes

- Go To 8

No

- Replace/update the module that set this DTC in accordance with the Service Information.
- Perform the appropriate verification test for the module being replaced. If there is no verification test for the associated module perform the BODY VERIFICATION TEST. Refer to **STANDARD PROCEDURE** .

8. **CHECK THE CAN C BUS (+) CIRCUIT FOR A SHORT TO VOLTAGE**

Fig. 59: Checking CAN C BUS (+) Circuit For A Short To Voltage
Courtesy of CHRYSLER GROUP, LLC

1. Measure the voltage between the (D57) CAN C Bus (+) circuit and ground.

   Is the voltage above 5.0 volts?

   Yes

   - Repair the short to voltage in the CAN C Bus (+) circuit. The short to voltage is present in one of the CAN C Bus circuits. Use the Star Connectors to isolate portions of the CAN C Bus in order to locate the concern.
   - Perform the BODY VERIFICATION TEST. Refer to **STANDARD PROCEDURE** .

No

- Go To 9

9. **CHECK THE CAN C BUS (-) CIRCUIT FOR A SHORT TO GROUND**

Fig. 60: Checking CAN C BUS (-) Circuit For A Short To Ground
Courtesy of CHRYSLER GROUP, LLC

1. Turn the ignition off.
2. Measure the resistance between ground and the (D58) CAN C Bus (-) circuit.

   Is the resistance below 10k Ohms?

   Yes

   - Repair the short to ground in the CAN C Bus (-) circuit. The short to ground is present in one

of the CAN C Bus circuits. Use the Star Connectors to isolate portions of the CAN C Bus in order to locate the concern.

- Perform the BODY VERIFICATION TEST. Refer to **STANDARD PROCEDURE** .

No

- Replace/update the module that set this DTC in accordance with the Service Information.
- Perform the appropriate verification test for the module being replaced. If there is no verification test for the associated module perform the BODY VERIFICATION TEST. Refer to **STANDARD PROCEDURE** .

U0128-87-LOST COMMUNICATION WITH PARK BRAKE CONTROL MODULE - MISSING MESSAGE

For a complete wiring diagram, **refer to appropriate SYSTEM WIRING DIAGRAMS article** .

THEORY OF OPERATION

The primary communication network between electronic control modules is the Controller Area Network (CAN) data bus system. The Controller Area Network (CAN) data bus allows all electronic modules connected to the bus to share information with each other. Regardless of whether a message originates from a module on the higher speed CAN C (500K) Bus or on the lower speed bus, CAN Interior High Speed (IHS) (125K) Bus, the message structure and layout is similar, which allows the Body Control Module (BCM) to process and transfer messages between the CAN buses. The BCM stores Diagnostic Trouble Codes (DTCs) for certain bus network faults on the CAN C (500K) Bus and CAN IHS (125K) Bus.

All modules transmit and receive messages over one of these buses. Data exchange between the modules is achieved by serial transmission of encoded data messages (a form of transmission in which data bits are sent sequentially, one at a time, over a single line). Each module can both send and receive serial data simultaneously. Each data bit of a CAN Bus message is carried over the bus as a voltage differential between the two bus circuits which, when strung together, form a message. Each module uses arbitration to sort the message priority if two competing messages are attempting to be broadcast at the same time. Corruption of a single bit within a message will corrupt the entire message. Each message contains a Cyclic Redundancy Check (CRC) which specifies the message size exactly. If the message detected conflicts with the CRC the ECU receiving it will determine the message to be an error and consider that communication has not been possible. Diagnosis of this condition using a lab scope may reveal activity that appears to be Bus data messages even if no actual communication is possible. Communication problems that affect the whole bus, as a result of opens and terminal push outs are more likely to occur on data busses that operate at a high speed than a data bus that operates at a lower speed.

When an open circuit or terminal push out occurs one or more modules can become isolated from the remainder of the bus. The isolated module will attempt to communicate, but will not be able to receive messages or determine arbitration from other modules. Each time the isolated module attempts to communicate it alters the bus voltage on the intact bus circuit. Without functioning arbitration the isolated module alters the bus voltage while other bus messages are being sent thereby corrupting the messages on the remainder of the bus.

The CAN bus modules are connected in parallel to the two-wire bus using a twisted pair, where the wires are

wrapped around each other to provide shielding from unwanted electromagnetic induction, thus preventing interference with the relatively low voltage signals being carried through them. While the CAN bus is operating (active), one of the bus wires will carry a higher voltage and is referred to as the CAN High or CAN bus (+) wire, while the other bus wire will carry a lower voltage and is referred to as the CAN Low or CAN bus (-) wire.

For additional information on the communication network and star connector locations, refer to **COMMUNICATION, DESCRIPTION** .

WHEN MONITORED

With the ignition on for at least five seconds.

Battery voltage between 10 and 16 volts.

Body Control Module (BCM) is configured correctly.

SET CONDITION

Bus messages not received from the Park Brake Module for approximately two to five seconds.

POSSIBLE CAUSES

Possible Causes
CAN C BUS (+) CIRCUIT SHORTED TO VOLTAGE
CAN C BUS (-) CIRCUIT SHORTED TO GROUND
DTCS RELATED TO BATTERY VOLTAGE, IGNITION, OR VIN MESSAGES
BCM NOT CONFIGURED CORRECTLY
PARK BRAKE CONTROL MODULE POWER AND GROUND
PARK BRAKE CONTROL MODULE
MODULE THAT SET THIS DTC

DIAGNOSTIC TEST

1. **VERIFY DTC IS ACTIVE**

NOTE: Make sure the battery voltage is between 10 and 16 volts before proceeding.

1. With the scan tool, read active DTCs.

   Is this DTC active?

   Yes

- Go To 2

No

- Refer to **DIAGNOSIS AND TESTING** and perform the STORED LOST COMMUNICATION DTCS diagnostic procedure.

2. **CHECK FOR ANY OF THE FOLLOWING ACTIVE DTCS**
   1. With the scan tool, read all active DTCs from all modules.

      NOTE: Check for BCM configuration, CAN C hardware electrical, VIN Missing/Mismatch, battery or ignition related DTCs.

      Does the scan tool display any active DTCs to the conditions listed above?

      Yes

      - Go to the **DTC INDEX** and perform the appropriate diagnostic procedure.

      No

      - Go To 3

3. **VERIFY THE PARK BRAKE CONTROL MODULE IS ACTIVE ON THE BUS**
   1. Turn the ignition on.
   2. With the scan tool, verify the Park Brake Control Module is active on the bus.

      Is the Park Brake Control Module active on the bus?

      Yes

      - Go To 4

      No

      - Refer to **DIAGNOSIS AND TESTING** and perform the NO RESPONSE FROM PARK ASSIST MODULE diagnostic procedure.

4. **CHECK FOR ADDITIONAL COMMUNICATION RELATED DTCS**
   1. With the scan tool, read all the DTCs.

      Is there more than one module with active DTCs "Logged Against" the Park Brake Control Module?

      Yes

      - Replace/update the Park Brake Control Module in accordance with the Service Information.

- Perform the BODY VERIFICATION TEST. Refer to **STANDARD PROCEDURE** .

No

- Go To 5

5. **CLEAR DTC IN MODULE SETTING FAULT**
   1. With the scan tool, select the module setting the DTC against the Park Brake Control Module.
   2. Clear active DTCs.

      Is this DTC still active?

      Yes

      - Replace/update the module that set this DTC in accordance with the Service Information.
      - Perform the appropriate verification test for the module being replaced. If there is no verification test for the associated module perform the BODY VERIFICATION TEST. Refer to **STANDARD PROCEDURE** .

      No

      - Go To 6

6. **CYCLE IGNITION**
   1. Cycle the ignition from RUN to OFF three times ending with the key in the RUN position.

      Does this DTC become active?

      Yes

      - Go To 7

      No

      - The condition is not present at this time. Using the wiring diagram/schematic as a guide, inspect the wiring for chafed, pierced, pinched, and partially broken wires and the wiring harness connectors for broken, bent, pushed out, and corroded terminals.
      - Perform the appropriate verification test for the module. If there is no verification test for the associated module perform the BODY VERIFICATION TEST. Refer to **STANDARD PROCEDURE** .

7. **CHECK FOR ADDITIONAL LOST COMMUNICATION FAULTS**
   1. With the scan tool, view the modules.

      Does the BCM and other CAN C BUS modules show Lost Communication with the remaining CAN C BUS modules?

Yes

- Go To 8

No

- Replace/update the module that set this DTC in accordance with the Service Information.
- Perform the appropriate verification test for the module being replaced. If there is no verification test for the associated module perform the BODY VERIFICATION TEST. Refer to **STANDARD PROCEDURE** .

8. **CHECK THE CAN C BUS (+) CIRCUIT FOR A SHORT TO VOLTAGE**

Fig. 61: Checking CAN C BUS (+) Circuit For A Short To Voltage
Courtesy of CHRYSLER GROUP, LLC

1. Measure the voltage between the (D57) CAN C Bus (+) circuit and ground.

   Is the voltage above 5.0 volts?

   Yes

   - Repair the short to voltage in the CAN C Bus (+) circuit. The short to voltage is present in one of the CAN C Bus circuits. Use the Star Connectors to isolate portions of the CAN C

Bus in order to locate the concern.

- Perform the BODY VERIFICATION TEST. Refer to **STANDARD PROCEDURE** .

No

- Go To 9

9. **CHECK THE CAN C BUS (-) CIRCUIT FOR A SHORT TO GROUND**

Fig. 62: Checking CAN C BUS (-) Circuit For A Short To Ground
Courtesy of CHRYSLER GROUP, LLC

1. Turn the ignition off.
2. Measure the resistance between ground and the (D58) CAN C Bus (-) circuit.

   Is the resistance below 10k Ohms?

Yes

- Repair the short to ground in the CAN C Bus (-) circuit. The short to ground is present in one of the CAN C Bus circuits. Use the Star Connectors to isolate portions of the CAN C Bus in order to locate the concern.
- Perform the BODY VERIFICATION TEST. Refer to **STANDARD PROCEDURE** .

No

- Replace/update the module that set this DTC in accordance with the Service Information.
- Perform the appropriate verification test for the module being replaced. If there is no verification test for the associated module perform the BODY VERIFICATION TEST. Refer to **STANDARD PROCEDURE** .

U0131-87-LOST COMMUNICATION WITH ELECTRIC POWER STEERING CONTROL MODULE - MISSING MESSAGE

For a complete wiring diagram, **refer to appropriate SYSTEM WIRING DIAGRAMS article** .

THEORY OF OPERATION

The primary communication network between electronic control modules is the Controller Area Network (CAN) data bus system. The Controller Area Network (CAN) data bus allows all electronic modules connected to the bus to share information with each other. Regardless of whether a message originates from a module on the higher speed CAN C (500K) Bus or on the lower speed bus, CAN Interior High Speed (IHS) (125K) Bus, the message structure and layout is similar, which allows the Body Control Module (BCM) to process and transfer messages between the CAN buses. The BCM stores Diagnostic Trouble Codes (DTCs) for certain bus network faults on the CAN C (500K) Bus and CAN IHS (125K) Bus.

All modules transmit and receive messages over one of these buses. Data exchange between the modules is achieved by serial transmission of encoded data messages (a form of transmission in which data bits are sent sequentially, one at a time, over a single line). Each module can both send and receive serial data simultaneously. Each data bit of a CAN Bus message is carried over the bus as a voltage differential between the two bus circuits which, when strung together, form a message. Each module uses arbitration to sort the message priority if two competing messages are attempting to be broadcast at the same time. Corruption of a single bit within a message will corrupt the entire message. Each message contains a Cyclic Redundancy Check (CRC) which specifies the message size exactly. If the message detected conflicts with the CRC the ECU receiving it will determine the message to be an error and consider that communication has not been possible. Diagnosis of this condition using a lab scope may reveal activity that appears to be Bus data messages even if no actual communication is possible. Communication problems that affect the whole bus, as a result of opens and terminal push outs are more likely to occur on data busses that operate at a high speed than a data bus that operates at a lower speed.

When an open circuit or terminal push out occurs one or more modules can become isolated from the remainder of the bus. The isolated module will attempt to communicate, but will not be able to receive messages or determine arbitration from other modules. Each time the isolated module attempts to communicate it alters the bus voltage on the intact bus circuit. Without functioning arbitration the isolated module alters the bus voltage

while other bus messages are being sent thereby corrupting the messages on the remainder of the bus.

The CAN bus modules are connected in parallel to the two-wire bus using a twisted pair, where the wires are wrapped around each other to provide shielding from unwanted electromagnetic induction, thus preventing interference with the relatively low voltage signals being carried through them. While the CAN bus is operating (active), one of the bus wires will carry a higher voltage and is referred to as the CAN High or CAN bus (+) wire, while the other bus wire will carry a lower voltage and is referred to as the CAN Low or CAN bus (-) wire.

For additional information on the communication network and star connector locations, refer to **COMMUNICATION, DESCRIPTION** .

WHEN MONITORED

With the ignition on for at least five seconds.

Battery voltage between 10 and 16 volts.

Body Control Module (BCM) is configured correctly.

SET CONDITION

Bus messages not received from the Electric Power Steering Module (EPS) for approximately two to five seconds.

POSSIBLE CAUSES

Possible Causes
CAN C BUS (+) CIRCUIT SHORTED TO VOLTAGE
CAN C BUS (-) CIRCUIT SHORTED TO GROUND
DTCS RELATED TO BATTERY VOLTAGE, IGNITION, OR VIN MESSAGES
BCM NOT CONFIGURED CORRECTLY
EPS POWER AND GROUND
ELECTRIC POWER STEERING MODULE (EPS)
MODULE THAT SET THIS DTC

DIAGNOSTIC TEST

1. **VERIFY DTC IS ACTIVE**

NOTE: Make sure the battery voltage is between 10 and 16 volts before proceeding.

1. With the scan tool, read active DTCs.

Is this DTC active?

Yes

- Go To 2

No

- Refer to **DIAGNOSIS AND TESTING** and perform the STORED LOST COMMUNICATION DTCS diagnostic procedure.

2. **CHECK FOR ANY OF THE FOLLOWING ACTIVE DTCS**
   1. With the scan tool, read all active DTCs from all modules.

      NOTE: Check for BCM configuration, CAN C hardware electrical, VIN Missing/Mismatch, battery or ignition related DTCs.

      Does the scan tool display any active DTCs to the conditions listed above?

      Yes

      - Refer to **DTC INDEX** and perform the appropriate diagnostic procedure.

      No

      - Go To 3

3. **VERIFY THE EPS IS ACTIVE ON THE BUS**
   1. Turn the ignition on.
   2. With the scan tool, verify the EPS is active on the bus.

      Is the EPS active on the bus?

      Yes

      - Go To 4

      No

      - Refer to **DIAGNOSIS AND TESTING** and perform the NO RESPONSE FROM EPS (ELECTRIC POWER STEERING MODULE) diagnostic procedure.

4. **CHECK FOR ADDITIONAL COMMUNICATION RELATED DTCS**
   1. With the scan tool, read all the DTCs.

      Is there more than one module with active DTCs "Logged Against" the EPS?

Yes

- Replace/update the EPS in accordance with the Service Information.
- Perform the appropriate verification test for the module being replaced. If there is no verification test for the associated module perform the BODY VERIFICATION TEST. Refer to **STANDARD PROCEDURE** .

No

- Go To 5

5. **CLEAR DTC IN MODULE SETTING FAULT**
   1. With the scan tool, select the module setting the DTC against the EPS.
   2. Clear active DTCs.

   Is this DTC still active?

   Yes

   - Replace/update the module that set this DTC in accordance with the Service Information.
   - Perform the appropriate verification test for the module being replaced. If there is no verification test for the associated module perform the BODY VERIFICATION TEST. Refer to **STANDARD PROCEDURE** .

   No

   - Go To 6

6. **CYCLE IGNITION**
   1. Cycle the ignition from RUN to OFF three times ending with the key in the RUN position.

   Does this DTC become active?

   Yes

   - Go To 7

   No

   - The condition is not present at this time. Using the wiring diagram/schematic as a guide, inspect the wiring for chafed, pierced, pinched and partially broken wires and the wiring harness connectors for broken, bent, pushed out and corroded terminals.
   - Perform the appropriate verification test for the module. If there is no verification test for the associated module perform the BODY VERIFICATION TEST. Refer to **STANDARD PROCEDURE** .

7. **CHECK FOR ADDITIONAL LOST COMMUNICATION FAULTS**

1. With the scan tool, view the modules.

   Does the BCM and other CAN C BUS modules show Lost Communication with the remaining CAN C BUS modules?

   Yes

   - Go To 8

   No

   - Replace/update the module that set this DTC in accordance with the Service Information.
   - Perform the appropriate verification test for the module being replaced. If there is no verification test for the associated module perform the BODY VERIFICATION TEST. Refer to **STANDARD PROCEDURE** .

8. **CHECK THE CAN C BUS (+) CIRCUIT FOR A SHORT TO VOLTAGE**

Fig. 63: Checking CAN C BUS (+) Circuit For A Short To Voltage
Courtesy of CHRYSLER GROUP, LLC

1. Measure the voltage between the (D57) CAN C Bus (+) circuit and ground.

   Is the voltage above 5.0 volts?

Yes

- Repair the short to voltage in the CAN C Bus (+) circuit. The short to voltage is present in one of the CAN C Bus circuits. Use the Star Connectors to isolate portions of the CAN C Bus in order to locate the concern.
- Perform the BODY VERIFICATION TEST. Refer to **STANDARD PROCEDURE** .

No

- Go To 9

9. **CHECK THE CAN C BUS (-) CIRCUIT FOR A SHORT TO GROUND**

Fig. 64: Checking CAN C BUS (-) Circuit For A Short To Ground
Courtesy of CHRYSLER GROUP, LLC

1. Turn the ignition off.

2. Measure the resistance between ground and the (D58) CAN C Bus (-) circuit.

   Is the resistance below 10k Ohms?

   Yes

   - Repair the short to ground in the CAN C Bus (-) circuit. The short to ground is present in one of the CAN C Bus circuits. Use the Star Connectors to isolate portions of the CAN C Bus in order to locate the concern.
   - Perform the BODY VERIFICATION TEST. Refer to **STANDARD PROCEDURE** .

   No

   - Replace/update the module that set this DTC in accordance with the Service Information.
   - Perform the appropriate verification test for the module being replaced. If there is no verification test for the associated module perform the BODY VERIFICATION TEST. Refer to **STANDARD PROCEDURE** .

U0151-87-LOST COMMUNICATION WITH OCCUPANT RESTRAINT CONTROLLER (ORC) - MISSING MESSAGE

For a complete wiring diagram, **refer to appropriate SYSTEM WIRING DIAGRAMS article** .

THEORY OF OPERATION

The primary communication network between electronic control modules is the Controller Area Network (CAN) data bus system. The Controller Area Network (CAN) data bus allows all electronic modules connected to the bus to share information with each other. Regardless of whether a message originates from a module on the higher speed CAN C (500K) Bus or on the lower speed bus, CAN Interior High Speed (IHS) (125K) Bus, the message structure and layout is similar, which allows the Body Control Module (BCM) to process and transfer messages between the CAN buses. The BCM stores Diagnostic Trouble Codes (DTCs) for certain bus network faults on the CAN C (500K) Bus and CAN IHS (125K) Bus.

All modules transmit and receive messages over one of these buses. Data exchange between the modules is achieved by serial transmission of encoded data messages (a form of transmission in which data bits are sent sequentially, one at a time, over a single line). Each module can both send and receive serial data simultaneously. Each data bit of a CAN Bus message is carried over the bus as a voltage differential between the two bus circuits which, when strung together, form a message. Each module uses arbitration to sort the message priority if two competing messages are attempting to be broadcast at the same time. Corruption of a single bit within a message will corrupt the entire message. Each message contains a Cyclic Redundancy Check (CRC) which specifies the message size exactly. If the message detected conflicts with the CRC the ECU receiving it will determine the message to be an error and consider that communication has not been possible. Diagnosis of this condition using a lab scope may reveal activity that appears to be Bus data messages even if no actual communication is possible. Communication problems that affect the whole bus, as a result of opens and terminal push outs are more likely to occur on data busses that operate at a high speed than a data bus that operates at a lower speed.

When an open circuit or terminal push out occurs one or more modules can become isolated from the remainder of the bus. The isolated module will attempt to communicate, but will not be able to receive messages or determine arbitration from other modules. Each time the isolated module attempts to communicate it alters the bus voltage on the intact bus circuit. Without functioning arbitration the isolated module alters the bus voltage while other bus messages are being sent thereby corrupting the messages on the remainder of the bus.

The CAN bus modules are connected in parallel to the two-wire bus using a twisted pair, where the wires are wrapped around each other to provide shielding from unwanted electromagnetic induction, thus preventing interference with the relatively low voltage signals being carried through them. While the CAN bus is operating (active), one of the bus wires will carry a higher voltage and is referred to as the CAN High or CAN bus (+) wire, while the other bus wire will carry a lower voltage and is referred to as the CAN Low or CAN bus (-) wire.

For additional information on the communication network and star connector locations, refer to **COMMUNICATION, DESCRIPTION** .

WHEN MONITORED

With the ignition on for at least five seconds.

Battery voltage between 10 and 16 volts.

Body Control Module (BCM) is configured correctly.

SET CONDITION

Bus messages not received from the Occupant Restraint Controller (ORC) for approximately two to five seconds.

POSSIBLE CAUSES

Possible Causes
CAN C BUS (+) CIRCUIT SHORTED TO VOLTAGE
CAN C BUS (-) CIRCUIT SHORTED TO GROUND
DTCS RELATED TO BATTERY VOLTAGE, IGNITION, OR VIN MESSAGES
BCM NOT CONFIGURED CORRECTLY
ORC POWER AND GROUND
OCCUPANT RESTRAINT CONTROLLER (ORC)
MODULE THAT SET THIS DTC

DIAGNOSTIC TEST

1. **VERIFY DTC IS ACTIVE**

NOTE: Make sure the battery voltage is between 10 and 16 volts before

proceeding.

1. With the scan tool, read active DTCs.

   Is this DTC active?

   Yes

   - Go To 2

   No

   - Refer to **DIAGNOSIS AND TESTING** and perform the STORED LOST COMMUNICATION DTCS diagnostic procedure.

2. **CHECK FOR ANY OF THE FOLLOWING ACTIVE DTCS**
   1. With the scan tool, read all active DTCs from all modules.

      NOTE: Check for BCM configuration, CAN C hardware electrical, VIN Missing/Mismatch, battery or ignition related DTCs.

      Does the scan tool display any active DTCs to the conditions listed above?

      Yes

      - Go to the **DTC INDEX** and perform the appropriate diagnostic procedure.

      No

      - Go To 3

3. **VERIFY THE ORC IS ACTIVE ON THE BUS**
   1. Turn the ignition on.
   2. With the scan tool, verify the ORC is active on the bus.

      Is the ORC active on the bus?

      Yes

      - Go To 4

      No

      - Refer to **DIAGNOSIS AND TESTING** and perform the NO RESPONSE FROM ORC diagnostic procedure.

4. **CHECK FOR ADDITIONAL COMMUNICATION RELATED DTCS**

1. With the scan tool, read all the DTCs.

   Is there more than one module with active DTCs "Logged Against" the ORC?

   Yes

   - Replace/update the ORC in accordance with the Service Information. Refer to **MODULE, OCCUPANT RESTRAINT CONTROLLER, REMOVAL** .
   - Perform the RESTRAINTS SYSTEM VERIFICATION TEST. Refer to **STANDARD PROCEDURE** .

   No

   - Go To 5

5. **CLEAR DTC IN MODULE SETTING FAULT**
   1. With the scan tool, select the module setting the DTC against the ORC.
   2. Clear active DTCs.

      Is this DTC still active?

      Yes

      - Replace/update the module that set this DTC in accordance with the Service Information.
      - Perform the appropriate verification test for the module being replaced. If there is no verification test for the associated module perform the BODY VERIFICATION TEST. Refer to **STANDARD PROCEDURE** .

      No

      - Go To 6

6. **CYCLE IGNITION**
   1. Cycle the ignition from RUN to OFF three times ending with the key in the RUN position.

      Does this DTC become active?

      Yes

      - Go To 7

      No

      - The condition is not present at this time. Using the wiring diagram/schematic as a guide, inspect the wiring for chafed, pierced, pinched, and partially broken wires and the wiring harness connectors for broken, bent, pushed out, and corroded terminals.

- Perform the appropriate verification test for the module. If there is no verification test for the associated module perform the BODY VERIFICATION TEST. Refer to **STANDARD PROCEDURE** .

7. **CHECK FOR ADDITIONAL LOST COMMUNICATION FAULTS**
   1. With the scan tool, view the modules.

      Does the BCM and other CAN C BUS modules show Lost Communication with the remaining CAN C BUS modules?

      Yes

      - Go To 8

      No

      - Replace/update the module that set this DTC in accordance with the Service Information.
      - Perform the appropriate verification test for the module being replaced. If there is no verification test for the associated module perform the BODY VERIFICATION TEST. Refer to **STANDARD PROCEDURE** .
8. **CHECK THE CAN C BUS (+) CIRCUIT FOR A SHORT TO VOLTAGE**

Fig. 65: Checking CAN C BUS (+) Circuit For A Short To Voltage

Courtesy of CHRYSLER GROUP, LLC

1. Measure the voltage between the (D57) CAN C Bus (+) circuit and ground.

   Is the voltage above 5.0 volts?

   Yes

   - Repair the short to voltage in the CAN C Bus (+) circuit. The short to voltage is present in one of the CAN C Bus circuits. Use the Star Connectors to isolate portions of the CAN C Bus in order to locate the concern.
   - Perform the BODY VERIFICATION TEST. Refer to **STANDARD PROCEDURE** .

   No

   - Go To 9

9. **CHECK THE CAN C BUS (-) CIRCUIT FOR A SHORT TO GROUND**

Fig. 66: Checking CAN C BUS (-) Circuit For A Short To Ground
Courtesy of CHRYSLER GROUP, LLC

1. Turn the ignition off.
2. Measure the resistance between ground and the (D58) CAN C Bus (-) circuit.

   Is the resistance below 10k Ohms?

   Yes

   - Repair the short to ground in the CAN C Bus (-) circuit. The short to ground is present in one of the CAN C Bus circuits. Use the Star Connectors to isolate portions of the CAN C Bus in order to locate the concern.
   - Perform the BODY VERIFICATION TEST. Refer to **STANDARD PROCEDURE** .

   No

- Replace/update the module that set this DTC in accordance with the Service Information.
- Perform the appropriate verification test for the module being replaced. If there is no verification test for the associated module perform the BODY VERIFICATION TEST. Refer to **STANDARD PROCEDURE** .

U0154-87-LOST COMMUNICATION WITH OCCUPANT CLASSIFICATION MODULE - MISSING MESSAGE

For a complete wiring diagram, **refer to appropriate SYSTEM WIRING DIAGRAMS article** .

THEORY OF OPERATION

The primary communication network between electronic control modules is the Controller Area Network (CAN) data bus system. The Controller Area Network (CAN) data bus allows all electronic modules connected to the bus to share information with each other. Regardless of whether a message originates from a module on the higher speed CAN C (500K) Bus or on the lower speed bus, CAN Interior High Speed (IHS) (125K) Bus, the message structure and layout is similar, which allows the Body Control Module (BCM) to process and transfer messages between the CAN buses. The BCM stores Diagnostic Trouble Codes (DTCs) for certain bus network faults on the CAN C (500K) Bus and CAN IHS (125K) Bus.

All modules transmit and receive messages over one of these buses. Data exchange between the modules is achieved by serial transmission of encoded data messages (a form of transmission in which data bits are sent sequentially, one at a time, over a single line). Each module can both send and receive serial data simultaneously. Each data bit of a CAN Bus message is carried over the bus as a voltage differential between the two bus circuits which, when strung together, form a message. Each module uses arbitration to sort the message priority if two competing messages are attempting to be broadcast at the same time. Corruption of a single bit within a message will corrupt the entire message. Each message contains a Cyclic Redundancy Check (CRC) which specifies the message size exactly. If the message detected conflicts with the CRC the ECU receiving it will determine the message to be an error and consider that communication has not been possible. Diagnosis of this condition using a lab scope may reveal activity that appears to be Bus data messages even if no actual communication is possible. Communication problems that affect the whole bus, as a result of opens and terminal push outs are more likely to occur on data busses that operate at a high speed than a data bus that operates at a lower speed.

When an open circuit or terminal push out occurs one or more modules can become isolated from the remainder of the bus. The isolated module will attempt to communicate, but will not be able to receive messages or determine arbitration from other modules. Each time the isolated module attempts to communicate it alters the bus voltage on the intact bus circuit. Without functioning arbitration the isolated module alters the bus voltage while other bus messages are being sent thereby corrupting the messages on the remainder of the bus.

The CAN bus modules are connected in parallel to the two-wire bus using a twisted pair, where the wires are wrapped around each other to provide shielding from unwanted electromagnetic induction, thus preventing interference with the relatively low voltage signals being carried through them. While the CAN bus is operating (active), one of the bus wires will carry a higher voltage and is referred to as the CAN High or CAN bus (+) wire, while the other bus wire will carry a lower voltage and is referred to as the CAN Low or CAN bus (-) wire.

For additional information on the communication network and star connector locations, refer to **COMMUNICATION, DESCRIPTION** .

WHEN MONITORED

With the ignition on for at least five seconds.

Battery voltage between 10 and 16 volts.

Body Control Module (BCM) is configured correctly.

SET CONDITION

Bus messages not received from the Occupant Classification Module (OCM) for approximately two to five seconds.

POSSIBLE CAUSES

Possible Causes
CAN C BUS (+) CIRCUIT SHORTED TO VOLTAGE
CAN C BUS (-) CIRCUIT SHORTED TO GROUND
DTCS RELATED TO BATTERY VOLTAGE, IGNITION, OR VIN MESSAGES
BCM NOT CONFIGURED CORRECTLY
OCM POWER AND GROUND
OCCUPANT CLASSIFICATION MODULE (OCM)
MODULE THAT SET THIS DTC

DIAGNOSTIC TEST

1. **VERIFY DTC IS ACTIVE**

   NOTE: Make sure the battery voltage is between 10 and 16 volts before proceeding.

   1. With the scan tool, read active DTCs.

      Is this DTC active?

      Yes

      - Go To 2

      No

      - Refer to **DIAGNOSIS AND TESTING** and perform the STORED LOST

COMMUNICATION DTCS diagnostic procedure.

2. **CHECK FOR ANY OF THE FOLLOWING ACTIVE DTCS**
   1. With the scan tool, read all active DTCs from all modules.

      NOTE: Check for BCM configuration, CAN C hardware electrical, VIN Missing/Mismatch, battery or ignition related DTCs.

      Does the scan tool display any active DTCs to the conditions listed above?

      Yes

      - Go to the **DTC INDEX** and perform the appropriate diagnostic procedure.

      No

      - Go To 3
3. **VERIFY THE OCM IS ACTIVE ON THE BUS**
   1. Turn the ignition on.
   2. With the scan tool, verify the OCM is active on the bus.

      Is the OCM active on the bus?

      Yes

      - Go To 4

      No

      - Refer to **DIAGNOSIS AND TESTING** and perform the NO RESPONSE FROM OCM (OCCUPANT CLASSIFICATION MODULE) diagnostic procedure.
4. **CHECK FOR ADDITIONAL COMMUNICATION RELATED DTCS**
   1. With the scan tool, read all the DTCs.

      Is there more than one module with active DTCs "Logged Against" the OCM?

      Yes

      - Replace/update the OCM in accordance with the Service Information. Refer to **MODULE, OCCUPANT CLASSIFICATION, REMOVAL** .
      - Perform the appropriate verification test for the module being replaced. If there is no verification test for the associated module perform the BODY VERIFICATION TEST. Refer to **STANDARD PROCEDURE** .

      No

- Go To 5

5. **CLEAR DTC IN MODULE SETTING FAULT**
   1. With the scan tool, select the module setting the DTC against the OCM.
   2. Clear active DTCs.

      Is this DTC still active?

      Yes

      - Replace/update the module that set this DTC in accordance with the Service Information.
      - Perform the appropriate verification test for the module being replaced. If there is no verification test for the associated module perform the BODY VERIFICATION TEST. Refer to **STANDARD PROCEDURE** .

      No

      - Go To 6
6. **CYCLE IGNITION**
   1. Cycle the ignition from RUN to OFF three times ending with the key in the RUN position.

      Does this DTC become active?

      Yes

      - Go To 7

      No

      - The condition is not present at this time. Using the wiring diagram/schematic as a guide, inspect the wiring for chafed, pierced, pinched and partially broken wires and the wiring harness connectors for broken, bent, pushed out and corroded terminals.
      - Perform the appropriate verification test for the module. If there is no verification test for the associated module perform the BODY VERIFICATION TEST. Refer to **STANDARD PROCEDURE** .
7. **CHECK FOR ADDITIONAL LOST COMMUNICATION FAULTS**
   1. With the scan tool, view the modules.

      Does the BCM and other CAN C BUS modules show Lost Communication with the remaining CAN C BUS modules?

      Yes

      - Go To 8

No

- Replace/update the module that set this DTC in accordance with the Service Information.
- Perform the appropriate verification test for the module being replaced. If there is no verification test for the associated module perform the BODY VERIFICATION TEST. Refer to **STANDARD PROCEDURE** .

8. **CHECK THE CAN C BUS (+) CIRCUIT FOR A SHORT TO VOLTAGE**

Fig. 67: Checking CAN C BUS (+) Circuit For A Short To Voltage
Courtesy of CHRYSLER GROUP, LLC

1. Measure the voltage between the (D57) CAN C Bus (+) circuit and ground.

   Is the voltage above 5.0 volts?

   Yes

   - Repair the short to voltage in the CAN C Bus (+) circuit. The short to voltage is present in one of the CAN C Bus circuits. Use the Star Connectors to isolate portions of the CAN C Bus in order to locate the concern.
   - Perform the BODY VERIFICATION TEST. Refer to **STANDARD PROCEDURE** .

   No

- Go To 9

9. **CHECK THE CAN C BUS (-) CIRCUIT FOR A SHORT TO GROUND**

Fig. 68: Checking CAN C BUS (-) Circuit For A Short To Ground
Courtesy of CHRYSLER GROUP, LLC

1. Turn the ignition off.
2. Measure the resistance between ground and the (D58) CAN C Bus (-) circuit.

   Is the resistance below 10k Ohms?

   Yes

   - Repair the short to ground in the CAN C Bus (-) circuit. The short to ground is present in one of the CAN C Bus circuits. Use the Star Connectors to isolate portions of the CAN C Bus in order to locate the concern.

- Perform the BODY VERIFICATION TEST. Refer to **STANDARD PROCEDURE** .

No

- Replace/update the module that set this DTC in accordance with the Service Information.
- Perform the appropriate verification test for the module being replaced. If there is no verification test for the associated module perform the BODY VERIFICATION TEST. Refer to **STANDARD PROCEDURE** .

U0155-87-LOST COMMUNICATION WITH CLUSTER/CCN - MISSING MESSAGE

For a complete wiring diagram, **refer to appropriate SYSTEM WIRING DIAGRAMS article** .

THEORY OF OPERATION

The primary communication network between electronic control modules is the Controller Area Network (CAN) data bus system. The Controller Area Network (CAN) data bus allows all electronic modules connected to the bus to share information with each other. Regardless of whether a message originates from a module on the higher speed CAN C (500K) Bus or on the lower speed bus, CAN Interior High Speed (IHS) (125K) Bus, the message structure and layout is similar, which allows the Body Control Module (BCM) to process and transfer messages between the CAN buses. The BCM stores Diagnostic Trouble Codes (DTCs) for certain bus network faults on the CAN C (500K) Bus and CAN IHS (125K) Bus.

All modules transmit and receive messages over one of these buses. Data exchange between the modules is achieved by serial transmission of encoded data messages (a form of transmission in which data bits are sent sequentially, one at a time, over a single line). Each module can both send and receive serial data simultaneously. Each data bit of a CAN Bus message is carried over the bus as a voltage differential between the two bus circuits which, when strung together, form a message. Each module uses arbitration to sort the message priority if two competing messages are attempting to be broadcast at the same time. Corruption of a single bit within a message will corrupt the entire message. Each message contains a Cyclic Redundancy Check (CRC) which specifies the message size exactly. If the message detected conflicts with the CRC the ECU receiving it will determine the message to be an error and consider that communication has not been possible. Diagnosis of this condition using a lab scope may reveal activity that appears to be Bus data messages even if no actual communication is possible. Communication problems that affect the whole bus, as a result of opens and terminal push outs are more likely to occur on data busses that operate at a high speed than a data bus that operates at a lower speed.

When an open circuit or terminal push out occurs one or more modules can become isolated from the remainder of the bus. The isolated module will attempt to communicate, but will not be able to receive messages or determine arbitration from other modules. Each time the isolated module attempts to communicate it alters the bus voltage on the intact bus circuit. Without functioning arbitration the isolated module alters the bus voltage while other bus messages are being sent thereby corrupting the messages on the remainder of the bus.

The CAN bus modules are connected in parallel to the two-wire bus using a twisted pair, where the wires are wrapped around each other to provide shielding from unwanted electromagnetic induction, thus preventing interference with the relatively low voltage signals being carried through them. While the CAN bus is operating (active), one of the bus wires will carry a higher voltage and is referred to as the CAN High or CAN bus (+)

wire, while the other bus wire will carry a lower voltage and is referred to as the CAN Low or CAN bus (-) wire.

For additional information on the communication network and star connector locations, refer to **COMMUNICATION, DESCRIPTION** .

WHEN MONITORED

With the ignition on for at least five seconds.

Battery voltage between 10 and 16 volts.

Body Control Module (BCM) is configured correctly.

SET CONDITION

Bus messages not received from the Instrument Panel Cluster (IPC)/Instrument Cluster (IC) for approximately two to five seconds.

POSSIBLE CAUSES

Possible Causes
CAN C BUS (+) CIRCUIT SHORTED TO VOLTAGE
CAN C BUS (-) CIRCUIT SHORTED TO GROUND
DTCS RELATED TO BATTERY VOLTAGE, IGNITION, OR VIN MESSAGES
BCM NOT CONFIGURED CORRECTLY
IC POWER AND GROUND
INSTRUMENT CLUSTER (IC)
MODULE THAT SET THE DTC

DIAGNOSTIC TEST

1. **VERIFY DTC IS ACTIVE**

   NOTE: Make sure the battery voltage is between 10 and 16 volts before proceeding.

   1. With the scan tool, read active DTCs.

      Is this DTC active?

      Yes

      - Go To 2

No

- Refer to **DIAGNOSIS AND TESTING** and perform the STORED LOST COMMUNICATION DTCS diagnostic procedure.

2. **CHECK FOR ANY OF THE FOLLOWING ACTIVE DTCS**
   1. With the scan tool, read all active DTCs from all modules.

      NOTE: Check for BCM configuration, CAN C hardware electrical, VIN Missing/Mismatch, battery or ignition related DTCs.

      Does the scan tool display any active DTCs to the conditions listed above?

      Yes

      - Go to the **DTC INDEX** and perform the appropriate diagnostic procedure.

      No

      - Go To 3

3. **VERIFY THE IPC IS ACTIVE ON THE BUS**
   1. Turn the ignition on.
   2. With the scan tool, verify the IPC is active on the bus.

      Is the IPC active on the bus?

      Yes

      - Go To 4

      No

      - Refer to **DIAGNOSIS AND TESTING** and perform the NO RESPONSE FROM IC (INSTRUMENT CLUSTER) diagnostic procedure.

4. **CHECK FOR ADDITIONAL COMMUNICATION RELATED DTCS**
   1. With the scan tool, read all the DTCs.

      Is there more than one module with active DTCs "Logged Against" the IPC?

      Yes

      - Replace/update the Instrument Cluster (IC) in accordance with the Service Information. Refer to **REMOVAL** .
      - Perform the BODY VERIFICATION TEST. Refer to **STANDARD PROCEDURE** .

No

- Go To 5

5. **CLEAR DTC IN MODULE SETTING FAULT**
   1. With the scan tool, select the module setting the DTC against the IPC.
   2. Clear active DTCs.

   Is this DTC still active?

   Yes

   - Replace/update the module that set this DTC in accordance with the Service Information.
   - Perform the appropriate verification test for the module being replaced. If there is no verification test for the associated module perform the BODY VERIFICATION TEST. Refer to **STANDARD PROCEDURE** .

   No

   - Go To 6

6. **CYCLE IGNITION**
   1. Cycle the ignition from RUN to OFF three times ending with the key in the RUN position.

   Does this DTC become active?

   Yes

   - Go To 7

   No

   - The condition is not present at this time. Using the wiring diagrams as a guide, check all related splices and connectors for signs of water intrusion, corrosion, pushed out or bent terminals, and correct pin tension.
   - Perform the appropriate verification test for the module. If there is no verification test for the associated module perform the BODY VERIFICATION TEST. Refer to **STANDARD PROCEDURE** .

7. **CHECK FOR ADDITIONAL LOST COMMUNICATION FAULTS**
   1. With the scan tool, view the modules.

   Does the BCM and other CAN C BUS modules show Lost Communication with the remaining CAN C BUS modules?

   Yes

- Go To 8

No

- Replace/update the module that set this DTC in accordance with the Service Information.
- Perform the appropriate verification test for the module being replaced. If there is no verification test for the associated module perform the BODY VERIFICATION TEST. Refer to **STANDARD PROCEDURE** .

8. **CHECK THE CAN C BUS (+) CIRCUIT FOR A SHORT TO VOLTAGE**

Fig. 69: Checking CAN C BUS (+) Circuit For A Short To Voltage
Courtesy of CHRYSLER GROUP, LLC

1. Measure the voltage between the (D57) CAN C Bus (+) circuit and ground.

   Is the voltage above 5.0 volts?

   Yes

   - Repair the short to voltage in the CAN C Bus (+) circuit. The short to voltage is present in one of the CAN C Bus circuits. Use the Star Connectors to isolate portions of the CAN C Bus in order to locate the concern.
   - Perform the BODY VERIFICATION TEST. Refer to **STANDARD PROCEDURE** .

No

- Go To 9

9. **CHECK THE CAN C BUS (-) CIRCUIT FOR A SHORT TO GROUND**

Fig. 70: Checking CAN C BUS (-) Circuit For A Short To Ground
Courtesy of CHRYSLER GROUP, LLC

1. Turn the ignition off.
2. Measure the resistance between ground and the (D58) CAN C Bus (-) circuit.

   Is the resistance below 10k Ohms?

   Yes

   - Repair the short to ground in the CAN C Bus (-) circuit. The short to ground is present in one

of the CAN C Bus circuits. Use the Star Connectors to isolate portions of the CAN C Bus in order to locate the concern.

- Perform the BODY VERIFICATION TEST. Refer to **STANDARD PROCEDURE** .

No

- Replace/update the module that set this DTC in accordance with the Service Information.
- Perform the appropriate verification test for the module being replaced. If there is no verification test for the associated module perform the BODY VERIFICATION TEST. Refer to **STANDARD PROCEDURE** .

U0159-LOST COMMUNICATION WITH PARKING ASSIST CONTROL MODULE-MISSING MESSAGE

For a complete wiring diagram, **refer to appropriate SYSTEM WIRING DIAGRAMS article** .

THEORY OF OPERATION

The primary communication network between electronic control modules is the Controller Area Network (CAN) data bus system. The Controller Area Network (CAN) data bus allows all electronic modules connected to the bus to share information with each other. Regardless of whether a message originates from a module on the higher speed CAN C (500K) Bus or on the lower speed bus, CAN Interior High Speed (IHS) (125K) Bus, the message structure and layout is similar, which allows the Body Control Module (BCM) to process and transfer messages between the CAN buses. The BCM stores Diagnostic Trouble Codes (DTCs) for certain bus network faults on the CAN C (500K) Bus and CAN IHS (125K) Bus.

All modules transmit and receive messages over one of these buses. Data exchange between the modules is achieved by serial transmission of encoded data messages (a form of transmission in which data bits are sent sequentially, one at a time, over a single line). Each module can both send and receive serial data simultaneously. Each data bit of a CAN Bus message is carried over the bus as a voltage differential between the two bus circuits which, when strung together, form a message. Each module uses arbitration to sort the message priority if two competing messages are attempting to be broadcast at the same time. Corruption of a single bit within a message will corrupt the entire message. Each message contains a Cyclic Redundancy Check (CRC) which specifies the message size exactly. If the message detected conflicts with the CRC the ECU receiving it will determine the message to be an error and consider that communication has not been possible. Diagnosis of this condition using a lab scope may reveal activity that appears to be Bus data messages even if no actual communication is possible. Communication problems that affect the whole bus, as a result of opens and terminal push outs are more likely to occur on data busses that operate at a high speed than a data bus that operates at a lower speed.

When an open circuit or terminal push out occurs one or more modules can become isolated from the remainder of the bus. The isolated module will attempt to communicate, but will not be able to receive messages or determine arbitration from other modules. Each time the isolated module attempts to communicate it alters the bus voltage on the intact bus circuit. Without functioning arbitration the isolated module alters the bus voltage while other bus messages are being sent thereby corrupting the messages on the remainder of the bus.

The CAN bus modules are connected in parallel to the two-wire bus using a twisted pair, where the wires are

wrapped around each other to provide shielding from unwanted electromagnetic induction, thus preventing interference with the relatively low voltage signals being carried through them. While the CAN bus is operating (active), one of the bus wires will carry a higher voltage and is referred to as the CAN High or CAN bus (+) wire, while the other bus wire will carry a lower voltage and is referred to as the CAN Low or CAN bus (-) wire.

For additional information on the communication network and star connector locations, refer to **COMMUNICATION, DESCRIPTION** .

WHEN MONITORED

With the ignition on for at least five seconds.

Battery voltage between 10 and 16 volts.

Body Control Module (BCM) is configured correctly.

SET CONDITION

Bus messages not received from the Park Assist Module (PAM) for approximately two to five seconds.

POSSIBLE CAUSES

Possible Causes
CAN C BUS (+) CIRCUIT SHORTED TO VOLTAGE
CAN C BUS (-) CIRCUIT SHORTED TO GROUND
DTCS RELATED TO BATTERY VOLTAGE, IGNITION, OR VIN MESSAGES
BCM NOT CONFIGURED CORRECTLY
PAM POWER AND GROUND
PARK ASSIST MODULE (PAM)
MODULE THAT SET THIS DTC

DIAGNOSTIC TEST

1. **VERIFY DTC IS ACTIVE**

NOTE: Make sure the battery voltage is between 10 and 16 volts before proceeding.

1. With the scan tool, read active DTCs.

   Is this DTC active?

   Yes

- Go To 2

No

- Refer to **DIAGNOSIS AND TESTING** and perform the STORED LOST COMMUNICATION DTCS diagnostic procedure.

2. **CHECK FOR ANY OF THE FOLLOWING ACTIVE DTCS**
   1. With the scan tool, read all active DTCs from all modules.

      NOTE: Check for BCM configuration, CAN C hardware electrical, VIN Missing/Mismatch, battery or ignition related DTCs.

      Does the scan tool display any active DTCs to the conditions listed above?

      Yes

      - Go to the **DTC INDEX** and perform the appropriate diagnostic procedure.

      No

      - Go To 3

3. **VERIFY THE PAM IS ACTIVE ON THE BUS**
   1. Turn the ignition on.
   2. With the scan tool, verify the PAM is active on the bus.

      Is the PAM active on the bus?

      Yes

      - Go To 4

      No

      - Refer to **DIAGNOSIS AND TESTING** and perform the NO RESPONSE FROM PAM (PARK ASSIST MODULE) diagnostic procedure.

4. **CHECK FOR ADDITIONAL COMMUNICATION RELATED DTCS**
   1. With the scan tool, read all the DTCs.

      Is there more than one module with active DTCs "Logged Against" the PAM?

      Yes

      - Replace/update the PAM in accordance with the Service Information. Refer to **MODULE, PARK ASSIST, REMOVAL** .

- Perform the appropriate verification test for the module being replaced. If there is no verification test for the associated module perform the BODY VERIFICATION TEST. Refer to **STANDARD PROCEDURE** .

No

- Go To 5

5. **CLEAR DTC IN MODULE SETTING FAULT**
   1. With the scan tool, select the module setting the DTC against the PAM.
   2. Clear active DTCs.

   Is this DTC still active?

   Yes

   - Replace/update the module that set this DTC in accordance with the Service Information.
   - Perform the appropriate verification test for the module being replaced. If there is no verification test for the associated module perform the BODY VERIFICATION TEST. Refer to **STANDARD PROCEDURE** .

   No

   - Go To 6

6. **CYCLE IGNITION**
   1. Cycle the ignition from RUN to OFF three times ending with the key in the RUN position.

   Does this DTC become active?

   Yes

   - Go To 7

   No

   - The condition is not present at this time. Using the wiring diagram/schematic as a guide, inspect the wiring for chafed, pierced, pinched and partially broken wires and the wiring harness connectors for broken, bent, pushed out and corroded terminals.
   - Perform the appropriate verification test for the module. If there is no verification test for the associated module perform the BODY VERIFICATION TEST. Refer to **STANDARD PROCEDURE** .

7. **CHECK FOR ADDITIONAL LOST COMMUNICATION FAULTS**
   1. With the scan tool, view the modules.

   Does the BCM and other CAN C BUS modules show Lost Communication with the remaining

CAN C BUS modules?

Yes

- Go To 8

No

- Replace/update the module that set this DTC in accordance with the Service Information.
- Perform the appropriate verification test for the module being replaced. If there is no verification test for the associated module perform the BODY VERIFICATION TEST. Refer to **STANDARD PROCEDURE** .

8. **CHECK THE CAN C BUS (+) CIRCUIT FOR A SHORT TO VOLTAGE**

Fig. 71: Checking CAN C BUS (+) Circuit For A Short To Voltage
Courtesy of CHRYSLER GROUP, LLC

1. Measure the voltage between the (D57) CAN C Bus (+) circuit and ground.

   Is the voltage above 5.0 volts?

   Yes

- Repair the short to voltage in the CAN C Bus (+) circuit. The short to voltage is present in one of the CAN C Bus circuits. Use the Star Connectors to isolate portions of the CAN C Bus in order to locate the concern.
- Perform the BODY VERIFICATION TEST. Refer to **STANDARD PROCEDURE** .

No

- Go To 9

9. **CHECK THE CAN C BUS (-) CIRCUIT FOR A SHORT TO GROUND**

Fig. 72: Checking CAN C BUS (-) Circuit For A Short To Ground
Courtesy of CHRYSLER GROUP, LLC

1. Turn the ignition off.
2. Measure the resistance between ground and the (D58) CAN C Bus (-) circuit.

Is the resistance below 10k Ohms?

Yes

- Repair the short to ground in the CAN C Bus (-) circuit. The short to ground is present in one of the CAN C Bus circuits. Use the Star Connectors to isolate portions of the CAN C Bus in order to locate the concern.
- Perform the BODY VERIFICATION TEST. Refer to **STANDARD PROCEDURE** .

No

- Replace/update the module that set this DTC in accordance with the Service Information.
- Perform the appropriate verification test for the module being replaced. If there is no verification test for the associated module perform the BODY VERIFICATION TEST. Refer to **STANDARD PROCEDURE** .

U0164-87-LOST COMMUNICATION WITH HVAC CONTROL MODULE - MISSING MESSAGE

For a complete wiring diagram, **refer to appropriate SYSTEM WIRING DIAGRAMS article** .

THEORY OF OPERATION

The primary communication network between electronic control modules is the Controller Area Network (CAN) data bus system. The Controller Area Network (CAN) data bus allows all electronic modules connected to the bus to share information with each other. Regardless of whether a message originates from a module on the higher speed CAN C (500K) Bus or on the lower speed bus, CAN Interior High Speed (IHS) (125K) Bus, the message structure and layout is similar, which allows the Body Control Module (BCM) to process and transfer messages between the CAN buses. The BCM stores Diagnostic Trouble Codes (DTCs) for certain bus network faults on the CAN C (500K) Bus and CAN IHS (125K) Bus.

All modules transmit and receive messages over one of these buses. Data exchange between the modules is achieved by serial transmission of encoded data messages (a form of transmission in which data bits are sent sequentially, one at a time, over a single line). Each module can both send and receive serial data simultaneously. Each data bit of a CAN Bus message is carried over the bus as a voltage differential between the two bus circuits which, when strung together, form a message. Each module uses arbitration to sort the message priority if two competing messages are attempting to be broadcast at the same time. Corruption of a single bit within a message will corrupt the entire message. Each message contains a Cyclic Redundancy Check (CRC) which specifies the message size exactly. If the message detected conflicts with the CRC the ECU receiving it will determine the message to be an error and consider that communication has not been possible. Diagnosis of this condition using a lab scope may reveal activity that appears to be Bus data messages even if no actual communication is possible. Communication problems that affect the whole bus, as a result of opens and terminal push outs are more likely to occur on data busses that operate at a high speed than a data bus that operates at a lower speed.

When an open circuit or terminal push out occurs one or more modules can become isolated from the remainder of the bus. The isolated module will attempt to communicate, but will not be able to receive messages or determine arbitration from other modules. Each time the isolated module attempts to communicate it alters the

bus voltage on the intact bus circuit. Without functioning arbitration the isolated module alters the bus voltage while other bus messages are being sent thereby corrupting the messages on the remainder of the bus.

The CAN bus modules are connected in parallel to the two-wire bus using a twisted pair, where the wires are wrapped around each other to provide shielding from unwanted electromagnetic induction, thus preventing interference with the relatively low voltage signals being carried through them. While the CAN bus is operating (active), one of the bus wires will carry a higher voltage and is referred to as the CAN High or CAN bus (+) wire, while the other bus wire will carry a lower voltage and is referred to as the CAN Low or CAN bus (-) wire.

For additional information on the communication network and star connector locations, refer to **COMMUNICATION, DESCRIPTION** .

WHEN MONITORED

With the ignition on for at least five seconds.

Battery voltage between 10 and 16 volts.

Body Control Module (BCM) is configured correctly.

SET CONDITION

Bus messages not received from the HVAC Control Module for approximately two to five seconds.

POSSIBLE CAUSES

Possible Causes
CAN IHS BUS (125K) (+) CIRCUIT SHORTED TO VOLTAGE
CAN IHS BUS (125K) (-) CIRCUIT SHORTED TO GROUND
DTCS RELATED TO BATTERY VOLTAGE, IGNITION, OR VIN MESSAGES
BCM NOT CONFIGURED CORRECTLY
HVAC POWER AND GROUND
HVAC CONTROL MODULE
MODULE THAT SET THE DTC

DIAGNOSTIC TEST

1. **VERIFY DTC IS ACTIVE**

NOTE: Make sure the battery voltage is between 10 and 16 volts before proceeding.

1. With the scan tool, read active DTCs.

Is this DTC active?

Yes

- Go To 2

No

- Refer to **DIAGNOSIS AND TESTING** and perform the STORED LOST COMMUNICATION DTC diagnostic procedure.

2. **CHECK FOR ANY OF THE FOLLOWING ACTIVE DTCS**
   1. With the scan tool, read active DTCs from all modules.

      NOTE: Check for BCM configuration, CAN Interior Bus hardware electrical, VIN Missing/Mismatch, battery or ignition related DTCs.

      Does the scan tool display any active DTCs to the conditions listed above?

      Yes

      - Go to the **DTC INDEX** and perform the appropriate diagnostic procedure.

      No

      - Go To 3

3. **VERIFY THE HVAC IS ACTIVE ON THE BUS**
   1. Turn the ignition on.
   2. With the scan tool, verify the HVAC is active on the bus.

      Is the HVAC active on the bus?

      Yes

      - Go To 4

      No

      - Refer to **DIAGNOSIS AND TESTING** and perform the NO RESPONSE FROM HVAC diagnostic procedure.

4. **CHECK FOR ADDITIONAL COMMUNICATION RELATED DTCS**
   1. With the scan tool, read all the DTCs.

      Is there more than one module with active DTCs "Logged Against" the HVAC?

Yes

- Replace/update the HVAC Module in accordance with the Service Information.
- Perform the HVAC VERIFICATION TEST. Refer to **STANDARD PROCEDURE** .

No

- Go To 5

5. **CLEAR DTC IN MODULE SETTING FAULT**
   1. With the scan tool, select the module setting the DTC against the HVAC.
   2. Clear active DTCs.

   Is this DTC still active?

   Yes

   - Replace/update the module that set this DTC in accordance with the Service Information.
   - Perform the appropriate verification test for the module being replaced. If there is no verification test for the associated module perform the BODY VERIFICATION TEST. Refer to **STANDARD PROCEDURE** .

   No

   - Go To 6

6. **CYCLE IGNITION**
   1. Cycle the ignition from RUN to OFF three times ending with the key in the RUN position.

   Does this DTC become active?

   Yes

   - Go To 7

   No

   - The condition is not present at this time. Using the wiring diagrams as a guide, check all related splices and connectors for signs of water intrusion, corrosion, pushed out or bent terminals, and correct pin tension.
   - Perform the appropriate verification test for the module. If there is no verification test for the associated module perform the BODY VERIFICATION TEST. Refer to **STANDARD PROCEDURE** .

7. **CHECK FOR ADDITIONAL LOST COMMUNICATION FAULTS**
   1. With the scan tool, view the modules.

Does the BCM and other CAN IHS BUS modules show Lost Communication with the remaining CAN IHS BUS modules?

Yes

- Go To 8

No

- Replace/update the module that set this DTC in accordance with the Service Information.
- Perform the appropriate verification test for the module being replaced. If there is no verification test for the associated module perform the BODY VERIFICATION TEST. Refer to **STANDARD PROCEDURE** .

8. **CHECK THE CAN IHS BUS (125K) (+) CIRCUIT FOR A SHORT TO VOLTAGE**

Fig. 73: Checking CAN IHS BUS (125K) (+) Circuit For A Short To Voltage
Courtesy of CHRYSLER GROUP, LLC

1. Measure the voltage between the (D157) CAN IHS Bus (125K) (+) circuit and ground.

Is the voltage above 5.0 volts?

Yes

- Repair the short to voltage in the CAN IHS Bus (125K) (+) circuit. The short to voltage is present in one of the CAN IHS Bus (125K) (+) circuits. Use the Star Connectors to isolate portions of the CAN IHS Bus (125K) (+) in order to locate the concern.
- Perform the BODY VERIFICATION TEST. Refer to **STANDARD PROCEDURE** .

No

- Go To 9

9. **CHECK THE CAN IHS BUS (125K) (-) CIRCUIT FOR A SHORT TO GROUND**

Fig. 74: Checking CAN IHS BUS (125K) (-) Circuit For A Short To Ground
Courtesy of CHRYSLER GROUP, LLC

1. Turn the ignition off.
2. Measure the resistance between ground and the (D158) CAN IHS Bus (125K) (-) circuit.

   Is the resistance below 10k Ohms?

   Yes

   - Repair the short to ground in the CAN IHS Bus (125K) (-) circuit. The short to ground is present in one of the CAN IHS Bus (125K) (-) circuits. Use the Star Connectors to isolate portions of the CAN IHS Bus (125K) (-) in order to locate the concern.
   - Perform the BODY VERIFICATION TEST. Refer to **STANDARD PROCEDURE** .

   No

   - Replace/update the module that set this DTC in accordance with the Service Information.
   - Perform the appropriate verification test for the module being replaced. If there is no verification test for the associated module perform the BODY VERIFICATION TEST. Refer to **STANDARD PROCEDURE** .

U0181-87-LOST COMMUNICATION WITH AUTOMATIC HEADLAMP LEVELING MODULE - MISSING MESSAGE

For a complete wiring diagram, **refer to appropriate SYSTEM WIRING DIAGRAMS article** .

THEORY OF OPERATION

The primary communication network between electronic control modules is the Controller Area Network (CAN) data bus system. The Controller Area Network (CAN) data bus allows all electronic modules connected to the bus to share information with each other. Regardless of whether a message originates from a module on the higher speed CAN C (500K) Bus or on the lower speed bus, CAN Interior High Speed (IHS) (125K) Bus, the message structure and layout is similar, which allows the Body Control Module (BCM) to process and transfer messages between the CAN buses. The BCM stores Diagnostic Trouble Codes (DTCs) for certain bus network faults on the CAN C (500K) Bus and CAN IHS (125K) Bus.

All modules transmit and receive messages over one of these buses. Data exchange between the modules is achieved by serial transmission of encoded data messages (a form of transmission in which data bits are sent sequentially, one at a time, over a single line). Each module can both send and receive serial data simultaneously. Each data bit of a CAN Bus message is carried over the bus as a voltage differential between the two bus circuits which, when strung together, form a message. Each module uses arbitration to sort the message priority if two competing messages are attempting to be broadcast at the same time. Corruption of a single bit within a message will corrupt the entire message. Each message contains a Cyclic Redundancy Check (CRC) which specifies the message size exactly. If the message detected conflicts with the CRC the ECU receiving it will determine the message to be an error and consider that communication has not been possible. Diagnosis of this condition using a lab scope may reveal activity that appears to be Bus data messages even if no actual communication is possible. Communication problems that affect the whole bus, as a result of opens and terminal push outs are more likely to occur on data busses that operate at a high speed than a data bus that

operates at a lower speed.

When an open circuit or terminal push out occurs one or more modules can become isolated from the remainder of the bus. The isolated module will attempt to communicate, but will not be able to receive messages or determine arbitration from other modules. Each time the isolated module attempts to communicate it alters the bus voltage on the intact bus circuit. Without functioning arbitration the isolated module alters the bus voltage while other bus messages are being sent thereby corrupting the messages on the remainder of the bus.

The CAN bus modules are connected in parallel to the two-wire bus using a twisted pair, where the wires are wrapped around each other to provide shielding from unwanted electromagnetic induction, thus preventing interference with the relatively low voltage signals being carried through them. While the CAN bus is operating (active), one of the bus wires will carry a higher voltage and is referred to as the CAN High or CAN bus (+) wire, while the other bus wire will carry a lower voltage and is referred to as the CAN Low or CAN bus (-) wire.

For additional information on the communication network and star connector locations, refer to **COMMUNICATION, DESCRIPTION** .

WHEN MONITORED

With the ignition on for at least five seconds.

Battery voltage between 10 and 16 volts.

Body Control Module (BCM) is configured correctly.

SET CONDITION

Bus messages not received from the Automatic Headlamp Leveling Module (AHLM) for approximately two to five seconds.

POSSIBLE CAUSES

Possible Causes
CAN C BUS (+) CIRCUIT SHORTED TO VOLTAGE
CAN C BUS (-) CIRCUIT SHORTED TO GROUND
DTCS RELATED TO BATTERY VOLTAGE, IGNITION, OR VIN MESSAGES
BCM NOT CONFIGURED CORRECTLY
AUTOMATIC HEADLAMP LEVELING MODULE (AHLM) POWER AND GROUND
AUTOMATIC HEADLAMP LEVELING MODULE (AHLM)
MODULE THAT SET THIS DTC

DIAGNOSTIC TEST

1. **VERIFY DTC IS ACTIVE**

NOTE: Make sure the battery voltage is between 10 and 16 volts before proceeding.

1. With the scan tool, read active DTCs.

   Is this DTC active?

   Yes

   - Go To 2

   No

   - Refer to **DIAGNOSIS AND TESTING** and perform the STORED LOST COMMUNICATION DTCS diagnostic procedure.

2. **CHECK FOR ANY OF THE FOLLOWING ACTIVE DTCS**
   1. With the scan tool, read all active DTCs from all modules.

      NOTE: Check for BCM configuration, CAN C hardware electrical, VIN Missing/Mismatch, battery or ignition related DTCs.

      Does the scan tool display any active DTCs to the conditions listed above?

      Yes

      - Go to the **DTC INDEX** and perform the appropriate diagnostic procedure.

      No

      - Go To 3

3. **VERIFY THE AUTOMATIC HEADLAMP LEVELING MODULE (AHLM) IS ACTIVE ON THE BUS**
   1. Turn the ignition on.
   2. With the scan tool, verify the AHLM is active on the bus.

      Is the AHLM active on the bus?

      Yes

      - Go To 4

      No

      - Refer to **DIAGNOSIS AND TESTING** and perform the NO RESPONSE FROM AHLM

diagnostic procedure.

4. **CHECK FOR ADDITIONAL COMMUNICATION RELATED DTCS**
   1. With the scan tool, read all the DTCs.

      Is there more than one module with active DTCs "Logged Against" the AHLM?

      Yes

      - Replace/update the AHLM in accordance with the Service Information.
      - Perform the BODY VERIFICATION TEST. Refer to **STANDARD PROCEDURE** .

      No

      - Go To 5
5. **CLEAR DTC IN MODULE SETTING FAULT**
   1. With the scan tool, select the module setting the DTC against the AHLM.
   2. Clear active DTCs.

      Is this DTC still active?

      Yes

      - Replace/update the module that set this DTC in accordance with the Service Information.
      - Perform the appropriate verification test for the module being replaced. If there is no verification test for the associated module perform the BODY VERIFICATION TEST. Refer to **STANDARD PROCEDURE** .

      No

      - Go To 6
6. **CYCLE IGNITION**
   1. Cycle the ignition from RUN to OFF three times ending with the key in the RUN position.

      Does this DTC become active?

      Yes

      - Go To 7

      No

      - The condition is not present at this time. Using the wiring diagram/schematic as a guide, inspect the wiring for chafed, pierced, pinched, and partially broken wires and the wiring harness connectors for broken, bent, pushed out, and corroded terminals.

- Perform the appropriate verification test for the module. If there is no verification test for the associated module perform the BODY VERIFICATION TEST. Refer to **STANDARD PROCEDURE** .

7. **CHECK FOR ADDITIONAL LOST COMMUNICATION FAULTS**
   1. With the scan tool, view the modules.

      Does the BCM and other CAN C BUS modules show Lost Communication with the remaining CAN C BUS modules?

      Yes

      - Go To 8

      No

      - Replace/update the module that set this DTC in accordance with the Service Information.
      - Perform the appropriate verification test for the module being replaced. If there is no verification test for the associated module perform the BODY VERIFICATION TEST. Refer to **STANDARD PROCEDURE** .
8. **CHECK THE CAN C BUS (+) CIRCUIT FOR A SHORT TO VOLTAGE**

Fig. 75: Checking CAN C BUS (+) Circuit For A Short To Voltage

Courtesy of CHRYSLER GROUP, LLC

1. Measure the voltage between the (D57) CAN C Bus (+) circuit and ground.

   Is the voltage above 5.0 volts?

   Yes

   - Repair the short to voltage in the CAN C Bus (+) circuit. The short to voltage is present in one of the CAN C Bus circuits. Use the Star Connectors to isolate portions of the CAN C Bus in order to locate the concern.
   - Perform the BODY VERIFICATION TEST. Refer to **STANDARD PROCEDURE** .

   No

   - Go To 9

9. **CHECK THE CAN C BUS (-) CIRCUIT FOR A SHORT TO GROUND**

Fig. 76: Checking CAN C BUS (-) Circuit For A Short To Ground
Courtesy of CHRYSLER GROUP, LLC

1. Turn the ignition off.
2. Measure the resistance between ground and the (D58) CAN C Bus (-) circuit.

   Is the resistance below 10k Ohms?

   Yes

   - Repair the short to ground in the CAN C Bus (-) circuit. The short to ground is present in one of the CAN C Bus circuits. Use the Star Connectors to isolate portions of the CAN C Bus in order to locate the concern.
   - Perform the BODY VERIFICATION TEST. Refer to **STANDARD PROCEDURE** .

   No

- Replace/update the module that set this DTC in accordance with the Service Information.
- Perform the appropriate verification test for the module being replaced. If there is no verification test for the associated module perform the BODY VERIFICATION TEST. Refer to **STANDARD PROCEDURE** .

U0184-87-LOST COMMUNICATION WITH RADIO - MISSING MESSAGE

For a complete wiring diagram, **refer to appropriate SYSTEM WIRING DIAGRAMS article** .

THEORY OF OPERATION

The primary communication network between electronic control modules is the Controller Area Network (CAN) data bus system. The Controller Area Network (CAN) data bus allows all electronic modules connected to the bus to share information with each other. Regardless of whether a message originates from a module on the higher speed CAN C (500K) Bus or on the lower speed bus, CAN Interior High Speed (IHS) (125K) Bus, the message structure and layout is similar, which allows the Body Control Module (BCM) to process and transfer messages between the CAN buses. The BCM stores Diagnostic Trouble Codes (DTCs) for certain bus network faults on the CAN C (500K) Bus and CAN IHS (125K) Bus.

All modules transmit and receive messages over one of these buses. Data exchange between the modules is achieved by serial transmission of encoded data messages (a form of transmission in which data bits are sent sequentially, one at a time, over a single line). Each module can both send and receive serial data simultaneously. Each data bit of a CAN Bus message is carried over the bus as a voltage differential between the two bus circuits which, when strung together, form a message. Each module uses arbitration to sort the message priority if two competing messages are attempting to be broadcast at the same time. Corruption of a single bit within a message will corrupt the entire message. Each message contains a Cyclic Redundancy Check (CRC) which specifies the message size exactly. If the message detected conflicts with the CRC the ECU receiving it will determine the message to be an error and consider that communication has not been possible. Diagnosis of this condition using a lab scope may reveal activity that appears to be Bus data messages even if no actual communication is possible. Communication problems that affect the whole bus, as a result of opens and terminal push outs are more likely to occur on data busses that operate at a high speed than a data bus that operates at a lower speed.

When an open circuit or terminal push out occurs one or more modules can become isolated from the remainder of the bus. The isolated module will attempt to communicate, but will not be able to receive messages or determine arbitration from other modules. Each time the isolated module attempts to communicate it alters the bus voltage on the intact bus circuit. Without functioning arbitration the isolated module alters the bus voltage while other bus messages are being sent thereby corrupting the messages on the remainder of the bus.

The CAN bus modules are connected in parallel to the two-wire bus using a twisted pair, where the wires are wrapped around each other to provide shielding from unwanted electromagnetic induction, thus preventing interference with the relatively low voltage signals being carried through them. While the CAN bus is operating (active), one of the bus wires will carry a higher voltage and is referred to as the CAN High or CAN bus (+) wire, while the other bus wire will carry a lower voltage and is referred to as the CAN Low or CAN bus (-) wire.

For additional information on the communication network and star connector locations, refer to

COMMUNICATION, DESCRIPTION .

WHEN MONITORED

With the ignition on for at least five seconds.

Battery voltage between 10 and 16 volts.

Body Control Module (BCM) is configured correctly.

SET CONDITION

Bus messages not received from the Radio for approximately two to five seconds.

POSSIBLE CAUSES

Possible Causes
CAN IHS BUS (125K) (+) CIRCUIT SHORTED TO VOLTAGE
CAN IHS BUS (125K) (-) CIRCUIT SHORTED TO GROUND
DTCS RELATED TO BATTERY VOLTAGE, IGNITION, OR VIN MESSAGES
BCM NOT CONFIGURED CORRECTLY
RADIO POWER AND GROUND
RADIO
MODULE THAT SET THIS DTC

DIAGNOSTIC TEST

1. **VERIFY DTC IS ACTIVE**

   NOTE: Make sure the battery voltage is between 10 and 16 volts before proceeding.

   1. With the scan tool, read active DTCs.

      Is this DTC active?

      Yes

      - Go To 2

      No

      - Refer to **DIAGNOSIS AND TESTING** and perform the STORED LOST COMMUNICATION DTCS diagnostic procedure.

2. **CHECK FOR ANY OF THE FOLLOWING ACTIVE DTCS**

1. With the scan tool, read all active DTCs from all modules.

   NOTE: Check for BCM configuration, CAN IHS hardware electrical, VIN Missing/Mismatch, battery or ignition related DTCs.

   Does the scan tool display any active DTCs to the conditions listed above?

   Yes

   - Go to the **DTC INDEX** and perform the appropriate diagnostic procedure.

   No

   - Go To 3

3. **VERIFY THE RADIO IS ACTIVE ON THE BUS**
   1. Turn the ignition on.
   2. With the scan tool, verify the Radio is active on the bus.

      Is the Radio active on the bus?

      Yes

      - Go To 4

      No

      - Refer to **DIAGNOSIS AND TESTING** and perform the NO RESPONSE FROM RADIO diagnostic procedure.

4. **CHECK FOR ADDITIONAL COMMUNICATION RELATED DTCS**
   1. With the scan tool, read all the DTCs.

      Is there more than one module with active DTCs "Logged Against" the Radio?

      Yes

      - Replace/update the Radio in accordance with the Service Information.
      - Perform the BODY VERIFICATION TEST. Refer to **STANDARD PROCEDURE** .

      No

      - Go To 5

5. **CLEAR DTC IN MODULE SETTING FAULT**
   1. With the scan tool, select the module setting the DTC against the Radio.

2. Clear active DTCs.

   Is this DTC still active?

   Yes

   - Replace/update the module that set this DTC in accordance with the Service Information.
   - Perform the appropriate verification test for the module being replaced. If there is no verification test for the associated module perform the BODY VERIFICATION TEST. Refer to **STANDARD PROCEDURE** .

   No

   - Go To 6

6. **CYCLE IGNITION**
   1. Cycle the ignition from RUN to OFF three times ending with the key in the RUN position.

      Does this DTC become active?

      Yes

      - Go To 7

      No

      - The condition is not present at this time. Using the wiring diagram/schematic as a guide, inspect the wiring for chafed, pierced, pinched and partially broken wires and the wiring harness connectors for broken, bent, pushed out and corroded terminals.
      - Perform the appropriate verification test for the module. If there is no verification test for the associated module perform the BODY VERIFICATION TEST. Refer to **STANDARD PROCEDURE** .

7. **CHECK FOR ADDITIONAL LOST COMMUNICATION FAULTS**
   1. With the scan tool, view the modules.

      Does the BCM and other CAN IHS BUS modules show Lost Communication with the remaining CAN IHS BUS modules?

      Yes

      - Go To 8

      No

      - Replace/update the module that set this DTC in accordance with the Service Information.

- Perform the appropriate verification test for the module being replaced. If there is no verification test for the associated module perform the BODY VERIFICATION TEST. Refer to **STANDARD PROCEDURE** .

8. **CHECK THE CAN IHS BUS (+) CIRCUIT FOR A SHORT TO VOLTAGE**
   1. Measure the voltage between the (D157) CAN IHS BUS (+) circuit and ground at the Data Link Connector.

      Is the voltage above 5.0 volts?

      Yes

      - Repair the short to voltage in the CAN IHS BUS (+) circuit. The short to voltage is present in one of the CAN IHS BUS circuits. Use the Star Connectors to isolate portions of the CAN IHS BUS in order to locate the concern.
      - Perform the BODY VERIFICATION TEST. Refer to **STANDARD PROCEDURE** .

      No

      - Go To 9

9. **CHECK THE CAN IHS BUS (-) CIRCUIT FOR A SHORT TO GROUND**
   1. Turn the ignition off.
   2. Measure the resistance between ground and the (D158) CAN IHS BUS (-) circuit Data Link Connector.

      Is the resistance below 10k Ohms?

      Yes

      - Repair the short to ground in the CAN IHS BUS (-) circuit. The short to ground is present in one of the CAN IHS BUS circuits. Use the Star Connectors to isolate portions of the CAN IHS BUS in order to locate the concern.
      - Perform the BODY VERIFICATION TEST. Refer to **STANDARD PROCEDURE** .

      No

      - Replace/update the module that set this DTC in accordance with the Service Information.
      - Perform the appropriate verification test for the module being replaced. If there is no verification test for the associated module perform the BODY VERIFICATION TEST. Refer to **STANDARD PROCEDURE** .

U0186-87-LOST COMMUNICATION WITH AUDIO AMPLIFIER - MISSING MESSAGE

For a complete wiring diagram, **refer to appropriate SYSTEM WIRING DIAGRAMS article** .

THEORY OF OPERATION

The primary communication network between electronic control modules is the Controller Area Network (CAN) data bus system. The Controller Area Network (CAN) data bus allows all electronic modules connected to the bus to share information with each other. Regardless of whether a message originates from a module on the higher speed CAN C (500K) Bus or on the lower speed bus, CAN Interior High Speed (IHS) (125K) Bus, the message structure and layout is similar, which allows the Body Control Module (BCM) to process and transfer messages between the CAN buses. The BCM stores Diagnostic Trouble Codes (DTCs) for certain bus network faults on the CAN C (500K) Bus and CAN IHS (125K) Bus.

All modules transmit and receive messages over one of these buses. Data exchange between the modules is achieved by serial transmission of encoded data messages (a form of transmission in which data bits are sent sequentially, one at a time, over a single line). Each module can both send and receive serial data simultaneously. Each data bit of a CAN Bus message is carried over the bus as a voltage differential between the two bus circuits which, when strung together, form a message. Each module uses arbitration to sort the message priority if two competing messages are attempting to be broadcast at the same time. Corruption of a single bit within a message will corrupt the entire message. Each message contains a Cyclic Redundancy Check (CRC) which specifies the message size exactly. If the message detected conflicts with the CRC the ECU receiving it will determine the message to be an error and consider that communication has not been possible. Diagnosis of this condition using a lab scope may reveal activity that appears to be Bus data messages even if no actual communication is possible. Communication problems that affect the whole bus, as a result of opens and terminal push outs are more likely to occur on data busses that operate at a high speed than a data bus that operates at a lower speed.

When an open circuit or terminal push out occurs one or more modules can become isolated from the remainder of the bus. The isolated module will attempt to communicate, but will not be able to receive messages or determine arbitration from other modules. Each time the isolated module attempts to communicate it alters the bus voltage on the intact bus circuit. Without functioning arbitration the isolated module alters the bus voltage while other bus messages are being sent thereby corrupting the messages on the remainder of the bus.

The CAN bus modules are connected in parallel to the two-wire bus using a twisted pair, where the wires are wrapped around each other to provide shielding from unwanted electromagnetic induction, thus preventing interference with the relatively low voltage signals being carried through them. While the CAN bus is operating (active), one of the bus wires will carry a higher voltage and is referred to as the CAN High or CAN bus (+) wire, while the other bus wire will carry a lower voltage and is referred to as the CAN Low or CAN bus (-) wire.

For additional information on the communication network and star connector locations, refer to **COMMUNICATION, DESCRIPTION** .

WHEN MONITORED

With the ignition on for at least five seconds.

Battery voltage between 10 and 16 volts.

Body Control Module (BCM) is configured correctly.

SET CONDITION

Bus messages not received from the Amplifier for approximately two to five seconds.

POSSIBLE CAUSES

Possible Causes
CAN IHS BUS (125K) (+) CIRCUIT SHORTED TO VOLTAGE
CAN IHS BUS (125K) (-) CIRCUIT SHORTED TO GROUND
DTCS RELATED TO BATTERY VOLTAGE, IGNITION, OR VIN MESSAGES
BCM NOT CONFIGURED CORRECTLY
AMPLIFIER POWER AND GROUND
AMPLIFIER
MODULE THAT SET THIS DTC

DIAGNOSTIC TEST

1. **VERIFY DTC IS ACTIVE**

   NOTE: Make sure the battery voltage is between 10 and 16 volts before proceeding.

   1. With the scan tool, read active DTCs.

      Is this DTC active?

      Yes

      - Go To 2

      No

      - Refer to **DIAGNOSIS AND TESTING** and perform the STORED LOST COMMUNICATION DTCS diagnostic procedure.
2. **CHECK FOR ANY OF THE FOLLOWING ACTIVE DTCS**
   1. With the scan tool, read all active DTCs from all modules.

      NOTE: Check for BCM configuration, CAN IHS hardware electrical, VIN Missing/Mismatch, battery or ignition related DTCs.

      Does the scan tool display any active DTCs to the conditions listed above?

      Yes

- Go to the **DTC INDEX** and perform the appropriate diagnostic procedure.

No

- Go To 3

3. **VERIFY THE AMPLIFIER IS ACTIVE ON THE BUS**
   1. Turn the ignition on.
   2. With the scan tool, verify the Amplifier is active on the bus.

   Is the Amplifier active on the bus?

   Yes

   - Go To 4

   No

   - Refer to **DIAGNOSIS AND TESTING** and perform the NO RESPONSE FROM AMP (AMPLIFIER) diagnostic procedure.

4. **CHECK FOR ADDITIONAL COMMUNICATION RELATED DTCS**
   1. With the scan tool, read all the DTCs.

   Is there more than one module with active DTCs "Logged Against" the AMP?

   Yes

   - Replace/update the Amplifier in accordance with the Service Information. Refer to **AMPLIFIER, REMOVAL** .
   - Perform the BODY VERIFICATION TEST. Refer to **STANDARD PROCEDURE** .

   No

   - Go To 5

5. **CLEAR DTC IN MODULE SETTING FAULT**
   1. With the scan tool, select the module setting the DTC against the Amplifier.
   2. Clear active DTCs.

   Is this DTC still active?

   Yes

   - Replace/update the module that set this DTC in accordance with the Service Information.
   - Perform the appropriate verification test for the module being replaced. If there is no

verification test for the associated module perform the BODY VERIFICATION TEST. Refer to **STANDARD PROCEDURE** .

No

- Go To 6

6. **CYCLE IGNITION**
   1. Cycle the ignition from RUN to OFF three times ending with the key in the RUN position.

      Does this DTC become active?

      Yes

      - Go To 7

      No

      - The condition is not present at this time. Using the wiring diagram/schematic as a guide, inspect the wiring for chafed, pierced, pinched and partially broken wires and the wiring harness connectors for broken, bent, pushed out and corroded terminals.
      - Perform the appropriate verification test for the module. If there is no verification test for the associated module perform the BODY VERIFICATION TEST. Refer to **STANDARD PROCEDURE** .
7. **CHECK FOR ADDITIONAL LOST COMMUNICATION FAULTS**
   1. With the scan tool, view the modules.

      Does the BCM and other CAN IHS BUS modules show Lost Communication with the remaining CAN IHS BUS modules?

      Yes

      - Go To 8

      No

      - Replace/update the module that set this DTC in accordance with the Service Information.
      - Perform the appropriate verification test for the module being replaced. If there is no verification test for the associated module perform the BODY VERIFICATION TEST. Refer to **STANDARD PROCEDURE** .
8. **CHECK THE CAN IHS BUS (+) CIRCUIT FOR A SHORT TO VOLTAGE**
   1. Measure the voltage between the (D157) CAN IHS BUS (+) circuit and ground at the Data Link Connector.

      Is the voltage above 5.0 volts?

Yes

- Repair the short to voltage in the CAN IHS BUS (+) circuit. The short to voltage is present in one of the CAN IHS BUS circuits. Use the Star Connectors to isolate portions of the CAN IHS BUS in order to locate the concern.
- Perform the BODY VERIFICATION TEST. Refer to **STANDARD PROCEDURE** .

No

- Go To 9

9. **CHECK THE CAN IHS BUS (-) CIRCUIT FOR A SHORT TO GROUND**
   1. Turn the ignition off.
   2. Measure the resistance between ground and the (D158) CAN IHS BUS (-) circuit at the Data Link Connector.

      Is the resistance below 10k Ohms?

      Yes

      - Repair the short to ground in the CAN IHS BUS (-) circuit. The short to ground is present in one of the CAN IHS BUS circuits. Use the Star Connectors to isolate portions of the CAN IHS BUS in order to locate the concern.
      - Perform the BODY VERIFICATION TEST. Refer to **STANDARD PROCEDURE** .

      No

      - Replace/update the module that set this DTC in accordance with the Service Information.
      - Perform the appropriate verification test for the module being replaced. If there is no verification test for the associated module perform the BODY VERIFICATION TEST. Refer to **STANDARD PROCEDURE** .

U0199-87-LOST COMMUNICATION WITH DRIVER DOOR MODULE - MISSING MESSAGE

For a complete wiring diagram, **refer to appropriate SYSTEM WIRING DIAGRAMS article** .

THEORY OF OPERATION

The primary communication network between electronic control modules is the Controller Area Network (CAN) data bus system. The Controller Area Network (CAN) data bus allows all electronic modules connected to the bus to share information with each other. Regardless of whether a message originates from a module on the higher speed CAN C (500K) Bus or on the lower speed bus, CAN Interior High Speed (IHS) (125K) Bus, the message structure and layout is similar, which allows the Body Control Module (BCM) to process and transfer messages between the CAN buses. The BCM stores Diagnostic Trouble Codes (DTCs) for certain bus network faults on the CAN C (500K) Bus and CAN IHS (125K) Bus.

All modules transmit and receive messages over one of these buses. Data exchange between the modules is achieved by serial transmission of encoded data messages (a form of transmission in which data bits are sent sequentially, one at a time, over a single line). Each module can both send and receive serial data simultaneously. Each data bit of a CAN Bus message is carried over the bus as a voltage differential between the two bus circuits which, when strung together, form a message. Each module uses arbitration to sort the message priority if two competing messages are attempting to be broadcast at the same time. Corruption of a single bit within a message will corrupt the entire message. Each message contains a Cyclic Redundancy Check (CRC) which specifies the message size exactly. If the message detected conflicts with the CRC the ECU receiving it will determine the message to be an error and consider that communication has not been possible. Diagnosis of this condition using a lab scope may reveal activity that appears to be Bus data messages even if no actual communication is possible. Communication problems that affect the whole bus, as a result of opens and terminal push outs are more likely to occur on data busses that operate at a high speed than a data bus that operates at a lower speed.

When an open circuit or terminal push out occurs one or more modules can become isolated from the remainder of the bus. The isolated module will attempt to communicate, but will not be able to receive messages or determine arbitration from other modules. Each time the isolated module attempts to communicate it alters the bus voltage on the intact bus circuit. Without functioning arbitration the isolated module alters the bus voltage while other bus messages are being sent thereby corrupting the messages on the remainder of the bus.

The CAN bus modules are connected in parallel to the two-wire bus using a twisted pair, where the wires are wrapped around each other to provide shielding from unwanted electromagnetic induction, thus preventing interference with the relatively low voltage signals being carried through them. While the CAN bus is operating (active), one of the bus wires will carry a higher voltage and is referred to as the CAN High or CAN bus (+) wire, while the other bus wire will carry a lower voltage and is referred to as the CAN Low or CAN bus (-) wire.

For additional information on the communication network and star connector locations, refer to **COMMUNICATION, DESCRIPTION** .

WHEN MONITORED

With the ignition on for at least five seconds.

Battery voltage between 10 and 16 volts.

Body Control Module (BCM) is configured correctly.

SET CONDITION

Bus messages not received from the Driver Door Module (DDM) for approximately two to five seconds.

POSSIBLE CAUSES

Possible Causes
CAN C BUS (+) CIRCUIT SHORTED TO VOLTAGE
CAN C BUS (-) CIRCUIT SHORTED TO GROUND

DTCS RELATED TO BATTERY VOLTAGE, IGNITION, OR VIN MESSAGES
BCM NOT CONFIGURED CORRECTLY
DRIVER DOOR MODULE (DDM) POWER AND GROUND
DRIVER DOOR MODULE (DDM)
MODULE THAT SET THIS DTC

DIAGNOSTIC TEST

1. **VERIFY DTC IS ACTIVE**

   NOTE: Make sure the battery voltage is between 10 and 16 volts before proceeding.

   1. With the scan tool, read active DTCs.

      Is this DTC active?

      Yes

      - Go To 2

      No

      - Refer to **DIAGNOSIS AND TESTING** and perform the STORED LOST COMMUNICATION DTCS diagnostic procedure.

2. **CHECK FOR ANY OF THE FOLLOWING ACTIVE DTCS**
   1. With the scan tool, read all active DTCs from all modules.

      NOTE: Check for BCM configuration, CAN C hardware electrical, VIN Missing/Mismatch, battery or ignition related DTCs.

      Does the scan tool display any active DTCs to the conditions listed above?

      Yes

      - Refer to **DTC INDEX** and perform the appropriate diagnostic procedure.

      No

      - Go To 3

3. **VERIFY THE DRIVER DOOR MODULE IS ACTIVE ON THE BUS**
   1. Turn the ignition on.
   2. With the scan tool, verify the Driver Door Module is active on the bus.

Is the Driver Door Module active on the bus?

Yes

- Go To 4

No

- Refer to **DIAGNOSIS AND TESTING** and perform the NO RESPONSE FROM DRIVER DOOR MODULE diagnostic procedure.

4. **CHECK FOR ADDITIONAL COMMUNICATION RELATED DTCS**
   1. With the scan tool, read all the DTCs.

   Is there more than one module with active DTCs "Logged Against" the Driver Door Module?

   Yes

   - Replace/update the Driver Door Module in accordance with the Service Information.
   - Perform the BODY VERIFICATION TEST. Refer to **STANDARD PROCEDURE** .

   No

   - Go To 5

5. **CLEAR DTC IN MODULE SETTING FAULT**
   1. With the scan tool, select the module setting the DTC against the Driver Door Module.
   2. Clear active DTCs.

   Is this DTC still active?

   Yes

   - Replace/update the module that set this DTC in accordance with the Service Information.
   - Perform the appropriate verification test for the module being replaced. If there is no verification test for the associated module perform the BODY VERIFICATION TEST. Refer to **STANDARD PROCEDURE** .

   No

   - Go To 6

6. **CYCLE IGNITION**
   1. Cycle the ignition from RUN to OFF three times ending with the key in the RUN position.

   Does this DTC become active?

Yes

- Go To 7

No

- The condition is not present at this time. Using the wiring diagram/schematic as a guide, inspect the wiring for chafed, pierced, pinched, and partially broken wires and the wiring harness connectors for broken, bent, pushed out, and corroded terminals.
- Perform the appropriate verification test for the module. If there is no verification test for the associated module perform the BODY VERIFICATION TEST. Refer to **STANDARD PROCEDURE** .

7. **CHECK FOR ADDITIONAL LOST COMMUNICATION FAULTS**
   1. With the scan tool, view the modules.

      Does the BCM and other CAN C BUS modules show Lost Communication with the remaining CAN C BUS modules?

      Yes

      - Go To 8

      No

      - Replace/update the module that set this DTC in accordance with the Service Information.
      - Perform the appropriate verification test for the module being replaced. If there is no verification test for the associated module perform the BODY VERIFICATION TEST. Refer to **STANDARD PROCEDURE** .
8. **CHECK THE CAN C BUS (+) CIRCUIT FOR A SHORT TO VOLTAGE**

Fig. 77: Checking CAN C BUS (+) Circuit For A Short To Voltage
Courtesy of CHRYSLER GROUP, LLC

1. Measure the voltage between the (D57) CAN C Bus (+) circuit and ground.

   Is the voltage above 5.0 volts?

   Yes

   - Repair the short to voltage in the CAN C Bus (+) circuit. The short to voltage is present in one of the CAN C Bus circuits. Use the Star Connectors to isolate portions of the CAN C Bus in order to locate the concern.
   - Perform the BODY VERIFICATION TEST. Refer to **STANDARD PROCEDURE** .

   No

   - Go To 9

9. **CHECK THE CAN C BUS (-) CIRCUIT FOR A SHORT TO GROUND**

Fig. 78: Checking CAN C BUS (-) Circuit For A Short To Ground
Courtesy of CHRYSLER GROUP, LLC

1. Turn the ignition off.
2. Measure the resistance between ground and the (D58) CAN C Bus (-) circuit.

   Is the resistance below 10k Ohms?

   Yes

   - Repair the short to ground in the CAN C Bus (-) circuit. The short to ground is present in one of the CAN C Bus circuits. Use the Star Connectors to isolate portions of the CAN C Bus in order to locate the concern.
   - Perform the BODY VERIFICATION TEST. Refer to **STANDARD PROCEDURE** .

   No

- Replace/update the module that set this DTC in accordance with the Service Information.
- Perform the appropriate verification test for the module being replaced. If there is no verification test for the associated module perform the BODY VERIFICATION TEST. Refer to **STANDARD PROCEDURE** .

U01B0-87-LOST COMMUNICATION WITH BATTERY MONITOR MODULE - MISSING MESSAGE

For a complete wiring diagram, **refer to appropriate SYSTEM WIRING DIAGRAMS article** .

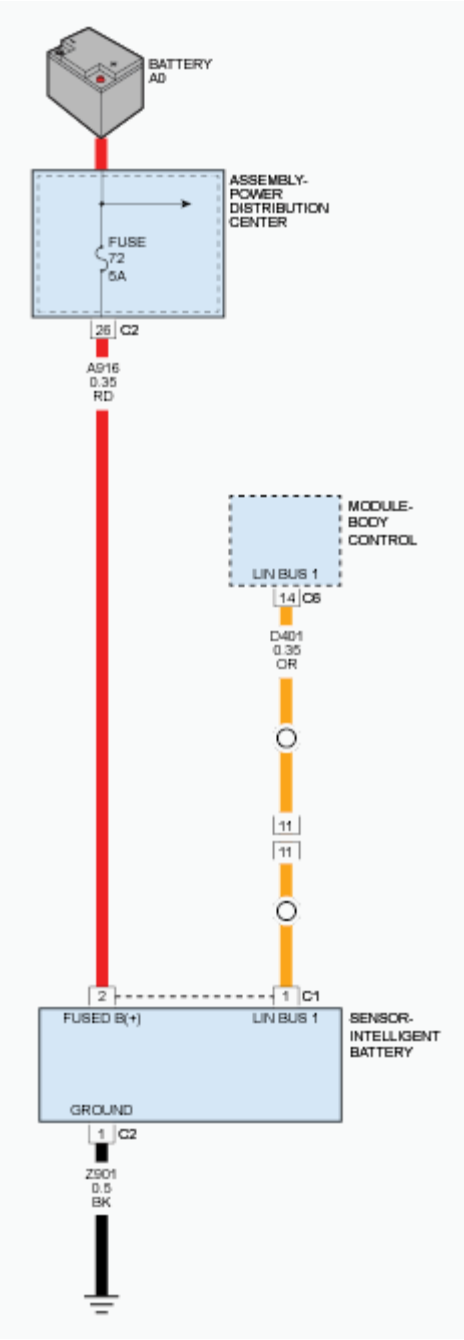

Fig. 79: Intelligent Battery Sensor Circuit Diagram
Courtesy of CHRYSLER GROUP, LLC

WHEN MONITORED

With the ignition on.

SET CONDITION

The Body Control Module (BCM) does not receive information from the Intelligent Battery Sensor (IBS).

POSSIBLE CAUSES

Possible Causes
(A916) FUSED (B+) CIRCUIT OPEN
(Z901) GROUND CIRCUIT OPEN
(D401) LIN BUS CIRCUIT OPEN
INTELLIGENT BATTERY SENSOR (IBS)

DIAGNOSTIC TEST

1. **CHECK FOR AN ACTIVE DTC**
    1. Turn the ignition on.
    2. With the scan tool, read DTCs.

    Does the scan tool display this DTC as active?

    Yes

    - Go To 2

    No

    - Test complete. The condition or conditions that originally set this DTC are not present at this time. Using the wiring diagrams as a guide, check all related splices and connectors for signs of water intrusion, corrosion, pushed out or bent terminals and correct pin tension.
    - Perform the BODY VERIFICATION TEST. Refer to **STANDARD PROCEDURE** .
2. **CHECK THE (A916) FUSED (B+) CIRCUIT FOR AN OPEN**
    1. Turn the ignition off.
    2. Disconnect the Intelligent Battery Sensor (IBS) C1 harness connector.
    3. Turn the ignition on.
    4. Using a 12-volt test light connected to ground, check the (A916) Fused (B+) circuit at the IBS C1 harness connector.

    Does the test light illuminate brightly?

    Yes

    - Go To 3

    No

    - Repair the open or short to ground in the (A916) Fused (B+) circuit.
    - Perform the BODY VERIFICATION TEST. Refer to **STANDARD PROCEDURE** .

3. **CHECK THE (Z901) GROUND CIRCUIT FOR AN OPEN**
   1. Turn the ignition off.
   2. Disconnect the IBS C2 harness connector.
   3. Using a 12-volt test light connected to 12-volts, check the (Z901) Ground circuit at the IBS C2 harness connector.

      Does the test light illuminate brightly?

      Yes

      - Go To 4

      No

      - Repair the open in the (Z901) Ground circuit.
      - Perform the BODY VERIFICATION TEST. Refer to **STANDARD PROCEDURE** .
4. **CHECK THE (D401) LIN BUS CIRCUIT FOR AN OPEN**
   1. Turn the ignition on.
   2. Measure the voltage between ground and the (D401) LIN BUS circuit at the IBS C1 harness connector.

      Is the voltage above 5.0 volts?

      Yes

      - Replace the IBS in accordance with the Service Information.
      - Perform the BODY VERIFICATION TEST. Refer to **STANDARD PROCEDURE** .

      No

      - Repair the open in the (D401) LIN Bus circuit.
      - Perform the BODY VERIFICATION TEST. Refer to **STANDARD PROCEDURE** .

2014 ACCESSORIES AND EQUIPMENT

Body Control Module (BCM) - Electrical Diagnostics - Cherokee

DIAGNOSIS AND TESTING

U0200-87-LOST COMMUNICATION WITH PASSENGER DOOR MODULE - MISSING MESSAGE

For a complete wiring diagram, **refer to appropriate SYSTEM WIRING DIAGRAMS article** .

THEORY OF OPERATION

The primary communication network between electronic control modules is the Controller Area Network (CAN) data bus system. The Controller Area Network (CAN) data bus allows all electronic modules connected to the bus to share information with each other. Regardless of whether a message originates from a module on the higher speed CAN C (500K) Bus or on the lower speed bus, CAN Interior High Speed (IHS) (125K) Bus, the message structure and layout is similar, which allows the Body Control Module (BCM) to process and transfer messages between the CAN buses. The BCM stores Diagnostic Trouble Codes (DTCs) for certain bus network faults on the CAN C (500K) Bus and CAN IHS (125K) Bus.

All modules transmit and receive messages over one of these buses. Data exchange between the modules is achieved by serial transmission of encoded data messages (a form of transmission in which data bits are sent sequentially, one at a time, over a single line). Each module can both send and receive serial data simultaneously. Each data bit of a CAN Bus message is carried over the bus as a voltage differential between the two bus circuits which, when strung together, form a message. Each module uses arbitration to sort the message priority if two competing messages are attempting to be broadcast at the same time. Corruption of a single bit within a message will corrupt the entire message. Each message contains a Cyclic Redundancy Check (CRC) which specifies the message size exactly. If the message detected conflicts with the CRC the ECU receiving it will determine the message to be an error and consider that communication has not been possible. Diagnosis of this condition using a lab scope may reveal activity that appears to be Bus data messages even if no actual communication is possible. Communication problems that affect the whole bus, as a result of opens and terminal push outs are more likely to occur on data busses that operate at a high speed than a data bus that operates at a lower speed.

When an open circuit or terminal push out occurs one or more modules can become isolated from the remainder of the bus. The isolated module will attempt to communicate, but will not be able to receive messages or determine arbitration from other modules. Each time the isolated module attempts to communicate it alters the bus voltage on the intact bus circuit. Without functioning arbitration the isolated module alters the bus voltage while other bus messages are being sent thereby corrupting the messages on the remainder of the bus.

The CAN bus modules are connected in parallel to the two-wire bus using a twisted pair, where the wires are wrapped around each other to provide shielding from unwanted electromagnetic induction, thus preventing interference with the relatively low voltage signals being carried through them. While the CAN bus is operating (active), one of the bus wires will carry a higher voltage and is referred to as the CAN High or CAN bus (+) wire, while the other bus wire will carry a lower voltage and is referred to as the CAN Low or CAN bus (-) wire.

For additional information on the communication network and star connector locations, refer to **COMMUNICATION, DESCRIPTION** .

WHEN MONITORED

With the ignition on for at least five seconds.

Battery voltage between 10 and 16 volts.

Body Control Module (BCM) is configured correctly.

SET CONDITION

Bus messages not received from the Passenger Door Module (PDM) for approximately two to five seconds.

POSSIBLE CAUSES

Possible Causes
CAN C BUS (+) CIRCUIT SHORTED TO VOLTAGE
CAN C BUS (-) CIRCUIT SHORTED TO GROUND
DTCS RELATED TO BATTERY VOLTAGE, IGNITION, OR VIN MESSAGES
BCM NOT CONFIGURED CORRECTLY
PASSENGER DOOR MODULE (PDM) POWER AND GROUND
PASSENGER DOOR MODULE (PDM)
MODULE THAT SET THIS DTC

DIAGNOSTIC TEST

1. **VERIFY DTC IS ACTIVE**

   NOTE: Make sure the battery voltage is between 10 and 16 volts before proceeding.

   1. With the scan tool, read active DTCs.

      Is this DTC active?

      Yes

      - Go To 2

      No

      - Refer to **DIAGNOSIS AND TESTING** and perform the STORED LOST COMMUNICATION DTCS diagnostic procedure.

2. **CHECK FOR ANY OF THE FOLLOWING ACTIVE DTCS**
   1. With the scan tool, read all active DTCs from all modules.

      NOTE: Check for BCM configuration, CAN C hardware electrical, VIN Missing/Mismatch, battery or ignition related DTCs.

      Does the scan tool display any active DTCs to the conditions listed above?

      Yes

      - Go to the **DTC INDEX** and perform the appropriate diagnostic procedure.

      No

      - Go To 3
3. **VERIFY THE PASSENGER DOOR MODULE IS ACTIVE ON THE BUS**
   1. Turn the ignition on.
   2. With the scan tool, verify the Passenger Door Module is active on the bus.

      Is the Passenger Door Module active on the bus?

      Yes

      - Go To 4

      No

      - Refer to **DIAGNOSIS AND TESTING** and perform the NO RESPONSE FROM PASSENGER DOOR MODULE diagnostic procedure.
4. **CHECK FOR ADDITIONAL COMMUNICATION RELATED DTCS**
   1. With the scan tool, read all the DTCs.

      Is there more than one module with active DTCs "Logged Against" the Passenger Door Module?

      Yes

      - Replace/update the Passenger Door Module in accordance with the Service Information.
      - Perform the BODY VERIFICATION TEST. Refer to **STANDARD PROCEDURE** .

      No

      - Go To 5
5. **CLEAR DTC IN MODULE SETTING FAULT**

1. With the scan tool, select the module setting the DTC against the Passenger Door Module.
2. Clear active DTCs.

   Is this DTC still active?

   Yes

   - Replace/update the module that set this DTC in accordance with the Service Information.
   - Perform the appropriate verification test for the module being replaced. If there is no verification test for the associated module perform the BODY VERIFICATION TEST. Refer to **STANDARD PROCEDURE** .

   No

   - Go To 6

6. **CYCLE IGNITION**
   1. Cycle the ignition from RUN to OFF three times ending with the key in the RUN position.

      Does this DTC become active?

      Yes

      - Go To 7

      No

      - The condition is not present at this time. Using the wiring diagram/schematic as a guide, inspect the wiring for chafed, pierced, pinched, and partially broken wires and the wiring harness connectors for broken, bent, pushed out, and corroded terminals.
      - Perform the appropriate verification test for the module. If there is no verification test for the associated module perform the BODY VERIFICATION TEST. Refer to **STANDARD PROCEDURE** .

7. **CHECK FOR ADDITIONAL LOST COMMUNICATION FAULTS**
   1. With the scan tool, view the modules.

      Does the BCM and other CAN C BUS modules show Lost Communication with the remaining CAN C BUS modules?

      Yes

      - Go To 8

      No

- Replace/update the module that set this DTC in accordance with the Service Information.
- Perform the appropriate verification test for the module being replaced. If there is no verification test for the associated module perform the BODY VERIFICATION TEST. Refer to **STANDARD PROCEDURE** .

8. **CHECK THE CAN C BUS (+) CIRCUIT FOR A SHORT TO VOLTAGE**

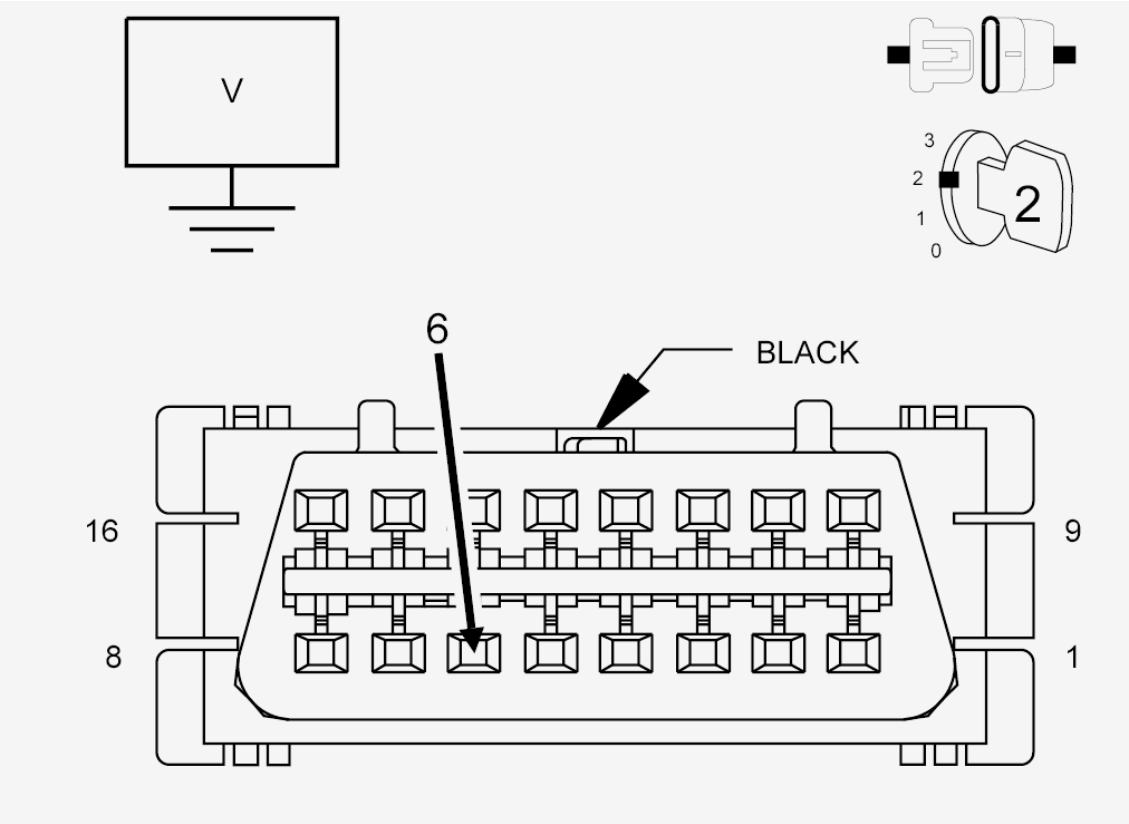

Fig. 1: Checking CAN C BUS (+) Circuit For A Short To Voltage
Courtesy of CHRYSLER GROUP, LLC

1. Measure the voltage between the (D57) CAN C Bus (+) circuit and ground.

   Is the voltage above 5.0 volts?

   Yes

   - Repair the short to voltage in the CAN C Bus (+) circuit. The short to voltage is present in one of the CAN C Bus circuits. Use the Star Connectors to isolate portions of the CAN C Bus in order to locate the concern.
   - Perform the BODY VERIFICATION TEST. Refer to **STANDARD PROCEDURE** .

   No

   - Go To 9

9. **CHECK THE CAN C BUS (-) CIRCUIT FOR A SHORT TO GROUND**

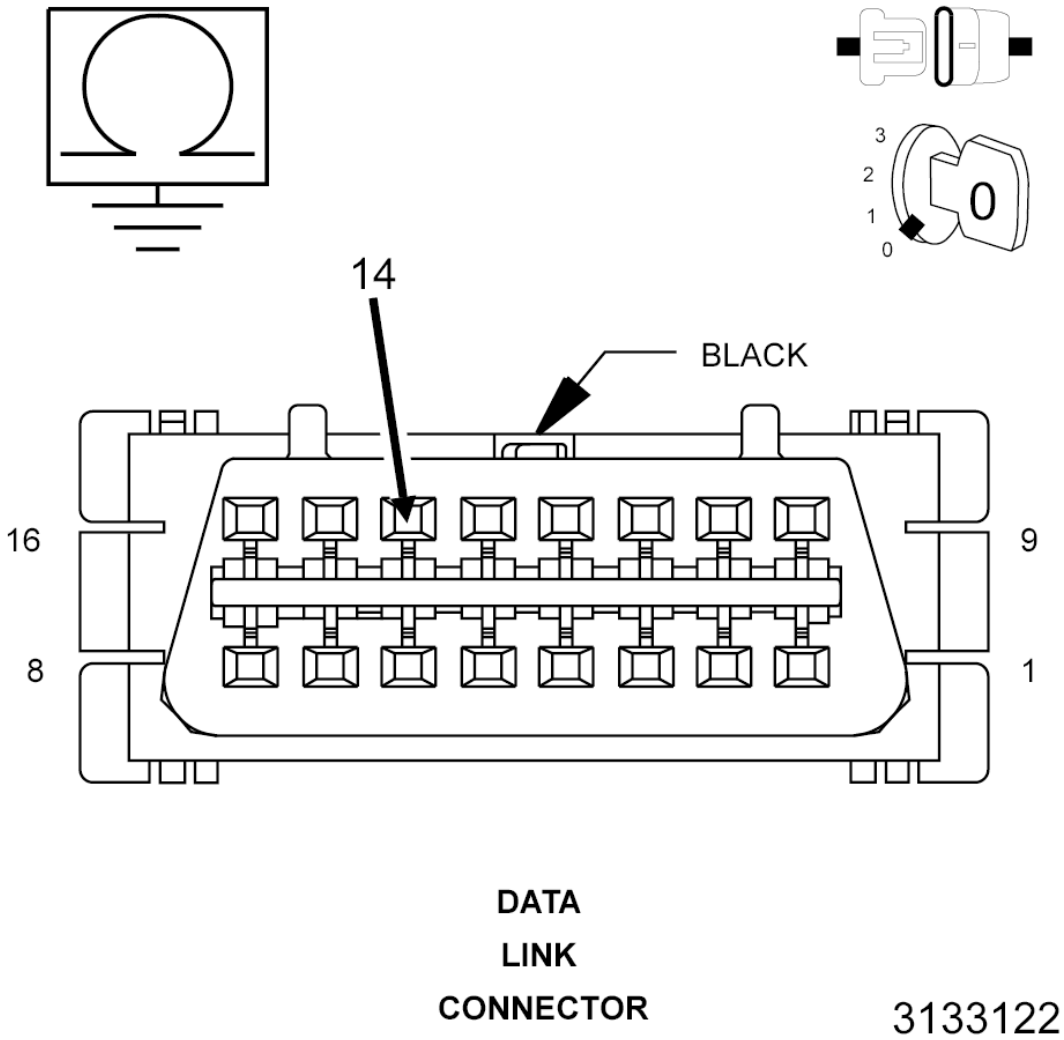

Fig. 2: Checking CAN C BUS (-) Circuit For A Short To Ground
Courtesy of CHRYSLER GROUP, LLC

1. Turn the ignition off.
2. Measure the resistance between ground and the (D58) CAN C Bus (-) circuit.

   Is the resistance below 10k Ohms?

   Yes

   - Repair the short to ground in the CAN C Bus (-) circuit. The short to ground is present in one of the CAN C Bus circuits. Use the Star Connectors to isolate portions of the CAN C Bus in order to locate the concern.
   - Perform the BODY VERIFICATION TEST. Refer to **STANDARD PROCEDURE** .

No

- Replace/update the module that set this DTC in accordance with the Service Information.
- Perform the appropriate verification test for the module being replaced. If there is no verification test for the associated module perform the BODY VERIFICATION TEST. Refer to **STANDARD PROCEDURE** .

U0204-87-LOST COMMUNICATION WITH RIGHT FRONT DOOR MODULE - MISSING MESSAGE

For a complete wiring diagram, **refer to appropriate SYSTEM WIRING DIAGRAMS article** .

THEORY OF OPERATION

The primary communication network between electronic control modules is the Controller Area Network (CAN) data bus system. The Controller Area Network (CAN) data bus allows all electronic modules connected to the bus to share information with each other. Regardless of whether a message originates from a module on the higher speed CAN C (500K) Bus or on the lower speed bus, CAN Interior High Speed (IHS) (125K) Bus, the message structure and layout is similar, which allows the Body Control Module (BCM) to process and transfer messages between the CAN buses. The BCM stores Diagnostic Trouble Codes (DTCs) for certain bus network faults on the CAN C (500K) Bus and CAN IHS (125K) Bus.

All modules transmit and receive messages over one of these buses. Data exchange between the modules is achieved by serial transmission of encoded data messages (a form of transmission in which data bits are sent sequentially, one at a time, over a single line). Each module can both send and receive serial data simultaneously. Each data bit of a CAN Bus message is carried over the bus as a voltage differential between the two bus circuits which, when strung together, form a message. Each module uses arbitration to sort the message priority if two competing messages are attempting to be broadcast at the same time. Corruption of a single bit within a message will corrupt the entire message. Each message contains a Cyclic Redundancy Check (CRC) which specifies the message size exactly. If the message detected conflicts with the CRC the ECU receiving it will determine the message to be an error and consider that communication has not been possible. Diagnosis of this condition using a lab scope may reveal activity that appears to be Bus data messages even if no actual communication is possible. Communication problems that affect the whole bus, as a result of opens and terminal push outs are more likely to occur on data busses that operate at a high speed than a data bus that operates at a lower speed.

When an open circuit or terminal push out occurs one or more modules can become isolated from the remainder of the bus. The isolated module will attempt to communicate, but will not be able to receive messages or determine arbitration from other modules. Each time the isolated module attempts to communicate it alters the bus voltage on the intact bus circuit. Without functioning arbitration the isolated module alters the bus voltage while other bus messages are being sent thereby corrupting the messages on the remainder of the bus.

The CAN bus modules are connected in parallel to the two-wire bus using a twisted pair, where the wires are wrapped around each other to provide shielding from unwanted electromagnetic induction, thus preventing interference with the relatively low voltage signals being carried through them. While the CAN bus is operating (active), one of the bus wires will carry a higher voltage and is referred to as the CAN High or CAN bus (+) wire, while the other bus wire will carry a lower voltage and is referred to as the CAN Low or CAN bus (-)

wire.

For additional information on the communication network and star connector locations, refer to **COMMUNICATION, DESCRIPTION** .

WHEN MONITORED

With the ignition on for at least five seconds.

Battery voltage between 10 and 16 volts.

Body Control Module (BCM) is configured correctly.

SET CONDITION

Bus messages not received from the Adaptive Cruise Control Module for approximately two to five seconds.

POSSIBLE CAUSES

Possible Causes
CAN C BUS (+) CIRCUIT SHORTED TO VOLTAGE
CAN C BUS (-) CIRCUIT SHORTED TO GROUND
DTCS RELATED TO BATTERY VOLTAGE, IGNITION, OR VIN MESSAGES
BCM NOT CONFIGURED CORRECTLY
ADAPTIVE CRUISE CONTROL MODULE POWER AND GROUND
ADAPTIVE CRUISE CONTROL MODULE
MODULE THAT SET THIS DTC

NOTE: This DTC is for the Adaptive Cruise Control Module and does not address any door module concerns.

DIAGNOSTIC TEST

1. **VERIFY DTC IS ACTIVE**

   NOTE: This DTC is for the Adaptive Cruise Control Module and does not address any door module concerns.

   NOTE: Make sure the battery voltage is between 10 and 16 volts before proceeding.

   1. With the scan tool, read active DTCs.

      Is this DTC active?

Yes

- Go To 2

No

- Refer to **DIAGNOSIS AND TESTING** and perform the STORED LOST COMMUNICATION DTCS diagnostic procedure.

2. **CHECK FOR ANY OF THE FOLLOWING ACTIVE DTCS**
   1. With the scan tool, read all active DTCs from all modules.

      NOTE: Check for BCM configuration, CAN C hardware electrical, VIN Missing/Mismatch, battery or ignition related DTCs.

      Does the scan tool display any active DTCs to the conditions listed above?

      Yes

      - Go to the **DTC INDEX** and perform the appropriate diagnostic procedure.

      No

      - Go To 3

3. **VERIFY THE ADAPTIVE CRUISE CONTROL MODULE IS ACTIVE ON THE BUS**
   1. Turn the ignition on.
   2. With the scan tool, verify the Adaptive Cruise Control Module is active on the bus.

      Is the Adaptive Cruise Control Module active on the bus?

      Yes

      - Go To 4

      No

      - Refer to **DIAGNOSIS AND TESTING** and perform the NO RESPONSE FROM ADAPTIVE CRUISE CONTROL MODULE diagnostic procedure.

4. **CHECK FOR ADDITIONAL COMMUNICATION RELATED DTCS**
   1. With the scan tool, read all the DTCs.

      Is there more than one module with active DTCs "Logged Against" the Adaptive Cruise Control Module?

      Yes

- Replace/update the Adaptive Cruise Control Module in accordance with the Service Information.
- Perform the appropriate verification test for the module being replaced. If there is no verification test for the associated module perform the BODY VERIFICATION TEST. Refer to **STANDARD PROCEDURE** .

No

- Go To 5

5. **CLEAR DTC IN MODULE SETTING FAULT**
   1. With the scan tool, select the module setting the DTC against the Adaptive Cruise Control Module.
   2. Clear active DTCs.

   Is this DTC still active?

   Yes

   - Replace/update the module that set this DTC in accordance with the Service Information.
   - Perform the appropriate verification test for the module being replaced. If there is no verification test for the associated module perform the BODY VERIFICATION TEST. Refer to **STANDARD PROCEDURE** .

   No

   - Go To 6

6. **CYCLE IGNITION**
   1. Cycle the ignition from RUN to OFF three times ending with the key in the RUN position.

   Does this DTC become active?

   Yes

   - Go To 7

   No

   - The condition is not present at this time. Using the wiring diagram/schematic as a guide, inspect the wiring for chafed, pierced, pinched and partially broken wires and the wiring harness connectors for broken, bent, pushed out and corroded terminals.
   - Perform the appropriate verification test for the module. If there is no verification test for the associated module perform the BODY VERIFICATION TEST. Refer to **STANDARD PROCEDURE** .

7. **CHECK FOR ADDITIONAL LOST COMMUNICATION FAULTS**
   1. With the scan tool, view the modules.

Does the BCM and other CAN C BUS modules show Lost Communication with the remaining CAN C BUS modules?

Yes

- Go To 8

No

- Replace/update the module that set this DTC in accordance with the Service Information.
- Perform the appropriate verification test for the module being replaced. If there is no verification test for the associated module perform the BODY VERIFICATION TEST. Refer to **STANDARD PROCEDURE** .

8. **CHECK THE CAN C BUS (+) CIRCUIT FOR A SHORT TO VOLTAGE**

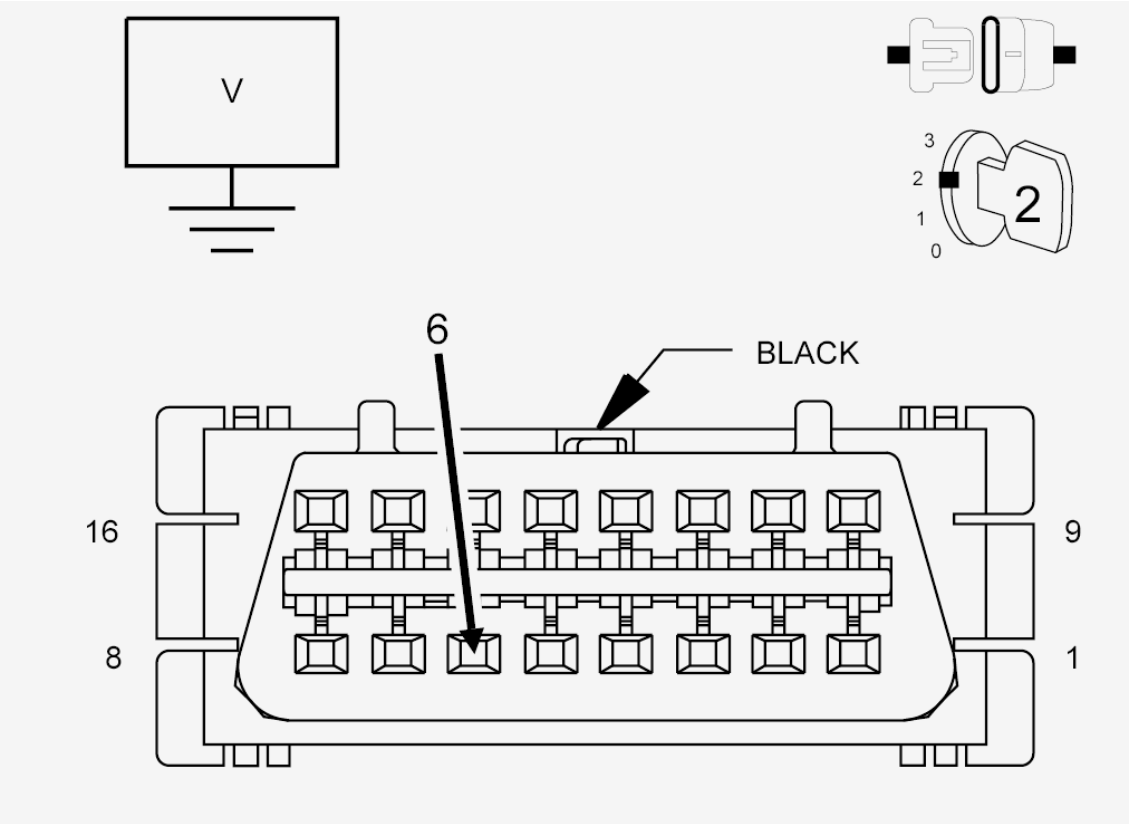

Fig. 3: Checking CAN C BUS (+) Circuit For A Short To Voltage
Courtesy of CHRYSLER GROUP, LLC

1. Measure the voltage between the (D57) CAN C Bus (+) circuit and ground.

   Is the voltage above 5.0 volts?

   Yes

- Repair the short to voltage in the CAN C Bus (+) circuit. The short to voltage is present in one of the CAN C Bus circuits. Use the Star Connectors to isolate portions of the CAN C Bus in order to locate the concern.
- Perform the BODY VERIFICATION TEST. Refer to **STANDARD PROCEDURE** .

No

- Go To 9

9. **CHECK THE CAN C BUS (-) CIRCUIT FOR A SHORT TO GROUND**

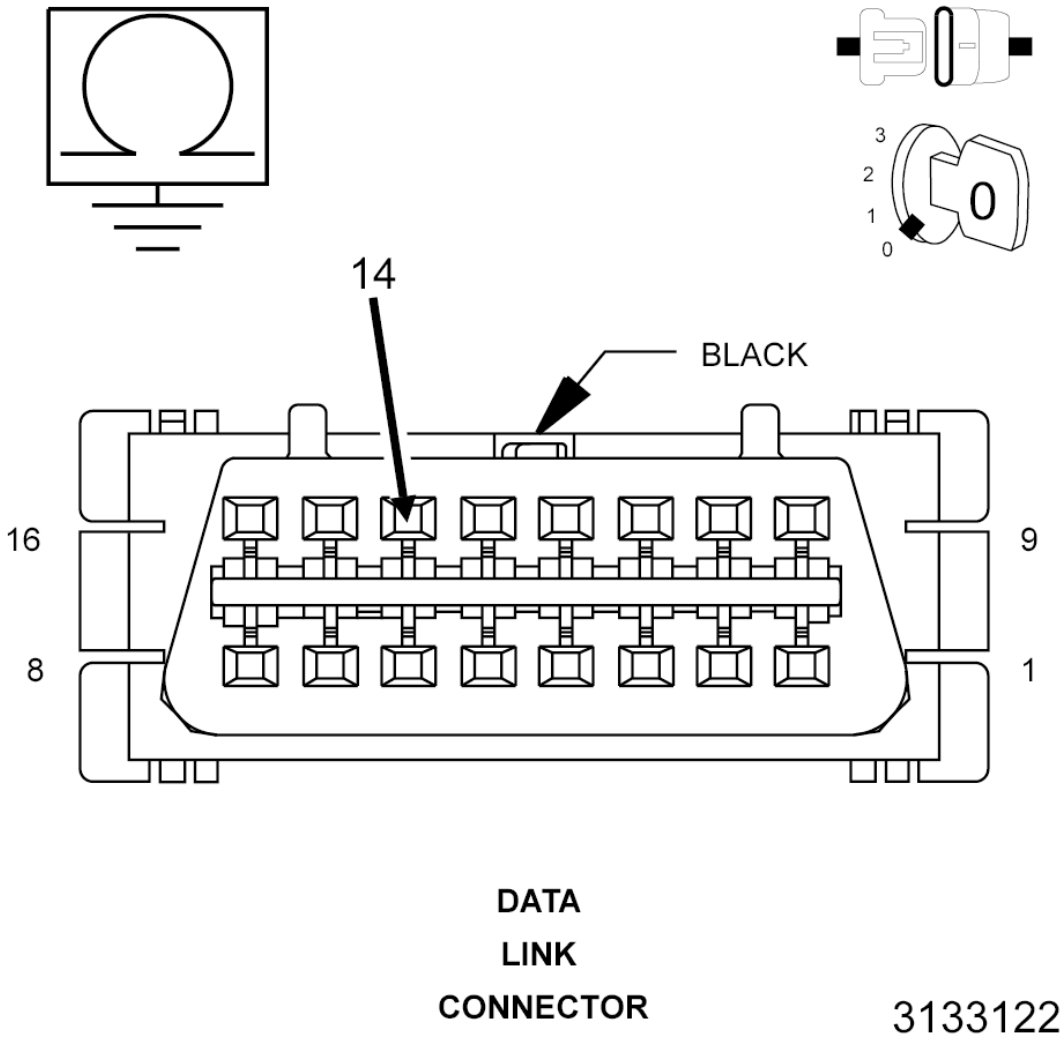

Fig. 4: Checking CAN C BUS (-) Circuit For A Short To Ground
Courtesy of CHRYSLER GROUP, LLC

1. Turn the ignition off.
2. Measure the resistance between ground and the (D58) CAN C Bus (-) circuit.

Is the resistance below 10k Ohms?

Yes

- Repair the short to ground in the CAN C Bus (-) circuit. The short to ground is present in one of the CAN C Bus circuits. Use the Star Connectors to isolate portions of the CAN C Bus in order to locate the concern.
- Perform the BODY VERIFICATION TEST. Refer to **STANDARD PROCEDURE** .

No

- Replace/update the module that set this DTC in accordance with the Service Information.
- Perform the appropriate verification test for the module being replaced. If there is no verification test for the associated module perform the BODY VERIFICATION TEST. Refer to **STANDARD PROCEDURE** .

U0208-87-LOST COMMUNICATION WITH HEATED SEAT CONTROL MODULE - MISSING MESSAGE

For a complete wiring diagram, **refer to appropriate SYSTEM WIRING DIAGRAMS article** .

THEORY OF OPERATION

The primary communication network between electronic control modules is the Controller Area Network (CAN) data bus system. The Controller Area Network (CAN) data bus allows all electronic modules connected to the bus to share information with each other. Regardless of whether a message originates from a module on the higher speed CAN C (500K) Bus or on the lower speed bus, CAN Interior High Speed (IHS) (125K) Bus, the message structure and layout is similar, which allows the Body Control Module (BCM) to process and transfer messages between the CAN buses. The BCM stores Diagnostic Trouble Codes (DTCs) for certain bus network faults on the CAN C (500K) Bus and CAN IHS (125K) Bus.

All modules transmit and receive messages over one of these buses. Data exchange between the modules is achieved by serial transmission of encoded data messages (a form of transmission in which data bits are sent sequentially, one at a time, over a single line). Each module can both send and receive serial data simultaneously. Each data bit of a CAN Bus message is carried over the bus as a voltage differential between the two bus circuits which, when strung together, form a message. Each module uses arbitration to sort the message priority if two competing messages are attempting to be broadcast at the same time. Corruption of a single bit within a message will corrupt the entire message. Each message contains a Cyclic Redundancy Check (CRC) which specifies the message size exactly. If the message detected conflicts with the CRC the ECU receiving it will determine the message to be an error and consider that communication has not been possible. Diagnosis of this condition using a lab scope may reveal activity that appears to be Bus data messages even if no actual communication is possible. Communication problems that affect the whole bus, as a result of opens and terminal push outs are more likely to occur on data busses that operate at a high speed than a data bus that operates at a lower speed.

When an open circuit or terminal push out occurs one or more modules can become isolated from the remainder of the bus. The isolated module will attempt to communicate, but will not be able to receive messages or

determine arbitration from other modules. Each time the isolated module attempts to communicate it alters the bus voltage on the intact bus circuit. Without functioning arbitration the isolated module alters the bus voltage while other bus messages are being sent thereby corrupting the messages on the remainder of the bus.

The CAN bus modules are connected in parallel to the two-wire bus using a twisted pair, where the wires are wrapped around each other to provide shielding from unwanted electromagnetic induction, thus preventing interference with the relatively low voltage signals being carried through them. While the CAN bus is operating (active), one of the bus wires will carry a higher voltage and is referred to as the CAN High or CAN bus (+) wire, while the other bus wire will carry a lower voltage and is referred to as the CAN Low or CAN bus (-) wire.

For additional information on the communication network and star connector locations, refer to **COMMUNICATION, DESCRIPTION** .

WHEN MONITORED

With the ignition on for at least five seconds.

Battery voltage between 10 and 16 volts.

Body Control Module (BCM) is configured correctly.

SET CONDITION

Bus messages not received from the Comfort Seat and Wheel Module (CSWM) for approximately two to five seconds.

POSSIBLE CAUSES

Possible Causes
CAN IHS BUS (125K) (+) CIRCUIT SHORTED TO VOLTAGE
CAN IHS BUS (125K) (-) CIRCUIT SHORTED TO GROUND
DTCS RELATED TO BATTERY VOLTAGE, IGNITION, OR VIN MESSAGES
BCM NOT CONFIGURED CORRECTLY
CSWM POWER AND GROUND
COMFORT SEAT AND WHEEL MODULE (CSWM)
MODULE THAT SET THIS DTC

DIAGNOSTIC TEST

1. **VERIFY DTC IS ACTIVE**

NOTE: Make sure the battery voltage is between 10 and 16 volts before proceeding.

1. With the scan tool, read active DTCs.

   Is this DTC active?

   Yes

   - Go To 2

   No

   - Refer to **DIAGNOSIS AND TESTING** and perform the STORED LOST COMMUNICATION DTCS diagnostic procedure.

2. **CHECK FOR ANY OF THE FOLLOWING ACTIVE DTCS**
   1. With the scan tool, read all active DTCs from all modules.

      NOTE: Check for BCM configuration, CAN IHS hardware electrical, VIN Missing/Mismatch, battery or ignition related DTCs.

      Does the scan tool display any active DTCs to the conditions listed above?

      Yes

      - Go to the **DTC INDEX** and perform the appropriate diagnostic procedure.

      No

      - Go To 3

3. **VERIFY THE CSWM IS ACTIVE ON THE BUS**
   1. Turn the ignition on.
   2. With the scan tool, verify the CSWM is active on the bus.

      Is the CSWM active on the bus?

      Yes

      - Go To 4

      No

      - Refer to **DIAGNOSIS AND TESTING** and perform the NO RESPONSE FROM CSWM (COMFORT SEAT AND WHEEL MODULE) diagnostic procedure.

4. **CHECK FOR ADDITIONAL COMMUNICATION RELATED DTCS**
   1. With the scan tool, read all the DTCs.

Is there more than one module with active DTCs "Logged Against" the CSWM?

Yes

- Replace/update the CSWM in accordance with the Service Information. Refer to **MODULE, COMFORT SEAT AND WHEEL, REMOVAL** .
- Perform the BODY VERIFICATION TEST. Refer to **STANDARD PROCEDURE** .

No

- Go To 5

5. **CLEAR DTC IN MODULE SETTING FAULT**
   1. With the scan tool, select the module setting the DTC against the CSWM.
   2. Clear active DTCs.

   Is this DTC still active?

   Yes

   - Replace/update the module that set this DTC in accordance with the Service Information.
   - Perform the appropriate verification test for the module being replaced. If there is no verification test for the associated module perform the BODY VERIFICATION TEST. Refer to **STANDARD PROCEDURE** .

   No

   - Go To 6

6. **CYCLE IGNITION**
   1. Cycle the ignition from RUN to OFF three times ending with the key in the RUN position.

   Does this DTC become active?

   Yes

   - Go To 7

   No

   - The condition is not present at this time. Using the wiring diagram/schematic as a guide, inspect the wiring for chafed, pierced, pinched and partially broken wires and the wiring harness connectors for broken, bent, pushed out and corroded terminals.
   - Perform the appropriate verification test for the module. If there is no verification test for the associated module perform the BODY VERIFICATION TEST. Refer to **STANDARD PROCEDURE** .

7. **CHECK FOR ADDITIONAL LOST COMMUNICATION FAULTS**
   1. With the scan tool, view the modules.

      Does the BCM and other CAN IHS BUS modules show Lost Communication with the remaining CAN IHS BUS modules?

      Yes

      - Go To 8

      No

      - Replace/update the module that set this DTC in accordance with the Service Information.
      - Perform the appropriate verification test for the module being replaced. If there is no verification test for the associated module perform the BODY VERIFICATION TEST. Refer to **STANDARD PROCEDURE** .
8. **CHECK THE CAN IHS BUS (+) CIRCUIT FOR A SHORT TO VOLTAGE**
   1. Measure the voltage between the (D157) CAN IHS BUS (+) circuit and ground at the Data Link Connector.

      Is the voltage above 5.0 volts?

      Yes

      - Repair the short to voltage in the CAN IHS BUS (+) circuit. The short to voltage is present in one of the CAN IHS BUS circuits. Use the Star Connectors to isolate portions of the CAN IHS BUS in order to locate the concern.
      - Perform the BODY VERIFICATION TEST. Refer to **STANDARD PROCEDURE** .

      No

      - Go To 9
9. **CHECK THE CAN IHS BUS (-) CIRCUIT FOR A SHORT TO GROUND**
   1. Turn the ignition off.
   2. Measure the resistance between ground and the (D158) CAN IHS BUS (-) circuit at the Data Link Connector.

      Is the resistance below 10k Ohms?

      Yes

      - Repair the short to ground in the CAN IHS BUS (-) circuit. The short to ground is present in one of the CAN IHS BUS circuits. Use the Star Connectors to isolate portions of the CAN IHS BUS in order to locate the concern.

- Perform the BODY VERIFICATION TEST. Refer to **STANDARD PROCEDURE** .

No

- Replace/update the module that set this DTC in accordance with the Service Information.
- Perform the appropriate verification test for the module being replaced. If there is no verification test for the associated module perform the BODY VERIFICATION TEST. Refer to **STANDARD PROCEDURE** .

U0209-87-LOST COMMUNICATION WITH MEMORY SEAT CONTROL MODULE - MISSING MESSAGE

For a complete wiring diagram, **refer to appropriate SYSTEM WIRING DIAGRAMS article** .

THEORY OF OPERATION

The primary communication network between electronic control modules is the Controller Area Network (CAN) data bus system. The Controller Area Network (CAN) data bus allows all electronic modules connected to the bus to share information with each other. Regardless of whether a message originates from a module on the higher speed CAN C (500K) Bus or on the lower speed bus, CAN Interior High Speed (IHS) (125K) Bus, the message structure and layout is similar, which allows the Body Control Module (BCM) to process and transfer messages between the CAN buses. The BCM stores Diagnostic Trouble Codes (DTCs) for certain bus network faults on the CAN C (500K) Bus and CAN IHS (125K) Bus.

All modules transmit and receive messages over one of these buses. Data exchange between the modules is achieved by serial transmission of encoded data messages (a form of transmission in which data bits are sent sequentially, one at a time, over a single line). Each module can both send and receive serial data simultaneously. Each data bit of a CAN Bus message is carried over the bus as a voltage differential between the two bus circuits which, when strung together, form a message. Each module uses arbitration to sort the message priority if two competing messages are attempting to be broadcast at the same time. Corruption of a single bit within a message will corrupt the entire message. Each message contains a Cyclic Redundancy Check (CRC) which specifies the message size exactly. If the message detected conflicts with the CRC the ECU receiving it will determine the message to be an error and consider that communication has not been possible. Diagnosis of this condition using a lab scope may reveal activity that appears to be Bus data messages even if no actual communication is possible. Communication problems that affect the whole bus, as a result of opens and terminal push outs are more likely to occur on data busses that operate at a high speed than a data bus that operates at a lower speed.

When an open circuit or terminal push out occurs one or more modules can become isolated from the remainder of the bus. The isolated module will attempt to communicate, but will not be able to receive messages or determine arbitration from other modules. Each time the isolated module attempts to communicate it alters the bus voltage on the intact bus circuit. Without functioning arbitration the isolated module alters the bus voltage while other bus messages are being sent thereby corrupting the messages on the remainder of the bus.

The CAN bus modules are connected in parallel to the two-wire bus using a twisted pair, where the wires are wrapped around each other to provide shielding from unwanted electromagnetic induction, thus preventing interference with the relatively low voltage signals being carried through them. While the CAN bus is operating

(active), one of the bus wires will carry a higher voltage and is referred to as the CAN High or CAN bus (+) wire, while the other bus wire will carry a lower voltage and is referred to as the CAN Low or CAN bus (-) wire.

For additional information on the communication network and star connector locations, refer to **COMMUNICATION, DESCRIPTION** .

WHEN MONITORED

With the ignition on for at least five seconds.

Battery voltage between 10 and 16 volts.

Body Control Module (BCM) is configured correctly.

SET CONDITION

Bus messages not received from the Driver Seat Module (DSM) for approximately two to five seconds.

POSSIBLE CAUSES

Possible Causes
CAN C BUS (+) CIRCUIT SHORTED TO VOLTAGE
CAN C BUS (-) CIRCUIT SHORTED TO GROUND
DTCS RELATED TO BATTERY VOLTAGE, IGNITION, OR VIN MESSAGES
BCM NOT CONFIGURED CORRECTLY
DRIVER SEAT MODULE (DSM) POWER AND GROUND
DRIVER SEAT MODULE (DSM)
MODULE THAT SET THIS DTC

DIAGNOSTIC TEST

1. **VERIFY DTC IS ACTIVE**

   NOTE: Make sure the battery voltage is between 10 and 16 volts before proceeding.

   1. With the scan tool, read active DTCs.

      Is this DTC active?

      Yes

      - Go To 2

No

- Refer to **DIAGNOSIS AND TESTING** and perform the STORED LOST COMMUNICATION DTCS diagnostic procedure.

2. **CHECK FOR ANY OF THE FOLLOWING ACTIVE DTCS**
   1. With the scan tool, read all active DTCs from all modules.

NOTE: Check for BCM configuration, CAN C hardware electrical, VIN Missing/Mismatch, battery or ignition related DTCs.

Does the scan tool display any active DTCs to the conditions listed above?

Yes

- Go to the **DTC INDEX** and perform the appropriate diagnostic procedure.

No

- Go To 3

3. **VERIFY THE DRIVER SEAT MODULE (DSM) IS ACTIVE ON THE BUS**
   1. Turn the ignition on.
   2. With the scan tool, verify the DSM is active on the bus.

Is the DSM active on the bus?

Yes

- Go To 4

No

- Refer to **DIAGNOSIS AND TESTING** and perform the NO RESPONSE FROM DRIVER SEAT MODULE diagnostic procedure.

4. **CHECK FOR ADDITIONAL COMMUNICATION RELATED DTCS**
   1. With the scan tool, read all the DTCs.

Is there more than one module with active DTCs "Logged Against" the DSM?

Yes

- Replace/update the DSM in accordance with the Service Information.
- Perform the BODY VERIFICATION TEST. Refer to **STANDARD PROCEDURE** .

No

- Go To 5

5. **CLEAR DTC IN MODULE SETTING FAULT**
   1. With the scan tool, select the module setting the DTC against the DSM.
   2. Clear active DTCs.

      Is this DTC still active?

      Yes

      - Replace/update the module that set this DTC in accordance with the Service Information.
      - Perform the appropriate verification test for the module being replaced. If there is no verification test for the associated module perform the BODY VERIFICATION TEST. Refer to **STANDARD PROCEDURE** .

      No

      - Go To 6
6. **CYCLE IGNITION**
   1. Cycle the ignition from RUN to OFF three times ending with the key in the RUN position.

      Does this DTC become active?

      Yes

      - Go To 7

      No

      - The condition is not present at this time. Using the wiring diagram/schematic as a guide, inspect the wiring for chafed, pierced, pinched, and partially broken wires and the wiring harness connectors for broken, bent, pushed out, and corroded terminals.
      - Perform the appropriate verification test for the module. If there is no verification test for the associated module perform the BODY VERIFICATION TEST. Refer to **STANDARD PROCEDURE** .
7. **CHECK FOR ADDITIONAL LOST COMMUNICATION FAULTS**
   1. With the scan tool, view the modules.

      Does the BCM and other CAN C BUS modules show Lost Communication with the remaining CAN C BUS modules?

      Yes

      - Go To 8

No

- Replace/update the module that set this DTC in accordance with the Service Information.
- Perform the appropriate verification test for the module being replaced. If there is no verification test for the associated module perform the BODY VERIFICATION TEST. Refer to **STANDARD PROCEDURE** .

8. **CHECK THE CAN C BUS (+) CIRCUIT FOR A SHORT TO VOLTAGE**

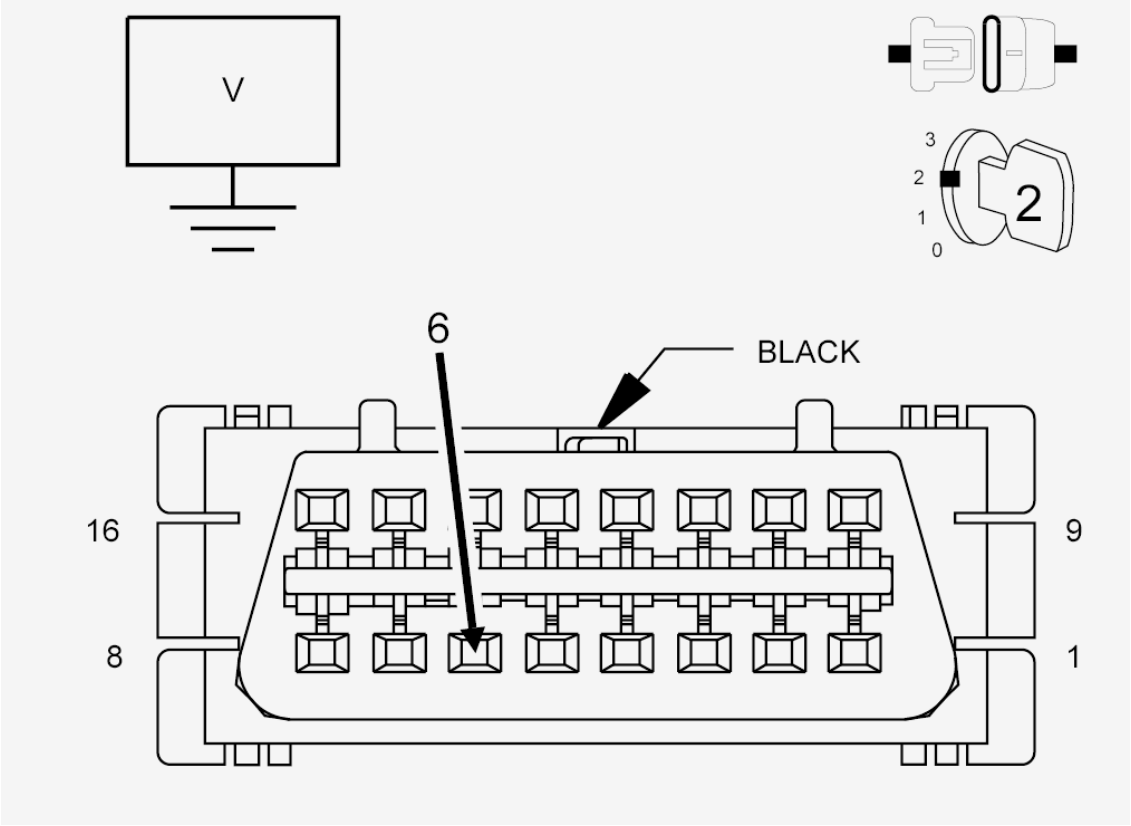

Fig. 5: Checking CAN C BUS (+) Circuit For A Short To Voltage
Courtesy of CHRYSLER GROUP, LLC

1. Measure the voltage between the (D57) CAN C Bus (+) circuit and ground.

   Is the voltage above 5.0 volts?

   Yes

   - Repair the short to voltage in the CAN C Bus (+) circuit. The short to voltage is present in one of the CAN C Bus circuits. Use the Star Connectors to isolate portions of the CAN C Bus in order to locate the concern.
   - Perform the BODY VERIFICATION TEST. Refer to **STANDARD PROCEDURE** .

   No

- Go To 9

9. **CHECK THE CAN C BUS (-) CIRCUIT FOR A SHORT TO GROUND**

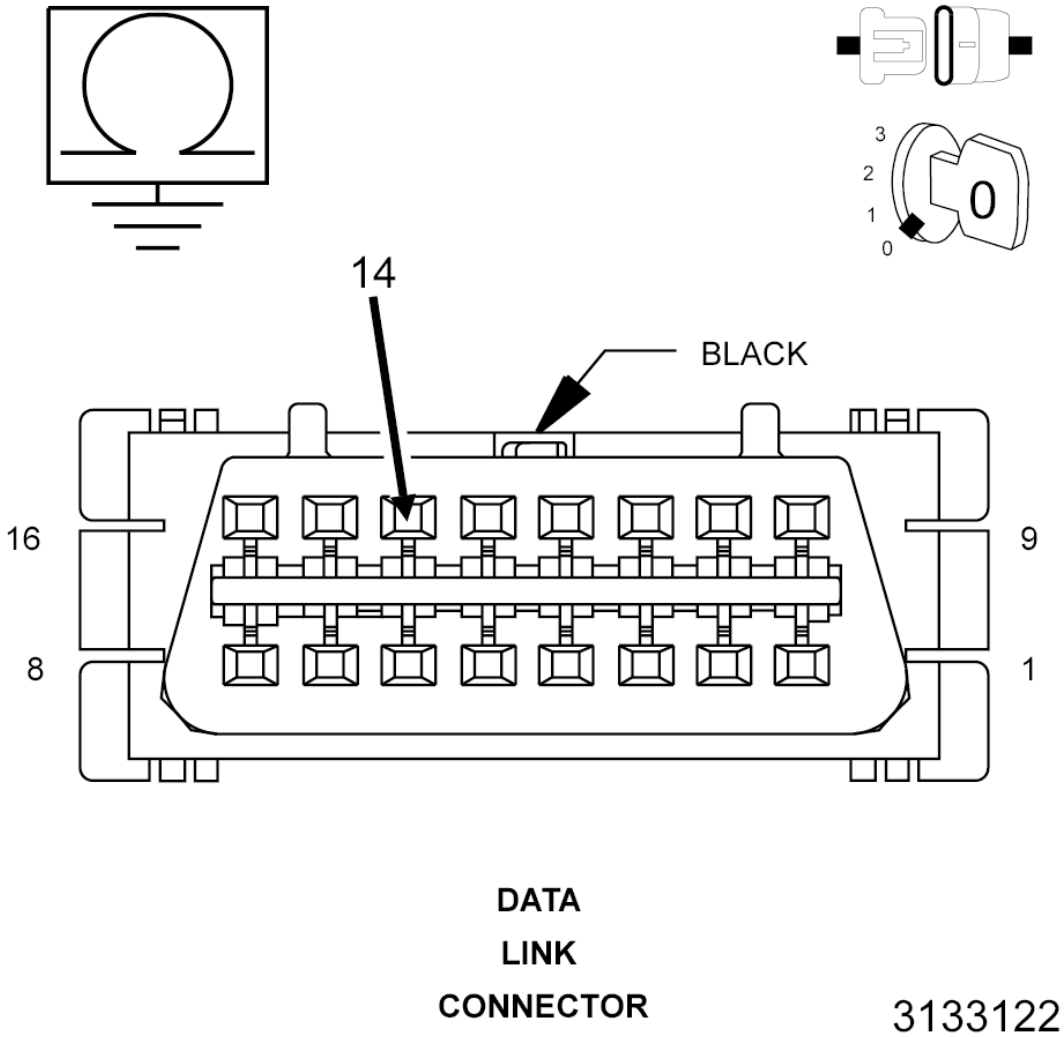

Fig. 6: Checking CAN C BUS (-) Circuit For A Short To Ground
Courtesy of CHRYSLER GROUP, LLC

1. Turn the ignition off.
2. Measure the resistance between ground and the (D58) CAN C Bus (-) circuit.

   Is the resistance below 10k Ohms?

   Yes

   - Repair the short to ground in the CAN C Bus (-) circuit. The short to ground is present in one of the CAN C Bus circuits. Use the Star Connectors to isolate portions of the CAN C Bus in order to locate the concern.

- Perform the BODY VERIFICATION TEST. Refer to **STANDARD PROCEDURE** .

No

- Replace/update the module that set this DTC in accordance with the Service Information.
- Perform the appropriate verification test for the module being replaced. If there is no verification test for the associated module perform the BODY VERIFICATION TEST. Refer to **STANDARD PROCEDURE** .

U0230-87-LOST COMMUNICATION WITH POWER LIFTGATE MODULE - MISSING MESSAGE

For a complete wiring diagram, **refer to appropriate SYSTEM WIRING DIAGRAMS article** .

THEORY OF OPERATION

The primary communication network between electronic control modules is the Controller Area Network (CAN) data bus system. The Controller Area Network (CAN) data bus allows all electronic modules connected to the bus to share information with each other. Regardless of whether a message originates from a module on the higher speed CAN C (500K) Bus or on the lower speed bus, CAN Interior High Speed (IHS) (125K) Bus, the message structure and layout is similar, which allows the Body Control Module (BCM) to process and transfer messages between the CAN buses. The BCM stores Diagnostic Trouble Codes (DTCs) for certain bus network faults on the CAN C (500K) Bus and CAN IHS (125K) Bus.

All modules transmit and receive messages over one of these buses. Data exchange between the modules is achieved by serial transmission of encoded data messages (a form of transmission in which data bits are sent sequentially, one at a time, over a single line). Each module can both send and receive serial data simultaneously. Each data bit of a CAN Bus message is carried over the bus as a voltage differential between the two bus circuits which, when strung together, form a message. Each module uses arbitration to sort the message priority if two competing messages are attempting to be broadcast at the same time. Corruption of a single bit within a message will corrupt the entire message. Each message contains a Cyclic Redundancy Check (CRC) which specifies the message size exactly. If the message detected conflicts with the CRC the ECU receiving it will determine the message to be an error and consider that communication has not been possible. Diagnosis of this condition using a lab scope may reveal activity that appears to be Bus data messages even if no actual communication is possible. Communication problems that affect the whole bus, as a result of opens and terminal push outs are more likely to occur on data busses that operate at a high speed than a data bus that operates at a lower speed.

When an open circuit or terminal push out occurs one or more modules can become isolated from the remainder of the bus. The isolated module will attempt to communicate, but will not be able to receive messages or determine arbitration from other modules. Each time the isolated module attempts to communicate it alters the bus voltage on the intact bus circuit. Without functioning arbitration the isolated module alters the bus voltage while other bus messages are being sent thereby corrupting the messages on the remainder of the bus.

The CAN bus modules are connected in parallel to the two-wire bus using a twisted pair, where the wires are wrapped around each other to provide shielding from unwanted electromagnetic induction, thus preventing interference with the relatively low voltage signals being carried through them. While the CAN bus is operating (active), one of the bus wires will carry a higher voltage and is referred to as the CAN High or CAN bus (+)

wire, while the other bus wire will carry a lower voltage and is referred to as the CAN Low or CAN bus (-) wire.

For additional information on the communication network and star connector locations, refer to **COMMUNICATION, DESCRIPTION** .

WHEN MONITORED

With the ignition on for at least five seconds.

Battery voltage between 10 and 16 volts.

Body Control Module (BCM) is configured correctly.

SET CONDITION

Bus messages not received from the Power Liftgate Module (PLGM) for approximately two to five seconds.

POSSIBLE CAUSES

Possible Causes
CAN C BUS (+) CIRCUIT SHORTED TO VOLTAGE
CAN C BUS (-) CIRCUIT SHORTED TO GROUND
DTCS RELATED TO BATTERY VOLTAGE, IGNITION, OR VIN MESSAGES
BCM NOT CONFIGURED CORRECTLY
POWER LIFTGATE MODULE (PLGM) POWER AND GROUND
POWER LIFTGATE MODULE (PLGM)
MODULE THAT SET THIS DTC

DIAGNOSTIC TEST

1. **VERIFY DTC IS ACTIVE**

   NOTE: Make sure the battery voltage is between 10 and 16 volts before proceeding.

   1. With the scan tool, read active DTCs.

      Is this DTC active?

      Yes

      - Go To 2

      No

- Refer to **DIAGNOSIS AND TESTING** and perform the STORED LOST COMMUNICATION DTCS diagnostic procedure.

2. **CHECK FOR ANY OF THE FOLLOWING ACTIVE DTCS**
   1. With the scan tool, read all active DTCs from all modules.

      NOTE: Check for BCM configuration, CAN C hardware electrical, VIN Missing/Mismatch, battery or ignition related DTCs.

      Does the scan tool display any active DTCs to the conditions listed above?

      Yes

      - Go to the **DTC INDEX** and perform the appropriate diagnostic procedure.

      No

      - Go To 3

3. **VERIFY THE POWER LIFTGATE MODULE (PLGM) IS ACTIVE ON THE BUS**
   1. Turn the ignition on.
   2. With the scan tool, verify the PLGM is active on the bus.

      Is the PLGM active on the bus?

      Yes

      - Go To 4

      No

      - Refer to **DIAGNOSIS AND TESTING** and perform the NO RESPONSE FROM POWER LIFTGATE MODULE diagnostic procedure.

4. **CHECK FOR ADDITIONAL COMMUNICATION RELATED DTCS**
   1. With the scan tool, read all the DTCs.

      Is there more than one module with active DTCs "Logged Against" the PLGM?

      Yes

      - Replace/update the PLGM in accordance with the Service Information.
      - Perform the BODY VERIFICATION TEST. Refer to **STANDARD PROCEDURE** .

      No

      - Go To 5

5. **CLEAR DTC IN MODULE SETTING FAULT**
   1. With the scan tool, select the module setting the DTC against the PLGM.
   2. Clear active DTCs.

      Is this DTC still active?

      Yes

      - Replace/update the module that set this DTC in accordance with the Service Information.
      - Perform the appropriate verification test for the module being replaced. If there is no verification test for the associated module perform the BODY VERIFICATION TEST. Refer to **STANDARD PROCEDURE** .

      No

      - Go To 6
6. **CYCLE IGNITION**
   1. Cycle the ignition from RUN to OFF three times ending with the key in the RUN position.

      Does this DTC become active?

      Yes

      - Go To 7

      No

      - The condition is not present at this time. Using the wiring diagram/schematic as a guide, inspect the wiring for chafed, pierced, pinched, and partially broken wires and the wiring harness connectors for broken, bent, pushed out, and corroded terminals.
      - Perform the appropriate verification test for the module. If there is no verification test for the associated module perform the BODY VERIFICATION TEST. Refer to **STANDARD PROCEDURE** .
7. **CHECK FOR ADDITIONAL LOST COMMUNICATION FAULTS**
   1. With the scan tool, view the modules.

      Does the BCM and other CAN C BUS modules show Lost Communication with the remaining CAN C BUS modules?

      Yes

      - Go To 8

      No

- Replace/update the module that set this DTC in accordance with the Service Information.
- Perform the appropriate verification test for the module being replaced. If there is no verification test for the associated module perform the BODY VERIFICATION TEST. Refer to **STANDARD PROCEDURE** .

8. **CHECK THE CAN C BUS (+) CIRCUIT FOR A SHORT TO VOLTAGE**

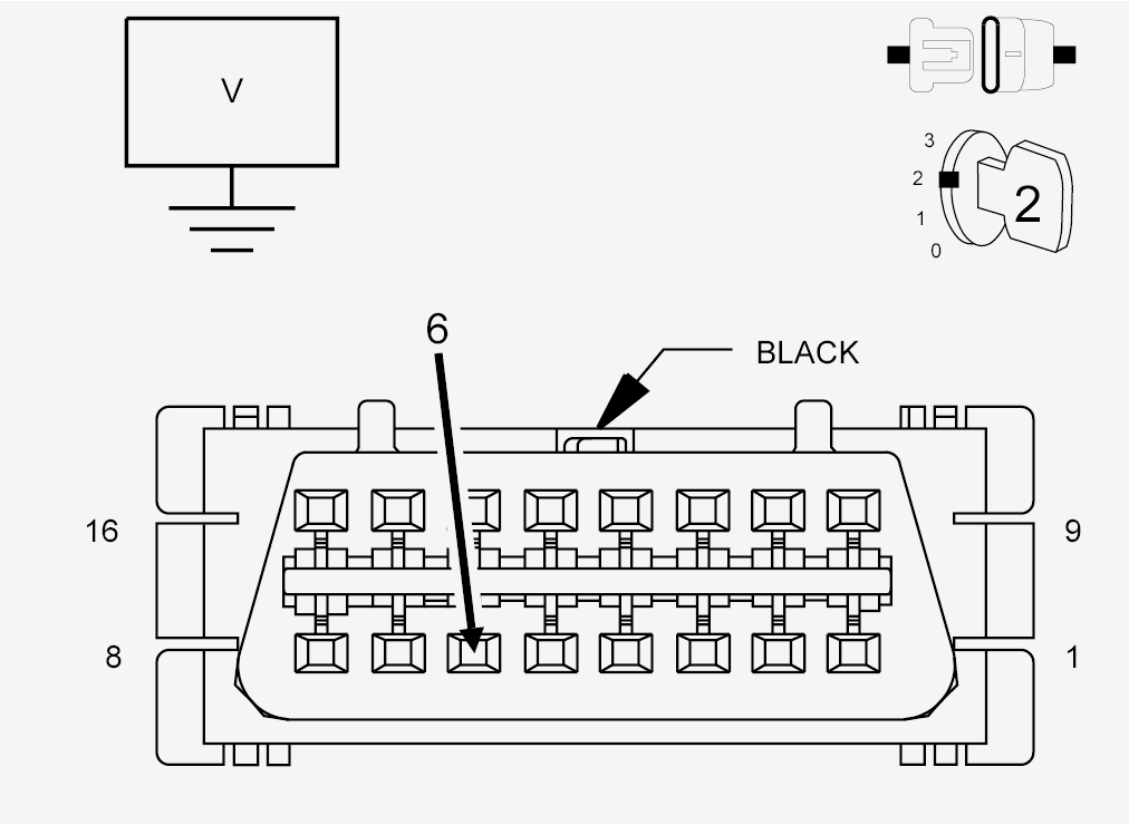

Fig. 7: Checking CAN C BUS (+) Circuit For A Short To Voltage
Courtesy of CHRYSLER GROUP, LLC

1. Measure the voltage between the (D57) CAN C Bus (+) circuit and ground.

   Is the voltage above 5.0 volts?

   Yes

   - Repair the short to voltage in the CAN C Bus (+) circuit. The short to voltage is present in one of the CAN C Bus circuits. Use the Star Connectors to isolate portions of the CAN C Bus in order to locate the concern.
   - Perform the BODY VERIFICATION TEST. Refer to **STANDARD PROCEDURE** .

   No

   - Go To 9

9. **CHECK THE CAN C BUS (-) CIRCUIT FOR A SHORT TO GROUND**

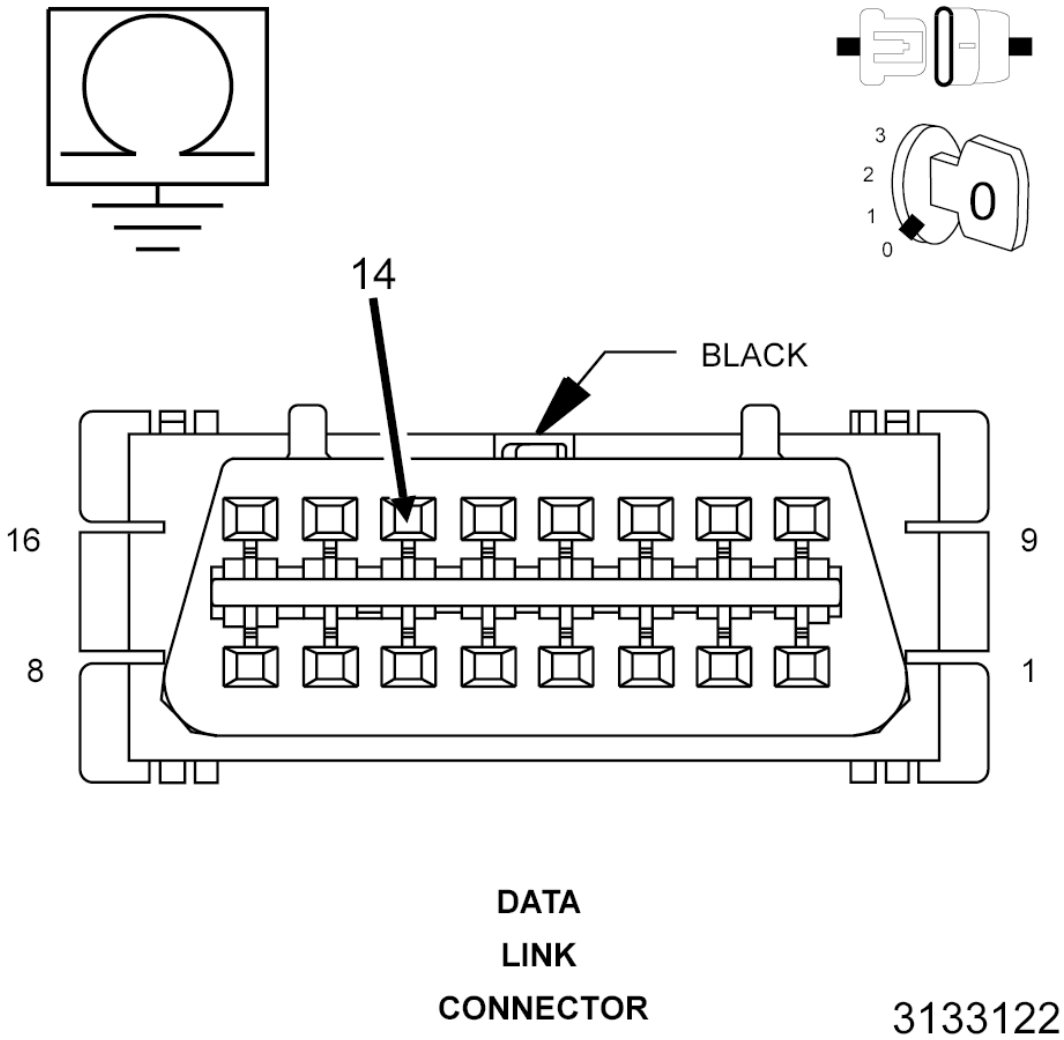

Fig. 8: Checking CAN C BUS (-) Circuit For A Short To Ground
Courtesy of CHRYSLER GROUP, LLC

1. Turn the ignition off.
2. Measure the resistance between ground and the (D58) CAN C Bus (-) circuit.

   Is the resistance below 10k Ohms?

   Yes

   - Repair the short to ground in the CAN C Bus (-) circuit. The short to ground is present in one of the CAN C Bus circuits. Use the Star Connectors to isolate portions of the CAN C Bus in order to locate the concern.
   - Perform the BODY VERIFICATION TEST. Refer to **STANDARD PROCEDURE** .

No

- Replace/update the module that set this DTC in accordance with the Service Information.
- Perform the appropriate verification test for the module being replaced. If there is no verification test for the associated module perform the BODY VERIFICATION TEST. Refer to **STANDARD PROCEDURE** .

U0231-87-LOST COMMUNICATION WITH RAIN SENSING MODULE-MISSING MESSAGE

For a complete wiring diagram, **refer to appropriate SYSTEM WIRING DIAGRAMS article** .

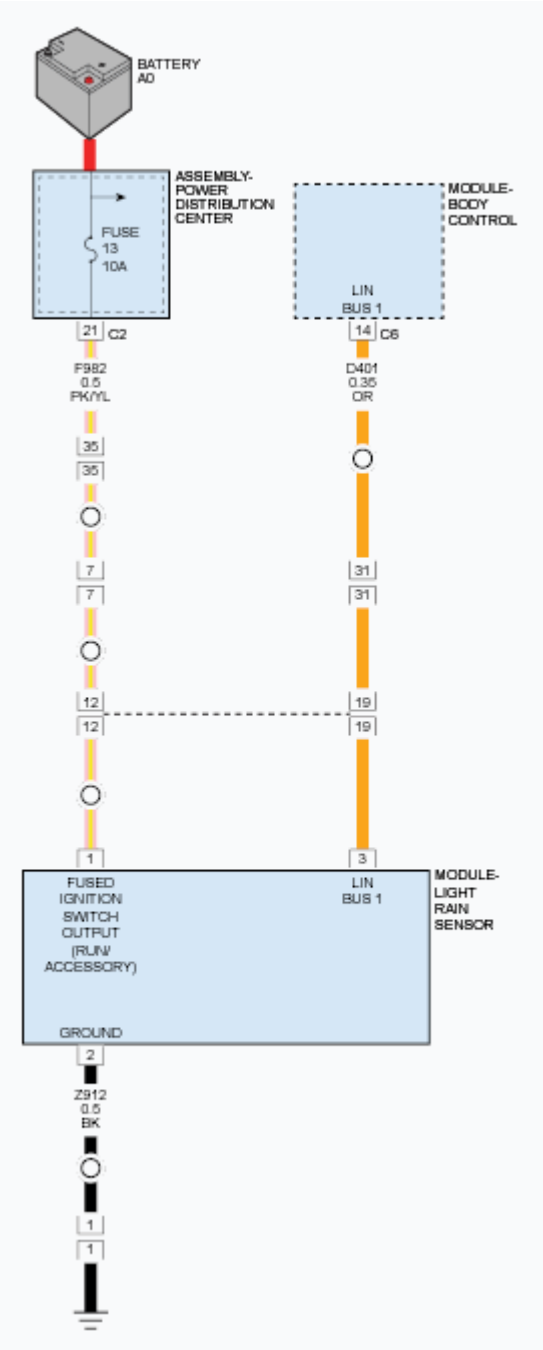

Fig. 9: Rain Sensing Module Circuit Diagram
Courtesy of CHRYSLER GROUP, LLC

WHEN MONITORED

With the ignition on.

SET CONDITION

The Body Control Module (BCM) does not receive information from the Light Rain Sensor Module (LRSM).

POSSIBLE CAUSES

Possible Causes
(F982) FUSED IGNITION SWITCH OUTPUT CIRCUIT OPEN
(Z912) GROUND CIRCUIT OPEN
(D401) LIN BUS CIRCUIT OPEN
LIGHT RAIN SENSOR MODULE (LRSM)

DIAGNOSTIC TEST

1. **CHECK FOR AN ACTIVE DTC**
    1. Turn the ignition on.
    2. With the scan tool, read DTCs.

    Does the scan tool display this DTC as active?

    Yes

    - Go To 2

    No

    - Test complete. The condition or conditions that originally set this DTC are not present at this time. Using the wiring diagrams as a guide, check all related splices and connectors for signs of water intrusion, corrosion, pushed out or bent terminals and correct pin tension.
    - Perform the BODY VERIFICATION TEST. Refer to **STANDARD PROCEDURE** .
2. **CHECK THE (F982) FUSED IGNITION SWITCH OUTPUT CIRCUIT FOR AN OPEN**
    1. Turn the ignition off.
    2. Disconnect the LRSM harness connector.
    3. Turn the ignition on.
    4. Using a 12-volt test light connected to ground, check the (F982) Fused Ignition Switch Output circuit at the LRSM harness connector.

    Does the test light illuminate brightly?

    Yes

    - Go To 3

    No

    - Repair the open or short to ground in the (F982) Fused Ignition Switch Output circuit.

- Perform the BODY VERIFICATION TEST. Refer to **STANDARD PROCEDURE** .

3. **CHECK THE (Z912) GROUND CIRCUIT FOR AN OPEN**
   1. Turn the ignition off.
   2. Using a 12-volt test light connected to 12-volts, check the (Z912) Ground circuit at the LRSM harness connector.

      Does the test light illuminate brightly?

      Yes

      - Go To 4

      No

      - Repair the open in the (Z912) Ground circuit.
      - Perform the BODY VERIFICATION TEST. Refer to **STANDARD PROCEDURE** .
4. **CHECK THE (D401) LIN BUS CIRCUIT FOR AN OPEN**
   1. Turn the ignition on.
   2. Measure the voltage between ground and the (D401) LIN BUS circuit at the LRSM harness connector.

      Is the voltage above 5.0 volts?

      Yes

      - Replace the LRSM in accordance with the Service Information.
      - Perform the BODY VERIFICATION TEST. Refer to **STANDARD PROCEDURE** .

      No

      - Repair the open in the (D401) LIN Bus circuit.
      - Perform the BODY VERIFICATION TEST. Refer to **STANDARD PROCEDURE** .

U0236-87-LOST COMMUNICATION WITH ELECTRONIC STEERING COLUMN LOCK MODULE - MISSING MESSAGE

For a complete wiring diagram, **refer to appropriate SYSTEM WIRING DIAGRAMS article** .

THEORY OF OPERATION

The primary communication network between electronic control modules is the Controller Area Network (CAN) data bus system. The Controller Area Network (CAN) data bus allows all electronic modules connected to the bus to share information with each other. Regardless of whether a message originates from a module on the higher speed CAN C (500K) Bus or on the lower speed bus, CAN Interior High Speed (IHS) (125K) Bus,

the message structure and layout is similar, which allows the Body Control Module (BCM) to process and transfer messages between the CAN buses. The BCM stores Diagnostic Trouble Codes (DTCs) for certain bus network faults on the CAN C (500K) Bus and CAN IHS (125K) Bus.

All modules transmit and receive messages over one of these buses. Data exchange between the modules is achieved by serial transmission of encoded data messages (a form of transmission in which data bits are sent sequentially, one at a time, over a single line). Each module can both send and receive serial data simultaneously. Each data bit of a CAN Bus message is carried over the bus as a voltage differential between the two bus circuits which, when strung together, form a message. Each module uses arbitration to sort the message priority if two competing messages are attempting to be broadcast at the same time. Corruption of a single bit within a message will corrupt the entire message. Each message contains a Cyclic Redundancy Check (CRC) which specifies the message size exactly. If the message detected conflicts with the CRC the ECU receiving it will determine the message to be an error and consider that communication has not been possible. Diagnosis of this condition using a lab scope may reveal activity that appears to be Bus data messages even if no actual communication is possible. Communication problems that affect the whole bus, as a result of opens and terminal push outs are more likely to occur on data busses that operate at a high speed than a data bus that operates at a lower speed.

When an open circuit or terminal push out occurs one or more modules can become isolated from the remainder of the bus. The isolated module will attempt to communicate, but will not be able to receive messages or determine arbitration from other modules. Each time the isolated module attempts to communicate it alters the bus voltage on the intact bus circuit. Without functioning arbitration the isolated module alters the bus voltage while other bus messages are being sent thereby corrupting the messages on the remainder of the bus.

The CAN bus modules are connected in parallel to the two-wire bus using a twisted pair, where the wires are wrapped around each other to provide shielding from unwanted electromagnetic induction, thus preventing interference with the relatively low voltage signals being carried through them. While the CAN bus is operating (active), one of the bus wires will carry a higher voltage and is referred to as the CAN High or CAN bus (+) wire, while the other bus wire will carry a lower voltage and is referred to as the CAN Low or CAN bus (-) wire.

For additional information on the communication network and star connector locations, refer to **COMMUNICATION, DESCRIPTION** .

WHEN MONITORED

With the ignition on for at least five seconds.

Battery voltage between 10 and 16 volts.

Body Control Module (BCM) is configured correctly.

SET CONDITION

Bus messages not received from the Electronic Steering Column Lock Module for approximately two to five seconds.

POSSIBLE CAUSES

Possible Causes
CAN C BUS (+) CIRCUIT SHORTED TO VOLTAGE
CAN C BUS (-) CIRCUIT SHORTED TO GROUND
DTCS RELATED TO BATTERY VOLTAGE, IGNITION, OR VIN MESSAGES
BCM NOT CONFIGURED CORRECTLY
ELECTRONIC STEERING COLUMN LOCK MODULE POWER AND GROUND
ELECTRONIC STEERING LOCK (ESL)
MODULE THAT SET THIS DTC

DIAGNOSTIC TEST

1. **VERIFY DTC IS ACTIVE**

   NOTE: Make sure the battery voltage is between 10 and 16 volts before proceeding.

   1. With the scan tool, read active DTCs.

      Is this DTC active?

      Yes

      - Go To 2

      No

      - Refer to **DIAGNOSIS AND TESTING** and perform the STORED LOST COMMUNICATION DTCS diagnostic procedure.

2. **CHECK FOR ANY OF THE FOLLOWING ACTIVE DTCS**
   1. With the scan tool, read all active DTCs from all modules.

      NOTE: Check for BCM configuration, CAN C hardware electrical, VIN Missing/Mismatch, battery or ignition related DTCs.

      Does the scan tool display any active DTCs to the conditions listed above?

      Yes

      - Refer to the **DTC INDEX** and perform the appropriate diagnostic procedure.

      No

- Go To 3

3. **VERIFY THE ELECTRONIC STEERING COLUMN LOCK MODULE IS ACTIVE ON THE BUS**
   1. Turn the ignition on.
   2. With the scan tool, verify the Electronic Steering Column Lock Module is active on the bus.

      Is the Electronic Steering Column Lock Module active on the bus?

      Yes

      - Go To 4

      No

      - Refer to **DIAGNOSIS AND TESTING** and perform the NO RESPONSE FROM ELECTRONIC STEERING COLUMN LOCK MODULE diagnostic procedure.
4. **CHECK FOR ADDITIONAL COMMUNICATION RELATED DTCS**
   1. With the scan tool, read all the DTCs.

      Is there more than one module with active DTCs "Logged Against" the Electronic Steering Column Lock Module?

      Yes

      - Replace/update the Electronic Steering Column Lock Module in accordance with the Service Information.
      - Perform the BODY VERIFICATION TEST. Refer to **STANDARD PROCEDURE** .

      No

      - Go To 5
5. **CLEAR DTC IN MODULE SETTING FAULT**
   1. With the scan tool, select the module setting the DTC against the Electronic Steering Column Lock Module.
   2. Clear active DTCs.

      Is this DTC still active?

      Yes

      - Replace/update the module that set this DTC in accordance with the Service Information.
      - Perform the appropriate verification test for the module being replaced. If there is no verification test for the associated module perform the BODY VERIFICATION TEST. Refer to **STANDARD PROCEDURE** .

No

- Go To 6

6. **CYCLE IGNITION**
   1. Cycle the ignition from RUN to OFF three times ending with the key in the RUN position.

      Does this DTC become active?

      Yes

      - Go To 7

      No

      - The condition is not present at this time. Using the wiring diagram/schematic as a guide, inspect the wiring for chafed, pierced, pinched, and partially broken wires and the wiring harness connectors for broken, bent, pushed out, and corroded terminals.
      - Perform the appropriate verification test for the module. If there is no verification test for the associated module perform the BODY VERIFICATION TEST. Refer to **STANDARD PROCEDURE** .
7. **CHECK FOR ADDITIONAL LOST COMMUNICATION FAULTS**
   1. With the scan tool, view the modules.

      Does the BCM and other CAN C BUS modules show Lost Communication with the remaining CAN C BUS modules?

      Yes

      - Go To 8

      No

      - Replace/update the module that set this DTC in accordance with the Service Information.
      - Perform the appropriate verification test for the module being replaced. If there is no verification test for the associated module perform the BODY VERIFICATION TEST. Refer to **STANDARD PROCEDURE** .
8. **CHECK THE CAN C BUS (+) CIRCUIT FOR A SHORT TO VOLTAGE**

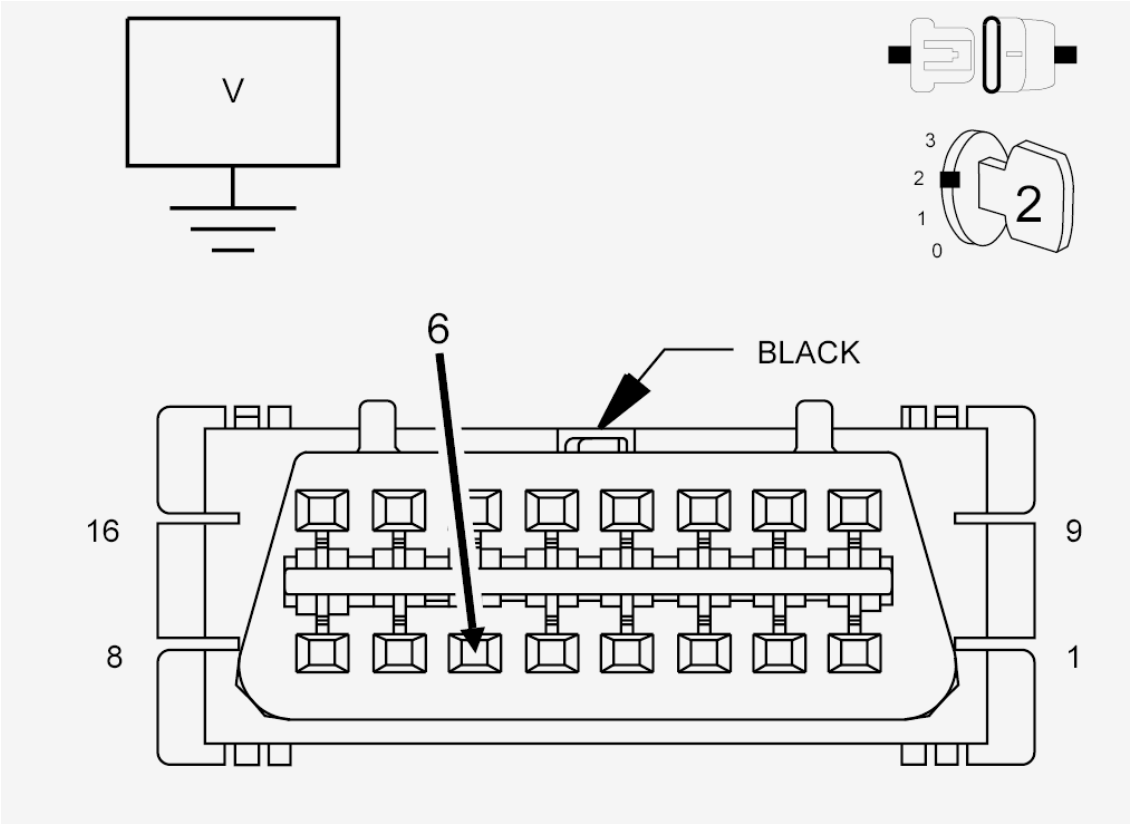

Fig. 10: Checking CAN C BUS (+) Circuit For A Short To Voltage
Courtesy of CHRYSLER GROUP, LLC

1. Measure the voltage between the (D57) CAN C Bus (+) circuit and ground.

   Is the voltage above 5.0 volts?

   Yes

   - Repair the short to voltage in the CAN C Bus (+) circuit. The short to voltage is present in one of the CAN C Bus circuits. Use the Star Connectors to isolate portions of the CAN C Bus in order to locate the concern.
   - Perform the BODY VERIFICATION TEST. Refer to **STANDARD PROCEDURE** .

   No

   - Go To 9

9. **CHECK THE CAN C BUS (-) CIRCUIT FOR A SHORT TO GROUND**

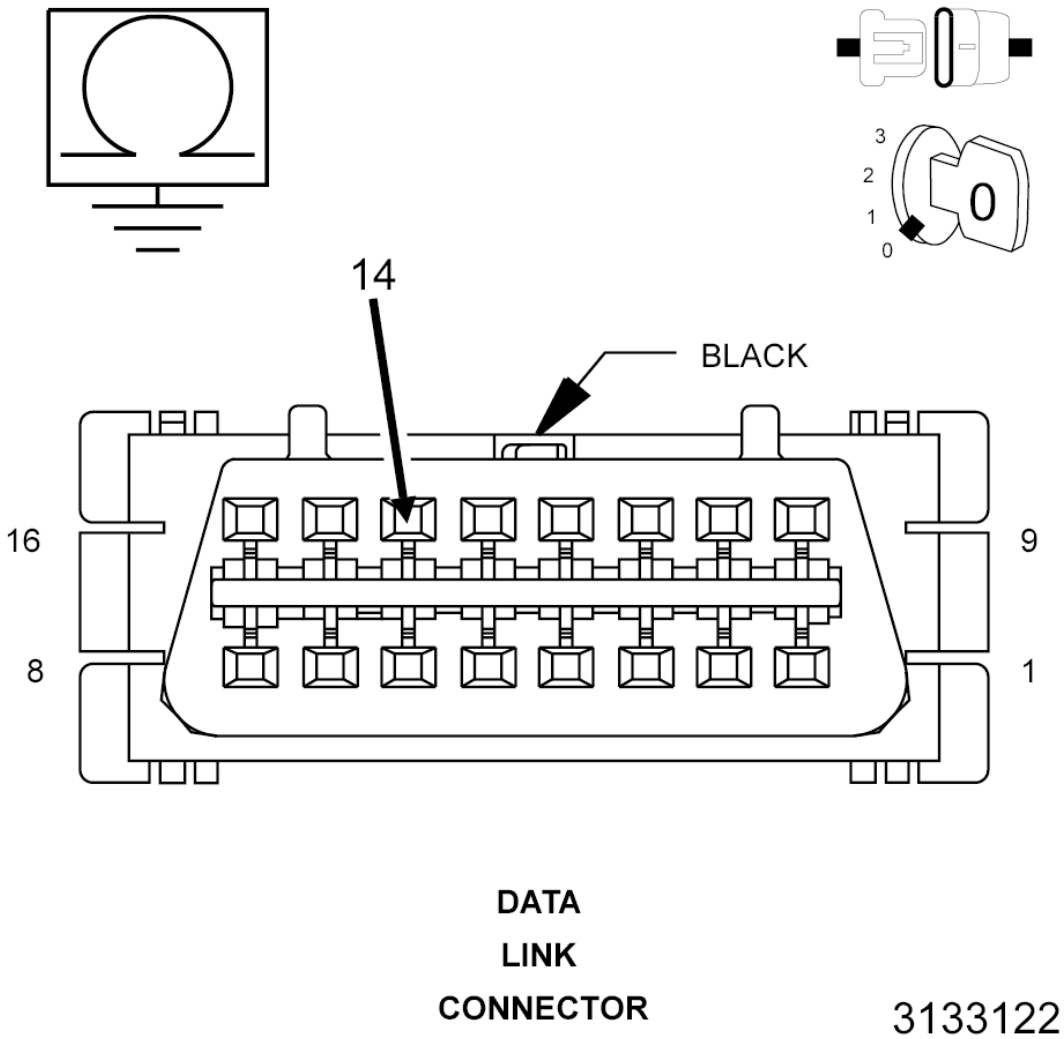

Fig. 11: Checking CAN C BUS (-) Circuit For A Short To Ground
Courtesy of CHRYSLER GROUP, LLC

1. Turn the ignition off.
2. Measure the resistance between ground and the (D58) CAN C Bus (-) circuit.

   Is the resistance below 10k Ohms?

   Yes

   - Repair the short to ground in the CAN C Bus (-) circuit. The short to ground is present in one of the CAN C Bus circuits. Use the Star Connectors to isolate portions of the CAN C Bus in order to locate the concern.
   - Perform the BODY VERIFICATION TEST. Refer to **STANDARD PROCEDURE** .

   No

- Replace/update the module that set this DTC in accordance with the Service Information.
- Perform the appropriate verification test for the module being replaced. If there is no verification test for the associated module perform the BODY VERIFICATION TEST. Refer to **STANDARD PROCEDURE** .

U0241-87-LOST COMMUNICATION WITH AUTO HIGHBEAM HEADLAMP CONTROL MODULE - MISSING MESSAGE

For a complete wiring diagram, **refer to appropriate SYSTEM WIRING DIAGRAMS article** .

THEORY OF OPERATION

The primary communication network between electronic control modules is the Controller Area Network (CAN) data bus system. The Controller Area Network (CAN) data bus allows all electronic modules connected to the bus to share information with each other. Regardless of whether a message originates from a module on the higher speed CAN C (500K) Bus or on the lower speed bus, CAN Interior High Speed (IHS) (125K) Bus, the message structure and layout is similar, which allows the Body Control Module (BCM) to process and transfer messages between the CAN buses. The BCM stores Diagnostic Trouble Codes (DTCs) for certain bus network faults on the CAN C (500K) Bus and CAN IHS (125K) Bus.

All modules transmit and receive messages over one of these buses. Data exchange between the modules is achieved by serial transmission of encoded data messages (a form of transmission in which data bits are sent sequentially, one at a time, over a single line). Each module can both send and receive serial data simultaneously. Each data bit of a CAN Bus message is carried over the bus as a voltage differential between the two bus circuits which, when strung together, form a message. Each module uses arbitration to sort the message priority if two competing messages are attempting to be broadcast at the same time. Corruption of a single bit within a message will corrupt the entire message. Each message contains a Cyclic Redundancy Check (CRC) which specifies the message size exactly. If the message detected conflicts with the CRC the ECU receiving it will determine the message to be an error and consider that communication has not been possible. Diagnosis of this condition using a lab scope may reveal activity that appears to be Bus data messages even if no actual communication is possible. Communication problems that affect the whole bus, as a result of opens and terminal push outs are more likely to occur on data busses that operate at a high speed than a data bus that operates at a lower speed.

When an open circuit or terminal push out occurs one or more modules can become isolated from the remainder of the bus. The isolated module will attempt to communicate, but will not be able to receive messages or determine arbitration from other modules. Each time the isolated module attempts to communicate it alters the bus voltage on the intact bus circuit. Without functioning arbitration the isolated module alters the bus voltage while other bus messages are being sent thereby corrupting the messages on the remainder of the bus.

The CAN bus modules are connected in parallel to the two-wire bus using a twisted pair, where the wires are wrapped around each other to provide shielding from unwanted electromagnetic induction, thus preventing interference with the relatively low voltage signals being carried through them. While the CAN bus is operating (active), one of the bus wires will carry a higher voltage and is referred to as the CAN High or CAN bus (+) wire, while the other bus wire will carry a lower voltage and is referred to as the CAN Low or CAN bus (-) wire.

For additional information on the communication network and star connector locations, refer to **COMMUNICATION, DESCRIPTION** .

WHEN MONITORED

With the ignition on for at least five seconds.

Battery voltage between 10 and 16 volts.

Body Control Module (BCM) is configured correctly.

SET CONDITION

Bus messages not received from the Automatic High Beam Module (AHBM) for approximately two to five seconds.

POSSIBLE CAUSES

Possible Causes
CAN C BUS (+) CIRCUIT SHORTED TO VOLTAGE
CAN C BUS (-) CIRCUIT SHORTED TO GROUND
DTCS RELATED TO BATTERY VOLTAGE, IGNITION, OR VIN MESSAGES
BCM NOT CONFIGURED CORRECTLY
AUTOMATIC HIGH BEAM MODULE (AHBM) POWER AND GROUND
AUTOMATIC HIGH BEAM MODULE (AHBM)
MODULE THAT SET THIS DTC

DIAGNOSTIC TEST

1. **VERIFY DTC IS ACTIVE**

   NOTE: Make sure the battery voltage is between 10 and 16 volts before proceeding.

   1. With the scan tool, read active DTCs.

      Is this DTC active?

      Yes

      - Go To 2

      No

      - Refer to **DIAGNOSIS AND TESTING** and perform the STORED LOST

COMMUNICATION DTCS diagnostic procedure.

2. **CHECK FOR ANY OF THE FOLLOWING ACTIVE DTCS**
   1. With the scan tool, read all active DTCs from all modules.

      NOTE: Check for BCM configuration, CAN C hardware electrical, VIN Missing/Mismatch, battery or ignition related DTCs.

      Does the scan tool display any active DTCs to the conditions listed above?

      Yes

      - Go to the **DTC INDEX** and perform the appropriate diagnostic procedure.

      No

      - Go To 3
3. **VERIFY THE AUTOMATIC HIGH BEAM MODULE (AHBM) IS ACTIVE ON THE BUS**
   1. Turn the ignition on.
   2. With the scan tool, verify the AHBM is active on the bus.

      Is the Passenger Door Module active on the bus?

      Yes

      - Go To 4

      No

      - Refer to **DIAGNOSIS AND TESTING** and perform the NO RESPONSE FROM AUTOMATIC HIGH BEAM MODULE diagnostic procedure.
4. **CHECK FOR ADDITIONAL COMMUNICATION RELATED DTCS**
   1. With the scan tool, read all the DTCs.

      Is there more than one module with active DTCs "Logged Against" the AHBM?

      Yes

      - Replace/update the AHBM in accordance with the Service Information.
      - Perform the BODY VERIFICATION TEST. Refer to **STANDARD PROCEDURE** .

      No

      - Go To 5
5. **CLEAR DTC IN MODULE SETTING FAULT**

1. With the scan tool, select the module setting the DTC against the AHBM.
2. Clear active DTCs.

   Is this DTC still active?

   Yes

   - Replace/update the module that set this DTC in accordance with the Service Information.
   - Perform the appropriate verification test for the module being replaced. If there is no verification test for the associated module perform the BODY VERIFICATION TEST. Refer to **STANDARD PROCEDURE** .

   No

   - Go To 6

6. **CYCLE IGNITION**
   1. Cycle the ignition from RUN to OFF three times ending with the key in the RUN position.

      Does this DTC become active?

      Yes

      - Go To 7

      No

      - The condition is not present at this time. Using the wiring diagram/schematic as a guide, inspect the wiring for chafed, pierced, pinched, and partially broken wires and the wiring harness connectors for broken, bent, pushed out, and corroded terminals.
      - Perform the appropriate verification test for the module. If there is no verification test for the associated module perform the BODY VERIFICATION TEST. Refer to **STANDARD PROCEDURE** .

7. **CHECK FOR ADDITIONAL LOST COMMUNICATION FAULTS**
   1. With the scan tool, view the modules.

      Does the BCM and other CAN C BUS modules show Lost Communication with the remaining CAN C BUS modules?

      Yes

      - Go To 8

      No

- Replace/update the module that set this DTC in accordance with the Service Information.
- Perform the appropriate verification test for the module being replaced. If there is no verification test for the associated module perform the BODY VERIFICATION TEST. Refer to **STANDARD PROCEDURE** .

8. **CHECK THE CAN C BUS (+) CIRCUIT FOR A SHORT TO VOLTAGE**

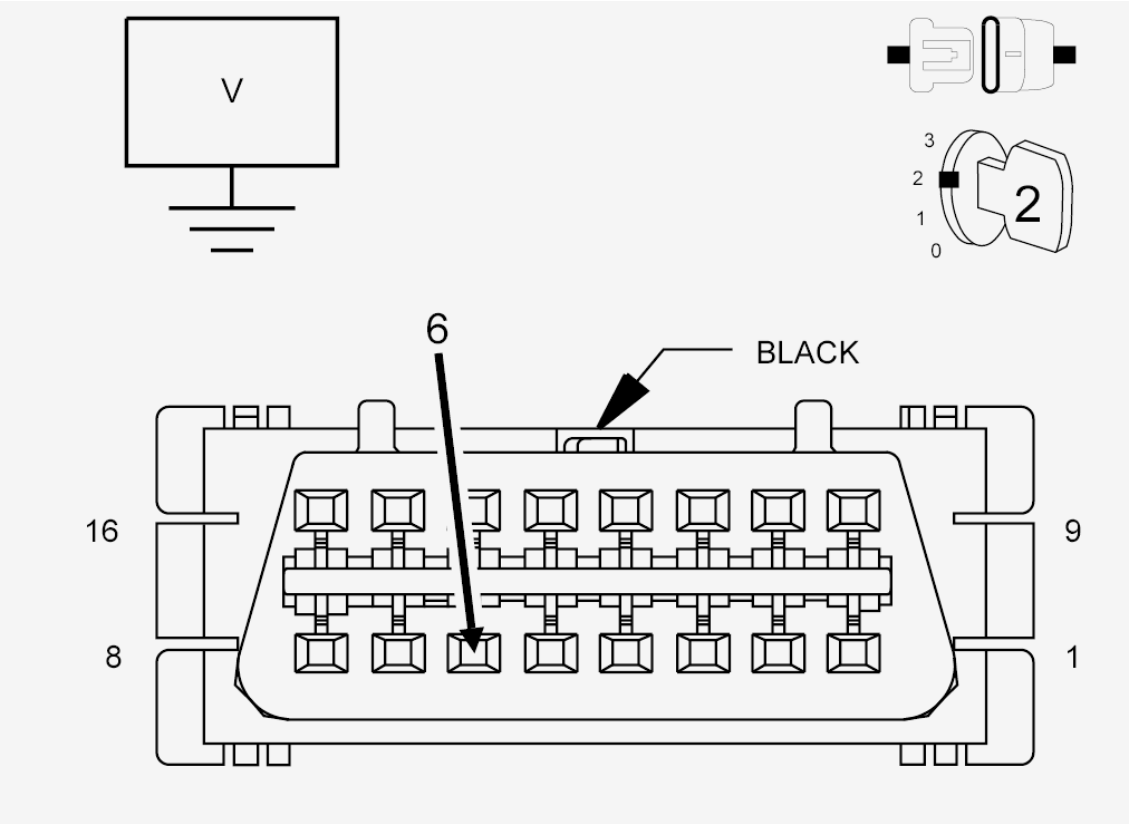

Fig. 12: Checking CAN C BUS (+) Circuit For A Short To Voltage
Courtesy of CHRYSLER GROUP, LLC

1. Measure the voltage between the (D57) CAN C Bus (+) circuit and ground.

   Is the voltage above 5.0 volts?

   Yes

   - Repair the short to voltage in the CAN C Bus (+) circuit. The short to voltage is present in one of the CAN C Bus circuits. Use the Star Connectors to isolate portions of the CAN C Bus in order to locate the concern.
   - Perform the BODY VERIFICATION TEST. Refer to **STANDARD PROCEDURE** .

   No

   - Go To 9

9. **CHECK THE CAN C BUS (-) CIRCUIT FOR A SHORT TO GROUND**

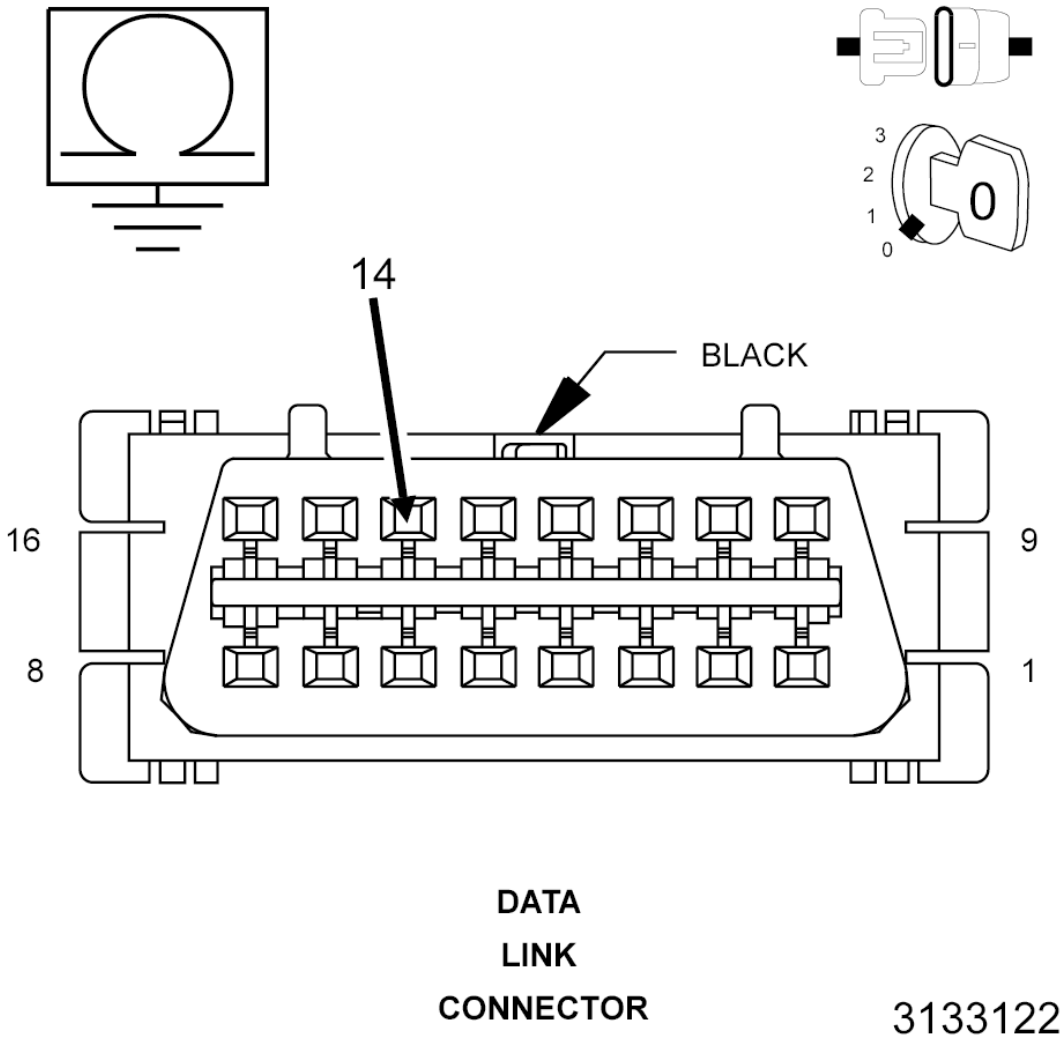

Fig. 13: Checking CAN C BUS (-) Circuit For A Short To Ground
Courtesy of CHRYSLER GROUP, LLC

1. Turn the ignition off.
2. Measure the resistance between ground and the (D58) CAN C Bus (-) circuit.

   Is the resistance below 10k Ohms?

   Yes

   - Repair the short to ground in the CAN C Bus (-) circuit. The short to ground is present in one of the CAN C Bus circuits. Use the Star Connectors to isolate portions of the CAN C Bus in order to locate the concern.
   - Perform the BODY VERIFICATION TEST. Refer to **STANDARD PROCEDURE** .

No

- Replace/update the module that set this DTC in accordance with the Service Information.
- Perform the appropriate verification test for the module being replaced. If there is no verification test for the associated module perform the BODY VERIFICATION TEST. Refer to **STANDARD PROCEDURE** .

U0264-87-LOST COMMUNICATION WITH CAMERA MODULE - REAR-MISSING MESSAGE

For a complete wiring diagram, **refer to appropriate SYSTEM WIRING DIAGRAMS article** .

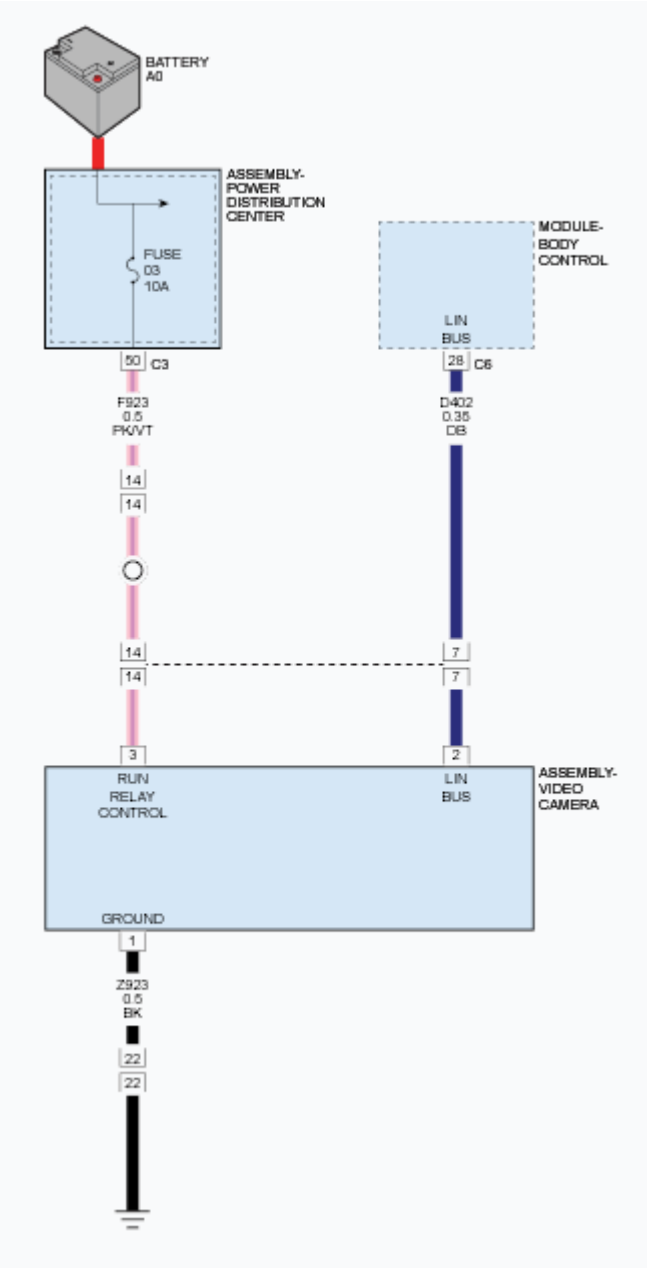

Fig. 14: Video Camera Module Circuit Diagram
Courtesy of CHRYSLER GROUP, LLC

WHEN MONITORED

With the ignition on.

SET CONDITION

The Body Control Module (BCM) does not receive information from the Rear View Camera Module.

POSSIBLE CAUSES

Possible Causes
(F923) FUSED RUN RELAY CONTROL CIRCUIT OPEN
(Z923) GROUND CIRCUIT OPEN
(D402) LIN BUS CIRCUIT OPEN
REAR VIEW CAMERA MODULE

DIAGNOSTIC TEST

1. **CHECK FOR AN ACTIVE DTC**
    1. Turn the ignition on.
    2. With the scan tool, read DTCs.

    Does the scan tool display this DTC as active?

    Yes

    - Go To 2

    No

    - Test complete. The condition or conditions that originally set this DTC are not present at this time. Using the wiring diagrams as a guide, check all related splices and connectors for signs of water intrusion, corrosion, pushed out or bent terminals and correct pin tension.
    - Perform the BODY VERIFICATION TEST. Refer to **STANDARD PROCEDURE** .
2. **CHECK THE (F923) FUSED RUN RELAY CONTROL CIRCUIT FOR AN OPEN**
    1. Turn the ignition off.
    2. Disconnect the Rear View Camera Module harness connector.
    3. Turn the ignition on.
    4. Using a 12-volt test light connected to ground, check the (F923) Fused Run Relay Control circuit at the Rear View Camera Module harness connector.

Does the test light illuminate brightly?

Yes

- Go To 3

No

- Repair the open or short to ground in the (F923) Fused Run Relay Control circuit.
- Perform the BODY VERIFICATION TEST. Refer to **STANDARD PROCEDURE** .

3. **CHECK THE (Z923) GROUND CIRCUIT FOR AN OPEN**
   1. Turn the ignition off.
   2. Using a 12-volt test light connected to 12-volts, check the (Z923) Ground circuit at the Rear View Camera Module harness connector.

   Does the test light illuminate brightly?

   Yes

   - Go To 4

   No

   - Repair the open in the (Z923) Ground circuit.
   - Perform the BODY VERIFICATION TEST. Refer to **STANDARD PROCEDURE** .
4. **CHECK THE (D402) LIN BUS CIRCUIT FOR AN OPEN**
   1. Turn the ignition on.
   2. Measure the voltage between ground and the (D402) LIN BUS circuit at the Rear View Camera Module harness connector.

   Is the voltage above 5.0 volts?

   Yes

   - Replace the Rear View Camera Module in accordance with the Service Information.
   - Perform the BODY VERIFICATION TEST. Refer to **STANDARD PROCEDURE** .

   No

   - Repair the open in the (D402) LIN Bus circuit.
   - Perform the BODY VERIFICATION TEST. Refer to **STANDARD PROCEDURE** .

U0401-86-IMPLAUSIBLE DATA RECEIVED FROM ECM/PCM - SIGNAL INVALID

For a complete wiring diagram, **refer to appropriate SYSTEM WIRING DIAGRAMS article** .

WHEN MONITORED

With the ignition on.

SET CONDITION

Incorrect data received from the Powertrain Control Module (PCM).

POSSIBLE CAUSES

Possible Causes
NO COMMUNICATION WITH THE POWERTRAIN CONTROL MODULE (PCM)
DTCS STORED OR ACTIVE IN THE PCM
BODY CONTROL MODULE (BCM)

DIAGNOSTIC TEST

1. **CHECK FOR AN ACTIVE DIAGNOSTIC TROUBLE CODE (DTC)**
    1. Turn the ignition on.
    2. With the scan tool, read active DTCs.

    Does the scan tool display this DTC as active?

    Yes

    - Go To 2

    No

    - The condition that caused this code to set is not present at this time. Check for an intermittent condition by inspecting the related wiring harness for chafed, pierced, pinched, and partially broken wires. Also inspect the related connectors for broken, bent, pushed out, spread, corroded, or contaminated terminals.
    - Perform the BODY VERIFICATION TEST. Refer to **STANDARD PROCEDURE** .
2. **VERIFY THE PCM IS ACTIVE ON THE CAN BUS**
    1. With the scan tool, verify that the PCM is active on the bus.

    NOTE: If any DTCs are stored in the PCM, repair those first before proceeding.

    Is the PCM active on the bus?

Yes

- Replace and program the BCM in accordance with the Service Information. Refer to **MODULE, BODY CONTROL, REMOVAL** .
- Perform the BODY VERIFICATION TEST. Refer to **STANDARD PROCEDURE** .

No

- Refer to **DIAGNOSIS AND TESTING** and perform the NO RESPONSE FROM PCM diagnostic procedure.
- Perform the BODY VERIFICATION TEST. Refer to **STANDARD PROCEDURE** .

U0402-86-IMPLAUSIBLE DATA RECEIVED FROM TCM - SIGNAL INVALID

For a complete wiring diagram, **refer to appropriate SYSTEM WIRING DIAGRAMS article** .

WHEN MONITORED

With the ignition on.

SET CONDITION

Incorrect data received from the Transmission Control Module (TCM).

POSSIBLE CAUSES

Possible Causes
NO COMMUNICATION WITH THE TRANSMISSION CONTROL MODULE (TCM)
DTCS STORED OR ACTIVE IN THE BCM
BODY CONTROL MODULE (BCM)

DIAGNOSTIC TEST

1. **CHECK FOR AN ACTIVE DIAGNOSTIC TROUBLE CODE (DTC)**
    1. Turn the ignition on.
    2. With the scan tool, read active DTCs.

    Does the scan tool display this DTC as active?

    Yes

    - Go To 2

    No

- The condition that caused this code to set is not present at this time. Check for an intermittent condition by inspecting the related wiring harness for chafed, pierced, pinched, and partially broken wires. Also inspect the related connectors for broken, bent, pushed out, spread, corroded, or contaminated terminals.
- Perform the BODY VERIFICATION TEST. Refer to **STANDARD PROCEDURE** .

2. **VERIFY THE TCM IS ACTIVE ON THE CAN BUS**
   1. With the scan tool, verify that the TCM is active on the bus.

      Is the TCM active on the bus?

      Yes

      - Replace and program the BCM in accordance with the Service Information. Refer to **MODULE, BODY CONTROL, REMOVAL** .
      - Perform the BODY VERIFICATION TEST. Refer to **STANDARD PROCEDURE** .

      No

      - Refer to **DIAGNOSIS AND TESTING** and perform the NO RESPONSE FROM TCM diagnostic procedure.
      - Perform the BODY VERIFICATION TEST. Refer to **STANDARD PROCEDURE** .

U0403-86-IMPLAUSIBLE DATA RECEIVED FROM T-CASE - SIGNAL INVALID

For a complete wiring diagram, **refer to appropriate SYSTEM WIRING DIAGRAMS article** .

WHEN MONITORED

With the ignition on.

SET CONDITION

Incorrect data received from the Drive Train Control Module.

POSSIBLE CAUSES

Possible Causes
NO COMMUNICATION WITH THE DRIVE TRAIN CONTROL MODULE
DTCS STORED OR ACTIVE IN THE BCM
BODY CONTROL MODULE (BCM)

DIAGNOSTIC TEST

1. **CHECK FOR AN ACTIVE DIAGNOSTIC TROUBLE CODE (DTC)**

1. Turn the ignition on.
2. With the scan tool, read active DTCs.

   Does the scan tool display this DTC as active?

   Yes

   - Go To 2

   No

   - The condition that caused this code to set is not present at this time. Check for an intermittent condition by inspecting the related wiring harness for chafed, pierced, pinched, and partially broken wires. Also inspect the related connectors for broken, bent, pushed out, spread, corroded, or contaminated terminals.
   - Perform the BODY VERIFICATION TEST. Refer to **STANDARD PROCEDURE** .

2. **VERIFY THE DRIVE TRAIN CONTROL MODULE IS ACTIVE ON THE CAN BUS**
   1. With the scan tool, verify that the Drive Train Control Module is active on the bus.

      Is the Drive Train Control Module active on the bus?

      Yes

      - Replace and program the BCM in accordance with the Service Information. Refer to **MODULE, BODY CONTROL, REMOVAL** .
      - Perform the BODY VERIFICATION TEST. Refer to **STANDARD PROCEDURE** .

      No

      - Refer to **DIAGNOSIS AND TESTING** and perform the NO RESPONSE FROM DRIVE TRAIN CONTROL MODULE diagnostic procedure.
      - Perform the BODY VERIFICATION TEST. Refer to **STANDARD PROCEDURE** .

U0404-86-IMPLAUSIBLE DATA RECEIVED FROM ESM - SIGNAL INVALID

For a complete wiring diagram, **refer to appropriate SYSTEM WIRING DIAGRAMS article** .

WHEN MONITORED

With the ignition on.

SET CONDITION

Incorrect data received from the Electronic Shift Module (ESM).

POSSIBLE CAUSES

Possible Causes
NO COMMUNICATION WITH THE ELECTRONIC SHIFT MODULE (ESM)
DTCS STORED OR ACTIVE IN THE BCM
BODY CONTROL MODULE (BCM)

DIAGNOSTIC TEST

1. **CHECK FOR AN ACTIVE DIAGNOSTIC TROUBLE CODE (DTC)**
    1. Turn the ignition on.
    2. With the scan tool, read active DTCs.

    Does the scan tool display this DTC as active?

    Yes

    - Go To 2

    No

    - The condition that caused this code to set is not present at this time. Check for an intermittent condition by inspecting the related wiring harness for chafed, pierced, pinched, and partially broken wires. Also inspect the related connectors for broken, bent, pushed out, spread, corroded, or contaminated terminals.
    - Perform the BODY VERIFICATION TEST. Refer to **STANDARD PROCEDURE** .
2. **VERIFY THE ESM IS ACTIVE ON THE CAN BUS**
    1. With the scan tool, verify that the ESM is active on the bus.

    Is the ESM active on the bus?

    Yes

    - Replace and program the BCM in accordance with the Service Information. Refer to **MODULE, BODY CONTROL, REMOVAL** .
    - Perform the BODY VERIFICATION TEST. Refer to **STANDARD PROCEDURE** .

    No

    - Refer to **DIAGNOSIS AND TESTING** and perform the NO RESPONSE FROM ESM diagnostic procedure.
    - Perform the BODY VERIFICATION TEST. Refer to **STANDARD PROCEDURE** .

U0405-86-INVALID DATA RECEIVED FROM CRUISE CONTROL MODULE - SIGNAL INVALID

For a complete wiring diagram, **refer to appropriate SYSTEM WIRING DIAGRAMS article** .

WHEN MONITORED

With the ignition on.

SET CONDITION

Incorrect data received from the Adaptive Cruise Control Module.

POSSIBLE CAUSES

Possible Causes
NO COMMUNICATION WITH THE ADAPTIVE CRUISE CONTROL MODULE
DTCS STORED OR ACTIVE IN THE BCM
BODY CONTROL MODULE (BCM)

DIAGNOSTIC TEST

1. **CHECK FOR AN ACTIVE DIAGNOSTIC TROUBLE CODE (DTC)**
    1. Turn the ignition on.
    2. With the scan tool, read active DTCs.

    Does the scan tool display this DTC as active?

    Yes

    - Go To 2

    No

    - The condition that caused this code to set is not present at this time. Check for an intermittent condition by inspecting the related wiring harness for chafed, pierced, pinched, and partially broken wires. Also inspect the related connectors for broken, bent, pushed out, spread, corroded, or contaminated terminals.
    - Perform the BODY VERIFICATION TEST. Refer to **STANDARD PROCEDURE** .
2. **VERIFY THE ADAPTIVE CRUISE CONTROL MODULE IS ACTIVE ON THE CAN BUS**
    1. With the scan tool, verify that the Adaptive Cruise Control Module is active on the bus.

    Is the Adaptive Cruise Control Module active on the bus?

    Yes

    - Replace and program the BCM in accordance with the Service Information. Refer to **MODULE, BODY CONTROL, REMOVAL** .

- Perform the BODY VERIFICATION TEST. Refer to **STANDARD PROCEDURE** .

No

- Refer to **DIAGNOSIS AND TESTING** and perform the NO RESPONSE FROM ADAPTIVE CRUISE CONTROL MODULE diagnostic procedure.
- Perform the BODY VERIFICATION TEST. Refer to **STANDARD PROCEDURE** .

U0415-86-IMPLAUSIBLE DATA RECEIVED FROM ABS - SIGNAL INVALID

For a complete wiring diagram, **refer to appropriate SYSTEM WIRING DIAGRAMS article** .

WHEN MONITORED

With the ignition on.

SET CONDITION

Incorrect data received from the Antilock Brake System Module (ABS).

POSSIBLE CAUSES

Possible Causes
NO COMMUNICATION WITH THE ANTILOCK BRAKE SYSTEM MODULE (ABS)
DTCS STORED OR ACTIVE IN THE BCM
BODY CONTROL MODULE (BCM)

DIAGNOSTIC TEST

1. **CHECK FOR AN ACTIVE DIAGNOSTIC TROUBLE CODE (DTC)**
    1. Turn the ignition on.
    2. With the scan tool, read active DTCs.

    Does the scan tool display this DTC as active?

    Yes

    - Go To 2

    No

    - The condition that caused this code to set is not present at this time. Check for an intermittent condition by inspecting the related wiring harness for chafed, pierced, pinched, and partially broken wires. Also inspect the related connectors for broken, bent, pushed out, spread, corroded, or contaminated terminals.

- Perform the BODY VERIFICATION TEST. Refer to **STANDARD PROCEDURE** .

2. **VERIFY THE ABS IS ACTIVE ON THE CAN BUS**
   1. With the scan tool, verify that the ABS is active on the bus.

      Is the ABS active on the bus?

      Yes

      - Replace and program the BCM in accordance with the Service Information. Refer to **MODULE, BODY CONTROL, REMOVAL** .
      - Perform the BODY VERIFICATION TEST. Refer to **STANDARD PROCEDURE** .

      No

      - Refer to **DIAGNOSIS AND TESTING** and perform the NO RESPONSE FROM ABS diagnostic procedure.
      - Perform the BODY VERIFICATION TEST. Refer to **STANDARD PROCEDURE** .

U0417-86-IMPLAUSIBLE DATA RECEIVED FROM PARK BRAKE CONTROL MODULE - SIGNAL INVALID

For a complete wiring diagram, **refer to appropriate SYSTEM WIRING DIAGRAMS article** .

WHEN MONITORED

With the ignition on.

SET CONDITION

Incorrect data received from the Park Brake Control Module.

POSSIBLE CAUSES

Possible Causes
NO COMMUNICATION WITH THE PARK BRAKE CONTROL MODULE
DTCS STORED OR ACTIVE IN THE BCM
BODY CONTROL MODULE (BCM)

DIAGNOSTIC TEST

1. **CHECK FOR AN ACTIVE DIAGNOSTIC TROUBLE CODE (DTC)**
   1. Turn the ignition on.
   2. With the scan tool, read active DTCs.

Does the scan tool display this DTC as active?

Yes

- Go To 2

No

- The condition that caused this code to set is not present at this time. Check for an intermittent condition by inspecting the related wiring harness for chafed, pierced, pinched, and partially broken wires. Also inspect the related connectors for broken, bent, pushed out, spread, corroded, or contaminated terminals.
- Perform the BODY VERIFICATION TEST. Refer to **STANDARD PROCEDURE** .

2. **VERIFY THE PARK BRAKE CONTROL MODULE IS ACTIVE ON THE CAN BUS**
   1. With the scan tool, verify that the Park Brake Control Module is active on the bus.

   Is the Park Brake Control Module active on the bus?

   Yes

   - Replace and program the BCM in accordance with the Service Information. Refer to **MODULE, BODY CONTROL, REMOVAL** .
   - Perform the BODY VERIFICATION TEST. Refer to **STANDARD PROCEDURE** .

   No

   - Refer to **DIAGNOSIS AND TESTING** and perform the NO RESPONSE FROM PARK BRAKE CONTROL MODULE diagnostic procedure.
   - Perform the BODY VERIFICATION TEST. Refer to **STANDARD PROCEDURE** .

U0423-86-IMPLAUSIBLE DATA RECEIVED FROM CLUSTER/CCN - SIGNAL INVALID

For a complete wiring diagram, **refer to appropriate SYSTEM WIRING DIAGRAMS article** .

WHEN MONITORED

With the ignition on.

SET CONDITION

Incorrect data received from the Cluster.

POSSIBLE CAUSES

Possible Causes

NO COMMUNICATION WITH THE CLUSTER
DTCS STORED OR ACTIVE IN THE BCM
BODY CONTROL MODULE (BCM)

DIAGNOSTIC TEST

1. **CHECK FOR AN ACTIVE DIAGNOSTIC TROUBLE CODE (DTC)**
    1. Turn the ignition on.
    2. With the scan tool, read active DTCs.

    Does the scan tool display this DTC as active?

    Yes

    - Go To 2

    No

    - The condition that caused this code to set is not present at this time. Check for an intermittent condition by inspecting the related wiring harness for chafed, pierced, pinched, and partially broken wires. Also inspect the related connectors for broken, bent, pushed out, spread, corroded, or contaminated terminals.
    - Perform the BODY VERIFICATION TEST. Refer to **STANDARD PROCEDURE** .
2. **VERIFY THE CLUSTER IS ACTIVE ON THE CAN BUS**
    1. With the scan tool, verify that the Cluster is active on the bus.

    Is the Cluster active on the bus?

    Yes

    - Replace and program the BCM in accordance with the Service Information. Refer to **MODULE, BODY CONTROL, REMOVAL** .
    - Perform the BODY VERIFICATION TEST. Refer to **STANDARD PROCEDURE** .

    No

    - Refer to **DIAGNOSIS AND TESTING** and perform the NO RESPONSE FROM CLUSTER diagnostic procedure.
    - Perform the BODY VERIFICATION TEST. Refer to **STANDARD PROCEDURE** .

U0424-86-IMPLAUSIBLE DATA RECEIVED FROM HVAC CONTROL MODULE - SIGNAL INVALID

For a complete wiring diagram, **refer to appropriate SYSTEM WIRING DIAGRAMS article** .

WHEN MONITORED

With the ignition on.

SET CONDITION

Incorrect data received from the HVAC Control Module.

POSSIBLE CAUSES

Possible Causes
NO COMMUNICATION WITH THE HVAC CONTROL MODULE
DTCS STORED OR ACTIVE IN THE BCM
BODY CONTROL MODULE (BCM)

DIAGNOSTIC TEST

1. **CHECK FOR AN ACTIVE DIAGNOSTIC TROUBLE CODE (DTC)**
    1. Turn the ignition on.
    2. With the scan tool, read active DTCs.

    Does the scan tool display this DTC as active?

    Yes

    - Go To 2

    No

    - The condition that caused this code to set is not present at this time. Check for an intermittent condition by inspecting the related wiring harness for chafed, pierced, pinched, and partially broken wires. Also inspect the related connectors for broken, bent, pushed out, spread, corroded, or contaminated terminals.
    - Perform the BODY VERIFICATION TEST. Refer to **STANDARD PROCEDURE** .
2. **VERIFY THE HVAC CONTROL MODULE IS ACTIVE ON THE CAN BUS**
    1. With the scan tool, verify that the HVAC is active on the bus.

    Is the HVAC active on the bus?

    Yes

    - Replace and program the BCM in accordance with the Service Information. Refer to **MODULE, BODY CONTROL, REMOVAL** .
    - Perform the BODY VERIFICATION TEST. Refer to **STANDARD PROCEDURE** .

No

- Refer to **DIAGNOSIS AND TESTING** and perform the NO RESPONSE FROM HVAC diagnostic procedure.
- Perform the BODY VERIFICATION TEST. Refer to **STANDARD PROCEDURE** .

U0429-86-IMPLAUSIBLE DATA RECEIVED FROM SCM - SIGNAL INVALID

For a complete wiring diagram, **refer to appropriate SYSTEM WIRING DIAGRAMS article** .

WHEN MONITORED

With the ignition on.

SET CONDITION

Incorrect data received from the Steering Column Control Module (SCCM).

POSSIBLE CAUSES

Possible Causes
NO COMMUNICATION WITH THE STEERING COLUMN CONTROL MODULE (SCCM)
DTCS STORED OR ACTIVE IN THE BCM
BODY CONTROL MODULE (BCM)

DIAGNOSTIC TEST

1. **CHECK FOR AN ACTIVE DIAGNOSTIC TROUBLE CODE (DTC)**
   1. Turn the ignition on.
   2. With the scan tool, read active DTCs.

      Does the scan tool display this DTC as active?

      Yes

      - Go To 2

      No

      - The condition that caused this code to set is not present at this time. Check for an intermittent condition by inspecting the related wiring harness for chafed, pierced, pinched, and partially broken wires. Also inspect the related connectors for broken, bent, pushed out, spread, corroded, or contaminated terminals.
      - Perform the BODY VERIFICATION TEST. Refer to **STANDARD PROCEDURE** .
2. **VERIFY THE SCCM IS ACTIVE ON THE CAN BUS**

1. With the scan tool, verify that the SCCM is active on the bus.

   Is the SCCM active on the bus?

   Yes

   - Replace and program the BCM in accordance with the Service Information. Refer to **MODULE, BODY CONTROL, REMOVAL** .
   - Perform the BODY VERIFICATION TEST. Refer to **STANDARD PROCEDURE** .

   No

   - Refer to **DIAGNOSIS AND TESTING** and perform the NO RESPONSE FROM SCCM diagnostic procedure.
   - Perform the BODY VERIFICATION TEST. Refer to **STANDARD PROCEDURE** .

U0452-86-IMPLAUSIBLE DATA RECEIVED FROM RESTRAINTS CONTROL MODULE - SIGNAL INVALID

For a complete wiring diagram, **refer to appropriate SYSTEM WIRING DIAGRAMS article** .

WHEN MONITORED

With the ignition on.

SET CONDITION

Incorrect data received from the Occupant Restraint Controller (ORC).

POSSIBLE CAUSES

Possible Causes
NO COMMUNICATION WITH THE OCCUPANT RESTRAINT CONTROLLER (ORC)
DTCS STORED OR ACTIVE IN THE BCM
BODY CONTROL MODULE (BCM)

DIAGNOSTIC TEST

1. **CHECK FOR AN ACTIVE DIAGNOSTIC TROUBLE CODE (DTC)**
   1. Turn the ignition on.
   2. With the scan tool, read active DTCs.

      Does the scan tool display this DTC as active?

      Yes

- Go To 2

No

- The condition that caused this code to set is not present at this time. Check for an intermittent condition by inspecting the related wiring harness for chafed, pierced, pinched, and partially broken wires. Also inspect the related connectors for broken, bent, pushed out, spread, corroded, or contaminated terminals.
- Perform the BODY VERIFICATION TEST. Refer to **STANDARD PROCEDURE** .

2. **VERIFY THE ORC IS ACTIVE ON THE CAN BUS**
   1. With the scan tool, verify that the ORC is active on the bus.

      Is the ORC active on the bus?

      Yes

      - Replace and program the BCM in accordance with the Service Information. Refer to **MODULE, BODY CONTROL, REMOVAL** .
      - Perform the BODY VERIFICATION TEST. Refer to **STANDARD PROCEDURE** .

      No

      - Refer to **DIAGNOSIS AND TESTING** and perform the NO RESPONSE FROM ORC diagnostic procedure.
      - Perform the BODY VERIFICATION TEST. Refer to **STANDARD PROCEDURE** .

U0455-86-IMPLAUSIBLE DATA RECEIVED FROM OCCUPANT CLASSIFICATION MODULE - SIGNAL INVALID

For a complete wiring diagram, **refer to appropriate SYSTEM WIRING DIAGRAMS article** .

WHEN MONITORED

With the ignition on.

SET CONDITION

Incorrect data received from the Occupant Classification Module (OCM).

POSSIBLE CAUSES

Possible Causes
NO COMMUNICATION WITH THE OCCUPANT CLASSIFICATION MODULE (OCM)
DTCS STORED OR ACTIVE IN THE BCM

BODY CONTROL MODULE (BCM)

DIAGNOSTIC TEST

1. **CHECK FOR AN ACTIVE DIAGNOSTIC TROUBLE CODE (DTC)**
    1. Turn the ignition on.
    2. With the scan tool, read active DTCs.

    Does the scan tool display this DTC as active?

    Yes

    - Go To 2

    No

    - The condition that caused this code to set is not present at this time. Check for an intermittent condition by inspecting the related wiring harness for chafed, pierced, pinched, and partially broken wires. Also inspect the related connectors for broken, bent, pushed out, spread, corroded, or contaminated terminals.
    - Perform the BODY VERIFICATION TEST. Refer to **STANDARD PROCEDURE** .
2. **VERIFY THE OCM IS ACTIVE ON THE CAN BUS**
    1. With the scan tool, verify that the OCM is active on the bus.

    Is the OCM active on the bus?

    Yes

    - Replace and program the BCM in accordance with the Service Information. Refer to **MODULE, BODY CONTROL, REMOVAL** .
    - Perform the BODY VERIFICATION TEST. Refer to **STANDARD PROCEDURE** .

    No

    - Refer to **DIAGNOSIS AND TESTING** and perform the NO RESPONSE FROM OCM diagnostic procedure.
    - Perform the BODY VERIFICATION TEST. Refer to **STANDARD PROCEDURE** .

U045A-86-IMPLAUSIBLE DATA RECEIVED FROM PARKING ASSIST MODULE - SIGNAL INVALID

For a complete wiring diagram, **refer to appropriate SYSTEM WIRING DIAGRAMS article** .

WHEN MONITORED

With the ignition on.

SET CONDITION

Incorrect data received from the Park Assist Module (PAM).

POSSIBLE CAUSES

Possible Causes
NO COMMUNICATION WITH THE PARK ASSIST MODULE (PAM)
DTCS STORED OR ACTIVE IN THE BCM
BODY CONTROL MODULE (BCM)

DIAGNOSTIC TEST

1. **CHECK FOR AN ACTIVE DIAGNOSTIC TROUBLE CODE (DTC)**
    1. Turn the ignition on.
    2. With the scan tool, read active DTCs.

    Does the scan tool display this DTC as active?

    Yes

    - Go To 2

    No

    - The condition that caused this code to set is not present at this time. Check for an intermittent condition by inspecting the related wiring harness for chafed, pierced, pinched, and partially broken wires. Also inspect the related connectors for broken, bent, pushed out, spread, corroded, or contaminated terminals.
    - Perform the BODY VERIFICATION TEST. Refer to **STANDARD PROCEDURE** .
2. **VERIFY THE PAM IS ACTIVE ON THE CAN BUS**
    1. With the scan tool, verify that the PAM is active on the bus.

    Is the PAM active on the bus?

    Yes

    - Replace and program the BCM in accordance with the Service Information. Refer to **MODULE, BODY CONTROL, REMOVAL** .
    - Perform the BODY VERIFICATION TEST. Refer to **STANDARD PROCEDURE** .

    No

- Refer to **DIAGNOSIS AND TESTING** and perform the NO RESPONSE FROM PAM diagnostic procedure.
- Perform the BODY VERIFICATION TEST. Refer to **STANDARD PROCEDURE** .

U0482-86-IMPLAUSIBLE DATA RECEIVED FROM AUTOMATIC HEADLAMP LEVELING MODULE - SIGNAL INVALID

For a complete wiring diagram, **refer to appropriate SYSTEM WIRING DIAGRAMS article** .

WHEN MONITORED

With the ignition on.

SET CONDITION

Incorrect data received from the Automatic Headlamp Leveling Module (AHLM).

POSSIBLE CAUSES

Possible Causes
NO COMMUNICATION WITH THE AUTOMATIC HEADLAMP LEVELING MODULE (AHLM)
DTCS STORED OR ACTIVE IN THE BCM
BODY CONTROL MODULE (BCM)

DIAGNOSTIC TEST

1. **CHECK FOR AN ACTIVE DIAGNOSTIC TROUBLE CODE (DTC)**
   1. Turn the ignition on.
   2. With the scan tool, read active DTCs.

      Does the scan tool display this DTC as active?

      Yes

      - Go To 2

      No

      - The condition that caused this code to set is not present at this time. Check for an intermittent condition by inspecting the related wiring harness for chafed, pierced, pinched, and partially broken wires. Also inspect the related connectors for broken, bent, pushed out, spread, corroded, or contaminated terminals.
      - Perform the BODY VERIFICATION TEST. Refer to **STANDARD PROCEDURE** .
2. **VERIFY THE AUTOMATIC HEADLAMP LEVELING MODULE (AHLM) IS ACTIVE ON THE CAN BUS**

1. With the scan tool, verify that the Automatic Headlamp Leveling Module (AHLM) is active on the bus.

   Is the Automatic Headlamp Leveling Module (AHLM) active on the bus?

   Yes

   - Replace and program the BCM in accordance with the Service Information. Refer to **MODULE, BODY CONTROL, REMOVAL** .
   - Perform the BODY VERIFICATION TEST. Refer to **STANDARD PROCEDURE** .

   No

   - Refer to **DIAGNOSIS AND TESTING** and perform the NO RESPONSE FROM AUTOMATIC HEADLAMP LEVELING MODULE diagnostic procedure.
   - Perform the BODY VERIFICATION TEST. Refer to **STANDARD PROCEDURE** .

U0485-86-IMPLAUSIBLE DATA RECEIVED FROM RADIO - SIGNAL INVALID

For a complete wiring diagram, **refer to appropriate SYSTEM WIRING DIAGRAMS article** .

WHEN MONITORED

With the ignition on.

SET CONDITION

Incorrect data received from the Radio.

POSSIBLE CAUSES

Possible Causes
NO COMMUNICATION WITH THE RADIO
DTCS STORED OR ACTIVE IN THE BCM
BODY CONTROL MODULE (BCM)

DIAGNOSTIC TEST

1. **CHECK FOR AN ACTIVE DIAGNOSTIC TROUBLE CODE (DTC)**
   1. Turn the ignition on.
   2. With the scan tool, read active DTCs.

      Does the scan tool display this DTC as active?

      Yes

- Go To 2

No

- The condition that caused this code to set is not present at this time. Check for an intermittent condition by inspecting the related wiring harness for chafed, pierced, pinched, and partially broken wires. Also inspect the related connectors for broken, bent, pushed out, spread, corroded, or contaminated terminals.
- Perform the BODY VERIFICATION TEST. Refer to **STANDARD PROCEDURE** .

2. **VERIFY THE RADIO IS ACTIVE ON THE CAN BUS**
   1. With the scan tool, verify that the Radio is active on the bus.

      Is the Radio active on the bus?

      Yes

      - Replace and program the BCM in accordance with the Service Information. Refer to **MODULE, BODY CONTROL, REMOVAL** .
      - Perform the BODY VERIFICATION TEST. Refer to **STANDARD PROCEDURE** .

      No

      - Refer to **DIAGNOSIS AND TESTING** and perform the NO RESPONSE FROM RADIO diagnostic procedure.
      - Perform the BODY VERIFICATION TEST. Refer to **STANDARD PROCEDURE** .

U049A-86-IMPLAUSIBLE DATA RECEIVED FROM DRIVER DOOR MODULE - SIGNAL INVALID

For a complete wiring diagram, **refer to appropriate SYSTEM WIRING DIAGRAMS article** .

WHEN MONITORED

With the ignition on.

SET CONDITION

Incorrect data received from the Driver Door Module (DDM).

POSSIBLE CAUSES

Possible Causes
NO COMMUNICATION WITH THE DRIVER DOOR MODULE
DTCS STORED OR ACTIVE IN THE BCM
BODY CONTROL MODULE (BCM)

DIAGNOSTIC TEST

1. **CHECK FOR AN ACTIVE DIAGNOSTIC TROUBLE CODE (DTC)**
    1. Turn the ignition on.
    2. With the scan tool, read active DTCs.

    Does the scan tool display this DTC as active?

    Yes

    - Go To 2

    No

    - The condition that caused this code to set is not present at this time. Check for an intermittent condition by inspecting the related wiring harness for chafed, pierced, pinched, and partially broken wires. Also inspect the related connectors for broken, bent, pushed out, spread, corroded, or contaminated terminals.
    - Perform the BODY VERIFICATION TEST. Refer to **STANDARD PROCEDURE** .
2. **VERIFY THE DRIVER DOOR MODULE (DDM) IS ACTIVE ON THE CAN BUS**
    1. With the scan tool, verify that the DDM is active on the bus.

    Is the DDM active on the bus?

    Yes

    - Replace and program the BCM in accordance with the Service Information. Refer to **MODULE, BODY CONTROL, REMOVAL** .
    - Perform the BODY VERIFICATION TEST. Refer to **STANDARD PROCEDURE** .

    No

    - Refer to **DIAGNOSIS AND TESTING** and perform the NO RESPONSE FROM DRIVER DOOR MODULE diagnostic procedure.
    - Perform the BODY VERIFICATION TEST. Refer to **STANDARD PROCEDURE** .

U0501-86-IMPLAUSIBLE DATA RECEIVED FROM PASSENGER DOOR MODULE - SIGNAL INVALID

For a complete wiring diagram, **refer to appropriate SYSTEM WIRING DIAGRAMS article** .

WHEN MONITORED

With the ignition on.

SET CONDITION

Incorrect data received from the Passenger Door Module (PDM).

POSSIBLE CAUSES

Possible Causes
NO COMMUNICATION WITH THE PASSENGER DOOR MODULE (PDM)
DTCS STORED OR ACTIVE IN THE BCM
BODY CONTROL MODULE (BCM)

DIAGNOSTIC TEST

1. **CHECK FOR AN ACTIVE DIAGNOSTIC TROUBLE CODE (DTC)**
   1. Turn the ignition on.
   2. With the scan tool, read active DTCs.

      Does the scan tool display this DTC as active?

      Yes

      - Go To 2

      No

      - The condition that caused this code to set is not present at this time. Check for an intermittent condition by inspecting the related wiring harness for chafed, pierced, pinched, and partially broken wires. Also inspect the related connectors for broken, bent, pushed out, spread, corroded, or contaminated terminals.
      - Perform the BODY VERIFICATION TEST. Refer to **STANDARD PROCEDURE** .
2. **VERIFY THE PASSENGER DOOR MODULE (PDM) IS ACTIVE ON THE CAN BUS**
   1. With the scan tool, verify that the PDM is active on the bus.

      Is the PDM active on the bus?

      Yes

      - Replace and program the BCM in accordance with the Service Information. Refer to **MODULE, BODY CONTROL, REMOVAL** .
      - Perform the BODY VERIFICATION TEST. Refer to **STANDARD PROCEDURE** .

      No

      - Refer to **DIAGNOSIS AND TESTING** and perform the NO RESPONSE FROM

PASSENGER DOOR MODULE diagnostic procedure.

- Perform the BODY VERIFICATION TEST. Refer to **STANDARD PROCEDURE** .

U050A-86-IMPLAUSIBLE DATA RECEIVED FROM MEMORY SEAT CONTROL MODULE - SIGNAL INVALID

For a complete wiring diagram, **refer to appropriate SYSTEM WIRING DIAGRAMS article** .

WHEN MONITORED

With the ignition on.

SET CONDITION

Incorrect data received from the Driver Seat Module (DSM).

POSSIBLE CAUSES

Possible Causes
NO COMMUNICATION WITH THE DRIVER SEAT MODULE (DSM)
DTCS STORED OR ACTIVE IN THE BCM
BODY CONTROL MODULE (BCM)

DIAGNOSTIC TEST

1. **CHECK FOR AN ACTIVE DIAGNOSTIC TROUBLE CODE (DTC)**
    1. Turn the ignition on.
    2. With the scan tool, read active DTCs.

    Does the scan tool display this DTC as active?

    Yes

    - Go To 2

    No

    - The condition that caused this code to set is not present at this time. Check for an intermittent condition by inspecting the related wiring harness for chafed, pierced, pinched, and partially broken wires. Also inspect the related connectors for broken, bent, pushed out, spread, corroded, or contaminated terminals.
    - Perform the BODY VERIFICATION TEST. Refer to **STANDARD PROCEDURE** .
2. **VERIFY THE DRIVER SEAT MODULE (DSM) IS ACTIVE ON THE CAN BUS**
    1. With the scan tool, verify that the DSM is active on the bus.

Is the DSM active on the bus?

Yes

- Replace and program the BCM in accordance with the Service Information. Refer to **MODULE, BODY CONTROL, REMOVAL** .
- Perform the BODY VERIFICATION TEST. Refer to **STANDARD PROCEDURE** .

No

- Refer to **DIAGNOSIS AND TESTING** and perform the NO RESPONSE FROM DRIVER SEAT MODULE diagnostic procedure.
- Perform the BODY VERIFICATION TEST. Refer to **STANDARD PROCEDURE** .

U052A-86-IMPLAUSIBLE DATA RECEIVED FROM HEATED SEAT MODULE - SIGNAL INVALID

For a complete wiring diagram, **refer to appropriate SYSTEM WIRING DIAGRAMS article** .

WHEN MONITORED

With the ignition on.

SET CONDITION

Incorrect data received from the Comfort Seat and Wheel Module (CSWM).

POSSIBLE CAUSES

Possible Causes
NO COMMUNICATION WITH THE COMFORT SEAT AND WHEEL MODULE (CSWM)
DTCS STORED OR ACTIVE IN THE BCM
BODY CONTROL MODULE (BCM)

DIAGNOSTIC TEST

1. **CHECK FOR AN ACTIVE DIAGNOSTIC TROUBLE CODE (DTC)**
    1. Turn the ignition on.
    2. With the scan tool, read active DTCs.

    Does the scan tool display this DTC as active?

    Yes

    - Go To 2

No

- The condition that caused this code to set is not present at this time. Check for an intermittent condition by inspecting the related wiring harness for chafed, pierced, pinched, and partially broken wires. Also inspect the related connectors for broken, bent, pushed out, spread, corroded, or contaminated terminals.
- Perform the BODY VERIFICATION TEST. Refer to **STANDARD PROCEDURE** .

2. **VERIFY THE CSWM IS ACTIVE ON THE CAN BUS**
   1. With the scan tool, verify that the CSWM is active on the bus.

   Is the CSWM active on the bus?

   Yes

   - Replace and program the BCM in accordance with the Service Information. Refer to **MODULE, BODY CONTROL, REMOVAL** .
   - Perform the BODY VERIFICATION TEST. Refer to **STANDARD PROCEDURE** .

   No

   - Refer to **DIAGNOSIS AND TESTING** and perform the NO RESPONSE FROM CSWM diagnostic procedure.
   - Perform the BODY VERIFICATION TEST. Refer to **STANDARD PROCEDURE** .

U0531-86-IMPLAUSIBLE DATA RECEIVED FROM POWER LIFTGATE MODULE - SIGNAL INVALID

For a complete wiring diagram, **refer to appropriate SYSTEM WIRING DIAGRAMS article** .

WHEN MONITORED

With the ignition on.

SET CONDITION

Incorrect data received from the Power Liftgate Module (PLGM).

POSSIBLE CAUSES

Possible Causes
NO COMMUNICATION WITH THE POWER LIFTGATE MODULE (PLGM)
DTCS STORED OR ACTIVE IN THE BCM
BODY CONTROL MODULE (BCM)

DIAGNOSTIC TEST

1. **CHECK FOR AN ACTIVE DIAGNOSTIC TROUBLE CODE (DTC)**
    1. Turn the ignition on.
    2. With the scan tool, read active DTCs.

    Does the scan tool display this DTC as active?

    Yes

    - Go To 2

    No

    - The condition that caused this code to set is not present at this time. Check for an intermittent condition by inspecting the related wiring harness for chafed, pierced, pinched, and partially broken wires. Also inspect the related connectors for broken, bent, pushed out, spread, corroded, or contaminated terminals.
    - Perform the BODY VERIFICATION TEST. Refer to **STANDARD PROCEDURE** .
2. **VERIFY THE POWER LIFTGATE MODULE (PLGM) IS ACTIVE ON THE CAN BUS**
    1. With the scan tool, verify that the PLGM is active on the bus.

    Is the PLGM active on the bus?

    Yes

    - Replace and program the BCM in accordance with the Service Information. Refer to **MODULE, BODY CONTROL, REMOVAL** .
    - Perform the BODY VERIFICATION TEST. Refer to **STANDARD PROCEDURE** .

    No

    - Refer to **DIAGNOSIS AND TESTING** and perform the NO RESPONSE FROM POWER LIFTGATE MODULE diagnostic procedure.
    - Perform the BODY VERIFICATION TEST. Refer to **STANDARD PROCEDURE** .

U0537-86-IMPLAUSIBLE DATA RECEIVED FROM ELECTRONIC STEERING COLUMN LOCK MODULE - SIGNAL INVALID

For a complete wiring diagram, **refer to appropriate SYSTEM WIRING DIAGRAMS article** .

WHEN MONITORED

With the ignition on.

SET CONDITION

Incorrect data received from the Electronic Steering Column Lock Module.

POSSIBLE CAUSES

Possible Causes
NO COMMUNICATION WITH THE ELECTRONIC STEERING COLUMN LOCK MODULE
DTCS STORED OR ACTIVE IN THE BCM
BODY CONTROL MODULE (BCM)

DIAGNOSTIC TEST

1. **CHECK FOR AN ACTIVE DIAGNOSTIC TROUBLE CODE (DTC)**
   1. Turn the ignition on.
   2. With the scan tool, read active DTCs.

      Does the scan tool display this DTC as active?

      Yes

      - Go To 2

      No

      - The condition that caused this code to set is not present at this time. Check for an intermittent condition by inspecting the related wiring harness for chafed, pierced, pinched, and partially broken wires. Also inspect the related connectors for broken, bent, pushed out, spread, corroded, or contaminated terminals.
      - Perform the BODY VERIFICATION TEST. Refer to **STANDARD PROCEDURE** .
2. **VERIFY THE ELECTRONIC STEERING COLUMN LOCK MODULE IS ACTIVE ON THE CAN BUS**
   1. With the scan tool, verify that the Electronic Steering Column Lock Module is active on the bus.

      Is the Electronic Steering Column Lock Module active on the bus?

      Yes

      - Replace and program the BCM in accordance with the Service Information. Refer to **MODULE, BODY CONTROL, REMOVAL** .
      - Perform the BODY VERIFICATION TEST. Refer to **STANDARD PROCEDURE** .

      No

      - Refer to **DIAGNOSIS AND TESTING** and perform the NO RESPONSE FROM ELECTRONIC STEERING COLUMN LOCK MODULE diagnostic procedure.

- Perform the BODY VERIFICATION TEST. Refer to **STANDARD PROCEDURE** .

U1008-11-LIN 1 BUS - CIRCUIT SHORT TO GROUND

For a complete wiring diagram, **refer to appropriate SYSTEM WIRING DIAGRAMS article** .

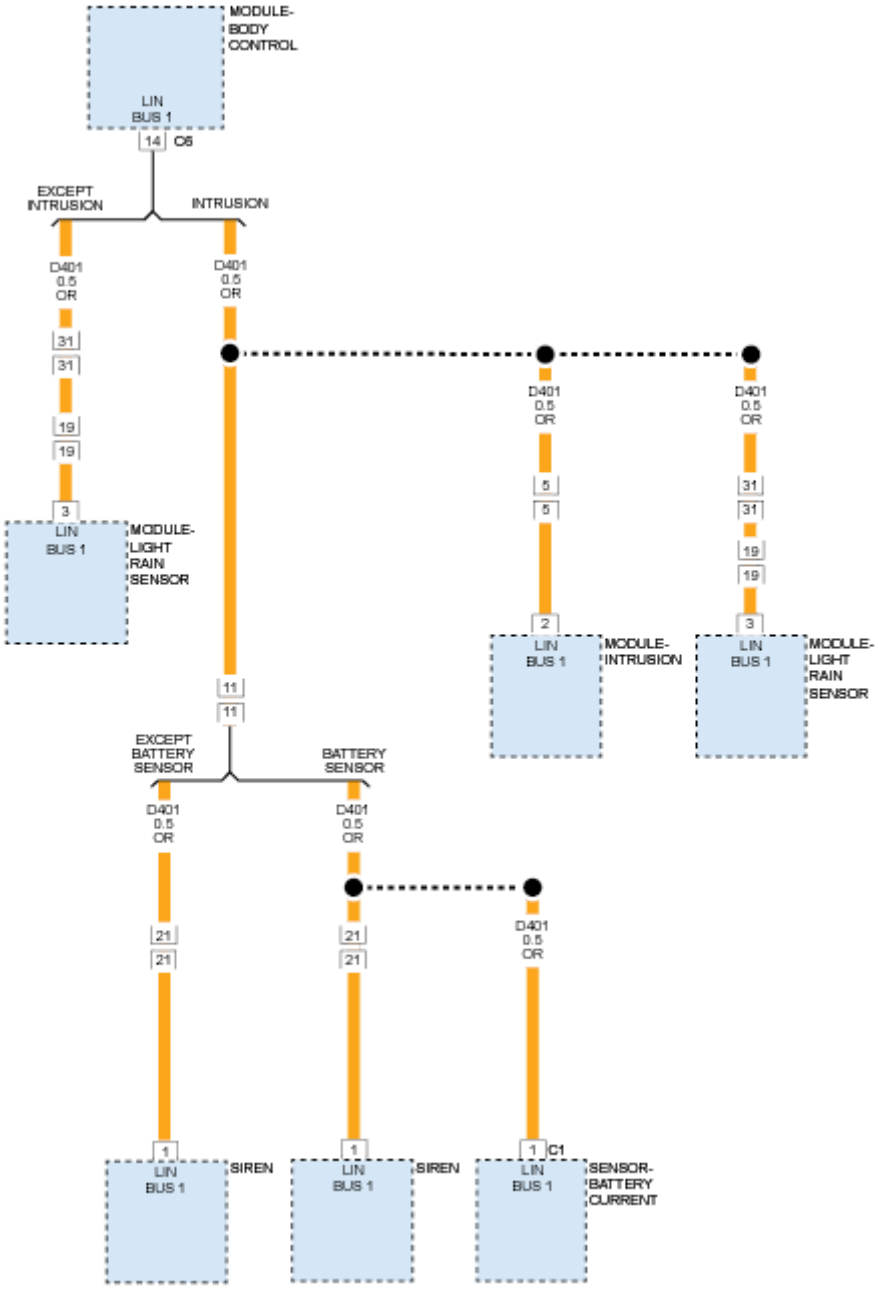

Fig. 15: Battery Sensor, Alarm Siren, Intrusion & Light Rain Sensing Module Circuit Diagram
Courtesy of CHRYSLER GROUP, LLC

THEORY OF OPERATION

The Body Control Module (BCM) is the Local Interconnect Network (LIN) master for the Ultra-Sonic Anti-tilt Module (UAM), Intelligent Battery Sensor (IBS), Alarm Siren Unit (ASU) and Light Rain Sensing Module (LRSM). The BCM monitors the LIN circuit for any concerns.

WHEN MONITORED

Continuously with the ignition on.

SET CONDITION

When the BCM detects that the LIN Bus is shorted to ground.

POSSIBLE CAUSES

Possible Causes
LIN BUS CIRCUIT SHORTED TO GROUND
INTELLIGENT BATTERY SENSOR (IBS)
ULTRA-SONIC ANTI-TILT MODULE (UAM)
ALARM SIREN UNIT (ASU)
LIGHT AND RAIN SENSING MODULE (LRSM)
BODY CONTROL MODULE (BCM)

DIAGNOSTIC TEST

1. **CHECK FOR AN ACTIVE DTC**
    1. Turn the ignition on.
    2. With the scan tool, read DTCs.

    Does the scan tool display this DTC as active?

    Yes

    - Go To 2

    No

    - Test complete. The condition or conditions that originally set this DTC are not present at this time. Using the wiring diagrams as a guide, check all related splices and connectors for signs of water intrusion, corrosion, pushed out or bent terminals and correct pin tension.
    - Perform the BODY VERIFICATION TEST. Refer to **STANDARD PROCEDURE** .
2. **ULTRA-SONIC ANTI-TILT MODULE (UAM)**
    1. Turn the ignition off.
    2. Disconnect the UAM harness connector.
    3. Turn the ignition on.

4. With the scan tool, read DTCs.

   Does the scan tool display this DTC as active?

   Yes

   - Go To 3

   No

   - Replace the UAM in accordance with the Service Information. Refer to **MODULE, ULTRASONIC AND ANTI-TILT, REMOVAL** .
   - Perform the BODY VERIFICATION TEST. Refer to **STANDARD PROCEDURE** .

3. **ALARM SIREN UNIT (ASU)**
   1. Turn the ignition off.
   2. Disconnect the ASU harness connector.
   3. Turn the ignition on.
   4. With the scan tool, read DTCs.

      Does the scan tool display this DTC as active?

      Yes

      - Go To 4

      No

      - Replace the ASU in accordance with the Service Information.
      - Perform the BODY VERIFICATION TEST. Refer to **STANDARD PROCEDURE** .

4. **INTELLIGENT BATTERY SENSOR (IBS)**
   1. Turn the ignition off.
   2. Disconnect the IBS C1 harness connector.
   3. Turn the ignition on.
   4. With the scan tool, read DTCs.

      Does the scan tool display this DTC as active?

      Yes

      - Go To 5

      No

- Replace the IBS in accordance with the Service Information.
- Perform the BODY VERIFICATION TEST. Refer to **STANDARD PROCEDURE** .

5. **LIGHT AND RAIN SENSING MODULE (LRSM)**
   1. Turn the ignition off.
   2. Disconnect the LRSM harness connector.
   3. Turn the ignition on.
   4. With the scan tool, read DTCs.

      Does the scan tool display this DTC as active?

      Yes

      - Go To 6

      No

      - Replace the LRSM in accordance with the Service Information.
      - Perform the BODY VERIFICATION TEST. Refer to **STANDARD PROCEDURE** .
6. **CHECK THE (D401) LIN BUS CIRCUIT FOR A SHORT TO GROUND**
   1. Turn the ignition off.
   2. Disconnect the BCM C6 harness connector.
   3. Measure the resistance between ground and the (D401) LIN Bus circuit at the BCM C6 harness connector.

      Is the resistance above 10K Ohms?

      Yes

      - Replace the BCM in accordance with the Service Information. Refer to **MODULE, BODY CONTROL, REMOVAL** .
      - Perform the BODY VERIFICATION TEST. Refer to **STANDARD PROCEDURE** .

      No

      - Repair the short to ground in the (D401) LIN Bus circuit.
      - Perform the BODY VERIFICATION TEST. Refer to **STANDARD PROCEDURE** .

U1008-12-LIN 1 BUS - CIRCUIT SHORT TO BATTERY

For a complete wiring diagram, **refer to appropriate SYSTEM WIRING DIAGRAMS article** .

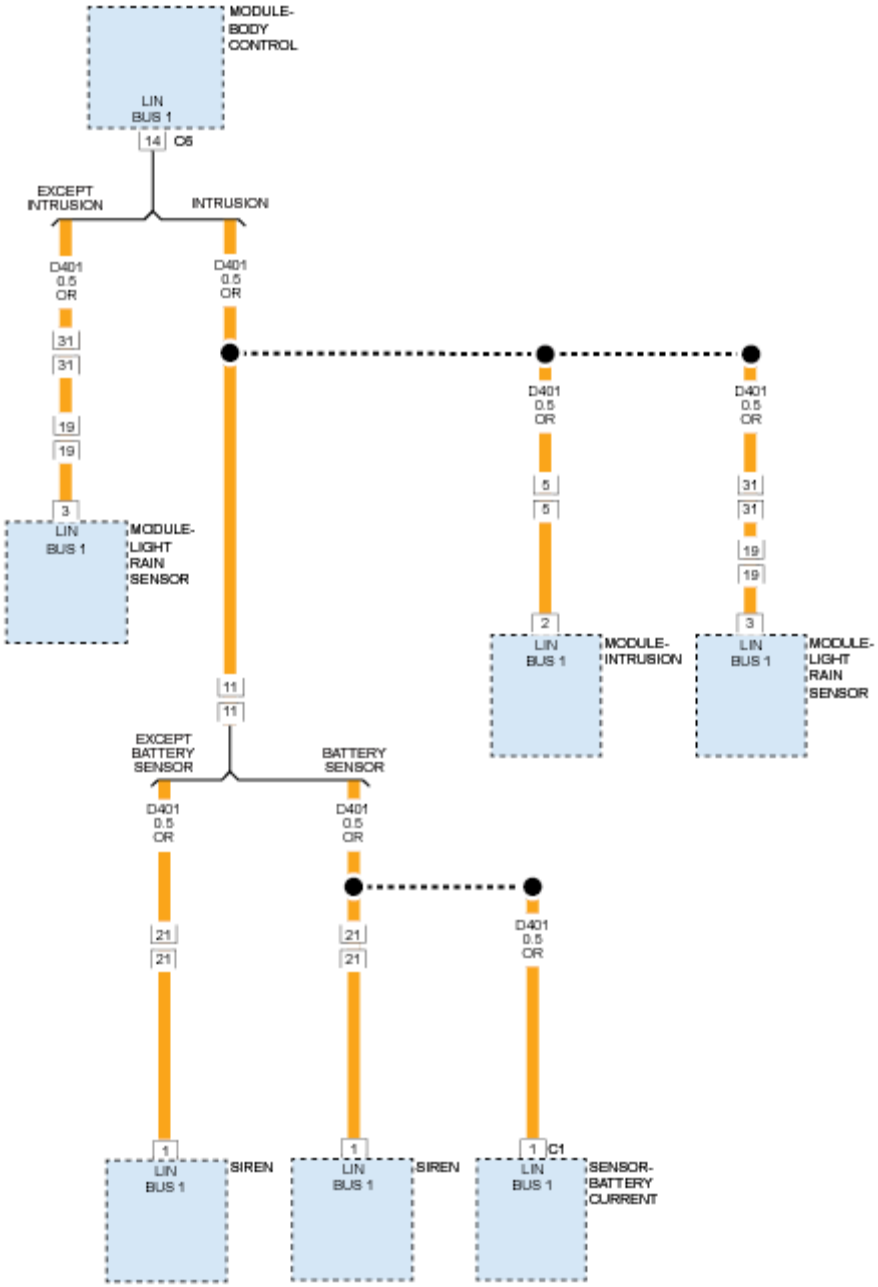

Fig. 16: Battery Sensor, Alarm Siren, Intrusion & Light Rain Sensing Module Circuit Diagram
Courtesy of CHRYSLER GROUP, LLC

THEORY OF OPERATION

The Body Control Module (BCM) is the Local Interconnect Network (LIN) master for the Ultra-Sonic Anti-tilt Module (UAM), Intelligent Battery Sensor (IBS), Alarm Siren Unit (ASU) and Light Rain Sensing Module (LRSM). The BCM monitors the LIN circuit for any concerns.

WHEN MONITORED

Continuously with the ignition on.

SET CONDITION

When the BCM detects that the LIN Bus is shorted to battery voltage.

POSSIBLE CAUSES

Possible Causes
LIN BUS CIRCUIT SHORTED TO VOLTAGE
ULTRA-SONIC ANTI-TILT MODULE (UAM)
ALARM SIREN UNIT (ASU)
INTELLIGENT BATTERY SENSOR (IBS)
LIGHT AND RAIN SENSING MODULE (LRSM)
BODY CONTROL MODULE (BCM)

DIAGNOSTIC TEST

1. **CHECK FOR AN ACTIVE DTC**
    1. Turn the ignition on.
    2. With the scan tool, read DTCs.

    Does the scan tool display this DTC as active?

    Yes

    - Go To 2

    No

    - Test complete. The condition or conditions that originally set this DTC are not present at this time. Using the wiring diagrams as a guide, check all related splices and connectors for signs of water intrusion, corrosion, pushed out or bent terminals, and correct pin tension.
    - Perform the BODY VERIFICATION TEST. Refer to **STANDARD PROCEDURE** .
2. **ULTRA-SONIC ANTI-TILT MODULE (UAM)**
    1. Turn the ignition off.
    2. Disconnect the UAM harness connector.
    3. Turn the ignition on.
    4. With the scan tool, read DTCs.

    Does the scan tool display this DTC as active?

    Yes

- Go To 3

No

- Replace the UAM in accordance with the Service Information. Refer to **MODULE, ULTRASONIC AND ANTI-TILT, REMOVAL** .
- Perform the BODY VERIFICATION TEST. Refer to **STANDARD PROCEDURE** .

3. **ALARM SIREN UNIT (ASU)**
   1. Turn the ignition off.
   2. Disconnect the ASU harness connector.
   3. Turn the ignition on.
   4. With the scan tool, read DTCs.

   Does the scan tool display this DTC as active?

   Yes

   - Go To 4

   No

   - Replace the UAM in accordance with the Service Information.
   - Perform the BODY VERIFICATION TEST. Refer to **STANDARD PROCEDURE** .

4. **INTELLIGENT BATTERY SENSOR (IBS)**
   1. Turn the ignition off.
   2. Disconnect the IBS C1 harness connector.
   3. Turn the ignition on.
   4. With the scan tool, read DTCs.

   Does the scan tool display this DTC as active?

   Yes

   - Go To 5

   No

   - Replace the IBS in accordance with the Service Information.
   - Perform the BODY VERIFICATION TEST. Refer to **STANDARD PROCEDURE** .

5. **LIGHT AND RAIN SENSING MODULE (LRSM)**
   1. Turn the ignition off.
   2. Disconnect the LRSM harness connector.

3. Turn the ignition on.
4. With the scan tool, read DTCs.

   Does the scan tool display this DTC as active?

   Yes

   - Go To 6

   No

   - Replace the LRSM in accordance with the Service Information.
   - Perform the BODY VERIFICATION TEST. Refer to **STANDARD PROCEDURE** .

6. **CHECK THE (D401) LIN BUS CIRCUIT FOR A SHORT TO VOLTAGE**
   1. Turn the ignition off.
   2. Disconnect the BCM C6 harness connector.
   3. Turn the ignition on.
   4. Measure the voltage of the (D401) LIN Bus circuit at the BCM C6 harness connector.

      Is voltage present?

      Yes

      - Repair the short to voltage on the (D401) LIN Bus circuit.
      - Perform the BODY VERIFICATION TEST. Refer to **STANDARD PROCEDURE** .

      No

      - Replace the BCM in accordance with the Service Information. Refer to **MODULE, BODY CONTROL, REMOVAL** .
      - Perform the BODY VERIFICATION TEST. Refer to **STANDARD PROCEDURE** .

U1008-67-LIN 1 BUS - SIGNAL INCORRECT AFTER EVENT

For a complete wiring diagram, **refer to appropriate SYSTEM WIRING DIAGRAMS article** .

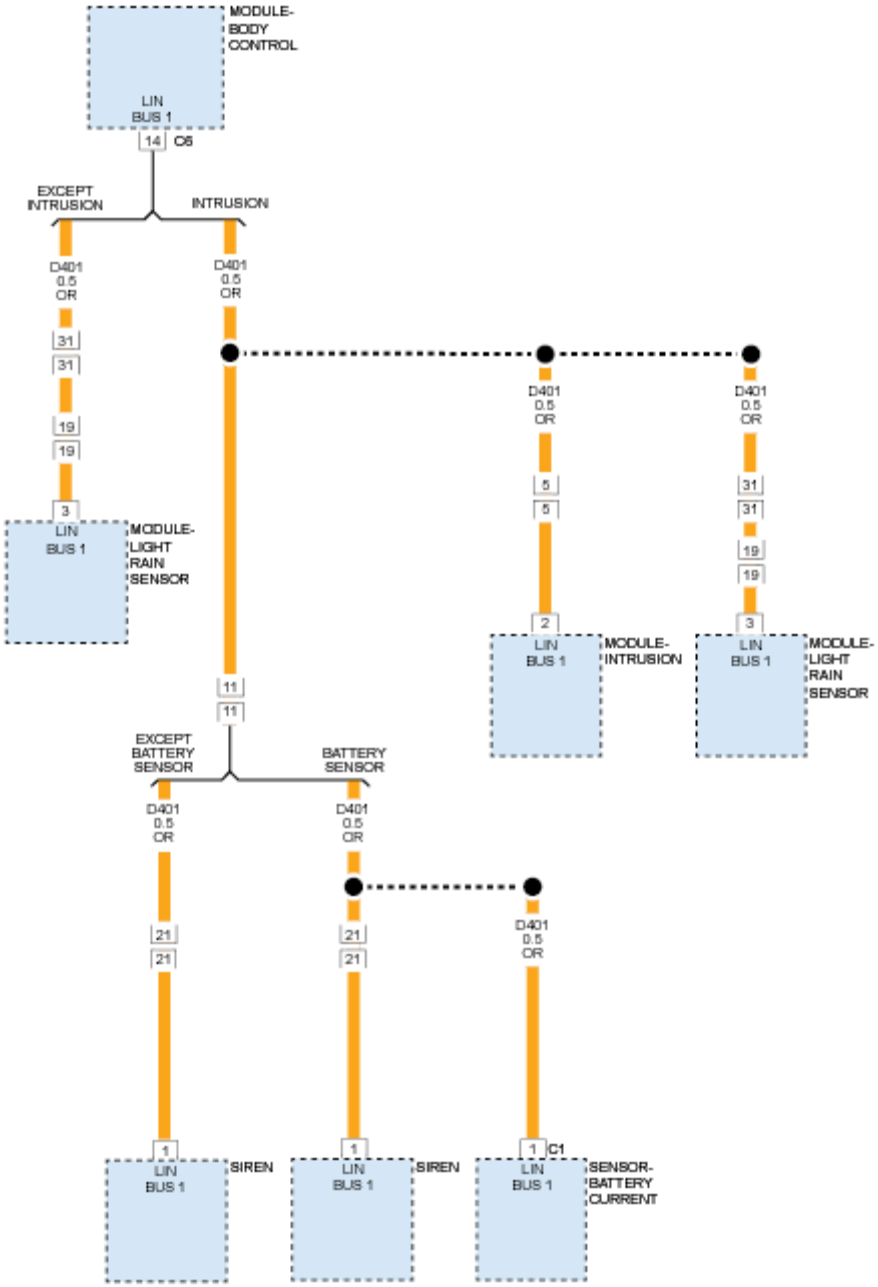

Fig. 17: Battery Sensor, Alarm Siren, Intrusion & Light Rain Sensing Module Circuit Diagram
Courtesy of CHRYSLER GROUP, LLC

THEORY OF OPERATION

The Body Control Module (BCM) is the Local Interconnect Network (LIN) master for the Ultra-Sonic Anti-tilt Module (UAM), Intelligent Battery Sensor (IBS), Alarm Siren Unit (ASU) and Light Rain Sensing Module (LRSM). The BCM monitors the LIN circuit for any concerns.

WHEN MONITORED

Continuously with the ignition on.

SET CONDITION

The BCM does not receive any response from the LIN 1 Bus devices.

POSSIBLE CAUSES

Possible Causes
LIN 1 BUS CIRCUIT OPEN
BODY CONTROL MODULE (BCM)

DIAGNOSTIC TEST

1. **CHECK FOR AN ACTIVE DTC**
    1. Turn the ignition on.
    2. With the scan tool, read DTCs.

    Does the scan tool display this DTC as active?

    Yes

    - Go To 2

    No

    - Test complete. The condition or conditions that originally set this DTC are not present at this time. Using the wiring diagrams as a guide, check all related splices and connectors for signs of water intrusion, corrosion, pushed out or bent terminals, and correct pin tension.
    - Perform the BODY VERIFICATION TEST. Refer to **STANDARD PROCEDURE** .
2. **CHECK THE (D401) LIN BUS CIRCUIT FOR AN OPEN**
    1. Turn the ignition off.
    2. Disconnect the BCM C6 harness connector.
    3. Disconnect the UAM harness connector.
    4. Disconnect the ASU harness connector.
    5. Disconnect the IBS C1 harness connector.
    6. Disconnect the LRSM harness connector.
    7. Measure the resistance or the (D401) LIN Bus circuit between the BCM C6 harness connector and the UAM/ASU/IBS C1/LRSM harness connectors.

    Is the resistance above 5.0 Ohms?

    Yes

- Repair the open in the (D401) LIN Bus circuit.
- Perform the BODY VERIFICATION TEST. Refer to **STANDARD PROCEDURE** .

No

- Replace the BCM in accordance with the Service Information. Refer to **MODULE, BODY CONTROL, REMOVAL** .
- Perform the BODY VERIFICATION TEST. Refer to **STANDARD PROCEDURE** .

U1009-11-LIN 2 BUS - CIRCUIT SHORT TO GROUND

For a complete wiring diagram, **refer to appropriate SYSTEM WIRING DIAGRAMS article** .

Fig. 18: LIN 2 BUS Video Camera Assembly Circuit Diagram
Courtesy of CHRYSLER GROUP, LLC

THEORY OF OPERATION

The Body Control Module (BCM) is the Local Interconnect Network (LIN) master for the Rear View Camera Module. The BCM monitors the LIN 2 Bus circuit for any concerns.

WHEN MONITORED

Continuously with the ignition on.

SET CONDITION

When the BCM detects that the LIN 2 Bus circuit is shorted to ground.

POSSIBLE CAUSES

Possible Causes
LIN 2 BUS CIRCUIT SHORTED TO GROUND
REAR VIEW CAMERA MODULE
BODY CONTROL MODULE (BCM)

DIAGNOSTIC TEST

1. **CHECK FOR AN ACTIVE DTC**
    1. Turn the ignition on.
    2. With the scan tool, read DTCs.

    Does the scan tool display this DTC as active?

    Yes

    - Go To 2

    No

    - Test complete. The condition or conditions that originally set this DTC are not present at this time. Using the wiring diagrams as a guide, check all related splices and connectors for signs of water intrusion, corrosion, pushed out or bent terminals and correct pin tension.
    - Perform the BODY VERIFICATION TEST. Refer to **STANDARD PROCEDURE** .
2. **REAR VIEW CAMERA MODULE**
    1. Turn the ignition off.
    2. Disconnect the Rear View Camera Module harness connector.

3. Turn the ignition on.
4. With the scan tool, read DTCs.

   Does the scan tool display this DTC as active?

   Yes

   - Go To 3

   No

   - Replace the Rear View Camera Module in accordance with the Service Information.
   - Perform the BODY VERIFICATION TEST. Refer to **STANDARD PROCEDURE** .

3. **CHECK THE (D402) LIN BUS CIRCUIT FOR A SHORT TO GROUND**
   1. Turn the ignition off.
   2. Disconnect the BCM C6 harness connector.
   3. Measure the resistance between ground and the (D402) LIN Bus circuit at the BCM C6 harness connector.

      Is the resistance above 10K Ohms?

      Yes

      - Replace the BCM in accordance with the Service Information. Refer to **MODULE, BODY CONTROL, REMOVAL** .
      - Perform the BODY VERIFICATION TEST. Refer to **STANDARD PROCEDURE** .

      No

      - Repair the short to ground in the (D402) LIN Bus circuit.
      - Perform the BODY VERIFICATION TEST. Refer to **STANDARD PROCEDURE** .

U1009-12-LIN 2 BUS - CIRCUIT SHORT TO BATTERY

For a complete wiring diagram, **refer to appropriate SYSTEM WIRING DIAGRAMS article** .

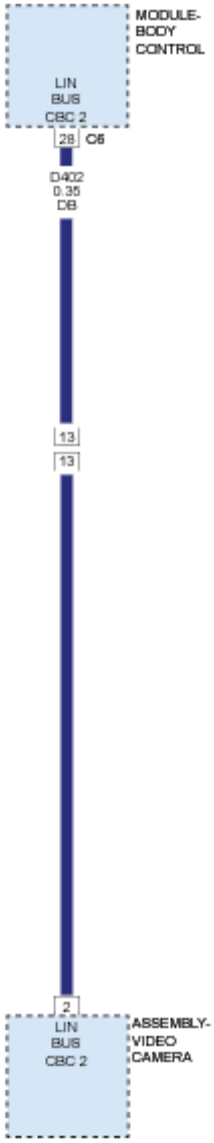

Fig. 19: LIN 2 BUS Video Camera Assembly Circuit Diagram
Courtesy of CHRYSLER GROUP, LLC

THEORY OF OPERATION

The Body Control Module (BCM) is the Local Interconnect Network (LIN) master for the Rear View Camera Module. The BCM monitors the LIN 2 Bus circuit for any concerns.

WHEN MONITORED

Continuously with the ignition on.

SET CONDITION

When the BCM detects that the LIN 2 Bus circuit is shorted to battery voltage.

POSSIBLE CAUSES

Possible Causes
LIN 2 BUS CIRCUIT SHORTED TO VOLTAGE
REAR VIEW CAMERA MODULE
BODY CONTROL MODULE (BCM)

DIAGNOSTIC TEST

1. **CHECK FOR AN ACTIVE DTC**
    1. Turn the ignition on.
    2. With the scan tool, read DTCs.

    Does the scan tool display this DTC as active?

    Yes

    - Go To 2

    No

    - Test complete. The condition or conditions that originally set this DTC are not present at this time. Using the wiring diagrams as a guide, check all related splices and connectors for signs of water intrusion, corrosion, pushed out or bent terminals and correct pin tension.
    - Perform the BODY VERIFICATION TEST. Refer to **STANDARD PROCEDURE** .
2. **REAR VIEW CAMERA MODULE**
    1. Turn the ignition off.
    2. Disconnect the Rear View Camera Module harness connector.
    3. Turn the ignition on.
    4. With the scan tool, read DTCs.

    Does the scan tool display this DTC as active?

    Yes

    - Go To 3

    No

    - Replace the Rear View Camera Module in accordance with the Service Information.
    - Perform the BODY VERIFICATION TEST. Refer to **STANDARD PROCEDURE** .

3. **CHECK THE (D402) LIN BUS CIRCUIT FOR A SHORT TO VOLTAGE**
    1. Turn the ignition off.
    2. Disconnect the BCM C6 harness connector.
    3. Turn the ignition on.
    4. Measure the voltage of the (D402) LIN Bus circuit at the BCM C6 harness connector.

    Is voltage present?

    Yes

    - Repair the short to voltage on the (D402) LIN Bus circuit.
    - Perform the BODY VERIFICATION TEST. Refer to **STANDARD PROCEDURE** .

    No

    - Replace the BCM in accordance with the Service Information. Refer to **MODULE, BODY CONTROL, REMOVAL** .
    - Perform the BODY VERIFICATION TEST. Refer to **STANDARD PROCEDURE** .

U1009-67-LIN 2 BUS - SIGNAL INCORRECT AFTER EVENT

For a complete wiring diagram, **refer to appropriate SYSTEM WIRING DIAGRAMS article** .

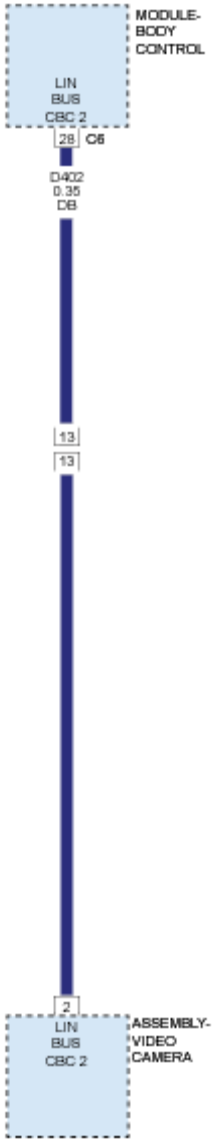

Fig. 20: LIN 2 BUS Video Camera Assembly Circuit Diagram
Courtesy of CHRYSLER GROUP, LLC

THEORY OF OPERATION

The Body Control Module (BCM) is the Local Interconnect Network (LIN) master for the Rear View Camera Module. The BCM monitors the LIN 2 Bus circuit for any concerns.

WHEN MONITORED

Continuously with the ignition on.

SET CONDITION

The BCM does not receive any response from the LIN 2 Bus circuit devices.

POSSIBLE CAUSES

Possible Causes
LIN 2 BUS CIRCUIT OPEN
BODY CONTROL MODULE (BCM)

DIAGNOSTIC TEST

1. **CHECK FOR AN ACTIVE DTC**
    1. Turn the ignition on.
    2. With the scan tool, read DTCs.

    Does the scan tool display this DTC as active?

    Yes

    - Go To 2

    No

    - Test complete. The condition or conditions that originally set this DTC are not present at this time. Using the wiring diagrams as a guide, check all related splices and connectors for signs of water intrusion, corrosion, pushed out or bent terminals and correct pin tension.
    - Perform the BODY VERIFICATION TEST. Refer to **STANDARD PROCEDURE** .
2. **CHECK THE (D402) LIN BUS CIRCUIT FOR AN OPEN**
    1. Turn the ignition off.
    2. Disconnect the BCM C6 harness connector.
    3. Disconnect the Rear View Camera Module harness connector.
    4. Measure the resistance or the (D402) LIN Bus circuit between the BCM C6 harness connector and the Rear View Camera Module harness connectors.

    Is the resistance above 5.0 Ohms?

    Yes

    - Repair the open in the (D402) LIN Bus circuit.
    - Perform the BODY VERIFICATION TEST. Refer to **STANDARD PROCEDURE** .

    No

    - Replace the BCM in accordance with the Service Information. Refer to **MODULE, BODY CONTROL, REMOVAL** .

- Perform the BODY VERIFICATION TEST. Refer to **STANDARD PROCEDURE** .

U1045-11-LIN 3 BUS - CIRCUIT SHORT TO GROUND

For a complete wiring diagram, **refer to appropriate SYSTEM WIRING DIAGRAMS article** .

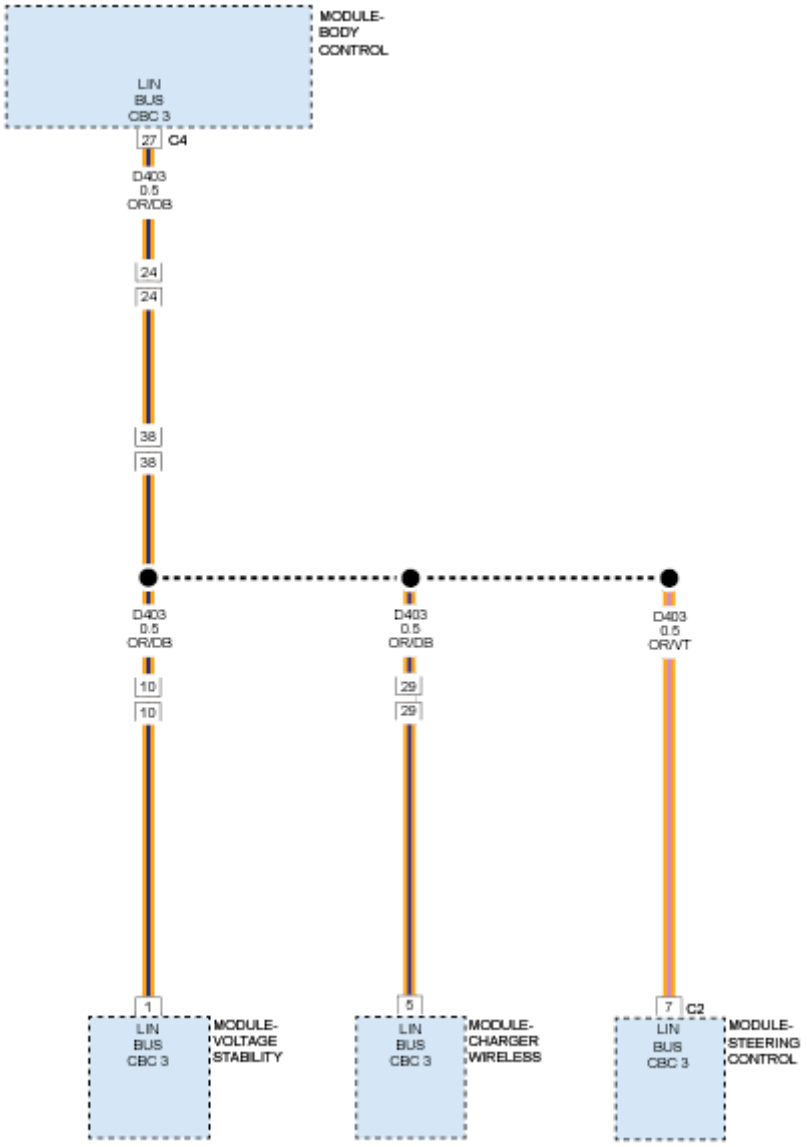

Fig. 21: Voltage Stability, Steering Column Control & Wireless Charging Pad Modules Circuit Diagram Courtesy of CHRYSLER GROUP, LLC

THEORY OF OPERATION

The Body Control Module (BCM) is the Local Interconnect Network (LIN) master for the Voltage Stability Module, Steering Column Control Module (SCCM) and Wireless Charging Pad Module. The BCM monitors

the LIN circuit for any concerns.

WHEN MONITORED

Continuously with the ignition on.

SET CONDITION

When the BCM detects that the LIN Bus is shorted to ground.

POSSIBLE CAUSES

Possible Causes
LIN BUS CIRCUIT SHORTED TO GROUND
VOLTAGE STABILITY MODULE
WIRELESS CHARGING PAD MODULE
STEERING COLUMN CONTROL MODULE (SCCM)
BODY CONTROL MODULE (BCM)

DIAGNOSTIC TEST

1. **CHECK FOR AN ACTIVE DTC**
    1. Turn the ignition on.
    2. With the scan tool, read DTCs.

    Does the scan tool display this DTC as active?

    Yes

    - Go To 2

    No

    - Test complete. The condition or conditions that originally set this DTC are not present at this time. Using the wiring diagrams as a guide, check all related splices and connectors for signs of water intrusion, corrosion, pushed out or bent terminals and correct pin tension.
    - Perform the BODY VERIFICATION TEST. Refer to **STANDARD PROCEDURE** .
2. **VOLTAGE STABILITY MODULE**
    1. Turn the ignition off.
    2. Disconnect the Voltage Stability Module harness connector.
    3. Turn the ignition on.
    4. With the scan tool, read DTCs.

    Does the scan tool display this DTC as active?

Yes

- Go To 3

No

- Replace the Voltage Stability Module in accordance with the Service Information.
- Perform the BODY VERIFICATION TEST. Refer to **STANDARD PROCEDURE** .

3. **WIRELESS CHARGING PAD MODULE**
   1. Turn the ignition off.
   2. Disconnect the Wireless Charging Pad Module harness connector.
   3. Turn the ignition on.
   4. With the scan tool, read DTCs.

   Does the scan tool display this DTC as active?

   Yes

   - Go To 4

   No

   - Replace the Wireless Charging Pad Module in accordance with the Service Information.
   - Perform the BODY VERIFICATION TEST. Refer to **STANDARD PROCEDURE** .
4. **STEERING COLUMN CONTROL MODULE**
   1. Turn the ignition off.
   2. Disconnect the SCCM C2 harness connector.
   3. Turn the ignition on.
   4. With the scan tool, read DTCs.

   Does the scan tool display this DTC as active?

   Yes

   - Go To 5

   No

   - Replace the SCCM in accordance with the Service Information.
   - Perform the BODY VERIFICATION TEST. Refer to **STANDARD PROCEDURE** .
5. **CHECK THE (D403) LIN BUS CIRCUIT FOR A SHORT TO GROUND**
   1. Turn the ignition off.

2. Disconnect the BCM C4 harness connector.
3. Measure the resistance between ground and the (D403) LIN Bus circuit at the BCM C4 harness connector.

   Is the resistance above 10K Ohms?

   Yes

   - Replace the BCM in accordance with the Service Information. Refer to **MODULE, BODY CONTROL, REMOVAL** .
   - Perform the BODY VERIFICATION TEST. Refer to **STANDARD PROCEDURE** .

   No

   - Repair the short to ground in the (D403) LIN Bus circuit.
   - Perform the BODY VERIFICATION TEST. Refer to **STANDARD PROCEDURE** .

U1045-12-LIN 3 BUS - CIRCUIT SHORT TO BATTERY

For a complete wiring diagram, **refer to appropriate SYSTEM WIRING DIAGRAMS article** .

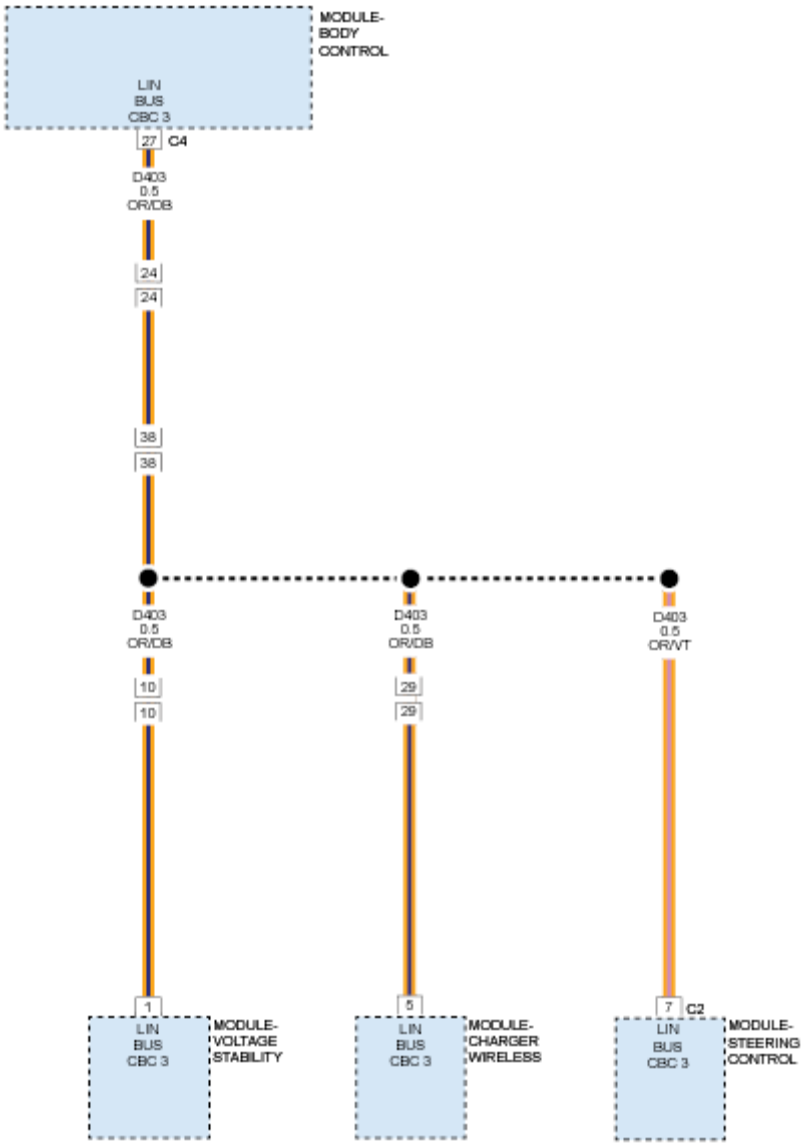

Fig. 22: Voltage Stability, Steering Column Control & Wireless Charging Pad Modules Circuit Diagram
Courtesy of CHRYSLER GROUP, LLC

THEORY OF OPERATION

The Body Control Module (BCM) is the Local Interconnect Network (LIN) master for the Voltage Stability Module, Steering Column Control Module (SCCM) and Wireless Charging Pad Module. The BCM monitors the LIN circuit for any concerns.

WHEN MONITORED

Continuously with the ignition on.

SET CONDITION

When the BCM detects that the LIN Bus is shorted to voltage.

POSSIBLE CAUSES

Possible Causes
LIN BUS CIRCUIT SHORTED TO VOLTAGE
VOLTAGE STABILITY MODULE
WIRELESS CHARGING PAD MODULE
STEERING COLUMN CONTROL MODULE (SCCM)
BODY CONTROL MODULE (BCM)

DIAGNOSTIC TEST

1. **CHECK FOR AN ACTIVE DTC**
    1. Turn the ignition on.
    2. With the scan tool, read DTCs.

    Does the scan tool display this DTC as active?

    Yes

    - Go To 2

    No

    - Test complete. The condition or conditions that originally set this DTC are not present at this time. Using the wiring diagrams as a guide, check all related splices and connectors for signs of water intrusion, corrosion, pushed out or bent terminals, and correct pin tension.
    - Perform the BODY VERIFICATION TEST. Refer to **STANDARD PROCEDURE** .
2. **VOLTAGE STABILITY MODULE**
    1. Turn the ignition off.
    2. Disconnect the Voltage Stability Module harness connector.
    3. Turn the ignition on.
    4. With the scan tool, read DTCs.

    Does the scan tool display this DTC as active?

    Yes

    - Go To 3

    No

- Replace the Voltage Stability Module in accordance with the Service Information.
- Perform the BODY VERIFICATION TEST. Refer to **STANDARD PROCEDURE** .

3. **WIRELESS CHARGING PAD MODULE**
   1. Turn the ignition off.
   2. Disconnect the Wireless Charging Pad Module harness connector.
   3. Turn the ignition on.
   4. With the scan tool, read DTCs.

   Does the scan tool display this DTC as active?

   Yes

   - Go To 4

   No

   - Replace the Wireless Charging Pad Module in accordance with the Service Information.
   - Perform the BODY VERIFICATION TEST. Refer to **STANDARD PROCEDURE** .

4. **STEERING COLUMN CONTROL MODULE**
   1. Turn the ignition off.
   2. Disconnect the SCCM C2 harness connector.
   3. Turn the ignition on.
   4. With the scan tool, read DTCs.

   Does the scan tool display this DTC as active?

   Yes

   - Go To 5

   No

   - Replace the SCCM in accordance with the Service Information.
   - Perform the BODY VERIFICATION TEST. Refer to **STANDARD PROCEDURE** .

5. **CHECK THE (D403) LIN BUS CIRCUIT FOR A SHORT TO VOLTAGE**
   1. Turn the ignition off.
   2. Disconnect the BCM C4 harness connector.
   3. Turn the ignition on.
   4. Measure the voltage of the (D403) LIN Bus circuit at the BCM C4 harness connector.

   Is voltage present?

Yes

- Repair the short to voltage on the (D403) LIN Bus circuit.
- Perform the BODY VERIFICATION TEST. Refer to **STANDARD PROCEDURE** .

No

- Replace the BCM in accordance with the Service Information. Refer to **MODULE, BODY CONTROL, REMOVAL** .
- Perform the BODY VERIFICATION TEST. Refer to **STANDARD PROCEDURE** .

U1045-67-LIN 3 BUS - SIGNAL INCORRECT AFTER EVENT

For a complete wiring diagram, **refer to appropriate SYSTEM WIRING DIAGRAMS article** .

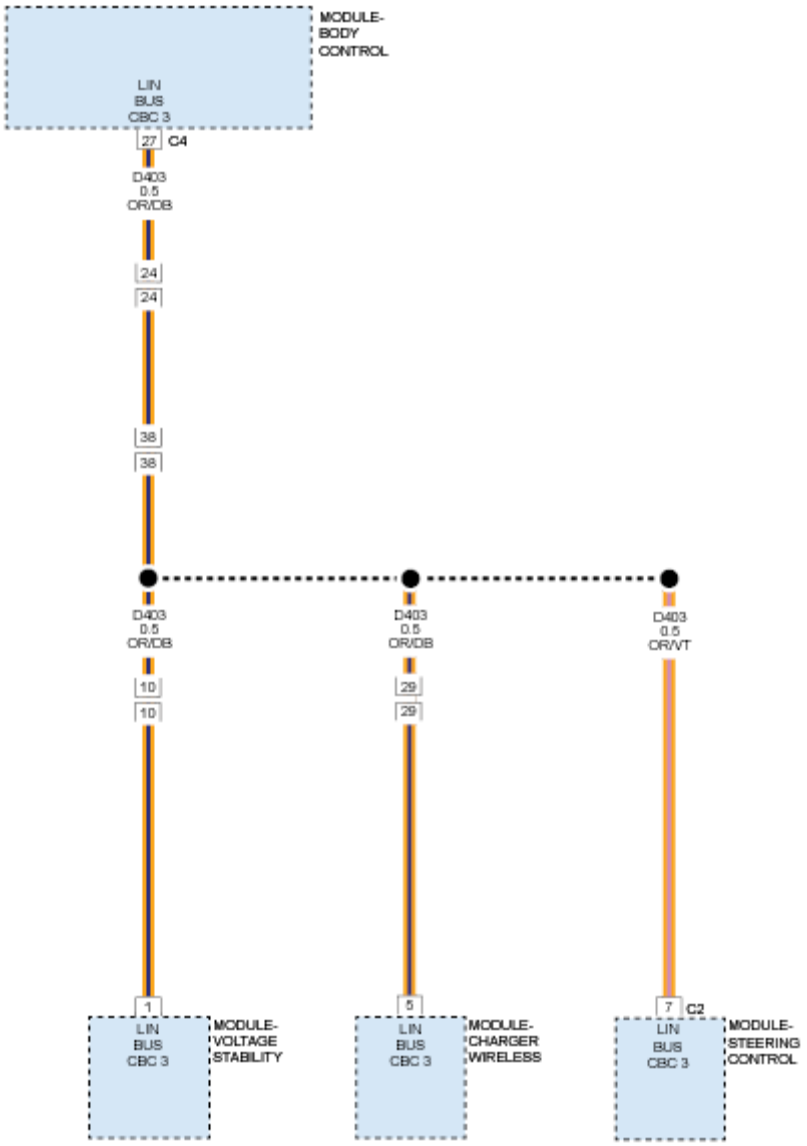

Fig. 23: Voltage Stability, Steering Column Control & Wireless Charging Pad Modules Circuit Diagram
Courtesy of CHRYSLER GROUP, LLC

THEORY OF OPERATION

The Body Control Module (BCM) is the Local Interconnect Network (LIN) master for the Voltage Stability Module, Steering Column Control Module (SCCM) and Wireless Charging Pad Module. The BCM monitors the LIN circuit for any concerns.

WHEN MONITORED

Continuously with the ignition on.

SET CONDITION

The BCM does not receive any response from the LIN 3 Bus circuit devices.

POSSIBLE CAUSES

Possible Causes
LIN 3 BUS CIRCUIT OPEN
BODY CONTROL MODULE (BCM)

DIAGNOSTIC TEST

1. **CHECK FOR AN ACTIVE DTC**
    1. Turn the ignition on.
    2. With the scan tool, read DTCs.

    Does the scan tool display this DTC as active?

    Yes

    - Go To 2

    No

    - Test complete. The condition or conditions that originally set this DTC are not present at this time. Using the wiring diagrams as a guide, check all related splices and connectors for signs of water intrusion, corrosion, pushed out or bent terminals, and correct pin tension.
    - Perform the BODY VERIFICATION TEST. Refer to **STANDARD PROCEDURE** .
2. **CHECK THE (D403) LIN BUS CIRCUIT FOR AN OPEN**
    1. Turn the ignition off.
    2. Disconnect the BCM C4 harness connector.
    3. Disconnect the Voltage Stability Module harness connector.
    4. Disconnect the Wireless Charging Pad Module harness connector.
    5. Disconnect the SCCM C2 harness connector.
    6. Measure the resistance or the (D403) LIN Bus circuit between the BCM C4 harness connector and the Voltage Stability Module/Wireless Charging Pad Module/SCCM C2 harness connectors.

    Is the resistance above 5.0 Ohms?

    Yes

    - Repair the open in the (D403) LIN Bus circuit.
    - Perform the BODY VERIFICATION TEST. Refer to **STANDARD PROCEDURE** .

    No

- Replace the BCM in accordance with the Service Information. Refer to **MODULE, BODY CONTROL, REMOVAL** .
- Perform the BODY VERIFICATION TEST. Refer to **STANDARD PROCEDURE** .

U1046-11-LIN 4 BUS - CIRCUIT SHORT TO GROUND

For a complete wiring diagram, **refer to appropriate SYSTEM WIRING DIAGRAMS article** .

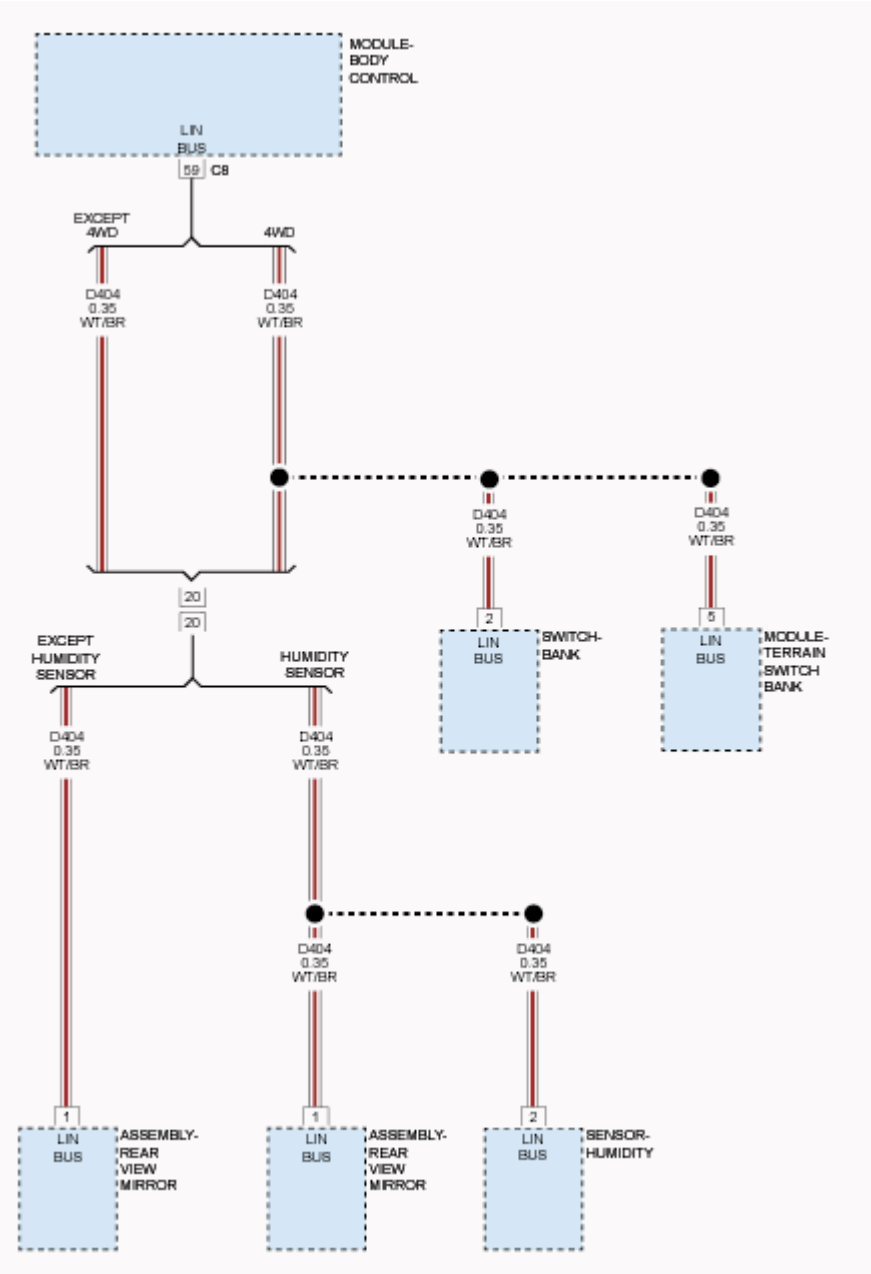

Fig. 24: Rear View Mirror, Humidity Sensor, Terrain Switch Bank & Auxiliary Switch Bank Modules Circuit Diagram
Courtesy of CHRYSLER GROUP, LLC

THEORY OF OPERATION

The Body Control Module (BCM) is the Local Interconnect Network (LIN) master for the Rear View Mirror, Humidity Sensor Module, Terrain Switch Bank Module and Auxiliary Switch Bank Module. The BCM monitors the LIN circuit for any concerns.

WHEN MONITORED

Continuously with the ignition on.

SET CONDITION

When the BCM detects that the LIN Bus is shorted to ground.

POSSIBLE CAUSES

Possible Causes
LIN BUS CIRCUIT SHORTED TO GROUND
REAR VIEW MIRROR
HUMIDITY SENSOR MODULE
TERRAIN SWITCH BANK MODULE
AUXILIARY SWITCH BANK MODULE
BODY CONTROL MODULE (BCM)

DIAGNOSTIC TEST

1. **CHECK FOR AN ACTIVE DTC**
    1. Turn the ignition on.
    2. With the scan tool, read DTCs.

    Does the scan tool display this DTC as active?

    Yes

    - Go To 2

    No

    - Test complete. The condition or conditions that originally set this DTC are not present at this time. Using the wiring diagrams as a guide, check all related splices and connectors for signs of water intrusion, corrosion, pushed out or bent terminals and correct pin tension.
    - Perform the BODY VERIFICATION TEST. Refer to **STANDARD PROCEDURE** .
2. **HUMIDITY SENSOR MODULE**
    1. Turn the ignition off.

2. Disconnect the Humidity Sensor Module harness connector.
3. Turn the ignition on.
4. With the scan tool, read DTCs.

   Does the scan tool display this DTC as active?

   Yes

   - Go To 3

   No

   - Replace the Humidity Sensor Module in accordance with the Service Information.
   - Perform the BODY VERIFICATION TEST. Refer to **STANDARD PROCEDURE** .

3. **INSIDE REAR VIEW MIRROR**
   1. Turn the ignition off.
   2. Disconnect the Inside Rear View Mirror harness connector.
   3. Turn the ignition on.
   4. With the scan tool, read DTCs.

      Does the scan tool display this DTC as active?

      Yes

      - Go To 4

      No

      - Replace the Inside Rear View Mirror in accordance with the Service Information.
      - Perform the BODY VERIFICATION TEST. Refer to **STANDARD PROCEDURE** .

4. **TERRAIN SWITCH BANK MODULE**
   1. Turn the ignition off.
   2. Disconnect the Terrain Switch Bank Module harness connector.
   3. Turn the ignition on.
   4. With the scan tool, read DTCs.

      Does the scan tool display this DTC as active?

      Yes

      - Go To 5

No

- Replace the Terrain Switch Bank Module in accordance with the Service Information.
- Perform the BODY VERIFICATION TEST. Refer to **STANDARD PROCEDURE** .

5. **AUXILIARY SWITCH BANK MODULE**
   1. Turn the ignition off.
   2. Disconnect the Auxiliary Switch Bank Module harness connector.
   3. Turn the ignition on.
   4. With the scan tool, read DTCs.

   Does the scan tool display this DTC as active?

   Yes

   - Go To 6

   No

   - Replace the Auxiliary Switch Bank Module in accordance with the Service Information.
   - Perform the BODY VERIFICATION TEST. Refer to **STANDARD PROCEDURE** .

6. **CHECK THE (D404) LIN BUS CIRCUIT FOR A SHORT TO GROUND**
   1. Turn the ignition off.
   2. Disconnect the BCM C8 harness connector.
   3. Measure the resistance between ground and the (D404) LIN Bus circuit at the BCM C8 harness connector.

   Is the resistance above 10K Ohms?

   Yes

   - Replace the BCM in accordance with the Service Information. Refer to **MODULE, BODY CONTROL, REMOVAL** .
   - Perform the BODY VERIFICATION TEST. Refer to **STANDARD PROCEDURE** .

   No

   - Repair the short to ground in the (D404) LIN Bus circuit.
   - Perform the BODY VERIFICATION TEST. Refer to **STANDARD PROCEDURE** .

U1046-12-LIN 4 BUS - CIRCUIT SHORT TO BATTERY

For a complete wiring diagram, **refer to appropriate SYSTEM WIRING DIAGRAMS article** .

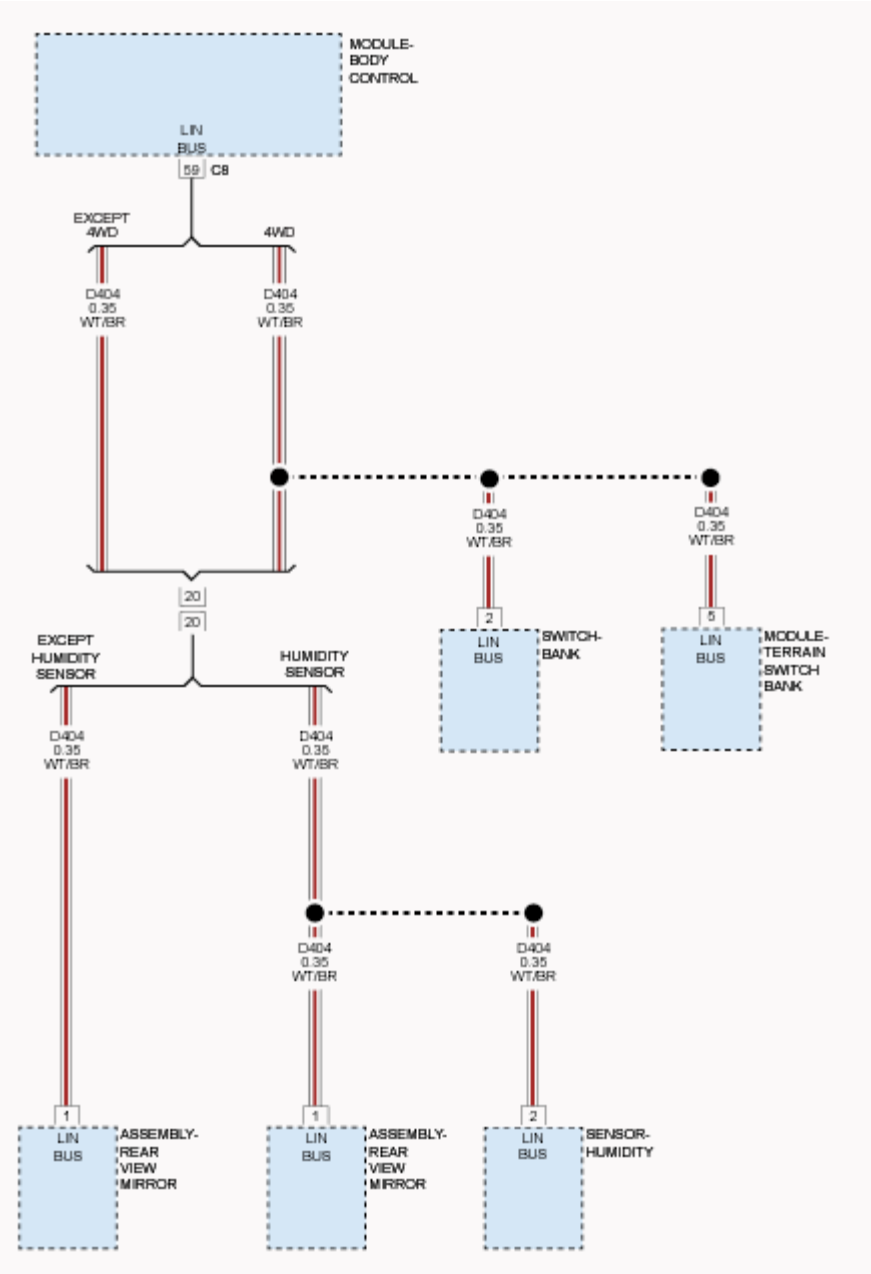

Fig. 25: Rear View Mirror, Humidity Sensor, Terrain Switch Bank & Auxiliary Switch Bank Modules Circuit Diagram
Courtesy of CHRYSLER GROUP, LLC

THEORY OF OPERATION

The Body Control Module (BCM) is the Local Interconnect Network (LIN) master for the Rear View Mirror, Humidity Sensor Module, Terrain Switch Bank Module and Auxiliary Switch Bank Module. The BCM monitors the LIN circuit for any concerns.

WHEN MONITORED

Continuously with the ignition on.

SET CONDITION

When the BCM detects that the LIN Bus is shorted to voltage.

POSSIBLE CAUSES

Possible Causes
LIN BUS CIRCUIT SHORTED TO VOLTAGE
REAR VIEW MIRROR
HUMIDITY SENSOR MODULE
TERRAIN SWITCH BANK MODULE
AUXILIARY SWITCH BANK MODULE
BODY CONTROL MODULE (BCM)

DIAGNOSTIC TEST

1. **CHECK FOR AN ACTIVE DTC**
    1. Turn the ignition on.
    2. With the scan tool, read DTCs.

    Does the scan tool display this DTC as active?

    Yes

    - Go To 2

    No

    - Test complete. The condition or conditions that originally set this DTC are not present at this time. Using the wiring diagrams as a guide, check all related splices and connectors for signs of water intrusion, corrosion, pushed out or bent terminals, and correct pin tension.
    - Perform the BODY VERIFICATION TEST. Refer to **STANDARD PROCEDURE** .
2. **HUMIDITY SENSOR MODULE**
    1. Turn the ignition off.
    2. Disconnect the Humidity Sensor Module harness connector.
    3. Turn the ignition on.
    4. With the scan tool, read DTCs.

    Does the scan tool display this DTC as active?

    Yes

- Go To 3

No

- Replace the Humidity Sensor Module in accordance with the Service Information.
- Perform the BODY VERIFICATION TEST. Refer to **STANDARD PROCEDURE** .

3. **INSIDE REAR VIEW MIRROR**
   1. Turn the ignition off.
   2. Disconnect the Inside Rear View Mirror harness connector.
   3. Turn the ignition on.
   4. With the scan tool, read DTCs.

   Does the scan tool display this DTC as active?

   Yes

   - Go To 4

   No

   - Replace the Inside Rear View Mirror in accordance with the Service Information.
   - Perform the BODY VERIFICATION TEST. Refer to **STANDARD PROCEDURE** .

4. **TERRAIN SWITCH BANK MODULE**
   1. Turn the ignition off.
   2. Disconnect the Terrain Switch Bank Module harness connector.
   3. Turn the ignition on.
   4. With the scan tool, read DTCs.

   Does the scan tool display this DTC as active?

   Yes

   - Go To 5

   No

   - Replace the Terrain Switch Bank Module in accordance with the Service Information.
   - Perform the BODY VERIFICATION TEST. Refer to **STANDARD PROCEDURE** .

5. **AUXILIARY SWITCH BANK MODULE**
   1. Turn the ignition off.
   2. Disconnect the Auxiliary Switch Bank Module harness connector.
   3. Turn the ignition on.

4. With the scan tool, read DTCs.

   Does the scan tool display this DTC as active?

   Yes

   - Go To 6

   No

   - Replace the Auxiliary Switch Bank Module in accordance with the Service Information.
   - Perform the BODY VERIFICATION TEST. Refer to **STANDARD PROCEDURE** .

6. **CHECK THE (D404) LIN BUS CIRCUIT FOR A SHORT TO VOLTAGE**
   1. Turn the ignition off.
   2. Disconnect the BCM C8 harness connector.
   3. Turn the ignition on.
   4. Measure the voltage of the (D404) LIN Bus circuit at the BCM C8 harness connector.

      Is voltage present?

      Yes

      - Repair the short to voltage on the (D404) LIN Bus circuit.
      - Perform the BODY VERIFICATION TEST. Refer to **STANDARD PROCEDURE** .

      No

      - Replace the BCM in accordance with the Service Information. Refer to **MODULE, BODY CONTROL, REMOVAL** .
      - Perform the BODY VERIFICATION TEST. Refer to **STANDARD PROCEDURE** .

U1046-67-LIN 4 BUS - SIGNAL INCORRECT AFTER EVENT

For a complete wiring diagram, **refer to appropriate SYSTEM WIRING DIAGRAMS article** .

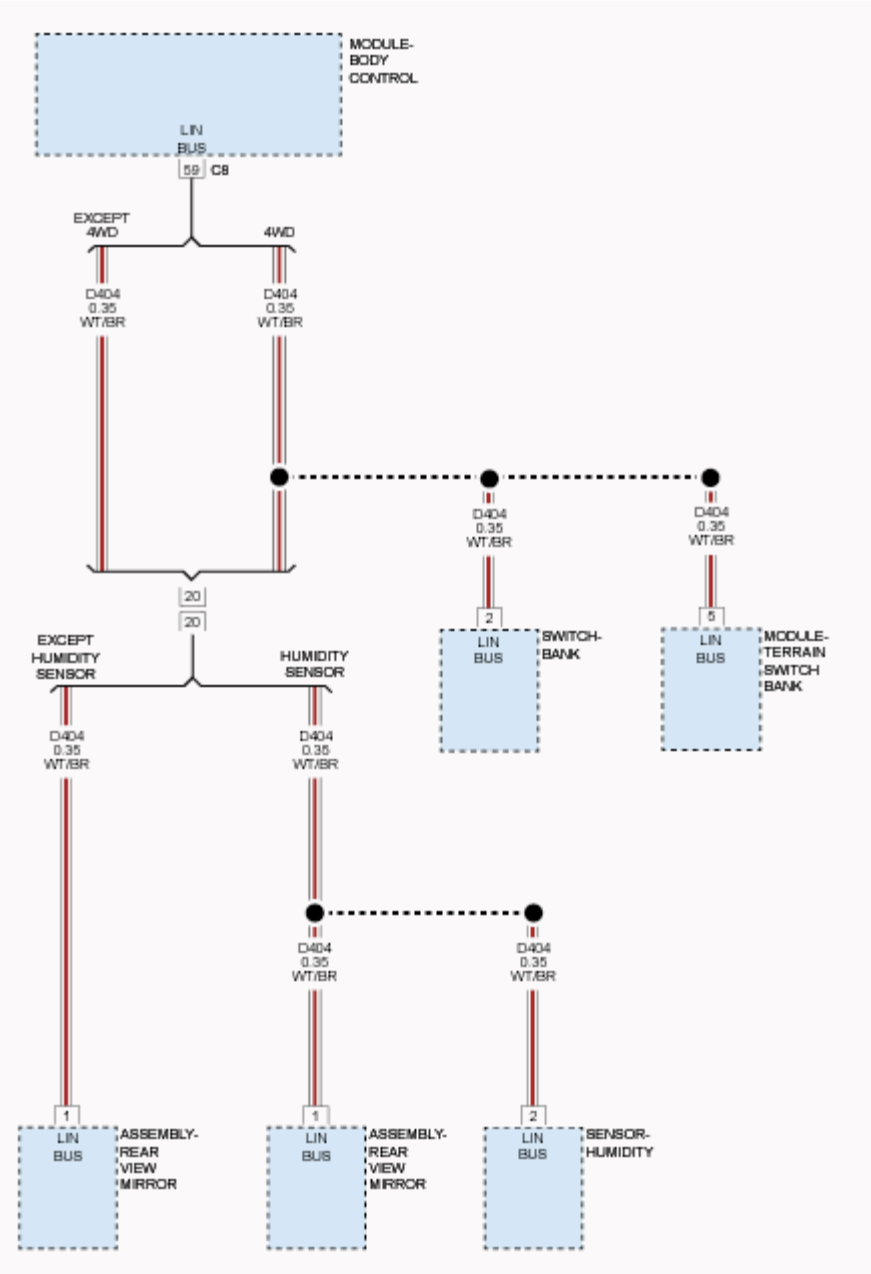

Fig. 26: Rear View Mirror, Humidity Sensor, Terrain Switch Bank & Auxiliary Switch Bank Modules Circuit Diagram
Courtesy of CHRYSLER GROUP, LLC

THEORY OF OPERATION

The Body Control Module (BCM) is the Local Interconnect Network (LIN) master for the Rear View Mirror, Humidity Sensor Module, Terrain Switch Bank Module and Auxiliary Switch Bank Module. The BCM monitors the LIN circuit for any concerns.

WHEN MONITORED

Continuously with the ignition on.

SET CONDITION

The BCM does not receive any response from the LIN 4 Bus circuit devices.

POSSIBLE CAUSES

Possible Causes
LIN 4 BUS CIRCUIT OPEN
BODY CONTROL MODULE (BCM)

DIAGNOSTIC TEST

1. **CHECK FOR AN ACTIVE DTC**
    1. Turn the ignition on.
    2. With the scan tool, read DTCs.

    Does the scan tool display this DTC as active?

    Yes

    - Go To 2

    No

    - Test complete. The condition or conditions that originally set this DTC are not present at this time. Using the wiring diagrams as a guide, check all related splices and connectors for signs of water intrusion, corrosion, pushed out or bent terminals, and correct pin tension.
    - Perform the BODY VERIFICATION TEST. Refer to **STANDARD PROCEDURE** .
2. **CHECK THE (D404) LIN BUS CIRCUIT FOR AN OPEN**
    1. Turn the ignition off.
    2. Disconnect the BCM C8 harness connector.
    3. Disconnect the Humidity Sensor Module harness connector.
    4. Disconnect the Inside Rear View Mirror harness connector.
    5. Disconnect the Terrain Switch Bank Module harness connector.
    6. Disconnect the Auxiliary Switch Bank Module harness connector.
    7. Measure the resistance or the (D404) LIN Bus circuit between the BCM C8 harness connector and the Humidity Sensor Module/Inside Rear View Mirror/Terrain Switch Bank Module/Auxiliary Switch Bank Module harness connectors.

    Is the resistance above 5.0 Ohms?

Yes

- Repair the open in the (D404) LIN Bus circuit.
- Perform the BODY VERIFICATION TEST. Refer to **STANDARD PROCEDURE** .

No

- Replace the BCM in accordance with the Service Information. Refer to **MODULE, BODY CONTROL, REMOVAL** .
- Perform the BODY VERIFICATION TEST. Refer to **STANDARD PROCEDURE** .

U1106-87-CAN C SIGNAL MISSING-MISSING MESSAGE

For a complete wiring diagram, **refer to appropriate SYSTEM WIRING DIAGRAMS article** .

THEORY OF OPERATION

The primary communication network between electronic control modules is the Controller Area Network (CAN) data bus system. The Controller Area Network (CAN) data bus allows all electronic modules connected to the bus to share information with each other. Regardless of whether a message originates from a module on the higher speed CAN C (500K) Bus or on the lower speed bus, CAN Interior High Speed (IHS) (125K) Bus, the message structure and layout is similar, which allows the Body Control Module (BCM) to process and transfer messages between the CAN buses. The BCM stores Diagnostic Trouble Codes (DTCs) for certain bus network faults on the CAN C (500K) Bus and CAN IHS (125K) Bus.

All modules transmit and receive messages over one of these buses. Data exchange between the modules is achieved by serial transmission of encoded data messages (a form of transmission in which data bits are sent sequentially, one at a time, over a single line). Each module can both send and receive serial data simultaneously. Each data bit of a CAN Bus message is carried over the bus as a voltage differential between the two bus circuits which, when strung together, form a message. Each module uses arbitration to sort the message priority if two competing messages are attempting to be broadcast at the same time. Corruption of a single bit within a message will corrupt the entire message. Each message contains a Cyclic Redundancy Check (CRC) which specifies the message size exactly. If the message detected conflicts with the CRC the ECU receiving it will determine the message to be an error and consider that communication has not been possible. Diagnosis of this condition using a lab scope may reveal activity that appears to be Bus data messages even if no actual communication is possible. Communication problems that affect the whole bus, as a result of opens and terminal push outs are more likely to occur on data busses that operate at a high speed than a data bus that operates at a lower speed.

When an open circuit or terminal push out occurs one or more modules can become isolated from the remainder of the bus. The isolated module will attempt to communicate, but will not be able to receive messages or determine arbitration from other modules. Each time the isolated module attempts to communicate it alters the bus voltage on the intact bus circuit. Without functioning arbitration the isolated module alters the bus voltage while other bus messages are being sent thereby corrupting the messages on the remainder of the bus.

The CAN bus modules are connected in parallel to the two-wire bus using a twisted pair, where the wires are wrapped around each other to provide shielding from unwanted electromagnetic induction, thus preventing

interference with the relatively low voltage signals being carried through them. While the CAN bus is operating (active), one of the bus wires will carry a higher voltage and is referred to as the CAN High or CAN bus (+) wire, while the other bus wire will carry a lower voltage and is referred to as the CAN Low or CAN bus (-) wire.

For additional information on the communication network and star connector locations, refer to **COMMUNICATION, DESCRIPTION** .

WHEN MONITORED

With the ignition on.

SET CONDITION

The Body Control Module (BCM) detects a short condition on one of the CAN C Bus circuits.

POSSIBLE CAUSES

Possible Causes
CAN C BUS (+) CIRCUIT SHORTED TO GROUND
CAN C BUS (-) CIRCUIT SHORTED TO VOLTAGE
CAN C BUS (+) CIRCUIT SHORTED TO THE CAN C BUS (-) CIRCUIT
STAR CONNECTOR
ANY MODULE CONNECTED TO THE CAN C BUS

DIAGNOSTIC TEST

1. **CHECK FOR AN ACTIVE DTC**

NOTE: Disconnecting the Radio Frequency (RF) Hub Module results in a loss of ignition status messages and may cause scan tool communication concerns.

1. Turn the ignition on.
2. With the scan tool, read DTCs.

Does the scan tool display this DTC as active?

Yes

- Go To 2

No

- Test complete, the condition or conditions that originally set this DTC are not present at this

time. Using the wiring diagrams as a guide, check all related splices and connectors for signs of water intrusion, corrosion, pushed out or bent terminals, and correct pin tension.

- Perform the BODY VERIFICATION TEST. Refer to **STANDARD PROCEDURE** .

2. **CHECK THE CAN BUS (-) CIRCUIT FOR A SHORT TO VOLTAGE**

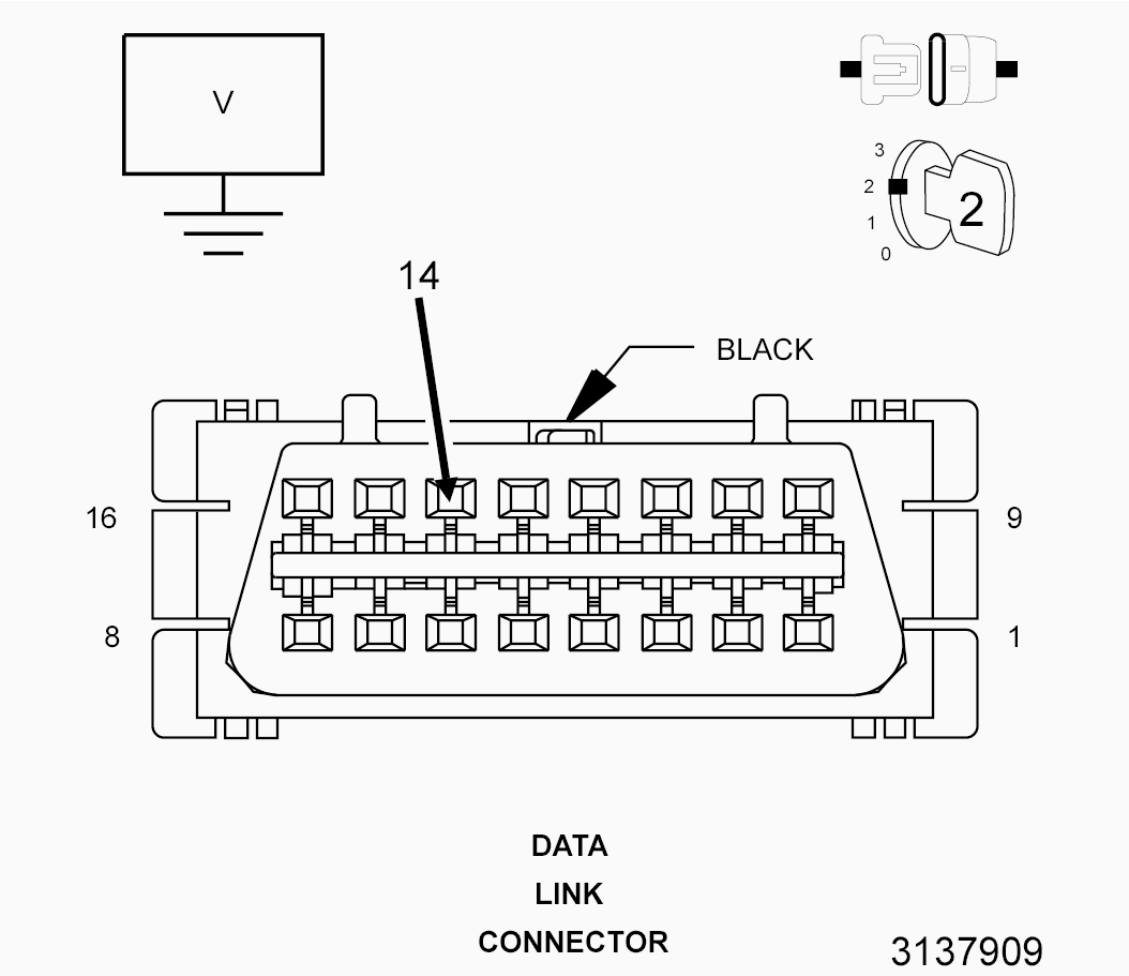

Fig. 27: Checking CAN BUS (-) Circuit For A Short To Voltage
Courtesy of CHRYSLER GROUP, LLC

1. Disconnect the scan tool.
2. Measure the voltage between ground and the CAN C Bus (-) circuit.

   Is the voltage above 10.0 volts?

   Yes

   - Diagnose the short to voltage in the CAN C Bus (-) circuit. Use the Star Connectors to isolate portions of the bus to assist in determining the location of the concern. Repair the circuit concern or replace the module that when disconnected allowed the bus voltage to return to normal.

- Perform the BODY VERIFICATION TEST. Refer to **STANDARD PROCEDURE** .

No

- Go To 3

3. **CHECK THE CAN C BUS (+) CIRCUIT FOR A SHORT TO GROUND**

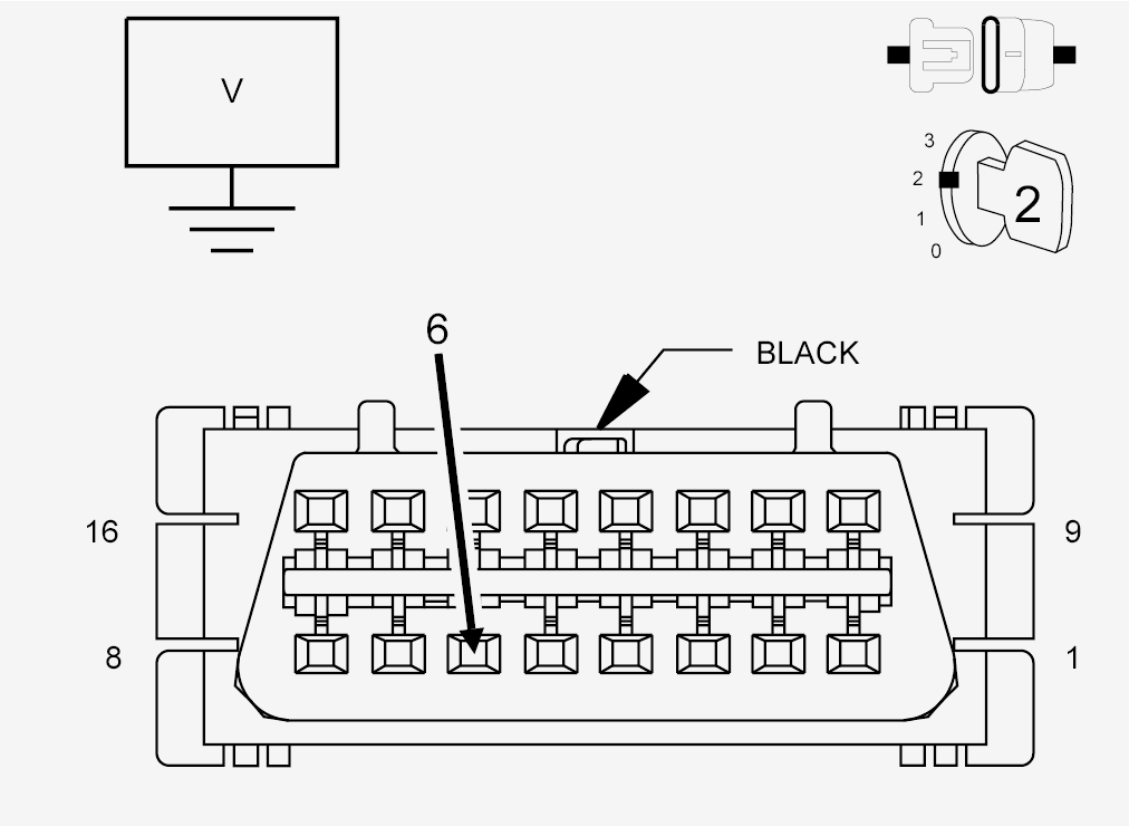

Fig. 28: Checking CAN C BUS (+) Circuit For A Short To Voltage
Courtesy of CHRYSLER GROUP, LLC

1. Measure the voltage between ground and the CAN C Bus (+) circuit.

   Is the voltage approximately 0 volt?

   Yes

   - Diagnose the short to ground in the CAN C Bus (+) circuit. Use the Star Connectors to isolate portions of the bus to assist in determining the location of the concern. Repair the circuit concern or replace the module that when disconnected allowed the bus voltage to return to normal.
   - Perform the BODY VERIFICATION TEST. Refer to **STANDARD PROCEDURE** .

   No

- Go To 4

4. **CHECK FOR CORRECT BUS TERMINATION RESISTANCE**

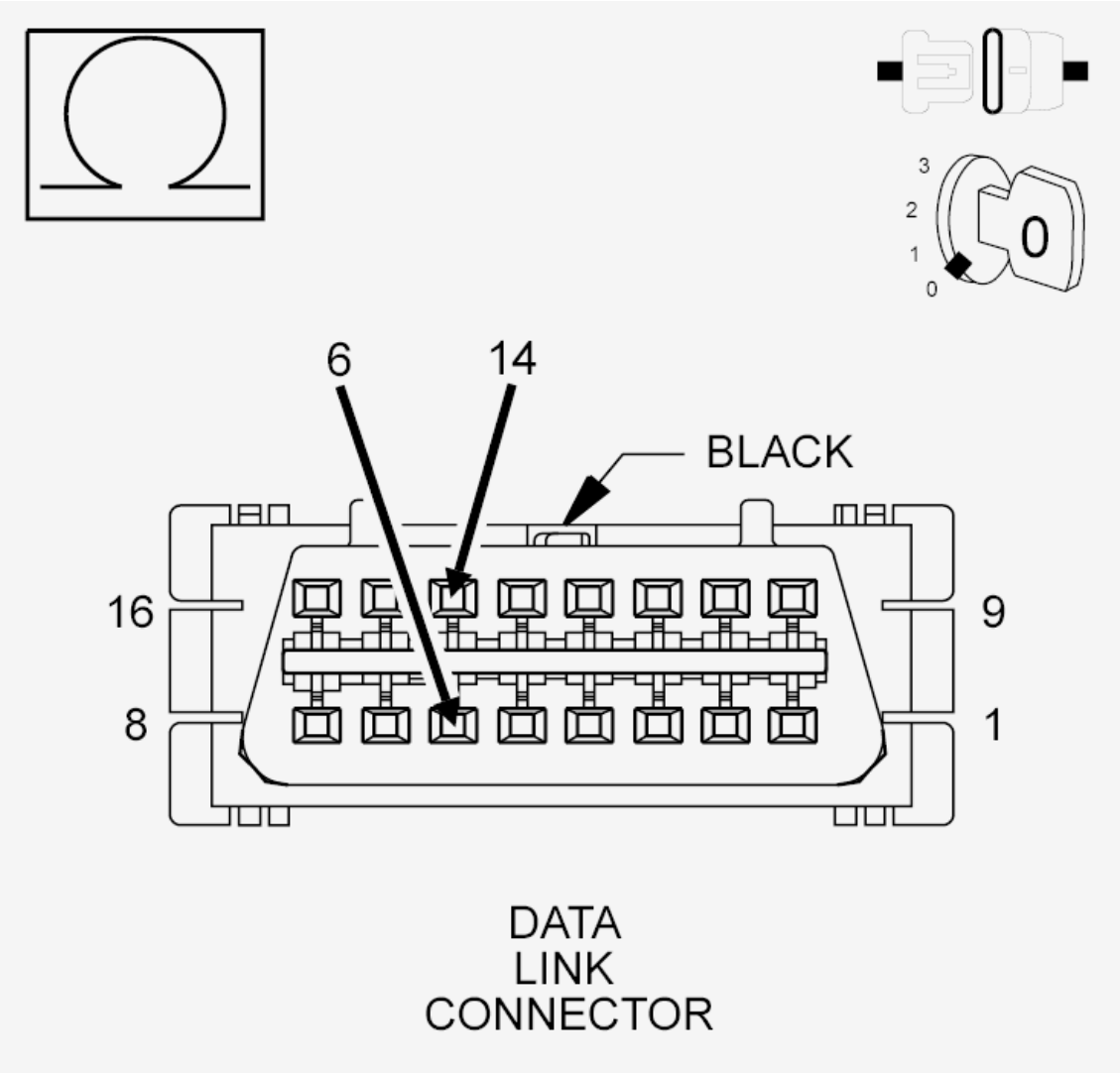

Fig. 29: Checking For Correct BUS Termination Resistance
Courtesy of CHRYSLER GROUP, LLC

1. Turn the ignition off.
2. Disconnect and isolate the negative battery cable.
3. Measure the resistance between the CAN C Bus (+) circuit and the CAN C Bus (-) circuit.

   Is the resistance between 53.5 and 67 Ohms?

   Yes

   - Test complete, the condition or conditions that originally caused this concern are not present

at this time. Using the wiring diagrams as a guide, check the Star Connectors and all related splices for signs of water intrusion, corrosion, pushed out or bent terminals, and correct pin tension.

- Perform the BODY VERIFICATION TEST. Refer to **STANDARD PROCEDURE** .

No

- For a resistance measurement above 67 Ohms, an open or high resistance is present in the CAN C Bus (+) circuit or the CAN C Bus (-) circuit between the Star Connectors or one of the termination resistors internal to the Star Connector is damaged. Diagnose and repair as necessary.
- For a resistance measurement below 53.5 Ohms, a short between the CAN C Bus (+) circuit and the CAN C Bus (-) is present. Diagnose the short between the CAN C Bus (+) circuit and the CAN C Bus (-) circuit. Use the Star Connectors to isolate portions of the bus to assist in determining the location of the concern. Repair the circuit concern or replace the module that when disconnected allowed the resistance to return to normal.
- Perform the BODY VERIFICATION TEST. Refer to **STANDARD PROCEDURE** .

U1106-88-CAN C SIGNAL MISSING - BUS OFF

For a complete wiring diagram, **refer to appropriate SYSTEM WIRING DIAGRAMS article** .

THEORY OF OPERATION

The primary communication network between electronic control modules is the Controller Area Network (CAN) data bus system. The Controller Area Network (CAN) data bus allows all electronic modules connected to the bus to share information with each other. Regardless of whether a message originates from a module on the higher speed CAN C (500K) Bus or on the lower speed bus, CAN Interior High Speed (IHS) (125K) Bus, the message structure and layout is similar, which allows the Body Control Module (BCM) to process and transfer messages between the CAN buses. The BCM stores Diagnostic Trouble Codes (DTCs) for certain bus network faults on the CAN C (500K) Bus and CAN IHS (125K) Bus.

All modules transmit and receive messages over one of these buses. Data exchange between the modules is achieved by serial transmission of encoded data messages (a form of transmission in which data bits are sent sequentially, one at a time, over a single line). Each module can both send and receive serial data simultaneously. Each data bit of a CAN Bus message is carried over the bus as a voltage differential between the two bus circuits which, when strung together, form a message. Each module uses arbitration to sort the message priority if two competing messages are attempting to be broadcast at the same time. Corruption of a single bit within a message will corrupt the entire message. Each message contains a Cyclic Redundancy Check (CRC) which specifies the message size exactly. If the message detected conflicts with the CRC the ECU receiving it will determine the message to be an error and consider that communication has not been possible. Diagnosis of this condition using a lab scope may reveal activity that appears to be Bus data messages even if no actual communication is possible. Communication problems that affect the whole bus, as a result of opens and terminal push outs are more likely to occur on data busses that operate at a high speed than a data bus that operates at a lower speed.

When an open circuit or terminal push out occurs one or more modules can become isolated from the remainder of the bus. The isolated module will attempt to communicate, but will not be able to receive messages or determine arbitration from other modules. Each time the isolated module attempts to communicate it alters the bus voltage on the intact bus circuit. Without functioning arbitration the isolated module alters the bus voltage while other bus messages are being sent thereby corrupting the messages on the remainder of the bus.

The CAN bus modules are connected in parallel to the two-wire bus using a twisted pair, where the wires are wrapped around each other to provide shielding from unwanted electromagnetic induction, thus preventing interference with the relatively low voltage signals being carried through them. While the CAN bus is operating (active), one of the bus wires will carry a higher voltage and is referred to as the CAN High or CAN bus (+) wire, while the other bus wire will carry a lower voltage and is referred to as the CAN Low or CAN bus (-) wire.

For additional information on the communication network and star connector locations, refer to **COMMUNICATION, DESCRIPTION** .

WHEN MONITORED

With the ignition on.

SET CONDITION

The Body Control Module (BCM) detects a short condition on one of the CAN C Bus circuits.

POSSIBLE CAUSES

Possible Causes
CAN C BUS (+) CIRCUIT SHORTED TO GROUND
CAN C BUS (-) CIRCUIT SHORTED TO VOLTAGE
CAN C BUS (+) CIRCUIT SHORTED TO THE CAN C BUS (-) CIRCUIT
STAR CONNECTOR
ANY MODULE CONNECTED TO THE CAN C BUS

DIAGNOSTIC TEST

1. **CHECK FOR AN ACTIVE DTC**

NOTE: Disconnecting the Radio Frequency (RF) Hub Module results in a loss of ignition status messages and may cause scan tool communication concerns.

1. Turn the ignition on.
2. With the scan tool, read DTCs.

Does the scan tool display this DTC as active?

Yes

- Go To 2

No

- Test complete, the condition or conditions that originally set this DTC are not present at this time. Using the wiring diagrams as a guide, check all related splices and connectors for signs of water intrusion, corrosion, pushed out or bent terminals, and correct pin tension.
- Perform the BODY VERIFICATION TEST. Refer to **STANDARD PROCEDURE** .

2. **CHECK THE CAN BUS (-) CIRCUIT FOR A SHORT TO VOLTAGE**

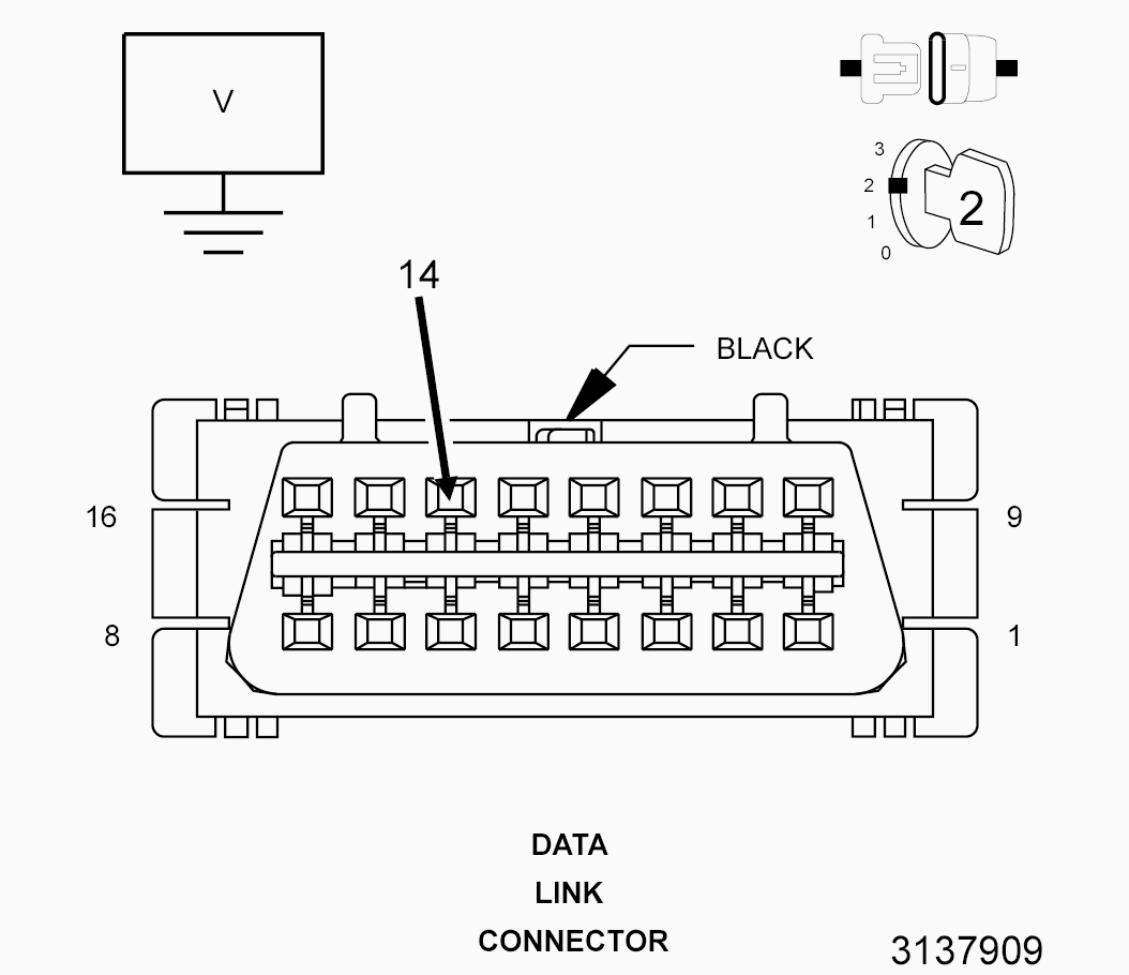

Fig. 30: Checking CAN BUS (-) Circuit For A Short To Voltage
Courtesy of CHRYSLER GROUP, LLC

1. Disconnect the scan tool.
2. Measure the voltage between ground and the CAN C Bus (-) circuit.

   Is the voltage above 10.0 volts?

Yes

- Diagnose the short to voltage in the CAN C Bus (-) circuit. Use the Star Connectors to isolate portions of the bus to assist in determining the location of the concern. Repair the circuit concern or replace the module that when disconnected allowed the bus voltage to return to normal.
- Perform the BODY VERIFICATION TEST. Refer to **STANDARD PROCEDURE** .

No

- Go To 3

3. **CHECK THE CAN C BUS (+) CIRCUIT FOR A SHORT TO GROUND**

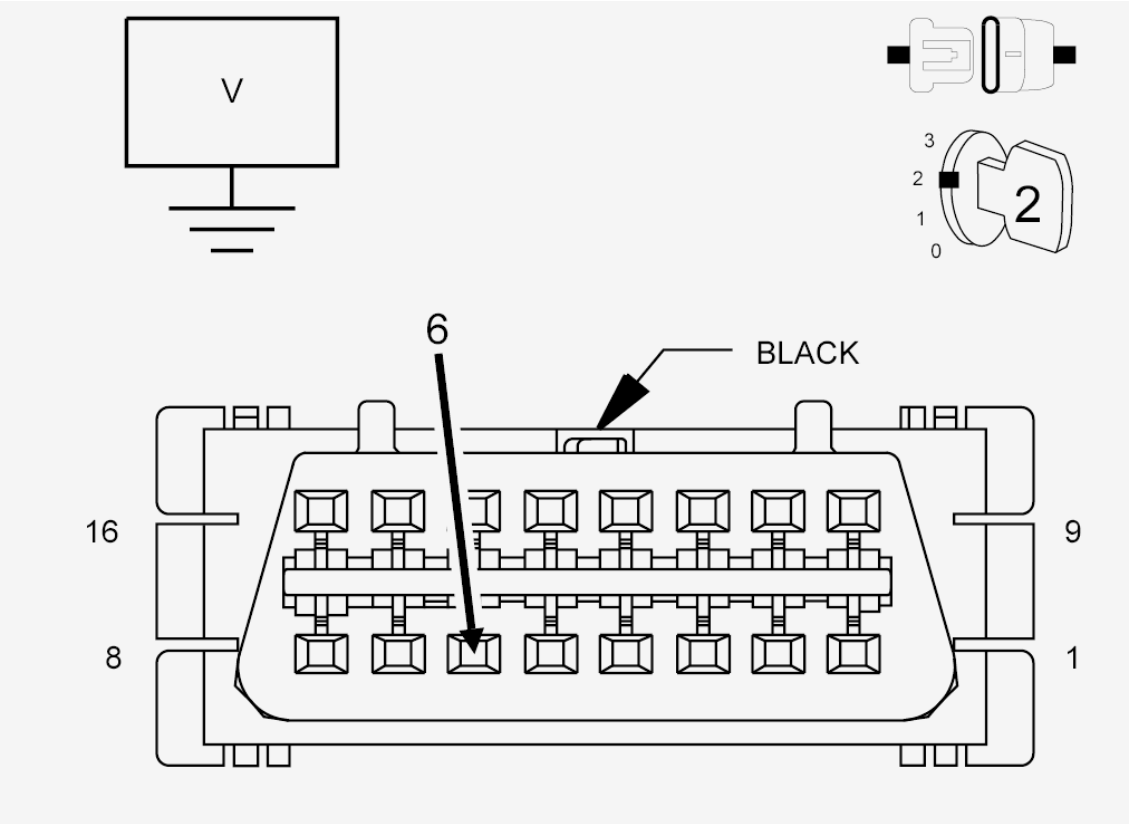

Fig. 31: Checking CAN C BUS (+) Circuit For A Short To Voltage
Courtesy of CHRYSLER GROUP, LLC

1. Measure the voltage between ground and the CAN C Bus (+) circuit.

   Is the voltage approximately 0 volt?

   Yes

   - Diagnose the short to ground in the CAN C Bus (+) circuit. Use the Star Connectors to

isolate portions of the bus to assist in determining the location of the concern. Repair the circuit concern or replace the module that when disconnected allowed the bus voltage to return to normal.

- Perform the BODY VERIFICATION TEST. Refer to **STANDARD PROCEDURE** .

No

- Go To 4

4. **CHECK FOR CORRECT BUS TERMINATION RESISTANCE**

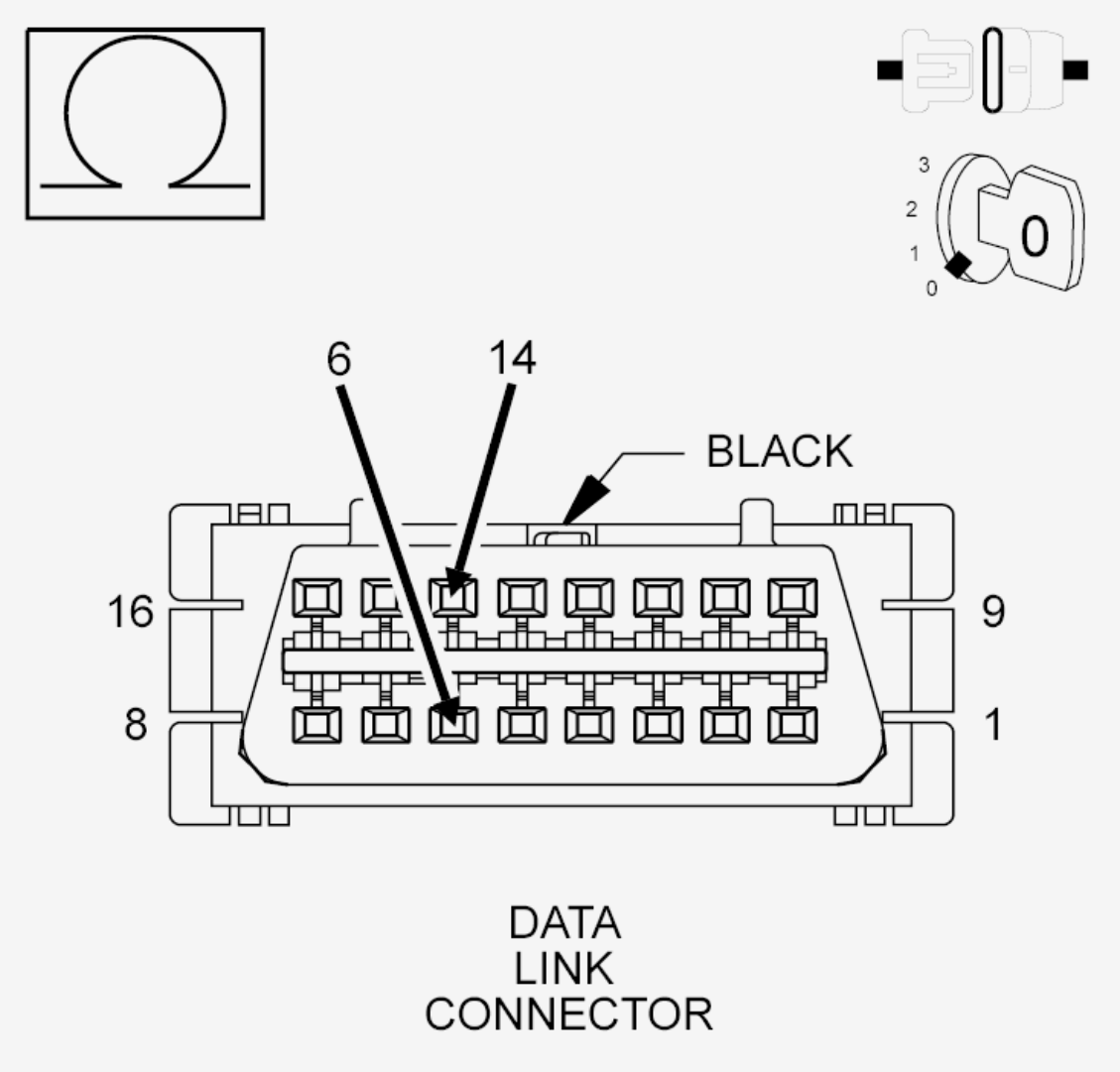

Fig. 32: Checking For Correct BUS Termination Resistance
Courtesy of CHRYSLER GROUP, LLC

1. Turn the ignition off.
2. Disconnect and isolate the negative battery cable.
3. Measure the resistance between the CAN C Bus (+) circuit and the CAN C Bus (-) circuit.

Is the resistance between 53.5 and 67 Ohms?

Yes

- Test complete, the condition or conditions that originally caused this concern are not present at this time. Using the wiring diagrams as a guide, check the Star Connectors and all related splices for signs of water intrusion, corrosion, pushed out or bent terminals, and correct pin tension.
- Perform the BODY VERIFICATION TEST. Refer to **STANDARD PROCEDURE** .

No

- For a resistance measurement above 67 Ohms, an open or high resistance is present in the CAN C Bus (+) circuit or the CAN C Bus (-) circuit between the Star Connectors or one of the termination resistors internal to the Star Connector is damaged. Diagnose and repair as necessary.
- For a resistance measurement below 53.5 Ohms, a short between the CAN C Bus (+) circuit and the CAN C Bus (-) is present. Diagnose the short between the CAN C Bus (+) circuit and the CAN C Bus (-) circuit. Use the Star Connectors to isolate portions of the bus to assist in determining the location of the concern. Repair the circuit concern or replace the module that when disconnected allowed the resistance to return to normal.
- Perform the BODY VERIFICATION TEST. Refer to **STANDARD PROCEDURE** .

U1109-87-LOST COMMUNICATION WITH LIN STEERING WHEEL CONTROLS-MISSING MESSAGE

For a complete wiring diagram, **refer to appropriate SYSTEM WIRING DIAGRAMS article** .

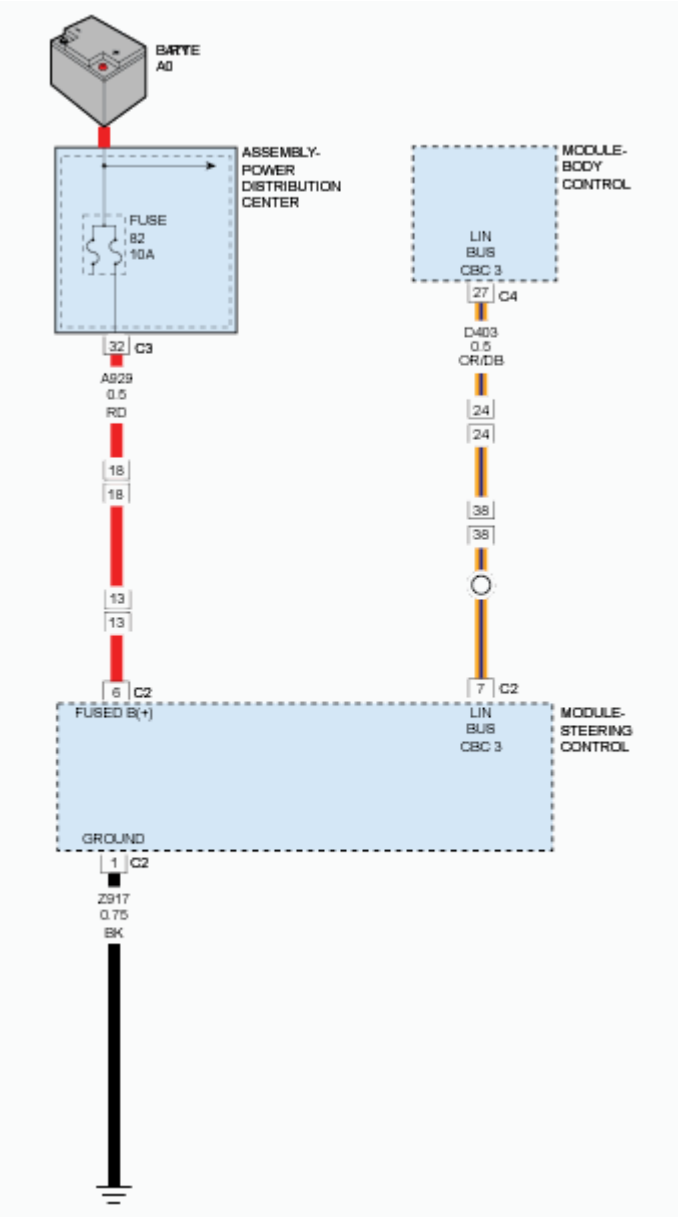

Fig. 33: Steering Wheel Controls Circuit Diagram
Courtesy of CHRYSLER GROUP, LLC

WHEN MONITORED

With the ignition on.

SET CONDITION

The Body Control Module (BCM) does not receive information from the Steering Column Control Module (SCCM) for greater than 3 seconds.

POSSIBLE CAUSES

Possible Causes
(A929) FUSED B(+) CIRCUIT OPEN OR SHORTED TO GROUND
(Z917) GROUND CIRCUIT OPEN
(D403) LIN 3 BUS CIRCUIT OPEN
STEERING COLUMN CONTROL MODULE (SCCM)

DIAGNOSTIC TEST

1. **CHECK FOR AN ACTIVE DTC**
    1. Turn the ignition on.
    2. With the scan tool, read DTCs.

    Does the scan tool display this DTC as active?

    Yes

    - Go To 2

    No

    - Test complete. The condition or conditions that originally set this DTC are not present at this time. Using the wiring diagrams as a guide, check all related splices and connectors for signs of water intrusion, corrosion, pushed out or bent terminals and correct pin tension.
    - Perform the BODY VERIFICATION TEST. Refer to **STANDARD PROCEDURE** .
2. **CHECK THE (A929) FUSED B(+) CIRCUIT FOR AN OPEN**
    1. Turn the ignition off.
    2. Disconnect the Steering Column Control Module (SCCM) harness connector.
    3. Turn the ignition on.
    4. Using a 12-volt test light connected to ground, check the (A929) Fused B(+) circuit at the SCCM harness connector.

    Does the test light illuminate brightly?

    Yes

    - Go To 3

    No

    - Repair the open or short to ground in the (A929) Fused B(+) circuit.
    - Perform the BODY VERIFICATION TEST. Refer to **STANDARD PROCEDURE** .
3. **CHECK THE (Z917) GROUND CIRCUIT FOR AN OPEN**
    1. Turn the ignition off.

2. Using a 12-volt test light connected to 12-volts, check the (Z917) Ground circuit at the SCCM harness connector.

   Does the test light illuminate brightly?

   Yes

   - Go To 4

   No

   - Repair the open in the (Z917) Ground circuit.
   - Perform the BODY VERIFICATION TEST. Refer to **STANDARD PROCEDURE** .

4. **CHECK THE (D403) LIN 3 BUS CIRCUIT FOR AN OPEN**
   1. Turn the ignition on.
   2. Measure the voltage between ground and the (D403) LIN 3 Bus circuit at the SCCM harness connector.

      Is the voltage above 5.0 volts?

      Yes

      - Replace the Steering Column Control Module (SCCM) in accordance with the Service Information.
      - Perform the BODY VERIFICATION TEST. Refer to **STANDARD PROCEDURE** .

      No

      - Repair the open in the (D403) LIN 3 Bus circuit.
      - Perform the BODY VERIFICATION TEST. Refer to **STANDARD PROCEDURE** .

U110A-87-LOST COMMUNICATION WITH SCM CAN-C - MISSING MESSAGE

For a complete wiring diagram, **refer to appropriate SYSTEM WIRING DIAGRAMS article** .

THEORY OF OPERATION

The primary communication network between electronic control modules is the Controller Area Network (CAN) data bus system. The Controller Area Network (CAN) data bus allows all electronic modules connected to the bus to share information with each other. Regardless of whether a message originates from a module on the higher speed CAN C (500K) Bus or on the lower speed bus, CAN Interior High Speed (IHS) (125K) Bus, the message structure and layout is similar, which allows the Body Control Module (BCM) to process and transfer messages between the CAN buses. The BCM stores Diagnostic Trouble Codes (DTCs) for certain bus network faults on the CAN C (500K) Bus and CAN IHS (125K) Bus.

All modules transmit and receive messages over one of these buses. Data exchange between the modules is achieved by serial transmission of encoded data messages (a form of transmission in which data bits are sent sequentially, one at a time, over a single line). Each module can both send and receive serial data simultaneously. Each data bit of a CAN Bus message is carried over the bus as a voltage differential between the two bus circuits which, when strung together, form a message. Each module uses arbitration to sort the message priority if two competing messages are attempting to be broadcast at the same time. Corruption of a single bit within a message will corrupt the entire message. Each message contains a Cyclic Redundancy Check (CRC) which specifies the message size exactly. If the message detected conflicts with the CRC the ECU receiving it will determine the message to be an error and consider that communication has not been possible. Diagnosis of this condition using a lab scope may reveal activity that appears to be Bus data messages even if no actual communication is possible. Communication problems that affect the whole bus, as a result of opens and terminal push outs are more likely to occur on data busses that operate at a high speed than a data bus that operates at a lower speed.

When an open circuit or terminal push out occurs one or more modules can become isolated from the remainder of the bus. The isolated module will attempt to communicate, but will not be able to receive messages or determine arbitration from other modules. Each time the isolated module attempts to communicate it alters the bus voltage on the intact bus circuit. Without functioning arbitration the isolated module alters the bus voltage while other bus messages are being sent thereby corrupting the messages on the remainder of the bus.

The CAN bus modules are connected in parallel to the two-wire bus using a twisted pair, where the wires are wrapped around each other to provide shielding from unwanted electromagnetic induction, thus preventing interference with the relatively low voltage signals being carried through them. While the CAN bus is operating (active), one of the bus wires will carry a higher voltage and is referred to as the CAN High or CAN bus (+) wire, while the other bus wire will carry a lower voltage and is referred to as the CAN Low or CAN bus (-) wire.

For additional information on the communication network and star connector locations, refer to **COMMUNICATION, DESCRIPTION** .

WHEN MONITORED

With the ignition on for at least five seconds.

Battery voltage between 10 and 16 volts.

Body Control Module (BCM) is configured correctly.

SET CONDITION

Bus messages not received from the Steering Column Control Module (SCCM) for approximately two to five seconds.

POSSIBLE CAUSES

Possible Causes
CAN C BUS (+) CIRCUIT SHORTED TO VOLTAGE

CAN C BUS (-) CIRCUIT SHORTED TO GROUND
DTCS RELATED TO BATTERY VOLTAGE, IGNITION, OR VIN MESSAGES
BCM NOT CONFIGURED CORRECTLY
SCCM POWER AND GROUND
STEERING COLUMN CONTROL MODULE (SCCM)
MODULE THAT SET THIS DTC

DIAGNOSTIC TEST

1. **VERIFY DTC IS ACTIVE**

   NOTE: Make sure the battery voltage is between 10 and 16 volts before proceeding.

   1. With the scan tool, read active DTCs.

      Is this DTC active?

      Yes

      - Go To 2

      No

      - Refer to **DIAGNOSIS AND TESTING** and perform the STORED LOST COMMUNICATION DTCS diagnostic procedure.
2. **CHECK FOR ANY OF THE FOLLOWING ACTIVE DTCS**
   1. With the scan tool, read all active DTCs from all modules.

      NOTE: Check for BCM configuration, CAN C hardware electrical, VIN Missing/Mismatch, battery or ignition related DTCs.

      Does the scan tool display any active DTCs to the conditions listed above?

      Yes

      - Refer to the **DTC INDEX** and perform the appropriate diagnostic procedure.

      No

      - Go To 3
3. **VERIFY THE SCCM IS ACTIVE ON THE BUS**
   1. Turn the ignition on.

2. With the scan tool, verify the SCCM is active on the bus.

   Is the SCCM active on the bus?

   Yes

   - Go To 4

   No

   - Refer to **DIAGNOSIS AND TESTING** and perform the NO RESPONSE FROM SCCM diagnostic procedure.

4. **CHECK FOR ADDITIONAL COMMUNICATION RELATED DTCS**
   1. With the scan tool, read all the DTCs.

      Is there more than one module with active DTCs "Logged Against" the SCCM?

      Yes

      - Replace/update the Steering Column Control Module (SCCM) in accordance with the Service Information. Refer to **MODULE, STEERING COLUMN, REMOVAL** .
      - Perform the BODY VERIFICATION TEST. Refer to **STANDARD PROCEDURE** .

      No

      - Go To 5

5. **CLEAR DTC IN MODULE SETTING FAULT**
   1. With the scan tool, select the module setting the DTC against the SCCM.
   2. Clear active DTCs.

      Is this DTC still active?

      Yes

      - Replace/update the module that set this DTC in accordance with the Service Information.
      - Perform the appropriate verification test for the module being replaced. If there is no verification test for the associated module perform the BODY VERIFICATION TEST. Refer to **STANDARD PROCEDURE** .

      No

      - Go To 6

6. **CYCLE IGNITION**
   1. Cycle the ignition from RUN to OFF three times ending with the key in the RUN position.

Does this DTC become active?

Yes

- Go To 7

No

- The condition is not present at this time. Using the wiring diagram/schematic as a guide, inspect the wiring for chafed, pierced, pinched, and partially broken wires and the wiring harness connectors for broken, bent, pushed out, and corroded terminals.
- Perform the appropriate verification test for the module. If there is no verification test for the associated module perform the BODY VERIFICATION TEST. Refer to **STANDARD PROCEDURE** .

7. **CHECK FOR ADDITIONAL LOST COMMUNICATION FAULTS**
   1. With the scan tool, view the modules.

      Does the BCM and other CAN C BUS modules show Lost Communication with the remaining CAN C BUS modules?

      Yes

      - Go To 8

      No

      - Replace/update the module that set this DTC in accordance with the Service Information.
      - Perform the appropriate verification test for the module being replaced. If there is no verification test for the associated module perform the BODY VERIFICATION TEST. Refer to **STANDARD PROCEDURE** .
8. **CHECK THE CAN C BUS (+) CIRCUIT FOR A SHORT TO VOLTAGE**

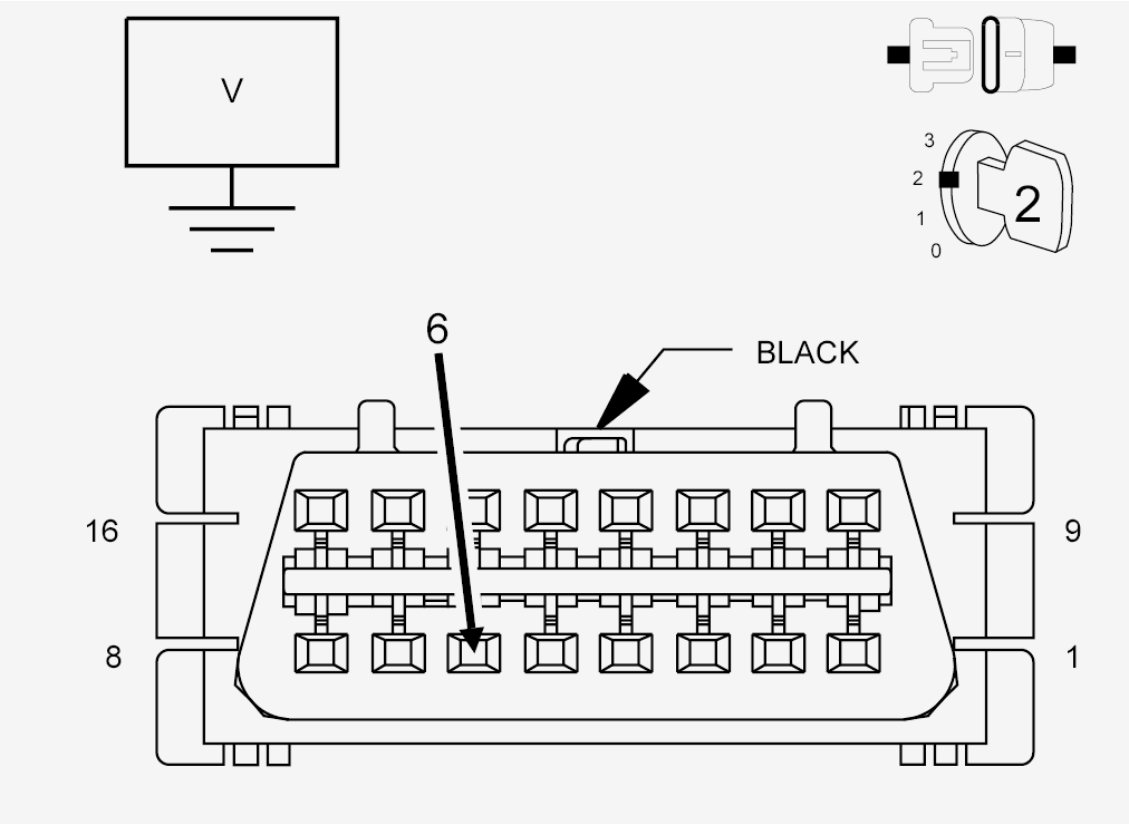

Fig. 34: Checking CAN C BUS (+) Circuit For A Short To Voltage
Courtesy of CHRYSLER GROUP, LLC

1. Measure the voltage between the (D57) CAN C Bus (+) circuit and ground.

   Is the voltage above 5.0 volts?

   Yes

   - Repair the short to voltage in the CAN C Bus (+) circuit. The short to voltage is present in one of the CAN C Bus circuits. Use the Star Connectors to isolate portions of the CAN C Bus in order to locate the concern.
   - Perform the BODY VERIFICATION TEST. Refer to **STANDARD PROCEDURE** .

   No

   - Go To 9

9. **CHECK THE CAN C BUS (-) CIRCUIT FOR A SHORT TO GROUND**

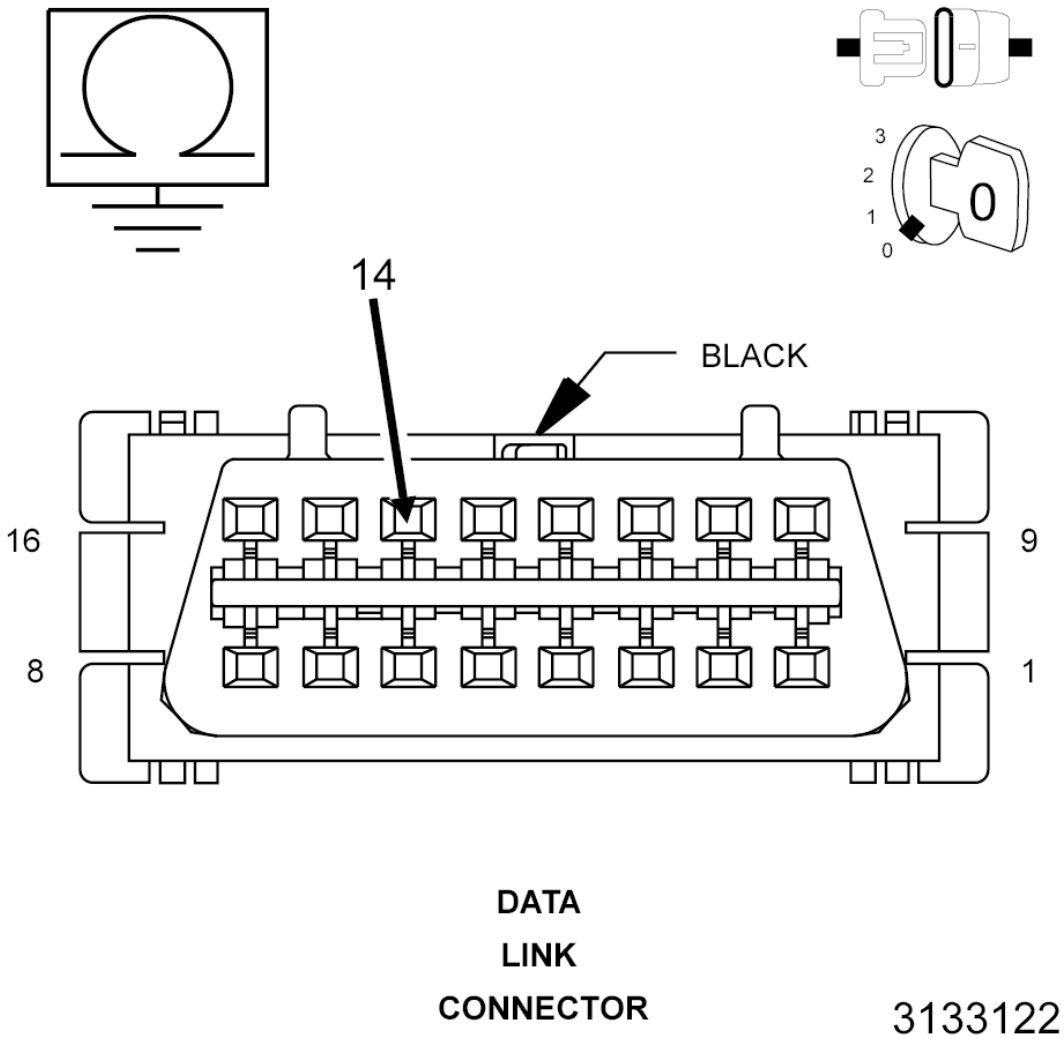

Fig. 35: Checking CAN C BUS (-) Circuit For A Short To Ground
Courtesy of CHRYSLER GROUP, LLC

1. Turn the ignition off.
2. Measure the resistance between ground and the (D58) CAN C Bus (-) circuit.

   Is the resistance below 10k Ohms?

   Yes

   - Repair the short to ground in the CAN C Bus (-) circuit. The short to ground is present in one of the CAN C Bus circuits. Use the Star Connectors to isolate portions of the CAN C Bus in order to locate the concern.
   - Perform the BODY VERIFICATION TEST. Refer to **STANDARD PROCEDURE** .

   No

- Replace/update the module that set this DTC in accordance with the Service Information.
- Perform the appropriate verification test for the module being replaced. If there is no verification test for the associated module perform the BODY VERIFICATION TEST. Refer to **STANDARD PROCEDURE** .

U110D-87-LOST COMMUNICATION WITH SECURITY SIREN - MISSING MESSAGE

For a complete wiring diagram, **refer to appropriate SYSTEM WIRING DIAGRAMS article** .

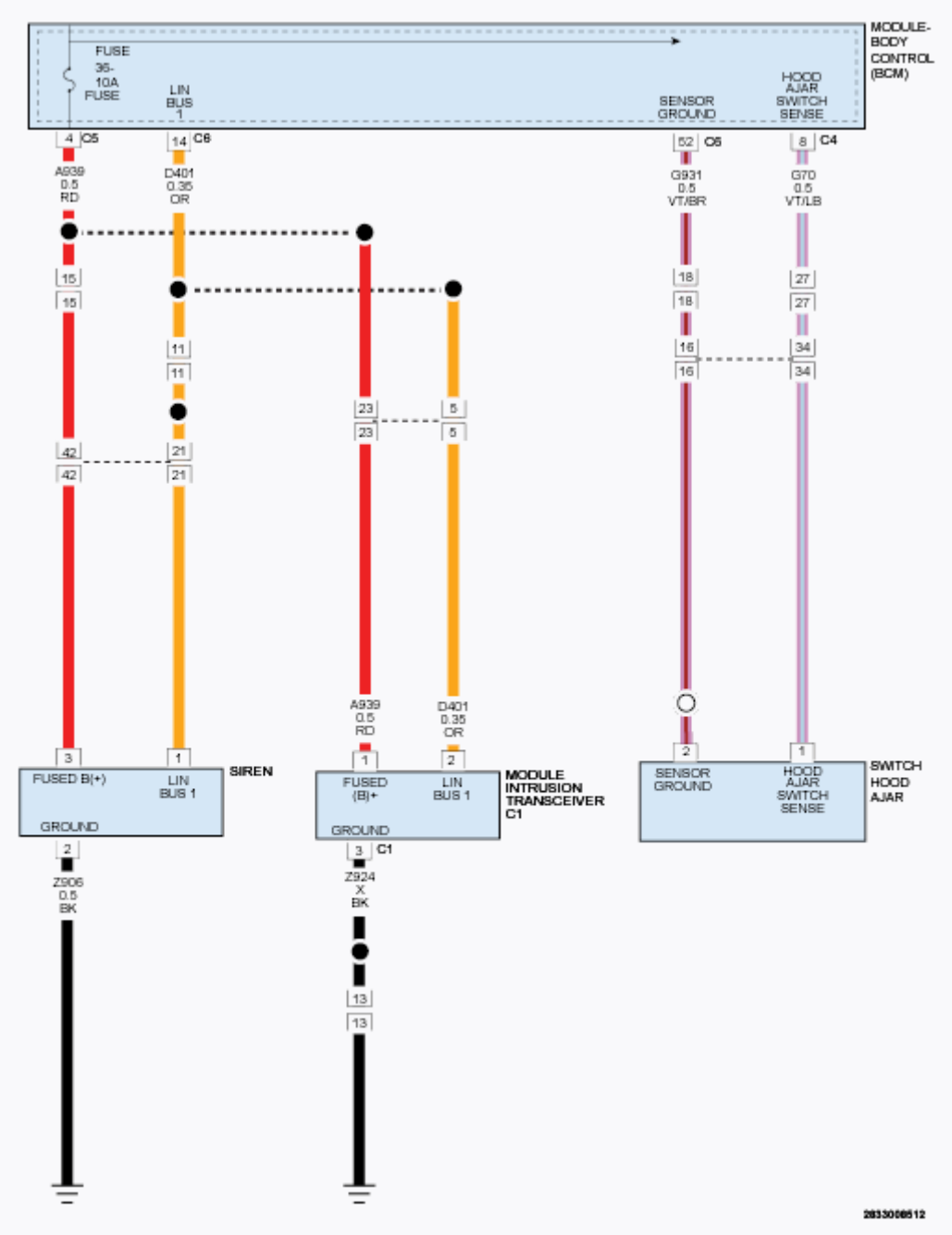

Fig. 36: Intrusion Module, Siren & Hood Switch Circuit Diagram
Courtesy of CHRYSLER GROUP, LLC

WHEN MONITORED

With the ignition on.

SET CONDITION

The Body Control Module (BCM) does not receive information from the Security Siren.

POSSIBLE CAUSES

Possible Causes
(A989) FUSED B(+) CIRCUIT OPEN
(Z906) GROUND CIRCUIT OPEN
(D401) LIN BUS CIRCUIT OPEN
SECURITY SIREN

DIAGNOSTIC TEST

1. **CHECK FOR AN ACTIVE DTC**
    1. Turn the ignition on.
    2. With the scan tool, read DTCs.

    Does the scan tool display this DTC as active?

    Yes

    - Go To 2

    No

    - Test complete. The condition or conditions that originally set this DTC are not present at this time. Using the wiring diagrams as a guide, check all related splices and connectors for signs of water intrusion, corrosion, pushed out or bent terminals and correct pin tension.
    - Perform the BODY VERIFICATION TEST. Refer to **STANDARD PROCEDURE** .
2. **CHECK THE (A989) FUSED B(+) CIRCUIT FOR AN OPEN**
    1. Turn the ignition off.
    2. Disconnect the Security Siren harness connector.
    3. Turn the ignition on.
    4. Using a 12-volt test light connected to ground, check the (F989) Fused B(+) circuit at the Security Siren harness connector.

Does the test light illuminate brightly?

Yes

- Go To 3

No

- Repair the open or short to ground in the (F989) Fused B(+) circuit.
- Perform the BODY VERIFICATION TEST. Refer to **STANDARD PROCEDURE** .

3. **CHECK THE (Z906) GROUND CIRCUIT FOR AN OPEN**
   1. Turn the ignition off.
   2. Using a 12-volt test light connected to 12-volts, check the (Z906) Ground circuit at the Security Siren harness connector.

   Does the test light illuminate brightly?

   Yes

   - Go To 4

   No

   - Repair the open in the (Z906) Ground circuit.
   - Perform the BODY VERIFICATION TEST. Refer to **STANDARD PROCEDURE** .
4. **CHECK THE (D401) LIN BUS CIRCUIT FOR AN OPEN**
   1. Turn the ignition on.
   2. Measure the voltage between ground and the (D401) LIN BUS circuit at the Security Siren harness connector.

   Is the voltage above 5.0 volts?

   Yes

   - Replace the Security Siren in accordance with the Service Information.
   - Perform the BODY VERIFICATION TEST. Refer to **STANDARD PROCEDURE** .

   No

   - Repair the open in the (D401) LIN Bus circuit.
   - Perform the BODY VERIFICATION TEST. Refer to **STANDARD PROCEDURE** .

U113B-87-LOST COMMUNICATION WITH SWITCH BANK MODULE - MISSING MESSAGE

For a complete wiring diagram, **refer to appropriate SYSTEM WIRING DIAGRAMS article** .

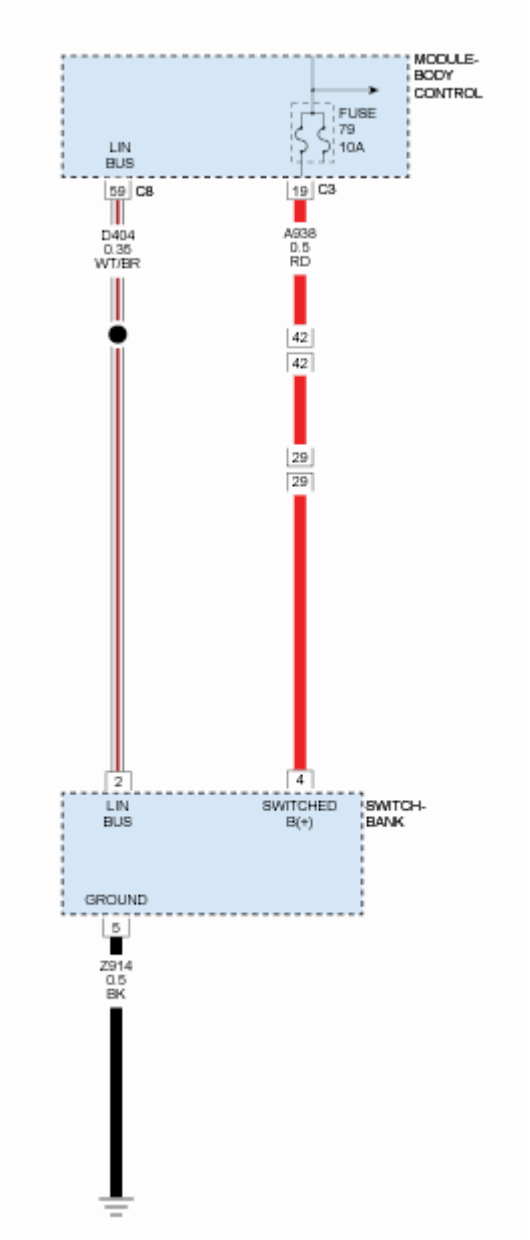

Fig. 37: Switch Bank Module Circuit Diagram
Courtesy of CHRYSLER GROUP, LLC

WHEN MONITORED

With the ignition on.

SET CONDITION

The Body Control Module (BCM) does not receive information from the Auxiliary Switch Bank Module for

greater than 3 seconds.

POSSIBLE CAUSES

Possible Causes
(A938) FUSED B(+) CIRCUIT OPEN OR SHORTED TO GROUND
(Z914) GROUND CIRCUIT OPEN
(D404) LIN BUS CIRCUIT OPEN
AUXILIARY SWITCH BANK MODULE

DIAGNOSTIC TEST

1. **CHECK FOR AN ACTIVE DTC**
    1. Turn the ignition on.
    2. With the scan tool, read DTCs.

    Does the scan tool display this DTC as active?

    Yes

    - Go To 2

    No

    - Test complete. The condition or conditions that originally set this DTC are not present at this time. Using the wiring diagrams as a guide, check all related splices and connectors for signs of water intrusion, corrosion, pushed out or bent terminals and correct pin tension.
    - Perform the BODY VERIFICATION TEST. Refer to **STANDARD PROCEDURE** .
2. **CHECK THE (A938) FUSED B(+) CIRCUIT FOR AN OPEN**
    1. Turn the ignition off.
    2. Disconnect the Auxiliary Switch Bank Module harness connector.
    3. Turn the ignition on.
    4. Using a 12-volt test light connected to ground, check the (A938) Fused B(+) circuit at the Auxiliary Switch Bank Module harness connector.

    Does the test light illuminate brightly?

    Yes

    - Go To 3

    No

    - Repair the open or short to ground in the (A938) Fused B(+) circuit.

- Perform the BODY VERIFICATION TEST. Refer to **STANDARD PROCEDURE** .

3. **CHECK THE (Z914) GROUND CIRCUIT FOR AN OPEN**
   1. Turn the ignition off.
   2. Using a 12-volt test light connected to 12-volts, check the (Z914) Ground circuit at the Auxiliary Switch Bank Module harness connector.

      Does the test light illuminate brightly?

      Yes

      - Go To 4

      No

      - Repair the open in the (Z914) Ground circuit.
      - Perform the BODY VERIFICATION TEST. Refer to **STANDARD PROCEDURE** .
4. **CHECK THE (D404) LIN BUS CIRCUIT FOR AN OPEN**
   1. Turn the ignition on.
   2. Measure the voltage between ground and the (D404) LIN Bus circuit at the Auxiliary Switch Bank Module harness connector.

      Is the voltage above 5.0 volts?

      Yes

      - Replace the Auxiliary Switch Bank Module in accordance with the Service Information.
      - Perform the BODY VERIFICATION TEST. Refer to **STANDARD PROCEDURE** .

      No

      - Repair the open in the (D404) BCM LIN Bus circuit.
      - Perform the BODY VERIFICATION TEST. Refer to **STANDARD PROCEDURE** .

U1190-87-LOST COMMUNICATION WITH HUMIDITY SENSOR - MISSING MESSAGE

For a complete wiring diagram, **refer to appropriate SYSTEM WIRING DIAGRAMS article** .

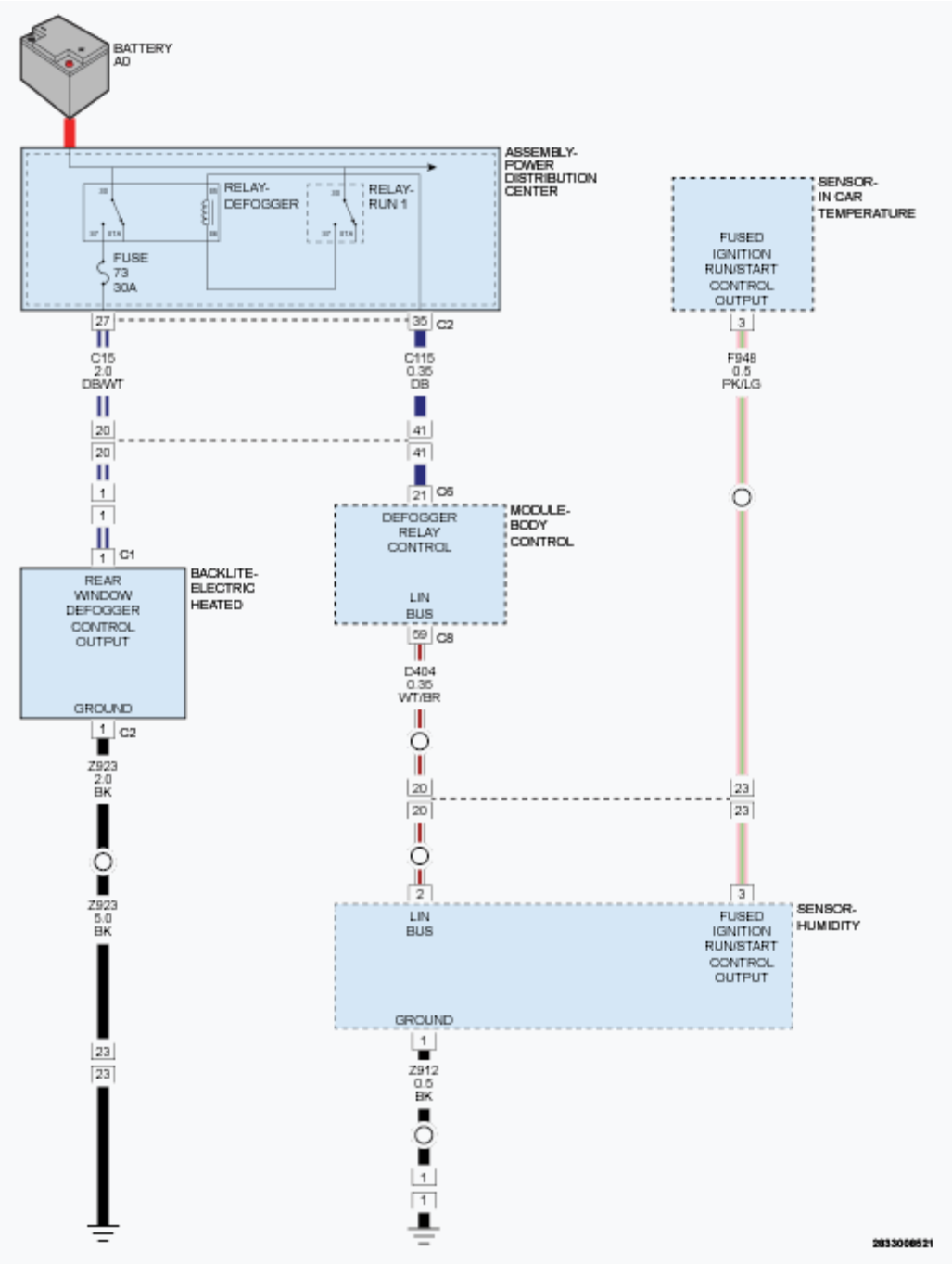

Fig. 38: Rear Defrost Control Circuit Diagram
Courtesy of CHRYSLER GROUP, LLC

WHEN MONITORED

With the ignition on.

SET CONDITION

The Body Control Module (BCM) does not receive information from the Humidity Sensor for greater than 3 seconds.

POSSIBLE CAUSES

Possible Causes
(F948) FUSED IGNITION RUN/START CONTROL OUTPUT CIRCUIT OPEN OR SHORTED TO GROUND
(Z912) GROUND CIRCUIT OPEN
(D404) LIN BUS CIRCUIT OPEN
HUMIDITY SENSOR

DIAGNOSTIC TEST

1. **CHECK FOR AN ACTIVE DTC**
   1. Turn the ignition on.
   2. With the scan tool, read DTCs.

      Does the scan tool display this DTC as active?

      Yes

      - Go To 2

      No

      - Test complete. The condition or conditions that originally set this DTC are not present at this time. Using the wiring diagrams as a guide, check all related splices and connectors for signs of water intrusion, corrosion, pushed out or bent terminals and correct pin tension.
      - Perform the BODY VERIFICATION TEST. Refer to **STANDARD PROCEDURE** .
2. **CHECK THE (F948) FUSED IGNITION RUN/START CONTROL OUTPUT CIRCUIT FOR AN OPEN**
   1. Turn the ignition off.
   2. Disconnect the Humidity Sensor harness connector.
   3. Turn the ignition on.
   4. Using a 12-volt test light connected to ground, check the (F948) Fused Ignition Run/Start Control Output circuit at the Humidity Sensor harness connector.

      Does the test light illuminate brightly?

      Yes

      - Go To 3

No

- Repair the open or short to ground in the (F948) Fused Ignition Run/Start Control Output circuit.
- Perform the BODY VERIFICATION TEST. Refer to **STANDARD PROCEDURE** .

3. **CHECK THE (Z912) GROUND CIRCUIT FOR AN OPEN**
   1. Turn the ignition off.
   2. Using a 12-volt test light connected to 12-volts, check the (Z912) Ground circuit at the Humidity Sensor harness connector.

      Does the test light illuminate brightly?

      Yes

      - Go To 4

      No

      - Repair the open in the (Z912) Ground circuit.
      - Perform the BODY VERIFICATION TEST. Refer to **STANDARD PROCEDURE** .
4. **CHECK THE (D404) LIN BUS CIRCUIT FOR AN OPEN**
   1. Turn the ignition on.
   2. Measure the voltage between ground and the (D404) LIN Bus circuit at the Humidity Sensor harness connector.

      Is the voltage above 5.0 volts?

      Yes

      - Replace the Humidity Sensor in accordance with the Service Information.
      - Perform the BODY VERIFICATION TEST. Refer to **STANDARD PROCEDURE** .

      No

      - Repair the open in the (D404) BCM LIN Bus circuit.
      - Perform the BODY VERIFICATION TEST. Refer to **STANDARD PROCEDURE** .

U1193-87-LOST COMMUNICATION WITH DRIVER SIDE BLIND SPOT SENSOR - MISSING MESSAGE

For a complete wiring diagram, **refer to appropriate SYSTEM WIRING DIAGRAMS article** .

THEORY OF OPERATION

The primary communication network between electronic control modules is the Controller Area Network (CAN) data bus system. The Controller Area Network (CAN) data bus allows all electronic modules connected to the bus to share information with each other. Regardless of whether a message originates from a module on the higher speed CAN C (500K) Bus or on the lower speed bus, CAN Interior High Speed (IHS) (125K) Bus, the message structure and layout is similar, which allows the Body Control Module (BCM) to process and transfer messages between the CAN buses. The BCM stores Diagnostic Trouble Codes (DTCs) for certain bus network faults on the CAN C (500K) Bus and CAN IHS (125K) Bus.

All modules transmit and receive messages over one of these buses. Data exchange between the modules is achieved by serial transmission of encoded data messages (a form of transmission in which data bits are sent sequentially, one at a time, over a single line). Each module can both send and receive serial data simultaneously. Each data bit of a CAN Bus message is carried over the bus as a voltage differential between the two bus circuits which, when strung together, form a message. Each module uses arbitration to sort the message priority if two competing messages are attempting to be broadcast at the same time. Corruption of a single bit within a message will corrupt the entire message. Each message contains a Cyclic Redundancy Check (CRC) which specifies the message size exactly. If the message detected conflicts with the CRC the ECU receiving it will determine the message to be an error and consider that communication has not been possible. Diagnosis of this condition using a lab scope may reveal activity that appears to be Bus data messages even if no actual communication is possible. Communication problems that affect the whole bus, as a result of opens and terminal push outs are more likely to occur on data busses that operate at a high speed than a data bus that operates at a lower speed.

When an open circuit or terminal push out occurs one or more modules can become isolated from the remainder of the bus. The isolated module will attempt to communicate, but will not be able to receive messages or determine arbitration from other modules. Each time the isolated module attempts to communicate it alters the bus voltage on the intact bus circuit. Without functioning arbitration the isolated module alters the bus voltage while other bus messages are being sent thereby corrupting the messages on the remainder of the bus.

The CAN bus modules are connected in parallel to the two-wire bus using a twisted pair, where the wires are wrapped around each other to provide shielding from unwanted electromagnetic induction, thus preventing interference with the relatively low voltage signals being carried through them. While the CAN bus is operating (active), one of the bus wires will carry a higher voltage and is referred to as the CAN High or CAN bus (+) wire, while the other bus wire will carry a lower voltage and is referred to as the CAN Low or CAN bus (-) wire.

For additional information on the communication network and star connector locations, refer to **COMMUNICATION, DESCRIPTION** .

WHEN MONITORED

With the ignition on for at least five seconds.

Battery voltage between 10 and 16 volts.

Body Control Module (BCM) is configured correctly.

SET CONDITION

Bus messages not received from the Left Blind Spot Sensor (LBSS) for approximately two to five seconds.

POSSIBLE CAUSES

Possible Causes
CAN IHS BUS (+) CIRCUIT SHORTED TO VOLTAGE
CAN IHS BUS (-) CIRCUIT SHORTED TO GROUND
DTCS RELATED TO BATTERY VOLTAGE, IGNITION, OR VIN MESSAGES
BCM NOT CONFIGURED CORRECTLY
LBSS POWER AND GROUND
LEFT BLIND SPOT SENSOR (LBSS)
MODULE THAT SET THE DTC

DIAGNOSTIC TEST

1. **VERIFY DTC IS ACTIVE**

   NOTE: Make sure the battery voltage is between 10 and 16 volts before proceeding.

   1. With the scan tool, read active DTCs.

      Is this DTC active?

      Yes

      - Go To 2

      No

      - Refer to **DIAGNOSIS AND TESTING** and perform the STORED LOST COMMUNICATION DTC diagnostic procedure.

2. **CHECK FOR ANY OF THE FOLLOWING ACTIVE DTCS**
   1. With the scan tool, read active DTCs from all modules.

      NOTE: Check for BCM configuration, CAN Interior Bus hardware electrical, VIN Missing/Mismatch, battery or ignition related DTCs.

      Does the scan tool display any active DTCs to the conditions listed above?

      Yes

      - Perform the appropriate diagnostic procedure for any of the above DTCs. Refer to the **DTC INDEX** .

No

- Go To 3

3. **VERIFY THE LBSS IS ACTIVE ON THE BUS**
   1. Turn the ignition on.
   2. With the scan tool, verify the LBSS is active on the bus.

   Is the LBSS active on the bus?

   Yes

   - Go To 4

   No

   - Refer to **DIAGNOSIS AND TESTING** and perform the NO RESPONSE FROM LBSS diagnostic procedure.

4. **CHECK FOR ADDITIONAL COMMUNICATION RELATED DTCS**
   1. With the scan tool, read all the DTCs.

   Is there more than one module with active DTCs "Logged Against" the LBSS?

   Yes

   - Replace/update the Left Blind Spot Sensor (LBSS) in accordance with the Service Information. Refer to **SENSOR, BLIND SPOT, REMOVAL** .
   - Perform the BODY VERIFICATION TEST. Refer to **STANDARD PROCEDURE** .

   No

   - Go To 5

5. **CLEAR DTC IN MODULE SETTING FAULT**
   1. With the scan tool, select the module setting the DTC against the LBSS.
   2. Clear active DTCs.

   Is this DTC still active?

   Yes

   - Replace/update the module that set this DTC in accordance with the Service Information.
   - Perform the appropriate verification test for the module being replaced. If there is no verification test for the associated module perform the BODY VERIFICATION TEST. Refer to **STANDARD PROCEDURE** .

No

- Go To 6

6. **CYCLE IGNITION**
   1. Cycle the ignition from RUN to OFF three times ending with the key in the RUN position.

      Does this DTC become active?

      Yes

      - Go To 7

      No

      - The condition is not present at this time. Using the wiring diagrams as a guide, check all related splices and connectors for signs of water intrusion, corrosion, pushed out or bent terminals, and correct pin tension.
      - Perform the appropriate verification test for the module. If there is no verification test for the associated module perform the BODY VERIFICATION TEST. Refer to **STANDARD PROCEDURE** .
7. **CHECK FOR ADDITIONAL LOST COMMUNICATION FAULTS**
   1. With the scan tool, view the modules.

      Does the BCM and other CAN IHS BUS modules show Lost Communication with the remaining CAN IHS BUS modules?

      Yes

      - Go To 8

      No

      - Replace/update the module that set this DTC in accordance with the Service Information.
      - Perform the appropriate verification test for the module being replaced. If there is no verification test for the associated module perform the BODY VERIFICATION TEST. Refer to **STANDARD PROCEDURE** .
8. **CHECK THE CAN IHS BUS (+) CIRCUIT FOR A SHORT TO VOLTAGE**

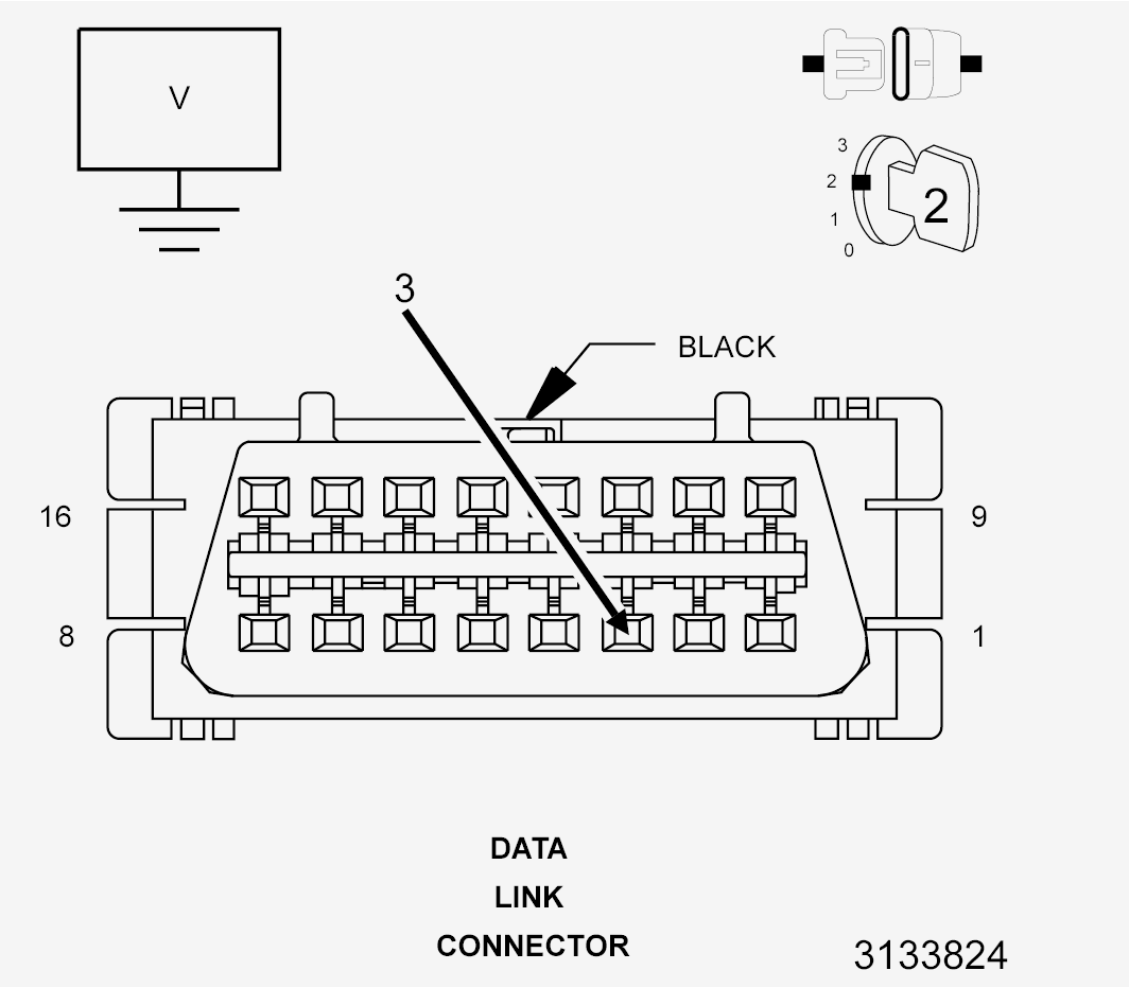

Fig. 39: Checking CAN IHS BUS (125K) (+) Circuit For A Short To Voltage
Courtesy of CHRYSLER GROUP, LLC

1. Measure the voltage between the (D157) CAN IHS Bus (+) circuit and ground.

   Is the voltage above 5.0 volts?

   Yes

   - Repair the short to voltage in the CAN IHS Bus (+) circuit. The short to voltage is present in one of the CAN IHS Bus (+) circuits. Use the Star Connectors to isolate portions of the CAN IHS Bus (125K) (+) in order to locate the concern.
   - Perform the BODY VERIFICATION TEST. Refer to **STANDARD PROCEDURE** .

   No

   - Go To 9

9. **CHECK THE CAN IHS BUS (-) CIRCUIT FOR A SHORT TO GROUND**

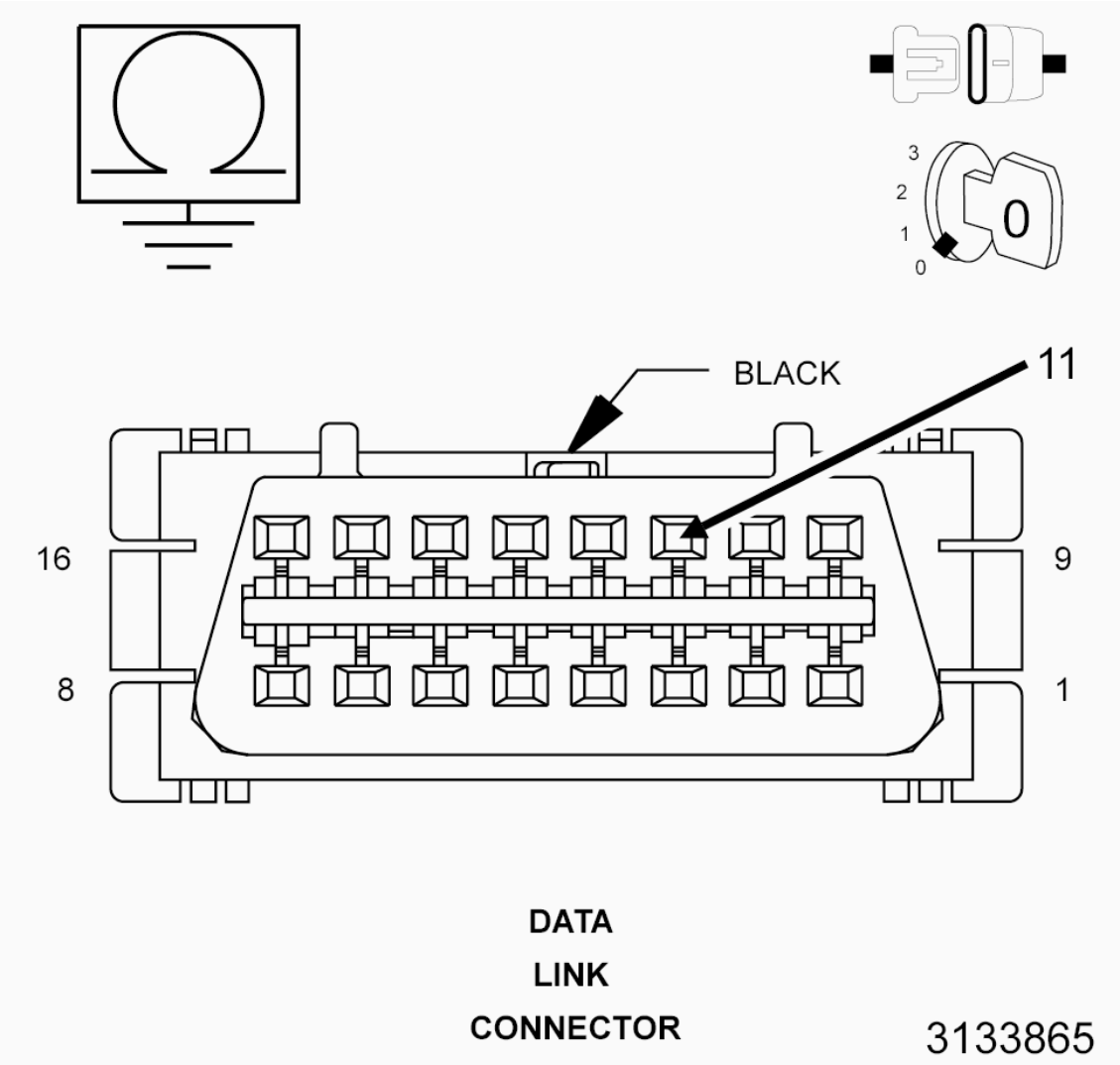

Fig. 40: Checking CAN IHS BUS (125K) (-) Circuit For A Short To Ground
Courtesy of CHRYSLER GROUP, LLC

1. Turn the ignition off.
2. Measure the resistance between ground and the (D158) CAN IHS Bus (-) circuit.

   Is the resistance below 10k Ohms?

   Yes

   - Repair the short to ground in the CAN IHS Bus (-) circuit. The short to ground is present in one of the CAN IHS Bus (-) circuits. Use the Star Connectors to isolate portions of the CAN IHS Bus (125K) (-) in order to locate the concern.
   - Perform the BODY VERIFICATION TEST. Refer to **STANDARD PROCEDURE** .

   No

- Replace/update the module that set this DTC in accordance with the Service Information.
- Perform the appropriate verification test for the module being replaced. If there is no verification test for the associated module perform the BODY VERIFICATION TEST. Refer to **STANDARD PROCEDURE** .

U1194-87-LOST COMMUNICATION WITH PASSENGER SIDE BLIND SPOT SENSOR - MISSING MESSAGE

For a complete wiring diagram, **refer to appropriate SYSTEM WIRING DIAGRAMS article** .

THEORY OF OPERATION

The primary communication network between electronic control modules is the Controller Area Network (CAN) data bus system. The Controller Area Network (CAN) data bus allows all electronic modules connected to the bus to share information with each other. Regardless of whether a message originates from a module on the higher speed CAN C (500K) Bus or on the lower speed bus, CAN Interior High Speed (IHS) (125K) Bus, the message structure and layout is similar, which allows the Body Control Module (BCM) to process and transfer messages between the CAN buses. The BCM stores Diagnostic Trouble Codes (DTCs) for certain bus network faults on the CAN C (500K) Bus and CAN IHS (125K) Bus.

All modules transmit and receive messages over one of these buses. Data exchange between the modules is achieved by serial transmission of encoded data messages (a form of transmission in which data bits are sent sequentially, one at a time, over a single line). Each module can both send and receive serial data simultaneously. Each data bit of a CAN Bus message is carried over the bus as a voltage differential between the two bus circuits which, when strung together, form a message. Each module uses arbitration to sort the message priority if two competing messages are attempting to be broadcast at the same time. Corruption of a single bit within a message will corrupt the entire message. Each message contains a Cyclic Redundancy Check (CRC) which specifies the message size exactly. If the message detected conflicts with the CRC the ECU receiving it will determine the message to be an error and consider that communication has not been possible. Diagnosis of this condition using a lab scope may reveal activity that appears to be Bus data messages even if no actual communication is possible. Communication problems that affect the whole bus, as a result of opens and terminal push outs are more likely to occur on data busses that operate at a high speed than a data bus that operates at a lower speed.

When an open circuit or terminal push out occurs one or more modules can become isolated from the remainder of the bus. The isolated module will attempt to communicate, but will not be able to receive messages or determine arbitration from other modules. Each time the isolated module attempts to communicate it alters the bus voltage on the intact bus circuit. Without functioning arbitration the isolated module alters the bus voltage while other bus messages are being sent thereby corrupting the messages on the remainder of the bus.

The CAN bus modules are connected in parallel to the two-wire bus using a twisted pair, where the wires are wrapped around each other to provide shielding from unwanted electromagnetic induction, thus preventing interference with the relatively low voltage signals being carried through them. While the CAN bus is operating (active), one of the bus wires will carry a higher voltage and is referred to as the CAN High or CAN bus (+) wire, while the other bus wire will carry a lower voltage and is referred to as the CAN Low or CAN bus (-) wire.

For additional information on the communication network and star connector locations, refer to **COMMUNICATION, DESCRIPTION** .

WHEN MONITORED

With the ignition on for at least five seconds.

Battery voltage between 10 and 16 volts.

Body Control Module (BCM) is configured correctly.

SET CONDITION

Bus messages not received from the Right Blind Spot Sensor (RBSS) for approximately two to five seconds.

POSSIBLE CAUSES

Possible Causes
CAN IHS BUS (+) CIRCUIT SHORTED TO VOLTAGE
CAN IHS BUS (-) CIRCUIT SHORTED TO GROUND
DTCS RELATED TO BATTERY VOLTAGE, IGNITION, OR VIN MESSAGES
BCM NOT CONFIGURED CORRECTLY
RBSS POWER AND GROUND
RIGHT BLIND SPOT SENSOR (LBSS)
MODULE THAT SET THE DTC

DIAGNOSTIC TEST

1. **VERIFY DTC IS ACTIVE**

   NOTE: Make sure the battery voltage is between 10 and 16 volts before proceeding.

   1. With the scan tool, read active DTCs.

      Is this DTC active?

      Yes

      - Go To 2

      No

      - Refer to **DIAGNOSIS AND TESTING** and perform the STORED LOST COMMUNICATION DTC diagnostic procedure.

2. **CHECK FOR ANY OF THE FOLLOWING ACTIVE DTCS**
   1. With the scan tool, read active DTCs from all modules.

      NOTE: Check for BCM configuration, CAN Interior Bus hardware electrical, VIN Missing/Mismatch, battery or ignition related DTCs.

      Does the scan tool display any active DTCs to the conditions listed above?

      Yes

      - Perform the appropriate diagnostic procedure for any of the above DTCs. Refer to the **DTC INDEX** .

      No

      - Go To 3
3. **VERIFY THE RBSS IS ACTIVE ON THE BUS**
   1. Turn the ignition on.
   2. With the scan tool, verify the RBSS is active on the bus.

      Is the RBSS active on the bus?

      Yes

      - Go To 4

      No

      - Refer to **DIAGNOSIS AND TESTING** and perform the NO RESPONSE FROM RBSS diagnostic procedure.
4. **CHECK FOR ADDITIONAL COMMUNICATION RELATED DTCS**
   1. With the scan tool, read all the DTCs.

      Is there more than one module with active DTCs "Logged Against" the RBSS?

      Yes

      - Replace/update the Right Blind Spot Sensor (RBSS) in accordance with the Service Information. Refer to **SENSOR, BLIND SPOT, REMOVAL** .
      - Perform the BODY VERIFICATION TEST. Refer to **STANDARD PROCEDURE** .

      No

      - Go To 5

5. **CLEAR DTC IN MODULE SETTING FAULT**
   1. With the scan tool, select the module setting the DTC against the RBSS.
   2. Clear active DTCs.

      Is this DTC still active?

      Yes

      - Replace/update the module that set this DTC in accordance with the Service Information.
      - Perform the appropriate verification test for the module being replaced. If there is no verification test for the associated module perform the BODY VERIFICATION TEST. Refer to **STANDARD PROCEDURE** .

      No

      - Go To 6
6. **CYCLE IGNITION**
   1. Cycle the ignition from RUN to OFF three times ending with the key in the RUN position.

      Does this DTC become active?

      Yes

      - Go To 7

      No

      - The condition is not present at this time. Using the wiring diagrams as a guide, check all related splices and connectors for signs of water intrusion, corrosion, pushed out or bent terminals, and correct pin tension.
      - Perform the appropriate verification test for the module. If there is no verification test for the associated module perform the BODY VERIFICATION TEST. Refer to **STANDARD PROCEDURE** .
7. **CHECK FOR ADDITIONAL LOST COMMUNICATION FAULTS**
   1. With the scan tool, view the modules.

      Does the BCM and other CAN IHS BUS modules show Lost Communication with the remaining CAN IHS BUS modules?

      Yes

      - Go To 8

      No

- Replace/update the module that set this DTC in accordance with the Service Information.
- Perform the appropriate verification test for the module being replaced. If there is no verification test for the associated module perform the BODY VERIFICATION TEST. Refer to **STANDARD PROCEDURE** .

8. **CHECK THE CAN IHS BUS (+) CIRCUIT FOR A SHORT TO VOLTAGE**

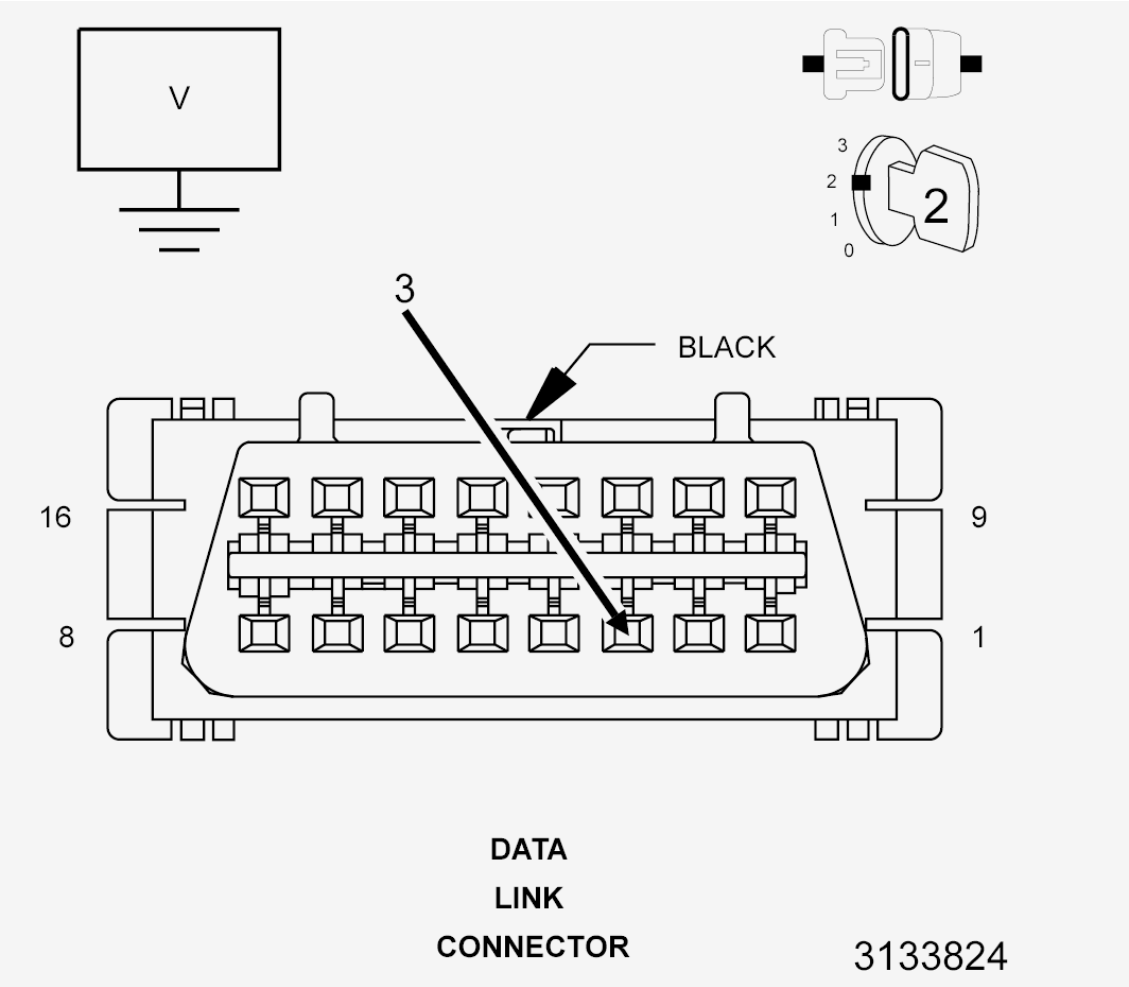

Fig. 41: Checking CAN IHS BUS (125K) (+) Circuit For A Short To Voltage
Courtesy of CHRYSLER GROUP, LLC

1. Measure the voltage between the (D157) CAN IHS Bus (+) circuit and ground.

   Is the voltage above 5.0 volts?

   Yes

   - Repair the short to voltage in the CAN IHS Bus (+) circuit. The short to voltage is present in one of the CAN IHS Bus (+) circuits. Use the Star Connectors to isolate portions of the CAN IHS Bus (125K) (+) in order to locate the concern.

- Perform the BODY VERIFICATION TEST. Refer to **STANDARD PROCEDURE** .

No

- Go To 9

9. **CHECK THE CAN IHS BUS (-) CIRCUIT FOR A SHORT TO GROUND**

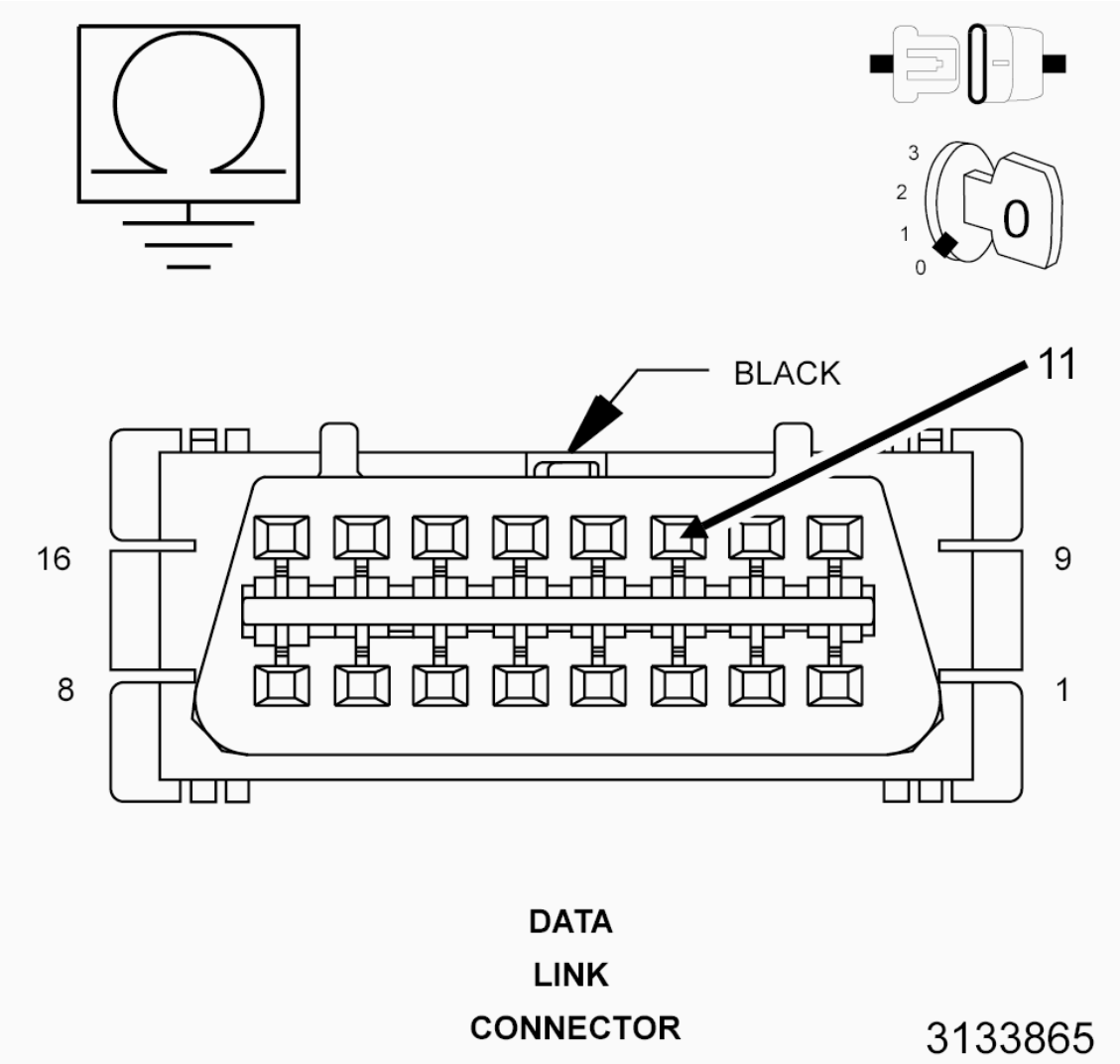

Fig. 42: Checking CAN IHS BUS (125K) (-) Circuit For A Short To Ground
Courtesy of CHRYSLER GROUP, LLC

1. Turn the ignition off.
2. Measure the resistance between ground and the (D158) CAN IHS Bus (-) circuit.

   Is the resistance below 10k Ohms?

   Yes

- Repair the short to ground in the CAN IHS Bus (-) circuit. The short to ground is present in one of the CAN IHS Bus (-) circuits. Use the Star Connectors to isolate portions of the CAN IHS Bus (125K) (-) in order to locate the concern.
- Perform the BODY VERIFICATION TEST. Refer to **STANDARD PROCEDURE** .

No

- Replace/update the module that set this DTC in accordance with the Service Information.
- Perform the appropriate verification test for the module being replaced. If there is no verification test for the associated module perform the BODY VERIFICATION TEST. Refer to **STANDARD PROCEDURE** .

U11B8-87-LOST COMMUNICATION WITH INTEGRATED CENTER STACK (ICS) - MISSING MESSAGE

For a complete wiring diagram, **refer to appropriate SYSTEM WIRING DIAGRAMS article** .

THEORY OF OPERATION

The primary communication network between electronic control modules is the Controller Area Network (CAN) data bus system. The Controller Area Network (CAN) data bus allows all electronic modules connected to the bus to share information with each other. Regardless of whether a message originates from a module on the higher speed CAN C (500K) Bus or on the lower speed bus, CAN Interior High Speed (IHS) (125K) Bus, the message structure and layout is similar, which allows the Body Control Module (BCM) to process and transfer messages between the CAN buses. The BCM stores Diagnostic Trouble Codes (DTCs) for certain bus network faults on the CAN C (500K) Bus and CAN IHS (125K) Bus.

All modules transmit and receive messages over one of these buses. Data exchange between the modules is achieved by serial transmission of encoded data messages (a form of transmission in which data bits are sent sequentially, one at a time, over a single line). Each module can both send and receive serial data simultaneously. Each data bit of a CAN Bus message is carried over the bus as a voltage differential between the two bus circuits which, when strung together, form a message. Each module uses arbitration to sort the message priority if two competing messages are attempting to be broadcast at the same time. Corruption of a single bit within a message will corrupt the entire message. Each message contains a Cyclic Redundancy Check (CRC) which specifies the message size exactly. If the message detected conflicts with the CRC the ECU receiving it will determine the message to be an error and consider that communication has not been possible. Diagnosis of this condition using a lab scope may reveal activity that appears to be Bus data messages even if no actual communication is possible. Communication problems that affect the whole bus, as a result of opens and terminal push outs are more likely to occur on data busses that operate at a high speed than a data bus that operates at a lower speed.

When an open circuit or terminal push out occurs one or more modules can become isolated from the remainder of the bus. The isolated module will attempt to communicate, but will not be able to receive messages or determine arbitration from other modules. Each time the isolated module attempts to communicate it alters the bus voltage on the intact bus circuit. Without functioning arbitration the isolated module alters the bus voltage while other bus messages are being sent thereby corrupting the messages on the remainder of the bus.

The CAN bus modules are connected in parallel to the two-wire bus using a twisted pair, where the wires are wrapped around each other to provide shielding from unwanted electromagnetic induction, thus preventing interference with the relatively low voltage signals being carried through them. While the CAN bus is operating (active), one of the bus wires will carry a higher voltage and is referred to as the CAN High or CAN bus (+) wire, while the other bus wire will carry a lower voltage and is referred to as the CAN Low or CAN bus (-) wire.

For additional information on the communication network and star connector locations, refer to **COMMUNICATION, DESCRIPTION** .

WHEN MONITORED

With the ignition on for at least five seconds.

Battery voltage between 10 and 16 volts.

Body Control Module (BCM) is configured correctly.

SET CONDITION

Bus messages not received from the Integrated Center Stack (ICS) for approximately two to five seconds.

POSSIBLE CAUSES

Possible Causes
CAN IHS BUS (125K) (+) CIRCUIT SHORTED TO VOLTAGE
CAN IHS BUS (125K) (-) CIRCUIT SHORTED TO GROUND
DTCS RELATED TO BATTERY VOLTAGE, IGNITION, OR VIN MESSAGES
BCM NOT CONFIGURED CORRECTLY
ICS POWER AND GROUND
INTEGRATED CENTER STACK (ICS)
MODULE THAT SET THE DTC

DIAGNOSTIC TEST

1. **VERIFY DTC IS ACTIVE**

NOTE: Make sure the battery voltage is between 10 and 16 volts before proceeding.

1. With the scan tool, read active DTCs.

   Is this DTC active?

   Yes

- Go To 2

No

- Refer to **DIAGNOSIS AND TESTING** and perform the STORED LOST COMMUNICATION DTC diagnostic procedure.

2. **CHECK FOR ANY OF THE FOLLOWING ACTIVE DTCS**
   1. With the scan tool, read active DTCs from all modules.

      NOTE: Check for BCM configuration, CAN Interior Bus hardware electrical, VIN Missing/Mismatch, battery or ignition related DTCs.

      Does the scan tool display any active DTCs to the conditions listed above?

      Yes

      - Go to the **DTC INDEX** and perform the appropriate diagnostic procedure.

      No

      - Go To 3

3. **VERIFY THE ICS IS ACTIVE ON THE BUS**
   1. Turn the ignition on.
   2. With the scan tool, verify the ICS is active on the bus.

      Is the ICS active on the bus?

      Yes

      - Go To 4

      No

      - Refer to **DIAGNOSIS AND TESTING** and perform the NO RESPONSE FROM ICS diagnostic procedure.

4. **CHECK FOR ADDITIONAL COMMUNICATION RELATED DTCS**
   1. With the scan tool, read all the DTCs.

      Is there more than one module with active DTCs "Logged Against" the ICS ?

      Yes

      - Replace/update the Integrated Center Stack (ICS) in accordance with the Service Information.

- Perform the BODY VERIFICATION TEST. Refer to **STANDARD PROCEDURE** .

No

- Go To 5

5. **CLEAR DTC IN MODULE SETTING FAULT**
   1. With the scan tool, select the module setting the DTC against the ICS.
   2. Clear active DTCs.

   Is this DTC still active?

   Yes

   - Replace/update the module that set this DTC in accordance with the Service Information.
   - Perform the appropriate verification test for the module being replaced. If there is no verification test for the associated module perform the BODY VERIFICATION TEST. Refer to **STANDARD PROCEDURE** .

   No

   - Go To 6

6. **CYCLE IGNITION**
   1. Cycle the ignition from RUN to OFF three times ending with the key in the RUN position.

   Does this DTC become active?

   Yes

   - Go To 7

   No

   - The condition is not present at this time. Using the wiring diagrams as a guide, check all related splices and connectors for signs of water intrusion, corrosion, pushed out or bent terminals, and correct pin tension.
   - Perform the appropriate verification test for the module. If there is no verification test for the associated module perform the BODY VERIFICATION TEST. Refer to **STANDARD PROCEDURE** .

7. **CHECK FOR ADDITIONAL LOST COMMUNICATION FAULTS**
   1. With the scan tool, view the modules.

   Does the BCM and other CAN IHS BUS modules show Lost Communication with the remaining CAN IHS BUS modules?

Yes

- Go To 8

No

- Replace/update the module that set this DTC in accordance with the Service Information.
- Perform the appropriate verification test for the module being replaced. If there is no verification test for the associated module perform the BODY VERIFICATION TEST. Refer to **STANDARD PROCEDURE** .

8. **CHECK THE CAN IHS BUS (125K) (+) CIRCUIT FOR A SHORT TO VOLTAGE**

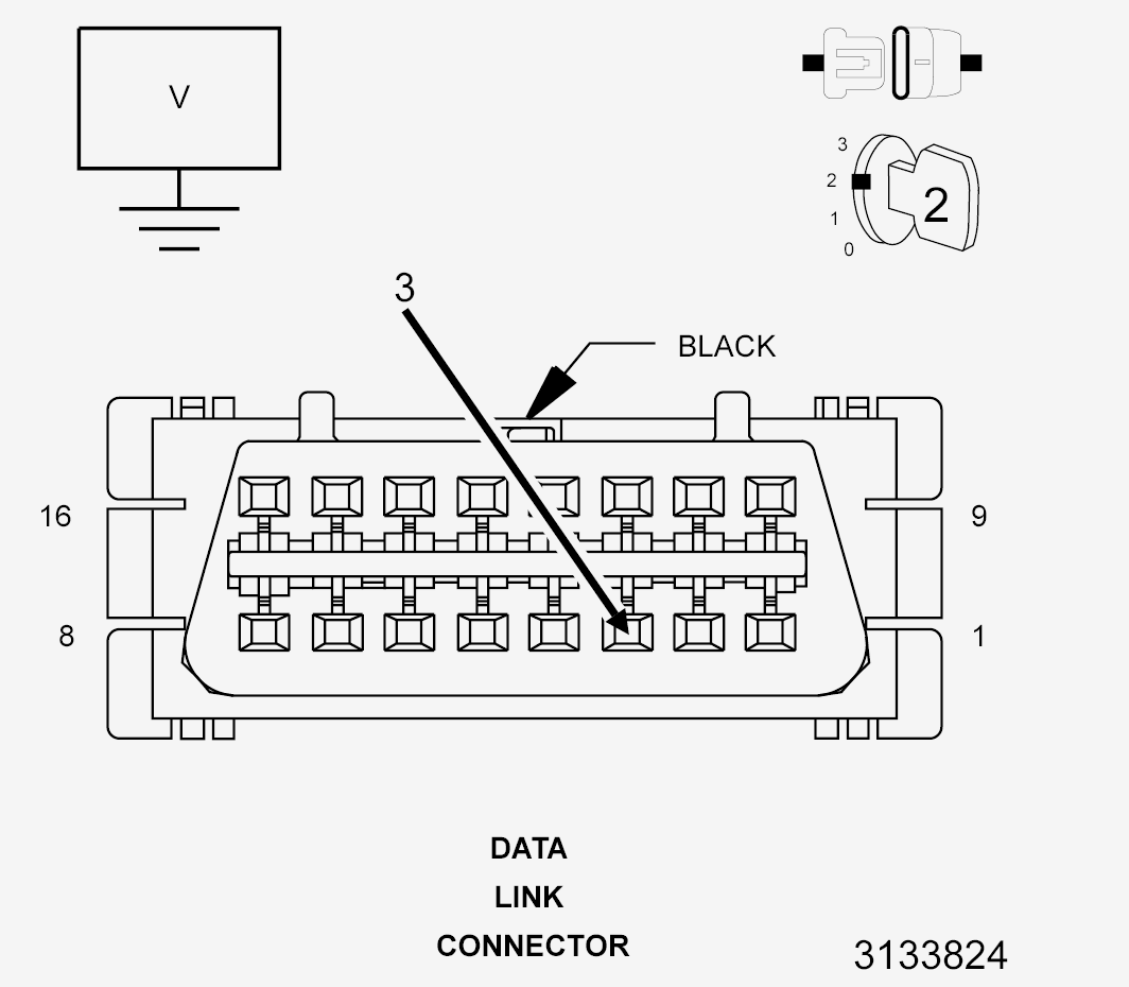

Fig. 43: Checking CAN IHS BUS (125K) (+) Circuit For A Short To Voltage
Courtesy of CHRYSLER GROUP, LLC

1. Measure the voltage between the (D157) CAN IHS Bus (125K) (+) circuit and ground.

   Is the voltage above 5.0 volts?

Yes

- Repair the short to voltage in the CAN IHS Bus (125K) (+) circuit. The short to voltage is present in one of the CAN IHS Bus (125K) (+) circuits. Use the Star Connectors to isolate portions of the CAN IHS Bus (125K) (+) in order to locate the concern.
- Perform the BODY VERIFICATION TEST. Refer to **STANDARD PROCEDURE** .

No

- Go To 9

9. **CHECK THE CAN IHS BUS (125K) (-) CIRCUIT FOR A SHORT TO GROUND**

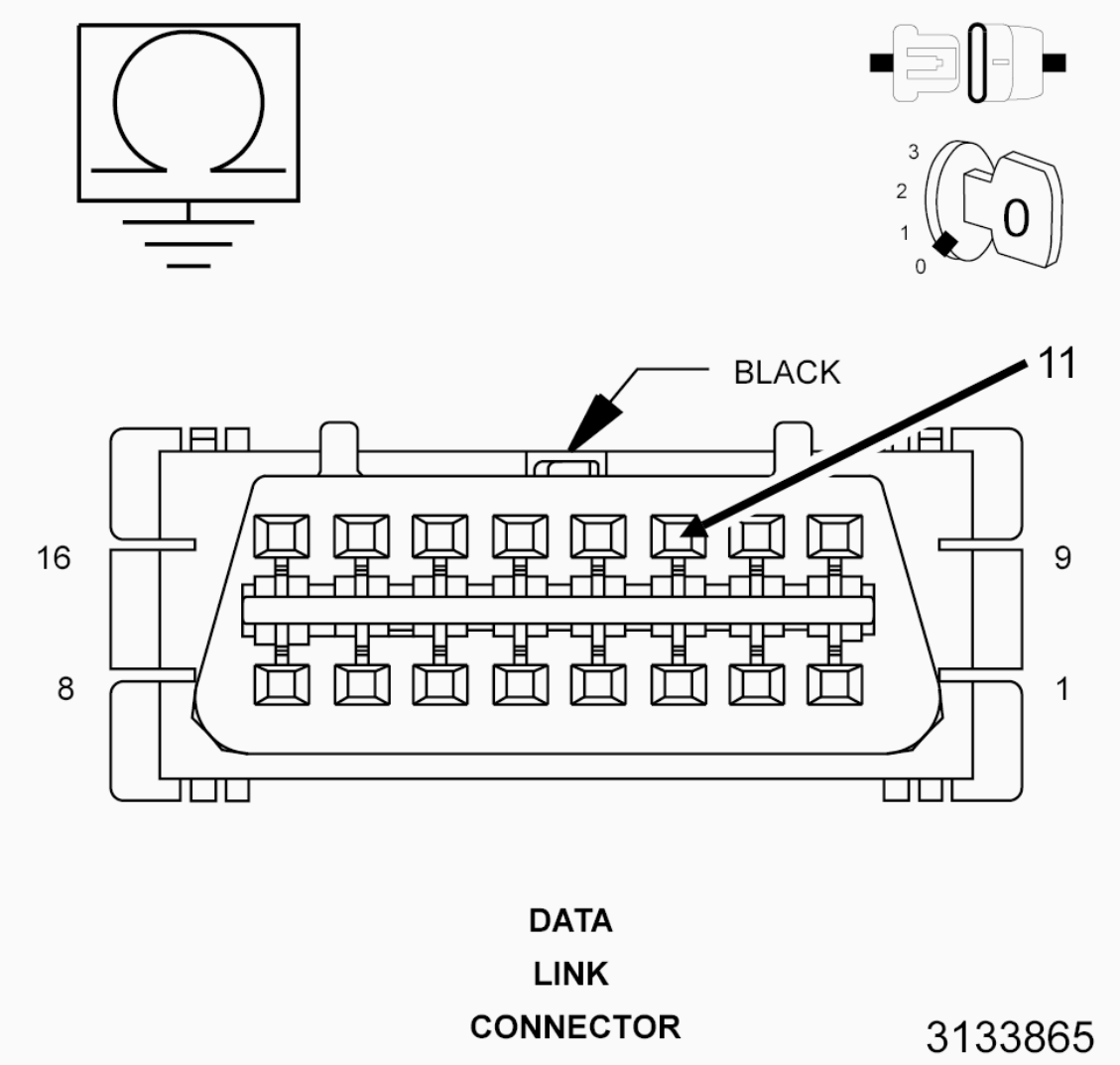

Fig. 44: Checking CAN IHS BUS (125K) (-) Circuit For A Short To Ground
Courtesy of CHRYSLER GROUP, LLC

1. Turn the ignition off.

2. Measure the resistance between ground and the (D158) CAN IHS Bus (125K) (-) circuit.

   Is the resistance below 10k Ohms?

   Yes

   - Repair the short to ground in the CAN IHS Bus (125K) (-) circuit. The short to ground is present in one of the CAN IHS Bus (125K) (-) circuits. Use the Star Connectors to isolate portions of the CAN IHS Bus (125K) (-) in order to locate the concern.
   - Perform the BODY VERIFICATION TEST. Refer to **STANDARD PROCEDURE** .

   No

   - Replace/update the module that set this DTC in accordance with the Service Information.
   - Perform the appropriate verification test for the module being replaced. If there is no verification test for the associated module perform the BODY VERIFICATION TEST. Refer to **STANDARD PROCEDURE** .

U11B9-87-LOST COMMUNICATION WITH RF HUB - MISSING MESSAGE

For a complete wiring diagram, **refer to appropriate SYSTEM WIRING DIAGRAMS article** .

THEORY OF OPERATION

The primary communication network between electronic control modules is the Controller Area Network (CAN) data bus system. The Controller Area Network (CAN) data bus allows all electronic modules connected to the bus to share information with each other. Regardless of whether a message originates from a module on the higher speed CAN C (500K) Bus or on the lower speed bus, CAN Interior High Speed (IHS) (125K) Bus, the message structure and layout is similar, which allows the Body Control Module (BCM) to process and transfer messages between the CAN buses. The BCM stores Diagnostic Trouble Codes (DTCs) for certain bus network faults on the CAN C (500K) Bus and CAN IHS (125K) Bus.

All modules transmit and receive messages over one of these buses. Data exchange between the modules is achieved by serial transmission of encoded data messages (a form of transmission in which data bits are sent sequentially, one at a time, over a single line). Each module can both send and receive serial data simultaneously. Each data bit of a CAN Bus message is carried over the bus as a voltage differential between the two bus circuits which, when strung together, form a message. Each module uses arbitration to sort the message priority if two competing messages are attempting to be broadcast at the same time. Corruption of a single bit within a message will corrupt the entire message. Each message contains a Cyclic Redundancy Check (CRC) which specifies the message size exactly. If the message detected conflicts with the CRC the ECU receiving it will determine the message to be an error and consider that communication has not been possible. Diagnosis of this condition using a lab scope may reveal activity that appears to be Bus data messages even if no actual communication is possible. Communication problems that affect the whole bus, as a result of opens and terminal push outs are more likely to occur on data busses that operate at a high speed than a data bus that operates at a lower speed.

When an open circuit or terminal push out occurs one or more modules can become isolated from the remainder of the bus. The isolated module will attempt to communicate, but will not be able to receive messages or determine arbitration from other modules. Each time the isolated module attempts to communicate it alters the bus voltage on the intact bus circuit. Without functioning arbitration the isolated module alters the bus voltage while other bus messages are being sent thereby corrupting the messages on the remainder of the bus.

The CAN bus modules are connected in parallel to the two-wire bus using a twisted pair, where the wires are wrapped around each other to provide shielding from unwanted electromagnetic induction, thus preventing interference with the relatively low voltage signals being carried through them. While the CAN bus is operating (active), one of the bus wires will carry a higher voltage and is referred to as the CAN High or CAN bus (+) wire, while the other bus wire will carry a lower voltage and is referred to as the CAN Low or CAN bus (-) wire.

For additional information on the communication network and star connector locations, refer to **COMMUNICATION, DESCRIPTION** .

WHEN MONITORED

With the ignition on for at least five seconds.

Battery voltage between 10 and 16 volts.

Body Control Module (BCM) is configured correctly.

SET CONDITION

Bus messages not received from the Radio Frequency (RF) Hub Module for approximately two to five seconds.

POSSIBLE CAUSES

Possible Causes
CAN C BUS (+) CIRCUIT SHORTED TO VOLTAGE
CAN C BUS (-) CIRCUIT SHORTED TO GROUND
DTCS RELATED TO BATTERY VOLTAGE, IGNITION, OR VIN MESSAGES
BCM NOT CONFIGURED CORRECTLY
RFH MODULE POWER AND GROUND
RADIO FREQUENCY HUB (RFH) MODULE
MODULE THAT SET THE DTC

DIAGNOSTIC TEST

1. **VERIFY DTC IS ACTIVE**

NOTE: **Make sure the battery voltage is between 10 and 16 volts before proceeding.**

1. With the scan tool, read active DTCs.

   Is this DTC active?

   Yes

   - Go To 2

   No

   - Refer to **DIAGNOSIS AND TESTING** and perform the STORED LOST COMMUNICATION DTCS diagnostic procedure.

2. **CHECK FOR ANY OF THE FOLLOWING ACTIVE DTCS**
   1. With the scan tool, read all active DTCs from all modules.

      NOTE: Check for BCM configuration, CAN C hardware electrical, VIN Missing/Mismatch, battery or ignition related DTCs.

      Does the scan tool display any active DTCs to the conditions listed above?

      Yes

      - Go to the **DTC INDEX** and perform the appropriate diagnostic procedure.

      No

      - Go To 3

3. **VERIFY THE RFH IS ACTIVE ON THE BUS**
   1. Turn the ignition on.
   2. With the scan tool, verify the RFH is active on the bus.

      Is the RFH active on the bus?

      Yes

      - Go To 4

      No

      - Refer to **DIAGNOSIS AND TESTING** and perform the NO RESPONSE FROM RF HUB diagnostic procedure.

4. **CHECK FOR ADDITIONAL COMMUNICATION RELATED DTCS**
   1. With the scan tool, read all the DTCs.

Is there more than one module with active DTCs "Logged Against" the RFH?

Yes

- Replace/update the RF Hub Module in accordance with the Service Information. Refer to **MODULE, RADIO FREQUENCY (RF HUB), REMOVAL** .
- Perform the BODY VERIFICATION TEST. Refer to **STANDARD PROCEDURE** .

No

- Go To 5

5. **CLEAR DTC IN MODULE SETTING FAULT**
   1. With the scan tool, select the module setting the DTC against the RFH.
   2. Clear active DTCs.

   Is this DTC still active?

   Yes

   - Replace/update the module that set this DTC in accordance with the Service Information.
   - Perform the appropriate verification test for the module being replaced. If there is no verification test for the associated module perform the BODY VERIFICATION TEST. Refer to **STANDARD PROCEDURE** .

   No

   - Go To 6

6. **CYCLE IGNITION**
   1. Cycle the ignition from RUN to OFF three times ending with the key in the RUN position.

   Does this DTC become active?

   Yes

   - Go To 7

   No

   - The condition is not present at this time. Using the wiring diagrams as a guide, check all related splices and connectors for signs of water intrusion, corrosion, pushed out or bent terminals, and correct pin tension.
   - Perform the appropriate verification test for the module. If there is no verification test for the associated module perform the BODY VERIFICATION TEST. Refer to **STANDARD PROCEDURE** .

7. **CHECK FOR ADDITIONAL LOST COMMUNICATION FAULTS**
   1. With the scan tool, view the modules.

      Does the BCM and other CAN C BUS modules show Lost Communication with the remaining CAN C BUS modules?

      Yes

      - Go To 8

      No

      - Replace/update the module that set this DTC in accordance with the Service Information.
      - Perform the appropriate verification test for the module being replaced. If there is no verification test for the associated module perform the BODY VERIFICATION TEST. Refer to **STANDARD PROCEDURE** .
8. **CHECK THE CAN C BUS (+) CIRCUIT FOR A SHORT TO VOLTAGE**

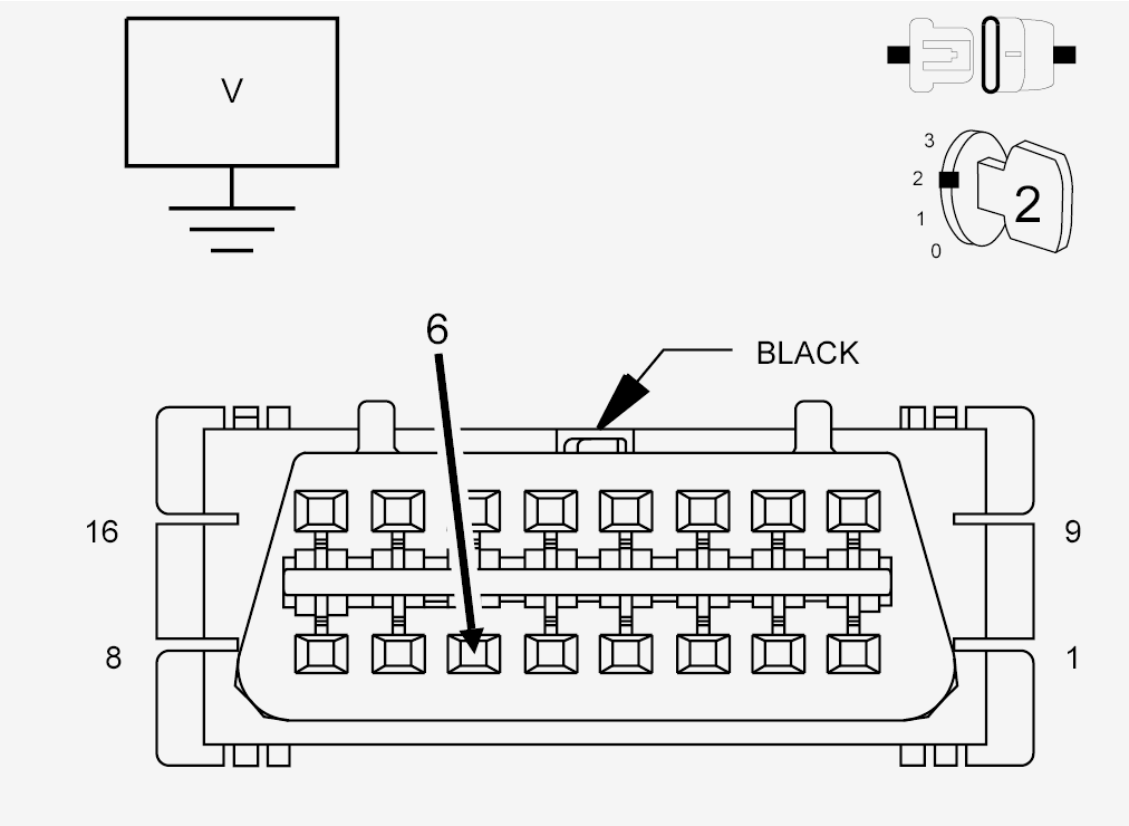

Fig. 45: Checking CAN C BUS (+) Circuit For A Short To Voltage
Courtesy of CHRYSLER GROUP, LLC

   1. Measure the voltage between the (D57) CAN C Bus (+) circuit and ground.

Is the voltage above 5.0 volts?

Yes

- Repair the short to voltage in the CAN C Bus (+) circuit. The short to voltage is present in one of the CAN C Bus circuits. Use the Star Connectors to isolate portions of the CAN C Bus in order to locate the concern.
- Perform the BODY VERIFICATION TEST. Refer to **STANDARD PROCEDURE** .

No

- Go To 9

9. **CHECK THE CAN C BUS (-) CIRCUIT FOR A SHORT TO GROUND**

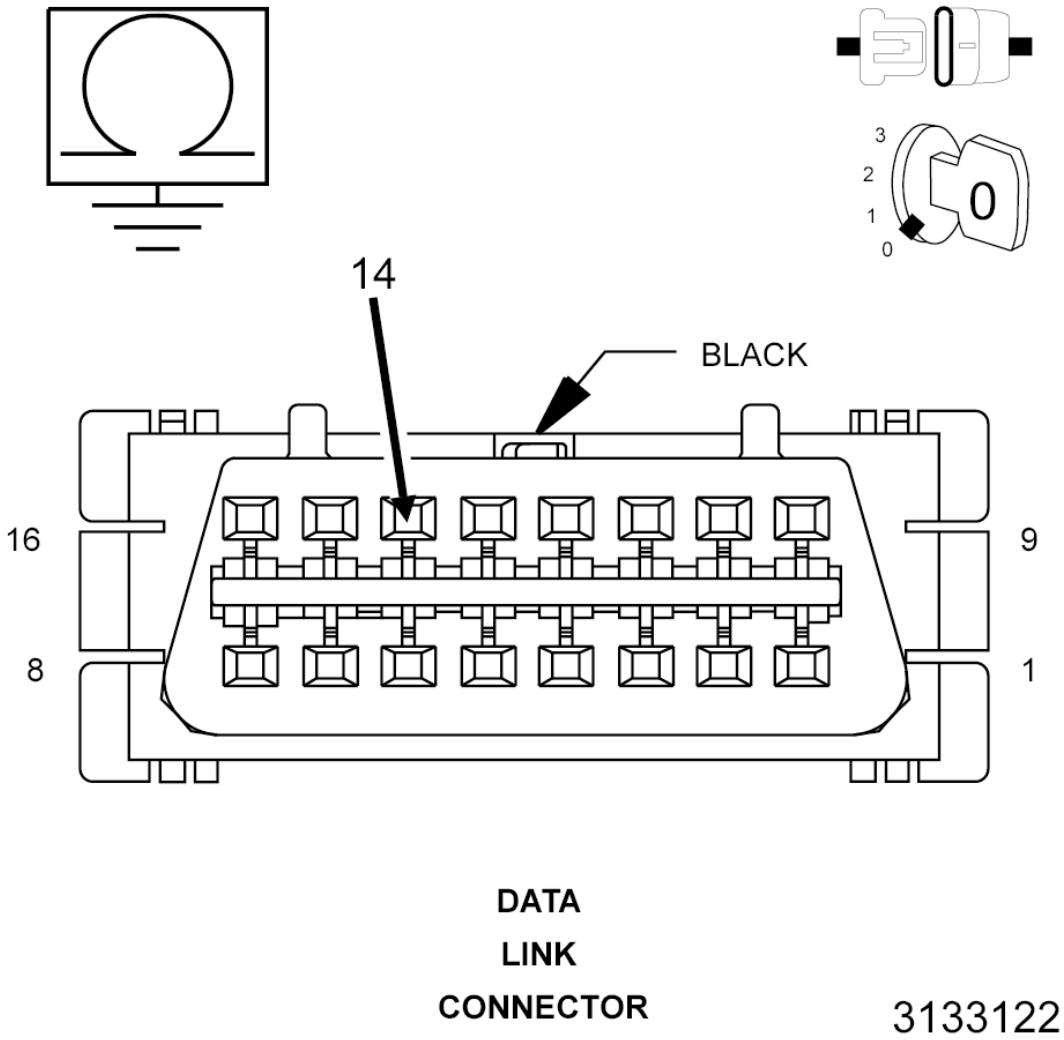

Fig. 46: Checking CAN C BUS (-) Circuit For A Short To Ground
Courtesy of CHRYSLER GROUP, LLC

1. Turn the ignition off.
2. Measure the resistance between ground and the (D58) CAN C Bus (-) circuit.

   Is the resistance below 10k Ohms?

   Yes

   - Repair the short to ground in the CAN C Bus (-) circuit. The short to ground is present in one of the CAN C Bus circuits. Use the Star Connectors to isolate portions of the CAN C Bus in order to locate the concern.
   - Perform the BODY VERIFICATION TEST. Refer to **STANDARD PROCEDURE** .

   No

   - Replace/update the module that set this DTC in accordance with the Service Information.
   - Perform the appropriate verification test for the module being replaced. If there is no verification test for the associated module perform the BODY VERIFICATION TEST. Refer to **STANDARD PROCEDURE** .

U11F5-87-LOST COMMUNICATION WITH EXTERNAL DISC MODULE - MISSING MESSAGE

For a complete wiring diagram, **refer to appropriate SYSTEM WIRING DIAGRAMS article** .

THEORY OF OPERATION

The primary communication network between electronic control modules is the Controller Area Network (CAN) data bus system. The Controller Area Network (CAN) data bus allows all electronic modules connected to the bus to share information with each other. Regardless of whether a message originates from a module on the higher speed CAN C (500K) Bus or on the lower speed bus, CAN Interior High Speed (IHS) (125K) Bus, the message structure and layout is similar, which allows the Body Control Module (BCM) to process and transfer messages between the CAN buses. The BCM stores Diagnostic Trouble Codes (DTCs) for certain bus network faults on the CAN C (500K) Bus and CAN IHS (125K) Bus.

All modules transmit and receive messages over one of these buses. Data exchange between the modules is achieved by serial transmission of encoded data messages (a form of transmission in which data bits are sent sequentially, one at a time, over a single line). Each module can both send and receive serial data simultaneously. Each data bit of a CAN Bus message is carried over the bus as a voltage differential between the two bus circuits which, when strung together, form a message. Each module uses arbitration to sort the message priority if two competing messages are attempting to be broadcast at the same time. Corruption of a single bit within a message will corrupt the entire message. Each message contains a Cyclic Redundancy Check (CRC) which specifies the message size exactly. If the message detected conflicts with the CRC the ECU receiving it will determine the message to be an error and consider that communication has not been possible. Diagnosis of this condition using a lab scope may reveal activity that appears to be Bus data messages even if no actual communication is possible. Communication problems that affect the whole bus, as a result of opens and terminal push outs are more likely to occur on data busses that operate at a high speed than a data bus that operates at a lower speed.

When an open circuit or terminal push out occurs one or more modules can become isolated from the remainder of the bus. The isolated module will attempt to communicate, but will not be able to receive messages or determine arbitration from other modules. Each time the isolated module attempts to communicate it alters the bus voltage on the intact bus circuit. Without functioning arbitration the isolated module alters the bus voltage while other bus messages are being sent thereby corrupting the messages on the remainder of the bus.

The CAN bus modules are connected in parallel to the two-wire bus using a twisted pair, where the wires are wrapped around each other to provide shielding from unwanted electromagnetic induction, thus preventing interference with the relatively low voltage signals being carried through them. While the CAN bus is operating (active), one of the bus wires will carry a higher voltage and is referred to as the CAN High or CAN bus (+) wire, while the other bus wire will carry a lower voltage and is referred to as the CAN Low or CAN bus (-) wire.

For additional information on the communication network and star connector locations, refer to **COMMUNICATION, DESCRIPTION** .

WHEN MONITORED

With the ignition on for at least five seconds.

Battery voltage between 10 and 16 volts.

Body Control Module (BCM) is configured correctly.

SET CONDITION

Bus messages not received from the External Disc Module (EDM) for approximately two to five seconds.

POSSIBLE CAUSES

Possible Causes
CAN IHS BUS (125K) (+) CIRCUIT SHORTED TO VOLTAGE
CAN IHS BUS (125K) (-) CIRCUIT SHORTED TO GROUND
DTCS RELATED TO BATTERY VOLTAGE, IGNITION, OR VIN MESSAGES
BCM NOT CONFIGURED CORRECTLY
EDM POWER AND GROUND
EXTERNAL DISC MODULE (EDM)
MODULE THAT SET THE DTC

DIAGNOSTIC TEST

1. **VERIFY DTC IS ACTIVE**

NOTE: **Make sure the battery voltage is between 10 and 16 volts before proceeding.**

1. With the scan tool, read active DTCs.

   Is this DTC active?

   Yes

   - Go To 2

   No

   - Refer to **DIAGNOSIS AND TESTING** and perform the STORED LOST COMMUNICATION DTC diagnostic procedure.

2. **CHECK FOR ANY OF THE FOLLOWING ACTIVE DTCS**
   1. With the scan tool, read active DTCs from all modules.

      NOTE: Check for BCM configuration, CAN Interior Bus hardware electrical, VIN Missing/Mismatch, battery or ignition related DTCs.

      Does the scan tool display any active DTCs to the conditions listed above?

      Yes

      - Go to the **DTC INDEX** and perform the appropriate diagnostic procedure.

      No

      - Go To 3

3. **VERIFY THE EDM IS ACTIVE ON THE BUS**
   1. Turn the ignition on.
   2. With the scan tool, verify the EDM is active on the bus.

      Is the EDM active on the bus?

      Yes

      - Go To 4

      No

      - Refer to **DIAGNOSIS AND TESTING** and perform the NO RESPONSE FROM EDM diagnostic procedure.

4. **CHECK FOR ADDITIONAL COMMUNICATION RELATED DTCS**
   1. With the scan tool, read all the DTCs.

Is there more than one module with active DTCs "Logged Against" the EDM?

Yes

- Replace/update the External Disc Module (EDM) in accordance with the Service Information.
- Perform the BODY VERIFICATION TEST. Refer to **STANDARD PROCEDURE** .

No

- Go To 5

5. **CLEAR DTC IN MODULE SETTING FAULT**
   1. With the scan tool, select the module setting the DTC against the EDM.
   2. Clear active DTCs.

   Is this DTC still active?

   Yes

   - Replace/update the module that set this DTC in accordance with the Service Information.
   - Perform the appropriate verification test for the module being replaced. If there is no verification test for the associated module perform the BODY VERIFICATION TEST. Refer to **STANDARD PROCEDURE** .

   No

   - Go To 6

6. **CYCLE IGNITION**
   1. Cycle the ignition from RUN to OFF three times ending with the key in the RUN position.

   Does this DTC become active?

   Yes

   - Go To 7

   No

   - The condition is not present at this time. Using the wiring diagrams as a guide, check all related splices and connectors for signs of water intrusion, corrosion, pushed out or bent terminals, and correct pin tension.
   - Perform the appropriate verification test for the module. If there is no verification test for the associated module perform the BODY VERIFICATION TEST. Refer to **STANDARD PROCEDURE** .

7. **CHECK FOR ADDITIONAL LOST COMMUNICATION FAULTS**
   1. With the scan tool, view the modules.

      Does the BCM and other CAN IHS BUS modules show Lost Communication with the remaining CAN IHS BUS modules?

      Yes

      - Go To 8

      No

      - Replace/update the module that set this DTC in accordance with the Service Information.
      - Perform the appropriate verification test for the module being replaced. If there is no verification test for the associated module perform the BODY VERIFICATION TEST. Refer to **STANDARD PROCEDURE** .
8. **CHECK THE CAN IHS BUS (125K) (+) CIRCUIT FOR A SHORT TO VOLTAGE**

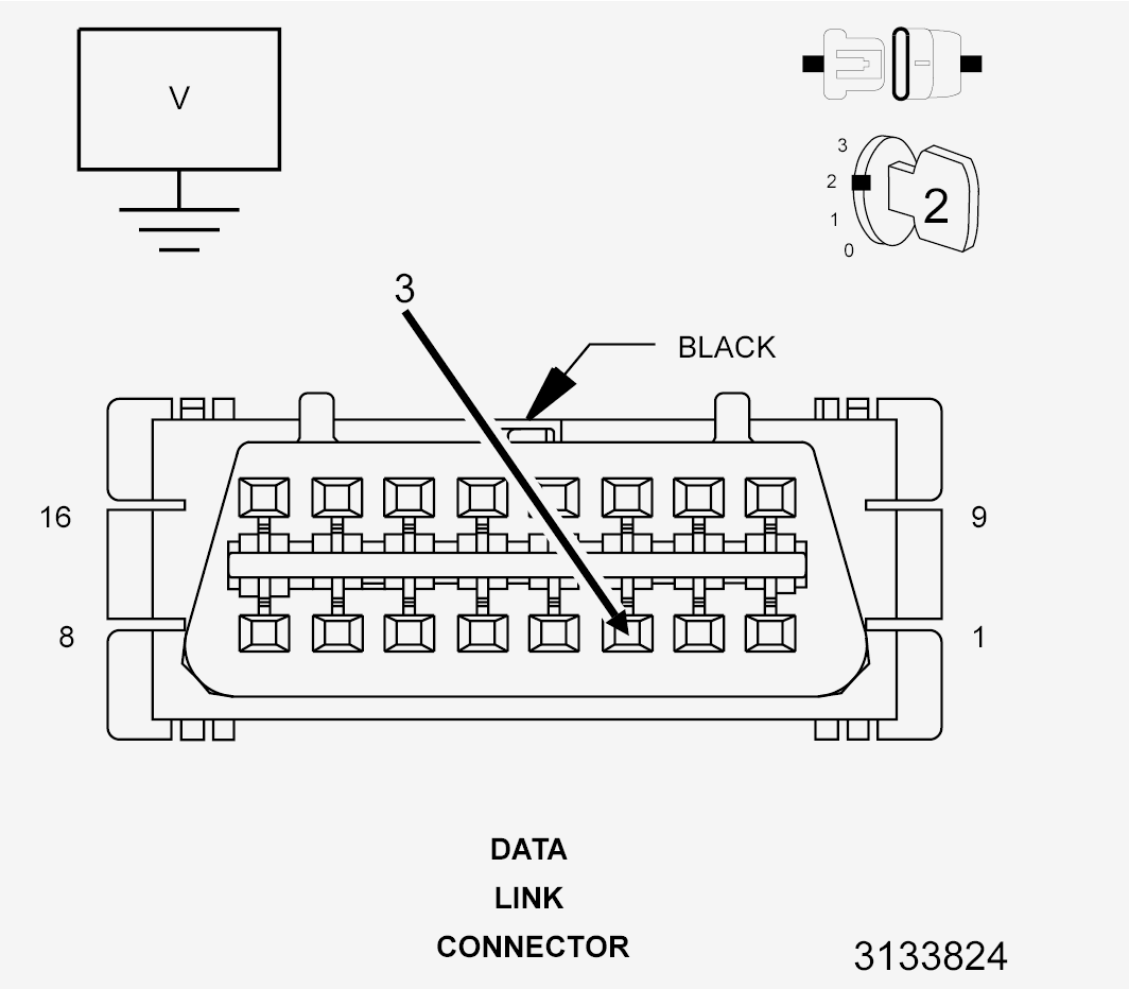

Fig. 47: Checking CAN IHS BUS (125K) (+) Circuit For A Short To Voltage
Courtesy of CHRYSLER GROUP, LLC

1. Measure the voltage between the (D157) CAN IHS Bus (125K) (+) circuit and ground.

   Is the voltage above 5.0 volts?

   Yes

   - Repair the short to voltage in the CAN IHS Bus (125K) (+) circuit. The short to voltage is present in one of the CAN IHS Bus (125K) (+) circuits. Use the Star Connectors to isolate portions of the CAN IHS Bus (125K) (+) in order to locate the concern.
   - Perform the BODY VERIFICATION TEST. Refer to **STANDARD PROCEDURE** .

   No

   - Go To 9

9. **CHECK THE CAN IHS BUS (125K) (-) CIRCUIT FOR A SHORT TO GROUND**

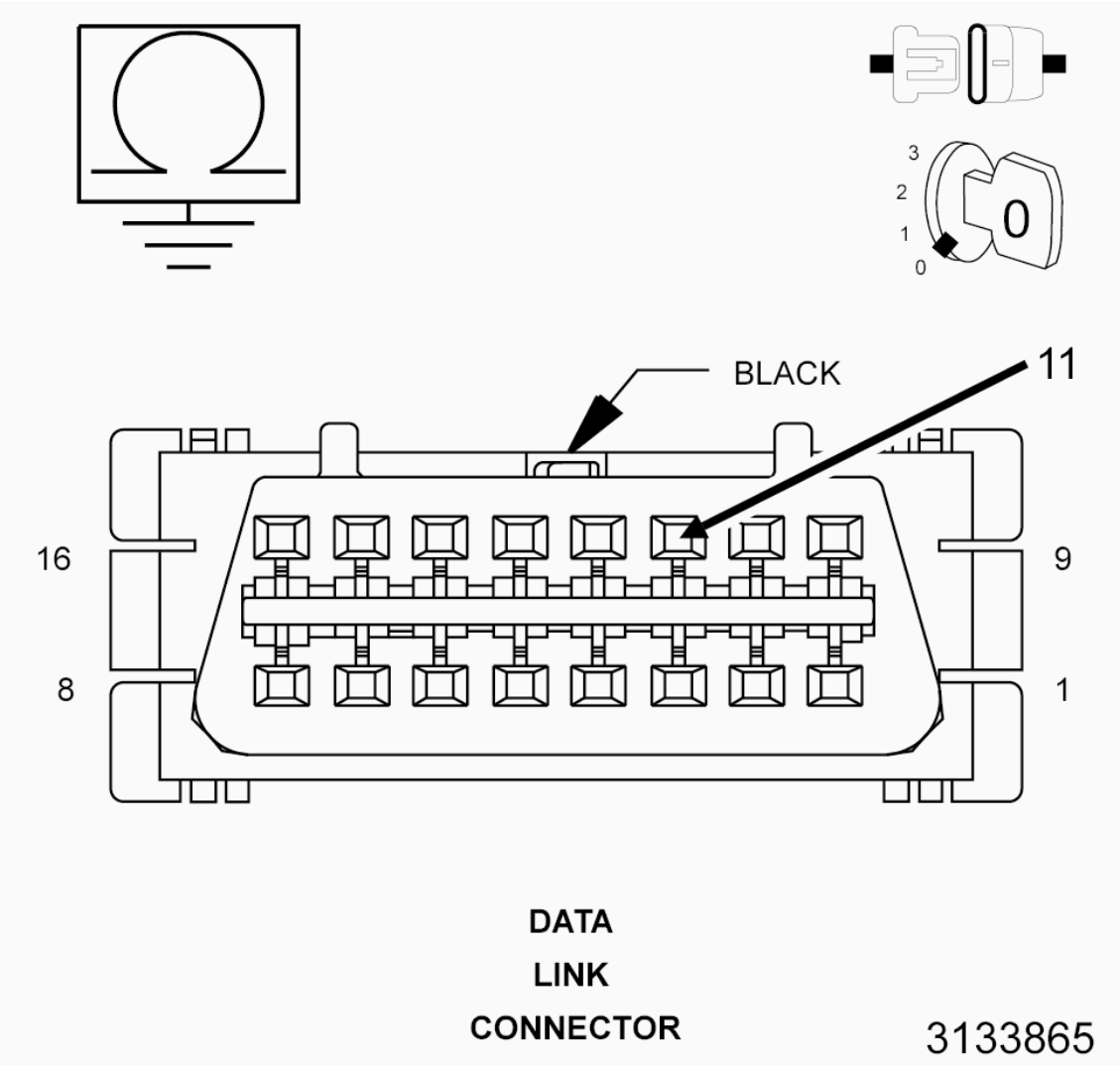

Fig. 48: Checking CAN IHS BUS (125K) (-) Circuit For A Short To Ground
Courtesy of CHRYSLER GROUP, LLC

1. Turn the ignition off.
2. Measure the resistance between ground and the (D158) CAN IHS Bus (125K) (-) circuit.

   Is the resistance below 10k Ohms?

   Yes

   - Repair the short to ground in the CAN IHS Bus (125K) (-) circuit. The short to ground is present in one of the CAN IHS Bus (125K) (-) circuits. Use the Star Connectors to isolate portions of the CAN IHS Bus (125K) (-) in order to locate the concern.
   - Perform the BODY VERIFICATION TEST. Refer to **STANDARD PROCEDURE** .

   No

- Replace/update the module that set this DTC in accordance with the Service Information.
- Perform the appropriate verification test for the module being replaced. If there is no verification test for the associated module perform the BODY VERIFICATION TEST. Refer to **STANDARD PROCEDURE** .

U1207-87-LOST COMMUNICATION WITH TERRAIN SWITCH BANK MODULE - MISSING MESSAGE

For a complete wiring diagram, **refer to appropriate SYSTEM WIRING DIAGRAMS article** .

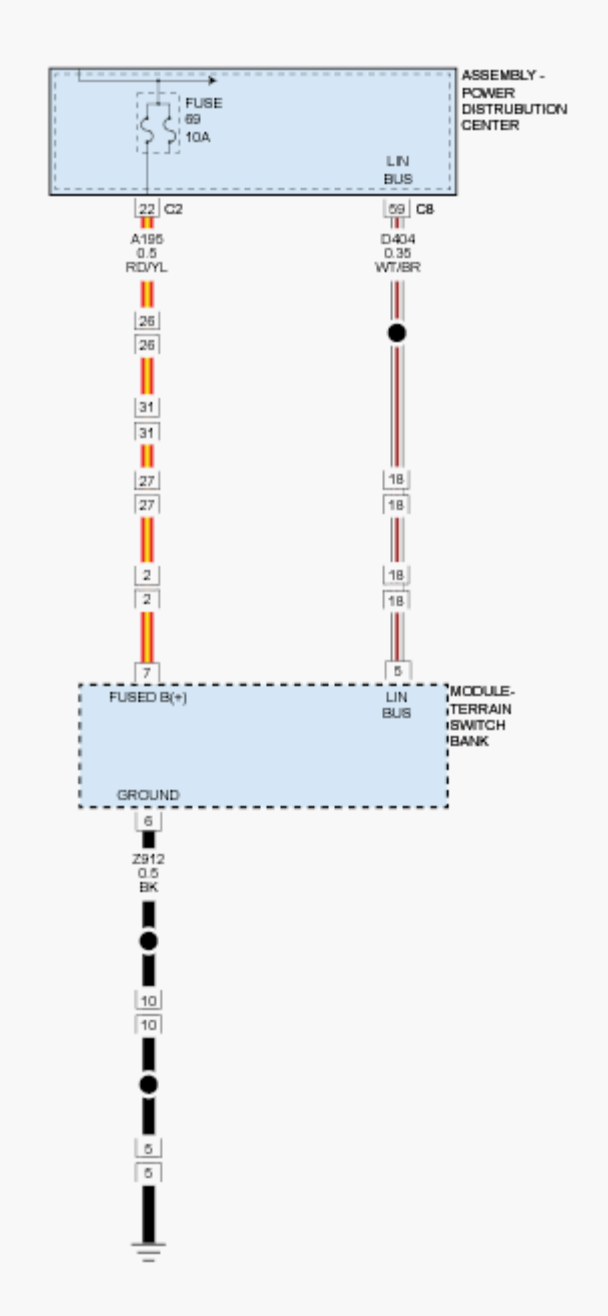

Fig. 49: Terrain Switch Bank Module Circuit Diagram
Courtesy of CHRYSLER GROUP, LLC

WHEN MONITORED

With the ignition on.

SET CONDITION

The Body Control Module (BCM) does not receive information from the Terrain Switch Bank Module (TSBM) for greater than 3 seconds.

POSSIBLE CAUSES

Possible Causes
(A195) FUSED B(+) CIRCUIT OPEN OR SHORTED TO GROUND
(Z912) GROUND CIRCUIT OPEN
(D404) LIN BUS CIRCUIT OPEN
TERRAIN SWITCH BANK MODULE (TSBM)

DIAGNOSTIC TEST

1. **CHECK FOR AN ACTIVE DTC**
    1. Turn the ignition on.
    2. With the scan tool, read DTCs.

    Does the scan tool display this DTC as active?

    Yes

    - Go To 2

    No

    - Test complete. The condition or conditions that originally set this DTC are not present at this time. Using the wiring diagrams as a guide, check all related splices and connectors for signs of water intrusion, corrosion, pushed out or bent terminals and correct pin tension.
    - Perform the BODY VERIFICATION TEST. Refer to **STANDARD PROCEDURE** .
2. **CHECK THE (A195) FUSED B(+) CIRCUIT FOR AN OPEN**
    1. Turn the ignition off.
    2. Disconnect the Terrain Switch Bank Module (TSBM) harness connector.
    3. Turn the ignition on.
    4. Using a 12-volt test light connected to ground, check the (A195) Fused B(+) circuit at the TSBM harness connector.

Does the test light illuminate brightly?

Yes

- Go To 3

No

- Repair the open or short to ground in the (A195) Fused B(+) circuit.
- Perform the BODY VERIFICATION TEST. Refer to **STANDARD PROCEDURE** .

3. **CHECK THE (Z912) GROUND CIRCUIT FOR AN OPEN**
   1. Turn the ignition off.
   2. Using a 12-volt test light connected to 12-volts, check the (Z912) Ground circuit at the TSBM harness connector.

   Does the test light illuminate brightly?

   Yes

   - Go To 4

   No

   - Repair the open in the (Z912) Ground circuit.
   - Perform the BODY VERIFICATION TEST. Refer to **STANDARD PROCEDURE** .

4. **CHECK THE (D404) LIN BUS CIRCUIT FOR AN OPEN**
   1. Turn the ignition on.
   2. Measure the voltage between ground and the (D404) LIN Bus circuit at the TSBM harness connector.

   Is the voltage above 5.0 volts?

   Yes

   - Replace the Terrain Switch Bank Module (TSBM) in accordance with the Service Information.
   - Perform the BODY VERIFICATION TEST. Refer to **STANDARD PROCEDURE** .

   No

   - Repair the open in the (D404) BCM LIN Bus circuit.
   - Perform the BODY VERIFICATION TEST. Refer to **STANDARD PROCEDURE** .

U1212-87-LOST COMMUNICATION WITH LIN ULTRASONIC AND ANTI-TILT MODULE-

MISSING MESSAGE

For a complete wiring diagram, **refer to appropriate SYSTEM WIRING DIAGRAMS article** .

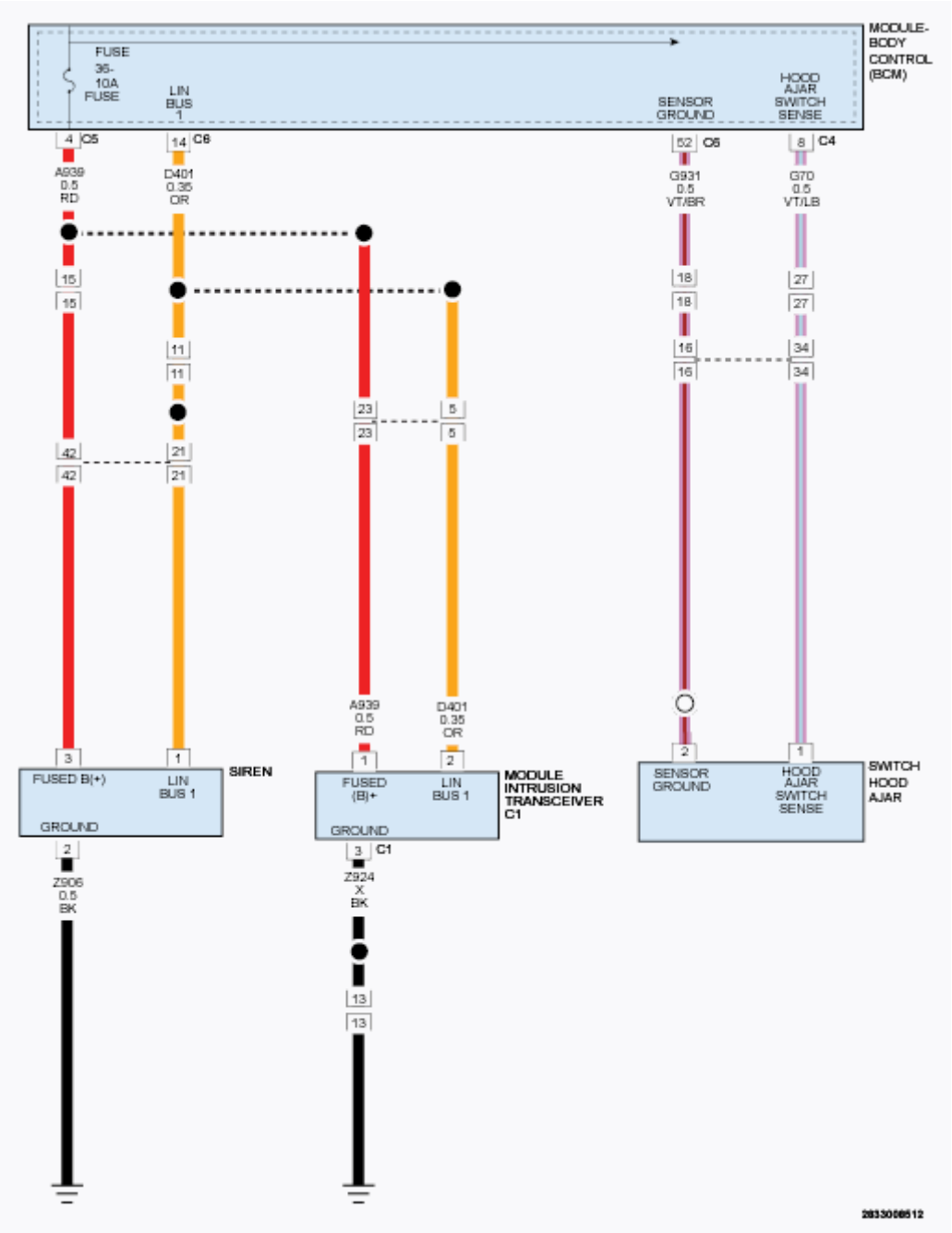

Fig. 50: Intrusion Module, Siren & Hood Switch Circuit Diagram
Courtesy of CHRYSLER GROUP, LLC

WHEN MONITORED

With the ignition on.

SET CONDITION

The Body Control Module (BCM) does not receive information from the Ultrasonic Alarm Module (UAM).

POSSIBLE CAUSES

Possible Causes
(A939) FUSED B(+) CIRCUIT OPEN
(Z924) GROUND CIRCUIT OPEN
LIN BUS CIRCUIT OPEN
ULTRASONIC ALARM MODULE (UAM)

DIAGNOSTIC TEST

1. **CHECK FOR AN ACTIVE DTC**
    1. Turn the ignition on.
    2. With the scan tool, read DTCs.

    Does the scan tool display this DTC as active?

    Yes

    - Go To 2

    No

    - Test complete. The condition or conditions that originally set this DTC are not present at this time. Using the wiring diagrams as a guide, check all related splices and connectors for signs of water intrusion, corrosion, pushed out or bent terminals, and correct pin tension.
    - Perform the BODY VERIFICATION TEST. Refer to **STANDARD PROCEDURE** .
2. **CHECK THE (A939) FUSED B(+) CIRCUIT FOR AN OPEN**
    1. Turn the ignition off.
    2. Disconnect the Ultrasonic Alarm Module (UAM) harness connector.
    3. Turn the ignition on.
    4. Using a 12-volt test light connected to ground, check the (A939) Fused B(+) circuit at the Ultrasonic Alarm Module (UAM) harness connector.

    Does the test light illuminate brightly?

    Yes

    - Go To 3

    No

- Repair the open or short to ground in the (A939) Fused B(+) circuit.
- Perform the BODY VERIFICATION TEST. Refer to **STANDARD PROCEDURE** .

3. **CHECK THE (Z924) GROUND CIRCUIT FOR AN OPEN**
   1. Turn the ignition off.
   2. Using a 12-volt test light connected to 12-volts, check the (Z924) Ground circuit at the Ultrasonic Alarm Module (UAM) harness connector.

      Does the test light illuminate brightly?

      Yes

      - Go To 4

      No

      - Repair the open in the (Z924) Ground circuit.
      - Perform the BODY VERIFICATION TEST. Refer to **STANDARD PROCEDURE** .
4. **CHECK THE (D401) LIN BUS CIRCUIT FOR AN OPEN**
   1. Turn the ignition on.
   2. Measure the voltage between ground and the (D401) LIN Bus circuit at the Ultrasonic Alarm Module (UAM) harness connector.

      Is the voltage above 5.0 volts?

      Yes

      - Replace the Ultrasonic Alarm Module (UAM) in accordance with the Service Information. Refer to **MODULE, ULTRASONIC AND ANTI-TILT, REMOVAL** .
      - Perform the BODY VERIFICATION TEST. Refer to **STANDARD PROCEDURE** .

      No

      - Repair the open in the (D401) LIN Bus circuit.
      - Perform the BODY VERIFICATION TEST. Refer to **STANDARD PROCEDURE** .

U1215-87-LOST COMMUNICATION WITH FORWARD FACING CAMERA - MISSING MESSAGE

For a complete wiring diagram, **refer to appropriate SYSTEM WIRING DIAGRAMS article** .

THEORY OF OPERATION

The primary communication network between electronic control modules is the Controller Area Network (CAN) data bus system. The Controller Area Network (CAN) data bus allows all electronic modules connected to the bus to share information with each other. Regardless of whether a message originates from a module on

the higher speed CAN C (500K) Bus or on the lower speed bus, CAN Interior High Speed (IHS) (125K) Bus, the message structure and layout is similar, which allows the Body Control Module (BCM) to process and transfer messages between the CAN buses. The BCM stores Diagnostic Trouble Codes (DTCs) for certain bus network faults on the CAN C (500K) Bus and CAN IHS (125K) Bus.

All modules transmit and receive messages over one of these buses. Data exchange between the modules is achieved by serial transmission of encoded data messages (a form of transmission in which data bits are sent sequentially, one at a time, over a single line). Each module can both send and receive serial data simultaneously. Each data bit of a CAN Bus message is carried over the bus as a voltage differential between the two bus circuits which, when strung together, form a message. Each module uses arbitration to sort the message priority if two competing messages are attempting to be broadcast at the same time. Corruption of a single bit within a message will corrupt the entire message. Each message contains a Cyclic Redundancy Check (CRC) which specifies the message size exactly. If the message detected conflicts with the CRC the ECU receiving it will determine the message to be an error and consider that communication has not been possible. Diagnosis of this condition using a lab scope may reveal activity that appears to be Bus data messages even if no actual communication is possible. Communication problems that affect the whole bus, as a result of opens and terminal push outs are more likely to occur on data busses that operate at a high speed than a data bus that operates at a lower speed.

When an open circuit or terminal push out occurs one or more modules can become isolated from the remainder of the bus. The isolated module will attempt to communicate, but will not be able to receive messages or determine arbitration from other modules. Each time the isolated module attempts to communicate it alters the bus voltage on the intact bus circuit. Without functioning arbitration the isolated module alters the bus voltage while other bus messages are being sent thereby corrupting the messages on the remainder of the bus.

The CAN bus modules are connected in parallel to the two-wire bus using a twisted pair, where the wires are wrapped around each other to provide shielding from unwanted electromagnetic induction, thus preventing interference with the relatively low voltage signals being carried through them. While the CAN bus is operating (active), one of the bus wires will carry a higher voltage and is referred to as the CAN High or CAN bus (+) wire, while the other bus wire will carry a lower voltage and is referred to as the CAN Low or CAN bus (-) wire.

For additional information on the communication network and star connector locations, refer to **COMMUNICATION, DESCRIPTION** .

WHEN MONITORED

With the ignition on for at least five seconds.

Battery voltage between 10 and 16 volts.

Body Control Module (BCM) is configured correctly.

SET CONDITION

Bus messages not received from the Forward Facing Camera for approximately two to five seconds.

POSSIBLE CAUSES

Possible Causes
CAN C BUS (+) CIRCUIT SHORTED TO VOLTAGE
CAN C BUS (-) CIRCUIT SHORTED TO GROUND
DTCS RELATED TO BATTERY VOLTAGE, IGNITION, OR VIN MESSAGES
BCM NOT CONFIGURED CORRECTLY
FORWARD FACING CAMERA POWER AND GROUND
FORWARD FACING CAMERA
MODULE THAT SET THE DTC

DIAGNOSTIC TEST

1. **VERIFY DTC IS ACTIVE**

   NOTE: Make sure the battery voltage is between 10 and 16 volts before proceeding.

   1. With the scan tool, read active DTCs.

      Is this DTC active?

      Yes

      - Go To 2

      No

      - Refer to **DIAGNOSIS AND TESTING** and perform the STORED LOST COMMUNICATION DTCS diagnostic procedure.

2. **CHECK FOR ANY OF THE FOLLOWING ACTIVE DTCS**
   1. With the scan tool, read all active DTCs from all modules.

      NOTE: Check for BCM configuration, CAN C hardware electrical, VIN Missing/Mismatch, battery or ignition related DTCs.

      Does the scan tool display any active DTCs to the conditions listed above?

      Yes

      - Go to the **DTC INDEX** and perform the appropriate diagnostic procedure.

      No

- Go To 3

3. **VERIFY THE FORWARD FACING CAMERA IS ACTIVE ON THE BUS**
   1. Turn the ignition on.
   2. With the scan tool, verify the Forward Facing Camera is active on the bus.

      Is the Forward Facing Camera active on the bus?

      Yes

      - Go To 4

      No

      - Refer to **DIAGNOSIS AND TESTING** and perform the NO RESPONSE FROM FORWARD FACING CAMERA diagnostic procedure.
4. **CHECK FOR ADDITIONAL COMMUNICATION RELATED DTCS**
   1. With the scan tool, read all the DTCs.

      Is there more than one module with active DTCs "Logged Against" the Forward Facing Camera?

      Yes

      - Replace/update the Forward Facing Camera in accordance with the Service Information.
      - Perform the BODY VERIFICATION TEST. Refer to **STANDARD PROCEDURE** .

      No

      - Go To 5
5. **CLEAR DTC IN MODULE SETTING FAULT**
   1. With the scan tool, select the module setting the DTC against the Forward Facing Camera.
   2. Clear active DTCs.

      Is this DTC still active?

      Yes

      - Replace/update the module that set this DTC in accordance with the Service Information.
      - Perform the appropriate verification test for the module being replaced. If there is no verification test for the associated module perform the BODY VERIFICATION TEST. Refer to **STANDARD PROCEDURE** .

      No

- Go To 6

6. **CYCLE IGNITION**
   1. Cycle the ignition from RUN to OFF three times ending with the key in the RUN position.

      Does this DTC become active?

      Yes

      - Go To 7

      No

      - The condition is not present at this time. Using the wiring diagrams as a guide, check all related splices and connectors for signs of water intrusion, corrosion, pushed out or bent terminals, and correct pin tension.
      - Perform the appropriate verification test for the module. If there is no verification test for the associated module perform the BODY VERIFICATION TEST. Refer to **STANDARD PROCEDURE** .
7. **CHECK FOR ADDITIONAL LOST COMMUNICATION FAULTS**
   1. With the scan tool, view the modules.

      Does the BCM and other CAN C BUS modules show Lost Communication with the remaining CAN C BUS modules?

      Yes

      - Go To 8

      No

      - Replace/update the module that set this DTC in accordance with the Service Information.
      - Perform the appropriate verification test for the module being replaced. If there is no verification test for the associated module perform the BODY VERIFICATION TEST. Refer to **STANDARD PROCEDURE** .
8. **CHECK THE CAN C BUS (+) CIRCUIT FOR A SHORT TO VOLTAGE**

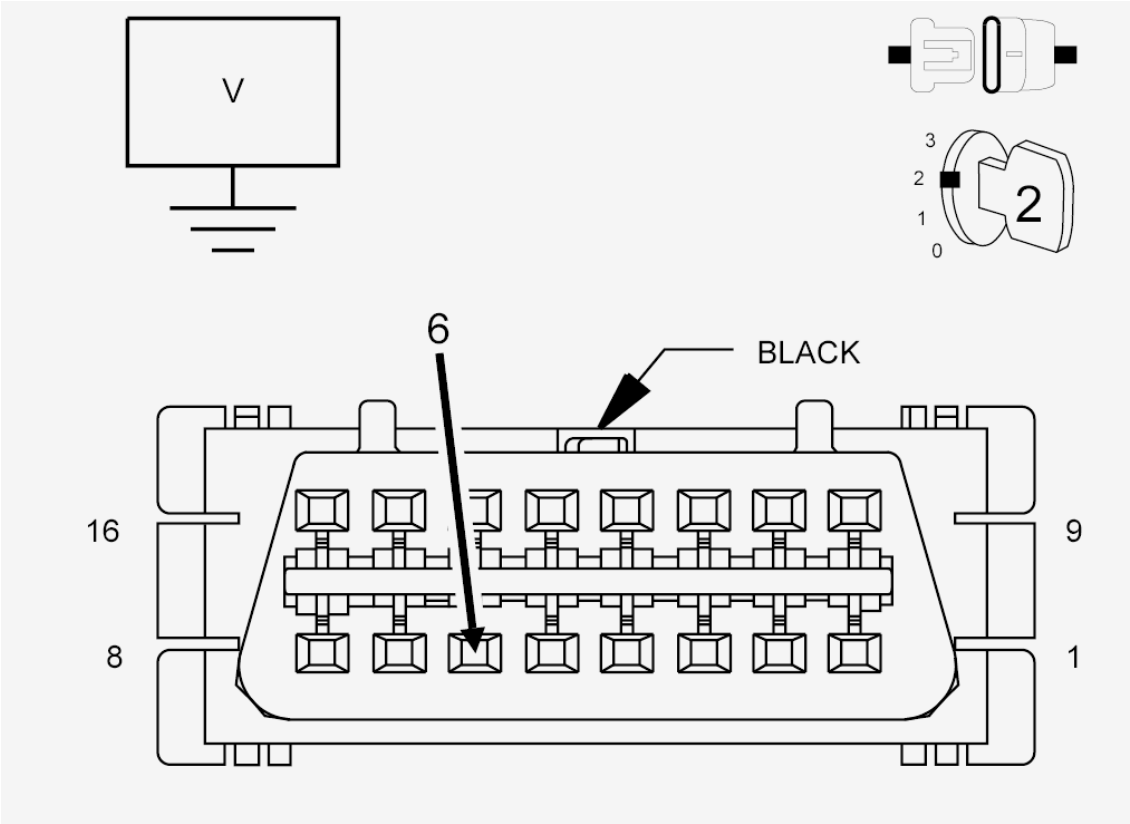

Fig. 51: Checking CAN C BUS (+) Circuit For A Short To Voltage
Courtesy of CHRYSLER GROUP, LLC

1. Measure the voltage between the (D57) CAN C Bus (+) circuit and ground.

   Is the voltage above 5.0 volts?

   Yes

   - Repair the short to voltage in the CAN C Bus (+) circuit. The short to voltage is present in one of the CAN C Bus circuits. Use the Star Connectors to isolate portions of the CAN C Bus in order to locate the concern.
   - Perform the BODY VERIFICATION TEST. Refer to **STANDARD PROCEDURE** .

   No

   - Go To 9

9. **CHECK THE CAN C BUS (-) CIRCUIT FOR A SHORT TO GROUND**

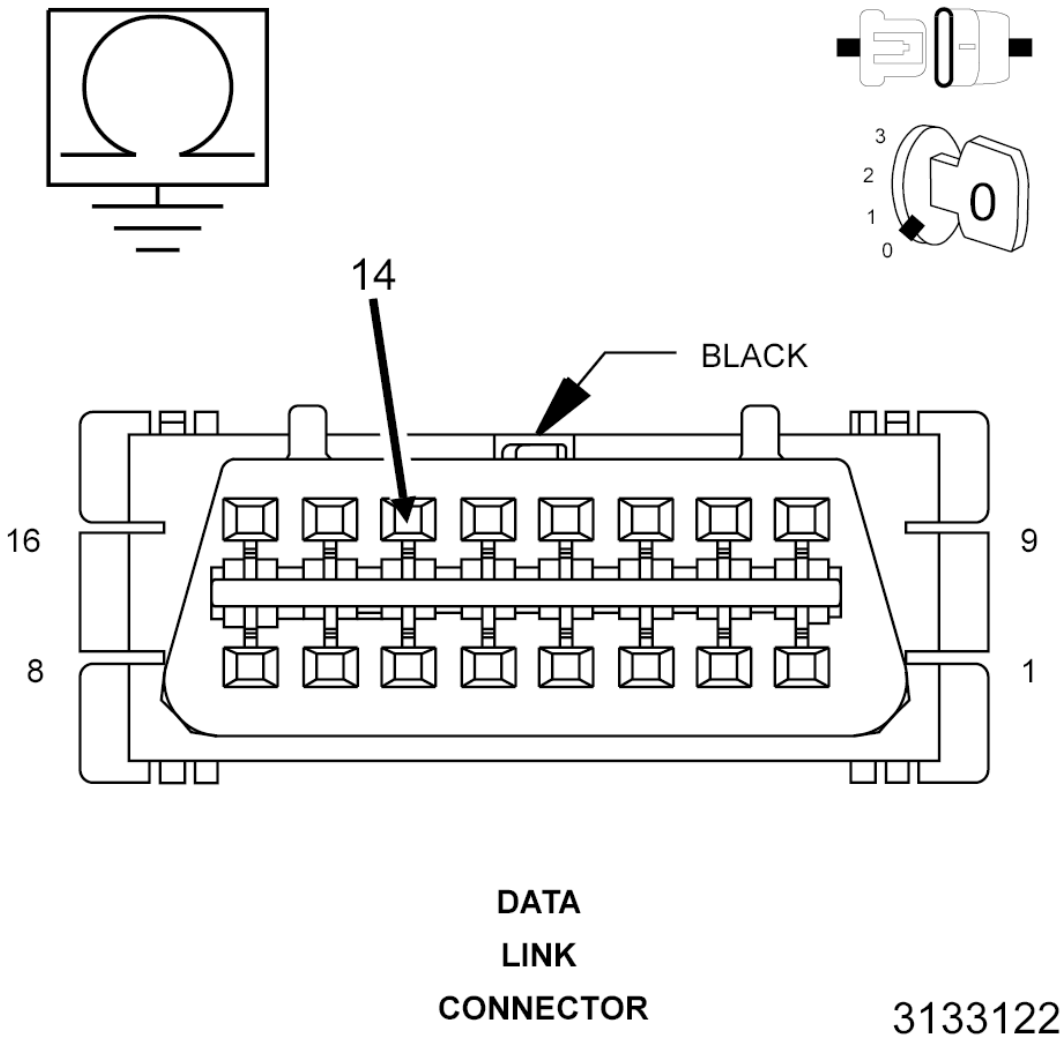

Fig. 52: Checking CAN C BUS (-) Circuit For A Short To Ground
Courtesy of CHRYSLER GROUP, LLC

1. Turn the ignition off.
2. Measure the resistance between ground and the (D58) CAN C Bus (-) circuit.

   Is the resistance below 10k Ohms?

   Yes

   - Repair the short to ground in the CAN C Bus (-) circuit. The short to ground is present in one of the CAN C Bus circuits. Use the Star Connectors to isolate portions of the CAN C Bus in order to locate the concern.
   - Perform the BODY VERIFICATION TEST. Refer to **STANDARD PROCEDURE** .

   No

- Replace/update the module that set this DTC in accordance with the Service Information.
- Perform the appropriate verification test for the module being replaced. If there is no verification test for the associated module perform the BODY VERIFICATION TEST. Refer to **STANDARD PROCEDURE** .

U1223-87-LOST COMMUNICATION WITH WIRELESS CHARGING PAD MODULE - MISSING MESSAGE

For a complete wiring diagram, **refer to appropriate SYSTEM WIRING DIAGRAMS article** .

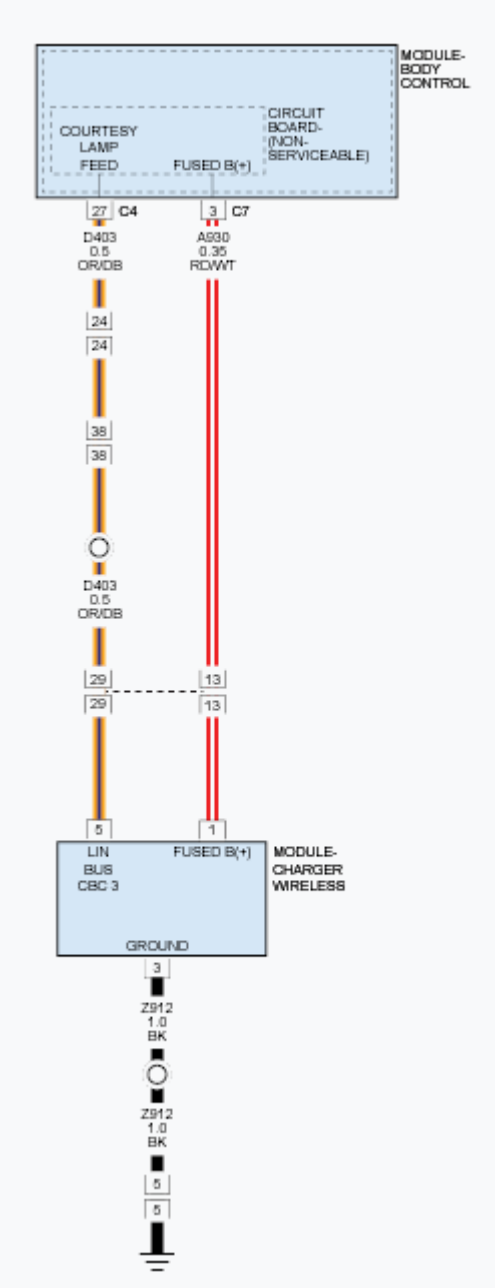

Fig. 53: Wireless Charging Pad Module Circuit Diagram
Courtesy of CHRYSLER GROUP, LLC

WHEN MONITORED

With the ignition on.

SET CONDITION

The Body Control Module (BCM) does not receive information from the Wireless Charging Pad Module for greater than 3 seconds.

POSSIBLE CAUSES

Possible Causes
(A930) FUSED B(+) CIRCUIT OPEN OR SHORTED TO GROUND
(Z912) GROUND CIRCUIT OPEN
(D403) LIN 3 BUS CIRCUIT OPEN
WIRELESS CHARGING PAD MODULE

DIAGNOSTIC TEST

1. **CHECK FOR AN ACTIVE DTC**
    1. Turn the ignition on.
    2. With the scan tool, read DTCs.

    Does the scan tool display this DTC as active?

    Yes

    - Go To 2

    No

    - Test complete. The condition or conditions that originally set this DTC are not present at this time. Using the wiring diagrams as a guide, check all related splices and connectors for signs of water intrusion, corrosion, pushed out or bent terminals and correct pin tension.
    - Perform the BODY VERIFICATION TEST. Refer to **STANDARD PROCEDURE** .
2. **CHECK THE (A930) FUSED B(+) CIRCUIT FOR AN OPEN**
    1. Turn the ignition off.
    2. Disconnect the Wireless Charging Pad Module harness connector.
    3. Turn the ignition on.
    4. Using a 12-volt test light connected to ground, check the (A930) Fused B(+) circuit at the Wireless Charging Pad Module harness connector.

Does the test light illuminate brightly?

Yes

- Go To 3

No

- Repair the open or short to ground in the (A930) Fused B(+) circuit.
- Perform the BODY VERIFICATION TEST. Refer to **STANDARD PROCEDURE** .

3. **CHECK THE (Z912) GROUND CIRCUIT FOR AN OPEN**
   1. Turn the ignition off.
   2. Using a 12-volt test light connected to 12-volts, check the (Z912) Ground circuit at the Wireless Charging Pad Module harness connector.

   Does the test light illuminate brightly?

   Yes

   - Go To 4

   No

   - Repair the open in the (Z912) Ground circuit.
   - Perform the BODY VERIFICATION TEST. Refer to **STANDARD PROCEDURE** .
4. **CHECK THE (D403) LIN 3 BUS CIRCUIT FOR AN OPEN**
   1. Turn the ignition on.
   2. Measure the voltage between ground and the (D403) LIN 3 Bus circuit at the Wireless Charging Pad Module harness connector.

   Is the voltage above 5.0 volts?

   Yes

   - Replace the Wireless Charging Pad Module in accordance with the Service Information.
   - Perform the BODY VERIFICATION TEST. Refer to **STANDARD PROCEDURE** .

   No

   - Repair the open in the (D403) LIN 3 Bus circuit.
   - Perform the BODY VERIFICATION TEST. Refer to **STANDARD PROCEDURE** .

U1224-87-LOST COMMUNICATION WITH VOLTAGE STABILITY MODULE - MISSING MESSAGE

For a complete wiring diagram, **refer to appropriate SYSTEM WIRING DIAGRAMS article** .

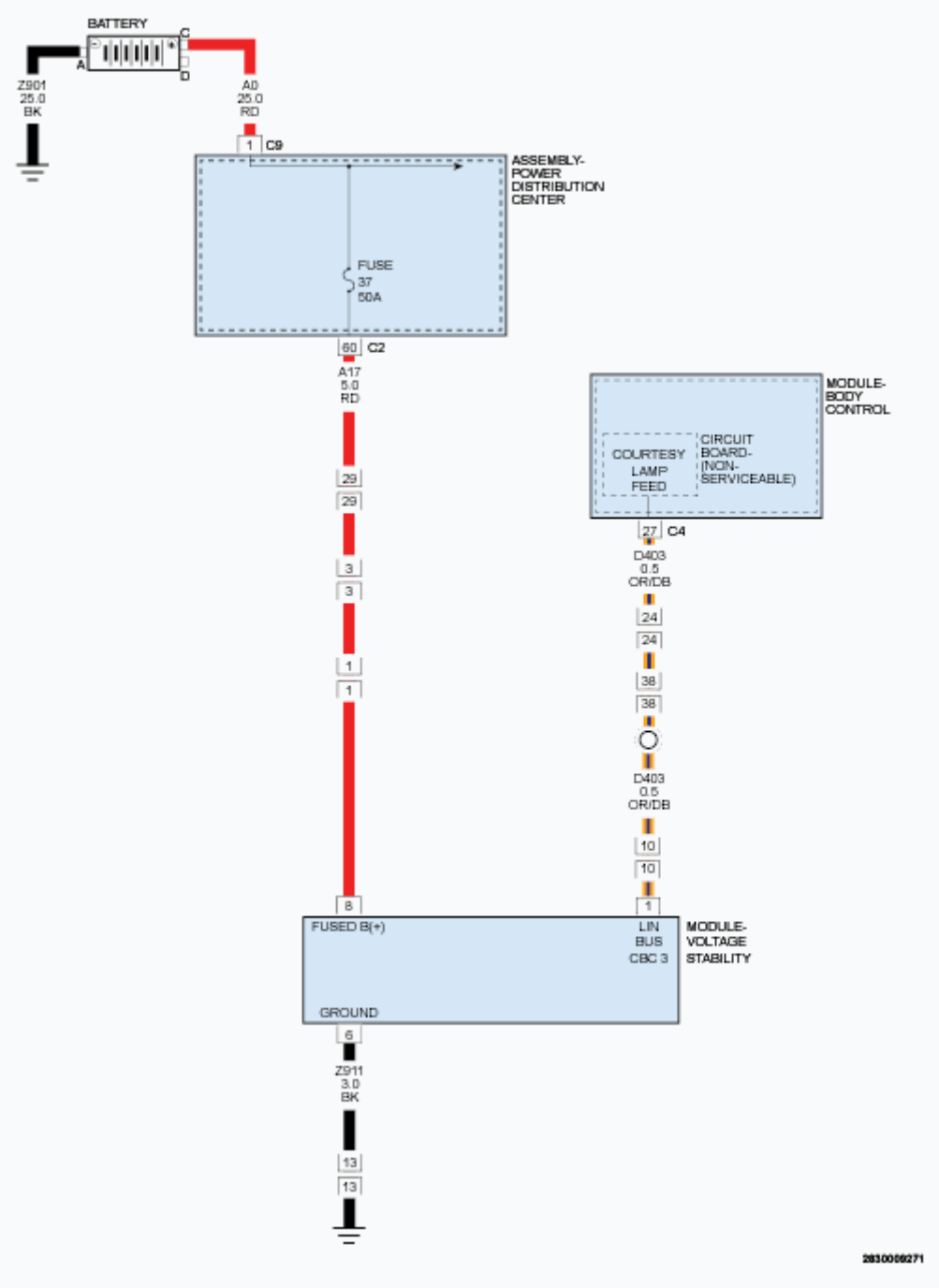

Fig. 54: Voltage Stability Module Circuit Diagram
Courtesy of CHRYSLER GROUP, LLC

WHEN MONITORED

With the ignition on.

SET CONDITION

The Body Control Module (BCM) does not receive information from the Voltage Stability Module for greater than 3 seconds.

POSSIBLE CAUSES

Possible Causes
(F944) FUSED IGNITION RUN/START CIRCUIT OPEN OR SHORTED TO GROUND
(Z911) GROUND CIRCUIT OPEN
(D403) LIN 3 BUS CIRCUIT OPEN
VOLTAGE STABILITY MODULE

DIAGNOSTIC TEST

1. **CHECK FOR AN ACTIVE DTC**
    1. Turn the ignition on.
    2. With the scan tool, read DTCs.

    Does the scan tool display this DTC as active?

    Yes

    - Go To 2

    No

    - Test complete. The condition or conditions that originally set this DTC are not present at this time. Using the wiring diagrams as a guide, check all related splices and connectors for signs of water intrusion, corrosion, pushed out or bent terminals and correct pin tension.
    - Perform the BODY VERIFICATION TEST. Refer to **STANDARD PROCEDURE** .
2. **CHECK THE (F944) FUSED IGNITION RUN/START CIRCUIT FOR AN OPEN**
    1. Turn the ignition off.
    2. Disconnect the Voltage Stability Module harness connector.
    3. Turn the ignition on.
    4. Using a 12-volt test light connected to ground, check the (F944) Fused Ignition Run/Start circuit at the Voltage Stability Module harness connector.

    Does the test light illuminate brightly?

    Yes

    - Go To 3

No

- Repair the open or short to ground in the (A929) Fused B(+) circuit.
- Perform the BODY VERIFICATION TEST. Refer to **STANDARD PROCEDURE** .

3. **CHECK THE (Z911) GROUND CIRCUIT FOR AN OPEN**
   1. Turn the ignition off.
   2. Using a 12-volt test light connected to 12-volts, check the (Z911) Ground circuit at the Voltage Stability Module harness connector.

      Does the test light illuminate brightly?

      Yes

      - Go To 4

      No

      - Repair the open in the (Z911) Ground circuit.
      - Perform the BODY VERIFICATION TEST. Refer to **STANDARD PROCEDURE** .
4. **CHECK THE (D403) LIN 3 BUS CIRCUIT FOR AN OPEN**
   1. Turn the ignition on.
   2. Measure the voltage between ground and the (D403) LIN 3 Bus circuit at the Voltage Stability Module harness connector.

      Is the voltage above 5.0 volts?

      Yes

      - Replace the Voltage Stability Module in accordance with the Service Information.
      - Perform the BODY VERIFICATION TEST. Refer to **STANDARD PROCEDURE** .

      No

      - Repair the open in the (D403) LIN 3 Bus circuit.
      - Perform the BODY VERIFICATION TEST. Refer to **STANDARD PROCEDURE** .

U1412-86-IMPLAUSIBLE VEHICLE SPEED SIGNAL RECEIVED-SIGNAL INVALID

For a complete wiring diagram, **refer to appropriate SYSTEM WIRING DIAGRAMS article** .

THEORY OF OPERATION

The Body Control Module (BCM) receives the vehicle speed signal over the CAN C Bus from the Anti-lock Brake Module.

WHEN MONITORED

With the ignition on, and battery voltage above 10.38 volts.

SET CONDITION

The BCM does not receive a vehicle speed signal from the Anti-Lock Brake Module over the CAN C bus for a duration of 4.8 seconds.

POSSIBLE CAUSES

POSSIBLE CAUSES
CAN C BUS CIRCUIT OPEN OR SHORTED
ANTI-LOCK BRAKE (ABS) MODULE
BODY CONTROL MODULE (BCM)

DIAGNOSTIC TEST

1. **CHECK FOR AN ACTIVE DTC**

   NOTE: Diagnose and repair any Lost Communication or CAN C BUS DTCs before continuing with this diagnostic procedure.

   1. Turn the ignition on.
   2. With a scan tool, read DTCs.

      Does the scan tool display this DTC as active?

      Yes

      - Go To 2

      No

      - Test complete. The condition or conditions that originally set this DTC are not present at this time. Using the wiring diagrams as a guide, check all related splices and connectors for signs of water intrusion, corrosion, pushed out or bent terminals and correct pin tension.
      - Perform the BODY VERIFICATION TEST. Refer to **STANDARD PROCEDURE** .

2. **CHECK OTHER MODULES FOR LOST VEHICLE SPEED MESSAGE DTCS**
   1. With the scan tool, check if any other modules have a Lost Vehicle Speed Message DTC present.

      Were any Lost Vehicle Speed Message DTCs present in any other modules?

      Yes

- Replace and program the Anti-Lock Brake Module (ABS) in accordance with the Service Information. Refer to **MODULE, ANTI-LOCK BRAKE SYSTEM, REMOVAL** .
- Perform the BODY VERIFICATION TEST. Refer to **STANDARD PROCEDURE** .

No

- Replace and program the Body Control Module (BCM) in accordance with the Service Information.
- Perform the BODY VERIFICATION TEST. Refer to **STANDARD PROCEDURE** .

U1433-86-IMPLAUSIBLE IGNITION SWITCH STATUS MESSAGE RECEIVED - SIGNAL INVALID

For a complete wiring diagram, **refer to appropriate SYSTEM WIRING DIAGRAMS article** .

Fig. 55: Radio Frequency Hub Circuit Diagram
Courtesy of CHRYSLER GROUP, LLC

THEORY OF OPERATION

The Body Control Module (BCM) receives an ignition feed from the Radio Frequency (RF) Hub indicating run/start operation is requested. The BCM provides a voltage output through the run/start relay control circuit, which connects to the coil side of the Run/Start Relay. The Body Control Module (BCM) monitors the ignition switch status message received over the Controller Area Network (CAN) bus.

WHEN MONITORED

With the ignition switch on.

SET CONDITION

The BCM detects that the hardwired ignition switch input voltage from the RF Hub module indicates that the ignition switch is in the off position, but the CAN bus message indicates that the ignition switch is the run position for more than 10 seconds.

POSSIBLE CAUSES

Possible Causes
(F20) IGNITION RUN-START CONTROL OUTPUT CIRCUIT OPEN
(F20) IGNITION RUN-START CONTROL OUTPUT CIRCUIT SHORTED TO GROUND
RADIO FREQUENCY (RF) HUB MODULE
BODY CONTROL MODULE (BCM)

DIAGNOSTIC TEST

1. **CHECK FOR ACTIVE DTC**

   NOTE: Check to make sure the battery and charging system are operating properly. Battery and/or charging system problems may cause these DTCs to set.

   NOTE: Diagnose any related Powertrain DTC(s) before continuing.

   1. Turn the ignition on.
   2. With the scan tool, read DTCs.

      Does the scan tool display this DTC as active?

      Yes

      - Go To 2

      No

      - Test complete. The condition or conditions that originally set this DTC are not present at this time. Using the wiring diagrams as a guide, check all related splices and connectors for signs of water intrusion, corrosion, pushed out or bent terminals and correct pin tension.
      - Perform the BODY VERIFICATION TEST. Refer to **STANDARD PROCEDURE** .

2. **CHECK THE (F20) IGNITION RUN-START CONTROL OUTPUT CIRCUIT AT THE BCM**

1. Turn the ignition off.
2. Disconnect the BCM C8 harness connector.
3. Turn the ignition on.
4. Measure the voltage between ground and the (F20) Ignition Run-Start Control Output circuit.

   Is the voltage above 10.0 volts?

   Yes

   - Replace the BCM in accordance with the Service Information. Refer to **MODULE, BODY CONTROL, REMOVAL** .
   - Perform the BODY VERIFICATION TEST. Refer to **STANDARD PROCEDURE** .

   No

   - Go To 3

3. **CHECK THE (F20) IGNITION RUN-START CONTROL OUTPUT CIRCUIT FOR A SHORT TO GROUND**
   1. Turn the ignition off.
   2. Disconnect the RF Hub Module C1 harness connector.
   3. Measure the resistance between ground and the (F20) Ignition Run-Start Control Output circuit.

      Is the resistance above 10K Ohms?

      Yes

      - Go To 4

      No

      - Repair the short to ground in the (F20) Ignition Run-Start Control Output circuit.
      - Perform the BODY VERIFICATION TEST. Refer to **STANDARD PROCEDURE** .

4. **CHECK THE (F20) IGNITION RUN-START CONTROL OUTPUT CIRCUIT FOR AN OPEN**
   1. Measure the resistance of the (F20) Ignition Run-Start Control Output circuit between the RF Hub Module C1 harness connector and the BCM C8 harness connector.

      Is the resistance below 5.0 Ohms?

      Yes

      - Replace the RF Hub Module in accordance with the Service Information. Refer to **MODULE, RADIO FREQUENCY (RF HUB), REMOVAL** .
      - Perform the RADIO FREQUENCY HUB (RF HUB) VERIFICATION TEST. Refer to

STANDARD PROCEDURE .

No

- Repair the open in the (F20) Ignition Run-Start Output circuit.
- Perform the BODY VERIFICATION TEST. Refer to **STANDARD PROCEDURE** .

U1434-86-IMPLAUSIBLE DATA RECEIVED FROM DRIVER BLIND SPOT SENSOR - SIGNAL INVALID

For a complete wiring diagram, **refer to appropriate SYSTEM WIRING DIAGRAMS article** .

WHEN MONITORED

With the ignition on.

SET CONDITION

Incorrect data received from the Left Blind Spot Sensor (LBSS).

POSSIBLE CAUSES

Possible Causes
NO COMMUNICATION WITH THE LEFT BLIND SPOT SENSOR (LBSS)
DTCS STORED OR ACTIVE IN THE BCM
BODY CONTROL MODULE (BCM)

DIAGNOSTIC TEST

1. **CHECK FOR AN ACTIVE DIAGNOSTIC TROUBLE CODE (DTC)**
    1. Turn the ignition on.
    2. With the scan tool, read active DTCs.

    Does the scan tool display this DTC as active?

    Yes

    - Go To 2

    No

    - The condition that caused this code to set is not present at this time. Check for an intermittent condition by inspecting the related wiring harness for chafed, pierced, pinched, and partially broken wires. Also inspect the related connectors for broken, bent, pushed out, spread, corroded, or contaminated terminals.

- Perform the BODY VERIFICATION TEST. Refer to **STANDARD PROCEDURE** .

2. **VERIFY THE LBSS IS ACTIVE ON THE CAN BUS**
   1. With the scan tool, verify that the LBSS is active on the bus.

      Is the LBSS active on the bus?

      Yes

      - Replace and program the BCM in accordance with the Service Information. Refer to **MODULE, BODY CONTROL, REMOVAL** .
      - Perform the BODY VERIFICATION TEST. Refer to **STANDARD PROCEDURE** .

      No

      - Refer to **DIAGNOSIS AND TESTING** and perform the NO RESPONSE FROM LBSS diagnostic procedure.
      - Perform the BODY VERIFICATION TEST. Refer to **STANDARD PROCEDURE** .

U1435-86-IMPLAUSIBLE DATA RECEIVED FROM PASSENGER SIDE BLIND SPOT SENSOR - SIGNAL INVALID

For a complete wiring diagram, **refer to appropriate SYSTEM WIRING DIAGRAMS article** .

WHEN MONITORED

With the ignition on.

SET CONDITION

Incorrect data received from the Right Blind Spot Sensor (RBSS).

POSSIBLE CAUSES

Possible Causes
NO COMMUNICATION WITH THE RIGHT BLIND SPOT SENSOR (RBSS)
DTCS STORED OR ACTIVE IN THE BCM
BODY CONTROL MODULE (BCM)

DIAGNOSTIC TEST

1. **CHECK FOR AN ACTIVE DIAGNOSTIC TROUBLE CODE (DTC)**
   1. Turn the ignition on.
   2. With the scan tool, read active DTCs.

Does the scan tool display this DTC as active?

Yes

- Go To 2

No

- The condition that caused this code to set is not present at this time. Check for an intermittent condition by inspecting the related wiring harness for chafed, pierced, pinched, and partially broken wires. Also inspect the related connectors for broken, bent, pushed out, spread, corroded, or contaminated terminals.
- Perform the BODY VERIFICATION TEST. Refer to **STANDARD PROCEDURE** .

2. **VERIFY THE RBSS IS ACTIVE ON THE CAN BUS**
   1. With the scan tool, verify that the RBSS is active on the bus.

   Is the RBSS active on the bus?

   Yes

   - Replace and program the BCM in accordance with the Service Information. Refer to **MODULE, BODY CONTROL, REMOVAL** .
   - Perform the BODY VERIFICATION TEST. Refer to **STANDARD PROCEDURE** .

   No

   - Refer to **DIAGNOSIS AND TESTING** and perform the NO RESPONSE FROM RBSS diagnostic procedure.
   - Perform the BODY VERIFICATION TEST. Refer to **STANDARD PROCEDURE** .

U1464-86-IMPLAUSIBLE DATA RECEIVED FROM EPS STEERING TORQUE - SIGNAL INVALID

For a complete wiring diagram, **refer to appropriate SYSTEM WIRING DIAGRAMS article** .

WHEN MONITORED

With the ignition on.

SET CONDITION

Incorrect steering torque data received from the Electronic Power Steering Module.

POSSIBLE CAUSES

Possible Causes

NO COMMUNICATION WITH THE ELECTRONIC POWER STEERING MODULE
DTCS STORED OR ACTIVE IN THE BCM
BODY CONTROL MODULE (BCM)

DIAGNOSTIC TEST

1. **CHECK FOR AN ACTIVE DIAGNOSTIC TROUBLE CODE (DTC)**
    1. Turn the ignition on.
    2. With the scan tool, read active DTCs.

    Does the scan tool display this DTC as active?

    Yes

    - Go To 2

    No

    - The condition that caused this code to set is not present at this time. Check for an intermittent condition by inspecting the related wiring harness for chafed, pierced, pinched, and partially broken wires. Also inspect the related connectors for broken, bent, pushed out, spread, corroded, or contaminated terminals.
    - Perform the BODY VERIFICATION TEST. Refer to **STANDARD PROCEDURE** .
2. **VERIFY THE ELECTRONIC POWER STEERING MODULE IS ACTIVE ON THE CAN BUS**
    1. With the scan tool, verify that the Electronic Power Steering Module is active on the bus.

    Is the Electronic Power Steering Module active on the bus?

    Yes

    - Replace and program the BCM in accordance with the Service Information. Refer to **MODULE, BODY CONTROL, REMOVAL** .
    - Perform the BODY VERIFICATION TEST. Refer to **STANDARD PROCEDURE** .

    No

    - Refer to **DIAGNOSIS AND TESTING** and perform the NO RESPONSE FROM ELECTRONIC POWER STEERING MODULE diagnostic procedure.
    - Perform the BODY VERIFICATION TEST. Refer to **STANDARD PROCEDURE** .

U147F-86-IMPLAUSIBLE DATA RECEIVED FROM EXTERNAL DISC MODULE-SIGNAL INVALID

For a complete wiring diagram, **refer to appropriate SYSTEM WIRING DIAGRAMS article** .

WHEN MONITORED

With the ignition on.

SET CONDITION

Incorrect data received from the External Disc Module (EDM).

POSSIBLE CAUSES

Possible Causes
NO COMMUNICATION WITH THE EXTERNAL DISC MODULE (EDM)
DTCS STORED OR ACTIVE IN THE BCM
BODY CONTROL MODULE (BCM)

DIAGNOSTIC TEST

1. **CHECK FOR AN ACTIVE DIAGNOSTIC TROUBLE CODE (DTC)**
    1. Turn the ignition on.
    2. With the scan tool, read active DTCs.

    Does the scan tool display this DTC as active?

    Yes

    - Go To 2

    No

    - The condition that caused this code to set is not present at this time. Check for an intermittent condition by inspecting the related wiring harness for chafed, pierced, pinched, and partially broken wires. Also inspect the related connectors for broken, bent, pushed out, spread, corroded, or contaminated terminals.
    - Perform the BODY VERIFICATION TEST. Refer to **STANDARD PROCEDURE** .
2. **VERIFY THE EDM IS ACTIVE ON THE CAN BUS**
    1. With the scan tool, verify that the EDM is active on the bus.

    Is the EDM active on the bus?

    Yes

    - Replace and program the BCM in accordance with the Service Information. Refer to **MODULE, BODY CONTROL, REMOVAL** .
    - Perform the BODY VERIFICATION TEST. Refer to **STANDARD PROCEDURE** .

No

- Refer to **DIAGNOSIS AND TESTING** and perform the NO RESPONSE FROM EDM diagnostic procedure.
- Perform the BODY VERIFICATION TEST. Refer to **STANDARD PROCEDURE** .

U1480-86-IMPLAUSIBLE DATA RECEIVED FROM INTEGRATED CENTER STACK - SIGNAL INVALID

For a complete wiring diagram, **refer to appropriate SYSTEM WIRING DIAGRAMS article** .

WHEN MONITORED

With the ignition on.

SET CONDITION

Incorrect data received from the Integrated Center Stack (ICS).

POSSIBLE CAUSES

Possible Causes
NO COMMUNICATION WITH THE INTEGRATED CENTER STACK (ICS)
DTCS STORED OR ACTIVE IN THE BCM
BODY CONTROL MODULE (BCM)

DIAGNOSTIC TEST

1. **CHECK FOR AN ACTIVE DIAGNOSTIC TROUBLE CODE (DTC)**
    1. Turn the ignition on.
    2. With the scan tool, read active DTCs.

    Does the scan tool display this DTC as active?

    Yes

    - Go To 2

    No

    - The condition that caused this code to set is not present at this time. Check for an intermittent condition by inspecting the related wiring harness for chafed, pierced, pinched, and partially broken wires. Also inspect the related connectors for broken, bent, pushed out, spread, corroded, or contaminated terminals.
    - Perform the BODY VERIFICATION TEST. Refer to **STANDARD PROCEDURE** .

2. **VERIFY THE ICS IS ACTIVE ON THE CAN BUS**
    1. With the scan tool, verify that the ICS is active on the bus.

       Is the PCM active on the bus?

       Yes

       - Replace and program the BCM in accordance with the Service Information. Refer to **MODULE, BODY CONTROL, REMOVAL** .
       - Perform the BODY VERIFICATION TEST. Refer to **STANDARD PROCEDURE** .

       No

       - Refer to **DIAGNOSIS AND TESTING** and perform the NO RESPONSE FROM ICS diagnostic procedure.
       - Perform the BODY VERIFICATION TEST. Refer to **STANDARD PROCEDURE** .

U148D-86-IMPLAUSIBLE DATA RECEIVED FROM FORWARD FACING CAMERA - SIGNAL INVALID

For a complete wiring diagram, **refer to appropriate SYSTEM WIRING DIAGRAMS article** .

WHEN MONITORED

With the ignition on.

SET CONDITION

Incorrect data received from the Forward Facing Camera (FFC).

POSSIBLE CAUSES

Possible Causes
NO COMMUNICATION WITH THE FORWARD FACING CAMERA (FFC)
DTCS STORED OR ACTIVE IN THE BCM
BODY CONTROL MODULE (BCM)

DIAGNOSTIC TEST

1. **CHECK FOR AN ACTIVE DIAGNOSTIC TROUBLE CODE (DTC)**
    1. Turn the ignition on.
    2. With the scan tool, read active DTCs.

       Does the scan tool display this DTC as active?

Yes

- Go To 2

No

- Test Complete. The condition that caused this code to set is not present at this time. Check for an intermittent condition by inspecting the related wiring harness for chafed, pierced, pinched and partially broken wires. Also inspect the related connectors for broken, bent, pushed out, spread, corroded or contaminated terminals.
- Perform the BODY VERIFICATION TEST. Refer to **STANDARD PROCEDURE** .

2. **VERIFY THE FORWARD FACING CAMERA (FFC) IS ACTIVE ON THE CAN BUS**
   1. With the scan tool, verify that the Forward Facing Camera (FFC) is active on the bus.

   Is the Forward Facing Camera (FFC) active on the bus?

   Yes

   - Replace and program the BCM in accordance with the Service Information. Refer to **MODULE, BODY CONTROL, REMOVAL** .
   - Perform the BODY VERIFICATION TEST. Refer to **STANDARD PROCEDURE** .

   No

   - Refer to **DIAGNOSIS AND TESTING** and perform the NO RESPONSE FROM FORWARD FACING CAMERA (FFC) diagnostic procedure.
   - Perform the BODY VERIFICATION TEST. Refer to **STANDARD PROCEDURE** .

U1496-8F-IMPLAUSIBLE DATA RECEIVED FROM ULTRASONIC AND ANTI-TILT MODULE - ERRATIC

For a complete wiring diagram, **refer to appropriate SYSTEM WIRING DIAGRAMS article** .

WHEN MONITORED

With the ignition on.

SET CONDITION

The Ultrasonic and Anti-Tilt Module (UAM) detects an internal failure.

POSSIBLE CAUSES

Possible Causes
ULTRASONIC AND ANTI-TILT MODULE (UAM)

DIAGNOSTIC TEST

CHECK FOR AN ACTIVE DTC

1. Turn the ignition on.
2. With the scan tool, read DTCs.

   Does the scan tool display this DTC as active?

   Yes

   - Replace the UAM in accordance with the Service Information. Refer to **MODULE, ULTRASONIC AND ANTI-TILT, REMOVAL** .
   - Perform the BODY VERIFICATION TEST. Refer to **STANDARD PROCEDURE** .

   No

   - Test Complete.

U1497-29-IMPLAUSIBLE DATA RECEIVED FROM WIRELESS CHARGING PAD MODULE-SIGNAL INVALID

For a complete wiring diagram, **refer to appropriate SYSTEM WIRING DIAGRAMS article** .

WHEN MONITORED

With the ignition on.

SET CONDITION

The Wireless Charging Pad Module detects an internal failure.

POSSIBLE CAUSES

Possible Causes
WIRELESS CHARGING PAD MODULE

DIAGNOSTIC TEST

CHECK FOR AN ACTIVE DTC

1. Turn the ignition on.
2. With the scan tool, read DTCs.

   Does the scan tool display this DTC as active?

Yes

- Replace the Wireless Charging Pad Module in accordance with the Service Information.
- Perform the BODY VERIFICATION TEST. Refer to **STANDARD PROCEDURE** .

No

- Test Complete.

U1514-64-ENGINE CONTROLLER SECRET CODE - SIGNAL PLAUSIBILITY FAILURE

For a complete wiring diagram, **refer to appropriate SYSTEM WIRING DIAGRAMS article** .

WHEN MONITORED

Ignition on.

SET CONDITION

The BCM receives and invalid SKIM Key message from the Powertrain Control Module (PCM).

POSSIBLE CAUSES

Possible Causes
INCORRECT VIN PROGRAMMED IN THE PCM
PCM (POWERTRAIN CONTROL MODULE)
BCM (BODY CONTROL MODULE)

DIAGNOSTIC TEST

1. **TEST FOR INTERMITTENT CONDITION**
   1. Turn the ignition on.
   2. With the scan tool, read the Active DTCs.

      Does the scan tool display this DTC as active?

      Yes

      - Go To 2

      No

      - Test complete. The condition or conditions that originally set this DTC are not present at this time. Using the wiring diagrams as a guide, check all related splices and connectors for signs of water intrusion, corrosion, pushed out or bent terminals and correct pin tension.

- Perform the BODY VERIFICATION TEST. Refer to **STANDARD PROCEDURE** .

2. **VERIFY THE VEHICLE IDENTIFICATION NUMBER (VIN) STORED IN THE POWERTRAIN CONTROL MODULE (PCM).**
   1. Using the scan tool, access the VIN number stored in the PCM.

      NOTE: Make sure that a VIN has been programmed into the PCM. If a VIN is not displayed, attempt to program the PCM with the correct VIN before continuing.

   2. Compare the VIN displayed, with the VIN of the vehicle.

      Does the VIN recorded in the PCM match the VIN of the vehicle?

      Yes

      - **Using the scan tool, verify the VIN in the BCM matches the VIN of the vehicle. If it DOES, Go To 3 If it does NOT match, replace the BCM in accordance with the Service Information.**
      - Replace and program the BCM in accordance with the Service Information. Refer to **MODULE, BODY CONTROL, REMOVAL** .
      - Perform the BODY VERIFICATION TEST. Refer to **STANDARD PROCEDURE** .

      No

      - Using the scan tool, perform the PCM Replaced Procedure to update the VIN in the PCM. Then, Go To 3

3. **PCM STARTING DTCS**
   1. Use the scan tool and erase all DTCs in the BCM and PCM.
   2. Turn the Ignition Off, and wait 15 seconds before turning the Ignition On.
   3. Try to start the engine. If the engine starts, leave it run for one minute and then turn the engine off (ignition on).
   4. Wait one minute, and read the active PCM DTCs.

      Does the scan tool display any Starting related DTCs?

      Yes

      - Refer to the **DTC INDEX** and perform the appropriate Diagnostic Procedure.

      No

      - Go To 4

4. **VERIFY PCM PROGRAMMING**

1. Use the scan tool and erase all DTCs in the BCM and PCM.
2. Turn the Ignition Off, and wait 15 seconds before turning the Ignition On.
3. Wait one minute, and read the active DTCs.

   Does the scan tool display this DTC as active?

   Yes

   - Replace and program the Powertrain Control Module in accordance with the Service Information. Refer to **MODULE, POWERTRAIN CONTROL, REMOVAL** .
   - Perform the POWERTRAIN VERIFICATION TEST. Refer to the appropriate diagnosis and testing article in engine performance .

   No

   - Repair is complete.
   - Perform the BODY VERIFICATION TEST. Refer to **STANDARD PROCEDURE** .

U1514-87-ENGINE CONTROLLER SECRET CODE - MISSING MESSAGE

For a complete wiring diagram, **refer to appropriate SYSTEM WIRING DIAGRAMS article** .

WHEN MONITORED

Ignition on.

SET CONDITION

The BCM does not receive a SKIM Key message from the Powertrain Control Module (PCM).

POSSIBLE CAUSES

Possible Causes
PCM (POWERTRAIN CONTROL MODULE)

DIAGNOSTIC TEST

1. **VERIFY PCM DTCs**
   1. Using the scan tool, record and erase all codes in the PCM.
   2. Turn the Ignition Off, and wait fifteen seconds before turning the Ignition On.
   3. Wait one minute, and read the active PCM codes.

      Does the scan tool display any starting, ignition or charging DTCs?

Yes

- Refer to the **DTC INDEX** and perform the appropriate diagnostic procedure(s).

No

- Go To 2

2. **VERIFY PCM PROGRAMMING**
   1. Using the scan tool, erase all codes in the BCM.
   2. Turn the Ignition Off, and wait fifteen seconds before turning the Ignition On.
   3. Wait one minute, and read the active BCM DTCs.

   Does the scan tool display this DTC as Active?

   Yes

   - Program the Powertrain Control Module in accordance with the Service Information.
   - Perform the PCM/TCM PROGRAMMING procedure. For the 2.0L Engine, refer to **PCM/ECM/TCM PROGRAMMING** . For 2.4L Engine, refer to **PCM/TCM PROGRAMMING** .
   - Perform the POWERTRAIN VERIFICATION TEST. Refer to the appropriate diagnosis and testing article in engine performance .

   No

   - Test complete. The condition or conditions that originally set this DTC are not present at this time. Using the wiring diagrams as a guide, check all related splices and connectors for signs of water intrusion, corrosion, pushed out or bent terminals and poor pin fit.
   - Perform the BODY VERIFICATION TEST. Refer to **STANDARD PROCEDURE** .

U1515-62-STEERING COLUMN LOCK SECRET CODE - SIGNAL COMPARE FAILURE

For a complete wiring diagram, **refer to appropriate SYSTEM WIRING DIAGRAMS article** .

WHEN MONITORED

With the ignition on.

SET CONDITION

The BCM receives and invalid SKIM Key message from the Electronic Steering Lock (ESL).

POSSIBLE CAUSES

Possible Causes

ELECTRONIC STEERING LOCK (ESL)
BCM (BODY CONTROL MODULE)

DIAGNOSTIC TEST

1. **VERIFY DTC IS ACTIVE**

   NOTE: Make sure the battery voltage is between 10 and 16 volts before proceeding.

   1. With the scan tool, read active DTCs.

      Does the scan tool display this DTC as active?

      Yes

      - Go To 2

      No

      - The condition is not present at this time. Using the wiring diagrams as a guide, check all related splices and connectors for signs of water intrusion, corrosion, pushed out or bent terminals, and correct pin tension.
      - Perform the BODY VERIFICATION TEST. Refer to **STANDARD PROCEDURE** .

2. **VERIFY THE ELECTRONIC STEERING LOCK (ESL) IS ACTIVE ON THE BUS**
   1. Turn the ignition on.
   2. With the scan tool, verify the ESL is active on the bus.

      Is the ESL active on the bus?

      Yes

      - Go To 3

      No

      - Refer to **DIAGNOSIS AND TESTING** and perform the NO RESPONSE FROM ESL diagnostic procedure.

3. **CHECK FOR ANY ACTIVE SKIM RELATED DTCS**
   1. With the scan tool, read all active DTCs from all modules.

      NOTE: Check for BCM configuration, VIN Missing/Mismatch or SKIM related DTCs.

Does the scan tool display any active DTCs to the conditions listed above?

Yes

- Go to the **DTC INDEX** and perform the appropriate diagnostic procedure.

No

- Go To 4

4. **BCM PROGRAMMING CHECK**
   1. Using the Scan Tool, verify the BCM is programmed.

      Is the BCM programmed?

      Yes

      - Replace the BCM in accordance with Service Information. Refer to **MODULE, BODY CONTROL, REMOVAL** .

      No

      - Perform the BCM replacement procedure in accordance with Service Information. Refer to **MODULE, BODY CONTROL, REMOVAL** .

U1515-64-STEERING COLUMN LOCK SECRET CODE - SIGNAL PLAUSIBILITY FAILURE

For a complete wiring diagram, **refer to appropriate SYSTEM WIRING DIAGRAMS article** .

WHEN MONITORED

With the ignition on.

SET CONDITION

The BCM receives and invalid SKIM Key message from the Electronic Steering Lock (ESL).

POSSIBLE CAUSES

Possible Causes
ELECTRONIC STEERING LOCK (ESL)
BCM (BODY CONTROL MODULE)

DIAGNOSTIC TEST

1. **VERIFY DTC IS ACTIVE**

NOTE: Make sure the battery voltage is between 10 and 16 volts before proceeding.

1. With the scan tool, read active DTCs.

   Does the scan tool display this DTC as active?

   Yes

   - Go To 2

   No

   - The condition is not present at this time. Using the wiring diagrams as a guide, check all related splices and connectors for signs of water intrusion, corrosion, pushed out or bent terminals, and correct pin tension.
   - Perform the BODY VERIFICATION TEST. Refer to **STANDARD PROCEDURE** .

2. **VERIFY THE ELECTRONIC STEERING LOCK (ESL) IS ACTIVE ON THE BUS**
   1. Turn the ignition on.
   2. With the scan tool, verify the ESL is active on the bus.

      Is the ESL active on the bus?

      Yes

      - Go To 3

      No

      - Refer to **DIAGNOSIS AND TESTING** and perform the NO RESPONSE FROM ESL diagnostic procedure.

3. **CHECK FOR ANY ACTIVE SKIM RELATED DTCS**
   1. With the scan tool, read all active DTCs from all modules.

      NOTE: Check for BCM configuration, VIN Missing/Mismatch or SKIM related DTCs.

      Does the scan tool display any active DTCs to the conditions listed above?

      Yes

      - Go to the **DTC INDEX** and perform the appropriate diagnostic procedure.

      No

- Go To 4

4. **BCM PROGRAMMING CHECK**
   1. Using the Scan Tool, verify the BCM is programmed.

      Is the BCM programmed?

      Yes

      - Replace the BCM in accordance with Service Information. Refer to **MODULE, BODY CONTROL, REMOVAL** .

      No

      - Perform the BCM replacement procedure in accordance with Service Information. Refer to **MODULE, BODY CONTROL, REMOVAL** .

U1515-87-STEERING COLUMN LOCK SECRET CODE - MISSING MESSAGE

For a complete wiring diagram, **refer to appropriate SYSTEM WIRING DIAGRAMS article** .

WHEN MONITORED

With the ignition on.

SET CONDITION

The BCM does not receive a SKIM Key message from the Electronic Steering Lock (ESL).

POSSIBLE CAUSES

Possible Causes
ELECTRONIC STEERING LOCK (ESL)
BCM (BODY CONTROL MODULE)

DIAGNOSTIC TEST

1. **VERIFY DTC IS ACTIVE**

   NOTE: Make sure the battery voltage is between 10 and 16 volts before proceeding.

   1. With the scan tool, read active DTCs.

      Does the scan tool display this DTC as active?

Yes

- Go To 2

No

- The condition is not present at this time. Using the wiring diagrams as a guide, check all related splices and connectors for signs of water intrusion, corrosion, pushed out or bent terminals, and correct pin tension.
- Perform the BODY VERIFICATION TEST. Refer to **STANDARD PROCEDURE** .

2. **VERIFY THE ELECTRONIC STEERING LOCK (ESL) IS ACTIVE ON THE BUS**
   1. Turn the ignition on.
   2. With the scan tool, verify the ESL is active on the bus.

   Is the ESL active on the bus?

   Yes

   - Go To 3

   No

   - Refer to **DIAGNOSIS AND TESTING** and perform the NO RESPONSE FROM ESL diagnostic procedure.

3. **CHECK FOR ANY ACTIVE SKIM RELATED DTCS**
   1. With the scan tool, read all active DTCs from all modules.

   NOTE: Check for BCM configuration, VIN Missing/Mismatch or SKIM related DTCs.

   Does the scan tool display any active DTCs to the conditions listed above?

   Yes

   - Go to the **DTC INDEX** and perform the appropriate diagnostic procedure.

   No

   - Go To 4

4. **BCM PROGRAMMING CHECK**
   1. Using the Scan Tool, verify the BCM is programmed.

   Is the BCM programmed?

Yes

- Replace the BCM in accordance with Service Information. Refer to **MODULE, BODY CONTROL, REMOVAL** .

No

- Perform the BCM replacement procedure in accordance with Service Information. Refer to **MODULE, BODY CONTROL, REMOVAL** .

U1516-64-RF HUB SECRET CODE - SIGNAL PLAUSIBILITY FAILURE

For a complete wiring diagram, **refer to appropriate SYSTEM WIRING DIAGRAMS article** .

WHEN MONITORED

With the ignition on.

SET CONDITION

The BCM receives and invalid SKIM Key message from the RF Hub.

POSSIBLE CAUSES

Possible Causes
RADIO FREQUENCY HUB (RF HUB)
BCM (BODY CONTROL MODULE)

DIAGNOSTIC TEST

1. **VERIFY DTC IS ACTIVE**

NOTE: Make sure the battery voltage is between 10 and 16 volts before proceeding.

1. With the scan tool, read active DTCs.

   Does the scan tool display this DTC as active?

   Yes

   - Go To 2

   No

   - The condition is not present at this time. Using the wiring diagrams as a guide, check all

related splices and connectors for signs of water intrusion, corrosion, pushed out or bent terminals, and correct pin tension.

- Perform the BODY VERIFICATION TEST. Refer to **STANDARD PROCEDURE** .

2. **VERIFY THE RF HUB IS ACTIVE ON THE BUS**
   1. Turn the ignition on.
   2. With the scan tool, verify the RF Hub is active on the bus.

   Is the RF Hub active on the bus?

   Yes

   - Go To 3

   No

   - Refer to **DIAGNOSIS AND TESTING** and perform the NO RESPONSE FROM RF HUB diagnostic procedure.

3. **CHECK FOR ANY ACTIVE SKIM RELATED DTCS**
   1. With the scan tool, read all active DTCs from all modules.

   NOTE: Check for BCM configuration, VIN Missing/Mismatch or SKIM related DTCs.

   Does the scan tool display any active DTCs to the conditions listed above?

   Yes

   - Go to the **DTC INDEX** and perform the appropriate diagnostic procedure.

   No

   - Go To 4

4. **BCM PROGRAMMING CHECK**
   1. Using the Scan Tool, verify the BCM is programmed.

   Is the BCM programmed?

   Yes

   - Replace the BCM in accordance with Service Information. Refer to **MODULE, BODY CONTROL, REMOVAL** .

   No

- Perform the BCM replacement procedure in accordance with Service Information. Refer to **MODULE, BODY CONTROL, REMOVAL** .

U1516-87-RF HUB SECRET CODE - MISSING MESSAGE

For a complete wiring diagram, **refer to appropriate SYSTEM WIRING DIAGRAMS article** .

WHEN MONITORED

With the ignition on.

SET CONDITION

The BCM does not receive a SKIM Key message from the RF Hub.

POSSIBLE CAUSES

Possible Causes
RADIO FREQUENCY HUB (RF HUB)
BCM (BODY CONTROL MODULE)

DIAGNOSTIC TEST

1. **VERIFY DTC IS ACTIVE**

   NOTE: Make sure the battery voltage is between 10 and 16 volts before proceeding.

   1. With the scan tool, read active DTCs.

      Does the scan tool display this DTC as active?

      Yes

      - Go To 2

      No

      - The condition is not present at this time. Using the wiring diagrams as a guide, check all related splices and connectors for signs of water intrusion, corrosion, pushed out or bent terminals, and correct pin tension.
      - Perform the BODY VERIFICATION TEST. Refer to **STANDARD PROCEDURE** .
2. **VERIFY THE RF HUB IS ACTIVE ON THE BUS**
   1. Turn the ignition on.
   2. With the scan tool, verify the RF Hub is active on the bus.

Is the RF Hub active on the bus?

Yes

- Go To 3

No

- Refer to **DIAGNOSIS AND TESTING** and perform the NO RESPONSE FROM RF HUB diagnostic procedure.

3. **CHECK FOR ANY ACTIVE SKIM RELATED DTCS**
   1. With the scan tool, read all active DTCs from all modules.

      NOTE: Check for BCM configuration, VIN Missing/Mismatch or SKIM related DTCs.

      Does the scan tool display any active DTCs to the conditions listed above?

      Yes

      - Go to the **DTC INDEX** and perform the appropriate diagnostic procedure.

      No

      - Go To 4

4. **BCM PROGRAMMING CHECK**
   1. Using the Scan Tool, verify the BCM is programmed.

      Is the BCM programmed?

      Yes

      - Replace the BCM in accordance with Service Information. Refer to **MODULE, BODY CONTROL, REMOVAL** .

      No

      - Perform the BCM replacement procedure in accordance with Service Information. Refer to **MODULE, BODY CONTROL, REMOVAL** .

2014 ACCESSORIES AND EQUIPMENT

Body Control Module (BCM) - Electrical Diagnostics - Cherokee

DIAGNOSTIC CODE INDEX

DIAGNOSTIC CODE INDEX

DTC	Description
B106A-12	REAR DEFROST (EBL) CONTROL CIRCUIT - CIRCUIT SHORT TO BATTERY
B106A-14	REAR DEFROST (EBL) CONTROL CIRCUIT-CIRCUIT SHORT TO GROUND OR OPEN
B1609-11	PANEL DIMMER INPUT - CIRCUIT SHORT TO GROUND
B1609-15	PANEL DIMMER INPUT - CIRCUIT SHORT TO BATTERY OR OPEN
B1620-12	FRONT READING LAMP - CIRCUIT SHORT TO BATTERY
B1621-12	REAR READING LAMP - CIRCUIT SHORT TO BATTERY
B162A-18	LEFT LOW BEAM CONTROL - UNDER CURRENT
B162A-18	LEFT LOW BEAM CONTROL - UNDER CURRENT - EXPORT
B162A-19	LEFT LOW BEAM CONTROL - OVER CURRENT
B162A-19	LEFT LOW BEAM CONTROL-OVER CURRENT - EXPORT
B162E-18	RIGHT LOW BEAM CONTROL - UNDER CURRENT
B162E-18	RIGHT LOW BEAM CONTROL - UNDER CURRENT - EXPORT
B162E-19	RIGHT LOW BEAM CONTROL - OVER CURRENT
B162E-19	RIGHT LOW BEAM CONTROL-OVER CURRENT - EXPORT
B1632-18	LEFT HIGH BEAM CONTROL - UNDER CURRENT
B1632-18	LEFT HIGH BEAM CONTROL - UNDER CURRENT - EXPORT
B1632-19	LEFT HIGH BEAM CONTROL - OVER CURRENT
B1632-19	LEFT HIGH BEAM CONTROL - OVER CURRENT - EXPORT
B1636-18	RIGHT HIGH BEAM CONTROL - UNDER CURRENT
B1636-18	RIGHT HIGH BEAM CONTROL - UNDER CURRENT - EXPORT
B1636-19	RIGHT HIGH BEAM CONTROL - OVER CURRENT
B1636-19	RIGHT HIGH BEAM CONTROL - OVER CURRENT - EXPORT
B163A-18	FRONT LEFT TURN LAMP CONTROL - UNDER CURRENT
B163A-18	FRONT LEFT TURN LAMP CONTROL - UNDER CURRENT - EXPORT
B163A-19	FRONT LEFT TURN LAMP CONTROL - OVER CURRENT
B163A-19	FRONT LEFT TURN LAMP CONTROL - OVER CURRENT - EXPORT
B163E-18	FRONT RIGHT TURN LAMP CONTROL - UNDER CURRENT
B163E-18	FRONT RIGHT TURN LAMP CONTROL - UNDER CURRENT - EXPORT
B163E-19	FRONT RIGHT TURN LAMP CONTROL - OVER CURRENT
B163E-19	FRONT RIGHT TURN LAMP CONTROL - OVER CURRENT - EXPORT
B1642-19	REAR LEFT TURN LAMP CONTROL - OVER CURRENT

B1642-19	REAR LEFT TURN LAMP CONTROL - OVER CURRENT - EXPORT
B1646-19	REAR RIGHT TURN LAMP CONTROL-OVER CURRENT
B1646-19	REAR RIGHT TURN LAMP CONTROL-OVER CURRENT - EXPORT
B165B-18	PARK LAMP CONTROL - UNDER CURRENT
B165B-19	PARK LAMP CONTROL-OVER CURRENT
B1666-18	LEFT REVERSE LAMP CONTROL - UNDER CURRENT
B1666-19	LEFT REVERSE LAMP CONTROL - OVER CURRENT
B166A-12	LEFT TRAILER TOW LAMP CONTROL - CIRCUIT SHORT TO BATTERY
B166A-14	LEFT TRAILER TOW LAMP CONTROL - CIRCUIT SHORT TO GROUND OR OPEN
B166E-12	RIGHT TRAILER TOW LAMP CONTROL - CIRCUIT SHORT TO BATTERY
B166E-14	RIGHT TRAILER TOW LAMP CONTROL - CIRCUIT SHORT TO GROUND OR OPEN
B168E-2A	FRONT FOG LAMP SWITCH CIRCUIT-STUCK
B16AF-09	LEFT STOP LAMP CONTROL - COMPONENT FAILURES
B16B3-09	RIGHT STOP LAMP CONTROL - COMPONENT FAILURES
B16B7-18	CENTER STOP LAMP CONTROL - UNDER CURRENT
B16B7-19	CENTER STOP LAMP CONTROL - OVER CURRENT
B16BB-12	TRAILER STOP LAMP CONTROL - CIRCUIT SHORT TO BATTERY
B16BB-14	TRAILER STOP LAMP CONTROL - CIRCUIT SHORT TO GROUND OR OPEN
B16CF-09	LEFT DRL LAMP CONTROL - COMPONENT FAILURES
B16CF-19	LEFT DRL LAMP CONTROL - OVER CURRENT
B16CF-19	LEFT DRL LAMP CONTROL - OVER CURRENT - EXPORT
B16D3-09	RIGHT DRL LAMP CONTROL - COMPONENT FAILURES
B16D3-19	RIGHT DRL LAMP CONTROL - OVER CURRENT
B16D3-19	RIGHT DRL LAMP CONTROL - OVER CURRENT - EXPORT
B16E7-18	LICENSE PLATE LAMP CONTROL - UNDER CURRENT
B16E7-19	LICENSE PLATE LAMP CONTROL - OVER CURRENT
B1751-12	COURTESY LAMP CONTROL - CIRCUIT SHORT TO BATTERY
B1783-18	STOP LAMP CONTROL - UNDER CURRENT
B1783-19	STOP LAMP CONTROL - OVER CURRENT
B178E-11	HEADLAMP SWITCH INPUT CIRCUIT - SHORT TO GROUND
B178E-15	HEADLAMP SWITCH INPUT - CIRCUIT SHORT TO BATTERY OR OPEN
B178E-64	HEADLAMP SWITCH INPUT SIGNAL - PLAUSIBILITY FAILURE
B179F-2A	REAR FOG LAMP SWITCH - STUCK
B17C5-12	TRAILER TOW REVERSE LAMP CONTROL - CIRCUIT SHORT TO BATTERY
B17C5-14	TRAILER TOW REVERSE LAMP CONTROL - CIRCUIT SHORT TO GROUND OR OPEN
B17F3-8F	AUTO HIGH BEAM SYSTEM AIM - ERRATIC

B17F6-12	TRAILER TAILLAMP CONTROL - CIRCUIT SHORT TO BATTERY
B17F6-14	TRAILER TAILLAMP CONTROL - CIRCUIT SHORT TO GROUND OR OPEN
B17FB-8F	AUTO HIGH BEAM CAMERA VIEW BLOCK - ERRATIC
B17FF-11	AMBIENT CABIN LIGHT DIMMER SWITCH - CIRCUIT SHORT TO GROUND
B17FF-15	AMBIENT CABIN LIGHT DIMMER SWITCH - CIRCUIT SHORT TO BATTERY OR OPEN
B1800-2A	DRIVER DOOR LOCK/UNLOCK SWITCH-STUCK
B1805-2A	PASSENGER DOOR LOCK/UNLOCK SWITCH-STUCK
B181C-23	TRUNK/LIFTGATE INPUT - SIGNAL STUCK LOW
B181E-11	HOOD AJAR INPUT - CIRCUIT SHORT TO GROUND
B181E-15	HOOD AJAR INPUT - CIRCUIT SHORT TO BATTERY OR OPEN
B182C-64	ALL DOOR LOCK CONTROL SIGNAL - PLAUSIBILITY FAILURE
B186E-64	ALL DOOR SECONDARY LOCK CONTROL - SIGNAL PLAUSIBILITY FAILURE
B1989-64	ALL DOOR SECONDARY UNLOCK CONTROL - SIGNAL PLAUSIBILITY FAILURE
B1A90-51	SECRET KEY NOT STORED IN BCM - NOT PROGRAMMED
B2100-12	IGNITION RUN/START INPUT-CIRCUIT SHORT TO BATTERY
B2100-14	IGNITION RUN/START INPUT - CIRCUIT SHORT TO GROUND OR OPEN
B2103-18	IGNITION RUN/START 1 CONTROL-UNDER CURRENT
B2103-19	IGNITION RUN/START 1 CONTROL - OVER CURRENT
B2121-12	IGNITION RUN CONTROL 1 - CIRCUIT SHORT TO BATTERY
B2121-14	IGNITION RUN CONTROL 1 - CIRCUIT SHORT TO GROUND OR OPEN
B212E-12	IGNITION RUN/ACC CONTROL - CIRCUIT SHORT TO BATTERY
B212E-14	IGNITION RUN/ACC CONTROL - CIRCUIT SHORT TO GROUND OR OPEN
B2143-12	UGDO ENABLE CONTROL - CIRCUIT SHORT TO BATTERY
B2143-14	UGDO ENABLE CONTROL - CIRCUIT SHORT TO GROUND OR OPEN
B215B-18	IGNITION RUN START 2 - CONTROL UNDER CURRENT
B215B-19	IGNITION RUN START 2 CONTROL OVER CURRENT
B2199-16	BATTERY VOLTAGE - CIRCUIT VOLTAGE BELOW THRESHOLD
B2199-17	BATTERY VOLTAGE - CIRCUIT VOLTAGE ABOVE THRESHOLD
B2204-55	ECU CONFIGURATION MISMATCH - NOT CONFIGURED
B221D-29	(RSM) RAIN SENSOR MODULE INTERNAL - SIGNAL INVALID
B223A-8F	AUTO HIGH BEAM ECU INTERNAL - ERRATIC
B225C-29	COMPASS MODULE INTERNAL - SIGNAL INVALID
B2267-8F	ELECTRO CHROMATIC MIRROR MODULE INTERNAL - ERRATIC
B22A9-44	ECU INTERNAL PERFORMANCE - DATA MEMORY FAILURE
B22A9-45	ECU INTERNAL PERFORMANCE - PROGRAM MEMORY FAILURE
B22A9-46	ECU INTERNAL PERFORMANCE - CALIBRATION/PARAMETER MEMORY FAILURE

B22A9-47	ECU INTERNAL PERFORMANCE - WATCHDOG/SAFETY FAILURE
B2303-64	WIPER PARK SWITCH INPUT - SIGNAL PLAUSIBILITY FAILURE
B2303-71	WIPER PARK SWITCH INPUT - ACTUATOR STUCK
B2309-2A	REAR WIPER SWITCH - STUCK
B2322-12	HEADLAMP WASHER MOTOR CONTROL - CIRCUIT SHORT TO BATTERY
B2322-14	HEADLAMP WASHER MOTOR CONTROL - CIRCUIT SHORT TO GROUND OR OPEN
B2345-18	WIPER MOTOR LOW SPEED CONTROL - UNDER CURRENT
B2345-19	WIPER MOTOR LOW SPEED CONTROL - OVERCURRENT
B2349-18	WIPER MOTOR HI SPEED CONTROL - UNDER CURRENT
B2349-19	WIPER MOTOR HI SPEED CONTROL - OVERCURRENT
B23B9-18	REAR WIPER CONTROL - UNDER CURRENT
B23B9-19	REAR WIPER CONTROL - OVERCURRENT
B25B3-64	PASSENGER DOOR LOCK/UNLOCK RELAY SIGNAL - PLAUSIBILITY FAILURE
B2880-11	FOG LAMP CONTROL - CIRCUIT SHORT TO GROUND
B2880-15	FOG LAMP CONTROL - CIRCUIT SHORT TO BATTERY OR OPEN
B2881-19	LEFT REAR PARK LAMP CONTROL - OVERCURRENT
B2881-19	LEFT REAR PARK LAMP CONTROL - OVERCURRENT - EXPORT
B2882-19	RIGHT REAR PARK LAMP CONTROL - OVERCURRENT
B2882-19	RIGHT REAR PARK LAMP CONTROL - OVERCURRENT - EXPORT
B2883-18	LEFT REVERSE/BUX TURN SIGNAL CONTROL - UNDER CURRENT
B2883-19	LEFT REVERSE/BUX TURN SIGNAL CONTROL - OVERCURRENT
B2884-18	RIGHT REVERSE/BUX TURN SIGNAL CONTROL-UNDER CURRENT
B2884-19	RIGHT REVERSE/BUX TURN SIGNAL CONTROL - OVERCURRENT
C1006-15	BRAKE FLUID LEVEL INPUT - CIRCUIT SHORT TO BATTERY OR OPEN
C107D-67	BRAKE PEDAL SWITCH 1/2 CORRELATION - SIGNAL INCORRECT AFTER EVENT
P0070-11	AMBIENT AIR TEMPERATURE SENSOR CIRCUIT - CIRCUIT SHORT TO GROUND
P0070-15	AMBIENT AIR TEMPERATURE SENSOR CIRCUIT - CIRCUIT SHORT TO BATTERY OR OPEN
P0460-11	FUEL LEVEL SENSOR 1 - CIRCUIT SHORT TO GROUND
P0460-15	FUEL LEVEL SENSOR 1 - CIRCUIT SHORT TO BATTERY OR OPEN
P0615-12	STARTER CONTROL CIRCUIT-CIRCUIT SHORT TO BATTERY
P2065-11	FUEL LEVEL SENSOR 2 - CIRCUIT SHORT TO GROUND
P2065-15	FUEL LEVEL SENSOR 2 - CIRCUIT SHORT TO BATTERY OR OPEN
P2687-12	FUEL SUPPLY HEATER CONTROL - CIRCUIT SHORT TO BATTERY
P2687-14	FUEL SUPPLY HEATER CONTROL - CIRCUIT SHORT TO GROUND OR OPEN
U0010-87	CAN INTERIOR BUS - MISSING MESSAGE

U0010-88	CAN INTERIOR BUS - BUS OFF
U0100-87	LOST COMMUNICATION WITH ECM/PCM - MISSING MESSAGE
U0101-87	LOST COMMUNICATION WITH TCM - MISSING MESSAGE
U0102-87	LOST COMMUNICATION WITH TRANSFER CASE CONTROL MODULE/AWD - MISSING MESSAGE
U0103-87	LOST COMMUNICATION WITH ELECTRIC GEAR SHIFT MODULE - MISSING MESSAGE
U0121-87	LOST COMMUNICATION WITH ANTI-LOCK BRAKE SYSTEM (ABS) CONTROL MODULE - MISSING MESSAGE
U0128-87	LOST COMMUNICATION WITH PARK BRAKE CONTROL MODULE - MISSING MESSAGE
U0131-87	LOST COMMUNICATION WITH ELECTRIC POWER STEERING CONTROL MODULE - MISSING MESSAGE
U0151-87	LOST COMMUNICATION WITH OCCUPANT RESTRAINT CONTROLLER (ORC) - MISSING MESSAGE
U0154-87	LOST COMMUNICATION WITH OCCUPANT CLASSIFICATION MODULE - MISSING MESSAGE
U0155-87	LOST COMMUNICATION WITH CLUSTER/CCN - MISSING MESSAGE
U0159	LOST COMMUNICATION WITH PARKING ASSIST CONTROL MODULE-MISSING MESSAGE
U0164-87	LOST COMMUNICATION WITH HVAC CONTROL MODULE - MISSING MESSAGE
U0181-87	LOST COMMUNICATION WITH AUTOMATIC HEADLAMP LEVELING MODULE - MISSING MESSAGE
U0184-87	LOST COMMUNICATION WITH RADIO - MISSING MESSAGE
U0186-87	LOST COMMUNICATION WITH AUDIO AMPLIFIER - MISSING MESSAGE
U0199-87	LOST COMMUNICATION WITH DRIVER DOOR MODULE - MISSING MESSAGE
U01B0-87	LOST COMMUNICATION WITH BATTERY MONITOR MODULE - MISSING MESSAGE
U0200-87	LOST COMMUNICATION WITH PASSENGER DOOR MODULE - MISSING MESSAGE
U0204-87	LOST COMMUNICATION WITH RIGHT FRONT DOOR MODULE - MISSING MESSAGE
U0208-87	LOST COMMUNICATION WITH HEATED SEAT CONTROL MODULE - MISSING MESSAGE
U0209-87	LOST COMMUNICATION WITH MEMORY SEAT CONTROL MODULE - MISSING MESSAGE
U0230-87	LOST COMMUNICATION WITH POWER LIFTGATE MODULE - MISSING MESSAGE
U0231-87	LOST COMMUNICATION WITH RAIN SENSING MODULE-MISSING MESSAGE
U0236-87	LOST COMMUNICATION WITH ELECTRONIC STEERING COLUMN LOCK

	MODULE - MISSING MESSAGE
U0241-87	LOST COMMUNICATION WITH AUTO HIGHBEAM HEADLAMP CONTROL MODULE - MISSING MESSAGE
U0264-87	LOST COMMUNICATION WITH CAMERA MODULE - REAR-MISSING MESSAGE
U0401-86	IMPLAUSIBLE DATA RECEIVED FROM ECM/PCM - SIGNAL INVALID
U0402-86	IMPLAUSIBLE DATA RECEIVED FROM TCM - SIGNAL INVALID
U0403-86	IMPLAUSIBLE DATA RECEIVED FROM T-CASE - SIGNAL INVALID
U0404-86	IMPLAUSIBLE DATA RECEIVED FROM ESM - SIGNAL INVALID
U0405-86	INVALID DATA RECEIVED FROM CRUISE CONTROL MODULE - SIGNAL INVALID
U0415-86	IMPLAUSIBLE DATA RECEIVED FROM ABS - SIGNAL INVALID
U0417-86	IMPLAUSIBLE DATA RECEIVED FROM PARK BRAKE CONTROL MODULE - SIGNAL INVALID
U0423-86	IMPLAUSIBLE DATA RECEIVED FROM CLUSTER/CCN - SIGNAL INVALID
U0424-86	IMPLAUSIBLE DATA RECEIVED FROM HVAC CONTROL MODULE - SIGNAL INVALID
U0429-86	IMPLAUSIBLE DATA RECEIVED FROM SCM - SIGNAL INVALID
U0452-86	IMPLAUSIBLE DATA RECEIVED FROM RESTRAINTS CONTROL MODULE - SIGNAL INVALID
U0455-86	IMPLAUSIBLE DATA RECEIVED FROM OCCUPANT CLASSIFICATION MODULE - SIGNAL INVALID
U045A-86	IMPLAUSIBLE DATA RECEIVED FROM PARKING ASSIST MODULE - SIGNAL INVALID
U0482-86	IMPLAUSIBLE DATA RECEIVED FROM AUTOMATIC HEADLAMP LEVELING MODULE - SIGNAL INVALID
U0485-86	IMPLAUSIBLE DATA RECEIVED FROM RADIO - SIGNAL INVALID
U049A-86	IMPLAUSIBLE DATA RECEIVED FROM DRIVER DOOR MODULE - SIGNAL INVALID
U0501-86	IMPLAUSIBLE DATA RECEIVED FROM PASSENGER DOOR MODULE - SIGNAL INVALID
U050A-86	IMPLAUSIBLE DATA RECEIVED FROM MEMORY SEAT CONTROL MODULE - SIGNAL INVALID
U052A-86	IMPLAUSIBLE DATA RECEIVED FROM HEATED SEAT MODULE - SIGNAL INVALID
U0531-86	IMPLAUSIBLE DATA RECEIVED FROM POWER LIFTGATE MODULE - SIGNAL INVALID
U0537-86	IMPLAUSIBLE DATA RECEIVED FROM ELECTRONIC STEERING COLUMN LOCK MODULE - SIGNAL INVALID
U1008-11	LIN 1 BUS - CIRCUIT SHORT TO GROUND
U1008-12	LIN 1 BUS - CIRCUIT SHORT TO BATTERY
U1008-67	LIN 1 BUS - SIGNAL INCORRECT AFTER EVENT
U1009-11	LIN 2 BUS - CIRCUIT SHORT TO GROUND

U1009-12	LIN 2 BUS - CIRCUIT SHORT TO BATTERY
U1009-67	LIN 2 BUS - SIGNAL INCORRECT AFTER EVENT
U1045-11	LIN 3 BUS - CIRCUIT SHORT TO GROUND
U1045-12	LIN 3 BUS - CIRCUIT SHORT TO BATTERY
U1045-67	LIN 3 BUS - SIGNAL INCORRECT AFTER EVENT
U1046-11	LIN 4 BUS - CIRCUIT SHORT TO GROUND
U1046-12	LIN 4 BUS - CIRCUIT SHORT TO BATTERY
U1046-67	LIN 4 BUS - SIGNAL INCORRECT AFTER EVENT
U1106-87	CAN C SIGNAL MISSING-MISSING MESSAGE
U1106-88	CAN C SIGNAL MISSING - BUS OFF
U1109-87	LOST COMMUNICATION WITH LIN STEERING WHEEL CONTROLS-MISSING MESSAGE
U110A-87	LOST COMMUNICATION WITH SCM CAN-C - MISSING MESSAGE
U110D-87	LOST COMMUNICATION WITH SECURITY SIREN - MISSING MESSAGE
U113B-87	LOST COMMUNICATION WITH SWITCH BANK MODULE - MISSING MESSAGE
U1190-87	LOST COMMUNICATION WITH HUMIDITY SENSOR - MISSING MESSAGE
U1193-87	LOST COMMUNICATION WITH DRIVER SIDE BLIND SPOT SENSOR - MISSING MESSAGE
U1194-87	LOST COMMUNICATION WITH PASSENGER SIDE BLIND SPOT SENSOR - MISSING MESSAGE
U11B8-87	LOST COMMUNICATION WITH INTEGRATED CENTER STACK (ICS) - MISSING MESSAGE
U11B9-87	LOST COMMUNICATION WITH RF HUB - MISSING MESSAGE
U11F5-87	LOST COMMUNICATION WITH EXTERNAL DISC MODULE - MISSING MESSAGE
U1207-87	LOST COMMUNICATION WITH TERRAIN SWITCH BANK MODULE - MISSING MESSAGE
U1212-87	LOST COMMUNICATION WITH LIN ULTRASONIC AND ANTI-TILT MODULE-MISSING MESSAGE
U1215-87	LOST COMMUNICATION WITH FORWARD FACING CAMERA - MISSING MESSAGE
U1223-87	LOST COMMUNICATION WITH WIRELESS CHARGING PAD MODULE - MISSING MESSAGE
U1224-87	LOST COMMUNICATION WITH VOLTAGE STABILITY MODULE - MISSING MESSAGE
U1412-86	IMPLAUSIBLE VEHICLE SPEED SIGNAL RECEIVED-SIGNAL INVALID
U1433-86	IMPLAUSIBLE IGNITION SWITCH STATUS MESSAGE RECEIVED - SIGNAL INVALID
U1434-86	IMPLAUSIBLE DATA RECEIVED FROM DRIVER BLIND SPOT SENSOR - SIGNAL INVALID
U1435-86	IMPLAUSIBLE DATA RECEIVED FROM PASSENGER SIDE BLIND SPOT SENSOR - SIGNAL INVALID

U1464-86	IMPLAUSIBLE DATA RECEIVED FROM EPS STEERING TORQUE - SIGNAL INVALID
U147F-86	IMPLAUSIBLE DATA RECEIVED FROM EXTERNAL DISC MODULE-SIGNAL INVALID
U1480-86	IMPLAUSIBLE DATA RECEIVED FROM INTEGRATED CENTER STACK - SIGNAL INVALID
U148D-86	IMPLAUSIBLE DATA RECEIVED FROM FORWARD FACING CAMERA - SIGNAL INVALID
U1496-8F	IMPLAUSIBLE DATA RECEIVED FROM ULTRASONIC AND ANTI-TILT MODULE - ERRATIC
U1497-29	IMPLAUSIBLE DATA RECEIVED FROM WIRELESS CHARGING PAD MODULE-SIGNAL INVALID
U1514-64	ENGINE CONTROLLER SECRET CODE - SIGNAL PLAUSIBILITY FAILURE
U1514-87	ENGINE CONTROLLER SECRET CODE - MISSING MESSAGE
U1515-62	STEERING COLUMN LOCK SECRET CODE - SIGNAL COMPARE FAILURE
U1515-64	STEERING COLUMN LOCK SECRET CODE - SIGNAL PLAUSIBILITY FAILURE
U1515-87	STEERING COLUMN LOCK SECRET CODE - MISSING MESSAGE
U1516-64	RF HUB SECRET CODE - SIGNAL PLAUSIBILITY FAILURE
U1516-87	RF HUB SECRET CODE - MISSING MESSAGE

2014 ACCESSORIES AND EQUIPMENT

Chime/Buzzer/Driver Assist - Service Information - Cherokee

DESCRIPTION

BLIND SPOT MONITOR SYSTEM

The Blind Spot Monitor (BSM) system is an available factory-installed electronic driving aid. This system provides both blind spot and Rear Cross Path (RCP) monitoring features. While the vehicle is being driven, this system alerts the vehicle operator when it detects other highway licensable vehicles that enter the targeted blind spot and cross path alert zones. These zones lie immediately to the right and behind as well as immediately to the left and behind the vehicle. Due to the surrounding rear vehicle structure or other adjacent stationary obstacles outside of the vehicle, these zones might be more difficult for the vehicle operator to easily monitor.

When the BSM system detects another vehicle within one of the target zones, the system is capable of illuminating an amber triangle icon located in each outside rear view mirror glass, as well as reducing audio system volume and sounding chime tones through the audio system speakers to provide the vehicle operator with both visual and audible alerts. However, it should be noted that this BSM system is intended to supplement and not to replace safe vehicle operating habits, including proper adjustment and use of the standard equipment inside and outside rear view mirrors.

The BSM system includes the following major components, which are described in further detail elsewhere within this service information:

- **Blind Spot Displays** - Vehicles equipped with the BSM system have an amber Light Emitting Diode (LED) unit mounted on the back of each outside rear view mirror glass case behind the translucent outline of a triangle in the mirror glass. The BSM system illuminates the appropriate triangle icon in amber each time a vehicle is detected in one of the blind spot or rear cross path alert zones.
- **Blind Spot Sensors** - Vehicles equipped with the BSM system have both a Left Blind Spot Sensor (LBSS) and a Right Blind Spot Sensor (RBSS). The LBSS and the RBSS each include a RAdio Detection And Ranging (RADAR) sensor and an integral electronic control unit. Each of the two control units is independent, communicates on the Controller Area Network (CAN) data bus with its respective Driver Door Module (DDM) or Passenger Door Module (PDM), which is hard wired to its respective right or left blind spot display. The LBSS and the RBSS are concealed behind their respective right or left outboard end of the rear bumper fascia, just behind each rear wheel opening.
- **Door Modules**

  - An electronic Driver Door Module (DDM) and Passenger Door Module (PDM) receives electronic messages over the Controller Area Network (CAN) data bus from its respective Left Blind Spot Sensor (LBSS) or Right Blind Spot Sensor (RBSS) to control a hard wired output to the BSM display in its respective outside rear view mirror. The door modules are concealed behind the front door trim panels on each front door inside panel.

- **Electronic Vehicle Information Center** - In vehicles equipped with the optional BSM system, the Electronic Vehicle Information Center (EVIC) within the Instrument Cluster (IC) (also known as the

Instrument Panel Cluster/IPC) may display textual warnings and error messages related to the current operating status of the BSM system.

- **Radio Receiver Module** - The virtual buttons in the touch screen of the optional premium Radio Receiver Module (RRM) (also known as the radio or the head unit) provide an interface that allows the vehicle operator to enable, disable and modify certain BSM system settings using the customer programmable features option.

Hard wired circuitry connects the BSM system components to each other through the electrical system of the vehicle. These hard wired circuits are integral to several wire harnesses, which are routed throughout the vehicle and retained by many different methods. These circuits may be connected to each other and to the vehicle electrical system through the use of a combination of soldered splices, splice block connectors and many different types of wire harness terminal connectors and insulators. Refer to the appropriate wiring information. The wiring information includes wiring diagrams, proper wire and connector repair procedures, further details on wire harness routing and retention, as well as pin out and location views for the various wire harness connectors, splices and grounds.

The BSM system components cannot be adjusted or repaired. If any of the BSM system components becomes damaged or ineffective, that component must be replaced.

CHIME WARNING SYSTEM

A chime warning system is standard factory-installed equipment. The chime warning system uses an electromechanical transducer and an electromechanical relay that are soldered onto the electronic circuit board within the Instrument Cluster (IC) (also known as the Instrument Panel Cluster/IPC) to provide audible indications of various vehicle conditions that may require the attention of the vehicle operator or occupants.

The electromechanical transducer generates beep tones and chime tones, while the electromechanical relay generates click tones to emulate the sounds associated with conventional turn signal and hazard warning flasher operation. The microprocessor-based IC utilizes electronic **chime request** messages received from other modules in the vehicle over the Controller Area Network (CAN) data bus along with hard wired inputs to monitor many sensors and switches throughout the vehicle. In response to those inputs, the circuitry and programming of the IC allow it to control the audible outputs that are produced through its on-board transducer and relay.

The IC is capable of producing the following audible outputs:

- **Slow Rate Repetitive Click** - Repeated **click** tones that are issued at a slow rate of about 90 clicks per minute.
- **Fast Rate Repetitive Click** - Repeated **click** tones that are issued at a fast rate of more than about 180 clicks per minute.
- **Single Chime Tone** - A single **beep** or **chime** tone.
- **Slow Rate Repetitive Chime Tones** - Repeated **chime** tones that are issued at a rate of about 50 chimes per minute.
- **Fast Rate Repetitive Chime Tones** - Repeated **chime** tones that are issued at a rate of about 180 chimes per minute.

Hard wired circuitry connects the IC and the various chime warning system switch and sensor inputs to their modules and to each other through the electrical system of the vehicle. These hard wired circuits are integral to several wire harnesses, which are routed throughout the vehicle and retained by many different methods. These circuits may be connected to each other, to the vehicle electrical system and to the IC through the use of a combination of soldered splices, splice block connectors and many different types of wire harness terminal connectors and insulators. Refer to the appropriate wiring information. The wiring information includes wiring diagrams, proper wire and connector repair procedures, further details on wire harness routing and retention, as well as pin out and location views for the various wire harness connectors, splices and grounds.

The IC chime warning system circuits and components cannot be adjusted or repaired. If the IC circuitry, the on-board transducer or the relay are damaged or ineffective, the IC assembly must be replaced.

FORWARD COLLISION WARNING PLUS

The Forward Collision Warning Plus (FCW+) system is an enhancement to the current vehicles equipped with Adaptive Cruise Control (ACC) and a Forward Facing Camera (FFC). This system uses the FFC for enhanced sensitivity to objects in front of the vehicle. The system utilizes radar and video input to detect whether the vehicle is approaching another vehicle or large obstacle in its path too rapidly and warn/assist the driver in avoiding the incident. The system communicates with other components on the vehicle to apply the brakes and/or to alert the driver through visual and audible warnings. The FCW Plus function operates regardless of whether ACC with stop and go is active or not. The system operates down to 0 mph and provides audible closing/proximity warnings as well as brake pedal vibration.

Forward Collision Warning options and Active Braking settings can be changed. When the vehicle is equipped with a Uconnect® 8.4/8.4A system screen, the Safety and Driving Assistance soft key needs to be selected to access the options menu. When the vehicle is equipped with the Uconnect® 5.0 system, pressing the "+ MORE" hard-key located on the lower right side of the Uconnect® system will bring you to the "Settings" soft key.

The system also monitors the torque sensor inside the EPS to verify the driver's hands remain on the wheel. If no driver's steering input is received for 3-5 seconds, the system alert the driver with audio and visual warning. If the steering wheel continues to receive no torque input from the driver, the FCW+, ACC+ and LDW+ will deactivate. Once the vehicle has achieved road speeds of 60 km/h (37 mph) and below 160 km/h (100 mph), sense the drivers steering input and the FFC can clearly detect the lines in the road, the system will enable again. The system will also disable when the drivers seatbelt is unbuckled while the vehicle is travelling at speeds of 10 mph or greater.

The following is a list of FCW+ operations:

- Utilizes Radar and Video sensors to detect whether the vehicle is approaching another vehicle or large obstacle in its path too rapidly and warn / assist the driver in avoiding / mitigating the incident;
- The driver has the ability to adjust the sensitivity and turn brake support on or off in the radio;
- Prefill: Prepares the brakes for emergency braking;
- Audible & Visual Warnings;
- Brake Jerk: Short deceleration to alert driver;
- CMS (Collision Mitigation System) Up to 1.5 sec of braking to give driver additional reaction time;

- ABA (Advanced Brake Assist) If the driver is not braking enough, ABA will increase the braking to avoid / mitigate the accident. **NOTE: it is important to note the system will use "mitigated" braking to avoid accidents, but will not completely stop the vehicle in all scenarios if an impact is imminent - its purpose is to "warn and assist".**

LANE DEPARTURE WARNING (LDW+)

Haptic Lane Departure Warning Plus (LDW+) - This system is an available option offered on vehicles equipped with Electronic Power Steering (EPS) and the Forward Facing camera (FFC). The system can be turned on or off with a single hard button the Auxiliary Switch Bank Module (ASBM). The LED on the button will inform the driver of the system status when the driver is not on the Drive Assist screen. The system operates when enabled above 60 km/h (37 mph) and below 160 km/h (100 mph).

The LDW+ system issues a warning alert to the driver in case of an unintended lane departure (i.e the driver did not use turn signals beforehand to confirm a planned lane change). The LDW system uses the Forward Facing Camera (FFC) to detect lane markings and measure vehicle position within those lane boundaries. The warning can be audible, visual or haptic feedback to the driver, for example through a vibration in the steering wheel that feels like a virtual "rumble strip" induced by the electronic powered steering (EPS) system. If the driver continues to unintentionally drift out of the lane, the system provides a visual warning to prompt the driver to adjust the vehicle's trajectory to remain within the lane boundaries. When only a single lame marking is detected and the driver unintentionally drifts across the lane marking (again, no turn signal), the LDW system provides a visual warning through the instrument cluster to prompt the driver to remain within the lane. When only a single lane marking is detected, as haptic warning will not be provided. The driver may manually override the haptic warning by applying torque into the steering wheel at any time. The use of the turn signal suppresses the warning.

No Hands Recognition Strategy - When operating conditions have been met, the LDW system will employ a "No Hands Recognition Strategy". The system monitors the torque sensor inside the EPS to verify the driver's hands remain on the wheel. If the hands are not detected, this will cause an audible warning to the driver consisting of left front and right front chimes as well as displaying a visual warning message. The strategy will cancel LDW+ activation if the driver does not return their hands to the wheel.

The driver can configure the torque feedback amount and warning zone start point through personalization settings in the radio. Three settings for each are provided.

The LDW system will indicate the current lane drift condition through the Electronic Vehicle Information Center (EVIC). When the LDW system is ON, the lane lines are gray when the lane boundaries have not been detected and the LDW indicator is solid white.

Changing LDW+ Status:

1. Press the "Controls" soft-key located on the bottom of the Uconnect® system screen.
2. Press the "Settings" soft-key.
3. Press the "Safety and Driving Assistance" soft-key.

Personalization Settings:

- The LDW+ system can be enabled/disabled via an ON/OFF defeat switch with indicator (indicator ON when system is OFF). The indicator will remain ON when a fault is detected in the LDW+ system.
- The LDW+ system retains the last system state (enabled or disabled) from the last ignition cycle when the ignition is changed to the ON/RUN position.
- The LDW+ system has a lane warning sensitivity setting to adjust earliest to latest haptic feedback warning levels (e.g. early, medium, late) located within the personalization settings.
- The LDW+ system retains the last lane warning sensitivity setting from the last ignition cycle when the ignition is changed to the ON/RUN position.
- The LDW+ system has a torque intensity setting to adjust the torque level (e.g. low, medium, high) of the haptic warning located within the personalization settings.
- The LDW+ lane sensitivity and torque intensity settings will not be locked out during driving.

EVIC Lane Detection Display -

3.5 EVIC Screen - Left Lane Departure - Only Left Lane Detected (Right Side Similar) :

- When the LDW system is ON, the LDW indicator is solid white when only the left lane marking has been detected and the system is ready to provide visual warnings in the EVIC if an unintentional lane departure occurs.
- When the LDW system senses that the lane has been approached and is in a lane cross situation, the left thick lane line flashes from gray to flashing white, the left thin line remains solid and the LDW indicator changes from solid white to a flashing yellow.

Left Lane Departure - Both Lanes Detected:

- When the LDW system is ON, the lane lines turn from gray to white to indicate that the lane markings have been detected. The LDW indicator is solid green when both lane marking have been detected and the system is "armed" to provide visual warnings in the EVIC and a torque warning in the steering wheel if an unintentional lane departure occurs.
- When the LDW system sense a lane cross situation, the left thick lane line turns solid white, the right thin line remains solid white. The LDW indicator changes from solid green to solid yellow. At this time torque is applied to the steering wheel in the opposite direction of the lane boundary. For example, if approaching the left side of the lane, the steering wheel will torque to the right side.
- When the LDW system senses the lane has been approached and is in a lane cross situation, the left thick lane line flashes from white to gray, the right thin line remains solid white and the LDW indicator changes from solid yellow to flashing yellow. At this time torque is applied to the steering wheel in the opposite direction of the lane boundary. For example, if approaching the left side of the lane, the steering wheel will torque to the right side.

7.0 EVIC Screen - Left Lane Departure - Only Left Lane Detected (Right Side Similar)

- When the LDW system is on, the lane lines are gray when the lane boundaries have not been detected and the LDW indicator is solid white.

- When the LDW system is ON, the LDW indicator is solid white when only the left lane marking has been

detected and the system is ready to provide visual warning in the EVIC if an unintentional lane departure occurs.

- When the LDW system senses the lane has been approached and is in a lane cross situation, the left lane line flashes think yellow and the right lane line remains grey.

Left Lane Departure - Both Lanes Detected:

- When the LDW system is ON, the lane lines turn from gray to white to indicate that the lane marking have been detected. The LDW indicator is solid green when both lane markings have been detected and the system is "armed" to provide visual warning in the EVIC and a torque warning in the steering wheel if an unintentional lane departure occurs.
- When the LDW system sense a lane cross situation, the left lane line changes to think yellow and the right lane line. The LDW indicator changes from solid green to solid yellow. At this time torque is applied to the steering wheel in the opposite direction of the lane boundary.
- When the LDW system senses the lane has been approached and is in a lane cross situation, the left lane line flashes yellow and the right lane line remains white. The LDW indicator changes from solid yellow to flashing yellow. At this time, torque is applied to the steering wheel in the opposite direction of the lane boundary.

PARK ASSIST SYSTEM

A park assist system is an optional factory-installed electronic parking aid. There are also three distinct versions of the park assist system. The three versions can be readily identified by noting the quantity of ultrasonic sensors installed and the sensor location in the rear or the front and rear bumper fascias. Additional details of each of these versions and their components can be found elsewhere in this service information.

- **Rear Park Assist** - The Rear Park Assist (RPA) alerts the vehicle operator to obstacles located in the path immediately behind the vehicle. This system has four radar sensors, all installed in the rear bumper fascia.
- **Front and Rear Park Assist** - The Front and Rear Park Assist (FRPA) alerts the vehicle operator to obstacles located in the path immediately in front of the vehicle as well as those behind. This system has ten radar sensors, four installed in the rear bumper fascia and six installed in the front bumper fascia. In vehicles equipped with an automatic transmission, the FRPA can also provide an additional autonomous braking alert (also known as stop and release) feature when the automatic transmission gear selector is in Reverse (**R**) and certain obstacles are detected at the rear of the vehicle. The autonomous braking feature is not available in vehicles equipped with a manual transmission.
- **Parallel and Perpendicular Park Assist** - The Parallel and Perpendicular Park Assist (PPPA) includes all of the features of the FRPA, but adds semiautomatic parallel and perpendicular parking assistance features. This system has twelve radar sensors, six installed in the rear bumper fascia and six installed in the front bumper fascia.

Hard wired circuitry connects the RPA, FRPA or PPPA components to the electrical system of the vehicle. These hard wired circuits are integral to several wire harnesses, which are routed throughout the vehicle and retained by many different methods. These circuits may be connected to each other, to the vehicle electrical system and to the RPA, FRPA or PPPA components through the use of a combination of soldered splices, splice block connectors and many different types of wire harness terminal connectors and insulators. Refer to the

appropriate wiring information. The wiring information includes wiring diagrams, proper wire and connector repair procedures, further details on wire harness routing and retention, as well as pin out and location views for the various wire harness connectors, splices and grounds.

The RPA, FRPA and PPPA system components cannot be adjusted or repaired. If any of these components is damaged or ineffective, that component must be replaced.

REAR PARK ASSIST

A Rear Park Assist (RPA) system is an optional factory-installed electronic parking aid. During parking and other similar vehicle maneuvers this system alerts the vehicle operator to the approximate relative distance of obstacles located in the path immediately behind the vehicle which, due to the surrounding rear vehicle structure, might be otherwise difficult to perceive. When an obstacle is detected, the system uses graphics and chimes to provide the vehicle operator with visual and audible indications of the presence and proximity of such objects.

The RPA system includes the following major components, which are described in further detail elsewhere in this service information:

- **Body Control Module** - The Body Control Module (BCM) serves as the gateway between the Controller Area Network (CAN) C and the CAN Interior High Speed (IHS) data bus networks used to communicate between the Park Assist Module (PAM), the Instrument Cluster (IC) (also known as the Instrument Panel Cluster/IPC) and the Radio Receiver Module (RRM) (also known as the radio or the head unit).
- **Instrument Cluster** - In vehicles equipped with the optional RPA system, the Electronic Vehicle Information Center (EVIC) within the Instrument Cluster (IC) (also known as the Instrument Panel Cluster/IPC) displays vehicle graphics and amber or red arc sections that illustrate the approximate location and relative distance of obstacles within the rear path of the vehicle. The EVIC also displays textual warnings and error messages along with issuing audible alerts related to the current operating status of the RPA system.
- **Park Assist Module** - Vehicles equipped with the RPA system include a 4 channel Park Assist Module (PAM) (also known as the ParkTronic System/PTS module), which is secured through integral mounting tabs to weld studs on the left quarter inner panel just behind the left rear wheel house, where it is concealed beneath the quarter inside trim within the cargo area of the vehicle.
- **Park Assist Off Switch** - The optional RPA system can be manually disabled or enabled using a park assist Off switch. The park assist Off switch is integral to the instrument panel switch pod (also known as the Accessory Switch Bank Module/ASBM) in the instrument panel center stack below the heater and air conditioner controls. This switch allows the operator to turn the RPA system Off.
- **Park Assist Sensors** - Vehicles equipped with the RPA system have four ultrasonic park assist sensors that are concealed behind the rear bumper fascia. Only the sensor membrane is visible on the outer surface of the rear bumper fascia. Each sensor is snapped into an individual molded plastic mounting bracket located at horizontal intervals along the inside surface of the rear bumper fascia.
- **Radio Receiver Module** - In vehicles equipped with the RPA system, the PAM sends electronic message requests to the RRM to generate audible signals indicating the approximate distance of obstacles from the rear path of the vehicle. The RRM is capable of generating repetitive single chime tones at several varying frequencies or continuous tones through the rear audio system speakers. If the audio system speakers are already in use, the RRM will mute that output during chime tone generation. In addition, the

RRM provides an interface that allows the vehicle operator to manually disable or enable the RPA system using the customer programmable features option.

FRONT AND REAR PARK ASSIST

A Front and Rear Park Assist (FRPA) system is an optional factory-installed electronic parking aid. During parking and other similar vehicle maneuvers this system alerts the vehicle operator to the approximate relative distance of obstacles located in the paths immediately behind and ahead of the vehicle which, due to the surrounding vehicle structures, might be otherwise difficult to perceive. When an obstacle is detected, the system uses graphics and chimes to provide the vehicle operator with visual and audible indications of the presence and proximity of such objects.

The FRPA is also capable of providing an autonomous brake warning (also known as brake and release) feature. When enabled, this feature will alert the vehicle operator when the automatic transmission gear selector is in the Reverse (**R**) position and an object is detected in the rear path of the vehicle by aggressively applying and releasing the brakes. Following an autonomous brake warning application, an icon representing the rear of the vehicle with three red arcs and the text **BRAKE!** will appear in the Electronic Vehicle Information Center (EVIC) within the Instrument Cluster (IC) (also known as the Instrument Panel Cluster/IPC). This brake warning feature is not available in vehicles equipped with a manual transmission.

The FRPA system includes the following major components, which are described in further detail elsewhere in this service information:

- **Antilock Brake Module** - The Antilock Brake Module (ABM) controls the application of the vehicle brakes to implement the autonomous brake warning feature when it receives the appropriate electronic message input over the Controller Area Network (CAN) data bus from the Park Assist Module (PAM).
- **Body Control Module** - The Body Control Module (BCM) serves as the gateway between the Controller Area Network (CAN) C and the CAN Interior High Speed (IHS) data bus networks used to communicate between the Park Assist Module (PAM), the Antilock Brake Module (ABM), the Instrument Cluster (IC) (also known as the Instrument Panel Cluster/IPC) and the Radio Receiver Module (RRM).
- **Instrument Cluster** - In vehicles equipped with the optional FRPA system, the Electronic Vehicle Information Center (EVIC) within the Instrument Cluster (IC) (also known as the Instrument Panel Cluster/IPC) displays vehicle graphics and amber or red arc sections that illustrate the approximate location of obstacles within the front or rear paths of the vehicle. The EVIC also displays textual warnings and error messages along with issuing audible alerts related to the current operating status of the FRPA system.
- **Park Assist Module** - Vehicles equipped with the FRPA system include a 10 channel Park Assist Module (PAM) (also known as the ParkTronic System/PTS module), which is secured through integral mounting tabs to weld studs on the left quarter inner panel just behind the left rear wheel house, where it is concealed beneath the quarter inside trim within the cargo area of the vehicle.
- **Park Assist Off Switch** - The optional FRPA system can be manually disabled or enabled using a park assist Off switch. The park assist Off switch is integral to the instrument panel switch pod (also known as the Accessory Switch Bank Module/ASBM) in the instrument panel center stack below the heater and air conditioner controls. This switch allows the operator to turn the FRPA system Off.
- **Park Assist Sensors** - Vehicles equipped with the FRPA system have ten ultrasonic park assist sensors. Four are concealed behind the rear bumper fascia and six are concealed behind the front bumper fascia.

Only the sensor membrane is visible on the outer surface of the bumper fascia. Each sensor is snapped into an individual molded plastic mounting bracket located at horizontal intervals along the inside surfaces of the front and rear bumper fascias.

- **Radio Receiver Module** - In vehicles equipped with the FRPA system, the PAM sends electronic message requests to the RRM to generate audible signals indicating the approximate distance of obstacles from the front and rear paths of the vehicle. The RRM is capable of generating repetitive single chime tones at several varying frequencies or continuous tones through the front or rear audio system speakers. If the audio system speakers are already in use, the RRM will mute that output during chime tone generation. In addition, the RRM provides an interface that allows the vehicle operator to manually disable or enable the FRPA system using the customer programmable features option.

PARALLEL AND PERPENDICULAR PARK ASSIST

A Parallel and Perpendicular Park Assist (PPPA) system is an optional factory-installed electronic parking aid. During parking and other similar vehicle maneuvers this system alerts the vehicle operator to the approximate relative distance of obstacles located in the paths immediately behind and ahead of the vehicle which, due to the surrounding vehicle structures, might be otherwise difficult to perceive. When an obstacle is detected, the system uses graphics and chimes to provide the vehicle operator with visual and audible indications of the presence and proximity of such objects.

The PPPA is also capable of providing an autonomous brake warning (also known as brake and release) feature. When enabled, this feature will alert the vehicle operator when the automatic transmission gear selector is in the Reverse (**R**) position and an object is detected in the rear path of the vehicle by aggressively applying and releasing the brakes. Following an autonomous brake warning application, an icon representing the rear of the vehicle with three red arcs and the text **BRAKE!** will appear in the Electronic Vehicle Information Center (EVIC) within the Instrument Cluster (IC) (also known as the Instrument Panel Cluster/IPC). This brake warning feature is not available in vehicles equipped with a manual transmission.

Finally, the PPPA provides a semiautomatic parallel and perpendicular park assist feature. When enabled, this feature will identify a suitable parking spot and help to steer the vehicle into a selected parallel or perpendicular parking spot accordingly.

The PPPA system includes the following major components, which are described in further detail elsewhere in this service information:

- **Antilock Brake Module** - The Antilock Brake Module (ABM) controls the application of the vehicle brakes to implement the autonomous brake warning feature when it receives the appropriate electronic message input over the Controller Area Network (CAN) data bus from the Park Assist Module (PAM).
- **Body Control Module** - The Body Control Module (BCM) serves as the gateway between the Controller Area Network (CAN) C and the CAN Interior High Speed (IHS) data bus networks used to communicate between the Park Assist Module (PAM), the Antilock Brake Module (ABM), the Electronic Power Steering (EPS) module, the Instrument Cluster (IC) (also known as the Instrument Panel Cluster/IPC) and the Radio Receiver Module (RRM).
- **Electronic Power Steering Module** - The Electronic Power Steering (EPS) module controls the vehicle steering in order to maneuver the vehicle into a selected parallel or perpendicular parking space based upon electronic message inputs received over the Controller Area Network (CAN) data bus from the Park Assist Module (PAM).

- **Instrument Cluster** - In vehicles equipped with the optional PPPA system, the Electronic Vehicle Information Center (EVIC) within the Instrument Cluster (IC) (also known as the Instrument Panel Cluster/IPC) displays vehicle graphics and amber or red arc sections that illustrate the approximate location of obstacles within the front or rear paths of the vehicle. The EVIC displays graphics and text to support the parallel and perpendicular parking features, textual warnings and error messages along with issuing audible alerts related to the current operating status of the PPPA system.
- **Parallel And Perpendicular Park Assist On Switch** - The Parallel and Perpendicular Park Assist (PPPA) features of the optional PPPA system can be selected and toggled using a PPPA On switch. The PPPA On switch is integral to the instrument panel switch pod (also known as the Accessory Switch Bank Module/ASBM) in the instrument panel center stack below the heater and air conditioner controls. This switch allows the operator to turn the PPPA features On and toggle between the parallel and the perpendicular park assist features.
- **Park Assist Module** - Vehicles equipped with the PPPA system include a 12 channel Park Assist Module (PAM) (also known as the ParkTronic System/PTS module), which is secured through integral mounting tabs to weld studs on the left quarter inner panel just behind the left rear wheel house, where it is concealed beneath the quarter inside trim within the cargo area of the vehicle.
- **Park Assist Off Switch** - The optional PPPA system can be manually disabled or enabled using a park assist Off switch. The park assist Off switch is integral to the instrument panel switch pod (also known as the Accessory Switch Bank Module/ASBM) in the instrument panel center stack below the heater and air conditioner controls. This switch allows the operator to turn the FRPA system Off.
- **Park Assist Sensors** - Vehicles equipped with the PPPA system have twelve ultrasonic park assist sensors. Six are concealed behind the rear bumper fascia and six are concealed behind the front bumper fascia. Only the sensor membrane is visible on the outer surface of the bumper fascia. Each sensor is snapped into an individual molded plastic mounting bracket located at horizontal intervals along the inside surfaces of the front and rear bumper fascias.
- **Radio Receiver Module** - In vehicles equipped with the PPPA system, the PAM sends electronic message requests to the RRM to generate audible signals indicating the approximate distance of obstacles from the front and rear paths of the vehicle. The RRM is capable of generating repetitive single chime tones at several varying frequencies or continuous tones through the front or rear audio system speakers. If the audio system speakers are already in use, the RRM will mute that output during chime tone generation. In addition, the RRM provides an interface that allows the vehicle operator to manually disable or enable the PPPA system using the customer programmable features option.

OPERATION

BLIND SPOT MONITOR SYSTEM

The primary components of the Blind Spot Monitor (BSM) system are the micro-controller based Electronic Control Units (ECU) integral to each of the two RAdio Detection And Ranging (RADAR) sensors, one behind each outboard side of the rear bumper fascia. Each ECU operates on battery current received from a fuse in the interior Power Distribution Center (PDC) whenever the status of the ignition switch is On, and the ECU has a path to ground at all times through a take out and eyelet terminal of the body wire harness that is secured to the body sheet metal. Each of these ECU communicate with each other as well as with other electronic modules in the vehicle over the Controller Area Network (CAN) data bus network.

The BSM system ECU continually monitor all of the BSM system circuits and components for readiness, and will store a Diagnostic Trouble Code (DTC) for any fault that is detected. The ECU also communicate with a diagnostic scan tool over the CAN data bus. When a BSM system ECU stores a DTC, it sends an electronic request message to the Electronic Vehicle Information Center (EVIC) in the Instrument Cluster (IC) (also known as the Instrument Panel Cluster/IPC) and a **SERVICE BLIND SPOT SYSTEM** or **BLIND SPOT SYSTEM TEMPORARILY UNAVAILABLE** textual message is displayed by the EVIC to alert the vehicle operator.

The BSM system ECU also monitor electronic messages received over the CAN data bus from the Radio Receiver Module (RRM) (also known as the radio or the head unit) indicating the customer programmable features settings for the BSM system. The BSM system ECU receive and analyze data inputs directly from the radar sensors, calculate and provide the proper hard wired outputs to illuminate the visual alert displays in their respective right or left outside rear view mirrors, as well as calculate and communicate the proper audible alert output requests to the RRM over the CAN data bus.

The BSM radar sensors allow the BSM system ECU to locate and identify nearby objects of interest meeting the criteria established by algorithms within the system software. The BSM displays provide the vehicle operator with a visual alert indicating that an object of interest has been detected within one of the vehicle detection zones. The BSM audible alerts are then issued by the RRM through the appropriate audio system speakers based upon electronic **audible alert request** messages received from the BSM system ECU. The BSM system ECU also send electronic **radio mute request** messages over the CAN data bus to the RRM whenever an audible alert is requested. This message activates the radio mute function while the audible alert is being sounded, then resumes normal radio function when the alert is completed.

The hard wired circuits between components related to the BSM system may be diagnosed using conventional diagnostic tools and procedures. Refer to the appropriate wiring information. The wiring information includes wiring diagrams, proper wire and connector repair procedures, details of wire harness routing and retention, connector pin out information and location views for the various wire harness connectors, splices and grounds.

However, conventional diagnostic methods will not prove conclusive in the diagnosis of the BSM system or the electronic controls and communication between ECU and other devices that provide some features of this system. The most reliable, efficient and accurate means to diagnose the BSM system or the ECU and communication related to BSM system operation requires the use of a diagnostic scan tool. Refer to the appropriate diagnostic information.

BLIND SPOT MONITOR MODE

Unless disabled in the customer programmable features settings received through the Radio Receiver Module (RRM) (also known as the radio or the head unit), the Blind Spot Monitor (BSM) mode is active only when the manual transmission gear selector is in a position other than Reverse (**R**) or the automatic transmission gear selector is in a position other than Reverse (**R**) or Park (**P**). The BSM mode is intended to provide a visual alert to the driver when a target vehicle (object of interest) is located in the lane adjacent to and just behind either outside rear view mirror (the detection zone), in the blind spot area where vision of target vehicles may be inhibited by the rear structure of the host vehicle. If a turn signal is activated in the host vehicle in the same direction as that in which the target vehicle is located, an audible alert tone will also be generated. The audible alerts of the BSM mode are not active unless the turn signal is activated.

The width of the BSM mode detection zone covers one traffic lane over on each side of the host vehicle, approximately 4.0 meters (13 feet). The length of the BSM mode detection zone starts at the outside rear view mirror and extends approximately 4.5 meters (15 feet) rearward from the rear edge of the rear fascia. The BSM mode visual alerts are activated immediately if an object of interest is within the detection zone and meets the warning criteria. However, the BSM system will not activate these alerts if:

- The object of interest (target vehicle) comes from the rear of the detection zone and passes the host vehicle at a speed greater that 50 kilometers-per-hour (31 miles-per-hour).
- The object of interest (target vehicle) enters the detection zone from the front and remains in the zone for less than 1.5 seconds.
- The object of interest (target vehicle) passes through the detection zone with a relative speed greater than 20 kilometers-per-hour (12 miles-per-hour).
- The object of interest (target vehicle) passes the host vehicle from the opposite direction.

The BSM mode audible alert may be deactivated if the operator prefers using the customer programmable features settings within the RRM. The BSM mode can be configured for visual and audible alerts, visual alerts only or for the entire BSM system (including Rear Cross Path/RCP mode) to be turned Off.

REAR CROSS PATH MODE

Unless disabled in the customer programmable features settings received through the Radio Receiver Module (RRM) (also known as the radio or the head unit), the Blind Spot Monitor (BSM) system provides a feature called Rear Cross Path (RCP) mode. The RCP mode is active only when the transmission gear selector (manual or automatic) is in the Reverse (**R**) position. The RCP mode is intended to aid the driver when backing out of parking spaces where vision of vehicles crossing laterally through the rear path of the host vehicle may be blocked. The host vehicle must proceed slowly and cautiously out of the parking space until the rear end of the vehicle is exposed. The BSM radar sensors will then have a clear view of the crossing traffic and, if an oncoming vehicle (object of interest) is detected, will generate visual and audible alerts to the operator of the host vehicle.

The BSM system monitors the rear detection zones on both sides of the vehicle for objects that are moving toward the side of the vehicle with speeds of from 1 to 3 kilometers-per-hour (1 to 2 miles-per-hour) up to 35 kilometers-per-hour (22 miles-per-hour), such as typically encountered in parking lot situations. In vehicles equipped with the BSM option, the RCP mode is enabled from the factory as a default. The RCP mode can be manually disabled and enabled by the vehicle operator using the customer programmable features option of the RRM.

The RCP mode normally uses the same BSM system customer programmable features settings. However, the RCP mode will always include the audible alert feature, even if it was disabled for the BSM mode using the RRM customer programmable features settings. The audible alert can not be deactivated for the RCP mode. The RCP mode visual alert is illuminated only in the display located on the same side of the vehicle where the object of interest is detected. Likewise, the RCP mode repeating short audible alert is issued only through the audio system speakers located on the same side of the vehicle where the object of interest is detected.

STANDBY MODE

The Blind Spot Monitor (BSM) system remains in standby mode as long as the park brake is applied in a

vehicle with a manual transmission, or while the automatic transmission gear selector lever is in the Park (**P**) position. In the standby mode the system receives vehicle information, responds to changes in customer programmable features settings received through the Radio Receiver Module (RRM) (also known as the radio or the head unit) and can perform limited self-diagnostics indicating hard system fault conditions.

CHIME WARNING SYSTEM

The chime warning system operates on battery current received from the Body Control Module (BCM) on a non-switched fused B(+) circuit so that the system may operate regardless of the ignition switch status. The chime warning system also monitors the ignition switch status so that some chime features are functional only when the status of the ignition switch is On, while other features are functional regardless of the ignition switch status.

In nearly every instance the chime warning system simply provides an audible output to support a visual indication provided by a gauge or an indicator in the Instrument Cluster (IC) (also known as the Instrument Panel Cluster/IPC), or a textual message displayed by the Electronic Vehicle Information Center (EVIC). Outputs of the system include the following:

- **Battery Voltage Low Warning** - The IC transducer will generate one short chime when the **BATTERY VOLTAGE LOW** textual message is displayed in the EVIC. This warning indicates that the monitored electrical system voltage is low. This chime will only occur once during any ignition cycle.
- **Blind Spot Detection Temporarily Unavailable Warning** - The IC transducer will generate one short chime when the **BLIND SPOT DETECTION TEMPORARILY UNAVAILABLE** textual message is displayed in the EVIC. This warning indicates that the optional Blind Spot Monitor (BSM) system has been automatically disabled temporarily.
- **Blind Spot Detection Unavailable - Astronomy Zone Warning** - The IC transducer will generate one short chime when the **BLIND SPOT DETECTION UNAVAILABLE - ASTRONOMY ZONE** textual message is displayed in the EVIC. This warning indicates that the optional Blind Spot Monitor (BSM) system has been automatically turned Off.
- **Blind Spot Detection Unavailable - Wipe Off Rear Bumper Warning** - The IC transducer will generate one short chime when the **BLIND SPOT DETECTION UNAVAILABLE - WIPE OFF REAR BUMPER** textual message is displayed in the EVIC. This warning indicates that the optional Blind Spot Monitor (BSM) system has been automatically disabled due to an accumulation of road film, snow or ice on the rear bumper fascia that must be removed. This chime will occur each time the BSM system features would normally be employed.
- **Blind Spot System Off Warning** - The IC transducer will generate one short chime when the **BLIND SPOT SYSTEM OFF** textual message is displayed in the EVIC. This warning indicates that the optional Blind Spot Monitor (BSM) system has been manually turned Off by the vehicle operator.
- **Brake Fluid Low Warning** - The IC transducer will generate one short chime when the **BRAKE FLUID LOW** textual message is displayed in the EVIC. This warning indicates that the fluid level in the brake master cylinder is low. This chime will only occur once during any ignition cycle.
- **Check Fuel Cap Warning** - The IC transducer will generate one short chime when the **CHECK FUEL CAP** textual message is displayed in the EVIC. This warning indicates that the fuel cap is loose or not installed while the engine is running.
- **Door Open Warning** - The IC transducer will generate repetitive chimes at a slow rate when a **DOOR**

OPEN or **DOORS OPEN** textual message is displayed in the EVIC. This warning indicates that a door is, or multiple doors are not closed or completely latched while the vehicle is moving.

- **Driver Seat Belt Unbuckled Warning** - The IC transducer will generate repetitive chimes at a slow rate when the **DRIVER SEATBELT UNBUCKLED** textual message is displayed in the EVIC. This warning indicates that the driver side front seat belt is unbuckled while the vehicle is moving.
- **Engine Temperature Too Hot Warning** - The IC transducer will generate repetitive chimes at a slow rate when the **ENGINE TEMPERATURE TOO HOT** textual message is displayed in the EVIC. This warning indicates that the monitored engine coolant temperature is too hot. This chime will only recur during an ignition cycle if the engine coolant temperature cycles below the temperature threshold and back to above that threshold once again.
- **Front Seat Belts Unbuckled Warning** - The IC transducer will generate repetitive chimes at a slow rate when the **FRONT SEAT BELTS UNBUCKLED** textual message is displayed in the EVIC. This warning indicates that both the driver side and passenger side front seat belts are unbuckled while the vehicle is moving.
- **Fuel Low Warning** - The IC transducer will generate one short chime when the **FUEL LOW** textual message is displayed in the EVIC. This warning indicates that the monitored fuel level in the fuel tank is low. This chime will only occur once during any ignition cycle.
- **Headlight Out Warning** - The IC transducer will generate one short chime when the **HEADLIGHT OUT** textual message is displayed in the EVIC. This warning indicates that a Diagnostic Trouble Code (DTC) has been set for a fault monitored in a low beam headlight circuit. This chime will only occur once during any ignition cycle.
- **High Beam Headlight Out Warning** - The IC transducer will generate one short chime when the **HIGH BEAM HEADLIGHT OUT** textual message is displayed in the EVIC. This warning indicates that a Diagnostic Trouble Code (DTC) has been set for a fault monitored in a high beam headlight circuit. This chime will only occur once during any ignition cycle.
- **Ignition Or Accessory On, Lights On Warning** - The IC transducer will generate repetitive chimes at a slow rate when the **IGNITION OR ACCESSORY ON, LIGHTS ON** textual message is displayed in the EVIC. This warning indicates that the status of the ignition switch, an accessory system and the exterior lighting is On with the driver side front door open. The chimes will continue to sound until the status of the ignition switch, all accessory systems and the exterior lighting system is Off, or until the driver side front door is closed, whichever occurs first.
- **Inflate Tire Warning** - The IC transducer will generate one short chime when the **INFLATE TIRE TO XX Kpa (PSI)** textual message is displayed in the EVIC. This warning indicates that the Tire Pressure Monitor (TPM) system has detected a tire with a low inflation pressure. This chime will only occur once during any ignition cycle.
- **Key Fob Has Left Vehicle Warning** - The IC transducer will generate repetitive chimes at a slow rate when the **KEY FOB HAS LEFT VEHICLE** textual message is displayed in the EVIC. This warning indicates that the optional Keyless Go (KG) system will not operate until a valid key fob is detected within the vehicle.
- **Key Fob Not Detected Warning** - The IC transducer will generate repetitive chimes at a slow rate when the **KEY FOB NOT DETECTED** textual message is displayed in the EVIC. This warning indicates that the optional Keyless Go (KG) system will not operate until a valid key fob is detected within the vehicle.
- **Key In Ignition And Lights On Warning** - The IC transducer will generate repetitive chimes at a slow rate when the **KEY IN IGNITION AND LIGHTS ON** textual message is displayed in the EVIC. This warning indicates that the key is in the ignition switch and the exterior lighting system is turned On. The

chimes will continue to sound until the key is removed from the ignition switch or the exterior lighting system is turned Off, whichever occurs first.

- **Key In Ignition Warning** - The IC transducer will generate repetitive chimes at a fast rate when the **KEY IN IGNITION** textual message is displayed in the EVIC. This warning indicates that the key is in the ignition switch with the driver side front door open. The chimes will continue to sound until the key is removed from the ignition switch or the driver side front door is closed, whichever occurs first.
- **Left Turn Signal Light Out Warning** - The IC transducer will generate one short chime when the **LEFT TURN SIGNAL LIGHT OUT** textual message is displayed in the EVIC. This warning indicates that a Diagnostic Trouble Code (DTC) has been set for a fault monitored in a left turn signal light circuit. This chime will only occur once during any ignition cycle.
- **Lights On Warning** - The IC transducer will generate repetitive chimes at a slow rate when the **LIGHTS ON** textual message is displayed in the EVIC. This warning indicates that the exterior lighting is turned On while the status of the ignition switch is Off. The chimes will continue to sound until the exterior lighting is turned Off or the ignition switch transitions to a status other than Off, whichever occurs first.
- **Oil Change Due Warning** - The IC transducer will generate one short chime when the **OIL CHANGE DUE** textual message is displayed in the EVIC. This warning indicates that the monitored engine oil change interval has been surpassed. This chime will only occur once during any ignition cycle.
- **Oil Pressure Low Warning** - The IC transducer will generate one short chime when the **OIL PRESSURE LOW** textual message is displayed in the EVIC. This warning indicates that the monitored engine oil pressure is low.
- **Park Assist Sensor Fail Warning** - The IC transducer will generate one short chime when the **PARK ASSIST SENSOR FAIL** textual message is displayed in the EVIC. This warning indicates that a sensor of the optional park assist system has failed.
- **Park Assist System Disabled Warning** - The IC transducer will generate one short chime when the **PARK ASSIST SYSTEM DISABLED** textual message is displayed in the EVIC. This warning indicates that the optional park assist system has been automatically disabled due to a fault in a monitored circuit or component of the system. This chime will occur each time the park assist system features would normally be employed.
- **Park Assist Unavailable - Wipe Off Sensors Warning** - The IC transducer will generate one short chime when the **PARK ASSIST UNAVAILABLE - WIPE OFF SENSORS** textual message is displayed in the EVIC. This warning indicates that the optional park assist system has been automatically disabled due to an accumulation of road film, snow or ice on the sensor membrane that must be removed. This chime will occur each time the park assist system features would normally be employed.
- **Parking Brake Engaged Warning** - The IC transducer will generate one short chime when the **PARKING BRAKE ENGAGED** textual message is displayed in the EVIC. This warning indicates that the parking brake is engaged while the vehicle is moving. This chime will only occur once during any ignition cycle.
- **Parking Light Out Warning** - The IC transducer will generate one short chime when the **PARKING LIGHT OUT** textual message is displayed in the EVIC. This warning indicates that a Diagnostic Trouble Code (DTC) has been set for a fault monitored in a parking light circuit. This chime will only occur once during any ignition cycle.
- **Passenger Seat Belt Unbuckled Warning** - The IC transducer will generate repetitive chimes at a slow rate when the **PASSENGER SEATBELT UNBUCKLED** textual message is displayed in the EVIC. This warning indicates that the passenger side front seat belt is unbuckled while the vehicle is moving.

- **Plate Light Out Warning** - The IC transducer will generate one short chime when the **PLATE LIGHT OUT** textual message is displayed in the EVIC. This warning indicates that a Diagnostic Trouble Code (DTC) has been set for a fault monitored in a license plate light circuit. This chime will only occur once during any ignition cycle.
- **Rain Sensor Failure Warning** - The IC transducer will generate one short chime each time the **RAIN SENSOR FAILURE** textual message is displayed in the EVIC. This warning indicates that a Diagnostic Trouble Code (DTC) has been set for a fault monitored in the rain sensor in vehicles equipped with the optional automatic windshield wiper system. This chime will only occur once during any ignition cycle.
- **Reverse Light Out Warning** - The IC transducer will generate one short chime when the **REVERSE LIGHT OUT** textual message is displayed in the EVIC. This warning indicates that a Diagnostic Trouble Code (DTC) has been set for a fault monitored in a reverse (or backup) light circuit. This chime will only occur once during any ignition cycle.
- **Right Turn Signal Light Out Warning** - The IC transducer will generate one short chime when the **RIGHT TURN SIGNAL LIGHT OUT** textual message is displayed in the EVIC. This warning indicates that a Diagnostic Trouble Code (DTC) has been set for a fault monitored in a right turn signal light circuit. This chime will only occur once during any ignition cycle.
- **Service Airbag System Warning** - The IC transducer will generate one short chime each time the **SERVICE AIRBAG SYSTEM** textual message is displayed in the EVIC. This warning indicates that a Diagnostic Trouble Code (DTC) has been set for a fault monitored in a circuit or component of the Supplemental Restraint System (SRS). This chime will only occur once during any ignition cycle.
- **Service Airbag Warning Light** - The IC transducer will generate one short chime each time the **SERVICE AIRBAG WARNING LIGHT** textual message is displayed in the EVIC. This warning indicates that a Diagnostic Trouble Code (DTC) has been set for a fault monitored in the airbag indicator circuit of the Supplemental Restraint System (SRS). This chime will only occur once during any ignition cycle.
- **Service Antilock Brake System Warning** - The IC transducer will generate one short chime each time the **SERVICE ANTILOCK BRAKE SYSTEM WARNING** textual message is displayed in the EVIC. This warning indicates that a Diagnostic Trouble Code (DTC) has been set for a fault monitored in a circuit or component of the Antilock Brake System (ABS). This chime will only occur once during any ignition cycle.
- **Service Blind Spot System Warning** - The IC transducer will generate one short chime each time the **SERVICE BLIND SPOT SYSTEM** textual message is displayed in the EVIC. This warning indicates that a Diagnostic Trouble Code (DTC) has been set for a fault monitored in a circuit or component of the optional Blind Spot Monitor (BSM) system. This chime will only occur once during any ignition cycle.
- **Service Electronic Braking System Warning** - The IC transducer will generate one short chime each time the **SERVICE ELECTRONIC BRAKING SYSTEM** textual message is displayed in the EVIC. This warning indicates that a Diagnostic Trouble Code (DTC) has been set for a fault monitored in a circuit or component of the electronic braking system. This chime will only occur once during any ignition cycle.
- **Service Electronic Throttle Control Warning** - The IC transducer will generate one short chime each time the **SERVICE ELECTRONIC THROTTLE CONTROL** textual message is displayed in the EVIC. This warning indicates that a Diagnostic Trouble Code (DTC) has been set for a fault monitored in a circuit or component of the Electronic Throttle Control (ETC) system. This chime will only occur once during any ignition cycle.
- **Service Keyless System Warning** - The IC transducer will generate one short chime when the

SERVICE KEYLESS SYSTEM textual message is displayed in the EVIC. This warning indicates that a Diagnostic Trouble Code (DTC) has been set for a fault monitored in a circuit or component of the optional Passive Entry Keyless Go (PEKG) system.

- **Service Park Assist System Warning** - The IC transducer will generate one short chime when the **SERVICE PARK ASSIST SYSTEM** textual message is displayed in the EVIC. This warning indicates that a Diagnostic Trouble Code (DTC) has been set for a fault monitored in a circuit or component of the optional park assist system. This chime will only occur once during any ignition cycle.
- **Service Power Steering Warning** - The IC transducer will generate one short chime when the **SERVICE POWER STEERING** textual message is displayed in the EVIC. This warning indicates that a Diagnostic Trouble Code (DTC) has been set for a fault monitored in a circuit or component of the electric power steering system. This chime will only occur once during any ignition cycle.
- **Service Tire Pressure System Warning** - The IC transducer will generate one short chime each time the **SERVICE TIRE PRESSURE SYSTEM** textual message is displayed in the EVIC. This warning indicates that a Diagnostic Trouble Code (DTC) has been set for a fault monitored in a circuit or component of the Tire Pressure Monitor (TPM) system. This chime will only occur once during any ignition cycle.
- **Traction Control Off Warning** - The IC transducer will generate one short chime when the **TRACTION CONTROL OFF** textual message is displayed in the EVIC. This warning indicates that the Electronic Stability Control (ESC) has been manually turned Off by the vehicle operator.
- **Trunk Open Warning** - The IC transducer will generate repetitive chimes at a slow rate when the **TRUNK OPEN** textual message is displayed in the EVIC. This warning indicates that the trunk (deck lid) is not closed or completely latched while the vehicle is moving.
- **Turn Signal Indication** - The IC relay will generate repetitive clicks at a slow rate whenever a turn signal is active. The clicks will occur at a fast rate when a turn signal bulb outage is detected.
- **Turn Signal On Reminder** - The IC transducer will generate repetitive chimes at a slow rate when the **TURN SIGNAL ON** textual message is displayed in the EVIC. This reminder indicates that a turn signal has been active continuously for 1.6 kilometers (1 mile) with the vehicle moving. The hazard warning flashers will not activate this chime feature.
- **Vehicle Not In Park Warning** - The IC transducer will generate one short chime when the **VEHICLE NOT IN PARK** textual message is displayed in the EVIC. This warning indicates that the PARK position of the transmission is not engaged.
- **Washer Fluid Low Warning** - The IC transducer will generate one short chime when the **WASHER FLUID LOW** textual message is displayed in the EVIC. This warning indicates that the fluid level in the windshield washer reservoir is low. This chime will only occur once during any ignition cycle.

The IC provides chime service for all available features in the chime warning system, except for the audible warning function provided by the Radio Receiver Module (RRM) for the optional park assist system. The IC relies upon its internal programming, numerous hard wired inputs and electronic message inputs received from other electronic modules over the Controller Area Network (CAN) data bus to provide the chime warning system features. The programming of the IC determines the priority of each chime request input that is received, as well as the rate and duration of each chime that is to be generated.

The hard wired circuits between components related to the chime warning system may be diagnosed using conventional diagnostic tools and procedures. Refer to the appropriate wiring information. The wiring information includes wiring diagrams, proper wire and connector repair procedures, details of wire harness

routing and retention, connector pin out information and location views for the various wire harness connectors, splices and grounds.

However, conventional diagnostic methods will not prove conclusive in the diagnosis of the chime warning system or the electronic controls and communication between modules and other devices that provide some features of the chime warning system. The most reliable, efficient and accurate means to diagnose the chime warning system or the electronic controls and communication related to chime warning system operation requires the use of a diagnostic scan tool. Refer to the appropriate diagnostic information.

FORWARD COLLISION WARNING PLUS

The Forward Collision Warning Plus (FCW+) system is only active when the status of the ignition switch is ON and the PRNDL is in D (Drive). The system can be manually disabled and enabled by the vehicle operator using hard button on the Auxiliary Switch Bank Module (ASBM). The default status of FCW+ is "On". The system state is kept in memory from one key cycle to the next. If the system is turned OFF, it will remain OFF when the vehicle is restarted. The minimum speed for FCW+ activation is 5 mph (10 km/h).

Components that make up the FCW+ system are the Forward Facing Camera (FFC), Powertrain Control Module (PCM), ASBM and the Adaptive Cruise Control Plus (ACC+) radar sensor/module. The radar module is the component that is responsible for the FCW+, Lane Departure Warning Plus (LDW+) and ACC+ decision making. The radar sensor receives data from the FFC and performs a data fusion with its own sensor data. At this point, the radar determines if a FCW+, LDW+ or ACC+ event needs to occur.

Since there are multiple modules involved in the operation of the FCW+ system, all faults or diagnostic trouble codes should be checked during diagnosis. The system utilizes the radar sensor in front of the vehicle, so any alignment or configuration issues may cause the system to be inoperative. If the ACC radar detects incorrect or compromised information from the FFC, the ACC+/FCW+ will function in an limited capacity. If the data consistency continue to occur from the FFC, a fault code will set.

NOTE: The FCW+ does not stop the vehicles automatically, but alerts and assists the driver to help avoid or mitigate a collision. If the driver does not respond to any of the audible, visual, and haptic warnings, the impact may not be avoided

The FCW+ system uses fusion of the sensor data from the ACC radar and the FFC to detect a probable frontal or forward collision. The following actions will be performed when qualified:

- **Pre Fill -**

  The pre-fill process prepares the brakes for emergency braking by engaging the pump and applying a small amount of pressure to the brakes. This allows for immediate braking. Sufficient pressure applied between the brake pads and the discs means that driver intervention has a more immediate impact.

- **Audible and Visual Warnings -** Audible sounds within the cabin of the vehicle and visual warnings shown within the EVIC are activated when necessary to notify the driver.
- **Brake Jerk -** A short deceleration is performed to alert the driver.
- **Collision Mitigation System (CMS) -** CMS assists braking operation by automatically applying an

appropriate amount of braking force to help avoid or minimize the chances of hitting a vehicle. CMS allows up to 1.5 seconds of braking to give the driver additional reaction time. When CMS activates its automatic brake, it also turns the brake lights on.

- **Advanced Brake Assist (ABA) -** Once the driver presses the brake pedal, advanced brake assist (ABA) will engage If the driver is not applying enough force. ABA will increase the braking force required to avoid or mitigate the accident. If the driver does not react to any of the previous warnings, the collision cannot be avoided.

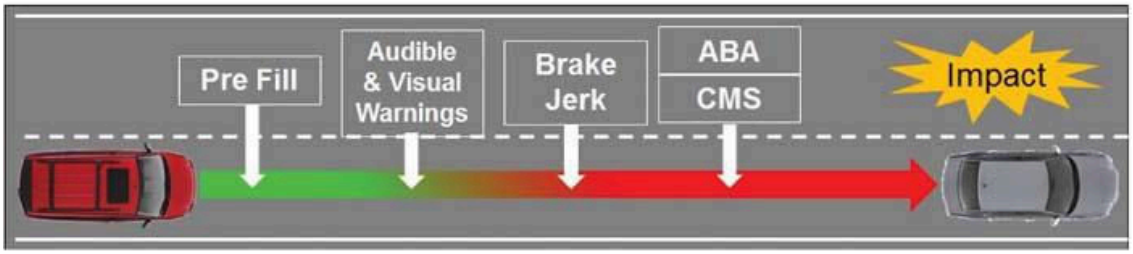

Fig. 1: Forward Collision Warning Plus
Courtesy of CHRYSLER GROUP, LLC

The hard wired circuits between components related to the FCW+ system may be diagnosed using conventional diagnostic tools and procedures. Refer to the appropriate wiring information. The wiring information includes wiring diagrams, proper wire and connector repair procedures, details of wire harness routing and retention, connector pin out information and location views for the various wire harness connectors, splices and grounds.

However, conventional diagnostic methods will not prove conclusive in the diagnosis of the FCW+ system or the electronic controls and communication between modules and other devices that are provided some features of the FCW+ system. The most reliable, efficient and accurate means to diagnose the system or the electronic controls and communication related to the FCW+ system operation requires the use of a diagnostic scan tool. Refer to the appropriate diagnostic information.

LANE DEPARTURE WARNING (LDW+)

The purpose of the Lane Departure Warning (LDW+) system is to provide a warning alert to the driver in case of an unintended lane departure (i.e the driver did not use turn signals beforehand to confirm a planned lane change).

The LDW+ system will be enabled and ready to provide feedback when the following conditions are met:

- System voltage is in a normal operating range.
- The vehicle ignition is in the ON/RUN state & driver has enabled the system & reverse gear is NOT engaged.
- No LDW+ system faults are present.
- Roads with positive or negative inclination transition (change in road grade) of up to 5%
- Left and Right lane boundaries are both detected simultaneously. (HAPTIC only)
- Vehicle speed is above 37 mph (60 km/h) and below 100 mph (180 km/h)
- No intervention of the safety systems ABS, ESP and DAS Safety Requests, e.g. ABA, ACC takeover request, FCW, etc. Note: After the intervention of a safety system has ended, the LDW+ system can only provide haptic feedback warnings again after a calibratable period has been allowed to elapse.

The LDW+ system will retain the last system state (enabled or disabled) and the last lane warning sensitivity selected in the radio from the last ignition cycle when the ignition is changed to the On/Run position.

The system can be overridden by the driver using a variety of methods, including turn signals, driver steering torque, steering torque rate, and acceleration and deceleration rate. The LDW+ system can also be turned on or off with a single hard button on the switch bank. The LED on the button will inform the driver of the system status when the driver is not on the driver assist screen in the EVIC. The feature will automatically disable when a safety system engages (such as traction control).

The main component of the LDW+ system is the forward facing camera. The camera mounts near the rear view mirror and communicates on the CAN-C bus. The camera also has a dedicated private CAN B bus that connects directly to the radar sensor and that is used for forward collision warning and adaptive cruise control. The camera has the ability to detect alignment faults and is adjusted similar to the smart beam camera.

Another important factor in system operation is road condition. The forward facing camera has the ability to detect the contrast of the surface of the pavement and the white or yellow lines. Roads that are not marked or that have extremely worn markings may not be detected by the camera which will disable the system. While monitoring the EVIC display for driver assist systems, a customer can tell if the system is enabled by the solid lines on the display. This is also important for diagnosing an intermittent or inoperative concern.

The system also monitors the torque sensor inside the EPS to verify the driver's hands remain on the wheel. If no driver's steering input is received, the system will deactivate until all enabling conditions are met. These Include:

- Drivers steering input.
- The FFC can clearly detect the lines in the road.
- There are no Diagnostic Trouble Codes (DTC) present in the steering or LDW+ system.
- Vehicle speed is above 37 mph (60 km/h) and below 100 mph (180 km/h).

COMPONENT RESPONSIBILITY - BODY CONTROL MODULE (BCM)

- Acquisition on the CAN-C bus of the LDW+ system enabled/disabled status from the Forward Facing Camera (FFC) to control the Auxiliary Switch Bank Module (ASBM) LED indication.

- Acquisition on the CAN-C bus of the chime request from the FFC to inform the driver to place his/her hands on the steering wheel.
- Acquisition on the CAN-C bus of the current LDW+ system sensitivity setting from the FFC.
- Acquisition on the CAN-C bus of the current LDW+ system torque intensity setting from the FFC.
- Acquisition on the LIN bus of the LDW+ system enable/disable switch (pressed/not pressed) status from the ASBM.
- Gates the ASBM on/off signal command on LIN to a signal on CAN-C.
- Gates the current ASBM status signal on CAN-C to the BCM concerning an ASBM control signal on the LIN bus.
- Transmission on the CAN-B bus of the chime request to the Radio to inform the driver to place his/her hands on the steering wheel (audible alert).
- Transmission on the CAN-B bus of the LDW+ system current sensitivity setting to the Radio.
- Transmission on the CAN-B bus of the LDW+ system current torque intensity setting to the Radio.
- Transmission on the CAN-C bus of the brake pedal status to the FFC.
- Transmission on the CAN-C bus of the (left/right) turn signal lamp status to the FFC.
- Transmission on the CAN-C bus of the wiper status (parked/not parked) to the FFC.
- Transmission on the CAN-C bus of the LDW+ system enable/disable request to the FFC (gated from LIN).
- Transmission on the CAN-C bus of the LDW+ system sensitivity setting request (gated from CAN-B) to the FFC.
- Transmission on the CAN-C bus of the LDW+ system torque intensity setting request (gated from CAN-B) to the FFC.
- Transmission on the LIN bus of the LDW+ system enable/disable switch indicator control status to the ASBM (gated from CAN-C).

COMPONENT RESPONSIBILITY - ELECTRONIC POWER STEERING (EPS)

- Apply directional torque to the steering wheel based on lane position of vehicle during an unintentional lane departure.
- Manage the Torque Overlay Interface (TOI).
- Acquisition on the CAN-C bus of the torque overlay interface activation request from the FFC.
- Acquisition on the CAN-C bus of the FFC system status from the FFC.
- Acquisition on the CAN-C bus of the FFC drive style status from the FFC.
- Transmission on the CAN-C bus of the steering angle and steering angle rate to the FFC.
- Transmission on the CAN-C bus of the FFC Torque Overlay Interface activation status to the FFC.
- Transmission on the CAN-C bus of the FFC Torque Overlay Interface fault status to the FFC.
- Transmission on the CAN-C bus of the DST Torque Overlay Interface activation status to the FFC.
- Transmission on the CAN-C bus of the EPS temporary deactivation status to the FFC.
- Transmission on the CAN-C bus of the steering column torque to the FFC.
- Transmission on the CAN-C bus of the steering column torque validity to the FFC.

- Transmission on the CAN-C bus of the EPS motor torque to the FFC.
- Transmission on the CAN-C bus of the EPS motor torque validity to the FFC.

COMPONENT RESPONSIBILITY - FORWARD FACING CAMERA (FFC)

- Monitor the road scenario.
- Process the video image.
- Quantify the geometry of the lane boundaries in front of the vehicle.
- Calculate the torque request to control the vehicle response based on lane position of vehicle.
- Evaluate the "Hands Off" condition. When the driver's hands are not detected on the steering wheel, the system provides an audible warning consisting of left front and right front chimes to inform the driver to place his/her hands on the steering wheel.
- Acquisition on the CAN-C bus of the EPS motor torque from the EPS.
- Acquisition on the CAN-C bus of the FFC Torque Overlay Interface activation status from the EPS.
- Acquisition on the CAN-C bus of the FFC Torque Overlay Interface fault status from the EPS.
- Acquisition on the CAN-C bus of the effective torque applied on the steering wheel from the EPS.
- Acquisition on the CAN-C bus of the brake pedal status from the BCM.
- Acquisition on the CAN-C bus of the (left/right) turn signal request status from the SCCM.
- Acquisition on the CAN-C bus of the (left/right) turn signal lamp status from the BCM.
- Acquisition on the CAN-C bus of the wiper status (parked/not parked) from the BCM.
- Acquisition on the CAN-C bus of the LDW+ system enable/disable request from the BCM.
- Acquisition on the CAN-C bus of the customer-selected LDW+ system sensitivity setting from the BCM.
- Acquisition on the CAN-C bus of the customer-selected LDW+ system torque intensity setting from the BCM.
- Acquisition on the CAN-C bus of the ABS status from the BSM.
- Acquisition on the CAN-C bus of the ESC status from the BSM.
- Acquisition on the CAN-C bus of the DAS request active status from the BSM.
- Acquisition on the CAN-C bus of the vehicle speed from the BSM.
- Acquisition on the CAN-C bus of the yaw rate offset from the BSM.
- Acquisition on the CAN-C bus of the lateral acceleration offset from the BSM.
- Acquisition on the CAN-C bus of the longitudinal acceleration offset from the BSM.
- Acquisition on the CAN-C bus of the ACC takeover request from the DASM.
- Acquisition on the CAN-C bus of the Forward Collision Warning system status from the DASM.
- Acquisition on the CAN-C bus of the engine start/stop status from the ECM.
- Acquisition on the CAN-C bus of the gas pedal position from the ECM.
- Acquisition on the CAN-C bus of the reverse gear status from the ECM.
- Acquisition on the CAN-C bus of the steering angle from the EPS.
- Acquisition on the CAN-C bus of the steering angle rate from the EPS.
- Acquisition on the CAN-C bus of the DST Torque Overlay Interface activation status from the EPS.

- Acquisition on the CAN-C bus of the EPS temporary deactivation status from the EPS.
- Acquisition on the CAN-C bus of the yaw rate from the ORC.
- Acquisition on the CAN-C bus of the lateral acceleration from the ORC.
- Acquisition on the CAN-C bus of the longitudinal acceleration from the ORC.
- Transmission on the CAN-C bus of the torque request to the EPS.
- Transmission on the CAN-C bus of the LDW+ system enabled/disabled status to the BCM.
- Transmission on the CAN-C bus of the chime request to the BCM (gateway) to inform the driver to place his/her hands on the steering wheel.
- Transmission on the CAN-C bus of the current LDW+ system sensitivity and torque intensity settings to the BCM and IPC.
- Transmission on the CAN-C bus of the LDW+ lane boundary detection status to the IPC.
- Transmission on the CAN-C bus of the LDW+ warning status to the IPC.
- Transmission on the CAN-C bus of the LDW+ ISO telltale status to the IPC.
- Transmission on the CAN-C bus of the LDW+ display popup status to the IPC.
- Transmission on the CAN-C bus of the LDW+ fault status to the IPC.

COMPONENT RESPONSIBILITY - INSTRUMENT PANEL CLUSTER (IPC)

- Display LDW+ system state, configuration (sensitivity setting, torque intensity setting), lane boundary detection, warning and fault status.
- Acquisition on the CAN-C bus of the LDW+ lane boundary detection status from the FFC.
- Acquisition on the CAN-C bus of the LDW+ warning status from the FFC.
- Acquisition on the CAN-C bus of the LDW+ fault status from the FFC.
- Acquisition on the CAN-C bus of the LDW+ ISO telltale status from the FFC.
- Acquisition on the CAN-C bus of the LDW+ display popup status from the FFC.
- Acquisition on the CAN-C bus of the current LDW+ system sensitivity setting from the FFC.
- Acquisition on the CAN-C bus of the current LDW+ system torque intensity setting from the FFC.

COMPONENT RESPONSIBILITY - AUXILIARY SWITCH BANK MODULE (ASBM)

- Display LDW+ system defeat switch state (LED illuminated = LDW+ System is OFF, i.e. "defeated").
- Transmission on the LIN bus of the LDW+ system enable/disable switch (pressed/not pressed) status to the BCM.
- Acquisition on the LIN bus of the LDW+ system enable/disable switch indicator control status from the BCM.

CAMERA -

The camera is able to detect lane markings of any color (especially yellow and white which common colors for lane markings). The camera is able to detect and quantify the following information regarding the lane boundaries:

- The lateral distance from the center of the vehicle to the left lane boundary.
- The lateral distance from the center of the vehicle to the right lane boundary.
- The heading angle of the vehicle with respect to the center axis of the lane.
- A measurement of the radius of curvature of the road ahead of the vehicle.
- The type of lane boundary, i.e. double line, solid line, dashed line, road edge.
- The camera shall be capable of detecting if the camera lens is occluded and the windshield needs to be cleaned. During this condition, an indication is provided to clean the windshield.
- The camera is capable of self-monitoring and diagnosis to determine whether it is operating properly.
- The effective horizontal field of view of the camera is at a minimum of 36 degrees.
- The effective vertical field of view of the camera is at a minimum of 20 degrees.

IMAGE ACQUISITION -

These functional requirements address a vision-based approach for measurement of vehicle lateral position relative to lane boundaries in the lane of travel.

- In the daytime, the camera shall be able to detect lane markings where lighting and environmental conditions provide good visibility in excess of 30 meters.
- At night, the camera shall be able to detect lane markings with lighting conditions provided by standard, production low beam headlamps, with or without additional sources of road illumination, and where environmental conditions provide good visibility in excess of 30 meters.
- The camera shall be capable of compensating for sudden changes in lighting conditions such as during tunnel entry/exit.
- The LDW+ system shall not have degraded performance from changes of the camera pitch angle due to vehicle dynamics (e.g. during hard braking or acceleration) or under maximum rated vehicle loading conditions, i.e. gross vehicle weight rating (GVWR).
-

The hard wired circuits between components related to the LDW+ system may be diagnosed using conventional diagnostic tools and procedures. Refer to the appropriate wiring information. The wiring information includes wiring diagrams, proper wire and connector repair procedures, details of wire harness routing and retention, connector pin out information and location views for the various wire harness connectors, splices and grounds.

However, conventional diagnostic methods will not prove conclusive in the diagnosis of the LDW+ system or the electronic controls and communication between ECU and other devices that provide some features of this system. The most reliable, efficient and accurate means to diagnose the LDW+ system and related communication operation requires the use of a diagnostic scan tool. Refer to the appropriate diagnostic information.

PARK ASSIST SYSTEM

Details for the three versions of the park assist system available for this vehicle (Rear Park Assist/RPA, Front and Rear Park Assist/FRPA, or Parallel and Perpendicular Park Assist/PPPA) can be found under dedicated, separate headings within this service information.

The hard wired circuits between components related to the park assist system may be diagnosed using conventional diagnostic tools and procedures. Refer to the appropriate wiring information. The wiring information includes wiring diagrams, proper wire and connector repair procedures, details of wire harness routing and retention, connector pin out information and location views for the various wire harness connectors, splices and grounds.

However, conventional diagnostic methods will not prove conclusive in the diagnosis of the park assist system or the electronic controls and communication between modules and other devices that provide some features of the park assist system. The most reliable, efficient and accurate means to diagnose the park assist system or the electronic controls and communication related to park assist system operation requires the use of a diagnostic scan tool. Refer to the appropriate diagnostic information.

REAR PARK ASSIST

The Rear Park Assist (RPA) system is active only when the status of the ignition switch is On, the transmission gear selector lever is in the Reverse (**R**) position and the vehicle speed is less than about 11 kilometers-per-hour (7 miles-per-hour). The system can be manually disabled and enabled by the vehicle operator using the park assist Off push button in the instrument panel switch pod (also known as the Accessory Switch Bank Module/ASBM). In vehicles equipped with this option, the system is enabled from the factory as a default.

Reasons for disabling the system include trailer towing and off road use. With a trailer attached to the vehicle the audible and visual RPA alerts would be incessant whenever the gear selector lever was in the Reverse (**R**) position due to the proximity of the trailer to the rear of the vehicle. Similarly, operating the vehicle off road may cause the RPA alerts to become distracting due to the proximity of large trees or boulders and the extreme rear approach angles that may be encountered while maneuvering on off road trails or terrain.

When the system is disabled, a **PARK ASSIST SYSTEM OFF** graphic and textual message will appear in the EVIC display of the Instrument Cluster (IC) (also known as the Instrument Panel Cluster/IPC) at the beginning of each ignition On cycle, and whenever the gear selector lever is in the Reverse (**R**) position. When the system is enabled, a **PARK ASSIST SYSTEM ON** graphic and textual message will appear in the EVIC display of the IC at the beginning of each ignition On cycle, and a **PARK ASSIST READY** graphic and textual message will appear in the display whenever the gear selector lever is in the Reverse (**R**) position.

The micro-controller based, 4 channel Park Assist Module (PAM) (also known as the ParkTronic System/PTS module) is the central component of the RPA system. It supplies voltage to the park assist sensors, receives and analyzes data from the sensors, calculates and communicates the proper display information to the EVIC display, calculates and communicates the proper audible outputs to the Radio Receiver Module (RRM), performs system diagnostics and communicates with other electronic modules in the vehicle or with a diagnostic scan tool over the Controller Area Network (CAN) data bus. The PAM operates on battery voltage received through a fused ignition (run) fuse in the Power Distribution Center (PDC) and is grounded through a take out of the body wire harness secured to the body sheet metal.

Four ultrasonic park assist sensors in the rear bumper fascia allow the RPA system to locate and identify the proximity of nearby obstacles. These sensors each generate ultrasonic sound pulses when triggered by the PAM, then signal the PAM when an echo of the reflected sound pulses is received. The detection distance range from the rear of the vehicle is about 2 meters (80 inches), and the detection height range from the ground is about 0.2 meters (7.8 inches) to about 0.8 meters (31 inches). The detection area extends somewhat around both rear

corners of the vehicle.

The EVIC display unit provides the vehicle operator with a graphical representation of the vehicle along with numerous illuminated arc sections that indicate the relative location and range of detected objects. The display is visible directly in front of the vehicle operator and operates based upon the electronic message inputs received from the PAM over the CAN data bus. There are three regions at the rear of the vehicle designated for arc alerts: Center, Left and Right. The Center region consists of six zones, while the Right and Left regions consist of two zones. The zones range from furthest to nearest from the rear of the vehicle. The arc sections are illuminated in an amber color until the nearest zone is reached, at which point the arc sections become illuminated red in color.

Meanwhile, the RRM generates audible indications of a detected object by emitting a series of chime tones that grow progressively higher in frequency as the vehicle gets closer to the object. As the vehicle comes within about 30 centimeters (12 inches) of the object, the audible warning changes from a high frequency series of chime tones to a single continuous tone. If the audio system is active when the RRM receives a chime request message from the PAM, the audio output will be muted automatically while the RPA audible warnings are being generated.

When the PAM monitors a problem in any of the RPA system circuits or components, it stores a fault code or Diagnostic Trouble Code (DTC) in its memory circuit, sends an electronic message to the EVIC and the EVIC displays a graphic with a **SERVICE PARK ASSIST SYSTEM** textual message. If the PAM detects that the park assist sensors are inoperative due to an accumulation of road film, mud, ice or snow on the rear fascia, the EVIC will display a **WIPE OFF REAR PARK ASSIST SENSORS** graphic and textual message. When the system is disabled by the PAM due to a detected external error or influence, a **PARK ASSIST SYSTEM DISABLED** graphic and textual message will appear in the EVIC display of the IC whenever a new ignition cycle begins and each time the gear selector lever is in the Reverse (**R**) position.

FRONT AND REAR PARK ASSIST

The Front and Rear Park Assist (FRPA) system is active only when the status of the ignition switch is On, the automatic transmission gear selector lever is in the Drive (**D**) or Reverse (**R**) position, the manual transmission gear selector lever is in the Reverse **R** or is not in Reverse and the vehicle speed is less than about 11 kilometers-per-hour (7 miles-per-hour). The system can be manually disabled and enabled by the vehicle operator using the park assist Off push button in the instrument panel switch pod (also known as the Accessory Switch Bank Module/ASBM). In vehicles equipped with this option, the system is enabled from the factory as a default.

Reasons for disabling the system include trailer towing and off road use. With a trailer attached to the vehicle the audible and visual FRPA alerts would be incessant whenever the gear selector lever was in the Reverse (**R**) position due to the proximity of the trailer to the rear of the vehicle. Similarly, operating the vehicle off road may cause the FRPA alerts to become distracting due to the proximity of large trees or boulders and the extreme front and rear approach angles that may be encountered while maneuvering on off road trails or terrain.

When the system is disabled, a **PARK ASSIST SYSTEM OFF** graphic and textual message will appear in the EVIC display of the Instrument Cluster (IC) (also known as the Instrument Panel Cluster/IPC) at the beginning of each ignition On cycle, whenever the automatic transmission gear selector lever is in the Drive (**D**) or Reverse (**R**) positions, or whenever the manual transmission gear selector lever is in the Reverse (**R**) or not in

Reverse positions. When the system is enabled, a **PARK ASSIST SYSTEM ON** graphic and textual message will appear in the EVIC display of the IC at the beginning of each ignition On cycle, and a **PARK ASSIST READY** graphic and textual message will appear in the display whenever the automatic transmission gear selector lever is in the Drive (**D**) or Reverse (**R**) positions and the vehicle speed is less than about 11 kilometers-per-hour (7 miles-per-hour), or whenever the manual transmission gear selector lever is in the Reverse (**R**) or not in Reverse positions and the vehicle speed is less than about 11 kilometers-per-hour (7 miles-per-hour).

The micro-controller based, 10 channel Park Assist Module (PAM) (also known as the ParkTronic System/PTS module) is the central component of the FRPA system. It supplies voltage to the park assist sensors, receives and analyzes data from the sensors, calculates and communicates the proper display information to the EVIC display, calculates and communicates the proper audible outputs to the Radio Receiver Module (RRM) (also known as the radio or the head unit), performs system diagnostics and communicates with other electronic modules in the vehicle or with a diagnostic scan tool over the Controller Area Network (CAN) data bus. The PAM operates on battery voltage received through a fused ignition (run) fuse in the Power Distribution Center (PDC) and is grounded through a take out of the body wire harness secured to the body sheet metal.

Six ultrasonic park assist sensors in the front bumper fascia and four sensors in the rear bumper fascia allow the FRPA system to locate and identify the proximity of nearby obstacles. These sensors each generate ultrasonic sound pulses when triggered by the PAM, then signal the PAM when an echo of the reflected sound pulses is received. The detection distance range from the front of the vehicle is about 1.2 meters (47 inches), or from the rear of the vehicle is about 2 meters (80 inches). The detection height range from the ground is about 0.2 meters (7.8 inches) to about 0.8 meters (31 inches). The detection area extends somewhat around both front and rear corners of the vehicle.

In vehicles with an automatic transmission, the FRPA has an available autonomous brake warning feature (also known as brake and release). When the transmission gear selector position is Reverse (**R**), an object is detected at the rear of the vehicle at a vehicle velocity based distance value and the ultrasonic sensors are capable of detecting an object the PAM sends an electronic **brake and release** message to the Antilock Brake Module (ABM) over the CAN data bus network. The autonomous brake warning is aggressively performed by the ABM to reduce vehicle speed and pre-fill the brake hydraulic system in an effort to warn and to give the vehicle operator more time to react to a detected object at the rear of the vehicle.

The autonomous brake warning feature is an alert function, not a comfort function; therefore, the brake application will be sharp and sudden to disturb, rather than smooth and discrete. This feature is enabled from the factory as a default, but can be manually disabled or enabled by the vehicle operator using the customer programmable features settings menu of the RRM.

The EVIC display unit provides the vehicle operator with a graphical representation of the vehicle along with numerous illuminated arc sections that indicate the relative location and range of detected objects. The display is visible directly in front of the vehicle operator and operates based upon the electronic message inputs received from the PAM over the CAN data bus. There are three regions at the front or rear of the vehicle designated for arc alerts: Center, Left and Right. The Front Center region consists of five zones, the Rear Center region consist of six zones, while the Right and Left regions at the front and rear both consist of two zones. The zones range from furthest to nearest from the vehicle. The arc sections are illuminated in an amber color until the nearest zone is reached, at which point the arc sections become illuminated red in color.

Meanwhile, the RRM generates audible indications of a detected object by emitting a series of chime tones that grow progressively higher in frequency as the vehicle gets closer to the object. As the vehicle comes within about 30 centimeters (12 inches) of the object, the audible warning changes from a high frequency series of chime tones to a single continuous tone. If the audio system is active when the RRM receives a chime request message from the PAM, the audio output will be muted automatically while the FRPA audible warnings are being generated.

When the PAM monitors a problem in any of the FRPA system circuits or components, it stores a fault code or Diagnostic Trouble Code (DTC) in its memory circuit, sends an electronic message to the EVIC and the EVIC displays a graphic with a **SERVICE PARK ASSIST SYSTEM** textual message. If the PAM detects that the park assist sensors are inoperative due to an accumulation of road film, mud, ice or snow on the front or rear fascia, the EVIC will display a **WIPE OFF FRONT PARK ASSIST SENSORS** or **WIPE OFF REAR PARK ASSIST SENSORS** graphic and textual message. When the system is disabled by the PAM due to a detected external error or influence, a **PARK ASSIST SYSTEM DISABLED** graphic and textual message will appear in the EVIC display of the IC whenever a new ignition cycle begins and each time the automatic transmission gear selector lever is in the Drive (**D**) or Reverse (**R**) position or the manual transmission gear selector lever is in the Reverse (**R**) or not in Reverse positions.

PARALLEL AND PERPENDICULAR PARK ASSIST

The Parallel and Perpendicular Park Assist (PPPA) system is active only when the status of the ignition switch is On, the automatic transmission gear selector lever is in the Drive (**D**) or Reverse (**R**) position, the manual transmission gear selector lever is in the Reverse **R** or is not in Reverse and the vehicle speed is less than about 11 kilometers-per-hour (7 miles-per-hour). The front and rear park assist features of this system can be manually disabled and enabled by the vehicle operator using the Park Assist Off push button in the instrument panel switch pod (also known as the Accessory Switch Bank Module/ASBM). In vehicles equipped with this option, the system is enabled from the factory as a default.

Reasons for disabling the system include trailer towing and off road use. With a trailer attached to the vehicle the audible and visual park assist alerts would be incessant whenever the gear selector lever was in the Reverse (**R**) position due to the proximity of the trailer to the rear of the vehicle. Similarly, operating the vehicle off road may cause the park assist alerts to become distracting due to the proximity of large trees or boulders and the extreme front and rear approach angles that may be encountered while maneuvering on off road trails or terrain.

When the system is disabled, a **PARK ASSIST SYSTEM OFF** graphic and textual message will appear in the EVIC display of the Instrument Cluster (IC) (also known as the Instrument Panel Cluster/IPC) at the beginning of each ignition On cycle, whenever the automatic transmission gear selector lever is in the Drive (**D**) or Reverse (**R**) positions, or whenever the manual transmission gear selector lever is in the Reverse (**R**) or not in Reverse positions. When the system is enabled, a **PARK ASSIST SYSTEM ON** graphic and textual message will appear in the EVIC display of the IC at the beginning of each ignition On cycle, and a **PARK ASSIST READY** graphic and textual message will appear in the display whenever the automatic transmission gear selector lever is in the Drive (**D**) or Reverse (**R**) positions and the vehicle speed is less than about 11 kilometers-per-hour (7 miles-per-hour), or whenever the manual transmission gear selector lever is in the Reverse (**R**) or not in Reverse positions and the vehicle speed is less than about 11 kilometers-per-hour (7 miles-per-hour).

The micro-controller based, 12 channel Park Assist Module (PAM) (also known as the ParkTronic System/PTS module) is the central component of the park assist system. It supplies voltage to the park assist sensors, receives and analyzes data from the sensors, calculates and communicates the proper display information to the EVIC display, calculates and communicates the proper audible outputs to the Radio Receiver Module (RRM), performs system diagnostics and communicates with other electronic modules in the vehicle or with a diagnostic scan tool over the Controller Area Network (CAN) data bus. The PAM operates on battery voltage received through a fused ignition (run) fuse in the Power Distribution Center (PDC) and is grounded through a take out of the body wire harness secured to the body sheet metal.

Six ultrasonic park assist sensors in the front bumper fascia and six sensors in the rear bumper fascia allow the park assist system to locate and identify the proximity of nearby obstacles. These sensors each generate ultrasonic sound pulses when triggered by the PAM, then signal the PAM when an echo of the reflected sound pulses is received. The detection distance range from the front of the vehicle is about 1.2 meters (47 inches), or from the rear of the vehicle is about 2 meters (80 inches). The detection height range from the ground is about 0.2 meters (7.8 inches) to about 0.8 meters (31 inches). The detection area extends somewhat around both front and rear corners of the vehicle. In the PPPA system, the four sensors on the outboard right and left ends of the front and rear fascias have increased range over the other eight sensors and are not interchangeable.

In vehicles with an automatic transmission, the PPPA has an available autonomous brake warning feature (also known as brake and release). When the transmission gear selector position is Reverse (**R**), an object is detected at the rear of the vehicle at a vehicle velocity based distance value and the ultrasonic sensors are capable of detecting an object the PAM sends an electronic **brake and release** message to the Antilock Brake Module (ABM) over the CAN data bus network. The autonomous brake warning is aggressively performed by the ABM to reduce vehicle speed and pre-fill the brake hydraulic system in an effort to warn and to give the vehicle operator more time to react to a detected object at the rear of the vehicle.

The autonomous brake warning feature is an alert function, not a comfort function; therefore, the brake application will be sharp and sudden to disturb, rather than smooth and discrete. This feature is enabled from the factory as a default, but can be manually disabled or enabled by the vehicle operator using the customer programmable features settings menu of the Radio Receiver Module (RRM) (also known as the radio or the head unit).

The EVIC display unit provides the vehicle operator with a graphical representation of the vehicle along with numerous illuminated arc sections that indicate the relative location and range of detected objects. The display is visible directly in front of the vehicle operator and operates based upon the electronic message inputs received from the PAM over the CAN data bus. There are three regions at the front or rear of the vehicle designated for arc alerts: Center, Left and Right. The Front Center region consists of five zones, the Rear Center region consist of six zones, while the Right and Left regions at the front and rear both consist of two zones. The zones range from furthest to nearest from the vehicle. The arc sections are illuminated in an amber color until the nearest zone is reached, at which point the arc sections become illuminated red in color.

Meanwhile, the RRM generates audible indications of a detected object by emitting a series of chime tones that grow progressively higher in frequency as the vehicle gets closer to the object. As the vehicle comes within about 30 centimeters (12 inches) of the object, the audible warning changes from a high frequency series of chime tones to a single continuous tone. If the audio system is active when the RRM receives a chime request message from the PAM, the audio output will be muted automatically while the park assist audible warnings are being generated.

The semiautomatic parallel and perpendicular parking feature is designed to assist the vehicle operator, not to substitute for the vehicle operator. The vehicle operator must stay in full control of the acceleration and braking of the vehicle. The driver initiates the parallel and perpendicular parking feature by using the Parallel And Perpendicular Park Assist On push button in the instrument panel switch pod (also known as the Accessory Switch Bank Module/ASBM).

Once the parallel and perpendicular park feature is turned On, a Active Park Sense Search screen pops up in the EVIC display unit. The initial search screen to pop up will be for the parallel parking feature, but text at the bottom of the EVIC display advises, **Press OK for Perpendicular Park** . The vehicle operator can then press the **OK** push button in the EVIC switch pod on the left horizontal spoke of the steering wheel to toggle back and forth between the parallel parking space and perpendicular parking space search screens. From this point through completion of the selected parking maneuver, the system will automatically coach the vehicle operator through the location of an appropriate parking space and the parking maneuver using both graphical representations and text that pops up within the EVIC display unit.

During parallel and perpendicular parking maneuvers the PPPA system assists the vehicle operator by measuring and identifying an appropriate parking space while driving slowly past the potential space. Then the system calculates the appropriate trajectory and controls the steering wheel to steer the vehicle into the selected space. Depending upon the parking maneuver selected, the PPPA system is capable of steering a vehicle into a parallel or a perpendicular parking space on either the driver side or the passenger side of the vehicle. The PAM controls the measuring and maneuvering of the vehicle by monitoring the ultrasonic sensor inputs and sending the appropriate electronic messages to the Electronic Power Steering (EPS) module over the CAN data bus.

When the PAM monitors a problem in any of the park assist system circuits or components, it stores a fault code or Diagnostic Trouble Code (DTC) in its memory circuit, sends an electronic message to the EVIC and the EVIC displays a graphic with a **SERVICE PARK ASSIST SYSTEM** textual message. If the PAM detects that the park assist sensors are inoperative due to an accumulation of road film, mud, ice or snow on the front or rear fascia, the EVIC will display a **WIPE OFF FRONT PARK ASSIST SENSORS** or **WIPE OFF REAR PARK ASSIST SENSORS** graphic and textual message. When the system is disabled by the PAM due to a detected external error or influence, a **PARK ASSIST SYSTEM DISABLED** graphic and textual message will appear in the EVIC display of the IC whenever a new ignition cycle begins and each time the automatic transmission gear selector lever is in the Drive (**D**) or Reverse (**R**) position or the manual transmission gear selector lever is in the Reverse (**R**) or not in Reverse positions.

DIAGNOSIS AND TESTING

DIAGNOSIS AND TESTING - BLIND SPOT MONITOR SYSTEM

WARNING: **To avoid serious or fatal injury on vehicles equipped with airbags, disable the Supplemental Restraint System (SRS) before attempting any steering wheel, steering column, airbag, Occupant Classification System (OCS), seat belt tensioner, impact sensor or instrument panel component diagnosis or service. Disconnect and isolate the battery negative (ground) cable, then wait two minutes for the system capacitor to discharge before performing further diagnosis or service. This is the only sure way to disable the SRS. Failure to follow these instructions may result in accidental airbag deployment.**

The following textual messages related to the Blind Spot Monitor (BSM) system may appear within the Electronic Vehicle Information Center (EVIC) display of the Instrument Cluster (IC) (also known as the Instrument Panel Cluster/IPC):

- **BLIND SPOT SYSTEM OFF** - This message to the vehicle operator when the ignition switch first transitions to the On status indicates that the BSM system has been turned Off using the customer programmable features function of the Radio Receiver Module (RRM) (also known as the radio or the head unit).
- **SERVICE BLIND SPOT SYSTEM** - This message to the vehicle operator while the ignition switch status is On indicates that the BSM system is unavailable due to a monitored system fault or faults.
- **BLIND SPOT SYSTEM TEMPORARILY UNAVAILABLE** - This message to the vehicle operator while the ignition switch status is On indicates that the BSM system is temporarily unavailable as a result of one of the following:
  1. **Sensor Blockage** - The amber BSM visual icon in both outside rear view mirrors will be illuminated as long as blockage exists or until the ignition switch status transitions to Off, whichever occurs first.
  2. **Monitored System Fault** - The BSM system has detected a monitored system fault condition and has stored a Diagnostic Trouble Code (DTC). The amber BSM visual icon will be illuminated in both outside rear view mirrors for as long as the condition exists or until the ignition switch status transitions to Off, whichever occurs first.

NOTE: **If the BLIND SPOT SYSTEM TEMPORARILY UNAVAILABLE message is received for a minimum of 5 minutes, please verify that the outboard area at each end of the rear fascia behind the rear wheel openings where the radar sensors are located is not blocked by snow, ice or road debris. If the area is blocked, remove the blockage and verify that the message is no longer present in the EVIC display.**

NOTE: **If the vehicle has experienced any trauma in the outboard area at each end of the rear fascia behind the rear wheel openings where the sensors are located, even if the fascia is not damaged, the radar sensor may have become misaligned. A misaligned radar sensor will result in the BSM system not operating properly.**

The hard wired circuits between components related to the BSM system may be diagnosed using conventional diagnostic tools and procedures. Refer to the appropriate wiring information. The wiring information includes wiring diagrams, proper wire and connector repair procedures, details of wire harness routing and retention, connector pin out information and location views for the various wire harness connectors, splices and grounds.

However, conventional diagnostic methods will not prove conclusive in the diagnosis of the BSM system or the electronic controls and communication between modules and other devices that provide some features of the system. The most reliable, efficient and accurate means to diagnose the BSM system or the electronic controls and communication related to BSM system operation requires the use of a diagnostic scan tool. Refer to **DIAGNOSIS AND TESTING** or **DIAGNOSIS AND TESTING** .

DIAGNOSIS AND TESTING - CHIME WARNING SYSTEM

WARNING: To avoid serious or fatal injury on vehicles equipped with airbags, disable the Supplemental Restraint System (SRS) before attempting any steering wheel, steering column, airbag, Occupant Classification System (OCS), seat belt tensioner, impact sensor or instrument panel component diagnosis or service. Disconnect and isolate the battery negative (ground) cable, then wait two minutes for the system capacitor to discharge before performing further diagnosis or service. This is the only sure way to disable the SRS. Failure to follow these instructions may result in accidental airbag deployment.

The hard wired circuits between components related to the chime warning system may be diagnosed using conventional diagnostic tools and procedures. Refer to the appropriate wiring information. The wiring information includes wiring diagrams, proper wire and connector repair procedures, details of wire harness routing and retention, connector pin out information and location views for the various wire harness connectors, splices and grounds.

However, conventional diagnostic methods will not prove conclusive in the diagnosis of the chime warning system or the electronic controls and communication between modules and other devices that provide some features of the chime warning system. The most reliable, efficient and accurate means to diagnose the chime warning system or the electronic controls and communication related to chime warning system operation requires the use of a diagnostic scan tool. Refer to **DIAGNOSIS AND TESTING** .

DIAGNOSIS AND TESTING - FORWARD COLLISION WARNING

The hard wired circuits between components related to the Forward Collision Warning (FCW+) system may be diagnosed using conventional diagnostic tools and procedures. Refer to the appropriate wiring information. The wiring information includes wiring diagrams, proper wire and connector repair procedures, details of wire harness routing and retention, connector pin out information and location views for the various wire harness connectors, splices and grounds.

However, conventional diagnostic methods will not prove conclusive in the diagnosis of the FCW+ system or the electronic controls and communication between modules and other devices that provide some features of the FCW+ system. The most reliable, efficient and accurate means to diagnose the FCW+ system or the electronic controls and communication related to FCW+ system operation requires the use of a diagnostic scan tool.

DIAGNOSIS AND TESTING - LANE DEPARTURE WARNING SYSTEM

The hard wired circuits between components related to the Lane Departure Warning (LDW+) system may be diagnosed using conventional diagnostic tools and procedures. Refer to the appropriate wiring information. The wiring information includes wiring diagrams, proper wire and connector repair procedures, details of wire harness routing and retention, connector pin out information and location views for the various wire harness connectors, splices and grounds.

However, conventional diagnostic methods will not prove conclusive in the diagnosis of the LDW+ system or the electronic controls and communication between modules and other devices that provide some features of the

LDW+ system. The most reliable, efficient and accurate means to diagnose the LDW+ system or the electronic controls and communication related to LDW+ system operation requires the use of a diagnostic scan tool.

DIAGNOSIS AND TESTING - PARK ASSIST SYSTEM

WARNING: To avoid serious or fatal injury on vehicles equipped with airbags, disable the Supplemental Restraint System (SRS) before attempting any steering wheel, steering column, airbag, Occupant Classification System (OCS), seat belt tensioner, impact sensor or instrument panel component diagnosis or service. Disconnect and isolate the battery negative (ground) cable, then wait two minutes for the system capacitor to discharge before performing further diagnosis or service. This is the only sure way to disable the SRS. Failure to follow these instructions may result in accidental airbag deployment.

If a **SERVICE PARK ASSIST SYSTEM** graphic and textual message appears in the Electronic Vehicle Information Center (EVIC) display of the Instrument Cluster (IC) (also known as the Instrument Panel Cluster/IPC), be certain to confirm the following:

- Be certain that the rear bumper fascia (with Rear Park Assist/RPA) is, or the front and rear bumper fascias (with Front and Rear Park Assist/FRPA or with Parallel and Perpendicular Park Assist/PPPA) are free of dirt and debris to keep the system operating properly.
- The presence of jackhammers, large trucks and other sources of vibration in the vicinity of the vehicle could also impact the performance of the system.

The hard wired circuits between components related to the park assist system may be diagnosed using conventional diagnostic tools and procedures. Refer to the appropriate wiring information. The wiring information includes wiring diagrams, proper wire and connector repair procedures, details of wire harness routing and retention, connector pin out information and location views for the various wire harness connectors, splices and grounds.

However, conventional diagnostic methods will not prove conclusive in the diagnosis of the park assist system or the electronic controls and communication between modules and other devices that provide some features of the park assist system. The most reliable, efficient and accurate means to diagnose the park assist system or the electronic controls and communication related to park assist system operation requires the use of a diagnostic scan tool. Refer to **DIAGNOSIS AND TESTING** .

DISPLAY, BLIND SPOT

DESCRIPTION

DESCRIPTION

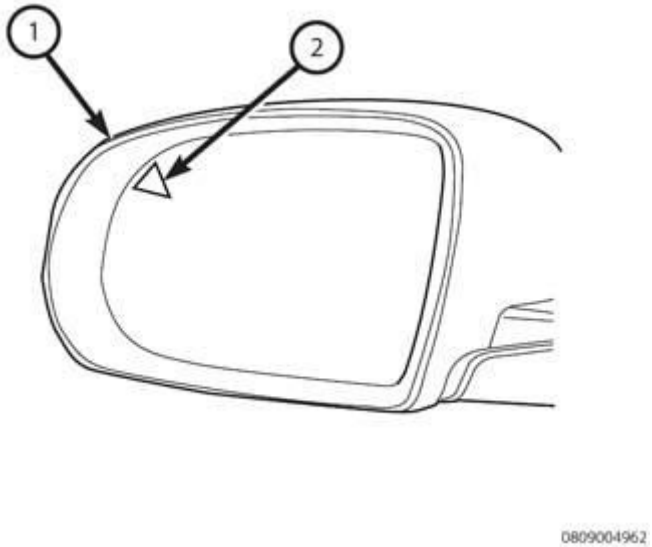

Fig. 2: Outside Rear View Mirror & Translucent Triangle Icon
Courtesy of CHRYSLER GROUP, LLC

Vehicles equipped with the Blind Spot Monitor (BSM) system have a display that appears in both the right and left outside rear view mirrors (1). The display consists of a translucent triangle icon (2) in the mirror glass that is illuminated by an amber Light Emitting Diode (LED) unit mounted behind the icon on the mirror glass case. When illuminated, only the amber colored triangle is visible on the outer surface of the mirror glass. The LED unit for the display is connected to the vehicle electrical system along with the other wiring for the power mirror through a dedicated take out and connector of the door wire harness.

The BSM displays are each integral to the outside rear view mirror glass and case unit. The displays cannot be adjusted or repaired. If a BSM display is ineffective or damaged, the entire mirror glass and case unit must be replaced. Refer to **MIRROR, OUTSIDE REARVIEW, REMOVAL** and **MIRROR, OUTSIDE REARVIEW, GLASS, REMOVAL** .

OPERATION

OPERATION

The Blind Spot Monitor (BSM) displays provide the vehicle operator with a visual alert that a target vehicle (object of interest) has been detected by the BSM system within one of the BSM or Rear Cross Path (RCP) detection zones. The BSM display is also illuminated momentarily as a bulb test each time the ignition switch status transitions to On as a part of the BSM system self tests. If a BSM display remains illuminated with the park brake applied or with the automatic transmission gear selector lever in the Park (**P**) position, it indicates that the BSM system has registered a system fault and may require service.

Each BSM display is completely controlled by a hard wired output of the Driver Door Module (DDM) or Passenger Door Module (PDM) on the same side of the vehicle as the display. The DDM and PDM receive electronic messages over the Controller Area Network (CAN) data bus from the Blind Spot Module (BSM) integral to the RAdio Detection And Ranging (RADAR) smart sensor (also known as Left Blind Spot Sensor/LBSS or Right Blind Spot Sensor) for the same side of the vehicle. The display units are grounded at all times through a takeout and eyelet terminal of the body wire harness that is secured to the body sheet metal.

The hard wired circuits between the BSM displays and the DDM or PDM may be diagnosed using conventional diagnostic tools and procedures. Refer to the appropriate wiring information. However, conventional diagnostic methods will not prove conclusive in the diagnosis of the BSM displays or the electronic controls and communication between other modules and devices that provide some features of the BSM displays. The most reliable, efficient and accurate means to diagnose the BSM displays or the electronic controls and communication related to BSM display operation requires the use of a diagnostic scan tool.

DIAGNOSIS AND TESTING

DIAGNOSIS AND TESTING - BLIND SPOT DISPLAY

The hard wired circuits between the Blind Spot Monitor (BSM) displays and the Driver Door Module (DDM) or Passenger Door Module (PDM) may be diagnosed using conventional diagnostic tools and procedures. Refer to the appropriate wiring information. The wiring information includes wiring diagrams, proper wire and connector repair procedures, details of wire harness routing and retention, connector pin out information and location views for the various wire harness connectors, splices and grounds.

However, conventional diagnostic methods will not prove conclusive in the diagnosis of the BSM displays or the electronic controls and communication between other modules and devices that provide some features of the BSM displays. The most reliable, efficient and accurate means to diagnose the BSM displays or the electronic controls and communication related to BSM display operation requires the use of a diagnostic scan tool.

REMOVAL

REMOVAL

The Blind Spot Monitor (BSM) display Light Emitting Diode (LED) indicator and icon are integral to the outside rear view mirror glass and case unit. Refer to **MIRROR, OUTSIDE REARVIEW, REMOVAL** and **MIRROR, OUTSIDE REARVIEW, GLASS, REMOVAL** .

INSTALLATION

INSTALLATION

The Blind Spot Monitor (BSM) display Light Emitting Diode (LED) indicator and icon are integral to the outside rear view mirror glass and case unit. Refer to **MIRROR, OUTSIDE REARVIEW, INSTALLATION** and **MIRROR, OUTSIDE REARVIEW, GLASS, INSTALLATION** .

DISPLAY, PARK ASSIST

DESCRIPTION

DESCRIPTION

The park assist graphics share the Electronic Vehicle Information Center (EVIC) display, which is an electronic display unit located near the center of, and soldered onto the printed circuit board of the Instrument Cluster (IC) (also known as the Instrument Panel Cluster/IPC). Refer to **CENTER, ELECTRONIC VEHICLE**

INFORMATION, DESCRIPTION . The park assist display along with the EVIC electronic display unit receive battery current and ground from, and are completely controlled by the IC circuit board.

The park assist graphics are only displayed when the system is active, sound and display mode is enabled, and an object or obstacle is detected within a detection area. The IC then displays the park assist graphic along with the appropriate object detection alert bar and arc sections within the EVIC display to indicate the approximate relative distance and location of the object or obstacle.

The EVIC electronic display unit is serviced only as a complete unit with the IC. The display unit cannot be adjusted or repaired. If ineffective or damaged, the entire IC unit must be replaced.

OPERATION

OPERATION

The park assist display in the Electronic Vehicle Information Center (EVIC) within the Instrument Cluster (IC) (also known as the Instrument Panel Cluster/IPC) provides the vehicle operator with visual feedback by illuminating a vehicle graphic and object detection bar and arc sections in zones at the rear (with Rear Park Assist/RPA) or front and rear (with Front and Rear Park Assist/FRPA or with Parallel and Perpendicular Park Assist/PPPA) of the icon indicating the approximate relative location and distance of an object or obstacle from the vehicle. The fewer bar and arc sections illuminated, the nearer the object. In addition, the nearest bar sections can change from solid illumination to flashing on and off or from amber to red in color as the object or obstacle becomes nearer.

The IC will display the park assist graphics in the EVIC electronic display unit whenever an object is within the detection area and an electronic request message is received from the Park Assist Module (PAM) (also known as the ParkTronic System/PTS module) over the Controller Area Network (CAN) data bus.

Conventional diagnostic methods will not prove conclusive in the diagnosis of the park assist display or the electronic controls and communication between modules and other devices that provide some features of the park assist display. The most reliable, efficient and accurate means to diagnose the park assist display or the electronic controls and communication related to park assist display operation requires the use of a diagnostic scan tool. Refer to the appropriate diagnostic information.

MODULE, BLIND SPOT

DESCRIPTION

DESCRIPTION

The optional Blind Spot Monitor (BSM) system used in this vehicle has two control modules. One control module is dedicated to each side of the vehicle. A Blind Spot Module (BSM) is integral to the Left Blind Spot Sensor (LBSS) or Right Blind Spot Sensor (RBSS) for the same side of the vehicle. Refer to **SENSOR, BLIND SPOT, DESCRIPTION**.

OPERATION

OPERATION

The optional Blind Spot Monitor (BSM) system used in this vehicle has two control modules. One control module is dedicated to each side of the vehicle. The blind spot modules are each integral to the blind spot sensor for the same side of the vehicle. Refer to **SENSOR, BLIND SPOT, OPERATION**.

REMOVAL

REMOVAL

Two blind spot modules are used in this vehicle, one for the left side and one for the right side. Each blind spot module is integral to the blind spot sensor on the same side of the vehicle. Refer to **SENSOR, BLIND SPOT, REMOVAL**.

INSTALLATION

INSTALLATION

Two blind spot modules are used in this vehicle, one for the left side and one for the right side. Each blind spot module is integral to the blind spot sensor on the same side of the vehicle. Refer to **SENSOR, BLIND SPOT, INSTALLATION**.

MODULE, PARK ASSIST

DESCRIPTION

DESCRIPTION

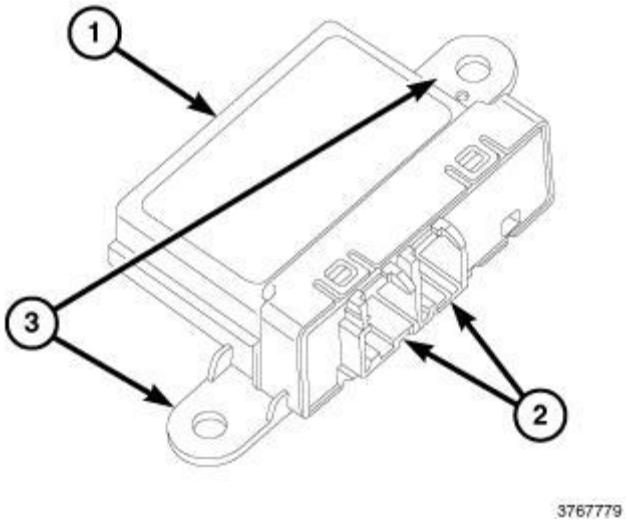

Fig. 3: Park Assist Module, Connector Receptacles & Mounting Tabs
Courtesy of CHRYSLER GROUP, LLC

The Park Assist Module (PAM) (also known as the ParkTronic System/PTS module) (1) is secured with two nuts to weld studs through two mounting tabs (3) integral to the module housing on the left quarter inner panel just behind the left rear wheel house. The module is concealed behind the quarter inner trim within the cargo area of the vehicle. Concealed within the molded plastic PAM housing is a micro-controller and the other electronic circuitry of the module. The module housing is sealed to enclose and protect the internal electronic circuitry.

There are three unique versions of the PAM used that are similar in appearance, but are not interchangeable. The PAM version depends upon the version of the park assist system in the vehicle. The Rear Park Assist (RPA) uses a 4 channel PAM, the Front and Rear Park Assist (FRPA) system uses a 10 channel PAM, and the Parallel and Perpendicular Park Assist (PPPA) uses a 12 channel PAM.

Two or three connector receptacles (2) containing terminal pins are integral to the downward-facing side of the housing. The module is connected to the vehicle electrical system through dedicated take outs and connectors of the body wire harness. The number of connector receptacles and body harness take outs also depends upon which of the three available versions of the park assist system is installed in the vehicle.

The PAM cannot be adjusted or repaired and, if damaged or ineffective, it must be replaced with a new unit. The PAM software is flash programmable.

OPERATION

OPERATION

The micro-controller within the Park Assist Module (PAM) (also known as the ParkTronic System/PTS module) contains the park assist system logic circuits. The PAM uses On-Board Diagnostics (OBD) and can communicate with other electronic modules in the vehicle as well as with the diagnostic scan tool using the Controller Area Network (CAN) data bus. This method of communication is also used for park assist system diagnosis and testing through the 16-way data link connector located on the driver side lower edge of the instrument panel.

The PAM provides source current to the park assist sensors located on the bumper fascia or fascias. The PAM then monitors return inputs from each of the sensors on dedicated hard wired data communication circuits. These sensor inputs allow the PAM to determine when an obstacle is in the path of the vehicle, to calculate the relative location of an obstacle and to determine whether the distance to that obstacle is increasing or decreasing.

Pre-programmed decision algorithms and calibrations allow the PAM micro-controller to determine the appropriate park assist system outputs based upon the inputs received from the park assist sensors and electronic messages received from other modules in the vehicle over the CAN data bus. When the programmed conditions are met, the PAM sends electronic messages to the Instrument Cluster (IC) (also known as the Instrument Panel Cluster/IPC) and the Radio Receiver Module (RRM) (also known as the radio or the head unit) over the CAN data bus to obtain the proper park assist system visual and audible outputs.

In vehicles equipped with an automatic transmission and the optional Front and Rear Park Assist (FRPA) or the Parallel and Perpendicular Park Assist (PPPA), the PAM also communicates with the Antilock Brake Module (ABM) using electronic messaging over the CAN data bus to provide the autonomous brake (also known as

brake and release) warning feature. In vehicles equipped with the optional PPPA, the PAM also communicates with the Electronic Power Steering (EPS) module using electronic messaging over the CAN data bus to provide the semiautomatic parallel and perpendicular parking features.

While the system is active, the PAM micro-controller continuously monitors all of the park assist system electrical circuits and components to determine the system readiness. If a monitored system fault is detected, the PAM sets a Diagnostic Trouble Code (DTC) and sends the appropriate electronic messages to the IC to control the display of the appropriate park assist system graphics and textual messages in the Electronic Vehicle Information Center (EVIC) display within the IC and the generation of the appropriate audible warnings by the IC.

The PAM receives battery current on a fused ignition output (run) circuit through the Power Distribution Center/PDC). The PAM has a path to ground at all times through a ground circuit and take out of the body wire harness that is secured to the body sheet metal. These connections allow the PAM to be operational whenever the status of the ignition switch is On.

The hard wired circuits between components related to the PAM may be diagnosed using conventional diagnostic tools and procedures. Refer to the appropriate wiring information. The wiring information includes wiring diagrams, proper wire and connector repair procedures, details of wire harness routing and retention, connector pin out information and location views for the various wire harness connectors, splices and grounds.

However, conventional diagnostic methods will not prove conclusive in the diagnosis of the PAM or the electronic controls and communication between modules and other devices that provide some features of the park assist system. The most reliable, efficient and accurate means to diagnose the PAM or the electronic controls and communication related to park assist system operation requires the use of a diagnostic scan tool. Refer to **DIAGNOSIS AND TESTING** .

DIAGNOSIS AND TESTING

DIAGNOSIS AND TESTING - PARK ASSIST MODULE

The hard wired circuits between components related to the Park Assist Module (PAM) (also known as the ParkTronic System/PTS module) may be diagnosed using conventional diagnostic tools and procedures. Refer to the appropriate wiring information. The wiring information includes wiring diagrams, proper wire and connector repair procedures, details of wire harness routing and retention, connector pin out information and location views for the various wire harness connectors, splices and grounds.

However, conventional diagnostic methods will not prove conclusive in the diagnosis of the PAM or the electronic controls and communication between modules and other devices that provide some features of the park assist system. The most reliable, efficient and accurate means to diagnose the PAM or the electronic controls and communication related to park assist system operation requires the use of a diagnostic scan tool. Refer to **DIAGNOSIS AND TESTING** .

REMOVAL

REMOVAL

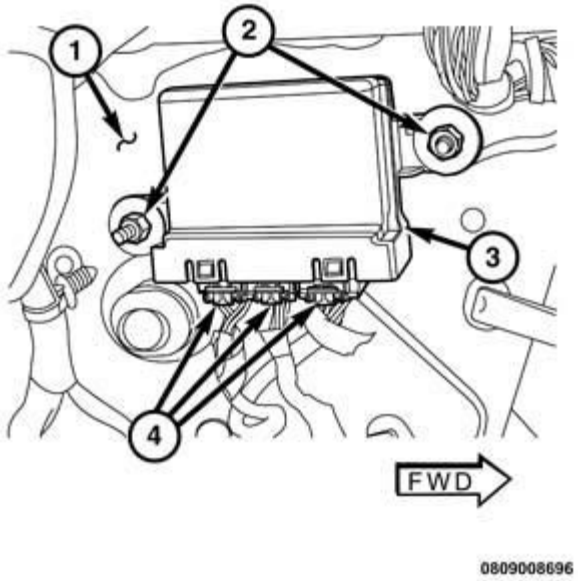

Fig. 4: Left Quarter Inner Panel, Connectors & Nuts
Courtesy of CHRYSLER GROUP, LLC

1. Disconnect and isolate the negative cable from the battery.
2. Remove the trim from the left quarter inner panel (1). Refer to **PANEL, QUARTER TRIM, REMOVAL** .
3. Disconnect the body wire harness connectors (4) from the Park Assist Module (PAM) (also known as the ParkTronic System/PTS module) (3) connector receptacles on the left quarter inner panel just behind the left rear wheel house.
4. Remove the two nuts (2) that secure the PAM to the weld studs on the quarter inner panel.
5. Remove the PAM from the vehicle.

INSTALLATION

INSTALLATION

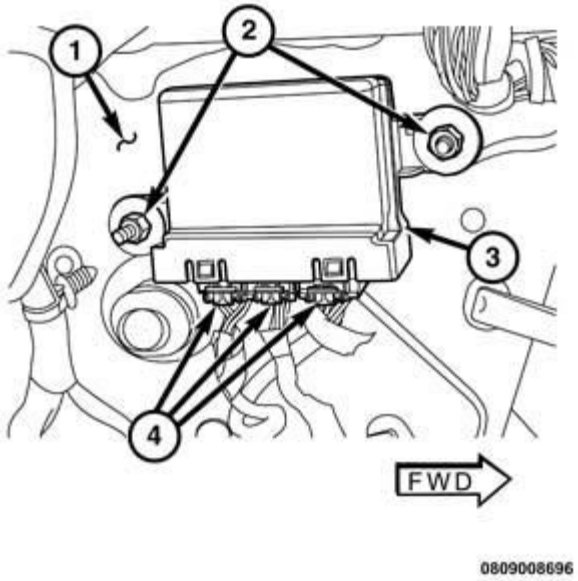

Fig. 5: Left Quarter Inner Panel, Connectors & Nuts
Courtesy of CHRYSLER GROUP, LLC

1. Position the Park Assist Module (PAM) (also known as the ParkTronic System/PTS module) (3) onto the weld studs on the left quarter inner panel (1) just behind the left rear wheel house.
2. Install and tighten the two nuts (2) that secure the PAM to the weld studs. Tighten the nuts securely.
3. Reconnect the body wire harness connectors (4) to the PAM connector receptacles.
4. Reinstall the trim onto the left quarter inner panel. Refer to **PANEL, QUARTER TRIM, INSTALLATION** .
5. Reconnect the negative cable to the battery.

NOTE: **If this Electronic Control Unit (ECU) is being replaced with a new unit, a diagnostic scan tool MUST be used to align the PROXI configuration data into the new ECU. Follow the routine outlined in the diagnostic scan tool for PROXI Configuration Alignment under Body Control Module (BCM) Miscellaneous Functions menu.**

SENSOR, BLIND SPOT

DESCRIPTION

DESCRIPTION

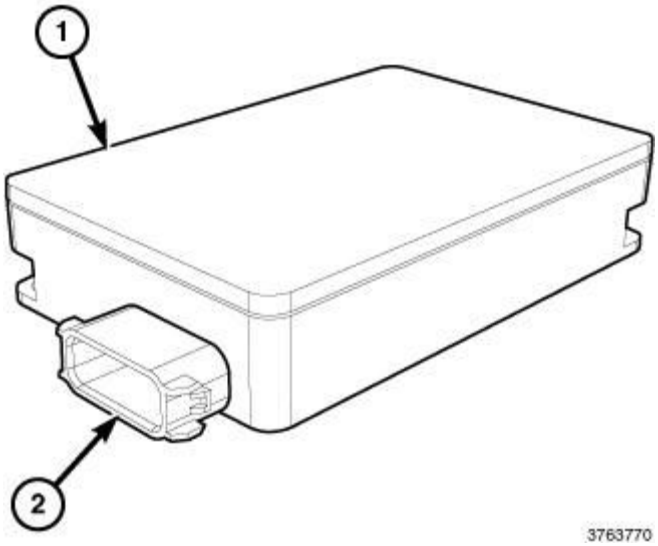

Fig. 6: Blind Spot Sensor & Connector
Courtesy of CHRYSLER GROUP, LLC

Vehicles equipped with the optional Blind Spot Monitor (BSM) system have two primary components. These components are the two RAdio Detection And Ranging (RADAR) blind spot sensors (1) (also known as the Left or Right Blind Spot Sensors/LBSS or RBSS). In this vehicle, each sensor also includes an internal micro-controller and control circuitry that monitors and controls both the sensor and the blind spot display for the same side of the vehicle. This explains why the sensors are sometimes referred to as smart sensors.

Each sensor with control circuitry is contained and protected within a molded plastic case that includes an integral connector receptacle (2) at one end. The sensors are each connected to the vehicle electrical system through a dedicated take out and connector of the rear bumper fascia wire harness. The two sensors are concealed behind the outboard ends of the rear bumper fascia. Each sensor is snapped into a dedicated molded plastic mounting bracket that is permanently affixed to the inside surface of the fascia just behind the left and right rear wheel openings.

The blind spot sensors and control circuitry cannot be adjusted or repaired. If a sensor is damaged or ineffective, it must be replaced with a new unit. The sensor module software is flash capable. The mounting bracket for each sensor is serviced only as a unit with the rear bumper fascia.

OPERATION

OPERATION

The Blind Spot Monitor (BSM) RAdio Detection And Ranging (RADAR) smart sensors (also known as the Left Blind Spot Sensor/LBSS and Right Blind Spot Sensor/RBSS) are each controlled by their on-board micro-controller and control circuitry. When the micro-controller recognizes that the appropriate conditions exist, it will energize the sensor to generate 25 Gigahertz radar pulses through the blind spot zone on that side of the vehicle. The sensor receives and filters the radar signals being returned from any objects detected within the zone, then transmits the appropriate data identifying the position and speed of identified objects to the micro-controller.

The micro-controller analyzes the sensor data to determine whether any detected objects should be reported. When it is determined that an object should be reported, the micro-controller sends electronic request messages over the Controller Area Network (CAN) data bus to its respective Driver Door Module (DDM) or Passenger Door Module (PDM). The DDM or PDM then controls its respective left or right BSM display directly through a hard wired output. The micro-controller of the LBSS or RBSS also sends electronic messages to the Radio Receiver Module (RRM) (also known as the radio or head unit) to mute any current output through the sound system speakers and to generate chime tones as an audible alert.

Each of the two BSM smart sensors is independent and communicates on the CAN data bus. The sensor performs a bulb test by requesting illumination of the triangle icon in its respective right or left blind spot display for a few seconds each time the status of the ignition switch transitions to On. Each sensor micro-controller also continually monitors the BSM system and the sensor circuits and will store a Diagnostic Trouble Code (DTC) for any fault that is detected.

The hard wired circuits between of the smart sensors may be diagnosed using conventional diagnostic tools and procedures. Refer to the appropriate wiring information. However, conventional diagnostic methods will not prove conclusive in the diagnosis of the smart sensors or the electronic controls and communication between other modules and devices that provide some features of the BSM system. The most reliable, efficient and accurate means to diagnose the smart sensors or the electronic controls and communication related to LBSS or RBSS operation requires the use of a diagnostic scan tool. Refer to **DIAGNOSIS AND TESTING** or **DIAGNOSIS AND TESTING** .

DIAGNOSIS AND TESTING

DIAGNOSIS AND TESTING - BLIND SPOT SENSOR

The hard wired circuits between the Blind Spot Monitor (BSM) smart sensors (also known as the Left Blind Spot Sensor/LBSS and the Right Blind Spot Sensor/RBSS) may be diagnosed using conventional diagnostic tools and procedures. Refer to the appropriate wiring information. The wiring information includes wiring diagrams, proper wire and connector repair procedures, details of wire harness routing and retention, connector pin out information and location views for the various wire harness connectors, splices and grounds.

However, conventional diagnostic methods will not prove conclusive in the diagnosis of the smart sensors or the electronic controls and communication between modules and other devices that provide some features of the BSM system. The most reliable, efficient and accurate means to diagnose the smart sensors or the electronic controls and communication related to LBSS or RBSS operation requires the use of a diagnostic scan tool.

REMOVAL

REMOVAL

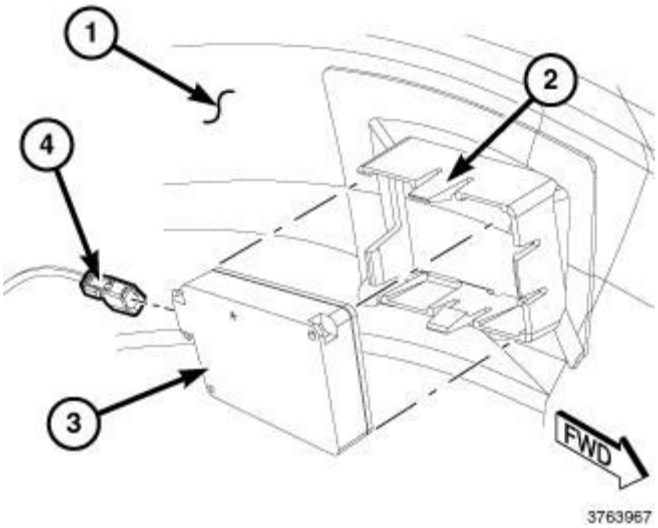

Fig. 7: Blind Spot Sensor, Latch Tabs & Harness Connector
Courtesy of CHRYSLER GROUP, LLC

1. Disconnect and isolate the negative cable from the battery.
2. Reach up behind the outboard end of the rear bumper fascia to access and disconnect the rear bumper fascia wire harness connector (4) from the Left Blind Spot Sensor (LBSS) or Right Blind Spot Sensor (RBSS) (3) connector receptacle.
3. Disengage the latch tabs (2) of the BSM sensor mounting bracket and pull the LBSS or RBSS out of the bracket.

INSTALLATION

INSTALLATION

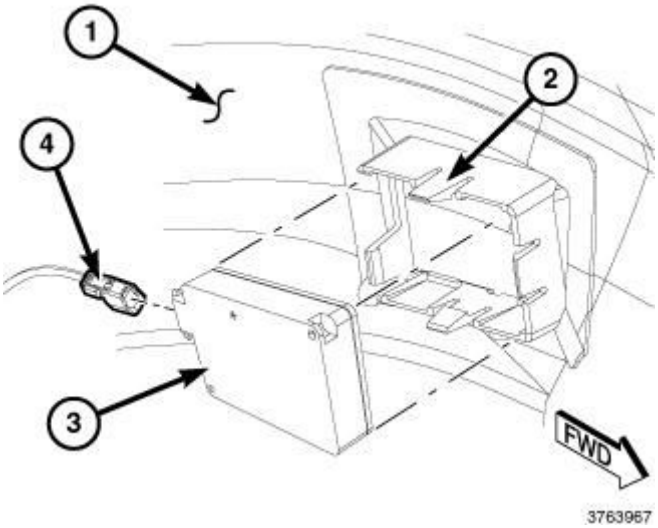

Fig. 8: Blind Spot Sensor, Latch Tabs & Harness Connector

Courtesy of CHRYSLER GROUP, LLC

1. Reach up behind the outboard end of the rear bumper fascia to position the Left Blind Spot Sensor (LBSS) or Right Blind Spot Sensor (RBSS) (3) to the mounting bracket on the inside surface of the fascia (1).
2. Using hand pressure, press the LBSS or RBSS firmly and evenly into the mounting bracket until the latch tabs (2) are fully engaged.
3. Reconnect the rear bumper fascia wire harness connector (4) to the LBSS or RBSS sensor connector receptacle.
4. Reconnect the negative cable to the battery.

NOTE: **If this Electronic Control Unit (ECU) is being replaced with a new unit, a diagnostic scan tool MUST be used to align the PROXI configuration data into the new ECU. Follow the routine outlined in the diagnostic scan tool for PROXI Configuration Alignment under Body Control Module (BCM) Miscellaneous Functions menu.**

SENSOR, PARK ASSIST

DESCRIPTION

DESCRIPTION

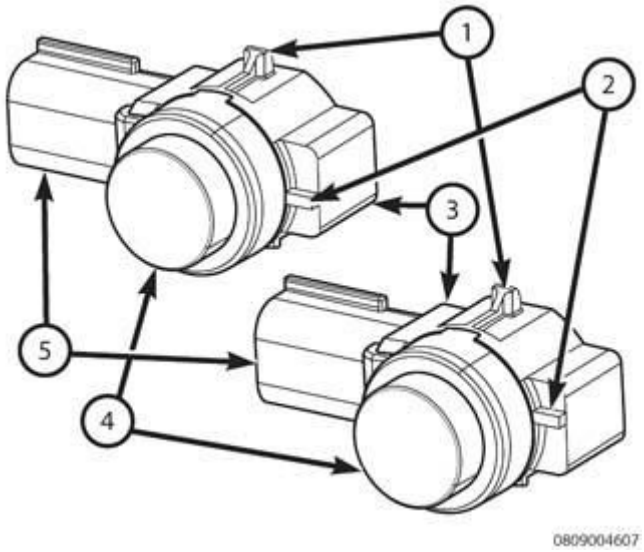

Fig. 9: Park Assist Sensor
Courtesy of CHRYSLER GROUP, LLC

Vehicles equipped with the park assist system have up to twelve park assist sensors (3). Vehicles with Rear Park Assist (RPA) have four sensors installed in the rear bumper fascia. Vehicles with Front and Rear Park Assist (FRPA) have four sensors in the rear bumper fascia plus six sensors in the front bumper fascia. Each of these sensors is a Generation 5.0 sensor and is identical in construction and is interchangeable.

Vehicles with Parallel and Perpendicular Park Assist (PPPA) have six sensors in the rear fascia and six sensors in the front fascia. However, the sensors in each right and left outward-facing end of the front and rear fascias has a unique Generation 5.1 sensor, while the forward and rearward-facing sensors are still the Generation 5.0 type. The Generation 5.1 sensors offer increased range required to support the parallel and perpendicular parking features of the PPPA system. The only physical difference between the two sensor types besides the part number is the offset location of the indexing feature (2) on the sensor body. This offset indexing feature is designed to match up with an indexing notch in the sensor bracket to prevent installation of a sensor in an incorrect location.

Only the membrane (4) of each sensor is visible through a hole in the outer vertical surface of the fascia. The remainder of each sensor including the sensor mounting bracket, the sensor spacer (also known as the O-ring or decoupling ring) and the sensor wiring connection is concealed behind the fascia. A sensor wire harness behind the fascia connects the sensors to the vehicle electrical system.

The electronic circuitry and a communication chip for each sensor is enclosed and protected within the molded black plastic sensor housing. The housing includes an integral connector receptacle (5) and two integral latch tabs (1). The sensor membrane extends from the surface of the sensor housing, and is finished to match the outer surface of the fascia.

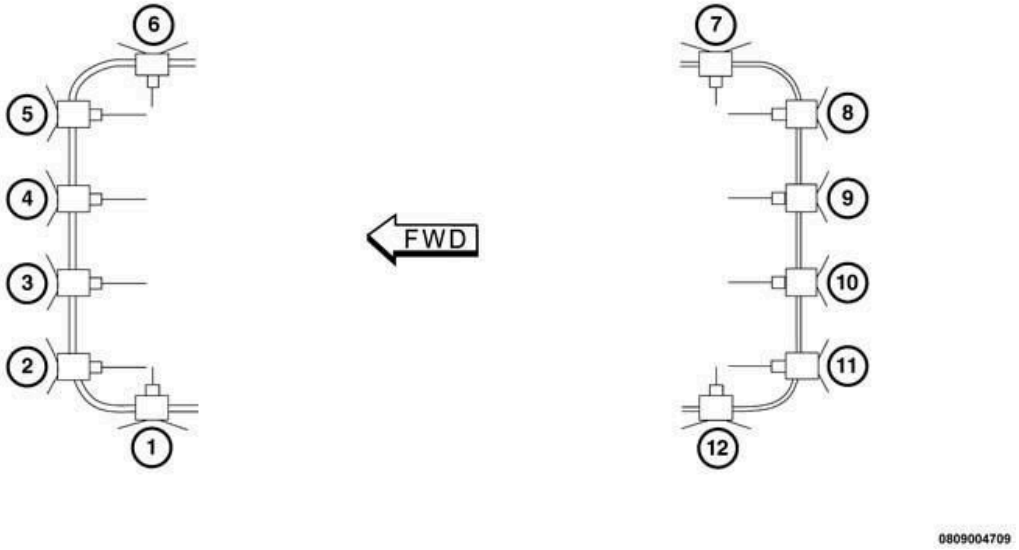

Fig. 10: Park Assist Sensors Numbering System
Courtesy of CHRYSLER GROUP, LLC

The numbering system for the park assist sensors allows for up to twelve sensors on the vehicle, six front and six rear. The sensors are numbered in a clockwise manner starting at the left front fascia. Regardless of whether the vehicle is equipped with RPA, FRPA or PPPA the left front sensor location is always considered the number 1 sensor. The numbering continues in a clockwise direction around the vehicle to the left rear sensor, which is always considered the number 12 sensor.

A resilient O-ring spacer (also known as a decoupling ring) around the circumference of the sensor membrane isolates the membrane from the openings in the fascia. Each sensor is snapped into its own dedicated molded

plastic mounting bracket. Each sensor mounting bracket is heat-staked to the back side of the bumper fascia.

The park assist sensors cannot be adjusted or repaired. If a sensor is ineffective or damaged it must be replaced with a new unit. The sensor spacers are available for individual service replacement. The sensor mounting brackets are serviced only as a unit with the bumper fascia.

OPERATION

OPERATION

The park assist sensors are ultrasonic transceivers that are completely controlled by the Park Assist Module (PAM) (also known as the ParkTronic System/PTS module). The sensors transmit and receive ultrasonic signals. The sensors each receive battery current and ground in parallel from the PAM, but are each connected to individual dedicated serial bus communication circuits to the module.

Each sensor membrane is oscillated, then quieted by the PAM in a pulsing fashion. While the sensor membrane oscillates, it emits an ultrasonic signal. This signal will bounce or echo off of objects within the field of vision for that sensor. While quieted, each membrane receives the echoes of the ultrasonic signals it and the other sensors have transmitted. The sensors then communicate this echo pulse data over the serial bus lines back to the PAM. The micro-controller within the PAM uses the intervals between the ultrasonic transmission and reception data from the sensors to calculate the distance to any obstacles identified by the ultrasonic echoes.

The hard wired circuits between components related to the park assist sensors may be diagnosed using conventional diagnostic tools and procedures. Refer to the appropriate wiring information. The wiring information includes wiring diagrams, proper wire and connector repair procedures, details of wire harness routing and retention, connector pin out information and location views for the various wire harness connectors, splices and grounds.

However, conventional diagnostic methods will not prove conclusive in the diagnosis of the park assist sensors or the electronic controls and communication between modules and other devices that provide some features of the park assist system. The most reliable, efficient and accurate means to diagnose the park assist sensors or the electronic controls and communication related to park assist sensor operation requires the use of a diagnostic scan tool. Refer to **DIAGNOSIS AND TESTING** .

DIAGNOSIS AND TESTING

DIAGNOSIS AND TESTING - PARK ASSIST SENSOR

The hard wired circuits between the park assist sensors and the Park Assist Module (PAM) (also known as the ParkTronic System/PTS module) may be diagnosed using conventional diagnostic tools and procedures. Refer to the appropriate wiring information. The wiring information includes wiring diagrams, proper wire and connector repair procedures, details of wire harness routing and retention, connector pin out information and location views for the various wire harness connectors, splices and grounds.

However, conventional diagnostic methods will not prove conclusive in the diagnosis of the park assist sensors or the electronic controls and communication between other modules and devices that provide some features of the park assist system. The most reliable, efficient and accurate means to diagnose the park assist sensors or the

electronic controls and communication related to park assist sensor operation requires the use of a diagnostic scan tool. Refer to **DIAGNOSIS AND TESTING** .

REMOVAL

FRONT CENTER

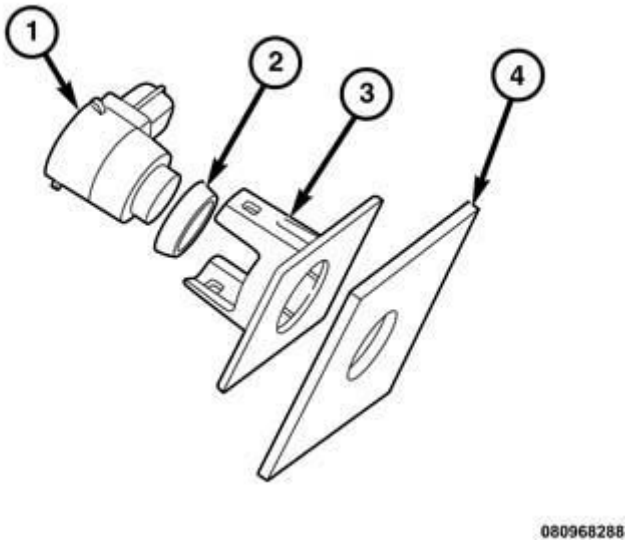

Fig. 11: Park Assist Sensor, Spacer, Bracket & Fascia
Courtesy of CHRYSLER GROUP, LLC

NOTE: **The park assist sensors (1) and the resilient sensor spacers (2) (also known as decoupling rings or O-rings) are each available for separate service replacement. The sensor brackets (3) are bonded to and integral to the inside surface of the bumper fascia (4).**

NOTE: **In vehicles equipped with the optional Parallel and Perpendicular Park Assist (PPPA) option only, the park assist sensors located in the outward facing ends of both the front and rear bumper fascias are unique and must not be interchanged with any other forward or rearward facing park assist sensor.**

1. Disconnect and isolate the negative cable from the battery.
2. Remove the front bumper fascia from the vehicle. Refer to **FASCIA, FRONT, REMOVAL** .
3. From behind the front bumper fascia (4), disconnect the wire harness connector from the park assist sensor (1) connector receptacle.
4. Carefully pry the sensor bracket (3) latch features away from the latch tabs of the sensor far enough to disengage the sensor from the bracket.
5. Disengage the resilient O-ring spacer (2) from around the circumference of the sensor membrane protrusion.

FRONT OUTBOARD

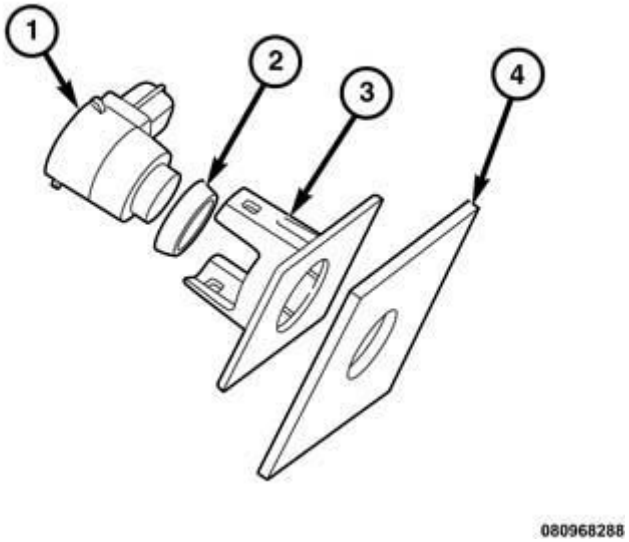

Fig. 12: Park Assist Sensor, Spacer, Bracket & Fascia
Courtesy of CHRYSLER GROUP, LLC

NOTE: **The park assist sensors (1) and the resilient sensor spacers (2) (also known as decoupling rings or O-rings) are each available for separate service replacement. The sensor brackets (3) are bonded to and integral to the inside surface of the bumper fascia (4).**

NOTE: **In vehicles equipped with the optional Parallel and Perpendicular Park Assist (PPPA) option only, the park assist sensors located in the outward facing ends of both the front and rear bumper fascias are unique and must not be interchanged with any other forward or rearward facing park assist sensor.**

1. Disconnect and isolate the negative cable from the battery.
2. Remove the fasteners that secure the front of the front fender wheel house splash shield to the front bumper fascia, the front belly pan and the front end structure. Refer to **SHIELD, SPLASH, FRONT WHEELHOUSE, REMOVAL** .
3. Pull the splash shield back from the front bumper fascia far enough to access and disconnect the wire harness connector from the park assist sensor (1) connector receptacle.
4. Carefully pry the sensor bracket (3) latch features away from the latch tabs of the sensor far enough to disengage the sensor from the bracket.
5. Disengage the resilient O-ring spacer (2) from around the circumference of the sensor membrane protrusion.

REAR

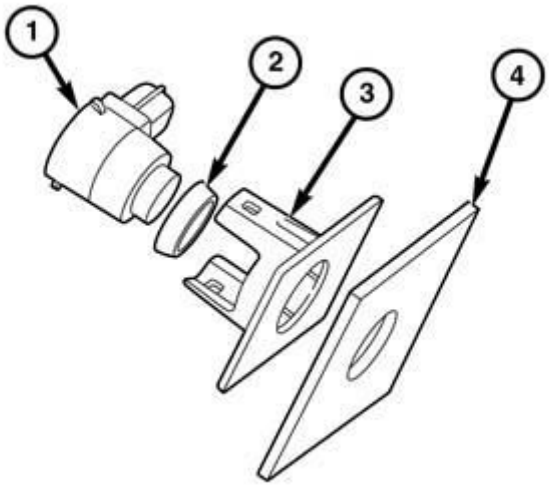

080968288

Fig. 13: Park Assist Sensor, Spacer, Bracket & Fascia
Courtesy of CHRYSLER GROUP, LLC

NOTE: **The park assist sensors (1) and the resilient sensor spacers (2) (also known as decoupling rings or O-rings) are each available for separate service replacement. The sensor brackets (3) are bonded to and integral to the inside surface of the bumper fascia (4).**

NOTE: **In vehicles equipped with the optional Parallel and Perpendicular Park Assist (PPPA) option only, the park assist sensors located in the outward facing ends of both the front and rear fascias are unique and must not be interchanged with any other forward or rearward facing park assist sensor.**

1. Disconnect and isolate the negative cable from the battery.
2. Reach up behind the rear bumper fascia (4) to access and disconnect the wire harness connector from the park assist sensor (1) connector receptacle.
3. Carefully pry the sensor bracket (3) latch features away from the latch tabs of the sensor far enough to disengage the sensor from the bracket.
4. Disengage the resilient O-ring spacer (2) from around the circumference of the sensor membrane protrusion.

INSTALLATION

FRONT CENTER

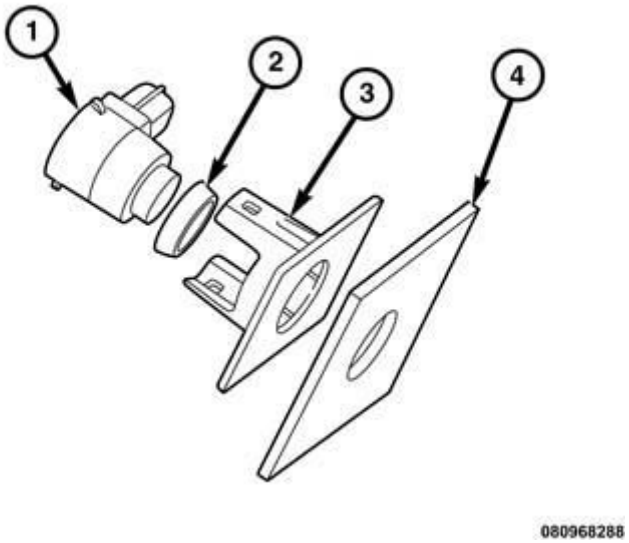

Fig. 14: Park Assist Sensor, Spacer, Bracket & Fascia
Courtesy of CHRYSLER GROUP, LLC

NOTE: **The park assist sensors (1) and the resilient sensor spacers (2) (also known as decoupling rings or O-rings) are each available for separate service replacement. The sensor brackets (3) are bonded to and integral to the inside surface of the bumper fascia (4).**

NOTE: **In vehicles equipped with the optional Parallel and Perpendicular Park Assist (PPPA) option only, the park assist sensors located in the outward facing ends of both the front and rear bumper fascias are unique and must not be interchanged with any other forward or rearward facing park assist sensor.**

1. Engage the O-ring spacer (2) around the circumference of the sensor membrane protrusion.

   NOTE: **Production and all service replacement O-ring spacers are tapered. The wide side (base) of the O-ring should be seated against the sensor housing and the narrow side should be oriented toward the outer surface of the sensor membrane and the rear fascia.**

2. From behind the front bumper fascia, align and insert the park assist sensor (1) into the sensor bracket (3) on the inside surface of the bumper fascia (4) until the bracket latch features are fully engaged over the latch tabs of the sensor.

   NOTE: **Be certain that each sensor membrane is properly centered in the openings of the bumper fascia and that the resilient O-ring spacers are not pinched. Improper centering or pinched O-rings can be detrimental to proper park assist sensor operation. Be certain that the sensor membrane is flush with the outer surface of the bumper fascia.**

3. Reconnect the wire harness connector to the sensor connector receptacle.
4. Reinstall the front bumper fascia onto the vehicle. Refer to **FASCIA, FRONT, INSTALLATION** .
5. Reconnect the negative cable to the battery.

FRONT OUTBOARD

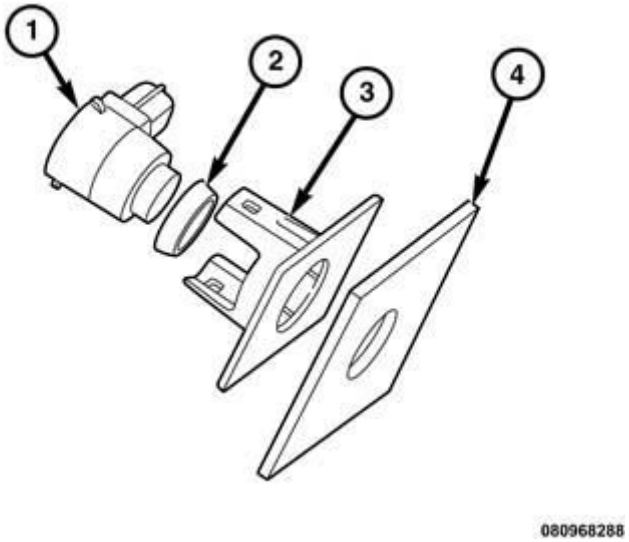

Fig. 15: Park Assist Sensor, Spacer, Bracket & Fascia
Courtesy of CHRYSLER GROUP, LLC

NOTE: The park assist sensors (1) and the resilient sensor spacers (2) (also known as decoupling rings or O-rings) are each available for separate service replacement. The sensor brackets (3) are bonded to and integral to the inside surface of the bumper fascia (4).

NOTE: In vehicles equipped with the optional Parallel and Perpendicular Park Assist (PPPA) option only, the park assist sensors located in the outward facing ends of both the front and rear bumper fascias are unique and must not be interchanged with any other forward or rearward facing park assist sensor.

1. Engage the O-ring spacer (2) around the circumference of the sensor membrane protrusion.

   NOTE: Production and all service replacement O-ring spacers are tapered. The wide side (base) of the O-ring should be seated against the sensor housing and the narrow side should be oriented toward the outer surface of the sensor membrane and the bumper fascia.

2. Pull the front of the front fender wheel house splash shield back from the front bumper fascia far enough to align and insert the sensor (1) into the sensor bracket (3) on the inside surface of the bumper fascia (4)

until the bracket latch features are fully engaged over the latch tabs of the sensor.

NOTE: Be certain that each sensor membrane is properly centered in the openings of the bumper fascia and that the resilient O-ring spacers are not pinched. Improper centering or pinched O-rings can be detrimental to proper park assist sensor operation. Be certain that the sensor membrane is flush with the outer surface of the bumper fascia.

3. Reconnect the wire harness connector to the sensor connector receptacle.
4. Reinstall the fasteners that secure the front of the front fender wheel house splash shield to the front bumper fascia, the front belly pan and the front end structure. Refer to **SHIELD, SPLASH, FRONT WHEELHOUSE, INSTALLATION** .
5. Reconnect the negative cable to the battery.

REAR

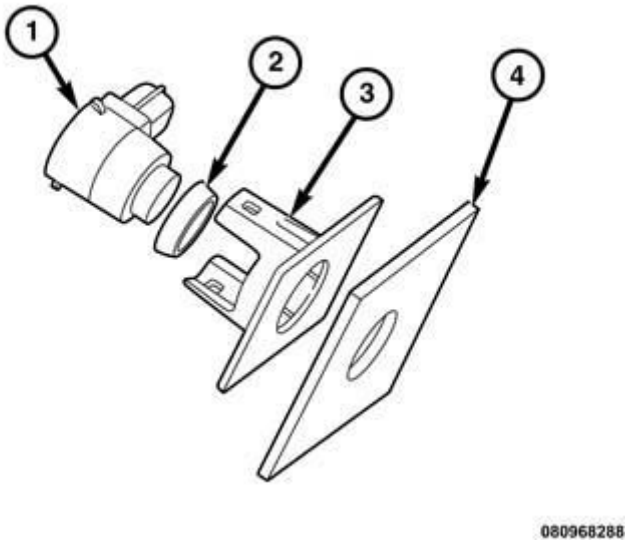

Fig. 16: Park Assist Sensor, Spacer, Bracket & Fascia
Courtesy of CHRYSLER GROUP, LLC

NOTE: The park assist sensors (1) and the resilient sensor spacers (2) (also known as decoupling rings or O-rings) are each available for separate service replacement. The sensor brackets (3) are bonded to and integral to the inside surface of the bumper fascia (4).

NOTE: In vehicles equipped with the optional Parallel and Perpendicular Park Assist (PPPA) option only, the park assist sensors located in the outward facing ends of both the front and rear bumper fascias are unique and must not be interchanged with any other forward or rearward facing park assist sensor.

1. Engage the O-ring spacer (2) around the circumference of the sensor membrane protrusion.

NOTE: Production and all service replacement O-ring spacers are tapered. The wide side (base) of the O-ring should be seated against the sensor housing and the narrow side should be oriented toward the outer surface of the sensor membrane and the rear fascia.

2. Reach up behind the rear bumper fascia far enough to align and insert the sensor (1) into the sensor bracket (3) on the inside surface of the bumper fascia (4) until the bracket latch features are fully engaged over the latch tabs of the sensor.

NOTE: Be certain that each sensor membrane is properly centered in the openings of the bumper fascia and that the resilient O-ring spacers are not pinched. Improper centering or pinched O-rings can be detrimental to proper park assist sensor operation. Be certain that the sensor membrane is flush with the outer surface of the bumper fascia.

3. Reconnect the wire harness connector to the sensor connector receptacle.
4. Reconnect the negative cable to the battery.

SWITCH, PARK ASSIST

DESCRIPTION

DESCRIPTION

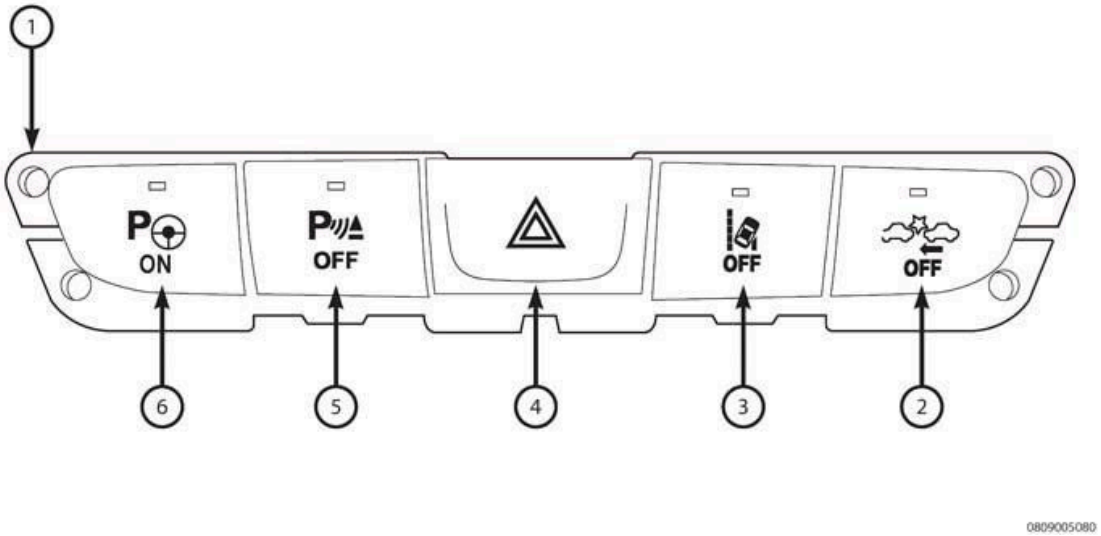

Fig. 17: Park Assist Switch
Courtesy of CHRYSLER GROUP, LLC

The park assist Off switch (5) and the Parallel and Perpendicular Park Assist (PPPA) On switch (6) are integral to the instrument panel switch pod (1) (also known as the Accessory Switch Bank Module/ASBM), which is secured to the instrument panel center bezel just below the heater and air conditioner controls. Refer to **POD, SWITCH, DESCRIPTION** .

The park assist Off switch push button is clearly identified with a white International Control and Display Symbol graphic for **Parking Aid** and the text **OFF** . The PPPA On switch push button is clearly identified with white International Control and Display Symbol graphics for **Parking** and **Electric Power Steering** along with the text **ON** .

An amber Light Emitting Diode (LED) unit is illuminated behind a small clear plastic jewel-like lens in the park assist Off push button to give a visual indication whenever the park assist system has been manually disabled or if a system fault is monitored. Another amber LED unit is illuminated in the PPPA On push button whenever that system has been enabled. Both switches are only functional while the status of the ignition switch is On. The switch buttons also have panel lamps dimmer controlled illumination for night visibility.

All of the circuitry and components of the park assist Off switch and the PPPA On switch are contained within a molded black plastic instrument panel switch pod housing. A single connector receptacle is integral to the back of the switch pod housing. The switch is connected to the vehicle electrical system through a dedicated take out and connector of the instrument panel wire harness.

The park assist Off switch and the PPPA On switch cannot be adjusted or repaired and, if either switch is ineffective or damaged, the entire instrument panel switch pod unit must be replaced with a new unit.

OPERATION

OPERATION

The status of the park assist Off switch and the Parallel and Perpendicular Park Assist (PPPA) On switch is continually monitored by the circuitry within the instrument panel switch pod (also known as the Accessory Switch Bank Module/ASBM). The switch pod receives battery voltage at all times on a fused battery feed circuit and has a path to ground at all times through the instrument panel wire harness. The inputs to and outputs from the switch pod consist of electronic message communication with the Body Control Module (BCM) over the single wire Local Interface Network (LIN) data bus.

Each time the park assist Off switch or PPPA On switch push button is depressed the switch pod circuitry sends an electronic **switch status** message input to the BCM over the LIN data bus. The BCM then relays an electronic **switch request** message to the Park Assist Module (PAM) over the Controller Area Network (CAN) data bus. The PAM responds to each **switch request** message by toggling the status of the appropriate park assist system feature from enabled to disabled, or from disabled to enabled, then sends an electronic **system status** message back to the BCM over the CAN data bus as confirmation.

The BCM responds to the system status message by sending a message to the switch pod over the LIN data bus to control the park assist Off switch or PPPA On switch Light Emitting Diode (LED) units so that they are illuminated only when appropriate while the status of the ignition switch is On, and are extinguished when the status of the ignition switch is anything except On. If the park assist system is disabled due to a monitored fault or failure, a press of the park assist Off push button will result in the LED flashing on and off for about 5

seconds, then lighting solid.

The hard wired circuits between components related to the park assist Off switch and the PPPA On switch may be diagnosed using conventional diagnostic tools and procedures. Refer to the appropriate wiring information. However, conventional diagnostic methods will not prove conclusive in the diagnosis of the electronic controls and communication between modules and other devices that provide some features of the park assist system. The most reliable, efficient and accurate means to diagnose the park assist Off switch, the PPPA On switch or the electronic controls and communication related to park assist switch operation requires the use of a diagnostic scan tool. Refer to the appropriate diagnostic information.

2014 ACCESSORIES AND EQUIPMENT

Comfort Seat & Wheel Module (CSWM) - Electrical Diagnostics - Cherokee

DIAGNOSTIC CODE INDEX

DIAGNOSTIC CODE INDEX

DTC	Description
B10C4-11	HEATED STEERING WHEEL CONTROL - CIRCUIT SHORT TO GROUND
B10C4-12	HEATED STEERING WHEEL CONTROL - CIRCUIT SHORT TO BATTERY
B10C4-13	HEATED STEERING WHEEL CONTROL - CIRCUIT OPEN
B11C1-13	STEERING WHEEL HEATER POWER SUPPLY - CIRCUIT OPEN
B1E99-11	FRONT LEFT HEATER CONTROL CIRCUIT - CIRCUIT SHORT TO GROUND
B1E99-12	FRONT LEFT HEATER CONTROL CIRCUIT - CIRCUIT SHORT TO BATTERY
B1E99-13	FRONT LEFT HEATER CONTROL CIRCUIT - CIRCUIT OPEN
B1E99-1E	FRONT LEFT HEATER CONTROL CIRCUIT - CIRCUIT RESISTANCE OUT OF RANGE
B1E9A-11	FRONT RIGHT HEATER CONTROL CIRCUIT - CIRCUIT SHORT TO GROUND
B1E9A-12	FRONT RIGHT HEATER CONTROL CIRCUIT - CIRCUIT SHORT TO BATTERY
B1E9A-13	FRONT RIGHT HEATER CONTROL CIRCUIT - CIRCUIT OPEN
B1E9A-1E	FRONT RIGHT HEATER CONTROL CIRCUIT - CIRCUIT RESISTANCE OUT OF RANGE
B1E9D-11	FRONT LEFT VENT CONTROL CIRCUIT - CIRCUIT SHORT TO GROUND
B1E9D-12	FRONT LEFT VENT CONTROL CIRCUIT - CIRCUIT SHORT TO BATTERY
B1E9D-13	FRONT LEFT VENT CONTROL CIRCUIT - CIRCUIT OPEN
B1E9E-11	FRONT RIGHT VENT CONTROL CIRCUIT - CIRCUIT SHORT TO GROUND
B1E9E-12	FRONT RIGHT VENT CONTROL CIRCUIT - CIRCUIT SHORT TO BATTERY
B1E9E-13	FRONT RIGHT VENT CONTROL CIRCUIT - CIRCUIT OPEN
B1EB1-1A	FRONT LEFT SEAT HEATER SENSOR - CIRCUIT RESISTANCE BELOW THRESHOLD
B1EB1-1B	FRONT LEFT SEAT HEATER SENSOR - CIRCUIT RESISTANCE ABOVE THRESHOLD
B1EB2-1A	FRONT RIGHT SEAT HEATER SENSOR - CIRCUIT RESISTANCE BELOW THRESHOLD
B1EB2-1B	FRONT RIGHT SEAT HEATER SENSOR - CIRCUIT RESISTANCE ABOVE THRESHOLD
B210C-17	BATTERY VOLTAGE INPUT - CIRCUIT VOLTAGE ABOVE THRESHOLD
B210C-18	BATTERY VOLTAGE INPUT - UNDER CURRENT
B21DD-84	SYSTEM VOLTAGE - SIGNAL BELOW ALLOWABLE RANGE

B21DD-85	SYSTEM VOLTAGE - SIGNAL ABOVE ALLOWABLE RANGE
B221A-00	(HSM) HEATED SEAT MODULE INTERNAL
U0011-00	CAN INTERIOR BUS OFF PERFORMANCE
U0140-00	LOST COMMUNICATION WITH BODY CONTROL MODULE
U1446-00	IMPLAUSIBLE HEATED STEERING WHEEL TEMPERATURE MESSAGE RECEIVED

DIAGNOSIS AND TESTING

B10C4-11-HEATED STEERING WHEEL CONTROL - CIRCUIT SHORT TO GROUND

For a complete wiring diagram, **refer to appropriate SYSTEM WIRING DIAGRAMS article** .

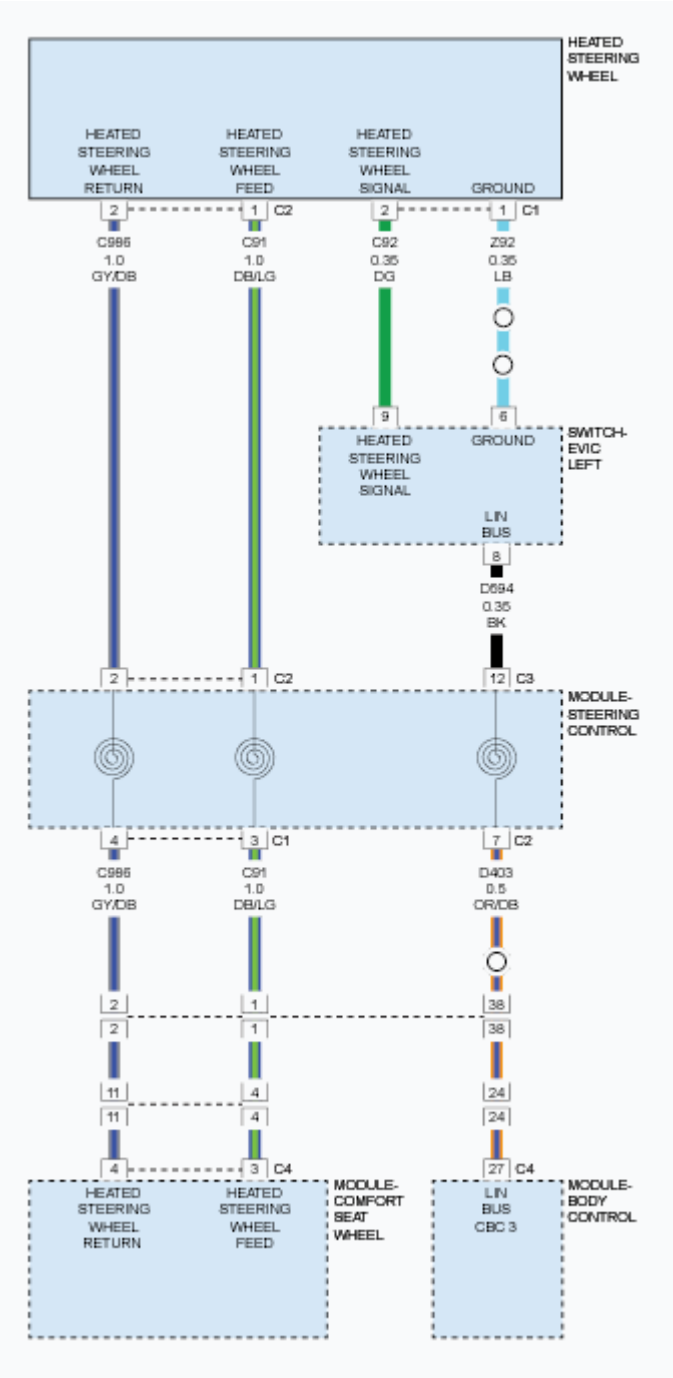

Fig. 1: Heated Steering Wheel Circuit Diagram
Courtesy of CHRYSLER GROUP, LLC

WHEN MONITORED

With the engine running.

SET CONDITION

The Comfort Seat Wheel Module (CSWM) detects on the Heated Steering Wheel Feed circuit a voltage below its threshold for more than two seconds when the output is turned on.

POSSIBLE CAUSES

Possible Causes
HEATED STEERING WHEEL FEED CIRCUIT SHORTED TO GROUND
HEATED STEERING WHEEL FEED CIRCUIT SHORTED TO THE HEATED STEERING WHEEL RETURN CIRCUIT
HEATED STEERING WHEEL (HSW)
STEERING COLUMN CONTROL MODULE (SCCM)
COMFORT SEAT WHEEL MODULE (CSWM)

DIAGNOSTIC TEST

1. **CHECK IF THE DTC IS ACTIVE**

   NOTE: Make sure the battery is fully charged and the charging system is operating properly before proceeding.

   1. Turn the ignition on.
   2. With the scan tool, record and erase Diagnostic Trouble Codes (DTCs).
   3. Turn the ignition off.
   4. Start the engine and let it run.
   5. Turn the Heated Steering Wheel (HSW) on.
   6. With the scan tool, read DTCs.

   Is this DTC active?

   Yes

   - Go To 2

   No

   - Go To 6

2. **CHECK THE (C91) HEATED STEERING WHEEL FEED CIRCUIT**

   WARNING: Turn the ignition off, disconnect the 12-volt battery and wait two minutes before proceeding. Failure to follow these instructions may result in possible serious or fatal injury.

   1. Disconnect the Steering Column Control Module (SCCM) C1 harness connector.

WARNING: Turn the ignition on, then reconnect the 12-volt battery and wait two minutes before proceeding. Failure to follow these instructions may result in possible serious or fatal injury.

2. With the scan tool, erase DTCs.
3. Start the engine and let it run.
4. Turn the HSW on.
5. With the scan tool, read DTCs.

   Is this DTC active?

   Yes

   - Go To 3

   No

   - Go To 5

3. **CHECK THE (C91) HEATED STEERING WHEEL FEED CIRCUIT FOR A SHORT TO GROUND**
   1. Turn the ignition off.
   2. Disconnect the Comfort Seat Wheel Module (CSWM) C4 harness connector.
   3. Measure the resistance between ground and the (C91) Heated Steering Wheel Feed circuit.

      Is the resistance below 10k Ohms?

      Yes

      - Repair the (C91) Heated Steering Wheel Feed circuit for a short to ground.
      - Perform the BODY VERIFICATION TEST. Refer to **STANDARD PROCEDURE** .

      No

      - Go To 4

4. **CHECK THE (C91) HEATED STEERING WHEEL FEED CIRCUIT FOR A SHORT TO THE (C986) HEATED STEERING WHEEL RETURN CIRCUIT**
   1. Measure the resistance between the (C91) Heated Steering Wheel Feed circuit and the (C986) Heated Steering Wheel Return circuit at the SCCM C1 harness connector.

      Is the resistance below 10k Ohms?

      Yes

- Repair the (C91) Heated Steering Wheel Feed circuit for a short to the (C986) Heated Steering Wheel Return circuit.
- Perform the BODY VERIFICATION TEST. Refer to **STANDARD PROCEDURE** .

No

- Replace the Comfort Seat Wheel Module (CSWM) in accordance with the Service Information. Refer to **MODULE, COMFORT SEAT AND WHEEL, REMOVAL** .
- Perform the BODY VERIFICATION TEST. Refer to **STANDARD PROCEDURE** .

5. **CHECK THE HEATED STEERING WHEEL**

WARNING: Turn the ignition off, disconnect the 12-volt battery and wait two minutes before proceeding. Failure to follow these instructions may result in possible serious or fatal injury.

1. Remove the Driver Airbag in accordance with the Service Information. Refer to **AIR BAG, DRIVER, REMOVAL** .
2. Disconnect the SCCM C2 harness connector.

NOTE: Before proceeding, thoroughly inspect the wiring harness and connectors between the Heated Steering Wheel (HSW) and the Steering Column Control Module (SCCM). Look for chafed, pierced, pinched, or partially broken wires and broken, bent, pushed out, spread, corroded, or contaminated terminals.

3. Reconnect the SCCM C1 harness connector.

WARNING: Turn the ignition on, then reconnect the 12-volt battery and wait two minutes before proceeding. Failure to follow these instructions may result in possible serious or fatal injury.

4. With the scan tool, erase DTCs.
5. Turn the ignition off.
6. Start the engine and let it run.
7. Turn the HSW on.
8. With the scan tool, read DTCs.

Is the same DTC active?

Yes

- Replace the Steering Column Control Module (SCCM) in accordance with the Service Information. Refer to **MODULE, STEERING COLUMN, REMOVAL** .

- Perform the BODY VERIFICATION TEST. Refer to **STANDARD PROCEDURE** .

No

- Replace the Heated Steering Wheel (HSW) in accordance with the Service Information. Refer to **WHEEL, STEERING, REMOVAL** .
- Perform the BODY VERIFICATION TEST. Refer to **STANDARD PROCEDURE** .

6. **CHECK THE WIRING AND CONNECTORS**
   1. The conditions necessary to set the DTC are not present at this time.
   2. Using the schematics as a guide, inspect the wiring and connectors specific to this circuit. Wiggle the wiring and connectors while checking for shorted and open circuits.
   3. Check all related splices and connectors for signs of water intrusion, corrosion, pushed out or bent terminals, and correct pin tension.
   4. Attempt to reproduce the condition by rotating the steering wheel or by adjusting the seat.
   5. With the scan tool, check for any Environmental Data to help identify the conditions in which the DTC was set.
   6. Check Service Bulletins for any possible causes that may apply.

   Were there any problems found?

   Yes

   - Repair as necessary.
   - Perform the BODY VERIFICATION TEST. Refer to **STANDARD PROCEDURE** .

   No

   - Test complete.

B10C4-12-HEATED STEERING WHEEL CONTROL - CIRCUIT SHORT TO BATTERY

For a complete wiring diagram, **refer to appropriate SYSTEM WIRING DIAGRAMS article** .

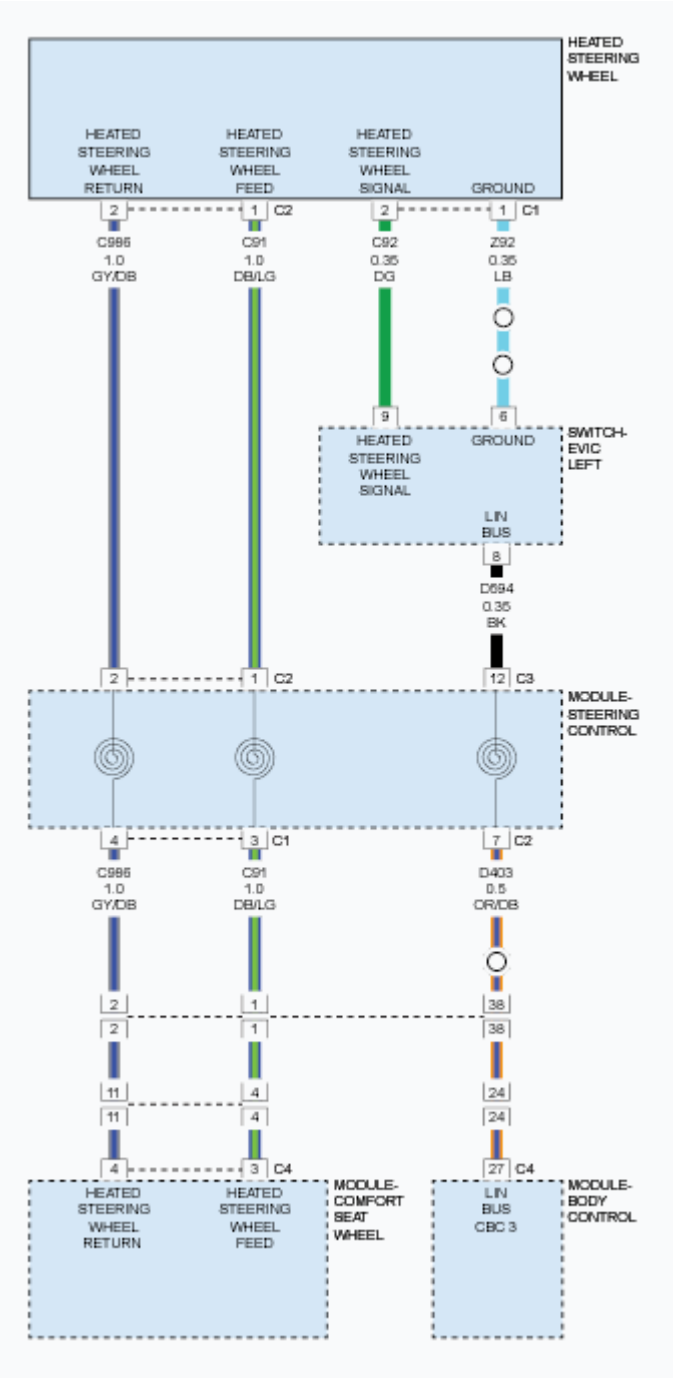

Fig. 2: Heated Steering Wheel Circuit Diagram
Courtesy of CHRYSLER GROUP, LLC

WHEN MONITORED

With the engine running.

SET CONDITION

The Comfort Seat Wheel Module (CSWM) detects voltage on the Heated Steering Wheel Feed circuit for more than two seconds with the output turned off.

POSSIBLE CAUSES

Possible Causes
HEATED STEERING WHEEL FEED CIRCUIT SHORTED TO VOLTAGE
HEATED STEERING WHEEL FEED CIRCUIT SHORTED TO THE FUSED IGNITION RUN CONTROL OUTPUT
HEATED STEERING WHEEL (HSW)
STEERING COLUMN CONTROL MODULE (SCCM)
COMFORT SEAT WHEEL MODULE (CSWM)

DIAGNOSTIC TEST

1. **CHECK IF THE DTC IS ACTIVE**

   NOTE: Make sure the battery is fully charged and the charging system is operating properly before proceeding.

   1. Turn the ignition on.
   2. With the scan tool, record and erase Diagnostic Trouble Codes (DTCs).

      NOTE: It is recommended to record any Environmental Data to help identify the conditions in which the DTC was set.

   3. Turn the ignition off.
   4. Ignition on, engine running.

      NOTE: The Heated Steering Wheel should be in the off position and remain off for the results to be valid.

   5. With the scan tool, read Comfort Seat Wheel Module (CSWM) DTCs.

      Does the scan tool show this DTC as active?

      Yes

      - Go To 2

      No

      - Go To 5

2. **CHECK THE (C91) HEATED STEERING WHEEL FEED CIRCUIT**

WARNING: Turn the ignition off, disconnect the 12-volt battery and wait two minutes before proceeding. Failure to follow these instructions may result in possible serious or fatal injury.

1. Disconnect the Steering Column Control Module (SCCM) C5 harness connector.

WARNING: Turn the ignition on, then reconnect the 12-volt battery and wait two minutes before proceeding. Failure to follow these instructions may result in possible serious or fatal injury.

2. Measure the voltage between ground and the (C91) Heated Steering Wheel Feed circuit at the SCCM C5 harness connector.

   Is there any voltage present?

   Yes

   - Go To 3

   No

   - Go To 4

3. **CHECK THE (C91) HEATED STEERING WHEEL FEED CIRCUIT FOR A SHORT TO VOLTAGE**
   1. Turn the ignition off.
   2. Disconnect the Heated Steering Module (CSWM) C4 harness connector.
   3. Turn the ignition on.
   4. Measure the voltage between ground and the (C91) Heated Steering Wheel Feed circuit in the CSWM C4 harness connector.

      Is there any voltage present?

      Yes

      - Repair the (C91) Heated Steering Wheel Feed circuit for a short to voltage.
      - Perform the BODY VERIFICATION TEST. Refer to **STANDARD PROCEDURE** .

      No

      - Replace the Comfort Seat Wheel Module (CSWM) in accordance with the Service Information. Refer to **MODULE, COMFORT SEAT AND WHEEL, REMOVAL** .
      - Perform the BODY VERIFICATION TEST. Refer to **STANDARD PROCEDURE** .

4. **CHECK THE STEERING COLUMN CONTROL MODULE**

WARNING: Turn the ignition off, disconnect the 12-volt battery and wait two minutes before proceeding. Failure to follow these instructions may result in possible serious or fatal injury.

1. Remove the Driver Airbag in accordance with the Service Information. Refer to **AIR BAG, DRIVER, REMOVAL** .
2. Disconnect the SCCM C7 harness connector.

NOTE: Before proceeding, thoroughly inspect the wiring harness and connectors between the Heated Steering Wheel (HSW) and the Steering Column Control Module (SCCM). Look for chafed, pierced, pinched, or partially broken wires and broken, bent, pushed out, spread, corroded, or contaminated terminals.

3. Reconnect the SCCM C5 harness connector.

WARNING: Turn the ignition on, then reconnect the 12-volt battery and wait two minutes before proceeding. Failure to follow these instructions may result in possible serious or fatal injury.

4. Measure the voltage between ground and the (C91) Heated Steering Wheel Feed circuit in the SCCM C7 component connector.

   Is there any voltage present?

   Yes

   - Replace the Steering Column Control Module (SCCM) or Clock Spring in accordance with the Service Information. Refer to **MODULE, STEERING COLUMN, REMOVAL** .
   - Perform the BODY VERIFICATION TEST. Refer to **STANDARD PROCEDURE** .

   No

   - Replace the Heated Steering Wheel (HSW) in accordance with the Service Information. Refer to **WHEEL, STEERING, REMOVAL** .
   - Perform the BODY VERIFICATION TEST. Refer to **STANDARD PROCEDURE** .

5. **CHECK THE WIRING AND CONNECTORS**
   1. The conditions necessary to set the DTC are not present at this time.
   2. Using the schematics as a guide, inspect the wiring and connectors specific to this circuit. Wiggle the wiring and connectors while checking for shorted and open circuits.
   3. Attempt to reproduce the condition by rotating the steering wheel or by adjusting the seat.
   4. Check all related splices and connectors for signs of water intrusion, corrosion, pushed out or bent terminals, and correct pin tension.

5. With the scan tool, check for any Environmental Data to help identify the conditions in which the DTC was set.
6. Check Service Bulletins for any possible causes that may apply.

   Were there any problems found?

   Yes

   - Repair as necessary.
   - Perform the BODY VERIFICATION TEST. Refer to **STANDARD PROCEDURE** .

   No

   - Test complete.

B10C4-13-HEATED STEERING WHEEL CONTROL - CIRCUIT OPEN

For a complete wiring diagram, **refer to appropriate SYSTEM WIRING DIAGRAMS article** .

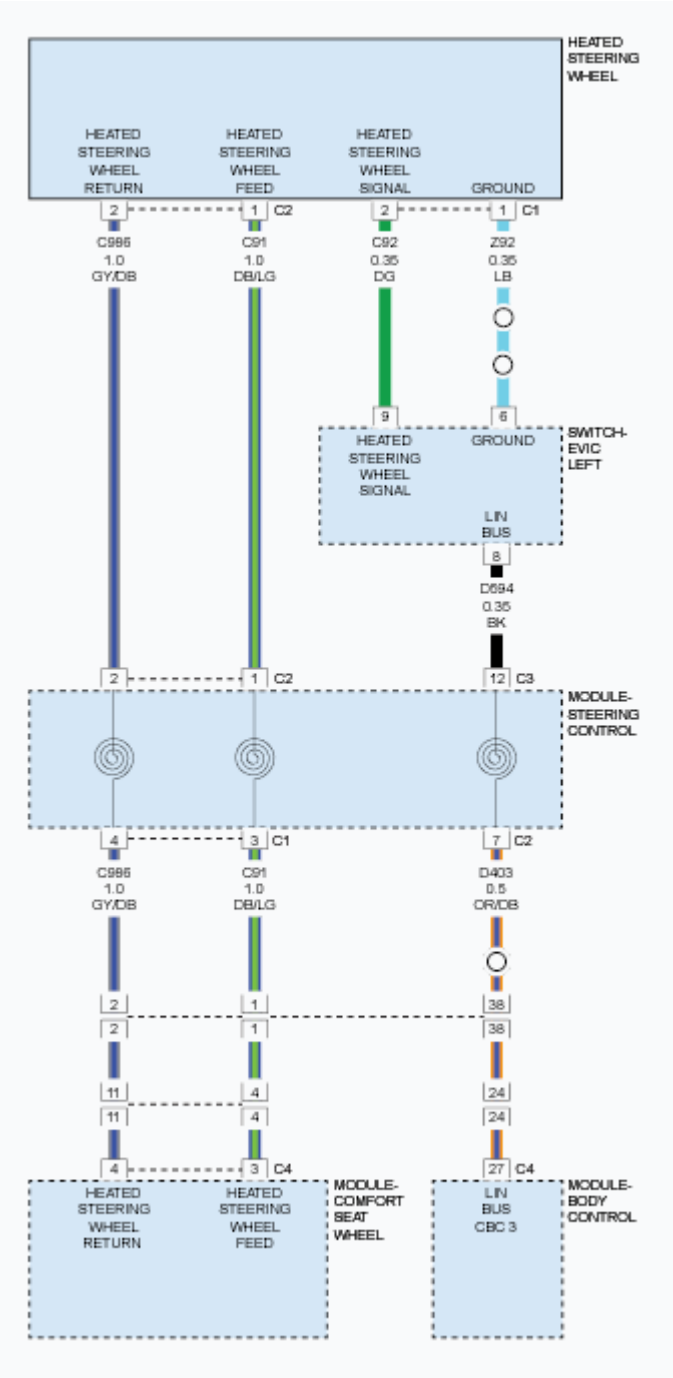

Fig. 3: Heated Steering Wheel Circuit Diagram
Courtesy of CHRYSLER GROUP, LLC

WHEN MONITORED

With the engine running.

SET CONDITION

The Comfort Seat Wheel Module (CSWM) detects on the Heated Steering Wheel Feed circuit a current level below its threshold for more than two seconds when the output is turned on.

POSSIBLE CAUSES

Possible Causes
HEATED STEERING WHEEL FEED CIRCUIT OPEN
HEATED STEERING WHEEL RETURN CIRCUIT OPEN
HEATED STEERING WHEEL (HSW)
STEERING CONTROL MODULE (SCCM)
COMFORT SEAT WHEEL MODULE (CSWM)

DIAGNOSTIC TEST

1. **CHECK IF THE DTC IS ACTIVE**

   NOTE: Make sure the battery is fully charged and the charging system is operating properly before proceeding.

   1. Turn the ignition on.
   2. With the scan tool, record and erase Diagnostic Trouble Codes (DTCs).
   3. Turn the ignition off.
   4. Start the engine and let it run.
   5. Turn the Heated Steering Wheel (HSW) on.
   6. With the scan tool, read DTCs.

   Is this DTC active?

   Yes

   - Go To 2

   No

   - Go To 7

2. **CHECK THE (C91) HEATED STEERING WHEEL FEED CIRCUIT FOR AN OPEN BETWEEN SCCM AND CSWM**
   1. Disconnect the SCCM C1 harness connector.
   2. Disconnect the CSWM C4 harness connector.

   NOTE: Check connectors. Clean and repair as necessary.

   3. Measure the resistance of the (C91) Heated Steering Wheel Feed circuit between the SCCM C1

harness connector and the CSWM C4 harness connector.

Is the resistance below 5.0 Ohms?

Yes

- Go To 3

No

- Repair the (C91) Heated Steering Wheel Feed circuit for an open.
- Perform the BODY VERIFICATION TEST. Refer to **STANDARD PROCEDURE** .

3. **CHECK THE (C986) HEATED STEERING WHEEL RETURN CIRCUIT FOR AN OPEN BETWEEN SCCM AND CSWM**
   1. Measure the resistance of the (C986) Heated Steering Wheel Return circuit between the SCCM C1 harness connector and the CSWM C4 harness connector.

      Is the resistance below 5.0 Ohms?

      Yes

      - Go To 4

      No

      - Repair the (C986) Heated Steering Wheel Return circuit for an open.
      - Perform the BODY VERIFICATION TEST. Refer to **STANDARD PROCEDURE** .
4. **CHECK THE HEATED STEERING WHEEL FOR AN OPEN**

   WARNING: **Turn the ignition off, disconnect the 12-volt battery and wait two minutes before proceeding. Failure to follow these instructions may result in possible serious or fatal injury.**

   1. Remove the Driver Airbag in accordance with the Service Information. Refer to **AIR BAG, DRIVER, REMOVAL** .
   2. Disconnect the SCCM C2 harness connector.

      NOTE: **Before proceeding, thoroughly inspect the wiring harness and connectors between the HSW and the Steering Control Module. Look for chafed, pierced, pinched, or partially broken wires and broken, bent, pushed out, spread, corroded, or contaminated terminals.**

   3. Measure the resistance between the (C91) Heated Steering Wheel Feed circuit and the (C986) Heated Steering Wheel Return circuit at the SCCM C2 harness connector.

Is the resistance 1.85 ± 0.2 Ohms?

Yes

- Refer to 5.

No

- Replace the Heated Steering Wheel (HSW) in accordance with the Service Information. Refer to **WHEEL, STEERING, REMOVAL** .
- Perform the BODY VERIFICATION TEST. Refer to **STANDARD PROCEDURE** .

5. **CHECK THE (C91) HEATED STEERING WHEEL FEED CIRCUIT FOR AN OPEN IN THE SCCM**
   1. Reconnect the SCCM C1 harness connector.
   2. Measure the resistance of the (C91) Heated Steering Wheel Feed circuit between the SCCM C2 component connector and the CSWM C4 harness connector.

   Is the resistance below 5.0 Ohms?

   Yes

   - Go To 6

   No

   - Replace the Steering Column Control Module (SCCM) in accordance with the Service Information. Refer to **MODULE, STEERING COLUMN, REMOVAL** .
   - Perform the BODY VERIFICATION TEST. Refer to **STANDARD PROCEDURE** .

6. **CHECK THE (C986) HEATED STEERING WHEEL RETURN CIRCUIT OPEN FOR AN OPEN IN THE SCCM**
   1. Measure the resistance of the (C986) Heated Steering Wheel Return circuit between the SCCM C2 component connector and the CSWM C4 harness connector.

   Is the resistance below 5.0 Ohms?

   Yes

   - Replace the Comfort Seat Wheel Module (CSWM) in accordance with the Service Information. Refer to **MODULE, COMFORT SEAT AND WHEEL, REMOVAL** .
   - Perform the BODY VERIFICATION TEST. Refer to **STANDARD PROCEDURE** .

   No

   - Replace the Steering Column Control Module (SCCM) in accordance with the Service

Information. Refer to **MODULE, STEERING COLUMN, REMOVAL** .

- Perform the BODY VERIFICATION TEST. Refer to **STANDARD PROCEDURE** .

7. **CHECK THE WIRING AND CONNECTORS**
   1. The conditions necessary to set the DTC are not present at this time.
   2. Using the schematics as a guide, inspect the wiring and connectors specific to this circuit. Wiggle the wiring and connectors while checking for shorted and open circuits.
   3. Attempt to reproduce condition by rotating the steering wheel or by adjusting the seat.
   4. Check all related splices and connectors for signs of water intrusion, corrosion, pushed out or bent terminals, and correct pin tension.
   5. With the scan tool, check for any Environmental Data to help identify the conditions in which the DTC was set.
   6. Check Service Bulletins for any possible causes that may apply.

   Were there any problems found?

   Yes

   - Repair as necessary.
   - Perform the BODY VERIFICATION TEST. Refer to **STANDARD PROCEDURE** .

   No

   - Test complete.

B11C1-13-STEERING WHEEL HEATER POWER SUPPLY - CIRCUIT OPEN

For a complete wiring diagram, **refer to appropriate SYSTEM WIRING DIAGRAMS article** .

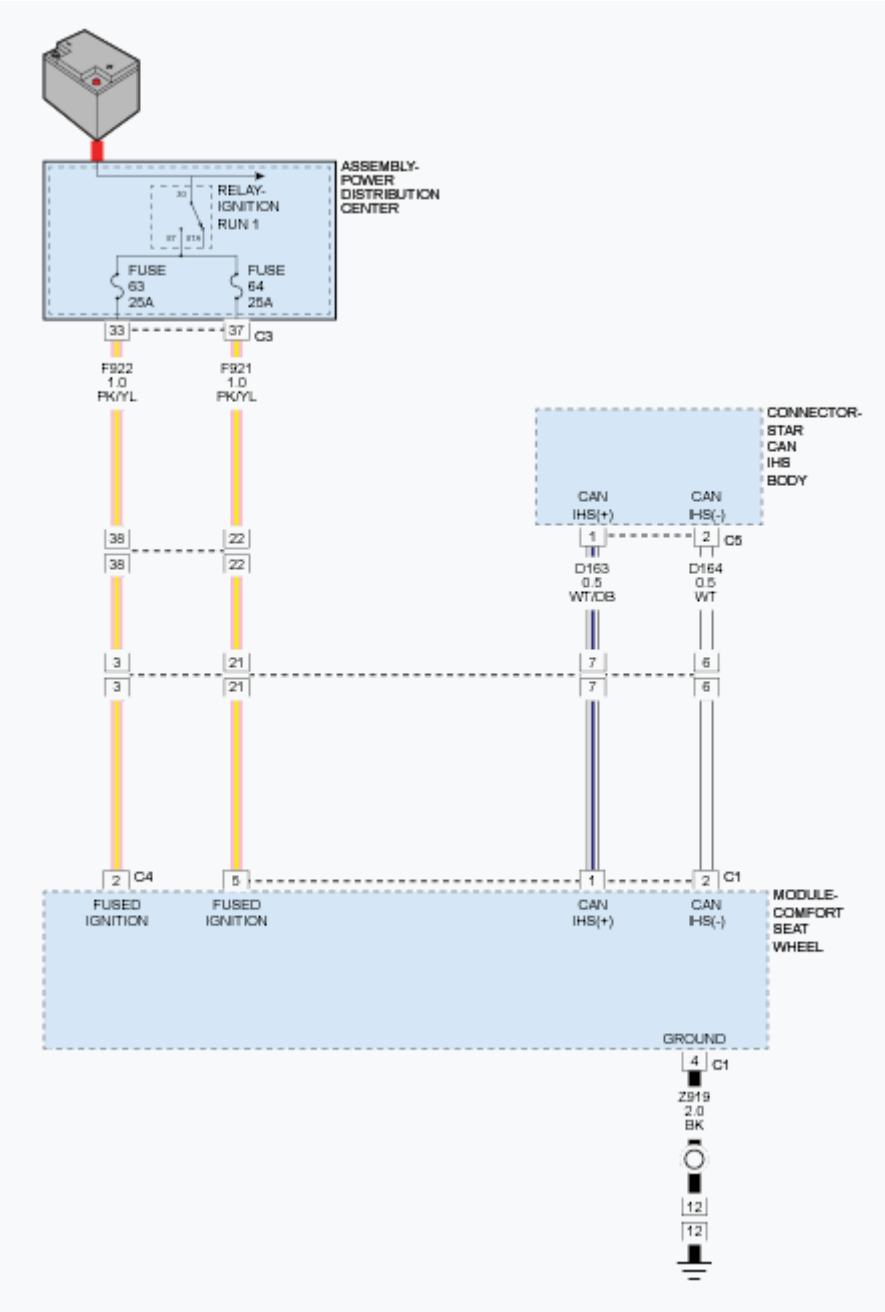

Fig. 4: CSWM CAN IHS, Fused Ignition & Ground Circuit Diagram
Courtesy of CHRYSLER GROUP, LLC

WHEN MONITORED

With the engine running.

SET CONDITION

The Comfort Seat Wheel Module (CSWM) detects no voltage on the Fused Ignition Run Control Output circuit

for more than two seconds.

POSSIBLE CAUSES

Possible Causes
FUSED IGNITION RUN CONTROL OUTPUT CIRCUIT OPEN OR SHORTED TO GROUND COMFORT SEAT WHEEL MODULE (CSWM)

DIAGNOSTIC TEST

1. **CHECK IF THE DTC IS ACTIVE**

   NOTE: Make sure the battery is fully charged and the charging system is operating properly before proceeding.

   1. Turn the ignition on.
   2. With the scan tool, record and erase Diagnostic Trouble Codes (DTCs).

      NOTE: It is recommended to record any Environmental Data to help identify the conditions in which the DTC was set.

   3. Turn the ignition off.
   4. Ignition on, engine running.
   5. With the scan tool, read Comfort Seat Wheel Module (CSWM) DTCs.

      Does the scan tool show this DTC as active?

      Yes

      - Go To 2

      No

      - Go To 3

2. **CHECK THE (F922) FUSED IGNITION RUN CONTROL OUTPUT CIRCUIT FOR AN OPEN**
   1. Turn the ignition off.
   2. Disconnect the CSWM C4 harness connector.
   3. Ignition on, engine running
   4. Using a 12-volt test light connected to ground, check the (F922) Fused Ignition Run Control Output circuit at the CSWM C4 harness connector.

      NOTE: The test light must illuminate brightly. Compare the brightness to that of a direct connection to the battery.

Does the test light illuminate brightly?

Yes

- Replace the Comfort Seat Wheel Module (CSWM) in accordance with the Service Information. Refer to **MODULE, COMFORT SEAT AND WHEEL, REMOVAL** .
- Perform the BODY VERIFICATION TEST. Refer to **STANDARD PROCEDURE** .

No

- Repair the (F922) Fused Ignition Run Control Output circuit for an open.

NOTE: If the fuse is open, make sure to check the circuit for a short to ground and repair as necessary.

- Perform the BODY VERIFICATION TEST. Refer to **STANDARD PROCEDURE** .

3. **CHECK THE WIRING AND CONNECTORS**
   1. The conditions necessary to set the DTC are not present at this time.
   2. Using the schematics as a guide, inspect the wiring and connectors specific to this circuit. Wiggle the wiring and connectors while checking for shorted and open circuits. Attempt to reproduce the condition by adjusting the seat.
   3. Check all related splices and connectors for signs of water intrusion, corrosion, pushed out or bent terminals, and correct pin tension.
   4. With the scan tool, check for any Environmental Data to help identify the conditions in which the DTC was set.
   5. Check Service Bulletins for any possible causes that may apply.

   Were there any problems found?

   Yes

   - Repair as necessary.
   - Perform the BODY VERIFICATION TEST. Refer to **STANDARD PROCEDURE** .

   No

   - Test complete.

B1E99-11-FRONT LEFT HEATER CONTROL CIRCUIT - CIRCUIT SHORT TO GROUND

For a complete wiring diagram, **refer to appropriate SYSTEM WIRING DIAGRAMS article** .

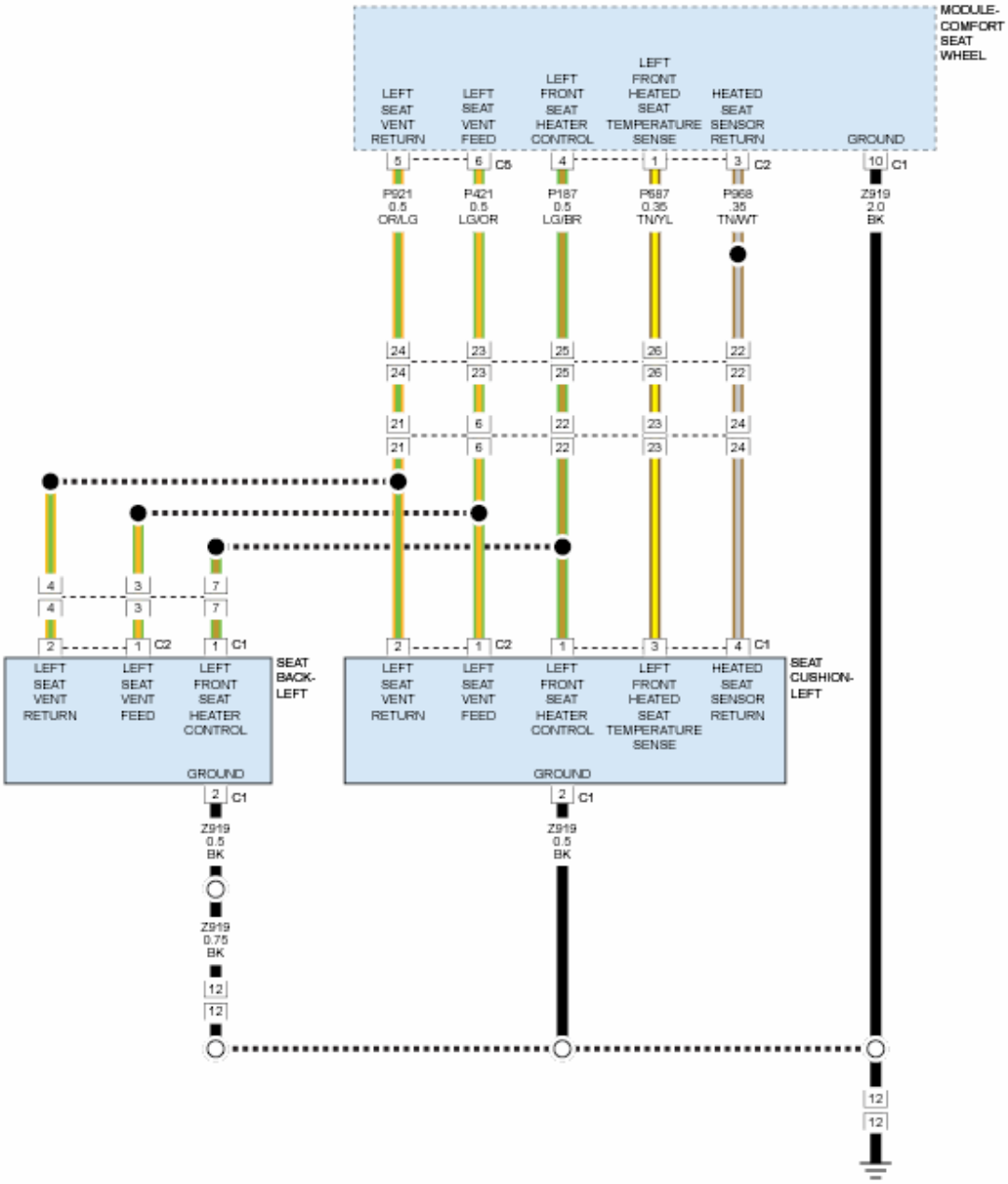

Fig. 5: Left Front Seat Cushion & Seat Back Circuit Diagram
Courtesy of CHRYSLER GROUP, LLC

WHEN MONITORED

With the engine running.

SET CONDITION

The Comfort Seat Wheel Module (CSWM) detects on the Left Front Seat Heater Control circuit a voltage below 1.0 volt or a current above 10.0 amps for more than two seconds with the output turned on.

POSSIBLE CAUSES

Possible Causes
LEFT FRONT SEAT HEATER CONTROL CIRCUIT SHORTED TO GROUND
SEAT CUSHION HEATER ELEMENT
SEAT BACK HEATER ELEMENT
COMFORT SEAT WHEEL MODULE (CSWM)

DIAGNOSTIC TEST

1. **CHECK IF THE DTC IS ACTIVE**

   NOTE: Make sure the battery is fully charged and the charging system is operating properly before proceeding.

   1. Turn the ignition on.
   2. With the scan tool, record and erase Diagnostic Trouble Codes (DTCs).

      NOTE: It is recommended to record any Environmental Data to help identify the conditions in which the DTC was set.

   3. Turn the ignition off.
   4. Ignition on, engine running.
   5. Turn the Heated Seat on and operate in all modes.
   6. With the scan tool, read Comfort Seat Wheel Module (CSWM) DTCs.

      Does the scan tool show this DTC as active?

      Yes

      - Go To 2

      No

      - Go To 5

2. **CHECK THE (P187) LEFT FRONT SEAT HEATER CONTROL CIRCUIT FOR A SHORT TO GROUND**
   1. Turn the ignition off.
   2. Disconnect the CSWM C2 harness connector.
   3. Disconnect the Left Seat Back Heater C1 harness connector.
   4. Disconnect the Left Seat Cushion Heater C1 harness connector.
   5. Measure the resistance between ground and the (P187) Left Front Seat Heater Control circuit in the CSWM C2 harness connector.

Is the resistance below 10K Ohms?

Yes

- Repair or replace the seat wiring harness for a short to ground on the (P187) Left Front Seat Heater Control circuit.
- Perform the BODY VERIFICATION TEST. Refer to **STANDARD PROCEDURE** .

No

- Go To 3

3. **CHECK THE LEFT FRONT SEAT CUSHION HEATER**
   1. Measure the resistance of the Left Front Seat Cushion Heater element between the (P187) Left Front Seat Heater Control circuit and the (Z919) Ground circuit in the Left Seat Cushion Heater connector.

      Is the resistance 5.04 Ohms (± 10%)?

      Yes

      - Go To 4

      No

      - Replace the Left Front Seat Cushion Heater element in accordance with the Service Information. Refer to **PAD, HEATER, REMOVAL** .
      - Perform the BODY VERIFICATION TEST. Refer to **STANDARD PROCEDURE** .
4. **CHECK THE LEFT FRONT SEAT BACK HEATER**
   1. Measure the resistance of the Left Front Seat Back Heater element between the (P187) Left Front Seat Heater Control circuit and the (Z919) Ground circuit in the Left Seat Back Heater connector.

      Is the resistance 5.13 Ohms (± 10%)?

      Yes

      - Check the Left Front Seat Back and Cushion Heater element pigtail wiring harnesses for a short to ground and repair as necessary. If no problems are found, replace the Comfort Seat Wheel Module (CSWM) in accordance with the Service Information. Refer to **MODULE, COMFORT SEAT AND WHEEL, REMOVAL** .
      - Perform the BODY VERIFICATION TEST. Refer to **STANDARD PROCEDURE** .

      No

      - Replace the Left Front Seat Back Heater element in accordance with the Service Information. Refer to **PAD, HEATER, REMOVAL** .

- Perform the BODY VERIFICATION TEST. Refer to **STANDARD PROCEDURE** .

5. **CHECK THE WIRING AND CONNECTORS**
   1. The conditions necessary to set the DTC are not present at this time.
   2. Using the schematics as a guide, inspect the wiring and connectors specific to this circuit. Wiggle the wiring and connectors while checking for shorted and open circuits. Attempt to reproduce the condition by adjusting the seat.
   3. Check all related splices and connectors for signs of water intrusion, corrosion, pushed out or bent terminals, and correct pin tension.
   4. With the scan tool, check for any Environmental Data to help identify the conditions in which the DTC was set.
   5. Check Service Bulletins for any possible causes that may apply.

   Were there any problems found?

   Yes

   - Repair as necessary.
   - Perform the BODY VERIFICATION TEST. Refer to **STANDARD PROCEDURE** .

   No

   - Test complete.

B1E99-12-FRONT LEFT HEATER CONTROL CIRCUIT - CIRCUIT SHORT TO BATTERY

For a complete wiring diagram, **refer to appropriate SYSTEM WIRING DIAGRAMS article** .

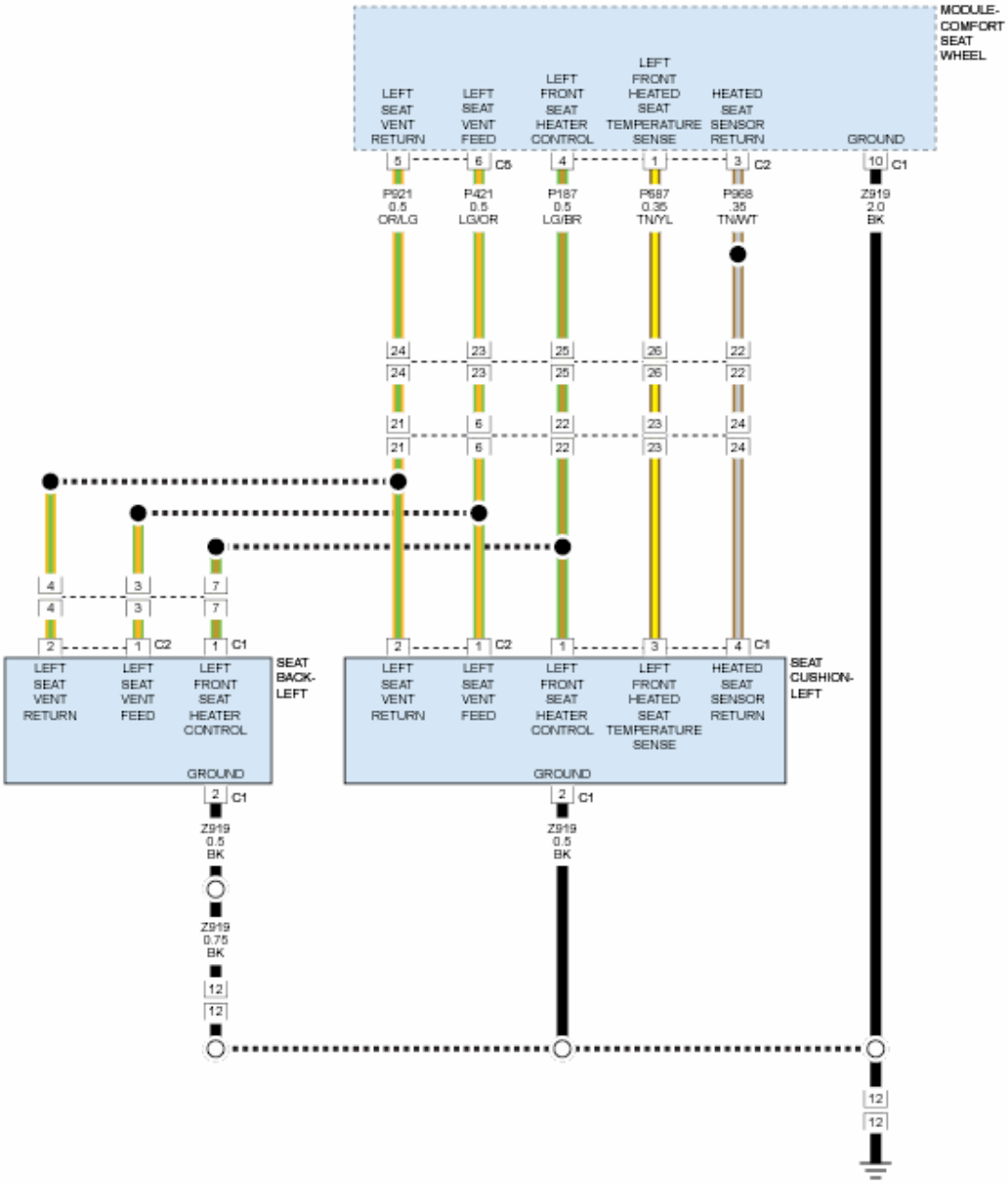

Fig. 6: Left Front Seat Cushion & Seat Back Circuit Diagram
Courtesy of CHRYSLER GROUP, LLC

WHEN MONITORED

With the engine running.

SET CONDITION

The Comfort Seat Wheel Module (CSWM) detects on the Left Front Seat Heater Control circuit a voltage above 5.0 volts for more than two seconds with the output turned off.

POSSIBLE CAUSES

Possible Causes
LEFT FRONT SEAT HEATER CONTROL CIRCUIT SHORTED TO VOLTAGE COMFORT SEAT WHEEL MODULE (CSWM)

DIAGNOSTIC TEST

1. **CHECK IF THE DTC IS ACTIVE**

   NOTE: Make sure the battery is fully charged and the charging system is operating properly before proceeding.

   1. Turn the ignition on.
   2. With the scan tool, record and erase Diagnostic Trouble Codes (DTCs).

      NOTE: It is recommended to record any Environmental Data to help identify the conditions in which the DTC was set.

   3. Turn the ignition off.
   4. Ignition on, engine running.

      NOTE: The Front Left Seat Heater should be in the off position and remain off for the results of the test to be valid.

   5. With the scan tool, read Comfort Seat Wheel Module (CSWM) DTCs.

      Does the scan tool show this DTC as active?

      Yes

      - Go To 2

      No

      - Go To 4

2. **CHECK THE (P187) LEFT FRONT SEAT HEATER CONTROL CIRCUIT FOR A SHORT TO VOLTAGE**
   1. Turn the ignition off.
   2. Disconnect the Comfort Seat Wheel Module (CSWM) C2 harness connector.

      NOTE: Check connectors - Clean/repair as necessary.

3. Ignition on, engine running.
4. Measure the voltage between ground and the (P187) Left Front Seat Heater Control circuit in the CSWM C2 harness connector.

   Is the voltage 5.0 volts or above?

   Yes

   - Repair the (P187) Left Front Seat Heater Control circuit for a short to voltage.
   - Perform the BODY VERIFICATION TEST. Refer to **STANDARD PROCEDURE** .

   No

   - Go To 3

3. **CHECK THE (P187) LEFT FRONT SEAT HEATER CONTROL CIRCUIT FOR A SHORT TO VOLTAGE DURING SEAT ADJUSTMENT**
   1. Measure the voltage between ground and the (P187) Left Front Seat Heater Control circuit at the CSWM C2 harness connector while adjusting the seat in all positions.

      Is the voltage 5.0 volts or above any time during the seat adjustment?

      Yes

      - Repair the (P187) Left Front Seat Heater Control circuit for a short to voltage.
      - Perform the BODY VERIFICATION TEST. Refer to **STANDARD PROCEDURE** .

      No

      - Replace the Comfort Seat Wheel Module (CSWM) in accordance with the Service Information. Refer to **MODULE, COMFORT SEAT AND WHEEL, REMOVAL** .
      - Perform the BODY VERIFICATION TEST. Refer to **STANDARD PROCEDURE** .

4. **CHECK THE WIRING AND CONNECTORS**
   1. The conditions necessary to set the DTC are not present at this time.
   2. Using the schematics as a guide, inspect the wiring and connectors specific to this circuit. Wiggle the wiring and connectors while checking for shorted and open circuits. Attempt to reproduce condition by adjusting the seat.
   3. Check all related splices and connectors for signs of water intrusion, corrosion, pushed out or bent terminals, and correct pin tension.
   4. With the scan tool, check for any Environmental Data to help identify the conditions in which the DTC was set.
   5. Check Service Bulletins for any possible causes that may apply.

      Were there any problems found?

Yes

- Repair as necessary.
- Perform the BODY VERIFICATION TEST. Refer to **STANDARD PROCEDURE** .

No

- Test complete.

B1E99-13-FRONT LEFT HEATER CONTROL CIRCUIT - CIRCUIT OPEN

For a complete wiring diagram, **refer to appropriate SYSTEM WIRING DIAGRAMS article** .

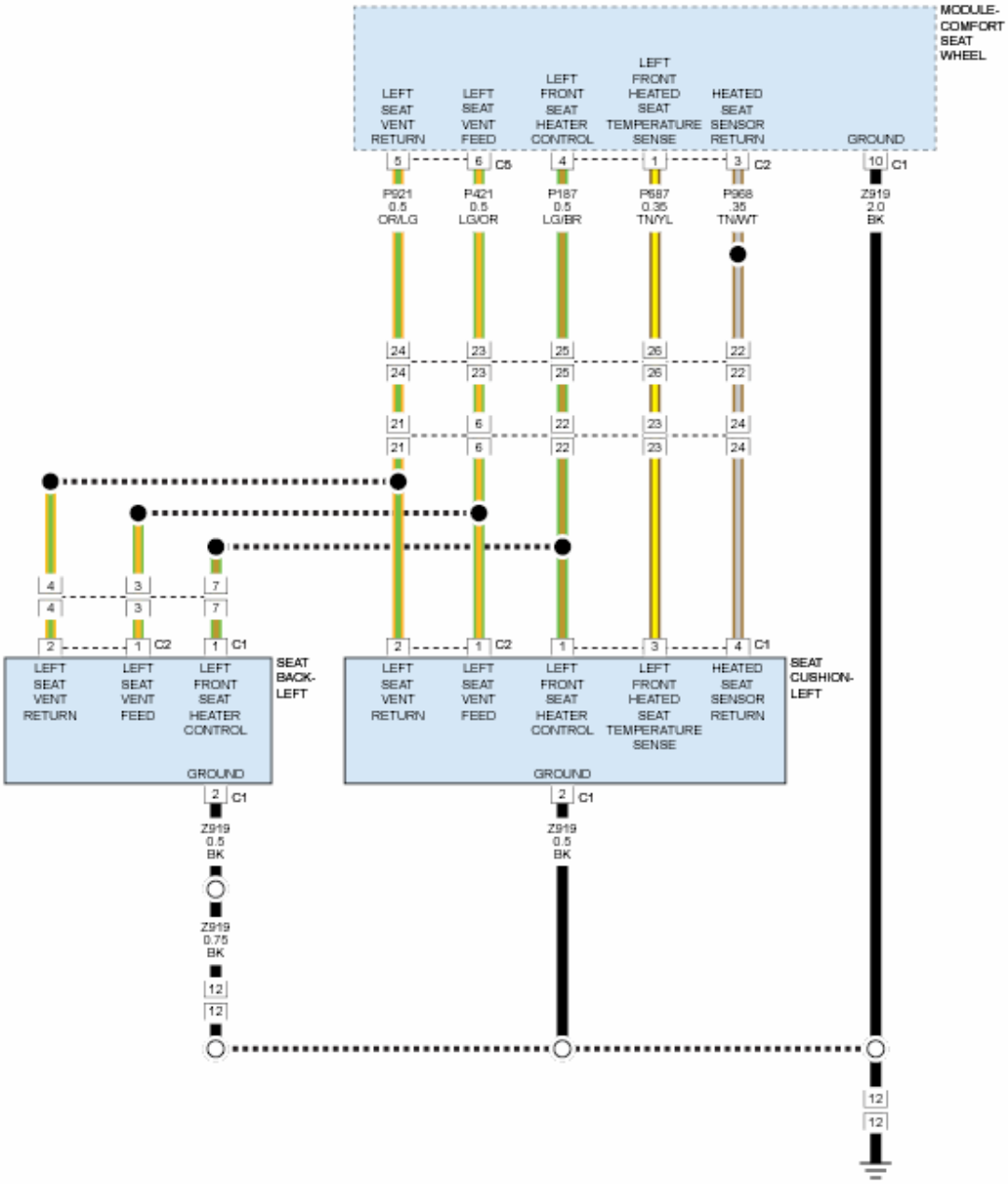

Fig. 7: Left Front Seat Cushion & Seat Back Circuit Diagram
Courtesy of CHRYSLER GROUP, LLC

WHEN MONITORED

With the engine running.

SET CONDITION

The Comfort Seat Wheel Module (CSWM) detects on the Left Front Seat Heater Control circuit a current below 0.5 of an amp for more than two seconds with the output turned on.

POSSIBLE CAUSES

Possible Causes
LEFT FRONT SEAT HEATER CONTROL CIRCUIT OPEN
GROUND CIRCUIT OPEN
SEAT CUSHION HEATER ELEMENT OPEN
SEAT BACK HEATER ELEMENT OPEN
COMFORT SEAT WHEEL MODULE (CSWM)

DIAGNOSTIC TEST

1. **CHECK IF THE DTC IS ACTIVE**

   NOTE: Make sure the battery is fully charged and the charging system is operating properly before proceeding.

   1. Turn the ignition on.
   2. Using a scan tool, record and erase Diagnostic Trouble Codes (DTCs).

      NOTE: It is recommended to record any Environmental Data to help identify the conditions in which the DTC was set.

   3. Turn the ignition off.
   4. Ignition on, engine running.
   5. Turn the Heated Seat on and operate in all modes.
   6. With the scan tool, read Comfort Seat Wheel Module (CSWM) DTCs.

   Does the scan tool show this DTC as active?

   Yes

   - Go To 2

   No

   - Go To 6

2. **CHECK THE (P187) LEFT FRONT SEAT HEATER CONTROL CIRCUIT FOR AN OPEN**
   1. Turn the ignition off.
   2. Disconnect the Left Seat Cushion Heater harness connector.
   3. Disconnect the Left Seat Back Heater harness connector.

      NOTE: Check connectors - Clean/repair as necessary.

4. Ignition on, engine running.
5. With the scan tool, actuate the seat heaters on high.
6. Using a 12-volt test light connected to ground, check the (P187) Left Front Seat Heater Control circuit at the Left Seat Cushion and Left Seat Back Heater harness connectors (harness side).

NOTE: The test light must illuminate brightly. Compare the brightness to that of a direct connection to the battery.

Does the test light illuminate brightly at both connectors?

Yes

- Go To 3

No

- Repair the (P187) Left Front Seat Heater Control circuit for an open.
- Perform the BODY VERIFICATION TEST. Refer to **STANDARD PROCEDURE** .

3. **CHECK THE (Z919) GROUND CIRCUIT FOR AN OPEN**
   1. With the scan tool, turn off the seat heater actuator.
   2. Turn the ignition off.
   3. Using a 12-volt test light connected to 12-volts, check the (Z919) Ground circuit at the Left Seat Cushion and Left Seat Back Heater harness connectors (harness side).

   Does the test light illuminate brightly at both connectors?

   Yes

   - Go To 4

   No

   - Repair the (Z919) Ground circuit for an open.
   - Perform the BODY VERIFICATION TEST. Refer to **STANDARD PROCEDURE** .
4. **CHECK THE LEFT SEAT CUSHION HEATER ELEMENT FOR AN OPEN**
   1. Measure the resistance between the (P187) Left Front Seat Heater Control circuit and the (Z919) Ground circuit at the Left Seat Cushion Heater connector (component side).

   Is the resistance 5.04 Ohms (± 10%)?

   Yes

   - Go To 5

No

- Replace the Seat Cushion Heater Element in accordance with the Service Information. Refer to **PAD, HEATER, REMOVAL** .
- Perform the BODY VERIFICATION TEST. Refer to **STANDARD PROCEDURE** .

5. **CHECK THE LEFT SEAT BACK HEATER ELEMENT FOR AN OPEN**
   1. Measure the resistance between the (P187) Left Front Seat Heater Control circuit and the (Z919) Ground circuit at the Driver Seat Assembly harness connector (seat back side).

      Is the resistance 5.13 Ohms (± 10%)?

      Yes

      - Replace the Comfort Seat Wheel Module (CSWM) in accordance with the Service Information. Refer to **MODULE, COMFORT SEAT AND WHEEL, REMOVAL** .
      - Perform the BODY VERIFICATION TEST. Refer to **STANDARD PROCEDURE** .

      No

      - Replace the Seat Back Heater Element in accordance with the Service Information. Refer to **PAD, HEATER, REMOVAL** .
      - Perform the BODY VERIFICATION TEST. Refer to **STANDARD PROCEDURE** .

6. **CHECK THE WIRING AND CONNECTORS**
   1. The conditions necessary to set the DTC are not present at this time.
   2. Using the schematics as a guide, inspect the wiring and connectors specific to this circuit. Wiggle the wiring and connectors while checking for shorted and open circuits. Attempt to reproduce the condition by adjusting the seat.
   3. Check all related splices and connectors for signs of water intrusion, corrosion, pushed out or bent terminals, and correct pin tension.
   4. With the scan tool, check for any Environmental Data to help identify the conditions in which the DTC was set.
   5. Check Service Bulletins for any possible causes that may apply.

      Were there any problems found?

      Yes

      - Repair as necessary.
      - Perform the BODY VERIFICATION TEST. Refer to **STANDARD PROCEDURE** .

      No

      - Test complete.

B1E99-1E-FRONT LEFT HEATER CONTROL CIRCUIT - CIRCUIT RESISTANCE OUT OF RANGE

For a complete wiring diagram, **refer to appropriate SYSTEM WIRING DIAGRAMS article** .

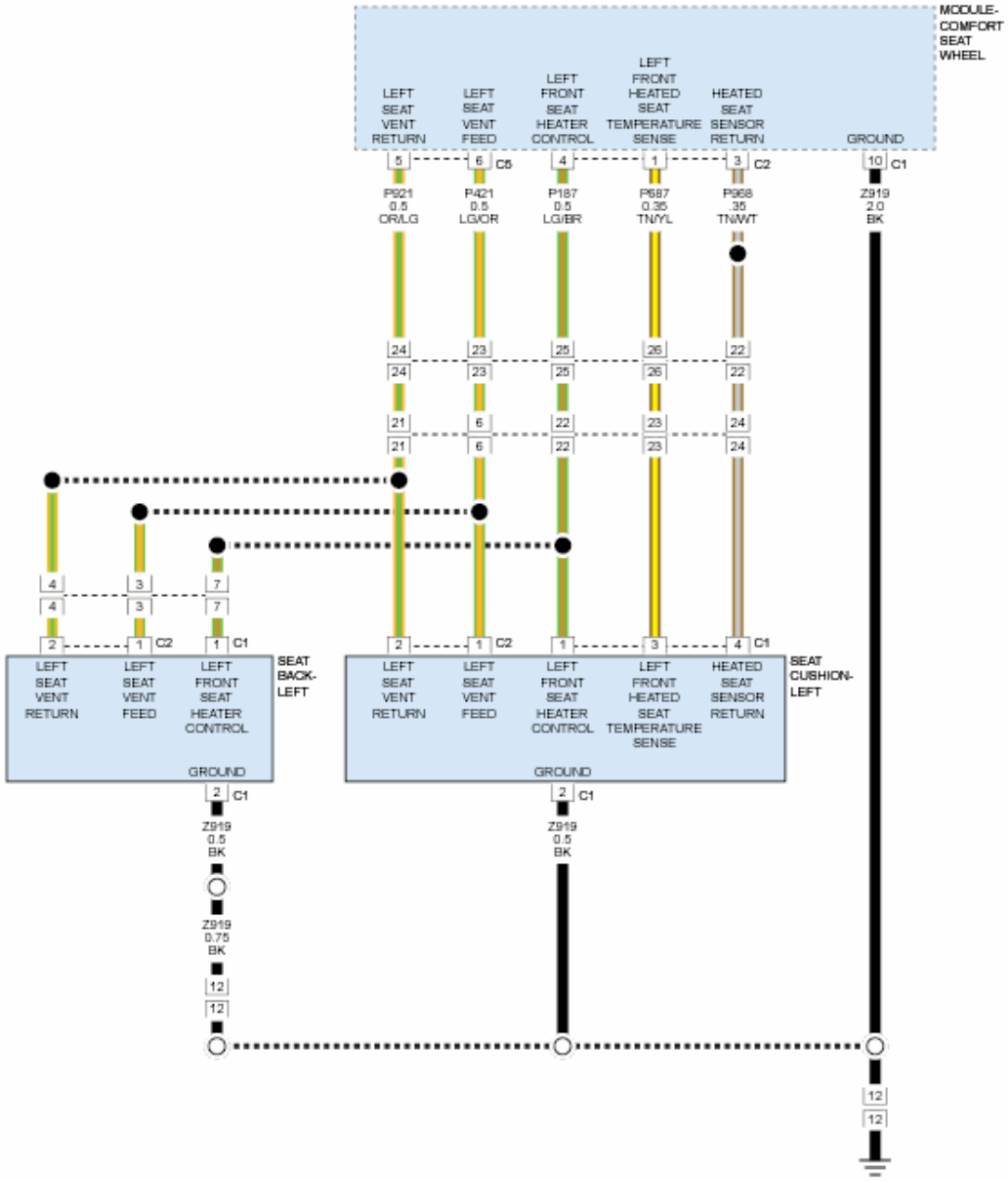

Fig. 8: Left Front Seat Cushion & Seat Back Circuit Diagram
Courtesy of CHRYSLER GROUP, LLC

WHEN MONITORED

With the engine running and the output turned on.

SET CONDITION

The Comfort Seat Wheel Module (CSWM) detects on the Left Front Seat Heater Control circuit an impedance equal to or above 7.0 Ohms for more than two seconds.

POSSIBLE CAUSES

Possible Causes
ONE HEATING ELEMENT NOT CONNECTED
LEFT FRONT SEAT HEATER CONTROL CIRCUIT HIGH RESISTANCE
GROUND CIRCUIT HIGH RESISTANCE
SEAT CUSHION HEATER ELEMENT
SEAT BACK HEATER ELEMENT
COMFORT SEAT WHEEL MODULE (CSWM)

DIAGNOSTIC TEST

1. **CHECK IF THE DTC IS ACTIVE**

NOTE: Before proceeding, verify the battery is fully charged, the charging system is operating properly, no Battery or System Voltage Diagnostic Trouble Codes (DTCs) are set, and the CSWM Power and Ground circuits are clean and tight.

1. Turn the ignition on.
2. Using a scan tool, record and erase Diagnostic Trouble Codes (DTCs).

NOTE: It is recommended to record any Environmental Data to help identify the conditions in which the DTC was set.

3. Turn the ignition off.
4. Ignition on, engine running.
5. Turn the Heated Seat on and operate in all modes.
6. With the scan tool, read Comfort Seat Wheel Module (CSWM) DTCs.

Does the scan tool show this DTC as active?

Yes

- Go To 2

No

- Go To 6

2. **CHECK THE (P187) LEFT FRONT SEAT HEATER CONTROL CIRCUIT FOR HIGH RESISTANCE**
   1. Turn the ignition off.
   2. Disconnect the CSWM C2 harness connector.
   3. Disconnect the Left Seat Cushion Heater harness connector.
   4. Disconnect the Left Seat Back Heater harness connector.
   5. Connect a jumper wire between the (P187) Left Front Seat Heater Control circuit and B(+) in the CSWM C2 harness connector.
   6. Using a 12-volt test light connected to ground, check the (P187) Left Front Seat Heater Control circuit at the Left Seat Cushion and the Back Heater harness connectors (harness side).

   NOTE: The test light must illuminate brightly. Compare the brightness to that of a direct connection to the battery.

   Does the test light illuminate brightly at both connectors?

   Yes

   - Go To 3

   No

   - Repair the (P187) Left Front Seat Heater Control circuit for high resistance.
   - Perform the BODY VERIFICATION TEST. Refer to **STANDARD PROCEDURE** .
3. **CHECK THE (Z919) GROUND CIRCUIT FOR HIGH RESISTANCE**
   1. Using a 12-volt test light connected to 12-volts, check the (Z919) Ground circuit at the Left Seat Cushion and Back Heater harness connectors (harness side).

   Does the test light illuminate brightly at both connectors?

   Yes

   - Go To 4

   No

   - Repair the (Z919) Ground circuit for high resistance.
   - Perform the BODY VERIFICATION TEST. Refer to **STANDARD PROCEDURE** .
4. **CHECK THE LEFT SEAT CUSHION HEATER ELEMENT RESISTANCE**
   1. Measure the resistance between the (P187) Left Front Seat Heater Control circuit and the (Z919) Ground circuit at the Left Seat Cushion Heater connector (component side).

   Is the resistance 5.04 Ohms (± 10%)?

Yes

- Go To 5

No

- Replace the Left Seat Cushion Heater Element in accordance with the Service Information. Refer to **PAD, HEATER, REMOVAL** .
- Perform the BODY VERIFICATION TEST. Refer to **STANDARD PROCEDURE** .

5. **CHECK THE LEFT SEAT BACK HEATER ELEMENT RESISTANCE**
   1. Measure the resistance between the (P187) Left Front Seat Heater Control circuit and the (Z919) Ground circuit at the Left Seat Back Heater Element connector (component side).

      Is the resistance 5.13 Ohms (± 10%)?

      Yes

      - Replace the Comfort Seat Wheel Module (CSWM) in accordance with the Service Information. Refer to **MODULE, COMFORT SEAT AND WHEEL, REMOVAL** .
      - Perform the BODY VERIFICATION TEST. Refer to **STANDARD PROCEDURE** .

      No

      - Replace the Left Seat Back Heater Element in accordance with the Service Information. Refer to **PAD, HEATER, REMOVAL** .
      - Perform the BODY VERIFICATION TEST. Refer to **STANDARD PROCEDURE** .

6. **CHECK THE WIRING AND CONNECTORS**
   1. The conditions necessary to set the DTC are not present at this time.
   2. Using the schematics as a guide, inspect the wiring and connectors specific to this circuit. Wiggle the wiring and connectors while checking for shorted and open circuits. Attempt to reproduce the condition by adjusting the seat.
   3. Check all related splices and connectors for signs of water intrusion, corrosion, pushed out or bent terminals, and correct pin tension.
   4. With the scan tool, check for any Environmental Data to help identify the conditions in which the DTC was set.
   5. Check Service Bulletins for any possible causes that may apply.

      Were there any problems found?

      Yes

      - Repair as necessary.
      - Perform the BODY VERIFICATION TEST. Refer to **STANDARD PROCEDURE** .

No

- Test complete.

B1E9A-11-FRONT RIGHT HEATER CONTROL CIRCUIT - CIRCUIT SHORT TO GROUND

For a complete wiring diagram, **refer to appropriate SYSTEM WIRING DIAGRAMS article** .

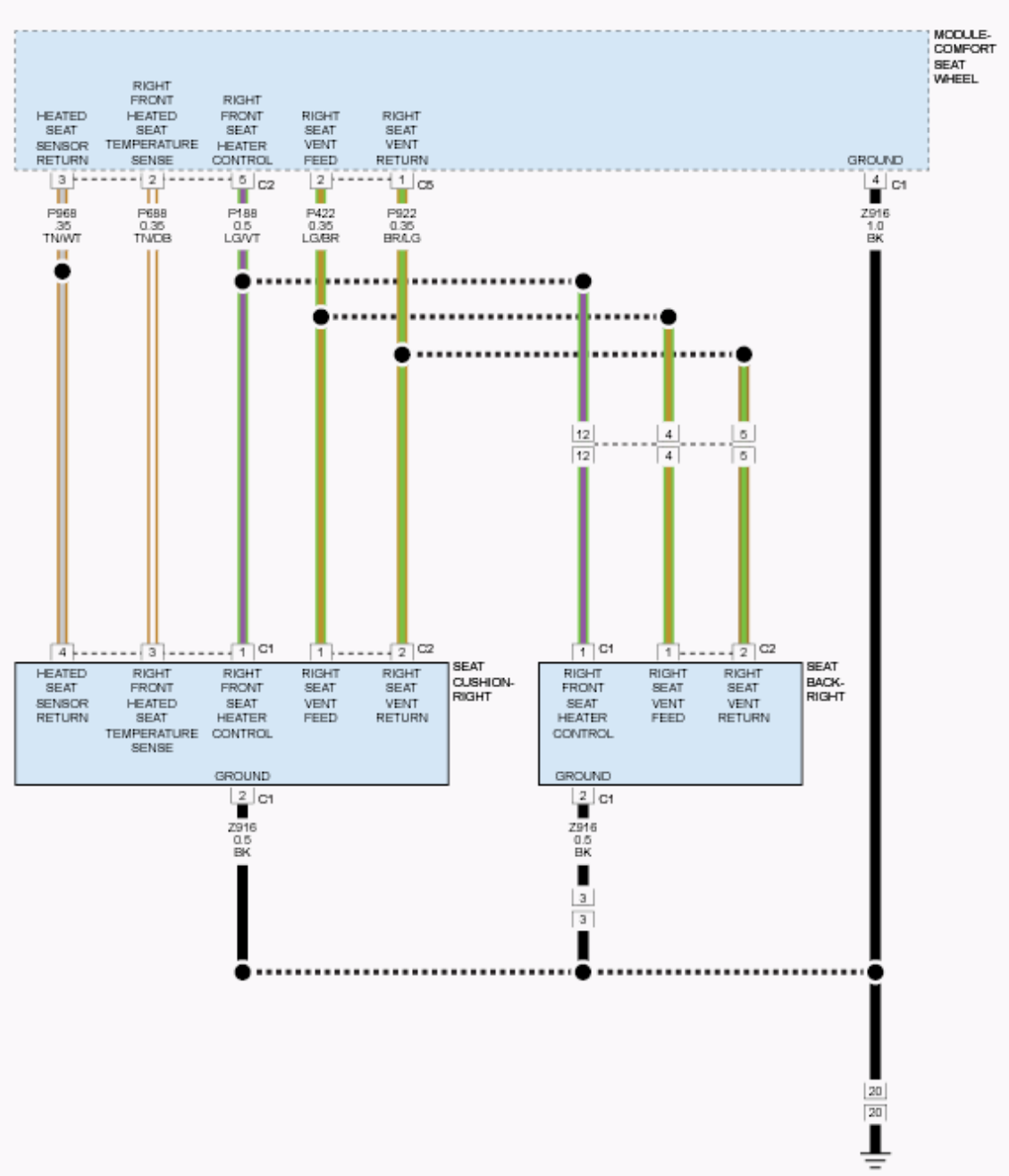

Fig. 9: Right Front Seat Cushion & Seat Back Circuit Diagram
Courtesy of CHRYSLER GROUP, LLC

WHEN MONITORED

With the engine running.

SET CONDITION

The Comfort Seat Wheel Module (CSWM) detects on the Right Front Seat Heater Control circuit a voltage below 1.0 volt or a current above 10.0 amps for more than two seconds with the output turned on.

POSSIBLE CAUSES

Possible Causes
RIGHT FRONT SEAT HEATER CONTROL CIRCUIT SHORTED TO GROUND
SEAT BACK HEATER ELEMENT
SEAT CUSHION HEATER ELEMENT
COMFORT SEAT WHEEL MODULE (CSWM)

DIAGNOSTIC TEST

1. **CHECK IF THE DTC IS ACTIVE**

NOTE: Make sure the battery is fully charged and the charging system is operating properly before proceeding.

1. Turn the ignition on.
2. Using a scan tool, record and erase Diagnostic Trouble Codes (DTCs).

NOTE: It is recommended to record any Environmental Data to help identify the conditions in which the DTC was set.

3. Turn the ignition off.
4. Ignition on, engine running.
5. Turn the Heated Seat on and operate in all modes.
6. With the scan tool, read Comfort Seat Wheel Module (CSWM) DTCs.

Does the scan tool show this DTC as active?

Yes

- Go To 2

No

- Go To 5

2. **CHECK THE (P188) RIGHT FRONT SEAT HEATER CONTROL CIRCUIT FOR A SHORT TO GROUND**
   1. Turn the ignition off.
   2. Disconnect the CSWM C2 harness connector.
   3. Disconnect the Right Front Seat Cushion Heater C1 harness connector.
   4. Disconnect the Right Front Seat Back Heater C1 harness connector.
   5. Measure the resistance between ground and the (P188) Right Front Seat Heater Control circuit at the CSWM C2 harness connector.

      Is the resistance below 10K Ohms?

      Yes

      - Repair or replace the seat wiring harness for a short to ground on the (P188) Right Front Seat Heater Control circuit.
      - Perform the BODY VERIFICATION TEST. Refer to **STANDARD PROCEDURE** .

      No

      - Go To 3
3. **CHECK THE RIGHT FRONT SEAT CUSHION HEATER**
   1. Measure the resistance of the Right Front Seat Cushion Heater element between the (P188) Right Front Seat Heater Control circuit and the (Z916) Ground circuit in the Right Seat Cushion Heater connector.

      Is the resistance 5.04 Ohms (± 10%)?

      Yes

      - Go To 4

      No

      - Inspect the Right Front Seat Cushion Heater element pigtail wiring harness for a short to ground and repair as necessary. If no problems are found, replace the Right Front Seat Cushion Heater element in accordance with the Service Information. Refer to **PAD, HEATER, REMOVAL** .
      - Perform the BODY VERIFICATION TEST. Refer to **STANDARD PROCEDURE** .
4. **CHECK THE RIGHT FRONT SEAT BACK HEATER**
   1. Measure the resistance of the Right Front Seat Back Heater element between the (P188) Right Front Seat Heater Control circuit and the (Z916) Ground circuit in the Right Front Seat Back Heater connector.

      Is the resistance between 5.13 Ohms (± 10%)?

Yes

- Check the Right Front Seat Back and Cushion Heater element pigtail wiring harnesses for a short to ground and repair as necessary. If no problems are found, replace the Comfort Seat Wheel Module (CSWM) in accordance with the Service Information. Refer to **MODULE, COMFORT SEAT AND WHEEL, REMOVAL** .
- Perform the BODY VERIFICATION TEST. Refer to **STANDARD PROCEDURE** .

No

- Replace the Right Front Seat Cushion Heater element in accordance with the Service Information. Refer to **PAD, HEATER, REMOVAL** .
- Perform the BODY VERIFICATION TEST. Refer to **STANDARD PROCEDURE** .

5. **CHECK THE WIRING AND CONNECTORS**
   1. The conditions necessary to set the DTC are not present at this time.
   2. Using the schematics as a guide, inspect the wiring and connectors specific to this circuit. Wiggle the wiring and connectors while checking for shorted and open circuits. Attempt to reproduce the condition by adjusting the seat.
   3. Check all related splices and connectors for signs of water intrusion, corrosion, pushed out or bent terminals, and correct pin tension.
   4. With the scan tool, check for any Environmental Data to help identify the conditions in which the DTC was set.
   5. Check Service Bulletins for any possible causes that may apply.

   Were there any problems found?

   Yes

   - Repair as necessary.
   - Perform the BODY VERIFICATION TEST. Refer to **STANDARD PROCEDURE** .

   No

   - Test complete.

B1E9A-12-FRONT RIGHT HEATER CONTROL CIRCUIT - CIRCUIT SHORT TO BATTERY

For a complete wiring diagram, **refer to appropriate SYSTEM WIRING DIAGRAMS article** .

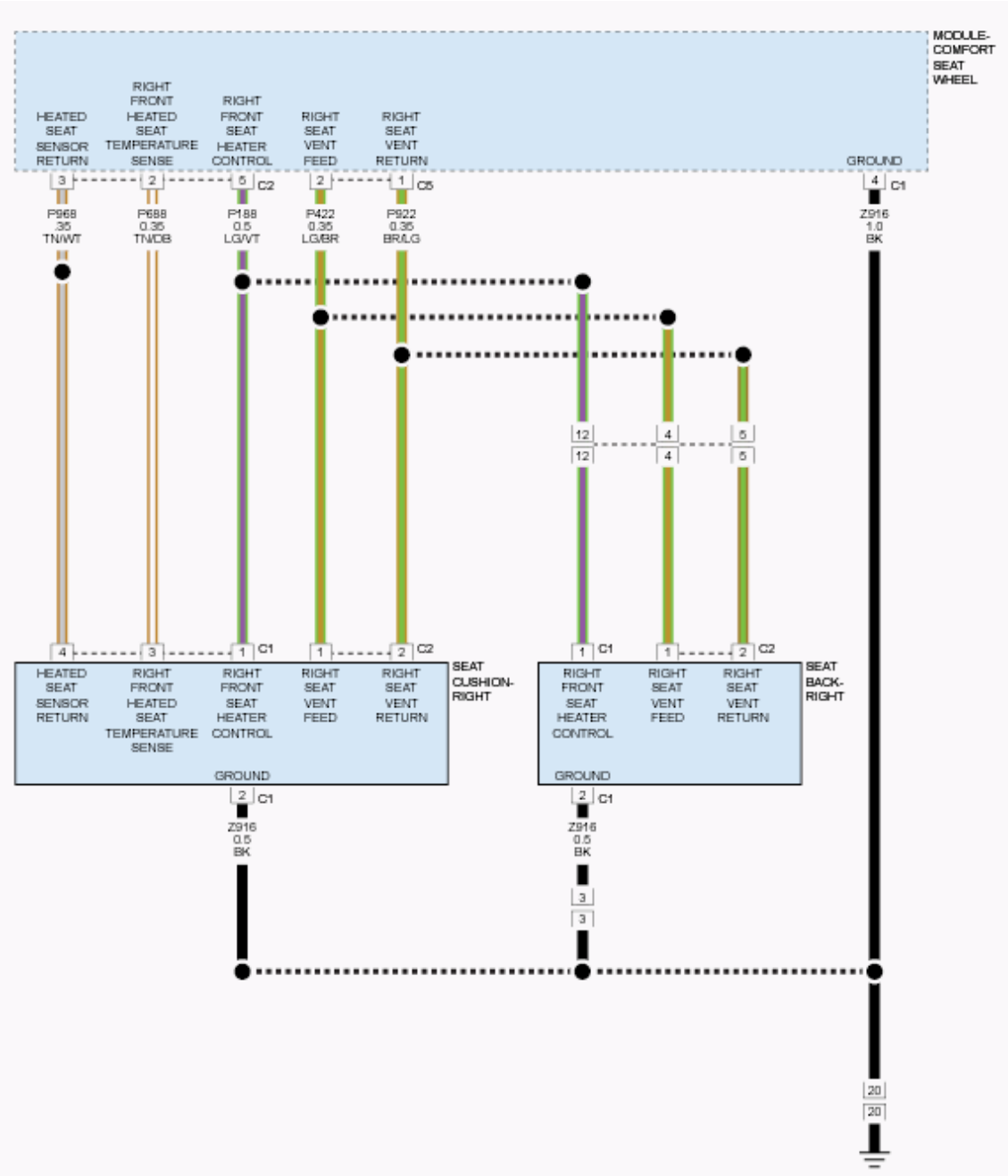

Fig. 10: Right Front Seat Cushion & Seat Back Circuit Diagram
Courtesy of CHRYSLER GROUP, LLC

WHEN MONITORED

With the engine running.

SET CONDITION

The Comfort Seat Wheel Module (CSWM) detects on the Right Front Seat Heater Control circuit a voltage

above 5.0 volts for more than two seconds with the output turned off.

POSSIBLE CAUSES

Possible Causes
RIGHT FRONT SEAT HEATER CONTROL CIRCUIT SHORTED TO VOLTAGE COMFORT SEAT WHEEL MODULE (CSWM)

DIAGNOSTIC TEST

1. **CHECK IF THE DTC IS ACTIVE**

   NOTE: Make sure the battery is fully charged and the charging system is operating properly before proceeding.

   1. Turn the ignition on.
   2. Using a scan tool, record and erase Diagnostic Trouble Codes (DTCs).

      NOTE: It is recommended to record any Environmental Data to help identify the conditions in which the DTC was set.

   3. Turn the ignition off.
   4. Ignition on, engine running.

      NOTE: The Right Front Seat Heater should be in the off position and remain off for the results of the test to be valid.

   5. With the scan tool, read Comfort Seat Wheel Module (CSWM) DTCs.

      Does the scan tool show this DTC as active?

      Yes

      - Go To 2

      No

      - Go To 4

2. **CHECK THE (P188) RIGHT FRONT SEAT HEATER CONTROL CIRCUIT FOR A SHORT TO VOLTAGE**
   1. Turn the ignition off.
   2. Disconnect the Comfort Seat Wheel Module (CSWM) C2 harness connector.

NOTE: Check connectors - Clean/repair as necessary.

3. Ignition on, engine running.
4. Measure the voltage between ground and the (P188) Right Front Seat Heater Control circuit at the CSWM C2 harness connector.

   Does the voltage read above 5.0 volts?

   Yes

   - Repair the (P188) Right Front Seat Heater Control circuit for a short to voltage.
   - Perform the BODY VERIFICATION TEST. Refer to **STANDARD PROCEDURE** .

   No

   - Go To 3

3. **CHECK THE (P188) RIGHT FRONT SEAT HEATER CONTROL CIRCUIT FOR A SHORT TO VOLTAGE DURING SEAT ADJUSTMENT**
   1. Measure the voltage between ground and the (P188) Right Front Seat Heater Control circuit at the CSWM C2 harness connector while adjusting the seat in all positions.

      Does the voltage read above 5.0 volts any time while adjusting the seat?

      Yes

      - Repair the (P188) Right Front Seat Heater Control circuit for a short to voltage.
      - Perform the BODY VERIFICATION TEST. Refer to **STANDARD PROCEDURE** .

      No

      - Replace the Comfort Seat Wheel Module (CSWM) in accordance with the Service Information. Refer to **MODULE, COMFORT SEAT AND WHEEL, REMOVAL** .
      - Perform the BODY VERIFICATION TEST. Refer to **STANDARD PROCEDURE** .

4. **CHECK THE WIRING AND CONNECTORS**
   1. The conditions necessary to set the DTC are not present at this time.
   2. Using the schematics as a guide, inspect the wiring and connectors specific to this circuit. Wiggle the wiring and connectors while checking for shorted and open circuits. Attempt to reproduce the condition by adjusting the seat(s).
   3. Check all related splices and connectors for signs of water intrusion, corrosion, pushed out or bent terminals, and correct pin tension.
   4. With the scan tool, check for any Environmental Data to help identify the conditions in which the DTC was set.
   5. Check Service Bulletins for any possible causes that may apply.

Were there any problems found?

Yes

- Repair as necessary.
- Perform the BODY VERIFICATION TEST. Refer to **STANDARD PROCEDURE** .

No

- Test complete.

B1E9A-13-FRONT RIGHT HEATER CONTROL CIRCUIT - CIRCUIT OPEN

For a complete wiring diagram, **refer to appropriate SYSTEM WIRING DIAGRAMS article** .

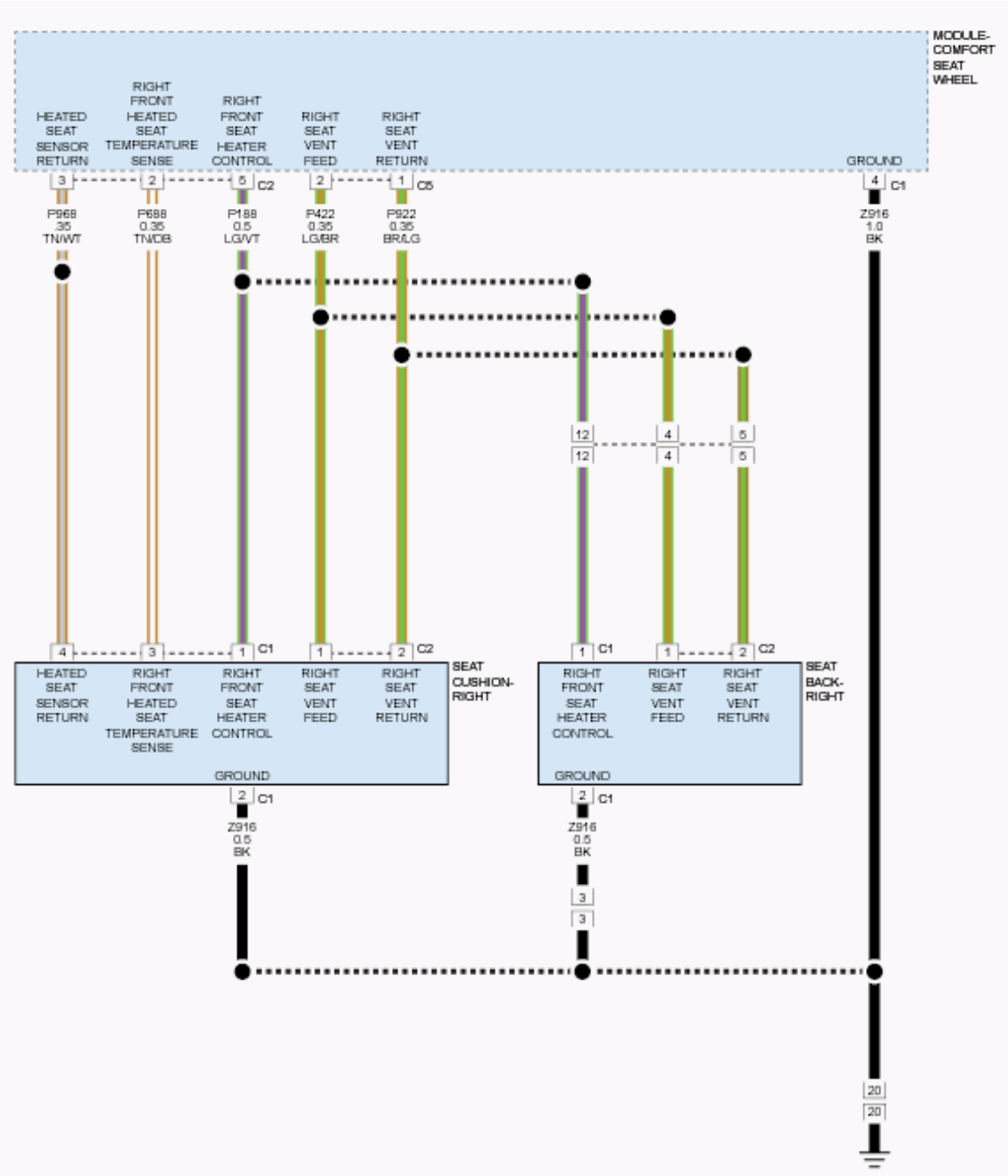

Fig. 11: Right Front Seat Cushion & Seat Back Circuit Diagram
Courtesy of CHRYSLER GROUP, LLC

WHEN MONITORED

With the engine running.

SET CONDITION

The Comfort Seat Wheel Module (CSWM) detects on the Right Front Seat Heater Control circuit a current

below 0.5 of an amp for more than two seconds with the output turned on.

POSSIBLE CAUSES

Possible Causes
RIGHT FRONT SEAT HEATER CONTROL CIRCUIT OPEN
GROUND CIRCUIT OPEN
SEAT CUSHION HEATER ELEMENT OPEN
SEAT BACK HEATER ELEMENT OPEN
COMFORT SEAT WHEEL MODULE (CSWM)

DIAGNOSTIC TEST

1. **CHECK IF THE DTC IS ACTIVE**

   NOTE: Make sure the battery is fully charged and the charging system is operating properly before proceeding.

   1. Turn the ignition on.
   2. Using a scan tool, record and erase Diagnostic Trouble Codes (DTCs).

      NOTE: It is recommended to record any Environmental Data to help identify the conditions in which the DTC was set.

   3. Turn the ignition off.
   4. Ignition on, engine running.
   5. Turn the Heated Seat on and operate in all modes.
   6. With the scan tool, read Comfort Seat Wheel Module (CSWM) DTCs.

   Does the scan tool show this DTC as active?

   Yes

   - Go To 2.

   No

   - Go To 6

2. **CHECK THE (P188) RIGHT FRONT SEAT HEATER CONTROL CIRCUIT FOR AN OPEN**
   1. Turn the ignition off.
   2. Disconnect the Right Seat Cushion Heater harness connector.
   3. Disconnect the Right Seat Back Heater harness connector.

NOTE: Check connectors - Clean/repair as necessary.

4. With the scan tool, actuate the seat heaters on high.
5. Using a 12-volt test light connected to ground, check the (P188) Right Front Seat Heater Control circuit at the Right Seat Cushion and Right Seat Back Heater harness connectors (harness side).

NOTE: The test light must illuminate brightly. Compare the brightness to that of a direct connection to the battery.

Does the test light illuminate brightly at both connectors?

Yes

- Go To 3.

No

- Repair the (P188) Right Front Seat Heater Control circuit for an open.
- Perform the BODY VERIFICATION TEST. Refer to **STANDARD PROCEDURE** .

3. **CHECK THE (Z916) GROUND CIRCUIT FOR AN OPEN**
   1. With the scan tool, stop the seat heater actuation.
   2. Turn the ignition off.
   3. Using a 12-volt test light connected to 12-volts, check the (Z916) Ground circuit at the Right Seat Cushion and Right Seat Back Heater harness connectors (harness side).

   Does the test light illuminate brightly at both connectors?

   Yes

   - Go To 4.

   No

   - Repair the (Z916) Ground circuit for an open.
   - Perform the BODY VERIFICATION TEST. Refer to **STANDARD PROCEDURE** .

4. **CHECK THE RIGHT SEAT CUSHION HEATER ELEMENT FOR AN OPEN**
   1. Measure the resistance between the (P188) Right Front Seat Heater Control circuit and the (Z916) Ground circuit at the Right Seat Cushion Heater connector (component side).

   Is the resistance 5.04 Ohms (± 10%)?

   Yes

- Go To 5

No

- Replace the Seat Cushion Heater Element in accordance with the Service Information. Refer to **PAD, HEATER, REMOVAL** .
- Perform the BODY VERIFICATION TEST. Refer to **STANDARD PROCEDURE** .

5. **CHECK THE RIGHT SEAT BACK HEATER ELEMENT FOR AN OPEN**
   1. Measure the resistance between the (P188) Right Front Seat Heater Control circuit and the (Z916) Ground circuit at the Right Seat Back Heater harness connector (component side).

      Is the resistance 5.13 Ohms (± 10%)?

      Yes

      - Replace the Comfort Seat Wheel Module (CSWM) in accordance with the Service Information. Refer to **MODULE, COMFORT SEAT AND WHEEL, REMOVAL** .
      - Perform the BODY VERIFICATION TEST. Refer to **STANDARD PROCEDURE** .

      No

      - Replace the Seat Back Heater Element in accordance with the Service Information. Refer to **PAD, HEATER, REMOVAL** .
      - Perform the BODY VERIFICATION TEST. Refer to **STANDARD PROCEDURE** .

6. **CHECK THE WIRING AND CONNECTORS**
   1. The conditions necessary to set the DTC are not present at this time.
   2. Using the schematics as a guide, inspect the wiring and connectors specific to this circuit. Wiggle the wiring and connectors while checking for shorted and open circuits. Attempt to reproduce the condition by adjusting the seat(s).
   3. Check all related splices and connectors for signs of water intrusion, corrosion, pushed out or bent terminals, and correct pin tension.
   4. With the scan tool, check for any Environmental Data to help identify the conditions in which the DTC was set.
   5. Check Service Bulletins for any possible causes that may apply.

      Were there any problems found?

      Yes

      - Repair as necessary.
      - Perform the BODY VERIFICATION TEST. Refer to **STANDARD PROCEDURE** .

      No

- Test complete.

B1E9A-1E-FRONT RIGHT HEATER CONTROL CIRCUIT - CIRCUIT RESISTANCE OUT OF RANGE

For a complete wiring diagram, **refer to appropriate SYSTEM WIRING DIAGRAMS article** .

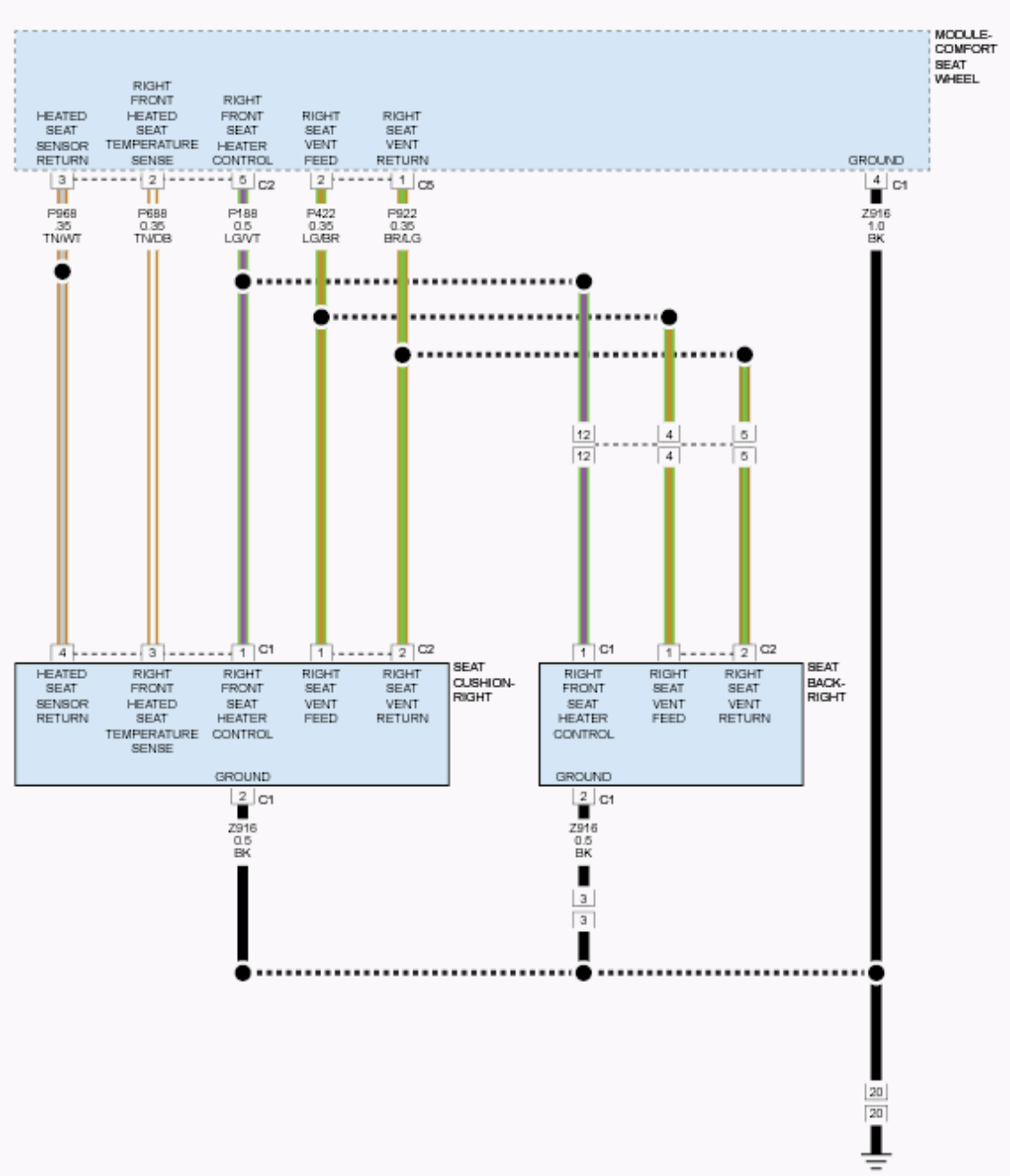

Fig. 12: Right Front Seat Cushion & Seat Back Circuit Diagram
Courtesy of CHRYSLER GROUP, LLC

WHEN MONITORED

With the engine running.

SET CONDITION

The Comfort Seat Wheel Module (CSWM) detects on the Right Front Seat Heater Control circuit an impedance equal to or above 7.0 Ohms for more than two seconds with the output turned on.

POSSIBLE CAUSES

Possible Causes
RIGHT FRONT SEAT HEATER CONTROL CIRCUIT RESISTANCE HIGH
GROUND CIRCUIT RESISTANCE HIGH
SEAT CUSHION HEATER ELEMENT
SEAT BACK HEATER ELEMENT
COMFORT SEAT WHEEL MODULE (CSWM)

DIAGNOSTIC TEST

1. **CHECK IF THE DTC IS ACTIVE**

NOTE: Before proceeding, verify the battery is fully charged, the charging system is operating properly, no Battery or System Voltage Diagnostic Trouble Codes (DTCs) are set, and the CSWM Power and Ground circuits are clean and tight.

1. Turn the ignition on.
2. Using a scan tool, record and erase Diagnostic Trouble Codes (DTCs).

NOTE: It is recommended to record any Environmental Data to help identify the conditions in which the DTC was set.

3. Turn the ignition off.
4. Ignition on, engine running.
5. Turn the Heated Seat on and operate in all modes.
6. With the scan tool, read Comfort Seat Wheel Module (CSWM) DTCs.

Does the scan tool show this DTC as active?

Yes

- Go To 2

No

- Go To 6

2. **CHECK THE (P188) RIGHT FRONT SEAT HEATER CONTROL CIRCUIT FOR HIGH RESISTANCE**
   1. Turn the ignition off.
   2. Disconnect the CSWM C2 harness connector.
   3. Disconnect the Right Seat Cushion Heater harness connector.
   4. Disconnect the Right Seat Back Heater harness connector.
   5. Connect a jumper wire between the (P188) Right Front Seat Heater Control circuit and B(+) in the CSWM C2 harness connector.
   6. Using a 12-volt test light connected to ground, check the (P188) Right Front Seat Heater Control circuit at the Right Seat Cushion and the Back Heater harness connectors (harness side).

   NOTE: The test light must illuminate brightly. Compare the brightness to that of a direct connection to the battery.

   Does the test light illuminate brightly at both connectors?

   Yes

   - Go To 3

   No

   - Repair the (P188) Right Front Seat Heater Control circuit for high resistance.
   - Perform the BODY VERIFICATION TEST. Refer to **STANDARD PROCEDURE** .

3. **CHECK THE (Z916) GROUND CIRCUIT FOR HIGH RESISTANCE**
   1. Using a 12-volt test light connected to 12-volts, check the (Z916) Ground circuit at the Right Seat Cushion and Back Heater harness connectors (harness side).

   Does the test light illuminate brightly at both connectors?

   Yes

   - Go To 4

   No

   - Repair the (Z916) Ground circuit for high resistance.
   - Perform the BODY VERIFICATION TEST. Refer to **STANDARD PROCEDURE** .

4. **CHECK THE RIGHT SEAT CUSHION HEATER ELEMENT RESISTANCE**
   1. Measure the resistance between the (P188) Right Front Seat Heater Control circuit and the (Z916)

Ground circuit at the Right Seat Cushion Heater connector (component side).

Is the resistance 5.04 Ohms (± 10%)?

Yes

- Go To 5

No

- Replace the Right Seat Cushion Heater Element in accordance with the Service Information. Refer to **PAD, HEATER, REMOVAL** .
- Perform the BODY VERIFICATION TEST. Refer to **STANDARD PROCEDURE** .

5. **CHECK THE RIGHT SEAT BACK HEATER ELEMENT RESISTANCE**
   1. Measure the resistance between the (P188) Right Front Seat Heater Control circuit and the (Z916) Ground circuit at the Right Seat Back Heater Element connector (component side).

      Is the resistance 5.13 Ohms (± 10%)?

      Yes

      - Replace the Comfort Seat Wheel Module (CSWM) in accordance with the Service Information. Refer to **MODULE, COMFORT SEAT AND WHEEL, REMOVAL** .
      - Perform the BODY VERIFICATION TEST. Refer to **STANDARD PROCEDURE** .

      No

      - Replace the Right Seat Back Heater Element in accordance with the Service Information. Refer to **PAD, HEATER, REMOVAL** .
      - Perform the BODY VERIFICATION TEST. Refer to **STANDARD PROCEDURE** .
6. **CHECK THE WIRING AND CONNECTORS**
   1. The conditions necessary to set the DTC are not present at this time.
   2. Using the schematics as a guide, inspect the wiring and connectors specific to this circuit. Wiggle the wiring and connectors while checking for shorted and open circuits. Attempt to reproduce the condition by adjusting the seat.
   3. Check all related splices and connectors for signs of water intrusion, corrosion, pushed out or bent terminals, and correct pin tension.
   4. With the scan tool, check for any Environmental Data to help identify the conditions in which the DTC was set.
   5. Check Service Bulletins for any possible causes that may apply.

      Were there any problems found?

      Yes

- Repair as necessary.
- Perform the BODY VERIFICATION TEST. Refer to **STANDARD PROCEDURE** .

No

- Test complete.

B1E9D-11-FRONT LEFT VENT CONTROL CIRCUIT - CIRCUIT SHORT TO GROUND

For a complete wiring diagram, **refer to appropriate SYSTEM WIRING DIAGRAMS article** .

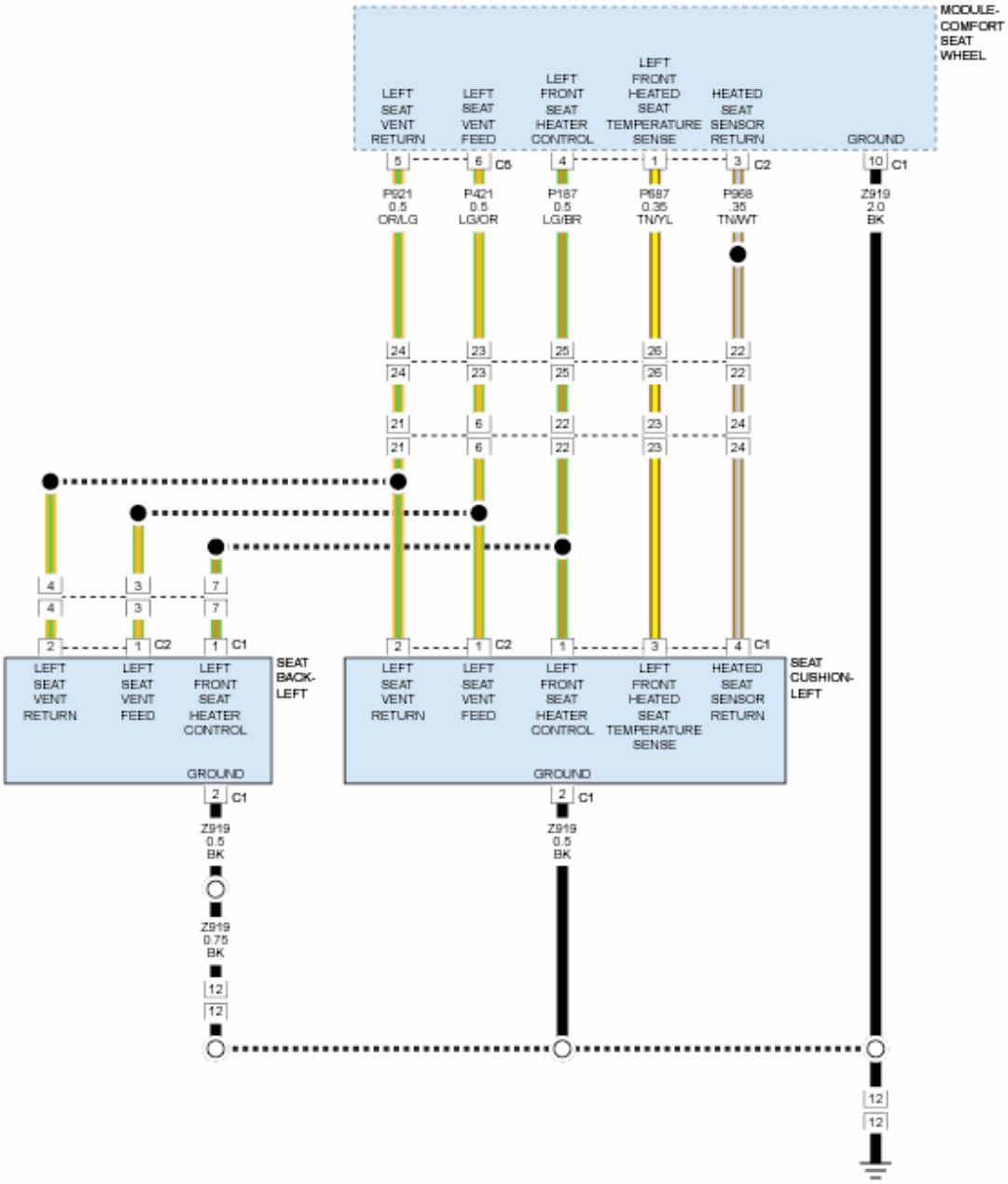

Fig. 13: Left Front Seat Cushion & Seat Back Circuit Diagram
Courtesy of CHRYSLER GROUP, LLC

WHEN MONITORED

With the engine running.

SET CONDITION

The Comfort Seat Wheel Module (CSWM) detects on the Left Seat Vent Feed circuit a voltage below 1.0 volt or an amperage draw exceeding 1.5 amps for more than 2.0 seconds with the output turned on.

POSSIBLE CAUSES

Possible Causes
LEFT SEAT VENT FEED CIRCUIT SHORTED TO GROUND
LEFT SEAT VENT FEED CIRCUIT SHORTED TO THE LEFT SEAT VENT RETURN CIRCUIT
SEAT CUSHION VENT MOTOR
SEAT BACK VENT MOTOR
COMFORT SEAT WHEEL MODULE (CSWM)

DIAGNOSTIC TEST

1. **CHECK IF THE DTC IS CURRENT**

   NOTE: Make sure the battery is fully charged and the charging system is operating properly before proceeding.

   1. Turn the ignition on.
   2. Using a scan tool, record and erase Diagnostic Trouble Codes (DTCs).

      NOTE: It is recommended to record any Environmental Data to help identify the conditions in which the DTC was set.

   3. Turn the ignition off.
   4. Ignition on, engine running.
   5. Turn the Vented Seat on and wait at least 12 seconds before proceeding.
   6. Using a scan tool, read Comfort Seat Wheel Module (CSWM) DTCs.

      Does the scan tool show this DTC as active?

      Yes

      - Go To 2

      No

      - Go To 7

2. **CHECK THE (P421) LEFT SEAT VENT FEED CIRCUIT FOR A SHORT TO GROUND**
   1. Turn the ignition off.
   2. Disconnect the CSWM C5 harness connector.
   3. Measure the resistance between ground and the (P421) Left Seat Vent Feed circuit in the CSWM C5 harness connector.

      Is the resistance below 10K Ohms?

Yes

- Repair the (P421) Left Seat Vent Feed circuit for a short to ground.
- Perform the BODY VERIFICATION TEST. Refer to **STANDARD PROCEDURE** .

No

- Go To 3

3. **CHECK THE LEFT VENT SEAT MOTORS**
   1. Connect a jumper wire between ground and the (P921) Left Seat Vent Return circuit in the CSWM C5 harness connector.
   2. Connect a fused jumper wire between B(+) and the (P421) Left Seat Vent Feed circuit in the CSWM C5 harness connector.

   Are both vent seat motors operative?

   Yes

   - Go To 4

   No

   - Inspect the wiring and connectors to the inoperative motor and repair as necessary. If no problems are found, replace the inoperative motor in accordance with the Service Information.
   - Perform the BODY VERIFICATION TEST. Refer to **STANDARD PROCEDURE** .
4. **CHECK THE AMPERAGE OF THE LEFT VENT SEAT MOTORS**
   1. Connect a fused jumper wire between B(+) and the (P421) Left Seat Vent Feed circuit in the CSWM C5 harness connector.
   2. Measure the amperage by connecting an ammeter between ground and the (P921) Left Seat Vent Return circuit in the CSWM C5 harness connector.

   Is the amperage above 1.5 amps?

   Yes

   - Go To 5

   No

   - Replace the Comfort Seat Wheel Module (CSWM) in accordance with the Service Information. Refer to **MODULE, COMFORT SEAT AND WHEEL, REMOVAL** .
   - Perform the BODY VERIFICATION TEST. Refer to **STANDARD PROCEDURE** .
5. **CHECK THE LEFT SEAT CUSHION VENT MOTOR**

1. Disconnect the Left Seat Cushion Vent Motor C2 harness connector.
2. Connect a fused jumper wire between B(+) and the (P421) Left Seat Vent Feed circuit in the Left Seat Cushion Vent Motor connector.
3. Measure the amperage by connecting an ammeter between ground and the (P921) Left Seat Vent Return circuit in the Left Seat Cushion Vent Motor connector.

NOTE: Individual vent motors normally operate between 0.4 and 0.5 amps.

Is the amperage above 0.75 amps?

Yes

- Replace the Seat Cushion Vent Motor in accordance with the Service Information.
- Perform the BODY VERIFICATION TEST. Refer to **STANDARD PROCEDURE** .

No

- Go To 6

6. **CHECK THE LEFT SEAT BACK VENT MOTOR**
   1. Disconnect the Left Seat Back Vent Motor C2 harness connector.
   2. Connect a fused jumper wire between B(+) and the (P421) Left Seat Vent Feed circuit in the Left Seat Back Vent Motor connector.
   3. Measure the amperage by connecting an ammeter between ground and the (P921) Left Seat Vent Return circuit in the Left Seat Back Vent Motor connector.

   Is the amperage above 0.75 amps?

   Yes

   - Replace the Seat Back Vent Motor in accordance with the Service Information.
   - Perform the BODY VERIFICATION TEST. Refer to **STANDARD PROCEDURE** .

   No

   - Repair or replace the left seat wiring harness for a short to another circuit.
   - Perform the BODY VERIFICATION TEST. Refer to **STANDARD PROCEDURE** .

7. **CHECK THE WIRING AND CONNECTORS**
   1. The conditions necessary to set the DTC are not present at this time.
   2. Using the schematics as a guide, inspect the wiring and connectors specific to this circuit. Wiggle the wiring and connectors while checking for shorted and open circuits. Attempt to reproduce the condition by adjusting the seat(s).
   3. Check all related splices and connectors for signs of water intrusion, corrosion, pushed out or bent terminals and correct pin tension. Verify the seat wiring harness is routed correctly to the Comfort

Seat Wheel Module (CSWM).

4. With the scan tool, check for any Environmental Data to help identify the conditions in which the DTC was set.
5. Check Service Bulletins for any possible causes that may apply.

Were there any problems found?

Yes

- Repair as necessary.
- Perform the BODY VERIFICATION TEST. Refer to **STANDARD PROCEDURE** .

No

- Test complete.

B1E9D-12-FRONT LEFT VENT CONTROL CIRCUIT - CIRCUIT SHORT TO BATTERY

For a complete wiring diagram, **refer to appropriate SYSTEM WIRING DIAGRAMS article** .

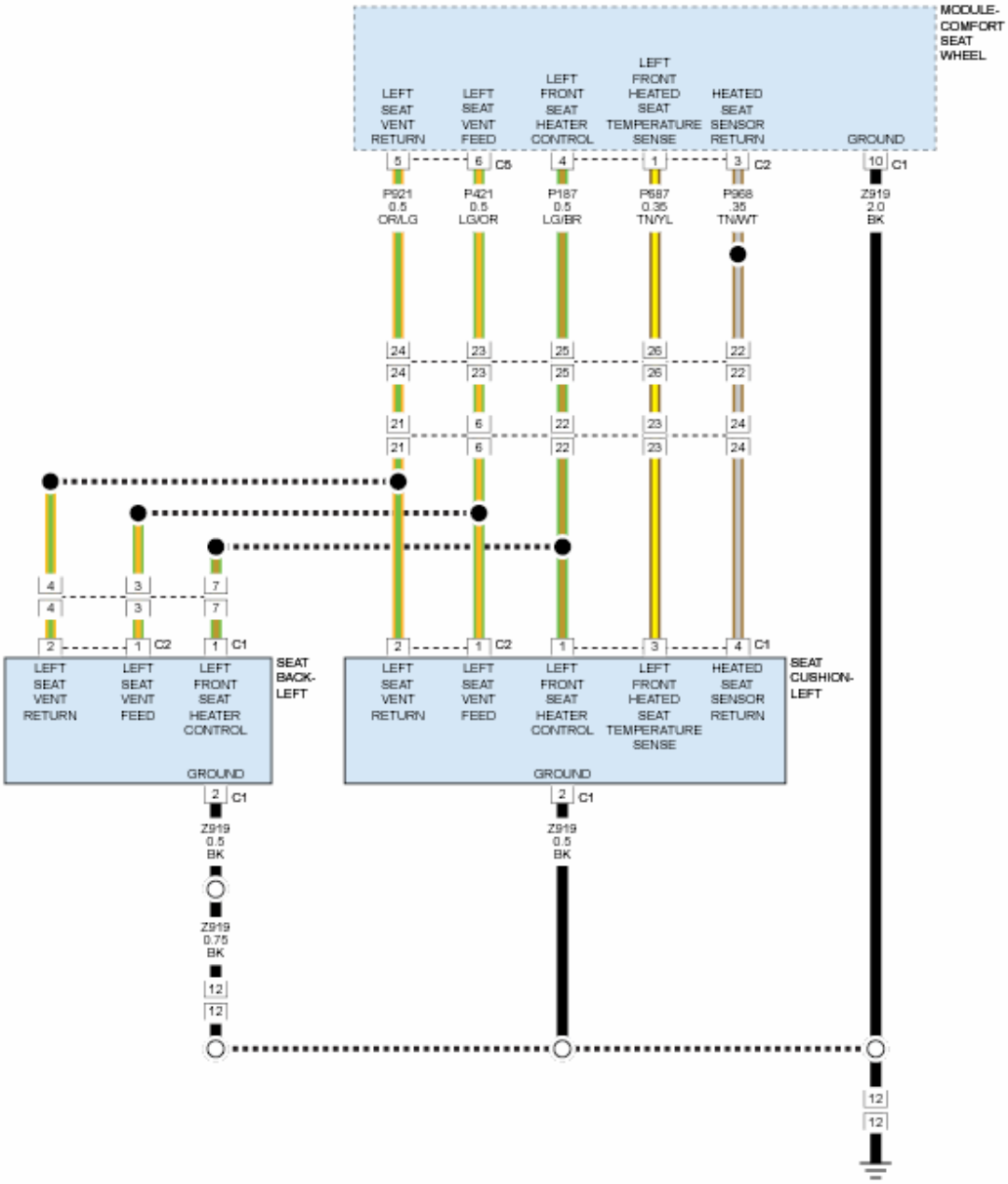

Fig. 14: Left Front Seat Cushion & Seat Back Circuit Diagram
Courtesy of CHRYSLER GROUP, LLC

WHEN MONITORED

With the engine running.

SET CONDITION

The Comfort Seat Wheel Module (CSWM) detects on the Left Seat Vent Feed circuit a voltage above 5.0 volts for more than two seconds with the output turned off.

POSSIBLE CAUSES

Possible Causes
LEFT SEAT VENT FEED CIRCUIT SHORTED TO VOLTAGE COMFORT SEAT WHEEL MODULE (CSWM)

DIAGNOSTIC TEST

1. **CHECK IF THE DTC IS ACTIVE**

   NOTE: Make sure the battery is fully charged and the charging system is operating properly before proceeding.

   1. Turn the ignition on.
   2. Using a scan tool, record and erase Diagnostic Trouble Codes (DTCs).
   3. Turn the ignition off.
   4. Start the engine and let it run.

      NOTE: The Seat Vent should be in the off position and remain off or the results of the test will be invalid.

   5. Ignition on, engine running.
   6. With the scan tool, read Comfort Seat Wheel Module (CSWM) DTCs.

      Does the scan tool show this DTC as active?

      Yes

      - Go To 2

      No

      - Go To 4

2. **CHECK THE (P421) LEFT SEAT VENT FEED CIRCUIT FOR A SHORT TO VOLTAGE**
   1. Turn the ignition off.
   2. Disconnect the CSWM C5 harness connector.
   3. Start the engine and let it run.
   4. Measure the voltage between ground and the (P421) Left Seat Vent Feed circuit at the CSWM C5 harness connector.

      Is the voltage 5.0 volts or above?

      Yes

- Repair the (P421) Left Seat Vent Feed circuit for a short to voltage.
- Perform the BODY VERIFICATION TEST. Refer to **STANDARD PROCEDURE** .

No

- Go To 3

3. **CHECK THE (P421) LEFT SEAT VENT FEED CIRCUIT FOR A SHORT TO VOLTAGE DURING SEAT ADJUSTMENT**
   1. Measure the voltage between ground and the (P421) Left Seat Vent Feed circuit at the CSWM C5 harness connector while adjusting the seat in all positions.

      Is the voltage 5.0 volts or above any time during the seat adjustment?

      Yes

      - Repair the (P421) Left Seat Vent Feed circuit for a short to voltage.
      - Perform the BODY VERIFICATION TEST. Refer to **STANDARD PROCEDURE** .

      No

      - Replace the Comfort Seat Wheel Module (CSWM) in accordance with the Service Information. Refer to **MODULE, COMFORT SEAT AND WHEEL, REMOVAL** .
      - Perform the BODY VERIFICATION TEST. Refer to **STANDARD PROCEDURE** .

4. **CHECK THE WIRING AND CONNECTORS**
   1. The conditions necessary to set the DTC are not present at this time.
   2. Using the schematics as a guide, inspect the wiring and connectors specific to this circuit. Wiggle the wiring and connectors while checking for shorted and open circuits. Attempt to reproduce the condition by adjusting the seat(s).
   3. Check all related splices and connectors for signs of water intrusion, corrosion, pushed out or bent terminals, and correct pin tension. Verify the seat wiring harness is routed correctly to the Comfort Seat Wheel Module (CSWM).
   4. Attempt to reproduce the condition(s) by operating all CSWM functions, except for the Left Front Vented Seat, one at a time.
   5. With the scan tool, check for any Environmental Data to help identify the conditions in which the DTC was set.
   6. Check Service Bulletins for any possible causes that may apply.

      Were there any problems found?

      Yes

      - Repair as necessary.
      - Perform the BODY VERIFICATION TEST. Refer to **STANDARD PROCEDURE** .

No

- Test complete.

B1E9D-13-FRONT LEFT VENT CONTROL CIRCUIT - CIRCUIT OPEN

For a complete wiring diagram, **refer to appropriate SYSTEM WIRING DIAGRAMS article** .

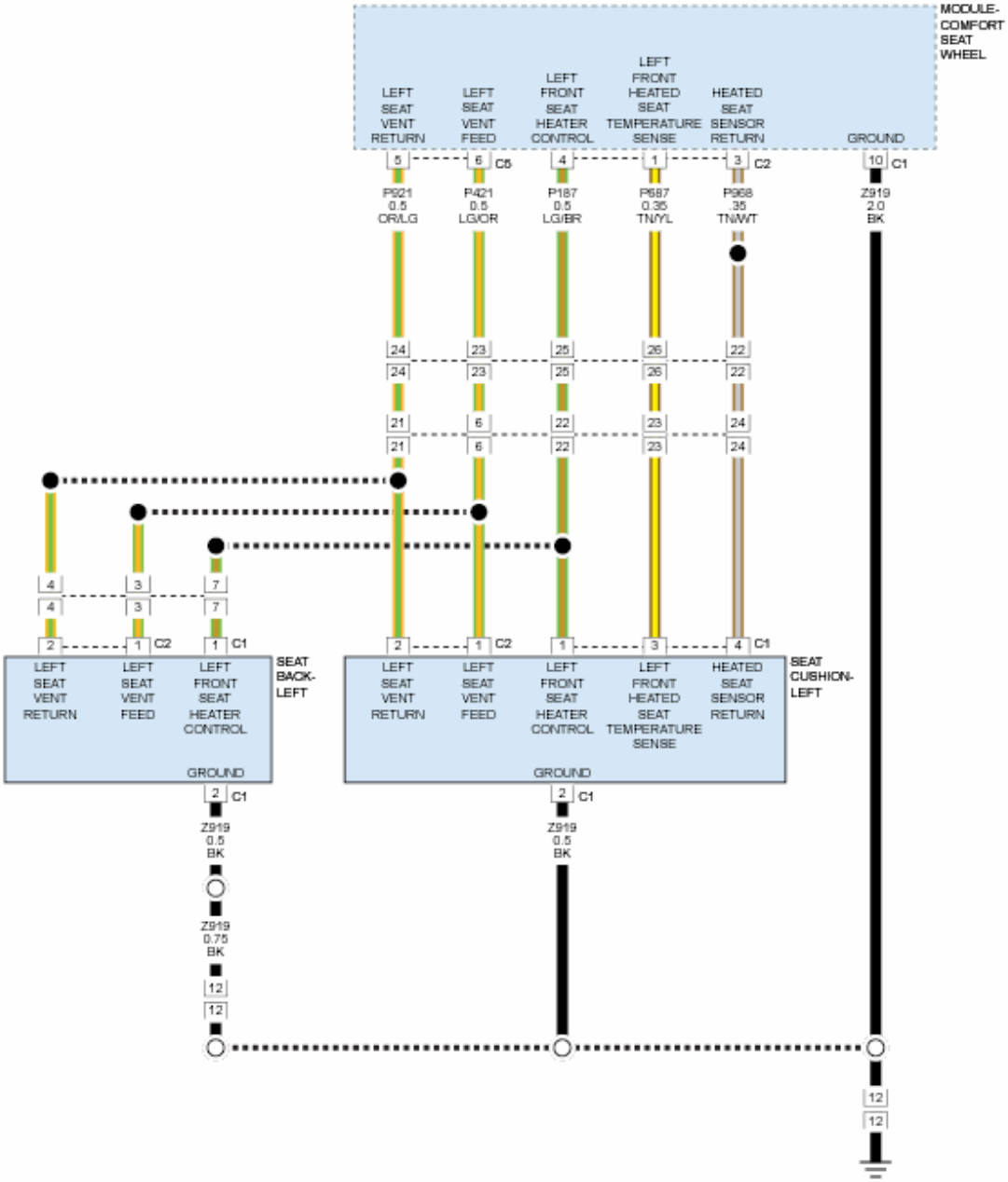

Fig. 15: Left Front Seat Cushion & Seat Back Circuit Diagram
Courtesy of CHRYSLER GROUP, LLC

WHEN MONITORED

With the engine running.

SET CONDITION

The Comfort Seat Wheel Module (CSWM) detects on the Left Seat Vent Feed circuit a current below 200 mA for more than 12 seconds with the output turned on.

POSSIBLE CAUSES

Possible Causes
LEFT SEAT VENT FEED CIRCUIT OPEN
LEFT SEAT VENT RETURN CIRCUIT OPEN
SEAT CUSHION VENT MOTOR OPEN
SEAT BACK VENT MOTOR OPEN
COMFORT SEAT WHEEL MODULE (CSWM)

DIAGNOSTIC TEST

1. **CHECK IF THE DTC IS ACTIVE**

NOTE: Make sure the battery is fully charged and the charging system is operating properly before proceeding.

1. Turn the ignition on.
2. Using a scan tool, record and erase Diagnostic Trouble Codes (DTCs).

NOTE: It is recommended to record any Environmental Data to help identify the conditions in which the DTC was set.

3. Turn the ignition off.
4. Ignition on, engine running.
5. Turn the Vented Seat on and wait at least 12 seconds before proceeding.
6. With the scan tool, read Comfort Seat Wheel Module (CSWM) DTCs.

Does the scan tool show this DTC as active?

Yes

- Go To 2

No

- Go To 6

2. **CHECK THE (P421) LEFT SEAT VENT FEED CIRCUIT FOR AN OPEN**
   1. Turn the ignition off.
   2. Disconnect the CSWM C5 harness connector.
   3. Disconnect the Left Seat Cushion Vent Motor.
   4. Disconnect the Left Seat Back Vent Motor.
   5. Connect a fused jumper wire between B(+) and the (P421) Left Seat Vent Feed circuit in the CSWM C5 harness connector.
   6. Using a 12 volt test light connected to ground, check the (P421) Left Seat Vent Feed circuit at the Left Seat Cushion Vent Motor and the Left Seat Back Vent Motor harness connectors.

   NOTE: The test light must illuminate brightly. Compare the brightness to that of a direct connection to the battery.

   Does the test light illuminate brightly at both harness connectors?

   Yes

   - Go To 3

   No

   - Repair the (P421) Left Seat Vent Feed circuit for an open.
   - Perform the BODY VERIFICATION TEST. Refer to **STANDARD PROCEDURE** .

3. **CHECK THE (P921) LEFT SEAT RETURN CIRCUIT FOR AN OPEN**
   1. Disconnect the fused jumper wire between B(+) and the (P421) Left Seat Vent Feed circuit in the CSWM C5 harness connector.
   2. Connect the fused jumper wire between B(+) and the (P921) Left Seat Vent Return circuit in the CSWM C5 harness connector.
   3. Using a 12 volt test light connected to ground, check the (P921) Left Seat Vent Return circuit at the Left Seat Cushion Vent Motor and the Left Seat Back Vent Motor harness connectors.

   Does the test light illuminate brightly at both harness connectors?

   Yes

   - Go To 4

   No

   - Repair the (P921) Left Seat Vent Return circuit for an open.
   - Perform the BODY VERIFICATION TEST. Refer to **STANDARD PROCEDURE** .

4. **CHECK THE LEFT SEAT CUSHION VENT MOTOR**
   1. Disconnect the fused jumper wire between B(+) and the (P921) Left Seat Vent Return circuit in the CSWM C5 harness connector.
   2. Connect a fused jumper wire between B(+) and the (P421) Left Seat Vent Feed circuit in the Left Cushion Vent Motor connector.
   3. Measure the amperage by connecting an ammeter between ground and the (P921) Left Seat Vent Return circuit in the Left Cushion Vent Motor connector.

   NOTE: Individual vent motors normally operate between 400 and 500 mA.

   Is the amperage between 300 and 700 mA?

   Yes

   - Go To 5

   No

   - Replace the Seat Cushion Vent Motor in accordance with the Service Information. Refer to **MOTOR, VENTED SEAT, REMOVAL** .
   - Perform the BODY VERIFICATION TEST. Refer to **STANDARD PROCEDURE** .
5. **CHECK THE LEFT SEAT BACK VENT MOTOR**
   1. Disconnect the fused jumper wire between B(+) and the (P421) Left Seat Vent Feed circuit in the Left Cushion Vent Motor connector.
   2. Connect a fused jumper wire between B(+) and the (P421) Left Seat Vent Feed circuit in the Left Back Vent Motor connector.
   3. Measure the amperage by connecting an ammeter between ground and the (P921) Left Seat Vent Return circuit in the Left Back Vent Motor connector.

   Is the amperage between 300 and 700 mA?

   Yes

   - Replace the Comfort Seat Wheel Module (CSWM) in accordance with the Service Information. Refer to **MODULE, COMFORT SEAT AND WHEEL, REMOVAL** .
   - Perform the BODY VERIFICATION TEST. Refer to **STANDARD PROCEDURE** .

   No

   - Replace the Seat Back Vent Motor in accordance with the Service Information. Refer to **MOTOR, VENTED SEAT, REMOVAL** .
   - Perform the BODY VERIFICATION TEST. Refer to **STANDARD PROCEDURE** .
6. **CHECK THE WIRING AND CONNECTORS**

1. The conditions necessary to set the DTC are not present at this time.
2. Using the schematics as a guide, inspect the wiring and connectors specific to this circuit. Wiggle the wiring and connectors while checking for shorted and open circuits. Attempt to reproduce the condition by adjusting the seat(s).
3. Check all related splices and connectors for signs of water intrusion, corrosion, pushed out or bent terminals, and correct pin tension. Verify the seat wiring harness is routed correctly to the Comfort Seat Wheel Module (CSWM).
4. With the scan tool, check for any Environmental Data to help identify the conditions in which the DTC was set.
5. Check Service Bulletins for any possible causes that may apply.

   Were there any problems found?

   Yes

   - Repair as necessary.
   - Perform the BODY VERIFICATION TEST. Refer to **STANDARD PROCEDURE** .

   No

   - Test complete.

B1E9E-11-FRONT RIGHT VENT CONTROL CIRCUIT - CIRCUIT SHORT TO GROUND

For a complete wiring diagram, **refer to appropriate SYSTEM WIRING DIAGRAMS article** .

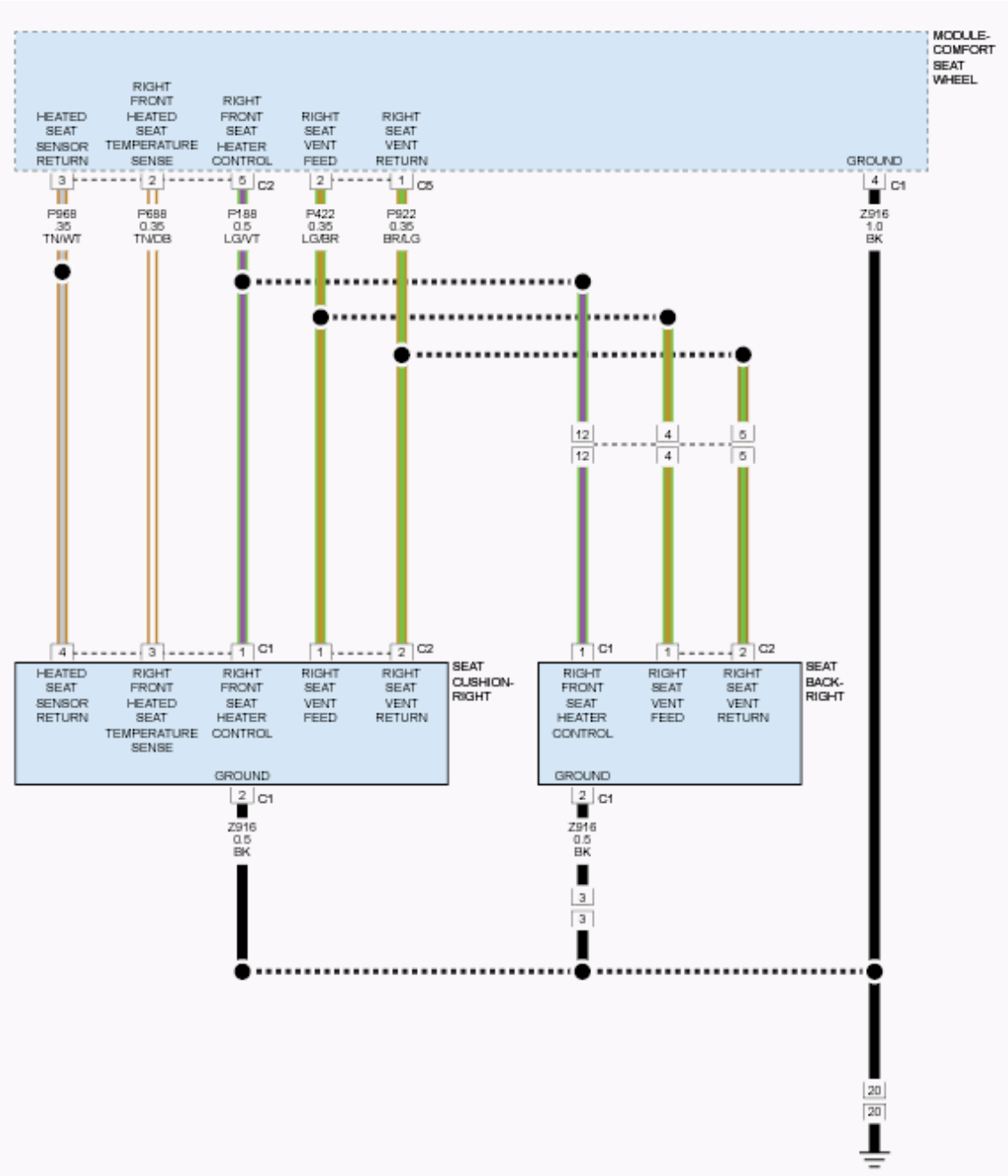

Fig. 16: Right Front Seat Cushion & Seat Back Circuit Diagram
Courtesy of CHRYSLER GROUP, LLC

WHEN MONITORED

With the engine running.

SET CONDITION

The Comfort Seat Wheel Module (CSWM) detects a voltage below 1.0 volt or an amperage draw exceeding 1.5

amps on the Right Seat Vent Feed circuit for more than 2.0 seconds with the output turned on.

POSSIBLE CAUSES

Possible Causes
RIGHT SEAT VENT FEED CIRCUIT SHORTED TO GROUND
RIGHT SEAT VENT FEED CIRCUIT SHORTED TO THE RIGHT SEAT VENT RETURN CIRCUIT
SEAT CUSHION VENT MOTOR
SEAT BACK VENT MOTOR
COMFORT SEAT WHEEL MODULE (CSWM)

DIAGNOSTIC TEST

1. **CHECK IF THE DTC IS CURRENT**

   NOTE: Make sure the battery is fully charged and the charging system is operating properly before proceeding.

   1. Turn the ignition on.
   2. Using a scan tool, record and erase Diagnostic Trouble Codes (DTCs).

      NOTE: It is recommended to record any Environmental Data to help identify the conditions in which the DTC was set.

   3. Turn the ignition off.
   4. Ignition on, engine running.
   5. Turn the Vented Seat on and wait at least 12 seconds before proceeding.
   6. Using a scan tool, read Comfort Seat Wheel Module (CSWM) DTCs.

      Does the scan tool show this DTC as active?

      Yes

      - Go To 2

      No

      - Go To 7

2. **CHECK THE (P422) RIGHT SEAT VENT FEED CIRCUIT FOR A SHORT TO GROUND**
   1. Turn the ignition off.
   2. Disconnect the CSWM C5 harness connector.
   3. Measure the resistance between ground and the (P422) Right Seat Vent Feed circuit in the CSWM C5 harness connector.

Is the resistance below 10K Ohms?

Yes

- Repair the (P422) Right Seat Vent Feed circuit for a short to ground.
- Perform the BODY VERIFICATION TEST. Refer to **STANDARD PROCEDURE** .

No

- Go To 3

3. **CHECK THE RIGHT VENT SEAT MOTORS**
   1. Connect a jumper wire between ground and the (P922) Right Seat Vent Return circuit in the CSWM C5 harness connector.
   2. Connect a fused jumper wire between B(+) and the (P422) Right Seat Vent Feed circuit in the CSWM C5 harness connector.

   Are both vent seat motors operative?

   Yes

   - Go To 4

   No

   - Inspect the wiring and connectors to the inoperative motor and repair as necessary. If no problems are found, replace the inoperative motor in accordance with the Service Information. Refer to **MOTOR, VENTED SEAT, REMOVAL** .
   - Perform the BODY VERIFICATION TEST. Refer to **STANDARD PROCEDURE** .
4. **CHECK THE AMPERAGE OF THE RIGHT VENT SEAT MOTORS**
   1. Connect a fused jumper wire between B(+) and the (P422) Right Seat Vent Feed circuit in the CSWM C5 harness connector.
   2. Measure the amperage by connecting an ammeter between ground and the (P922) Right Seat Vent Return circuit in the CSWM C5 harness connector.
   3. Is the amperage above 1.5 amps?

   Yes

   - Go To 5

   No

   - Replace the Comfort Seat Wheel Module (CSWM) in accordance with the Service Information. Refer to **MODULE, COMFORT SEAT AND WHEEL, REMOVAL** .
   - Perform the BODY VERIFICATION TEST. Refer to **STANDARD PROCEDURE** .

5. **CHECK THE RIGHT SEAT CUSHION VENT MOTOR**
   1. Disconnect the Right Seat Cushion Vent Motor C2 harness connector.
   2. Connect a fused jumper wire between B(+) and the (P422) Right Seat Vent Feed circuit in the Right Seat Cushion Vent Motor connector.
   3. Measure the amperage by connecting an ammeter between ground and the (P922) Right Seat Vent Return circuit in the Right Seat Cushion Vent Motor connector.

   NOTE: Individual vent motors normally operate between 0.4 and 0.5 amps.

   Is the amperage above 0.75 amps?

   Yes

   - Replace the Seat Cushion Vent Motor in accordance with the Service Information. Refer to **MOTOR, VENTED SEAT, REMOVAL** .
   - Perform the BODY VERIFICATION TEST. Refer to **STANDARD PROCEDURE** .

   No

   - Go To 6
6. **CHECK THE RIGHT SEAT BACK VENT MOTOR**
   1. Disconnect the Right Seat Back Vent Motor C2 harness connector.
   2. Connect a fused jumper wire between B(+) and the (P422) Right Seat Vent Feed circuit in the Right Seat Back Vent Motor connector.
   3. Measure the amperage by connecting an ammeter between ground and the (P922) Right Seat Vent Return circuit in the Right Seat Back Vent Motor connector.

   Is the amperage above 0.75 amps?

   Yes

   - Replace the Seat Back Vent Motor in accordance with the Service Information. Refer to **MOTOR, VENTED SEAT, REMOVAL** .
   - Perform the BODY VERIFICATION TEST. Refer to **STANDARD PROCEDURE** .

   No

   - Repair or replace the left seat wiring harness for a short to another circuit.
   - Perform the BODY VERIFICATION TEST. Refer to **STANDARD PROCEDURE** .
7. **CHECK THE WIRING AND CONNECTORS**
   1. The conditions necessary to set the DTC are not present at this time.
   2. Using the schematics as a guide, inspect the wiring and connectors specific to this circuit. Wiggle the wiring and connectors while checking for shorted and open circuits. Attempt to reproduce the

condition by adjusting the seat(s).

3. Check all related splices and connectors for signs of water intrusion, corrosion, pushed out or bent terminals and correct pin tension. Verify the seat wiring harness is routed correctly to the Comfort Seat Wheel Module (CSWM).
4. With the scan tool, check for any Environmental Data to help identify the conditions in which the DTC was set.
5. Check Service Bulletins for any possible causes that may apply.

   Were there any problems found?

   Yes

   - Repair as necessary.
   - Perform the BODY VERIFICATION TEST. Refer to **STANDARD PROCEDURE** .

   No

   - Test complete.

B1E9E-12-FRONT RIGHT VENT CONTROL CIRCUIT - CIRCUIT SHORT TO BATTERY

For a complete wiring diagram, **refer to appropriate SYSTEM WIRING DIAGRAMS article** .

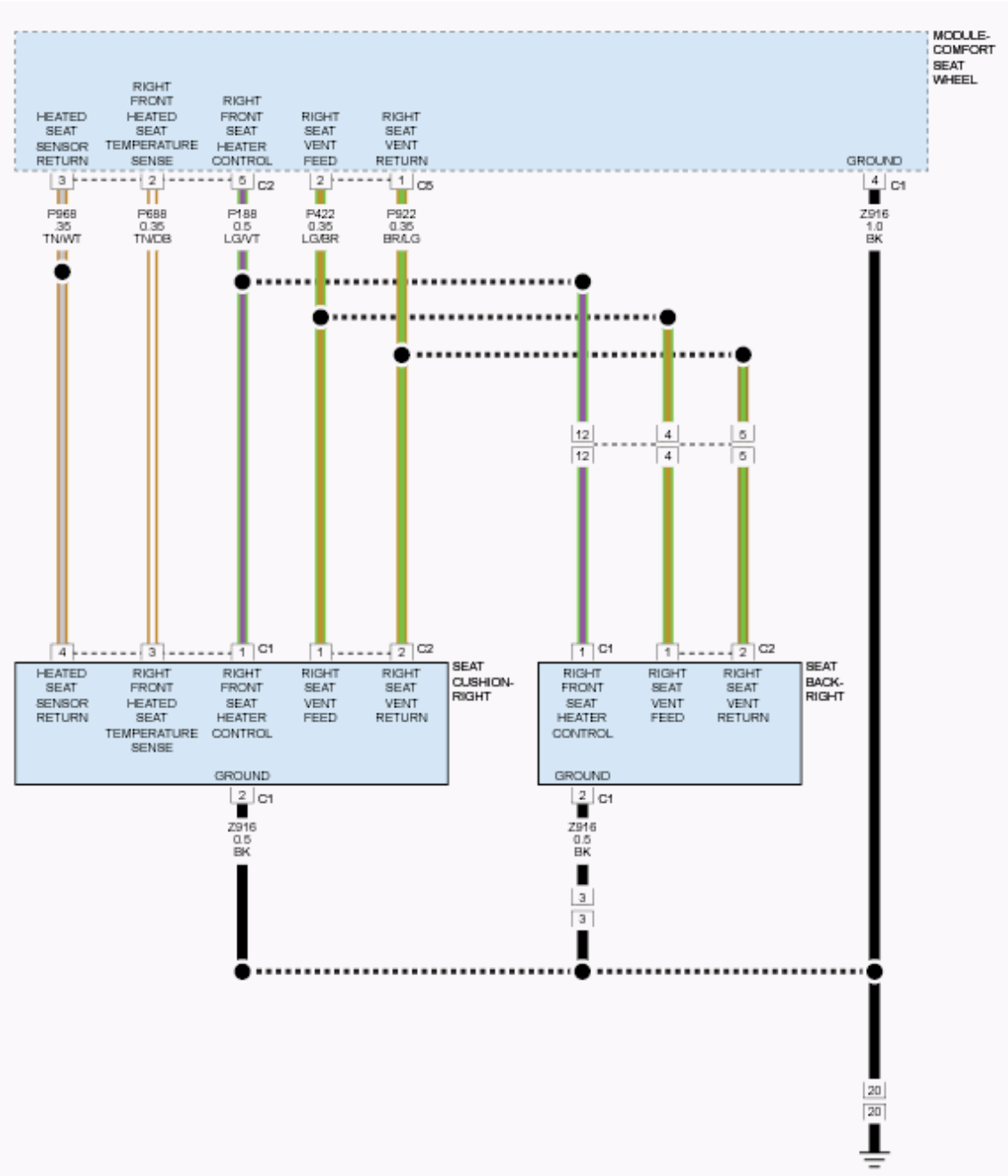

Fig. 17: Right Front Seat Cushion & Seat Back Circuit Diagram
Courtesy of CHRYSLER GROUP, LLC

WHEN MONITORED

With the engine running.

SET CONDITION

The Comfort Seat Wheel Module (CSWM) detects voltage above 5.0 volts on the Right Seat Vent Feed circuit

for more than two seconds with the output turned off.

POSSIBLE CAUSES

Possible Causes
RIGHT SEAT VENT FEED CIRCUIT SHORTED TO VOLTAGE COMFORT SEAT WHEEL MODULE (CSWM)

DIAGNOSTIC TEST

1. **CHECK IF THE DTC IS ACTIVE**

   NOTE: Make sure the battery is fully charged and the charging system is operating properly before proceeding.

   1. Turn the ignition on.
   2. Using a scan tool, record and erase Diagnostic Trouble Codes (DTCs).
   3. Turn the ignition off.
   4. Start the engine and let it run.

      NOTE: The Seat Vent should be in the off position and remain off or the results of the test will be invalid.

   5. Ignition on, engine running.
   6. With the scan tool, read Comfort Seat Wheel Module (CSWM) DTCs.

      Does the scan tool show this DTC as active?

      Yes

      - Go To 2

      No

      - Go To 4

2. **CHECK THE (P422) RIGHT SEAT VENT FEED CIRCUIT FOR A SHORT TO VOLTAGE**
   1. Turn the ignition off.
   2. Disconnect the CSWM C5 harness connector.
   3. Start the engine and let it run.
   4. Measure the voltage between ground and the (P422) Right Seat Vent Feed circuit at the CSWM C5 harness connector.

      Is the voltage 5.0 volts or above?

Yes

- Repair the (P422) Right Seat Vent Feed circuit for a short to voltage.
- Perform the BODY VERIFICATION TEST. Refer to **STANDARD PROCEDURE** .

No

- Go To 3

3. **CHECK THE (P422) RIGHT SEAT VENT FEED CIRCUIT FOR A SHORT TO VOLTAGE DURING SEAT ADJUSTMENT**
   1. Measure the voltage between ground and the (P422) Right Seat Vent Feed circuit at the CSWM C5 harness connector while adjusting the seat in all positions.

      Is the voltage 5.0 volts or above any time during the seat adjustment?

      Yes

      - Repair the (P422) Right Seat Vent Feed circuit for a short to voltage.
      - Perform the BODY VERIFICATION TEST. Refer to **STANDARD PROCEDURE** .

      No

      - Replace the Comfort Seat Wheel Module (CSWM) in accordance with the Service Information. Refer to **MODULE, COMFORT SEAT AND WHEEL, REMOVAL** .
      - Perform the BODY VERIFICATION TEST. Refer to **STANDARD PROCEDURE** .

4. **CHECK THE WIRING AND CONNECTORS**
   1. The conditions necessary to set the DTC are not present at this time.
   2. Using the schematics as a guide, inspect the wiring and connectors specific to this circuit. Wiggle the wiring and connectors while checking for shorted and open circuits. Attempt to reproduce the condition by adjusting the seat(s).
   3. Check all related splices and connectors for signs of water intrusion, corrosion, pushed out or bent terminals, and correct pin tension. Verify the seat wiring harness is routed correctly to the Comfort Seat Wheel Module (CSWM).
   4. Attempt to reproduce the condition(s) by operating all CSWM functions, except for the Right Front Vented Seat, one at a time.
   5. With the scan tool, check for any Environmental Data to help identify the conditions in which the DTC was set.
   6. Check Service Bulletins for any possible causes that may apply.

      Were there any problems found?

      Yes

      - Repair as necessary.

- Perform the BODY VERIFICATION TEST. Refer to **STANDARD PROCEDURE** .

No

- Test complete.

B1E9E-13-FRONT RIGHT VENT CONTROL CIRCUIT - CIRCUIT OPEN

For a complete wiring diagram, **refer to appropriate SYSTEM WIRING DIAGRAMS article** .

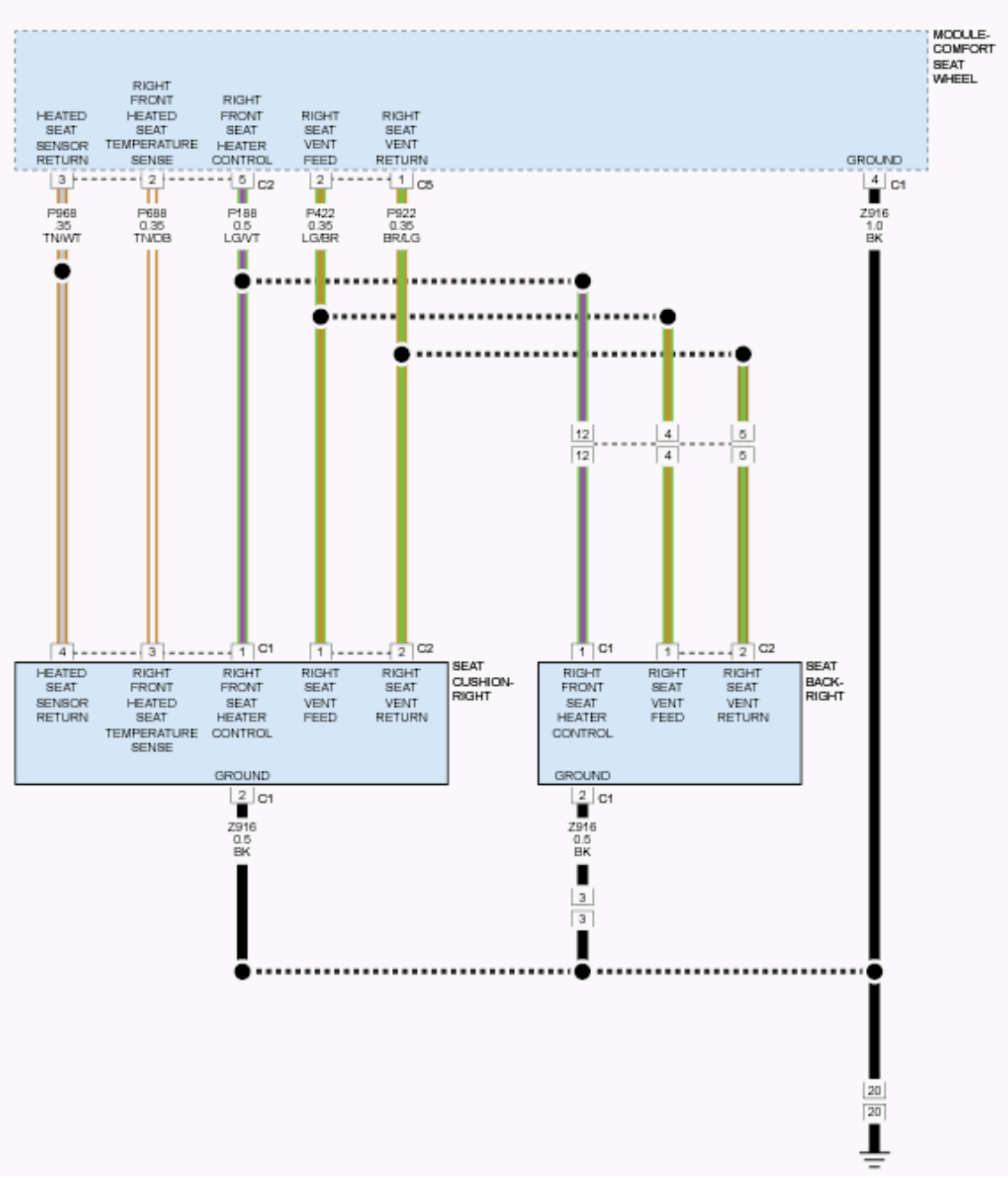

Fig. 18: Right Front Seat Cushion & Seat Back Circuit Diagram
Courtesy of CHRYSLER GROUP, LLC

WHEN MONITORED

With the engine running.

SET CONDITION

The Comfort Seat Wheel Module (CSWM) detects on the Right Seat Vent Feed circuit a current below 200 mA for more than 12 seconds with the output turned on

POSSIBLE CAUSES

Possible Causes
RIGHT SEAT VENT FEED CIRCUIT OPEN
RIGHT SEAT VENT RETURN CIRCUIT OPEN
SEAT CUSHION VENT MOTOR OPEN
SEAT BACK VENT MOTOR OPEN
COMFORT SEAT WHEEL MODULE (CSWM)

DIAGNOSTIC TEST

1. **CHECK IF THE DTC IS ACTIVE**

NOTE: Make sure the battery is fully charged and the charging system is operating properly before proceeding.

1. Turn the ignition on.
2. Using a scan tool, record and erase Diagnostic Trouble Codes (DTCs).

NOTE: It is recommended to record any Environmental Data to help identify the conditions in which the DTC was set.

3. Turn the ignition off.
4. Ignition on, engine running.
5. Turn the Vented Seat on and wait at least 12 seconds before proceeding.
6. With the scan tool, read Comfort Seat Wheel Module (CSWM) DTCs.

Does the scan tool show this DTC as active?

Yes

- Go To 2

No

- Go To 6

2. **CHECK THE (P422) RIGHT SEAT VENT FEED CIRCUIT FOR AN OPEN**
   1. Turn the ignition off.
   2. Disconnect the CSWM C5 harness connector.
   3. Disconnect the Right Seat Cushion Vent Motor.
   4. Disconnect the Right Seat Back Vent Motor.
   5. Connect a fused jumper wire between B(+) and the (P422) Right Seat Vent Feed circuit in the CSWM C5 harness connector.
   6. Using a 12 volt test light connected to ground, check the (P422) Right Seat Vent Feed circuit at the Right Seat Cushion Vent Motor and the Right Seat Back Vent Motor harness connectors.

   NOTE: The test light must illuminate brightly. Compare the brightness to that of a direct connection to the battery.

   Does the test light illuminate brightly at both harness connectors?

   Yes

   - Go To 3

   No

   - Repair the (P422) Right Seat Vent Feed circuit for an open.
   - Perform the BODY VERIFICATION TEST. Refer to **STANDARD PROCEDURE** .

3. **CHECK THE (P922) RIGHT SEAT RETURN CIRCUIT FOR AN OPEN**
   1. Disconnect the fused jumper wire between B(+) and the (P422) Right Seat Vent Feed circuit in the CSWM C5 harness connector.
   2. Connect the fused jumper wire between B(+) and the (P922) Right Seat Vent Return circuit in the CSWM C5 harness connector.
   3. Using a 12 volt test light connected to ground, check the (P922) Right Seat Vent Return circuit at the Right Seat Cushion Vent Motor and the Right Seat Back Vent Motor harness connectors.

   Does the test light illuminate brightly at both harness connectors?

   Yes

   - Go To 4

   No

   - Repair the (P922) Right Seat Vent Return circuit for an open.

- Perform the BODY VERIFICATION TEST. Refer to **STANDARD PROCEDURE** .

4. **CHECK THE RIGHT SEAT CUSHION VENT MOTOR**
   1. Disconnect the fused jumper wire between B(+) and the (P922) Right Seat Vent Return circuit in the CSWM C5 harness connector.
   2. Connect a fused jumper wire between B(+) and the (P422) Right Seat Vent Feed circuit in the Right Cushion Vent Motor connector.
   3. Measure the amperage by connecting an ammeter between ground and the (P922) Right Seat Vent Return circuit in the Right Cushion Vent Motor connector.

   NOTE: Individual vent motors normally operate between 400 and 500 mA.

   Is the amperage between 300 and 700 mA?

   Yes

   - Go To 5

   No

   - Replace the Seat Cushion Vent Motor in accordance with the Service Information. Refer to **MOTOR, VENTED SEAT, REMOVAL** .
   - Perform the BODY VERIFICATION TEST. Refer to **STANDARD PROCEDURE** .

5. **CHECK THE RIGHT SEAT BACK VENT MOTOR**
   1. Disconnect the fused jumper wire between B(+) and the (P422) Right Seat Vent Feed circuit in the Right Cushion Vent Motor connector.
   2. Connect a fused jumper wire between B(+) and the (P422) Right Seat Vent Feed circuit in the Right Back Vent Motor connector.
   3. Measure the amperage by connecting an ammeter between ground and the (P922) Right Seat Vent Return circuit in the Right Back Vent Motor connector.

   Is the amperage between 300 and 700 mA?

   Yes

   - Replace the Comfort Seat Wheel Module (CSWM) in accordance with the Service Information. Refer to **MODULE, COMFORT SEAT AND WHEEL, REMOVAL** .
   - Perform the BODY VERIFICATION TEST. Refer to **STANDARD PROCEDURE** .

   No

   - Replace the Seat Back Vent Motor in accordance with the Service Information. Refer to **MOTOR, VENTED SEAT, REMOVAL** .
   - Perform the BODY VERIFICATION TEST. Refer to **STANDARD PROCEDURE** .

6. **CHECK THE WIRING AND CONNECTORS**
    1. The conditions necessary to set the DTC are not present at this time.
    2. Using the schematics as a guide, inspect the wiring and connectors specific to this circuit. Wiggle the wiring and connectors while checking for shorted and open circuits. Attempt to reproduce the condition by adjusting the seat(s).
    3. Check all related splices and connectors for signs of water intrusion, corrosion, pushed out or bent terminals, and correct pin tension. Verify the seat wiring harness is routed correctly to the Comfort Seat Wheel Module (CSWM).
    4. With the scan tool, check for any Environmental Data to help identify the conditions in which the DTC was set.
    5. Check Service Bulletins for any possible causes that may apply.

    Were there any problems found?

    Yes

    - Repair as necessary.
    - Perform the BODY VERIFICATION TEST. Refer to **STANDARD PROCEDURE** .

    No

    - Test complete.

B1EB1-1A-FRONT LEFT SEAT HEATER SENSOR - CIRCUIT RESISTANCE BELOW THRESHOLD

For a complete wiring diagram, **refer to appropriate SYSTEM WIRING DIAGRAMS article** .

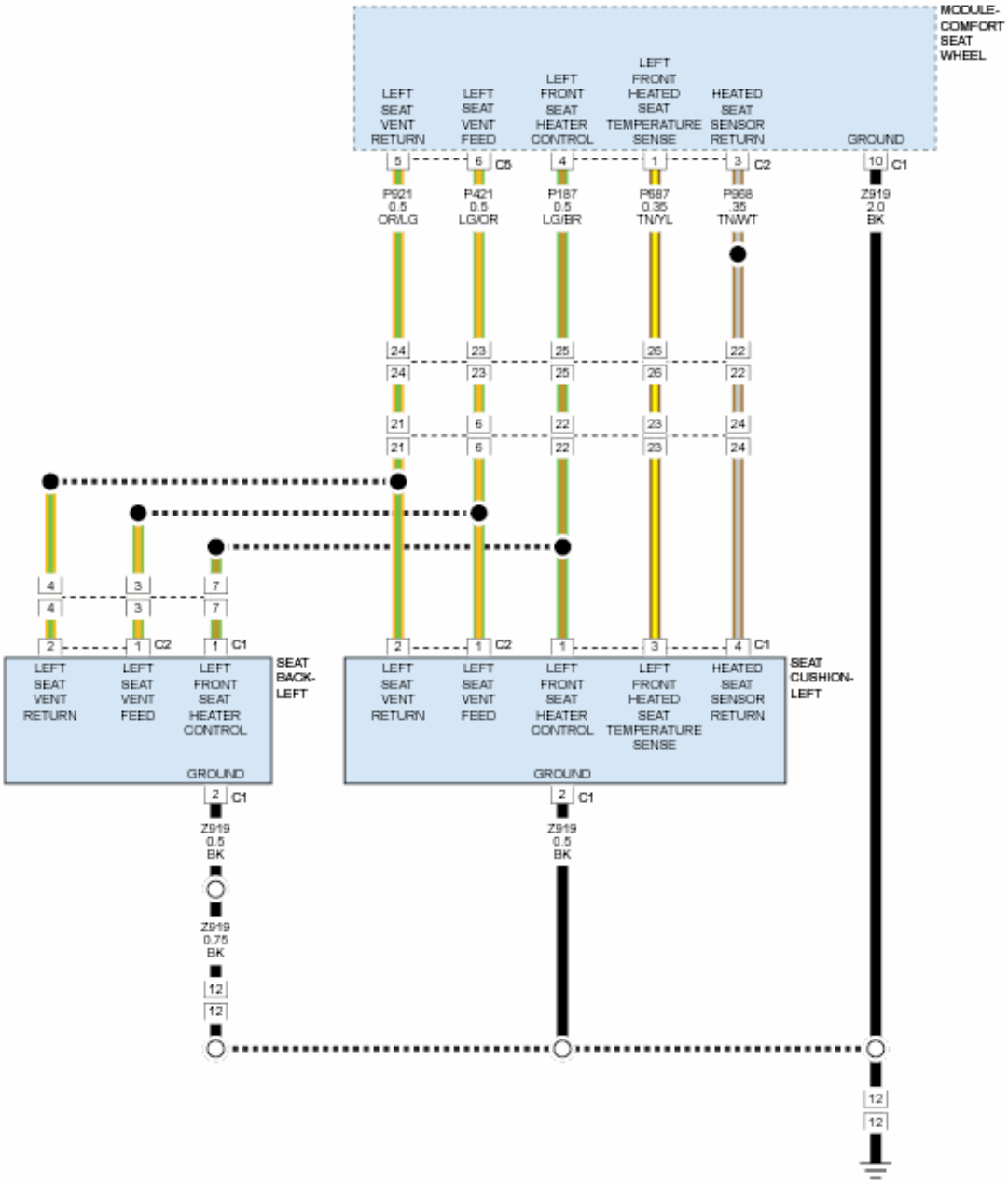

Fig. 19: Left Front Seat Cushion & Seat Back Circuit Diagram
Courtesy of CHRYSLER GROUP, LLC

WHEN MONITORED

When Comfort Seat Wheel Module (CSWM) is powered.

SET CONDITION

The Comfort Seat Wheel Module (CSWM) detects the signal from the Negative Temperature Coefficient (NTC) thermistor is below its threshold for more than two seconds.

POSSIBLE CAUSES

Possible Causes
LEFT FRONT HEATED SEAT TEMP SENSE CIRCUIT SHORTED TO GROUND HEATED SEAT TEMPERATURE SENSOR COMFORT SEAT WHEEL MODULE (CSWM)

Temperature Sensor Resistance				
°C	°F	Nominal (Ohms)	Minimum (Ohms)	Maximum (Ohms)
-40	-40	336500	306959	366042
-35	-31	242589	222163	263015
-30	-22	177000	162706	191294
-25	-13	130370	120273	140467
-20	-4	97070	89860	104280
-15	5	72929	67735	78124
-10	14	55330	51551	59108
-5	23	42315	39545	45085
0	32	32650	30601	34699
5	41	25388	23861	26914
10	50	19900	18754	21046
15	59	15708	14842	16574
20	68	12490	11831	13149
25	77	10000	9500	10500
30	86	8057	7632	8482
35	95	6531	6173	6889
40	104	5327	5024	5630
45	113	4369	4111	4626
50	122	3603	3384	3822
55	131	2986	2799	3174
60	140	2488	2327	2649
65	149	2083	1945	2221
70	158	1752	1633	1871
75	167	1481	1378	1585
80	176	1258	1168	1348
85	185	1072	994.2	1151
90	194	917.7	849.4	986.0
95	203	788.5	728.6	848.4
100	212	680.0	627.4	732.6

DIAGNOSTIC TEST

1. **CHECK IF THE DTC IS ACTIVE**

   NOTE: Make sure the battery is fully charged and the charging system is operating properly before proceeding.

   1. Turn the ignition on.
   2. Using a scan tool, record and erase Diagnostic Trouble Codes (DTCs).

      NOTE: It is recommended to record any Environmental Data to help identify the conditions in which the DTC was set.

   3. Turn the ignition off.
   4. Ignition on, engine running.
   5. With the scan tool, read Comfort Seat Wheel Module (CSWM) DTCs.

      Does the scan tool show this DTC as active?

      Yes

      - Go To 2

      No

      - Go To 5

2. **CHECK THE LEFT FRONT SEAT TEMPERATURE SENSOR**
   1. Turn the ignition off.
   2. Disconnect the CSWM C2 harness connector.
   3. Measure the resistance between the (P687) Left Front Heated Seat Temp Sense circuit and the (P968) Heated Seat Sensor Return circuit in the CSWM C2 harness connector.
   4. Compare the measured resistance to the Temperature Sensor Resistance chart.

      Is the resistance within the specifications listed in the chart?

      Yes

      - Go To 3

      No

      - Go To 4

3. **CHECK (P687) LEFT FRONT HEATED SEAT TEMP SENSE CIRCUIT FOR A SHORT TO GROUND**
   1. Measure the resistance between ground and the (P687) Left Front Heated Seat Temp Sense circuit

in the CSWM C2 harness connector.

Is the resistance below 10K Ohms?

Yes

- Repair the (P687) Left Front Heated Seat Temp Sense circuit for a short to ground.
- Perform the BODY VERIFICATION TEST. Refer to **STANDARD PROCEDURE** .

No

- Replace the Comfort Seat Wheel Module (CSWM) in accordance with the Service Information. Refer to **MODULE, COMFORT SEAT AND WHEEL, REMOVAL** .
- Perform the BODY VERIFICATION TEST. Refer to **STANDARD PROCEDURE** .

4. **CHECK THE LEFT FRONT SEAT WIRING HARNESS**
   1. Disconnect the Left Seat Cushion Heater harness connector.
   2. Measure the resistance between the (P687) Left Front Heated Seat Temp Sense circuit and the (P968) Heated Seat Sensor Return circuit in the Left Seat Cushion Heater connector.
   3. Compare the measured resistance to the Temperature Sensor Resistance chart.

   Is the resistance within the specifications listed in the chart?

   Yes

   - Repair or replace the Left Front Seat wiring harness for a short.
   - Perform the BODY VERIFICATION TEST. Refer to **STANDARD PROCEDURE** .

   No

   - Replace the Left Front Seat Temperature Sensor (Left Front Seat Cushion Heater Element) in accordance with the Service Information. Refer to **PAD, HEATER, REMOVAL** .
   - Perform the BODY VERIFICATION TEST. Refer to **STANDARD PROCEDURE** .
5. **CHECK THE WIRING AND CONNECTORS**
   1. The conditions necessary to set the DTC are not present at this time.
   2. Using the schematics as a guide, inspect the wiring and connectors specific to this circuit. Wiggle the wiring and connectors while checking for shorted and open circuits. Attempt to reproduce the condition by adjusting the seat(s).
   3. Check all related splices and connectors for signs of water intrusion, corrosion, pushed out or bent terminals, and correct pin tension. Verify the seat wiring harness is routed correctly to the Comfort Seat Wheel Module (CSWM).
   4. With the scan tool, check for any Environmental Data to help identify the conditions in which the DTC was set.
   5. Check Service Bulletins for any possible causes that may apply.

Were there any problems found?

Yes

- Repair as necessary.
- Perform the BODY VERIFICATION TEST. Refer to **STANDARD PROCEDURE** .

No

- Test complete.

B1EB1-1B-FRONT LEFT SEAT HEATER SENSOR - CIRCUIT RESISTANCE ABOVE THRESHOLD

For a complete wiring diagram, **refer to appropriate SYSTEM WIRING DIAGRAMS article** .

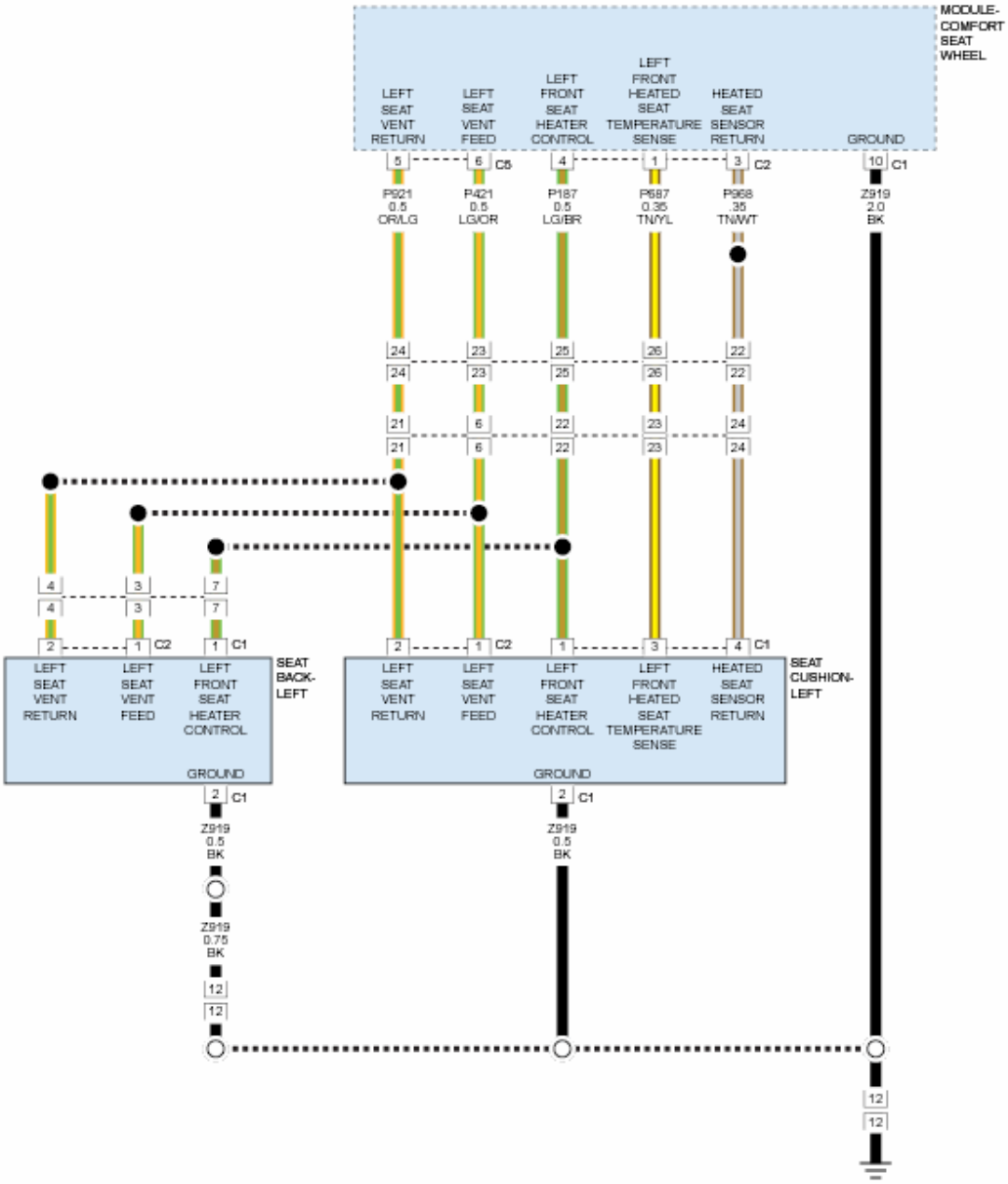

Fig. 20: Left Front Seat Cushion & Seat Back Circuit Diagram
Courtesy of CHRYSLER GROUP, LLC

WHEN MONITORED

When Comfort Seat Wheel Module (CSWM) is powered.

SET CONDITION

The Comfort Seat Wheel Module (CSWM) detects the signal from the Negative Temperature Coefficient (NTC) thermistor is above its threshold for more than two seconds.

POSSIBLE CAUSES

Possible Causes
LEFT FRONT HEATED SEAT TEMP SENSE CIRCUIT SHORTED TO VOLTAGE
LEFT FRONT HEATED SEAT TEMP SENSE CIRCUIT OPEN
HEATED SEAT SENSOR RETURN CIRCUIT OPEN
HEATED SEAT TEMPERATURE SENSOR
COMFORT SEAT WHEEL MODULE (CSWM)

Temperature Sensor Resistance				
°C	°F	Nominal (Ohms)	Minimum (Ohms)	Maximum (Ohms)
-40	-40	336500	306959	366042
-35	-31	242589	222163	263015
-30	-22	177000	162706	191294
-25	-13	130370	120273	140467
-20	-4	97070	89860	104280
-15	5	72929	67735	78124
-10	14	55330	51551	59108
-5	23	42315	39545	45085
0	32	32650	30601	34699
5	41	25388	23861	26914
10	50	19900	18754	21046
15	59	15708	14842	16574
20	68	12490	11831	13149
25	77	10000	9500	10500
30	86	8057	7632	8482
35	95	6531	6173	6889
40	104	5327	5024	5630
45	113	4369	4111	4626
50	122	3603	3384	3822
55	131	2986	2799	3174
60	140	2488	2327	2649
65	149	2083	1945	2221
70	158	1752	1633	1871
75	167	1481	1378	1585
80	176	1258	1168	1348
85	185	1072	994.2	1151
90	194	917.7	849.4	986.0
95	203	788.5	728.6	848.4
100	212	680.0	627.4	732.6

DIAGNOSTIC TEST

1. **CHECK IF THE DTC IS ACTIVE**

   NOTE: Make sure the battery is fully charged and the charging system is operating properly before proceeding.

   1. Turn the ignition on.
   2. Using a scan tool, record and erase Diagnostic Trouble Codes (DTCs).

      NOTE: It is recommended to record any Environmental Data to help identify the conditions in which the DTC was set.

   3. Turn the ignition off.
   4. Ignition on, engine running.
   5. With the scan tool, read Comfort Seat Wheel Module (CSWM) DTCs.

      Does the scan tool show this DTC as active?

      Yes

      - Go To 2

      No

      - Go To 6

2. **CHECK THE (P687) LEFT FRONT HEATED SEAT TEMP SENSE CIRCUIT FOR A SHORT TO VOLTAGE**
   1. Turn the ignition off.
   2. Disconnect the CSWM C2 harness connector.
   3. Disconnect the CSWM C3 harness connector (if equipped with rear heated seats).
   4. Ignition on, engine running.
   5. Measure the voltage between ground and the (P687) Left Front Heated Seat Temp Sense circuit at the CSWM C2 harness connector.

      Is there any voltage present?

      Yes

      - Repair the (P687) Left Front Heated Seat Temp Sense circuit or the (P968) Heated Seat Sensor Return circuit for a short to voltage.
      - Perform the BODY VERIFICATION TEST. Refer to **STANDARD PROCEDURE** .

No

- Go To 3

3. **CHECK THE SEAT TEMPERATURE SENSOR RESISTANCE**
   1. Turn the ignition off.
   2. Measure the resistance between the (P687) Left Front Heated Seat Temp Sense circuit harness connector and the (P968) Heated Seat Sensor Return circuit in the CSWM C2 harness connector.
   3. Compare the measured resistance to the Temperature Sensor Resistance chart.

   Is the resistance within the specifications listed in the chart?

   Yes

   - Replace the Comfort Seat Wheel Module (CSWM) in accordance with the Service Information. Refer to **MODULE, COMFORT SEAT AND WHEEL, REMOVAL** .
   - Perform the BODY VERIFICATION TEST. Refer to **STANDARD PROCEDURE** .

   No

   - Go To 4

4. **CHECK THE (P687) LEFT FRONT HEATED SEAT TEMP SENSE CIRCUIT OR AN OPEN**
   1. Disconnect the Left Seat Cushion Heater harness connector.
   2. Measure the resistance of the (P687) Left Front Heated Seat Temp Sense circuit between the CSWM C2 connector and the Left Seat Cushion Heater harness connector.

   Is the resistance below 5.0 Ohms?

   Yes

   - Go To 5

   No

   - Repair the (P687) Left Front Heated Seat Temp Sense circuit for an open.
   - Perform the BODY VERIFICATION TEST. Refer to **STANDARD PROCEDURE** .

5. **CHECK THE (P968) HEATED SEAT SENSOR RETURN CIRCUIT FOR AN OPEN**
   1. Measure the resistance of the (P968) Heated Seat Sensor Return circuit between the CSWM C2 harness connector and the Left Seat Cushion Heater harness connector.

   Is the resistance below 5.0 Ohms?

   Yes

   - Replace the Left Front Seat Temperature Sensor (Left Front Seat Cushion Heater Element) in

accordance with the Service Information. Refer to **PAD, HEATER, REMOVAL** .
- Perform the BODY VERIFICATION TEST. Refer to **STANDARD PROCEDURE** .

No

- Repair the (P968) Heated Seat Sensor Return circuit for an open.
- Perform the BODY VERIFICATION TEST. Refer to **STANDARD PROCEDURE** .

6. **CHECK THE WIRING AND CONNECTORS**
   1. The conditions necessary to set the DTC are not present at this time.
   2. Using the schematics as a guide, inspect the wiring and connectors specific to this circuit. Wiggle the wiring and connectors while checking for shorted and open circuits. Attempt to reproduce the condition by adjusting the seat(s).
   3. Check all related splices and connectors for signs of water intrusion, corrosion, pushed out or bent terminals, and correct pin tension. Verify the seat wiring harness is routed correctly to the Comfort Seat Wheel Module (CSWM).
   4. With the scan tool, check for any Environmental Data to help identify the conditions in which the DTC was set.
   5. Check Service Bulletins for any possible causes that may apply.

   Were there any problems found?

   Yes

   - Repair as necessary.
   - Perform the BODY VERIFICATION TEST. Refer to **STANDARD PROCEDURE** .

   No

   - Test complete.

B1EB2-1A-FRONT RIGHT SEAT HEATER SENSOR - CIRCUIT RESISTANCE BELOW THRESHOLD

For a complete wiring diagram, **refer to appropriate SYSTEM WIRING DIAGRAMS article** .

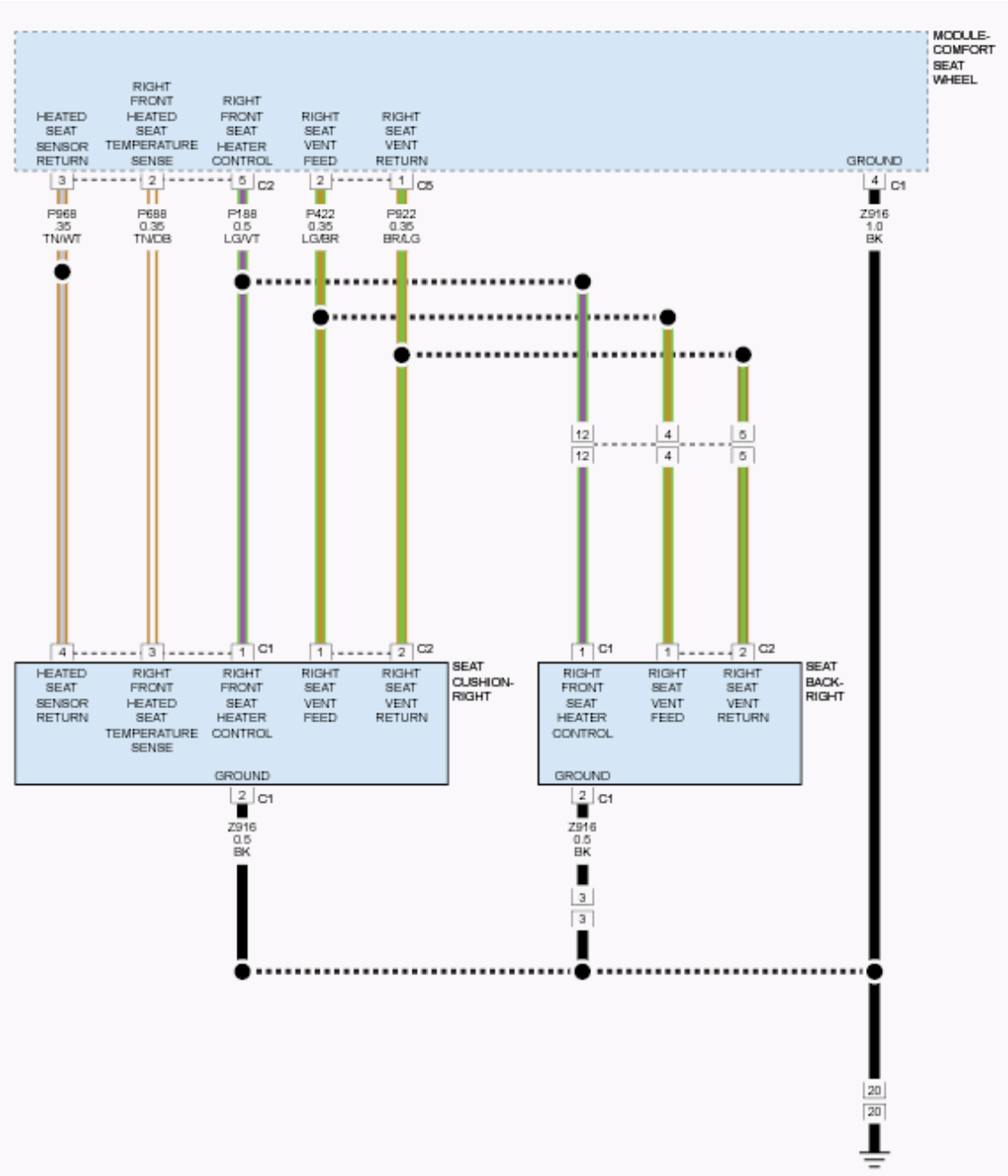

Fig. 21: Right Front Seat Cushion & Seat Back Circuit Diagram
Courtesy of CHRYSLER GROUP, LLC

WHEN MONITORED

When Comfort Seat Wheel Module (CSWM) is powered.

SET CONDITION

The Comfort Seat Wheel Module (CSWM) detects the signal from the Negative Temperature Coefficient

(NTC) thermistor is below its threshold for more than two seconds.

POSSIBLE CAUSES

Possible Causes
RIGHT FRONT HEATED SEAT TEMP SENSE CIRCUIT SHORTED TO GROUND RIGHT HEATED SEAT TEMPERATURE SENSOR COMFORT SEAT WHEEL MODULE (CSWM)

Temperature Sensor Resistance				
°C	°F	Nominal (Ohms)	Minimum (Ohms)	Maximum (Ohms)
-40	-40	336500	306959	366042
-35	-31	242589	222163	263015
-30	-22	177000	162706	191294
-25	-13	130370	120273	140467
-20	-4	97070	89860	104280
-15	5	72929	67735	78124
-10	14	55330	51551	59108
-5	23	42315	39545	45085
0	32	32650	30601	34699
5	41	25388	23861	26914
10	50	19900	18754	21046
15	59	15708	14842	16574
20	68	12490	11831	13149
25	77	10000	9500	10500
30	86	8057	7632	8482
35	95	6531	6173	6889
40	104	5327	5024	5630
45	113	4369	4111	4626
50	122	3603	3384	3822
55	131	2986	2799	3174
60	140	2488	2327	2649
65	149	2083	1945	2221
70	158	1752	1633	1871
75	167	1481	1378	1585
80	176	1258	1168	1348
85	185	1072	994.2	1151
90	194	917.7	849.4	986.0
95	203	788.5	728.6	848.4
100	212	680.0	627.4	732.6

DIAGNOSTIC TEST

1. **CHECK IF THE DTC IS ACTIVE**

   NOTE: Make sure the battery is fully charged and the charging system is operating properly before proceeding.

   1. Turn the ignition on.
   2. Using a scan tool, record and erase Diagnostic Trouble Codes (DTCs).

      NOTE: It is recommended to record any Environmental Data to help identify the conditions in which the DTC was set.

   3. Turn the ignition off.
   4. Ignition on, engine running.
   5. With the scan tool, read Comfort Seat Wheel Module (CSWM) DTCs.

      Does the scan tool show this DTC as active?

      Yes

      - Go To 2

      No

      - Go To 5

2. **CHECK THE RIGHT FRONT SEAT TEMPERATURE SENSOR**
   1. Turn the ignition off.
   2. Disconnect the CSWM C2 harness connector.
   3. Measure the resistance between the (P688) Right Front Heated Seat Temp Sense circuit and the (P968) Heated Seat Sensor Return circuit in the CSWM C2 harness connector.
   4. Compare the measured resistance to the Temperature Sensor Resistance chart.

      Is the resistance within the specifications listed in the chart?

      Yes

      - Go To 3

      No

      - Go To 4

3. **CHECK (P688) RIGHT FRONT HEATED SEAT TEMP SENSE CIRCUIT FOR A SHORT TO**

GROUND

1. Measure the resistance between ground and the (P688) Right Front Heated Seat Temp Sense circuit in the CSWM C2 harness connector.

   Is the resistance below 10K Ohms?

   Yes

   - Repair the (P688) Right Front Heated Seat Temp Sense circuit for a short to ground.
   - Perform the BODY VERIFICATION TEST. Refer to **STANDARD PROCEDURE** .

   No

   - Replace the Comfort Seat Wheel Module (CSWM) in accordance with the Service Information. Refer to **MODULE, COMFORT SEAT AND WHEEL, REMOVAL** .
   - Perform the BODY VERIFICATION TEST. Refer to **STANDARD PROCEDURE** .

4. **CHECK THE RIGHT FRONT SEAT WIRING HARNESS**
   1. Disconnect the Right Seat Cushion Heater harness connector.
   2. Measure the resistance between the (P688) Right Front Heated Seat Temp Sense circuit and the (P968) Heated Seat Sensor Return circuit in the Right Seat Cushion Heater connector.
   3. Compare the measured resistance to the Temperature Sensor Resistance chart.

      Is the resistance within the specifications listed in the chart?

      Yes

      - Repair or replace the Right Front Seat wiring harness for a short.
      - Perform the BODY VERIFICATION TEST. Refer to **STANDARD PROCEDURE** .

      No

      - Replace the Right Front Seat Temperature Sensor (Right Front Seat Cushion Heater Element) in accordance with the Service Information. Refer to **PAD, HEATER, REMOVAL** .
      - Perform the BODY VERIFICATION TEST. Refer to **STANDARD PROCEDURE** .

5. **CHECK THE WIRING AND CONNECTORS**
   1. The conditions necessary to set the DTC are not present at this time.
   2. Using the schematics as a guide, inspect the wiring and connectors specific to this circuit. Wiggle the wiring and connectors while checking for shorted and open circuits. Attempt to reproduce the condition by adjusting the seat(s).
   3. Check all related splices and connectors for signs of water intrusion, corrosion, pushed out or bent terminals, and correct pin tension. Verify the seat wiring harness is routed correctly to the Comfort Seat Wheel Module (CSWM).
   4. With the scan tool, check for any Environmental Data to help identify the conditions in which the

DTC was set.

5. Check Service Bulletins for any possible causes that may apply.

   Were there any problems found?

   Yes

   - Repair as necessary.
   - Perform the BODY VERIFICATION TEST. Refer to **STANDARD PROCEDURE** .

   No

   - Test complete.

B1EB2-1B-FRONT RIGHT SEAT HEATER SENSOR - CIRCUIT RESISTANCE ABOVE THRESHOLD

For a complete wiring diagram, **refer to appropriate SYSTEM WIRING DIAGRAMS article** .

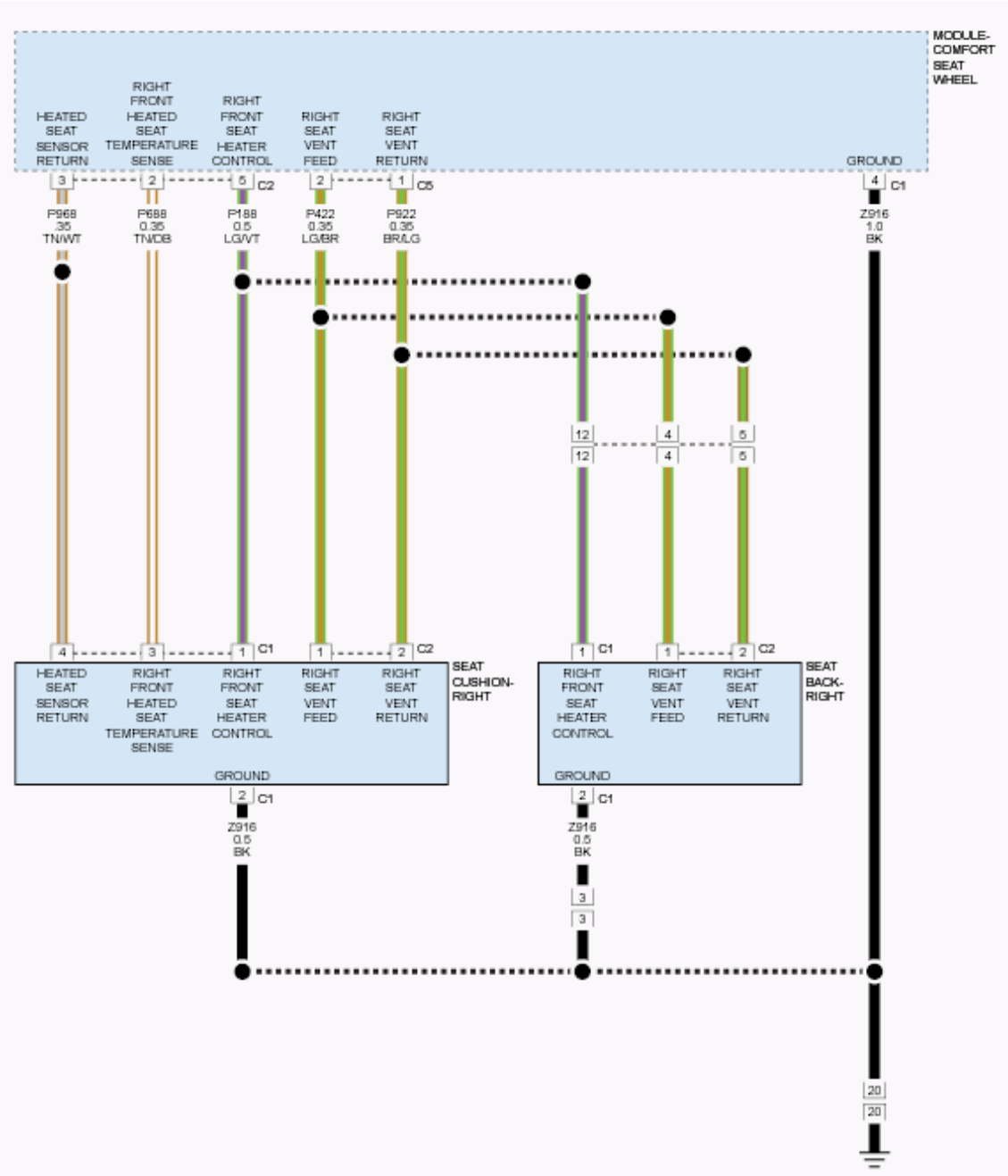

Fig. 22: Right Front Seat Cushion & Seat Back Circuit Diagram
Courtesy of CHRYSLER GROUP, LLC

WHEN MONITORED

When Comfort Seat Wheel Module (CSWM) is powered.

SET CONDITION

The Comfort Seat Wheel Module (CSWM) detects the signal from the Negative Temperature Coefficient

(NTC) thermistor is above its threshold for more than two seconds.

POSSIBLE CAUSES

Possible Causes
RIGHT FRONT HEATED SEAT TEMP SENSE CIRCUIT SHORTED TO VOLTAGE
RIGHT FRONT HEATED SEAT TEMP SENSE CIRCUIT OPEN
HEATED SEAT SENSOR RETURN CIRCUIT OPEN
RIGHT HEATED SEAT TEMPERATURE SENSOR
COMFORT SEAT WHEEL MODULE (CSWM)

Temperature Sensor Resistance				
°C	°F	Nominal (Ohms)	Minimum (Ohms)	Maximum (Ohms)
-40	-40	336500	306959	366042
-35	-31	242589	222163	263015
-30	-22	177000	162706	191294
-25	-13	130370	120273	140467
-20	-4	97070	89860	104280
-15	5	72929	67735	78124
-10	14	55330	51551	59108
-5	23	42315	39545	45085
0	32	32650	30601	34699
5	41	25388	23861	26914
10	50	19900	18754	21046
15	59	15708	14842	16574
20	68	12490	11831	13149
25	77	10000	9500	10500
30	86	8057	7632	8482
35	95	6531	6173	6889
40	104	5327	5024	5630
45	113	4369	4111	4626
50	122	3603	3384	3822
55	131	2986	2799	3174
60	140	2488	2327	2649
65	149	2083	1945	2221
70	158	1752	1633	1871
75	167	1481	1378	1585
80	176	1258	1168	1348
85	185	1072	994.2	1151
90	194	917.7	849.4	986.0
95	203	788.5	728.6	848.4

100	212	680.0	627.4	732.6

DIAGNOSTIC TEST

1. **CHECK IF THE DTC IS ACTIVE**

   NOTE: Make sure the battery is fully charged and the charging system is operating properly before proceeding.

   1. Turn the ignition on.
   2. Using a scan tool, record and erase Diagnostic Trouble Codes (DTCs).

      NOTE: It is recommended to record any Environmental Data to help identify the conditions in which the DTC was set.

   3. Turn the ignition off.
   4. Ignition on, engine running.
   5. With the scan tool, read Comfort Seat Wheel Module (CSWM) DTCs.

      Does the scan tool show this DTC as active?

      Yes

      - Go To 2

      No

      - Go To 6

2. **CHECK THE (P688) RIGHT FRONT HEATED SEAT TEMP SENSE CIRCUIT FOR A SHORT TO VOLTAGE**
   1. Turn the ignition off.
   2. Disconnect the CSWM C2 harness connector.
   3. Disconnect the CSWM C3 harness connector (if equipped with rear heated seats).
   4. Ignition on, engine running.
   5. Measure the voltage between ground and the (P688) Right Front Heated Seat Temp Sense circuit at the CSWM C2 harness connector.

      Is there any voltage present?

      Yes

      - Repair the (P688) Right Front Heated Seat Temp Sense circuit or the (P968) Heated Seat Sensor Return circuit for a short to voltage.

- Perform the BODY VERIFICATION TEST. Refer to **STANDARD PROCEDURE** .

No

- Go To 3

3. **CHECK THE SEAT TEMPERATURE SENSOR RESISTANCE**
   1. Turn the ignition off.
   2. Measure the resistance between the (P688) Right Front Heated Seat Temp Sense circuit and the (P968) Heated Seat Sensor Return circuit at the CSWM C2 harness connector.
   3. Compare the measured resistance to the Temperature Sensor Resistance chart.

   Is the resistance within the specifications listed in the chart?

   Yes

   - Replace the Comfort Seat Wheel Module (CSWM) in accordance with the Service Information. Refer to **MODULE, COMFORT SEAT AND WHEEL, REMOVAL** .
   - Perform the BODY VERIFICATION TEST. Refer to **STANDARD PROCEDURE** .

   No

   - Go To 4

4. **CHECK THE (P688) RIGHT FRONT HEATED SEAT TEMP SENSE CIRCUIT OR AN OPEN**
   1. Disconnect the Right Seat Cushion Heater harness connector.
   2. Measure the resistance of the (P688) Right Front Heated Seat Temp Sense circuit between the CSWM C2 connector and the Right Seat Cushion Heater connector (harness side).

   Is the resistance below 5.0 Ohms?

   Yes

   - Go To 5

   No

   - Repair the (P688) Right Front Heated Seat Temp Sense circuit for an open.
   - Perform the BODY VERIFICATION TEST. Refer to **STANDARD PROCEDURE** .

5. **CHECK THE (P968) HEATED SEAT SENSOR RETURN CIRCUIT FOR AN OPEN**
   1. Measure the resistance of the (P968) Heated Seat Sensor Return circuit between the CSWM C2 harness connector and the Right Seat Cushion Heater harness connector.

   Is the resistance below 5.0 Ohms?

Yes

- Replace the Seat Temperature Sensor (part of the Seat Cushion Heater Element) in accordance with the Service Information. Refer to **PAD, HEATER, REMOVAL** .
- Perform the BODY VERIFICATION TEST. Refer to **STANDARD PROCEDURE** .

No

- Repair the (P968) Heated Seat Sensor Return circuit for an open.
- Perform the BODY VERIFICATION TEST. Refer to **STANDARD PROCEDURE** .

6. **CHECK THE WIRING AND CONNECTORS**
   1. The conditions necessary to set the DTC are not present at this time.
   2. Using the schematics as a guide, inspect the wiring and connectors specific to this circuit. Wiggle the wiring and connectors while checking for shorted and open circuits. Attempt to reproduce the condition by adjusting the seat(s).
   3. Check all related splices and connectors for signs of water intrusion, corrosion, pushed out or bent terminals, and correct pin tension. Verify the seat wiring harness is routed correctly to the Comfort Seat Wheel Module (CSWM).
   4. With the scan tool, check for any Environmental Data to help identify the conditions in which the DTC was set.
   5. Check Service Bulletins for any possible causes that may apply.

   Were there any problems found?

   Yes

   - Repair as necessary.
   - Perform the BODY VERIFICATION TEST. Refer to **STANDARD PROCEDURE** .

   No

   - Test complete.

B210C-17-BATTERY VOLTAGE INPUT - CIRCUIT VOLTAGE ABOVE THRESHOLD

For a complete wiring diagram, **refer to appropriate SYSTEM WIRING DIAGRAMS article** .

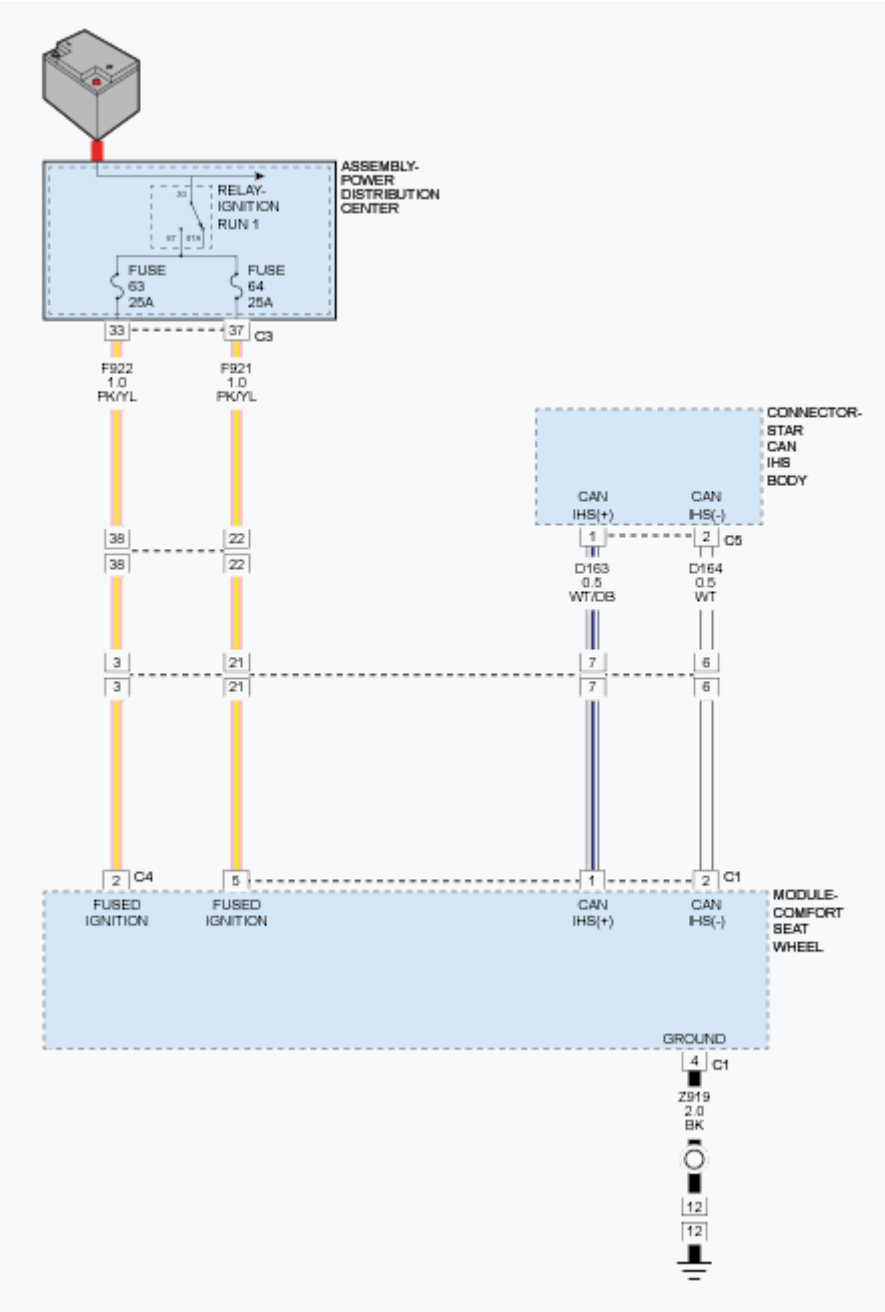

Fig. 23: CSWM CAN IHS, Fused Ignition & Ground Circuit Diagram
Courtesy of CHRYSLER GROUP, LLC

WHEN MONITORED

With the engine running.

SET CONDITION

If the Comfort Seat Wheel Module (CSWM) detects a voltage above 16.0 volts on the Fused Ignition Run

Control Output circuit.

POSSIBLE CAUSES

Possible Causes
CHARGING SYSTEM VOLTAGE HIGH FUSED IGNITION RUN CONTROL OUTPUT CIRCUIT COMFORT SEAT WHEEL MODULE (CSWM)

DIAGNOSTIC TEST

1. **CHECK FOR CHARGING SYSTEM DIAGNOSTIC TROUBLE CODES (DTCS)**
    1. Turn the ignition on.
    2. Using a scan tool, read Powertrain Control Module (PCM) DTCs.

    Are there any Charging System DTCs set in the PCM?

    Yes

    - Refer to the **DTC INDEX** article for Charging System diagnostic procedures.

    No

    - Go To 2
2. **VERIFY IF THE DTC IS ACTIVE**
    1. Using a scan tool, record and erase DTCs.
    2. Turn the ignition off.
    3. Start the engine and let run for one minute.
    4. Using a scan tool, read Comfort Seat Wheel Module (CSWM) DTCs.

    Is this DTC active?

    Yes

    - Go To 3

    No

    - The conditions that caused this DTC to set are not present at this time. Verify if the seat harness is routed correctly to the CSWM. Using the wiring diagram/schematic as a guide, inspect the wiring and connectors and repair as necessary.
    - Perform the BODY VERIFICATION TEST. Refer to **STANDARD PROCEDURE** .
3. **CHECK THE (F921) FUSED IGNITION RUN CIRCUIT VOLTAGE**

1. Turn the ignition off.
2. Disconnect the CSWM C1 harness connector.

NOTE: Check connectors. Clean and repair as necessary.

3. Start the engine and let idle.
4. Measure the voltage between ground and the (F921) Fused Ignition circuit in the CSWM C1 harness connector and compare it to the voltage at the vehicle battery.

   Is the (F921) Fused Ignition circuit voltage the same as the voltage measured at the battery?

   Yes

   - Replace the Comfort Seat Wheel Module (CSWM) in accordance with the Service Information. Refer to **MODULE, COMFORT SEAT AND WHEEL, REMOVAL** .
   - Perform the BODY VERIFICATION TEST. Refer to **STANDARD PROCEDURE** .

   No

   - Repair the (F921) Fused Ignition Run circuit for the cause of the high voltage condition at the CSWM.
   - Perform the BODY VERIFICATION TEST. Refer to **STANDARD PROCEDURE** .

B210C-18-BATTERY VOLTAGE INPUT - UNDER CURRENT

For a complete wiring diagram, **refer to appropriate SYSTEM WIRING DIAGRAMS article** .

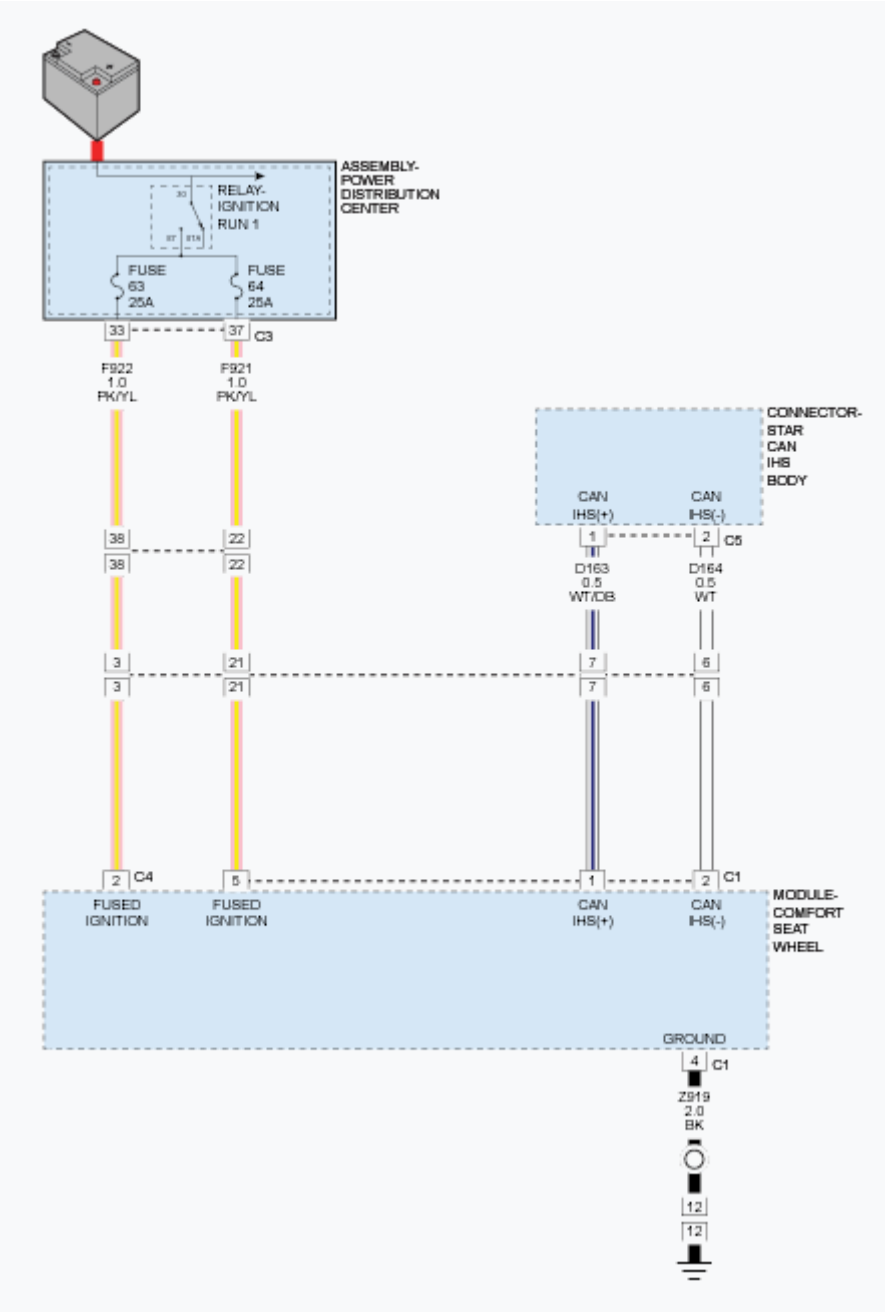

Fig. 24: CSWM CAN IHS, Fused Ignition & Ground Circuit Diagram
Courtesy of CHRYSLER GROUP, LLC

WHEN MONITORED

With engine running.

SET CONDITION

The Comfort Seat Wheel Module (CSWM) detects a voltage below 10.0 volts on the Fused Ignition Run circuit.

POSSIBLE CAUSES

Possible Causes
CHARGING SYSTEM VOLTAGE LOW
FUSED IGNITION RUN CIRCUIT HIGH RESISTANCE
GROUND CIRCUIT HIGH RESISTANCE
COMFORT SEAT WHEEL MODULE (CSWM)

DIAGNOSTIC TEST

1. **CHECK PCM FOR CHARGING SYSTEM DTCS**
    1. Turn the ignition on.
    2. Using a scan tool, read Powertrain Control Module (PCM) DTCs.

    Are there any PCM Charging or Battery DTCs present?

    Yes

    - Refer to the **DTC INDEX** article and perform the appropriate diagnostic procedure(s).

    No

    - Go To 2
2. **CHECK OTHER MODULES FOR DTCS**
    1. With the scan tool, read DTCs.

    Are there any other modules setting a low system voltage DTC?

    Yes

    - This is either an indication of an overall low system voltage or one or more power circuits with a high resistance in its output circuit. Using the wiring schematics as a guide, look for a common power circuit between the modules that set a low voltage DTC and repair as necessary. If it seems to be an overall low system voltage, check the battery and charging system in accordance with the Service Information.
    - Perform the BODY VERIFICATION TEST. Refer to **STANDARD PROCEDURE** .

    No

    - Go To 3
3. **VERIFY IF THE DTC IS ACTIVE**
    1. Using a scan tool, record and erase DTCs.
    2. Turn the ignition off.
    3. Start the engine and let it run for one minute.

4. Using a scan tool, read DTCs.

   Is this DTC active?

   Yes

   - Go To 4

   No

   - Go To 6

4. **CHECK (F921) FUSED IGNITION RUN CIRCUIT FOR HIGH RESISTANCE**
   1. Turn the ignition off.
   2. Disconnect the CSWM C1 harness connector.
   3. Ignition on, engine running.
   4. Using a 12-volt test light connected to ground, check the (F921) Fused Ignition Run circuit in the CSWM C1 harness connector

      NOTE: The test light must illuminate brightly. Compare the brightness to that of a direct connection to the battery.

      Does the test light illuminate brightly?

      Yes

      - Go To 5

      No

      - Repair the (F921) Fused Ignition Run Control Output circuit for an open or high resistance.
      - Perform BODY VERIFICATION TEST. Refer to **STANDARD PROCEDURE** .

5. **CHECK (z919) GROUND CIRCUIT FOR HIGH RESISTANCE**
   1. Using a 12-volt test light connected to 12 volts, check the (z919) Ground circuit in the CSWM C1 harness connector

      Does the test light illuminate brightly?

      Yes

      - Replace the Comfort Seat Wheel Module (CSWM) in accordance with the Service Information. Refer to **MODULE, COMFORT SEAT AND WHEEL, REMOVAL** .
      - Perform BODY VERIFICATION TEST. Refer to **STANDARD PROCEDURE** .

No

- Repair the (F921) Fused Ignition Run Control Output circuit for an open or high resistance.
- Perform BODY VERIFICATION TEST. Refer to **STANDARD PROCEDURE** .

6. **CHECK THE WIRING AND CONNECTORS**
   1. The conditions necessary to set the DTC are not present at this time.
   2. Using the schematics as a guide, inspect the wiring and connectors specific to this circuit. Wiggle the wiring and connectors while checking for shorted and open circuits.
   3. Check all related splices and connectors for signs of water intrusion, corrosion, pushed out or bent terminals, and correct pin tension.
   4. Check for Service Information Tune-ups or Service Bulletins for any possible causes that may apply.

   Were there any problems found?

   Yes

   - Repair as necessary.
   - Perform the BODY VERIFICATION TEST. Refer to **STANDARD PROCEDURE** .

   No

   - Test complete.

B21DD-84-SYSTEM VOLTAGE - SIGNAL BELOW ALLOWABLE RANGE

For a complete wiring diagram, **refer to appropriate SYSTEM WIRING DIAGRAMS article** .

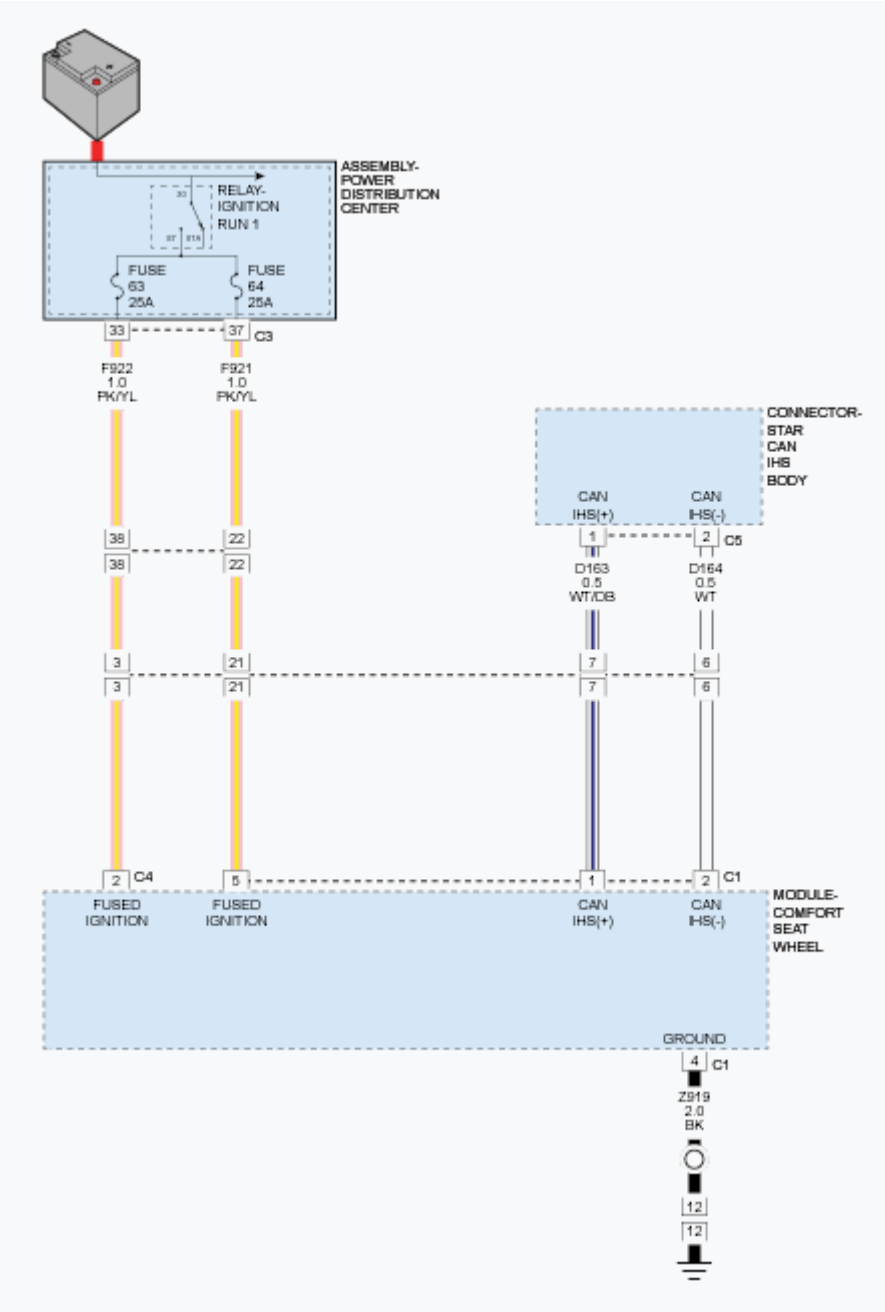

Fig. 25: CSWM CAN IHS, Fused Ignition & Ground Circuit Diagram
Courtesy of CHRYSLER GROUP, LLC

WHEN MONITORED

With the engine running.

SET CONDITION

The Comfort Seat Wheel Module (CSWM) receives a battery voltage below 10.0 volts through the CAN Bus.

POSSIBLE CAUSES

Possible Causes
CHARGING SYSTEM VOLTAGE LOW BODY CONTROL MODULE (BCM) DIAGNOSTIC TROUBLE CODES (DTCS) PRESENT COMFORT SEAT WHEEL MODULE (CSWM)

DIAGNOSTIC TEST

1. **CHECK FOR CHARGING SYSTEM DTCs**
    1. Turn the ignition on.
    2. With the scan tool, read Powertrain Control Module (PCM) DTCs.

    Are there any Charging System DTCs set in the PCM?

    Yes

    - Refer to the **DTC INDEX** article and perform the appropriate diagnostic procedure.

    No

    - Go To 2
2. **CHECK FOR BCM DTCS**
    1. With the scan tool, read Body Control Module (BCM) DTCs.

    Are there any BCM DTCs present?

    Yes

    - Refer to the **BODY CONTROL MODULE (BCM) - DIAGNOSTIC CODE INDEX** article and perform the appropriate diagnostic procedure.

    No

    - Go To 3
3. **CHECK FOR OTHER DTCS IN CSWM**
    1. With the scan tool, read CSWM DTCs.

    Is DTC B210C-18-Battery Voltage Input - Under Current active?

    Yes

    - Refer to **DIAGNOSIS AND TESTING** and perform the appropriate diagnostic procedure.

No

- Go To 4

4. **VERIFY IF THIS DTC IS ACTIVE**

NOTE:

- **Make sure the Battery is in good condition. Using a suitable Battery Tester, test the Battery before continuing.**
- **Make sure system voltage is in the normal operating range of approximately 12 to 14 volts before continuing.**
- **Inspect the vehicle for aftermarket accessories that may exceed the Generator System output.**
- **Make sure the generator drive belt is in good operating condition.**
- **Inspect the fuses. If an open fuse is found, use the wire diagram/schematic as a guide, inspect the wiring and connectors for damage.**

1. With the scan tool, record and erase CSWM DTCs.
2. Turn the ignition off.
3. Start the engine and let it run for one minute.
4. With the scan tool, read DTCs.

Is the DTC active?

Yes

- Replace the Comfort Seat Wheel Module (CSWM) in accordance with the Service Information. Refer to **MODULE, COMFORT SEAT AND WHEEL, REMOVAL** .
- Perform the BODY VERIFICATION TEST. Refer to **STANDARD PROCEDURE** .

No

- Go To 5

5. **CHECK THE WIRING AND CONNECTORS**
   1. The conditions necessary to set the DTC are not present at this time.
   2. Using the schematics as a guide, inspect the wiring and connectors specific to this module. Wiggle the wiring and connectors while checking for shorted and open circuits.
   3. Check all related splices and connectors for signs of water intrusion, corrosion, pushed out or bent terminals, and correct pin tension.
   4. Check Service Bulletins for any possible causes that may apply.

   Were there any problems found?

Yes

- Repair as necessary.
- Perform the BODY VERIFICATION TEST. Refer to **STANDARD PROCEDURE** .

No

- Test complete.

B21DD-85-SYSTEM VOLTAGE - SIGNAL ABOVE ALLOWABLE RANGE

For a complete wiring diagram, **refer to appropriate SYSTEM WIRING DIAGRAMS article** .

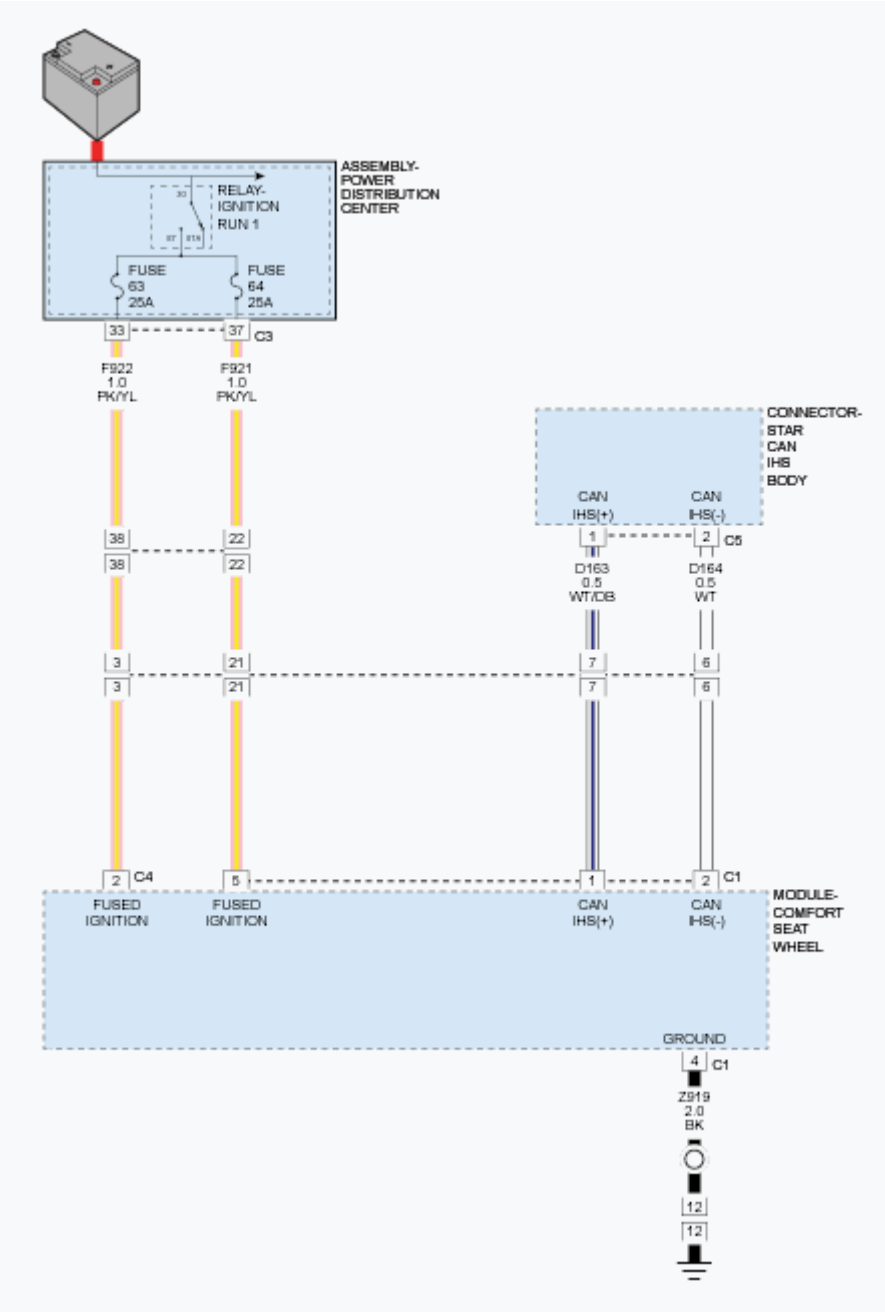

Fig. 26: CSWM CAN IHS, Fused Ignition & Ground Circuit Diagram
Courtesy of CHRYSLER GROUP, LLC

WHEN MONITORED

With the engine running.

SET CONDITION

The Comfort Seat Wheel Module (CSWM) receives a status message through the CAN Bus of a system voltage

above 16.0 volts.

POSSIBLE CAUSES

Possible Causes
CHARGING SYSTEM VOLTAGE HIGH BODY CONTROL MODULE (BCM) DIAGNOSTIC TROUBLE CODES (DTCs) PRESENT COMFORT SEAT WHEEL MODULE (CSWM)

DIAGNOSTIC TEST

1. **CHECK FOR CHARGING SYSTEM DTCs**

   NOTE: If present, diagnose and repair DTC U0140-00 Lost Communication With Body Control Module before proceeding with this diagnostic procedure.

   1. Turn the ignition on.
   2. With the scan tool, read Powertrain Control Module (PCM) DTCs.

      Are there any PCM DTCs present?

      Yes

      - Refer to the **DTC INDEX** article and perform the appropriate diagnostic procedure.

      No

      - Go To 2
2. **CHECK FOR BCM DTCS**
   1. With the scan tool, read Body Control Module (BCM) DTCs.

      Are there any BCM DTCs present?

      Yes

      - Refer to the **BODY CONTROL MODULE (BCM) - DIAGNOSTIC CODE INDEX** article and perform the appropriate diagnostic procedure.

      No

      - Go To 3
3. **CHECK FOR OTHER ACTIVE DTCS**
   1. With the scan tool, read Comfort Seat Wheel Module (CSWM) DTCs.

Is the DTC B210C-17-Battery Voltage Input - Circuit Above Threshold active?

Yes

- Refer to **DIAGNOSIS AND TESTING** and perform the appropriate diagnostic procedure.

No

- Go To 4

4. **VERIFY THIS DTC IS ACTIVE**

NOTE:

- **Make sure the Battery is in good condition. Using a suitable Battery Tester, test the Battery before continuing.**
- **Make sure system voltage is in the normal operating range of approximately 12 to 14 volts before continuing.**
- **Inspect the vehicle for aftermarket accessories that may exceed the Generator System output.**
- **Make sure the generator drive belt is in good operating condition.**
- **Inspect the fuses. If an open fuse is found, use the wire diagram/schematic as a guide, inspect the wiring and connectors for damage.**

1. With the scan tool, record and erase DTCs.
2. Turn the ignition Off.
3. Start the engine and let run for one minute.
4. With the scan tool, read DTCs.

Is this DTC active?

Yes

- Replace the Comfort Seat Wheel Module (CSWM) in accordance with the Service Information. Refer to **MODULE, COMFORT SEAT AND WHEEL, REMOVAL** .
- Perform BODY VERIFICATION TEST. Refer to **STANDARD PROCEDURE** .

No

- Go To 5

5. **CHECK THE WIRING AND CONNECTORS**
   1. The conditions necessary to set the DTC are not present at this time.
   2. Using the schematics as a guide, inspect the wiring and connectors specific to this module. Wiggle the wiring and connectors while checking for shorted and open circuits.
   3. Check all related splices and connectors for signs of water intrusion, corrosion, pushed out or bent

terminals, and correct pin tension.

4. Check Service Bulletins for any possible causes that may apply.

   Were there any problems found?

   Yes

   - Repair as necessary.
   - Perform BODY VERIFICATION TEST. Refer to **STANDARD PROCEDURE** .

   No

   - Test complete.

B221A-00-(HSM) HEATED SEAT MODULE INTERNAL

For a complete wiring diagram, **refer to appropriate SYSTEM WIRING DIAGRAMS article** .

WHEN MONITORED

With the engine running.

SET CONDITION

If the Comfort Seat Wheel Module (CSWM) detects an internal component failure.

POSSIBLE CAUSES

Possible Causes
COMFORT SEAT WHEEL MODULE (CSWM)

DIAGNOSTIC TEST

1. **CHECK IF THE DTC IS ACTIVE**
   1. Turn the ignition on.
   2. With the scan tool, record and erase DTCs.
   3. Turn the ignition off.
   4. Start the engine and let it run.
   5. Operate each of the heated systems one at a time.
   6. With the scan tool, read DTCs.

   Is the DTC active?

   Yes

- Replace the Comfort Seat and Wheel Module (CSWM) in accordance with the Service Information. Refer to **MODULE, COMFORT SEAT AND WHEEL, REMOVAL** .
- Perform the BODY VERIFICATION TEST. Refer to **STANDARD PROCEDURE** .

No

- Go To 2

2. **CHECK THE WIRING AND CONNECTORS**
   1. The conditions necessary to set the DTC are not present at this time.
   2. Using the schematics as a guide, inspect the wiring and connectors specific to this module. Wiggle the wiring and connectors while checking for shorted and open circuits.
   3. Check all related splices and connectors for signs of water intrusion, corrosion, pushed out or bent terminals, and correct pin tension.
   4. Check Service Bulletins for any possible causes that may apply.

   Were there any problems found?

   Yes

   - Repair as necessary.
   - Perform the BODY VERIFICATION TEST. Refer to **STANDARD PROCEDURE** .

   No

   - Test complete.

U0011-00-CAN INTERIOR BUS OFF PERFORMANCE

Perform the COMMUNICATION PRE-DIAGNOSTIC PROCEDURE. Refer to **STANDARD PROCEDURE** .

U0140-00-LOST COMMUNICATION WITH BODY CONTROL MODULE

Perform the COMMUNICATION PRE-DIAGNOSTIC PROCEDURE. Refer to **STANDARD PROCEDURE** .

U1446-00-IMPLAUSIBLE HEATED STEERING WHEEL TEMPERATURE MESSAGE RECEIVED

For a complete wiring diagram, **refer to appropriate SYSTEM WIRING DIAGRAMS article** .

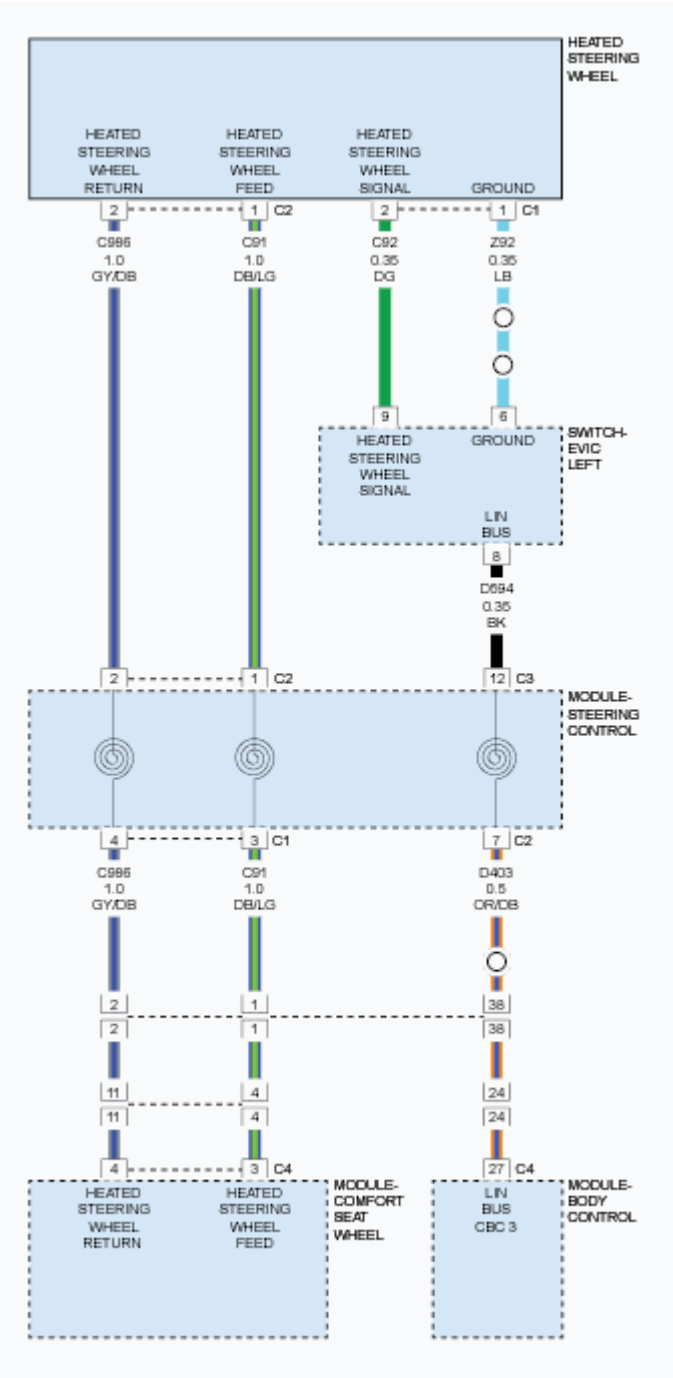

Fig. 27: Heated Steering Wheel Circuit Diagram
Courtesy of CHRYSLER GROUP, LLC

THEORY OF OPERATION

The Heated Steering Wheel (HSW) Temperature Sensor is wired to the Left EVIC Switch. The sensor data is transmitted from the Left EVIC Switch over a LIN Bus through the Steering Column Control Module (SCCM) clockspring to the Body Control Module (BCM). The data is then transmitted by the BCM over the CAN C Bus to the Comfort Seat Wheel Module (CSWM) and other modules.

WHEN MONITORED

With the engine running.

SET CONDITION

The Comfort Seat Wheel Module (CSWM) does not receive the Heated Steering Wheel (HSW) Temperature Sensor Signal from the Steering Column Control Module (SCCM) for more than two seconds.

POSSIBLE CAUSES

Possible Causes
HEATED STEERING WHEEL SIGNAL CIRCUIT OPEN
HEATED STEERING WHEEL SIGNAL CIRCUIT SHORTED TO GROUND
HEATED STEERING WHEEL TEMPERATURE SENSOR
LEFT EVIC SWITCH
STEERING COLUMN CONTROL MODULE (SCCM)

DIAGNOSTIC TEST

1. **CHECK IF THE DTC IS ACTIVE**

   NOTE: Diagnose and repair all active Bus related Diagnostic Trouble Codes (DTCs) including Lost Communication DTCs before diagnosing this DTC.

   1. Turn the ignition on.
   2. Using a scan tool, record and erase Comfort Seat Wheel Module (CSWM) DTCs.
   3. Cycle the ignition off to on.
   4. Using a scan tool, read DTCs CSWWM.

   Is the DTC active?

   Yes

   - Go To 2

   No

   - The conditions that caused this DTC to set are not present at this time. Using the wiring diagram/schematic as a guide, inspect the wiring and connectors. Look for chafed, pierced, pinched, or partially broken wires and broken, bent, pushed out, spread, corroded, or contaminated terminals. Attempt to reproduce condition by rotating the steering wheel.
   - Perform the BODY VERIFICATION TEST. Refer to **STANDARD PROCEDURE** .

2. **CHECK THE HEATED STEERING WHEEL TEMPERATURE SENSOR**

WARNING: Turn the ignition off, disconnect the 12-volt battery and wait two minutes before proceeding. Failure to follow these instructions may result in possible serious or fatal injury.

1. Remove the Driver Airbag in accordance with the Service Information.
2. Disconnect the Heated Steering Wheel (HSW) C1 harness connector.

NOTE: Before proceeding, thoroughly inspect the wiring harness and connectors between the HSW and the Left EVIC Switch. Look for chafed, pierced, pinched, or partially broken wires and broken, bent, pushed out, spread, corroded, or contaminated terminals.

WARNING: Turn the ignition on, then reconnect the 12-volt battery and wait two minutes before proceeding. Failure to follow these instructions may result in possible serious or fatal injury.

3. Measure the voltage between the (C92) Heated Steering Wheel Signal circuit and the (Z92) Ground circuit at the HSW C1 harness connector.

   Is the voltage above 3.5 volts?

   Yes

   - Replace the Heated Steering Wheel (HSW) in accordance with the Service Information. Refer to **WHEEL, STEERING, REMOVAL** .
   - Perform the BODY VERIFICATION TEST. Refer to **STANDARD PROCEDURE** .

   No

   - Go To 3

3. **CHECK THE (C92) HEATED STEERING WHEEL SIGNAL CIRCUIT FOR AN OPEN**

WARNING: Turn the ignition off, disconnect the 12-volt battery and wait two minutes before proceeding. Failure to follow these instructions may result in possible serious or fatal injury.

1. Disconnect the Left EVIC Switch harness connector.
2. Measure the resistance of the (C92) Heated Steering Wheel Signal circuit between the HSW C1 harness connector and the Left EVIC Switch harness connector.

   Is the resistance below 5.0 Ohms?

   Yes

- Go To 4

Yes

- Repair the (C92) Heated Steering Wheel Signal circuit for an open.
- Perform the BODY VERIFICATION TEST. Refer to **STANDARD PROCEDURE** .

4. **CHECK THE (C92) HEATED STEERING WHEEL SIGNAL CIRCUIT FOR A SHORT TO GROUND**
   1. Measure the resistance between ground and the (C92) Heated Steering Wheel Signal circuit.

      Is the resistance below 10K Ohms?

      Yes

      - Repair the (C92) Heated Steering Wheel Signal circuit for a short to ground.
      - Perform the BODY VERIFICATION TEST. Refer to **STANDARD PROCEDURE** .

      No

      - Go To 5
5. **CHECK THE (Z92) GROUND CIRCUIT FOR AN OPEN**
   1. Measure the resistance of the (Z92) Ground Circuit between the Heated Steering Wheel C1 harness connector and the Left EVIC Switch harness connector.

      Is the resistance below 5.0 Ohms?

      Yes

      - Go To 6

      No

      - Repair the (Z92) Ground Circuit for an open.
      - Perform the BODY VERIFICATION TEST. Refer to **STANDARD PROCEDURE** .
6. **CHECK THE LEFT EVIC SWITCH**
   1. Replace the Left EVIC Switch in accordance with the Service Information.
   2. Perform the BODY VERIFICATION TEST. Refer to **STANDARD PROCEDURE** .

      Does this DTC reset performing the Body Verification Test?

      Yes

      - Replace the Steering Column Control Module (SCCM) in accordance with the Service

Information. Refer to **MODULE, STEERING COLUMN, REMOVAL** .

- Perform the BODY VERIFICATION TEST. Refer to **STANDARD PROCEDURE** .

No

- Test complete.

2014 ACCESSORIES AND EQUIPMENT

Communication - Non-DTC Based Diagnostics - Cherokee

DIAGNOSIS AND TESTING

CAN C BUS NO RESPONSE

For a complete wiring diagram, **refer to appropriate SYSTEM WIRING DIAGRAMS article** .

THEORY OF OPERATION

The primary communication network between electronic control modules is the Controller Area Network (CAN) data bus system. The Controller Area Network (CAN) data bus allows all electronic modules connected to the bus to share information with each other. Regardless of whether a message originates from a module on the higher speed CAN C (500K) Bus or on the lower speed bus, CAN Interior High Speed (IHS) (125K) Bus, the message structure and layout is similar, which allows the Body Control Module/Central GateWay (BCM or BCMCGW) to process and transfer messages between the CAN buses. The BCM stores Diagnostic Trouble Codes (DTCs) for certain bus network faults on the CAN C (500K) Bus and CAN IHS (125K) Bus.

All modules transmit and receive messages over one of these buses. Data exchange between the modules is achieved by serial transmission of encoded data messages (a form of transmission in which data bits are sent sequentially, one at a time, over a single line). Each module can both send and receive serial data simultaneously. Each data bit of a CAN Bus message is carried over the bus as a voltage differential between the two bus circuits which, when strung together, form a message. Each module uses arbitration to sort the message priority if two competing messages are attempting to be broadcast at the same time. Corruption of a single bit within a message will corrupt the entire message. Each message contains a Cyclic Redundancy Check (CRC) which specifies the message size exactly. If the message detected conflicts with the CRC the ECU receiving it will determine the message to be an error and consider that communication has not been possible. Diagnosis of this condition using a lab scope may reveal activity that appears to be Bus data messages even if no actual communication is possible. Communication problems that affect the whole bus, as a result of opens and terminal push outs are more likely to occur on data busses that operate at a high speed than a data bus that operates at a lower speed.

When an open circuit or terminal push out occurs one or more modules can become isolated from the remainder of the bus. The isolated module will attempt to communicate, but will not be able to receive messages or determine arbitration from other modules. Each time the isolated module attempts to communicate it alters the bus voltage on the intact bus circuit. Without functioning arbitration the isolated module alters the bus voltage while other bus messages are being sent thereby corrupting the messages on the remainder of the bus.

The CAN bus modules are connected in parallel to the two-wire bus using a twisted pair, where the wires are wrapped around each other to provide shielding from unwanted electromagnetic induction, thus preventing interference with the relatively low voltage signals being carried through them. While the CAN bus is operating (active), one of the bus wires will carry a higher voltage and is referred to as the CAN High or CAN bus (+) wire, while the other bus wire will carry a lower voltage and is referred to as the CAN Low or CAN bus (-) wire.

For additional information on the communication network and star connector locations, refer to **COMMUNICATION, DESCRIPTION** .

CAN Bus Voltages (Normal Operation)								
CAN-C Bus Circuits	**Sleep**	**Recessive (Bus Idle)**	**Dominant (Bus Active)**	**CAN-L Short to Ground**	**CAN-H Short to Ground**	**CAN-L Short to Battery**	**CAN-H Short to Battery**	**CAN-H Short to CAN-L**
CAN-L (-)	0 V	2.4 - 2.5 V	1.3 - 2.3 V	0 V	0.3 - 0.5V	Battery Voltage	Battery Voltage Less 0.75 V	2.45 V
CAN-H (+)	0 V	2.4 - 2.5 V	2.6 - 3.5 V	0.02 V	0 V	Battery Voltage Less 0.75 V	Battery Voltage	2.45 V
CAN-IHS Bus Circuits	**Sleep**		**Bus Active**	**CAN-L Short to Ground**	**CAN-H Short to Ground**	**CAN-L Short to Battery**	**CAN-H Short to Battery**	**CAN-H Short to CAN-L**
CAN-L (-)	0.0 V		1.3 - 2.3 V	0 V	0.3 - 0.5 V	Battery Voltage	Battery Voltage Less 0.75 V	2.45 V
CAN-H (+)	0.0 V		2.6 - 3.5 V	0.02 V	0 V	Battery Voltage Less 0.75 V	Battery Voltage	2.45 V
Notes								
All measurements taken between node ground and CAN terminal with a standard DVOM. DVOM will display average network voltage. Total resistance of CAN networks can be measured with the battery disconnected. The average resistance is approximately 60 Ohms. The termination resistors are integral to the Star Connectors.								

POSSIBLE CAUSES

Possible Causes
CAN C BUS (+) CIRCUIT SHORTED TO GROUND
CAN C BUS (-) CIRCUIT SHORTED TO VOLTAGE
CAN C BUS (+) CIRCUIT SHORTED TO CAN C BUS (-) CIRCUIT
CAN C BUS (+) OR CAN C BUS (-) CIRCUIT OPEN BETWEEN THE STAR CONNECTORS
STAR CONNECTOR
ANY MODULE CONNECTED TO THE CAN C BUS

DIAGNOSTIC TEST

1. **CHECK THE CAN BUS (-) CIRCUIT FOR A SHORT TO VOLTAGE**

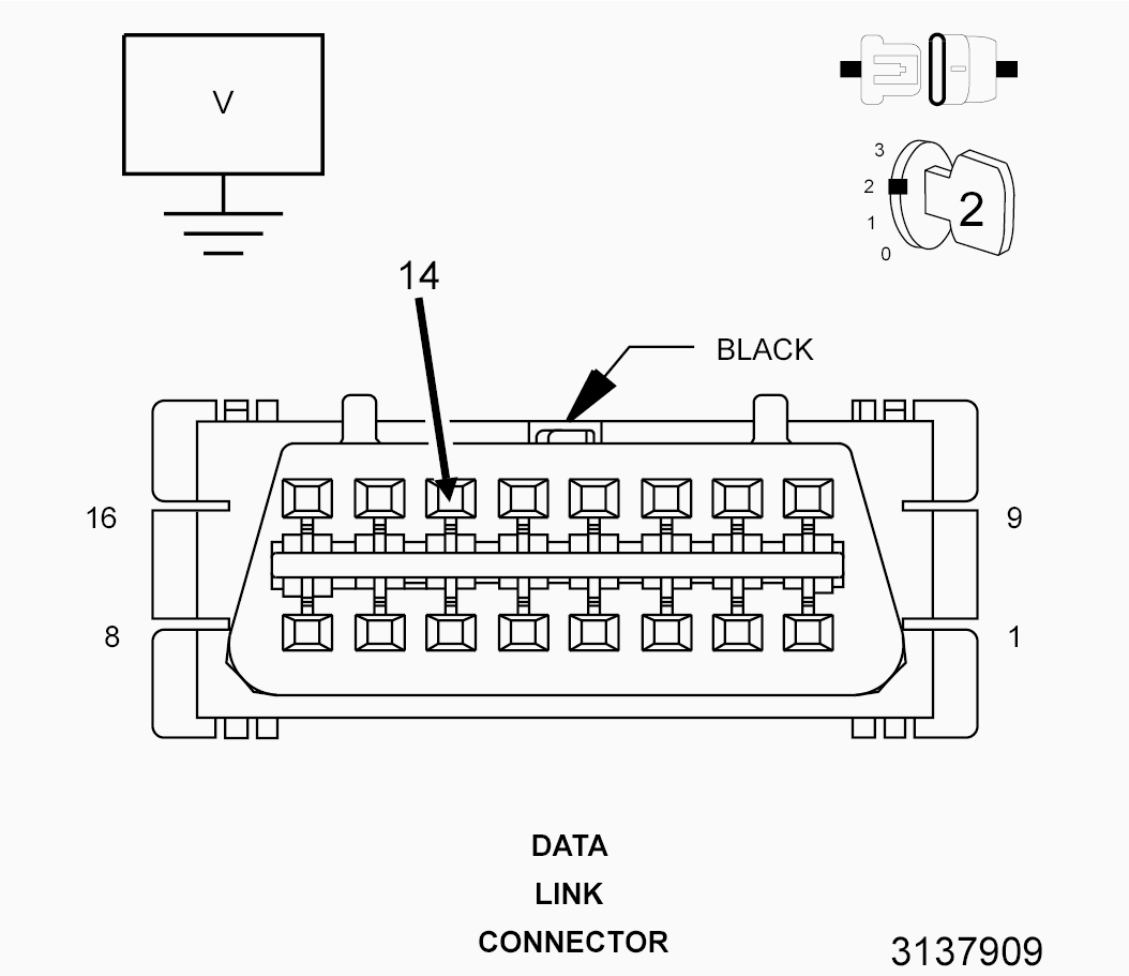

Fig. 1: Checking CAN BUS (-) Circuit For A Short To Voltage
Courtesy of CHRYSLER GROUP, LLC

1. Disconnect the scan tool.
2. Measure the voltage between ground and the CAN C Bus (-) circuit.

   Is the voltage above 10.0 volts?

   Yes

   - Diagnose the short to voltage in the CAN C Bus (-) circuit. Use the Star Connectors to isolate portions of the bus to assist in determining the location of the concern. Repair the circuit concern or replace the module that when disconnected allowed the bus voltage to return to normal.
   - Perform the BODY VERIFICATION TEST. Refer to **STANDARD PROCEDURE** .

   No

- Go To 2

2. **CHECK THE CAN C BUS (+) CIRCUIT FOR A SHORT TO GROUND**

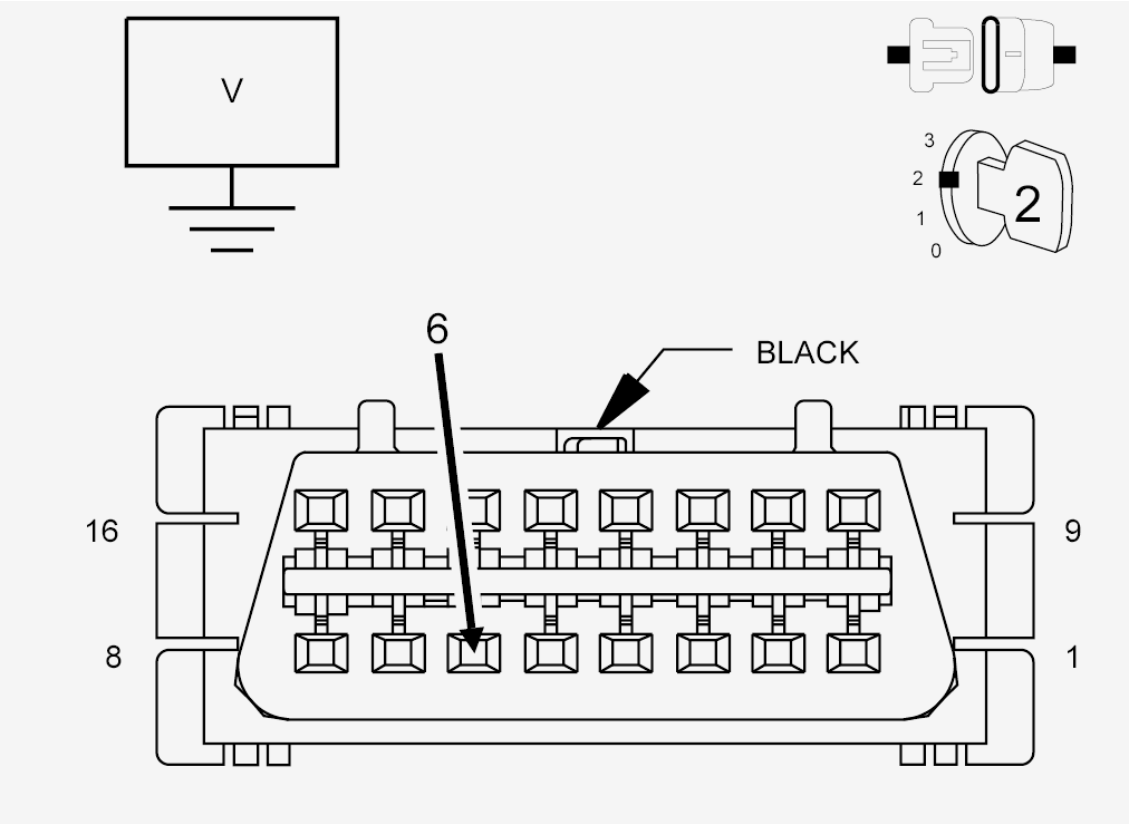

Fig. 2: Checking CAN C BUS (+) Circuit For A Short To Ground
Courtesy of CHRYSLER GROUP, LLC

1. Measure the voltage between ground and the CAN C Bus (+) circuit.

   Is the voltage approximately 0 volt?

   Yes

   - Diagnose the short to ground in the CAN C Bus (+) circuit. Use the Star Connectors to isolate portions of the bus to assist in determining the location of the concern. Repair the circuit concern or replace the module that when disconnected allowed the bus voltage to return to normal.
   - Perform the BODY VERIFICATION TEST. Refer to **STANDARD PROCEDURE** .

   No

   - Go To 3

3. **CHECK FOR CORRECT BUS TERMINATION RESISTANCE**

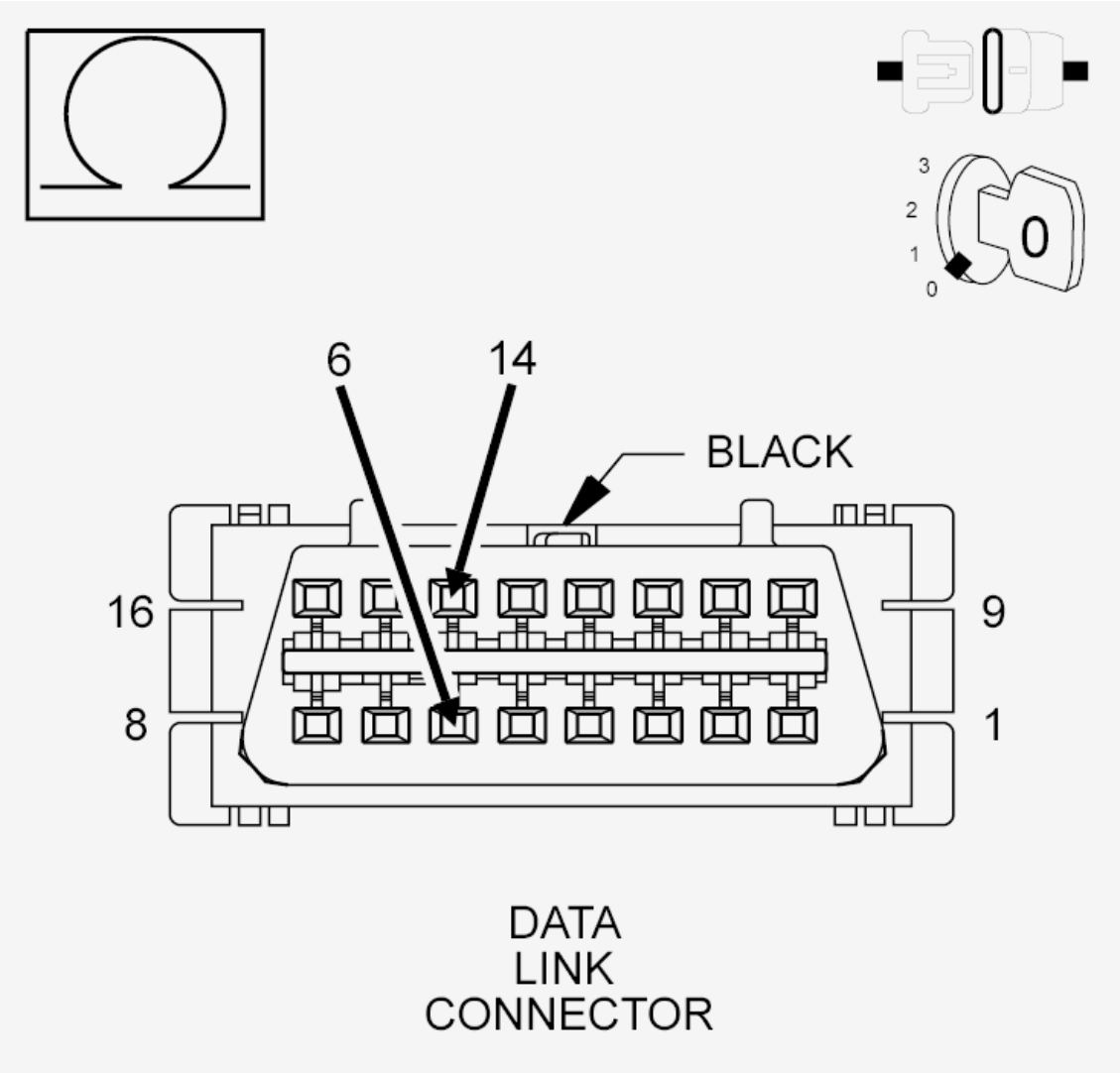

Fig. 3: Checking For Correct BUS Termination Resistance
Courtesy of CHRYSLER GROUP, LLC

1. Turn the ignition off.
2. Disconnect and isolate the negative battery cable.
3. Measure the resistance between the CAN C Bus (+) circuit and the CAN C Bus (-) circuit.

   Is the resistance between 53.5 and 67 Ohms?

   Yes

   - Test complete, the condition or conditions that originally caused this concern are not present at this time. Using the wiring diagrams as a guide, check the Star Connectors and all related splices for signs of water intrusion, corrosion, pushed out or bent terminals, and correct pin tension.
   - Perform the BODY VERIFICATION TEST. Refer to **STANDARD PROCEDURE** .

No

- For a resistance measurement above 67 Ohms, an open or high resistance is present in the CAN C Bus (+) circuit or the CAN C Bus (-) circuit between the Star Connectors or one of the termination resistors internal to the Star Connector is damaged. Diagnose and repair as necessary.
- For a resistance measurement below 53.5 Ohms, a short between the CAN C Bus (+) circuit and the CAN C Bus (-) is present. Diagnose the short between the CAN C Bus (+) circuit and the CAN C Bus (-) circuit. Use the Star Connectors to isolate portions of the bus to assist in determining the location of the concern. Repair the circuit concern or replace the module that when disconnected allowed the resistance to return to normal.
- Perform the BODY VERIFICATION TEST. Refer to **STANDARD PROCEDURE** .

NO RESPONSE FROM ABS (ANTILOCK BRAKE SYSTEM MODULE)

For a complete wiring diagram, **refer to appropriate SYSTEM WIRING DIAGRAMS article** .

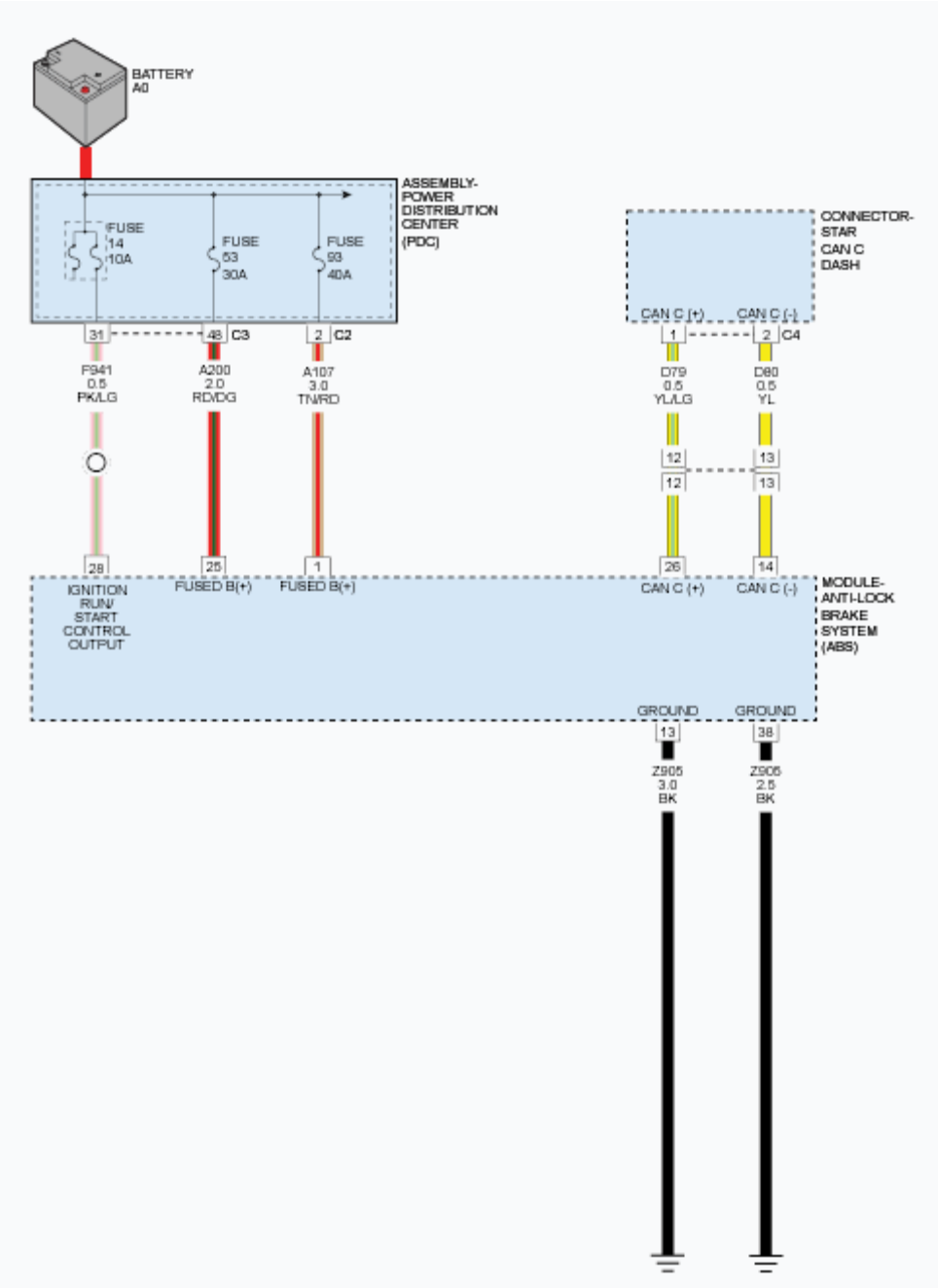

Fig. 4: ABS CAN C, Fused B+ & Ground Circuit Diagram
Courtesy of CHRYSLER GROUP, LLC

POSSIBLE CAUSES

Possible Causes
FUSED B(+) CIRCUITS OPEN OR SHORTED
FUSED RUN/START RELAY OUTPUT CIRCUIT OPEN OR SHORTED
GROUND CIRCUITS OPEN OR HIGH RESISTANCE

CAN C BUS (+) CIRCUIT OPEN OR HIGH RESISTANCE
CAN C BUS (-) CIRCUIT OPEN OR HIGH RESISTANCE
ANTI-LOCK BRAKE SYSTEM (ABS) MODULE

DIAGNOSTIC TEST

1. **TEST FOR INTERMITTENT CONDITION**

   NOTE: Check for any TSB(s) related to the condition. If a TSB applies, perform the procedure outlined in the TSB before continuing.

   1. Turn the ignition on.

      NOTE: Make sure the battery voltage is between 10.0 and 16.0 volts.

   2. With the scan tool, read the module status.

      NOTE: Check the BCM for any active CAN hardware DTCs, perform DTC before proceeding.

      Does the scan tool indicate that the module is active on the bus?

      Yes

      - The no response condition is not present at this time. Using the wiring diagram/schematic as a guide, inspect the wiring for chafed, pierced, pinched, and partially broken wires and the wiring harness connectors for broken, bent, pushed out, and corroded terminals.
      - Perform the BODY VERIFICATION TEST. Refer to **STANDARD PROCEDURE** .

      No

      - Go To 2

2. **CHECK THE (A107) AND (A200) FUSED B(+) CIRCUIT FOR AN OPEN OR SHORT CIRCUIT**
   1. Turn the ignition off.
   2. Disconnect the ABS Module harness connector.
   3. Using a 12-volt test light connected to ground, check each (A107) and (A200) Fused B(+) circuit.

      Does the test light illuminate brightly for each circuit?

      Yes

      - Go To 3

      No

- Repair the Fused B(+) circuits for an open or short.
- Perform the ABS VERIFICATION TEST. Refer to **STANDARD PROCEDURE** .

3. **CHECK THE (F941) FUSED RUN/START RELAY OUTPUT CIRCUIT FOR AN OPEN OR SHORT CIRCUIT**
   1. Turn the ignition on.
   2. Using a 12-volt test light connected to ground, check the (F941) Fused Run/Start Relay Output circuit.

      Does the test light illuminate brightly?

      Yes

      - Go To 4

      No

      - Repair the (F941) Fused Run/Start Relay Output circuit for an open or short.
      - Perform the ABS VERIFICATION TEST. Refer to **STANDARD PROCEDURE** .
4. **CHECK THE (Z905) GROUND CIRCUITS FOR AN OPEN OR HIGH RESISTANCE**
   1. Using a 12-volt test light connected to 12-volts, check the (Z905) Ground circuits.

      Does the test light illuminate brightly for each circuit?

      Yes

      - Go To 5

      No

      - Repair the (Z905) Ground circuits for an open or high resistance.
      - Perform the ABS VERIFICATION TEST. Refer to **STANDARD PROCEDURE** .
5. **(D79) CAN C BUS (+) CIRCUIT OPEN OR HIGH RESISTANCE**
   1. Turn the ignition off.
   2. Disconnect the CAN C Dash C4 Star harness connector.
   3. Measure the resistance of the (D79) CAN C Bus (+) circuit between the CAN C Body C4 Star Connector and the ABS Module harness connector.

      Is resistance below 5.0 Ohms?

      Yes

      - Go To 6

No

- Repair the (D79) CAN C Bus (+) circuit for an open or high resistance.
- Perform the ABS VERIFICATION TEST. Refer to **STANDARD PROCEDURE** .

6. **(D80) CAN C BUS (-) CIRCUIT OPEN OR HIGH RESISTANCE**
   1. Measure the resistance of the (D80) CAN C Bus (-) circuit between the CAN C Dash C4 Star Connector and the ABS Module harness connector.

      Is resistance below 5.0 Ohms?

      Yes

      - Replace the Anti-lock Brake System (ABS) Module in accordance with the Service Information. Refer to **MODULE, ANTI-LOCK BRAKE SYSTEM, REMOVAL** .
      - Perform the ABS VERIFICATION TEST. Refer to **STANDARD PROCEDURE** .

      No

      - Repair the (D80) CAN C Bus (-) circuit for an open or high resistance.
      - Perform the ABS VERIFICATION TEST. Refer to **STANDARD PROCEDURE** .

NO RESPONSE FROM ACC (ADAPTIVE CRUISE CONTROL) MODULE

For a complete wiring diagram, **refer to appropriate SYSTEM WIRING DIAGRAMS article** .

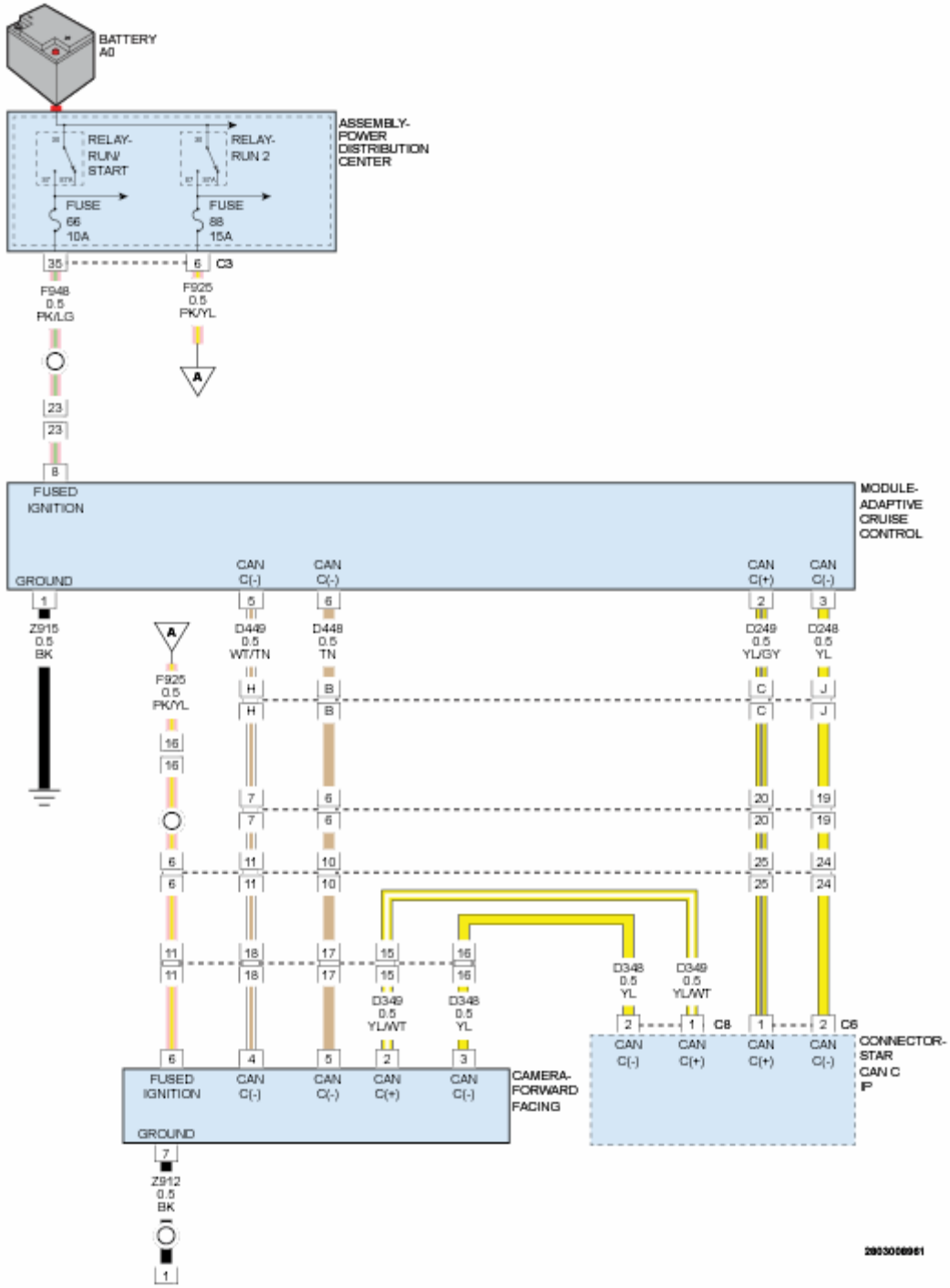

Fig. 5: ACC CAN C, Fused Ignition & Ground Circuit Diagram
Courtesy of CHRYSLER GROUP, LLC

POSSIBLE CAUSES

Possible Causes
GROUND CIRCUIT OPEN

FUSED IGNITION CIRCUIT OPEN OR SHORTED
CAN C BUS (+) CIRCUIT OPEN
CAN C BUS (-) CIRCUIT OPEN
ADAPTIVE CRUISE CONTROL MODULE/ADAPTIVE SPEED CONTROL SENSOR

DIAGNOSTIC TEST

1. **TEST FOR INTERMITTENT CONDITION**

   NOTE: Check for any TSB(s) related to the condition. If a TSB applies, perform the procedure outlined in the TSB before continuing.

   1. Turn the ignition on.

      NOTE: Make sure the battery voltage is between 10.0 and 16.0 volts.

   2. With the scan tool, read the module status.

      NOTE: Check the BCM for any active CAN C hardware DTCs, perform DTC before proceeding.

      Does the scan tool indicate that the module is active on the bus?

      Yes

      - The no response condition is not present at this time. Using the wiring diagrams as a guide, check all related splices and connectors for signs of water intrusion, corrosion, pushed out or bent terminals, and correct pin tension.

      No

      - Go To 2

2. **CHECK THE (Z915) GROUND CIRCUIT FOR AN OPEN**
   1. Turn the ignition off.
   2. Disconnect the Adaptive Cruise Control Module harness connector.
   3. Using a 12-volt test light connected to 12-volts, check the (Z915) Ground circuit.

      Does the test light illuminate brightly?

      Yes

      - Go To 3

      No

- Repair the (Z915) Ground circuit for an open.
- Perform the BODY VERIFICATION TEST. Refer to **STANDARD PROCEDURE** .

3. **CHECK THE (F948) FUSED IGNITION CIRCUIT FOR AN OPEN OR SHORT**
   1. Turn the ignition on.
   2. Using a 12-volt test light connected to ground, check the (F948) Fused Ignition circuit.

      Does the test light illuminate brightly?

      Yes

      - Go To 4

      No

      - Repair the (F948) Fused Ignition circuit for an open.

        NOTE: If the fuse is open, make sure to check the circuit for a short to ground.

      - Perform the BODY VERIFICATION TEST. Refer to **STANDARD PROCEDURE** .
4. **CHECK THE (D249) AND (D248) CAN C BUS CIRCUITS FOR AN OPEN**
   1. Turn the ignition off.
   2. Disconnect the dash CAN C C6 Star harness connector.
   3. Measure the resistance of the (D249) CAN C Bus (+) circuit between the Star C6 harness connector and the Adaptive Cruise Control Module harness connector.
   4. Measure the resistance of the (D248) CAN C Bus (-) circuit between the Star C6 harness connector and the Adaptive Cruise Control Module harness connector.

      Are the resistances below 5.0 Ohms?

      Yes

      - Replace and program the Adaptive Cruise Control (ACC) module in accordance with the Service Information. Refer to **MODULE, ADAPTIVE CRUISE CONTROL, REMOVAL** .
      - Perform the BODY VERIFICATION TEST. Refer to **STANDARD PROCEDURE** .

      No

      - Repair the (D249) or (D248) CAN C Bus circuit for an open.
      - Perform the BODY VERIFICATION TEST. Refer to **STANDARD PROCEDURE** .

NO RESPONSE FROM AHLM (AUTOMATIC HEADLAMP LEVELING MODULE)

For a complete wiring diagram, **refer to appropriate SYSTEM WIRING DIAGRAMS article** .

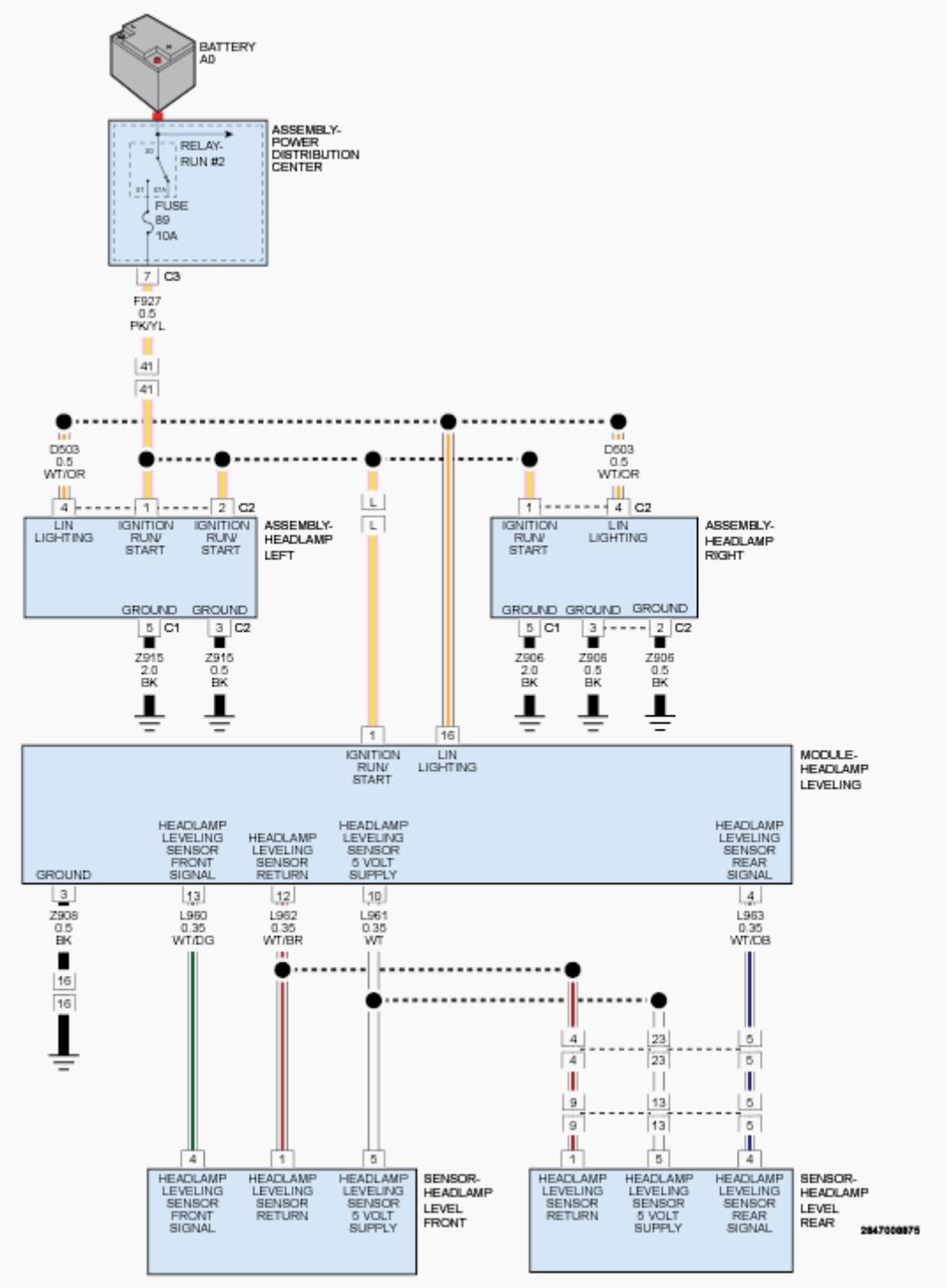

Fig. 6: Headlamp Leveling Module Circuit Diagram
Courtesy of CHRYSLER GROUP, LLC

POSSIBLE CAUSES

Possible Causes
(F927) RUN RELAY OUTPUT CIRCUIT OPEN OR SHORTED
(Z908) GROUND CIRCUIT OPEN
(D265) CAN C BUS (+) CIRCUIT OPEN
(D264) CAN C BUS (-) CIRCUIT OPEN
AUTOMATIC HEADLAMP LEVELING MODULE (AHLM)

DIAGNOSTIC TEST

1. **TEST FOR INTERMITTENT CONDITION**

   NOTE: Check for any TSB(s) related to the condition. If a TSB applies, perform the procedure outlined in the TSB before continuing.

   1. Turn the ignition on.

      NOTE: Make sure the battery voltage is between 10.0 and 16.0 volts.

   2. With the scan tool, read the module status.

      NOTE: Check the BCM for any active CAN hardware DTCs, perform DTC before proceeding.

      Does the scan tool indicate that the module is active on the bus?

      Yes

      - The no response condition is not present at this time. Using the wiring diagrams as a guide, check all related splices and connectors for signs of water intrusion, corrosion, pushed out or bent terminals, and correct pin tension.
      - Perform the BODY VERIFICATION TEST. Refer to **STANDARD PROCEDURE** .

      No

      - Go To 2

2. **CHECK THE (F927) RUN RELAY OUTPUT CIRCUIT FOR AN OPEN OR SHORT**
   1. Turn the ignition off.
   2. Disconnect the Automatic Headlamp Leveling Module harness connector.
   3. Turn the ignition on.
   4. Using a 12-volt test light connected to ground, check the (F927) Run Relay Output circuit.

      Does the test light illuminate brightly?

Yes

- Go To 3

No

- Repair the open or short in the (F927) Run Relay Output circuit.
- Perform the BODY VERIFICATION TEST. Refer to **STANDARD PROCEDURE** .

3. **CHECK THE (Z908) GROUND CIRCUIT FOR AN OPEN**
   1. Turn the ignition off.
   2. Using a 12-volt test light connected to 12-volts, check the (Z908) Ground circuit.

   Does the test light illuminate brightly?

   Yes

   - Go To 4

   No

   - Repair the open in the (Z908) Ground circuit.
   - Perform the BODY VERIFICATION TEST. Refer to **STANDARD PROCEDURE** .

4. **CHECK THE (D265) AND (D264) CAN C BUS CIRCUITS FOR AN OPEN**
   1. Disconnect the Body CAN C Star Connector C10 harness connector.
   2. Measure the resistance of the (D265) CAN C Bus (+) circuit between the Body CAN C Star Connector C10 harness connector and the Automatic Headlamp Leveling Module harness connector.
   3. Measure the resistance of the (D264) CAN C Bus (-) circuit between the Body CAN C Star Connector C10 harness connector and the Automatic Headlamp Leveling Module harness connector.

   Are the resistances below 5.0 Ohms?

   Yes

   - Replace the Automatic Headlamp Leveling Module in accordance with the Service Information.
   - Perform the BODY VERIFICATION TEST. Refer to **STANDARD PROCEDURE** .

   No

   - Repair the open in the (D265) CAN C Bus (+) or (D264) CAN C Bus (-) circuit.
   - Perform the BODY VERIFICATION TEST. Refer to **STANDARD PROCEDURE** .

NO RESPONSE FROM AMP (AMPLIFIER)

For a complete wiring diagram, **refer to appropriate SYSTEM WIRING DIAGRAMS article** .

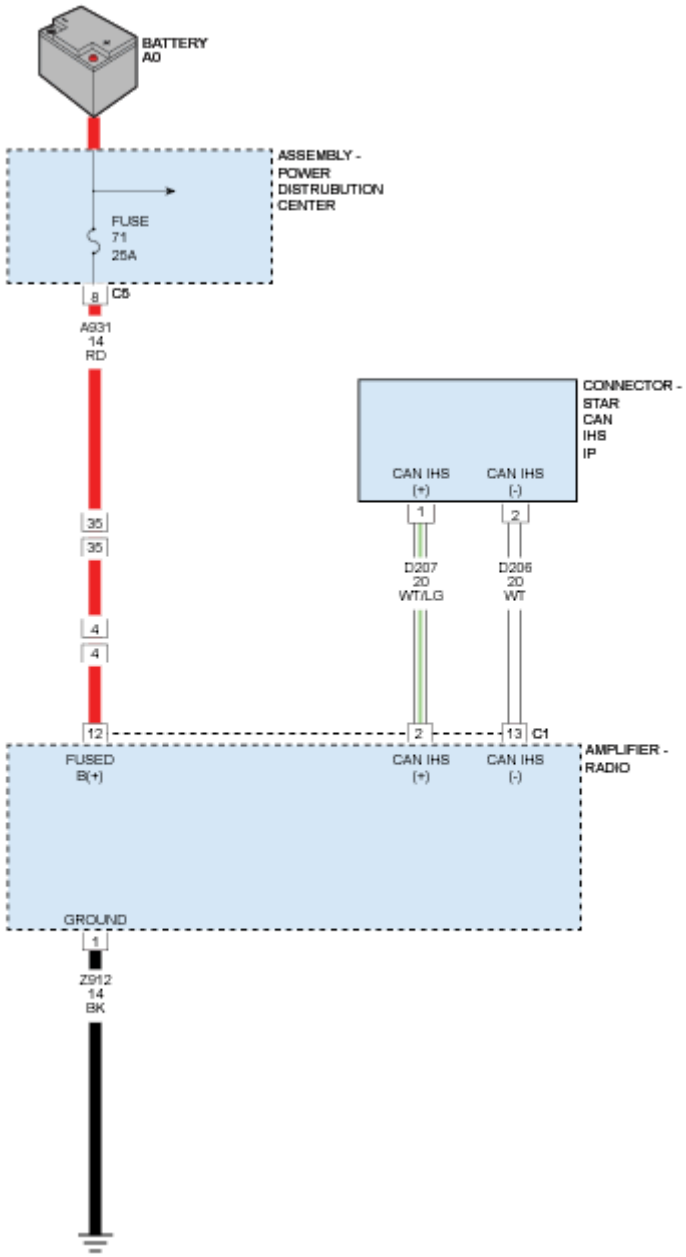

Fig. 7: Amplifier CAN IHS, Fused B+ & Ground Circuit Diagram
Courtesy of CHRYSLER GROUP, LLC

POSSIBLE CAUSES

Possible Causes

FUSED B (+) CIRCUIT OPEN OR SHORTED
GROUND CIRCUIT OPEN
CAN IHS BUS CIRCUITS OPEN
AMPLIFIER

DIAGNOSTIC TEST

1. **TEST FOR INTERMITTENT CONDITION**

   NOTE: Check for any TSB(s) related to the condition. If a TSB applies, perform the procedure outlined in the TSB before continuing.

   1. Turn the ignition on.

      NOTE: Make sure the battery voltage is between 10.0 and 16.0 volts.

   2. With the scan tool, read the module status.

      Does the scan tool indicate that the module is active on the bus?

      Yes

      - The no response condition is not present at this time. Using the wiring diagram/schematic as a guide, inspect the wiring for chafed, pierced, pinched, and partially broken wires and the wiring harness connectors for broken, bent, pushed out, and corroded terminals.
      - Perform the BODY VERIFICATION TEST. Refer to **STANDARD PROCEDURE** .

      No

      - Go To 2

2. **CHECK THE (A931) FUSED B(+) CIRCUIT FOR AN OPEN OR SHORT**
   1. Turn the ignition off.
   2. Disconnect the Radio Amplifier C1 harness connector.
   3. Using a 12-volt test light connected to ground, check the (A931) Fused B(+) circuit.

      Does the test light illuminate brightly?

      Yes

      - Go To 3

      No

      - Repair the open or short in the (A931) Fused B(+) circuit.

- Perform the BODY VERIFICATION TEST. Refer to **STANDARD PROCEDURE** .

3. **CHECK THE (Z912) GROUND CIRCUIT FOR AN OPEN**
   1. Using a 12-volt test light connected to 12-volts, check the (Z912) Ground circuit.

      Does the test light illuminate brightly for each circuit?

      Yes

      - Go To 4

      No

      - Repair the open in the (Z912) Ground circuit.
      - Perform the BODY VERIFICATION TEST. Refer to **STANDARD PROCEDURE** .
4. **(D207) OR (D206) CAN IHS BUS CIRCUIT OPEN**
   1. Disconnect the CAN IHS IP C1 Star Connector.
   2. Measure the resistance of the (D206) CAN IHS Bus (-) circuit between the CAN IHS IP C1 Star Connector and the Radio Amplifier C1 harness connector.
   3. Measure the resistance of the (D207) CAN IHS Bus (+) circuit between the CAN IHS IP C1 Star Connector and the Radio Amplifier C1 harness connector.

      Is resistance below 5.0 Ohms on both circuits?

      Yes

      - Replace the Radio Amplifier in accordance with the Service Information. Refer to **AMPLIFIER, REMOVAL** .
      - Perform the BODY VERIFICATION TEST. Refer to **STANDARD PROCEDURE** .

      No

      - Repair the open in the (D207) or (D206) CAN IHS Bus circuit. Inspect the connector for damage.
      - Perform the BODY VERIFICATION TEST. Refer to **STANDARD PROCEDURE** .

NO RESPONSE FROM BCM (BODY CONTROL MODULE)

For a complete wiring diagram, **refer to appropriate SYSTEM WIRING DIAGRAMS article** .

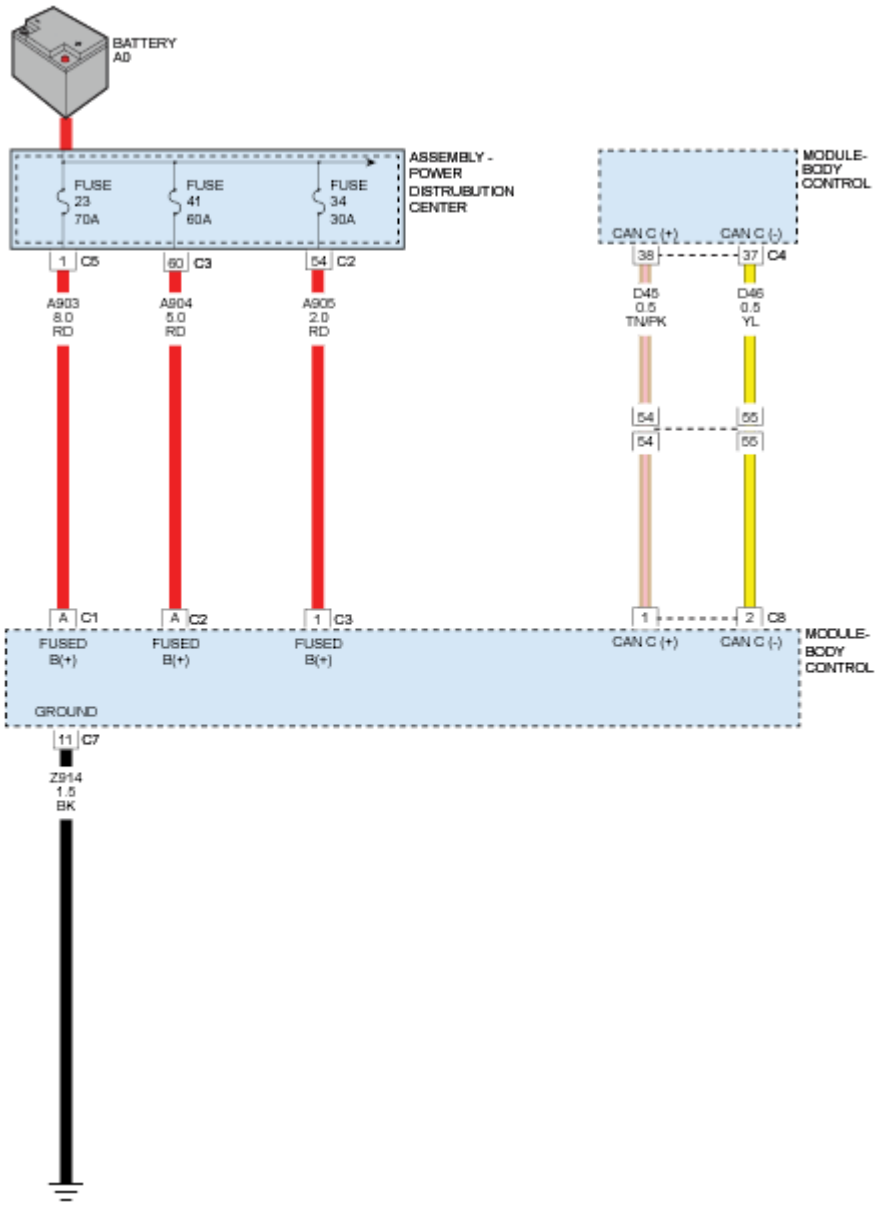

Fig. 8: BCM CAN C, Fused B+ & Ground Circuit Diagram
Courtesy of CHRYSLER GROUP, LLC

POSSIBLE CAUSES

Possible Causes
FUSED B(+) CIRCUITS OPEN OR SHORTED
(Z911) GROUND CIRCUIT OPEN
(D45) CAN C BUS (+) CIRCUIT OPEN
(D46) CAN C BUS (-) CIRCUIT OPEN
BODY CONTROL MODULE (BCM)

DIAGNOSTIC TEST

1. **TEST FOR INTERMITTENT CONDITION**

NOTE: **If the scan tool is unable to identify the vehicle, a CAN C bus concern may be present. Perform the CAN C BUS NO RESPONSE diagnostic procedure. Refer to DIAGNOSIS AND TESTING.**

NOTE: **Check for any TSB(s) related to the condition. If a TSB applies, perform the procedure outlined in the TSB before continuing.**

1. Turn the ignition on.

NOTE: **Make sure the battery voltage is between 10.0 and 16.0 volts.**

2. With the scan tool, read the module status.

NOTE: **Check the BCM for any active CAN hardware DTCs, perform DTC before proceeding.**

Does the scan tool indicate that the module is active on the bus?

Yes

- The no response condition is not present at this time. Using the wiring diagram/schematic as a guide, inspect the wiring for chafed, pierced, pinched, and partially broken wires and the wiring harness connectors for broken, bent, pushed out, and corroded terminals.
- Perform the BODY VERIFICATION TEST. Refer to **STANDARD PROCEDURE** .

No

- Go To 2

2. **CHECK THE FUSED B(+) CIRCUITS FOR AN OPEN OR SHORT CIRCUIT**
   1. Turn the ignition off.
   2. Using the wiring diagrams as a guide, disconnect the appropriate BCM harness connectors that house the Fused B(+) circuits.
   3. Using a 12-volt test light connected to ground, check each Fused B(+) circuit.

   Does the test light illuminate brightly for each circuit?

   Yes

   - Go To 3

No

- Repair the open or short in the applicable Fused B(+) circuit.
- Perform the BODY VERIFICATION TEST. Refer to **STANDARD PROCEDURE** .

3. **CHECK THE (Z911) GROUND CIRCUITS FOR AN OPEN**
   1. Using a 12-volt test light connected to 12-volts, check the (Z911) Ground circuits.

      Does the test light illuminate brightly for each circuit?

      Yes

      - Go To 4

      No

      - Repair the open in the (Z911) Ground circuit(s).
      - Perform the BODY VERIFICATION TEST. Refer to **STANDARD PROCEDURE** .
4. **CHECK THE (D45) AND (D46) CAN C BUS (+) CIRCUITS FOR AN OPEN**
   1. Turn the ignition off.
   2. Disconnect the CAN C Body C9 Star Connector.
   3. Measure the resistance of the (D45) CAN C Bus (+) circuit between the CAN C Body C9 Star Connector and the BCM C4 harness connector.
   4. Measure the resistance of the (D46) CAN C Bus (-) circuit between the CAN C Body C9 Star Connector and the BCM C4 harness connector.

      Are the resistances below 5.0 Ohms?

      Yes

      - Replace the BCM in accordance with the Service Information. Refer to **MODULE, BODY CONTROL, REMOVAL** .
      - Perform the BODY VERIFICATION TEST. Refer to **STANDARD PROCEDURE** .

      No

      - Repair the open in the (D45) CAN C Bus (+) or (D46) CAN C Bus (-) circuit.
      - Perform the BODY VERIFICATION TEST. Refer to **STANDARD PROCEDURE** .

NO RESPONSE FROM CSWM (COMFORT SEAT AND WHEEL MODULE)

For a complete wiring diagram, **refer to appropriate SYSTEM WIRING DIAGRAMS article** .

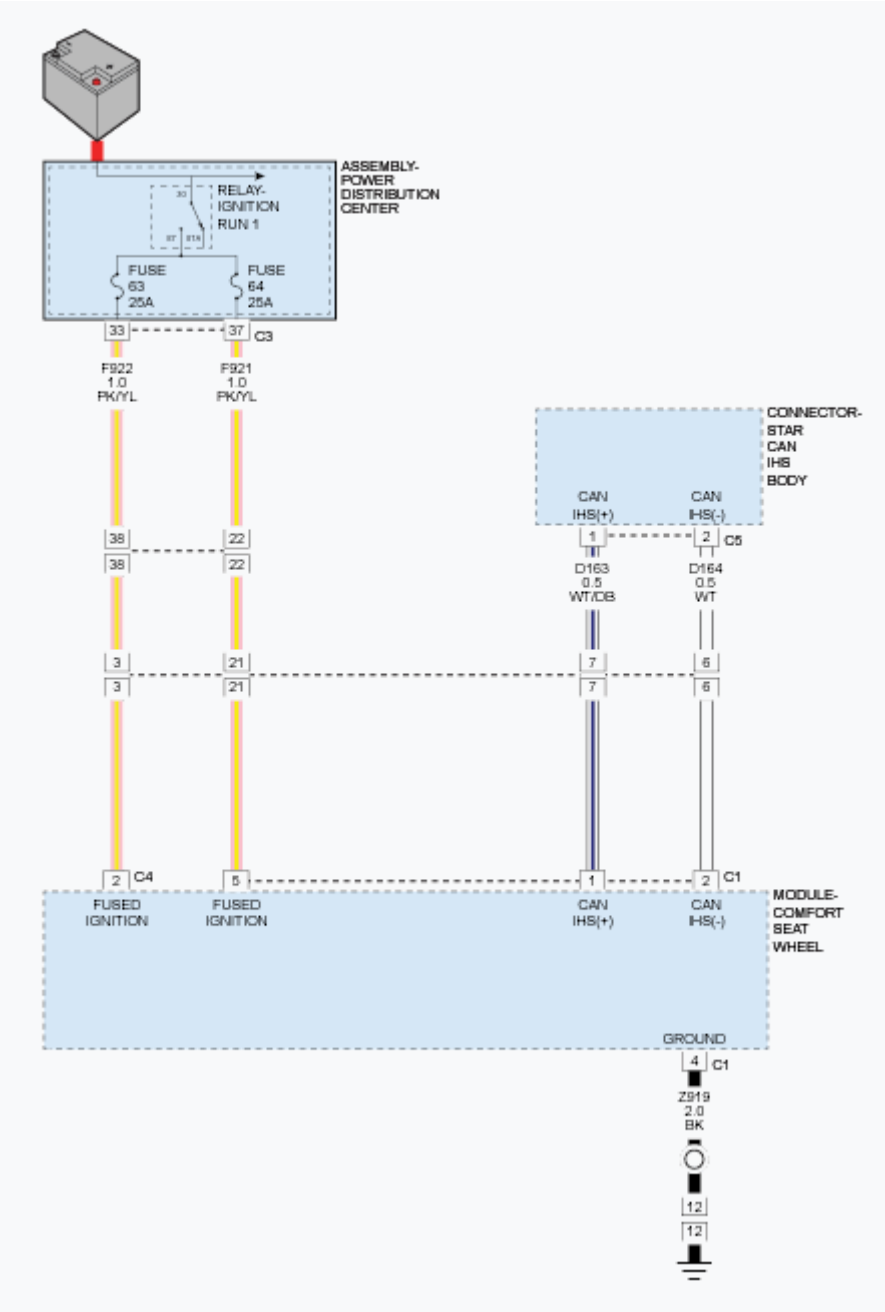

Fig. 9: CSWM CAN IHS, Fused Ignition & Ground Circuit Diagram
Courtesy of CHRYSLER GROUP, LLC

POSSIBLE CAUSES

Possible Causes
FUSED IGNITION CIRCUIT OPEN OR SHORTED
GROUND CIRCUIT OPEN
CAN IHS BUS CIRCUIT(S) OPEN

COMFORT SEAT AND WHEEL MODULE (CSWM)

DIAGNOSTIC TEST

1. **TEST FOR INTERMITTENT CONDITION**

   NOTE: Check for any TSB(s) related to the condition. If a TSB applies, perform the procedure outlined in the TSB before continuing.

   1. Turn the ignition on.

      NOTE: Make sure the battery voltage is between 10.0 and 16.0 volts.

   2. With the scan tool, read the module status.

      NOTE: Check the BCM for any active CAN hardware DTCs, perform DTC before proceeding.

      Does the scan tool indicate that the module is active on the bus?

      Yes

      - A no response condition is not present at this time. Using the wiring diagram/schematic as a guide, inspect the wiring for chafed, pierced, pinched, and partially broken wires and the wiring harness connectors for broken, bent, pushed out, and corroded terminals.
      - Perform the BODY VERIFICATION TEST. Refer to **STANDARD PROCEDURE** .

      No

      - Go To 2

2. **CHECK THE (F921) FUSED IGNITION RUN CONTROL OUTPUT CIRCUIT FOR AN OPEN OR SHORT**
   1. Turn the ignition off.
   2. Disconnect the Comfort Seat Wheel Module (CSWM) C1 harness connector.
   3. Turn the ignition on.
   4. Using a 12-volt test light connected to ground, check the (F921) Fused Ignition Run Control Output circuit.

      NOTE: The test light must illuminate brightly. Compare the brightness to that of a direct connection to the battery.

      Does the test light illuminate brightly?

Yes

- Go To 3

No

- Repair the (F921) Fused Ignition circuit for an open or high resistance.

NOTE: If the fuse is open, make sure to check for a short to ground.

- Perform the BODY VERIFICATION TEST. Refer to **STANDARD PROCEDURE** .

3. **CHECK THE (Z919) GROUND CIRCUIT FOR AN OPEN**
   1. Turn the ignition off.
   2. Using a 12-volt test light connected to 12-volts, check the (Z919) Ground circuit.

   Does the test light illuminate brightly?

   Yes

   - Go To 4

   No

   - Repair the (Z919) Ground circuit for an open or high resistance.
   - Perform the BODY VERIFICATION TEST. Refer to **STANDARD PROCEDURE** .

4. **CHECK THE (D163) AND (D164) CAN IHS BUS CIRCUITS FOR AN OPEN**
   1. Disconnect the CAN IHS Star Connector.
   2. Measure the resistance of the (D164) CAN IHS Bus (-) circuit between the CAN IHS Star Connector and the CSWM C1 harness connector.
   3. Measure the resistance of the (D163) CAN IHS Bus (+) circuit between the CAN IHS Star Connector and the CSWM C1 harness connector.

   Are both circuit resistances below 5.0 Ohms?

   Yes

   - Replace the Comfort Seat Wheel Module (CSWM) in accordance with the Service Information. Refer to **MODULE, COMFORT SEAT AND WHEEL, REMOVAL** .
   - Perform the BODY VERIFICATION TEST. Refer to **STANDARD PROCEDURE** .

   No

   - Repair the (D163) or the (D164) CAN IHS Bus circuit(s) for an open or high resistance.

- Perform the BODY VERIFICATION TEST. Refer to **STANDARD PROCEDURE** .

NO RESPONSE FROM DDM (DRIVER DOOR MODULE)

For a complete wiring diagram, **refer to appropriate SYSTEM WIRING DIAGRAMS article** .

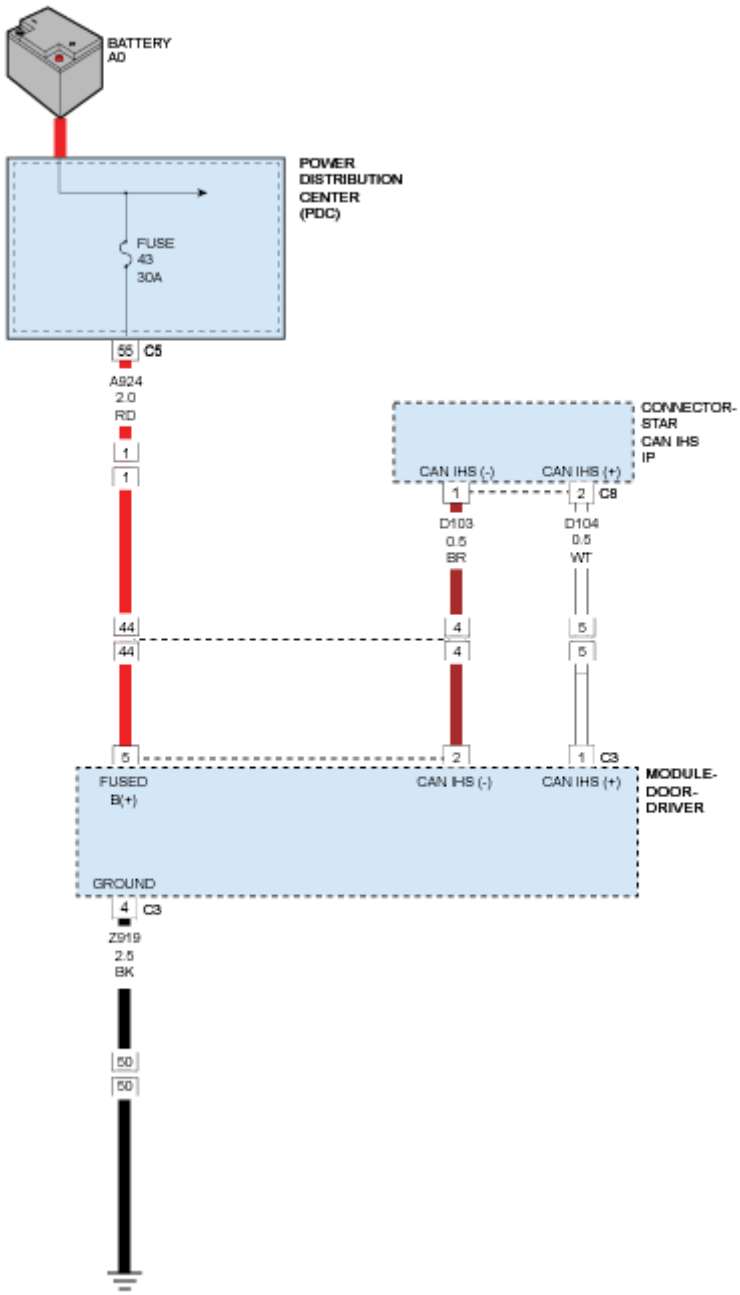

Fig. 10: DDM CAN IHS, Fused B+ & Ground Circuit Diagram
Courtesy of CHRYSLER GROUP, LLC

POSSIBLE CAUSES

Possible Causes
(A924) FUSED B(+) CIRCUIT OPEN OR SHORTED
(Z919) GROUND CIRCUIT OPEN
(D104) CAN IHS BUS (+) CIRCUIT OPEN
(D103) CAN IHS BUS (-) CIRCUIT OPEN
DRIVER DOOR MODULE

DIAGNOSTIC TEST

1. **TEST FOR INTERMITTENT CONDITION**

   NOTE: Check for any TSB(s) related to the condition. If a TSB applies, perform the procedure outlined in the TSB before continuing.

   1. Turn the ignition on.

      NOTE: Make sure the battery voltage is between 10.0 and 16.0 volts.

   2. With the scan tool, read the module status.

      NOTE: Check the BCM for any active CAN hardware DTCs, perform DTC before proceeding.

      Does the scan tool indicate that the module is active on the bus?

      Yes

      - The no response condition is not present at this time. Using the wiring diagrams as a guide, check all related splices and connectors for signs of water intrusion, corrosion, pushed out or bent terminals, and correct pin tension.

      No

      - Go To 2

2. **CHECK THE (A924) FUSED B(+) CIRCUIT FOR AN OPEN OR SHORT**
   1. Turn the ignition off.
   2. Disconnect the Driver Door Module C3 harness connector.
   3. Using a 12-volt test light connected to ground, check the (A924) Fused B(+) circuit. Compare the brightness to that of a direct connection to the battery.

      Does the test light illuminate brightly?

Yes

- Go To 3

No

- Repair the open or short in the (A924) Fused B(+) circuit.
- Perform the BODY VERIFICATION TEST. Refer to **STANDARD PROCEDURE** .

3. **CHECK THE (Z919) GROUND CIRCUIT FOR AN OPEN**
   1. Using a 12-volt test light connected to 12-volts, check the (Z919) Ground circuit. Compare the brightness to that of a direct connection to the battery.

      Does the test light illuminate brightly?

      Yes

      - Go To 4

      No

      - Repair the open in the (Z919) Ground circuit.
      - Perform the BODY VERIFICATION TEST. Refer to **STANDARD PROCEDURE** .
4. **CHECK THE (D104) AND (D103) CAN INTERIOR BUS (125K) CIRCUITS FOR AN OPEN**
   1. Measure the resistance of the (D103) CAN Interior Bus (125K) (-) circuit between the IP Star C2 harness connector and the Driver Door Module C3 harness connector.
   2. Measure the resistance of the (D104) CAN Interior Bus (125K) (+) circuit between the IP Star C2 harness connector and the Driver Door Module C3 harness connector.

      Are the resistances below 1.0 Ohms?

      Yes

      - Replace the Driver Door Module in accordance with the Service Information. Refer to **MODULE, DOOR, REMOVAL** .
      - Perform the BODY VERIFICATION TEST. Refer to **STANDARD PROCEDURE** .

      No

      - Repair the open in the (D104) or (D103) CAN Interior Bus (125K) circuit.
      - Perform the BODY VERIFICATION TEST. Refer to **STANDARD PROCEDURE** .

NO RESPONSE FROM DTCM (DRIVE TRAIN CONTROL MODULE)

For a complete wiring diagram, **refer to appropriate SYSTEM WIRING DIAGRAMS article** .

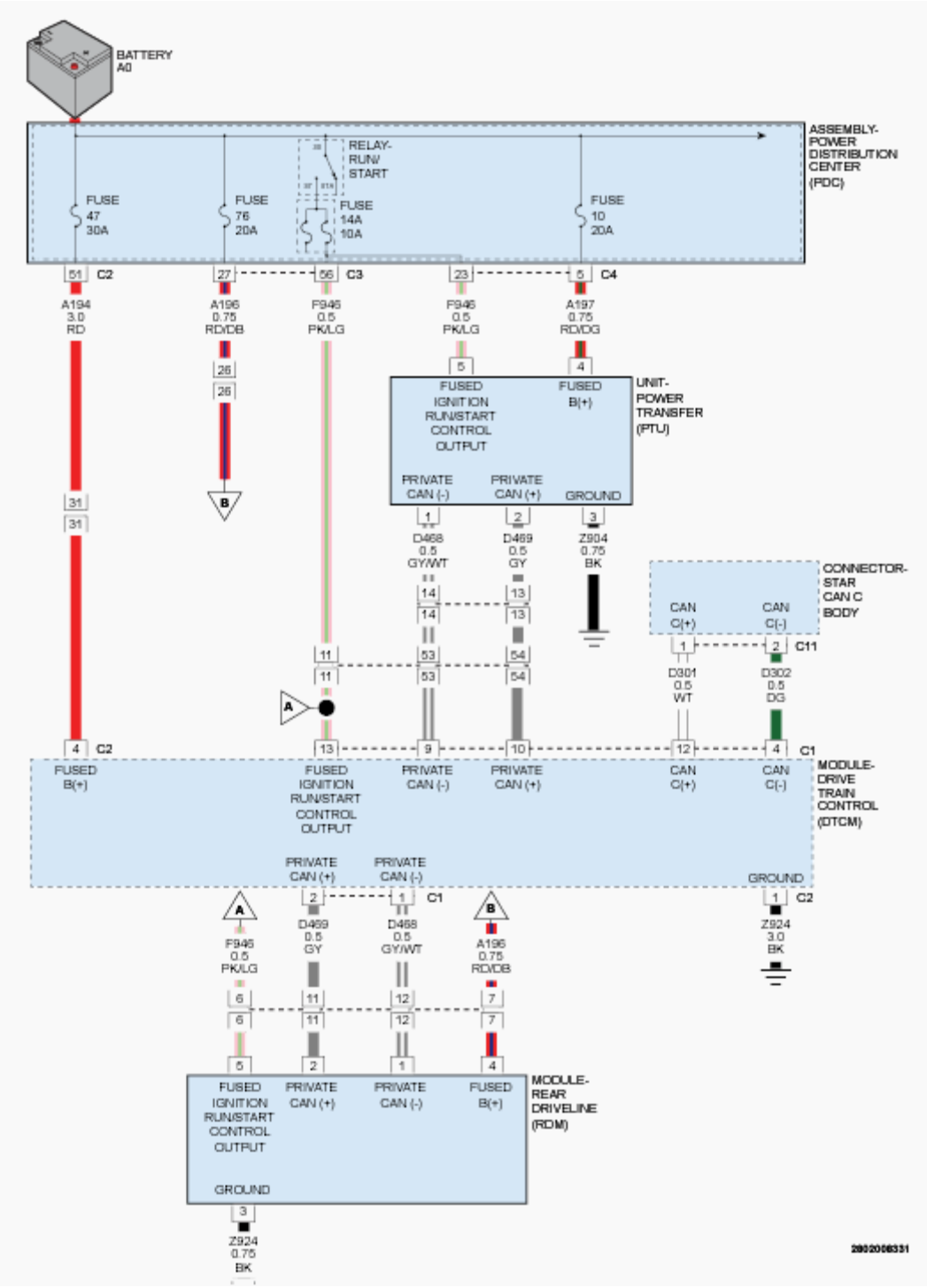

Fig. 11: DTCM Private CAN, Fused B+ & Ground Circuit Diagram
Courtesy of CHRYSLER GROUP, LLC

POSSIBLE CAUSES

Possible Causes

FUSED B(+) CIRCUIT OPEN OR SHORTED
FUSED IGNITION SWITCH OUTPUT (RUN-START) CIRCUIT OPEN OR SHORTED
GROUND CIRCUIT OPEN OR HIGH RESISTANCE
CAN C BUS (+) CIRCUIT OPEN OR HIGH RESISTANCE
CAN C BUS (-) CIRCUIT OPEN OR HIGH RESISTANCE
DRIVE TRAIN CONTROL MODULE (DTCM)

DIAGNOSTIC TEST

1. **TEST FOR INTERMITTENT CONDITION**

   NOTE: Check for any TSB(s) related to the condition. If a TSB applies, perform the procedure outlined in the TSB before continuing.

   1. Turn the ignition on.

      NOTE: Make sure the battery voltage is between 10.0 and 16.0 volts.

   2. With the scan tool, read the module status.

      NOTE: Check the BCM for any active CAN DTCs and perform the appropriate diagnostics before proceeding. Refer to the BODY CONTROL MODULE (BCM) - DIAGNOSTIC CODE INDEX article .

      Does the scan tool indicate that the module is active on the bus?

      Yes

      - Perform the STORED LOST COMMUNICATION DTCs diagnostic procedure. Refer to **DIAGNOSIS AND TESTING**.

      No

      - Go To 2

2. **CHECK THE (A194) FUSED B(+) CIRCUIT FOR AN OPEN OR SHORT**
   1. Turn the ignition off.
   2. Disconnect the DTCM C1 and C2 harness connectors.
   3. Turn the ignition on.
   4. Using a 12-volt test light connected to ground, check the (A194) Fused B(+) circuit.

      Does the test light illuminate brightly?

      Yes

- Go To 3

No

- Repair the (A194) Fused B(+) circuit for an open or short.
- Perform the DTCM VERIFICATION TEST. Refer to **STANDARD PROCEDURE** .

3. **CHECK THE (F946) FUSED IGNITION SWITCH OUTPUT (RUN-START) CIRCUIT FOR AN OPEN OR SHORT**
   1. Using a 12-volt test light connected to ground, check the (F946) Fused Ignition Switch Output (Run-Start) circuit.

      Does the test light illuminate brightly?

      Yes

      - Go To 4

      No

      - Repair the (F946) Fused Ignition Switch Output (Run-Start) circuit for an open or short.
      - Perform the DTCM VERIFICATION TEST. Refer to **STANDARD PROCEDURE** .
4. **CHECK THE (Z924) GROUND CIRCUIT FOR AN OPEN OR HIGH RESISTANCE**
   1. Turn the ignition off.
   2. Using a 12-volt test light connected to 12-volts, check the (Z924) Ground circuit.

      Does the test light illuminate brightly?

      Yes

      - Go To 5

      No

      - Repair the (Z924) Ground circuit for an open or high resistance.
      - Perform the DTCM VERIFICATION TEST. Refer to **STANDARD PROCEDURE** .
5. **CHECK THE (D301) CAN C(+) BUS CIRCUIT FOR AN OPEN OR HIGH RESISTANCE**
   1. Disconnect the Star Can C Body C11 harness connector. and perform the CAN C DASH STAR CONNECTOR REMOVAL process. Refer to **STANDARD PROCEDURE** .
   2. Measure the resistance of the (D301) CAN C Bus (+) circuit between the Star Can C Body C11 harness connector and the DTCM C1 harness connector.

      Is the resistances below 5.0 Ohms?

Yes

- Go To 6

No

- Repair the (D301) CAN C(+) Bus circuit for an open or high resistance.
- Perform the DTCM VERIFICATION TEST. Refer to **STANDARD PROCEDURE** .

6. **CHECK THE (D302) CAN C(-) BUS CIRCUIT FOR AN OPEN OR HIGH RESISTANCE**
   1. Measure the resistance of the (D302) CAN C Bus (-) circuit between the Star Can C Body C11 harness connector and the DTCM C1 harness connector.

      Are the resistances below 5.0 Ohms?

      Yes

      - Replace the Drive Train Control Module (DTCM) in accordance with the Service Information. Refer to **MODULE, DRIVETRAIN CONTROL, REMOVAL** .
      - Perform the DTCM VERIFICATION TEST. Refer to **STANDARD PROCEDURE** .

      No

      - Repair the (D302) CAN C(-) Bus circuit for an open or high resistance.
      - Perform the DTCM VERIFICATION TEST. Refer to **STANDARD PROCEDURE** .

NO RESPONSE FROM EDM (EXTERNAL DISC MODULE)

For a complete wiring diagram, **refer to appropriate SYSTEM WIRING DIAGRAMS article** .

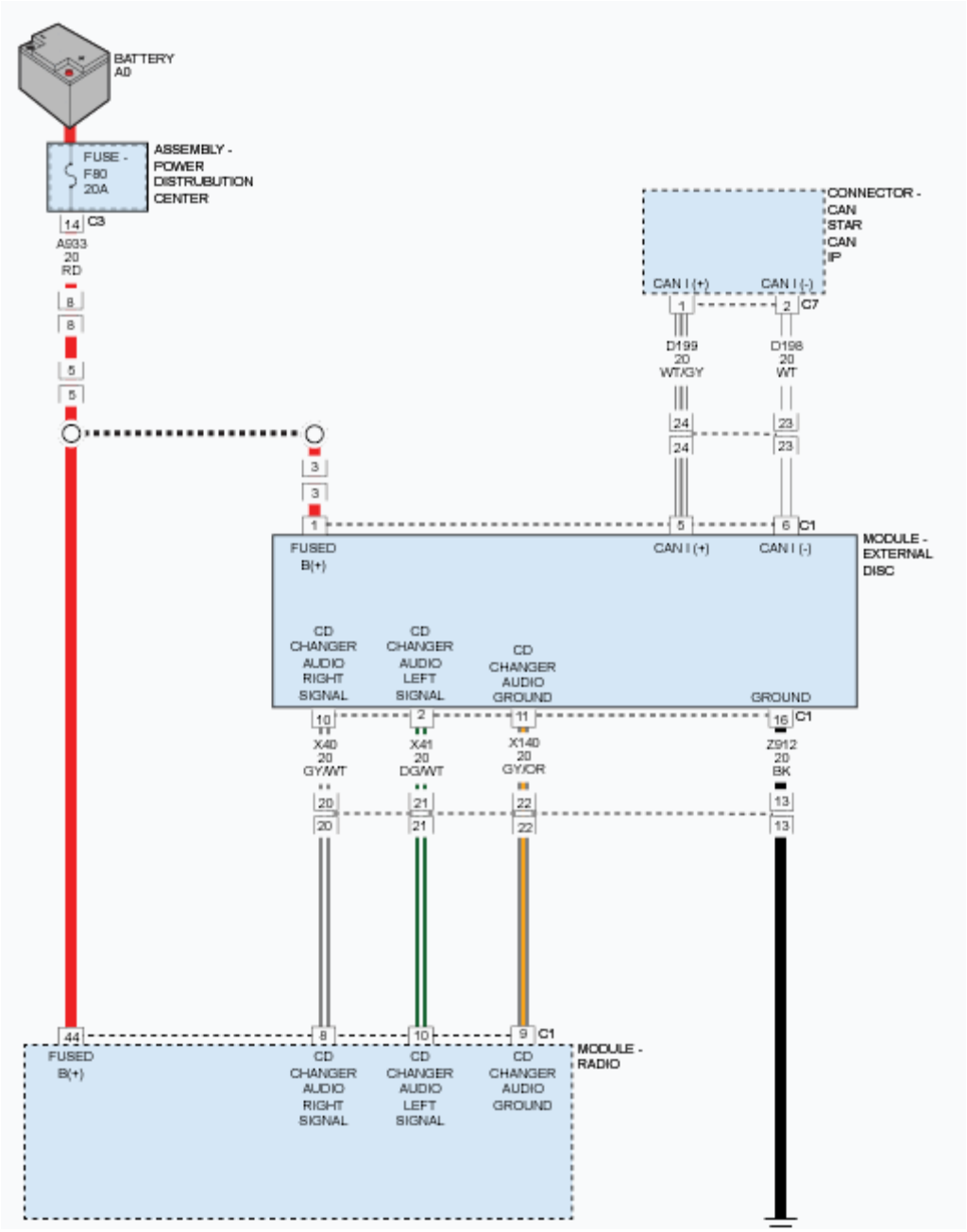

Fig. 12: EDM CAN I, Fused B+, Signal & Ground Circuit Diagram
Courtesy of CHRYSLER GROUP, LLC

POSSIBLE CAUSES

Possible Causes
FUSED B (+) CIRCUIT OPEN
GROUND CIRCUIT OPEN
CAN IHS BUS CIRCUITS OPEN
EXTERNAL DISC MODULE (EDM)

DIAGNOSTIC TEST

1. **TEST FOR INTERMITTENT CONDITION**
   1. Turn the ignition on.

      NOTE: Make sure the battery voltage is between 10.0 and 16.0 volts.

      NOTE: Check the BCM for any active CAN hardware DTCs, perform DTC before proceeding.

   2. With the scan tool, read the module status.

      Does the scan tool indicate that the module is active on the bus?

      Yes

      - The no response condition is not present at this time. Using the wiring diagram/schematic as a guide, inspect the wiring for chafed, pierced, pinched, and partially broken wires and the wiring harness connectors for broken, bent, pushed out, and corroded terminals.
      - Perform the BODY VERIFICATION TEST. Refer to **STANDARD PROCEDURE** .

      No

      - Go To 2
2. **CHECK THE (A933) FUSED B(+) CIRCUIT FOR AN OPEN OR SHORT**
   1. Turn the ignition off.
   2. Disconnect the EDM harness connector.
   3. Using a 12-volt test light connected to ground, check the (A933) Fused B(+) circuit.

      Does the test light illuminate brightly?

      Yes

      - Go To 3

      No

      - Using the wiring diagrams as a guide, repair the open or short to ground on the (A933) Fused B(+) circuit.
      - Perform the BODY VERIFICATION TEST. Refer to **STANDARD PROCEDURE** .
3. **CHECK THE (Z912) GROUND CIRCUIT FOR AN OPEN**
   1. Using a 12-volt test light connected to 12-volts, check the (Z912) Ground circuit.

Does the test light illuminate brightly?

Yes

- Go To 4

No

- Repair the open in the (Z912) Ground circuit.
- Perform the BODY VERIFICATION TEST. Refer to **STANDARD PROCEDURE** .

4. **CHECK THE (D198) OR (D199) CAN IHS BUS CIRCUIT FOR AN OPEN**
   1. Disconnect the CAN IHS IP Star connector.
   2. Measure the resistance of the (D198) CAN IHS Bus (-) circuit between the CAN IHS IP Star connector and the EDM harness connector.
   3. Measure the resistance of the (D199) CAN IHS Bus (+) circuit between the CAN IHS IP Star connector and the EDM harness connector.

   Is resistance below 5.0 Ohms on both circuits?

   Yes

   - Replace the External Disc Module (EDM) in accordance with the Service Information.
   - Perform the BODY VERIFICATION TEST. Refer to **STANDARD PROCEDURE** .

   No

   - Repair the open in the (D198) or (D199) CAN IHS Bus circuit. Inspect the connector for damage.
   - Perform the BODY VERIFICATION TEST. Refer to **STANDARD PROCEDURE** .

NO RESPONSE FROM EPB (ELECTRIC PARKING BRAKE MODULE)

For a complete wiring diagram, **refer to appropriate SYSTEM WIRING DIAGRAMS article** .

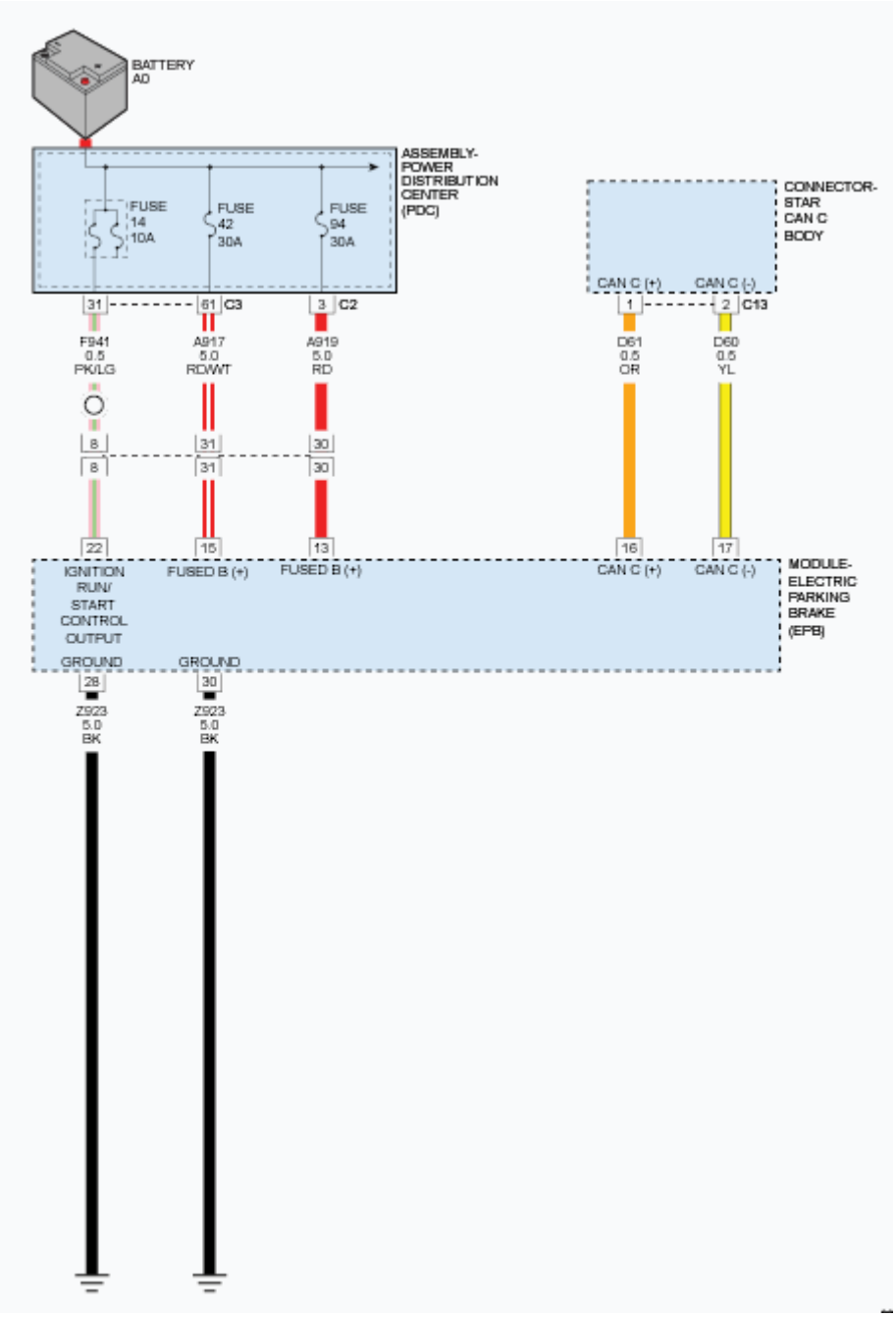

Fig. 13: EPB CAN C, Fused B+, Control Output & Ground Circuit Diagram
Courtesy of CHRYSLER GROUP, LLC

POSSIBLE CAUSES

Possible Causes
FUSED B(+) CIRCUITS OPEN OR SHORTED
IGNITION RUN/START CONTROL OUTPUT CIRCUIT OPEN OR SHORTED
GROUND CIRCUITS OPEN OR HIGH RESISTANCE

CAN C BUS (+) CIRCUIT OPEN OR HIGH RESISTANCE
CAN C BUS (-) CIRCUIT OPEN OR HIGH RESISTANCE
ELECTRIC PARKING BRAKE (EPB) MODULE

DIAGNOSTIC TEST

1. **CHECK THE (A917) AND (A919) FUSED B(+) CIRCUIT FOR AN OPEN OR SHORT CIRCUIT**
   1. Turn the ignition off.
   2. Disconnect the EPB Module harness connector.
   3. Using a 12-volt test light connected to ground, check each (A917) and (A919) Fused B(+) circuit.

      Does the test light illuminate brightly for each circuit?

      Yes

      - Go To 2

      No

      - Repair the Fused B(+) circuits for an open or short.
      - Perform the EPB VERIFICATION TEST. Refer to **STANDARD PROCEDURE** .
2. **CHECK THE (F941) FUSED RUN/START CONTROL OUTPUT CIRCUIT FOR AN OPEN OR SHORT CIRCUIT**
   1. Turn the ignition on.
   2. Using a 12-volt test light connected to ground, check the (F941) Fused Run/Start Control Output circuit.

      Does the test light illuminate brightly?

      Yes

      - Go To 3

      No

      - Repair the (F941) Fused Run/Start Control Output circuit for an open or short.
      - Perform the EPB VERIFICATION TEST. Refer to **STANDARD PROCEDURE** .
3. **CHECK THE (Z923) GROUND CIRCUITS FOR AN OPEN OR HIGH RESISTANCE**
   1. Using a 12-volt test light connected to 12-volts, check the (Z923) Ground circuits.

      Does the test light illuminate brightly for each circuit?

      Yes

- Go To 4

No

- Repair the (Z923) Ground circuits for an open or high resistance.
- Perform the EPB VERIFICATION TEST. Refer to **STANDARD PROCEDURE** .

4. **(D61) CAN C BUS (+) CIRCUIT OPEN OR HIGH RESISTANCE**
   1. Turn the ignition off.
   2. Disconnect the CAN C Body C13 Star harness connector.
   3. Measure the resistance of the (D61) CAN C Bus (+) circuit between the CAN C Body C13 Star harness connector and the ABS Module harness connector.

      Is resistance below 5.0 Ohms?

      Yes

      - Go To 5

      No

      - Repair the (D61) CAN C Bus (+) circuit for an open or high resistance.
      - Perform the EPB VERIFICATION TEST. Refer to **STANDARD PROCEDURE** .
5. **(D60) CAN C BUS (-) CIRCUIT OPEN OR HIGH RESISTANCE**
   1. Measure the resistance of the (D60) CAN C Bus (-) circuit between the CAN C Body C13 Star harness connector and the ABS Module harness connector.

      Is resistance below 5.0 Ohms?

      Yes

      - Replace the Electric Parking Brake (EPB) Module in accordance with service information. Refer to **MODULE, ELECTRIC PARK BRAKE, REMOVAL** .
      - Perform the EPB VERIFICATION TEST. Refer to **STANDARD PROCEDURE** .

      No

      - Repair the (D60) CAN C Bus (-) circuit for an open or high resistance.
      - Perform the EPB VERIFICATION TEST. Refer to **STANDARD PROCEDURE** .

NO RESPONSE FROM EPS (ELECTRIC POWER STEERING MODULE)

For a complete wiring diagram, **refer to appropriate SYSTEM WIRING DIAGRAMS article** .

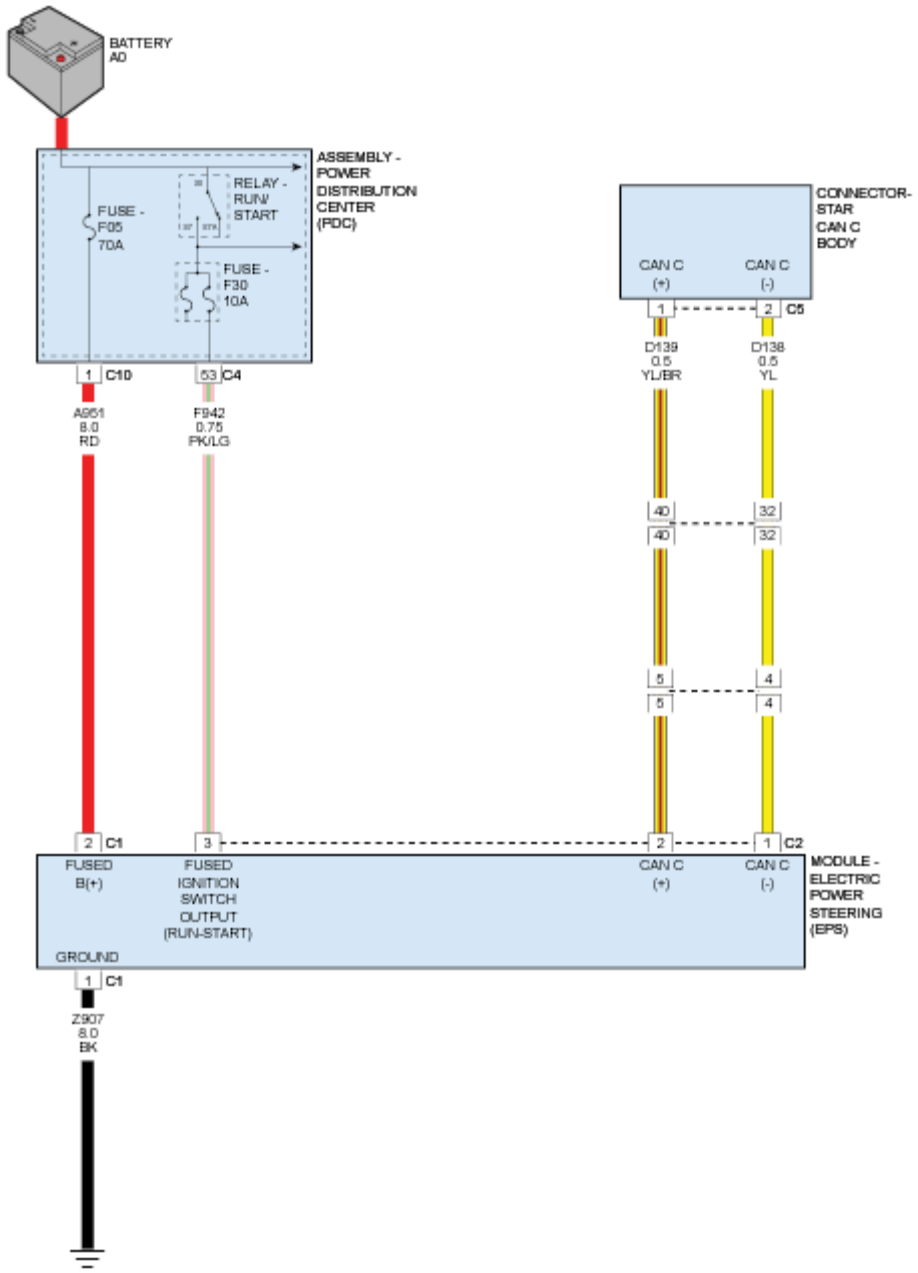

Fig. 14: EPSM CAN C, Fused B+, Fused Ignition Switch Output & Ground Circuit Diagram
Courtesy of CHRYSLER GROUP, LLC

POSSIBLE CAUSES

Possible Causes
FUSED B(+) CIRCUIT OPEN OR SHORTED
IGNITION RUN/START CONTROL OUTPUT CIRCUIT OPEN OR SHORTED
GROUND CIRCUIT OPEN OR HIGH RESISTANCE
CAN C BUS (+) CIRCUIT OPEN OR HIGH RESISTANCE

CAN C BUS (-) CIRCUIT OPEN OR HIGH RESISTANCE
ELECTRIC POWER STEERING (EPS) MODULE

DIAGNOSTIC TEST

1. **TEST FOR INTERMITTENT CONDITION**

   NOTE: Check for any TSB(s) related to the condition. If a TSB applies, perform the procedure outlined in the TSB before continuing.

   1. Turn the ignition on.

      NOTE: Make sure the battery voltage is between 10.0 and 16.0 volts.

   2. With the scan tool, read the module status.

      NOTE: Check the BCM for any active CAN hardware DTCs, perform the diagnostic procedure for those DTCs before proceeding.

      Does the scan tool indicate that the module is active on the bus?

      Yes

      - The no response condition is not present at this time. Using the wiring diagrams as a guide, check all related splices and connectors for signs of water intrusion, corrosion, pushed out or bent terminals, and correct pin tension.

      No

      - Go To 2

2. **CHECK THE (A951) FUSED B(+) CIRCUIT FOR AN OPEN OR SHORT**
   1. Turn the ignition off.
   2. Disconnect the Electronic Power Steering (EPS) Module C1 and C2 harness connectors.
   3. Turn the ignition on.
   4. Using a 12-volt test light connected to ground, check the (A951) Fused B(+) circuit.

      Does the test light illuminate brightly?

      Yes

      - Go To 3

      No

- Repair the (A951) Fused B(+) circuit for an open or short.
- Perform the EPS VERIFICATION TEST. Refer to **STANDARD PROCEDURE** .

3. **CHECK THE (F942) FUSED IGNITION SWITCH OUTPUT (RUN-START) CIRCUIT FOR AN OPEN OR SHORT**
   1. Using a 12-volt test light connected to ground, check the (F942) Fused Ignition Switch Output (Run-Start) circuit.

      Does the test light illuminate brightly?

      Yes

      - Go To 4

      No

      - Repair the (F942) Fused Ignition Switch Output (Run-Start) circuit for an open or short.
      - Perform the EPS VERIFICATION TEST. Refer to **STANDARD PROCEDURE** .
4. **CHECK THE (Z907) GROUND CIRCUIT FOR AN OPEN**
   1. Turn the ignition off.
   2. Using a 12-volt test light connected to 12-volts, check the (Z907) Ground circuit.

      Does the test light illuminate brightly?

      Yes

      - Go To 5

      No

      - Repair the (Z907) Ground circuit for an open.
      - Perform the EPS VERIFICATION TEST. Refer to **STANDARD PROCEDURE** .
5. **CHECK THE (D139) CAN C(+) BUS CIRCUIT FOR AN OPEN**
   1. Disconnect the Star Can C Body C5 harness connector. and perform the CAN C DASH STAR CONNECTOR REMOVAL process. Refer to **STANDARD PROCEDURE** .
   2. Measure the resistance of the (D139) CAN C Bus (+) circuit between the Star Can C Body C5 harness connector and the EPS C1 harness connector.

      Is the resistances below 5.0 Ohms?

      Yes

      - Go To 6

No

- Repair the (D139) CAN C(+) Bus circuit for an open.
- Perform the EPS VERIFICATION TEST. Refer to **STANDARD PROCEDURE** .

6. **CHECK THE (D138) CAN C(-) BUS CIRCUIT FOR AN OPEN**
   1. Measure the resistance of the (D138) CAN C Bus (-) circuit between the Star Can C Body C5 harness connector and the EPS C1 harness connector.

      Are the resistances below 5.0 Ohms?

      Yes

      - Replace the Electronic Power Steering (EPS) Module in accordance with the Service Information. Refer to **GEAR, REMOVAL** .
      - Perform the EPS VERIFICATION TEST. Refer to **STANDARD PROCEDURE** .

      No

      - Repair the (D138) CAN C(-) Bus circuit for an open.
      - Perform the EPS VERIFICATION TEST. Refer to **STANDARD PROCEDURE** .

NO RESPONSE FROM ESM (ELECTRONIC SHIFT MODULE)

For a complete wiring diagram, **refer to appropriate SYSTEM WIRING DIAGRAMS article** .

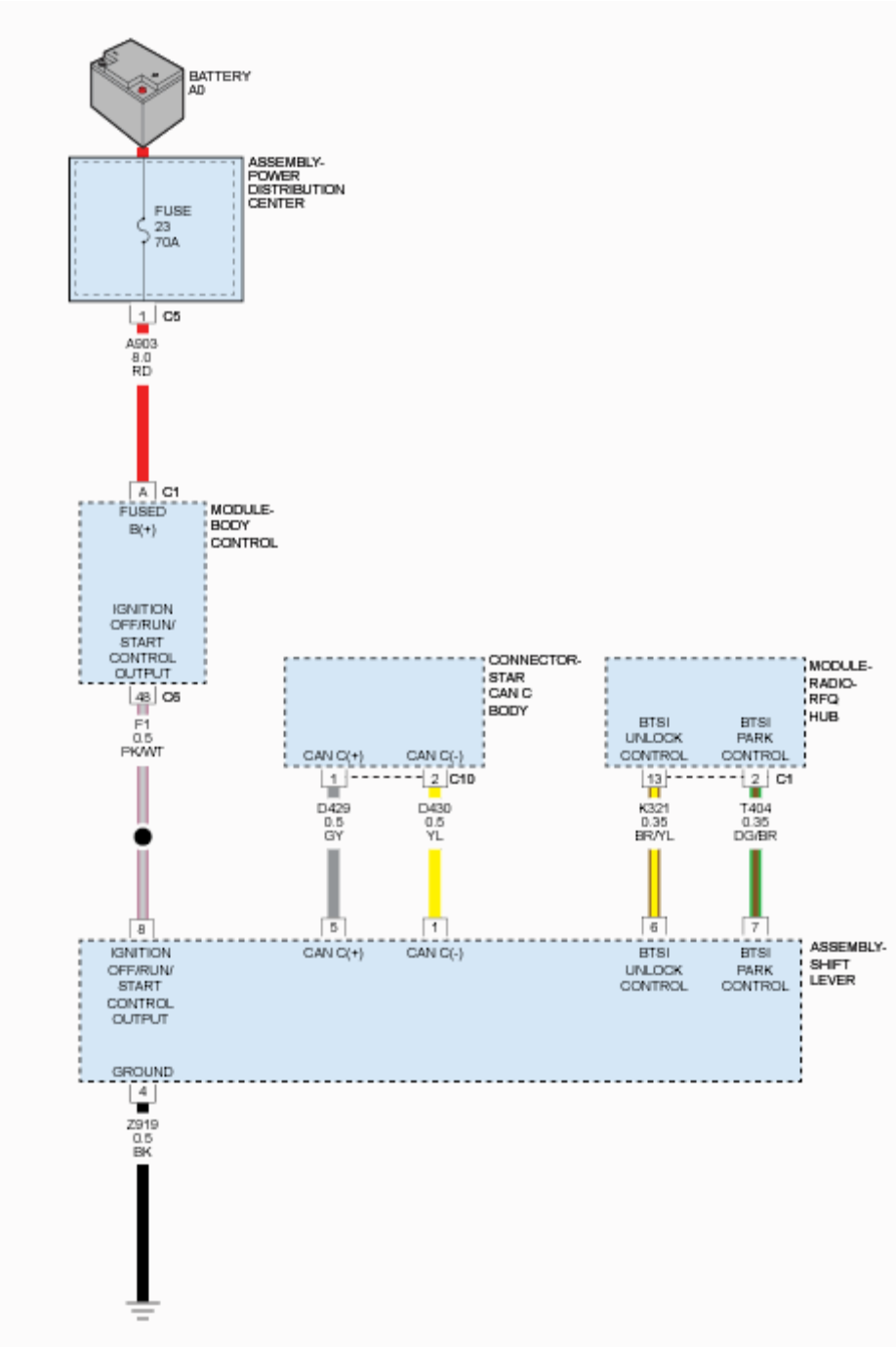

Fig. 15: Gear Shift Module (GSM) / Electronic Shift Module (ESM) Circuit Diagram
Courtesy of CHRYSLER GROUP, LLC

POSSIBLE CAUSES

Possible Causes
IGNITION OFF/RUN/START CONTROL OUTPUT CIRCUIT OPEN OR SHORTED GROUND CIRCUITS OPEN

CAN BUS CIRCUITS OPEN
ELECTRONIC SHIFT MODULE

DIAGNOSTIC TEST

1. **TEST FOR INTERMITTENT CONDITION**

   NOTE: Check for any TSB(s) related to the condition. If a TSB applies, perform the procedure outlined in the TSB before continuing.

   1. Turn the ignition on.

      NOTE: Make sure the battery voltage is between 10.0 and 16.0 volts.

   2. With the scan tool, read the module status.

      NOTE: Check the BCM for any active CAN hardware DTCs, perform DTC before proceeding.

      Does the scan tool indicate that the module is active on the bus?

      Yes

      - The no response condition is not present at this time. Using the wiring diagram/schematic as a guide, inspect the wiring for chafed, pierced, pinched, and partially broken wires and the wiring harness connectors for broken, bent, pushed out, and corroded terminals.
      - Perform the BODY VERIFICATION TEST. Refer to **STANDARD PROCEDURE** .

      No

      - Go To 2

2. **CHECK THE (F1) IGNITION OFF/RUN/START CONTROL OUTPUT CIRCUIT FOR AN OPEN OR SHORT**
   1. Turn the ignition off.
   2. Disconnect the Shift Lever Assembly C1 harness connectors.
   3. Turn the ignition on.
   4. Using a 12-volt test light connected to ground, check the (F1) Ignition Off/Run/Start Control Output circuit.

      Does the test light illuminate brightly?

      Yes

      - Go To 3

No

- Repair the open or short in the (F1) Ignition Off/Run/Start Control Output circuit.
- Perform the BODY VERIFICATION TEST. Refer to **STANDARD PROCEDURE** .

3. **CHECK THE (Z919) GROUND CIRCUITS FOR AN OPEN**
   1. Using a 12-volt test light connected to 12-volts, check the (Z919) Ground circuits at the Shift Lever Assembly harness connector.

      Does the test light illuminate brightly?

      Yes

      - Go To 4

      No

      - Repair the open in the (Z919) Ground circuit(s).
      - Perform the BODY VERIFICATION TEST. Refer to **STANDARD PROCEDURE** .
4. **CHECK THE (D429) AND (D430) CAN C BUS CIRCUITS FOR AN OPEN**
   1. Turn the ignition off.
   2. Disconnect the CAN C Body C7 Star Connector.
   3. Measure the resistance of the (D430) CAN C Bus (-) circuit between the CAN C Body C10 Star Connector and the Shift Lever Assembly harness connector.
   4. Measure the resistance of the (D429) CAN C Bus (+) circuit between the CAN C Body C10 Star Connector and the Shift Lever Assembly harness connector.

      Are the resistances below 5.0 Ohms?

      Yes

      - Replace the Shift Lever Assembly in accordance with the Service Information.
      - Perform the BODY VERIFICATION TEST. Refer to **STANDARD PROCEDURE** .

      No

      - Repair the open in the (D429) or (D430) CAN C Bus circuit. Inspect the connector for damage.
      - Perform the BODY VERIFICATION TEST. Refer to **STANDARD PROCEDURE** .

NO RESPONSE FROM FFCM (FORWARD FACING CAMERA MODULE)

For a complete wiring diagram, **refer to appropriate SYSTEM WIRING DIAGRAMS article** .

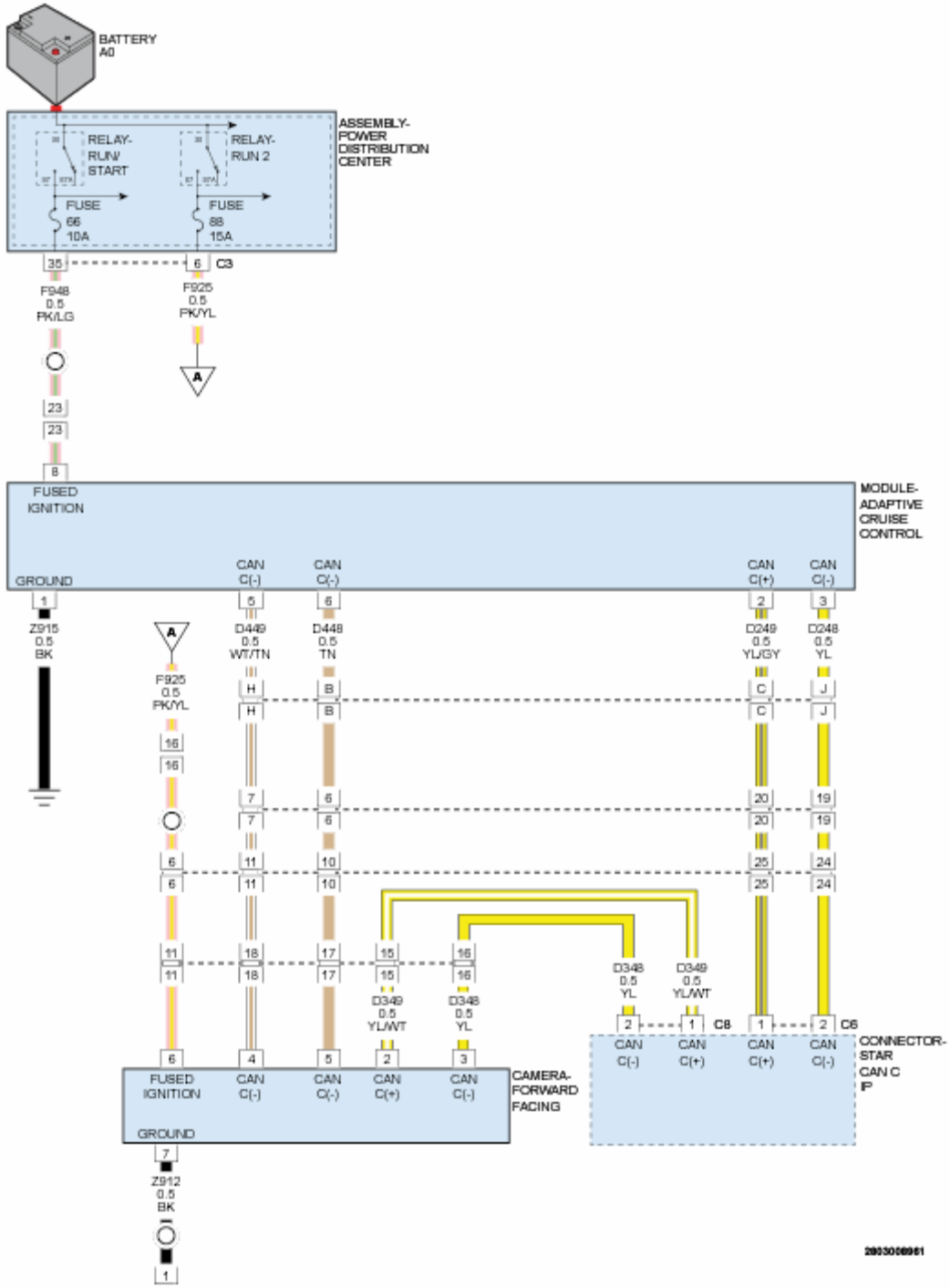

Fig. 16: FCCM CAN C, Fused Ignition, & Ground Circuit Diagram
Courtesy of CHRYSLER GROUP, LLC

POSSIBLE CAUSES

Possible Causes
GROUND CIRCUIT OPEN

FUSED IGNITION CIRCUIT OPEN OR SHORTED
CAN C BUS (+) CIRCUIT OPEN
CAN C BUS (-) CIRCUIT OPEN
FORWARD FACING CAMERA MODULE (FFCM)

DIAGNOSTIC TEST

1. **TEST FOR INTERMITTENT CONDITION**

   NOTE: Check for any TSB(s) related to the condition. If a TSB applies, perform the procedure outlined in the TSB before continuing.

   1. Turn the ignition on.

      NOTE: Make sure the battery voltage is between 10.0 and 16.0 volts.

   2. With the scan tool, read the module status.

      NOTE: Check the BCM for any active CAN C hardware DTCs and perform the appropriate diagnostic procedure before proceeding.

      Does the scan tool indicate that the module is active on the bus?

      Yes

      - The no response condition is not present at this time. Using the wiring diagrams as a guide, check all related splices and connectors for signs of water intrusion, corrosion, pushed out or bent terminals, and correct pin tension.

      No

      - Go To 2

2. **CHECK THE (Z912) GROUND CIRCUIT FOR AN OPEN**
   1. Turn the ignition off.
   2. Disconnect the Forward Facing Camera Module harness connector.
   3. Using a 12-volt test light connected to 12-volts, check the (Z912) Ground circuit.

      NOTE: The test light must illuminate brightly. Compare the brightness to that of a direct connection to the battery.

      Does the test light illuminate brightly?

      Yes

- Go To 3

No

- Repair the (Z912) Ground circuit for an open.
- Perform the FORWARD FACING CAMERA VERIFICATION TEST. Refer to **STANDARD PROCEDURE** .

3. **CHECK THE (F925) FUSED IGNITION CIRCUIT FOR AN OPEN OR SHORT**
   1. Turn the ignition on.
   2. Using a 12-volt test light connected to ground, check the (F925) Fused Ignition circuit.

   Does the test light illuminate brightly?

   Yes

   - Go To 4

   No

   - Repair the (F925) Fused Ignition circuit for an open.

   NOTE: If the fuse is open, make sure to check the circuit for a short to ground.

   - Perform the FORWARD FACING CAMERA VERIFICATION TEST. Refer to **STANDARD PROCEDURE** .

4. **CHECK THE (D349) AND (D348) CAN C BUS CIRCUITS FOR AN OPEN**
   1. Turn the ignition off.
   2. Disconnect the Star CAN C harness connector.
   3. Measure the resistance of the (D349) CAN C Bus (+) circuit between the Star CAN C harness connector and the Forward Facing Camera Module harness connector.
   4. Measure the resistance of the (D348) CAN C Bus (-) circuit between the CAN C harness connector and the Forward Facing Camera Module harness connector.

   Is the resistance below 5.0 Ohms on both circuits?

   Yes

   - Using the schematics as a guide, check the FFCM pins, terminals, and connectors for corrosion, damage, or terminal push out. Pay particular attention to all power and ground circuits. Is no problems are found, replace and program the Forward Facing Camera Module (FFCM) in accordance with the Service Information. Refer to **MODULE, FORWARD FACING CAMERA, REMOVAL** .

- Perform the FORWARD FACING CAMERA VERIFICATION TEST. Refer to **STANDARD PROCEDURE** .

No

- Repair the (D349) or (D348) CAN C Bus circuit for an open.
- Perform the FORWARD FACING CAMERA VERIFICATION TEST. Refer to **STANDARD PROCEDURE** .

NO RESPONSE FROM HVAC (A/C HEATER CONTROL MODULE)

For a complete wiring diagram, **refer to appropriate SYSTEM WIRING DIAGRAMS article** .

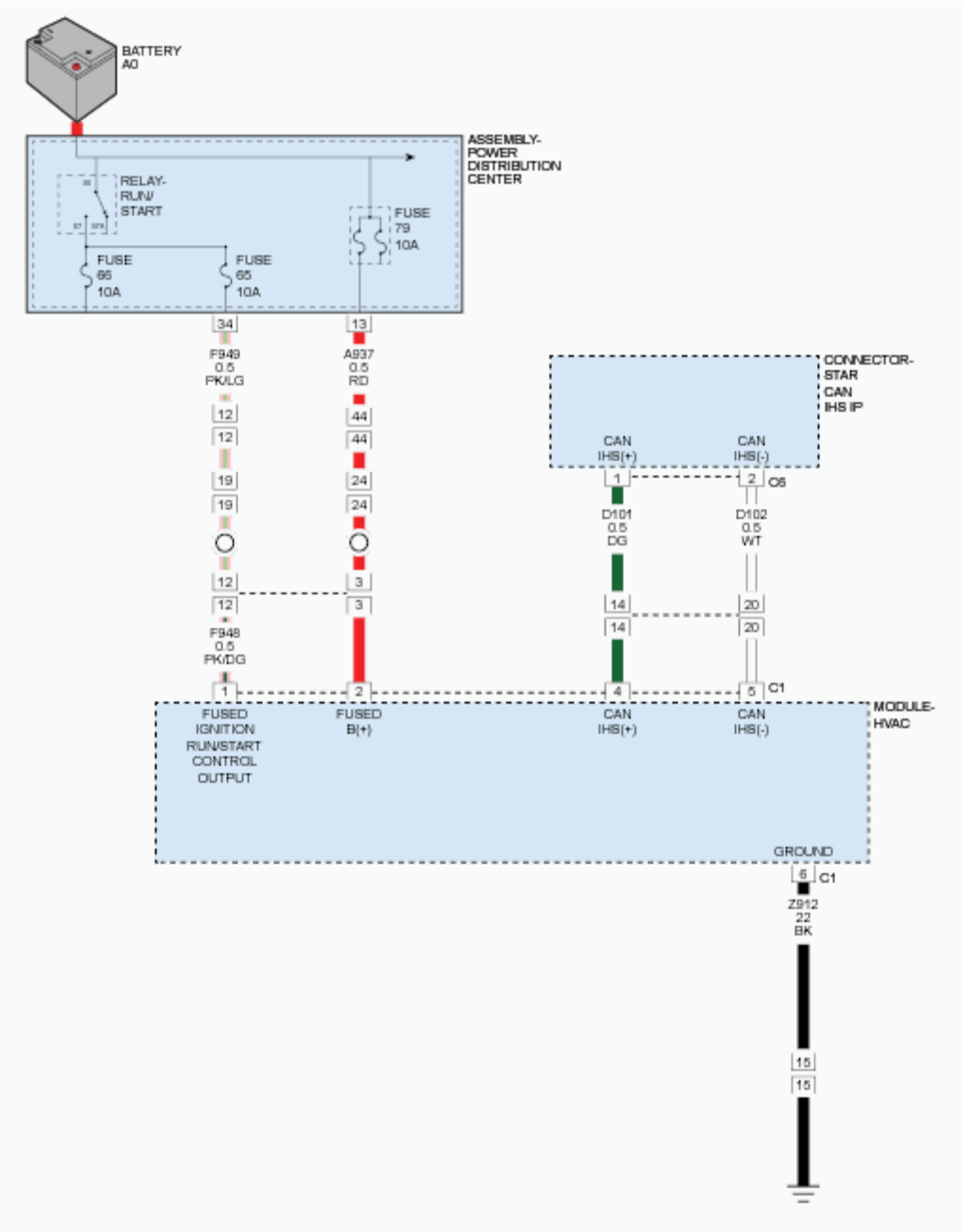

Fig. 17: HVAC Module CAN IHS, Fused B+, Fused Ignition Run/Start Control Output & Ground Circuit Diagram
Courtesy of CHRYSLER GROUP, LLC

POSSIBLE CAUSES

Possible Causes
FUSED B(+) CIRCUIT OPEN OR SHORTED
GROUND CIRCUITS OPEN
FUSED IGNITION RUN RELAY OUTPUT CIRCUIT OPEN OR SHORTED

CAN IHS BUS (125K) CIRCUITS OPEN
A/C HEATER MODULE

DIAGNOSTIC TEST

1. **TEST FOR INTERMITTENT CONDITION**

   NOTE: Check for any TSB(s) related to the condition. If a TSB applies, perform the procedure outlined in the TSB before continuing.

   1. Turn the ignition on.

      NOTE: Make sure the battery voltage is between 10.0 and 16.0 volts.

   2. With the scan tool, read the module status.

      NOTE: Check the BCM for any active CAN hardware DTCs, perform DTC before proceeding.

      Does the scan tool indicate that the module is active on the bus?

      Yes

      - The no response condition is not present at this time. Using the wiring diagram/schematic as a guide, inspect the wiring for chafed, pierced, pinched, and partially broken wires and the wiring harness connectors for broken, bent, pushed out, and corroded terminals.
      - Perform the BODY VERIFICATION TEST. Refer to **STANDARD PROCEDURE** .

      No

      - Go To 2

2. **CHECK THE (A937) FUSED B(+) CIRCUIT FOR AN OPEN OR SHORT**
   1. Turn the ignition off.
   2. Disconnect the A/C Heater Module harness connectors.
   3. Using a 12-volt test light connected to ground, check the (A937) Fused B(+) circuit.

      Does the test light illuminate brightly?

      Yes

      - Go To 3

      No

- Repair the open or short in the (A937) Fused B(+) circuit.
- Perform the HVAC VERIFICATION TEST. Refer to **STANDARD PROCEDURE** .

3. **CHECK THE (Z912) GROUND CIRCUIT FOR AN OPEN**
   1. Using a 12-volt test light connected to 12-volts, check the (Z912) Ground circuit.

      Does the test light illuminate brightly?

      Yes

      - Go To 4

      No

      - Repair the open in the (Z912) Ground circuit.
      - Perform the HVAC VERIFICATION TEST. Refer to **STANDARD PROCEDURE** .
4. **CHECK THE (F949) FUSED IGNITION RUN RELAY OUTPUT CIRCUIT FOR AN OPEN OR SHORT**
   1. Turn the ignition on.
   2. Using a 12-volt test light connected to ground, check the (F949) Fused Ignition Run Relay Output circuit.

      Does the test light illuminate brightly?

      Yes

      - Go To 5

      No

      - Repair the open or short in the (F949) Fused Ignition Run Relay Output circuit.
      - Perform the HVAC VERIFICATION TEST. Refer to **STANDARD PROCEDURE** .
5. **CHECK THE (D101) AND (D102) CAN IHS BUS (125K) CIRCUIT FOR AN OPEN**
   1. Turn the ignition off.
   2. Disconnect the CAN IHS IP C6 Star Connector.
   3. Measure the resistance of the (D102) CAN IHS Bus (-) (125K) circuit between the CAN IHS IP C6 Star Connector and the A/C Heater harness connector.
   4. Measure the resistance of the (D101) CAN IHS Bus (+) (125K) circuit between the CAN IHS IP C6 Star Connector and the A/C Heater harness connector.

      Are the resistances below 5.0 Ohms?

      Yes

- Replace the A/C Heater Module in accordance with the Service Information. Refer to **MODULE, HVAC, REMOVAL** .
- Perform the HVAC VERIFICATION TEST. Refer to **STANDARD PROCEDURE** .

No

- Repair the open in the (D101) or (D102) CAN IHS Bus (125K) circuit. Inspect the connector for damage.
- Perform the HVAC VERIFICATION TEST. Refer to **STANDARD PROCEDURE** .

NO RESPONSE FROM ICS (INTEGRATED CENTER STACK)

For a complete wiring diagram, **refer to appropriate SYSTEM WIRING DIAGRAMS article** .

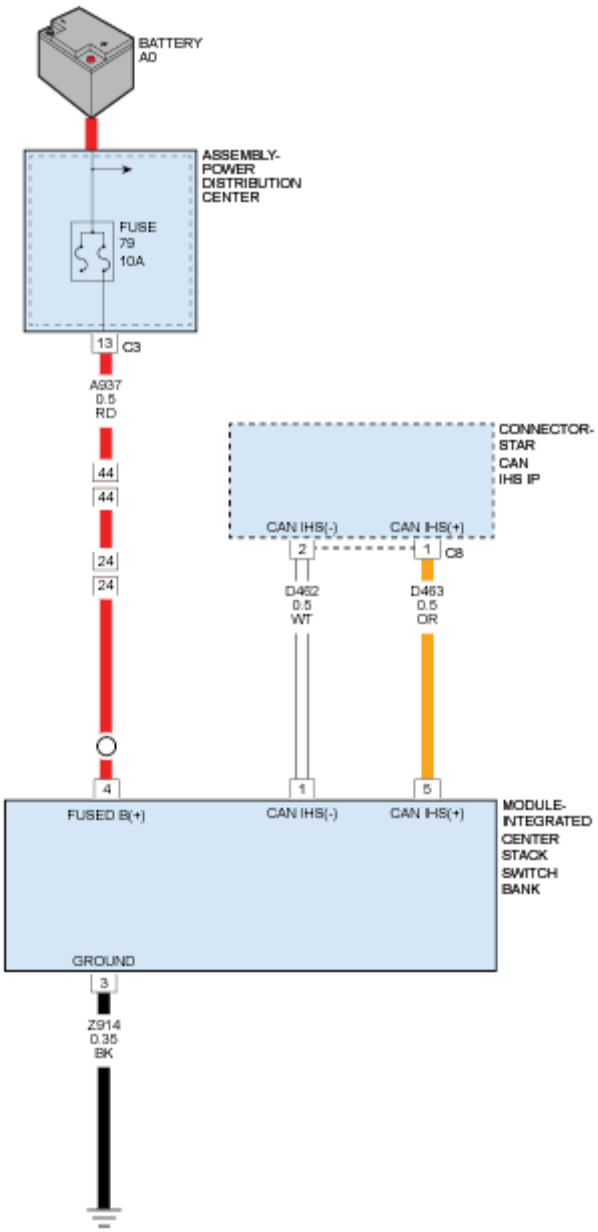

Fig. 18: Integrated Center Stack Switch Bank Module CAN IHS, Fused B+ & Ground Circuit Diagram
Courtesy of CHRYSLER GROUP, LLC

POSSIBLE CAUSES

Possible Causes
(A937) FUSED B(+) CIRCUIT OPEN OR SHORTED
(Z914) GROUND CIRCUIT OPEN
(D462) OR (D463) CAN IHS BUS CIRCUIT OPEN
INTEGRATED CENTER STACK (ICS)

DIAGNOSTIC TEST

1. **TEST FOR INTERMITTENT CONDITION**

   NOTE: Check for any TSB(s) related to the condition. If a TSB applies, perform the procedure outlined in the TSB before continuing.

   1. Turn the ignition on.

      NOTE: Make sure the battery voltage is between 10.0 and 16.0 volts.

   2. With the scan tool, read the module status.

      Does the scan tool indicate that the module is active on the bus?

      Yes

      - The no response condition is not present at this time. Using the wiring diagram/schematic as a guide, inspect the wiring for chafed, pierced, pinched, and partially broken wires and the wiring harness connectors for broken, bent, pushed out, and corroded terminals.
      - Perform the BODY VERIFICATION TEST. Refer to **STANDARD PROCEDURE** .

      No

      - Go To 2

2. **CHECK THE (A937) FUSED B(+) CIRCUIT FOR AN OPEN OR SHORT**
   1. Turn the ignition off.
   2. Disconnect the Integrated Center Stack Module C1 harness connector.
   3. Using a 12-volt test light connected to ground, check the (A937) Fused B(+) circuit.

      Does the test light illuminate brightly?

      Yes

      - Go To 3

      No

      - Repair the open or short in the (A937) Fused B(+) circuit.
      - Perform the BODY VERIFICATION TEST. Refer to **STANDARD PROCEDURE** .

3.
   1. Using a 12-volt test light connected to 12-volts, check the (Z914) Ground circuit.

      Does the test light illuminate brightly?

Yes

- Go To 4

No

- Repair the open in the (Z914) Ground circuit.
- Perform the BODY VERIFICATION TEST. Refer to **STANDARD PROCEDURE** .

4. **CHECK THE (D462) AND (D463) CAN IHS BUS CIRCUITS FOR AN OPEN**
   1. Disconnect the CAN IHS IP Star Connector.
   2. Measure the resistance of the (D462) CAN IHS Bus (-) circuit between the CAN IHS IP Star Connector and the Integrated Center Stack Module C1 harness connector.
   3. Measure the resistance of the (D463) CAN IHS Bus (+) circuit between the CAN IHS IP Star Connector and the Integrated Center Stack Module C1 harness connector.

   Are the resistances below 5.0 Ohms?

   Yes

   - Replace the Integrated Center Stack Module in accordance with the Service Information.
   - Perform the BODY VERIFICATION TEST. Refer to **STANDARD PROCEDURE** .

   No

   - Repair the open in the (D462) or (D463) CAN IHS Bus circuit.
   - Perform the BODY VERIFICATION TEST. Refer to **STANDARD PROCEDURE** .

NO RESPONSE FROM IPC (INSTRUMENT PANEL CLUSTER)

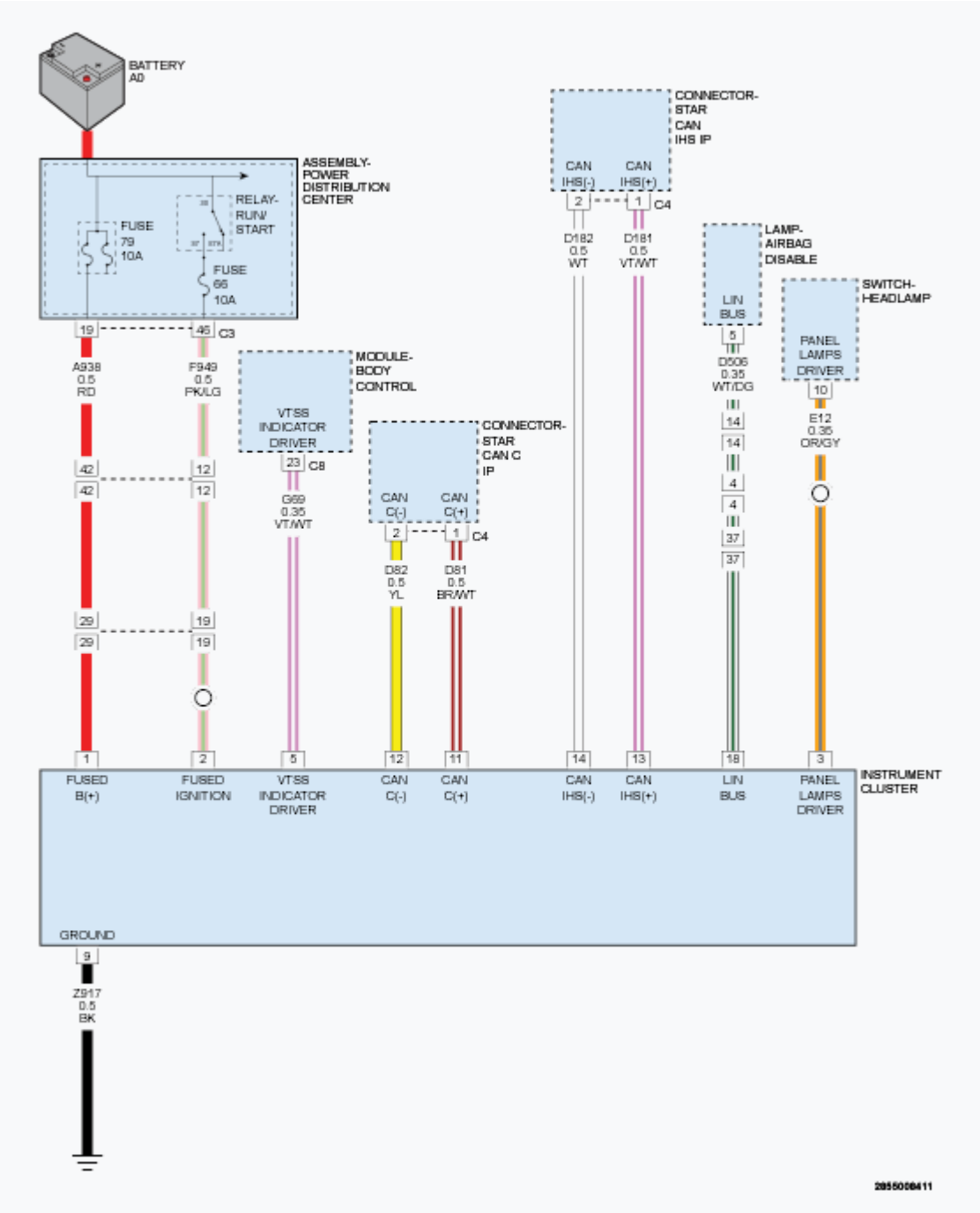

Fig. 19: Instrument Cluster CAN C, Fused B+, Fused Ignition & Ground Circuit Diagram
Courtesy of CHRYSLER GROUP, LLC

POSSIBLE CAUSES

Possible Causes
FUSED B(+) CIRCUIT OPEN OR SHORTED
GROUND CIRCUIT OPEN

FUSED IGNITION CIRCUIT OPEN OR SHORTED
CAN C BUS CIRCUITS OPEN
CLUSTER

DIAGNOSTIC TEST

1. **TEST FOR INTERMITTENT CONDITION**

   NOTE: Check for any TSB(s) related to the condition. If a TSB applies, perform the procedure outlined in the TSB before continuing.

   1. Turn the ignition on.

      NOTE: Make sure the battery voltage is between 10.0 and 16.0 volts.

   2. With the scan tool, read the module status.

      NOTE: Check the BCM for any active CAN hardware DTCs, perform DTC before proceeding.

      Does the scan tool indicate that the module is active on the bus?

      Yes

      - The no response condition is not present at this time. Using the wiring diagram/schematic as a guide, inspect the wiring for chafed, pierced, pinched, and partially broken wires and the wiring harness connectors for broken, bent, pushed out, and corroded terminals.
      - Perform the BODY VERIFICATION TEST. Refer to **STANDARD PROCEDURE** .

      No

      - Go To 2

2. **CHECK THE (A938) FUSED B(+) CIRCUIT FOR AN OPEN**
   1. Turn the ignition off.
   2. Disconnect the Instrument Cluster harness connector.
   3. Using a 12-volt test light connected to ground, check the (A938) Fused B(+) circuit.

      Does the test light illuminate brightly?

      Yes

      - Go To 3

      No

- Repair the (A938) Fused B(+) circuit for an open or high resistance.

NOTE: If the fuse is open, make sure to check for a short to ground.

- Perform the BODY VERIFICATION TEST. Refer to **STANDARD PROCEDURE** .

3. **CHECK THE (Z917) GROUND CIRCUIT FOR AN OPEN**
   1. Using a 12-volt test light connected to 12-volts, check each (Z917) Ground circuit.

      Does the test light illuminate brightly for each circuit?

      Yes

      - Go To 4

      No

      - Repair the (Z917) Ground circuit for an open or high resistance.
      - Perform the BODY VERIFICATION TEST. Refer to **STANDARD PROCEDURE** .
4. **CHECK THE (F949) FUSED IGNITION CIRCUIT FOR AN OPEN OR SHORT**
   1. Turn the ignition on.
   2. Using a 12-volt test light connected to ground, check the (F949) Fused Ignition circuit.

      Does the test light illuminate brightly?

      Yes

      - Go To 5

      No

      - Repair the (F949) Fused Ignition circuit for an open or high resistance.

      NOTE: If the fuse is open, make sure to check for a short to ground.

      - Perform the BODY VERIFICATION TEST. Refer to **STANDARD PROCEDURE** .
5. **CHECK THE (D81) AND (D82) CAN C BUS CIRCUITS FOR AN OPEN**
   1. Turn the ignition off.
   2. Disconnect the CAN C IP C4 Star Connector.
   3. Measure the resistance of the (D82) CAN C Bus (-) circuit between the CAN C IP C4 Star Connector and the Instrument Cluster harness connector.
   4. Measure the resistance of the (D81) CAN C Bus (+) circuit between the CAN C IP C4 Star Connector and the Instrument Cluster harness connector.

Are both resistances below 5.0 Ohms?

Yes

- Replace the Instrument Cluster in accordance with the Service Information. Refer to **REMOVAL** .
- Perform the BODY VERIFICATION TEST. Refer to **STANDARD PROCEDURE** .

No

- Repair the (D81) or (D82) CAN C Bus circuit(s) for an open or high resistance.
- Perform the BODY VERIFICATION TEST. Refer to **STANDARD PROCEDURE** .

NO RESPONSE FROM LBSS (LEFT BLIND SPOT SENSOR)

For a complete wiring diagram, **refer to appropriate SYSTEM WIRING DIAGRAMS article** .

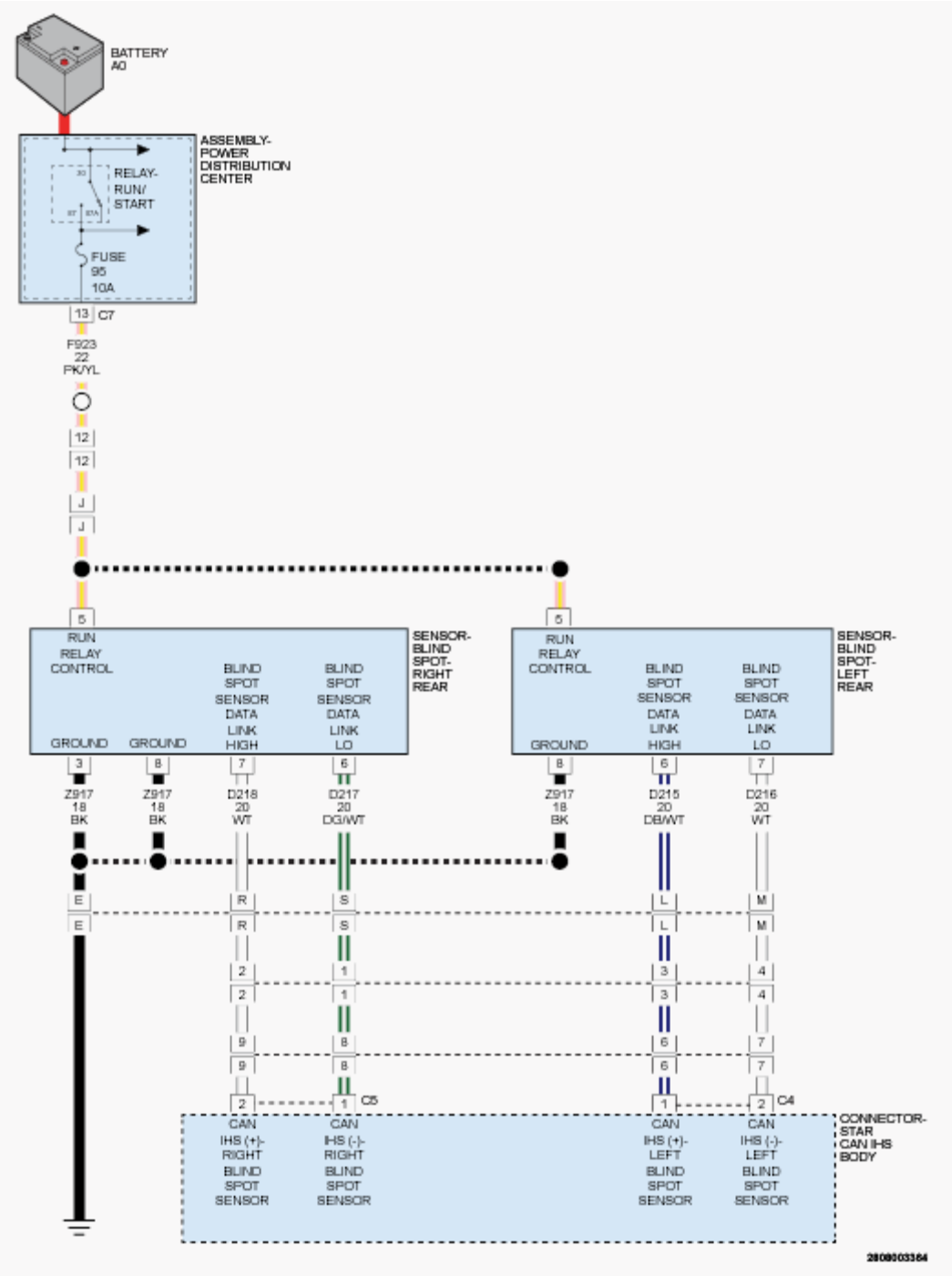

Fig. 20: Rear Blind Spot Sensor Circuit Diagram
Courtesy of CHRYSLER GROUP, LLC

WHEN MONITORED

With the ignition on.

SET CONDITION

No BUS messages from the Left Blind Spot Sensor (LBSS) are received for greater than 1.05 seconds.

POSSIBLE CAUSES

Possible Causes
FUSED RUN RELAY CONTROL CIRCUIT OPEN
GROUND CIRCUIT OPEN
CAN IHS BUS CIRCUITS OPEN
LEFT BLIND SPOT SENSOR (LBSS)

DIAGNOSTIC TEST

1. **TEST FOR INTERMITTENT CONDITION**
   1. Turn the ignition on.

      NOTE: Make sure the battery voltage is between 10.0 and 16.0 volts.

   2. With the scan tool, read the module status.

      Does the scan tool indicate that the module is active on the bus?

      Yes

      - The no response condition is not present at this time. Using the wiring diagram/schematic as a guide, inspect the wiring for chafed, pierced, pinched, and partially broken wires and the wiring harness connectors for broken, bent, pushed out, and corroded terminals.
      - Perform the BODY VERIFICATION TEST. Refer to **STANDARD PROCEDURE** .

      No

      - Go To 2
2. **CHECK THE (F923) FUSED RUN RELAY CONTROL CIRCUIT FOR AN OPEN OR SHORT**
   1. Turn the ignition off.
   2. Disconnect the LBSS harness connector.
   3. Using a 12-volt test light connected to ground, check the (F923) Fused Run Relay Control circuit.

      Does the test light illuminate brightly?

      Yes

      - Go To 3

      No

- Repair the open or short in the (F923) Fused Run Relay Control circuit.
- Perform the BODY VERIFICATION TEST. Refer to **STANDARD PROCEDURE** .

3. **CHECK THE (Z923) GROUND CIRCUIT FOR AN OPEN**
   1. Using a 12-volt test light connected to 12-volts, check the (Z923) Ground circuit.

      Does the test light illuminate brightly?

      Yes

      - Go To 4

      No

      - Repair the open in the (Z923) Ground circuit.
      - Perform the BODY VERIFICATION TEST. Refer to **STANDARD PROCEDURE** .
4. **CHECK THE (D215) OR (D216) CAN IHS BUS CIRCUIT FOR AN OPEN**
   1. Disconnect the CAN IHS Body Star connector.
   2. Measure the resistance of the (D216) CAN IHS Bus (-) circuit between the CAN IHS Body Star connector and the LBSS harness connector.
   3. Measure the resistance of the (D215) CAN IHS Bus (+) circuit between the CAN IHS Body Star connector and the LBSS harness connector.

      Is resistance below 5.0 Ohms on both circuits?

      Yes

      - Replace the LBSS in accordance with the Service Information. Refer to **SENSOR, BLIND SPOT, REMOVAL** .
      - Perform the BODY VERIFICATION TEST. Refer to **STANDARD PROCEDURE** .

      No

      - Repair the open in the (D215) or (D216) CAN IHS Bus circuit. Inspect the connector for damage.
      - Perform the BODY VERIFICATION TEST. Refer to **STANDARD PROCEDURE** .

NO RESPONSE FROM MSMD (MEMORY SEAT MODULE)

For a complete wiring diagram, **refer to appropriate SYSTEM WIRING DIAGRAMS article** .

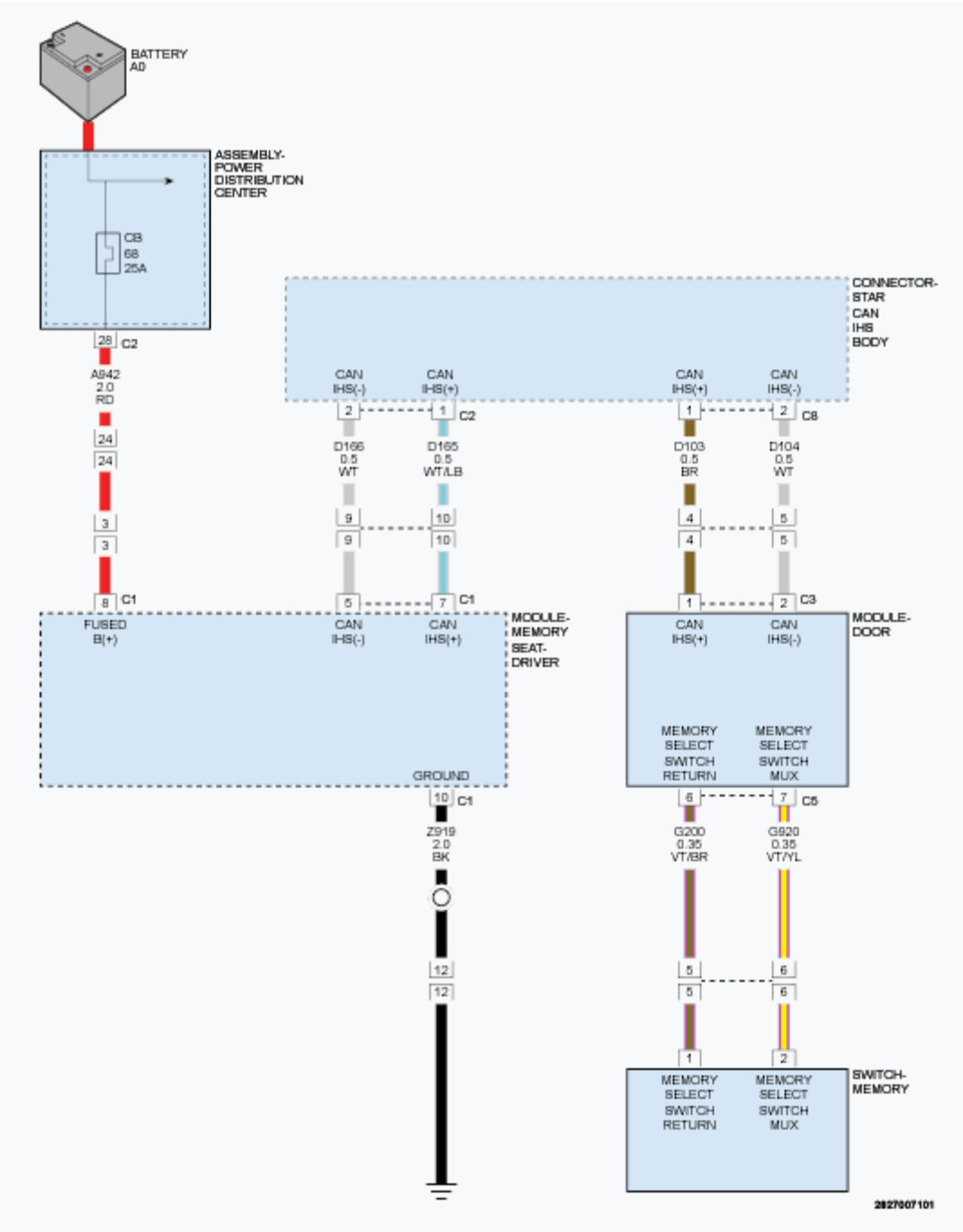

Fig. 21: MSDM CAN IHS, Fused B+ & Ground Circuit Diagram
Courtesy of CHRYSLER GROUP, LLC

POSSIBLE CAUSES

Possible Causes
FUSED B(+) CIRCUIT OPEN OR SHORTED
GROUND CIRCUIT OPEN

CAN IHS BUS CIRCUIT(S) OPEN
MEMORY SEAT MODULE-DRIVER (MSMD)

DIAGNOSTIC TEST

1. **TEST FOR INTERMITTENT CONDITION**

   NOTE: Check for any TSB(s) related to the condition. If a TSB applies, perform the procedure outlined in the TSB before continuing.

   1. Turn the ignition on.

      NOTE: Make sure the battery voltage is between 10.0 and 16.0 volts.

   2. With the scan tool, read the module status.

      NOTE: Check the BCM for any active CAN hardware DTCs, perform DTC before proceeding.

      Does the scan tool indicate that the module is active on the bus?

      Yes

      - The no response condition is not present at this time. Using the wiring diagram/schematic as a guide, inspect the wiring for chafed, pierced, pinched, and partially broken wires and the wiring harness connectors for broken, bent, pushed out, and corroded terminals.
      - Perform the POWER SEAT SYSTEM VERIFICATION TEST. Refer to **STANDARD PROCEDURE** .

      No

      - Go To 2

2. **CHECK THE (A942) FUSED B(+) CIRCUIT FOR AN OPEN**
   1. Turn the ignition off.
   2. Disconnect the Memory Seat Module (MSMD) C1 harness connector.
   3. Turn the ignition on.
   4. Using a 12-volt test light connected to ground, check the (A942) Fused B(+) circuit.

      NOTE: The test light must illuminate brightly. Compare the brightness to that of a direct connection to the battery.

      Does the test light illuminate brightly?

Yes

- Go To 3

No

- Repair the (A942) Fused B(+) circuit for an open or high resistance.

NOTE: If the fuse is open, make sure to check for a short to ground.

- Perform the POWER SEAT SYSTEM VERIFICATION TEST. Refer to **STANDARD PROCEDURE** .

3. **CHECK THE (Z919) GROUND CIRCUIT FOR AN OPEN**
   1. Turn the ignition off.
   2. Using a 12-volt test light connected to 12-volts, check the (Z919) Ground circuit.

   Does the test light illuminate brightly?

   Yes

   - Go To 4

   No

   - Repair the (Z919) Ground circuit for an open or high resistance.
   - Perform the POWER SEAT SYSTEM VERIFICATION TEST. Refer to **STANDARD PROCEDURE** .

4. **CHECK THE (D165) AND (D166) CAN IHS BUS CIRCUITS FOR AN OPEN**
   1. Disconnect the CAN IHS Star Connector.
   2. Measure the resistance of the (D166) CAN IHS Bus (-) circuit between the CAN IHS Star Connector and the CSWM C1 harness connector.
   3. Measure the resistance of the (D165) CAN IHS Bus (+) circuit between the CAN IHS Star Connector and the CSWM C1 harness connector.

   Are both circuit resistances below 5.0 Ohms?

   Yes

   - Replace and program the Memory Seat Module (MSMD) in accordance with the Service Information. Refer to **MODULE, MEMORY, SEAT, REMOVAL** .
   - Perform the POWER SEAT SYSTEM VERIFICATION TEST. Refer to **STANDARD PROCEDURE** .

   No

- Repair the (D165) or the (D166) CAN IHS Bus circuit(s) for an open or high resistance.
- Perform the POWER SEAT SYSTEM VERIFICATION TEST. Refer to **STANDARD PROCEDURE** .

NO RESPONSE FROM OCM (OCCUPANT CLASSIFICATION MODULE)

For a complete wiring diagram, **refer to appropriate SYSTEM WIRING DIAGRAMS article** .

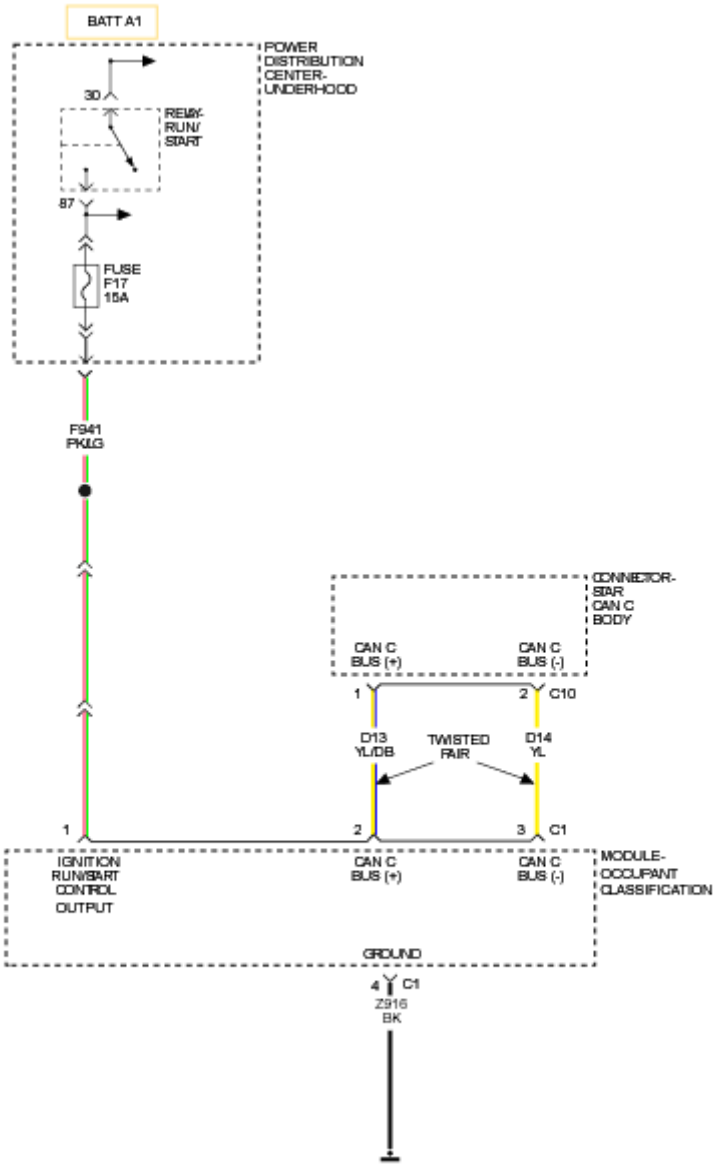

Fig. 22: Classification Module (OCM) CAN C BUS, Ignition Run/Start Control Output & Ground Circuit Diagram
Courtesy of CHRYSLER GROUP, LLC

POSSIBLE CAUSES

Possible Causes
(F941) IGNITION RUN/START CONTROL OUTPUT CIRCUIT OPEN OR SHORTED
(Z916) GROUND CIRCUIT OPEN
(D13) OR (D14) CAN C BUS CIRCUIT OPEN
OCCUPANT CLASSIFICATION MODULE (OCM)

DIAGNOSTIC TEST

1. **CHECK FOR AN ACTIVE DTC**

   NOTE: Check for any TSB(s) related to the condition. If a TSB applies, perform the procedure outlined in the TSB before continuing.

   1. Turn the ignition on.

      NOTE: Make sure the battery voltage is between 10.0 and 16.0 volts.

   2. With the scan tool, read the module status.

      NOTE: Check the BCM for any active CAN hardware DTCs, perform DTC before proceeding.

      Does the scan tool indicate that the module is active on the bus?

      Yes

      - The no response condition is not present at this time. Using the wiring diagram/schematic as a guide, inspect the wiring for chafed, pierced, pinched, and partially broken wires and the wiring harness connectors for broken, bent, pushed out, and corroded terminals.
      - Perform the BODY VERIFICATION TEST. Refer to **STANDARD PROCEDURE** .

      No

      - Go To 2

2. **CHECK THE (F941) IGNITION RUN/START CONTROL OUTPUT CIRCUIT FOR AN OPEN OR SHORT**

   NOTE: Check the BCM for any ignition related DTCs before proceeding. If set, refer to the BODY CONTROL MODULE (BCM) - DIAGNOSTIC CODE INDEX article.

   1. Using a 12-volt test light connected to ground, check the (F941) Ignition Run/Start Control Output

circuit.

Does the test light illuminate brightly?

Yes

- Go To 3

No

- Repair the open or short in the (F941) Ignition Run/Start Control Output circuit.
- Perform the BODY VERIFICATION TEST. Refer to **STANDARD PROCEDURE** .

3. **CHECK THE (Z916) GROUND CIRCUIT FOR AN OPEN**
   1. Disconnect the OCM harness connector.
   2. Measure the resistance between ground and the (Z916) Ground circuit.

   Is the resistance below 5.0 Ohms?

   Yes

   - Go To 4

   No

   - Repair the open in the (Z916) Ground circuit.
   - Perform the BODY VERIFICATION TEST. Refer to **STANDARD PROCEDURE** .

4. **CHECK THE (D13) AND (D14) CAN C BUS CIRCUITS FOR AN OPEN**
   1. Turn the ignition off.
   2. Disconnect the CAN C Body C10 Star Connector harness connector.
   3. Measure the resistance of the (D13) CAN C Bus (+) circuit between the CAN C Body C10 Star Connector harness connector and the OCM harness connector.
   4. Measure the resistance of the (D14) CAN C Bus (-) circuit between the CAN C Body C10 Star Connector harness connector and the OCM harness connector.

   Are the resistances below 5.0 Ohms?

   Yes

   - Replace the OCM in accordance with the Service Information. Refer to **MODULE, OCCUPANT CLASSIFICATION, REMOVAL** . Perform the re-zero OCM procedure when the OCM is replaced. Refer to **STANDARD PROCEDURE** .
   - Perform the OCM VERIFICATION TEST. Refer to **STANDARD PROCEDURE** .

   No

- Repair the open in the (D13) CAN C Bus (+) or (D14) CAN C Bus (-) circuit.
- Perform the BODY VERIFICATION TEST. Refer to **STANDARD PROCEDURE** .

NO RESPONSE FROM ORC (OCCUPANT RESTRAINT CONTROLLER)

For a complete wiring diagram, **refer to appropriate SYSTEM WIRING DIAGRAMS article** .

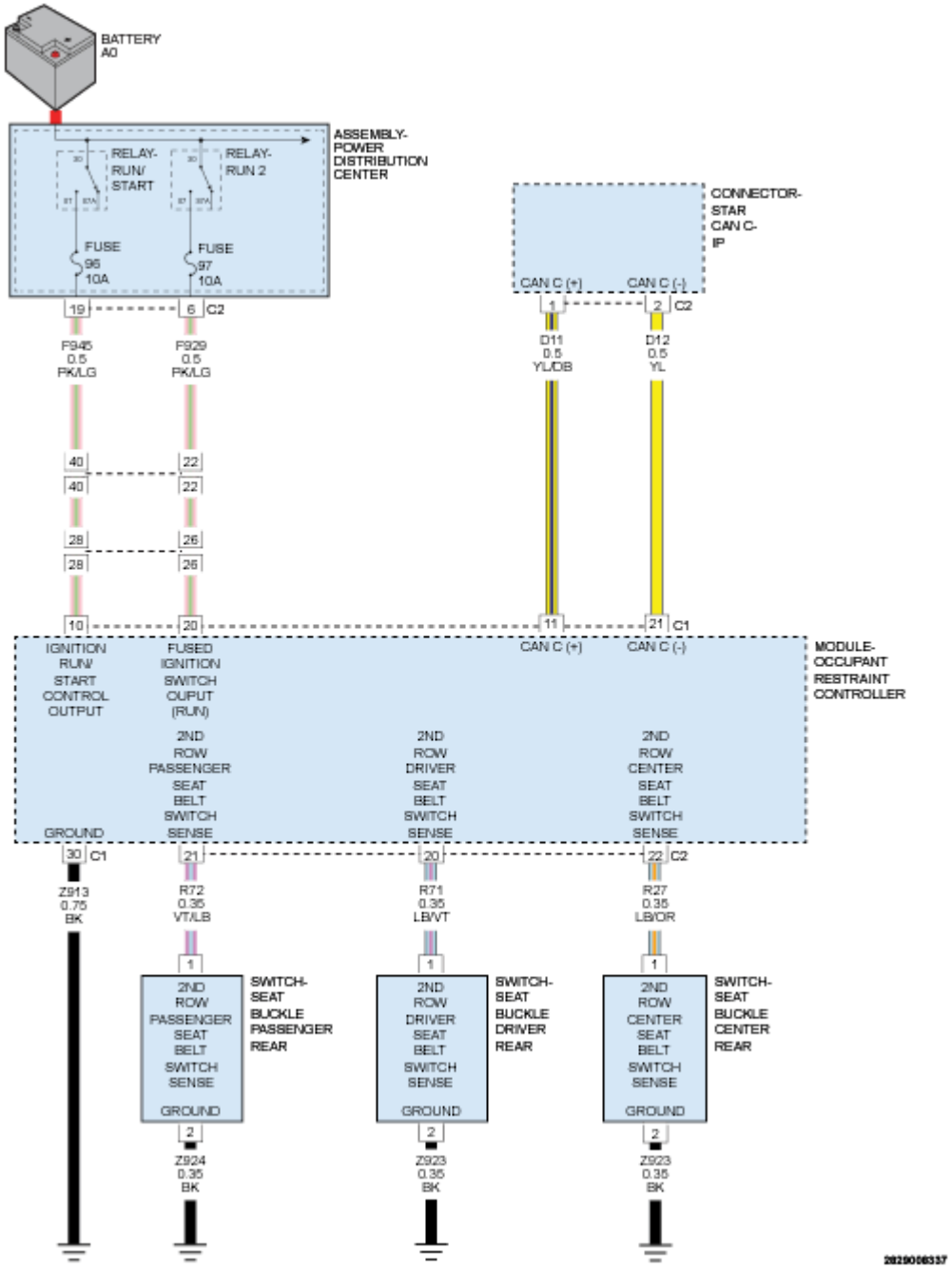

Fig. 23: Occupant Restraint Controller Module (ORC) Circuit Diagram

Courtesy of CHRYSLER GROUP, LLC

POSSIBLE CAUSES

Possible Causes
(F929) FUSED IGNITION SWITCH OUTPUT (RUN) CIRCUIT OPEN OR SHORTED
(F945) IGNITION RUN/START CONTROL OUTPUT CIRCUIT OPEN OR SHORTED
(Z913) GROUND CIRCUIT OPEN
(D11) OR (D12) CAN C BUS CIRCUIT OPEN
OCCUPANT RESTRAINT CONTROLLER (ORC) MODULE

Always Perform the Pre-Diagnostic Troubleshooting procedure before proceeding. Refer to STANDARD PROCEDURE .

DIAGNOSTIC TEST

1. **TEST FOR INTERMITTENT CONDITION**

   NOTE: Check for any TSB(s) related to the condition. If a TSB applies, perform the procedure outlined in the TSB before continuing.

   1. Turn the ignition on.

      NOTE: Make sure the battery voltage is between 10.0 and 16.0 volts.

   2. With the scan tool, read the module status.

      NOTE: Check the BCM for any active CAN hardware DTCs, perform DTC before proceeding.

      Does the scan tool indicate that the module is active on the bus?

      Yes

      - The no response condition is not present at this time. Using the wiring diagram/schematic as a guide, inspect the wiring for chafed, pierced, pinched, and partially broken wires and the wiring harness connectors for broken, bent, pushed out, and corroded terminals.
      - Perform the BODY VERIFICATION TEST. Refer to **STANDARD PROCEDURE** .

      No

      - Go To 2

2. **CHECK THE (Z913) GROUND CIRCUIT FOR AN OPEN**

WARNING: Turn the ignition off disconnect the 12-volt battery and wait two minutes before proceeding. Failure to follow these instructions may result in possible serious or fatal injury.

1. Disconnect the Occupant Restraint Controller Module harness connectors.
2. Connect the (special tool #8443-57, Adapter, Supplemental Restraint System Load Tool) to the ORC harness connectors.
3. Measure the resistance between ground and the (Z913) Ground circuit.

   Is the resistance below 5.0 Ohms?

   Yes

   - Go To 3

   No

   - Repair the open in the (Z913) Ground circuit.
   - Perform the RESTRAINTS SYSTEM VERIFICATION TEST. Refer to **STANDARD PROCEDURE** .

3. **CHECK THE (F929) FUSED IGNITION SWITCH OUTPUT (RUN) CIRCUIT FOR AN OPEN OR SHORT**

NOTE: Check the BCM for any ignition related DTCs before proceeding. If set, refer to the BODY CONTROL MODULE (BCM) - DIAGNOSTIC CODE INDEX article.

WARNING: Turn the ignition on, then reconnect the 12-volt battery and wait two minutes before proceeding. Failure to follow these instructions may result in possible serious or fatal injury.

1. Using a 12-volt test light connected to ground, check the (F929) Fused Ignition Switch Output (Run) circuit.

   Does the test light illuminate brightly?

   Yes

   - Go To 4

   No

   - Repair the open or short in the (F929) Fused Ignition Switch Output (Run) circuit.
   - Perform the RESTRAINTS SYSTEM VERIFICATION TEST. Refer to **STANDARD**

PROCEDURE .

4. **CHECK THE (F945) IGNITION RUN/START CONTROL OUTPUT CIRCUIT FOR AN OPEN OR SHORT**
   1. Using a 12-volt test light connected to ground, check the (F945) Ignition Run/Start Control Output circuit.

      Does the test light illuminate brightly?

      Yes

      - Go To 5

      No

      - Repair the open or short in the (F945) Ignition Run/Start Control Output circuit.
      - Perform the RESTRAINTS SYSTEM VERIFICATION TEST. Refer to **STANDARD PROCEDURE** .
5. **CHECK THE (D11) AND (D12) CAN C BUS CIRCUITS FOR AN OPEN**
   1. Turn the ignition off.
   2. Disconnect the CAN C IP C2 Star Connector.
   3. Measure the resistance of the (D11) CAN C Bus (+) circuit between the CAN C IP C2 Star Connector and the Occupant Restraint Controller C1 connector.
   4. Measure the resistance of the (D12) CAN C Bus (-) circuit between the CAN C IP C2 Star Connector and the Occupant Restraint Controller C1 connector.

      Are the resistances below 5.0 Ohms?

      Yes

      - Replace the Occupant Restraint Controller in accordance with the Service Information. Refer to **MODULE, OCCUPANT RESTRAINT CONTROLLER, REMOVAL** .
      - Perform the RESTRAINTS SYSTEM VERIFICATION TEST. Refer to **STANDARD PROCEDURE** .

      No

      - Repair the open in the (D11) CAN C Bus (+) or (D12) CAN C Bus (-) circuit.
      - Perform the RESTRAINTS SYSTEM VERIFICATION TEST. Refer to **STANDARD PROCEDURE** .

NO RESPONSE FROM PCM (POWERTRAIN CONTROL MODULE) - 2.4L

For a complete wiring diagram, **refer to appropriate SYSTEM WIRING DIAGRAMS article** .

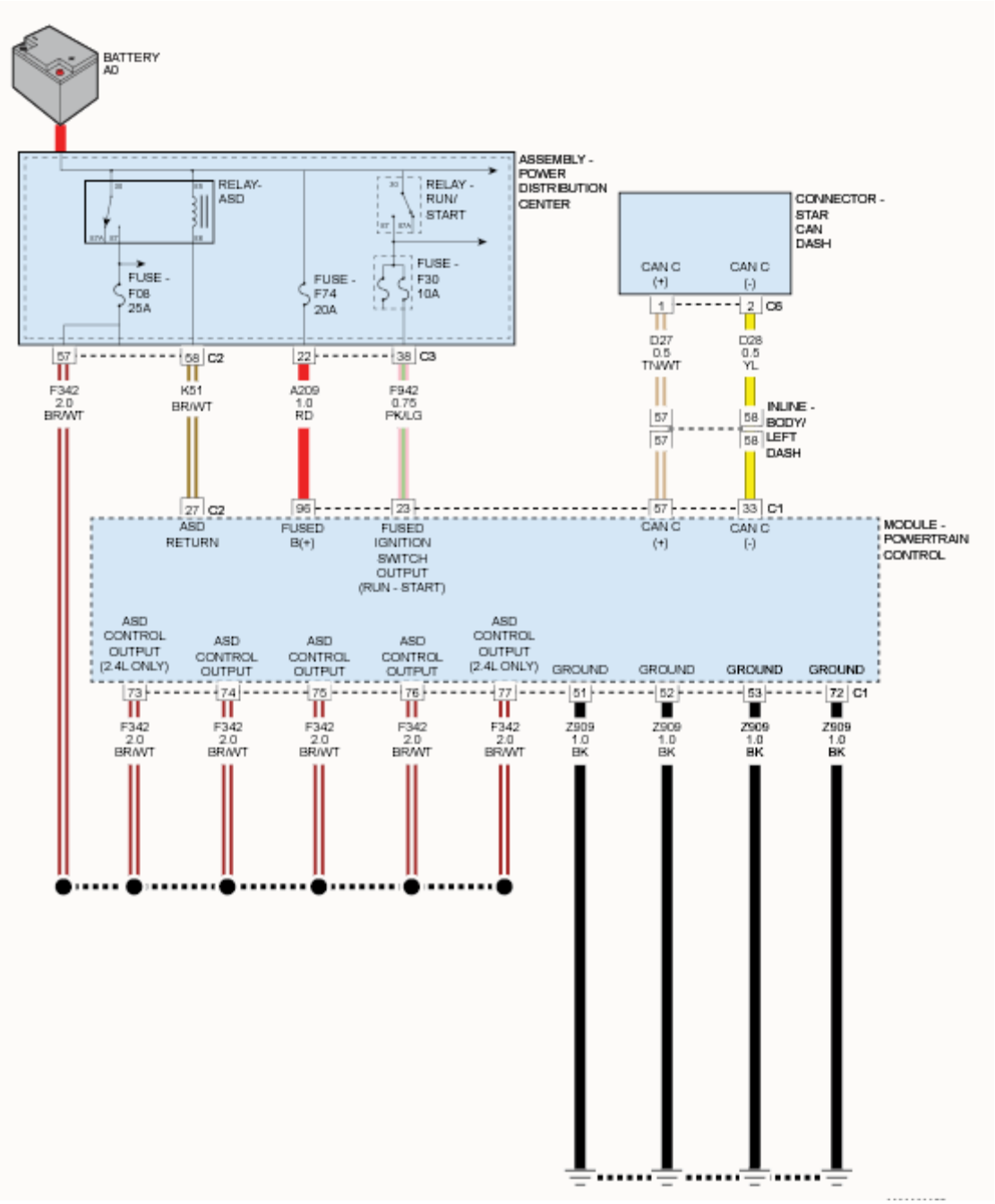

Fig. 24: ASD/Main Control Circuit Diagram
Courtesy of CHRYSLER GROUP, LLC

POSSIBLE CAUSES

Possible Causes
FUSED B(+) CIRCUIT OPEN OR SHORTED
GROUND CIRCUIT OPEN
FUSED IGNITION SWITCH OUTPUT (RUN-START) CIRCUIT OPEN OR SHORTED

FUSED ASD/MAIN RELAY OUTPUT CIRCUIT OPEN OR SHORTED
CAN C BUS (+) CIRCUIT OPEN
CAN C BUS (-) CIRCUIT OPEN
POWERTRAIN CONTROL MODULE (PCM)

DIAGNOSTIC TEST

1. **TEST FOR AN INTERMITTENT CONDITION**

   NOTE: Check for any TSB(s) related to the condition. If a TSB applies, perform the procedure outlined in the TSB before continuing.

   1. Turn the ignition on.

      NOTE: Make sure the battery voltage is between 10.0 and 16.0 volts.

   2. With the scan tool, read the module status.

      NOTE: Check the BCM for any active CAN hardware DTCs and perform those DTC before proceeding.

      Does the scan tool indicate that the module is active on the bus?

      Yes

      - The no response condition is not present at this time. Using the wiring diagram/schematic as a guide, inspect the wiring for chafed, pierced, pinched, and partially broken wires and the wiring harness connectors for broken, bent, pushed out, and corroded terminals.
      - Perform the BODY VERIFICATION TEST. Refer to **STANDARD PROCEDURE** .

      No

      - Go To 2

2. **CHECK THE (A209) FUSED B(+) CIRCUIT FOR AN OPEN OR SHORT**
   1. Turn the ignition off.
   2. Disconnect the PCM C1 harness connector.

      CAUTION: Do not probe the PCM harness connectors. Probing the PCM harness connectors will damage the PCM terminals resulting in poor terminal to pin connection. Install the GPEC Diagnostic Adaptor to perform the diagnosis.

   3. Connect the (special tool #10436, Adapter, GPEC Diagnostic).

4. Using a 12-volt test light connected to ground, probe the (A209) Fused B(+) circuit at the GPEC Adaptor.

   Does the test light illuminate brightly?

   Yes

   - Go To 3

   No

   - Repair the (A209) Fused B(+) circuit for an open or short.
   - Perform the POWERTRAIN VERIFICATION TEST. Refer to **POWERTRAIN VERIFICATION TEST** .

3. **CHECK THE (Z909) GROUND CIRCUITS FOR AN OPEN/HIGH RESISTANCE**
   1. Using a 12-volt test light connected to 12 volts, probe the (Z909) Ground circuits at the GPEC Adaptor.

      Does the test light illuminate brightly at each ground circuit?

      Yes

      - Go To 4

      No

      - Repair the (Z909) Ground circuit for an open or high resistance.
      - Perform the POWERTRAIN VERIFICATION TEST. Refer to **POWERTRAIN VERIFICATION TEST** .

4. **CHECK THE (F942) FUSED IGNITION SWITCH OUTPUT (RUN-START) CIRCUIT FOR AN OPEN OR SHORT**
   1. Turn the ignition on.
   2. Using a 12-volt test light connected to ground, probe the (F942) Fused Ignition Switch Output (Run-Start) circuit at the GPEC Adaptor.

      Does the test light illuminate brightly?

      Yes

      - Go To 5

      No

      - Repair the (F942) Fused Ignition Switch Output (Run-Start) circuit for an open or short.

- Perform the POWERTRAIN VERIFICATION TEST. Refer to **POWERTRAIN VERIFICATION TEST** .

5. **CHECK THE (F342) FUSED ASD RELAY OUTPUT CIRCUITS FOR AN OPEN OR SHORT**
   1. Turn the ignition off
   2. Disconnect the PCM C2 harness connector.

      CAUTION: Do not probe the PCM harness connectors. Probing the PCM harness connectors will damage the PCM terminals resulting in poor terminal to pin connection. Install the GPEC Diagnostic Adaptor to perform the diagnosis.

   3. Connect the (special tool #10436, Adapter, GPEC Diagnostic).
   4. Remove the ASD Relay from the Power Distribution Center (PDC).
   5. Connect a jumper between terminal 30 and terminal 87 at the ASD Relay connector in the PDC.
   6. Using a 12-volt test light connected to ground, probe the (F342) Fused ASD Relay Output circuits at the GPEC Adaptor.

      Does the test light illuminate brightly at each ASD Control Output circuit?

      Yes

      - Go To 6

      No

      - Repair the (F342) Fused ASD Relay Output circuit for an open or short.
      - Perform the POWERTRAIN VERIFICATION TEST. Refer to **POWERTRAIN VERIFICATION TEST** .

6. **CHECK THE (D27) CAN C BUS (+) CIRCUIT FOR AN OPEN/HIGH RESISTANCE**
   1. Turn the ignition off.
   2. Disconnect the STAR CAN Connector DASH C6 harness connector. and perform the CAN C DASH STAR CONNECTOR REMOVAL process. Refer to **STANDARD PROCEDURE** .
   3. Measure the resistance of the (D27) CAN C Bus (+) circuit between the STAR CAN Connector DASH C6 harness connector and the GPEC Adaptor.

      Is resistance below 5.0 Ohms?

      Yes

      - Go To 7

      No

- Repair the (D27) CAN C Bus (+) circuit for an open or high resistance.
- Perform the POWERTRAIN VERIFICATION TEST. Refer to **POWERTRAIN VERIFICATION TEST** .

7. **CHECK THE (D28) CAN C BUS (-) CIRCUIT FOR AN OPEN/HIGH RESISTANCE**
   1. Measure the resistance of the (D28) CAN C Bus (-) circuit between the STAR CAN Connector DASH C6 harness connector and the GPEC Adaptor.

      Is resistance below 5.0 Ohms?

      Yes

      - Replace the Powertrain Control Module in accordance with the Service Information. Refer to **MODULE, POWERTRAIN CONTROL, REMOVAL** .
      - Perform the POWERTRAIN VERIFICATION TEST. Refer to **POWERTRAIN VERIFICATION TEST** .

      No

      - Repair the (D28) CAN C Bus (-) circuit for an open or high resistance.
      - Perform the POWERTRAIN VERIFICATION TEST. Refer to **POWERTRAIN VERIFICATION TEST** .

NO RESPONSE FROM PCM (POWERTRAIN CONTROL MODULE) - 3.2L

For a complete wiring diagram, **refer to appropriate SYSTEM WIRING DIAGRAMS article** .

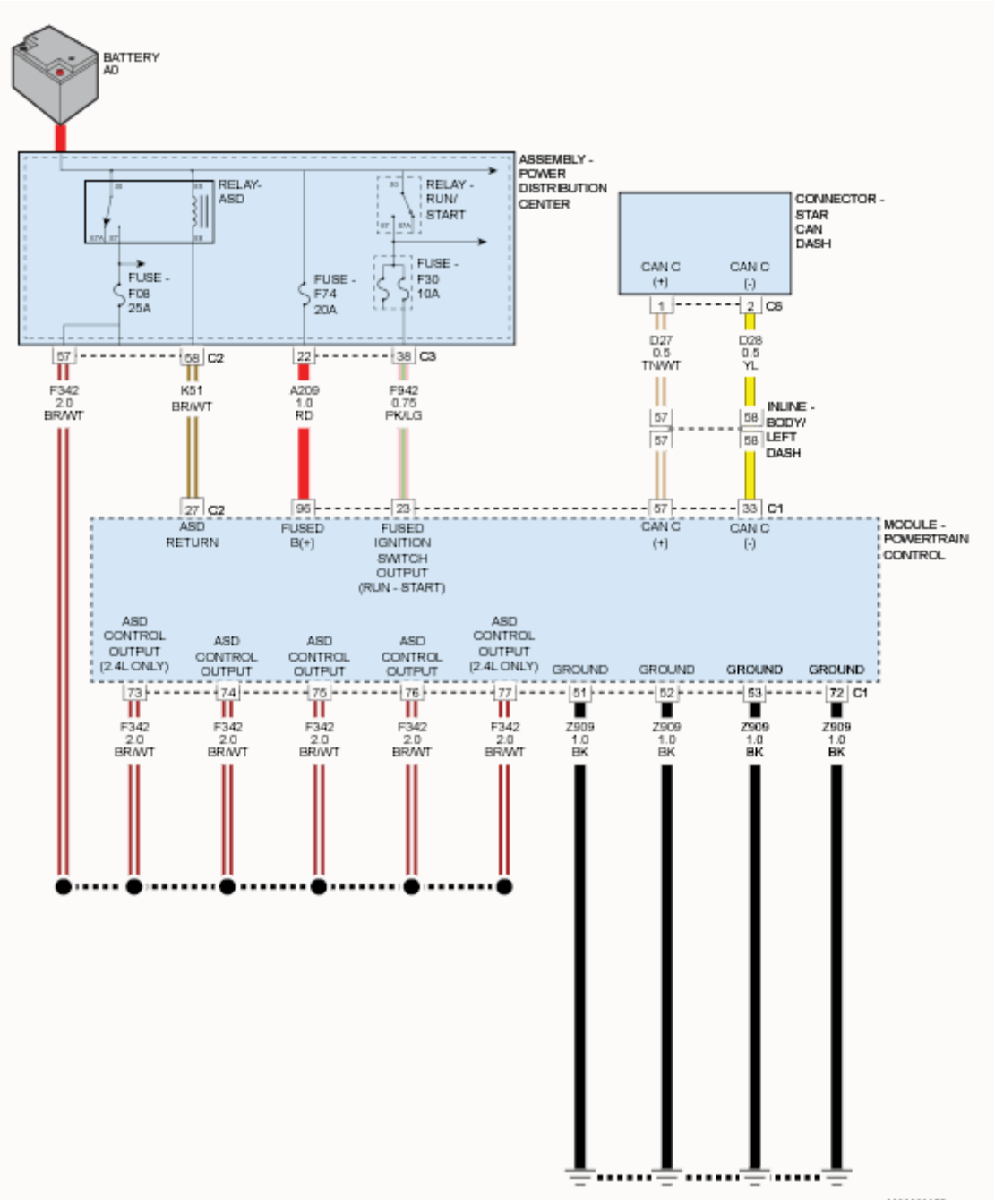

Fig. 25: ASD/Main Control Circuit Diagram
Courtesy of CHRYSLER GROUP, LLC

POSSIBLE CAUSES

Possible Causes
FUSED B(+) CIRCUIT OPEN OR SHORTED
GROUND CIRCUIT OPEN
FUSED IGNITION SWITCH OUTPUT (RUN-START) CIRCUIT OPEN OR SHORTED

FUSED ASD/MAIN RELAY OUTPUT CIRCUIT OPEN OR SHORTED
CAN C BUS (+) CIRCUIT OPEN
CAN C BUS (-) CIRCUIT OPEN
POWERTRAIN CONTROL MODULE (PCM)

DIAGNOSTIC TEST

1. **TEST FOR AN INTERMITTENT CONDITION**

   NOTE: Check for any TSB(s) related to the condition. If a TSB applies, perform the procedure outlined in the TSB before continuing.

   1. Turn the ignition on.

      NOTE: Make sure the battery voltage is between 10.0 and 16.0 volts.

   2. With the scan tool, read the module status.

      NOTE: Check the BCM for any active CAN hardware DTCs and perform those DTC before proceeding.

      Does the scan tool indicate that the module is active on the bus?

      Yes

      - The no response condition is not present at this time. Using the wiring diagram/schematic as a guide, inspect the wiring for chafed, pierced, pinched, and partially broken wires and the wiring harness connectors for broken, bent, pushed out, and corroded terminals.
      - Perform the BODY VERIFICATION TEST. Refer to **STANDARD PROCEDURE** .

      No

      - Go To 2

2. **CHECK THE (A209) FUSED B(+) CIRCUIT FOR AN OPEN OR SHORT**
   1. Turn the ignition off.
   2. Disconnect the PCM C1 harness connector.

      CAUTION: Do not probe the PCM harness connectors. Probing the PCM harness connectors will damage the PCM terminals resulting in poor terminal to pin connection. Install the GPEC Diagnostic Adaptor to perform the diagnosis.

   3. Connect the (special tool #10436, Adapter, GPEC Diagnostic).

4. Using a 12-volt test light connected to ground, probe the (A209) Fused B(+) circuit at the GPEC Adaptor.

   Does the test light illuminate brightly?

   Yes

   - Go To 3

   No

   - Repair the (A209) Fused B(+) circuit for an open or short.
   - Perform the POWERTRAIN VERIFICATION TEST. Refer to **POWERTRAIN VERIFICATION TEST** .

3. **CHECK THE (Z909) GROUND CIRCUITS FOR AN OPEN/HIGH RESISTANCE**
   1. Using a 12-volt test light connected to 12 volts, probe the (Z909) Ground circuits at the GPEC Adaptor.

      Does the test light illuminate brightly at each ground circuit?

      Yes

      - Go To 4

      No

      - Repair the (Z909) Ground circuit for an open or high resistance.
      - Perform the POWERTRAIN VERIFICATION TEST. Refer to **POWERTRAIN VERIFICATION TEST** .

4. **CHECK THE (F942) FUSED IGNITION SWITCH OUTPUT (RUN-START) CIRCUIT FOR AN OPEN OR SHORT**
   1. Turn the ignition on.
   2. Using a 12-volt test light connected to ground, probe the (F942) Fused Ignition Switch Output (Run-Start) circuit at the GPEC Adaptor.

      Does the test light illuminate brightly?

      Yes

      - Go To 5

      No

      - Repair the (F942) Fused Ignition Switch Output (Run-Start) circuit for an open or short.

- Perform the POWERTRAIN VERIFICATION TEST. Refer to **POWERTRAIN VERIFICATION TEST** .

5. **CHECK THE (F342) FUSED ASD RELAY OUTPUT CIRCUITS FOR AN OPEN OR SHORT**
   1. Turn the ignition off
   2. Disconnect the PCM C2 harness connector.

      CAUTION: Do not probe the PCM harness connectors. Probing the PCM harness connectors will damage the PCM terminals resulting in poor terminal to pin connection. Install the GPEC Diagnostic Adaptor to perform the diagnosis.

   3. Connect the (special tool #10436, Adapter, GPEC Diagnostic).
   4. Remove the ASD Relay from the Power Distribution Center (PDC).
   5. Connect a jumper between terminal 30 and terminal 87 at the ASD Relay connector in the PDC.
   6. Using a 12-volt test light connected to ground, probe the (F342) Fused ASD Relay Output circuits at the GPEC Adaptor.

      Does the test light illuminate brightly at each ASD Control Output circuit?

      Yes

      - Go To 6

      No

      - Repair the (F342) Fused ASD Relay Output circuit for an open or short.
      - Perform the POWERTRAIN VERIFICATION TEST. Refer to **POWERTRAIN VERIFICATION TEST** .

6. **CHECK THE (D27) CAN C BUS (+) CIRCUIT FOR AN OPEN/HIGH RESISTANCE**
   1. Turn the ignition off.
   2. Disconnect the STAR CAN Connector DASH C6 harness connector. and perform the CAN C DASH STAR CONNECTOR REMOVAL process. Refer to **STANDARD PROCEDURE** .
   3. Measure the resistance of the (D27) CAN C Bus (+) circuit between the STAR CAN Connector DASH C6 harness connector and the GPEC Adaptor.

      Is resistance below 5.0 Ohms?

      Yes

      - Go To 7

      No

- Repair the (D27) CAN C Bus (+) circuit for an open or high resistance.
- Perform the POWERTRAIN VERIFICATION TEST. Refer to **POWERTRAIN VERIFICATION TEST** .

7. **CHECK THE (D28) CAN C BUS (-) CIRCUIT FOR AN OPEN/HIGH RESISTANCE**
   1. Measure the resistance of the (D28) CAN C Bus (-) circuit between the STAR CAN Connector DASH C6 harness connector and the GPEC Adaptor.

      Is resistance below 5.0 Ohms?

      Yes

      - Replace the Powertrain Control Module in accordance with the Service Information. Refer to **MODULE, POWERTRAIN CONTROL, REMOVAL** .
      - Perform the POWERTRAIN VERIFICATION TEST. Refer to **POWERTRAIN VERIFICATION TEST** .

      No

      - Repair the (D28) CAN C Bus (-) circuit for an open or high resistance.
      - Perform the POWERTRAIN VERIFICATION TEST. Refer to **POWERTRAIN VERIFICATION TEST** .

NO RESPONSE FROM PAM (PARK ASSIST MODULE)

For a complete wiring diagram, **refer to appropriate SYSTEM WIRING DIAGRAMS article** .

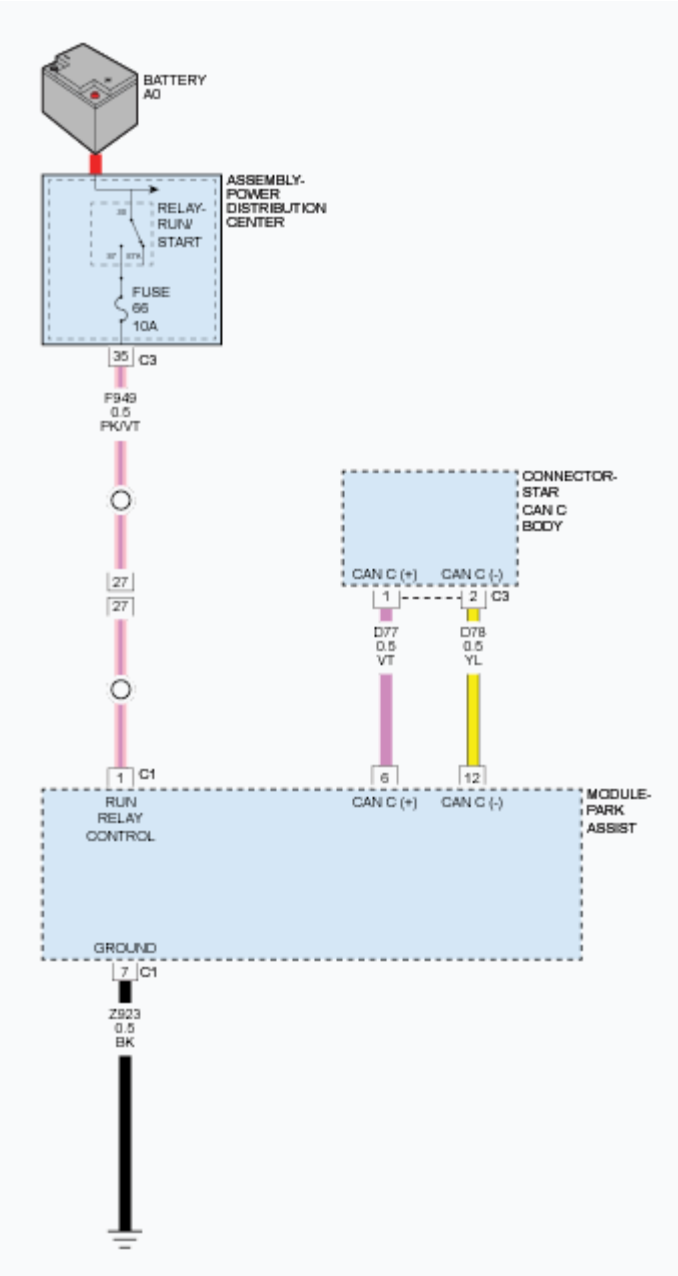

Fig. 26: PAM CAN C, Run Relay Control & Ground Circuit Diagram
Courtesy of CHRYSLER GROUP, LLC

POSSIBLE CAUSES

Possible Causes
FUSED RUN RELAY OUTPUT CIRCUIT OPEN OR SHORTED
GROUND CIRCUIT OPEN
CAN C BUS CIRCUIT(S) OPEN
PARK ASSIST MODULE

DIAGNOSTIC TEST

1. **TEST FOR INTERMITTENT CONDITION**

   NOTE: Check for any TSB(s) related to the condition. If a TSB applies, perform the procedure outlined in the TSB before continuing.

   1. Turn the ignition on.

      NOTE: Make sure the battery voltage is between 10.0 and 16.0 volts.

   2. With the scan tool, read the module status.

      NOTE: Check the BCM for any active CAN hardware DTCs, perform DTC before proceeding.

      Does the scan tool indicate that the module is active on the bus?

      Yes

      - The no response condition is not present at this time. Using the wiring diagram/schematic as a guide, inspect the wiring for chafed, pierced, pinched, and partially broken wires and the wiring harness connectors for broken, bent, pushed out, and corroded terminals.
      - Perform the BODY VERIFICATION TEST. Refer to **STANDARD PROCEDURE** .

      No

      - Go To 2

2. **CHECK THE (F923) FUSED RUN RELAY OUTPUT CIRCUIT FOR AN OPEN OR SHORT**
   1. Turn the ignition off.
   2. Disconnect the Park Assist Module C1 harness connector.
   3. Turn the ignition on.
   4. Using a 12-volt test light connected to ground, check the (F923) Fused Run Relay Output circuit.

      Does the test light illuminate brightly?

      Yes

      - Go To 3

      No

      - Repair the open or short in the (F923) Fused Run Relay Output circuit.
      - Perform the BODY VERIFICATION TEST. Refer to **STANDARD PROCEDURE** .

3. **CHECK THE (Z923) GROUND CIRCUIT FOR AN OPEN**
   1. Turn the ignition off.
   2. Using a 12-volt test light connected to 12-volts, check the (Z923) Ground circuit.

      Does the test light illuminate brightly?

      Yes

      - Go To 4

      No

      - Repair the open in the (Z923) Ground circuit.
      - Perform the BODY VERIFICATION TEST. Refer to **STANDARD PROCEDURE** .
4. **CHECK THE (D77) AND (D78) CAN C BUS CIRCUITS FOR AN OPEN**
   1. Disconnect the CAN C IP Star Connector harness connector.
   2. Measure the resistance of the (D78) CAN C Bus (-) circuit between the CAN C IP Star Connector harness connector and the Park Assist Module C1 harness connector.
   3. Measure the resistance of the (D77) CAN C Bus (+) circuit between the CAN C IP Star Connector harness connector and the Park Assist Module C1 harness connector.

      Are the resistances below 5.0 Ohms?

      Yes

      - Replace the Park Assist Module in accordance with the Service Information. Refer to **MODULE, PARK ASSIST, REMOVAL** .
      - Perform the BODY VERIFICATION TEST. Refer to **STANDARD PROCEDURE** .

      No

      - Repair the open in the (D77) or (D78) CAN C Bus circuit.
      - Perform the BODY VERIFICATION TEST. Refer to **STANDARD PROCEDURE** .

NO RESPONSE FROM PDM (PASSENGER DOOR MODULE)

For a complete wiring diagram, **refer to appropriate SYSTEM WIRING DIAGRAMS article** .

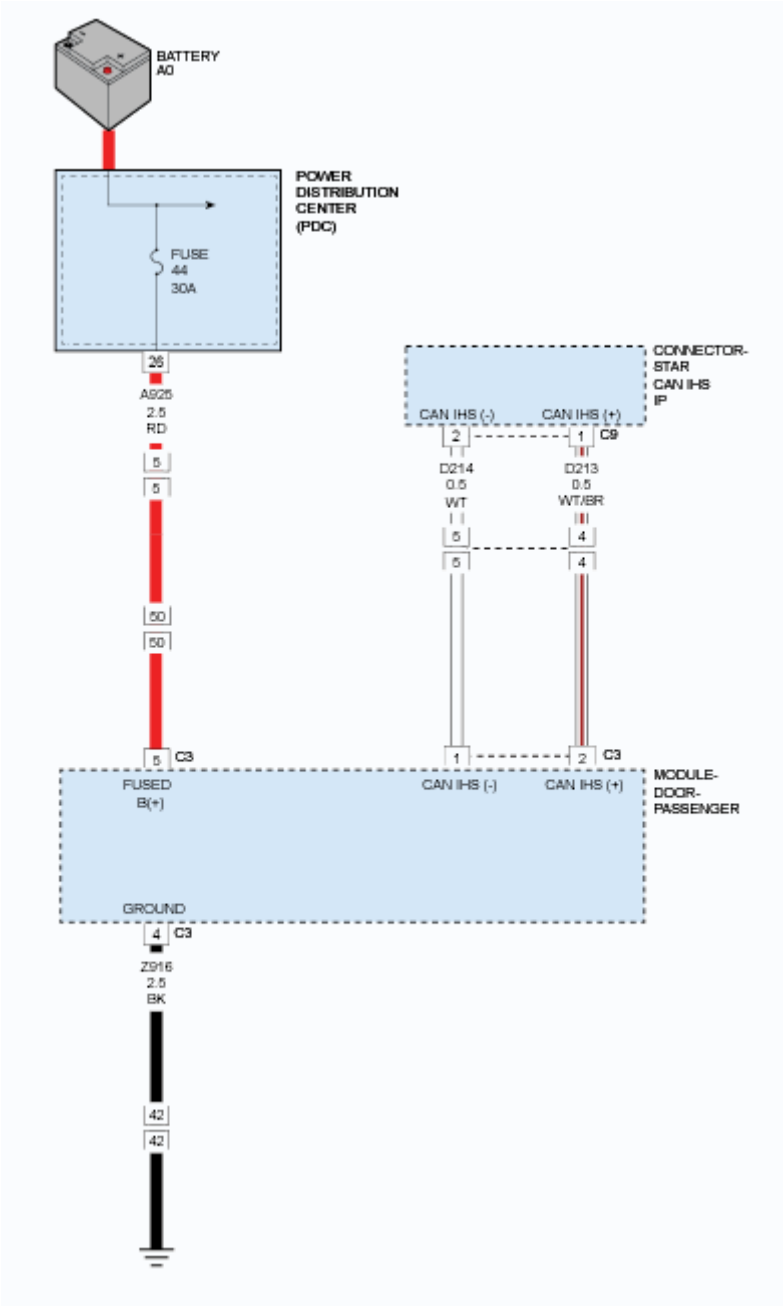

Fig. 27: PDM CAN IHS, Fused B+ & Ground Circuit Diagram
Courtesy of CHRYSLER GROUP, LLC

POSSIBLE CAUSES

Possible Causes
(A925) FUSED B(+) CIRCUIT OPEN OR SHORTED
(Z916) GROUND CIRCUIT OPEN
(D213) CAN IHS BUS (+) CIRCUIT OPEN
(D214) CAN IHS BUS (-) CIRCUIT OPEN

PASSENGER DOOR MODULE

DIAGNOSTIC TEST

1. **TEST FOR INTERMITTENT CONDITION**

   NOTE: Check for any TSB(s) related to the condition. If a TSB applies, perform the procedure outlined in the TSB before continuing.

   1. Turn the ignition on.

      NOTE: Make sure the battery voltage is between 10.0 and 16.0 volts.

   2. With the scan tool, read the module status.

      NOTE: Check the BCM for any active CAN hardware DTCs, perform DTC before proceeding.

      Does the scan tool indicate that the module is active on the bus?

      Yes

      - The no response condition is not present at this time. Using the wiring diagrams as a guide, check all related splices and connectors for signs of water intrusion, corrosion, pushed out or bent terminals, and correct pin tension.

      No

      - Go To 2

2. **CHECK THE (A925) FUSED B(+) CIRCUIT FOR AN OPEN OR SHORT**
   1. Turn the ignition off.
   2. Disconnect the Passenger Door Module C3 harness connector.
   3. Using a 12-volt test light connected to ground, check the (A925) Fused B(+) circuit. Compare the brightness to that of a direct connection to the battery.

      Does the test light illuminate brightly?

      Yes

      - Go To 3

      No

      - Repair the open or short in the (A925) Fused B(+) circuit.

- Perform the BODY VERIFICATION TEST. Refer to **STANDARD PROCEDURE** .

3. **CHECK THE (Z916) GROUND CIRCUIT FOR AN OPEN**
   1. Using a 12-volt test light connected to 12-volts, check the (Z916) Ground circuit. Compare the brightness to that of a direct connection to the battery.

      Does the test light illuminate brightly?

      Yes

      - Go To 4

      No

      - Repair the open in the (Z916) Ground circuit.
      - Perform the BODY VERIFICATION TEST. Refer to **STANDARD PROCEDURE** .
4. **CHECK THE (D213) AND (D214) CAN INTERIOR BUS (125K) CIRCUITS FOR AN OPEN**
   1. Measure the resistance of the (D214) CAN Interior Bus (125K) (-) circuit between the Body Star C6 harness connector and the Passenger Door Module C3 harness connector.
   2. Measure the resistance of the (D213) CAN Interior Bus (125K) (+) circuit between the Body Star C6 harness connector and the Passenger Door Module C3 harness connector.

      Are the resistances below 1.0 Ohms?

      Yes

      - Replace the Passenger Door Module in accordance with the Service Information. Refer to **MODULE, DOOR, REMOVAL** .
      - Perform the BODY VERIFICATION TEST. Refer to **STANDARD PROCEDURE** .

      No

      - Repair the open in the (D213) or (D214) CAN Interior Bus (125K) circuit.
      - Perform the BODY VERIFICATION TEST. Refer to **STANDARD PROCEDURE** .

NO RESPONSE FROM PLGM (POWER LIFTGATE MODULE)

For a complete wiring diagram, **refer to appropriate SYSTEM WIRING DIAGRAMS article** .

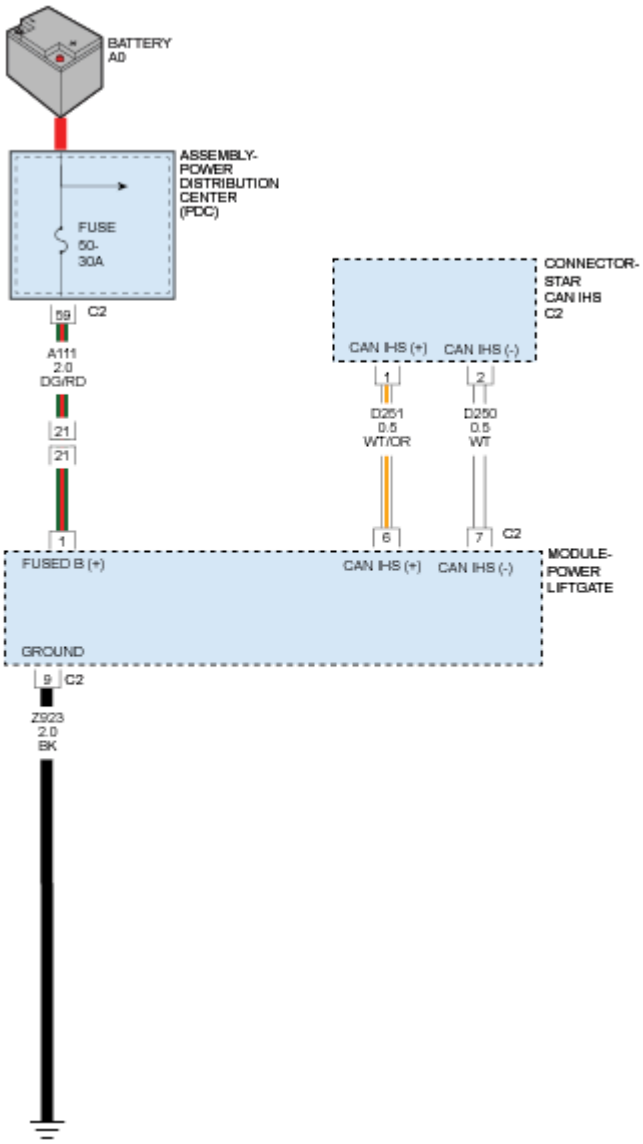

Fig. 28: PLGM CAN IHS, Fused B+ & Ground Circuit Diagram
Courtesy of CHRYSLER GROUP, LLC

POSSIBLE CAUSES

Possible Causes
(A111) FUSED B(+) CIRCUIT OPEN OR SHORTED
(Z923) GROUND CIRCUIT OPEN
(D251) CAN IHS BUS (+) CIRCUIT OPEN
(D250) CAN IHS BUS (-) CIRCUIT OPEN
POWER LIFTGATE MODULE

DIAGNOSTIC TEST

1. **TEST FOR INTERMITTENT CONDITION**

   NOTE: Check for any TSB(s) related to the condition. If a TSB applies, perform the procedure outlined in the TSB before continuing.

   1. Turn the ignition on.

      NOTE: Make sure the battery voltage is between 10.0 and 16.0 volts.

   2. With the scan tool, read the module status.

      NOTE: Check the BCM for any active CAN hardware DTCs, perform DTC before proceeding.

      Does the scan tool indicate that the module is active on the bus?

      Yes

      - The no response condition is not present at this time. Using the wiring diagrams as a guide, check all related splices and connectors for signs of water intrusion, corrosion, pushed out or bent terminals, and correct pin tension.

      No

      - Go To 2

2. **CHECK THE (A111) FUSED B(+) CIRCUIT FOR AN OPEN OR SHORT**
   1. Turn the ignition off.
   2. Disconnect the Power Liftgate Module C2 harness connector.
   3. Using a 12-volt test light connected to ground, check the (A111) Fused B(+) circuit. Compare the brightness to that of a direct connection to the battery.

      Does the test light illuminate brightly?

      Yes

      - Go To 3

      No

      - Repair the open or short in the (A111) Fused B(+) circuit.
      - Perform the BODY VERIFICATION TEST. Refer to **STANDARD PROCEDURE** .

3. **CHECK THE (Z923) GROUND CIRCUIT FOR AN OPEN**
   1. Using a 12-volt test light connected to 12-volts, check the (Z923) Ground circuit. Compare the

brightness to that of a direct connection to the battery.

Does the test light illuminate brightly?

Yes

- Go To 4

No

- Repair the open in the (Z923) Ground circuit.
- Perform the BODY VERIFICATION TEST. Refer to **STANDARD PROCEDURE** .

4. **CHECK THE (D251) AND (D250) CAN INTERIOR BUS (125K) CIRCUITS FOR AN OPEN**
   1. Measure the resistance of the (D250) CAN Interior Bus (125K) (-) circuit between the Power Liftgate Module C2 harness connector and the Body Star C2 harness connector.
   2. Measure the resistance of the (D251) CAN Interior Bus (125K) (+) circuit between the Power Liftgate Module C2 harness connector and the BCM Star C2 harness connector.

   Are the resistances below 1.0 Ohms?

   Yes

   - Replace the Power Liftgate Control Module in accordance with the Service Information. Refer to **MODULE, POWER LIFTGATE CONTROL, REMOVAL** .
   - Perform the BODY VERIFICATION TEST. Refer to **STANDARD PROCEDURE** .

   No

   - Repair the open in the (D251) or (D250) CAN Interior Bus (125K) circuit.
   - Perform the BODY VERIFICATION TEST. Refer to **STANDARD PROCEDURE** .

NO RESPONSE FROM RBSS (RIGHT BLIND SPOT SENSOR)

For a complete wiring diagram, **refer to appropriate SYSTEM WIRING DIAGRAMS article** .

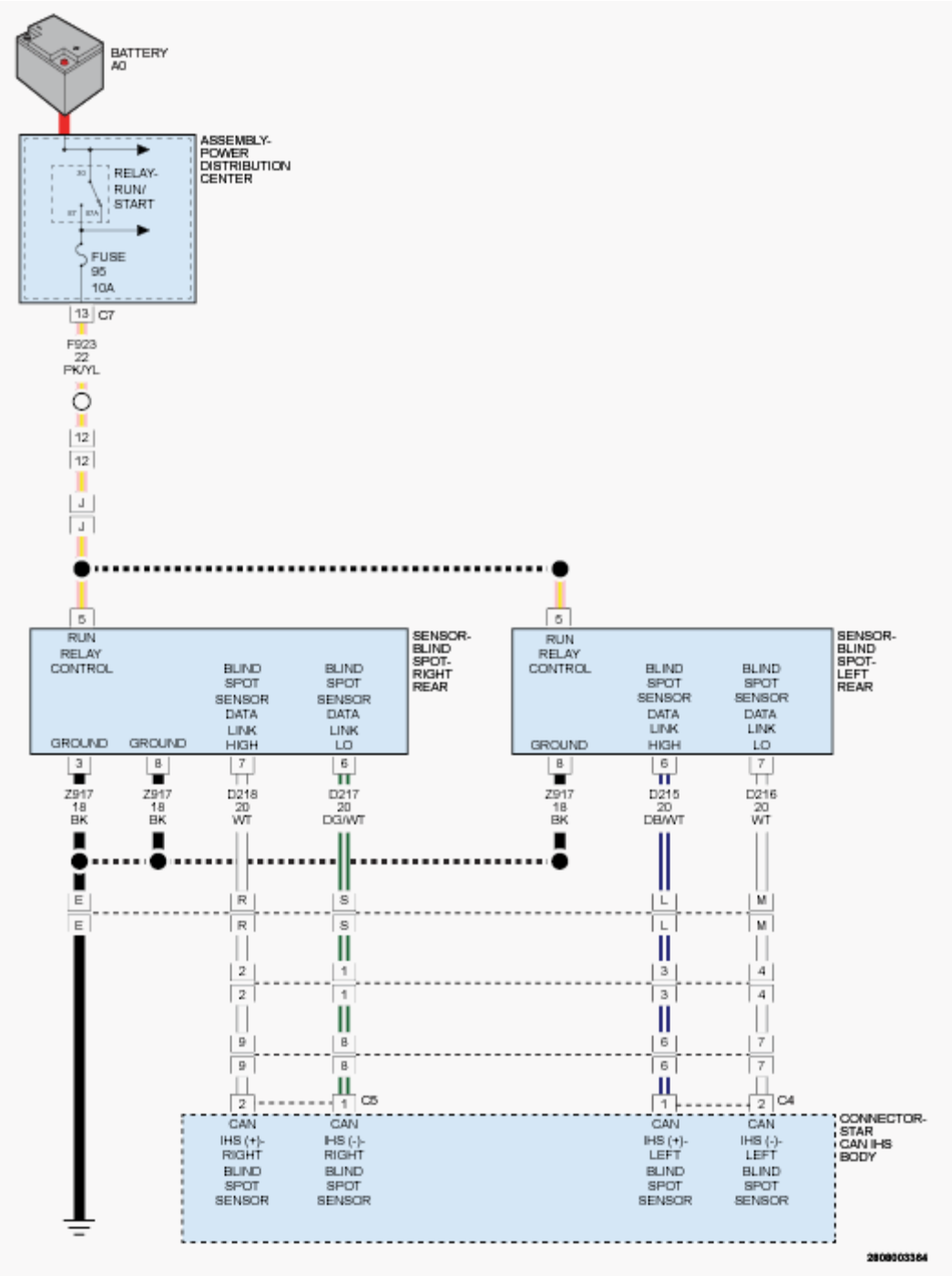

Fig. 29: Rear Blind Spot Sensor Circuit Diagram
Courtesy of CHRYSLER GROUP, LLC

WHEN MONITORED

With the ignition on.

SET CONDITION

No BUS messages from the Right Blind Spot Sensor (RBSS) are received for greater than 1.05 seconds.

POSSIBLE CAUSES

Possible Causes
FUSED RUN RELAY CONTROL CIRCUIT OPEN
GROUND CIRCUITS OPEN
CAN IHS BUS CIRCUITS OPEN
RIGHT BLIND SPOT SENSOR (RBSS)

DIAGNOSTIC TEST

1. **TEST FOR INTERMITTENT CONDITION**

   NOTE: Check for any TSB(s) related to the condition. If a TSB applies, perform the procedure outlined in the TSB before continuing.

   1. Turn the ignition on.

      NOTE: Make sure the battery voltage is between 10.0 and 16.0 volts.

   2. With the scan tool, read the module status.

      Does the scan tool indicate that the module is active on the bus?

      Yes

      - The no response condition is not present at this time. Using the wiring diagram/schematic as a guide, inspect the wiring for chafed, pierced, pinched, and partially broken wires and the wiring harness connectors for broken, bent, pushed out, and corroded terminals.
      - Perform the BODY VERIFICATION TEST. Refer to **STANDARD PROCEDURE** .

      No

      - Go To 2

2. **CHECK THE (F923) FUSED RUN RELAY CONTROL CIRCUIT FOR AN OPEN OR SHORT**
   1. Turn the ignition off.
   2. Disconnect the RBSS harness connector.
   3. Using a 12-volt test light connected to ground, check the (F923) Fused Run Relay Control circuit.

      Does the test light illuminate brightly?

      Yes

- Go To 3

No

- Repair the open or short in the (F923) Fused Run Relay Control circuit.
- Perform the BODY VERIFICATION TEST. Refer to **STANDARD PROCEDURE** .

3. **CHECK THE (Z917) GROUND CIRCUITS FOR AN OPEN**
   1. Using a 12-volt test light connected to 12-volts, check the (Z917) Ground circuits.

      Does the test light illuminate brightly?

      Yes

      - Go To 4

      No

      - Repair the open in the (Z917) Ground circuits.
      - Perform the BODY VERIFICATION TEST. Refer to **STANDARD PROCEDURE** .
4. **CHECK THE (D217) OR (D218) CAN IHS BUS CIRCUIT FOR AN OPEN**
   1. Disconnect the CAN IHS Body Star connector.
   2. Measure the resistance of the (D218) CAN IHS Bus (-) circuit between the CAN IHS Body Star connector and the RBSS harness connector.
   3. Measure the resistance of the (D217) CAN IHS Bus (+) circuit between the CAN IHS Body Star connector and the RBSS harness connector.

      Is resistance below 5.0 Ohms on both circuits?

      Yes

      - Replace the RBSS in accordance with the Service Information. Refer to **SENSOR, BLIND SPOT, REMOVAL** .
      - Perform the BODY VERIFICATION TEST. Refer to **STANDARD PROCEDURE** .

      No

      - Repair the open in the (D217) or (D218) CAN IHS Bus circuit. Inspect the connector for damage.
      - Perform the BODY VERIFICATION TEST. Refer to **STANDARD PROCEDURE** .

NO RESPONSE FROM RFH (RADIO FREQUENCY HUB) MODULE

For a complete wiring diagram, **refer to appropriate SYSTEM WIRING DIAGRAMS article** .

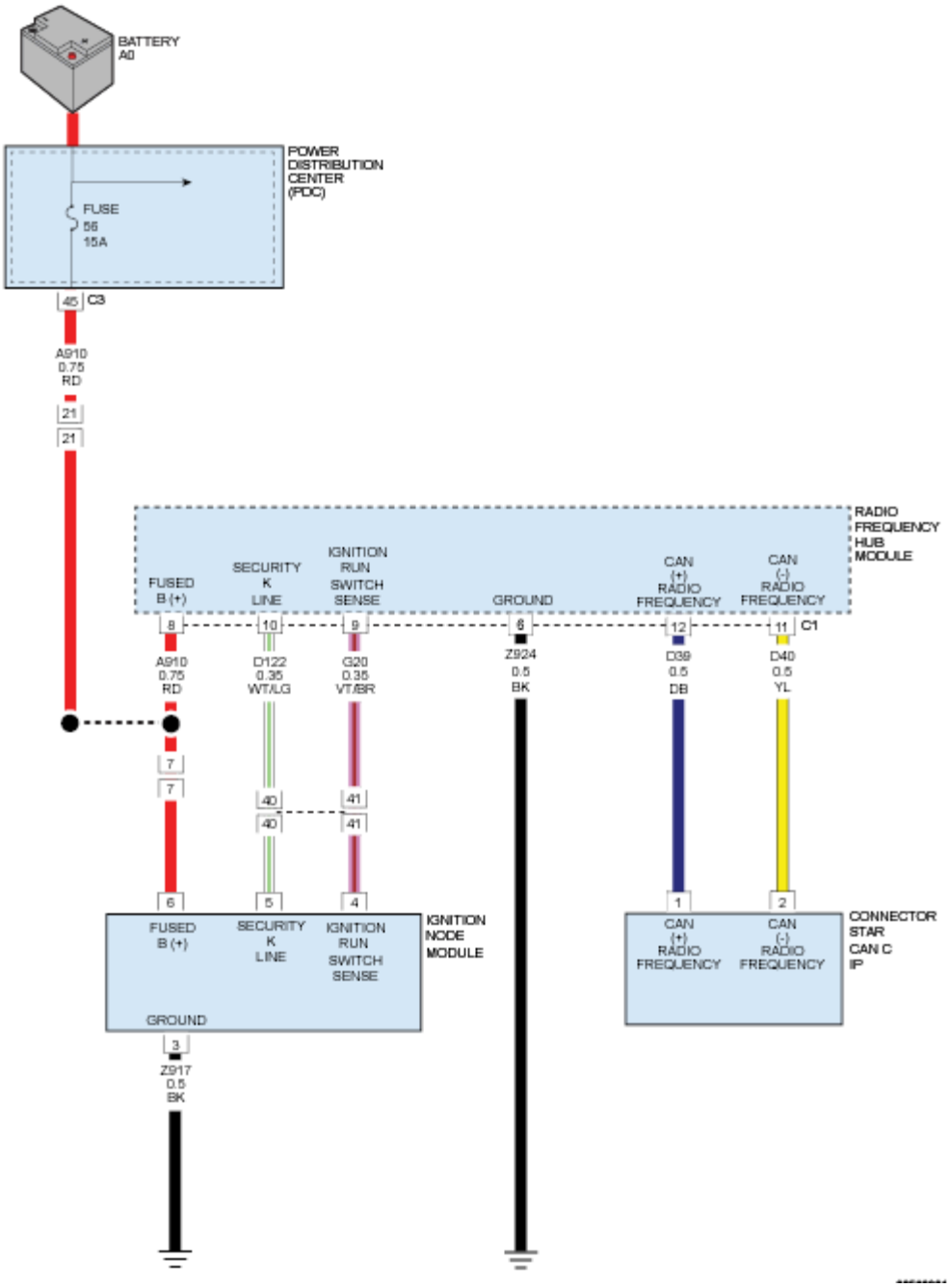

Fig. 30: RFH CAN, Fused B+, Security K Line & Ground Circuit Diagram
Courtesy of CHRYSLER GROUP, LLC

POSSIBLE CAUSES

Possible Causes
(A910) FUSED B+ CIRCUIT OPEN OR SHORTED
(Z924) GROUND CIRCUIT OPEN
(D39) CAN C BUS (+) CIRCUIT OPEN

(D40) CAN C BUS (-) CIRCUIT OPEN
RFH (RADIO FREQUENCY HUB) MODULE

DIAGNOSTIC TEST

1. **TEST FOR INTERMITTENT CONDITION**

   NOTE: Check for any TSB(s) related to the condition. If a TSB applies, perform the procedure outlined in the TSB before continuing.

   1. Turn the ignition on.

      NOTE: Make sure the battery voltage is between 10.0 and 16.0 volts.

   2. With the scan tool, read the module status.

      NOTE: Check the BCM for any active CAN hardware DTCs, perform DTC before proceeding.

      Does the scan tool indicate that the module is active on the bus?

      Yes

      - The no response condition is not present at this time. Using the wiring diagram/schematic as a guide, inspect the wiring for chafed, pierced, pinched, and partially broken wires and the wiring harness connectors for broken, bent, pushed out, and corroded terminals.
      - Perform the BODY VERIFICATION TEST. Refer to **STANDARD PROCEDURE** .

      No

      - Go To 2

2. **CHECK THE (A910) FUSED B(+) CIRCUIT FOR AN OPEN OR SHORT**
   1. Turn the ignition off.
   2. Disconnect the RF Hub Module C1 harness connector.
   3. Using a 12-volt test light connected to ground, check the (A910) Fused B(+) circuit. Compare the brightness to that of a direct connection to the battery.

      Does the test light illuminate brightly?

      Yes

      - Go To 3

      No

- Repair the open or short in the (A910) Fused B(+) circuit.
- Perform the RADIO FREQUENCY HUB (RF HUB) VERIFICATION TEST. Refer to **STANDARD PROCEDURE** .

3. **CHECK THE (Z924) GROUND CIRCUIT FOR AN OPEN**
   1. Using a 12-volt test light connected to 12-volts, check the (Z924) Ground circuit. Compare the brightness to that of a direct connection to the battery.

      Does the test light illuminate brightly?

      Yes

      - Go To 4

      No

      - Repair the open in the (Z924) Ground circuit.
      - Perform the RADIO FREQUENCY HUB (RF HUB) VERIFICATION TEST. Refer to **STANDARD PROCEDURE** .
4. **CHECK THE (D39) AND (D40) CAN C BUS CIRCUITS FOR AN OPEN**
   1. Turn the ignition off.
   2. Disconnect the CAN C Body C8 Star Connector harness connector.
   3. Measure the resistance of the (D39) CAN C Bus (+) circuit between the CAN C Body C8 Star Connector and the RF Hub Module C1 harness connector.
   4. Measure the resistance of the (D40) CAN C Bus (-) circuit between the CAN C Body C8 Star Connector and the RF Hub Module C1 harness connector.

      Are the resistances below 1.0 Ohms?

      Yes

      - Replace the RF Hub Module in accordance with the Service Information. Refer to **MODULE, RADIO FREQUENCY (RF HUB), REMOVAL** .
      - Perform the RADIO FREQUENCY HUB (RF HUB) VERIFICATION TEST. Refer to **STANDARD PROCEDURE** .

      No

      - Repair the open in the (D39) CAN C Bus (+) or (D40) CAN C Bus (-) circuit.
      - Perform the RADIO FREQUENCY HUB (RF HUB) VERIFICATION TEST. Refer to **STANDARD PROCEDURE** .

NO RESPONSE FROM SCCM (STEERING COLUMN CONTROL MODULE)

For a complete wiring diagram, **refer to appropriate SYSTEM WIRING DIAGRAMS article** .

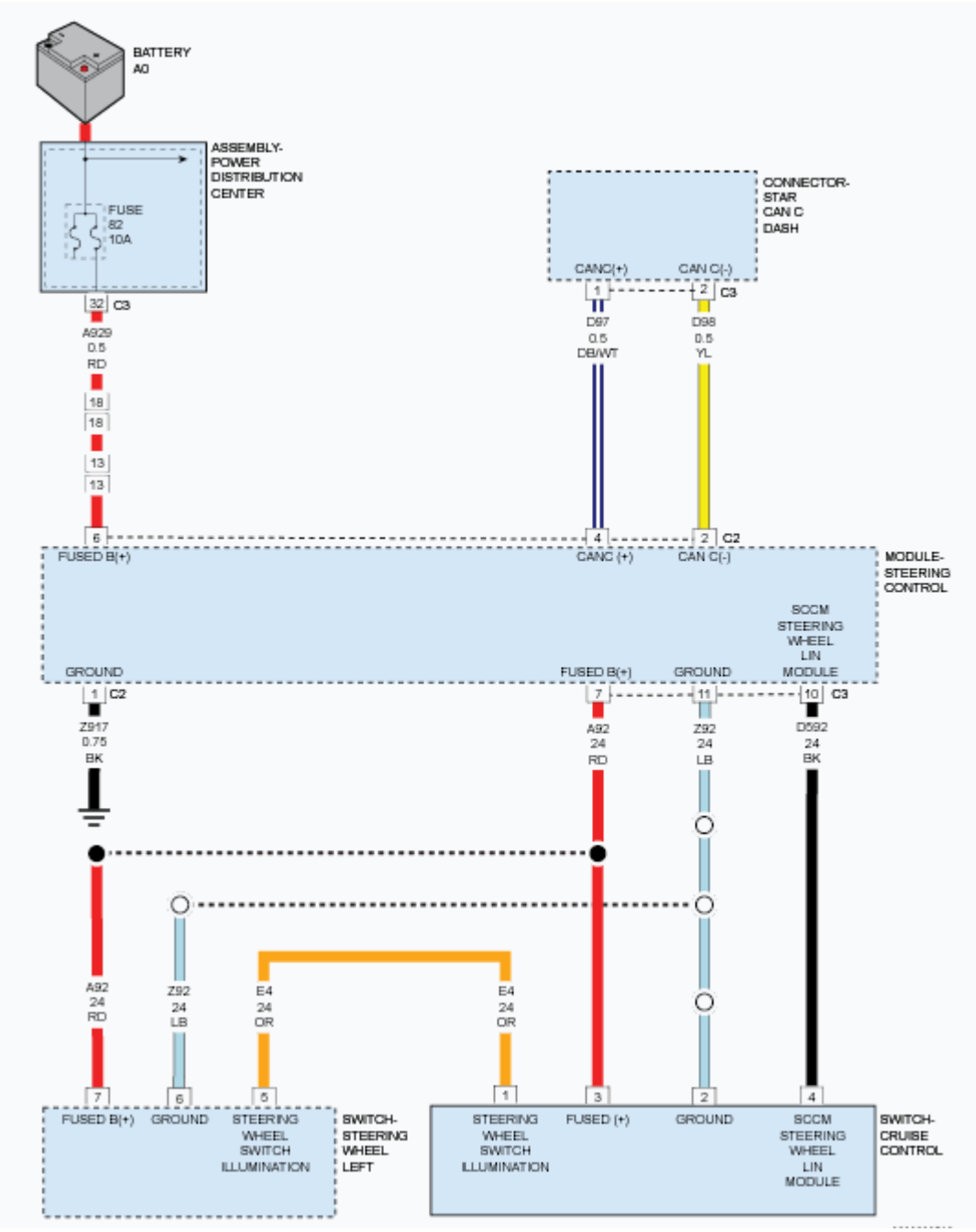

Fig. 31: SCCM CA C, Fused B+ & Ground Circuit Diagram
Courtesy of CHRYSLER GROUP, LLC

POSSIBLE CAUSES

Possible Causes
(A929) FUSED B(+) CIRCUIT OPEN OR SHORTED

(Z917) GROUND CIRCUIT OPEN
(D97) CAN C BUS (+) CIRCUIT OPEN
(D98) CAN C BUS (-) CIRCUIT OPEN
STEERING COLUMN CONTROL MODULE (SCCM)

DIAGNOSTIC TEST

1. **TEST FOR INTERMITTENT CONDITION**

   NOTE: Check for any TSB(s) related to the condition. If a TSB applies, perform the procedure outlined in the TSB before continuing.

   1. Turn the ignition on.

      NOTE: Make sure the battery voltage is between 10.0 and 16.0 volts.

   2. With the scan tool, read the module status.

      NOTE: Check the BCM for any active CAN hardware DTCs, perform DTC before proceeding.

      Does the scan tool indicate that the module is active on the bus?

      Yes

      - The no response condition is not present at this time. Using the wiring diagram/schematic as a guide, inspect the wiring for chafed, pierced, pinched, and partially broken wires and the wiring harness connectors for broken, bent, pushed out, and corroded terminals.
      - Perform the BODY VERIFICATION TEST. Refer to **STANDARD PROCEDURE** .

      No

      - Go To 2

2. **CHECK THE (A929) FUSED B(+) CIRCUIT FOR AN OPEN OR SHORT CIRCUIT**
   1. Turn the ignition off.
   2. Disconnect the Steering Control Module C2 harness connector.
   3. Using a 12-volt test light connected to ground, check the (A929) Fused B(+) circuit.

      Does the test light illuminate brightly?

      Yes

      - Go To 3

No

- Repair the open or short in the (A929) Fused B(+) circuit.
- Perform the BODY VERIFICATION TEST. Refer to **STANDARD PROCEDURE** .

3. **CHECK THE (Z917) GROUND CIRCUIT FOR AN OPEN**
   1. Using a 12-volt test light connected to 12-volts, check the (Z917) Ground circuit.

      Does the test light illuminate brightly?

      Yes

      - Go To 4

      No

      - Repair the open in the (Z917) Ground circuit.
      - Perform the BODY VERIFICATION TEST. Refer to **STANDARD PROCEDURE** .
4. **CHECK THE (D97) AND (D98) CAN C BUS CIRCUITS FOR AN OPEN**
   1. Turn the ignition off.
   2. Disconnect the CAN C IP C3 Star Connector.
   3. Measure the resistance of the (D97) CAN C Bus (+) circuit between the CAN C IP C3 Star Connector and the Steering Control Module harness connector.
   4. Measure the resistance of the (D98) CAN C Bus (-) circuit between the CAN C IP C3 Star Connector and the Steering Control Module harness connector.

      Are the resistances below 5.0 Ohms?

      Yes

      - Replace the Steering Control Module which is integral to the Clockspring in accordance with the Service Information. Refer to **CLOCKSPRING, REMOVAL** .
      - Perform the BODY VERIFICATION TEST. Refer to **STANDARD PROCEDURE** .

      No

      - Repair the open in the (D97) CAN C Bus (+) or (D98) CAN C Bus (-) circuit.
      - Perform the BODY VERIFICATION TEST. Refer to **STANDARD PROCEDURE** .

NO RESPONSE FROM TCM (TRANSMISSION CONTROL MODULE)

For a complete wiring diagram, **refer to appropriate SYSTEM WIRING DIAGRAMS article** .

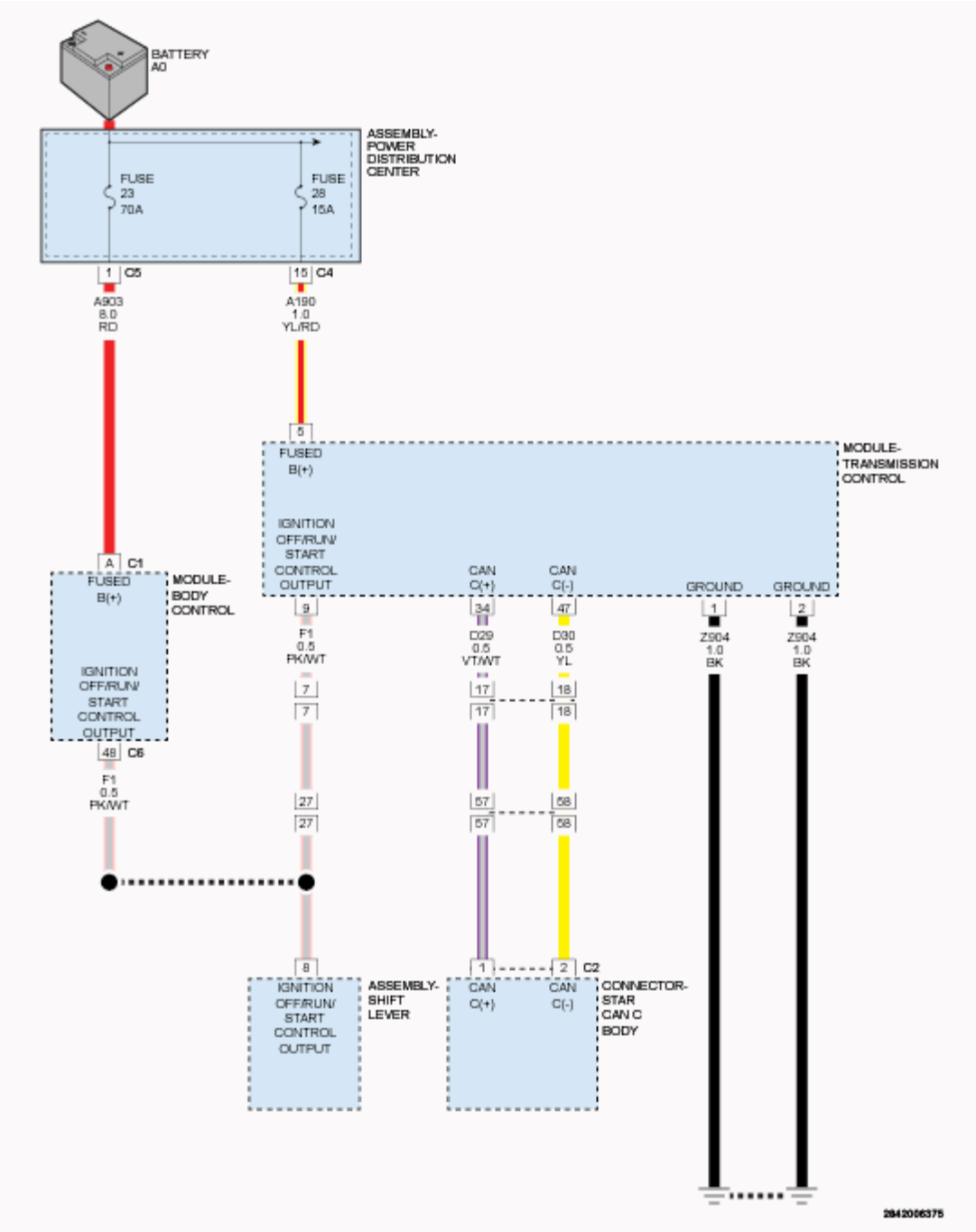

Fig. 32: TCM CAN C, Fused B+, Control Output & Ground Circuit Diagram
Courtesy of CHRYSLER GROUP, LLC

POSSIBLE CAUSES

Possible Causes
FUSED B(+) CIRCUIT(S) OPEN OR SHORTED
GROUND CIRCUIT(S) OPEN

IGNITION OFF/RUN/START CONTROL OUTPUT CIRCUIT OPEN OR SHORTED
CAN C BUS CIRCUIT(S) OPEN
TRANSMISSION CONTROL MODULE (TCM)

DIAGNOSTIC TEST

1. **TEST FOR INTERMITTENT CONDITION**

   NOTE: Check for any TSB(s) related to the condition. If a TSB applies, perform the procedure outlined in the TSB before continuing.

   1. Turn the ignition on.

      NOTE: Make sure the battery voltage is between 10.0 and 16.0 volts.

   2. With the scan tool, read the module status.

      NOTE: Check the BCM for any active CAN hardware DTCs, perform DTC before proceeding.

      Does the scan tool indicate that the module is active on the bus?

      Yes

      - The no response condition is not present at this time. Using the wiring diagram/schematic as a guide, inspect the wiring for chafed, pierced, pinched, and partially broken wires and the wiring harness connectors for broken, bent, pushed out, and corroded terminals.
      - Perform the BODY VERIFICATION TEST. Refer to **STANDARD PROCEDURE** .

      No

      - Go To 2

2. **CHECK THE (A190) FUSED B(+) CIRCUIT(S) FOR AN OPEN OR SHORT**
   1. Turn the ignition off.
   2. Disconnect the TCM C1 harness connector.
   3. Using a 12-volt test light connected to ground, check the (A190) Fused B(+) circuit.

      Does the test light illuminate brightly?

      Yes

      - Go To 3

      No

- Repair the open or short in the (A190) Fused B(+) circuit(s).
- Perform the TRANSMISSION VERIFICATION TEST. Refer to **TRANSMISSION VERIFICATION TEST-948TE** .

3. **CHECK THE (Z904) GROUND CIRCUITS FOR AN OPEN**
   1. Using a 12-volt test light connected to 12-volts, check the (Z904) Ground circuit(s).

      Does the test light illuminate brightly?

      Yes

      - Go To 4

      No

      - Repair the open in the (Z904) Ground circuit(s).
      - Perform the TRANSMISSION VERIFICATION TEST. Refer to **TRANSMISSION VERIFICATION TEST-948TE** .
4. **CHECK THE (F1) IGNITION OFF/RUN/START CONTROL OUTPUT CIRCUIT FOR AN OPEN OR SHORT**
   1. Turn the ignition on.
   2. Using a 12-volt test light connected to ground, check the (F1) Ignition Off/Run/Start Control Output circuit.

      Does the test light illuminate brightly?

      Yes

      - Go To 5

      No

      - Repair the open or short in the (F1) Ignition Off/Run/Start Control Output Circuit.
      - Perform the TRANSMISSION VERIFICATION TEST. Refer to **TRANSMISSION VERIFICATION TEST-948TE** .
5. **CHECK THE (D29) AND (D30) CAN C BUS CIRCUITS FOR AN OPEN**
   1. Turn the ignition off.
   2. Disconnect the CAN C Body C2 Star Connector harness connector.
   3. Measure the resistance of the (D29) CAN C Bus (+) circuit between the CAN C Body C2 Star Connector and the TCM C1 harness connector.
   4. Measure the resistance of the (D30) CAN C Bus (-) circuit between the CAN C Body C2 Star Connector and the TCM C1 harness connector.

      Are the resistances below 5.0 Ohms?

Yes

- Replace and program the Transmission Control Module in accordance with the Service Information. Refer to **MODULE, TRANSMISSION CONTROL, REMOVAL** .
- Perform the TRANSMISSION VERIFICATION TEST. Refer to **TRANSMISSION VERIFICATION TEST-948TE** .

No

- Repair the open in the (D29) or (D30) CAN C Bus circuit.
- Perform the TRANSMISSION VERIFICATION TEST. Refer to **TRANSMISSION VERIFICATION TEST-948TE** .

NO RESPONSE FROM RADIO

For a complete wiring diagram, **refer to appropriate SYSTEM WIRING DIAGRAMS article** .

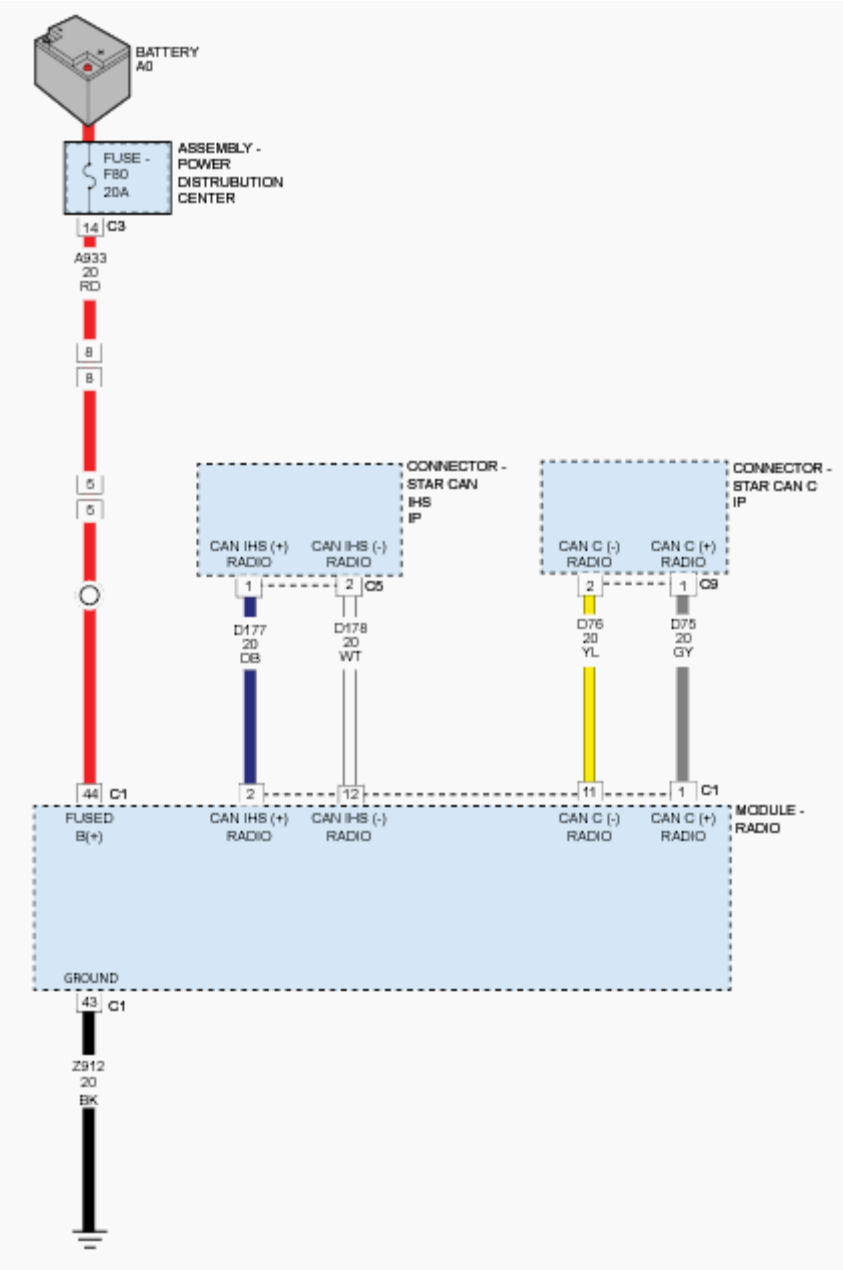

Fig. 33: Radio Module CAN IHS, Fused B+ & Ground Circuit Diagram
Courtesy of CHRYSLER GROUP, LLC

POSSIBLE CAUSES

Possible Causes
(A933) FUSED B(+) CIRCUIT OPEN OR SHORTED
(Z912) GROUND CIRCUIT OPEN
(D178) AND (D177) CAN INTERIOR BUS (125K) CIRCUITS OPEN
RADIO

DIAGNOSTIC TEST

1. **TEST FOR INTERMITTENT CONDITION**

   NOTE: Check for any TSB(s) related to the condition. If a TSB applies, perform the procedure outlined in the TSB before continuing.

   1. Turn the ignition on.

      NOTE: Make sure the battery voltage is between 10.0 and 16.0 volts.

   2. With the scan tool, read the module status.

      NOTE: Check the BCM for any active CAN hardware DTCs, perform DTC before proceeding.

      Does the scan tool indicate that the module is active on the bus?

      Yes

      - The no response condition is not present at this time. Using the wiring diagram/schematic as a guide, inspect the wiring for chafed, pierced, pinched, and partially broken wires and the wiring harness connectors for broken, bent, pushed out, and corroded terminals.
      - Perform the BODY VERIFICATION TEST. Refer to **STANDARD PROCEDURE** .

      No

      - Go To 2

2. **CHECK THE (A933) FUSED B(+) CIRCUIT FOR AN OPEN OR SHORT**
   1. Turn the ignition off.
   2. Disconnect the Radio Module C1 harness connector.
   3. Using a 12-volt test light connected to ground, check the (A933) Fused B(+) circuit.

      Does the test light illuminate brightly?

      Yes

      - Go To 3

      No

      - Repair the open or short in the (A933) Fused B(+) circuit.
      - Perform the BODY VERIFICATION TEST. Refer to **STANDARD PROCEDURE** .

3. **CHECK THE (Z912) GROUND CIRCUIT FOR AN OPEN**

1. Using a 12-volt test light connected to 12-volts, check the (Z912) Ground circuit.

   Does the test light illuminate brightly?

   Yes

   - Go To 4

   No

   - Repair the open in the (Z912) Ground circuit.
   - Perform the BODY VERIFICATION TEST. Refer to **STANDARD PROCEDURE** .

4. **CHECK THE (D177) OR (D178) CAN IHS BUS (125K) CIRCUIT FOR AN OPEN**
   1. Measure the resistance of the (D178) CAN IHS Bus (125K) (-) circuit between the Radio C1 harness connector and the CAN IHS IP Star Connector C4 harness connector.
   2. Measure the resistance of the (D177) CAN IHS Bus (125K) (+) circuit between the Radio C1 harness connector and the CAN IHS IP Star Connector C4 harness connector.

   Is resistance below 5.0 Ohms on both circuits?

   Yes

   - Replace the Radio Module in accordance with the Service Information. Refer to **RADIO, REMOVAL** .
   - Perform the BODY VERIFICATION TEST. Refer to **STANDARD PROCEDURE** .

   No

   - Repair the open in the (D177) or (D178) CAN IHS Bus (125K) circuit. Inspect the connector for damage.
   - Perform the BODY VERIFICATION TEST. Refer to **STANDARD PROCEDURE** .

STORED LOST COMMUNICATION DTCS

For a complete wiring diagram, **refer to appropriate SYSTEM WIRING DIAGRAMS article** .

WHEN MONITORED

With the ignition on for at least five seconds.

Battery voltage between 10 and 16 volts.

Body Control Module (BCM) is configured correctly.

SET CONDITION

Bus messages not received for approximately two to five seconds.

POSSIBLE CAUSES

Possible Causes
CAN C BUS CIRCUITS OPEN OR SHORT
CAN C INTERIOR BUS CIRCUITS OPEN OR SHORT
DTCS RELATED TO BATTERY VOLTAGE, IGNITION, OR VIN MESSAGES
BCM NOT CONFIGURED CORRECTLY
POWER OR GROUND FROM THE REPORTING MODULE
MODULE THAT SET THIS DTC
PREVIOUS SERVICE PERFORMED WITHIN THE LAST 100 KEY CYCLES (FUSE/RELAYS REMOVED, WIRING SERVICE, BATTERY DISCONNECT)
LOW BATTERY/JUMP START CONDITION
CHECK FOR RELATED TSBS

DIAGNOSTIC TEST

1. **VERIFY DIAGNOSTIC TROUBLE CODE (DTC) IS STORED**

   NOTE: Stored faults may indicate a customer perceived intermittent condition.

   NOTE: Make sure the battery voltage is between 10 and 16 volts before proceeding.

   1. Turn the ignition on.
   2. With the scan tool, read stored DTCs.

      Is this DTC stored?

      Yes

      - Go To 2

      No

      - Go to and perform the appropriate diagnostic procedure.
2. **CHECK THE ENVIRONMENTAL DATA**
   1. With the scan tool, read the loss of communication environmental data.

      Does the loss of communication environmental odometer data match up to any of the previous service procedures listed in the possible causes or are there any stored CAN C hardware electrical, battery, ignition voltage, VIN missing/mismatch, or BCM configuration DTCs present with matching environmental data?

Yes

- These DTCs may have been the result of other service procedures performed. Clear the DTCs.
- Perform the BODY VERIFICATION TEST. Refer to **STANDARD PROCEDURE** .

No

- Go To 3

3. **VERIFY INTERMITTENT LOST COMMUNICATION DTC - WIRING CONCERNS**
   1. With the scan tool, read all DTCs.

      Is there more than one ECU with stored DTCs "Logged Against" the module and one or more lost communication DTCs stored in the offending module?

      Yes

      - Verify if the vehicle was recently in for this type of service. Otherwise, visually inspect the related wiring harness for chafed, pierced, pinched, and partially broken wires and the wiring harness connectors for broken, bent, pushed out, and corroded terminals. Repair as necessary.

      No

      - Go To 4

4. **VERIFY INTERMITTENT LOST COMMUNICATION DTC - OFFENDING MODULE**
   1. With the scan tool, read all DTCs.

      Is there more than one ECU with stored DTCs "Logged Against" the module and NO lost communication DTCs stored in the offending module?

      Yes

      - Check for a TSB related to this offending module.

      No

      - Go To 5

5. **VERIFY INTERMITTENT LOST COMMUNICATION DTC - REPORTING MODULE**
   1. With the scan tool, read all DTCs.

      Is there ONLY ONE ECU with stored DTCs "Logged Against" the module?

      Yes

      - Check for a TSB related to the module that set this DTC.

No

- Verify if the vehicle was recently in for this type of service. Otherwise, visually inspect the related wiring harness for chafed, pierced, pinched, and partially broken wires and the wiring harness connectors for broken, bent, pushed out, and corroded terminals. Repair as necessary.

2014 ACCESSORIES AND EQUIPMENT

Driver Door Module (DDM) (DMFL/R) - Electrical Diagnostics, - Cherokee

DIAGNOSTIC CODE INDEX

DIAGNOSTIC CODE INDEX

DTC	Description
B173D-11	MIRROR SIGNAL LAMP CONTROL - CIRCUIT SHORT TO GROUND
B173D-12	MIRROR SIGNAL LAMP CONTROL - CIRCUIT SHORT TO BATTERY
B173D-13	MIRROR SIGNAL LAMP CONTROL - CIRCUIT OPEN
B18B5-00	MASTER SWITCH - FRONT LEFT WINDOW SWITCH - STUCK
B18B6-00	MASTER SWITCH - FRONT RIGHT WINDOW SWITCH - STUCK
B18B7-00	MASTER SWITCH - REAR LEFT WINDOW SWITCH - STUCK
B18B8-00	MASTER SWITCH - REAR RIGHT WINDOW SWITCH - STUCK
B18BA-11	WINDOW CONTROL - CIRCUIT SHORT TO GROUND
B18BA-12	WINDOW CONTROL - CIRCUIT SHORT TO BATTERY
B18BA-13	WINDOW CONTROL - CIRCUIT OPEN
B18BA-4B	B18BA-4B WINDOW CONTROL-OVER TEMPERATURE
B1D00-2A	MIRROR FOLD SWITCH INPUT - STUCK
B1D04-2A	MIRROR ADJUST SWITCH INPUT - STUCK
B1D4A-2A	MEMORY SWITCH INPUT - STUCK
B1DD0-11	MIRROR HEATER CONTROL - CIRCUIT SHORT TO GROUND
B1DD0-15	MIRROR HEATER CONTROL - CIRCUIT SHORT TO BATTERY OR OPEN
B1E64-00	LEFT MIRROR SELECT SWITCH - STUCK
B1E65-00	RIGHT MIRROR SELECT SWITCH - STUCK
B1F02-11	MIRROR VERTICAL MOTOR CONTROL - CIRCUIT SHORT TO GROUND
B1F02-12	MIRROR VERTICAL MOTOR CONTROL - CIRCUIT SHORT TO BATTERY
B1F02-13	MIRROR VERTICAL MOTOR CONTROL - CIRCUIT OPEN
B1F03-11	MIRROR HORIZONTAL MOTOR CONTROL - CIRCUIT SHORT TO GROUND
B1F03-12	MIRROR HORIZONTAL MOTOR CONTROL - CIRCUIT SHORT TO BATTERY
B1F03-13	MIRROR HORIZONTAL MOTOR CONTROL - CIRCUIT OPEN
B1F04-11	MIRROR FOLD CONTROL - CIRCUIT SHORT TO GROUND
B1F04-15	MIRROR FOLD CONTROL - CIRCUIT SHORT TO BATTERY OR OPEN

B1F06-12	MIRROR CONTROL SENSOR POSITION CIRCUIT - CIRCUIT SHORT TO BATTERY
B1F06-14	MIRROR CONTROL SENSOR POSITION CIRCUIT - CIRCUIT SHORT TO GROUND OR OPEN
B210C-16	BATTERY VOLTAGE INPUT - CIRCUIT VOLTAGE BELOW THRESHOLD
B210C-17	BATTERY VOLTAGE INPUT - CIRCUIT VOLTAGE ABOVE THRESHOLD
B21DD-84	SYSTEM VOLTAGE - SIGNAL BELOW ALLOWABLE RANGE
B21DD-85	SYSTEM VOLTAGE - SIGNAL VOLTAGE ABOVE ALLOWABLE RANGE
B224F-54	DOOR MODULE INTERNAL - MISSING CALIBRATION
B224F-96	DOOR MODULE INTERNAL - COMPONENT INTERNAL FAILURE
B25AF-2A	DOOR LOCK/UNLOCK SWITCH - STUCK
B25B0-31	WINDOW POSITION SENSOR - NO SIGNAL
B25B1-11	WINDOW POSITION SENSOR POWER SUPPLY - CIRCUIT SHORT TO GROUND
B285F-11	BLIND SPOT WARNING LIGHT CONTROL - CIRCUIT SHORT TO GROUND
B285F-15	BLIND SPOT WARNING LIGHT CONTROL - CIRCUIT SHORT TO BATTERY OR OPEN
B2860-11	DOOR AMBIENT LIGHT CONTROL - CIRCUIT SHORT TO GROUND
B2860-15	DOOR AMBIENT LIGHT CONTROL-CIRCUIT SHORT TO BATTERY OR OPEN
B2861-11	MIRROR APPROACH LIGHT CONTROL - CIRCUIT SHORT TO GROUND
B2861-15	MIRROR APPROACH LIGHT CONTROL - CIRCUIT SHORT TO BATTERY OR OPEN
U0010-00	CAN INTERIOR BUS
U0011-00	CAN INTERIOR BUS OFF PERFORMANCE
U0037-11	LIN BUS - CIRCUIT SHORT TO GROUND
U0140-00	LOST COMMUNICATION WITH BODY CONTROL MODULE
U0164-00	LOST COMMUNICATION WITH HVAC CONTROL MODULE
U0200-00	LOST COMMUNICATION WITH PASSENGER DOOR MODULE
U0209-00	LOST COMMUNICATION WITH MEMORY SEAT CONTROL MODULE
U0422-00	IMPLAUSIBLE DATA RECEIVED FROM BODY CONTROL MODULE
U0424-00	IMPLAUSIBLE DATA RECEIVED FROM HVAC CONTROL MODULE
U050A-00	IMPLAUSIBLE DATA RECEIVED FROM MEMORY SEAT CONTROL MODULE

U11FA-00	LOST COMMUNICATION WITH RIGHT BLIND SPOT SENSOR
U11FB-00	LOST COMMUNICATION WITH LEFT BLIND SPOT SENSOR
U113D-00	LOST COMMUNICATION WITH MASTER POWER WINDOW SWITCH
U147D-00	IMPLAUSIBLE DATA RECEIVED FROM RIGHT BLIND SPOT SENSOR
U147E-00	IMPLAUSIBLE DATA RECEIVED FROM LEFT BLIND SPOT SENSOR

DIAGNOSIS AND TESTING

B173D-11-MIRROR SIGNAL LAMP CONTROL - CIRCUIT SHORT TO GROUND

For a complete wiring diagram, **refer to appropriate SYSTEM WIRING DIAGRAMS article** .

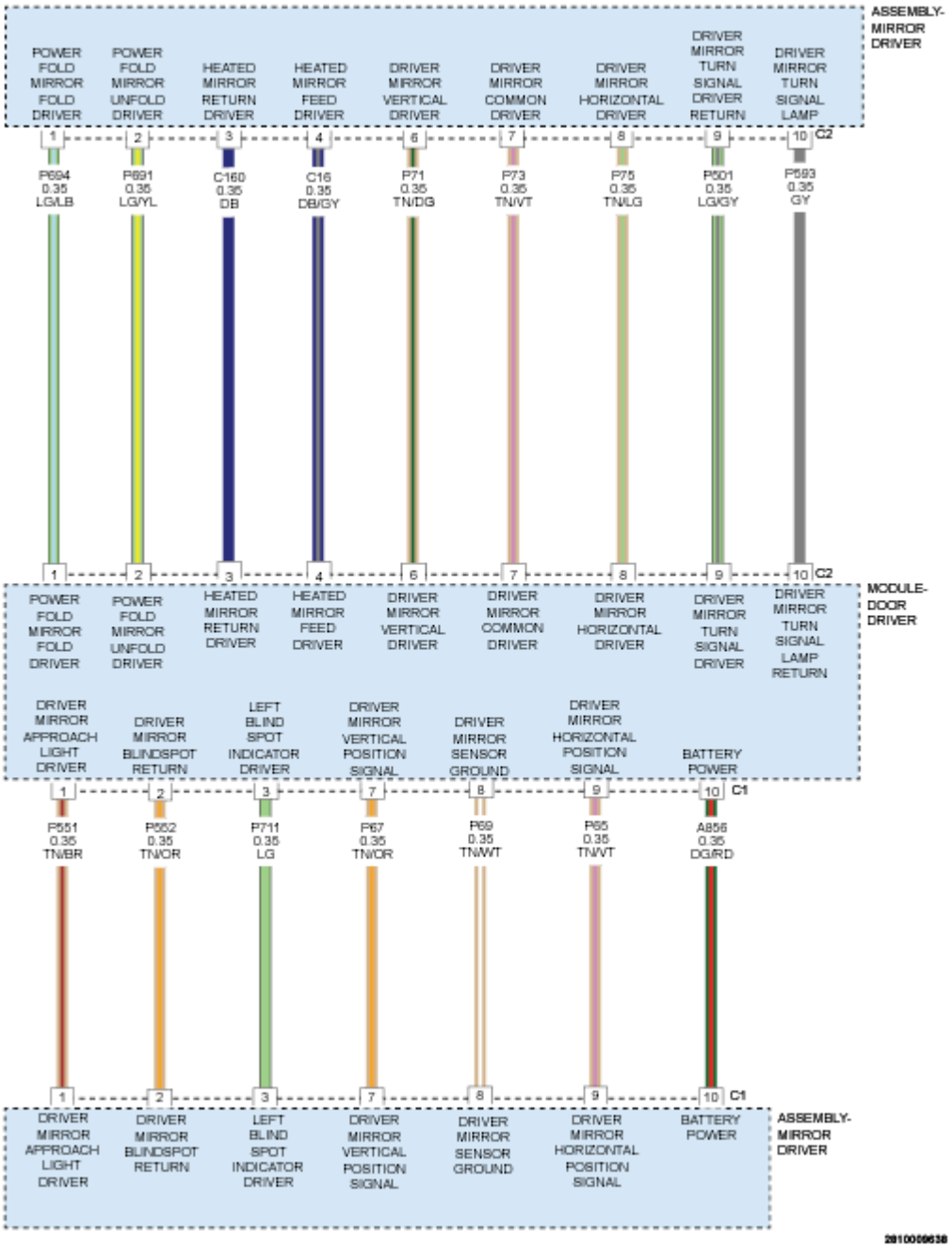

Fig. 1: Driver Mirror Assembly Wiring Diagram
Courtesy of CHRYSLER GROUP, LLC

WHEN MONITORED

Continuously.

SET CONDITION

The Door Module senses a short low on the Mirror Turn Signal Driver circuit for more than two seconds with the turn signal switched on.

POSSIBLE CAUSES

Possible Causes
OUTSIDE REARVIEW MIRROR DOOR MODULE

DIAGNOSTIC TEST

1. **TEST FOR INTERMITTENT CONDITION**
    1. Cycle the ignition on.
    2. With the scan tool, record and erase the DTCs.
    3. Turn the drivers side turn signal on.
    4. Turn the park lamps on.
    5. Turn the rear defogger on, if equipped with heated mirror.
    6. Press and release the Mirror Select switch to select the Driver Outside Rearview Mirror.
    7. Operate the Mirror Adjust switch in all directions several times while monitoring the scan tool for DTCs.

    NOTE: After adjusting the mirror in one direction wait at least two seconds before adjusting the mirror in the opposite direction, as this will allow time for an active fault to set if present.

    8. With the scan tool, read the DTCs.

    Does the scan tool display: B173D-11-MIRROR SIGNAL LAMP CONTROL - CIRCUIT SHORT TO GROUND?

    Yes

    - Go To 2

    No

    - Test complete, the condition or conditions that originally set this DTC are not present at this time. For vehicle's equipped with folding outside rearview mirrors, repeat the above test with the mirror folded. If this DTC is now active, Go To 2. Otherwise, using the wiring diagrams as a guide, check all related splices and connectors for signs of water intrusion, corrosion, pushed out or bent terminals, and correct pin tension.
    - Perform the BODY VERIFICATION TEST. Refer to **STANDARD PROCEDURE** .
2. **INSPECT MIRROR CONNECTIONS**

1. Cycle the ignition off.
2. Disconnect the Driver Outside Rearview Mirror C1 and C2 connectors at the Drivers Door Module.
3. Inspect the wiring harness, connectors and the Drivers Door Module.

   Were there any problems found?

   Yes

   - Repair as necessary.
   - Perform the BODY VERIFICATION TEST. Refer to **STANDARD PROCEDURE** .

   No

   - Go To 3

3. **MIRROR OR MODULE**
   1. Cycle the ignition on.
   2. With the scan tool, record and erase DTCs.
   3. Turn the drivers side turn signal on.
   4. Fold And Unfold the mirrors several time, if equipped with folding mirrors.
   5. Turn the rear defogger on, if equipped with heated mirror.
   6. Turn the park lamps on.
   7. Press and release the Mirror Select switch to select the Driver Outside Rearview Mirror.
   8. Operate the Mirror Adjust switch in all directions several times while monitoring the scan tool for DTCs.

      NOTE: After adjusting the mirror in one direction wait at least two seconds before adjusting the mirror in the opposite direction, as this will allow time for an active fault to set if present.

   9. With the scan tool, read DTCs.

      NOTE: Check for a change in DTCs.

      Does the scan tool display: B173D-13-MIRROR SIGNAL LAMP CONTROL - CIRCUIT OPEN as active?

      Yes

      - With the circuit now OPEN that indicates the short is NOT in the Module. Replace the mirror in accordance with the Service Information. Refer to **MIRROR, OUTSIDE REARVIEW, REMOVAL** and **MIRROR, OUTSIDE REARVIEW, GLASS, REMOVAL** .
      - Perform the BODY VERIFICATION TEST. Refer to **STANDARD PROCEDURE** .

No

- Replace the Door Module in accordance with the Service Information. Refer to **MODULE, DOOR, REMOVAL** .
- Perform the BODY VERIFICATION TEST. Refer to **STANDARD PROCEDURE** .

B173D-12-MIRROR SIGNAL LAMP CONTROL - CIRCUIT SHORT TO BATTERY

For a complete wiring diagram, **refer to appropriate SYSTEM WIRING DIAGRAMS article** .

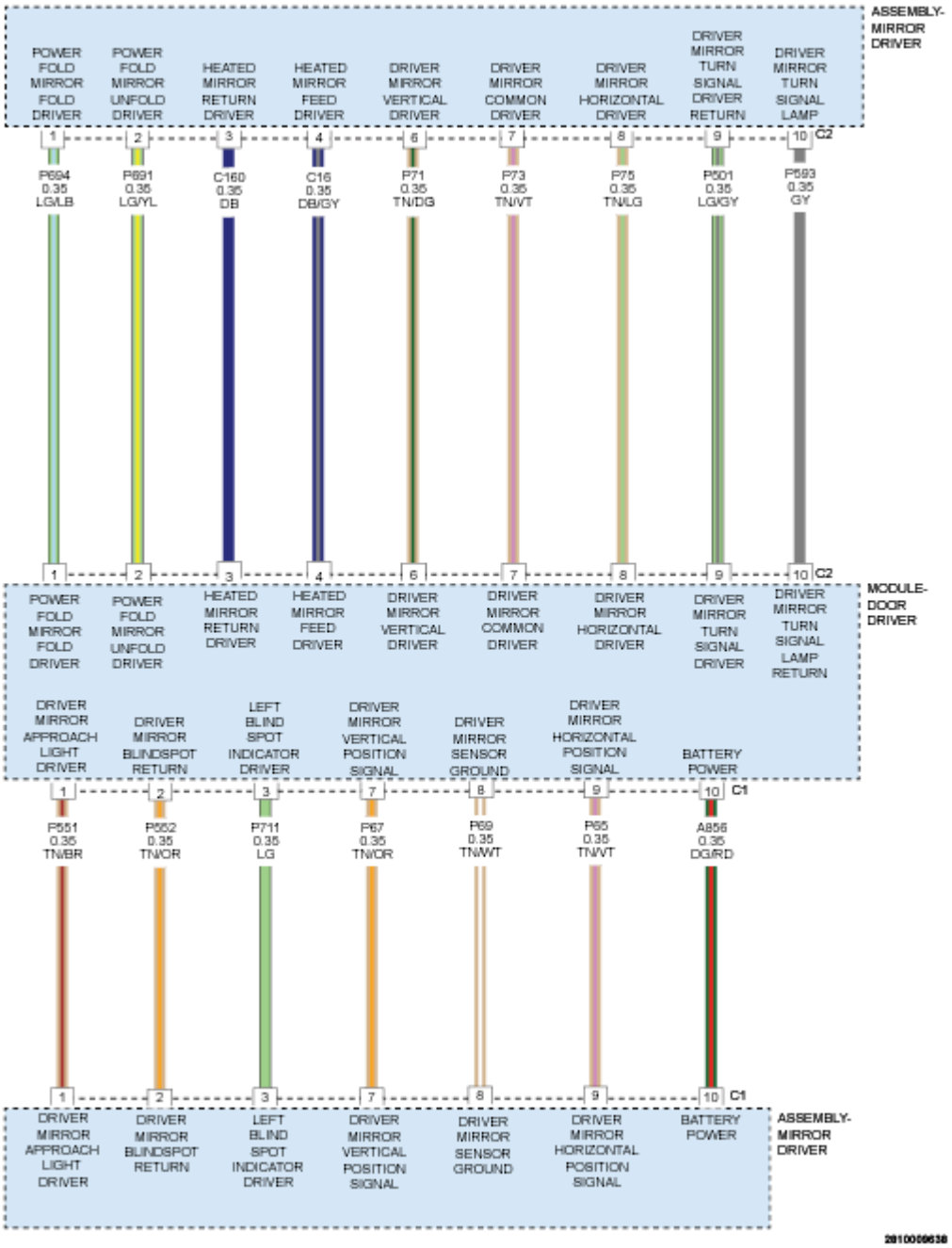

Fig. 2: Driver Mirror Assembly Wiring Diagram
Courtesy of CHRYSLER GROUP, LLC

WHEN MONITORED

Continuously.

SET CONDITION

The Door Module senses a short high on the Mirror Turn Signal Driver circuit for more than two seconds with the turn signal switched on.

POSSIBLE CAUSES

Possible Causes
MIRROR TURN SIGNAL DRIVER CIRCUIT FOR A SHORT TO ANY SIGNAL OR DRIVER CIRCUIT
OUTSIDE REARVIEW MIRROR
DOOR MODULE

DIAGNOSTIC TEST

1. **TEST FOR INTERMITTENT CONDITION**

NOTE: Check the turn signals to be sure they are flashing properly before proceeding.

1. Cycle the ignition on.
2. With the scan tool, record and erase DTCs.
3. Turn the drivers side turn signal on.
4. Turn the park lamps on.
5. Turn the rear defogger on, if equipped with heated mirror.
6. Press and release the Mirror Select switch to select the Driver Outside Rearview Mirror.
7. Operate the Mirror Adjust switch in all directions several times while monitoring the scan tool for DTCs.

NOTE: After adjusting the mirror in one direction wait at least two seconds before adjusting the mirror in the opposite direction, as this will allow time for an active fault to set if present.

8. With the scan tool, read the active DTCs.

Does the scan tool display: B173D-12-MIRROR SIGNAL LAMP CONTROL - CIRCUIT SHORT TO BATTERY?

Yes

- Go To 2

No

- Test complete, the condition or conditions that originally set this DTC are not present at this time. For vehicle's equipped with folding outside rearview mirrors, repeat the above test with

the mirror folded. If this DTC is now active, Go To 2. For others, using the wiring diagrams as a guide, check all related splices and connectors for signs of water intrusion, corrosion, pushed out or bent terminals, and correct pin tension.

- Perform the BODY VERIFICATION TEST. Refer to **STANDARD PROCEDURE** .

2. **CHECK (P501) DRIVER MIRROR TURN SIGNAL DRIVER CIRCUIT FOR A SHORT TO ANY SIGNAL OR DRIVER CIRCUIT**

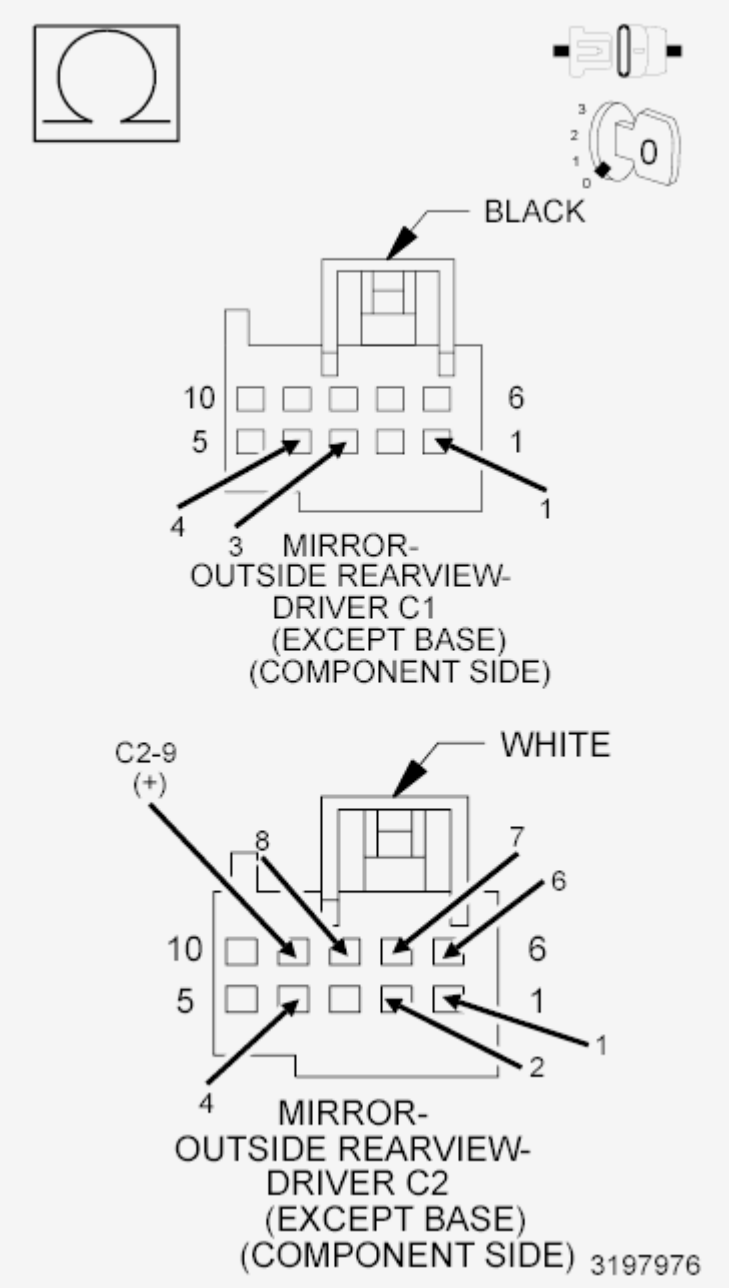

Fig. 3: Checking Driver Mirror Turn Signal Driver Circuit For Short To Any Signal Or Driver Circuit
Courtesy of CHRYSLER GROUP, LLC

1. Cycle the ignition off.
2. Turn all accessories off.
3. Disconnect the Driver Outside Rearview Mirror C1 (Component Side) and C2 (Component Side) harness connectors from the Door Module.
4. Measure the resistance between the (P501) Driver Mirror Turn Signal Driver circuit (C2-9) and each Signal and Driver circuit in the Driver Outside Rearview Mirror C1 and C2 (Component Side) harness connectors.

   Is the resistance below 10K Ohms for any measurement?

   Yes

   - Repair the (P501) Driver Mirror Turn Signal Driver circuit for a short to a Signal or Driver circuit. If the wiring harness and harness connectors are okay, replace the Driver Outside Rearview Mirror in accordance with the Service Information. Refer to **MIRROR, OUTSIDE REARVIEW, REMOVAL** and **MIRROR, OUTSIDE REARVIEW, GLASS, REMOVAL** .
   - Perform the BODY VERIFICATION TEST. Refer to **STANDARD PROCEDURE** .

   No

   - Inspect the wiring harness and harness connectors for damage and repair as necessary. If the wiring harness and harness connectors are okay, replace the Door Module in accordance with the Service Information. Refer to **MODULE, DOOR, REMOVAL** .
   - Perform the BODY VERIFICATION TEST. Refer to **STANDARD PROCEDURE** .

B173D-13-MIRROR SIGNAL LAMP CONTROL - CIRCUIT OPEN

For a complete wiring diagram, **refer to appropriate SYSTEM WIRING DIAGRAMS article** .

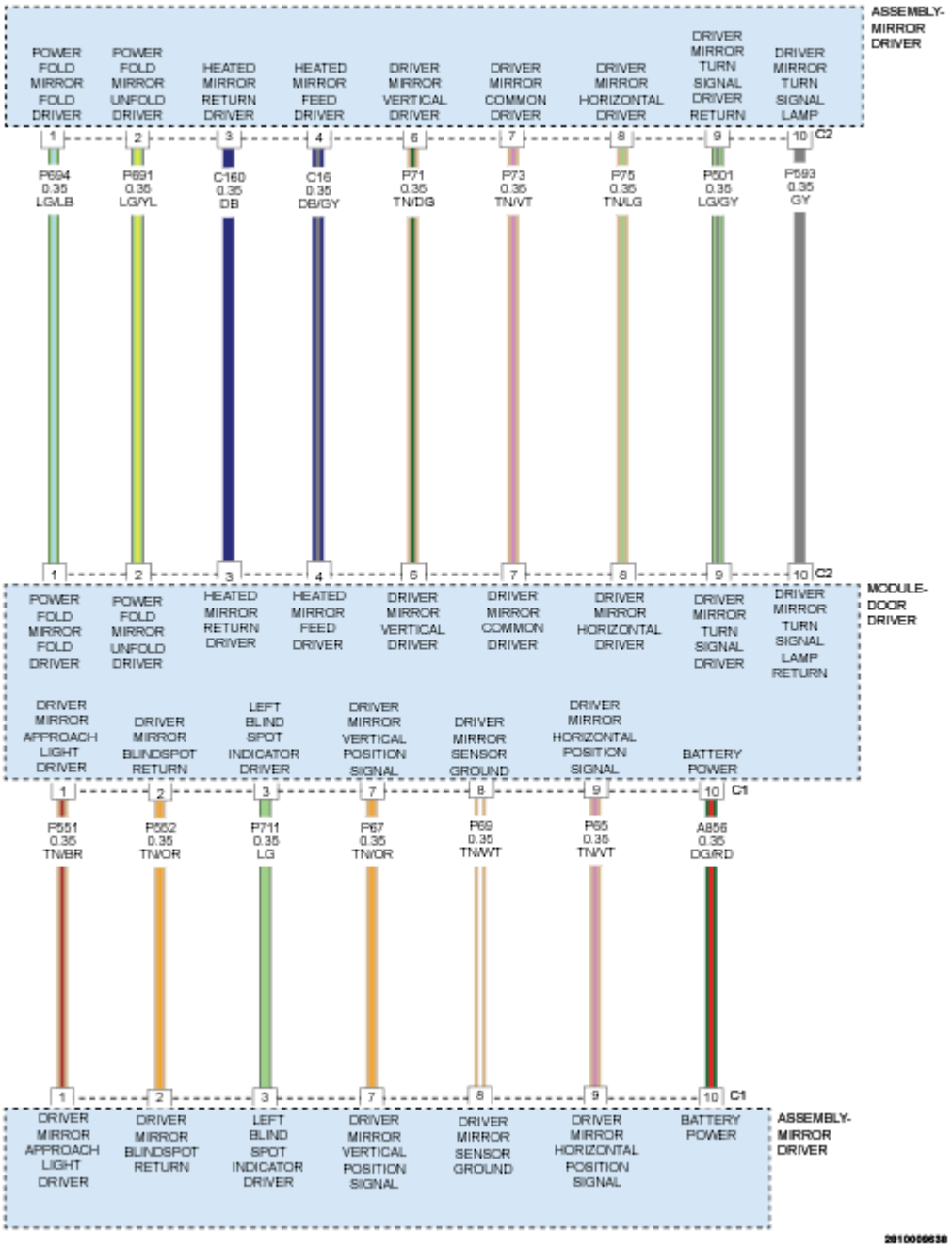

Fig. 4: Driver Mirror Assembly Wiring Diagram
Courtesy of CHRYSLER GROUP, LLC

WHEN MONITORED

Continuously.

SET CONDITION

The Door Module senses an open between the Mirror Turn Signal Driver circuit and the Mirror Turn Signal Return circuit for more than two seconds with the turn signal switched on.

POSSIBLE CAUSES

Possible Causes
MIRROR TURN SIGNAL DRIVER CIRCUIT OPEN TO THE MIRROR TURN SIGNAL LAMP RETURN CIRCUIT
OUTSIDE REARVIEW MIRROR
DOOR MODULE

DIAGNOSTIC TEST

1. **TEST FOR INTERMITTENT CONDITION**
    1. Cycle the ignition on.
    2. With the scan tool, record and erase DTCs.
    3. Turn the drivers side turn signal on.
    4. Press and release the Mirror Select switch to select the Driver Outside Rearview Mirror.
    5. With the scan tool, read the active DTCs.

    Does the scan tool display: B173D-13-MIRROR SIGNAL LAMP CONTROL - CIRCUIT OPEN?

    Yes

    - Go To 2

    No

    - Test complete, the condition or conditions that originally set this DTC are not present at this time. Using the wiring diagrams as a guide, check all related splices and connectors for signs of water intrusion, corrosion, pushed out or bent terminals, and correct pin tension.
    - Perform the BODY VERIFICATION TEST. Refer to **STANDARD PROCEDURE** .
2. **CHECK (P501) DRIVER MIRROR TURN SIGNAL DRIVER CIRCUIT FOR AN OPEN TO THE (P593) DRIVER MIRROR TURN SIGNAL RETURN CIRCUIT**

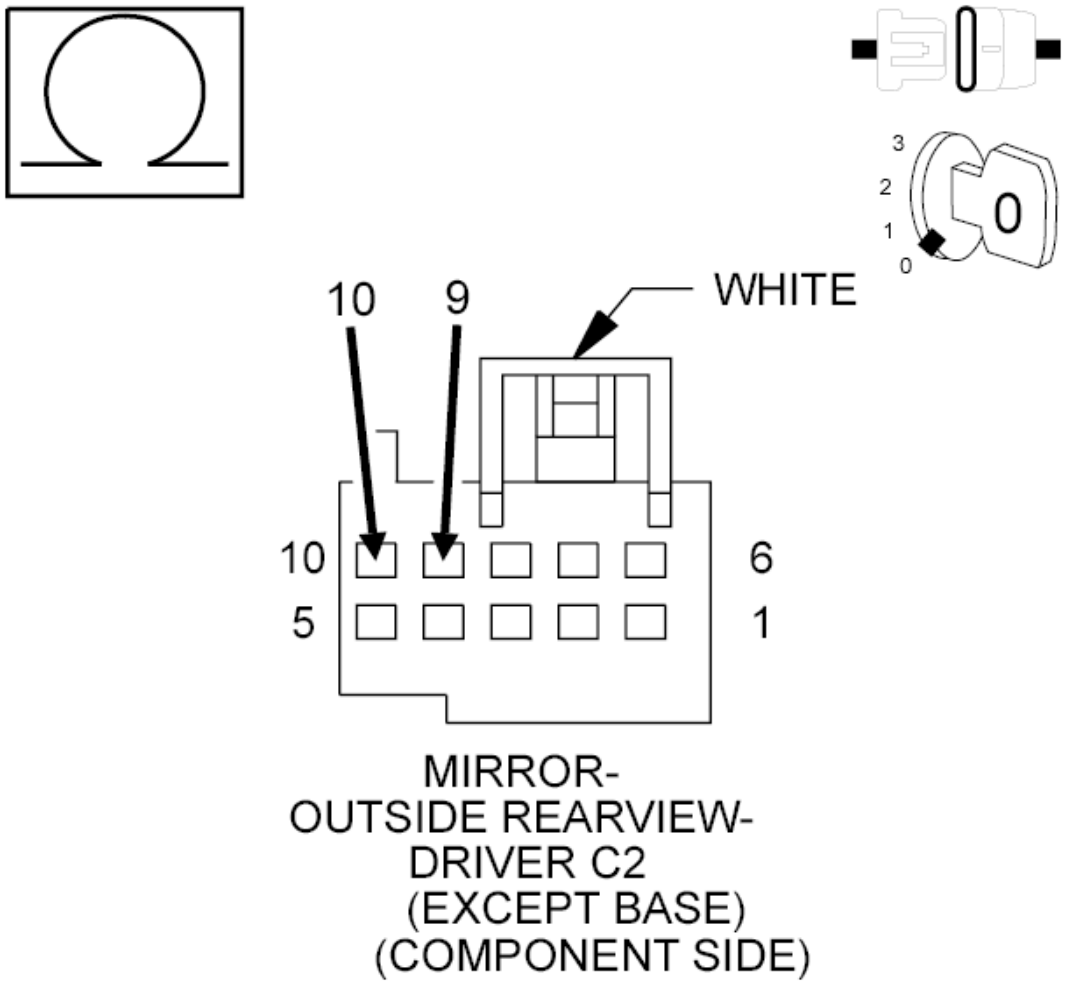

Fig. 5: Checking Driver Mirror Turn Signal Driver Circuit For Open To Driver Mirror Turn Signal Return Circuit
Courtesy of CHRYSLER GROUP, LLC

1. Measure the resistance between the (P501) Driver Mirror Turn Signal Driver circuit and the (P593) Driver Mirror Turn Signal Return circuit in the Driver Outside Rearview Mirror C2 (Component Side) harness connector.

   Is the resistance below 30.0 Ohms?

   Yes

   - Replace the Door Module in accordance with the Service Information. Refer to **MODULE, DOOR, REMOVAL** .
   - Perform the BODY VERIFICATION TEST. Refer to **STANDARD PROCEDURE** .

No

- Repair the open in the (P501) Driver Mirror Turn Signal Driver circuit. If the wiring harness and harness connectors are okay, replace the Driver Outside Rearview Mirror in accordance with the Service Information. Refer to **MIRROR, OUTSIDE REARVIEW, REMOVAL** and **MIRROR, OUTSIDE REARVIEW, GLASS, REMOVAL** .
- Perform the BODY VERIFICATION TEST. Refer to **STANDARD PROCEDURE** .

B18B5-00-MASTER SWITCH - FRONT LEFT WINDOW SWITCH - STUCK

For a complete wiring diagram, **refer to appropriate SYSTEM WIRING DIAGRAMS article** .

WHEN MONITORED

At all times.

SET CONDITION

Whenever the module detects a Front Left Window signal from the master power window switch, for over 30 seconds, this code will set.

POSSIBLE CAUSES

POSSIBLE CAUSES
DRIVER WINDOW/DOOR LOCK SWITCH

DIAGNOSTIC TEST

1. **TEST FOR INTERMITTENT CONDITION**
    1. Cycle the ignition on.
    2. With the scan tool, record and erase the DTCs.
    3. Operate the Front Left Window up and down several times.
    4. Wait 30 seconds.
    5. With the scan tool, read the DTCs.

    Does the scan tool display: B18B5-00-MASTER SWITCH-FRONT LEFT WINDOW SWITCH - STUCK?

    Yes

    - Go To 2

    No

    - The conditions that caused this code to set are not present at this time. Operate the switch

several more times. If the switch ever sticks, replace it.

- Perform the BODY VERIFICATION TEST. Refer to **STANDARD PROCEDURE** .

2. **MASTER POWER WINDOW/DOOR LOCK SWITCH**

NOTE: Anytime this code is active, the switch must be replaced.

Repair

- Replace the Master Window/Door Lock Switch in accordance with the Service Information. Refer to **SWITCH, POWER WINDOW, REMOVAL** .
- Perform the BODY VERIFICATION TEST. Refer to **STANDARD PROCEDURE** .

B18B6-00-MASTER SWITCH - FRONT RIGHT WINDOW SWITCH - STUCK

For a complete wiring diagram, **refer to appropriate SYSTEM WIRING DIAGRAMS article** .

WHEN MONITORED

At all times.

SET CONDITION

Whenever the module detects a Front Right Window signal from the master power window switch, for over 30 seconds, this code will set.

POSSIBLE CAUSES

POSSIBLE CAUSES
DRIVER WINDOW/DOOR LOCK SWITCH

DIAGNOSTIC TEST

1. **TEST FOR INTERMITTENT CONDITION**
    1. Cycle the ignition on.
    2. With the scan tool, record and erase the DTCs.
    3. Operate the Front Right Window up and down several times from the master switch.
    4. Wait 30 seconds.
    5. With the scan tool, read the DTCs.

    Does the scan tool display B18B6-00-MASTER SWITCH-FRONT RIGHT WINDOW SWITCH - STUCK?

    Yes

- Go To 2

No

- The conditions that caused this code to set are not present at this time. Operate the switch several more times. If the switch ever sticks, replace it.
- Perform the BODY VERIFICATION TEST. Refer to **STANDARD PROCEDURE** .

2. **MASTER POWER WINDOW/DOOR LOCK SWITCH**

NOTE: Anytime this code is active, the switch must be replaced.

Repair

- Replace the Driver Window/Door Lock Switch in accordance with the Service Information. Refer to **SWITCH, POWER WINDOW, REMOVAL** .
- Perform the BODY VERIFICATION TEST. Refer to **STANDARD PROCEDURE** .

B18B7-00-MASTER SWITCH - REAR LEFT WINDOW SWITCH - STUCK

For a complete wiring diagram, **refer to appropriate SYSTEM WIRING DIAGRAMS article** .

WHEN MONITORED

At all times.

SET CONDITION

Whenever the module detects a Rear Left Window signal from the master power window switch, for over 30 seconds, this code will set.

POSSIBLE CAUSES

Possible Causes
DRIVER WINDOW/DOOR LOCK SWITCH

DIAGNOSTIC TEST

1. **TEST FOR INTERMITTENT CONDITION**
    1. Cycle the ignition on.
    2. With the scan tool, record and erase the DTCs.
    3. Operate the Rear Left Window up and down several times from the master window switch.
    4. Wait 30 seconds.
    5. With the scan tool, read the DTCs.

Does the scan tool display; B18B7-00-MASTER SWITCH - REAR LEFT WINDOW SWITCH - STUCK?

Yes

- Go To 2

No

- The conditions that caused this code to set are not present at this time. Operate the switch several more times. If the switch ever sticks, replace it.
- Perform the BODY VERIFICATION TEST. Refer to **STANDARD PROCEDURE** .

2. **MASTER POWER WINDOW/DOOR LOCK SWITCH**

NOTE: Anytime this code is active, the switch must be replaced.

Repair

- Replace the Driver Window/Door Lock Switch in accordance with the Service Information. Refer to **SWITCH, POWER WINDOW, REMOVAL** .
- Perform the BODY VERIFICATION TEST. Refer to **STANDARD PROCEDURE** .

B18B8-00-MASTER SWITCH - REAR RIGHT WINDOW SWITCH - STUCK

For a complete wiring diagram, **refer to appropriate SYSTEM WIRING DIAGRAMS article** .

WHEN MONITORED

At all times.

SET CONDITION

Whenever the module detects a Rear Right Window signal from the master power window switch, for over 30 seconds, this code will set.

POSSIBLE CAUSES

POSSIBLE CAUSES
DRIVER WINDOW/DOOR LOCK SWITCH

DIAGNOSTIC TEST

1. **TEST FOR INTERMITTENT CONDITION**
    1. Cycle the ignition on.
    2. With the scan tool, record and erase the DTCs.

3. Operate the Rear Right Window up and down several times from the master switch.
4. Wait 30 seconds.
5. With the scan tool, read the DTCs.

   Does the scan tool display; B18B8-00-MASTER SWITCH - REAR RIGHT WINDOW SWITCH - STUCK?

   Yes

   - Go To 2

   No

   - The conditions that caused this code to set are not present at this time. Operate the switch several more times. If the switch ever sticks, replace it.
   - Perform the BODY VERIFICATION TEST. Refer to **STANDARD PROCEDURE** .

2. **MASTER POWER WINDOW/DOOR LOCK SWITCH**

   NOTE: Anytime this code is active, the switch must be replaced.

   Repair

   - Replace the Driver Window/Door Lock Switch in accordance with the Service Information. Refer to **SWITCH, POWER WINDOW, REMOVAL** .
   - Perform the BODY VERIFICATION TEST. Refer to **STANDARD PROCEDURE** .

B18BA-11-WINDOW CONTROL - CIRCUIT SHORT TO GROUND

For a complete wiring diagram, **refer to appropriate SYSTEM WIRING DIAGRAMS article** .

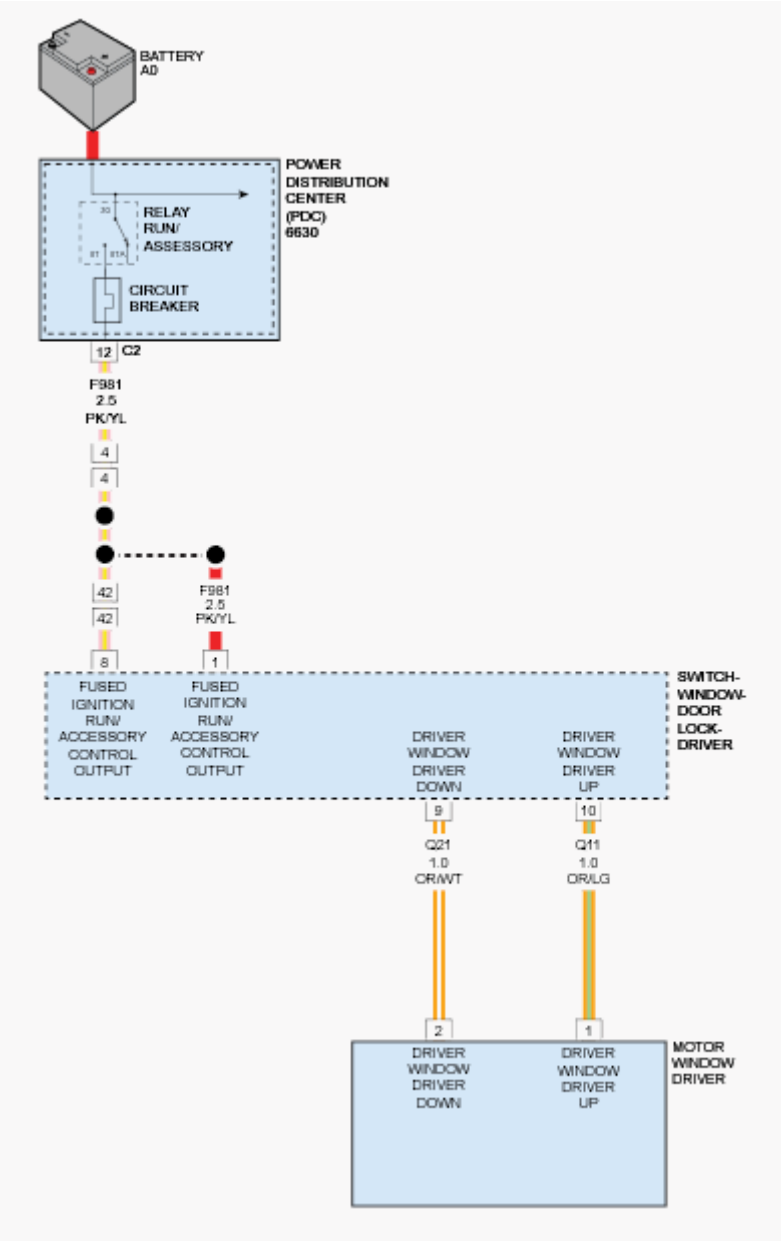

Fig. 6: Driver Window Motor Circuit Diagram
Courtesy of CHRYSLER GROUP, LLC

WHEN MONITORED

Whenever the module is awake.

SET CONDITION

When both Window Driver circuits (Up and Down) are grounded during a window movement command, this code will set.

POSSIBLE CAUSES

Possible Causes
WINDOW DRIVER DOWN CIRCUIT SHORTED TO GROUND
WINDOW DRIVER UP CIRCUIT SHORTED TO GROUND
WINDOW DRIVER DOWN CIRCUIT SHORTED TO THE WINDOW DRIVER UP CIRCUIT
WINDOW MOTOR
DOOR MODULE

DIAGNOSTIC TEST

1. **TEST FOR INTERMITTENT CONDITION**
    1. Cycle the ignition on.
    2. With the scan tool, record and erase the DTCs.
    3. Try to operate the Driver Window up and down several times.
    4. Wait 30 seconds.
    5. With the scan tool, read the DTCs.

    Does the scan tool display; B18BA-11-WINDOW CONTROL - CIRCUIT SHORT TO GROUND as active?

    Yes

    - Go To 2

    No

    - Test complete, the condition or conditions that originally set this DTC are not present at this time. Using the wiring diagrams as a guide, check all related splices and connectors for signs of water intrusion, corrosion, pushed out or bent terminals and correct pin tension.
    - Perform the BODY VERIFICATION TEST. Refer to **STANDARD PROCEDURE** .
2. **WINDOW MOTOR SHORTED**

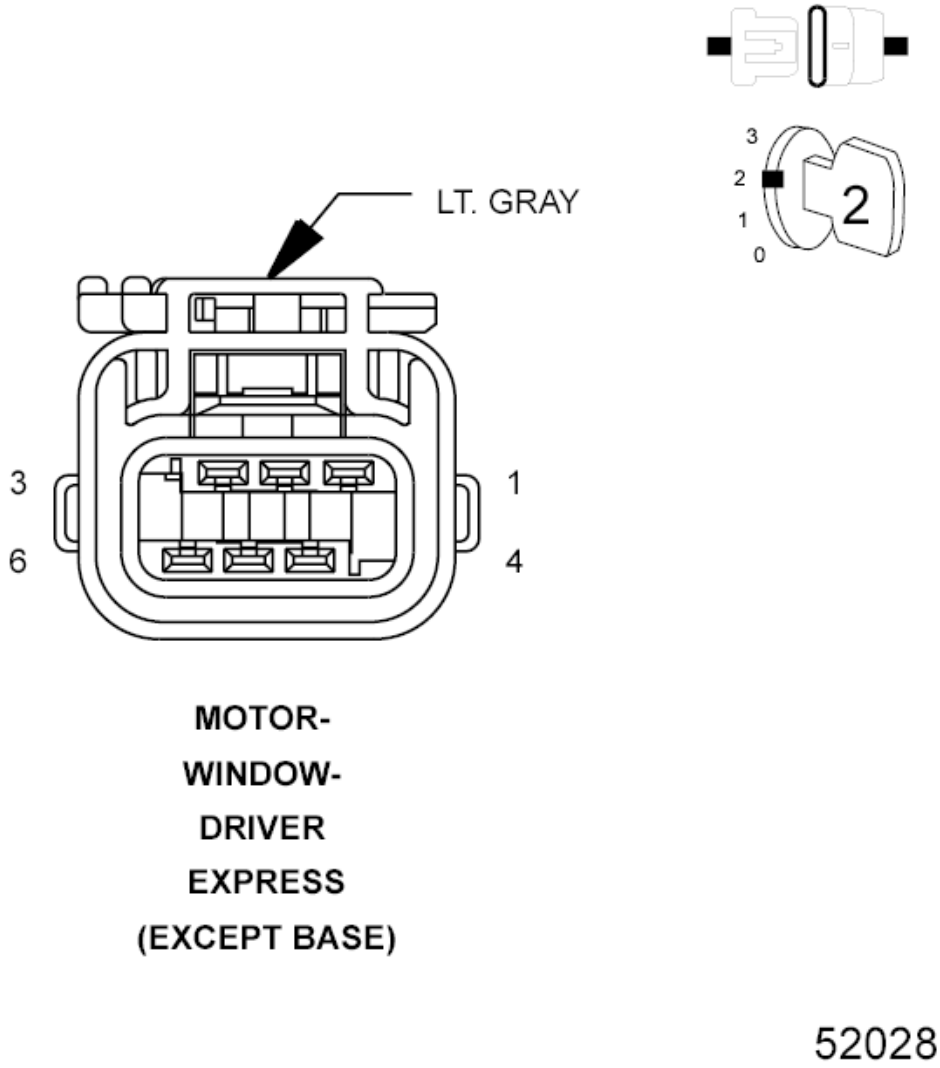

Fig. 7: Checking Window Motor For Short
Courtesy of CHRYSLER GROUP, LLC

1. With the scan tool, erase DTCs.
2. Cycle the ignition off.
3. Disconnect the Driver Window Motor harness connector.
4. Cycle the ignition on.
5. Operate the driver window switch up and down several times.
6. Wait 30 seconds.
7. With the scan tool, read active DTCs.

   Does the scan tool display; B18BA-11-WINDOW CONTROL - CIRCUIT SHORT TO GROUND as active?

Yes

- Go To 3

No

- Replace the Driver Window Motor in accordance with service information. Refer to **MOTOR, WINDOW REGULATOR, REMOVAL** .
- Perform the BODY VERIFICATION TEST. Refer to **STANDARD PROCEDURE** .

3. **(Q21) DRIVER WINDOW DRIVER DOWN CIRCUIT SHORTED TO GROUND**

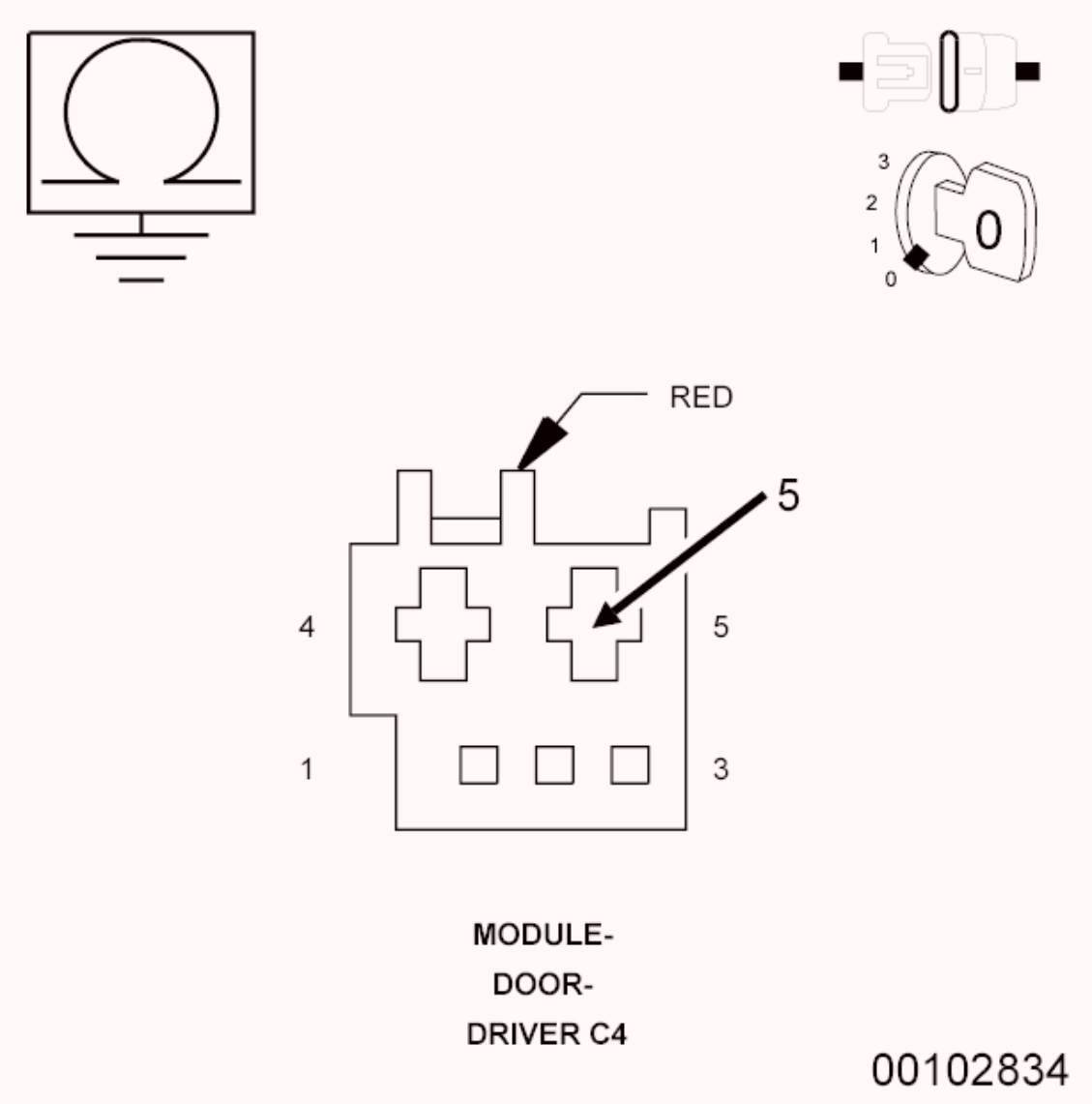

Fig. 8: Checking Driver Window Driver (Down) Circuit For Short To Ground
Courtesy of CHRYSLER GROUP, LLC

1. Cycle the ignition off.
2. Disconnect the Driver Door Module C4 harness connector.
3. Measure the resistance between Ground and the (Q21) Driver Window Driver Down circuit.

   Is the resistance below 10K Ohms?

   Yes

   - Repair the short to ground in the (Q21) Driver Window Driver Down circuit.
   - Perform the BODY VERIFICATION TEST. Refer to **STANDARD PROCEDURE** .

   No

   - Go To 4

4. **(Q11) DRIVER WINDOW DRIVER UP CIRCUIT SHORTED TO GROUND**

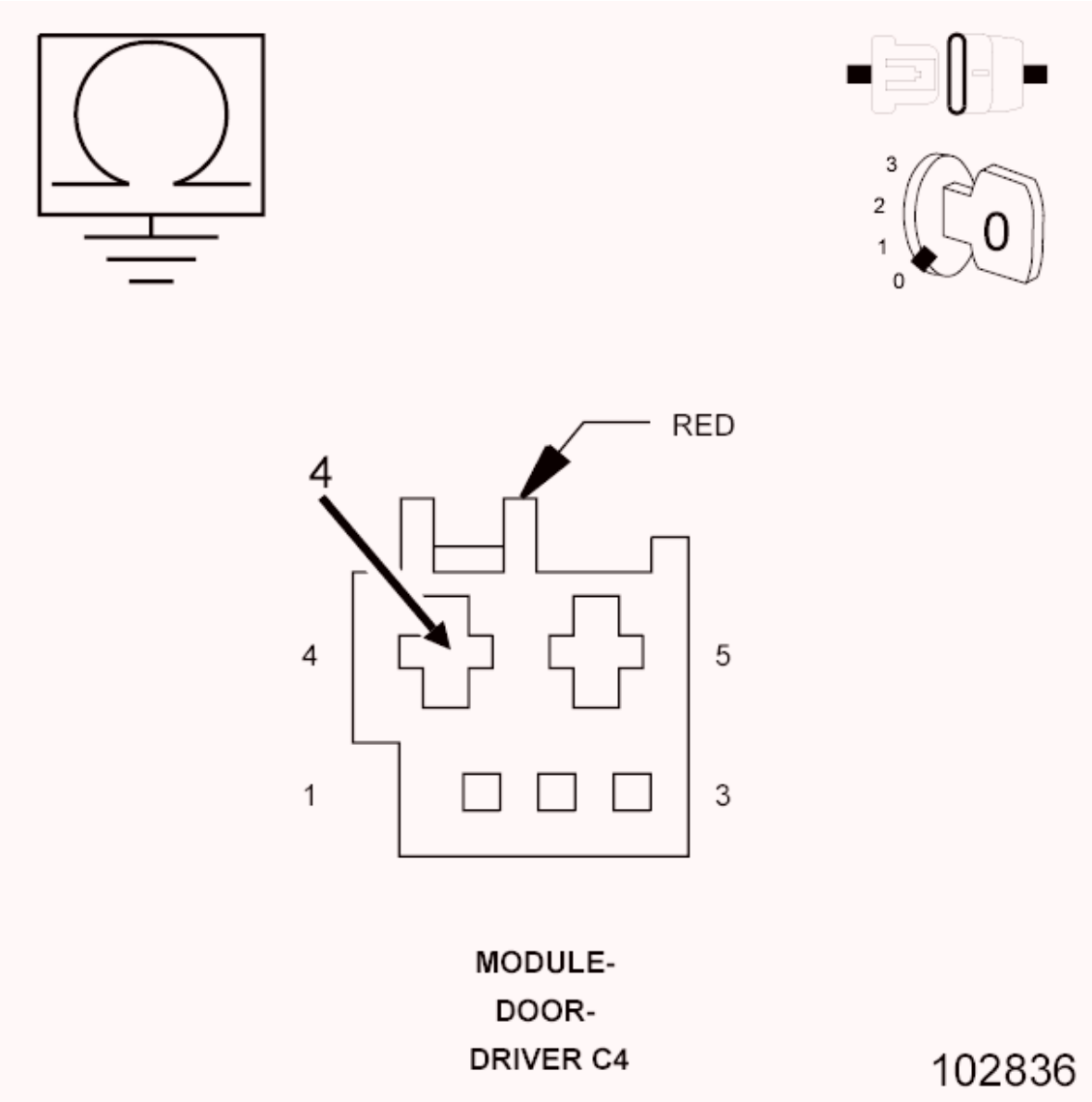

Fig. 9: Checking Driver Window Driver (Up) Circuit For Short To Ground
Courtesy of CHRYSLER GROUP, LLC

1. Measure the resistance between Ground and the (Q11) Driver Window Driver Up circuit.

   Is the resistance below 10K Ohms?

   Yes

   - Repair the short to ground in the (Q11) Driver Window Driver Up circuit.
   - Perform the BODY VERIFICATION TEST. Refer to **STANDARD PROCEDURE** .

   No

   - Go To 5

5. **(Q21) DRIVER WINDOW DRIVER DOWN CIRCUIT SHORTED TO THE (Q11) DRIVER WINDOW DRIVER UP CIRCUIT**

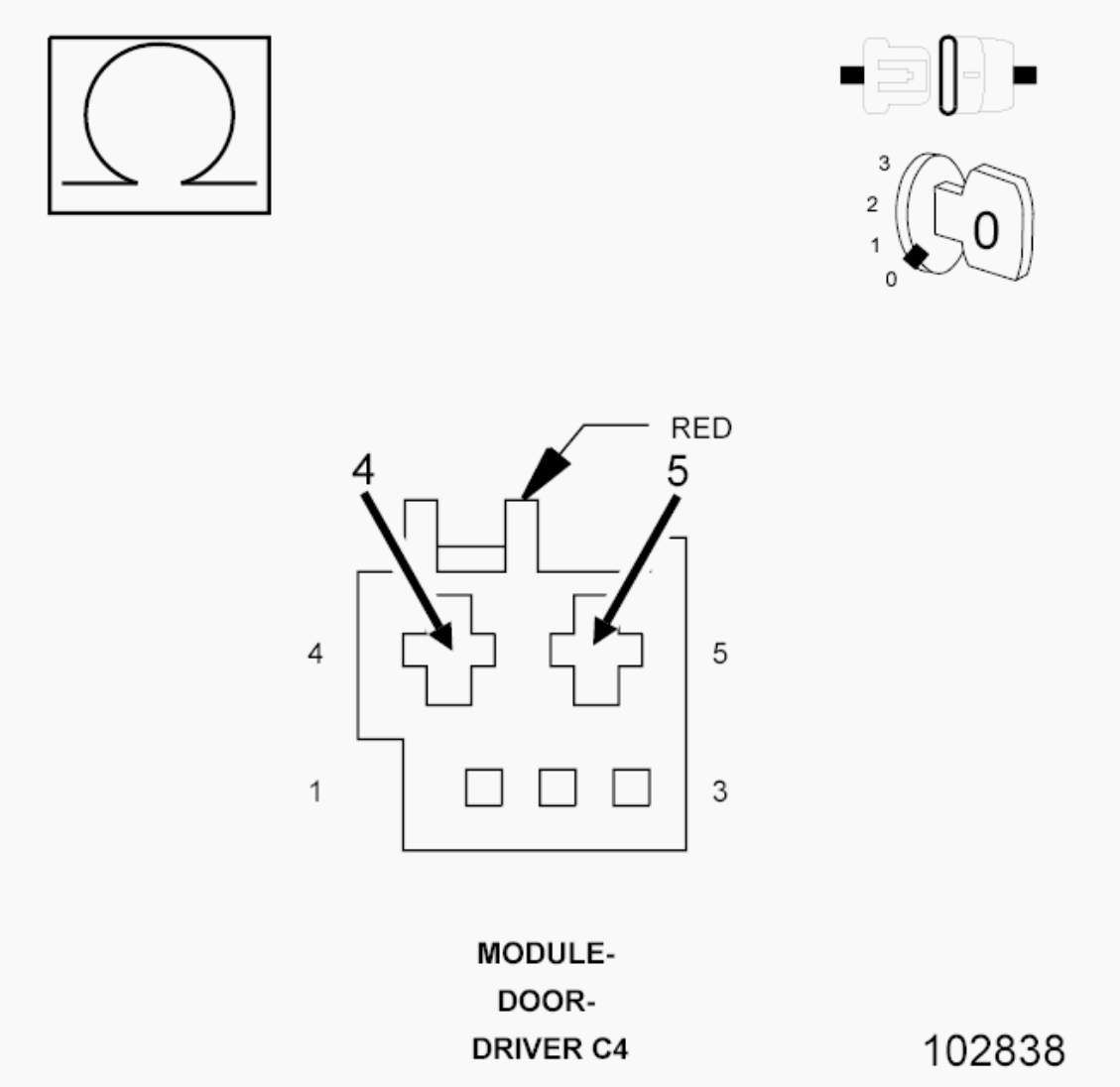

Fig. 10: Checking Driver Window Driver (Down) Circuit For A Short To The Driver Window Driver (Up) Circuit
Courtesy of CHRYSLER GROUP, LLC

1. Measure the resistance between the (Q21) Driver Window Driver Down circuit and the (Q11) Driver Window Driver Up circuit.

   Is the resistance below 10K Ohms?

   Yes

   - Repair the short between the (Q21) Driver Window Driver Down circuit and the (Q11) Driver Window Driver Up circuit.

- Perform the BODY VERIFICATION TEST. Refer to **STANDARD PROCEDURE** .

No

- Replace the Driver Door Module in accordance with the Service Information. Refer to **MODULE, DOOR, REMOVAL** .
- Perform the BODY VERIFICATION TEST. Refer to **STANDARD PROCEDURE** .

B18BA-12-WINDOW CONTROL - CIRCUIT SHORT TO BATTERY

For a complete wiring diagram, **refer to appropriate SYSTEM WIRING DIAGRAMS article** .

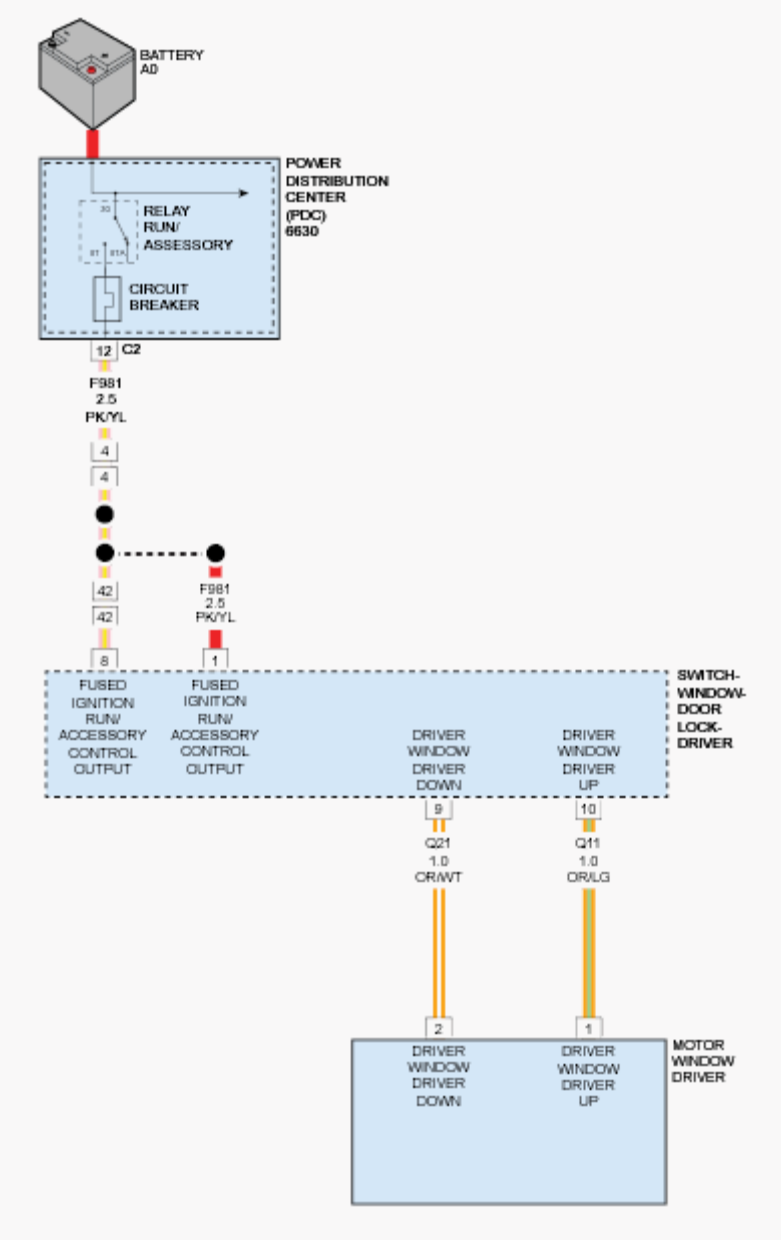

Fig. 11: Driver Window Motor Circuit Diagram
Courtesy of CHRYSLER GROUP, LLC

WHEN MONITORED

Whenever the module is awake.

SET CONDITION

When both Window Driver circuits (Up and Down) are supplied with voltage during a window movement command for more than five ms., this code will set.

POSSIBLE CAUSES

Possible Causes
WINDOW DRIVER DOWN CIRCUIT SHORTED TO VOLTAGE
WINDOW DRIVER UP CIRCUIT SHORTED TO VOLTAGE
WINDOW MOTOR
DOOR MODULE

DIAGNOSTIC TEST

1. **TEST FOR INTERMITTENT CONDITION**
    1. Cycle the ignition on.
    2. With the scan tool, record and erase the DTCs.
    3. Try to operate the Driver Window up and down several times.
    4. Wait 30 seconds.
    5. With the scan tool, read the DTCs.

    Does the scan tool display; B18BA-12-WINDOW CONTROL - CIRCUIT SHORT TO BATTERY as active?

    Yes

    - Go To 2

    No

    - Test complete, the condition or conditions that originally set this DTC are not present at this time. Using the wiring diagrams as a guide, check all related splices and connectors for signs of water intrusion, corrosion, pushed out or bent terminals and correct pin tension.
    - Perform the BODY VERIFICATION TEST. Refer to **STANDARD PROCEDURE** .
2. **WINDOW MOTOR SHORTED**
    1. With the scan tool, erase the DTCs.

2. Cycle the ignition off.
3. Disconnect the Driver Window Motor connector.
4. Cycle the ignition on.
5. Operate the driver window switch up and down several times.
6. With the scan tool, read the DTCs.

   Does the scan tool display; B18BA-12-WINDOW CONTROL - CIRCUIT SHORT TO BATTERY?

   Yes

   - Go To 3

   No

   - Replace the Driver Window Motor in accordance with service information.
   - Perform the BODY VERIFICATION TEST. Refer to **STANDARD PROCEDURE** .

3. **(Q21) DRIVER WINDOW DRIVER DOWN CIRCUIT SHORTED TO VOLTAGE**

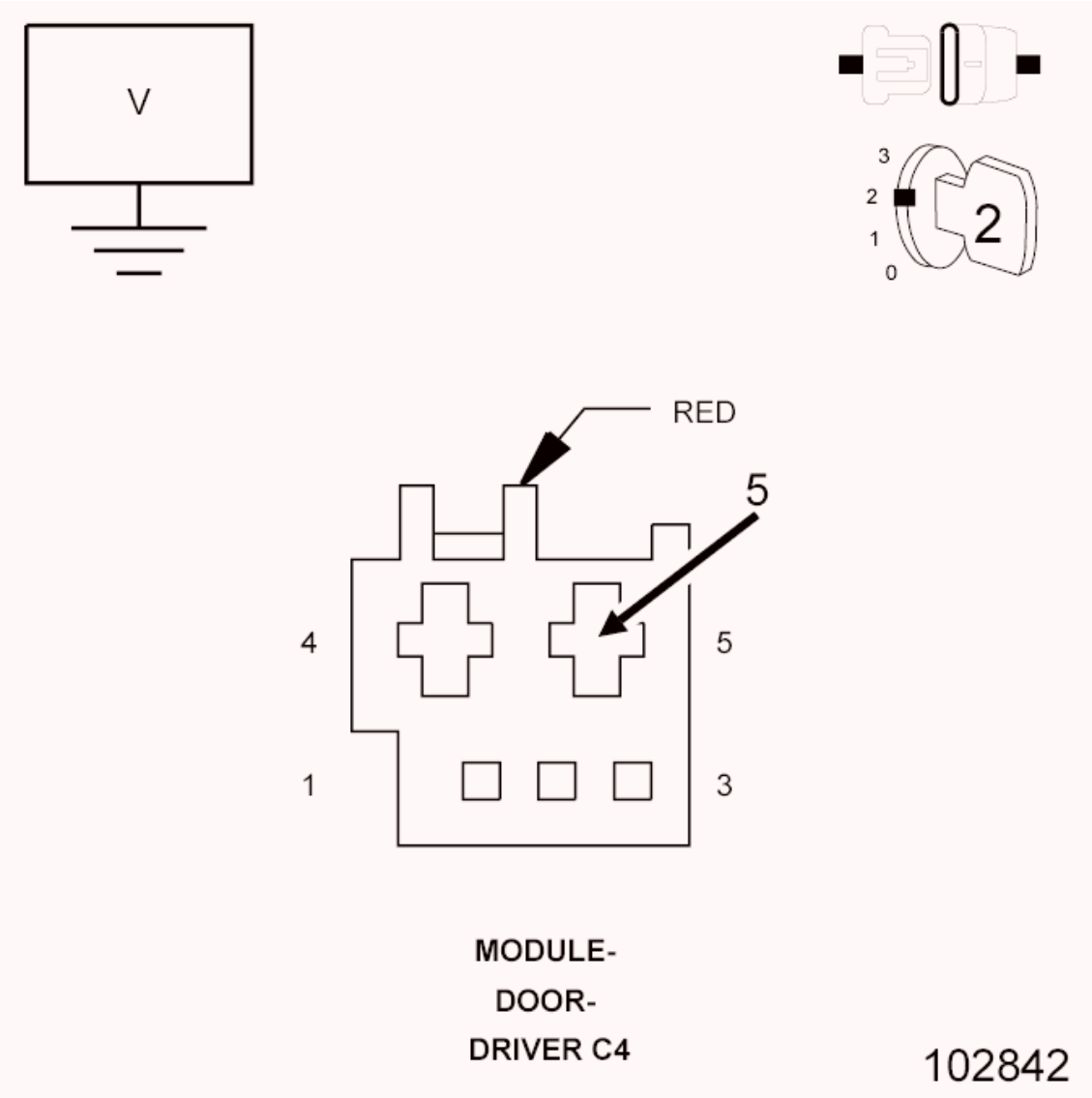

Fig. 12: Checking Driver Window Driver Down Circuit For A Short To Voltage
Courtesy of CHRYSLER GROUP, LLC

1. Cycle the ignition off.
2. Disconnect the Driver Door Module C4 connector.
3. Cycle the ignition on.
4. Measure the voltage between the (Q21) Driver Window Driver Down circuit and Ground.

   Is there any voltage present?

   Yes

   - Repair the (Q21) Driver Window Driver Down circuit for a short to voltage.
   - Perform the BODY VERIFICATION TEST. Refer to **STANDARD PROCEDURE** .

No

- Go To 4

4. **(Q11) DRIVER WINDOW DRIVER UP CIRCUIT SHORTED TO VOLTAGE**

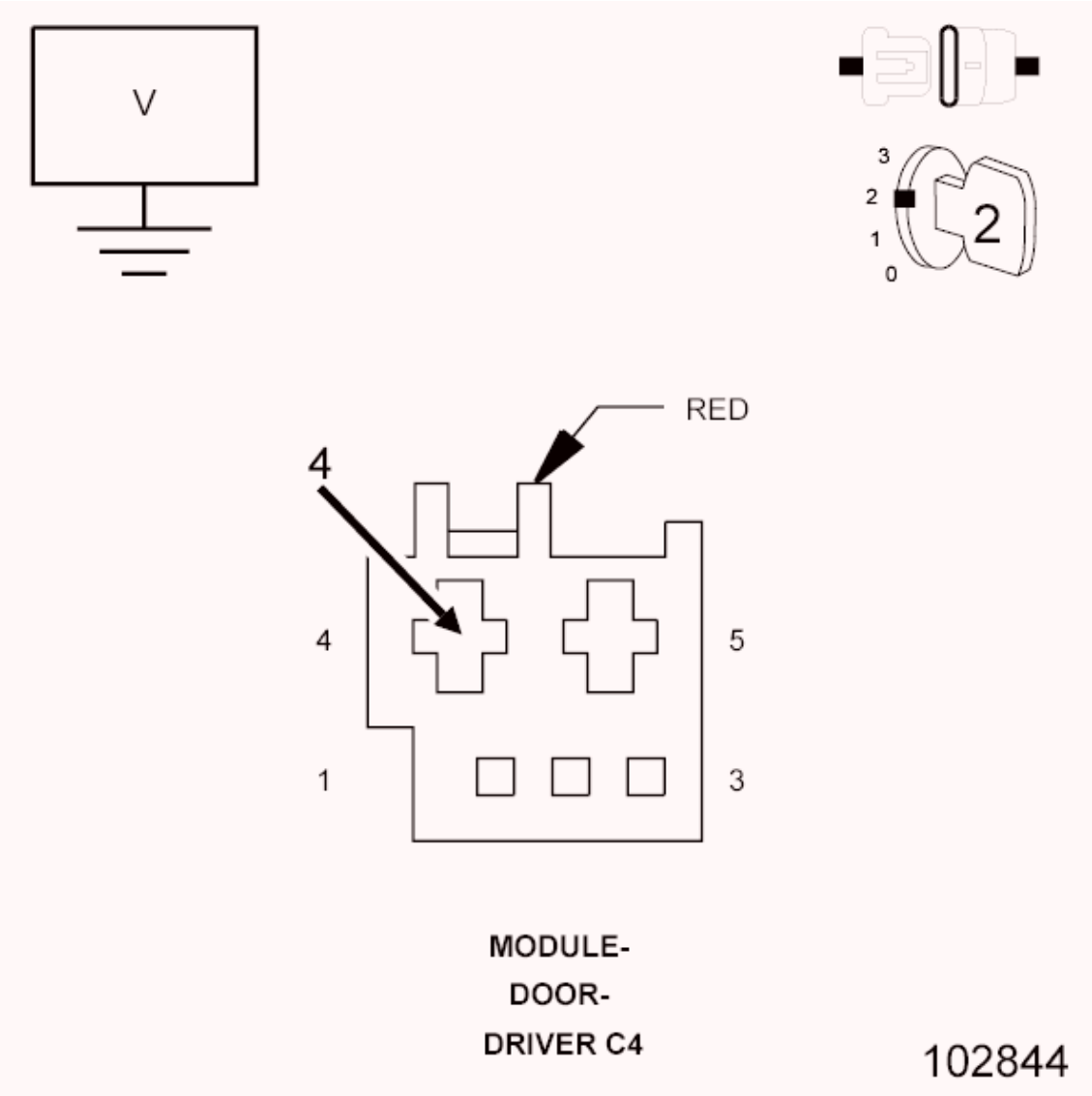

Fig. 13: Checking Driver Window Driver Up Circuit For A Short To Voltage
Courtesy of CHRYSLER GROUP, LLC

1. Measure the voltage between the (Q11) Driver Window Driver Up circuit and Ground.

   Is there any voltage present?

   Yes

   - Repair the (Q11) Driver Window Driver Up circuit for a short to voltage.

- Perform the BODY VERIFICATION TEST. Refer to **STANDARD PROCEDURE** .

No

- Replace the Driver Door Module in accordance with the Service Information. Refer to **MODULE, DOOR, REMOVAL** .
- Perform the BODY VERIFICATION TEST. Refer to **STANDARD PROCEDURE** .

B18BA-13-WINDOW CONTROL - CIRCUIT OPEN

For a complete wiring diagram, **refer to appropriate SYSTEM WIRING DIAGRAMS article** .

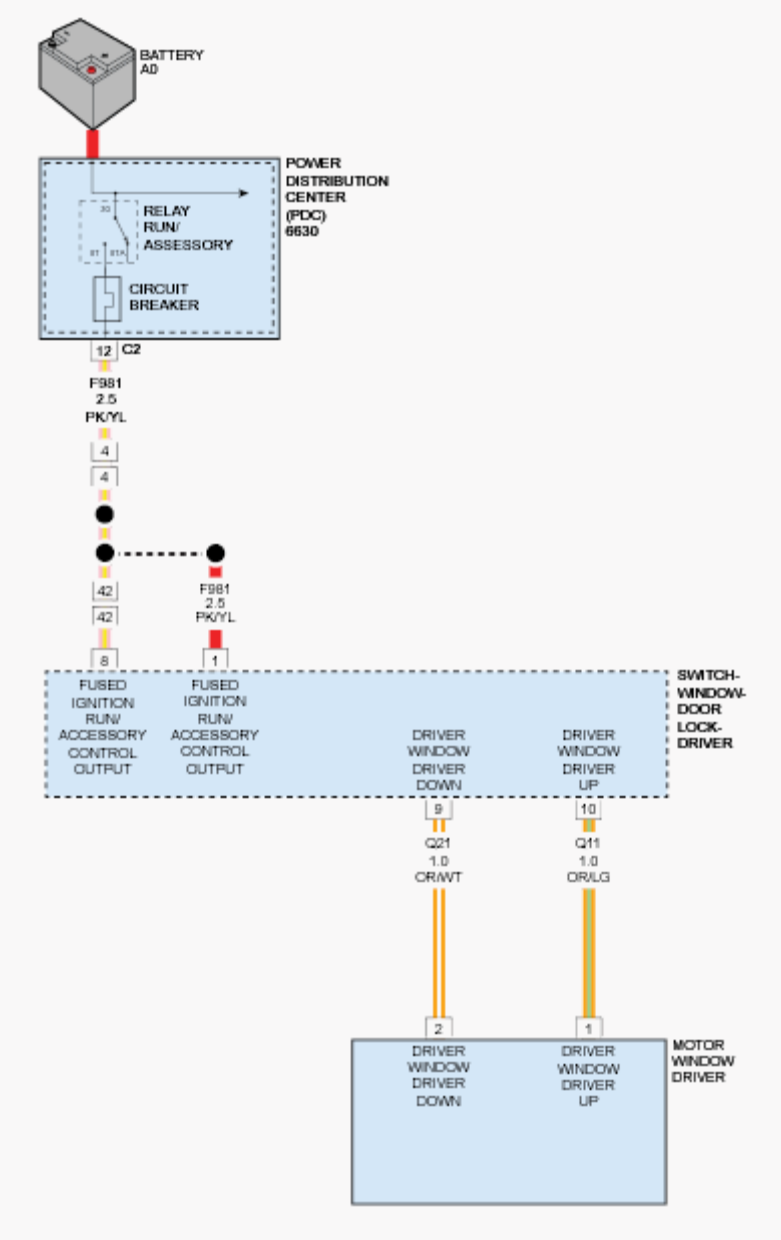

Fig. 14: Driver Window Motor Circuit Diagram
Courtesy of CHRYSLER GROUP, LLC

WHEN MONITORED

Whenever the module is awake.

SET CONDITION

When one or both Window circuits (Up and Down) are not supplied with voltage, when they should be, during a window movement command for more than five ms., this code will set.

POSSIBLE CAUSES

Possible Causes
WINDOW DOWN CIRCUIT OPEN
WINDOW UP CIRCUIT OPEN
WINDOW MOTOR
DOOR MODULE

DIAGNOSTIC TEST

1. **TEST FOR INTERMITTENT CONDITION**
    1. Cycle the ignition on.
    2. With the scan tool, record and erase the DTCs.
    3. Try to operate the Driver Window up and down several times.
    4. Wait 30 seconds.
    5. With the scan tool, read the DTCs.

    Does the scan tool display; B18BA-13-WINDOW CONTROL - CIRCUIT OPEN?

    Yes

    - Go To 2

    No

    - Test complete, the condition or conditions that originally set this DTC are not present at this time. Using the wiring diagrams as a guide, check all related splices and connectors for signs of water intrusion, corrosion, pushed out or bent terminals and correct pin tension.
    - Perform the BODY VERIFICATION TEST. Refer to **STANDARD PROCEDURE** .
2. **WINDOW MOTOR OR CIRCUIT OPEN**
    1. Cycle the ignition off.
    2. Disconnect the Driver Window Motor harness connector.

3. Connect a test light between the (Q11) Driver Window Driver Up circuit and the (Q21) Driver Window Driver Down circuit.
4. Cycle the ignition on.
5. Trip the driver door latch to the closed position.
6. Operate the driver window switch up and down several times while observing the test light.

   Does the test light illuminate brightly when the switch is pressed in both directions? With the express up window, the test light will only flash momentarily each time the switch is activated.

   Yes

   - Replace the Driver Window Motor in accordance with the Service Information.
   - Perform the BODY VERIFICATION TEST. Refer to **STANDARD PROCEDURE** .

   No

   - Go To 3

3. **(Q21) DRIVER WINDOW EXPRESS DOWN DRIVER CIRCUIT OPEN**
   1. Cycle the ignition off.
   2. Disconnect the Driver Door Module C4 harness connector.
   3. Measure the resistance of the (Q21) Driver Window Down Driver circuit between the C4 module connector and the motor connector.

      Is the resistance below 2.0 Ohms?

      Yes

      - Go To 4

      No

      - Repair the open in the (Q21) Driver Window Down Driver circuit.
      - Perform the BODY VERIFICATION TEST. Refer to **STANDARD PROCEDURE** .

4. **(Q11) DRIVER WINDOW DRIVER UP CIRCUIT OPEN**
   1. Measure the resistance of the (Q11) Driver Window Driver Up circuit between the C4 module connector and the motor connector.

      Is the resistance below 2.0 Ohms?

      Yes

      - Replace the Driver Door Module in accordance with the Service Information. Refer to **MODULE, DOOR, REMOVAL** .

- Perform the BODY VERIFICATION TEST. Refer to **STANDARD PROCEDURE** .

No

- Repair the (Q11) Driver Window Driver Up circuit for an open.
- Perform the BODY VERIFICATION TEST. Refer to **STANDARD PROCEDURE** .

B18BA-4B WINDOW CONTROL-OVER TEMPERATURE

For a complete wiring diagram, **refer to appropriate SYSTEM WIRING DIAGRAMS article** .

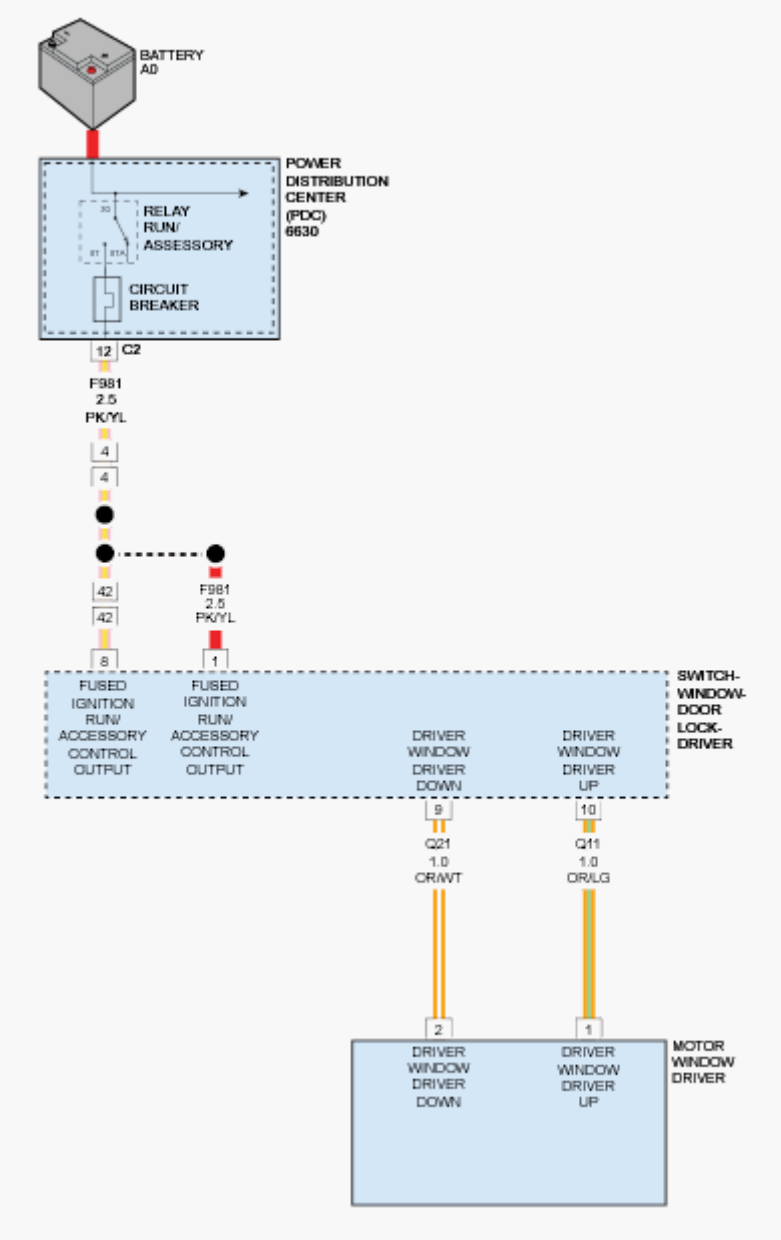

Fig. 15: Driver Window Motor Circuit Diagram

Courtesy of CHRYSLER GROUP, LLC

WHEN MONITORED

Continuously.

SET CONDITION

This DTC sets when the window motor is continuously requested to move repeatedly without a sufficient cooling time (1-2 seconds). The Driver Door Module logic has determined the temperature has exceeded 80°C (176°F) and inhibits window operation.

POSSIBLE CAUSES

Possible Causes
HIGH TEMPERATURE FAILURE
DRIVER DOOR WINDOW MOTOR
DRIVER DOOR MODULE

DIAGNOSTIC TEST

1. **TEST FOR INTERMITTENT CONDITION**
    1. Cycle the ignition on.
    2. With the scan tool, read and record the DTCs.

    Does the scan tool display; B18BA-4B WINDOW CONTROL-OVER TEMPERATURE as **ACTIVE** ?

    Yes

    - Go To 2

    No

    - Test complete, the conditions that caused this code to set is not present at this time.
    - Perform the BODY VERIFICATION TEST. Refer to **STANDARD PROCEDURE** .
2. **CONFIRM WINDOW OPERATION**

    NOTE: This step is being performed only when DTC B18BA-4B is ACTIVE.

    1. Run the window to the full up position and continue to hold the switch for an additional two seconds.
    2. Run the window to the full down position and continue to hold the switch for an additional two seconds.

3. Again run the window to the full up position and continue to hold the switch for an additional two seconds.
4. Lower the window to the full down position then press and release the switch to the express up position.

   Did the window move to the full up position?

   Yes

   - Replace the Driver Door Module in accordance with the Service Information. Refer to **MODULE, DOOR, REMOVAL** .
   - Perform the BODY VERIFICATION TEST. Refer to **STANDARD PROCEDURE** .

   No

   - Go To 3

3. **CHECKING THE (Q11) DRIVER WINDOW DRIVER UP CIRCUIT AND THE (Q21) DRIVER WINDOW DRIVER DOWN CIRCUIT FOR VOLTAGE**

NOTE: This step is being performed only when DTC B18BA-4B is ACTIVE

1. Cycle the ignition off.
2. Disconnect the Driver Window Motor harness connector.
3. Connect a test light between the (Q11) Driver Window Driver Up circuit and the (Q21) Driver Window Driver Down circuit.
4. Cycle the ignition on.
5. Trip the driver door latch to the closed position.
6. Operate the driver window switch up and down several times while observing the test light.

   Does the test light illuminate brightly when the switch is pressed in both directions? With the express up window, the test light will only flash momentarily each time the switch is activated.

   Yes

   - Replace the Driver Window Motor in accordance with the Service Information.
   - Perform the BODY VERIFICATION TEST. Refer to **STANDARD PROCEDURE** .

   No

   - Replace the Driver Door Module in accordance with the Service Information. Refer to **MODULE, DOOR, REMOVAL** .
   - Perform the BODY VERIFICATION TEST. Refer to **STANDARD PROCEDURE** .

B1D00-2A-MIRROR FOLD SWITCH INPUT - STUCK

For a complete wiring diagram, **refer to appropriate SYSTEM WIRING DIAGRAMS article** .

WHEN MONITORED

Whenever the Driver Door Module (DDM) is awake.

SET CONDITION

When the Driver Door Module (DDM) senses the Mirror Fold switch input for more than 30 seconds.

POSSIBLE CAUSES

Possible Causes
OBJECT HOLDING MIRROR FOLD SWITCH IN A PUSHED POSITION
SUBSTANCE CAUSING MIRROR FOLD SWITCH TO GET STUCK IN A PUSHED POSITION
DRIVER WINDOW/DOOR LOCK SWITCH

DIAGNOSTIC TEST

1. **INSPECT DRIVER DOOR SWITCH ASSEMBLY FOR DAMAGE**

   NOTE: Diagnose and repair all LIN Bus related DTCs before performing this test procedure.

   1. Cycle the ignition off.
   2. Inspect the Driver Window/Door Lock Switch for damage.

      Is the switch assembly damaged?

      Yes

      - Replace the Driver Window/Door Lock Switch in accordance with the Service Information. Refer to **SWITCH, POWER WINDOW, REMOVAL** .
      - Perform BODY VERIFICATION TEST. Refer to **STANDARD PROCEDURE** .

      No

      - Go To 2

2. **INSPECT FOR OBJECT OR SUBSTANCE CAUSING MIRROR FOLD SWITCH TO STAY OR STICK IN A PUSHED POSITION**
   1. Inspect the Mirror Fold switch for anything that would cause it to stay or stick in a pushed position.

      Is anything present that would cause the Mirror Fold switch to stay or stick in a pushed position?

Yes

- Repair as necessary.
- Perform BODY VERIFICATION TEST. Refer to **STANDARD PROCEDURE** .

No

- Go To 3

3. **TEST FOR INTERMITTENT CONDITION**
   1. Cycle the ignition on.
   2. With the scan tool, record and erase the DTCs.
   3. Operate the Mirror Fold switch several times and then wait 30 seconds.
   4. With the scan tool, read the DTCs.

   Does the scan tool display: B1D00-2A-MIRROR FOLD SWITCH INPUT STUCK?

   Yes

   - Replace the Driver Window/Door Lock Switch in accordance with the Service Information.
   - Perform BODY VERIFICATION TEST. Refer to **STANDARD PROCEDURE** .

   No

   - Test complete, the condition or conditions that originally set this DTC are not present at this time. Using the wiring diagrams as a guide, check all related splices and connectors for signs of water intrusion, corrosion, pushed out or bent terminals and correct pin tension.
   - Perform BODY VERIFICATION TEST. Refer to **STANDARD PROCEDURE** .

B1D04-2A-MIRROR ADJUST SWITCH INPUT - STUCK

For a complete wiring diagram, **refer to appropriate SYSTEM WIRING DIAGRAMS article** .

WHEN MONITORED

Whenever the Driver Door Module (DDM) is awake.

SET CONDITION

When the DDM senses the Mirror Adjust switch input for more than 30 seconds.

POSSIBLE CAUSES

Possible Causes
OBJECT HOLDING MIRROR ADJUST SWITCH IN A PUSHED POSITION

SUBSTANCE CAUSING MIRROR ADJUST SWITCH TO GET STUCK IN A PUSHED POSITION
DRIVER WINDOW/DOOR LOCK SWITCH

DIAGNOSTIC TEST

1. **INSPECT DRIVER DOOR SWITCH ASSEMBLY FOR DAMAGE**

   NOTE: Diagnose and repair all LIN Bus related DTCs before performing this test procedure.

   1. Cycle the ignition off.
   2. Inspect the Driver Window/Door Lock Switch for damage.

      Is the switch assembly damaged?

      Yes

      - Replace the Driver Window/Door Lock Switch in accordance with the Service Information.
      - Perform the BODY VERIFICATION TEST. Refer to **STANDARD PROCEDURE** .

      No

      - Go To 2
2. **INSPECT FOR OBJECT OR SUBSTANCE CAUSING MIRROR ADJUST SWITCH TO STAY OR STICK IN A PUSHED POSITION**
   1. Inspect the Mirror Adjust switch for anything that would cause it to stay or stick in a pushed position.

      Is anything present that would cause the Mirror Adjust switch to stay or stick in a pushed position?

      Yes

      - Repair as necessary.
      - Perform the BODY VERIFICATION TEST. Refer to **STANDARD PROCEDURE** .

      No

      - Go To 3
3. **TEST FOR INTERMITTENT CONDITION**
   1. Cycle the ignition on.
   2. With the scan tool, record and erase the DTCs.
   3. Press and release either Mirror Select switch.
   4. Operate the Mirror Adjust switch in all positions several times and then wait 30 seconds.

5. With the scan tool, read the DTCs.

   Does the scan tool display this DTC as active?

   Yes

   - Replace the Driver Window/Door Lock Switch in accordance with the Service Information. Refer to **SWITCH, POWER WINDOW, REMOVAL** .
   - Perform the BODY VERIFICATION TEST. Refer to **STANDARD PROCEDURE** .

   No

   - Test complete, the condition or conditions that originally set this DTC are not present at this time. Using the wiring diagrams as a guide, check all related splices and connectors for signs of water intrusion, corrosion, pushed out or bent terminals and correct pin tension.
   - Perform the BODY VERIFICATION TEST. Refer to **STANDARD PROCEDURE** .

B1D4A-2A-MEMORY SWITCH INPUT - STUCK

For a complete wiring diagram, **refer to appropriate SYSTEM WIRING DIAGRAMS article** .

WHEN MONITORED

Continuously.

SET CONDITION

The Door Module receives a conflicting input from the (G200) Memory Select Switch Mux circuit for more than 30 seconds.

POSSIBLE CAUSES

Possible Causes
OBJECT HOLDING MEMORY SET SWITCH IN A PUSHED POSITION
SUBSTANCE CAUSING MEMORY SET SWITCH TO GET STUCK IN A PUSHED POSITION
(G200) MEMORY SELECT SWITCH MUX CIRCUIT SHORTED TO GROUND
(G200) MEMORY SELECT SWITCH MUX CIRCUIT SHORTED TO THE (G920) MEMORY SELECT SWITCH MUX RETURN CIRCUIT
MEMORY SET SWITCH
DOOR MODULE

DIAGNOSTIC TEST

1. **INSPECT MEMORY SET SWITCH FOR DAMAGE**
   1. Cycle the ignition off.

2. Inspect the Memory Set switch for damage.

   Is the switch damaged?

   Yes

   - Replace the Memory Set switch in accordance with the Service Information. Refer to **SWITCH, MEMORY, REMOVAL** .
   - Perform the BODY VERIFICATION TEST. Refer to **STANDARD PROCEDURE** .

   No

   - Go To 2

2. **INSPECT FOR OBJECT OR SUBSTANCE CAUSING MEMORY SET SWITCH TO STAY OR STICK IN A PUSHED POSITION**
   1. Inspect the Memory Set switch for anything that would cause it to stay or stick in a pushed position.

      Is anything present that would cause the Memory Set switch to stay or stick in a pushed position?

      Yes

      - Repair as necessary.
      - Perform the BODY VERIFICATION TEST. Refer to **STANDARD PROCEDURE** .

      No

      - Go To 3

3. **TEST FOR INTERMITTENT CONDITION**
   1. Cycle the ignition on.
   2. Using a scan tool, record and erase the Diagnostic Trouble Codes (DTCs).
   3. Press the Memory Set switch several times in all positions.
   4. Cycle the ignition from on to off three times.
   5. Cycle the ignition on then wait 30 seconds.
   6. Using a scan tool, read the Active DTCs.

      Does the scan tool display; B1D4A-2A-MEMORY SWITCH INPUT - STUCK?

      Yes

      - Go To 4

      No

- The conditions that caused this code to set are not present at this time. Verify seat harness is routed correctly. Using the wiring diagram/schematic as a guide, inspect the wiring and connectors. Attempt to reproduce condition by adjusting the seat.
- Perform the BODY VERIFICATION TEST. Refer to **STANDARD PROCEDURE** .

4. **CHECK MEMORY SET SWITCH FOR A SHORT TO GROUND**
   1. Using a scan tool, erase the DTCs.
   2. Cycle the ignition off.
   3. Disconnect the Memory Set switch connector.
   4. Cycle the ignition three times.
   5. Cycle the ignition on and then wait 30 seconds.
   6. Using a scan tool, read the Active DTCs.

   Does the scan tool display; B1D4A-2A-MEMORY SWITCH INPUT - STUCK?

   Yes

   - Go To 5

   No

   - Replace the Memory Set switch in accordance with the Service Information. Refer to **SWITCH, MEMORY, REMOVAL** .
   - Perform the BODY VERIFICATION TEST. Refer to **STANDARD PROCEDURE** .

5. **CHECK (G200) MEMORY SELECT SWITCH MUX CIRCUIT FOR A SHORT TO GROUND**
   1. Cycle the ignition off.
   2. Disconnect the Door Module C5 harness connector.
   3. Measure the resistance between ground and the (G200) Memory Select Switch Mux circuit at the Memory Set switch connector.

   Is the resistance below 10K Ohms?

   Yes

   - Repair the (G200) Memory Select Switch Mux circuit for a short to ground.
   - Perform the BODY VERIFICATION TEST. Refer to **STANDARD PROCEDURE** .

   No

   - Go To 6

6. **CHECK (G200) MEMORY SELECT SWITCH MUX CIRCUIT FOR A SHORT TO THE (G920) MEMORY SELECT SWITCH RETURN CIRCUIT**
   1. Measure the resistance between the (G200) Memory Select Switch Mux circuit and the (G920)

Memory Select Switch Return circuit at the Memory Set switch connector.

Is the resistance below 10K Ohms?

Yes

- Repair the (G200) Memory Select Switch Mux circuit for a short to the (G920) Memory Select Switch return circuit.
- Perform the BODY VERIFICATION TEST. Refer to **STANDARD PROCEDURE** .

No

- Replace the Door Module in accordance with the Service Information. Refer to **MODULE, DOOR, REMOVAL** .
- Perform the BODY VERIFICATION TEST. Refer to **STANDARD PROCEDURE** .

B1DD0-11-MIRROR HEATER CONTROL - CIRCUIT SHORT TO GROUND

For a complete wiring diagram, **refer to appropriate SYSTEM WIRING DIAGRAMS article** .

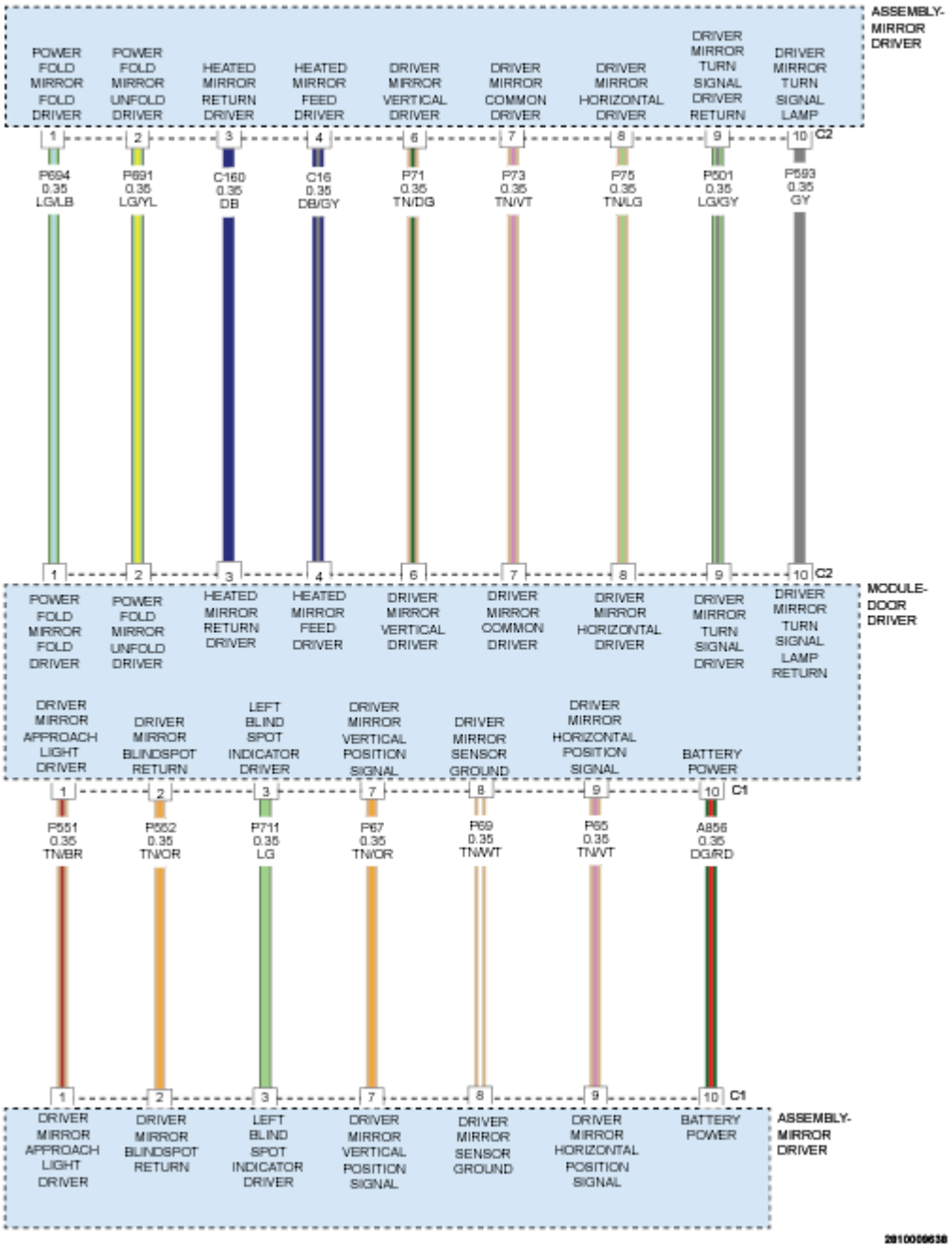

Fig. 16: Driver Mirror Assembly Wiring Diagram
Courtesy of CHRYSLER GROUP, LLC

WHEN MONITORED

Continuously.

SET CONDITION

The Door Module senses a short low on the Mirror Heater Driver circuit for more than two seconds with the heater switched on.

POSSIBLE CAUSES

Possible Causes
MIRROR HEATER DRIVER CIRCUIT SHORTED TO GROUND
MIRROR HEATER DRIVER CIRCUIT SHORTED TO ANY DRIVER MIRROR DRIVER CIRCUIT
MIRROR HEATER DRIVER CIRCUIT SHORTED TO THE MIRROR HEATER RETURN CIRCUIT
MIRROR HEATER DRIVER CIRCUIT SHORTED TO ANY SENSOR GROUND OR RETURN CIRCUIT
OUTSIDE REARVIEW MIRROR
DOOR MODULE

DIAGNOSTIC TEST

1. **TEST FOR INTERMITTENT CONDITION**
    1. Cycle the ignition on.
    2. Using a scan tool, record and erase Diagnostic Trouble Codes (DTCs).
    3. Turn the hazard lamps on.
    4. Turn the heated mirrors on.
    5. Turn the park lamps on.
    6. Press and release the Mirror Select switch to select the Driver Outside Rearview Mirror.
    7. Operate the Mirror Adjust switch in all directions several times while monitoring the scan tool for DTCs.

    NOTE: After adjusting the mirror in one direction wait at least two seconds before adjusting the mirror in the opposite direction, as this will allow time for an active fault to set if present.

    8. With the scan tool, read the active DTCs.

    Does the scan tool display: B1DD0-11-MIRROR HEATER CONTROL - CIRCUIT SHORT TO GROUND as active?

    Yes

    - Go To 2

    No

    - The conditions that caused this code to set are not present at this time. For vehicle's equipped with folding outside rearview mirrors, repeat test with mirror folded. If this DTC is now

active, Go To 2. Otherwise, use the wiring diagram/schematic as a guide and inspect the wiring and connectors.

- Perform the BODY VERIFICATION TEST. Refer to **STANDARD PROCEDURE** .

2. **INSPECT MIRROR CONNECTIONS**
   1. Cycle the ignition off.
   2. Disconnect the Driver Outside Rearview Mirror C1 and C2 connectors at the Drivers Door Module.
   3. Inspect the wiring harness, connectors and the Drivers Door Module. Check for cracks in the mirror glass.

   Were there any problems found?

   Yes

   - Repair as necessary.
   - Perform the BODY VERIFICATION TEST. Refer to **STANDARD PROCEDURE** .

   No

   - Go To 3

3. **CHECK (C16) DRIVER MIRROR HEATER DRIVER CIRCUIT FOR A SHORT TO THE (C160) DRIVER MIRROR HEATER RETURN CIRCUIT**

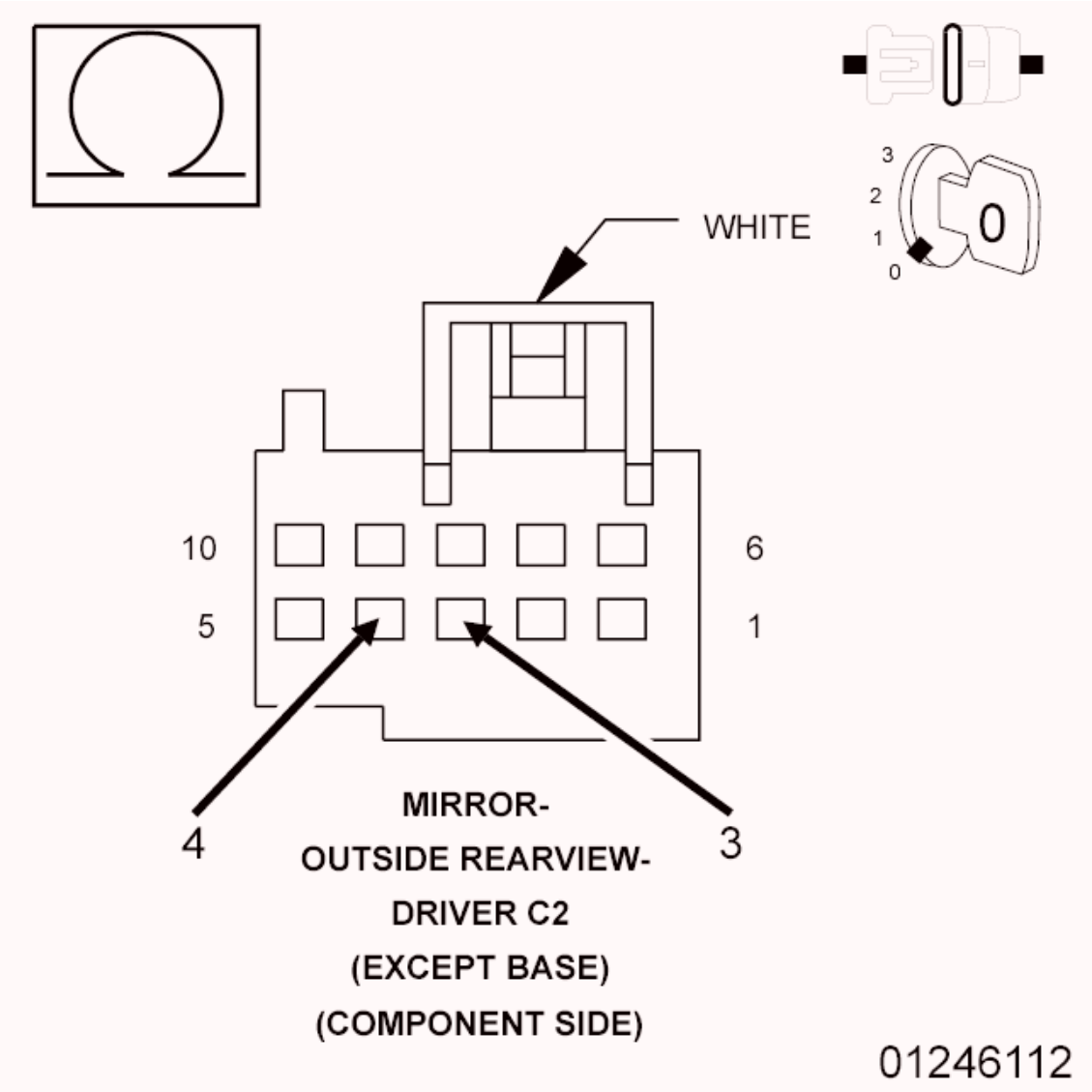

Fig. 17: Checking Driver Mirror Heater Driver Circuit For A Short To Driver Mirror Heater Return Circuit
Courtesy of CHRYSLER GROUP, LLC

1. Measure the resistance between the (C16) Driver Mirror Heater Driver circuit and the (C160) Driver Mirror Heater Return circuit at the Driver Outside Rearview Mirror C2 (Component Side) connector.

   Is the resistance below 2.5 Ohms?

   Yes

   - Repair the (C16) Driver Mirror Heater Driver circuit for a short to the (C160) Driver Mirror Heater Return circuit. If the wiring harness and connector are okay, replace the Driver Outside Rearview Mirror in accordance with the Service Information. Refer to **MIRROR,**

OUTSIDE REARVIEW, REMOVAL and **MIRROR, OUTSIDE REARVIEW, GLASS, REMOVAL** .

- Perform the BODY VERIFICATION TEST. Refer to **STANDARD PROCEDURE** .

No

- Go To 4

4. **MIRROR OR MODULE**
   1. Cycle the ignition on.
   2. With the scan tool, record and erase DTCs.
   3. Turn the drivers side turn signal on.
   4. Fold And Unfold the mirrors several time, if equipped with folding mirrors.
   5. Turn the rear defogger on.
   6. Turn the park lamps on.
   7. Press and release the Mirror Select switch to select the Driver Outside Rearview Mirror.
   8. Operate the Mirror Adjust switch in all directions several times while monitoring the scan tool for DTCs.

      NOTE: After adjusting the mirror in one direction wait at least two seconds before adjusting the mirror in the opposite direction, as this will allow time for an active fault to set if present.

   9. With the scan tool, read DTCs.

      NOTE: Check for a change in DTCs.

      Does the scan tool display: B1DD0-15-MIRROR HEATER CONTROL - CIRCUIT SHORT TO BATTERY OR OPEN as active?

      Yes

      - With the circuit now OPEN that indicates the short is NOT in the Module. Replace the mirror in accordance with the Service Information. Refer to **MIRROR, OUTSIDE REARVIEW, REMOVAL** and **MIRROR, OUTSIDE REARVIEW, GLASS, REMOVAL** .
      - Perform the BODY VERIFICATION TEST. Refer to **STANDARD PROCEDURE** .

      No

      - Replace the Door Module in accordance with the Service Information. Refer to **MODULE, DOOR, REMOVAL** .
      - Perform the BODY VERIFICATION TEST. Refer to **STANDARD PROCEDURE** .

B1DD0-15-MIRROR HEATER CONTROL - CIRCUIT SHORT TO BATTERY OR OPEN

For a complete wiring diagram, **refer to appropriate SYSTEM WIRING DIAGRAMS article** .

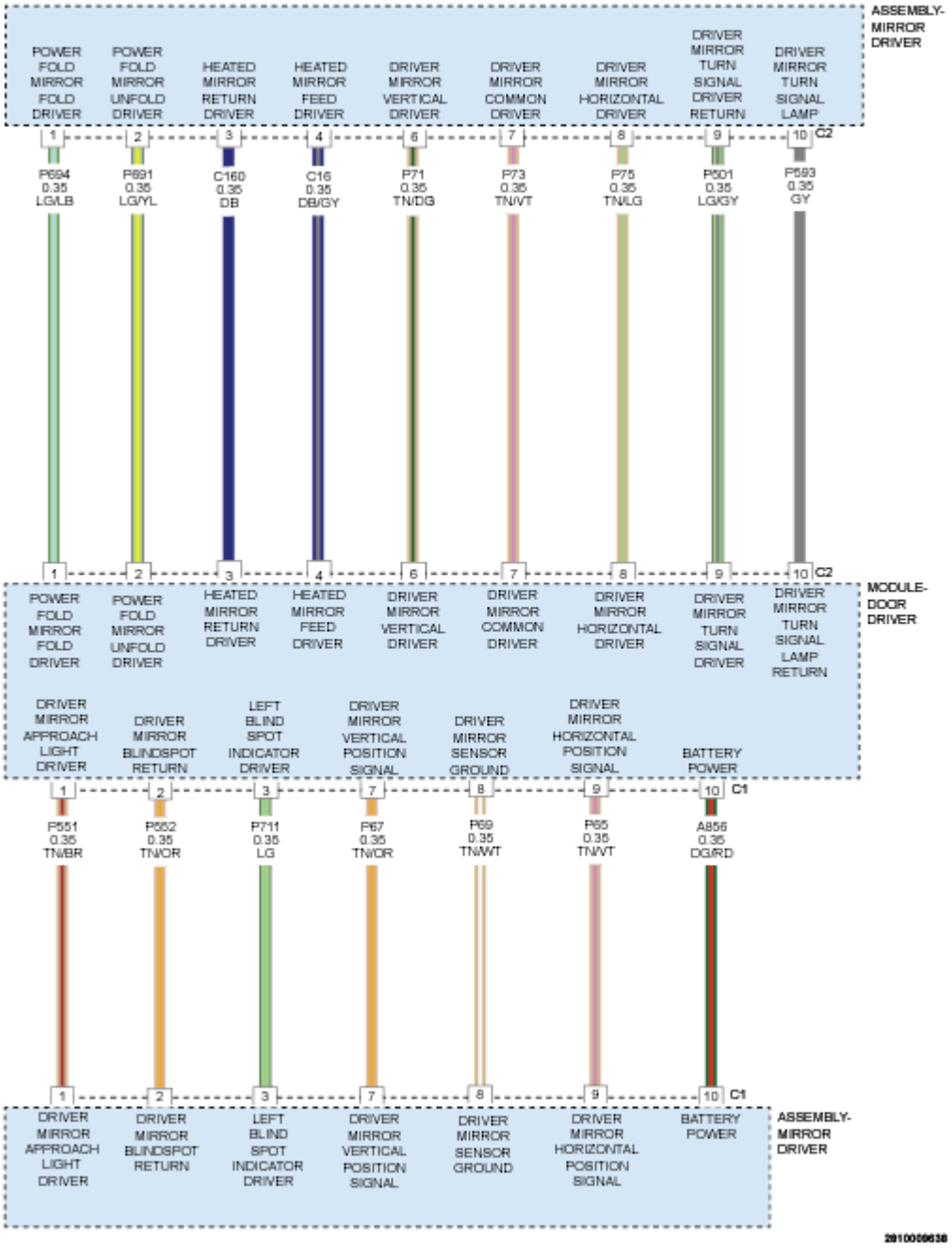

Fig. 18: Driver Mirror Assembly Wiring Diagram
Courtesy of CHRYSLER GROUP, LLC

WHEN MONITORED

Continuously.

SET CONDITION

The Door Module senses an open or a short high on the Mirror Heater Driver circuit for more than two seconds.

POSSIBLE CAUSES

Possible Causes
MIRROR HEATER DRIVER CIRCUIT SHORTED TO VOLTAGE
MIRROR HEATER DRIVER CIRCUIT OPEN
MIRROR HEATER RETURN CIRCUIT OPEN
MIRROR HEATER DRIVER CIRCUIT SHORTED TO THE MIRROR HEATER RETURN CIRCUIT
MIRROR HEATER DRIVER CIRCUIT SHORTED TO ANOTHER DRIVER CIRCUIT
OUTSIDE REARVIEW MIRROR
DOOR MODULE

DIAGNOSTIC TEST

1. **TEST FOR INTERMITTENT CONDITION**
    1. Turn the ignition on.
    2. Using a scan tool, record and erase Diagnostic Trouble Codes (DTCs).
    3. Turn the turn signal on, if equipped with turn signal mirror.
    4. Turn the approach lamps on, if equipped.
    5. Turn the rear defogger on.
    6. Press and release the Mirror Select switch to select the Driver Outside Rearview Mirror.
    7. Operate the Mirror Adjust switch in all directions several times while monitoring the scan tool for DTCs.

    NOTE: After adjusting the mirror in one direction wait at least two seconds before adjusting the mirror in the opposite direction, as this will allow time for an active fault to set if present.

    8. With the scan tool, read the active DTCs.

    Does the scan tool display: B1D00-15-DRIVER MIRROR HEATER CONTROL - CIRCUIT SHORT TO BATTERY OR OPEN as active?

    Yes

    - Go To 2

    No

    - The conditions that caused this code to set are not present at this time. For vehicle's equipped

with folding outside rearview mirrors, repeat test with mirror folded. If DTC is now active, Go To 2. Otherwise, use the wiring diagram/schematic as a guide and inspect the wiring and connectors.

- Perform the BODY VERIFICATION TEST. Refer to **STANDARD PROCEDURE** .

2. **CHECK (C16) DRIVER MIRROR HEATER DRIVER CIRCUIT FOR A SHORT TO VOLTAGE**

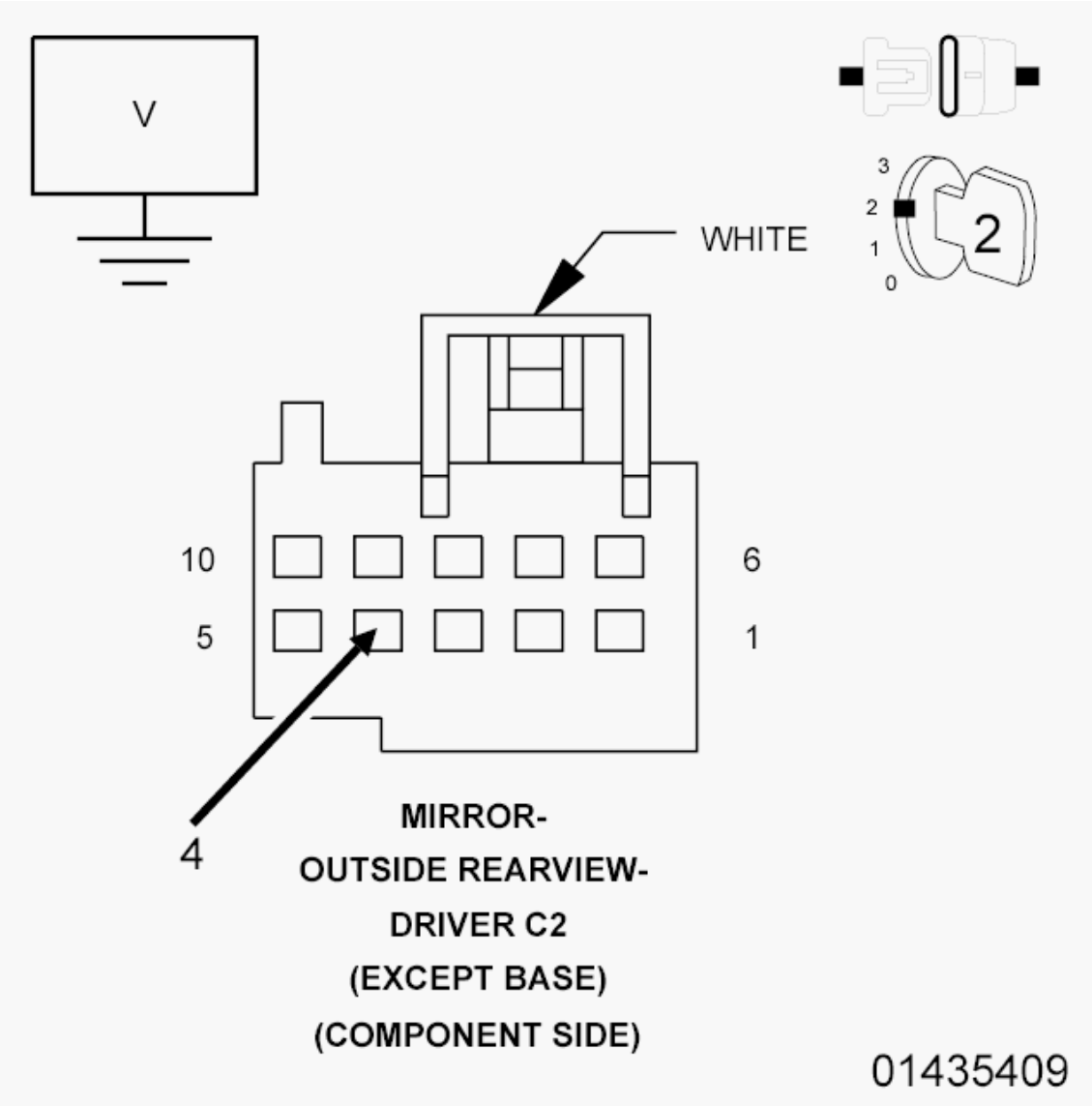

Fig. 19: Checking Driver Mirror Heater Driver Circuit For A Short To Voltage
Courtesy of CHRYSLER GROUP, LLC

1. Turn the ignition off.
2. Disconnect the Driver Outside Rearview Mirror C2 (Component Side) connector from the Door Module C2 harness connector.
3. Turn the ignition on.
4. Measure the voltage between ground and the (C16) Driver Mirror Heater Driver circuit in the

Driver Outside Rearview Mirror C2 (Component Side) connector.

Is there any voltage present?

Yes

- Repair the (C16) Driver Mirror Heater Driver circuit for a short to voltage. If the wiring harness and connector are okay, replace the Driver Outside Rearview Mirror in accordance with the Service Information. Refer to **MIRROR, OUTSIDE REARVIEW, REMOVAL** and **MIRROR, OUTSIDE REARVIEW, GLASS, REMOVAL** .
- Perform the BODY VERIFICATION TEST. Refer to **STANDARD PROCEDURE** .

No

- Go To 3

3. **CHECK (C16) DRIVER MIRROR HEATER DRIVER CIRCUIT AND (C160) DRIVER MIRROR HEATER RETURN CIRCUIT FOR AN OPEN**

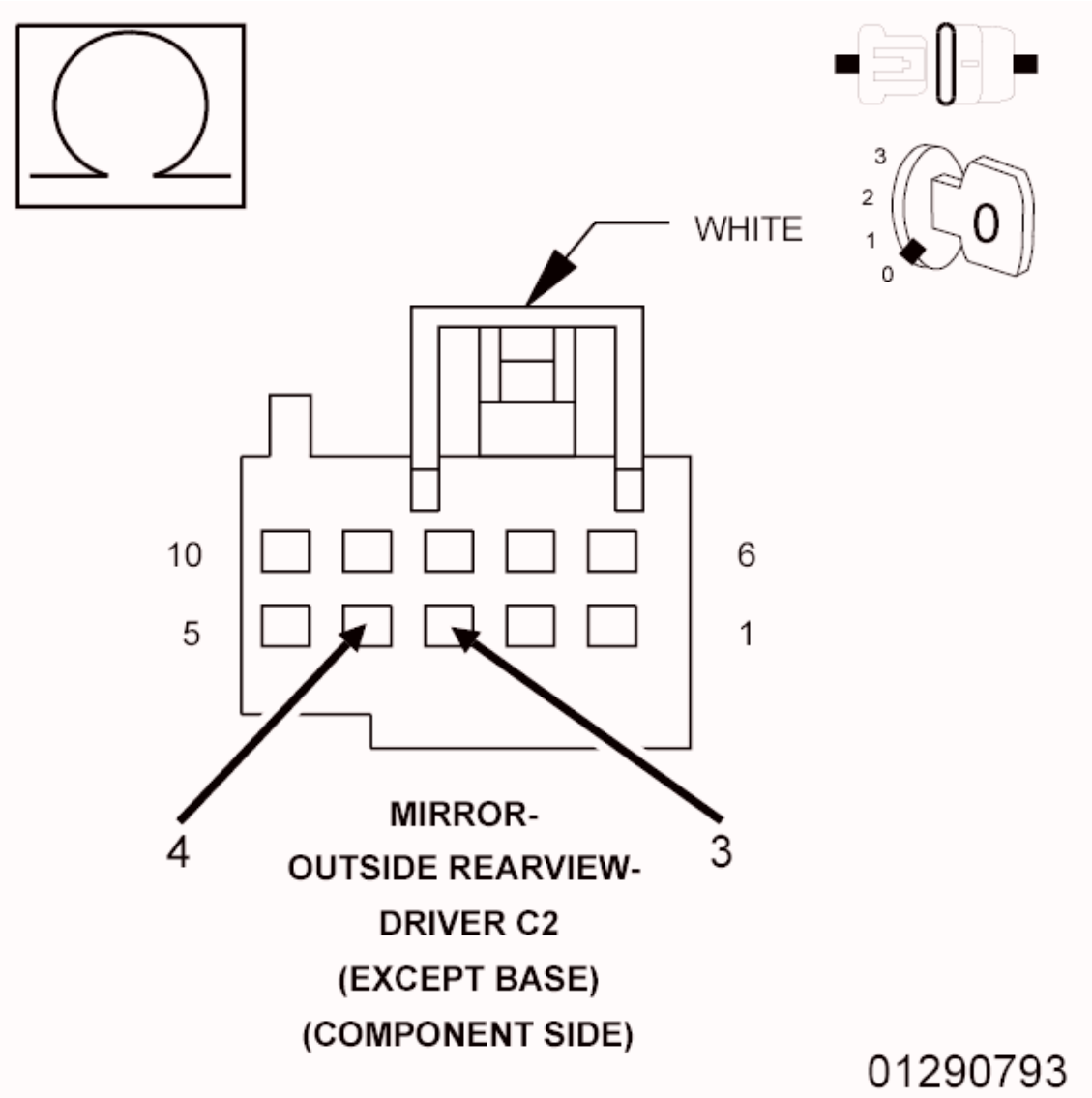

Fig. 20: Checking Driver Mirror Heater Driver Circuit And Driver Mirror Heater Return Circuit For An Open
Courtesy of CHRYSLER GROUP, LLC

1. Turn the ignition off.
2. Measure the resistance between the (C16) Driver Mirror Heater Driver circuit and the (C160) Driver Mirror Heater Return circuit at the Driver Outside Rearview Mirror C2 (Component Side) connector.

   Is the resistance below 10.0 Ohms?

   Yes

   - Go To 4

No

- Repair the (C16) Driver Mirror Heater Driver circuit or the (C160) Driver Mirror Heater Return circuit for an open. If the wiring harness and connector are okay, replace the Driver Outside Rearview Mirror in accordance with the Service Information. Refer to **MIRROR, OUTSIDE REARVIEW, REMOVAL** and **MIRROR, OUTSIDE REARVIEW, GLASS, REMOVAL** .
- Perform the BODY VERIFICATION TEST. Refer to **STANDARD PROCEDURE** .

4. **CHECK (C16) DRIVER MIRROR HEATER DRIVER CIRCUIT FOR A SHORT TO ANOTHER MIRROR DRIVER CIRCUIT**
   1.
   2. Measure the resistance between the (C16) Driver Mirror Heater Driver circuit (C2-4) and each of the Mirror Driver circuits in the Driver Outside Rearview Mirror C2 (Component Side) connectors.

      Is the resistance below 10k Ohms for any measurement?

      Yes

      - Repair all circuits with a resistance below 10k Ohms for a short to the (C16) Driver Mirror Heater Driver circuit. If the wiring harness and connector are okay, replace the Driver Outside Rearview Mirror in accordance with the Service Information. Refer to **MIRROR, OUTSIDE REARVIEW, REMOVAL** and **MIRROR, OUTSIDE REARVIEW, GLASS, REMOVAL** .
      - Perform the BODY VERIFICATION TEST. Refer to **STANDARD PROCEDURE** .

      No

      - Inspect the wiring and connectors for damage and repair as necessary. If the wiring and connectors are okay, replace the Door Module in accordance with the Service Information. Refer to **MODULE, DOOR, REMOVAL** .
      - Perform the BODY VERIFICATION TEST. Refer to **STANDARD PROCEDURE** .

B1E64-00-LEFT MIRROR SELECT SWITCH - STUCK

For a complete wiring diagram, **refer to appropriate SYSTEM WIRING DIAGRAMS article** .

WHEN MONITORED

Whenever the Driver Door Module (DDM) is awake.

SET CONDITION

When the DDM senses the Left Mirror Select switch input for more than 30 seconds.

POSSIBLE CAUSES

Possible Causes
OBJECT HOLDING LEFT MIRROR SELECT SWITCH IN A PUSHED POSITION
SUBSTANCE CAUSING LEFT MIRROR SELECT SWITCH TO GET STUCK IN A PUSHED POSITION
DRIVER WINDOW/DOOR LOCK SWITCH

DIAGNOSTIC TEST

1. **INSPECT DRIVER WINDOW/DOOR LOCK SWITCH ASSEMBLY FOR DAMAGE**

   NOTE: Diagnose and repair all LIN Bus related DTCs before performing this test procedure.

   1. Cycle the ignition off.
   2. Inspect the Driver Window/Door Lock Switch assembly for damage.

      Is the switch assembly damaged?

      Yes

      - Replace the Driver Window/Door Lock Switch in accordance with the Service Information. Refer to **SWITCH, POWER WINDOW, REMOVAL** .
      - Perform the BODY VERIFICATION TEST. Refer to **STANDARD PROCEDURE** .

      No

      - Go To 2
2. **INSPECT FOR OBJECT OR SUBSTANCE CAUSING LEFT MIRROR SELECT SWITCH TO STAY OR STICK IN A PUSHED POSITION**
   1. Inspect the Left Mirror Select switch for anything that would cause it to stay or stick in a pushed position.

      Is anything present that would cause the Left Mirror Select switch to stay or stick in a pushed position?

      Yes

      - Repair as necessary.
      - Perform the BODY VERIFICATION TEST. Refer to **STANDARD PROCEDURE** .

      No

      - Go To 3
3. **TEST FOR INTERMITTENT CONDITION**

1. Cycle the ignition on.
2. With the scan tool, record and erase the DTCs.
3. Press and release the Left Mirror Select switch several times and then wait 30 seconds.
4. With the scan tool, read the DTCs.

   Does the scan tool display: B1E64-00-LEFT MIRROR SELECT SWITCH - STUCK?

   Yes

   - Replace the Driver Window/Door Lock Switch in accordance with the Service Information. Refer to **SWITCH, POWER WINDOW, REMOVAL** .
   - Perform the BODY VERIFICATION TEST. Refer to **STANDARD PROCEDURE** .

   No

   - Test complete, the condition or conditions that originally set this DTC are not present at this time. Using the wiring diagrams as a guide, check all related splices and connectors for signs of water intrusion, corrosion, pushed out or bent terminals and correct pin tension.
   - Perform the BODY VERIFICATION TEST. Refer to **STANDARD PROCEDURE** .

B1E65-00-RIGHT MIRROR SELECT SWITCH - STUCK

For a complete wiring diagram, **refer to appropriate SYSTEM WIRING DIAGRAMS article** .

WHEN MONITORED

Whenever the Driver Door Module (DDM) is awake.

SET CONDITION

When the DDM senses the Right Mirror Select switch input for more than 30 seconds.

POSSIBLE CAUSES

Possible Causes
OBJECT HOLDING RIGHT MIRROR SELECT SWITCH IN A PUSHED POSITION
SUBSTANCE CAUSING RIGHT MIRROR SELECT SWITCH TO GET STUCK IN A PUSHED POSITION
DRIVER WINDOW/DOOR LOCK SWITCH

DIAGNOSTIC TEST

1. **INSPECT DRIVER DOOR SWITCH ASSEMBLY FOR DAMAGE**
   1. Cycle the ignition off.

2. Inspect the Driver Window/Door Lock Switch assembly for damage.

   Is the switch assembly damaged?

   Yes

   - Replace the Driver Window/Door Lock Switch in accordance with the Service Information. Refer to **SWITCH, POWER WINDOW, REMOVAL** .
   - Perform the BODY VERIFICATION TEST. Refer to **STANDARD PROCEDURE** .

   No

   - Go To 2

2. **INSPECT FOR OBJECT OR SUBSTANCE CAUSING RIGHT MIRROR SELECT SWITCH TO STAY OR STICK IN A PUSHED POSITION**
   1. Inspect the Right Mirror Select switch for anything that would cause it to stay or stick in a pushed position.

      Is anything present that would cause the Right Mirror Select switch to stay or stick in a pushed position?

      Yes

      - Repair as necessary.
      - Perform the BODY VERIFICATION TEST. Refer to **STANDARD PROCEDURE** .

      No

      - Go To 3

3. **TEST FOR INTERMITTENT CONDITION**
   1. Cycle the ignition on.
   2. With the scan tool, record and erase the DTCs.
   3. Press and release the Right Mirror Select switch several times and then wait 30 seconds.
   4. With the scan tool, read the DTCs.

      Does the scan tool display: B1E65-00-RIGHT MIRROR SELECT SWITCH STUCK?

      Yes

      - Replace the Driver Window/Door Lock Switch in accordance with the Service Information. Refer to **SWITCH, POWER WINDOW, REMOVAL** .
      - Perform the BODY VERIFICATION TEST. Refer to **STANDARD PROCEDURE** .

      No

- Test complete, the condition or conditions that originally set this DTC are not present at this time. Using the wiring diagrams as a guide, check all related splices and connectors for signs of water intrusion, corrosion, pushed out or bent terminals and correct pin tension.
- Perform the BODY VERIFICATION TEST. Refer to **STANDARD PROCEDURE** .

B1F02-11-MIRROR VERTICAL MOTOR CONTROL - CIRCUIT SHORT TO GROUND

For a complete wiring diagram, **refer to appropriate SYSTEM WIRING DIAGRAMS article** .

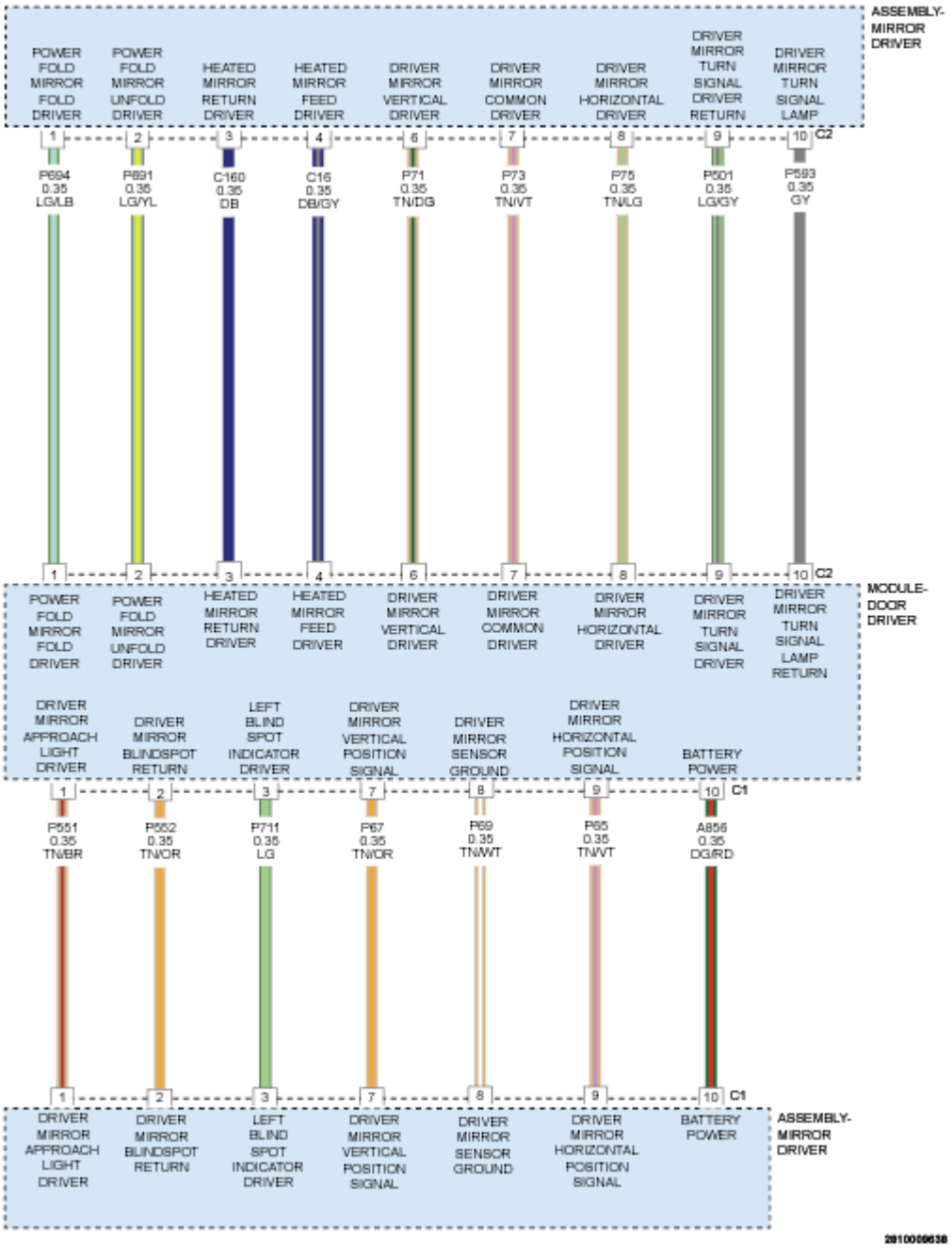

Fig. 21: Driver Mirror Assembly Wiring Diagram
Courtesy of CHRYSLER GROUP, LLC

THEORY OF OPERATION

The Mirror Vertical Driver circuit supplies battery voltage for the mirror up position and ground for the mirror down position. The Mirror Common Driver supplies battery voltage for the mirror Down position and ground for the mirror up position.

WHEN MONITORED

Continuously.

SET CONDITION

The Door Module senses a short low on the Mirror Vertical Driver circuit for more than 10 ms.

POSSIBLE CAUSES

Possible Causes
MIRROR VERTICAL DRIVER CIRCUIT SHORTED TO GROUND
MIRROR VERTICAL DRIVER CIRCUIT SHORTED TO THE MIRROR HEATER RETURN CIRCUIT
OUTSIDE REARVIEW MIRROR
DOOR MODULE

DIAGNOSTIC TEST

1. **TEST FOR INTERMITTENT CONDITION**
    1. Cycle the ignition on.
    2. With the scan tool, record and erase Diagnostic Trouble Codes (DTCs).
    3. Press and release the Mirror Select switch to select the Driver Outside Rearview Mirror.
    4. Turn the hazard lamps on.
    5. Turn on the park lamps (if equipped with auto dimming mirrors).
    6. Turn the rear defogger on, if equipped with heated mirror.
    7. Operate the Mirror Adjust switch in all directions several times while monitoring the scan tool for DTCs.

    NOTE: After adjusting the mirror in one direction wait at least two seconds before adjusting the mirror in the opposite direction, as this will allow time for an active fault to set if present.

    Does the scan tool display; B1F02-11-MIRROR VERTICAL MOTOR CONTROL - CIRCUIT SHORT TO GROUND?

    Yes

    - Go To 2

    No

    - The conditions that caused this code to set are not present at this time. For vehicle's equipped with folding outside rearview mirrors, repeat test with mirror folded. If DTC is now active,

Go To 2. Otherwise, use the wiring diagram/schematic as a guide and inspect the wiring and connectors.

- Perform the BODY VERIFICATION TEST. Refer to **STANDARD PROCEDURE** .

2. **INSPECT MIRROR CONNECTIONS**
   1. Cycle the ignition off.
   2. Disconnect the Driver Outside Rearview Mirror C1 and C2 connectors at the Drivers Door Module.
   3. Inspect the wiring harness, connectors and the Drivers Door Module.

   Were there any problems found?

   Yes

   - Repair as necessary.
   - Perform the BODY VERIFICATION TEST. Refer to **STANDARD PROCEDURE** .

   No

   - Go To 3

3. **MIRROR OR MODULE**
   1. Cycle the ignition on.
   2. With the scan tool, record and erase DTCs.
   3. Press and release the Mirror Select switch to select the Driver Outside Rearview Mirror.
   4. Operate the Mirror Adjust switch in all directions several times while monitoring the scan tool for DTCs.

   NOTE: After adjusting the mirror in one direction wait at least two seconds before adjusting the mirror in the opposite direction, as this will allow time for an active fault to set if present.

   5. With the scan tool, read DTCs.

   NOTE: Check for a change in DTCs.

   Does the scan tool display: B1F02-13-MIRROR VERTICAL MOTOR CONTROL - CIRCUIT OPEN as active?

   Yes

   - With the circuit now OPEN that indicates the short is NOT in the Module. Replace the mirror in accordance with the Service Information. Refer to **MIRROR, OUTSIDE REARVIEW, REMOVAL** and **MIRROR, OUTSIDE REARVIEW, GLASS, REMOVAL** .
   - Perform the BODY VERIFICATION TEST. Refer to **STANDARD PROCEDURE** .

No

- Replace the Door Module in accordance with the Service Information. Refer to **MODULE, DOOR, REMOVAL** .
- Perform the BODY VERIFICATION TEST. Refer to **STANDARD PROCEDURE** .

B1F02-12-MIRROR VERTICAL MOTOR CONTROL - CIRCUIT SHORT TO BATTERY

For a complete wiring diagram, **refer to appropriate SYSTEM WIRING DIAGRAMS article** .

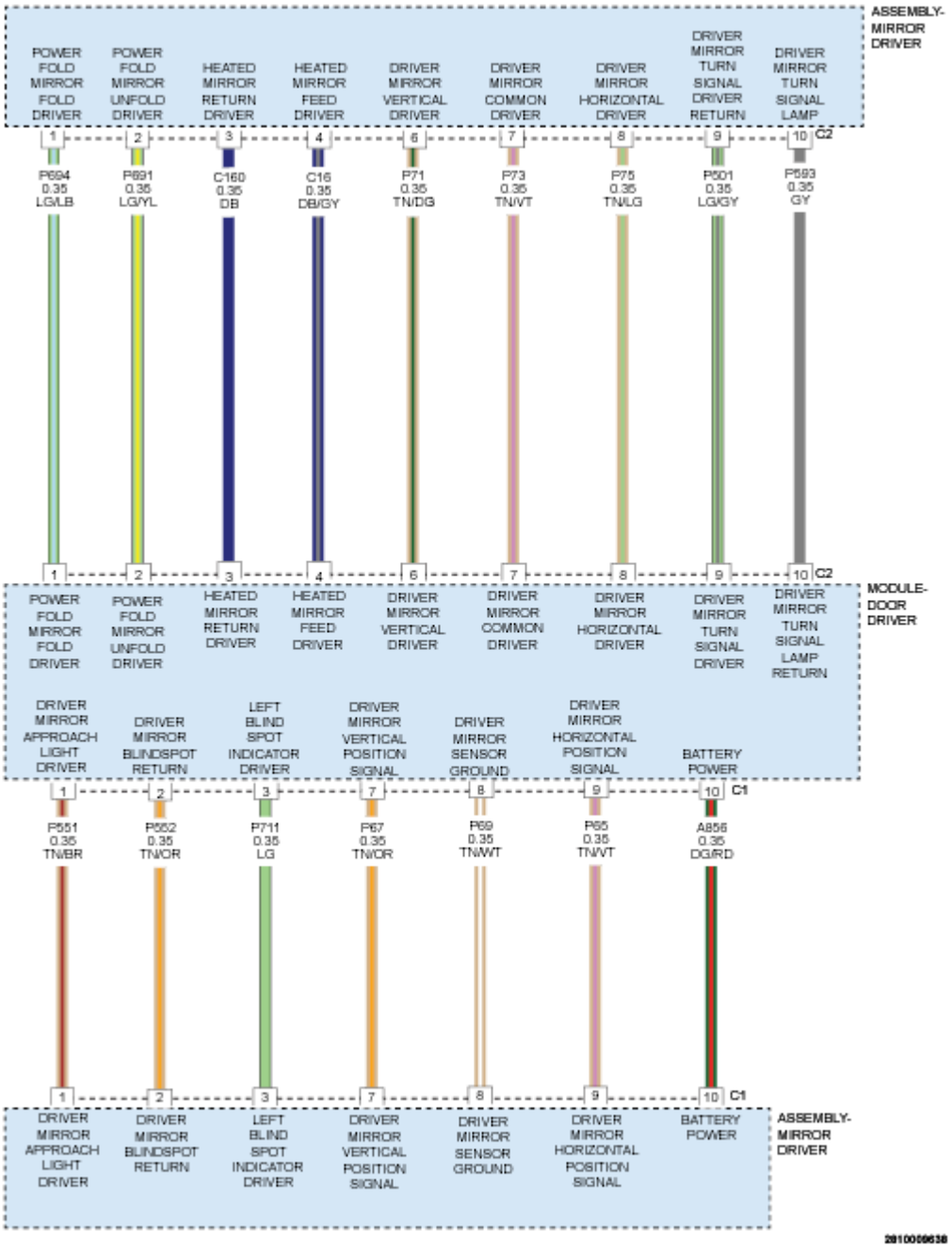

Fig. 22: Driver Mirror Assembly Wiring Diagram
Courtesy of CHRYSLER GROUP, LLC

THEORY OF OPERATION

The Mirror Vertical Driver circuit supplies battery voltage for the mirror up position and ground for the mirror down position. The Mirror Common Driver supplies battery voltage for the mirror Down position and ground for the mirror up position.

WHEN MONITORED

Continuously.

SET CONDITION

The Door Module senses a short to voltage on the Mirror Vertical Driver circuit during a mirror movement for more than 10 ms.

POSSIBLE CAUSES

Possible Causes
OUTSIDE REARVIEW MIRROR
DOOR MODULE

DIAGNOSTIC TEST

1. **TEST FOR INTERMITTENT CONDITION**
    1. Turn the ignition on.
    2. With the scan tool, record and erase Diagnostic Trouble Codes (DTCs).
    3. Press and release the Mirror Select switch to select the Driver Outside Rearview Mirror.
    4. Turn the hazard lamps on.
    5. Turn on the park lamps (if equipped with auto dimming mirrors).
    6. Turn the rear defogger on, if equipped with heated mirror.
    7. Operate the Mirror Adjust switch in all directions several times while monitoring the scan tool for DTCs.

    NOTE: After adjusting the mirror in one direction wait at least two seconds before adjusting the mirror in the opposite direction, as this will allow time for an active fault to set if present.

    Does the scan tool display; B1F02-12-MIRROR VERTICAL MOTOR CONTROL - CIRCUIT SHORT TO BATTERY?

    Yes

    - Go To 2

    No

    - The conditions that caused this code to set are not present at this time. For vehicle's equipped with folding outside rearview mirrors, repeat test with mirror folded. If DTC is now active, Go To 3. Otherwise, use the wiring diagram/schematic as a guide and inspect the wiring and connectors.

- Perform the BODY VERIFICATION TEST. Refer to **STANDARD PROCEDURE** .

2. **INSPECT MIRROR CONNECTIONS**
   1. Turn the ignition off.
   2. Disconnect the Driver Outside Rearview Mirror C2 connector at the Drivers Door Module.
   3. Inspect the wiring harness, connectors and the Drivers Door Module.

   Were there any problems found?

   Yes

   - Repair as necessary.
   - Perform the BODY VERIFICATION TEST. Refer to **STANDARD PROCEDURE** .

   No

   - Go To 3

3. **MIRROR OR MODULE**
   1. Turn the ignition on.
   2. With the scan tool, record and erase DTCs.
   3. Press and release the Mirror Select switch to select the Driver Outside Rearview Mirror.
   4. Operate the Mirror Adjust switch in all directions several times while monitoring the scan tool for DTCs.

   NOTE: After adjusting the mirror in one direction wait at least two seconds before adjusting the mirror in the opposite direction, as this will allow time for an active fault to set if present.

   5. With the scan tool, read DTCs.

   NOTE: Check for a change in DTCs.

   Does the scan tool display: B1F02-13-MIRROR VERTICAL MOTOR CONTROL - CIRCUIT OPEN as active?

   Yes

   - With the circuit now OPEN that indicates the short is NOT in the Module. Replace the mirror in accordance with the Service Information. Refer to **MIRROR, OUTSIDE REARVIEW, REMOVAL** and **MIRROR, OUTSIDE REARVIEW, GLASS, REMOVAL** .
   - Perform the BODY VERIFICATION TEST. Refer to **STANDARD PROCEDURE** .

   No

- Replace the Door Module in accordance with the Service Information. Refer to **MODULE, DOOR, REMOVAL** .
- Perform the BODY VERIFICATION TEST. Refer to **STANDARD PROCEDURE** .

B1F02-13-MIRROR VERTICAL MOTOR CONTROL - CIRCUIT OPEN

For a complete wiring diagram, **refer to appropriate SYSTEM WIRING DIAGRAMS article** .

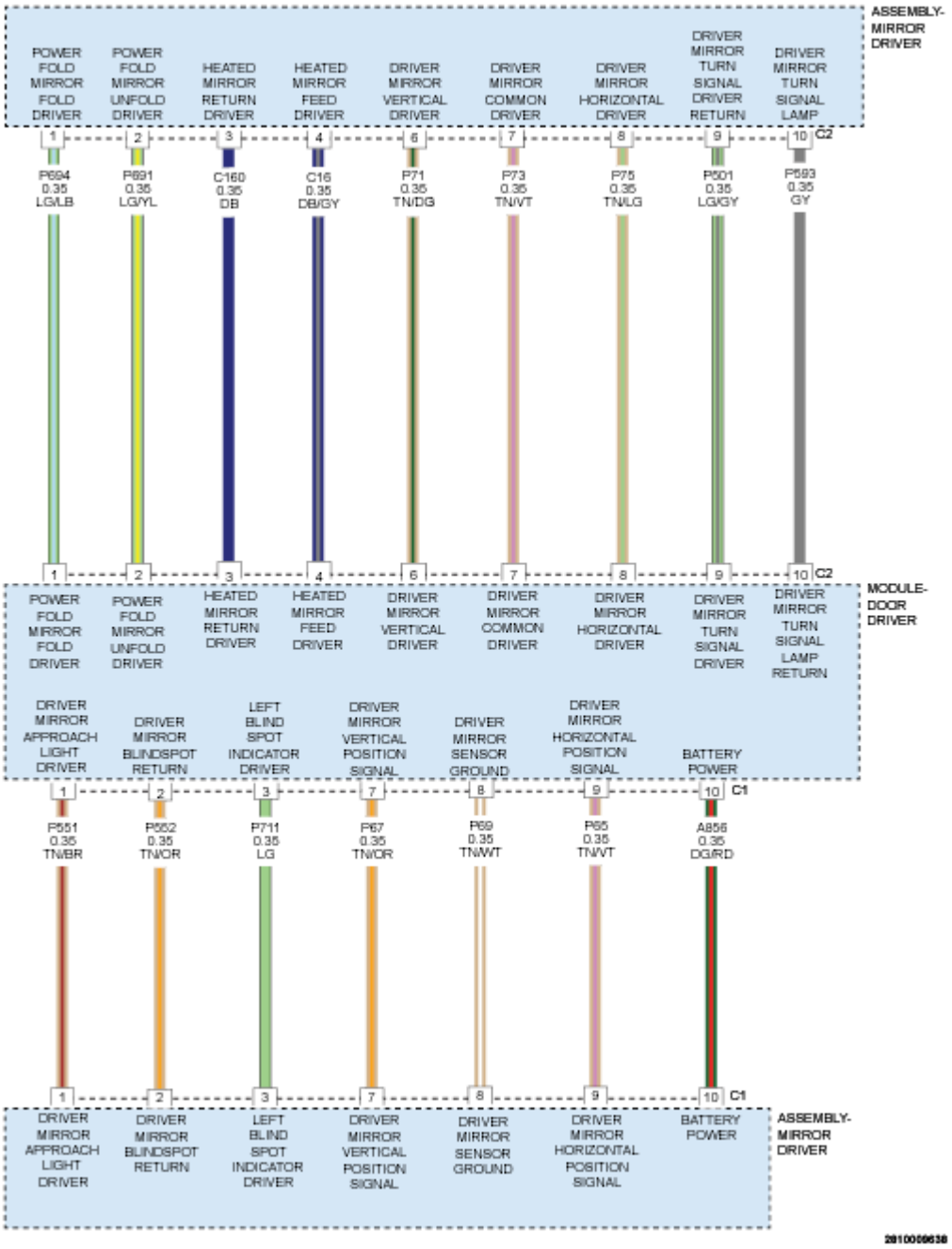

Fig. 23: Driver Mirror Assembly Wiring Diagram
Courtesy of CHRYSLER GROUP, LLC

THEORY OF OPERATION

The Mirror Vertical Driver circuit supplies battery voltage for the mirror up position and ground for the mirror down position. The Mirror Common Driver supplies battery voltage for the mirror Down position and ground for the mirror up position.

WHEN MONITORED

Continuously.

SET CONDITION

When the Door Module senses a short high on the Mirror Vertical Driver circuit for more than 10 ms.

POSSIBLE CAUSES

Possible Causes
MIRROR VERTICAL DRIVER CIRCUIT OPEN
MIRROR COMMON DRIVER CIRCUIT OPEN
OUTSIDE REARVIEW MIRROR
DOOR MODULE

DIAGNOSTIC TEST

1. **TEST FOR INTERMITTENT CONDITION**
    1. Cycle the ignition on.
    2. With the scan tool, record and erase the Diagnostic Trouble Codes (DTCs).
    3. Press and release the Mirror Select switch to select the Driver Outside Rearview Mirror.
    4. Operate the Mirror Adjust switch in all directions several times.
    5. Cycle the ignition from on to off three times.
    6. Cycle the ignition on.
    7. With the scan tool, read the DTCs.

    Does the scan tool display; B1F02-13-MIRROR VERTICAL MOTOR CONTROL - CIRCUIT OPEN?

    Yes

    - Go To 2

    No

- The conditions that caused this code to set are not present at this time. For vehicles equipped with folding outside rearview mirrors, repeat test with mirror folded. If DTC is now active, Go To 2. Otherwise, use the wiring diagram/schematic as a guide and inspect the wiring and connectors.
- Perform the BODY VERIFICATION TEST. Refer to **STANDARD PROCEDURE** .

2. **CHECK MIRROR AND HARNESS FOR AN OPEN**

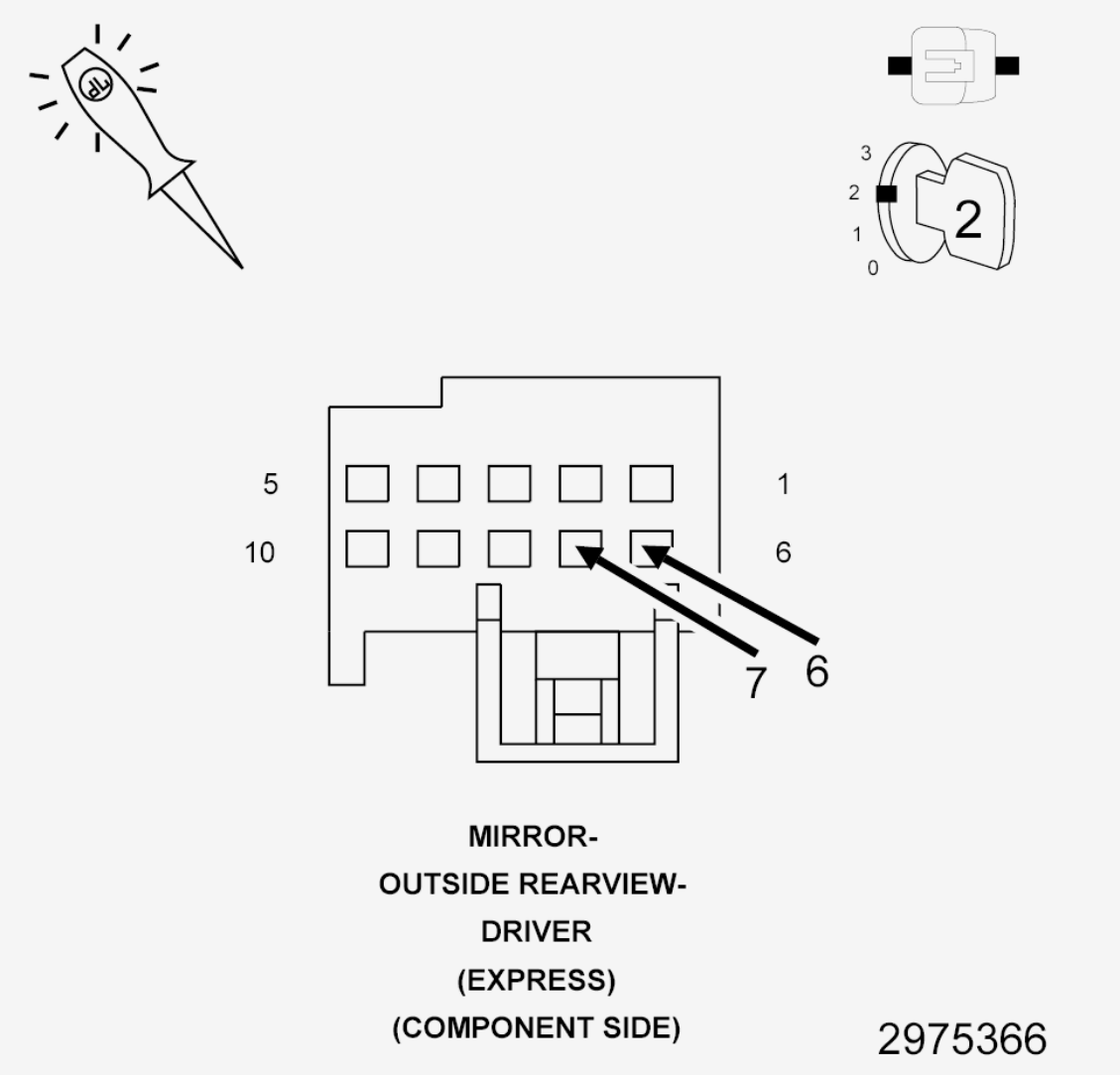

Fig. 24: Checking Mirror & Harness For Open
Courtesy of CHRYSLER GROUP, LLC

1. Gain access to the Driver Door Module but do not disconnect the connectors.
2. Using a 12 volt test light, backprobe and connect one lead to the (P71) Driver Mirror Vertical Driver circuit and the other lead to the (P73) Driver Mirror Common Driver circuit in the Driver Outside Rearview Mirror C2 connector.

NOTE: The graphic displays the end view of the connector, backprobe the Wire side.

3. While moving the mirror adjust switch up and down, observe the test light.

   Does the test light illuminate brightly when the switch is moved in either direction?

   Yes

   - Examine and repair the mirror harness for any breaks or damage. If the wiring harness and connector are okay, replace the Driver Outside Rearview Mirror in accordance with the Service Information. Refer to **MIRROR, OUTSIDE REARVIEW, REMOVAL** and **MIRROR, OUTSIDE REARVIEW, GLASS, REMOVAL** .
   - Perform the BODY VERIFICATION TEST. Refer to **STANDARD PROCEDURE** .

   No

   - Replace the Driver Door Module (DDM) in accordance with the Service Information. Refer to **MODULE, DOOR, REMOVAL** .
   - Perform the BODY VERIFICATION TEST. Refer to **STANDARD PROCEDURE** .

B1F03-11-MIRROR HORIZONTAL MOTOR CONTROL - CIRCUIT SHORT TO GROUND

For a complete wiring diagram, **refer to appropriate SYSTEM WIRING DIAGRAMS article** .

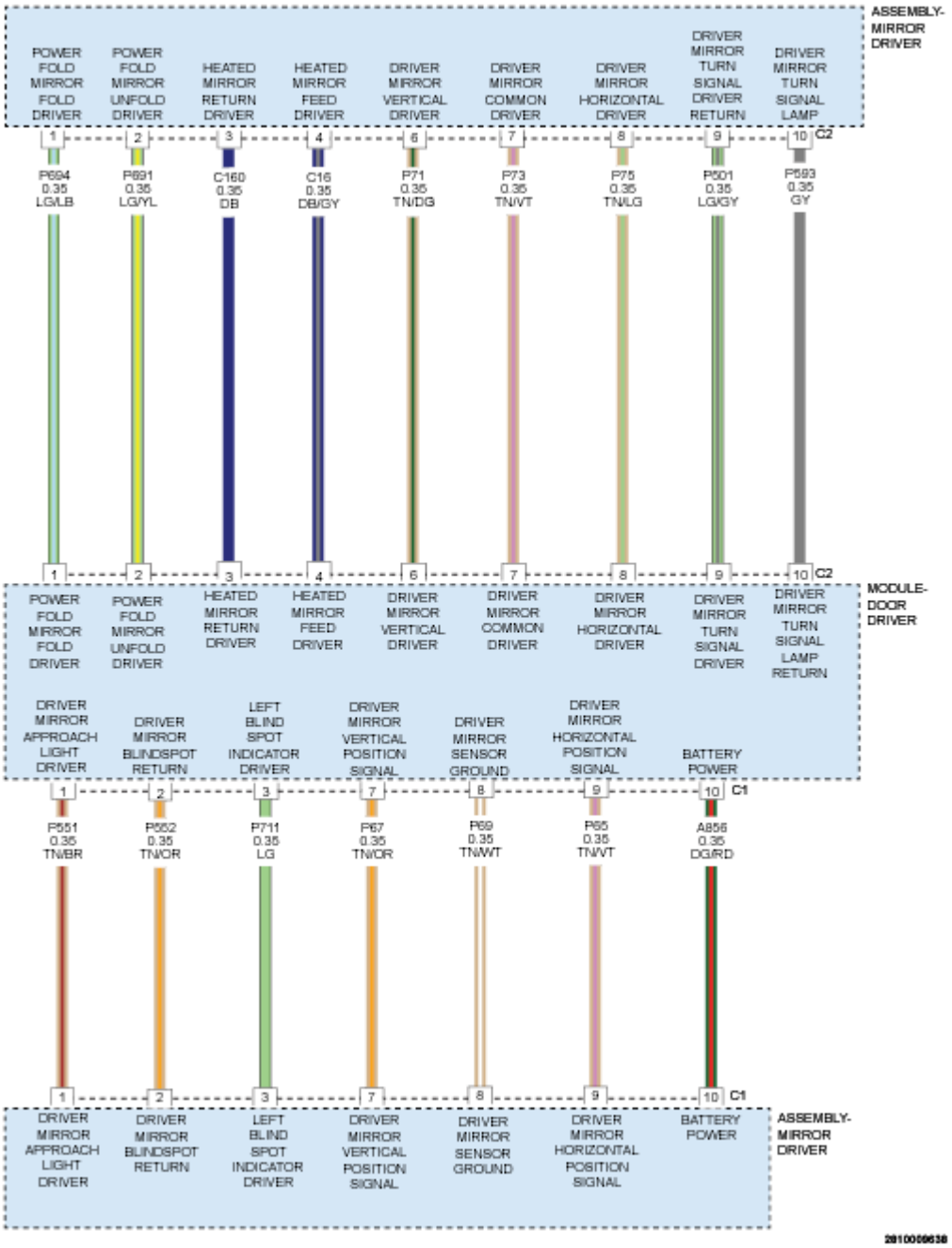

Fig. 25: Driver Mirror Assembly Wiring Diagram
Courtesy of CHRYSLER GROUP, LLC

THEORY OF OPERATION

The Mirror Horizontal Driver circuit supplies battery voltage for the mirror left position and ground for the mirror right position. The Mirror Common Driver supplies battery voltage for the mirror right position and ground for the mirror left.

WHEN MONITORED

Continuously.

SET CONDITION

The Door Module senses a short low on the Mirror Horizontal Driver circuit for more than two seconds.

POSSIBLE CAUSES

Possible Causes
MIRROR HORIZONTAL DRIVER CIRCUIT SHORTED TO GROUND
MIRROR HORIZONTAL DRIVER CIRCUIT SHORTED TO ANOTHER DRIVER MIRROR DRIVER CIRCUIT
MIRROR HORIZONTAL DRIVER CIRCUIT FOR A SHORT TO ANY RETURN OR GROUND CIRCUITS
OUTSIDE REARVIEW MIRROR
DOOR MODULE

DIAGNOSTIC TEST

1. **TEST FOR INTERMITTENT CONDITION**
    1. Cycle the ignition on.
    2. With the scan tool, record and erase Diagnostic Trouble Codes (DTCs).
    3. Press and release the Mirror Select switch to select the Driver Outside Rearview Mirror.
    4. Turn the hazard lamps on.
    5. Turn on the park lamps (if equipped with auto dimming mirrors).
    6. Turn the rear defogger on, if equipped with heated mirror.
    7. Operate the Mirror Adjust switch in all directions several times while monitoring the scan tool for DTCs.

    NOTE: After adjusting the mirror in one direction wait at least two seconds before adjusting the mirror in the opposite direction, as this will allow time for an active fault to set if present.

    Does the scan tool display; B1F03-11-MIRROR HORIZONTAL MOTOR CONTROL - CIRCUIT SHORT TO GROUND?

    Yes

    - Go To 2

    No

- The conditions that caused this code to set are not present at this time. For vehicle's equipped with folding outside rearview mirrors, repeat test with mirror folded. If DTC is now active, Go To 2. Otherwise, use the wiring diagram/schematic as a guide and inspect the wiring and connectors.
- Perform the BODY VERIFICATION TEST. Refer to **STANDARD PROCEDURE** .

2. **INSPECT MIRROR CONNECTIONS**
   1. Cycle the ignition off.
   2. Disconnect the Driver Outside Rearview Mirror C1 and C2 connectors at the Drivers Door Module.
   3. Inspect the wiring harness, connectors and the Drivers Door Module.

   Were there any problems found?

   Yes

   - Repair as necessary.
   - Perform the BODY VERIFICATION TEST. Refer to **STANDARD PROCEDURE** .

   No

   - Go To 3

3. **MIRROR OR MODULE**
   1. Cycle the ignition on.
   2. With the scan tool, record and erase DTCs.
   3. Press and release the Mirror Select switch to select the Driver Outside Rearview Mirror.
   4. Operate the Mirror Adjust switch in all directions several times while monitoring the scan tool for DTCs.

   NOTE: After adjusting the mirror in one direction wait at least two seconds before adjusting the mirror in the opposite direction, as this will allow time for an active fault to set if present.

   5. With the scan tool, read DTCs.

   NOTE: Check for a change in DTCs.

   Does the scan tool display: B1F03-13-MIRROR HORIZONTAL MOTOR CONTROL - CIRCUIT OPEN as active?

   Yes

   - With the circuit now OPEN that indicates the short is NOT in the Module. Replace the mirror in accordance with the Service Information. Refer to **MIRROR, OUTSIDE REARVIEW, REMOVAL** and **MIRROR, OUTSIDE REARVIEW, GLASS, REMOVAL** .

- Perform the BODY VERIFICATION TEST. Refer to **STANDARD PROCEDURE** .

No

- Replace the Door Module in accordance with the Service Information. Refer to **MODULE, DOOR, REMOVAL** .
- Perform the BODY VERIFICATION TEST. Refer to **STANDARD PROCEDURE** .

B1F03-12-MIRROR HORIZONTAL MOTOR CONTROL - CIRCUIT SHORT TO BATTERY

For a complete wiring diagram, **refer to appropriate SYSTEM WIRING DIAGRAMS article** .

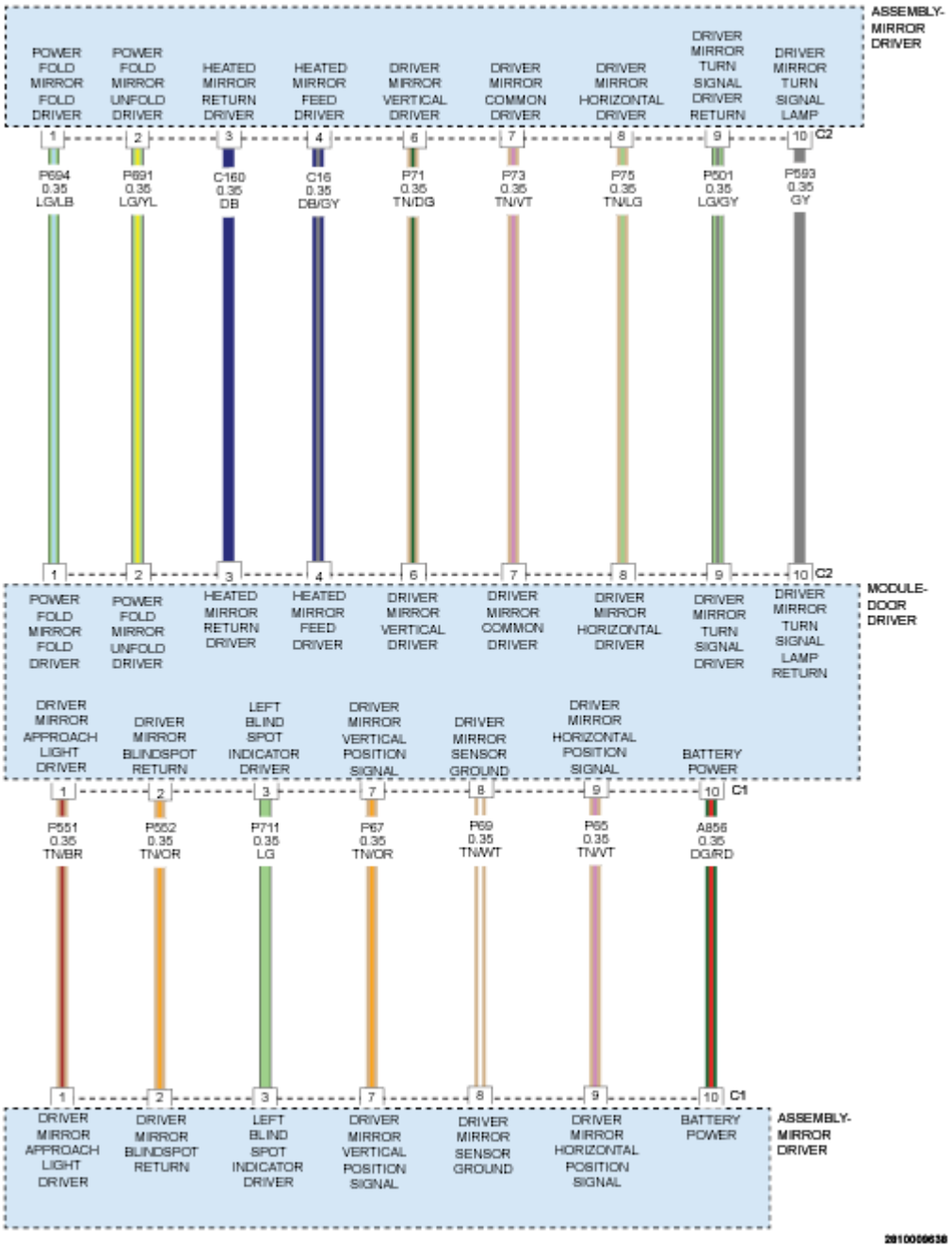

Fig. 26: Driver Mirror Assembly Wiring Diagram
Courtesy of CHRYSLER GROUP, LLC

THEORY OF OPERATION

The Mirror Horizontal Driver circuit supplies battery voltage for the mirror left position and ground for the mirror right position. The Mirror Common Driver supplies battery voltage for the mirror right position and ground for the mirror left.

WHEN MONITORED

Continuously.

SET CONDITION

When the Door Module (DDM) senses a short high on the Mirror Horizontal Driver circuit for more than 10 ms.

POSSIBLE CAUSES

Possible Causes
MIRROR HORIZONTAL DRIVER CIRCUIT SHORTED TO THE MIRROR FOLD DRIVER CIRCUIT
MIRROR HORIZONTAL DRIVER CIRCUIT SHORTED TO THE MIRROR UNFOLD DRIVER CIRCUIT
MIRROR HORIZONTAL DRIVER CIRCUIT SHORTED TO THE MIRROR HEATER DRIVER CIRCUIT
OUTSIDE REARVIEW MIRROR
DOOR MODULE

DIAGNOSTIC TEST

1. **TEST FOR INTERMITTENT CONDITION**
    1. Cycle the ignition on.
    2. With the scan tool, record and erase Diagnostic Trouble Codes (DTCs).
    3. Press and release the Mirror Select switch to select the Driver Outside Rearview Mirror.
    4. Turn the hazard lamps on.
    5. Turn on the park lamps (if equipped with auto dimming mirrors).
    6. Turn the rear defogger on, if equipped with heated mirror.
    7. Operate the Mirror Adjust switch in all directions several times while monitoring the scan tool for DTCs.

    NOTE: After adjusting the mirror in one direction wait at least two seconds before adjusting the mirror in the opposite direction, as this will allow time for an active fault to set if present.

    Does the scan tool display; B1F03-12-MIRROR HORIZONTAL MOTOR CONTROL - CIRCUIT SHORT TO BATTERY?

    Yes

    - Go To 2

    No

- The conditions that caused this code to set are not present at this time. For vehicle's equipped with folding outside rearview mirrors, repeat test with mirror folded. If DTC is now active, Go To 2. Otherwise, use the wiring diagram/schematic as a guide and inspect the wiring and connectors.
- Perform the BODY VERIFICATION TEST. Refer to **STANDARD PROCEDURE** .

2. **INSPECT MIRROR CONNECTIONS**
   1. Cycle the ignition off.
   2. Disconnect the Driver Outside Rearview Mirror C2 connector at the Drivers Door Module.
   3. Inspect the wiring harness, connectors and the Drivers Door Module.

   Were there any problems found?

   Yes

   - Repair as necessary.
   - Perform the BODY VERIFICATION TEST. Refer to **STANDARD PROCEDURE** .

   No

   - Go To 3

3. **MIRROR OR MODULE**
   1. Cycle the ignition on.
   2. With the scan tool, record and erase DTCs.
   3. Press and release the Mirror Select switch to select the Driver Outside Rearview Mirror.
   4. Operate the Mirror Adjust switch in all directions several times while monitoring the scan tool for DTCs.

   NOTE: After adjusting the mirror in one direction wait at least two seconds before adjusting the mirror in the opposite direction, as this will allow time for an active fault to set if present.

   5. With the scan tool, read DTCs.

   NOTE: Check for a change in DTCs.

   Does the scan tool display: B1F03-13-MIRROR HORIZONTAL MOTOR CONTROL - CIRCUIT OPEN as active?

   Yes

   - With the circuit now OPEN that indicates the short is NOT in the Module. Replace the mirror in accordance with the Service Information. Refer to **MIRROR, OUTSIDE REARVIEW, REMOVAL** and **MIRROR, OUTSIDE REARVIEW, GLASS, REMOVAL** .

- Perform the BODY VERIFICATION TEST. Refer to **STANDARD PROCEDURE** .

No

- Replace the Door Module in accordance with the Service Information. Refer to **MODULE, DOOR, REMOVAL** .
- Perform the BODY VERIFICATION TEST. Refer to **STANDARD PROCEDURE** .

B1F03-13-MIRROR HORIZONTAL MOTOR CONTROL - CIRCUIT OPEN

For a complete wiring diagram, **refer to appropriate SYSTEM WIRING DIAGRAMS article** .

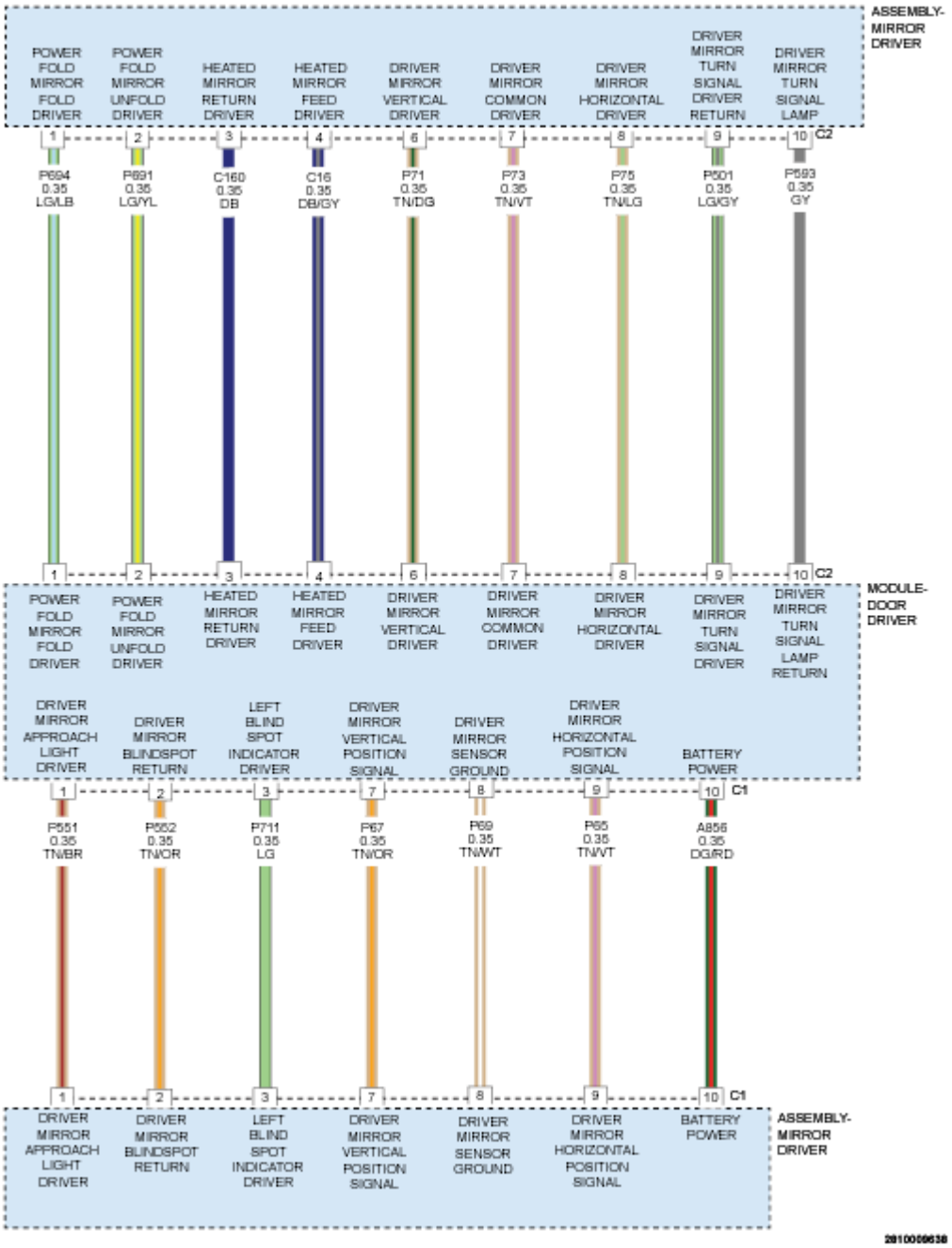

Fig. 27: Driver Mirror Assembly Wiring Diagram
Courtesy of CHRYSLER GROUP, LLC

THEORY OF OPERATION

The Mirror Horizontal Driver circuit supplies battery voltage for the mirror left position and ground for the mirror right position. The Mirror Common Driver supplies battery voltage for the mirror right position and ground for the mirror left.

WHEN MONITORED

Continuously.

SET CONDITION

When the Door Module senses a short high on the Mirror Horizontal Driver circuit for more than 10 ms.

POSSIBLE CAUSES

Possible Causes
MIRROR HORIZONTAL DRIVER CIRCUIT OPEN
MIRROR COMMON DRIVER CIRCUIT OPEN
OUTSIDE REARVIEW MIRROR
DOOR MODULE

DIAGNOSTIC TEST

1. **TEST FOR INTERMITTENT CONDITION**
    1. Cycle the ignition on.
    2. With the scan tool, record and erase the Diagnostic Trouble Codes (DTCs).
    3. Press and release the Mirror Select switch to select the Driver Outside Rearview Mirror.
    4. Operate the Mirror Adjust switch in all directions several times.
    5. Cycle the ignition from on to off three times.
    6. Cycle the ignition on.
    7. With the scan tool, read the DTCs.

    Does the scan tool display; B1F03-13-MIRROR HORIZONTAL MOTOR CONTROL - CIRCUIT OPEN?

    Yes

    - Go To 2

    No

    111111111111

    - The conditions that caused this code to set are not present at this time. For vehicle's equipped with folding outside rearview mirrors, repeat test with mirror folded. If DTC is now active, Go To 2. Otherwise, use the wiring diagram/schematic as a guide and inspect the wiring and connectors.
    - Perform the BODY VERIFICATION TEST. Refer to **STANDARD PROCEDURE** .
2. **CHECK MIRROR AND HARNESS FOR AN OPEN**

Fig. 28: Center Console Intrusion (Right) Sensor Power & Ground Circuit Diagram
Courtesy of CHRYSLER GROUP, LLC

1. Gain access to the Driver Door Module but do not disconnect the connectors.

2. Using a 12 volt test light, backprobe and connect one lead to the (P75) Driver Mirror Horizontal Driver circuit and the other lead to the (P73) Driver Mirror Common Driver circuit in the Driver Outside Rearview Mirror (Component Side) C2 connector.

   NOTE: The graphic displays the end view of the connector, backprobe the Wire side.

3. While moving the mirror adjust switch left and right, observe the test light.

   Does the test light illuminate brightly when the switch is moved in either direction?

   Yes

   - Examine and repair the mirror harness for any breaks or damage. If the wiring harness and connector are okay, replace the Driver Outside Rearview Mirror in accordance with the Service Information. Refer to **MIRROR, OUTSIDE REARVIEW, REMOVAL** and **MIRROR, OUTSIDE REARVIEW, GLASS, REMOVAL** .
   - Perform the BODY VERIFICATION TEST. Refer to **STANDARD PROCEDURE** .

   No

   - Replace the Driver Door Module (DDM) in accordance with the Service Information. Refer to **MODULE, DOOR, REMOVAL** .
   - Perform the BODY VERIFICATION TEST. Refer to **STANDARD PROCEDURE** .

B1F04-11-MIRROR FOLD CONTROL - CIRCUIT SHORT TO GROUND

For a complete wiring diagram, **refer to appropriate SYSTEM WIRING DIAGRAMS article** .

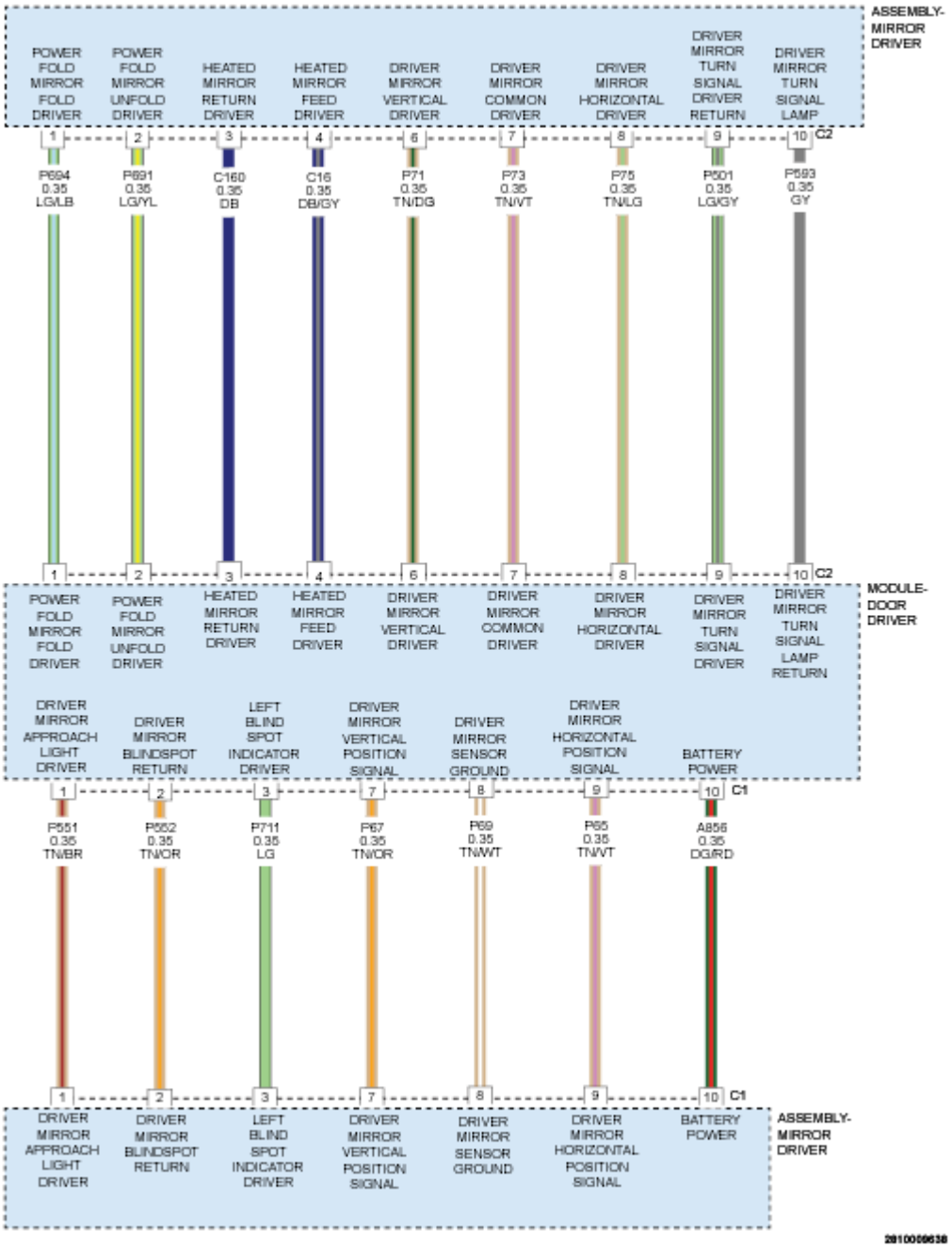

Fig. 29: Driver Mirror Assembly Wiring Diagram
Courtesy of CHRYSLER GROUP, LLC

WHEN MONITORED

Continuously.

SET CONDITION

When the Door Module senses a short low on the Mirror Fold Driver circuit or the Mirror Unfold Driver circuit for more than 10 ms.

POSSIBLE CAUSES

Possible Causes
MIRROR FOLD DRIVER CIRCUIT SHORTED TO GROUND
MIRROR UNFOLD DRIVER CIRCUIT SHORTED TO GROUND
MIRROR FOLD DRIVER CIRCUIT SHORTED TO THE MIRROR HEATER RETURN CIRCUIT
MIRROR UNFOLD DRIVER CIRCUIT SHORTED TO THE MIRROR HEATER RETURN CIRCUIT
OUTSIDE REARVIEW MIRROR
DOOR MODULE

DIAGNOSTIC TEST

1. **TEST FOR INTERMITTENT CONDITION**
    1. Turn the ignition on.
    2. With the scan tool, record and erase the Diagnostic Trouble Codes (DTCs).
    3. Operate the Mirror Fold switch several times.
    4. Cycle the ignition from on to off three times.
    5. Turn the ignition on.
    6. With the scan tool, read the active DTCs.

    Does the scan tool display; B1F04-11-MIRROR FOLD CONTROL - CIRCUIT SHORT TO GROUND as active?

    Yes

    - Go To 2

    No

    - The conditions that caused this code to set are not present at this time. Repeat the test with the mirror adjusted in several different positions. If the DTC is now active, Go To 2. Otherwise, use the wiring diagram/schematic as a guide and inspect the wiring and connectors.
    - Perform the BODY VERIFICATION TEST. Refer to **STANDARD PROCEDURE** .
2. **CHECK (P694) DRIVER MIRROR FOLD DRIVER CIRCUIT AND (P691) DRIVER MIRROR UNFOLD DRIVER CIRCUIT FOR A SHORT TO GROUND**

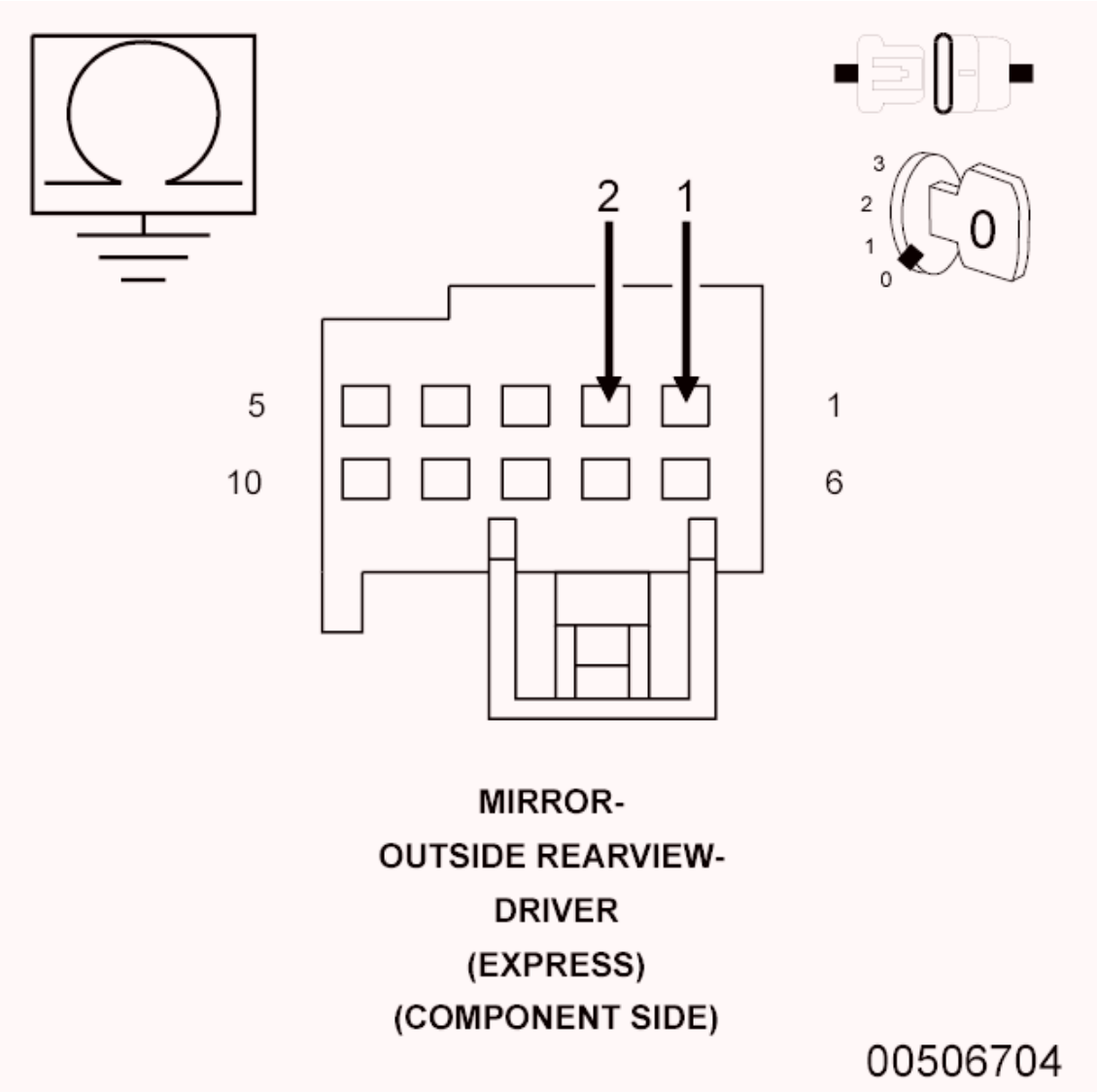

Fig. 30: Checking Driver Mirror Fold/Unfold Driver Circuit For A Short To Ground
Courtesy of CHRYSLER GROUP, LLC

1. Turn the ignition off.
2. Disconnect the Driver Outside Rearview Mirror (Component Side) C2 connector from the DDM.
3. Measure the resistance between ground and the (P694) Driver Mirror Fold Driver circuit in the Driver Outside Rearview Mirror (Component Side) connector.
4. Measure the resistance between ground and the (P691) Driver Mirror Unfold Driver circuit in the Driver Outside Rearview Mirror (Component Side) connector.

   Is the resistance below 10k Ohms for either measurement?

   Yes

   - Repair all circuits with a resistance below 10k Ohms for a short to ground. If the wiring

harness and connector are okay, replace the Driver Outside Rearview Mirror in accordance with the Service Information. Refer to **MIRROR, OUTSIDE REARVIEW, REMOVAL** and **MIRROR, OUTSIDE REARVIEW, GLASS, REMOVAL** .

- Perform the BODY VERIFICATION TEST. Refer to **STANDARD PROCEDURE** .

No

- Go To 3

3. **CHECK (P694) DRIVER MIRROR FOLD DRIVER CIRCUIT AND (P691) DRIVER MIRROR UNFOLD DRIVER CIRCUIT FOR A SHORT TO (C160) DRIVER MIRROR HEATER RETURN CIRCUIT**

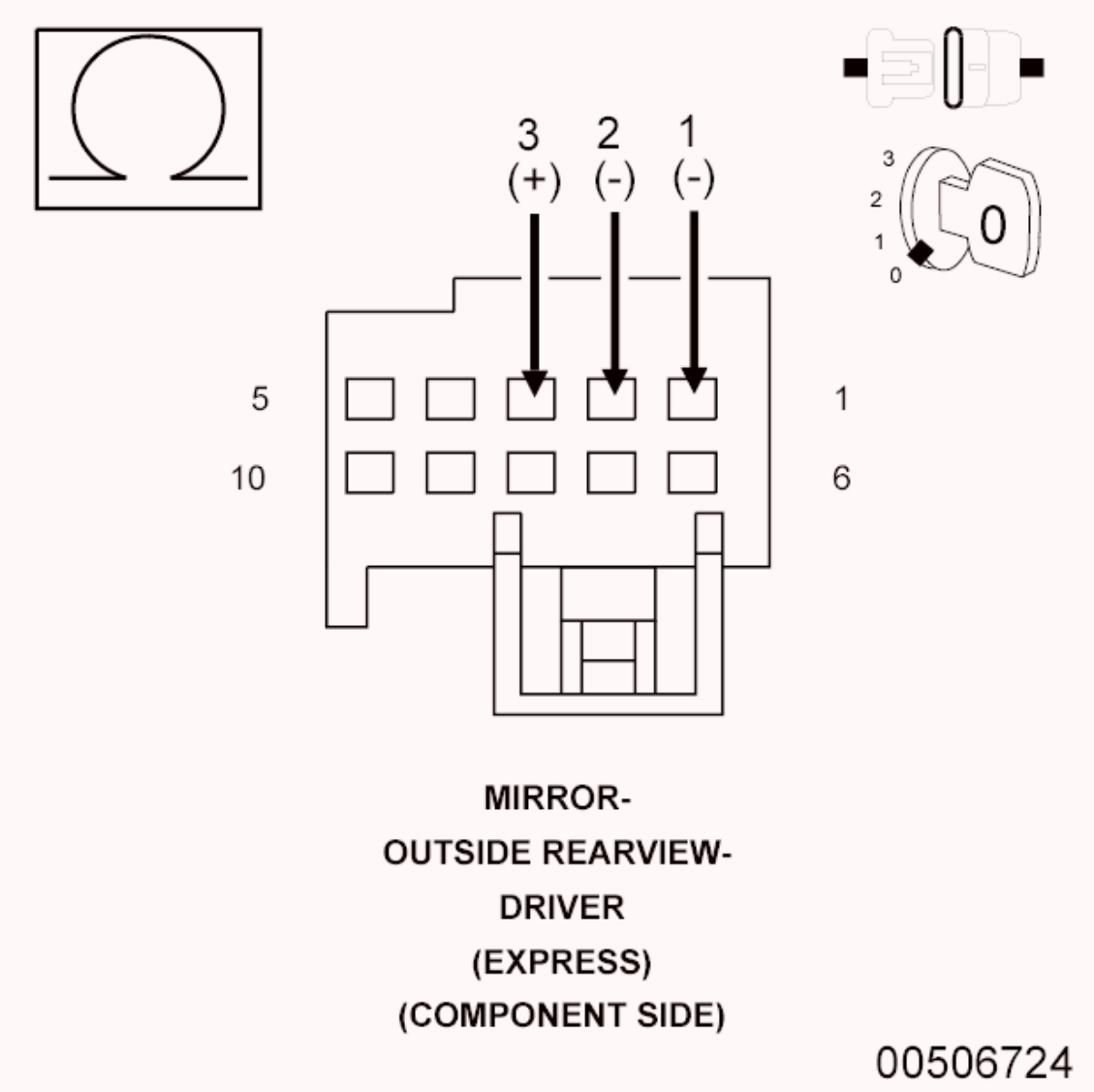

Fig. 31: Checking Driver Mirror Fold/Unfold Driver Circuit For A Short To Driver Mirror Heater Return Circuit
Courtesy of CHRYSLER GROUP, LLC

1. Measure the resistance between the (P694) Driver Mirror Fold Driver circuit and the (C160) Driver Mirror Heater Return circuit at the Driver Outside Rearview Mirror (Component Side) C2 connector.
2. Measure the resistance between the (P691) Driver Mirror Unfold Driver circuit and the (C160) Driver Mirror Heater Return circuit at the Driver Outside Rearview Mirror (Component Side) C2 connector.

   Is the resistance below 10k Ohms for either measurement?

   Yes

   - Repair the circuit(s) with a resistance below 10k Ohms for a short to the (C160) Driver Mirror Heater Return circuit. Check the If the wiring harness and connector are okay, replace the Driver Outside Rearview Mirror in accordance with the Service Information. Refer to **MIRROR, OUTSIDE REARVIEW, REMOVAL** and **MIRROR, OUTSIDE REARVIEW, GLASS, REMOVAL** .
   - Perform the BODY VERIFICATION TEST. Refer to **STANDARD PROCEDURE** .

   No

   - Go To 4

4. **MODULE OR MIRROR**
   1. Turn the ignition on.
   2. With the scan tool, record and erase the Diagnostic Trouble Codes (DTCs).
   3. Operate the Mirror Fold switch several times.
   4. Operate the mirror switch in all directions.
   5. Cycle the ignition from on to off three times.
   6. Turn the ignition on.
   7. With the scan tool, read the active DTCs.

   NOTE: Check for a CHANGE in the DTCs.

   Does the scan tool display; B1F04-15-MIRROR FOLD CONTROL - CIRCUIT SHORT TO BATTERY OR OPEN as active?

   Yes

   - Check and repair any damaged wiring in the C2 harnesses. If the wiring harness and connector is okay, replace the Driver Outside Rearview Mirror in accordance with the Service Information. Refer to **MIRROR, OUTSIDE REARVIEW, REMOVAL** and **MIRROR, OUTSIDE REARVIEW, GLASS, REMOVAL** .
   - Perform the BODY VERIFICATION TEST. Refer to **STANDARD PROCEDURE** .

No

- Replace the Driver Door Module (DDM) in accordance with the Service Information. Refer to **MODULE, DOOR, REMOVAL** .
- Perform the BODY VERIFICATION TEST. Refer to **STANDARD PROCEDURE** .

B1F04-15-MIRROR FOLD CONTROL - CIRCUIT SHORT TO BATTERY OR OPEN

For a complete wiring diagram, **refer to appropriate SYSTEM WIRING DIAGRAMS article** .

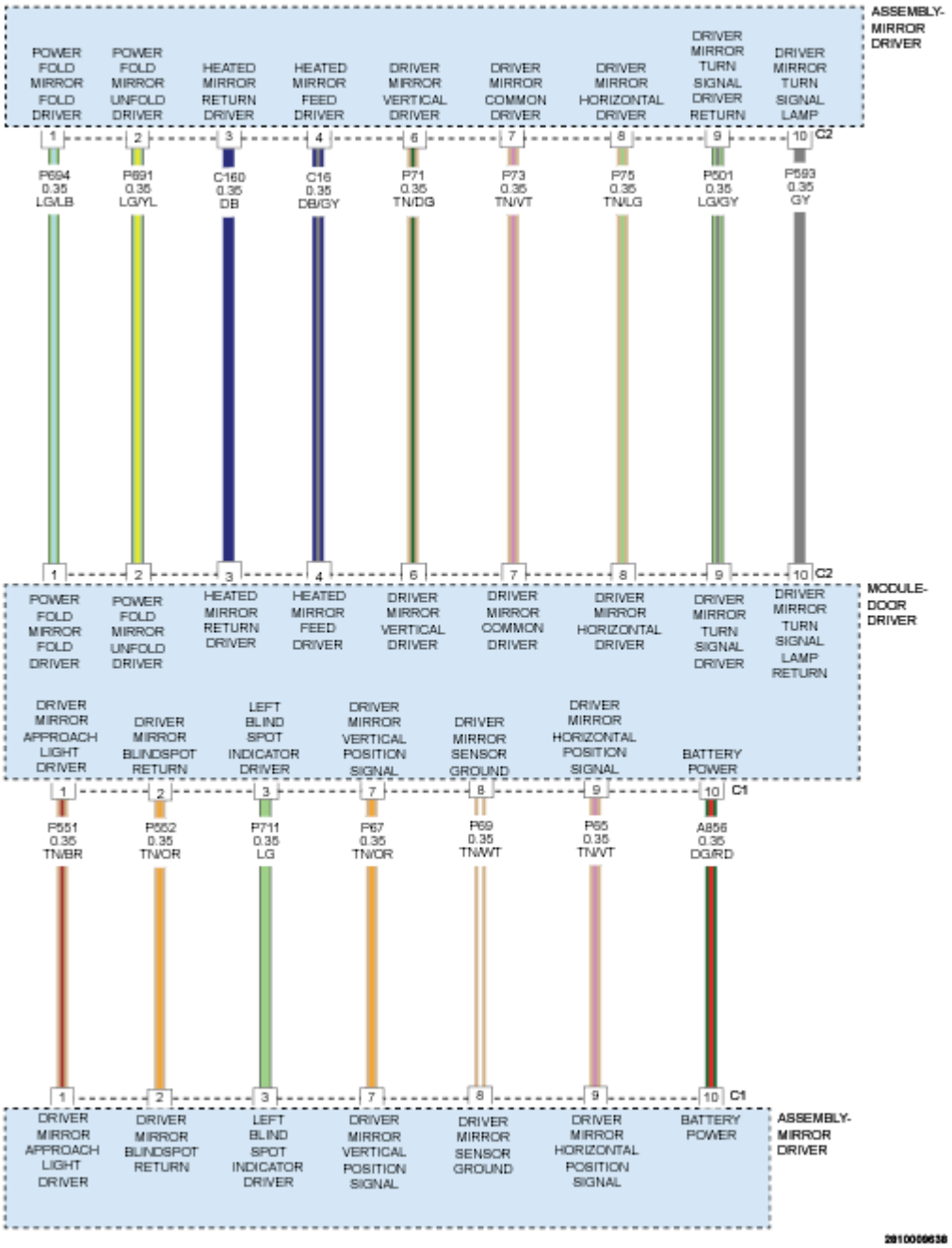

Fig. 32: Driver Mirror Assembly Wiring Diagram
Courtesy of CHRYSLER GROUP, LLC

WHEN MONITORED

Continuously.

SET CONDITION

When the Door Module senses voltage on the Mirror Fold Driver circuit or the Mirror Unfold Driver circuit for more than 10 ms when no voltage should be present or the Fold or Unfold Driver circuit is open.

POSSIBLE CAUSES

Possible Causes
MIRROR FOLD DRIVER CIRCUIT SHORTED TO THE MIRROR HEATER DRIVER CIRCUIT
MIRROR UNFOLD DRIVER CIRCUIT SHORTED TO THE MIRROR HEATER DRIVER CIRCUIT
MIRROR FOLD DRIVER CIRCUIT SHORTED TO VOLTAGE
MIRROR UNFOLD DRIVER CIRCUIT SHORTED TO VOLTAGE
MIRROR FOLD DRIVER CIRCUIT OPEN
MIRROR UNFOLD DRIVER CIRCUIT OPEN
OUTSIDE REARVIEW MIRROR SHORTED
DOOR MODULE

DIAGNOSTIC TEST

1. **TEST FOR INTERMITTENT CONDITION**
    1. Turn the ignition on.
    2. With the scan tool, record and erase the Diagnostic Trouble Codes (DTCs).
    3. For vehicles equipped with heated mirrors, turn the rear defogger ON.
    4. Operate the Mirror Fold switch several times.
    5. With the scan tool, read the active DTCs.

    Does the scan tool display; B1F04-15-DRIVER MIRROR FOLD CONTROL - CIRCUIT SHORT TO BATTERY OR OPEN as active?

    Yes, with Heated Mirrors

    - Go To 2

    Yes, without Heated Mirrors

    - Go To 3

    No

    - The conditions that caused this code to set are not present at this time. Repeat the test with the mirror adjusted in several different positions. If the DTC is now active, Go To2 (with heated mirrors) or (without heated mirrors), refer to 3. Otherwise, use the wiring diagram/schematic as a guide, check all related splices and connectors for signs of water intrusion, corrosion, pushed out or bent terminals and correct pin tension.

      Perform the BODY VERIFICATION TEST. Refer to **STANDARD PROCEDURE** .

2. **CHECK (P694) DRIVER MIRROR FOLD DRIVER CIRCUIT AND (P691) DRIVER MIRROR UNFOLD DRIVER CIRCUIT FOR A SHORT TO (C16) DRIVER MIRROR HEATER DRIVER CIRCUIT**

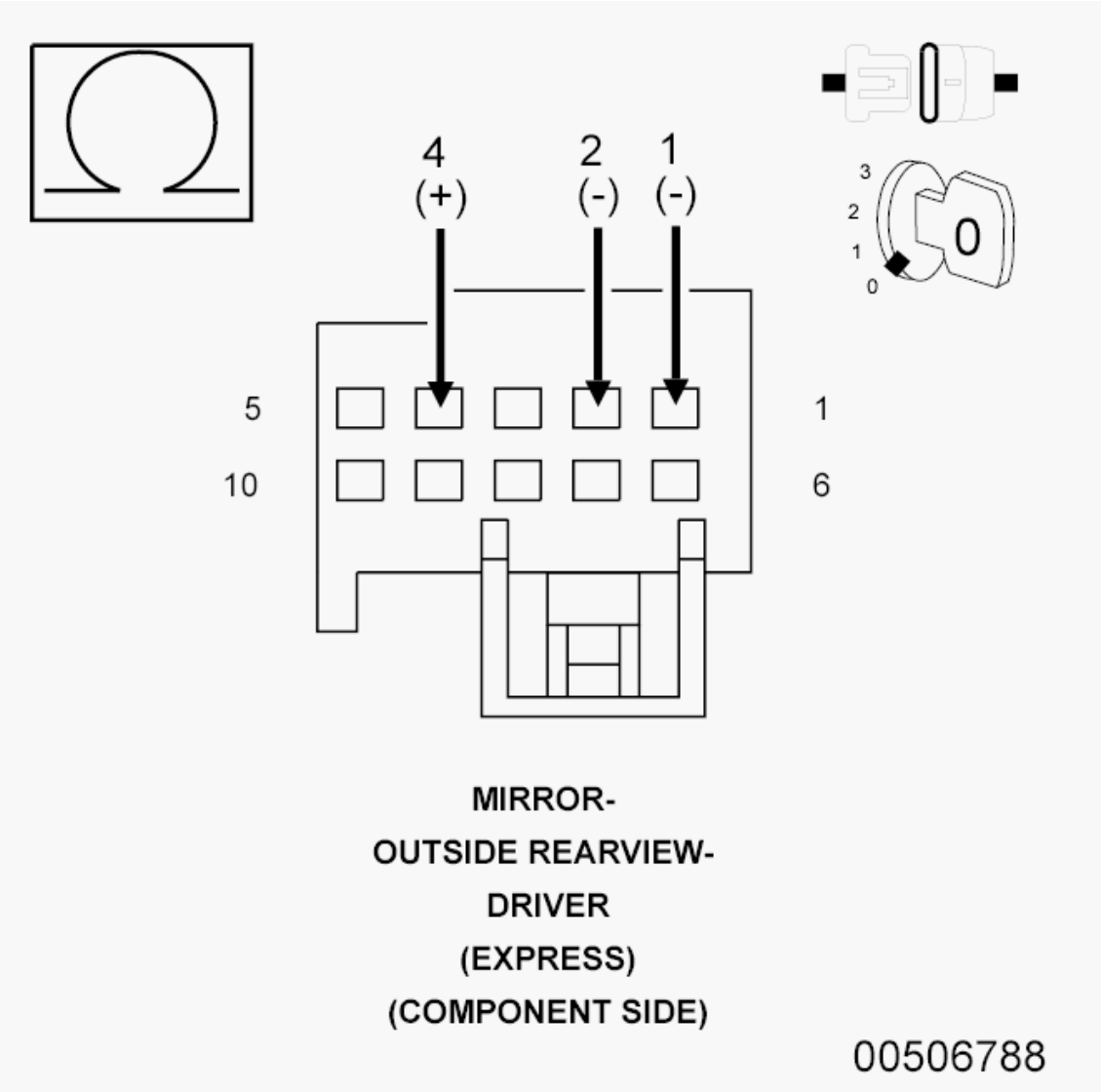

Fig. 33: Checking Driver Mirror Fold/Unfold Driver Circuit For A Short To Driver Mirror Heater Driver Circuit
Courtesy of CHRYSLER GROUP, LLC

1. Turn the ignition off.
2. Disconnect the Driver Outside Rearview Mirror (Component Side) C2 connector from the Door Module.
3. Measure the resistance between the (P694) Driver Mirror Fold Driver circuit and the (C16) Driver Mirror Heater Driver circuit at the Driver Outside Rearview Mirror (Component Side) connector.
4. Measure the resistance between the (P691) Driver Mirror Unfold Driver circuit and the (C16) Driver Mirror Heater Driver circuit at the Driver Outside Rearview Mirror (Component Side)

connector.

Is the resistance below 10k Ohms for either measurement?

Yes

- Repair the circuit(s) with a resistance below 10k Ohms for a short to the (C16) Driver Mirror Heater Driver circuit. If the wiring harness and connector are okay, replace the Driver Outside Rearview Mirror in accordance with the Service Information. Refer to **MIRROR, OUTSIDE REARVIEW, REMOVAL** and **MIRROR, OUTSIDE REARVIEW, GLASS, REMOVAL** .
- Perform the BODY VERIFICATION TEST. Refer to **STANDARD PROCEDURE** .

No

- Go To 3

3. **DRIVER POWER FOLDING MIRROR OPEN**

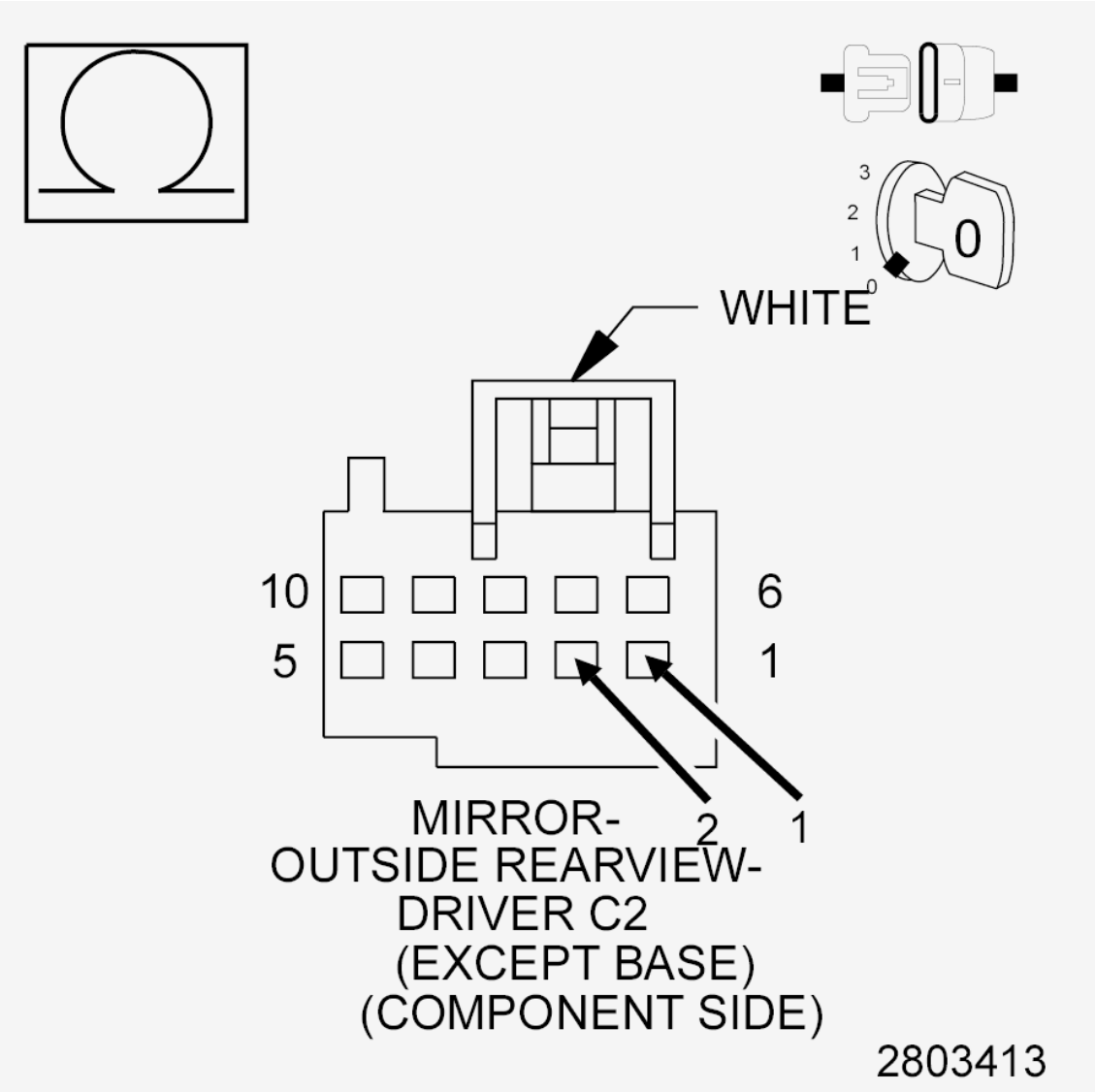

Fig. 34: Checking Driver Power Folding Mirror For Open
Courtesy of CHRYSLER GROUP, LLC

1. If not done previously, turn the ignition off.
2. If not done previously, disconnect the Driver Outside Rearview Mirror (Component Side) C2 connector from the Door Module.
3. Measure the resistance between the (P694) Folding Mirror Fold Driver and the (P691) Folding Mirror Unfold Driver circuits in the Driver Outside Rearview Mirror C2 connector.

   Is the resistance below 9.0 Ohms?

   Yes

   - Go To 4

No

- Check and repair the harness for an open circuit. If the harness is appears okay, replace the Drivers Power Folding Mirror Assembly in accordance with the Service Information. Refer to **MIRROR, OUTSIDE REARVIEW, REMOVAL** and **MIRROR, OUTSIDE REARVIEW, GLASS, REMOVAL** .
- Perform the BODY VERIFICATION TEST. Refer to **STANDARD PROCEDURE** .

4. **DRIVER POWER FOLDING MIRROR SHORT TO VOLTAGE**

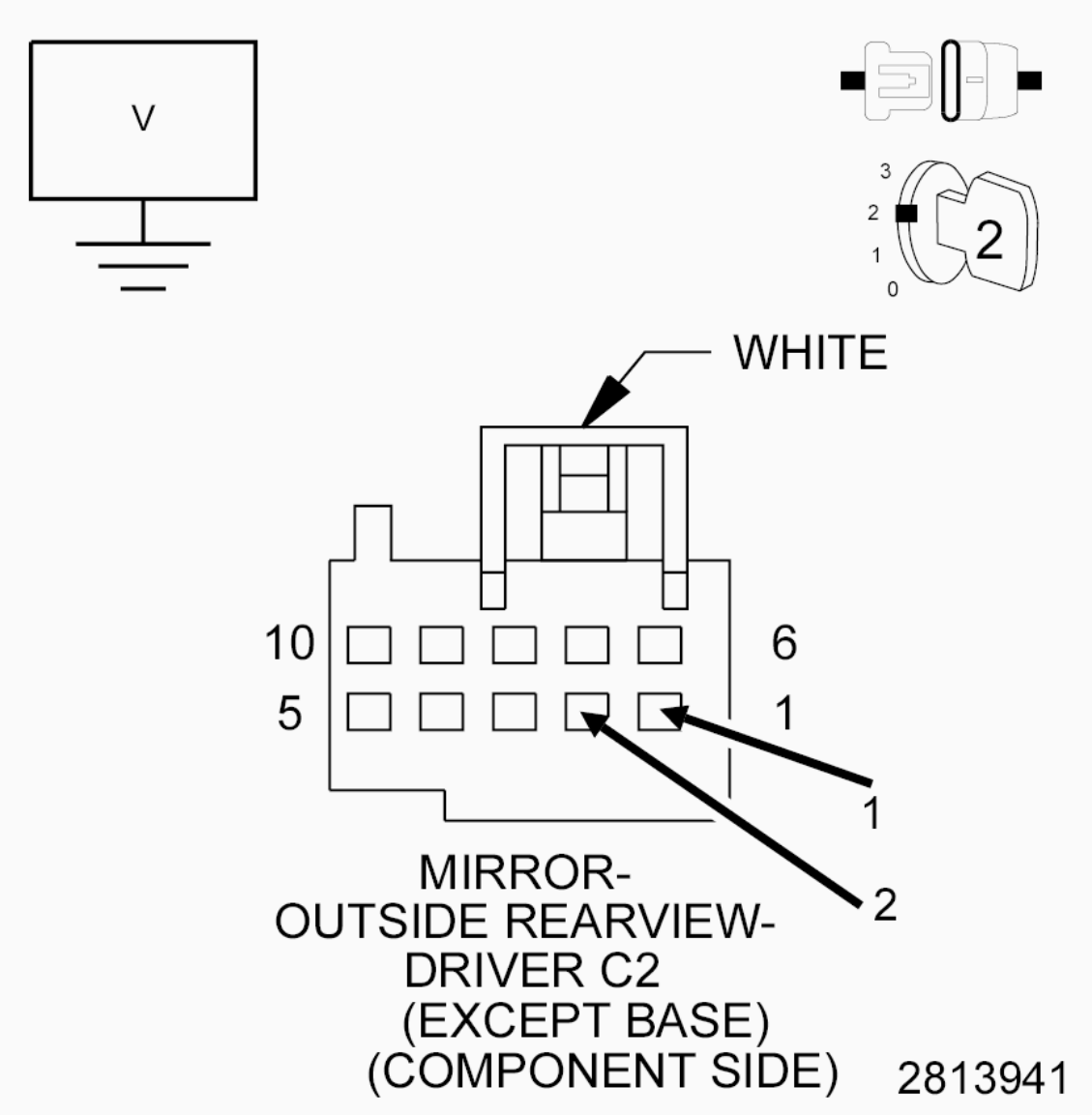

Fig. 35: Checking Driver Power Folding Mirror For A Short To Voltage
Courtesy of CHRYSLER GROUP, LLC

1. Turn the ignition on.
2. Measure the voltage between ground and the (P694) Folding Mirror Fold Driver circuit in the

Driver Outside Rearview Mirror C2 harness connector.

3. Measure the voltage between ground and the (P691) Folding Mirror Unfold Driver circuit in the Driver Outside Rearview Mirror C2 harness connector.

   Is there any voltage present in either circuit?

   Yes

   - Replace the Drivers Power Folding Mirror Assembly in accordance with the Service Information. Refer to **MIRROR, OUTSIDE REARVIEW, REMOVAL** and **MIRROR, OUTSIDE REARVIEW, GLASS, REMOVAL** .
   - Perform the BODY VERIFICATION TEST. Refer to **STANDARD PROCEDURE** .

   No

   - Replace the Drivers Door Module in accordance with the Service Information. Refer to **MODULE, DOOR, REMOVAL** .
   - Perform the BODY VERIFICATION TEST. Refer to **STANDARD PROCEDURE** .

B1F06-12-MIRROR CONTROL SENSOR POSITION CIRCUIT - CIRCUIT SHORT TO BATTERY

For a complete wiring diagram, **refer to appropriate SYSTEM WIRING DIAGRAMS article** .

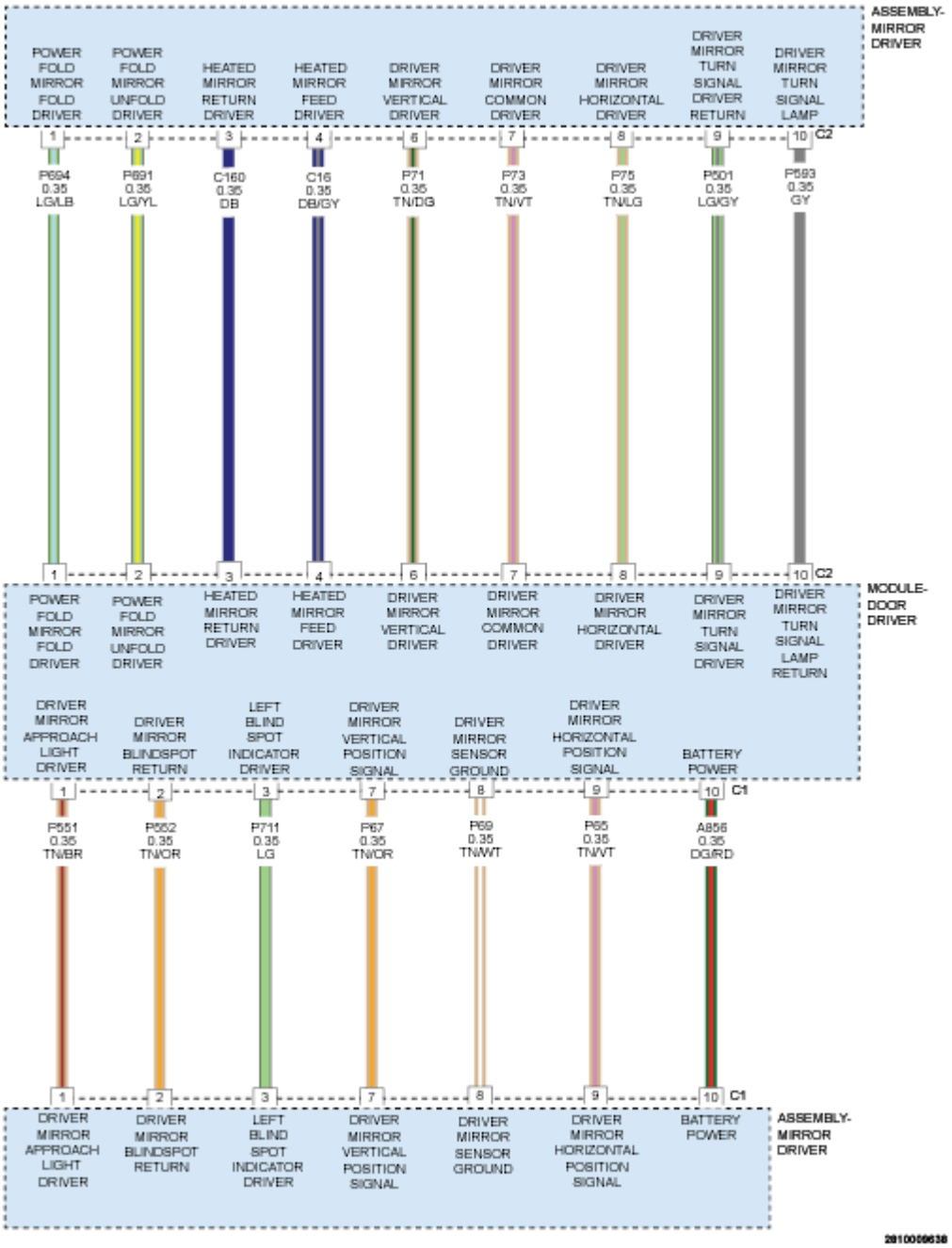

Fig. 36: Driver Mirror Assembly Wiring Diagram
Courtesy of CHRYSLER GROUP, LLC

WHEN MONITORED

Continuously with ignition on.

SET CONDITION

When the Door Module senses a short to battery on either the 5-volt supply, the mirror horizontal signal or the mirror vertical position signal circuit for more than two seconds, this code will set.

POSSIBLE CAUSES

Possible Causes
MIRROR VERTICAL POSITION SIGNAL CIRCUIT SHORTED TO VOLTAGE
MIRROR VERTICAL POSITION SIGNAL CIRCUIT SHORTED TO ANY DRIVER OR SIGNAL CIRCUIT
MIRROR HORIZONTAL POSITION SIGNAL CIRCUIT SHORTED TO VOLTAGE
MIRROR HORIZONTAL POSITION SIGNAL CIRCUIT SHORTED TO ANY DRIVER OR SIGNAL CIRCUIT
5 VOLT SUPPLY CIRCUIT SHORTED TO ANY CIRCUIT DRIVER CIRCUIT
5 VOLT SUPPLY CIRCUIT SHORTED TO BATTERY
OUTSIDE REARVIEW MIRROR
DOOR MODULE

DIAGNOSTIC TEST

1. **TEST FOR INTERMITTENT CONDITION**
    1. Cycle the ignition on.
    2. Using a scan tool, record and erase Diagnostic Trouble Codes (DTCs).
    3. Turn the turn signal on, if equipped with turn signal mirror.
    4. Fold and unfold the mirror several times, if equipped.
    5. Turn the rear defogger on, if equipped with heated mirror.
    6. Press and release the Mirror Select switch to select the Driver Outside Rearview Mirror.
    7. Operate the Mirror Adjust switch in all directions several times while monitoring the scan tool for DTCs.

    NOTE: After adjusting the mirror in one direction wait at least two seconds before adjusting the mirror in the opposite direction, as this will allow time for an active fault to set if present.

    Does the scan tool display: B1F06-12-MIRROR CONTROL SENSOR POSITION CIRCUIT - CIRCUIT SHORT TO BATTERY as active?

    Yes

    - Go To 2

    No

    - The conditions that caused this code to set are not present at this time. For vehicle's equipped

with folding outside rearview mirrors, repeat test with mirror folded. If DTC is now active, Go To 2. Otherwise, using the wiring diagrams as a guide, check all related splices and connectors for signs of water intrusion, corrosion, pushed out or bent terminals and poor pin fit. Repair as necessary.

- Perform the BODY VERIFICATION TEST. Refer to **STANDARD PROCEDURE** .

2. **CHECK (A856) 5-VOLT SUPPLY CIRCUIT FOR A SHORT TO VOLTAGE**

NOTE: In this step we are measuring the 5-Volt Supply voltage at the Door Module. It should not be over 5.2 volts.

1. Cycle the ignition off.
2. Disconnect the Driver Outside Rearview Mirror C1 and C2 (Component Side) harness connectors from the Door Module C1 and C2 sockets.
3. Cycle the ignition on.
4. Measure the voltage between Ground and the (A856) 5-volt Supply circuit at the Door Module (C1-Pin 10) (Module Side) socket.

Is the Voltage above 5.2 Volts?

Yes

- Replace the Door Module in accordance with the Service Information. Refer to **MODULE, DOOR, REMOVAL** .
- Perform the BODY VERIFICATION TEST. Refer to **STANDARD PROCEDURE** .

No

- Go To 3

3. **CHECK (A856) 5-VOLT SUPPLY CIRCUIT FOR A SHORT TO ANY OF THE CIRCUIT DRIVER CIRCUITS**

NOTE: We are now checking the wiring and the mirror for any crossed circuits.

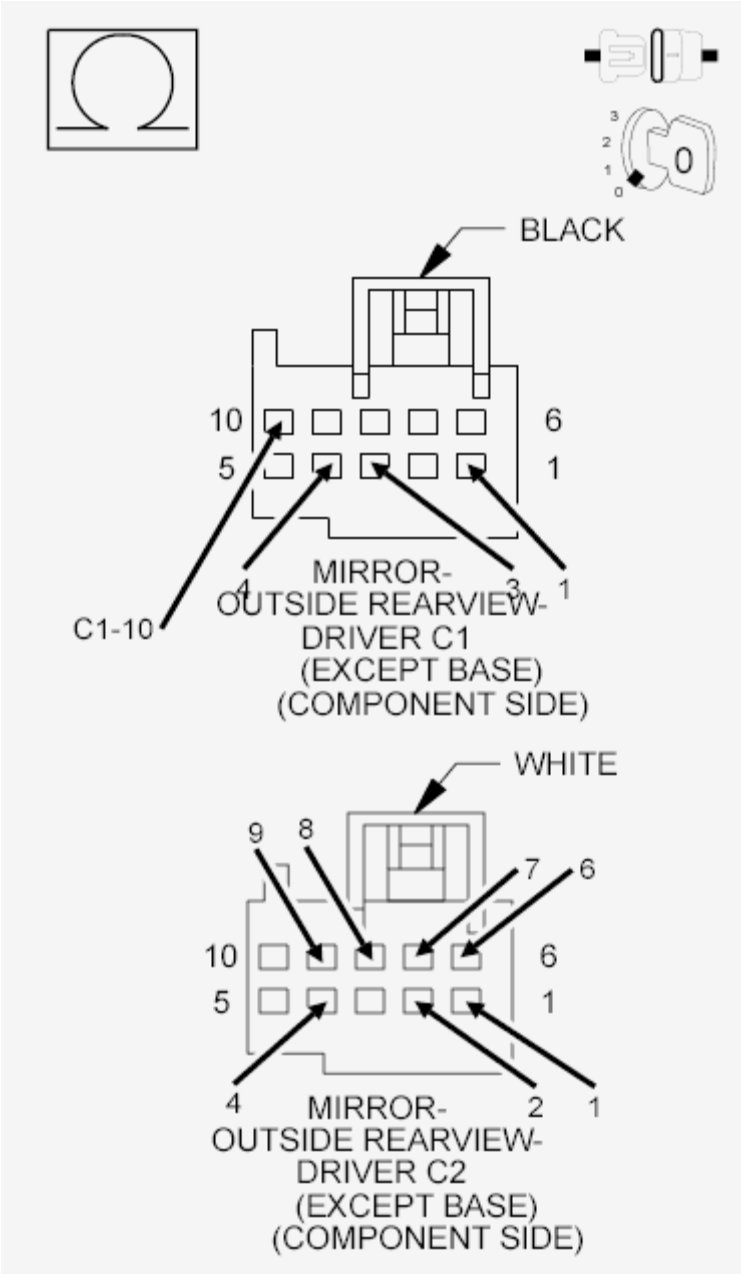

Fig. 37: Checking 5-Volt Supply Circuit For Short To Any Circuit Driver Circuits
Courtesy of CHRYSLER GROUP, LLC

1. Cycle the ignition off.
2. Measure the resistance between the (A856) 5-Volt Supply circuit (C1-Cavity 10) and all designated circuit Driver circuits in the Driver Outside Rearview Mirror C1 and C2 (Component Side) harness connectors.

   Is the resistance below 20K Ohms between the (A856) 5-Volt Supply and any of the designated Driver circuits?

Yes

- Repair all circuits with a resistance below 20K Ohms for a short to the (A856) 5-Volt Supply circuit. If the wiring harness and connectors are okay, replace the Driver Outside Rearview Mirror in accordance with the Service Information. Refer to **MIRROR, OUTSIDE REARVIEW, REMOVAL** and **MIRROR, OUTSIDE REARVIEW, GLASS, REMOVAL** .
- Perform the BODY VERIFICATION TEST. Refer to **STANDARD PROCEDURE** .

No

- Go To 4

4. **CHECK (P67) DRIVER MIRROR VERTICAL POSITION SIGNAL CIRCUIT FOR A SHORT TO ANY CIRCUIT DRIVER CIRCUITS**

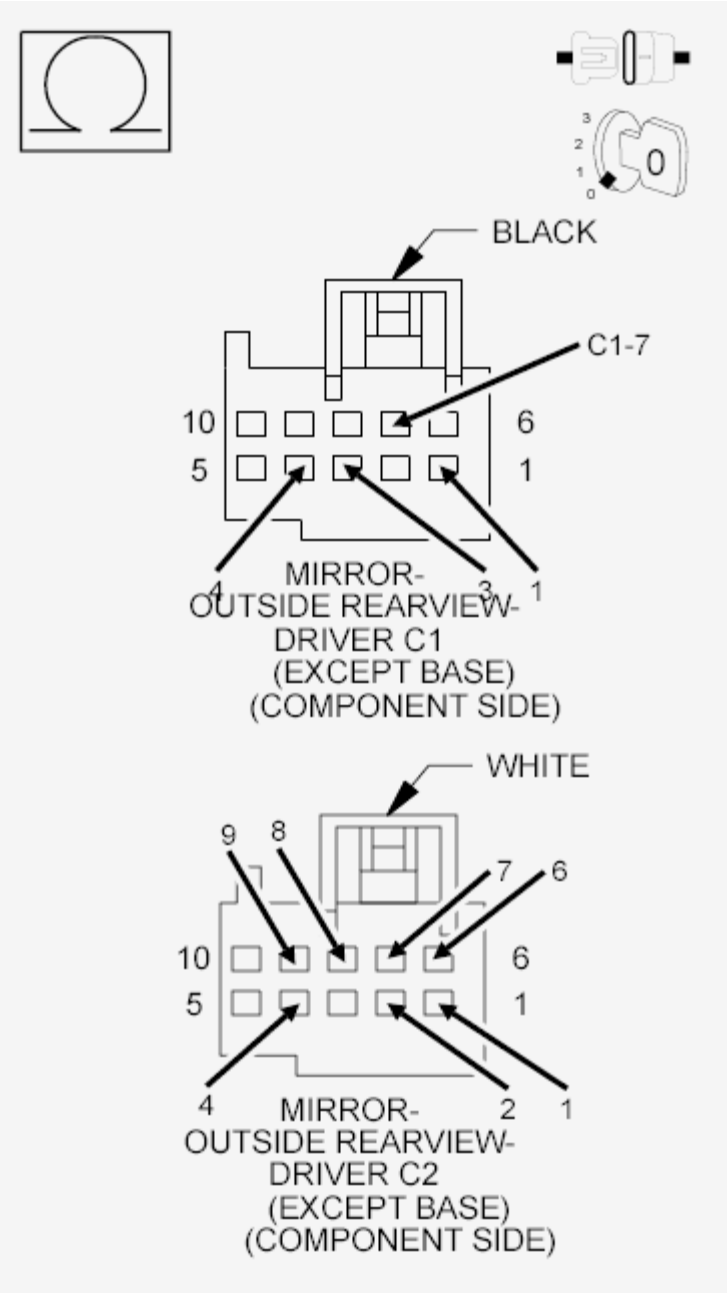

Fig. 38: Checking Driver Mirror Vertical Position Signal Circuit For Short To Any Circuit Driver Circuits
Courtesy of CHRYSLER GROUP, LLC

1. Measure the resistance between the (P67) Driver Mirror Vertical Position Signal circuit (C1-Cavity 7) and all designated circuit Driver circuits in the Driver Outside Rearview Mirror C1 and C2 (Component Side) harness connectors.

   Is the resistance below 20K Ohms between the (P67) circuit and any of the designated Driver circuits?

Yes

- Repair all circuits with a resistance below 20K Ohms for a short to the (P67) Driver Mirror Vertical Position Signal circuit. If the wiring harness and connectors are okay, replace the Driver Outside Rearview Mirror in accordance with the Service Information. Refer to **MIRROR, OUTSIDE REARVIEW, REMOVAL** and **MIRROR, OUTSIDE REARVIEW, GLASS, REMOVAL** .
- Perform the BODY VERIFICATION TEST. Refer to **STANDARD PROCEDURE** .

No

- Go To 5

5. **CHECK (P65) DRIVER MIRROR HORIZONTAL POSITION SIGNAL CIRCUIT FOR A SHORT TO ANY CIRCUIT DRIVER CIRCUITS**

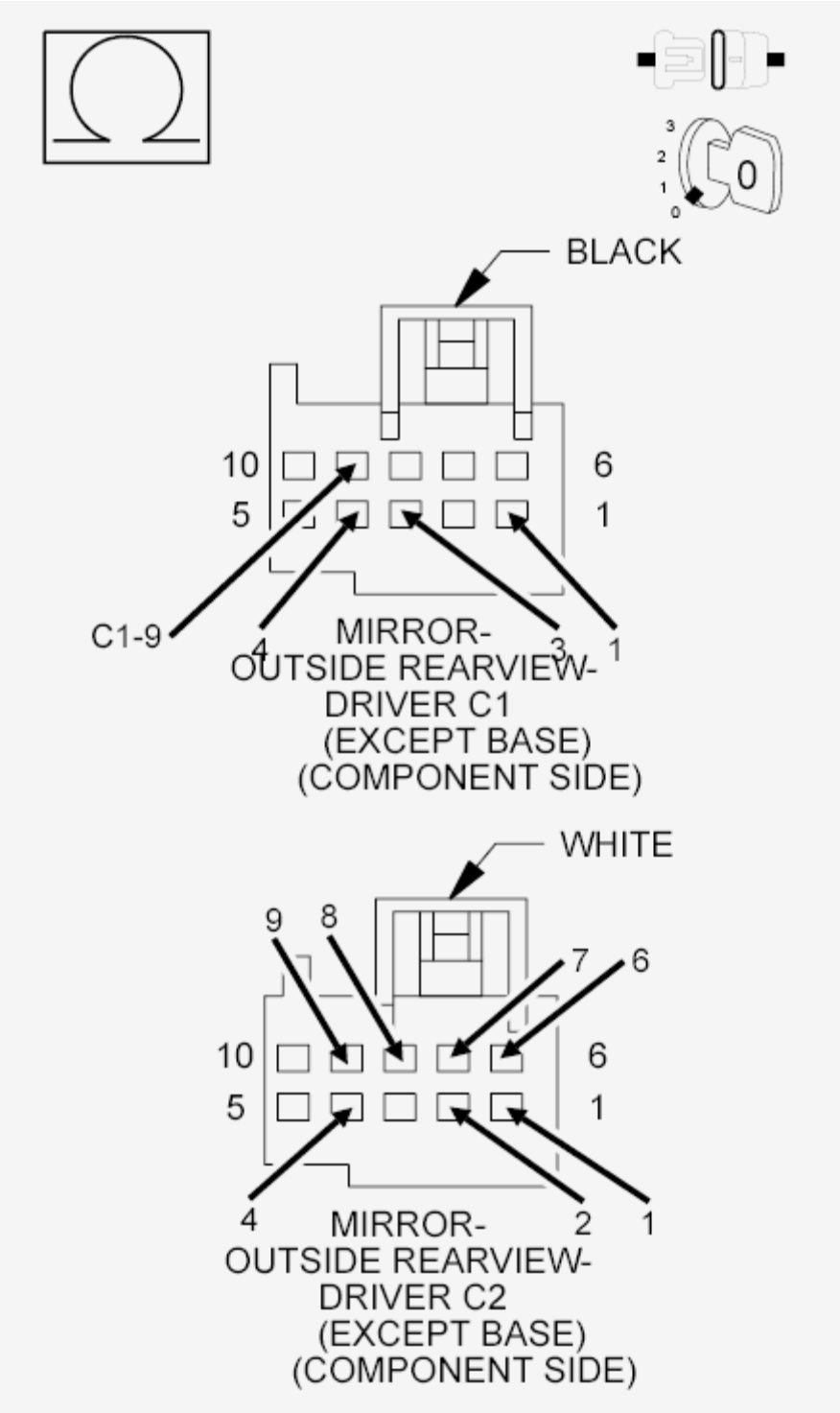

Fig. 39: Checking Driver Mirror Horizontal Position Signal Circuit For Short To Any Circuit Driver Circuits
Courtesy of CHRYSLER GROUP, LLC

1. Measure the resistance between the (P65) Driver Mirror Horizontal Position Signal circuit (C1-Cavity 9) and all the designated circuit Driver circuits in the Driver Outside Rearview Mirror C1

and C2 (Component Side) harness connectors.

Is the resistance below 20K Ohms between the (P65) circuit and any of the designated circuit Driver circuits?

Yes

- Repair all circuits with a resistance below 20K Ohms for a short to the (P65) Driver Mirror Horizontal Position Signal circuit. If the wiring harness and connectors are okay, replace the Driver Outside Rearview Mirror in accordance with the Service Information. Refer to **MIRROR, OUTSIDE REARVIEW, REMOVAL** and **MIRROR, OUTSIDE REARVIEW, GLASS, REMOVAL** .
- Perform the BODY VERIFICATION TEST. Refer to **STANDARD PROCEDURE** .

No

- Go To 6

6. **CHECK (P67) DRIVER MIRROR VERTICAL POSITION SIGNAL CIRCUIT FOR A OPEN IN THE DOOR MODULE**

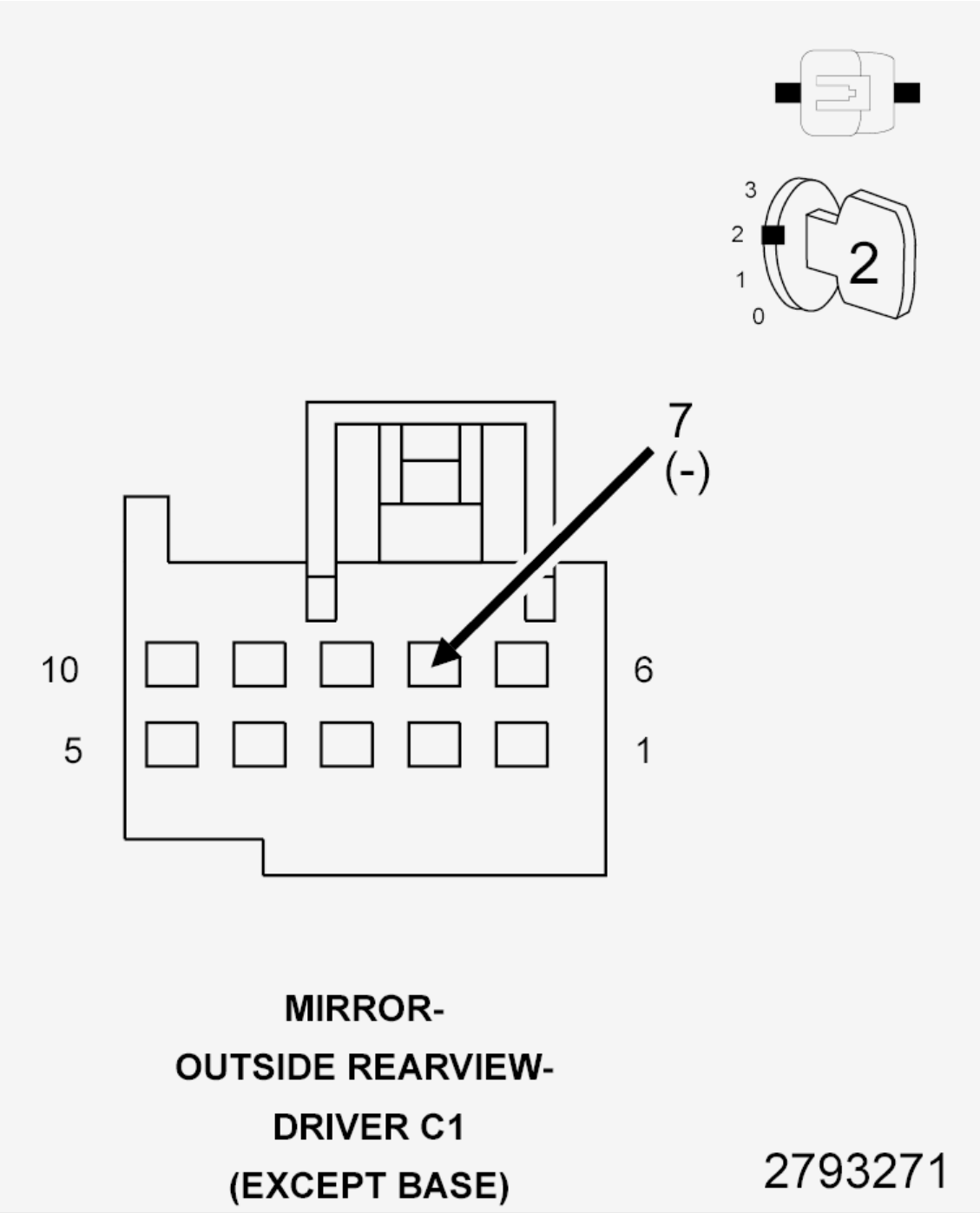

Fig. 40: Driver Outside Rearview Mirror Connector End View
Courtesy of CHRYSLER GROUP, LLC

1. Connect the Driver Outside Rearview Mirror C1 and C2 (Component Side) harness connectors to the Driver Door Module.
2. Cycle the ignition on.
3. Using a scan tool, record and erase the Diagnostic Trouble Codes (DTCs).

4. Using a jumper wire, connected to ground, back probe the (P67) Driver Mirror Vertical Position Signal circuit (C1-Cavity 7).

   NOTE: The graphic shows the connector terminal end view. Back probe the wire end of the terminal. Use caution not to damage the wire.

5. With the scan tool, read the active DTCs.

   Does the scan tool display: B1F06-14-MIRROR CONTROL SENSOR POSITION CIRCUIT - CIRCUIT SHORT TO GROUND OR OPEN as active?

   Yes

   - Go To 7

   No

   - Inspect the wiring and connectors for damage and repair as necessary. If the wiring and connectors are okay, replace the Driver Door Module in accordance with the Service Information. Refer to **MODULE, DOOR, REMOVAL** .
   - Perform the BODY VERIFICATION TEST. Refer to **STANDARD PROCEDURE** .

7. **CHECK (P65) DRIVER MIRROR HORIZONTAL POSITION SIGNAL CIRCUIT FOR A OPEN**

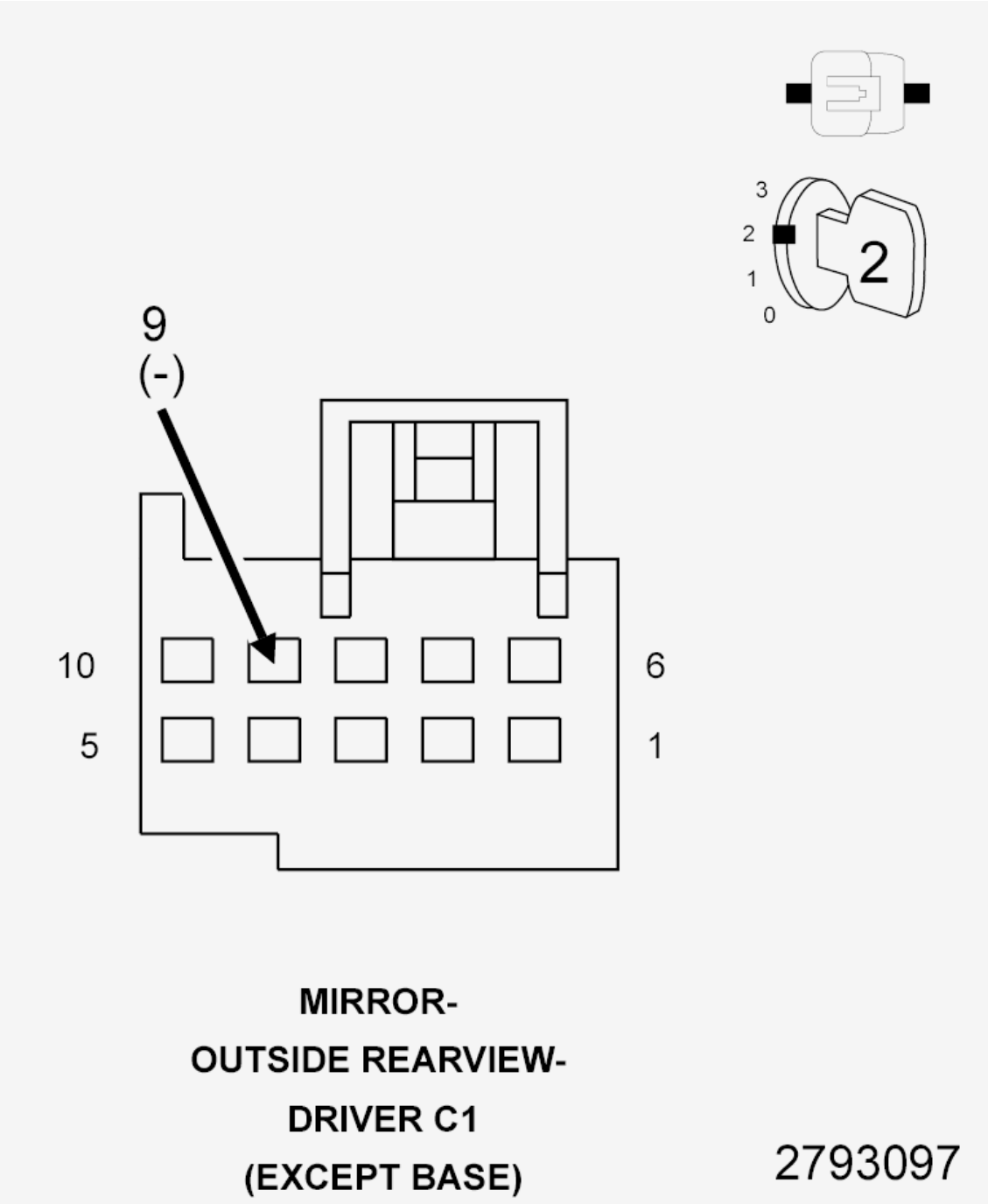

Fig. 41: Driver Outside Rearview Mirror Harness Connector End View
Courtesy of CHRYSLER GROUP, LLC

1. Using a scan tool, record and erase the Diagnostic Trouble Codes (DTCs).
2. Using a jumper wire, connected to ground, back probe the (P65) Driver Mirror Horizontal Position Signal circuit (C1-Cavity 9).

NOTE: The graphic shows the connector terminal end view. Back probe the

wire end of the terminal. Use caution not to damage the wire.

3. With the scan tool, read the active DTCs.

   Does the scan tool display: B1F06-14-MIRROR CONTROL SENSOR POSITION CIRCUIT - CIRCUIT SHORT TO GROUND OR OPEN as active?

   Yes

   - Replace the Driver Outside Rearview Mirror in accordance with the Service Information. Refer to **MIRROR, OUTSIDE REARVIEW, REMOVAL** and **MIRROR, OUTSIDE REARVIEW, GLASS, REMOVAL** .
   - Perform the BODY VERIFICATION TEST. Refer to **STANDARD PROCEDURE** .

   No

   - Inspect the wiring and connectors for damage and repair as necessary. If the wiring and connectors are okay, replace the Driver Door Module in accordance with the Service Information. Refer to **MODULE, DOOR, REMOVAL** .
   - Perform the BODY VERIFICATION TEST. Refer to **STANDARD PROCEDURE** .

B1F06-14-MIRROR CONTROL SENSOR POSITION CIRCUIT - CIRCUIT SHORT TO GROUND OR OPEN

For a complete wiring diagram, **refer to appropriate SYSTEM WIRING DIAGRAMS article** .

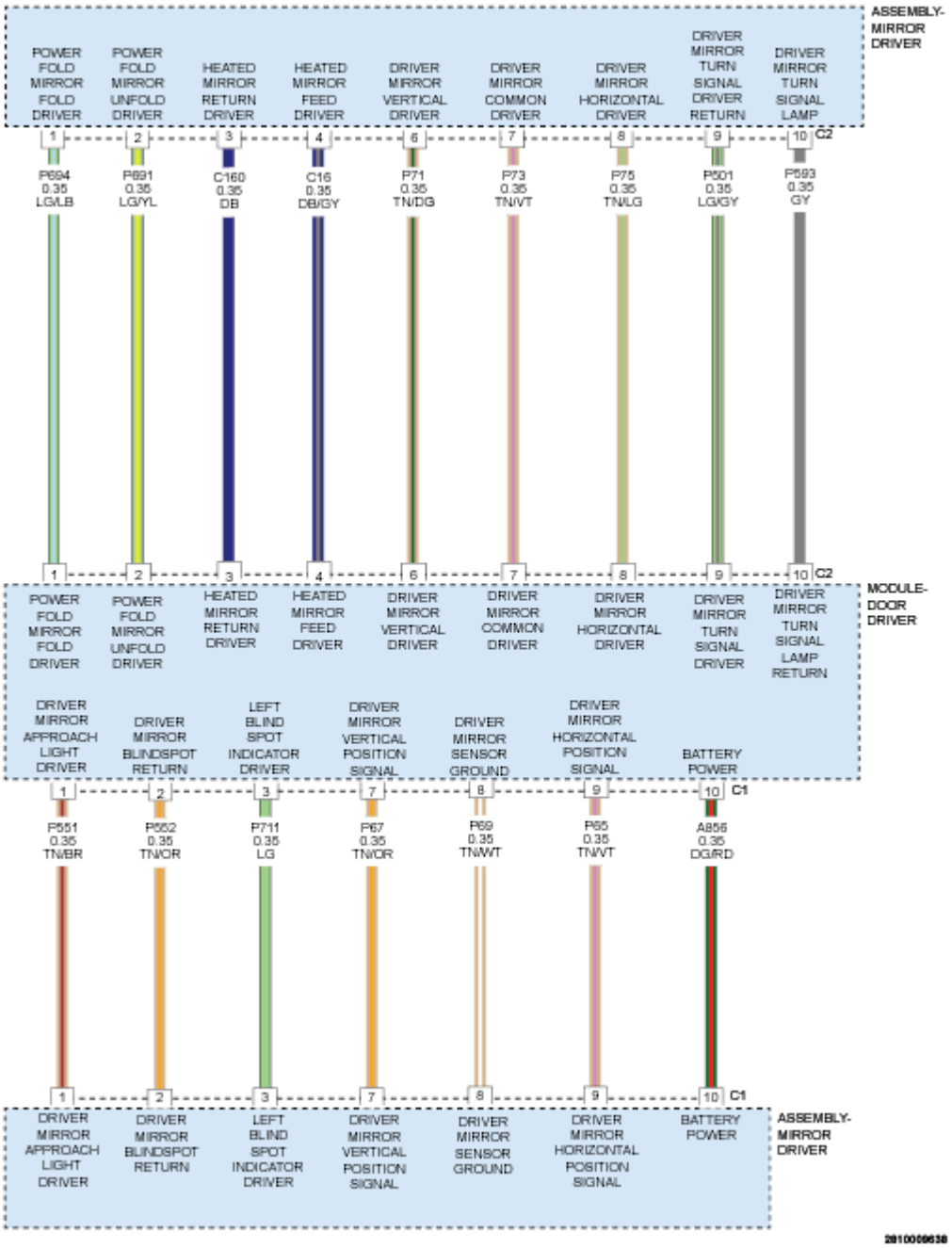

Fig. 42: Driver Mirror Assembly Wiring Diagram
Courtesy of CHRYSLER GROUP, LLC

WHEN MONITORED

Continuously with ignition on.

SET CONDITION

When the Door Module senses an open or short to ground on either the 5-volt supply, the mirror horizontal signal or the mirror vertical position signal circuit for more than two seconds, this code will set.

POSSIBLE CAUSES

Possible Causes
MIRROR VERTICAL POSITION SIGNAL CIRCUIT SHORTED TO GROUND
MIRROR VERTICAL POSITION SIGNAL CIRCUIT SHORTED TO ANY SENSOR GROUND OR RETURN CIRCUIT
MIRROR HORIZONTAL POSITION SIGNAL CIRCUIT SHORTED TO GROUND
MIRROR HORIZONTAL POSITION SIGNAL CIRCUIT SHORTED TO ANY SENSOR GROUND OR RETURN CIRCUIT
5 VOLT SUPPLY CIRCUIT SHORTED TO ANY SENSOR GROUND OR RETURN CIRCUIT
5 VOLT SUPPLY CIRCUIT SHORTED TO GROUND
5-VOLT SUPPLY CIRCUIT OPEN AT THE MODULE
MIRROR VERTICAL POSITION SIGNAL CIRCUIT OPEN
MIRROR HORIZONTAL POSITION SIGNAL CIRCUIT OPEN
5-VOLT SUPPLY CIRCUIT OPEN
OUTSIDE REARVIEW MIRROR
DOOR MODULE

DIAGNOSTIC TEST

1. **TEST FOR INTERMITTENT CONDITION**
    1. Cycle the ignition on.
    2. Using a scan tool, record and erase the Diagnostic Trouble Codes (DTCs).
    3. Turn the driver side turn signal on.
    4. Operate the power fold and unfold feature, if equipped, several times.
    5. Turn the rear defogger on, if equipped with heated mirror.
    6. Press and release the Mirror Select switch to select the Driver Outside Rearview Mirror.
    7. Operate the Mirror Adjust Switch in all directions several times while monitoring the scan tool for DTCs.

    NOTE: After adjusting the mirror in one direction wait at least two seconds before adjusting the mirror in the opposite direction, as this will allow time for an active DTC to set, if present.

    Does the scan tool display: B1F06-14-MIRROR CONTROL SENSOR POSITION CIRCUIT - CIRCUIT SHORT TO GROUND OR OPEN as active?

    Yes

    - Go To 2

No

- The conditions that caused this code to set are not present at this time. For vehicle's equipped with folding outside rearview mirrors, repeat this test with the mirror folded. If this DTC is now active, Go To 2. Otherwise, using the wiring diagrams as a guide, check all related connectors for signs of water intrusion, corrosion, pushed out or bent terminals and poor pin fit.
- Perform the BODY VERIFICATION TEST. Refer to **STANDARD PROCEDURE** .

2. **CHECK (A856) 5-VOLT SUPPLY CIRCUIT FOR AN OPEN AT THE MODULE**

NOTE: In this step we are measuring the 5-Volt Supply voltage at the Door Module. It should be over 4.7 volts.

1. Cycle the ignition off.
2. Disconnect the Driver Outside Rearview Mirror C1 and C2 (Component Side) harness connectors from the Door Module C1 and C2 sockets.
3. Cycle the ignition on.
4. Measure the voltage between Ground and the (A856) 5-volt Supply circuit at the Door Module (C1-Pin 10) (Module Side) socket.

Is the Voltage above 4.7 Volts?

Yes

- Go To 3

No

- Replace the Door Module in accordance with the Service Information. Refer to **MODULE, DOOR, REMOVAL** .
- Perform the BODY VERIFICATION TEST. Refer to **STANDARD PROCEDURE** .

3. **CHECK (A856) 5-VOLT SUPPLY CIRCUIT FOR A SHORT TO GROUND**

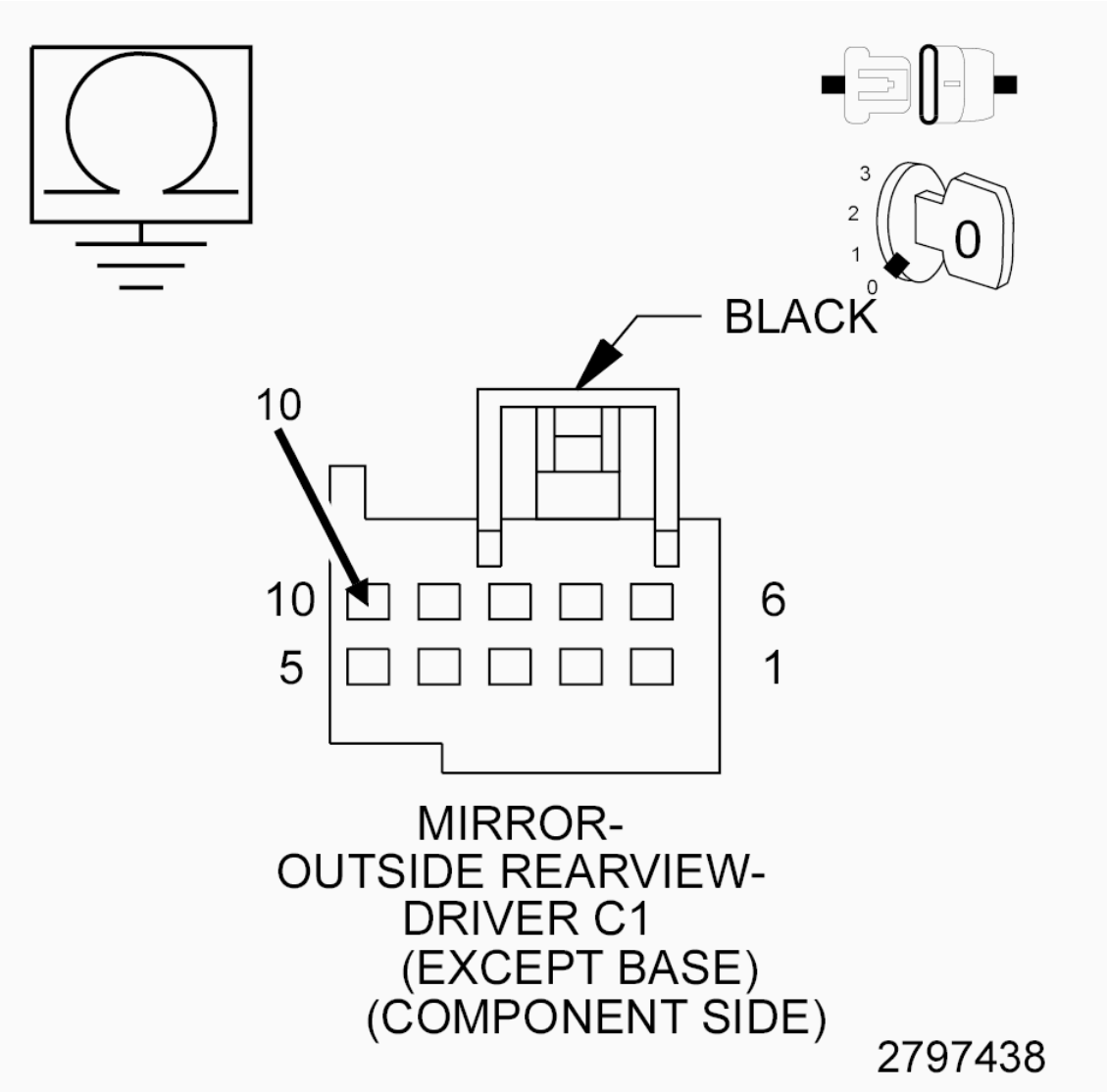

Fig. 43: Checking 5-Volt Supply Circuit For Short To Ground
Courtesy of CHRYSLER GROUP, LLC

1. Cycle the ignition off.
2. Measure the resistance between Ground and the (A856) 5-Volt Supply circuit in the Driver Outside Rearview Mirror C1 connector.

   Is the resistance below 10K Ohms

   Yes

   - Repair the short to ground in the (A856) 5-Volt Supply circuit. If the wiring harness and connector is okay, replace the Driver Outside Rearview Mirror in accordance with the Service Information. Refer to **MIRROR, OUTSIDE REARVIEW, REMOVAL** and **MIRROR, OUTSIDE REARVIEW, GLASS, REMOVAL** .

- Perform the BODY VERIFICATION TEST. Refer to **STANDARD PROCEDURE** .

No

- Go To 4

4. **CHECK (P67) DRIVER MIRROR VERTICAL POSITION SIGNAL CIRCUIT FOR A SHORT TO GROUND**

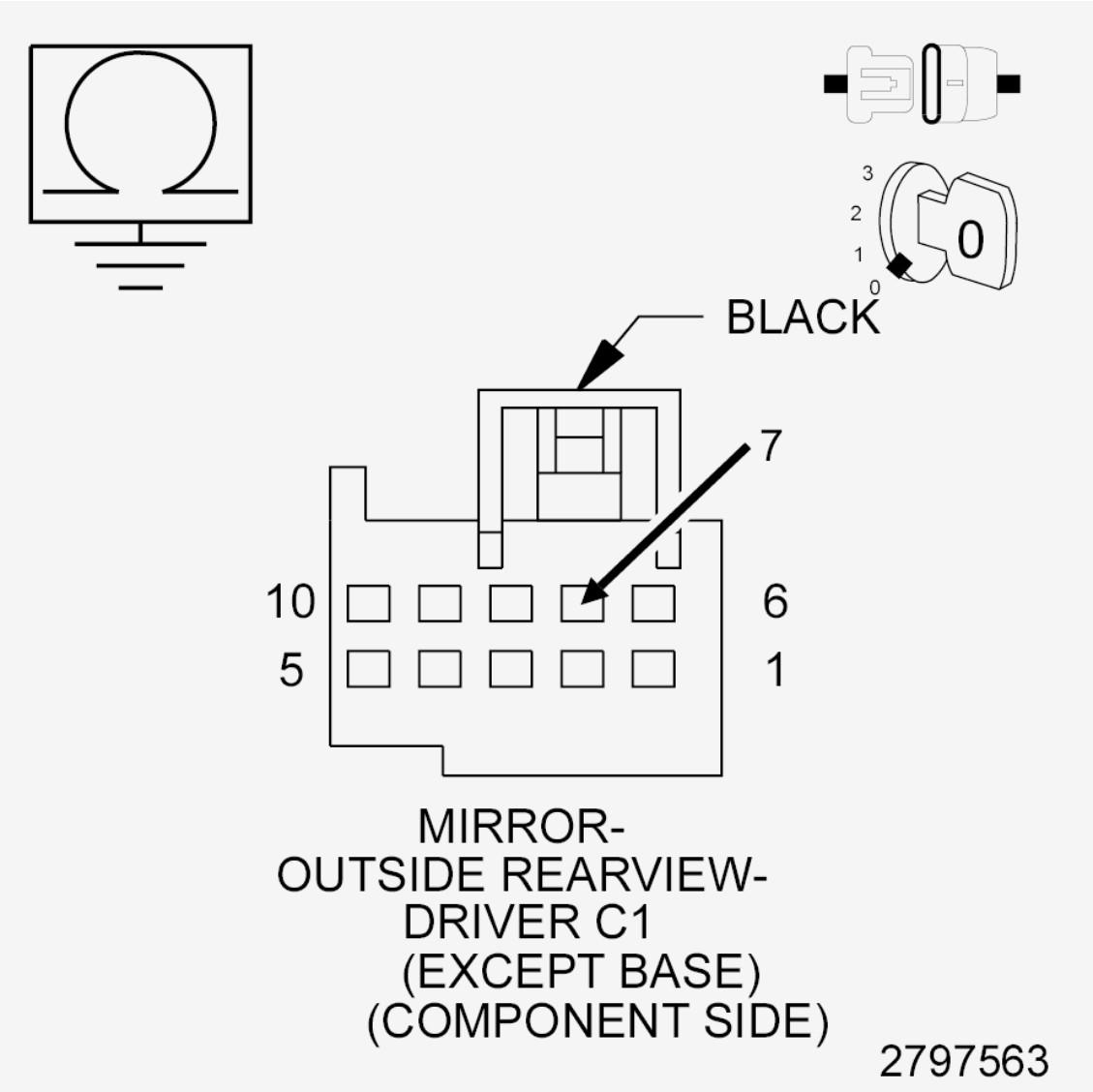

Fig. 44: Checking Passenger Mirror Vertical Position Signal Circuit For Short To Ground
Courtesy of CHRYSLER GROUP, LLC

1. Measure the resistance between Ground and the (P67) Driver Mirror Vertical Position Signal circuit in the Driver Outside Rearview Mirror C1 harness connector.

   Is the resistance below 10K Ohms?

Yes

- Repair the (P67) Driver Mirror Vertical Position Signal circuit for a short to ground. If the wiring harness and connector are okay, replace the Driver Outside Rearview Mirror in accordance with the Service Information. Refer to **MIRROR, OUTSIDE REARVIEW, REMOVAL** and **MIRROR, OUTSIDE REARVIEW, GLASS, REMOVAL** .
- Perform the BODY VERIFICATION TEST. Refer to **STANDARD PROCEDURE** .

No

- Go To 5

5. **CHECK (P65) DRIVER MIRROR HORIZONTAL POSITION SIGNAL CIRCUIT FOR A SHORT TO GROUND**

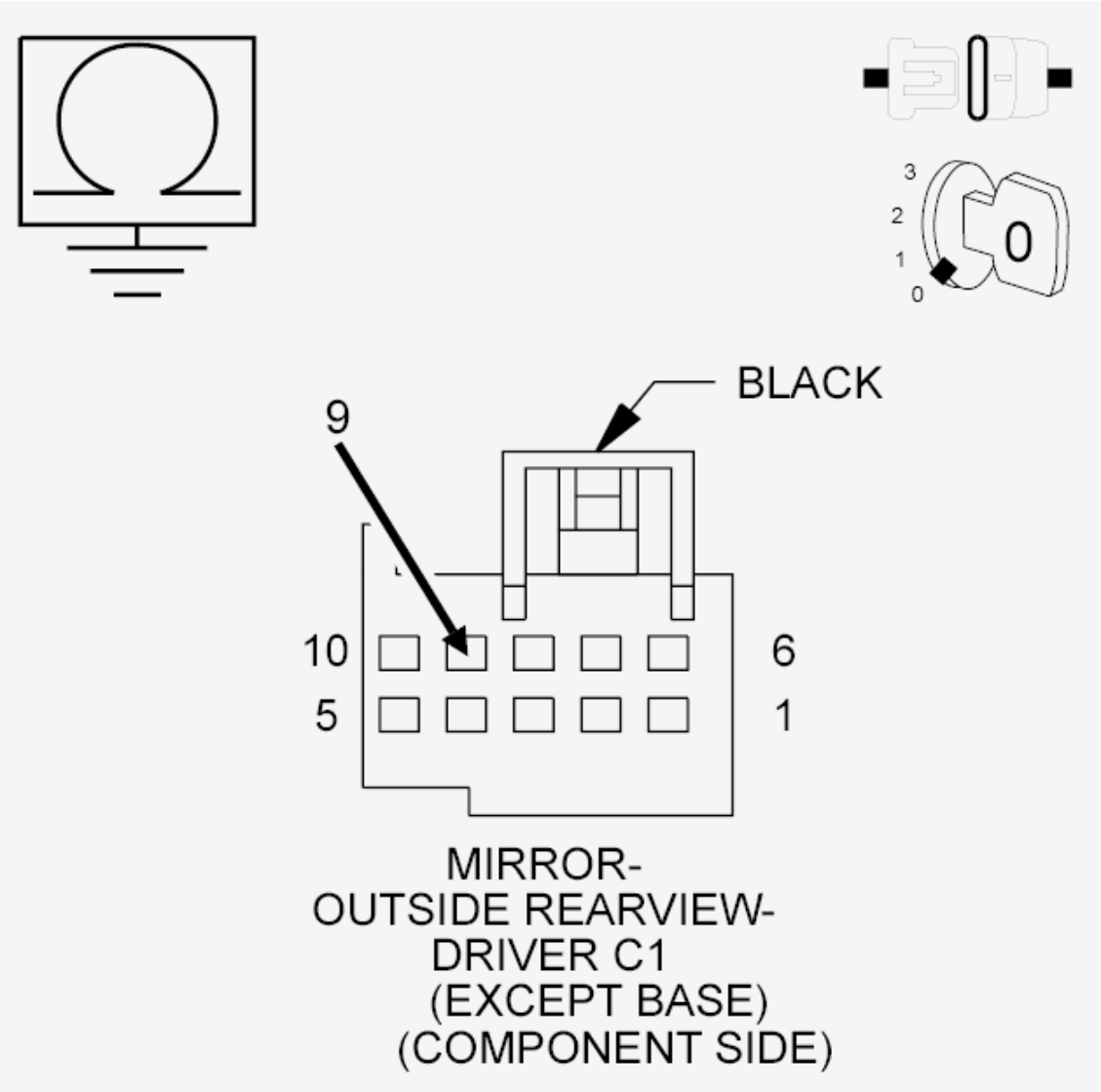

Fig. 45: Checking Driver Mirror Horizontal Position Signal Circuit For Short To Ground

Courtesy of CHRYSLER GROUP, LLC

1. Measure the resistance between Ground and the (P65) Driver Mirror Horizontal Position Signal circuit in the Driver Outside Rearview Mirror C1 harness connector.

   Is the resistance below 10K Ohms?

   Yes

   - Repair the (P65) Driver Mirror Horizontal Position Signal circuit for a short to ground. If the wiring harness and connector are okay, replace the Driver Outside Rearview Mirror in accordance with the Service Information. Refer to **MIRROR, OUTSIDE REARVIEW, REMOVAL** and **MIRROR, OUTSIDE REARVIEW, GLASS, REMOVAL** .
   - Perform the BODY VERIFICATION TEST. Refer to **STANDARD PROCEDURE** .

   No

   - Go To 6

6. **CHECK (P67) DRIVER MIRROR VERTICAL POSITION SIGNAL CIRCUIT FOR AN OPEN**

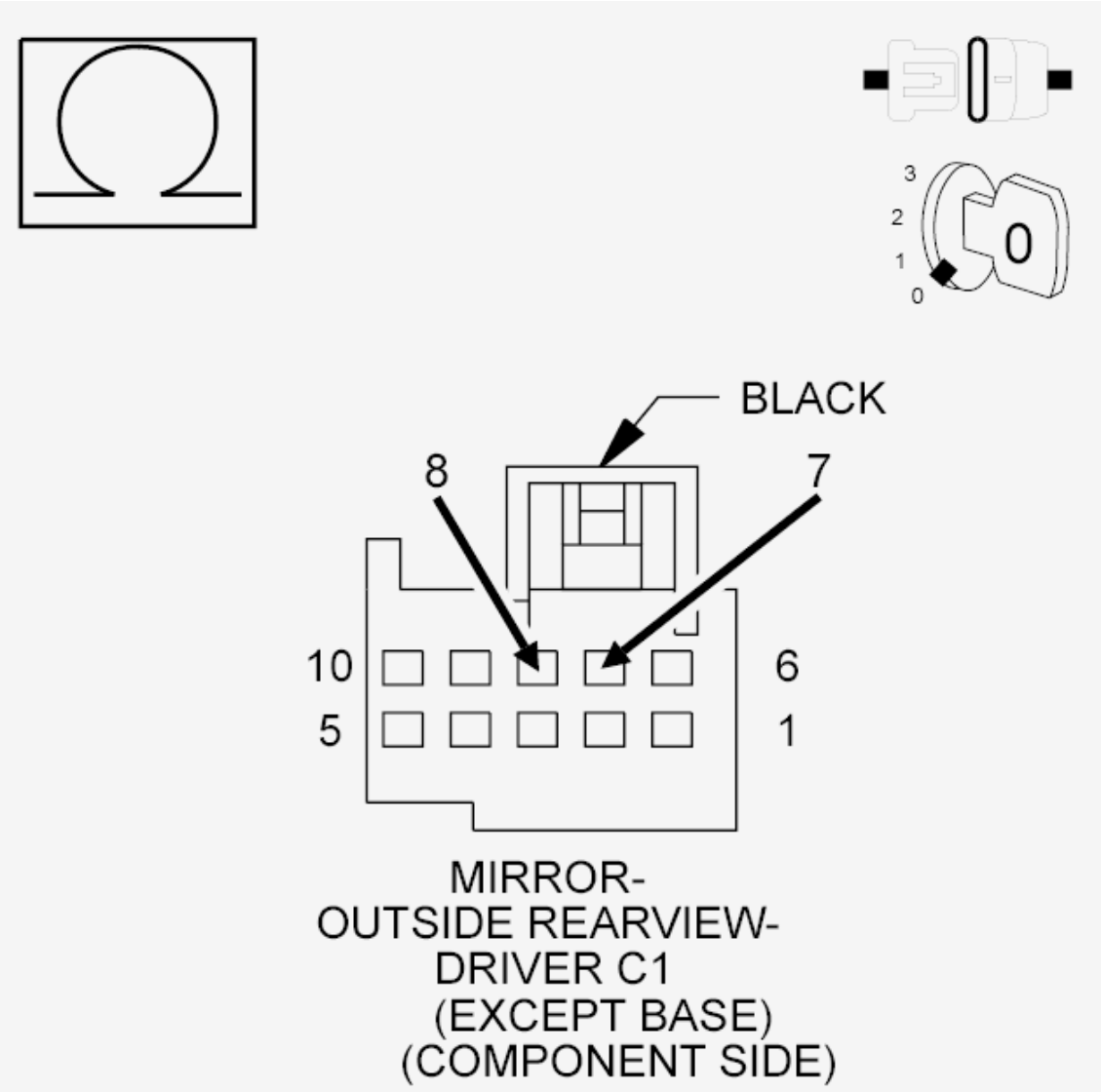

Fig. 46: Checking Driver Mirror Vertical Position Signal Circuit For Open
Courtesy of CHRYSLER GROUP, LLC

1. Connect an ohmmeter between the (P67) Driver Mirror Vertical Position Signal circuit and the (P69) Driver Mirror Sensor Ground circuit in the Driver Outside Rearview Mirror C1 (Component Side) harness connector.
2. Manually move the mirror Up and Down while observing the ohmmeter.

   Does the resistance measure between approximately 1.2K Ohms and 2.4K Ohms as you move the mirror from Up to Down?

   Yes

   - Go To 7

No

- Replace the Driver Outside Rearview Mirror in accordance with the Service Information. Refer to **MIRROR, OUTSIDE REARVIEW, REMOVAL** and **MIRROR, OUTSIDE REARVIEW, GLASS, REMOVAL** .
- Perform the BODY VERIFICATION TEST. Refer to **STANDARD PROCEDURE** .

7. **CHECK (P65) DRIVER MIRROR HORIZONTAL POSITION SIGNAL CIRCUIT FOR AN OPEN**

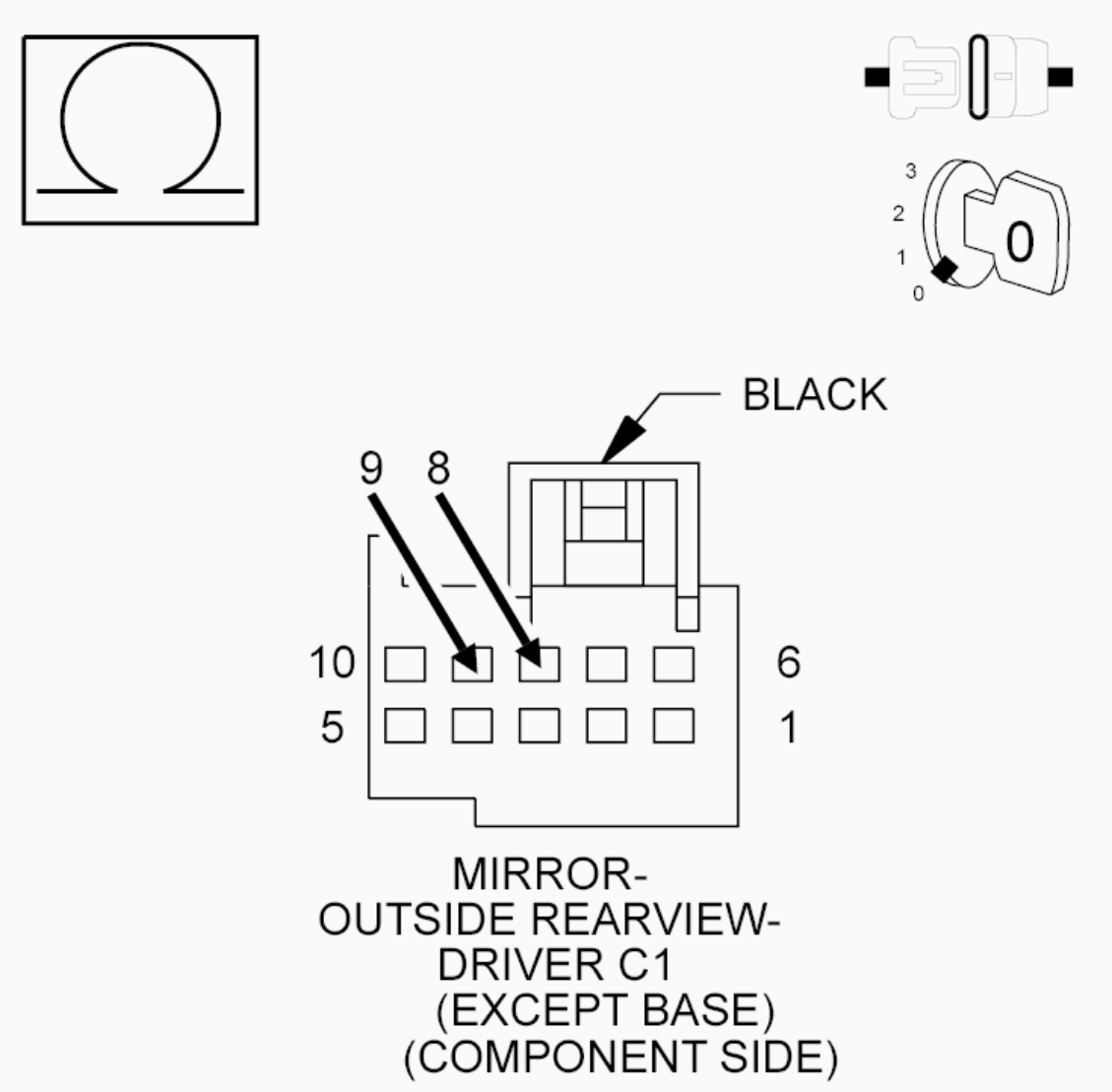

Fig. 47: Checking Passenger Mirror Horizontal Position Signal Circuit For Open
Courtesy of CHRYSLER GROUP, LLC

1. Connect an ohmmeter between the (P65) Driver Mirror Horizontal Position Signal circuit and the (P69) Driver Mirror Sensor Ground circuit in the Driver Outside Rearview Mirror C1 (Component Side) harness connector.

2. Manually move the mirror from Left to Right while observing the ohmmeter.

   Does the resistance measure between approximately 1.2K Ohms and 2.4K Ohms as you move the mirror from Left to Right?

   Yes

   - Go To 8

   No

   - Replace the Driver Outside Rearview Mirror in accordance with the Service Information. Refer to **MIRROR, OUTSIDE REARVIEW, REMOVAL** and **MIRROR, OUTSIDE REARVIEW, GLASS, REMOVAL** .
   - Perform the BODY VERIFICATION TEST. Refer to **STANDARD PROCEDURE** .

8. **CHECK (A856) 5-VOLT SUPPLY CIRCUIT FOR A SHORT TO ANY GROUND OR RETURN CIRCUIT**

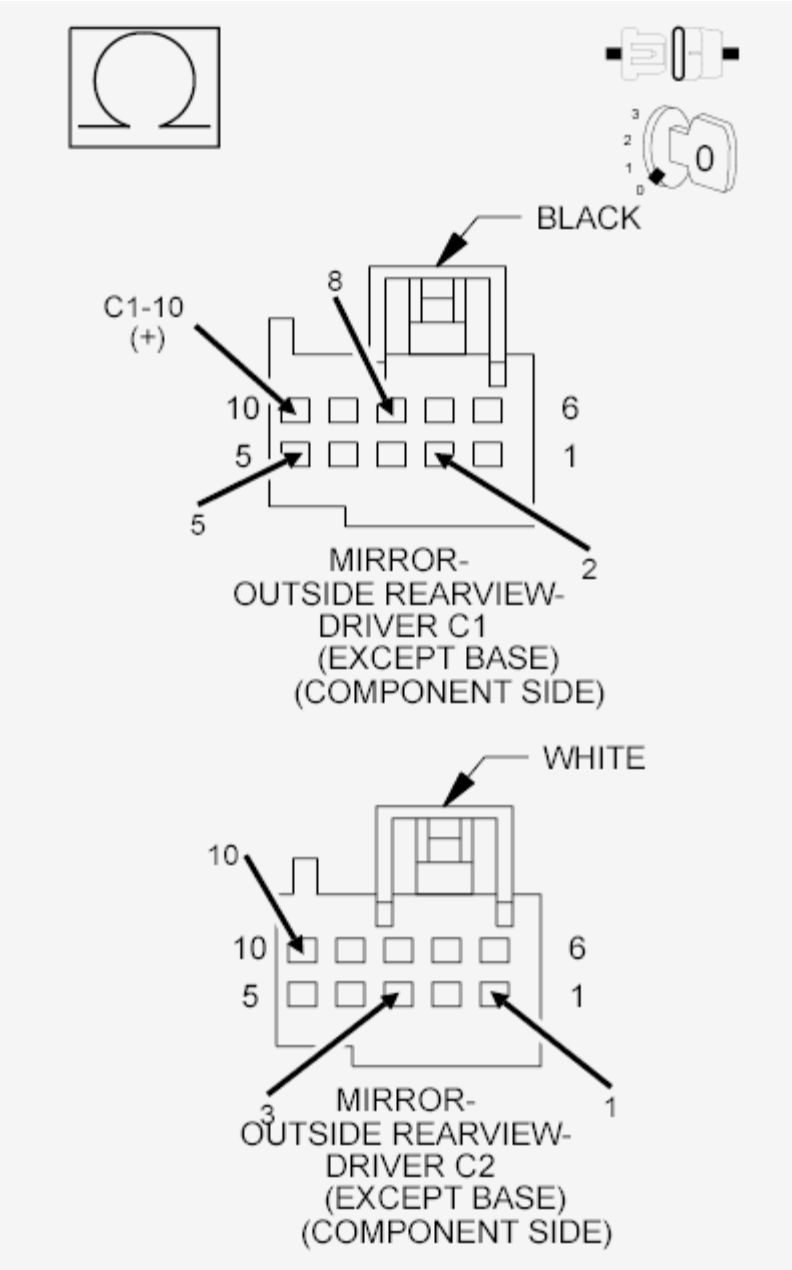

Fig. 48: Checking 5-Volt Supply Circuit For A Short To Any Ground Or Return Circuit, Or An Open
Courtesy of CHRYSLER GROUP, LLC

1. Measure the resistance between the (A856) 5-Volt Supply circuit (C1-10) and all designated Ground and Return circuits in the Driver Outside Rearview Mirror C1 and C2 (Component Side) connectors.

   Is the resistance below 1.2K Ohms between the (A856) 5-Volt Supply circuit and any Ground or Return circuit?

Yes

- Repair the (A856) 5-Volt Supply circuit for a short to the Ground or Return circuit. If the wiring harness and connector are okay, replace the Driver Outside Rearview Mirror in accordance with the Service Information. Refer to **MIRROR, OUTSIDE REARVIEW, REMOVAL** and **MIRROR, OUTSIDE REARVIEW, GLASS, REMOVAL** .
- Perform the BODY VERIFICATION TEST. Refer to **STANDARD PROCEDURE** .

No

- Go To 9

9. **CHECK (A856) 5-VOLT SUPPLY CIRCUIT FOR AN OPEN**

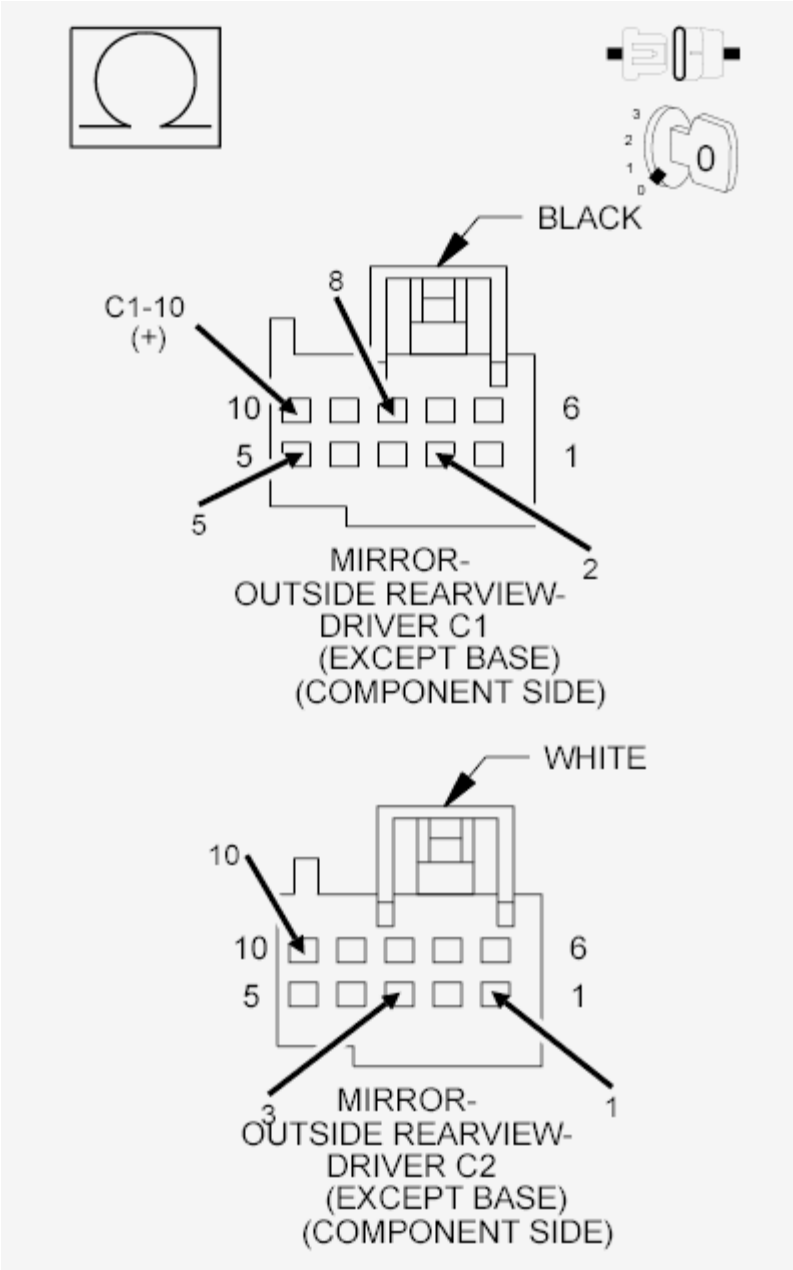

Fig. 49: Checking 5-Volt Supply Circuit For A Short To Any Ground Or Return Circuit, Or An Open
Courtesy of CHRYSLER GROUP, LLC

1. Measure the resistance between the (A856) 5-Volt Supply circuit (C1-10) and all designated Ground and Return circuits in the Driver Outside Rearview Mirror C1 and C2 (Component Side) connectors.

   Is the resistance between 1.2K and 5.0K Ohms between the (A856) 5-Volt Supply circuit and one or more of the Ground or Return circuits?

Yes

- Go To 10

No

- Repair the open in the (A856) 5-Volt Supply circuit. If the wiring harness and connector are okay, replace the Driver Outside Rearview Mirror in accordance with the Service Information. Refer to **MIRROR, OUTSIDE REARVIEW, REMOVAL** and **MIRROR, OUTSIDE REARVIEW, GLASS, REMOVAL** .
- Perform the BODY VERIFICATION TEST. Refer to **STANDARD PROCEDURE** .

10. **CHECK (P67) DRIVER MIRROR VERTICAL POSITION SIGNAL CIRCUIT FOR A SHORT TO ANY CIRCUIT GROUND OR RETURN CIRCUITS**

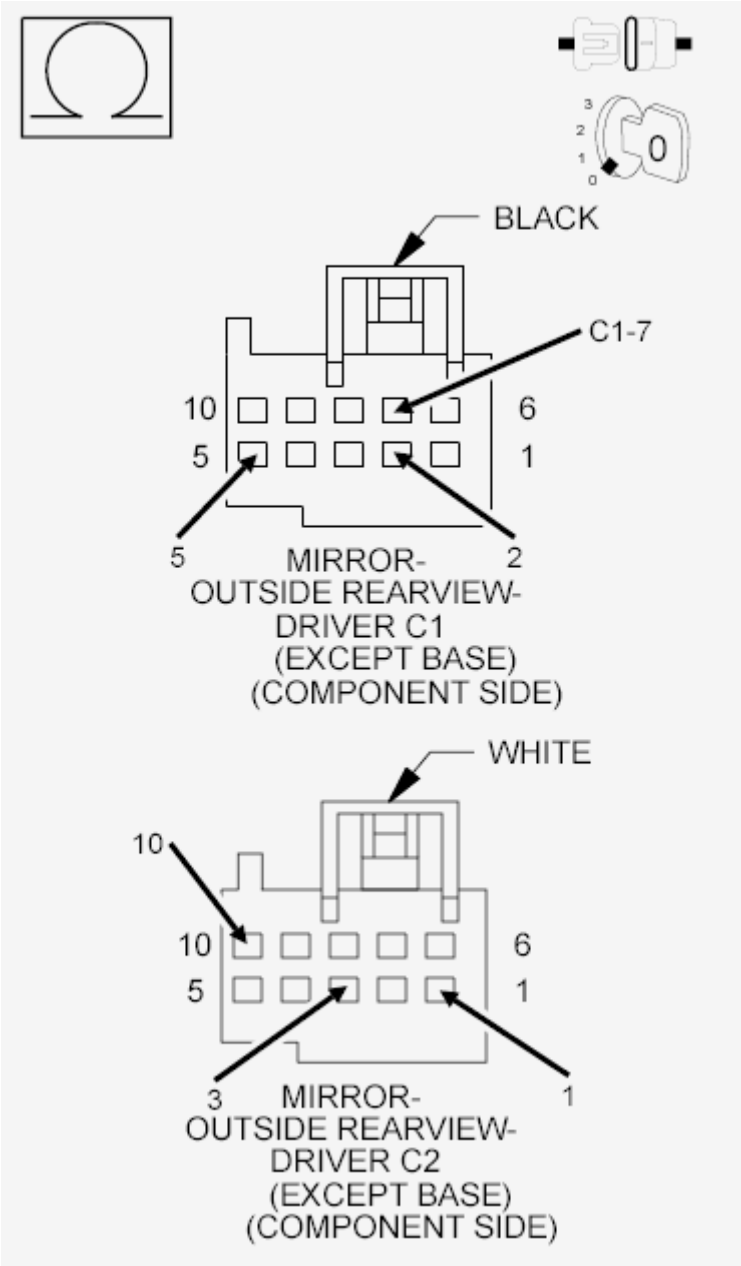

Fig. 50: Checking Driver Mirror Vertical Position Signal Circuit For Short To Any Circuit Ground Or Return Circuits
Courtesy of CHRYSLER GROUP, LLC

1. Measure the resistance between the (P67) Driver Mirror Vertical Position Signal circuit (C1-Cavity 7) and all designated circuit Ground or Return circuits in the Driver Outside Rearview Mirror C1 and C2 (Component Side) harness connectors.

   Is the resistance below 20K Ohms between the (P67) circuit and any of the designated circuit Ground or Return circuits?

   Yes

- Repair all circuits with a resistance below 20K Ohms for a short to the (P67) Driver Mirror Vertical Position Signal circuit. If the wiring harness and connectors are okay, replace the Driver Outside Rearview Mirror in accordance with the Service Information. Refer to **MIRROR, OUTSIDE REARVIEW, REMOVAL** and **MIRROR, OUTSIDE REARVIEW, GLASS, REMOVAL** .
- Perform the BODY VERIFICATION TEST. Refer to **STANDARD PROCEDURE** .

No

- Go To 11

11. **CHECK (P65) DRIVER MIRROR HORIZONTAL POSITION SIGNAL CIRCUIT FOR A SHORT TO ANY CIRCUIT GROUND OR RETURN CIRCUITS**

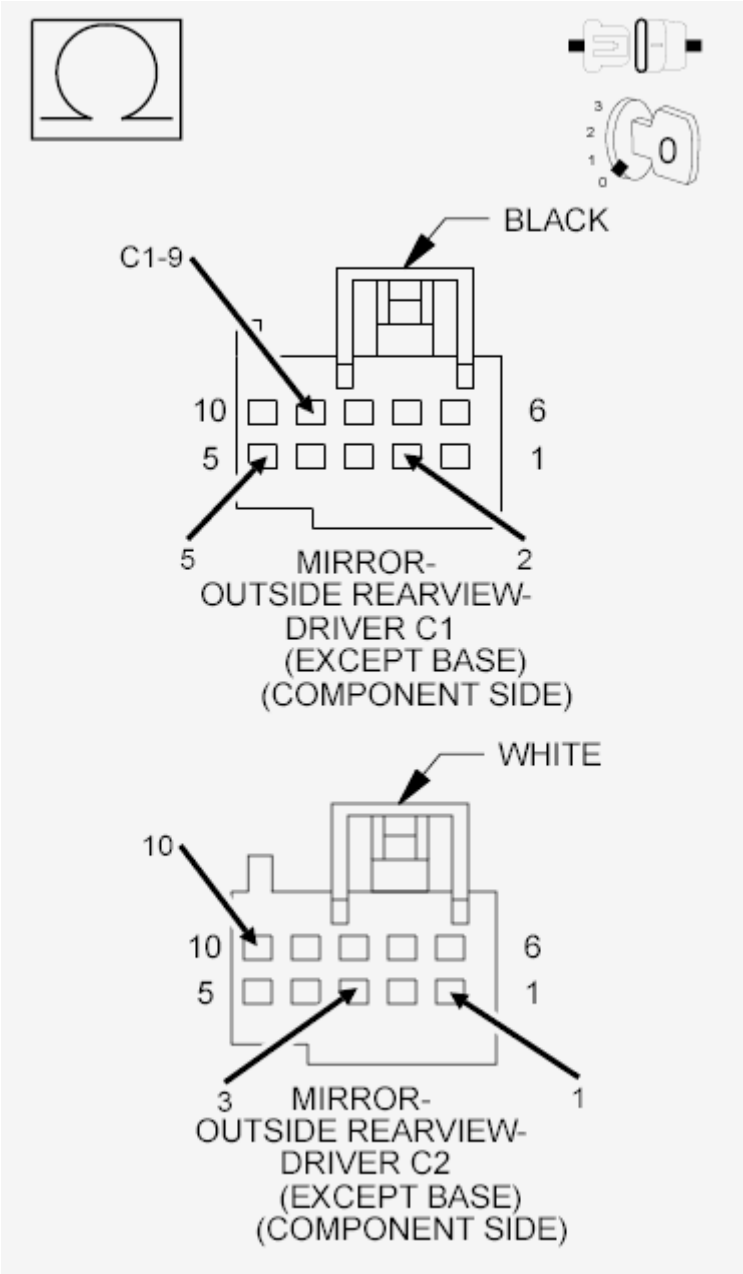

Fig. 51: Checking Driver Mirror Horizontal Position Signal Circuit For Short To Any Circuit Ground Or Return Circuits
Courtesy of CHRYSLER GROUP, LLC

1. Measure the resistance between the (P65) Driver Mirror Horizontal Position Signal circuit (C1-Cavity 9) and all designated circuit Ground or Return circuits in the Driver Outside Rearview Mirror C1 and C2 (Component Side) harness connectors.

   Is the resistance below 20K Ohms between the (P65) circuit and any of the designated circuit Ground or Return circuits?

Yes

- Repair all circuits with a resistance below 20K Ohms for a short to the (P65) Driver Mirror Horizontal Position Signal circuit. If the wiring harness and connectors are okay, replace the Driver Outside Rearview Mirror in accordance with the Service Information. Refer to **MIRROR, OUTSIDE REARVIEW, REMOVAL** and **MIRROR, OUTSIDE REARVIEW, GLASS, REMOVAL** .
- Perform the BODY VERIFICATION TEST. Refer to **STANDARD PROCEDURE** .

No

- Replace the Driver Door Module in accordance with the Service Information. Refer to **MODULE, DOOR, REMOVAL** .
- Perform the BODY VERIFICATION TEST. Refer to **STANDARD PROCEDURE** .

B210C-16-BATTERY VOLTAGE INPUT - CIRCUIT VOLTAGE BELOW THRESHOLD

For a complete wiring diagram, **refer to appropriate SYSTEM WIRING DIAGRAMS article** .

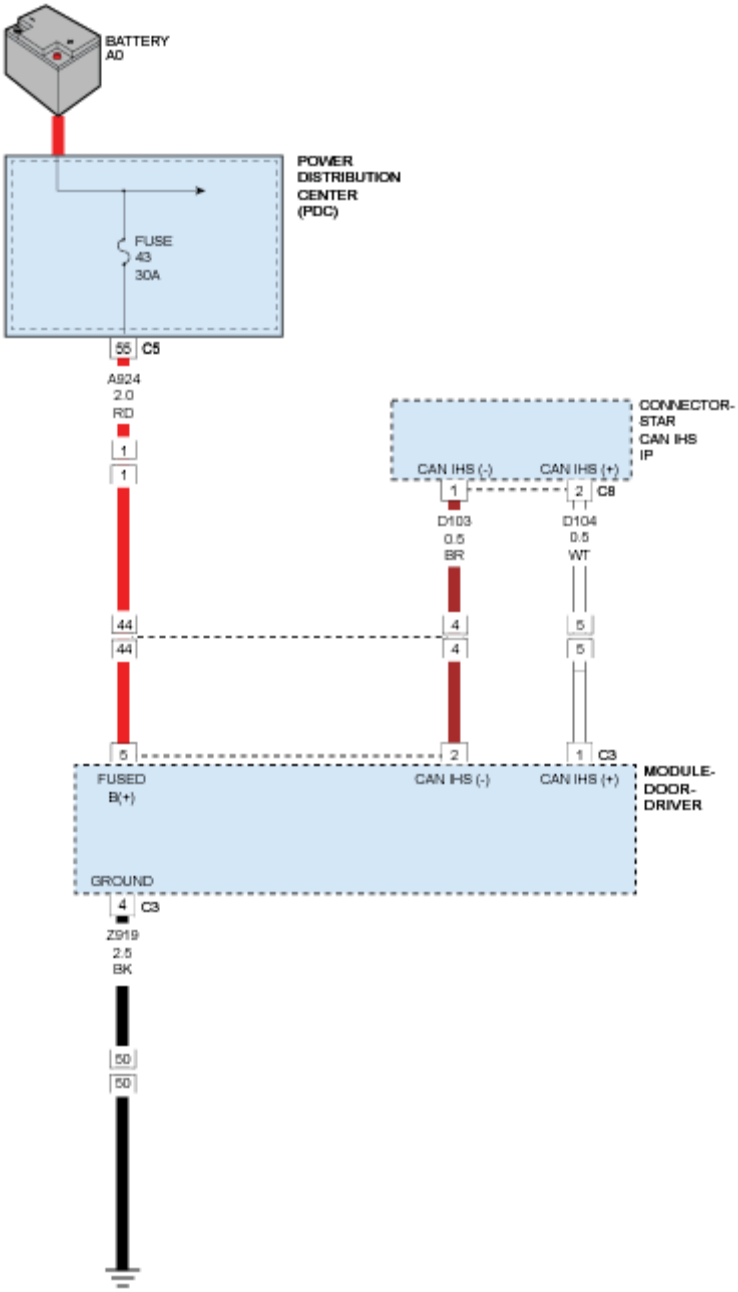

Fig. 52: DDM CAN IHS, Fused B+ & Ground Circuit Diagram
Courtesy of CHRYSLER GROUP, LLC

WHEN MONITORED

At all times.

SET CONDITION

Anytime the module senses a voltage input below 9.0 volts, this code will set.

POSSIBLE CAUSES

POSSIBLE CAUSES
LOW VOLTAGE ENGINE DTC
FUSED B (+) CIRCUIT HAS HIGH RESISTANCE
GROUND CIRCUIT HAS HIGH RESISTANCE
DOOR MODULE

DIAGNOSTIC TEST

1. **CHECK POWERTRAIN CONTROL MODULE (PCM) DTCs**
   1. With the scan tool, read the PCM DTCs.

      Are there any Charging or Battery DTCs present?

      Yes

      - Refer to the **DTC INDEX** article and perform the appropriate diagnostic procedure.

      No

      - Go To 2
2. **TEST FOR INTERMITTENT CONDITION**
   1. With the scan tool, record and erase the DTCs.
   2. Start the engine and run for two minutes.
   3. With the scan tool, read the DTCs in the Door Module.

      Does the scan tool display; B210C-16-BATTERY VOLTAGE INPUT - CIRCUIT VOLTAGE BELOW THRESHOLD?

      Yes

      - Go To 3

      No

      - Test complete, the condition or conditions that originally set this DTC are not present at this time. Using the wiring diagrams as a guide, check all related splices and connectors for signs of water intrusion, corrosion, pushed out or bent terminals and correct pin tension.
      - Perform the BODY VERIFICATION TEST. Refer to **STANDARD PROCEDURE** .
3. **(A924) FUSED B(+) OR (Z919) GROUND CIRCUITS RESISTED**

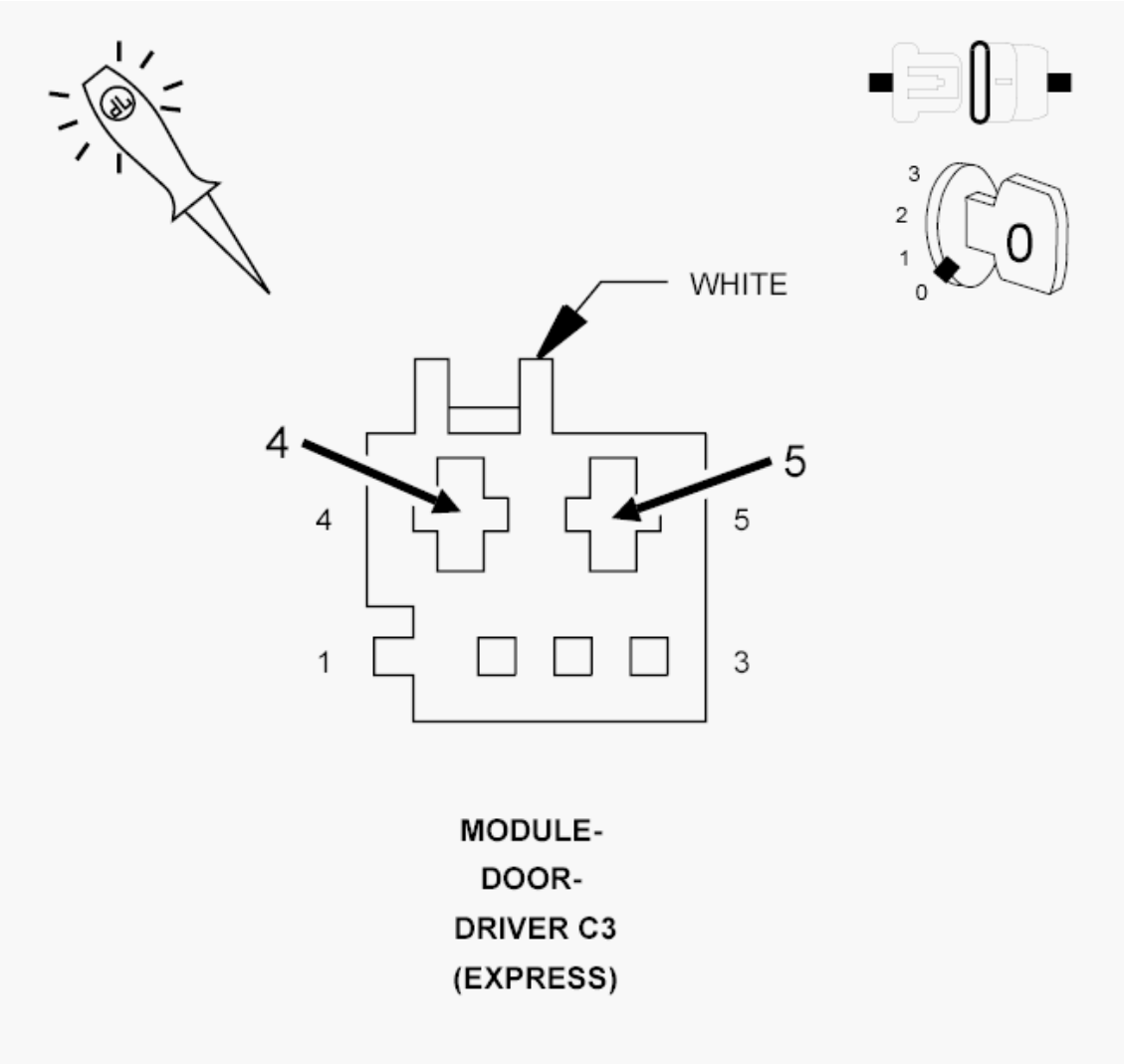

Fig. 53: Checking Fused B(+) Or Ground Circuits For Resistance
Courtesy of CHRYSLER GROUP, LLC

1. Turn the ignition off.
2. Disconnect the Driver Door Module C3 harness connector.
3. Test the circuits by connecting a 12-volt test light between the (A924) Fused B(+) circuit and the (Z919) Ground circuits in the door module C3 harness connector. The test light must illuminate brightly. Compare the brightness to that of a direct connection to the battery.

   Does the test light illuminate brightly?

   Yes

   - Replace the Driver Door Module in accordance with the Service Information. Refer to **MODULE, DOOR, REMOVAL** .
   - Perform the BODY VERIFICATION TEST. Refer to **STANDARD PROCEDURE** .

No

- Test the (A924) Fused B(+) and the Ground circuits to determine which one has the high resistance. Repair the circuit for high resistance.
- Perform the BODY VERIFICATION TEST. Refer to **STANDARD PROCEDURE** .

B210C-17-BATTERY VOLTAGE INPUT - CIRCUIT VOLTAGE ABOVE THRESHOLD

For a complete wiring diagram, **refer to appropriate SYSTEM WIRING DIAGRAMS article** .

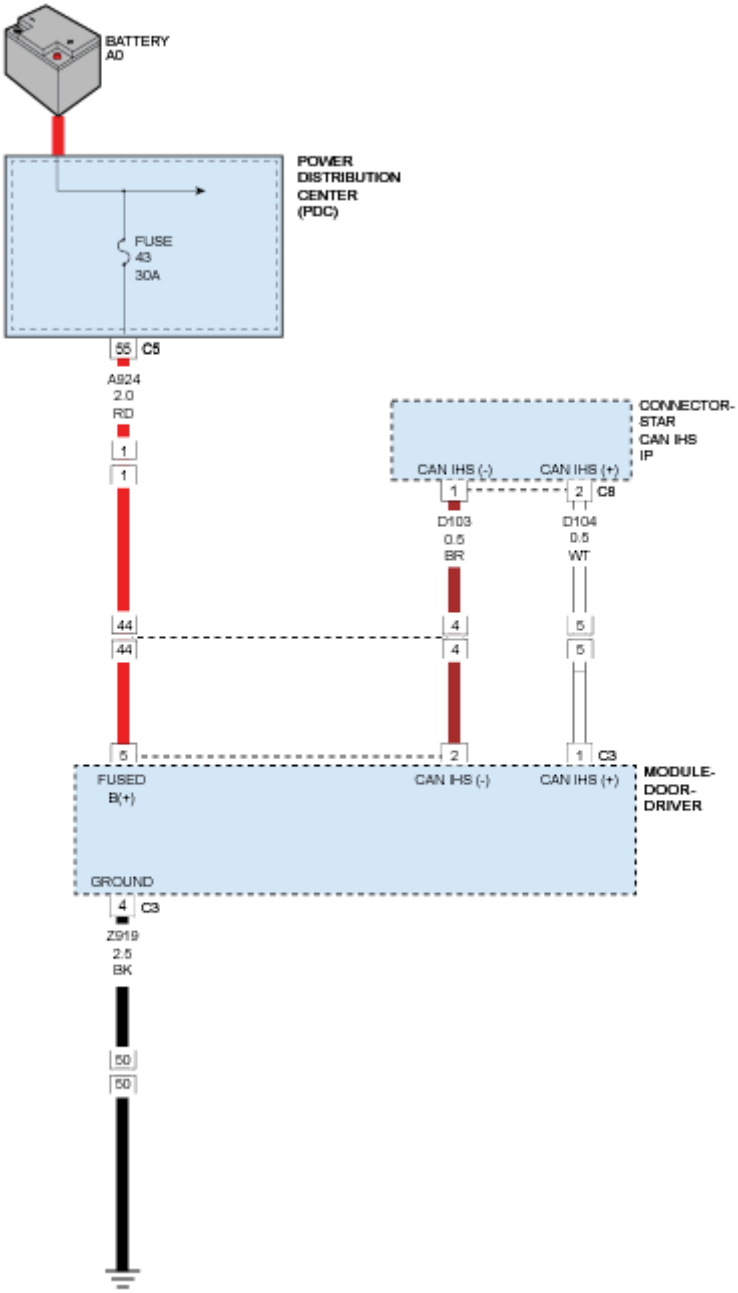

Fig. 54: DDM CAN IHS, Fused B+ & Ground Circuit Diagram
Courtesy of CHRYSLER GROUP, LLC

WHEN MONITORED

At all times.

SET CONDITION

Anytime the module senses voltage input above 15.9 volts, this code will set.

POSSIBLE CAUSES

POSSIBLE CAUSES
HIGH VOLTAGE POWERTRAIN CONTROL MODULE (PCM) DTC DOOR MODULE

DIAGNOSTIC TEST

1. **CHECK POWERTRAIN CONTROL MODULE (PCM) DTCs**
    1. With the scan tool, read the PCM DTCs.

       Are there any Charging or Battery DTCs present?

       Yes

       - Refer to the **DTC INDEX** article and perform the appropriate diagnostic procedure.

       No

       - Go To 2
2. **TEST FOR INTERMITTENT CONDITION**
    1. With the scan tool, record and erase the DTCs.
    2. Start the engine and run for two minutes.
    3. With the scan tool, read the DTCs.

       Does the scan tool display; B210C-17-BATTERY VOLTAGE INPUT - CIRCUIT VOLTAGE ABOVE THRESHOLD?

       Yes

       - Replace the Driver Door Module in accordance with the Service Information. Refer to **MODULE, DOOR, REMOVAL** .
       - Perform the BODY VERIFICATION TEST. Refer to **STANDARD PROCEDURE** .

No

- Test complete, the condition or conditions that originally set this DTC are not present at this time. Using the wiring diagrams as a guide, check all related splices and connectors for signs of water intrusion, corrosion, pushed out or bent terminals and correct pin tension.
- Perform the BODY VERIFICATION TEST. Refer to **STANDARD PROCEDURE** .

B21DD-84-SYSTEM VOLTAGE - SIGNAL BELOW ALLOWABLE RANGE

For a complete wiring diagram, **refer to appropriate SYSTEM WIRING DIAGRAMS article** .

WHEN MONITORED

At all times.

SET CONDITION

This is a Controller Area Network (CAN) message that the battery voltage was below 7.3 volts for over 10 seconds.

POSSIBLE CAUSES

POSSIBLE CAUSES
LOW SYSTEM VOLTAGE BATTERY OR CHARGING SYSTEM

DIAGNOSTIC TEST

CHECK POWERTRAIN CONTROL MODULE (PCM) DTCs

1. With the scan tool, read PCM DTCs.

   Are there any PCM Charging or Battery DTCs present?

   Yes

   - Refer to the **DTC INDEX** article and perform the appropriate diagnostic procedure.

   No

   - This code is for information only. At some time there was a low battery system voltage. Check the battery and charging system in accordance with the Service Information.

B21DD-85-SYSTEM VOLTAGE - SIGNAL VOLTAGE ABOVE ALLOWABLE RANGE

For a complete wiring diagram, **refer to appropriate SYSTEM WIRING DIAGRAMS article** .

WHEN MONITORED

At all times.

SET CONDITION

This is a Controller Area Network (CAN) message that the system voltage was above 18.4 volts for over 10 seconds.

POSSIBLE CAUSES

POSSIBLE CAUSES
HIGH BATTERY SYSTEM VOLTAGE CHARGING SYSTEM

DIAGNOSTIC TEST

CHECK ENGINE DTCs

1. With the scan tool, read the Powertrain Control Module (PCM) DTCs.

   Are there any PCM Charging or Battery DTCs present?

   Yes

   - Refer to the **DTC INDEX** article and perform the appropriate diagnostic procedure.

   No

   - This code is a CAN system message for information only. Check the charging system in accordance with the Service Information.

B224F-54-DOOR MODULE INTERNAL - MISSING CALIBRATION

For a complete wiring diagram, **refer to appropriate SYSTEM WIRING DIAGRAMS article** .

WHEN MONITORED

Whenever the window motor is operating.

SET CONDITION

When the Door Module has lost the parameters for window travel, this code will set.

POSSIBLE CAUSES

Possible Causes
MODULE NOT CALIBRATED
EXPRESS WINDOW SWITCH
DOOR MODULE

DIAGNOSTIC TEST

1. **TEST FOR INTERMITTENT CONDITION**
    1. Cycle the ignition on.
    2. With the scan tool, record and erase the DTCs.
    3. Operate the Driver Window up and down several times using the Express Up feature.
    4. Wait 30 seconds.
    5. With the scan tool, read the DTCs.

    Does the scan tool display; B224F-54-DOOR MODULE INTERNAL - MISSING CALIBRATION?

    Yes

    - Go To 2

    No

    - The conditions that caused this code to set are not present at this time. If the Express Up feature is operating properly, test complete. If the Express Up feature is not operating properly, continue to step 2. Refer to 2.
    - Perform the BODY VERIFICATION TEST. Refer to **STANDARD PROCEDURE** .
2. **WINDOW MODULE NOT CALIBRATED**
    1. Run the window to the full up position and continue to hold the switch for an additional two seconds.
    2. Run the window to the full down position and continue to hold the switch for an additional two seconds.
    3. Again run the window to the full up position and continue to hold the switch for an additional two seconds.
    4. Lower the window to the full down position then press and release the switch to the express up position.

    Did the window move to the full up position?

    Yes

    - Test complete.

No

- Go To 3

3. **EXPRESS WINDOW SWITCH**
   1. Cycle the ignition off.
   2. Move the Driver Express Switch from the idle position to the up position and then to the express up position.

   Is there two definite detent positions felt?

   Yes

   - Replace the Driver Door Module in accordance with the Service Information. Refer to **MODULE, DOOR, REMOVAL** .
   - Perform the BODY VERIFICATION TEST. Refer to **STANDARD PROCEDURE** .

   No

   - Replace the Driver Window/Door Lock Switch assembly. Refer to **SWITCH, POWER WINDOW, REMOVAL** .
   - Perform the BODY VERIFICATION TEST. Refer to **STANDARD PROCEDURE** .

B224F-96-DOOR MODULE INTERNAL - COMPONENT INTERNAL FAILURE

For a complete wiring diagram, **refer to appropriate SYSTEM WIRING DIAGRAMS article** .

WHEN MONITORED

At all times.

SET CONDITION

Whenever the module detects an EEPROM failure.

POSSIBLE CAUSES

POSSIBLE CAUSES
DOOR MODULE

DIAGNOSTIC TEST

Replace the Door Module

NOTE: Anytime this code is logged (active or stored), the module must be replaced.

Repair

- Replace the Door Module in accordance with the Service Information. Refer to **MODULE, DOOR, REMOVAL** .
- Perform the BODY VERIFICATION TEST. Refer to **STANDARD PROCEDURE** .

B25AF-2A-DOOR LOCK/UNLOCK SWITCH - STUCK

For a complete wiring diagram, **refer to appropriate SYSTEM WIRING DIAGRAMS article** .

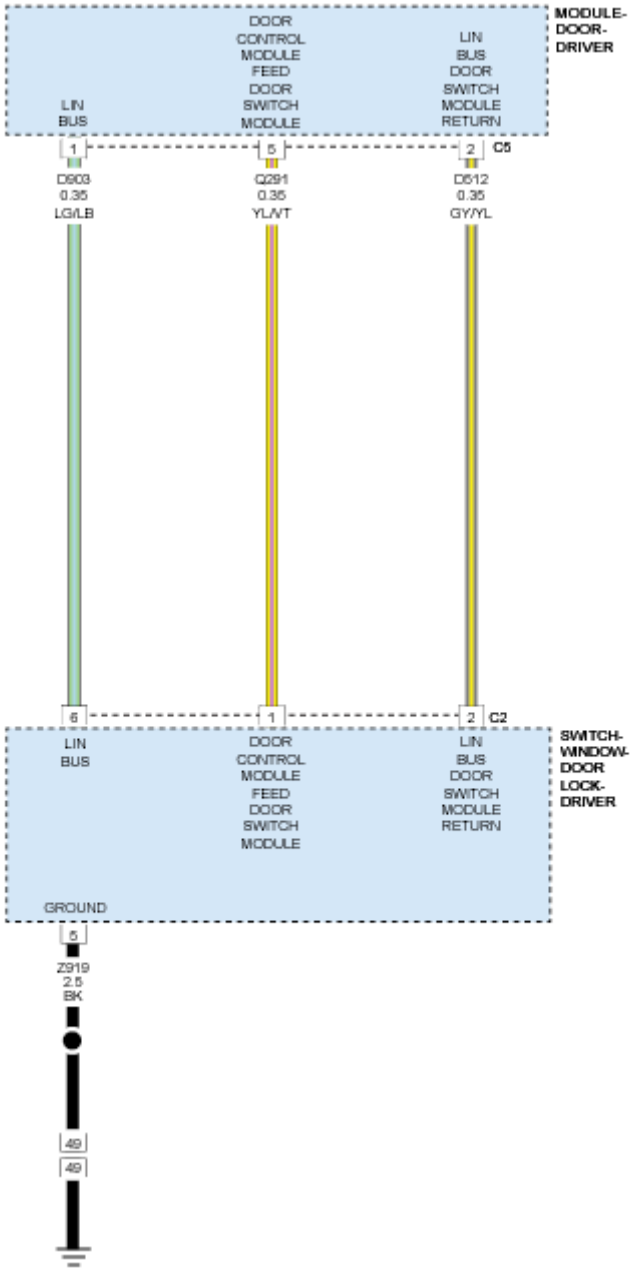

Fig. 55: Driver Door Lock/Unlock Switch LIN BUS, Power & Ground Circuit Diagram
Courtesy of CHRYSLER GROUP, LLC

WHEN MONITORED

Continuously whenever the door module is awake.

SET CONDITION

When the Driver Door Lin Bus circuit is out of range for five seconds.

POSSIBLE CAUSES

Possible Causes
(D903) DRIVER DOOR LIN BUS CIRCUIT SHORTED TO GROUND
(D903) DRIVER DOOR LIN BUS CIRCUIT SHORTED TO THE (D512) DRIVER DOOR LIN BUS RETURN CIRCUIT
(D903) DRIVER DOOR LIN BUS CIRCUIT OPEN
(D512) DRIVER DOOR LIN BUS RETURN CIRCUIT OPEN
DRIVER WINDOW/DOOR LOCK SWITCH
DRIVER DOOR MODULE

DIAGNOSTIC TEST

1. **TEST FOR INTERMITTENT CONDITION**
    1. With the scan tool, record and erase the DTCs.
    2. Operate the Driver Door Lock Switch several times.
    3. Cycle the ignition on and wait 30 seconds.
    4. With the scan tool, read the active DTCs.

    Does the scan tool display; B25AF-2A-DOOR LOCK/UNLOCK SWITCH - STUCK?

    Yes

    - Go To 2

    No

    - Test complete, the condition or conditions that originally set this DTC are not present at this time. Using the wiring diagrams as a guide, check all related splices and connectors for signs of water intrusion, corrosion, pushed out or bent terminals and correct pin tension.
    - Perform the BODY VERIFICATION TEST. Refer to **STANDARD PROCEDURE** .
2. **DOOR LOCK SWITCH**
    1. Disconnect the Driver Window/Door Lock Switch harness connector.

2. Cycle the ignition on.
3. Measure the voltage between the (D903) Driver Door Lin Bus circuit and the (D512) Driver Door Lin Bus Return circuit.

   Is the voltage between 6.5 and 12.5 volts?

   Yes

   - Replace the Driver Window/Door Lock Switch. Refer to **SWITCH, POWER WINDOW, REMOVAL** .
   - Perform the BODY VERIFICATION TEST. Refer to **STANDARD PROCEDURE** .

   No

   - Go To 3

3. **(D512) DRIVER DOOR LIN BUS RETURN CIRCUIT OPEN**
   1. Using a 12-volt test light connected to 12-volts, check the (D512) Driver Door Lin Bus Return circuit.

      Does the test light illuminate brightly?

      Yes

      - Go To 4

      No

      - Repair the (D512) Driver Door Lin Bus Return circuit for an open.
      - Perform the BODY VERIFICATION TEST. Refer to **STANDARD PROCEDURE** .

4. **(D903) DRIVER DOOR LIN BUS CIRCUIT OPEN**
   1. Cycle the ignition off.
   2. Disconnect the Driver Door Module C5 harness connector.
   3. Measure the resistance of the (D903) Driver Door Lin Bus circuit between the Door Module C5 harness connector and the Window/Door Lock Switch connector.

      Is the resistance below 2.0 Ohms?

      Yes

      - Go To 5

      No

      - Repair the (D903) Driver Door Lin Bus circuit for an open.

- Perform the BODY VERIFICATION TEST. Refer to **STANDARD PROCEDURE** .

5. **(D903) DRIVER DOOR LIN BUS CIRCUIT SHORTED TO THE (D512) DRIVER DOOR LIN BUS RETURN CIRCUIT**
   1. Measure the resistance between the (D903) Driver Door Lin Bus circuit and the (D512) Driver Door Lin Bus Return circuit in the Window/Door Lock Switch connector.

      Is the resistance below 10K Ohms?

      Yes

      - Repair the (D903) Driver Door Lin Bus circuit for a short to the (D512) Driver Door Lin Bus Return circuit.
      - Perform the BODY VERIFICATION TEST. Refer to **STANDARD PROCEDURE** .

      No

      - Replace the Driver Door Module in accordance with the Service Information. Refer to **MODULE, DOOR, REMOVAL** .
      - Perform the BODY VERIFICATION TEST. Refer to **STANDARD PROCEDURE** .

B25B0-31-WINDOW POSITION SENSOR - NO SIGNAL

For a complete wiring diagram, **refer to appropriate SYSTEM WIRING DIAGRAMS article** .

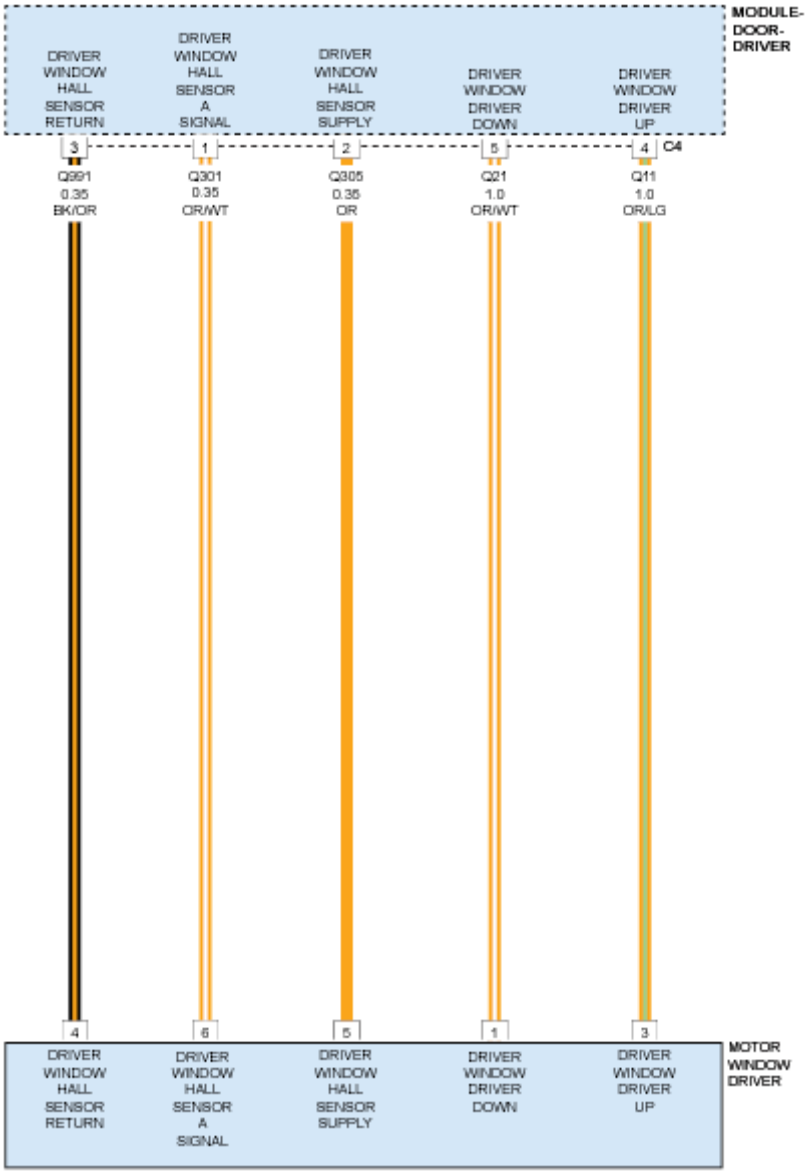

Fig. 56: Driver Window Motor Circuit Diagram
Courtesy of CHRYSLER GROUP, LLC

THEORY OF OPERATION

The window motor contains a hall effect sensor to detect the window position. A hall effect sensor is a transducer that varies its output voltage in response to changes in magnetic field. If the motor loses its counts, it may perform erratically or in very short movements.

WHEN MONITORED

Whenever the module is awake.

SET CONDITION

When one of the window motor hall sensors does not generate a signal during a window movement.

POSSIBLE CAUSES

Possible Causes
WINDOW HALL SENSOR SUPPLY CIRCUIT SHORTED TO VOLTAGE
WINDOW HALL SENSOR A SIGNAL CIRCUIT SHORTED TO GROUND
WINDOW HALL SENSOR RETURN CIRCUIT OPEN
WINDOW HALL SENSOR A SIGNAL CIRCUIT SHORTED TO THE WINDOW HALL SENSOR RETURN CIRCUIT
WINDOW HALL SENSOR A SIGNAL CIRCUIT OPEN
WINDOW HALL SENSOR SUPPLY CIRCUIT OPEN
WINDOW HALL SENSOR RETURN CIRCUIT OPEN
WINDOW MOTOR

DIAGNOSTIC TEST

1. **TEST FOR INTERMITTENT CONDITION**
    1. Cycle the ignition on.
    2. With the scan tool, record and erase the DTCs.
    3. Operate the Driver Window switch up and down several times.
    4. Wait 30 seconds.
    5. With the scan tool, read the active DTCs.

    Does the scan tool display: B25B0-31-WINDOW POSITION SENSOR - NO SIGNAL?

    Yes

    - Go To 3

    No

    - Test complete, the condition or conditions that originally set this DTC are not present at this time. Using the wiring diagrams as a guide, check all related splices and connectors for signs of water intrusion, corrosion, pushed out or bent terminals, and correct pin tension.
    - Perform the BODY VERIFICATION TEST. Refer to **STANDARD PROCEDURE** .
2. **(Q305) DRIVER WINDOW HALL SENSOR SUPPLY CIRCUIT SHORTED TO VOLTAGE**

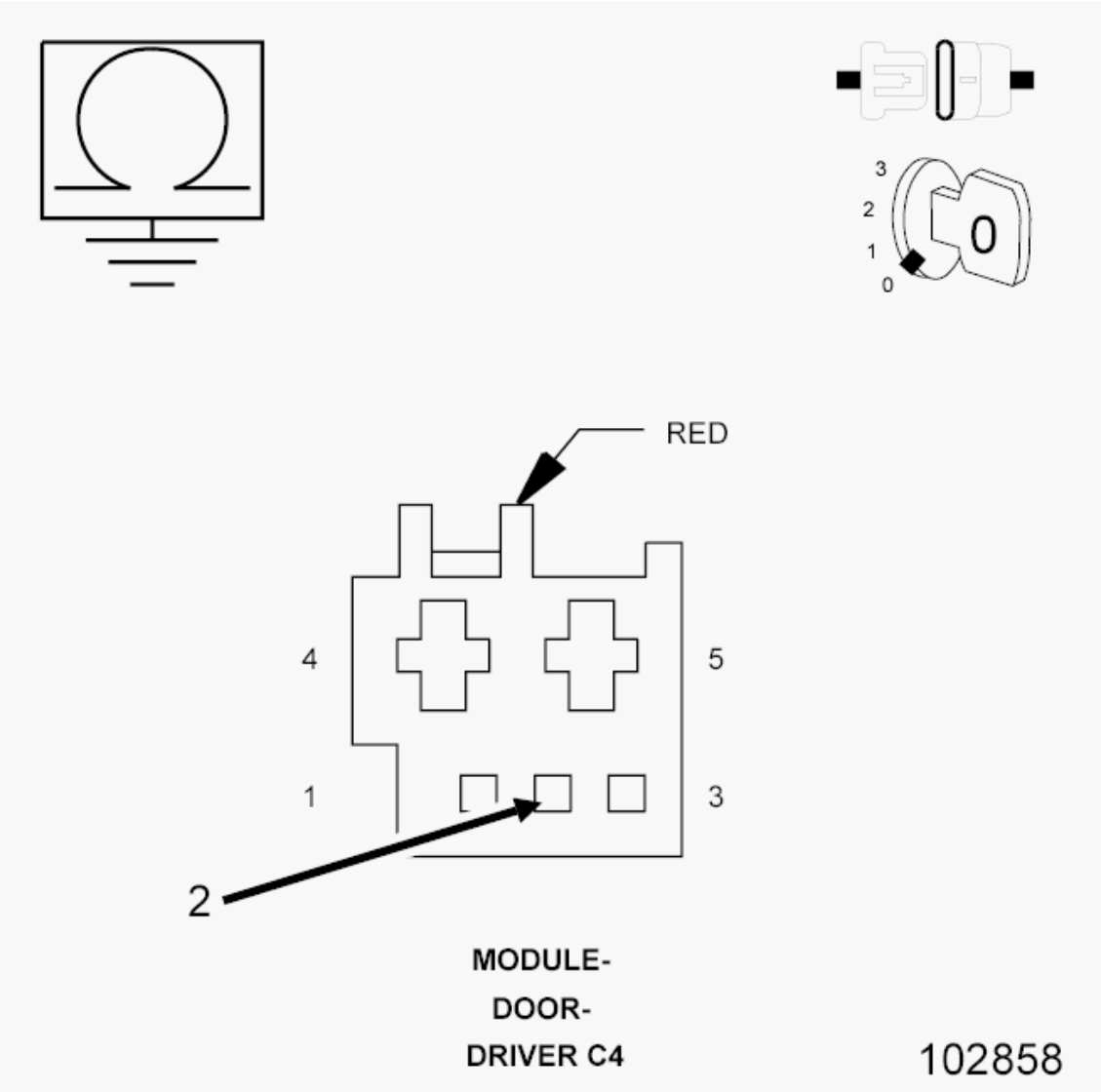

Fig. 57: Checking Driver Window Hall Sensor Supply Circuit For Short
Courtesy of CHRYSLER GROUP, LLC

1. Cycle the ignition off.
2. Disconnect the Driver Door Module C4 harness connector.
3. Cycle the ignition on.
4. Measure the voltage between ground and the (Q305) Driver Window Hall Sensor Supply circuit.

   Is there any voltage present?

   Yes

   - Repair the short to voltage in the (Q305) Driver Window Hall Sensor Supply circuit.
   - Perform the BODY VERIFICATION TEST. Refer to **STANDARD PROCEDURE** .

No

- Go To 3

3. **(Q301) DRIVER WINDOW HALL SENSOR A SIGNAL SHORTED TO GROUND**
   1. Cycle the ignition off.
   2. Disconnect the Driver Window Motor harness connector.
   3. Disconnect the Driver Door Module C4 harness connector.
   4. Measure the resistance between ground and the (Q301) Driver Window Hall Sensor A Signal circuit in the Driver Window Motor harness connector.

   Is the resistance below 10K Ohms?

   Yes

   - Repair the short to ground in the Driver Window Hall Sensor A signal circuit.
   - Perform the BODY VERIFICATION TEST. Refer to **STANDARD PROCEDURE** .

   No

   - Go To 5

4. **(Q305) DRIVER WINDOW HALL SENSOR SUPPLY CIRCUIT OPEN**
   1. Measure the resistance of the (Q305) Driver Window Hall Sensor Supply circuit between the Driver Door Module C4 harness connector and the Driver Window Motor harness connector.

   Is the resistance above 2.0 Ohms?

   Yes

   - Repair the open in the (Q305) Driver Window Hall Sensor Supply circuit.
   - Perform the BODY VERIFICATION TEST. Refer to **STANDARD PROCEDURE** .

   No

   - Go To 5

5. **(Q991) DRIVER WINDOW HALL SENSOR RETURN CIRCUIT OPEN**
   1. Measure the resistance of the (Q991) Driver Window Hall Sensor Return circuit between the Driver Door Module C4 harness connector and the Driver Window Motor harness connector.

   Is the resistance above 2.0 Ohms?

   Yes

   - Repair the open in the (Q991) Driver Window Hall Sensor Return circuit.

- Perform the BODY VERIFICATION TEST. Refer to **STANDARD PROCEDURE** .

No

- Go To 6

6. **(Q301) DRIVER WINDOW HALL SENSOR A SIGNAL CIRCUIT OPEN**
   1. Measure the resistance of the (Q301) Driver Window Hall Sensor A Signal circuit between the Driver Door Module C4 harness connector and the Driver Window Motor harness connector.

      Is the resistance above 2.0 Ohms?

      Yes

      - Repair the open in the (Q301) Driver Window Hall Sensor A Signal circuit.
      - Perform the BODY VERIFICATION TEST. Refer to **STANDARD PROCEDURE** .

      No

      - Go To 7

7. **(Q301) DRIVER WINDOW HALL SENSOR A SIGNAL CIRCUIT SHORTED TO THE (Q991) DRIVER WINDOW HALL SENSOR RETURN CIRCUIT**
   1. Measure the resistance between the (Q301) Driver Window Hall Sensor A Signal circuit and the (Q991) Driver Window Hall Sensor Return circuit in the Driver Window Motor harness connector.

      Is the resistance below 10K Ohms?

      Yes

      - Repair the (Q301) Driver Window Hall Sensor A Signal circuit for a short to the (Q991) Driver Window Hall Sensor Return circuit.
      - Perform the BODY VERIFICATION TEST. Refer to **STANDARD PROCEDURE** .

      No

      - Replace the Window Motor in accordance with the Service Information.
      - Perform the BODY VERIFICATION TEST. Refer to **STANDARD PROCEDURE** .

B25B1-11-WINDOW POSITION SENSOR POWER SUPPLY - CIRCUIT SHORT TO GROUND

For a complete wiring diagram, **refer to appropriate SYSTEM WIRING DIAGRAMS article** .

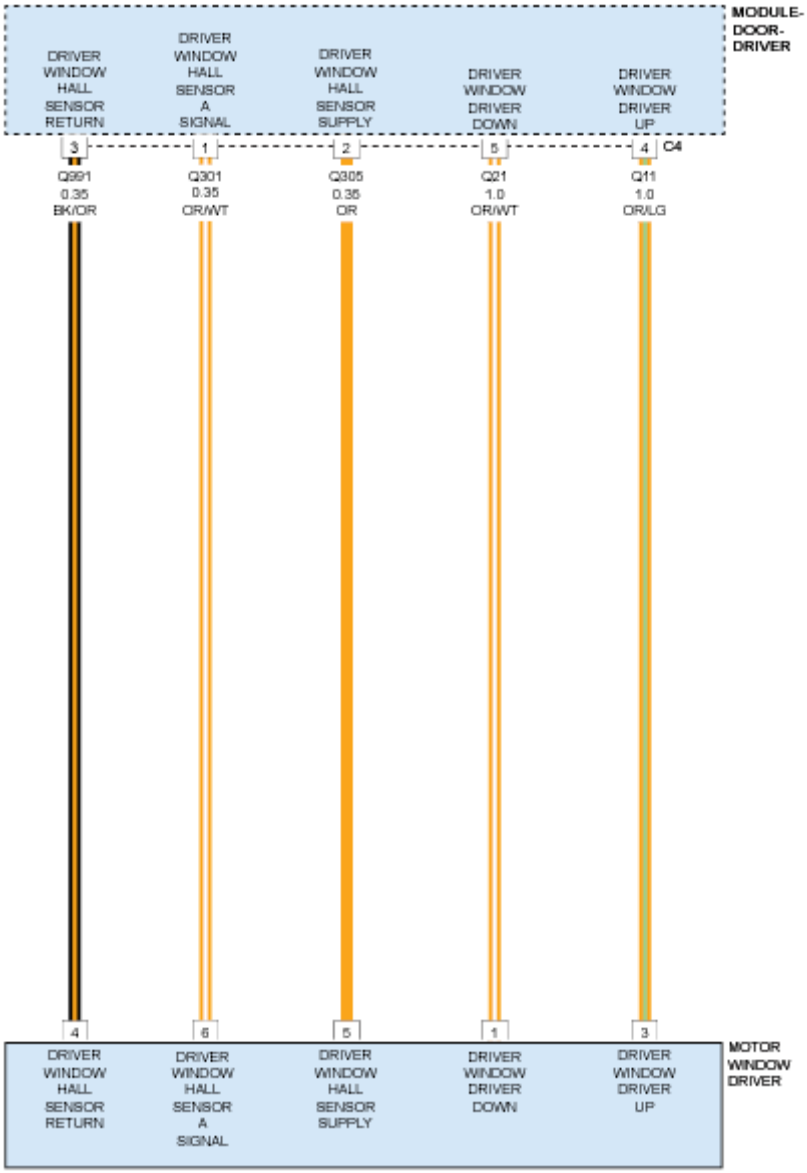

Fig. 58: Driver Window Motor Circuit Diagram
Courtesy of CHRYSLER GROUP, LLC

THEORY OF OPERATION

The window motor contains a hall effect sensor to detect the window position. A hall effect sensor is a transducer that varies its output voltage in response to changes in magnetic field. If the motor loses its counts, it may perform erratically or in very short movements.

WHEN MONITORED

Whenever the module is awake.

SET CONDITION

When the Window Hall Sensor Supply circuit falls below 0.8 of a volt for over 480 ms., this code will set.

POSSIBLE CAUSES

Possible Causes
WINDOW HALL SENSOR SUPPLY CIRCUIT SHORTED TO GROUND
WINDOW MOTOR
DOOR MODULE

DIAGNOSTIC TEST

1. **TEST FOR INTERMITTENT CONDITION**
    1. Cycle the ignition on.
    2. With the scan tool, record and erase the DTCs.
    3. Operate the Driver Window up and down several times.
    4. Wait 30 seconds.
    5. With the scan tool, read the DTCs.

    Does the scan tool display; B25B1-11-WINDOW POSITION SENSOR POWER SUPPLY - CIRCUIT SHORT TO GROUND?

    Yes

    - Go To 2

    No

    - Test complete, the condition or conditions that originally set this DTC are not present at this time. Using the wiring diagrams as a guide, check all related splices and connectors for signs of water intrusion, corrosion, pushed out or bent terminals and correct pin tension.
    - Perform the BODY VERIFICATION TEST. Refer to **STANDARD PROCEDURE** .
2. **WINDOW MOTOR SHORTED**
    1. With the scan tool, erase the DTCs.
    2. Cycle the ignition off.
    3. Disconnect the Driver Window Motor harness connector.
    4. Cycle the ignition on.
    5. Operate the driver window switch up and down several times.
    6. With the scan tool, read the DTCs.

    Does the scan tool display; B25B1-11-WINDOW POSITION SENSOR POWER SUPPLY - CIRCUIT SHORT TO GROUND?

Yes

- Go To 3

No

- Replace the Window Motor in accordance with the Service Information.
- Perform the BODY VERIFICATION TEST. Refer to **STANDARD PROCEDURE** .

3. **(Q305) DRIVER WINDOW HALL SENSOR SUPPLY CIRCUIT SHORTED TO GROUND**

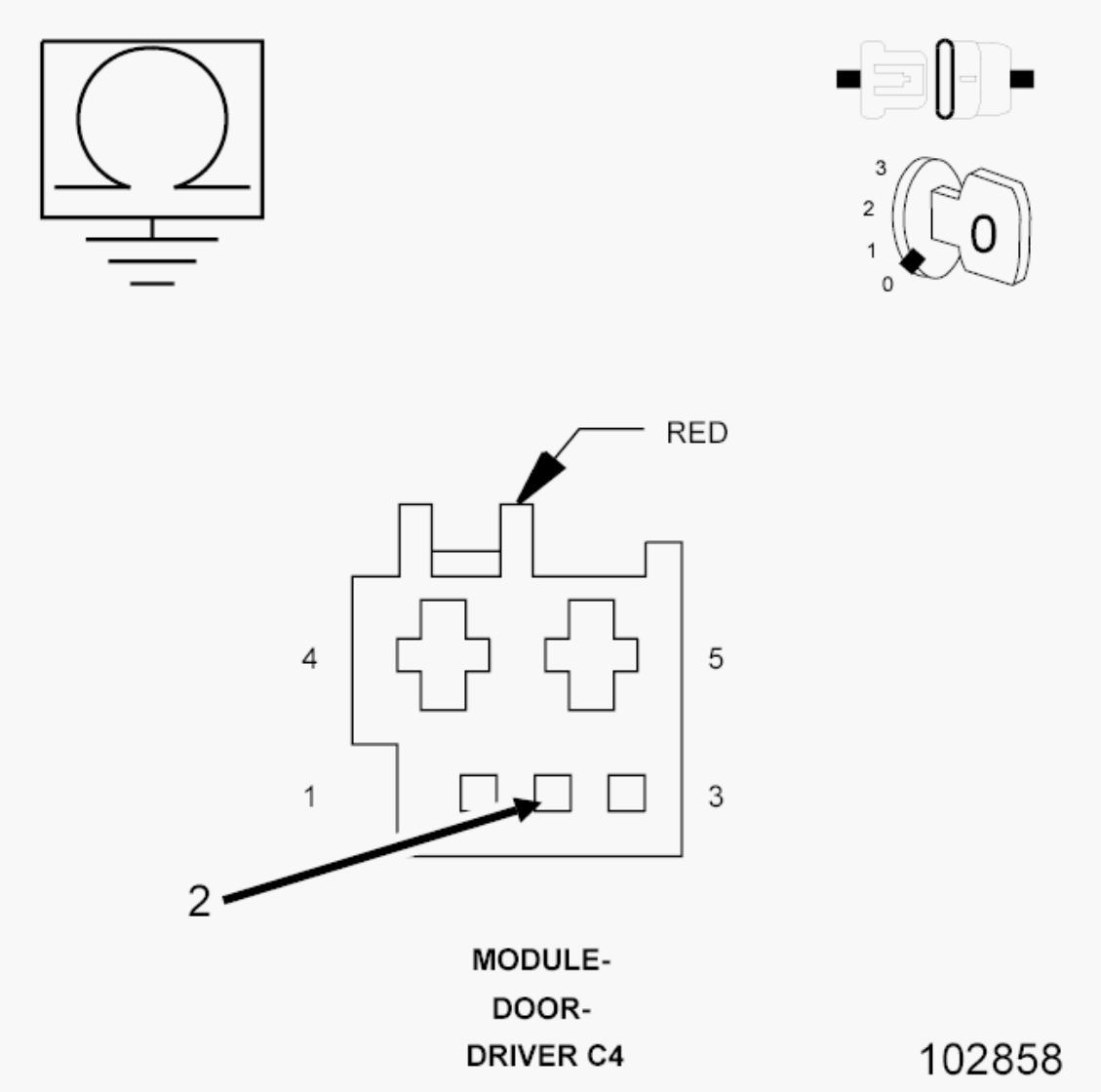

Fig. 59: Checking Driver Window Hall Sensor Supply Circuit For Short
Courtesy of CHRYSLER GROUP, LLC

1. Cycle the ignition off.
2. Disconnect the Driver Door Module C4 harness connector.

3. Measure the resistance between Ground and the (Q305) Driver Window Hall Sensor Supply circuit.

   Is the resistance below 10K Ohms?

   Yes

   - Repair the (Q305) Driver Window Hall Sensor Supply circuit for a short to ground.
   - Perform the BODY VERIFICATION TEST. Refer to **STANDARD PROCEDURE** .

   No

   - Replace the Driver Door Module in accordance with the Service Information. Refer to **MODULE, DOOR, REMOVAL** .
   - Perform the BODY VERIFICATION TEST. Refer to **STANDARD PROCEDURE** .

B285F-11-BLIND SPOT WARNING LIGHT CONTROL - CIRCUIT SHORT TO GROUND

For a complete wiring diagram, **refer to appropriate SYSTEM WIRING DIAGRAMS article** .

WHEN MONITORED

When the Driver Door Module (DDM) turns the Blind Spot Indicator on.

SET CONDITION

When the Driver Door Module (DDM) detects a short to ground on the Blind Spot Indicator circuit, this code will set.

POSSIBLE CAUSES

Possible Causes
MIRROR ASSEMBLY
DOOR MODULE

DIAGNOSTIC TEST

1. **TEST FOR INTERMITTENT CONDITION**
   1. Turn the ignition on.
   2. With the scan tool, erase all DTCs.
   3. Cycle the ignition from on to off three times.
   4. Turn the ignition on.
   5. Wait one minute.
   6. With the scan tool, read the active DTCs.

Does the scan tool display: B285F-11-BLIND SPOT WARNING LIGHT CONTROL - CIRCUIT SHORT TO GROUND as Active?

Yes

- Go To 2

No

- Test complete, the condition or conditions that originally set this DTC are not present at this time. Using the wiring diagrams as a guide, check all relate splices and connectors for signs of water intrusion, corrosion, pushed out or bent terminals and correct pin tension. Repair as necessary.
- Perform the BODY VERIFICATION TEST. Refer to **STANDARD PROCEDURE** .

2. **INSPECT MIRROR CONNECTIONS**
   1. Turn the ignition off.
   2. Disconnect the Driver Door Module C1 harness connector.
   3. Inspect the wiring and connectors between the mirror and the Drivers Door Module.

   Were there any problems found?

   Yes

   - Repair as necessary.
   - Perform the BODY VERIFICATION TEST. Refer to **STANDARD PROCEDURE** .

   No

   - Go To 3

3. **MIRROR ASSEMBLY**
   1. Turn the ignition on
   2. With the scan tool, erase the DTCs.
   3. Cycle the ignition from on to off three times.
   4. Turn the ignition on.
   5. Make sure the DDM C1 harness connector is still disconnected.
   6. Wait one minute.

   NOTE: Look for a change in DTCs.

   7. With the scan tool, read the active DTCs.

   Does the scan tool display: B285F-15-BLIND SPOT WARNING LIGHT CONTROL - CIRCUIT SHORT TO BATTERY OR OPEN as Active?

Yes

- Replace the Driver Mirror Assembly in accordance with the Service Information. Refer to **MIRROR, OUTSIDE REARVIEW, REMOVAL** and **MIRROR, OUTSIDE REARVIEW, GLASS, REMOVAL** .
- Perform the BODY VERIFICATION TEST. Refer to **STANDARD PROCEDURE** .

No

- Replace the Driver Door Module in accordance with the Service Information. Refer to **MODULE, BODY CONTROL, REMOVAL** .
- Perform the BODY VERIFICATION TEST. Refer to **STANDARD PROCEDURE** .

B285F-15-BLIND SPOT WARNING LIGHT CONTROL - CIRCUIT SHORT TO BATTERY OR OPEN

For a complete wiring diagram, **refer to appropriate SYSTEM WIRING DIAGRAMS article** .

WHEN MONITORED

Continuously.

SET CONDITION

When the Blind Spot Indicator circuit senses high voltage or an open circuit for over 55 ms., this code will set.

POSSIBLE CAUSES

Possible Causes
MIRROR ASSEMBLY
DOOR MODULE

DIAGNOSTIC TEST

1. **TEST FOR INTERMITTENT CONDITION**
    1. Cycle the ignition on.
    2. With the scan tool, erase all DTCs.
    3. Cycle the ignition from on to off three times.
    4. Cycle the ignition on.
    5. Wait one minute.
    6. With the scan tool, read the DTCs.

    Does the scan tool display active: B285F-15-BLIND SPOT WARNING LIGHT CONTROL - CIRCUIT SHORT TO BATTERY OR OPEN?

Yes

- Go To 2

No

- Test complete, the condition or conditions that originally set this DTC are not present at this time. Using the wiring diagrams as a guide, check all related splices and connectors for signs of water intrusion, corrosion, pushed out or bent terminals and correct pin tension. Repair as necessary.
- Perform the BODY VERIFICATION TEST. Refer to **STANDARD PROCEDURE** .

2. **INSPECT MIRROR CONNECTIONS**
   1. Cycle the ignition off.
   2. Disconnect the Drivers Door Module C1 harness connector.
   3. Inspect the wiring and connectors between the mirror and the Drivers Door Module.

   Were there any problems found?

   Yes

   - Repair as necessary.
   - Perform the BODY VERIFICATION TEST. Refer to **STANDARD PROCEDURE** .

   No

   - Go To 3

3. **MIRROR ASSEMBLY**
   1. Measure the resistance between the (P552) Driver Blind Spot/Approach Return circuit and the (P711) Driver Blind Spot Signal Driver circuit in the DDM C1 harness connector.

   Is the resistance between 550.0 and 650.0 Ohms?

   Yes

   - Replace the Driver Door Module in accordance with the Service Information. Refer to **MODULE, DOOR, REMOVAL** .
   - Perform the BODY VERIFICATION TEST. Refer to **STANDARD PROCEDURE** .

   No

   - Replace the Driver Mirror Assembly in accordance with the Service Information. Refer to **MIRROR, OUTSIDE REARVIEW, REMOVAL** and **MIRROR, OUTSIDE REARVIEW, GLASS, REMOVAL** .
   - Perform the BODY VERIFICATION TEST. Refer to **STANDARD PROCEDURE** .

B2860-11-DOOR AMBIENT LIGHT CONTROL - CIRCUIT SHORT TO GROUND

For a complete wiring diagram, **refer to appropriate SYSTEM WIRING DIAGRAMS article** .

THEORY OF OPERATION

An ambient lamp can be a: map pocket, door handle, halo ring, cup holder, etc. It is a LED with a built in circuit board.

WHEN MONITORED

Whenever the ambient lamp is commanded to be on.

SET CONDITION

When the Door Ambient Lamp Driver circuit falls below 3.0 volts for over 2000 ms. and the above conditions are met, this code will set.

POSSIBLE CAUSES

Possible Causes
DOOR AMBIENT LAMP DRIVER CIRCUIT SHORTED TO GROUND
DOOR AMBIENT LAMP DRIVER CIRCUIT SHORTED TO THE DOOR LIGHTING RETURN CIRCUIT
MAP POCKET LAMP
DOOR MODULE

DIAGNOSTIC TEST

1. **TEST FOR INTERMITTENT CONDITION**

NOTE: Be sure the thumbwheel on the Dimmer Module is turned fully on during this test.

1. Turn the ignition on.
2. With the scan tool, record and erase the DTCs.
3. Cycle the ignition on to off three times and leave in the On position.
4. Turn the park lamps on.
5. Wait one minute.
6. With the scan tool, read the active DTCs.

Does the scan tool display: B2860-11-DOOR AMBIENT LIGHT CONTROL - CIRCUIT SHORT TO GROUND as active?

Yes

- Go To 2

No

- Test complete, the condition or conditions that originally set this DTC are not present at this time. Using the wiring diagrams as a guide, check all related splices and connectors for signs of water intrusion, corrosion, pushed out or bent terminals and correct pin tension.
- Perform the BODY VERIFICATION TEST. Refer to **STANDARD PROCEDURE** .

2. **DRIVER DOOR MAP POCKET LAMP SHORTED**

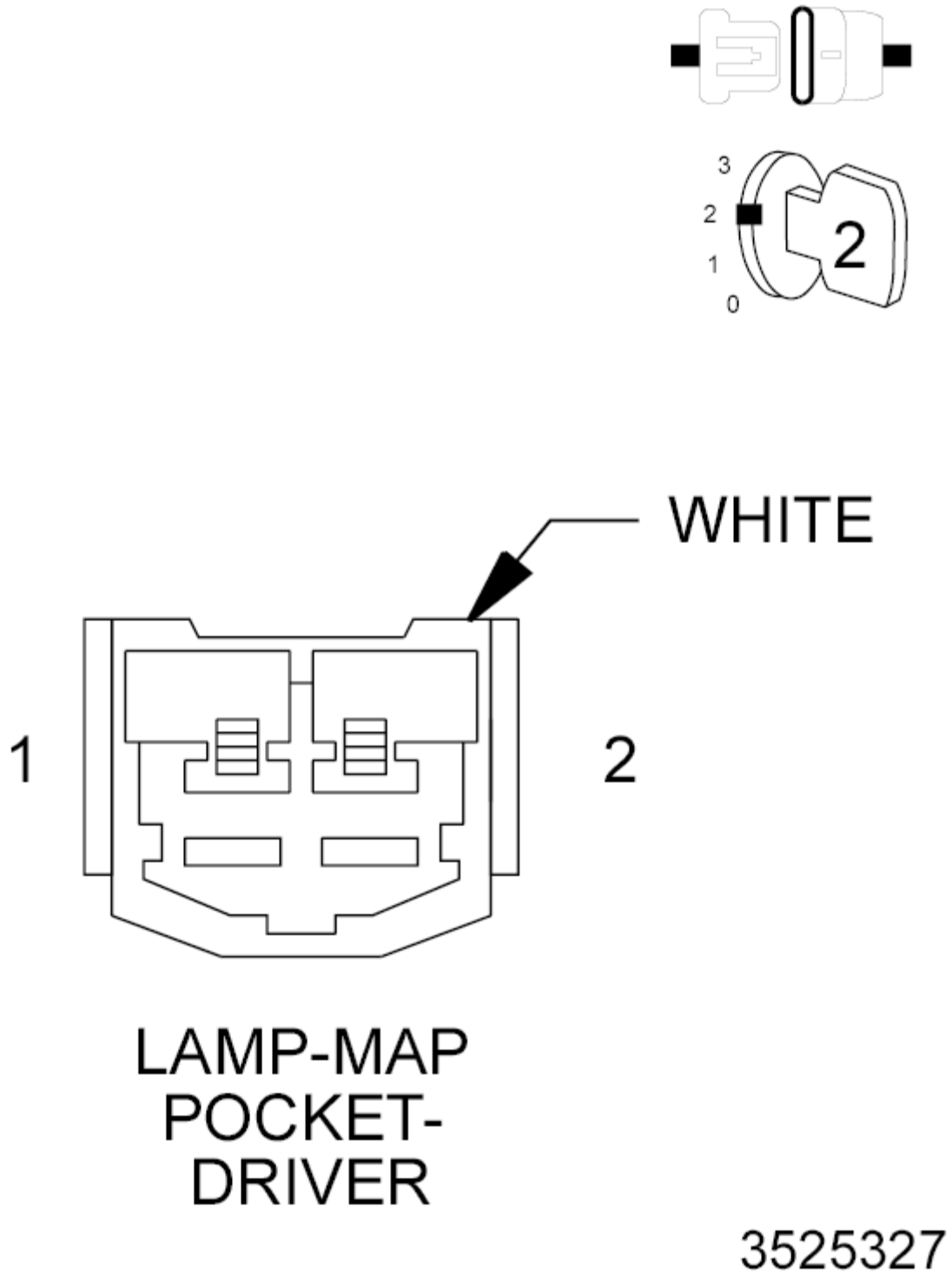

Fig. 60: Driver Door Map Pocket Lamp Connector End View
Courtesy of CHRYSLER GROUP, LLC

1. With the scan tool, erase the DTCs.
2. Turn the ignition off.

3. Disconnect the Driver Door Map Pocket Lamp connector.
4. Be sure the park lamps are still on.
5. Turn the ignition on.
6. Wait one minute.
7. With the scan tool, read the active DTCs.

   Does the scan tool display: B2860-11-DRIVER DOOR AMBIENT LAMP - CONTROL CIRCUIT SHORT TO GROUND as Active?

   Yes

   - Go To 3

   No

   - Replace the Driver Door Map Pocket Lamp Assembly.
   - Perform the BODY VERIFICATION TEST. Refer to **STANDARD PROCEDURE** .

3. **(M33) DRIVER DOOR AMBIENT LAMP DRIVER CIRCUIT SHORTED TO GROUND**

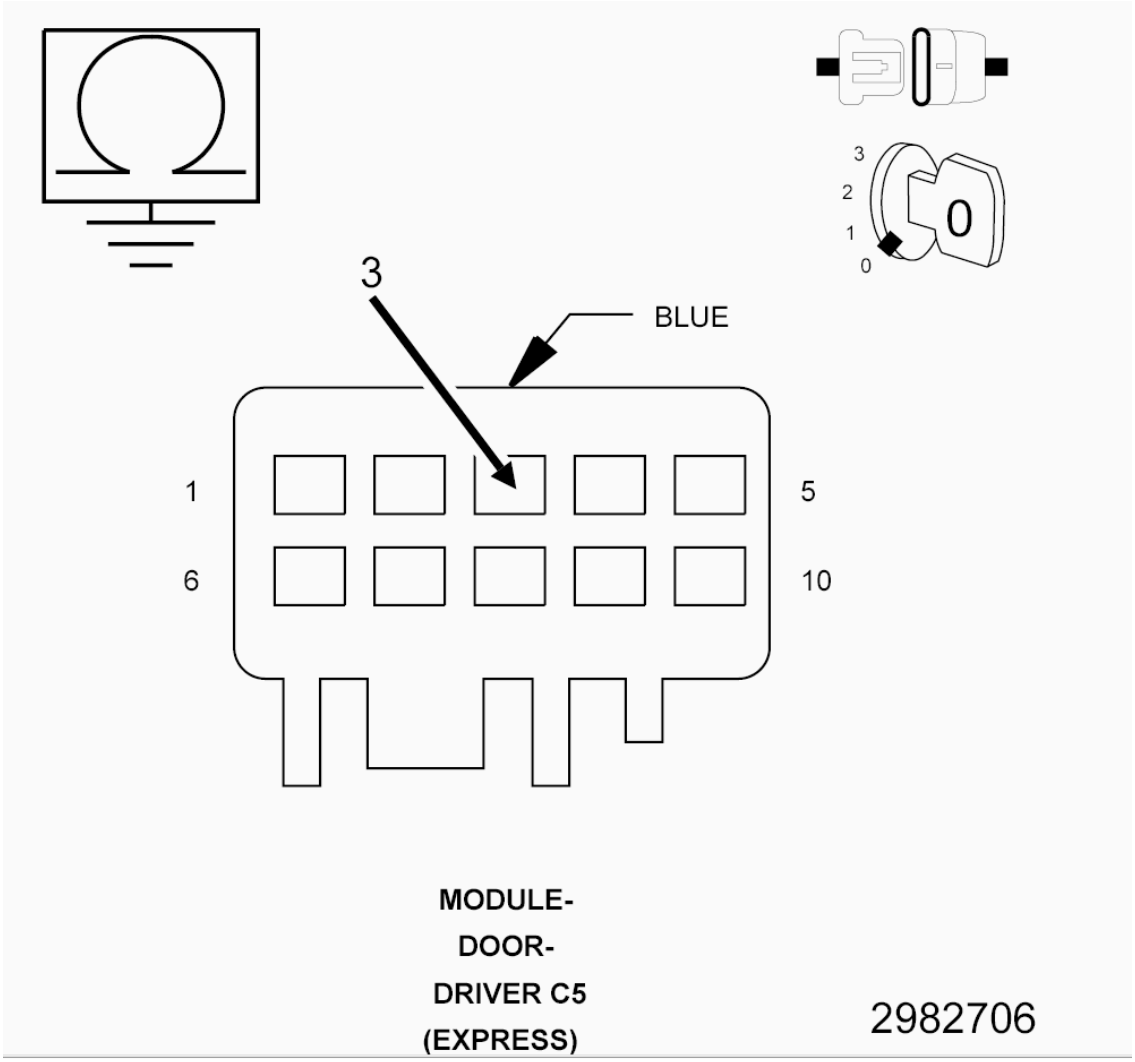

Fig. 61: Checking Driver Door Ambient Lamp Driver Circuit For Short To Ground
Courtesy of CHRYSLER GROUP, LLC

1. Turn the ignition off.
2. Disconnect the Driver Door Module C5 harness connector.
3. Measure the resistance between Ground and the (M33) Driver Door Ambient Lamp Driver circuit in the DDM C5 harness connector.

   Is the resistance below 20K Ohms?

   Yes

   - Repair the short to ground in the (M33) Driver Door Ambient Lamp Driver circuit.
   - Perform the BODY VERIFICATION TEST. Refer to **STANDARD PROCEDURE** .

   No

- Go To 4

4. **(M33) DRIVER DOOR AMBIENT LAMP DRIVER CIRCUIT SHORTED TO THE (M34) DRIVER DOOR LIGHTING RETURN CIRCUIT**

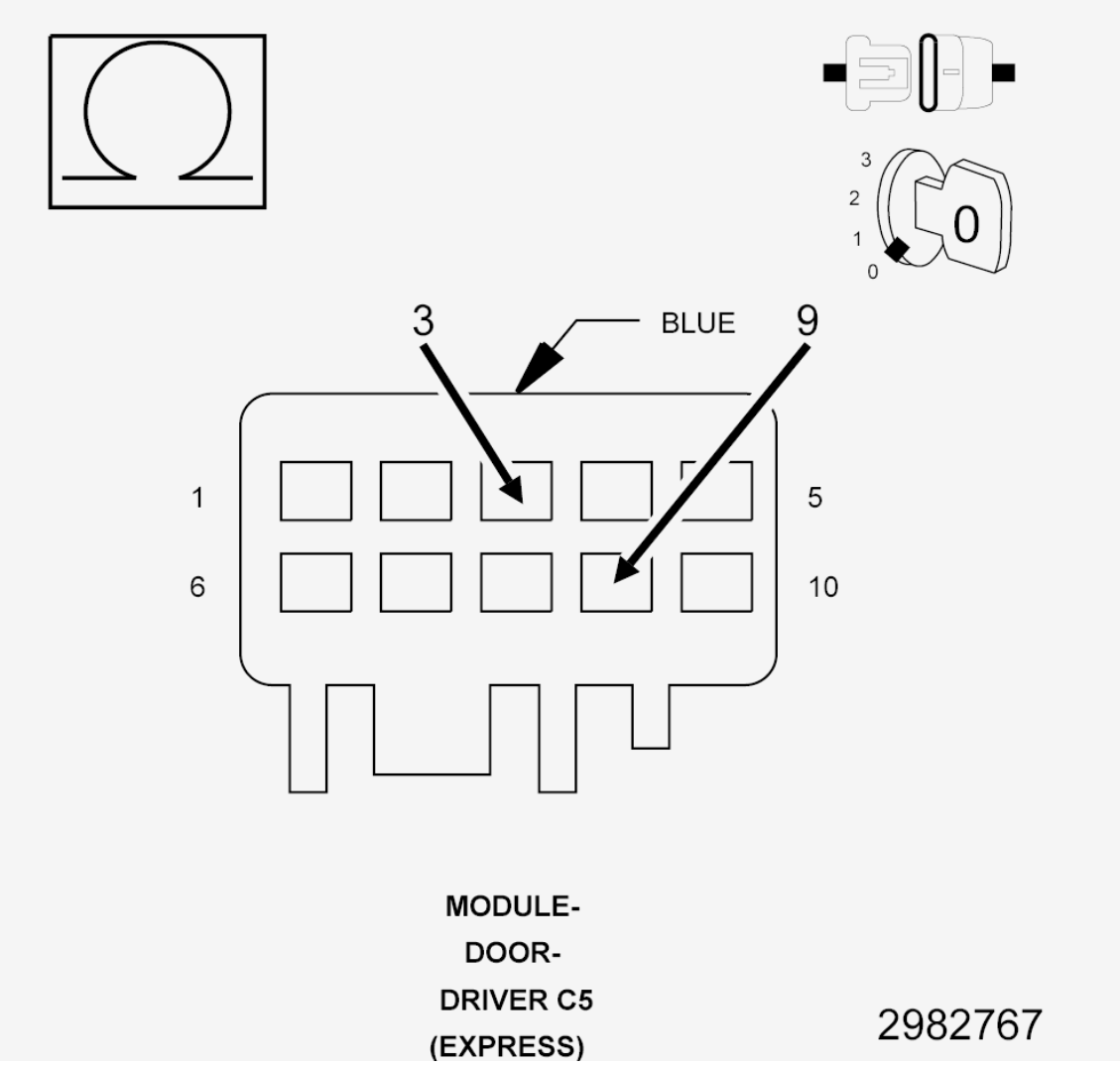

Fig. 62: Measuring Resistance Between Driver Door Ambient Lamp Driver Circuit & Driver Door Lighting Return Circuit
Courtesy of CHRYSLER GROUP, LLC

1. Measure the resistance between the (M33) Driver Door Ambient Lamp Driver circuit and the (M34) Driver Door Lighting Return circuit in the DDM C5 harness connector.

   Is the resistance below 20K Ohms?

   Yes

   - Repair the short between the (M33) Driver Door Ambient Lamp Driver circuit and the (M34)

Driver Door Lighting Return circuit.

- Perform the BODY VERIFICATION TEST. Refer to **STANDARD PROCEDURE** .

No

- Replace the Driver Door Module in accordance with the Service Information. Refer to **MODULE, DOOR, REMOVAL** .
- Perform the BODY VERIFICATION TEST. Refer to **STANDARD PROCEDURE** .

B2860-15-DOOR AMBIENT LIGHT CONTROL-CIRCUIT SHORT TO BATTERY OR OPEN

For a complete wiring diagram, **refer to appropriate SYSTEM WIRING DIAGRAMS article** .

THEORY OF OPERATION

An ambient lamp can be a: map pocket, door handle, halo ring, cup holder, etc. It is a LED with a built in circuit board.

WHEN MONITORED

Whenever the ambient lamp is commanded to be on.

SET CONDITION

When the Door Ambient Lamp Driver circuit is on when it should be off or off when it should be on, for over 2000 ms. and the above conditions are met, this code will set.

POSSIBLE CAUSES

Possible Causes
DOOR AMBIENT LAMP DRIVER CIRCUIT SHORTED TO BATTERY VOLTAGE
DOOR AMBIENT LAMP DRIVER CIRCUIT OPEN
DOOR MAP POCKET LAMP
DOOR MODULE

DIAGNOSTIC TEST

1. **TEST FOR INTERMITTENT CONDITION**

NOTE: Be sure the thumbwheel on the Dimmer Module is turned fully on during this test.

1. Turn the ignition on.
2. With the scan tool, record and erase the DTCs.
3. Cycle the ignition on to off three times and leave in the Lock position.

4. Turn the park lamps on.
5. Turn the ignition on and wait one minute.
6. With the scan tool, read the active DTCs.

   Does the scan tool display: B2860-15-DOOR AMBIENT LIGHT CONTROL - CIRCUIT SHORT TO BATTERY OR OPEN?

   Yes

   - Go To 2

   No

   - Test complete, the condition or conditions that originally set this DTC are not present at this time. Using the wiring diagrams as a guide, check all related splices and connectors for signs of water intrusion, corrosion, pushed out or bent terminals and correct pin tension.
   - Perform the BODY VERIFICATION TEST. Refer to **STANDARD PROCEDURE** .

2. **(M33) DRIVER DOOR AMBIENT LAMP DRIVER CIRCUIT SHORTED TO VOLTAGE**

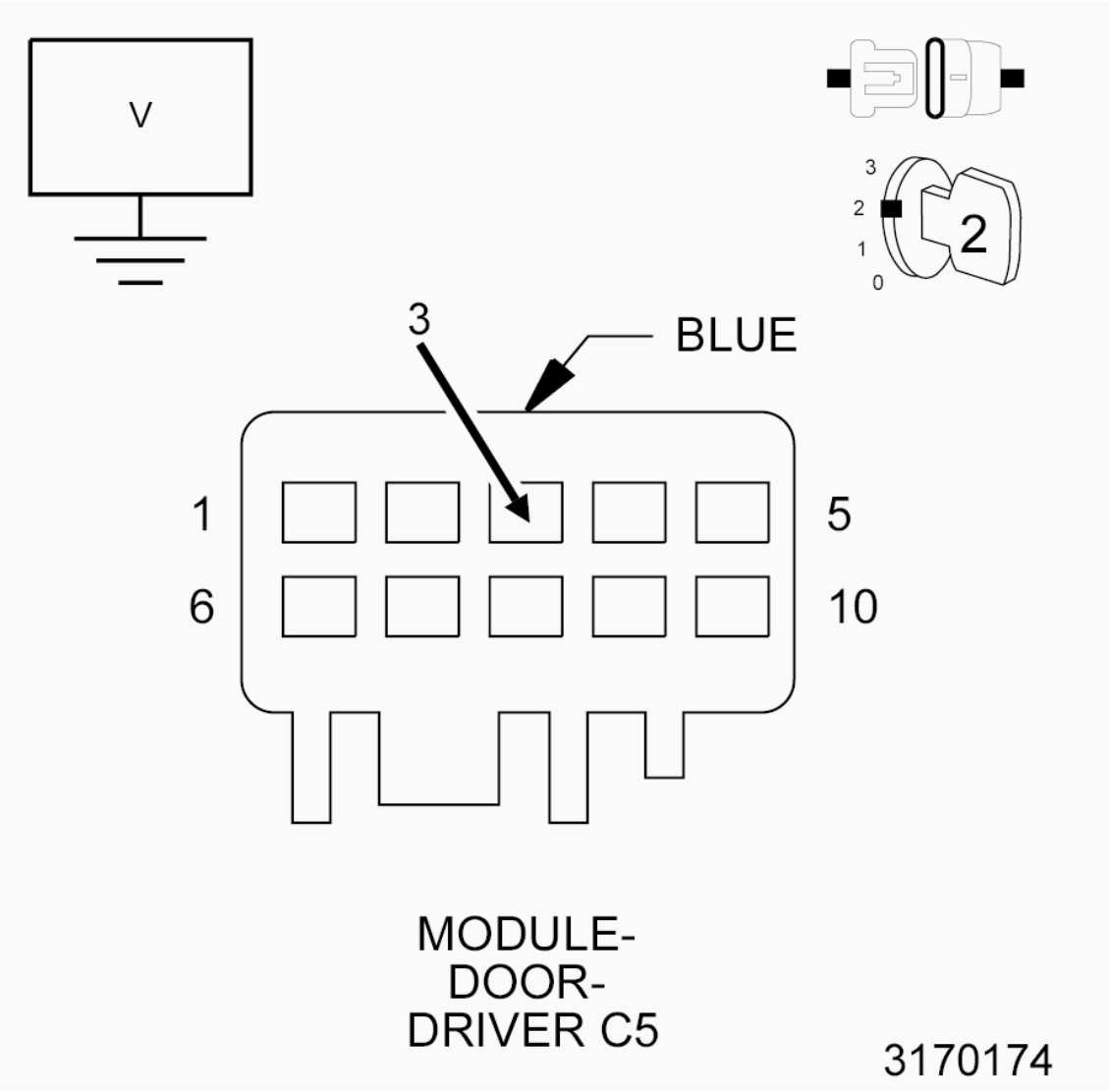

Fig. 63: Measuring Voltage Between Ground & Driver Door Ambient Lamp Driver Circuit
Courtesy of CHRYSLER GROUP, LLC

1. Turn the ignition off.
2. Remove the inner door panel trim in accordance with the Service Information. Refer to **PANEL, DOOR TRIM, REMOVAL** .
3. Leave the Driver Door Map Pocket Lamp connector connected.
4. Disconnect the Driver Door Module C5 harness connector.
5. Turn the ignition on.
6. Turn the Park Lamps on.
7. Measure the voltage between ground and the (M33) Driver Door Ambient Lamp Driver circuit in the Driver Door Module C5 harness connector.

   Is there any voltage present?

Yes

- Repair the (M33) Driver Door Ambient Lamp Driver circuit for a short to voltage.
- Perform the BODY VERIFICATION TEST. Refer to **STANDARD PROCEDURE** .

No

- Go To 3

3. **(M33) DRIVER DOOR AMBIENT LAMP DRIVER CIRCUIT OPEN**

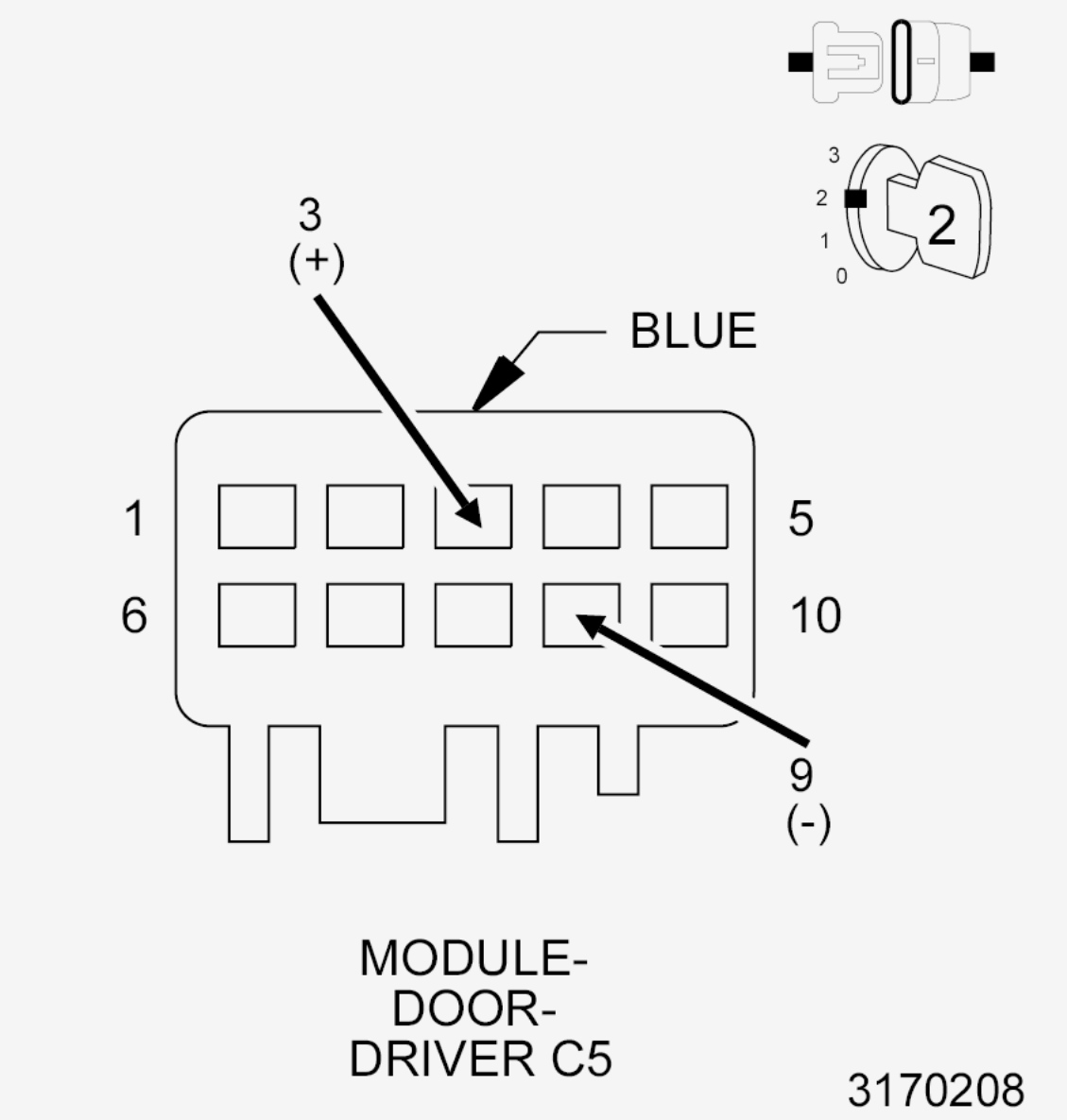

Fig. 64: Checking Driver Door Ambient Lamp Driver Circuit For Open
Courtesy of CHRYSLER GROUP, LLC

1. Turn the ignition off.
2. Be sure the Driver Door Map Pocket Lamp connector is still connected.
3. Turn the ignition on.
4. Connect a fused jumper wire, connected to battery to the (M33) Driver Door Ambient Lamp Driver circuit in the DDM C5 harness connector.
5. Connect a jumper wire, connected to ground to the (M34) Driver Door Lighting Return circuit in the DDM C5 harness connector

   Does the Driver Door Map Pocket Lamp illuminate brightly?

   Yes

   - Replace the Driver Door Module in accordance with the Service Information. Refer to **MODULE, DOOR, REMOVAL** .
   - Perform the BODY VERIFICATION TEST. Refer to **STANDARD PROCEDURE** .

   No

   - Go To 4

4. **(M33) DRIVER DOOR AMBIENT LAMP DRIVER CIRCUIT OPEN**
   1. Disconnect the Driver Door Map Pocket Lamp harness connector.
   2. Measure the resistance of the (M33) Driver Door Ambient Lamp Driver circuit between the DDM C5 harness connector and the Driver Door Map Pocket Lamp harness connector.

      Is the resistance below 2.0 Ohms between the (M33) Driver Door Ambient Lamp Driver circuit to the Map Pocket Lamp?

      Yes

      - Go To 5

      No

      - Repair the open in the (M33) Driver Door Ambient Lamp Driver circuit.
      - Perform the BODY VERIFICATION TEST. Refer to **STANDARD PROCEDURE** .

5. **(M34) DRIVER DOOR LIGHTING RETURN CIRCUIT OPEN**
   1. Measure the resistance of the (M34) Driver Door Lighting Return circuit between the DDM C5 harness connector and the Driver Door Map Pocket Lamp harness connector.

      Is the resistance below 2.0 Ohms on the (M34) Driver Door Lighting Return circuit to the Map Pocket Lamp?

      Yes

- Replace the Driver Door Ambient Lamp.
- Perform the BODY VERIFICATION TEST. Refer to **STANDARD PROCEDURE** .

No

- Repair the open in the (M34) Driver Door Lighting Return circuit.
- Perform the BODY VERIFICATION TEST. Refer to **STANDARD PROCEDURE** .

B2861-11-MIRROR APPROACH LIGHT CONTROL - CIRCUIT SHORT TO GROUND

For a complete wiring diagram, **refer to appropriate SYSTEM WIRING DIAGRAMS article** .

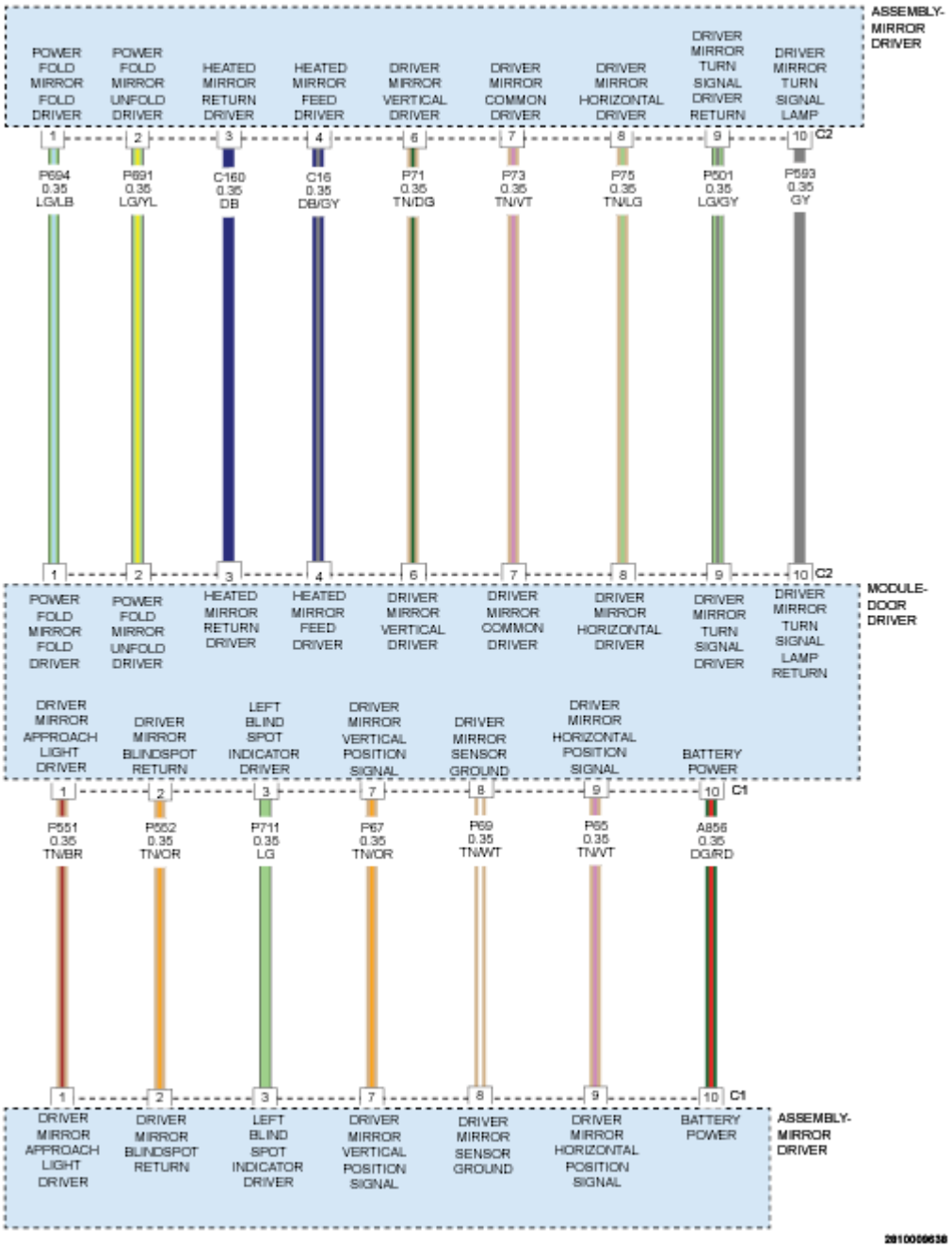

Fig. 65: Driver Mirror Assembly Wiring Diagram
Courtesy of CHRYSLER GROUP, LLC

WHEN MONITORED

Continuously.

SET CONDITION

The Door Module senses a short low on the Approach Lamp Driver circuit for more than two seconds with the approach lights switched on.

POSSIBLE CAUSES

Possible Causes
MIRROR APPROACH LAMP DRIVER CIRCUIT SHORTED TO GROUND
MIRROR APPROACH LAMP DRIVER CIRCUIT SHORTED TO THE APPROACH LAMP RETURN CIRCUIT
MIRROR APPROACH LAMP DRIVER CIRCUIT SHORTED TO ANY SENSOR GROUND OR RETURN CIRCUIT
OUTSIDE REARVIEW MIRROR
DOOR MODULE

DIAGNOSTIC TEST

1. **TEST FOR INTERMITTENT CONDITION**
    1. Cycle the ignition on.
    2. Using a scan tool, record and erase Diagnostic Trouble Codes (DTCs).
    3. Press and release the Mirror Select switch to select the Driver Outside Rearview Mirror.
    4. Turn the driver turn signal on.
    5. Open the driver door to turn the approach lights on. Leave the door open.
    6. Fold and unfold the mirrors (if equipped).
    7. Turn the rear defogger on (if equipped with heated mirrors).
    8. Operate the Mirror Adjust switch in all directions several times while monitoring the scan tool for DTCs.

    NOTE: After adjusting the mirror in one direction wait at least two seconds before adjusting the mirror in the opposite direction, as this will allow time for an active fault to set if present.

    9. With the scan tool, read the DTCs.

    Does the scan tool display: B2861-11-MIRROR APPROACH LAMP CONTROL - CIRCUIT SHORT TO GROUND?

    Yes

    - Go To 2

    No

    - The conditions that caused this code to set are not present at this time. Repeat this test again.

If this DTC is now present, Go To 2. Otherwise, use the wiring diagram/schematic as a guide and inspect the wiring and connectors.

- Perform the BODY VERIFICATION TEST. Refer to **STANDARD PROCEDURE** .

2. **CHECK (P551) DRIVER MIRROR APPROACH LAMP DRIVER CIRCUIT FOR A SHORT TO GROUND**

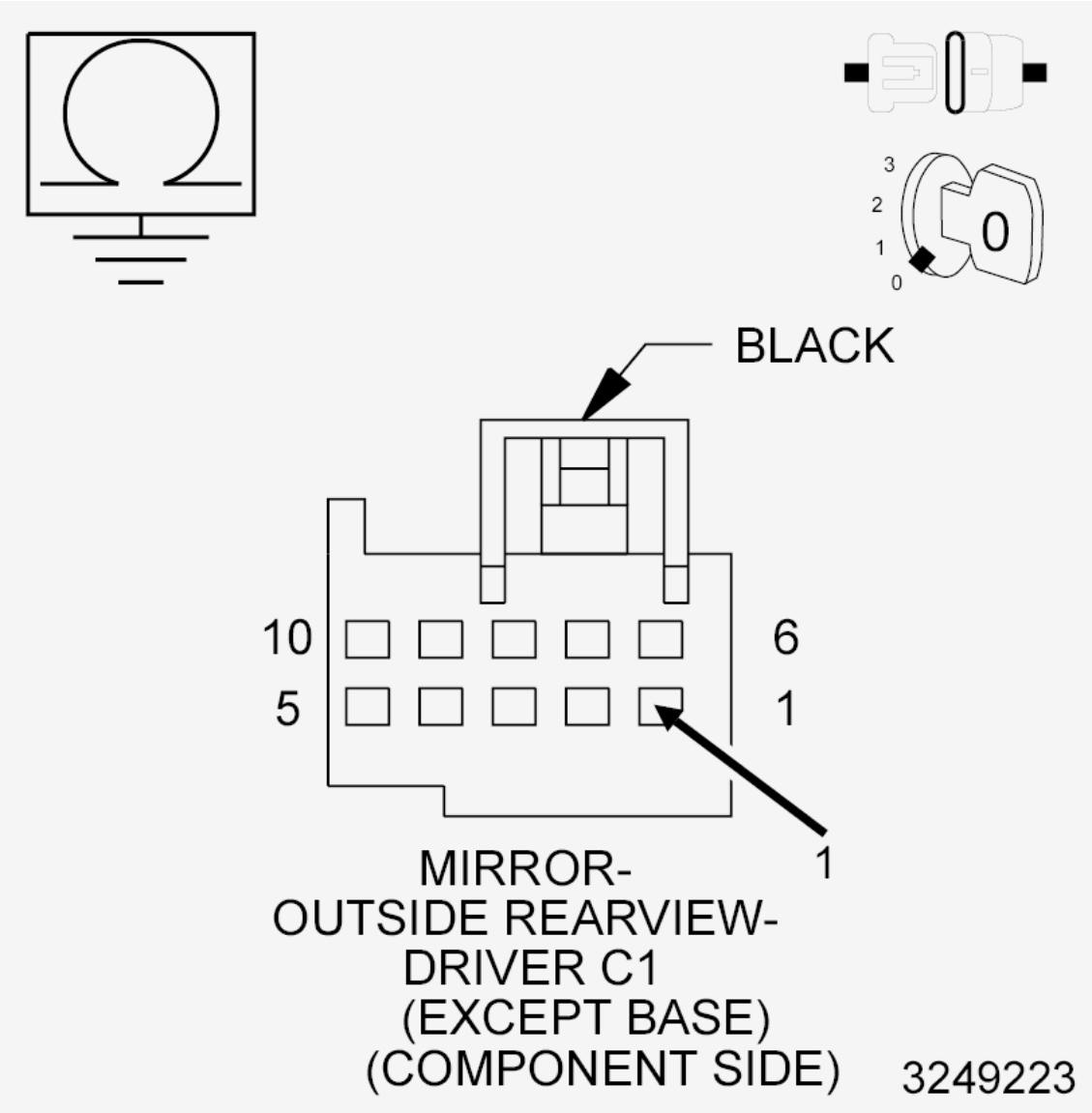

Fig. 66: Checking Driver Mirror Approach Lamp Driver Circuit For Short To Ground
Courtesy of CHRYSLER GROUP, LLC

1. Cycle the ignition off.
2. Disconnect the Driver Outside Rearview Mirror C1 and C2 (Component Side) harness connectors from the Door Module.
3. Measure the resistance between ground and the (P551) Driver Approach Lamp Driver circuit at the Driver Outside Rearview Mirror C1 (Component Side) connector.

Is the resistance below 10K Ohms?

Yes

- Repair the (P551) Driver Approach Lamp Driver circuit for a short to ground. If the wiring harness and connector are okay, replace the Driver Outside Rearview Mirror in accordance with the Service Information. Refer to **MIRROR, OUTSIDE REARVIEW, REMOVAL** and **MIRROR, OUTSIDE REARVIEW, GLASS, REMOVAL** .
- Perform the BODY VERIFICATION TEST. Refer to **STANDARD PROCEDURE** .

No

- Go To 3

3. **CHECK (P551) DRIVER MIRROR APPROACH LAMP DRIVER CIRCUIT FOR A SHORT TO THE (P552) APPROACH LAMP RETURN CIRCUIT**

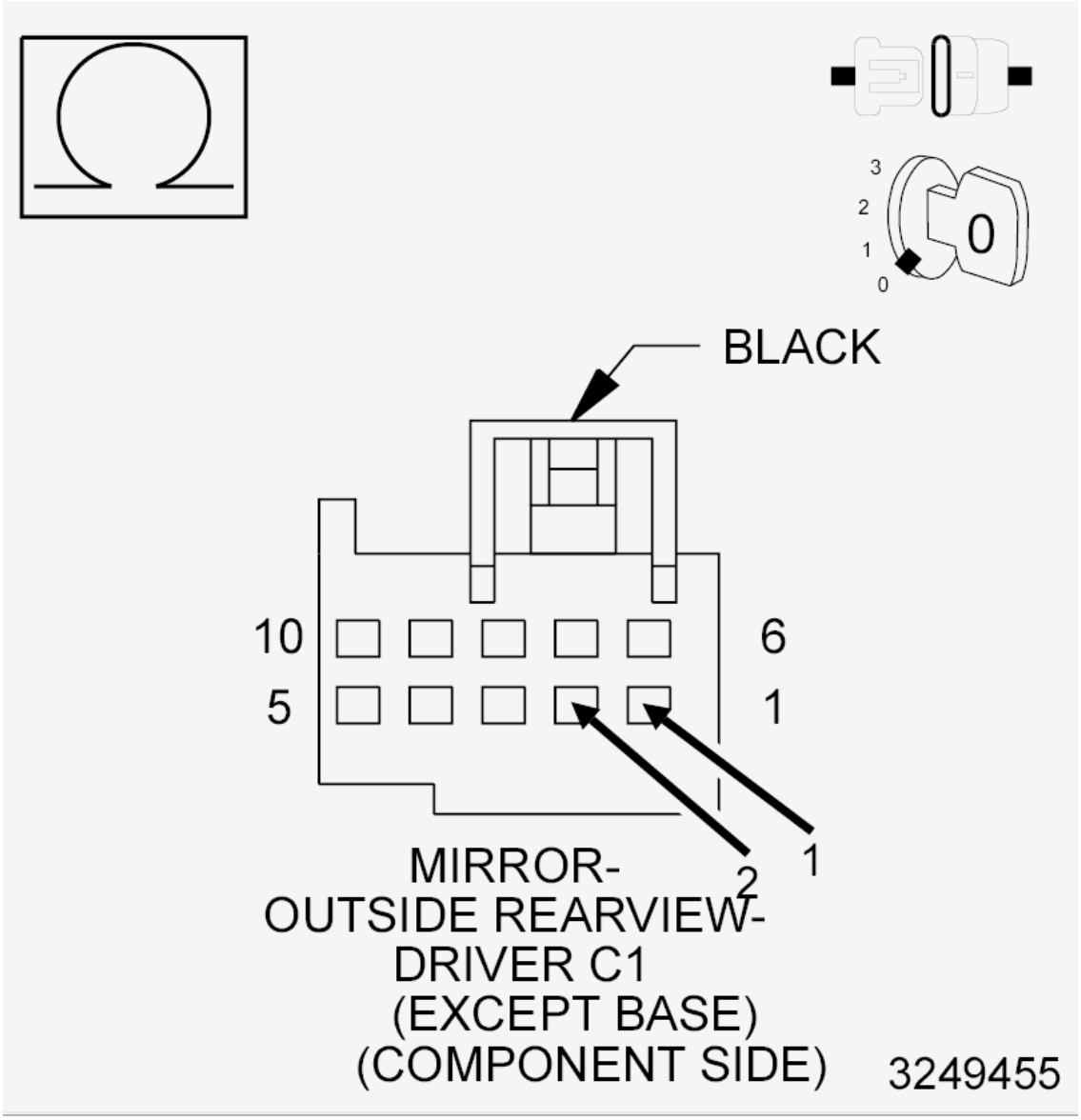

Fig. 67: Checking Driver Mirror Approach Lamp Driver Circuit For Short To Approach Lamp Return Circuit
Courtesy of CHRYSLER GROUP, LLC

1. Measure the resistance between the (P551) Driver Approach Lamp Driver circuit and the (P552) Approach Lamp Return circuit at the Driver Outside Rearview Mirror C1 (Component Side) harness connector.

   Is the resistance below 2.0 Ohm?

   Yes

   - Repair the (P551) Driver Approach Lamp Driver circuit for a short to the (P552)Approach Lamp Return circuit. If the wiring harness and connector are okay, replace the Driver Outside

Rearview Mirror in accordance with the Service Information. Refer to **MIRROR, OUTSIDE REARVIEW, REMOVAL** and **MIRROR, OUTSIDE REARVIEW, GLASS, REMOVAL** .

- Perform the BODY VERIFICATION TEST. Refer to **STANDARD PROCEDURE** .

No

- Go To 4

4. **CHECK (P551) DRIVER MIRROR APPROACH LAMP DRIVER CIRCUIT FOR A SHORT TO ANY DRIVER MIRROR GROUND OR RETURN CIRCUIT**
   1. Measure the resistance between the (P551) Driver Approach Lamp Driver circuit (C1-1) and each of the Driver Mirror Return or Ground circuits (except the ((P552) Approach Lamp Return) in the Driver Outside Rearview Mirror C1 and C2 (Component Side) connectors.

      Is the resistance below 10K Ohms for any measurement?

      Yes

      - Repair all circuits (except the ((P552) Approach Lamp Return) with a resistance below 10K Ohms for a short to the (P551) Driver Approach Lamp Driver circuit. If the wiring harness and connector are okay, replace the Driver Outside Rearview Mirror in accordance with the Service Information. Refer to **MIRROR, OUTSIDE REARVIEW, REMOVAL** and **MIRROR, OUTSIDE REARVIEW, GLASS, REMOVAL** .
      - Perform the BODY VERIFICATION TEST. Refer to **STANDARD PROCEDURE** .

      No

      - Inspect the wiring and connectors for damage and repair as necessary. If the wiring and connectors are okay, replace the Door Module in accordance with the Service Information. Refer to **MODULE, DOOR, REMOVAL** .
      - Perform the BODY VERIFICATION TEST. Refer to **STANDARD PROCEDURE** .

B2861-15-MIRROR APPROACH LIGHT CONTROL - CIRCUIT SHORT TO BATTERY OR OPEN

For a complete wiring diagram, **refer to appropriate SYSTEM WIRING DIAGRAMS article** .

WHEN MONITORED

Continuously.

SET CONDITION

The Door Module senses an open or a short high on the Mirror Approach Lamp Driver circuit for more than two seconds.

POSSIBLE CAUSES

Possible Causes
MIRROR APPROACH LAMP DRIVER CIRCUIT SHORTED TO VOLTAGE
MIRROR APPROACH LAMP DRIVER CIRCUIT OPEN
MIRROR APPROACH LAMP RETURN CIRCUIT OPEN
MIRROR APPROACH LAMP DRIVER CIRCUIT OPEN TO THE APPROACH LAMP RETURN CIRCUIT
MIRROR APPROACH LAMP DRIVER CIRCUIT SHORTED TO ANOTHER DRIVER OR SIGNAL CIRCUIT
OUTSIDE REARVIEW MIRROR
DOOR MODULE

DIAGNOSTIC TEST

1. **TEST FOR INTERMITTENT CONDITION**
    1. Cycle the ignition on.
    2. Using a scan tool, record and erase Diagnostic Trouble Codes (DTCs).
    3. Cycle the ignition from on to off then back to on.
    4. Press and release the Mirror Select switch to select the Driver Outside Rearview Mirror.
    5. Open the driver door to turn the approach lights on. Leave the door open.
    6. Turn the drivers turn signal on.
    7. Fold and unfold the mirrors (if equipped).
    8. Turn the rear defogger on (if equipped with heated mirrors).
    9. Operate the Mirror Adjust switch in all directions several times while monitoring the scan tool for DTCs.

    NOTE: After adjusting the mirror in one direction wait at least two seconds before adjusting the mirror in the opposite direction, as this will allow time for an active fault to set if present.

    10. With the scan tool, read the DTCs.

    Does the scan tool display: B2861-15-MIRROR APPROACH LIGHT CONTROL - CIRCUIT SHORT TO BATTERY OR OPEN?

    Yes

    - Go To 2

    No

    - The conditions that caused this code to set are not present at this time. Repeat this test again. If this DTC is now present, Go To 2. Otherwise, use the wiring diagram/schematic as a guide and inspect the wiring and connectors.

- Perform the BODY VERIFICATION TEST. Refer to **STANDARD PROCEDURE** .

2. **CHECK (P551) DRIVER MIRROR APPROACH LAMP DRIVER CIRCUIT FOR A SHORT TO VOLTAGE**

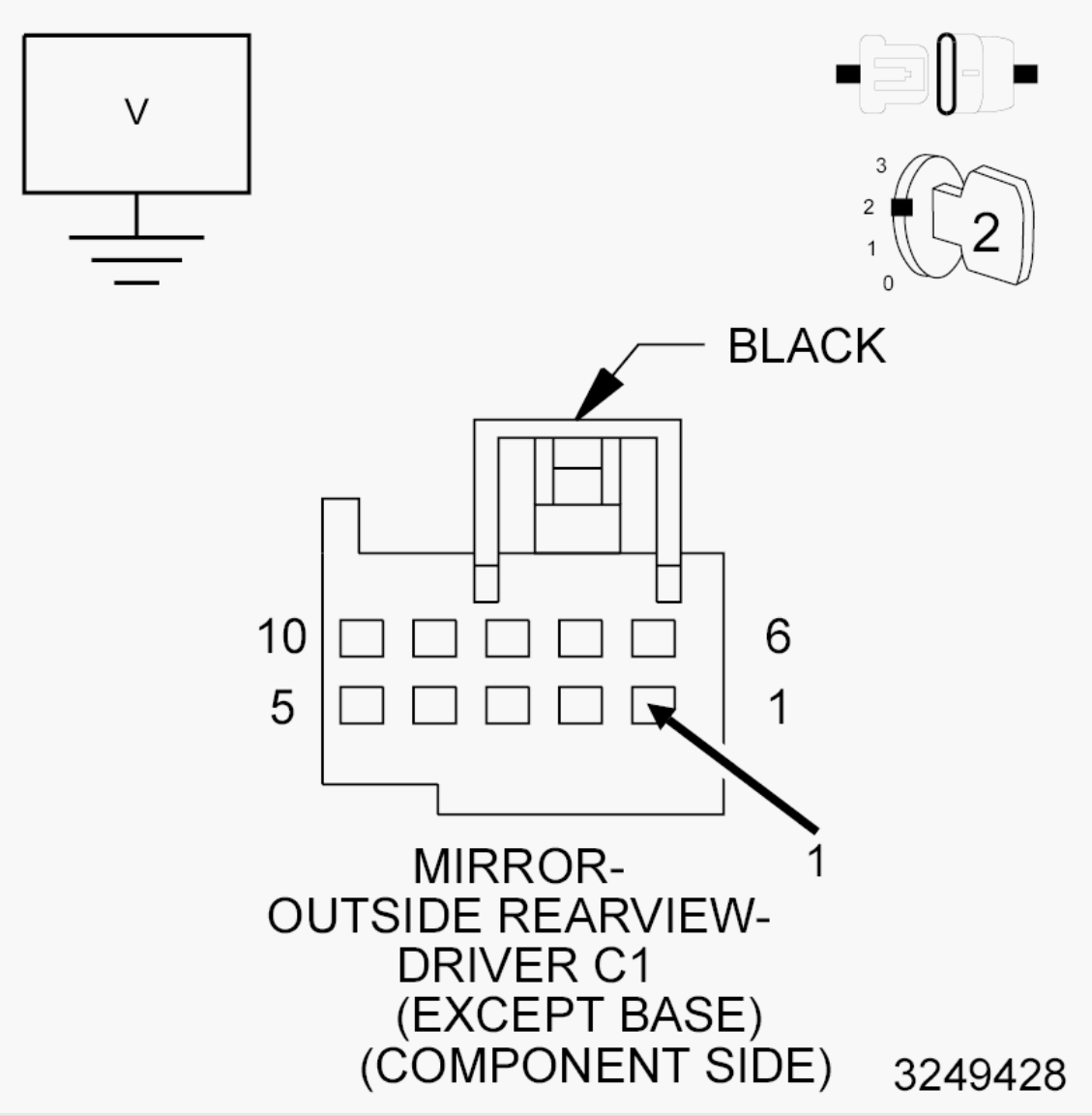

Fig. 68: Checking Driver Mirror Approach Lamp Driver Circuit For Short To Voltage
Courtesy of CHRYSLER GROUP, LLC

1. Cycle the ignition off.
2. Disconnect the Driver Outside Rearview Mirror C1 and C2 (Component Side) harness connectors from the Door Module.
3. Cycle the ignition on.
4. Measure the voltage between ground and the (P551) Driver Mirror Approach Lamp Driver circuit in the Driver Outside Rearview Mirror C1 (Component Side) harness connector.

Is there any voltage present?

Yes

- Repair the (P551) Driver Mirror Approach Lamp Driver circuit for a short to voltage. If the wiring harness and connector are okay, replace the Driver Outside Rearview Mirror in accordance with the Service Information. Refer to **MIRROR, OUTSIDE REARVIEW, REMOVAL** and **MIRROR, OUTSIDE REARVIEW, GLASS, REMOVAL** .
- Perform the BODY VERIFICATION TEST. Refer to **STANDARD PROCEDURE** .

No

- Go To 3

3. **CHECK (P551) DRIVER MIRROR APPROACH LAMP DRIVER CIRCUIT AND (P552) APPROACH LAMP RETURN CIRCUIT FOR AN OPEN**

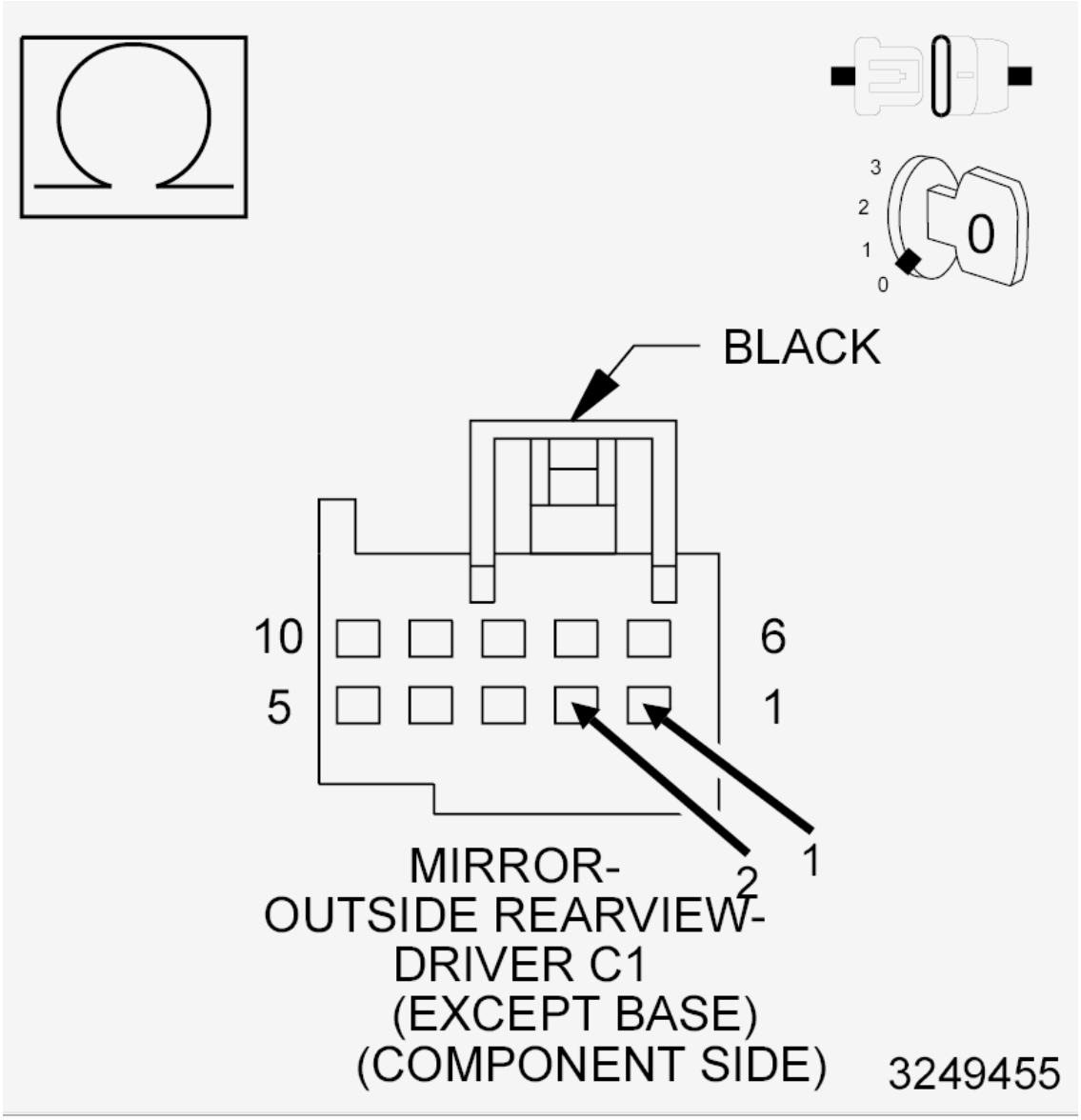

Fig. 69: Checking Driver Mirror Approach Lamp Driver Circuit For Short To Approach Lamp Return Circuit
Courtesy of CHRYSLER GROUP, LLC

1. Cycle the ignition off.
2. Measure the resistance between the (P551) Driver Mirror Approach Lamp Driver circuit and the (P552) Approach Lamp Return circuit at the Driver Outside Rearview Mirror C1 (Component Side) connector.

   Is the resistance below 10.0 Ohms?

   Yes

   - Go To 4

No

- Repair the (P551) Driver Mirror Approach Lamp Driver circuit or the (P552) Approach Lamp Return circuit for an open. If the wiring harness and connector are okay, replace the Driver Outside Rearview Mirror in accordance with the Service Information. Refer to **MIRROR, OUTSIDE REARVIEW, REMOVAL** and **MIRROR, OUTSIDE REARVIEW, GLASS, REMOVAL** .
- Perform the BODY VERIFICATION TEST. Refer to **STANDARD PROCEDURE** .

4. **CHECK (P551) DRIVER MIRROR APPROACH LAMP DRIVER CIRCUIT FOR A SHORT TO ANOTHER MIRROR DRIVER OR SIGNAL CIRCUIT**

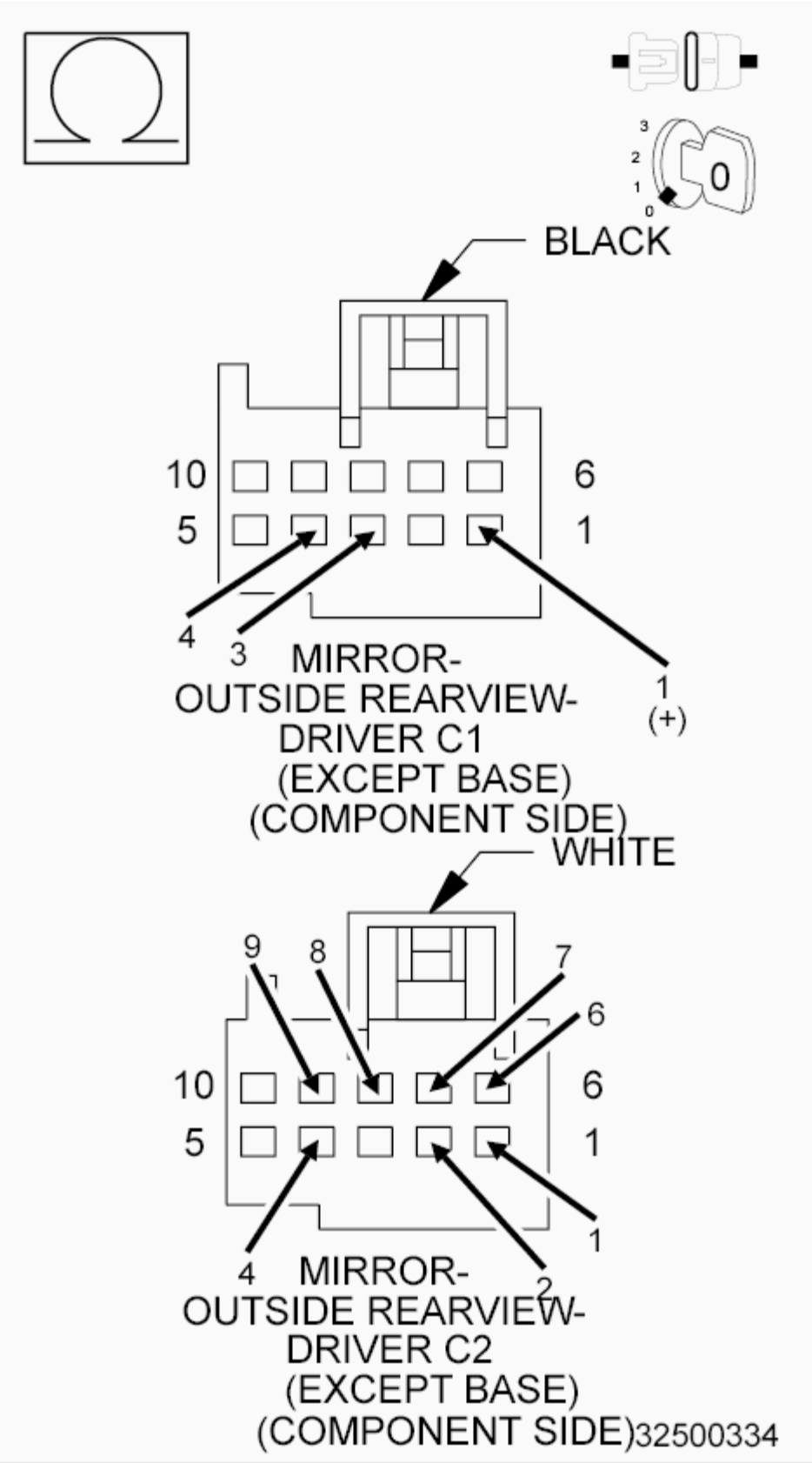
3
2
1
0
BLACK
10
6
5
1
4
3
1
(+)
MIRROR-
OUTSIDE REARVIEW-
DRIVER C1
(EXCEPT BASE)
(COMPONENT SIDE)
WHITE
9
8
7
6
10
6
5
1
1
4
2
MIRROR-
OUTSIDE REARVIEW-
DRIVER C2
(EXCEPT BASE)
(COMPONENT SIDE)
32500334

Fig. 70: Checking Driver Mirror Approach Lamp Driver Circuit For Short To Mirror Driver Or Signal Circuit
Courtesy of CHRYSLER GROUP, LLC

1. Measure the resistance between the (P551) Driver Mirror Approach Lamp Driver circuit (C1-1) and each of the designated Mirror Driver and Signal circuits in the Driver Outside Rearview Mirror C1 and C2 (Component Side) connectors.

   Is the resistance below 10K Ohms for any measurement?

   Yes

   - Repair all circuits with a resistance below 10K Ohms for a short to the (P551) Driver Mirror Approach Lamp Driver circuit. If the wiring harness and connector are okay, replace the Driver Outside Rearview Mirror in accordance with the Service Information. Refer to **MIRROR, OUTSIDE REARVIEW, REMOVAL** and **MIRROR, OUTSIDE REARVIEW, GLASS, REMOVAL** .
   - Perform the BODY VERIFICATION TEST. Refer to **STANDARD PROCEDURE** .

   No

   - Inspect the wiring and connectors for damage and repair as necessary. If the wiring and connectors are okay, replace the Driver Door Module in accordance with the Service Information. Refer to **MODULE, DOOR, REMOVAL** .
   - Perform the BODY VERIFICATION TEST. Refer to **STANDARD PROCEDURE** .

U0010-00-CAN INTERIOR BUS

For a complete wiring diagram, **refer to appropriate SYSTEM WIRING DIAGRAMS article** .

WHEN MONITORED

Continuously when the ignition is on.

Battery voltage between 10 and 16 volts.

SET CONDITION

The Body Control Module (BCM) detects a short to ground on the CAN Interior Bus (+) circuit or a short to voltage on the CAN Interior Bus (-) circuit.

POSSIBLE CAUSES

Possible Causes
CAN INTERIOR BUS (+) CIRCUIT SHORTED TO GROUND
CAN INTERIOR BUS (-) CIRCUIT SHORTED TO VOLTAGE

ANY CAN INTERIOR BUS MODULE
BODY CONTROL MODULE (BCM)

DIAGNOSTIC TEST

VERIFY IF THE DTC IS ACTIVE

1. Cycle the ignition on.
2. With the scan tool, read the active DTCs.

   Does the scan tool display this DTC as Active?

   Yes

   - Refer to the **DTC INDEX** article and perform the U0010-00 CAN INTERIOR BUS diagnostic procedure.

   No

   - Refer to **DIAGNOSIS AND TESTING** and perform the STORED LOST COMMUNICATION DTCs diagnostic procedure.

U0011-00-CAN INTERIOR BUS OFF PERFORMANCE

For a complete wiring diagram, **refer to appropriate SYSTEM WIRING DIAGRAMS article** .

WHEN MONITORED

With the ignition on.

SET CONDITION

The Body Control Module (BCM) detects a short condition in one of the CAN IHS Bus (125K) circuits for less than one second.

POSSIBLE CAUSES

Possible Causes
CAN IHS BUS (125K) (+) CIRCUIT SHORTED TO GROUND
CAN IHS BUS (125K) (-) CIRCUIT SHORTED TO VOLTAGE
CAN IHS BUS (125K) (+) CIRCUIT SHORTED TO THE CAN IHS BUS (125K) (-) CIRCUIT
ANY CAN IHS BUS MODULE
BODY CONTROL MODULE (BCM)

DIAGNOSTIC TEST

1. **TEST FOR INTERMITTENT CONDITION**
    1. Turn the ignition on.
    2. With the scan tool, record and erase DTCs.
    3. Cycle the ignition from on to off three times.
    4. Turn the ignition on and wait 10 seconds.
    5. With the scan tool, read active DTCs.

    Does the scan tool display this DTC as active?

    Yes

    - Go To 2

    No

    - Test complete. The condition or conditions that originally set this DTC are not present at this time. Using the wiring diagrams as a guide, check all related splices and connectors for signs of water intrusion, corrosion, pushed out or bent terminals and correct pin tension.
    - Perform the BODY VERIFICATION TEST. Refer to **STANDARD PROCEDURE** .
2. **CHECK THE CAN IHS BUS CIRCUITS FOR THE CAN IHS BUS (125K) MODULES**

    NOTE: When performing this step, turn the ignition off (wait one minute) before disconnecting any module. When the module is disconnected turn the ignition on.

    NOTE: This step is to determine if the fault is a module or the circuits between the module and the Star Connector.

    1. While monitoring the scan tool, disconnect each CAN IHS Bus (125K) module at the Front CAN IHS Star Connector (except for the BCM and DLC), one at a time.
    2. Check for this DTC to become stored after disconnecting each CAN IHS Bus (125K) module the vehicle is equipped with.

    NOTE: If the DTC becomes stored when a particular module is disconnected, that module or related circuits are causing the DTC to set.

    With all the CAN IHS Bus modules disconnected at the Star Connector (except for BCM and DLC), does the scan tool display this DTC as active?

    Yes

    - Go To 3

No

- Diagnose the wiring and connectors between the Front CAN IHS Star Connector and the module that when disconnected caused this DTC to become stored for damage or shorted circuits. If OK, replace the module that when disconnected caused this DTC to become stored in accordance with the Service Information.
- Perform the BODY VERIFICATION TEST. Refer to **STANDARD PROCEDURE** .

3. **CHECK THE CAN IHS BUS (125K) (-) CIRCUIT FOR A SHORT TO VOLTAGE**
   1. Turn the ignition off.
   2. Disconnect the scan tool.
   3. Disconnect the Front CAN IHS Star Connector for the DLC.
   4. Turn the ignition on.
   5. Measure the voltage between ground and the CAN IHS Bus (125K) (-) circuit.

   Is there any voltage present?

   Yes

   - Repair the short to voltage in the CAN IHS Bus (-) circuit.
   - Perform the BODY VERIFICATION TEST. Refer to **STANDARD PROCEDURE** .

   No

   - Go To 4
4. **CHECK THE CAN IHS BUS (125K) (+) CIRCUIT FOR A SHORT TO GROUND**
   1. Turn the ignition off.
   2. Measure the resistance between ground and the CAN IHS Bus (125K) (+) circuit.

   Is the resistance above 10k Ohms?

   Yes

   - Go To 5

   No

   - Repair the short to ground in the CAN IHS Bus (125K) (+) circuit.
   - Perform the BODY VERIFICATION TEST. Refer to **STANDARD PROCEDURE** .
5. **CHECK FOR A SHORT BETWEEN THE CAN IHS BUS (125K) (+) CIRCUIT AND CAN IHS BUS (125K) (-) CIRCUIT**
   1. Measure the resistance between the CAN IHS Bus (125K) (-) and the CAN IHS Bus (125K) (+) circuits.

Is the resistance above 10k Ohms?

Yes

- Go To 6

No

- Repair the short between the CAN IHS Bus (125K) (+) circuit and the CAN IHS Bus (125K) (-) circuit.
- Perform the BODY VERIFICATION TEST. Refer to **STANDARD PROCEDURE** .

6. **CHECK THE CAN IHS BUS CIRCUITS FOR A BCM CONCERN**
   1. Disconnect the Front CAN IHS Star Connector for the BCM.
   2. Reconnect all other connectors.
   3. Cycle the ignition from on to off three times.
   4. Turn the ignition on and wait 10 seconds.
   5. With the scan tool, read all DTCs.

   Do any modules on the CAN IHS BUS (125K) display this DTC or U0010-00-CAN INTERIOR BUS as active?

   Yes

   - Reconnect all the connectors and retest. If the concern is still present, replace the Star Connector.
   - Perform the BODY VERIFICATION TEST. Refer to **STANDARD PROCEDURE** .

   No

   - Diagnose the wiring and connectors between the Front CAN IHS Star Connector and the BCM. If OK, replace the Body Control Module (BCM) in accordance with the Service Information. Refer to **MODULE, BODY CONTROL, REMOVAL** .
   - Perform the BODY VERIFICATION TEST. Refer to **STANDARD PROCEDURE** .

U0037-11-LIN BUS - CIRCUIT SHORT TO GROUND

For a complete wiring diagram, **refer to appropriate SYSTEM WIRING DIAGRAMS article** .

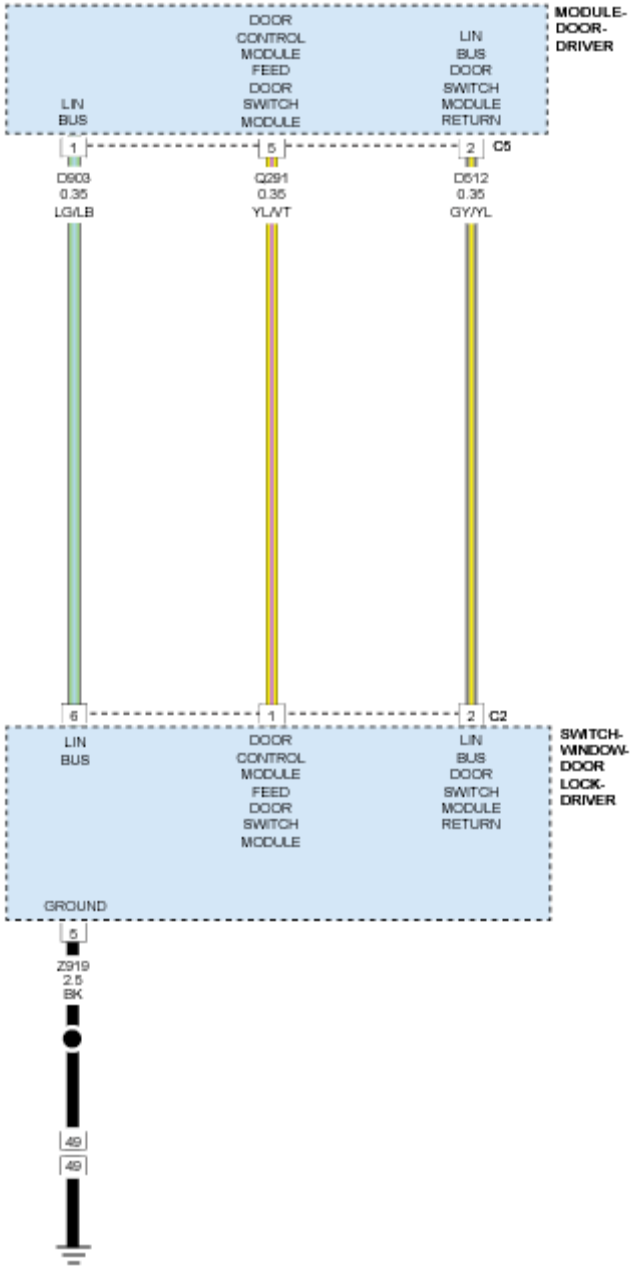

Fig. 71: Driver Door Lock/Unlock Switch LIN BUS, Power & Ground Circuit Diagram
Courtesy of CHRYSLER GROUP, LLC

WHEN MONITORED

Continuously when the ignition is on.

SET CONDITION

The module detects a short to ground on the LIN Bus circuit.

POSSIBLE CAUSES

Possible Causes
(D903) DRIVER DOOR LIN BUS CIRCUIT SHORTED TO GROUND
(D903) DRIVER DOOR LIN BUS CIRCUIT SHORTED TO THE (D512) DRIVER DOOR LIN BUS RETURN CIRCUIT
DRIVER WINDOW/DOOR LOCK SWITCH
DRIVER DOOR MODULE (DDM)

DIAGNOSTIC TEST

1. **VERIFY DTC IS ACTIVE**
    1. Cycle the ignition on.
    2. With the scan tool, read active Door Module DTCs.

    Does the scan tool display: U0037-11-LIN BUS - CIRCUIT SHORT TO GROUND as Active?

    Yes

    - Go To 2

    No

    - Refer to **DIAGNOSIS AND TESTING** and perform the STORED LOST COMMUNICATION DTCs diagnostic procedure.
2. **CHECK THE LIN BUS CIRCUIT**
    1. Cycle the ignition off.
    2. Disconnect the Driver Window/Door Lock Switch C1 harness connector.
    3. Cycle the ignition on.
    4. Measure the voltage between the (D903) Driver Door LIN Bus circuit and the (D512) Driver Door Lin Bus Return circuit in the Driver Window Switch C1 connector.

    Is the voltage above 7.0 volts?

    Yes

    - Replace the Driver Window/Door Lock Switch.
    - Perform the BODY VERIFICATION TEST. Refer to **STANDARD PROCEDURE** .

    No

    - Go To 3
3. **(D903) DRIVER DOOR LIN BUS CIRCUIT SHORTED TO GROUND**

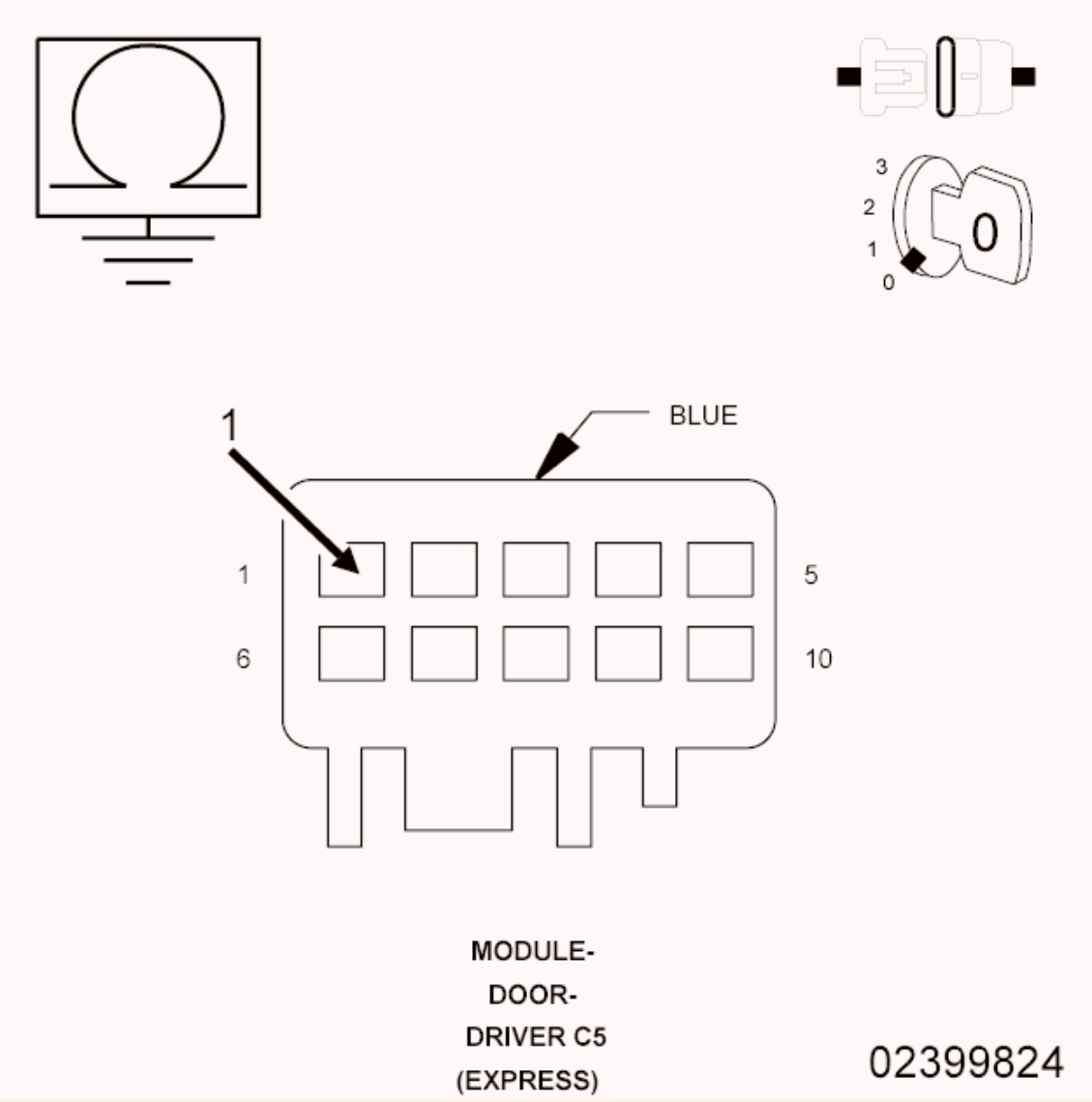

Fig. 72: Measuring Resistance Between Ground & LIN Bus Circuit In Door Module C5 Connector
Courtesy of CHRYSLER GROUP, LLC

1. Cycle the ignition off.
2. Disconnect the Driver Door Module C5 harness connector.
3. Measure the resistance between Ground and the (D903) Driver Door LIN Bus circuit in the Door Module C5 harness connector.

   Is the resistance below 10K Ohms?

   Yes

   - Repair the (D903) Driver Door LIN Bus circuit for a short to the ground.
   - Perform the BODY VERIFICATION TEST. Refer to **STANDARD PROCEDURE** .

No

- Go To 4

4. **(D903) DRIVER DOOR LIN BUS CIRCUIT SHORTED TO THE (D512) DRIVER DOOR LIN BUS RETURN CIRCUIT**

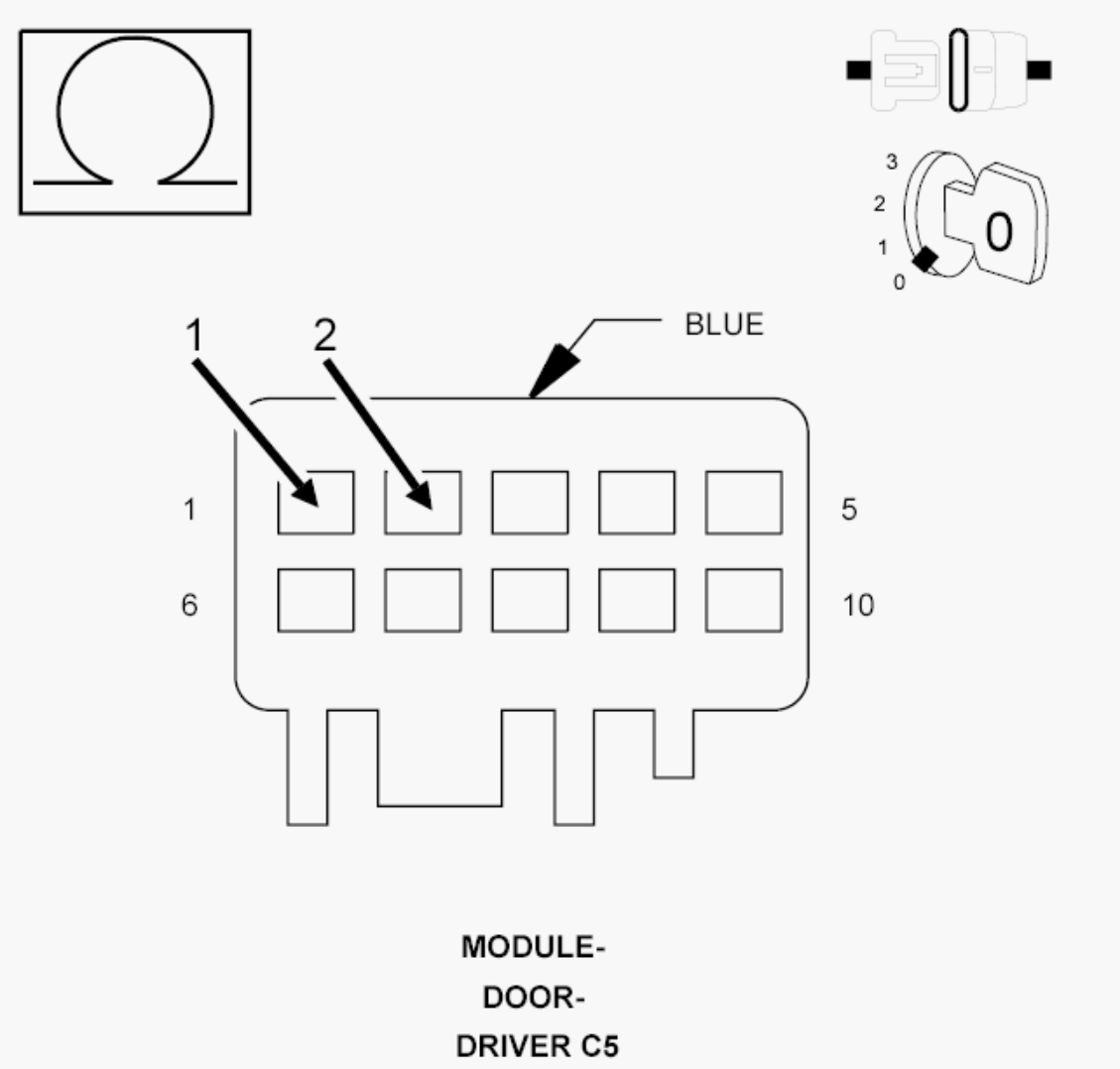

Fig. 73: Checking LIN BUS Circuit For A Short To The LIN BUS Return Circuit
Courtesy of CHRYSLER GROUP, LLC

1. Measure the resistance between the (D903) Driver Door LIN Bus circuit and the (D512) Driver Door LIN Bus Return circuit in the Door Module C5 harness connector.

   Is the resistance below 10K Ohms?

   Yes

- Repair the (D903) Driver Door LIN Bus circuit for a short to the (D512) Driver Door LIN Bus Sense Return circuit.
- Perform the BODY VERIFICATION TEST. Refer to **STANDARD PROCEDURE** .

No

- Replace the Driver Door Module in accordance with the Service Information. Refer to **MODULE, DOOR, REMOVAL** .
- Perform the BODY VERIFICATION TEST. Refer to **STANDARD PROCEDURE** .

U0140-00-LOST COMMUNICATION WITH BODY CONTROL MODULE

For a complete wiring diagram, **refer to appropriate SYSTEM WIRING DIAGRAMS article** .

WHEN MONITORED

Continuously when the ignition is on.

The battery voltage between 10.0 and 16.0 Volts.

Body Control Module (BCM) is configured correctly.

SET CONDITION

Bus messages not received from the Body Control Module (BCM) for approximately two to five seconds.

POSSIBLE CAUSES

Possible Causes
CAN BUS CIRCUITS OPEN OR SHORTED
DTCS RELATED TO BATTERY VOLTAGE, IGNITION, OR VIN MESSAGES
BODY CONTROL MODULE POWER AND GROUND
BCM NOT CONFIGURED CORRECTLY
BODY CONTROL MODULE (BCM)
MODULE THAT SET THIS DTC

DIAGNOSTIC TEST

VERIFY IF THE DTC IS ACTIVE

NOTE: **Make sure the battery is fully charged before performing any diagnostic procedure.**

With the scan tool, refer to the Network Review Screen to display a high level

view of the vehicle communication network. Modules shown in red are problem areas.

Always diagnose any Body Control Module (BCM) DTCs first before proceeding.

1. Turn the ignition on.
2. With the scan tool, read DTCs.

   Does the scan tool display this DTC as active?

   Yes

   - Refer to **DIAGNOSIS AND TESTING** and perform the NO RESPONSE FROM BCM (BODY CONTROL MODULE) diagnostic procedure.

   No

   - Refer to **DIAGNOSIS AND TESTING** and perform the STORED LOST COMMUNICATION DTC diagnostic procedure.

U0164-00-LOST COMMUNICATION WITH HVAC CONTROL MODULE

For a complete wiring diagram, **refer to appropriate SYSTEM WIRING DIAGRAMS article** .

WHEN MONITORED

Continuously when the ignition is on.

Battery voltage between 9 and 16 volts.

SET CONDITION

Bus messages not received from the HVAC Control Module for approximately two to five seconds.

POSSIBLE CAUSES

Possible Causes
CAN BUS (+) CIRCUIT SHORTED TO VOLTAGE
CAN BUS (-) CIRCUIT SHORTED TO GROUND
DTCS RELATED TO BATTERY VOLTAGE, IGNITION, OR VIN MESSAGES
BODY CONTROL MODULE (BCM) NOT CONFIGURED CORRECTLY
HVAC POWER AND GROUND
HVAC CONTROL MODULE
MODULE THAT SET THE DTC

DIAGNOSTIC TEST

VERIFY DTC IS ACTIVE

1. Cycle the ignition on.
2. With the scan tool, read the active DTCs.

   Does the scan tool display; U0164-00-LOST COMMUNICATION WITH HVAC CONTROL MODULE as Active?

   Yes

   - Refer to the **DTC INDEX** article and perform the U0164-00-LOST COMMUNICATION WITH HVAC CONTROL MODULE.

   No

   - Refer to **DIAGNOSIS AND TESTING** and perform the STORED LOST COMMUNICATION DTCs diagnostic procedure.

U0200-00-LOST COMMUNICATION WITH PASSENGER DOOR MODULE

For a complete wiring diagram, **refer to appropriate SYSTEM WIRING DIAGRAMS article** .

WHEN MONITORED

With the ignition on for at least five seconds.

Battery voltage between 9 and 16 volts.

SET CONDITION

Bus messages not received from the Passenger Door Module (PDM) for approximately two to five seconds.

POSSIBLE CAUSES

Possible Causes
PASSENGER DOOR MODULE (PDM) POWERS AND GROUNDS
PASSENGER DOOR MODULE (PDM)
CAN IHS BUS (+) CIRCUIT OPEN
CAN IHS BUS (-) CIRCUIT OPEN

DIAGNOSTIC TEST

CHECK FOR AN ACTIVE DTC

NOTE: If DTC U0010-00-CAN INTERIOR BUS or U0011-00-CAN INTERIOR BUS OFF PERFORMANCE is set in the Body Control Module (BCM), diagnose this DTC before continuing with this diagnostic procedure.

1. Turn the ignition on.
2. With the scan tool, read active DTCs.

   Does the scan tool display this DTC as active?

   Yes

   - Refer to **DIAGNOSIS AND TESTING** and perform the NO RESPONSE FROM PDM (PASSENGER DOOR MODULE) diagnostic procedure.

   No

   - Refer to **DIAGNOSIS AND TESTING** and perform the STORED LOST COMMUNICATION DTCS diagnostic procedure.

U0209-00-LOST COMMUNICATION WITH MEMORY SEAT CONTROL MODULE

For a complete wiring diagram, **refer to appropriate SYSTEM WIRING DIAGRAMS article** .

WHEN MONITORED

Continuously when the ignition is on.

Battery voltage between 9 and 16 volts.

Ignition Off Draw (IOD) fuse installed.

Body Control Module (BCM) is configured correctly.

SET CONDITION

Bus messages not received from the Memory Seat Module for approximately two to five seconds.

POSSIBLE CAUSES

Possible Causes
CAN INTERIOR BUS(+) (125k) CIRCUIT SHORTED TO VOLTAGE
CAN INTERIOR BUS(-) (125k) CIRCUIT SHORTED TO GROUND
MEMORY SEAT MODULE POWER AND GROUND
BCM NOT CONFIGURED CORRECTLY
MEMORY SEAT MODULE

MODULE THAT SET THIS DTC

Always perform the Pre-Diagnostic Troubleshooting procedure before proceeding. Refer to COMMUNICATION PRE-DIAGNOSTIC PROCEDURE

DIAGNOSTIC TEST

VERIFY DTC IS ACTIVE

NOTE: Make sure the IOD fuse is installed and the battery is fully charged before proceeding.

1. Turn the ignition on.
2. With the scan tool, read active DTCs.

   Is this DTC active?

   Yes

   - Refer to the **DTC INDEX** article and perform the U0209-LOST COMMUNICATION WITH MEMORY SEAT CONTROL MODULE diagnostic procedure.

   No

   - Refer to **DIAGNOSIS AND TESTING** and perform the STORED LOST COMMUNICATION DTCs diagnostic procedure.

U0422-00-IMPLAUSIBLE DATA RECEIVED FROM BODY CONTROL MODULE

For a complete wiring diagram, **refer to appropriate SYSTEM WIRING DIAGRAMS article** .

WHEN MONITORED

With the ignition on and the vehicle in reverse.

SET CONDITION

Ambient Temperature data not received from the Body Control Module (BCM).

POSSIBLE CAUSES

Possible Causes
NO COMMUNICATION WITH THE BODY CONTROL MODULE (BCM)
DTCS STORED OR ACTIVE IN THE BCM
DRIVER DOOR MODULE

Always perform the Pre-Diagnostic Troubleshooting procedure before proceeding. Refer to COMMUNICATION PRE-DIAGNOSTIC PROCEDURE .

DIAGNOSTIC TEST

1. **CHECK FOR AN ACTIVE DIAGNOSTIC TROUBLE CODE (DTC)**
    1. Turn the ignition on.
    2. With the scan tool, read Drivers Door Module DTCs.

    Does the scan tool display this DTC as active?

    Yes

    - Go To 2

    No

    - The condition that caused this code to set is not present at this time. Check for an intermittent condition by inspecting the related wiring harness for chafed, pierced, pinched, and partially broken wires. Also inspect the related connectors for broken, bent, pushed out, spread, corroded, or contaminated terminals.
    - Perform the BODY VERIFICATION TEST. Refer to **STANDARD PROCEDURE** .
2. **VERIFY BCM IS ACTIVE ON THE CAN BUS**
    1. With the scan tool, select ECU View.
    2. Verify that the BCM is active on the bus.

    Is the BCM active on the bus?

    Yes

    - Go To 3

    No

    - Refer to **DIAGNOSIS AND TESTING** and perform the NO RESPONSE FROM BCM diagnostic procedure.
    - Perform the BODY VERIFICATION TEST. Refer to **STANDARD PROCEDURE** .
3. **DTCS STORED OR ACTIVE IN THE BCM**
    1. With the scan tool, read BCM DTCs.

    Are any DTCs active or stored in the BCM?

    Yes

- Refer to the **BODY CONTROL MODULE (BCM) - DIAGNOSTIC CODE INDEX** article and perform the appropriate diagnostic procedure.

No

- Replace and program the Driver Door Module in accordance with the Service Information. Refer to **MODULE, DOOR, REMOVAL** .
- Perform the BODY VERIFICATION TEST. Refer to **STANDARD PROCEDURE** .

U0424-00-IMPLAUSIBLE DATA RECEIVED FROM HVAC CONTROL MODULE

For a complete wiring diagram, **refer to appropriate SYSTEM WIRING DIAGRAMS article** .

WHEN MONITORED

With the ignition on for at least five seconds.

Battery voltage between 9 and 16 volts.

Body Control Module (BCM) is configured correctly.

SET CONDITION

Whenever the communication data sent over the CAN BUS from the HVAC Control Module is missing part of the message, the message is corrupted, or the message is an irrational value.

POSSIBLE CAUSES

Possible Causes
DTCS RELATED TO BATTERY VOLTAGE, IGNITION, OR VIN MESSAGES
BCM NOT CONFIGURED CORRECTLY
HVAC POWER AND GROUND
HVAC CONTROL MODULE
MODULE THAT SET THE DTC

DIAGNOSTIC TEST

1. **VERIFY DTC IS ACTIVE**

NOTE: Make sure the battery voltage is between 9 and 16 volts before proceeding.

1. With the scan tool, read active DTCs.

   Is this DTC active?

Yes

- Go To 2

No

- Refer to **DIAGNOSIS AND TESTING** and perform the STORED LOST COMMUNICATION DTC diagnostic procedure.

2. **CHECK FOR ANY OF THE FOLLOWING ACTIVE DTCS**
   1. With the scan tool, read active DTCs from all modules.

      NOTE: Check for BCM configuration, Bus hardware electrical issues, VIN Missing/Mismatch, battery or ignition related DTCs.

      Does the scan tool display any active DTCs to the conditions listed above?

      Yes

      - Go to and perform the appropriate diagnostic procedure.

      No

      - Go To 3

3. **VERIFY THE HVAC IS ACTIVE ON THE BUS**
   1. Turn the ignition on.
   2. With the scan tool, verify the HVAC is active on the bus.

      Is the HVAC active on the bus?

      Yes

      - Go To 4

      No

      - Refer to **DIAGNOSIS AND TESTING** and perform the NO RESPONSE FROM HVAC diagnostic procedure.

4. **CHECK FOR ADDITIONAL COMMUNICATION RELATED DTCS**
   1. With the scan tool, read all the DTCs.

      Is there more than one module with active DTCs "Logged Against" the HVAC?

      Yes

- Replace/update the HVAC Module in accordance with the Service Information. Refer to **CONTROL, A/C AND HEATER, REMOVAL** .
- Perform the appropriate verification test for the module. If there is no verification test for the associated module perform the BODY VERIFICATION TEST. Refer to **STANDARD PROCEDURE** .

No

- Go To 5

5. **CLEAR DTC IN MODULE SETTING FAULT**
   1. With the scan tool, select the module setting the DTC against the HVAC.
   2. Clear active DTCs.

   Is this DTC still active?

   Yes

   - Replace/update the module that set this DTC in accordance with the Service Information.
   - Perform the appropriate verification test for the module being replaced. If there is no verification test for the associated module perform the BODY VERIFICATION TEST. Refer to **STANDARD PROCEDURE** .

   No

   - The condition is not present at this time. Using the wiring diagrams as a guide, check all related splices and connectors for signs of water intrusion, corrosion, pushed out or bent terminals, and correct pin tension.
   - Perform the appropriate verification test for the module. If there is no verification test for the associated module perform the BODY VERIFICATION TEST. Refer to **STANDARD PROCEDURE** .

U050A-00-IMPLAUSIBLE DATA RECEIVED FROM MEMORY SEAT CONTROL MODULE

For a complete wiring diagram, **refer to appropriate SYSTEM WIRING DIAGRAMS article** .

WHEN MONITORED

With the ignition on for at least five seconds.

Battery voltage between 9 and 16 volts.

Body Control Module (BCM) is configured correctly.

SET CONDITION

Whenever the communication data sent over the CAN BUS from the Memory Seat (MSMD) Module is missing part of the message, the message is corrupted, or the message is an irrational value.

POSSIBLE CAUSES

Possible Causes
DTCS RELATED TO BATTERY VOLTAGE, IGNITION, OR VIN MESSAGES
BCM NOT CONFIGURED CORRECTLY
MEMORY SEAT MODULE POWER AND GROUND
MEMORY SEAT MODULE
MODULE THAT SET THE DTC

Always perform the Pre-Diagnostic Troubleshooting procedure before proceeding. Refer to COMMUNICATION PRE-DIAGNOSTIC PROCEDURE .

DIAGNOSTIC TEST

1. **VERIFY DTC IS ACTIVE**

   NOTE: Make sure the battery voltage is between 9 and 16 volts before proceeding.

   1. With the scan tool, read active DTCs.

      Is this DTC active?

      Yes

      - Go To 2

      No

      - Refer to **DIAGNOSIS AND TESTING** and perform the STORED LOST COMMUNICATION DTC diagnostic procedure.
2. **CHECK FOR ANY OF THE FOLLOWING ACTIVE DTCS**
   1. With the scan tool, read active DTCs from all modules.

      NOTE: Check for BCM configuration, Bus hardware electrical issues, VIN Missing/Mismatch, battery or ignition related DTCs.

      Does the scan tool display any active DTCs to the conditions listed above?

      Yes

- Go to and perform the appropriate diagnostic procedure.

No

- Go To 3

3. **VERIFY THE MSMD IS ACTIVE ON THE BUS**
   1. Turn the ignition on.
   2. With the scan tool, verify the MSMD is active on the bus.

   Is the MSMD active on the bus?

   Yes

   - Go To 4

   No

   - Refer to **DIAGNOSIS AND TESTING** and perform the NO RESPONSE FROM MSMD diagnostic procedure.

4. **CHECK FOR ADDITIONAL COMMUNICATION RELATED DTCS**
   1. With the scan tool, read all the DTCs.

   Is there more than one module with active DTCs "Logged Against" the MSMD?

   Yes

   - Replace/update the MSMD Module in accordance with the Service Information. Refer to **MODULE, MEMORY, SEAT, REMOVAL** .
   - Perform the appropriate verification test for the module. If there is no verification test for the associated module perform the BODY VERIFICATION TEST. Refer to **STANDARD PROCEDURE** .

   No

   - Go To 5

5. **CLEAR DTC IN MODULE SETTING FAULT**
   1. With the scan tool, select the module setting the DTC against the MSMD.
   2. Clear active DTCs.

   Is this DTC still active?

   Yes

   - Replace/update the module that set this DTC in accordance with the Service Information.

- Perform the appropriate verification test for the module being replaced. If there is no verification test for the associated module perform the BODY VERIFICATION TEST. Refer to **STANDARD PROCEDURE** .

No

- The condition is not present at this time. Using the wiring diagrams as a guide, check all related splices and connectors for signs of water intrusion, corrosion, pushed out or bent terminals, and correct pin tension.
- Perform the appropriate verification test for the module. If there is no verification test for the associated module perform the BODY VERIFICATION TEST. Refer to **STANDARD PROCEDURE** .

U11FA-00-LOST COMMUNICATION WITH RIGHT BLIND SPOT SENSOR

For a complete wiring diagram, **refer to appropriate SYSTEM WIRING DIAGRAMS article** .

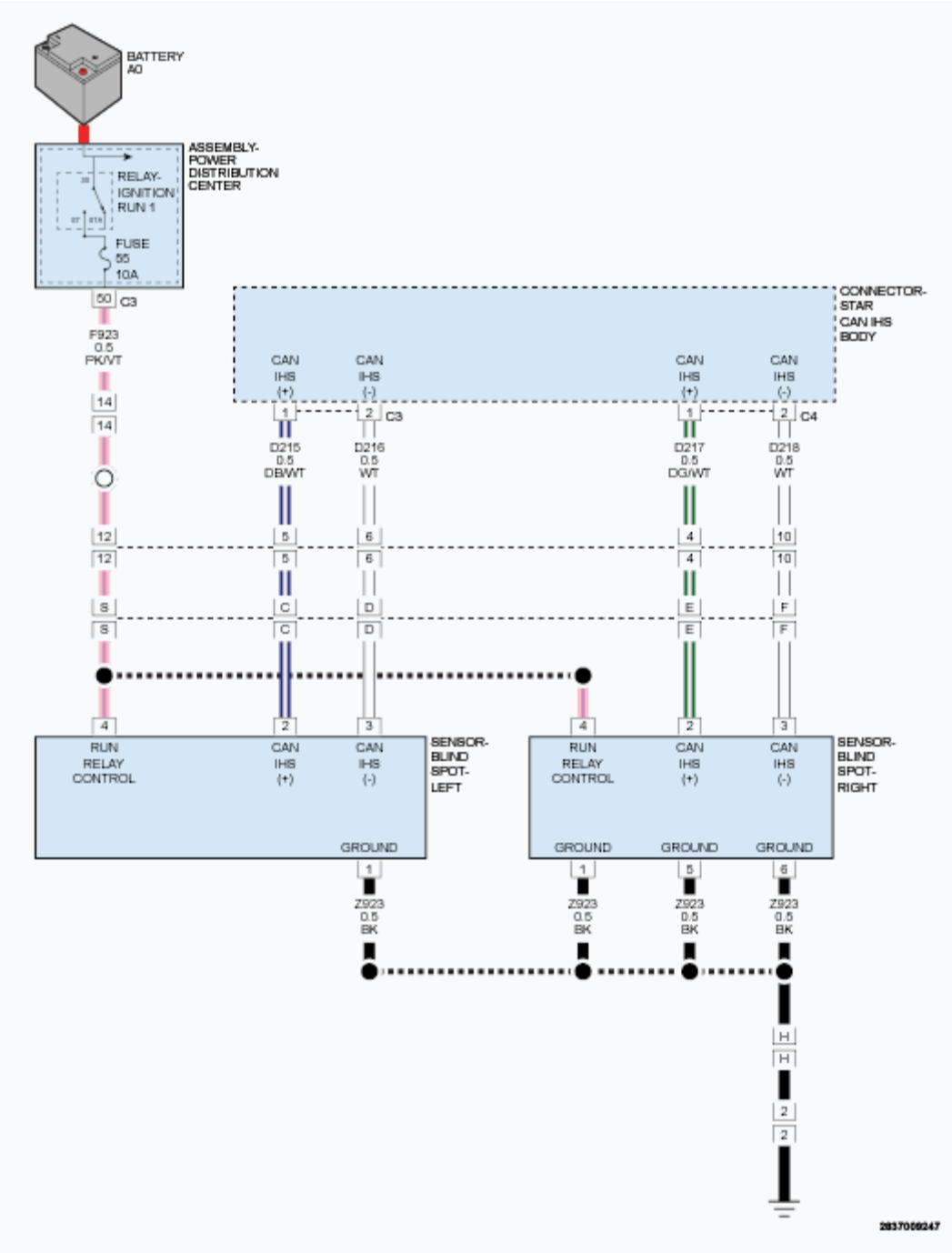

Fig. 74: Identifying Left/Right Blind Spot Sensor Circuit Diagram
Courtesy of CHRYSLER GROUP, LLC

THEORY OF OPERATION

The Blind Spot Monitor (BSM) system has two primary components; a Left Blind Spot Sensor (LBSS) and Right Blind Spot Sensor (RBSS). Each sensor includes an internal microprocessor that monitors and controls both the sensor and the blind spot indicator. The two sensors are concealed behind the outboard ends of the rear bumper fascia.

The microprocessor analyzes the sensor data to determine whether any detected objects should be reported. When it is determined that an object should be reported, the Sensor controls its respective left or right BSM display directly through a hard wired output to the Outside Rearview Mirrors. The sensor also sends an electronic request message over the CAN IHS Bus to the radio. The Radio then mutes any current output through the speakers and generates a chime as an audible alert.

Each sensor performs a bulb test by illuminating the triangle icon in the Outside Rearview Mirror at each ignition ON cycle.

WHEN MONITORED

With the ignition on.

SET CONDITION

The Left Blind Spot Sensor (LBSS) does not receive messages from the Right Blind Spot Sensor (RBSS).

POSSIBLE CAUSES

Possible Causes
FUSED IGNITION OUTPUT (RUN) CIRCUIT OPEN OR SHORTED TO GROUND
GROUND CIRCUIT(S) OPEN
CAN IHS BUS CIRCUIT(S) OPEN
RIGHT BLIND SPOT SENSOR (RBSS)

DIAGNOSTIC TEST

1. **CHECK FOR AN ACTIVE DIAGNOSTIC TROUBLE CODE (DTC)**
    1. Turn the ignition on.
    2. With the scan tool, read DTCs.

    Does the scan tool display this DTC as active?

    Yes

    - Go To 2

    No

    - The condition that caused this code to set is not present at this time. Check for an intermittent condition by inspecting the related wiring harness for chafed, pierced, pinched, and partially broken wires. Also inspect the related connectors for broken, bent, pushed out, spread, corroded, or contaminated terminals.
    - Perform the BODY VERIFICATION TEST. Refer to **STANDARD PROCEDURE** .
2. **(F923) FUSED IGNITION OUTPUT (RUN) CIRCUIT OPEN**

1. Disconnect the Right Blind Spot Sensor (RBSS) harness connector.
2. Turn the ignition on.
3. Using a volt meter, measure the voltage of the (F923) Fused Ignition Output (RUN) circuit.

   Is voltage present?

   Yes

   - Go To 3

   No

   - Repair the (F923) Fused Ignition Switch Output (RUN) circuit for an open or short to ground.
   - Perform the BODY VERIFICATION TEST. Refer to **STANDARD PROCEDURE** .

3. **(Z923) GROUND CIRCUIT(S) OPEN**
   1. Turn the ignition off.
   2. Using an ohm meter, measure the resistance between ground and the (Z923) Ground circuits at the RBSS harness connector.

      Is the resistance below 5.0 Ohms?

      Yes

      - Go To 4

      No

      - Repair the (Z923) Ground circuit(s) for an open.
      - Perform the BODY VERIFICATION TEST. Refer to **STANDARD PROCEDURE** .

4. **CHECK THE (D217) AND (D218) CAN IHS BUS CIRCUITS FOR AN OPEN**
   1. Turn the ignition on.
   2. Measure the resistance of the (D217) CAN IHS Bus (-) circuit between the Rear CAN IHS Star Connector C4 harness connector and the RBSS harness connector
   3. Measure the resistance of the (D218) CAN IHS Bus (+) circuit between the Rear CAN IHS Star Connector C4 harness connector and the RBSS harness connector.

      Is resistance below 5.0 Ohms on both circuits?

      Yes

      - Replace the Right Blind Spot Sensor in accordance with the Service Information. Refer to **SENSOR, BLIND SPOT, REMOVAL** .

- Perform the BODY VERIFICATION TEST. Refer to **STANDARD PROCEDURE** .

No

- Repair the (D218) or (D217) CAN IHS Bus circuit for an open. Inspect the connector for damage.
- Perform the BODY VERIFICATION TEST. Refer to **STANDARD PROCEDURE** .

U11FB-00-LOST COMMUNICATION WITH LEFT BLIND SPOT SENSOR

For a complete wiring diagram, **refer to appropriate SYSTEM WIRING DIAGRAMS article** .

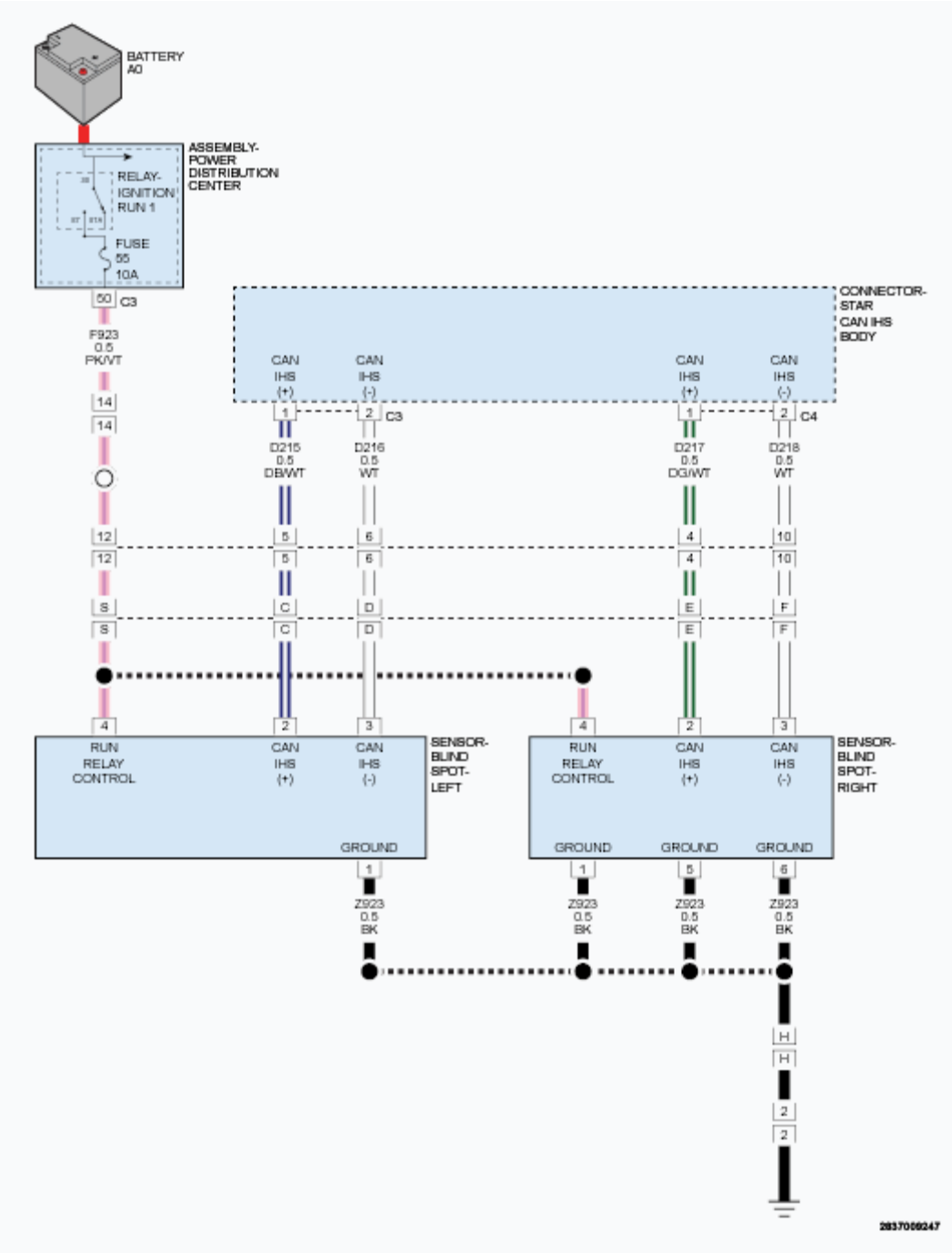

Fig. 75: Identifying Left/Right Blind Spot Sensor Circuit Diagram
Courtesy of CHRYSLER GROUP, LLC

THEORY OF OPERATION

The Blind Spot Monitor (BSM) system has two primary components; a Left Blind Spot Sensor (LBSS) and Right Blind Spot Sensor (RBSS). Each sensor includes an internal microprocessor that monitors and controls both the sensor and the blind spot indicator. The two sensors are concealed behind the outboard ends of the rear bumper fascia.

The microprocessor analyzes the sensor data to determine whether any detected objects should be reported. When it is determined that an object should be reported, the Sensor controls its respective left or right BSM display directly through a hard wired output to the Outside Rearview Mirrors. The sensor also sends an electronic request message over the CAN IHS Bus to the radio. The Radio then mutes any current output through the speakers and generates a chime as an audible alert.

Each sensor performs a bulb test by illuminating the triangle icon in the Outside Rearview Mirror at each ignition ON cycle.

WHEN MONITORED

With the ignition on.

SET CONDITION

The Right Blind Spot Sensor (LBSS) does not receive messages from the Left Blind Spot Sensor (RBSS).

POSSIBLE CAUSES

Possible Causes
FUSED IGNITION OUTPUT (RUN) CIRCUIT OPEN OR SHORTED TO GROUND
GROUND CIRCUIT(S) OPEN
CAN IHS BUS CIRCUIT(S) OPEN
LEFT BLIND SPOT SENSOR (RBSS)

DIAGNOSTIC TEST

VERIFY DTC IS ACTIVE

1. Cycle the ignition on.
2. With the scan tool, read the active DTCs.

   Does the scan tool display; U11FB-00- LOST COMMUNICATION WITH LEFT BLIND SPOT SENSOR as Active?

   Yes

   - Refer to **DIAGNOSIS AND TESTING** and perform the U11FB-00- LOST COMMUNICATION WITH LEFT BLIND SPOT SENSOR.

   No

   - Refer to **DIAGNOSIS AND TESTING** and perform the STORED LOST COMMUNICATION DTCs diagnostic procedure.

U113D-00-LOST COMMUNICATION WITH MASTER POWER WINDOW SWITCH

For a complete wiring diagram, **refer to appropriate SYSTEM WIRING DIAGRAMS article** .

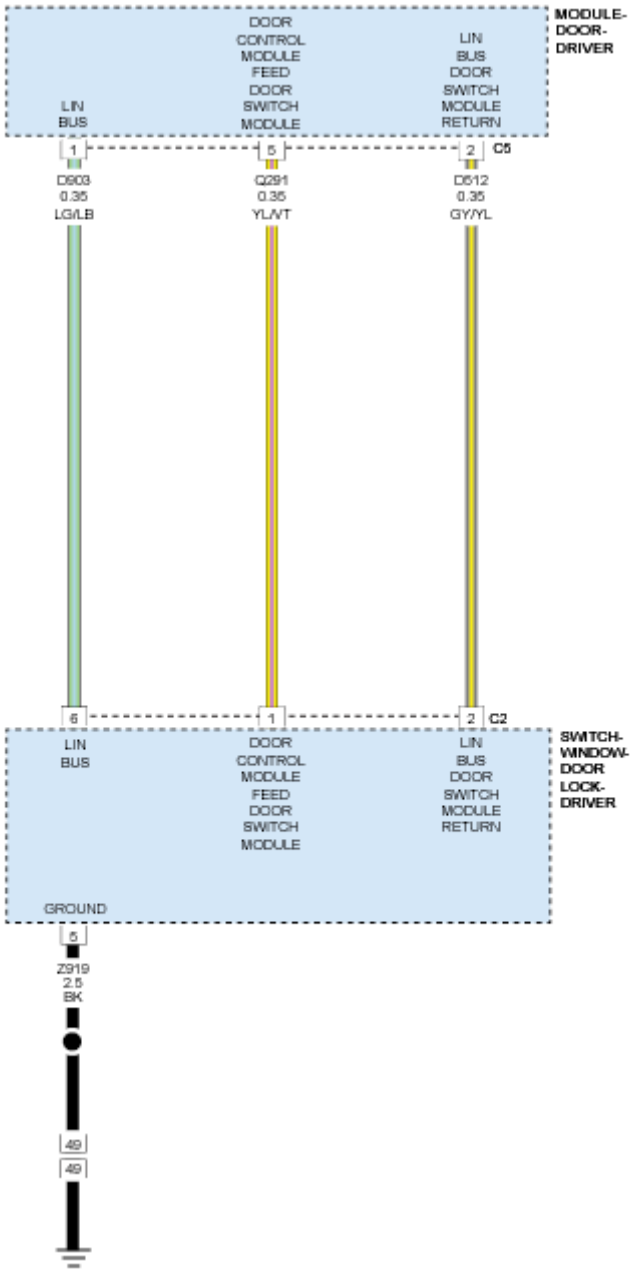

Fig. 76: Driver Door Lock/Unlock Switch LIN BUS, Power & Ground Circuit Diagram
Courtesy of CHRYSLER GROUP, LLC

WHEN MONITORED

Whenever the module is awake.

SET CONDITION

When one or both door modules have lost communication with the Driver Window/Door Lock Switch, this code will set.

POSSIBLE CAUSES

Possible Causes
(Q291) DOOR MODULE FEED TO DOOR SWITCH OPEN
(D903) DRIVER DOOR LIN BUS CIRCUIT SHORT TO GROUND
(D903) DRIVER DOOR LIN BUS CIRCUIT SHORT TO VOLTAGE
(D903) DRIVER DOOR LIN BUS CIRCUIT OPEN
(D512) DRIVER DOOR LIN BUS RETURN CIRCUIT OPEN
DRIVER WINDOW/DOOR LOCK SWITCH
DRIVER DOOR MODULE (DDM)

DIAGNOSTIC TEST

1. **TEST FOR INTERMITTENT CONDITION**

   NOTE: Make sure the battery is fully charged before proceeding.

   1. Cycle the ignition on.
   2. With the scan tool, record and erase DTCs.
   3. Try to operate the Front Windows up and down several times.
   4. Wait 30 seconds.
   5. With the scan tool, read the active DTCs.

   Does the scan tool display; U113D-00-LOST COMMUNICATION WITH MASTER POWER WINDOW SWITCH?

   Yes

   - Go To 2

   No

   - Test complete, the condition or conditions that originally set this DTC are not present at this time. Using the wiring diagrams as a guide, check all related splices and connectors for signs of water intrusion, corrosion, pushed out or bent terminals and poor pin fit.
   - Perform the BODY VERIFICATION TEST. Refer to **STANDARD PROCEDURE** .

2. **(Q291) DOOR MODULE FEED TO DOOR SWITCH CIRCUIT OPEN**
   1. With the scan tool, erase the DTCs.
   2. Cycle the ignition off.
   3. Disconnect the Driver Window/Door Lock Switch harness connector.

4. Cycle the ignition on.
5. Using a 12-volt test light connected to Ground, check the (Q291) Door Module Feed To Window Switch circuit in the Driver Window/Door Lock Switch harness connector.

   Does the test light illuminate brightly?

   Yes

   - Go To 3

   No

   - Go To 9

3. **CHECK THE LIN BUS CIRCUIT**
   1. Measure the voltage between the (D903) Driver Door LIN Bus circuit and the (D512) Driver Door LIN Bus Return circuit in the Driver Window/Door Lock Switch C1 connector.

      Is the voltage above 8.0 volts?

      Yes

      - Go To 4

      No

      - Go To 5

4. **(D903) DRIVER DOOR LIN BUS CIRCUIT SHORT TO VOLTAGE**

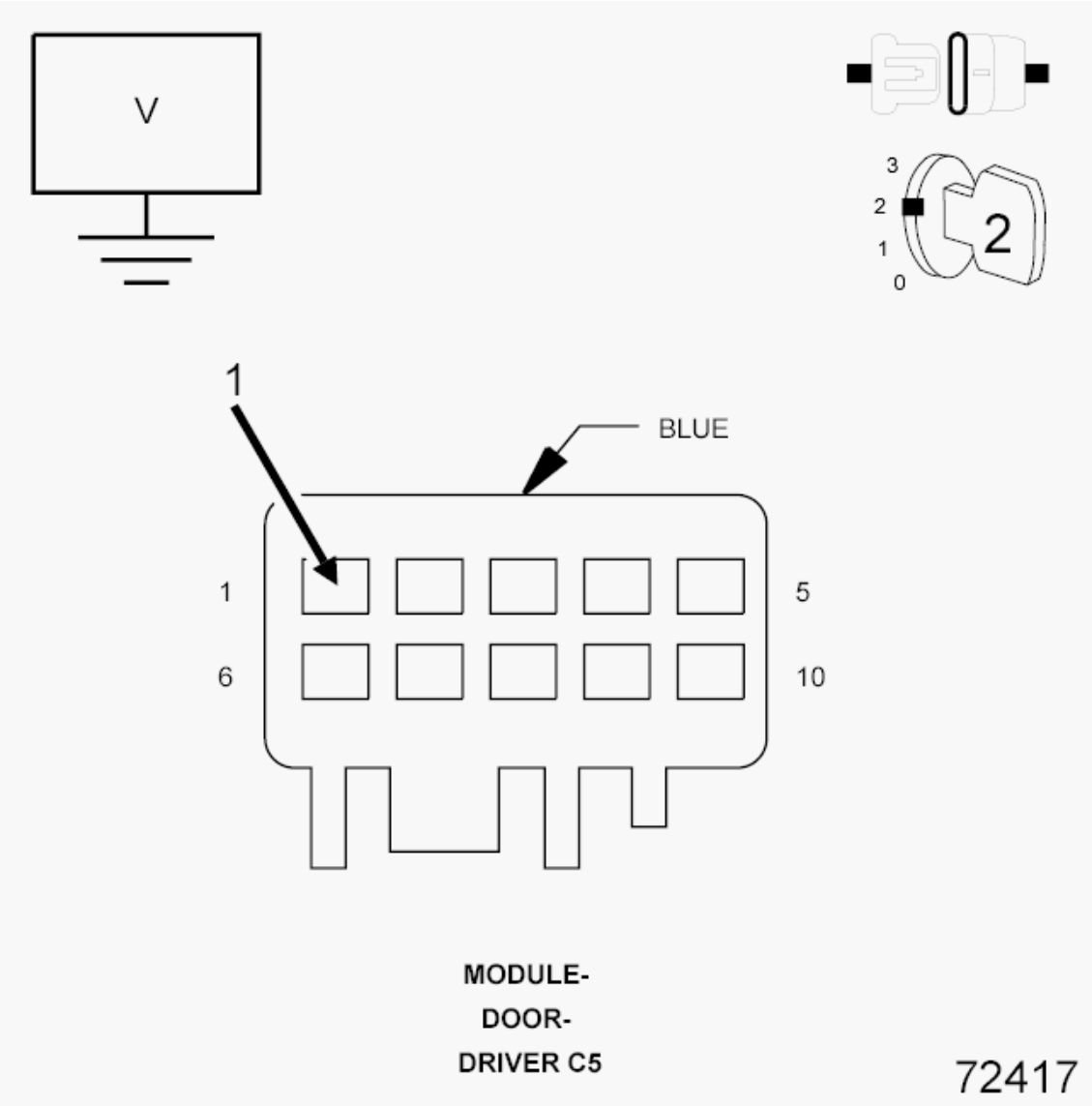

Fig. 77: Checking LIN BUS Circuit For Short To Voltage
Courtesy of CHRYSLER GROUP, LLC

1. Cycle the ignition off.
2. Disconnect the Driver Door Module C5 harness connector.
3. Cycle the ignition on.
4. Measure the voltage between Ground and the (D903) Driver Door LIN Bus circuit.

   Is there any voltage present?

   Yes

   - Repair the (D903) Driver Door LIN Bus circuit for a short to voltage.
   - Perform the BODY VERIFICATION TEST. Refer to **STANDARD PROCEDURE** .

No

- Replace the Driver Window/Door Lock Switch. Refer to **SWITCH, POWER WINDOW, REMOVAL** .
- Perform the BODY VERIFICATION TEST. Refer to **STANDARD PROCEDURE** .

5. **(D512) DRIVER DOOR LIN BUS RETURN CIRCUIT OPEN**
   1. Using a 12-volt test light connected to 12-volts, check the (D512) Driver Door LIN Bus Return circuit in the Driver Window/Door Lock Switch C1 harness connector.

      Does the test light illuminate brightly?

      Yes

      - Go To 6

      No

      - Repair the (D512) Driver Door LIN Bus Return circuit for an open.
      - Perform the BODY VERIFICATION TEST. Refer to **STANDARD PROCEDURE** .
6. **(D903) DRIVER DOOR LIN BUS CIRCUIT SHORTED TO VOLTAGE**

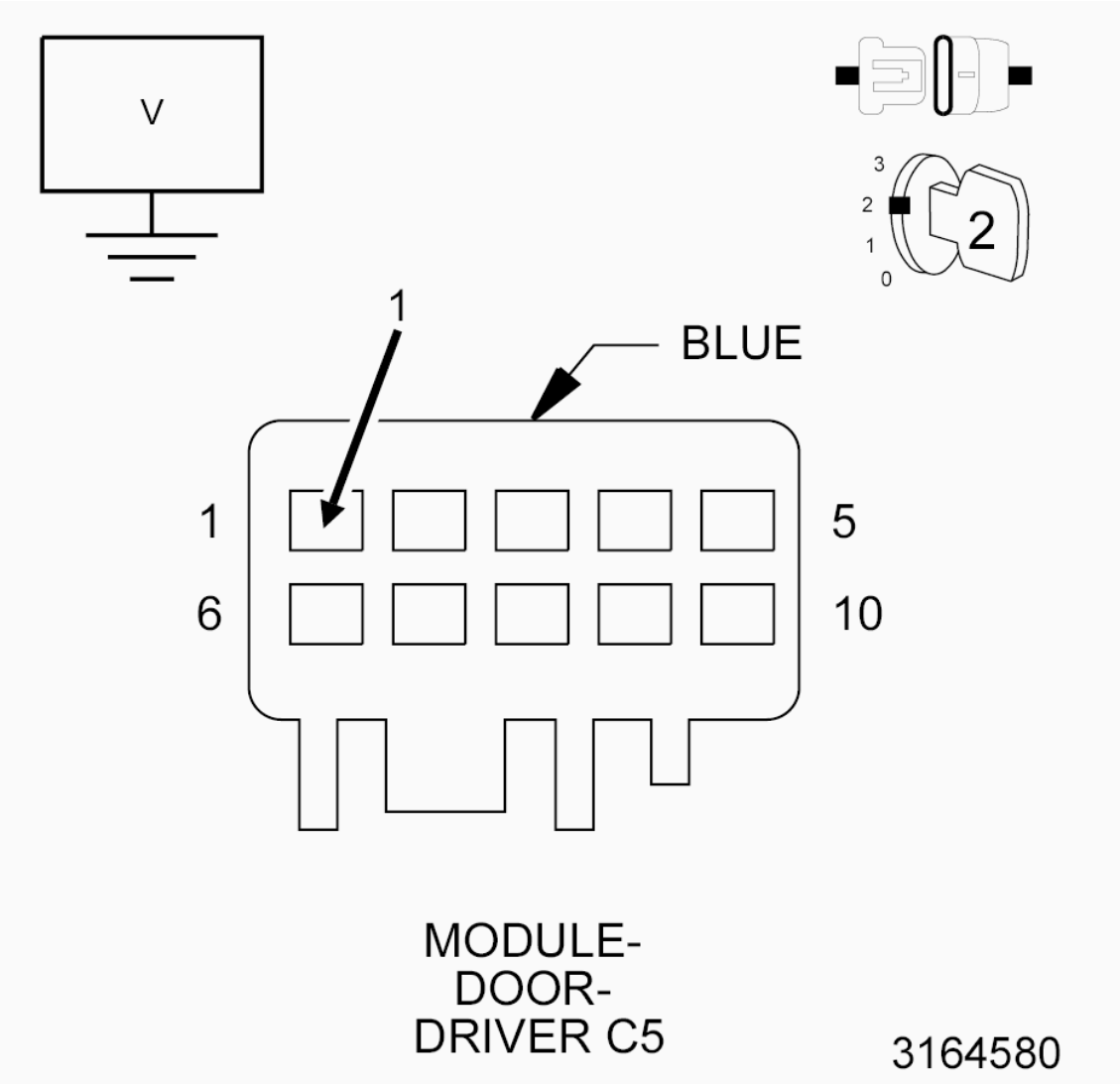

Fig. 78: Checking Driver Door Lin Bus Circuit For Short To Voltage
Courtesy of CHRYSLER GROUP, LLC

1. Cycle the ignition on.
2. Measure the voltage between Ground and the (D903) Driver Door LIN Bus circuit in the Door Module C5 harness connector.

   Is there any voltage present?

   Yes

   - Repair the short to voltage in the (D903) LIN Bus circuit.
   - Perform the BODY VERIFICATION TEST. Refer to **STANDARD PROCEDURE** .

   No

- Go To 7

7. **(D903) DRIVER DOOR LIN BUS CIRCUIT SHORTED TO GROUND**
   1. Measure the resistance between Ground and the (D903) Driver Door LIN Bus circuit in the Door Module C5 harness connector.

      Is the resistance below 10K Ohms?

      Yes

      - Repair the short to the ground in the (D903) Driver Door LIN Bus circuit.
      - Perform the BODY VERIFICATION TEST. Refer to **STANDARD PROCEDURE** .

      No

      - Go To 8

8. **(D903) DRIVER DOOR LIN BUS CIRCUIT OPEN**
   1. Measure the resistance of the (D903) Driver Door LIN Bus circuit between the Door Module C5 harness connector and the Driver Window/Door Lock Switch C1 harness connector.

      Is the resistance below 2.0 Ohms?

      Yes

      - Replace the Driver Door Module in accordance with the Service Information. Refer to **MODULE, DOOR, REMOVAL** .
      - Perform the BODY VERIFICATION TEST. Refer to **STANDARD PROCEDURE** .

      No

      - Repair the (D903) Driver Door LIN Bus circuit for an open.
      - Perform the BODY VERIFICATION TEST. Refer to **STANDARD PROCEDURE** .

9. **(Q291) DOOR MODULE FEED TO DOOR SWITCH WIRE OPEN**
   1. Cycle the ignition off.
   2. Disconnect the Driver Window/Door Lock Switch C1 connector.
   3. Measure the resistance of the (Q291) Door Module Feed To Door Switch circuit between the Door Module C5 harness connector and the Driver Window/Door Lock Switch C1 harness connector.

      Is the resistance below 2.0 Ohms?

      Yes

      - Replace the Driver Door Module in accordance with the Service Information. Refer to **MODULE, DOOR, REMOVAL** .

- Perform the BODY VERIFICATION TEST. Refer to **STANDARD PROCEDURE** .

No

- Repair the (Q291) Door Module Feed To Door Switch circuit for an open.
- Perform the BODY VERIFICATION TEST. Refer to **STANDARD PROCEDURE** .

U147D-00-IMPLAUSIBLE DATA RECEIVED FROM RIGHT BLIND SPOT SENSOR

For a complete wiring diagram, **refer to appropriate SYSTEM WIRING DIAGRAMS article** .

WHEN MONITORED

With the ignition on.

SET CONDITION

Incorrect data received from the Right Blind Spot Sensor (RBSS).

POSSIBLE CAUSES

Possible Causes
NO COMMUNICATION WITH THE RIGHT BLIND SPOT SENSOR (RBSS)
DTCS STORED OR ACTIVE IN THE RBSS
RIGHT BLIND SPOT SENSOR (RBSS)

DIAGNOSTIC TEST

1. **CHECK FOR AN ACTIVE DIAGNOSTIC TROUBLE CODE (DTC)**

NOTE: Diagnose and repair any Right Blind Spot Sensor DTCs before proceeding with this diagnostic procedure.

1. Turn the ignition on.
2. With the scan tool, read active DTCs.

Does the scan tool display this DTC as active?

Yes

- Go To 2

No

- The condition that caused this code to set is not present at this time. Check for an intermittent

condition by inspecting the related wiring harness for chafed, pierced, pinched, and partially broken wires. Also inspect the related connectors for broken, bent, pushed out, spread, corroded, or contaminated terminals.

- Perform the BODY VERIFICATION TEST. Refer to **STANDARD PROCEDURE** .

2. **VERIFY THE RBSS IS ACTIVE ON THE CAN BUS**
   1. With the scan tool, verify that the RBSS is active on the bus.

      Is the RBSS active on the bus?

      Yes

      - Replace and program the Blind Spot Sensor in accordance with the Service Information. Refer to **SENSOR, BLIND SPOT, REMOVAL** .
      - Perform the BODY VERIFICATION TEST. Refer to **STANDARD PROCEDURE** .

      No

      - Refer to **DIAGNOSIS AND TESTING** and perform the NO RESPONSE FROM RBSS diagnostic procedure.
      - Perform the BODY VERIFICATION TEST. Refer to **STANDARD PROCEDURE** .

U147E-00-IMPLAUSIBLE DATA RECEIVED FROM LEFT BLIND SPOT SENSOR

For a complete wiring diagram, **refer to appropriate SYSTEM WIRING DIAGRAMS article** .

WHEN MONITORED

With the ignition on.

SET CONDITION

Incorrect data received from the Left Blind Spot Sensor (LBSS).

POSSIBLE CAUSES

Possible Causes
NO COMMUNICATION WITH THE LEFT BLIND SPOT SENSOR (LBSS)
DTCS STORED OR ACTIVE IN THE LBSS
LEFT BLIND SPOT SENSOR (LBSS)

DIAGNOSTIC TEST

1. **CHECK FOR AN ACTIVE DIAGNOSTIC TROUBLE CODE (DTC)**

NOTE: Diagnose and repair any Left Blind Spot Sensor DTCs before proceeding with this diagnostic procedure.

1. Turn the ignition on.
2. With the scan tool, read active DTCs.

   Does the scan tool display this DTC as active?

   Yes

   - Go To 2

   No

   - The condition that caused this code to set is not present at this time. Check for an intermittent condition by inspecting the related wiring harness for chafed, pierced, pinched, and partially broken wires. Also inspect the related connectors for broken, bent, pushed out, spread, corroded, or contaminated terminals.
   - Perform the BODY VERIFICATION TEST. Refer to **STANDARD PROCEDURE** .

2. **VERIFY THE LBSS IS ACTIVE ON THE CAN IHS BUS**
   1. With the scan tool, verify that the LBSS is active on the bus.

      Is the LBSS active on the bus?

      Yes

      - Replace and program the Blind Spot Sensor in accordance with the Service Information. Refer to **SENSOR, BLIND SPOT, REMOVAL** .
      - Perform the BODY VERIFICATION TEST. Refer to **STANDARD PROCEDURE** .

      No

      - Refer to **DIAGNOSIS AND TESTING** and perform the NO RESPONSE FROM LBSS diagnostic procedure.
      - Perform the BODY VERIFICATION TEST. Refer to **STANDARD PROCEDURE** .

2014 ACCESSORIES AND EQUIPMENT

Drivetrain Control Module (DTCM) - Electrical Diagnostics - Cherokee

DIAGNOSTIC CODE INDEX

DIAGNOSTIC CODE INDEX

DTC	Description
C008E-00	ECU INTERNAL PERFORMANCE
C140B-11	TRANSFER CASE MOTOR - CIRCUIT SHORT TO GROUND
C140B-12	TRANSFER CASE MOTOR - CIRCUIT SHORT TO BATTERY
C140B-13	TRANSFER CASE MOTOR - CIRCUIT OPEN
C140B-4B	TRANSFER CASE MOTOR - OVER TEMPERATURE
C1415-92	TRANFER CASE MOTOR CURRENT - PERFORMANCE OR INCORRECT OPERATION
C1440-11	TRANSFER CASE CLUTCH PRESSURE SENSOR - CIRCUIT SHORT TO GROUND
C1440-12	TRANSFER CASE CLUTCH PRESSURE SENSOR - CIRCUIT SHORT TO BATTERY
C1440-1C	TRANSFER CASE CLUTCH PRESSURE SENSOR - CIRCUIT VOLTAGE OUT OF RANGE
C1440-64	TRANSFER CASE CLUTCH PRESSURE SENSOR - SIGNAL PLAUSIBILITY FAILURE
C1477-4B	TRANSFER CASE CLUTCH - OVER TEMPERATURE
C1492-00	PTU INTERNAL PERFOMANCE
C1493-00	RDM INTERNAL PERFOMANCE
C1494-92	PTU FORK POSITION - PERFORMANCE OR INCORRECT OPERATION
C1495-16	PTU - CIRCUIT VOLTAGE BELOW THRESHOLD
C1495-17	PTU - CIRCUIT VOLTAGE ABOVE THRESHOLD
C1495-98	PTU - COMPONENT OR SYSTEM OVER TEMPERATURE
C1496-92	PTU MOTOR POSITION - PERFORMANCE OR INCORRECT OPERATION
C1498-92	RDM FORK POSITION - PERFORMANCE OR INCORRECT OPERATION
C1499-92	RDM MOTOR POSITION - PERFORMANCE OR INCORRECT OPERATION
C149B-16	RDM - CIRCUIT VOLTAGE BELOW THRESHOLD
C149B-17	RDM - CIRCUIT VOLTAGE ABOVE THRESHOLD
C149B-98	RDM - COMPONENT OR SYSTEM OVER TEMPERATURE
C2129-16	BATTERY VOLTAGE - CIRCUIT VOLTAGE BELOW THRESHOLD
C2129-17	BATTERY VOLTAGE - CIRCUIT VOLTAGE ABOVE THRESHOLD
C2206-00	VEHICLE CONFIGURATION MISMATCH
C2223-00	ECU CONFIGURATION MISMATCH
U0002-00	CAN C BUS OFF PERFORMANCE
U0100-00	LOST COMMUNICATION WITH ECM/PCM

U0101-00	LOST COMMUNICATION WITH TCM
U0121-00	LOST COMMUNICATION WITH ANTI-LOCK BRAKE SYSTEM (ABS) CONTROL MODULE
U0131-00	LOST COMMUNICATION WITH ELECTRIC POWER STEERING CONTROL MODULE
U0140-00	LOST COMMUNICATION WITH BODY CONTROL MODULE
U0151-00	LOST COMMUNICATION WITH OCCUPANT RESTRAINT CONTROLLER (ORC)
U0401	IMPLAUSIBLE DATA RECEIVED FROM ECM/PCM
U0402	IMPLAUSIBLE DATA RECEIVED FROM TCM
U0415	IMPLAUSIBLE DATA RECEIVED FROM ABS
U0420-00	INVALID DATA RECEIVED FROM POWER STEERING CONTROL MODULE
U0422	IMPLAUSIBLE DATA RECEIVED FROM BODY CONTROL MODULE
U0452-00	IMPLAUSIBLE DATA RECEIVED FROM RESTRAINTS CONTROL MODULE
U1203-00	PTU LOST COMMUNICATION WITH DTCM
U1204-00	RDM LOST COMMUNICATION WITH DTCM
U1206-00	LOST COMMUNICATION WITH ELECTRONIC PARK BRAKE MODULE
U1484-00	IMPLAUSIBLE DATA RECEIVED FROM ELECTRONIC PARK BRAKE MODULE

DIAGNOSIS AND TESTING

C008E-00-ECU INTERNAL PERFORMANCE

For a complete wiring diagram, **refer to appropriate SYSTEM WIRING DIAGRAMS article** .

WHEN MONITORED

Ignition on.

SET CONDITION

The Drive Train Control Module (DTCM) runs a self diagnostic test to validate proper controller operation. This DTC will set if the controller has failed one or more internal test.

POSSIBLE CAUSES

Possible Causes
DRIVE TRAIN CONTROL MODULE (DTCM)

DIAGNOSTIC TEST

1. **VERIFY THE DTC IS ACTIVE**

1. Turn the ignition on.
2. Using the scan tool, read the DTCs.

   Is the DTC active at this time?

   Yes

   - Replace the Drive Train Control Module (DTCM) in accordance with the Service Information. Refer to **MODULE, DRIVETRAIN CONTROL, REMOVAL** .
   - Perform the DTCM VERIFICATION TEST. Refer to **STANDARD PROCEDURE**.

   No

   - Go To 2

2. **CHECK THE WIRING AND CONNECTORS**
   1. The conditions necessary to set the DTC are not present at this time.
   2. Using the schematics as a guide, inspect the wiring and connectors specific to this module. Wiggle the wiring and connectors while checking for shorted and open circuits.
   3. Check all related splices and connectors for signs of water intrusion, corrosion, pushed out or bent terminals, and correct pin tension.
   4. Check Service Bulletins for any possible causes that may apply.

      Were there any problems found?

      Yes

      - Repair as necessary.
      - Perform the DTCM VERIFICATION TEST. Refer to **STANDARD PROCEDURE**.

      No

      - Test complete.

C140B-11-TRANSFER CASE MOTOR - CIRCUIT SHORT TO GROUND

For a complete wiring diagram, **refer to appropriate SYSTEM WIRING DIAGRAMS article** .

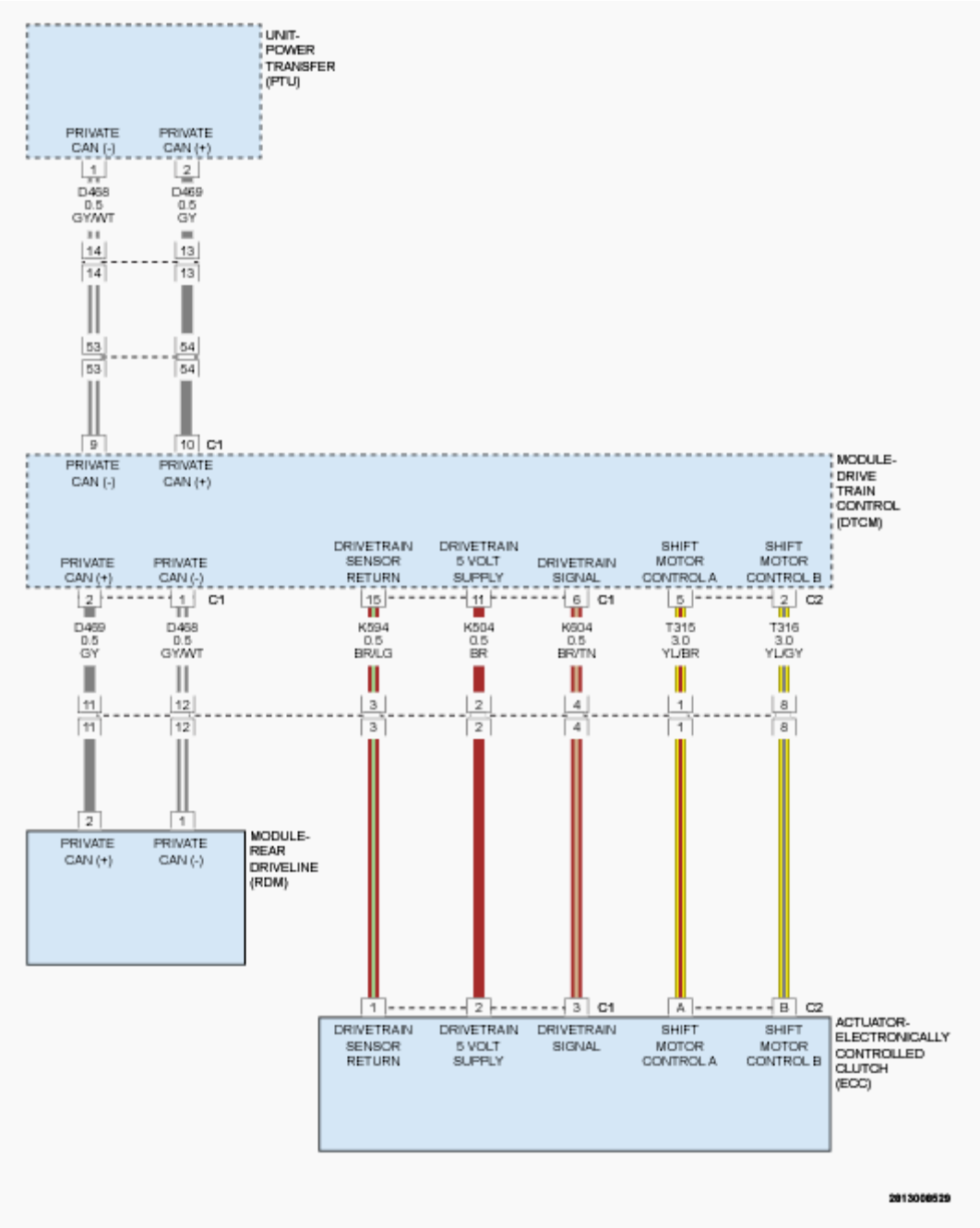

Fig. 1: Transfer Case Motor Circuit Diagram
Courtesy of CHRYSLER GROUP, LLC

WHEN MONITORED

With the ignition on and no undervoltage or overvoltage condition present.

SET CONDITION

A faulted condition is detected in the H-bridge driver.

POSSIBLE CAUSES

Possible Causes
(T315) SHIFT MOTOR CONTROL A CIRCUIT SHORTED TO GROUND
(T316) SHIFT MOTOR CONTROL B CIRCUIT SHORTED TO GROUND
(T315) SHIFT MOTOR CONTROL A CIRCUIT SHORTED TO THE (T316) SHIFT MOTOR CONTROL B CIRCUIT
ELECTRONICALLY CONTROLLED CLUTCH (ECC)
DRIVE TRAIN CONTROL MODULE (DTCM)

DIAGNOSTIC TEST

1. **VERIFY THE DTC ACTIVE**
    1. Ignition on, engine not running.
    2. With the scan tool, record and erase DTCs.
    3. Test drive the vehicle.
    4. Ignition on, engine not running.
    5. With the scan tool, read DTCs.

    Is the DTC active at this time?

    Yes

    - Go To 2

    No

    - Test complete.
2. **(T315) SHIFT MOTOR CONTROL A CIRCUIT SHORTED TO GROUND**
    1. Turn the ignition off to the lock position.
    2. Disconnect the ECC Actuator C2 harness connector.
    3. Disconnect the DTCM C2 harness connector.
    4. Ignition on, engine not running.
    5. Measure the resistance between ground and the (T315) Shift Motor Control A circuit at the Transfer Case Shift Motor/Mode Sensor Assembly harness connector.

    Is the resistance below 5.0 Ohms?

    Yes

    - Repair the (T315) Shift Motor Control A circuit for a short to ground.
    - Perform the TRANSFER CASE VERIFICATION TEST. Refer to **STANDARD PROCEDURE**.

No

- Go To 3

3. **(T316) SHIFT MOTOR CONTROL B CIRCUIT SHORTED TO GROUND**
   1. Measure the resistance between ground and the (T316) Shift Motor Control B circuit at the Transfer Case Motor/Mode Sensor Assembly harness connector.

      Is the resistance below 5.0 Ohms?

      Yes

      - Repair the (T316) Shift Motor Control B circuit for a short to ground.
      - Perform the TRANSFER CASE VERIFICATION TEST. Refer to **STANDARD PROCEDURE**.

      No

      - Go To 4

4. **(T315) SHIFT MOTOR CONTROL A CIRCUIT SHORTED TO THE (T316) SHIFT MOTOR CONTROL B CIRCUIT**
   1. Measure the resistance between the (T315) Shift Motor Control A circuit and the (T316) Shift Motor Control B circuit at the ECC Actuator harness connector.

      Is the resistance below 5.0 Ohms?

      Yes

      - Repair the (T315) Shift Motor Control A circuit and the (T316) Shift Motor Control B circuit for a short.
      - Perform the TRANSFER CASE VERIFICATION TEST. Refer to **STANDARD PROCEDURE**.

      No

      - Replace the Drive Train Control Module (DTCM) in accordance with the Service Information. Refer to **MODULE, DRIVETRAIN CONTROL, REMOVAL** .
      - Perform the DTCM VERIFICATION TEST. Refer to **STANDARD PROCEDURE**.

5. **INTERMITTENT WIRING HARNESS AND CONNECTORS**
   1. The conditions necessary to set this DTC are not present at this time.
   2. Using the wiring diagram/schematic as a guide, inspect the wiring harness and connectors.
   3. Wiggle test the wiring harness and connectors while monitoring the scan tool data relative to this circuit.
   4. Look for the data to change or for the DTC to reset during the wiggle test.

5. While monitoring the scan tool data relative to this circuit, move the selector switch to each position several times.
6. Look for the data to change other than as expected or for the DTC to reset.

   Were any problems found?

   Yes

   - Repair as necessary.
   - Perform the DTCM VERIFICATION TEST. Refer to **STANDARD PROCEDURE**.

   No

   - Test complete.

C140B-12-TRANSFER CASE MOTOR - CIRCUIT SHORT TO BATTERY

For a complete wiring diagram, **refer to appropriate SYSTEM WIRING DIAGRAMS article** .

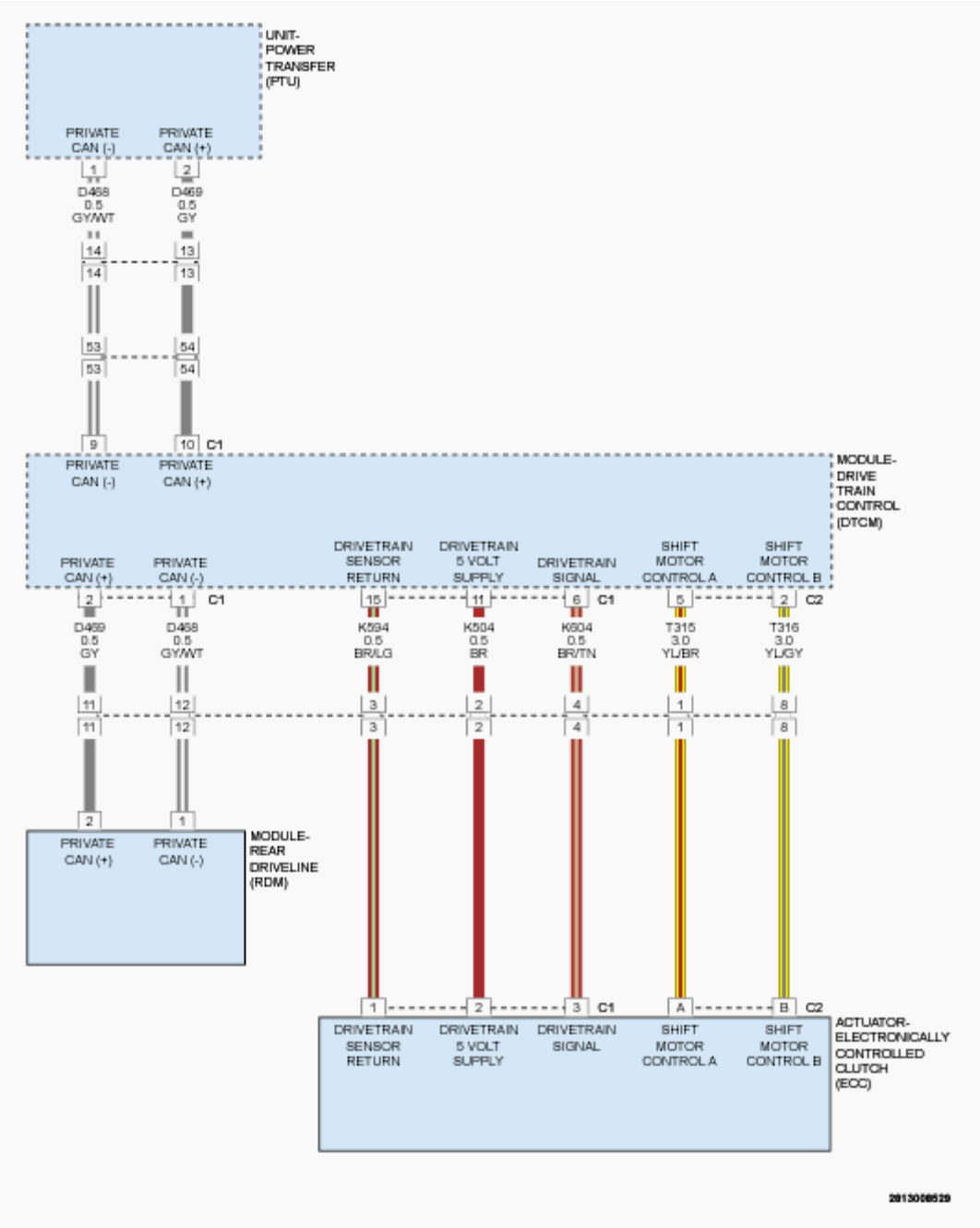

Fig. 2: Transfer Case Motor Circuit Diagram
Courtesy of CHRYSLER GROUP, LLC

WHEN MONITORED

With the ignition on and no undervoltage or overvoltage condition present.

SET CONDITION

A faulted condition is detected in the H-bridge driver.

POSSIBLE CAUSES

Possible Causes
(T315) SHIFT MOTOR CONTROL A CIRCUIT SHORTED TO BATTERY
(T316) SHIFT MOTOR CONTROL B CIRCUIT SHORTED TO BATTERY
(T315) SHIFT MOTOR CONTROL A CIRCUIT SHORTED TO THE (T316) SHIFT MOTOR CONTROL B CIRCUIT
ELECTRONICALLY CONTROLLED CLUTCH (ECC)
DRIVE TRAIN CONTROL MODULE (DTCM)

DIAGNOSTIC TEST

1. **VERIFY THE DTC ACTIVE**
    1. Ignition on, engine not running.
    2. With the scan tool, record and erase DTCs.
    3. Test drive the vehicle.
    4. Ignition on, engine not running.
    5. With the scan tool, read DTCs.

    Is the DTC active at this time?

    Yes

    - Go To 2

    No

    - Test complete.
2. **(T315) SHIFT MOTOR CONTROL A CIRCUIT SHORTED TO BATTERY**
    1. Turn the ignition off to the lock position.
    2. Disconnect the ECC Actuator C2 harness connector.
    3. Disconnect the DTCM C2 harness connector.
    4. Ignition on, engine not running.
    5. Measure the resistance between battery and the (T315) Shift Motor Control A circuit at the Transfer Case Shift Motor/Mode Sensor Assembly harness connector.

    Is the resistance below 5.0 Ohms?

    Yes

    - Repair the (T315) Shift Motor Control A circuit for a short to battery.
    - Perform the DTCM VERIFICATION TEST. Refer to **STANDARD PROCEDURE**.

No

- Go To 3

3. **(T316) SHIFT MOTOR CONTROL B CIRCUIT SHORTED TO BATTERY**
   1. Measure the resistance between battery and the (T316) Shift Motor Control B circuit at the Transfer Case Motor/Mode Sensor Assembly harness connector.

      Is the resistance below 5.0 Ohms?

      Yes

      - Repair the (T316) Shift Motor Control B circuit for a short to battery.
      - Perform the DTCM VERIFICATION TEST. Refer to **STANDARD PROCEDURE**.

      No

      - Go To 4

4. **(T315) SHIFT MOTOR CONTROL A CIRCUIT SHORTED TO THE (T316) SHIFT MOTOR CONTROL B CIRCUIT**
   1. Measure the resistance between the (T315) Shift Motor Control A circuit and the (T316) Shift Motor Control B circuit at the ECC Actuator harness connector.

      Is the resistance below 5.0 Ohms?

      Yes

      - Repair the (T315) Shift Motor Control A circuit and the (T316) Shift Motor Control B circuit for a short.
      - Perform the DTCM VERIFICATION TEST. Refer to **STANDARD PROCEDURE**.

      No

      - Go To 5

5. **DRIVE TRAIN CONTROL MODULE (DTCM)**
   1. Turn the ignition off to the lock position.
   2. Replace the Electronically Controlled Clutch (ECC) Actuator in accordance with the Service Information.
   3. Perform the DTCM VERIFICATION TEST. Refer to **STANDARD PROCEDURE**.
   4. With the scan tool, read the DTCs.

      Does the DTC remain active?

      Yes

- Replace the Drive Train Control Module (DTCM) in accordance with the Service Information. Refer to **MODULE, DRIVETRAIN CONTROL, REMOVAL** .
- Perform the DTCM VERIFICATION TEST. Refer to **STANDARD PROCEDURE**.

No

- Test complete.

C140B-13-TRANSFER CASE MOTOR - CIRCUIT OPEN

For a complete wiring diagram, **refer to appropriate SYSTEM WIRING DIAGRAMS article** .

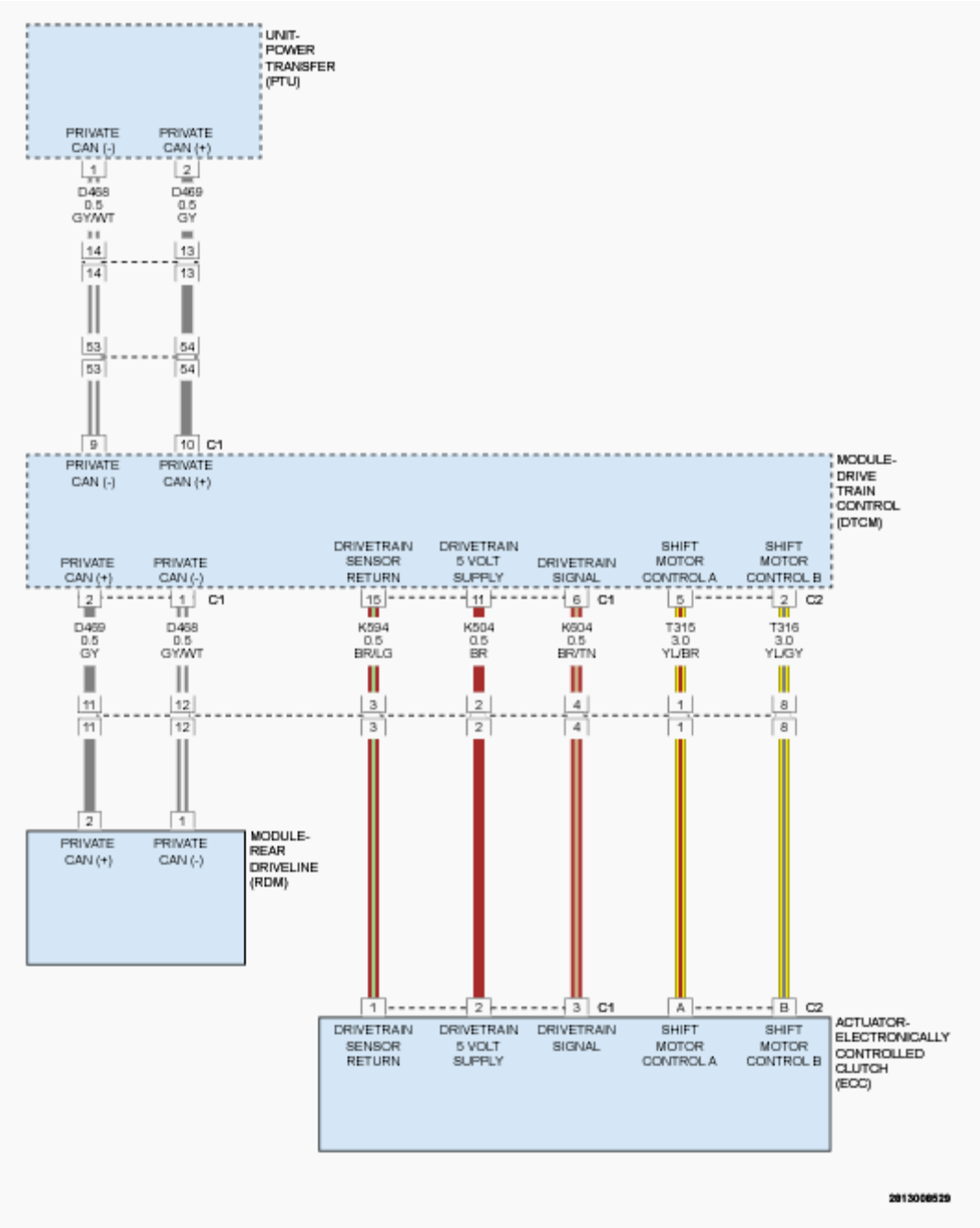

Fig. 3: Transfer Case Motor Circuit Diagram
Courtesy of CHRYSLER GROUP, LLC

WHEN MONITORED

With the ignition on and no system undervoltage or overvoltage condition present.

SET CONDITION

The Drive Train Control Module (DTCM) detects an open circuit on one of the Electronically Controlled Clutch

(ECC) Actuator Motor circuits.

POSSIBLE CAUSES

Possible Causes
(T315) SHIFT MOTOR CONTROL A CIRCUIT OPEN
(T316) SHIFT MOTOR CONTROL B CIRCUIT OPEN
(T315) SHIFT MOTOR CONTROL A CIRCUIT SHORTED TO VOLTAGE
(T316) SHIFT MOTOR CONTROL B CIRCUIT SHORTED TO VOLTAGE
ELECTRONICALLY CONTROLLED CLUTCH (ECC) ACTUATOR
DRIVE TRAIN CONTROL MODULE (DTCM)

DIAGNOSTIC TEST

1. **VERIFY THE DTC IS ACTIVE**
    1. Ignition on, engine not running.
    2. With the scan tool, record and erase DTCs.
    3. Test drive the vehicle.
    4. Ignition on, engine not running.
    5. With the scan tool, read DTCs.

    Is the DTC active at this time?

    Yes

    - Go To 2

    No

    - Go To 7
2. **(T315) SHIFT MOTOR CONTROL A CIRCUIT OPEN**
    1. Turn the ignition off to the lock position.
    2. Disconnect the ECC Actuator C2 harness connector.
    3. Disconnect the DTCM C2 harness connector.
    4. Measure the resistance of the (T315) Shift Motor Control A circuit from the ECC Actuator C2 harness connector to the DTCM C2 harness connector.

    Is the resistance above 5.0 Ohms?

    Yes

    - Repair the (T315) Shift Motor Control B circuit for an open.
    - Perform the DTCM VERIFICATION TEST. Refer to **STANDARD PROCEDURE**.

No

- Go To 3

3. **(T316) SHIFT MOTOR CONTROL B CIRCUIT OPEN**
   1. Measure the resistance of the (T316) Shift Motor Control C circuit from the ECC Actuator C2 harness connector to the DTCM C2 harness connector.

      Is the resistance above 5.0 Ohms?

      Yes

      - Repair the (T316) Shift Motor Control C circuit for an open.
      - Perform the DTCM VERIFICATION TEST. Refer to **STANDARD PROCEDURE**.

      No

      - Go To 4

4. **(T315) SHIFT MOTOR CONTROL A CIRCUIT SHORTED TO VOLTAGE**
   1. Ignition on, engine not running.
   2. Measure the voltage of the (T315) Shift Motor Control A circuit at the ECC Actuator C2 harness connector.

      Is the voltage above 0.5 of a volt?

      Yes

      - Repair the (T315) Shift Motor Control A circuit for a short to voltage.
      - Perform the TRANSFER CASE VERIFICATION TEST. Refer to **STANDARD PROCEDURE**.

      No

      - Go To 5

5. **(T316) SHIFT MOTOR CONTROL B CIRCUIT SHORTED TO VOLTAGE**
   1. Measure the voltage of the (T316) Shift Motor Control B circuit at the ECC Actuator C2 harness connector.

      Is the voltage above 0.5 of a volt?

      Yes

      - Repair the (T316) Shift Motor Control B circuit for a short to voltage.
      - Perform the TRANSFER CASE VERIFICATION TEST. Refer to **STANDARD PROCEDURE**.

No

- Go To 6

6. **ELECTRONICALLY CONTROLLED CLUTCH (ECC) ACTUATOR**
   1. Connect the ECC Actuator C2 harness connector.
   2. Measure the resistance between the (T315) Shift Motor Control A circuit and the (T316) Shift Motor Control B circuit at the DTCM C2 harness connector.

      Is the resistance below 5.0 Ohms?

      Yes

      - Replace the Drive Train Control Module (DTCM) in accordance with the Service Information.
      - Perform the DTCM VERIFICATION TEST. Refer to **STANDARD PROCEDURE**.

      No

      - Replace the shorted Electronically Controlled Clutch (ECC) Actuator in accordance with the Service Information.
      - Perform the DTCM VERIFICATION TEST. Refer to **STANDARD PROCEDURE**.
7. **INTERMITTENT WIRING HARNESS AND CONNECTORS**
   1. The conditions necessary to set this DTC are not present at this time.
   2. Using the wiring diagram/schematic as a guide, inspect the wiring harness and connectors.
   3. Wiggle test the wiring harness and connectors while monitoring the scan tool data relative to this circuit.
   4. Look for the data to change or for the DTC to reset during the wiggle test.
   5. While monitoring the scan tool data relative to this circuit, move the selector switch to each position several times.
   6. Look for the data to change other than as expected or for the DTC to reset.

      Were any problems found?

      Yes

      - Repair as necessary.
      - Perform the TRANSFER CASE VERIFICATION TEST. Refer to **STANDARD PROCEDURE**.

      No

      - Test complete.

C140B-4B-TRANSFER CASE MOTOR - OVER TEMPERATURE

For a complete wiring diagram, **refer to appropriate SYSTEM WIRING DIAGRAMS article** .

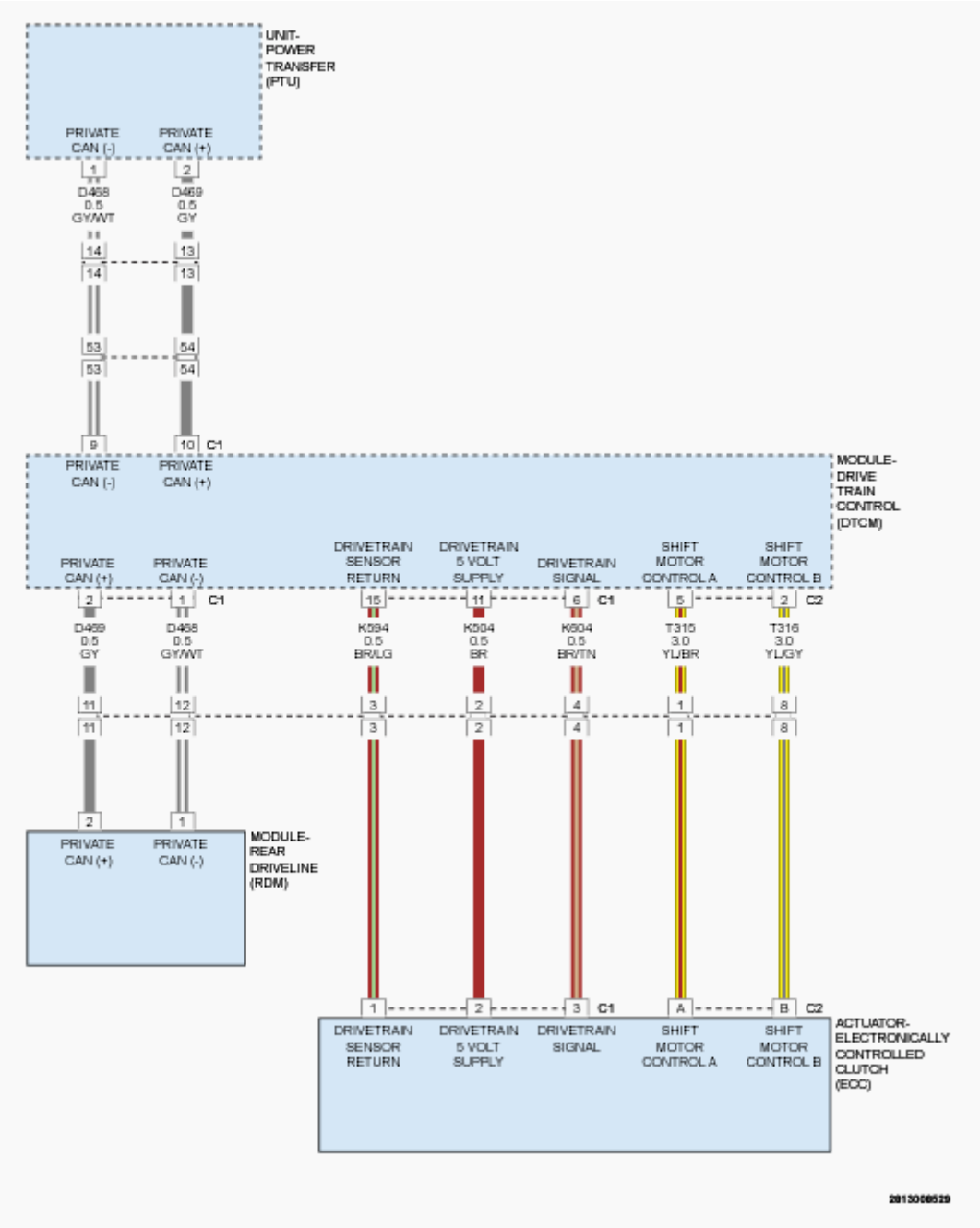

Fig. 4: Transfer Case Motor Circuit Diagram
Courtesy of CHRYSLER GROUP, LLC

WHEN MONITORED

With the ignition on.

SET CONDITION

A calibrated motor abuse temperature limit has been achieved. The Drive Train Control Module (DTCM) monitors the motor use and has determined that excessive motor activations have occurred. This DTC will be stored after Transfer Case Motor has cooled down.

POSSIBLE CAUSES

Possible Causes
TERRAIN SWITCH BANK MODULE (TSBM)
AMBIENT TEMPERATURE SENSOR
CLUSTER CONTROL NODE (CCN)
DRIVE TRAIN CONTROL MODULE (DTCM)

DIAGNOSTIC TEST

1. **VERIFY THE DTC IS ACTIVE**

   NOTE: Diagnose and repair any system voltage or Transfer Case related DTCs in the Drive Train Control Module (DTCM) before continuing with this test.

   1. Ignition on, engine not running.
   2. With the scan tool, clear Stored DTCs in the DTCM and the CCN.
   3. Test drive the vehicle.
   4. During the test drive, move the Transfer Case Selector Switch (if equipped) to each position several times in accordance with the Service Information.
   5. With the scan tool, read DTCs in the DTCM and the CCN.

   Is the DTC active at this time?

   Yes

   - Go To 2

   No

   - Go To 5

2. **AMBIENT TEMPERATURE SENSOR**
   1. With the scan tool, monitor the ambient temperature in the Body Control Module (BCM).

   Is the ambient temperature at room temperature?

   Yes

- Go To 3

No

- Replace the Ambient Temperature Sensor in accordance with the Service Information.
- Perform the TRANSFER CASE VERIFICATION TEST. Refer to **STANDARD PROCEDURE**.

3. **TERRAIN SWITCH BANK MODULE (TSBM) WIRING/HARNESS CONNECTOR**
   1. Using the wiring diagram/schematic as a guide, inspect the wiring and connectors relative to this circuit.
   2. While monitoring the scan tool data relative to this circuit, wiggle test the wiring and connectors.

   Were any problems found?

   Yes

   - Repair as necessary.
   - Perform the TRANSFER CASE VERIFICATION TEST. Refer to **STANDARD PROCEDURE**.

   No

   - Go To 4

4. **TERRAIN SWITCH BANK MODULE (TSBM)**
   1. Turn the ignition off to the lock position
   2. Replace the Terrain Switch Bank Module (TSBM).
   3. Ignition on, engine not running.
   4. With the scan tool, clear Stored DTCs in the CCN and the DTCM.
   5. Test drive the vehicle.
   6. During the test drive, move the Terrain Switch Bank Module (TSBM) to each position several times in accordance with the Service Information.
   7. With the scan tool, read DTCs in the CCN and the DTCM.

   Does the DTC remain active?

   Yes

   - Replace the Drive Train Control Module (DTCM) in accordance with the Service Information. Refer to **MODULE, DRIVETRAIN CONTROL, REMOVAL** .
   - Perform the DTCM VERIFICATION TEST. Refer to **STANDARD PROCEDURE**.

   No

- Test complete.

5. **INTERMITTENT WIRING AND CONNECTORS**
    1. The conditions necessary to set this DTC are not present at this time.
    2. Using the wiring diagram/schematic as a guide, inspect the wiring harness and connectors.
    3. Wiggle test the wiring harness and connectors while monitoring the scan tool data relative to this circuit.
    4. Look for the data to change or for the DTC to reset during the wiggle test.
    5. While monitoring the scan tool data relative to this circuit, move the selector switch to each position several times.
    6. Look for the data to change other than as expected or for the DTC to reset.

    Were any problems found?

    Yes

    - Repair as necessary.
    - Perform the TRANSFER CASE VERIFICATION TEST. Refer to **STANDARD PROCEDURE**.

    No

    - Test complete.

C1415-92-TRANFER CASE MOTOR CURRENT - PERFORMANCE OR INCORRECT OPERATION

For a complete wiring diagram, **refer to appropriate SYSTEM WIRING DIAGRAMS article** .

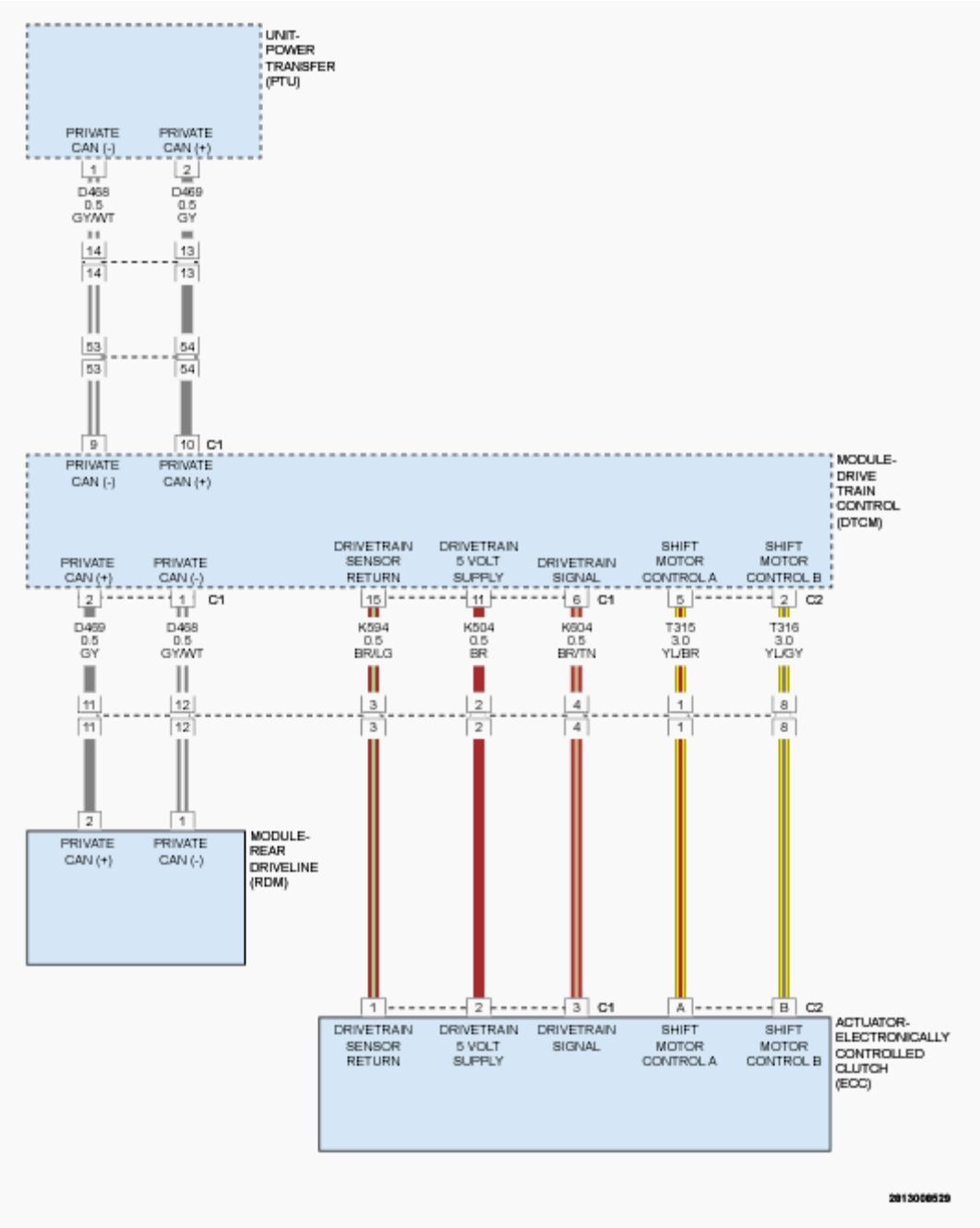

Fig. 5: Transfer Case Motor Circuit Diagram
Courtesy of CHRYSLER GROUP, LLC

WHEN MONITORED

With the ignition on and no system undervoltage or overvoltage condition present.

SET CONDITION

1. Current reading greater than 1A for 200 msec with no motor activation.

2. Current reading never greater than 1A during a completed range or neutral shift.

POSSIBLE CAUSES

Possible Causes
(T315) SHIFT MOTOR CONTROL A CIRCUIT OPEN OR HIGH RESISTANCE
(T316) SHIFT MOTOR CONTROL B CIRCUIT OPEN OR HIGH RESISTANCE
DRIVE TRAIN CONTROL MODULE (DTCM)

DIAGNOSTIC TEST

1. **VERIFY THE DTC IS ACTIVE**
    1. Ignition on, engine not running.
    2. With the scan tool, record and erase DTCs.
    3. Test drive the vehicle
    4. Ignition on, engine not running.
    5. With the scan tool, read DTCs.

    Is the DTC active at this time?

    Yes

    - Go To 2

    No

    - Go To 4
2. **(T315) SHIFT MOTOR CONTROL A CIRCUIT OPEN OR HIGH RESISTANCE**
    1. Turn the ignition off to the lock position.
    2. Disconnect the Transfer Case Shift Motor/Mode Sensor Assembly harness connector.
    3. Disconnect the DTCM C2 harness connector.
    4. Measure the resistance of the (T315) Shift Motor Control A circuit from the Transfer Case Shift Motor/Mode Sensor Assembly harness connector to the DTCM C2 harness connector.

    Is the resistance above 5.0 Ohms?

    Yes

    - Repair the (T315) Shift Motor Control A circuit for an open or high resistance.
    - Perform the TRANSFER CASE VERIFICATION TEST. Refer to **STANDARD PROCEDURE**.

    No

- Go To 3

3. **(T316) SHIFT MOTOR CONTROL B CIRCUIT OPEN OR HIGH RESISTANCE**
   1. Measure the resistance of the (T316) Shift Motor Control B circuit from the Transfer Case Shift Motor/Mode Sensor Assembly harness connector to the DTCM C2 harness connector.

      Is the resistance above 5.0 Ohms?

      Yes

      - Repair the (T316) Shift Motor Control B circuit for an open or high resistance.
      - Perform the TRANSFER CASE VERIFICATION TEST. Refer to **STANDARD PROCEDURE**.

      No

      - Replace the Drive Train Control Module (DTCM) in accordance with the Service Information. Refer to **MODULE, DRIVETRAIN CONTROL, REMOVAL** .
      - Perform the DTCM VERIFICATION TEST. Refer to **STANDARD PROCEDURE**.
4. **INTERMITTENT WIRING HARNESS AND CONNECTORS**
   1. The conditions necessary to set this DTC are not present at this time.
   2. Using the wiring diagram/schematic as a guide, inspect the wiring harness and connectors.
   3. Wiggle test the wiring harness and connectors while monitoring the scan tool data relative to this circuit.
   4. Look for the data to change or for the DTC to reset during the wiggle test.
   5. While monitoring the scan tool data relative to this circuit, move the selector switch to each position several times.
   6. Look for the data to change other than as expected or for the DTC to reset.

      Were any problems found?

      Yes

      - Repair as necessary.
      - Perform the DTCM VERIFICATION TEST. Refer to **STANDARD PROCEDURE**.

      No

      - Test complete.

C1440-11-TRANSFER CASE CLUTCH PRESSURE SENSOR - CIRCUIT SHORT TO GROUND

For a complete wiring diagram, **refer to appropriate SYSTEM WIRING DIAGRAMS article** .

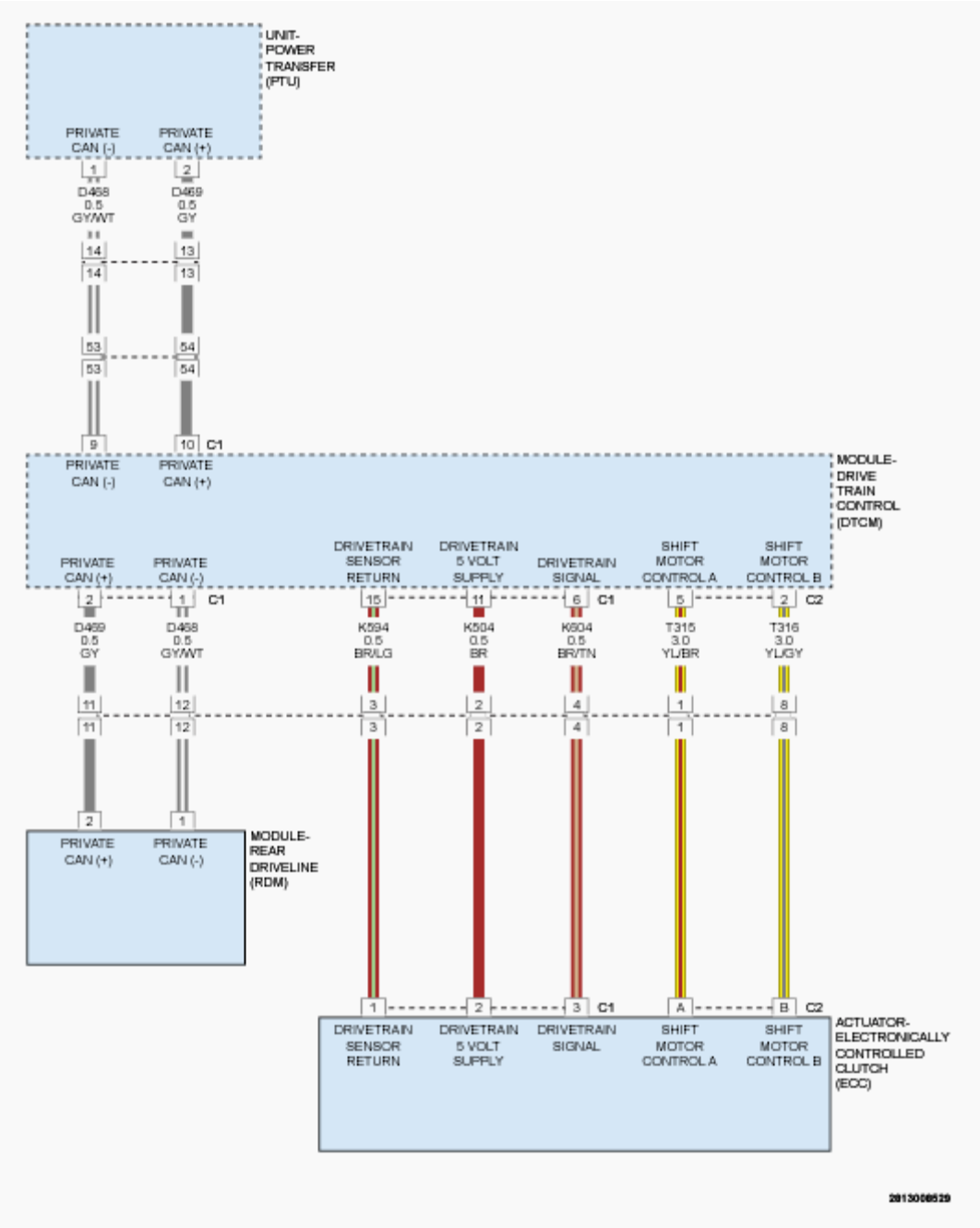

Fig. 6: Transfer Case Motor Circuit Diagram
Courtesy of CHRYSLER GROUP, LLC

WHEN MONITORED

With the ignition on and no undervoltage or overvoltage condition present.

SET CONDITION

The Drive Train Control Module (DTCM) detects an error from the drivetrain sensor incorporated in the

Electronically Controlled Clutch (ECC).

POSSIBLE CAUSES

Possible Causes
(K604) DRIVETRAIN SENSOR SIGNAL CIRCUIT SHORTED TO GROUND
(K604) DRIVETRAIN SENSOR SIGNAL CIRCUIT OPEN OR HIGH RESISTANCE
(K504) DRIVETRAIN SENSOR 5V SUPPLY CIRCUIT OPEN OR HIGH RESISTANCE
ELECTRONICALLY CONTROLLED CLUTCH (ECC)
DRIVE TRAIN CONTROL MODULE (DTCM)

DIAGNOSTIC TEST

1. **VERIFY THE DTC ACTIVE**
    1. Ignition on, engine not running.
    2. With the scan tool, record and erase DTCs.
    3. Test drive the vehicle.
    4. Ignition on, engine not running.
    5. With the scan tool, read DTCs.

    Is the DTC active at this time?

    Yes

    - Go To 2

    No

    - Go To 6
2. **(K604) DRIVETRAIN SENSOR SIGNAL CIRCUIT SHORTED TO GROUND**
    1. Turn the ignition off to the lock position.
    2. Disconnect the ECC Actuator C1 harness connector.
    3. Disconnect the DTCM C1 harness connector.
    4. Measure the resistance between ground and the (K604) Drivetrain Sensor Signal circuit at the DTCM C1 harness connector.

    Is the resistance below 5.0 Ohms?

    Yes

    - Repair the (K604) Drivetrain Sensor Signal circuit for a short to ground.
    - Perform the DTCM VERIFICATION TEST. Refer to **STANDARD PROCEDURE**.

No

- Go To 3

3. **(K604) DRIVETRAIN SENSOR SIGNAL CIRCUIT OPEN OR HIGH RESISTANCE**
   1. Measure the resistance of the (K604) Drivetrain Sensor Signal circuit between the ECC Actuator C1 harness connector and the DTCM C1 harness connector.

      Is the resistance above 5.0 Ohms?

      Yes

      - Repair the (K604) Drivetrain Sensor Signal circuit for an open or high resistance.
      - Perform the DTCM VERIFICATION TEST. Refer to **STANDARD PROCEDURE**.

      No

      - Go To 4

4. **(K504) DRIVETRAIN SENSOR 5V SUPPLY CIRCUIT OPEN OR HIGH RESISTANCE**
   1. Measure the resistance of the (K504) Drivetrain Sensor 5V Supply circuit between the ECC Actuator C1 harness connector and the DTCM C1 harness connector.

      Is the resistance above 5.0 Ohms?

      Yes

      - Repair the (K504) Drivetrain Sensor 5V Supply circuit for an open or high resistance.
      - Perform the DTCM VERIFICATION TEST. Refer to **STANDARD PROCEDURE**.

      No

      - Go To 5

5. **ELECTRONICALLY CONTROLLED CLUTCH (ECC)**
   1. Replace the Electronically Controlled Clutch (ECC) in accordance with the Service Information.
   2. Ignition on, engine not running.
   3. With the scan tool, record and erase DTCs.
   4. Test drive the vehicle. If equipped with a Terrain Selector Switch drive the vehicle in each Transfer Case range and verify proper operation in each range.
   5. Ignition on, engine not running.
   6. With the scan tool, read DTCs.

      Does the DTC remain active?

      Yes

- Replace the Drive Train Control Module (DTCM) in accordance with the Service Information. Refer to **MODULE, DRIVETRAIN CONTROL, REMOVAL** .
- Perform the DTCM VERIFICATION TEST. Refer to **STANDARD PROCEDURE**.

No

- Test complete.

6. **INTERMITTENT WIRING HARNESS AND CONNECTORS**
   1. The conditions necessary to set this DTC are not present at this time.
   2. Using the wiring diagram/schematic as a guide, inspect the wiring harness and connectors.
   3. Wiggle test the wiring harness and connectors while monitoring the scan tool data relative to this circuit.
   4. Look for the data to change or for the DTC to reset during the wiggle test.
   5. While monitoring the scan tool data relative to this circuit, move the selector switch to each position several times.
   6. Look for the data to change other than as expected or for the DTC to reset.

   Were any problems found?

   Yes

   - Repair as necessary.
   - Perform the DTCM VERIFICATION TEST. Refer to **STANDARD PROCEDURE**.

   No

   - Test complete.

C1440-12-TRANSFER CASE CLUTCH PRESSURE SENSOR - CIRCUIT SHORT TO BATTERY

For a complete wiring diagram, **refer to appropriate SYSTEM WIRING DIAGRAMS article** .

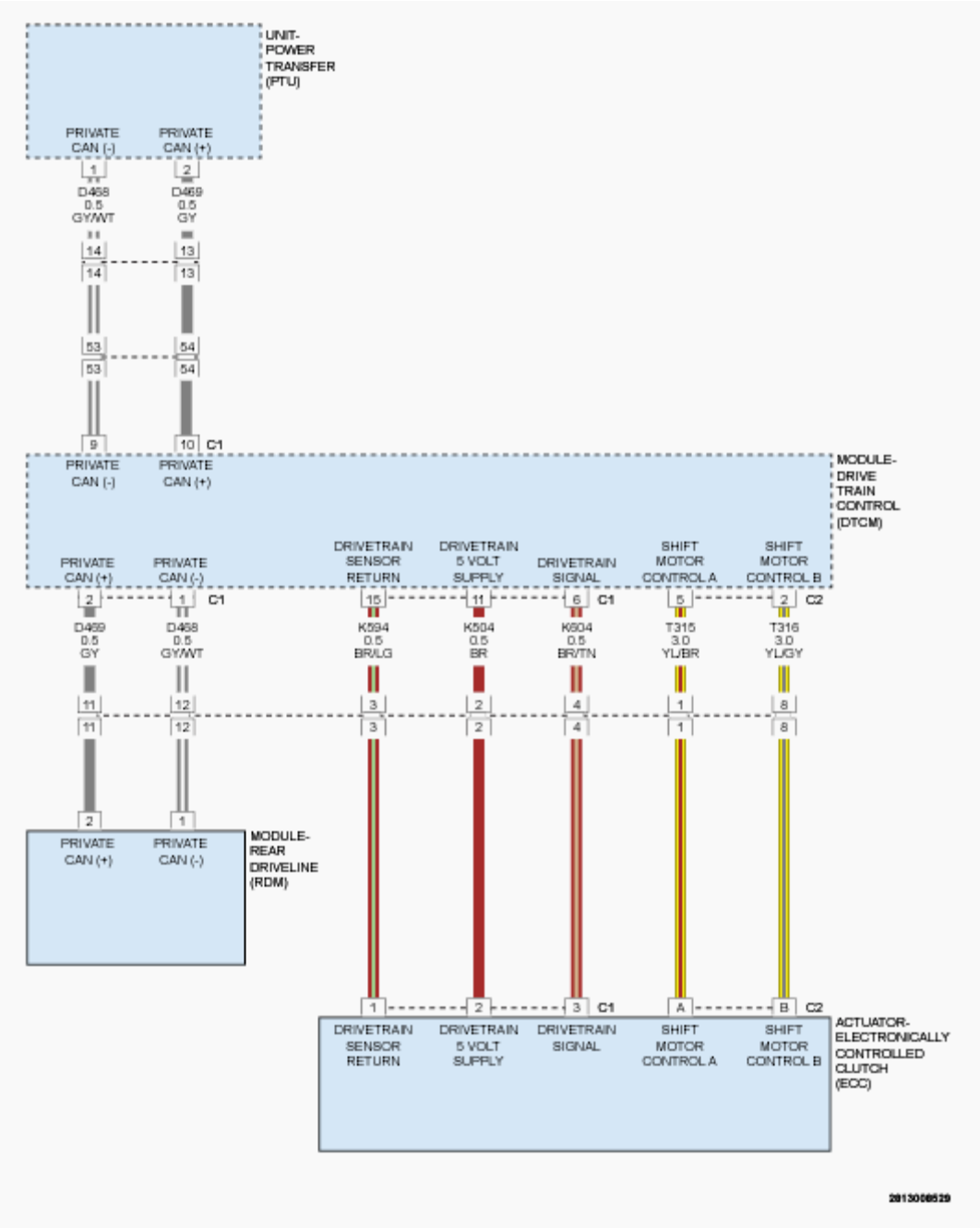

Fig. 7: Transfer Case Motor Circuit Diagram
Courtesy of CHRYSLER GROUP, LLC

WHEN MONITORED

With the ignition on and no undervoltage or overvoltage condition present.

SET CONDITION

The Drive Train Control Module (DTCM) detects an error from the drivetrain sensor incorporated in the

Electronically Controlled Clutch (ECC).

POSSIBLE CAUSES

Possible Causes
(K604) DRIVETRAIN SENSOR SIGNAL CIRCUIT SHORTED TO BATTERY
(K594) DRIVETRAIN SENSOR RETURN CIRCUIT OPEN OR HIGH RESISTANCE
(Z924) GROUND CIRCUIT OPEN OR HIGH RESISTANCE
ELECTRONICALLY CONTROLLED CLUTCH (ECC)
DRIVE TRAIN CONTROL MODULE (DTCM)

DIAGNOSTIC TEST

1. **VERIFY THE DTC ACTIVE**
    1. Ignition on, engine not running.
    2. With the scan tool, record and erase DTCs.
    3. Test drive the vehicle.
    4. Ignition on, engine not running.
    5. With the scan tool, read DTCs.

    Is the DTC active at this time?

    Yes

    - Go To 2

    No

    - Go To 6
2. **(K604) DRIVETRAIN SENSOR SIGNAL CIRCUIT SHORTED TO BATTERY**
    1. Turn the ignition off to the lock position.
    2. Disconnect the ECC Actuator C1 harness connector.
    3. Disconnect the DTCM C1 harness connector.
    4. Ignition on, engine not running.
    5. Measure the voltage of the (K604) Drivetrain Sensor Signal circuit between the ECC Actuator C1 harness connector and the DTCM C1 harness connector.

    Is there any voltage present?

    Yes

    - Repair the (K604) Drivetrain Sensor Signal circuit for a short to battery.
    - Perform the DTCM VERIFICATION TEST. Refer to **STANDARD PROCEDURE**.

No

- Go To 3

3. **(K594) DRIVETRAIN SENSOR SIGNAL CIRCUIT OPEN OR HIGH RESISTANCE**
   1. Turn the ignition off to the lock position.
   2. Measure the resistance of the (K594) Drivetrain Sensor Return circuit between the ECC Actuator C1 harness connector and the DTCM C1 harness connector.

      Is the resistance above 5.0 Ohms?

      Yes

      - Repair the (K594) Drivetrain Sensor Return circuit for an open or high resistance.
      - Perform the DTCM VERIFICATION TEST. Refer to **STANDARD PROCEDURE**.

      No

      - Go To 4

4. **(Z924) DRIVETRAIN SENSOR RETURN CIRCUIT OPEN OR HIGH RESISTANCE**
   1. Disconnect the Rear Driveline Module (RDM) harness connector.
   2. Measure the resistance of the (Z924) Ground circuit between the RDM harness connector and ground.

      Is the resistance above 5.0 Ohms?

      Yes

      - Repair the (Z924) Ground circuit for an open or high resistance.
      - Perform the DTCM VERIFICATION TEST. Refer to **STANDARD PROCEDURE**.

      No

      - Go To 5

5. **ELECTRONICALLY CONTROLLED CLUTCH (ECC)**
   1. Replace the Electronically Controlled Clutch (ECC) in accordance with the Service Information.
   2. Ignition on, engine not running.
   3. With the scan tool, record and erase DTCs.
   4. Test drive the vehicle. If equipped with a Terrain Selector Switch drive the vehicle in each Transfer Case range and verify proper operation in each range.
   5. Ignition on, engine not running.
   6. With the scan tool, read DTCs.

      Does the DTC remain active?

Yes

- Replace the Drive Train Control Module (DTCM) in accordance with the Service Information. Refer to **MODULE, DRIVETRAIN CONTROL, REMOVAL** .
- Perform the DTCM VERIFICATION TEST. Refer to **STANDARD PROCEDURE**.

No

- Test complete.

6. **INTERMITTENT WIRING HARNESS AND CONNECTORS**
   1. The conditions necessary to set this DTC are not present at this time.
   2. Using the wiring diagram/schematic as a guide, inspect the wiring harness and connectors.
   3. Wiggle test the wiring harness and connectors while monitoring the scan tool data relative to this circuit.
   4. Look for the data to change or for the DTC to reset during the wiggle test.
   5. While monitoring the scan tool data relative to this circuit, move the selector switch to each position several times.
   6. Look for the data to change other than as expected or for the DTC to reset.

   Were any problems found?

   Yes

   - Repair as necessary.
   - Perform the DTCM VERIFICATION TEST. Refer to **STANDARD PROCEDURE**.

   No

   - Test complete.

C1440-1C-TRANSFER CASE CLUTCH PRESSURE SENSOR - CIRCUIT VOLTAGE OUT OF RANGE

For a complete wiring diagram, **refer to appropriate SYSTEM WIRING DIAGRAMS article** .

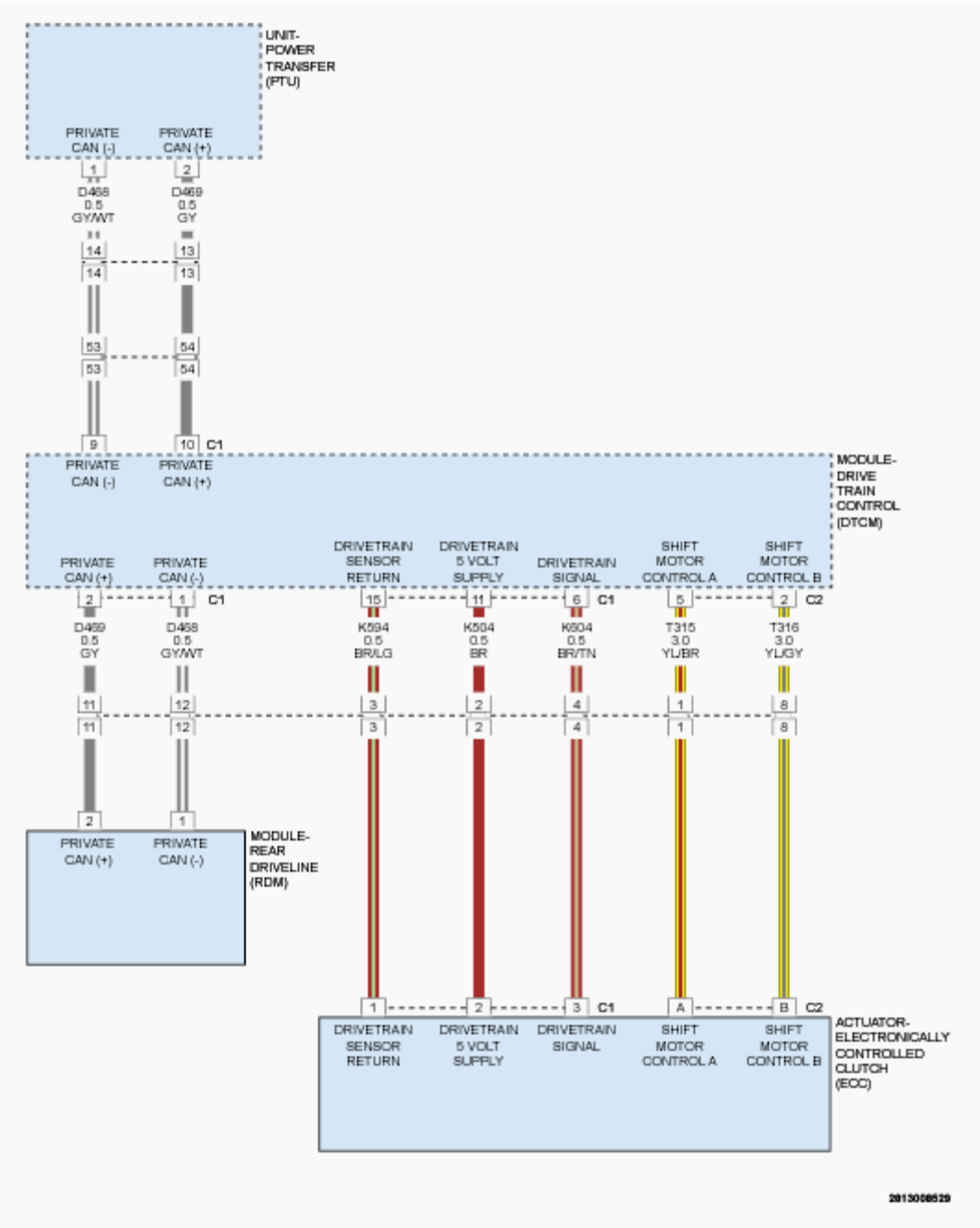

Fig. 8: Transfer Case Motor Circuit Diagram
Courtesy of CHRYSLER GROUP, LLC

WHEN MONITORED

With the ignition on and no undervoltage or overvoltage condition present.

SET CONDITION

The Drive Train Control Module (DTCM) detects an error from the drivetrain sensor incorporated in the

Electronically Controlled Clutch (ECC).

POSSIBLE CAUSES

Possible Causes
(K504) DRIVETRAIN SENSOR 5V SUPPLY CIRCUIT SHORTED TO BATTERY
(K504) DRIVETRAIN SENSOR 5V SUPPLY CIRCUIT SHORTED TO GROUND
ELECTRONICALLY CONTROLLED CLUTCH (ECC)
DRIVE TRAIN CONTROL MODULE (DTCM)

DIAGNOSTIC TEST

1. **VERIFY THE DTC ACTIVE**
    1. Ignition on, engine not running.
    2. With the scan tool, record and erase DTCs.
    3. Test drive the vehicle.
    4. Ignition on, engine not running.
    5. With the scan tool, read DTCs.

    Is the DTC active at this time?

    Yes

    - Go To 2

    No

    - Go To 5
2. **(K504) DRIVETRAIN SENSOR 5V SUPPLY CIRCUIT SHORTED TO BATTERY**
    1. Turn the ignition off to the lock position.
    2. Disconnect the ECC Actuator C1 harness connector.
    3. Disconnect the DTCM C1 harness connector.
    4. Ignition on, engine not running.
    5. Measure the voltage of the (K504) Drivetrain Sensor 5V Supply circuit between the ECC Actuator C1 harness connector and the DTCM C1 harness connector.

    Is there any voltage present?

    Yes

    - Repair the (K504) Drivetrain Sensor 5V Supply circuit for a short to battery.
    - Perform the DTCM VERIFICATION TEST. Refer to **STANDARD PROCEDURE**.

No

- Go To 3

3. **(K504) DRIVETRAIN SENSOR 5V SUPPLY CIRCUIT SHORTED TO GROUND**
   1. Turn the ignition off to the lock position.
   2. Disconnect the ECC Actuator C1 harness connector.
   3. Disconnect the DTCM C1 harness connector.
   4. Measure the resistance between ground and the (K504) Drivetrain Sensor 5V Supply circuit at the DTCM C1 harness connector.

      Is the resistance below 5.0 Ohms?

      Yes

      - Repair the (K504) Drivetrain Sensor 5V Supply circuit for a short to ground.
      - Perform the DTCM VERIFICATION TEST. Refer to **STANDARD PROCEDURE**.

      No

      - Go To 4

4. **ELECTRONICALLY CONTROLLED CLUTCH (ECC)**
   1. Replace the Electronically Controlled Clutch (ECC) in accordance with the Service Information.
   2. Ignition on, engine not running.
   3. With the scan tool, record and erase DTCs.
   4. Test drive the vehicle. If equipped with a Terrain Selector Switch drive the vehicle in each Transfer Case range and verify proper operation in each range.
   5. Ignition on, engine not running.
   6. With the scan tool, read DTCs.

      Does the DTC remain active?

      Yes

      - Replace the Drive Train Control Module (DTCM) in accordance with the Service Information. Refer to **MODULE, DRIVETRAIN CONTROL, REMOVAL** .
      - Perform the DTCM VERIFICATION TEST. Refer to **STANDARD PROCEDURE**.

      No

      - Test complete.

5. **INTERMITTENT WIRING HARNESS AND CONNECTORS**
   1. The conditions necessary to set this DTC are not present at this time.

2. Using the wiring diagram/schematic as a guide, inspect the wiring harness and connectors.
3. Wiggle test the wiring harness and connectors while monitoring the scan tool data relative to this circuit.
4. Look for the data to change or for the DTC to reset during the wiggle test.
5. While monitoring the scan tool data relative to this circuit, move the selector switch to each position several times.
6. Look for the data to change other than as expected or for the DTC to reset.

Were any problems found?

Yes

- Repair as necessary.
- Perform the DTCM VERIFICATION TEST. Refer to **STANDARD PROCEDURE**.

No

- Test complete.

C1440-64-TRANSFER CASE CLUTCH PRESSURE SENSOR - SIGNAL PLAUSIBILITY FAILURE

For a complete wiring diagram, **refer to appropriate SYSTEM WIRING DIAGRAMS article** .

WHEN MONITORED

With the ignition on and no undervoltage or overvoltage condition present.

SET CONDITION

The Drive Train Control Module (DTCM) detects an error from the drivetrain sensor incorporated in the Electronically Controlled Clutch (ECC).

POSSIBLE CAUSES

Possible Causes
CHECK HYDRAULIC SYSTEM FOR FLUID LEAKS OR MECHANICAL FAILURE
ELECTRONICALLY CONTROLLED CLUTCH (ECC)
DRIVE TRAIN CONTROL MODULE (DTCM)

NOTE: If any other DTCs are present, repair them first before continuing with this diagnostic procedure.

DIAGNOSTIC TEST

1. **VERIFY THE DTC ACTIVE**
    1. Ignition on, engine not running.
    2. With the scan tool, record and erase DTCs.
    3. Test drive the vehicle.
    4. With the scan tool, read DTCs.

    Is the DTC active at this time?

    Yes

    - Go To 2

    No

    - Go To 4
2. **CHECK HYDRAULIC SYSTEM FOR FLUID LEAKS OR MECHANICAL FAILURE**
    1. Turn the ignition off.
    2. Check the fluid levels in the ECC.
    3. Visually inspect all the ECC for damage or mechanical problems.

    Where any problems found?

    Yes

    - Repair as necessary.
    - Perform the DTCM VERIFICATION TEST. Refer to **STANDARD PROCEDURE**.

    No

    - Go To 3
3. **REAR DIFFERENTIAL BLEED ROUTINE**
    1. Ignition on, engine not running.
    2. With the scan tool, under "Miscellaneous Functions" perform the Rear Differential bleed routine.

    Did the Rear Differential bleed routine successfully complete?

    Yes

    - Replace the Drive Train Control Module (DTCM) in accordance with the Service Information. Refer to **MODULE, DRIVETRAIN CONTROL, REMOVAL** .
    - Perform the DTCM VERIFICATION TEST. Refer to **STANDARD PROCEDURE**.

    No

- Replace the Electronically Controlled Clutch (ECC) in accordance with the Service Information.
- Perform the DTCM VERIFICATION TEST. Refer to **STANDARD PROCEDURE**.

4. **INTERMITTENT WIRING HARNESS AND CONNECTORS**
   1. The conditions necessary to set this DTC are not present at this time.
   2. Using the wiring diagram/schematic as a guide, inspect the wiring harness and connectors.
   3. Wiggle test the wiring harness and connectors while monitoring the scan tool data relative to this circuit.
   4. Look for the data to change or for the DTC to reset during the wiggle test.
   5. While monitoring the scan tool data relative to this circuit, move the selector switch to each position several times.
   6. Look for the data to change other than as expected or for the DTC to reset.

   Were any problems found?

   Yes

   - Repair as necessary.
   - Perform the DTCM VERIFICATION TEST. Refer to **STANDARD PROCEDURE**.

   No

   - Test complete.

C1477-4B-TRANSFER CASE CLUTCH - OVER TEMPERATURE

For a complete wiring diagram, **refer to appropriate SYSTEM WIRING DIAGRAMS article** .

WHEN MONITORED

Ignition on.

SET CONDITION

The Drive Train Control Module (DTCM) detects an overheat condition due to excessive usage of components from hard driving conditions (Mud, Sand, Snow, 2WD Chassis dynamometer etc.) or ambient temperatures.

POSSIBLE CAUSES

Possible Causes
DRIVING CONDITIONS
AMBIENT TEMPERATURE SENSOR
ELECTRONICALLY CONTROLLED CLUTCH (ECC)

DRIVE TRAIN CONTROL MODULE (DTCM)

DIAGNOSTIC TEST

1. **VERIFY THE DTC IS ACTIVE**
    1. Ignition on, engine not running.
    2. With the scan tool, record and erase DTCs.
    3. Test drive the vehicle. If equipped with a Terrain Selector Switch drive the vehicle in each Transfer Case range and verify proper operation in each range.
    4. Ignition on, engine not running.
    5. With the scan tool, read DTCs.

    Is the DTC active at this time?

    Yes

    - Go To 2

    No

    - Go To 5
2. **AMBIENT TEMPERATURE SENSOR**
    1. With the scan tool, monitor the ambient temperature in the BCM.

    Is the ambient temperature at room temperature?

    Yes

    - Go To 3

    No

    - Replace the Ambient Temperature Sensor in accordance with the Service Information. Refer to **SENSOR, AMBIENT TEMPERATURE, REMOVAL** .
    - Perform the TRANSFER CASE VERIFICATION TEST. Refer to **STANDARD PROCEDURE**.
3. **VERIFY SET CONDITION**

    NOTE: Check with customer on driving terrain (e.g. mud, sand, snow) for set condition.

    1. With the scan tool, erase DTCs.
    2. Allow the System to cool down.

3. Test drive the vehicle. If equipped with a Terrain Selector Switch drive the vehicle in each Transfer Case range and verify proper operation in each range.
4. With the scan tool, read DTCs.

   Does the DTC remain active?

   Yes

   - Go To 4

   No

   - Test complete, the condition or conditions that originally set this DTC are not present at this time. Using the wiring diagrams as a guide, check all related splices and connectors for signs of water intrusion, corrosion, pushed out or bent terminals, and correct pin tension.
   - Perform the TRANSFER CASE VERIFICATION TEST. Refer to **STANDARD PROCEDURE**.

4. **ELECTRONICALLY CONTROLLED CLUTCH (ECC)**
   1. Replace the Electronically Controlled Clutch (ECC) accordance with the Service Information.
   2. Ignition on, engine not running.
   3. With the scan tool, record and erase DTCs.
   4. Test drive the vehicle. If equipped with a Terrain Selector Switch drive the vehicle in each Transfer Case range and verify proper operation in each range.
   5. Ignition on, engine not running.
   6. With the scan tool, read DTCs.

      Does the DTC remain active?

      Yes

      - Replace the Drive Train Control Module (DTCM) in accordance with the Service Information. Refer to **MODULE, DRIVETRAIN CONTROL, REMOVAL** .
      - Perform the DTCM VERIFICATION TEST. Refer to **STANDARD PROCEDURE**.

      No

      - Test complete.

5. **INTERMITTENT WIRING AND CONNECTORS**
   1. Using the wiring diagram/schematic as a guide, inspect the wiring harness and connectors.
   2. Wiggle test the wiring harness and connectors while monitoring the scan tool data relative to this circuit.
   3. Look for the data to change or for the DTC to reset during the wiggle test.

4. While monitoring the scan tool data relative to this circuit, move the selector switch to each position several times.
5. Look for the data to change other than as expected or for the DTC to reset.

   Were there any problems found?

   Yes

   - Repair as necessary.
   - Perform the TRANSFER CASE VERIFICATION TEST. Refer to **STANDARD PROCEDURE**.

   No

   - Test complete, the condition or conditions that originally set this DTC are not present at this time.

C1492-00-PTU INTERNAL PERFOMANCE

For a complete wiring diagram, **refer to appropriate SYSTEM WIRING DIAGRAMS article** .

WHEN MONITORED

With the ignition on.

SET CONDITION

The Drive Train Control Module (DTCM) has detected an internal failure in the Power Transfer Unit (PTU).

POSSIBLE CAUSES

Possible Causes
POWER TRANSFER UNIT (PTU)

DIAGNOSTIC TEST

VERIFY THE DTC IS ACTIVE

1. Ignition on, engine not running.
2. With the scan tool, read DTCs in the Drive Train Control Module (DTCM).

   Is the DTC active at this time?

   Yes

- Replace the Power Transfer Unit (PTU) in accordance with the Service Information.
- Perform the DTCM VERIFICATION TEST. Refer to **STANDARD PROCEDURE**.

No

- Test complete, the condition or conditions that originally set this DTC are not present at this time. Using the wiring diagrams as a guide, check all related splices and connectors for signs of water intrusion, corrosion, pushed out or bent terminals, and correct pin tension.

C1493-00-RDM INTERNAL PERFOMANCE

For a complete wiring diagram, **refer to appropriate SYSTEM WIRING DIAGRAMS article** .

WHEN MONITORED

With the ignition on.

SET CONDITION

The Drive Train Control Module (DTCM) has detected an internal failure in the Rear Driveline Module (RDM).

POSSIBLE CAUSES

Possible Causes
REAR DRIVELINE MODULE (RDM)

DIAGNOSTIC TEST

VERIFY THE DTC IS ACTIVE

1. Ignition on, engine not running.
2. With the scan tool, read DTCs in the Drive Train Control Module (DTCM).

   Is the DTC active at this time?

   Yes

   - Replace the Rear Driveline Module (RDM) in accordance with the Service Information.
   - Perform the DTCM VERIFICATION TEST. Refer to **STANDARD PROCEDURE**.

   No

   - Test complete, the condition or conditions that originally set this DTC are not present at this time. Using the wiring diagrams as a guide, check all related splices and connectors for signs of water intrusion, corrosion, pushed out or bent terminals, and correct pin tension.

C1494-92-PTU FORK POSITION - PERFORMANCE OR INCORRECT OPERATION

For a complete wiring diagram, **refer to appropriate SYSTEM WIRING DIAGRAMS article** .

WHEN MONITORED

With the ignition on.

SET CONDITION

The Drive Train Control Module (DTCM) has detected an internal or mechanical failure in the Power Transfer Unit (PTU).

POSSIBLE CAUSES

Possible Causes
MECHANICAL DAMAGE POWER TRANSFER UNIT (PTU) DRIVE TRAIN CONTROL MODULE (DTCM)

NOTE: If DTC U1203-00 is present, perform the diagnostics for this DTC before continuing with this diagnostic procedure.

DIAGNOSTIC TEST

1. **VERIFY THE DTC IS ACTIVE**
    1. Ignition on, engine not running.
    2. With the scan tool, record and erase DTCs.
    3. Test drive the vehicle. If equipped with a Terrain Selector Switch drive the vehicle in each Transfer Case range and verify proper operation in each range.
    4. Ignition on, engine not running.
    5. With the scan tool, read DTCs.

    Is the DTC active at this time?

    Yes

    - Go To 2

    No

    - Go To 4
2. **CHECK FOR MECHANICAL FAILURES**
    1. Turn the ignition off.

2. Visually inspect the PTU for damage or mechanical problems.

   Where any problems found?

   Yes

   - Repair as necessary.
   - Perform the DTCM VERIFICATION TEST. Refer to **STANDARD PROCEDURE**.

   No

   - Go To 3

3. **POWER TRANSFER UNIT (PTU)**
   1. Replace the Power Transfer Unit (PTU) in accordance with the Service Information.
   2. Ignition on, engine not running.
   3. With the scan tool, record and erase DTCs.
   4. Test drive the vehicle. If equipped with a Terrain Selector Switch drive the vehicle in each Transfer Case range and verify proper operation in each range.
   5. Ignition on, engine not running.
   6. With the scan tool, read DTCs.

   Does the DTC remain active?

   Yes

   - Replace the Drive Train Control Module (DTCM) in accordance with the Service Information. Refer to **MODULE, DRIVETRAIN CONTROL, REMOVAL** .
   - Perform the DTCM VERIFICATION TEST. Refer to **STANDARD PROCEDURE**.

   No

   - Test complete.

4. **INTERMITTENT WIRING AND CONNECTORS**
   1. The conditions necessary to set this DTC are not present at this time.
   2. Using the wiring diagram/schematic as a guide, inspect the wiring and connectors.
   3. While monitoring the scan tool data relative to this circuit, wiggle test the wiring and connectors.
   4. Look for the data to change or for the DTC to reset during the wiggle test.

   Were any problems found?

   Yes

   - Repair as necessary.

- Perform the TRANSFER CASE VERIFICATION TEST. Refer to **STANDARD PROCEDURE**.

No

- Test complete, the condition or conditions that originally set this DTC are not present at this time.

C1495-16-PTU - CIRCUIT VOLTAGE BELOW THRESHOLD

For a complete wiring diagram, **refer to appropriate SYSTEM WIRING DIAGRAMS article** .

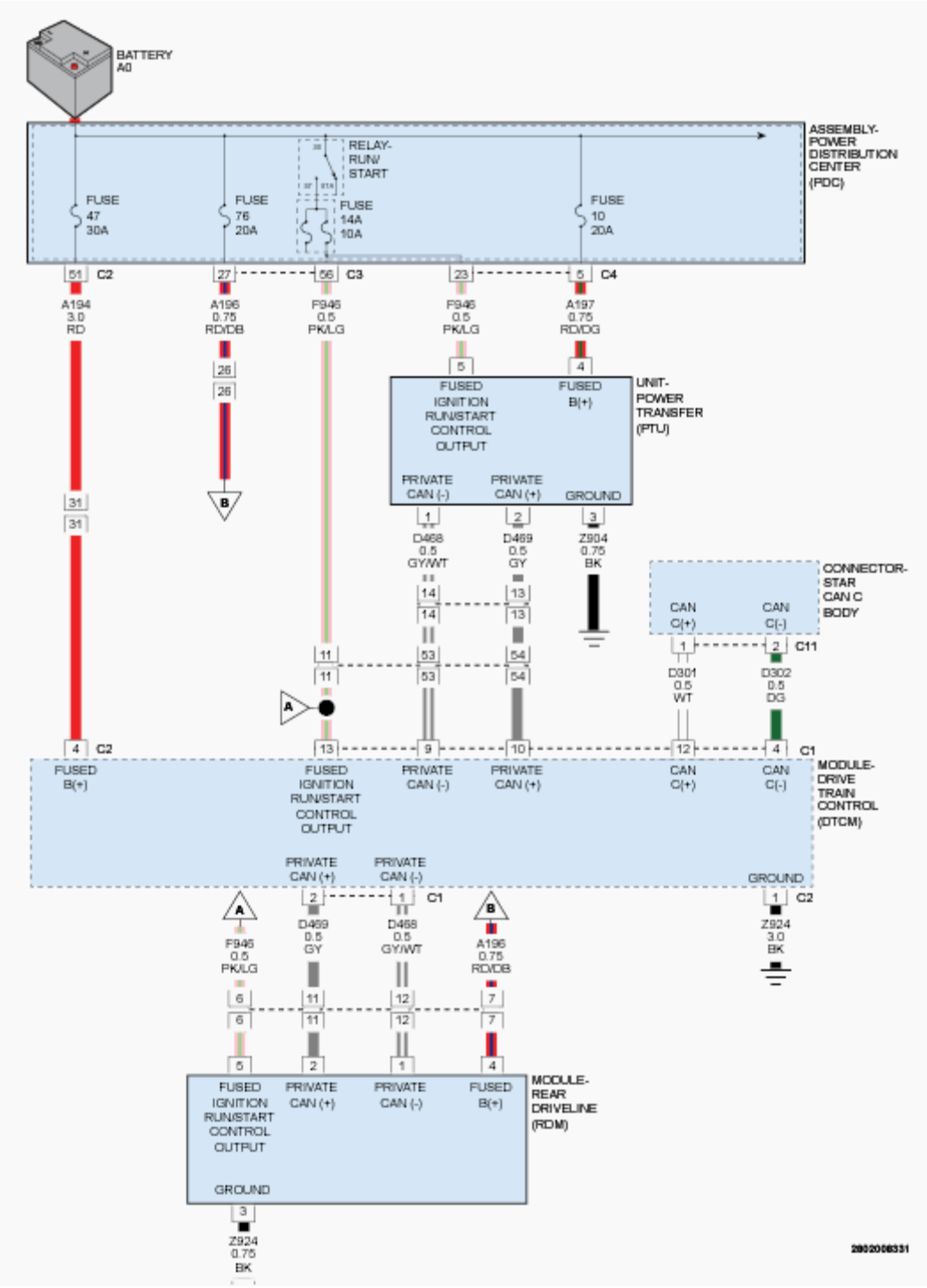

Fig. 9: Drive Train Control Module, Rear Driveline Module & Power Transfer Unit System Voltage Circuit Diagram
Courtesy of CHRYSLER GROUP, LLC

WHEN MONITORED

Continuously.

SET CONDITION

The Drive Train Control Module (DTCM) detects that the Power Transfer Unit (PTU) system voltage is below 8.5 volts for 60 seconds.

POSSIBLE CAUSES

Possible Causes
POWER TRANSFER UNIT (PTU) POWER CIRCUITS OPEN OR HIGH RESISTANCE
POWER TRANSFER UNIT (PTU) GROUND CIRCUIT OPEN OR HIGH RESISTANCE
POWER TRANSFER UNIT (PTU)
DRIVE TRAIN CONTROL MODULE (DTCM)

NOTE: If any other DTCs are present, repair them first before continuing with this diagnostic procedure.

DIAGNOSTIC TEST

1. **VERIFY THE DTC IS ACTIVE**
    1. Ignition on, engine not running.
    2. With the scan tool, record and erase DTCs.
    3. Test drive the vehicle. If equipped with a Terrain Selector Switch drive the vehicle in each Transfer Case range and verify proper operation in each range.
    4. Ignition on, engine not running.
    5. With the scan tool, read DTCs.

    Is the DTC active at this time?

    Yes

    - Go To 2

    No

    - Go To 5
2. **POWER CIRCUITS OPEN OR HIGH RESISTANCE**
    1. Disconnect the PTU harness connector.
    2. Ignition on, engine not running.
    3. With a 12-volt test light connected to ground, check the (F946) Fused Ignition Switch Output circuit and the (A197) Fused B+ circuit in the PTU harness connector.

NOTE: The test light must illuminate brightly. Compare the brightness to that of a direct connection to the battery.

Does the test light illuminate brightly for each of the circuits?

Yes

- Go To 3

No

- Repair the Power circuit(s) for an open circuit or high resistance.
- Perform the DTCM VERIFICATION TEST. Refer to **STANDARD PROCEDURE**.

3. **GROUND CIRCUIT OPEN OR HIGH RESISTANCE**
   1. Turn the ignition off to the lock position
   2. With a 12-volt test light connected to B+, check the (Z904) Ground circuit in the PTU harness connector.

NOTE: The test light must illuminate brightly. Compare the brightness to that of a direct connection to the battery.

Does the test light illuminate brightly for each of the Ground circuits?

Yes

- Go To 4

No

- Repair the Ground circuit for an open circuit or high resistance.
- Perform the DTCM VERIFICATION TEST. Refer to **STANDARD PROCEDURE**.

4. **POWER TRANSFER UNIT (PTU)**
   1. Replace the Power Transfer Unit (PTU) in accordance with the Service Information.
   2. Ignition on, engine not running.
   3. With the scan tool, record and erase DTCs.
   4. Test drive the vehicle. If equipped with a Terrain Selector Switch drive the vehicle in each Transfer Case range and verify proper operation in each range.
   5. Ignition on, engine not running.
   6. With the scan tool, read DTCs.

Does the DTC remain active?

Yes

- Replace the Drive Train Control Module (DTCM) in accordance with the Service Information. Refer to **MODULE, DRIVETRAIN CONTROL, REMOVAL** .
- Perform the DTCM VERIFICATION TEST. Refer to **STANDARD PROCEDURE**.

No

- Test complete.

5. **INTERMITTENT WIRING AND CONNECTORS**
   1. The conditions necessary to set this DTC are not present at this time.
   2. Using the wiring diagram/schematic as a guide, inspect the wiring and connectors.
   3. While monitoring the scan tool data relative to this circuit, wiggle test the wiring and connectors.
   4. Look for the data to change or for the DTC to reset during the wiggle test.

   Were any problems found?

   Yes

   - Repair as necessary.
   - Perform the TRANSFER CASE VERIFICATION TEST. Refer to **STANDARD PROCEDURE**.

   No

   - Test complete, the condition or conditions that originally set this DTC are not present at this time.

C1495-17-PTU - CIRCUIT VOLTAGE ABOVE THRESHOLD

For a complete wiring diagram, **refer to appropriate SYSTEM WIRING DIAGRAMS article** .

WHEN MONITORED

Continuously.

SET CONDITION

The Drive Train Control Module (DTCM) detects that the Power Transfer Unit (PTU) system voltage is above 16.0 volts for 60 seconds.

POSSIBLE CAUSES

Possible Causes
POWER TRANSFER UNIT (PTU)
DRIVE TRAIN CONTROL MODULE (DTCM)

NOTE: **If any other DTCs are present, repair them first before continuing with this diagnostic procedure.**

DIAGNOSTIC TEST

1. **VERIFY THE DTC IS ACTIVE**
    1. Ignition on, engine not running.
    2. With the scan tool, record and erase DTCs.
    3. Test drive the vehicle. If equipped with a Terrain Selector Switch drive the vehicle in each Transfer Case range and verify proper operation in each range.
    4. Ignition on, engine not running.
    5. With the scan tool, read DTCs.

    Is the DTC active at this time?

    Yes

    - Go To 2

    No

    - Go To 3
2. **POWER TRANSFER UNIT (PTU)**
    1. Replace the Power Transfer Unit (PTU) in accordance with the Service Information.
    2. Ignition on, engine not running.
    3. With the scan tool, record and erase DTCs.
    4. Test drive the vehicle. If equipped with a Terrain Selector Switch drive the vehicle in each Transfer Case range and verify proper operation in each range.
    5. Ignition on, engine not running.
    6. With the scan tool, read DTCs.

    Does the DTC remain active?

    Yes

    - Replace the Drive Train Control Module (DTCM) in accordance with the Service Information. Refer to **MODULE, DRIVETRAIN CONTROL, REMOVAL** .
    - Perform the DTCM VERIFICATION TEST. Refer to **STANDARD PROCEDURE**.

    No

    - Test complete.
3. **INTERMITTENT WIRING AND CONNECTORS**

1. The conditions necessary to set this DTC are not present at this time.
2. Using the wiring diagram/schematic as a guide, inspect the wiring and connectors.
3. While monitoring the scan tool data relative to this circuit, wiggle test the wiring and connectors.
4. Look for the data to change or for the DTC to reset during the wiggle test.

   Were any problems found?

   Yes

   - Repair as necessary.
   - Perform the TRANSFER CASE VERIFICATION TEST. Refer to **STANDARD PROCEDURE**.

   No

   - Test complete, the condition or conditions that originally set this DTC are not present at this time.

C1495-98-PTU - COMPONENT OR SYSTEM OVER TEMPERATURE

For a complete wiring diagram, **refer to appropriate SYSTEM WIRING DIAGRAMS article** .

WHEN MONITORED

Ignition on.

SET CONDITION

The Drive Train Control Module (DTCM) detects an overheat condition due to excessive usage of components from hard driving conditions (Mud, Sand, Snow, 2WD Chassis dynamometer etc.) or ambient temperatures.

POSSIBLE CAUSES

Possible Causes
DRIVING CONDITIONS
AMBIENT TEMPERATURE SENSOR
POWER TRANSFER UNIT (PTU)
DRIVE TRAIN CONTROL MODULE (DTCM)

DIAGNOSTIC TEST

1. **VERIFY THE DTC IS ACTIVE**
   1. Ignition on, engine not running.
   2. With the scan tool, record and erase DTCs.

3. Test drive the vehicle. If equipped with a Terrain Selector Switch drive the vehicle in each Transfer Case range and verify proper operation in each range.
4. Ignition on, engine not running.
5. With the scan tool, read DTCs.

   Is the DTC active at this time?

   Yes

   - Go To 2

   No

   - Go To 5

2. **AMBIENT TEMPERATURE SENSOR**
   1. With the scan tool, monitor the ambient temperature in the BCM.

      Is the ambient temperature at room temperature?

      Yes

      - Go To 3

      No

      - Replace the Ambient Temperature Sensor in accordance with the Service Information. Refer to **SENSOR, AMBIENT TEMPERATURE, REMOVAL** .
      - Perform the TRANSFER CASE VERIFICATION TEST. Refer to **STANDARD PROCEDURE**.

3. **VERIFY SET CONDITION**

   NOTE: Check with customer on driving terrain (e.g. mud, sand, snow) for set condition.

   1. With the scan tool, erase DTCs.
   2. Allow the System to cool down.
   3. Test drive the vehicle. If equipped with a Terrain Selector Switch drive the vehicle in each Transfer Case range and verify proper operation in each range.
   4. With the scan tool, read DTCs.

      Does the DTC remain active?

      Yes

- Go To 4

No

- Test complete, the condition or conditions that originally set this DTC are not present at this time. Using the wiring diagrams as a guide, check all related splices and connectors for signs of water intrusion, corrosion, pushed out or bent terminals, and correct pin tension.
- Perform the TRANSFER CASE VERIFICATION TEST. Refer to **STANDARD PROCEDURE**.

4. **POWER TRANSFER UNIT (PTU)**
   1. Replace the Rear Power Transfer Unit (PTU) accordance with the Service Information.
   2. Ignition on, engine not running.
   3. With the scan tool, record and erase DTCs.
   4. Test drive the vehicle. If equipped with a Terrain Selector Switch drive the vehicle in each Transfer Case range and verify proper operation in each range.
   5. Ignition on, engine not running.
   6. With the scan tool, read DTCs.

   Does the DTC remain active?

   Yes

   - Replace the Drive Train Control Module (DTCM) in accordance with the Service Information. Refer to **MODULE, DRIVETRAIN CONTROL, REMOVAL** .
   - Perform the DTCM VERIFICATION TEST. Refer to **STANDARD PROCEDURE**.

   No

   - Test complete.

5. **INTERMITTENT WIRING AND CONNECTORS**
   1. Using the wiring diagram/schematic as a guide, inspect the wiring harness and connectors.
   2. Wiggle test the wiring harness and connectors while monitoring the scan tool data relative to this circuit.
   3. Look for the data to change or for the DTC to reset during the wiggle test.
   4. While monitoring the scan tool data relative to this circuit, move the selector switch to each position several times.
   5. Look for the data to change other than as expected or for the DTC to reset.

   Were there any problems found?

   Yes

- Repair as necessary.
- Perform the TRANSFER CASE VERIFICATION TEST. Refer to **STANDARD PROCEDURE**.

No

- Test complete, the condition or conditions that originally set this DTC are not present at this time.

C1496-92-PTU MOTOR POSITION - PERFORMANCE OR INCORRECT OPERATION

For a complete wiring diagram, **refer to appropriate SYSTEM WIRING DIAGRAMS article** .

WHEN MONITORED

With the ignition on.

SET CONDITION

The Drive Train Control Module (DTCM) has detected an internal or mechanical failure in the Power Transfer Unit (PTU).

POSSIBLE CAUSES

Possible Causes
MECHANICAL DAMAGE
POWER TRANSFER UNIT (PTU)
DRIVE TRAIN CONTROL MODULE (DTCM)

NOTE: If DTC U1203-00 is present, perform the diagnostics for this DTC before continuing with this diagnostic procedure.

DIAGNOSTIC TEST

1. **VERIFY THE DTC IS ACTIVE**
    1. Ignition on, engine not running.
    2. With the scan tool, record and erase DTCs.
    3. Test drive the vehicle. If equipped with a Terrain Selector Switch drive the vehicle in each Transfer Case range and verify proper operation in each range.
    4. Ignition on, engine not running.
    5. With the scan tool, read DTCs.

    Is the DTC active at this time?

Yes

- Go To 2

No

- Go To 4

2. **CHECK FOR MECHANICAL FAILURES**
   1. Turn the ignition off.
   2. Visually inspect the PTU for damage or mechanical problems.

   Where any problems found?

   Yes

   - Repair as necessary.
   - Perform the DTCM VERIFICATION TEST. Refer to **STANDARD PROCEDURE**.

   No

   - Go To 3

3. **POWER TRANSFER UNIT (PTU)**
   1. Replace the Power Transfer Unit (PTU) in accordance with the Service Information.
   2. Ignition on, engine not running.
   3. With the scan tool, record and erase DTCs.
   4. Test drive the vehicle. If equipped with a Terrain Selector Switch drive the vehicle in each Transfer Case range and verify proper operation in each range.
   5. Ignition on, engine not running.
   6. With the scan tool, read DTCs.

   Does the DTC remain active?

   Yes

   - Replace the Drive Train Control Module (DTCM) in accordance with the Service Information. Refer to **MODULE, DRIVETRAIN CONTROL, REMOVAL** .
   - Perform the DTCM VERIFICATION TEST. Refer to **STANDARD PROCEDURE**.

   No

   - Test complete.

4. **INTERMITTENT WIRING AND CONNECTORS**
   1. The conditions necessary to set this DTC are not present at this time.

2. Using the wiring diagram/schematic as a guide, inspect the wiring and connectors.
3. While monitoring the scan tool data relative to this circuit, wiggle test the wiring and connectors.
4. Look for the data to change or for the DTC to reset during the wiggle test.

   Were any problems found?

   Yes

   - Repair as necessary.
   - Perform the TRANSFER CASE VERIFICATION TEST. Refer to **STANDARD PROCEDURE**.

   No

   - Test complete, the condition or conditions that originally set this DTC are not present at this time.

C1498-92-RDM FORK POSITION - PERFORMANCE OR INCORRECT OPERATION

For a complete wiring diagram, **refer to appropriate SYSTEM WIRING DIAGRAMS article** .

WHEN MONITORED

With the ignition on.

SET CONDITION

The Drive Train Control Module (DTCM) has detected an internal or mechanical failure in the Rear Driveline Module (RDM).

POSSIBLE CAUSES

Possible Causes
MECHANICAL DAMAGE
REAR DRIVELINE MODULE (RDM)
DRIVE TRAIN CONTROL MODULE (DTCM)

NOTE: If DTC U1204-00 is present, perform the diagnostics for this DTC before continuing with this diagnostic procedure.

DIAGNOSTIC TEST

1. **VERIFY THE DTC IS ACTIVE**
   1. Ignition on, engine not running.

2. With the scan tool, record and erase DTCs.
3. Test drive the vehicle. If equipped with a Terrain Selector Switch drive the vehicle in each Transfer Case range and verify proper operation in each range.
4. Ignition on, engine not running.
5. With the scan tool, read DTCs.

   Is the DTC active at this time?

   Yes

   - Go To 2

   No

   - Go To 4

2. **CHECK FOR MECHANICAL FAILURES**
   1. Turn the ignition off.
   2. Visually inspect the RDM for damage or mechanical problems.

      Where any problems found?

      Yes

      - Repair as necessary.
      - Perform the DTCM VERIFICATION TEST. Refer to **STANDARD PROCEDURE**.

      No

      - Go To 3

3. **REAR DRIVELINE MODULE (RDM)**
   1. Replace the Rear Driveline Module (RDM) in accordance with the Service Information.
   2. Ignition on, engine not running.
   3. With the scan tool, record and erase DTCs.
   4. Test drive the vehicle. If equipped with a Terrain Selector Switch drive the vehicle in each Transfer Case range and verify proper operation in each range.
   5. Ignition on, engine not running.
   6. With the scan tool, read DTCs.

      Does the DTC remain active?

      Yes

      - Replace the Drive Train Control Module (DTCM) in accordance with the Service

Information. Refer to **MODULE, DRIVETRAIN CONTROL, REMOVAL** .
- Perform the DTCM VERIFICATION TEST. Refer to **STANDARD PROCEDURE**.

No

- Test complete.

4. **INTERMITTENT WIRING AND CONNECTORS**
   1. The conditions necessary to set this DTC are not present at this time.
   2. Using the wiring diagram/schematic as a guide, inspect the wiring and connectors.
   3. While monitoring the scan tool data relative to this circuit, wiggle test the wiring and connectors.
   4. Look for the data to change or for the DTC to reset during the wiggle test.

   Were any problems found?

   Yes

   - Repair as necessary.
   - Perform the TRANSFER CASE VERIFICATION TEST. Refer to **STANDARD PROCEDURE**.

   No

   - Test complete, the condition or conditions that originally set this DTC are not present at this time.

C1499-92-RDM MOTOR POSITION - PERFORMANCE OR INCORRECT OPERATION

For a complete wiring diagram, **refer to appropriate SYSTEM WIRING DIAGRAMS article** .

WHEN MONITORED

With the ignition on.

SET CONDITION

The Drive Train Control Module (DTCM) has detected an internal or mechanical failure in the Rear Driveline Module (RDM).

POSSIBLE CAUSES

Possible Causes
MECHANICAL DAMAGE REAR DRIVELINE MODULE (RDM) DRIVE TRAIN CONTROL MODULE (DTCM)

NOTE: If DTC U1204-00 is present, perform the diagnostics for this DTC before continuing with this diagnostic procedure.

DIAGNOSTIC TEST

1. **VERIFY THE DTC IS ACTIVE**
    1. Ignition on, engine not running.
    2. With the scan tool, record and erase DTCs.
    3. Test drive the vehicle. If equipped with a Terrain Selector Switch drive the vehicle in each Transfer Case range and verify proper operation in each range.
    4. Ignition on, engine not running.
    5. With the scan tool, read DTCs.

    Is the DTC active at this time?

    Yes

    - Go To 2

    No

    - Go To 4
2. **CHECK FOR MECHANICAL FAILURES**
    1. Turn the ignition off.
    2. Visually inspect the RDM for damage or mechanical problems.

    Where any problems found?

    Yes

    - Repair as necessary.
    - Perform the DTCM VERIFICATION TEST. Refer to **STANDARD PROCEDURE**.

    No

    - Go To 3
3. **REAR DRIVELINE MODULE (RDM)**
    1. Replace the Rear Driveline Module (RDM) in accordance with the Service Information.
    2. Ignition on, engine not running.
    3. With the scan tool, record and erase DTCs.
    4. Test drive the vehicle. If equipped with a Terrain Selector Switch drive the vehicle in each Transfer Case range and verify proper operation in each range.

5. Ignition on, engine not running.
6. With the scan tool, read DTCs.

   Does the DTC remain active?

   Yes

   - Replace the Drive Train Control Module (DTCM) in accordance with the Service Information. Refer to **MODULE, DRIVETRAIN CONTROL, REMOVAL** .
   - Perform the DTCM VERIFICATION TEST. Refer to **STANDARD PROCEDURE**.

   No

   - Test complete.

4. **INTERMITTENT WIRING AND CONNECTORS**
   1. The conditions necessary to set this DTC are not present at this time.
   2. Using the wiring diagram/schematic as a guide, inspect the wiring and connectors.
   3. While monitoring the scan tool data relative to this circuit, wiggle test the wiring and connectors.
   4. Look for the data to change or for the DTC to reset during the wiggle test.

   Were any problems found?

   Yes

   - Repair as necessary.
   - Perform the TRANSFER CASE VERIFICATION TEST. Refer to **STANDARD PROCEDURE**.

   No

   - Test complete, the condition or conditions that originally set this DTC are not present at this time.

C149B-16-RDM - CIRCUIT VOLTAGE BELOW THRESHOLD

For a complete wiring diagram, **refer to appropriate SYSTEM WIRING DIAGRAMS article** .

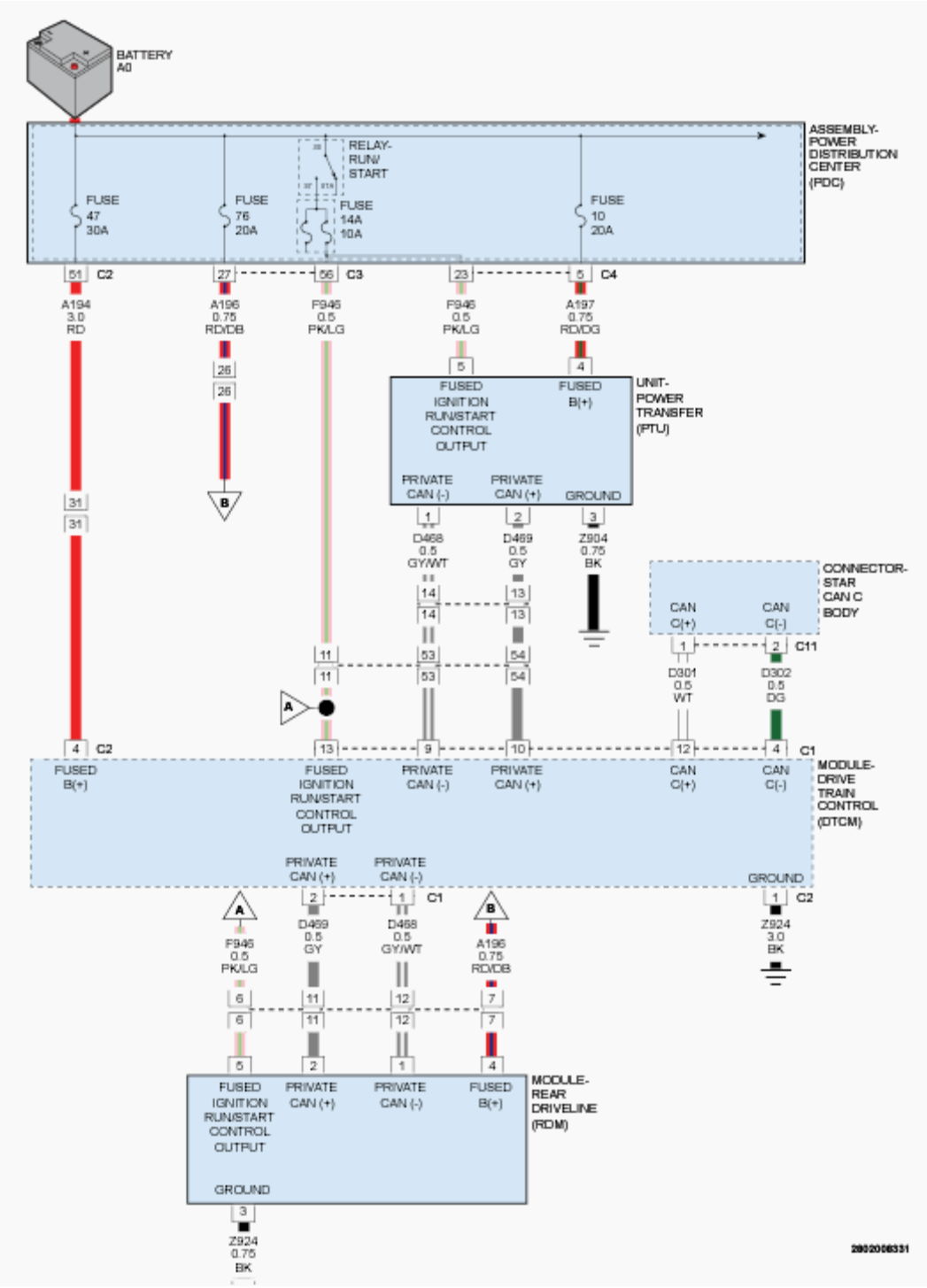

Fig. 10: Drive Train Control Module, Rear Driveline Module & Power Transfer Unit System Voltage Circuit Diagram
Courtesy of CHRYSLER GROUP, LLC

WHEN MONITORED

Continuously.

SET CONDITION

The Drive Train Control Module (DTCM) detects that the Rear Driveline Module (RDM) system voltage is below 8.5 volts for 60 seconds.

POSSIBLE CAUSES

Possible Causes
REAR DRIVELINE MODULE (RDM) POWER CIRCUITS OPEN OR HIGH RESISTANCE
REAR DRIVELINE MODULE (RDM) GROUND CIRCUIT OPEN OR HIGH RESISTANCE
REAR DRIVELINE MODULE (RDM)
DRIVE TRAIN CONTROL MODULE (DTCM)

NOTE: If any other DTCs are present, repair them first before continuing with this diagnostic procedure.

DIAGNOSTIC TEST

1. **VERIFY THE DTC IS ACTIVE**
    1. Ignition on, engine not running.
    2. With the scan tool, record and erase DTCs.
    3. Test drive the vehicle. If equipped with a Terrain Selector Switch drive the vehicle in each Transfer Case range and verify proper operation in each range.
    4. Ignition on, engine not running.
    5. With the scan tool, read DTCs.

    Is the DTC active at this time?

    Yes

    - Go To 2

    No

    - Go To 5
2. **POWER CIRCUITS OPEN OR HIGH RESISTANCE**
    1. Disconnect the PTU harness connector.
    2. Ignition on, engine not running.
    3. With a 12-volt test light connected to ground, check the (F946) Fused Ignition Switch Output circuit and the (A196) Fused B+ circuit in the RDM harness connector.

NOTE: The test light must illuminate brightly. Compare the brightness to that of a direct connection to the battery.

Does the test light illuminate brightly for each of the circuits?

Yes

- Go To 3

No

- Repair the Power circuit(s) for an open circuit or high resistance.
- Perform the DTCM VERIFICATION TEST. Refer to **STANDARD PROCEDURE**.

3. **GROUND CIRCUIT OPEN OR HIGH RESISTANCE**
   1. Turn the ignition off to the lock position
   2. With a 12-volt test light connected to B+, check the (Z924) Ground circuit in the RDM harness connector.

NOTE: The test light must illuminate brightly. Compare the brightness to that of a direct connection to the battery.

Does the test light illuminate brightly for each of the Ground circuits?

Yes

- Go To 4

No

- Repair the Ground circuit for an open circuit or high resistance.
- Perform the DTCM VERIFICATION TEST. Refer to **STANDARD PROCEDURE**.

4. **REAR DRIVELINE MODULE (RDM)**
   1. Replace the Rear Driveline Module (RDM) in accordance with the Service Information.
   2. Ignition on, engine not running.
   3. With the scan tool, record and erase DTCs.
   4. Test drive the vehicle. If equipped with a Terrain Selector Switch drive the vehicle in each Transfer Case range and verify proper operation in each range.
   5. Ignition on, engine not running.
   6. With the scan tool, read DTCs.

Does the DTC remain active?

Yes

- Replace the Drive Train Control Module (DTCM) in accordance with the Service Information. Refer to **MODULE, DRIVETRAIN CONTROL, REMOVAL** .
- Perform the DTCM VERIFICATION TEST. Refer to **STANDARD PROCEDURE**.

No

- Test complete.

5. **INTERMITTENT WIRING AND CONNECTORS**
   1. The conditions necessary to set this DTC are not present at this time.
   2. Using the wiring diagram/schematic as a guide, inspect the wiring and connectors.
   3. While monitoring the scan tool data relative to this circuit, wiggle test the wiring and connectors.
   4. Look for the data to change or for the DTC to reset during the wiggle test.

   Were any problems found?

   Yes

   - Repair as necessary.
   - Perform the TRANSFER CASE VERIFICATION TEST. Refer to **STANDARD PROCEDURE**.

   No

   - Test complete, the condition or conditions that originally set this DTC are not present at this time.

C149B-17-RDM - CIRCUIT VOLTAGE ABOVE THRESHOLD

For a complete wiring diagram, **refer to appropriate SYSTEM WIRING DIAGRAMS article** .

WHEN MONITORED

Continuously.

SET CONDITION

The Drive Train Control Module (DTCM) detects that the Rear Driveline Module (RDM) system voltage is above 16.0 volts for 60 seconds.

POSSIBLE CAUSES

Possible Causes
REAR DRIVELINE MODULE (RDM)
DRIVE TRAIN CONTROL MODULE (DTCM)

NOTE: **If any other DTCs are present, repair them first before continuing with this diagnostic procedure.**

DIAGNOSTIC TEST

1. **VERIFY THE DTC IS ACTIVE**
    1. Ignition on, engine not running.
    2. With the scan tool, record and erase DTCs.
    3. Test drive the vehicle. If equipped with a Terrain Selector Switch drive the vehicle in each Transfer Case range and verify proper operation in each range.
    4. Ignition on, engine not running.
    5. With the scan tool, read DTCs.

    Is the DTC active at this time?

    Yes

    - Go To 2

    No

    - Go To 3
2. **REAR DRIVELINE MODULE (RDM)**
    1. Replace the Rear Driveline Module (RDM) in accordance with the Service Information.
    2. Ignition on, engine not running.
    3. With the scan tool, record and erase DTCs.
    4. Test drive the vehicle. If equipped with a Terrain Selector Switch drive the vehicle in each Transfer Case range and verify proper operation in each range.
    5. Ignition on, engine not running.
    6. With the scan tool, read DTCs.

    Does the DTC remain active?

    Yes

    - Replace the Drive Train Control Module (DTCM) in accordance with the Service Information. Refer to **MODULE, DRIVETRAIN CONTROL, REMOVAL** .
    - Perform the DTCM VERIFICATION TEST. Refer to **STANDARD PROCEDURE**.

    No

    - Test complete.
3. **INTERMITTENT WIRING AND CONNECTORS**

1. The conditions necessary to set this DTC are not present at this time.
2. Using the wiring diagram/schematic as a guide, inspect the wiring and connectors.
3. While monitoring the scan tool data relative to this circuit, wiggle test the wiring and connectors.
4. Look for the data to change or for the DTC to reset during the wiggle test.

   Were any problems found?

   Yes

   - Repair as necessary.
   - Perform the TRANSFER CASE VERIFICATION TEST. Refer to **STANDARD PROCEDURE**.

   No

   - Test complete, the condition or conditions that originally set this DTC are not present at this time.

C149B-98-RDM - COMPONENT OR SYSTEM OVER TEMPERATURE

For a complete wiring diagram, **refer to appropriate SYSTEM WIRING DIAGRAMS article** .

WHEN MONITORED

Ignition on.

SET CONDITION

The Drive Train Control Module (DTCM) detects an overheat condition due to excessive usage of components from hard driving conditions (Mud, Sand, Snow, 2WD Chassis dynamometer etc.) or ambient temperatures.

POSSIBLE CAUSES

Possible Causes
DRIVING CONDITIONS
AMBIENT TEMPERATURE SENSOR
REAR DRIVELINE MODULE (RDM)
DRIVE TRAIN CONTROL MODULE (DTCM)

DIAGNOSTIC TEST

1. **VERIFY THE DTC IS ACTIVE**
   1. Ignition on, engine not running.
   2. With the scan tool, record and erase DTCs.

3. Test drive the vehicle. If equipped with a Terrain Selector Switch drive the vehicle in each Transfer Case range and verify proper operation in each range.
4. Ignition on, engine not running.
5. With the scan tool, read DTCs.

   Is the DTC active at this time?

   Yes

   - Go To 2

   No

   - Go To 5

2. **AMBIENT TEMPERATURE SENSOR**
   1. With the scan tool, monitor the ambient temperature in the BCM.

      Is the ambient temperature at room temperature?

      Yes

      - Go To 3

      No

      - Replace the Ambient Temperature Sensor in accordance with the Service Information. Refer to **SENSOR, AMBIENT TEMPERATURE, REMOVAL** .
      - Perform the TRANSFER CASE VERIFICATION TEST. Refer to **STANDARD PROCEDURE**.

3. **VERIFY SET CONDITION**

   NOTE: Check with customer on driving terrain (e.g. mud, sand, snow) for set condition.

   1. With the scan tool, erase DTCs.
   2. Allow the System to cool down.
   3. Test drive the vehicle on dry paved road. If equipped with a Terrain Selector Switch drive the vehicle in each Transfer Case range and verify proper operation in each range.
   4. With the scan tool, read DTCs.

      Does the DTC remain active?

      Yes

- Go To 4

No

- Test complete, the condition or conditions that originally set this DTC are not present at this time. Using the wiring diagrams as a guide, check all related splices and connectors for signs of water intrusion, corrosion, pushed out or bent terminals, and correct pin tension.
- Perform the TRANSFER CASE VERIFICATION TEST. Refer to **STANDARD PROCEDURE**.

4. **REAR DRIVELINE MODULE (RDM)**
   1. Replace the Rear Driveline Module (RDM) in accordance with the Service Information.
   2. Ignition on, engine not running.
   3. With the scan tool, record and erase DTCs.
   4. Test drive the vehicle. If equipped with a Terrain Selector Switch drive the vehicle in each Transfer Case range and verify proper operation in each range.
   5. Ignition on, engine not running.
   6. With the scan tool, read DTCs.

   Does the DTC remain active?

   Yes

   - Replace the Drive Train Control Module (DTCM) in accordance with the Service Information. Refer to **MODULE, DRIVETRAIN CONTROL, REMOVAL** .
   - Perform the DTCM VERIFICATION TEST. Refer to **STANDARD PROCEDURE**.

   No

   - Test complete.

5. **INTERMITTENT WIRING AND CONNECTORS**
   1. Using the wiring diagram/schematic as a guide, inspect the wiring harness and connectors.
   2. Wiggle test the wiring harness and connectors while monitoring the scan tool data relative to this circuit.
   3. Look for the data to change or for the DTC to reset during the wiggle test.
   4. While monitoring the scan tool data relative to this circuit, move the selector switch to each position several times.
   5. Look for the data to change other than as expected or for the DTC to reset.

   Were there any problems found?

   Yes

- Repair as necessary.
- Perform the TRANSFER CASE VERIFICATION TEST. Refer to **STANDARD PROCEDURE**.

No

- Test complete, the condition or conditions that originally set this DTC are not present at this time.

C2129-16-BATTERY VOLTAGE - CIRCUIT VOLTAGE BELOW THRESHOLD

For a complete wiring diagram, **refer to appropriate SYSTEM WIRING DIAGRAMS article** .

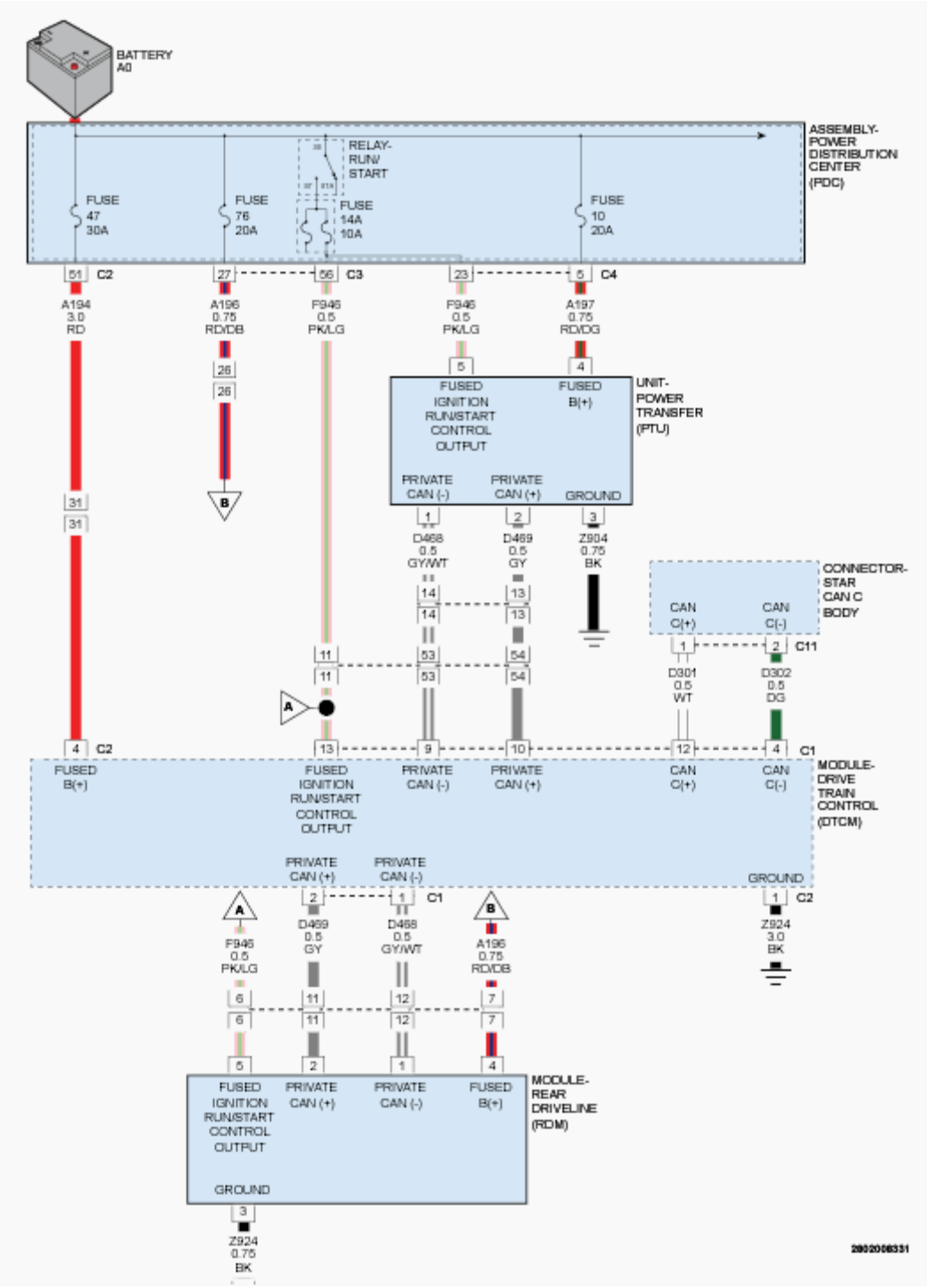

Fig. 11: Drive Train Control Module, Rear Driveline Module & Power Transfer Unit System Voltage Circuit Diagram
Courtesy of CHRYSLER GROUP, LLC

WHEN MONITORED

Continuously.

SET CONDITION

The Drive Train Control Module (DTCM) detects that system voltage is below 8.5 volts for 60 seconds with engine RPM greater than 1500.

POSSIBLE CAUSES

Possible Causes
CHARGING SYSTEM DTCS PRESENT
DRIVE TRAIN CONTROL MODULE (DTCM) POWER CIRCUITS OPEN OR HIGH RESISTANCE
DRIVE TRAIN CONTROL MODULE (DTCM) GROUND CIRCUIT OPEN OR HIGH RESISTANCE
DRIVE TRAIN CONTROL MODULE (DTCM)

DIAGNOSTIC TEST

1. **CHARGING SYSTEM DTCS PRESENT**
    1. Ignition on, engine not running.
    2. With the scan tool, read DTCs in the Powertrain Control Module.

    Are there any Charging System or related voltage DTCs present?

    Yes

    - Perform the appropriate Charging System DTC diagnostic procedures before continuing with this test. Refer to the **DTC INDEX** article .

    No

    - Go To 2
2. **VERIFY THE DTC IS ACTIVE**
    1. With the scan tool, read DTCs in the DTCM.

    Is the DTC active at this time?

    Yes

    - Go To 3

    No

    - Go To 5
3. **POWER CIRCUITS OPEN OR HIGH RESISTANCE**

1. Disconnect the DTCM C1 harness connector.
2. Ignition on, engine not running.
3. With a 12-volt test light connected to ground, check the (F946) Fused Ignition Switch Output circuit in the DTCM C1 harness connector and the (A194) Fused B+ circuit in the DTCM C2 harness connector.

NOTE: The test light must illuminate brightly. Compare the brightness to that of a direct connection to the battery.

Does the test light illuminate brightly for each of the circuits?

Yes

- Go To 4

No

- Repair the Fused B+ circuit(s) for an open circuit or high resistance.
- Perform the DTCM VERIFICATION TEST. Refer to **STANDARD PROCEDURE**.

4. **(Z924) GROUND CIRCUIT OPEN OR HIGH RESISTANCE**
   1. Turn the ignition off to the lock position
   2. Disconnect the DTCM C2 harness connector.
   3. With a 12-volt test light connected to B+, check the (Z924) Ground circuit in the DTCM C2 harness connector.

NOTE: The test light must illuminate brightly. Compare the brightness to that of a direct connection to the battery.

Does the test light illuminate brightly for each of the Ground circuits?

Yes

- Replace the Drive Train Control Module (DTCM) in accordance with the Service Information. Refer to **MODULE, DRIVETRAIN CONTROL, REMOVAL** .
- Perform the DTCM VERIFICATION TEST. Refer to **STANDARD PROCEDURE**.

No

- Repair the (Z924) Ground circuit for an open circuit or high resistance.
- Perform the DTCM VERIFICATION TEST. Refer to **STANDARD PROCEDURE**.

5. **INTERMITTENT WIRING AND CONNECTORS**
   1. The conditions necessary to set this DTC are not present at this time.

2. Using the wiring diagram/schematic as a guide, inspect the wiring and connectors.
3. While monitoring the scan tool data relative to this circuit, wiggle test the wiring and connectors.
4. Look for the data to change or for the DTC to reset during the wiggle test.

   Were any problems found?

   Yes

   - Repair as necessary.
   - Perform the TRANSFER CASE VERIFICATION TEST. Refer to **STANDARD PROCEDURE**.

   No

   - Test complete, the condition or conditions that originally set this DTC are not present at this time.

C2129-17-BATTERY VOLTAGE - CIRCUIT VOLTAGE ABOVE THRESHOLD

For a complete wiring diagram, **refer to appropriate SYSTEM WIRING DIAGRAMS article** .

WHEN MONITORED

Continuously.

SET CONDITION

The Drive Train Control Module (DTCM) detects that system voltage is above 16.0 volts for 60 seconds with engine RPM greater than 1500.

POSSIBLE CAUSES

Possible Causes
CHARGING SYSTEM DTCS PRESENT
DRIVE TRAIN CONTROL MODULE (DTCM)

DIAGNOSTIC TEST

1. **CHARGING SYSTEM DTCS PRESENT**
   1. Ignition on, engine not running.
   2. With the scan tool, read DTCs in the Powertrain Control Module.

      Are there any Charging System or related voltage DTCs present?

      Yes

- Refer to the **DTC INDEX** article and perform the appropriate diagnostic procedure.

No

- Go To 2

2. **VERIFY THE DTC IS ACTIVE**
   1. With the scan tool, read DTCs in the DTCM.

      Is the DTC active at this time?

      Yes

      - Replace the Drive Train Control Module (DTCM) in accordance with the Service Information. Refer to **MODULE, DRIVETRAIN CONTROL, REMOVAL** .
      - Perform the DTCM VERIFICATION TEST. Refer to **STANDARD PROCEDURE**.

      No

      - Go To 3

3. **INTERMITTENT WIRING AND CONNECTORS**
   1. Using the wiring diagram/schematic as a guide, inspect the wiring harness and connectors.
   2. Wiggle test the wiring harness and connectors while monitoring the scan tool data relative to this circuit.
   3. Look for the data to change or for the DTC to reset during the wiggle test.
   4. While monitoring the scan tool data relative to this circuit, move the selector switch to each position several times.
   5. Look for the data to change other than as expected or for the DTC to reset.

      Were any problems found?

      Yes

      - Repair as necessary.
      - Perform the TRANSFER CASE VERIFICATION TEST. Refer to **STANDARD PROCEDURE**.

      No

      - Test complete, the condition or conditions that originally set this DTC are not present at this time.

C2206-00-VEHICLE CONFIGURATION MISMATCH

For a complete wiring diagram, **refer to appropriate SYSTEM WIRING DIAGRAMS article** .

WHEN MONITORED

Ignition on.

SET CONDITION

This DTC will set if the vehicle type is not identified or incorrectly identified.

POSSIBLE CAUSES

Possible Causes
DRIVE TRAIN CONTROL MODULE (DTCM)
BODY CONTROL MODULE (BCM)

DIAGNOSTIC TEST

VERIFY THE DTC IS ACTIVE

NOTE: Diagnose and repair any Powertrain Control Module VIN or Communication DTCs before continuing with this test.

1. Ignition on, engine not running.
2. With the scan tool, read and record the DTCs.
3. With the scan tool, read and record the Environmental Data to help identify the conditions in which the DTC was set.
4. With the scan tool, erase the DTCs.
5. Cycle the ignition switch from off to on.
6. With the scan tool, read the DTCs.

   Is the DTC active at this time?

   Yes

   - With the scan tool select BCM under the ECU selection then Misc Functions and Restore Vehicle Configuration.

   No

   - Test complete. The condition or conditions that originally set this DTC are not present at this time. Using the wiring diagrams as a guide, check all related splices and connectors for signs of water intrusion, corrosion, pushed out or bent terminals, and correct pin tension.

C2223-00-ECU CONFIGURATION MISMATCH

For a complete wiring diagram, **refer to appropriate SYSTEM WIRING DIAGRAMS article** .

WHEN MONITORED

Continuously with system voltage between 10.0 and 16.0 volts Electric Parking Brake (EPB) Module is not in Plant-Mode.

SET CONDITION

Body Control Module (BCM) does not expect the Electric Parking Brake (EPB) Module to be present.

POSSIBLE CAUSES

Possible Causes
BODY CONTROL MODULE (BCM) DOES NOT DETECT THE ELECTRIC PARKING BRAKE (EPB)
DRIVE TRAIN CONTROL MODULE (DTCM) NOT PROGRAMED

DIAGNOSTIC TEST

DRIVE TRAIN CONTROL MODULE (DTCM) NOT PROGRAMED

This Diagnostic Trouble Code will set if the Body Control Module (BCM) is not configured for Drive Train Control Module (DTCM).

- Program the BCM with the correct sales code. Refer to **STANDARD PROCEDURE** .
- Perform the DTCM VERIFICATION TEST. Refer to **STANDARD PROCEDURE**.

U0002-00-CAN C BUS OFF PERFORMANCE

Perform the COMMUNICATION PRE-DIAGNOSTIC PROCEDURE. Refer to **COMMUNICATION PRE-DIAGNOSTIC PROCEDURE** .

U0100-00-LOST COMMUNICATION WITH ECM/PCM

Perform the COMMUNICATION PRE-DIAGNOSTIC PROCEDURE. Refer to **COMMUNICATION PRE-DIAGNOSTIC PROCEDURE** .

U0101-00-LOST COMMUNICATION WITH TCM

Perform the COMMUNICATION PRE-DIAGNOSTIC PROCEDURE. Refer to **COMMUNICATION PRE-DIAGNOSTIC PROCEDURE** .

U0121-00-LOST COMMUNICATION WITH ANTI-LOCK BRAKE SYSTEM (ABS) CONTROL MODULE

Perform the COMMUNICATION PRE-DIAGNOSTIC PROCEDURE. Refer to **COMMUNICATION PRE-DIAGNOSTIC PROCEDURE** .

U0131-00-LOST COMMUNICATION WITH ELECTRIC POWER STEERING CONTROL MODULE

Perform the COMMUNICATION PRE-DIAGNOSTIC PROCEDURE. Refer to **COMMUNICATION PRE-DIAGNOSTIC PROCEDURE** .

U0140-00-LOST COMMUNICATION WITH BODY CONTROL MODULE

Perform the COMMUNICATION PRE-DIAGNOSTIC PROCEDURE. Refer to **COMMUNICATION PRE-DIAGNOSTIC PROCEDURE** .

U0151-00-LOST COMMUNICATION WITH OCCUPANT RESTRAINT CONTROLLER (ORC)

Perform the COMMUNICATION PRE-DIAGNOSTIC PROCEDURE. Refer to **COMMUNICATION PRE-DIAGNOSTIC PROCEDURE** .

U0401-IMPLAUSIBLE DATA RECEIVED FROM ECM/PCM

For a complete wiring diagram, **refer to appropriate SYSTEM WIRING DIAGRAMS article** .

WHEN MONITORED

Continuously with the ignition on, one valid CAN message received at least once.

SET CONDITION

When the Drive Train Control Module (DTCM) detects an incorrect CAN message from the Power Control Module (PCM).

POSSIBLE CAUSES

Possible Causes
BODY CONTROL MODULE (BCM) NOT CONFIGURED CORRECTLY
ABS MODULE CAN BUS DTCS
ENGINE DTCS
DRIVE TRAIN CONTROL MODULE (DTCM)

DIAGNOSTIC TEST

1. **VERIFY THE DTC IS ACTIVE**

NOTE: This DTC must be active for the results of this test to be valid.

1. Turn the ignition on.
2. With the scan tool, record and erase DTCs.
3. Cycle the ignition switch from off to on.

4. With the scan tool, read DTCs.

   Is the DTC active at this time?

   Yes

   - Go To 2

   No

   - Go To 4

2. **CHECK IF BCM CAN BUS DTCs ARE PRESENT**
   1. With the scan tool, read BCM DTCs.

      Are there any BCM CAN BUS DTCs present?

      Yes

      - Perform the appropriate diagnostic procedure. Refer to the **DIAGNOSTIC CODE INDEX** .

      No

      - Go To 3

3. **CHECK TO SEE ANY IF POWERTRAIN CONTROL MODULE (PCM) DTCS ARE PRESENT**
   1. With the scan tool, read PCM DTCs.

      Are there any PCM DTCs present?

      Yes

      - Perform the appropriate diagnostic procedure. Refer to the **DTC INDEX** article .

      No

      - Replace the Drive Train Control Module (DTCM) in accordance with Service Information. Refer to **MODULE, DRIVETRAIN CONTROL, REMOVAL** .
      - Perform the DTCM VERIFICATION TEST. Refer to **STANDARD PROCEDURE**.

4. **INTERMITTENT WIRING AND CONNECTORS**
   1. The conditions necessary to set this DTC are not present at this time.
   2. Using the schematics as a guide, inspect the wiring and connectors specific to this circuit.
   3. Wiggle test the wiring harness and connectors while checking for shorted and open circuits.
   4. Using the scan tool, monitor the data related to this circuit while performing the wiggle test. Look for the data to change or for the DTC to reset.

Were there any problems found?

Yes

- Repair as necessary.
- Perform the DTCM VERIFICATION TEST. Refer to **STANDARD PROCEDURE**.

No

- Test complete.

U0402-IMPLAUSIBLE DATA RECEIVED FROM TCM

For a complete wiring diagram, **refer to appropriate SYSTEM WIRING DIAGRAMS article** .

WHEN MONITORED

With the ignition on for four seconds, no CAN bus circuit error condition present, no lost communication with Transmission Control Module (TCM) condition present and no system undervoltage or overvoltage condition present.

SET CONDITION

The Drive Train Control Module (DTCM) is receiving implausible data for gear or PRNDL position from the TCM.

POSSIBLE CAUSES

Possible Causes
CAN BUS OPEN OR SHORTED CONDITION TRANSMISSION CONTROL MODULE (TCM) DTCS PRESENT DRIVE TRAIN CONTROL MODULE (DTCM)

DIAGNOSTIC TEST

1. **VERIFY THE DTC IS ACTIVE**

NOTE: Diagnose all CAN B and C communication DTCs before continuing.

1. Ignition on, engine not running.
2. With the scan tool, read DTCs.

Is the DTC active at this time?

Yes

- Go To 3

No

- Test complete. The condition or conditions that originally set this DTC are not present at this time. Using the wiring diagrams as a guide, check all related splices and connectors for signs of water intrusion, corrosion, pushed out or bent terminals, and correct pin tension.

2. **CHECK FOR BCM DTCS**
   1. With the scan tool, read BCM DTCs.

      Are there any BCM DTCs present?

      Yes

      - Perform the appropriate diagnostic procedure. Refer to **STANDARD PROCEDURE** .

      No

      - Go To 3
3. **CHECK FOR TCM DTCS**
   1. Ignition on, engine not running.
   2. With the scan tool, read the DTCs in the TCM.

      Are there any TCM DTCs present?

      Yes

      - Perform the appropriate diagnostic procedure.

      No

      - Using the schematics as a guide, check the Drive Train Control Module (DTCM) pins, terminals, and connectors for corrosion, damage, or terminal push out. Pay particular attention to all power and ground circuits. If no problems are found, replace the Drive Train Control Module (DTCM) in accordance with the Service Information. Refer to **MODULE, DRIVETRAIN CONTROL, REMOVAL** .
      - Perform the DTCM VERIFICATION TEST. Refer to **STANDARD PROCEDURE**.

U0415-IMPLAUSIBLE DATA RECEIVED FROM ABS

For a complete wiring diagram, **refer to appropriate SYSTEM WIRING DIAGRAMS article** .

WHEN MONITORED

With the ignition on for Four seconds, no CAN BUS circuit error condition present, no lost communication with

ABS condition present, and no system undervoltage or overvoltage condition present.

SET CONDITION

The Drive Train Control Module (DTCM) is receiving implausible data for vehicle speed, wheel speeds, brake switch status, longitudinal acceleration, yaw rate, or lateral acceleration from the ABS controller.

POSSIBLE CAUSES

Possible Causes
BODY CONTROL MODULE (BCM) DTCS
ANTILOCK BRAKE SYSTEM (ABS) MODULE DTCS PRESENT
DRIVE TRAIN CONTROL MODULE (DTCM) DTCS
DRIVE TRAIN CONTROL MODULE (DTCM)

DIAGNOSTIC TEST

1. **VERIFY THE DTC IS ACTIVE**

   NOTE: This DTC must be active for the results of this test to be valid.

   1. Turn the ignition on.
   2. With the scan tool, record and erase DTCs.
   3. Cycle the ignition switch from off to on.
   4. With the scan tool, read DTCs.

   Is the DTC active at this time?

   Yes

   - Go To 2

   No

   - Go To 4

2. **CHECK IF BCM CAN BUS DTCS ARE PRESENT**
   1. With the scan tool, read BCM DTCs.

   Are there any BCM CAN BUS DTC's present?

   Yes

   - Perform the appropriate diagnostic procedure. Refer to **MODULE, BODY CONTROL, REMOVAL** .

No

- Go To 3

3. **ABS DTCS PRESENT**
   1. Ignition on, engine not running.
   2. With the scan tool, read DTCs in the Antilock Brake Controller.

      Are there any DTCs present?

      Yes

      - Perform the appropriate diagnostic procedure. Refer to **DIAGNOSIS AND TESTING** .

      No

      - Replace the Drive Train Control Module (DTCM) in accordance with the Service Information.
      - Perform DTCM VERIFICATION TEST. Refer to **STANDARD PROCEDURE**.
4. **INTERMITTENT WIRING HARNESS AND CONNECTORS**
   1. The conditions necessary to set this DTC are not present at this time.
   2. Using the wiring diagram/schematic as a guide, inspect the wiring harness and connectors.
   3. Wiggle test the wiring harness and connectors while monitoring the scan tool data relative to this circuit.
   4. Look for the data to change or for the DTC to reset during the wiggle test.
   5. While monitoring the scan tool data relative to this circuit, move the selector switch to each position several times (if equipped).

      Were there any problems found?

      Yes

      - Repair as necessary.
      - Perform DTCM VERIFICATION TEST. Refer to **STANDARD PROCEDURE**.

      No

      - Test complete.

U0420-00-INVALID DATA RECEIVED FROM POWER STEERING CONTROL MODULE

For a complete wiring diagram, **refer to appropriate SYSTEM WIRING DIAGRAMS article** .

WHEN MONITORED

Continuously with the ignition on, one valid CAN message received at least once, and no CAN C Bus Off Performance DTC present.

SET CONDITION

When the Drive Train Control Module (DTCM) detects an incorrect CAN message from the Electric Power Steering (EPS) Module.

POSSIBLE CAUSES

Possible Causes
DRIVE TRAIN CONTROL MODULE (DTCM) CAN BUS DTCS
BODY CONTROL MODULE (BCM) DTCS
ELECTRIC POWER STEERING (EPS) MODULE DTCS
DRIVE TRAIN CONTROL MODULE (DTCM)

DIAGNOSTIC TEST

1. **VERIFY THE DTC IS ACTIVE**
    1. Turn the ignition on.
    2. With the scan tool, record and erase DTCs.
    3. Cycle the ignition from off to on.
    4. With the scan tool, read DTCs.

    Is the DTC active at this time?

    Yes

    - Go To 2

    No

    - Go To 5
2. **CHECK FOR BODY CONTROL MODULE (BCM) DTCS**
    1. With the scan tool, read BCM DTCs.

    Are there any BCM CAN Bus DTCs present?

    Yes

    - Perform the appropriate diagnostic procedure. Refer to the **DIAGNOSTIC CODE INDEX** .

    No

- Go To 3

3. **CHECK FOR DRIVE TRAIN CONTROL MODULE (DTCM) CAN BUS DTCS**
   1. With the scan tool, read DTCM DTCs.

      Are there any DTCM CAN Bus DTCs present?

      Yes

      - Perform the appropriate diagnostic procedure. Refer to the **DIAGNOSTIC CODE INDEX**.

      No

      - Go To 4

4. **CHECK OTHER MODULES FOR DTCS**
   1. With the scan tool, read DTCs.

      Are there any other modules reporting implausible communication DTCs against the EPS Module?

      Yes

      - Replace the Electric Power Steering (EPS) Module in accordance with the Service Information. Refer to **GEAR, REMOVAL** .

      No

      - Using the schematics as a guide, check the DTCM pins, terminals, and connectors for corrosion, damage, or terminal push out. Pay particular attention to all power and ground circuits. If no problems are found, replace the Dive Train Control Module (DTCM) in accordance with the Service Information. Refer to **MODULE, DRIVETRAIN CONTROL, REMOVAL** .
      - Perform the DTCM VERIFICATION TEST. Refer to **STANDARD PROCEDURE**.

5. **CHECK THE WIRING AND CONNECTORS**
   1. The conditions necessary to set the DTC are not present at this time.
   2. Using the schematics as a guide, inspect the wiring and connectors specific to this module. Wiggle the wiring and connectors while checking for shorted and open circuits.
   3. Check all related splices and connectors for signs of water intrusion, corrosion, pushed out or bent terminals, and correct pin tension.
   4. Check Service Bulletins for any possible causes that may apply.

      Were there any problems found?

      Yes

      - Repair as necessary.

- Perform the EPS VERIFICATION TEST. Refer to **STANDARD PROCEDURE** .

No

- Test complete.

U0422-IMPLAUSIBLE DATA RECEIVED FROM BODY CONTROL MODULE

For a complete wiring diagram, **refer to appropriate SYSTEM WIRING DIAGRAMS article** .

WHEN MONITORED

Continuously with the ignition on, one valid CAN message received at least once, and no U0002-00-CAN C Bus Off Performance DTC present.

SET CONDITION

When the Drive Train Control Module (DTCM) detects an incorrect CAN message from the Body Control Module (BCM).

POSSIBLE CAUSES

Possible Causes
DRIVE TRAIN CONTROL MODULE (DTCM) CAN BUS DTCS
BODY CONTROL MODULE (BCM) DTCS
POWERTRAIN CONTROL MODULE (PCM) DTCS
DRIVE TRAIN CONTROL MODULE (DTCM)

DIAGNOSTIC TEST

1. **VERIFY THE DTC IS ACTIVE**

NOTE: This DTC must be active for the results of this test to be valid.

1. Perform any Technical Service Bulletins (TSBs) that may apply.
2. Turn the ignition on.
3. With the scan tool, record and erase the DTCs.
4. Cycle the ignition switch from off to on.
5. With the scan tool, read the DTCs.

Is the DTC active at this time?

Yes

- Go To 2

No

- Perform the DTCM VERIFICATION TEST. Refer to **STANDARD PROCEDURE**.

2. **CHECK POWERTRAIN CONTROL MODULE (PCM) CAN BUS DTCS ARE PRESENT**
   1. With the scan tool, read the PCM DTCs.

      Are there any PCM CAN BUS DTCs present?

      Yes

      - Perform the appropriate diagnostic procedures. Refer to the **DTC INDEX** article .
      - Perform the DTCM VERIFICATION TEST. Refer to **STANDARD PROCEDURE**.

      No

      - Go To 3

3. **CHECK BODY CONTROL MODULE (BCM) CAN BUS DTCS ARE PRESENT**
   1. With the scan tool, read the BCM DTCs.

      Are there any BCM CAN BUS DTCs present?

      Yes

      - Perform the appropriate diagnostic procedures. Refer to the **DIAGNOSTIC CODE INDEX** .
      - Perform the DTCM VERIFICATION TEST. Refer to **STANDARD PROCEDURE**.

      No

      - Using the schematics as a guide, check the Drive Train Control Module (DTCM) pins, terminals, and connectors for corrosion, damage, or terminal push out. Pay particular attention to all power and ground circuits. If no problems are found, replace the Drive Train Control Module (DTCM) accordance with Service Information. Refer to **MODULE, DRIVETRAIN CONTROL, REMOVAL** .
      - Perform the DTCM VERIFICATION TEST. Refer to **STANDARD PROCEDURE**.

U0452-00-IMPLAUSIBLE DATA RECEIVED FROM RESTRAINTS CONTROL MODULE

For a complete wiring diagram, **refer to appropriate SYSTEM WIRING DIAGRAMS article** .

WHEN MONITORED

Continuously with the ignition on, one valid CAN message received at least once, and no CAN C Bus Off Performance DTC present.

SET CONDITION

When the Drive Train Control Module (DTCM) detects an incorrect CAN message from the Occupant Restraint Controller (ORC).

POSSIBLE CAUSES

Possible Causes
DRIVE TRAIN CONTROL MODULE (DTCM) CAN BUS DTCS
BODY CONTROL MODULE (BCM) DTCS
OCCUPANT RESTRAINT CONTROLLER (ORC) DTCS
DRIVE TRAIN CONTROL MODULE (DTCM)

DIAGNOSTIC TEST

1. **VERIFY THE DTC IS ACTIVE**
    1. Turn the ignition on.
    2. With the scan tool, record and erase DTCs.
    3. Cycle the ignition from off to on.
    4. With the scan tool, read DTCs.

    Is the DTC active at this time?

    Yes

    - Go To 2

    No

    - Go To 5
2. **CHECK FOR BODY CONTROL MODULE (BCM) DTCS**
    1. With the scan tool, read BCM DTCs.

    Are there any BCM CAN Bus DTCs present?

    Yes

    - Perform the appropriate diagnostic procedure. Refer to the **DIAGNOSTIC CODE INDEX** .

    No

- Go To 3

3. **CHECK FOR DRIVE TRAIN CONTROL MODULE (DTCM) CAN BUS DTCS**
   1. With the scan tool, read DTCM DTCs.

      Are there any DTCM CAN Bus DTCs present?

      Yes

      - Perform the appropriate diagnostic procedure. Refer to the **DIAGNOSTIC CODE INDEX**.

      No

      - Go To 4

4. **CHECK OTHER MODULES FOR DTCS**
   1. With the scan tool, read DTCs.

      Are there any other modules reporting implausible communication DTCs against the ORC?

      Yes

      - Replace the Occupant Restraint Controller (ORC) in accordance with the Service Information. Refer to **MODULE, OCCUPANT RESTRAINT CONTROLLER, REMOVAL** .

      No

      - Using the schematics as a guide, check the DTCM pins, terminals, and connectors for corrosion, damage, or terminal push out. Pay particular attention to all power and ground circuits. If no problems are found, replace the Dive Train Control Module (DTCM) in accordance with the Service Information. Refer to **MODULE, DRIVETRAIN CONTROL, REMOVAL** .
      - Perform the DTCM VERIFICATION TEST. Refer to **STANDARD PROCEDURE**.

5. **CHECK THE WIRING AND CONNECTORS**
   1. The conditions necessary to set the DTC are not present at this time.
   2. Using the schematics as a guide, inspect the wiring and connectors specific to this module. Wiggle the wiring and connectors while checking for shorted and open circuits.
   3. Check all related splices and connectors for signs of water intrusion, corrosion, pushed out or bent terminals, and correct pin tension.
   4. Check Service Bulletins for any possible causes that may apply.

      Were there any problems found?

      Yes

- Repair as necessary.
- Perform the EPS VERIFICATION TEST. Refer to **STANDARD PROCEDURE** .

No

- Test complete.

U1203-00-PTU LOST COMMUNICATION WITH DTCM

For a complete wiring diagram, **refer to appropriate SYSTEM WIRING DIAGRAMS article** .

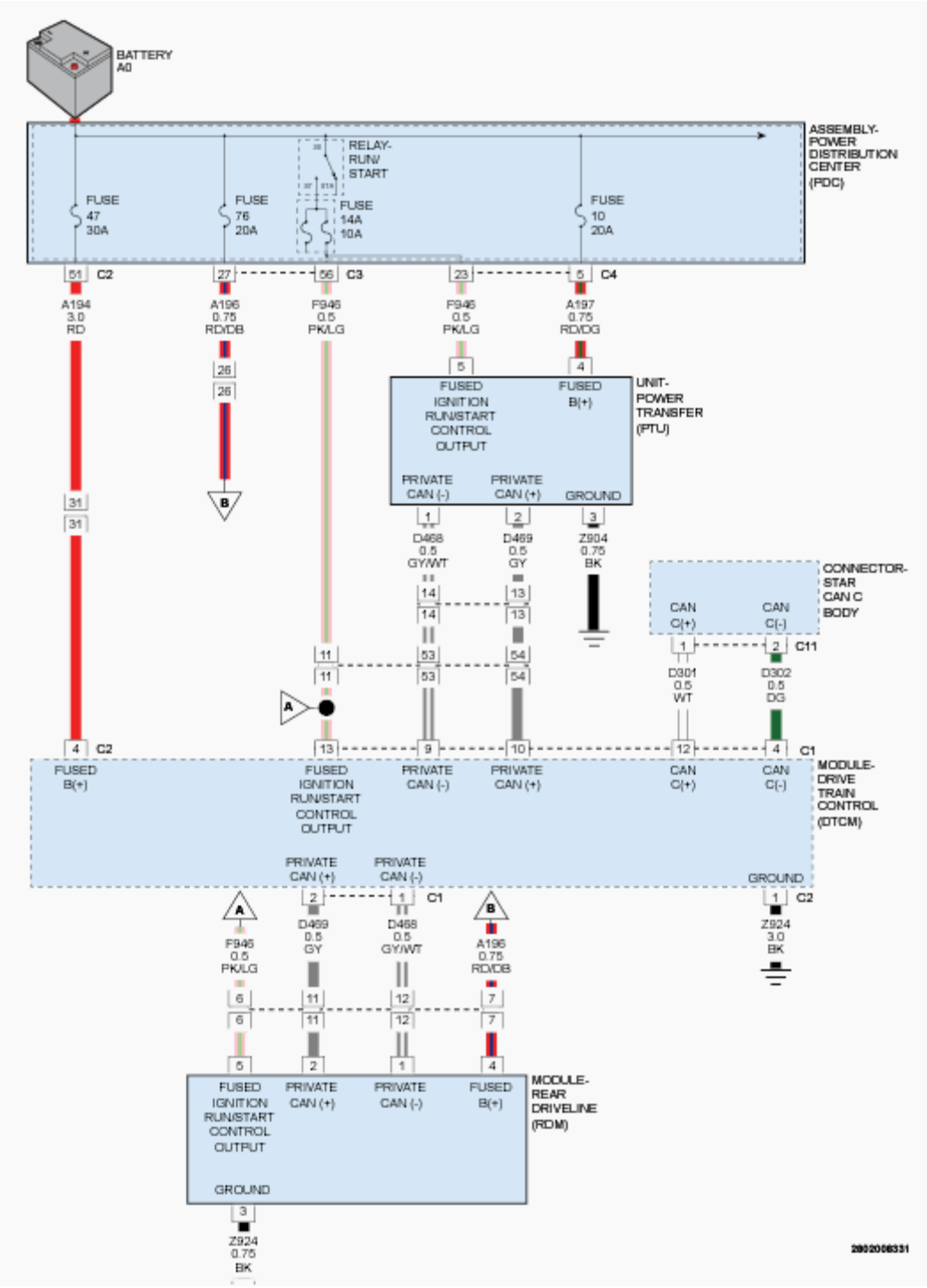

Fig. 12: Drive Train Control Module, Rear Driveline Module & Power Transfer Unit System Voltage Circuit Diagram
Courtesy of CHRYSLER GROUP, LLC

WHEN MONITORED

With the ignition on.

SET CONDITION

The Drive Train Control Module (DTCM) has lost communication with the Power Transfer Unit (PTU).

POSSIBLE CAUSES

Possible Causes
FUSED B(+) CIRCUIT OPEN OR SHORTED
FUSED IGNITION RUN/START CONTROL OUTPUT CIRCUIT OPEN OR SHORTED
GROUND CIRCUIT OPEN
PRIVATE CAN (+) CIRCUIT OPEN
PRIVATE CAN (-) CIRCUIT OPEN
POWER TRANSFER UNIT (PTU)
DRIVE TRAIN CONTROL MODULE (DTCM)

DIAGNOSTIC TEST

1. **VERIFY THE DTC IS ACTIVE**

   NOTE: Make sure the battery voltage is between 10.0 and 16.0 volts.

   1. Ignition on, engine not running.
   2. With the scan tool, record and erase DTCs.
   3. Cycle the ignition from off to on.
   4. With the scan tool, read DTCs.

   Is the DTC active at this time?

   Yes

   - Go To 2

   No

   - Go To 8

2. **CHECK THE (A197) FUSED B(+) CIRCUIT FOR AN OPEN OR SHORT**
   1. Turn the ignition off.
   2. Disconnect the PTU harness connector.
   3. Turn the ignition on.
   4. Using a 12-volt test light connected to ground, check the (A197) Fused B(+) circuit.

Does the test light illuminate brightly?

Yes

- Go To 3

No

- Repair the (A197) Fused B(+) circuit for an open or short.
- Perform the DTCM VERIFICATION TEST. Refer to **STANDARD PROCEDURE**.

3. **CHECK THE (F946) FUSED IGNITION (RUN-START) CONTROL OUTPUT CIRCUIT FOR AN OPEN OR SHORT**
   1. Using a 12-volt test light connected to ground, check the (F946) Fused Ignition (Run-Start) Control Output circuit.

      Does the test light illuminate brightly?

      Yes

      - Go To 4

      No

      - Repair the (F946) Fused Ignition (Run-Start) Control Output circuit for an open or short.
      - Perform the DTCM VERIFICATION TEST. Refer to **STANDARD PROCEDURE**.
4. **CHECK THE (Z904) GROUND CIRCUIT FOR AN OPEN**
   1. Turn the ignition off.
   2. Using a 12-volt test light connected to 12-volts, check the (Z904) Ground circuit.

      Does the test light illuminate brightly?

      Yes

      - Go To 5

      No

      - Repair the (Z904) Ground circuit for an open.
      - Perform the DTCM VERIFICATION TEST. Refer to **STANDARD PROCEDURE**.
5. **CHECK THE (D469) PRIVATE CAN (+) CIRCUIT FOR AN OPEN**
   1. Disconnect the DTCM C1 harness connector.
   2. Measure the resistance of the (D469) PRIVATE CAN C (+) circuit between the PTU harness connector and the DTCM C1 harness connector.

Is the resistances below 5.0 Ohms?

Yes

- Go To 6

No

- Repair the (D469) PRIVATE CAN C (+) circuit for an open.
- Perform the DTCM VERIFICATION TEST. Refer to **STANDARD PROCEDURE**.

6. **CHECK THE (D468) PRIVATE CAN C(-) CIRCUIT FOR AN OPEN**
   1. Measure the resistance of the (D468) PRIVATE CAN C (-) circuit between the PTU harness connector and the DTCM C1 harness connector.

   Are the resistances below 5.0 Ohms?

   Yes

   - Go To 7

   No

   - Repair the (D468) PRIVATE CAN C (-) circuit for an open.
   - Perform the DTCM VERIFICATION TEST. Refer to **STANDARD PROCEDURE**.

7. **DRIVE TRAIN CONTROL MODULE (DTCM)**
   1. Replace the Drive Train Control Module (DTCM) in accordance with the Service Information. Refer to **MODULE, DRIVETRAIN CONTROL, REMOVAL** .Perform the DTCM VERIFICATION TEST. Refer to **STANDARD PROCEDURE**.
   2. Ignition on, engine not running.
   3. With the scan tool, record and erase DTCs.
   4. Cycle the ignition from off to on.
   5. With the scan tool, read DTCs.

   Does the DTC remain active?

   Yes

   - Replace the Power Transfer Unit (PTU) in accordance with the Service Information.
   - Perform the DTCM VERIFICATION TEST. Refer to **STANDARD PROCEDURE**.

   No

   - Test complete.

8. **INTERMITTENT WIRING AND CONNECTORS**
    1. The conditions necessary to set this DTC are not present at this time.
    2. Using the wiring diagram/schematic as a guide, inspect the wiring and connectors.
    3. While monitoring the scan tool data relative to this circuit, wiggle test the wiring and connectors.
    4. Look for the data to change or for the DTC to reset during the wiggle test.

    Were any problems found?

    Yes

    - Repair as necessary.
    - Perform the TRANSFER CASE VERIFICATION TEST. Refer to **STANDARD PROCEDURE**.

    No

    - Test complete, the condition or conditions that originally set this DTC are not present at this time.

U1204-00-RDM LOST COMMUNICATION WITH DTCM

For a complete wiring diagram, **refer to appropriate SYSTEM WIRING DIAGRAMS article** .

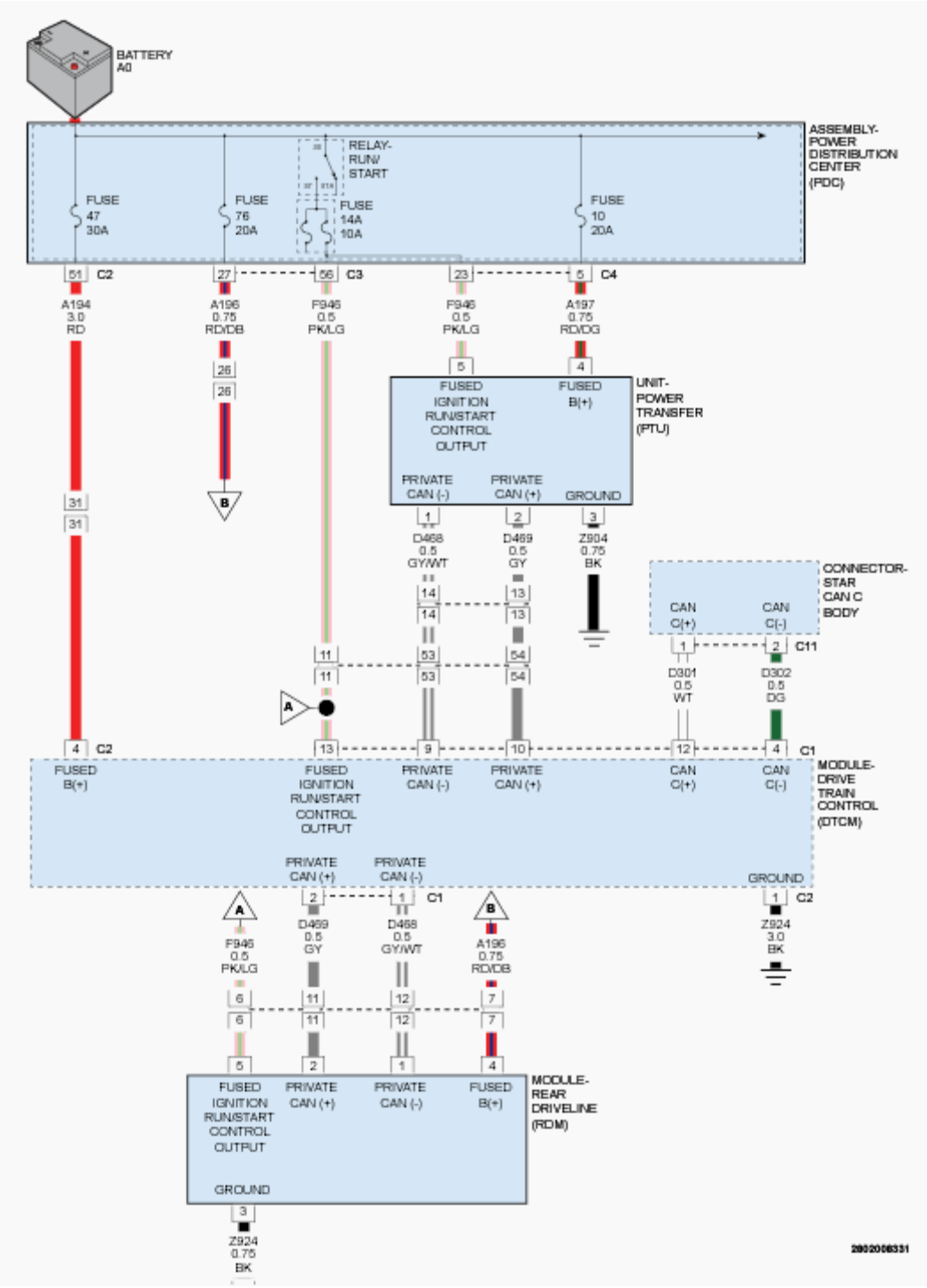

Fig. 13: Drive Train Control Module, Rear Driveline Module & Power Transfer Unit System Voltage Circuit Diagram
Courtesy of CHRYSLER GROUP, LLC

WHEN MONITORED

With the ignition on.

SET CONDITION

The Drive Train Control Module (DTCM) has lost communication with the Rear Driveline Module (RDM).

POSSIBLE CAUSES

Possible Causes
FUSED B(+) CIRCUIT OPEN OR SHORTED
FUSED IGNITION RUN/START CONTROL OUTPUT CIRCUIT OPEN OR SHORTED
GROUND CIRCUIT OPEN
PRIVATE CAN (+) CIRCUIT OPEN
PRIVATE CAN (-) CIRCUIT OPEN
REAR DRIVELINE MODULE (RDM)
DRIVE TRAIN CONTROL MODULE (DTCM)

DIAGNOSTIC TEST

1. **VERIFY THE DTC IS ACTIVE**

   NOTE: Make sure the battery voltage is between 10.0 and 16.0 volts.

   1. Ignition on, engine not running.
   2. With the scan tool, record and erase DTCs.
   3. Cycle the ignition from off to on.
   4. With the scan tool, read DTCs.

   Is the DTC active at this time?

   Yes

   - Go To 2

   No

   - Go To 8

2. **CHECK THE (A196) FUSED B(+) CIRCUIT FOR AN OPEN OR SHORT**
   1. Turn the ignition off.
   2. Disconnect the PTU harness connector.
   3. Turn the ignition on.
   4. Using a 12-volt test light connected to ground, check the (A196) Fused B(+) circuit.

Does the test light illuminate brightly?

Yes

- Go To 3

No

- Repair the (A196) Fused B(+) circuit for an open or short.
- Perform the DTCM VERIFICATION TEST. Refer to **STANDARD PROCEDURE**.

3. **CHECK THE (F946) FUSED IGNITION (RUN-START) CONTROL OUTPUT CIRCUIT FOR AN OPEN OR SHORT**
   1. Using a 12-volt test light connected to ground, check the (F946) Fused Ignition (Run-Start) Control Output circuit.

      Does the test light illuminate brightly?

      Yes

      - Go To 4

      No

      - Repair the (F946) Fused Ignition (Run-Start) Control Output circuit for an open or short.
      - Perform the DTCM VERIFICATION TEST. Refer to **STANDARD PROCEDURE**.
4. **CHECK THE (Z924) GROUND CIRCUIT FOR AN OPEN**
   1. Turn the ignition off.
   2. Using a 12-volt test light connected to 12-volts, check the (Z924) Ground circuit.

      Does the test light illuminate brightly?

      Yes

      - Go To 5

      No

      - Repair the (Z924) Ground circuit for an open.
      - Perform the DTCM VERIFICATION TEST. Refer to **STANDARD PROCEDURE**.
5. **CHECK THE (D469) PRIVATE CAN (+) CIRCUIT FOR AN OPEN**
   1. Disconnect the DTCM C1 harness connector.
   2. Measure the resistance of the (D469) PRIVATE CAN C (+) circuit between the PTU harness connector and the DTCM C1 harness connector.

Is the resistances below 5.0 Ohms?

Yes

- Go To 6

No

- Repair the (D469) PRIVATE CAN C (+) circuit for an open.
- Perform the DTCM VERIFICATION TEST. Refer to **STANDARD PROCEDURE**.

6. **CHECK THE (D468) PRIVATE CAN C(-) CIRCUIT FOR AN OPEN**
   1. Measure the resistance of the (D468) PRIVATE CAN C (-) circuit between the PTU harness connector and the DTCM C1 harness connector.

   Are the resistances below 5.0 Ohms?

   Yes

   - Go To 7

   No

   - Repair the (D468) PRIVATE CAN C (-) circuit for an open.
   - Perform the DTCM VERIFICATION TEST. Refer to **STANDARD PROCEDURE**.

7. **DRIVE TRAIN CONTROL MODULE (DTCM)**
   1. Replace the Drive Train Control Module (DTCM) in accordance with the Service Information. Refer to **MODULE, DRIVETRAIN CONTROL, REMOVAL** .Perform the DTCM VERIFICATION TEST. Refer to **STANDARD PROCEDURE**.
   2. Ignition on, engine not running.
   3. With the scan tool, record and erase DTCs.
   4. Cycle the ignition from off to on.
   5. With the scan tool, read DTCs.

   Does the DTC remain active?

   Yes

   - Replace the Rear Driveline Module (RDM) in accordance with the Service Information.
   - Perform the DTCM VERIFICATION TEST. Refer to **STANDARD PROCEDURE**.

   No

   - Test complete.

8. **INTERMITTENT WIRING AND CONNECTORS**
    1. The conditions necessary to set this DTC are not present at this time.
    2. Using the wiring diagram/schematic as a guide, inspect the wiring and connectors.
    3. While monitoring the scan tool data relative to this circuit, wiggle test the wiring and connectors.
    4. Look for the data to change or for the DTC to reset during the wiggle test.

    Were any problems found?

    Yes

    - Repair as necessary.
    - Perform the TRANSFER CASE VERIFICATION TEST. Refer to **STANDARD PROCEDURE**.

    No

    - Test complete, the condition or conditions that originally set this DTC are not present at this time.

U1206-00-LOST COMMUNICATION WITH ELECTRONIC PARK BRAKE MODULE

Perform the COMMUNICATION PRE-DIAGNOSTIC PROCEDURE. Refer to **STANDARD PROCEDURE** .

U1484-00-IMPLAUSIBLE DATA RECEIVED FROM ELECTRONIC PARK BRAKE MODULE

For a complete wiring diagram, **refer to appropriate SYSTEM WIRING DIAGRAMS article** .

WHEN MONITORED

Continuously with the ignition on, one valid CAN message received at least once, and no CAN C Bus Off Performance DTC present.

SET CONDITION

When the Drive Train Control Module (DTCM) detects an incorrect CAN message from the Electric Parking Brake (EPB) Module.

POSSIBLE CAUSES

Possible Causes
DRIVE TRAIN CONTROL MODULE (DTCM) CAN BUS DTCS
BODY CONTROL MODULE (BCM) DTCS
ELECTRIC PARKING BRAKE (EPS) MODULE

DRIVE TRAIN CONTROL MODULE (DTCM)

DIAGNOSTIC TEST

1. **VERIFY THE DTC IS ACTIVE**
    1. Turn the ignition on.
    2. With the scan tool, record and erase DTCs.
    3. Cycle the ignition from off to on.
    4. With the scan tool, read DTCs.

    Is the DTC active at this time?

    Yes

    - Go To 2

    No

    - Go To 5
2. **CHECK FOR BODY CONTROL MODULE (BCM) DTCS**
    1. With the scan tool, read BCM DTCs.

    Are there any BCM CAN Bus DTCs present?

    Yes

    - Perform the appropriate diagnostic procedure. Refer to the **DIAGNOSTIC CODE INDEX** .

    No

    - Go To 3
3. **CHECK FOR DRIVE TRAIN CONTROL MODULE (DTCM) CAN BUS DTCS**
    1. With the scan tool, read DTCM DTCs.

    Are there any DTCM CAN Bus DTCs present?

    Yes

    - Perform the appropriate diagnostic procedure. Refer to **DIAGNOSIS AND TESTING**.

    No

    - Go To 4
4. **CHECK OTHER MODULES FOR DTCS**

1. With the scan tool, read DTCs.

   Are there any other modules reporting implausible communication DTCs against the EPB Module?

   Yes

   - Replace the Electric Parking Brake (EPB) Module in accordance with the Service Information. Refer to **MODULE, ELECTRIC PARK BRAKE, REMOVAL** .

   No

   - Using the schematics as a guide, check the DTCM pins, terminals, and connectors for corrosion, damage, or terminal push out. Pay particular attention to all power and ground circuits. If no problems are found, replace the Dive Train Control Module (DTCM) in accordance with the Service Information. Refer to **MODULE, DRIVETRAIN CONTROL, REMOVAL** .
   - Perform the DTCM VERIFICATION TEST. Refer to **STANDARD PROCEDURE**.

5. **CHECK THE WIRING AND CONNECTORS**
   1. The conditions necessary to set the DTC are not present at this time.
   2. Using the schematics as a guide, inspect the wiring and connectors specific to this module. Wiggle the wiring and connectors while checking for shorted and open circuits.
   3. Check all related splices and connectors for signs of water intrusion, corrosion, pushed out or bent terminals, and correct pin tension.
   4. Check Service Bulletins for any possible causes that may apply.

      Were there any problems found?

      Yes

      - Repair as necessary.
      - Perform the EPS VERIFICATION TEST. Refer to **STANDARD PROCEDURE** .

      No

      - Test complete.

STANDARD PROCEDURE

DTCM VERIFICATION TEST

DIAGNOSTIC TEST

PERFORM DTCM VERIFICATION TEST

CAUTION: Before removing the DTCM harness connectors, clean the connectors and locking cam area of dirt and debris. Failure to do so can result in the connector being jammed or damage to the locking cams on the harness connector or module. Do not force the assist arm when releasing or installing the harness connector.

NOTE: If the Powertrain Control Module (PCM) or Body Control Module (BCM) was replaced, refer to the service information for proper programming procedures.

1. Disconnect all jumper wires and reconnect all previously disconnected components and connectors.
2. Make sure that all accessories are turned off.
3. Make sure that the battery is fully charged.
4. With the scan tool, record and erase all DTC(s) from the DTCM.
5. Start and run the engine for two minutes while operating all functions of the system that caused the original concern.

   NOTE: When a Stabilizer System DTC diagnostic is complete and all repairs have been made, running the Stabilizer Motor System Test and/or LED System Test can also provide verification that the DTC has been repaired and the system is operating normally.

6. Turn the ignition off, wait five seconds, then turn the ignition on. Using the scan tool, read DTC(s) from the DTCM.

   Are any DTCM DTC(s) present or is the original condition still present?

   Yes

   - The repair is not complete. Perform the appropriate diagnostic procedure for the DTC or symptom that is still present.

   No

   - The repair is complete.

TRANSFER CASE VERIFICATION TEST

DIAGNOSTIC TEST

1. Disconnect all jumper wires and reconnect all previously disconnected components and connectors.
2. Make sure that all accessories are turned off.
3. Make sure that the battery is fully charged.
4. With the scan tool, record and erase all DTC(s) from the Drive Train Control Module (DTCM) and the Cluster/CCN.

5. Test drive the vehicle. If equipped with a selector switch drive the vehicle in each Transfer Case range and verify proper operation in each range.
   - To select or deselect 2WD, AWD or 4HI mode, vehicle speed must be below 88 Kmh (55 mph) with all wheels at vehicle speed.
   - Shifts will not take place with a wheel speed difference of greater than 21 Kmh (13 mph) between the front and rear wheels.
   - To select or deselect 4LO (if equipped), vehicle speed must be below 5 Kmh (3 mph) with the ignition on, engine not running and the transmission in neutral (automatic transmission) or the clutch pedal pressed (manual transmission).
   - To select or deselect Transfer Case Neutral (if equipped), vehicle speed must be 0 Kmh (0 mph) with the ignition on, engine not running, the brake pedal applied, and the transmission in neutral (automatic transmission) or the clutch pedal pressed (manual transmission). Press the Neutral button (if equipped) on the Transfer Case Selector Switch until the Neutral Indicator is illuminated.

     WARNING: Apply the parking brake. The vehicle may roll with the Transfer Case in neutral.

   -
   - To verify that the Transfer Case is in Neutral, shift the automatic transmission into reverse and release the brake pedal for three seconds or shift the manual transmission into gear and slowly release the clutch pedal. There should be no vehicle movement if the Transfer Case is in Neutral.
6. With the scan tool, read DTCs in the Drive Train Control Module (DTCM) and in the Cluster Control Node (CCN).

   Are any DTCs present in the DTCM or CCN?

   Yes

   - Perform the appropriate diagnostic procedure. Refer to the **DIAGNOSTIC CODE INDEX** and the **DTC INDEX** article.

   No

   - Test complete.

2014 ACCESSORIES AND EQUIPMENT

Electronic Control Modules - Service Information - Cherokee

STANDARD PROCEDURE

FLASH PROGRAMMING

NOTE: The wiTECH diagnostic application is the preferred method for flashing ECUs.

NOTE: Help using the wiTECH diagnostic application for flashing an ECU is available by selecting "Help" then "Help Contents" at the top of the wiTECH diagnostic application window.

NOTE: The wiTECH software level must be at the latest release to perform this procedure.

NOTE: The StarMobile Desktop Client may also be used to perform this flash procedure.

FOBIK PROGRAMMING

The Radio Frequency Hub (RF-Hub) may be programmed to recognize up to a total of eight FOBIKs. When replacing or adding a FOBIK, the integrated key must be cut to match the door lock cylinder in the vehicle for which it will be used. Once an additional or new key has been cut, the **RF-Hub must be programmed to recognize it as a valid FOBIK** . When programming a FOBIK it may be necessary to have the vehicle PIN. Follow the instructions on the scan tool screen.

This procedure will require you to log into DealerCONNECT and enter a PIN when requested. The PIN is temporary and will be active for 12 hours. After 12 hours, a new PIN will need to be obtained from DealerCONNECT.

NOTE: All FOBIKs that are to be used in this vehicle must remain on the front seat near the center console but behind the shifter.

NOTE: Do not put a Laptop or any wireless device (cell phone, audio device, etc.) on top of or near the center console. The RF Antenna is below the console.

1. Turn the ignition on.
2. With the scan tool select RFH.
3. Go to "View", select "Data" tab. Verify "Number of Key/Fob programmed" to make sure programmed FOBIKs do not exceed eight
4. Turn the ignition to the off/lock position. The ignition must be left off throughout this procedure on

vehicles equipped with the RF-Hub.

5. With the scan tool select; "Misc. Functions" "Program Ignition FOBIKs".

NOTE: Premium System (KIN) - When programming a FOBIK, hold it near or on the center console top. When you are instructed to "Press the Unlock button" it is important that you do not hold the button. Press it One time quickly.

NOTE: Baseline System (IGNM) - When programming a FOBIK, place the new, un-programmed FOBIK into the ignition, leave in the LOCK position.

6. Have the Sentry Key PIN available as this will be required to be entered into the scan tool.
7. Press "Continue" and follow the instructions on the screen.
8. When the programming is completed the screen will display "Programming of Ignition FOBIK successful, continue to program another or close". Select "Close" or "Continue" to program another FOBIK.
9. Verify successful programming by removing the FOBIK (IGNM) from the ignition and pressing the various buttons to verify operation. Vehicle should unlock. Go to RFH "View", select "Data" tab to verify "Number of key/FOBIK programmed" equal the new Programmed FOBIK count.

MODULE PROXI REQUIREMENTS

NOTE: When replacing a module, a PROXI Alignment Procedure may need to be completed for that module.

The PROXI Alignment Procedure is needed to learn the PROXI Configuration from the BCM. This PROXI information configures the modules based on the content of the vehicle.

Refer to the chart below for the list of which modules do and do not require the PROXI Alignment Procedure.

MODULE	REQUIRES PROXI
ABS	YES
AMP	YES
BCM	MASTER OF THE PROXI CONFIGURATION DATA
CSWM	YES
CTM (Magnetti Marelli)	YES
CTM (Pieker)	NO
EDM	YES
EPS	YES
ESM	YES

HVAC	YES
ICS	NO
IPC	YES
LBSS	YES
OCM	YES
ORC	YES
PAM	YES
PCM (2.0L) Diesel	YES
PCM (2.4L)	YES
PCM (3.2L)	YES
RADIO	YES
RBSS	YES
RFH	YES
SCCM	NO
TCM	NO

NOTE: Some modules require several steps to replace the ECU. See the appropriate ECU replacement procedure Service Information for a full list of replacement steps.

PROGRAM THE BCM (BODY CONTROL MODULE)

NOTE: After installing a brand new BCM, the scan tool will be unable to identify the vehicle. Manual VIN entry into the scan tool must be used to continue scan tool communication.

1. Turn the ignition on.
2. With the scan tool, perform the following procedure in the BCM Miscellaneous Functions: Restore BCM PROXI Configuration*.

   NOTE: NOTE: The Restore BCM PROXI Configuration uses the VIN and sales code information from DealerCONNECT to reconfigure the vehicle. After running the Restore BCM PROXI Configuration, the scan tool will restart to begin a new diagnostic session with the vehicle.

3. If instructed by the scan tool, run the following procedure in the BCM Miscellaneous Functions: PROXI Configuration Alignment*.
4. With the scan tool, perform the following procedure in the RFH Miscellaneous Functions: BCM Replaced*.

* - Denotes that a user message indicating that the scan tool procedure is required may automatically display to the technician during the tool connection process

NOTE: Customer programmable features in the BCM may need to be reset back to the customers preferred settings.

PROGRAM THE IPC (INSTRUMENT PANEL CLUSTER)

1. Connect the scan tool.
2. Turn the ignition ON to the RUN position (engine not running).
3. With the scan tool, clear all DTCs.
4. Turn ignition OFF then ON to the RUN position and confirm DTCs are cleared.
5. If this Electronic Control Unit (ECU) is being replaced with a new unit, a diagnostic scan tool MUST be used to align the PROXI configuration data into the new ECU. Follow the routine outlined in the diagnostic scan tool for PROXI Configuration Alignment under Body Control Module (BCM) Miscellaneous Functions menu.
6. With the scan tool under RF Hub (RFH), under Miscellaneous Functions menu, "Update Front and Rear Axle Nominal Tire Pressure Values" to program the tire pressure threshold values.

PROGRAMMING THE PCM

The secret key is an ID code that is unique to each KIN. This code is programmed and stored in the KIN, the PCM, and each ignition key transponder chip. When the PCM or KIN is replaced, it is necessary to program the Secret Key Code into the new module using a diagnostic scan tool. Follow the programming steps outlined in the diagnostic scan tool for **PCM REPLACED** , **KIN REPLACED** , or **BCM REPLACED** under **MISCELLANEOUS FUNCTIONS** for the **KEYLESS IGNITION NODE** menu item as appropriate.

NOTE: Programming the PCM or KIN is done using a diagnostic scan tool and a PIN to enter secure access mode. If three attempts are made to enter secure access mode using an incorrect PIN, secure access mode will be locked out for one hour. To exit this lockout mode, turn the ignition to the RUN position for one hour and then enter the correct PIN. Be certain that all accessories are turned OFF. Also, monitor the battery state and connect a battery charger if necessary.

CAUTION: Read all notes and cautions for programming procedures.

NOTE: If you are also replacing the KIN and/or Ignition Keys/FOBIKS refer to the module/programming order replacement guide before starting. Refer to STANDARD PROCEDURE.

1. Connect a battery charger to the vehicle.
2. Connect the scan tool.
3. Have a unique vehicle PIN readily available before running the routine.
4. Ignition key should be in RUN position.
5. Select "ECU View".

6. Select "KIN".
7. Select "Miscellaneous Functions."
8. Select "PCM Replaced".
9. Enter the PIN when prompted.
10. Verify the correct information.
11. Cycle ignition key after the successful routine completion.

PROGRAMMING THE RF-HUB

NOTE: If a BCM is also going to be replaced at this time, check the "RF-HUB, BCM, FOBIK REPLACEMENT AND PROGRAMMING ORDER GUIDE" before proceeding. Refer to STANDARD PROCEDURE.

NOTE: Do not put a laptop or any wireless device (cell phones, audio devices etc.) near the top of the center console (the RKE antenna is located below the center console).

1. After the RF-Hub has been replaced with new unit, connect the diagnostic scan tool to the Data Link Connector (DLC).
2. Navigate to the RF-Hub (RFH) in the "Vehicle View" of the diagnostic scan tool.
3. With the scan tool select "RF-Hub" and perform the "RF-HUB Replace" routine.

NOTE: This procedure will require you to log into DealerCONNECT and enter a PIN when requested. The PIN is temporary and will be active for 12 hours. After 12 hours, a new PIN will need to be obtained from DealerCONNECT.

4. Select "Misc. Function" and perform the "PROXI Configuration Alignment" routine.
5. Put all the FOBiKs used in this vehicle on the front seat away from the console.
6. With the scan tool select: "Program ignition FOBIKs" in the Miscellaneous Functions menu and follow the instructions on the screen.

NOTE: When programming a FOBIK, have it in your hand resting on the console.

NOTE: When you are instructed to "Press the Unlock button" it is important that you do not hold the button. Press it One time quickly.

NOTE: This procedure will require you to log into DealerCONNECT and enter a PIN when requested. The PIN is temporary and will be active for 12 hours. After 12 hours, a new PIN will need to be obtained from DealerCONNECT.

7. After all the FOBIKs have been programmed, turn the ignition on and with the scan tool select "BCM".
8. Update the Front and Rear Axle Normal Tire Pressure Values.

9. Program the Tire Sensor IDs.
10. Turn the ignition to the OFF position, wait 30 seconds, then cycle the ignition back to the ON/RUN position.
11. Check for any active RF-Hub DTCs. If any are present, go to **DTC INDEX** and perform the appropriate procedure.
12. Turn the ignition off and check each FOBiK for proper operation.
13. Finish the installation procedure (if necessary). Refer to **MODULE, RADIO FREQUENCY (RF HUB), INSTALLATION**.
14. Perform the BODY VERIFICATION TEST. Refer to **STANDARD PROCEDURE** .

KL MODULE REPLACEMENT GUIDE (RF-HUB, PCM, BCM, ESL)

NOTE: **NOTE: If using 14.01 tool software and replacing the RF-Hub, the 'PROXI Configuration Alignment' procedure may need to be ran before running the 'Program Ignition FOBIKs' procedure in addition to the 'PROXI Configuration Alignment' procedure already documented in the below charts .**

MODULE	KL MODULE REPLACEMENT GUIDE (RF-HUB, PCM, BCM, ESL)						
	Condition 1	Condition 2	Condition 3	Condition 4	Condition 5	Condition 6	Condit
RF-HUB (and ELV/ESCL if equipped)	New	Existing	Existing	Existing	Existing	New	Ne
BCM	Existing	New	Existing	Existing	Existing	New	Exist
FOBiKs	Existing	Existing	New	Existing	Existing	Existing	Ne
PCM	Existing	Existing	Existing	New	Existing	Existing	Exist
ESL	Existing	Existing	Existing	Existing	New	Existing	Exist
PROGRAMMING ORDER	**ASSOCIATED MODULE MISC. FUNCTION**						
1	RF-HUB Replace	Restore BCM PROXI Configuration	Program Ignition FOBIKs (ignition off)	Flash update PCM (if PCM arrives in a generic state)	Program Ignition FOBIKs (ignition off)	Restore BCM PROXI Configuration	RF-H Repl
2	Program Ignition FOBIKs (Ignition Off)	BCM Replaced (in Vehicle Prep)		PCM Replaced (in Vehicle Prep)	PROXI Configuration Alignment	RF-HUB Replace	Prog Ignit FOB (ignitio
3	'PROXI Configuration Alignment			PROXI Configuration Alignment	RF-HUB Replace	Program Ignition FOBIKs (Ignition Off)	PRC Configu Align
	Update Front				Update Front		Update

4	and Rear Axle Nominal Tire Pressure Values			Check PCM VIN and other PCM routines	and Rear Axle Nominal Tire Pressure Values	'PROXI Configuration Alignment	and F Ax Nomina Press Valu
5	Program Tire Sensor IDs				Program Tire Sensor IDs	BCM Replaced (in Vehicle Prep)	Prograr Senso
6						Update Front and Rear Axle Nominal Tire Pressure Values	
7						Program Tire Sensor IDs	

MODULE	KL MODULE REPLACEMENT GUIDE (RF-HUB, PCM, BCM, ESL)						
	Condition 8	**Condition 9**	**Condition 10**	**Condition 11**	**Condition 12**	**Condition 13**	**Con**
RF-HUB (and ELV/ESCL if equipped)	New	Existing	Existing	Existing	Existing	New	New
BCM	Existing	New	New	Existing	New	Existing	New
FOBiKs	Existing	New	Existing	New	New	New	Exis
PCM	New	Existing	New	New	New	New	New
ESL	Existing	Existing	Existing	Existing	Existing	Existing	Exis
PROGRAMMING ORDER	**ASSOCIATED MODULE MISC. FUNCTION**						
1	RF-HUB Replace	Restore BCM Proxi Configuration	Restore BCM Proxi Configuration	Program Ignition FOBIKs (Ignition Off)	Restore BCM Proxi Configuration	RF-HUB Replace	Rest Prox Con
2	Program Ignition FOBIKs (Ignition Off)	Program Ignition FOBIKs (Ignition Off)	Flash update PCM (if PCM arrives in a generic state)	Flash update PCM (if PCM arrives in a generic state)	Program Ignition FOBIKs (Ignition Off)	Program Ignition FOBIKs (Ignition Off)	RF-I Repl
3	Flash update PCM (if PCM arrives in a generic state)	BCM Replaced (in Vehicle Prep)	BCM Replaced (in Vehicle Prep)	PCM Replaced (in Vehicle Prep)	Flash update PCM (if PCM arrives in a generic state)	Flash update PCM (if PCM arrives in a generic state)	Prog Igni FOE (Ign
4	PCM Replaced (in		PCM Replaced (in	PROXI Configuration	BCM Replaced (in	PCM Replaced (in	Flas PCM PCM

	Vehicle Prep)		Vehicle Prep)	Alignment	Vehicle Prep)	Vehicle Prep)	in a state
5	PROXI Configuration Alignment		PROXI Configuration Alignment	Check PCM VIN and other PCM routines	PCM Replaced (in Vehicle Prep)	PROXI Configuration Alignment	BCM Rep Veh
6	Check PCM VIN and other PCM routines		Check PCM VIN and other PCM routines		PROXI Configuration Alignment	Update Front and Rear Axle Nominal Tire Pressure Values	PCM Rep Veh
7	Update Front and Rear Axle Nominal Tire Pressure Values				Check PCM VIN and other PCM routines	Program Tire Sensor IDs	PRC Con Alig
8	Program Tire Sensor IDs					Check PCM VIN and other PCM routines	Che VIN othe rout
9							Upd and Axle Non Pres Valu
10							Prog Sens

MODULE	KL MODULE REPLACEMENT GUIDE (RF-HUB, PCM, BCM, ESL)						
	Condition 15	**Condition 16**	**Condition 7**	**Condition 18**	**Condition 19**	**Condition 20**	**Con**
RF-HUB (and ELV/ESCL if equipped)	New	New	New	New	New	Existing	Exis
BCM	New	New	New	Existing	Existing	New	New
FOBiKs	New	New	Existing	New	Existing	New	Exis
PCM	Existing	New	Existing	Existing	New	Existing	New
ESL	Existing	Existing	New	New	New	New	New
PROGRAMMING ORDER	**ASSOCIATED MODULE MISC. FUNCTION**						
1	Restore BCM Proxi Configuration	Restore BCM Proxi Configuration	Restore BCM Proxi Configuration	RF-HUB Replace	RF-HUB Replace	Restore BCM Proxi Configuration	Rest Prox Con

2	RF-HUB Replace	RF-HUB Replace	RF-HUB Replace	Program Ignition FOBIKs (Ignition Off)	Program Ignition FOBIKs (Ignition Off)	Program Ignition FOBIKs (Ignition Off)	Flas PCM PCM in a state
3	Program Ignition FOBIKs (Ignition Off)	Program Ignition FOBIKs (Ignition Off)	Program Ignition FOBIKs (Ignition Off)	ESL Replaced (in Vehicle Prep)	Flash update PCM (if PCM arrives in a generic state)	BCM Replaced (in Vehicle Prep)	BCM Rep Veh
4	BCM Replaced (in Vehicle Prep)	Flash update PCM (if PCM arrives in a generic state)	BCM Replaced (in Vehicle Prep)	PROXI Configuration Alignment	PCM Replaced (in Vehicle Prep)	ESL Replace (in Vehicle Prep)	PCM Rep Veh
5	PROXI Configuration Alignment	BCM Replaced (in Vehicle Prep)	ESL Replaced (in Vehicle Prep)	Update Front and Rear Axle Nominal Tire Pressure Values	ESL Replace (in Vehicle Prep)		ESL (in V Prep
6	Update Front and Rear Axle Nominal Tire Pressure Values	PCM Replaced (in Vehicle Prep)	PROXI Configuration Alignment	Program Tire Sensor IDs	PROXI Configuration Alignment		PRO Con Alig
7	Program Tire Sensor IDs	PROXI Configuration Alignment	Update Front and Rear Axle Nominal Tire Pressure Values		Check PCM VIN and other PCM routines		Che VIN othe rout
8		Check PCM VIN and other PCM routines	Program Tire Sensor IDs		Update Front and Rear Axle Nominal Tire Pressure Values		
9		Update Front and Rear Axle Nominal Tire Pressure Values			Program Tire Sensor IDs		
		Program Tire					

10		Sensor IDs					

MODULE	KL MODULE REPLACEMENT GUIDE (RF-HUB, PCM, BCM, ESL)					
	Condition 22	Condition 23	Condition 24	Condition 25	Condition 26	Condition 27
RF-HUB (and ELV/ESCL if equipped)	Existing	Existing	New	New	New	New
BCM	Existing	New	Existing	New	New	New
FOBiKs	New	New	New	Existing	New	New
PCM	New	New	New	New	Existing	New
ESL	New	New	New	New	New	New
PROGRAMMING ORDER	**ASSOCIATED MODULE MISC. FUNCTION**					
1	Program Ignition FOBIKs (Ignition Off)	Restore BCM Proxi Configuration	RF-HUB Replace	Restore BCM Proxi Configuration	Restore BCM Proxi Configuration	Restore BCM Proxi Configuration
2	Flash update PCM (if PCM arrives in a generic state)	Program Ignition FOBIKs (Ignition Off)	Program Ignition FOBIKs (Ignition Off)	RF-HUB Replace	RF-HUB Replace	RF-HUB Replace
3	PCM Replaced (in Vehicle Prep)	Flash update PCM (if PCM arrives in a generic state)	Flash update PCM (if PCM arrives in a generic state)	Program Ignition FOBIKs (Ignition Off)	Program Ignition FOBIKs (Ignition Off)	Program Ignition FOBIKs (Ignition Off)
4	ESL Replace (in Vehicle Prep)	BCM Replaced (in Vehicle Prep)	PCM Replaced (in Vehicle Prep)	Flash update PCM (if PCM arrives in a generic state)	BCM Replaced (in Vehicle Prep)	Flash update PCM (if PCM arrives in a generic state)
5	PROXI Configuration Alignment	PCM Replaced (in Vehicle Prep)	ESL Replace (in Vehicle Prep)	BCM Replaced (in Vehicle Prep)	ESL Replace (in Vehicle Prep)	BCM Replaced (in Vehicle Prep)
6	Check PCM VIN and other PCM routines	ESL Replace (in Vehicle Prep)	PROXI Configuration Alignment	PCM Replaced (in Vehicle Prep)	PROXI Configuration Alignment	PCM Replaced (in Vehicle Prep)
7		PROXI Configuration Alignment	Update Front and Rear Axle Nominal Tire Pressure Values	ESL Replace (in Vehicle Prep)	Update Front and Rear Axle Nominal Tire Pressure Values	ESL Replace (in Vehicle Prep)

8		Check PCM VIN and other PCM routines	Program Tire Sensor IDs	PROXI Configuration Alignment	Program Tire Sensor IDs	PROXI Configuration Alignment
9			Check PCM VIN and other PCM routines	Check PCM VIN and other PCM routines		Check PCM VIN and other PCM routines
10				Update Front and Rear Axle Nominal Tire Pressure Values		Update Front and Rear Axle Nominal Tire Pressure Values
11				Program Tire Sensor IDs		Program Tire Sensor IDs

VEHICLE SCAN AND CONFIGURATION REPORTS

YouTube	A multimedia supplement to the instructions contained in this article is available. To view the multimedia example of the condition described go to; **http://www.youtube.com/user/Mitchell1Tips** **then type, "A00641406.vid1" into the "Search Channel" box.**

COMMUNICATION

DESCRIPTION

DESCRIPTION

The primary on-board communication network between microprocessor-based electronic control modules in this vehicle is the Controller Area Network (CAN) data bus system. A data bus network minimizes redundant wiring connections; and, at the same time, reduces wire harness complexity, sensor current loads and controller hardware by allowing each sensing device to be connected to only one module (also referred to as a node). Each node reads, then broadcasts its sensor data over the bus for use by all other nodes requiring that data. Each node ignores the messages on the bus that it cannot use.

The CAN bus is a two-wire multiplex system. Multiplexing is any system that enables the transmission of multiple messages over a single channel or circuit. The CAN bus is used for communication between most vehicle nodes. However, in addition to the CAN bus network, certain nodes may also be equipped with a Local Interface Network (LIN) data bus. The LIN data bus is a single wire low-speed (9.6 Kbps) serial link bus used to provide direct communication between a LIN master module and certain switch or sensor inputs.

There are two separate CAN bus systems used in the vehicle. They are designated: the CAN-IHS, and the CAN-C. The CAN-IHS and CAN-C systems provide on-board communication between all of the nodes that are

connected to them. The CAN-C is the faster of the two systems providing near real-time communication (500 Kbps). The CAN-C is used typically for communications between more critical nodes, while the slower CAN-IHS (125 Kbps) system is used for communications between less critical nodes.

The added speed of the CAN data bus is many times faster than previous data bus systems. This added speed facilitates the addition of more electronic control modules or nodes and the incorporation of many new electrical and electronic features in the vehicle.

The central CAN gateway or hub module integral to the BCM is connected to CAN-IHS and CAN-C buses. This gateway physically and electrically isolates the CAN buses from each other and coordinates the bi-directional transfer of messages between them. The BCM is located under the left hand side of the instrument panel.

OPERATION

OPERATION

YouTube	A multimedia supplement to the instructions contained in this article is available. To view the multimedia example of the condition described go to; **http://www.youtube.com/user/Mitchell1Tips** **then type, "A00641406.vid2" into the "Search Channel" box.**

The primary communication network between electronic control modules on this vehicle is the Controller Area Network (CAN) data bus system. The Controller Area Network (CAN) data bus allows all electronic modules connected to the bus to share information with each other. Regardless of whether a message originates from a module on the higher speed CAN C (500K) Bus or on the lower speed CAN Interior High Speed (IHS) (125K) Bus the message structure and layout is similar, which allows the Body Control Module (BCM) to be a Central Gateway to process and transfer messages between the CAN C and CAN IHS buses. The BCM also stores Diagnostic Trouble Codes (DTCs) for certain bus network faults.

The CAN bus nodes are connected in parallel to the two-wire bus using a twisted pair, where the wires are wrapped around each other to provide shielding from unwanted electromagnetic induction, thus preventing interference with the relatively low voltage signals being carried through them. The twisted pairs have between 33 and 50 twists per meter (yard). While the CAN bus is operating (active), one of the bus wires will carry a higher voltage and is referred to as the CAN High or CAN bus (+) wire, while the other bus wire will carry a lower voltage and is referred to as the CAN Low or CAN bus (-) wire. Refer to the CAN Bus Voltages table.

CAN BUS VOLTAGES TABLE

CAN Bus Voltages (Normal Operation)								
CAN-C Bus Circuits	**Sleep**	**Recessive (Bus Idle)**	**Dominant (Bus Active)**	**CAN-L Short to Ground**	**CAN-H Short to Ground**	**CAN-L Short to Battery**	**CAN-H Short to Battery**	**CAN-H Short to CAN-L**
CAN-L (-)	0 V	2.3 - 2.5 V	1.3 - 2.3 V	0 V	0.3 - 0.5V	Battery Voltage	Battery Voltage Less 0.75	2.45 V

							V	
CAN-H (+)	0 V	2.5 - 2.7 V	2.6 - 3.5 V	0.02 V	0 V	Battery Voltage Less 0.75 V	Battery Voltage	2.45 V
CAN-IHS Bus Circuits	**Key-Off (Bus Asleep)**		**Key-On (Bus Active)**	**CAN-L Short to Ground**	**CAN-H Short to Ground**	**CAN-L Short to Battery**	**CAN-H Short to Battery**	**CAN-H Short to CAN-L**
CAN-L (-)	0.0V		1.3 - 2.3 V	0 V	0.3 - 0.5 V	Battery Voltage	Battery Voltage Less 0.75 V	2.45 V
CAN-H (+)	0.0 V		2.6 - 3.5 V	0.02 V	0 V	Battery Voltage Less 0.75 V	Battery Voltage	2.45 V
Notes								
All measurements taken between node ground and CAN terminal with a standard DVOM. DVOM will display average network voltage. Total resistance of CAN networks can be measured with the battery disconnected. The average resistance is approximately 60 Ohms. The termination resistors are integral to the Star Connectors.								

The CAN-IHS bus network remains active until all nodes on that network are ready for sleep. This is determined by the network using tokens in a manner similar to polling. When the last node that is active on the network is ready for sleep, and it has already received a token indicating that all other nodes on the bus are ready for sleep, it broadcasts a **bus sleep acknowledgment** message that causes the network to sleep. Once the CAN-IHS bus network is asleep, any node on the bus can awaken it by transmitting a message on the network.

In the CAN system, available options are configured into the BCM at the assembly plant, but additional options can be added in the field using the diagnostic scan tool. The configuration settings are stored in non-volatile memory. The BCM stores a Diagnostic Trouble Code (DTC) in one of two caches for any detected active or stored faults in the order in which they occur. One cache stores powertrain (P-Code), chassis (C-Code) and body (B-Code) DTCs, while the second cache is dedicated to storing network (U-Code) DTCs.

CONNECTOR, DATA LINK

DESCRIPTION

DESCRIPTION

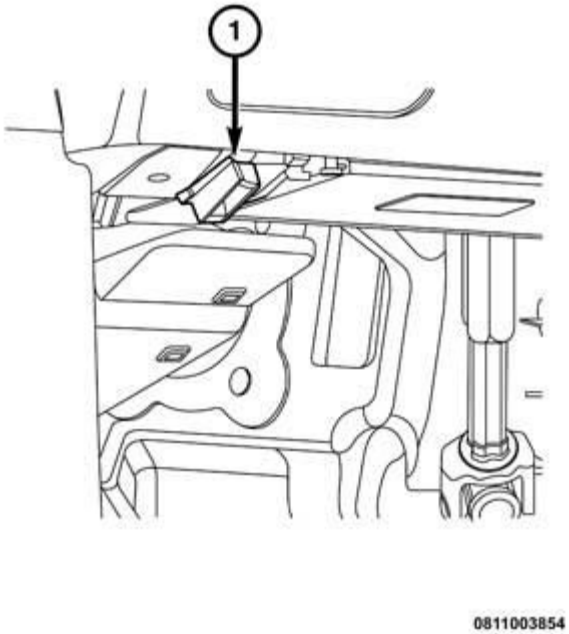

Fig. 1: Identifying Data Link Connector (DLC)
Courtesy of CHRYSLER GROUP, LLC

The Data Link Connector (DLC) (1) is a 16-way molded plastic connector that is part of the instrument panel wire harness. This connector is located at the lower edge of the instrument panel, outboard of the steering column. The connector insulator is retained by integral snap features within a rectangular cutout in a mounting bracket integral to the lower instrument panel and inboard of the inside hood release on the inner cowl side trim.

OPERATION

OPERATION

The Data Link Connector (DLC) is an industry-standard 16-way connector that permits the connection of a diagnostic scan tool to the Controller Area Network (CAN) data bus for interfacing with, configuring, and retrieving Diagnostic Trouble Code (DTC) data from the electronic modules that reside on the data bus network of the vehicle.

CONNECTOR, STAR DIAGNOSTIC

DESCRIPTION

DESCRIPTION

Star connectors provide a simple method of diagnosing CAN Bus communication faults through the use of connection points for all modules on the bus. The connectors can be used to eliminate a module or group of modules in order to diagnose issues with the CAN Bus circuits and connectors to the modules or the modules themselves.

There are two locations for the STAR diagnostic connectors on this vehicle:

- The location of IP side CAN Connectors - behind the glove box on the passenger side. These connectors slide right to left in order to remove from the mounting bracket.
- The location of Body side CAN Connectors - under the center console. The rear potion of the console is removed to access the connectors. These connectors are mounted to a bracket underneath the console. They are removed from the bracket by pulling rearward.

MODULE, ADAPTIVE CRUISE CONTROL

DESCRIPTION

DESCRIPTION

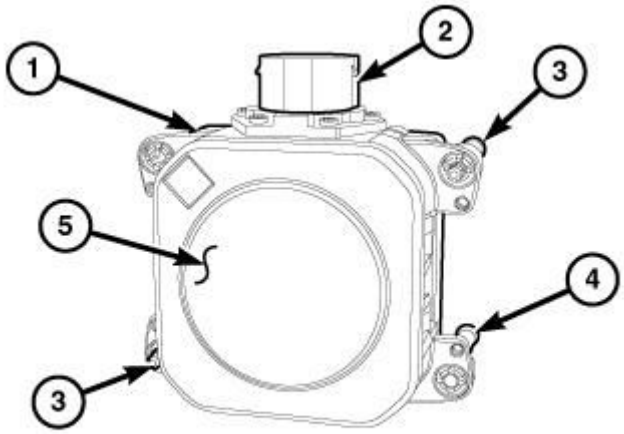

2849199

Fig. 2: Adaptive Speed Control Sensor, One Fixed Ball Stud, Two Adjustable Ball Studs & Radar Dome
Courtesy of CHRYSLER GROUP, LLC

The adaptive speed control sensor (1) (also known as the Adaptive Cruise Control/ACC sensor or module, or the radar sensor or module) is located on a bracket secured near the center of the underside of the front bumper support behind the front fascia. The stamped steel ACC sensor mounting bracket is secured by two screws to a bracket on the bumper support member. This sensor is also a component of the Forward Collision Warning (FCW) feature.

One fixed ball stud (4) and two adjustable ball studs (3) secure the sensor housing through a snap fit into three molded plastic ball socket clips installed in the mounting bracket. The sensor pivots on the fixed ball stud while the two adjustable ball studs allow the sensor to be vertically aligned after installation using an ACC vertical alignment special tool and a 3.5 millimeter hex nut driver special tool. Horizontal alignment is performed electronically using a diagnostic scan tool during a ten minute drive at a steady, predetermined speed following completion of the vertical alignment.

The ACC sensor electronic circuitry is sealed and protected within a die cast aluminum housing. A molded

plastic cover and a lens or radar dome (5) faces forward through an opening in the center of the front fascia lower airflow grille texture that is trimmed with a bezel snapped into the texture opening. A molded plastic sensor bezel or mirror cover with a center clearance hole for the sensor lens snaps over the sensor and conceals a small square mirror in one corner of the sensor cover that is used for calibration purposes during the sensor manufacturing process.

The ACC sensor includes an applied connector receptacle (2) that is sealed and secured to the sensor housing with screws and faces downward when installed on the mounting bracket. The ACC sensor is connected to the vehicle electrical system through a single dedicated takeout and connector of the FEM wire harness.

The adjustable ball studs and the ACC sensor cannot be repaired. If ineffective or damaged the entire sensor unit must be replaced. The three plastic ball socket clips in the sensor mounting bracket must also be replaced each time the ACC sensor is removed from and reinstalled onto the mounting bracket.

OPERATION

OPERATION

The microprocessor in the adaptive speed control sensor (also known as the Adaptive Cruise Control/ACC sensor or module, or as the radar sensor or module) contains the logic circuits and controls many of the features of the adaptive speed control system. The ACC sensor receives battery voltage on a fused ignition switch output (run) circuit and is grounded at all times through a hard wired remote ground point. These connections allow the ACC sensor to operate only when the ignition switch is in the ON position. Likewise, the ACC sensor sleeps whenever the ignition switch is in any position except ON.

The ACC sensor is also a Radio Detection And Ranging (RADAR) transceiver. The ACC sensor transmits electromagnetic signal bursts at an operating frequency of 77 gigahertz. Those signal bursts are scattered by any objects they strike within the 40 degree field of view of the transceiver, which changes the strength and frequency of the signal. The ACC sensor antenna receives and interprets the returned signals to detect any objects in the path of the vehicle as well as their speed and direction.

The ACC sensor receives electronic **speed control switch status** message inputs from the Steering Control Module (SCM) integral to the Steering Column Control Module (SCCM) over the Controller Area Network (CAN) data bus. The sensor also monitors electronic message inputs from the Powertrain Control Module (PCM), the Antilock Brake Module (ABM) (also known as the Controller Antilock Brake/CAB or the Electronic Stability Control/ESC module) and the Transmission Control Module (TCM).

The ACC sensor logic processes all of those inputs, then provides the appropriate electronic message outputs over the CAN data bus to the PCM, the TCM and the ABM to control and maintain the separation setting selected by the vehicle operator between the vehicle and any preceding vehicles. The ACC sensor also provides electronic message outputs to the ElectroMechanical Instrument Cluster (EMIC) (also known as the Cab Compartment Node/CCN) and the Electronic Vehicle Information Center (EVIC) to invoke the Forward Collision Warning (FCW) features.

Among other features, the sensor also contains an electronic ambient temperature sensor and a heating element. When appropriate ambient temperatures are sensed, the heating element is energized by the sensor control circuitry to keep the sensor lens or radar dome clear of ice and snow accumulations that might otherwise blind

the sensor to proper reception of returned signals.

For those models equipped with the Forward Facing Camera (FFC), the FFC has a function that serves as a redundancy check with what the ACC radar is reading. If the two readings between the FFC and the ACC radar are not completely identical, the system will become disabled and set a Diagnostic Trouble Code (DTC). When the ACC system is paired with the FFC option, this is known as the ACC+ system.

The ACC sensor microprocessor continuously monitors all of its internal electronics to determine the sensor readiness. If the ACC sensor detects a monitored sensor fault, it sets and stores a DTC. The ACC sensor uses On-Board Diagnostics (OBD) and can communicate with other electronic modules in the vehicle as well as with the diagnostic scan tool using the CAN data bus. This method of communication is used for control of the indicators and indications provided to the vehicle operator through the EMIC and the EVIC. The ACC sensor is also Flash programmable, allowing the sensor software to be updated using a diagnostic scan tool.

The hard wired inputs for the ACC sensor may be diagnosed using conventional diagnostic tools and procedures. Refer to the appropriate wiring information. However, conventional diagnostic methods will not prove conclusive in the diagnosis of the ACC sensor or the electronic controls or communication between other modules and devices that provide features of the adaptive speed control and FCW system features. The most reliable, efficient, and accurate means to diagnose the ACC sensor or the electronic controls and communication related to adaptive speed control or FCW system operation requires the use of a diagnostic scan tool. Refer to the appropriate diagnostic information.

DIAGNOSIS AND TESTING

DIAGNOSIS AND TESTING - ACC SYSTEM

The hard wired circuits to the adaptive speed control sensor (also known as the Adaptive Cruise Control/ACC sensor or module, or the radar sensor or module) may be diagnosed using conventional diagnostic tools and procedures. Refer to the appropriate wiring information. The wiring information includes wiring diagrams, proper wire and connector repair procedures, details of wire harness routing and retention, connector pin-out information and location views for the various wire harness connectors, splices and grounds.

However, conventional diagnostic methods will not prove conclusive in the diagnosis of the ACC sensor or the electronic controls and communication between modules and other devices that provide some features of the adaptive speed control and Forward Collision Warning (FCW) systems. The most reliable, efficient, and accurate means to diagnose the ACC sensor or the electronic controls and communication related to adaptive speed control or FCW system operation requires the use of a diagnostic scan tool. Refer to **DIAGNOSIS AND TESTING** .

STANDARD PROCEDURE

STANDARD PROCEDURE - ADAPTIVE SPEED CONTROL SENSOR ALIGNMENT

The adaptive speed control sensor (also known as the Adaptive Cruise Control/ACC sensor or module, or the radar sensor or module) requires alignment whenever the ACC sensor is removed and reinstalled, whenever front end structural repairs are performed or whenever a Diagnostic Trouble Code (DTC) indicates ACC sensor adjustment is required. Sensor alignment consists of performing the mechanical vertical alignment described in

the following procedure, followed by the electronic horizontal alignment that is performed with a diagnostic scan tool and the appropriate diagnostic information.

VEHICLE PREPARATION FOR SENSOR VERTICAL ALIGNMENT

1. Repair or replace any ineffective, worn or damaged body components. Repair any loose or cracked fascia components that might interfere with the sensor field of view. The radar dome of the sensor module should be roughly centered in the opening of the fascia.
2. Verify proper tire inflation pressures.
3. Remove any accumulations of mud, snow or ice from the vehicle underbody.
4. Verify that there is no load in the vehicle (cargo or passengers), except for the driver.

NOTE: The vehicle MUST be placed upon a wheel alignment or frame rack to achieve the proper sensor vertical alignment results. If a wheel alignment or frame rack is not available, then a verified level surface can be used. When using the wheel alignment rack, the fore - after specifications must be within 0 (+/- 0.2) degrees.

5. Rock the vehicle side-to-side three times to allow the suspension to stabilize.
6. Jounce the front and rear suspension three times by pushing downward on the front and rear bumpers and releasing.
7. Verify correct vehicle suspension height.

SENSOR VERTICAL ALIGNMENT

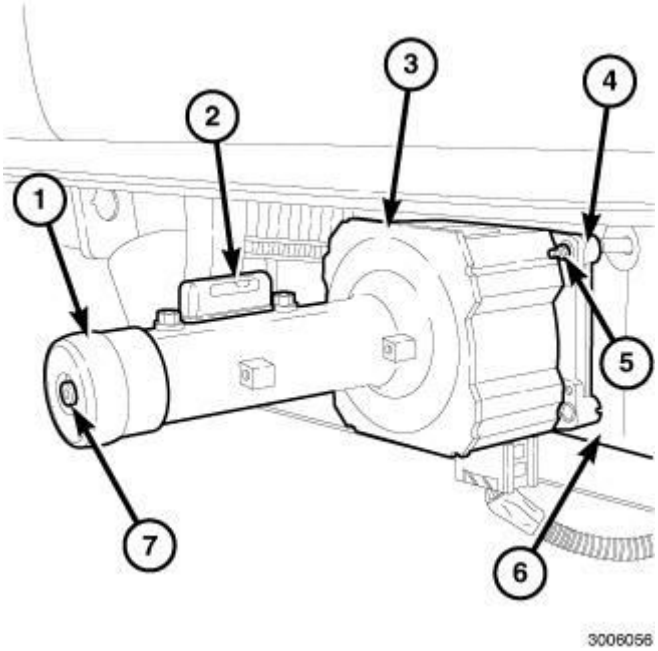

Fig. 3: Adaptive Speed Control Sensor, Bracket, Vertical Alignment Tool & Plunger
Courtesy of CHRYSLER GROUP, LLC

1. The adaptive speed control sensor (4) (also known as the Adaptive Cruise Control/ACC sensor or module and the radar sensor or module) is located on a bracket (6) secured near the center of the underside of the front bumper support member of the Front End Module (FEM) behind the front fascia.
2. Unsnap and remove the molded plastic ACC fascia closeout bezel in the center of the grille texture insert of the lower air intake opening of the front fascia to gain access to the ACC adjustment screws.
3. Remove the smaller plastic bezel (mirror cover) from over the front of the sensor housing.
4. Using standard glass cleaner and a clean soft towel, remove any dirt or road salt from the convex molded dark plastic lens (radar dome) on the face of the sensor as well as from the suction cup of the vertical alignment tool (3).
5. Carefully slide the vertical alignment tool over the sensor housing until the suction cup rests against the lens of the sensor.

NOTE: **It may take several attempts to get the suction cup of the special tool to fasten securely to the sensor. If necessary, lightly wet the suction cup with clean water to help improve adhesion.**

6. Depress the plunger (1) of the vertical alignment tool to engage the suction cup and attach the special tool securely to the lens of the sensor.

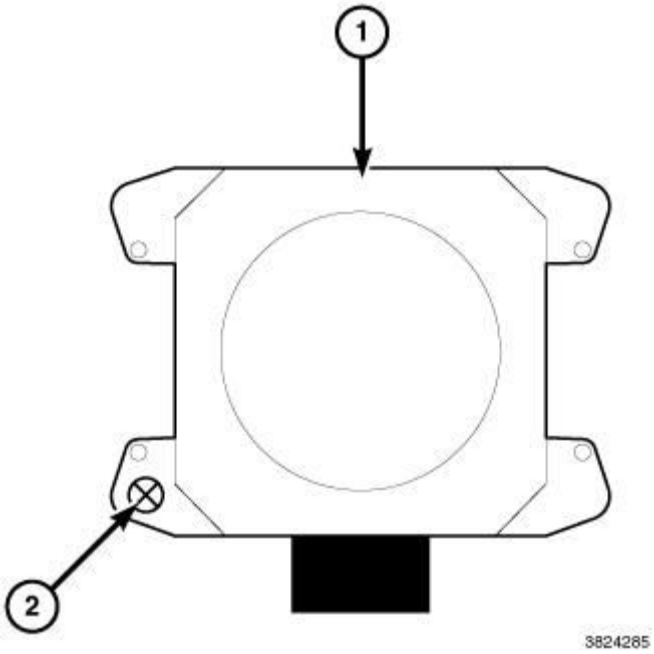

Fig. 4: Sensor & Ball Stud
Courtesy of CHRYSLER GROUP, LLC

7. Use the 3.5 millimeter hex nut driver (Special Tool No. (special tool #10243-2, Driver, Nut)) to rotate the vertical adjustment ball stud (2) that secures the sensor (1) to the mounting bracket as necessary to center the bubble of the spirit level between the two center marks on the vial of the level located on the top of the vertical alignment tool.
8. Depress the center release button of the special tool to release the suction cup from the sensor lens and

remove the special tool from the sensor.

9. Perform the ACC sensor horizontal alignment using a diagnostic scan tool and the appropriate diagnostic information.
10. Reinstall the smaller plastic bezel (mirror cover) onto the front of the sensor housing. Care must be taken to orient the bezel properly to ensure proper retention.
11. Reinstall the molded plastic ACC fascia closeout bezel into the center of the grille texture insert of the lower air intake opening of the front fascia.

REMOVAL

REMOVAL

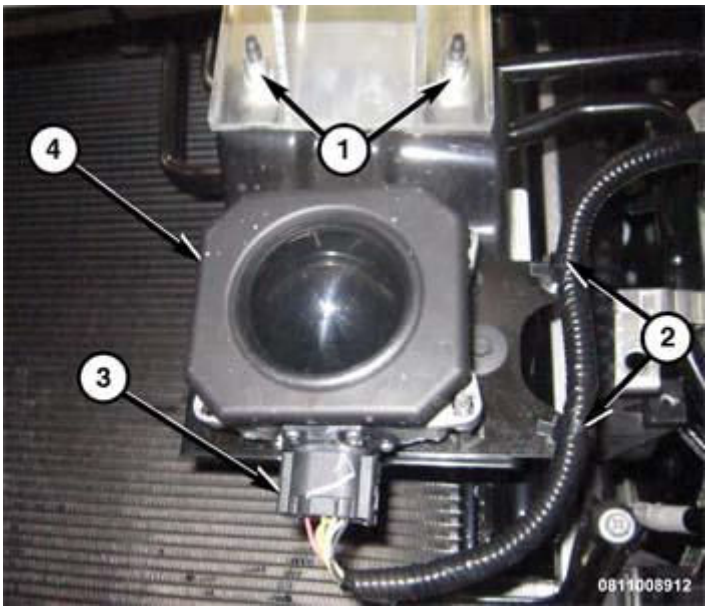

Fig. 5: Identifying ACC Module, Connector, Fasteners & Screws
Courtesy of CHRYSLER GROUP, LLC

1. Disconnect and isolate the battery cable from the negative battery post.
2. Raise and support the vehicle.
3. Remove the wire harness to ACC bracket routing fasteners (2).
4. Disconnect the electrical harness from the electrical connector (3) of the ACC module assembly (4).
5. Remove two bolts (1) securing the ACC module assembly bracket to the support cross bracing.
6. Remove the ACC module assembly with bracket from the vehicle to bench.
7. Remove the four retainers that secure the ACC module assembly to the ACC bracket.

INSTALLATION

INSTALLATION

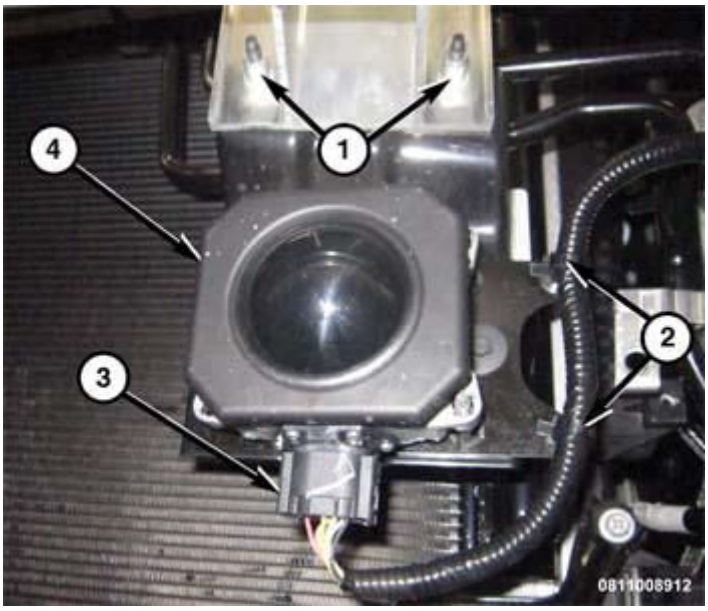

Fig. 6: Identifying ACC Module, Connector, Fasteners & Screws
Courtesy of CHRYSLER GROUP, LLC

1. If the ACC module is removed from the bracket, align the module to the bracket so that all four fastener locations are properly seated. Use the given fasteners to secure the ACC module to the bracket.
2. Raise and suppose the vehicle.
3. Position the ACC module assembly with bracket (4) to the vehicle for installation. Insert both bolts (1) that secure the bracket to the support cross bracing.
4. Connect and seat the wiring harness end to the ACC module connector (3).
5. Connect the wire harness routing fasteners (2) on the harness to the ACC module bracket assembly.
6. Lower the vehicle.
7. Connect the negative battery cable to the negative terminal of the battery.
8. Perform calibration procedures. Refer to **MODULE, ADAPTIVE CRUISE CONTROL, STANDARD PROCEDURE**.

MODULE, ANTI-LOCK BRAKE SYSTEM

DESCRIPTION

DESCRIPTION

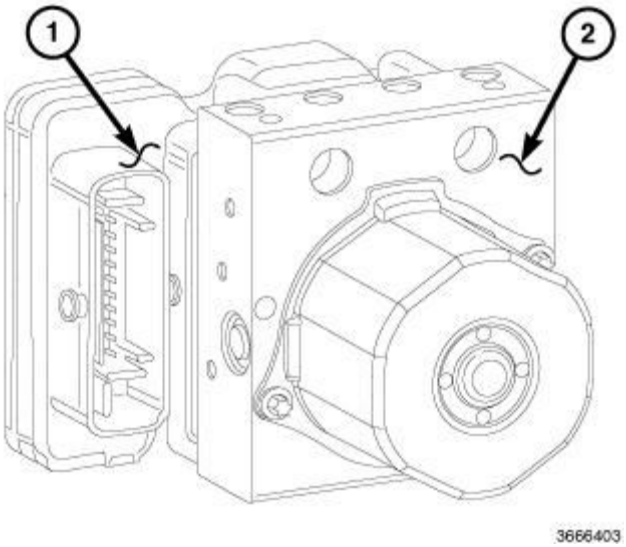

Fig. 7: Antilock Brake Module & Hydraulic Control Unit
Courtesy of CHRYSLER GROUP, LLC

The Antilock Brake Module (ABM) is a microprocessor-based device which monitors the antilock brake system (ABS) during normal braking and controls it when the vehicle is in an ABS stop or when in a traction control situation. The ABM utilizes a 38-way electrical connector on the vehicle wiring harness. The power source for the ABM is through the ignition switch in the RUN or ON position.

The ABM (1) is mounted to the HCU (2) as part of the Integrated Control Unit (ICU). The ICU is located in the engine compartment below the master cylinder on the front suspension cradle/crossmember. For information on the ICU, refer to **INTEGRATED CONTROL UNIT (ICU), DESCRIPTION** .

OPERATION

OPERATION

NOTE: The Electronic Stability Control (ESC) may also be referred to as Electronic Stability Program (ESP) depending on the vehicle model year and configuration. Certain components may also reference ESP, ESC, or use the traction control symbol.

The primary functions of the Antilock Brake Module (ABM) are to:

- Monitor the antilock brake system for proper operation.
- Detect wheel locking or wheel slipping tendencies by monitoring the speed of all four wheels of the vehicle.
- Control fluid modulation to the wheel brakes while the system is in an ABS mode.
- Store diagnostic information.
- Provide communication to the scan tool while in diagnostic mode.
- Illuminate the amber ABS warning indicator lamp.

- Illuminate the ESC function lamp in the message center on the instrument panel when a traction control event occurs.
- Illuminate the ESC function lamp when the amber ABS warning indicator lamp illuminates.

The ABM constantly monitors the antilock brake system for proper operation. If the ABM detects a fault, it will turn on the amber ABS warning indicator lamp and disable the antilock braking system. The normal base braking system will remain operational.

NOTE: If the vehicle is equipped with traction control, the ESC function lamp will illuminate anytime the amber ABS warning indicator lamp illuminates.

The ABM continuously monitors the speed of each wheel through the signals generated by the wheel speed sensors to determine if any wheel is beginning to lock. When a wheel locking tendency is detected, the ABM commands the ABM command coils to actuate. The coils then open and close the valves in the HCU that modulate brake fluid pressure in some or all of the hydraulic circuits. The ABM continues to control pressure in individual hydraulic circuits until a locking tendency is no longer present.

The ABM contains a self-diagnostic program that monitors the antilock brake system for system faults. When a fault is detected, the amber ABS warning indicator lamp is turned on and the fault diagnostic trouble code (DTC) is then stored in a diagnostic program memory. A latched fault will disable certain system functionality for the current ignition cycle. An unlatched fault will disable certain system functionality until the fault condition disappears. These DTC's will remain in the ABM memory even after the ignition has been turned off. The DTC's can be read and cleared from the ABM memory by a technician using a scan tool. If not cleared with a scan tool, the fault occurrence and DTC will be automatically cleared from the ABM memory after the identical fault has not been seen during the next 3, 500 miles. Drive-off may be required for the amber ABS warning indicator lamp to go out on the next ignition cycle.

REMOVAL

REMOVAL

1. To replace the ABM, the ICU assembly must be removed. Refer to **INTEGRATED CONTROL UNIT (ICU), REMOVAL** .

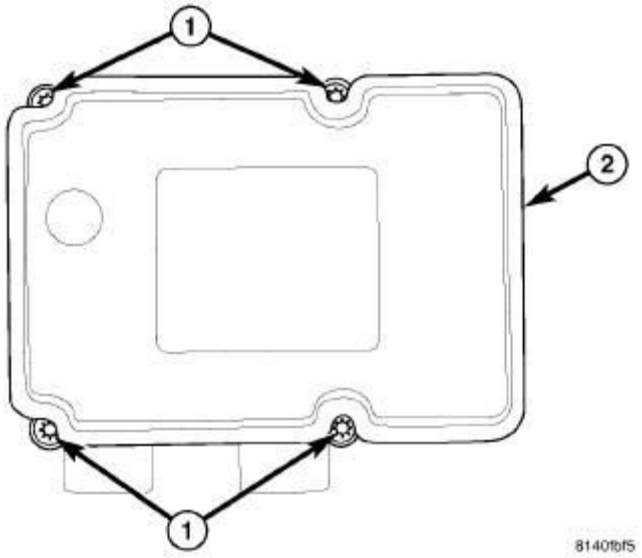

Fig. 8: ABM Mounting Screws - With Traction Control
Courtesy of CHRYSLER GROUP, LLC

2. Remove the four screws (1) attaching the ABM (2) to the HCU.

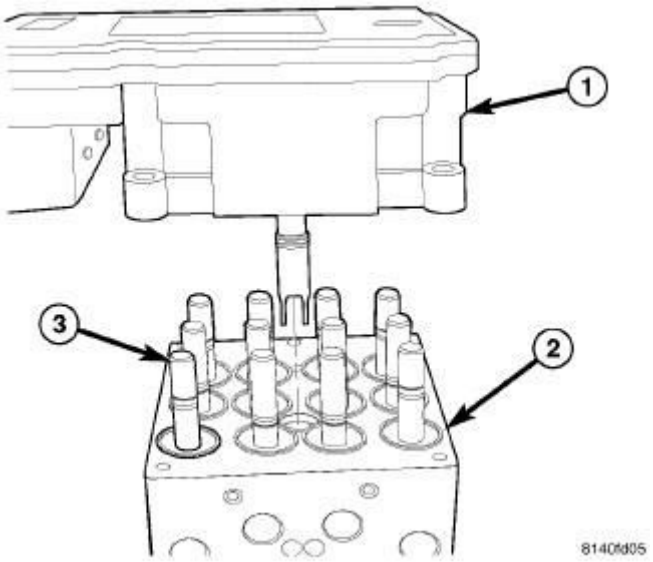

Fig. 9: ABM Assembly To HCU
Courtesy of CHRYSLER GROUP, LLC

CAUTION: When removing the ABM from the HCU, be sure to completely separate the two components (approximately 38 mm (1.5 inches)) before removing the ABM. Otherwise, damage to the pressure sensor or pump motor connection may result, requiring HCU replacement. Do not to touch the sensor terminals on the HCU side or the contact

pads on the ABM side as this may result in contamination and issues in the future.

3. Separate the ABM (1) from the HCU (2).

INSTALLATION

INSTALLATION

1. Clean any debris off the mating surfaces of the HCU and ABM.

CAUTION: When installing new O-rings or solenoid valve stem seals, do not use any type of lubricant.

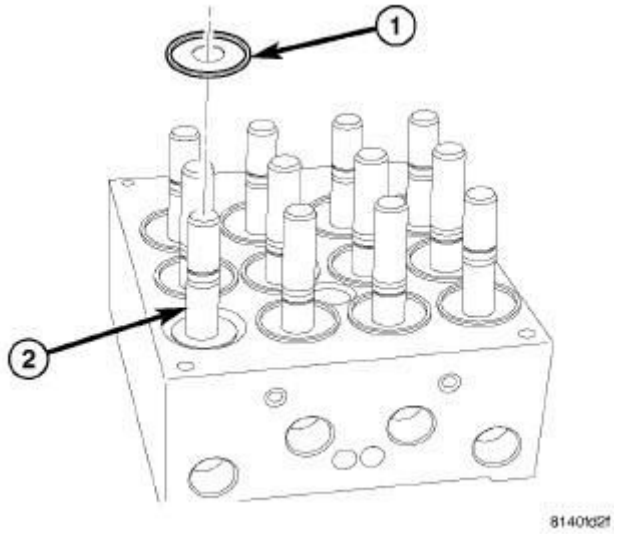

Fig. 10: Solenoid Valve Seal
Courtesy of CHRYSLER GROUP, LLC

2. **New** solenoid valve stems seals (1) and (2) must be installed. **Do not reuse solenoid valve stem seals.**

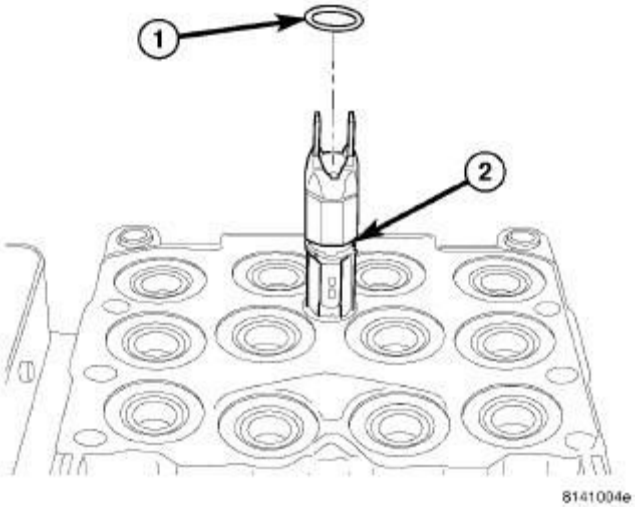

Fig. 11: Internal Pump Connector O-Ring
Courtesy of CHRYSLER GROUP, LLC

3. Replace the pump/motor connector O-ring (1) if it is not new. Be sure the O-ring is properly seated in the mounting groove (2).

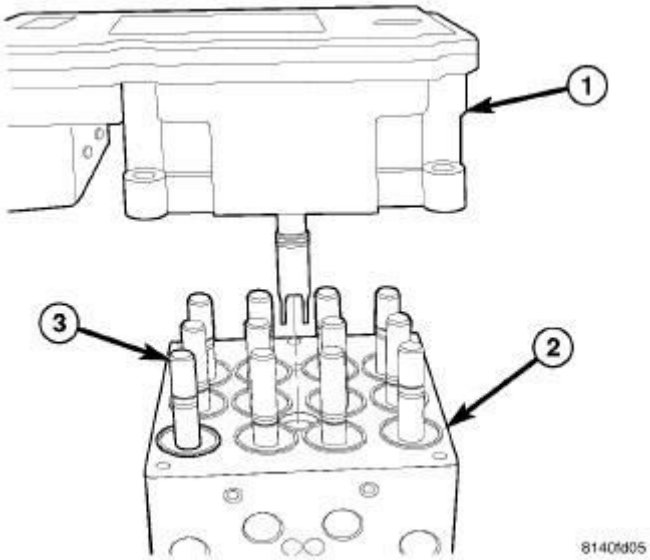

Fig. 12: ABM Assembly To HCU
Courtesy of CHRYSLER GROUP, LLC

4. Align components and install the ABM (1) on the HCU (2).

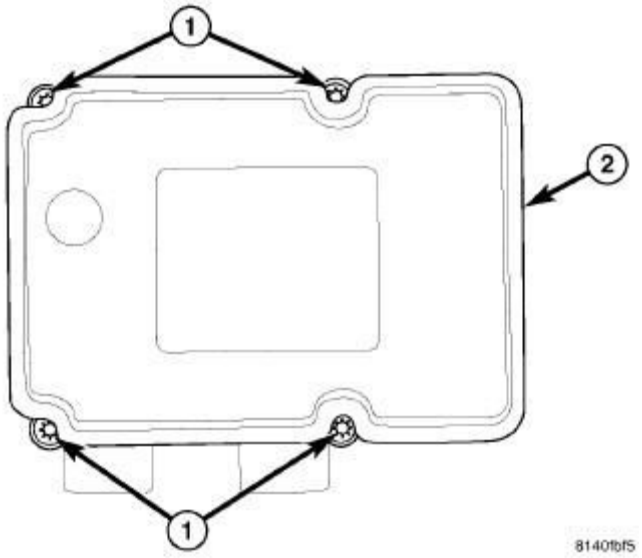

Fig. 13: ABM Mounting Screws - With Traction Control
Courtesy of CHRYSLER GROUP, LLC

5. Install the four screws (1) attaching the ABM (2) to the HCU. Tighten the mounting screws to 2 N.m (17 in. lbs.).
6. Install the ICU into the vehicle. Refer to **INTEGRATED CONTROL UNIT (ICU), INSTALLATION** .

MODULE, BLIND SPOT

DESCRIPTION

DESCRIPTION

The optional Blind Spot Monitor (BSM) system used in this vehicle has two control modules. One control module is dedicated to each side of the vehicle. The blind spot modules are each integral to the blind spot sensor for the same side of the vehicle. Refer to **SENSOR, BLIND SPOT, DESCRIPTION** .

OPERATION

OPERATION

The optional Blind Spot Monitor (BSM) system used in this vehicle has two control modules. One control module is dedicated to each side of the vehicle. The blind spot modules are each integral to the blind spot sensor for the same side of the vehicle. Refer to **SENSOR, BLIND SPOT, OPERATION** .

DIAGNOSIS AND TESTING

DIAGNOSIS AND TESTING - BLIND SPOT MODULE

The optional Blind Spot Monitor (BSM) system used in this vehicle has two control modules. One control module is dedicated to each side of the vehicle. The blind spot modules are each integral to the blind spot sensor for the same side of the vehicle. Refer to **SENSOR, BLIND SPOT, DIAGNOSIS AND TESTING** .

REMOVAL

REMOVAL

The optional Blind Spot Monitor (BSM) system used in this vehicle has two control modules. One control module is dedicated to each side of the vehicle. The blind spot modules are each integral to the blind spot sensor for the same side of the vehicle. Refer to **SENSOR, BLIND SPOT, REMOVAL** .

INSTALLATION

INSTALLATION

The optional Blind Spot Monitor (BSM) system used in this vehicle has two control modules. One control module is dedicated to each side of the vehicle. The blind spot modules are each integral to the blind spot sensor for the same side of the vehicle. Refer to **SENSOR, BLIND SPOT, INSTALLATION** .

MODULE, BODY CONTROL

DESCRIPTION

DESCRIPTION

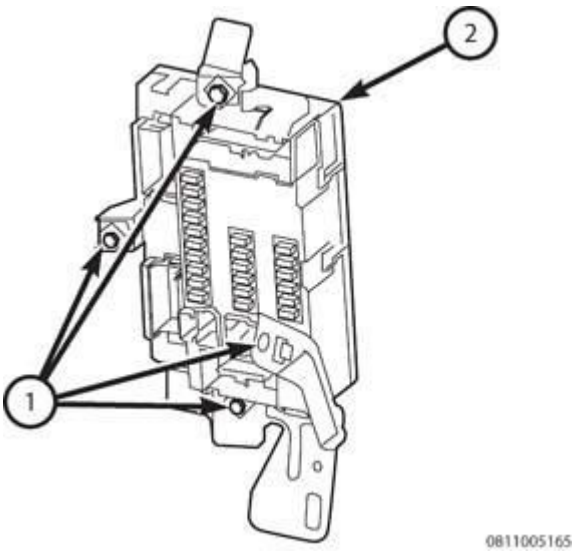

Fig. 14: Identifying Body Control Module (BCM) & Integral Receptacles
Courtesy of CHRYSLER GROUP, LLC

The CUSW - Body Control Module is an electronic control unit that manages the main body functions of the vehicle thus performing gateway functions between high and low speed CAN and between LIN and CAN

networks. Moreover, the BCM is an interconnecting unit that provides protected supply to many electrical loads by means of fuses.

The BCM is made by two main PCBs:

- The power PCB, that contains fuses, relays and power connections;
- The Logic PCB that contains the microcontroller and the main solid state devices.

Power PCB and Logic PCB are in the same case. The relays on the power PCB are soldered in place and are not individually serviceable.

The Body Control Module (BCM) (2) is mounted in the dashboard, left of the steering wheel, behind a removable aesthetical cover that allows the access to fuses mounted on the component and those found in the adjacent Junction Block (JB) (also known as the interior Power Distribution Center/PDC). The BCM has a molded plastic case that has integral receptacles in three clusters (1) for individual fuses on the rearward facing surface.

The BCM is secured with screws within two stamped metal brackets that form a mounting yoke. The yoke is then secured with screws to the metal support structure of the instrument panel. The BCM is connected to the vehicle electrical system through eight wire harness connections. Six connector receptacles are integral to the rearward facing surface of the BCM case, while two connector receptacles are integral to the forward facing surface of the case.

The BCM software is flash programmable. Otherwise, the BCM cannot be adjusted or repaired and, if damaged or ineffective, the entire BCM must be replaced. The mounting brackets for the BCM as well as the fuses found in the BCM are individually serviceable.

OPERATION

OPERATION

A Body Control Module (BCM) is an electronic control unit with a microcontroller that controls and integrates many of the main body electronic functions and features of the vehicle. Many of the functions and features provided by the BCM are possible because of numerous hard wired inputs and outputs, but most of these features are only possible or are enhanced because the BCM communicates electronically with other electronic modules in the vehicle as well as with a diagnostic scan tool using the Controller Area Network (CAN) data bus.

The BCM is a gateway between the high and low speed CAN data bus networks as well as a Local Interface Network (LIN) master node. This method of communication allows the sharing of sensor information, which reduces wire harness complexity, internal controller hardware and component sensor current loads. At the same time, this system provides increased reliability, enhanced diagnostics and allows the addition of many new feature capabilities. This method of communication is used by the BCM to acquire vehicle configuration data, including customer programmable features.

Software programming allows the BCM microcontroller to monitor all of these inputs and provide the appropriate outputs through high side drivers, low side drivers, on-board relays, Pulse-Width Modulation

(PWM) and electronic messages to other modules in the vehicle. Some of the functions and features that the BCM supports or controls include:

BCM INPUTS AND OUTPUT MANAGEMENT QUICK REFERENCE			
ON/OFF signal acquisition	High/Low beam headlight commands	Relay ON/OFF output management	Front/Rear washer pump
	Hand brake command		Projector front lighting
	Hazard command		Fog lights
	Fog light command		Door deadlock
	Left/Right turn command		Front/Rear windshield wiper
	Parking light command		Trunk
	Open/Close door switch	Direct management of ON/OFF output on loads and diagnosis functions	Front parking lights (Left and Right)
	Headlamp washing command		Rear parking lights (Left and Right)
	Hood switch		Front turn lights (Left and Right)
	Brake fluid level		Rear turn lights (Left and Right)
	Stop/Start enabling		Lateral turn lights (Left and Right)
Analog signal acquisition	Fuel level		License plate light (Left and Right)
	External temperature		Stop lights (Left and Right)
	Roof lamp command	Direct management of ON/OFF output on loads.	Rear Windows LED
	Stop light command		Emergency LED
Vehicle Speed Acquisition		Master functionality of CAN-B network (diagnosis, commands, and data).	Protocol errors management and monitoring
Door Lock Sensor acquisition and Management			Timing control
LIN Communication Management		Multi-master functionality of CAN-C towards ECM.	Protocol errors management and monitoring
Courtesy/Convenience with Timed and Dimming Management			Timing control

- **Brake Fluid Level** - The BCM continuously monitors the brake fluid level sensor through a hard-wired input to monitor the brake fluid level. The BCM transmits an electronic message over the Can data bus to Instrument Cluster (IC) to illuminate the Low Fluid indicator based on the input signal received from the fluid level sensor.
- **Enhanced Accident Response Support** - The BCM monitors an input from the Occupant Restraint Controller (ORC) and, following an airbag deployment, will immediately disable the power lock output, unlock all doors by activating the power unlock output, then enables the power lock output if the power lock switch input remains inactive for two seconds. The BCM also monitors an input from the Powertrain Control Module (PCM) to automatically turn ON the interior lighting after an airbag deployment event, 10 seconds after the vehicle speed is zero. The interior lighting remains illuminated until the ignition switch is turned to the OFF position, at which time the interior lighting returns to normal operation and control. These Enhanced Accident Response System (EARS) features are each dependent upon a functional vehicle electrical system following the vehicle impact event.
- **Exterior Lighting Switch Support** - The BCM continuously monitors the headlamp switch position to activate or deactivate the exterior lighting. The headlamp switch provides the appropriate resistor multiplexed output hardwired to the BCM. The BCM reads and responds to this input by energizing or de-energizing the right and left park lamp feed circuits and the right and left high or low beam driver circuits through internal High Side Drivers (HSD) and by sending an electronic confirmation message back to the IC, which controls the high beam indicator as appropriate. The BCM also remembers which headlamp beams were last selected with the multi-function switch, and energizes those beams by default the next time the headlamps are turned ON. If the vehicle is equipped with optional automatic headlamps and the **A** (Automatic) position is selected, the BCM also monitors an electronic **ambient light level** message received over the CAN data bus from the Heat, Ventilation and Air Conditioning (HVAC) control module based upon a hard wired input from the rain sensor to turn the exterior lighting ON and OFF automatically while the ignition switch is in the ON position. The BCM also controls the fog lamps, cargo lamp, CHMSL, tail/stop lamps, reverse lamps and turn signals.
- **Fuel Level Data Support** - The BCM provides a current source for and receives a hard-wired analog input from the fuel level sending unit located on the fuel pump module in the fuel tank. Based upon this input, the BCM uses electronic messaging to transmit this data over the CAN data bus for use by other electronic modules in the vehicle. The IC calculates the proper fuel gauge needle position and to control low fuel indicator operation based on these messages.
- **Hazard Lamp Circuit Control** - The BCM monitors an input from the hazard switch and receives a hard-wired analog input from the switch. The BCM reads and responds to this input by energizing or de-energizing the right and left park lamp feed circuits through internal HSD units and by sending an electronic confirmation message to the IC over the CAN data bus, which controls the hazard light indicators as appropriate.
- **Headlamp Washer Control** - On vehicles equipped with headlamp washers, the BCM controls a relay in the Power distribution Center (PDC) based on electronic messages received over the Can data bus.
- **Ignition On and Ignition Accessory/On Relay Control** - The BCM monitors electronic **ignition switch status** messages received over the CAN bus from the RF hub and a hard-wired input from the ignition switch on the instrument panel, and provides high side driver outputs to control both the ignition ON and ignition ACCESSORY/ON relays in the Power Distribution Center (PDC) as appropriate.
- **Interior Lamp Load Shedding** - The BCM provides a battery saver feature which will automatically turn OFF all interior lamps if they remain ON after a timed interval of about eight minutes.
- **Interior Lighting Control** - The BCM monitors electronic messages and hard-wired inputs from the

interior lighting switch, the door ajar switches, the liftgate ajar, and liftgate flip-up glass ajar switches (where applicable), the reading lamp switches and the RF hub to provide courtesy lamp control. This includes support for timed illuminated entry with theater-style fade-to-OFF and courtesy illumination DEFEAT features.

- **Local Interface Network Master Module** - The BCM is the master module for the LIN data bus. In this role it gathers information from the compass sensor, and the Intelligent Battery Sensor (IBS), then either acts on that information directly or places electronic messages on the CAN data bus for use by other modules
- **Power Inverter Support** - The BCM monitors a hard-wired input from the power inverter to determine the inverter status, then transmits electronic **inverter status** messages to other electronic modules in the vehicle over the CAN data bus.
- **Power Lock System Control** - The BCM monitors inputs from the power lock switches and the RF hub to provide control of the power lock motors through high side and low side driver outputs. This includes support for rolling door locks (also known as automatic door locks), automatic door unlock, and a door lock inhibit mode.
- **Remote Radio Switch Support** - The BCM receives electronic message inputs from the remote radio switches on the steering wheel over the CAN data bus, then provides electronic **radio request** messages over the CAN data bus to support the remote radio switch function.
- **Remote Start System Support** - The BCM receives electronic message inputs from the RF hub and then displays the appropriate remote start system textual reminder messages to the vehicle operator within the EVIC display.
- **Shipping Mode** - The new Chrysler Telematics Platform (CTP) vehicles no longer have a IOD fuse to use when transporting or storing for a long period of time. The BCM has a mode that takes the place of pulling the IOD fuse called **"Shipping Mode"** that is easily enabled or disabled.
- **Steering Wheel Switch Support** - The SCM receives electronic message inputs from the steering wheel switches on the steering wheel over the CAN data bus to control and configure many of the EVIC displays and functions.
- **Vehicle Theft Security System Control** - The BCM monitors inputs from the door ajar switches, and the RF hub, on vehicles so equipped. The intrusion module provides electronic **horn** and **lighting request** messages to the BCM for the appropriate VTSS alarm output features.
- **Washer Fluid Level** - The continuously monitors the washer fluid level sensor through a hard-wired input to monitor washer fluid level. the BCM transmits an electronic message over the Can data bus to Instrument Cluster (IC) to illuminate the Low Washer Fluid indicator based on the input signal received from the fluid level sensor.

The BCM stores and compares vehicle configuration data with other Electronic Control Units (ECU) in the vehicle. This process is referred to as PRogramming Of Configuration of Systems Integrated (PROCSI) (also known as PROXI). If a configuration mismatch is detected, the BCM sets a Diagnostic Trouble Code (DTC). A configuration mismatch will require the performance of a Restore BCM PROXI Configuration routine, or a PROXI Configuration Alignment routine using a diagnostic scan tool.

The BCM uses On-Board Diagnostics (OBD) to monitor all of the systems and circuits it controls, then sets active and stored Diagnostic Trouble Codes (DTC) for any monitored system faults it detects. The BCM will also send electronic message requests to the Instrument Cluster (IC) (also known as the Instrument Panel Cluster/IPC) for the display of certain textual warning messages related to some detected system conditions or

faults.

The hard wired inputs and outputs of the BCM may be diagnosed using conventional diagnostic tools and procedures. Refer to the appropriate wiring information. However, conventional diagnostic methods will not prove conclusive in the diagnosis of the BCM electronic controls or the communication between modules and other devices that provide some features of the BCM-controlled systems. The most reliable, efficient and accurate means to diagnose the BCM or the electronic controls and communication related to BCM-controlled systems operation requires the use of a diagnostic scan tool. Refer to the appropriate diagnostic information.

BATTERY SAVER MODE/BATTERY SAVER ON MESSAGE - IF EQUIPPED

When the "Battery Saver Mode" or "Battery Saver On" message is displayed, the vehicle will turn off certain electrical functions to reduce battery energy consumption. This will occur during periods when the battery is not being adequately charged. During this time, the following features (if equipped) may be turned off or will operate at a reduced power level: heated seats and heated steering wheel, heated or cooled cup-holder, rear defroster and heated mirrors, heating and air conditioning, power inverter, audio and telematics system. This condition is temporary and recoverable.

DIAGNOSIS AND TESTING

DIAGNOSIS AND TESTING - BODY CONTROL MODULE

WARNING: To avoid serious or fatal injury on vehicles equipped with airbags, disable the Supplemental Restraint System (SRS) before attempting any steering wheel, steering column, airbag, Occupant Classification System (OCS), seat belt tensioner, impact sensor or instrument panel component diagnosis or service. Disconnect and isolate the battery negative (ground) cable, then wait two minutes for the system capacitor to discharge before performing further diagnosis or service. This is the only sure way to disable the SRS. Failure to follow these instructions may result in accidental airbag deployment.

The hard wired inputs and outputs of the Body Control Module (BCM) may be diagnosed using conventional diagnostic tools and procedures. Refer to the appropriate wiring information. The wiring information includes wiring diagrams, proper wire and connector repair procedures, details of wire harness routing and retention, connector pin out information and location views for the various wire harness connectors, splices and grounds.

However, conventional diagnostic methods will not prove conclusive in the diagnosis of the BCM electronic controls or the communication between modules and other devices that provide some features of the BCM-controlled systems. The most reliable, efficient and accurate means to diagnose the BCM or the electronic controls and communication related to BCM-controlled systems operation requires the use of a diagnostic scan tool. Refer to **DIAGNOSIS AND TESTING** .

REMOVAL

REMOVAL

WARNING: To avoid serious or fatal injury on vehicles equipped with airbags, disable the Supplemental Restraint System (SRS) before attempting any steering wheel, steering column, airbag, Occupant Classification System (OCS), seat belt tensioner, impact sensor or instrument panel component diagnosis or service. Disconnect and isolate the battery negative (ground) cable, then wait two minutes for the system capacitor to discharge before performing further diagnosis or service. This is the only sure way to disable the SRS. Failure to follow these instructions may result in accidental airbag deployment.

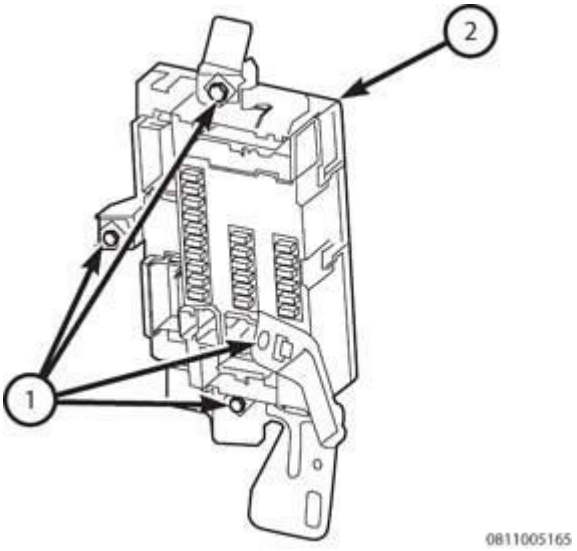

Fig. 15: Identifying Body Control Module (BCM) & Integral Receptacles
Courtesy of CHRYSLER GROUP, LLC

1. Disconnect and isolate the battery negative cable.
2. Remove the knee blocker cover from the instrument panel. Refer to **COVER, STEERING COLUMN OPENING, REMOVAL** .
3. Remove the lower left side A-Pillar extension trim.
4. Disconnect up to eight wire harness connectors from the connector receptacles of the Body Control Module (BCM).
5. Remove the four screws (1) that secure the yoke-like BCM mounting brackets to the instrument panel support structure outboard of the steering column.
6. Remove the BCM and mounting brackets from the instrument panel as a unit.
7. Remove the four screws that secure the BCM to the mounting brackets (2).
8. Unsnap and remove the BCM from the mounting brackets.

INSTALLATION

INSTALLATION

WARNING: To avoid serious or fatal injury on vehicles equipped with airbags, disable the Supplemental Restraint System (SRS) before attempting any steering wheel, steering column, airbag, Occupant Classification System (OCS), seat belt tensioner, impact sensor or instrument panel component diagnosis or service. Disconnect and isolate the battery negative (ground) cable, then wait two minutes for the system capacitor to discharge before performing further diagnosis or service. This is the only sure way to disable the SRS. Failure to follow these instructions may result in accidental airbag deployment.

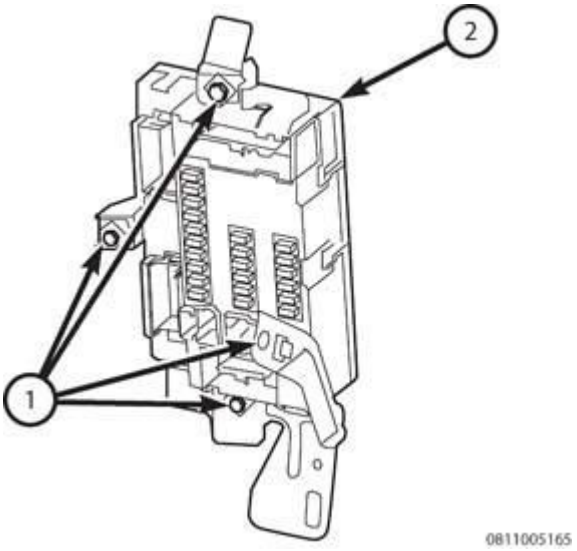

Fig. 16: Identifying Body Control Module (BCM) & Integral Receptacles
Courtesy of CHRYSLER GROUP, LLC

1. Snap the Body Control Module (BCM) (2) into the mounting brackets.
2. Install and tighten the screws (1) that secure the BCM to the mounting brackets. Tighten the screws to 2.5 N.m (30 in. lbs.).
3. Position the BCM and the yoke-like BCM mounting brackets (4) to the instrument panel support structure outboard of the steering column as a unit.
4. Install and tighten the screws that secure the BCM mounting bracket to the instrument panel support structure. Tighten the screws to 2.5 N.m (30 in. lbs.).
5. Reconnect up to eight wire harness connectors to the connector receptacles of the BCM. Six integral connector receptacles are located on the rearward facing surface of the BCM housing and two are on the forward facing surface.
6. Reinstall the steering column opening cover onto the instrument panel. Refer to **COVER, STEERING COLUMN OPENING, INSTALLATION** .
7. Reconnect the battery negative cable.
8. Perform BCM module programming with the scan tool. Refer to **STANDARD PROCEDURE**.

NOTE: If this Electronic Control Unit (ECU) is being replaced with a new unit, a

diagnostic scan tool MUST be used to align the PROXI configuration data into the new ECU. Follow the routine outlined in the diagnostic scan tool for PROXI Configuration Alignment under Body Control Module (BCM) Miscellaneous Functions menu.

MODULE, COMBINED REAR VIEW MIRROR

DESCRIPTION

DESCRIPTION

The Combined Rear View Multiple Mirror Module (CRVV) is an available factory installed component on this vehicle. The Internal Electrochromatic Mirror feature automatically changes reflectance of the internal mirror to provide maximum nighttime vision, while giving relief from glare caused by headlights from the rear during night driving. This feature shall function normally in any case of (Remote Starts, StopStart). The CRVV combines the following modules and items:

- Electro-Mechanical Mirror Module (EMCC).
- Compass Module. **Note:** If the radio module supports dead-reckoning, stand-alone compass module will not be present on the vehicle.
- Auto High Beam Features.
- Two hard wired telematic microphones integral to the housing.

The CRVMM is secured to the same mounting button on the inside of the windshield glass and in the same manner that is used to mount the standard equipment mirrors.

OPERATION

OPERATION

Electrochromic Inside Rear View Mirror - Refer to **MIRROR, AUTOMATIC DAY AND NIGHT, DESCRIPTION** for description and operation characteristics of the EM mirror assembly.

Compass Module - Refer to **MODULE, COMPASS, DESCRIPTION** for a description and operation of the Compass Module.

Auto High Beam Module (AHBM) - The AHBM is integral to the Combined Rear View mirror Module (CRVMM). For description and operation of the Smart Beam lighting system, refer to **OPERATION** .

REMOVAL

REMOVAL

Refer to **MIRROR, REARVIEW, REMOVAL** for removal of the Combined Rearview Mirror Module (CRVMM).

INSTALLATION

INSTALLATION

Refer to **MIRROR, REARVIEW, INSTALLATION** for installation of the Combined Reaview Mirror Module.

MODULE, COMFORT SEAT AND WHEEL

DESCRIPTION

DESCRIPTION

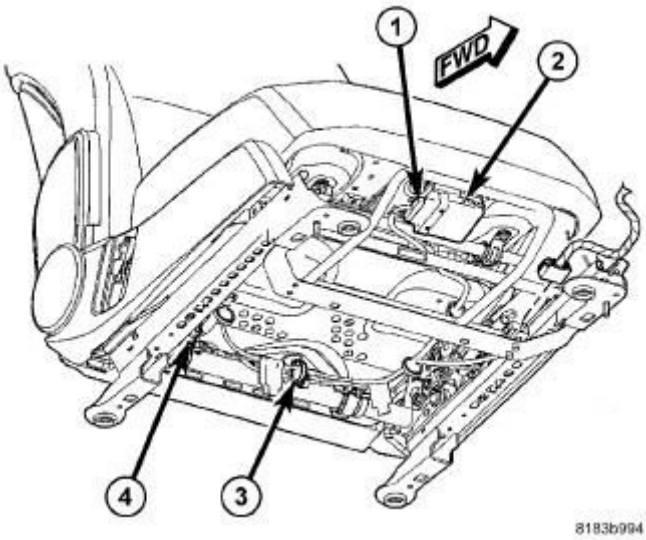

Fig. 17: Locating Heated Seat Module
Courtesy of CHRYSLER GROUP, LLC

The Comfort Seat and Wheel Module (CSWM) (also known as the Heated Seat Module) is located under the driver front seat. It has a single electrical connector (1) and a push pin style retainer that secures it to the seat pan (4). The module can be accessed from under the Driver seat with the seat in the full back and up position.

The CSWM is a 125 kBd CAN-I controller providing outputs to the power seats, heated seat pads, heated steering wheel, and ventilating up to 2 seats.

The CSWM is a microprocessor designed to use the Local Interface Network (LIN) data bus messages from the instrument cluster, sometimes referred to as the Cab Compartment Node (CCN). The CCN receives inputs from the heated seat switches and in turn signals the heated seat module to operate the heated seat elements for both front seats.

Heated Seats - The CSWM directly provides power to the seat heating elements in the seat cushions and backs for seat heating. A thermistor sensor feedback from each seat heating elements to the CSWM regulates the

heater outputs to prevent any seat temperature to rise above set points. Seat heating has 2 selectable heat settings which are HI and LO. Depending on thermistor reading, the CSWM will start the heater output by adjusting the PWM heat level according to the calibration table.

Vented Seats - The CSWM vents the two front seats by providing variable analog voltages driving the external blowers in the seats. The seat venting has two selectable speeds for the fans. For seat venting, each press of the switch button will cause the seat to change venting modes. The CSWM will turn on the vented seats only with the engine running

Heated Steering Wheel - The CSWM directly provides power to the steering wheel heating element. The heated steering wheel is an option only available with at least the presence of front heated seats. During normal operation, the CSWM will switch on the power for the heated wheel only if the engine is running. A thermistor sensor feedback from the steering wheel heating element via the CAN bus to the CSWM regulates the heater output to prevent the wheel temperature to rise above the maximum threshold temperature set point.

OPERATION

OPERATION

The heated seat module (also known as the Custom Seat and Wheel Module - CSWM) operates on fused battery current received from the ignition switch. The module is grounded to the body at all times through the electrical connector. Inputs to the module include Local Interface Network (LIN) data bus messages and standard hardwired 12 volt power and ground. In response to the LIN inputs the heated seat module will control the battery current to the appropriate heated seat elements.

When a heated seat switch LIN data bus signal is received by the heated seat module, the module energizes the selected heated seat element. The Low heat set point is about 38° C (100.4° F), and the High heat set point is about 42° C (107.6° F).

The CSWM will automatically transition the output from high to low after a maximum period of 60 minutes has elapsed. The CSWM will automatically transition the output from low to off after a maximum period of 45 minutes has elapsed.

In addition to operating the heated seat elements, the heated seat module sends LED illumination messages to the instrument cluster, sometimes referred to as the Cab Compartment Node (CCN) via the LIN data bus. The CCN then sends the LED illumination message to the accessory switch bank so that the appropriate LEDs are illuminated for any given heating level. Pressing the switch once will select high-level heating. Pressing the switch a second time will select low-level heating. Pressing the switch a third time will shut the heating elements off.

If the heated seat module detects a heated seat element OPEN or SHORT circuit, it will record and store the appropriate Diagnostic Trouble Code (DTC).

Driver and Passenger Seat Heat Systems

- The element consists of a cushion element connected in parallel with a back element.
- The seat cushion has a thermistor to provide feedback to the CSWM.

- The seat cushion and seat back has a thermostat to automatically open the feed to the heated seat system.
- The heated seat cushion and seat back have a thermostat to automatically open the feed to turn the heated seat system off if the temperature reaches or exceeds 135 °F (+/- 9 ° F).

- Vented Seats - Refer to **OPERATION** .
- Heated Seats - Refer to **OPERATION** .
- Heated Steering Wheel - Refer to **OPERATION** .

If the CSWM detects a heated seat element OPEN or SHORT circuit, it will record and store the appropriate diagnostic trouble code (DTC).

DIAGNOSIS AND TESTING

DIAGNOSIS AND TESTING - HEATED SEAT MODULE

In order to obtain conclusive testing, the heated seat system and the Local Interface Network (LIN) data bus circuit must be checked. **Any diagnosis of the heated seat system should begin with, the use of a scan tool and the appropriate diagnostic service information.**

Refer to the appropriate wiring information for complete circuit schematic or connector pin-out information.

NOTE: Vehicles equipped with the heated seat option utilize a low voltage cut-off feature. This feature turns off power to the heated seat system anytime vehicle voltage is below 11.7v or above 15.5v. Be certain to check the vehicle electrical system for proper voltage anytime the power seat system appears inoperative.

Before any testing of the heated seat system is attempted, the battery should be fully-charged.

REMOVAL

REMOVAL

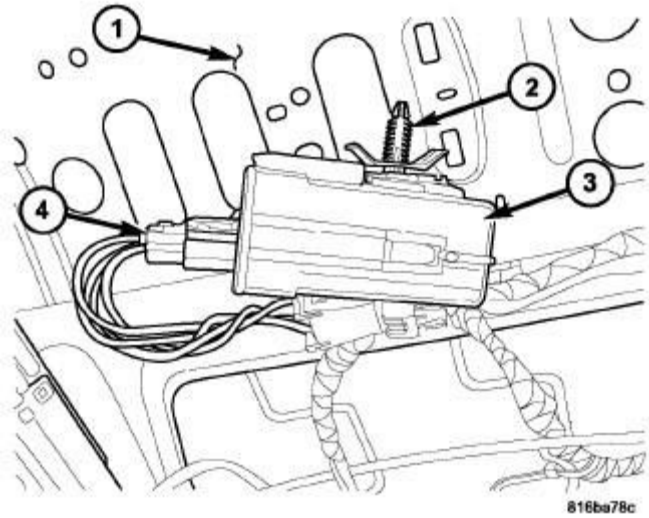

Fig. 18: Locating Heated Seat Module
Courtesy of CHRYSLER GROUP, LLC

CAUTION: The Heated Seat Module mounting tab can be damaged during module removal and installation. Use care to properly align tab to prevent binding that could result in tab breakage.

1. Position the driver front seat to the full rearward position.
2. Disconnect and isolate the battery negative cable.
3. Disconnect the wire harness connector (4) from the heated seat module (3).
4. Unsnap the heated seat module retaining tab (2) from the seat pan (1).
5. Remove the heated seat module (3) from the vehicle.

INSTALLATION

INSTALLATION

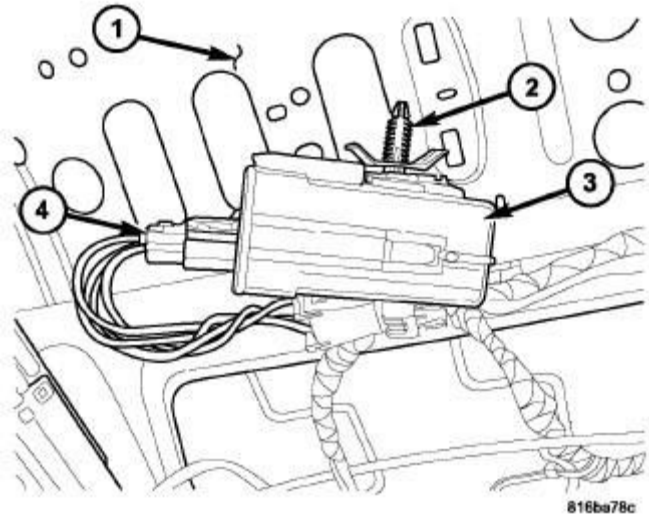

Fig. 19: Locating Heated Seat Module
Courtesy of CHRYSLER GROUP, LLC

CAUTION: The Heated Seat Module mounting tab can be damaged during module removal and installation. Use care to properly align tab to prevent binding that could result in tab breakage.

1. Install the heated seat module (3) into the vehicle.
2. Position the retaining tab (2) with the mounting hole in the seat pan (1). Firmly apply even pressure to the module (3) until the mounting tab is fully seated.
3. Connect the wire harness connector (4) to the heated seat module (3).
4. Connect the battery negative cable.
5. Check for proper heated seat system operation.

If this Electronic Control Unit (ECU) is being replaced with a new unit, a diagnostic scan tool MUST be used to align the PROXI configuration data into the new ECU. Follow the routine outlined in the diagnostic scan tool for PROXI Configuration Alignment under Body Control Module (BCM) Miscellaneous Functions menu.

MODULE, COMPASS

DESCRIPTION

DESCRIPTION

On vehicles equipped with the Combined Rear View Mirror Module (CRVMM), the Remote Compass Module (RCM) is located internal to the CRVMM. The RCM is only serviced by replacing the CRVMM assembly.

Some models "dead reckoning" navigation system. The RCM is located internally to the radio with this option.

If the compass position sensor (Remote Compass Module) is inoperative and requires replacement, refer to **MIRROR, REARVIEW, REMOVAL** for models equipped with a CRVMM assembly.

If the compass position sensor (Remote Compass Module) is inoperative and requires replacement, refer to **RADIO, REMOVAL** .

MODULE, DOOR

DESCRIPTION

DESCRIPTION

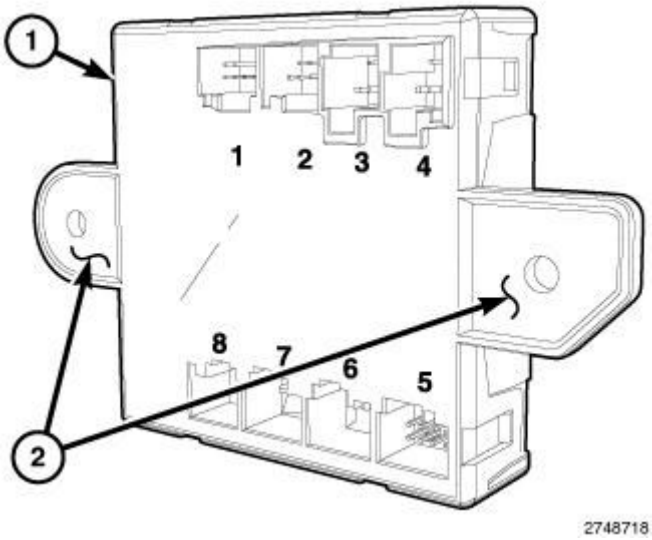

Fig. 20: Identifying Front Door Control Module
Courtesy of CHRYSLER GROUP, LLC

This vehicle can be equipped with two electronic front door control modules (1) (also known as a Driver Door Module/DDM, a Passenger Door Module/PDM or Front Door Multiplex/MUX Modules), one each on both the driver and passenger front doors. Each door control module is concealed behind the front door trim panel where it is secured through two integral mounting tabs (2) to the door hardware module carrier by two screws. The front door control modules are located in the upper front corner of the front door hardware carriers, just below the mirror flag area of the front door.

Each door control module contains a microprocessor and is connected to the various switches on that door. In the case of the driver side module, it communicates with some switches over a Local Interface Network (LIN) data bus. Both the driver and passenger side module also receive various hard wired switch inputs and provide numerous hard wired outputs to various devices located on their respective doors. In addition, both front door control modules communicate with each other and with other electronic modules in the vehicle over the Controller Area Network (CAN) Interior High Speed (IHS) data bus system.

Concealed and protected within the molded plastic door control module housing is the printed circuit board and the other electronic circuitry of the module. The front door control modules are connected to the vehicle electrical system through up to eight connector receptacles that are integral to the module housing.

A door control module cannot be adjusted or repaired and, if damaged or ineffective, it must be replaced. The door control module software is flash programmable.

OPERATION

OPERATION

The microprocessor-based electronic front door control modules (also known as a Driver Door Module/DDM, a Passenger Door Module/PDM or Front Door Multiplex/MUX Modules) contain logic circuits that monitor various hard wired low current, multiplexed inputs from the power window, power lock, power mirror and memory switches on their respective door. They also receive Controller Area Network (CAN) Interior High Speed (IHS) data bus electronic message-based external inputs from the opposing front door control module as well as from other electronic modules in the vehicle. The front door control modules also monitor hard wired power window motor Hall effect sensors and memory mirror position sensor inputs.

In addition, the front door control module on the driver side front door receives electronic message inputs from the driver side front door switch module over the Local Interface Network (LIN) data bus network. The program logic within the front door control module allows the microprocessor to prioritize all of these inputs and determine the tasks it needs to perform. These tasks are then completed either by controlling hard wired outputs to the various motors, actuators or lamps on its own or the rear doors, or by sending electronic message requests over the CAN-IHS bus to the appropriate electronic module in the vehicle.

The front door control modules are powered by a fused B(+) circuit and are grounded at all times so that they can operate regardless of the ignition switch position. Both driver and passenger door control modules provide active and stored Diagnostic Trouble Codes (DTC) through On-Board Diagnostics (OBD) and communicate with a diagnostic scan tool using the CAN data bus.

The hard wired circuits between components related to the electronic front door control modules (also known as a Driver Door Module/DDM, a Passenger Door Module/PDM or Front Door Multiplex/MUX Modules) may be diagnosed using conventional diagnostic tools and procedures. Refer to the appropriate wiring information. The wiring information includes wiring diagrams, proper wire and connector repair procedures, details of wire harness routing and retention, connector pin-out information and location views for the various wire harness connectors, splices and grounds.

However, conventional diagnostic methods will not prove conclusive in the diagnosis of the front door control modules or the electronic controls and communication between modules and other devices that provide some features of the door modules. The most reliable, efficient, and accurate means to diagnose the front door control modules or the electronic controls and communication related to module operation requires the use of a diagnostic scan tool. Refer to the appropriate diagnostic information.

DIAGNOSIS AND TESTING

DIAGNOSIS AND TESTING - DOOR MODULES

The hard wired circuits between components related to the electronic front door control modules (also known as a Driver Door Module/DDM, a Passenger Door Module/PDM or Front Door Multiplex/MUX Modules) may be diagnosed using conventional diagnostic tools and procedures. Refer to the appropriate wiring information. The wiring information includes wiring diagrams, proper wire and connector repair procedures, details of wire harness routing and retention, connector pin-out information and location views for the various wire harness connectors, splices and grounds.

However, conventional diagnostic methods will not prove conclusive in the diagnosis of the front door control modules or the electronic controls and communication between modules and other devices that provide some features of the door modules. The most reliable, efficient, and accurate means to diagnose the front door control modules or the electronic controls and communication related to module operation requires the use of a diagnostic scan tool. Refer to the appropriate diagnostic information.

REMOVAL

REMOVAL

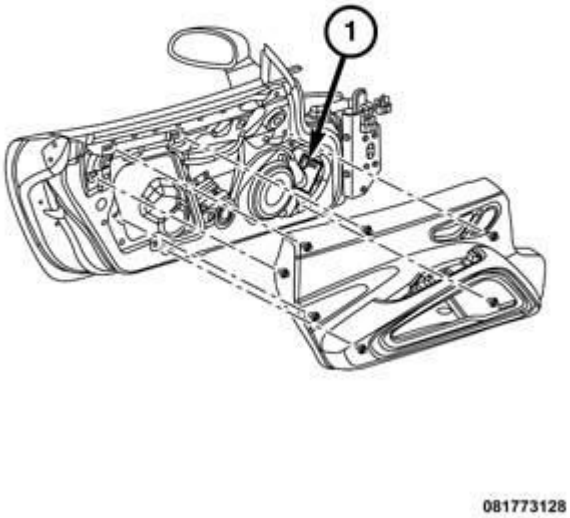

Fig. 21: Driver Door Module
Courtesy of CHRYSLER GROUP, LLC

1. Disconnect and isolate the battery negative cable.
2. Remove the lower trim panel from the inside of the front door to access the Driver Door Module (1) (DDM). Refer to **PANEL, DOOR TRIM, REMOVAL** .

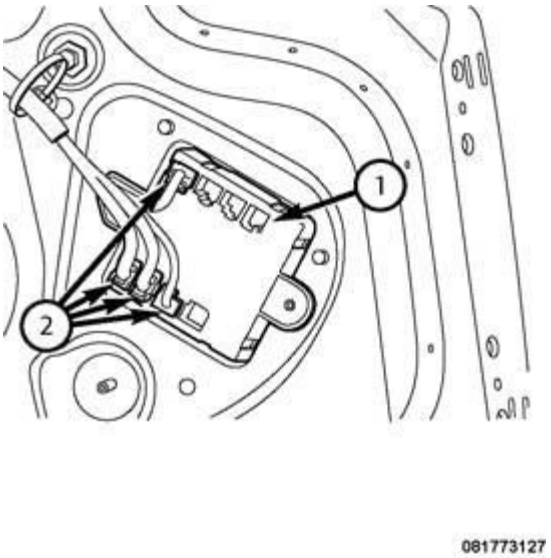

Fig. 22: Driver Door Module & Connectors
Courtesy of CHRYSLER GROUP, LLC

3. Disconnect each of the electrical connectors (2) from the connector receptacles of the door control module.

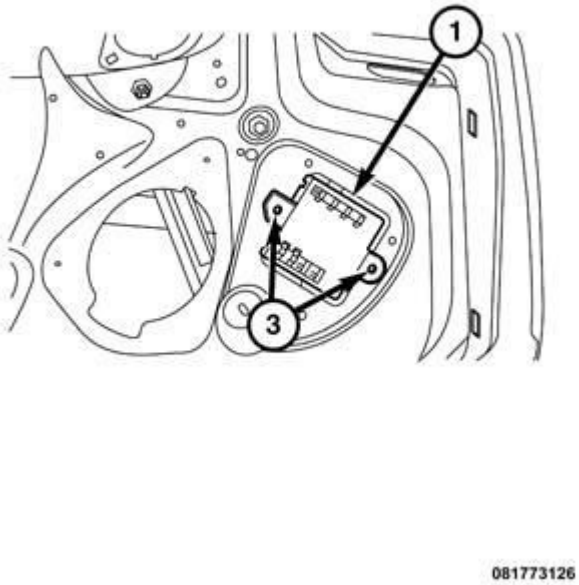

Fig. 23: Driver Door Module & Fasteners
Courtesy of CHRYSLER GROUP, LLC

4. Remove the two screws (3) that secure the door control module to the front door hardware module carrier (1).

5. Remove the door control module from the door hardware module carrier.

INSTALLATION

INSTALLATION

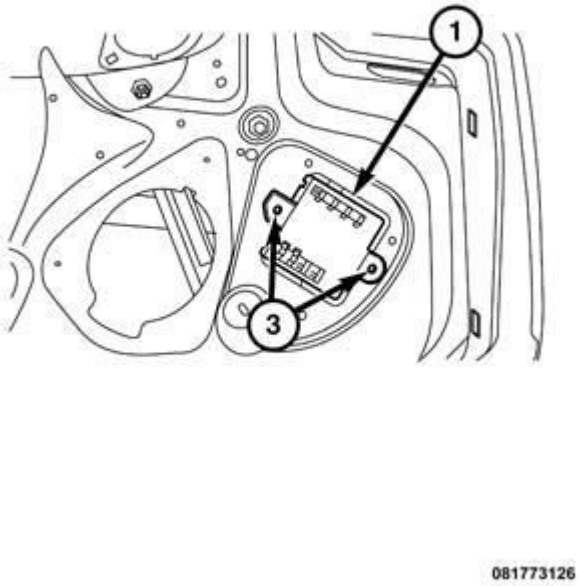

Fig. 24: Driver Door Module & Fasteners
Courtesy of CHRYSLER GROUP, LLC

1. Position the door control module to the front door hardware module carrier.
2. Install and tighten the two screws (3) that secure the door control module to the front door hardware module carrier. Tighten the screws securely.

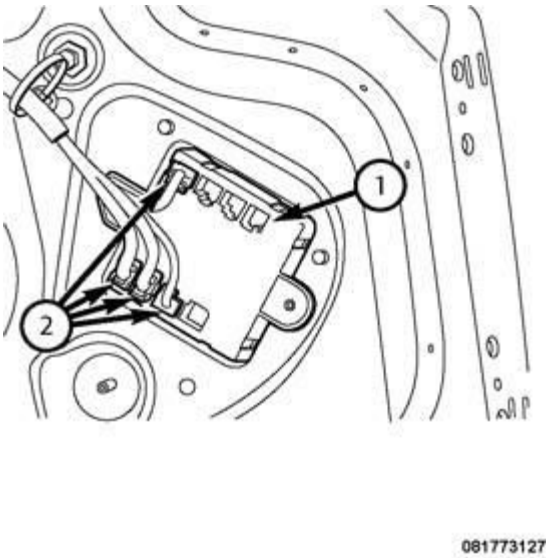

Fig. 25: Driver Door Module & Connectors
Courtesy of CHRYSLER GROUP, LLC

3. Reconnect each of the electrical connectors (2) to the connector receptacles of the door control module (1).

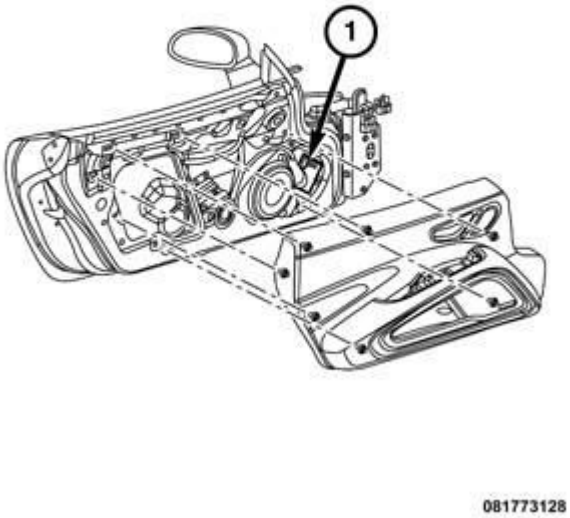

Fig. 26: Driver Door Module
Courtesy of CHRYSLER GROUP, LLC

4. With the DDM (1) securely in place and reconnect, install the lower trim panel to the inside of the front door. Refer to **PANEL, DOOR TRIM, INSTALLATION** .

5. Reconnect the battery negative cable.
6. Perform the manual relearn procedure. Refer to **STANDARD PROCEDURE** .

MODULE, DRIVETRAIN CONTROL

DESCRIPTION

DESCRIPTION

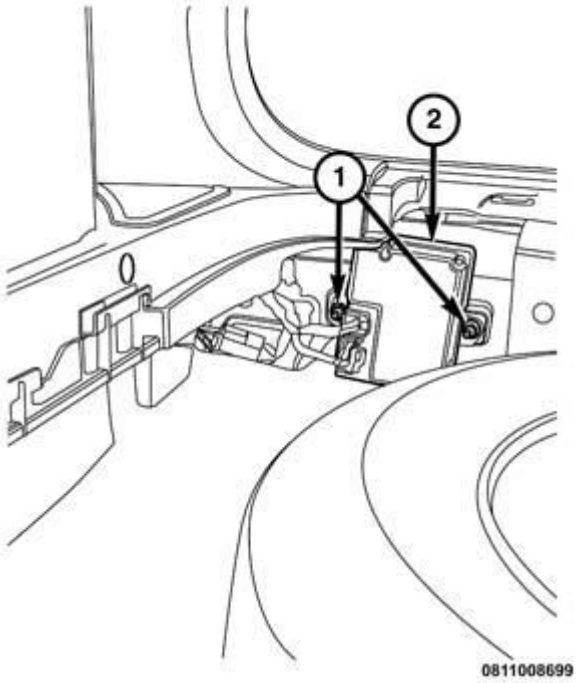

Fig. 27: Identifying Drivetrain Control Module (DTCM) & Nuts
Courtesy of CHRYSLER GROUP, LLC

The DriveTrain Control Module (DTCM) (2) is located in the right rear corner of the vehicle, under the rear sill plate. It communicates with other systems over the CAN bus.

REMOVAL

REMOVAL

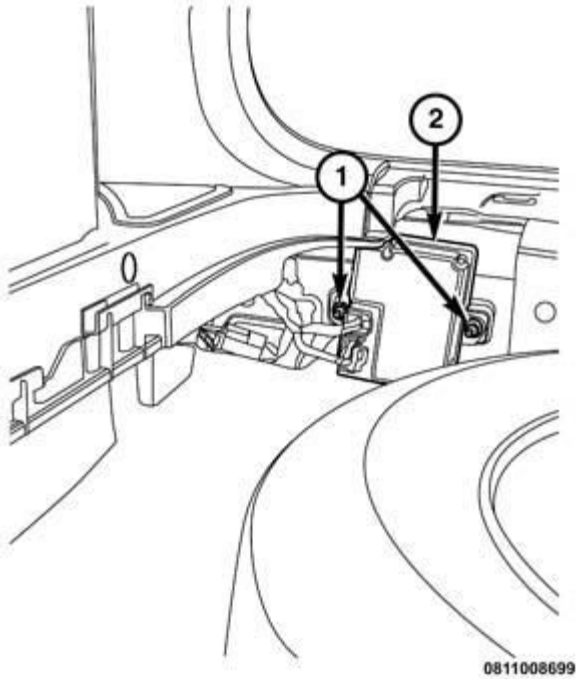

Fig. 28: Identifying Drivetrain Control Module (DTCM) & Nuts
Courtesy of CHRYSLER GROUP, LLC

1. Open the liftgate.
2. Disconnect the battery negative cable.
3. Remove the liftgate sill plate. Refer to **PLATE, SCUFF, DOOR SILL, REMOVAL** .
4. Remove the load floor. Refer to **LOAD FLOOR, CARGO, REMOVAL** .
5. Disconnect the electrical connectors.
6. Remove the two nuts (1) holding the module in place.
7. Remove the Drive Train Control Module (DTCM).

INSTALLATION

INSTALLATION

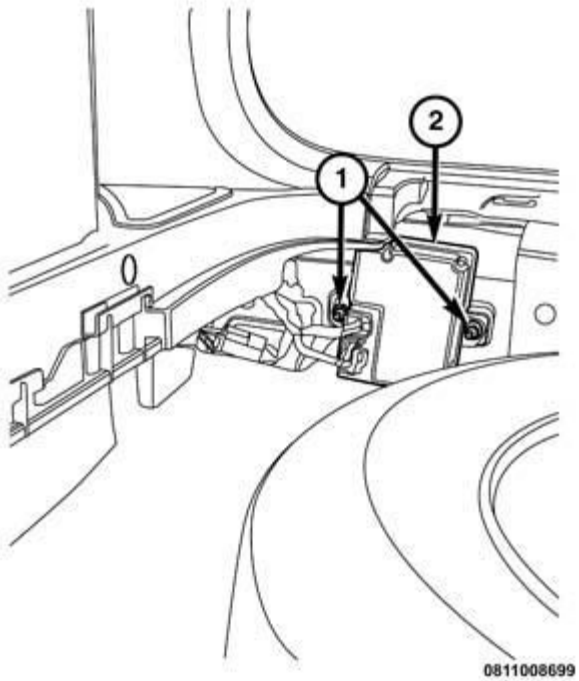

Fig. 29: Identifying Drivetrain Control Module (DTCM) & Nuts
Courtesy of CHRYSLER GROUP, LLC

1. Install the DriveTrain Control Module (DTCM) (2) to the mounting studs.
2. Install the mounting nuts (1) and tighten to 8 N.m (71 in. lbs.).
3. Connect the electrical connectors.
4. Install the load floor. Refer to **LOAD FLOOR, CARGO, INSTALLATION** .
5. Install the liftgate sill plate. Refer to **PLATE, SCUFF, DOOR SILL, INSTALLATION** .
6. Connect the battery negative cable.
7. Verify correct operation.

MODULE, ELECTRIC PARK BRAKE

DESCRIPTION

DESCRIPTION

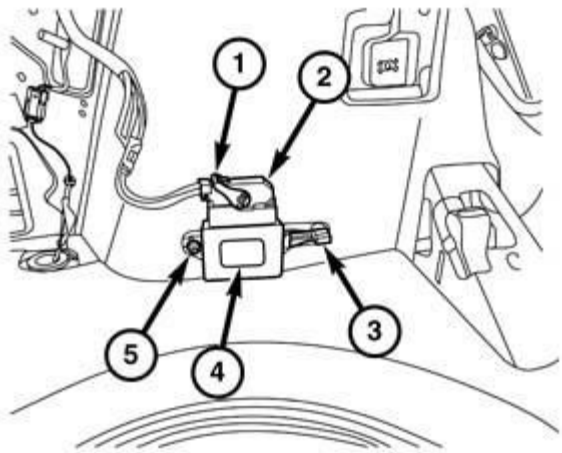

0508007142

Fig. 30: Identifying Electronic Park Brake Module
Courtesy of CHRYSLER GROUP, LLC

The Electric Park Brake (EPB) module is located in the back left side of the interior near the spare tire and is attached by a slide locking retainer and fastener.

OPERATION

OPERATION

The Electric Park Brake module receives 12 volt constant power and 12 volt key on ignition signal power. It controls the on/off output command for the Electric Park Brake (EPB), the electromechanical motor gear unit that drives both rear brake caliper pistons during park brake mode.

NOTE: Once the EPB is applied, it does not need 12 volts to maintain clamp load and cannot be manually released if voltage is lost.

Input to the EPB module for the on/off action is received from the EPB manual switch and a C-CAN line from the EVIC, Uconnect, ESC, and other controllers including the Scan Tool (For Service Mode).

The output of the module is controlled by the following normal conditions:

Manual Apply

- The EPB module will apply the parking brakes when the EPB switch is pulled and the vehicle is at a stop (Ignition On or Off). The EPB module can also apply the brakes while the vehicle is moving if the EPB switch is pulled to request a dynamic apply, where hydraulic braking is actuated via ESC control.

Manual Release

- EPB module will release the EPB when the EPB switch is pushed and the brake pedal is applied, **seat belt** is on with the ignition on.

Auto Park Brake

NOTE: This mode is shipped from the factory in "off" mode.

- The EPB will apply when the vehicle is moved into the "park" position or whenever the ignition is turned "off" with a manual transmission. This occurs when the driver selects this option from the Uconnect menu which commands the EPB module to apply the EPB.

Drive Away Release

- When in any drive gear, the EPB module will automatically release the EPB when throttle input and engine torque is detected.

Safe Hold

- If the EPB module detects that the vehicle is not secure (transmission not in park, door open, etc.) it will actuate the EPB. This is hard programmed into the module and is not able to be turned off.

Loss of Voltage

- EPB module is not able to manually release EPB when voltage is lost.

External Apply

- Other vehicle systems can request the EPB module to apply the EPB if necessary to secure vehicle.

Service Mode

- The EPB module can be commanded to retract the EPB (actuators) through the Uconnect (customer usable method) and through the Scan Tool.

NOTE: EPB fault light flashes continuously in service mode. Actuating the EPB switch will remove the vehicle from service mode.

CAUTION: If the electric park brake (EPB) switch is actuated with the caliper removed from the caliper bracket and still connected electrically, the EPB motor will fully extend causing damage to the caliper piston. Disconnect and isolate the negative battery cable before servicing any EPB component.

At any time, the EPB switch can be actuated. Depending on the speed of the vehicle when the EPB switch is

actuated, the EPB module will output different commands under the following conditions:

Static Apply (under 5 kph) - Actuates the EPB motors attached to the rear calipers.

Dynamic Apply (over 5 kph) - Actuates the hydraulic braking system.

EPB module fail-safe include that the EPB can be applied ignition off, EPB cannot be released with ignition off, brake pedal must be applied and **seat belt** must be on when releasing the EPB.

Fig. 31: Identifying Brake Warning And EPB Fault Lamp
Courtesy of CHRYSLER GROUP, LLC

EPB module illuminates the red BRAKE warning lamp when EPB is applied. EPB module faults are indicated through the amber EPB fault lamp and EVIC messages when present.

REMOVAL

REMOVAL

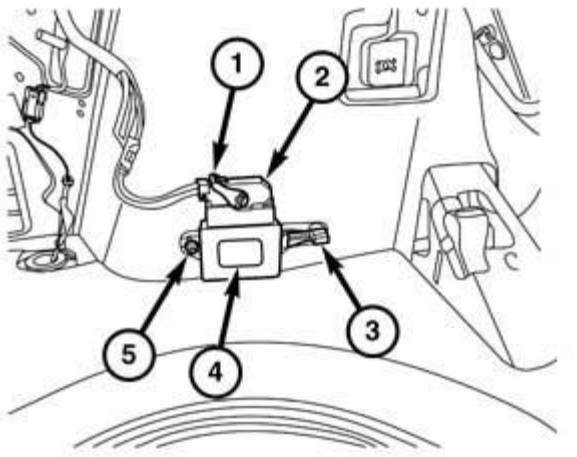

0508007142

Fig. 32: Identifying Electronic Park Brake Module
Courtesy of CHRYSLER GROUP, LLC

1. Disconnect negative (ground) cable from the battery and isolate it.
2. Remove the cargo load floor panel. Refer to **LOAD FLOOR, CARGO, REMOVAL** .
3. Push in on tab to release the lever (1) on the electrical connector (2) and disconnect from the EPB (Electric Park Brake) module (4).
4. Using a suitable tool, gently slide retainer (3) from stud.
5. Remove fastener (5) and remove the EPB module (4).

INSTALLATION

INSTALLATION

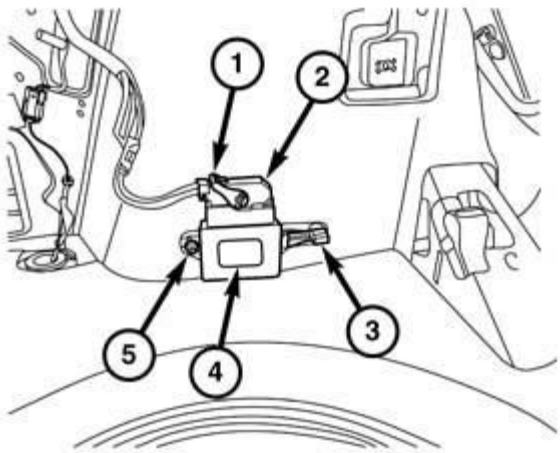

0508007142

Fig. 33: Identifying Electronic Park Brake Module
Courtesy of CHRYSLER GROUP, LLC

1. Position EPB (Electric Park Brake) module (4) onto mounting studs.
2. Install nut (5) and tighten to 6 N.m (53 in. lbs.).
3. Push retainer (3) onto stud.
4. Connect electrical connector (2) to the EPB module (4) and push the lever (1) down to lock into position.
5. Install the load floor cargo panel. Refer to **LOAD FLOOR, CARGO, INSTALLATION** .
6. Connect negative (ground) cable to the battery.
7. Perform PROXI configuration. Refer to **STANDARD PROCEDURE** .

MODULE, FORWARD FACING CAMERA

DESCRIPTION

DESCRIPTION

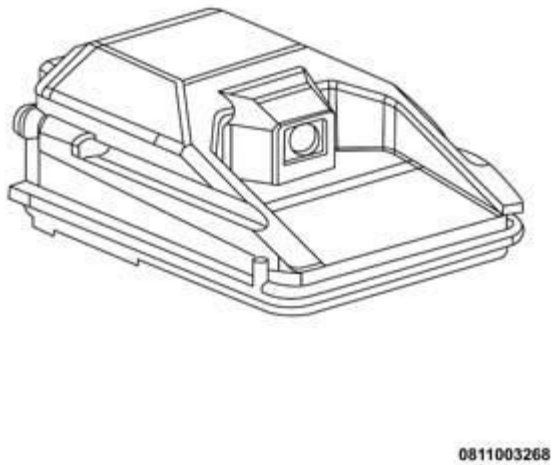

Fig. 34: Forward Facing Camera Module
Courtesy of CHRYSLER GROUP, LLC

The Forward Facing Camera Module (FFC) is a stand-alone monocular camera mounted to the inside interior of the front windshield, within the Combined Rear View Mirror Module (CRVMM) housing, that captures and processes video images. The camera will perform the following functions on this model:

- **Automatic High Beam Control (AHBC)**

  - Based on ambient situations, the AHBC feature will control the vehicle high-beam headlights automatically, relieving the driver of the manual operation of the high beam headlights. The AHBC feature automatically turns off the high beams when there is oncoming traffic, preceding traffic, presence of a village, high ambient lighting due to a town or twilight/dusk, when the vehicle driving speed to low, delay and fog.

- **Object detection for supporting data fusion (ACC+)**

  - The FFC acts as a secondary radar for the ACC system. The camera provides additional object, lane and environmental conditions for data fusion. The FFC will also perform redundancy checks with the ACC master radar to verify accurate detection.

- **Lane Departure Warning (LDW+)** - LDW+ utilizes camera-based machine vision sensor to detect and measure vehicle position within lane boundaries (when enabled). The system can be turned on of off with a single hard button on the Auxiliary Switch Bank Module (ASBM). The driver can configure the torque feedback amount and warning zone start point through the personalization settings in the radio. Three settings for each are provided.
- **Forward Collision Warning Plus (FCW+)** - The FFC in conjunction with the radar sensor is used to

detect whether the vehicle is approaching another vehicle or large obstacle in its path too rapidly and will warn/assist the driver in avoiding/mitigating the incident (when enabled). The driver has the ability to adjust the sensitivity and turn brake support on or off in the radio.

The camera and bracket are not adjustable or repairable and must be replaced if inoperable or damaged.

OPERATION

OPERATION

The Forward Facing Camera (FFC) is powered by a battery feed from the Power Distribution Center (PDC) so that it is only active when ignition is set to the run position.

Auto High Beam Control -

The FFC reports on the CAN C bus to the BCM for messages needed for the AHBC functionality, and for further detailed operating parameters of the AHBC system.

- Refer to **OPERATION** for further description and functionality of the smart beam system.

Adaptive Cruise Control Plus and Forward Collision Warning Plus (ACC+/FCW+) -

The FFC reports to the Adaptive Cruise Control (ACC) radar to create the enhanced ACC+ as well as the FCW+ operation. These components share a private CAN B bus where data from the FFC is sent to the ACC module for data fusion.

- Refer to **DESCRIPTION** for further description and functionality of the FCW+ system.
- Refer to **DESCRIPTION** for further ACC+ operation information.

Lane Departure Warning Plus (LDW+) -

The LDW+ feature uses the FFC to identify visible lane markings and to track lane boundaries. The FFC requests haptic responses from the Electric Power Steering (EPS) system when required.

- Refer to **DESCRIPTION** for further description and functionality of the LDW+ system.

The hard wired circuits between components related to the FFC system may be diagnosed using conventional diagnostic tools and procedures. Refer to the appropriate wiring information. The wiring information includes wiring diagrams, proper wire and connector repair procedures, details of wire harness routing and retention, connector pin out information and location views for the various wire harness connectors, splices and grounds. However, conventional diagnostic methods will not prove conclusive in the diagnosis of the FFC system or the electronic controls and communication between ECU and other devices that provide some features of this system. The most reliable, efficient and accurate means to diagnose the FFC and communication related to the FFC system operation requires the use of a diagnostic scan tool. Refer to the appropriate diagnostic information.

STANDARD PROCEDURE

FORWARD FACING CAMERA - CALIBRATION PROCEDURE

The Forward Facing Camera (FFC) Calibration need to be performed when the FFC and/or windshield has been replaced. Perform the following steps:

- Connect the scan tool and start the vehicle.
- Navigate to the "Misc Functions" menu under the FFC and place the camera in "In Plant Mode" with the scan tool.
- The screen will now prompt you to drive the vehicle for calibration. The vehicle needs to be driven at speeds of 65 km/h (40 mph) and in the straightest road condition possible. You need a lane with lines (dashed or solid) on both sides of the vehicle. This averages to roughly ten minutes of drive time, terrain permitting.
- After the camera learns the calibration, the scan tool FFC view will show calibrated.
- Return to the "Misc Functions" menu and exit "In Plant Mode." Service calibration DTCs should be in the stored status at this point.
- Clear those DTCs.

REMOVAL

REMOVAL

Fig. 35: Forward Facing Camera & Connector
Courtesy of CHRYSLER GROUP, LLC

1. Disconnect and isolate the negative battery cable.
2. Separate the rear view mirror trim covers to gain access to the Forward Facing Camera (FFC). Refer to

MIRROR, REARVIEW, REMOVAL .

3. Disconnect the electrical connector (1) from the Forward Facing Camera (2).
4. The Camera is attached to a bracket in a hook and rotate fashion. Rotate the camera clockwise to release from the bracket.

INSTALLATION

INSTALLATION

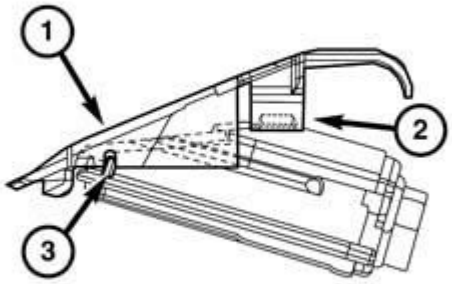

0811003749

Fig. 36: Forward Facing Camera Bracket, Tabs & Locks
Courtesy of CHRYSLER GROUP, LLC

1. Install the Forward Facing Camera to the bracket on the windshield. Position the FFC to the bracket attachment point (1) making sure that the alignment tabs are proper (2) and set the FFC in place until the bracket locks (3) engage.

Fig. 37: Forward Facing Camera & Connector
Courtesy of CHRYSLER GROUP, LLC

2. Connect the electrical connector (1) to the back of the Forward Facing Camera (2).
3. Assemble the rear view mirror covers into place. Refer to **MIRROR, REARVIEW, INSTALLATION** .
4. Connect the negative battery cable to the battery post.
5. Perform the Forward Facing Camera procedure. Refer to **MODULE, FORWARD FACING CAMERA, STANDARD PROCEDURE**.

MODULE, GLOW PLUG

DESCRIPTION

DESCRIPTION

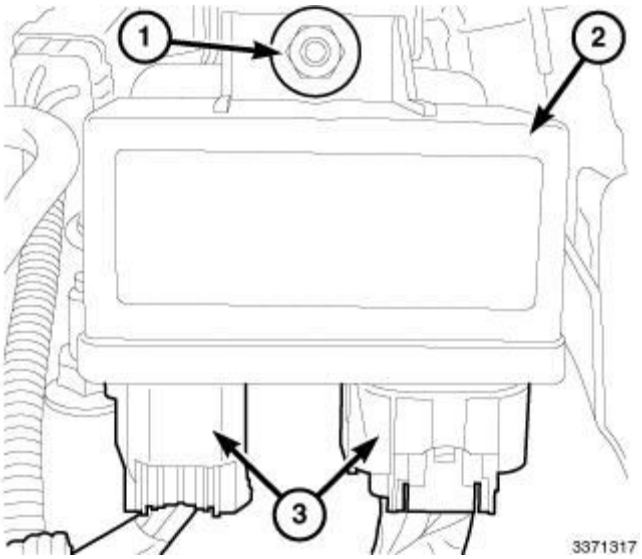

Fig. 38: Glow Plug Module & Connectors
Courtesy of CHRYSLER GROUP, LLC

The Glow Plug Module is located on the left side of the engine compartment, between the Powertrain Control Module (PCM) and the master cylinder.

OPERATION

OPERATION

When the ignition (key) switch is placed in the ON position, a signal is sent to the PCM relating current engine coolant temperature. This signal is sent from the engine coolant temperature sensor.

The glow plug control module receives information about the glow function from the engine control module. The start of glow plug operation, the period of glow plug operation, the actuation frequency and the pulse duty factor are therefore determined by the engine control module.

REMOVAL

REMOVAL

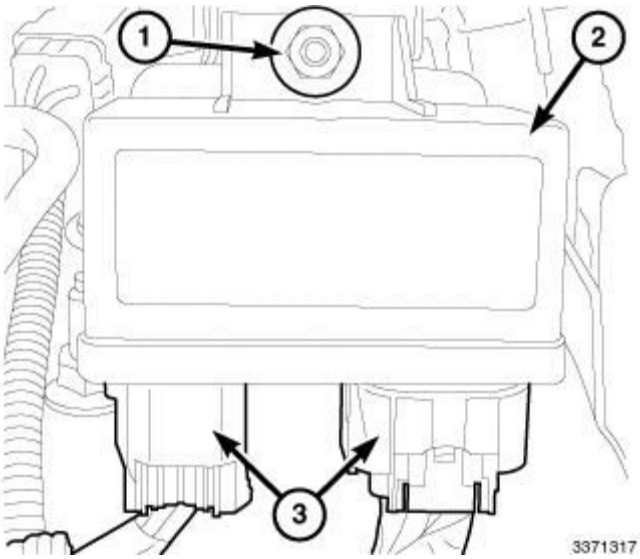

Fig. 39: Glow Plug Module & Connectors
Courtesy of CHRYSLER GROUP, LLC

1. Disconnect the negative battery cable.
2. Disconnect the two glow plug harness connector (3).
3. Remove the nut (1) and the glow plug module (2).

INSTALLATION

INSTALLATION

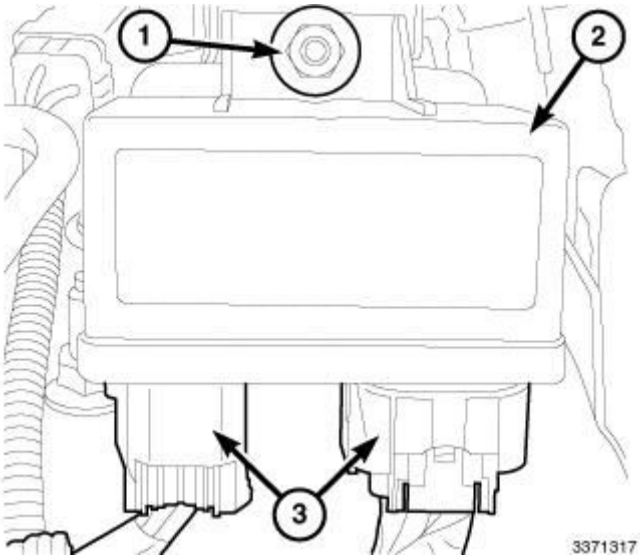

Fig. 40: Glow Plug Module & Connectors
Courtesy of CHRYSLER GROUP, LLC

1. Install the glow plug module (2) and securely tighten the retaining nut (1).

2. Connect the Glow Plug Module harness connector (3).
3. Connect negative battery cable.

MODULE, HEADLAMP LEVELING

DESCRIPTION

DESCRIPTION

Vehicles equipped with the optional headlamp leveling system are also equipped with an Automatic Headlamp Leveling Module (AHLM). The AHLM is located on a bracket behind the passenger side knee air bag, to the right of the HVAC unit.

This module works in conjunction with the front and rear axle (leveling) sensors, the headlamp leveling motors, and electronic message inputs received over the Controller Area Network (CAN) data bus from other electronic modules in the vehicle. The module provides automatic headlamp beam aim adjustment to compensate for changes in vehicle height caused by changes in vehicle loading, acceleration, deceleration, and YAW rate.

Concealed within the module housing is the circuitry of the module itself, which includes a microprocessor. The module is connected to the vehicle electrical system through an integral connector receptacle by a take out and connector of the headlamp and dash wire harness.

The AHLM cannot be adjusted or repaired and, if ineffective or damaged, the module must be replaced. The AHLM is Flash programmable.

OPERATION

OPERATION

The microprocessor in the Automatic Headlamp Leveling Module (AHLM) contains the logic circuits and controls all of the features of the headlamp leveling system. The AHLM uses On-Board Diagnostics (OBD) and communicates with other electronic modules and related components in the vehicle as well as with a diagnostic scan tool using the Controller Area Network (CAN) data bus. The AHLM is also a Local Interface Network (LIN) master node and uses this method of communication to communicate with the two stepper motors within each right and left front lamp unit.

The AHLM e microprocessor continuously monitors electronic message inputs from the Body Control Module (BCM). The AHLM also energizes or de-energizes the front and rear axle sensors as appropriate to monitor the vehicle height. When the axle sensors are energized, the AHLM monitors and evaluates the Pulse Width Modulated (PWM) return signals from those sensors.

The AHLM uses these inputs to determine vehicle speed, accelerator pedal position, vehicle yaw rate and ABS status. It then uses internal programming algorithms to compute the proper electronic message control outputs to provide over the LIN bus to the LIN slave headlamp leveling stepper motor to adjust the headlamp beams horizontally as required. The AHLM also continuously monitors return inputs from the leveling motor to confirm stepper motor responsiveness as well as the proper positioning of the headlamp beams.

The AHLM receives battery voltage on a fused ignition switch output (RUN) circuit, and is grounded at all times through a hard wired remote ground point. These connections allow the AHLM to operate only when the ignition switch is in the ON position. The AHLM also monitors all of the AHLM circuits and components, then sets active and stored Diagnostic Trouble Codes (DTC) for any monitored system faults it detects.

The hard wired circuits of the AHLM may be diagnosed using conventional diagnostic tools and procedures. Refer to the appropriate wiring information. However, conventional diagnostic methods will not prove conclusive in the diagnosis of the AHLM or the electronic controls or communication between modules and other devices that provide some features of the AHLM. The most reliable, efficient, and accurate means to diagnose the AHLM or the electronic controls and communication related to AHLM operation requires the use of a diagnostic scan tool. Refer to the appropriate diagnostic information.

DIAGNOSIS AND TESTING

DIAGNOSIS AND TESTING - HEADLAMP LEVELING

The hard wired circuits between components related to the headlamp leveling system and the Automatic Headlamp Leveling Module (AHLM) (also known as the Headlamp Leveling Module/HLM) may be diagnosed using conventional diagnostic tools and procedures. Refer to the appropriate wiring information. The wiring information includes wiring diagrams, proper wire and connector repair procedures, details of wire harness routing and retention, connector pin-out information and location views for the various wire harness connectors, splices and grounds.

However, conventional diagnostic methods will not prove conclusive in the diagnosis of the AHLM or the electronic controls and communication between modules and other devices that provide some features of the headlamp leveling system or the AHLM. The most reliable, efficient, and accurate means to diagnose the headlamp leveling system, the AHLM or the electronic controls and communication related to headlamp leveling or AHLM operation requires the use of a diagnostic scan tool. Refer to the appropriate diagnostic information.

STANDARD PROCEDURE

STANDARD PROCEDURE - AHLM CALIBRATION

NOTE: The following procedure is necessary and should be performed ONLY after an Automatic Headlamp Leveling Module (AHLM) is replaced with a new (uncalibrated) unit.

1. Before beginning, the vehicle should be empty with between 1/4 and 1/2 tank of fuel.
2. Perform a mechanical Front Lamp Alignment of the headlamps. Refer to **STANDARD PROCEDURE** .
3. Calibrate the AHLM. Follow the steps outlined in the diagnostic scan tool under the AHLM Electronic Control Unit (ECU), Miscellaneous Functions.

REMOVAL

REMOVAL

WARNING: To avoid serious or fatal injury when working on the High Intensity Discharge (HID) headlamp system, be certain to take the proper precautions. The headlamp switch must be in the OFF position. Disconnect and isolate the battery negative cable. There is a risk of fatal injury caused by contact with high voltage used in the HID headlamps. There is a risk of explosion or fire caused by highly flammable materials in the vicinity of damaged HID lighting elements. There is a risk of injury caused by exposure to Ultra Violet (UV) light, a risk of burns caused by high component operating temperatures, a risk of mercury poisoning through glass splinters produced by bursting HID lighting elements. There is also a risk of poisoning caused by inhalation of mercury vapors and by toxic salts and mercury compounds being ingested or coming into contact with the skin. Do not come into contact with parts that are under high voltage. Persons with active electronic implants (e.g. heart pacemakers) must never work on HID headlamps. Wear insulated safety shoes, safety glasses and protective gloves. Remove flammable materials and ensure sufficient ventilation in the working area.

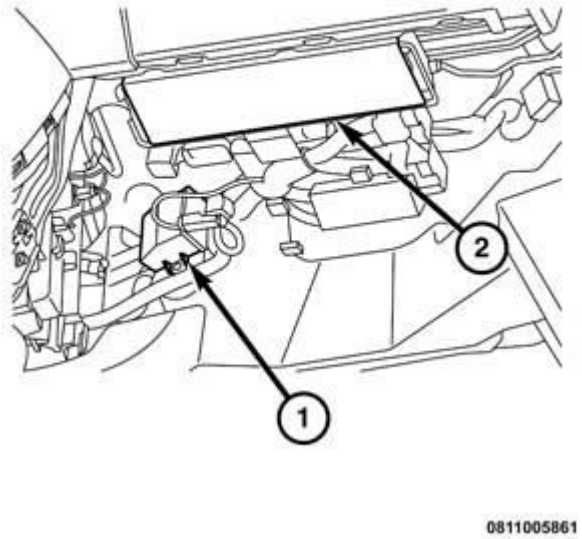

Fig. 41: Identifying Automatic Headlamp Leveling Module (AHLM) & Passenger Side Knee Blocker
Courtesy of CHRYSLER GROUP, LLC

1. Disconnect and isolate the battery negative cable.
2. Disconnect the wire harness connector from the connector receptacle on the side of the AHLM.
3. Remove the four screws that secure the cover plate and the Automatic Headlamp Leveling Module (AHLM) (1) (also known as the Headlamp Leveling Module/HLM) located in the passenger cabin underneath the glove box, to the left the passenger side knee blocker (2).

4. Remove the AHLM from the vehicle.

INSTALLATION

INSTALLATION

WARNING: To avoid serious or fatal injury when working on the High Intensity Discharge (HID) headlamp system, be certain to take the proper precautions. The headlamp switch must be in the OFF position. Disconnect and isolate the battery negative cable. There is a risk of fatal injury caused by contact with high voltage used in the HID headlamps. There is a risk of explosion or fire caused by highly flammable materials in the vicinity of damaged HID lighting elements. There is a risk of injury caused by exposure to Ultra Violet (UV) light, a risk of burns caused by high component operating temperatures, a risk of mercury poisoning through glass splinters produced by bursting HID lighting elements. There is also a risk of poisoning caused by inhalation of mercury vapors and by toxic salts and mercury compounds being ingested or coming into contact with the skin. Do not come into contact with parts that are under high voltage. Persons with active electronic implants (e.g. heart pacemakers) must never work on HID headlamps. Wear insulated safety shoes, safety glasses and protective gloves. Remove flammable materials and ensure sufficient ventilation in the working area.

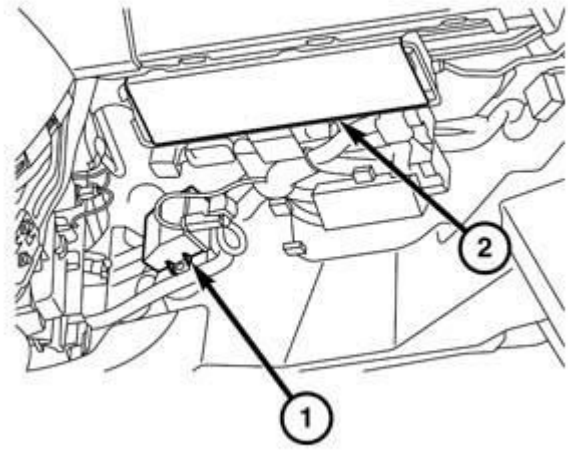

0811005861

Fig. 42: Identifying Automatic Headlamp Leveling Module (AHLM) & Passenger Side Knee Blocker
Courtesy of CHRYSLER GROUP, LLC

1. Position the Automatic Headlamp Leveling Module (AHLM) (1) (also known as the Headlamp Leveling Module/HLM) for installation.
2. Install and tighten the four screws that secure the cover plate and the AHLM to the lamp housing. Tighten the screws securely.
3. Connect the wire harness connector to the connector receptacle on the side of the AHLM.
4. Reconnect the battery negative cable.

NOTE: On vehicles equipped with the optional High Intensity Discharge (HID) headlamps, when the Automatic Headlamp Leveling Module (AHLM) is replaced with a new unit, a diagnostic scan tool MUST be used to initialize and calibrate the new AHLM before the automatic headlamp leveling system can operate properly. Refer to MODULE, HEADLAMP LEVELING, STANDARD PROCEDURE.

MODULE, HVAC

DESCRIPTION

DESCRIPTION

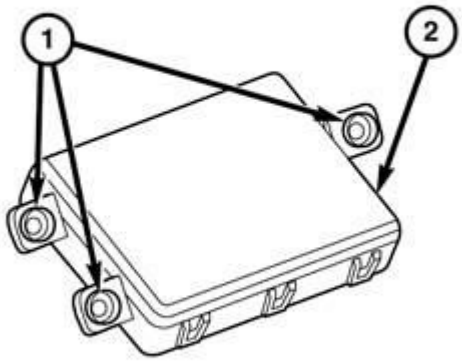

080671660

Fig. 43: A/C Heater Module & Mounting Tabs
Courtesy of CHRYSLER GROUP, LLC

The A/C heater module (2) is a microprocessor designed to operate the heating and A/C system, using the Controller Area Network (CAN) data bus. The A/C heater module has a plastic housing with two integral electrical connector receptacles and three mounting tabs (1).

The A/C heater module is located on the top of the air distribution housing, behind the radio or Integrated center stack screen, depending on how equipped.

OPERATION

OPERATION

The A/C heater module utilizes integrated circuitry and information carried over the Controller Area Network (CAN) data bus to monitor many sensors and switch inputs throughout the vehicle. In response to those inputs, the internal circuitry and programming of the A/C heater module allows it to control electronic functions and features of the heating and A/C system.

Some of the inputs received by the A/C heater module over the CAN bus are as follows:

- A/C Request
- Ambient Air Temperature
- Electric Back Light (EBL) Request
- Electrical System Voltage
- Engine Coolant Temperature
- Engine Speed
- Humidity, Windshield Glass Temperature and Dewpoint (ATC only)
- Refrigerant Pressure
- Vehicle Identification Number
- Vehicle Odometer

Some of the messages broadcasted by the A/C heater module on the CAN bus are as follows:

- A/C Clutch Engage
- Auto Headlamp Signal
- EBL Status

The A/C heater module receives the following information over hardwired circuits:

- Auto Headlamp Signal
- Evaporator Temperature
- Interior Air Temperature
- Left and Right Sun Load

The A/C heater module monitors and controls the following over hardwired circuits:

- Driver and Passenger Blend Door Positions
- Blower Motor Speed
- Mode Door Position

- Recirculation Door Position

The A/C heater module is diagnosed using a scan tool. Prior to replacing an A/C heater module, run the calibration procedure to verify that the concern is not an air door calibration issue. Refer to **STANDARD PROCEDURE** .

The A/C heater module cannot be adjusted or repaired and must be replaced if inoperative or damaged.

REMOVAL

REMOVAL

WARNING: Disable the airbag system before attempting any steering wheel, steering column, or instrument panel component diagnosis or service. Disconnect and isolate the negative battery (ground) cable, then wait two minutes for the airbag system capacitor to discharge before performing further diagnosis or service. This is the only sure way to disable the airbag system. Failure to follow these instructions may result in accidental airbag deployment and possible serious or fatal injury.

1. Disconnect and isolate the negative battery cable.
2. Remove the A/C and Heater Control. Refer to **CONTROL, A/C AND HEATER, REMOVAL** .

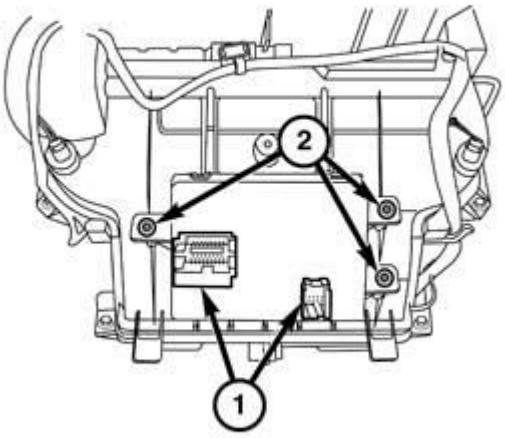

080671661

Fig. 44: A/C Heater Module Retaining Screws & Connectors
Courtesy of CHRYSLER GROUP, LLC

3. Disconnect the wire harness connectors (1) from the A/C heater module.
4. Remove the three A/C heater module retaining screws (2).
5. Remove the A/C heater module from the HVAC housing.

INSTALLATION

INSTALLATION

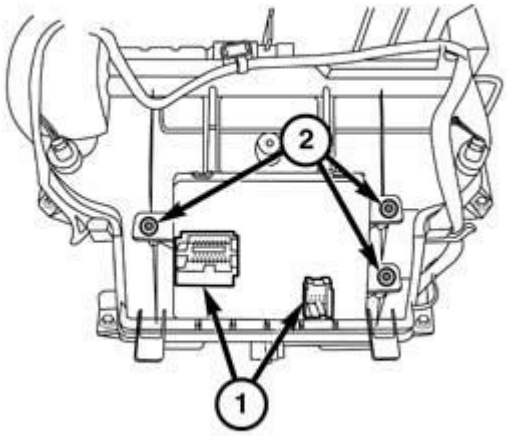

080671661

Fig. 45: A/C Heater Module Retaining Screws & Connectors
Courtesy of CHRYSLER GROUP, LLC

1. Position the A/C heater module to the HVAC housing.
2. Install the three retaining screws (2) that secure the A/C heater module to the HVAC housing.
3. Tighten all the screws that secure the A/C heater module to the HVAC housing to 2 N.m (17 in. lbs.).
4. Connect the wire harness connectors (1) to the A/C heater module.
5. Install the A/C and Heater Control. Refer to **CONTROL, A/C AND HEATER, INSTALLATION** .
6. Connect the negative battery cable.
7. Initiate the Actuator Calibration function using a scan tool. Refer to **STANDARD PROCEDURE** .

NOTE: **If this Electronic Control Unit (ECU) is being replaced with a new unit, a diagnostic scan tool MUST be used to align the PROXI configuration data into the new ECU. Follow the routine outlined in the diagnostic scan tool for PROXI Configuration Alignment under Body Control Module (BCM) Miscellaneous Functions menu.**

MODULE, IGNITION NODE

DESCRIPTION

DESCRIPTION

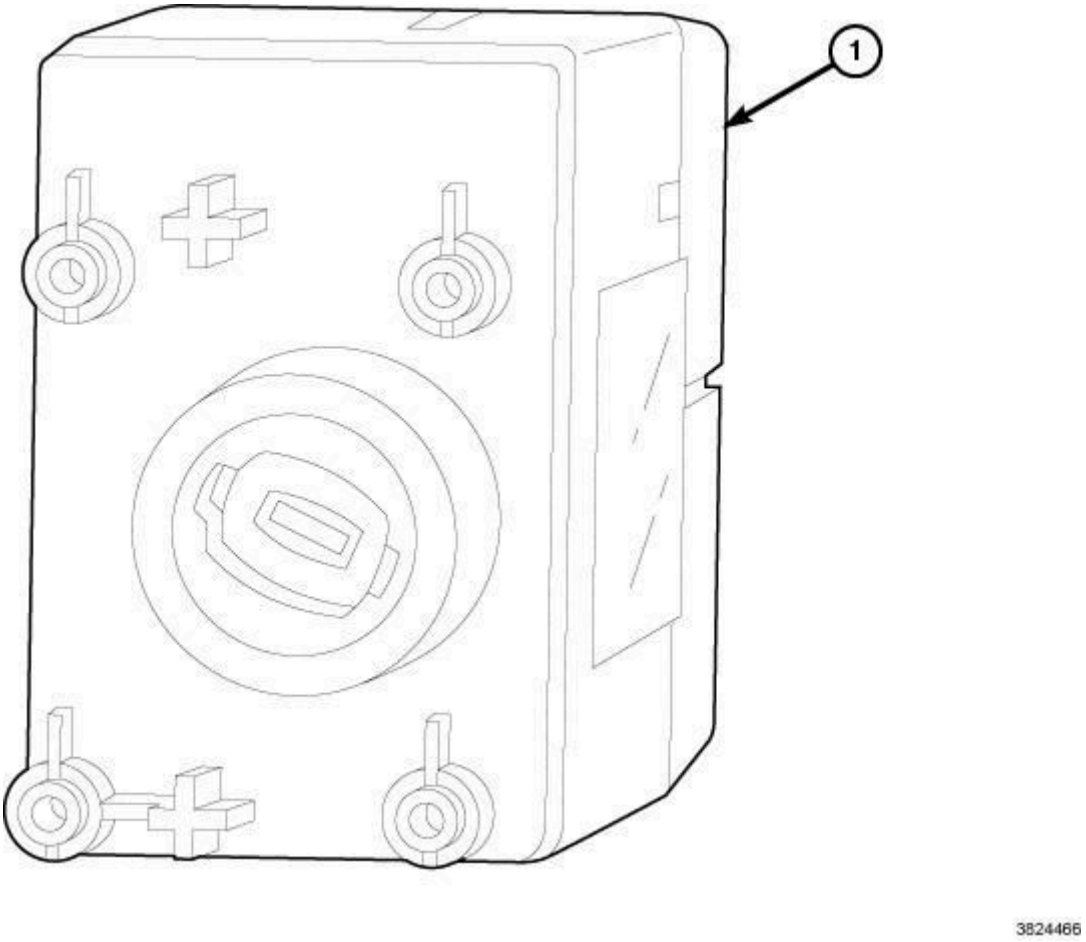

Fig. 46: Ignition Node Module
Courtesy of CHRYSLER GROUP, LLC

The Ignition Node Module (IGNM) is a rotary type ignition switch and is used on the base and midline vehicles. It will accept either a steel cut key (Sentry Key Immobilizer Module (SKIM) only) or a Remote Keyless Entry (RKE) FOBIK.

The IGNM is encased in a bracket mounted in the instrument panel and is held in by four (4) screws.

OPERATION

OPERATION

Following are brief descriptions of the systems that the Ignition Node Module (IGNM) controls.

IGNITION SWITCH

IGNITION SWITCH

The Ignition Node Module (IGNM) incorporates an integral ignition switch that consists of four rotary positions with three detent positions and one spring-loaded position. The one extreme clockwise position is a spring-loaded momentary contact **"START"** position. When released from the **"START"** position, the switch will automatically return to the detent **"RUN"** position. The other position includes a detent **"ACCESSORY"** position and a detent **"OFF"** position.

SENTRY KEY IMMOBILIZER SYSTEM (SKIS)

All modules of the IGNM have transponder chips in all keys and FOBIKS. Upon failure of proper Sentry Key Immobilizer (SKIS) communication to the Remote Frequency Hub Module, (RFHM), the RFHM will not allow the vehicle to crank. The engine will not re-crank on the key cycle that the failure occurred, a full key down sequence must be performed for the engine to crank again. Refer to **OPERATION** .

REMOTE KEYLESS ENTRY (RKE)

The midline model of the IGNM has the Remote Keyless Entry (RKE) feature. The FOBIK uses Radio Frequency (RF) signals to communicate with the Radio Frequency Hub (RF-Hub) and the RF-Hub relays the RKE requests to other modules in the vehicle over the CAN data bus. The IGNM itself does not control any of the RKE functions. Refer to **OPERATION** .

KEY REMOVAL INHIBIT

The Key Removal Inhibit has a motor driven gear internal to the IGNM to facilitate this feature. This prevents the key from going past accessory (to off) if the gear shifter is not in Park.

REMOVAL

REMOVAL

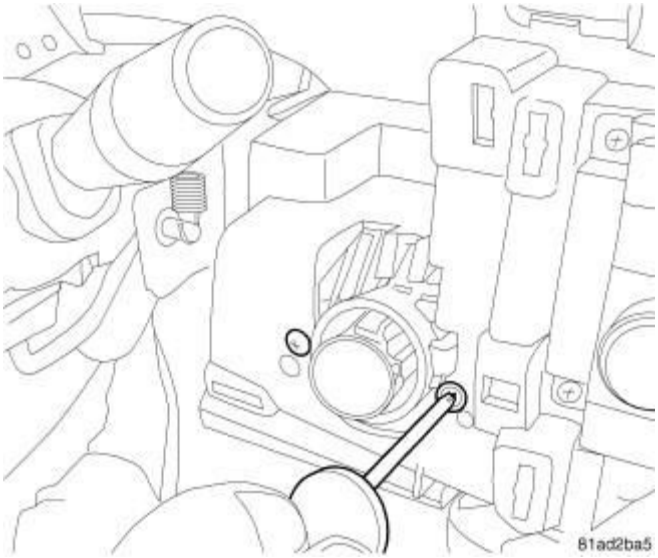

Fig. 47: Removing/Installing Switch Mounting Screws
Courtesy of CHRYSLER GROUP, LLC

1. Disconnect the and isolate the negative battery cable.
2. Remove the dash end cap. Refer to **CAP, INSTRUMENT PANEL END, REMOVAL** .
3. Remove the steering column opening cover.
4. Remove the chin bezel located above the floor console. One fastener snaps to the console. Refer to **CONSOLE, FLOOR, REMOVAL** .
5. Disconnect the wire harness connector from the Ignition Node Module (IGNM).
6. Remove 4 screws that retain the IGNM in place.
7. Disconnect the wiring harness connector from the back of the IGNM.
8. Remove the IGNM from the backside of the instrument panel.

INSTALLATION

INSTALLATION

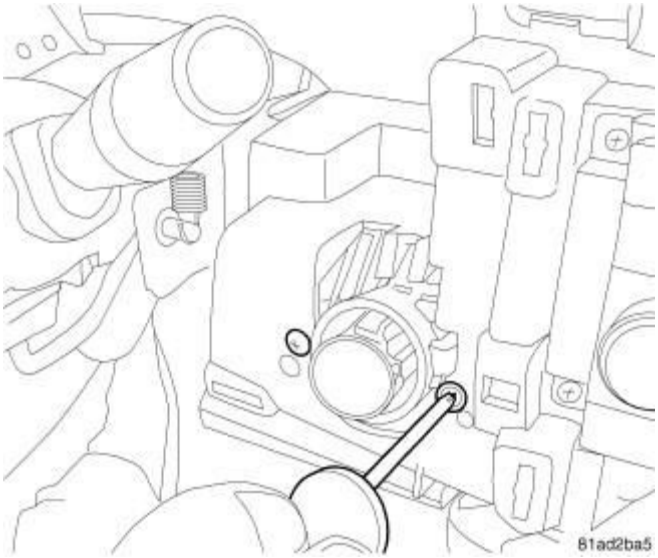

Fig. 48: Removing/Installing Switch Mounting Screws
Courtesy of CHRYSLER GROUP, LLC

1. Install the Ignition Node Module (IGNM) into the Instrument Panel from the backside.
2. Pull the Ignition Node Module into place.
3. Install 4 screws the IGNM and tighten.
4. Connect Electrical harness connector into IGNM.
5. Install the chin bezel. Refer to **CONSOLE, FLOOR, INSTALLATION** .
6. Install the steering column opening cover and connect the wire harness connectors.
7. Install dash end cap. Refer to **CAP, INSTRUMENT PANEL END, INSTALLATION** .
8. Connect negative battery cable.
9. If IGNM is being replaced, program the module. Refer to **STANDARD PROCEDURE** .

MODULE, MEMORY SEAT

DESCRIPTION

DESCRIPTION

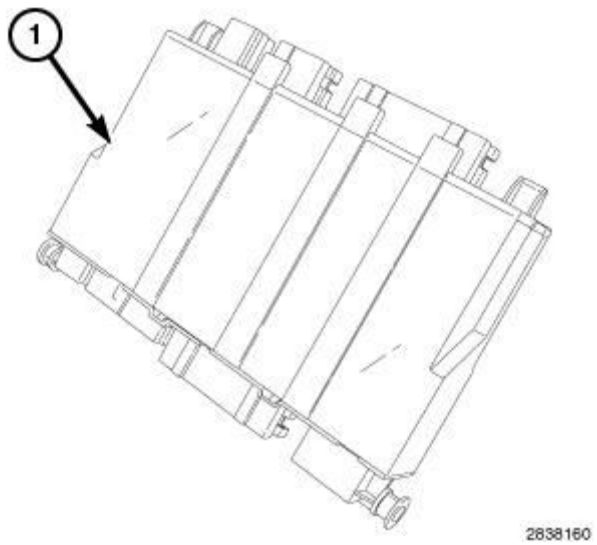

Fig. 49: Memory Seat Module (MSM)
Courtesy of CHRYSLER GROUP, LLC

When equipped, the Memory Seat Module (MSM) (1) is located underneath the driver seat. It is used in conjunction with the other modules in the memory system to recall the driver seat to two different driver preset seat position preferences. The memory seat module is able to store and recall all driver side power seat positions (fore/aft, up/down, tilt and recline), outside mirror position, power steering column position and up to twelve radio station presets (six AM and six FM), on vehicles with a factory installed radio connected to the Controller Area Network (CAN) data bus network. The memory system will also store and recall the last radio station listened to for each driver, even if it is not one of the twelve preset stations.

The memory seat system will automatically recall the settings when a button of the memory switch located in the driver door trim panel is pressed, or when the doors are unlocked using the Remote Keyless Entry (RKE) transmitter (if the "RKE Linked to Memory" feature is enabled). If the vehicle has more than two drivers the RKE transmitter recall of memory features can be disabled. This is a customer programmable feature.

OPERATION

OPERATION

The Memory Seat Module (MSM) receives battery current through a fuse in the Power Distribution Center (PDC). The memory system remains operational, regardless of ignition position. When a driver memory seat switch button or FOBIK transmitter button (when programmed) is pushed, signal is sent to the MSM over the Controller Area Network (CAN) bus. The MSM is responsible for the 12 volt Direct Current (DC) feed and ground path to the power seat adjuster motors and to the other memory system components.

The MSM also receives hard-wired input from the hall effect sensors, mounted on each of the driver power seat adjuster motors, driver side view mirror motors and power adjustable steering column motors, when equipped. The programmed software in the MSM allows it to know where the driver seat, mirror and steering column are located in there designed travel by a pulse count, generated from hall effect sensors. This way, when a memory seat switch is pressed the MSM will power these components until the correct preset location is achieved. The MSM will prevent the seat memory recall function from being initiated, if the transmission gear selector is not

in the Park position. These inputs are monitored over the CAN bus by the MSM.

A memory setting is saved by pressing the "Set" button, then pressing either the memory "1" or "2" button within five seconds of pressing the "Set" button. The key needs to be out of the ignition in order for this setting to save.

A memory setting is recalled by pressing either the memory "1" or "2" button, or by pressing the unlock button on a "linked" FOBIK transmitter.

The MSM performs the following functions:

- Positions the driver power seat (fore/aft, up/down, tilt and recline positions).
- Sends the memory save or recall (number 1 or number 2) command over the CAN data bus circuit to the other memory system components, radio station pre-sets and power mirror positions.
- Provides for the easy entry/exit feature.

When a memory button is pressed (number 1 or number 2) on the memory seat switch, it provides resistive signal to the MSM. The MSM will then position the driver seat to the pre-set location. When a FOBIK transmitter button is pressed, depending on which transmitter (number 1 or number 2), the KIN receiver sends the recall request and FOBIK number (number 1 or number 2) data message. The FOBIK transmitter function depends on if the MSM is programmed to trigger the recall (linked FOBIKs).

A FOBIK is "linked" to a memory setting by performing the following steps:

1. Remove the Key Fob from the ignition (or change the ignition to OFF, for vehicles equipped with Keyless Enter-N-Go).
2. Select desired memory profile (1) or (2).
3. Press and release the LOCK button on the RKE transmitter within 5 seconds of selecting the memory profile.

The MSM has the capacity to store two linked fobs only. If one is lost or damage, a third can not be programmed successfully. In order to remove stored keys and to add the new key, the MSM module needs to forget what links already exist. Using the scan tool, enter the MSM and then select MISC FUNCTIONS. Reset/Erase the saved settings in this menu. Once this has been completed, you will need to re-link the original FOBIK as well as linking the new FOBIK. Remember that linking requires the key/FOBIK to be out of the ignition.

The memory seat system "Easy Entry and Exit" feature provides the driver with more room to enter or exit the vehicle. When the driver seat is in a memorized position, it will move rearward 55 millimeters (2.2 inches) or to the end of its travel, whichever occurs first, when the key is removed from the ignition switch lock cylinder. This is a customer programmable feature. The seat will return to the pre-set position when the ignition is pressed to RUN.

The memory seat system "learns" the seat, mirror and column motors maximum end positions when the motor reaches the limit of travel in any direction and stalls. Subsequently, movement will stop just short of that position to avoid extra stress on the motors and mechanisms. If the system learned a maximum position as a

result of an obstruction, as for instance if a large object was placed on the floor behind the seat, the system can relearn the "true" maximum position through manually operating the power seat after the obstruction is removed.

NOTE: It is normal for the power accessories contained in the memory system to stop at the maximum "learned" position and then continue to the "true" maximum position when the control switch is released and then applied in the same direction a second time.

Certain functions and features of the memory seat system rely upon resources shared with other electronic modules in the vehicle over the CAN bus. The CAN bus allows the sharing of sensor information. This helps to reduce wire harness complexity, internal controller hardware and component sensor current loads. At the same time, the memory seat system provides increased reliability, enhanced diagnostics and allows the addition of new feature capabilities.

NOTE: Anytime a new Memory Seat Module (MSM) or a driver power seat motor or seat track is replaced, the MSM must be cleared of all learned parameters using a scan tool and the Power Seat System Verification test must be performed.

The use of a scan tool is needed for diagnosis of the MSM, CAN bus and other electronic modules. Refer to **DIAGNOSIS AND TESTING** .

DIAGNOSIS AND TESTING

DIAGNOSIS AND TESTING - MEMORY SEAT MODULE (MSM)

In order to obtain conclusive testing of the memory system, the Controller Area Network (CAN) data bus, and all of the electronic modules that provide inputs to, or receive outputs from the memory system components must be checked. **Any diagnosis of the memory system/module should begin with, the use of a scan tool and the appropriate diagnostic service information.**

Refer to the appropriate wiring information for complete circuit schematic or connector pin-out information.

NOTE: Vehicles equipped with the memory/heated seat option utilize a low voltage cut-off feature. This feature turns off the 12v power to the power seat system anytime vehicle voltage is below 11.7v. Be certain to check the vehicle electrical system for proper voltage anytime the power seat system appears inoperative.

Before any testing of the power seat system is attempted, the battery should be fully-charged.

REMOVAL

REMOVAL

NOTE: The scan tool standardization process must be performed on the Memory Seat

Module (MSM) any time a new MSM is installed or the existing MSM is reflashed.

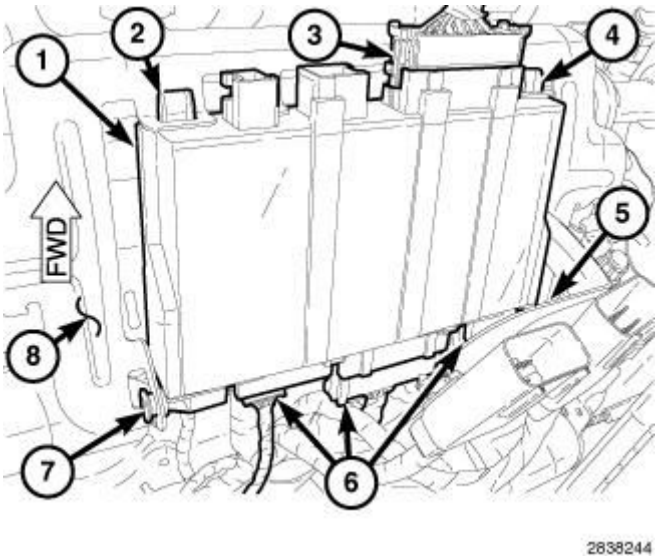

Fig. 50: Electrical Connectors, Memory Seat Module (MSM), Two Rear MSM Retaining Tabs, Bracket & Tabs
Courtesy of CHRYSLER GROUP, LLC

NOTE: Depending on how equipped, more memory seat module electrical connectors may be present than shown in the illustration.

1. Disconnect and isolate the negative battery cable.
2. Remove the fasteners that secure the driver seat to the body and tip the seat rearward to gain access to the underneath of the seat. Refer to **SEAT, REMOVAL** and **SEAT, REAR, REMOVAL** .
3. Disconnect the electrical connectors (3 and 6) from the Memory Seat Module (MSM) (1).
4. Disengage the two rear MSM retaining tabs (5 and 7) from the bracket (8) by carefully pushing the rear of the MSM upward.
5. Disengage the two front MSM retaining tabs (2 and 4) from the bracket by pulling the MSM rearward.
6. Remove the MSM from underneath the driver seat.

INSTALLATION

INSTALLATION

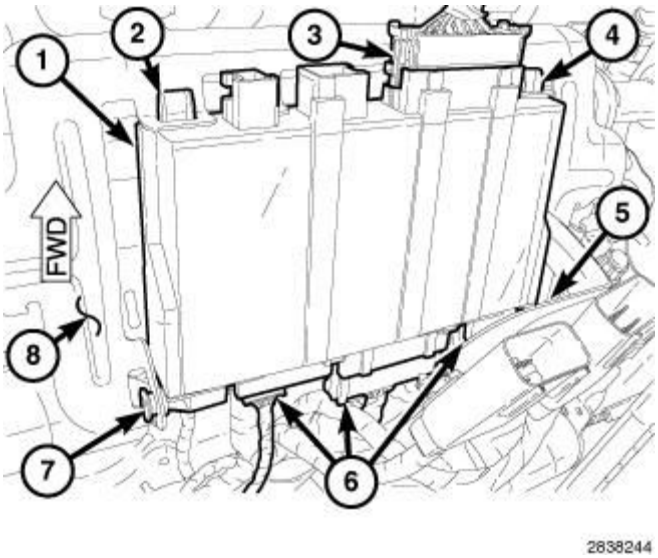

Fig. 51: Electrical Connectors, Memory Seat Module (MSM), Two Rear MSM Retaining Tabs, Bracket & Tabs
Courtesy of CHRYSLER GROUP, LLC

NOTE: Depending on how equipped, more memory seat module electrical connectors may be present than shown in the illustration.

1. Position the Memory Seat Module (MSM) (1) to the driver seat and engage the two front retaining tabs (2 and 4) to the bracket (8).

CAUTION: Properly align the rear Memory Seat Module (MSM) retaining tabs to the bracket, prior to engagement. Failure to follow these instructions may result damage to the MSM rear retaining tabs.

2. Align the two rear MSM retaining tabs (5 and 7) to the bracket and carefully pull downward down on the MSM to engage the tabs. Make sure the retaining tabs are fully engaged to the bracket.
3. Connect the electrical connectors (3 and 6) to the MSM.
4. Install the driver seat. Refer to **SEAT, INSTALLATION** and **SEAT, REAR, INSTALLATION** .
5. Reconnect the negative battery cable.

NOTE: Anytime a new Memory Seat Module (MSM) is replaced, the MSM must be cleared of all learned parameters using a scan tool and the Power Seat System Verification test must be performed.

6. Using a scan tool, select Clear All MSM Learned Parameters, found under the Memory Seat Module, Miscellaneous Functions tab.
7. Perform the Power Seat System Verification test. Refer to **STANDARD PROCEDURE** .
8. Verify proper memory seat system operation.

MODULE, PARK ASSIST

DESCRIPTION

DESCRIPTION

Refer to **MODULE, PARK ASSIST, DESCRIPTION** .

OPERATION

OPERATION

Refer to **MODULE, PARK ASSIST, OPERATION** .

DIAGNOSIS AND TESTING

DIAGNOSIS AND TESTING - PARK ASSIST MODULE

Refer to **MODULE, PARK ASSIST, DIAGNOSIS AND TESTING** .

REMOVAL

REMOVAL

Refer to **MODULE, PARK ASSIST, REMOVAL** .

INSTALLATION

INSTALLATION

Refer to **MODULE, PARK ASSIST, INSTALLATION** .

MODULE, POWER LIFTGATE CONTROL

DESCRIPTION

DESCRIPTION

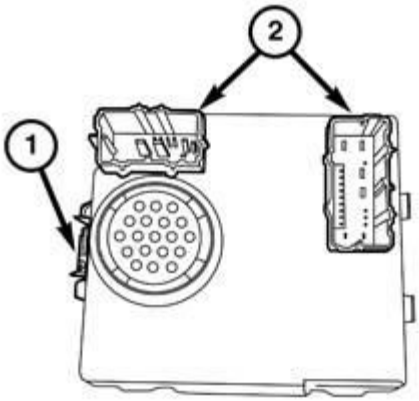

0821006691

Fig. 52: Identifying Power Liftgate Module (PLGM) & Connector Receptacles
Courtesy of CHRYSLER GROUP, LLC

Vehicles equipped with an optional power-operated liftgate are equipped with a Power LiftGate Module (PLGM) (also known as the Power LiftGate/PLG control module). The PLGM is concealed behind the liftgate sill scuff plate and trim, on the inside of the back rear cargo area. The PLGM is secured by two integral mounting tabs and an integral latch tab (1) to slots in the sheet metal.

Concealed and protected within the molded plastic housing of the PLGM is the printed circuit board and the other electronic circuitry of the module. The module contains a microprocessor and communicates with other electronic modules in the vehicle over the Controller Area Network (CAN) Interior High Speed (IHS) data bus system. Two connector receptacles (2) integral to the PLGM housing are connected to the vehicle electrical system through two dedicated take outs and connectors of the body wire harness.

A PLGM cannot be adjusted or repaired and, if damaged or ineffective, it must be replaced. The PLGM software is flash programmable.

OPERATION

OPERATION

The microprocessor-based electronic Power LiftGate Module (PLGM) (also known as the Power LiftGate/PLG control module) contains the electronic logic circuitry and software that is used to monitor the numerous switch and sensor inputs and control the outputs that operate and provide the various electronic features of the power liftgate system.

In addition, the PLGM receives electronic message inputs from and shares its hard wired switch and sensor

resources through electronic message outputs to other electronic control modules in the vehicle over the Controller Area Network (CAN) Interior High Speed (IHS) data bus network. The program logic within the PLGM allows the microprocessor to prioritize all of these inputs and determine the task it needs to perform. The task is then completed by controlling hard wired outputs to the liftgate Power Drive Unit (PDU) and latch mechanisms, which lock, unlock, open and close the liftgate. If enabled through the Electronic Vehicle Information Center (EVIC) customer programmable features, the PLGM also provides a hard wired output that controls the power liftgate warning chime unit.

The PLGM is powered by a fused B(+) circuit and is grounded at all times so that it can operate the liftgate regardless of the ignition switch position. The module monitors both active and stored Diagnostic Trouble Codes (DTC) through On-Board Diagnostics (OBD) and communicates with a diagnostic scan tool using the CAN data bus.

The PLGM uses adaptive memory that allows the power liftgate system to learn and adapt to the many variables that may be required to operate the liftgate. If a replacement power liftgate system component is installed or a mechanical liftgate adjustment is made, the PLGM is required to relearn the effort and time to open or close the liftgate. This learn cycle can be initiated only with a diagnostic scan tool connected to the Data Link Connector (DLC). Refer to **MODULE, POWER LIFTGATE CONTROL, STANDARD PROCEDURE**.

The hard wired inputs and outputs of the PLGM may be diagnosed using conventional diagnostic tools and procedures. Refer to the appropriate wiring information. However, conventional diagnostic methods will not prove conclusive in the diagnosis of the electronic controls and communication between modules and other devices that provide some features of the power liftgate system. The most reliable, efficient and accurate means to diagnose the PLGM or the electronic controls and communication related to operation of the power liftgate system requires the use of a diagnostic scan tool. Refer to the appropriate diagnostic information.

DIAGNOSIS AND TESTING

DIAGNOSIS AND TESTING - PLGM

The hard wired circuits between components related to the power liftgate system and the Power LiftGate Module (PLGM) (also known as the Power LiftGate/PLG control module) may be diagnosed using conventional diagnostic tools and procedures. Refer to the appropriate wiring information. The wiring information includes wiring diagrams, proper wire and connector repair procedures, details of wire harness routing and retention, connector pin-out information and location views for the various wire harness connectors, splices and grounds.

However, conventional diagnostic methods will not prove conclusive in the diagnosis of the PLGM or the electronic controls and communication between modules and other devices that provide some features of the power liftgate system or the PLGM. The most reliable, efficient, and accurate means to diagnose the power liftgate system, the PLGM or the electronic controls and communication related to power liftgate or PLGM operation requires the use of a diagnostic scan tool. Refer to the appropriate diagnostic information.

STANDARD PROCEDURE

STANDARD PROCEDURE - POWER LIFTGATE LEARN/RELEARN PROCEDURE

The Power LiftGate Module (PLGM) uses adaptive memory that allows the power liftgate system to learn and adapt to the many variables (travel limits, resistance to travel, etc.) that may be required to operate the liftgate. After 8 miles have been recorded on the vehicle odometer (in-plant mode), anytime the liftgate is fully opened and fully closed using the power liftgate system, the PLGM will learn or relearn from that cycle. If a replacement power liftgate system component is installed or a mechanical liftgate adjustment is made, the PLGM can relearn the effort and time required to open or close the liftgate. This learn/relearn cycle can be initiated using the power liftgate switches, using the Remote Keyless Entry (RKE) FOB with Integrated Key (FOBIK) or with a diagnostic scan tool connected to the Data Link Connector (DLC).

To perform a power liftgate learn/relearn cycle, do the following:

1. Connect a diagnostic scan tool to the DLC and check for any power liftgate system active or stored Diagnostic Trouble Codes (DTC). Correct and erase any active or stored DTC.
2. Close the liftgate.
3. Using the scan tool, select the **Power LiftGate Module (PLGM)** menu item. Then select, **Misc Functions** and select the **Calibrate Liftgate** routine.
4. After the **Calibrate Liftgate** routine completes, use the scan tool to check the **Routine Status** for a **Pass** or **Fail** message. If the **Routine Status** is **Fail** , the scan tool will display the reason for the failure to aid in further system diagnosis and in rerunning the **Calibrate Liftgate** routine.
5. Follow the instructions displayed in the scan tool to complete the test.
6. Use any switch or RKE FOBIK to be certain the liftgate can be powered open and closed successfully.
7. The liftgate learn cycle is now complete.

NOTE: If the power liftgate will not complete a full cycle a problem exists with the power liftgate system.

In order to obtain conclusive testing of the power liftgate system, the Controller Area Network (CAN) data bus and all of the electronic modules that provide inputs to, or receive outputs from the PLGM, as well as all of the power liftgate system components must be checked. **Any diagnosis of the power liftgate system should begin with the use of a diagnostic scan tool and the appropriate diagnostic procedures.**

REMOVAL

REMOVAL

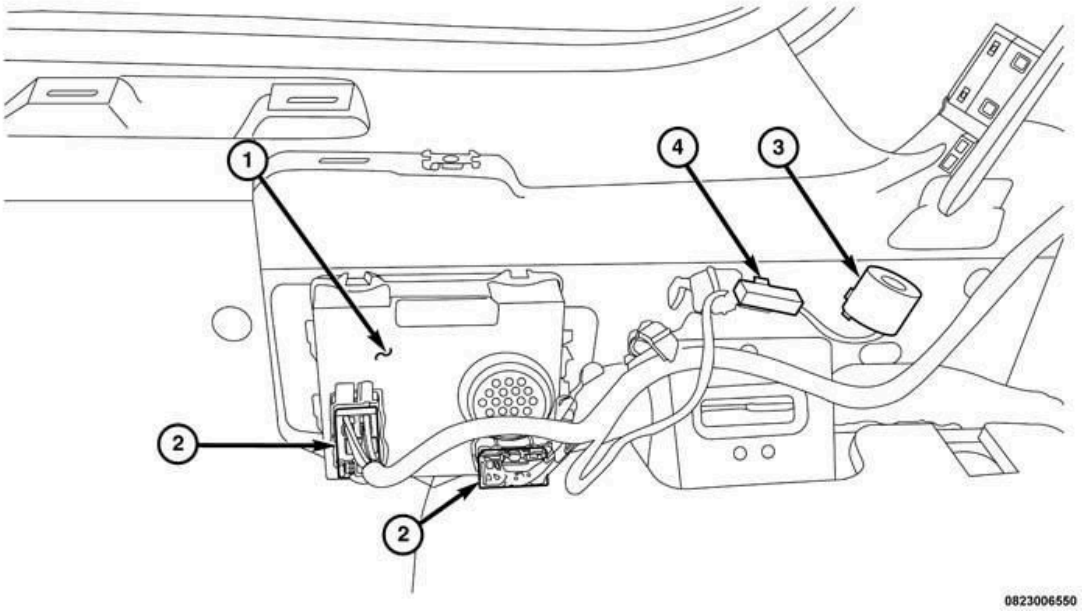

Fig. 53: Power LiftGate Module (PLGM) & Harness Connectors
Courtesy of CHRYSLER GROUP, LLC

1. Disconnect and isolate the battery negative cable.
2. Remove the rear cargo load floor. Refer to **LOAD FLOOR, CARGO, REMOVAL** .
3. Disconnect the two body wire harness (2) connectors from the PLGM connector receptacles.
4. Depress the latch feature integral to the left end of the PLGM housing and pull the top of the PLGM out and away from the mounting bracket.
5. Disengage the two tabs integral to the upper end of the PLGM housing from the slots.
6. Remove the PLGM (1) from the vehicle.

INSTALLATION

INSTALLATION

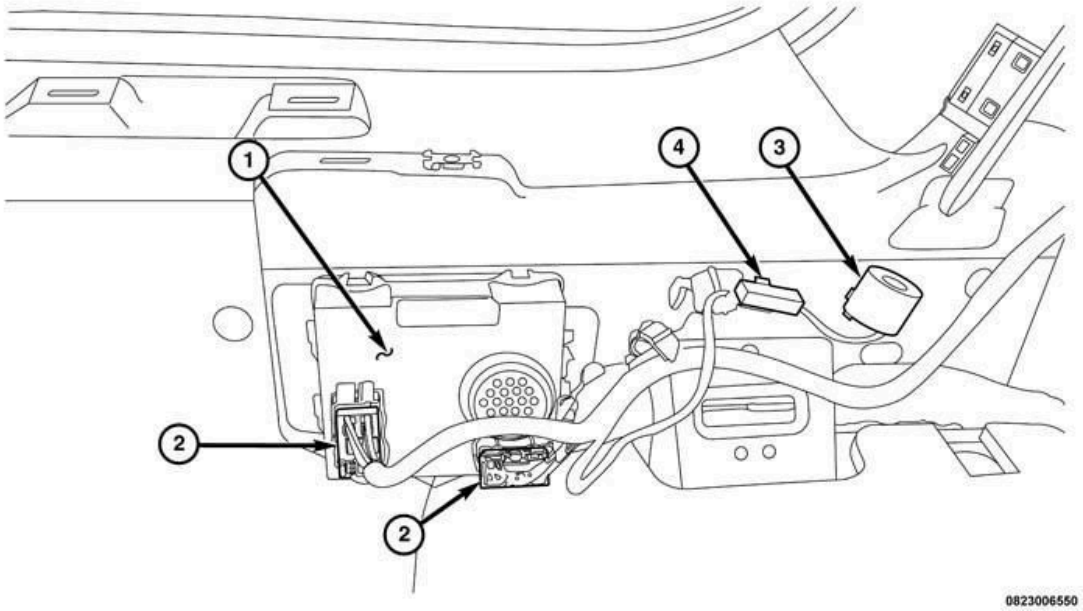

Fig. 54: Power LiftGate Module (PLGM) & Harness Connectors
Courtesy of CHRYSLER GROUP, LLC

1. Position the PLGM (1) to the vehicle for installation.
2. Seat the module in to the mounting bracket making sure it is snapped into place securely.
3. Connect the two body wire harness connectors (2) to the PLGM housing.
4. Install the rear cargo load floor. Refer to **LOAD FLOOR, CARGO, INSTALLATION** .
5. Connect the negative battery cable to the negative battery terminal.
6. Verify the power liftgate operates properly. for the power liftgate learn/relearn procedure. Refer to **MODULE, POWER LIFTGATE CONTROL, STANDARD PROCEDURE**.

MODULE, POWER TOP CONTROL, FULL OPEN RETRACTABLE ROOF

DESCRIPTION

DESCRIPTION

The Electronic Control Unit (ECU) (sometimes referred to as the Power Top Control Module) is located at the rear of the vehicle roof next to the Full Open Retractable Roof (FORR) motors. The ECU is mounted to the FORR frame assembly with two screws. Three wire harness connectors are used to supply inputs to the ECU and send outputs to the FORR motors.

The ECU communicates via the Controller Area Network (CAN) data bus circuit and can be diagnosed and receive software updates with the use of a diagnostic scan tool.

OPERATION

OPERATION

This vehicle is available with the Full Open Retractable Roof (FORR) option. Marketed as Sky Slider™, the unit is made of reinforced acrylic cloth, similar to a convertible top. The FORR system receives battery feed through the "sunroof" relay and a 25 amp mini fuse located in the Power Distribution Center (PDC). The FORR system power is supplied when the ignition switch is in the RUN and ACCESSORY positions. The sunroof will operate normally with the key in any position while the Accessory Delay system is active.

The FORR utilizes a single Electronic Control Unit (ECU) (sometimes referred to as the Power Top Control Module) to control the movement of the power top. The ECU sends a reference voltage to and receives inputs back from the power top switch via a hardwired connection. The ECU responds to the switch input by controlling one or both of the power top motors via a hardwired connection.

The ECU is a new non-CAN based sunroof module unique to the KL SkySlider

STANDARD PROCEDURE

STANDARD PROCEDURE - INITIALIZE SUNROOF MODULE

NOTE: The temperature must be between 5°C (41°F) to 45°C (113°F) for initialization to be performed. Outside of this temperature range, an initialization will not start and if requested by a diagnostics scan tool, the Electronic Control Unit (ECU), (sometimes referred to as the Power Top control Module) sends the proper reject code.

NOTE: Vehicle voltage must be maintained between 13V - 15V during initialization.

1. Put a battery changer on the vehicle.
2. Using a scan tool, clear all codes.
3. From the scan tool, select "SUNRF" in the list of modules on the scan tool.
4. Select "More Options".
5. Select "System Tests".
6. Select "Sunroof Initialization".
7. Follow the on-screen prompts.

REMOVAL

REMOVAL

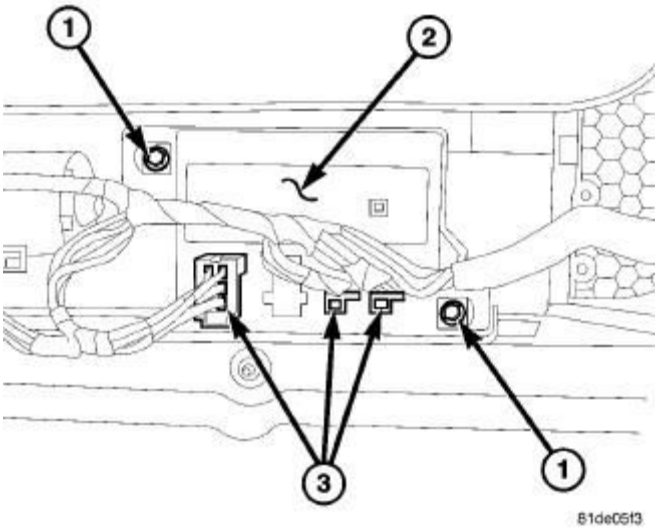

Fig. 55: Electrical Connectors
Courtesy of CHRYSLER GROUP, LLC

1. Disconnect and isolate the battery negative cable.
2. Drop rear of headliner down as needed to gain access to the module. Refer to **HEADLINER, REMOVAL** .
3. Disconnect the electrical connectors (3) from the module.
4. Remove the two screws (1) and separate the module (2) from the roof system.

INSTALLATION

INSTALLATION

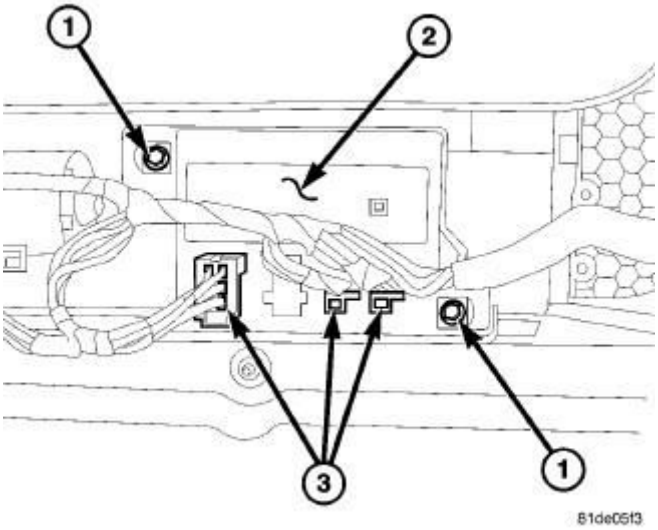

Fig. 56: Electrical Connectors
Courtesy of CHRYSLER GROUP, LLC

1. Position the module (2) onto the power full open retractable roof assembly.
2. Install the two mounting screws (1).
3. Connect the electrical connectors (3).
4. Install the headliner. Refer to **HEADLINER, INSTALLATION** .
5. Connect the battery negative cable.
6. Re-initialize roof assembly. Refer to **STANDARD PROCEDURE** .

MODULE, POWERTRAIN CONTROL

DESCRIPTION

POWERTRAIN CONTROL MODULE (PCM)

The Powertrain Control Module (PCM) is a digital computer containing a microprocessor. The PCM receives input signals from various switches and sensors referred to as Powertrain Control Module Inputs. These inputs are as follows:

- Air Conditioning Pressure Transducer
- ASD/Main Relay
- Battery Voltage
- Brake Switch
- Camshaft Position Sensor
- Crankshaft Position Sensor
- Distance Sensor (from transmission control module)
- EGR Position Feedback (if equipped)
- Engine Coolant Temperature Sensor
- Heated Oxygen Sensors
- Ignition sense
- Inlet Air Temperature Sensor
- Knock Sensor
- Manifold Absolute Pressure (MAP) Sensor
- Park/Neutral (from trans range sensor)
- Power Steering Pressure Switch
- Proportional Purge Sense
- CAN C Bus
- Speed Control
- Transmission Control Relay (Switched B+)

- Transmission Pressure Switches
- Transmission Temperature Sensor
- Transmission Input Shaft Speed Sensor
- Transmission Output Shaft Speed Sensor
- Vehicle Speed

Based on the above inputs, the PCM adjusts various engine and vehicle operations through devices referred to as Powertrain Control Module Outputs. These outputs are as follows:

- Air Conditioning Clutch Relay
- Data Link Connector (CAN C Bus)
- Double Start Override
- EGR Solenoid (if equipped)
- Fuel Injectors
- Generator Field
- High Speed Fan Relay
- Ignition Coils
- Natural Vacuum Leak Detection
- Low Speed Fan Relay
- MTV Actuator
- Proportional Purge Solenoid
- SRV Valve
- Speed Control Relay
- Speed Control Vent Relay
- Speed Control Vacuum Relay
- Torque Reduction Request
- Transmission Control Relay
- Transmission Solenoids
- 5 Volt Output

Based on inputs it receives, the PCM adjusts fuel injector pulse width, idle speed, ignition timing, and canister purge operation and EGR, if equipped. The PCM regulates the cooling fans, air conditioning and speed control systems. The PCM changes generator charge rate by adjusting the generator field.

The PCM adjusts injector pulse width (air-fuel ratio) based on the following inputs.

- Manifold Absolute Pressure
- Engine Speed (crankshaft position sensor)
- Battery Voltage
- Inlet Air Temperature Sensor

- Engine Coolant Temperature
- Exhaust Gas Oxygen Content (heated oxygen sensors)
- Throttle Position

The PCM adjusts engine idle speed through the idle air control motor based on the following inputs.

- Brake Switch
- Engine Coolant Temperature
- Engine Speed (crankshaft position sensor)
- Park/Neutral
- Transaxle Gear Engagement
- Throttle Position
- Vehicle Speed (from Transmission Control Module)

The PCM adjusts ignition timing based on the following inputs.

- Inlet Air Temperature
- Engine Coolant Temperature
- Engine Speed (crankshaft position sensor)
- Knock Sensor
- Manifold Absolute Pressure
- Park/Neutral (from trans range sensor)
- Transaxle Gear Engagement
- Throttle Position

The camshaft and crankshaft signals are sent to the PCM. If the PCM does not receive both signals within approximately one second of engine cranking, it deactivates the fuel pump. When deactivated, power is shut off to the fuel injectors, ignition coils, fuel pump and the heating element in each oxygen sensor.

The PCM contains a voltage converter that changes battery voltage to a regulated 5.0 volts. The 5.0 volts power the camshaft position sensor, and crankshaft position sensor. The PCM also provides a regulated 5.0 volts supply for the, manifold absolute pressure sensor, throttle position sensor and EGR (if equipped).

The PCM engine control strategy prevents reduced idle speeds until after the engine operates for 320 km (200 miles). If the PCM is replaced after 320 km (200 miles) of usage, update the mileage in new PCM. PCM/ECM Reprogramming. Refer to the appropriate Testing & Diagnostics article in Engine Performance .

REMOVAL

DIESEL

Fig. 57: Powertrain Control Module (PCM) & Harness Connectors
Courtesy of CHRYSLER GROUP, LLC

1. Disconnect the negative battery cable.
2. Disconnect the Powertrain Control Module (2) (PCM) wire harness connectors (1).

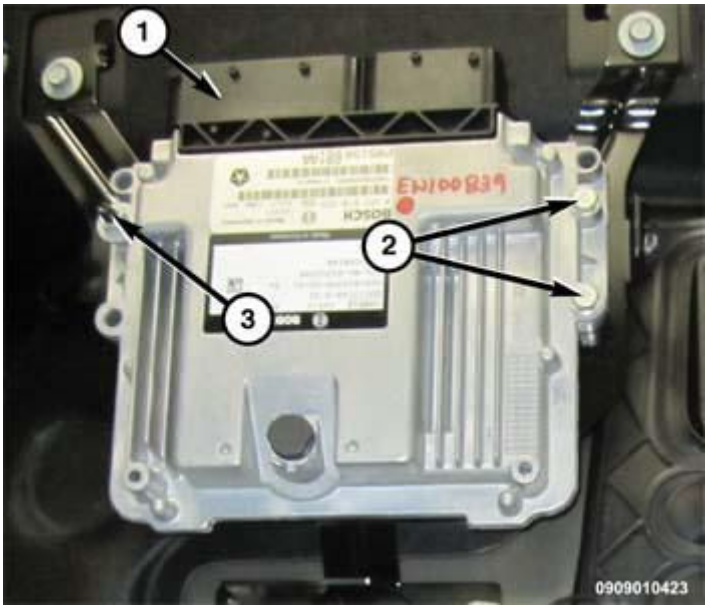

Fig. 58: Powertrain Control Module (PCM), Nuts & Bolts
Courtesy of CHRYSLER GROUP, LLC

3. Remove nut (3), bolts (2) and the Powertrain Control Module (PCM) (1).

2.4L/3.2L

CAUTION: Do not disconnect the Powertrain Control Module (PCM) electrical connectors before the ignition key is in the off position and the battery cable disconnected. If these steps are not preformed damage to the PCM may result from a voltage spike.

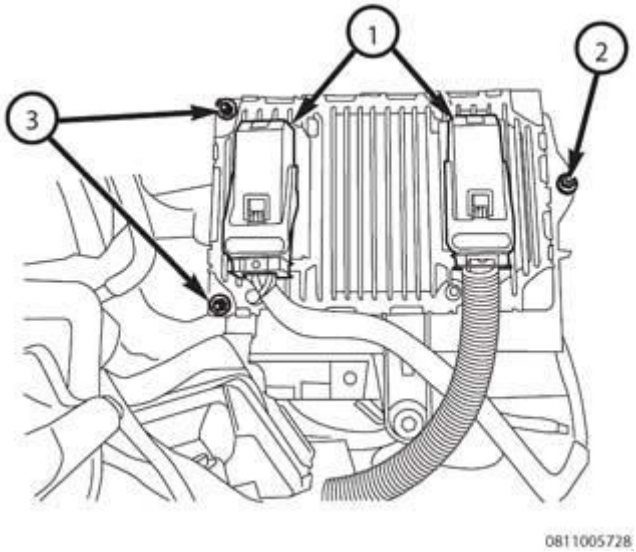

Fig. 59: Powertrain Control Module Electrical Connectors & Nuts
Courtesy of CHRYSLER GROUP, LLC

1. Disconnect the battery negative cable.
2. Disconnect the Powertrain Control module electrical connector (1).
3. Remove the nuts (2, 3) that secure the PCM to the PCM mount

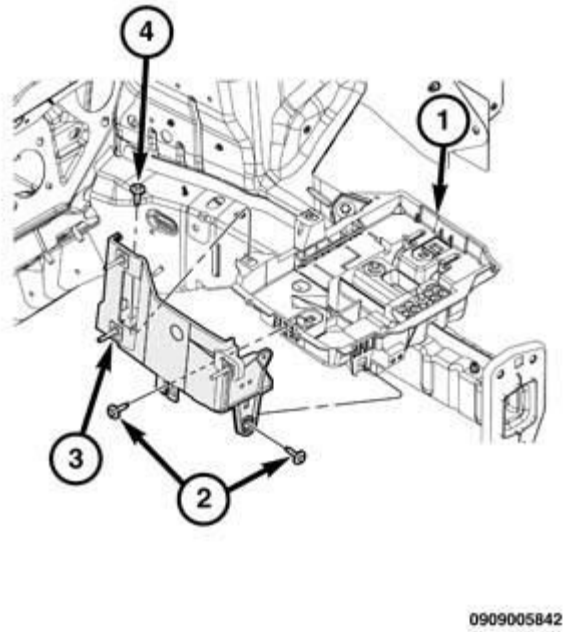

Fig. 60: Battery Tray, PCM Mount & Bolts
Courtesy of CHRYSLER GROUP, LLC

4. If required, remove the PCM mount (3).

INSTALLATION

DIESEL

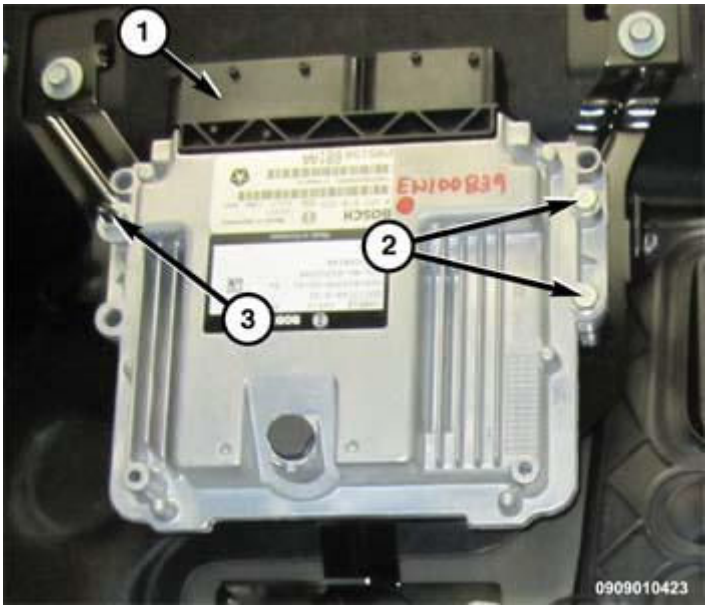

Fig. 61: Powertrain Control Module (PCM), Nuts & Bolts

Courtesy of CHRYSLER GROUP, LLC

1. Check pin connectors in Powertrain Control Module (PCM) and the wire harness connectors for corrosion or damage. Also check pin heights in connectors. Pin heights should all be the same. Repair as necessary before installing harness connectors.
2. Install the PCM (1) and securely tighten bolts (2), nut (3).

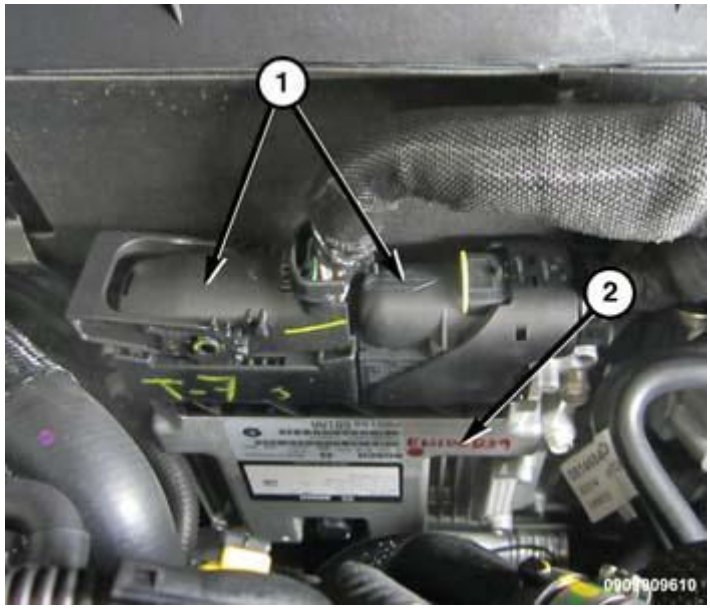

Fig. 62: Powertrain Control Module (PCM) & Harness Connectors
Courtesy of CHRYSLER GROUP, LLC

3. Connect the PCM wire harness connector (1).
4. Connect the negative battery cable.
5. Use a diagnostic scan tool to reprogram new PCM with vehicles original Vehicle Identification Number (VIN) and original vehicle mileage. Refer to the appropriate Testing & Diagnostics article in Engine Performance .

2.4L/3.2L

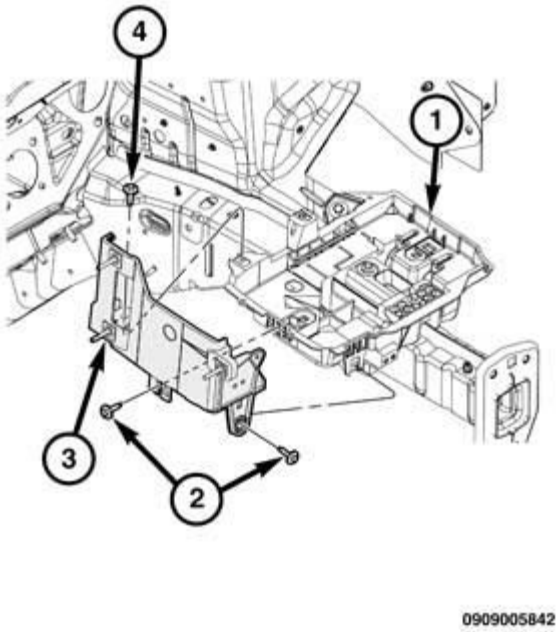

Fig. 63: Battery Tray, PCM Mount & Bolts
Courtesy of CHRYSLER GROUP, LLC

CAUTION: If a new powertrain control module is being installed, use a scan tool to reprogram the new module with the original vehicle identification number (VIN) and original mileage. If this step is not performed, a Diagnostic Trouble Code (DTC) will set.

1. If removed, install the PCM mount (3). Tighten the bolts (2) to 5 N.m (44 in. lbs.).

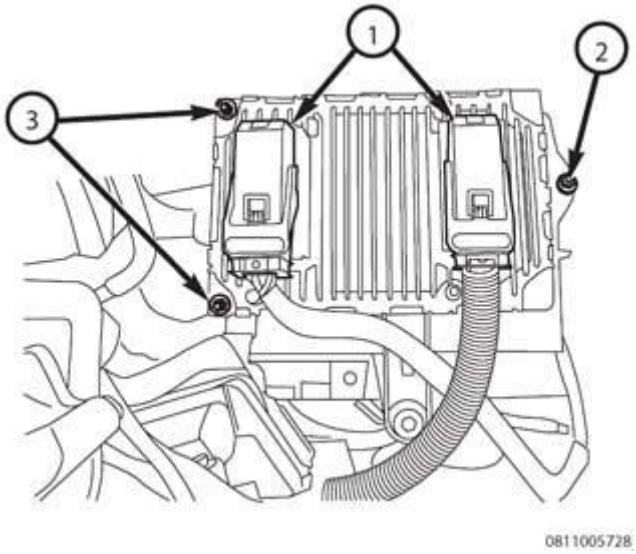

Fig. 64: Powertrain Control Module Electrical Connectors & Nuts

Courtesy of CHRYSLER GROUP, LLC

2. Position the PCM onto the mount.
3. Install the ground wire. Tighten the nut (2) to 7 N.m (62 in. lbs.).
4. Install the nuts (3) Tighten to 7 N.m (62 in. lbs.).
5. Install the PCM electrical connectors.
6. Connect the battery negative cable.

NOTE: **If the module is being replaced with a new unit, a diagnostic scan tool MUST be used to align the PROXI configuration data into the new. Follow the routine outlined in the diagnostic scan tool for PROXI Configuration Alignment.**

MODULE, RADIO FREQUENCY (RF HUB)

DESCRIPTION

DESCRIPTION

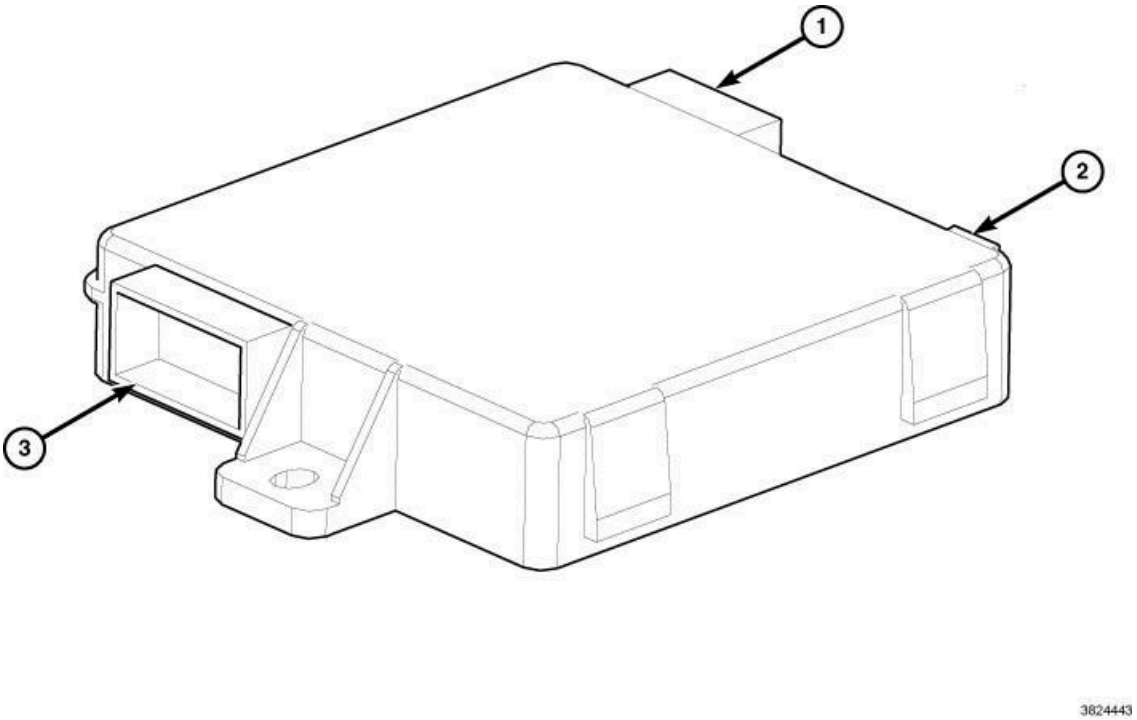

Fig. 65: Radio Frequency Hub Module & Connector Receptacles
Courtesy of CHRYSLER GROUP, LLC

The Radio Frequency Hub Module (RFHM) (2) (also known as the RF Hub/RFH) is a primary component of several standard and optional electronic systems in the vehicle. The RFHM is a Radio Frequency (RF) and Low Frequency (LF) receiver, contains controlling logic for a number of systems and communicates with other

electronic modules and nodes in the vehicle over the Controller Area Network (CAN) data bus as well as over a private serial bus. There are several models of the RFHM that support NAFTA, BUX and Japan markets. Different signal supporting options include automatic transmission, manual transmission, Rotary ignition system using IGNM switch, Passive Entry Keyless go system using smart door handles and KIN switch, and remote start.

Systems and features supported by the RFHM include:

- **Brake Transmission Shift Interlock (BTSI) System**
- **Ignition Switch System**
- **Passive Entry (PE) Keyless Go (KG) System**
- **Remote Keyless Entry (RKE) System**
- **Remote Start System**
- **Sentry Key Immobilizer System (SKIS)**
- **Tire Pressure Monitor (TPM) System**
- **Vehicle Theft Alarm (VTA) System**

Concealed and protected within the molded black plastic RFHM housing is the microprocessor and the other electronic circuitry of the module. The RFHM is located in the rear cargo area headliner. It is secured through two mounting tabs integral to the module housing by two plastic push-in fasteners.

Depending upon vehicle equipment, either one or two connector receptacles (1 and 3) integral to the RFHM housing are connected to the vehicle electrical system through dedicated take outs and connectors of the body wire harness. In vehicles with the optional remote start system, a remote start antenna is located adjacent to the RFHM on the shelf support and is connected directly to the RFHM through a third integral connector receptacle (2).

The RFHM cannot be adjusted or repaired and, if damaged or ineffective, it must be replaced.

OPERATION

OPERATION

The Radio Frequency Hub Module (RFHM) (also known as the RF Hub/RFH) is an integrated receiver (or base station) in the vehicle that communicates with other electronic modules in the vehicle over either the Controller Area Network (CAN) data bus or a private serial bus to support the following standard and optional vehicle features or systems.

- **Brake Transmission Shift Interlock System (for automatic Transmission only)** - The RFHM contains the controlling logic for the Brake Transmission Shift Interlock (BTSI) solenoid. The RFHM monitors the key position from the IGnition Node Module (IGNM) received over a private serial bus, hard wires brake input as well as inputs received over the CAN data bus to perform the BTSI solenoid control functions.
- **Ignition Systems** - Depending upon how the vehicle is equipped, Rotary Switch system or Keyless GO system. For rotary system, IGnition Node Module IGNM coil communicate with FOBIK through LF signals (125 KHz) then communicates it to RFHM through a private serial bus, then RFHM sends CAN

data bus to BCM for IGNTION status after valid key is verified. The RFHM also contains the controlling logic for the KG (KIN) back lighting features.

- **Passive Entry** - If Smart door handles or exterior deck lid release switch is activated, RFHM fires and monitors LF signals from five Low Frequency (LF) antennas which wake up and communicate with the FOBIK, and RF signals from FOBIK to verify the key,, if valid key is recognized by RFHM then RFHM sends CAN data bus to BCM to lock or unlock the vehicle.
- **Remote Keyless Entry** - The RFHM is an RF receiver that monitors RF signals from Remote Keyless Entry (RKE) transmitter (FOBIK) and relays the appropriate electronic messages BCM module over the CAN data bus to support the features of RKE functions.
- **Remote Start System** - The RFHM is an RF receiver that monitors RF signals received through the remote start antenna (longer range) from the Remote Keyless Entry (RKE) transmitter or the Passive Entry Keyless Go (PEKG) FOBIK and relays the appropriate electronic messages to BCM over the CAN data bus to support all RKE functions including optional remote start function.
- **Sentry Key Immobilizer System** - RFHM uses a new high security encryption system called "Advanced Encryption Standard -AES" for Sentry Key Immobilizer System (SKIS). The new system marries FOBIKs, RFHM, BCM, ELV (if so equipped" and ECM with unique secret keys for each vehicle. Swapping parts ARE NOT ALLOWED in the new system, FOBIK are not allow to program for more than one Vehicle. Replacing any part of the system shall be done only in Chrysler authorize dealers using Chrysler diagnostic tool.
- **Tire Pressure Monitor System** - The RFHM is an RF receiver that monitors RF signals received from the Tire Pressure Monitor (TPM) sensors and relays the appropriate electronic messages to other electronic modules in the vehicle over the CAN data bus to support the features of the TPM system.
- **Vehicle Theft Alarm System** - The RFHM is an RF receiver that monitors RF signals received from the Remote Keyless Entry (RKE) transmitter or the Passive Entry Keyless Go (PEKG) FOB with Integrated Key (FOBIK) and relays the appropriate electronic messages to other electronic modules in the vehicle over the CAN data bus to support the features of the optional VTA system.

The RFHM is connected to a fused B(+) circuit and has a path to a clean ground at all times. These connections allow it to remain functional regardless of the ignition switch status. Any input to the RFHM that controls a vehicle system function that does not require that the ignition switch status be ON such as depressing a button on an RKE or FOBIK transmitter, prompts the RFHM to wake up and transmit on the CAN data bus.

The Body Control Module (BCM) stores and compares vehicle configuration data with the RFHM as well as with other Electronic Control Units (ECU) in the vehicle. This process is referred to as PRogramming Of Configuration of Systems Integrated (PROCSI) (also known as PROXI). If a configuration mismatch is detected, the BCM sets a DTC. A configuration mismatch DTC will require the performance of a Restore BCM PROXI Configuration routine, or a PROXI Configuration Alignment routine using a diagnostic scan tool.

RFHM uses On-Board Diagnostics (OBD) to monitor all of the Functions and circuits it controls, then sets active and stored Diagnostic Trouble Codes (DTC) for any monitored function faults it detects. RFHM will also send electronic message requests to the Instrument Cluster (IC) (also known as the Instrument Panel Cluster/IPC) through the gate way module (BCM) for the display of certain textual warning messages related to some detected functions conditions or faults.

The hard wired inputs and outputs of the RFHM may be diagnosed using conventional diagnostic tools and procedures. Refer to the appropriate wiring information. However, conventional diagnostic methods will not

prove conclusive in the diagnosis of the RFHM electronic controls or the communication between modules and other devices that provide some features of the RFHM controlled systems. The most reliable, efficient and accurate means to diagnose the RFHM or the electronic controls and communication related to RFHM-controlled systems operation requires the use of a diagnostic scan tool. Refer to the appropriate diagnostic information.

REMOVAL

REMOVAL

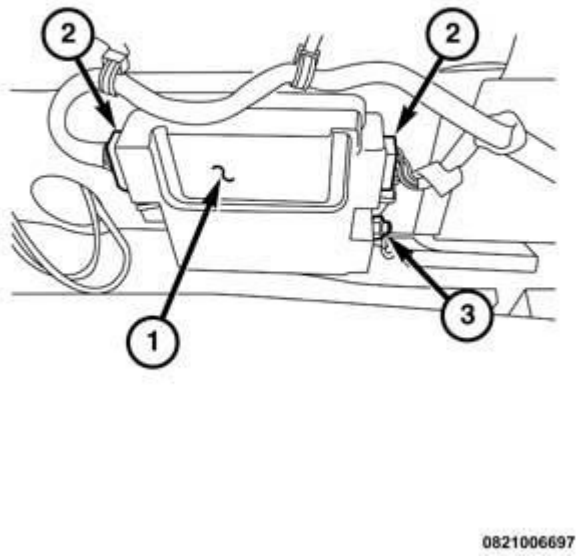

Fig. 66: RF Hub & Harness Connectors
Courtesy of CHRYSLER GROUP, LLC

1. Disconnect the negative battery cable from the battery terminal.
2. Remove the rear cargo area sliding cover.
3. Fold both rear seats down.
4. Remove upper C pillar trim panel cover and fastener on both left and right side of the vehicle.
5. Position aside the both upper C pillar trim panels.
6. Pull down the rear of the headliner to gain access to the RF Hub assembly.
7. Remove both body harness connectors (2) (if so equipped) and the antenna connectors (3) (if so equipped) from the RF Hub (1).
8. Remove both fasteners securing the RF Hub to the roof of the vehicle.
9. Remove the RF Hub assembly.

INSTALLATION

INSTALLATION

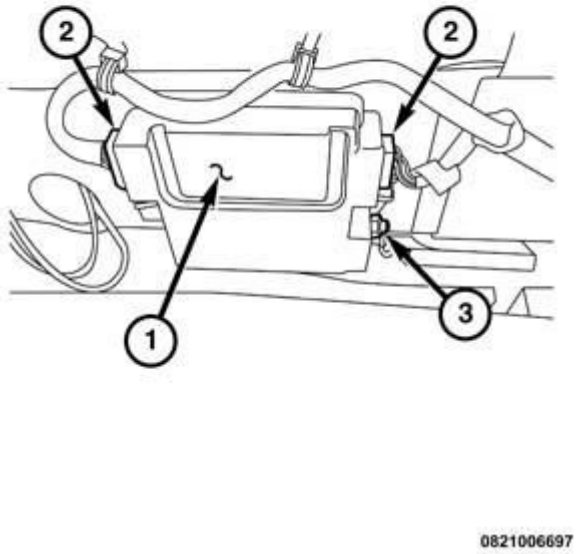

Fig. 67: RF Hub & Harness Connectors
Courtesy of CHRYSLER GROUP, LLC

1. Position the RF HUB (1) in place for installation.
2. Use two fasteners to secure the RF HUB in position.
3. Connect both body harness connectors (2) (if so equipped) and the antenna connectors (3) (if so equipped) to the RF Hub (1).
4. Secure the rear of the headliner to an installed position.
5. Seat both C pillar panels into an installed position.
6. Install the fastener and cap into place on both C pillar panels.
7. Install the rear cargo sliding cover.
8. Position both rear seats to their upright position.
9. Connect the negative battery cable to the negative battery post.
10. Perform the BODY VERIFICATION TEST. Refer to **STANDARD PROCEDURE** .

NOTE: Replace and Program the module(s) per the "RF-Hub, BCM, PCM, FOBik and ELV Replacement and Programming Order Guide". Refer to STANDARD PROCEDURE.

NOTE: If this Electronic Control Unit (ECU) is being replaced with a new unit, a diagnostic scan tool MUST be used to align the PROXI configuration data into the new ECU. Follow the routine outlined in the diagnostic scan tool for PROXI

Configuration Alignment under Body Control Module (BCM) Miscellaneous Functions menu.

MODULE, STEERING COLUMN

DESCRIPTION

DESCRIPTION

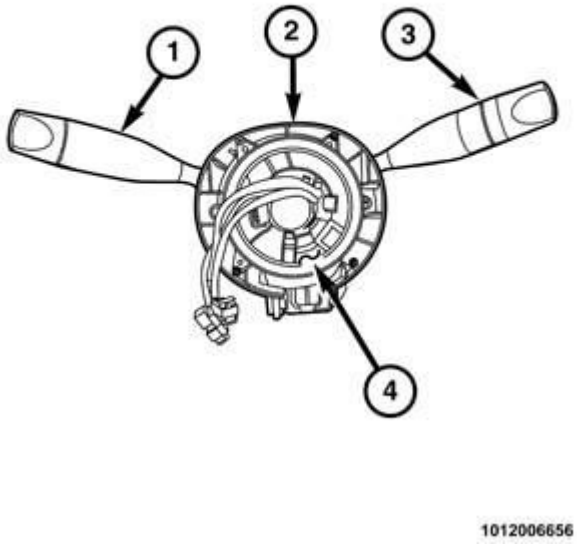

Fig. 68: Steering Column Control Module (SCCM) & Clockspring
Courtesy of CHRYSLER GROUP, LLC

The Steering Control Module (SCM) for this vehicle is a microcontroller based electronic unit internal to the molded plastic Steering Column Control Module (SCCM) mounting housing (2). The SCCM mounting housing is located near the top of the steering column directly below the steering wheel. The SCCM mounting housing includes the left (lighting) multifunction switch (1), the right (wiper) multifunction switch (3) and the SCM, which is also a Local Interface Network (LIN) master node and a gateway to the Controller Area Network (CAN) data bus. The clockspring (4) is secured by four screws over the top of the SCCM mounting housing. For additional information on the clockspring, refer to **CLOCKSPRING, DESCRIPTION** . For additional information on the left multifunction switch, refer to **SWITCH, MULTIFUNCTION, DESCRIPTION** . For additional information on the right multifunction switch, refer to **SWITCH, MULTIFUNCTION, RIGHT, DESCRIPTION** .

The SCCM mounting housing is aligned on the steering column jacket by a rib integral to the upper steering column housing that is engaged in a groove in the mounting flange of the SCCM mounting housing. A plastic latch feature of the SCCM mounting flange then snaps over a small lug that is also integral to the outer circumference of the upper steering column housing, and a metal clamp with a single screw tightens the flange

to the steering column. There are lugs cast into the outer circumference of the steering wheel hub that engage the inner circumference of the clockspring rotor hub to drive the clockspring and to disengage a small red plastic spring-loaded blocker that locks the clockspring rotor hub to the clockspring housing until the steering wheel is properly installed. The steering wheel hub disengages the blocker when properly installed. The steering wheel must be tightened to specification to ensure proper clockspring function.

The SCCM mounting housing includes an integral connector insulator that faces toward the instrument panel. However, the terminal pins that populate this insulator are integral to the clockspring and are connected to the vehicle electrical system through a take out and connector of the instrument panel wire harness. The SCCM mounting housing also has an interconnect receptacle that faces toward the steering wheel. This receptacle accepts the fixed terminal pins of the clockspring half of the interconnect, which consists of several circuits that pass through the clockspring dedicated to connecting the SCM to the vehicle electrical system.

The SCCM mounting housing, the multifunction switches as well as the SCM LIN master node and CAN gateway electronics unit cannot be adjusted or repaired. If ineffective or damaged the entire SCCM mounting housing, left multifunction switch, right multifunction switch and SCM must be replaced as a unit. The clockspring is available for separate service replacement.

OPERATION

OPERATION

Besides serving as the carrier for the clockspring, the left (lighting) multifunction switch and the right (wiper) multifunction switch, the Steering Column Control Module (SCCM) mounting housing contains an electronic circuit board, sometimes referred to as the Steering Control Module (SCM). The SCM is a Local Interface Network (LIN) bus master node and a gateway for the Controller Area Network (CAN) data bus. Refer to **COMMUNICATION, DESCRIPTION**. For additional information on the clockspring, refer to **CLOCKSPRING, OPERATION** . For additional information on the left multifunction switch, refer to **SWITCH, MULTIFUNCTION, OPERATION** . For additional information on the right multifunction switch, refer to **SWITCH, MULTIFUNCTION, RIGHT, OPERATION** .

The microcontroller based SCM provides power and ground to the multifunction switches, then utilizes integrated circuitry to monitor hard wired digital return inputs from the switches. Except for the circuits for the standard equipment Driver AirBag (DAB), which are pass-through circuits of the clockspring, the SCM also provides power and ground to all of the electronics carried on the steering wheel through the stand alone LIN module or, if the vehicle is so equipped, the LIN module integral to the speed control switch pod in the right horizontal steering wheel spoke. The stand alone LIN module or the integral LIN circuitry of the speed control switch pod are each a LIN slave node.

The steering wheel-mounted electronics monitored by the SCM include the horn switch, the standard equipment odometer switch pod, the optional equipment speed control switch pod, the remote radio switches, the optional hands-free communication switches and the optional Electronic Vehicle Information Center (EVIC) control switch pod. The LIN slave node monitors the changing states of these switches through both hard wired analog and digital return inputs, then communicates those switch states to the LIN master node circuitry of the SCM over the LIN data bus. In response to those inputs, the SCM CAN gateway circuitry then transmits electronic message outputs communicating all of the monitored switch state changes to other electronic modules in the vehicle over the CAN data bus.

The SCM is connected to a fused B(+) circuit and has a path to a clean ground at all times. These connections allow it to remain functional regardless of the ignition switch status. Any input to the SCM that controls a vehicle system function that does not require that the ignition switch status be On such as depressing the horn switch, prompts the SCM to wake up and transmit on the CAN data bus.

The Body Control Module (BCM) stores and compares vehicle configuration data with the SCM as well as with other Electronic Control Units (ECU) in the vehicle. This process is referred to as PRogramming Of Configuration of Systems Integrated (PROCSI) (also known as PROXI). If a configuration mismatch is detected, the BCM sets a DTC. A configuration mismatch DTC will require the performance of a Restore BCM PROXI Configuration routine, or a PROXI Configuration Alignment routine using a diagnostic scan tool.

The hard wired circuits between components related to the SCM may be diagnosed using conventional diagnostic tools and procedures. Refer to the appropriate wiring information. The wiring information includes wiring diagrams, proper wire and connector repair procedures, details of wire harness routing and retention, connector pin out information and location views for the various wire harness connectors, splices and grounds.

However, conventional diagnostic methods will not prove conclusive in the diagnosis of the SCM or the electronic controls and communication between modules and other devices that provide some features of the SCM. The most reliable, efficient and accurate means to diagnose the SCM or the electronic controls and communication related to SCM operation requires the use of a diagnostic scan tool. Refer to **DIAGNOSIS AND TESTING** .

DIAGNOSIS AND TESTING

DIAGNOSIS AND TESTING - STEERING COLUMN MODULE

WARNING: **To avoid serious or fatal injury on vehicles equipped with airbags, disable the Supplemental Restraint System (SRS) before attempting any steering wheel, steering column, airbag, Occupant Classification System (OCS), seat belt tensioner, impact sensor or instrument panel component diagnosis or service. Disconnect and isolate the battery negative (ground) cable, then wait two minutes for the system capacitor to discharge before performing further diagnosis or service. This is the only sure way to disable the SRS. Failure to follow these instructions may result in accidental airbag deployment.**

The hard wired circuits between components related to the Steering Control Module (SCM) may be diagnosed using conventional diagnostic tools and procedures. Refer to the appropriate wiring information. The wiring information includes wiring diagrams, proper wire and connector repair procedures, details of wire harness routing and retention, connector pin out information and location views for the various wire harness connectors, splices and grounds.

However, conventional diagnostic methods will not prove conclusive in the diagnosis of the SCM or the electronic control and communication features of the SCM. The most reliable, efficient and accurate means to diagnose the SCM or the electronic control and communication features related to SCM operation requires the use of a diagnostic scan tool. Refer to **DIAGNOSIS AND TESTING** .

REMOVAL

REMOVAL

WARNING: To avoid serious or fatal injury on vehicles equipped with airbags, disable the Supplemental Restraint System (SRS) before attempting any steering wheel, steering column, airbag, Occupant Classification System (OCS), seat belt tensioner, impact sensor or instrument panel component diagnosis or service. Disconnect and isolate the battery negative (ground) cable, then wait two minutes for the system capacitor to discharge before performing further diagnosis or service. This is the only sure way to disable the SRS. Failure to follow these instructions may result in accidental airbag deployment.

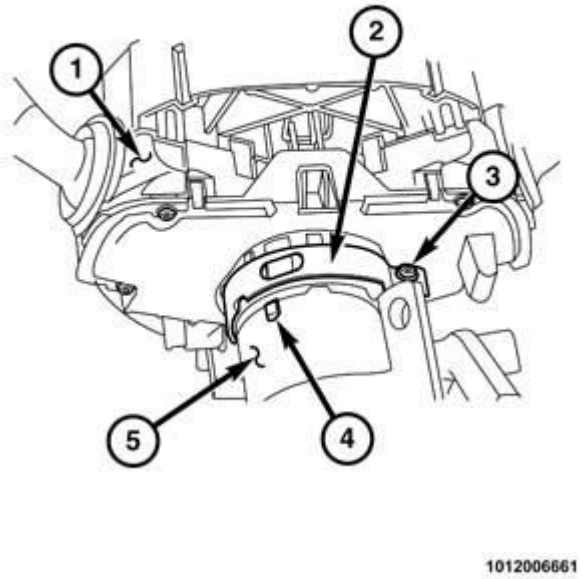

Fig. 69: Steering Column Control Module (SCCM) Mounting Housing, Multifunction Switches Unit, Steering Column & Fasteners
Courtesy of CHRYSLER GROUP, LLC

1. Disconnect and isolate the negative cable from the battery.
2. Remove the clockspring from the Steering Column Control Module (SCCM) mounting housing, Steering Control Module (SCM) and multifunction switches unit (1). Refer to **CLOCKSPRING, REMOVAL** .
3. Remove the screw (3) from the clamp (2) that secures the collar of the SCCM mounting housing, SCM and multifunction switches unit to the steering column (5). The screw head is accessed from the underside of the steering column.
4. Firmly grasp both sides of the SCCM mounting housing and pull it sharply upward to unsnap the latch feature of the collar from the retention tab (4) at about the 1 o'clock position on the top of the steering

column housing.

5. Remove the SCCM mounting housing, SCM and multifunction switches from the vehicle as a unit.

INSTALLATION

INSTALLATION

WARNING: To avoid serious or fatal injury on vehicles equipped with airbags, disable the Supplemental Restraint System (SRS) before attempting any steering wheel, steering column, airbag, Occupant Classification System (OCS), seat belt tensioner, impact sensor or instrument panel component diagnosis or service. Disconnect and isolate the battery negative (ground) cable, then wait two minutes for the system capacitor to discharge before performing further diagnosis or service. This is the only sure way to disable the SRS. Failure to follow these instructions may result in accidental airbag deployment.

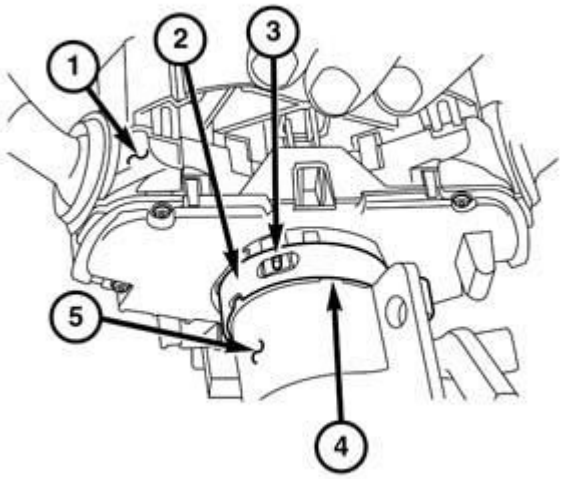

1012006663

Fig. 70: Steering Column Control Module (SCCM) Mounting Housing, Multifunction Switches Unit, Steering Column & Fasteners
Courtesy of CHRYSLER GROUP, LLC

1. Align the notch (4) in the collar on the back of the Steering Column Control Module (SCCM) mounting housing, Steering Control Module (SCM) and multifunction switches unit (1) to the alignment tab at the 12 o'clock position on the top of the steering column housing (5).
2. Using both hand, press the SCCM mounting housing downward over the top of the steering column firmly and evenly until the latch feature of the collar snaps into place over the retention tab (3) at about

the 1 o'clock position on the top of the steering column housing. The retention tab must be fully within the opening of the collar clamp (2) as shown in the illustration.

NOTE: The SCCM mounting housing must be held firmly while tightening the clamp screw to keep it from rotating clockwise on the column housing.

3. Install and tighten the screw into the clamp that secures the collar of the SCCM mounting housing, SCM and multifunction switches unit to the steering column. The screw is installed from the underside of the steering column. Tighten the screw to 6.5 N.m (57 in. lbs.).
4. Reinstall the clockspring onto the SCCM mounting housing, SCM and multifunction switches unit.
5. Reconnect the negative cable to the battery.

NOTE: If this Electronic Control Unit (ECU) is being replaced with a new unit, a diagnostic scan tool MUST be used to align the PROXI configuration data into the new ECU. Follow the routine outlined in the diagnostic scan tool for PROXI Configuration Alignment under the Body Control Module (BCM) Miscellaneous Functions menu.

MODULE, TRANSMISSION CONTROL

OPERATION

OPERATION

The TCM regulates the amount of hydraulic pressure used to engage the clutches and the Torque Converter Clutch (TCC), in addition to directing hydraulic pressure to engage or release any given clutch for any given required gear. The TCM will actuate the valves via solenoids based on the position of the shifter, transmission fluid temperature, engine operating conditions, traction conditions and driver demands. During a shift, the TCM will actuate the solenoids to match the gear ranges to the optimal torque range of the engine based on the position of the accelerator pedal, shifter and vehicle speed as determined by the PCM based on input from the Vehicle Speed Sensor (VSS) and ABS module. Due to the complexity of the 948TE transmission control system, always refer to **DIAGNOSIS AND TESTING** when attempting to diagnose transmission problems.

REMOVAL

REMOVAL

1. Position vehicle on a suitable hoist with the transaxle in neutral. Refer to **HOISTING, STANDARD PROCEDURE** .
2. Release the hood latch and open the hood.
3. Raise the vehicle enough to gain access to the left front wheel.
4. Remove the left front wheel. Refer to **REMOVAL** .
5. Through the opening rearward of the suspension strut, remove the lower bolts holding the TCM to the transaxle located below the power brake booster.

6. Lower the vehicle.
7. Remove the engine cover.

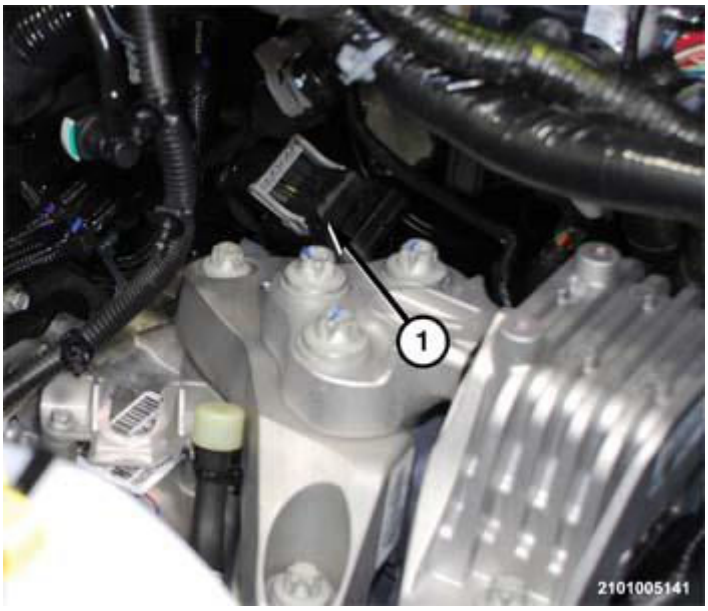

Fig. 71: Identifying Wire Connector Lock To TCM
Courtesy of CHRYSLER GROUP, LLC

8. Disengage the lock (1) holding the wire connector to the TCM.
9. Separate the wire connector from the TCM.
10. Remove the bolts holding the top of the TCM to the transaxle.
11. Separate the TCM from the vehicle.

INSTALLATION

INSTALLATION

NOTE: **When replacing a Transmission Control Module (TCM), the TCM must be programmed. Failure to properly program the TCM may result in the illumination of the Malfunction Indicator Lamp (MIL) and setting DTC(s).**

NOTE: **If this electronic Control Unit (ECU) is being replaced with a new unit, a diagnostics scan tool MUST be used to align the PROXI configuration data into the new ECU. Follow the routine outlined in the diagnostic scan tool for PROXI Configuration Alignment under Body Control Module (BCM) Miscellaneous Functions menu.**

NOTE: **The Valve Body Solenoid Learn procedure must be performed when the TCM and/or valve body is replaced. Failure to perform the Valve Body Solenoid Learn procedure will result in reduced shift quality.**

1. Place the TCM in position on the vehicle.
2. Install the bolts to hold the top of the TCM to the transaxle. Refer to **SPECIFICATIONS** .
3. Insert the wire connector into the TCM.

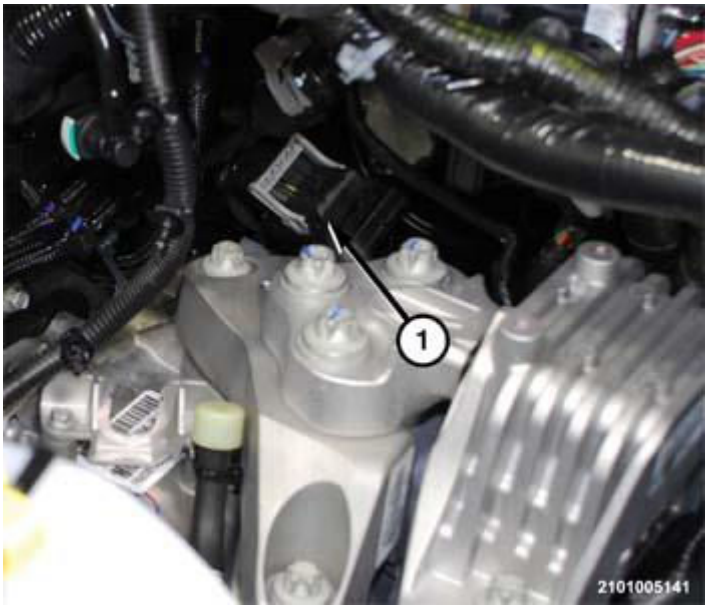

Fig. 72: Identifying Wire Connector Lock To TCM
Courtesy of CHRYSLER GROUP, LLC

4. Engage the lock to hold the wire connector to the TCM.
5. Install the engine cover.
6. Raise the vehicle.
7. Through the opening rearward of the suspension strut, install the lower bolts to hold the TCM to the transaxle located below the power brake booster. Refer to **SPECIFICATIONS** .
8. Install the left front wheel. Refer to **INSTALLATION** .
9. Lower the vehicle to the ground
10. Perform TCM programming and verification. Refer to **STANDARD PROCEDURE** .
11. Close the hood.
12. Road test the vehicle to verify the repair.

MODULE, KEYLESS IGNITION NODE

DESCRIPTION

DESCRIPTION

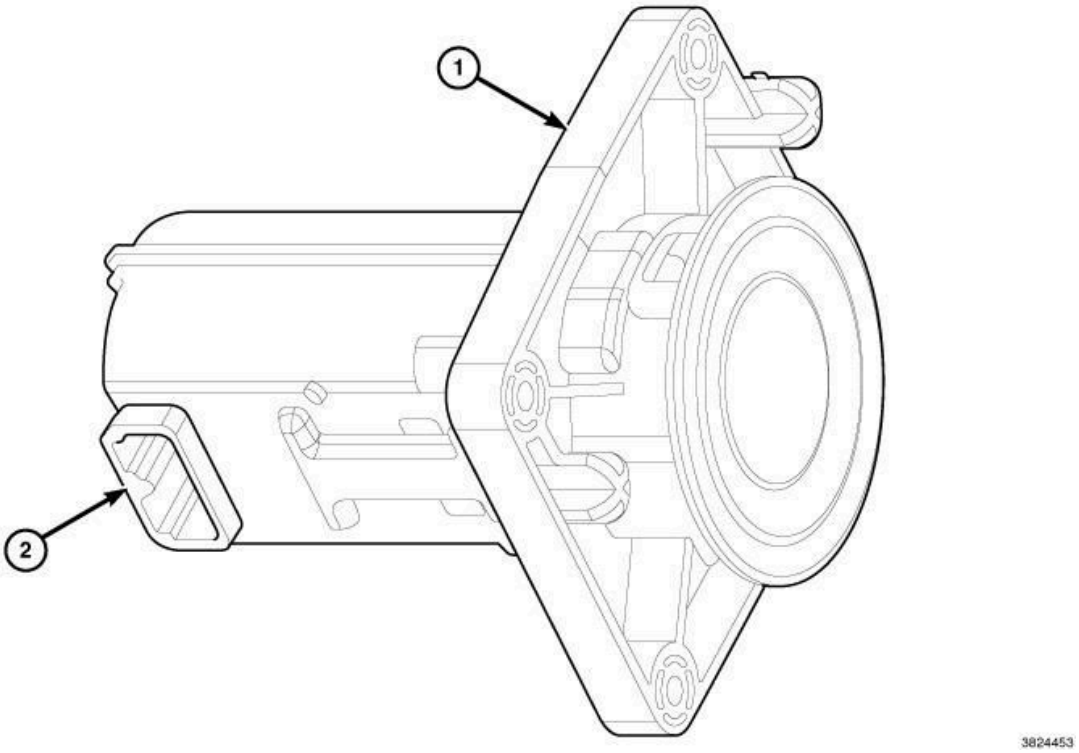

Fig. 73: Keyless Ignition Node
Courtesy of CHRYSLER GROUP, LLC

Keyless Ignition Node (KIN) is part of the new ignition system.

Used on the High end vehicles featuring "Keyless Go".

The KIN module is located in the instrument panel to the left of the center stack.

The KIN is encased in a mounting bracket which is secured to the instrument panel by four (4) screws.

Similar to the LX/JC vehicles except for the mounting bracket.

OPERATION

OPERATION

The KIN module contains the customer interface for ignition switch activation in the form of a momentary switch. Pressing the Start/Stop Button is the method of activation by the customer. The actual ignition status is communicated to the vehicle via a Start Button sense line to the RF HUB. The RF HUB transmits the ignition status on the CAN C communication bus to the vehicle. The KIN contains an LF coil which is used to communicate with and authenticate Fobiks during Back Up mode. A dedicated KIN communication line is used when authenticating or programming Fobiks. The KIN also has the ability to display the ignition status to the customer via three LEDs which illuminate the OFF, ACC, RUN states in a status ring around the Start/Stop Button. A fourth LED provides backlighting illumination for the Start/Stop Button itself.

After the driver is buckled and the shifter is in Park, the driver then pushes the KIN's SSB (Keyless Ignition Node's Start/Stop Button) while pushing the brake pedal as if braking while coming to a stoplight. (For manual transmission vehicles the clutch pedal is fully pressed instead of the brake pedal to initiate a start procedure). Before the vehicle is allowed to start, a 'FOB authentication' cycle must be completed. Once successfully completed, the RF Hub next sends the BCM the ignition switch position, which equates to a 'request to start' command. The process of starting a vehicle without the act of using a bladed key or FOBIK is called 'Keyless Go'.

For further information regarding the Passive Entry system, refer to **OPERATION** .

For further information regarding the Keyless GO system, refer to **OPERATION** .

REMOVAL

REMOVAL

1. Disconnect the negative battery cable.
2. Remove the lower steering column opening trim. Refer to **COVER, STEERING COLUMN OPENING, REMOVAL** .
3. Remove the chin bezel located above the floor console. One fastener and snaps to console.
4. Remove the four (4) screws that retain the keyless ignition node.
5. Disconnect the harness connector and remove the keyless ignition node.

INSTALLATION

INSTALLATION

1. Connect the wire harness to the keyless ignition node.
2. Secure the keyless ignition node to the instrument panel.
3. Install the chin bezel.
4. Install the kneeblocker/lower steering column opening trim. Refer to **COVER, STEERING COLUMN OPENING, INSTALLATION** .
5. Connect the negative battery cable.
6. If KIN is being replaced, program the module. Refer to **STANDARD PROCEDURE** .

NOTE: **This procedure will require you to log into DealerCONNECT and enter a PIN when requested. The PIN is temporary and will be active for 12 hours. After 12 hours, a new PIN will need to be obtained from DealerCONNECT.**

2014 ACCESSORIES AND EQUIPMENT

Electronic Steering Lock (ESL) Module - Electrical Diagnostics - Cherokee

DIAGNOSTIC CODE INDEX

DIAGNOSTIC CODE INDEX

DTC	Description
B1A92-09	STEERING LOCK MOTOR - COMPONENT FAILURES
B1A92-71	STEERING LOCK MOTOR - ACTUATOR STUCK
B1A93-64	STEERING LOCK MOTOR SENSOR - SIGNAL PLAUSIBILITY FAILURE
B212E-23	IGNITION RUN/ACC CONTROL - SIGNAL STUCK LOW
B2199-16	BATTERY VOLTAGE - CIRCUIT VOLTAGE BELOW THRESHOLD
B2199-17	BATTERY VOLTAGE-CIRCUIT VOLTAGE ABOVE THRESHOLD
B22A9-01	ECU INTERNAL PERFORMANCE - GENERAL ELECTRICAL FAILURE
C211B-64	IGNITION RUN/START INPUT - SIGNAL PLAUSIBILITY FAILURE
U0001-00	CAN C BUS
U0001-87	CAN C BUS
U0002-00	CAN C BUS OFF PERFORMANCE
U0002-88	CAN C BUS OFF PERFORMANCE
U0121-00	LOST COMMUNICATION WITH ANTI-LOCK BRAKE SYSTEM (ABS) CONTROL MODULE
U0140-00	LOST COMMUNICATION WITH BODY CONTROL MODULE
U0415-29	IMPLAUSIBLE DATA RECEIVED FROM ABS - SIGNAL INVALID
U0422-29	IMPLAUSIBLE DATA RECEIVED FROM BODY CONTROL MODULE - SIGNAL INVALID
U1110-29	LOST VEHICLE SPEED MESSAGE - SIGNAL INVALID
U1220-87	LOST STEERING LOCK REQUEST MESSAGE - MISSING MESSAGE
U1412-62	IMPLAUSIBLE VEHICLE SPEED SIGNAL RECEIVED - SIGNAL COMPARE FAILURE
U1433-64	IMPLAUSIBLE IGNITION SWITCH STATUS MESSAGE RECEIVED - SIGNAL PLAUSIBILITY FAILURE
U1517-62	BODY CONTROLLER SECRET CODE - SIGNAL COMPARE FAILURE
U1517-87	BODY CONTROLLER SECRET CODE-MISSING MESSAGE

DIAGNOSIS AND TESTING

B1A92-09-STEERING LOCK MOTOR - COMPONENT FAILURES

For a complete wiring diagram, **refer to appropriate SYSTEM WIRING DIAGRAMS article** .

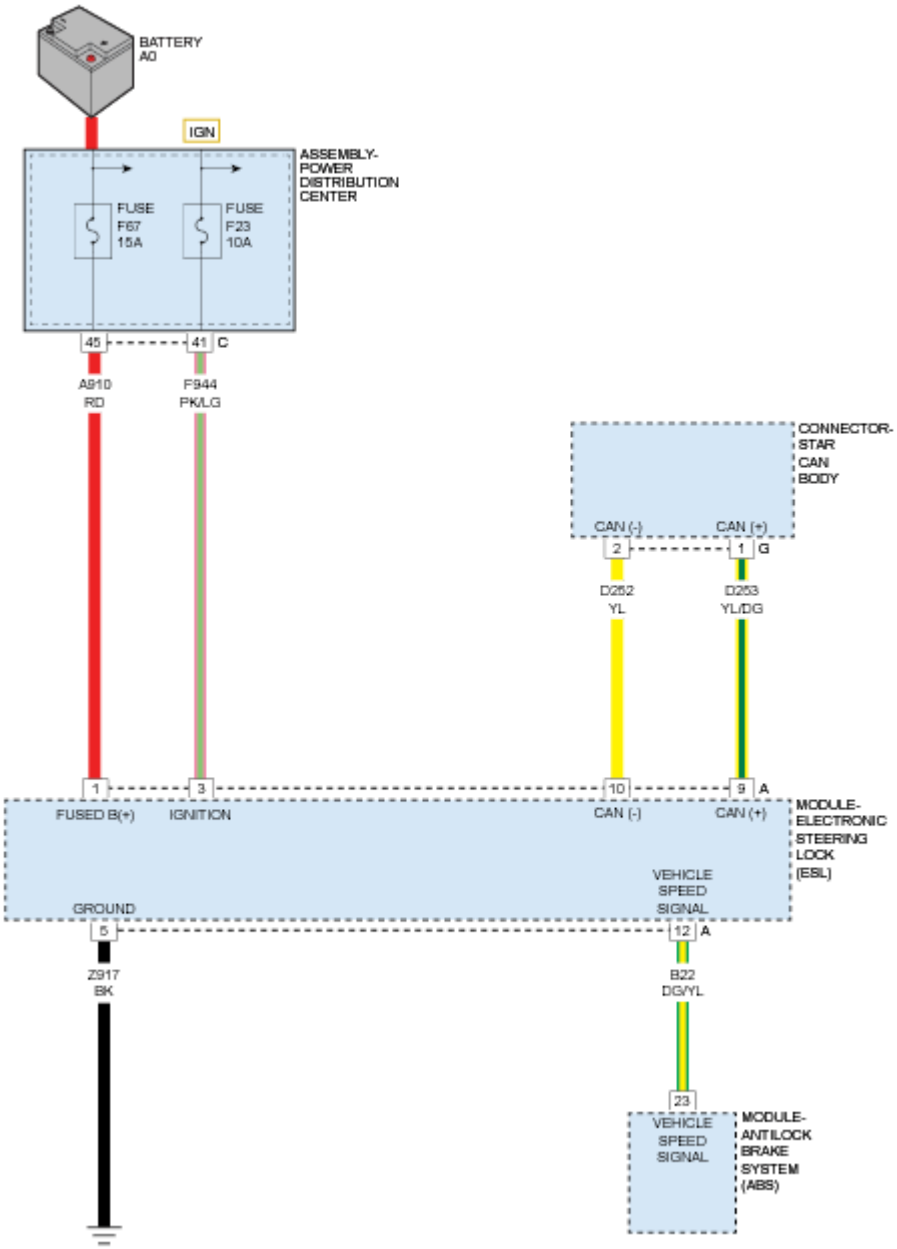

Fig. 1: Electronic Steering Lock Module Circuit Diagram
Courtesy of CHRYSLER GROUP, LLC

THEORY OF OPERATION

The Electronic Steering Lock (ESL) Module prevents the Steering Wheel from turning once the Ignition Switch is turned OFF or if the Immobilizer System does not receive the correct security code. A Lock/Unlock Motor inside the ESL Module incorporates a locking mechanism that locks or unlocks the steering wheel. The ESL Module communicates with several Electronic Control Units (ECUs) via Controller Area Network (CAN). The Antilock Brake System (ABS) Module provides a vehicle speed signal to the ESL Module by way of a dedicated circuit and a CAN message. The Vehicle Speed signal is used by the ESL Module to determine if it is

safe to lock the steering wheel. The Body Control Module (BCM) transmits the Lock/Unlock commands via CAN message to the ESL Module.

WHEN MONITORED

Ignition switch is ON.

System voltage is above a calibrated threshold.

SET CONDITION

An internal failure has been detected.

POSSIBLE CAUSES

Possible Causes
ELECTRONIC STEERING LOCK (ESL) MODULE

Always perform the Pre-Diagnostic Troubleshooting procedure before proceeding. Refer to STANDARD PROCEDURES.

DIAGNOSTIC TEST

1. **CHECK IF DTC IS CURRENT**
    1. With the scan tool, read ESL DTCs.
    2. Record the Environmental Data and any DTCs.
    3. With the scan tool, erase DTCs.
    4. Using the recorded Environmental Data, along with the When Monitored and Set Conditions above, operate the vehicle in the conditions that set the DTC.
    5. With the scan tool, read ESL DTCs.

    Did the DTC reset?

    Yes

    - Using the schematics as a guide, check the Electronic Steering Lock (ESL) terminals and connectors for corrosion, damage or pushed out terminals. Pay particular attention to the power and ground circuits. If no problems are found, replace the ESL Module in accordance with the Service Information.
    - Perform the Electronic Steering Lock (ESL) Verification Test. Refer to **STANDARD PROCEDURES**.

    No

    - Go to 2.

2. **CHECK WIRING AND CONNECTORS**
    1. The conditions necessary to set the DTC are not present at this time.
    2. Using the schematics as a guide, inspect the wiring and connectors specific to this circuit.
    3. Wiggle the wires while checking for shorted and open circuits.
    4. Check for any Service Bulletins that may apply.

    Were there any problems found?

    Yes

    - Repair as necessary.
    - Perform the Electronic Steering Lock (ESL) Verification Test. Refer to **STANDARD PROCEDURES**.

    No

    - Test complete.

B1A92-71-STEERING LOCK MOTOR - ACTUATOR STUCK

For a complete wiring diagram, **refer to appropriate SYSTEM WIRING DIAGRAMS article** .

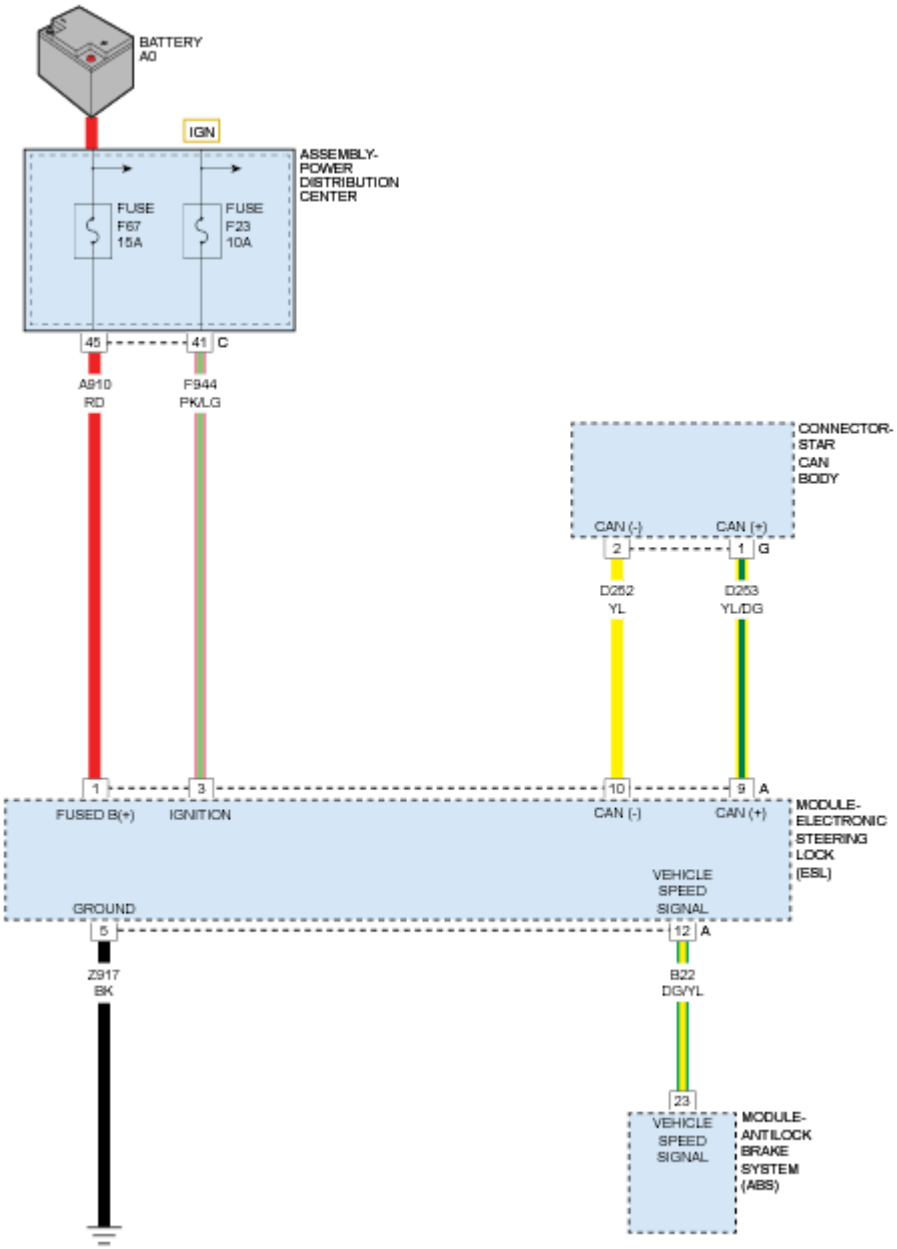

Fig. 2: Electronic Steering Lock Module Circuit Diagram
Courtesy of CHRYSLER GROUP, LLC

THEORY OF OPERATION

The Electronic Steering Lock (ESL) Module prevents the Steering Wheel from turning once the Ignition Switch is turned OFF or if the Immobilizer System does not receive the correct security code. A Lock/Unlock Motor inside the ESL Module incorporates a locking mechanism that locks or unlocks the steering wheel. The ESL Module communicates with several Electronic Control Units (ECUs) via Controller Area Network (CAN). The Antilock Brake System (ABS) Module provides a vehicle speed signal to the ESL Module by way of a dedicated circuit and a CAN message. The Vehicle Speed signal is used by the ESL Module to determine if it is

safe to lock the steering wheel. The Body Control Module (BCM) transmits the Lock/Unlock commands via CAN message to the ESL Module.

WHEN MONITORED

Ignition switch is ON.

System voltage is above a calibrated threshold.

SET CONDITION

An internal failure has been detected.

POSSIBLE CAUSES

Possible Causes
ELECTRONIC STEERING LOCK (ESL) MODULE

Always perform the Pre-Diagnostic Troubleshooting procedure before proceeding. Refer to STANDARD PROCEDURES.

DIAGNOSTIC TEST

1. **CHECK IF DTC IS CURRENT**
    1. With the scan tool, read ESL DTCs.
    2. Record the Environmental Data and any DTCs.
    3. With the scan tool, erase DTCs.
    4. Using the recorded Environmental Data, along with the When Monitored and Set Conditions above, operate the vehicle in the conditions that set the DTC.
    5. With the scan tool, read ESL DTCs.

    Did the DTC reset?

    Yes

    - Using the schematics as a guide, check the Electronic Steering Lock (ESL) terminals and connectors for corrosion, damage or pushed out terminals. Pay particular attention to the power and ground circuits. If no problems are found, replace the ESL Module in accordance with the Service Information.
    - Perform the Electronic Steering Lock (ESL) Verification Test. Refer to **STANDARD PROCEDURES**.

    No

    - Go to 2.

2. **CHECK WIRING AND CONNECTORS**
    1. The conditions necessary to set the DTC are not present at this time.
    2. Using the schematics as a guide, inspect the wiring and connectors specific to this circuit.
    3. Wiggle the wires while checking for shorted and open circuits.
    4. Check for any Service Bulletins that may apply.

    Were there any problems found?

    Yes

    - Repair as necessary.
    - Perform the Electronic Steering Lock (ESL) Verification Test. Refer to **STANDARD PROCEDURES**.

    No

    - Test complete.

B1A93-64-STEERING LOCK MOTOR SENSOR - SIGNAL PLAUSIBILITY FAILURE

For a complete wiring diagram, **refer to appropriate SYSTEM WIRING DIAGRAMS article** .

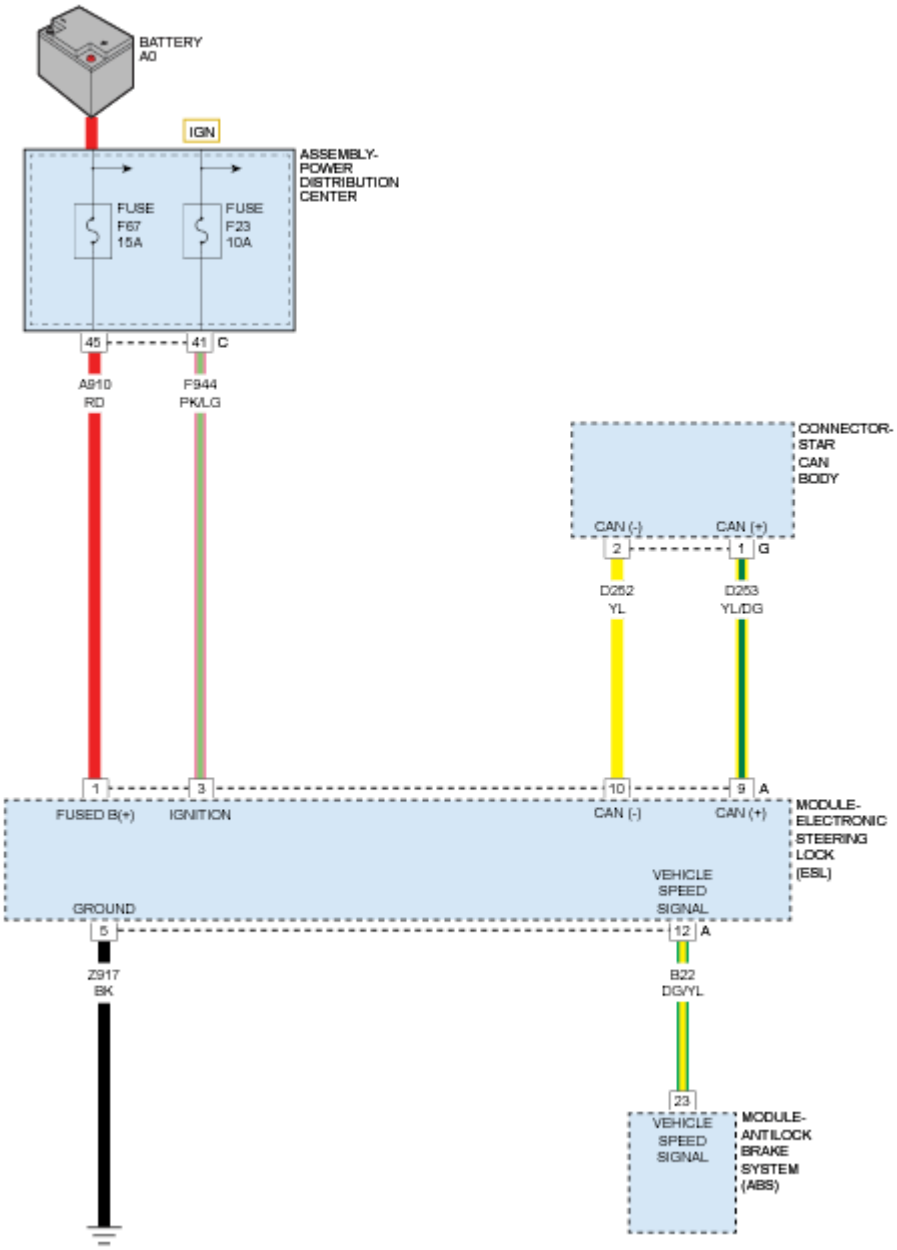

Fig. 3: Electronic Steering Lock Module Circuit Diagram
Courtesy of CHRYSLER GROUP, LLC

THEORY OF OPERATION

The Electronic Steering Lock (ESL) Module prevents the Steering Wheel from turning once the Ignition Switch is turned OFF or if the Immobilizer System does not receive the correct security code. A Lock/Unlock Motor inside the ESL Module incorporates a locking mechanism that locks or unlocks the steering wheel. The ESL Module communicates with several Electronic Control Units (ECUs) via Controller Area Network (CAN). The Antilock Brake System (ABS) Module provides a vehicle speed signal to the ESL Module by way of a dedicated circuit and a CAN message. The Vehicle Speed signal is used by the ESL Module to determine if it is

safe to lock the steering wheel. The Body Control Module (BCM) transmits the Lock/Unlock commands via CAN message to the ESL Module.

WHEN MONITORED

Ignition switch is ON.

System voltage is above a calibrated threshold.

SET CONDITION

An internal failure has been detected.

POSSIBLE CAUSES

Possible Causes
ELECTRONIC STEERING LOCK (ESL) MODULE

Always perform the Pre-Diagnostic Troubleshooting procedure before proceeding. Refer to STANDARD PROCEDURES.

B212E-23-IGNITION RUN/ACC CONTROL - SIGNAL STUCK LOW

For a complete wiring diagram, **refer to appropriate SYSTEM WIRING DIAGRAMS article** .

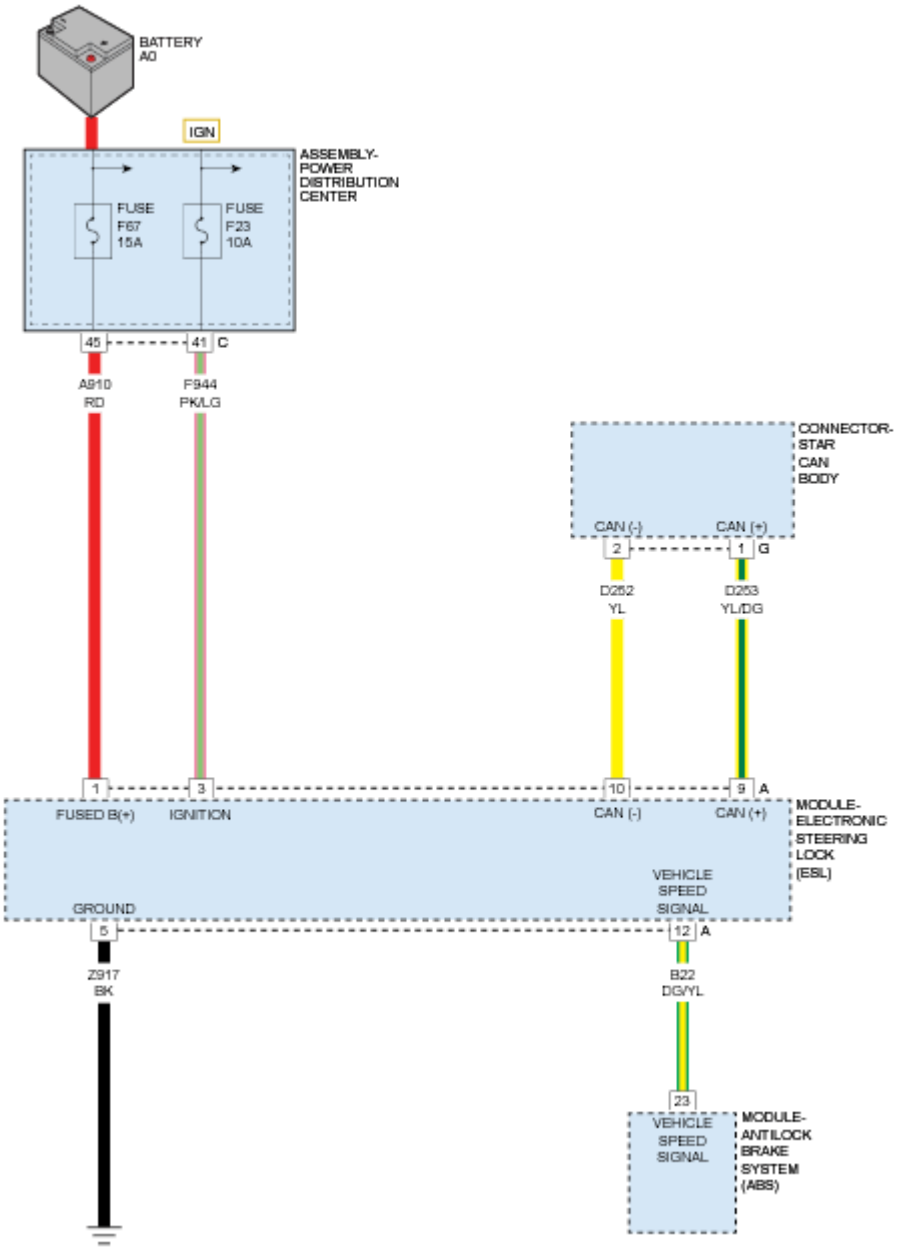

Fig. 4: Electronic Steering Lock Module Circuit Diagram
Courtesy of CHRYSLER GROUP, LLC

THEORY OF OPERATION

The Electronic Steering Lock (ESL) Module prevents the Steering Wheel from turning once the Ignition Switch is turned OFF or if the Immobilizer System does not receive the correct security code. A Lock/Unlock Motor inside the ESL Module incorporates a locking mechanism that locks or unlocks the steering wheel. The ESL Module communicates with several Electronic Control Units (ECUs) via Controller Area Network (CAN). The Antilock Brake System (ABS) Module provides a vehicle speed signal to the ESL Module by way of a dedicated circuit and a CAN message. The Vehicle Speed signal is used by the ESL Module to determine if it is

safe to lock the steering wheel. The Body Control Module (BCM) transmits the Lock/Unlock commands via CAN message to the ESL Module.

WHEN MONITORED

Ignition switch is ON.

SET CONDITION

ESL Module supply voltage is not within specification.

POSSIBLE CAUSES

Possible Causes
(A910) BATTERY SUPPLY CIRCUIT OPEN OR HIGH RESISTANCE
(A910) BATTERY SUPPLY CIRCUIT SHORTED TO GROUND
(F944) IGNITION VOLTAGE SUPPLY CIRCUIT OPEN OR HIGH RESISTANCE
(F944) IGNITION VOLTAGE SUPPLY CIRCUIT SHORTED TO GROUND
(F944) IGNITION VOLTAGE SUPPLY CIRCUIT SHORTED TO BATTERY
(Z917) GROUND CIRCUIT OPEN OR HIGH RESISTANCE
ELECTRONIC STEERING LOCK (ESL) MODULE

Always perform the Pre-Diagnostic Troubleshooting procedure before proceeding. Refer to STANDARD PROCEDURES.

DIAGNOSTIC TEST

1. **CHECK IF DTC IS CURRENT**
    1. With the scan tool, read ESL DTCs.
    2. Record the Environmental Data and any DTCs.
    3. With the scan tool, erase DTCs.
    4. Using the recorded Environmental Data, along with the When Monitored and Set Conditions above, operate the vehicle in the conditions that set the DTC.
    5. With the scan tool, read ESL DTCs.

    Did the DTC reset?

    Yes

    - Go to 2.

    No

    - Go to 10.

2. **CHECK FOR POWERTRAIN CONTROL MODULE (PCM) CHARGING SYSTEM DTCS**
   1. With the scan tool, read PCM DTCs.

      Does the scan tool display any PCM charging system related DTCs?

      Yes

      - Repair PCM Charging System related DTCs. Refer to the **DTC INDEX** article .
      - Perform the Electronic Steering Lock (ESL) Verification Test. Refer to **STANDARD PROCEDURES**.

      No

      - Go to 3.
3. **CHECK FUSES**
   1. Check fuse F67 (15A).
   2. Check fuse F23 (10A).

      Are one or more fuses blown?

      Yes

      - Go to 8.

      No

      - Go to 4.
4. **CHECK (Z917) GROUND CIRCUIT**
   1. Reinstall fuses if removed.
   2. Turn the Ignition Switch OFF.
   3. Disconnect the ESL Module harness connector.
   4. Measure the resistance between ground and the (Z917) circuit.

      Is the resistance below 5.0 Ohms?

      Yes

      - Go to 5.

      No

      - Repair the open or high resistance in the (Z917) ground circuit.
      - Perform the Electronic Steering Lock (ESL) Verification Test. Refer to **STANDARD**

PROCEDURES.

5. **CHECK (A910) BATTERY SUPPLY CIRCUIT FOR AN OPEN OR HIGH RESISTANCE**
   1. Turn the Ignition ON, Engine not running.
   2. Measure the voltage between (A910) Battery Supply circuit and ground.

      Is the voltage above 9 volts?

      Yes

      - Go to 6.

      No

      - Repair the open or high resistance in the (A910) Battery Supply circuit.
      - Perform the Electronic Steering Lock (ESL) Verification Test. Refer to **STANDARD PROCEDURES**.
6. **CHECK (F944) IGNITION VOLTAGE SUPPLY CIRCUIT FOR AN OPEN OR HIGH RESISTANCE**
   1. Measure the voltage between (F944) Ignition Voltage Supply circuit and ground.

      Is the voltage above 9 volts?

      Yes

      - Go to 7.

      No

      - Repair the (F944) Ignition Voltage Supply circuit for an open or high resistance.
      - Perform the Electronic Steering Lock (ESL) Verification Test. Refer to **STANDARD PROCEDURES**.
7. **CHECK (A9101) BATTERY SUPPLY CIRCUIT SHORTED TO (F944) IGNITION VOLTAGE SUPPLY CIRCUIT**
   1. Turn the Ignition Switch OFF.
   2. Remove fuses F67 (15A) and F23 (10A).
   3. Measure the resistance between the (A910) circuit and the (F944) circuit at the ESL Module harness connector.

      Is there continuity between the (A910) circuit and the (F944) circuit?

      Yes

      - Repair the (A910) circuit and the (F944) circuit for a short to each other.

- Perform the Electronic Steering Lock (ESL) Verification Test. Refer to **STANDARD PROCEDURES**.

No

- Replace the ESL Module in accordance with the Service Information.
- Perform the Electronic Steering Lock (ESL) Verification Test. Refer to **STANDARD PROCEDURES**.

8. **CHECK (A910) CIRCUIT FOR A SHORT TO GROUND**
   1. Turn the Ignition Switch OFF.
   2. Remove fuse F67 (15A).
   3. Disconnect the ESL Module harness connector.
   4. Measure the resistance between ground and the (A910) Battery Supply circuit at the ESL Module harness connector.
   5. Measure the resistance between the (A910) Battery Supply circuit and all other circuits in the ESL Module harness connector.

   Is there continuity between the (A910) Battery Supply circuit and ground or another circuit?

   Yes

   - Repair the (A910) Battery Supply circuit for a short to ground or another circuit.
   - Perform the Electronic Steering Lock (ESL) Verification Test. Refer to **STANDARD PROCEDURES**.

   No

   - Go to 9.

9. **CHECK (F944) CIRCUIT FOR A SHORT TO GROUND**
   1. Remove fuse F23 (10A).
   2. Measure the resistance between ground and the (F944) Ignition Supply circuit at the ESL Module harness connector.
   3. Measure the resistance between the (F944) Ignition Supply circuit and all other circuits in the ESL Module harness connector.

   Is there continuity between the (F944) Ignition Supply circuit and ground or another circuit?

   Yes

   - Repair the (F944) Ignition Supply circuit for a short to ground or another circuit.
   - Perform the Electronic Steering Lock (ESL) Verification Test. Refer to **STANDARD PROCEDURES**.

No

- Replace the ESL Module in accordance with the Service Information.
- Perform the Electronic Steering Lock (ESL) Verification Test. Refer to **STANDARD PROCEDURES**.

10. **CHECK WIRING AND CONNECTORS**
    1. The conditions necessary to set the DTC are not present at this time.
    2. Using the schematics as a guide, inspect the wiring and connectors specific to this circuit.
    3. Wiggle the wires while checking for shorted and open circuits.
    4. Check for any Service Bulletins that may apply.

    Were there any problems found?

    Yes

    - Repair as necessary.
    - Perform the Electronic Steering Lock (ESL) Verification Test. Refer to **STANDARD PROCEDURES**.

    No

    - Test complete.

B2199-16-BATTERY VOLTAGE - CIRCUIT VOLTAGE BELOW THRESHOLD

For a complete wiring diagram, **refer to appropriate SYSTEM WIRING DIAGRAMS article** .

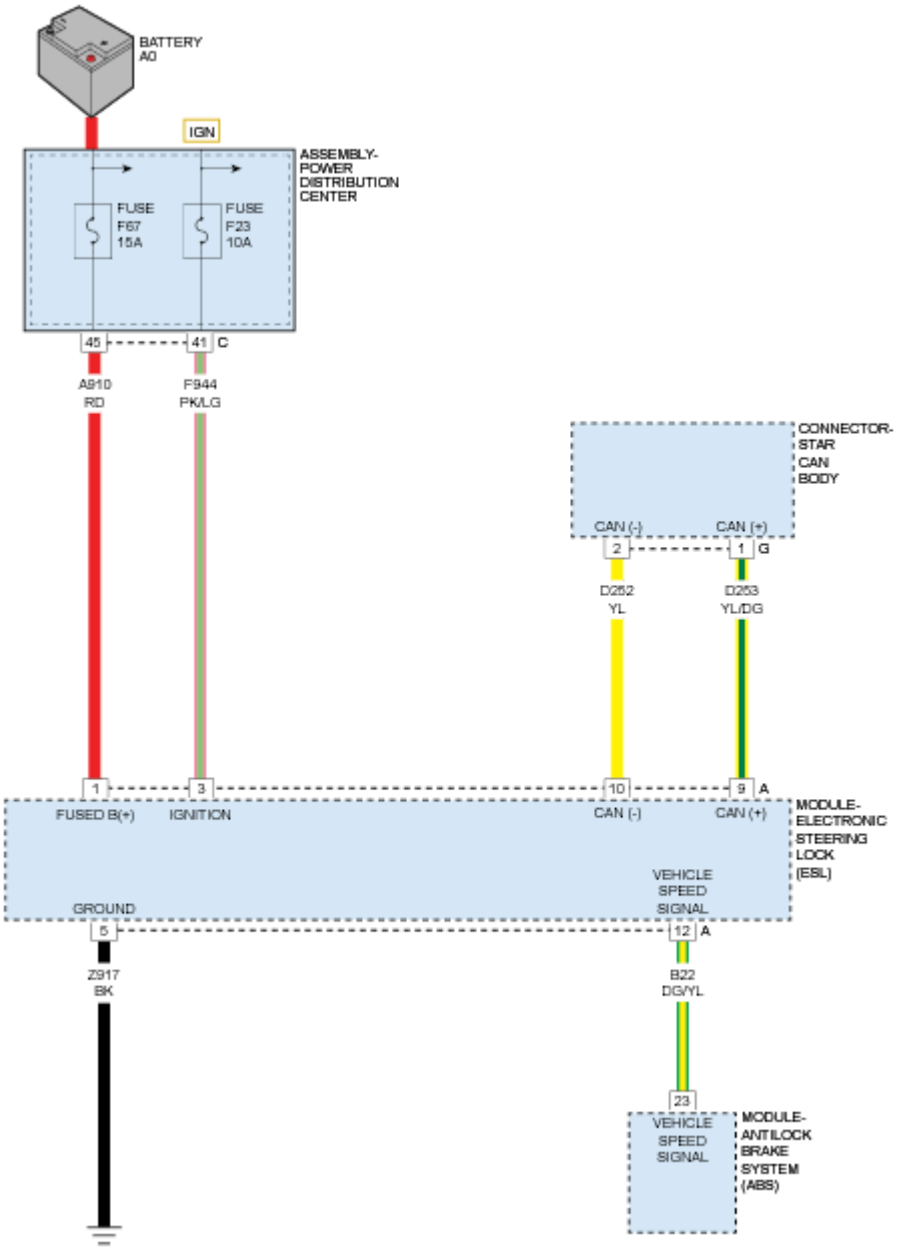

Fig. 5: Electronic Steering Lock Module Circuit Diagram
Courtesy of CHRYSLER GROUP, LLC

THEORY OF OPERATION

The Electronic Steering Lock (ESL) Module prevents the Steering Wheel from turning once the Ignition Switch is turned OFF or if the Immobilizer System does not receive the correct security code. A Lock/Unlock Motor inside the ESL Module incorporates a locking mechanism that locks or unlocks the steering wheel. The ESL Module communicates with several Electronic Control Units (ECUs) via Controller Area Network (CAN). The Antilock Brake System (ABS) Module provides a vehicle speed signal to the ESL Module by way of a dedicated circuit and a CAN message. The Vehicle Speed signal is used by the ESL Module to determine if it is

safe to lock the steering wheel. The Body Control Module (BCM) transmits the Lock/Unlock commands via CAN message to the ESL Module.

WHEN MONITORED

Ignition switch is ON.

SET CONDITION

ESL Module supply voltage is not within specification.

POSSIBLE CAUSES

Possible Causes
(A910) BATTERY SUPPLY CIRCUIT OPEN OR HIGH RESISTANCE
(A910) BATTERY SUPPLY CIRCUIT SHORTED TO GROUND
(F944) IGNITION VOLTAGE SUPPLY CIRCUIT OPEN OR HIGH RESISTANCE
(F944) IGNITION VOLTAGE SUPPLY CIRCUIT SHORTED TO GROUND
(F944) IGNITION VOLTAGE SUPPLY CIRCUIT SHORTED TO BATTERY
(Z917) GROUND CIRCUIT OPEN OR HIGH RESISTANCE
ELECTRONIC STEERING LOCK (ESL) MODULE

Always perform the Pre-Diagnostic Troubleshooting procedure before proceeding. Refer to STANDARD PROCEDURES.

DIAGNOSTIC TEST

1. **CHECK IF DTC IS CURRENT**
    1. With the scan tool, read ESL DTCs.
    2. Record the Environmental Data and any DTCs.
    3. With the scan tool, erase DTCs.
    4. Using the recorded Environmental Data, along with the When Monitored and Set Conditions above, operate the vehicle in the conditions that set the DTC.
    5. With the scan tool, read ESL DTCs.

    Did the DTC reset?

    Yes

    - Go to 2.

    No

    - Go to 10.

2. **CHECK FOR POWERTRAIN CONTROL MODULE (PCM) CHARGING SYSTEM DTCS**
   1. With the scan tool, read PCM DTCs.

      Does the scan tool display any PCM charging system related DTCs?

      Yes

      - Repair PCM Charging System related DTCs. Refer to the **DTC INDEX** article .
      - Perform the Electronic Steering Lock (ESL) Verification Test. Refer to **STANDARD PROCEDURES**.

      No

      - Go to 3.
3. **CHECK FUSES**
   1. Check fuse F67 (15A).
   2. Check fuse F23 (10A).

      Are one or more fuses blown?

      Yes

      - Go to 8.

      No

      - Go to 4.
4. **CHECK (Z917) GROUND CIRCUIT**
   1. Reinstall fuses if removed.
   2. Turn the Ignition Switch OFF.
   3. Disconnect the ESL Module harness connector.
   4. Measure the resistance between ground and the (Z917) circuit.

      Is the resistance below 5.0 Ohms?

      Yes

      - Go to 5.

      No

      - Repair the open or high resistance in the (Z917) ground circuit.
      - Perform the Electronic Steering Lock (ESL) Verification Test. Refer to **STANDARD**

PROCEDURES.

5. **CHECK (A910) BATTERY SUPPLY CIRCUIT FOR AN OPEN OR HIGH RESISTANCE**
   1. Turn the Ignition ON, Engine not running.
   2. Measure the voltage between (A910) Battery Supply circuit and ground.

      Is the voltage above 9 volts?

      Yes

      - Go to 6.

      No

      - Repair the open or high resistance in the (A910) Battery Supply circuit.
      - Perform the Electronic Steering Lock (ESL) Verification Test. Refer to **STANDARD PROCEDURES**.
6. **CHECK (F944) IGNITION VOLTAGE SUPPLY CIRCUIT FOR AN OPEN OR HIGH RESISTANCE**
   1. Measure the voltage between (F944) Ignition Voltage Supply circuit and ground.

      Is the voltage above 9 volts?

      Yes

      - Go to 7.

      No

      - Repair the (F944) Ignition Voltage Supply circuit for an open or high resistance.
      - Perform the Electronic Steering Lock (ESL) Verification Test. Refer to **STANDARD PROCEDURES**.
7. **CHECK (A9101) BATTERY SUPPLY CIRCUIT SHORTED TO (F944) IGNITION VOLTAGE SUPPLY CIRCUIT**
   1. Turn the Ignition Switch OFF.
   2. Remove fuses F67 (15A) and F23 (10A).
   3. Measure the resistance between the (A910) circuit and the (F944) circuit at the ESL Module harness connector.

      Is there continuity between the (A910) circuit and the (F944) circuit?

      Yes

      - Repair the (A910) circuit and the (F944) circuit for a short to each other.

- Perform the Electronic Steering Lock (ESL) Verification Test. Refer to **STANDARD PROCEDURES**.

No

- Replace the ESL Module in accordance with the Service Information.
- Perform the Electronic Steering Lock (ESL) Verification Test. Refer to **STANDARD PROCEDURES**.

8. **CHECK (A910) CIRCUIT FOR A SHORT TO GROUND**
   1. Turn the Ignition Switch OFF.
   2. Remove fuse F67 (15A).
   3. Disconnect the ESL Module harness connector.
   4. Measure the resistance between ground and the (A910) Battery Supply circuit at the ESL Module harness connector.
   5. Measure the resistance between the (A910) Battery Supply circuit and all other circuits in the ESL Module harness connector.

   Is there continuity between the (A910) Battery Supply circuit and ground or another circuit?

   Yes

   - Repair the (A910) Battery Supply circuit for a short to ground or another circuit.
   - Perform the Electronic Steering Lock (ESL) Verification Test. Refer to **STANDARD PROCEDURES**.

   No

   - Go to 9.

9. **CHECK (F944) CIRCUIT FOR A SHORT TO GROUND**
   1. Remove fuse F23 (10A).
   2. Measure the resistance between ground and the (F944) Ignition Supply circuit at the ESL Module harness connector.
   3. Measure the resistance between the (F944) Ignition Supply circuit and all other circuits in the ESL Module harness connector.

   Is there continuity between the (F944) Ignition Supply circuit and ground or another circuit?

   Yes

   - Repair the (F944) Ignition Supply circuit for a short to ground or another circuit.
   - Perform the Electronic Steering Lock (ESL) Verification Test. Refer to **STANDARD PROCEDURES**.

No

- Replace the ESL Module in accordance with the Service Information.
- Perform the Electronic Steering Lock (ESL) Verification Test. Refer to **STANDARD PROCEDURES**.

10. **CHECK WIRING AND CONNECTORS**
    1. The conditions necessary to set the DTC are not present at this time.
    2. Using the schematics as a guide, inspect the wiring and connectors specific to this circuit.
    3. Wiggle the wires while checking for shorted and open circuits.
    4. Check for any Service Bulletins that may apply.

    Were there any problems found?

    Yes

    - Repair as necessary.
    - Perform the Electronic Steering Lock (ESL) Verification Test. Refer to **STANDARD PROCEDURES**.

    No

    - Test complete.

B2199-17-BATTERY VOLTAGE-CIRCUIT VOLTAGE ABOVE THRESHOLD

For a complete wiring diagram, **refer to appropriate SYSTEM WIRING DIAGRAMS article** .

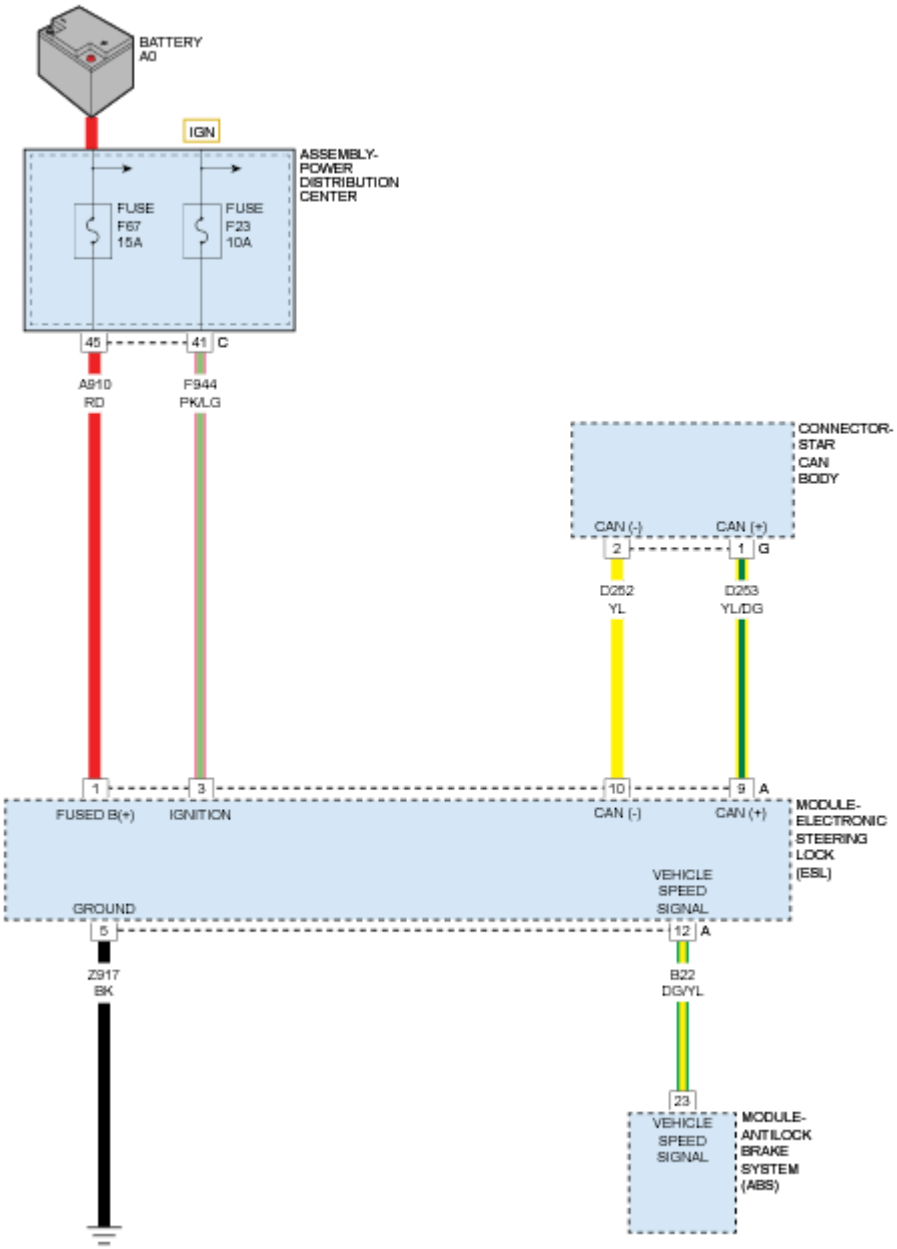

Fig. 6: Electronic Steering Lock Module Circuit Diagram
Courtesy of CHRYSLER GROUP, LLC

THEORY OF OPERATION

The Electronic Steering Lock (ESL) Module prevents the Steering Wheel from turning once the Ignition Switch is turned OFF or if the Immobilizer System does not receive the correct security code. A Lock/Unlock Motor inside the ESL Module incorporates a locking mechanism that locks or unlocks the steering wheel. The ESL Module communicates with several Electronic Control Units (ECUs) via Controller Area Network (CAN). The Antilock Brake System (ABS) Module provides a vehicle speed signal to the ESL Module by way of a dedicated circuit and a CAN message. The Vehicle Speed signal is used by the ESL Module to determine if it is

safe to lock the steering wheel. The Body Control Module (BCM) transmits the Lock/Unlock commands via CAN message to the ESL Module.

WHEN MONITORED

Ignition switch is ON.

SET CONDITION

ESL Module supply voltage is not within specification.

POSSIBLE CAUSES

Possible Causes
(A910) BATTERY SUPPLY CIRCUIT OPEN OR HIGH RESISTANCE
(A910) BATTERY SUPPLY CIRCUIT SHORTED TO GROUND
(F944) IGNITION VOLTAGE SUPPLY CIRCUIT OPEN OR HIGH RESISTANCE
(F944) IGNITION VOLTAGE SUPPLY CIRCUIT SHORTED TO GROUND
(F944) IGNITION VOLTAGE SUPPLY CIRCUIT SHORTED TO BATTERY
(Z917) GROUND CIRCUIT OPEN OR HIGH RESISTANCE
ELECTRONIC STEERING LOCK (ESL) MODULE

Always perform the Pre-Diagnostic Troubleshooting procedure before proceeding. Refer to STANDARD PROCEDURES.

DIAGNOSTIC TEST

1. **CHECK IF DTC IS CURRENT**
    1. With the scan tool, read ESL DTCs.
    2. Record the Environmental Data and any DTCs.
    3. With the scan tool, erase DTCs.
    4. Using the recorded Environmental Data, along with the When Monitored and Set Conditions above, operate the vehicle in the conditions that set the DTC.
    5. With the scan tool, read ESL DTCs.

    Did the DTC reset?

    Yes

    - Go to 2.

    No

    - Go to 10.

2. **CHECK FOR POWERTRAIN CONTROL MODULE (PCM) CHARGING SYSTEM DTCS**
   1. With the scan tool, read PCM DTCs.

      Does the scan tool display any PCM charging system related DTCs?

      Yes

      - Repair PCM Charging System related DTCs. Refer to the **DTC INDEX** article .
      - Perform the Electronic Steering Lock (ESL) Verification Test. Refer to **STANDARD PROCEDURES**.

      No

      - Go to 3.
3. **CHECK FUSES**
   1. Check fuse F67 (15A).
   2. Check fuse F23 (10A).

      Are one or more fuses blown?

      Yes

      - Go to 8.

      No

      - Go to 4.
4. **CHECK (Z917) GROUND CIRCUIT**
   1. Reinstall fuses if removed.
   2. Turn the Ignition Switch OFF.
   3. Disconnect the ESL Module harness connector.
   4. Measure the resistance between ground and the (Z917) circuit.

      Is the resistance below 5.0 Ohms?

      Yes

      - Go to 5.

      No

      - Repair the open or high resistance in the (Z917) ground circuit.
      - Perform the Electronic Steering Lock (ESL) Verification Test. Refer to **STANDARD**

PROCEDURES.

5. **CHECK (A910) BATTERY SUPPLY CIRCUIT FOR AN OPEN OR HIGH RESISTANCE**
   1. Turn the Ignition ON, Engine not running.
   2. Measure the voltage between (A910) Battery Supply circuit and ground.

      Is the voltage above 9 volts?

      Yes

      - Go to 6.

      No

      - Repair the open or high resistance in the (A910) Battery Supply circuit.
      - Perform the Electronic Steering Lock (ESL) Verification Test. Refer to **STANDARD PROCEDURES**.
6. **CHECK (F944) IGNITION VOLTAGE SUPPLY CIRCUIT FOR AN OPEN OR HIGH RESISTANCE**
   1. Measure the voltage between (F944) Ignition Voltage Supply circuit and ground.

      Is the voltage above 9 volts?

      Yes

      - Go to 7.

      No

      - Repair the (F944) Ignition Voltage Supply circuit for an open or high resistance.
      - Perform the Electronic Steering Lock (ESL) Verification Test. Refer to **STANDARD PROCEDURES**.
7. **CHECK (A9101) BATTERY SUPPLY CIRCUIT SHORTED TO (F944) IGNITION VOLTAGE SUPPLY CIRCUIT**
   1. Turn the Ignition Switch OFF.
   2. Remove fuses F67 (15A) and F23 (10A).
   3. Measure the resistance between the (A910) circuit and the (F944) circuit at the ESL Module harness connector.

      Is there continuity between the (A910) circuit and the (F944) circuit?

      Yes

      - Repair the (A910) circuit and the (F944) circuit for a short to each other.

- Perform the Electronic Steering Lock (ESL) Verification Test. Refer to **STANDARD PROCEDURES**.

No

- Replace the ESL Module in accordance with the Service Information.
- Perform the Electronic Steering Lock (ESL) Verification Test. Refer to **STANDARD PROCEDURES**.

8. **CHECK (A910) CIRCUIT FOR A SHORT TO GROUND**
   1. Turn the Ignition Switch OFF.
   2. Remove fuse F67 (15A).
   3. Disconnect the ESL Module harness connector.
   4. Measure the resistance between ground and the (A910) Battery Supply circuit at the ESL Module harness connector.
   5. Measure the resistance between the (A910) Battery Supply circuit and all other circuits in the ESL Module harness connector.

   Is there continuity between the (A910) Battery Supply circuit and ground or another circuit?

   Yes

   - Repair the (A910) Battery Supply circuit for a short to ground or another circuit.
   - Perform the Electronic Steering Lock (ESL) Verification Test. Refer to **STANDARD PROCEDURES**.

   No

   - Go to 9.

9. **CHECK (F944) CIRCUIT FOR A SHORT TO GROUND**
   1. Remove fuse F23 (10A).
   2. Measure the resistance between ground and the (F944) Ignition Supply circuit at the ESL Module harness connector.
   3. Measure the resistance between the (F944) Ignition Supply circuit and all other circuits in the ESL Module harness connector.

   Is there continuity between the (F944) Ignition Supply circuit and ground or another circuit?

   Yes

   - Repair the (F944) Ignition Supply circuit for a short to ground or another circuit.
   - Perform the Electronic Steering Lock (ESL) Verification Test. Refer to **STANDARD PROCEDURES**.

No

- Replace the ESL Module in accordance with the Service Information.
- Perform the Electronic Steering Lock (ESL) Verification Test. Refer to **STANDARD PROCEDURES**.

10. **CHECK WIRING AND CONNECTORS**
    1. The conditions necessary to set the DTC are not present at this time.
    2. Using the schematics as a guide, inspect the wiring and connectors specific to this circuit.
    3. Wiggle the wires while checking for shorted and open circuits.
    4. Check for any Service Bulletins that may apply.

    Were there any problems found?

    Yes

    - Repair as necessary.
    - Perform the Electronic Steering Lock (ESL) Verification Test. Refer to **STANDARD PROCEDURES**.

    No

    - Test complete.

B22A9-01-ECU INTERNAL PERFORMANCE - GENERAL ELECTRICAL FAILURE

For a complete wiring diagram, **refer to appropriate SYSTEM WIRING DIAGRAMS article** .

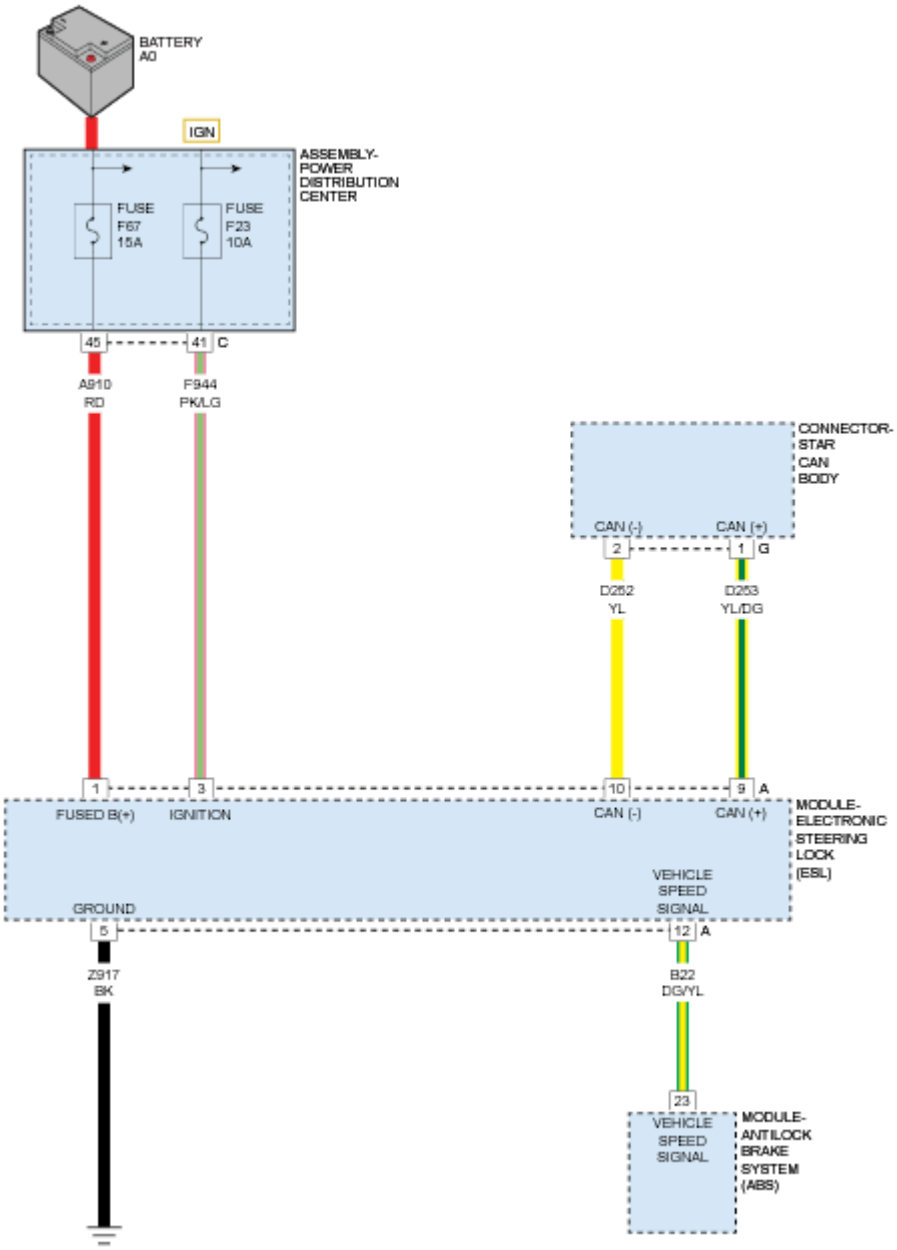

Fig. 7: Electronic Steering Lock Module Circuit Diagram
Courtesy of CHRYSLER GROUP, LLC

THEORY OF OPERATION

The Electronic Steering Lock (ESL) Module prevents the Steering Wheel from turning once the Ignition Switch is turned OFF or if the Immobilizer System does not receive the correct security code. A Lock/Unlock Motor inside the ESL Module incorporates a locking mechanism that locks or unlocks the steering wheel. The ESL Module communicates with several Electronic Control Units (ECUs) via Controller Area Network (CAN). The Antilock Brake System (ABS) Module provides a vehicle speed signal to the ESL Module by way of a dedicated circuit and a CAN message. The Vehicle Speed signal is used by the ESL Module to determine if it is

safe to lock the steering wheel. The Body Control Module (BCM) transmits the Lock/Unlock commands via CAN message to the ESL Module.

WHEN MONITORED

Ignition switch is ON.

System voltage is above a calibrated threshold.

SET CONDITION

An internal failure has been detected.

POSSIBLE CAUSES

Possible Causes
ELECTRONIC STEERING LOCK (ESL) MODULE

Always perform the Pre-Diagnostic Troubleshooting procedure before proceeding. Refer to STANDARD PROCEDURES.

DIAGNOSTIC TEST

1. **CHECK IF DTC IS CURRENT**
    1. With the scan tool, read ESL DTCs.
    2. Record the Environmental Data and any DTCs.
    3. With the scan tool, erase DTCs.
    4. Using the recorded Environmental Data, along with the When Monitored and Set Conditions above, operate the vehicle in the conditions that set the DTC.
    5. With the scan tool, read ESL DTCs.

    Did the DTC reset?

    Yes

    - Using the schematics as a guide, check the Electronic Steering Lock (ESL) terminals and connectors for corrosion, damage or pushed out terminals. Pay particular attention to the power and ground circuits. If no problems are found, replace the ESL Module in accordance with the Service Information.
    - Perform the Electronic Steering Lock (ESL) Verification Test. Refer to **STANDARD PROCEDURES**.

    No

    - Go to 2.

2. **CHECK WIRING AND CONNECTORS**
    1. The conditions necessary to set the DTC are not present at this time.
    2. Using the schematics as a guide, inspect the wiring and connectors specific to this circuit.
    3. Wiggle the wires while checking for shorted and open circuits.
    4. Check for any Service Bulletins that may apply.

    Were there any problems found?

    Yes

    - Repair as necessary.
    - Perform the Electronic Steering Lock (ESL) Verification Test. Refer to **STANDARD PROCEDURES**.

    No

    - Test complete.

C211B-64-IGNITION RUN/START INPUT - SIGNAL PLAUSIBILITY FAILURE

For a complete wiring diagram, **refer to appropriate SYSTEM WIRING DIAGRAMS article** .

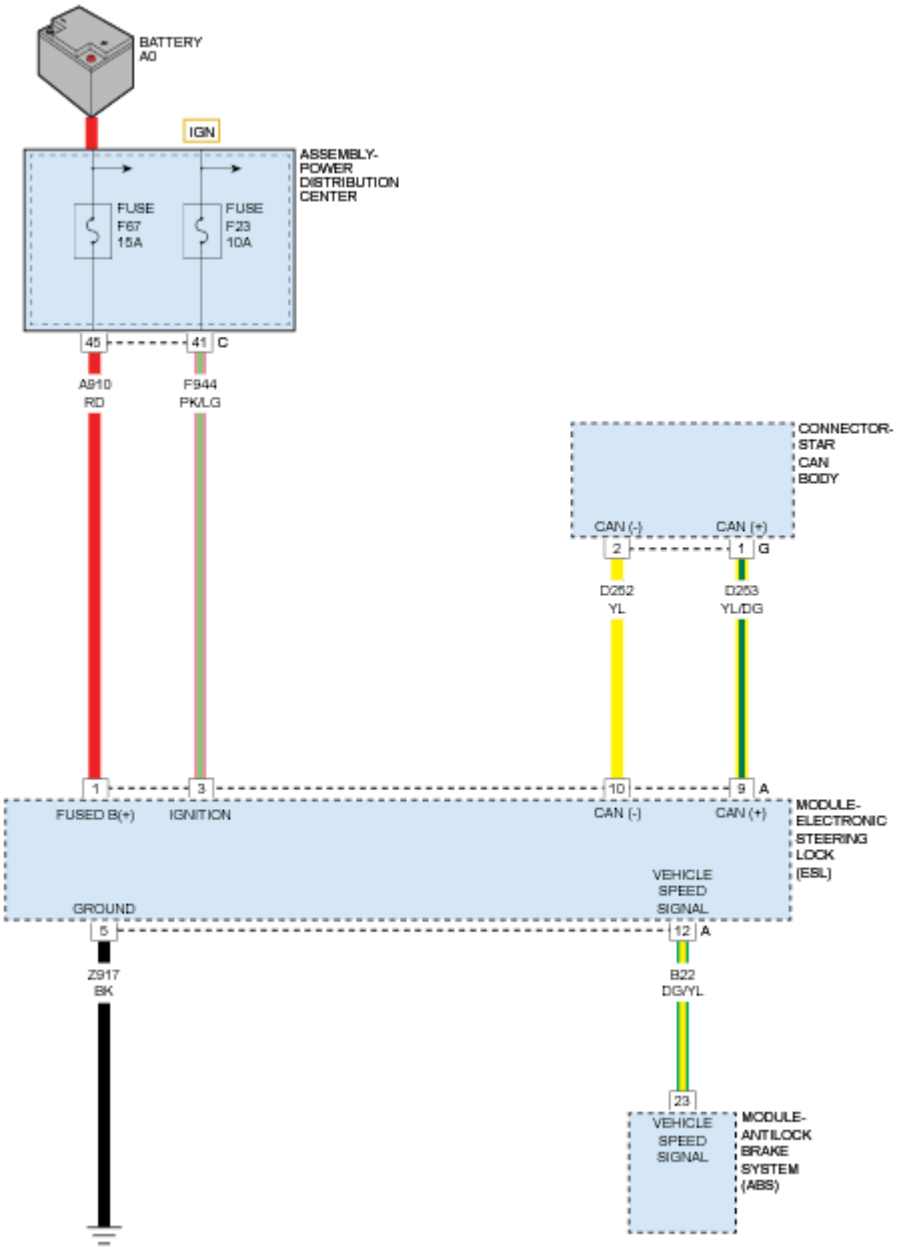

Fig. 8: Electronic Steering Lock Module Circuit Diagram
Courtesy of CHRYSLER GROUP, LLC

THEORY OF OPERATION

The Electronic Steering Lock (ESL) Module prevents the Steering Wheel from turning once the Ignition Switch is turned OFF or if the Immobilizer System does not receive the correct security code. A Lock/Unlock Motor inside the ESL Module incorporates a locking mechanism that locks or unlocks the steering wheel. The ESL Module communicates with several Electronic Control Units (ECUs) via Controller Area Network (CAN). The Antilock Brake System (ABS) Module provides a vehicle speed signal to the ESL Module by way of a dedicated circuit and a CAN message. The Vehicle Speed signal is used by the ESL Module to determine if it is

safe to lock the steering wheel. The Body Control Module (BCM) transmits the Lock/Unlock commands via CAN message to the ESL Module.

WHEN MONITORED

Ignition switch is ON.

System voltage is above a calibrated threshold.

SET CONDITION

An internal failure has been detected.

POSSIBLE CAUSES

Possible Causes
ELECTRONIC STEERING LOCK (ESL) MODULE

Always perform the Pre-Diagnostic Troubleshooting procedure before proceeding. Refer to STANDARD PROCEDURES.

DIAGNOSTIC TEST

1. **CHECK IF DTC IS CURRENT**
    1. With the scan tool, read ESL DTCs.
    2. Record the Environmental Data and any DTCs.
    3. With the scan tool, erase DTCs.
    4. Using the recorded Environmental Data, along with the When Monitored and Set Conditions above, operate the vehicle in the conditions that set the DTC.
    5. With the scan tool, read ESL DTCs.

    Did the DTC reset?

    Yes

    - Using the schematics as a guide, check the Electronic Steering Lock (ESL) terminals and connectors for corrosion, damage or pushed out terminals. Pay particular attention to the power and ground circuits. If no problems are found, replace the ESL Module in accordance with the Service Information.
    - Perform the Electronic Steering Lock (ESL) Verification Test. Refer to **STANDARD PROCEDURES**.

    No

    - Go to 2.

2. **CHECK WIRING AND CONNECTORS**
    1. The conditions necessary to set the DTC are not present at this time.
    2. Using the schematics as a guide, inspect the wiring and connectors specific to this circuit.
    3. Wiggle the wires while checking for shorted and open circuits.
    4. Check for any Service Bulletins that may apply.

    Were there any problems found?

    Yes

    - Repair as necessary.
    - Perform the Electronic Steering Lock (ESL) Verification Test. Refer to **STANDARD PROCEDURES**.

    No

    - Test complete.

U0001-00-CAN C BUS

Perform the COMMUNICATION PRE-DIAGNOSTIC PROCEDURE. Refer to **STANDARD PROCEDURE** .

U0001-87-CAN C BUS

Perform the COMMUNICATION PRE-DIAGNOSTIC PROCEDURE. Refer to **STANDARD PROCEDURE** .

U0002-00-CAN C BUS OFF PERFORMANCE

Perform the COMMUNICATION PRE-DIAGNOSTIC PROCEDURE. Refer to **STANDARD PROCEDURE** .

U0002-88-CAN C BUS OFF PERFORMANCE

Perform the COMMUNICATION PRE-DIAGNOSTIC PROCEDURE. Refer to **STANDARD PROCEDURE** .

U0121-00-LOST COMMUNICATION WITH ANTI-LOCK BRAKE SYSTEM (ABS) CONTROL MODULE

Perform the COMMUNICATION PRE-DIAGNOSTIC PROCEDURE. Refer to **STANDARD PROCEDURE** .

U0140-00-LOST COMMUNICATION WITH BODY CONTROL MODULE

Perform the COMMUNICATION PRE-DIAGNOSTIC PROCEDURE. Refer to **STANDARD PROCEDURE** .

U0415-29-IMPLAUSIBLE DATA RECEIVED FROM ABS - SIGNAL INVALID

For a complete wiring diagram, **refer to appropriate SYSTEM WIRING DIAGRAMS article** .

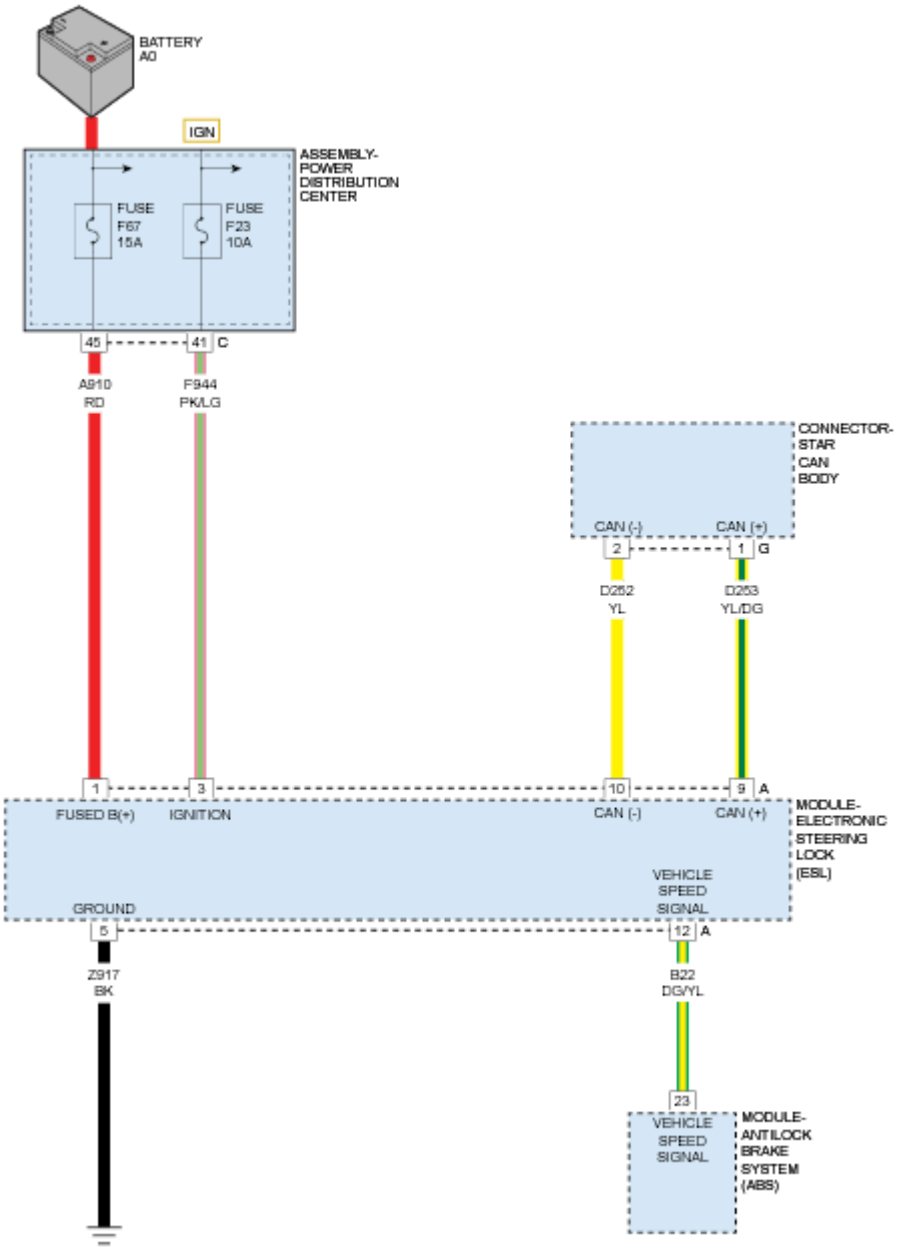

Fig. 9: Electronic Steering Lock Module Circuit Diagram
Courtesy of CHRYSLER GROUP, LLC

THEORY OF OPERATION

The Electronic Steering Lock (ESL) Module prevents the Steering Wheel from turning once the Ignition Switch is turned OFF or if the Immobilizer System does not receive the correct security code. A Lock/Unlock Motor inside the ESL Module incorporates a locking mechanism that locks or unlocks the steering wheel. The ESL Module communicates with several Electronic Control Units (ECUs) via Controller Area Network (CAN). The Antilock Brake System (ABS) Module provides a vehicle speed signal to the ESL Module by way of a dedicated circuit and a CAN message. The Vehicle Speed signal is used by the ESL Module to determine if it is safe to lock the steering wheel. The Body Control Module (BCM) transmits the Lock/Unlock commands via CAN message to the ESL Module.

WHEN MONITORED

Ignition Switch is ON.

System voltage is above a calibrated value.

SET CONDITION

Loss of communication or implausible data from ABS module.

POSSIBLE CAUSES

Possible Causes
ANTILOCK BRAKE SYSTEM (ABS) MODULE DTCS

Always perform the Pre-Diagnostic Troubleshooting procedure before proceeding. Refer to STANDARD PROCEDURES.

DIAGNOSTIC TEST

1. **CHECK IF DTC IS CURRENT**
    1. With the scan tool, read ESL DTCs.
    2. Record the Environmental Data and any DTCs.
    3. With the scan tool, erase DTCs.
    4. Using the recorded Environmental Data, along with the When Monitored and Set Conditions above, operate the vehicle in the conditions that set the DTC.
    5. With the scan tool, read ESL DTCs.

    Did the DTC reset?

    Yes

    - Go to 2.

    No

- Go to 3.

2. **CHECK ABS DTCS**
   1. With the scan tool, read ABS DTCs.

      Are ABS DTCs present?

      Yes

      - Repair ABS DTCs. Refer to **DIAGNOSIS AND TESTING** .
      - Perform the Electronic Steering Lock (ESL) Verification Test. Refer to **STANDARD PROCEDURES**.

      No

      - Using the schematics as a guide, check the Electronic Steering Lock (ESL) terminals and connectors for corrosion, damage or pushed out terminals. Pay particular attention to the power and ground circuits. If no problems are found, replace the ESL Module in accordance with the Service Information.
      - Perform the Electronic Steering Lock (ESL) Verification Test. Refer to **STANDARD PROCEDURES**.

3. **CHECK WIRING AND CONNECTORS**
   1. The conditions necessary to set the DTC are not present at this time.
   2. Using the schematics as a guide, inspect the wiring and connectors specific to this circuit.
   3. Wiggle the wires while checking for shorted and open circuits.
   4. Check for any Service Bulletins that may apply.

      Were there any problems found?

      Yes

      - Repair as necessary.
      - Perform the Electronic Steering Lock (ESL) Verification Test. Refer to **STANDARD PROCEDURES**.

      No

      - Test complete.

U0422-29-IMPLAUSIBLE DATA RECEIVED FROM BODY CONTROL MODULE - SIGNAL INVALID

For a complete wiring diagram, **refer to appropriate SYSTEM WIRING DIAGRAMS article** .

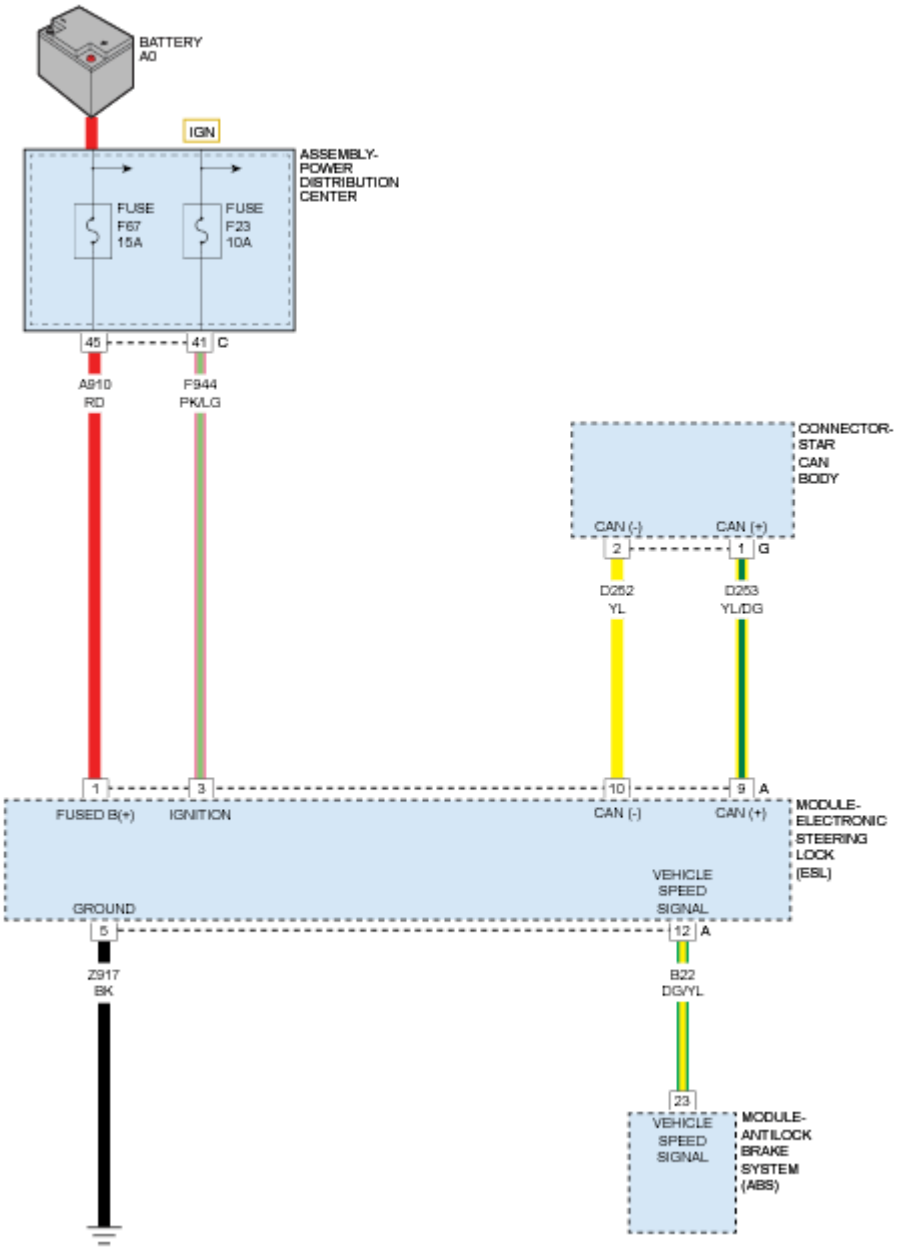

Fig. 10: Electronic Steering Lock Module Circuit Diagram
Courtesy of CHRYSLER GROUP, LLC

THEORY OF OPERATION

The Electronic Steering Lock (ESL) Module prevents the Steering Wheel from turning once the Ignition Switch is turned OFF or if the Immobilizer System does not receive the correct security code. A Lock/Unlock Motor inside the ESL Module incorporates a locking mechanism that locks or unlocks the steering wheel. The ESL Module communicates with several Electronic Control Units (ECUs) via Controller Area Network (CAN). The Antilock Brake System (ABS) Module provides a vehicle speed signal to the ESL Module by way of a dedicated circuit and a CAN message. The Vehicle Speed signal is used by the ESL Module to determine if it is

safe to lock the steering wheel. The Body Control Module (BCM) transmits the Lock/Unlock commands via CAN message to the ESL Module.

WHEN MONITORED

Ignition switch is ON.

System voltage is above a calibrated value.

SET CONDITION

Loss of communication or implausible data from BCM.

POSSIBLE CAUSES

Possible Causes
BODY CONTROL MODULE (BCM) DTCS

Always perform the Pre-Diagnostic Troubleshooting procedure before proceeding. Refer to STANDARD PROCEDURES.

DIAGNOSTIC TEST

1. **CHECK IF DTC IS CURRENT**
    1. With the scan tool, read ESL DTCs.
    2. Record the Environmental Data and any DTCs.
    3. With the scan tool, erase DTCs.
    4. Using the recorded Environmental Data, along with the When Monitored and Set Conditions above, operate the vehicle in the conditions that set the DTC.
    5. With the scan tool, read ESL DTCs.

    Did the DTC reset?

    Yes

    - Go to 2.

    No

    - Go to 3.
2. **CHECK BCM DTCS**
    1. With the scan tool, read BCM DTCs.

    Are BCM DTCs present?

Yes

- Repair BCM DTCs. Refer to the **BODY CONTROL MODULE (BCM) - DIAGNOSTIC CODE INDEX** article .
- Perform the Electronic Steering Lock (ESL) Verification Test. Refer to **STANDARD PROCEDURES**.

No

- Using the schematics as a guide, check the Electronic Steering Lock (ESL) terminals and connectors for corrosion, damage or pushed out terminals. Pay particular attention to the power and ground circuits. If no problems are found, replace the ESL Module in accordance with the Service Information.
- Perform the Electronic Steering Lock (ESL) Verification Test. Refer to **STANDARD PROCEDURES**.

3. **CHECK WIRING AND CONNECTORS**
   1. The conditions necessary to set the DTC are not present at this time.
   2. Using the schematics as a guide, inspect the wiring and connectors specific to this circuit.
   3. Wiggle the wires while checking for shorted and open circuits.
   4. Check for any Service Bulletins that may apply.

   Were there any problems found?

   Yes

   - Repair as necessary.
   - Perform the Electronic Steering Lock (ESL) Verification Test. Refer to **STANDARD PROCEDURES**.

   No

   - Test complete.

U1110-29-LOST VEHICLE SPEED MESSAGE - SIGNAL INVALID

For a complete wiring diagram, **refer to appropriate SYSTEM WIRING DIAGRAMS article** .

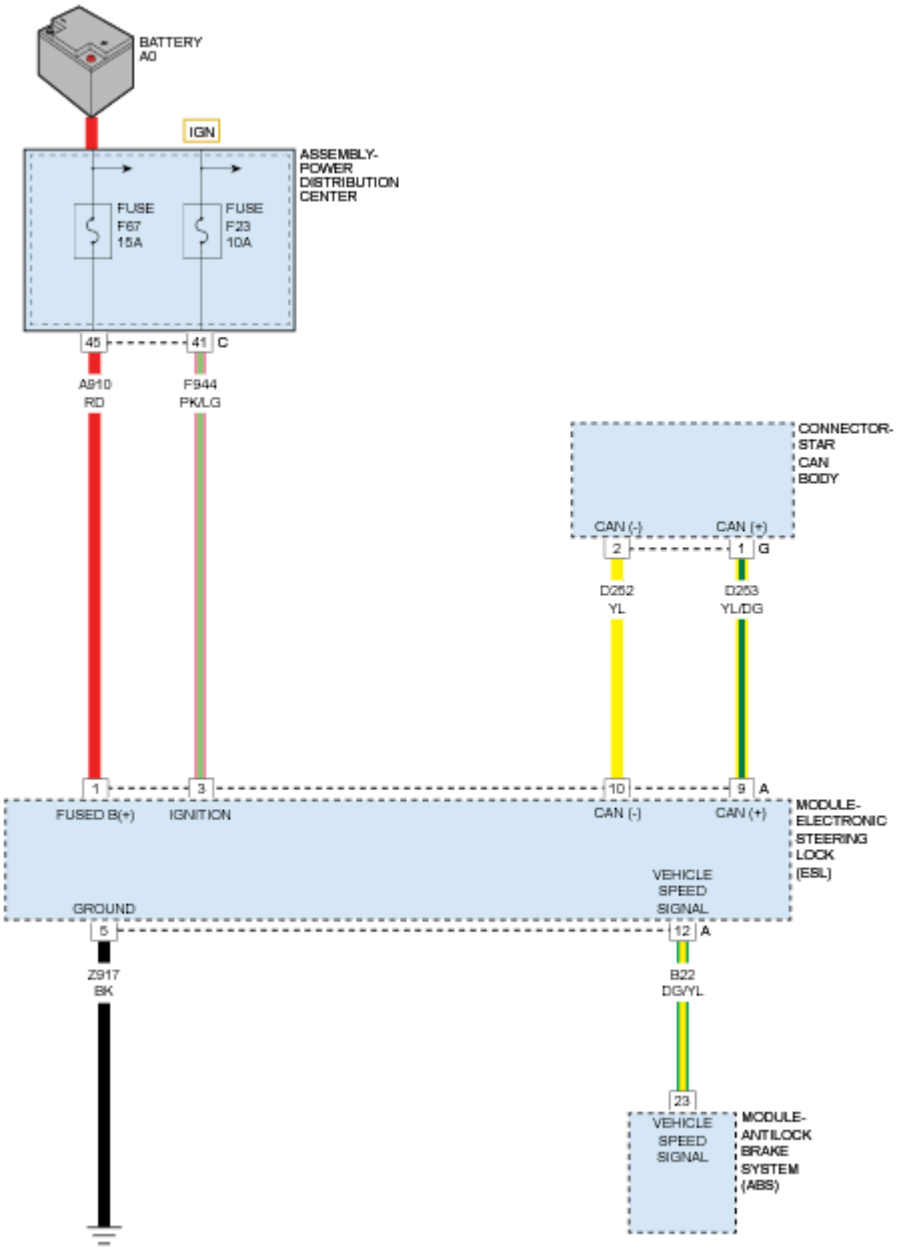

Fig. 11: Electronic Steering Lock Module Circuit Diagram
Courtesy of CHRYSLER GROUP, LLC

THEORY OF OPERATION

The Electronic Steering Lock (ESL) Module prevents the Steering Wheel from turning once the Ignition Switch is turned OFF or if the Immobilizer System does not receive the correct security code. A Lock/Unlock Motor inside the ESL Module incorporates a locking mechanism that locks or unlocks the steering wheel. The ESL Module communicates with several Electronic Control Units (ECUs) via Controller Area Network (CAN). The Antilock Brake System (ABS) Module provides a vehicle speed signal to the ESL Module by way of a dedicated circuit and a CAN message. The Vehicle Speed signal is used by the ESL Module to determine if it is

safe to lock the steering wheel. The Body Control Module (BCM) transmits the Lock/Unlock commands via CAN message to the ESL Module.

WHEN MONITORED

Ignition Switch ON.

SET CONDITION

Vehicle Speed Signal is received from CAN and not received on (B22) Vehicle Speed Signal circuit.

POSSIBLE CAUSES

Possible Causes
(B22) VEHICLE SPEED SIGNAL CIRCUIT OPEN
(B22) VEHICLE SPEED SIGNAL CIRCUIT SHORT TO GROUND
(B22) VEHICLE SPEED SIGNAL CIRCUIT SHORTED TO ANOTHER CIRCUIT
ABS MODULE DTCS
ELECTRONIC STEERING LOCK (ESL) MODULE

Always perform the Pre-Diagnostic Troubleshooting procedure before proceeding. Refer to STANDARD PROCEDURES.

DIAGNOSTIC TEST

1. **CHECK IF DTC IS CURRENT**
    1. With the scan tool, read ESL DTCs.
    2. Record the Environmental Data and any DTCs.
    3. With the scan tool, erase DTCs.
    4. Using the recorded Environmental Data, along with the When Monitored and Set Conditions above, operate the vehicle in the conditions that set the DTC.
    5. With the scan tool, read ESL DTCs.

    Did the DTC reset?

    Yes

    - Go to 3.

    No

    - Go to 5.
2. **CHECK FOR ABS MODULE DTCS**
    1. With the scan tool, read ABS DTCs.

Are ABS Vehicle Speed or Wheel Speed DTCs present?

Yes

- Repair ABS DTCs before proceeding, refer to **DIAGNOSIS AND TESTING** .
- Perform the Electronic Steering Lock (ESL) Verification Test. Refer to **STANDARD PROCEDURES**.

No

- Go to 3.

3. **CHECK (B22) CIRCUIT FOR AN OPEN**
   1. Turn the Ignition Switch OFF.
   2. Disconnect the ESL Module harness connector.
   3. Disconnect the ABS Module harness connector.
   4. Measure the resistance of the (B22) circuit between the ABS Module harness connector and the ESL Module harness connector.

   Is the resistance below 5.0 ohms?

   Yes

   - Go to 4.

   No

   - Repair the (B22) circuit for an open.
   - Perform the Electronic Steering Lock (ESL) Verification Test. Refer to **STANDARD PROCEDURES**.

4. **CHECK (B22) CIRCUIT FOR A SHORT TO GROUND OR SHORT TO ANOTHER CIRCUIT**
   1. Measure the resistance between ground and the (B22) circuit at the ABS Module harness connector.
   2. Measure the resistance between the (B22) circuit and all other circuits in the ABS Module harness connector.

   Is there continuity between the (B22) circuit and ground or another circuit?

   Yes

   - Repair the (B22) circuit for a short to ground or short to another circuit.
   - Perform the Electronic Steering Lock (ESL) Verification Test. Refer to **STANDARD PROCEDURES**.

   No

- Using the schematics as a guide, check the Electronic Steering Lock (ESL) terminals and connectors for corrosion, damage or pushed out terminals. Pay particular attention to the power and ground circuits. If no problems are found, replace the ESL Module in accordance with the Service Information.
- Perform the Electronic Steering Lock (ESL) Verification Test. Refer to **STANDARD PROCEDURES**.

5. **CHECK WIRING AND CONNECTORS**
   1. The conditions necessary to set the DTC are not present at this time.
   2. Using the schematics as a guide, inspect the wiring and connectors specific to this circuit.
   3. Wiggle the wires while checking for shorted and open circuits.
   4. Check for any Service Bulletins that may apply.

   Were there any problems found?

   Yes

   - Repair as necessary.
   - Perform the Electronic Steering Lock (ESL) Verification Test. Refer to **STANDARD PROCEDURES**.

   No

   - Test complete.

U1220-87-LOST STEERING LOCK REQUEST MESSAGE - MISSING MESSAGE

For a complete wiring diagram, **refer to appropriate SYSTEM WIRING DIAGRAMS article** .

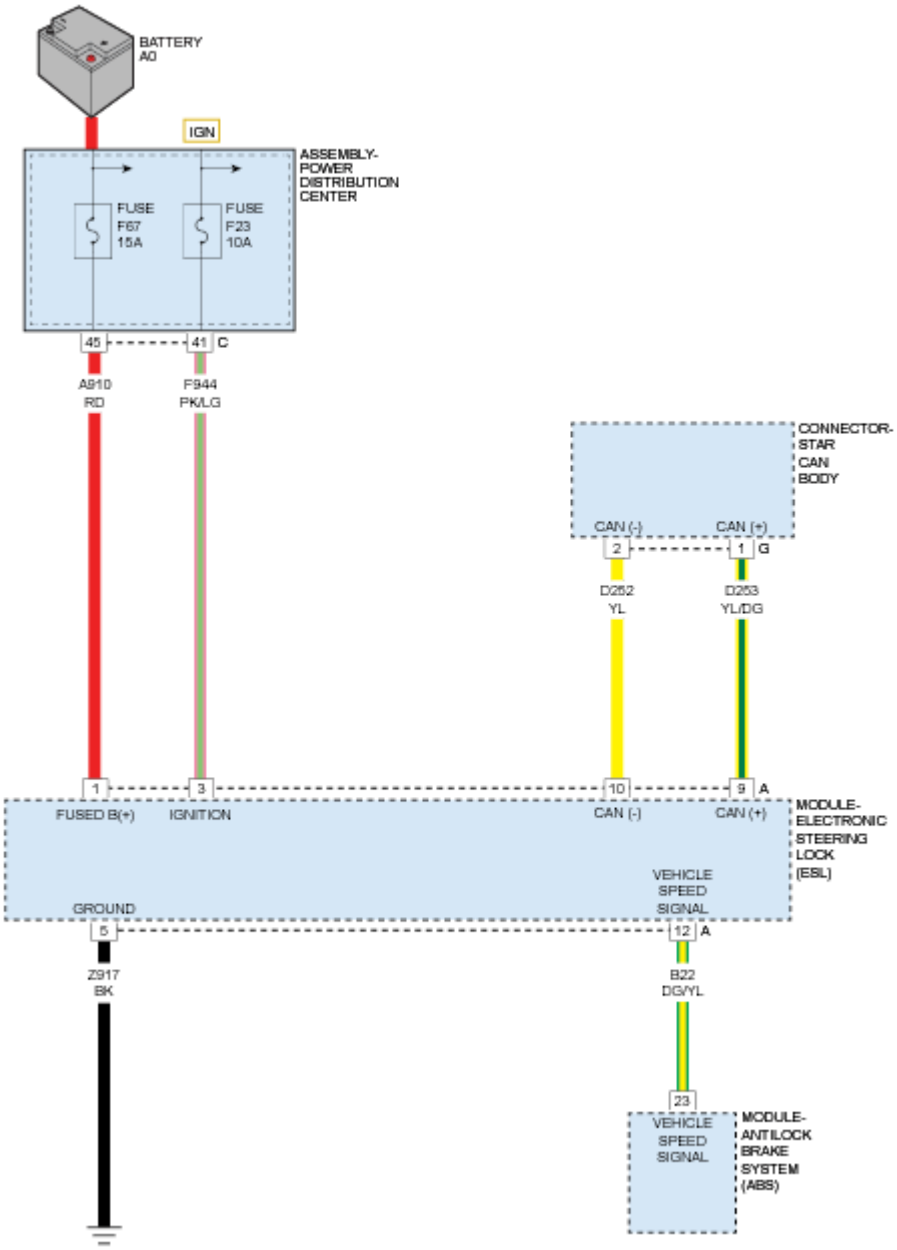

Fig. 12: Electronic Steering Lock Module Circuit Diagram
Courtesy of CHRYSLER GROUP, LLC

THEORY OF OPERATION

The Electronic Steering Lock (ESL) Module prevents the Steering Wheel from turning once the Ignition Switch is turned OFF or if the Immobilizer System does not receive the correct security code. A Lock/Unlock Motor inside the ESL Module incorporates a locking mechanism that locks or unlocks the steering wheel. The ESL Module communicates with several Electronic Control Units (ECUs) via Controller Area Network (CAN). The Antilock Brake System (ABS) Module provides a vehicle speed signal to the ESL Module by way of a dedicated circuit and a CAN message. The Vehicle Speed signal is used by the ESL Module to determine if it is

safe to lock the steering wheel. The Body Control Module (BCM) transmits the Lock/Unlock commands via CAN message to the ESL Module.

WHEN MONITORED

Ignition switch is ON.

System voltage is above a calibrated value.

SET CONDITION

Loss of communication or implausible data from BCM.

POSSIBLE CAUSES

Possible Causes
BODY CONTROL MODULE (BCM) DTCS

Always perform the Pre-Diagnostic Troubleshooting procedure before proceeding. Refer to STANDARD PROCEDURES.

DIAGNOSTIC TEST

1. **CHECK IF DTC IS CURRENT**
    1. With the scan tool, read ESL DTCs.
    2. Record the Environmental Data and any DTCs.
    3. With the scan tool, erase DTCs.
    4. Using the recorded Environmental Data, along with the When Monitored and Set Conditions above, operate the vehicle in the conditions that set the DTC.
    5. With the scan tool, read ESL DTCs.

    Did the DTC reset?

    Yes

    - Go to 2.

    No

    - Go to 3.
2. **CHECK BCM DTCS**
    1. With the scan tool, read BCM DTCs.

    Are BCM DTCs present?

Yes

- Repair BCM DTCs. Refer to the **BODY CONTROL MODULE (BCM) - DIAGNOSTIC CODE INDEX** article .
- Perform the Electronic Steering Lock (ESL) Verification Test. Refer to **STANDARD PROCEDURES**.

No

- Using the schematics as a guide, check the Electronic Steering Lock (ESL) terminals and connectors for corrosion, damage or pushed out terminals. Pay particular attention to the power and ground circuits. If no problems are found, replace the ESL Module in accordance with the Service Information.
- Perform the Electronic Steering Lock (ESL) Verification Test. Refer to **STANDARD PROCEDURES**.

3. **CHECK WIRING AND CONNECTORS**
   1. The conditions necessary to set the DTC are not present at this time.
   2. Using the schematics as a guide, inspect the wiring and connectors specific to this circuit.
   3. Wiggle the wires while checking for shorted and open circuits.
   4. Check for any Service Bulletins that may apply.

   Were there any problems found?

   Yes

   - Repair as necessary.
   - Perform the Electronic Steering Lock (ESL) Verification Test. Refer to **STANDARD PROCEDURES**.

   No

   - Test complete.

U1412-62-IMPLAUSIBLE VEHICLE SPEED SIGNAL RECEIVED - SIGNAL COMPARE FAILURE

For a complete wiring diagram, **refer to appropriate SYSTEM WIRING DIAGRAMS article** .

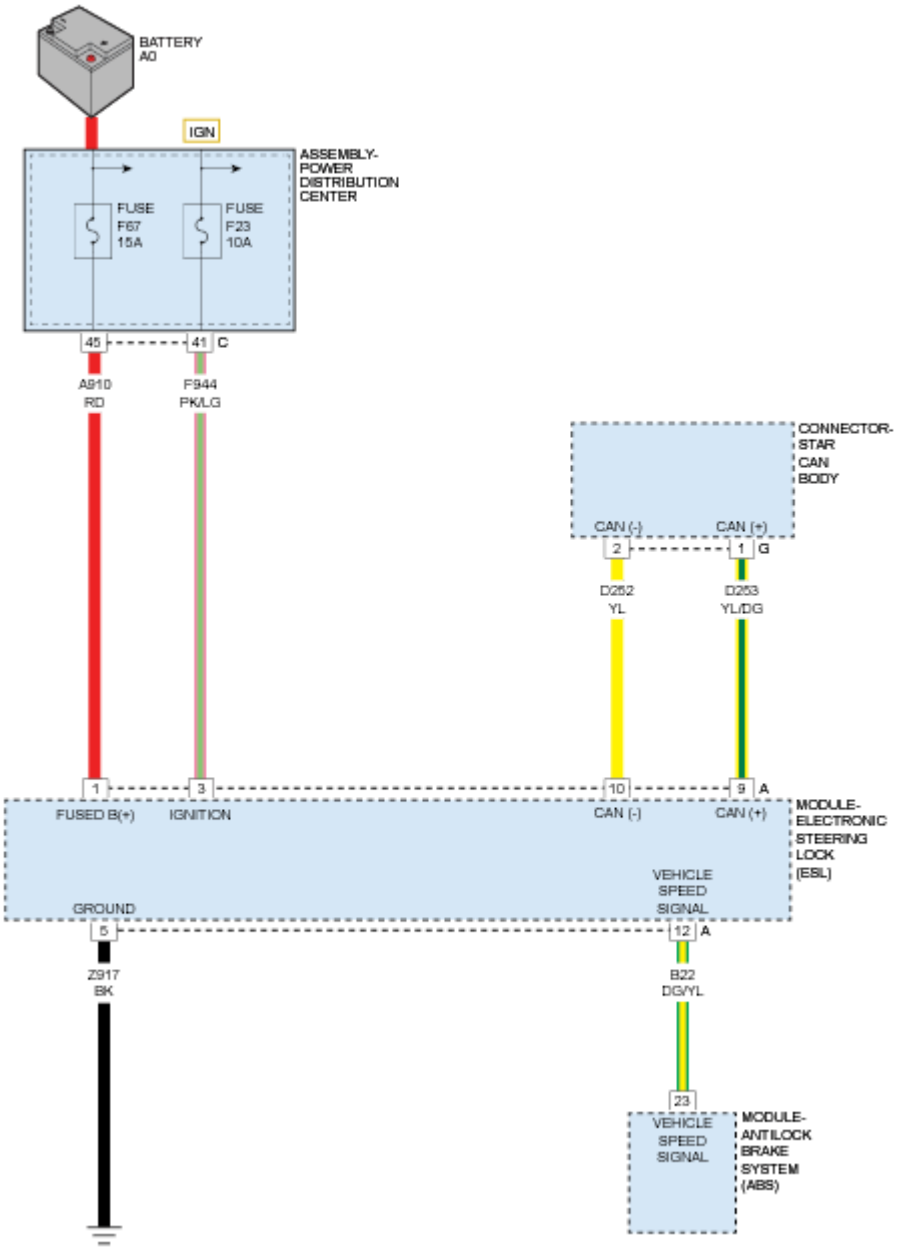

Fig. 13: Electronic Steering Lock Module Circuit Diagram
Courtesy of CHRYSLER GROUP, LLC

THEORY OF OPERATION

The Electronic Steering Lock (ESL) Module prevents the Steering Wheel from turning once the Ignition Switch is turned OFF or if the Immobilizer System does not receive the correct security code. A Lock/Unlock Motor inside the ESL Module incorporates a locking mechanism that locks or unlocks the steering wheel. The ESL Module communicates with several Electronic Control Units (ECUs) via Controller Area Network (CAN). The Antilock Brake System (ABS) Module provides a vehicle speed signal to the ESL Module by way of a dedicated circuit and a CAN message. The Vehicle Speed signal is used by the ESL Module to determine if it is

safe to lock the steering wheel. The Body Control Module (BCM) transmits the Lock/Unlock commands via CAN message to the ESL Module.

WHEN MONITORED

Ignition Switch ON.

SET CONDITION

Vehicle Speed Signal is received from CAN and not received on (B22) Vehicle Speed Signal circuit.

POSSIBLE CAUSES

Possible Causes
(B22) VEHICLE SPEED SIGNAL CIRCUIT OPEN
(B22) VEHICLE SPEED SIGNAL CIRCUIT SHORT TO GROUND
(B22) VEHICLE SPEED SIGNAL CIRCUIT SHORTED TO ANOTHER CIRCUIT
ABS MODULE DTCS
ELECTRONIC STEERING LOCK (ESL) MODULE

Always perform the Pre-Diagnostic Troubleshooting procedure before proceeding. Refer to STANDARD PROCEDURES.

DIAGNOSTIC TEST

1. **CHECK IF DTC IS CURRENT**
    1. With the scan tool, read ESL DTCs.
    2. Record the Environmental Data and any DTCs.
    3. With the scan tool, erase DTCs.
    4. Using the recorded Environmental Data, along with the When Monitored and Set Conditions above, operate the vehicle in the conditions that set the DTC.
    5. With the scan tool, read ESL DTCs.

    Did the DTC reset?

    Yes

    - Go to 3.

    No

    - Go to 5.
2. **CHECK FOR ABS MODULE DTCS**
    1. With the scan tool, read ABS DTCs.

Are ABS Vehicle Speed or Wheel Speed DTCs present?

Yes

- Repair ABS DTCs before proceeding. Refer to **DIAGNOSIS AND TESTING** .
- Perform the Electronic Steering Lock (ESL) Verification Test. Refer to **STANDARD PROCEDURES**.

No

- Go to 3.

3. **CHECK (B22) CIRCUIT FOR AN OPEN**
   1. Turn the Ignition Switch OFF.
   2. Disconnect the ESL Module harness connector.
   3. Disconnect the ABS Module harness connector.
   4. Measure the resistance of the (B22) circuit between the ABS Module harness connector and the ESL Module harness connector.

   Is the resistance below 5.0 ohms?

   Yes

   - Go to 4.

   No

   - Repair the (B22) circuit for an open.
   - Perform the Electronic Steering Lock (ESL) Verification Test. Refer to **STANDARD PROCEDURES**.

4. **CHECK (B22) CIRCUIT FOR A SHORT TO GROUND OR SHORT TO ANOTHER CIRCUIT**
   1. Measure the resistance between ground and the (B22) circuit at the ABS Module harness connector.
   2. Measure the resistance between the (B22) circuit and all other circuits in the ABS Module harness connector.

   Is there continuity between the (B22) circuit and ground or another circuit?

   Yes

   - Repair the (B22) circuit for a short to ground or short to another circuit.
   - Perform the Electronic Steering Lock (ESL) Verification Test. Refer to **STANDARD PROCEDURES**.

   No

- Using the schematics as a guide, check the Electronic Steering Lock (ESL) terminals and connectors for corrosion, damage or pushed out terminals. Pay particular attention to the power and ground circuits. If no problems are found, replace the ESL Module in accordance with the Service Information.
- Perform the Electronic Steering Lock (ESL) Verification Test. Refer to **STANDARD PROCEDURES**.

5. **CHECK WIRING AND CONNECTORS**
   1. The conditions necessary to set the DTC are not present at this time.
   2. Using the schematics as a guide, inspect the wiring and connectors specific to this circuit.
   3. Wiggle the wires while checking for shorted and open circuits.
   4. Check for any Service Bulletins that may apply.

   Were there any problems found?

   Yes

   - Repair as necessary.
   - Perform the Electronic Steering Lock (ESL) Verification Test. Refer to **STANDARD PROCEDURES**.

   No

   - Test complete.

U1433-64-IMPLAUSIBLE IGNITION SWITCH STATUS MESSAGE RECEIVED - SIGNAL PLAUSIBILITY FAILURE

For a complete wiring diagram, **refer to appropriate SYSTEM WIRING DIAGRAMS article** .

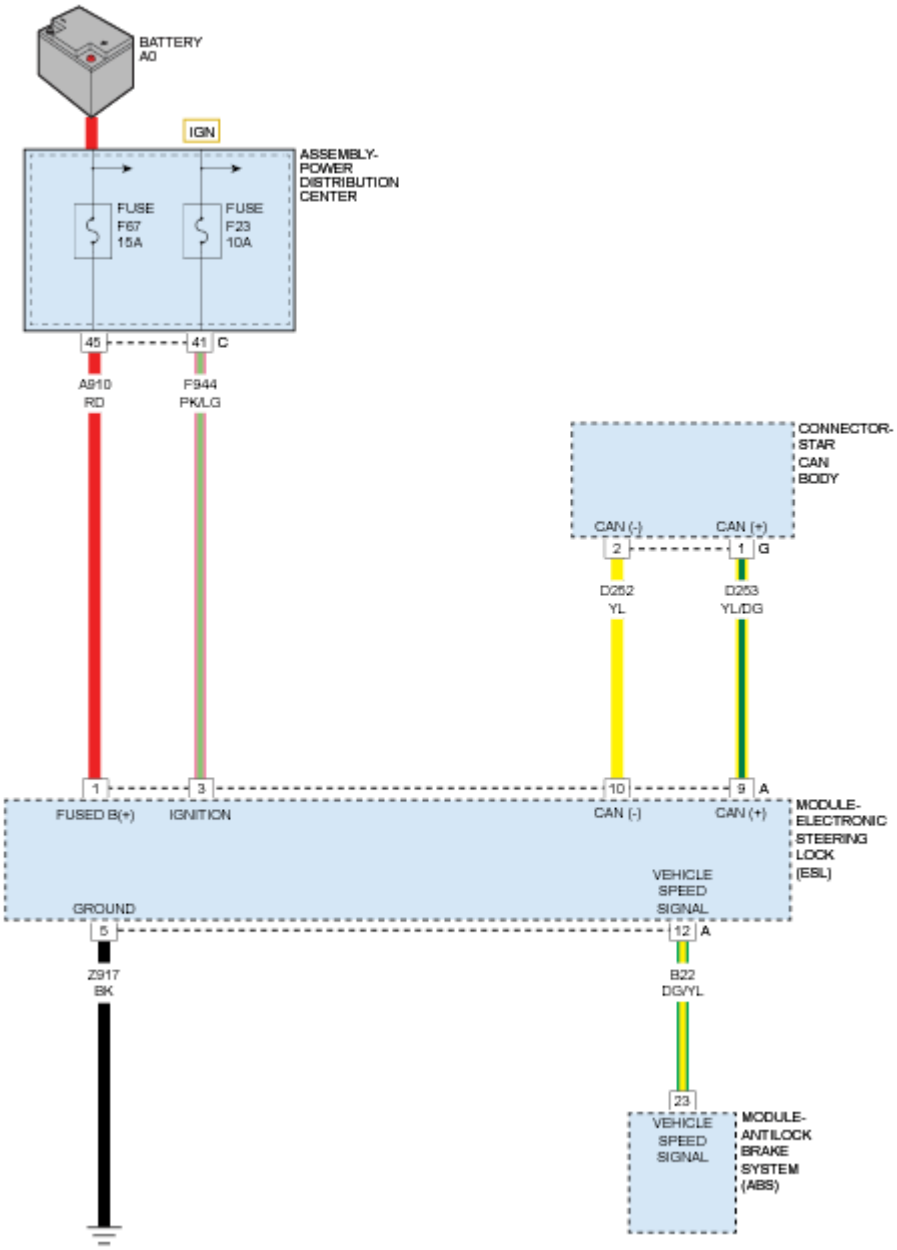

Fig. 14: Electronic Steering Lock Module Circuit Diagram
Courtesy of CHRYSLER GROUP, LLC

THEORY OF OPERATION

The Electronic Steering Lock (ESL) Module prevents the Steering Wheel from turning once the Ignition Switch is turned OFF or if the Immobilizer System does not receive the correct security code. A Lock/Unlock Motor inside the ESL Module incorporates a locking mechanism that locks or unlocks the steering wheel. The ESL Module communicates with several Electronic Control Units (ECUs) via Controller Area Network (CAN). The Antilock Brake System (ABS) Module provides a vehicle speed signal to the ESL Module by way of a dedicated circuit and a CAN message. The Vehicle Speed signal is used by the ESL Module to determine if it is

safe to lock the steering wheel. The Body Control Module (BCM) transmits the Lock/Unlock commands via CAN message to the ESL Module.

WHEN MONITORED

Ignition switch is ON.

System voltage is above a calibrated value.

SET CONDITION

Loss of communication or implausible data from BCM.

POSSIBLE CAUSES

Possible Causes
BODY CONTROL MODULE (BCM) DTCS

Always perform the Pre-Diagnostic Troubleshooting procedure before proceeding. Refer to STANDARD PROCEDURES.

DIAGNOSTIC TEST

1. **CHECK IF DTC IS CURRENT**
    1. With the scan tool, read ESL DTCs.
    2. Record the Environmental Data and any DTCs.
    3. With the scan tool, erase DTCs.
    4. Using the recorded Environmental Data, along with the When Monitored and Set Conditions above, operate the vehicle in the conditions that set the DTC.
    5. With the scan tool, read ESL DTCs.

    Did the DTC reset?

    Yes

    - Go to 2.

    No

    - Go to 3.
2. **CHECK BCM DTCS**
    1. With the scan tool, read BCM DTCs.

    Are BCM DTCs present?

Yes

- Repair BCM DTCs. Refer to the **BODY CONTROL MODULE (BCM) - DIAGNOSTIC CODE INDEX** article .
- Perform the Electronic Steering Lock (ESL) Verification Test. Refer to **STANDARD PROCEDURES**.

No

- Using the schematics as a guide, check the Electronic Steering Lock (ESL) terminals and connectors for corrosion, damage or pushed out terminals. Pay particular attention to the power and ground circuits. If no problems are found, replace the ESL Module in accordance with the Service Information.
- Perform the Electronic Steering Lock (ESL) Verification Test. Refer to **STANDARD PROCEDURES**.

3. **CHECK WIRING AND CONNECTORS**
   1. The conditions necessary to set the DTC are not present at this time.
   2. Using the schematics as a guide, inspect the wiring and connectors specific to this circuit.
   3. Wiggle the wires while checking for shorted and open circuits.
   4. Check for any Service Bulletins that may apply.

   Were there any problems found?

   Yes

   - Repair as necessary.
   - Perform the Electronic Steering Lock (ESL) Verification Test. Refer to **STANDARD PROCEDURES**.

   No

   - Test complete.

U1517-62-BODY CONTROLLER SECRET CODE - SIGNAL COMPARE FAILURE

For a complete wiring diagram, **refer to appropriate SYSTEM WIRING DIAGRAMS article** .

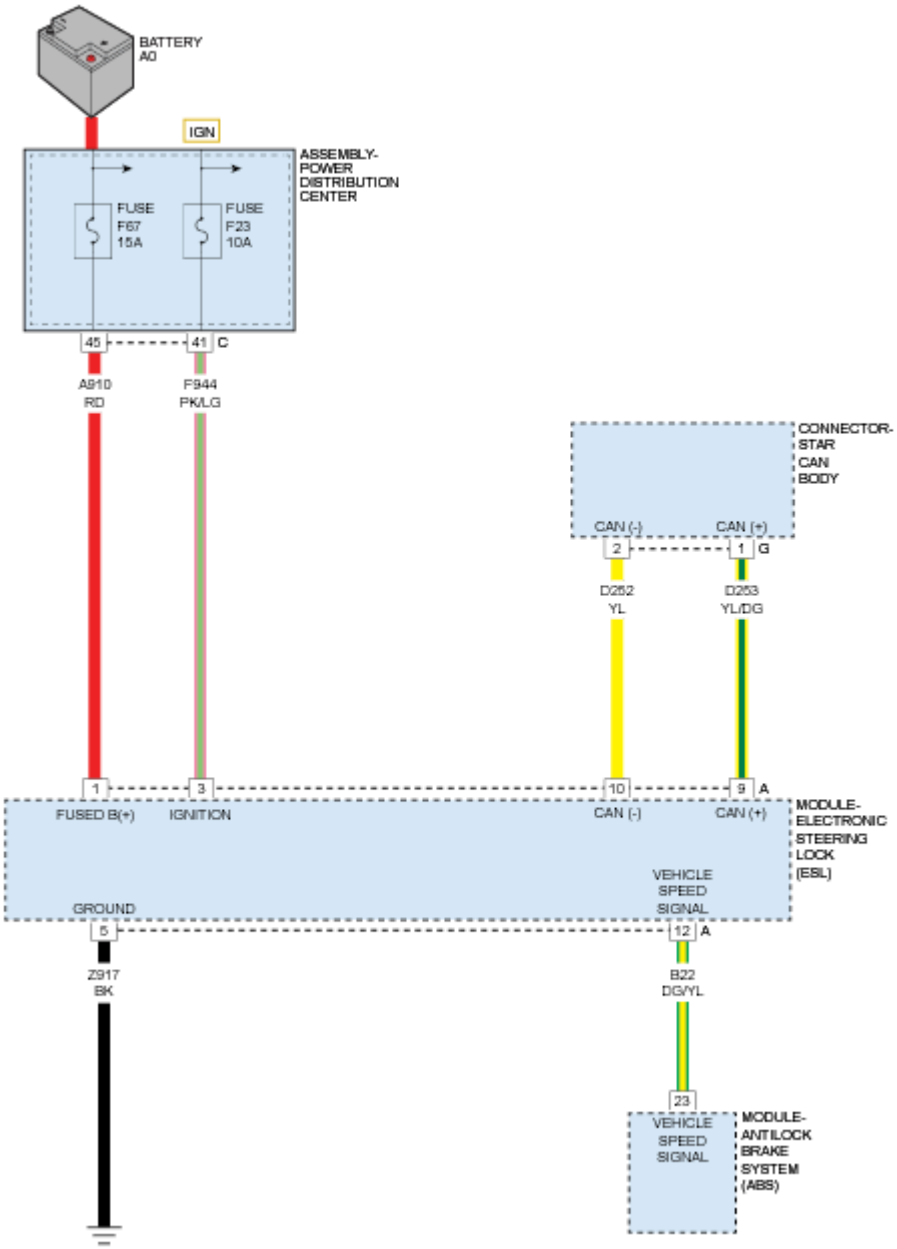

Fig. 15: Electronic Steering Lock Module Circuit Diagram
Courtesy of CHRYSLER GROUP, LLC

THEORY OF OPERATION

The Electronic Steering Lock (ESL) Module prevents the Steering Wheel from turning once the Ignition Switch is turned OFF or if the Immobilizer System does not receive the correct security code. A Lock/Unlock Motor inside the ESL Module incorporates a locking mechanism that locks or unlocks the steering wheel. The ESL Module communicates with several Electronic Control Units (ECUs) via Controller Area Network (CAN). The Antilock Brake System (ABS) Module provides a vehicle speed signal to the ESL Module by way of a dedicated circuit and a CAN message. The Vehicle Speed signal is used by the ESL Module to determine if it is

safe to lock the steering wheel. The Body Control Module (BCM) transmits the Lock/Unlock commands via CAN message to the ESL Module.

WHEN MONITORED

Ignition switch is ON.

System voltage is above a calibrated value.

SET CONDITION

Loss of communication or implausible data from BCM.

POSSIBLE CAUSES

Possible Causes
BODY CONTROL MODULE (BCM) DTCS

Always perform the Pre-Diagnostic Troubleshooting procedure before proceeding. Refer to STANDARD PROCEDURES.

DIAGNOSTIC TEST

1. **CHECK IF DTC IS CURRENT**
    1. With the scan tool, read ESL DTCs.
    2. Record the Environmental Data and any DTCs.
    3. With the scan tool, erase DTCs.
    4. Using the recorded Environmental Data, along with the When Monitored and Set Conditions above, operate the vehicle in the conditions that set the DTC.
    5. With the scan tool, read ESL DTCs.

    Did the DTC reset?

    Yes

    - Go to 2.

    No

    - Go to 3.
2. **CHECK BCM DTCS**
    1. With the scan tool, read BCM DTCs.

    Are BCM DTCs present?

Yes

- Repair BCM DTCs. Refer to the **BODY CONTROL MODULE (BCM) - DIAGNOSTIC CODE INDEX** article .
- Perform the Electronic Steering Lock (ESL) Verification Test. Refer to **STANDARD PROCEDURES**.

No

- Using the schematics as a guide, check the Electronic Steering Lock (ESL) terminals and connectors for corrosion, damage or pushed out terminals. Pay particular attention to the power and ground circuits. If no problems are found, replace the ESL Module in accordance with the Service Information.
- Perform the Electronic Steering Lock (ESL) Verification Test. Refer to **STANDARD PROCEDURES**.

3. **CHECK WIRING AND CONNECTORS**
   1. The conditions necessary to set the DTC are not present at this time.
   2. Using the schematics as a guide, inspect the wiring and connectors specific to this circuit.
   3. Wiggle the wires while checking for shorted and open circuits.
   4. Check for any Service Bulletins that may apply.

   Were there any problems found?

   Yes

   - Repair as necessary.
   - Perform the Electronic Steering Lock (ESL) Verification Test. Refer to **STANDARD PROCEDURES**.

   No

   - Test complete.

U1517-87-BODY CONTROLLER SECRET CODE-MISSING MESSAGE

For a complete wiring diagram, **refer to appropriate SYSTEM WIRING DIAGRAMS article** .

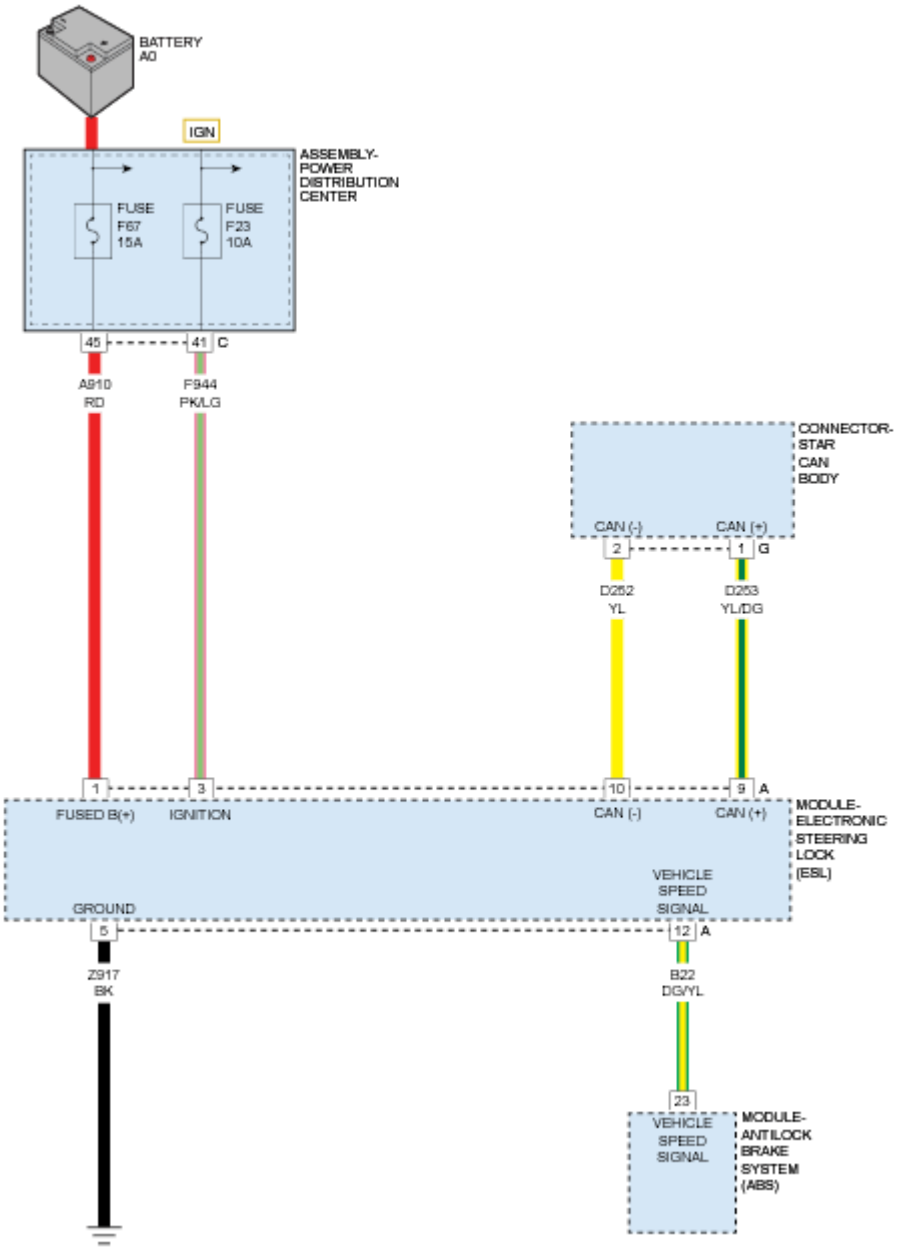

Fig. 16: Electronic Steering Lock Module Circuit Diagram
Courtesy of CHRYSLER GROUP, LLC

THEORY OF OPERATION

The Electronic Steering Lock (ESL) Module prevents the Steering Wheel from turning once the Ignition Switch is turned OFF or if the Immobilizer System does not receive the correct security code. A Lock/Unlock Motor inside the ESL Module incorporates a locking mechanism that locks or unlocks the steering wheel. The ESL Module communicates with several Electronic Control Units (ECUs) via Controller Area Network (CAN). The Antilock Brake System (ABS) Module provides a vehicle speed signal to the ESL Module by way of a dedicated circuit and a CAN message. The Vehicle Speed signal is used by the ESL Module to determine if it is

safe to lock the steering wheel. The Body Control Module (BCM) transmits the Lock/Unlock commands via CAN message to the ESL Module.

WHEN MONITORED

Ignition switch is ON.

System voltage is above a calibrated value.

SET CONDITION

Loss of communication or implausible data from BCM.

POSSIBLE CAUSES

Possible Causes
BODY CONTROL MODULE (BCM) DTCS

Always perform the Pre-Diagnostic Troubleshooting procedure before proceeding. Refer to STANDARD PROCEDURES.

DIAGNOSTIC TEST

1. **CHECK IF DTC IS CURRENT**
    1. With the scan tool, read ESL DTCs.
    2. Record the Environmental Data and any DTCs.
    3. With the scan tool, erase DTCs.
    4. Using the recorded Environmental Data, along with the When Monitored and Set Conditions above, operate the vehicle in the conditions that set the DTC.
    5. With the scan tool, read ESL DTCs.

    Did the DTC reset?

    Yes

    - Go to 2.

    No

    - Go to 3.
2. **CHECK BCM DTCS**
    1. With the scan tool, read BCM DTCs.

    Are BCM DTCs present?

Yes

- Repair BCM DTCs. Refer to the **BODY CONTROL MODULE (BCM) - DIAGNOSTIC CODE INDEX** article .
- Perform the Electronic Steering Lock (ESL) Verification Test. Refer to **STANDARD PROCEDURES**.

No

- Using the schematics as a guide, check the Electronic Steering Lock (ESL) terminals and connectors for corrosion, damage or pushed out terminals. Pay particular attention to the power and ground circuits. If no problems are found, replace the ESL Module in accordance with the Service Information.
- Perform the Electronic Steering Lock (ESL) Verification Test. Refer to **STANDARD PROCEDURES**.

3. **CHECK WIRING AND CONNECTORS**
   1. The conditions necessary to set the DTC are not present at this time.
   2. Using the schematics as a guide, inspect the wiring and connectors specific to this circuit.
   3. Wiggle the wires while checking for shorted and open circuits.
   4. Check for any Service Bulletins that may apply.

   Were there any problems found?

   Yes

   - Repair as necessary.
   - Perform the Electronic Steering Lock (ESL) Verification Test. Refer to **STANDARD PROCEDURES**.

   No

   - Test complete.

STANDARD PROCEDURES

ELECTRONIC STEERING LOCK (ESL) PRE-DIAGNOSTIC TROUBLESHOOTING PROCEDURE

For a complete wiring diagram, **refer to appropriate SYSTEM WIRING DIAGRAMS article** .

DIAGNOSTIC TEST

NOTE: Perform the following pre-diagnostic troubleshooting procedures prior to performing any diagnostic test.

NOTE: Always perform diagnostics with a fully charged battery to avoid false symptoms.

1. Using the wiring diagram/schematic as a guide, inspect the wiring and harness connector terminals related to the ESL Module for physical damage and corrosion. Make sure related ground circuits are clean and tight. Clean or repair as necessary.
2. Inspect the vehicle for any aftermarket accessories that may have been installed incorrectly.
3. With a Scan Tool, read PCM, BCM, ABS, and RFHM DTCs. Repair all Communication and Security DTCs prior to performing ESL Module diagnostic procedures.
4. With the scan tool, read and record all ESL Module DTCs. Record the ESL Module software version and variant ID (configuration or level).
5. If the ESL Module was recently replaced, make sure the ESL Module was properly programmed.
6. Check for Service Information Tune-ups or Technical Service Bulletins (TSB) that may apply.

   Were there any repairs made that fixed the vehicle?

   Yes

   - Testing complete.
   - Perform the Electronic Steering Lock (ESL) Verification Test. Refer to **STANDARD PROCEDURES**.

   No

   - Perform the appropriate diagnostic procedure.

ELECTRONIC STEERING LOCK (ESL) VERIFICATION TEST

For a complete wiring diagram, **refer to appropriate SYSTEM WIRING DIAGRAMS article** .

ELECTRONIC STEERING LOCK (ESL) VERIFICATION TEST

1. **FIRST**
   1. Connect any disconnected harness connectors.
   2. Replace any blown fuses.
   3. With the Scan Tool, erase DTCs.
   4. Cycle the Ignition Switch from ON to OFF.
   5. Start the Engine.

      Did the Engine start?

      Yes

- Go to 2

No

- With the Scan Tool, read DTCs and refer to the appropriate Diagnostic Procedure.

2. **SECOND**
   1. Attempt to turn the steering wheel.

      Did the steering wheel turn?

      Yes

      Go to 3.

      No

      - With the Scan Tool, read DTCs and refer to the appropriate Diagnostic Procedure. If no DTCs are present, check for mechanical binding in the steering column and steering linkage. Refer to the appropriate Service Procedure.
3. **THIRD**
   1. Turn the Ignition Switch OFF.
   2. Attempt to turn the steering wheel.

      Did the steering wheel turn?

      Yes

      - With the Scan Tool, read DTCs and refer to the appropriate Diagnostic Procedure. If no DTCs are present, inspect ESL Module locking pin for proper movement. Refer to the appropriate Service Procedure.

      No

      - Testing is complete.

ELECTRONIC STEERING LOCK (ESL) PROGRAMMING PROCEDURE

For a complete wiring diagram, **refer to appropriate SYSTEM WIRING DIAGRAMS article** .

NOTE: When replacing an ESL Module, the ESL Module must be programmed.

NOTE: Failure to properly program the ESL Module may result in the illumination of the Malfunction Indicator Lamp (MIL) and setting DTC(s).

NOTE: While performing the ESL Module programming procedure, the vehicle battery must be maintained between 10 and 16 volts. Ambient temperature must be between 0° C (32° F) 60° C (140° F). Vehicle must be in Park with brake pedal depressed.

1. Turn the Ignition ON, Engine not running.
2. With the scan tool, verify the ESL Module is communicating on the CAN BUS and it is not programmed.

   NOTE: If the Scan Tool indicates that the ESL Module is already programmed, replace the ESL Module.

   NOTE: If the Scan Tool can not communicate with the ESL Module, check the harness connections. If the harness connections are good, replace the ESL Module.

3. Following the menu on the scan tool, program the ESL Module.
4. With the scan tool, erase DTCs.
5. With the scan tool, read ESL Module DTCs.

   Does the scan tool display any DTCs?

   Yes

   - Perform the appropriate diagnostic procedure(s).

   No

   - Test Complete
   - Perform the Electronic Steering Lock (ESL) Verification Test. Refer to **STANDARD PROCEDURES**.

2014 ACCESSORIES AND EQUIPMENT

External Audio/Video Module - Electrical Diagnostics - Cherokee

DIAGNOSTIC CODE INDEX

DIAGNOSTIC CODE INDEX

DTC	Description
B1421-00	AUDIO CD READ ERROR/INOPERABLE DISC
B157D-2A	CD/DVD EJECT BUTTON - STUCK
B210D-00	BATTERY VOLTAGE LOW
B210E-00	BATTERY VOLTAGE HIGH
B2220-4B	CD CHANGER INTERNAL - OVER TEMPERATURE
U0010-00	CAN INTERIOR BUS
U0011-00	CAN INTERIOR BUS OFF PERFORMANCE
U0019-00	CAN B BUS
U0020-00	CAN B BUS OFF PERFORMANCE
U0140-00	LOST COMMUNICATION WITH BODY CONTROL MODULE
U0184-00	LOST COMMUNICATION WITH RADIO
U0422-00	IMPLAUSIBLE DATA RECEIVED FROM BODY CONTROL MODULE
U0485-00	IMPLAUSIBLE DATA RECEIVED FROM RADIO

DIAGNOSIS AND TESTING

B1421-00-AUDIO CD READ ERROR/INOPERABLE DISC

For a complete wiring diagram, **refer to appropriate SYSTEM WIRING DIAGRAMS article** .

WHEN MONITORED

Continuously with the ignition on and the radio CD player turned on.

SET CONDITION

The code will set if a CD that is cracked, defective or not formatted as a music CD is installed in the External Disc Module.

POSSIBLE CAUSES

Possible Causes
CD READ FAILURE EXTERNAL DISC MODULE (EDM)

DIAGNOSTIC TEST

EXTERNAL DISC MODULE

1. With the scan tool, erase the DTCs.
2. Replace the problem CD with a good, clean, unscratched, music CD.
3. Turn the radio CD player on.
4. With the scan tool, read the active DTCs.

   Does the Scan Tool display: B1421-00- AUDIO CD READ ERROR/INOPERABLE DISC?

   Yes

   - Eject the inoperative CD and replace the External Disc Module (EDM) in accordance with the Service Information.
   - Perform the BODY VERIFICATION TEST. Refer to **STANDARD PROCEDURE** .

   No

   - Test Complete.
   - Perform the BODY VERIFICATION TEST. Refer to **STANDARD PROCEDURE** .

B157D-2A-CD/DVD EJECT BUTTON - STUCK

For a complete wiring diagram, **refer to appropriate SYSTEM WIRING DIAGRAMS article** .

WHEN MONITORED

With the ignition on. External Disc Module (EDM) active.

SET CONDITION

The External Disc Module (EDM) detects a closed switch for 60 seconds.

POSSIBLE CAUSES

Possible Causes
EXTERNAL DISC MODULE (EDM)

DIAGNOSTIC TEST

VERIFY OPERATION OF THE BUTTON

1. With the scan tool, erase DTCs.
2. Press and release the button three times.
3. Wait 60 seconds.

4. With the scan tool, read DTCs.

   Is DTC: B157D-2A- CD/DVD EJECT BUTTON-STUCK active?

   Yes

   - Replace the External Disc Module (EDM) in accordance with the Service Information.
   - Perform the BODY VERIFICATION TEST. Refer to **STANDARD PROCEDURE** .

   No

   - Test complete.
   - Perform the BODY VERIFICATION TEST. Refer to **STANDARD PROCEDURE** .

B210D-00-BATTERY VOLTAGE LOW

For a complete wiring diagram, **refer to appropriate SYSTEM WIRING DIAGRAMS article** .

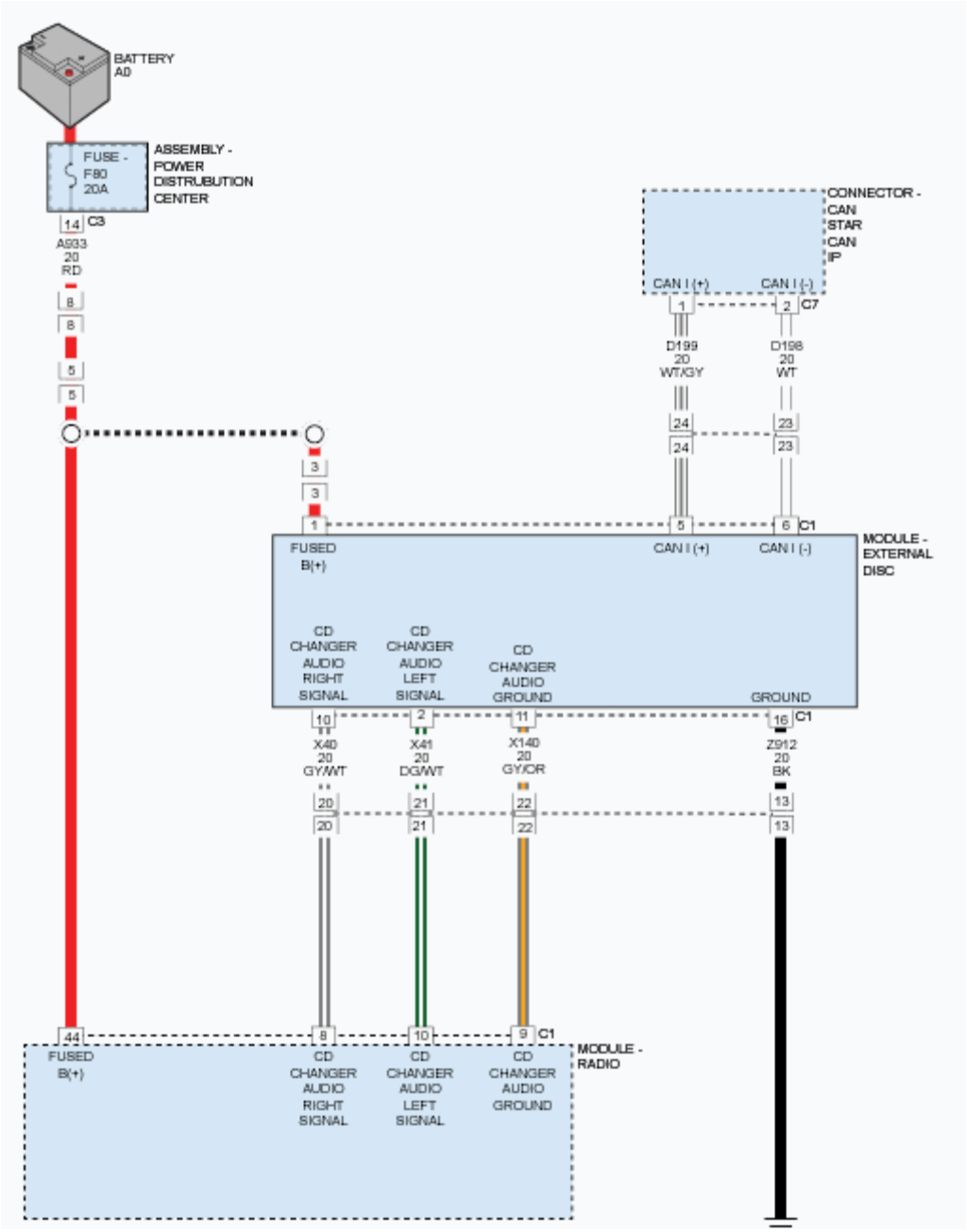

Fig. 1: CD Changer Audio Circuit Diagram
Courtesy of CHRYSLER GROUP, LLC

WHEN MONITORED

At all times.

SET CONDITION

Anytime the module senses voltage input below 9.0 volts, this code will set.

POSSIBLE CAUSES

Possible Causes
LOW VOLTAGE ENGINE DTC
FUSED B(+) CIRCUIT HAS HIGH RESISTANCE
GROUND CIRCUIT HAS HIGH RESISTANCE
EXTERNAL DISC MODULE (EDM)

DIAGNOSTIC TEST

1. **CHECK ENGINE DTCs**
    1. With the scan tool, read active Powertrain Control Module (PCM) DTCs.

       Are there any Charging or Starting DTCs present?

       No

       - Refer to the **DTC INDEX** article and perform the appropriate diagnostic procedure.

       Yes

       - Go To 2
2. **TEST FOR INTERMITTENT CONDITION**
    1. With the scan tool, record and erase the DTCs.
    2. Start the engine and run for two minutes.
    3. With the scan tool, read the active DTCs.

       Does the scan tool display; B210D-00-BATTERY VOLTAGE LOW?

       Yes

       - Go To 3

       No

       - Test complete, the condition or conditions that originally set this DTC are not present at this time. Using the wiring diagrams as a guide, check all related splices and connectors for signs of water intrusion, corrosion, pushed out or bent terminals and correct pin tension.
       - Perform the BODY VERIFICATION TEST. Refer to **STANDARD PROCEDURE** .
3. **(A933) FUSED B(+) OR (Z912) GROUND CIRCUITS RESISTED**
    1. Disconnect the External Disk Module harness connector.
    2. Connect a 12-volt test light between the (A933) Fused B(+) circuit and the (Z912) Ground circuit in the door module connector. The test light must illuminate brightly. Compare the brightness to that of a direct connection to the battery.

Does the test light illuminate brightly?

Yes

- Replace the External Disc Module in accordance with the Service Information.
- Perform the BODY VERIFICATION TEST. Refer to **STANDARD PROCEDURE** .

No

- Test the Fused B(+) and the Ground circuit to determine which one has the high resistance. Repair the circuit for high resistance.
- Perform the BODY VERIFICATION TEST. Refer to **STANDARD PROCEDURE** .

B210E-00-BATTERY VOLTAGE HIGH

For a complete wiring diagram, **refer to appropriate SYSTEM WIRING DIAGRAMS article** .

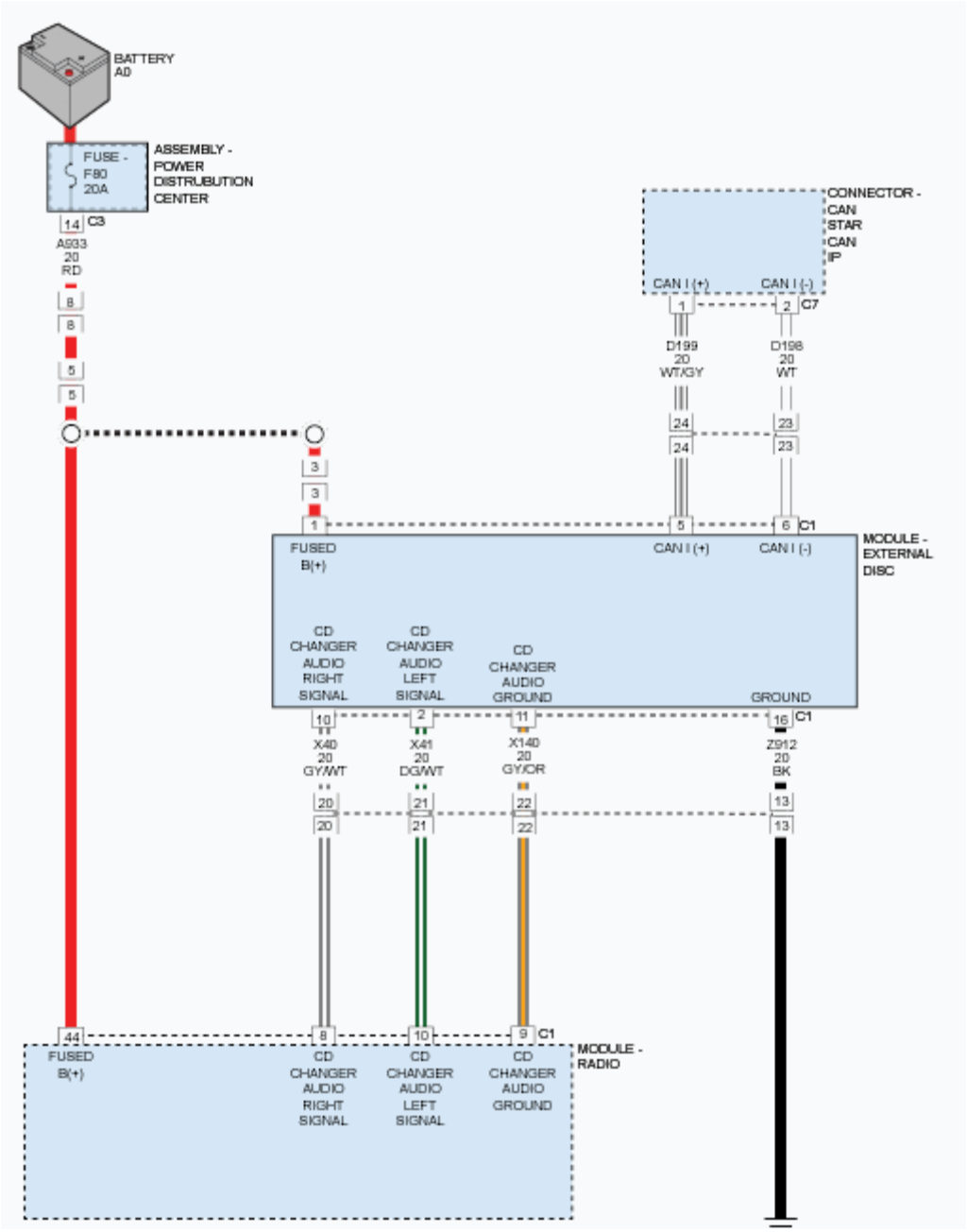

Fig. 2: CD Changer Audio Circuit Diagram
Courtesy of CHRYSLER GROUP, LLC

WHEN MONITORED

At all times.

SET CONDITION

Anytime the module senses voltage input above 15.9 volts, this code will set.

POSSIBLE CAUSES

Possible Causes
HIGH VOLTAGE ENGINE DTC EXTERNAL DISC MODULE (EDM)

DIAGNOSTIC TEST

1. **CHECK ENGINE DTCs**
    1. With the scan tool, read Powertrain Control Module (PCM) DTCs.

       Are there any Charging or Starting DTCs present?

       Yes

       - Refer to the **DTC INDEX** article and perform the appropriate diagnostic procedure.

       No

       - Go To 2
2. **TEST FOR INTERMITTENT CONDITION**
    1. With the scan tool, record and erase the DTCs.
    2. Start the engine and run for two minutes.
    3. With the scan tool, read the active DTCs.

       Does the scan tool display; B210E-00-BATTERY VOLTAGE HIGH?

       Yes

       - Replace the External Disc Module (EDM) in accordance with the Service Information.
       - Perform the BODY VERIFICATION TEST. Refer to **STANDARD PROCEDURE** .

       No

       - Test complete, the condition or conditions that originally set this DTC are not present at this time. Using the wiring diagrams as a guide, check all related splices and connectors for signs of water intrusion, corrosion, pushed out or bent terminals and correct pin tension.
       - Perform the BODY VERIFICATION TEST. Refer to **STANDARD PROCEDURE** .

B2220-4B-CD CHANGER INTERNAL - OVER TEMPERATURE

For a complete wiring diagram, **refer to appropriate SYSTEM WIRING DIAGRAMS article** .

WHEN MONITORED

Continuously with the ignition on and the Radio and External Disc Module turned on.

SET CONDITION

The code will set if the External Disc Module temperature rises above 60°C (140°F). The player may also shut down.

POSSIBLE CAUSES

Possible Causes
VEHICLE INTERIOR TEMPERATURE EXTERNAL DISC MODULE

DIAGNOSTIC TEST

RADIO

1. Move the vehicle to a shaded area and allow it to cool down.
2. Turn the ignition on when the vehicle interior is no warmer than the ambient temperature.
3. With the scan tool, erase the DTCs.
4. Turn the Radio and External Disc Module on and wait 90 seconds.
5. With the scan tool, read the active DTCs.

   Does the Scan Tool display: B2220-4B-CD CHANGER INTERNAL-OVER TEMPERATURE?

   Yes

   - Replace the CD Player in accordance with the Service Information.
   - Perform the BODY VERIFICATION TEST. Refer to **STANDARD PROCEDURE** .

   No

   - Test Complete.
   - Perform the BODY VERIFICATION TEST. Refer to **STANDARD PROCEDURE** .

U0010-00-CAN INTERIOR BUS

For a complete wiring diagram, **refer to appropriate SYSTEM WIRING DIAGRAMS article** .

THEORY OF OPERATION

The primary communication network between electronic control modules is the Controller Area Network (CAN) data bus system. The Controller Area Network (CAN) data bus allows all electronic modules connected to the bus to share information with each other. Regardless of whether a message originates from a module on the higher speed CAN C (500K) Bus or on the lower speed bus, CAN Interior High Speed (IHS) (125K) Bus,

the message structure and layout is similar, which allows the Body Control Module/Central Gateway (BCM or BCMCGW) to process and transfer messages between the CAN buses. The BCM stores Diagnostic Trouble Codes (DTCs) for certain bus network faults on the CAN C (500K) Bus and CAN IHS (125K) Bus.

All modules transmit and receive messages over one of these buses. Data exchange between the modules is achieved by serial transmission of encoded data messages (a form of transmission in which data bits are sent sequentially, one at a time, over a single line). Each module can both send and receive serial data simultaneously. Each data bit of a CAN Bus message is carried over the bus as a voltage differential between the two bus circuits which, when strung together, form a message. Each module uses arbitration to sort the message priority if two competing messages are attempting to be broadcast at the same time. Corruption of a single bit within a message will corrupt the entire message. Each message contains a Cyclic Redundancy Check (CRC) which specifies the message size exactly. If the message detected conflicts with the CRC the ECU receiving it will determine the message to be an error and consider that communication has not been possible. Diagnosis of this condition using a lab scope may reveal activity that appears to be Bus data messages even if no actual communication is possible. Communication problems that affect the whole bus, as a result of opens and terminal push outs are more likely to occur on data busses that operate at a high speed than a data bus that operates at a lower speed.

When an open circuit or terminal push out occurs one or more modules can become isolated from the remainder of the bus. The isolated module will attempt to communicate, but will not be able to receive messages or determine arbitration from other modules. Each time the isolated module attempts to communicate it alters the bus voltage on the intact bus circuit. Without functioning arbitration the isolated module alters the bus voltage while other bus messages are being sent thereby corrupting the messages on the remainder of the bus.

The CAN bus modules are connected in parallel to the two-wire bus using a twisted pair, where the wires are wrapped around each other to provide shielding from unwanted electromagnetic induction, thus preventing interference with the relatively low voltage signals being carried through them. While the CAN bus is operating (active), one of the bus wires will carry a higher voltage and is referred to as the CAN High or CAN bus (+) wire, while the other bus wire will carry a lower voltage and is referred to as the CAN Low or CAN bus (-) wire.

For additional information on the communication network. Refer to **COMMUNICATION, DESCRIPTION** .

WHEN MONITORED

With the ignition on.

SET CONDITION

The Body Control Module (BCM) detects a short condition in one of the CAN IHS Bus (125K) circuits for less than one second.

POSSIBLE CAUSES

Possible Causes
(D157) CAN IHS BUS (125K) (+) CIRCUIT SHORTED TO GROUND
(D158) CAN IHS BUS (125K) (-) CIRCUIT SHORTED TO VOLTAGE

(D157) CAN IHS BUS (125K) (+) CIRCUIT SHORTED TO THE (D158) CAN IHS BUS (125K) (-) CIRCUIT
ANY CAN IHS BUS MODULE
BODY CONTROL MODULE (BCM)

DIAGNOSTIC TEST

1. **TEST FOR INTERMITTENT CONDITION**
   1. Turn the ignition on.
   2. With the scan tool, record and erase DTCs.
   3. Cycle the ignition from on to off three times.
   4. Turn the ignition on and wait 10 seconds.
   5. With the scan tool, read active DTCs.

   Does the scan tool display this DTC as active?

   Yes

   - Go To 2

   No

   - Test complete, the condition or conditions that originally set this DTC are not present at this time. Using the wiring diagrams as a guide, check all related splices and connectors for signs of water intrusion, corrosion, pushed out or bent terminals, and correct pin tension.
   - Perform the BODY VERIFICATION TEST. Refer to **STANDARD PROCEDURE** .
2. **CHECK THE CAN IHS BUS CIRCUITS FOR A CONCERN WHILE DISCONNECTING THE CAN IHS BUS MODULES**

   NOTE: When performing this step, turn the ignition off (wait one minute) before disconnecting any module. When the module is disconnected turn the ignition on.

   NOTE: The BCM contains pass-through circuits which are used to connect the Front and Rear CAN IHS Star Connectors.

   1. While monitoring the scan tool, disconnect each CAN IHS Bus (125K) module at the CAN IHS Star Connectors (except for the BCM and DLC), one at a time.
   2. Check for this DTC to become stored after disconnecting each CAN IHS Bus (125K) module the vehicle is equipped with.

   NOTE: If the DTC becomes stored when a particular module is disconnected, that module or related circuits are causing the DTC to set.

With all the CAN IHS Bus modules disconnected at the Star Connectors (except for BCM and DLC), does the scan tool display this DTC as active?

Yes

- Go To 3

No

- Diagnose the wiring and connectors between the CAN IHS Star Connector and the module that when disconnected caused this DTC to become stored for damage or shorted circuits. If OK, replace the module that when disconnected caused this DTC to become stored in accordance with the Service Information.
- Perform the BODY VERIFICATION TEST. Refer to **STANDARD PROCEDURE** .

3. **CHECK THE (D158) CAN IHS BUS (125K) (-) CIRCUIT FOR A SHORT TO VOLTAGE**

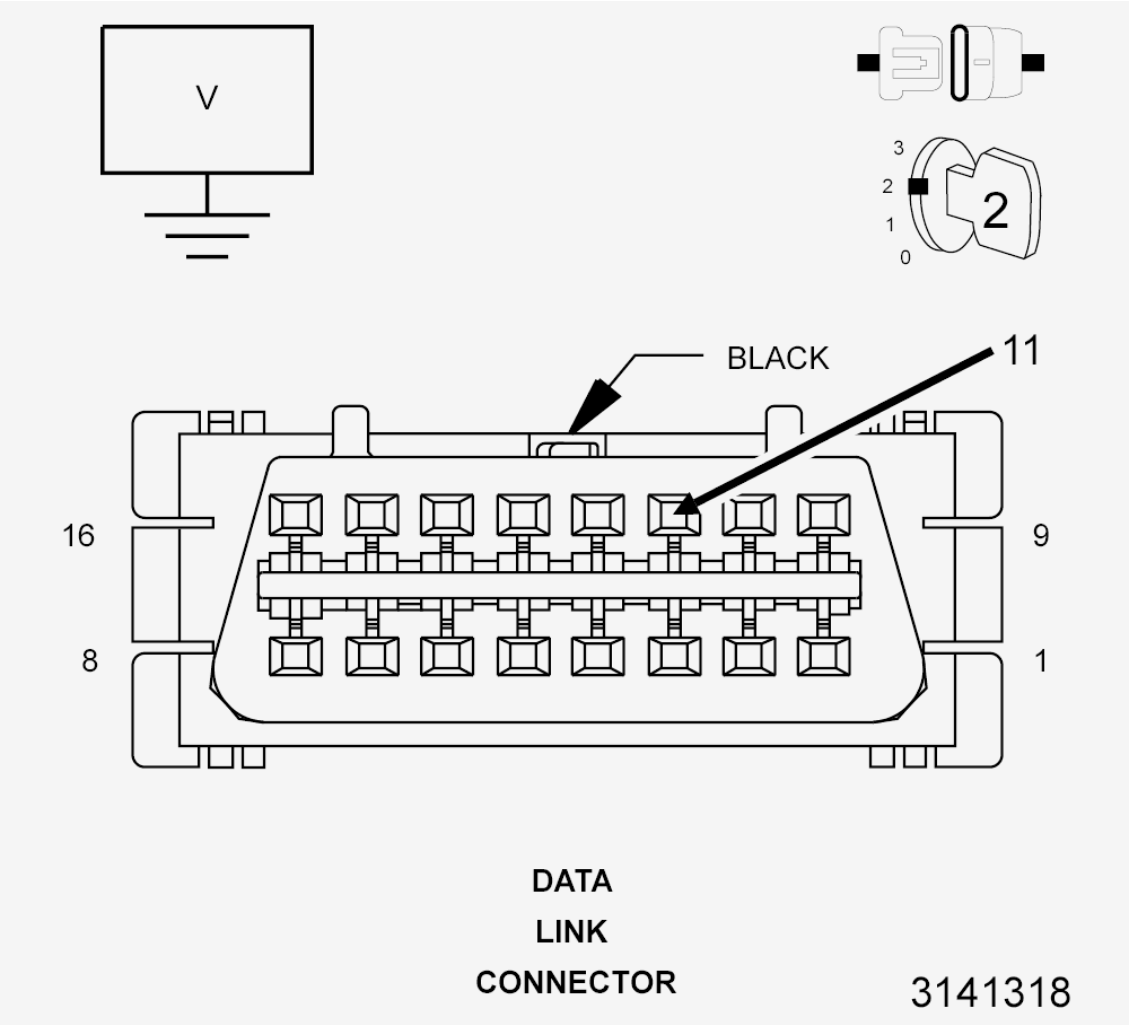

Fig. 3: Checking CAN IHS BUS (125K) (-) Circuit For A Short To Voltage
Courtesy of CHRYSLER GROUP, LLC

1. Turn the ignition off.
2. Disconnect the scan tool.
3. Turn the ignition on.
4. Measure the voltage between ground and the (D158) CAN IHS Bus (125K) (-) circuit.

   Is the voltage above 10.0 volts?

   Yes

   - Repair the short to voltage in the (D158) CAN IHS Bus (125K) (-) circuit.
   - Perform the BODY VERIFICATION TEST. Refer to **STANDARD PROCEDURE** .

   No

   - Go To 4

4. **CHECK THE (D157) CAN IHS BUS (125K) (+) CIRCUIT FOR A SHORT TO GROUND**

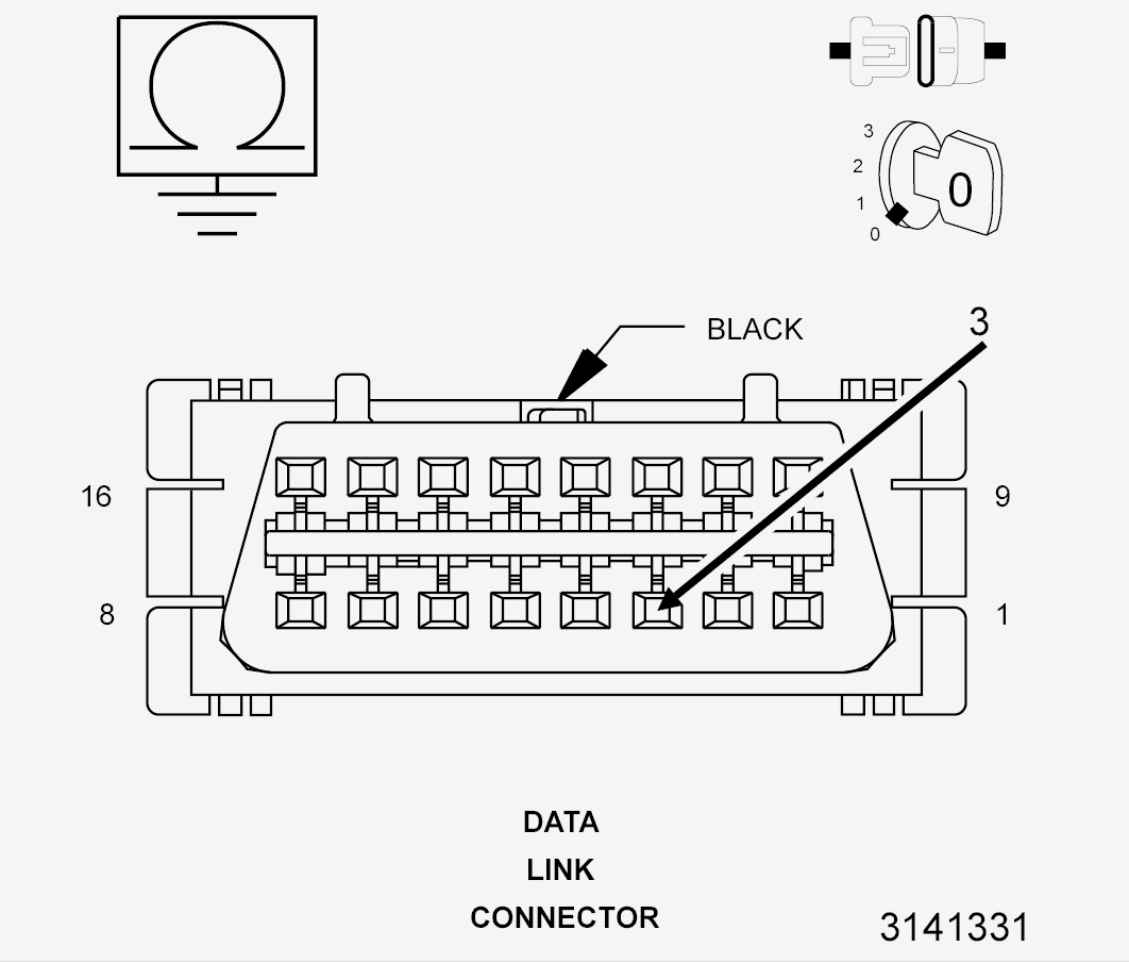

Fig. 4: Checking CAN IHS BUS (125K) (+) Circuit For A Short To Ground

Courtesy of CHRYSLER GROUP, LLC

1. Turn the ignition off.
2. Measure the resistance between ground and the (D157) CAN IHS Bus (125K) (+) circuit.

   Is the resistance above 10k Ohms?

   Yes

   - Go To 5

   No

   - Repair the short to ground in the (D157) CAN IHS Bus (125K) (+) circuit.
   - Perform the BODY VERIFICATION TEST. Refer to **STANDARD PROCEDURE** .

5. **CHECK FOR CORRECT BUS TERMINATION RESISTANCE**

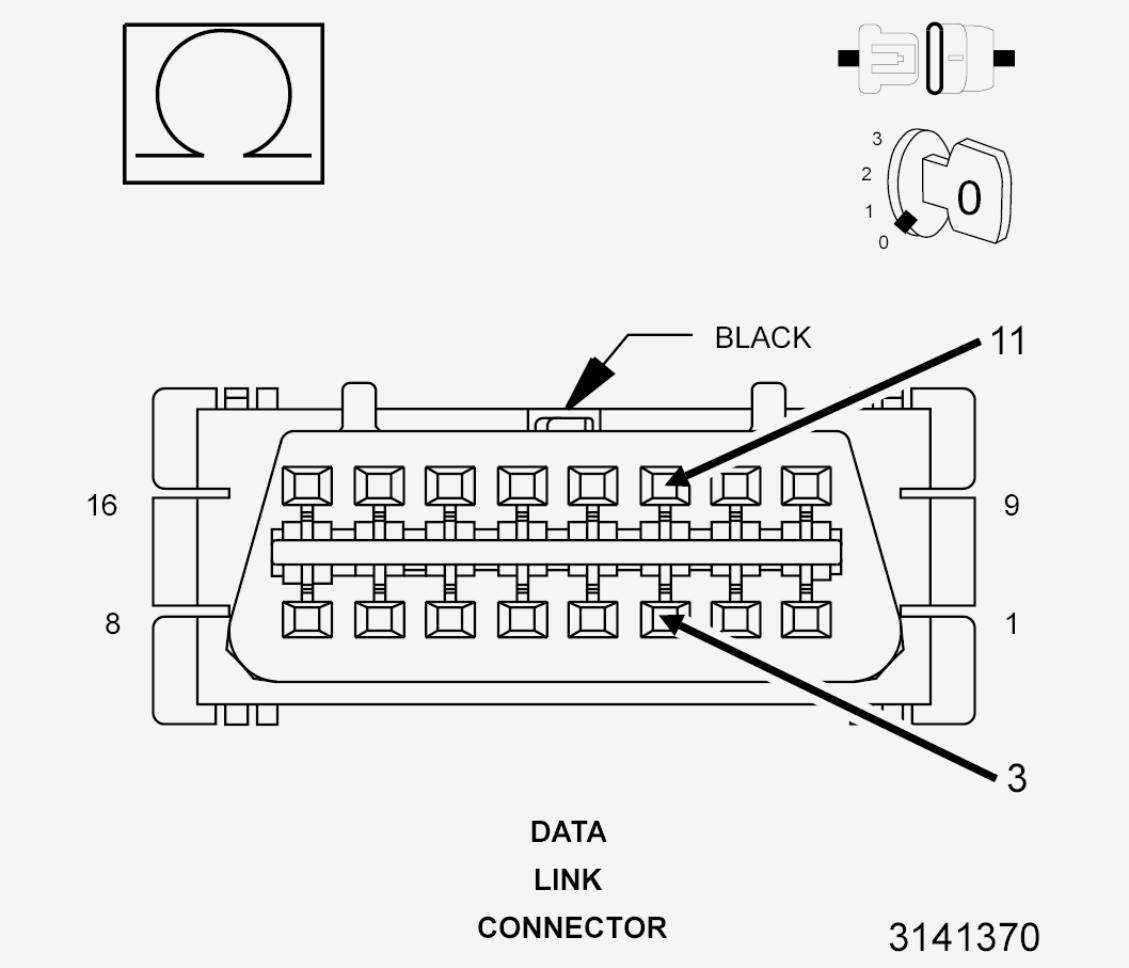

Fig. 5: Checking For Correct BUS Termination Resistance
Courtesy of CHRYSLER GROUP, LLC

1. Turn the ignition off.
2. Disconnect and isolate the negative battery cable.
3. Measure the resistance between the (D157) CAN IHS Bus (125K) (+) circuit and the (D158) CAN IHS Bus (125K) (-) circuit.

   Is the resistance between 53.5 and 67 Ohms?

   Yes

   - Replace the Body Control Module (BCM) in accordance with the Service Information. Refer to **MODULE, BODY CONTROL, REMOVAL** .
   - Perform the BODY VERIFICATION TEST. Refer to **STANDARD PROCEDURE** .

   No

   - For a resistance measurement above 67 Ohms, an open or high resistance is present in the CAN IHS Bus (125K) (+) circuit or the CAN IHS Bus (125K) (-) circuit between the Star Connectors or one of the termination resistors internal to the Star Connector is damaged. Diagnose and repair as necessary.
   - For a resistance measurement below 53.5 Ohms, a short between the CAN IHS Bus (125K) (+) circuit and the CAN IHS Bus (125K) (-) is present. Diagnose the short between the CAN IHS Bus (125K) (+) circuit and the CAN IHS Bus (125K) (-) circuit. Use the Star Connectors to isolate portions of the bus to assist in determining the location of the concern. Diagnose and repair as necessary.
   - Perform the BODY VERIFICATION TEST. Refer to **STANDARD PROCEDURE** .

U0011-00-CAN INTERIOR BUS OFF PERFORMANCE

For a complete wiring diagram, **refer to appropriate SYSTEM WIRING DIAGRAMS article** .

THEORY OF OPERATION

The primary communication network between electronic control modules is the Controller Area Network (CAN) data bus system. The Controller Area Network (CAN) data bus allows all electronic modules connected to the bus to share information with each other. Regardless of whether a message originates from a module on the higher speed CAN C (500K) Bus or on the lower speed bus, CAN Interior High Speed (IHS) (125K) Bus, the message structure and layout is similar, which allows the Body Control Module/Central Gateway (BCM or BCMCGW) to process and transfer messages between the CAN buses. The BCM stores Diagnostic Trouble Codes (DTCs) for certain bus network faults on the CAN C (500K) Bus and CAN IHS (125K) Bus.

All modules transmit and receive messages over one of these buses. Data exchange between the modules is achieved by serial transmission of encoded data messages (a form of transmission in which data bits are sent sequentially, one at a time, over a single line). Each module can both send and receive serial data simultaneously. Each data bit of a CAN Bus message is carried over the bus as a voltage differential between the two bus circuits which, when strung together, form a message. Each module uses arbitration to sort the

message priority if two competing messages are attempting to be broadcast at the same time. Corruption of a single bit within a message will corrupt the entire message. Each message contains a Cyclic Redundancy Check (CRC) which specifies the message size exactly. If the message detected conflicts with the CRC the ECU receiving it will determine the message to be an error and consider that communication has not been possible. Diagnosis of this condition using a lab scope may reveal activity that appears to be Bus data messages even if no actual communication is possible. Communication problems that affect the whole bus, as a result of opens and terminal push outs are more likely to occur on data busses that operate at a high speed than a data bus that operates at a lower speed.

When an open circuit or terminal push out occurs one or more modules can become isolated from the remainder of the bus. The isolated module will attempt to communicate, but will not be able to receive messages or determine arbitration from other modules. Each time the isolated module attempts to communicate it alters the bus voltage on the intact bus circuit. Without functioning arbitration the isolated module alters the bus voltage while other bus messages are being sent thereby corrupting the messages on the remainder of the bus.

The CAN bus modules are connected in parallel to the two-wire bus using a twisted pair, where the wires are wrapped around each other to provide shielding from unwanted electromagnetic induction, thus preventing interference with the relatively low voltage signals being carried through them. While the CAN bus is operating (active), one of the bus wires will carry a higher voltage and is referred to as the CAN High or CAN bus (+) wire, while the other bus wire will carry a lower voltage and is referred to as the CAN Low or CAN bus (-) wire.

For additional information on the communication network. Refer to **COMMUNICATION, DESCRIPTION** .

WHEN MONITORED

With the ignition on.

SET CONDITION

The Body Control Module (BCM) detects a short condition in one of the CAN IHS Bus (125K) circuits for less than one second.

POSSIBLE CAUSES

Possible Causes
(D157) CAN IHS BUS (125K) (+) CIRCUIT SHORTED TO GROUND
(D158) CAN IHS BUS (125K) (-) CIRCUIT SHORTED TO VOLTAGE
(D157) CAN IHS BUS (125K) (+) CIRCUIT SHORTED TO THE (D158) CAN IHS BUS (125K) (-) CIRCUIT
ANY CAN IHS BUS MODULE
BODY CONTROL MODULE (BCM)

DIAGNOSTIC TEST

1. **TEST FOR INTERMITTENT CONDITION**

1. Turn the ignition on.
2. With the scan tool, record and erase DTCs.
3. Cycle the ignition from on to off three times.
4. Turn the ignition on and wait 10 seconds.
5. With the scan tool, read active DTCs.

Does the scan tool display this DTC as active?

Yes

- Go To 2

No

- Test complete, the condition or conditions that originally set this DTC are not present at this time. Using the wiring diagrams as a guide, check all related splices and connectors for signs of water intrusion, corrosion, pushed out or bent terminals, and correct pin tension.
- Perform the BODY VERIFICATION TEST. Refer to **STANDARD PROCEDURE** .

2. **CHECK THE CAN IHS BUS CIRCUITS FOR A CONCERN WHILE DISCONNECTING THE CAN IHS BUS MODULES**

NOTE: When performing this step, turn the ignition off (wait one minute) before disconnecting any module. When the module is disconnected turn the ignition on.

NOTE: The BCM contains pass-through circuits which are used to connect the Front and Rear CAN IHS Star Connectors.

1. While monitoring the scan tool, disconnect each CAN IHS Bus (125K) module at the CAN IHS Star Connectors (except for the BCM and DLC), one at a time.
2. Check for this DTC to become stored after disconnecting each CAN IHS Bus (125K) module the vehicle is equipped with.

NOTE: If the DTC becomes stored when a particular module is disconnected, that module or related circuits are causing the DTC to set.

With all the CAN IHS Bus modules disconnected at the Star Connectors (except for BCM and DLC), does the scan tool display this DTC as active?

Yes

- Go To 3

No

- Diagnose the wiring and connectors between the CAN IHS Star Connector and the module that when disconnected caused this DTC to become stored for damage or shorted circuits. If OK, replace the module that when disconnected caused this DTC to become stored in accordance with the Service Information.
- Perform the BODY VERIFICATION TEST. Refer to **STANDARD PROCEDURE** .

3. **CHECK THE (D158) CAN IHS BUS (125K) (-) CIRCUIT FOR A SHORT TO VOLTAGE**

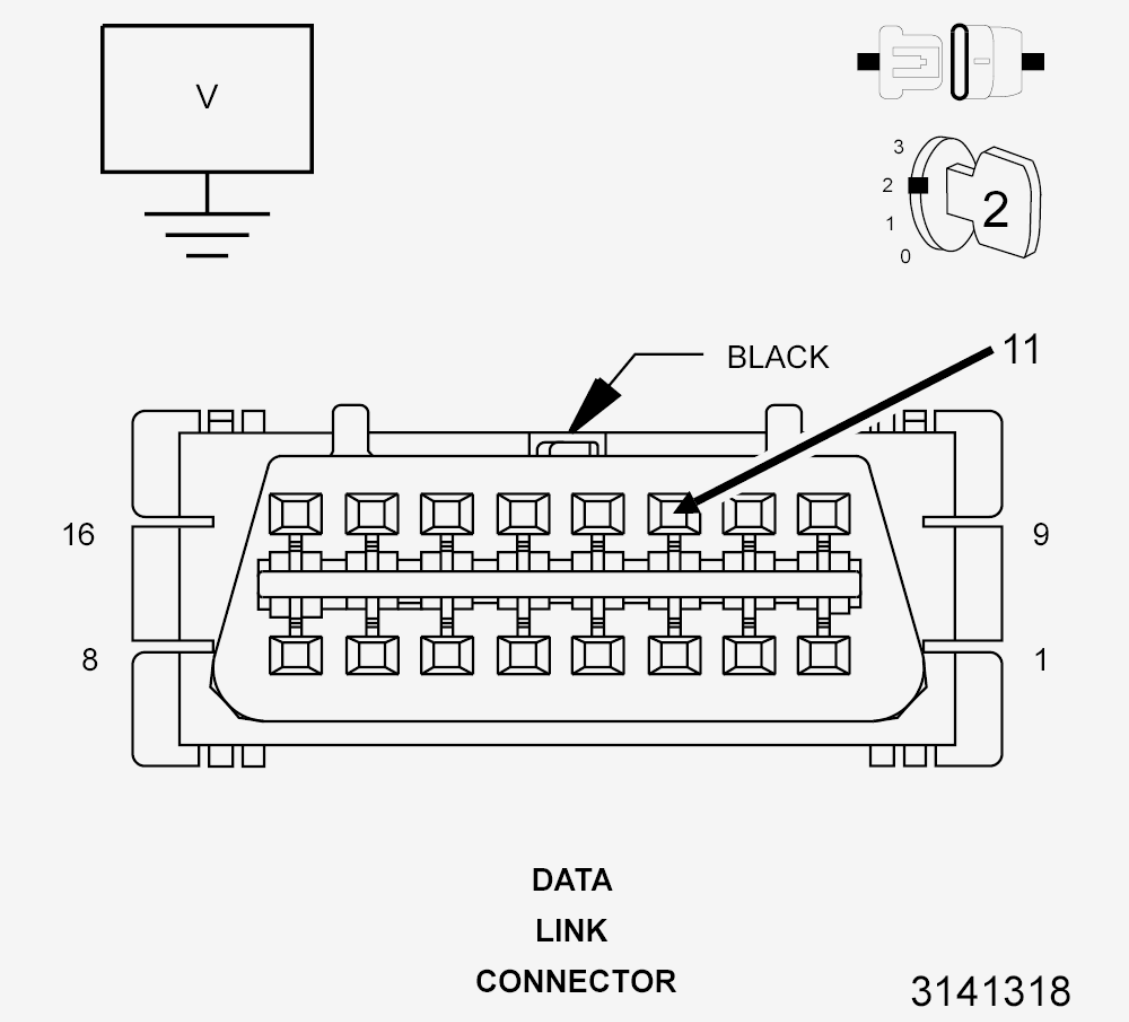

Fig. 6: Checking CAN IHS BUS (125K) (-) Circuit For A Short To Voltage
Courtesy of CHRYSLER GROUP, LLC

1. Turn the ignition off.
2. Disconnect the scan tool.
3. Turn the ignition on.
4. Measure the voltage between ground and the (D158) CAN IHS Bus (125K) (-) circuit.

Is the voltage above 10.0 volts?

Yes

- Repair the short to voltage in the (D158) CAN IHS Bus (125K) (-) circuit.
- Perform the BODY VERIFICATION TEST. Refer to **STANDARD PROCEDURE** .

No

- Go To 4

4. **CHECK THE (D157) CAN IHS BUS (125K) (+) CIRCUIT FOR A SHORT TO GROUND**

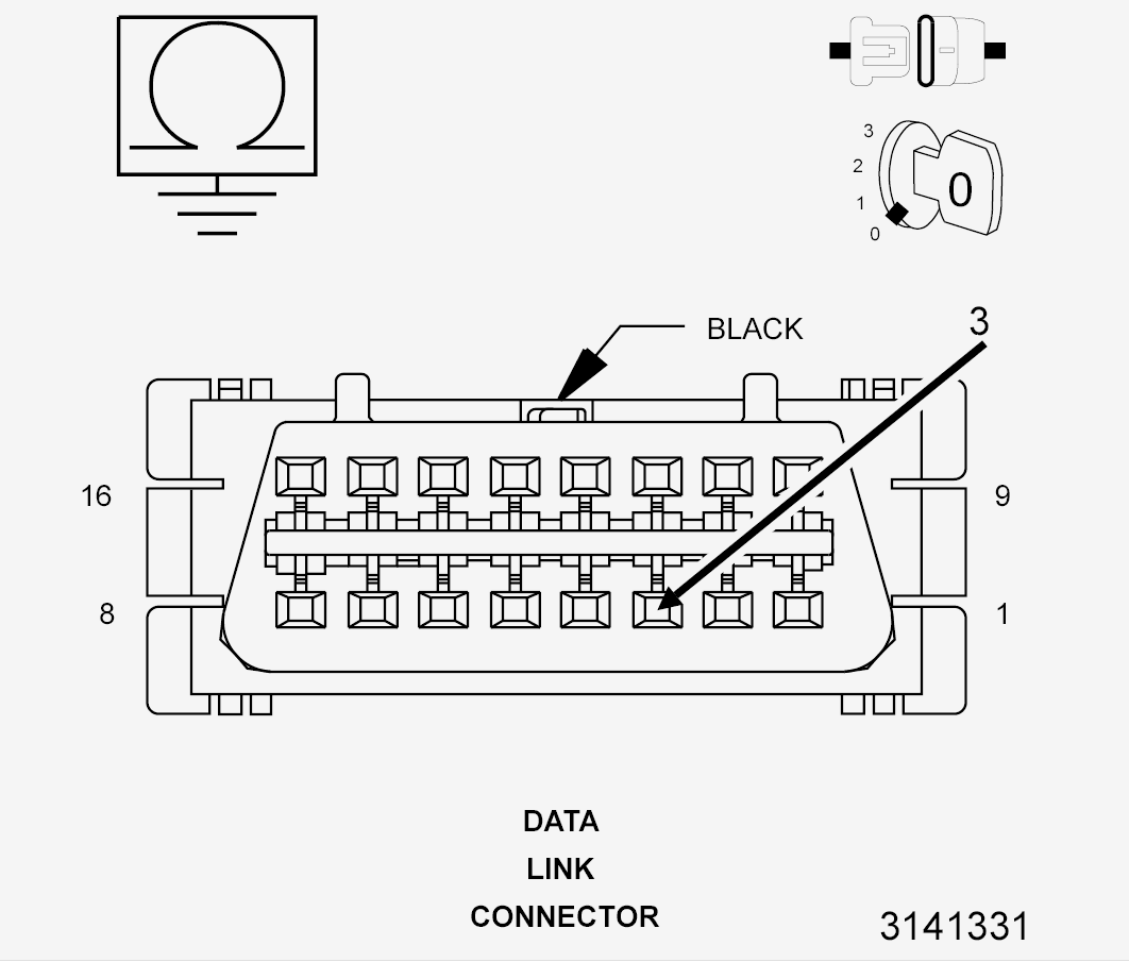

Fig. 7: Checking CAN IHS BUS (125K) (+) Circuit For A Short To Ground
Courtesy of CHRYSLER GROUP, LLC

1. Turn the ignition off.
2. Measure the resistance between ground and the (D157) CAN IHS Bus (125K) (+) circuit.

   Is the resistance above 10k Ohms?

Yes

- Go To 5

No

- Repair the short to ground in the (D157) CAN IHS Bus (125K) (+) circuit.
- Perform the BODY VERIFICATION TEST. Refer to **STANDARD PROCEDURE** .

5. **CHECK FOR CORRECT BUS TERMINATION RESISTANCE**

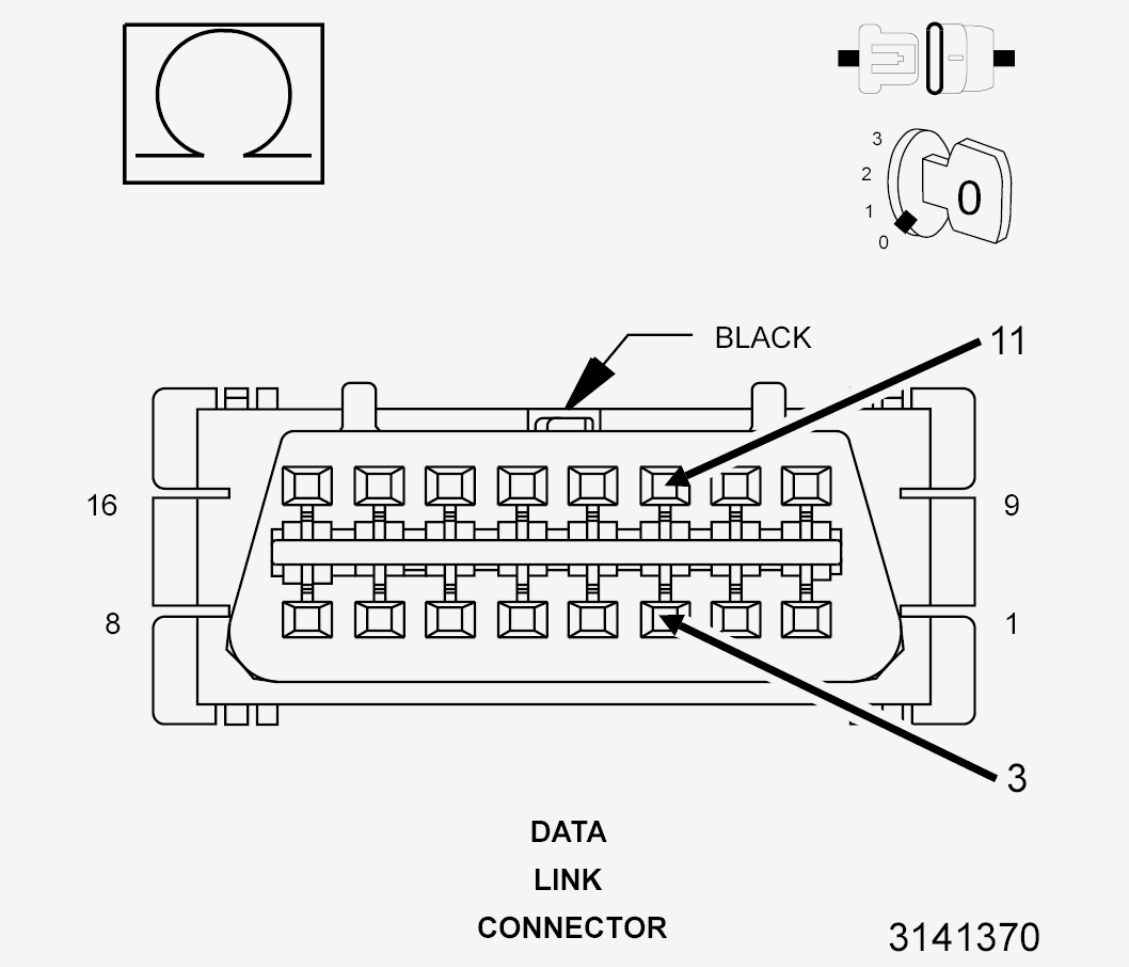

Fig. 8: Checking For Correct BUS Termination Resistance
Courtesy of CHRYSLER GROUP, LLC

1. Turn the ignition off.
2. Disconnect and isolate the negative battery cable.
3. Measure the resistance between the (D157) CAN IHS Bus (125K) (+) circuit and the (D158) CAN IHS Bus (125K) (-) circuit.

   Is the resistance between 53.5 and 67 Ohms?

Yes

- Replace the Body Control Module (BCM) in accordance with the Service Information. Refer to **MODULE, BODY CONTROL, REMOVAL** .
- Perform the BODY VERIFICATION TEST. Refer to **STANDARD PROCEDURE** .

No

- For a resistance measurement above 67 Ohms, an open or high resistance is present in the CAN IHS Bus (125K) (+) circuit or the CAN IHS Bus (125K) (-) circuit between the Star Connectors or one of the termination resistors internal to the Star Connector is damaged. Diagnose and repair as necessary.
- For a resistance measurement below 53.5 Ohms, a short between the CAN IHS Bus (125K) (+) circuit and the CAN IHS Bus (125K) (-) is present. Diagnose the short between the CAN IHS Bus (125K) (+) circuit and the CAN IHS Bus (125K) (-) circuit. Use the Star Connectors to isolate portions of the bus to assist in determining the location of the concern. Diagnose and repair as necessary.
- Perform the BODY VERIFICATION TEST. Refer to **STANDARD PROCEDURE** .

U0019-00-CAN B BUS

For a complete wiring diagram, **refer to appropriate SYSTEM WIRING DIAGRAMS article** .

WHEN MONITORED

Continuously when the ignition is on.

Battery voltage between 10 and 16 volts.

Body Control Module (BCM) is configured correctly.

SET CONDITION

The Body Control Module (BCM) detects a short condition in one of the CAN IHS Bus (125K) circuits for less than one second.

DIAGNOSTIC TEST

VERIFY DTC IS ACTIVE

NOTE: Make sure the battery is fully charged before proceeding.

1. Turn the ignition on.
2. With the scan tool, read the active DTCs.

Does the scan tool display: U0019-00-CAN B BUS active?

Yes

- **For this code, perform the U0010-00-CAN INTERIOR BUS diagnostic procedure in this service information.**

No

- Refer to **DIAGNOSIS AND TESTING** and perform the STORED LOST COMMUNICATION DTCs diagnostic procedure.

U0020-00-CAN B BUS OFF PERFORMANCE

For a complete wiring diagram, **refer to appropriate SYSTEM WIRING DIAGRAMS article** .

WHEN MONITORED

Continuously when the ignition is on.

The battery voltage between 10.0 and 16.0 Volts.

Body Control Module (BCM) is configured correctly.

SET CONDITION

Bus messages not received from the Body Control Module (BCM) for approximately two to five seconds.

POSSIBLE CAUSES

Possible Causes
CAN IHS BUS (125K) CIRCUITS OPEN OR SHORTED
DTCS RELATED TO BATTERY VOLTAGE, IGNITION, OR VIN MESSAGES
BODY CONTROL MODULE (BCM) POWER AND GROUND
BCM NOT CONFIGURED CORRECTLY
BODY CONTROL MODULE (BCM)
MODULE THAT SET THIS DTC

DIAGNOSTIC TEST

VERIFY DTC IS ACTIVE

NOTE: Make sure the battery is fully charged before proceeding.

1. Turn the ignition on.

2. With the scan tool, read the active DTCs.

   Does the scan tool display; U0020-00-CAN B BUS OFF PERFORMANCE as active?

   Yes

   - **For this code, perform the U0011-00-CAN INTERIOR BUS OFF PERFORMANCE diagnostic procedure in this service information.**

   No

   - Refer to **DIAGNOSIS AND TESTING** and perform the STORED LOST COMMUNICATION DTCs diagnostic procedure.

U0140-00-LOST COMMUNICATION WITH BODY CONTROL MODULE

For a complete wiring diagram, **refer to appropriate SYSTEM WIRING DIAGRAMS article** .

WHEN MONITORED

Continuously when the ignition is on.

The battery voltage between 10.0 and 16.0 Volts.

Body Control Module (BCM) is configured correctly.

SET CONDITION

Bus messages not received from the Body Control Module (BCM) for approximately two to five seconds.

POSSIBLE CAUSES

Possible Causes
CAN BUS CIRCUITS OPEN OR SHORTED
DTCS RELATED TO BATTERY VOLTAGE, IGNITION, OR VIN MESSAGES
BODY CONTROL MODULE POWER AND GROUND
BCM NOT CONFIGURED CORRECTLY
BODY CONTROL MODULE (BCM)
MODULE THAT SET THIS DTC

DIAGNOSTIC TEST

VERIFY DTC IS ACTIVE

1. Turn the ignition on.

2. With the scan tool, read the active DTCs.

   Does the scan tool display; U0140-00-LOST COMMUNICATION WITH BODY CONTROL MODULE as active?

   Yes

   - Refer to **DIAGNOSIS AND TESTING** and perform the NO RESPONSE FROM BCM (BODY CONTROL MODULE) diagnostic procedure.

   No

   - Refer to **DIAGNOSIS AND TESTING** and perform the STORED LOST COMMUNICATION DTCs diagnostic procedure.

U0184-00-LOST COMMUNICATION WITH RADIO

For a complete wiring diagram, **refer to appropriate SYSTEM WIRING DIAGRAMS article** .

WHEN MONITORED

Continuously when the ignition is on.

The battery voltage is between 10 and 16 volts.

Body Control Module (BCM) is configured correctly.

SET CONDITION

Bus messages not received from the Radio for approximately two to five seconds.

POSSIBLE CAUSES

Possible Causes
CAN BUS CIRCUITS OPEN OR SHORTED
DTCS RELATED TO BATTERY VOLTAGE, IGNITION, OR VIN MESSAGES
RADIO POWER AND GROUND
BCM NOT CONFIGURED CORRECTLY
RADIO
MODULE THAT SET THIS DTC

DIAGNOSTIC TEST

VERIFY THE DIAGNOSTIC TROUBLE CODE (DTC) IS ACTIVE

NOTE: Make sure the battery is fully charged before proceeding.

1. Turn the ignition on.
2. With the scan tool, read the active DTCs.

   Is this DTC active?

   Yes

   - Refer to **DIAGNOSIS AND TESTING** and perform the NO RESPONSE FROM RADIO diagnostic procedure.

   No

   - Refer to **DIAGNOSIS AND TESTING** and perform the STORED LOST COMMUNICATION DTCs diagnostic procedure.

U0422-00-IMPLAUSABLE DATA RECEIVED FROM BODY CONTROL MODULE

For a complete wiring diagram, **refer to appropriate SYSTEM WIRING DIAGRAMS article** .

WHEN MONITORED

At all times with Ignition in Run/Start.

SET CONDITION

Incorrect data received from the Body Control Module (BCM).

POSSIBLE CAUSES

Possible Causes
NO COMMUNICATION WITH THE BODY CONTROL MODULE (BCM)
DTCS STORED OR ACTIVE IN THE BCM
RADIO (RRM)

DIAGNOSTIC TEST

1. **CHECK FOR AN ACTIVE DIAGNOSTIC TROUBLE CODE (DTC)**
   1. Turn the ignition on.
   2. With the scan tool, read the active DTCs.

      Does the scan tool display this DTC as active?

      Yes

- Go To 2

No

- The condition that caused this code to set is not present at this time. Check for an intermittent condition by inspecting the related wiring harness for chafed, pierced, pinched, and partially broken wires. Also inspect the related connectors for broken, bent, pushed out, spread, corroded, or contaminated terminals.
- Perform the BODY VERIFICATION TEST. Refer to **STANDARD PROCEDURE** .

2. **VERIFY THE BCM IS ACTIVE ON THE CAN BUS**
   1. With the scan tool, select ECU View.
   2. Verify that the BCM is active on the bus.

   Is the BCM active on the bus?

   Yes

   - Replace the Radio (RRM) in accordance with the Service Information. Refer to **RADIO, REMOVAL** .
   - Perform the BODY VERIFICATION TEST. Refer to **STANDARD PROCEDURE** .

   No

   - Refer to **DIAGNOSIS AND TESTING** and perform the NO RESPONSE FROM BCM diagnostic procedure.
   - Perform the BODY VERIFICATION TEST. Refer to **STANDARD PROCEDURE** .

U0485-00-IMPLAUSIBLE DATA RECEIVED FROM RADIO

For a complete wiring diagram, **refer to appropriate SYSTEM WIRING DIAGRAMS article** .

WHEN MONITORED

With the ignition on.

SET CONDITION

Incorrect data received from the Radio.

POSSIBLE CAUSES

Possible Causes
NO COMMUNICATION WITH THE RADIO DTCS STORED OR ACTIVE IN THE RADIO

RADIO
MODULE THAT SET THE DTC

DIAGNOSTIC TEST

1. **CHECK FOR AN ACTIVE DIAGNOSTIC TROUBLE CODE (DTC)**

   NOTE: Diagnose and repair any Radio DTCs before proceeding with this diagnostic procedure.

   1. Turn the ignition on.
   2. With the scan tool, read active DTCs.

      Does the scan tool display this DTC as active?

      Yes

      - Go To 2

      No

      - The condition that caused this code to set is not present at this time. Check for an intermittent condition by inspecting the related wiring harness for chafed, pierced, pinched, and partially broken wires. Also inspect the related connectors for broken, bent, pushed out, spread, corroded, or contaminated terminals.
      - Perform the BODY VERIFICATION TEST. Refer to **STANDARD PROCEDURE** .
2. **VERIFY THE RADIO IS ACTIVE ON THE CAN BUS**
   1. With the scan tool, verify that the Radio is active on the bus.

      Is the Radio active on the bus?

      Yes

      - Replace/update the module that set this DTC in accordance with the Service Information.
      - Perform the BODY VERIFICATION TEST. Refer to **STANDARD PROCEDURE** .

      No

      - Refer to **DIAGNOSIS AND TESTING** and perform the NO RESPONSE FROM RADIO diagnostic procedure.
      - Perform the BODY VERIFICATION TEST. Refer to **STANDARD PROCEDURE** .

2014 ACCESSORIES AND EQUIPMENT

Forward Facing Camera Module (FFCM) - Electrical Diagnostics - Cherokee

DIAGNOSTIC CODE INDEX

DIAGNOSTIC CODE INDEX

DTC	Description
C008E-00	ECU INTERNAL PERFORMANCE
C008F-00	CALIBRATION NOT LEARNED
C14A4-00	SENSOR ADJUSTMENT REQUIRED
C14A5-00	SENSOR BLINDED
C211B-16	IGNITION RUN/START INPUT - CIRCUIT VOLTAGE BELOW THRESHOLD
C211B-17	IGNITION RUN/START INPUT - CIRCUIT VOLTAGE ABOVE THRESHOLD
C2206-00	VEHICLE CONFIGURATION MISMATCH
C2210-00	ECU OVERTEMPERATURE
C2212-00	ECU IN PLANT MODE
U0002-00	CAN C BUS OFF PERFORMANCE
U0011-00	CAN INTERIOR BUS OFF PERFORMANCE
U0100-00	LOST COMMUNICATION WITH ECM/PCM
U0129-00	LOST COMMUNICATION WITH BRAKE SYSTEM CONTROL MODULE
U0131-00	LOST COMMUNICATION WITH ELECTRIC POWER STEERING CONTROL MODULE
U0140-00	LOST COMMUNICATION WITH BODY CONTROL MODULE
U0151-00	LOST COMMUNICATION WITH OCCUPANT RESTRAINT CONTROLLER (ORC)
U0212-00	LOST COMMUNICATION WITH SCM
U0401-00	IMPLAUSIBLE DATA RECEIVED FROM ECM/PCM
U0418-00	IMPLAUSIBLE DATA RECEIVED FROM BRAKE SYSTEM CONTROL MODULE
U0422-00	IMPLAUSIBLE DATA RECEIVED FROM BODY CONTROL MODULE
U0428-00	IMPLAUSIBLE DATA RECEIVED FROM STEERING ANGLE SENSOR MODULE
U0452-00	IMPLAUSIBLE DATA RECEIVED FROM RESTRAINTS CONTROL MODULE

DIAGNOSIS AND TESTING

C008E-00-ECU INTERNAL PERFORMANCE

For a complete wiring diagram, **refer to appropriate SYSTEM WIRING DIAGRAMS article** .

WHEN MONITORED

Ignition on.

SET CONDITION

The Forward Facing Camera Module (FFCM) runs a self diagnostic test to validate proper controller operation. This DTC will set if the controller has failed one or more internal test.

POSSIBLE CAUSES

Possible Causes
FORWARD FACING CAMERA MODULE (FFCM)

DIAGNOSTIC TEST

1. **CHECK IF THE DTC IS ACTIVE**
   1. Turn the ignition on.
   2. Using the scan tool, read Forward Facing Camera Module (FFCM) DTCs.

      Does the scan tool display this DTC as active?

      Yes

      - Replace and program the Forward Facing Camera Module (FFCM) in accordance with the Service Information. Refer to **MODULE, FORWARD FACING CAMERA, REMOVAL** .
      - Perform the FORWARD FACING CAMERA VERIFICATION TEST. Refer to **STANDARD PROCEDURE**.

      No

      - Go To 2
2. **CHECK THE WIRING AND CONNECTORS**
   1. The conditions necessary to set the DTC are not present at this time.
   2. Using the schematics as a guide, inspect the wiring and connectors specific to this module. Wiggle the wiring and connectors while checking for shorted and open circuits.
   3. Check all related splices and connectors for signs of water intrusion, corrosion, pushed out or bent terminals, and correct pin tension.
   4. Check Service Bulletins for any possible causes that may apply.

      Were there any problems found?

      Yes

      - Repair as necessary.
      - Perform the FORWARD FACING CAMERA VERIFICATION TEST. Refer to

STANDARD PROCEDURE.

No

- Test complete.

C008F-00-CALIBRATION NOT LEARNED

For a complete wiring diagram, **refer to appropriate SYSTEM WIRING DIAGRAMS article** .

WHEN MONITORED

Ignition on.

SET CONDITION

The Forward Facing Camera Module (FFCM) detects that the camera system has not been calibrated.

POSSIBLE CAUSES

Possible Causes
FORWARD FACING CAMERA NOT CALIBRATED FORWARD FACING CAMERA MODULE (FFCM)

DIAGNOSTIC TEST

PERFORM THE FORWARD FACING CAMERA - CALIBRATION PROCEDURE

1. With the scan tool, perform the Forward Facing Camera - Calibration Procedure. Refer to **MODULE, FORWARD FACING CAMERA, STANDARD PROCEDURE** .
2. Perform the FORWARD FACING CAMERA VERIFICATION TEST. Refer to **STANDARD PROCEDURE**.

   Does this DTC reset after performing the Forward Facing Camera Verification Test?

   Yes

   - Check for any technical bulletins that may apply. If no other problems are found, replace and program the Forward Facing Camera Module (FFCM) in accordance with the Service Information. Refer to **MODULE, FORWARD FACING CAMERA, REMOVAL** .
   - Perform the FORWARD FACING CAMERA VERIFICATION TEST. Refer to **STANDARD PROCEDURE**.

   No

   - Test Complete.

C14A4-00-SENSOR ADJUSTMENT REQUIRED

For a complete wiring diagram, **refer to appropriate SYSTEM WIRING DIAGRAMS article** .

WHEN MONITORED

Ignition on.

SET CONDITION

The Forward Facing Camera Module (FFCM) detects that the camera system has not been installed properly.

POSSIBLE CAUSES

Possible Causes
FORWARD FACING CAMERA NOT INSTALLED PROPERLY
FORWARD FACING CAMERA MODULE (FFCM)

DIAGNOSTIC TEST

CHECK IF THE FORWARD FACING CAMERA IS INSTALLED PROPERLY

1. Check if the Forward Facing Camera is installed properly. Refer to **MODULE, FORWARD FACING CAMERA, INSTALLATION** .
2. With the scan tool, perform the Forward Facing Camera - Calibration Procedure. Refer to **MODULE, FORWARD FACING CAMERA, STANDARD PROCEDURE** .
3. Perform the FORWARD FACING CAMERA VERIFICATION TEST. Refer to **STANDARD PROCEDURE**.

   Does this DTC reset after performing the Forward Facing Camera Verification Test?

   Yes

   - Check for any technical bulletins that may apply. If no other problems are found, replace and program the Forward Facing Camera Module (FFCM) in accordance with the Service Information. Refer to **MODULE, FORWARD FACING CAMERA, REMOVAL** .
   - Perform the FORWARD FACING CAMERA VERIFICATION TEST. Refer to **STANDARD PROCEDURE**.

   No

   - Test Complete

C14A5-00-SENSOR BLINDED

For a complete wiring diagram, **refer to appropriate SYSTEM WIRING DIAGRAMS article** .

WHEN MONITORED

Ignition on.

SET CONDITION

The Forward Facing Camera Module (FFCM) detects that the camera system view is blocked or obstructed.

POSSIBLE CAUSES

Possible Causes
FORWARD FACING CAMERA OBSTRUCTED FORWARD FACING CAMERA MODULE (FFCM)

DIAGNOSTIC TEST

1. **CHECK IF THE DTC IS ACTIVE**
   1. Using a scan tool, read Forward Facing Camera Module (FCCM) DTCs.

      Is this DTC active?

      Yes

      - Go To 2

      No

      - No repair is necessary. Make sure the lens area is free of dirt, damage, and other obstructions. Clear the DTC and verify proper operation of the FFC system.
      - Perform the FORWARD FACING CAMERA VERIFICATION TEST. Refer to **STANDARD PROCEDURE**.
2. **INSPECT FCCM MOUNTING AND LENS ALIGNMENT**

   NOTE: Make sure the FCCM lens is free from dirt and debris (mud, dirt, ice, road debris) that would compromise the function of the FFC system.

   1. Perform a thorough visual and physical inspect of the FCCM and the mounting bracket and location.
   2. Check for:
      - Debris on windshield obstructing lens
      - Damaged or out of alignment lens
      - Damage to the FCCM module

Were there any problems found?

Yes

- Repair as necessary in accordance with the Service Information.
- Perform the FORWARD FACING CAMERA VERIFICATION TEST. Refer to **STANDARD PROCEDURE**.

No

- Replace and program the Forward Facing Camera Module (FFCM) in accordance with the Service Information. Refer to **MODULE, FORWARD FACING CAMERA, REMOVAL** .
- Perform the FORWARD FACING CAMERA VERIFICATION TEST. Refer to **STANDARD PROCEDURE**.

C211B-16-IGNITION RUN/START INPUT - CIRCUIT VOLTAGE BELOW THRESHOLD

For a complete wiring diagram, **refer to appropriate SYSTEM WIRING DIAGRAMS article** .

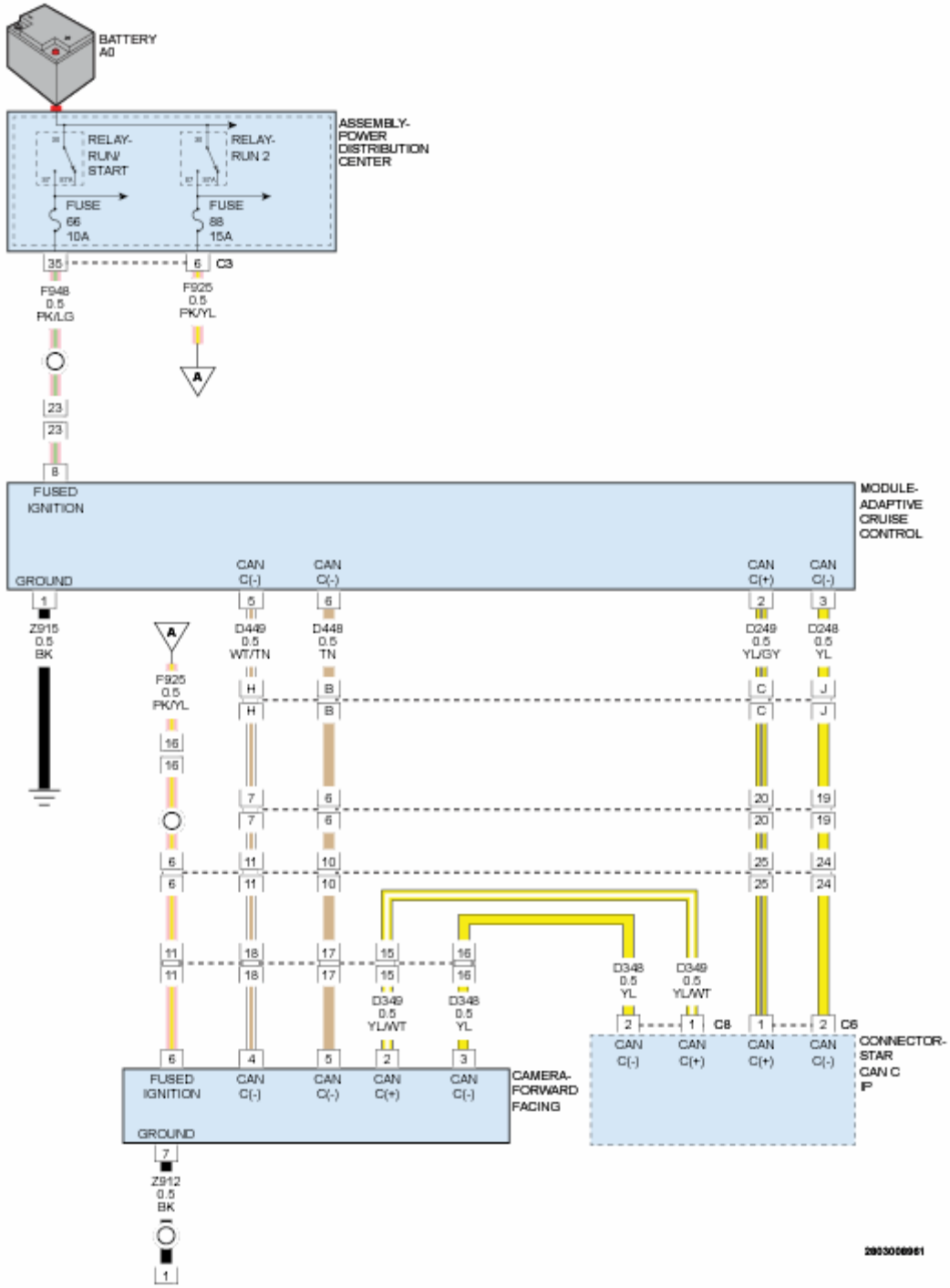

Fig. 1: Adaptive Cruise Control Circuit Diagram
Courtesy of CHRYSLER GROUP, LLC

WHEN MONITORED

Continuously with the ignition on.

SET CONDITION

If the voltage to the Forward Facing Camera Module (FFCM) is below 9.0 volts.

POSSIBLE CAUSES

Possible Causes
RELATED DTCS PRESENT IN PCM
LOW BATTERY VOLTAGE
FUSED IGNITION OPEN OR HIGH RESISTANCE
GROUND CIRCUIT OPEN OR HIGH RESISTANCE
FORWARD FACING CAMERA MODULE (FFCM)

DIAGNOSTIC TEST

1. **RELATED DTCS PRESENT IN PCM**
    1. Turn the ignition on.
    2. With the scan tool, read Powertrain Control Module (PCM) DTCs.

    Are there any charging system or battery related DTCs present?

    Yes

    - Refer to the **DTC INDEX** article and perform the appropriate diagnostic procedure.

    No

    - Go To 2
2. **CHECK IF THE DTC IS ACTIVE**
    1. With the scan tool, read Forward Facing Camera Module (FFCM) DTCs.

    Does the scan tool display this DTC as active?

    Yes

    - Go To 3

    No

    - The condition or conditions that originally set this DTC are not present at this time. Using the wiring diagrams as a guide, check all related splices and connectors for signs of water intrusion, corrosion, pushed out or bent terminals, and correct pin tension.
    - Perform the FORWARD FACING CAMERA VERIFICATION TEST. Refer to **STANDARD PROCEDURE**.

3. **CHECK THE (F925) FUSED IGNITION CIRCUIT FOR AN OPEN**
   1. Turn the ignition off.
   2. Disconnect the FFCM harness connector.
   3. Turn the ignition on.
   4. Using a 12-volt test light connected to ground, check the (F925) Fused Ignition circuit in the FFCM harness connector.

      NOTE: The test light must illuminate brightly. Compare the brightness to that of a direct connection to the battery.

      Does the test light illuminate brightly?

      Yes

      - Go To 4

      No

      - Repair the (F925) Fused Ignition circuit for an open or high resistance.
      - Perform the FORWARD FACING CAMERA VERIFICATION TEST. Refer to **STANDARD PROCEDURE**.
4. **CHECK THE (Z915) GROUND CIRCUIT OPEN OR HIGH RESISTANCE**
   1. Turn the ignition off.
   2. Using a 12-volt test light connected to 12-volts, check the ground and the (Z915) Ground circuit in the FFCM harness connector.

      Does the test light illuminate brightly?

      Yes

      - Replace and program the Forward Facing Camera Module (FFCM) in accordance with the Service Information. Refer to **MODULE, FORWARD FACING CAMERA, REMOVAL** .
      - Perform the FORWARD FACING CAMERA VERIFICATION TEST. Refer to **STANDARD PROCEDURE**.

      No

      - Repair the (Z915) Ground circuit for an open or high resistance.
      - Perform the FORWARD FACING CAMERA VERIFICATION TEST. Refer to **STANDARD PROCEDURE**.

C211B-17-IGNITION RUN/START INPUT - CIRCUIT VOLTAGE ABOVE THRESHOLD

For a complete wiring diagram, **refer to appropriate SYSTEM WIRING DIAGRAMS article** .

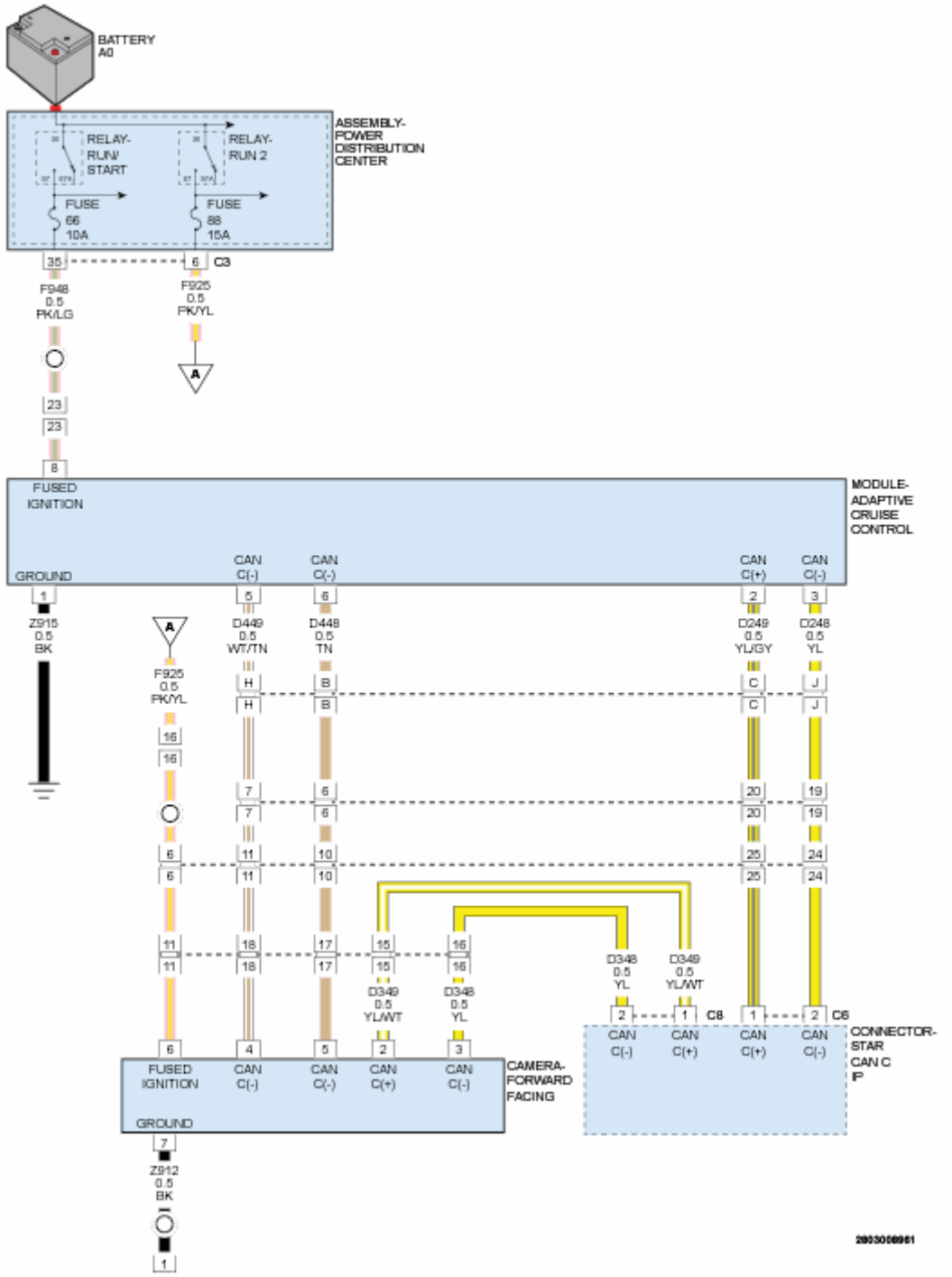

Fig. 2: Adaptive Cruise Control Circuit Diagram
Courtesy of CHRYSLER GROUP, LLC

WHEN MONITORED

Continuously with the ignition on.

SET CONDITION

If the voltage to the Forward Facing Camera Module (FFCM) is above 16.0 volts.

POSSIBLE CAUSES

Possible Causes
RELATED DTC(S) PRESENT IN THE PCM
HIGH BATTERY VOLTAGE
FORWARD FACING CAMERA MODULE (FFCM)

DIAGNOSTIC TEST

1. **RELATED DTCS PRESENT IN THE PCM**
    1. Ignition on, engine running.
    2. With the scan tool, read Powertrain Control Module (PCM) DTCs.

    Are there any charging system or battery related DTCs present in the PCM?

    Yes

    - Refer to the **DTC INDEX** article and perform the appropriate diagnostic procedure.

    No

    - Go To 2
2. **CHECK IF THE DTC IS ACTIVE**
    1. Ignition on, engine running.
    2. With the scan tool, read DTCs.

    Does the scan tool display this DTC as active?

    Yes

    - Replace and program the Forward Facing Camera Module (FFCM) in accordance with the Service Information. Refer to **MODULE, FORWARD FACING CAMERA, REMOVAL** .
    - Perform the FORWARD FACING CAMERA VERIFICATION TEST. Refer to **STANDARD PROCEDURE**.

    No

    - Go To3

3. **CHECK THE WIRING AND CONNECTORS**
   1. The conditions necessary to set the DTC are not present at this time.
   2. Using the schematics as a guide, inspect the wiring and connectors specific to this module. Wiggle the wiring and connectors while checking for shorted and open circuits.
   3. Check all related splices and connectors for signs of water intrusion, corrosion, pushed out or bent terminals, and correct pin tension.
   4. Check Service Bulletins for any possible causes that may apply.

   Were there any problems found?

   Yes

   - Repair as necessary.
   - Perform the FORWARD FACING CAMERA VERIFICATION TEST. Refer to **STANDARD PROCEDURE**.

   No

   - Test complete.

C2206-00-VEHICLE CONFIGURATION MISMATCH

For a complete wiring diagram, **refer to appropriate SYSTEM WIRING DIAGRAMS article** .

WHEN MONITORED

Ignition on.

SET CONDITION

If the Forward Facing Camera Module (FFCM) detects if the vehicle type is not identified or incorrectly identified over the Can Bus.

POSSIBLE CAUSES

Possible Causes
BODY CONTROL MODULE (BCM) NOT CONFIGURED FORWARD FACING CAMERA MODULE (FFCM)

DIAGNOSTIC TEST

1. **VERIFY IF THE DTC IS ACTIVE**

NOTE: Diagnose and repair any Powertrain Control Module (PCM) Vehicle

Identification Number (VIN) or Communication DTCs before continuing with this test.

1. Ignition on, engine not running.
2. With the scan tool, erase Forward Facing Camera Module (FFCM) DTCs.
3. Cycle the ignition switch from off to on.
4. With the scan tool, read FFCM DTCs.

Is this DTC active?

Yes

- Go To 2

No

- The condition or conditions that originally set this DTC are not present at this time. Using the wiring diagrams as a guide, check all related splices and connectors for signs of water intrusion, corrosion, pushed out or bent terminals, and correct pin tension and repair as necessary. If no problems are found, test complete.
- Perform the FORWARD FACING CAMERA VERIFICATION TEST. Refer to **STANDARD PROCEDURE**.

2. **CHECK THE BCM FOR PROPER CONFIGURATION**
   1. With the scan tool perform the Body Control Module (BCM) Restore Vehicle Configuration.
   2. With the scan tool, perform the Forward Facing Camera Module (FFCM) Calibration Procedure.
   3. With the scan tool, erase Forward Facing Camera Module (FFCM) DTCs.
   4. Cycle the ignition from off to on.
   5. With the scan tool, read FFCM DTCs.

   Does this DTC reset?

   Yes

   - Verify that the proper Vehicle Identification Number (VIN) is stored in the PCM and BCM. Check for any Service Bulletins that may apply. If no problems are found, replace and program the Forward Facing Camera Module (FFCM) in accordance with the Service Information. Refer to **MODULE, FORWARD FACING CAMERA, REMOVAL** .
   - Perform the FORWARD FACING CAMERA VERIFICATION TEST. Refer to **STANDARD PROCEDURE**.

   No

   - Test Complete.

C2210-00-ECU OVERTEMPERATURE

For a complete wiring diagram, **refer to appropriate SYSTEM WIRING DIAGRAMS article** .

WHEN MONITORED

Ignition on.

SET CONDITION

If the Forward Facing Camera Module (FFCM) detects the internal module temperature is above 105° C (221° F).

POSSIBLE CAUSES

Possible Causes
FORWARD FACING CAMERA MODULE (FFCM) OVER TEMPERATURE FORWARD FACING CAMERA MODULE (FFCM)

DIAGNOSTIC TEST

1. **CHECK IF THE DTC IS ACTIVE**
    1. Ignition on, engine not running.
    2. With the scan tool, read Forward Facing Camera Module (FCCM) DTCs.

    Is this DTC active?

    Yes

    - Go To 2

    No

    - The condition or conditions that originally set this DTC are not present at this time. Using the wiring diagrams as a guide, check all related splices and connectors for signs of water intrusion, corrosion, pushed out or bent terminals, and correct pin tension and repair as necessary. If no problems are found, test complete.
    - Perform the FORWARD FACING CAMERA VERIFICATION TEST. Refer to **STANDARD PROCEDURE**.
2. **CHECK FOR RELATED CONDITIONS**
    1. With the scan tool, read Powertrain Control Module (PCM) ambient air temperature.

    Is the ambient air temperature above 105° C (221° F)

    Yes

- Move the vehicle to a cooler location and recheck.
- Perform the FORWARD FACING CAMERA VERIFICATION TEST. Refer to **STANDARD PROCEDURE**.

No

- Check for any Service Bulletins that may apply. If no problems are found, replace and program the Forward Facing Camera Module (FFCM) in accordance with the Service Information. Refer to **MODULE, FORWARD FACING CAMERA, REMOVAL** .
- Perform the FORWARD FACING CAMERA VERIFICATION TEST. Refer to **STANDARD PROCEDURE**.

C2212-00-ECU IN PLANT MODE

For a complete wiring diagram, **refer to appropriate SYSTEM WIRING DIAGRAMS article** .

WHEN MONITORED

Ignition on.

SET CONDITION

The Forward Facing Camera Module (FFCM) detects that it is in the in-plant mode.

POSSIBLE CAUSES

Possible Causes
FORWARD FACING CAMERA MODULE (FFCM) CALIBRATION PROCEDURE NEEDS TO BE PERFORMED

DIAGNOSTIC TEST

PERFORM THE FORWARD FACING CAMERA CALIBRATION PROCEDURE

NOTE: This DTC must be active before proceeding.

1. With the scan tool, perform the Forward Facing Camera - Calibration Procedure. Refer to **MODULE, FORWARD FACING CAMERA, STANDARD PROCEDURE** .
2. Perform the FORWARD FACING CAMERA VERIFICATION TEST. Refer to **STANDARD PROCEDURE**.

   Does this DTC reset after performing the verification test?

   Yes

- Check for any Service Bulletins that may apply. If no problems are found, replace and program the Forward Facing Camera Module (FFCM) in accordance with the Service Information. Refer to **MODULE, FORWARD FACING CAMERA, REMOVAL** .
- Perform the FORWARD FACING CAMERA VERIFICATION TEST. Refer to **STANDARD PROCEDURE**.

No

- Test Complete.

U0002-00-CAN C BUS OFF PERFORMANCE

Perform the COMMUNICATION PRE-DIAGNOSTIC PROCEDURE. Refer to **STANDARD PROCEDURE** .

U0011-00-CAN INTERIOR BUS OFF PERFORMANCE

Perform the COMMUNICATION PRE-DIAGNOSTIC PROCEDURE. Refer to **STANDARD PROCEDURE** .

U0100-00-LOST COMMUNICATION WITH ECM/PCM

Perform the COMMUNICATION PRE-DIAGNOSTIC PROCEDURE. Refer to **STANDARD PROCEDURE** .

U0129-00-LOST COMMUNICATION WITH BRAKE SYSTEM CONTROL MODULE

Perform the COMMUNICATION PRE-DIAGNOSTIC PROCEDURE. Refer to **STANDARD PROCEDURE** .

U0131-00-LOST COMMUNICATION WITH ELECTRIC POWER STEERING CONTROL MODULE

Perform the COMMUNICATION PRE-DIAGNOSTIC PROCEDURE. Refer to **STANDARD PROCEDURE** .

U0140-00-LOST COMMUNICATION WITH BODY CONTROL MODULE

Perform the COMMUNICATION PRE-DIAGNOSTIC PROCEDURE. Refer to **STANDARD PROCEDURE** .

U0151-00-LOST COMMUNICATION WITH OCCUPANT RESTRAINT CONTROLLER (ORC)

Perform the COMMUNICATION PRE-DIAGNOSTIC PROCEDURE. Refer to **STANDARD PROCEDURE** .

U0212-00-LOST COMMUNICATION WITH SCM

Perform the COMMUNICATION PRE-DIAGNOSTIC PROCEDURE. Refer to **STANDARD PROCEDURE** .

U0401-00-IMPLAUSIBLE DATA RECEIVED FROM ECM/PCM

For a complete wiring diagram, **refer to appropriate SYSTEM WIRING DIAGRAMS article** .

WHEN MONITORED

Continuously with the ignition on.

SET CONDITION

When the Forward Facing Camera Module (FFCM) receives an implausible (default/error value, toggle error or parity error) message from the Powertrain Control Module (PCM).

POSSIBLE CAUSES

Possible Causes
BODY CONTROL MODULE (BCM) DTCS PRESENT
POWERTRAIN CONTROL MODULE (PCM) DTCS PRESENT
POWERTRAIN CONTROL MODULE (PCM)
FORWARD FACING CAMERA MODULE (FFCM)

DIAGNOSTIC TEST

1. **VERIFY THE DTC IS ACTIVE**
    1. Turn the ignition on.
    2. With the scan tool, record and erase Forward Facing Camera Module (FFCM) DTCs.
    3. Cycle the ignition from off to on.
    4. With the scan tool, read FFCM DTCs.

    Does the scan tool display this DTC as active?

    Yes

    - Go To 2

    No

    - Go To 5
2. **CHECK FOR BODY CONTROL MODULE (BCM) DTCS**
    1. With the scan tool, read BCM DTCs.

Are there any BCM CAN Bus DTCs present?

Yes

- Refer to the **BODY CONTROL MODULE (BCM) - DIAGNOSTIC CODE INDEX** article and perform the appropriate diagnostic procedure.

No

- Go To 3

3. **CHECK FOR POWERTRAIN CONTROL MODULE (PCM) DTCS**
   1. With the scan tool, read PCM DTCs.

   Are there any PCM DTCs present?

   Yes

   - Refer to the **DTC INDEX** article and perform the appropriate diagnostic procedure.

   No

   - Go To 4

4. **CHECK OTHER MODULES FOR DTCS**
   1. With the scan tool, read DTCs.

   Are there any other modules reporting implausible communication DTCs against the PCM?

   Yes

   - Replace and program the Powertrain Control Module (PCM) in accordance with the Service Information. Refer to **MODULE, POWERTRAIN CONTROL, REMOVAL** .
   - Perform the FORWARD FACING CAMERA VERIFICATION TEST. Refer to **STANDARD PROCEDURE**.

   No

   - Using the schematics as a guide, check the FFCM pins, terminals, and connectors for corrosion, damage, or terminal push out. Pay particular attention to all power and ground circuits. Is no problems are found, replace and program the Forward Facing Camera Module (FFCM) in accordance with the Service Information. Refer to **MODULE, FORWARD FACING CAMERA, REMOVAL** .
   - Perform the FORWARD FACING CAMERA VERIFICATION TEST. Refer to **STANDARD PROCEDURE**.

5. **CHECK THE WIRING AND CONNECTORS**

1. The conditions necessary to set the DTC are not present at this time.
2. Using the schematics as a guide, inspect the wiring and connectors specific to this module. Wiggle the wiring and connectors while checking for shorted and open circuits.
3. Check all related splices and connectors for signs of water intrusion, corrosion, pushed out or bent terminals, and correct pin tension.
4. Check Service Bulletins for any possible causes that may apply.

   Were there any problems found?

   Yes

   - Repair as necessary.
   - Perform the FORWARD FACING CAMERA VERIFICATION TEST. Refer to **STANDARD PROCEDURE**.

   No

   - Test complete.

U0418-00-IMPLAUSIBLE DATA RECEIVED FROM BRAKE SYSTEM CONTROL MODULE

For a complete wiring diagram, **refer to appropriate SYSTEM WIRING DIAGRAMS article** .

WHEN MONITORED

Continuously with the ignition on.

SET CONDITION

When the Forward Facing Camera Module (FFCM) receives an implausible (default/error value, toggle error or parity error) message from the Antilock Brake System (ABS) Module.

POSSIBLE CAUSES

Possible Causes
ANTILOCK BRAKE SYSTEM (ABS) MODULE DTCS PRESENT
BODY CONTROL MODULE (BCM) DTCS PRESENT
ANTILOCK BRAKE SYSTEM (ABS) MODULE
FORWARD FACING CAMERA MODULE (FFCM)

DIAGNOSTIC TEST

1. **VERIFY THE DTC IS ACTIVE**
   1. Turn the ignition on.

2. With the scan tool, record and erase Forward Facing Camera Module (FFCM) DTCs.
3. Cycle the ignition from off to on.
4. With the scan tool, read FFCM DTCs.

   Does the scan tool display this DTC as active?

   Yes

   - Go To 2

   No

   - Go To 5

2. **CHECK FOR BODY CONTROL MODULE (BCM) DTCS**
   1. With the scan tool, read BCM DTCs.

      Are there any BCM CAN Bus DTCs present?

      Yes

      - Refer to the **BODY CONTROL MODULE (BCM) - DIAGNOSTIC CODE INDEX** article and perform the appropriate diagnostic procedure.

      No

      - Go To 3

3. **CHECK FOR ANTILOCK BRAKE SYSTEM (ABS) MODULE DTCS**
   1. With the scan tool, read ABS DTCs.

      Are there any ABS DTCs present?

      Yes

      - Refer to **DIAGNOSIS AND TESTING** and perform the appropriate diagnostic procedure.

      No

      - Go To 4

4. **CHECK OTHER MODULES FOR DTCS**
   1. With the scan tool, read DTCs.

      Are there any other modules reporting implausible communication DTCs against the ABS?

      Yes

- Replace and program the Antilock Brake System (ABS) Module in accordance with the Service Information. Refer to **MODULE, ANTI-LOCK BRAKE SYSTEM, REMOVAL** .
- Perform the FORWARD FACING CAMERA VERIFICATION TEST. Refer to **STANDARD PROCEDURE**.

No

- Using the schematics as a guide, check the FFCM pins, terminals, and connectors for corrosion, damage, or terminal push out. Pay particular attention to all power and ground circuits. Is no problems are found, replace and program the Forward Facing Camera Module (FFCM) in accordance with the Service Information. Refer to **MODULE, FORWARD FACING CAMERA, REMOVAL** .
- Perform the FORWARD FACING CAMERA VERIFICATION TEST. Refer to **STANDARD PROCEDURE**.

5. **CHECK THE WIRING AND CONNECTORS**
   1. The conditions necessary to set the DTC are not present at this time.
   2. Using the schematics as a guide, inspect the wiring and connectors specific to this module. Wiggle the wiring and connectors while checking for shorted and open circuits.
   3. Check all related splices and connectors for signs of water intrusion, corrosion, pushed out or bent terminals, and correct pin tension.
   4. Check Service Bulletins for any possible causes that may apply.

   Were there any problems found?

   Yes

   - Repair as necessary.
   - Perform the FORWARD FACING CAMERA VERIFICATION TEST. Refer to **STANDARD PROCEDURE**.

   No

   - Test complete.

U0422-00-IMPLAUSIBLE DATA RECEIVED FROM BODY CONTROL MODULE

For a complete wiring diagram, **refer to appropriate SYSTEM WIRING DIAGRAMS article** .

WHEN MONITORED

Continuously with the ignition on.

SET CONDITION

When the Forward Facing Camera Module (FFCM) receives an implausible (default/error value, toggle error or parity error) message from the Body Control Module (BCM).

POSSIBLE CAUSES

Possible Causes
BODY CONTROL MODULE (BCM) DTCS PRESENT
BODY CONTROL MODULE (BCM)
FORWARD FACING CAMERA MODULE (FFCM)

DIAGNOSTIC TEST

1. **VERIFY THE DTC IS ACTIVE**
    1. Turn the ignition on.
    2. With the scan tool, record and erase Forward Facing Camera Module (FFCM) DTCs.
    3. Cycle the ignition from off to on.
    4. With the scan tool, read FFCM DTCs.

    Does the scan tool display this DTC as active?

    Yes

    - Go To 2

    No

    - Go To 4
2. **CHECK FOR BODY CONTROL MODULE (BCM) DTCS**
    1. With the scan tool, read BCM DTCs.

    Are there any BCM CAN Bus DTCs present?

    Yes

    - Refer to the **BODY CONTROL MODULE (BCM) - DIAGNOSTIC CODE INDEX** article and perform the appropriate diagnostic procedure.

    No

    - Go To 3
3. **CHECK OTHER MODULES FOR DTCS**
    1. With the scan tool, read DTCs.

    Are there any other modules reporting implausible communication DTCs against the BCM?

Yes

- Replace and program the Body Control Module (BCM) in accordance with the Service Information. Refer to **MODULE, BODY CONTROL, REMOVAL** .
- Perform the FORWARD FACING CAMERA VERIFICATION TEST. Refer to **STANDARD PROCEDURE**.

No

- Using the schematics as a guide, check the FFCM pins, terminals, and connectors for corrosion, damage, or terminal push out. Pay particular attention to all power and ground circuits. Is no problems are found, replace and program the Forward Facing Camera Module (FFCM) in accordance with the Service Information. Refer to **MODULE, FORWARD FACING CAMERA, REMOVAL** .
- Perform the FORWARD FACING CAMERA VERIFICATION TEST. Refer to **STANDARD PROCEDURE**.

4. **CHECK THE WIRING AND CONNECTORS**
   1. The conditions necessary to set the DTC are not present at this time.
   2. Using the schematics as a guide, inspect the wiring and connectors specific to this module. Wiggle the wiring and connectors while checking for shorted and open circuits.
   3. Check all related splices and connectors for signs of water intrusion, corrosion, pushed out or bent terminals, and correct pin tension.
   4. Check Service Bulletins for any possible causes that may apply.

   Were there any problems found?

   Yes

   - Repair as necessary.
   - Perform the FORWARD FACING CAMERA VERIFICATION TEST. Refer to **STANDARD PROCEDURE**.

   No

   - Test complete.

U0428-00-IMPLAUSIBLE DATA RECEIVED FROM STEERING ANGLE SENSOR MODULE

For a complete wiring diagram, **refer to appropriate SYSTEM WIRING DIAGRAMS article** .

WHEN MONITORED

Continuously with the ignition on.

SET CONDITION

When the Forward Facing Camera Module (FFCM) receives an implausible (default/error value, toggle error or parity error) message from the Steering Angle Sensor (SAS). The SAS is part of the Steering Column Control Module (SCCM).

POSSIBLE CAUSES

Possible Causes
STEERING COLUMN CONTROL MODULE (SCCM) DTCS PRESENT
BODY CONTROL MODULE (BCM) DTCS PRESENT
STEERING COLUMN CONTROL MODULE (SCCM) MODULE
FORWARD FACING CAMERA MODULE (FFCM)

DIAGNOSTIC TEST

1. **VERIFY THE DTC IS ACTIVE**
    1. Turn the ignition on.
    2. With the scan tool, record and erase Forward Facing Camera Module (FFCM) DTCs.
    3. Cycle the ignition from off to on.
    4. With the scan tool, read FFCM DTCs.

    Does the scan tool display this DTC as active?

    Yes

    - Go To 2

    No

    - Go To 5
2. **CHECK FOR BODY CONTROL MODULE (BCM) DTCS**
    1. With the scan tool, read BCM DTCs.

    Are there any BCM CAN Bus DTCs present?

    Yes

    - Refer to the **BODY CONTROL MODULE (BCM) - DIAGNOSTIC CODE INDEX** article and perform the appropriate diagnostic procedure.

    No

    - Go To 3
3. **CHECK FOR STEERING ANGLE SENSOR/STEERING COLUMN CONTROL MODULE DTCS**

1. With the scan tool, read SCCM DTCs.

   Are there any SCCM DTCs present?

   Yes

   - Refer to **DIAGNOSIS AND TESTING** and perform the appropriate diagnostic procedure.

   No

   - Go To 4

4. **CHECK OTHER MODULES FOR DTCS**
   1. With the scan tool, read DTCs.

      Are there any other modules reporting implausible communication DTCs against the SAS/SCCM?

      Yes

      - Replace and program the Steering Column Control Module (SCCM) in accordance with the Service Information. Refer to **MODULE, STEERING COLUMN, REMOVAL** .
      - Perform the FORWARD FACING CAMERA VERIFICATION TEST. Refer to **STANDARD PROCEDURE**.

      No

      - Using the schematics as a guide, check the FFCM pins, terminals, and connectors for corrosion, damage, or terminal push out. Pay particular attention to all power and ground circuits. Is no problems are found, replace and program the Forward Facing Camera Module (FFCM) in accordance with the Service Information. Refer to **MODULE, FORWARD FACING CAMERA, REMOVAL** .
      - Perform the FORWARD FACING CAMERA VERIFICATION TEST. Refer to **STANDARD PROCEDURE**.

5. **CHECK THE WIRING AND CONNECTORS**
   1. The conditions necessary to set the DTC are not present at this time.
   2. Using the schematics as a guide, inspect the wiring and connectors specific to this module. Wiggle the wiring and connectors while checking for shorted and open circuits.
   3. Check all related splices and connectors for signs of water intrusion, corrosion, pushed out or bent terminals, and correct pin tension.
   4. Check Service Bulletins for any possible causes that may apply.

      Were there any problems found?

      Yes

- Repair as necessary.
- Perform the FORWARD FACING CAMERA VERIFICATION TEST. Refer to **STANDARD PROCEDURE**.

No

- Test complete.

U0452-00-IMPLAUSIBLE DATA RECEIVED FROM RESTRAINTS CONTROL MODULE

For a complete wiring diagram, **refer to appropriate SYSTEM WIRING DIAGRAMS article** .

WHEN MONITORED

Continuously with the ignition on.

SET CONDITION

When the Forward Facing Camera Module (FFCM) receives an implausible (default/error value, toggle error or parity error) message from the Occupant Restraint Controller (ORC).

POSSIBLE CAUSES

Possible Causes
OCCUPANT RESTRAINT CONTROLLER (ORC) DTCS PRESENT
BODY CONTROL MODULE (BCM) DTCS PRESENT
OCCUPANT RESTRAINT CONTROLLER (ORC)
FORWARD FACING CAMERA MODULE (FFCM)

DIAGNOSTIC TEST

1. **VERIFY THE DTC IS ACTIVE**
    1. Turn the ignition on.
    2. With the scan tool, record and erase Forward Facing Camera Module (FFCM) DTCs.
    3. Cycle the ignition from off to on.
    4. With the scan tool, read FFCM DTCs.

    Does the scan tool display this DTC as active?

    Yes

    - Go To 2

    No

- Go To 5

2. **CHECK FOR BODY CONTROL MODULE (BCM) DTCS**
   1. With the scan tool, read BCM DTCs.

      Are there any BCM CAN Bus DTCs present?

      Yes

      - Refer to the **BODY CONTROL MODULE (BCM) - DIAGNOSTIC CODE INDEX** article and perform the appropriate diagnostic procedure.

      No

      - Go To 3

3. **CHECK FOR OCCUPANT RESTRAINT CONTROLLER (ORC) DTCS**
   1. With the scan tool, read ORC DTCs.

      Are there any ORC DTCs present?

      Yes

      - Refer to the **OCCUPANT RESTRAINT CONTROLLER (ORC) - DIAGNOSTIC CODE INDEX** article and perform the appropriate diagnostic procedure.

      No

      - Go To 4

4. **CHECK OTHER MODULES FOR DTCS**
   1. With the scan tool, read DTCs.

      Are there any other modules reporting implausible communication DTCs against the ORC?

      Yes

      - Replace and program the Occupant Restraint Controller (ORC) in accordance with the Service Information.
      - Perform the FORWARD FACING CAMERA VERIFICATION TEST. Refer to **STANDARD PROCEDURE**.

      No

      - Using the schematics as a guide, check the FFCM pins, terminals, and connectors for corrosion, damage, or terminal push out. Pay particular attention to all power and ground circuits. Is no problems are found, replace and program the Forward Facing Camera Module

(FFCM) in accordance with the Service Information. Refer to **MODULE, FORWARD FACING CAMERA, REMOVAL** .
- Perform the FORWARD FACING CAMERA VERIFICATION TEST. Refer to **STANDARD PROCEDURE**.

5. **CHECK THE WIRING AND CONNECTORS**
   1. The conditions necessary to set the DTC are not present at this time.
   2. Using the schematics as a guide, inspect the wiring and connectors specific to this module. Wiggle the wiring and connectors while checking for shorted and open circuits.
   3. Check all related splices and connectors for signs of water intrusion, corrosion, pushed out or bent terminals, and correct pin tension.
   4. Check Service Bulletins for any possible causes that may apply.

   Were there any problems found?

   Yes

   - Repair as necessary.
   - Perform the FORWARD FACING CAMERA VERIFICATION TEST. Refer to **STANDARD PROCEDURE**.

   No

   - Test complete.

STANDARD PROCEDURE

FORWARD FACING CAMERA VERIFICATION TEST

DIAGNOSTIC TEST

FORWARD FACING CAMERA VERIFICATION TEST

1. Disconnect all jumper wires and reconnect all previously disconnected components and connectors.
2. With the scan tool, erase Forward Facing Camera (FFCM) DTCs.
3. Make sure that all accessories are turned off and that the battery is fully charged.
4. If the FFCM was replaced or moved in any way, with the scan tool, perform the Forward Facing Camera - Calibration Procedure. Refer to **MODULE, FORWARD FACING CAMERA, STANDARD PROCEDURE** .
5. With the scan tool, read FFCM DTCs.

   Are there any DTCs present in the FFCM?

   Yes

- Refer to **DIAGNOSIS AND TESTING** and perform the appropriate diagnostic procedure.

No

- Repair is complete.

2014 ACCESSORIES AND EQUIPMENT

Frame and Bumpers - Cherokee

SPECIAL TOOLS

SPECIAL TOOLS

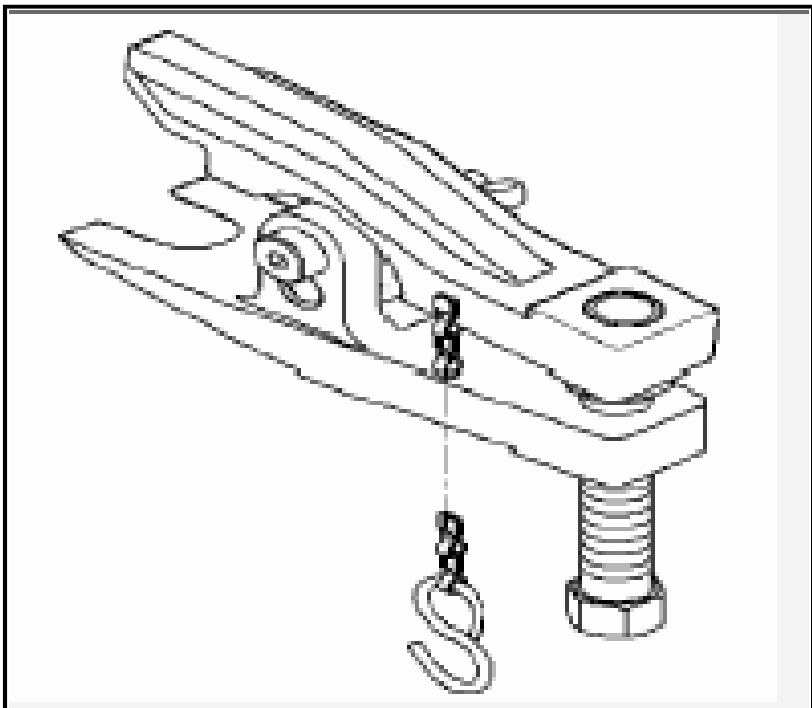	9360 - Remover, Ball Joint (Originally Shipped In Kit Number(s) 9329, 9515, 9516, 9516-CAN, 9517, 9517-CAN, 9518, 9519, 9540, 9541.)
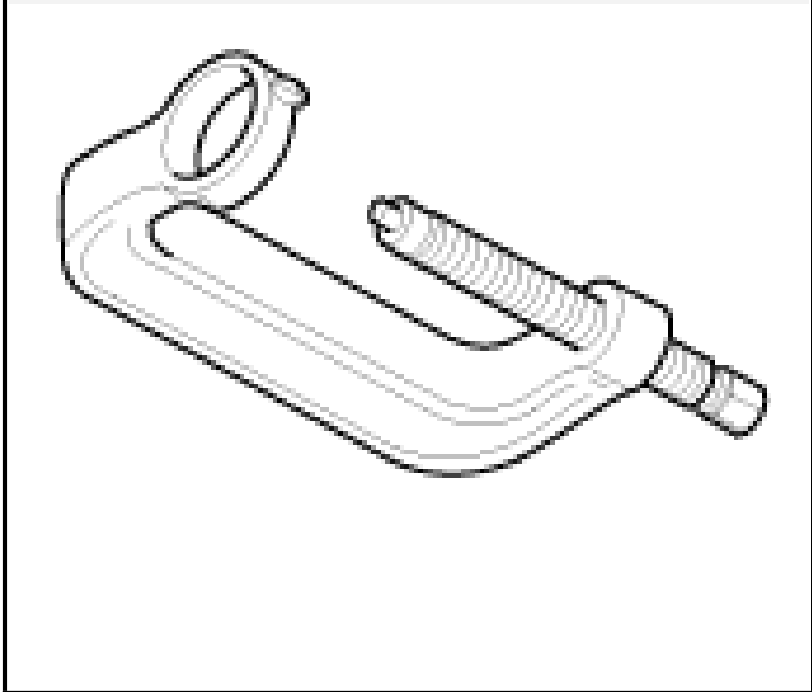	C-4212F - Press, Ball Joint (Originally Shipped In Kit Number(s) 6745, 6880, 6881, MLR-C03.)

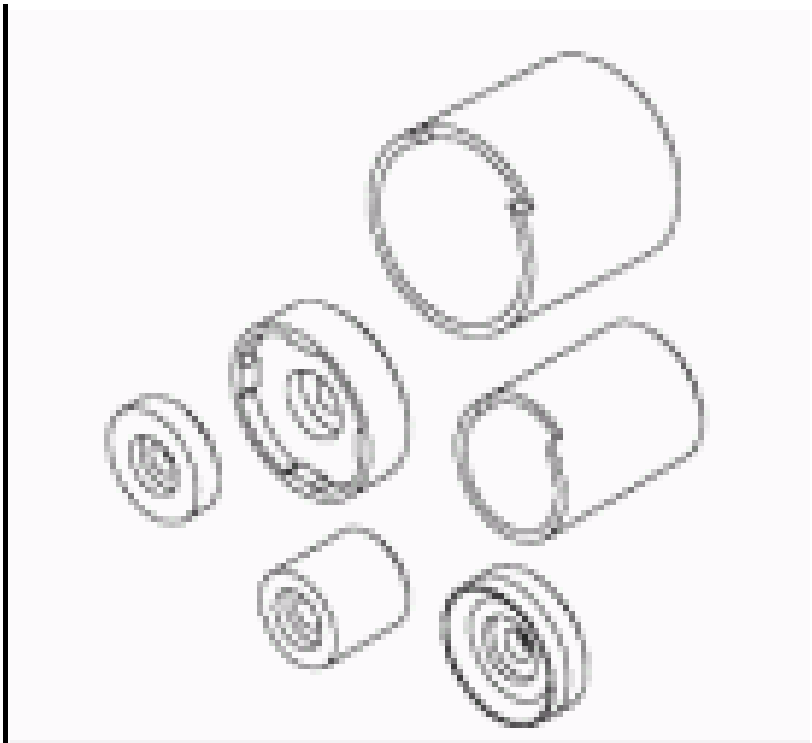

8858-6 - Remover
(Originally Shipped In Kit Number(s).)

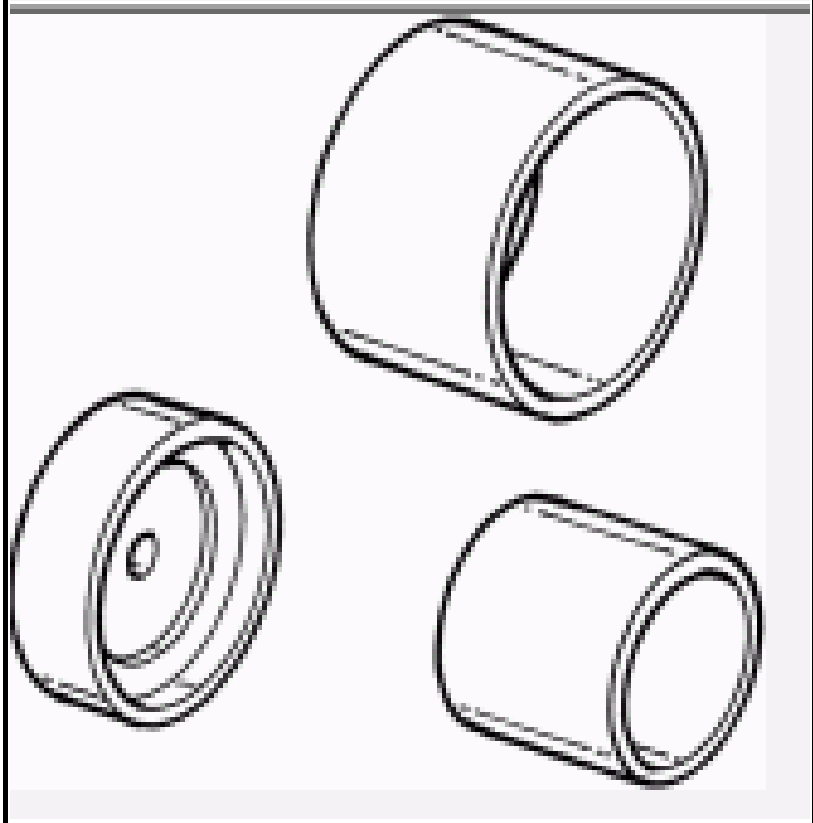

8861-2 - Receiver, Ball Joint
(Originally Shipped In Kit Number(s).)

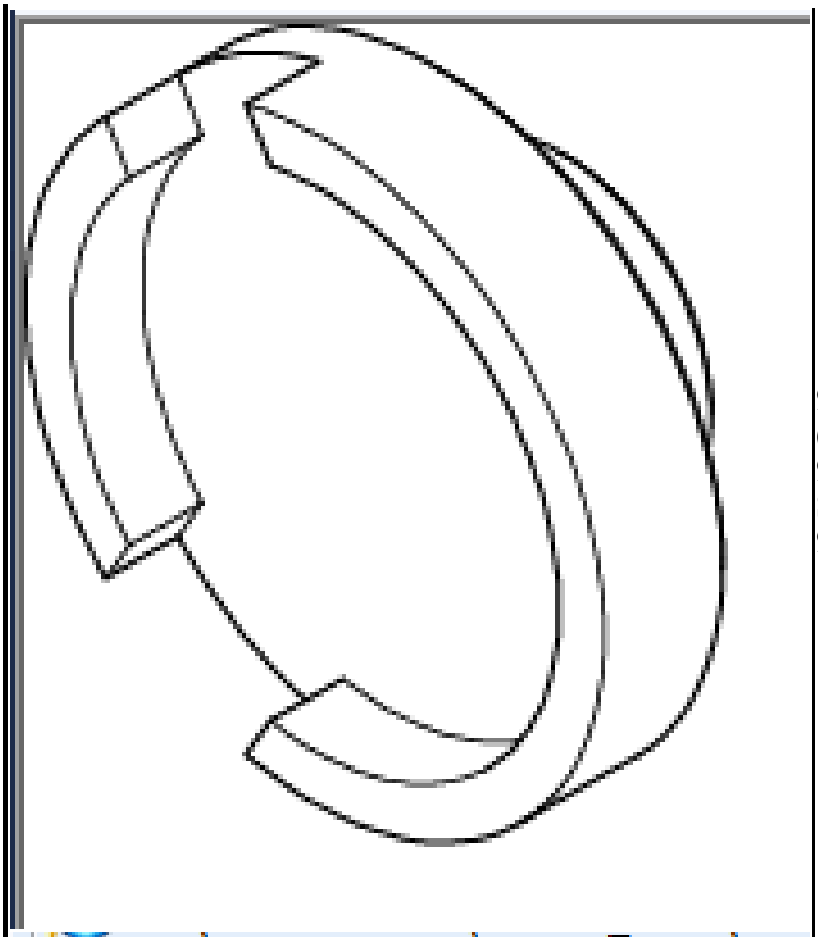

9031-4 - Installer, Bushing
(Originally Shipped In Kit Number(s) 9074, 9076, 9090, 9329-SUP, 9396, 9515-SUP, 9516-SUP, 9517-SUP, 9518, 9519, 9540-SUP, 9541-SUP.)

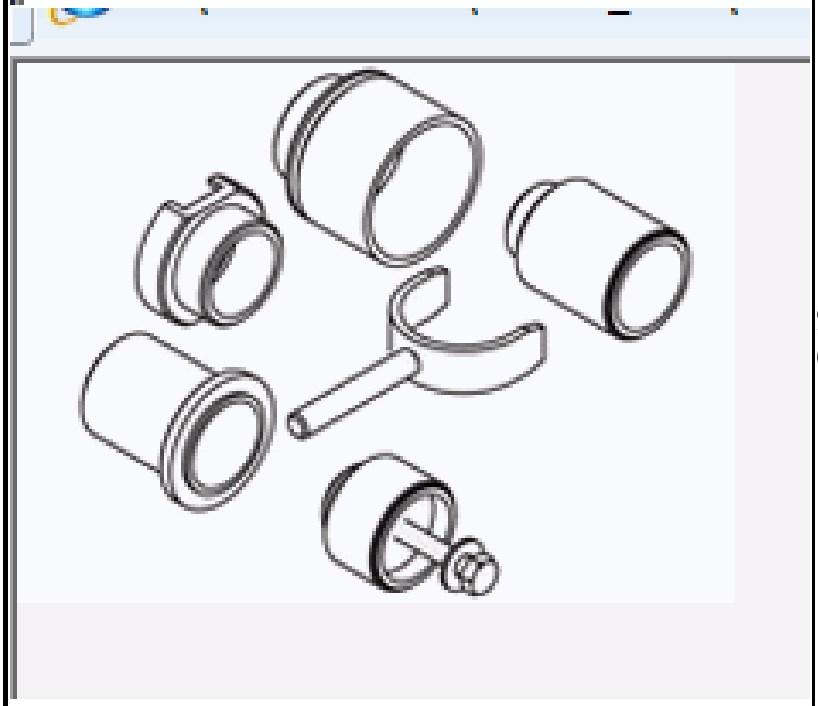

9958 - Remover/Installer, Axle Bushing
(Originally Shipped In Kit Number(s) 10089.)

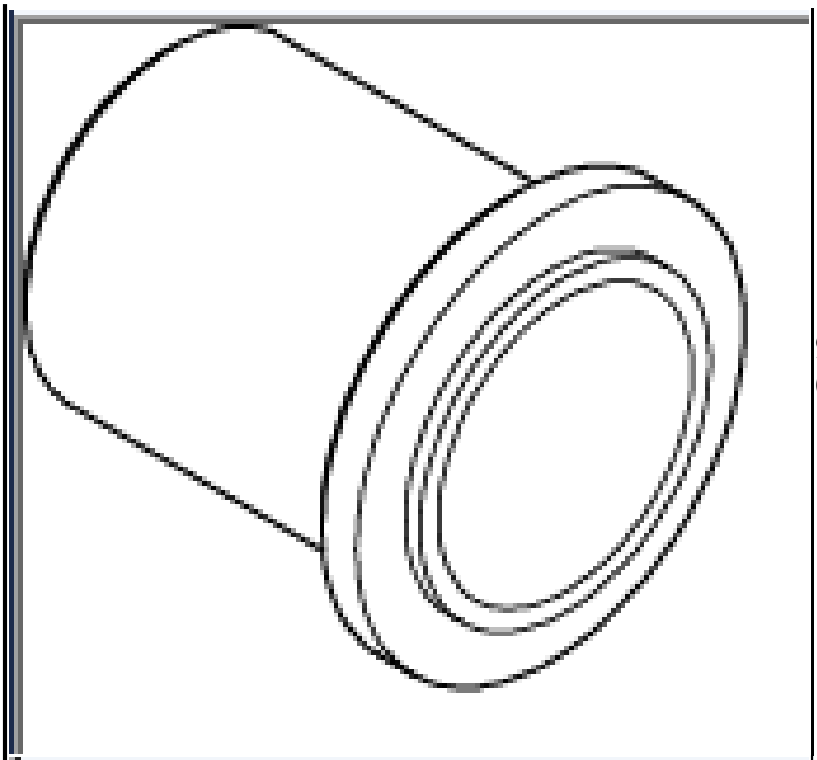

9958-3 - Installer, Bushing
(Originally Shipped In Kit Number(s) 10089, 10125.)

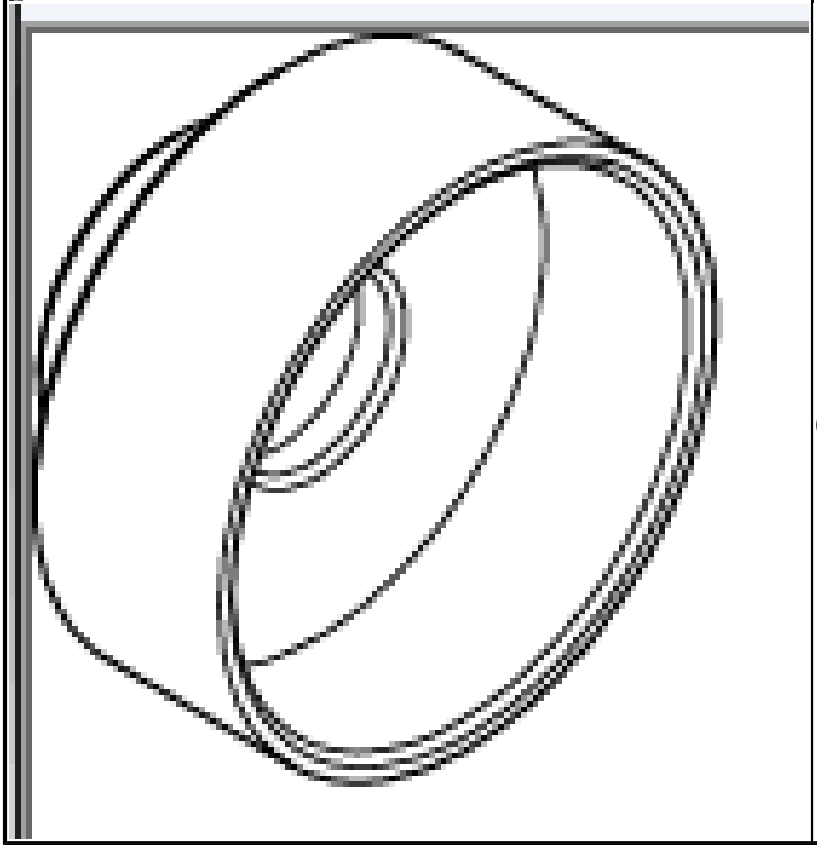

10106-2 - Receiver, Depth Setting
(Originally Shipped In Kit Number(s) 10105, 10108.)

SPECIFICATIONS

TORQUE SPECIFICATIONS

TORQUE SPECIFICATIONS

DESCRIPTION	N.m	Ft Lbs	In Lbs
Front suspension crossmember mounting bolts	189	139	-
Front suspension crossmember upper mounting bolts	120	86	-
Front upper bumper reinforcement bolts	45	33	-
Lower ball joint to control arm nut (new)	25 plus 175°	18 plus 175°	-
Lower load beam bracket bolts	95	70	-
Lower load beam extension bolts	45	33	-
Lower transversal link to lower control arm bolt	130	96	-
Outer tie rod end to knuckle nut (new)	25 plus 80°	18 plus 80°	-
Rear bumper reinforcement nuts	28	21	-
Rear crossmember to body bolts	150	111	-
Rear crossmember to lower transversal link bolt	90 plus 45°	66 plus 45°	-
Rear crossmember to upper transversal link nut and bolt	90 plus 45°	66 plus 45°	-
Skid plate to underbody bolts	20	15	-
Skid plate to skid plate bolts	20	15	-
Stabilizer bar (rear) to cradle bolts	110	81	-
Stabilizer link to stabilizer bar nut	55	41	-
Tow hook (front) to bracket nut	25	18	-
Tow hook (front) to bumper bolts	47	35	-
Tow hook (front) bracket to load beam bolts	50	37	-
Tow hook (rear) bolts	80	59	-
Trailer hitch bolts	165	122	-
Underbody shield to floor pan bolt	5	-	44
Underbody shield to floor pan nut	4	-	35
Upper transversal link to lower control arm	80 plus 45°	59 plus 45°	-

BUMPERS

FASCIA, FRONT

REMOVAL

REMOVAL

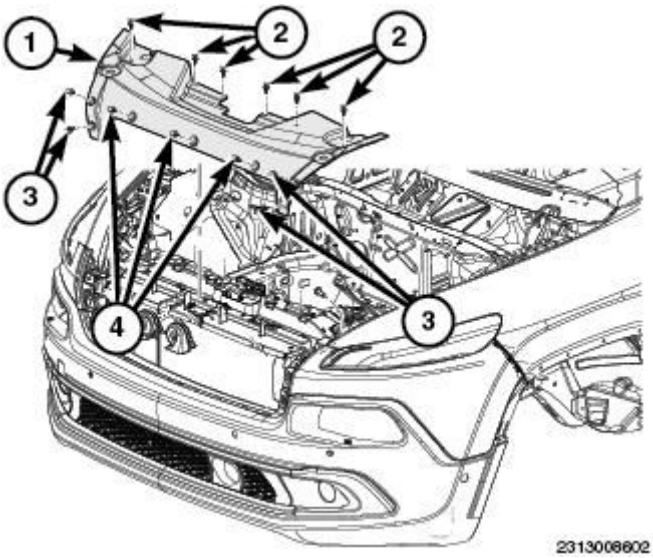

Fig. 1: Upper Close Out Panel Cover Components
Courtesy of CHRYSLER GROUP, LLC

1. Open the hood.
2. Remove the push pin fasteners and remove the radiator closeout panel (1).

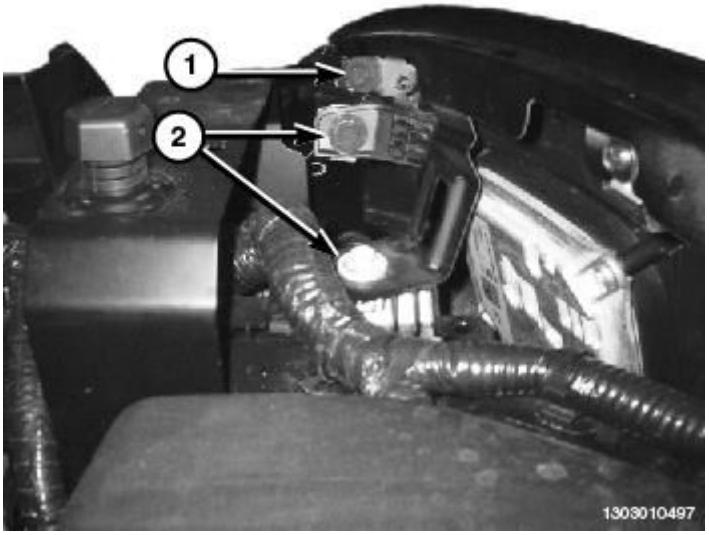

Fig. 2: Identifying Fender & Fascia Bracket Fasteners
Courtesy of CHRYSLER GROUP, LLC

3. Remove the fender (1) and fascia bracket fasteners (2).

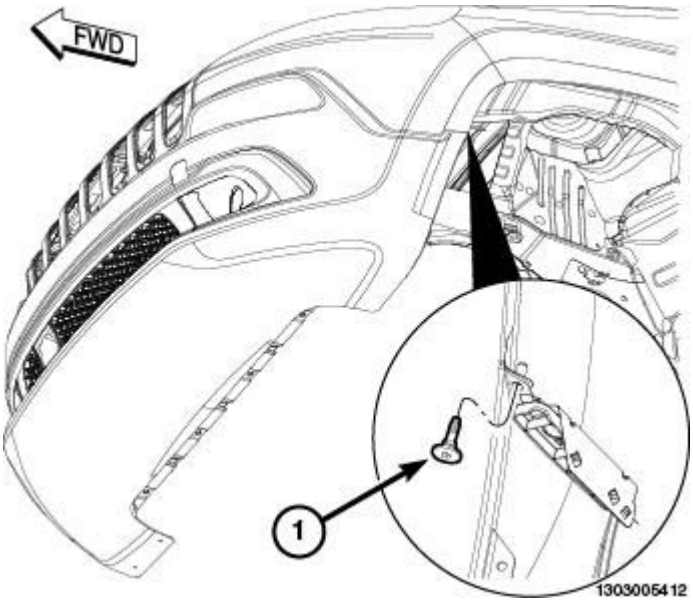

Fig. 3: Identifying Fender To Fascia Fastener
Courtesy of CHRYSLER GROUP, LLC

4. Disconnect the negative battery cable.
5. Raise and support the vehicle.
6. Remove the engine belly pan. Refer to **BELLY PAN, REMOVAL**.
7. Remove the front wheel flare. Refer to **MOLDING, FRONT WHEEL OPENING, REMOVAL** .
8. Accessing from the wheelhouse, remove the fender to fascia fastener (1). Repeat for the opposite side.

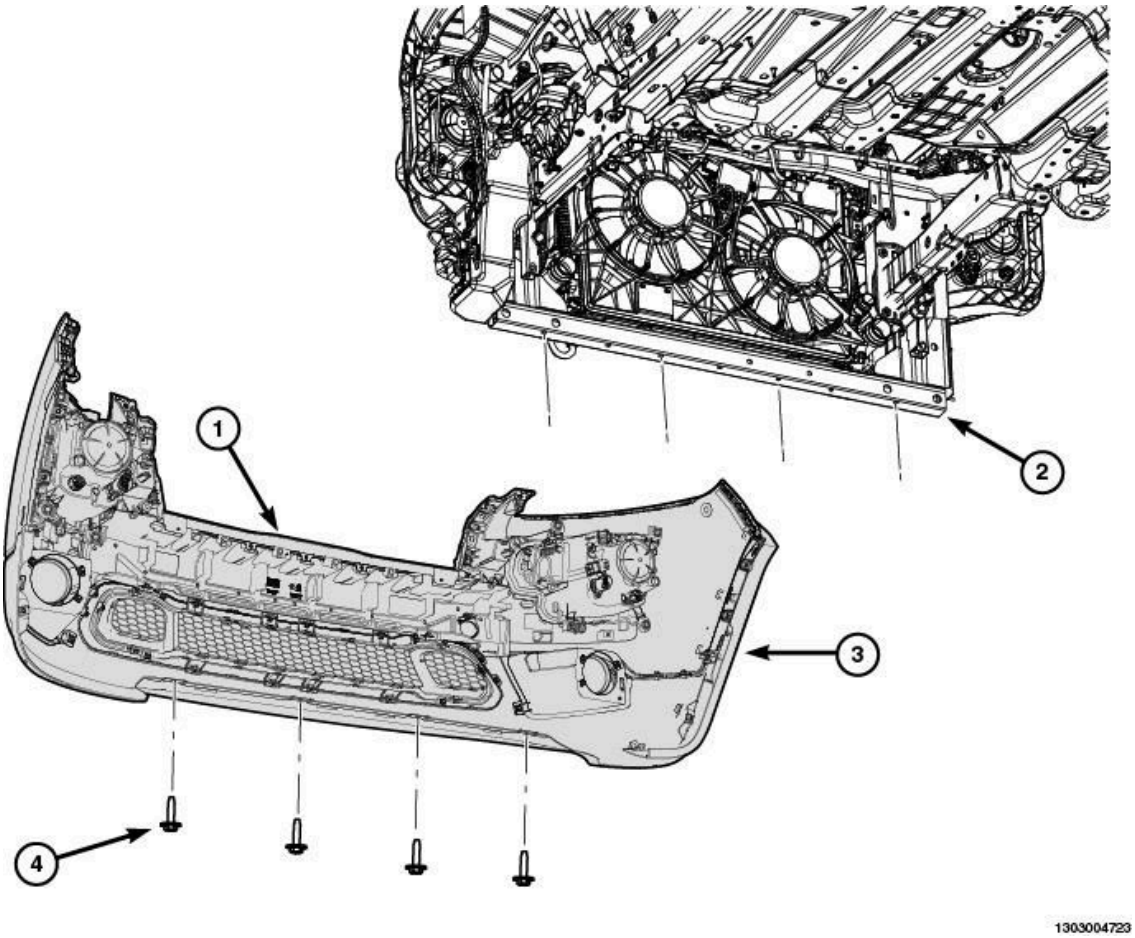

Fig. 4: Identifying Upper Fascia Closeout Panel, Radiator Support & Fasteners
Courtesy of CHRYSLER GROUP, LLC

9. Remove the lower fasteners (4).
10. Remove the eight push pin fasteners (2) from the upper fascia closeout panel (1).
11. Remove the upper fascia closeout panel (1) from the vehicle.
12. Remove the two fascia to upper radiator support push pins (1) located above the headlamp. Repeat on the opposite side.
13. Remove the fascia to upper radiator fasteners (2, 3, 6).
14. Carefully pull out on the upper and lower fascia sides (4, 5) to disengage the fascia retaining tabs. Repeat on the opposite side.
15. Remove the fascia from the vehicle.
16. Accessing from under the vehicle, disconnect the active grille shutter wire harness.
17. If equipped, disconnect the fog lamps.

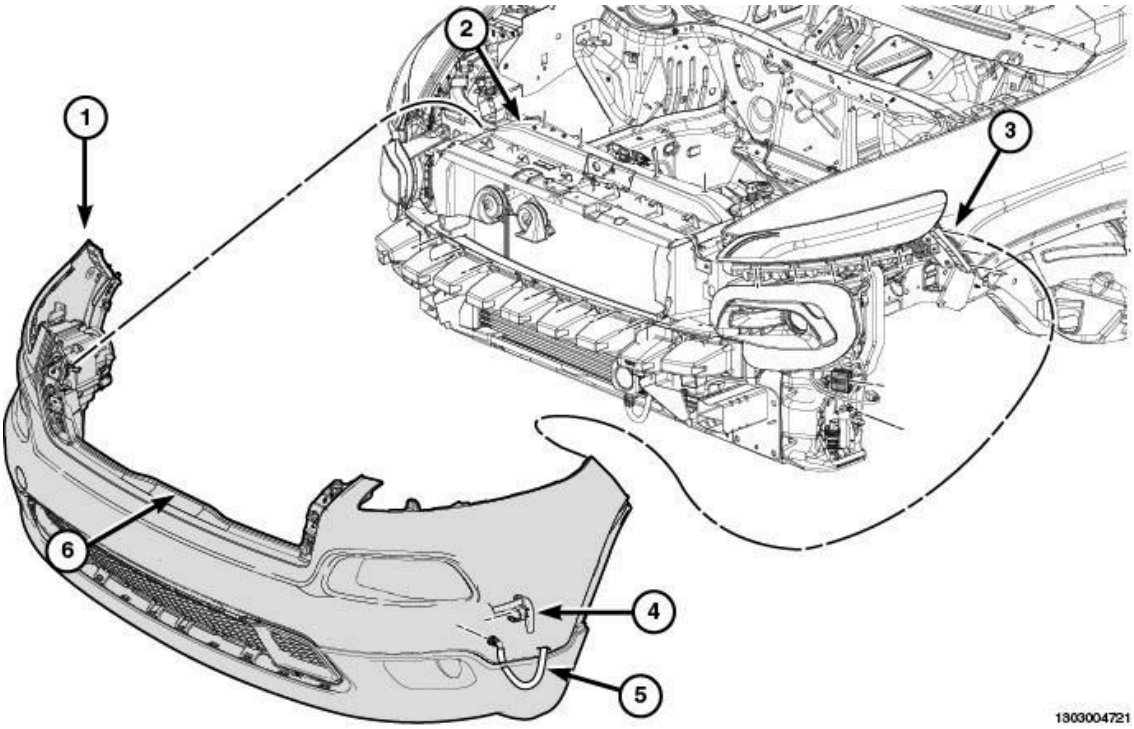

Fig. 5: Identifying Upper Fascia Closeout Panel, Upper & Lower Fascia Sides & Fasteners
Courtesy of CHRYSLER GROUP, LLC

INSTALLATION

INSTALLATION

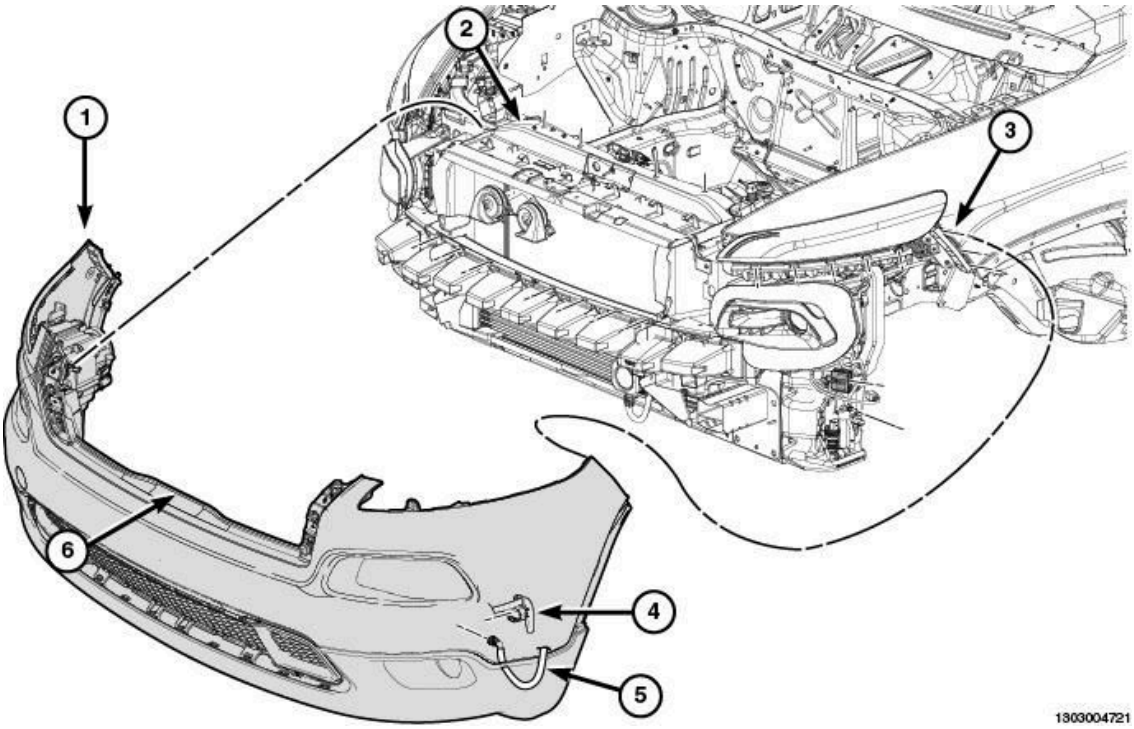

Fig. 6: Identifying Upper Fascia Closeout Panel, Upper & Lower Fascia Sides & Fasteners
Courtesy of CHRYSLER GROUP, LLC

1. With the help of an assistant, position the fascia to the vehicle.
2. Align and hand tap the fascia sides (4, 5) to engage the fascia retaining tabs. Repeat on the opposite side.
3. Install the fascia to upper radiator fasteners (2, 3, 6). Tighten the fasteners securely.
4. Install the four fascia to upper radiator support push pins (1).

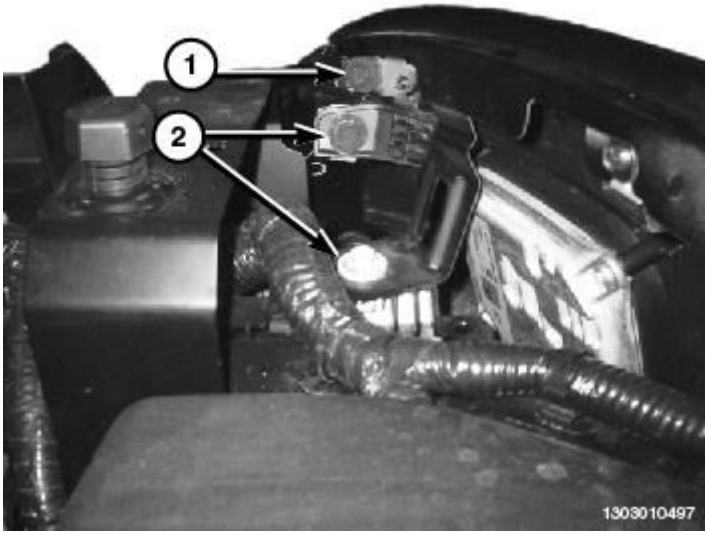

Fig. 7: Identifying Fender & Fascia Bracket Fasteners
Courtesy of CHRYSLER GROUP, LLC

5. Install the fascia bracket fasteners (1) and (2).

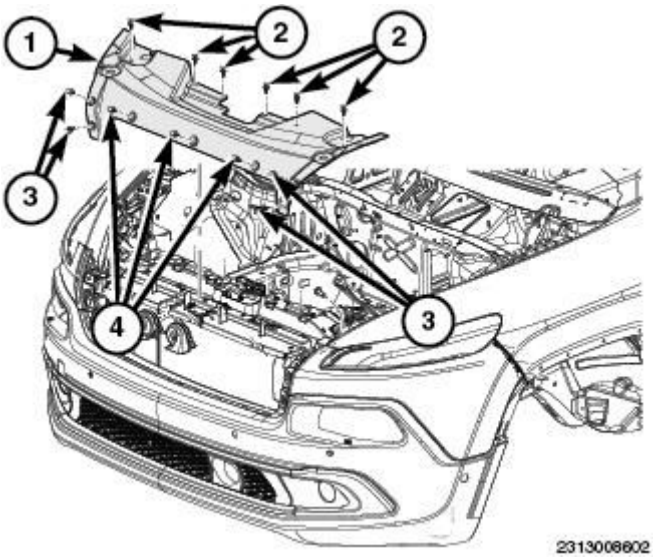

Fig. 8: Upper Close Out Panel Cover Components

Courtesy of CHRYSLER GROUP, LLC

6. Position the upper radiator closeout panel (1) back into place and install the push pin fasteners.

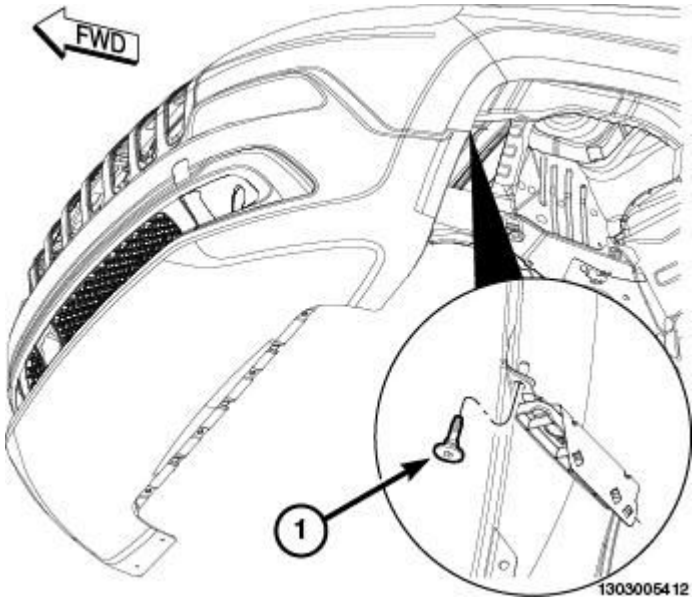

Fig. 9: Identifying Fender To Fascia Fastener
Courtesy of CHRYSLER GROUP, LLC

7. Raise the vehicle.
8. Install the fender to fascia fastener (1). Tighten the fastener securely. Repeat for the opposite side.
9. If equipped, connect the fog lamps.
10. Accessing from under the vehicle, connect the active grille shutter wire harness.
11. Position the fascia lower closeout panel (1), install the thirteen fasteners (2) securing the fascia lower close out panel. Tighten the fasteners securely.
12. Install the front splash shield. Refer to **SHIELD, SPLASH, FRONT WHEELHOUSE, INSTALLATION** .
13. Lower the vehicle.
14. Connect the negative battery cable.
15. Close the hood.

FASCIA, REAR

REMOVAL

REMOVAL

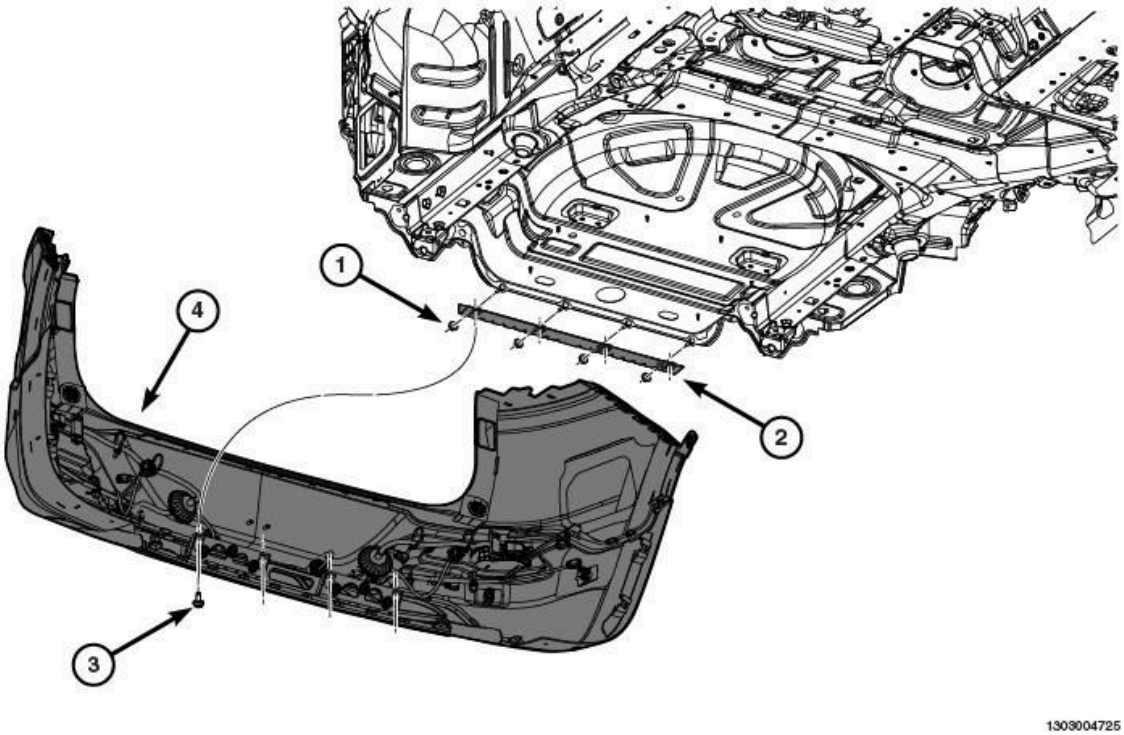

Fig. 10: Identifying Rear Fascia Assembly & Fasteners
Courtesy of CHRYSLER GROUP, LLC

1. Open the liftgate.
2. Disconnect the negative battery cable.
3. Raise and support the vehicle.
4. Remove the wheelhouse splash shields. Refer to **SHIELD, SPLASH, REAR WHEELHOUSE, REMOVAL** .
5. Remove the push pin retainer (3) that secures the underside of the rear fascia assembly.

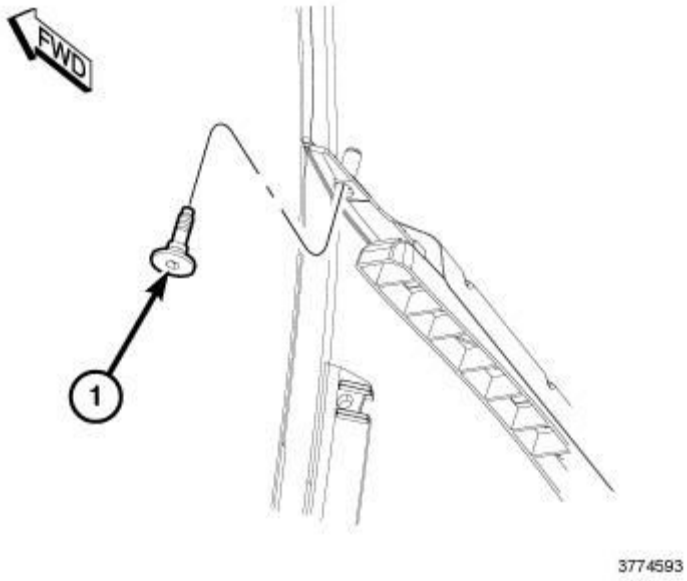

Fig. 11: Fender To Fascia Fastener
Courtesy of CHRYSLER GROUP, LLC

6. Accessing from the wheelhouse, remove the fender to fascia fastener (1). Repeat for the opposite side.

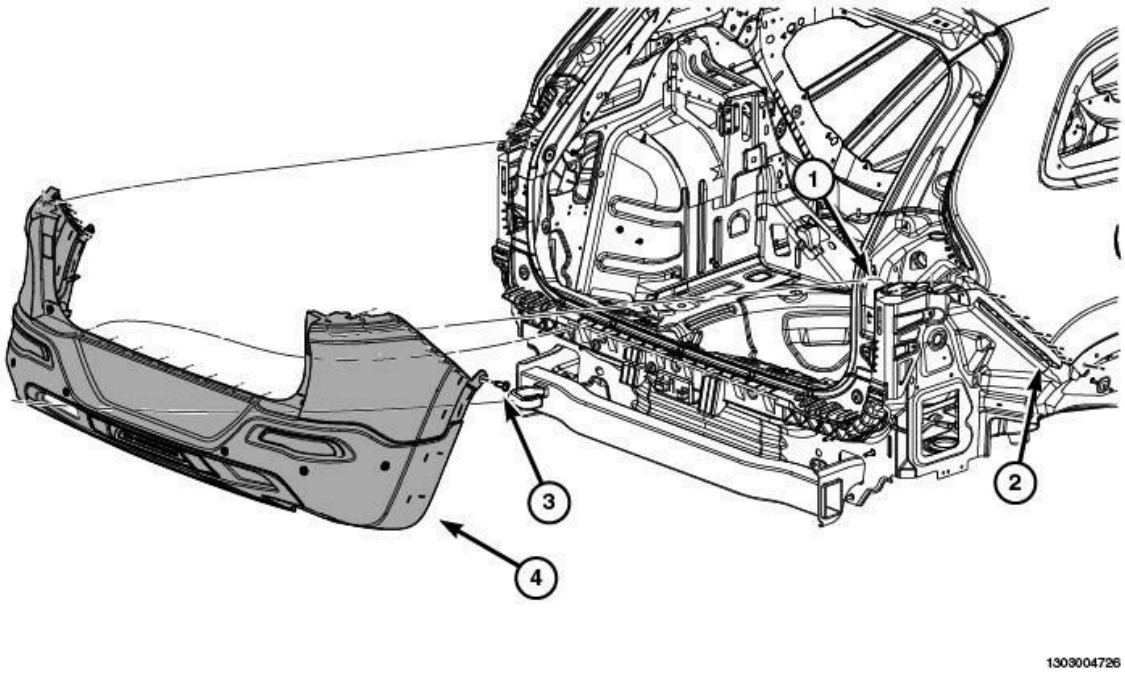

Fig. 12: Identifying Rear Fascia Assembly, Fender To Fascia Fastener & Push Pin Retainers
Courtesy of CHRYSLER GROUP, LLC

7. Remove the quarter panel wheel opening flare molding. Refer to **MOLDING, REAR WHEEL OPENING, REMOVAL** .
8. Remove the bolts (3).
9. Pull out on the fascia (4) at the wheel house opening (2) to disengage the fascia from the retaining bracket. Repeat on the opposite side.
10. With the help of an assistant, pull rearward to disengage the fascia (1) from the rear retaining bracket. **Do not completely remove at this time.**
11. Disconnect the vehicle wiring harness (2).
12. Remove the fascia (1) from vehicle.

INSTALLATION

INSTALLATION

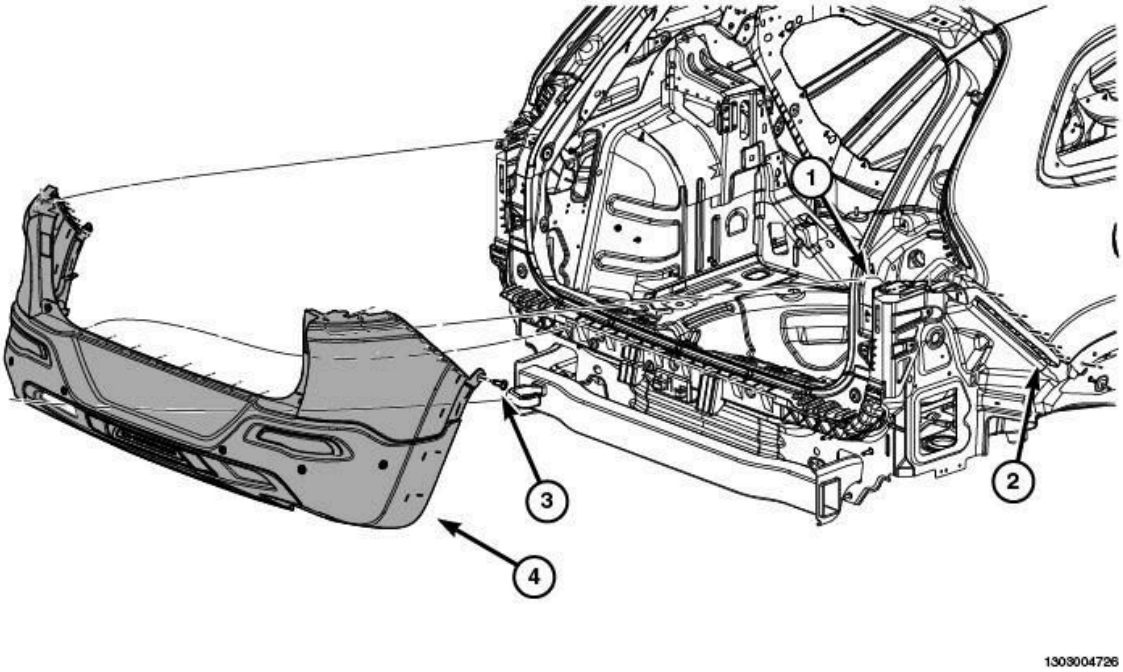

Fig. 13: Identifying Rear Fascia Assembly, Fender To Fascia Fastener & Push Pin Retainers
Courtesy of CHRYSLER GROUP, LLC

1. With the help of an assistant, position the fascia (4) to the vehicle.
2. Connect the vehicle wiring harness.
3. With the help of an assistant and using firm pressure, align and push forward to engage the fascia to the rear retaining bracket.

4. Align the fascia (4) with the retaining brackets at the tail lamp (1) and wheelhouse openings (2). Using firm pressure push in to engage. Repeat on the opposite side.

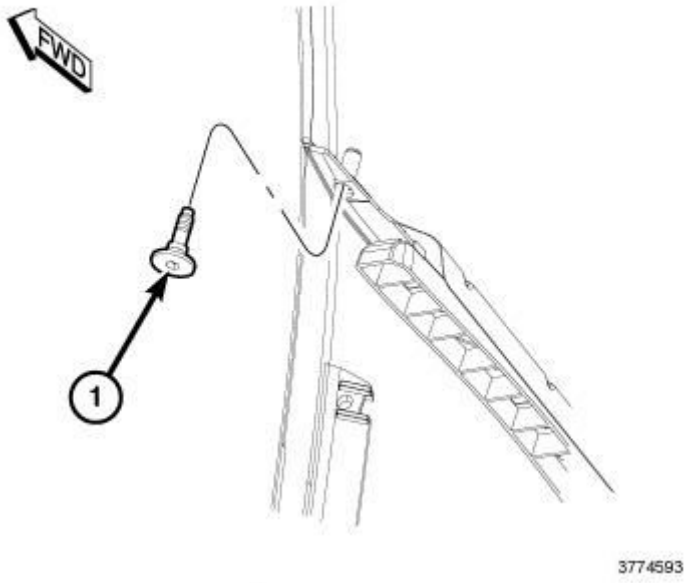

Fig. 14: Fender To Fascia Fastener
Courtesy of CHRYSLER GROUP, LLC

5. Accessing from the wheelhouse, install the fastener (1) that secures the rear fascia assembly to the rear quarter. Tighten the fastener securely. Repeat for opposite side.

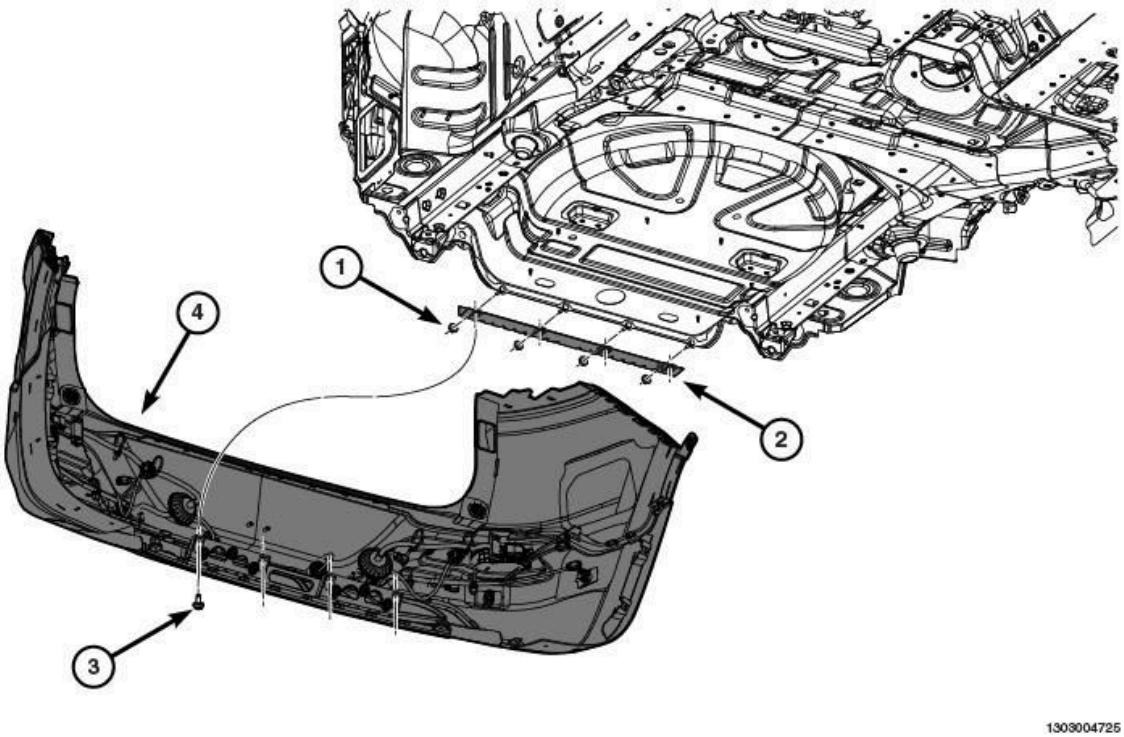

Fig. 15: Identifying Rear Fascia Assembly & Fasteners
Courtesy of CHRYSLER GROUP, LLC

6. Install the fasteners (3) that secures the rear fascia assembly to the underbody.
7. Install the wheelhouse splash shields. Refer to **SHIELD, SPLASH, REAR WHEELHOUSE, INSTALLATION** .
8. Connect the negative battery cable.

REINFORCEMENT, BUMPER, FRONT

REMOVAL

REMOVAL

UPPER REINFORCEMENT

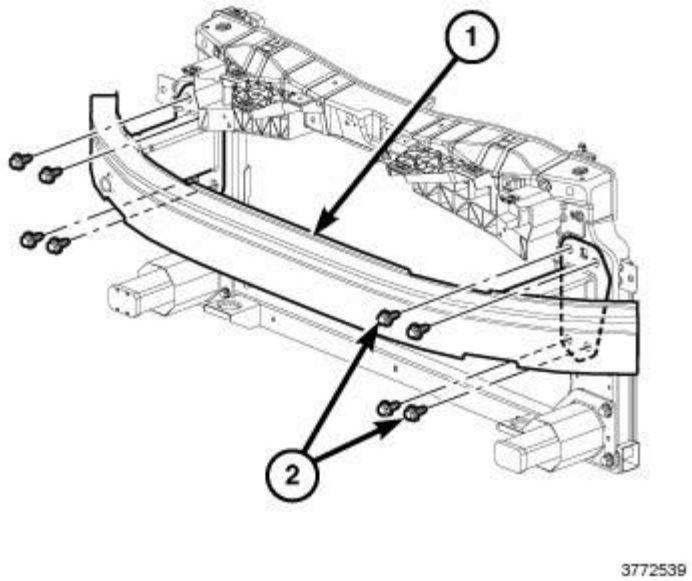

Fig. 16: Upper Bumper Reinforcement & Fasteners
Courtesy of CHRYSLER GROUP, LLC

1. Remove front fascia. Refer to **FASCIA, FRONT, REMOVAL**.
2. Remove the fasteners (2) securing the upper bumper reinforcement (1) to the frame/front end module. Repeat on the opposite side and remove the upper bumper reinforcement (1).

LOWER REINFORCEMENT

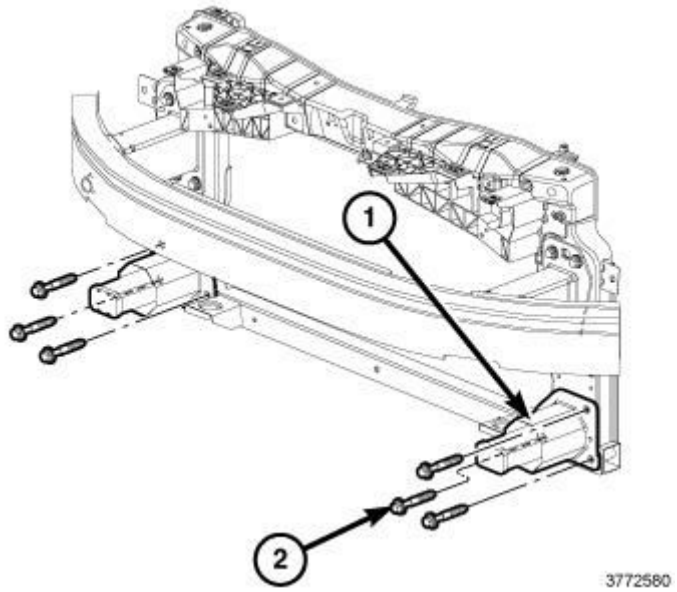

Fig. 17: Lower Bumper Reinforcements & Fasteners
Courtesy of CHRYSLER GROUP, LLC

1. Remove front fascia. Refer to **FASCIA, FRONT, REMOVAL**.

2. Remove the fasteners (2) securing the lower bumper reinforcement (1) to the frame/front end module. Remove the lower bumper reinforcement (2).
3. If necessary, repeat steps for the opposite side.

INSTALLATION

INSTALLATION

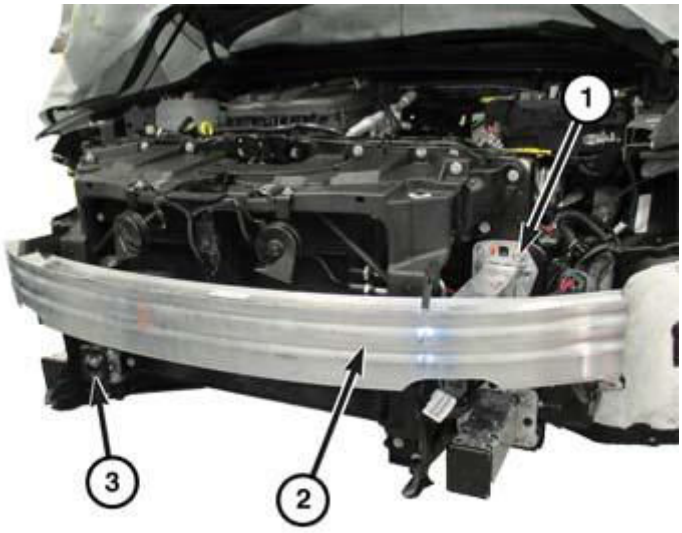

2311036493

Fig. 18: Identifying Front Bumper Reinforcement, Bolts & Adaptive Cruise Control Module
Courtesy of CHRYSLER GROUP, LLC

1. Position the front bumper reinforcement (2) and install the bolts (1). Tighten the front bumper reinforcement bolts to the proper. Refer to **SPECIFICATIONS**.
2. Install the adaptive cruise control module (3). Refer to **MODULE, ADAPTIVE CRUISE CONTROL, INSTALLATION** .
3. Install the front fascia. Refer to **FASCIA, FRONT, INSTALLATION**.

UPPER REINFORCEMENT

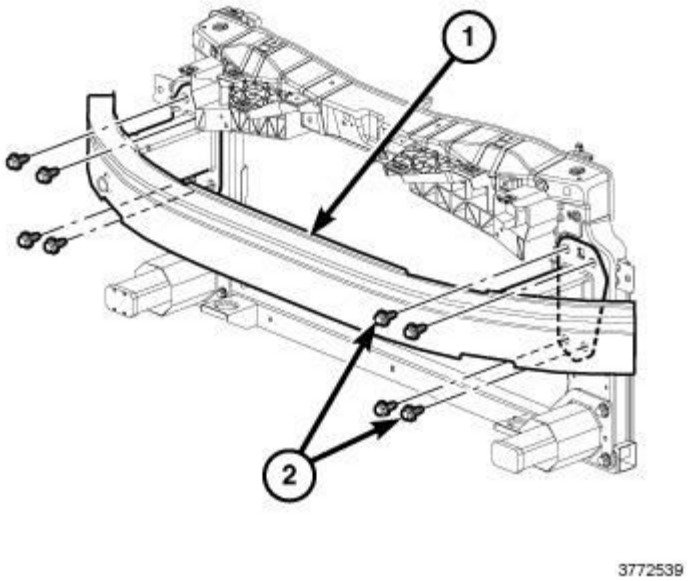

Fig. 19: Upper Bumper Reinforcement & Fasteners
Courtesy of CHRYSLER GROUP, LLC

1. Position the upper bumper reinforcement (1) to the frame/front end module.
2. Install the fasteners securing the upper bumper reinforcement (1) to the frame/front end module. Tighten the fasteners to 45 N.m (33 ft. lbs.). Repeat on the opposite side.
3. Install the front fascia. Refer to **FASCIA, FRONT, INSTALLATION**.

LOWER REINFORCEMENT

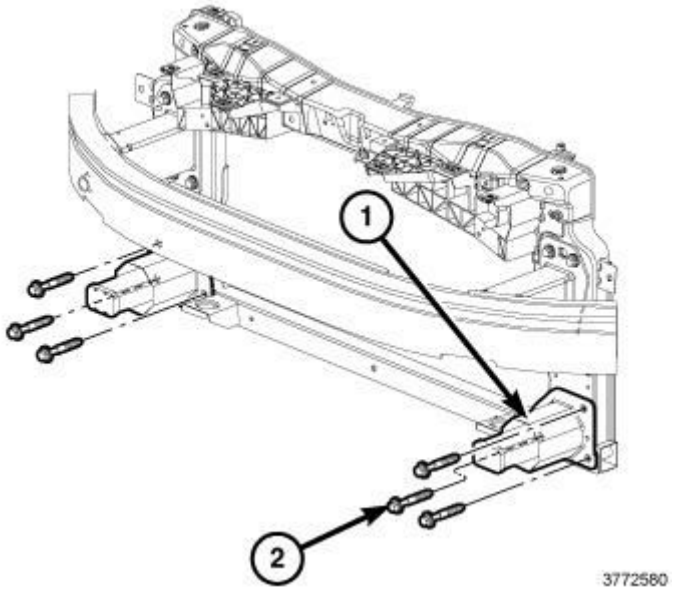

Fig. 20: Lower Bumper Reinforcements & Fasteners
Courtesy of CHRYSLER GROUP, LLC

1. Position the lower bumper reinforcement (1) to the frame/front end module.
2. Install the fasteners (2) securing the lower bumper reinforcement (1) to the frame/front end module. Tighten the fasteners to 45 N.m (33 ft. lbs.).
3. Install the front fascia. Refer to **FASCIA, FRONT, INSTALLATION**.
4. If necessary, repeat steps for opposite side.

REINFORCEMENT, BUMPER, REAR

REMOVAL

REMOVAL

STANDARD BUMPER

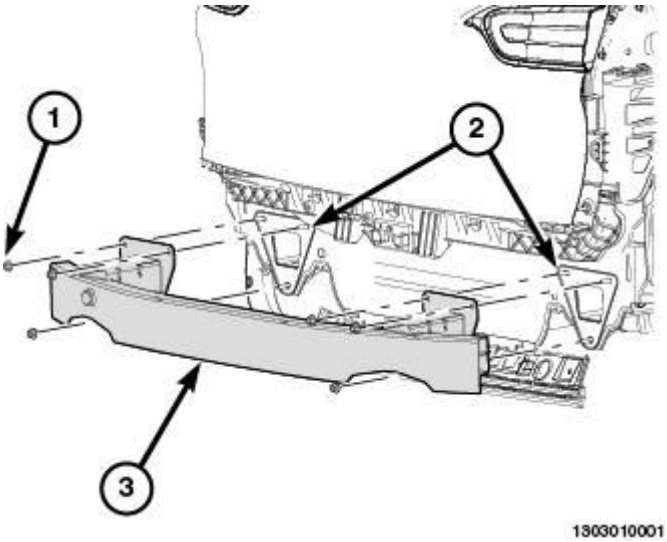

Fig. 21: Identifying Rear Bumper Reinforcement & Nuts
Courtesy of CHRYSLER GROUP, LLC

1. Remove rear fascia. Refer to **FASCIA, REAR, REMOVAL**.
2. Remove nuts (1) attaching rear bumper reinforcement (3) to frame rail.
3. Remove bumper reinforcement (3) from vehicle.

TRAILHAWK BUMPER

NOTE: Trailer hitch shown, bumper beam similar.

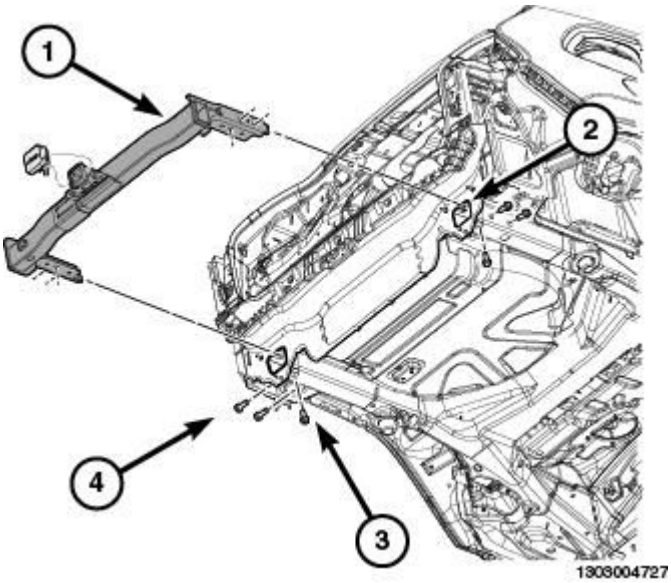

Fig. 22: Identifying Rear Fascia, Trailer Hitch & Bolts
Courtesy of CHRYSLER GROUP, LLC

1. Remove the rear fascia. Refer to **FASCIA, REAR, REMOVAL**.
2. Remove the bolts (3, 4) and remove the hitch (1).

INSTALLATION

INSTALLATION

STANDARD BUMPER

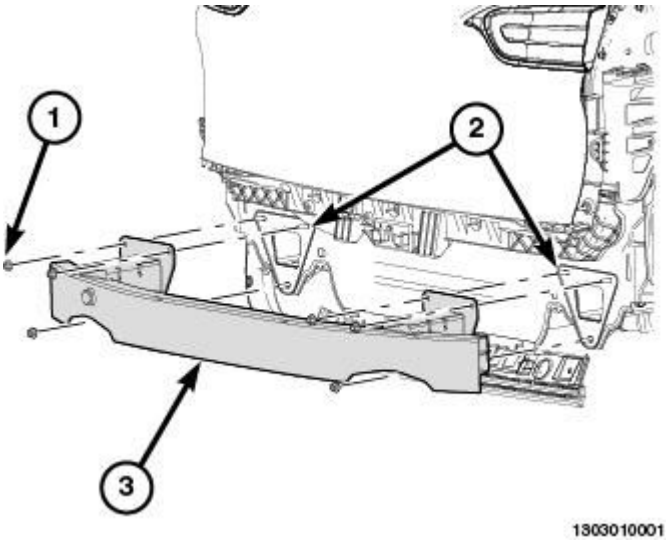

Fig. 23: Identifying Rear Bumper Reinforcement & Nuts
Courtesy of CHRYSLER GROUP, LLC

1. Position rear bumper reinforcement (3) on vehicle.

2. Install nuts (1) attaching the bumper reinforcement to frame rail.
3. Tighten nuts (2) to 28 N.m (21 ft lbs).
4. Install rear fascia. Refer to **FASCIA, REAR, INSTALLATION**.

TRAILHAWK BUMPER

NOTE: Trailer hitch shown, bumper beam similar.

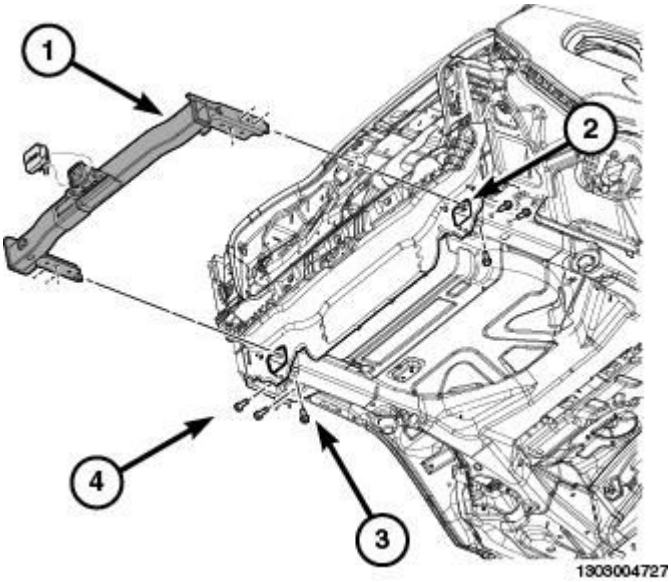

Fig. 24: Identifying Rear Fascia, Trailer Hitch & Bolts
Courtesy of CHRYSLER GROUP, LLC

1. Position the bumper beam (1) into the frame openings (2).
2. Install the bolts (3, 4) and tighten to 165 N.m (122 ft lbs)
3. Install the rear fascia. Refer to **FASCIA, REAR, INSTALLATION**.

FRAME

WARNING

WARNINGS

WARNING: **Use an Occupational Safety and Health Administration (OSHA) approved breathing filter, when spraying paint or solvents in a confined area. Failure to follow these instructions may result in possible serious or fatal injury.**

- **avoid prolonged skin contact with petroleum or alcohol based cleaning solvents.**

- **do not stand under a hoisted vehicle that is not properly supported on safety stands. Failure to follow these instructions may result in possible serious or fatal injury.**

CAUTION: When holes are drilled or punched in an inner body panel, verify the depth of space to the outer body panel, electrical wiring or other components. Damage to the vehicle can result.

- **do not weld exterior panels unless combustible material on the interior of vehicle is removed from the repair area. Fire or hazardous conditions, can result.**
- **always have a fire extinguisher ready for use when welding.**
- **disconnect the negative (-) cable clamp from the battery when servicing electrical components that are live when the ignition is off. Damage to electrical system can result.**
- **do not use abrasive chemicals or compounds on painted surfaces. Damage to finish can result.**
- **do not use harsh alkaline based cleaning solvents on painted or upholstered surfaces. Damage to finish or color can result.**
- **do not hammer or pound on plastic trim panel when servicing interior trim. Plastic panels can break.**

RESTRAINT WARNINGS

WARNING: To avoid potential physical injury, or damage to sensitive electronic circuits and systems, always disconnect and isolate the battery negative (ground) cable and the positive cable, then ground the positive cable to discharge the ORC capacitor before performing any welding operations on the vehicle. Failure to take the proper precautions could result in accidental airbag deployment, possible damage to the Supplemental Restraint System (SRS) circuits and components, and possible damage to other electronic circuits and components. Whenever a welding process is being performed within 30 cm (12 in) of an electronic module/harness, then that module/harness should be relocated out of the way, or disconnected. Always protect against component or vehicle damage from weld spatter by using weld blankets and screens. Failure to follow these instructions may result in serious or fatal injury.

WARNING: To avoid serious or fatal injury on vehicles equipped with the Supplemental Restraint System (SRS), never attempt to repair the electrically conductive circuits or wiring components related to the SRS for which there is no MOPAR wiring repair kit. It is important to use ONLY the recommended splicing kit and procedure. For applicable and available MOPAR wiring repair kits, please visit the MOPAR Connector Web Site at

the following address on the Internet: (http://dto.vftis.com/mopar/disclaimer.asp). Inappropriate repairs can compromise the conductivity and current carrying capacity of those critical electrical circuits, which may cause SRS components not to deploy when required, or to deploy when not required. Only minor cuts or abrasions of wire and terminal insulation where the conductive material has not been damaged, or connector insulators where the integrity of the latching and locking mechanisms have not been compromised may be repaired using appropriate methods.

WARNING: **To avoid serious or fatal injury during and following any seat belt or child restraint anchor service, carefully inspect all seat belts, buckles, mounting hardware, retractors, tether straps, and anchors for proper installation, operation, or damage. Replace any belt that is cut, frayed, or torn. Straighten any belt that is twisted. Tighten any loose fasteners. Replace any belt that has a damaged or ineffective buckle or retractor. Replace any belt that has a bent or damaged latch plate or anchor plate. Replace any child restraint anchor or the unit to which the anchor is integral that has been bent or damaged. Never attempt to repair a seat belt or child restraint component. Always replace damaged or ineffective seat belt and child restraint components with the correct, new and unused replacement parts listed in the Chrysler Mopar® Parts Catalog. Failure to follow these instructions may result in possible serious or fatal injury.**

WARNING: **To avoid serious or fatal injury on vehicles equipped with airbags, disable the Supplemental Restraint System (SRS) before attempting any steering wheel, steering column, airbag, Occupant Classification System (OCS), seat belt tensioner, impact sensor or instrument panel component diagnosis or service. Disconnect and isolate the battery negative (ground) cable, then wait two minutes for the system capacitor to discharge before performing further diagnosis or service. This is the only sure way to disable the SRS. Failure to follow these instructions may result in accidental airbag deployment.**

WARNING: **To avoid potential physical injury or damage to sensitive electronic circuits and systems, always disconnect and isolate the battery negative (ground) cable and the positive cable, then ground the positive cable to discharge the Occupant Restraint Controller (ORC) capacitor before performing any welding operations on the vehicle. Failure to take the proper precautions could result in accidental airbag deployment, possible damage to the Supplemental Restraint System (SRS) circuits and components, and possible damage to other electronic circuits and components. Whenever a welding process is being performed within 12 inches (30 centimeters) of an electronic module or wiring harness, then that module or harness should be relocated out of the way, or**

disconnected. Always protect against component or vehicle damage from weld spatter by using weld blankets and screens.

WARNING: **To avoid serious or fatal injury, do not attempt to dismantle an airbag unit or tamper with its inflator. Do not puncture, incinerate or bring into contact with electricity. Do not store at temperatures exceeding 93° C (200° F). An airbag inflator unit may contain sodium azide and potassium nitrate. These materials are poisonous and extremely flammable. Contact with acid, water, or heavy metals may produce harmful and irritating gases (sodium hydroxide is formed in the presence of moisture) or combustible compounds. An airbag inflator unit may also contain a gas canister pressurized to over 17.24 kPa (2500 psi). Failure to follow these instructions may result in possible serious or fatal injury.**

WARNING: **To avoid serious or fatal injury when handling a seat belt tensioner retractor. Exercise proper care to keep fingers out from under the retractor cover and away from the seat belt webbing where it exits from the retractor cover. Failure to follow these instructions may result in possible serious or fatal injury.**

WARNING: **To avoid serious or fatal injury, replace all Supplemental Restraint System (SRS) components only with parts specified in the Chrysler Mopar® Parts Catalog. Substitute parts may appear interchangeable, but internal differences may result in inferior occupant protection.**

WARNING: **To avoid serious or fatal injury, the fasteners, screws, and bolts originally used for the Supplemental Restraint System (SRS) components must never be replaced with any substitutes. These fasteners have special coatings and are specifically designed for the SRS. Anytime a new fastener is needed, replace it with the correct fasteners provided in the service package or specified in the Chrysler Mopar® Parts Catalog.**

WARNING: **To avoid serious or fatal injury when a steering column has an airbag unit attached, never place the column on the floor or any other surface with the steering wheel or airbag unit face down. Failure to follow these instructions may result in possible serious or fatal injury.**

USE OF HEAT DURING REPAIR

WARNING: **Chrysler Group LLC engineering's position on the use of heat during collision repair is as follows:**

- **Any body panel or frame component damaged which is to be repaired and reused, must be repaired using the "cold straightening" method. No heat may be used during the**

straightening process.

- **During rough straightening prior to panel replacement, damaged panels or frame components may be heated to assist in body/frame realignment. The application of heat must be constrained to the parts which will be replaced and not allowed to affect any other components.**

This "no heat" recommendation is due to the extensive use of high strength and advanced high strength steels in Chrysler Group LLC products. High-strength materials can be substantially and negatively affected from heat input which will not be obviously known to the repairer or consumer.

Ignoring these recommendations may lead to serious compromises in the ability to protect occupants in a future collision event, reduce the engineered qualities and attributes, or decrease the durability and reliability of the vehicle.

This statement supersedes any previously released information by the Chrysler Group LLC.

Failure to follow these instructions may result in serious or fatal injury.

SPECIFICATIONS

FRAME DIMENSIONS

NOTE: **Frame dimensions are listed in metric scale millimeter (mm). All dimensions are from center to center of Principal Locating Point (PLP), or from center to center of PLP and fastener location.**

VEHICLE PREPARATION

Position the vehicle on a level work surface. Using screw or bottle jacks, adjust the vehicle PLP heights to the specified dimension above a level work surface. Vertical dimensions can be taken from the work surface to the locations indicated were applicable.

INDEX

DESCRIPTION	FIGURE
Under Body Dimensions	Fig. 25
Under Hood Dimensions	Fig. 26

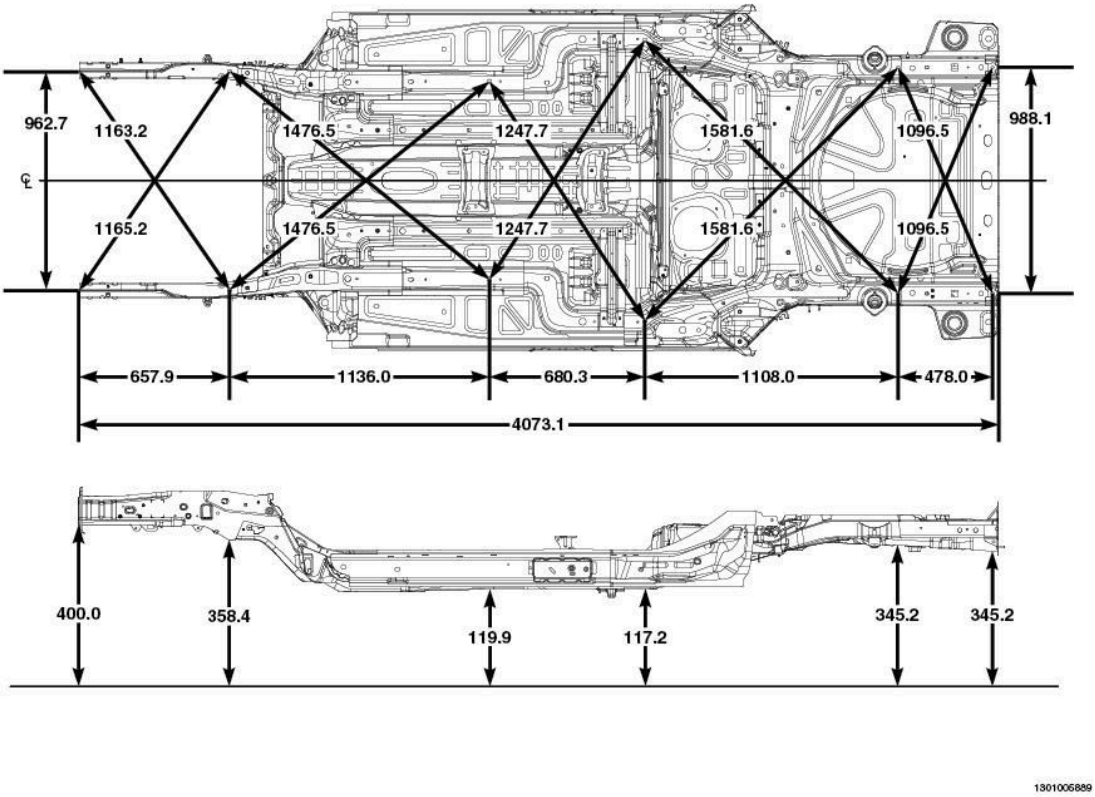

Fig. 25: Figure 1 - Under Body Dimensions
Courtesy of CHRYSLER GROUP, LLC

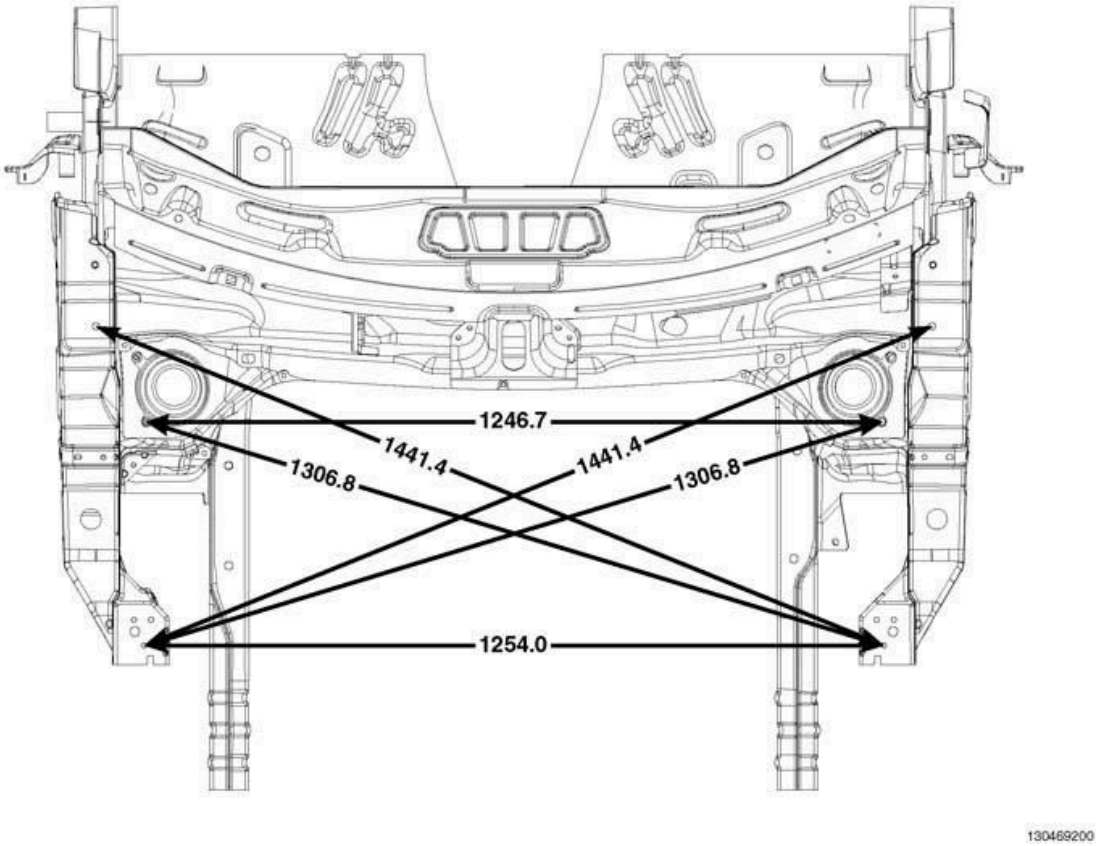

Fig. 26: Figure 2 - Under Hood Dimensions
Courtesy of CHRYSLER GROUP, LLC

CROSSMEMBER, FRONT SUSPENSION

REMOVAL

REMOVAL

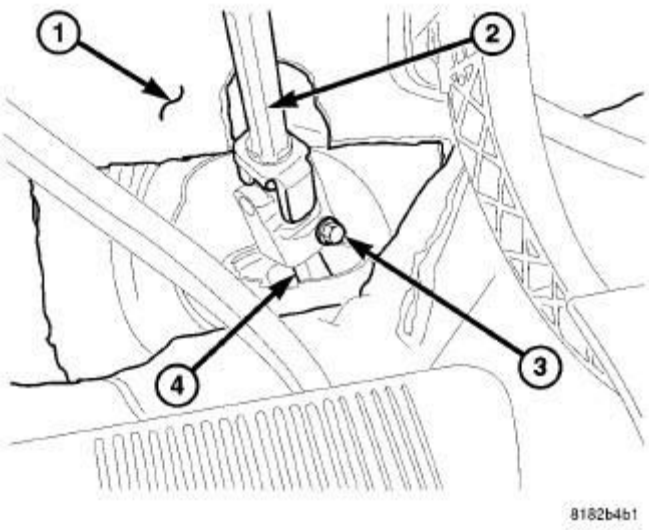

Fig. 27: Floor Carpet, Intermediate Shaft, Coupling Bolt & Steering Gear Pinion Shaft
Courtesy of CHRYSLER GROUP, LLC

NOTE: Before proceeding, refer to FRONT, WARNING .

1. Disconnect battery negative cable.
2. Using a steering wheel holder, lock the steering wheel in place to keep it from rotating. This keeps the clockspring in the proper orientation.
3. Remove pinch bolt (3) and separate intermediate shaft (2) from steering gear shaft.

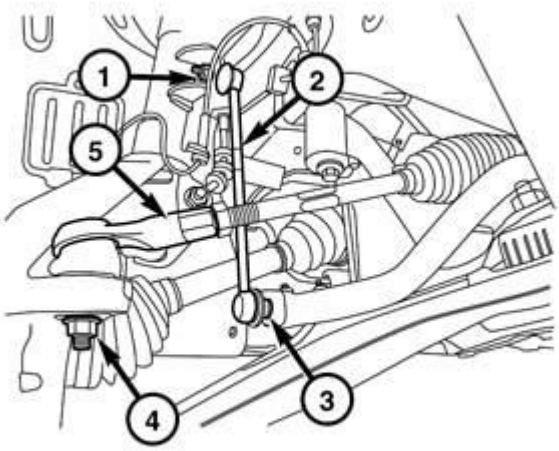

Fig. 28: Identifying Stabilizer Bar Link, Nuts & Ball Joint Nut
Courtesy of CHRYSLER GROUP, LLC

4. Raise and support the vehicle. Refer to **HOISTING, STANDARD PROCEDURE** .
5. Remove the wheel mounting bolts, then the tire and wheel assembly.
6. If equipped, remove the engine belly pan. Refer to **BELLY PAN, REMOVAL**.
7. At each end of the stabilizer bar, while holding the stabilizer bar link stud stationary, remove the nut (3) securing the link (2) to the stabilizer bar and position aside.

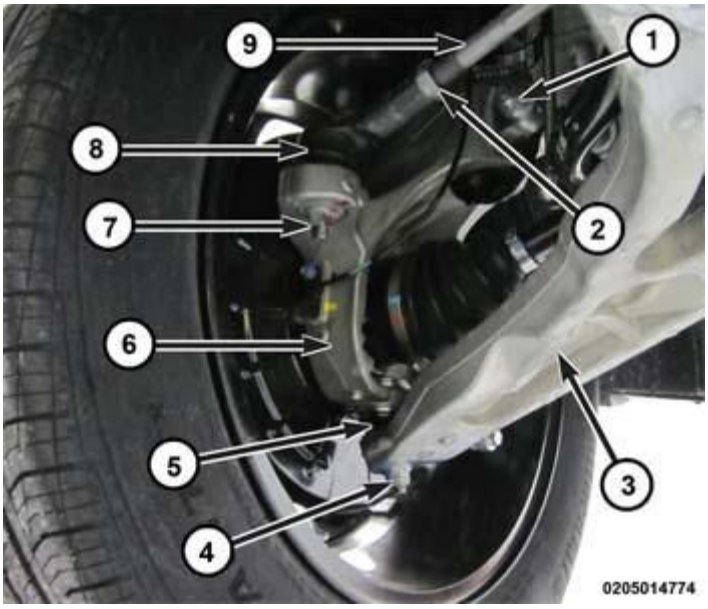

Fig. 29: Removing/Installing The Lower Ball Joint Nut To Control Arm
Courtesy of CHRYSLER GROUP, LLC

NOTE: Discard the ball joint retaining nut. Use a NEW nut when installing the ball joint.

8. Remove the ball joint to control arm retaining nut (4).
9. Remove the outer tie rod retaining nut (7) and separate the outer tie rod end (7) from the knuckle

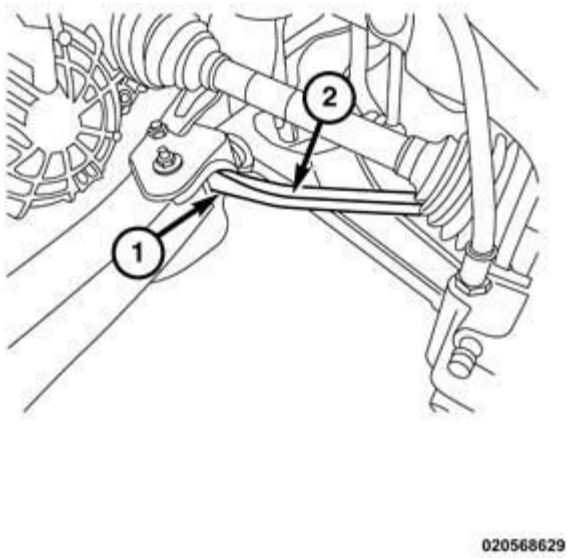

Fig. 30: Opening Between Control Arm Front Mounting Bolt & Front Fascia Support Beam & Pry Bar
Courtesy of CHRYSLER GROUP, LLC

NOTE: **Use care when separating the ball joint stud from the knuckle so the ball joint boot does not get cut.**

NOTE: **After separating the control arm from the knuckle, do not let it swing rapidly back up, this can tear the ball joint dust boot.**

10. Insert a pry bar (2) in the opening (1) between the control arm front mounting bolt and the front fascia support beam.
11. Separate the lower control arm from the knuckle by prying down with the pry bar (2).
12. Remove the lower load beam. Refer to **LOAD BEAM, LOWER, REMOVAL**.

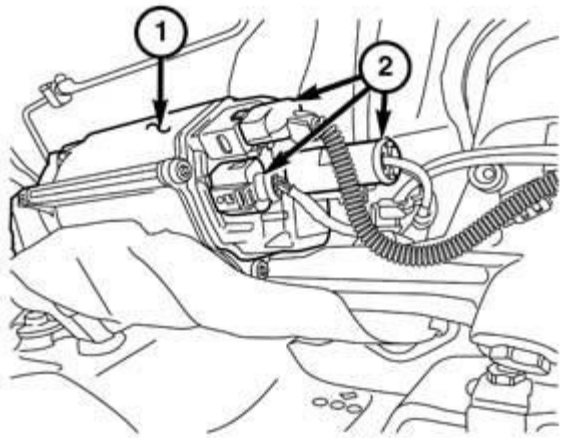

191069435

Fig. 31: Steering Gear Control Module & Harness Connectors
Courtesy of CHRYSLER GROUP, LLC

13. Disconnect the downstream oxygen sensor harness connector.
14. Remove the exhaust extension pipe.
15. Disconnect the harness connectors (2) at the steering gear control module (1).

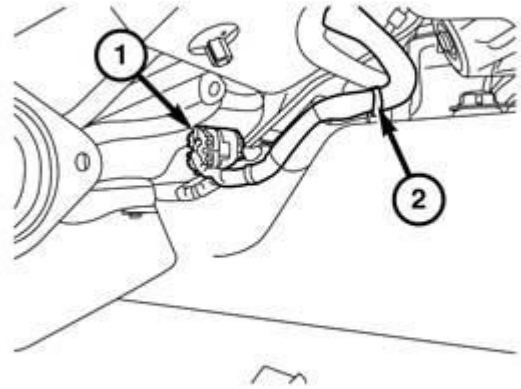

191069436

Fig. 32: Steering Gear Connector & Tie Strap
Courtesy of CHRYSLER GROUP, LLC

16. Disconnect the steering gear connector (1) from the body harness connector at the bottom of the dash panel.
17. Separate the steering gear harness from the crossmember by removing the tie strap (2) from the crossmember.
18. Remove the rear engine mount.

NOTE: **Before lowering the front suspension crossmember, the location of the crossmember must be marked on the body of the vehicle. Do this so the crossmember can be relocated, upon reinstallation, against the body of vehicle in the same location as before removal. If the front suspension crossmember is not reinstalled in exactly the same location as before removal, the preset front wheel alignment settings (caster and camber) may be lost.**

19.
20. Mark the position of the cross member with a grease pencil or equivalent.

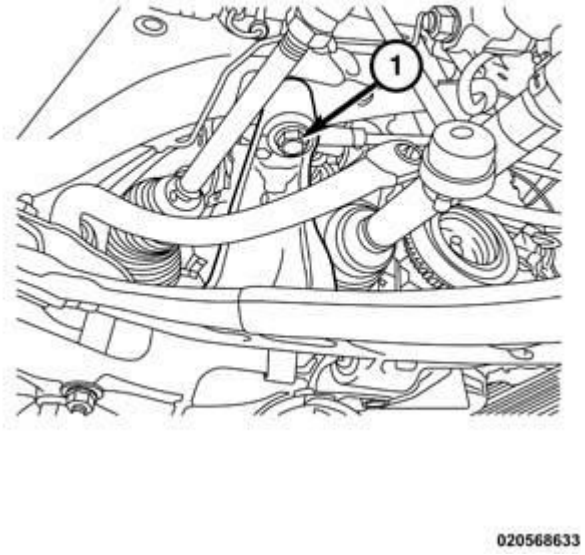

Fig. 33: Upper Crossmember Mounting Bolt
Courtesy of CHRYSLER GROUP, LLC

21. Support the crossmember with a transmission jack, or equivalent.
22. Remove the upper mounting bolt (1) from each side of the crossmember.

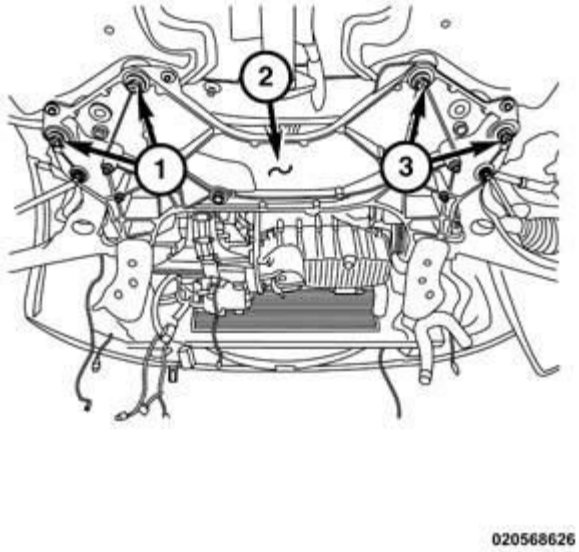

Fig. 34: Crossmember Rear Mounting Bolts
Courtesy of CHRYSLER GROUP, LLC

23. Remove the four rear mounting bolts (1, 3) that secure the crossmember (2) to the vehicle
24. Slowly lower the crossmember with the jack and remove from the vehicle.

INSTALLATION

INSTALLATION

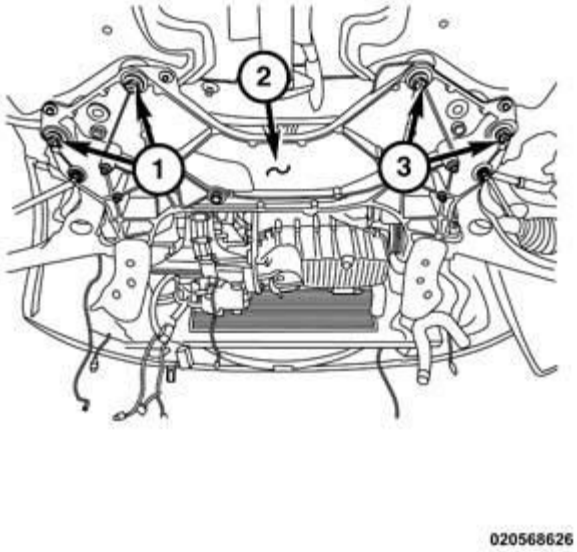

Fig. 35: Crossmember Rear Mounting Bolts
Courtesy of CHRYSLER GROUP, LLC

1. Slowly raise the crossmember (2) into mounted position using the transmission jack matching the crossmember to the marked locations on the body made during removal.
2. Install four mounting bolts (1, 3) and tighten to 189 N.m (139 ft lbs).

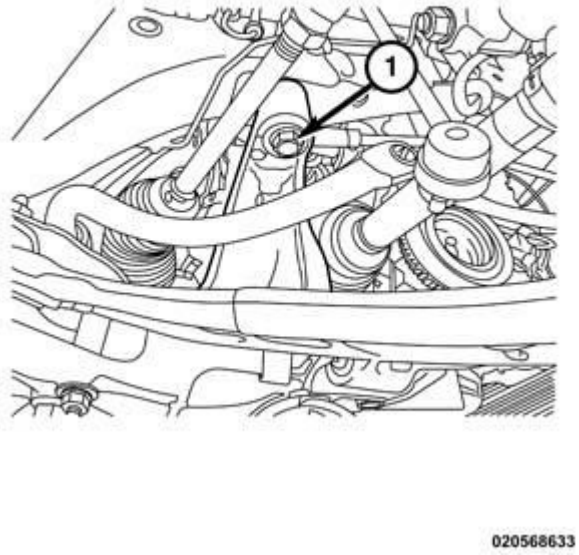

Fig. 36: Upper Crossmember Mounting Bolt
Courtesy of CHRYSLER GROUP, LLC

3. Install the upper mounting bolt (1) on each side of the crossmember and tighten to 120 N.m (86 ft lbs).

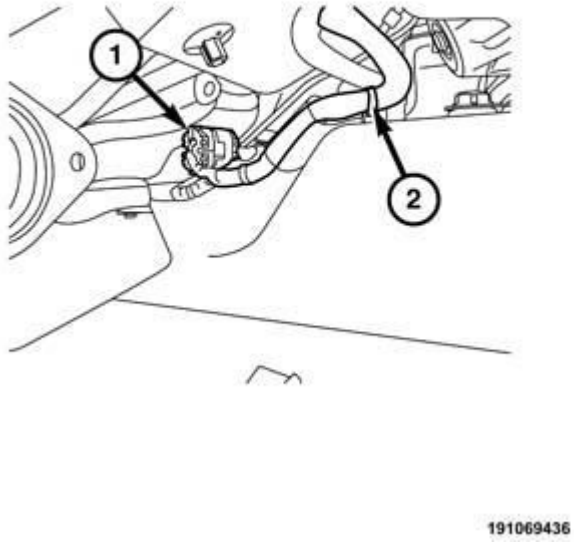

Fig. 37: Steering Gear Connector & Tie Strap
Courtesy of CHRYSLER GROUP, LLC

4. Connect the steering harness connector (1) to the body harness connector at the bottom of the dash panel.
5. Install the tie strap (2) to the crossmember.

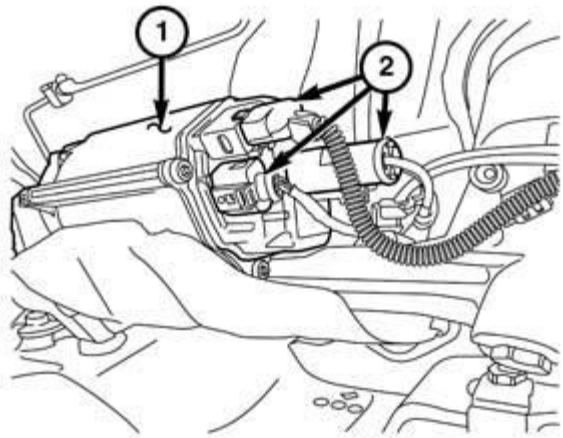

191069435

Fig. 38: Steering Gear Control Module & Harness Connectors
Courtesy of CHRYSLER GROUP, LLC

6. Connect the harness connectors (2) at the steering gear module (1).
7. Install the rear engine mount. Refer to **INSULATOR, ENGINE MOUNT, RIGHT, INSTALLATION** for 2.0L Diesel, **INSULATOR, ENGINE MOUNT, LEFT, INSTALLATION** for 2.0L Diesel, **INSULATOR, ENGINE MOUNT, REAR, INSTALLATION** for 2.0L Diesel, **INSULATOR, ENGINE MOUNT, LEFT, INSTALLATION** for 2.4L, **INSULATOR, ENGINE MOUNT, REAR, INSTALLATION** for 2.4L, **INSULATOR, ENGINE MOUNT, RIGHT, INSTALLATION** for 2.4L, **INSULATOR, ENGINE MOUNT, LEFT, INSTALLATION** for 3.2L, **INSULATOR, ENGINE MOUNT, RIGHT, INSTALLATION** for 3.2L, **INSULATOR, ENGINE MOUNT, REAR, INSTALLATION** for 3.2L.
8. Install the exhaust extension pipe.
9. Connect the downstream oxygen sensor harness connector.
10. Install the lower load beams (1). Refer to **LOAD BEAM, LOWER, INSTALLATION**.

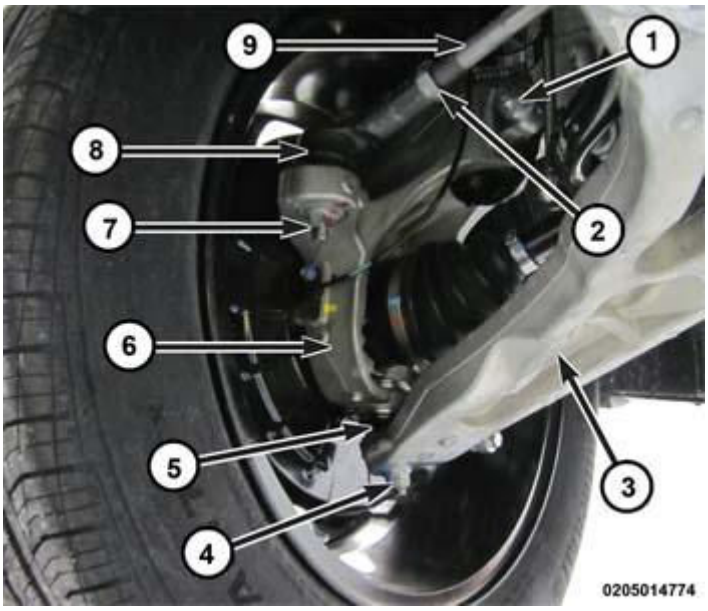

Fig. 39: Removing/Installing The Lower Ball Joint Nut To Control Arm
Courtesy of CHRYSLER GROUP, LLC

11. Insert the lower ball joint into the control arm, install a **NEW** nut (4) and tighten to 25 N.m Plus 175° (18 ft lbs Plus 175°).
12. Install the outer tie rod end (8) into the knuckle and install a **NEW** retaining nut (7) and tighten to 25 N.m Plus 80° (18 ft lbs Plus 80°).

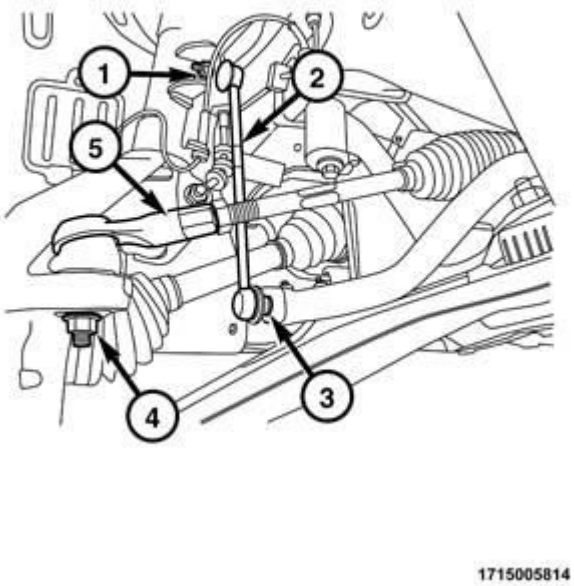

Fig. 40: Identifying Stabilizer Bar Link, Nuts & Ball Joint Nut
Courtesy of CHRYSLER GROUP, LLC

13. Install the stabilizer link stud into the stabilizer bar and install the nut.
14. Hold the stabilizer link stud stationary and tighten the nut to 63 N.m (46 ft lbs).

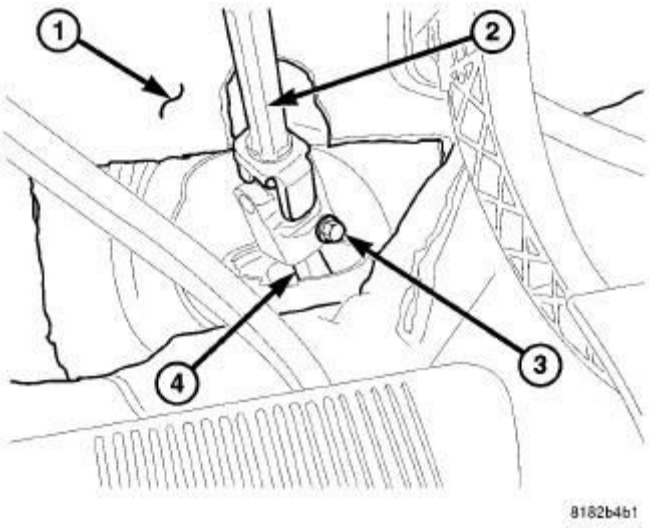

Fig. 41: Floor Carpet, Intermediate Shaft, Coupling Bolt & Steering Gear Pinion Shaft
Courtesy of CHRYSLER GROUP, LLC

15. If equipped, install the engine belly pan. Refer to **BELLY PAN, INSTALLATION**.
16. Install the tire and wheel assembly. Refer to **INSTALLATION** .
17. Lower the vehicle.
18. Install the intermediate shaft (2) to the steering gear pinion shaft (4).
19. Install a **NEW** pinch bolt (3) and tighten to specification. Refer to **COLUMN, SPECIFICATIONS** .
20. Remove the steering wheel holder.
21. Connect the battery negative cable.
22. Check and adjust wheel alignment as necessary. Refer to **FRONT SUSPENSION & WHEEL ALIGNMENT** .

CROSSMEMBER, REAR SUSPENSION

REMOVAL

REMOVAL

ALL WHEEL DRIVE

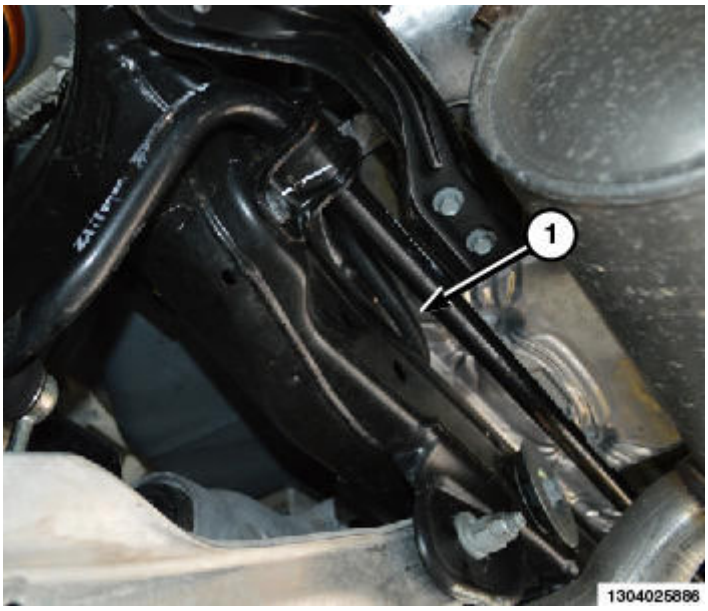

Fig. 42: Identifying Rear Suspension Crossmember (All Wheel Drive)
Courtesy of CHRYSLER GROUP, LLC

1. Raise and support the vehicle. Refer to **HOISTING, STANDARD PROCEDURE** .
2. Remove the muffler. Refer to **MUFFLER, EXHAUST, REMOVAL** .
3. Remove the rear stabilizer bar. Refer to **STABILIZER BAR, REAR SUSPENSION, REMOVAL** .
4. Remove the rear driveline module. Refer to **REMOVAL** .
5. Remove the remaining knuckle. Refer to **KNUCKLE, REAR, REMOVAL** .
6. Separate the vent tube from the crossmember.

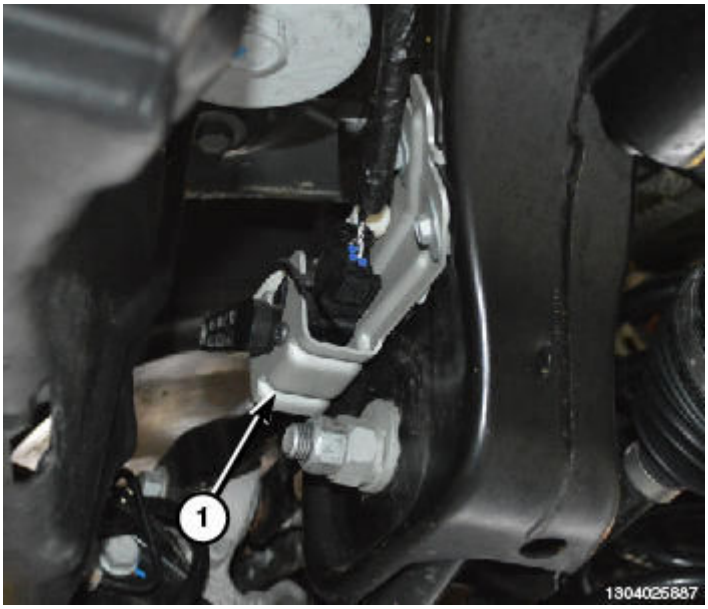

Fig. 43: Identifying Ride Height Sensor
Courtesy of CHRYSLER GROUP, LLC

7. Remove the ride height sensor (1), if equipped.

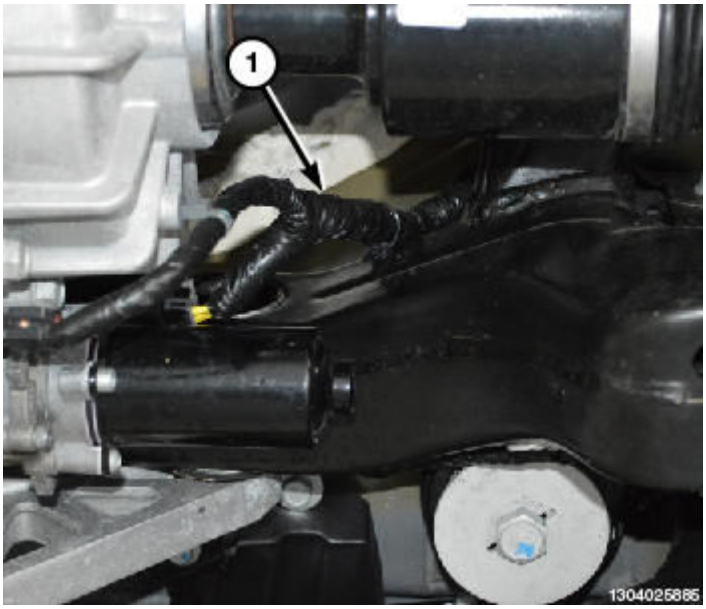

Fig. 44: Identifying Wire Harness From Crossmember
Courtesy of CHRYSLER GROUP, LLC

8. Separate the wire harness (1) from the crossmember.

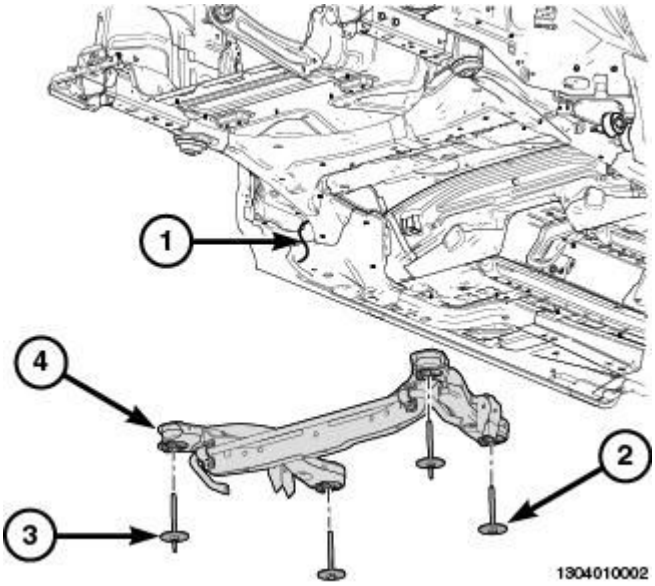

Fig. 45: Identifying Rear Crossmember & Mounting Bolts
Courtesy of CHRYSLER GROUP, LLC

9. Remove the rear crossmember mounting bolts (2, 3) and remove the rear crossmember (4) from the vehicle (1).
10. If necessary, remove the spring links. Refer to **LINK, CAMBER, REMOVAL** , **LINK, TOE,**

REMOVAL and **LINK, SPRING, REMOVAL** .

11. If necessary, remove the bushings. Refer to **ISOLATOR, REAR CROSSMEMBER, DIFFERENTIAL, REMOVAL** and **ISOLATOR, REAR CROSSMEMBER, FRAME, REMOVAL**.

FRONT WHEEL DRIVE

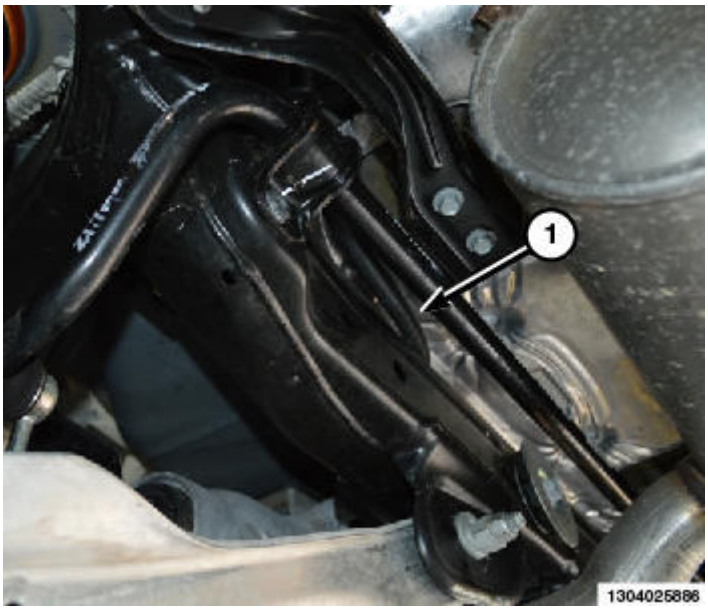

Fig. 46: Identifying Rear Suspension Crossmember (All Wheel Drive)
Courtesy of CHRYSLER GROUP, LLC

1. Raise and support the vehicle. Refer to **HOISTING, STANDARD PROCEDURE** .
2. Remove both rear knuckles. Refer to **KNUCKLE, REAR, REMOVAL** .
3. Remove the muffler. Refer to **MUFFLER, EXHAUST, REMOVAL** .
4. Remove the rear stabilizer bar. Refer to **STABILIZER BAR, REAR SUSPENSION, REMOVAL** .
5. Separate the vent tube from the crossmember.

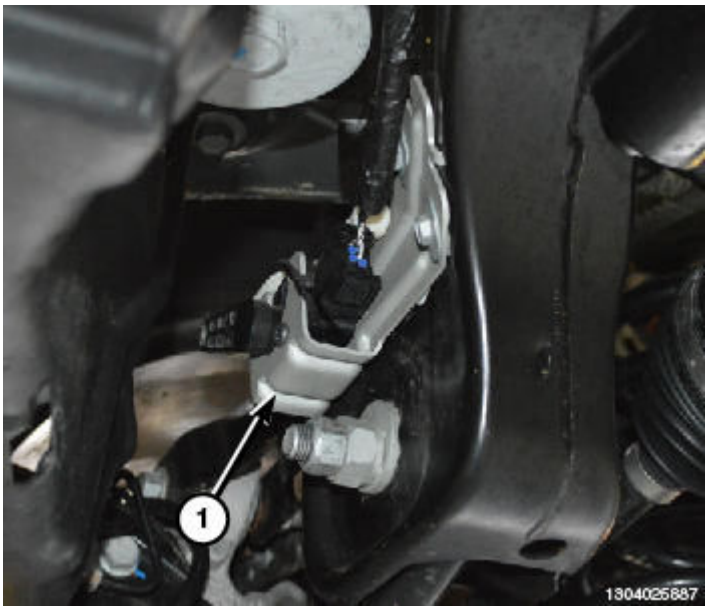

Fig. 47: Identifying Ride Height Sensor
Courtesy of CHRYSLER GROUP, LLC

6. Remove the ride height sensor, if equipped.

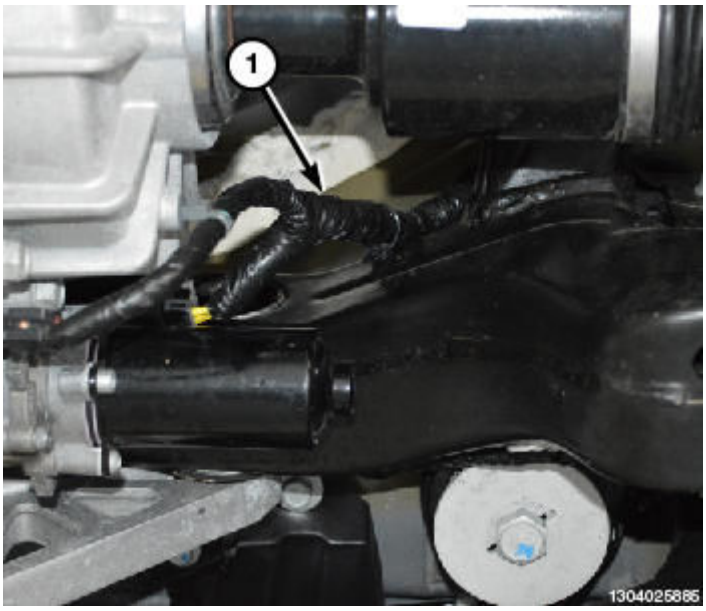

Fig. 48: Identifying Wire Harness From Crossmember
Courtesy of CHRYSLER GROUP, LLC

7. Separate the wire harness from the crossmember.

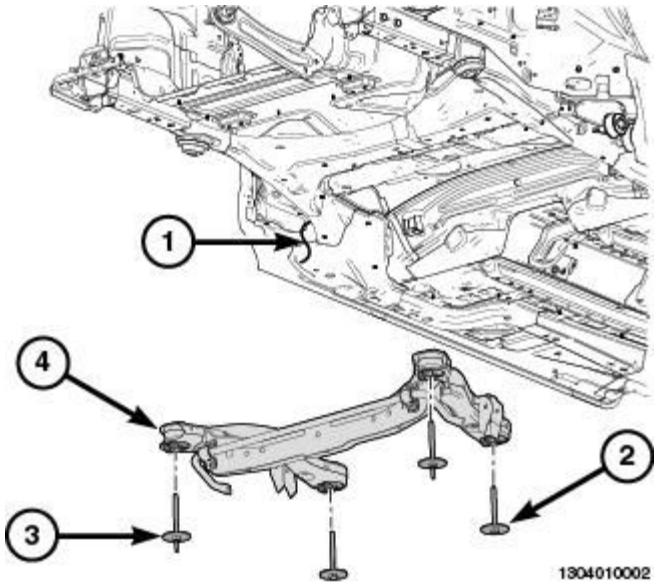

Fig. 49: Identifying Rear Crossmember & Mounting Bolts
Courtesy of CHRYSLER GROUP, LLC

8. Remove the rear crossmember mounting bolts (2, 3) and remove the rear crossmember (4) from the vehicle.
9. If necessary, remove the spring links. Refer to **LINK, CAMBER, REMOVAL** , **LINK, TOE, REMOVAL** and **LINK, SPRING, REMOVAL** .
10. If necessary, remove the bushings. Refer to **ISOLATOR, REAR CROSSMEMBER, DIFFERENTIAL, REMOVAL** and **ISOLATOR, REAR CROSSMEMBER, FRAME, REMOVAL**.

INSTALLATION

INSTALLATION

ALL WHEEL DRIVE

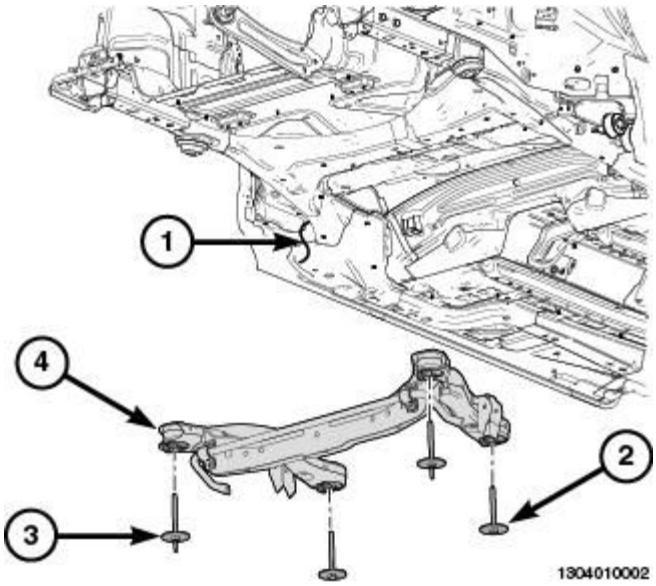

Fig. 50: Identifying Rear Crossmember & Mounting Bolts
Courtesy of CHRYSLER GROUP, LLC

1. If necessary, install the bushings. Refer to **ISOLATOR, REAR CROSSMEMBER, DIFFERENTIAL, INSTALLATION** and **ISOLATOR, REAR CROSSMEMBER, FRAME, INSTALLATION**.
2. If necessary, install the spring links. Refer to **LINK, CAMBER, INSTALLATION** , **LINK, TOE, INSTALLATION** and **LINK, SPRING, INSTALLATION** .
3. Install the rear crossmember (2) to the body and install the mounting bolts (1, 3) and tighten to 150 N.m (111 ft. lbs.).
4. Install the rear stabilizer bar. Refer to **STABILIZER BAR, REAR SUSPENSION, INSTALLATION** .

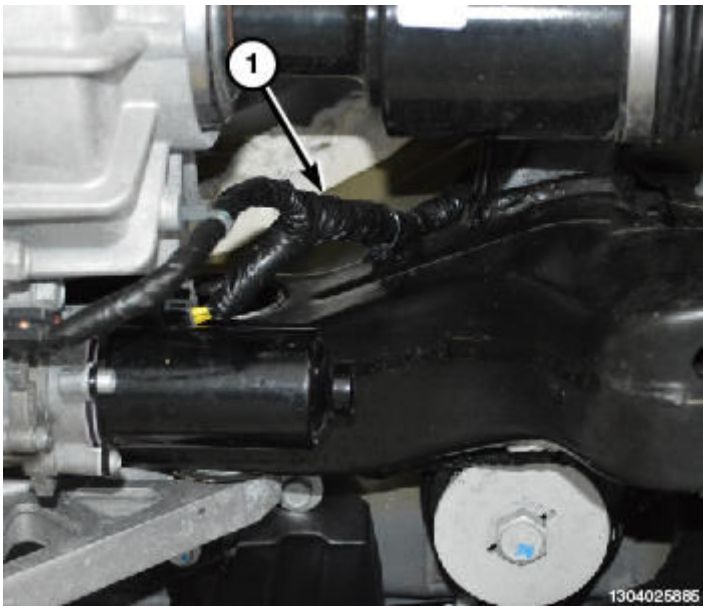

Fig. 51: Identifying Wire Harness From Crossmember
Courtesy of CHRYSLER GROUP, LLC

5. Connect the wire harness (1) to the crossmember.

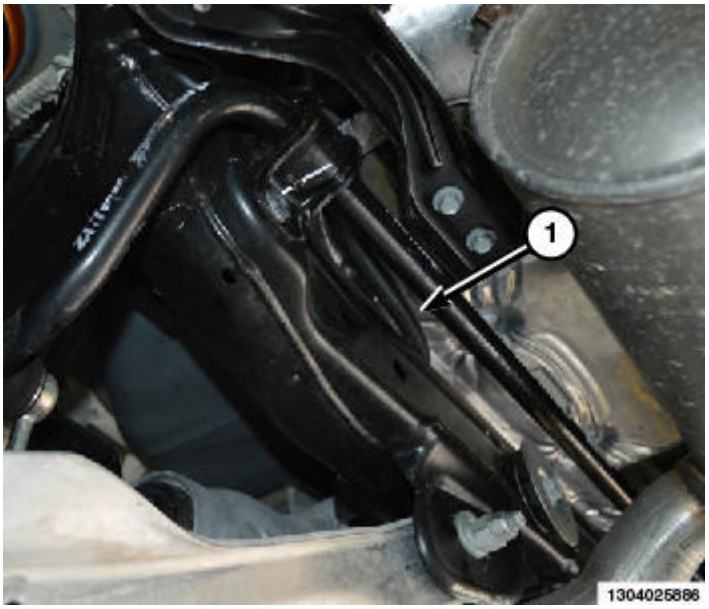

Fig. 52: Identifying Rear Suspension Crossmember (All Wheel Drive)
Courtesy of CHRYSLER GROUP, LLC

6. Connect the vent tube (1) to the crossmember.

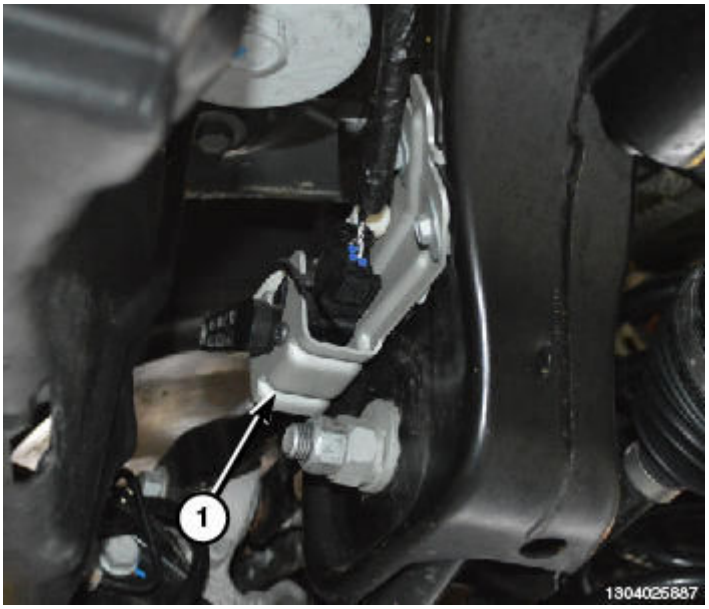

Fig. 53: Identifying Ride Height Sensor
Courtesy of CHRYSLER GROUP, LLC

7. Install the ride height sensor (1), if equipped.
8. Install the rear driveline module. Refer to **INSTALLATION** .

9. Install the knuckles as necessary. Refer to **KNUCKLE, REAR, INSTALLATION** .
10. Install the exhaust to the vehicle. Refer to **MUFFLER, EXHAUST, INSTALLATION** .
11. Lower the vehicle and tighten the following fasteners with the vehicle at normal ride height:
    - Lower transversal link to rear crossmember: 90 N.m (66 ft. lbs.) Plus 45°.
    - Upper transversal link to rear crossmember: 90 N.m (66 ft. lbs.) Plus 45°.
    - Upper transversal link to lower control arm: 80 N.m (59 ft. lbs.) Plus 45°.
12. Perform a wheel alignment. Refer to **WHEEL ALIGNMENT, STANDARD PROCEDURE** then tighten the lower transversal link to lower control arm bolt to 130 N.m (96 ft. lbs.).

FRONT WHEEL DRIVE

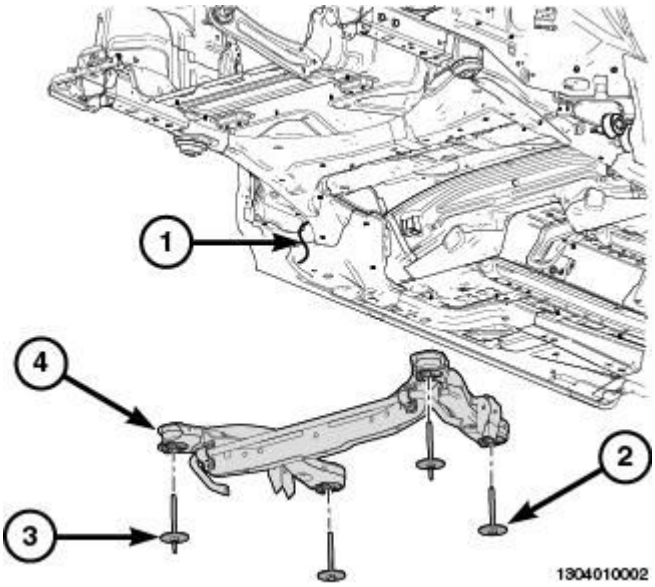

Fig. 54: Identifying Rear Crossmember & Mounting Bolts
Courtesy of CHRYSLER GROUP, LLC

1. If necessary, install the bushings. Refer to **ISOLATOR, REAR CROSSMEMBER, DIFFERENTIAL, INSTALLATION** and **ISOLATOR, REAR CROSSMEMBER, FRAME, INSTALLATION**.
2. If necessary, install the spring links. Refer to **LINK, CAMBER, INSTALLATION** , **LINK, TOE, INSTALLATION** and **LINK, SPRING, INSTALLATION** .
3. Install the rear crossmember (2) to the body and install the mounting bolts (1, 3) and tighten to 150 N.m (111 ft. lbs.).
4. Install the rear stabilizer bar. Refer to **STABILIZER BAR, REAR SUSPENSION, INSTALLATION** .

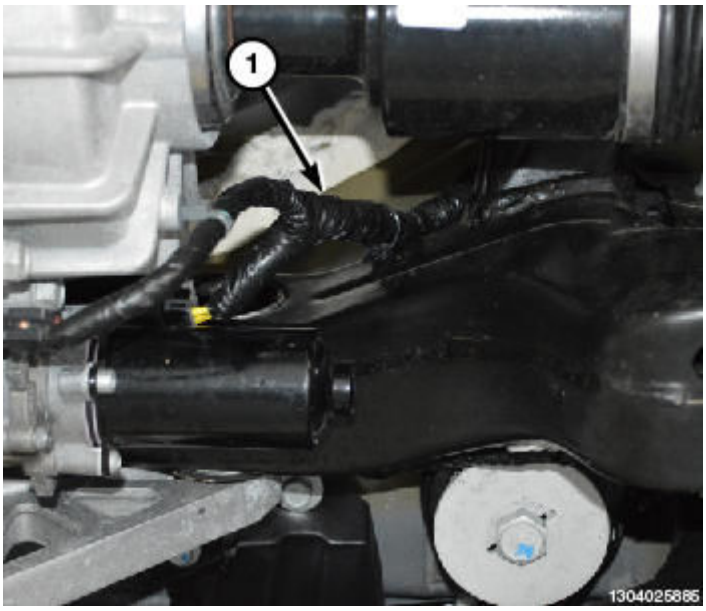

Fig. 55: Identifying Wire Harness From Crossmember
Courtesy of CHRYSLER GROUP, LLC

5. Connect the wire harness (1) to the crossmember.

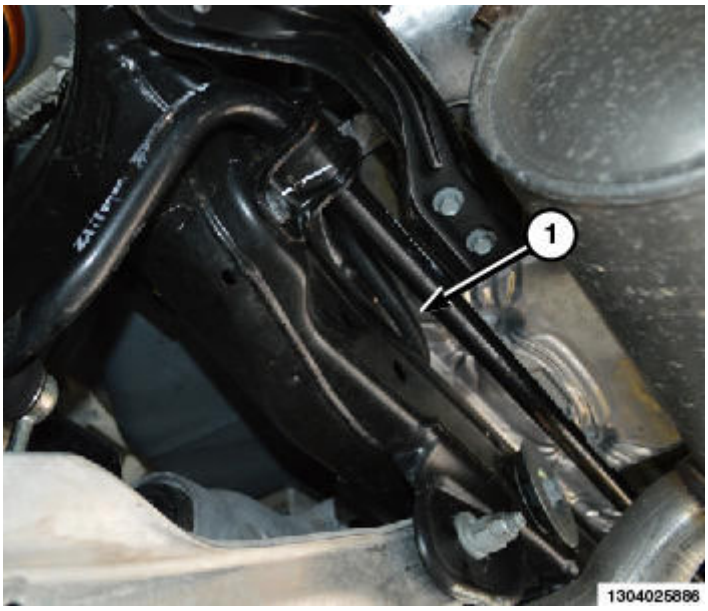

Fig. 56: Identifying Rear Suspension Crossmember (All Wheel Drive)
Courtesy of CHRYSLER GROUP, LLC

6. Connect the vent tube (1) to the crossmember.

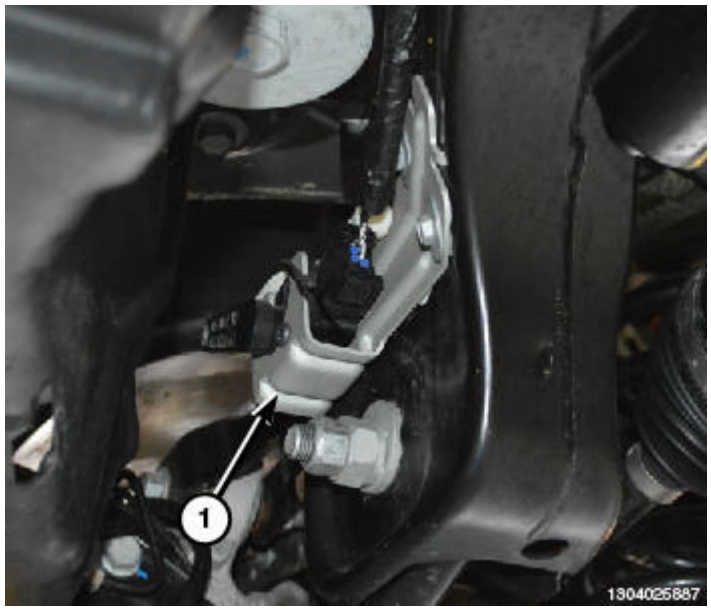

Fig. 57: Identifying Ride Height Sensor
Courtesy of CHRYSLER GROUP, LLC

7. Install the ride height sensor (1), if equipped.
8. Install the knuckles as necessary. Refer to **KNUCKLE, REAR, INSTALLATION** .
9. Install the exhaust to the vehicle. Refer to **MUFFLER, EXHAUST, INSTALLATION** .
10. Lower the vehicle and tighten the following fasteners with the vehicle at normal ride height:
    - Lower transversal link to rear crossmember: 90 N.m (66 ft. lbs.) Plus 45°.
    - Upper transversal link to rear crossmember: 90 N.m (66 ft. lbs.) Plus 45°.
    - Upper transversal link to lower control arm: 80 N.m (59 ft. lbs.) Plus 45°.
11. Perform a wheel alignment. Refer to **WHEEL ALIGNMENT, STANDARD PROCEDURE** then tighten the lower transversal link to lower control arm bolt to 130 N.m (96 ft. lbs.).

HITCH, TRAILER

REMOVAL

REMOVAL

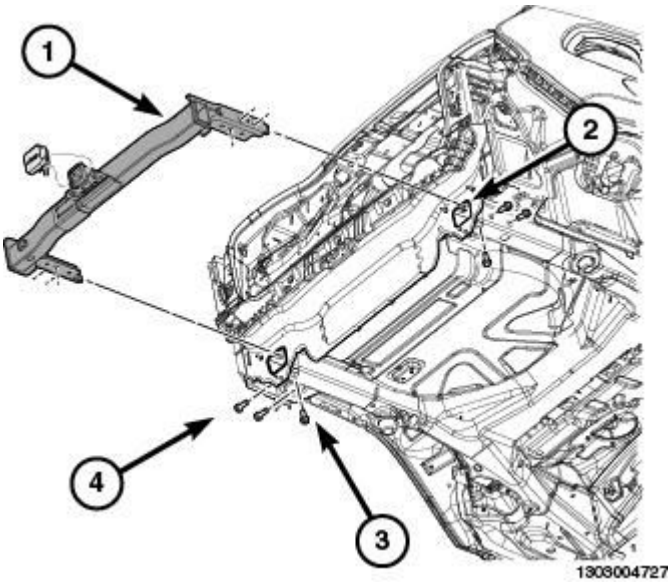

Fig. 58: Identifying Rear Fascia, Trailer Hitch & Bolts
Courtesy of CHRYSLER GROUP, LLC

1. Remove the rear fascia. Refer to **FASCIA, REAR, REMOVAL**.
2. Remove the bolts (3, 4) and remove the hitch (1).

INSTALLATION

INSTALLATION

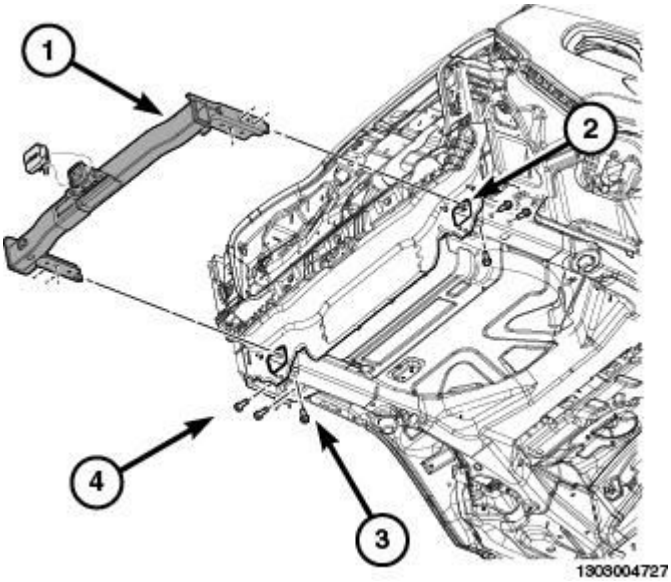

Fig. 59: Identifying Rear Fascia, Trailer Hitch & Bolts
Courtesy of CHRYSLER GROUP, LLC

1. Position the hitch (1) back into the frame openings (2).

2. Install the bolts (3, 4) and tighten to 165 N.m (122 ft. lbs.)

HOOK(S), TOW, FRONT

REMOVAL

REMOVAL

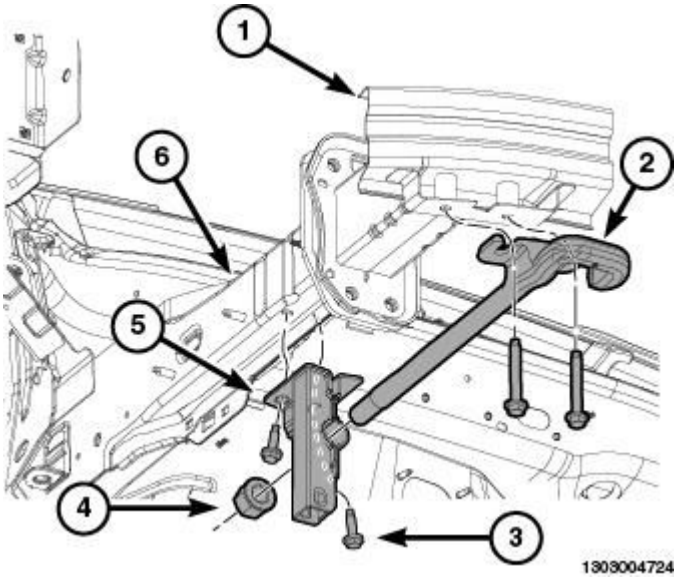

Fig. 60: Identifying Front Tow Hook, Bracket & Fasteners
Courtesy of CHRYSLER GROUP, LLC

1. Remove the bolts and remove the nut (4).
2. Remove the tow hook (2)
3. Remove the bolts (5) and remove the bracket.

INSTALLATION

INSTALLATION

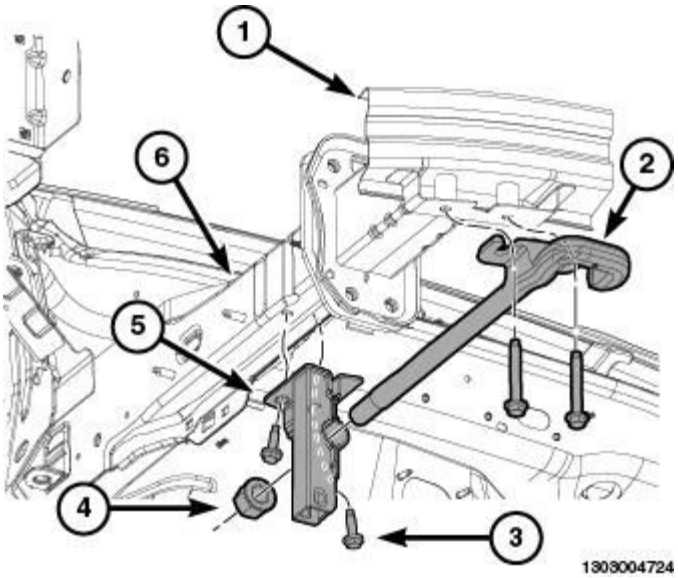

Fig. 61: Identifying Front Tow Hook, Bracket & Fasteners
Courtesy of CHRYSLER GROUP, LLC

1. Install the bracket (5) and install the bolts (3)
2. Install the hook (2).
3. Install the bolts and install the nut (4).

HOOK(S), TOW, REAR

REMOVAL

REMOVAL

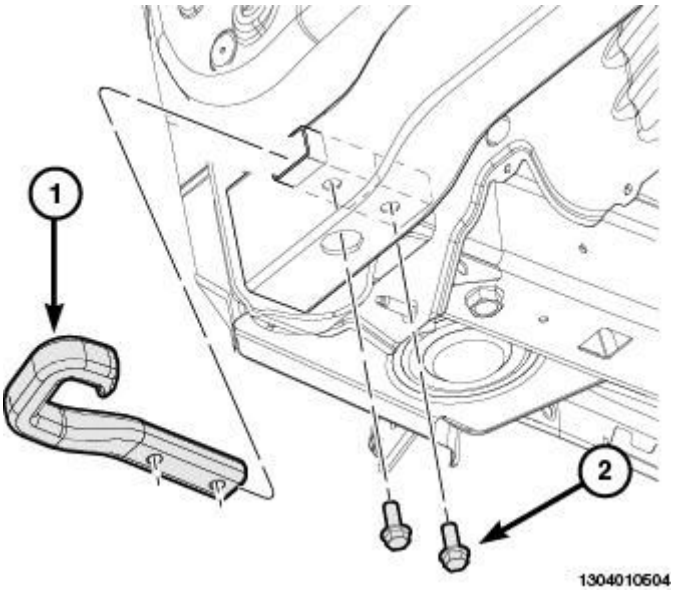

Fig. 62: Identifying Rear Tow Hook & Bolts

Courtesy of CHRYSLER GROUP, LLC

1. Remove the bolts (2) and remove the hook (1).

INSTALLATION

INSTALLATION

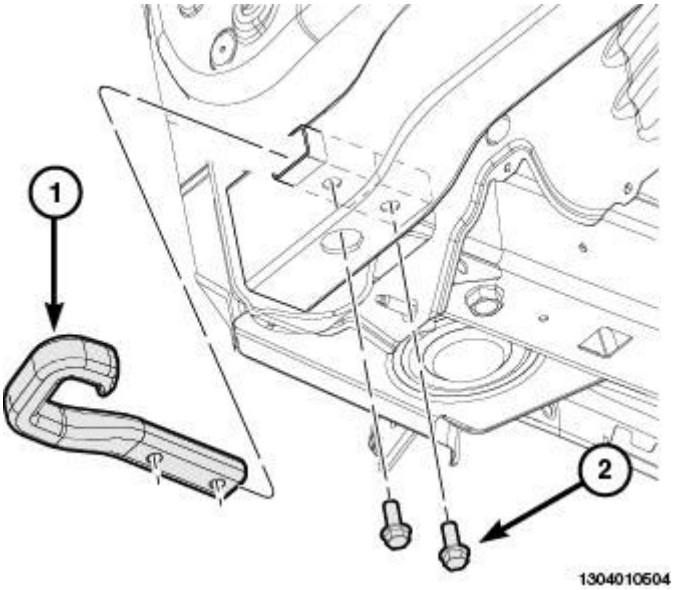

Fig. 63: Identifying Rear Tow Hook & Bolts
Courtesy of CHRYSLER GROUP, LLC

1. Install the hook (1) and install the bolts (2).

ISOLATOR, REAR CROSSMEMBER, DIFFERENTIAL

REMOVAL

REMOVAL

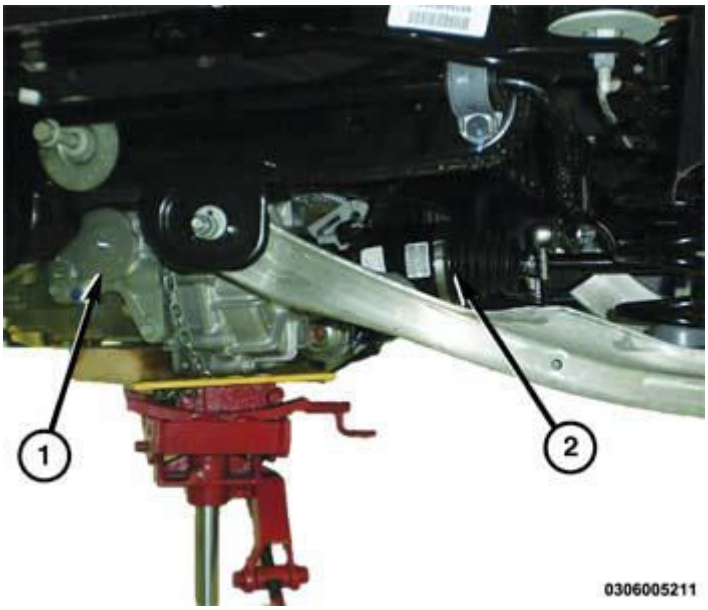

Fig. 64: Installing The Half Shaft Onto The Rear Drive Module
Courtesy of CHRYSLER GROUP, LLC

1. Remove the rear differential (1) as necessary to gain enough access to the differential support isolators. Refer to **REMOVAL** .

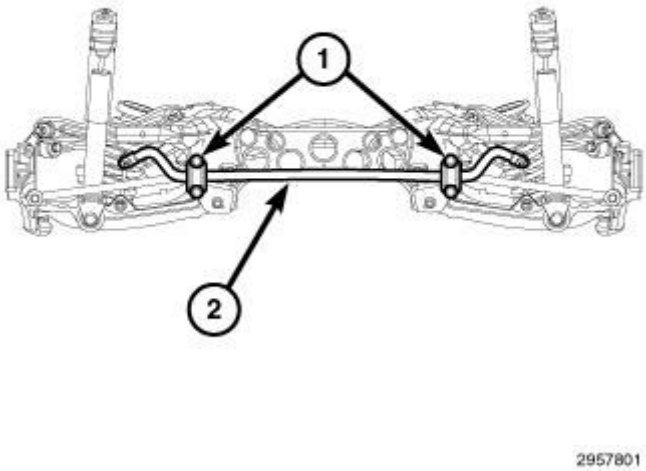

Fig. 65: Bolts & Stabilizer Bar
Courtesy of CHRYSLER GROUP, LLC

2. Remove the bolts (1) and lower the stabilizer bar (2).

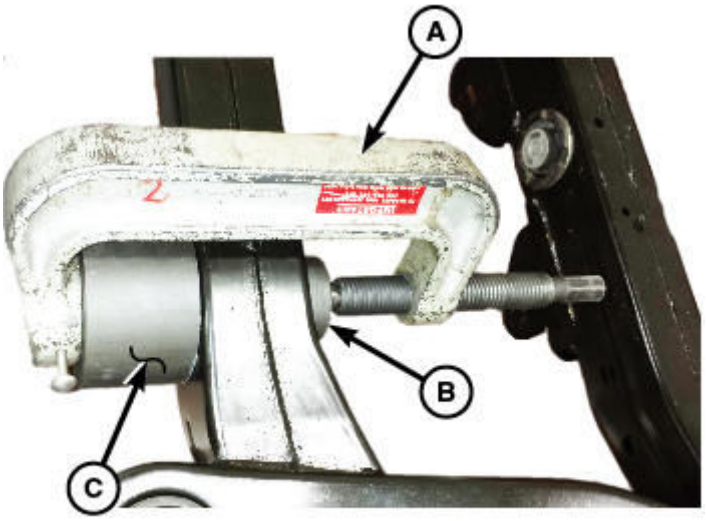

1304019335

Fig. 66: Identifying Special Tools Over Isolator Crossmember Assembly
Courtesy of CHRYSLER GROUP, LLC

NOTE: Prior to using special tools, lubricate Press, Ball Joint: C-4212F (A) threads to provide ease of use and promote tool longevity.

3. Assemble tools over isolator crossmember assembly as shown:
   1. (special tool #C-4212F, Press, Ball Joint)
   2. (special tool #8858-6, Remover)
   3. (special tool #8861-2, Receiver, Ball Joint)
4. Tighten Press, Ball Joint C-4212F (1) screw-drive, pressing isolator out of the crossmember.

INSTALLATION

INSTALLATION

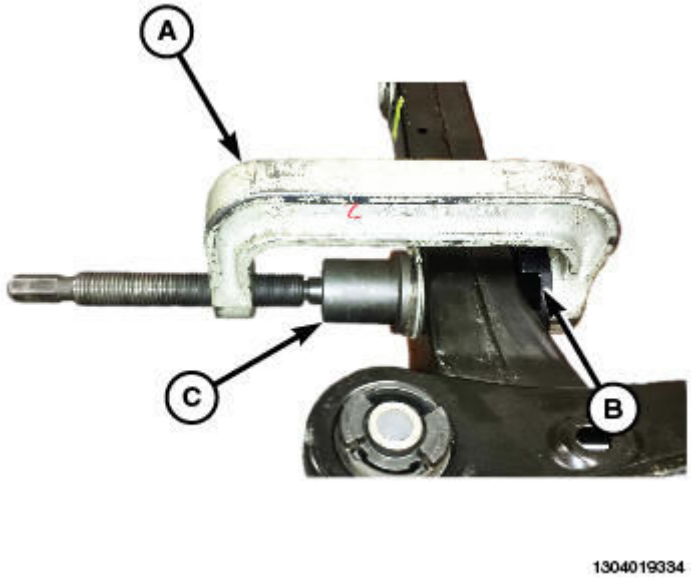

Fig. 67: Identifying Special Tools Over Isolator Crossmember Assembly
Courtesy of CHRYSLER GROUP, LLC

NOTE: Prior to using special tools, lubricate Press, Ball Joint: C-4212F (3) threads to provide ease of use and promote tool longevity.

1. Assemble tools over isolator crossmember assembly as shown:
    1. (special tool #C-4212F, Press, Ball Joint)
    2. (special tool #9031-4, Installer, Bushing)
    3. Pusher 9958-3 of (special tool #9958, Remover/Installer, Axle Bushing)
2. Tighten Press, Ball Joint C-4212F (A) screw-drive, pressing isolator into crossmember. Install isolator until isolator can flange contacts surface of crossmember.
3. Remove the tools.

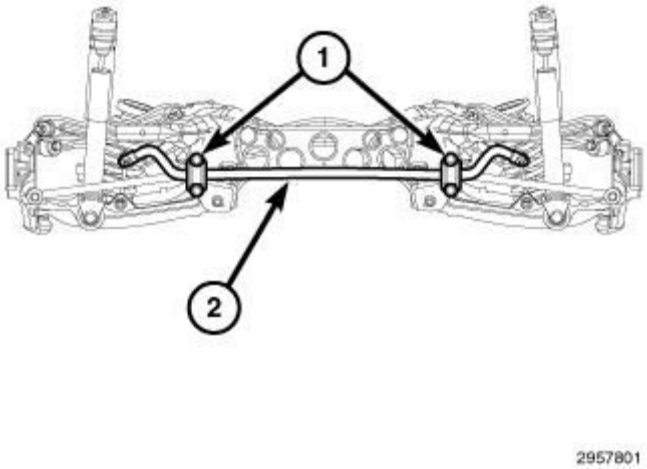

Fig. 68: Bolts & Stabilizer Bar
Courtesy of CHRYSLER GROUP, LLC

4. Position the stabilizer bar (2) and install the upper and lower stabilizer bar to cradle bolts (1) and tighten to 110 N.m (81 ft. lbs.).
5. Install the rear differential. Refer to **INSTALLATION** .

ISOLATOR, REAR CROSSMEMBER, FRAME

REMOVAL

REMOVAL

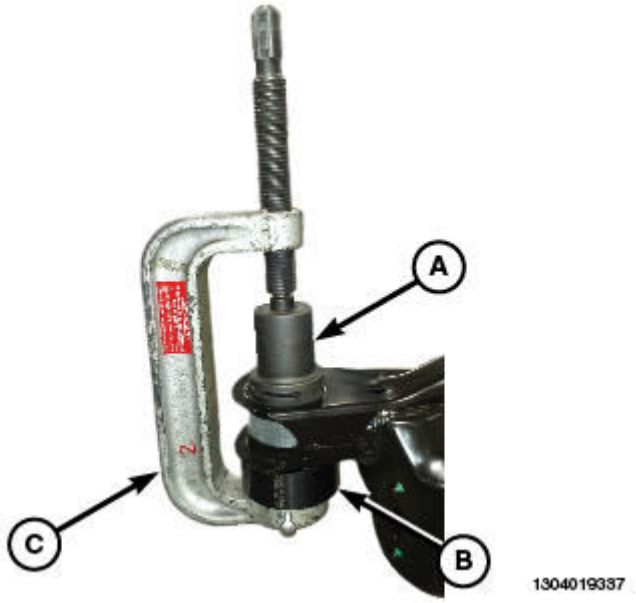

Fig. 69: Identifying Special Tools Over Isolator Crossmember Assembly
Courtesy of CHRYSLER GROUP, LLC

1. Remove the rear crossmember. Refer to **CROSSMEMBER, FRONT SUSPENSION, REMOVAL** and **CROSSMEMBER, REAR SUSPENSION, REMOVAL**.

NOTE: **Prior to using special tools, lubricate Press, Ball Joint: C-4212F (3) threads to provide ease of use and promote tool longevity.**

2. Assemble tools over isolator crossmember assembly as shown:
   a. (special tool #9958-3, Installer, Bushing)
   b. (special tool #10106-2, Receiver, Depth Setting)
   c. (special tool #C-4212F, Press, Ball Joint)
3. Tighten Press, Ball Joint C-4212F (c) screw-drive, pressing isolator out of the crossmember.

INSTALLATION

INSTALLATION

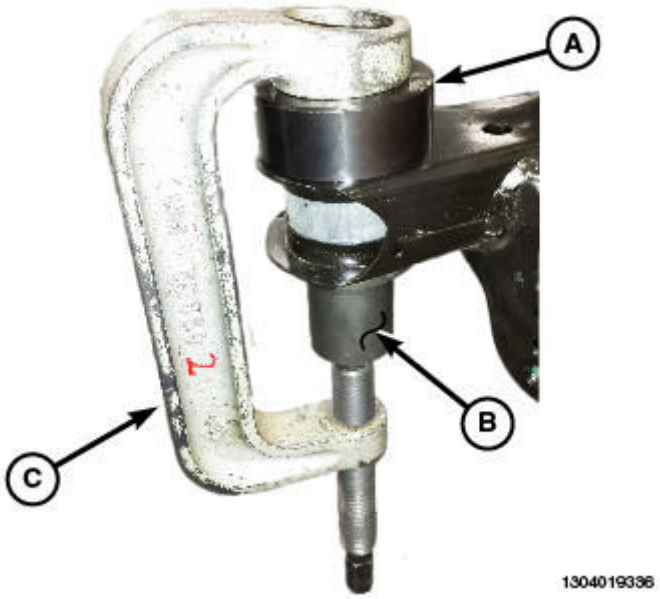

Fig. 70: Installing Isolator On Crossmember Using Special Tools
Courtesy of CHRYSLER GROUP, LLC

1. Position isolator (1) on crossmember (2) isolator bore.

NOTE: **Prior to using special tools, lubricate Press, Ball Joint (3) threads to provide ease of use and promote tool longevity.**

2. Assemble tools over isolator as shown:
   1. (special tool #10106-2, Receiver, Depth Setting)
   2. (special tool #9958-3, Installer, Bushing)
   3. (special tool #C-4212F, Press, Ball Joint)
3. Tighten Press, Ball Joint screw-drive, pressing isolator (5) into crossmember (4). Install isolator until isolator can flange contacts surface of crossmember.
4. Remove tools.
5. Install the rear suspension crossmember. Refer to **CROSSMEMBER, FRONT SUSPENSION, INSTALLATION** and **CROSSMEMBER, REAR SUSPENSION, INSTALLATION**.

LOAD BEAM, LOWER

REMOVAL

REMOVAL

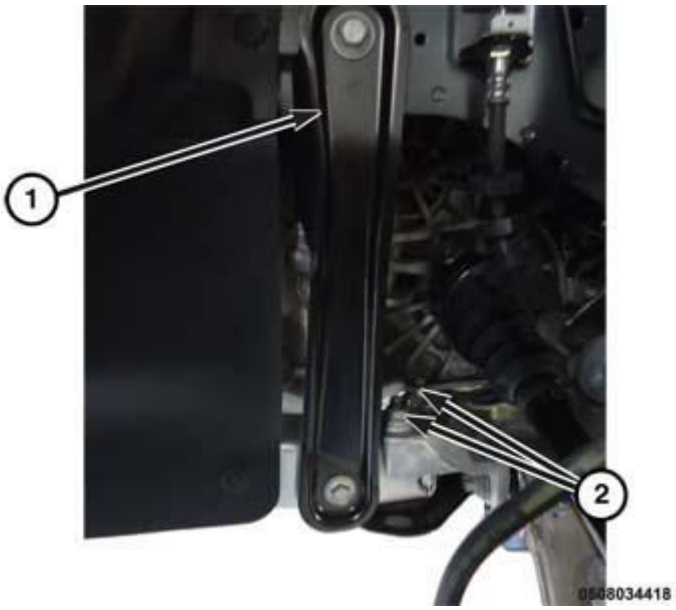

Fig. 71: Identifying Vertical Bracket & Nuts
Courtesy of CHRYSLER GROUP, LLC

1. Remove the front fascia. Refer to **FASCIA, FRONT, REMOVAL**.
2. Remove the vertical bracket (1) from the side of the lower load beam.

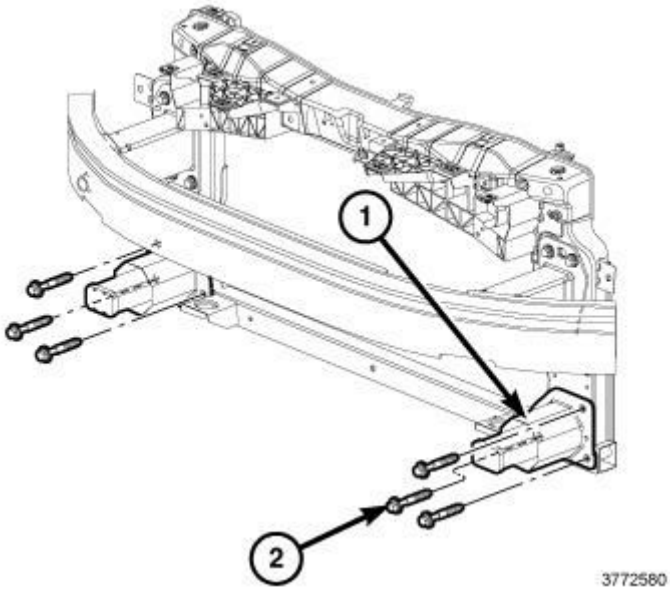

Fig. 72: Lower Bumper Reinforcements & Fasteners
Courtesy of CHRYSLER GROUP, LLC

3. Remove the bolts (2) and the lower load beam extensions (1).

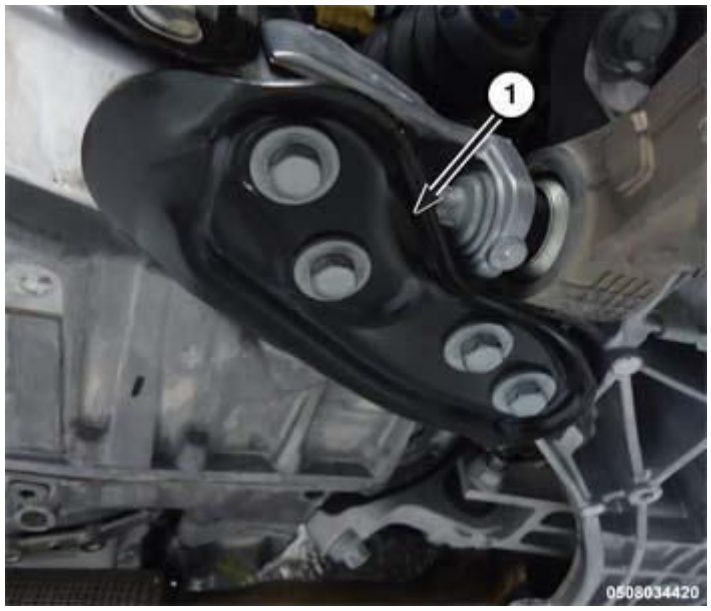

Fig. 73: Identifying Lower Load Beam Bracket
Courtesy of CHRYSLER GROUP, LLC

4. Remove the four bolts and the lower load beam bracket (1).

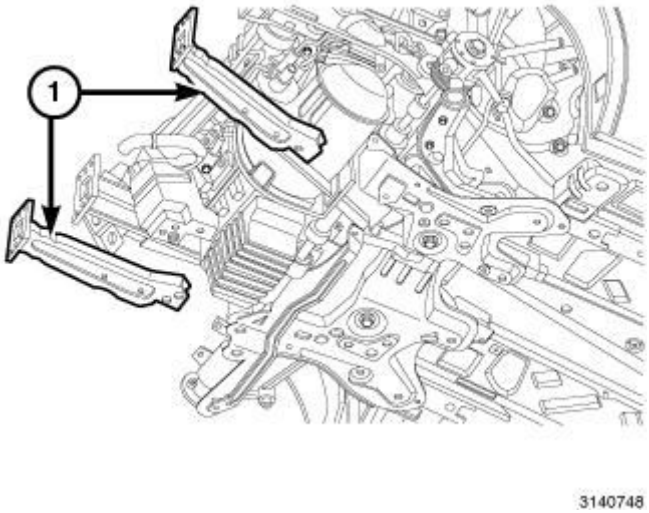

Fig. 74: Front Fascia Support Beams
Courtesy of CHRYSLER GROUP, LLC

5. Remove the lower load beams (1).

INSTALLATION

INSTALLATION

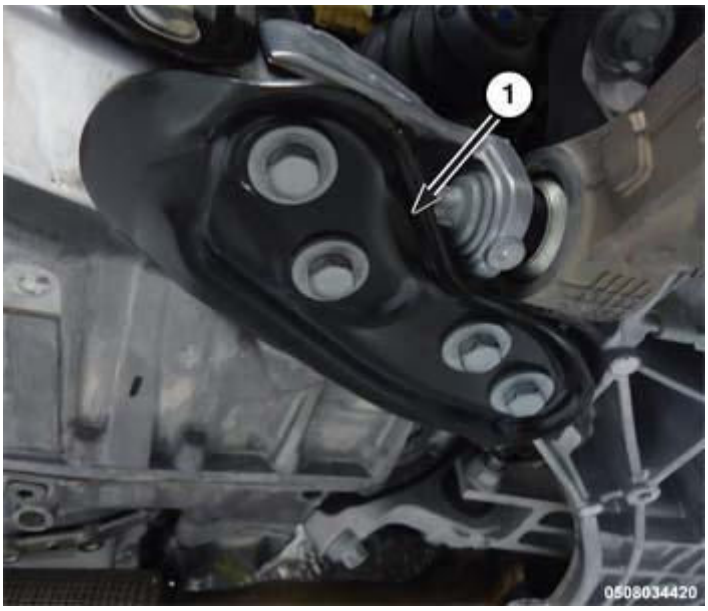

Fig. 75: Identifying Lower Load Beam Bracket
Courtesy of CHRYSLER GROUP, LLC

1. Position a lower load beam on the vehicle and install the lower load beam bracket (1) and bolts. Repeat for both lower load beams.

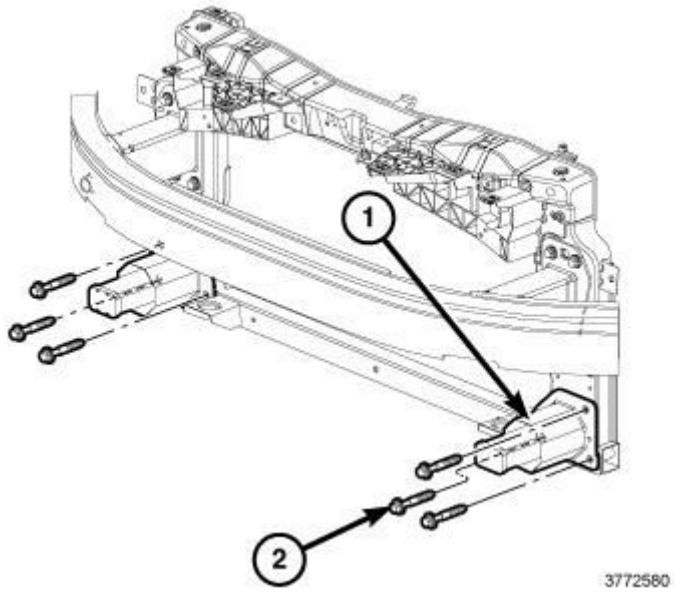

Fig. 76: Lower Bumper Reinforcements & Fasteners
Courtesy of CHRYSLER GROUP, LLC

2. Position the lower load beam extensions (1) and install the bolts (2).
3. Tighten the lower load beam extension bolts (2) to specification. Refer to **SPECIFICATIONS** .
4. Tighten the lower load beam bracket bolts to specification. Refer to **FRAME, SPECIFICATIONS**.

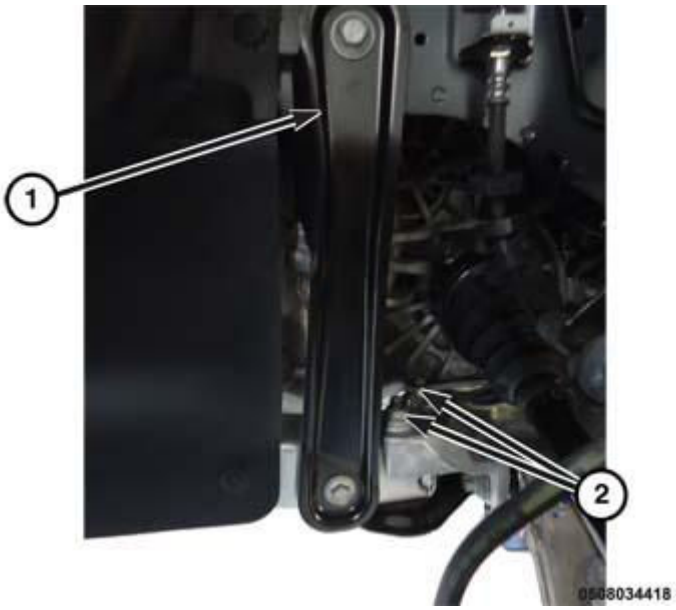

Fig. 77: Identifying Vertical Bracket & Nuts
Courtesy of CHRYSLER GROUP, LLC

5. Install the vertical brace (1) and tighten the bolts.
6. Install the front fascia. Refer to **FASCIA, FRONT, INSTALLATION**.

UNDER BODY PROTECTION

BELLY PAN

REMOVAL

REMOVAL

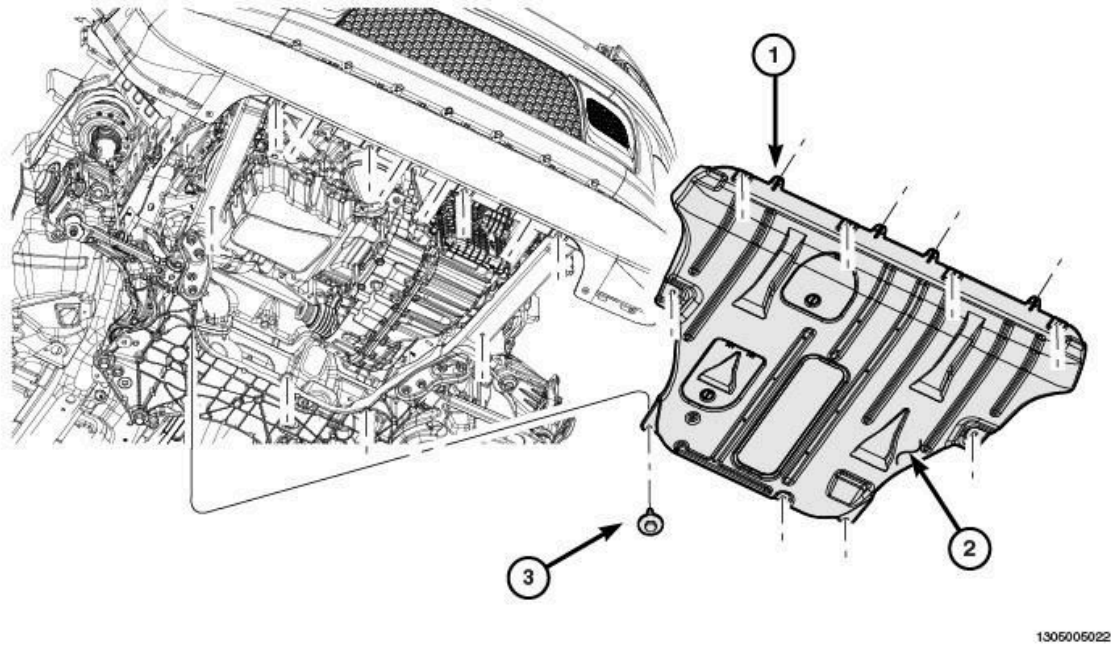

Fig. 78: Identifying Engine Belly Pan & Fasteners
Courtesy of CHRYSLER GROUP, LLC

1. Raise and support the vehicle.
2. Remove the nine fasteners (3) securing the engine belly pan (2).
3. Remove the engine belly pan (2) from the underside of the vehicle.

INSTALLATION

INSTALLATION

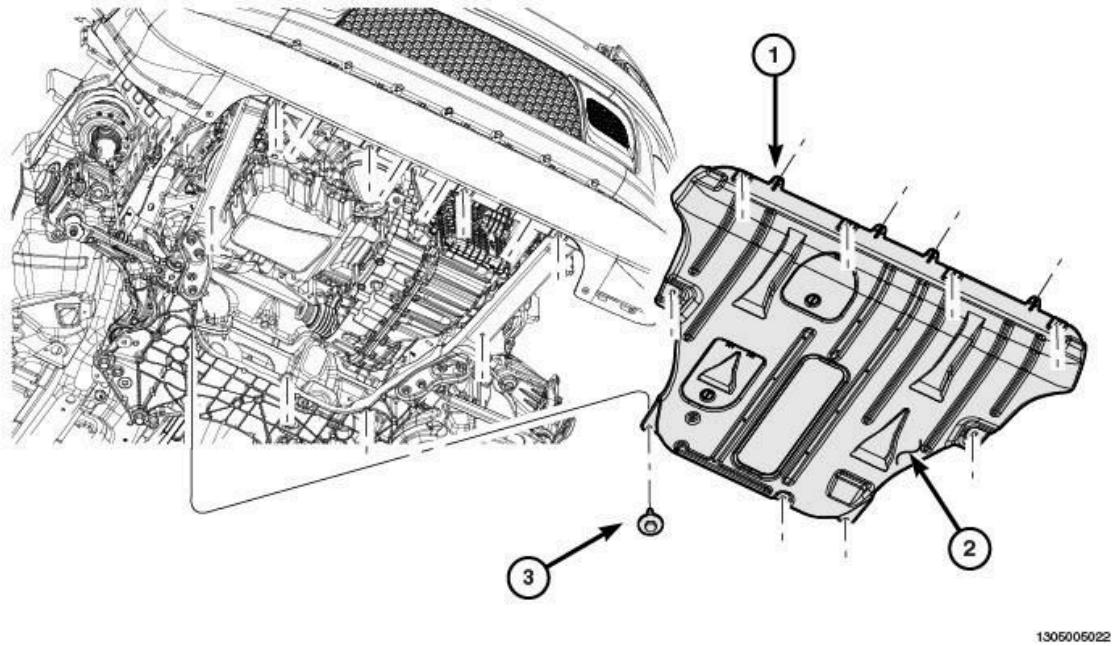

Fig. 79: Identifying Engine Belly Pan & Fasteners
Courtesy of CHRYSLER GROUP, LLC

1. Insert the tabs (1) into the slots on the fascia and Position the engine belly pan (1) to the underside of the vehicle.
2. Install the nine fasteners (3) securing the engine belly pan (2). Tighten the fasteners securely.

PLATE, SKID, FRONT

REMOVAL

REMOVAL

TRANSMISSION SKID PLATE

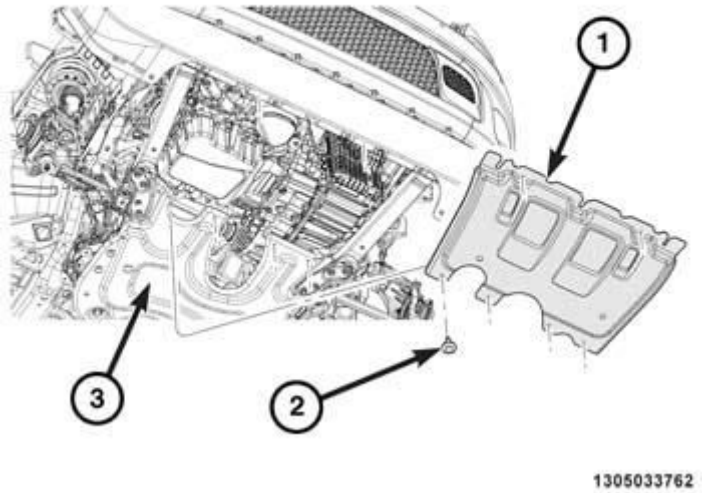

Fig. 80: Identifying Front Skid Plate, Transmission Skid Plate & Bolts
Courtesy of CHRYSLER GROUP, LLC

1. Raise and support the vehicle. Refer to **HOISTING, STANDARD PROCEDURE** .
2. Remove the bolts (2) from the frame and the front skid plate (3).
3. Remove the transmission skid plate (1).

FRONT SKID PLATE

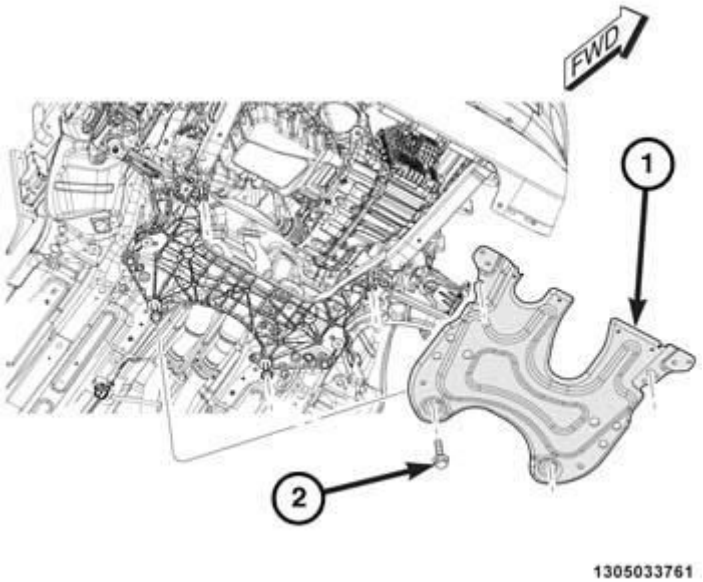

Fig. 81: Identifying Front Skid Plate & Bolts
Courtesy of CHRYSLER GROUP, LLC

1. Raise and support the vehicle. Refer to **HOISTING, STANDARD PROCEDURE** .

2. Remove the transmission skid plate. Refer to **PLATE, SKID, FRONT, REMOVAL**.
3. Remove the bolts (2) and the front skid plate (1).

RIGHT SKID PLATE

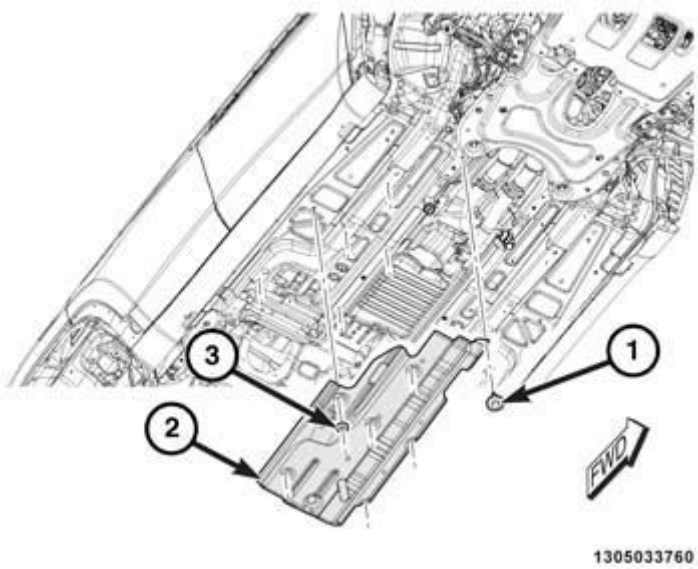

Fig. 82: Identifying Right Skid Plate & Fasteners
Courtesy of CHRYSLER GROUP, LLC

NOTE: Right side skid plate shown, left side skid plate is similar.

1. Raise and support the vehicle. Refer to **HOISTING, STANDARD PROCEDURE** .
2. Remove the bolts (1), the nut (3) and the right skid plate (2).

INSTALLATION

INSTALLATION

TRANSMISSION SKID PLATE

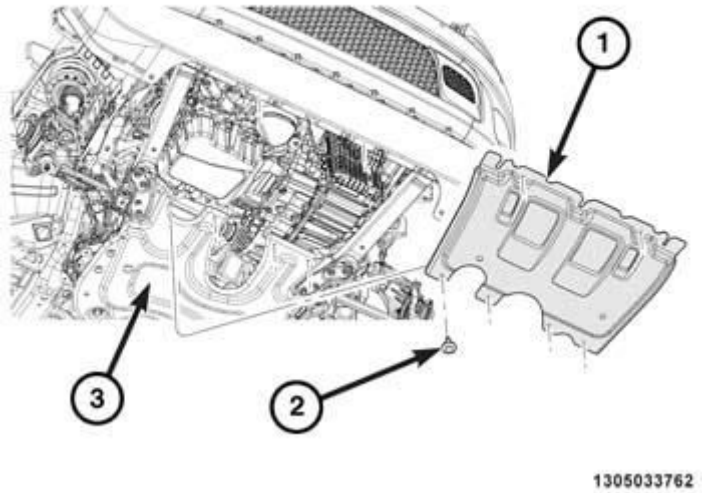

Fig. 83: Identifying Front Skid Plate, Transmission Skid Plate & Bolts
Courtesy of CHRYSLER GROUP, LLC

1. Position the transmission skid plate (1) and install the bolts (2).
2. Tighten the bolts to specification. Refer to **SPECIFICATIONS**.

FRONT SKID PLATE

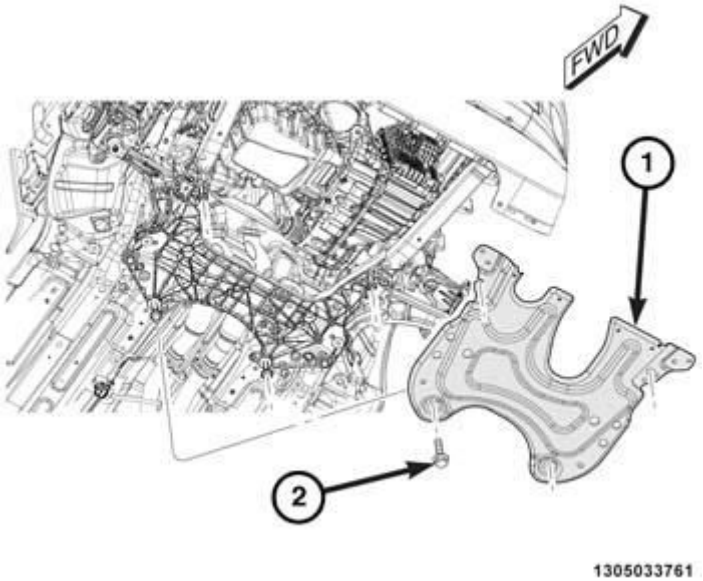

Fig. 84: Identifying Front Skid Plate & Bolts
Courtesy of CHRYSLER GROUP, LLC

1. Position the front skid plate (1) and install the bolts (2).
2. Tighten the bolts to specification. Refer to **SPECIFICATIONS**.

3. Install the transmission skid plate. Refer to **PLATE, SKID, FRONT, INSTALLATION**.

RIGHT SKID PLATE

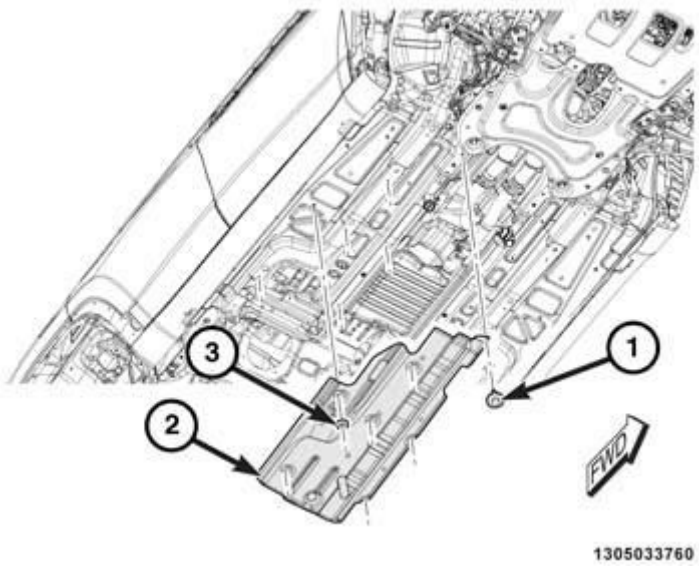

Fig. 85: Identifying Right Skid Plate & Fasteners
Courtesy of CHRYSLER GROUP, LLC

NOTE: Right skid plate shown, left skid plate is similar.

1. Position the right skid plate (2). Install the bolts (1) and nut (3).
2. Tighten the fasteners to specification. Refer to **SPECIFICATIONS**.

SHIELD, UNDERBODY

REMOVAL

REMOVAL

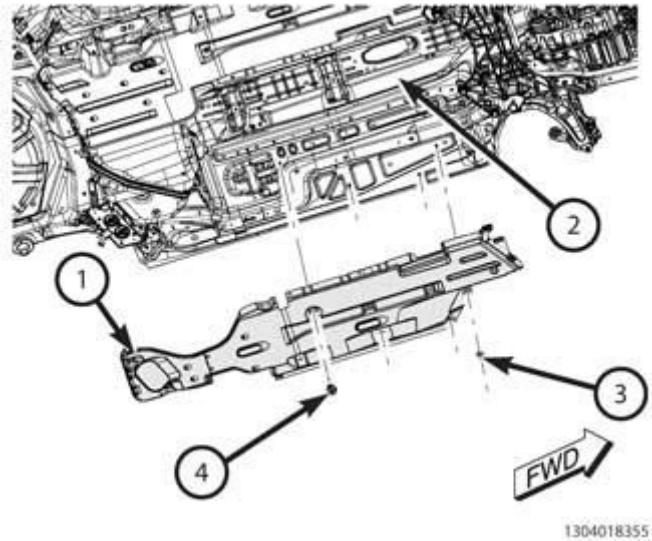

Fig. 86: Identifying Underbody Shield, Vehicle Underbody & Fasteners
Courtesy of CHRYSLER GROUP, LLC

NOTE: Right side shown, left side typical.

1. Raise and support the vehicle.
2. Remove the two push pin fasteners (4)
3. Remove the two retaining nuts (3) that secure the underbody shield (1) to the vehicle underbody (2).
4. Remove the seven fasteners that secure the underbody shield (1) to the vehicle underbody (2).
5. Remove the underbody shield (1) from the vehicle.

INSTALLATION

INSTALLATION

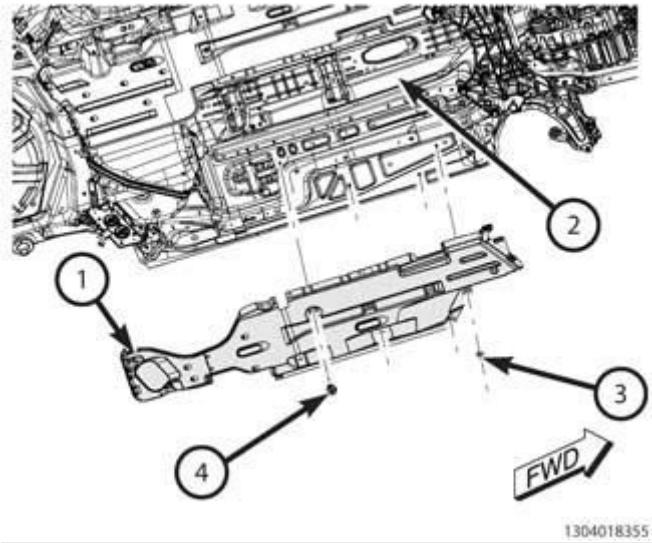

Fig. 87: Identifying Underbody Shield, Vehicle Underbody & Fasteners
Courtesy of CHRYSLER GROUP, LLC

NOTE: Right side shown, left side typical.

1. Position the underbody shield (1) to the vehicle.
2. Install the two retaining nuts (3) that secure the underbody shield (1) to the vehicle underbody (2). Tighten to 4 N.m (35 in. lbs.).
3. Install the two push pin fasteners (4) that secure the underbody shield (1).
4. Install the seven fasteners that secure the underbody shield (1) to the vehicle underbody (2). Tighten to 5 N.m (44 in. lbs.).
5. Lower the vehicle.

2014 ACCESSORIES AND EQUIPMENT

Heated Glass - Service Information - Cherokee

DESCRIPTION

DESCRIPTION

CAUTION: Grid lines can be damaged or scraped off with sharp instruments. Care should be taken when cleaning or removing foreign materials, decals or stickers from the rear glass. Normal glass cleaning solvents or hot water used with soft toweling is recommended.

The rear window defogger system consists of two vertical bus bars and a series of grid lines fired onto the inside surface of the rear window.

The front windshield wiper defogger system (if equipped) consists of three horizontal grid lines fired onto the inside surface of the front windshield.

The defrost for each system is turned on or off by a push-buttons. The soft switch is located in the Uconnect touch screen menu. The hard switch is located on the center of the instrument panel center bezel. (Refer to **DESCRIPTION**)

Circuit protection is provided by fuses located in the power distribution center (PDC). The heater mirrors, rear defrost and front windshield wiper de-icer each have a separate fuse.

OPERATION

OPERATION

The defogger system can be controlled by a momentary switch located in the A/C-heater control. An amber indicator will illuminate whenever either switch is pushed to the ON position.

The defogger system can also be controlled by momentary soft switches located in the U-Connect® touch screen. The front or rear defrost switch will illuminate when selected for use.

When the rear window defogger switch is pressed to ON with the ignition switch in RUN, the switch sends a request signal over the CAN Bus to the Power Distribution Center (PDC) to energize the internal high side driver. When energized, the high side driver provides battery current to the rear window defogger grid lines and to the heated side view mirrors. The grid lines heat the glass to help clear the rear window and side mirror surfaces of fog or frost.

The front window defogger switch is pressed to ON with the ignition switch in RUN, the switch sends a signal over the CAN bus to a relay grid located inside the PDC. That relay is actuated by a low-side driver in the BCM.

The Wiper Deicer system is automatically activated when the outside ambient temperature is less than 40 degrees F (5C) and either the rear defrost system or full front defrost system is active. The wiper blade Deicer will be able to unfreeze both wiper blades from the windshield in 8 minutes or less at minus 10 degrees F (-23C) if the vehicle is stationary.

The defogger and Deicer system will automatically turn off after an initial programmed time interval of about ten minutes, as long as the ignition switch is in RUN. After the initial time interval has expired, if either switch is pressed to ON again during the same ignition cycle, the defogger system will automatically turn off after about five minutes.

Repair of the defogger grid lines, bus bars, terminals or pigtail wires can be accomplished using the Mopar® Rear Window Defogger Repair Kit (Part Number 04549275) or equivalent. Refer to **GRID, DEFOGGER, STANDARD PROCEDURE**.

The defogger control system is diagnosed using a scan tool. Refer to **DIAGNOSIS AND TESTING** .

DIAGNOSIS AND TESTING

DIAGNOSIS AND TESTING - ELECTRIC BACK LIGHT (EBL) SYSTEM

NOTE: Illumination of the rear window defogger indicator lamp in the instrument cluster does not necessarily mean that electrical current is reaching the rear window glass heating grid.

NOTE: Refer to SYSTEM WIRING DIAGRAMS for circuit descriptions and diagrams.

Operation of the EBL system can be confirmed by the following:

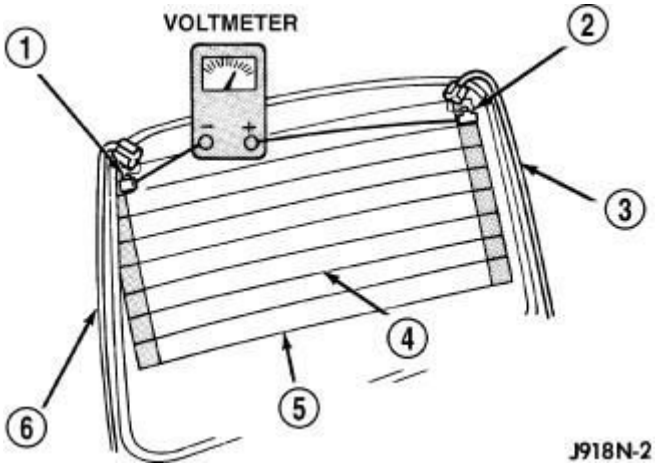

Fig. 1: Rear Window Glass Grid Test
Courtesy of CHRYSLER GROUP, LLC

NOTE: Typical heated rear window glass shown.

1. Use a scan tool and check for Diagnostic Trouble Codes (DTCs) related to the Body Control Module (BCM) and the lower accessory switchbank. If no DTCs are found, go to Step 2. If any DTCs are found, repair as required.
2. Turn the ignition to RUN and press the rear window defogger switch to on. Rear window defogger operation can be checked by feeling the surfaces of the rear window glass. A distinct difference in temperature between the grid lines (5) and the adjacent clear glass should be detected within three to four minutes of operation.
3. If a temperature difference is not detected, use a 12 volt Direct Current (DC) voltmeter and contact the rear glass heating grid terminal A (1) with the negative lead, and terminal B (2) with the positive lead. The voltmeter should read battery voltage. If the voltmeter does not read battery voltage, check the following:
   - Confirm the ignition is in RUN.
   - Confirm the rear window defogger switch is on.
   - Confirm the EBL feed wire (3) is connected to the heating grid positive terminal and that there is continuity between the heating grid and the EBL relay in the Power Distribution Center (PDC).
   - Confirm the EBL ground wire (6) is connected to the heating grid negative terminal and that there is continuity to ground.
   - Confirm the EBL relay in the PDC is operational. Refer to **SYSTEM WIRING DIAGRAMS** .
4. If broken defogger grid lines or bus bars are suspected, use a 12 volt DC voltmeter and contact terminal A with the negative lead and each rear glass heating grid line at its mid-point C (4) with the positive lead. The voltmeter should read approximately 6 volts at each grid line mid-point. If the voltmeter does not read approximately 6 volts, repair the open grid line(s) or bus bar(s). Refer to **GRID, DEFOGGER, STANDARD PROCEDURE**.
5. If the EBL system operation has been verified but the rear window defogger indicator in the instrument cluster does not illuminate, replace the switch bank.

GRID, DEFOGGER

STANDARD PROCEDURE

STANDARD PROCEDURE - GRID LINE AND TERMINAL REPAIR

WARNING: **Materials contained in the Repair Kit (Part Number 04549275) may cause skin or eye irritation. The kit contains epoxy resin and amine type hardener, which are harmful if swallowed. Avoid contact with the skin and eyes. For skin contact, wash the affected areas with soap and water. For contact with the eyes, flush with plenty of water. Do not take internally. If taken internally, induce vomiting and call a physician immediately. Use with adequate ventilation. Do not use near fire or flame. Contains flammable solvents. Keep out of the reach of children. Failure to follow these instructions may result in serious or fatal injury.**

Repair of the rear glass heating grid lines, bus bars, terminals or pigtail wires can be accomplished using the Mopar® Rear Window Defogger Repair Kit (Part Number 04549275) or equivalent.

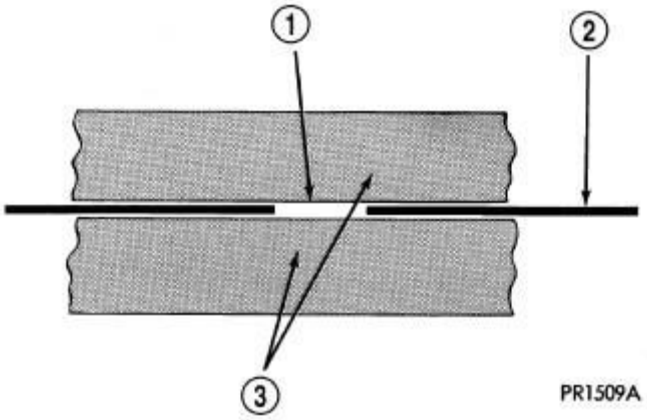

Fig. 2: Grid Line Repair - Typical
Courtesy of CHRYSLER GROUP, LLC

1. Mask the repair area with masking tape (3) so that the conductive epoxy can be applied neatly. Extend the epoxy application onto the grid line (2) or the bus bar on each side of the break (1).
2. Follow the instructions in the repair kit for preparing the damaged area.
3. Remove the package separator clamp and mix the two conductive epoxy components thoroughly within the packaging. Fold the package in half and cut the center corner to dispense the epoxy.
4. Apply the epoxy through the slit in the masking tape or template. Overlap both ends of the break by at least 19 millimeters (0.75 inch).
5. For a terminal or pigtail wire replacement, mask the adjacent areas so the epoxy can be extended onto the adjacent grid line as well as the bus bar. Apply a thin layer of epoxy to the area where the terminal or pigtail wire was fastened and onto the adjacent grid line.
6. Apply a thin layer of conductive epoxy to the terminal or bare wire end of the pigtail and place it in the proper location on the bus bar. To prevent the terminal or pigtail wire from moving while the epoxy is curing, it must be wedged or clamped.
7. Carefully remove the masking tape or template.

CAUTION: Do not allow the glass surface to exceed 204° C (400° F) when using a heat gun, or the glass may fracture.

8. Allow the epoxy to cure 24 hours at room temperature, or carefully use a heat gun for 15 minutes. When using a heat gun, hold it approximately 25.4 centimeters (10 inches) from the repair and do not allow the glass surface to exceed 204° C (400° F).
9. After the conductive epoxy is properly cured, remove the wedge or clamp from the terminal or pigtail wire.
10. Connect the wire harness leads to the grid terminals or pigtail wires and verify EBL operation.

SWITCH, DEFOGGER

DESCRIPTION

DESCRIPTION

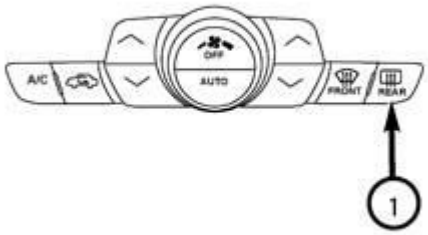

0812002401

Fig. 3: Rear Window Defogger Switch
Courtesy of CHRYSLER GROUP, LLC

The momentary push-button switch for the rear window defogger (EBL) system can be located in the A/C-heater control in the center of the instrument panel.

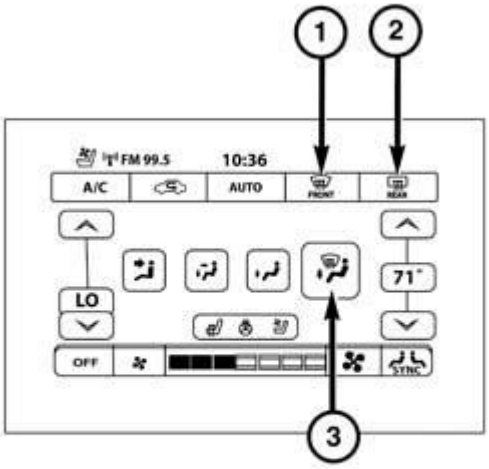

0812002402

Fig. 4: Heated Mirror System Switches
Courtesy of CHRYSLER GROUP, LLC

There is an option for the switches to be located within the U-Connect touch screen. An amber indicator will illuminate to indicate when the EBL system is turned on for either switch.

OPERATION

OPERATION

An amber indicator will illuminate when either window defogger switch is activated. When activated, the switch sends a request signal to the Body Control Module (BCM) to energize the internal EBL high side driver to provide battery current to the appropriate window defogger grid lines and to the heated side view mirrors, when equipped.

NOTE: The defrogger system turns off automatically after 10 minutes of initial operation. Each following activation cycle of the defrost system will last 5 minutes.

The defogger/deicer system will automatically turn off after an initial programmed time interval of about 10 minutes as long as the ignition switch is in RUN. After the initial time interval has expired, if the window defogger switch is pressed to ON again during the same ignition cycle, the defogger/deicer system will automatically turn off after about 5 minutes. The defogger/deicer system will also turn off if the ignition switch is turned to any position other than RUN or by manually pressing the window defogger switch a second time.

The window defogger switch is diagnosed using a scan tool. Refer to **DIAGNOSIS AND TESTING** .

The window defogger switch and indicator cannot be adjusted or repaired. The switch bank (hard switch) or the radio (soft switch) must be replaced if diagnostics lead to switch replacement.

2014 ACCESSORIES AND EQUIPMENT

Heated Mirrors - Service Information - Cherokee

DESCRIPTION

DESCRIPTION

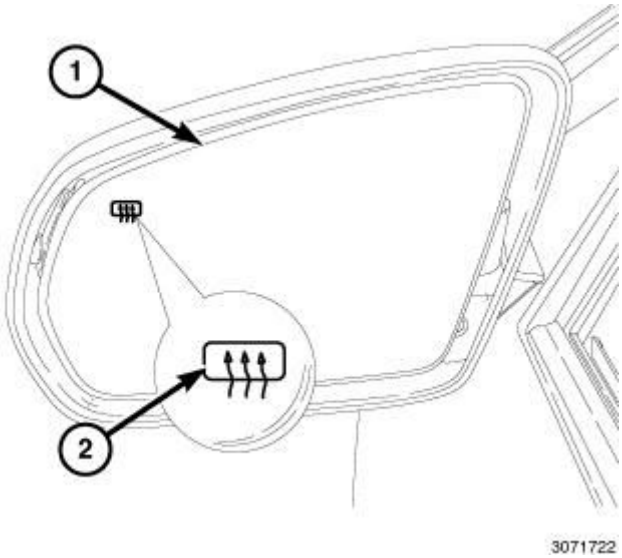

Fig. 1: Heated Outside Rear View Mirrors & Window Defogger
Courtesy of CHRYSLER GROUP, LLC

Electrically heated outside rear view mirrors (1) are optional on some models. Vehicles with this option can be visually identified by the International Standards Organization (ISO) icon for rear window defogger (2), which appears on the corner of the outside rear view mirror glass.

The heated mirror system operates in concert with the rear window defogger system, also know as the Electric Back Light (EBL). The EBL system is controlled by the rear window defogger switch, located in the A/C heater control or a soft switch locating in the U-Connect touch screen menu. An amber indicator lamp in the control will illuminate to indicate when the heated mirror system is on. Refer to **SWITCH, DEFOGGER, DESCRIPTION** .

The heated mirror system will automatically turn off after a programmed time interval of about ten minutes as long as the ignition is in RUN. After the initial time interval has expired, if the rear window defogger system is turned on again during the same ignition cycle, the heated mirror system will automatically turn off after about five minutes. The heated mirror system will also turn off if the ignition is set to any position other than RUN, or by manually pressing the rear window defogger switch a second time.

Circuit protection is provided by a fuse located in the Power Distribution Center (PDC).

OPERATION

OPERATION

When equipped, the heated mirror system is activated when the rear window defogger (EBL) system is turned on. Refer to **OPERATION** . When the heated mirror system is activated, an electric heater grid located behind the glass of each outside rear view mirror becomes energized and produces heat to help clear the mirror of ice, snow, or fog.

If the outside mirror heating grids are both inoperative, refer to **DIAGNOSIS AND TESTING** .

The heating grid behind each outside mirror glass cannot be repaired and the mirror assembly must be replaced if the heating grid is found inoperative or damaged. Refer to **MIRROR, OUTSIDE REARVIEW, REMOVAL** and **MIRROR, OUTSIDE REARVIEW, GLASS, REMOVAL** .

2014 ACCESSORIES AND EQUIPMENT

Heated Seats - Service Information - Cherokee

DESCRIPTION

DESCRIPTION

Vehicles with the optional heated seat system can be visually identified by the two heated seat switches located in the Radio Receiver Module (RRM), in the center of the instrument panel. The heated seat system allows the driver and front seat passenger to select from two different levels of electrical seat heating (HI and LO).

The heated seat system includes the following major components:

- **Heated Seat Switches** - Two heated seat switches are used per vehicle, one for each front heated seat. Both switches are integral to the Radio Receiver Module (RRM). Refer to **SWITCH, HEATED SEAT, DESCRIPTION**.
- **Comfort Seat and Wheel Module** - One Comfort Seat and Wheel Module (CSWM) is used per vehicle. The CSWM is mounted under the driver seat and contains the control logic and software for the front heated seat system. Refer to **MODULE, COMFORT SEAT AND WHEEL, DESCRIPTION** .
- **Heated Seat Elements** - Four heated seat elements are used per vehicle. Two heated seat elements for each seat, one on the seat back cushion and the other on the seat bottom cushion. The heated seat elements are hard-wired to the CSWM. Refer to **PAD, HEATER, DESCRIPTION**.

OPERATION

OPERATION

The Comfort Seat and Wheel Module (CSWM) directly provides power to the seat heating elements in the seat cushions and backs for seat heating. Fused ignition switch output (run) circuits are used, so that the heated seat system will only operate when the ignition switch is in the On position and the engine is running. The module responds to heated seat thermistor sensor feedback from each heating element and ignition switch status inputs by controlling the electrical output to the front seat heating elements. The heated seat system will turn off automatically whenever the ignition switch is turned to any position except On.

Pressing a heated seat switch once will select high-level heating and pressing the same switch a second time will select low-level heating. Pressing the switch a third time will shut the heating elements off. When the switch is pressed, the CSWM energizes an integral solid-state relay, which supplies battery current to the heating elements. If high-level heating is initially selected, the heated seat control system will automatically switch to a lower level temperature after 50 minutes of continuous operation at the desired temperature level. Operation in the low-level setting automatically turns to off after 45 minutes.

The driver seat heat system and passenger seat heat system each consist of a cushion element connected in parallel with a back element. Both systems have a seat cushion with a thermistor sensor that provides feedback to the CWSM. Both systems seat cushion and seat back have a thermostat that will request the heated seat to turn off if the temperature reaches or exceeds 135 °F (+/- 9 ° F). The CSWM will also turn off the heated seat

elements if an open or short in the heating element circuit is detected.

Auto On Feature

The Auto On feature is a customer configurable feature that when enabled will activate the driver heated seat and heated steering wheel on engine start based on ambient temperature. If Auto On feature is enabled, and the ambient temperature is at or below 40° F the CSWM will activate the driver heated seat and heated steering wheel feature at the high level during engine start. This feature also works with Remote Start.

DIAGNOSIS AND TESTING

DIAGNOSIS AND TESTING - HEATED SEAT SYSTEM

NOTE: **Vehicles equipped with the heated seat option utilize a voltage cut-off feature. This feature turns off power to the heated seat system anytime vehicle voltage is below 9.0 volts or above 16.0 volts. Be certain to check the vehicle electrical system for proper voltage anytime the heated seat system appears inoperative.**

NOTE: **If a Diagnostic Trouble Code (DTC) can not be verified, it is a good indication that an intermittent fault condition may be present. To help find an intermittent problem, sit in the seat in question and move around the heating elements within the seat while testing continuity. Wiggle the heated seat wire harness and electrical connectors while testing continuity.**

NOTE: **For complete circuit diagrams, refer to SYSTEM WIRING DIAGRAMS . Wiring Information includes wiring diagrams, connector pin-out and location views, details of wire harness routing and retention, splice and ground locations and proper wire and connector repair procedures.**

Before testing any individual components in the heated seat system, check the following:

- Check to see if the concern is isolated to only one seat. Operate the other heated seat.
- Check the fuse in the Power Distribution Center (PDC) and for power at the CSWM. Repair as necessary.
- Using a scan tool, check for any Diagnostic Trouble Codes (DTCs) related to the Comfort Seat and Wheel Module (CSWM) and/or the Radio Receiver Module (RRM). If any DTCs are found, repair as necessary (Refer to **DTC INDEX**).
- Check the vehicles battery open-circuit voltage and charging system performance. If the vehicle's electrical system is defective or weak it may not be suppling sufficient energy to operate the heated seat system.

PAD, HEATER

DESCRIPTION

DESCRIPTION

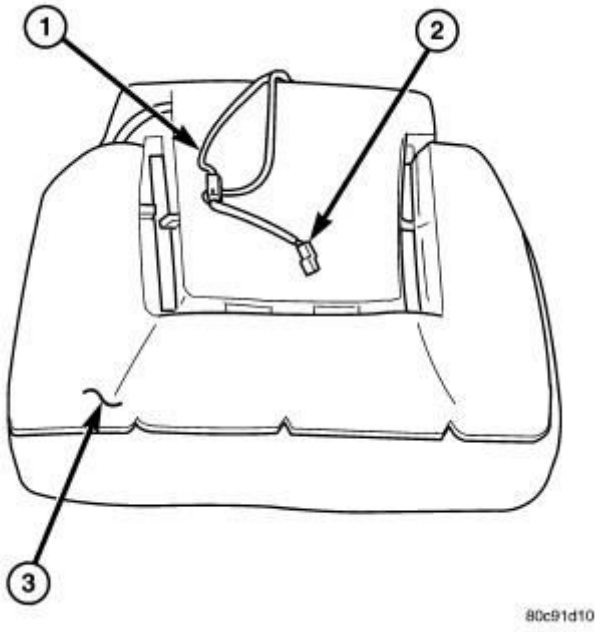

Fig. 1: Removing/Installing Heated Seat Element
Courtesy of CHRYSLER GROUP, LLC

Vehicles equipped with the optional heated seat system have two heated seats. One heating element (1) is used for each seat bottom cushion and another heating element is used for each seat back cushion.

All of the heated seat elements consist of multiple heating circuits operating in parallel throughout the carbon fiber element and a wire lead and connector (2). The heated seat elements are captured between the seat cover and the seat cushion (3). If a malfunction occurs in one or more of the individual circuits, the remaining operational circuits will continue to provide heat.

OPERATION

OPERATION

Battery current is directed to the heated seat elements by the Comfort Seat and Wheel Module (CSWM). The CSWM will energize the heated seat elements when a heated seat switch is pressed on.

As electrical current passes through each heated seat element, the resistance of the wire used in the element disperse some of the electrical current in the form of heat. The heat produced by the heated seat element then radiates through the seat bottom and seat back covers, warming the seat covers and its occupant.

The heated seat elements cannot be repaired and must be replaced if inoperative or damaged.

DIAGNOSIS AND TESTING

DIAGNOSIS AND TESTING - HEATED SEAT ELEMENT

NOTE: **For complete circuit diagrams, SYSTEM WIRING DIAGRAMS . Wiring Information includes wiring diagrams, connector pin-out and location views, details of wire harness routing and retention, splice and ground locations and proper wire and connector repair procedures.**

NOTE: **The wire harness connectors for the heating elements are located under the seat.**

NOTE: **When checking heated seat elements for continuity, be certain to move the heating element being checked. Moving the element, such as sitting in the seat will eliminate the possibility of an intermittent open in the element which would only be evident if the element was in a certain position.**

1. Locate and disconnect the seat heating element electrical connectors as necessary.
2. Check the resistance between the circuits leading in and out of the suspect heated seat element. The resistance should be between the specifications listed in the following Heated Seat Element Resistance table . If OK, refer to **DIAGNOSIS AND TESTING**. If not OK, replace the inoperative heated seat element. Refer to **PAD, HEATER, REMOVAL**.

HEATED SEAT ELEMENT RESISTANCE

Element Location	Acceptable Resistance Value
Driver Seat Bottom Cushion	7.8 - 9.6 ohms
Passenger Seat Bottom Cushion	8.4 - 10.4 ohms
Driver and Passenger Seat Back Cushion	8.5 - 10.6 ohms

REMOVAL

REMOVAL

WARNING: **Disable the airbag system before attempting any component diagnosis or service of the front seats, when equipped with front seat air bags. Disconnect and isolate the negative battery (ground) cable, then wait two minutes for the airbag system capacitor to discharge before performing further diagnosis or service. This is the only sure way to disable the airbag system. Failure to follow these instructions may result in accidental airbag deployment and possible serious or fatal injury.**

NOTE: **Seat bottom cushion shown in illustrations, seat back cushion similar.**

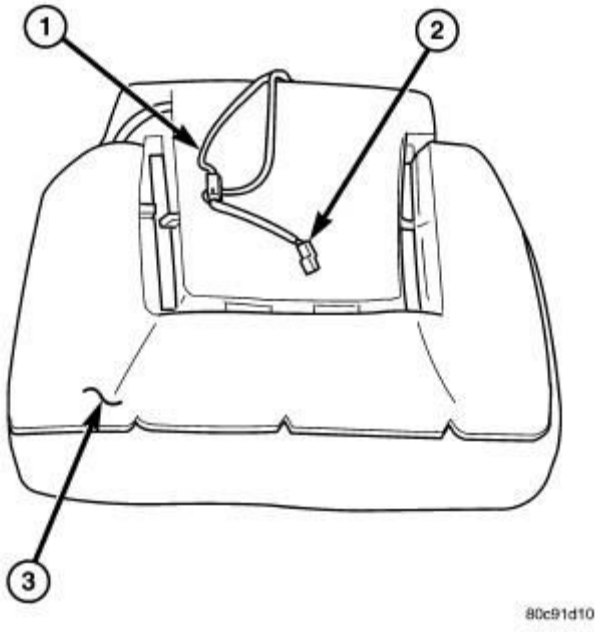

Fig. 2: Removing/Installing Heated Seat Element
Courtesy of CHRYSLER GROUP, LLC

1. Disconnect and isolate the negative battery cable.
2. Remove the appropriate seat bottom or seat back cushion and place it on a workbench (Refer to **SEATS, FRONT** or **SEATS, REAR**).
3. Remove the seat bottom or seat back cover from the cushion (1) (Refer to **SEATS, FRONT** or **SEATS, REAR**).
4. Make note of the installed location of the heated seat element on the cushion (3) being serviced.
5. Remove the heated seat element from the foam cushion by peeling the element away from the cushion. Be careful not to remove excessive foam from the cushion.

INSTALLATION

INSTALLATION

CAUTION: During heated seat element replacement, be careful not to fold or crease the new heating element. Folds or creases will cause premature heated seat element failure.

NOTE: Front seat bottom cushion shown, rear seat and seat back cushions similar.

Fig. 3: Identifying Replacement Heating Element And Factory Installed Heating Element
Courtesy of CHRYSLER GROUP, LLC

1. Peel off the adhesive backing from the replacement heated seat element (2).
2. Position the heated seat element to the foam cushion directly where the original heater element was located. There will be adhesive marks on the cushion outlining the factory installed location (1).
3. Firmly press the heated seat element onto the foam cushion. Make sure the adhesive is fully adhered to the cushion.
4. Install the cover onto the seat bottom or seat back cushion (1) (Refer to **SEATS, FRONT** or **SEATS, REAR**).

NOTE: **Make certain the heated seat element and airbag wire harnesses are correctly routed. Any excess wire should be securely placed between the rear of the seat bottom cushion and the rear seat cover flap.**

5. Install the seat bottom or seat back cushion (Refer to **SEATS, FRONT** or **SEATS, REAR**).
6. Install the seat. Refer to **SEAT, INSTALLATION** **SEAT, REAR, INSTALLATION** .
7. Reconnect the negative battery cable.
8. Verify proper heated seat system operation.

SWITCH, HEATED SEAT

DESCRIPTION

DESCRIPTION

Fig. 4: View of Vented Seats U-Connect Touch Screen
Courtesy of CHRYSLER GROUP, LLC

The switches (1) for the optional front heated seat system are located in the U-Connect Touch ™ screen module, at the center of the instrument panel. The heated seat system allows the driver and front seat passenger to select from two different levels of electrical seat heating (HI and LO). When the heated seat switches are pressed on, each heated seat switch illuminates either HI or LO, and an International Standards Organization (ISO) symbol appears at the top of the U-Connect Touch ™ screen module.

OPERATION

OPERATION

When either of the hard or soft front heated seat switches are pressed with the engine running, a signal is sent to the Comfort Seat and Wheel Module (CSWM) over the Controller Area Network (CAN) data bus, signaling the module to energize the heating elements for the selected seat. Indicator lamps illuminate for each heated seat switch and indicate the level of heat in use (HI or LO). Pressing a heated seat switch once will select high-level heating and pressing the same switch a second time will select low-level heating. Pressing the switch a third time will shut the heating elements off.

The CSWM energizes the integral solid-state relays that supply battery current to the heating elements. During high-temperature level operation, the HI indicator illuminates on the U-Connect Touch ™ screen. After 50 minutes of high-temperature level heating, the CSWM automatically lowers the heat level to low. At that time, the LO indicator illuminates on the U-Connect Touch ™ screen. Operation on the low-temperature level setting will automatically turn off after 45 minutes.

The individual front heated seat switches located in the U-Connect Touch ™ screen module cannot be adjusted or repaired. If a front heated seat switch or indicator is inoperative or damaged, the entire U-Connect Touch ™ screen module must be replaced. Refer to **RADIO, REMOVAL** .

2014 ACCESSORIES AND EQUIPMENT

Heated/Cooled Accessories - Service Information - Cherokee

DESCRIPTION

HEATED STEERING WHEEL

0804005802

Fig. 1: View of Vented Seats U-Connect Touch Screen
Courtesy of CHRYSLER GROUP, LLC

The heated steering wheel system is designed to enhance the thermal comfort of the driver by heating the steering wheel, when desired. The steering wheel heating element is made of copper wire and is sandwiched between the leather and the substrate material of the steering wheel. A vehicle with a heated steering wheel can easily be identified by the heated steering wheel switch (3) located in the U-Connect Touch ™ screen module, at the center of the instrument panel. When the heated steering wheel switch is pressed on, the heated steering wheel switch illuminates and an International Standards Organization (ISO) symbol appears in the top corner of the U-Connect Touch ™ screen module.

The heated steering wheel system consists of the following major components

- **Heated Steering Wheel Switch** - Refer to **SWITCH, HEATED STEERING WHEEL, DESCRIPTION**.
- **Comfort Seat and Wheel Module** - Refer to **MODULE, COMFORT SEAT AND WHEEL, DESCRIPTION** .
- **Heated Steering Wheel** - Refer to **OPERATION**.

VENTED SEATS

0804005802

Fig. 2: View of Vented Seats U-Connect Touch Screen
Courtesy of CHRYSLER GROUP, LLC

The vented seat system is designed to enhance the thermal comfort of the driver and front seat occupant, when desired. Occupant comfort is achieved by pulling air from the outside of the seating surfaces into the seat back and cushion of the seat. A vehicle with vented seats can be identified by the vented seat switches (2) located in the Radio Receiver Modules (RRM) U-Connect touch screen.

Each vented seat switch illuminates when the vented seat system is on.

The vented seat system consist of the following major components (there are two different available seat modules, the HSM and the CSWM) :

- **Vented Seat Pads -** Refer to **PAD, VENTED SEAT, DESCRIPTION** for more information.
- **Vented Seat Switches -** Refer to **SWITCH, VENTED SEAT, DESCRIPTION** for more information.
- **Vented Seat Motors -** Refer to **MOTOR, VENTED SEAT, DESCRIPTION** for more information.
- **Custom Seat and Wheel Module -** Refer to **MODULE, COMFORT SEAT AND WHEEL, DESCRIPTION** .

OPERATION

HEATED STEERING WHEEL

Operation of the steering wheel heating element is controlled by the Comfort Seat and Wheel Module (CSWM). The Steering Column Control Module is the interface between the heated steering wheel and the vehicle. The CSWM provides power to the heated steering wheel heating elements in the steering wheel. A temperature sensor is integrated into the steering wheel heating element that sends the temperature of the steering wheel to the steering wheel switch. The steering wheel switch sends this information over the LIN bus to the SCCM. The SCCM then sends this information over the CAN C bus to the Body Control Module (BCM). The BCM sends

this information to the CSWM over the CAN I bus. The normal heating cycle of the steering wheel will last up to 50 minutes on high setting, unless the switch is pressed again. The heated steering wheel system will automatically shut off if the heating element reaches a temperature greater than 46° C (115° F), or if a fault is detected. If for any reason a fault in the heated steering wheel system becomes present, a Diagnostic Trouble Code (DTC) will set.

Auto On Feature

The Auto On feature is a customer configurable feature that when enabled will activate the driver heated seat and heated steering wheel on engine start based on ambient temperature. If Auto On feature is enabled, and the ambient temperature is at or below 40° F the CSWM will activate the driver heated seat and heated steering wheel feature at the high level during engine start. This feature also works with Remote Start.

The heated steering wheel system is diagnosed using a scan tool. Refer to **DIAGNOSIS AND TESTING** .

The steering wheel heating element is not serviced separately from the steering wheel and if inoperative or damaged, the entire steering wheel assembly must be replaced. Refer to **WHEEL, STEERING, REMOVAL** .

VENTED SEATS

The Vented Seat assembly is located internally to the front seats and are intended to enhance the thermal comfort of the seat occupant by ventilating seat to occupant interface. Occupant comfort is achieved by pulling air from the seat surface to the back and underside under side of the seat.

The vented seats are controlled by the heated seat module (HSM also know as the Comfort Seat Wheel Module or CSWM) which provides variable analog voltages driving the 12V vented seat motors in the seats. The vented seats have 2 selectable speeds with a hidden intermediate speed for the fans. For seat venting, each press of the vented seat switch will cause the vented seat to change venting modes. From OFF to HI, from HI to LO and from LO to OFF. The HSM shall turn on the vented seats only with the engine running. Both vented seats operate separately from each other, and will not operate at the same time as the heated seats. To review vented seat switch information, refer to **SWITCH, VENTED SEAT, DESCRIPTION**.

DIAGNOSIS AND TESTING

HEATED STEERING WHEEL

NOTE: **Vehicles equipped with the heated steering wheel option utilize a low voltage cut-off feature. This feature turns off power to the heated steering wheel anytime vehicle voltage is below 9.0 volts or above 16.0 volts. Be certain to check the vehicle electrical system for proper voltage anytime the heated steering wheel appears inoperative.**

NOTE: **If a Diagnostic Trouble Code (DTC) can not be verified, it is a good indication that an INTERMITTENT fault condition may be present. To help find an intermittent problem, move the steering wheel around while testing continuity. Also wiggle the heated steering wheel wire harness and electrical connectors**

while testing continuity.

NOTE: **For complete circuit diagrams, see SYSTEM WIRING DIAGRAMS . Wiring Information includes wiring diagrams, connector pin-out and location views, details of wire harness routing and retention, splice and ground locations and proper wire and connector repair procedures.**

NOTE: **The Auto On feature is designed to function at an ambient temperature of 40° F or below. Make sure this option is enabled the customer programmable interface prior to diagnosis of an inoperative Auto On feature concern.**

Before testing any individual components in the heated steering wheel system, check the following:

- Using a scan tool, check for any Diagnostic Trouble Codes (DTCs) related to the Comfort Seat and Wheel module (CSWM), U-Connect Touch ™ screen module and the Radio Receiver Module (RRM). If any DTCs are found, repair as necessary.
- Check the vehicles battery open-circuit voltage and charging system performance. If the vehicle's electrical system is defective or weak it may not be suppling sufficient energy to operate the heated steering wheel system.
- If there are no DTCs and the heated steering wheel system functions properly, but the heated steering wheel indicator does not illuminate, the entire U-Connect Touch ™ screen module (Integrated Center Stack) must be replaced (Refer to **RADIO**).

VENTILATED SEATS

NOTE: **Vehicles equipped with the ventilated seat option utilize a low voltage cut-off feature. This feature turns off power to the ventilated seat system anytime vehicle voltage is below 11.7 volts or above 15.5 volts. Be certain to check the vehicle electrical system for proper voltage anytime the ventilated seat system appears inoperative.**

NOTE: **If a Diagnostic Trouble Code (DTC) can not be verified, it is a good indication that an INTERMITTENT fault condition may be present. To help find an intermittent problem, sit in the seat in question and move around within the seat while testing continuity. Also wiggle the ventilated seat wire harness and electrical connectors while testing continuity.**

NOTE: **For complete circuit diagrams, see SYSTEM WIRING DIAGRAMS . Wiring Information includes wiring diagrams, connector pin-out and location views, details of wire harness routing and retention, splice and ground locations and proper wire and connector repair procedures.**

Before testing any individual components in the ventilated seat system, check the following:

- Check the ignition fuse in the Power Distribution Center (PDC). Repair as necessary.
- Using a scan tool, check for any Diagnostic Trouble Codes (DTCs) related to the Heated Seat Module (HSM) and the U-Connect Touch ™ screen module. If any DTCs are found, repair as necessary (Refer to **DTC INDEX**).
- Check the vehicles battery open-circuit voltage and charging system performance. If the vehicle's electrical system is defective or weak it may not be suppling sufficient energy to operate the front vented seat system.
- If there are no DTCs and the front vented seat system functions properly, but a vented seat indicator does not illuminate, the entire U-Connect Touch ™ screen module must be replaced (Refer to **RADIO**).

SWITCH, HEATED STEERING WHEEL

DESCRIPTION

DESCRIPTION

Fig. 3: View of Vented Seats U-Connect Touch Screen
Courtesy of CHRYSLER GROUP, LLC

The switch (3) for the optional heated steering wheel is located in the U-Connect Touch ™ screen module, at the center of the instrument panel. When the heated steering wheel switch is pressed on, the heated steering wheel switch illuminates and an International Standards Organization (ISO) symbol appears at the top of the U-Connect Touch ™ screen module.

OPERATION

OPERATION

The heated steering wheel switch allows the driver to turn on and off the heated steering wheel. The heated

steering wheel will remain off until the driver presses the switch. Once the switch is pressed, the switch will illuminate and an International Standards Organization (ISO) symbol appears in to top corner of the U-Connect Touch™ screen module, indicating that the heating element in the steering wheel is operating. Pressing the switch while the heated steering wheel is on, will turn the heating steering wheel off.

The heated steering wheel switch also functions as a visual indicator for a fault with the heated steering wheel system. When the heated steering wheel switch is pressed and a fault is present in the heated steering wheel system, the switch will illuminate for two seconds and then immediately turn off.

The heated steering wheel switch is diagnosed using a scan tool.

The heated steering wheel switch located in the U-Connect Touch™ screen module cannot be adjusted or repaired. If a heated steering wheel switch or indicator lamp is inoperative or damaged, the entire U-Connect Touch™ screen module must be replaced (Refer to **RADIO**).

SWITCH, VENTED SEAT

DESCRIPTION

DESCRIPTION

Fig. 4: View of Vented Seats U-Connect Touch Screen
Courtesy of CHRYSLER GROUP, LLC

The vented seat system is designed to enhance the thermal comfort of the driver and front seat occupant, when desired. Occupant comfort is achieved by pulling air from the outside of the seating surfaces into the seat back and cushion of the seat. A vehicle with vented seats can be identified by the vented seat switches (2) located in the Radio Receiver Modules (RRM) U-Connect touch screen. Each vented seat switch illuminates when the vented seat system is on.

OPERATION

OPERATION

The two vented seat switches are momentary push button type switches that are used to operate the front vented seats. When a vented seat switch is pressed, Light Emitting Diode(s) (LEDs) on the face of that switch will illuminate to indicate the desired mode for that particular vented seat, and a request signal is sent over the Controller Area Network (CAN) bus to the Heated Seat Module (HSM). The HSM provides variable analog voltages that drive the two 12 volt vented seat motors in the seat. There are three settings for each vented seat; off, hi and lo. The vented seat system always starts in the off setting, where none of the LEDs on the switches are illuminated. Pressing a switch once will change the setting for that particular seat from off to hi, and will illuminate both LEDs on the switch. Pressing the same vented seat switch again will change the setting from hi to lo, and only one LED on that switch will illuminate. Pressing the switch once again will change the setting from lo to off again. If for any reason a fault in the vented seat system becomes present, a Diagnostic Trouble Code (DTC) will set and a LED in the vented seat switch will illuminate for two seconds and then go out.

The vented seat switches are diagnosed using a scan tool.

PAD, VENTED SEAT

DESCRIPTION

DESCRIPTION

NOTE: Seat cushion shown, seat back cushion similar.

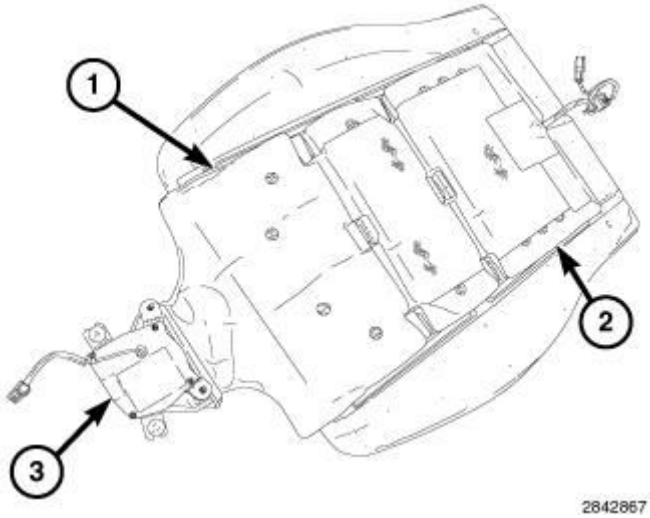

Fig. 5: Vented Seat Pad, 12 Volt Motor & Heated Seat Pad
Courtesy of CHRYSLER GROUP, LLC

When equipped, each seat bottom and seat back cushion have there own vented seat pad (1) and 12 volt motor (3). The vented seat pad and the heated seat pad (2) are a one piece assembly. The vented and heated pad

assemblies are located between each front seat cushion and cover and are attached to each cushion, by an adhesive.

OPERATION

OPERATION

The vented seat pads provide a path for the air to be pulled away from the seat bottom and seat back surfaces for seat ventilation.

The vented seat pads cannot be repaired and must be replaced if found damaged.

REMOVAL

REMOVAL

WARNING: Disable the airbag system before attempting any component diagnosis or service of the front seats, when equipped with front seat air bags. Disconnect and isolate the negative battery (ground) cable, then wait two minutes for the airbag system capacitor to discharge before performing further diagnosis or service. This is the only sure way to disable the airbag system. Failure to follow these instructions may result in accidental airbag deployment and possible serious or fatal injury.

NOTE: Front seat bottom cushion shown, front seat back cushion similar.

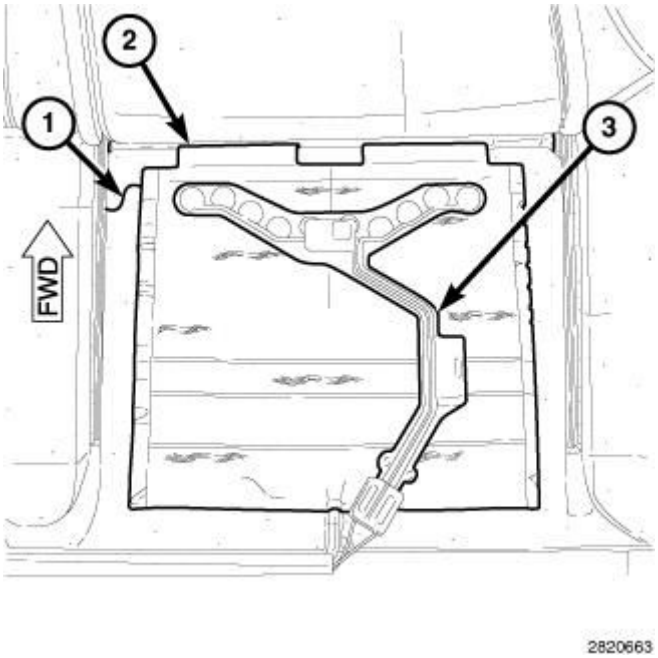

Fig. 6: Front Passenger Seat Bottom Cushion, Occupant Detection Sensor (ODS) & Heater Element
Courtesy of CHRYSLER GROUP, LLC

1. Disconnect and isolate the negative battery cable.
2. Remove the appropriate front seat and place it on a workbench. Refer to **SEAT, REMOVAL** .
3. Remove the vented seat motor from the seat cushion being serviced. Refer to **MOTOR, VENTED SEAT, REMOVAL**.
4. Remove the seat bottom or seat back cover from the cushion (1) (Refer to **SEATS, FRONT**).

NOTE: On all models, the front passenger seat contains an Occupant Detection Sensor (ODS) to provide information to the Occupant Restraint Controller (ORC).

5. When servicing the front passenger vented and heated seat pad assembly (2), be sure to replace the Occupant Detection Sensor (ODS) (3). Refer to **SENSOR, OCCUPANT DETECTION, DESCRIPTION** .

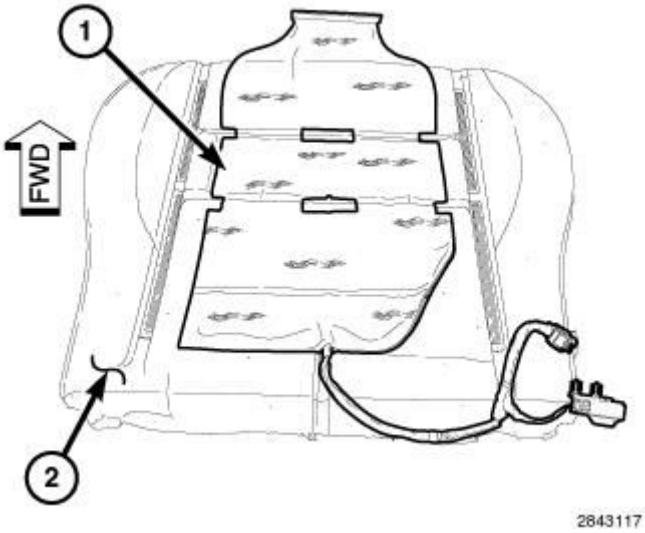

Fig. 7: Heated Seat Pad Assembly & Cushion
Courtesy of CHRYSLER GROUP, LLC

NOTE: When servicing the seat back vented and heated pad assembly, carefully guide the vented pad through the opening in the seat back cushion while removing the pad assembly.

6. Remove the vented and heated seat pad assembly (1) by slowly peeling the pad away from the cushion (2). Be careful not to remove excessive foam from the cushion.

INSTALLATION

INSTALLATION

CAUTION: During vented and heated seat pad replacement, be careful not to fold or

crease the new seat pad. Folds or creases will cause premature failure.

NOTE: Front seat bottom cushion shown, front seat back cushion similar.

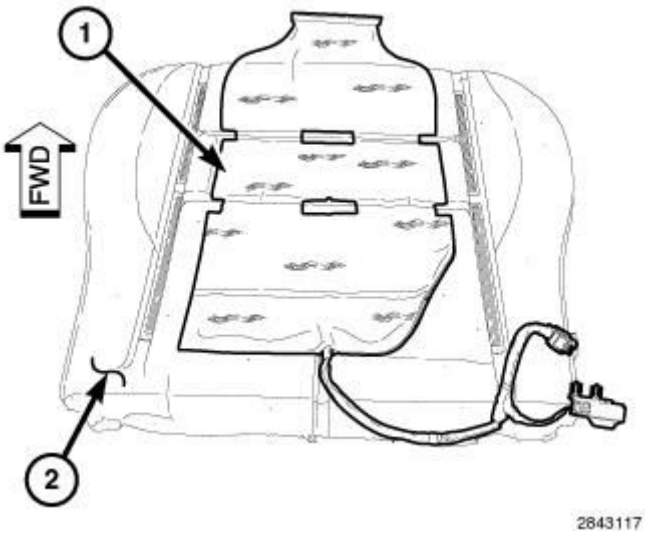

Fig. 8: Heated Seat Pad Assembly & Cushion
Courtesy of CHRYSLER GROUP, LLC

1. Peel off the adhesive backing from the replacement vented and heated seat pad assembly (1).

NOTE: When servicing the seat back vented and heated pad assembly, carefully guide the vented pad through the opening in the seat back cushion while installing the pad assembly.

2. Position the seat pad to the foam cushion directly where the original seat pad was located. There will be adhesive marks on the cushion outlining the factory installed location.
3. Firmly press the vented and heated pad assembly onto the foam cushion. Make sure the adhesive is fully adhered to the cushion.

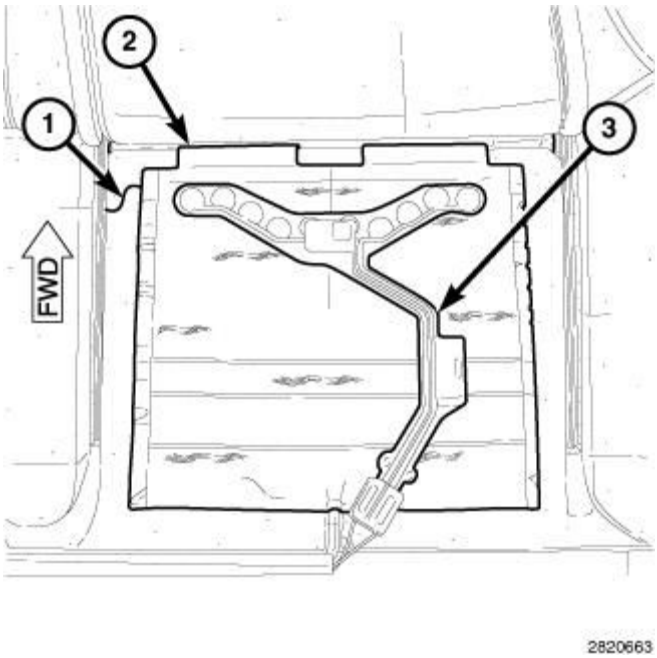

Fig. 9: Front Passenger Seat Bottom Cushion, Occupant Detection Sensor (ODS) & Heater Element
Courtesy of CHRYSLER GROUP, LLC

4. When servicing the front passenger bottom vented and heated seat pad assembly (2), install a new Occupant Detection Sensor (ODS) (3). Refer to **SENSOR, OCCUPANT DETECTION, INSTALLATION** .
5. Install the seat bottom or seat back cover onto the cushion (1) (Refer to **SEATS, FRONT**).
6. Install the vented seat motor and cushion. Refer to **MOTOR, VENTED SEAT, INSTALLATION**.
7. Install the seat. Refer to **SEAT, INSTALLATION** .

NOTE: **Make certain the vented and heated seat wire harnesses and ODS harness (when equipped) are correctly routed. Any excess wire for the heated seat element and ODS should be securely placed between the rear of the foam cushion and the rear seat cover flap.**

8. Reconnect the negative battery cable.
9. Verify proper vented and heated seat system operation.

MOTOR, VENTED SEAT

DESCRIPTION

DESCRIPTION

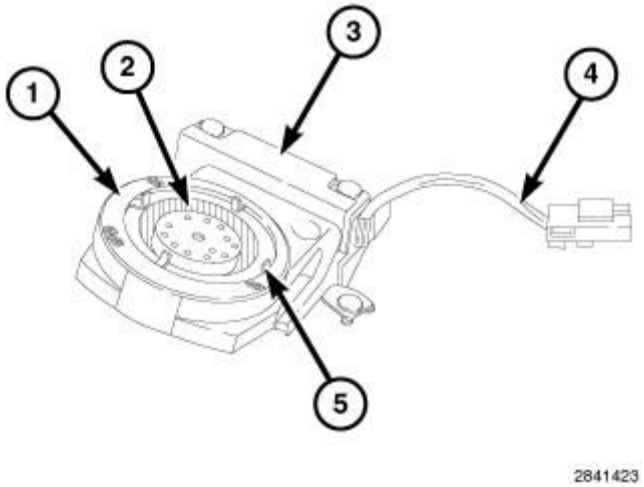

Fig. 10: Vented Seat Motor, Integral Fan Blade, Wire Lead And Connector, Metal Mounting Bracket & Plastic Tabs
Courtesy of CHRYSLER GROUP, LLC

when equipped, each front seat has two vented seat motors (1). One motor is mounted to the seat back frame and the second motor is mounted to the seat bottom pan. Each vented seat motor is attached to a vented pad.

Each vented seat motor consists of a 12 volt motor with a wire lead and connector (4), an integral fan blade (2), a metal mounting bracket (3) and four plastic tabs (5) that secure the motor to the vented pad. The vented seat motors can be seen once the cushions and covers have been removed.

OPERATION

OPERATION

The vented seat motors will only operate with the engine running and will not operate at the same time as the heated seats. The vented seat motors are controlled by the Heated Seat Module (HSM). The HSM provides the vented seat motors with variable analog voltages giving the motors two selectable speeds. These speeds are selected by the driver and/or front passenger by pressing the vented seat switches. Switching the vented seats on while the heated seats are already operating will disable the heating of the seat and start the venting of the seat. Both front vented seats work independently from each other, so that the driver and front passenger can choose there own settings for individual comfort preferences.

The vented seat system is diagnosed using a scan tool. Comfort Seat and Wheel Module. Refer to **DIAGNOSIS AND TESTING** .

The vented seat motors cannot be adjusted or repaired and must be replaced if inoperative or damaged.

REMOVAL

REMOVAL

WARNING: To avoid serious or fatal injury on vehicles equipped with airbags, disable the Supplemental Restraint System (SRS) before attempting any steering wheel, steering column, airbag, seat belt tensioner, impact sensor or instrument panel component diagnosis or service. Disconnect and isolate the battery negative (ground) cable, then wait two minutes for the system capacitor to discharge before performing further diagnosis or service. This is the only sure way to disable the SRS. Failure to take the proper precautions could result in accidental airbag deployment.

NOTE: LHD passenger seat shown in illustrations, RHD and driver seat similar.

SEAT BOTTOM CUSHION MOTOR

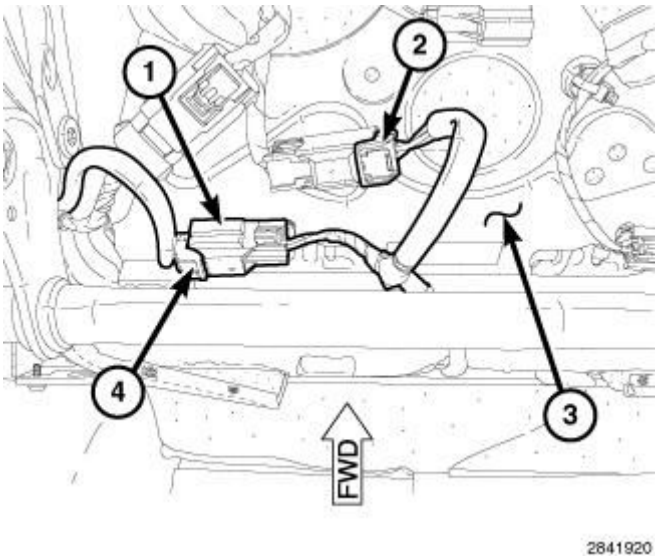

Fig. 11: Heated Seat Pad Electrical Connectors, Seat Cushion Pan & Heated Seat Pad Electrical Connector
Courtesy of CHRYSLER GROUP, LLC

1. Disconnect and isolate the negative battery cable.
2. Remove the appropriate seat and place it on a workbench. Refer to **SEAT, REMOVAL** .
3. Disconnect the heated seat pad electrical connectors (2 and 4) located on the seat cushion pan (3).
4. Disengage the heated seat pad electrical connector (1) from the seat cushion pan.

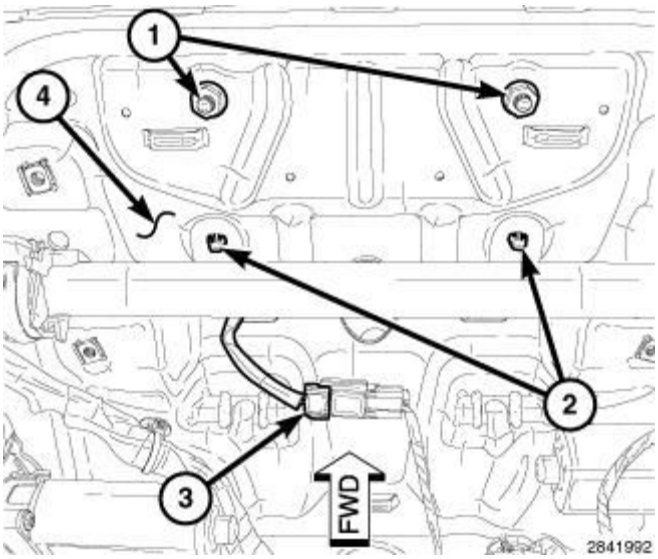

Fig. 12: Two Nuts, Two Push Pin Retainers & Seat Cushion Pan
Courtesy of CHRYSLER GROUP, LLC

5. When servicing the passenger seat, remove the comfort seat and wheel module with bracket. Refer to **MODULE, COMFORT SEAT AND WHEEL, REMOVAL** .
6. Remove the two nuts (1) and disengage the two push pin retainers (2) that secure the vented seat motor to the seat cushion pan (4).
7. Disconnect the vented seat motor electrical connector (3).

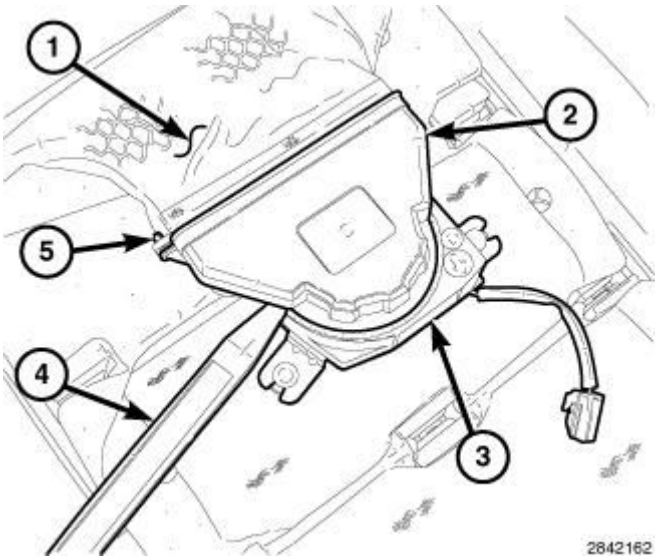

Fig. 13: Trim Stick, Vented Seat Motor & Vented Seat Duct
Courtesy of CHRYSLER GROUP, LLC

NOTE: **Illustration shown with seat cover removed. It is not necessary to completely remove the seat bottom cushion cover from the seat bottom cushion to service the vented seat motor.**

8. Remove the seat bottom cushion cover from the seat cushion pan (Refer to **SEATS, FRONT**).

NOTE: On all models, the front passenger seat bottom cushion contains an Occupant Detection Sensor (ODS) to provide information to the Occupant Restraint Controller (ORC). Be sure to disconnect the wire harness connector for the ODS prior to removing the front passenger seat cover and cushion. Refer to SENSOR, OCCUPANT DETECTION, REMOVAL .

9. Remove the seat bottom cushion (3) and cover from the seat cushion pan and place on a workbench (Refer to **SEATS, FRONT**).
10. Using Trim Stick (special tool #C-4755, Trim Stick) or equivalent (4), carefully disengage the four retaining clips that secure the vented seat motor (3) to the vented seat duct (2) and remove the motor.
11. If required, carefully disengage the retaining tab (5) and remove the vented seat duct from the vented seat pad (1).

SEAT BACK CUSHION MOTOR

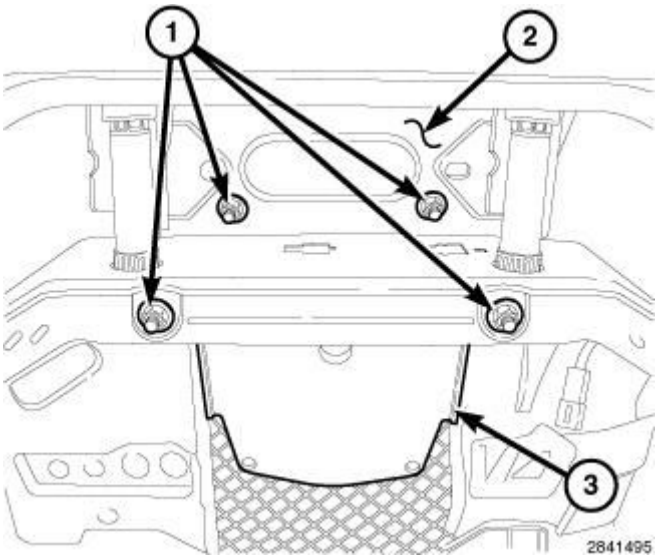

Fig. 14: Four Nuts, Vented Seat Motor & Seat Back Frame
Courtesy of CHRYSLER GROUP, LLC

1. Disconnect and isolate the negative battery cable.
2. Remove the appropriate seat and place it on a workbench. Refer to **SEAT, REMOVAL** .
3. Remove the seat back cover from the seat back frame (Refer to **SEATS, FRONT**).
4. Remove the four nuts (1) that secure the vented seat motor (3) to the seat back frame (2).

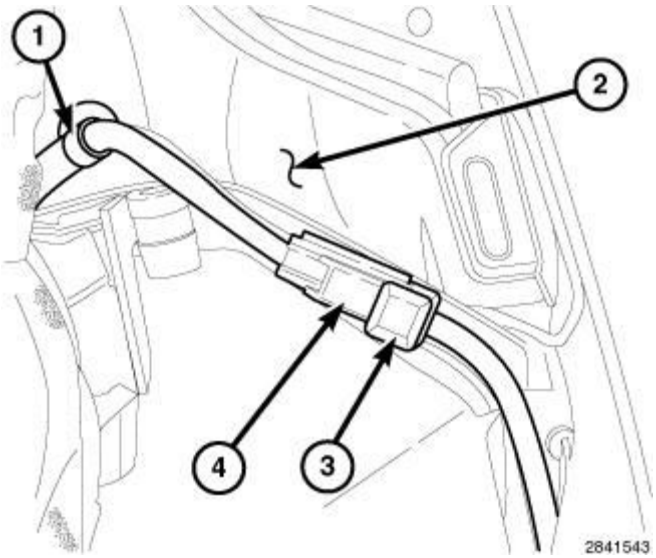

Fig. 15: Vented Seat Motor Electrical Harness Retainer, Connector & Seat Back Frame
Courtesy of CHRYSLER GROUP, LLC

5. Move the top of the seat back cushion out of way and disconnect the electrical connector (3) for the vented seat motor.
6. Disengage the vented seat motor electrical harness retainer (1) and the connector (4) from the seat back frame (2).

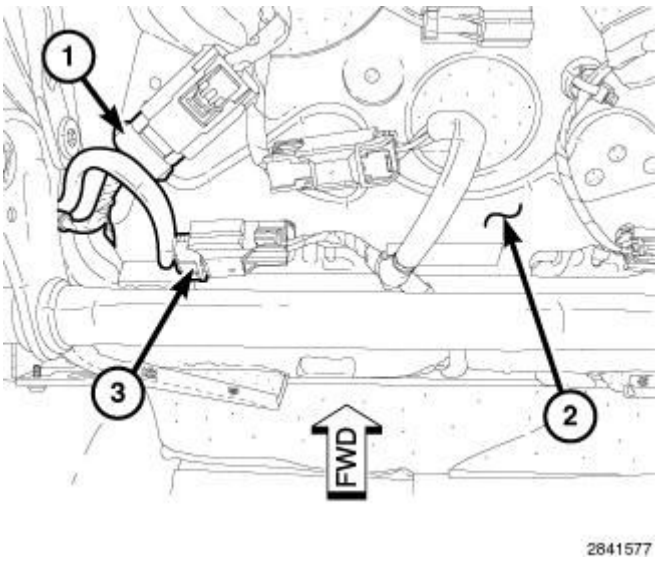

Fig. 16: Air Bag Electrical Connector, Seat Back Heated Pad Electrical Connector & Seat Cushion Pan
Courtesy of CHRYSLER GROUP, LLC

7. Disconnect the air bag electrical connector (1) and seat back heated pad electrical connector (3) located on the seat cushion pan (2).

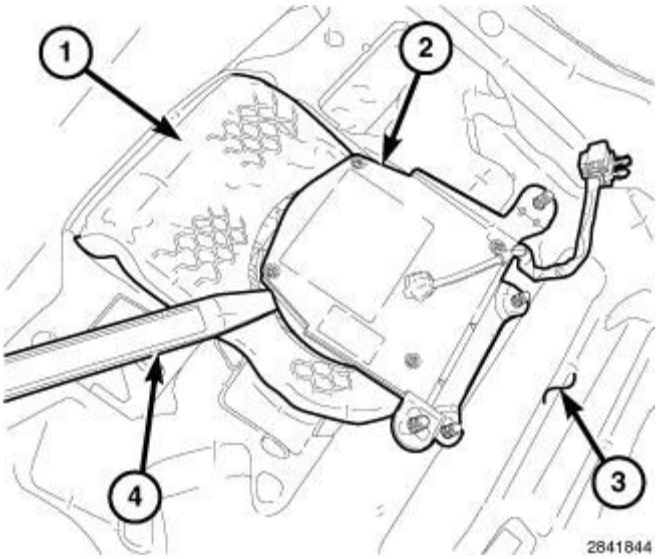

Fig. 17: Trim Stick, Vented Seat Motor & Vented Seat Pad
Courtesy of CHRYSLER GROUP, LLC

NOTE: It is not necessary to remove the seat back cushion cover from the seat back cushion to replace the seat back vented seat motor. Keep the seat cushion and cover together as an assembly while performing this procedure.

8. Remove the seat back cover and cushion (3) as an assembly and place on a workbench (Refer to **SEATS, FRONT**).
9. Using Trim Stick (special tool #C-4755, Trim Stick) or equivalent (4), carefully disengage the four retaining clips that secure the vented seat motor (2) to the vented seat pad (1) and remove the motor.

INSTALLATION

INSTALLATION

NOTE: LHD passenger seat shown in illustrations, RHD and driver seat similar.

SEAT BOTTOM CUSHION MOTOR

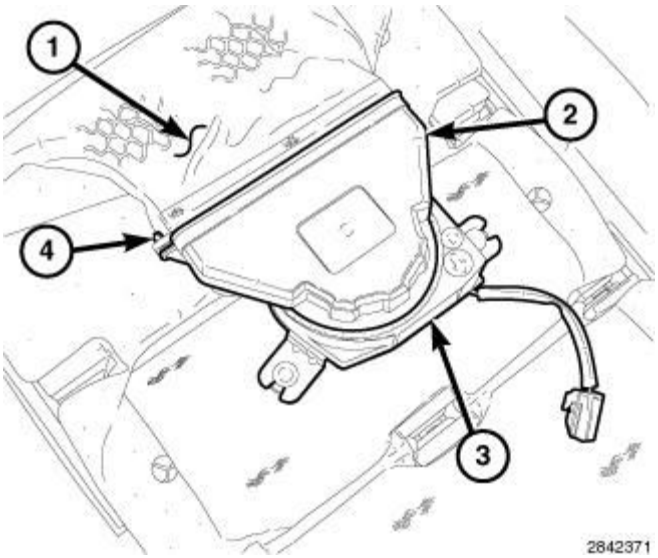

Fig. 18: Vented Seat Duct, Vented Seat Pad, Vented Seat Motor & Retaining Tab
Courtesy of CHRYSLER GROUP, LLC

NOTE: Illustration shown with seat cover removed from cushion.

1. If removed, install the vented seat duct (2) onto the vented seat pad (1). Be sure the retaining tab (4) is fully engaged.
2. Position the vented seat motor (3) to the vented seat duct and carefully engage the four retaining clips that secure the vented seat motor (3) to the duct. Be sure the retaining clips are fully engaged.

NOTE: On all models, the front passenger seat bottom cushion contains an Occupant Detection Sensor (ODS) to provide information to the Occupant Restraint Controller (ORC). Be sure to reconnect the wire harness connector for the ODS once the front passenger seat bottom cushion and cover are installed. Refer to SENSOR, OCCUPANT DETECTION, INSTALLATION .

3. Install the seat bottom cushion (Refer to **SEATS, FRONT**).

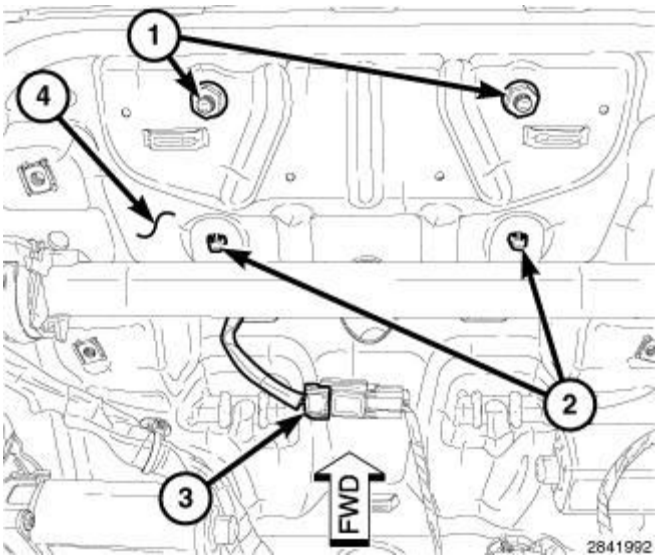

Fig. 19: Two Nuts, Two Push Pin Retainers & Seat Cushion Pan
Courtesy of CHRYSLER GROUP, LLC

4. Position the vented seat motor to the seat cushion pan (4), install the two nuts (1) and engage the two push pin retainers (2). Tighten the nuts securely.
5. Connect the vented seat motor electrical connector (3).
6. Install the seat bottom cushion cover (Refer to **SEATS, FRONT**).
7. When servicing the passenger seat, install the Comfort Seat and Wheel Module with bracket. Refer to **MODULE, COMFORT SEAT AND WHEEL, INSTALLATION** .

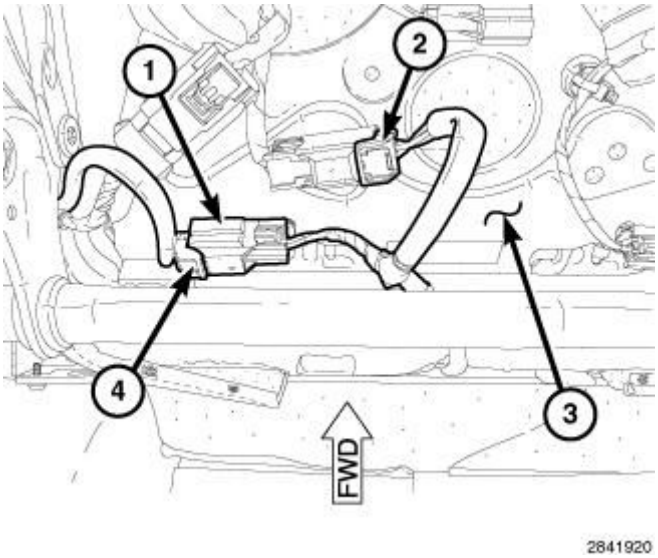

Fig. 20: Heated Seat Pad Electrical Connectors, Seat Cushion Pan & Heated Seat Pad Electrical Connector
Courtesy of CHRYSLER GROUP, LLC

8. Engage the heated seat pad electrical connector (1) to the seat cushion pan (3).

9. Connect the heated seat pad electrical connectors (2 and 4).

NOTE: **On all models, the front passenger seat bottom cushion contains an Occupant Detection Sensor (ODS) to provide information to the Occupant Restraint Controller (ORC). Be sure to reconnect the wire harness connector for the ODS once the front passenger seat bottom cushion and cover are installed. Refer to SENSOR, OCCUPANT DETECTION, INSTALLATION .**

10. Install the seat. Refer to **SEAT, INSTALLATION** .
11. Reconnect the negative battery cable.
12. Verify proper vented seat system operation.

SEAT BACK CUSHION MOTOR

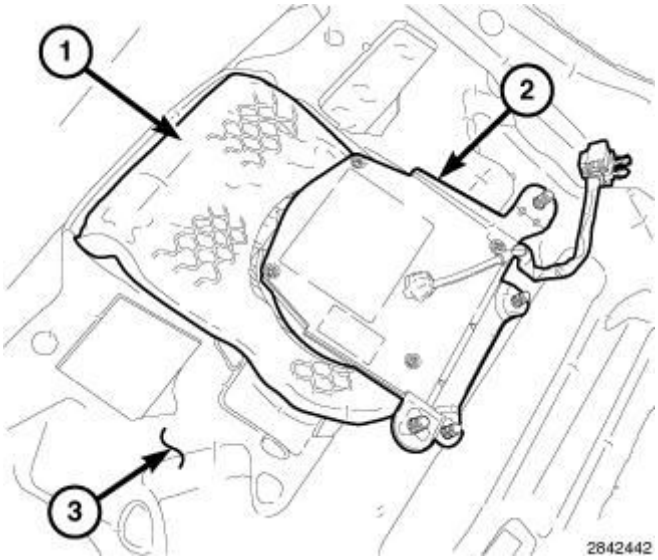

Fig. 21: Vented Seat Motor & Vented Seat Pad
Courtesy of CHRYSLER GROUP, LLC

1. Position the vented seat motor (2) to the vented seat pad (1) and carefully engage the four retaining clips that secure the motor to the pad. Be sure the retaining clips are fully engaged.

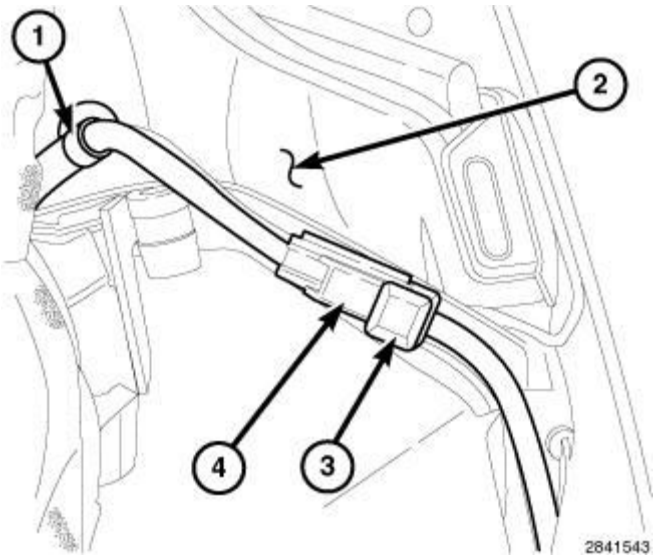

Fig. 22: Vented Seat Motor Electrical Harness Retainer, Connector & Seat Back Frame
Courtesy of CHRYSLER GROUP, LLC

2. Position the seat back cushion and cover onto the seat back frame (2).
3. Engage the vented seat motor electrical harness retainer (1) and the connector (4) to the seat back frame.
4. Connect the vented seat motor electrical connector (3).

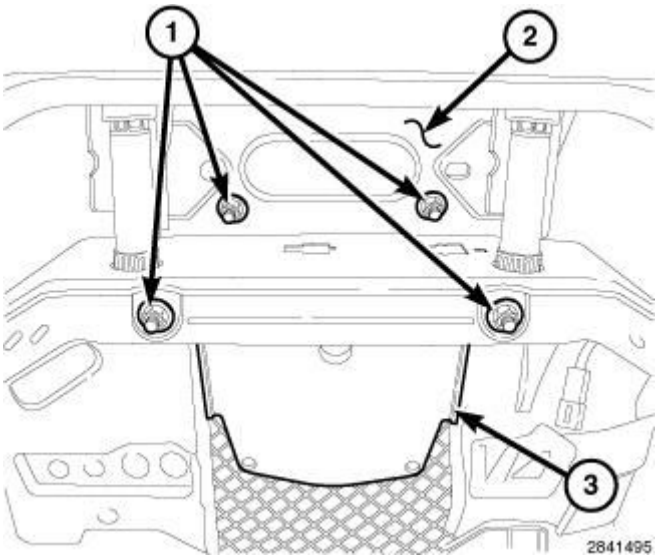

Fig. 23: Four Nuts, Vented Seat Motor & Seat Back Frame
Courtesy of CHRYSLER GROUP, LLC

5. Position the vented seat motor (3) to the seat back frame (2) and install the four nuts (1). Tighten the nuts securely.
6. Install the seat back cushion cover onto the seat back frame (Refer to **SEATS, FRONT**).

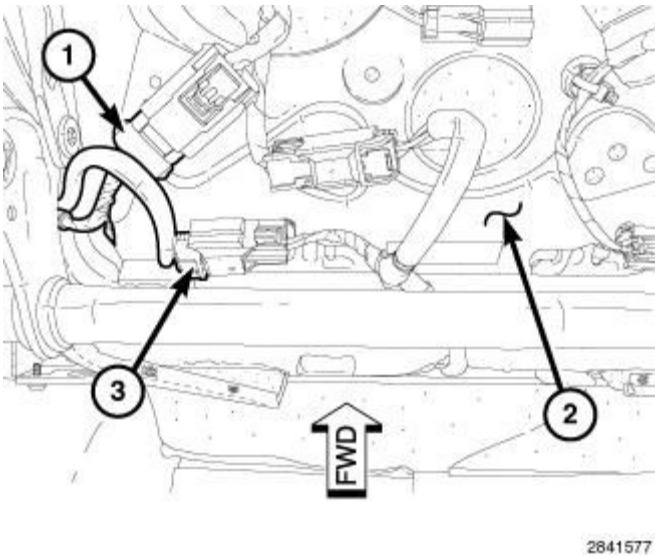

Fig. 24: Air Bag Electrical Connector, Seat Back Heated Pad Electrical Connector & Seat Cushion Pan
Courtesy of CHRYSLER GROUP, LLC

7. Connect the air bag electrical connector (1) and seat back heated pad electrical connector (3) at the seat cushion pan (2).
8. Install the seat. Refer to **SEAT, INSTALLATION** .
9. Reconnect the negative battery cable.
10. Verify proper vented seat system operation.

2014 ACCESSORIES AND EQUIPMENT

Horn System - Service Information - Cherokee

DESCRIPTION

DESCRIPTION

An electrically-operated horn system is standard factory-installed equipment in this vehicle. Depressing the Driver AirBag (DAB) trim cover in the center of the steering wheel actuates the horn switch contacts, which provides the vehicle operator with a convenient, audible signaling device that can be used to alert pedestrians or the operators of other vehicles in near proximity.

The Body Control Module (BCM) serves as the controller for the horn system, which also allows the BCM to utilize the horn system when providing audible outputs to support other vehicle features such as the horn chirp verification of the Remote Keyless Entry (RKE) and Remote Start systems, as well as the pulsing horn deterrent feature of the optional Vehicle Theft Alarm (VTA) and RKE Panic mode.

The horn system includes the following major components, which are described in further detail elsewhere in this service information:

- **Horn Relay** - The horn relay is soldered onto the Printed Circuit Board (PCB) located within the Body Control Module (BCM) and is not serviceable. The BCM is concealed within the instrument panel behind a fuse access panel outboard of the steering column.
- **Horns** - The standard dual-note horns are located on a bracket secured to the Front End Module (FEM) carrier near the center of the upper radiator cross member, just behind the radiator grille panel. The appearance shield covering the FEM carrier, the cross member and the outboard sides of the cooling module must be removed to gain access to the horns for service.
- **Horn Switch Plate** - The floating horn switch plate is secured to the back of the DAB housing within the steering wheel hub cavity and also serves as the mounting bracket between the DAB and the steering wheel.

Certain functions and features of the horn system rely upon resources shared with other electronic modules in the vehicle over the Local Interface Network (LIN) data bus and the Controller Area Network (CAN) data bus. Other electronic modules in the vehicle that may affect horn system operation are:

- **Body Control Module** - The Body Control Module (BCM) is concealed within the instrument panel outboard of the steering column. The BCM is both a LIN bus master node and a gateway to the CAN data bus. Refer to **MODULE, BODY CONTROL, DESCRIPTION** .
- **Radio Frequency Hub Module** - The Radio Frequency Hub Module (RFHM) (also known as the RF Hub) is located on the upper right D-pillar near the liftgate opening upper header where it is concealed behind the interior trim. Refer to **MODULE, RADIO FREQUENCY (RF HUB), DESCRIPTION** .

The BCM and the RFHM each contain a microcontroller and programming that allow them to communicate with each other and other electronic modules in the vehicle using the Controller Area Network (CAN) data bus. Refer to **COMMUNICATION, DESCRIPTION** .

Hard wired circuitry connects the various horn system components to each other through the electrical system of the vehicle. These hard wired circuits are integral to several wire harnesses, which are routed throughout the vehicle and retained by many different methods. These circuits may be connected to each other and to the vehicle electrical system through the use of a combination of soldered splices, splice block connectors and many different types of wire harness terminal connectors and insulators. Refer to the appropriate wiring information. The wiring information includes wiring diagrams, proper wire and connector repair procedures, further details on wire harness routing and retention as well as pin out and location views for the various wire harness connectors, splices and grounds.

OPERATION

OPERATION

The horn system components operate on battery current received through non-switched fused B(+) circuits so that the system will remain operational, regardless of the status of the ignition switch (also known as the Keyless Ignition Node/KIN or IGnition Node Module/IGNM). The Body Control Module (BCM) controls the output of battery current to the horns through a horn relay soldered to a Printed Circuit Board (PCB) located within the BCM. The BCM controls the relay based upon internal programming, hard wired inputs from the horn switch as well as electronic message inputs received from the Radio Frequency Hub Module (RFHM) (also known as the RF Hub) over the Controller Area Network (CAN) data bus.

The vehicle operator can control typical horn system signaling through the horn switch contacts on the horn switch plate on the back of the Driver AirBag (DAB) within the hub cavity of the steering wheel. When the DAB trim cover in the center of the steering wheel is depressed, the horn switch contacts close, providing a hard wired analog input to the BCM.

In addition, the RFHM sends electronic **horn request** messages to the BCM over the CAN data bus in response to inputs received from the Remote Keyless Entry (RKE) transmitter in vehicles without the optional Passive Entry Keyless Go (PEKG) system, or received from the FOB with Integrated Key (FOBIK) transmitter in vehicles with the PEKG system. Lastly, as the Vehicle Theft Security System (VTSS) controller, the BCM can activate the horn system based upon programming and both hard wired and electronic message inputs from the various VTSS components.

The horns can be activated by the BCM to support each of the following features:

- **Remote Keyless Entry System** - Remote Keyless Entry (RKE) system **Lock** request audible verification.
- **Remote Keyless Entry System** - Remote Keyless Entry (RKE) system **Panic** mode audible alert.
- **Remote Start System** - Remote Start System **Start** request audible verification.
- **Vehicle Theft Alarm** - Vehicle Theft Alarm (VTA) audible alarm.

The RKE system **Lock** request audible verification is a customer programmable feature, which allows the feature to be enabled or disabled to suit individual preferences. Refer to **CENTER, ELECTRONIC VEHICLE INFORMATION, OPERATION** .

The hard wired circuits between components related to the horn system may be diagnosed using conventional diagnostic tools and procedures. Refer to the appropriate wiring information. The wiring information includes

wiring diagrams, proper wire and connector repair procedures, details of wire harness routing and retention, connector pin out information and location views for the various wire harness connectors, splices and grounds.

However, conventional diagnostic methods will not prove conclusive in the diagnosis of the horn system or the electronic controls and communication between modules and other devices that provide some features of the horn system. The most reliable, efficient and accurate means to diagnose the horn system or the electronic controls and communication related to horn system operation requires the use of a diagnostic scan tool.

DIAGNOSIS AND TESTING

DIAGNOSIS AND TESTING - HORN SYSTEM

WARNING: **To avoid serious or fatal injury on vehicles equipped with airbags, disable the Supplemental Restraint System (SRS) before attempting any steering wheel, steering column, airbag, Occupant Classification System (OCS), seat belt tensioner, impact sensor or instrument panel component diagnosis or service. Disconnect and isolate the battery negative (ground) cable, then wait two minutes for the system capacitor to discharge before performing further diagnosis or service. This is the only sure way to disable the SRS. Failure to follow these instructions may result in accidental airbag deployment.**

NOTE: **A continuously sounding horn is immediately resolved by disconnecting the wiring at the horns.**

HORN SYSTEM DIAGNOSIS		
CONDITION	**POSSIBLE CAUSES**	**CORRECTION**
HORNS SOUND CONTINUOUSLY	1. Ineffective horn feed circuit.	1. Test and repair shorted horn feed circuit if required.
	2. Ineffective horn switch return circuit.	2. Test and repair shorted horn switch return circuit if required.
	3. Ineffective horn relay.	3. Test and replace the horn relay, which is integral to the Body Control Module (BCM), if required.
	4. Ineffective horn switch.	4. Test and replace the shorted horn switch, which is integral to the Driver AirBag (DAB), if required.
	5. Ineffective Body Control Module (BCM) inputs or outputs.	5. Use a diagnostic scan tool to test the BCM inputs and outputs. Refer to the appropriate diagnostic information.
HORNS SOUND INTERMITTENTLY AS THE STEERING WHEEL IS ROTATED	1. Ineffective horn switch return circuit.	1. Test and repair intermittently shorted horn switch return circuit if required.
	2. Ineffective horn switch.	2. Test and replace the intermittently open or shorted horn switch, which is integral to the Driver AirBag (DAB), if required.

HORNS DO NOT SOUND	1. Ineffective horn ground circuit.	1. Test and repair open horn ground circuit if required.
	2. Ineffective horn feed circuit.	2. Test and repair open horn feed circuit if required.
	3. Ineffective horn relay.	3. Test and replace the horn relay, which is integral to the Body Control Module (BCM), if required.
	4. Ineffective horns.	4. Test and replace open horns if required.
	5. Ineffective horn switch feed circuit.	5. Test and repair open horn switch feed circuit if required.
	6. Ineffective horn switch return circuit.	6. Test and repair open horn switch return circuit if required.
	7. Ineffective horn switch.	7. Test and replace the open horn switch, which is integral to the Driver AirBag (DAB), if required.
	8. Ineffective BCM inputs or outputs.	8. Use a diagnostic scan tool to test the BCM inputs and outputs. Refer to the appropriate diagnostic information.

SPECIFICATIONS

SPECIFICATIONS

SPECIFICATIONS

TORQUE SPECIFICATIONS			
DESCRIPTION	**N.m**	**Ft. Lbs.**	**In. Lbs.**
Horn Mounting Bracket Screw	6	-	53

HORN

DESCRIPTION

DESCRIPTION

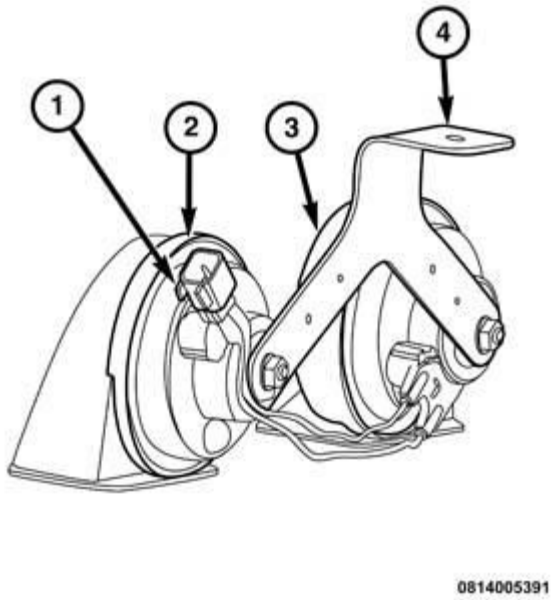

Fig. 1: Horns, Connector & Bracket
Courtesy of CHRYSLER GROUP, LLC

Dual electromagnetic diaphragm-type horns are standard equipment on this vehicle. A low note (3) and a high note (2) trumpet-style horn are each secured to a mounting bracket (4). The horn and mounting bracket unit is then secured by a single screw to the Front End Module (FEM) carrier atop the upper radiator cross member. The mounting bracket fastening provision is concealed beneath an appearance shield. Internally the two horns are identical in construction and the external horn trumpets are symmetrically opposite.

A short jumper harness connects the horns to each other electrically so they can both be connected through a single connection (1) integral to the left horn. A dedicated take out and connector of the FEM wire harness connects the horns to the vehicle electrical system.

The two horns and the mounting bracket are factory-tuned as a unit and, therefore, are serviced only as a unit. These horns cannot be adjusted or repaired. If either horn or the mounting bracket is ineffective or damaged, the entire unit must be replaced.

OPERATION

OPERATION

Each horn has a path to ground at all times through its wire harness connection to an eyelet terminal secured to the body sheet metal. The horns are completely controlled by a fused B(+) output received through a relay soldered onto the Printed Circuit Board (PCB) within the Body Control Module (BCM).

Within the two halves of the horn housing are a flexible diaphragm, a plunger, an electromagnetic coil and a set of contact points. The diaphragm is secured in suspension around its perimeter by the mating surfaces of the

horn housing. The plunger is secured to the center of the diaphragm and extends into the center of the electromagnetic coil. The contact points control the current flow through the windings of the electromagnetic coil.

When the horn is energized, electrical current flows through the closed contact points to the electromagnetic coil. The resulting electromagnetic field draws the plunger and diaphragm toward it until that movement mechanically opens the contact points. When the contact points open, the electromagnetic field collapses allowing the plunger and diaphragm to return to their relaxed positions and closing the contact points again. This cycle continues repeating at a very rapid rate producing the vibration and movement of air that creates the sound that is directed through the horn trumpet outlet.

The horns as well as the hard wired input circuits for the horns may be diagnosed using conventional diagnostic tools and procedures. Refer to the appropriate wiring information.

DIAGNOSIS AND TESTING

DIAGNOSIS AND TESTING - HORNS

Refer to the appropriate wiring information. The wiring information includes wiring diagrams, proper wire and connector repair procedures, details of wire harness routing and retention, connector pin out information and location views for the various wire harness connectors, splices and grounds.

1. Disconnect the Front End Module (FEM) wire harness connectors from the pigtail connector on the horn and mounting bracket unit. Check for continuity between the horn ground circuit in the FEM wire harness connector for the horns and a good ground. There should be continuity. If OK, go to Step 2. If not OK, repair the open ground circuit to ground as required.
2. Check for battery voltage at the horn circuit in the FEM wire harness connector for the horns. There should be zero volts. If OK, go to Step 3. If not OK, repair the shorted horn circuit between the horns and the Body Control Module (BCM) as required.
3. Depress the horn switch. There should now be battery voltage at the horn circuit of the FEM wire harness connector for the horns. If OK, replace the ineffective horn and mounting bracket unit. If not OK, use a diagnostic scan tool and the appropriate diagnostic information for further diagnosis of the Body Control Module (BCM) inputs and outputs.

REMOVAL

REMOVAL

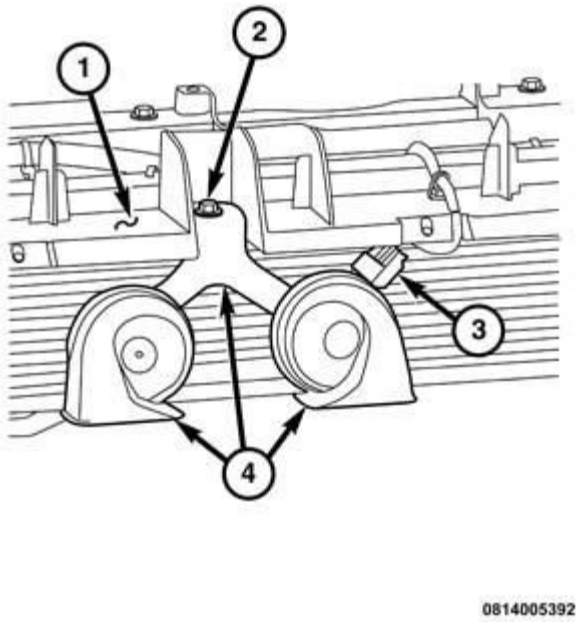

Fig. 2: Carrier, Screw, Connector & Bracket
Courtesy of CHRYSLER GROUP, LLC

1. Disconnect and isolate the negative cable from the battery.
2. Remove the appearance shield from over the Front End Module (FEM) carrier (1) on the upper radiator cross member.
3. Disconnect the FEM wire harness connector (3) from the pigtail wire connector for the horns.
4. Remove the screw (2) that secures the horn mounting bracket (4) to the top surface of the FEM carrier.
5. Remove both horns and the mounting bracket from the vehicle as a unit.

INSTALLATION

INSTALLATION

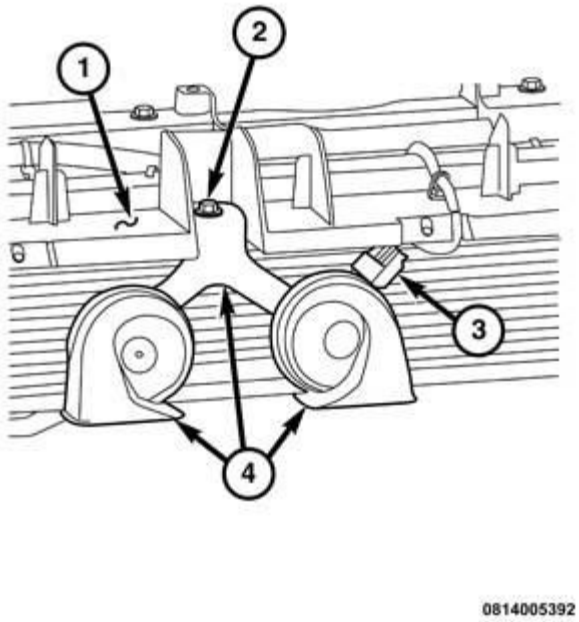

Fig. 3: Carrier, Screw, Connector & Bracket
Courtesy of CHRYSLER GROUP, LLC

1. Position the horns and the mounting bracket (4) to the Front End Module (FEM) carrier (1) atop the upper radiator cross member as a unit.
2. Install and tighten the screw (2) that secures the horn mounting bracket to the top surface of the FEM carrier. Tighten the screw to 6 N.m (53 in. lbs.).
3. Reconnect the FEM wire harness connector (3) to the pigtail wire connector for the horns.
4. Reinstall the appearance shield onto the FEM carrier.
5. Reconnect the negative cable to the battery.

RELAY, HORN

DESCRIPTION

DESCRIPTION

The horn relay is a electromechanical device that consists of an electromagnetic coil, a resistor and a pair of normally open electrical contacts. One of the two electrical contacts is fixed, while the other contact is movable. The movable relay contact is held away from the fixed contact by spring pressure. The horn relay for this vehicle is soldered in place on the Printed Circuit Board (PCB) internal to the Body Control Module (BCM), which is located within the instrument panel outboard of the steering column.

The horn relay cannot be repaired or adjusted and, if ineffective or damaged, the entire BCM unit must be replaced.

OPERATION

OPERATION

The horn relay within the Body Control Module (BCM) switches battery current to the horns when the BCM energizes the electromagnetic coil of the relay. When the electromagnetic relay coil is energized, it draws and holds the normally open movable contact of the relay against the fixed relay contact. The closed relay contacts supply fused battery current from the BCM to energize the horns.

When the BCM de-energizes the electromagnetic relay coil, spring pressure returns the movable contact to the normally open position, which de-energizes the horns. The resistor within the relay is connected in parallel with the electromagnetic coil, and helps to dissipate voltage spikes that are produced when the coil is de-energized.

The hard wired output of the horn relay within the BCM may be diagnosed using conventional diagnostic tools and procedures. Refer to the appropriate wiring information. However, conventional diagnostic methods will not prove conclusive in the diagnosis of the BCM or the electronic controls and communication between modules and other devices that provide some features of the BCM controlled horn relay. The most reliable, efficient and accurate means to diagnose the BCM or the electronic controls and communication related to BCM controlled horn relay operation requires the use of a diagnostic scan tool. Refer to the appropriate diagnostic information.

DIAGNOSIS AND TESTING

DIAGNOSIS AND TESTING - HORN RELAY

The hard wired output of the horn relay in the Body Control Module (BCM) may be diagnosed using conventional diagnostic tools and procedures. Refer to the appropriate wiring information. However, conventional diagnostic methods will not prove conclusive in the diagnosis of the BCM or the electronic controls and communication between modules and other devices that provide some features of the BCM controlled horn relay. The most reliable, efficient and accurate means to diagnose the BCM or the electronic controls and communication related to BCM controlled horn relay operation requires the use of a diagnostic scan tool. Refer to the appropriate diagnostic information.

REMOVAL

REMOVAL

The horn relay used in this vehicle is soldered onto a Printed Circuit Board (PCB) internal to the Body Control Module located in the instrument panel outboard of the steering column. The horn relay is integral to and serviced only as a unit with the BCM. Refer to **MODULE, BODY CONTROL, REMOVAL** .

INSTALLATION

INSTALLATION

The horn relay used in this vehicle is soldered onto a Printed Circuit Board (PCB) internal to the Body Control Module (BCM) located in the instrument panel outboard of the steering column. The horn relay is integral to

and serviced only as a unit with the BCM. Refer to **MODULE, BODY CONTROL, INSTALLATION** .

SWITCH, HORN

DESCRIPTION

DESCRIPTION

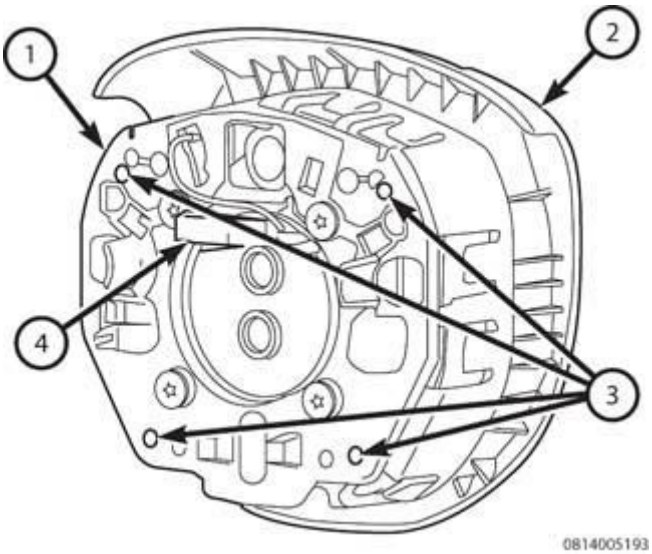

Fig. 4: Horn Switch Plate, Mounting Plate, Horn Switch Contacts & Connector
Courtesy of CHRYSLER GROUP, LLC

The horn switch for this vehicle consists of four individual sets of normally open contacts wired in parallel so that all four sets of contacts operate as one switch. The horn switch contacts (3) are secured to, but insulated from a stamped metal floating horn switch plate (1) that also serves as the mounting plate for the Driver AirBag (DAB) (2). The horn switch plate is over-molded with integral plastic insulators for the horn contacts and routing clips for the contact wiring.

The horn switch plate is secured to but isolated from the DAB housing with four sleeved screws and insulating washers. Each sleeved screw passes through a small coiled spring retained by an interference fit within an isolator on the switch plate. A dedicated take out and connector of the steering wheel wire harness connects the horn switch plate to the vehicle electrical system through a connector (4) on the upper edge of the switch plate. A mounting spring on each outboard side of the horn switch plate is secured within the hub of the steering wheel under a hook formation in the steering wheel hub armature adjacent to each horizontal steering wheel spoke.

The components that make up the horn switch plate cannot be adjusted or repaired. If damaged or ineffective, the entire DAB and horn switch plate must be replaced as a unit.

OPERATION

OPERATION

The floating horn switch plate allows the vehicle operator to actuate the horns by depressing anywhere on the upper surface of the Driver AirBag (DAB) trim cover in the center of the steering wheel. The four sets of horn switch contacts are wired in parallel so they perform as a single switch. One contact from each pair is connected to a path to ground at all times through the steering wheel wire harness and the clockspring.

When the DAB trim cover is depressed, the DAB housing compresses the coil springs isolating the floating horn switch plate causing at least one of the four sets of electrically conductive horn switch contacts to close. When the DAB trim cover is released, the coil springs on the switch plate return the DAB to its at rest position and open the horn switch contacts, which opens the horn switch circuit. The closed horn switch contacts provide a ground signal to the Body Control Module (BCM), which will energize the control coil of the horn relay located within the BCM. The horn relay in the BCM then controls the output to the horns accordingly.

The hard wired circuits between components related to the horn switch plate may be diagnosed using conventional diagnostic tools and procedures. Refer to the appropriate wiring information. The wiring information includes wiring diagrams, proper wire and connector repair procedures, details of wire harness routing and retention, connector pin out information and location views for the various wire harness connectors, splices and grounds.

DIAGNOSIS AND TESTING

DIAGNOSIS AND TESTING - HORN SWITCH

WARNING: To avoid serious or fatal injury on vehicles equipped with airbags, disable the Supplemental Restraint System (SRS) before attempting any steering wheel, steering column, airbag, Occupant Classification System (OCS), seat belt tensioner, impact sensor or instrument panel component diagnosis or service. Disconnect and isolate the battery negative (ground) cable, then wait two minutes for the system capacitor to discharge before performing further diagnosis or service. This is the only sure way to disable the SRS. Failure to follow these instructions may result in accidental airbag deployment.

Refer to the appropriate wiring information. The wiring information includes wiring diagrams, proper wire and connector repair procedures, details of wire harness routing and retention, connector pin out information and location views for the various wire harness connectors, splices and grounds.

1. Remove the Driver AirBag (DAB) from the steering wheel. Refer to **AIR BAG, DRIVER, REMOVAL** .
2. Disconnect the steering wheel wire harness connector from the horn switch pigtail wire harness connector.
3. With the horn switch contacts released, check for continuity between the two terminals in the horn switch pigtail wire harness connector. There should be no continuity. If OK, go to Step 4. If not OK, replace the ineffective horn switch plate and DAB as a unit.
4. With each of the horn switch contacts compressed one at a time, check for continuity between the two terminals in the horn switch pigtail wire harness connector. There should now be continuity. If OK, go to Step 5. If not OK, replace the ineffective horn switch plate and DAB as a unit.

5. Check the steering wheel wire harness for shorts or opens between the horn switch connector and the clockspring. If OK, go to Step 6. If not OK, repair or replace the steering wheel wire harness as required.
6. Check the clockspring ground circuit between the clockspring and the ground source for continuity. If OK, go to Step 7. If not OK, repair or replace the clockspring or the open ground circuit as required.
7. Check the horn switch output circuit between the clockspring and the horn switch output circuit at the Body Control Module (BCM) for shorts or opens. Repair or replace the clockspring or the shorted or open circuit as required.

REMOVAL

REMOVAL

The horn switch is serviced only as a unit with the Driver AirBag (DAB). Refer to **AIR BAG, DRIVER, REMOVAL** .

INSTALLATION

INSTALLATION

The horn switch is serviced only as a unit with the Driver AirBag (DAB). Refer to **AIR BAG, DRIVER, INSTALLATION** .

2014 ACCESSORIES AND EQUIPMENT

Instrument Cluster - Electrical Diagnostics - Cherokee

DIAGNOSTIC CODE INDEX

DIAGNOSTIC CODE INDEX

DTC	Description
B21DD-84	SYSTEM VOLTAGE - SIGNAL BELOW ALLOWABLE RANGE
B275B-00	AIRBAG TELLTALE
U0002-00	CAN C BUS OFF PERFORMANCE
U0010-00	CAN INTERIOR BUS
U0011-00	CAN INTERIOR BUS OFF PERFORMANCE
U0037-00	LIN BUS
U0100-00	LOST COMMUNICATION WITH ECM/PCM
U0101-00	LOST COMMUNICATION WITH TCM
U0102-00	LOST COMMUNICATION WITH TRANSFER CASE CONTROL MODULE / AWD
U0129-00	LOST COMMUNICATION WITH BRAKE SYSTEM CONTROL MODULE
U0131-00	LOST COMMUNICATION WITH ELECTRIC POWER STEERING CONTROL MODULE
U0140-00	LOST COMMUNICATION WITH BODY CONTROL MODULE
U0151-00	LOST COMMUNICATION WITH OCCUPANT RESTRAINT CONTROLLER (ORC)
U0159-00	LOST COMMUNICATION WITH PARK ASSIST CONTROL MODULE (PTS)
U0184-00	LOST COMMUNICATION WITH RADIO
U0209-00	LOST COMMUNICATION WITH MEMORY SEAT CONTROL MODULE
U0401-00	IMPLAUSIBLE DATA RECEIVED FROM ECM/PCM
U0402-00	IMPLAUSIBLE DATA RECEIVED FROM TCM
U0403-00	IMPLAUSIBLE DATA RECEIVED FROM T-CASE
U0418-00	IMPLAUSIBLE DATA RECEIVED FROM BRAKE SYSTEM CONTROL MODULE
U0422-00	IMPLAUSIBLE DATA RECEIVED FROM BODY CONTROL MODULE
U045A-00	IMPLAUSIBLE DATA RECEIVED FROM PARKING ASSIST MODULE
U0485-00	IMPLAUSIBLE DATA RECEIVED FROM RADIO
U050A-00	IMPLAUSIBLE DATA RECEIVED FROM MEMORY SEAT CONTROL MODULE
U11B9-00	LOST COMMUNICATION WITH RF HUB
U11FA-00	LOST COMMUNICATION WITH RIGHT BLIND SPOT SENSOR
U11FB-00	LOST COMMUNICATION WITH LEFT BLIND SPOT SENSOR
U1215-00	LOST COMMUNICATION WITH FORWARD FACING CAMERA
U1216-00	LOST COMMUNICATION WITH DASM

U121F-00	LOST COMMUNICATION WITH SEATBELT REMINDER MODULE
U1464-00	IMPLAUSIBLE DATA RECEIVED FROM EPS STEERING TORQUE
U147D-00	IMPLAUSIBLE DATA RECEIVED FROM RIGHT BLIND SPOT SENSOR
U147E-00	IMPLAUSIBLE DATA RECEIVED FROM LEFT BLIND SPOT SENSOR
U1489-00	IMPLAUSIBLE DATA RECEIVED FROM RF HUB
U148D-00	IMPLAUSIBLE DATA RECEIVED FROM FORWARD FACING CAMERA

DIAGNOSIS AND TESTING

B21DD-84-SYSTEM VOLTAGE - SIGNAL BELOW ALLOWABLE RANGE

For a complete wiring diagram, **refer to appropriate SYSTEM WIRING DIAGRAMS article** .

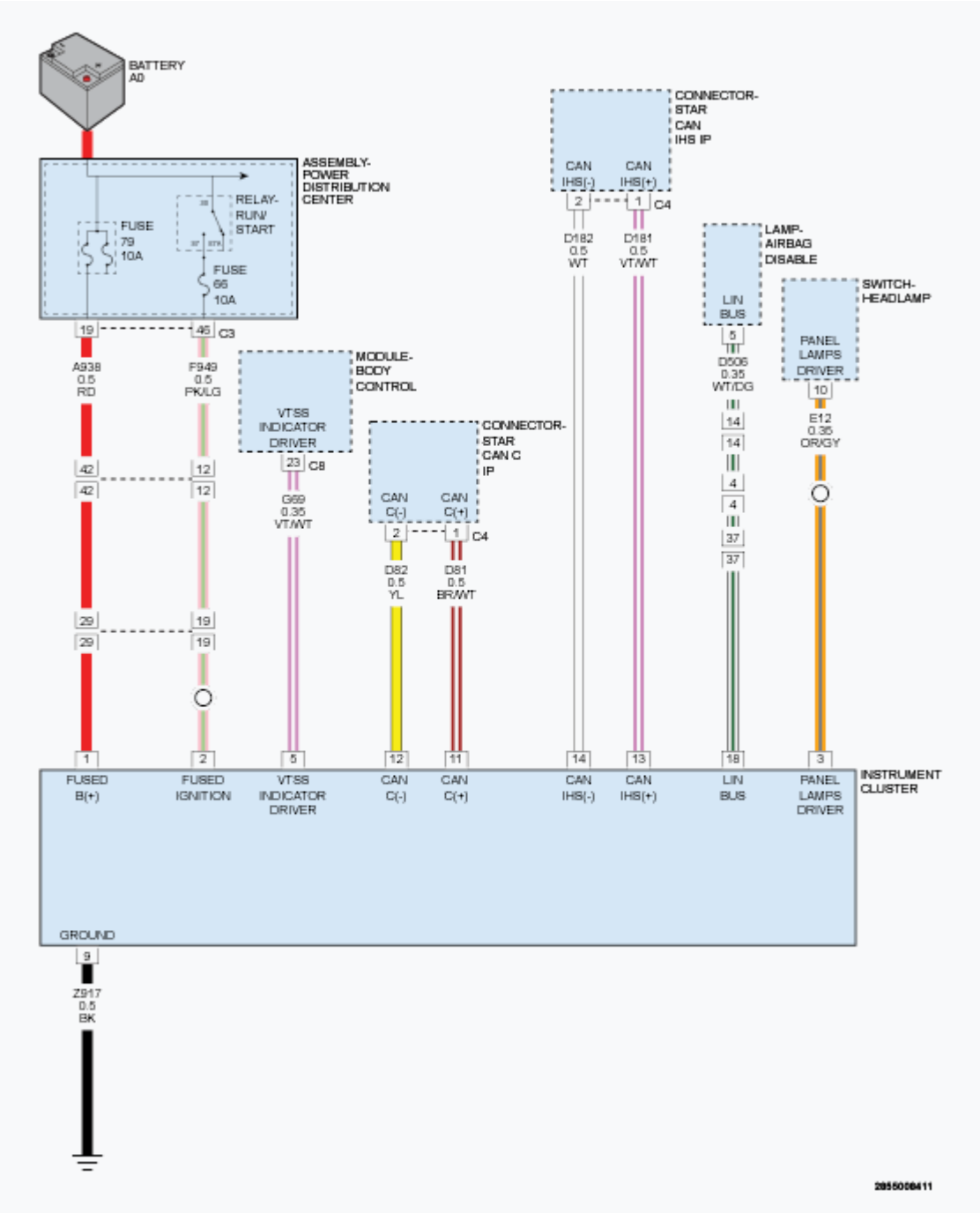

Fig. 1: Instrument Cluster Circuit Diagram
Courtesy of CHRYSLER GROUP, LLC

WHEN MONITORED

Ignition on.

SET CONDITION

Monitored battery voltage is below 9.0 volts for over 5 seconds.

POSSIBLE CAUSES

Possible Causes
LOW SYSTEM VOLTAGE BATTERY OR CHARGING SYSTEM

DIAGNOSTIC TEST

1. **CHECK POWERTRAIN CONTROL MODULE (PCM) DTCs**
    1. With the scan tool, read PCM DTCs.

       Are there any PCM Charging or Battery DTCs present?

       Yes

       - Refer to the **DTC INDEX** article and perform the appropriate diagnostic procedure.

       No

       - Go To 2
2. **CHECK OTHER MODULES FOR DTCS**
    1. With the scan tool, read DTCs.

       Are there any other modules setting a low system voltage DTC?

       Yes

       - This is either an indication of an overall low system voltage, or depending on the modules affected, it can be one or more power circuits with a high resistance in its output circuit. Using the wiring schematics as a guide, look for a common power circuit between the modules that set a low voltage DTC and repair as necessary. If it seems to be an overall low voltage, check the battery and charging system in accordance with the Service Information.
       - Perform the BODY VERIFICATION TEST. Refer to **STANDARD PROCEDURE** .

       No

       - Go To 3
3. **CHECK FUSED B(+) CIRCUIT FOR AN OPEN OR HIGH RESISTANCE**
    1. Turn the ignition off.
    2. Disconnect the Instrument Cluster harness connector.
    3. Using a 12-volt test light connected to ground, check the (A938) Fused B(+) circuit in the Instrument Cluster harness connector.

NOTE: The test light must illuminate brightly. Compare the brightness to that of a direct connection to the battery.

Does the test light illuminate brightly?

Yes

- Go To 4

No

- Repair the (A938) Fused B(+) circuit for an open or high resistance.
- Perform the BODY VERIFICATION TEST. Refer to **STANDARD PROCEDURE** .

4. **CHECK IF DTC IS ACTIVE**
   1. Reconnect the Instrument Cluster harness connector.
   2. With the scan tool, erase DTCs.
   3. Cycle the ignition off, then start the engine and allow to idle.
   4. After a couple of minutes, with the scan tool, read Cluster DTCs.

   Does this DTC reset?

   Yes

   - Replace the Instrument Cluster in accordance with the Service Information. Refer to **REMOVAL** .
   - Perform the BODY VERIFICATION TEST. Refer to **STANDARD PROCEDURE** .

   No

   - Go To 5

5. **CHECK THE WIRING AND CONNECTORS**
   1. The conditions necessary to set the DTC are not present at this time.
   2. Using the schematics as a guide, inspect the wiring and connectors specific to this circuit. Wiggle the wiring and connectors while checking for shorted and open circuits.
   3. Check all related splices and connectors for signs of water intrusion, corrosion, pushed out or bent terminals, and correct pin tension.
   4. Check for Service Information Tune-ups or Service Bulletins for any possible causes that may apply.

   Were there any problems found?

   Yes

- Repair as necessary.
- Perform the BODY VERIFICATION TEST. Refer to **STANDARD PROCEDURE** .

No

- Test complete.

B275B-00-AIRBAG TELLTALE

For a complete wiring diagram, **refer to appropriate SYSTEM WIRING DIAGRAMS article** .

WHEN MONITORED

Ignition on.

SET CONDITION

The Instrument Cluster (IPC) detects an open or short in the Airbag LED circuit.

POSSIBLE CAUSES

Possible Causes
INSTRUMENT CLUSTER

DIAGNOSTIC TEST

CHECK IF THE DTC IS ACTIVE

1. With the scan tool, read Instrument Cluster (IPC) DTCs.

   Does the scan tool display this DTC as active?

   Yes

   - The LED circuit for the Airbag is non-serviceable. Replace the Instrument Cluster in accordance with the Service Information. Refer to **REMOVAL** .
   - Perform the BODY VERIFICATION TEST. Refer to **STANDARD PROCEDURE** .

   No

   - The condition or conditions that originally set this DTC are not present at this time. Using the wiring diagrams as a guide, check all related splices and connectors for signs of water intrusion, corrosion, pushed out or bent terminals, and correct pin tension.
   - Perform the BODY VERIFICATION TEST. Refer to **STANDARD PROCEDURE** .

U0002-00-CAN C BUS OFF PERFORMANCE

Perform the COMMUNICATION PRE-DIAGNOSTIC PROCEDURE. Refer to **STANDARD PROCEDURE** .

U0010-00-CAN INTERIOR BUS

Perform the COMMUNICATION PRE-DIAGNOSTIC PROCEDURE. Refer to **STANDARD PROCEDURE** .

U0011-00-CAN INTERIOR BUS OFF PERFORMANCE

Perform the COMMUNICATION PRE-DIAGNOSTIC PROCEDURE. Refer to **STANDARD PROCEDURE** .

U0037-00-LIN BUS

For a complete wiring diagram, **refer to appropriate SYSTEM WIRING DIAGRAMS article** .

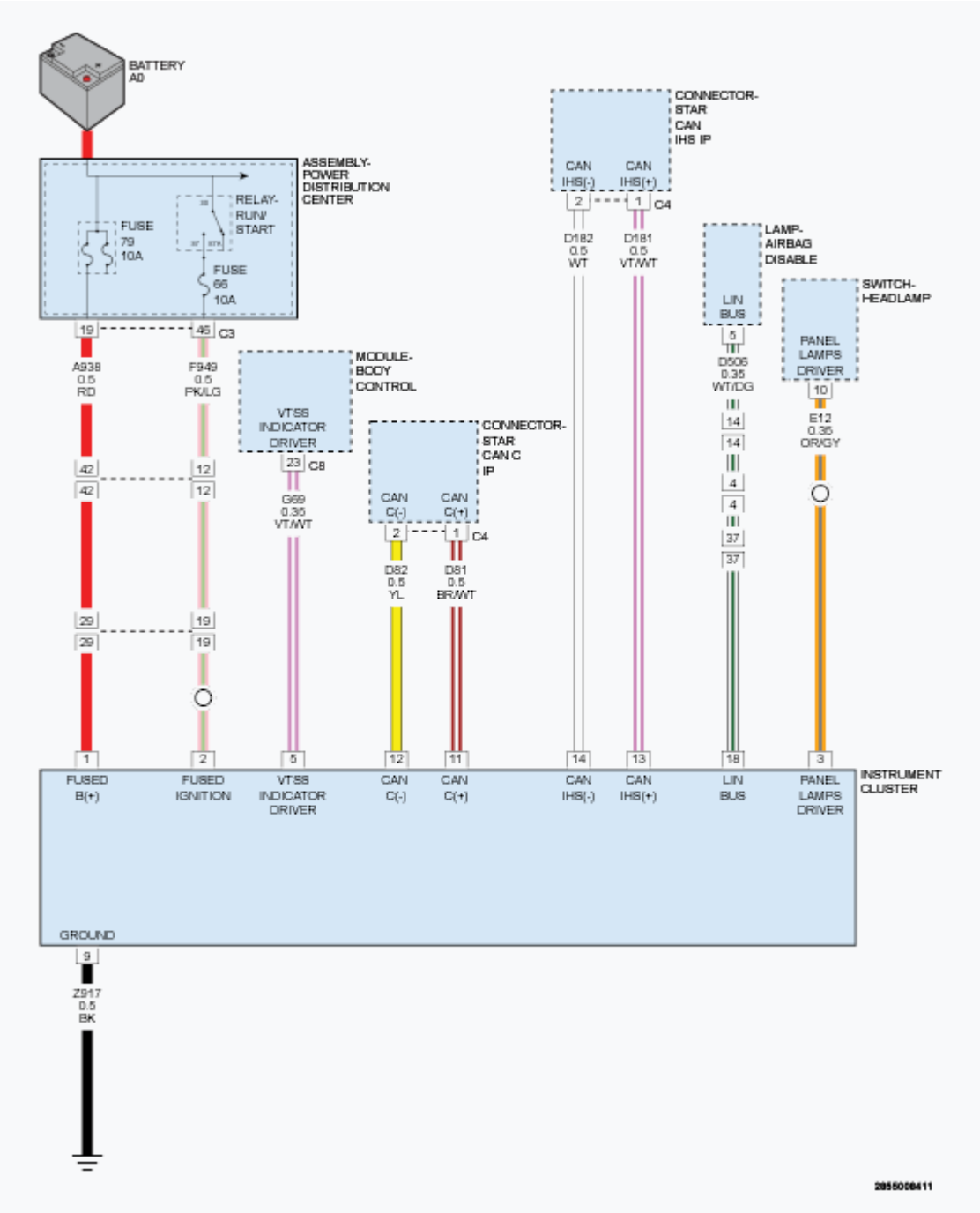

Fig. 2: Instrument Cluster Circuit Diagram
Courtesy of CHRYSLER GROUP, LLC

WHEN MONITORED

Ignition on.

SET CONDITION

The Instrument Cluster (IPC) detects an open/short on the LIN Bus circuit.

POSSIBLE CAUSES

Possible Causes
LIN BUS SHORTED TO GROUND
LIN BUS OPEN
AIRBAG DISABLE LAMP
INSTRUMENT CLUSTER

DIAGNOSTIC TEST

1. **VERIFY THE DTC IS ACTIVE**
    1. Turn the ignition on.
    2. With the scan tool, record and erase Instrument Cluster (IPC) DTCs.
    3. Cycle the ignition from off to on.
    4. With the scan tool, read IPC DTCs.

    Does the scan tool display this DTC as active?

    Yes

    - Go To 2

    No

    - Go To 5
2. **CHECK THE (D509) LIN BUS FOR AN OPEN**
    1. Turn the ignition off.
    2. Disconnect the Instrument Cluster harness connector.
    3. Disconnect the Airbag Disable Lamp harness connector.
    4. Measure the resistance of the (D509) LIN Bus circuit between the Instrument Cluster harness connector and the Airbag Disable Lamp harness connector.

    Is the resistance below 5.0 Ohms?

    Yes

    - Go To 3

    No

    - Repair the (D509) LIN Bus circuit for an open or high resistance.

- Perform the BODY VERIFICATION TEST. Refer to **STANDARD PROCEDURE** .

3. **CHECK THE (D509) LIN BUS FOR A SHORT TO GROUND**
   1. Measure the resistance between ground and the (D509) LIN Bus circuit.

      Is the resistance above 100K Ohms?

      Yes

      - Go To 4

      No

      - Repair the (D509) LIN Bus circuit for a short to ground.
      - Perform the BODY VERIFICATION TEST. Refer to **STANDARD PROCEDURE** .
4. **CHECK THE AIRBAG DISABLE LAMP**
   1. Replace the Airbag Disable Lamp module in accordance with the Service Information.
   2. Perform the BODY VERIFICATION TEST. Refer to **STANDARD PROCEDURE** .

      Does the scan tool display this DTC as active?

      Yes

      - Using the schematics as a guide, check the IPC module pins, terminals, and connectors for corrosion, damage, or terminal push out. Pay particular attention to all power and ground circuits. If no problems are found, replace the Instrument Cluster in accordance with the Service Information. Refer to **REMOVAL** .
      - Perform the BODY VERIFICATION TEST. Refer to **STANDARD PROCEDURE** .

      No

      - Test Complete.
5. **CHECK THE WIRING AND CONNECTORS**
   1. The conditions necessary to set the DTC are not present at this time.
   2. Using the schematics as a guide, inspect the wiring and connectors specific to this module. Wiggle the wiring and connectors while checking for shorted and open circuits.
   3. Check all related splices and connectors for signs of water intrusion, corrosion, pushed out or bent terminals, and correct pin tension.
   4. Check Service Bulletins for any possible causes that may apply.

      Were there any problems found?

      Yes

- Repair as necessary.
- Perform the BODY VERIFICATION TEST. Refer to **STANDARD PROCEDURE** .

No

- Test complete.

U0100-00-LOST COMMUNICATION WITH ECM/PCM

Perform the COMMUNICATION PRE-DIAGNOSTIC PROCEDURE. Refer to **STANDARD PROCEDURE** .

U0101-00-LOST COMMUNICATION WITH TCM

Perform the COMMUNICATION PRE-DIAGNOSTIC PROCEDURE. Refer to **STANDARD PROCEDURE** .

U0102-00-LOST COMMUNICATION WITH TRANSFER CASE CONTROL MODULE / AWD

Perform the COMMUNICATION PRE-DIAGNOSTIC PROCEDURE. Refer to **STANDARD PROCEDURE** .

U0129-00-LOST COMMUNICATION WITH BRAKE SYSTEM CONTROL MODULE

Perform the COMMUNICATION PRE-DIAGNOSTIC PROCEDURE. Refer to **STANDARD PROCEDURE** .

U0131-00-LOST COMMUNICATION WITH ELECTRIC POWER STEERING CONTROL MODULE

Perform the COMMUNICATION PRE-DIAGNOSTIC PROCEDURE. Refer to **STANDARD PROCEDURE** .

U0140-00-LOST COMMUNICATION WITH BODY CONTROL MODULE

Perform the COMMUNICATION PRE-DIAGNOSTIC PROCEDURE. Refer to **STANDARD PROCEDURE** .

U0151-00-LOST COMMUNICATION WITH OCCUPANT RESTRAINT CONTROLLER (ORC)

Perform the COMMUNICATION PRE-DIAGNOSTIC PROCEDURE. Refer to **STANDARD PROCEDURE** .

U0159-00-LOST COMMUNICATION WITH PARK ASSIST CONTROL MODULE (PTS)

Perform the COMMUNICATION PRE-DIAGNOSTIC PROCEDURE. Refer to **STANDARD PROCEDURE** .

U0184-00-LOST COMMUNICATION WITH RADIO

Perform the COMMUNICATION PRE-DIAGNOSTIC PROCEDURE. Refer to **STANDARD PROCEDURE** .

U0209-00-LOST COMMUNICATION WITH MEMORY SEAT CONTROL MODULE

Perform the COMMUNICATION PRE-DIAGNOSTIC PROCEDURE. Refer to **STANDARD PROCEDURE** .

U0401-00-IMPLAUSIBLE DATA RECEIVED FROM ECM/PCM

For a complete wiring diagram, **refer to appropriate SYSTEM WIRING DIAGRAMS article** .

WHEN MONITORED

Continuously with the ignition on.

SET CONDITION

When the Instrument Cluster (IPC) receives an implausible (default/error value, toggle error or parity error) message from the Powertrain Control Module (PCM).

POSSIBLE CAUSES

Possible Causes
BODY CONTROL MODULE (BCM) DTCS PRESENT
POWERTRAIN CONTROL MODULE (PCM) DTCS PRESENT
POWERTRAIN CONTROL MODULE (PCM)
INSTRUMENT CLUSTER

DIAGNOSTIC TEST

1. **VERIFY THE DTC IS ACTIVE**
    1. Turn the ignition on.
    2. With the scan tool, record and erase Instrument Cluster (IPC) DTCs.
    3. Cycle the ignition from off to on.
    4. With the scan tool, read IPC DTCs.

    Does the scan tool display this DTC as active?

    Yes

    - Go To 2

No

- Go To 5

2. **CHECK FOR BODY CONTROL MODULE (BCM) DTCS**
   1. With the scan tool, read BCM DTCs.

      Are there any BCM CAN Bus DTCs present?

      Yes

      - Refer to the **BODY CONTROL MODULE (BCM) - DIAGNOSTIC CODE INDEX** article and perform the appropriate diagnostic procedure.

      No

      - Go To 3

3. **CHECK FOR POWERTRAIN CONTROL MODULE (PCM) DTCS**
   1. With the scan tool, read PCM DTCs.

      Are there any PCM DTCs present?

      Yes

      - Refer to the **DTC INDEX** article and perform the appropriate diagnostic procedure.

      No

      - Go To 4

4. **CHECK OTHER MODULES FOR DTCS**
   1. With the scan tool, read DTCs.

      Are there any other modules reporting implausible communication DTCs against the PCM?

      Yes

      - Replace and program the Powertrain Control Module (PCM) in accordance with the Service Information. Refer to **MODULE, POWERTRAIN CONTROL, REMOVAL** .
      - Perform the BODY VERIFICATION TEST. Refer to **STANDARD PROCEDURE** .

      No

      - Using the schematics as a guide, check the IPC module pins, terminals, and connectors for corrosion, damage, or terminal push out. Pay particular attention to all power and ground circuits. If no problems are found, replace the Instrument Cluster in accordance with the Service Information. Refer to **REMOVAL** .

- Perform the BODY VERIFICATION TEST. Refer to **STANDARD PROCEDURE** .

5. **CHECK THE WIRING AND CONNECTORS**
   1. The conditions necessary to set the DTC are not present at this time.
   2. Using the schematics as a guide, inspect the wiring and connectors specific to this module. Wiggle the wiring and connectors while checking for shorted and open circuits.
   3. Check all related splices and connectors for signs of water intrusion, corrosion, pushed out or bent terminals, and correct pin tension.
   4. Check Service Bulletins for any possible causes that may apply.

   Were there any problems found?

   Yes

   - Repair as necessary.
   - Perform the BODY VERIFICATION TEST. Refer to **STANDARD PROCEDURE** .

   No

   - Test complete.

U0402-00-IMPLAUSIBLE DATA RECEIVED FROM TCM

For a complete wiring diagram, **refer to appropriate SYSTEM WIRING DIAGRAMS article** .

WHEN MONITORED

Continuously with the ignition on.

SET CONDITION

When the Instrument Cluster (IPC) receives an implausible (default/error value, toggle error or parity error) message from the Transmission Control Module (TCM).

POSSIBLE CAUSES

Possible Causes
BODY CONTROL MODULE (BCM) DTCS PRESENT
TRANSMISSION CONTROL MODULE (TCM) DTCS PRESENT
TRANSMISSION CONTROL MODULE (TCM)
INSTRUMENT CLUSTER

DIAGNOSTIC TEST

1. **VERIFY THE DTC IS ACTIVE**

1. Turn the ignition on.
2. With the scan tool, record and erase Instrument Cluster (IPC) DTCs.
3. Cycle the ignition from off to on.
4. With the scan tool, read IPC DTCs.

   Does the scan tool display this DTC as active?

   Yes

   - Go To 2

   No

   - Go To 5

2. **CHECK FOR BODY CONTROL MODULE (BCM) DTCS**
   1. With the scan tool, read BCM DTCs.

      Are there any BCM CAN Bus DTCs present?

      Yes

      - Refer to the **BODY CONTROL MODULE (BCM) - DIAGNOSTIC CODE INDEX** article and perform the appropriate diagnostic procedure.

      No

      - Go To 3

3. **CHECK FOR TRANSMISSION CONTROL MODULE (TCM) DTCS**
   1. With the scan tool, read TCM DTCs.

      Are there any TCM DTCs present?

      Yes

      - Refer to the **DTC INDEX** article and perform the appropriate diagnostic procedure.

      No

      - Go To 4

4. **CHECK OTHER MODULES FOR DTCS**
   1. With the scan tool, read DTCs.

      Are there any other modules reporting implausible communication DTCs against the TCM?

Yes

- Replace and program the Transmission Control Module (TCM) in accordance with the Service Information.
- Perform the BODY VERIFICATION TEST. Refer to **STANDARD PROCEDURE** .

No

- Using the schematics as a guide, check the IPC module pins, terminals, and connectors for corrosion, damage, or terminal push out. Pay particular attention to all power and ground circuits. If no problems are found, replace the Instrument Cluster in accordance with the Service Information. Refer to **REMOVAL** .
- Perform the BODY VERIFICATION TEST. Refer to **STANDARD PROCEDURE** .

5. **CHECK THE WIRING AND CONNECTORS**
   1. The conditions necessary to set the DTC are not present at this time.
   2. Using the schematics as a guide, inspect the wiring and connectors specific to this module. Wiggle the wiring and connectors while checking for shorted and open circuits.
   3. Check all related splices and connectors for signs of water intrusion, corrosion, pushed out or bent terminals, and correct pin tension.
   4. Check Service Bulletins for any possible causes that may apply.

   Were there any problems found?

   Yes

   - Repair as necessary.
   - Perform the BODY VERIFICATION TEST. Refer to **STANDARD PROCEDURE** .

   No

   - Test complete.

U0403-00-IMPLAUSIBLE DATA RECEIVED FROM T-CASE

For a complete wiring diagram, **refer to appropriate SYSTEM WIRING DIAGRAMS article** .

WHEN MONITORED

Continuously with the ignition on.

SET CONDITION

When the Instrument Cluster (IPC) receives an implausible (default/error value, toggle error or parity error) message from the Drive Train Control Module (DTCM).

POSSIBLE CAUSES

Possible Causes
DRIVE TRAIN CONTROL MODULE (DTCM) DTCS PRESENT
BODY CONTROL MODULE (BCM) DTCS PRESENT
DRIVE TRAIN CONTROL MODULE (DTCM)
INSTRUMENT CLUSTER

DIAGNOSTIC TEST

1. **VERIFY THE DTC IS ACTIVE**
    1. Turn the ignition on.
    2. With the scan tool, record and erase Instrument Cluster (IPC) DTCs.
    3. Cycle the ignition from off to on.
    4. With the scan tool, read IPC DTCs.

    Does the scan tool display this DTC as active?

    Yes

    - Go To 2

    No

    - Go To 5
2. **CHECK FOR BODY CONTROL MODULE (BCM) DTCS**
    1. With the scan tool, read BCM DTCs.

    Are there any BCM CAN Bus DTCs present?

    Yes

    - Refer to the **BODY CONTROL MODULE (BCM) - DIAGNOSTIC CODE INDEX** article and perform the appropriate diagnostic procedure.

    No

    - Go To 3
3. **CHECK FOR DRIVE TRAIN CONTROL MODULE (DTCM) DTCS**
    1. With the scan tool, read DTCM DTCs.

    Are there any DTCM DTCs present?

    Yes

- Refer to **DIAGNOSIS AND TESTING** and perform the appropriate diagnostic procedure.

No

- Go To 4

4. **CHECK OTHER MODULES FOR DTCS**
   1. With the scan tool, read DTCs.

      Are there any other modules reporting implausible communication DTCs against the DTCM?

      Yes

      - Replace and program the Drive Train Control Module (DTCM) in accordance with the Service Information. Refer to **MODULE, DRIVETRAIN CONTROL, REMOVAL** .
      - Perform the BODY VERIFICATION TEST. Refer to **STANDARD PROCEDURE** .

      No

      - Using the schematics as a guide, check the IPC pins, terminals, and connectors for corrosion, damage, or terminal push out. Pay particular attention to all power and ground circuits. If no problems are found, replace the Instrument Cluster in accordance with the Service Information. Refer to **REMOVAL** .
      - Perform the BODY VERIFICATION TEST. Refer to **STANDARD PROCEDURE** .
5. **CHECK THE WIRING AND CONNECTORS**
   1. The conditions necessary to set the DTC are not present at this time.
   2. Using the schematics as a guide, inspect the wiring and connectors specific to this module. Wiggle the wiring and connectors while checking for shorted and open circuits.
   3. Check all related splices and connectors for signs of water intrusion, corrosion, pushed out or bent terminals, and correct pin tension.
   4. Check Service Bulletins for any possible causes that may apply.

      Were there any problems found?

      Yes

      - Repair as necessary.
      - Perform the BODY VERIFICATION TEST. Refer to **STANDARD PROCEDURE** .

      No

      - Test complete.

U0418-00-IMPLAUSIBLE DATA RECEIVED FROM BRAKE SYSTEM CONTROL MODULE

For a complete wiring diagram, **refer to appropriate SYSTEM WIRING DIAGRAMS article** .

WHEN MONITORED

Continuously with the ignition on.

SET CONDITION

When the Instrument Cluster (IPC) receives an implausible (default/error value, toggle error or parity error) message from the Antilock Brake System (ABS) Module.

POSSIBLE CAUSES

Possible Causes
ANTILOCK BRAKE SYSTEM (ABS) MODULE DTCS PRESENT
BODY CONTROL MODULE (BCM) DTCS PRESENT
ANTILOCK BRAKE SYSTEM (ABS) MODULE
INSTRUMENT CLUSTER

DIAGNOSTIC TEST

1. **VERIFY THE DTC IS ACTIVE**
    1. Turn the ignition on.
    2. With the scan tool, record and erase Instrument Cluster (IPC) DTCs.
    3. Cycle the ignition from off to on.
    4. With the scan tool, read IPC DTCs.

    Does the scan tool display this DTC as active?

    Yes

    - Go To 2

    No

    - Go To 5
2. **CHECK FOR BODY CONTROL MODULE (BCM) DTCS**
    1. With the scan tool, read BCM DTCs.

    Are there any BCM CAN Bus DTCs present?

    Yes

    - Refer to the **BODY CONTROL MODULE (BCM) - DIAGNOSTIC CODE INDEX**

article and perform the appropriate diagnostic procedure.

No

- Go To 3

3. **CHECK FOR ANTILOCK BRAKE SYSTEM (ABS) MODULE DTCS**
   1. With the scan tool, read ABS DTCs.

      Are there any ABS DTCs present?

      Yes

      - Refer to **DIAGNOSIS AND TESTING** and perform the appropriate diagnostic procedure.

      No

      - Go To 4

4. **CHECK OTHER MODULES FOR DTCS**
   1. With the scan tool, read DTCs.

      Are there any other modules reporting implausible communication DTCs against the ABS?

      Yes

      - Replace and program the Antilock Brake System (ABS) Module in accordance with the Service Information. Refer to **MODULE, ANTI-LOCK BRAKE SYSTEM, REMOVAL** .
      - Perform the BODY VERIFICATION TEST. Refer to **STANDARD PROCEDURE** .

      No

      - Using the schematics as a guide, check the IPC pins, terminals, and connectors for corrosion, damage, or terminal push out. Pay particular attention to all power and ground circuits. If no problems are found, replace the Instrument Cluster in accordance with the Service Information. Refer to **REMOVAL** .
      - Perform the BODY VERIFICATION TEST. Refer to **STANDARD PROCEDURE** .

5. **CHECK THE WIRING AND CONNECTORS**
   1. The conditions necessary to set the DTC are not present at this time.
   2. Using the schematics as a guide, inspect the wiring and connectors specific to this module. Wiggle the wiring and connectors while checking for shorted and open circuits.
   3. Check all related splices and connectors for signs of water intrusion, corrosion, pushed out or bent terminals, and correct pin tension.
   4. Check Service Bulletins for any possible causes that may apply.

      Were there any problems found?

Yes

- Repair as necessary.
- Perform the BODY VERIFICATION TEST. Refer to **STANDARD PROCEDURE** .

No

- Test complete.

U0422-00-IMPLAUSABLE DATA RECEIVED FROM BODY CONTROL MODULE

For a complete wiring diagram, **refer to appropriate SYSTEM WIRING DIAGRAMS article** .

WHEN MONITORED

Continuously with the ignition on.

SET CONDITION

When the Instrument Cluster (IPC) receives an implausible (default/error value, toggle error or parity error) message from the Body Control Module (BCM).

POSSIBLE CAUSES

Possible Causes
BODY CONTROL MODULE (BCM) DTCS PRESENT
BODY CONTROL MODULE (BCM)
INSTRUMENT CLUSTER

DIAGNOSTIC TEST

1. **VERIFY THE DTC IS ACTIVE**
    1. Turn the ignition on.
    2. With the scan tool, record and erase Instrument Cluster (IPC) DTCs.
    3. Cycle the ignition from off to on.
    4. With the scan tool, read IPC DTCs.

    Does the scan tool display this DTC as active?

    Yes

    - Go To 2

    No

- Go To 4

2. **CHECK FOR BODY CONTROL MODULE (BCM) DTCS**
   1. With the scan tool, read BCM DTCs.

      Are there any BCM CAN Bus DTCs present?

      Yes

      - Refer to the **BODY CONTROL MODULE (BCM) - DIAGNOSTIC CODE INDEX** article and perform the appropriate diagnostic procedure.

      No

      - Go To 3

3. **CHECK OTHER MODULES FOR DTCS**
   1. With the scan tool, read DTCs.

      Are there any other modules reporting implausible communication DTCs against the BCM?

      Yes

      - Replace and program the Body Control Module (BCM) in accordance with the Service Information. Refer to **MODULE, BODY CONTROL, REMOVAL** .
      - Perform the BODY VERIFICATION TEST. Refer to **STANDARD PROCEDURE** .

      No

      - Using the schematics as a guide, check the IPC pins, terminals, and connectors for corrosion, damage, or terminal push out. Pay particular attention to all power and ground circuits. If no problems are found, replace the Instrument Cluster in accordance with the Service Information. Refer to **REMOVAL** .
      - Perform the BODY VERIFICATION TEST. Refer to **STANDARD PROCEDURE** .

4. **CHECK THE WIRING AND CONNECTORS**
   1. The conditions necessary to set the DTC are not present at this time.
   2. Using the schematics as a guide, inspect the wiring and connectors specific to this module. Wiggle the wiring and connectors while checking for shorted and open circuits.
   3. Check all related splices and connectors for signs of water intrusion, corrosion, pushed out or bent terminals, and correct pin tension.
   4. Check Service Bulletins for any possible causes that may apply.

      Were there any problems found?

      Yes

- Repair as necessary.
- Perform the BODY VERIFICATION TEST. Refer to **STANDARD PROCEDURE** .

No

- Test complete.

U045A-00-IMPLAUSIBLE DATA RECEIVED FROM PARKING ASSIST MODULE

For a complete wiring diagram, **refer to appropriate SYSTEM WIRING DIAGRAMS article** .

WHEN MONITORED

Continuously with the ignition on.

SET CONDITION

When the Instrument Cluster (IPC) receives an implausible (default/error value, toggle error or parity error) message from the Park Assist Module (PAM).

POSSIBLE CAUSES

Possible Causes
PARK ASSIST MODULE (PAM) DTCS PRESENT
BODY CONTROL MODULE (BCM) DTCS PRESENT
PARK ASSIST MODULE (PAM)
INSTRUMENT CLUSTER

DIAGNOSTIC TEST

1. **VERIFY THE DTC IS ACTIVE**
    1. Turn the ignition on.
    2. With the scan tool, record and erase Instrument Cluster (IPC) DTCs.
    3. Cycle the ignition from off to on.
    4. With the scan tool, read IPC DTCs.

    Does the scan tool display this DTC as active?

    Yes

    - Go To 2

    No

- Go To 5

2. **CHECK FOR BODY CONTROL MODULE (BCM) DTCS**
   1. With the scan tool, read BCM DTCs.

      Are there any BCM CAN Bus DTCs present?

      Yes

      - Refer to the **BODY CONTROL MODULE (BCM) - DIAGNOSTIC CODE INDEX** article and perform the appropriate diagnostic procedure.

      No

      - Go To 3

3. **CHECK FOR PARKING ASSIST MODULE (PAM) DTCS**
   1. With the scan tool, read PAM DTCs.

      Are there any PAM DTCs present?

      Yes

      - Refer to **DIAGNOSIS AND TESTING** and perform the appropriate diagnostic procedure.

      No

      - Go To 4

4. **CHECK OTHER MODULES FOR DTCS**
   1. With the scan tool, read DTCs.

      Are there any other modules reporting implausible communication DTCs against the PAM?

      Yes

      - Replace and program the Park Assist Module (PAM) in accordance with the Service Information. Refer to **MODULE, PARK ASSIST, REMOVAL** .
      - Perform the BODY VERIFICATION TEST. Refer to **STANDARD PROCEDURE** .

      No

      - Using the schematics as a guide, check the IPC pins, terminals, and connectors for corrosion, damage, or terminal push out. Pay particular attention to all power and ground circuits. If no problems are found, replace the Instrument Cluster in accordance with the Service Information. Refer to **REMOVAL** .
      - Perform the BODY VERIFICATION TEST. Refer to **STANDARD PROCEDURE** .

5. **CHECK THE WIRING AND CONNECTORS**
    1. The conditions necessary to set the DTC are not present at this time.
    2. Using the schematics as a guide, inspect the wiring and connectors specific to this module. Wiggle the wiring and connectors while checking for shorted and open circuits.
    3. Check all related splices and connectors for signs of water intrusion, corrosion, pushed out or bent terminals, and correct pin tension.
    4. Check Service Bulletins for any possible causes that may apply.

    Were there any problems found?

    Yes

    - Repair as necessary.
    - Perform the BODY VERIFICATION TEST. Refer to **STANDARD PROCEDURE** .

    No

    - Test complete.

U0485-00-IMPLAUSIBLE DATA RECEIVED FROM RADIO

For a complete wiring diagram, **refer to appropriate SYSTEM WIRING DIAGRAMS article** .

WHEN MONITORED

Continuously with the ignition on.

SET CONDITION

When the Instrument Cluster (IPC) receives an implausible (default/error value, toggle error or parity error) message from the Radio.

POSSIBLE CAUSES

Possible Causes
RADIO DTCS PRESENT
BODY CONTROL MODULE (BCM) DTCS PRESENT
RADIO
INSTRUMENT CLUSTER

DIAGNOSTIC TEST

1. **VERIFY THE DTC IS ACTIVE**
    1. Turn the ignition on.

2. With the scan tool, record and erase Instrument Cluster (IPC) DTCs.
3. Cycle the ignition from off to on.
4. With the scan tool, read IPC DTCs.

   Does the scan tool display this DTC as active?

   Yes

   - Go To 2

   No

   - Go To 5

2. **CHECK FOR BODY CONTROL MODULE (BCM) DTCS**
   1. With the scan tool, read BCM DTCs.

      Are there any BCM CAN Bus DTCs present?

      Yes

      - Refer to the **BODY CONTROL MODULE (BCM) - DIAGNOSTIC CODE INDEX** article and perform the appropriate diagnostic procedure.

      No

      - Go To 3

3. **CHECK FOR RADIO DTCS**
   1. With the scan tool, read Radio DTCs.

      Are there any Radio DTCs present?

      Yes

      - Refer to **DIAGNOSIS AND TESTING** and perform the appropriate diagnostic procedure.

      No

      - Go To 4

4. **CHECK OTHER MODULES FOR DTCS**
   1. With the scan tool, read DTCs.

      Are there any other modules reporting implausible communication DTCs against the Radio?

      Yes

- Replace and program the Radio in accordance with the Service Information. Refer to **RADIO, REMOVAL** .
- Perform the BODY VERIFICATION TEST. Refer to **STANDARD PROCEDURE** .

No

- Using the schematics as a guide, check the IPC pins, terminals, and connectors for corrosion, damage, or terminal push out. Pay particular attention to all power and ground circuits. If no problems are found, replace the Instrument Cluster in accordance with the Service Information. Refer to **REMOVAL** .
- Perform the BODY VERIFICATION TEST. Refer to **STANDARD PROCEDURE** .

5. **CHECK THE WIRING AND CONNECTORS**
   1. The conditions necessary to set the DTC are not present at this time.
   2. Using the schematics as a guide, inspect the wiring and connectors specific to this module. Wiggle the wiring and connectors while checking for shorted and open circuits.
   3. Check all related splices and connectors for signs of water intrusion, corrosion, pushed out or bent terminals, and correct pin tension.
   4. Check Service Bulletins for any possible causes that may apply.

   Were there any problems found?

   Yes

   - Repair as necessary.
   - Perform the BODY VERIFICATION TEST. Refer to **STANDARD PROCEDURE** .

   No

   - Test complete.

U050A-00-IMPLAUSIBLE DATA RECEIVED FROM MEMORY SEAT CONTROL MODULE

For a complete wiring diagram, **refer to appropriate SYSTEM WIRING DIAGRAMS article** .

WHEN MONITORED

Continuously with the ignition on.

SET CONDITION

When the Instrument Cluster (IPC) receives an implausible (default/error value, toggle error or parity error) message from the Memory Seat Module (MSMD).

POSSIBLE CAUSES

Possible Causes
MEMORY SEAT MODULE (MSMD) DTCS PRESENT BODY CONTROL MODULE (BCM) DTCS PRESENT MEMORY SEAT MODULE INSTRUMENT CLUSTER

DIAGNOSTIC TEST

1. **VERIFY THE DTC IS ACTIVE**
    1. Turn the ignition on.
    2. With the scan tool, record and erase Instrument Cluster (IPC) DTCs.
    3. Cycle the ignition from off to on.
    4. With the scan tool, read IPC DTCs.

    Does the scan tool display this DTC as active?

    Yes

    - Go To 2

    No

    - Go To 5
2. **CHECK FOR BODY CONTROL MODULE (BCM) DTCS**
    1. With the scan tool, read BCM DTCs.

    Are there any BCM CAN Bus DTCs present?

    Yes

    - Refer to the **BODY CONTROL MODULE (BCM) - DIAGNOSTIC CODE INDEX** article and perform the appropriate diagnostic procedure.

    No

    - Go To 3
3. **CHECK FOR MSMD DTCS**
    1. With the scan tool, read Memory Seat Module (MSMD) DTCs.

    Are there any MSMD DTCs present?

    Yes

    - Refer to **DIAGNOSIS AND TESTING** and perform the appropriate diagnostic procedure.

No

- Go To 4

4. **CHECK OTHER MODULES FOR DTCS**
   1. With the scan tool, read DTCs.

      Are there any other modules reporting implausible communication DTCs against the MSMD?

      Yes

      - Replace and program the Memory Seat Module (MSMD) in accordance with the Service Information. Refer to **MODULE, MEMORY, SEAT, REMOVAL** .
      - Perform the BODY VERIFICATION TEST. Refer to **STANDARD PROCEDURE** .

      No

      - Using the schematics as a guide, check the IPC pins, terminals, and connectors for corrosion, damage, or terminal push out. Pay particular attention to all power and ground circuits. If no problems are found, replace the Instrument Cluster in accordance with the Service Information. Refer to **REMOVAL** .
      - Perform the BODY VERIFICATION TEST. Refer to **STANDARD PROCEDURE** .

5. **CHECK THE WIRING AND CONNECTORS**
   1. The conditions necessary to set the DTC are not present at this time.
   2. Using the schematics as a guide, inspect the wiring and connectors specific to this module. Wiggle the wiring and connectors while checking for shorted and open circuits.
   3. Check all related splices and connectors for signs of water intrusion, corrosion, pushed out or bent terminals, and correct pin tension.
   4. Check Service Bulletins for any possible causes that may apply.

      Were there any problems found?

      Yes

      - Repair as necessary.
      - Perform the BODY VERIFICATION TEST. Refer to **STANDARD PROCEDURE** .

      No

      - Test complete.

U11B9-00-LOST COMMUNICATION WITH RF HUB

Perform the COMMUNICATION PRE-DIAGNOSTIC PROCEDURE. Refer to **STANDARD PROCEDURE** .

U11FA-00-LOST COMMUNICATION WITH RIGHT BLIND SPOT SENSOR

Perform the COMMUNICATION PRE-DIAGNOSTIC PROCEDURE. Refer to **STANDARD PROCEDURE** .

U11FB-00-LOST COMMUNICATION WITH LEFT BLIND SPOT SENSOR

Perform the COMMUNICATION PRE-DIAGNOSTIC PROCEDURE. Refer to **STANDARD PROCEDURE** .

U1215-00-LOST COMMUNICATION WITH FORWARD FACING CAMERA

Perform the COMMUNICATION PRE-DIAGNOSTIC PROCEDURE. Refer to **STANDARD PROCEDURE** .

U1216-00-LOST COMMUNICATION WITH DASM

Perform the COMMUNICATION PRE-DIAGNOSTIC PROCEDURE. Refer to **STANDARD PROCEDURE** .

NOTE: DASM is also referred to as the Adaptive Cruise Control (ACC) module.

U121F-00-LOST COMMUNICATION WITH SEATBELT REMINDER MODULE

Perform the COMMUNICATION PRE-DIAGNOSTIC PROCEDURE. Refer to **STANDARD PROCEDURE** .

U1464-00-IMPLAUSIBLE DATA RECEIVED FROM EPS STEERING TORQUE

For a complete wiring diagram, **refer to appropriate SYSTEM WIRING DIAGRAMS article** .

WHEN MONITORED

Continuously with the ignition on.

SET CONDITION

When the Instrument Cluster (IPC) receives an implausible (default/error value, toggle error or parity error) message from the Electronic Power Steering (EPS) module.

POSSIBLE CAUSES

Possible Causes
ELECTRONIC POWER STEERING (EPS) MODULE DTCS PRESENT
BODY CONTROL MODULE (BCM) DTCS PRESENT
ELECTRONIC POWER STEERING (EPS) MODULE

INSTRUMENT CLUSTER

DIAGNOSTIC TEST

1. **VERIFY THE DTC IS ACTIVE**
    1. Turn the ignition on.
    2. With the scan tool, record and erase Instrument Cluster (IPC) DTCs.
    3. Cycle the ignition from off to on.
    4. With the scan tool, read IPC DTCs.

    Does the scan tool display this DTC as active?

    Yes

    - Go To 2

    No

    - Go To 5
2. **CHECK FOR BODY CONTROL MODULE (BCM) DTCS**
    1. With the scan tool, read BCM DTCs.

    Are there any BCM CAN Bus DTCs present?

    Yes

    - Refer to the **BODY CONTROL MODULE (BCM) - DIAGNOSTIC CODE INDEX** article and perform the appropriate diagnostic procedure.

    No

    - Go To 3
3. **CHECK FOR EPS DTCS**
    1. With the scan tool, read Electronic Power Steering (EPS) DTCs.

    Are there any EPS DTCs present?

    Yes

    - Refer to **DIAGNOSIS AND TESTING** and perform the appropriate diagnostic procedure.

    No

    - Go To 4

4. **CHECK OTHER MODULES FOR DTCS**
   1. With the scan tool, read DTCs.

      Are there any other modules reporting implausible communication DTCs against the EPS?

      Yes

      - Replace and program the Electronic Power Steering (EPS) module in accordance with the Service Information. Refer to **GEAR, REMOVAL** .
      - Perform the BODY VERIFICATION TEST. Refer to **STANDARD PROCEDURE** .

      No

      - Using the schematics as a guide, check the IPC pins, terminals, and connectors for corrosion, damage, or terminal push out. Pay particular attention to all power and ground circuits. If no problems are found, replace the Instrument Cluster in accordance with the Service Information. Refer to **REMOVAL** .
      - Perform the BODY VERIFICATION TEST. Refer to **STANDARD PROCEDURE** .
5. **CHECK THE WIRING AND CONNECTORS**
   1. The conditions necessary to set the DTC are not present at this time.
   2. Using the schematics as a guide, inspect the wiring and connectors specific to this module. Wiggle the wiring and connectors while checking for shorted and open circuits.
   3. Check all related splices and connectors for signs of water intrusion, corrosion, pushed out or bent terminals, and correct pin tension.
   4. Check Service Bulletins for any possible causes that may apply.

      Were there any problems found?

      Yes

      - Repair as necessary.
      - Perform the BODY VERIFICATION TEST. Refer to **STANDARD PROCEDURE** .

      No

      - Test complete.

U147D-00-IMPLAUSIBLE DATA RECEIVED FROM RIGHT BLIND SPOT SENSOR

For a complete wiring diagram, **refer to appropriate SYSTEM WIRING DIAGRAMS article** .

WHEN MONITORED

Continuously with the ignition on.

SET CONDITION

When the Instrument Cluster (IPC) receives an implausible (default/error value, toggle error or parity error) message from the Right Blind Spot Sensor (RBSS).

POSSIBLE CAUSES

Possible Causes
RIGHT BLIND SPOT SENSOR (RBSS) MODULE DTCS PRESENT
BODY CONTROL MODULE (BCM) DTCS PRESENT
RIGHT BLIND SPOT SENSOR
INSTRUMENT CLUSTER

DIAGNOSTIC TEST

1. **VERIFY THE DTC IS ACTIVE**
    1. Turn the ignition on.
    2. With the scan tool, record and erase Instrument Cluster (IPC) DTCs.
    3. Cycle the ignition from off to on.
    4. With the scan tool, read IPC DTCs.

    Does the scan tool display this DTC as active?

    Yes

    - Go To 2

    No

    - Go To 5
2. **CHECK FOR BODY CONTROL MODULE (BCM) DTCS**
    1. With the scan tool, read BCM DTCs.

    Are there any BCM CAN Bus DTCs present?

    Yes

    - Refer to the **BODY CONTROL MODULE (BCM) - DIAGNOSTIC CODE INDEX** article and perform the appropriate diagnostic procedure.

    No

    - Go To 3
3. **CHECK FOR RBSS DTCS**

1. With the scan tool, read Right Blind Spot Sensor (RBSS) DTCs.

   Are there any RBSS DTCs present?

   Yes

   - Refer to **DIAGNOSIS AND TESTING** and perform the appropriate diagnostic procedure.

   No

   - Go To 4

4. **CHECK OTHER MODULES FOR DTCS**
   1. With the scan tool, read DTCs.

      Are there any other modules reporting implausible communication DTCs against the RBSS?

      Yes

      - Replace and program the Right Blind Spot Sensor (RBSS) in accordance with the Service Information. Refer to **SENSOR, BLIND SPOT, REMOVAL** .
      - Perform the BODY VERIFICATION TEST. Refer to **STANDARD PROCEDURE** .

      No

      - Using the schematics as a guide, check the IPC pins, terminals, and connectors for corrosion, damage, or terminal push out. Pay particular attention to all power and ground circuits. If no problems are found, replace the Instrument Cluster in accordance with the Service Information. Refer to **REMOVAL** .
      - Perform the BODY VERIFICATION TEST. Refer to **STANDARD PROCEDURE** .

5. **CHECK THE WIRING AND CONNECTORS**
   1. The conditions necessary to set the DTC are not present at this time.
   2. Using the schematics as a guide, inspect the wiring and connectors specific to this module. Wiggle the wiring and connectors while checking for shorted and open circuits.
   3. Check all related splices and connectors for signs of water intrusion, corrosion, pushed out or bent terminals, and correct pin tension.
   4. Check Service Bulletins for any possible causes that may apply.

      Were there any problems found?

      Yes

      - Repair as necessary.
      - Perform the BODY VERIFICATION TEST. Refer to **STANDARD PROCEDURE** .

No

- Test complete.

U147E-00-IMPLAUSIBLE DATA RECEIVED FROM LEFT BLIND SPOT SENSOR

For a complete wiring diagram, **refer to appropriate SYSTEM WIRING DIAGRAMS article** .

WHEN MONITORED

Continuously with the ignition on.

SET CONDITION

When the Instrument Cluster (IPC) receives an implausible (default/error value, toggle error or parity error) message from the Left Blind Spot Sensor (LBSS).

POSSIBLE CAUSES

Possible Causes
LEFT BLIND SPOT SENSOR (LBSS) DTCS PRESENT
BODY CONTROL MODULE (BCM) DTCS PRESENT
LEFT BLIND SPOT SENSOR
INSTRUMENT CLUSTER

DIAGNOSTIC TEST

1. **VERIFY THE DTC IS ACTIVE**
    1. Turn the ignition on.
    2. With the scan tool, record and erase Instrument Cluster (IPC) DTCs.
    3. Cycle the ignition from off to on.
    4. With the scan tool, read IPC DTCs.

    Does the scan tool display this DTC as active?

    Yes

    - Go To 2

    No

    - Go To 5
2. **CHECK FOR BODY CONTROL MODULE (BCM) DTCS**
    1. With the scan tool, read BCM DTCs.

Are there any BCM CAN Bus DTCs present?

Yes

- Refer to the **BODY CONTROL MODULE (BCM) - DIAGNOSTIC CODE INDEX** article and perform the appropriate diagnostic procedure.

No

- Go To 3

3. **CHECK FOR LBSS DTCS**
   1. With the scan tool, read Left Blind Spot Sensor (LBSS) DTCs.

      Are there any LBSS DTCs present?

      Yes

      - Refer to **DIAGNOSIS AND TESTING** and perform the appropriate diagnostic procedure.

      No

      - Go To 4

4. **CHECK OTHER MODULES FOR DTCS**
   1. With the scan tool, read DTCs.

      Are there any other modules reporting implausible communication DTCs against the LBSS?

      Yes

      - Replace and program the Left Blind Spot Sensor (LBSS) in accordance with the Service Information. Refer to **SENSOR, BLIND SPOT, REMOVAL** .
      - Perform the BODY VERIFICATION TEST. Refer to **STANDARD PROCEDURE** .

      No

      - Using the schematics as a guide, check the IPC pins, terminals, and connectors for corrosion, damage, or terminal push out. Pay particular attention to all power and ground circuits. If no problems are found, replace the Instrument Cluster in accordance with the Service Information. Refer to **REMOVAL** .
      - Perform the BODY VERIFICATION TEST. Refer to **STANDARD PROCEDURE** .

5. **CHECK THE WIRING AND CONNECTORS**
   1. The conditions necessary to set the DTC are not present at this time.
   2. Using the schematics as a guide, inspect the wiring and connectors specific to this module. Wiggle the wiring and connectors while checking for shorted and open circuits.

3. Check all related splices and connectors for signs of water intrusion, corrosion, pushed out or bent terminals, and correct pin tension.
4. Check Service Bulletins for any possible causes that may apply.

   Were there any problems found?

   Yes

   - Repair as necessary.
   - Perform the BODY VERIFICATION TEST. Refer to **STANDARD PROCEDURE** .

   No

   - Test complete.

U1489-00-IMPLAUSIBLE DATA RECEIVED FROM RF HUB

For a complete wiring diagram, **refer to appropriate SYSTEM WIRING DIAGRAMS article** .

WHEN MONITORED

Continuously with the ignition on.

SET CONDITION

When the Instrument Cluster (IPC) receives an implausible (default/error value, toggle error or parity error) message from the Radio Frequency (RF) Hub.

POSSIBLE CAUSES

Possible Causes
RADIO FREQUENCY (RF) HUB DTCS PRESENT
BODY CONTROL MODULE (BCM) DTCS PRESENT
RADIO FREQUENCY HUB
INSTRUMENT CLUSTER

DIAGNOSTIC TEST

1. **VERIFY THE DTC IS ACTIVE**
   1. Turn the ignition on.
   2. With the scan tool, record and erase Instrument Cluster (IPC) DTCs.
   3. Cycle the ignition from off to on.
   4. With the scan tool, read IPC DTCs.

Does the scan tool display this DTC as active?

Yes

- Go To 2

No

- Go To 5

2. **CHECK FOR BODY CONTROL MODULE (BCM) DTCS**
   1. With the scan tool, read BCM DTCs.

      Are there any BCM CAN Bus DTCs present?

      Yes

      - Refer to the **BODY CONTROL MODULE (BCM) - DIAGNOSTIC CODE INDEX** article and perform the appropriate diagnostic procedure.

      No

      - Go To 3

3. **CHECK FOR RF HUB DTCS**
   1. With the scan tool, read Radio Frequency (RF) Hub DTCs.

      Are there any RF Hub DTCs present?

      Yes

      - Refer to **DIAGNOSIS AND TESTING** and perform the appropriate diagnostic procedure.

      No

      - Go To 4

4. **CHECK OTHER MODULES FOR DTCS**
   1. With the scan tool, read DTCs.

      Are there any other modules reporting implausible communication DTCs against the RF Hub?

      Yes

      - Replace and program the Radio Frequency (RF) Hub in accordance with the Service Information. Refer to **MODULE, RADIO FREQUENCY (RF HUB), REMOVAL** .
      - Perform the BODY VERIFICATION TEST. Refer to **STANDARD PROCEDURE** .

No

- Using the schematics as a guide, check the IPC pins, terminals, and connectors for corrosion, damage, or terminal push out. Pay particular attention to all power and ground circuits. If no problems are found, replace the Instrument Cluster in accordance with the Service Information. Refer to **REMOVAL** .
- Perform the BODY VERIFICATION TEST. Refer to **STANDARD PROCEDURE** .

5. **CHECK THE WIRING AND CONNECTORS**
   1. The conditions necessary to set the DTC are not present at this time.
   2. Using the schematics as a guide, inspect the wiring and connectors specific to this module. Wiggle the wiring and connectors while checking for shorted and open circuits.
   3. Check all related splices and connectors for signs of water intrusion, corrosion, pushed out or bent terminals, and correct pin tension.
   4. Check Service Bulletins for any possible causes that may apply.

   Were there any problems found?

   Yes

   - Repair as necessary.
   - Perform the BODY VERIFICATION TEST. Refer to **STANDARD PROCEDURE** .

   No

   - Test complete.

U148D-00-IMPLAUSIBLE DATA RECEIVED FROM FORWARD FACING CAMERA

For a complete wiring diagram, **refer to appropriate SYSTEM WIRING DIAGRAMS article** .

WHEN MONITORED

Continuously with the ignition on.

SET CONDITION

When the Instrument Cluster (IPC) receives an implausible (default/error value, toggle error or parity error) message from the Forward Facing Camera Module (FFCM).

POSSIBLE CAUSES

Possible Causes
FORWARD FACING CAMERA MODULE (FFCM) DTCS PRESENT BODY CONTROL MODULE (BCM) DTCS PRESENT

FORWARD FACING CAMERA MODULE
INSTRUMENT CLUSTER

DIAGNOSTIC TEST

1. **VERIFY THE DTC IS ACTIVE**
    1. Turn the ignition on.
    2. With the scan tool, record and erase Instrument Cluster (IPC) DTCs.
    3. Cycle the ignition from off to on.
    4. With the scan tool, read IPC DTCs.

    Does the scan tool display this DTC as active?

    Yes

    - Go To 2

    No

    - Go To 5
2. **CHECK FOR BODY CONTROL MODULE (BCM) DTCS**
    1. With the scan tool, read BCM DTCs.

    Are there any BCM CAN Bus DTCs present?

    Yes

    - Refer to the **BODY CONTROL MODULE (BCM) - DIAGNOSTIC CODE INDEX** article and perform the appropriate diagnostic procedure.

    No

    - Go To 3
3. **CHECK FOR FFCM DTCS**
    1. With the scan tool, read Forward Facing Camera (FFCM) DTCs.

    Are there any FFCM DTCs present?

    Yes

    - Refer to **DIAGNOSIS AND TESTING** and perform the appropriate diagnostic procedure.

    No

- Go To 4

4. **CHECK OTHER MODULES FOR DTCS**
   1. With the scan tool, read DTCs.

      Are there any other modules reporting implausible communication DTCs against the FFCM?

      Yes

      - Replace and program the Forward Facing Camera (FFCM) module in accordance with the Service Information. Refer to **MODULE, FORWARD FACING CAMERA, REMOVAL** .
      - Perform the BODY VERIFICATION TEST. Refer to **STANDARD PROCEDURE** .

      No

      - Using the schematics as a guide, check the IPC pins, terminals, and connectors for corrosion, damage, or terminal push out. Pay particular attention to all power and ground circuits. If no problems are found, replace the Instrument Cluster in accordance with the Service Information. Refer to **REMOVAL** .
      - Perform the BODY VERIFICATION TEST. Refer to **STANDARD PROCEDURE** .
5. **CHECK THE WIRING AND CONNECTORS**
   1. The conditions necessary to set the DTC are not present at this time.
   2. Using the schematics as a guide, inspect the wiring and connectors specific to this module. Wiggle the wiring and connectors while checking for shorted and open circuits.
   3. Check all related splices and connectors for signs of water intrusion, corrosion, pushed out or bent terminals, and correct pin tension.
   4. Check Service Bulletins for any possible causes that may apply.

      Were there any problems found?

      Yes

      - Repair as necessary.
      - Perform the BODY VERIFICATION TEST. Refer to **STANDARD PROCEDURE** .

      No

      - Test complete.

2014 ACCESSORIES AND EQUIPMENT

Instrument Cluster - Service Information - Cherokee

DESCRIPTION

DESCRIPTION

Fig. 1: Base Instrument Cluster with 3.5" EVIC
Courtesy of CHRYSLER GROUP, LLC

Fig. 2: Premium Instrument Cluster with 7" EVIC

Courtesy of CHRYSLER GROUP, LLC

The Instrument Cluster (IC) is also known as the Instrument Panel Cluster (IPC) for this vehicle. There are two distinct versions of the IPC offered in this vehicle: Base with 3.5 inch EVIC and Premium with 7 inch EVIC. The IPC is located in the instrument panel above the steering column opening, directly in front of the driver. The remainder of the IPC, including the mounts and the electrical connections are concealed within the instrument panel behind the cluster bezel. The IPC gauges and indicators are visible through a dedicated opening in the cluster bezel and are protected by a hard plastic cluster lens.

Besides analog gauges and indicators, the IPC incorporates an electronic display unit for displaying odometer/trip odometer information, automatic transmission gear selector position, several warning or reminder indications and certain diagnostic information as well as for the display of the optional Electronic Vehicle Information Center (EVIC) data. There are also unique versions of both the Base and Premium IPC, which accommodate the variations of regulatory requirements for the various markets where the vehicle will be offered.

The rear of the cluster housing and the IPC electronic circuitry are protected by a molded plastic housing and rear cover, which are secured to each other by integral latch features. The rear cover includes an integral lever-type connector receptacle, which is connected to the vehicle electrical system through a dedicated take out and connector from the instrument panel wire harness. The IPC housing also serves as the carrier for the IPC printed circuit board and electronic circuitry, the major and minor analog gauges, a Light Emitting Diode (LED) unit for each indicator, the electronic display unit, an audible tone transducer, several LED units for general illumination lighting and the cluster lens, mask and overlay. The cluster housing also has four integral mounting tabs, one near each upper and lower corner of the housing.

The cluster overlay is a laminated plastic unit. The dark, visible, outer surface of the overlay is marked with all of the analog gauge dial faces and graduations, but this layer is also translucent. The darkness of this outer layer prevents the cluster from appearing cluttered or busy by concealing the cluster indicators that are not illuminated. The translucence of this layer allows those indicators and icons that are illuminated to be readily visible. The underlying layer of the overlay is opaque and allows light from the LED unit for each of the various indicators and illumination lamps behind it to be visible through the outer layer of the overlay through predetermined stencil-like cutouts.

The microcontroller-based IPC utilizes integrated circuitry and digital information carried on the Controller Area Network (CAN) data bus along with hard wired analog inputs to monitor sensors and switches throughout the vehicle. In response to those inputs, the internal circuitry and programming of the IPC allow it to control and integrate many electronic functions and features of the vehicle through both hard wired outputs and the transmission of digital message outputs to other electronic modules in the vehicle over the CAN data bus. Refer to **COMMUNICATION, DESCRIPTION** .

The IPC is serviced only as a complete unit. It cannot be adjusted or repaired. If a gauge, an indicator, a display unit, the electronic printed circuit board, the circuit board hardware, the overlay, the mask, the lens or the housing are damaged or ineffective, the entire IPC must be replaced. The IPC software is flash programmable over the CAN data bus.

ELECTRONIC DISPLAY UNIT

An electronic display unit is a standard factory-installed feature in every IC. The odometer and trip odometer as well as many other indications are displayed in the electronic display unit. This display unit is soldered onto the IC electronic circuit board. There are two distinct versions of the IC offered in this vehicle: Base and Premium. The primary distinction between these two versions lies in the size and type of display used. The Base IC on vehicles with or without the optional EVIC has a monochrome, 4 line, dot matrix display unit. Meanwhile, the Premium IC has a color, 178 millimeter (7 inch) diagonal, Thin Film Transistor (TFT) display unit.

During daylight hours (exterior lamps are OFF) the electronic display unit is illuminated at full brightness for clear visibility. At night (exterior lamps are ON), the electronic display unit lighting level is adjusted with the other cluster general illumination lamps using the panel lamps dimmer thumbwheel of the dimmer module on the instrument panel to the left of the steering column. However, a PARADE mode position of the dimmer thumbwheel allows the display to be illuminated at full brightness if the exterior lamps are turned ON during daylight hours.

VEHICLE SYSTEMS SUPPORT

Besides typical gauge and indicator support, the electronic functions and features that the IC supports or controls include the following:

- **Audible Warnings Support** - The IC electronic circuit board is equipped with an audible tone transducer and programming that allows it to provide various audible alerts to the vehicle operator. These alerts include single chime tones and continuous slow or fast tones. An electromechanical relay is also soldered onto the circuit board to produce audible clicks that are used to emulate the sound of a conventional turn signal or hazard warning flasher. Refer to **DESCRIPTION** .
- **Compass/Temperature Support** - The premium IC provides support for each of the functions and features of the compass/temperature display, as well as for the odometer switch pod in the left horizontal spoke of the steering wheel, which provides user inputs to control the compass/temperature display options.
- **Electronic Vehicle Information Center Support** - On vehicles so equipped, the IC provides support for each of the functions and features of the Electronic Vehicle Information Center (EVIC) display. This includes support for the compass, thermometer and audio system mode, customer programmable features, textual warnings, premium Tire Pressure Monitor (TPM), trip computer, U-Connect™ Hands-Free communication and the switch inputs from the EVIC switch pod located in the left horizontal spoke of the steering wheel, which provides user inputs to control and configure many of the displays. This also includes display arbitrator programming, which controls the priorities, sequences and transition of information that is displayed in the EVIC display, particularly when multiple display requests are received simultaneously. Refer to **CENTER, ELECTRONIC VEHICLE INFORMATION, DESCRIPTION** .
- **Panel Lamps Dimming Control** - The IC monitors electronic **dimming level** messages received from the Body Control Module (BCM) over the CAN data bus, which is based upon a hard wired input to the BCM from the panel lamps dimmer thumbwheel of the dimmer module, then provides both a hard wired 12-volt Pulse-Width Modulated (PWM) output and electronic message outputs over the CAN data bus that synchronize the dimming level of all panel lamps dimmer controlled lamps with that of the IC general illumination lighting.

OPERATION

OPERATION

The Instrument Cluster (IC) (also known as the Instrument Panel Cluster/IPC) is designed to allow the vehicle operator to monitor the conditions of many of the vehicle components and operating systems. The gauges and indicators in the IC provide valuable information about the various standard and optional powertrains, fuel and emissions systems, cooling systems, lighting systems, safety systems and many other convenience items. The IC is installed in the instrument panel so that all of these monitors can be easily viewed by the vehicle operator when driving, while still allowing relative ease of access for service.

The microcontroller-based IC hardware and software uses various inputs to control the gauges and indicators visible on the face of the IC. These inputs are in the form of electronic messages that are transmitted by other electronic modules over the Controller Area Network (CAN) data bus. Refer to **COMMUNICATION, OPERATION** .

The IC microcontroller smooths the input data using algorithms to provide gauge readings that are accurate, stable and responsive to operating conditions. These algorithms are designed to provide gauge readings during normal operation that are consistent with customer expectations. However, when abnormal conditions such as high coolant temperature occur, the algorithm can drive the gauge pointer to an extreme position and the microcontroller can sound an audible alert through the on-board audible tone transducer to provide distinct visual and audible indications of a problem to the vehicle operator. The IC may also produce audible warnings on behalf of other electronic modules in the vehicle based upon electronic **tone request** messages received over the CAN data bus. Each audible warning is intended to provide the vehicle operator with an audible alert to supplement a visual indication.

The IC circuitry operates on battery current received through a fused B(+) fuse on a non-switched fused B(+) circuit, and on battery current received through a fused ignition output (run) fuse on a fused ignition output (run) circuit. This arrangement allows the IC to provide some features regardless of the status of the ignition switch, while other features will operate only when the status of the ignition switch is ON. The IC circuitry has a path to ground at all times through a takeout of the instrument panel wire harness that is secured to the instrument panel support structure.

The Body Control Module (BCM) stores and compares vehicle configuration data with the IC as well as with other Electronic Control Units (ECU) in the vehicle. This process is referred to as Programming Of Configuration of Systems Integrated (PROCSI) (also known as PROXI). If a configuration mismatch is detected, the BCM sets a Diagnostic Trouble Code (DTC). A configuration mismatch will require the performance of a Restore BCM PROXI Configuration routine, or a PROXI Configuration Alignment routine using a diagnostic scan tool.

NOTE: The odometer value on the IC will blink if there is any PROXI mismatch between different modules.

The IC also has a self-diagnostic test capability which will test each of the CAN bus message-controlled functions of the IC by lighting the appropriate indicators, positioning the gauge needles at several predetermined calibration points across the gauge faces and illuminating all segments of the electronic display unit. The electronic display unit will also display the software version used in the IC. Refer to **DIAGNOSIS AND TESTING**.

ELECTRONIC DISPLAY UNIT

When the status of the ignition switch is OFF, the electronic display unit is inactive and the total odometer information is displayed only when the driver side front door is open and is deactivated when the driver side front door is closed. Otherwise, the display unit is only active and the total odometer information is only displayed when the status of the ignition switch is ON/RUN or Accessory (ACC), and is inactive when the status of the ignition switch is OFF.

- **Odometer/Trip Odometer Display Toggling** - Momentarily actuating the appropriate push button within the odometer switch pod (in vehicles equipped with base instrument clusters) or the EVIC switch pod (in vehicles equipped with premium instrument clusters) with the electronic display unit active, will toggle the display between the total odometer and trip odometer information.
- **Trip Odometer Reset** - Actuating the appropriate push button within the odometer switch pod (in vehicles with base cluster) or the EVIC switch pod (in vehicles equipped with premium cluster) for longer than about two seconds while the status of the ignition switch is ON will reset the active trip odometer (A or B) to **0.0** kilometers (miles). Only the trip odometer information being currently displayed (active) will be reset.
- **Communication Error** - If the IC fails to receive an electronic **distance** message during normal operation, it will hold and display the last data received until the status of the ignition switch is OFF. If the IC does not receive a **distance** message within one second after the ignition switch status transitions to ON, it will display the last distance value stored in IC memory. If the IC is unable to display distance information due to an error internal to the IC, the electronic display unit will display **Error** .
- **Self Test** - Each time the IC is put through the self diagnostics test, the electronic display unit will illuminate all of its segments simultaneously to confirm the functionality of the display and the IC control circuitry.

CLUSTER ILLUMINATION

The IC has several Light-Emitting Diode (LED) units that serve as general illumination lighting for the IC. These LED units are illuminated whenever the exterior lighting is turned ON. The illumination intensity of these LED units is adjusted when the panel dimmer thumbwheel on the dimmer module is rotated (down to dim, up to brighten) to one of six available minor detent positions.

The Body Control Module (BCM) monitors a hard wired resistor multiplexed input from the dimmer module on a dimmer input circuit. In response to that input, the BCM sends an electronic **dimming level** message to the IC over the CAN data bus. The electronic circuitry of the IC then converts a fused 12-volt input it receives into a 12-volt Pulse Width Modulated (PWM) output. The IC uses this PWM output to control the illumination intensity of the general illumination of the IC and provides a hard wired PWM output to other components on the instrument panel and within the vehicle interior to control and synchronize their illumination intensity.

In addition, the thumbwheel on the dimmer module has a Parade Mode position to provide a parade or funeral mode. The BCM monitors the request for this mode from the dimmer module, then transmits an electronic **dimming level** message to illuminate all electronic display units in the vehicle at full (daytime) intensity for easier visibility when driving in daylight with the exterior lighting turned ON.

The hard wired headlamp switch and panel lamps dimmer inputs to and outputs from the BCM may be diagnosed using conventional diagnostic methods. However, proper testing of the PWM processing of the IC

and the electronic **dimming level** messages sent by the BCM over the CAN data bus requires the use of a diagnostic scan tool. Refer to **DIAGNOSIS AND TESTING** .

DIAGNOSIS AND TESTING

DIAGNOSIS AND TESTING - INSTRUMENT CLUSTER

If all of the instrument cluster gauges and indicators are inoperative, be certain to check the instrument cluster fused B(+) fuse and the instrument cluster fused B(+) and ground circuits for shorts or opens. Refer to the appropriate wiring information. The wiring information includes wiring diagrams, proper wire and connector repair procedures, details of wire harness routing and retention, connector pin-out information and location views for the various wire harness connectors, splices and grounds.

If an individual hard wired gauge or indicator is inoperative, refer to the diagnosis and testing service information for that specific gauge or indicator. If an individual Controller Area Network (CAN) or Local Interconnect Network (LIN) data bus message-controlled gauge or indicator is inoperative, perform the Actuator Test as follows:

CAUTION: Instrument clusters used in this model automatically configure themselves for compatibility with the features and optional equipment in the vehicle in which they are initially installed. The instrument cluster is programmed to do this by embedding the Vehicle Identification Number (VIN) and other information critical to proper cluster operation into electronic memory. This embedded information is learned through electronic messages received from other electronic modules in the vehicle over the Controller Area Network (CAN) data bus, and through certain hard wired inputs received when the cluster is connected to the vehicle electrically. Once configured, the instrument cluster memory may be irreparably damaged and certain irreversible configuration errors may occur if the cluster is connected electrically to another vehicle; or, if an electronic module from another vehicle is connected that provides data to the instrument cluster (including odometer values) that conflicts with that which was previously learned and stored. Therefore, the practice of exchanging (swapping) instrument clusters and other electronic modules in this vehicle with those removed from another vehicle must always be avoided. Failure to observe this caution may result in instrument cluster damage, which is not reimbursable under the terms of the product warranty. Service replacement instrument clusters are provided with the correct VIN, and the certified odometer and engine hours values embedded into cluster memory, but will otherwise be automatically configured for compatibility with the features and optional equipment in the vehicle in which they are initially installed.

SELF TEST

The self-diagnostic test will put the instrument cluster into its self-diagnostic mode. In this mode the instrument

cluster can perform a self-diagnostic test that will confirm that the circuitry, the gauges and the indicators are capable of operating as designed. During the test the IC circuitry will position each of the gauge needles at various calibration points, illuminate each of the segments in the electronic display unit, and turn all of the indicators ON and OFF again.

Successful completion of the actuator test will confirm that the instrument cluster is operational. However, there may still be a problem with the CAN/LIN data bus, the Powertrain Control Module (PCM), the Body Control Module (BCM), the Transmission Control Module (TCM), the Occupant Restraint Controller (ORC), the Controller Anti-lock Brake (CAB), the compass module, the RF Hub (RFHM) or the hard wired inputs to one of these electronic control modules. Use a diagnostic scan tool to diagnose these components. Refer to the appropriate diagnostic information.

1. Begin the test with the ignition switch in the Off position.
2. Depress the "DOWN" button with a premium cluster or the "RIGHT" button with a base cluster.
3. While still holding the button, position the ignition switch to the Accessory (ACC) position, but do not start the engine.
4. Release the "DOWN" or the "RIGHT" button.
5. The instrument cluster will simultaneously begin to illuminate all of the operational segments in the VFD unit and perform a bulb check of each operational LED indicator. The VFD segments and LED indicators remain illuminated as each gauge needle is swept to several calibration points and back. During this self-diagnostic test, the software level will be displayed. If a VFD segment or an LED indicator fails to illuminate, or if a gauge needle fails to sweep through the calibration points and back during this test, the instrument cluster must be replaced.
6. The actuator test is now completed. The instrument cluster will automatically exit the self-diagnostic mode and return to normal operation at the completion of the test. The actuator test will be aborted if the ignition switch is changed to the Off position, or if a vehicle speed message indicating that the vehicle is moving is received from the PCM over the CAN data bus during the test.

STANDARD PROCEDURE

STANDARD PROCEDURE - ENHANCED SEATBELT REMINDER PROGRAMMING

The seatbelt indicator also includes a programmable enhanced seatbelt reminder or "beltminder" feature that is enabled when the vehicle is shipped from the factory. This beltminder feature provides extended and modified visual seatbelt indicator and audible chime warning responses to an unbuckled driver side or both driver and passenger front seat belts. For further information on the description and operation of the "beltminder" feature, refer to **DESCRIPTION** or **OPERATION** . The beltminder feature may be disabled or enabled by the customer using the programming sequence that follows, or by the dealer using a diagnostic scan tool.

CUSTOMER PROGRAMMING SEQUENCE

NOTE: The following sequence of events must occur within sixty (60) seconds of the ignition switch being placed in the On position in order for the programming to be completed successfully. Even if the vehicle is equipped with both driver and passenger side front seat belt switches, this programming sequence MUST be

performed using the driver side front seat belt. The passenger side front seat belt switch has no programming functionality. Perform the steps again for reactivation.

1. With all doors closed and the ignition switch in the off position, buckle the driver side front seat belt.
2. Turn the ignition switch to the On position and wait for the seat belt indicator reminder function to conclude (about six seconds).
3. Unbuckle and buckle the driver side front seat belt three or more times, ending with the belt buckled.

NOTE: The occupant must be sure to fully retract the seat belt each time during this cycle because the actual switch is located in the seat belt retractor and not the buckle. Each time the seat belt is buckled or unbuckled, and fully retracted, the seat belt indicator will illuminate or turn OFF, depending on switch state.

4. Turn the ignition switch to the off position. A single chime tone will provide an audible confirmation that the programming sequence has been successfully completed.

NOTE: In exclusion mode (Seat belt reminder deactivated) the tell tale works like before but the acoustic portion of the seat belt reminder alert is disabled.

REMOVAL

REMOVAL

WARNING: To avoid serious or fatal injury on vehicles equipped with airbags, disable the Supplemental Restraint System (SRS) before attempting any steering wheel, steering column, airbag, seat belt tensioner, impact sensor or instrument panel component diagnosis or service. Disconnect and isolate the battery negative (ground) cable, then wait two minutes for the system capacitor to discharge before performing further diagnosis or service. This is the only sure way to disable the SRS. Failure to take the proper precautions could result in accidental airbag deployment.

CLUSTER ASSEMBLY

1. Disconnect and isolate the negative battery cable.

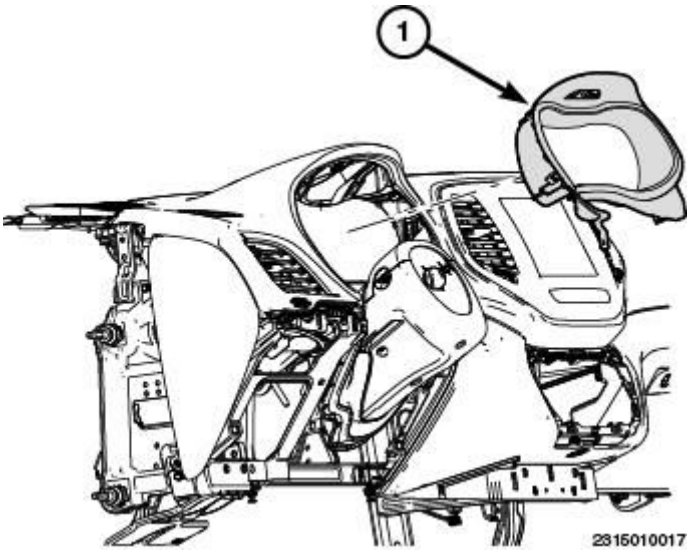

Fig. 3: Instrument Cluster Bezel
Courtesy of CHRYSLER GROUP, LLC

2. Remove the instrument cluster bezel (1). Refer to **BEZEL, INSTRUMENT CLUSTER, REMOVAL** .

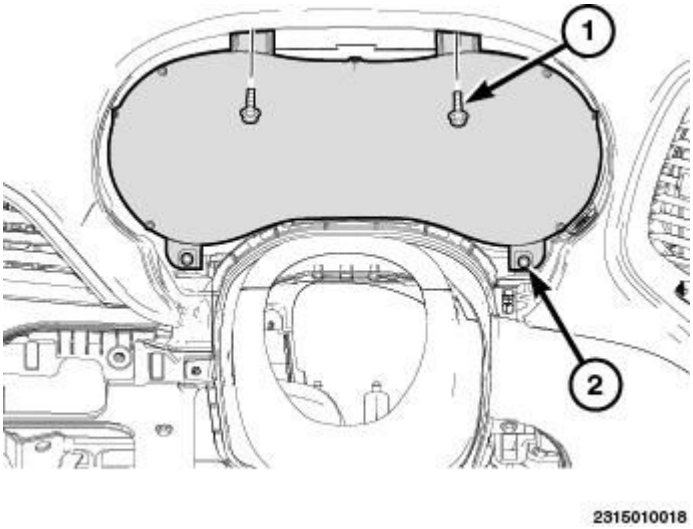

Fig. 4: Upper & Lower Fasteners
Courtesy of CHRYSLER GROUP, LLC

3. Remove the two upper (1) and the two lower (2) fasteners securing the instrument cluster to the instrument panel.
4. Pull the top of the instrument cluster back and lift the instrument cluster upward to remove.

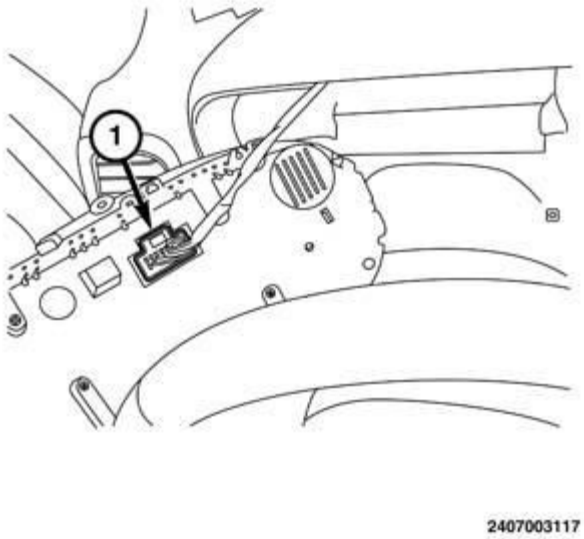

Fig. 5: Instrument Cluster Wire Harness Connector
Courtesy of CHRYSLER GROUP, LLC

5. Disconnect the instrument cluster wire harness connector (1) from the connector receptacles on the back of the cluster housing.

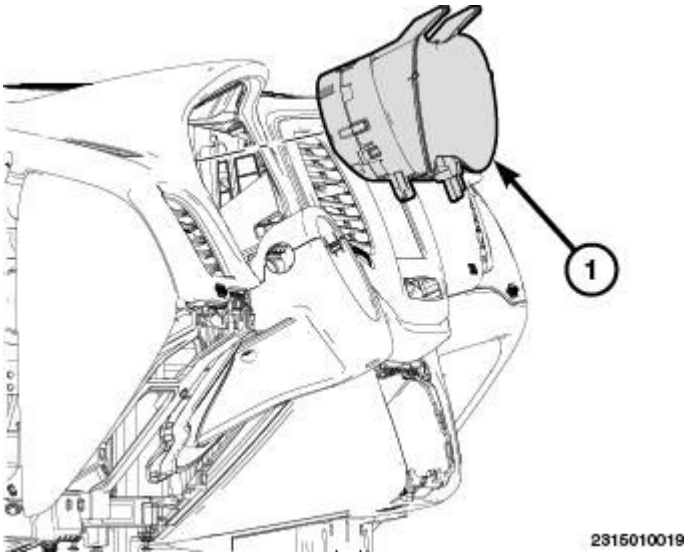

Fig. 6: Instrument Cluster
Courtesy of CHRYSLER GROUP, LLC

6. Remove the instrument cluster (1) from the vehicle.

CLUSTER LENS

1. Disconnect and isolate the negative battery cable.
2. Remove the instrument cluster from the instrument panel .

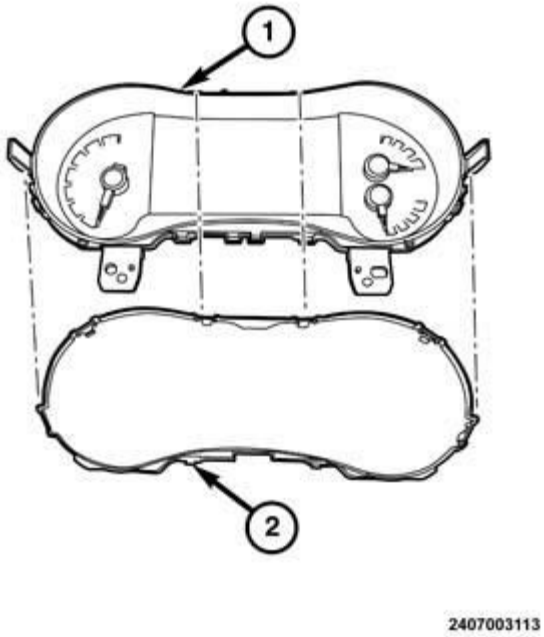

Fig. 7: Instrument Cluster & Lens
Courtesy of CHRYSLER GROUP, LLC

3. Working around the perimeter of the cluster housing, disengage each of the latches that secure the cluster lens (2), to the instrument cluster housing (1).
4. Remove the lens from the face of the instrument cluster.

INSTALLATION

INSTALLATION

WARNING: To avoid serious or fatal injury on vehicles equipped with airbags, disable the Supplemental Restraint System (SRS) before attempting any steering wheel, steering column, airbag, seat belt tensioner, impact sensor or instrument panel component diagnosis or service. Disconnect and isolate the battery negative (ground) cable, then wait two minutes for the system capacitor to discharge before performing further diagnosis or service. This is the only sure way to disable the SRS. Failure to take the proper precautions could result in accidental airbag deployment.

NOTE: Certain indicators in this instrument cluster are automatically configured. This feature allows those indicators to be activated or deactivated for compatibility

with certain optional equipment. If a problem is noted that involves improper illumination of an indicator, disconnect and isolate the battery negative cable. After about five minutes, reconnect the battery negative cable and turn the ignition switch to the ON position. The instrument cluster should automatically relearn the equipment in the vehicle and properly configure the configurable indicators accordingly.

CLUSTER ASSEMBLY

1. Make sure the steering column is at its lowest position.

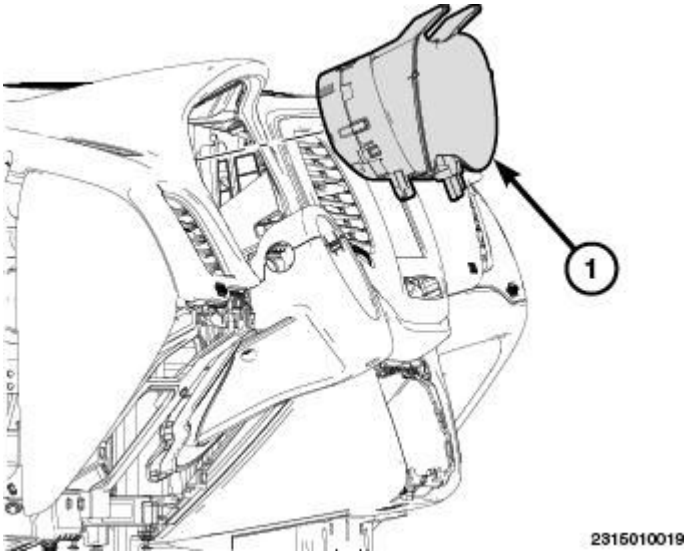

Fig. 8: Instrument Cluster
Courtesy of CHRYSLER GROUP, LLC

2. Position the instrument cluster (1) close enough to the instrument panel to connect the instrument panel wire harness connector to the receptacle on the back of the cluster housing.

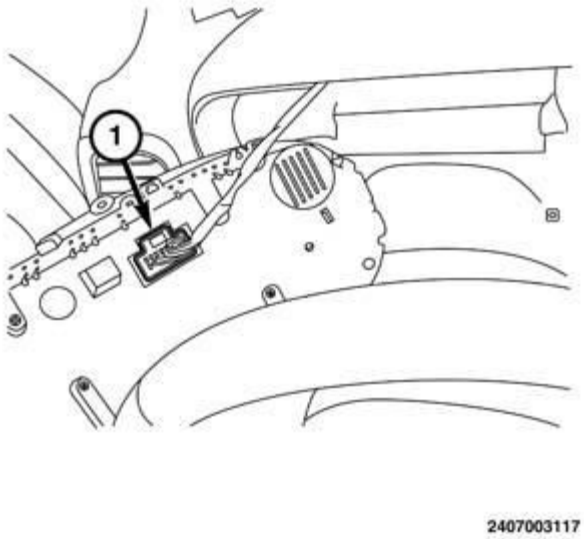

Fig. 9: Instrument Cluster Wire Harness Connector
Courtesy of CHRYSLER GROUP, LLC

3. Connect the instrument cluster wire harness connector (1) to the receptacle on the back of the instrument cluster housing.
4. Position the instrument cluster down into instrument panel bottom end first, aligning the mounting tabs.
5. Tilt the top of the instrument cluster forward until the upper mounting hole align with the upper fastener clip in the instrument panel.

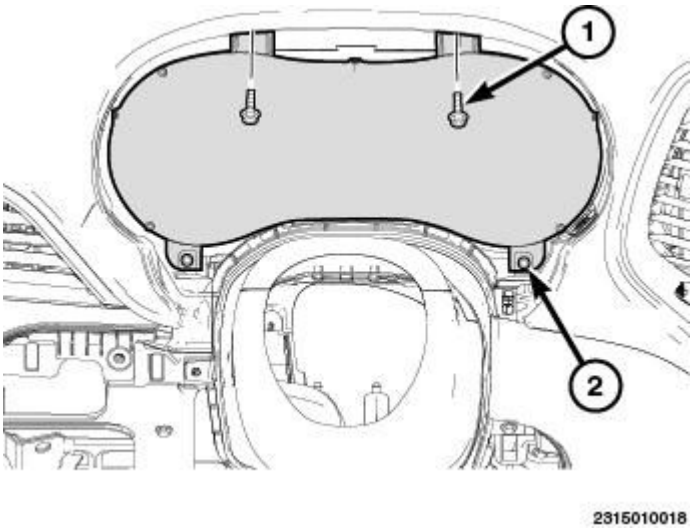

Fig. 10: Upper & Lower Fasteners
Courtesy of CHRYSLER GROUP, LLC

6. Install and tighten the two lower (2) and the two upper (1) fasteners that secure the instrument cluster to the instrument panel.

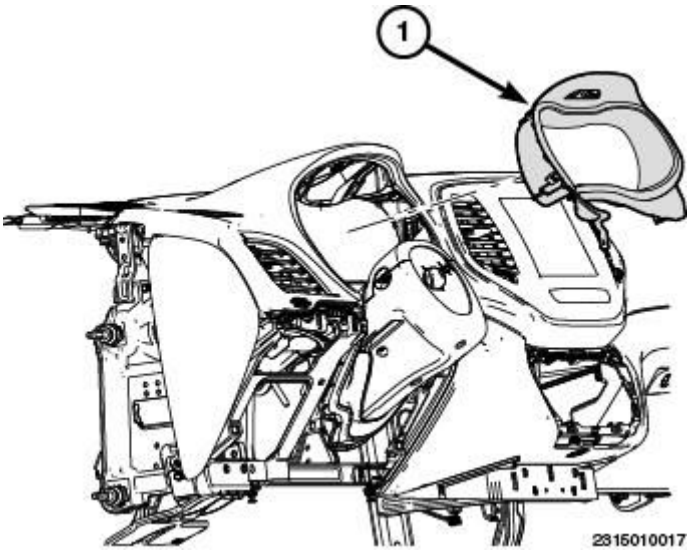

Fig. 11: Instrument Cluster Bezel
Courtesy of CHRYSLER GROUP, LLC

7. Install the instrument cluster bezel (1). Refer to **BEZEL, INSTRUMENT CLUSTER, INSTALLATION** .
8. Connect the negative battery cable.

NOTE: **If this Electronic Control Unit (ECU) is being replaced with a new unit, a diagnostic scan tool MUST be used to align the PROXI configuration data into the new ECU. Follow the routine outlined in the diagnostic scan tool for PROXI Configuration Alignment under Body Control Module (BCM) Miscellaneous Functions menu. Once the PROXI Configuration has been completed, tire pressure placard values must be programmed in the RF Hub under "Update Front and Rear Axle Nominal Tire Pressure Values". If this routine is not completed, the new Instrument Cluster will display "0 PSI" for tire pressure values as default. (Refer to PROGRAM THE IPC (INSTRUMENT PANEL CLUSTER)).**

CLUSTER LENS

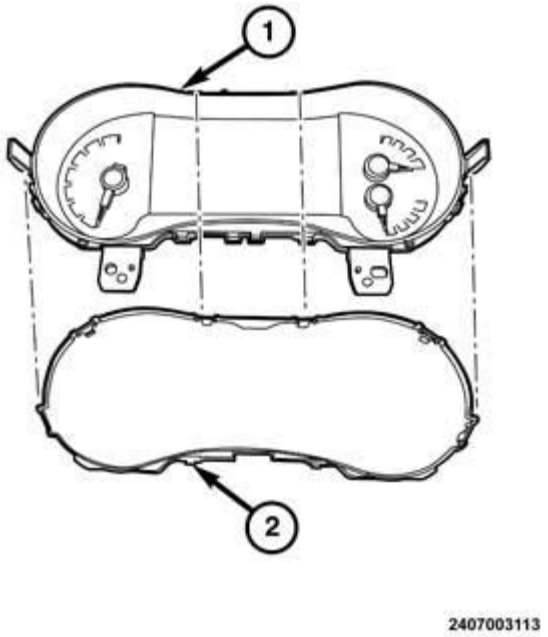

Fig. 12: Instrument Cluster & Lens
Courtesy of CHRYSLER GROUP, LLC

1. Position the cluster lens (2), over the face of the instrument cluster (1).
2. Press firmly and evenly on the lens, until each of the latches are fully engaged around the perimeter of the cluster housing.
3. Install the instrument cluster into the instrument panel .
4. Connect the negative battery cable.

GAUGE PACK, INSTRUMENT CLUSTER

DESCRIPTION

DESCRIPTION

Both the Base and the Premium Instrument Cluster (IC) (also known as the Instrument Panel Cluster/IPC) include analog gauges as well as a digital odometer - trip odometer display, which appears within the electronic display unit for that IC. Textual messages and digital displays, some accompanied by virtual icons may appear in the electronic display unit when appropriate to supplement certain analog gauges in either IC.

Analog gauge illumination is provided by dimmer controlled Light Emitting Diode (LED) units soldered onto the IC electronic circuit board. The analog gauge needles have internal optical illumination. Electronic display unit lighting is also dimmer controlled unless the Parade mode has been selected with the thumbwheel of the dimmer module, or unless certain indicators are active within the display. Whether analog, digital or virtual the gauges are all serviced only as a unit with the IC.

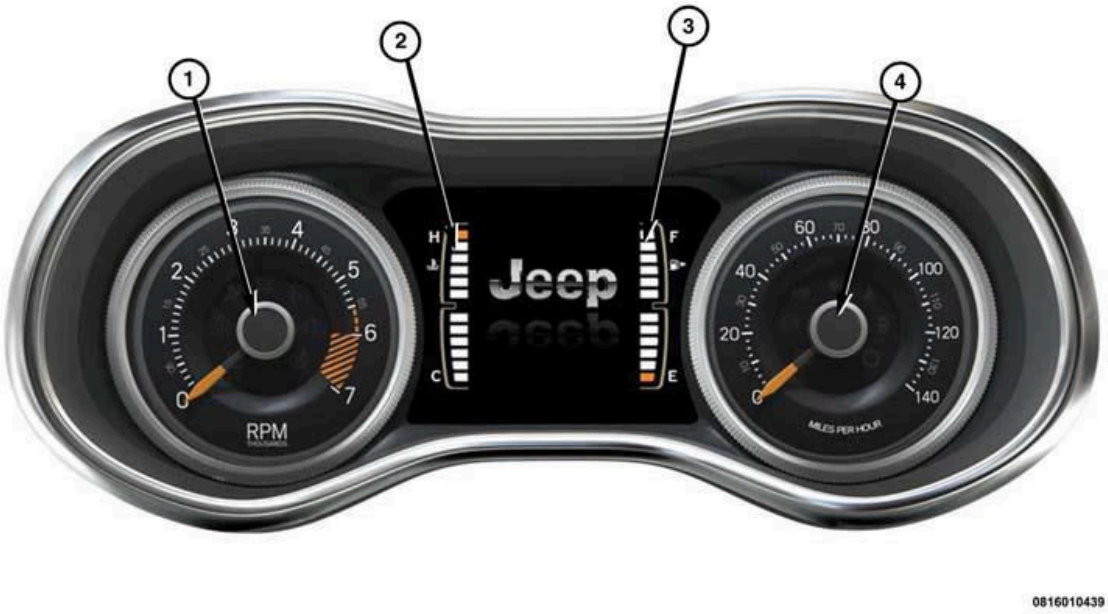

Fig. 13: Tachometer, Engine Temperature Gauge, Fuel Gauge & Speedometer (Base)
Courtesy of CHRYSLER GROUP, LLC

The Base IC for this vehicle includes the following analog gauges:

- **Tachometer (1)**
- **Engine Temperature Gauge (2)**
- **Fuel Gauge (3)**
- **Speedometer (4)**

Fig. 14: Tachometer, Engine Temperature Gauge, Fuel Gauge & Speedometer (Premium)

Courtesy of CHRYSLER GROUP, LLC

The Premium IC for this vehicle includes the following analog gauges:

- **Tachometer (1)**
- **Engine Temperature Gauge (2)**
- **Fuel Gauge (3)**
- **Speedometer (4)**

TACHOMETER

An analog tachometer is standard equipment. The gauge is located at the far left side of the IC overlay. The tachometer in the Base IC consists of a movable gauge needle or pointer controlled by the IC circuitry and a fixed 200 degree scale on the gauge dial face that reads left-to-right from **0** to **7** . On the Premium IC the tachometer consists of a movable gauge needle controlled by the IC circuitry and a fixed 185 degree scale on the gauge dial face that also reads left-to-right from **0** to **7** . The text **RPM X 1000** imprinted on the cluster overlay identifies that each number on the tachometer scale is to be multiplied by 1000 rpm.

SPEEDOMETER

Standard equipment on all instrument clusters, the speedometer is located to the right of center in the instrument cluster. The speedometer consists of a movable gauge needle or pointer controlled by the instrument cluster circuitry and a fixed 210 degree primary scale on the gauge dial face. For all vehicles the speedometer reads left-to-right either from **0** to **120** mph, or from **0** to **220** km/h, depending upon the market for which the vehicle is manufactured. Each version also has a secondary inner scale on the gauge dial face that provides the equivalent opposite units from the primary scale. On all vehicles, text appearing on the cluster overlay above the hub of the speedometer needle abbreviates the unit of measure for the primary scale (either **MPH** or **km/h**), and text inside the low end of the secondary scale indicates the unit of measure for that scale.

ENGINE TEMPERATURE

The standard equipment engine temperature gauge is located in the instrument cluster near center. The gauge consists of a movable gauge needle or pointer controlled by the IC circuitry and a fixed 90 degree gauge scale on the IC overlay that reads from **C** (or Cold) to **H** . An International Control and Display Symbol icon for **Engine Coolant Temperature** is located on the gauge face, near the low end of the scale. For more information, refer to **INTERNATIONAL VEHICLE CONTROL AND DISPLAY SYMBOLS, DESCRIPTION** .

FUEL GAUGE

A fuel gauge is standard equipment on all instrument clusters. This gauge consists of a movable gauge needle or pointer controlled by the instrument cluster circuitry and a fixed 90 degree scale on the cluster overlay that reads left-to-right from **E** (or Empty) to **F** (or Full).

OPERATION

OPERATION

All analog gauges in the Base and the Premium Instrument Cluster (IC) (also known as the Instrument Panel Cluster/IPC) receive battery current on the IC printed circuit board only when the status of the ignition switch is ON. When status of the ignition switch is OFF, battery current is not supplied to any gauges and the IC is programmed to move all of the gauge needles back to the low end of their respective scales. Therefore, the gauges do not accurately indicate any vehicle condition unless the status of the ignition switch is ON.

Each of the analog IC gauges contains an electronically controlled stepper motor unit. The IC circuitry completely controls the activation and deactivation of these stepper motors to position each gauge needle in the appropriate position based upon IC programming and electronic messages received from other electronic modules in the vehicle over the Controller Area Network (CAN) data bus.

The analog gauges are diagnosed using the self-diagnostic IC actuator test. Proper testing of the CAN data bus and the electronic message inputs that the IC uses to control each gauge requires the use of a diagnostic scan tool. Refer to **DIAGNOSIS AND TESTING** .

INDICATORS, INSTRUMENT CLUSTER

DESCRIPTION

BASE

The instrument cluster assembly has provisions for International Control and Display Symbol icon indicators, as well as three analog gauges standard on all models. Refer to **GAUGE PACK, INSTRUMENT CLUSTER, DESCRIPTION**. Some of the indicators are automatically configured when connected to the vehicle electrical system for compatibility with certain optional equipment or equipment required for regulatory purposes in certain markets. While each instrument cluster may have provisions for indicators to support every available option, the configurable indicators will not function in vehicles that do not have the equipment that an indicator supports.

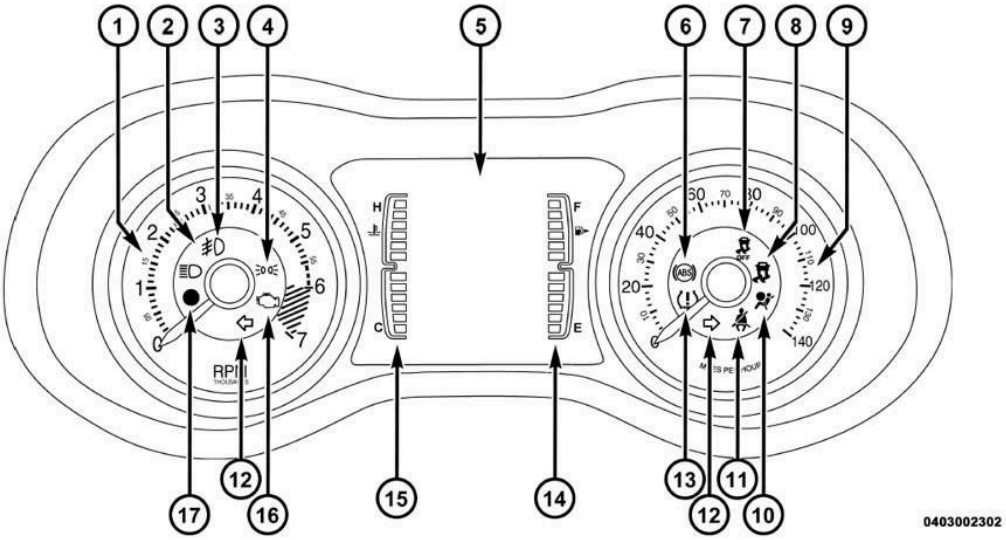

Fig. 15: Instrument Cluster Indicators (Base)
Courtesy of CHRYSLER GROUP, LLC

The instrument cluster includes provisions for the following indicators:

- **Airbag Indicator**
- **Antilock Brake System (ABS) Indicator**
- **Brake Indicator** - may include icon and **LOW BRAKE FLUID LEVEL** textual message in electronic display.
- **Change Oil Indicator** - textual message in electronic display (vehicles manufactured for domestic markets only).
- **Charging Indicator** - icon and textual message in electronic display.
- **Check Gauges Indicator** - textual message in electronic display.
- **Coolant Low Indicator** - icon and textual message in electronic display (diesel only).
- **Cruise Indicator** - icons and textual messages in electronic display.
- **Door Ajar Indicator(s)** - icons and textual messages in electronic display.
- **Electronic Stability Control (ESC) Indicator**
- **Electronic Throttle Control (ETC) Indicator** - icon and textual message in electronic display.
- **Engine Temperature Indicator**
- **ESC Off Indicator** - and textual message in electronic display.
- **Four-Wheel Drive Low Indicator** - may include **CHECK SHIFT PROCEDURE** textual message in electronic display.
- **Front Fog Lamp Indicator**
- **Fuel Saver Indicator - Economizer (ECO)** - icons and textual messages in electronic display.
- **Gas Cap Indicator** - textual message in electronic display.
- **High Beam Indicator**
- **Hill Descent Indicator**
- **Liftgate Ajar Indicator** - icon and textual message in electronic display.
- **Liftgate Flip-Up Glass Ajar Indicator** - icon and textual message in electronic display.
- **Low Fuel Indicator** .
- **Low Oil Pressure Indicator** - icon and textual message in electronic display.
- **Malfunction Indicator Lamp (MIL)**
- **Memory System Indicator** - textual messages in electronic display.
- **No Bus Indicator** - textual message in electronic display.
- **No Fuse Indicator** - textual message in electronic display.
- **Park Assist Disabled Indicator** - textual message in electronic display (if equipped only).
- **Perform Service Indicator** - textual message in electronic display (diesel only).
- **Position Lamp Indicator** - vehicles manufactured for certain export markets only.
- **Power Liftgate Indicator** - textual messages in electronic display (if equipped only).

- **Rear Fog Lamp Indicator** - vehicles manufactured for certain export markets only.
- **Remote Start Indicator** - textual messages in electronic display (if equipped only).
- **Seat Belt Indicator**
- **Security Indicator**
- **Service 4WD Indicator** - textual message in electronic display.
- **Service Column Lock Indicator** - textual messages in electronic display (vehicles manufactured for certain export markets only).
- **Service Exhaust Indicator** - textual messages in electronic display (diesel only).
- **Service Park Assist Indicator** - textual message in electronic display (if equipped only).
- **SmartBeam™ (Auto High Beam) Indicator** - textual message in electronic display (if equipped only).
- **Tire Pressure Monitor (TPM) Indicator** - may also include textual messages in electronic display.
- **Tow / Haul Indicator**
- **Transmission Range Indicator** - textual message in electronic display.
- **Transmission Temperature Indicator** - icon and textual message in electronic display.
- **Turn Signal (Right and Left) Indicators** - may also include icon and **TURN SIGNAL ON** reminder textual message in electronic display (12).
- **Washer Fluid Indicator** - icon and textual message in electronic display.

Each indicator in the instrument cluster, except those located within an electronic display unit, is illuminated by a dedicated Light Emitting Diode (LED) that is soldered onto the electronic circuit board. Cluster illumination is accomplished by several dimmable LED units, which illuminate each of the gauge dial faces for visibility when the exterior lighting is turned ON. These LED units are serviced only as a complete unit with the instrument cluster and, if damaged or ineffective, the entire instrument cluster assembly must be replaced. The cluster lens and the cluster hood and mask unit are the only components of the instrument cluster assembly that can be serviced separately.

PREMIUM

The instrument cluster assembly has provisions for International Control and Display Symbol icon indicators, as well as three analog gauges standard on all models. Refer to **GAUGE PACK, INSTRUMENT CLUSTER, DESCRIPTION**. Some of the indicators are automatically configured when connected to the vehicle electrical system for compatibility with certain optional equipment or equipment required for regulatory purposes in certain markets. While each instrument cluster may have provisions for indicators to support every available option, the configurable indicators will not function in vehicles that do not have the equipment that an indicator supports.

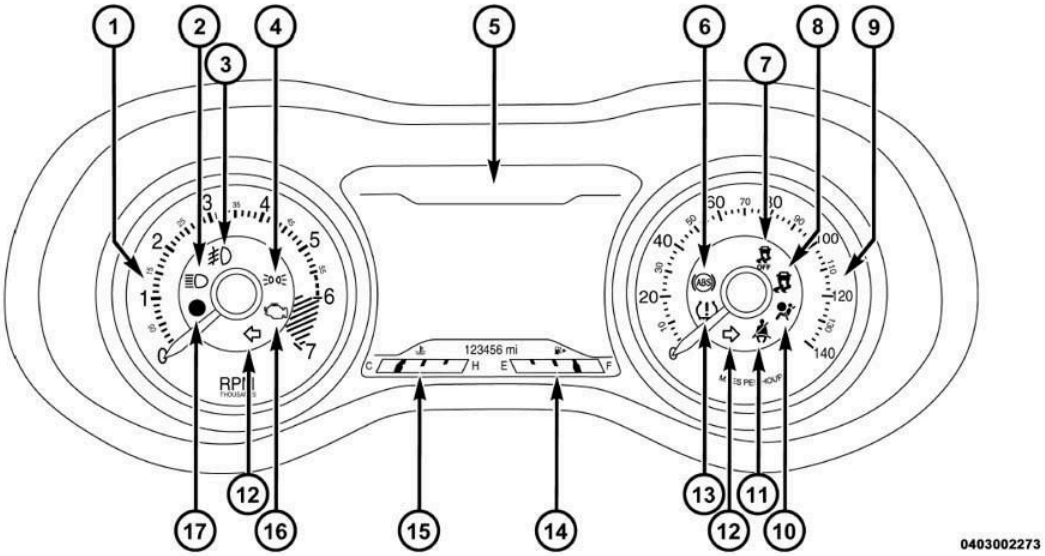

Fig. 16: Instrument Cluster Indicators (Premium)
Courtesy of CHRYSLER GROUP, LLC

The instrument cluster includes provisions for the following indicators:

- **Airbag Indicator**
- **Antilock Brake System (ABS) Indicator**
- **Brake Indicator** - may include icon and **LOW BRAKE FLUID LEVEL** textual message in electronic display.
- **Change Oil Indicator** - textual message in electronic display (vehicles manufactured for domestic markets only).
- **Charging Indicator** - icon and textual message in electronic display.
- **Check Gauges Indicator** - textual message in electronic display.
- **Coolant Low Indicator** - icon and textual message in electronic display (diesel only).
- **Cruise Indicator** - icons and textual messages in electronic display.
- **Door Ajar Indicator(s)** - icons and textual messages in electronic display.
- **Electronic Stability Control (ESC) Indicator**
- **Electronic Throttle Control (ETC) Indicator** - icon and textual message in electronic display (21).
- **Engine Temperature Indicator**
- **ESC Off Indicator** - and textual message in electronic display.
- **Four-Wheel Drive Low Indicator** - may include **CHECK SHIFT PROCEDURE** textual message in electronic display.
- **Front Fog Lamp Indicator**
- **Fuel Saver Indicator - Economizer (ECO)** - icons and textual messages in electronic display (21).
- **Gas Cap Indicator** - textual message in electronic display.

- **High Beam Indicator**
- **Hill Descent Indicator**
- **Liftgate Ajar Indicator** - icon and textual message in electronic display.
- **Liftgate Flip-Up Glass Ajar Indicator** - icon and textual message in electronic display.
- **Low Fuel Indicator** .
- **Low Oil Pressure Indicator** - icon and textual message in electronic display.
- **Malfunction Indicator Lamp (MIL)**
- **Memory System Indicator** - textual messages in electronic display.
- **No Bus Indicator** - textual message in electronic display.
- **No Fuse Indicator** - textual message in electronic display (22).
- **Park Assist Disabled Indicator** - textual message in electronic display (if equipped only).
- **Perform Service Indicator** - textual message in electronic display (diesel only).
- **Position Lamp Indicator** - vehicles manufactured for certain export markets only.
- **Power Liftgate Indicator** - textual messages in electronic display (if equipped only).
- **Rear Fog Lamp Indicator** - vehicles manufactured for certain export markets only.
- **Remote Start Indicator** - textual messages in electronic display (if equipped only).
- **Seat Belt Indicator**
- **Security Indicator**
- **Service 4WD Indicator** - textual message in electronic display.
- **Service Column Lock Indicator** - textual messages in electronic display (vehicles manufactured for certain export markets only).
- **Service Exhaust Indicator** - textual messages in electronic display (diesel only).
- **Service Park Assist Indicator** - textual message in electronic display (if equipped only).
- **SmartBeam™ (Auto High Beam) Indicator** - textual message in electronic display (if equipped only).
- **Tire Pressure Monitor (TPM) Indicator** - may also include textual messages in electronic display.
- **Tow / Haul Indicator**
- **Transmission Range Indicator** - textual message in electronic display.
- **Transmission Temperature Indicator** - icon and textual message in electronic display.
- **Turn Signal (Right and Left) Indicators** - may also include icon and **TURN SIGNAL ON** reminder textual message in electronic display (12).
- **Washer Fluid Indicator** - icon and textual message in electronic display.

Each indicator in the instrument cluster, except those located within an electronic display unit, is illuminated by a dedicated Light Emitting Diode (LED) that is soldered onto the electronic circuit board. Cluster illumination is accomplished by several dimmable LED units, which illuminate each of the gauge dial faces for visibility when the exterior lighting is turned ON. These LED units are serviced only as a complete unit with the instrument cluster and, if damaged or ineffective, the entire instrument cluster assembly must be replaced. The cluster lens and the cluster hood and mask unit are the only components of the instrument cluster assembly that can be serviced separately.

OPERATION

OPERATION

Indicators are located in various positions within the Instrument Cluster (IC) (also known as the Instrument Panel Cluster/IPC) and are all connected to the electronic circuit board of the IC. Some indicators operate based upon hard-wired inputs to the IC, but most are controlled by Controller Area Network (CAN) data bus messages from other electronic modules in the vehicle. If the IC loses CAN data bus communication, the IC circuitry will automatically turn on the Malfunction Indicator Lamp (MIL) until CAN data bus communication is restored.

The various IC indicators are controlled by different strategies; some require fused ignition output to the IC circuitry and have a switched ground, while others are grounded through the IC circuitry and have a switched battery feed. However, all indicators are completely controlled by the IC microprocessor based upon various hard-wired and electronic message inputs. A few, non-critical indicators are dimmable, but most indicators are illuminated at a fixed intensity, which is not affected by the selected illumination intensity of the IC general illumination Light Emitting Diode (LED) units. The illumination intensity of the dimmable indicators is synchronized with that of the general illumination lighting.

In addition, certain indicators in this IC are automatically or self-configured. This feature allows the configurable indicators to be enabled by the IC circuitry for compatibility with certain optional equipment. These indicators are enabled or disabled by an electronic **configuration** message sent to the IC by the Body Control Module (BCM). The defaults for some indicators may be enabled, and these configuration settings must be programmatically disabled in the BCM using a diagnostic scan tool for vehicles that do not have the equipment the indicator supports. The automatically or self-configured indicators remain latent in each IC at all times and will be active only when the IC receives the appropriate CAN bus message inputs for that optional system or equipment.

The hard-wired indicator inputs may be diagnosed using conventional diagnostic tools and procedures. However, the IC circuitry and electronic CAN data bus message controlled indicators are diagnosed using the self-diagnostic test. Proper testing of the CAN data bus and the electronic data bus message inputs to the IC that control each indicator requires the use of a diagnostic scan tool. Refer to the appropriate diagnostic information. Specific details of the operation for each indicator may be found elsewhere in this service information.

AIRBAG INDICATOR

The airbag indicator gives an indication to the vehicle operator when the airbag system, or a circuit or component of the system is ineffective. The airbag indicator is controlled by a transistor on the IC circuit board based upon programming and electronic messages received by the IC from the Occupant Restraint Controller (ORC) over the CAN data bus. The IC will illuminate the airbag indicator for about six seconds as a bulb test each time the ignition switch status transitions to ON.

The airbag indicator LED is completely controlled by the IC logic circuit, and that logic will only allow this indicator to operate when the IC receives a battery current input on the fused ignition output (run-start) circuit. Therefore, the LED will always be OFF when the ignition switch status is anything except ON or START. The LED only illuminates when it is provided a path to ground by the IC transistor. The IC will turn ON the airbag indicator for the following reasons:

- **Airbag Indicator Lamp-On Message** - Each time the IC receives an electronic **airbag indicator lamp-on** message from the ORC, the airbag indicator will be illuminated. The indicator remains illuminated for about thirty seconds or until the IC receives a lamp-off message from the ORC, whichever is longer. This indicator will also be extinguished when the ignition switch status transitions to OFF.
- **Communication Error** - If the IC receives no lamp-ON or lamp-OFF messages from the ORC for 10 consecutive message cycles, the airbag indicator is illuminated. The indicator remains illuminated until the IC receives a single lamp-OFF message from the ORC.

The ORC continually monitors the airbag system circuits and sensors to decide whether the system is in good operating condition. The ORC then sends the proper electronic **airbag indicator lamp-on** or **lamp-off** message to the IC. If the ORC sends a lamp-on message after the bulb test, it indicates that the ORC has detected a system malfunction or that the airbags and seat belt tensioners may not deploy when required, or may deploy when not required. The ORC will store a DTC for any malfunction it detects. Each time the airbag indicator fails to illuminate due to an open or short in the IC airbag indicator circuit, the IC sends a message notifying the ORC of the condition, then the IC and the ORC will each store a DTC.

For proper diagnosis of the airbag system, the ORC, the IC, the CAN data bus or the electronic communication related to airbag indicator operation a diagnostic scan tool is required. Refer to the appropriate diagnostic information.

AJAR INDICATORS

The ajar indicators give an indication to the vehicle operator that one or more of the passenger compartment doors or the deck lid may be open or not completely latched. These indicators are controlled by a transistor on the IC circuit board based upon programming and electronic messages received by the IC from the Body Control Module (BCM) over the CAN data bus. The BCM monitors hard-wired inputs from the door and deck lid ajar switches.

The ajar indicator function of the electronic display unit is completely controlled by the IC logic circuit, and that logic will only allow this indicator to operate when the IC receives a battery current input on the fused B(+) circuit. The ajar indications can occur regardless of the ignition switch position. The IC will turn ON an ajar indicator for the following reasons:

- **Ajar Indicator Lamp-On Message** - Each time the IC receives an electronic **door ajar indicator lamp-on** or **deck lid ajar indicator lamp-on** message from the BCM indicating that a door or the deck lid or a combination of these is open or not completely latched, the appropriate ajar textual message and icons will be illuminated. If the IC detects a vehicle speed input greater than 8 km/h (5 mph) while the ignition switch status is ON or START, the ajar indication will be accompanied by a single chime tone. All door ajar indications will remain on as long as the cluster is awake.

The ajar switches on the door and deck lid latch mechanisms provide hard-wired ground inputs to the BCM circuitry through the ajar switch sense circuits whenever a door or the deck lid is open or not completely latched. The BCM continually monitors the door and deck lid ajar switches to determine the status of the doors and deck lid, then sends the proper electronic **ajar indicator lamp-on** or **lamp-off** message to the IC.

The hard wired ajar switch inputs to the BCM may be diagnosed using conventional diagnostic tools and procedures. Refer to the appropriate wiring information. For proper diagnosis of the BCM, the IC, the CAN

data bus or the electronic communication related to ajar indicator operation a diagnostic scan tool is required. Refer to the appropriate diagnostic information.

ANTILOCK BRAKE SYSTEM INDICATOR

The Antilock Brake System (ABS) indicator gives an indication to the vehicle operator when the ABS system, or a circuit or component of the system is ineffective. This indicator is controlled by a transistor on the IC circuit board based upon programming and electronic messages received by the IC from the Braking System Module (BSM) over the CAN data bus. The IC will illuminate the ABS indicator for about five seconds as a bulb test each time the ignition switch status transitions to ON.

The ABS indicator LED is completely controlled by the IC logic circuit, and that logic will only allow this indicator to operate when the IC receives a battery current input on the fused ignition output (run-start) circuit. Therefore, the LED will always be OFF when the ignition switch status is anything except ON or START. The LED only illuminates when it is provided a path to ground by the IC transistor. The IC will turn ON the ABS indicator for the following reasons:

- **ABS Indicator Lamp-On Message** - Each time the cluster receives an electronic **ABS indicator lamp-on** message from the BSM, the ABS indicator will be illuminated. The indicator remains illuminated until the IC receives a lamp-off message from the BSM, or until the ignition switch status transitions to OFF, whichever occurs first.
- **Communication Error** - If the IC receives no lamp-on or lamp-off messages from the BSM for five consecutive message cycles, the ABS indicator is illuminated. The indicator remains illuminated until the IC receives a valid message from the BSM, or until the ignition switch status transitions to OFF, whichever occurs first.
- **ABS Diagnostic Test** - The ABS indicator is blinked ON and OFF by lamp-on and lamp-off messages from the BSM during the performance of the ABS diagnostic tests.

The BSM continually monitors the ABS circuits and sensors to decide whether the system is in good operating condition. The BSM then sends the proper electronic **ABS indicator lamp-on** or **lamp-off** message to the IC. If the BSM sends a lamp-on message after the bulb test, it indicates that the BSM has detected a system malfunction or that the ABS system has become ineffective. The BSM will store a DTC for any malfunction it detects. Each time the ABS indicator fails to light due to an open or short in the IC ABS indicator circuit, the IC sends a message notifying the BSM of the condition, then the IC and the BSM will each store a DTC and the IC will flash the brake indicator ON and OFF as a backup to notify the vehicle operator.

For proper diagnosis of the anti-lock brake system, the BSM, the IC, the CAN data bus or the electronic communication related to ABS indicator operation a diagnostic scan tool is required. Refer to the appropriate diagnostic information.

BRAKE/PARK BRAKE INDICATOR

The brake indicator gives an indication to the vehicle operator when the parking brake is applied, when there are certain brake hydraulic system malfunctions as indicated by a low brake hydraulic fluid level condition or when the brake fluid level switch is disconnected. The brake indicator can also give an indication when certain faults are detected in the Antilock Brake System (ABS). This indicator is controlled by the IC logic circuit board based upon programming and electronic messages received by the IC from the CAB or the Body Control

Module (BCM) over the CAN data bus. The IC will illuminate the brake indicator for about three seconds as a bulb test each time the ignition switch status transitions to ON.

The brake indicator is completely controlled by the IC logic circuit, and that logic will only allow this indicator to operate when the IC receives a battery current input on the fused ignition output (run-start) circuit. Therefore, the brake indicator will always be OFF when the ignition switch status is anything except ON or START. The IC will turn ON the brake indicator for the following reasons:

- **Brake Indicator Lamp-On Message** - Each time the IC receives an electronic **brake indicator lamp-on** message from the CAB, the brake indicator will be illuminated. The CAB may also send lamp-on messages as feedback during ABS diagnostic procedures. The indicator remains illuminated until the IC receives a lamp-off message from the CAB or until the ignition switch status transitions to OFF, whichever occurs first.
- **Low Brake Fluid Textual Warning Message** - When the CAB detects a low brake fluid level input from the brake fluid level switch, it will send an electronic **textual warning request** message requesting the IC display a textual warning message. Each time the IC receives this message from the CAB, a **BRAKE FLUID LOW** textual message will appear within the IC electronic display to accompany brake indicator illumination. This message indicates that the CAB has detected a low brake fluid level condition in the brake master cylinder or that there is a problem in the brake fluid level switch or circuits.
- **Park Brake Switch Input** - When the BCM detects an input from the park brake switch while the ignition switch status is ON, it will send electronic **brake indicator lamp-flash** and **textual warning request** messages to the IC. Each time the IC receives these messages from the BCM it will flash the brake indicator ON and OFF and a **PARKING BRAKE ENGAGED** textual message will appear within the IC electronic display to accompany brake indicator illumination. While the ignition switch status is ON, the BCM monitors the park brake switch through the park brake switch sense circuit (park brake switch closed = park brake applied or not fully released). The indicator continues to flash until the park brake switch sense input to the BCM is an open circuit (park brake switch open = park brake fully released), or until the ignition switch status transitions to OFF, whichever occurs first.
- **Antilock Brake System (ABS) Indicator Backup** - If the IC detects a fault in the ABS indicator circuit it will send a message indicating the fault to the CAB, then flash the brake indicator ON and OFF. The IC will continue to flash the brake indicator until the ABS indicator circuit fault is resolved, or until the ignition switch status transitions to OFF, whichever occurs first.

The park brake switch on the park brake lever mechanism provides a hard-wired ground input to the BCM circuitry through the park brake switch sense circuit whenever the park brake is applied or not fully released. The CAB continually monitors the ABS system circuits and sensors, including the brake fluid level switch on the brake master cylinder reservoir, to decide whether the system is in good operating condition. The BCM or the CAB then sends the proper electronic **brake indicator lamp-on** , **lamp-off** or **lamp-flash** messages to the IC. If the CAB sends a lamp-on message after the bulb test, it indicates that the CAB has detected a brake hydraulic system malfunction or that the ABS system has become ineffective. The CAB will store a DTC for any malfunction it detects.

The hard wired inputs to the BCM or the CAB may be diagnosed using conventional diagnostic tools and procedures. Refer to the appropriate wiring information. For proper diagnosis of the brake fluid level switch, the ABS, the BCM, the CAB, the IC, the CAN data bus or the electronic communication related to brake indicator operation a diagnostic scan tool is required. Refer to the appropriate diagnostic information.

CHANGE OIL INDICATOR

The change oil indicator gives an indication to the vehicle operator when a duty-cycle algorithm contained within the software of the PCM determines that a recommended oil change interval has been attained. This indicator is controlled by the IC logic circuit based upon cluster programming and electronic messages received over the CAN data bus from the PCM.

The change oil indicator function of the IC electronic display unit is completely controlled by the IC logic circuit, and that logic will only allow this indicator to operate when the IC receives a battery current input on the fused ignition output (run-start) circuit. Therefore, the change oil indication will always be OFF when the ignition switch status is anything except ON or START. The IC will turn ON the change oil indicator for the following reasons:

- **Change Oil Indicator Lamp-On Message** - Each time the ignition switch status transitions to ON and the IC receives an electronic **change oil indicator lamp-on** message from the PCM indicating that a duty-cycle based recommended oil change interval has been attained, the change oil indicator will be illuminated for about ten seconds, until the IC arbitrator logic determines that another display request has priority, or until the ignition switch status transitions to OFF, whichever occurs first.
- **Change Oil Indicator Reset Procedure** - Once an engine oil change has been completed, the PCM duty cycle counters can be reset using the following procedure. Transition the ignition switch status to ON, but DO NOT start the engine. Slowly depress and release the accelerator pedal fully three times within ten seconds. The IC will display a textual **OIL CHANGE RESET** message. Transition the ignition switch status to OFF. If the change oil indicator illuminates the next time the engine is started, repeat this procedure.

The PCM continually monitors numerous sensor inputs to determine the duty-cycles to which the engine is being subjected. A pre-programmed algorithm within the PCM then determines when to send the proper electronic **change oil indicator lamp-on** or **lamp-off** message to the IC.

For proper diagnosis of the change oil indicator, the PCM, the IC, the CAN data bus or the electronic communication related to change oil indicator operation a diagnostic scan tool is required. Refer to the appropriate diagnostic information.

CHARGING INDICATOR

The charging indicator gives an indication to the vehicle operator when the electrical system voltage is too low or too high. This indicator is controlled by the IC logic circuit based upon programming and electronic messages received by the IC from the PCM over the CAN data bus. The IC will illuminate the charge indicator for about three seconds as a bulb test each time the ignition switch status transitions to ON.

The charging indicator is completely controlled by the IC logic circuit, and that logic will only allow this indicator to operate when the IC receives a battery current input on the fused ignition output (run-start) circuit. Therefore, the charging indicator will always be OFF when the ignition switch status is anything except ON or START. The IC will turn ON the charging indicator for the following reasons:

- **Voltage Low Message** - Each time the IC receives an electronic **system voltage** message from the PCM indicating the voltage is low (less than about 11.5 volts is a charge fail condition), the charging indicator

will be illuminated. The indicator remains illuminated until the IC receives a message from the PCM indicating the voltage is normal (greater than about 12.0 volts, but less than 16.0 volts), or until the ignition switch status transitions to OFF, whichever occurs first.

- **Voltage High Message** - Each time the IC receives an electronic **system voltage** message from the PCM indicating the voltage is high (greater than about 16.0 volts), the charging indicator will be illuminated. The indicator remains illuminated until the IC receives a message from the PCM indicating the voltage is normal (less than about 15.5 volts, but greater than 11.5 volts), or until the ignition switch status transitions to OFF, whichever occurs first.

The PCM continually monitors the electrical system voltage to control the generator output. The PCM then sends the proper electronic **system voltage** messages to the IC. If the IC turns ON the charging indicator due to a charge fail or voltage high condition, it may indicate that the charging system requires service.

For proper diagnosis of the charging system, the PCM, the IC, the CAN data bus or the electronic communication related to charging indicator operation a diagnostic scan tool is required. Refer to the appropriate diagnostic information.

CRUISE INDICATOR

The cruise indicator gives two indications to the vehicle operator. When the speed control system is ON, but not engaged, the indicator is illuminated in an amber color. When the speed control system is ON and engaged, the indicator is illuminated in a green color. This indicator is controlled by the IC logic circuit based upon programming and electronic messages received by the IC from the PCM over the CAN data bus.

The cruise indicator is completely controlled by the IC logic circuit, and that logic only allows this indicator to operate when the IC receives a battery current input on the fused ignition output (run-start) circuit. Therefore, the indicator will always be OFF when the ignition switch status is anything except ON or START. The IC will turn ON the cruise indicator for the following reasons:

- **Cruise Ready Lamp-On Message** - Each time the IC receives an electronic **cruise ready lamp-on** message from the PCM indicating the speed control system is ON, but not actively engaged, the cruise indicator is illuminated in an amber color. The indicator remains illuminated in amber until the IC receives a cruise ready lamp-off message from the PCM, a cruise engaged lamp-on message from the PCM or until the ignition switch status transitions to OFF, whichever occurs first.
- **Cruise Engaged Lamp-On Message** - Each time the cluster receives an electronic **cruise engaged lamp-on** message from the PCM indicating the speed control system is actively engaged, the cruise indicator is illuminated in a green color. The indicator remains illuminated in green until the IC receives a cruise engaged lamp-off message from the PCM, a cruise ready lamp-on message from the PCM or until the ignition switch status transitions to OFF, whichever occurs first.

The PCM continually monitors inputs received from the speed control switch pod through the Steering Control Module (SCM) over the CAN data bus to determine the appropriate outputs to control the vehicle speed. The PCM then sends the proper electronic **cruise ready** and **cruise engaged lamp-on** or **lamp-off** messages to the IC.

For proper diagnosis of the speed control switch pod, the SCM, the PCM, the IC, the CAN data bus or the electronic communication related to cruise indicator operation a diagnostic scan tool is required. Refer to the

appropriate diagnostic information.

ELECTRIC POWER STEERING INDICATOR

The Electric Power Steering (EPS) indicator gives an indication to the vehicle operator when the EPS system, or a circuit or component of the system is ineffective. This indicator is controlled by the IC logic circuit based upon programming and electronic messages received by the IC from the EPS Electronic Control Unit (ECU) over the CAN data bus. The IC will illuminate the EPS indicator for about three seconds as a bulb test each time the ignition switch status transitions to ON.

The EPS indicator is completely controlled by the IC logic circuit, and that logic only allows this indicator to operate when the IC receives a battery current input on the fused ignition output (run-start) circuit. Therefore, the indicator will always be OFF when the ignition switch status is anything except ON or START. The IC will turn ON the EPS indicator for the following reasons:

- **EPS Indicator Lamp-On Message** - Each time the cluster receives an electronic **EPS indicator lamp-on** message from the EPS ECU, the EPS indicator will be illuminated. The indicator remains illuminated until the IC receives a lamp-off message from the EPS ECU, or until the ignition switch status transitions to OFF, whichever occurs first.
- **EPS Textual Warning Message** - When the EPS ECU detects that the EPS system has become ineffective, it will send an electronic **textual warning request** message requesting the IC display a textual warning message. Each time the IC receives this message from the EPS ECU, a **SERVICE POWER STEERING** textual message will appear within the IC electronic display to accompany EPS indicator illumination. This message indicates that the EPS ECU has detected a problem in the EPS system components or circuits.
- **Communication Error** - If the IC receives no lamp-on or lamp-off messages from the EPS ECU for five consecutive message cycles, the EPS indicator is illuminated. The indicator remains illuminated until the IC receives a valid message from the EPS ECU, or until the ignition switch status transitions to OFF, whichever occurs first.

The EPS ECU continually monitors the EPS circuits and sensors to decide whether the system is in good operating condition. The EPS ECU then sends the proper electronic **EPS indicator lamp-on** or **lamp-off** message to the IC. If the EPS ECU sends a lamp-on message after the bulb test, it indicates that the ECU has detected a system malfunction or that the EPS system has become ineffective. The ECU will store a DTC for any malfunction it detects.

For proper diagnosis of the EPS system, the EPS ECU, the IC, the CAN data bus or the electronic communication related to EPS indicator operation a diagnostic scan tool is required. Refer to the appropriate diagnostic information.

ELECTRONIC STABILITY CONTROL INDICATORS

The Electronic Stability Control (ESC) indicators give an indication to the vehicle operator of the ESC system status. These indicators are controlled by transistors on the IC circuit board based upon cluster programming and electronic messages received by the IC from the CAB over the CAN data bus. The IC will illuminate the ESC indicators for about four seconds as a bulb test each time the ignition switch status transitions to ON.

The ESC indicator and the ESC OFF indicator LED units are completely controlled by the IC logic circuit, and that logic will only allow these indicators to operate when the IC receives a battery current input on the fused ignition output (run-start) circuit. Therefore, the ESC and ESC OFF indicator LED units will always be OFF when the ignition switch status is anything except ON or START. The LED units only illuminate when provided a path to ground by the IC transistors. The IC will turn ON the ESC indicators for the following reasons:

- **ESC Indicator Lamp-On Message** - Each time the IC receives an electronic **ESC indicator lamp-on** message from the CAB indicating that the ESC system has been activated, the ESC indicator will be illuminated. The indicator remains illuminated until the IC receives a lamp-off message from the CAB, or until the ignition switch status transitions to OFF, whichever occurs first.
- **ESC Off Indicator Lamp-On Message** - Each time the IC receives an electronic **ESC Off indicator lamp-on** message from the CAB indicating that the ESC system has been manually disabled, the ESC Off indicator will be illuminated. The indicator remains illuminated until the IC receives a lamp-off message from the CAB, or until the ignition switch status transitions to OFF, whichever occurs first.
- **ESC Off Textual Message** - Each time the IC receives an electronic **ESC Off indicator lamp-on** message from the CAB indicating that the ESC system has been manually disabled, a **TRACTION CONTROL OFF** textual message will appear within the IC electronic display unit. The textual message remains displayed until the IC receives a lamp-off message from the CAB, until the IC arbitrator logic determines that another display request has priority, or until the ignition switch status transitions to OFF, whichever occurs first.

The CAB continually monitors the ESC system circuits and sensors to decide whether the system is in good operating condition and the proper outputs to the components of the system. The CAB then sends the proper **ESC indicator** and **ESC Off indicator lamp-ON** or **lamp-OFF** message to the IC.

For proper diagnosis of the ESC system, the CAB, the IC, the CAN data bus or the electronic communication related to the ESC or ESC Off indicator operation a diagnostic scan tool is required. Refer to the appropriate diagnostic information.

ELECTRONIC THROTTLE CONTROL INDICATOR

The Electronic Throttle Control (ETC) indicator gives an indication to the vehicle operator when the ETC system, or a circuit or component of the system is ineffective. The ETC indicator is controlled by the IC logic circuit based upon programming and electronic messages received by the IC from the Powertrain Control Module (PCM) over the CAN data bus. The IC will illuminate the ETC indicator for about fifteen seconds as a bulb test each time the ignition switch status transitions to ON.

The ETC indicator is completely controlled by the IC logic circuit, and that logic will only allow this indicator to operate when the IC receives a battery current input on the fused ignition output (run-start) circuit. Therefore, the indicator will always be OFF when the ignition switch status is anything except ON or START. The IC will turn ON the ETC indicator for the following reasons:

- **ETC Indicator Lamp-On Message** - Each time the IC receives an electronic **ETC indicator lamp-on** message from the PCM, the ETC indicator will be illuminated. The indicator can be flashed ON and OFF, or illuminated solid, as dictated by the PCM message. The indicator remains illuminated solid or continues to flash for about 12 seconds or until the IC receives a lamp-off message from the PCM,

whichever is longer. If the indicator is illuminated solid with the engine running the vehicle will usually remain drivable. If the indicator is flashing with the engine running the vehicle may require towing. A flashing indicator means the ETC system requires immediate service. The indicator will be extinguished when the ignition switch status transitions to OFF.

- **ETC Indicator Textual Message** - Each time the IC receives an electronic **ETC indicator lamp-on** message from the PCM indicating that the ETC system has become ineffective, a **SERVICE ELECTRONIC THROTTLE CONTROL** textual message will appear within the IC electronic display unit. The textual message remains displayed until the IC receives a lamp-off message from the PCM, until the IC arbitrator logic determines that another display request has priority, or until the ignition switch status transitions to OFF, whichever occurs first.

The PCM continually monitors the ETC system circuits and sensors to decide whether the system is in good operating condition. The PCM then sends the proper electronic **ETC indicator lamp-on** or **lamp-off** message to the IC. If the PCM sends a lamp-on message after the bulb test, it indicates that the PCM has detected an ETC system malfunction or that the ETC system is ineffective. The PCM will store a DTC for any malfunction it detects. Each time the ETC indicator fails to illuminate due to an open or short in the IC ETC indicator circuit, the IC sends a message notifying the PCM of the condition, then the IC and the PCM will each store a DTC.

For proper diagnosis of the ETC system, the PCM, the IC, the CAN data bus or the electronic communication related to the ETC indicator operation a diagnostic scan tool is required. Refer to the appropriate diagnostic information.

ENGINE TEMPERATURE INDICATOR

The engine temperature indicator gives an indication to the vehicle operator when the engine temperature reflects a condition requiring immediate attention. This indicator is controlled by the IC logic circuit based upon programming and electronic messages received by the IC from the PCM over the CAN data bus. The IC will illuminate the engine temperature indicator for about three seconds as a bulb test each time the ignition switch status transitions to ON.

The engine temperature indicator is completely controlled by the IC logic circuit, and that logic will only allow this indicator to operate when the IC receives a battery current input on the fused ignition output (run-start) circuit. Therefore, the engine temperature indicator will always be OFF when the ignition switch status is anything except ON or START. The IC will turn ON the engine temperature indicator for the following reasons:

- **Engine Temperature High Message** - Each time the IC receives an electronic **engine temperature** message from the PCM indicating the engine coolant temperature is high, the engine temperature indicator will be illuminated and a single chime tone is sounded. The indicator remains illuminated until a message is received from the PCM indicating that the engine coolant temperature is below the high end of normal, or until the ignition switch status transitions to OFF, whichever occurs first. The chime tone feature will only repeat during the same ignition cycle if the engine temperature indicator is cycled off and then on again by the appropriate engine temperature messages from the PCM.
- **Engine Temperature Textual Message** - Each time the IC receives an electronic **engine temperature** message from the PCM indicating the engine coolant temperature is high, a **ENGINE TEMPERATURE HOT** textual message will appear within the IC electronic display unit. The textual message remains displayed until a message is received from the PCM indicating that the engine coolant temperature is

below the high end of normal, until the IC arbitrator logic determines that another display request has priority, or until the ignition switch status transitions to OFF, whichever occurs first.

The PCM continually monitors the engine coolant temperature sensor to determine the engine operating temperature. The PCM then sends the proper electronic **engine temperature** messages to the IC. If the IC turns ON the engine temperature indicator due to a high engine coolant temperature condition, it may indicate that the engine or the engine cooling system requires service.

For proper diagnosis of the engine temperature sensor, the PCM, the IC, the CAN data bus or the electronic communication related to the engine temperature indicator operation a diagnostic scan tool is required. Refer to the appropriate diagnostic information.

FRONT FOG LAMP INDICATOR

The front fog lamp indicator gives an indication to the vehicle operator whenever the front fog lamps are illuminated. This indicator is controlled by a transistor on the IC circuit board based upon programming and electronic messages received by the IC from the BCM over the CAN data bus.

The front fog lamp indicator LED is completely controlled by the IC logic circuit, and that logic will allow this indicator to operate whenever the IC receives a battery current input on the fused B(+) circuit. Therefore, the LED can be illuminated regardless of the ignition switch status. The LED only illuminates when it is provided a path to ground by the IC transistor. The IC will turn ON the front fog lamp indicator for the following reasons:

- **Front Fog Indicator Lamp-On Message** - Each time the IC receives an electronic **front fog indicator lamp-on** message from the BCM indicating the front fog lamps are turned ON, the front fog lamp indicator will be illuminated. The indicator remains illuminated until the IC receives a lamp-OFF message from the BCM, or until the exterior lamp load shedding (battery saver) timed interval expires, whichever occurs first.

The BCM continually monitors a hard wired input from the exterior lighting switch to determine the appropriate outputs to the front fog lamps. The BCM activates or deactivates the front fog lamps then sends the proper electronic **front fog indicator lamp-on** or **lamp-off** message to the IC to control the front fog lamp indicator.

For proper diagnosis of the front fog lamp system, the BCM, the IC, the CAN data bus or the electronic communication related to front fog lamp indicator operation a diagnostic scan tool is required. Refer to the appropriate diagnostic information.

HIGH BEAM INDICATOR

The high beam indicator gives an indication to the vehicle operator whenever the headlamp high beams are illuminated. This indicator is controlled by a transistor on the IC circuit board based upon programming and electronic messages received from the BCM over the CAN data bus.

The high beam indicator LED is completely controlled by the IC logic circuit, and that logic will allow this indicator to operate whenever the IC receives a battery current input on the fused B(+) circuit. Therefore, the LED can be illuminated regardless of the ignition switch status. The LED only illuminates when it is provided a path to ground by the IC transistor. The IC will turn ON the high beam indicator for the following reasons:

- **High Beam Indicator Lamp-On Message** - Each time the IC receives an electronic **high beam indicator lamp-on** message from the BCM indicating the high beam lamps are turned ON, the high beam indicator will be illuminated. The indicator remains illuminated until the IC receives a lamp-off message from the BCM, or until the exterior lamp load shedding (battery saver) timed interval expires, whichever occurs first.

The BCM continually monitors electronic **beam select switch status** messages received from the Steering Control Module (SCM) over the CAN data bus as well as messages from the Automatic High Beam Module (AHBM) (also known as SmartBeam® on vehicles so equipped) over the Local Interface Network (LIN) data bus to determine the appropriate outputs to the headlamps. The BCM activates or deactivates the headlamp high beams then sends the proper **high beam indicator lamp-on** or **lamp-off** message to the IC.

For proper diagnosis of the SCM, the AHBM, the BCM, the IC, the CAN data bus, the LIN data bus or the electronic communication related to high beam indicator operation a diagnostic scan tool is required. Refer to the appropriate diagnostic information.

LOW FUEL INDICATOR

The low fuel indicator gives an indication to the vehicle operator when the level of fuel in the fuel tank becomes low. This indicator is controlled by the IC logic circuit based upon programming and electronic messages received from the PCM over the CAN data bus. The IC will illuminate the low fuel indicator for about three seconds as a bulb test each time the ignition switch status transitions to ON.

The low fuel indicator is completely controlled by the IC logic circuit, and that logic will only allow this indicator to operate when the IC receives a battery current input on the fused ignition output (run-start) circuit. Therefore, the low fuel indicator will always be OFF when the ignition switch status is anything except ON or START. The IC will turn ON the low fuel indicator for the following reasons:

- **Less Than 11 Percent Tank Full Input** - The PCM provides a constant current source to the fuel level sending unit, and monitors a return input on a fuel level sense circuit. The resistance through the fuel level sending unit increases as the fuel level falls, and decreases as the fuel level rises causing changes in the sense input voltage. Each time the fuel level sense input to the PCM indicates the fuel tank is about 11 percent full or less for 10 consecutive seconds and the vehicle speed is zero, or for 60 consecutive seconds and the vehicle speed is greater than zero, the PCM sends an electronic message to the IC. Then the IC moves the gauge needle to the appropriate position on the gauge scale; the low fuel indicator is illuminated and a single chime tone is sounded. The low fuel indicator remains illuminated until the fuel level sense input indicates that the fuel tank is greater than about 14 percent full for 10 consecutive seconds and the vehicle speed is zero, or for 60 consecutive seconds and the vehicle speed is greater than zero, or until the ignition switch transitions to OFF, whichever occurs first. The chime tone feature will only repeat during the same ignition cycle if the low fuel indicator is cycled OFF and then ON again by the appropriate inputs from the fuel level sending unit.
- **Less Than Empty Stop Input** - Each time the IC receives a fuel level message from the PCM that indicates the fuel level in the fuel tank is less than the **E** (or Empty) gauge needle stop position for five consecutive seconds, the gauge needle is moved to the low end of the gauge scale and the low fuel indicator is illuminated immediately. This input would indicate that the fuel level sense input to the PCM is a short circuit.
- **More Than Full Stop Input** - Each time the IC receives a fuel level message from the PCM that

indicates the fuel level in the fuel tank is more than the **F** (or Full) gauge needle stop position for five consecutive seconds, the gauge needle is moved to the low end of the gauge scale and the low fuel indicator is illuminated immediately. This input would indicate that the fuel level sense input to the PCM is an open circuit.

The PCM continually monitors the fuel tank sending unit to determine the level of fuel in the fuel tank. The PCM then sends the proper electronic **fuel level** message to the IC and other electronic modules in the vehicle over the CAN data bus. The PCM will store a DTC for any fault detected in the fuel level sense circuit.

For proper diagnosis of the fuel tank sending unit, the PCM, the IC, the CAN data bus or the electronic communication related to low fuel indicator operation or fuel level data processing, a diagnostic scan tool is required. Refer to the appropriate diagnostic information.

MALFUNCTION INDICATOR LAMP

The Malfunction Indicator Lamp (MIL) gives an indication to the vehicle operator when the PCM has recorded a DTC for an On-Board Diagnostics II (OBDII) emissions-related circuit or component malfunction. The MIL is controlled by a transistor on the IC circuit board based upon programming and electronic messages received by the IC from the PCM over the CAN data bus. The IC will illuminate the MIL indicator for about fifteen seconds as a bulb test each time the ignition switch status transitions to ON.

The MIL LED is completely controlled by the IC logic circuit, and that logic will only allow this indicator to operate when the IC receives a battery current input on the fused ignition output (run-start) circuit. Therefore, the LED will always be OFF when the ignition switch status is anything except ON or START. The LED only illuminates when it is energized by the IC transistor. The IC will turn ON the MIL for the following reasons:

- **MIL Lamp-On Message** - Each time the IC receives an electronic **MIL lamp-on** message from the PCM, the indicator will be illuminated. The indicator can be flashed ON and OFF, or illuminated solid, as dictated by the PCM message. For some DTCs, if a problem does not recur, the PCM will send a lamp-off message automatically. Other DTCs may require that a fault be repaired and the PCM be reset before a lamp-off message will be sent. In the absence of a lamp-off message, the indicator remains illuminated until the ignition switch status transitions to OFF.
- **Communication Error** - If the IC receives no lamp-on or lamp-off messages from the PCM for 10 consecutive message cycles, the MIL is illuminated by the IC to indicate a loss of bus communication. The indicator remains controlled and illuminated by the IC until a valid message is received from the PCM.

The PCM continually monitors the fuel and emissions system circuits and sensors to decide whether the system is in good operating condition. The PCM then sends the proper electronic **MIL lamp-on** or **lamp-off** message to the IC. If the IC turns ON the MIL after the bulb test, it may indicate that a malfunction has occurred and that the fuel and emissions systems require service.

For proper diagnosis of the fuel and emissions systems, the PCM, the IC, the CAN data bus or the electronic communication related to MIL operation a diagnostic scan tool is required. Refer to the appropriate diagnostic information.

OIL PRESSURE INDICATOR

The low oil pressure indicator gives an indication to the vehicle operator when the engine oil pressure reading reflects a condition requiring immediate attention. This indicator is controlled by the IC logic circuit based upon programming and electronic messages received by the IC from the PCM over the CAN data bus.

The low oil pressure indicator is completely controlled by the IC logic circuit, and that logic will only allow this indicator to operate when the IC receives a battery current input on the fused ignition output (run-start) circuit. Therefore, the low oil pressure indicator will always be OFF when the ignition switch status is anything except ON or START. The IC will turn ON the low oil pressure indicator for the following reasons:

- **Engine Oil Pressure Low Message** - Each time the IC receives an electronic **engine oil pressure** message from the PCM indicating the pressure is about 6.9 kPa (1 psi) or lower, the low oil pressure indicator will be illuminated. The indicator can be flashed ON and OFF, or illuminated solid, as dictated by the PCM message. The indicator remains illuminated solid or flashing until the cluster receives a message from the PCM indicating that the pressure is above about 6.9 kPa (1 psi), or until the ignition switch status transitions to OFF, whichever occurs first. The IC will only turn the indicator ON in response to low engine oil pressure if the engine speed is greater than zero.

The PCM continually monitors the engine oil pressure sensor to determine the engine oil pressure. The PCM then sends the proper electronic **oil pressure** messages to the IC. If the IC turns ON the indicator after the bulb test, it may indicate that the engine or the engine oiling system requires service.

For proper diagnosis of the engine oil pressure sensor, the PCM, the IC, the CAN data bus or the electronic communication related to low oil pressure indicator operation a diagnostic scan tool is required. Refer to the appropriate diagnostic information.

SEAT BELT INDICATOR

The seatbelt indicator gives an indication to the vehicle operator of the status of the front seat belts. This indicator is controlled by a transistor on the IC circuit board based upon programming and electronic messages received from the ORC over the CAN data bus.

The seatbelt indicator also includes a programmable enhanced seatbelt reminder (also known as Beltminder) feature that is enabled when the vehicle is shipped from the factory. This feature can be disabled and enabled by the customer using a specific programming event sequence, or by the dealer using a diagnostic scan tool.

The seatbelt indicator LED is completely controlled by the IC logic circuit, and that logic will only allow this indicator to operate when the IC receives a battery current input on the fused ignition output (run-start) circuit. Therefore, the LED will always be OFF when the ignition switch status is anything except ON or START. The LED only illuminates when it is provided a path to ground by the IC transistor. The IC will turn ON the seatbelt indicator for the following reasons:

- **Seatbelt Reminder Function** - Each time the IC receives a battery current input on the fused ignition output (run-start) circuit, the indicator will be illuminated as a seatbelt reminder for about six seconds, or until the ignition switch status transitions to OFF, whichever occurs first. This reminder function will occur regardless of the status of the seatbelt switch inputs to the ORC.
- **Front Seat Belt Not Buckled Message - Beltminder Active** - Following the seatbelt reminder function, each time the IC receives an electronic **driver side** or **passenger side front seat belt unbuckled status**

message from the ORC while the ignition switch status is START or ON, the indicator will be illuminated. In addition, if the front seat belt remains unbuckled about 60 seconds after the conclusion of the seatbelt reminder function with the vehicle speed greater than about 8 kilometers-per-hour (5 miles-per-hour), the seat belt indicator will begin to cycle between flashing ON and OFF for 3 seconds, then lighting solid for 2 seconds. The seat belt indicator will continue to cycle between flashing and solid illumination for 13 complete cycles, until the seat belt switch sense inputs to the ORC are closed circuits (seat belt switch closed = seat belt buckled) or until the ignition switch status transitions to OFF, whichever occurs first.

- **Front Seat Belt Not Buckled Message - Beltminder Inactive** - Following the seat belt reminder function, each time the IC receives an electronic **seat belt indicator lamp-on** message from the ORC while the ignition switch status is START or ON, the indicator will be illuminated. The indicator remains illuminated until the IC receives a lamp-off message from the ORC or until the ignition switch status transitions to OFF, whichever occurs first.

Each seat belt switch is connected in series between source current and a sense circuit from the ORC. The ORC continually monitors the seat belt switch circuits then sends the proper electronic **seat belt indicator lamp-on** or **lamp-off** messages to the IC.

The seat belt switch inputs to the ORC may be diagnosed using conventional diagnostic tools and procedures. Refer to the appropriate wiring information. For proper diagnosis of the ORC, the IC, the CAN data bus or the electronic communication related to seat belt indicator operation a diagnostic scan tool is required. Refer to the appropriate diagnostic information.

SECURITY INDICATOR

The security indicator gives an indication to the vehicle operator when the Vehicle Theft Security System (VTSS) is arming or is armed. On vehicles equipped with the Sentry Key Immobilizer System (SKIS), the security indicator also gives an indication to the vehicle operator of the status of the SKIS. On vehicles so equipped, the BCM also monitors electronic messages received from the Radio Frequency Hub Module (RFHM) (also known as the RF Hub) over the CAN data bus for the SKIS status features. The BCM will illuminate the security indicator for about three seconds as a bulb test each time the ignition switch status transitions to ON.

The security indicator LED is completely controlled by the BCM, and that logic will allow this indicator to operate whenever the BCM receives a battery current input on the fused B(+) circuit. Therefore, the LED can be illuminated regardless of the ignition switch status. The LED only illuminates when it is provided a path to ground by the BCM. Depending upon the programmed condition the indicator can be illuminated solid, flashed at a slow rate (0.5 Hertz, 12.5 percent duty cycle), or flashed at a fast rate (1 Hertz, 50 percent duty cycle). The BCM will turn ON the security indicator for the following reasons:

- **VTSS Arming Or Armed** - During the 16 second VTSS arming function, the BCM will flash the security indicator ON and OFF repeatedly at a steady, fast rate to indicate that the VTSS is in the process of arming. Following successful VTSS arming, the BCM will flash the security indicator ON and OFF continuously at a slower rate to indicate that the VTSS is armed. The security indicator continues flashing at the slower rate until the VTSS is disarmed or triggered. If the VTSS has alarmed and rearmed, the BCM will flash the security indicator at a steady, slow rate for about 30 seconds after the VTSS is disarmed.

- **SKIS Indicator Lamp-On Message** - Each time the BCM receives an electronic **SKIS indicator lamp-on** message from the RFHM, the security indicator will be illuminated. The indicator can be flashed ON and OFF, or illuminated solid, as dictated by the RFHM message. The indicator remains illuminated solid or continues to flash until the BCM receives a lamp-off message from the RFHM, or until the ignition switch status transitions to OFF, whichever occurs first. Refer to **OPERATION** .
- **SKIS Textual Message** - When the RFHM detects certain monitored conditions or is placed in the programming mode it will send electronic messages requesting the IC display certain textual messages, and the appropriate textual message or combination of messages is illuminated in the electronic display unit. **PROGRAMMING ACTIVE** , **NEW KEY PROGRAMMED** , **REMOTE KEY BATTERY LOW** and **SERVICE SECURITY KEY** messages appear individually, while a **KEY NOT PROGRAMMED** message is followed by either a **DAMAGED KEY** , **INVALID KEY** or **EXCEEDED KEY PROGRAM LIMIT** message and an **INVALID KEY** message is followed by a **TRY ALTERNATE KEY** message. The textual messages related to key programming are active only on vehicles sold in markets where customer programming is an available feature of the SKIS.
- **Communication Error** - If the BCM receives no lamp-on or lamp-off messages from the RFHM for 10 consecutive message cycles, the security indicator is illuminated. The indicator remains controlled and illuminated by the BCM until a valid lamp-on or lamp-off message is received from the RFHM.

The BCM circuitry controls the security indicator whenever the ignition switch status is OFF and the VTSS is arming, armed or alarming. Whenever the ignition switch status is ON or START, the RFHM performs a self-test to decide whether the SKIS is in good operating condition and whether a valid key is present within the vehicle. The RFHM then sends the proper electronic **security indicator lamp-on** or **lamp-off** message to the BCM. If the BCM flashes the security indicator when the ignition switch transitions to ON, or turns ON the security indicator solid after the bulb test, it indicates that a SKIS malfunction has occurred or that the SKIS is ineffective.

For proper diagnosis of the VTSS, the SKIS, the BCM, the RFHM, the IC, the CAN data bus or the electronic communication related to security indicator operation a diagnostic scan tool is required. Refer to the appropriate diagnostic information.

TIRE PRESSURE MONITOR INDICATOR

The Tire Pressure Monitor (TPM) indicator gives an indication to the vehicle operator of the status of the TPM system. This indicator is controlled by a transistor on the IC circuit board based upon programming and electronic messages received by the IC from the RFHM over the CAN data bus. The IC will illuminate the TPM indicator for about three seconds as a bulb test each time the ignition switch status transitions to ON.

The TPM indicator LED is completely controlled by the IC logic circuit, and that logic will only allow this indicator to operate when the IC receives a battery current input on the fused ignition output (run-start) circuit. Therefore, the LED will always be OFF when the ignition switch status is anything except ON or START. The LED only illuminates when it is provided a path to ground by the IC transistor. The IC will turn ON the TPM indicator for the following reasons:

- **TPM Indicator Lamp-On Message** - Each time the IC receives an electronic **TPM indicator lamp-on** message from the RFHM, the TPM indicator will be illuminated. The indicator can be flashed ON and OFF, or illuminated solid, as dictated by the RFHM message. The indicator remains illuminated until the IC receives a lamp-off message from the RFHM, or until the ignition switch status transitions to OFF,

whichever occurs first.

- **TPM Low Pressure Message** - Each time the IC receives an electronic **low pressure** message from the RFHM, a vehicle icon with a flashing box containing the pressure value for the identified low tire or tires location or locations will appear within the IC electronic display unit to accompany a solid TPM indicator. This message indicates that the RFHM has received a low tire pressure input from the tire pressure sensor in the identified location on the vehicle.
- **TPM Textual Warning Message** - When the RFHM detects certain monitored fault conditions in the TPM system, it will send electronic messages requesting the IC display a textual warning message. Each time the IC receives an electronic **textual warning request** message from the RFHM, a **SERVICE TIRE PRESSURE MONITORING SYSTEM** textual message will appear within the electronic display unit to accompany a flashing TPM indicator or to replace the TPM **LOW TIRE** icon display. This message indicates that the RFHM has detected a problem in one of the TPM system components.
- **Communication Error** - If the IC receives no TPM lamp-on or lamp-off messages from the RFHM for six consecutive seconds, the TPM indicator is illuminated by the IC. The indicator remains controlled and illuminated by the IC until a valid lamp-on or lamp-off message is received from the RFHM.

The RFHM performs a self-test each time the ignition switch status transitions to ON to decide whether the TPM system is in good operating condition and whether the tire inflation pressures are too high or too low. The RFHM then sends the proper electronic **TPM indicator lamp-on** or **lamp-off** message to the IC. If the IC turns ON the TPM indicator after the bulb test, it indicates that the inflation pressure of a tire is too low or that a malfunction has occurred and the TPM system is ineffective.

For proper diagnosis of the TPM system, the RFHM, the IC, the CAN data bus or the electronic communication related to TPM indicator operation a diagnostic scan tool is required. Refer to the appropriate diagnostic information.

TRANSMISSION RANGE INDICATOR

The transmission range indicator (also known as the electronic gear selector indicator) gives an indication to the vehicle operator of the transmission gear that has been selected with the automatic transmission gear selector lever. This indicator is controlled by the IC logic circuit based upon programming and electronic messages received over the CAN data bus from the Gear Shift Module (GSM). The IC circuitry automatically configures itself for the proper transmission type based upon an electronic **configuration** message sent to the IC by the BCM.

The transmission range indicator function of the IC electronic display unit is completely controlled by the IC logic circuit, and that logic will only allow this indicator to operate when the IC receives a battery current input on the fused ignition output (run-start) circuit. Therefore, the transmission range indicator will always be OFF when the ignition switch status is anything except ON or START. Each time the IC is disconnected from battery current for more than about five minutes, it must configure itself for the automatic transmission type that is in the vehicle once it is reconnected to battery current. The IC will turn ON the gear selector indicator for the following reasons:

- **Selected Gear Message** - Each time the IC receives an electronic **selected gear** message from the GSM indicating the automatic transmission gear that is currently selected, the appropriate letter, number or word representing the selected gear will be highlighted or displayed in the IC electronic display unit. The indication remains highlighted or displayed until a different electronic **selected gear** message is received,

or until the ignition switch status transitions to OFF, whichever occurs first.

- **Communication Error** - If the IC fails to receive a **selected gear** message from the GSM within three seconds after the ignition switch status transitions to ON, the IC will display all gear positions selected until a valid electronic **selected gear** message is received, or until the ignition switch status transitions to OFF, whichever occurs first.

The GSM continually monitors the gear selector lever position as well as sensor inputs from the automatic transmission that confirm the selected gear is actually engaged. The GSM then sends the proper electronic **gear shift module status** message to the IC.

In vehicles with the premium IC, the way the gear selector indication is displayed is a customer programmable feature. The customer can choose to use the default premium IC indicator, which displays a conventional PRND+/- and highlights only the letter or number that represents the currently selected gear, or they can choose to have only the single letter or number that represents the currently selected gear displayed, which is also the method by which the gear selector indicator is displayed by the base IC. Finally, they can choose to have the one word that represents the currently selected gear spelled out in the premium IC electronic display unit (example:**DRIVE** or **REVERSE**).

For proper diagnosis of the GSM, the IC, the CAN data bus or the electronic communication related to transmission range indicator operation a diagnostic scan tool is required. Refer to the appropriate diagnostic information.

TURN SIGNAL INDICATORS

The turn signal indicators give an indication to the vehicle operator that the turn signal (left or right indicator flashing) or hazard warning (both left and right indicators flashing) have been selected and are operating. These indicators are controlled by transistors on the IC electronic circuit board based upon programming and electronic messages received from the BCM over the CAN data bus.

Each turn signal indicator LED unit is completely controlled by the IC logic circuit, and that logic will allow this indicator to operate whenever the IC receives a battery current input on the fused B(+) circuit. Therefore, each LED can be illuminated regardless of the ignition switch status. The LED only illuminates when it is provided a path to ground by the IC transistor. The IC will turn ON the turn signal indicators for the following reasons:

- **Turn Signal Indicator Lamp-On Message** - Each time the IC receives an electronic **right** or **left turn signal indicator lamp-on** message from the BCM the appropriate turn signal indicator will be flashed ON and OFF. The BCM also sends the appropriate electronic message to the IC to control the flash rate of the turn signal indicators and the click rate of an electromechanical relay soldered onto the IC electronic circuit board. The relay emulates the sound emitted by a conventional turn signal flasher. The turn signal indicators continue to flash ON and OFF until the IC receives a lamp-off message from the BCM, or until the ignition switch status transitions to OFF, whichever occurs first.
- **Hazard Warning Indicator Lamp-On Message** - Each time the IC receives an electronic **hazard warning indicator lamp-on** message from the BCM both turn signal indicators will be flashed ON and OFF. The BCM also sends the appropriate electronic message to the IC to control the flash rate of the turn signal indicators and the click rate of an electromechanical relay soldered onto the IC electronic circuit board. The relay emulates the sound emitted by a conventional hazard warning flasher. The turn

signal indicators continue to flash ON and OFF until the IC receives a lamp-off message from the BCM.

- **Turn Signal-On Textual Warning Message** - When the BCM detects that a turn signal has been active continuously for 1.6 kilometers (1 mile) with the vehicle speed greater than 22 kilometers-per-hour (15 miles-per hour) a **TURN SIGNAL ON** textual message and flashing right or left turn signal icon will appear within the IC electronic display unit and a chime tone will be sounded.
- **Lamp Out Mode** - If the BCM detects an ineffective turn signal lamp or circuit, it increases the flash rate for the remaining operative turn signals and sends an electronic message to the IC. The IC then increases the flash rate of the turn signal indicators and the click rate of the electromechanical relay to provide an indication of the problem to the vehicle operator.

The BCM continually monitors a hard wired input from the hazard switch and electronic **turn signal switch status** message inputs from the SCM to determine the proper turn signal and hazard warning system operation. The BCM then sends the proper electronic **turn signal indicator** and **hazard warning indicator lamp-on** and **lamp-off** messages to the IC.

For proper diagnosis of the turn signal and hazard warning system, the multi-function switch, the SCM, the BCM, the IC, the CAN data bus or the electronic communication related to turn signal indicator operation a diagnostic scan tool is required. Refer to the appropriate diagnostic information.

WASHER FLUID INDICATOR

The washer fluid indicator gives an indication to the vehicle operator that the fluid level in the washer reservoir is low. This indicator is controlled by the IC logic circuit based upon programming and electronic messages received from the BCM over the CAN data bus.

The washer fluid indicator function of the electronic display unit is completely controlled by the IC logic circuit, and that logic will only allow this indicator to operate when the IC receives a battery current input on the fused ignition output (run-start) circuit. Therefore, the washer fluid indication will always be OFF when the ignition switch status is anything except ON or START. The IC will turn ON the washer fluid indicator for the following reasons:

- **Washer Fluid Indicator Lamp-On Message** - Each time the IC receives an electronic **washer fluid indicator lamp-on** message from the BCM indicating that a low washer fluid condition has been detected for 60 consecutive seconds, the washer fluid indicator is illuminated and a single chime tone is sounded. The indicator remains illuminated until the IC receives lamp-off messages for 60 consecutive seconds from the BCM, or until the ignition switch status transitions to OFF, whichever occurs first. The chime tone feature will only repeat during the same ignition cycle if the washer fluid indicator is cycled OFF and then ON again by the appropriate lamp-on and lamp-off messages from the BCM.

The BCM continually monitors the washer fluid level switch in the washer reservoir to determine the level of the washer fluid. The BCM then sends the proper **washer fluid indicator lamp-on** or **lamp-off** message to the IC.

For proper diagnosis of the washer fluid level switch, the BCM, the IC, the CAN data bus or the electronic communication related to washer fluid indicator operation a diagnostic scan tool is required. Refer to the appropriate diagnostic information.

POD, SWITCH

DESCRIPTION

DESCRIPTION

The instrument panel switch pod is located just below the heater and air conditioner controls in the center stack area of the instrument panel. This switch is available in multiple configurations, which vary depending upon the equipment in the vehicle. However, every available configuration includes the hazard warning push button switch. The switch pod may include the following switches:

- **Automatic Transmission Tow/Haul Mode Switch**
- **Electronic Stability Control (ESC) Off Switch**
- **Hazard Warning Switch**
- **Headlamp Leveling Switch**
- **Hill Descent Switch**
- **Park Assist Off Switch**

The switch housing and the push buttons are constructed of molded plastic. Each push button has a smooth finish and is clearly identified with the appropriate text and International Control and Display Symbol icons. Refer to **INTERNATIONAL VEHICLE CONTROL AND DISPLAY SYMBOLS, DESCRIPTION** . Several of the push buttons feature Light Emitting Diode (LED) units to give the vehicle operator an indication when the function of that switch is currently active. Only the hazard warning switch push button latches, the manual headlamp leveling switch features a thumbwheel with four detent positions, while the remaining switches feature momentary operation.

Four screws secure the switch to the back of the instrument panel center bezel through integral mounting tabs that are molded onto each end of the switch housing. The back of the switch housing has an integral connector receptacle containing terminal pins that connect the switch to the vehicle electrical system through a dedicated take out and connector of the instrument panel wire harness.

Panel lamps dimmer controlled illumination lamps integral to the circuit board within the switch provide back lighting for visibility at night, but these lamps are not serviceable. The individual switches in the upper instrument panel switch pod cannot be repaired and are not serviced individually. If any component within the switch pod is ineffective or damaged, the entire switch pod must be replaced.

2014 ACCESSORIES AND EQUIPMENT

Integrated Center Stack Screen Module - Electrical Diagnostics - Cherokee

DIAGNOSTIC CODE INDEX

DIAGNOSTIC CODE INDEX

DTC	Description
B157F-2A	INTEGRATED CENTER STACK BUTTON - STUCK
B210D-16	BATTERY VOLTAGE LOW - CIRCUIT BELOW THRESHOLD
B210E-17	BATTERY VOLTAGE HIGH - CIRCUIT VOLTAGE ABOVE THRESHOLD
U0010-00	CAN INTERIOR BUS
U0011-00	CAN INTERIOR BUS OFF PERFORMANCE
U0140-00	LOST COMMUNICATION WITH BODY CONTROL MODULE
U0164	LOST COMMUNICATION WITH HVAC CONTROL
U0184-00	LOST COMMUNICATION WITH RADIO
U0422-00	IMPLAUSIBLE DATA RECEIVED FROM BODY CONTROL MODULE
U0424-00	IMPLAUSIBLE DATA RECEIVED FROM HVAC CONTROL MODULE
U0485-00	IMPLAUSIBLE DATA RECEIVED FROM RADIO

DIAGNOSIS AND TESTING

B157F-2A-INTEGRATED CENTER STACK BUTTON - STUCK

For a complete wiring diagram, **refer to appropriate SYSTEM WIRING DIAGRAMS article** .

WHEN MONITORED

With the ignition on. Radio Receiver Module (RRM) and Integrated Center Stack (ICS) active.

SET CONDITION

The Integrated Center Stack (ICS) detects a closed switch for greater than 120 seconds.

POSSIBLE CAUSES

Possible Causes
INTEGRATED CENTER STACK (ICS)

DIAGNOSTIC TEST

VERIFY OPERATION OF THE BUTTON

NOTE: Verify that the ICS buttons are clean and free of debris.

1. With the scan tool, erase DTCs.
2. Press and release the button three times.
3. Wait 120 seconds.
4. With the scan tool, read DTCs.

   Is DTC: B157F-2A-INTEGRATED CENTER STACK BUTTON-STUCK active?

   Yes

   - Replace the Integrated Center Stack (ICS) in accordance with the Service Information.
   - Perform the BODY VERIFICATION TEST. Refer to **STANDARD PROCEDURE** .

   No

   - Test complete.
   - Perform the BODY VERIFICATION TEST. Refer to **STANDARD PROCEDURE** .

B210D-16-BATTERY VOLTAGE LOW - CIRCUIT BELOW THRESHOLD

For a complete wiring diagram, **refer to appropriate SYSTEM WIRING DIAGRAMS article** .

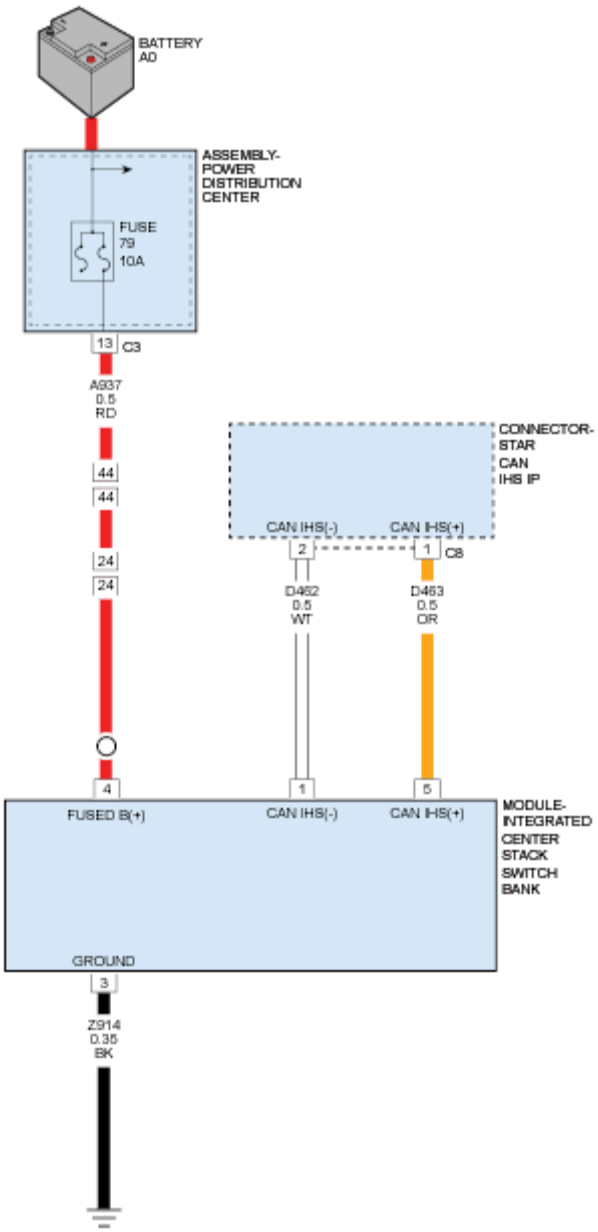

Fig. 1: Integrated Center Stack Switch Bank Module Circuit Diagram
Courtesy of CHRYSLER GROUP, LLC

WHEN MONITORED

With the ignition on.

SET CONDITION

Vehicle System voltage less than 9.0 volts.

POSSIBLE CAUSES

Possible Causes
VEHICLE CHARGING SYSTEM MODULE THAT SET THIS DTC

DIAGNOSTIC TEST

1. **CHECK FOR POWERTRAIN CONTROL MODULE (PCM) DTCs**

   NOTE: Make sure the battery is fully charged before proceeding.

   1. Using the scan tool, read the active PCM DTCs.

      Are there any battery or charging system DTCs present?

      Yes

      - Refer to the **DTC INDEX** article and perform the appropriate diagnostic procedure.

      No

      - Go To 2
2. **TEST FOR AN INTERMITTENT CONDITION**
   1. Using the scan tool, record and erase the DTCs.
   2. Start the engine.
   3. Allow the engine to idle for two minutes.
   4. Using the scan tool, read the DTCs.

      Does the scan tool display: B210D-16-BATTERY VOLTAGE LOW-CIRCUIT BELOW THRESHOLD?

      Yes

      - Go To 3

      No

      - Test complete, the condition or conditions that originally set this DTC are not present at this time. Using the wiring diagrams as a guide, check all related splices and connectors for signs of water intrusion, corrosion, pushed out or bent terminals, and correct pin tension.
      - Perform the BODY VERIFICATION TEST. Refer to **STANDARD PROCEDURE** .
3. **CHECK THE (A937) FUSED B(+) CIRCUIT FOR AN OPEN OR EXCESSIVE RESISTANCE**

NOTE: Check the fuse for an open. If the fuse is open, make sure to check for a short to ground prior to replacing the fuse.

1. Turn the ignition off.
2. Disconnect the INTEGRATED CENTER STACK (ICS) harness connector.
3. Ignition on, engine not running.
4. Using a 12-volt test light connected to ground, check the (A937) Fused B (+) circuit in the INTEGRATED CENTER STACK (ICS) C1 harness connector.
5. The test light must illuminate brightly. Compare the brightness to that of a direct connection to the battery.

   Does the test light illuminate brightly?

   Yes

   - Go To 4

   No

   - Repair the open or excessive resistance in the (A937) Fused B (+) circuit.
   - Perform the BODY VERIFICATION TEST. Refer to **STANDARD PROCEDURE** .

4. **CHECK THE (Z914) GROUND CIRCUIT FOR AN OPEN OR EXCESSIVE RESISTANCE**
   1. Using a 12-volt test light connected to 12-volts, check the (Z914) Ground circuit in the INTEGRATED CENTER STACK (ICS harness connector.
   2. The test light must illuminate brightly. Compare the brightness to that of a direct connection to the battery.

      Does the test light illuminate brightly?

      Yes

      - Replace the INTEGRATED CENTER STACK (ICS) in accordance with the Service Information.
      - Perform the BODY VERIFICATION TEST. Refer to **STANDARD PROCEDURE** .

      No

      - Repair the open or excessive resistance in the (Z914) Ground circuit.
      - Perform the BODY VERIFICATION TEST. Refer to **STANDARD PROCEDURE** .

B210E-17-BATTERY VOLTAGE HIGH - CIRCUIT VOLTAGE ABOVE THRESHOLD

For a complete wiring diagram, **refer to appropriate SYSTEM WIRING DIAGRAMS article** .

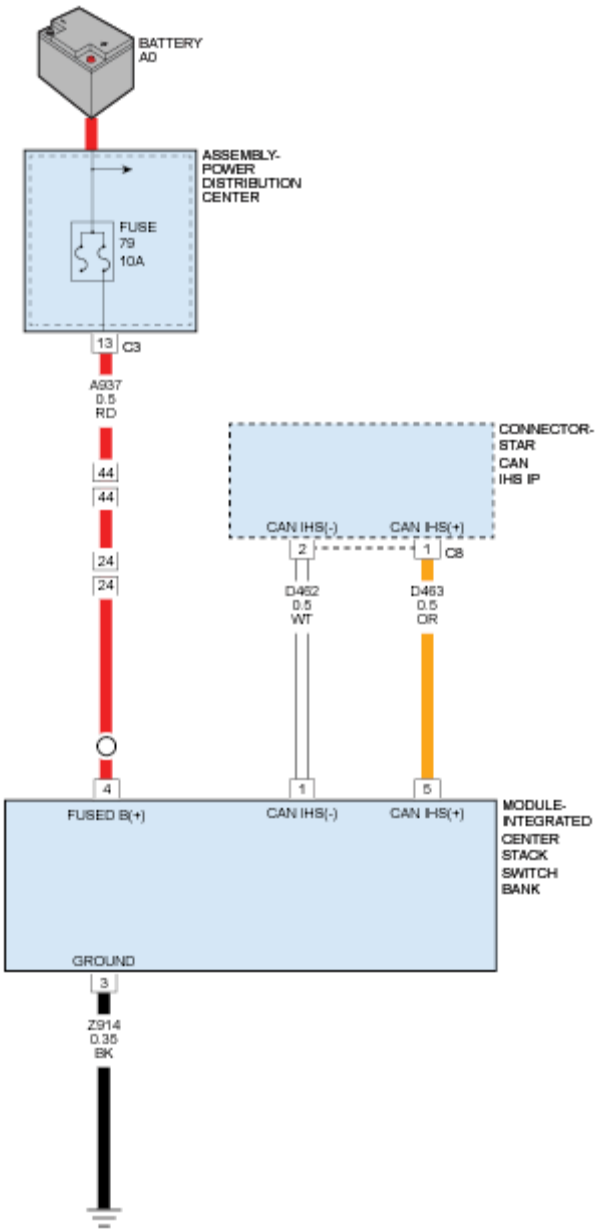

Fig. 2: Integrated Center Stack Switch Bank Module Circuit Diagram
Courtesy of CHRYSLER GROUP, LLC

WHEN MONITORED

With the ignition on.

SET CONDITION

Vehicle System voltage greater than 16.0 volts.

POSSIBLE CAUSES

Possible Causes
VEHICLE CHARGING SYSTEM MODULE THAT SET THIS DTC

DIAGNOSTIC TEST

1. **CHECK FOR POWERTRAIN CONTROL MODULE (PCM) DTCS**
    1. Using the scan tool, read the active PCM DTCs.

       Are there any battery or charging system DTCs?

       Yes

       - Refer to the **DTC INDEX** article and perform the appropriate diagnostic procedure.

       No

       - Go To 2
2. **TEST FOR AN INTERMITTENT CONDITION**
    1. Using the scan tool, record and erase the DTCs.
    2. Start the engine.
    3. Allow the engine to idle for two minutes.
    4. Using the scan tool, read the DTCs.

       Does the scan tool display: B210E-17 BATTERY VOLTAGE HIGH-CIRCUIT VOLTAGE ABOVE THRESHOLD?

       Yes

       - Replace INTEGRATED CENTER STACK (ICS) in accordance with the Service Information.
       - Perform the BODY VERIFICATION TEST. Refer to **STANDARD PROCEDURE** .

       No

       - Test complete, the condition or conditions that originally set this DTC are not present at this time. Using the wiring diagrams as a guide, check all related splices and connectors for signs of water intrusion, corrosion, pushed out or bent terminals, and correct pin tension.
       - Perform the BODY VERIFICATION TEST. Refer to **STANDARD PROCEDURE** .

U0010-00-CAN INTERIOR BUS

For a complete wiring diagram, **refer to appropriate SYSTEM WIRING DIAGRAMS article** .

WHEN MONITORED

With the ignition on.

SET CONDITION

The Integrated Center Stack (ICS) detects that the CAN IHS Bus has been off for more than five seconds when activity was expected.

POSSIBLE CAUSES

Possible Causes
CAN IHS BUS (125K) (+) CIRCUIT SHORTED TO GROUND
CAN IHS BUS (125K) (-) CIRCUIT SHORTED TO VOLTAGE
CAN IHS BUS (125K) (+) CIRCUIT SHORTED TO THE CAN IHS BUS (125K) (-) CIRCUIT
ANY CAN IHS BUS MODULE
INTEGRATED CENTER STACK (ICS)

DIAGNOSTIC TEST

VERIFY IF THE DTC IS ACTIVE

1. Cycle the ignition on.
2. With the scan tool, read the active DTCs.

   Does the scan tool display this DTC as Active?

   Yes

   - Refer to the **BODY CONTROL MODULE (BCM) - DIAGNOSTIC CODE INDEX** article and perform the U0010-00 CAN INTERIOR BUS diagnostic procedure.

   No

   - Refer to **DIAGNOSIS AND TESTING** and perform the STORED LOST COMMUNICATION DTCs diagnostic procedure.

U0011-00-CAN INTERIOR BUS OFF PERFORMANCE

For a complete wiring diagram, **refer to appropriate SYSTEM WIRING DIAGRAMS article** .

THEORY OF OPERATION

The primary communication network between electronic control modules is the Controller Area Network

(CAN) data bus system. The Controller Area Network (CAN) data bus allows all electronic modules connected to the bus to share information with each other. Regardless of whether a message originates from a module on the higher speed CAN C (500K) Bus or on the lower speed bus, CAN Interior High Speed (IHS) (125K) Bus, the message structure and layout is similar, which allows the Body Control Module/Central Gateway (BCM or BCMCGW) to process and transfer messages between the CAN buses. The BCM stores Diagnostic Trouble Codes (DTCs) for certain bus network faults on the CAN C (500K) Bus and CAN IHS (125K) Bus.

All modules transmit and receive messages over one of these buses. Data exchange between the modules is achieved by serial transmission of encoded data messages (a form of transmission in which data bits are sent sequentially, one at a time, over a single line). Each module can both send and receive serial data simultaneously. Each data bit of a CAN Bus message is carried over the bus as a voltage differential between the two bus circuits which, when strung together, form a message. Each module uses arbitration to sort the message priority if two competing messages are attempting to be broadcast at the same time. Corruption of a single bit within a message will corrupt the entire message. Each message contains a Cyclic Redundancy Check (CRC) which specifies the message size exactly. If the message detected conflicts with the CRC the ECU receiving it will determine the message to be an error and consider that communication has not been possible. Diagnosis of this condition using a lab scope may reveal activity that appears to be Bus data messages even if no actual communication is possible. Communication problems that affect the whole bus, as a result of opens and terminal push outs are more likely to occur on data busses that operate at a high speed than a data bus that operates at a lower speed.

When an open circuit or terminal push out occurs one or more modules can become isolated from the remainder of the bus. The isolated module will attempt to communicate, but will not be able to receive messages or determine arbitration from other modules. Each time the isolated module attempts to communicate it alters the bus voltage on the intact bus circuit. Without functioning arbitration the isolated module alters the bus voltage while other bus messages are being sent thereby corrupting the messages on the remainder of the bus.

The CAN bus modules are connected in parallel to the two-wire bus using a twisted pair, where the wires are wrapped around each other to provide shielding from unwanted electromagnetic induction, thus preventing interference with the relatively low voltage signals being carried through them. While the CAN bus is operating (active), one of the bus wires will carry a higher voltage and is referred to as the CAN High or CAN bus (+) wire, while the other bus wire will carry a lower voltage and is referred to as the CAN Low or CAN bus (-) wire.

For additional information on the communication network. Refer to **COMMUNICATION, DESCRIPTION** .

WHEN MONITORED

With the ignition on.

SET CONDITION

The Body Control Module (BCM) detects a short condition in one of the CAN IHS Bus (125K) circuits for less than one second.

POSSIBLE CAUSES

Possible Causes
(D157) CAN IHS BUS (125K) (+) CIRCUIT SHORTED TO GROUND
(D158) CAN IHS BUS (125K) (-) CIRCUIT SHORTED TO VOLTAGE
(D157) CAN IHS BUS (125K) (+) CIRCUIT SHORTED TO THE (D158) CAN IHS BUS (125K) (-) CIRCUIT
ANY CAN IHS BUS MODULE
BODY CONTROL MODULE (BCM)

DIAGNOSTIC TEST

1. **TEST FOR INTERMITTENT CONDITION**
    1. Turn the ignition on.
    2. With the scan tool, record and erase DTCs.
    3. Cycle the ignition from on to off three times.
    4. Turn the ignition on and wait 10 seconds.
    5. With the scan tool, read active DTCs.

    Does the scan tool display this DTC as active?

    Yes

    - Go To 2

    No

    - Test complete, the condition or conditions that originally set this DTC are not present at this time. Using the wiring diagrams as a guide, check all related splices and connectors for signs of water intrusion, corrosion, pushed out or bent terminals, and correct pin tension.
    - Perform the BODY VERIFICATION TEST. Refer to **STANDARD PROCEDURE** .
2. **CHECK THE CAN IHS BUS CIRCUITS FOR A CONCERN WHILE DISCONNECTING THE CAN IHS BUS MODULES**

    NOTE: When performing this step, turn the ignition off (wait one minute) before disconnecting any module. When the module is disconnected turn the ignition on.

    NOTE: The BCM contains pass-through circuits which are used to connect the Front and Rear CAN IHS Star Connectors.

    1. While monitoring the scan tool, disconnect each CAN IHS Bus (125K) module at the CAN IHS Star Connectors (except for the BCM and DLC), one at a time.
    2. Check for this DTC to become stored after disconnecting each CAN IHS Bus (125K) module the vehicle is equipped with.

NOTE: If the DTC becomes stored when a particular module is disconnected, that module or related circuits are causing the DTC to set.

With all the CAN IHS Bus modules disconnected at the Star Connectors (except for BCM and DLC), does the scan tool display this DTC as active?

Yes

- Go To 3

No

- Diagnose the wiring and connectors between the CAN IHS Star Connector and the module that when disconnected caused this DTC to become stored for damage or shorted circuits. If OK, replace the module that when disconnected caused this DTC to become stored in accordance with the Service Information.
- Perform the BODY VERIFICATION TEST. Refer to **STANDARD PROCEDURE** .

3. **CHECK THE (D158) CAN IHS BUS (125K) (-) CIRCUIT FOR A SHORT TO VOLTAGE**

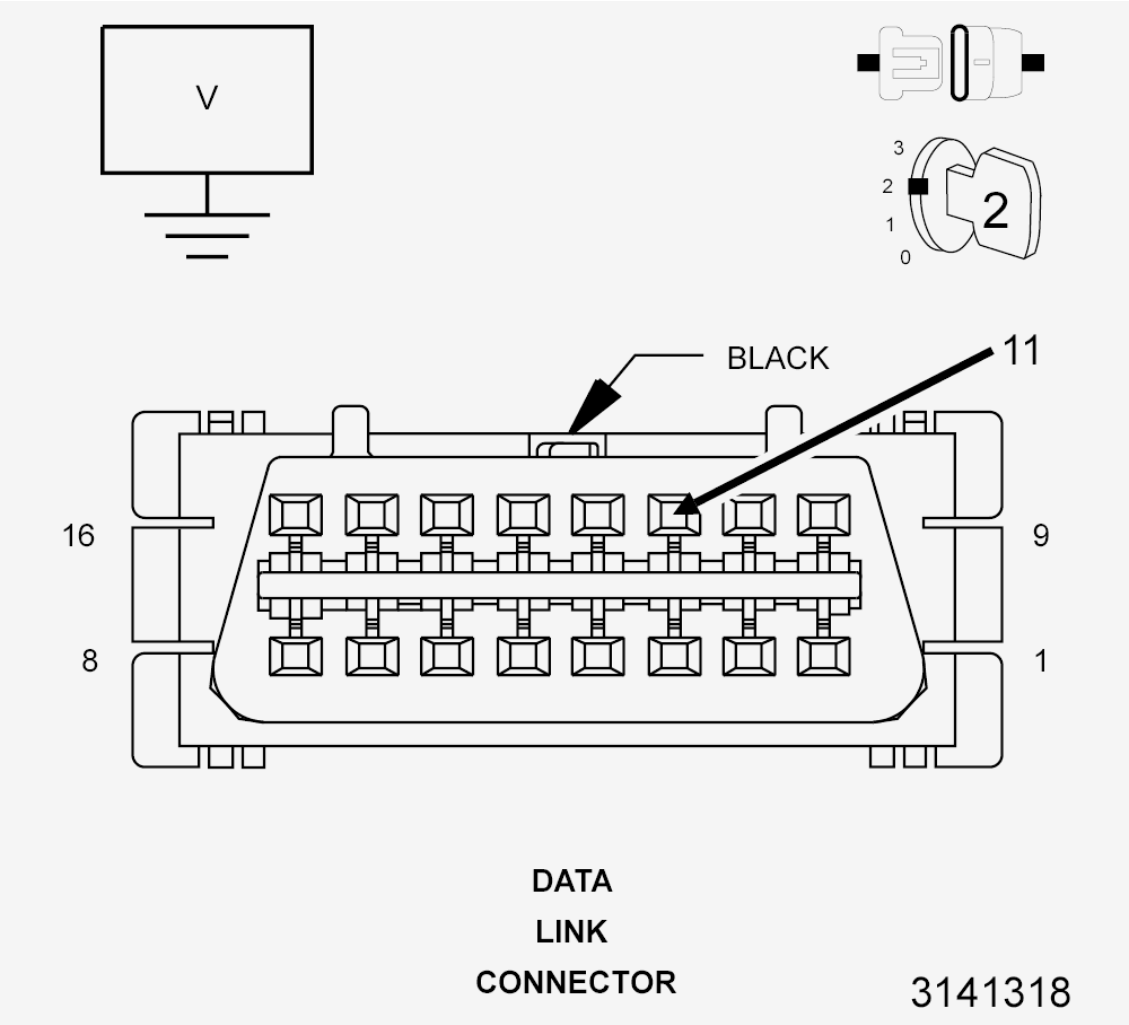

Fig. 3: Checking CAN IHS BUS (125K) (-) Circuit For A Short To Voltage
Courtesy of CHRYSLER GROUP, LLC

1. Turn the ignition off.
2. Disconnect the scan tool.
3. Turn the ignition on.
4. Measure the voltage between ground and the (D158) CAN IHS Bus (125K) (-) circuit.

   Is the voltage above 10.0 volts?

   Yes

   - Repair the short to voltage in the (D158) CAN IHS Bus (125K) (-) circuit.
   - Perform the BODY VERIFICATION TEST. Refer to **STANDARD PROCEDURE** .

   No

- Go To 4

4. **CHECK THE (D157) CAN IHS BUS (125K) (+) CIRCUIT FOR A SHORT TO GROUND**

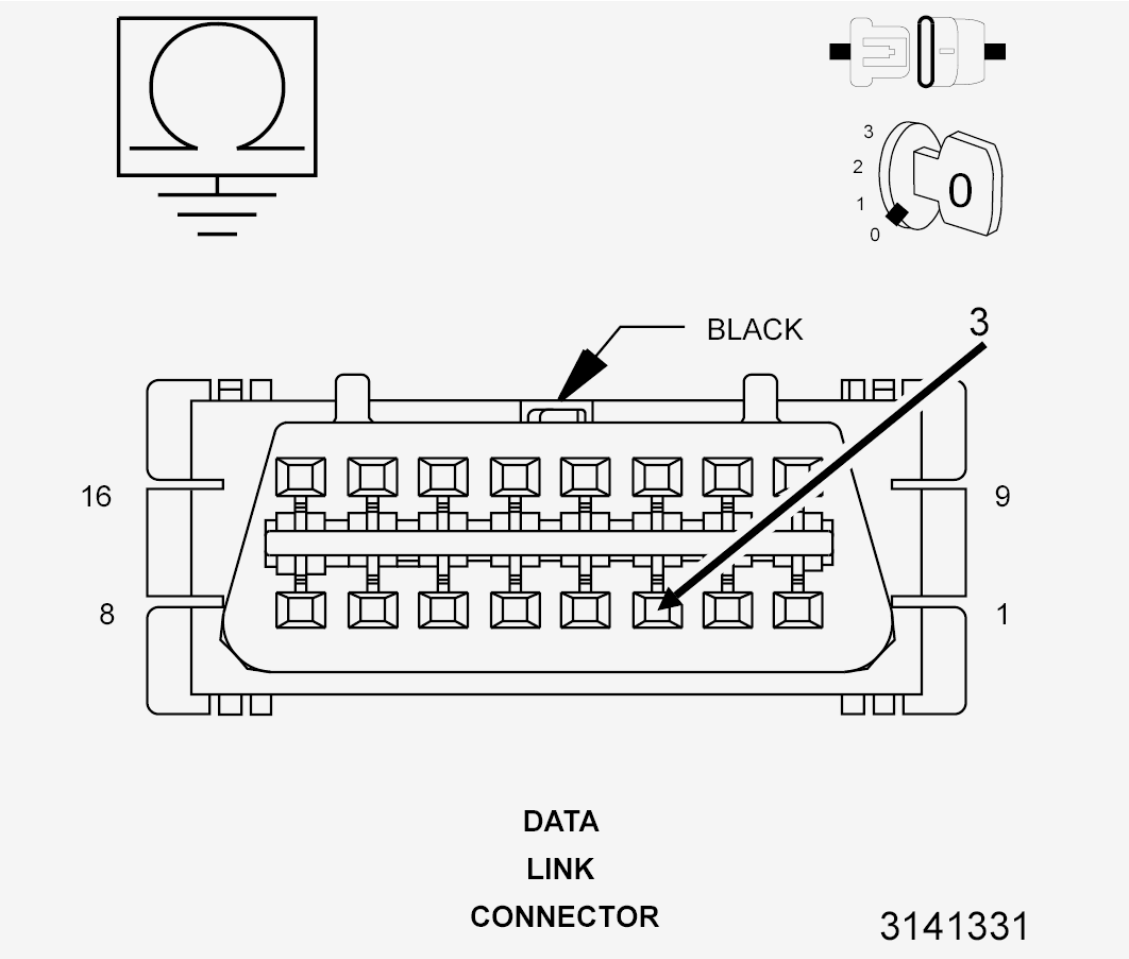

Fig. 4: Checking CAN IHS BUS (125K) (+) Circuit For A Short To Ground
Courtesy of CHRYSLER GROUP, LLC

1. Turn the ignition off.
2. Measure the resistance between ground and the (D157) CAN IHS Bus (125K) (+) circuit.

   Is the resistance above 10k Ohms?

   Yes

   - Go To 5

   No

   - Repair the short to ground in the (D157) CAN IHS Bus (125K) (+) circuit.
   - Perform the BODY VERIFICATION TEST. Refer to **STANDARD PROCEDURE** .

5. **CHECK FOR CORRECT BUS TERMINATION RESISTANCE**

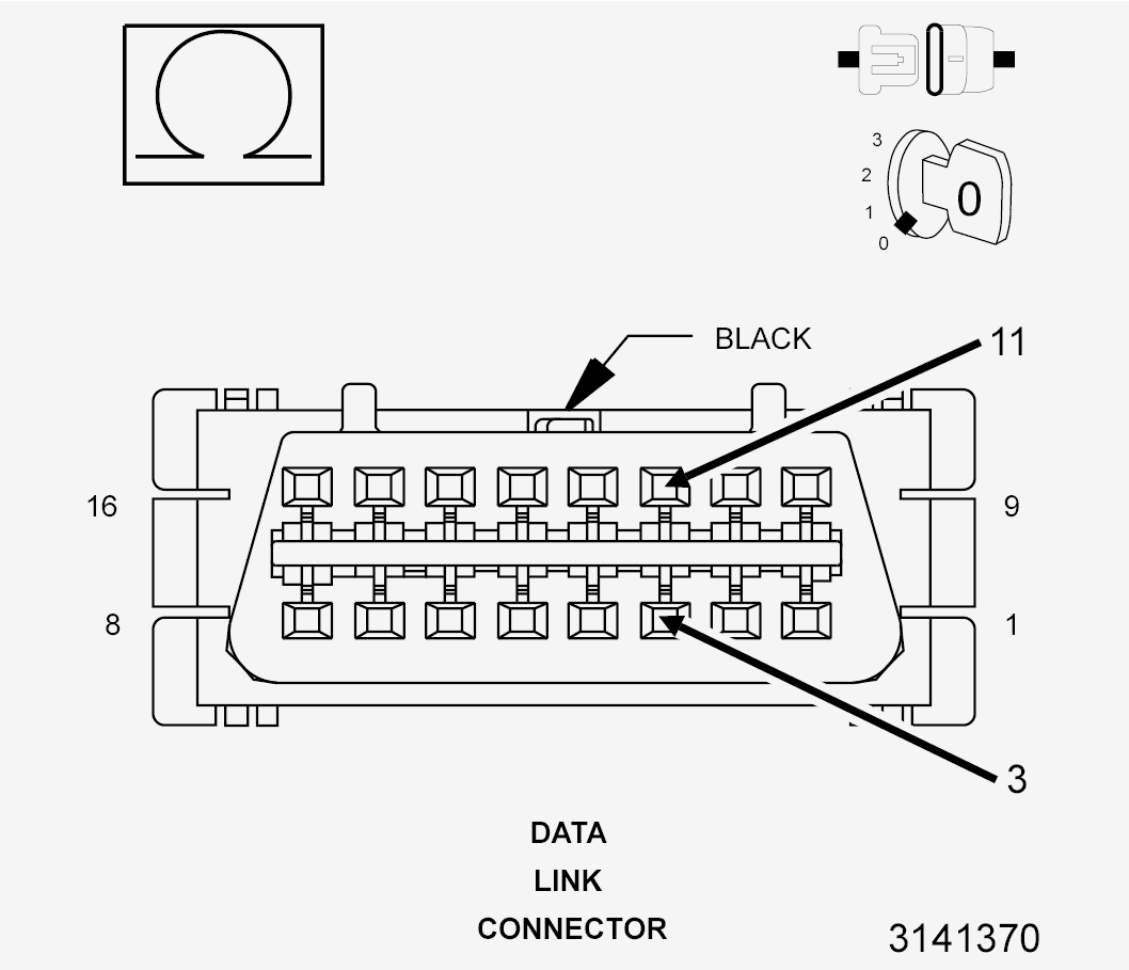

Fig. 5: Checking For Correct BUS Termination Resistance
Courtesy of CHRYSLER GROUP, LLC

1. Turn the ignition off.
2. Disconnect and isolate the negative battery cable.
3. Measure the resistance between the (D157) CAN IHS Bus (125K) (+) circuit and the (D158) CAN IHS Bus (125K) (-) circuit.

   Is the resistance between 53.5 and 67 Ohms?

   Yes

   - Replace the Body Control Module (BCM) in accordance with the Service Information. Refer to **MODULE, BODY CONTROL, REMOVAL** .
   - Perform the BODY VERIFICATION TEST. Refer to **STANDARD PROCEDURE** .

   No

- For a resistance measurement above 67 Ohms, an open or high resistance is present in the CAN IHS Bus (125K) (+) circuit or the CAN IHS Bus (125K) (-) circuit between the Star Connectors or one of the termination resistors internal to the Star Connector is damaged. Diagnose and repair as necessary.
- For a resistance measurement below 53.5 Ohms, a short between the CAN IHS Bus (125K) (+) circuit and the CAN IHS Bus (125K) (-) is present. Diagnose the short between the CAN IHS Bus (125K) (+) circuit and the CAN IHS Bus (125K) (-) circuit. Use the Star Connectors to isolate portions of the bus to assist in determining the location of the concern. Diagnose and repair as necessary.
- Perform the BODY VERIFICATION TEST. Refer to **STANDARD PROCEDURE** .

U0140-00-LOST COMMUNICATION WITH BODY CONTROL MODULE

Perform the COMMUNICATION PRE-DIAGNOSTIC PROCEDURE. Refer to **STANDARD PROCEDURE** .

U0164-LOST COMMUNICATION WITH HVAC CONTROL

For a complete wiring diagram, **refer to appropriate SYSTEM WIRING DIAGRAMS article** .

WHEN MONITORED

Continuously when the ignition is on.

Battery voltage between 10 and 16 volts.

SET CONDITION

Bus messages not received from the HVAC Control Module for approximately 10 seconds.

POSSIBLE CAUSES

Possible Causes
CAN BUS (+) CIRCUIT SHORTED TO VOLTAGE
CAN BUS (-) CIRCUIT SHORTED TO GROUND
DTCS RELATED TO BATTERY VOLTAGE, IGNITION, OR VIN MESSAGES
BODY CONTROL MODULE (BCM) NOT CONFIGURED CORRECTLY
HVAC POWER AND GROUND
HVAC CONTROL MODULE
MODULE THAT SET THE DTC

Always perform the Pre-Diagnostic Troubleshooting procedure before proceeding. Refer to STANDARD PROCEDURE for 2.0L diesel engine, STANDARD PROCEDURE for 2.4L gasoline engine or STANDARD PROCEDURE for 3.2L gasoline engine. .

DIAGNOSTIC TEST

VERIFY DTC IS ACTIVE

1. Turn the ignition on.
2. With the scan tool, read the active DTCs.

   Does the scan tool display; U0164-LOST COMMUNICATION WITH HVAC CONTROL MODULE as Active?

   Yes

   - Refer to the **BODY CONTROL MODULE (BCM) - DIAGNOSTIC CODE INDEX** article and perform the U0164-LOST COMMUNICATION WITH HVAC Control Module.

   No

   - Refer to **DIAGNOSIS AND TESTING** and perform the STORED LOST COMMUNICATION DTCs diagnostic procedure.

U0184-00-LOST COMMUNICATION WITH RADIO

For a complete wiring diagram, **refer to appropriate SYSTEM WIRING DIAGRAMS article** .

WHEN MONITORED

Continuously when the ignition is on.

The battery voltage is between 10 and 16 volts.

Body Control Module (BCM) is configured correctly.

SET CONDITION

Bus messages not received from the Radio for approximately two to five seconds.

POSSIBLE CAUSES

Possible Causes
CAN BUS CIRCUITS OPEN OR SHORTED
DTCS RELATED TO BATTERY VOLTAGE, IGNITION, OR VIN MESSAGES
RADIO POWER AND GROUND
BCM NOT CONFIGURED CORRECTLY
RADIO
MODULE THAT SET THIS DTC

DIAGNOSTIC TEST

VERIFY THE DIAGNOSTIC TROUBLE CODE (DTC) IS ACTIVE

NOTE: Make sure the battery is fully charged before proceeding.

1. Turn the ignition on.
2. With the scan tool, read the active DTCs.

   Is this DTC active?

   Yes

   - Refer to **DIAGNOSIS AND TESTING** and perform the NO RESPONSE FROM RADIO diagnostic procedure.

   No

   - Refer to **DIAGNOSIS AND TESTING** and perform the STORED LOST COMMUNICATION DTCs diagnostic procedure.

U0422-00- IMPLAUSIBLE DATA RECEIVED FROM BODY CONTROL MODULE

For a complete wiring diagram, **refer to appropriate SYSTEM WIRING DIAGRAMS article** .

WHEN MONITORED

At all times with Ignition in Run/Start.

SET CONDITION

Incorrect data received from the Body Control Module (BCM).

POSSIBLE CAUSES

Possible Causes
NO COMMUNICATION WITH THE BODY CONTROL MODULE (BCM)
DTCS STORED OR ACTIVE IN THE BCM
INTEGRATED CENTER STACK (ICS)

DIAGNOSTIC TEST

1. **CHECK FOR AN ACTIVE DIAGNOSTIC TROUBLE CODE (DTC)**
   1. Turn the ignition on.
   2. With the scan tool, read the active DTCs.

Does the scan tool display this DTC as active?

Yes

- Go To 2

No

- The condition that caused this code to set is not present at this time. Check for an intermittent condition by inspecting the related wiring harness for chafed, pierced, pinched, and partially broken wires. Also inspect the related connectors for broken, bent, pushed out, spread, corroded, or contaminated terminals.
- Perform the BODY VERIFICATION TEST. Refer to **STANDARD PROCEDURE** .

2. **VERIFY THE BCM IS ACTIVE ON THE CAN BUS**
   1. With the scan tool, select ECU View.
   2. Verify that the BCM is active on the bus.

   Is the BCM active on the bus?

   Yes

   - Replace the Integrated Center Stack (ICS) in accordance with the Service Information.
   - Perform the BODY VERIFICATION TEST. Refer to **STANDARD PROCEDURE** .

   No

   - Refer to **DIAGNOSIS AND TESTING** and perform the NO RESPONSE FROM BCM diagnostic procedure.
   - Perform the BODY VERIFICATION TEST. Refer to **STANDARD PROCEDURE** .

U0424-00- IMPLAUSIBLE DATA RECEIVED FROM HVAC CONTROL MODULE

For a complete wiring diagram, **refer to appropriate SYSTEM WIRING DIAGRAMS article** .

WHEN MONITORED

With the ignition on for at least five seconds.

Battery voltage between 9 and 16 volts.

Body Control Module (BCM) is configured correctly.

SET CONDITION

Whenever the communication data sent over the CAN BUS from the HVAC Control Module is missing part of

the message, the message is corrupted, or the message is an irrational value.

POSSIBLE CAUSES

Possible Causes
DTCS RELATED TO BATTERY VOLTAGE, IGNITION, OR VIN MESSAGES
BCM NOT CONFIGURED CORRECTLY
HVAC POWER AND GROUND
HVAC CONTROL MODULE
MODULE THAT SET THE DTC

DIAGNOSTIC TEST

1. **VERIFY DTC IS ACTIVE**

   NOTE: Make sure the battery voltage is between 9 and 16 volts before proceeding.

   1. With the scan tool, read active DTCs.

      Is this DTC active?

      Yes

      - Go To 2

      No

      - Refer to **DIAGNOSIS AND TESTING** and perform the STORED LOST COMMUNICATION DTC diagnostic procedure.

2. **CHECK FOR ANY OF THE FOLLOWING ACTIVE DTCS**
   1. With the scan tool, read active DTCs from all modules.

      NOTE: Check for BCM configuration, Bus hardware electrical issues, VIN Missing/Mismatch, battery or ignition related DTCs.

      Does the scan tool display any active DTCs to the conditions listed above?

      Yes

      - Go to and perform the appropriate diagnostic procedure.

      No

- Go To 3

3. **VERIFY THE HVAC IS ACTIVE ON THE BUS**
   1. Turn the ignition on.
   2. With the scan tool, verify the HVAC is active on the bus.

      Is the HVAC active on the bus?

      Yes

      - Go To 4

      No

      - Refer to **DIAGNOSIS AND TESTING** and perform the NO RESPONSE FROM HVAC diagnostic procedure.
4. **CHECK FOR ADDITIONAL COMMUNICATION RELATED DTCS**
   1. With the scan tool, read all the DTCs.

      Is there more than one module with active DTCs "Logged Against" the HVAC?

      Yes

      - Replace/update the HVAC Module in accordance with the Service Information. Refer to **CONTROL, A/C AND HEATER, REMOVAL** .
      - Perform the appropriate verification test for the module. If there is no verification test for the associated module perform the BODY VERIFICATION TEST. Refer to **STANDARD PROCEDURE** .

      No

      - Go To 5
5. **CLEAR DTC IN MODULE SETTING FAULT**
   1. With the scan tool, select the module setting the DTC against the HVAC.
   2. Clear active DTCs.

      Is this DTC still active?

      Yes

      - Replace/update the module that set this DTC in accordance with the Service Information.
      - Perform the appropriate verification test for the module being replaced. If there is no verification test for the associated module, perform the BODY VERIFICATION TEST. Refer to **STANDARD PROCEDURE** .

No

- The condition is not present at this time. Using the wiring diagrams as a guide, check all related splices and connectors for signs of water intrusion, corrosion, pushed out or bent terminals, and correct pin tension.
- Perform the appropriate verification test for the module. If there is no verification test for the associated module, perform the BODY VERIFICATION TEST. Refer to **STANDARD PROCEDURE** .

U0485-00- IMPLAUSIBLE DATA RECEIVED FROM RADIO

For a complete wiring diagram, **refer to appropriate SYSTEM WIRING DIAGRAMS article** .

WHEN MONITORED

With the ignition on.

SET CONDITION

Incorrect data received from the Radio.

POSSIBLE CAUSES

Possible Causes
NO COMMUNICATION WITH THE RADIO
DTCS STORED OR ACTIVE IN THE RADIO
RADIO
MODULE THAT SET THE DTC

DIAGNOSTIC TEST

1. **CHECK FOR AN ACTIVE DIAGNOSTIC TROUBLE CODE (DTC)**

NOTE: Diagnose and repair any Radio DTCs before proceeding with this diagnostic procedure.

1. Turn the ignition on.
2. With the scan tool, read active DTCs.

   Does the scan tool display this DTC as active?

   Yes

   - Go To 2

No

- The condition that caused this code to set is not present at this time. Check for an intermittent condition by inspecting the related wiring harness for chafed, pierced, pinched, and partially broken wires. Also inspect the related connectors for broken, bent, pushed out, spread, corroded, or contaminated terminals.
- Perform the BODY VERIFICATION TEST. Refer to **STANDARD PROCEDURE** .

2. **VERIFY THE RADIO IS ACTIVE ON THE CAN BUS**
   1. With the scan tool, verify that the Radio is active on the bus.

   Is the Radio active on the bus?

   Yes

   - Replace/update the module that set this DTC in accordance with the Service Information.
   - Perform the BODY VERIFICATION TEST. Refer to **STANDARD PROCEDURE** .

   No

   - Refer to **DIAGNOSIS AND TESTING** and perform the NO RESPONSE FROM RADIO diagnostic procedure.
   - Perform the BODY VERIFICATION TEST. Refer to **STANDARD PROCEDURE** .

2014 ACCESSORIES AND EQUIPMENT

Lamps/Lighting - Exterior - Service Information - Cherokee

WARNING

WARNING

WARNING: To avoid serious or fatal injury, eye protection should be used when servicing any glass components.

WARNING: To avoid serious or fatal injury when working on the High Intensity Discharge (HID) headlamp system, be certain to take the proper precautions. The headlamp switch must be in the OFF position. Disconnect and isolate the battery negative cable. There is a risk of fatal injury caused by contact with high voltage used in the HID headlamps. There is a risk of explosion or fire caused by highly flammable materials in the vicinity of damaged HID lighting elements. There is a risk of injury caused by exposure to Ultra Violet (UV) light, a risk of burns caused by high component operating temperatures, a risk of mercury poisoning through glass splinters produced by bursting HID lighting elements. There is also a risk of poisoning caused by inhalation of mercury vapors and by toxic salts and mercury compounds being ingested or coming into contact with the skin. Do not come into contact with parts that are under high voltage. Persons with active electronic implants (e.g. heart pacemakers) must never work on HID headlamps. Wear insulated safety shoes, safety glasses and protective gloves. Remove flammable materials and ensure sufficient ventilation in the working area.

CAUTION: Do not contaminate the glass of halogen bulbs with fingerprints or allow contact with other possibly oily surfaces. Reduced bulb life will result.

CAUTION: Do not use bulbs with higher candle power than indicated in the Bulb Application table. In addition, do not use fuses, circuit breakers or relays having greater amperage value than indicated on the fuse panel or in the Owner's Manual. Damage to lamps, lenses, wiring and other related electrical components can result.

DESCRIPTION

DESCRIPTION

The exterior lighting system for this vehicle includes the following exterior lamp units:

- **Center High Mounted Stop Lamp** - A standard equipment Center High Mounted Stop Lamp (CHMSL) is centered on the liftgate spoiler just above the flip-up glass opening at the rear of the vehicle.
- **Daytime Running Lamps** - The Daytime Running Lamps (DRL) are located in the combination Park/Turn lamp assembly. The DRLs on this vehicle are LED. There is a LED module located on the back of the lamp assembly.
- **Front Fog Cornering Lamps** - Vehicles equipped with this option have a separate fog lamp unit mounted near each outboard end of the front fascia, below each front lamp unit.
- **Front Lamp Units** - A halogen front lamp unit is standard equipment on vehicles manufactured for domestic markets. A High Intensity Discharge (HID) front lamp unit is optional equipment in vehicles manufactured for export markets and optional for domestic market vehicles. The front lamp units are mounted to the front fascia on either side of the mid grille opening.
- **License Plate Lamps** - Two standard equipment rear license plate lamp units are mounted to the underside of the light bar and handle unit, just above the license plate tub formation on the outer liftgate panel.
- **Outside Mirror Signal Lamps** - Vehicles equipped with this option have a signal lamp unit integral to the lower forward facing surface of each outside rear view mirror. These signal lamps are serviced only as a unit with the outside rear view mirror assembly.
- **Rear Lamp Unit** - Full 48-element LED illumination on either side of the vehicle - 24-LED elements are position on either side of the tailgate-to-rear aperture split line. The rear lamp unit combines a three-shot lens that integrates clear, red, and black surround surfacing. Direction signals and braking lamps illuminate on the outside array of the lamp, running lamps illuminate on the full array inside and outside.
- **Rear Fog Lamps** - In certain export markets where they are required, two rectangular fog lamps with red lenses and reflectors are located in the rear bumper fascia, one just inboard and below each rear lamp unit. In domestic market vehicles, a red reflector is installed in the rear fascia in place of a rear fog lamp.

These exterior lighting lamp units and their controls are combined to provide the following exterior lighting features:

- **Automatic Headlamps** - Automatic headlamps are optional equipment on this vehicle. The headlamp switch includes an **A** (Automatic) position and an automatic headlamp sensor senses ambient light levels. The automatic headlamp sensor is integral to the sun load sensor located on the top of the instrument panel. When the **A** position of the headlamp switch is selected, the headlamps are turned ON and OFF automatically as ambient light levels dictate.
- **Automatic High Beam Control** - Vehicles equipped with the optional automatic high beam control system include a unique digital light-sensing imager camera inside the vehicle on the windshield next to the rear view mirror. The conditions that need to be met for Automatic High Beam Control (AHBC) are:
  1. The headlamp switch needs to be sit to AUTO.
  2. Customer preference in the radio options needs to be enable.
  3. The stalk moved to the back/high beam position.
  4. Appropriate light conditions.
- **Backup Lamps** - In domestic market vehicles, the backup (or reverse) lamps include a clear bulb, reflector and clear lens that are integral to each inner and outer rear lamp unit. In export market vehicles, backup lamps are found in only the two inner rear lamp units.

- **Brake Lamps** - The brake (or stop) lamps are LED and are integral to each outer rear lamp unit, and the red lens and multiple Light-Emitting Diode (LED) units of the CHMSL. On vehicles equipped with combined rear lighting, the turn signal and stop lamp use the same LED elements. When combined rear lighting is present, turn signals are allowed to interrupt stop lamp actuation to allow turn signal actuation.
- **Daytime Running Lamps** - Domestic market vehicles with HID front lamp units and DRL illuminate a dedicated DRL bulb in the combination park/turn lamp unit, while export market vehicles illuminate a combination DRL/position lamp bulb in each front lamp unit.
- **Exterior Lamp Fail-Safe Operation** - The ElectroMechanical Instrument Cluster (EMIC) (also known as the Cab Compartment Node/CCN) and the Body Control Module (BCM) provide a fail-safe feature which will automatically turn ON the low beam headlamps and all park lamps when the ignition switch is in the ON position and there is no detected input from the headlamp switch, or when there is no communication over the Controller Area Network (CAN) data bus.
- **Exterior Lamp Load Shedding** - The BCM provides a battery saver feature which will automatically turn OFF all exterior lamps that remain ON with the ignition switch in the LOCK position after a timed interval of about eight minutes.
- **Front Fog Cornering Lamps** - The optional front fog lamps include the bulb, reflector and lens of each adjustable front fog lamp unit.
- **Hazard Warning Lamps** - The hazard warning lamps include the bulbs, reflectors and lenses of each lamp in the right and left, front and rear turn signal circuits.
- **Headlamp Delay** - The low or high beam headlamps remain illuminated for 90 seconds after the ignition switch has been turned to the OFF position. If the vehicle is equipped with the optional Electronic Vehicle Information Center (EVIC), the delay interval is customer-programmable for 0, 30, 60 or 90 seconds.
- **Headlamps** - Two headlamp systems are available on this vehicle for domestic markets. The standard halogen headlamp system includes two single filament halogen bulbs in each front lamp unit, one low beam and one high beam. The optional HID headlamp system includes a single HID lighting element/igniter unit for low or high beam headlamps. An electric motor and mechanism internal to the HID lamp unit closes a shutter for low beams and opens the shutter for high beams. The HID front lamp units each include an electronic ballast module, while an Automatic Headlamp Leveling Module (AHLM) that serves both front lamp units levelling motor. Both headlamp systems also include an adjustable reflector and clear lens integral to each front lamp unit.
- **Headlamp Leveling** - On all vehicles equipped with optional HID headlamps, an Automatic Headlamp Leveling Module (AHLM) controls a headlamp leveling actuator motor attached to each front lamp unit to automatically perform headlamp adjustments using inputs from front and rear axle sensors to monitor changes in the vehicle suspension height. On vehicles equipped with manual headlamp levelling, the BCM directly drives both of the headlamp motors.
- **Optical Horn** - Also known as flash-to-pass, the beam selection function of the multi-function switch control stalk has a momentary intermediate position that allows the headlamp high beams to be flashed momentarily, without changing the headlamp beam selection.
- **Park Lamps** - The front park lamps include either the bulbs, the reflectors and the clear lenses of the park lamp compartment in both front combination lamp units. On vehicles not equipped with repeater lamp units, the front lamps also include the front side marker lamp bulbs and reflectors. On vehicles equipped with repeater lamp units, only the side marker reflectors are retained in the front lamp units. The rear park lamps include a clear bulb, a reflector and a red lens integral to each inner and outer rear lamp unit as well as the clear bulbs and lenses of the two license plate lamp units.

- **Rear Fog Lamps** - Rear fog lamps are available only in certain export markets where they are required equipment. The rear fog lamps include a clear bulb and a red lens and reflector that are integral to each rear fog lamp unit located below the outer tail lamps in the rear fascia. On domestic market vehicles, only the red reflector is retained in the rear fascia.
- **Turn Signal Lamps** - The front turn signal lamps include an amber bulb, a reflector, and a clear lens that are integral to each front combination lamp unit. On vehicles equipped with the optional outside mirror signal lamps, there are several amber LED units integral to each mirror signal lamp unit that are also activated by the turn signal circuits for the same side of the vehicle. Depending upon market requirements, the rear turn signal lamps include either a clear bulb and a red lens or an amber lens and a reflector that are integral to each outer rear lamp unit. On vehicles equipped with combined rear lighting, the turn signal and stop lamps use the same bulb filament. When combined rear lighting is preset, turn signals are allowed to interrupt stop lamp actuation to allow turn signal actuation.

Other components of the exterior lighting system for this vehicle include:

- **Automatic Headlamp Leveling Module** - Vehicles equipped with HID headlamps have an AHLM located in the passenger cabin underneath the glove box. The AHLM monitors the vehicle ride height through the front and rear axle sensors, then provides inputs to the headlamp leveling motor on each front lamp unit as appropriate.
- **Axle Sensors** - Vehicles equipped with HID headlamps have an axle sensor for both the front and the rear axles, which monitor the suspension height of the vehicle.
- **Backup Lamp Switch** - A Transmission Range Sensor (TRS) integral to the solenoid pack on the valve body of the electronic automatic transmission performs the backup lamp switch function for this vehicle.
- **Brake Lamp Switch** - A plunger-type brake lamp switch is located on the steering column support bracket under the instrument panel and is actuated by the brake pedal arm when the brake pedal is depressed.
- **Daytime Running Lamp Relays** - All vehicles equipped with optional HID headlamps have two DRL relays located in the Power Distribution Center (PDC).
- **Electronic Ballast Module** - Vehicles equipped with the HID headlamps have an electronic ballast module secured to the underside of each front lamp unit. Each module controls the HID lighting element/igniter within the front lamp unit to which it is mounted.
- **Hazard Switch** - A latching push button-actuated hazard switch is integral to the switch pod located just below the heater and air conditioner controls in the center stack area of the instrument panel.
- **Headlamp Leveling Motor** - A headlamp leveling actuator motor is attached to each front lamp unit housing of vehicles manufactured with HID headlamps.
- **Headlamp Switch** - A headlamp switch is located on the left side of the instrument panel, below the left instrument panel vent outboard of the steering column. The headlamp switch includes a rotary knob to turn the park lamps and headlamps ON or OFF and is pushed inward for selecting the optional front fog lamps on vehicles so equipped. The headlamp switch also features a vertical thumbwheel for selecting the panel lamps dimming level, a PARADE mode to illuminate all Vacuum Fluorescent Display (VFD) units at full brightness for visibility when driving in daylight with the exterior lighting turned ON, and for interior lighting control.
- **Instrument Cluster** - The ElectroMechanical Instrument Cluster (EMIC) is also known as the Cab Compartment Node (CCN) in this vehicle. The EMIC/CCN is located in the instrument panel above the

steering column opening, directly in front of the driver. Refer to **DESCRIPTION** .

- **Multi-Function Switch** - The multi-function switch is integral to the Steering Column Control Module (SCCM) located on the steering column, just below the steering wheel. A control stalk that extends from the left side of the SCM is used to select the turn signal lamps (right or left) and to select the headlamp beam (low, high or optical horn).
- **Park Brake Switch** - A park brake switch is located on the park brake lever mechanism on the cowl side inner panel (Left-Hand Drive/LHD) or the right side of the floor panel transmission tunnel (Right-Hand Drive/RHD) to the left of the steering column.
- **Steering Control Module** - The Steering Control Module (SCM) is located within and integral to the Steering Column Control Module (SCCM) located on the top of the steering column, just below the steering wheel. Refer to **MODULE, STEERING COLUMN, DESCRIPTION** .
- **Body Control Module** - The Body Control Module (BCM) is located beneath the instrument panel on the driver side of the vehicle. Refer to **MODULE, BODY CONTROL, DESCRIPTION** .
- **Trailer Tow Wiring** - Domestic market vehicles with a factory-installed trailer towing package have a trailer tow wire harness with a combination 4-way and heavy duty 7-way trailer tow connector installed in the rear bumper fascia near the trailer hitch receiver. This package also includes an electric trailer brake wiring provision that terminates at a connector located on top of the large body harness connection bracket under the instrument panel to the left of the steering column. An electric trailer brake pigtail harness and an instruction card are available through MOPAR® to ease installation of most aftermarket electric trailer brake controllers.
- **Trailer Tow Relays** - Domestic market vehicles with a factory-installed trailer towing package have two trailer tow relays installed in the TIPM in the engine compartment. One relay is for the trailer right turn and brake lamps, and the other is for the trailer left turn and brake lamps.

Hard wired circuitry connects the exterior lighting system components to the electrical system of the vehicle. These hard wired circuits are integral to several wire harnesses, which are routed throughout the vehicle and retained by many different methods. These circuits may be connected to each other, to the vehicle electrical system and to the exterior lighting components through the use of a combination of soldered splices, splice block connectors, and many different types of wire harness terminal connectors and insulators. Refer to the appropriate wiring information. The wiring information includes wiring diagrams, proper wire and connector repair procedures, further details on wire harness routing and retention, as well as pin-out and location views for the various wire harness connectors, splices and grounds.

OPERATION

OPERATION

Following are paragraphs that briefly describe the operation of each of the major exterior lighting systems. The lamps and the hard wired circuits between components related to the exterior lighting system may be diagnosed using conventional diagnostic tools and procedures. Refer to the appropriate wiring information. The wiring information includes wiring diagrams, proper wire and connector repair procedures, details of wire harness routing and retention, connector pin-out information and location views for the various wire harness connectors, splices and grounds.

However, conventional diagnostic methods will not prove conclusive in the diagnosis of the exterior lighting

system or the electronic controls or communication between modules and other devices that provide some features of the exterior lighting system. The most reliable, efficient and accurate means to diagnose the exterior lighting system or the electronic controls and communication related to exterior lighting system operation requires the use of a diagnostic scan tool. Refer to the appropriate diagnostic information.

AUTOMATIC HEADLAMP

The two optional automatic headlamp systems can include the headlamp switch, the Body Control Module (BCM), the heater and air conditioner control head (also known as the Electronic Climate Control/ECC). The auto headlamp system has two available sensors that give the BCM feedback for lamp control. The light rain sensor and the twilight sensor on the top of the instrument panel are the two available sensors.

If the vehicle is not equipped with a light rain sensor, the twilight sensor provides the ambient light level input to the A/C - heater control whenever the ignition switch status is ON. The A/C - heater control responds to this input by sending the appropriate electronic **light level** messages to the BCM over the Controller Area Network (CAN) data bus. When the **AUTO** (Automatic) position is selected with the headlamp switch, the BCM receives a hard wired multiplex input from the headlamp switch. The BCM also receives electronic messages over the CAN data bus from the Powertrain Control Module (PCM) (also known as the Engine Control Module/ECM) indicating the engine is running. **The twilight sensor is only used for auto headlamp operation when the vehicle is not equipped with an optional light rain sensor.**

If the vehicle is equipped with a light rain sensor, then this rain sensor is what is read by the BCM.

The BCM responds to either input condition by automatically controlling a Pulse-Width Modulated (PWM) voltage output to the selected headlamp bulb filaments through the right and left low or high beam driver circuits to illuminate the headlamps. The BCM also remembers which beams (low or high) were selected when the headlamps were last turned OFF, and energizes those beams and lamps again the next time it turns the headlamps ON.

AUTOMATIC HIGH BEAM CONTROL

The optional auto high beam system **(if equipped with the Forward Facing Camera (FFC))** includes the digital imager Forward Facing (FFC), the BCM, the radio, the IC and the headlamp switch. First, the **Auto High Beams** option must be enabled using the customer programmable features function of the radio. Then the **AUTO** (Automatic) position must be selected using the rotary knob of the headlamp switch, the headlamp beam selector switch must be in the high beam position and the appropriate lighting conditions must be present. Finally, the vehicle speed must be greater than 32 kilometers-per-hour (20 miles-per-hour).

Once all of these prerequisites have been met, the HaLF module (otherwise known as the Forward Facing Camera or FFC) automatically sends the appropriate electronic **headlamp beam select switch status** messages to the BCM over the CAN C data bus. The BCM follows the command from the HaLF and turns on or off the high beams appropriately. The BCM also sends a message to the cluster for "Enabled" and Disabled" display messages. These messages should not display unless under optimal lighting conditions (night, dusk, etc.).

BACKUP LAMPS

The backup (or reverse) lamps have a path to ground at all times through a takeout and eyelet terminal of the

body wire harness that is secured to the body sheet metal within the passenger compartment. On vehicles with a manual transmission, the backup lamp switch provides a hard wired input to the to the PCM through a backup lamp switch signal circuit, and the PCM sends the appropriate electronic **reverse gear status** messages to the BCM over the CAN data bus. The BCM then controls a battery feed to the backup lamps on the backup lamp feed circuit as required whenever the ignition switch status is ON.

On vehicles with an automatic transmission, the PCM continually monitors electronic an hard wired multiplex input from the Transmission Range Sensor (TRS), then sends the appropriate electronic **gear selector status** messages received from the Gear Shift Module (GSM) over the CAN data bus, then relays the appropriate electronic **reverse gear status** messages to the BCM over the CAN data bus.

BRAKE LAMPS

The brake (or stop) lamps and the Center High Mounted Stop Lamp (CHMSL) each have a path to ground at all times through a takeout and eyelet terminal of the body wire harness that is secured to the body sheet metal within the passenger compartment. The brake lamp switch is continually monitored by the BCM. When the normally open circuit of the brake lamp switch is closed by the brake pedal arm, the BCM responds to the brake lamp switch input by providing a control output that energizes or de-energizes the brake lamps.

Some models can be equipped with combined rear lighting. This option allows the brake lamp and the turn signal lamp to use the same single bulb filament. The turn signal operation will take precedence when commanded on.

DAYTIME RUNNING LAMPS

Vehicles equipped with this option or manufactured for sale in Canada illuminate the LED bulbs of both front combination turn/park lamp units when the engine is running, the parking brake is released and the exterior lamps are turned OFF. The BCM must be programmed appropriately for this feature to be enabled. Once enabled, anytime the BCM receives electronic messages over the CAN data bus from the PCM indicating the engine is running, a hard wired multiplex input from the headlamp switch indicating the status of the headlamp switch is OFF and a hard wired input from the park brake switch indicating that the parking brake is released, the BCM provides an output to the proper bulb filaments through the right and left front turn signal feed circuits to produce illumination at the proper intensity.

FRONT FOG AND CORNERING LAMPS

Vehicles equipped with optional front fog lamps include a front fog lamp switch integral to the headlamp switch on the instrument panel. The front fog lamps have a path to ground at all times through their connection to the Front End Module (FEM) wire harness and a takeout with an eyelet terminal that is secured to the body sheet metal.

When the BCM input from the headlamp switch assembly indicates the fog lamps are selected, it controls front fog lamp operation by providing a battery voltage output to the fog lamps through the right and left front fog lamp control circuits. The BCM also sends the appropriate electronic **front fog lamp status** messages to the Instrument Cluster (IC) (also known as the Instrument Panel Cluster/IPC) to illuminate or extinguish the front fog lamp indicator.

Fog Lamp Dropout with High Beam Activation - If the front fog lamps are active and the vehicle's high beams turn ON, then the front fog lamp outputs shall turn OFF and the IPC indicator will also turn off and remain off until the high beams are turned OFF. If vehicle high beams are active and the front fog lamp command is operated, the IPC indicator will remain OFF. The BCM will keep track of a fog lamp request and honor the request when the high beams are turned OFF.

The BCM also provides a battery saver (load shedding) feature for the front fog lamps, which will turn these lamps OFF if they are left ON for more than about eight minutes when the status of the ignition switch is LOCK, if there is a charging system failure or if the electrical system voltage falls below about 11.75 volts for more than about 30 seconds.

Each front fog lamp includes an integral adjustment screw to be used for static aiming of the fog lamp beams.

FRONT FOG CORNERING LAMPS

The Cornering lights function is derived from two different inputs. Steering angle or the activation of the turn signal lamps. Both of those items can induce lamp cornering activation. In the event that both are creating an active request at the same time, the steering angle will be given priority to the expense of the one based on the turn signal lights. In the case of the steering angle sensor, the lamps will activate at the "10 and 2" positions when turning. When neither angle is breached, both of the front fog lamps remain on uninterrupted.

HAZARD WARNING LAMPS

The hazard warning system includes the IC, the BCM and the hazard latching switch in the switch pod bank in the center area of the instrument panel. The hazard switch provides a hard wired input to the BCM. When the BCM receives an input from the hazard switch, it controls hazard warning system operation and flash rate by controlling battery voltage outputs through high side drivers on the front and rear, right and left turn signal control circuits.

The BCM also sends the appropriate electronic **hazard switch status** messages to the IC over the CAN data bus to control the illumination and flash rate of the right and left turn signal indicators, as well as to control the click rate of an electromechanical relay soldered onto the IC electronic circuit board that emulates the sound emitted by a conventional electromechanical hazard warning flasher.

HEADLAMPS

The headlamp system includes the IC, the Steering Control Module (SCM), the BCM, the headlamp switch and the multi-function switch on the steering column. The headlamp bulbs have a path to ground at all times through their connection to the FEM wire harness. The FEM harness has takeouts with eyelet terminals that are secured to the front end sheet metal within the engine compartment. The BCM will store a Diagnostic Trouble Code (DTC) for any shorts or opens in the headlamp circuits.

The BCM monitors a hard wired multiplex input to determine the status of the headlamp switch. The BCM also monitors electronic **headlamp beam select switch status** messages received from the SCM over the CAN data bus. The BCM responds to these inputs by providing a pulse width modulated voltage output to the headlamp bulbs through high side drivers on the right and left headlamp feed circuits to illuminate the headlamps, and controls the high and low beam shutter operation through high side drivers on the right and left high beam feed

circuits. The BCM also sends the appropriate electronic **headlamp beam status** messages to the IC to control the illumination of the high beam indicator.

The BCM also remembers which beams (LOW or HIGH) were selected when the headlamps were last turned OFF, and energizes those beams again the next time the headlamps are turned ON. The BCM provides a battery saver (load shedding) feature for the headlamps, which will turn these lamps OFF if they are left ON for more than about eight minutes when the ignition switch status is LOCK. The SCM and the BCM each provide a fail-safe feature for the headlamps, which will cause the BCM to turn the low beam headlamps ON automatically if there is no input available from the headlamp switch or the multi-function switch. The BCM also provides a fail-safe feature for the headlamps that will turn the headlamps ON automatically whenever a loss of CAN bus communication is detected when the ignition switch status is ON.

Each headlamp includes an integral reflector adjustment screw to be used for static aiming of the headlamps.

HEADLAMP LEVELING

On vehicles with the HID headlamps, an automatic leveling system is used that includes front and rear axle sensors and an Automatic Headlamp Leveling Module (AHLM) located under the dash on the passenger side compartment. A headlamp leveling motor located on the back of each HID lamp unit is mechanically connected through an integral pushrod to the adjustable headlamp reflector.

The automatic headlamp leveling system automatically adjusts the headlamp beam reflectors to compensate for changes in vehicle suspension height regardless of whether caused by the loading of the vehicle suspension or vehicle pitch changes caused by acceleration and deceleration. The actuator motors are automatically adjusted by the AHLM, which reads the front and the rear axle sensors to determine the suspension height changes. The circuitry of the AHLM provides a voltage signal to the electronic circuitry of both leveling actuator motors and the electronic circuitry of these stepper motors responds to the voltage inputs received from the AHLM to move the headlamp reflectors to the selected position.

The headlamp leveling motors have a path to ground at all times. The automatic headlamp leveling components operate on battery current received only when the exterior lighting and the ignition switch are turned ON.

MANUAL HEADLAMP LEVELING

In certain markets where required, a headlamp leveling system is provided on the vehicle. The headlamp leveling system includes unique front headlamp units each connected to a headlamp leveling actuator motor, and a roller-actuated headlamp leveling switch integral to the headlamp switch pod on the instrument panel. The headlamp leveling system allows the headlamp beams to be adjusted to one of four vertical positions to compensate for changes in inclination caused by the loading of the vehicle suspension. The leveling motors are mechanically connected through an integral pushrod to the adjustable headlamp mounting collar.

Each time the headlamp leveling switch is depressed the circuitry of the switch pod provides an electronic **select status up** or **select status down** message input to the BCM over the a data bus. The BCM provides a voltage output to the headlamp leveling motors through high side drivers on the headlamp leveling motor right and left signal circuits to move the headlamp reflectors to the selected position based upon the voltage input received from the BCM. The BCM also sends the appropriate electronic messages back to the switch to control the illumination of the **1** , **2** , or **3** Light Emitting Diode (LED) selected position indicator in the leveling switch

button. BCM logic will only allow the headlamp leveling system to operate while the ignition switch is in the ON position and the exterior lighting is turned ON.

HEADLAMP TIME DELAY

The headlamp delay feature includes the headlamp switch and the BCM. In vehicles with the optional EVIC, this feature is customer programmable using the EVIC switch pod and the EVIC electronic display unit to select delay intervals of 0 seconds (disabled), 30 seconds, 60 seconds and 90 seconds. If the headlamp switch remains in the headlamp **AUTO** (Automatic) position until after the ignition switch status transitions to OFF, then the headlamps will remain illuminated until after the selected delay interval has elapsed. The park lamps will not stay ON during the headlamp time delay interval. The default delay interval is 90 seconds, but can be reprogrammed by the customer using the EVIC switch pod.

PARK LAMPS

The park lamps system includes the headlamp switch on the instrument panel and the BCM. The front park lamps each have a path to ground at all times through their connection to the FEM wire harness. The FEM wire harness has takeouts with eyelet terminals that are secured to the body sheet metal. The rear park/tail lamps and license plate lamp bulb each have a path to ground at all times through a takeout and eyelet terminal of the body wire harness that is also secured to the body sheet metal.

The BCM monitors a hard wired multiplex input from the headlamp switch. The BCM responds to this input by controlling a battery voltage output to the appropriate lamps and bulbs through high side drivers on the front and rear, right and left lamp driver and control circuits. The BCM also sends the appropriate electronic **park lamps status** messages to the IC to control the illumination and lighting level of the panel lamps.

The BCM provides a battery saver (load shedding) feature for the park lamps, which will turn these lamps OFF if they are left ON for more than about eight minutes while the ignition switch status is LOCK. The BCM also provides a fail-safe feature for the park lamps, which will turn the park lamps and low beam headlamps ON automatically if there is no input available from the headlamp switch after the ignition switch status transitions to ON. The BCM also provides a fail-safe feature for the park lamps that will turn the park lamps and low beam headlamps ON automatically whenever a loss of CAN bus communication is detected after the ignition switch status transitions to ON.

TURN SIGNAL LAMPS

The left or right direction signals are activated using the left stalk switch input to the SCCM. These commands are codified using a resistive divider, into the analogical command that is read by the SCCM and then sent to the BCM over CAN-C.

The turn signal lamps system includes the multi-function switch on the steering column, the SCM, the IC and the BCM. The front turn signal lamp bulbs each have a path to ground at all times through their connection to the combination park/turn lamp and dash wire harness. The combination park/turn lamp and dash wire harness has takeouts with eyelet terminals that are secured to the body sheet metal. The rear turn signal lamps are LED elements within the rear outer tail lamp housing.

The SCM monitors a hard wired multiplex input from the multi-function switch to determine the status of the

turn signal switch, then sends the appropriate electronic **turn signal switch status** messages to the BCM over the CAN data bus. The BCM responds to these messages by controlling a battery voltage output and the flash rate for either the right or left turn signal lamps through high side drivers on the appropriate front and rear, right or left turn signal control circuits. The BCM also sends the appropriate electronic messages to the IC to control the illumination and flash rate of the right or left turn signal indicators, as well as to control the click rate of an electromechanical relay soldered onto the IC electronic circuit board that emulates the sound emitted by a conventional electromechanical turn signal flasher.

The BCM also provides a Turn Signal ON warning that will send a **turn signal ON warning** request message to the IC over the CAN bus that causes the IC to generate repetitive chimes to indicate that a turn signal has been active continuously for 1.6 kilometers (1 mile) with the vehicle speed greater than 22 kilometers-per-hour (15 miles-per-hour). The chime will continue until the turn signal input becomes inactive or until the vehicle speed message indicates that the speed is less than 22 kilometers-per-hour (15 miles-per-hour), whichever occurs first.

SNA Definition - Signal Not Acquired. If the SCCM detects an issue (stuck switch, etc) and sets an active fault, the SCCM shall broadcast the SNA state to the BCM. BCM will default to an idle state and keep all turn signal outputs OFF until a valid request is received.

Combined Rear Lighting - Some models will be equipped with combined rear lighting. The stop lamp and the turn signal lamp share the same single bulb filament. When the turn signal is activated, the SCCM recognizes the signal switch request. The SCCM sends this message over the CAN C bus to the BCM for processing. The BCM then actuates the single bulb filament for signal operation only until the stalk is reset back to the neutral position.

Combined Front Park/Turn - When the turn signal function is active, the BCM will apply the normal voltage to the turn signal output. When both the park and the turn functions (or hazards) are active, the BCM will switch between park intensity and turn intensity for the duration of the front left turn or right turn (or hazard) event.

Lane Change Function - If either of the turn signals are actuated for a time equal to or less than 500 ms, the BCM will activate the requested turn signal light and will blink for three blinks. At the same time the signals are switched ON, the BCM will also activate the internal signal corresponding with the selected side. The internal signal will show ON for the entire period of the turn signal even and will not show to be blinking. The internal signal is synchronous with the signal activation and will turn OFF at the end of the vent. After 3 blink cycles, the BCM switches OFF the turn signals, the CAN-B signals, and the internal signals corresponding to the selected side.

Turn Signal Alert Feature - When either the left or right turn signal are activated, the IPC (Cluster) will record the distance travelled using odometer information by way of the CAN-B signal. When one mile (1.6 km) has been traveled, the cluster will assume that the operator has unintentionally left the turn signals activated and two alerts will occur: A slow audible chime will emit from the cluster or an icon and textual message will display on the cluster.

CONTROL MODULE RESPONSIBILITY

- BCM - Turn signal lights request from the SCCM, received from the turn signal multi-function switch.

- BCM - Turn signal lights powering (left and right sides)
- BCM - Turn signal light status transmittal over CAN-B.
- BCM - Combined lighting turn/stop and park/turn lamp management.
- IPC - Obtain turn signal lamp status from CAN-B
- IPC - Turn signal lights signalling management.
- IPC - Turn signal lights fail signalling management.
- SCCM - Turn signal output acquisition from the multi-function switch
- SCCM - Turn signal activation request to BCM over CAN-C

DIAGNOSIS AND TESTING

DIAGNOSIS AND TESTING - EXTERIOR LIGHTING

WARNING: **To avoid serious or fatal injury on vehicles equipped with airbags, disable the Supplemental Restraint System (SRS) before attempting any steering wheel, steering column, airbag, seat belt tensioner, impact sensor or instrument panel component diagnosis or service. Disconnect and isolate the battery negative (ground) cable, then wait two minutes for the system capacitor to discharge before performing further diagnosis or service. This is the only sure way to disable the SRS. Failure to take the proper precautions could result in accidental airbag deployment.**

NOTE: **When diagnosing the exterior lighting circuits, remember that high generator output can burn out bulbs rapidly and repeatedly; and, that dim or flickering bulbs can be caused by low generator output or poor battery condition. If one of these symptoms is a problem on the vehicle, be certain to diagnose the battery and charging system, then repair as necessary.**

NOTE: **A good ground is necessary for proper lighting operation. If a lighting problem is being diagnosed that involves multiple symptoms, systems, or components, the problem can often be traced to a loose, corroded, or open ground.**

The lamps and the hard wired circuits between components related to the exterior lighting system may be diagnosed using conventional diagnostic tools and procedures. Refer to the appropriate wiring information. The wiring information includes wiring diagrams, proper wire and connector repair procedures, details of wire harness routing and retention, connector pin-out information and location views for the various wire harness connectors, splices and grounds.

However, conventional diagnostic methods will not prove conclusive in the diagnosis of the exterior lighting system or the electronic controls or communication between modules and other devices that provide some features of the exterior lighting system. The most reliable, efficient, and accurate means to diagnose the exterior lighting system or the electronic controls and communication related to exterior lighting system operation requires the use of a diagnostic scan tool. Refer to the appropriate diagnostic information.

AUTOMATIC HEADLAMPS

NOTE: **Be certain that the headlamps can be turned ON and OFF manually before attempting to diagnose and repair the Automatic Headlamps. If not, diagnose and repair those problems before attempting to repair the Automatic Headlamps.**

NOTE: **The Automatic Headlamp switch is integral to the headlamp switch itself, which communicates with the Body Control Module (BCM) over via data bus. Before performing any of the following tests, determine whether the other functions of the headlamp are operational. If the other functions are ineffective, diagnose and repair that problem before attempting to repair the Automatic Headlamps.**

CONDITION	POSSIBLE CAUSES	CORRECTION
AUTO HEADLAMPS INEFFECTIVE	1. Feature not enabled.	1. Enable **Auto Low** or **Auto Low/High** using the customer programmable features function of the Electronic Vehicle Information Center (EVIC).
	2. Ineffective headlamp switch.	2. Test and replace switch if required.
	2. Incorrect BCM configuration.	2. Use a diagnostic scan tool to check and configure BCM if required.
	3. Ineffective circuits between sun load sensor and air conditioner - heater control (except with automatic wipers).	3. Test and repair sun sensor and sun sensor return circuits if required.
	4. Ineffective sun load sensor (except with automatic wipers). If vehicle is export, then LRSM is 100% in control of light identification and not the Sun Sensor.	4. Test and replace sun load sensor if required. Connect the scan tool and monitor the sensor voltage while covering and uncovering the sensor. A covered sensor voltage should read approximately 4.6V and an uncovered sensor should read approximately 2.3V.
	5. Ineffective Light Rain Sensor Module (LRSM) (with automatic wipers).	5. Use a diagnostic scan tool to test and replace the LRSM if required. Refer to the appropriate diagnostic information.
	6. Ineffective BCM inputs or outputs.	6. Use a diagnostic scan tool to test the BCM inputs and outputs. Refer to the appropriate diagnostic information.

AUTO HIGH BEAM HEADLAMP

Please make sure the beauty cover is installed in position while testing the (Forward Facing Camera) FFC and Auto High Beams. Loss of cover creates interference with the imager of the camera.

CONDITION	POSSIBLE CAUSES	CORRECTION
AUTO HIGH BEAM CONTROL SYSTEM IS INOPERATIVE.	1. Feature is not enabled.	1. Enable **Auto Low/High** using the customer programmable features function located within the radio.
	2. Automatic headlamps are not turned **ON** .	2. Turn automatic headlamps ON using the control knob of the headlamp switch.
	3. Headlamp high beams are not selected.	3. Turn high beam headlamps ON using the stalk.
	4. Vehicle speed is below 34 kilometers-per-hour (18 miles-per-hour).	4. Increase vehicle speed. This system not designed to operate at speeds below 34 kilometers-per-hour (18 miles-per-hour).
	5. Incorrect (Body Control Module) BCM configuration.	5. Use a diagnostic scan tool to check and correct the BCM configuration settings if required. Refer to the appropriate diagnostic information.
	6. FFC is inoperative on the bus or a loss of CAN C bus communication.	6. Using the WiTech, confirm the FFC is off-line and to test the CAN C bus system.
	7. Ineffective ground circuit to the FFC.	7. Test and repair open ground circuit to the forward facing camera as required.
	8. Ineffective feed circuit to the FFC.	8. Test and repair open fused run relay output circuit to the forward facing camera if required.
	9. Forward Facing Camera imager lens dirty or obstructed.	9. Clean imager lens and windshield or remove obstructions from the windshield glass if required.
	10. FFC bussed outputs to the BCM.	10. Use a diagnostic scan tool confirm the FFC operation.
	11. FFC is in a limited function mode.	11. Use a diagnostic scan tool and check for DTCs relative to FFC reliant components.

BACKUP LAMPS

CONDITION	POSSIBLE CAUSES	CORRECTION
BACKUP LAMP DOES NOT ILLUMINATE	1. Ineffective or missing bulb.	1. Test and replace backup lamp bulb if required.
	2. Ineffective ground circuit.	2. Test and repair open backup lamp ground circuit if required.
	3. Ineffective feed circuit.	3. Test and repair open backup lamp feed circuit if required.

	4. Ineffective switch.	4. Test and replace backup lamp switch (manual transmission) or TRS (automatic transmission) if required.
	5. Ineffective BCM inputs or outputs.	5. Use a diagnostic scan tool to test the BCM inputs and outputs. Refer to the appropriate diagnostic information.
BACKUP LAMP DOES NOT EXTINGUISH	1. Ineffective feed circuit.	1. Test and repair shorted backup lamp feed circuit if required.
	2. Ineffective switch.	2. Test and replace backup lamp switch (manual transmission) or transmission range sensor (automatic transmission) if required.
	3. Ineffective BCM inputs or outputs.	3. Use a diagnostic scan tool to test the BCM inputs and outputs. Refer to the appropriate diagnostic information.

BRAKE LAMPS

NOTE: **The brake lamps and the Center High Mounted Stop Lamp (CHMSL) are illuminated by several Light-Emitting Diode (LED) units that are soldered to the electronic circuit board within the lamp housing. The CHMSL is hard wired to the output of the brake lamp switch, while the brake lamps are powered by high side drivers within the BCM based upon an input from the brake lamp switch. If the brake lamps and all of the LED units within the CHMSL fail to operate, diagnose and repair the brake lamps before attempting to repair the CHMSL. If the brake lamps operate but none of the CHMSL LED units illuminate, test and repair the CHMSL ground or feed circuit if required. If some of the CHMSL LED units operate and others do not, the CHMSL assembly must be replaced with a new unit.**

CONDITION	POSSIBLE CAUSES	CORRECTION
BRAKE LAMP DOES NOT ILLUMINATE	1. Ineffective ground circuit.	1. Test and repair open brake lamp ground circuit if required.
	2. Ineffective fuse.	2. Test and replace the fuse in the BCM if required.
	3. Ineffective feed circuit.	3. Test and repair open brake lamp switch output circuit or stop lamp output circuit if required.
	4. Ineffective switch.	4. Test and replace brake lamp switch if required.
	5. Ineffective BCM inputs or outputs.	5. Use a diagnostic scan tool to test the BCM inputs and outputs. Refer to the appropriate diagnostic information.
BRAKE LAMP DOES NOT EXTINGUISH	1. Ineffective feed circuit.	1. Test and repair shorted brake lamp switch output circuit or stop lamp output

		circuit if required.
	2. Improperly adjusted switch.	2. Adjust the brake lamp switch if required.
	3. Ineffective switch.	3. Test and replace brake lamp switch if required.
	4. Ineffective BCM inputs or outputs.	4. Use a diagnostic scan tool to test the BCM inputs and outputs. Refer to the appropriate diagnostic information.

DAYTIME RUNNING LAMPS

NOTE: Before performing the following tests, determine whether the turn signals operate. If the turn signals are also ineffective, diagnose and repair that problem before attempting to repair the Daytime Running Lamps.

CONDITION	POSSIBLE CAUSES	CORRECTION
DAYTIME RUNNING LAMPS WILL NOT ILLUMINATE	1. Incorrect BCM programming.	1. Use a diagnostic scan tool to check and configure BCM if required.
	2. Automatic transmission in PARK position.	2. Place the transmission gear selector lever in any position except PARK.
	3. Parking brake applied.	3. Release the parking brake.
	4. Engine not running.	4. Start the engine.
	5. Ineffective LED Module	5. Confirm power and ground at the LED module prior to replacement.
	6. Ineffective BCM inputs or outputs.	6. Use a diagnostic scan tool to test the BCM inputs and outputs. Refer to the appropriate diagnostic information.

FRONT FOG LAMPS

NOTE: The front fog lamp switch is integral to the left multi-function switch/Steering Control Module (SCM), which communicates with the Body Control Module (BCM). The BCM communicates or broadcasts to the ElectroMechanical Instrument Cluster (EMIC)/Cab Compartment Node (CCN) over the CAN-B. Before performing any of the following tests, determine whether the other functions of the left multi-function switch/SCM are operational. If the other left multi-function switch/SCM functions are ineffective, diagnose and repair that problem before attempting to repair the Front Fog Lamps.

If the BCM receives a short or open circuit from the fog lamp switch, the BCM will set a DTC for each present faulted condition. If the BCM received an open or short circuit while the front fog lamps are ON then the BCM will retain the last state of the fog lamp switch until the next engine cycle. After the next ignition cycle if the headlamp switch is still faulted, the BCM will not activate the front fog lamps.

If the front fog lamp switch is active for 20 second or more, the BCM shall activate the front fog lamps and will

set a front fog stick switch fault DTC. If the front fog lamp switch remains faulted, the BCM will continue to drive the front fog lamps in a normal manner until the switch is repaired or replaced. If the front fog switch is no longer stuck, the BCM will clear the related fault DTC.

If the BCM received a front fog command and the PROXI is not correct or set for the vehicle being equipped with fog lamps, the BCM will set a misbuild fault. Run PROXI configuration first.

CONDITION	POSSIBLE CAUSES	CORRECTION
FRONT FOG LAMP DOES NOT ILLUMINATE	1. Ineffective or missing bulb.	1. Test and replace front fog lamp bulb if required.
	2. Ineffective ground circuit.	2. Test and repair open front fog lamp ground circuit if required.
	3. Ineffective feed circuit.	3. Test and repair open front fog lamp feed circuit if required.
	4. Ineffective EMIC (CCN) inputs or outputs.	4. Use a diagnostic scan tool and the appropriate diagnostic information for further EMIC diagnosis.
	5. Ineffective BCM inputs or outputs.	5. Use a diagnostic scan tool to test the BCM inputs and outputs. Refer to the appropriate diagnostic information.
FRONT FOG LAMP DOES NOT EXTINGUISH	1. Ineffective feed circuit.	1. Test and repair shorted front fog lamp feed circuit if required.
	2. Ineffective EMIC (CCN) inputs or outputs.	2. Use a diagnostic scan tool and the appropriate diagnostic information for further EMIC diagnosis.
	3. Ineffective BCM inputs or outputs.	3. Use a diagnostic scan tool to test the BCM inputs and outputs. Refer to the appropriate diagnostic information.

HAZARD WARNING LAMPS

NOTE: **The hazard switch is integral to the instrument panel switch bank, which provides a hard wired output to the BCM. Before performing any of the following tests, confirm whether the left and right turn signals operate satisfactorily. Then determine whether the other functions of the instrument panel switch bank are operational. If the turn signals are ineffective or operate improperly, or if the other instrument panel switch bank functions are ineffective, diagnose and repair those problems before attempting to repair the hazard warning lamps system.**

CONDITION	POSSIBLE CAUSES	CORRECTION
HAZARD WARNING LAMPS DO NOT FLASH	1. Ineffective instrument panel switch bank.	1. Test and replace instrument panel switch bank if required.
	2. Ineffective BCM inputs or	2. Use a diagnostic scan tool to test the BCM inputs and outputs. Refer to the

	outputs.	appropriate diagnostic information.
HAZARD WARNING LAMPS DO NOT STOP FLASHING	1. Ineffective instrument panel switch bank.	1. Test and replace instrument panel switch bank if required.
	2. Ineffective BCM inputs or outputs.	2. Use a diagnostic scan tool to test the BCM inputs and outputs. Refer to the appropriate diagnostic information.

HEADLAMPS

NOTE: **As part of the exterior lighting fail-safe feature, upon ignition ON, all exterior park lamps and the headlamp low beams will illuminate regardless of the left multi-function switch control knob position if the SCM cannot detect an input from the left multi-function switch, or if there is a loss of communication between the left multi-function switch/SCM and the EMIC or between the EMIC and the BCM. Diagnose and repair those problems before attempting to repair the Headlamps. In addition, the BCM will store a Diagnostic Trouble Code (DTC) for an open or shorted headlamp circuit.**

CONDITION	POSSIBLE CAUSES	CORRECTION
HEADLAMP DOES NOT ILLUMINATE	1. Ineffective or missing bulb.	1. Test and replace headlamp bulb if required.
	2. Ineffective ground circuit.	2. Test and repair open headlamp ground circuit if required.
	3. Ineffective feed circuit.	3. Test and repair open headlamp low beam or high beam feed circuit if required.
	4. Ineffective EMIC (CCN) inputs or outputs.	4. Use a diagnostic scan tool and the appropriate diagnostic information for further EMIC diagnosis.
	5. Ineffective BCM inputs or outputs.	5. Use a diagnostic scan tool to test the BCM inputs and outputs. Refer to the appropriate diagnostic information.
HEADLAMP DOES NOT EXTINGUISH	1. Ineffective feed circuit.	1. Test and repair shorted headlamp low beam or high beam feed circuit if required.
	2. Ineffective EMIC (CCN) inputs or outputs.	2. Use a diagnostic scan tool and the appropriate diagnostic information for further EMIC diagnosis.
	3. Ineffective BCM inputs or outputs.	3. Use a diagnostic scan tool to test the BCM inputs and outputs. Refer to the appropriate diagnostic information.
HEADLAMPS ILLUMINATE WITH IGNITION ON AND HEADLAMP SWITCH OFF (FAIL-SAFE OPERATION)	1. Loss of LIN or CAN data bus communication.	1. Test and repair the LIN or CAN data bus if required. Refer to the appropriate diagnostic information.

HEADLAMPS WILL NOT SWITCH FROM HIGH TO LOW BEAMS, OR FROM LOW TO HIGH BEAMS	1. Ineffective EMIC (CCN) inputs or outputs.	1. Use a diagnostic scan tool and the appropriate diagnostic information for further EMIC diagnosis.
	2. Ineffective BCM inputs or outputs.	2. Use a diagnostic scan tool to test the BCM inputs and outputs. Refer to the appropriate diagnostic information.

HEADLAMP LEVELING - AUTOMATIC

NOTE: **Before performing any of the following tests, confirm whether the park lamps operate satisfactorily. If the park lamps are ineffective or operate improperly, diagnose and repair that problem before attempting to repair the automatic headlamp leveling function.**

CONDITION	POSSIBLE CAUSES	CORRECTION
ONE LEVELING MOTOR IS INEFFECTIVE	1. Ineffective ground circuit.	1. Test and repair open leveling motor ground circuit if required.
	2. Ineffective feed circuit.	2. Test and repair open leveling motor feed circuit if required.
	3. Ineffective signal circuit.	3. Test and repair open headlamp adjust signal circuit if required.
	4. Ineffective motor.	4. Test and replace headlamp leveling motor (front lamp unit) if required.
BOTH LEVELING MOTORS ARE INEFFECTIVE	1. Ineffective motor ground circuit.	1. Test and repair open leveling motor ground circuit if required.
	2. Ineffective motor feed circuit.	2. Test and repair open leveling motor feed circuit if required.
	3. Ineffective signal circuit.	3. Test and repair open or shorted leveling motor signal circuit if required.
	4. Ineffective Automatic Headlamp Leveling Module (AHLM) (also known as the High Intensity Discharge Transducer/HIDT) inputs or outputs.	4. Use a diagnostic scan tool to test the AHLM inputs and outputs. Refer to the appropriate diagnostic information.
	5. Ineffective BCM inputs or outputs.	5. Use a diagnostic scan tool to test the BCM inputs and outputs. Refer to the appropriate diagnostic information.
	6. Ineffective motors.	6. Test and replace leveling motors (front lamp units) if required.

HEADLAMP LEVELING - MANUAL

NOTE: **Before performing any of the following tests, confirm whether the park lamps operate satisfactorily. If the park lamps are ineffective or operate improperly, or if the other instrument panel switch pod functions are ineffective, diagnose and repair those problems before attempting to repair the manual headlamp leveling function.**

CONDITION	POSSIBLE CAUSES	CORRECTION
ONE LEVELING MOTOR IS INEFFECTIVE	1. Ineffective ground circuit.	1. Test and repair open leveling motor ground circuit if required.
	2. Ineffective feed circuit.	2. Test and repair open leveling motor feed circuit if required.
	3. Ineffective signal circuit.	3. Test and repair open headlamp leveling motor signal circuit if required.
	4. Ineffective motor.	4. Test and replace headlamp leveling motor if required.
BOTH LEVELING MOTORS ARE INEFFECTIVE	1. Ineffective switch inputs or outputs.	1. Use a diagnostic scan tool and the appropriate diagnostic information for further switch diagnosis.
	2. Ineffective motor ground circuit.	2. Test and repair open leveling motor ground circuit if required.
	3. Ineffective motor feed circuit.	3. Test and repair open leveling motor feed circuit if required.
	4. Ineffective signal circuit.	4. Test and repair open or shorted headlamp leveling motor signal circuit if required.
	5. Ineffective BCM inputs or outputs.	5. Use a diagnostic scan tool to test the BCM inputs and outputs. Refer to the appropriate diagnostic information.
	6. Ineffective motors.	6. Test and replace leveling motors if required.

PARK LAMPS

NOTE: **As part of the exterior lighting fail-safe feature, upon ignition ON, all exterior park lamps and the headlamp low beams will illuminate regardless of the left multi-function switch control knob position if the SCM cannot detect an input from the left multi-function switch, or if there is a loss of communication between the left multi-function switch/SCM and the EMIC or between the EMIC and the BCM. Diagnose and repair those problems before attempting to repair the Park Lamps.**

CONDITION	POSSIBLE CAUSES	CORRECTION
PARK LAMP DOES NOT ILLUMINATE	1. Ineffective or missing bulb.	1. Test and replace park lamp bulb if required.

	2. Ineffective ground circuit.	2. Test and repair open park lamp ground circuit if required.
	3. Ineffective feed circuit.	3. Test and repair open park lamp feed circuit if required.
	4. Ineffective EMIC (CCN) inputs or outputs.	4. Use a diagnostic scan tool and the appropriate diagnostic information for further EMIC diagnosis.
	5. Ineffective BCM inputs or outputs.	5. Use a diagnostic scan tool to test the BCM inputs and outputs. Refer to the appropriate diagnostic information.
PARK LAMP DOES NOT EXTINGUISH	1. Ineffective feed circuit.	1. Test and repair shorted park lamp feed circuit if required.
	2. Ineffective EMIC (CCN) inputs or outputs.	2. Use a diagnostic scan tool and the appropriate diagnostic information for further EMIC diagnosis.
	3. Ineffective BCM inputs or outputs.	3. Use a diagnostic scan tool to test the BCM inputs and outputs. Refer to the appropriate diagnostic information.

TURN SIGNAL LAMPS

NOTE: The turn signal switch is integral to the left multi-function switch/SCM, which communicates with the EMIC/CCN over the LIN data bus. Before performing any of the following tests, determine whether the other functions of the left multi-function switch/SCM are operational. If the other left multi-function switch/SCM functions are ineffective, diagnose and repair that problem before attempting to repair the Turn Signal Lamps.

Turn Lamp Fault Environment - Diagnoses is performed for the front and rear turns signal lamps by the BCM. If Combined Front Park/Turn is present on the vehicle, the BCM will only perform diagnostics when the turn signal is placed into an active state. If a left or right turn signal is requested and a faulted condition is present for either the front or rear turn signals at the time of the activation, the frequency of the CAN-B signals will show doubled corresponding to the side of the fault. If the left or right side has a faulted condition, the cluster will send an internal signal to display to the driver the faulted condition. However, the BCM output frequency to the lamps will not be changed during this faulted state. Even if the CAN-B frequency is doubled, the output from the BCM to the lamps will still be driven at a normal operating frequency.

It is required that, during the same ignition cycle, if a turn signal lamp or bulb is replaced, the system will recover with no intervention by the technician. Starting the vehicle and disconnecting a turn signal bulb or LED will result in an open fault. Replacing the bulb or LED lamp assembly causes the fault to change from active to stored. Normal signalling behavior will returns. This process applies to any of the six exterior lighting turn signal displays in use for this vehicle.

CONDITION	POSSIBLE CAUSES	CORRECTION
ONE TURN SIGNAL LAMP	1. Ineffective or missing	1. Test and replace turn signal bulb if

DOES NOT ILLUMINATE	bulb.	required.
	2. Ineffective ground circuit.	2. Test and repair open ground circuit if required.
	3. Ineffective feed circuit.	3. Test and repair open right or left turn signal feed circuit if required.
	4. Ineffective BCM inputs or outputs.	4. Use a diagnostic scan tool to test the BCM inputs and outputs. Refer to the appropriate diagnostic information.
ALL RIGHT SIDE OR ALL LEFT SIDE TURN SIGNAL LAMPS (OR BOTH SIDES) DO NOT FLASH	1. Ineffective feed circuit.	1. Test and repair open right or left turn signal feed circuit if required.
	2. Ineffective EMIC (CCN) inputs or outputs.	2. Use a diagnostic scan tool and the appropriate diagnostic information for further EMIC diagnosis.
	3. Ineffective BCM inputs or outputs.	3. Use a diagnostic scan tool to test the BCM inputs and outputs. Refer to the appropriate diagnostic information.
ALL RIGHT SIDE OR ALL LEFT SIDE TURN SIGNALS DO NOT FLASH	1. Ineffective or missing bulb.	1. Test and replace turn signal bulb if required.
	2. Ineffective ground circuit.	2. Test and repair open bulb ground circuit if required.
	3. Ineffective feed circuit.	3. Test and repair open right or left turn signal feed circuit if required.
TURN SIGNALS DO NOT AUTOMATICALLY CANCEL	1. Ineffective cancel cam.	1. Inspect and replace the turn signal cancel cam (clockspring) if required.
	2. Ineffective cancel actuator.	2. Inspect and replace the turn signal cancel actuator (left multi-function switch) if required.

STANDARD PROCEDURE

STANDARD PROCEDURE - LAMP ALIGNMENT

VEHICLE PREPARATION FOR LAMP ALIGNMENT

1. Check for and correct any burnt out bulbs.
2. Repair or replace any ineffective, worn or damaged body or suspension components that could hinder proper lamp alignment.
3. Verify the proper tire inflation pressures.
4. Remove any accumulations of mud, snow or ice from the vehicle underbody and clean the front lamp lenses.
5. Verify that there is no load in the vehicle (cargo or passengers), except for the driver.
6. The fuel tank should be FULL. Add 2.94 kilograms (6.5 pounds) of weight over the fuel tank for each estimated gallon of missing fuel.

7. Verify the correct vehicle suspension height.

LAMP ALIGNMENT SCREEN PREPARATION

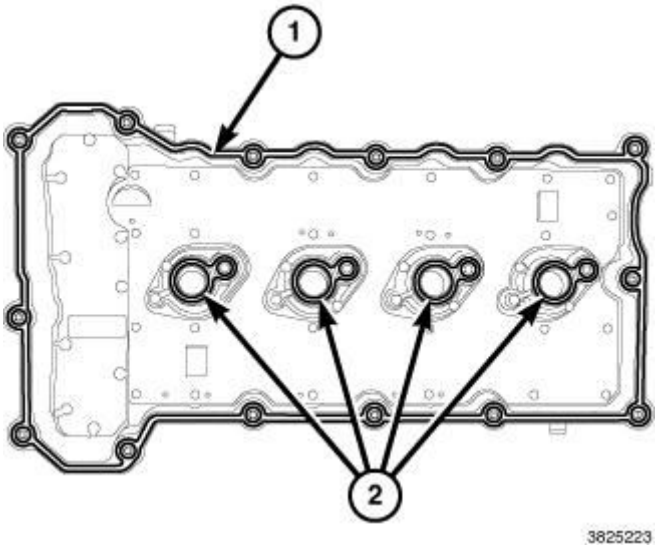

Fig. 1: Lamp Alignment Screen Preparation
Courtesy of CHRYSLER GROUP, LLC

The procedure that follows will prepare a suitable front lamp alignment screen.

1. Tape a line on a level floor 7.62 meters (25 feet) away from and parallel to the flat wall that will be used as the lamp alignment screen. The level floor will be used as the horizontal zero reference.
2. An adjacent wall or floor member that is perpendicular to the alignment screen can be used as the vertical zero reference. If there is no adjacent wall or floor member that is perpendicular to the screen, tape a second line on the floor perpendicular to both the alignment screen and the first line, and outboard of either side of where the vehicle will be positioned. This will be used as the vertical zero reference.
3. Position the vehicle so that the side of the vehicle is parallel to the vertical zero reference, and so that the front of the lamp lenses are in the vertical plane of the parallel line taped on the floor 7.62 meters (25 feet) away from the screen.
4. Rock the vehicle side-to-side three times to allow the suspension to stabilize.
5. Jounce the front suspension three times by pushing downward on the front bumper and releasing.
6. Measure the distance between the optical center of one of the lamps being aimed (head or fog) and the floor (horizontal zero reference). Transfer this measurement to the alignment screen with a piece of tape placed horizontally to the floor. This line will be used as the lamp horizontal reference.
7. Measure the distance between the vertical zero reference and the optical center of the nearest lamp being aimed (head or fog). Transfer this measurement to the alignment screen with a piece of tape placed vertically across the appropriate (head or fog) lamp horizontal reference. This is the centerline reference for the first lamp.
8. Measure the distance on center between the first and the second lamp being aimed. Transfer this measurement to the alignment screen with a second piece of tape placed vertically across the appropriate (head or fog) lamp horizontal reference. This is the centerline reference for the second lamp.

HEADLAMP ALIGNMENT

NOTE: **Due to the linear nature of the headlamp cutoff, a properly aimed low beam headlamp will project the top edge of the high intensity pattern on the alignment screen from the horizontal line to 50 millimeters (2 inches) below the horizontal line for domestic market vehicles, or to 125 millimeters (5 inches) below the horizontal line for export market vehicles. No horizontal (right/left) adjustment is required for this headlamp beam pattern in domestic market vehicles. Export market vehicles have a second horizontal (right/left) adjustment screw provided. The high beam pattern will be correct when the low beams are properly aimed.**

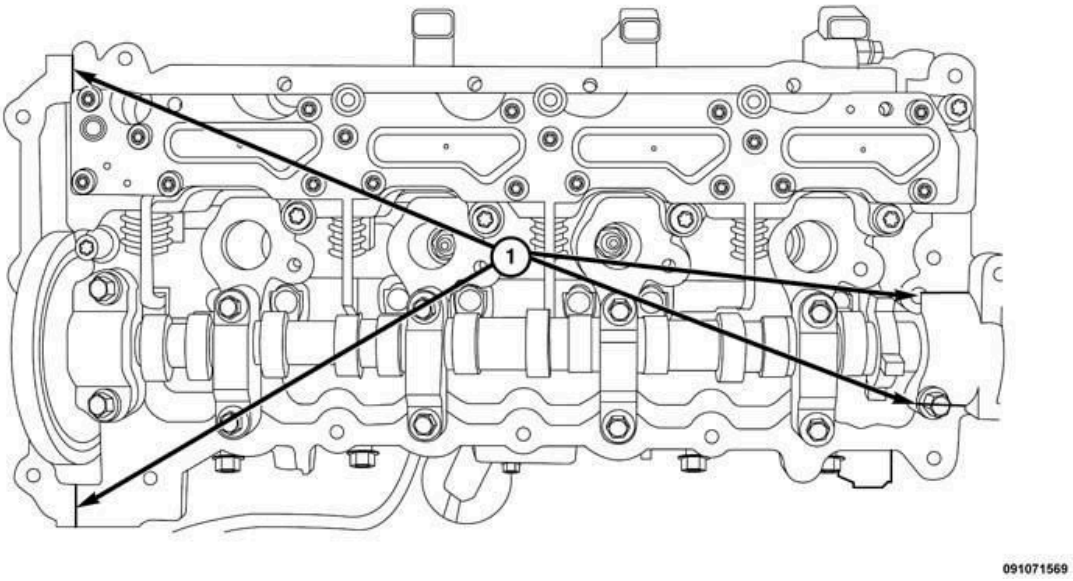

Fig. 2: Headlamp Vertical Adjustment Screw
Courtesy of CHRYSLER GROUP, LLC

1. Turn the headlamps ON and select the LOW beams for vehicles in all markets.
2. On all vehicles except those with headlamp leveling, use a screwdriver to rotate the headlamp vertical adjustment screw (2) on the back of the front lamp unit just inboard of the fender and forward of the upper radiator crossmember (1) to adjust the beam height as required.
3. For export markets only, use a screwdriver to rotate the headlamp horizontal adjustment screw on each headlamp to adjust the beam right or left as required.

FOG LAMP ALIGNMENT

NOTE: **A properly aimed front fog lamp will project a pattern on the alignment screen 100 millimeters (4 inches) below the fog lamp centerline and straight ahead of the lamp for domestic market vehicles.**

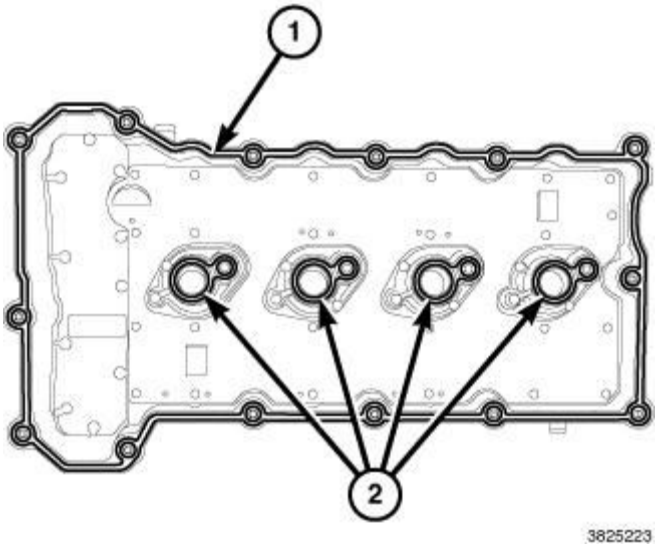

Fig. 3: Vertical Adjustment Screw, Front Fog Lamp & Front Fascia
Courtesy of CHRYSLER GROUP, LLC

1. Turn the fog lamps ON.
2. Insert a screwdriver through the clearance hole in the underside of the front fascia (3) closure panel below each fog lamp (2) to rotate the vertical adjustment screw (1) on each lamp to adjust the beam height as required.

SPECIFICATIONS

SPECIFICATIONS

BULB APPLICATION TABLE

LAMP	BULB
BACKUP	T-20 (W21W)
BRAKE	3157 (P27/7W)
CENTER HIGH MOUNTED STOP	LIGHT-EMITTING DIODES SERVICED IN ASSEMBLY
DAYTIME RUNNING LAMP	LIGHT-EMITTING DIODES SERVICED IN ASSEMBLY
FRONT FOG	H11LL/55W
FRONT PARK	7442NALL
FRONT SIDE MARKER	FEDERAL MOGUL SOCKET 194 BULB
FRONT TURN SIGNAL	7442NALL
HEADLAMP (HALOGEN)	Halogen HIR2
HEADLAMP (HID)	HID Version D3S Xenon Burner
LICENSE PLATE	W5W
REAR PARK	LIGHT-EMITTING DIODES SERVICED IN ASSEMBLY

REAR SIDE MARKER	LIGHT-EMITTING DIODES SERVICED IN ASSEMBLY
REAR TURN SIGNAL	LIGHT-EMITTING DIODES SERVICED IN ASSEMBLY

BALLAST, HIGH INTENSITY DISCHARGE (HID)

DESCRIPTION

DESCRIPTION

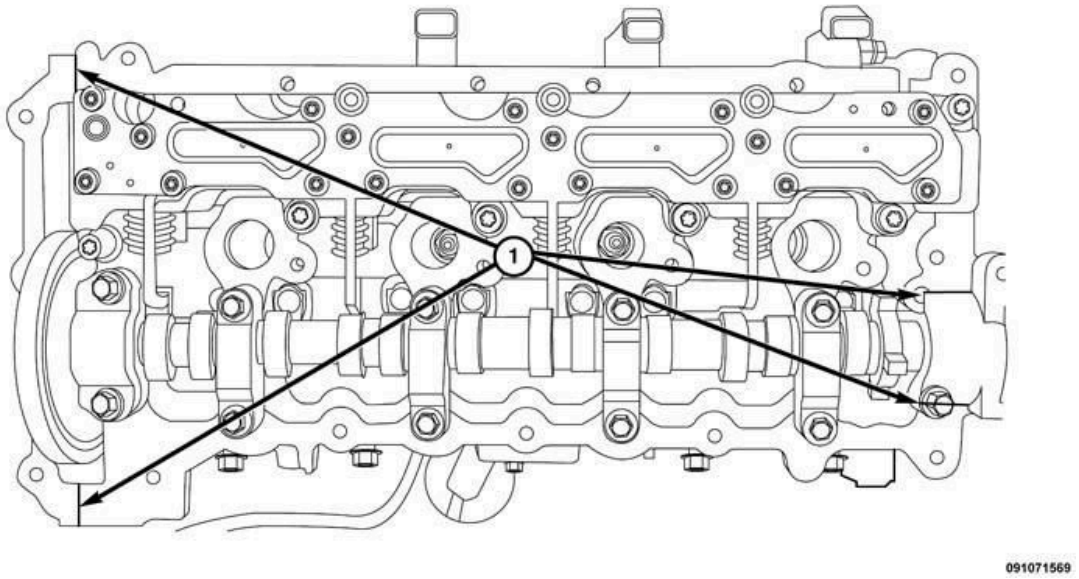

Fig. 4: Electronic Ballast Module & Screws
Courtesy of CHRYSLER GROUP, LLC

Vehicles equipped with the optional High Intensity Discharge (HID) headlamps have an electronic ballast module (1) mounted to the inboard side of each upper lamp unit. The electronic circuitry of the module is contained within a die cast aluminum module housing, which is secured by four screws through integral mounting tabs to the molded plastic front lamp unit housing.

The sealed connector receptacle of the module is integral located on the side of the housing. The connector receptacle contains terminal pins that connect the module to the vehicle electrical system, to the high tension HID cable and to the front lamp unit through dedicated take outs and connectors of the front lamp unit wire harness.

The electronic ballast module cannot be adjusted or repaired and, if damaged or ineffective, it must be replaced.

OPERATION

OPERATION

The electronic ballast module operates on battery current and ground received directly from the Body Control Module (BCM). Each module controls operation of the High Intensity Discharge (HID) igniter and lighting element for the front lamp unit on which it is installed. The BCM monitors a hard wired input from the headlamp switch to determine the proper control outputs to the electronic ballast module, which then provides a controlled voltage to operate the HID lamp igniter as appropriate.

The BCM also monitors electronic message inputs received from the Steering Control Module (SCM) over the Controller Area Network (CAN) Interior High Speed (IHS) data bus based upon multi-function switch inputs and, if the vehicle is so equipped, from the SmartBeam® (also known as the Automatic High Beam Module/AHBM) and the Light Rain Sensor Module (LRSM) (also known as the Rain Sensor Module/RSM, Light Sensor Module/LSM or Rain/Light Sensor Module/RLSM) to determine the proper lighting outputs to provide to the ballast module.

When a proper 12 volt Direct Current (DC) control output is received from the BCM, the HID electronic ballast module activates the HID igniter integral to the lighting element through a high-tension cable to provide a high voltage (up to about 800 volts Alternating Current/AC) surge. The igniter further steps up this AC voltage to up to about 25, 000 volts, which creates a light arc between the lighting element electrodes. Once the igniter and electronic ballast module detect a suitably stable light arc, they switch over to a power-limiting mode to sustain the light arc, which requires only about 85 volts to sustain proper lighting element output.

The hard wired electronic ballast module circuits may be diagnosed using conventional diagnostic tools and procedures. However, conventional diagnostic methods will not prove conclusive in the diagnosis of the electronic ballast module or the electronic controls and communication that provide some features of the HID lamp system. Proper diagnosis of the electronic ballast module, the BCM, the SCM, the SmartBeam®, the LRSM, the CAN data bus and the electronic communication related to electronic ballast module operation requires the use of a diagnostic scan tool. Refer to the appropriate diagnostic information.

REMOVAL

REMOVAL

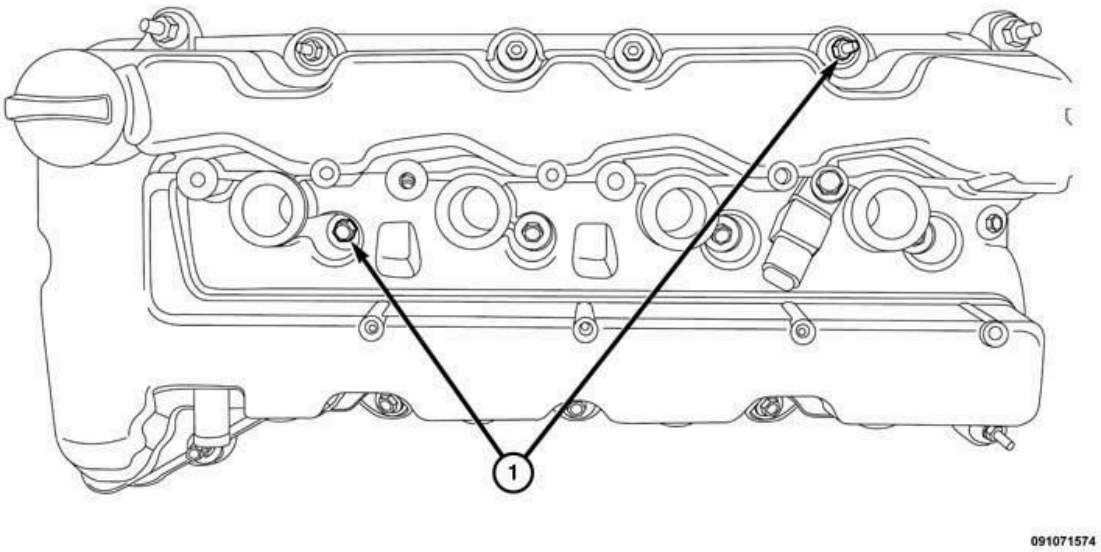

Fig. 5: Electronic Ballast Module & Screws
Courtesy of CHRYSLER GROUP, LLC

WARNING: **To avoid serious or fatal injury when working on the High Intensity Discharge (HID) headlamp system, be certain to take the proper precautions. The headlamp switch must be in the OFF position. Disconnect and isolate the battery negative cable. There is a risk of fatal injury caused by contact with high voltage used in the HID headlamps. There is a risk of explosion or fire caused by highly flammable materials in the vicinity of damaged HID lighting elements. There is a risk of injury caused by exposure to Ultra Violet (UV) light, a risk of burns caused by high component operating temperatures, a risk of mercury poisoning through glass splinters produced by bursting HID lighting elements. There is also a risk of poisoning caused by inhalation of mercury vapors and by toxic salts and mercury compounds being ingested or coming into contact with the skin. Do not come into contact with parts that are under high voltage. Persons with active electronic implants (e.g. heart pacemakers) must never work on HID headlamps. Wear insulated safety shoes, safety glasses and protective gloves. Remove flammable materials and ensure sufficient ventilation in the working area.**

1. Disconnect and isolate the battery negative cable.
2. Remove the upper lamp unit from the vehicle. Refer to **UNIT, FRONT LAMP, REMOVAL**.
3. Remove the screws (2) that secure the electronic ballast module (1) to the inboard side of the front lamp unit housing.
4. Pull the ballast module away from the front lamp unit far enough to access and disconnect the wire harness connections within the front lamp unit.
5. Remove the electronic ballast module from the lamp.

INSTALLATION

INSTALLATION

WARNING: To avoid serious or fatal injury when working on the High Intensity Discharge (HID) headlamp system, be certain to take the proper precautions. The headlamp switch must be in the OFF position. Disconnect and isolate the battery negative cable. There is a risk of fatal injury caused by contact with high voltage used in the HID headlamps. There is a risk of explosion or fire caused by highly flammable materials in the vicinity of damaged HID lighting elements. There is a risk of injury caused by exposure to Ultra Violet (UV) light, a risk of burns caused by high component operating temperatures, a risk of mercury poisoning through glass splinters produced by bursting HID lighting elements. There is also a risk of poisoning caused by inhalation of mercury vapors and by toxic salts and mercury compounds being ingested or coming into contact with the skin. Do not come into contact with parts that are under high voltage. Persons with active electronic implants (e.g. heart pacemakers) must never work on HID headlamps. Wear insulated safety shoes, safety glasses and protective gloves. Remove flammable materials and ensure sufficient ventilation in the working area.

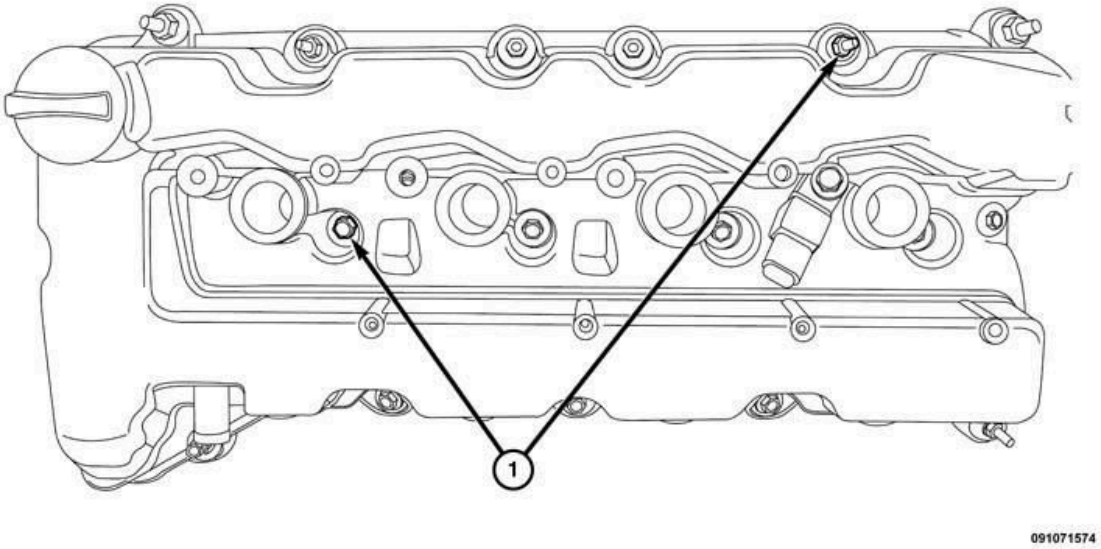

Fig. 6: Electronic Ballast Module & Screws
Courtesy of CHRYSLER GROUP, LLC

1. Position the electronic ballast module (1) to the inboard side of the front lamp unit housing.
2. Reconnect the wire harness connections within the front lamp unit to the module connector receptacles.
3. Install and tighten the screws (2) that secure the module to the housing. Tighten the screws securely.

4. Reinstall the front lamp unit into the vehicle. Refer to **UNIT, FRONT LAMP, INSTALLATION**.
5. Reconnect the battery negative cable.

CAM, TURN SIGNAL CANCEL

DESCRIPTION

DESCRIPTION

The turn signal cancel cam is concealed within the clockspring case on the steering column. The turn signal cancel cam consists of integral eccentrics on the outer circumference of the molded plastic clockspring rotor. The clockspring mechanism provides turn signal cancellation as well as a constant electrical connection between the rotating electrical components on the steering wheel and the instrument panel wire harness on the steering column. The multi-function switch and the housing of the clockspring are secured to the steering column and remain stationary. The rotor of the clockspring, including the turn signal cancel cam lobes, rotate with the steering wheel.

The turn signal cancel cam is serviced as a unit with the clockspring and cannot be repaired. If ineffective or damaged, the entire clockspring unit must be replaced. Refer to **CLOCKSPRING, REMOVAL** .

OPERATION

OPERATION

When the multi-function switch control stalk is moved to a latched turn signal ON position, a turn signal cancel actuator is extended from the inside surface of the switch housing through a small opening on the left side of the Steering Column Control Module (SCCM) mounting housing toward the turn signal cancel cam. As the steering wheel is rotated to complete the turn, one of the cam eccentrics will contact the actuator, automatically cancelling the turn signal event and releasing the latched multi-function switch control stalk to the neutral or OFF position.

LAMP, CENTER HIGH MOUNTED STOP

REMOVAL

REMOVAL

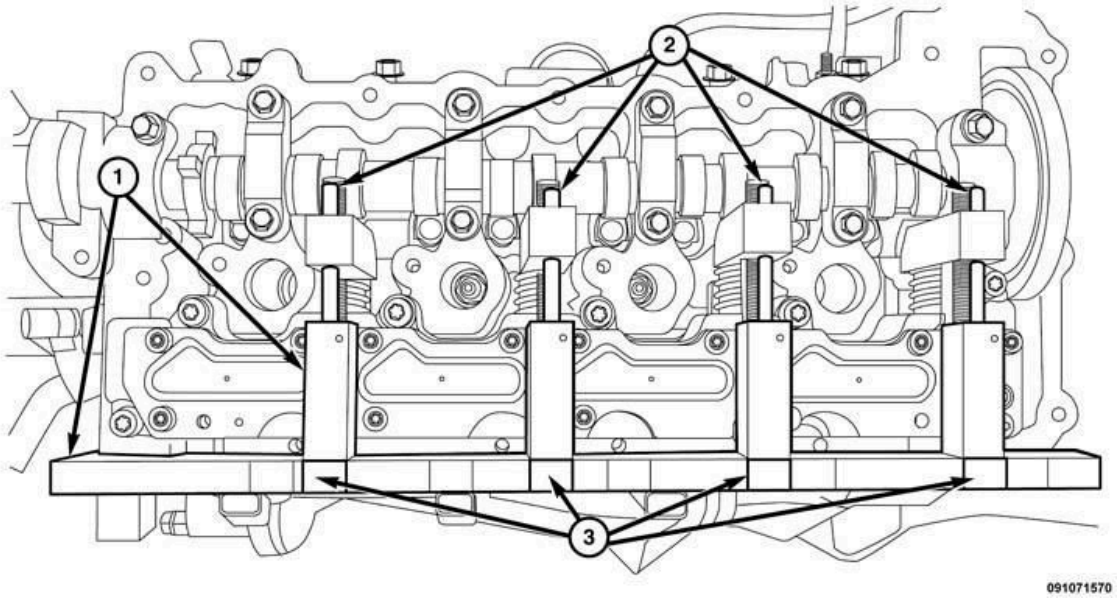

Fig. 7: Center High Mounted Stop Lamp
Courtesy of CHRYSLER GROUP, LLC

1. Disconnect and isolate the battery negative cable.
2. Remove the rear spoiler from the vehicle. Refer to **SPOILER, REMOVAL** .
3. Working from the back of the rear spoiler, remove the support bracket (2), the washer nozzle hose from the nozzle and the washer nozzle itself (3).
4. Disconnect the electrical connection (4) from the back of the CHMSL assembly.
5. Remove five screws (5) that secure the CHMSL to the spoiler assembly.
6. Remove the CHMSL assembly from the spoiler.

INSTALLATION

INSTALLATION

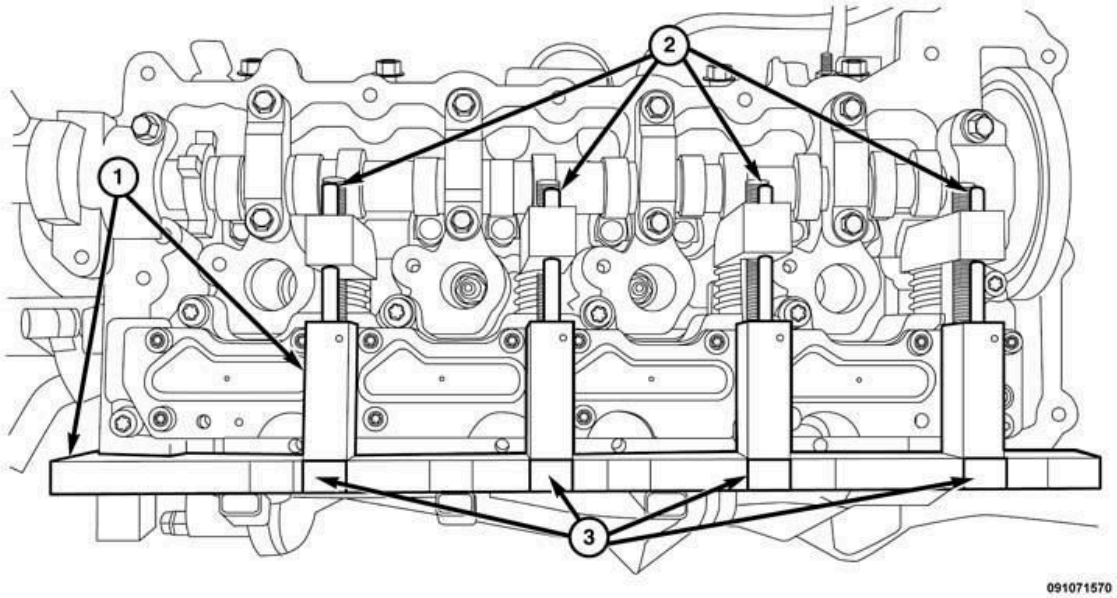

Fig. 8: Center High Mounted Stop Lamp
Courtesy of CHRYSLER GROUP, LLC

1. Position the Center High Mounted Stop Lamp (CHMSL) into the rear spoiler for installation.
2. Secure the CHMSL to the rear spoiler using the provided fasteners (1). Secure the center bolts first and then the outer bolts last.
3. Connect the body electrical connector to the receptacle (4) on the back of the CHMSL.
4. Install the bracket (2) to the CHMSL.
5. Install the washer nozzle (3) to the CHMSL.
6. Route the washer fluid tube and seat into position on the CHMSL.
7. Install the rear spoiler to the vehicle. Refer to **SPOILER, INSTALLATION** .
8. Connect the negative battery cable to the proper negative battery terminal.

LAMP, FOG

REMOVAL

BULB

CAUTION: Do not contaminate the bulb glass by touching it with your fingers or by allowing it to contact other oily surfaces. Shortened bulb life will result.

1. Disconnect and isolate the battery negative cable.
2. Raise the vehicle until the wheel well access cover for the fog lamps can be reached comfortably.
3. Twist the top rotational button until the top of the cover releases. Rotate the cover 180° allowing full access to the back of the fog lamp and bulb assembly.

4. Disconnect the harness from the back of the fog lamp assembly.
5. Remove the four fasteners securing the lamp to the lower front fascia.
6. Pull the fog lamp through the access hole.
7. Depress on the two points of the bulb socket to release and remove from the fog lamp assembly.
8. Remove the bulb from the bulb socket.

LAMP

1. Disconnect and isolate the battery negative cable.
2. Raise the vehicle until the wheel well access cover for the fog lamps can be reached comfortably.
3. Twist the top rotational button until the top of the cover releases. Rotate the cover 180° allowing full access to the back of the fog lamp and bulb assembly.
4. Disconnect the harness from the back of the fog lamp assembly.
5. Remove the four fasteners securing the lamp to the lower front fascia.
6. Pull the fog lamp through the access hole.

INSTALLATION

BULB

CAUTION: Always use the correct bulb size and type for replacement. An incorrect bulb size or type may overheat and cause damage to the lamp, the socket or the lamp wiring.

CAUTION: Do not contaminate the bulb glass by touching it with your fingers or by allowing it to contact other oily surfaces. Shortened bulb life will result.

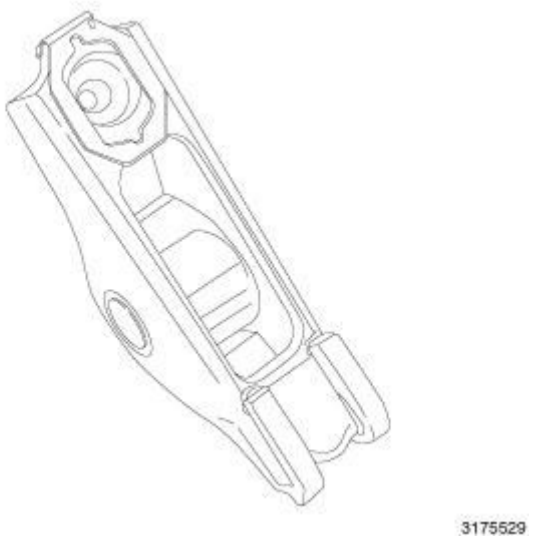

Fig. 9: Fog Lamp, Bulb & Socket

Courtesy of CHRYSLER GROUP, LLC

1. Secure the replacement bulb into the bulb socket (3).
2. Insert the bulb and socket into the back of the fog lamp assembly.
3. Connect the wiring harness connector to the back of the fog lamp socket.
4. Close the access cover in the wheel well area.
5. Connect the negative battery cable to the battery negative post.

LAMP

1. Insert the fog lamp through the access panel in the wheel well.
2. Line up the lamp with the screw holes and secure the lamp using all four fasteners.
3. Attach the harness connector to the back of the lamp assembly.
4. Turn the access cover until the cover is lined up and the button can be turned to secure the cover to the wheel well.
5. Lower the vehicle to access and connect the negative battery cable to the negative battery post.

LAMP, LICENSE PLATE

REMOVAL

BULB

Fig. 10: Bulb & Socket
Courtesy of CHRYSLER GROUP, LLC

1. Disconnect and isolate the battery negative cable.
2. Remove the license plate lamp from the rear fascia.
3. Pull the base of the bulb (2) straight out of the socket (1).

LAMP

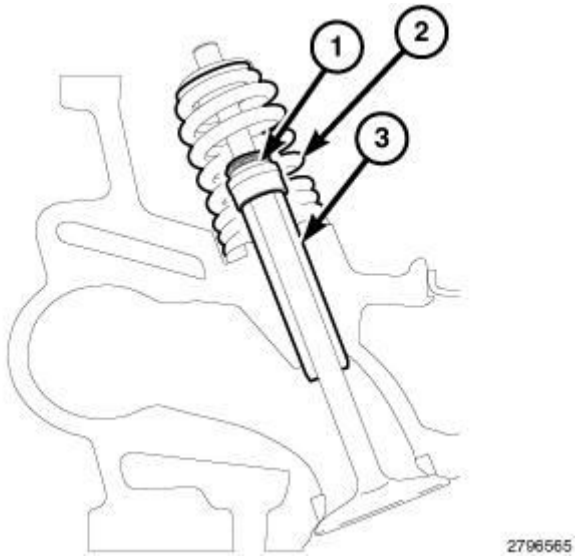

Fig. 11: Two Screws, License Plate Lamp & Rear Fascia
Courtesy of CHRYSLER GROUP, LLC

1. Disconnect and isolate the battery negative cable.
2. Remove the two screws (2) that secure the license plate lamp (3) to the rear fascia (1).
3. Slide the license plate lamp to one side of the fascia opening far enough to lower one end of the lamp through the opening, then lower the opposite end through the opening.

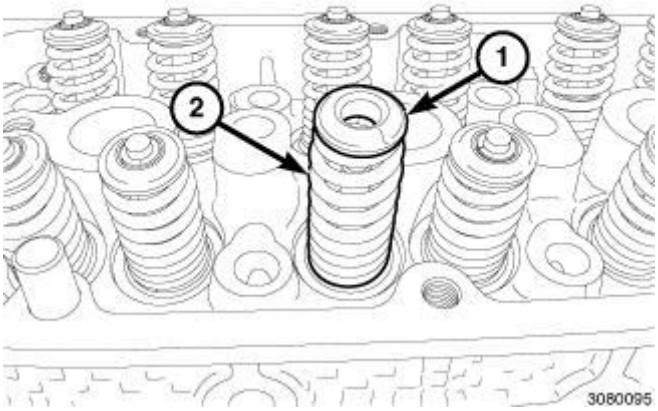

Fig. 12: Bulb Socket & Lamp Housing
Courtesy of CHRYSLER GROUP, LLC

4. Firmly grasp the bulb socket (1) on the top of the lamp housing (2) and rotate it counterclockwise about 30 degrees to unlock it.

5. Pull the socket and bulb straight out of the lamp housing.
6. Remove the lamp lens and housing from the vehicle.

INSTALLATION

BULB

CAUTION: Always use the correct bulb size and type for replacement. An incorrect bulb size or type may overheat and cause damage to the lamp, the socket or the lamp wiring.

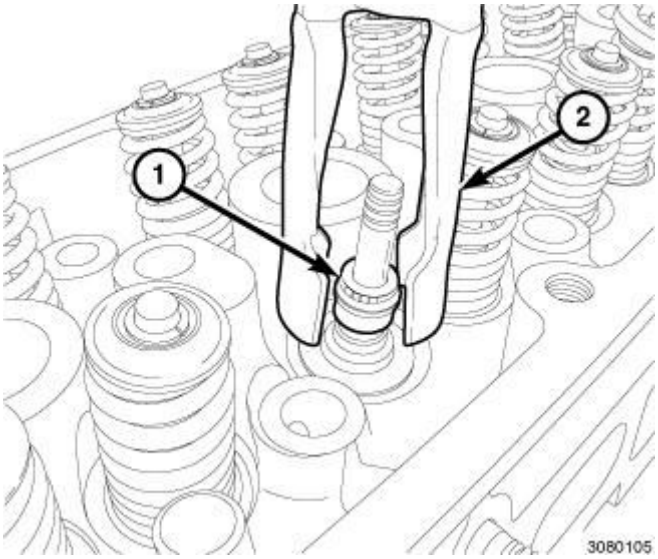

Fig. 13: Bulb & Socket
Courtesy of CHRYSLER GROUP, LLC

1. Align the base of the license plate lamp bulb (2) with the socket (1).
2. Push the bulb straight into the socket until the base is firmly seated.
3. Reinstall the license plate lamp into the rear fascia.
4. Reconnect the battery negative cable.

LAMP

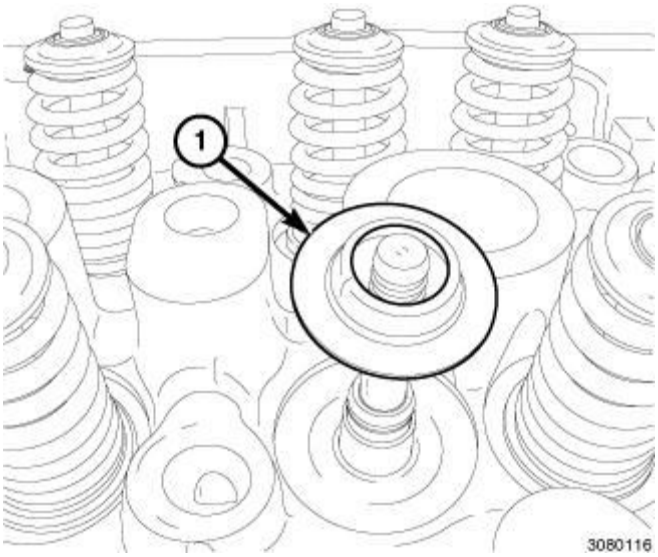

Fig. 14: Bulb Socket & Lamp Housing
Courtesy of CHRYSLER GROUP, LLC

1. Position the license plate lamp lens and housing (2) close enough to the rear fascia mounting hole to align the socket (1) and bulb with the keyed opening on the top of the housing.
2. Insert the socket and bulb into the housing until the socket is firmly seated.
3. Rotate the socket clockwise about 30 degrees to lock it into place.

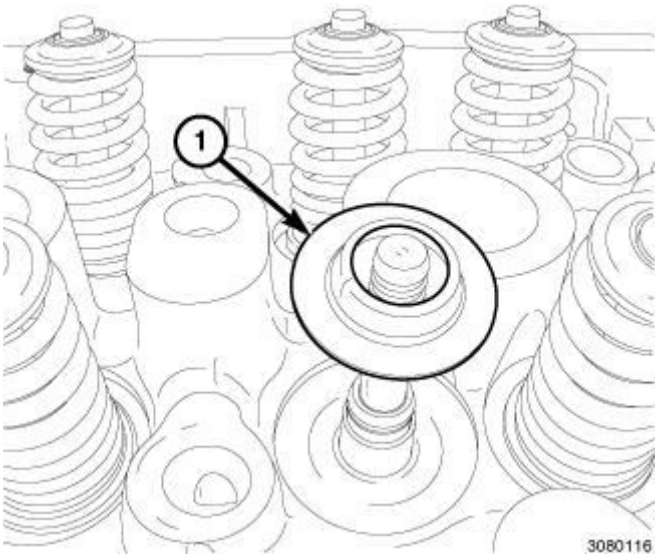

Fig. 15: Two Screws, License Plate Lamp & Rear Fascia
Courtesy of CHRYSLER GROUP, LLC

4. Insert one end of the license plate lamp (3) into one side of the rear fascia (1) mounting hole and slide it to that side far enough to insert the opposite end through the opening.
5. Center the lamp in the opening.
6. Install and tighten the two screws (2) that secure the lamp to the rear fascia. Tighten the screws securely.

7. Reconnect the battery negative cable.

LAMP, MIRROR

REMOVAL

PUDDLE LAMP

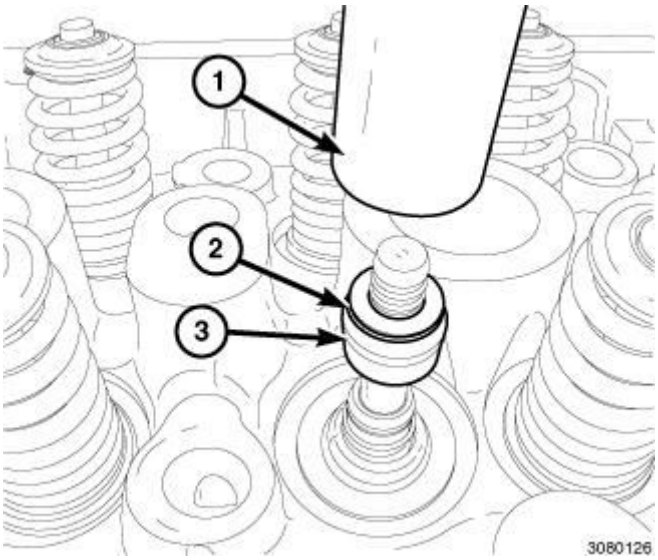

Fig. 16: Latch, Puddle Lamp, Mirror Shell & Screw Driver
Courtesy of CHRYSLER GROUP, LLC

1. Disconnect and isolate the battery negative cable.

NOTE: **The graphic shows the puddle lamp latch with the mirror glass and case removed for clarity; however, it is NOT necessary to remove the mirror glass and case to remove or to install the puddle lamp.**

2. Insert a small flat-bladed screw driver (4) between the bottom of the mirror housing bezel and the lower edge of the mirror glass and case to access the puddle lamp (2) latch feature (1).
3. Push the outboard side of the puddle lamp latch feature toward the lamp far enough to release the lamp from the underside of the mirror shell.
4. Disengage the inboard side of the puddle lamp from the inboard side of the lamp opening in the mirror shell.

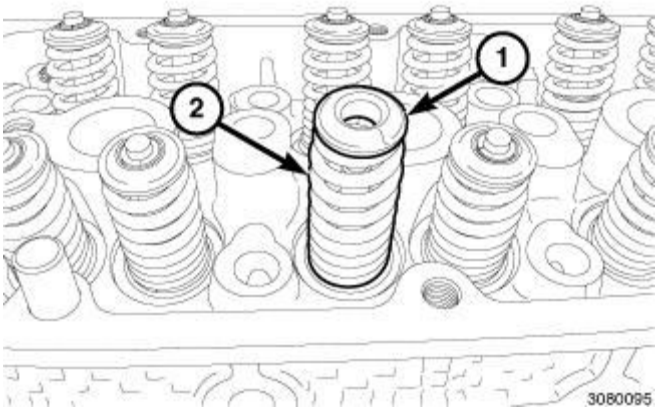

Fig. 17: Puddle Lamp & Connectors
Courtesy of CHRYSLER GROUP, LLC

5. Pull the puddle lamp (3) away from the mirror shell (1) far enough to access and disconnect the two mirror wire harness connectors (2) from the two terminals of the puddle lamp.
6. Remove the puddle lamp from the mirror.

SIGNAL LAMP

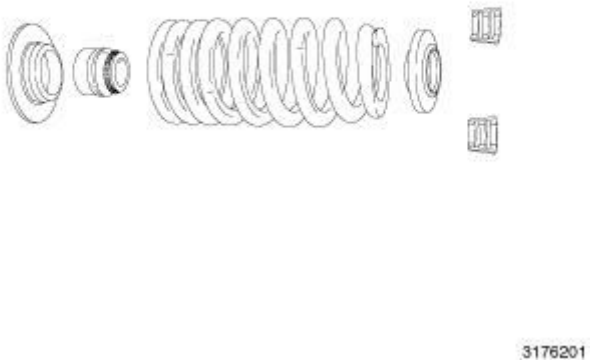

Fig. 18: Outside Rear View Mirror & Signal Lamp
Courtesy of CHRYSLER GROUP, LLC

Vehicles equipped with the optional signal lamps (2) located in the outside rear view mirrors (1) have two Light Emitting Diode (LED) units that illuminate an optic light pipe through a clear lens on the lower, forward and outboard facing surfaces of the mirror shell. Illumination of these lamps is coordinated with the illumination of the turn signals for the same side of the vehicle.

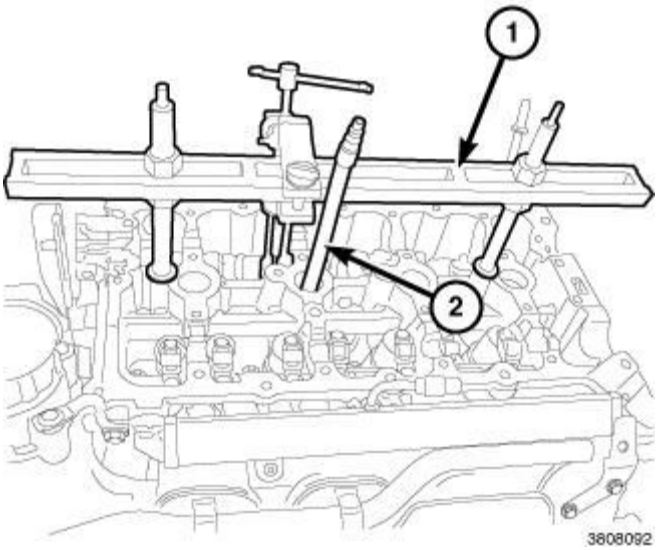

Fig. 19: Mirror Housing, Fasteners & Retaining Tabs
Courtesy of CHRYSLER GROUP, LLC

1. Disconnect and isolate the battery negative cable.
2. Remove the mirror glass and case unit from the outside rear view mirror. Refer to **MIRROR, OUTSIDE REARVIEW, REMOVAL** and **MIRROR, OUTSIDE REARVIEW, GLASS, REMOVAL** .
3. Remove the puddle lamp from the outside rear view mirror. Refer to **LAMP, MIRROR, REMOVAL**.
4. Remove the three screws (2) that secure the mirror bezel and housing unit (1) to both the mirror shell and the mirror arm.
5. Insert two flat-bladed screwdrivers into the two holes (3) in the upper inboard corner of the mirror housing and push the screwdriver handles away from each other to pry the two latch features of the housing toward each other far enough to disengage the housing latch features from the mirror shell.
6. Remove the mirror bezel and housing unit from the mirror shell and the mirror arm.

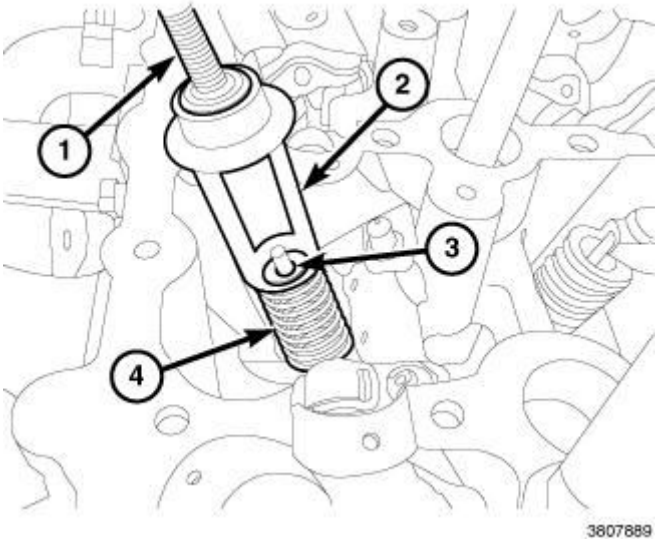

Fig. 20: Mirror Shell, Mirror Arm & Tab

Courtesy of CHRYSLER GROUP, LLC

7. Disengage the tab (3) that secures the inboard end of the mirror shell (1) to the notch in the inboard end of the mirror arm (2).

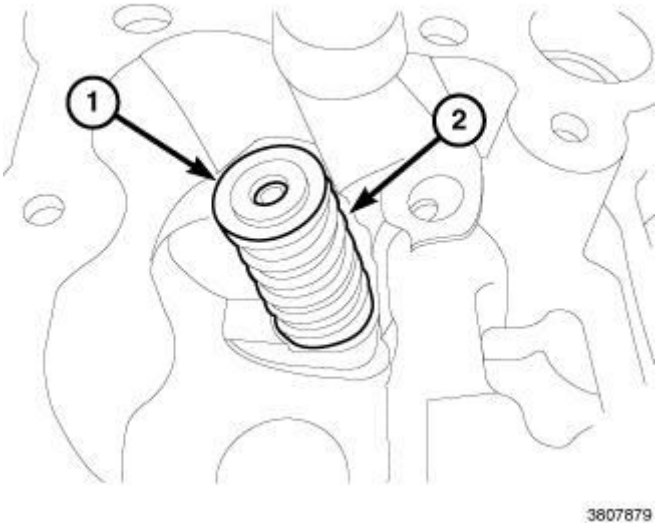

Fig. 21: Turn Signal Retaining Tabs
Courtesy of CHRYSLER GROUP, LLC

8. From within the outboard end of the mirror shell, carefully pry the mounting tab (3) of the signal lamp (4) housing away from the face of the mounting pocket formation (1) integral to the interior of the mirror shell until it disengages from the locating rib (6) with a light audible snap.
9. Slide the mirror shell mounting pocket formation off of the outboard end of the mirror arm (2).
10. From outside of the mirror shell, press the inboard end of the signal lamp lens into the interior of the shell.
11. Press the outboard end of the signal lamp inboard far enough to disengage the two lamp mounting tabs (5) from the lamp mounting tab receptacle loops integral to the outboard end of the mirror shell interior.
12. Set the mirror shell aside.

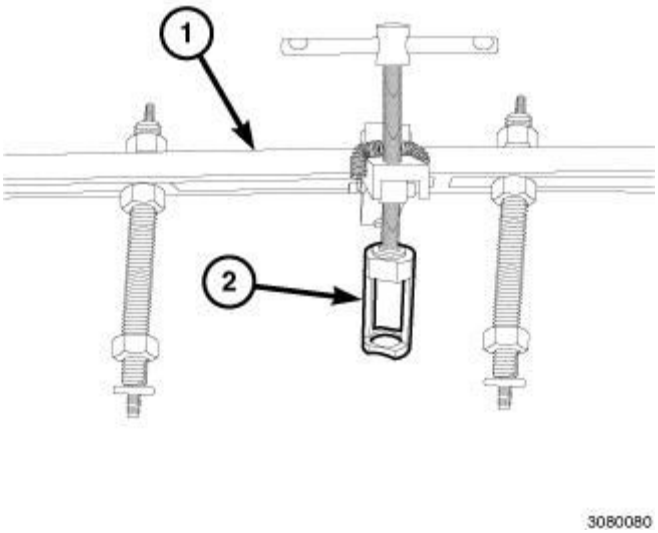

Fig. 22: Signal Lamp Housing, Harness Connector, Mirror Arm & Connector Receptacle
Courtesy of CHRYSLER GROUP, LLC

13. Disconnect the mirror wire harness connector (2) from the connector receptacle (4) integral to the signal lamp housing (1).
14. Remove the signal lamp from the mirror arm (3).

INSTALLATION

PUDDLE LAMP

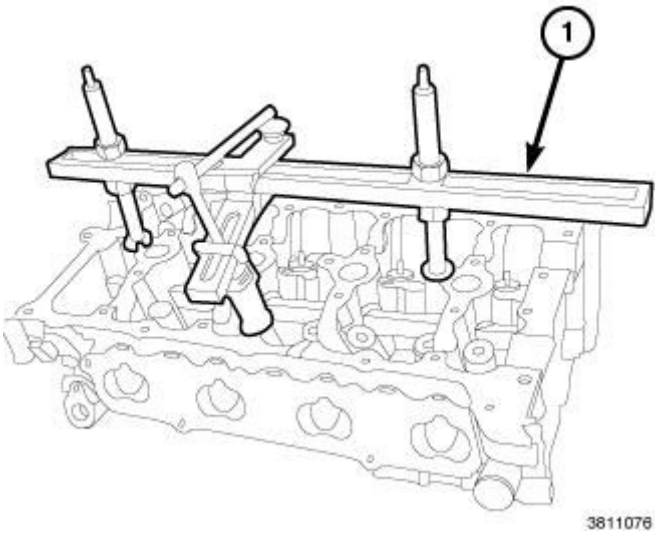

Fig. 23: Puddle Lamp & Connectors
Courtesy of CHRYSLER GROUP, LLC

1. Position the puddle lamp (3) near the lamp opening on the underside of the mirror shell (1).

2. Reconnect the two mirror wire harness connectors (2) to the two terminals of the puddle lamp. Be certain to connect small connector to the small lamp terminal and the large connector to the large lamp terminal.

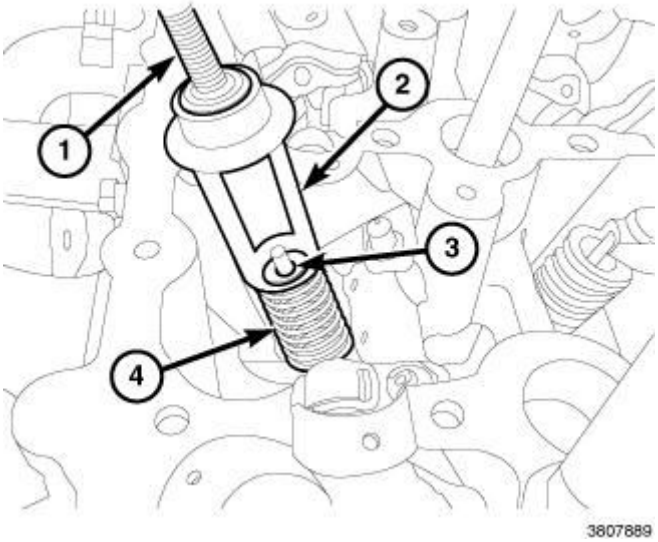

Fig. 24: Mirror Shell, Puddle Lamp & Latch
Courtesy of CHRYSLER GROUP, LLC

3. Engage the hook features on the inboard side of the puddle lamp (2) into the inboard side of the lamp opening in the mirror shell (1).
4. Using hand pressure, push the outboard side of the lamp up into the opening in the mirror shell until the latch feature (3) snaps into place.
5. Reconnect the battery negative cable.

SIGNAL LAMP

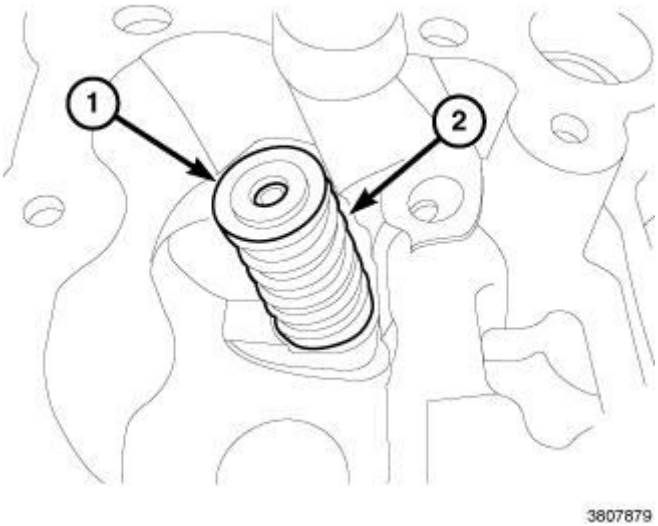

Fig. 25: Outside Rear View Mirror & Signal Lamp

Courtesy of CHRYSLER GROUP, LLC

Vehicles equipped with the optional signal lamps (2) located in the outside rear view mirrors (1) have two Light Emitting Diode (LED) units that illuminate an optic light pipe through a clear lens on the lower, forward and outboard facing surfaces of the mirror shell. Illumination of these lamps is coordinated with the illumination of the turn signals for the same side of the vehicle.

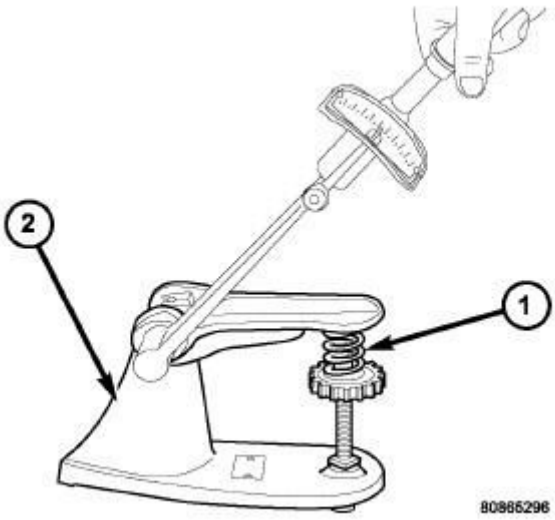

Fig. 26: Signal Lamp Housing, Harness Connector, Mirror Arm & Connector Receptacle
Courtesy of CHRYSLER GROUP, LLC

1. Position the signal lamp (1) to the forward facing surface of the mirror arm (3).
2. Reconnect the mirror wire harness connector (2) to the connector receptacle (4) integral to the signal lamp housing. Be certain the connector is fully engaged and latched.

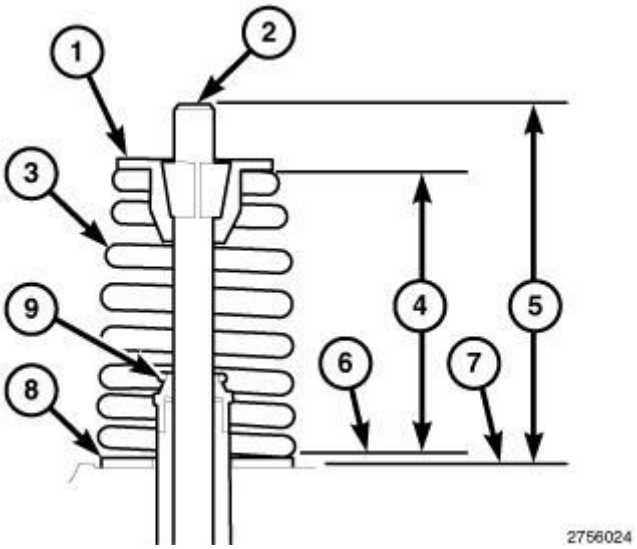

Fig. 27: Turn Signal Retaining Tabs
Courtesy of CHRYSLER GROUP, LLC

3. Engage the two signal lamp mounting tabs (5) into the lamp mounting tab receptacle loops integral to the outboard end of the mirror shell interior.
4. From within the interior of the mirror shell, press the inboard end of the signal lamp lens (4) into engagement with the mounting hole of the shell.
5. Slide the mounting pocket formation (1) integral to the interior of the mirror shell over the outboard end of the mirror arm (2).
6. From within the outboard end of the mirror shell, press the mounting tab (3) of the signal lamp into position against the locating rib (6) on the face of the mounting pocket until it engages with a light audible snap.

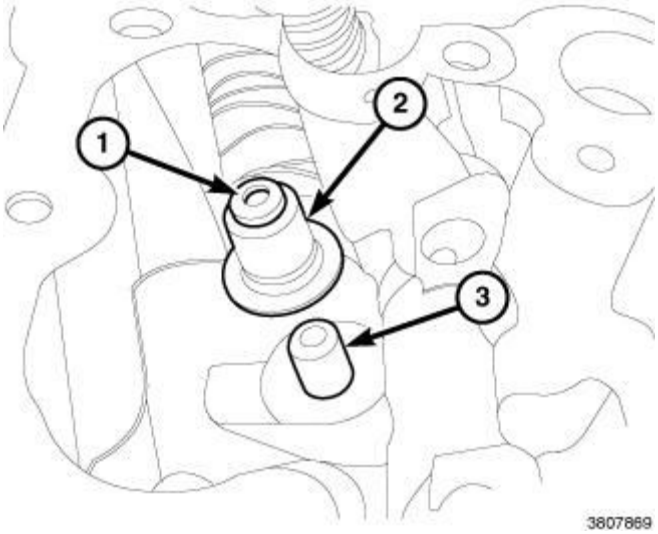

Fig. 28: Mirror Shell, Mirror Arm & Tab
Courtesy of CHRYSLER GROUP, LLC

7. Engage the tab (3) that secures the inboard end of the mirror shell (1) to the notch in the inboard end of the mirror arm (2).

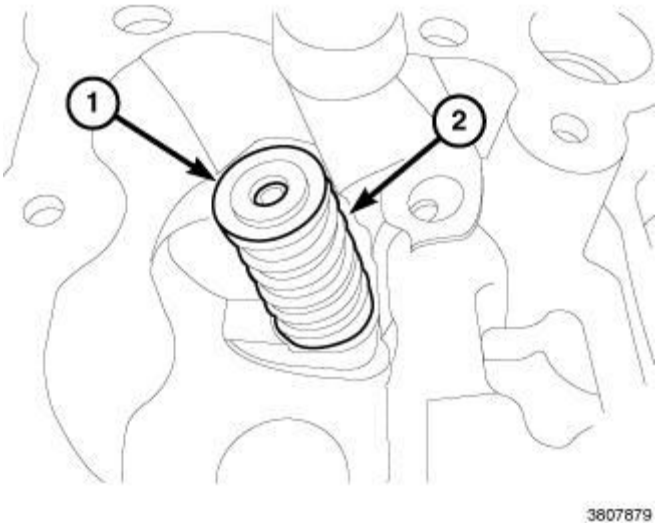

Fig. 29: Mirror Housing, Fasteners & Retaining Tabs
Courtesy of CHRYSLER GROUP, LLC

8. Position the mirror bezel and housing unit (1) over the mirror arm and the mirror shell. Be certain that the mirror wire harness is not pinched between the bezel and the shell, and that the wiring for the puddle lamp is routed through the mounting hole in the underside of the shell.
9. With the bezel aligned with the shell, squeeze the two together until the latch features (3) of the housing engage the receptacle of the shell with a light audible snap.
10. Install and tighten the three screws (2) that secure the mirror bezel and housing unit to both the mirror shell and the mirror arm. Tighten the screws securely.
11. Reinstall the puddle lamp into the outside rear view mirror. Refer to **LAMP, MIRROR, INSTALLATION**.
12. Reinstall the mirror glass and case unit into the outside rear view mirror. Refer to **MIRROR, OUTSIDE REARVIEW, INSTALLATION** and **MIRROR, OUTSIDE REARVIEW, GLASS, INSTALLATION** .
13. Reconnect the battery negative cable.

LAMP, PARK AND TURN SIGNAL

DESCRIPTION

DESCRIPTION

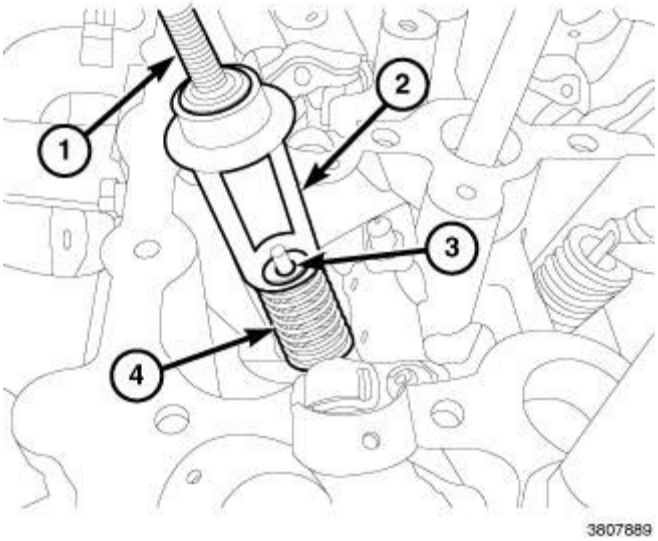

Fig. 30: Park And Turn Signal Lamp
Courtesy of CHRYSLER GROUP, LLC

This vehicle is equipped with a combination Park and Turn signal lamp assembly. The combination lamp includes the following components:

- **Daytime Running Lamp (1):** Domestic market vehicles with HID front lamp units and DRL illuminate a dedicated DRL LED bar in the combination lamp unit. This bar is made up of ten LED points of light.
- **Turn signal lamp (2):**

  The front turn signal indicator integral to the combination lamp uses a single amber bulb.

- **Park lamps (3):** The front park indicator integral to the combination lamp assembly uses a single amber colored bulb.
- **Side marker lamp (3):** The side marker indicator integral to the combination lamp uses a single clear bulb.
- **LED Module:** The LED module is secured to the back of the combination lamp by four fasteners.

REMOVAL

LAMP

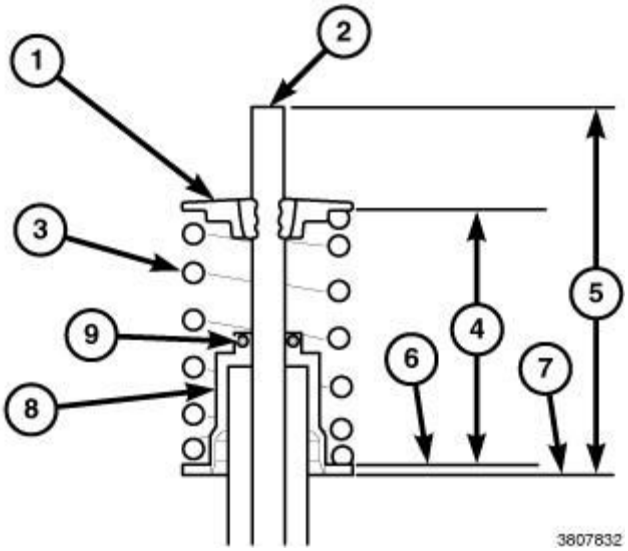

Fig. 31: Front Park/Turn Signal Lamp Housing
Courtesy of CHRYSLER GROUP, LLC

1. Disconnect and isolate the battery negative cable.
2. Remove the front fascia. Refer to **FASCIA, FRONT, REMOVAL** .
3. Disconnect the wire harness connector from the connector receptacles (3) on the back of the front park/turn signal lamp housing.
4. Remove the fasteners (1) that secure the lamp housing in place.
5. Pull out on the lamp until the alignment pin (2) has been released.

PARK/TURN LAMP BEZEL REMOVAL

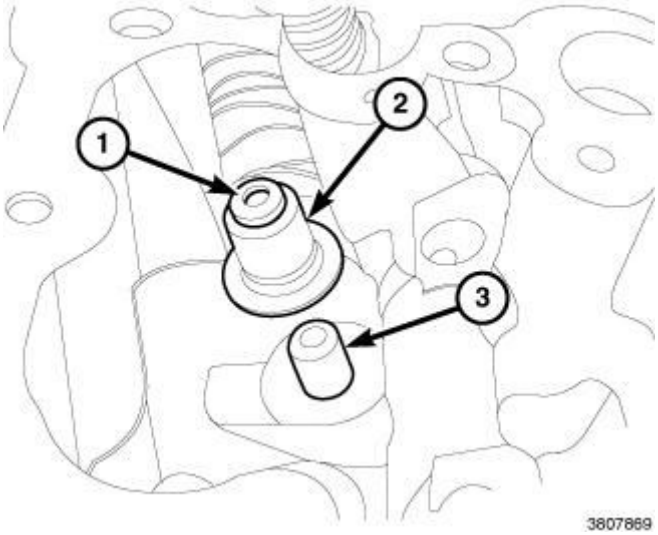

Fig. 32: Park/Turn Lamp Assembly
Courtesy of CHRYSLER GROUP, LLC

1. Remove the park/turn lamp assembly. This will involve front fascia removal. Refer to **LAMP, PARK AND TURN SIGNAL, REMOVAL**.
2. Flip the lamp assembly over to access the three fasteners (1) securing the bezel to the bottom of the lamp assembly.
3. Remove the bezel from the lamp assembly.

INSTALLATION

INSTALLATION

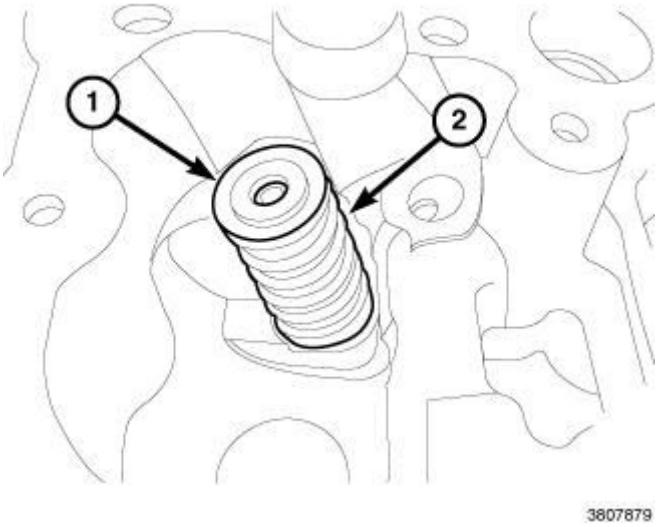

Fig. 33: Front Park/Turn Signal Lamp Housing
Courtesy of CHRYSLER GROUP, LLC

1. Position the lamp assembly to the vehicle for installation and insert the alignment pin (2) into position.
2. Install the fasteners (1) that secure the lamp in place.
3. Connect the wire harness connectors to the connector receptacles (3) on the back of the front park/turn signal lamp housing.
4. Install the front fascia to the vehicle. Refer to **FASCIA, FRONT, INSTALLATION** .
5. Connect the negative battery cable to the negative battery terminal.

PARK/TURN LAMP BEZEL REMOVAL

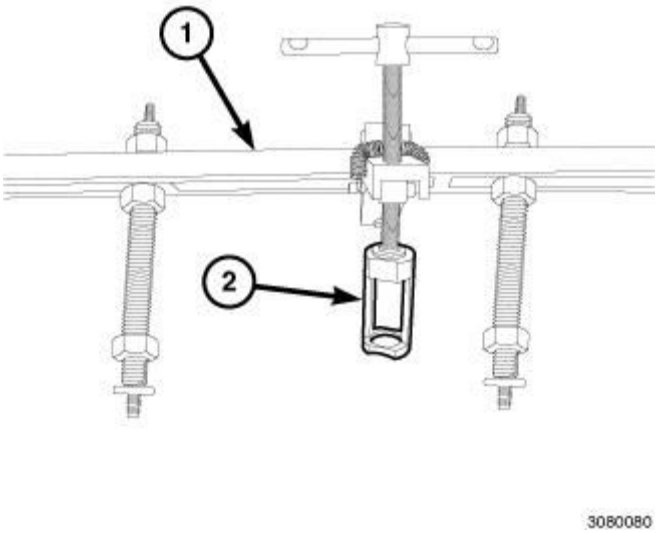

Fig. 34: Park/Turn Lamp Assembly
Courtesy of CHRYSLER GROUP, LLC

1. Position the bezel to the bottom of the lamp assembly for installation.
2. Secure the bezel to the lamp assembly by inserting and tightening the three fasteners (1).
3. Install the front lamp assembly. Refer to **LAMP, PARK AND TURN SIGNAL, INSTALLATION**.

MOTOR, HEADLAMP LEVELING

DESCRIPTION

DESCRIPTION

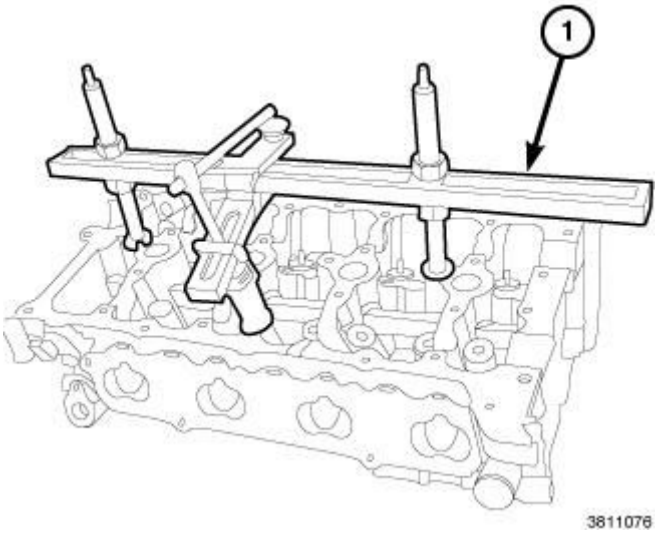

Fig. 35: Headlamp Leveling Motor, Integral Molded Connector Receptacle & Ball Formation
Courtesy of CHRYSLER GROUP, LLC

The headlamp leveling motor (1) is located on the rear lower surface of each front lamp unit on vehicles equipped with High Intensity Discharge (HID) headlamps and the automatic headlamp leveling system. The motor is encased within a molded plastic housing and is secured by an integral wedge-type mounting flange (3) to a keyed flange on the back of the front lamp unit housing. A rubber seal around the circumference of the mounting flange seals the motor to the lamp housing.

The outside of the motor housing features an integral molded connector receptacle (4) facing rearward on its lower surface, and a plastic pushrod with a ball formation (2) on its free end extends from the motor mounting flange. Within the motor housing is a 12-volt Direct Current (DC) servo motor, an electronic controller board that includes the motor logic circuits, and an integral screw-drive transmission. The headlamp leveling motor is connected to the vehicle electrical system through a dedicated take out and connector of the Front End Module (FEM) wire harness.

The headlamp leveling motor is serviced as a unit with the front lamp unit. The motor cannot be repaired and, if ineffective or damaged, the entire front lamp unit must be replaced.

OPERATION

OPERATION

The controller board and logic circuitry of the headlamp leveling motor controls motor operation based upon a voltage signal input received from the Body Control Module (BCM). On vehicles with High Intensity Discharge (HID) lighting and the automatic headlamp leveling system, the BCM uses electronic messages received over the Controller Area Network (CAN) data bus from the Automatic Headlamp Leveling Module (AHLM) (also known as the High Intensity Discharge Transducer/HIDT) to determine the correct voltage signal to provide the leveling motor.

The headlamp leveling motors have a path to ground at all times. The motors operate on battery voltage received through the headlamp low beam feed circuits so that the system will only operate when the headlamp low beams are turned ON. When the motor is energized it will extend or retract the motor pushrod through an integral screw-drive transmission. The ball on the end of the pushrod is snapped into a socket clip on the back of the reflector within the front lamp unit housing, which will cause the reflector to move as the pushrod is extended or retracted, changing the angle at which the light is projected from the headlamp.

The hard wired circuits for the headlamp leveling motors may be diagnosed using conventional diagnostic tools and procedures. Refer to the appropriate wiring information. However, conventional diagnostic methods will not prove conclusive in the diagnosis of the active electronic elements within the headlamp leveling motors or the electronic controls and communication between other modules and devices that provide some features of the headlamp leveling system. The most reliable, efficient, and accurate means to diagnose the headlamp leveling motor or the electronic controls and communication related to headlamp leveling system operation requires the use of a diagnostic scan tool. Refer to the appropriate diagnostic information.

LAMP, TAIL STOP TURN

REMOVAL

BULB

Each rear lamp unit for this vehicle consists of two pieces. An outer rear lamp unit that is secured at the rear of each quarter panel. An inner rear lamp is secured on each outboard side of the liftgate outer panel adjacent to the outer lamp.

OUTER LAMP

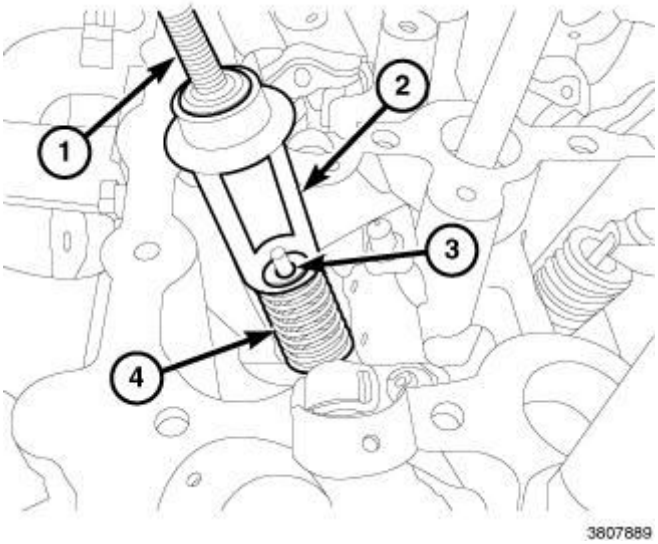

Fig. 36: Outer Rear Lamp Unit & Bulbs
Courtesy of CHRYSLER GROUP, LLC

NOTE: In vehicles manufactured for domestic markets, the outer rear lamp unit (1) contains a bulb (2) for tail/stop/rear side marker/turn signal functions and a second bulb (3) behind a clear lens for an auxiliary backup lamp function. In vehicles manufactured for export markets, the tail/stop/rear side marker functions are performed by one bulb (2) and a separate turn signal bulb (3) behind an amber lens is used in place of the auxiliary backup bulb. The service procedures for each bulb are the same, only the bulb sizes and types may differ.

1. Disconnect and isolate the battery negative cable.
2. Remove the outer rear lamp unit (1) from the end of the quarter panel. Refer to **LAMP, TAIL STOP TURN, REMOVAL**.
3. Firmly grasp the appropriate bulb socket (2 or 3) on the back of the rear lamp unit housing and rotate it counterclockwise about 30 degrees to unlock it.
4. Pull the socket and bulb straight out from the keyed opening in the housing.
5. Pull the base of the bulb straight out of the socket.

INNER LAMP

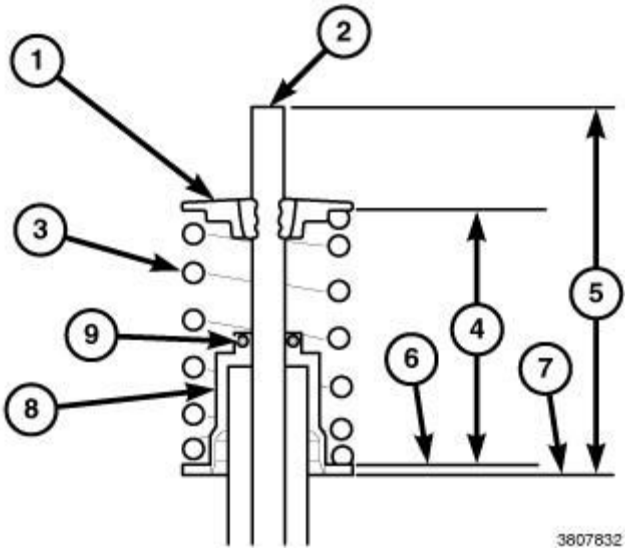

Fig. 37: Inner Rear Lamp Unit & Bulbs
Courtesy of CHRYSLER GROUP, LLC

NOTE: **The inner rear lamp unit contains two bulbs. The upper socket contains the tail lamp bulb, while the lower socket contains the backup lamp bulb. The service procedures for each bulb are the same, only the bulb sizes and types may differ.**

1. Disconnect and isolate the battery negative cable.
2. Open the liftgate to access and remove the inside trim panel from the lower liftgate. Refer to **PANEL, TRIM, REMOVAL** .
3. Firmly grasp the appropriate bulb socket (2 or 3) on the back of the lamp housing (1) and rotate it counterclockwise about 30 degrees to unlock it.
4. Pull the socket and bulb straight out of the lamp.
5. Pull the base of the bulb straight out of the socket.

LAMP

Each rear lamp unit for this vehicle consists of two pieces. An outer rear lamp unit that is secured at the rear of each quarter panel. An inner rear lamp is secured on each outboard side of the decklid or liftgate (depending on application) adjacent to the outer lamp.

OUTER

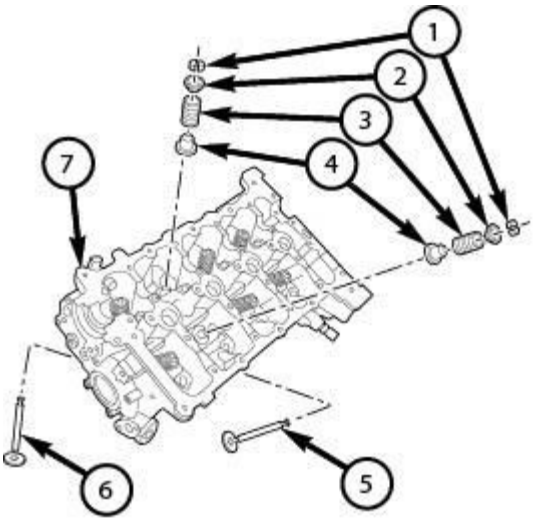

091072939

Fig. 38: Outer Rear Tail Lamp Housing, Grommets, Push-Pins & Connectors
Courtesy of CHRYSLER GROUP, LLC

1. Disconnect and isolate the battery negative cable.
2. Locate and remove the plastic push-pin fastener that secures the bracket on the bottom of the inboard side of the outer rear tail lamp housing (2) to the upper flange of the rear fascia.
3. Open the liftgate to access and remove the two plastic push-pin fasteners (1) that secure the inboard side of the lamp to the side jamb of the liftgate opening.
4. Pull the outboard side of the lamp rearward far enough to disengage the two ball studs on the back of the lamp housing from the plastic grommets (3) in the lamp opening of the body sheet metal (4).
5. Pull the lamp away from the vehicle far enough to access and disconnect the two body wire harness connectors (5) from the two bulb socket connector receptacles on the back of the lamp housing.
6. Remove the lamp from the vehicle.

INNER

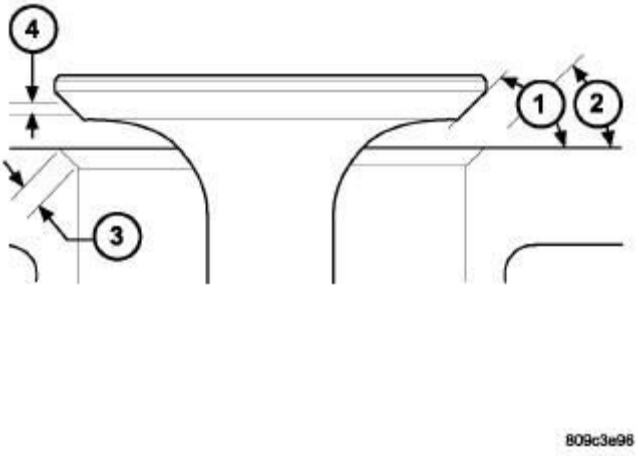

Fig. 39: Inner Rear Tail Lamp Unit, Acorn Nuts & Connectors
Courtesy of CHRYSLER GROUP, LLC

1. Disconnect and isolate the battery negative cable.
2. Open the liftgate (2) to access and remove the inside trim panel from the lower liftgate. Refer to **PANEL, TRIM, REMOVAL** .
3. Disconnect the two liftgate wire harness connectors (3) from the bulb socket connector receptacles on the back of the inner rear tail lamp unit (4).
4. Remove the four acorn nuts (1) that secure the four studs on the back of the lamp housing to the lamp opening of the liftgate.
5. Remove the lamp from the vehicle.

INSTALLATION

BULB

Each rear lamp unit for this vehicle consists of two pieces. An outer rear lamp unit that is secured at the rear of each quarter panel. An inner rear lamp is secured on each outboard side of the liftgate outer panel adjacent to the outer lamp.

OUTER LAMP

CAUTION: Always use the correct bulb size and type for replacement. An incorrect bulb size or type may overheat and cause damage to the lamp, the socket or the lamp wiring.

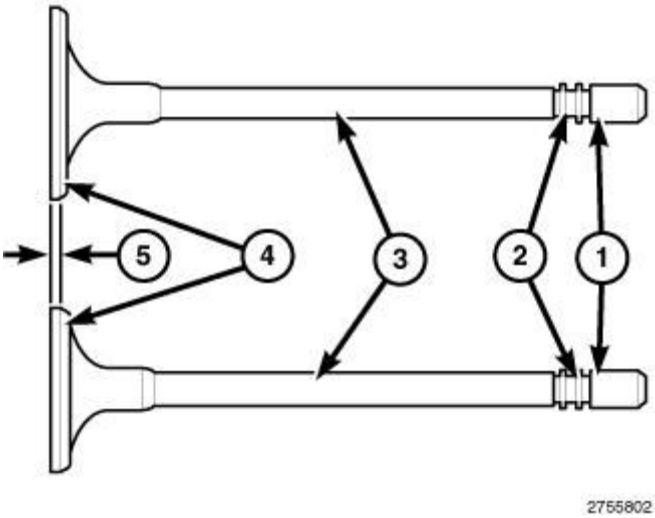

Fig. 40: Outer Rear Lamp Unit & Bulbs
Courtesy of CHRYSLER GROUP, LLC

NOTE: **In vehicles manufactured for domestic markets, the outer rear lamp unit (1) contains a bulb (2) for tail/stop/rear side marker/turn signal functions and a second bulb (3) behind a clear lens for an auxiliary backup lamp function. In vehicles manufactured for export markets, the tail/stop/rear side marker functions are performed by one bulb (2) and a separate turn signal bulb (3) behind an amber lens is used in place of the auxiliary backup bulb. The service procedures for each bulb are the same, only the bulb sizes and types may differ.**

1. Align the base of the bulb with the appropriate bulb socket (2 or 3).
2. Push the bulb straight into the socket until the base is firmly seated.
3. Align the socket and bulb with the keyed opening on the back of the outer rear lamp unit housing (1).
4. Insert the socket and bulb into the housing until the socket is firmly seated.
5. Rotate the socket clockwise about 30 degrees to lock it into place.
6. Reinstall the outer rear lamp unit. Refer to **LAMP, TAIL STOP TURN, INSTALLATION**.
7. Reconnect the battery negative cable.

INNER LAMP

CAUTION: **Always use the correct bulb size and type for replacement. An incorrect bulb size or type may overheat and cause damage to the lamp, the socket or the lamp wiring.**

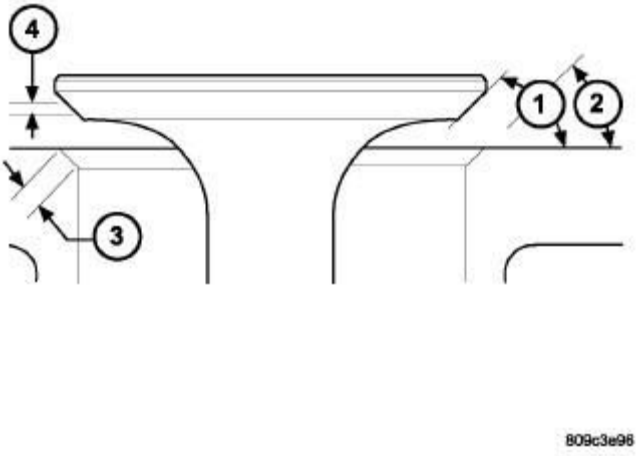

Fig. 41: Inner Rear Lamp Unit & Bulbs
Courtesy of CHRYSLER GROUP, LLC

NOTE: The inner rear lamp unit contains two bulbs. The upper socket contains the tail lamp bulb, while the lower socket contains the backup lamp bulb. The service procedures for each bulb are the same, only the bulb sizes and types may differ.

1. Align the base of the bulb with the appropriate bulb socket (2 or 3).
2. Push the bulb straight into the socket until the base is firmly seated.
3. Align the socket and bulb with the keyed opening on the back of the inner rear lamp unit housing (1).
4. Insert the socket and bulb into the housing until the socket is firmly seated.
5. Rotate the socket clockwise about 30 degrees to lock it into place.
6. Reinstall the inside trim panel to the lower liftgate. Refer to **PANEL, TRIM, INSTALLATION** .
7. Reconnect the battery negative cable.

LAMP

Each rear lamp unit for this vehicle consists of two pieces. An outer rear lamp unit that is secured at the rear of each quarter panel. An inner rear lamp is secured on each outboard side of the decklid or liftgate (depending on application) adjacent to the outer lamp.

OUTER

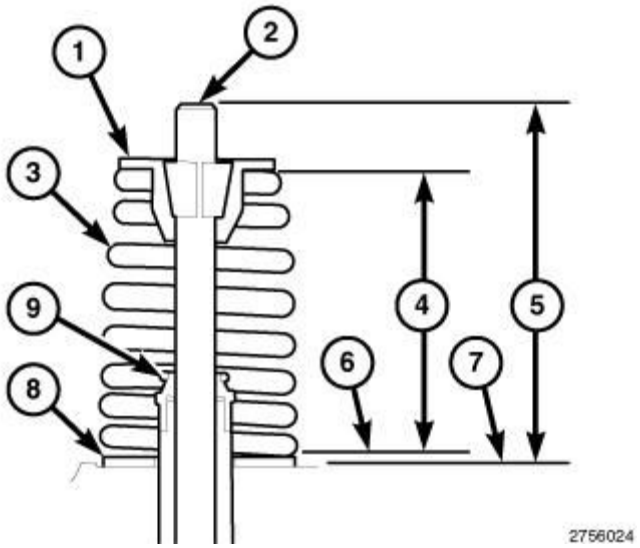

Fig. 42: Outer Rear Tail Lamp Housing, Grommets, Push-Pins & Connectors
Courtesy of CHRYSLER GROUP, LLC

1. Check to be certain that the two plastic grommets (3) are in good condition and properly installed in the outboard side of the lamp opening of the body sheet metal (4).
2. Position the outer rear lamp unit (2) to the lamp opening of the body sheet metal.
3. Reconnect the two body wire harness connectors (5) to the two bulb socket connector receptacles on the back of the lamp housing.
4. Align the two ball studs on the back of the lamp housing with the plastic grommets in the lamp opening of the body sheet metal.
5. Using hand pressure, push firmly and evenly on the outboard top and bottom of the lamp until both ball studs snap into the grommets.
6. Reinstall the upper plastic push-pin fastener (1) followed by the lower fastener that secures the inboard side of the outer rear lamp unit to the side jamb of the liftgate opening.
7. Reinstall the plastic push-pin fastener that secures the bracket on the bottom of the inboard side of the outer rear tail lamp housing to the upper flange of the rear fascia.
8. Reconnect the battery negative cable.

INNER

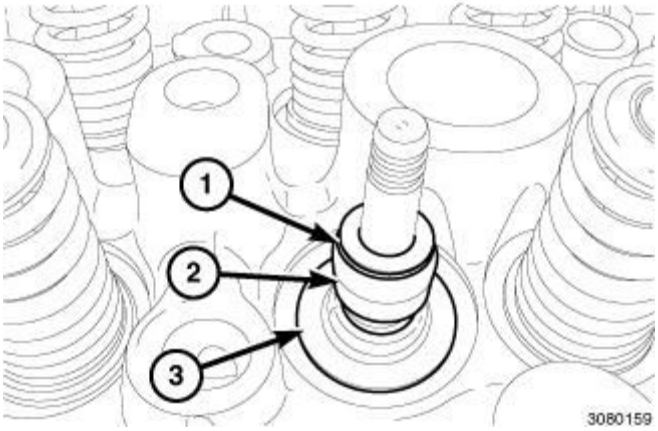

Fig. 43: Inner Rear Tail Lamp Unit, Acorn Nuts & Connectors
Courtesy of CHRYSLER GROUP, LLC

1. Position the inner rear lamp unit (4) to the lamp opening of the liftgate (2).
2. Install and tighten the four acorn nuts (1) that secure the four studs on the back of the lamp housing to the lamp opening of the liftgate in the following sequence: upper outboard, upper inboard, lower outboard then lower inboard. Tighten the nuts securely.
3. Reconnect the two liftgate wire harness connectors (3) to the bulb socket connector receptacles on the back of the lamp housing.
4. Reinstall the inside trim panel to the lower liftgate. Refer to **PANEL, TRIM, INSTALLATION** .
5. Reconnect the battery negative cable.

SWITCH, BACKUP LAMP

DESCRIPTION

DESCRIPTION

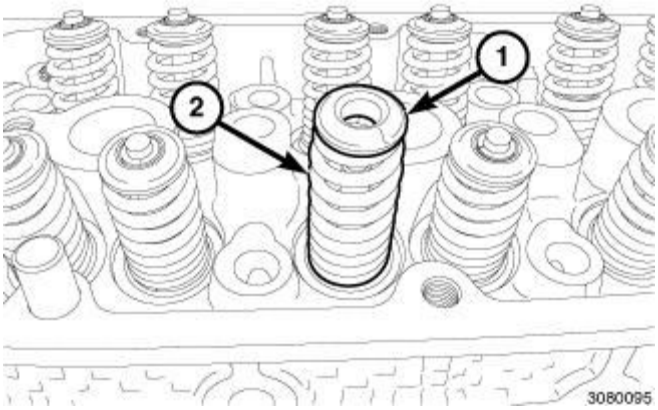

Fig. 44: Backup Lamp Switch
Courtesy of CHRYSLER GROUP, LLC

Vehicles equipped with a manual transmission (2) have a normally open, spring-loaded plunger type backup lamp switch (1). Vehicles with an optional electronic automatic transmission have a Gear Shift Module (GSM) that is used to perform several functions, including that of the backup lamp switch. The GSM is described in further detail elsewhere in this service information. Refer to the service and diagnostic information for the automatic transmission type installed in the vehicle.

The backup lamp switch is located in a threaded hole in the manual transmission housing. The switch has a threaded body and a hex formation near the plunger end of the switch. An integral connector receptacle at the end of the switch opposite the plunger connects the switch to the vehicle electrical system through a take out and connector of the engine wire harness. When installed, only the switch connector and the hex formation are visible on the outside of the transmission housing.

The backup lamp switch cannot be adjusted or repaired and, if ineffective or damaged, the entire switch unit must be replaced.

OPERATION

OPERATION

The backup lamp switch controls a path to ground for the Powertrain Control Module (PCM) (also known as the Engine Control Module/ECM) on the reverse switch signal circuit. The PCM reads this input through an internal pull-up, then sends an electronic **reverse switch status** message to the Body Control Module (BCM) over the Controller Area Network (CAN) data bus network. The BCM controls an output through a high side driver that regulates the flow of battery current to the backup lamp bulbs as appropriate on the backup lamp feed circuit.

The backup lamp switch plunger is mechanically actuated by the gearshift mechanism within the transmission, which will depress the switch plunger and close the switch contacts whenever the REVERSE gear has been selected. The switch has a path to ground at all times through a take out and eyelet terminal of the engine wire

harness that is secured to the body sheet metal.

The backup lamp switch as well as the hard wired inputs and outputs of the switch may be diagnosed using conventional diagnostic tools and procedures. Refer to the appropriate wiring information. The wiring information includes wiring diagrams, proper wire and connector repair procedures, details of wire harness routing and retention, connector pin-out information and location views for the various wire harness connectors, splices and grounds.

However, conventional diagnostic methods will not prove conclusive in the diagnosis of the electronic controls or communication between modules and other devices that provide some features of the backup lamp switch input. The most reliable, efficient, and accurate means to diagnose the electronic controls and communication related to backup lamp switch operation requires the use of a diagnostic scan tool.

DIAGNOSIS AND TESTING

DIAGNOSIS AND TESTING - BACKUP LAMP SWITCH

1. Disconnect and isolate the battery negative cable.
2. Locate and disconnect the engine wire harness connector from the backup lamp switch connector receptacle.
3. Check for continuity between the two terminal pins in the backup lamp switch connector receptacle.
    a. With the gear selector lever in the REVERSE position, there should be continuity.
    b. With the gear selector lever in any position other than REVERSE, there should be no continuity.
4. If the switch fails either of these two continuity tests, replace the ineffective backup lamp switch.

SWITCH, HAZARD WARNING

DESCRIPTION

DESCRIPTION

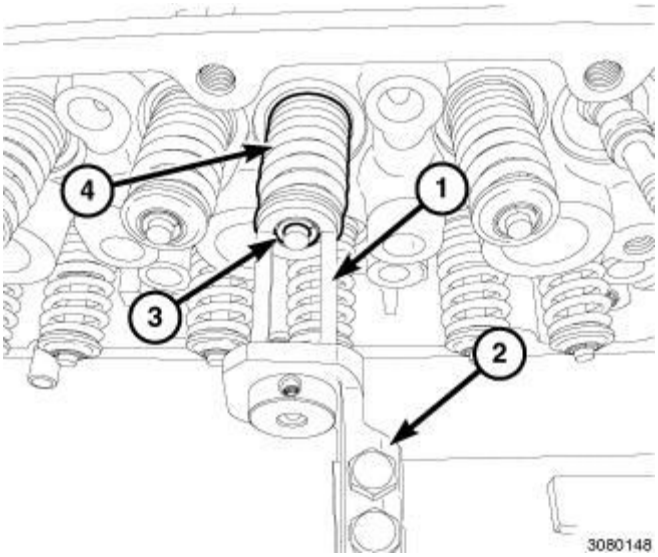

Fig. 45: Switch Pod
Courtesy of CHRYSLER GROUP, LLC

The hazard warning flasher switch (4) is located in the switch pod (1) below the radio screen. A red, stencil-like International Control and Display Symbol icon for **Hazard Warning** identifies the hazard warning flasher switch button.

The hazard switch button has panel lamps dimmer controlled illumination for night visibility. The switch button latches to a slightly lowered position when the hazard warning system is activated and the icon on the switch button may illuminate at an increased intensity while the turn signals and turn signal indicators are flashing. The switch button latches to a position flush with the other push buttons in the switch pod when the hazard warning is deactivated.

All of the circuitry and components of the hazard switch are contained within the molded plastic control head or switch bank housing. The switch is connected to the vehicle electrical system through a dedicated take out and connector of the instrument panel wire harness.

The hazard switch cannot be adjusted or repaired and, if ineffective or damaged, the switch pod will need be replaced. Refer to **POD, SWITCH, DESCRIPTION** .

OPERATION

OPERATION

The hazard switch has a path to ground at all times through the instrument panel wire harness. Whenever the hazard switch is in its latched and lowered position, the switch bank circuitry provides a hard wired ground signal output to the Body Control Module (BCM) and the hazard warning system is selected. When the BCM receives a hazard switch input, it then controls hazard warning system operation and flash rate by controlling battery voltage outputs through high side drivers on the right and left, front and rear turn signal feed circuits.

The BCM also sends the appropriate electronic messages to the Instrument Cluster (IC) (also known as the

Instrument Panel Cluster/IPC) over the Controller Area Network (CAN) data bus to control the illumination and flash rate of the right and left turn signal indicators, as well as to control the click rate of an electromechanical relay soldered onto the IC electronic circuit board that emulates the sound emitted by a conventional hazard warning flasher.

The hard wired circuits for the hazard switch may be diagnosed using conventional diagnostic tools and procedures. Refer to the appropriate wiring information. However, conventional diagnostic methods will not prove conclusive in the diagnosis of the electronic controls and communication between other modules and devices that provide some features of the hazard warning system. The most reliable, efficient, and accurate means to diagnose the hazard switch or the electronic controls and communication related to hazard warning system operation requires the use of a diagnostic scan tool. Refer to the appropriate diagnostic information.

DIAGNOSIS AND TESTING

DIAGNOSIS AND TESTING - HAZARD WARNING SWITCH

WARNING: To avoid serious or fatal injury on vehicles equipped with airbags, disable the Supplemental Restraint System (SRS) before attempting any steering wheel, steering column, airbag, Occupant Classification System (OCS), seat belt tensioner, impact sensor or instrument panel component diagnosis or service. Disconnect and isolate the battery negative (ground) cable, then wait two minutes for the system capacitor to discharge before performing further diagnosis or service. This is the only sure way to disable the SRS. Failure to follow these instructions may result in accidental airbag deployment.

The hazard switch as well as the hard wired inputs and outputs of the heater or air conditioner and heater control head or the Integrated Center Stack (ICS) switch bank may be diagnosed using conventional diagnostic tools and procedures. Refer to the appropriate wiring information.

1. Remove the control head or switch bank from the instrument panel as a unit, but do not disconnect it from the instrument panel wire harness.
2. Using a multi-meter, test the continuity between the ground terminal and the hazard switch sense terminal of the control head or switch bank. There should be continuity when the hazard switch push button is in its latched (lowered) position, and no continuity when the push button is in its unlatched (flush) position.
3. If the switch fails either of the continuity tests, replace the ineffective control head or switch bank as required.

SWITCH, HEADLAMP

DESCRIPTION

DESCRIPTION

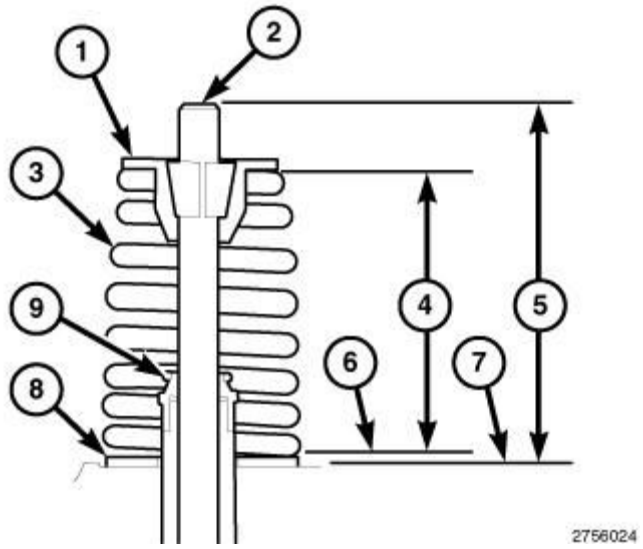

Fig. 46: Headlamp Switch
Courtesy of CHRYSLER GROUP, LLC

The headlamp switch (1) is located on the instrument panel, molded into the steering column opening cover to the left of the steering column. Several different switches are used, depending upon optional equipment requirements. The standard switch features a three-position rotary knob for exterior lighting control. An optional switch has a fourth position added to the rotary knob for automatic headlamps and a momentary PUSH function added to the rotary knob for front fog lamp control.

Each of these switches is constructed of molded plastic. On vehicles with optional fog lamps the rotary knob also has the International Control and Display Symbol icon for **Front Fog Light** applied to it. The switch face plate is also labeled with graphics and icons to clearly identify the many functions of the rotary knob.

The back of the switch housing has an integral connector receptacle containing terminal pins that connect the switch to the vehicle electrical system through a dedicated take out and connector of the instrument panel wire harness. A panel dimmer controlled Light Emitting Diode (LED) unit soldered to the circuit board within the switch provides back lighting for visibility at night, but is not serviceable.

The headlamp switch cannot be repaired and, if ineffective or damaged, it must be replaced.

OPERATION

OPERATION

The headlamp switch uses a single resistor multiplexed output to control the many functions and features it provides. The switch receives a clean ground from the Body Control Module (BCM) on a headlamp switch MUX return circuit. The BCM then reads the switch outputs using an internal pull up on the headlamp/fog lamp switch signal circuit to control the exterior lighting functions.

The switch illumination circuit receives a path to ground at all times through an instrument panel ground circuit. The illumination level is controlled by a Pulse-Width Modulated (PWM) output received from the BCM on a

panel lamps driver circuit. The BCM controls this output based upon the panel lamps dimmer signal circuit input from the interior lighting thumbwheel switch in the dimmer module. Refer to **SWITCH, DIMMER, OPERATION** .

The headlamp switch operates as follows:

- **Front Fog Lamps Control** - For vehicles so equipped, the rotary knob on the headlamp switch is depressed to activate or deactivate the optional front fog lamps. The headlamp switch provides the appropriate resistor multiplexed output to the BCM over the headlamp/fog lamp switch signal circuit, and the BCM reads and responds to this input by energizing or de-energizing the right and left front and rear fog lamp control circuits through internal High Side Drivers (HSD) and by sending an electronic confirmation message to the Instrument Cluster (IC) (also known as the Instrument Panel Cluster/IPC) over the Controller Area Network (CAN) data bus, which controls the front fog lamp indicator as appropriate.
- **Exterior Lighting Control** - The rotary knob on the headlamp switch is rotated to a detent position to activate or deactivate the exterior lighting. The headlamp switch provides the appropriate resistor multiplexed output to the BCM over the headlamp/fog lamp switch signal circuit, and the BCM responds by energizing or de-energizing the right and left park lamp feed circuits and the right and left high or low beam driver circuits through internal HSDs and by sending an electronic confirmation message to the IC over the CAN data bus, which controls the high beam indicator as appropriate. The BCM also remembers which headlamp beams were last selected with the multi-function switch, and energizes those beams by default the next time the headlamps are turned ON. If the vehicle is equipped with optional automatic headlamps and the **AUTO** (Automatic) position is selected, the BCM monitors an electronic **ambient light level** message received over the Local Interface Network (LIN) data bus from the Light Rain Sensor Module (LRSM) (also known as the Rain Light Sensor Module/RLSM, the Rain Sensor Module/RSM or the Light Sensor Module/LSM) from the turn to the exterior lighting ON and OFF automatically while the ignition switch status is ON. If vehicle is not equipped with a RLSM,/LSM/RSM but is equipped with auto head lamps, the BCM also monitors for an electronic **ambient light level** message received over the CAN data bus from the air conditioner - heater control module based upon a hard wired input from the sun sensor

  .

The headlamp switch as well as the hard wired inputs and outputs of the switch may be diagnosed using conventional diagnostic tools and procedures. Refer to the appropriate wiring information.

DIAGNOSIS AND TESTING

DIAGNOSIS AND TESTING - HEADLAMP SWITCH

WARNING: **To avoid serious or fatal injury on vehicles equipped with airbags, disable the Supplemental Restraint System (SRS) before attempting any steering wheel, steering column, airbag, Occupant Classification System (OCS), seat belt tensioner, impact sensor or instrument panel component diagnosis or service. Disconnect and isolate the battery negative (ground) cable, then wait two minutes for the system capacitor to discharge before performing further diagnosis or service. This is the only sure way to**

disable the SRS. Failure to follow these instructions may result in accidental airbag deployment.

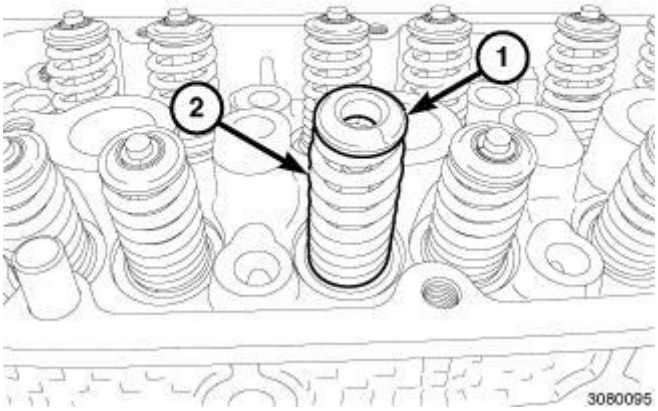

Fig. 47: Terminals Of The Switch
Courtesy of CHRYSLER GROUP, LLC

1. Remove the headlamp switch from the instrument panel. Refer to **SWITCH, HEADLAMP, REMOVAL**.
2. Disconnect the instrument panel wire harness connector from the back of the headlamp switch.
3. Using an ohmmeter, test the resistance between the terminals of the switch as shown in the Headlamp Switch Tests table.

HEADLAMP SWITCH TESTS TABLE

HEADLAMP SWITCH TESTS	
SWITCH POSITION (PINS)	***RESISTANCE RANGE (OHMS)**
AUTO (3 and 6)	4028.0 - 4452.0
OFF (3 and 6)	1938.0 - 2142.0
PARK (3 and 6)	1073.5 - 1186.5
HEADLAMP (3 and 6)	627.0 - 693.0
FOG LAMP - AUTO (3 and 6)	347.2 - 383.8
FOG LAMP - OFF (3 and 6)	317.7 - 351.1
FOG LAMP - PARK (3 and 6)	280.6 - 310.1
FOG LAMP - HEADLAMP (3 and 6)	236.6 - 261.5
SWITCH ILLUMINATION (4 and 5)	LEDs - SET MULTIMETER TO DIODE MODE - CONNECT PIN 4 TO PLUS (+), CONNECT PIN 5 TO MINUS (-) - LEDs SHOULD BARELY GLOW
*All resistance values are plus or minus 5%.	

4. If the switch fails any of the tests, replace the ineffective headlamp switch as required.

REMOVAL

REMOVAL

WARNING: To avoid serious or fatal injury on vehicles equipped with airbags, disable the Supplemental Restraint System (SRS) before attempting any steering wheel, steering column, airbag, Occupant Classification System (OCS), seat belt tensioner, impact sensor or instrument panel component diagnosis or service. Disconnect and isolate the battery negative (ground) cable, then wait two minutes for the system capacitor to discharge before performing further diagnosis or service. This is the only sure way to disable the SRS. Failure to follow these instructions may result in accidental airbag deployment.

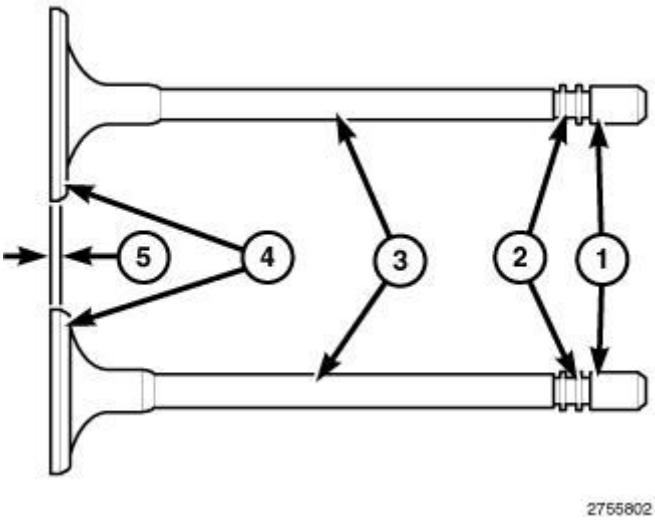

Fig. 48: Headlamp Switch Harness Receptacle & Push Down Tabs
Courtesy of CHRYSLER GROUP, LLC

1. Disconnect and isolate the battery negative cable.
2. Remove the drivers side lower steering column cover panel. Refer to **COVER, STEERING COLUMN OPENING, REMOVAL** .
3. With the panel loosened, disconnect the wiring connector from the headlamp switch harness receptacle (2).
4. Remove the panel to access the two push down tabs (1). Press down on both tabs to and press the switch outward from the panel.
5. Remove the headlamp switch.

INSTALLATION

INSTALLATION

WARNING: To avoid serious or fatal injury on vehicles equipped with airbags, disable the Supplemental Restraint System (SRS) before attempting any steering wheel, steering column, airbag, Occupant Classification System (OCS), seat belt tensioner, impact sensor or instrument panel component diagnosis or service. Disconnect and isolate the battery negative (ground) cable, then wait two minutes for the system capacitor to discharge before performing further diagnosis or service. This is the only sure way to disable the SRS. Failure to follow these instructions may result in accidental airbag deployment.

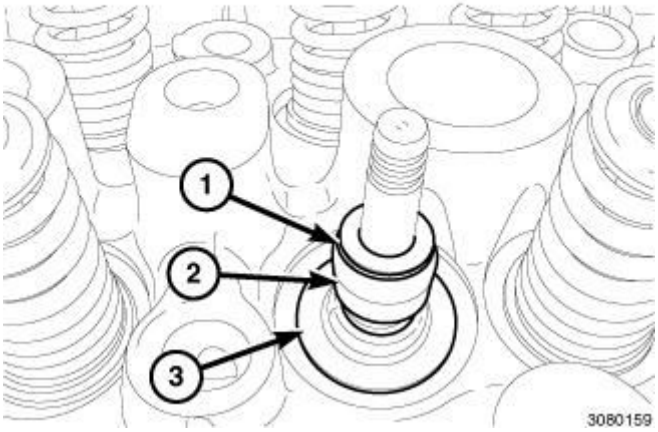

Fig. 49: Headlamp Switch Harness Receptacle & Push Down Tabs
Courtesy of CHRYSLER GROUP, LLC

1. Align the headlamp switch to the mounting location in the instrument panel steering column opening cover.
2. Using hand pressure, push the switch through in order to seat the switch to the housing. Make sure both pawl retainers (1) have cleared the opening and are retaining the switch to the cover.
3. Connect the wiring harness to the headlamp switch harness receptacle (2).
4. Install the lower steering column cover. Refer to **COVER, STEERING COLUMN OPENING, INSTALLATION** .
5. Reconnect the battery negative cable.

SWITCH, MULTIFUNCTION

DESCRIPTION

DESCRIPTION

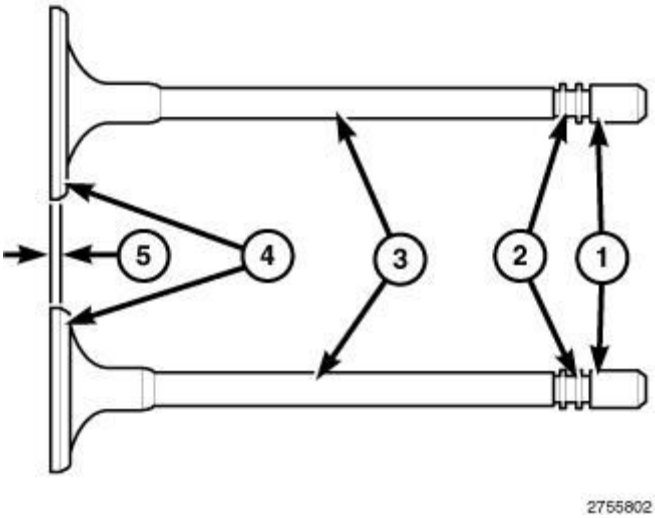

Fig. 50: Control Knob & Control Stalk
Courtesy of CHRYSLER GROUP, LLC

The multi-function switch is located on the left side of the steering column, just below the steering wheel. This switch is the primary control for the front wiper and washer systems, the turn signals and for headlamp beam selection. The only visible components of the switch are the control stalk (2) and the control knob (1) that extend through the steering column shrouds on the left side of the column. The remainder of the switch including its mounting provisions, its electrical connections and the turn signal cancel actuator are concealed within the Steering Column Control Module (SCCM) mounting housing beneath the shrouds.

The multi-function switch controls as well as the SCCM mounting housing are constructed of molded black plastic. Each of the switch controls has white International Control and Display Symbol graphics applied to it, which clearly identify its many functions. The multi-function switch is integral to the SCCM mounting housing.

The SCCM mounting housing is located near the top of the steering column below the steering wheel. In addition to the integral multi-function switch the SCCM mounting housing incorporates the Steering Control Module (SCM) and has integral features to support the mounting of the clockspring. All of the multi-function switch inputs and outputs are directly connected to the SCM. The SCM is an electronic microcontroller that serves as a Local Interface Network (LIN) master node and also as a gateway to the Controller Area Network (CAN) data bus.

The SCCM mounting housing also features an integral interconnect connector receptacle. This interconnect connects all of the inputs and outputs of the SCM to the vehicle electrical system through several terminal pins of the clockspring interconnect connector and the pass through circuits of the clockspring. The clockspring is connected to the vehicle electrical system through a dedicated take out and connector of the instrument panel wire harness.

The multi-function switch provides the vehicle operator with a control interface for the following exterior lighting functions:

- **Front Washer Control** - The multi-function switch control knob provides a momentary WASH position for washer system operation.

- **Front Wiper Control** - The multi-function switch control knob provides detent switching for two continuous wipe switch positions, low (LO) speed or high (HI) speed and an intermittent wipe mode with four delay interval positions. The four delay positions become four sensitivity positions for vehicles equipped with the optional automatic wiper system. The control knob also has a momentary pulse wipe (MIST) feature switch position.
- **Headlamp Beam Selection** - The multi-function switch control stalk provides detent switching for selection of the headlamp HIGH or LOW beams.
- **Headlamp Optical Horn** - The multi-function switch control stalk includes momentary switching of the headlamp high beam circuits to provide an optical horn feature (sometimes referred to as flash-to-pass), which allows the vehicle operator to momentarily flash the headlamp high beams as an optical signalling device.
- **Turn Signal Control** - The multi-function switch control stalk provides both momentary non-detent (lane change) switching and detent switching with automatic cancellation for both the left and right turn signal.

The multi-function switch cannot be adjusted or repaired. If any function of the switch is ineffective, or if the switch is damaged, the entire SCCM mounting housing, SCM and multi-function switch unit must be replaced. Refer to **MODULE, STEERING COLUMN, REMOVAL** . The clockspring is available for separate service replacement.

OPERATION

OPERATION

The multi-function switch uses resistor multiplexing to control the many functions and features it provides using a minimal number of hard wired circuits. The switch receives clean grounds from the Steering Control Module (SCM), then provides resistor multiplexed return outputs to the SCM to indicate the selected switch positions. The SCM then sends electronic **switch status** messages over the Controller Area Network (CAN) data bus to the Body Control Module (BCM) and other electronic modules in the vehicle.

If the SCM detects no inputs from the multi-function switch, it transmits an electronic **Signal Not Available (SNA)** status message over the CAN data bus. The SNA status signals the other electronic modules to implement a fail-safe or default mode of operation. For the exterior lighting system, the multi-function switch fail-safe mode automatically selects LOW beams when the headlamps are turned ON. For the wiper system, the multi-function switch fail-safe mode will maintain the last selected wiper system mode of operation for the remainder of the current ignition cycle, after which the wiper system will default to OFF.

The hard wired inputs and outputs of the SCM may be diagnosed using conventional diagnostic tools and procedures. Refer to the appropriate wiring information. However, conventional diagnostic methods will not prove conclusive in the diagnosis of the multi-function switch or the electronic controls and communication between other modules and devices that provide some features of the lighting or wiper and washer systems. The most reliable, efficient and accurate means to diagnose the multi-function switch or the electronic controls and communication related to right multi-function switch operation requires the use of a diagnostic scan tool. Refer to the appropriate diagnostic information.

Following are descriptions of how the multi-function switch is operated to control the functions and features it

provides:

- **Front Washer Control** - The control knob on the end of the multi-function switch control stalk is depressed toward the steering column to the momentary WASH position to activate the washer pump/motor in the FRONT WASH mode. The washer pump/motor will continue to operate for as long as the control knob is held in this position. The SCM reads the resistor multiplexed input from the multi-function switch and sends an electronic **front washer switch status** message over the CAN data bus to the BCM and to other electronic modules in the vehicle.
- **Front Wiper Control** - The control knob on the end of the multi-function switch control stalk is rotated to one of the two continuous wiper detent positions (LO or HI), to one of four intermittent delay or sensitivity wiper detent positions, or to the OFF position to select the FRONT WIPER mode. The SCM reads the resistor multiplexed input from the multi-function switch and sends electronic **front wiper switch status** messages over the CAN data bus to the BCM and to other electronic modules in the vehicle.
- **Front Wiper Mist Mode** - The control knob on the end of the multi-function switch control stalk is rotated to the momentary MIST position to activate the wiper MIST mode. The wiper motor will continue to operate, one complete cycle at a time, for as long as the control knob is held in this position. The SCM reads the resistor multiplexed input from the multi-function switch and sends an electronic **front wiper switch status** message over the CAN data bus to the BCM and to other electronic modules in the vehicle.
- **Headlamp Beam Selection** - The headlamp high beams are selected when the multi-function switch control stalk is pushed forward to the high beam selection detent position. The low beams are selected when the control stalk is pulled rearward to the low beam selection detent position. The SCM reads the resistor multiplexed input from the multi-function switch and sends an electronic **beam select switch status** message over the CAN data bus to the BCM and to other electronic modules in the vehicle.
- **Headlamp Optical Horn** - The headlamp optical horn is selected each time the multi-function switch control stalk is pulled fully rearward to a momentary position. The headlamp HIGH beams will remain illuminated for as long as the control stalk is held in this momentary position and the LOW beams will be restored when the control stalk is released. The SCM reads the resistor multiplexed input from the multi-function switch and sends an electronic **beam select switch status** message over the CAN data bus to the BCM and to other electronic modules in the vehicle.
- **Turn Signal Control** - The turn signals are requested when the multi-function switch control stalk is moved downward (LEFT signal) or upward (RIGHT signal). The control stalk has a detent position in each direction that provides turn signals with automatic cancellation, and an intermediate, momentary position in each direction that automatically provides three turn signal blinks as a LANE CHANGE feature when the control stalk is tapped or will energize the turn signals for as long as the control stalk is held in the momentary position. When the control stalk is moved to a detent turn signal switch position, a cancel actuator extends from the multi-function switch through the Steering Column Control Module (SCCM) mounting housing toward the center of the steering column. A turn signal cancel cam that is integral to the clockspring rotor rotates with the steering wheel and the cam lobes contact the cancel actuator when it is extended from the multi-function switch. When the steering wheel is rotated during a turning maneuver, one of the turn signal cancel cam lobes will contact the turn signal cancel actuator. The cancel actuator latches against the cancel cam rotation in the direction opposite that which is signaled. If the LEFT turn signal detent is selected, the lobes of the cancel cam will ratchet past the cancel actuator when the steering wheel is rotated to the left, but will unlatch the cancel actuator as the steering wheel rotates to the right and returns to center, which will cancel the turn signal event and release the control stalk from the detent so it returns to the neutral OFF position. The SCM reads the resistor multiplexed

input from the multi-function switch and sends an electronic **turn signal switch status** message over the CAN data bus to the BCM and to other electronic modules in the vehicle.

REMOVAL

REMOVAL

The multi-function switch is serviced only as a unit with the Steering Column Control Module (SCCM) mounting housing, the Steering Control Module (SCM) and multi-function switch unit. Refer to **MODULE, STEERING COLUMN, REMOVAL** . The clockspring is available for separate service replacement.

INSTALLATION

INSTALLATION

The multi-function switch is serviced only as a unit with the Steering Column Control Module (SCCM) mounting housing, the Steering Control Module (SCM) and multi-function switch unit. Refer to **MODULE, STEERING COLUMN, INSTALLATION** . The clockspring is available for separate service replacement.

SWITCH, STOP LAMP

DESCRIPTION

DESCRIPTION

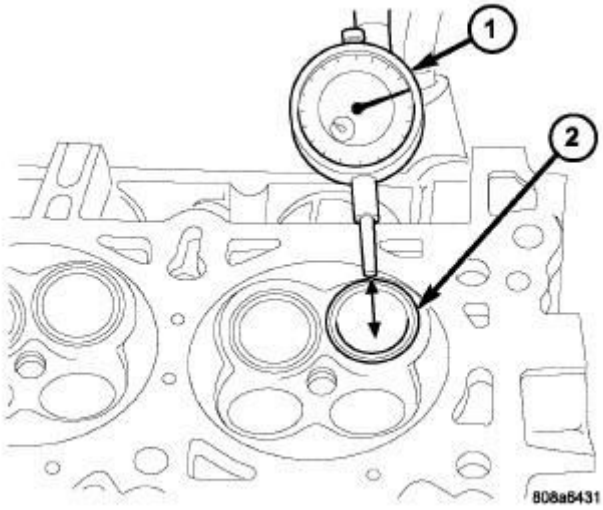

Fig. 51: Stop Lamp Switch, Mounting Collar, Switch Plunger & Connector Receptacle
Courtesy of CHRYSLER GROUP, LLC

The brake (or stop) lamp switch (1) is a two-circuit, spring-loaded plunger actuated switch that is secured to the brake pedal support bracket under the instrument panel on the driver side of the vehicle. The molded plastic

switch housing has an integral connector receptacle (4) containing four terminal pins. The switch is connected to the vehicle electrical system through a dedicated take out and connector of the body wire harness.

The switch plunger (3) extends through a mounting collar (2) on one end of the switch housing. The plunger has a telescoping self-adjustment feature that is activated as the switch is being installed by the brake pedal in its normal at-rest position.

This brake lamp switch cannot be repaired. If the switch is damaged or ineffective it must be replaced with a new unit.

OPERATION

OPERATION

The brake (or stop) lamp switch controls two independent circuits. These circuits are described as follows:

- **Normally Closed** - The normally closed circuit provides a hard wired output to the Body Control Module (BCM) indicating the position of the brake pedal, depressed or released. The BCM responds by relaying electronic **brake switch status** messages over the Controller Area Network (CAN) data bus to other electronic modules in the vehicle.
- **Normally Open** - The normally open circuit provides hard wired outputs to the BCM, the Powertrain Control Module (PCM) and the Radio Frequency Hub Module (RFHM) (also known as the RF Hub) whenever the brake pedal is depressed. The BCM responds to the normally open input by providing a control output that energizes or de-energizes the brake lamps. The RFHM responds to the normally open input by providing a control output that energizes or de-energizes the Brake Transmission Shift Interlock (BTSI) solenoid.

The brake lamp switch as well as the hard wired inputs and outputs of the switch may be diagnosed using conventional diagnostic tools and procedures. Refer to the appropriate wiring information. However, the switch can only be tested while installed and, while in the installed position, the switch terminals are inaccessible to test meter probes. The most reliable, efficient and accurate means to diagnose the electronic controls and communication related to brake lamp switch operation requires the use of a diagnostic scan tool to read the switch status through the BCM. Refer to the appropriate diagnostic information.

DIAGNOSIS AND TESTING

DIAGNOSIS AND TESTING - STOP LAMP SWITCH

WARNING: **To avoid serious or fatal injury on vehicles equipped with airbags, disable the Supplemental Restraint System (SRS) before attempting any steering wheel, steering column, airbag, Occupant Classification System (OCS), seat belt tensioner, impact sensor or instrument panel component diagnosis or service. Disconnect and isolate the battery negative (ground) cable, then wait two minutes for the system capacitor to discharge before performing further diagnosis or service. This is the only sure way to disable the SRS. Failure to follow these instructions may result in accidental airbag deployment.**

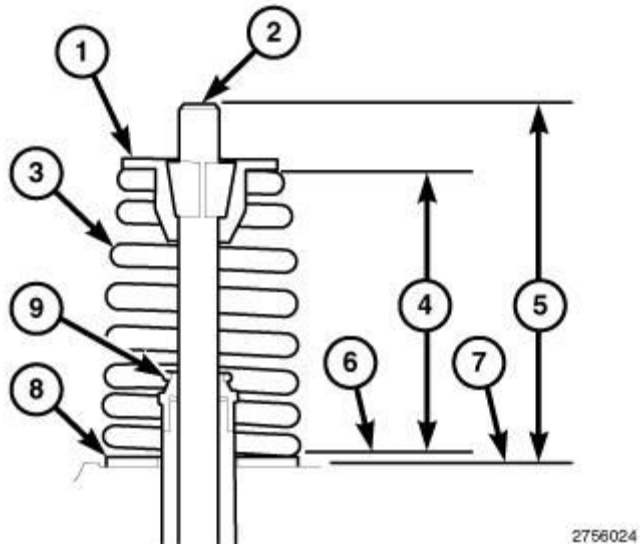

Fig. 52: Stop Lamp Switch Connector End View
Courtesy of CHRYSLER GROUP, LLC

The brake lamp switch as well as the hard wired inputs and outputs of the switch may be diagnosed using conventional diagnostic tools and procedures. Refer to the appropriate wiring information. However, the switch can only be tested while installed and, while in the installed position, the switch terminals are inaccessible to test meter probes. The most reliable, efficient and accurate means to diagnose the electronic controls and communication related to brake lamp switch operation requires the use of a diagnostic scan tool to read the switch status through the BCM and the PCM.

1. Using a scan tool, check for Diagnostic Trouble Codes (DTCs) in the BCM and PCM. If no DTCs are found, go to Step 2. If any DTCs are found, refer to **DTC INDEX** to locate the DTC and repair as needed.
2. Monitor the Brake Lamp Switch operation by using the diagnostic scan tool to verify that both switch states in the BCM changes while actuating the brake pedal. If actuation is detected in the BCM, move to the PCM to confirm actuation is detected.

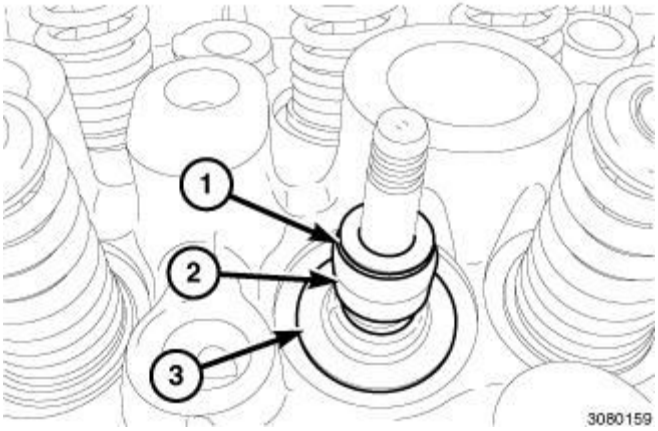

Fig. 53: Identifying Brake Switch Condition
Courtesy of CHRYSLER GROUP, LLC

3. **If damage to the switch is present for any reason the switch is to be replaced. If a switch is removed and the plunger length differs from a new switch, the switch should always be replaced and not reinstalled. The nominal height for a new switch (tip of the plunger to the body of the switch) is 16.90mm.**
   - 1 - Defective brake switch due to the switch tab being sheared off.
   - 2 - Defective brake switch due to the switch tab being offset.
   - 3 - **Normal operational brake lamp switch to be used for installation.**

REMOVAL

REMOVAL

WARNING: To avoid serious or fatal injury on vehicles equipped with airbags, disable the Supplemental Restraint System (SRS) before attempting any steering wheel, steering column, airbag, Occupant Classification System (OCS), seat belt tensioner, impact sensor or instrument panel component diagnosis or service. Disconnect and isolate the battery negative (ground) cable, then wait two minutes for the system capacitor to discharge before performing further diagnosis or service. This is the only sure way to disable the SRS. Failure to follow these instructions may result in accidental airbag deployment.

CAUTION: Never remove or install the brake lamp switch while the brake pedal arm is disassembled from the brake booster push rod.

CAUTION: Do not depress, lift or move the brake pedal during brake lamp switch

removal to avoid switch damage. Do not depress, lift or move the brake pedal during brake lamp switch installation to avoid improper switch adjustment.

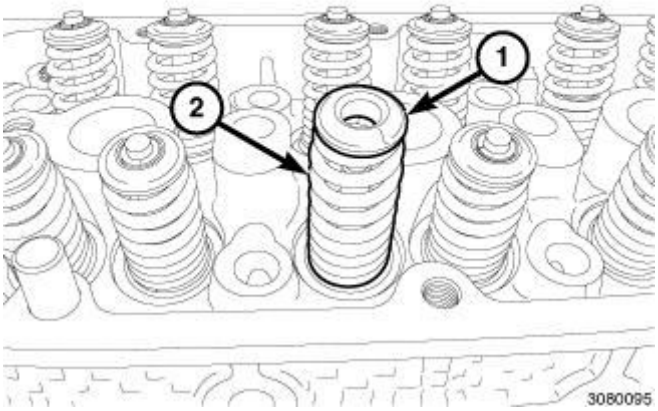

Fig. 54: Stop Lamp Switch & Brake Pedal Support Bracket
Courtesy of CHRYSLER GROUP, LLC

1. Disconnect and isolate the battery negative cable.
2. Locate the brake lamp switch (1) on the brake pedal support bracket (2) on the dash panel under the instrument panel.
3. Disconnect the body wire harness connector from the brake lamp switch.

NOTE: **If a click noise is heard during switch removal, the switch may have internal damage and should be replaced.**

4. Press the brake lamp switch against the bracket while rotating the switch housing clockwise about 45 degrees to align the tabs on the switch locking collar with the keyed hole in the brake pedal support bracket.
5. Pull the switch straight away from the keyed hole to remove it from the bracket.
6. Remove the switch from the vehicle.

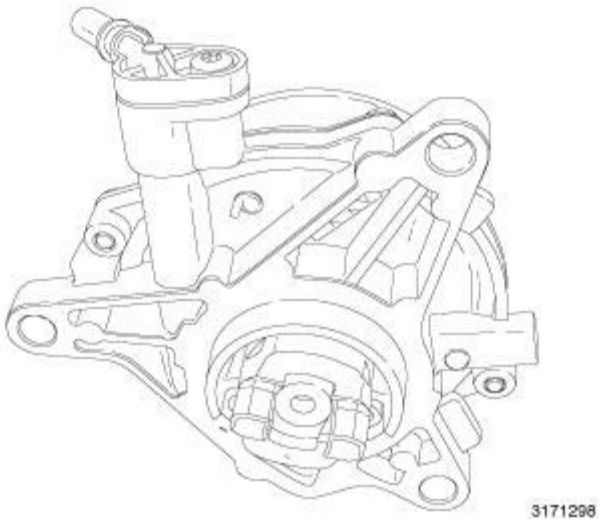

Fig. 55: Identifying Brake Switch Condition
Courtesy of CHRYSLER GROUP, LLC

7. **If damage to the switch is present for any reason the switch is to be replaced. If a switch is removed and the plunger length differs from a new switch, the switch should always be replaced and not reinstalled. The nominal height for a new switch (tip of the plunger to the body of the switch) is 16.90mm.**
   - 1 - Defective brake switch due to the switch tab being sheared off.
   - 2 - Defective brake switch due to the switch tab being offset.
   - 3 - **Normal operational brake lamp switch to be used for installation.**

INSTALLATION

INSTALLATION

WARNING: To avoid serious or fatal injury on vehicles equipped with airbags, disable the Supplemental Restraint System (SRS) before attempting any steering wheel, steering column, airbag, Occupant Classification System (OCS), seat belt tensioner, impact sensor or instrument panel component diagnosis or service. Disconnect and isolate the battery negative (ground) cable, then wait two minutes for the system capacitor to discharge before performing further diagnosis or service. This is the only sure way to disable the SRS. Failure to follow these instructions may result in accidental airbag deployment.

CAUTION: Never remove or install the brake lamp switch while the brake pedal arm is disassembled from the brake booster push rod.

CAUTION: Do not depress, lift or move the brake pedal during brake lamp switch

removal to avoid switch damage. Do not depress, lift or move the brake pedal during brake lamp switch installation to avoid improper switch adjustment.

NOTE: Be certain that the brake pedal bracket is not bent or damaged before installing or reinstalling a brake lamp switch. Inspect the brake switch tab location making sure its in the proper location indicating that the switch is not defective.

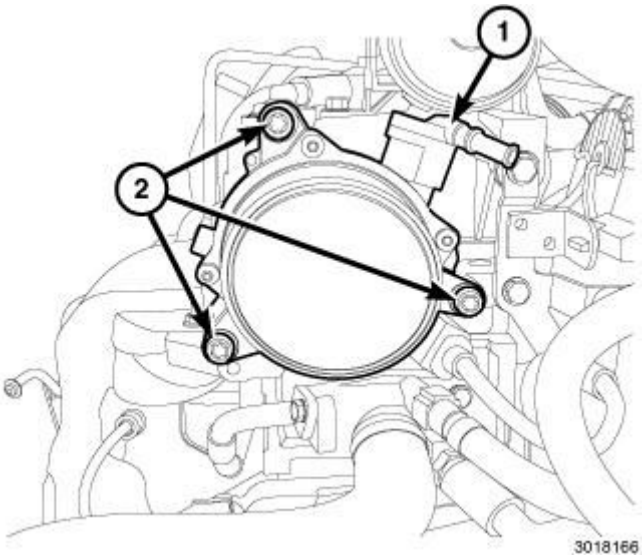

Fig. 56: Identifying Brake Switch Condition
Courtesy of CHRYSLER GROUP, LLC

NOTE: If damage to the switch is present for any reason the switch is to be replaced. If a switch is removed and the plunger length differs from a new switch, the switch should always be replaced and not reinstalled. The nominal height for a new switch (tip of the plunger to the body of the switch) is 16.90mm.

- 1 - Defective brake switch due to the switch tab being sheared off.
- 2 - Defective brake switch due to the switch tab being offset.
- 3 - **Normal operational brake lamp switch to be used for installation.**

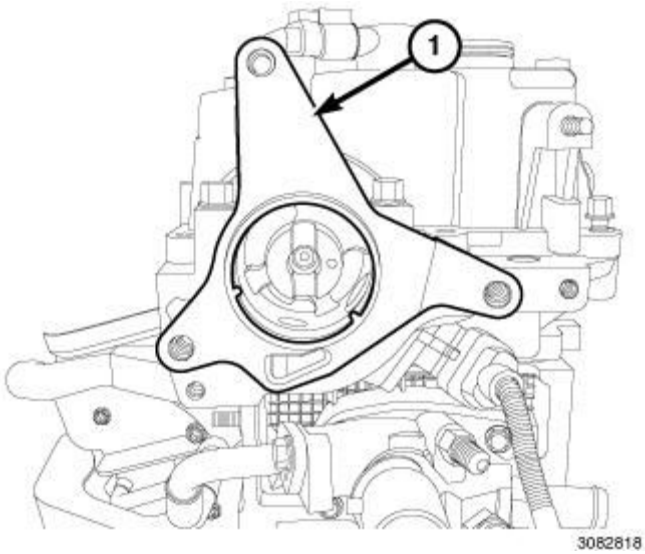

Fig. 57: Stop Lamp Switch & Brake Pedal Support Bracket
Courtesy of CHRYSLER GROUP, LLC

NOTE: Be certain that the brake pedal bracket is not bent before installing or reinstalling a brake lamp switch.

1. Position the brake lamp switch (1) near the brake pedal support bracket (2) on the dash panel under the instrument panel.
2. Align the tabs on the brake lamp switch locking collar with the keyed hole in the brake pedal support bracket.
3. Holding the brake lamp switch perpendicular to the support bracket, insert the tabs on the brake lamp switch locking collar through the keyed hole in the support bracket until the switch housing is firmly seated against the bracket.
4. Rotate the switch housing counterclockwise about 45 degrees to engage the tabs on the locking collar with the support bracket.
5. Reconnect the body wire harness connector to the connector receptacle on the switch.
6. Reconnect the battery negative cable.

UNIT, FRONT LAMP

STANDARD PROCEDURE

STANDARD PROCEDURE - LAMP LENS DEFOGGING

Some customers may report that on occasion, vehicle exterior lamp assemblies are fogged with a light layer of condensation on the inside of the lenses. This may be reported after the lamps have been turned on and brought up to operating temperature, turned off, and then rapidly cooled by cold water (such as rain, or the water from a car wash). Lens fogging can also occur under certain atmospheric conditions after a vehicle has been parked outside overnight (i.e., a warm humid day followed by clear cool night). This will usually clear as atmospheric conditions change to allow the condensation to change back into a vapor. Turning the lamps on will usually

accelerate this process.

A lamp that exhibits condensation/fogging should be evaluated in a service bay environment by first drying all water from the outside surface of the lens and operating the lamp for 20 minutes. If the condensation/fogging has begun to clear from the lamp lens after 20 minutes with the lamps operating, this indicates the lamp sealing has not been breached, and the lamp does not need to be replaced.

If the condensation/fogging has not begun to clear after 20 minutes with the lamps operating, or the lamp has large amounts of water droplets visible on most internal surfaces, this indicates a problem with the lamp sealing that has allowed water to enter the lamp. In this instance, the customer is also likely to report that moisture in the lamp is always present and never disappears. A lamp that exhibits internal moisture permanently should be replaced.

REMOVAL

BULB - HEADLAMP

CAUTION: Do not contaminate the bulb glass by touching it with your fingers or by allowing it to contact other oily surfaces. Shortened bulb life will result.

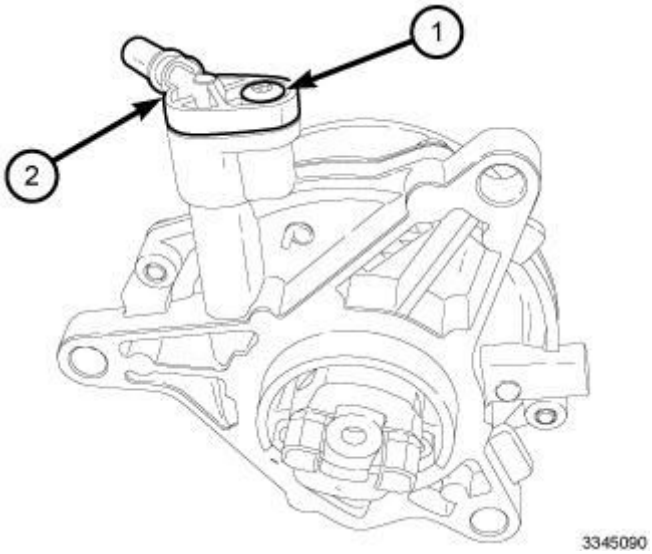

Fig. 58: Headlamp Bulb Base & Wire Harness Connector
Courtesy of CHRYSLER GROUP, LLC

1. Disconnect and isolate the battery negative cable.
2. For passenger side bulb assembly, position the air cleaner box out of the way. Refer to **AIR CLEANER, REMOVAL** for 2.0L Diesel, **AIR CLEANER, REMOVAL** for 2.4L or **AIR CLEANER, REMOVAL** for 3.2L.
3. Firmly grasp the headlamp bulb access cover on the outboard back of the front lamp unit housing and rotate it counterclockwise about 30 degrees to unlock it.
4. Remove the access cover from the lamp housing.

5. Firmly grasp the headlamp bulb base (1) on the back of the reflector within the front lamp unit housing and rotate it counterclockwise about 30 degrees to unlock it.
6. Pull the bulb and base straight out from the keyed opening in the reflector.

NOTE: Take care to prevent the front lamp unit wire harness and connector from falling back into the lamp housing after disconnecting it from the bulb.

7. Disconnect the front lamp unit wire harness connector (2) from the bulb connector receptacle.
8. Remove the bulb from the back of the front lamp unit.

LAMP

WARNING: To avoid serious or fatal injury when working on the High Intensity Discharge (HID) headlamp system, be certain to take the proper precautions. The headlamp switch must be in the OFF position. Disconnect and isolate the battery negative cable. There is a risk of fatal injury caused by contact with high voltage used in the HID headlamps. There is a risk of explosion or fire caused by highly flammable materials in the vicinity of damaged HID lighting elements. There is a risk of injury caused by exposure to Ultra Violet (UV) light, a risk of burns caused by high component operating temperatures, a risk of mercury poisoning through glass splinters produced by bursting HID lighting elements. There is also a risk of poisoning caused by inhalation of mercury vapors and by toxic salts and mercury compounds being ingested or coming into contact with the skin. Do not come into contact with parts that are under high voltage. Persons with active electronic implants (e.g. heart pacemakers) must never work on HID headlamps. Wear insulated safety shoes, safety glasses and protective gloves. Remove flammable materials and ensure sufficient ventilation in the working area.

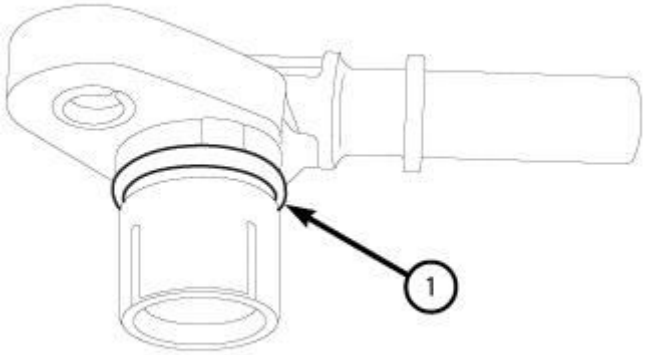

3345100

Fig. 59: Front End Module (FEM)
Courtesy of CHRYSLER GROUP, LLC

1. Disconnect and isolate the battery negative cable.
2. Remove the fascia from the Front End Module (FEM) (1). Refer to **FASCIA, FRONT, REMOVAL** .
3. Remove the 4 screws (1) that secures the lower front lamp unit to the vehicle.
4. Pull the lamp away from the front of the vehicle far enough to access and disconnect the wire harness connection (2) from the back of the lamp housing.
5. Remove the front lamp unit from the vehicle.

LIGHTING ELEMENT - HIGH INTENSITY DISCHARGE

WARNING: **To avoid serious or fatal injury when working on the High Intensity Discharge (HID) headlamp system, be certain to take the proper precautions. The headlamp switch must be in the OFF position. Disconnect and isolate the battery negative cable. There is a risk of fatal injury caused by contact with high voltage used in the HID headlamps. There is a risk of explosion or fire caused by highly flammable materials in the vicinity of damaged HID lighting elements. There is a risk of injury caused by exposure to Ultra Violet (UV) light, a risk of burns caused by high component operating temperatures, a risk of mercury poisoning through glass splinters produced by bursting HID lighting elements. There is also a risk of poisoning caused by inhalation of mercury vapors and by toxic salts and mercury compounds being ingested or coming into contact with the skin. Do not come into contact with parts that are under high voltage. Persons with active electronic implants (e.g. heart pacemakers) must never work on HID headlamps. Wear insulated safety shoes, safety glasses and protective gloves. Remove flammable materials and ensure sufficient ventilation in the working area.**

CAUTION: **Do not contaminate the lighting element glass by touching it with your fingers or by allowing it to contact other oily surfaces. Shortened lighting element life will result.**

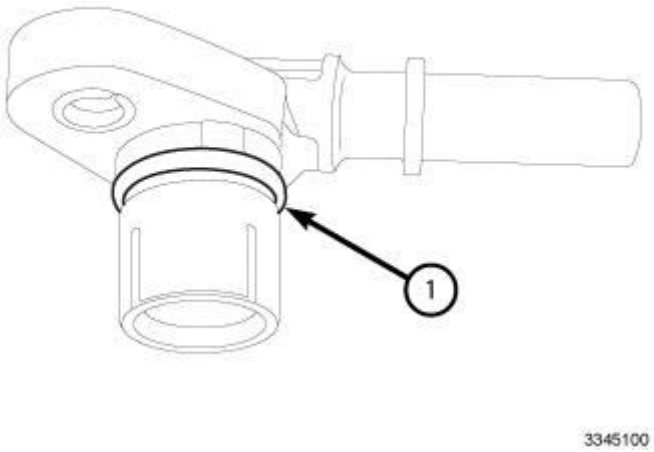

Fig. 60: HID Igniter & High Tension Cable
Courtesy of CHRYSLER GROUP, LLC

1. Disconnect and isolate the battery negative cable.
2. Remove the front fascia. Refer to **FASCIA, FRONT, REMOVAL** .
3. Remove the front headlamp assembly. Refer to **UNIT, FRONT LAMP, REMOVAL**.
4. Firmly grasp the headlamp bulb access cover on the outboard back of the front lamp unit housing and rotate it counterclockwise about 30 degrees to unlock it.
5. Remove the access cover from the lamp housing.

NOTE: Take care to prevent the high tension cable from falling back into the lamp housing after disconnecting it from the HID igniter (2).

6. Disconnect the high tension cable (1) from the HID igniter connector receptacle on the back of the reflector within the front lamp unit housing.
7. Firmly grasp the igniter (2) and rotate it counterclockwise about 30 degrees to unlock it.
8. Pull the HID igniter and lighting element straight out from the keyed opening in the reflector.
9. Remove the igniter and lighting element from the back of the front lamp unit.

INSTALLATION

BULB - HEADLAMP

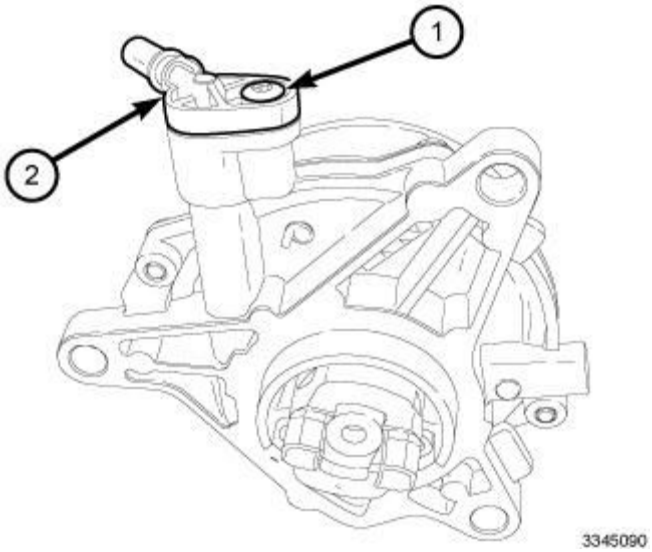

Fig. 61: Headlamp Bulb Base & Wire Harness Connector
Courtesy of CHRYSLER GROUP, LLC

CAUTION: Always use the correct bulb size and type for replacement. An incorrect bulb size or type may overheat and cause damage to the lamp, the socket or the lamp wiring.

CAUTION: Do not contaminate the bulb glass by touching it with your fingers or by allowing it to contact other oily surfaces. Shortened bulb life will result.

1. Position the headlamp bulb close enough to the back of the front lamp unit housing to access and reconnect the lamp wire harness connector (1) to the headlamp bulb connector receptacle.
2. Insert the headlamp bulb into the reflector opening until firmly seated.
3. Rotate the base clockwise about 30 degrees to lock it into place.
4. Position the headlamp bulb access cover onto the outboard back of the front lamp unit housing and rotate it clockwise about 30 degrees to lock it into place.
5. Install the air cleaner assembly (for passenger bulb installations). Refer to **AIR CLEANER, INSTALLATION** for 2.0L Diesel, **AIR CLEANER, INSTALLATION** for 2.4L or **AIR CLEANER, INSTALLATION** for 3.2L.
6. Reconnect the battery negative cable.

LAMP

WARNING: To avoid serious or fatal injury when working on the High Intensity Discharge (HID) headlamp system, be certain to take the proper precautions. The headlamp switch must be in the OFF position. Disconnect and isolate the battery negative cable. There is a risk of fatal injury caused by contact with high voltage used in the HID headlamps. There is a risk of explosion or fire caused by highly flammable materials

in the vicinity of damaged HID lighting elements. There is a risk of injury caused by exposure to Ultra Violet (UV) light, a risk of burns caused by high component operating temperatures, a risk of mercury poisoning through glass splinters produced by bursting HID lighting elements. There is also a risk of poisoning caused by inhalation of mercury vapors and by toxic salts and mercury compounds being ingested or coming into contact with the skin. Do not come into contact with parts that are under high voltage. Persons with active electronic implants (e.g. heart pacemakers) must never work on HID headlamps. Wear insulated safety shoes, safety glasses and protective gloves. Remove flammable materials and ensure sufficient ventilation in the working area.

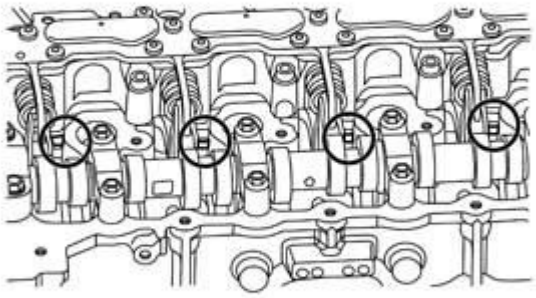

Fig. 62: Screws & Wire Harness Connector
Courtesy of CHRYSLER GROUP, LLC

1. Position the front lamp unit close enough to the front of the vehicle to reconnect the headlamp and dash wire harness connections to the front lamp unit wire harness connector (2) on the back of the lamp housing.
2. Install and tighten the four screw (1) to secure the front lamp unit to the mounting bracket.
3. Reinstall the fascia onto the FEM. Refer to **FASCIA, FRONT, INSTALLATION** .
4. Reconnect the battery negative cable.
5. Confirm proper headlamp alignment. Refer to **STANDARD PROCEDURE**.

LIGHTING ELEMENT - HIGH INTENSITY DISCHARGE

WARNING: To avoid serious or fatal injury when working on the High Intensity

Discharge (HID) headlamp system, be certain to take the proper precautions. The headlamp switch must be in the OFF position. Disconnect and isolate the battery negative cable. There is a risk of fatal injury caused by contact with high voltage used in the HID headlamps. There is a risk of explosion or fire caused by highly flammable materials in the vicinity of damaged HID lighting elements. There is a risk of injury caused by exposure to Ultra Violet (UV) light, a risk of burns caused by high component operating temperatures, a risk of mercury poisoning through glass splinters produced by bursting HID lighting elements. There is also a risk of poisoning caused by inhalation of mercury vapors and by toxic salts and mercury compounds being ingested or coming into contact with the skin. Do not come into contact with parts that are under high voltage. Persons with active electronic implants (e.g. heart pacemakers) must never work on HID headlamps. Wear insulated safety shoes, safety glasses and protective gloves. Remove flammable materials and ensure sufficient ventilation in the working area.

CAUTION: Always use the correct lighting element size and type for replacement. An incorrect size or type may overheat and cause damage to the lamp or the lamp wiring.

CAUTION: Do not contaminate the lighting element glass by touching it with your fingers or by allowing it to contact other oily surfaces. Shortened lighting element life will result.

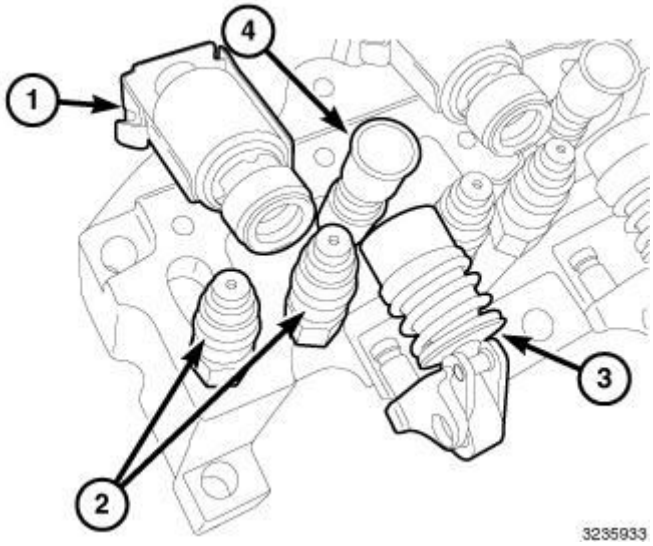

Fig. 63: HID Igniter & High Tension Cable
Courtesy of CHRYSLER GROUP, LLC

1. Align and insert the High Intensity Discharge (HID) igniter and lighting element unit (2) straight into the opening in the front lamp unit reflector as a unit.

2. Press the igniter firmly and evenly toward the reflector until the base is firmly seated.
3. Rotate the igniter clockwise about 30 degrees to lock it into place.
4. Reconnect the high tension cable connector (1) to the connector receptacle integral to the lower edge of the igniter housing.
5. Position the headlamp bulb access cover onto the outboard back of the front lamp unit (2) housing and rotate it clockwise about 30 degrees to lock it into place.
6. Reconnect the battery negative cable.

2014 ACCESSORIES AND EQUIPMENT

Lamps/Lighting - Interior - Service Information - Cherokee

WARNING

WARNING

WARNING: To avoid serious or fatal injury, eye protection should be used when servicing any glass components.

CAUTION: Do not contaminate the glass of halogen bulbs with fingerprints or allow contact with other possibly oily surfaces. Reduced bulb life will result.

CAUTION: Do not use bulbs with higher candle power than indicated in the BULB APPLICATION TABLE . In addition, do not use fuses, circuit breakers or relays having greater amperage value than indicated on the fuse panel or in the Owner's Manual. Damage to lamps, lenses, wiring and other related electrical components can result.

DESCRIPTION

DESCRIPTION

The interior lighting system for this vehicle includes lighting on the dome/courtesy lamp circuit and the non-dimming panel lamps circuit. The lamps on the dome/courtesy circuit include:

- **Cargo Lamp** - An available cargo lamp is located in the left quarter inside panel just forward of the trunk side trim panel at the back of the vehicle and is controlled by the courtesy lamp circuit.
- **Dome/Reading Lamps** - Standard front seat driver side and passenger side dome/reading lamps are located in a mounting bracket on the headliner above the instrument panel near the upper windshield header and are controlled by both the courtesy lamp circuit and by independent push button switches adjacent to each lamp.
- **Vanity Lamps** - An optional single intensity, incandescent vanity lamp is located on each side of a covered mirror on both the right and left sun visors, and is controlled by an integral vanity mirror cover-actuated switch.
- **Glove Box Lamp** - A standard glove box lamp with a single LED unit and an integral switch is located in the glove box housing of the instrument panel and illuminates whenever the glove box is opened.
- **Courtesy Lamps** - Standard incandescent courtesy lamps are located under the right and left ends of the instrument panel, and are controlled by the courtesy lamp circuit.
- **Front Door Map Pocket Lamps** - Front door trim panel map pockets on some models include an LED lamp unit to assist visibility at night. These lamps are controlled by the panel lamps dimmer circuit and illuminate whenever the exterior lighting is turned ON.

- **Center Dome Lamps** - The standard incandescent rear dome/reading lamps are controlled by both the courtesy lamp circuit and independent lens-actuated switches.

Most controls on the instrument panel and elsewhere in the interior of the vehicle are illuminated by Light-Emitting Diode (LED) units on a non-dimming panel lamps circuit for night visibility. These LED units are soldered to internal circuit boards and are not serviceable.

Other components of the interior lighting system for this vehicle include:

- **Body Control Module** - The Body Control Module (BCM) is located under the instrument panel to the left of the steering column in the passenger compartment of the vehicle. Refer to **MODULE, BODY CONTROL, DESCRIPTION** .
- **Door Ajar Switches** - A door ajar switch is integral to the door latch mechanism of each door.
- **Liftgate Ajar Switch** - A liftgate ajar switch is integral to the latch mechanism of the liftgate.
- **Instrument Panel Cluster** - The Instrument Panel Cluster (IPC) is located in the instrument panel above the steering column opening, directly in front of the driver. Refer to **DESCRIPTION** .
- **Headlamp Switch** - A headlamp switch is located on the left side of the instrument panel, below and outboard of the steering column. The headlamp switch includes a thumbwheel for selecting the panel lamps dimming level and for interior lighting control. A PARADE position of the thumbwheel illuminates all display units at full brightness for visibility when driving in daylight with the exterior lighting turned ON. There are also detent positions to turn ON all interior courtesy lighting, and a DEFEAT position that overrides door ajar switch control of interior lighting. Refer to **SWITCH, HEADLAMP, DESCRIPTION** .

Hard wired circuitry connects the interior lighting system components to the electrical system of the vehicle. These hard wired circuits are integral to several wire harnesses, which are routed throughout the vehicle and retained by many different methods. These circuits may be connected to each other, to the vehicle electrical system and to the interior lighting components through the use of a combination of soldered splices, splice block connectors, and many different types of wire harness terminal connectors and insulators. Refer to the appropriate wiring information. The wiring information includes wiring diagrams, proper wire and connector repair procedures, further details on wire harness routing and retention as well as pin-out and location views for the various wire harness connectors, splices and grounds.

OPERATION

OPERATION

The lamps of the interior lighting system can be divided into two general classifications based upon the circuit that controls their operation: The courtesy lamp circuit, or the non-dimming panel lamps circuit. The following are paragraphs that briefly describe the operation of each of these interior lighting circuits.

The lamps and the hard wired circuits between components related to the interior lighting system may be diagnosed using conventional diagnostic tools and procedures. Refer to the appropriate wiring information. The wiring information includes wiring diagrams, proper wire and connector repair procedures, details of wire harness routing and retention, connector pin-out information and location views for the various wire harness

connectors, splices and grounds.

However, conventional diagnostic methods will not prove conclusive in the diagnosis of the interior lighting system or the electronic controls or communication between modules and other devices that provide some features of the interior lighting system. The most reliable, efficient, and accurate means to diagnose the interior lighting system or the electronic controls and communication related to interior lighting system operation requires the use of a diagnostic scan tool. Refer to the appropriate diagnostic information.

COURTESY LAMP CIRCUIT

The courtesy lamp circuit includes the dome/reading lamps located on the headliner near the center of the windshield opening upper header and the cargo (or trunk) lamp located on the rear edge of the left quarter inner trim near the left trunk trim panel at the rear of the vehicle. The lamps in the courtesy lamp circuit are provided with battery voltage and ground by the Body Control Module (BCM) using internal low side drivers through two ground circuits based upon hard wired inputs from the ignition switch and the door ajar switches. Power for the Trunk Lighting Function is sourced via a dedicated high side relay. The BCM also uses electronic message inputs received from other electronic modules in the vehicle over the Controller Area Network (CAN) data bus to control these outputs.

When a door or trunk ajar switch input to the BCM transitions to closed, the BCM will illuminate the courtesy lamps and keep them active for up to about 3 minutes. After all of the ajar switch inputs to the BCM transition to open, the BCM will keep the courtesy lamps illuminated for about 10 seconds. The BCM also provides courtesy lamp operation based upon certain inputs received from the Remote Keyless Entry (RKE) transmitter to provide an Illuminated Entry feature and in response to certain electronic message inputs received from the Occupant Restraint Controller (ORC) or the Powertrain Control Module (PCM) over the CAN data bus.

For those lamps in the courtesy lamp circuit with independent switching such as the dome/reading lamps, the BCM provides a second feed to the switches using another internal low side driver through a separate load shed circuit. The BCM provides a battery saver (load shedding) feature for these lamps, which will automatically turn the lamps OFF if they are left ON for more than about fifteen minutes with the ignition switch in the OFF position.

READING LAMP CIRCUIT

For those lamps on the courtesy lamp circuit with independent switching such as the map or reading lamps, the optional vanity lamps and the glove box lamp, the EMIC also provides a battery voltage output to those switches through a separate reading lamp circuit. The EMIC provides a battery saver (load shedding) feature for the reading lamp circuit as well as the courtesy lamp circuit, which will automatically turn these lamps OFF if they are left ON for more than about 10 minutes after the electronic **ignition switch status** message transitions to OFF. If any reading lamp input is received subsequent to a 10 minute load shed and prior to a new ignition cycle, the reading lamps will turn OFF after 90 seconds.

PANEL LAMPS DIMMER CIRCUIT

The panel lamps dimmer circuit actually includes several circuits. These circuits control the back lighting illumination and dimming level of the headlamp switch, the dimmer module, the automatic transmission gear selector bezel lamp, the front door map pocket lamps, as well as the center floor console cup holder and forward

storage compartment lamps. All lamps in the panel lamps dimmer circuits are provided a path to ground at all times through a hard wired ground circuit. These lamps are illuminated by a 12-volt Pulse Width Modulated (PWM) output of the BCM through several panel lamps dimmer circuits.

This shared PWM output synchronizes the selected illumination intensity level of all the lamps in the panel lamps dimmer circuits. The BCM uses hard wired resistor multiplexed inputs from the rotary exterior lighting control knob of the headlamp switch to determine when the exterior lighting is turned ON and from the thumbwheel of the dimmer module to determine the dimming level selection. Then the BCM provides the appropriate PWM outputs through the panel lamps dimmer circuits as well as electronic **dimming level** messages over the CAN data bus to other electronic modules in the vehicle.

The Instrument Cluster (IC) (also known as the Common Instrument Cluster/CIC) and the Integrated Center Stack (ICS) use the electronic **dimming level** messages to control the illumination intensity of their own back lighting, controls and display units. In addition, when the interior lighting thumbwheel of the dimmer module is moved to the PARADE (or funeral) mode detent position, all of the electronic display units are illuminated at their full intensity levels for increased visibility when the vehicle is driven during daylight hours with the exterior lighting turned ON. The PARADE mode has no effect on the illumination intensity of incandescent panel lamps.

DIAGNOSIS AND TESTING

DIAGNOSIS AND TESTING - INTERIOR LIGHTING

WARNING: **To avoid serious or fatal injury on vehicles equipped with airbags, disable the Supplemental Restraint System (SRS) before attempting any steering wheel, steering column, airbag, seat belt tensioner, impact sensor or instrument panel component diagnosis or service. Disconnect and isolate the battery negative (ground) cable, then wait two minutes for the system capacitor to discharge before performing further diagnosis or service. This is the only sure way to disable the SRS. Failure to take the proper precautions could result in accidental airbag deployment.**

NOTE: **When diagnosing the interior lighting circuits, remember that high generator output can burn out bulbs rapidly and repeatedly; and, that dim or flickering bulbs can be caused by low generator output or poor battery condition. If one of these symptoms is a problem on the vehicle, be certain to diagnose the battery and charging system, then repair as necessary.**

NOTE: **A good ground is necessary for proper lighting operation. If a lighting problem is being diagnosed that involves multiple symptoms, systems, or components, the problem can often be traced to a loose, corroded, or open ground.**

WARNING: **On vehicles equipped with the high voltage system, disconnecting the 12-volt battery negative cable alone will not power down the 12-volt system. You must perform the 12-volt Power Down procedure before proceeding.**

Failure to follow these instructions may result in possible serious or fatal injury.

The lamps and the hard wired circuits between components related to the interior lighting system may be diagnosed using conventional diagnostic tools and procedures. Refer to the appropriate wiring information. The wiring information includes wiring diagrams, proper wire and connector repair procedures, details of wire harness routing and retention, connector pin-out information and location views for the various wire harness connectors, splices and grounds.

However, conventional diagnostic methods will not prove conclusive in the diagnosis of the interior lighting system or the electronic controls or communication between modules and other devices that provide some features of the interior lighting system. The most reliable, efficient, and accurate means to diagnose the interior lighting system or the electronic controls and communication related to interior lighting system operation requires the use of a diagnostic scan tool. Refer to the appropriate diagnostic information.

COURTESY LAMP CIRCUIT

CONDITION	POSSIBLE CAUSES	CORRECTION
A SINGLE LAMP IN THE COURTESY LAMP CIRCUIT DOES NOT ILLUMINATE	1. Ineffective or missing bulb.	1. Test and replace the courtesy lamp bulb if required.
	2. Ineffective lamp switch.	2. Test and replace a dome/reading lamp switch if required.
	3. Ineffective ground circuit.	3. Test and repair the open ground circuit if required.
	4. Ineffective feed circuit.	4. Test and repair the open feed circuit if required.
ALL LAMPS IN THE COURTESY LAMP CIRCUIT DO NOT ILLUMINATE	1. Ineffective ground circuit.	1. Test and repair the open ground circuit if required.
	2. Ineffective feed circuit.	2. Test and repair the open feed circuit if required.
	3. Courtesy DEFEAT feature turned ON.	3. Turn courtesy DEFEAT feature OFF.
	4. Ineffective courtesy lamp control circuit.	4. Test and repair the courtesy lamp control circuit if required.
	5. Ineffective Body Control Module (BCM) inputs or outputs.	5. Use a diagnostic scan tool and the appropriate diagnostic information for further BCM diagnosis.
A SINGLE LAMP IN THE COURTESY LAMP CIRCUIT DOES NOT EXTINGUISH	1. Ineffective lamp switch.	1. Test and replace a dome/reading lamp switch if required.
ALL LAMPS IN THE COURTESY LAMP CIRCUIT DO NOT EXTINGUISH	1. Ineffective ajar switch.	1. Test and replace a door ajar or liftgate ajar switch if required.
	2. Ineffective ajar switch sense circuit.	2. Test and repair the shorted ajar switch sense circuit if required.
	3. Ineffective BCM inputs or	3. Use a diagnostic scan tool and the

	outputs.	appropriate diagnostic information for further BCM diagnosis.

PANEL LAMPS DIMMER CIRCUIT

NOTE: **As part of the exterior lighting fail-safe feature, upon ignition ON all of the panel lamps dimmer circuit lamps will illuminate at full intensity and the exterior park lamps and headlamp low beams will illuminate regardless of the left multi-function switch control knob and sleeve positions if the Steering Control Module (SCM) cannot detect an input from the left multi-function switch, or if there is a loss of data bus communication.**

CONDITION	POSSIBLE CAUSES	CORRECTION
A SINGLE LAMP DOES NOT ILLUMINATE	1. Ineffective or missing bulb or Light Emitting Diode (LED) unit.	1. Test and replace the lamp bulb or LED unit if required.
	2. Ineffective ground circuit.	2. Test and repair the open lamp ground circuit if required.
	3. Ineffective feed circuit.	3. Test and repair the open lamp feed circuit if required.
A SINGLE LAMP DOES NOT EXTINGUISH	1. Ineffective feed circuit.	1. Test and repair the shorted lamp feed circuit if required.
ALL LAMPS DO NOT ILLUMINATE	1. Ineffective ground circuit.	1. Test and repair the open lamp ground circuit if required.
	2. Ineffective feed circuit.	2. Test and repair the open lamp feed circuit if required.
	3. Ineffective BCM inputs or outputs.	3. Use a diagnostic scan tool and the appropriate diagnostic information for further BCM diagnosis.
ALL LAMPS ILLUMINATE AT FULL INTENSITY AT IGNITION ON	1. Ineffective dimmer module.	1. Test and replace the dimmer module if required.
	2. Ineffective BCM inputs or outputs.	2. Use a diagnostic scan tool and the appropriate diagnostic information for further BCM diagnosis.
	3. Loss of data bus communication.	3. Use a diagnostic scan tool to test the data bus. Refer to the appropriate diagnostic information.

SPECIFICATIONS

COURTESY LAMPS

BULB APPLICATION TABLE

LAMP	BULB

COURTESY	906
FRONT DOME	MOPAR® 68090625AA
REAR DOME	MOPAR® 68090625AA
GLOVE BOX LAMP	LIGHT EMITTING DIODES (LED) SERVICED IN OVERHEAD CONSOLE ASSEMBLY
LIFTGATE LAMP	579
VANITY LAMP	MOPAR® 06501966

TORQUE SPECIFICATIONS

DESCRIPTION	N.m	Ft. Lbs.	In. Lbs.
Under Instrument Panel Courtesy Lamp Mounting Screw	2	-	17

LAMP, READING

REMOVAL

BULB - OVERHEAD CONSOLE

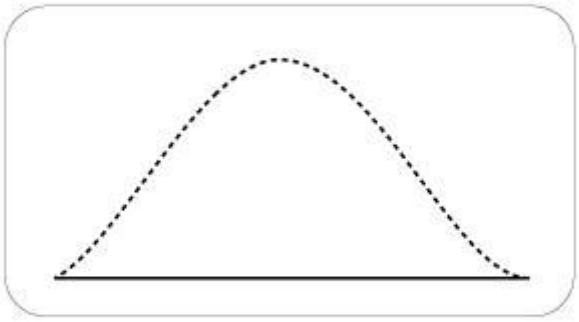

3250466

Fig. 1: Dome/Reading Lamp Socket
Courtesy of CHRYSLER GROUP, LLC

1. Disconnect and isolate the battery negative cable.
2. Remove the overhead console (1) from the headliner.
3. Grasp the dome/reading lamp socket (3) firmly and push it to one side far enough to unsnap the socket latch features from the lamp housing (4).
4. Pull the socket and bulb (2) out of the lamp housing.
5. Pull the base of the bulb straight out of the lamp socket.

INSTALLATION

BULB - OVERHEAD CONSOLE

CAUTION: Always use the correct bulb size and type for replacement. An incorrect bulb size or type may overheat and cause damage to the lamp, the socket or the lamp wiring.

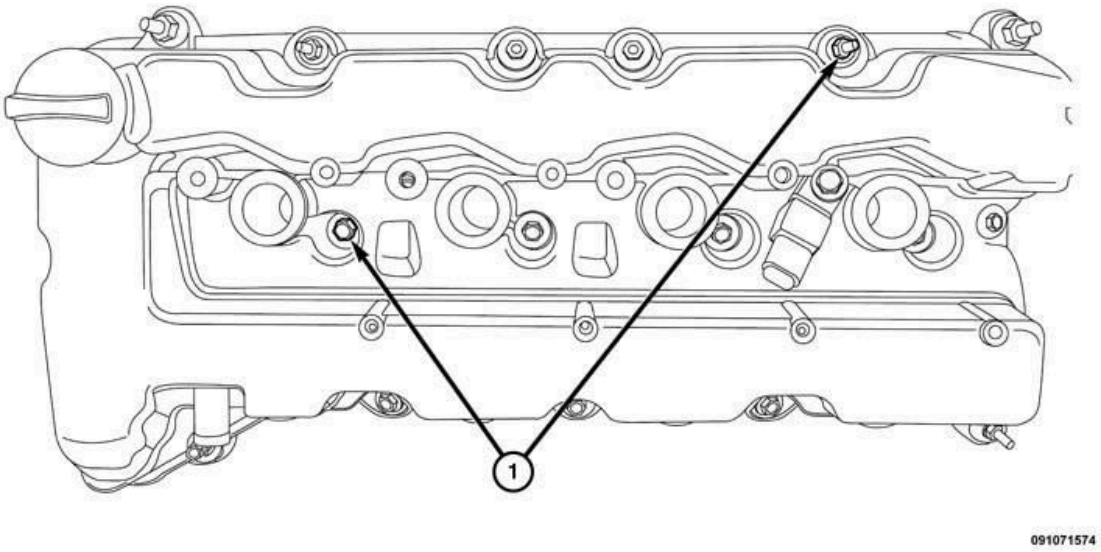

Fig. 2: Dome/Reading Lamp Socket
Courtesy of CHRYSLER GROUP, LLC

1. Align the base of the bulb (2) with the overhead console dome/reading lamp socket (3).
2. Push the bulb straight into the socket until the base is fully seated.
3. Align the socket and bulb with the keyed opening in the lamp housing (4).
4. Insert the bulb and socket straight into the hosing until the socket latch features are both fully engaged.
5. Reinstall the overhead console (1) to the headliner.
6. Reconnect the battery negative cable.

LAMP, VANITY

DESCRIPTION

DESCRIPTION

If the overhead visor is equipped with illumination, the lamp and bulb are not serviced. Replacement of the visor is necessary if the bulb is found to be burned out. Refer to **VISOR, REMOVAL** .

SWITCH, DIMMER

DESCRIPTION

DESCRIPTION

This vehicle has a panel dimmer switch (also known as the dimmer module) (1) that is located within the headlamp switch housing on the instrument panel steering column opening cover. The standard dimmer module features a single thumbwheel for panel lamps dimming and interior lighting control. There is also an optional switch with a second thumbwheel. The second thumbwheel is used for ambient (also known as halo) lighting control in vehicles with the ambient lighting option.

The dimmer module is constructed of molded plastic. The thumbwheel is molded plastic and knurled around its circumference to ease operator control. The headlamp switch face plate is labeled with graphics and International Control and Display Symbol icons to clearly identify the functions of the thumbwheel or optional thumbwheels.

The headlamp switch housing is snapped into place within the mounting hole of the steering column opening and held in place by two tension push down to release springs built into the headlamp switch housing itself. The back of the switch housing has an integral connector receptacle containing terminal pins that connect the module to the vehicle electrical system through a dedicated take out and connector of the instrument panel wire harness. Panel dimmer controlled Light Emitting Diode (LED) units soldered to the circuit board within the module provide back lighting for visibility at night, but are not serviceable.

The switch cannot be repaired and, if ineffective or damaged, it must be replaced. Refer to **SWITCH, HEADLAMP, REMOVAL** .

OPERATION

OPERATION

The panel dimmer switch (also known as the dimmer module) uses a single resistor multiplexed output for each switch thumbwheel to control the many functions and features it provides. The switch receives a clean ground from the Body Control Module (BCM) on a multifunction switch MUX return circuit. It then provides outputs to the BCM on a panel lamps dimmer signal circuit to control panel dimmer and interior lighting functions, or on a dimmer environmental lighting circuit to control ambient (halo) lighting functions.

The dimmer module illumination circuit receives a path to ground at all times through an instrument panel ground circuit. The illumination level is controlled by a Pulse-Width Modulated (PWM) output received from the BCM on a panel lamps driver circuit. The BCM controls this output based upon the panel lamps dimmer signal circuit input from the dimmer module.

The dimmer module operates as follows:

- **Ambient (Halo) Lighting Control -** On vehicles so equipped, the right thumbwheel on the dimmer module is rotated to the ambient DEFEAT or one of the six ambient dimmer detent positions to control the ambient (halo) lighting level. The dimmer module provides the appropriate resistor multiplexed

output to the BCM over the dimmer environmental lighting circuit. The BCM reads and responds to this input by providing the appropriate control outputs through internal HSDs over the liftgate courtesy feeds driver circuit.

- **Interior Lighting Control** - The left thumbwheel on the dimmer module is rotated to the dome DEFEAT, dome ON, PARADE mode, or one of the six panel dimmer detent positions to control the interior courtesy/dome and panel lamps. The dimmer module provides the appropriate resistor multiplexed output to the BCM over the panel lamps dimmer signal circuit. The BCM reads and responds to this input by providing the appropriate control outputs through internal HSDs over the courtesy lamps, panel lamps and reading lamps driver circuits, and by sending appropriate electronic **dimming level** messages to other electronic modules over the CAN data bus.

The dimmer module as well as the hard wired inputs and outputs of the module may be diagnosed using conventional diagnostic tools and procedures. Refer to the appropriate wiring information.

SWITCH, DOOR AJAR

DESCRIPTION

DOOR

This vehicle has four door ajar switches, one for each door. Each switch is concealed within and integral to its respective door latch unit. The switches are momentary leaf contact-type micro switch units that are actuated by the mechanisms internal to the door latch. An integral connector receptacle on each door latch connects the door ajar switch and the power lock motor to the vehicle electrical system through its respective door wire harness.

The door ajar switches cannot be adjusted or repaired and, if ineffective or damaged, the door latch unit must be replaced. Refer to **LATCH, DOOR, REMOVAL** or **LATCH, DOOR, REMOVAL** .

LIFTGATE

A liftgate ajar switch is standard equipment on this vehicle. The switch is concealed within and integral to the liftgate latch unit. The switch is a momentary leaf contact-type micro switch unit that is actuated by the liftgate latch mechanism. An integral connector receptacle on the liftgate latch connects the liftgate ajar switch to the vehicle electrical system through the liftgate wire harness.

The liftgate ajar switch cannot be adjusted or repaired and, if ineffective or damaged, the liftgate latch unit must be replaced. Refer to **LATCH, LIFTGATE, REMOVAL** .

OPERATION

DOOR

The door ajar switches are actuated by the mechanisms internal to the door latch. When a door is closed and properly latched, its door ajar switch is an open circuit. When a door is open or only partially latched, the door ajar switch is a closed circuit. The door ajar switches are hard wired in series between a body ground and the Body Control Module (BCM). The BCM reads the hard wired door ajar switch inputs through internal pull-ups, then uses these inputs to control many electronic functions and features of the vehicle. The BCM also sends

electronic **door ajar switch status** messages to other electronic modules in the vehicle over the Controller Area Network (CAN) data bus.

The door ajar switches as well as the hard wired inputs and outputs of the switches may be diagnosed using conventional diagnostic tools and procedures. Refer to the appropriate wiring information.

LIFTGATE

The liftgate ajar switch is actuated by the liftgate latch mechanism. When the liftgate is closed and properly latched, the liftgate ajar switch is an open circuit. When the liftgate is open or only partially latched, the liftgate ajar switch is a closed circuit. The liftgate ajar switch is hard wired in series between a body ground and the Body Control Module (BCM) on vehicles without the power liftgate option, or the Power LiftGate Module (PLGM) on vehicles with the power liftgate option. The BCM or the PLGM reads the hard wired liftgate ajar switch input through an internal pull-up, then uses this input to control many electronic functions and features of the vehicle. The BCM or the PLGM also sends electronic **liftgate ajar switch status** messages to other electronic modules in the vehicle over the Controller Area Network (CAN) data bus.

The liftgate ajar switch as well as the hard wired inputs and outputs of the switch may be diagnosed using conventional diagnostic tools and procedures. Refer to the appropriate wiring information.

LAMP, DOME

REMOVAL

LAMP - CENTER

1. Disconnect and isolate the battery negative cable.
2. To remove and replace a bulb, use a trim stick to pop loose the lens covering the defective bulb. Remove bulb and replace.
3. To remove the entire dome lamp assembly, Insert a trim stick between the lamp housing and the headliner to pry the dome lamp assembly loose.
4. Disconnect the harness from the back of the dome lamp.

INSTALLATION

LAMP - CENTER

1. Position the dome lamp to the mounting hole in the headliner.
2. Reconnect the wire harness connector to the connector on the back of the lamp.
3. Set the lamp into the opening in the headliner.
4. Gently and evenly press the lens lamp into the mounting hole until the bezel of the lamp housing is snapped flush with the headliner.
5. Reconnect the battery negative cable.

LAMP, CARGO

REMOVAL

BULB

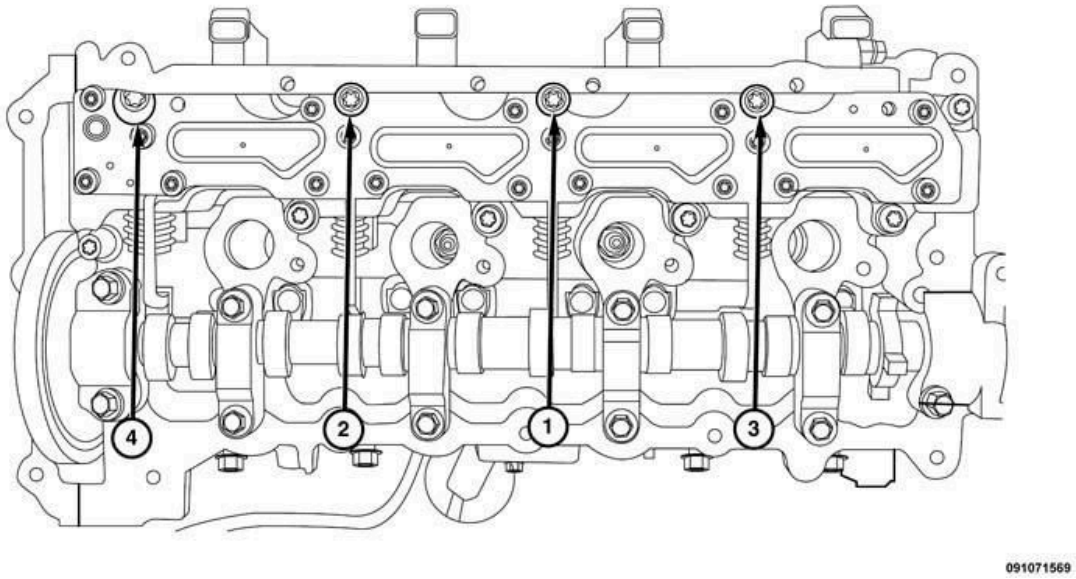

Fig. 3: Lamp Hood, Bulb, Lamp Lens & Lamp Socket
Courtesy of CHRYSLER GROUP, LLC

1. Disconnect and isolate the battery negative cable.
2. Remove the cargo lamp from the vehicle. Refer to **LAMP, CARGO, REMOVAL**.
3. Disengage the end of the lamp lens (3) with the latch feature from the retention pin on each side of the lamp hood (1).
4. Pivot the lens up from over the hood.
5. Unfold the lamp hood from the lamp socket (4) far enough to access the bulb (2).
6. Pull the base of the bulb straight out of the socket.

LAMP

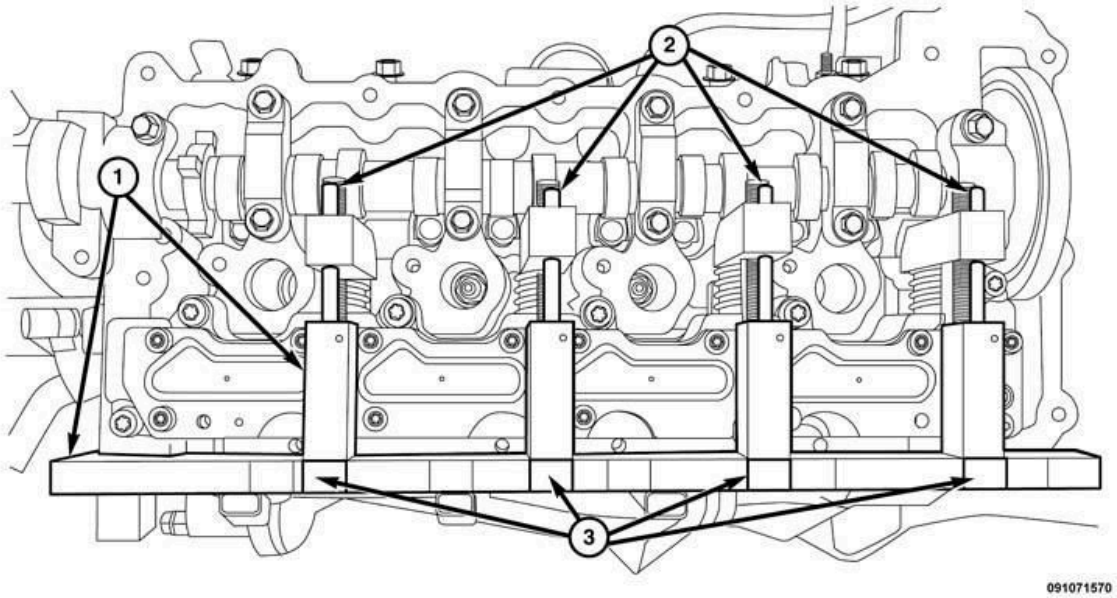

Fig. 4: Trunk Side Trim Panel, Left Quarter Trim Panel & Cargo Lamp
Courtesy of CHRYSLER GROUP, LLC

1. Disconnect and isolate the battery negative cable.
2. Locate the cargo lamp (3) in the rear edge of the left quarter trim panel (2) near the trunk side trim panel (1).
3. Using a trim stick or another suitable wide flat-bladed tool, carefully pry the notched lower end of the cargo lamp lens to disengage the lower end of the lamp housing from the mounting hole in the quarter trim panel.
4. Pull the upper end of the lamp housing out of the mounting hole far enough to access and disconnect the body wire harness connector from the lamp connector receptacle.
5. Remove the cargo lamp from the vehicle.

INSTALLATION

BULB

CAUTION: Always use the correct bulb size and type for replacement. An incorrect bulb size or type may overheat and cause damage to the lamp, the socket or the lamp wiring.

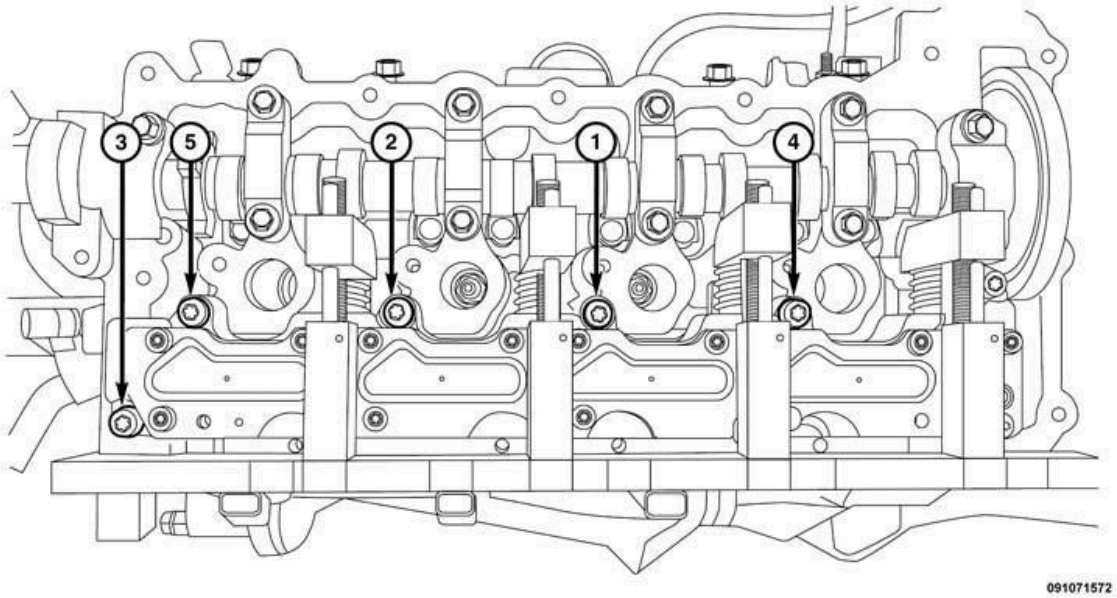

Fig. 5: Lamp Hood, Bulb, Lamp Lens & Lamp Socket
Courtesy of CHRYSLER GROUP, LLC

1. Align the base of the bulb (2) with the cargo lamp socket (4).
2. Push the bulb straight into the socket until the base is firmly seated.
3. Fold the lamp hood (1) back over the bulb until it is parallel to the lamp socket and connector.
4. Pivot the lens down over the hood.
5. Press the end of the lamp lens with the latch feature down firmly and evenly over the hood until the lens snaps into place over the retention pin on each side of the hood.
6. Install the cargo lamp into the vehicle. Refer to **LAMP, CARGO, INSTALLATION**.
7. Reconnect the battery negative cable.

LAMP

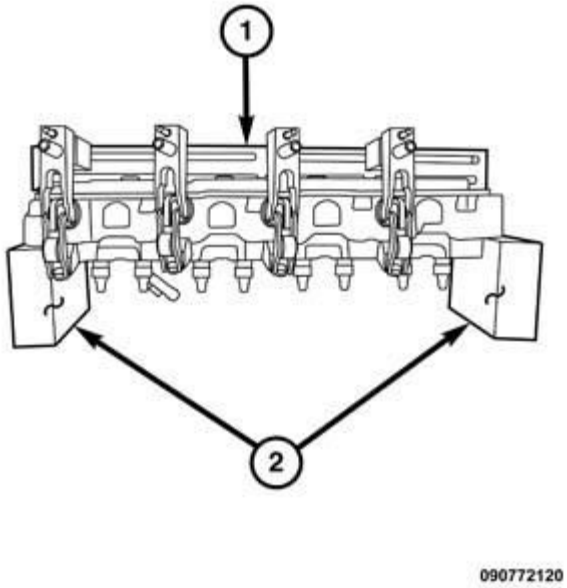

Fig. 6: Trunk Side Trim Panel, Left Quarter Trim Panel & Cargo Lamp
Courtesy of CHRYSLER GROUP, LLC

1. Position the cargo lamp (3) close enough to the mounting hole in the rear edge of the left quarter trim panel (2) near the trunk side trim panel (1) to access and reconnect the body wire harness connector to the lamp connector receptacle.
2. Engage the wiring and connector on the upper end of the lamp housing into the upper end of the mounting hole.
3. Using hand pressure, press the notched lower end of the cargo lamp lens firmly and evenly into the mounting hole against the spring pressure of the latch feature until the latch snaps into place.
4. Reconnect the battery negative cable.

2014 ACCESSORIES AND EQUIPMENT

Left Blind Spot Sensor Module (BSM) (LBSS) - Electrical Diagnostics - Cherokee

DIAGNOSTIC CODE INDEX

DIAGNOSTIC CODE INDEX

DTC	Description
B129E-2A	LEFT BLIND SPOT SENSOR - STUCK
B129E-48	LEFT BLIND SPOT SENSOR - SUPERVISION SOFTWARE FAILURE
B129E-98	LEFT BLIND SPOT SENSOR - COMPONENT OR SYSTEM OVER TEMPERATURE
B12A2-00	LBSS RADAR SENSOR ADDRESS FAULT
B2199-16	BATTERY VOLTAGE - CIRCUIT VOLTAGE BELOW THRESHOLD
B2199-17	BATTERY VOLTAGE - CIRCUIT VOLTAGE ABOVE THRESHOLD
B21DD-84	SYSTEM VOLTAGE - SIGNAL BELOW ALLOWABLE RANGE
B21DD-85	SYSTEM VOLTAGE - SIGNAL ABOVE ALLOWABLE RANGE
B223B-00	VEHICLE CONFIGURATION MISMATCH
B2598-00	DOOR MODULE FRONT LEFT
B2204-00	ECU CONFIGURATION MISMATCH
B22A9-04	ECU INTERNAL PERFORMANCE-SYSTEM INTERNAL FAILURES
U0020-00	CAN B BUS OFF PERFORMANCE
U0140-00	LOST COMMUNICATION WITH BODY CONTROL MODULE
U0155-00	LOST COMMUNICATION WITH CLUSTER/CCN
U0203-00	LOST COMMUNICATION WITH LEFT FRONT DOOR MODULE
U0204-00	LOST COMMUNICATION WITH RIGHT FRONT DOOR MODULE
U0422-00	IMPLAUSIBLE DATA RECEIVED FROM BODY CONTROL MODULE
U11FA-00	LOST COMMUNICATION WITH RIGHT BLIND SPOT SENSOR
U147D-00	IMPLAUSIBLE DATA RECEIVED FROM RIGHT BLIND SPOT SENSOR

DIAGNOSIS AND TESTING

B129E-2A-LEFT BLIND SPOT SENSOR - STUCK

For a complete wiring diagram, **refer to appropriate SYSTEM WIRING DIAGRAMS article** .

WHEN MONITORED

With the ignition on.

SET CONDITION

The Blind Spot Sensor detects an internal failure.

POSSIBLE CAUSES

Possible Causes
LEFT BLIND SPOT SENSOR (LBSS)

DIAGNOSTIC TEST

CHECK FOR AN ACTIVE DIAGNOSTIC TROUBLE CODE (DTC)

1. Turn the ignition on.
2. With the scan tool, read DTCs.

   Does the scan tool display this DTC as active?

   Yes

   - Replace the Left Blind Spot Sensor in accordance with the Service Information. Refer to **SENSOR, BLIND SPOT, REMOVAL** .
   - Perform the BODY VERIFICATION TEST. Refer to **STANDARD PROCEDURE** .

   No

   - Test complete, the condition or conditions that originally set this DTC are not present at this time. Using the wiring diagrams as a guide, check all related splices and connectors for signs of water intrusion, corrosion, pushed out or bent terminals, and correct pin tension.
   - Perform the BODY VERIFICATION TEST. Refer to **STANDARD PROCEDURE** .

B129E-48-LEFT BLIND SPOT SENSOR - SUPERVISION SOFTWARE FAILURE

For a complete wiring diagram, **refer to appropriate SYSTEM WIRING DIAGRAMS article** .

WHEN MONITORED

With the ignition on.

SET CONDITION

The Blind Spot Sensor detects an internal failure.

POSSIBLE CAUSES

Possible Causes
LEFT BLIND SPOT SENSOR (LBSS)

DIAGNOSTIC TEST

CHECK FOR AN ACTIVE DIAGNOSTIC TROUBLE CODE (DTC)

1. Turn the ignition on.
2. With the scan tool, read DTCs.

   Does the scan tool display this DTC as active?

   Yes

   - Replace the Left Blind Spot Sensor in accordance with the Service Information. Refer to **SENSOR, BLIND SPOT, REMOVAL** .
   - Perform the BODY VERIFICATION TEST. Refer to **STANDARD PROCEDURE** .

   No

   - Test complete, the condition or conditions that originally set this DTC are not present at this time. Using the wiring diagrams as a guide, check all related splices and connectors for signs of water intrusion, corrosion, pushed out or bent terminals, and correct pin tension.
   - Perform the BODY VERIFICATION TEST. Refer to **STANDARD PROCEDURE** .

B129E-98-LEFT BLIND SPOT SENSOR - COMPONENT OR SYSTEM OVER TEMPERATURE

For a complete wiring diagram, **refer to appropriate SYSTEM WIRING DIAGRAMS article** .

THEORY OF OPERATION

The Blind Spot Monitor (BSM) system has two primary components; a Left Blind Spot Sensor (LBSS) and Right Blind Spot Sensor (RBSS). Each sensor includes an internal microprocessor that monitors and controls both the sensor and the blind spot indicator. The two sensors are concealed behind the outboard ends of the rear bumper fascia.

The microprocessor analyzes the sensor data to determine whether any detected objects should be reported. When it is determined that an object should be reported, the Sensor controls its respective left or right BSM display directly through a hard wired output to the Outside Rearview Mirrors. The sensor also sends an electronic request message over the CAN IHS Bus to the radio. The Radio then mutes any current output through the speakers and generates a chime as an audible alert.

Each sensor performs a bulb test by illuminating the triangle icon in the Outside Rearview Mirror at each ignition ON cycle.

WHEN MONITORED

With the ignition on.

SET CONDITION

The Blind Spot Sensor detects the internal temperature is too high.

POSSIBLE CAUSES

Possible Causes
BLIND SPOT SENSOR OBSTRUCTED (MUD OR DIRT COVERING INNER FASCIA) BLIND SPOT SENSOR

DIAGNOSTIC TEST

1. **CHECK FOR AN ACTIVE DIAGNOSTIC TROUBLE CODE (DTC)**

   NOTE: Before proceeding with this diagnostic procedure, remove any ice mud, dirt, or other obstructions from the underside of the Fascia/Bumper surrounding the sensors.

   1. Turn the ignition on.
   2. With the scan tool, read DTCs.

      Does the scan tool display this DTC as active?

      Yes

      - Go To 2

      No

      - Test complete, the condition or conditions that originally set this DTC are not present at this time. Using the wiring diagrams as a guide, check all related splices and connectors for signs of water intrusion, corrosion, pushed out or bent terminals, and correct pin tension.
      - Perform the BODY VERIFICATION TEST. Refer to **STANDARD PROCEDURE** .
2. **BLIND SPOT SENSOR**
   1. Verify that none of the possible causes mentioned above are present. Repair as necessary.

      If none of the possible causes mentioned above are present, view repair.

      Repair

      - Replace the Blind Spot Sensor in accordance with the Service Information. Refer to **SENSOR, BLIND SPOT, REMOVAL** .
      - Perform the BODY VERIFICATION TEST. Refer to **STANDARD PROCEDURE** .

B12A2-00-LBSS RADAR SENSOR ADDRESS FAULT

For a complete wiring diagram, **refer to appropriate SYSTEM WIRING DIAGRAMS article** .

WHEN MONITORED

With the ignition on.

SET CONDITION

This DTC will set if the Blind Spot Sensor detects an extra ground circuit in the harness connector.

POSSIBLE CAUSES

Possible Causes
LEFT BLIND SPOT SENSOR (LBSS)

DIAGNOSTIC TEST

CHECK FOR AN ACTIVE DIAGNOSTIC TROUBLE CODE (DTC)

NOTE: Before proceeding, disconnect the Left Blind Spot Sensor harness connector. Inspect the wiring harness, harness connector and module pins for any damage or corrosion. Repair as necessary.

1. Turn the ignition on.
2. With the scan tool, read DTCs.

   Does the scan tool display this DTC as active?

   Yes

   - Replace the Left Blind Spot Sensor in accordance with the Service Information. Refer to **SENSOR, BLIND SPOT, REMOVAL** .
   - Perform the BODY VERIFICATION TEST. Refer to **STANDARD PROCEDURE** .

   No

   - Test complete, the condition or conditions that originally set this DTC are not present at this time. Using the wiring diagrams as a guide, check all related splices and connectors for signs of water intrusion, corrosion, pushed out or bent terminals, and correct pin tension.
   - Perform the BODY VERIFICATION TEST. Refer to **STANDARD PROCEDURE** .

B2199-16-BATTERY VOLTAGE - CIRCUIT VOLTAGE BELOW THRESHOLD

For a complete wiring diagram, **refer to appropriate SYSTEM WIRING DIAGRAMS article** .

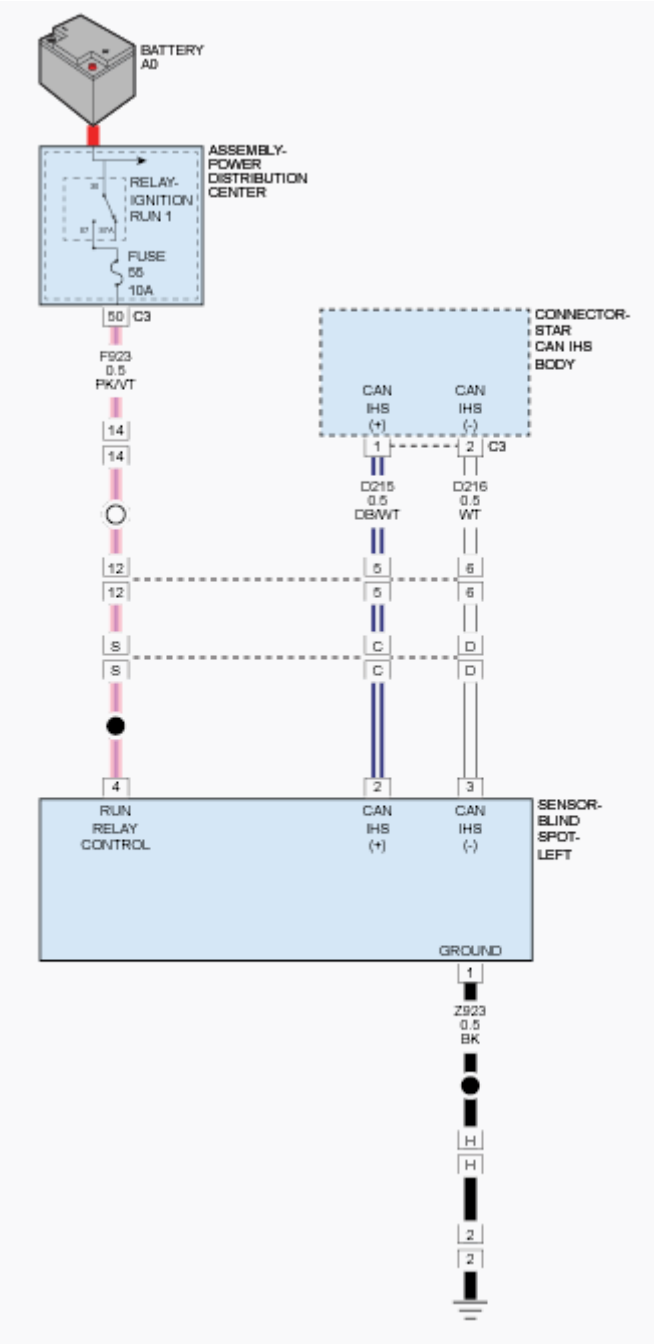

Fig. 1: Left Blind Spot Sensor Circuit Diagram
Courtesy of CHRYSLER GROUP, LLC

WHEN MONITORED

With the ignition on.

SET CONDITION

Blind Spot Sensor supply voltage less than 9.5 volts.

POSSIBLE CAUSES

Possible Causes
FUSED IGNITION OUTPUT CIRCUIT EXCESSIVE RESISTANCE
GROUND CIRCUIT EXCESSIVE RESISTANCE
VEHICLE CHARGING SYSTEM
BLIND SPOT SENSOR

DIAGNOSTIC TEST

1. **CHECK FOR AN ACTIVE DIAGNOSTIC TROUBLE CODE (DTC)**
   1. Turn the ignition on.
   2. With the scan tool, read DTCs.

      Does the scan tool display this DTC as active?

      Yes

      - Go To 2

      No

      - Test complete, the condition or conditions that originally set this DTC are not present at this time. Using the wiring diagrams as a guide, check all related splices and connectors for signs of water intrusion, corrosion, pushed out or bent terminals, and correct pin tension.
      - Perform the BODY VERIFICATION TEST. Refer to **STANDARD PROCEDURE** .
2. **VERIFY OPERATION OF THE VEHICLE CHARGING SYSTEM**

   NOTE: Troubleshoot any PCM charging/cranking DTCs before proceeding.

   NOTE: Make sure the battery is fully charged.

   Are any charging system DTCs present?

   Yes

   - Refer to the **DTC INDEX** article and perform the appropriate diagnostic procedure.

   No

   - Go To 3
3. **CHECK THE (F923) FUSED IGNITION OUTPUT (RUN) CIRCUIT FOR EXCESSIVE RESISTANCE**
   1. Turn the ignition off.

2. Disconnect the Left Blind Spot Sensor harness connector.
3. Turn the ignition on.
4. Measure the voltage of the (F923) Fused Ignition Output (RUN) circuit.

   Is the voltage below 9.5 volts?

   Yes

   - Repair the (F923) Fused Ignition Output (RUN) circuit for excessive resistance.
   - Perform the BODY VERIFICATION TEST. Refer to **STANDARD PROCEDURE** .

   No

   - Go To 4

4. **CHECK THE (Z917) GROUND CIRCUIT FOR EXCESSIVE RESISTANCE**
   1. Measure the resistance between ground and the (Z917) Ground circuit.

      Is the resistance above 10.0 Ohms?

      Yes

      - Repair the (Z917) Ground circuit for excessive resistance.
      - Perform the BODY VERIFICATION TEST. Refer to **STANDARD PROCEDURE** .

      No

      - Replace the Blind Spot Sensor in accordance with the Service Information. Refer to **SENSOR, BLIND SPOT, REMOVAL** .
      - Perform the BODY VERIFICATION TEST. Refer to **STANDARD PROCEDURE** .

B2199-17-BATTERY VOLTAGE - CIRCUIT VOLTAGE ABOVE THRESHOLD

For a complete wiring diagram, **refer to appropriate SYSTEM WIRING DIAGRAMS article** .

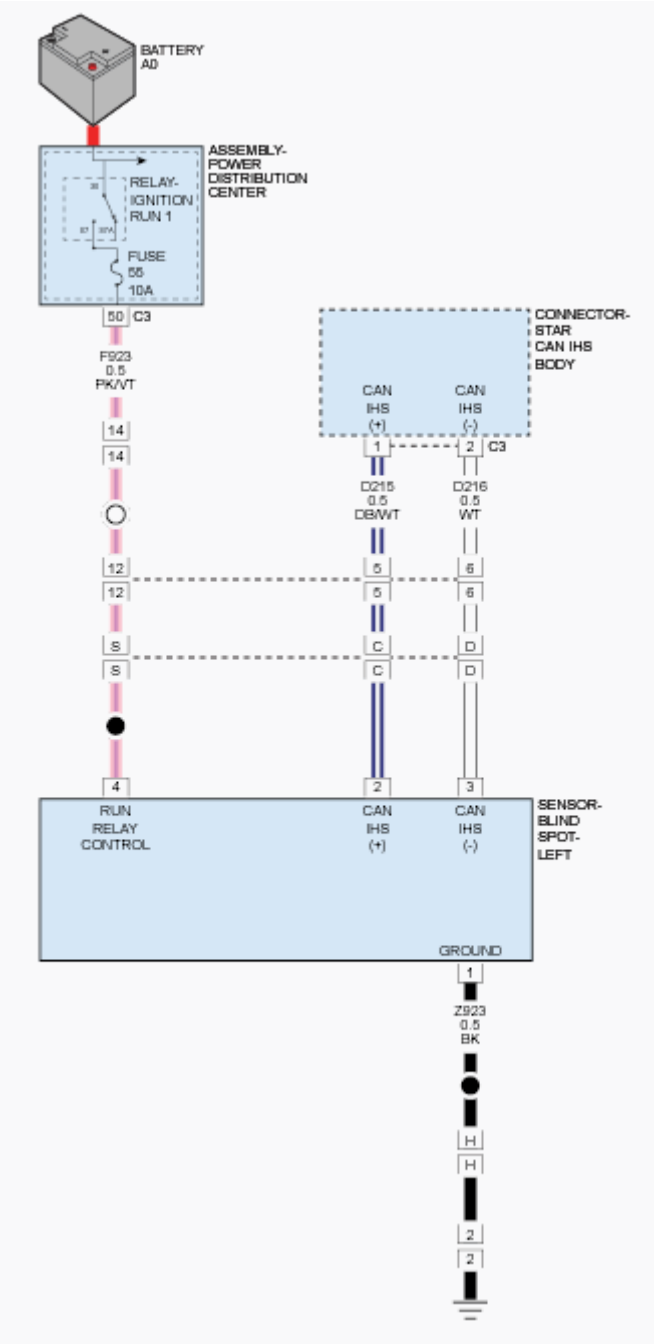

Fig. 2: Left Blind Spot Sensor Circuit Diagram
Courtesy of CHRYSLER GROUP, LLC

WHEN MONITORED

With the ignition on.

SET CONDITION

Blind Spot Sensor supply voltage greater than 16.0 volts.

POSSIBLE CAUSES

Possible Causes
VEHICLE CHARGING SYSTEM BLIND SPOT SENSOR

DIAGNOSTIC TEST

1. **CHECK FOR AN ACTIVE DIAGNOSTIC TROUBLE CODE (DTC)**
   1. Turn the ignition on.
   2. With the scan tool, read DTCs.

      Does the scan tool display this DTC as active?

      Yes

      - Go To 2

      No

      - Test complete, the condition or conditions that originally set this DTC are not present at this time. Using the wiring diagrams as a guide, check all related splices and connectors for signs of water intrusion, corrosion, pushed out or bent terminals, and correct pin tension.
      - Perform the BODY VERIFICATION TEST. Refer to **STANDARD PROCEDURE** .
2. **VERIFY OPERATION OF THE VEHICLE CHARGING SYSTEM**

   NOTE: Troubleshoot any PCM charging/cranking DTCs before proceeding.

   NOTE: Make sure the battery is fully charged.

   Are any charging system DTCs present?

   Yes

   - Refer to the **DTC INDEX** article and perform the appropriate diagnostic procedure.

   No

   - Replace the Blind Spot Sensor in accordance with the Service Information. Refer to **SENSOR, BLIND SPOT, REMOVAL** .
   - Perform the BODY VERIFICATION TEST. Refer to **STANDARD PROCEDURE** .

B21DD-84-SYSTEM VOLTAGE - SIGNAL BELOW ALLOWABLE RANGE

For a complete wiring diagram, **refer to appropriate SYSTEM WIRING DIAGRAMS article** .

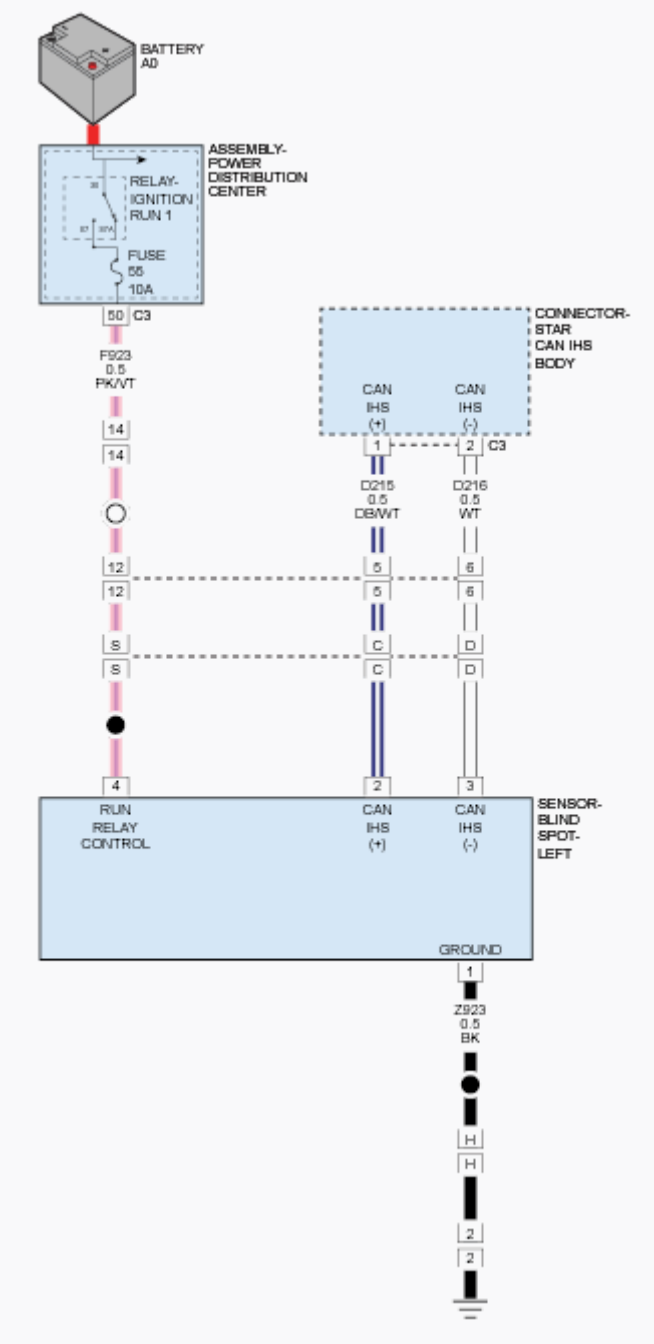

Fig. 3: Left Blind Spot Sensor Circuit Diagram
Courtesy of CHRYSLER GROUP, LLC

WHEN MONITORED

Ignition on.

SET CONDITION

Monitored battery voltage is below 9.0 volts for over 5 seconds.

POSSIBLE CAUSES

Possible Causes
LOW SYSTEM VOLTAGE BATTERY OR CHARGING SYSTEM

DIAGNOSTIC TEST

1. **CHECK FOR AN ACTIVE DIAGNOSTIC TROUBLE CODE (DTC)**
   1. Turn the ignition on.
   2. With the scan tool, read DTCs.

      Does the scan tool display this DTC as active?

      Yes

      - Go To 2

      No

      - Test complete, the condition or conditions that originally set this DTC are not present at this time. Using the wiring diagrams as a guide, check all related splices and connectors for signs of water intrusion, corrosion, pushed out or bent terminals, and correct pin tension.
      - Perform the BODY VERIFICATION TEST. Refer to **STANDARD PROCEDURE** .
2. **VERIFY OPERATION OF THE VEHICLE CHARGING SYSTEM**

   NOTE: Troubleshoot any PCM charging/cranking DTCs before proceeding.

   NOTE: Make sure the battery is fully charged.

   Are any charging system DTCs present?

   Yes

   - Refer to the **DTC INDEX** article and perform the appropriate diagnostic procedure.

   No

   - Replace the Blind Spot Sensor in accordance with the Service Information. Refer to **SENSOR, BLIND SPOT, REMOVAL** .
   - Perform the BODY VERIFICATION TEST. Refer to **STANDARD PROCEDURE** .

B21DD-85-SYSTEM VOLTAGE - SIGNAL ABOVE ALLOWABLE RANGE

For a complete wiring diagram, **refer to appropriate SYSTEM WIRING DIAGRAMS article** .

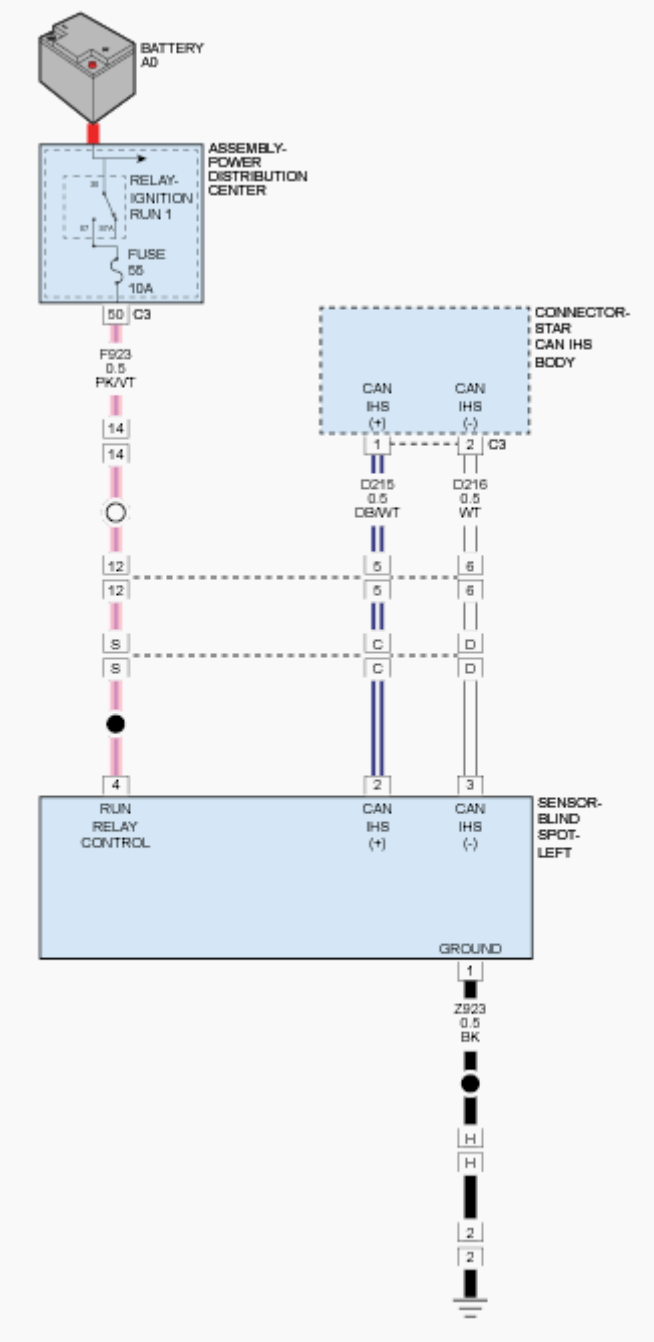

Fig. 4: Left Blind Spot Sensor Circuit Diagram
Courtesy of CHRYSLER GROUP, LLC

WHEN MONITORED

Ignition on

SET CONDITION

This is a Controller Monitored system voltage was above 16 volts for 5 seconds or more.

POSSIBLE CAUSES

Possible Causes
HIGH BATTERY SYSTEM VOLTAGE CHARGING SYSTEM

DIAGNOSTIC TEST

CHECK ENGINE DTCs

1. With the scan tool, read the Powertrain Control Module (PCM) DTCs.

   Are there any PCM Charging or Battery DTCs present?

   Yes

   - Refer to the **DTC INDEX** article and perform the appropriate diagnostic procedure.

   No

   - This code is a CAN system message for information only. Check the charging system in accordance with the Service Information.

B223B-00-VEHICLE CONFIGURATION MISMATCH

For a complete wiring diagram, **refer to appropriate SYSTEM WIRING DIAGRAMS article** .

WHEN MONITORED

With the ignition on.

SET CONDITION

This DTC will set if the vehicle type is not identified or incorrectly identified.

POSSIBLE CAUSES

Possible Causes
INCORRECT VEHICLE CONFIGURATION IN THE BODY CONTROL MODULE (BCM)

DIAGNOSTIC TEST

CHECK FOR AN ACTIVE DIAGNOSTIC TROUBLE CODE (DTC)

NOTE: Diagnose and repair any BCM VIN or Communication DTCs before continuing with this test.

1. Turn the ignition on.
2. With the scan tool, select View DTCs.

   Does the scan tool display this DTC as active?

   Yes

   - Verify the correct vehicle configuration in the BCM.
   - Perform the BODY VERIFICATION TEST. Refer to **STANDARD PROCEDURE** .

   No

   - Use the scan tool to read DTCs in all other modules. If any communication DTCs are present, perform the appropriate diagnostic procedure. Perform any Technical Service Bulletins that apply. If no problems are found, test is complete.
   - Perform the BODY VERIFICATION TEST. Refer to **STANDARD PROCEDURE** .

B2598-00-DOOR MODULE FRONT LEFT

For a complete wiring diagram, **refer to appropriate SYSTEM WIRING DIAGRAMS article** .

WHEN MONITORED

With the ignition on.

Vehicle speed greater than 6 mph (9.6 km/h).

SET CONDITION

The door module is reporting a DTC.

POSSIBLE CAUSES

Possible Causes
DTC IN FRONT LEFT DOOR MODULE

DIAGNOSTIC TEST

CHECK FOR ACTIVE DTC

1. Turn the ignition on.
2. With the scan tool, read DTCs.

   Does the scan tool display this DTC as active?

   Yes

   - Refer to **DIAGNOSIS AND TESTING** and perform the appropriate diagnostic procedure.

   No

   - The condition that caused this code to set is not present at this time. Check for an intermittent condition by inspecting the related wiring harness for chafed, pierced, pinched, and partially broken wires. Also inspect the related connectors for broken, bent, pushed out, spread, corroded, or contaminated terminals.
   - Perform the BODY VERIFICATION TEST. Refer to **STANDARD PROCEDURE** .

B2204-00-ECU CONFIGURATION MISMATCH

For a complete wiring diagram, **refer to appropriate SYSTEM WIRING DIAGRAMS article** .

THEORY OF OPERATION

Each Body Control Module (BCM) is unique to a vehicle and cannot be used with a different vehicle. The configuration information is programmed into the module prior to shipment.

WHEN MONITORED

With the ignition on.

SET CONDITION

The Body Control Module (BCM) is not configured correctly to the vehicle.

POSSIBLE CAUSES

Possible Causes
BCM INSTALLED IN INCORRECT VEHICLE
BCM NOT CONFIGURED CORRECTLY
BODY CONTROL MODULE (BCM)

DIAGNOSTIC TEST

1. **CHECK FOR ACTIVE DTC**

1. With the scan tool, read the active DTCs.
2. With the scan tool, clear all the DTCs.
3. Cycle the ignition switch from off to on.
4. Wait 10 seconds.
5. With the scan tool, read the active DTCs.

   Does the scan tool display this DTC as active?

   Yes

   - Go To 2

   No

   - Test complete, the condition or conditions that originally set this DTC are not present at this time.
   - Perform the BODY VERIFICATION TEST. Refer to **STANDARD PROCEDURE** .

2. **VERIFY THE BCM IS INSTALLED IN THE CORRECT VEHICLE**
   1. With the scan tool, read the VIN in the ECU Details.
   2. Compare the VIN in the BCM to the vehicle.

      Do the VINs match?

      Yes

      - Check the repair history for any changes that required a configuration update. Repair as necessary.
      - Perform the BODY VERIFICATION TEST. Refer to **STANDARD PROCEDURE** .

      No

      - The BCM is installed on the wrong vehicle or the BCM was configured incorrectly. Reinstall the BCM on the correct vehicle or replace the BCM in accordance with the Service Information. Refer to **MODULE, BODY CONTROL, REMOVAL** .
      - Perform the BODY VERIFICATION TEST. Refer to **STANDARD PROCEDURE** .

B22A9-04-ECU INTERNAL PERFORMANCE-SYSTEM INTERNAL FAILURES

For a complete wiring diagram, **refer to appropriate SYSTEM WIRING DIAGRAMS article** .

THEORY OF OPERATION

The Left Blind Spot Sensor Module (LBSS) performs an internal self test. The repair of this fault condition does not involve any external circuitry and centers on verifying the integrity of the internal circuitry and software

validity.

WHEN MONITORED

Continuously.

SET CONDITION

The Left Blind Spot Sensor Module (LBSS) detects an internal fault.

POSSIBLE CAUSES

Possible Causes
LEFT BLIND SPOT SENSOR MODULE (LBSS)

DIAGNOSTIC TEST

REPLACE THE BLIND SPOT SENSOR MODULE IF THE DTC IS ACTIVE

1. With the scan tool, read the active DTCs.

   Does the scan tool display this DTC as active?

   Yes

   - Replace the Blind Spot Sensor Module in accordance with the Service Information.
   - Perform the BODY VERIFICATION TEST. Refer to **STANDARD PROCEDURE** .

   No

   - Test complete, the condition or conditions that originally set this DTC are not present at this time. Using the wiring diagrams as a guide, check all related splices and connectors for signs of water intrusion, corrosion, pushed out or bent terminals, and correct pin tension.
   - Perform the BODY VERIFICATION TEST. Refer to **STANDARD PROCEDURE** .

U0020-00-CAN B BUS OFF PERFORMANCE

For a complete wiring diagram, **refer to appropriate SYSTEM WIRING DIAGRAMS article** .

WHEN MONITORED

Continuously when the ignition is on.

The battery voltage between 10.0 and 16.0 Volts.

Body Control Module (BCM) is configured correctly.

SET CONDITION

Bus messages not received from the Body Control Module (BCM) for approximately two to five seconds.

POSSIBLE CAUSES

Possible Causes
CAN IHS BUS (125K) CIRCUITS OPEN OR SHORTED
DTCS RELATED TO BATTERY VOLTAGE, IGNITION, OR VIN MESSAGES
BODY CONTROL MODULE (BCM) POWER AND GROUND
BCM NOT CONFIGURED CORRECTLY
BODY CONTROL MODULE (BCM)
MODULE THAT SET THIS DTC

DIAGNOSTIC TEST

VERIFY DTC IS ACTIVE

NOTE: Make sure the battery is fully charged before proceeding.

1. Turn the ignition on.
2. With the scan tool, read the active DTCs.

   Does the scan tool display; U0020-00-CAN B BUS OFF PERFORMANCE as active?

   Yes

   - **For this code, perform the U0011-00-CAN INTERIOR BUS OFF PERFORMANCE diagnostic procedure.** Refer to the **DTC INDEX** article.

   No

   - Refer to **DIAGNOSIS AND TESTING** and perform the STORED LOST COMMUNICATION DTCs diagnostic procedure.

U0140-00-LOST COMMUNICATION WITH BODY CONTROL MODULE

For a complete wiring diagram, **refer to appropriate SYSTEM WIRING DIAGRAMS article** .

WHEN MONITORED

Continuously when the ignition is on.

The battery voltage between 10.0 and 16.0 Volts.

Body Control Module (BCM) is configured correctly.

SET CONDITION

Bus messages not received from the Body Control Module (BCM) for approximately two to five seconds.

POSSIBLE CAUSES

Possible Causes
CAN BUS CIRCUITS OPEN OR SHORTED
DTCS RELATED TO BATTERY VOLTAGE, IGNITION, OR VIN MESSAGES
BODY CONTROL MODULE POWER AND GROUND
BCM NOT CONFIGURED CORRECTLY
BODY CONTROL MODULE (BCM)
MODULE THAT SET THIS DTC

DIAGNOSTIC TEST

VERIFY IF THE DTC IS ACTIVE

NOTE: **Make sure the battery is fully charged before performing any diagnostic procedure.**

With the scan tool, refer to the Network Review Screen to display a high level view of the vehicle communication network. Modules shown in red are problem areas.

Always diagnose any Body Control Module (BCM) DTCs first before proceeding.

1. Turn the ignition on.
2. With the scan tool, read DTCs.

   Does the scan tool display this DTC as active?

   Yes

   - Refer to **DIAGNOSIS AND TESTING** and perform the NO RESPONSE FROM BCM (BODY CONTROL MODULE) diagnostic procedure.

   No

   - Refer to **DIAGNOSIS AND TESTING** and perform the STORED LOST COMMUNICATION DTCs diagnostic procedure.

U0155-00-LOST COMMUNICATION WITH CLUSTER/CCN

Perform the COMMUNICATION PRE-DIAGNOSTIC PROCEDURE. Refer to **STANDARD PROCEDURE** .

WHEN MONITORED

Continuously when the ignition is on.

Battery voltage between 10 and 16 volts.

Body Control Module (BCM) is configured correctly.

SET CONDITION

Bus messages not received from the Instrument Cluster (IC) for approximately two to five seconds.

POSSIBLE CAUSES

Possible Causes
CAN BUS (+) CIRCUIT SHORTED TO VOLTAGE
CAN BUS (-) CIRCUIT SHORTED TO GROUND
INSTRUMENT CLUSTER (IPC) POWER AND GROUND
BCM NOT CONFIGURED CORRECTLY
INSTRUMENT CLUSTER (IPC)
MODULE THAT SET THIS DTC

DIAGNOSTIC TEST

VERIFY DTC IS ACTIVE

NOTE: Make sure the battery is fully charged before proceeding.

1. Turn the ignition on.
2. With the scan tool, read the active DTCs.

   Does the scan tool display: U0155-00-LOST COMMUNICATION WITH CLUSTER/CCN?

   Yes

   - Refer to the **BODY CONTROL MODULE (BCM) - DIAGNOSTIC CODE INDEX** article and perform the U0155-87-LOST COMMUNICATION WITH CLUSTER/CCN diagnostic procedure.

   No

   - Refer to **DIAGNOSIS AND TESTING** and perform the STORED LOST COMMUNICATION DTCs diagnostic procedure.

U0203-00-LOST COMMUNICATION WITH LEFT FRONT DOOR MODULE

For a complete wiring diagram, **refer to appropriate SYSTEM WIRING DIAGRAMS article** .

WHEN MONITORED

With the ignition on.

Battery voltage between 10 and 16 volts.

Body Control Module (BCM) is configured correctly.

SET CONDITION

Bus messages not received from the Driver Door Module for approximately two to five seconds.

POSSIBLE CAUSES

Possible Causes
CAN INTERIOR BUS (+) CIRCUIT SHORTED TO VOLTAGE
CAN INTERIOR BUS (-) CIRCUIT SHORTED TO GROUND
DTCS RELATED TO BATTERY VOLTAGE, IGNITION, OR VIN MESSAGES
DRIVER DOOR MODULE POWER AND GROUND
BCM NOT CONFIGURED CORRECTLY
DRIVER DOOR MODULE
MODULE THAT SET THIS DTC

DIAGNOSTIC TEST

VERIFY DTC IS ACTIVE

NOTE: Make sure the fuse is installed and the battery is fully charged before proceeding.

1. Turn the ignition on.
2. With the scan tool, read active DTCs.

   Is this DTC active?

   Yes

   - Refer to the **DTC INDEX** article and perform the U0203-00 LOST COMMUNICATION WITH DOOR MODULE FRONT LEFT diagnostic procedure.

   No

- Refer to **DIAGNOSIS AND TESTING** and perform the STORED LOST COMMUNICATION DTCs diagnostic procedure.

U0204-00-LOST COMMUNICATION WITH RIGHT FRONT DOOR MODULE

For a complete wiring diagram, **refer to appropriate SYSTEM WIRING DIAGRAMS article** .

WHEN MONITORED

With the ignition on.

Battery voltage between 10 and 16 volts.

Body Control Module (BCM) is configured correctly.

SET CONDITION

Bus messages not received from the Passenger Door Module for approximately two to five seconds.

POSSIBLE CAUSES

Possible Causes
CAN INTERIOR BUS (+) CIRCUIT SHORTED TO VOLTAGE
CAN INTERIOR BUS (-) CIRCUIT SHORTED TO GROUND
DTCS RELATED TO BATTERY VOLTAGE, IGNITION, OR VIN MESSAGES
PASSENGER DOOR MODULE POWER AND GROUND
BCM NOT CONFIGURED CORRECTLY
PASSENGER DOOR MODULE
MODULE THAT SET THIS DTC

DIAGNOSTIC TEST

CHECK FOR AN ACTIVE DIAGNOSTIC TROUBLE CODE (DTC)

1. Turn the ignition on.
2. With the scan tool, read the active DTCs.

   Does the scan tool display this DTC as active?

   Yes

   - Refer to the **BODY CONTROL MODULE (BCM) - DIAGNOSTIC CODE INDEX** article and perform the U0200-00-LOST COMMUNICATION WITH PASSENGER DOOR MODULE diagnostic procedure.

No

- Refer to **DIAGNOSIS AND TESTING** and perform the STORED LOST COMMUNICATION DTCs diagnostic procedure.

U0422-00-IMPLAUSIBLE DATA RECEIVED FROM BODY CONTROL MODULE

For a complete wiring diagram, **refer to appropriate SYSTEM WIRING DIAGRAMS article** .

WHEN MONITORED

With the ignition on.

SET CONDITION

Incorrect data received from the Body Control Module (BCM).

POSSIBLE CAUSES

Possible Causes
NO COMMUNICATION WITH THE BODY CONTROL MODULE (BCM)
DTCS STORED OR ACTIVE IN THE BCM
BLIND SPOT SENSORS

DIAGNOSTIC TEST

1. **CHECK FOR AN ACTIVE DIAGNOSTIC TROUBLE CODE (DTC)**

   NOTE: Diagnose and repair any Body Control Module DTCs before proceeding with this diagnostic procedure.

   1. Turn the ignition on.
   2. With the scan tool, read active DTCs.

      Does the scan tool display this DTC as active?

      Yes

      - Go To 2

      No

      - The condition that caused this code to set is not present at this time. Check for an intermittent condition by inspecting the related wiring harness for chafed, pierced, pinched, and partially broken wires. Also inspect the related connectors for broken, bent, pushed out, spread, corroded, or contaminated terminals.

- Perform the BODY VERIFICATION TEST. Refer to **STANDARD PROCEDURE** .

2. **VERIFY THE BCM IS ACTIVE ON THE CAN BUS**
   1. With the scan tool, verify that the BCM is active on the bus.

      Is the BCM active on the bus?

      Yes

      - Replace and program the Blind Spot Sensor in accordance with the Service Information. Refer to **SENSOR, BLIND SPOT, REMOVAL** .
      - Perform the BODY VERIFICATION TEST. Refer to **STANDARD PROCEDURE** .

      No

      - Refer to **DIAGNOSIS AND TESTING** and perform the NO RESPONSE FROM BCM diagnostic procedure.
      - Perform the BODY VERIFICATION TEST. Refer to **STANDARD PROCEDURE** .

U11FA-00-LOST COMMUNICATION WITH RIGHT BLIND SPOT SENSOR

For a complete wiring diagram, **refer to appropriate SYSTEM WIRING DIAGRAMS article** .

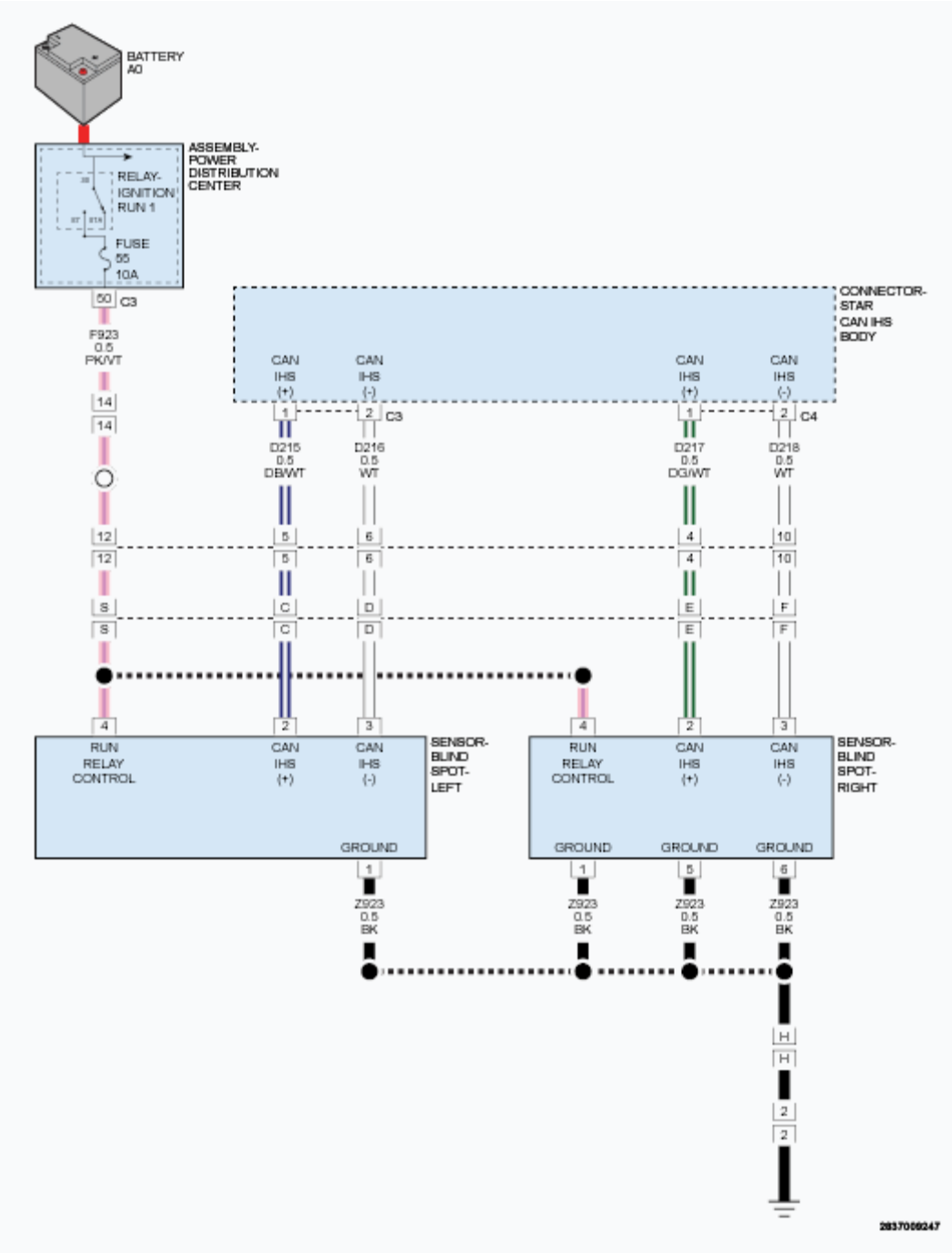

Fig. 5: Identifying Left/Right Blind Spot Sensor Circuit Diagram
Courtesy of CHRYSLER GROUP, LLC

THEORY OF OPERATION

The Blind Spot Monitor (BSM) system has two primary components; a Left Blind Spot Sensor (LBSS) and Right Blind Spot Sensor (RBSS). Each sensor includes an internal microprocessor that monitors and controls both the sensor and the blind spot indicator. The two sensors are concealed behind the outboard ends of the rear bumper fascia.

The microprocessor analyzes the sensor data to determine whether any detected objects should be reported. When it is determined that an object should be reported, the Sensor controls its respective left or right BSM display directly through a hard wired output to the Outside Rearview Mirrors. The sensor also sends an electronic request message over the CAN IHS Bus to the radio. The Radio then mutes any current output through the speakers and generates a chime as an audible alert.

Each sensor performs a bulb test by illuminating the triangle icon in the Outside Rearview Mirror at each ignition ON cycle.

WHEN MONITORED

With the ignition on.

SET CONDITION

The Left Blind Spot Sensor (LBSS) does not receive messages from the Right Blind Spot Sensor (RBSS).

POSSIBLE CAUSES

Possible Causes
FUSED IGNITION OUTPUT (RUN) CIRCUIT OPEN OR SHORTED TO GROUND
GROUND CIRCUIT(S) OPEN
CAN IHS BUS CIRCUIT(S) OPEN
RIGHT BLIND SPOT SENSOR (RBSS)

DIAGNOSTIC TEST

1. **CHECK FOR AN ACTIVE DIAGNOSTIC TROUBLE CODE (DTC)**
    1. Turn the ignition on.
    2. With the scan tool, read DTCs.

    Does the scan tool display this DTC as active?

    Yes

    - Go To 2

    No

    - The condition that caused this code to set is not present at this time. Check for an intermittent condition by inspecting the related wiring harness for chafed, pierced, pinched, and partially broken wires. Also inspect the related connectors for broken, bent, pushed out, spread, corroded, or contaminated terminals.
    - Perform the BODY VERIFICATION TEST. Refer to **STANDARD PROCEDURE** .
2. **(F923) FUSED IGNITION OUTPUT (RUN) CIRCUIT OPEN**

1. Disconnect the Right Blind Spot Sensor (RBSS) harness connector.
2. Turn the ignition on.
3. Using a volt meter, measure the voltage of the (F923) Fused Ignition Output (RUN) circuit.

   Is voltage present?

   Yes

   - Go To 3

   No

   - Repair the (F923) Fused Ignition Switch Output (RUN) circuit for an open or short to ground.
   - Perform the BODY VERIFICATION TEST. Refer to **STANDARD PROCEDURE** .

3. **(Z923) GROUND CIRCUIT(S) OPEN**
   1. Turn the ignition off.
   2. Using an ohm meter, measure the resistance between ground and the (Z923) Ground circuits at the RBSS harness connector.

      Is the resistance below 5.0 Ohms?

      Yes

      - Go To 4

      No

      - Repair the (Z923) Ground circuit(s) for an open.
      - Perform the BODY VERIFICATION TEST. Refer to **STANDARD PROCEDURE** .

4. **CHECK THE (D217) AND (D218) CAN IHS BUS CIRCUITS FOR AN OPEN**
   1. Turn the ignition on.
   2. Measure the resistance of the (D217) CAN IHS Bus (-) circuit between the Rear CAN IHS Star Connector C4 harness connector and the RBSS harness connector
   3. Measure the resistance of the (D218) CAN IHS Bus (+) circuit between the Rear CAN IHS Star Connector C4 harness connector and the RBSS harness connector.

      Is resistance below 5.0 Ohms on both circuits?

      Yes

      - Replace the Right Blind Spot Sensor in accordance with the Service Information. Refer to **SENSOR, BLIND SPOT, REMOVAL** .

- Perform the BODY VERIFICATION TEST. Refer to **STANDARD PROCEDURE** .

No

- Repair the (D218) or (D217) CAN IHS Bus circuit for an open. Inspect the connector for damage.
- Perform the BODY VERIFICATION TEST. Refer to **STANDARD PROCEDURE** .

U147D-00-IMPLAUSIBLE DATA RECEIVED FROM RIGHT BLIND SPOT SENSOR

For a complete wiring diagram, **refer to appropriate SYSTEM WIRING DIAGRAMS article** .

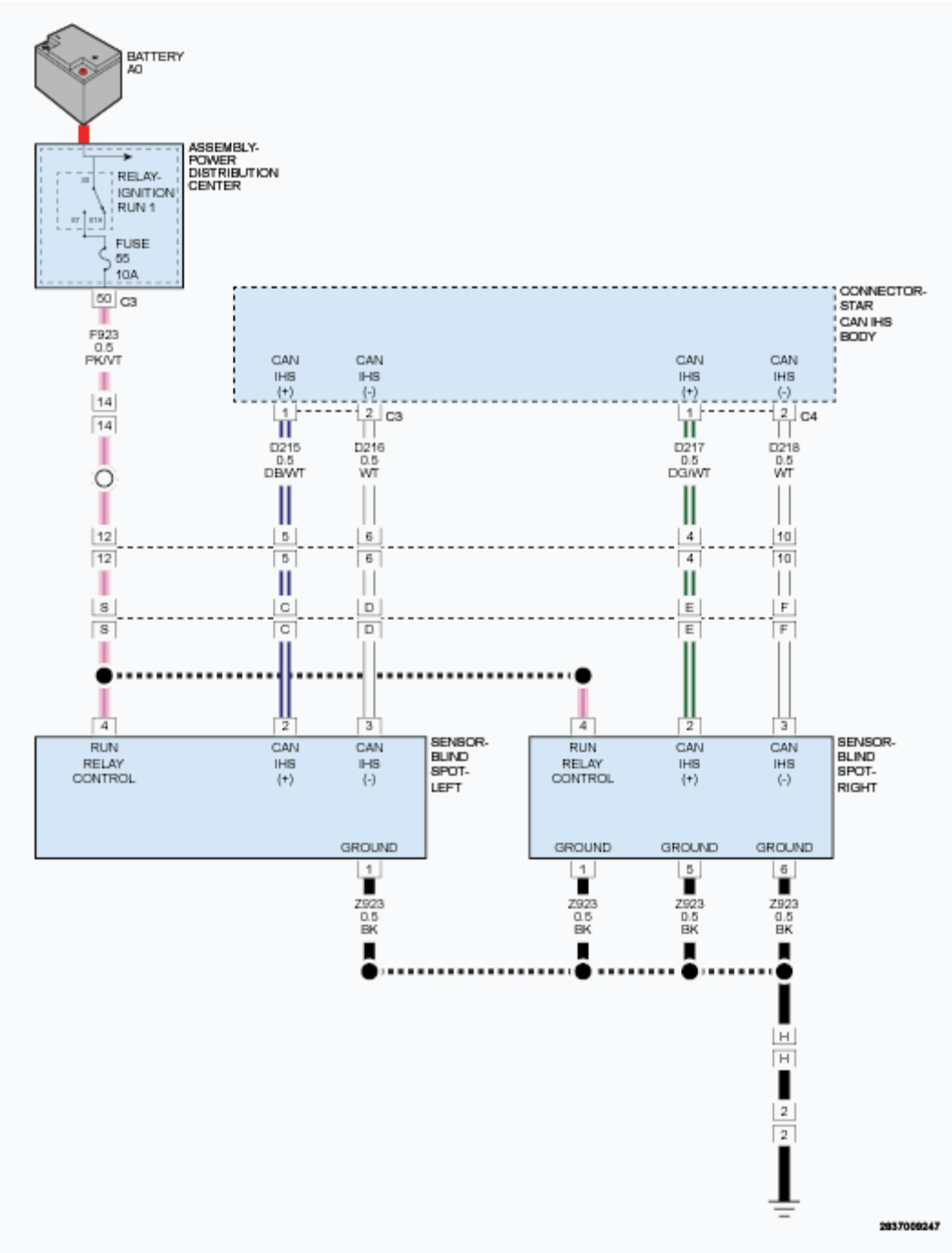

Fig. 6: Identifying Left/Right Blind Spot Sensor Circuit Diagram
Courtesy of CHRYSLER GROUP, LLC

THEORY OF OPERATION

The Blind Spot Monitor (BSM) system has two primary components; a Left Blind Spot Sensor (LBSS) and Right Blind Spot Sensor (RBSS). Each sensor includes an internal microprocessor that monitors and controls both the sensor and the blind spot indicator. The two sensors are concealed behind the outboard ends of the rear bumper fascia.

The microprocessor analyzes the sensor data to determine whether any detected objects should be reported. When it is determined that an object should be reported, the Sensor controls its respective left or right BSM display directly through a hard wired output to the Outside Rearview Mirrors. The sensor also sends an electronic request message over the CAN IHS Bus to the radio. The Radio then mutes any current output through the speakers and generates a chime as an audible alert.

Each sensor performs a bulb test by illuminating the triangle icon in the Outside Rearview Mirror at each ignition ON cycle.

WHEN MONITORED

With the ignition on.

SET CONDITION

Incorrect data received from the Right Blind Spot Sensor (RBSS).

POSSIBLE CAUSES

Possible Causes
NO COMMUNICATION WITH THE RIGHT BLIND SPOT SENSOR (RBSS)
DTCS STORED OR ACTIVE IN THE RBSS
RIGHT BLIND SPOT SENSOR (RBSS)

DIAGNOSTIC TEST

1. **CHECK FOR AN ACTIVE DIAGNOSTIC TROUBLE CODE (DTC)**

   NOTE: Diagnose and repair any Right Blind Spot Sensor DTCs before proceeding with this diagnostic procedure.

   1. Turn the ignition on.
   2. With the scan tool, read active DTCs.

      Does the scan tool display this DTC as active?

      Yes

      - Go To 2

      No

      - The condition that caused this code to set is not present at this time. Check for an intermittent condition by inspecting the related wiring harness for chafed, pierced, pinched, and partially broken wires. Also inspect the related connectors for broken, bent, pushed out, spread, corroded, or contaminated terminals.

- Perform the BODY VERIFICATION TEST. Refer to **STANDARD PROCEDURE** .

2. **VERIFY THE RBSS IS ACTIVE ON THE CAN BUS**
   1. With the scan tool, verify that the RBSS is active on the bus.

      Is the RBSS active on the bus?

      Yes

      - Replace and program the Blind Spot Sensor in accordance with the Service Information. Refer to **SENSOR, BLIND SPOT, REMOVAL** .
      - Perform the BODY VERIFICATION TEST. Refer to **STANDARD PROCEDURE** .

      No

      - Refer to **DIAGNOSIS AND TESTING** and perform the NO RESPONSE FROM RBSS diagnostic procedure.
      - Perform the BODY VERIFICATION TEST. Refer to **STANDARD PROCEDURE** .

2014 ACCESSORIES AND EQUIPMENT

Memory Seat Module (MSMD) - Electrical Diagnostics - Cherokee

DIAGNOSTIC CODE INDEX

DIAGNOSTIC CODE INDEX

DTC	Description
B1D5E-13	POWER SEAT SWITCH - CIRCUIT OPEN
B1D5E-2A	POWER SEAT SWITCH - STUCK
B1D6B-11	SEAT HORIZONTAL POSITION SENSOR - CIRCUIT SHORT TO GROUND
B1D6B-12	SEAT HORIZONTAL POSITION SENSOR - CIRCUIT SHORT TO BATTERY
B1D6F-11	SEAT FRONT VERTICAL POSITION SENSOR - CIRCUIT SHORT TO GROUND
B1D6F-12	SEAT FRONT VERTICAL POSITION SENSOR - CIRCUIT SHORT TO BATTERY
B1D73-11	SEAT REAR VERTICAL POSITION SENSOR - CIRCUIT SHORT TO GROUND
B1D73-12	SEAT REAR VERTICAL POSITION SENSOR - CIRCUIT SHORT TO BATTERY
B1D77-11	SEAT RECLINER POSITION SENSOR - CIRCUIT SHORT TO GROUND
B1D77-12	SEAT RECLINER POSITION SENSOR - CIRCUIT SHORT TO BATTERY
B1D7C-92	SEAT HORIZONTAL MOTOR CONTROL - PERFORMANCE OR INCORRECT OPERATION
B1D7F-00	SEAT FRONT VERTICAL MOTOR CONTROL CIRCUIT PERFORMANCE
B1D84-92	SEAT REAR VERTICAL MOTOR CONTROL - PERFORMANCE OR INCORRECT OPERATION
B1D87-00	SEAT BACK REST MOTOR CONTROL - CIRCUIT PERFORMANCE
B1D9B-00	SEAT HORIZONTAL FRONT STOP NOT LEARNED
B2199-16	BATTERY VOLTAGE - CIRCUIT VOLTAGE BELOW THRESHOLD
B2199-17	BATTERY VOLTAGE-CIRCUIT VOLTAGE ABOVE THRESHOLD
B221C-00	(MSM) MEMORY SEAT MODULE INTERNAL
U0011-00	CAN INTERIOR BUS OFF PERFORMANCE
U0013-00	CAN INTERIOR BUS (+) CIRCUIT LOW
U0014-00	CAN INTERIOR BUS (+) CIRCUIT HIGH
U0016-00	CAN INTERIOR BUS (-) CIRCUIT LOW
U0017-00	CAN INTERIOR BUS (-) CIRCUIT HIGH
U0140-00	LOST COMMUNICATION WITH BODY CONTROL MODULE
U0199-00	LOST COMMUNICATION WITH DRIVER DOOR MODULE
U0422-00	IMPLAUSIBLE DATA RECEIVED FROM BODY CONTROL MODULE

DIAGNOSIS AND TESTING

B1D5E-13-POWER SEAT SWITCH - CIRCUIT OPEN

For a complete wiring diagram, **refer to appropriate SYSTEM WIRING DIAGRAMS article** .

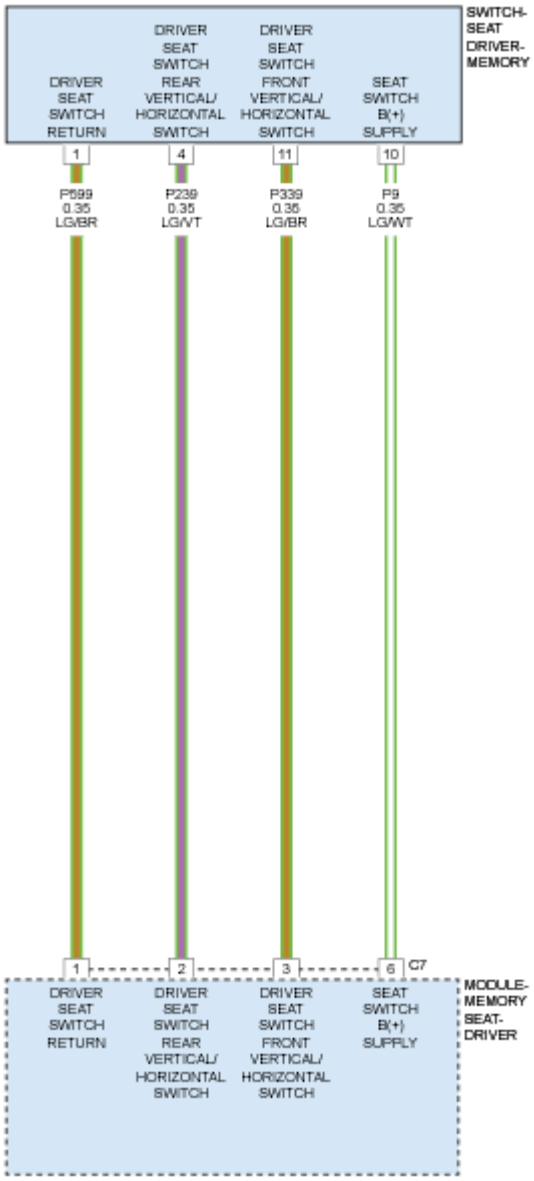

Fig. 1: Driver Memory Seat Switch Circuit Diagram
Courtesy of CHRYSLER GROUP, LLC

THEORY OF OPERATION

The Memory System is made up of the Memory Seat Module-Driver (MSMD), Memory Switch, Driver Seat Switch and multiple Seat Motors. The motors each contain a hall-effect position sensor. The hall-effect position sensor provides feedback to the MSMD in relation to the motors position.

The Driver Seat Switch is a Multiplex (Mux) switch which uses set resistance levels for each switch position. These resistances correspond to different voltages which is monitored by the MSMD over two separate circuits. When a voltage change is detected, the MSMD will command the appropriate Seat motor(s) to move the seat in the requested direction as long as the Driver Seat Switch is held in that direction or its stops have been reached.

The Memory Switch is a Mux switch that is used to set and recall the seat positions. When a Memory Switch button is pressed, the Driver Door Module (DDM) detects a voltage change and sends a request over the Controller Area Network (CAN) bus circuit to the MSMD to perform the requested command. If the SET button on the Memory Switch is pressed, followed by the 1 or 2 button, the MSMD will store the seat positions based on the position inputs received from the hall-effect position sensors. If the 1 or 2 button on the Memory Switch is pressed, the MSMD will recall the stored seat positions for that particular selection and return the seat to the stored positions. Memory position may also be recalled using a linked FOBIK transmitter. For driver safety, the MSMD will prevent the memory recall function from being initiated if the transmission gear selector lever is not in the Park position or if the vehicle is moving. For further information, refer to **MODULE, MEMORY, SEAT, OPERATION** .

WHEN MONITORED

Continuously.

SET CONDITION

The MSMD detects an open in either Driver Seat Switch MUX circuit.

POSSIBLE CAUSES

Possible Causes
DRIVER SEAT REAR VERTICAL/HORIZONTAL SWITCH MUX CIRCUIT OPEN
DRIVER SEAT FRONT VERTICAL/RECLINER SWITCH MUX CIRCUIT OPEN
DRIVER SEAT SWITCH MUX RETURN CIRCUIT OPEN
DRIVER SEAT SWITCH
MEMORY SEAT MODULE

Driver Seat Switch Continuity		
Switch Position	**Continuity Between**	**Resistance Value (± 5%)**
Off	10-4	Open
Off	10-11	Open
Off	1-4	47 Ohms
Off	1-11	47 Ohms
Rear Tilt Up	10-11	169 Ohms
Rear Tilt Down	10-11	76 Ohms
Horizontal Forward	10-11	43 Ohms
Horizontal Rearward	10-11	10 Ohms
Recliner Up	10-4	43 Ohms

Recliner Down	10-4	10 Ohms
Front Tilt Up	10-4	169 Ohms
Front Tilt Down	10-4	76 Ohms

DIAGNOSTIC TEST

1. **CHECK IF THE DTC IS ACTIVE**
    1. Ignition on, engine not running.
    2. With the scan tool, record and erase Memory Seat Module-Driver (MSMD) DTCs.
    3. Cycle the ignition switch from off to on.
    4. Cycle the Power Seat Switch to all positions.
    5. With the scan tool, read MSMD DTCs.

    Does the scan tool display this DTC as active?

    Yes

    - Go To 2

    No

    - Go To 6
2. **CHECKING THE DRIVER SEAT SWITCH MUX RETURN CIRCUIT**
    1. Turn the ignition off.
    2. Disconnect the Driver Seat Switch harness connector.
    3. Using the DRIVER SEAT SWITCH CONTINUITY CHART, measure the resistance of the Driver Seat Switch in the Off position.

    Is the resistance within specifications?

    Yes

    - Go To 3

    No

    - Replace the Driver Seat Switch in accordance with the Service Information. Refer to **SWITCH, SEAT, REMOVAL** .
    - Perform the POWER SEAT SYSTEM VERIFICATION TEST. Refer to **STANDARD PROCEDURE**.
3. **CHECK THE (P599) DRIVER SEAT SWITCH MUX RETURN CIRCUIT FOR AN OPEN**
    1. Disconnect the MSMD C7 harness connector.
    2. Measure the resistance of the (P599) Driver Seat Switch Mux Return circuit between the MSMD

C7 harness connector and the Driver Seat Switch harness connector.

Is the resistance below 1.0 Ohm?

Yes

- Go To 4

No

- Repair the (P599) Driver Seat Switch Mux Return circuit for an open or high resistance.
- Perform the POWER SEAT SYSTEM VERIFICATION TEST. Refer to **STANDARD PROCEDURE**.

4. **CHECK THE (P339) DRIVER SEAT SWITCH FRONT VERTICAL/RECLINER SWITCH MUX CIRCUIT FOR AN OPEN**
   1. Measure the resistance of the (P339) Driver Seat Switch Front Vertical/Recliner Switch Mux circuit between the MSMD C7 harness connector and the Driver Seat Switch harness connector.

      Is the resistance below 1.0 Ohm?

      Yes

      - Go To 5

      No

      - Repair the (P339) Driver Seat Switch Front Vertical/Recliner Switch Mux circuit for an open or high resistance.
      - Perform the POWER SEAT SYSTEM VERIFICATION TEST. Refer to **STANDARD PROCEDURE**.
5. **CHECK THE (P239) DRIVER SEAT SWITCH REAR VERTICAL/HORIZONTAL SWITCH MUX CIRCUIT FOR AN OPEN**
   1. Measure the resistance of the (P239) Driver Seat Switch Rear Vertical/Horizontal Switch Mux circuit between the MSMD C7 harness connector and the Driver Seat Switch harness connector.

      Is the resistance below 1.0 Ohm?

      Yes

      - Replace the Driver Seat Switch in accordance with the Service Information. Refer to **SWITCH, SEAT, REMOVAL** .
      - Perform the POWER SEAT SYSTEM VERIFICATION TEST. Refer to **STANDARD PROCEDURE**.

      No

- Repair the (P239) Driver Seat Switch Rear Vertical/Horizontal Switch Mux circuit for an open or high resistance.
- Perform the POWER SEAT SYSTEM VERIFICATION TEST. Refer to **STANDARD PROCEDURE**.

6. **CHECK THE WIRING AND CONNECTORS**
   1. The conditions necessary to set the DTC are not present at this time.
   2. Using the schematics as a guide, inspect the wiring and connectors specific to this circuit. Wiggle the wiring and connectors while checking for shorted and open circuits. Attempt to reproduce the condition by adjusting the seat(s).
   3. Check all related splices and connectors for signs of water intrusion, corrosion, pushed out or bent terminals, and correct pin tension.
   4. Check Service Bulletins for any possible causes that may apply.

   Were there any problems found?

   Yes

   - Repair as necessary.
   - Perform the POWER SEAT SYSTEM VERIFICATION TEST. Refer to **STANDARD PROCEDURE**.

   No

   - Test complete.

B1D5E-2A-POWER SEAT SWITCH - STUCK

For a complete wiring diagram, **refer to appropriate SYSTEM WIRING DIAGRAMS article** .

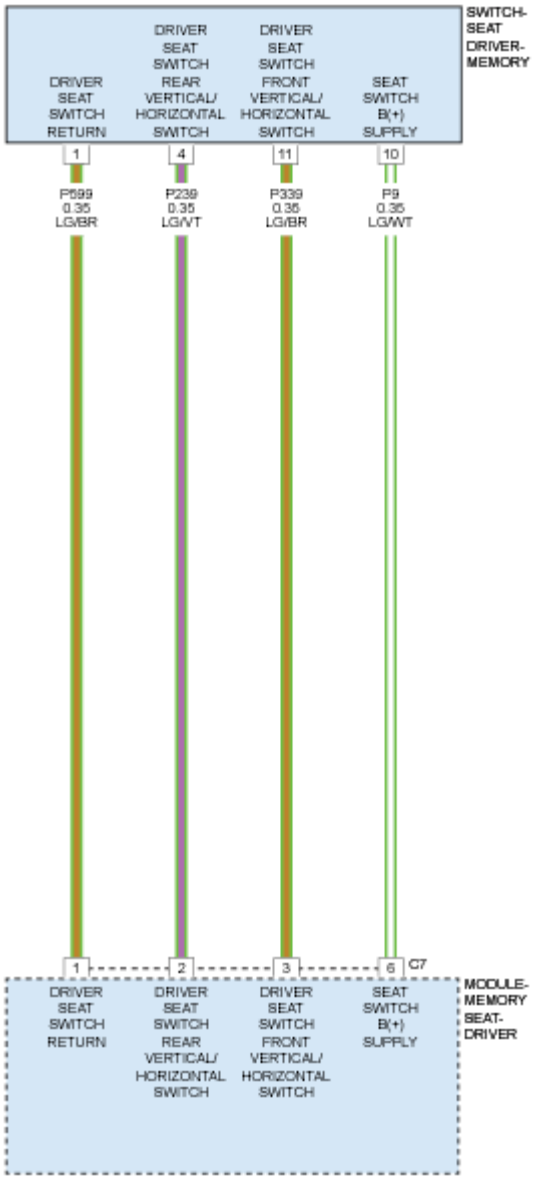

Fig. 2: Driver Memory Seat Switch Circuit Diagram
Courtesy of CHRYSLER GROUP, LLC

THEORY OF OPERATION

The Memory System is made up of the Memory Seat Module-Driver (MSMD), Memory Switch, Driver Seat Switch and multiple Seat Motors. The motors each contain a hall-effect position sensor. The hall-effect position sensor provides feedback to the MSMD in relation to the motors position.

The Driver Seat Switch is a Multiplex (Mux) switch which uses set resistance levels for each switch position. These resistances correspond to different voltages which is monitored by the MSMD over two separate circuits. When a voltage change is detected, the MSMD will command the appropriate Seat motor(s) to move the seat in the requested direction as long as the Driver Seat Switch is held in that direction or its stops have been reached.

The Memory Switch is a Mux switch that is used to set and recall the seat positions. When a Memory Switch button is pressed, the Driver Door Module (DDM) detects a voltage change and sends a request over the Controller Area Network (CAN) bus circuit to the MSMD to perform the requested command. If the SET button on the Memory Switch is pressed, followed by the 1 or 2 button, the MSMD will store the seat positions based on the position inputs received from the hall-effect position sensors. If the 1 or 2 button on the Memory Switch is pressed, the MSMD will recall the stored seat positions for that particular selection and return the seat to the stored positions. Memory position may also be recalled using a linked FOBIK transmitter. For driver safety, the MSMD will prevent the memory recall function from being initiated if the transmission gear selector lever is not in the Park position or if the vehicle is moving. For further information, refer to **MODULE, MEMORY, SEAT, OPERATION** .

WHEN MONITORED

Continuously.

SET CONDITION

The Memory Seat Module-Driver (MSM) detects that the Driver Seat Switch is in an active position for longer than 50 seconds.

POSSIBLE CAUSES

Possible Causes
DRIVER SEAT SWITCH

DIAGNOSTIC TEST

CHECK IF THE DTC IS ACTIVE

1. Ignition on, engine not running.
2. With the scan tool, record and erase Memory Seat Module-Driver (MSMD) DTCs.
3. Cycle the ignition switch from off to on.
4. Cycle the Driver Seat Switch in all directions several times.
5. Wait one minute.
6. With the scan tool, read MSMD DTCs.

   Does the scan tool display this DTC as active?

   Yes

   - Replace the Driver Seat Switch in accordance with the Service Information. Refer to **SWITCH, SEAT, REMOVAL** .
   - Perform POWER SEAT SYSTEM VERIFICATION TEST. Refer to **STANDARD PROCEDURE**.

No

- The condition or conditions that originally set this DTC are not present at this time. Using the wiring diagram as a guide, check all related splices and connectors for signs of water intrusion, corrosion, pushed out or bent terminals, and correct pin tension.
- Perform POWER SEAT SYSTEM VERIFICATION TEST. Refer to **STANDARD PROCEDURE**.

B1D6B-11-SEAT HORIZONTAL POSITION SENSOR - CIRCUIT SHORT TO GROUND

For a complete wiring diagram, **refer to appropriate SYSTEM WIRING DIAGRAMS article** .

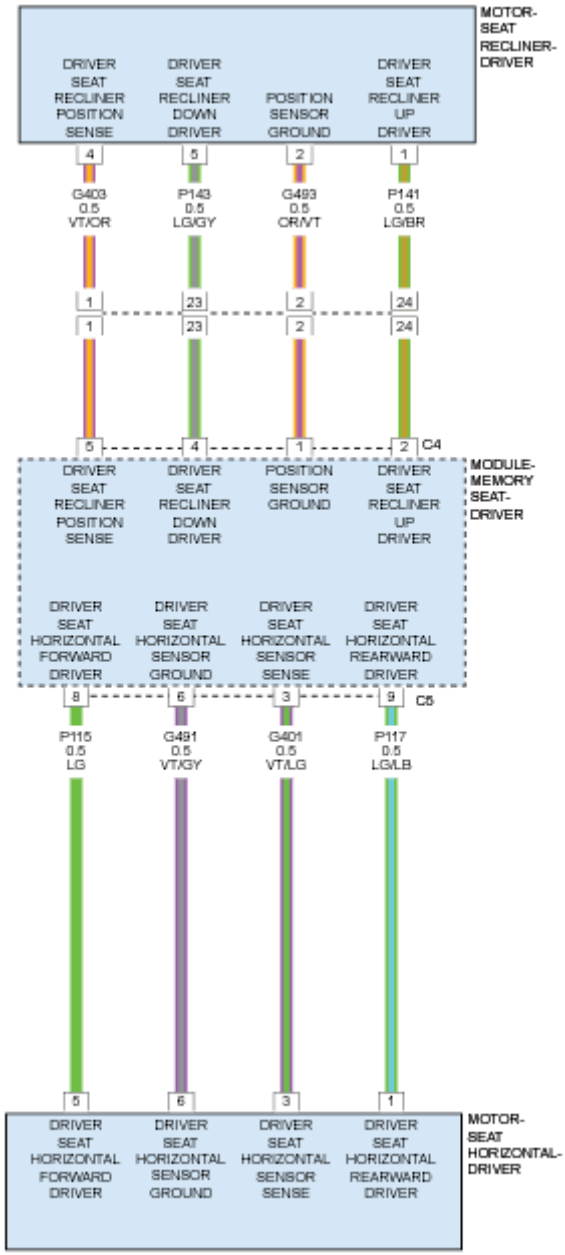

Fig. 3: Driver Memory Seat Module Circuit Diagram
Courtesy of CHRYSLER GROUP, LLC

THEORY OF OPERATION

The Memory System is made up of the Memory Seat Module-Driver (MSMD), Memory Switch, Driver Seat Switch and multiple Seat Motors. The motors each contain a hall-effect position sensor. The hall-effect position sensor provides feedback to the MSMD in relation to the motors position.

The Driver Seat Switch is a Multiplex (Mux) switch which uses set resistance levels for each switch position.

These resistances correspond to different voltages which is monitored by the MSMD over two separate circuits. When a voltage change is detected, the MSMD will command the appropriate Seat motor(s) to move the seat in the requested direction as long as the Driver Seat Switch is held in that direction or its stops have been reached.

The Memory Switch is a Mux switch that is used to set and recall the seat positions. When a Memory Switch button is pressed, the Driver Door Module (DDM) detects a voltage change and sends a request over the Controller Area Network (CAN) bus circuit to the MSMD to perform the requested command. If the SET button on the Memory Switch is pressed, followed by the 1 or 2 button, the MSMD will store the seat positions based on the position inputs received from the hall-effect position sensors. If the 1 or 2 button on the Memory Switch is pressed, the MSMD will recall the stored seat positions for that particular selection and return the seat to the stored positions. Memory position may also be recalled using a linked FOBIK transmitter. For driver safety, the MSMD will prevent the memory recall function from being initiated if the transmission gear selector lever is not in the Park position or if the vehicle is moving. For further information, refer to **MODULE, MEMORY, SEAT, OPERATION** .

WHEN MONITORED

The seat motor is activated.

SET CONDITION

If the Memory Seat Module-Driver (MSMD) detects the Driver Seat Horizontal Position Sensor voltage is not within a specified range. The DTC will only set when the seat switch is moved in the same direction three consecutive times.

POSSIBLE CAUSES

Possible Causes
DRIVER SEAT HORIZONTAL POSITION SENSE CIRCUIT SHORTED TO GROUND
DRIVER HORIZONTAL SEAT ADJUSTER MOTOR
MEMORY SEAT MODULE-DRIVER (MSMD)

DIAGNOSTIC TEST

1. **CHECK IF THE DTC IS ACTIVE**
    1. Ignition on, engine not running.
    2. With the scan tool, record and erase Memory Seat Module-Driver (MSMD) DTCs.
    3. Cycle the ignition switch from off to on.
    4. Move the Seat Switch in the horizontal position three times.
    5. With the scan tool, read MSMD DTCs.

    Does the scan tool display this DTC as active?

    Yes

- Go To 2

No

- Go To 5

2. **CHECK THE (G401) DRIVER SEAT HORIZONTAL POSITION SENSE CIRCUIT**
   1. Turn the ignition off.
   2. Disconnect the Driver Seat Adjuster Horizontal Motor harness connector.
   3. Ignition on, engine not running.
   4. Measure the voltage of the (G401) Driver Seat Horizontal Position Sense circuit in the Driver Seat Adjuster Horizontal Motor harness connector.

   Is the voltage above 11.0 volts?

   Yes

   - Replace the Power Seat Track in accordance with the Service Information. Refer to **DESCRIPTION** . Refer to **SEAT** .
   - Perform the POWER SEAT SYSTEM VERIFICATION TEST. Refer to **STANDARD PROCEDURE**.

   No

   - Go To 3

3. **CHECK THE (G401) DRIVER SEAT HORIZONTAL POSITION SENSE CIRCUIT FOR A SHORT TO GROUND**
   1. Turn the ignition off.
   2. Disconnect the MSMD C5 harness connector.
   3. Measure the resistance between ground and the (G401) Driver Seat Horizontal Position Sense circuit.

   Is the resistance below 100K Ohms?

   Yes

   - Repair the (G401) Driver Seat Horizontal Position Sense circuit for a short to ground.
   - Perform the POWER SEAT SYSTEM VERIFICATION TEST. Refer to **STANDARD PROCEDURE**.

   No

   - Go To 4

4. **MEMORY SEAT MODULE (MSMD)**

1. Using the wiring diagram/schematic as a guide, inspect the wiring and harness connectors between the Driver Horizontal Seat Adjuster Motor and the MSMD.
2. Look for any chafed, pierced, pinched, or partially broken wires.
3. Look for broken, bent, pushed out or corroded terminals. Verify that there is good pin to terminal contact in the Driver Horizontal Seat Adjuster Motor and MSMD harness connectors.
4. Perform any Technical Service Bulletins that may apply.

   Were there any problems found?

   Yes

   - Repair as necessary.
   - Perform the POWER SEAT SYSTEM VERIFICATION TEST. Refer to **STANDARD PROCEDURE**.

   No

   - Replace and program the MSMD in accordance with the Service Information. Refer to **MODULE, MEMORY, SEAT, REMOVAL** .
   - Perform POWER SEAT SYSTEM VERIFICATION TEST. Refer to **STANDARD PROCEDURE**.

5. **CHECK THE WIRING AND CONNECTORS**
   1. The conditions necessary to set the DTC are not present at this time.
   2. Using the schematics as a guide, inspect the wiring and connectors specific to this circuit. Wiggle the wiring and connectors while checking for shorted and open circuits. Attempt to reproduce the condition by adjusting the seat(s).
   3. Check all related splices and connectors for signs of water intrusion, corrosion, pushed out or bent terminals, and correct pin tension.
   4. Check Service Bulletins for any possible causes that may apply.

      Were there any problems found?

      Yes

      - Repair as necessary.
      - Perform the POWER SEAT SYSTEM VERIFICATION TEST. Refer to **STANDARD PROCEDURE**.

      No

      - Test complete.

B1D6B-12-SEAT HORIZONTAL POSITION SENSOR - CIRCUIT SHORT TO BATTERY

For a complete wiring diagram, **refer to appropriate SYSTEM WIRING DIAGRAMS article** .

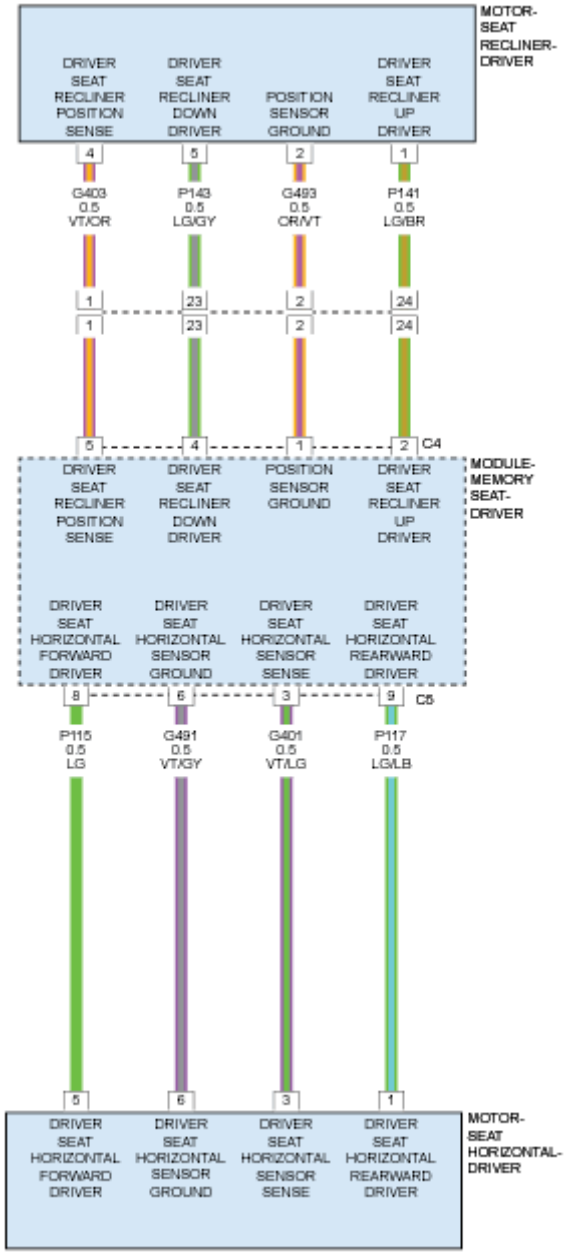

Fig. 4: Driver Memory Seat Module Circuit Diagram
Courtesy of CHRYSLER GROUP, LLC

THEORY OF OPERATION

The Memory System is made up of the Memory Seat Module-Driver (MSMD), Memory Switch, Driver Seat Switch and multiple Seat Motors. The motors each contain a hall-effect position sensor. The hall-effect position sensor provides feedback to the MSMD in relation to the motors position.

The Driver Seat Switch is a Multiplex (Mux) switch which uses set resistance levels for each switch position. These resistances correspond to different voltages which is monitored by the MSMD over two separate circuits. When a voltage change is detected, the MSMD will command the appropriate Seat motor(s) to move the seat in the requested direction as long as the Driver Seat Switch is held in that direction or its stops have been reached.

The Memory Switch is a Mux switch that is used to set and recall the seat positions. When a Memory Switch button is pressed, the Driver Door Module (DDM) detects a voltage change and sends a request over the Controller Area Network (CAN) bus circuit to the MSMD to perform the requested command. If the SET button on the Memory Switch is pressed, followed by the 1 or 2 button, the MSMD will store the seat positions based on the position inputs received from the hall-effect position sensors. If the 1 or 2 button on the Memory Switch is pressed, the MSMD will recall the stored seat positions for that particular selection and return the seat to the stored positions. Memory position may also be recalled using a linked FOBIK transmitter. For driver safety, the MSMD will prevent the memory recall function from being initiated if the transmission gear selector lever is not in the Park position or if the vehicle is moving. For further information, refer to **MODULE, MEMORY, SEAT, OPERATION** .

WHEN MONITORED

The seat motor is activated.

SET CONDITION

If the Memory Seat Module-Driver (MSMD) detects the Driver Seat Horizontal Position sensor voltage is not within a specified range. The DTC will only set when the seat switch is moved in the same direction three consecutive times.

POSSIBLE CAUSES

Possible Causes
DRIVER SEAT HORIZONTAL POSITION SENSE CIRCUIT SHORTED TO VOLTAGE
DRIVER HORIZONTAL SEAT ADJUSTER MOTOR
MEMORY SEAT MODULE

DIAGNOSTIC TEST

1. **CHECK IF THE DTC IS ACTIVE**
    1. Ignition on, engine not running.
    2. With the scan tool, record and erase Memory Seat Module-Driver (MSMD) DTCs.
    3. Cycle the ignition switch from off to on.
    4. Move the Seat Switch in the horizontal position three times.
    5. With the scan tool, read MSMD DTCs.

    Does the scan tool display this DTC as active?

    Yes

- Go To 2

No

- The condition or conditions that originally set this DTC are not present at this time. Using the wiring diagrams as a guide, check all related splices and connectors for signs of water intrusion, corrosion, pushed out or bent terminals, and correct pin tension.
- Perform the POWER SEAT SYSTEM VERIFICATION TEST. Refer to **STANDARD PROCEDURE**.

2. **CHECK THE (G401) DRIVER SEAT HORIZONTAL POSITION SENSE CIRCUIT**
   1. Turn the ignition off.
   2. Disconnect the Driver Horizontal Seat Adjuster Motor harness connector.
   3. Ignition on, engine not running.
   4. Measure the voltage between the (G401) Driver Seat Horizontal Position Sense circuit and ground.

   Is the voltage above 11.0 volts?

   Yes

   - Go To 3

   No

   - Replace the Power Seat Track in accordance with the Service Information. Refer to **DESCRIPTION** . Refer to **SEAT** .
   - Perform the POWER SEAT SYSTEM VERIFICATION TEST. Refer to **STANDARD PROCEDURE**.

3. **CHECK THE (G401) DRIVER SEAT HORIZONTAL POSITION SENSE CIRCUIT FOR A SHORT TO VOLTAGE**
   1. Turn the ignition off.
   2. Disconnect the MSMD C5 harness connector.
   3. Ignition on, engine not running.
   4. Measure the voltage between ground and the (G401) Driver Seat Horizontal Position Sense circuit.

   Is the voltage above 1.0 volt?

   Yes

   - Repair the (G401) Driver Seat Horizontal Position Sense circuit for a short to voltage.
   - Perform the POWER SEAT SYSTEM VERIFICATION TEST. Refer to **STANDARD PROCEDURE**.

   No

- Go To 4

4. **MEMORY SEAT MODULE (MSMD)**
   1. Using the wiring diagram/schematic as a guide, inspect the wiring and harness connectors between the Driver Horizontal Seat Adjuster Motor and the MSMD.
   2. Look for any chafed, pierced, pinched, or partially broken wires.
   3. Look for broken, bent, pushed out or corroded terminals. Verify that there is good pin to terminal contact in the Driver Horizontal Seat Adjuster Motor and MSMD harness connectors.
   4. Perform any Technical Service Bulletins that may apply.

   Were there any problems found?

   Yes

   - Repair as necessary.
   - Perform the POWER SEAT SYSTEM VERIFICATION TEST. Refer to **STANDARD PROCEDURE**.

   No

   - Replace the MSMD in accordance with the Service Information. Refer to **MODULE, MEMORY, SEAT, REMOVAL** .
   - Perform the POWER SEAT SYSTEM VERIFICATION TEST. Refer to **STANDARD PROCEDURE**.

B1D6F-11-SEAT FRONT VERTICAL POSITION SENSOR - CIRCUIT SHORT TO GROUND

For a complete wiring diagram, **refer to appropriate SYSTEM WIRING DIAGRAMS article** .

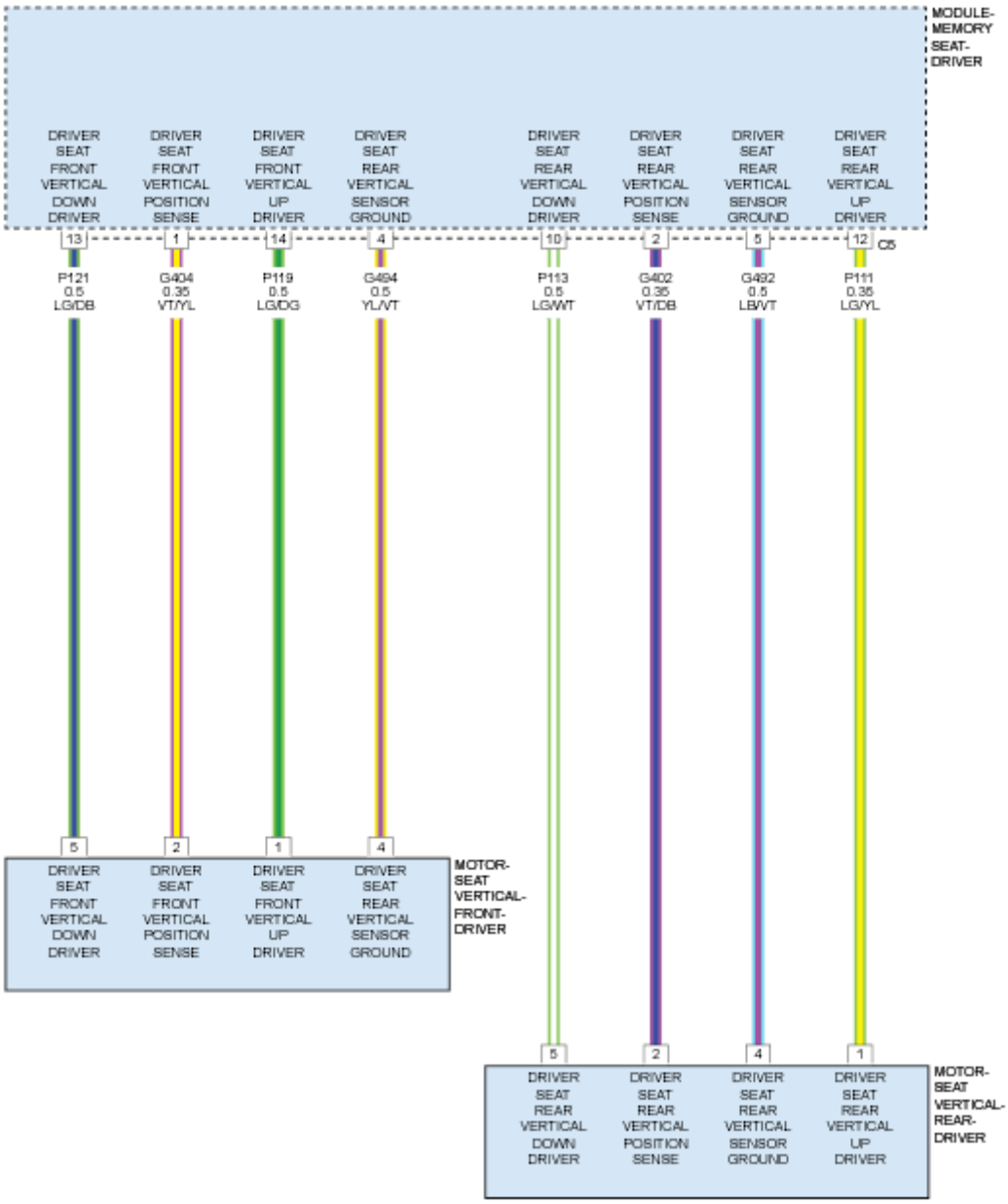

Fig. 5: Driver Vertical Seat Motor Circuit Diagram
Courtesy of CHRYSLER GROUP, LLC

THEORY OF OPERATION

The Memory System is made up of the Memory Seat Module-Driver (MSMD), Memory Switch, Driver Seat Switch and multiple Seat Motors. The motors each contain a hall-effect position sensor. The hall-effect position sensor provides feedback to the MSMD in relation to the motors position.

The Driver Seat Switch is a Multiplex (Mux) switch which uses set resistance levels for each switch position. These resistances correspond to different voltages which is monitored by the MSMD over two separate circuits. When a voltage change is detected, the MSMD will command the appropriate Seat motor(s) to move the seat in

the requested direction as long as the Driver Seat Switch is held in that direction or its stops have been reached.

The Memory Switch is a Mux switch that is used to set and recall the seat positions. When a Memory Switch button is pressed, the Driver Door Module (DDM) detects a voltage change and sends a request over the Controller Area Network (CAN) bus circuit to the MSMD to perform the requested command. If the SET button on the Memory Switch is pressed, followed by the 1 or 2 button, the MSMD will store the seat positions based on the position inputs received from the hall-effect position sensors. If the 1 or 2 button on the Memory Switch is pressed, the MSMD will recall the stored seat positions for that particular selection and return the seat to the stored positions. Memory position may also be recalled using a linked FOBIK transmitter. For driver safety, the MSMD will prevent the memory recall function from being initiated if the transmission gear selector lever is not in the Park position or if the vehicle is moving. For further information, refer to **MODULE, MEMORY, SEAT, OPERATION** .

WHEN MONITORED

The seat motor is activated.

SET CONDITION

If the Memory Seat Module-Driver (MSMD) detects the Vertical Position sensor voltage is not within a specified range. The DTC will only set when the seat switch is moved in the same direction three consecutive times.

POSSIBLE CAUSES

Possible Causes
DRIVER SEAT FRONT VERTICAL POSITION SENSE CIRCUIT SHORTED TO GROUND
DRIVER FRONT VERTICAL SEAT ADJUSTER MOTOR
MEMORY SEAT MODULE-DRIVER (MSMD)

DIAGNOSTIC TEST

1. **CHECK IF THE DTC IS ACTIVE**
    1. Ignition on, engine not running.
    2. With the scan tool, record and erase Memory Seat Module-Driver (MSMD) DTCs.
    3. Cycle the ignition switch from off to on.
    4. Move the Seat Switch in the front vertical position three times.
    5. With the scan tool, read MSMD DTCs.

    Does the scan tool display this DTC as active?

    Yes

    - Go To 2

No

- The condition or conditions that originally set this DTC are not present at this time. Using the wiring diagrams as a guide, check all related splices and connectors for signs of water intrusion, corrosion, pushed out or bent terminals, and correct pin tension.
- Perform the POWER SEAT SYSTEM VERIFICATION TEST. Refer to **STANDARD PROCEDURE**.

2. **CHECK THE (G404) DRIVER SEAT FRONT VERTICAL POSITION SENSE CIRCUIT**
   1. Turn the ignition off.
   2. Disconnect the Driver Seat Front Vertical Adjuster Motor harness connector.
   3. Ignition on, engine not running.
   4. Measure the voltage between ground and the (G404) Driver Seat Front Vertical Position Sense circuit.

   Is the voltage above 11.0 volts?

   Yes

   - Replace the Power Seat Track in accordance with the Service Information. Refer to **DESCRIPTION** . Refer to **SEAT** .
   - Perform the POWER SEAT SYSTEM VERIFICATION TEST. Refer to **STANDARD PROCEDURE**.

   No

   - Go To 3

3. **CHECKING THE (G404) DRIVER SEAT FRONT VERTICAL POSITION SENSE CIRCUIT FOR A SHORT TO GROUND**
   1. Turn the ignition off.
   2. Disconnect the MSMD C5 harness connector.
   3. Measure the resistance between ground and the (G404) Driver Seat Front Vertical Position Sense circuit.

   Is the resistance below 100K Ohms?

   Yes

   - Repair the (G404) Driver Seat Front Vertical Position Sense circuit for a short to ground.
   - Perform the POWER SEAT SYSTEM VERIFICATION TEST. Refer to **STANDARD PROCEDURE**.

   No

   - Go To 4

4. **MEMORY SEAT MODULE (MSMD)**
    1. Using the wiring diagram/schematic as a guide, inspect the wiring and harness connectors between the Driver Seat Front Vertical Adjuster Motor and the MSMD.
    2. Look for any chafed, pierced, pinched, or partially broken wires.
    3. Look for broken, bent, pushed out or corroded terminals. Verify that there is good pin to terminal contact in the Driver Seat Front Vertical Adjuster Motor and MSMD harness connectors.
    4. Perform any Technical Service Bulletins that may apply.

    Were there any problems found?

    Yes

    - Repair as necessary.
    - Perform the POWER SEAT SYSTEM VERIFICATION TEST. Refer to **STANDARD PROCEDURE**.

    No

    - Replace and program the MSMD in accordance with the Service Information. Refer to **MODULE, MEMORY, SEAT, REMOVAL** .
    - Perform the POWER SEAT SYSTEM VERIFICATION TEST. Refer to **STANDARD PROCEDURE**.

B1D6F-12-SEAT FRONT VERTICAL POSITION SENSOR - CIRCUIT SHORT TO BATTERY

For a complete wiring diagram, **refer to appropriate SYSTEM WIRING DIAGRAMS article** .

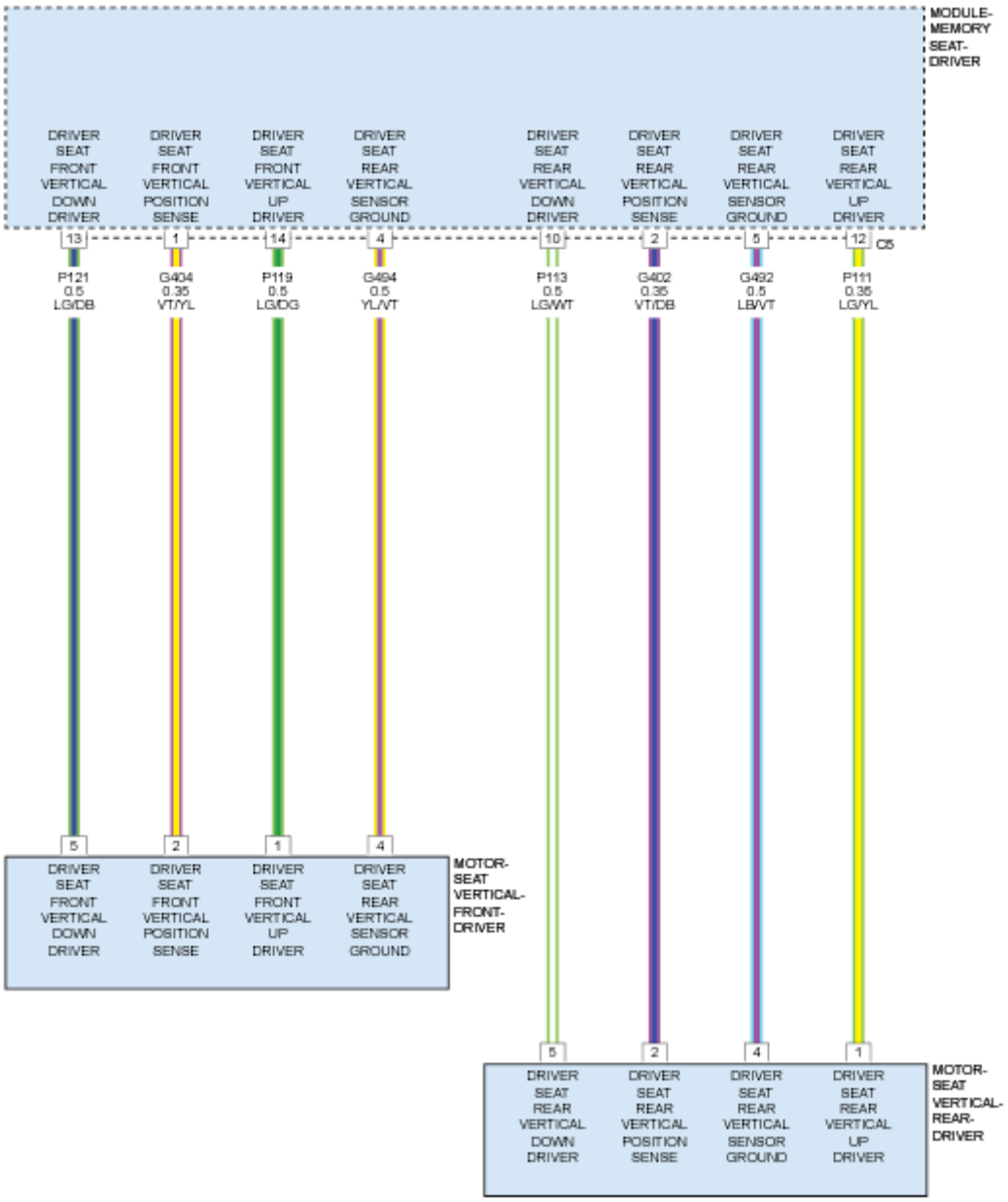

Fig. 6: Driver Vertical Seat Motor Circuit Diagram
Courtesy of CHRYSLER GROUP, LLC

THEORY OF OPERATION

The Memory System is made up of the Memory Seat Module-Driver (MSMD), Memory Switch, Driver Seat Switch and multiple Seat Motors. The motors each contain a hall-effect position sensor. The hall-effect position sensor provides feedback to the MSMD in relation to the motors position.

The Driver Seat Switch is a Multiplex (Mux) switch which uses set resistance levels for each switch position. These resistances correspond to different voltages which is monitored by the MSMD over two separate circuits. When a voltage change is detected, the MSMD will command the appropriate Seat motor(s) to move the seat in

the requested direction as long as the Driver Seat Switch is held in that direction or its stops have been reached.

The Memory Switch is a Mux switch that is used to set and recall the seat positions. When a Memory Switch button is pressed, the Driver Door Module (DDM) detects a voltage change and sends a request over the Controller Area Network (CAN) bus circuit to the MSMD to perform the requested command. If the SET button on the Memory Switch is pressed, followed by the 1 or 2 button, the MSMD will store the seat positions based on the position inputs received from the hall-effect position sensors. If the 1 or 2 button on the Memory Switch is pressed, the MSMD will recall the stored seat positions for that particular selection and return the seat to the stored positions. Memory position may also be recalled using a linked FOBIK transmitter. For driver safety, the MSMD will prevent the memory recall function from being initiated if the transmission gear selector lever is not in the Park position or if the vehicle is moving. For further information, refer to **MODULE, MEMORY, SEAT, OPERATION** .

WHEN MONITORED

The seat motor is activated.

SET CONDITION

If the Memory Seat Module-Driver (MSMD) detects the Vertical Position sensor voltage is not within a specified range. The DTC will only set when the seat switch is moved in the same direction three consecutive times.

POSSIBLE CAUSES

Possible Causes
DRIVER SEAT FRONT VERTICAL POSITION SENSE CIRCUIT SHORTED TO VOLTAGE
DRIVER SEAT FRONT VERTICAL ADJUSTER MOTOR
MEMORY SEAT MODULE-DRIVER (MSMD)

DIAGNOSTIC TEST

1. **CHECK IF THE DTC IS ACTIVE**
    1. Ignition on, engine not running.
    2. With the scan tool, record and erase Memory Seat Module-Driver (MSMD) DTCs.
    3. Cycle the ignition switch from off to on.
    4. Move the Seat Switch in the front vertical position three times.
    5. With the scan tool, read MSMD DTCs.

    Does the scan tool display this DTC as active?

    Yes

    - Go To 2

No

- The condition or conditions that originally set this DTC are not present at this time. Using the wiring diagrams as a guide, check all related splices and connectors for signs of water intrusion, corrosion, pushed out or bent terminals, and correct pin tension.
- Perform the POWER SEAT SYSTEM VERIFICATION TEST. Refer to **STANDARD PROCEDURE**.

2. **CHECK THE (G404) DRIVER SEAT FRONT VERTICAL POSITION SENSE CIRCUIT**
   1. Disconnect the Driver Seat Front Vertical Adjuster Motor harness connector.
   2. Measure the voltage between the (G404) Driver Seat Front Vertical Position Sense circuit and ground.

      Is the voltage above 11.0 volts?

      Yes

      - Go To 3

      No

      - Replace the Power Seat Track in accordance with the Service Information. Refer to **DESCRIPTION** . Refer to **SEAT** .
      - Perform POWER SEAT SYSTEM VERIFICATION TEST. Refer to **STANDARD PROCEDURE**.

3. **CHECK THE (G404) DRIVER SEAT FRONT VERTICAL POSITION SENSE CIRCUIT FOR A SHORT TO VOLTAGE**
   1. Disconnect the MSMD C5 harness connector.
   2. Measure the voltage between the (G404) Driver Seat Front Vertical Position Sense circuit and ground.

      Is the voltage above 11.0 volts?

      Yes

      - Repair the (G404) Driver Seat Front Vertical Position Sensor circuit for a short to voltage.
      - Perform POWER SEAT SYSTEM VERIFICATION TEST. Refer to **STANDARD PROCEDURE**.

      No

      - Go To 4

4. **MEMORY SEAT MODULE (MSMD)**
   1. Using the wiring diagram/schematic as a guide, inspect the wiring and harness connectors between the Driver Seat Front Vertical Adjuster Motor and the MSMD.

2. Look for any chafed, pierced, pinched, or partially broken wires.
3. Look for broken, bent, pushed out or corroded terminals. Verify that there is good pin to terminal contact in the Driver Seat Front Vertical Adjuster Motor and MSMD harness connectors.
4. Perform any Technical Service Bulletins that may apply.

   Were there any problems found?

   Yes

   - Repair as necessary.
   - Perform the POWER SEAT SYSTEM VERIFICATION TEST. Refer to **STANDARD PROCEDURE**.

   No

   - Replace and program the MSMD in accordance with the Service Information. Refer to **MODULE, MEMORY, SEAT, REMOVAL** .
   - Perform the POWER SEAT SYSTEM VERIFICATION TEST. Refer to **STANDARD PROCEDURE**.

B1D73-11-SEAT REAR VERTICAL POSITION SENSOR - CIRCUIT SHORT TO GROUND

For a complete wiring diagram, **refer to appropriate SYSTEM WIRING DIAGRAMS article** .

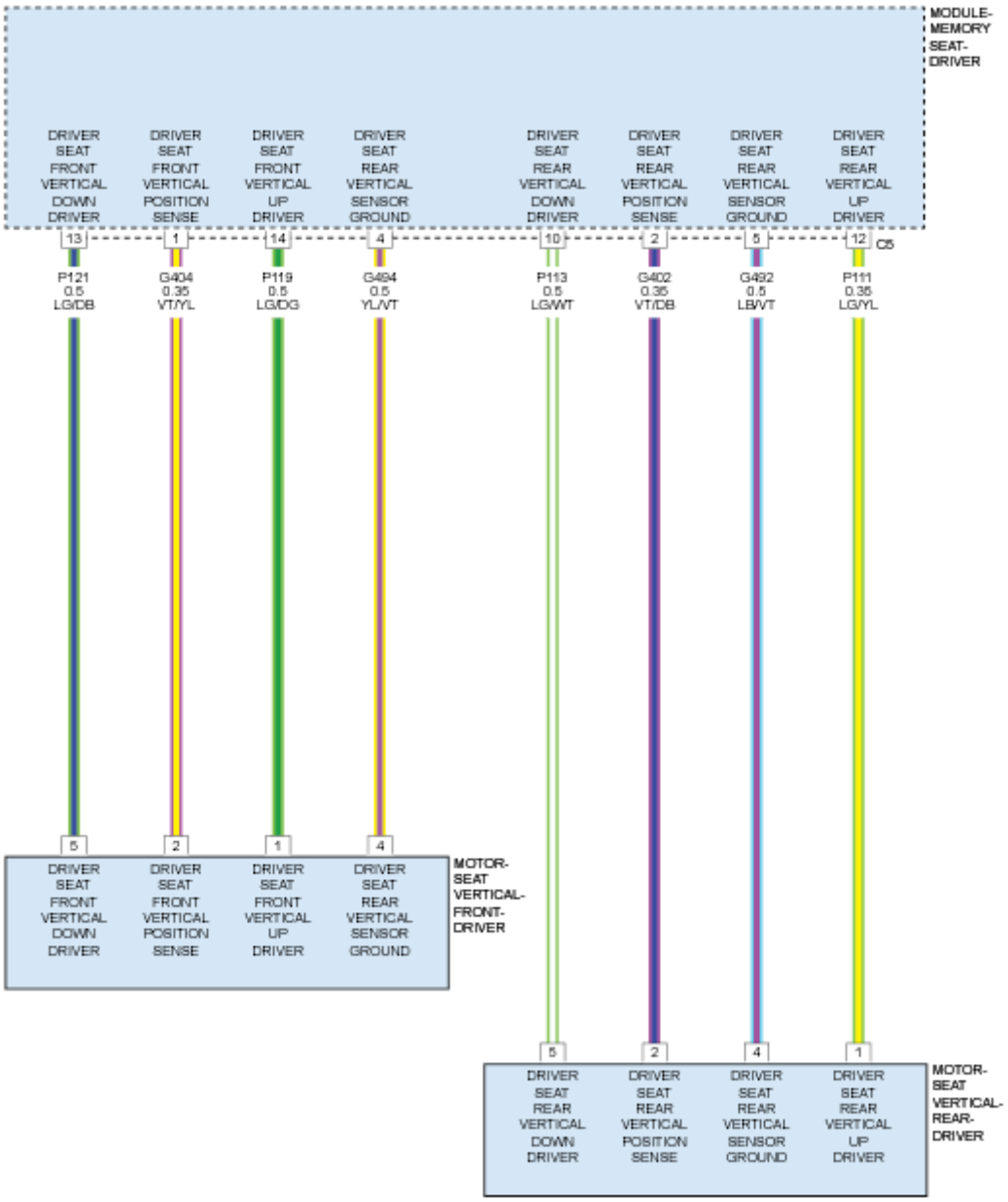

Fig. 7: Driver Vertical Seat Motor Circuit Diagram
Courtesy of CHRYSLER GROUP, LLC

THEORY OF OPERATION

The Memory System is made up of the Memory Seat Module-Driver (MSMD), Memory Switch, Driver Seat Switch and multiple Seat Motors. The motors each contain a hall-effect position sensor. The hall-effect position sensor provides feedback to the MSMD in relation to the motors position.

The Driver Seat Switch is a Multiplex (Mux) switch which uses set resistance levels for each switch position. These resistances correspond to different voltages which is monitored by the MSMD over two separate circuits. When a voltage change is detected, the MSMD will command the appropriate Seat motor(s) to move the seat in

the requested direction as long as the Driver Seat Switch is held in that direction or its stops have been reached.

The Memory Switch is a Mux switch that is used to set and recall the seat positions. When a Memory Switch button is pressed, the Driver Door Module (DDM) detects a voltage change and sends a request over the Controller Area Network (CAN) bus circuit to the MSMD to perform the requested command. If the SET button on the Memory Switch is pressed, followed by the 1 or 2 button, the MSMD will store the seat positions based on the position inputs received from the hall-effect position sensors. If the 1 or 2 button on the Memory Switch is pressed, the MSMD will recall the stored seat positions for that particular selection and return the seat to the stored positions. Memory position may also be recalled using a linked FOBIK transmitter. For driver safety, the MSMD will prevent the memory recall function from being initiated if the transmission gear selector lever is not in the Park position or if the vehicle is moving. For further information, refer to **MODULE, MEMORY, SEAT, OPERATION** .

WHEN MONITORED

The seat motor is activated.

SET CONDITION

If the Memory Seat Module-Driver (MSMD) detects the Vertical Position sensor voltage is not within a specified range. The DTC will only set when the seat switch is moved in the same direction three consecutive times.

POSSIBLE CAUSES

Possible Causes
DRIVER SEAT REAR VERTICAL POSITION SENSE CIRCUIT SHORTED TO GROUND
DRIVER REAR VERTICAL SEAT ADJUSTER MOTOR
MEMORY SEAT MODULE-DRIVER (MSMD)

DIAGNOSTIC TEST

1. **CHECK IF THE DTC IS ACTIVE**
    1. Ignition on, engine not running.
    2. With the scan tool, record and erase Memory Seat Module-Driver (MSMD) DTCs.
    3. Cycle the ignition switch from off to on.
    4. Move the Seat Switch in the rear vertical position three times.
    5. With the scan tool, read MSMD DTCs.

    Does the scan tool display this DTC as active?

    Yes

    - Go To 2

No

- The condition or conditions that originally set this DTC are not present at this time. Using the wiring diagrams as a guide, check all related splices and connectors for signs of water intrusion, corrosion, pushed out or bent terminals, and correct pin tension.
- Perform the POWER SEAT SYSTEM VERIFICATION TEST. Refer to **STANDARD PROCEDURE**.

2. **CHECK THE (G402) DRIVER SEAT REAR VERTICAL POSITION SENSE CIRCUIT**
   1. Disconnect the Driver Seat Rear Vertical Adjuster Motor harness connector.
   2. Measure the voltage between the (G402) Driver Seat Rear Vertical Position Sense circuit and ground.

   Is the voltage above 11 volts?

   Yes

   - Replace the Power Seat Track in accordance with the Service Information. Refer to **DESCRIPTION** . Refer to **SEAT** .
   - Perform the POWER SEAT SYSTEM VERIFICATION TEST. Refer to **STANDARD PROCEDURE**.

   No

   - Go To 3

3. **CHECK THE (G402) DRIVER SEAT REAR VERTICAL POSITION SENSE CIRCUIT FOR A SHORT TO GROUND**
   1. Turn the ignition off.
   2. Disconnect the MSMD C5 harness connector.
   3. Measure the resistance between ground and the (G402) Driver Seat Rear Vertical Position Sense circuit.

   Is the resistance below 100K Ohms.

   Yes

   - Repair the (G402) Driver Seat Rear Vertical Position Sense circuit for a short to ground.
   - Perform the POWER SEAT SYSTEM VERIFICATION TEST. Refer to **STANDARD PROCEDURE**.

   No

   - Go To 4

4. **MEMORY SEAT MODULE (MSMD)**
   1. Using the wiring diagram/schematic as a guide, inspect the wiring and harness connectors between

the Driver Seat Rear Vertical Adjuster Motor and the MSMD.

2. Look for any chafed, pierced, pinched, or partially broken wires.
3. Look for broken, bent, pushed out or corroded terminals. Verify that there is good pin to terminal contact in the Driver Seat Rear Vertical Adjuster Motor and MSMD harness connectors.
4. Perform any Technical Service Bulletins that may apply.

Were there any problems found?

Yes

- Repair as necessary.
- Perform the POWER SEAT SYSTEM VERIFICATION TEST. Refer to **STANDARD PROCEDURE**.

No

- Replace and program the MSMD in accordance with the Service Information. Refer to **MODULE, MEMORY, SEAT, REMOVAL** .
- Perform the POWER SEAT SYSTEM VERIFICATION TEST. Refer to **STANDARD PROCEDURE**.

B1D73-12-SEAT REAR VERTICAL POSITION SENSOR - CIRCUIT SHORT TO BATTERY

For a complete wiring diagram, **refer to appropriate SYSTEM WIRING DIAGRAMS article** .

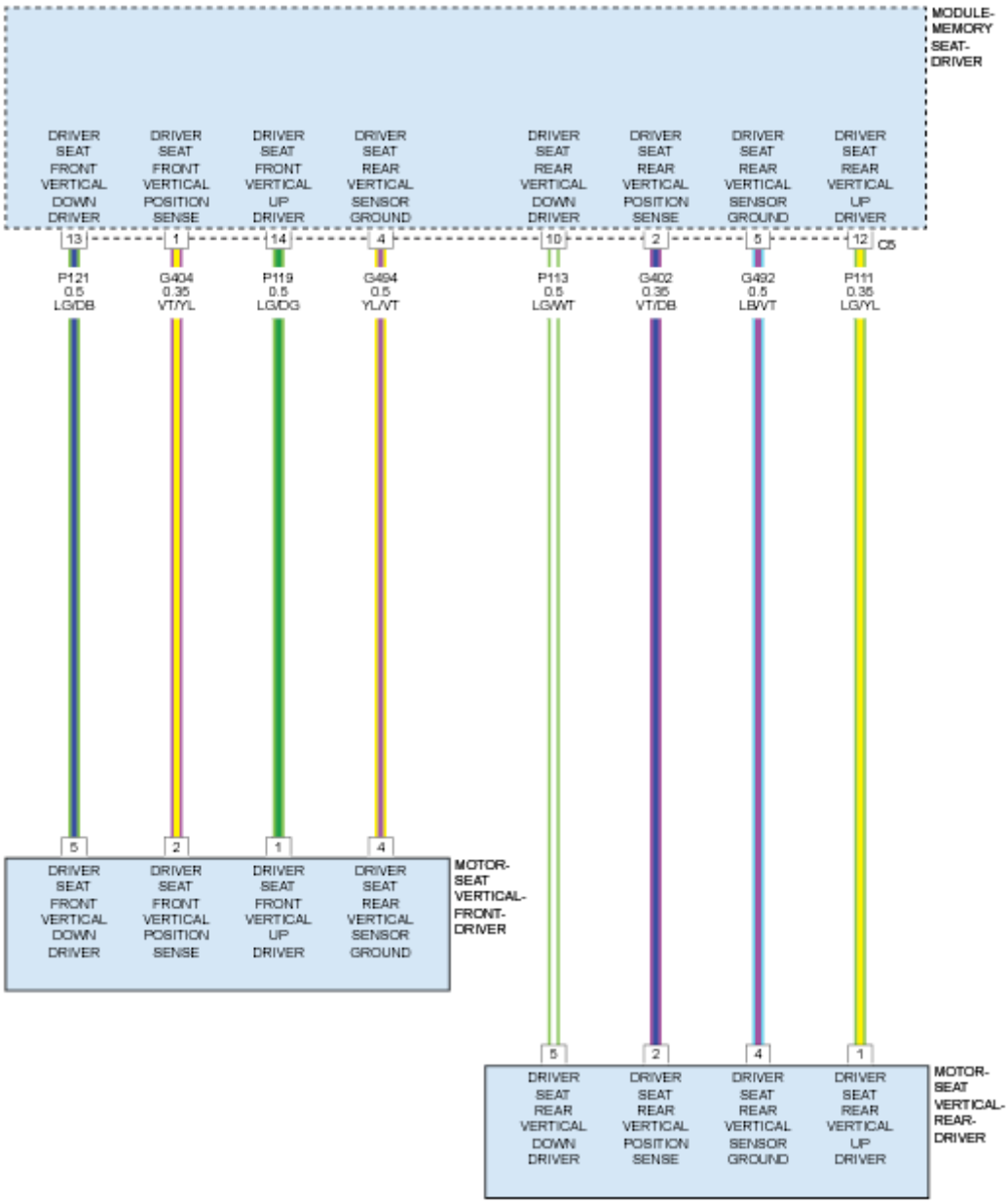

Fig. 8: Driver Vertical Seat Motor Circuit Diagram
Courtesy of CHRYSLER GROUP, LLC

THEORY OF OPERATION

The Memory System is made up of the Memory Seat Module-Driver (MSMD), Memory Switch, Driver Seat Switch and multiple Seat Motors. The motors each contain a hall-effect position sensor. The hall-effect position sensor provides feedback to the MSMD in relation to the motors position.

The Driver Seat Switch is a Multiplex (Mux) switch which uses set resistance levels for each switch position. These resistances correspond to different voltages which is monitored by the MSMD over two separate circuits. When a voltage change is detected, the MSMD will command the appropriate Seat motor(s) to move the seat in

the requested direction as long as the Driver Seat Switch is held in that direction or its stops have been reached.

The Memory Switch is a Mux switch that is used to set and recall the seat positions. When a Memory Switch button is pressed, the Driver Door Module (DDM) detects a voltage change and sends a request over the Controller Area Network (CAN) bus circuit to the MSMD to perform the requested command. If the SET button on the Memory Switch is pressed, followed by the 1 or 2 button, the MSMD will store the seat positions based on the position inputs received from the hall-effect position sensors. If the 1 or 2 button on the Memory Switch is pressed, the MSMD will recall the stored seat positions for that particular selection and return the seat to the stored positions. Memory position may also be recalled using a linked FOBIK transmitter. For driver safety, the MSMD will prevent the memory recall function from being initiated if the transmission gear selector lever is not in the Park position or if the vehicle is moving. For further information, refer to **MODULE, MEMORY, SEAT, OPERATION** .

WHEN MONITORED

The seat motor is activated.

SET CONDITION

If the Memory Seat Module-Driver (MSMD) detects the Vertical Position sensor voltage is not within a specified range. The DTC will only set when the seat switch is moved in the same direction three consecutive times.

POSSIBLE CAUSES

Possible Causes
DRIVER SEAT REAR VERTICAL POSITION SENSE CIRCUIT SHORTED TO VOLTAGE
DRIVER REAR VERTICAL SEAT ADJUSTER MOTOR
MEMORY SEAT MODULE-DRIVER (MSMD)

DIAGNOSTIC TEST

1. **CHECK IF THE DTC IS ACTIVE**
    1. Ignition on, engine not running.
    2. With the scan tool, record and erase Memory Seat Module-Driver (MSMD) DTCs.
    3. Cycle the ignition switch from off to on.
    4. Move the Seat Switch in the rear vertical position three times.
    5. With the scan tool, read MSMD DTCs.

    Does the scan tool display this DTC as active?

    Yes

    - Go To 2

No

- The condition or conditions that originally set this DTC are not present at this time. Using the wiring diagrams as a guide, check all related splices and connectors for signs of water intrusion, corrosion, pushed out or bent terminals, and correct pin tension.
- Perform the POWER SEAT SYSTEM VERIFICATION TEST. Refer to **STANDARD PROCEDURE**.

2. **CHECK THE (G402) DRIVER SEAT REAR VERTICAL POSITION SENSE CIRCUIT**
   1. Turn the ignition off.
   2. Disconnect the Driver Seat Rear Vertical Adjuster Motor harness connector.
   3. Ignition on, engine not running.
   4. Measure the voltage between ground and the (G402) Driver Seat Rear Vertical Position Sense circuit.

   Is the voltage above 11.0 volts?

   Yes

   - Go To 3

   No

   - Replace the Power Seat Track in accordance with the Service Information. Refer to **DESCRIPTION** . Refer to **SEAT** .
   - Perform the POWER SEAT SYSTEM VERIFICATION TEST. Refer to **STANDARD PROCEDURE**.

3. **CHECK THE (G402) DRIVER SEAT REAR VERTICAL POSITION SENSE CIRCUIT FOR A SHORT TO VOLTAGE**
   1. Disconnect the MSMD C5 harness connector.
   2. Measure the voltage between the (G402) Driver Seat Rear Vertical Position Sense circuit and ground.

   Is the voltage above 11.0 volts?

   Yes

   - Repair the (G402) Driver Seat Rear Vertical Position Sense circuit for a short to voltage.
   - Perform the POWER SEAT SYSTEM VERIFICATION TEST. Refer to **STANDARD PROCEDURE**.

   No

   - Go To 4

4. **MEMORY SEAT MODULE (MSMD)**

1. Using the wiring diagram/schematic as a guide, inspect the wiring and harness connectors between the Driver Seat Rear Vertical Adjuster Motor and the MSMD.
2. Look for any chafed, pierced, pinched, or partially broken wires.
3. Look for broken, bent, pushed out or corroded terminals. Verify that there is good pin to terminal contact in the Driver Seat Rear Vertical Adjuster Motor and MSMD harness connectors.
4. Perform any Technical Service Bulletins that may apply.

   Were there any problems found?

   Yes

   - Repair as necessary.
   - Perform the POWER SEAT SYSTEM VERIFICATION TEST. Refer to **STANDARD PROCEDURE**.

   No

   - Replace and program the MSMD in accordance with the Service Information. Refer to **MODULE, MEMORY, SEAT, REMOVAL** .
   - Perform the POWER SEAT SYSTEM VERIFICATION TEST. Refer to **STANDARD PROCEDURE**.

B1D77-11-SEAT RECLINER POSITION SENSOR - CIRCUIT SHORT TO GROUND

For a complete wiring diagram, **refer to appropriate SYSTEM WIRING DIAGRAMS article** .

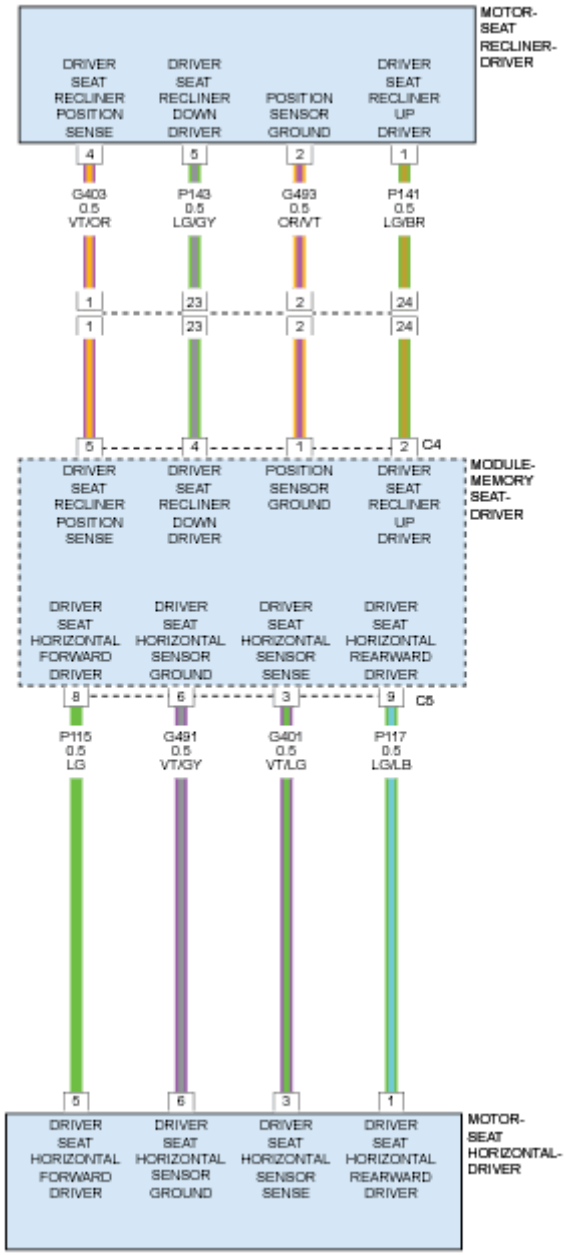

Fig. 9: Driver Memory Seat Module Circuit Diagram
Courtesy of CHRYSLER GROUP, LLC

THEORY OF OPERATION

The Memory System is made up of the Memory Seat Module-Driver (MSMD), Memory Switch, Driver Seat Switch and multiple Seat Motors. The motors each contain a hall-effect position sensor. The hall-effect position sensor provides feedback to the MSMD in relation to the motors position.

The Driver Seat Switch is a Multiplex (Mux) switch which uses set resistance levels for each switch position.

These resistances correspond to different voltages which is monitored by the MSMD over two separate circuits. When a voltage change is detected, the MSMD will command the appropriate Seat motor(s) to move the seat in the requested direction as long as the Driver Seat Switch is held in that direction or its stops have been reached.

The Memory Switch is a Mux switch that is used to set and recall the seat positions. When a Memory Switch button is pressed, the Driver Door Module (DDM) detects a voltage change and sends a request over the Controller Area Network (CAN) bus circuit to the MSMD to perform the requested command. If the SET button on the Memory Switch is pressed, followed by the 1 or 2 button, the MSMD will store the seat positions based on the position inputs received from the hall-effect position sensors. If the 1 or 2 button on the Memory Switch is pressed, the MSMD will recall the stored seat positions for that particular selection and return the seat to the stored positions. Memory position may also be recalled using a linked FOBIK transmitter. For driver safety, the MSMD will prevent the memory recall function from being initiated if the transmission gear selector lever is not in the Park position or if the vehicle is moving. For further information, refer to **MODULE, MEMORY, SEAT, OPERATION** .

WHEN MONITORED

The seat motor is activated.

SET CONDITION

If the Memory Seat Module-Driver (MSMD) detects the Recliner Position sensor voltage is not within a specified range. The DTC will only set when the seat switch is moved in the same direction three consecutive times.

POSSIBLE CAUSES

Possible Causes
DRIVER SEAT RECLINER POSITION SENSE CIRCUIT SHORTED TO GROUND
DRIVER RECLINER SEAT ADJUSTER MOTOR
MEMORY SEAT MODULE-DRIVER (MSMD)

DIAGNOSTIC TEST

1. **CHECK IF THE DTC IS ACTIVE**
    1. Ignition on, engine not running.
    2. With the scan tool, record and erase Memory Seat Module-Driver (MSMD) DTCs.
    3. Cycle the ignition switch from off to on.
    4. Move the Seat Switch in the recliner position three times.
    5. With the scan tool, read MSMD DTCs.

    Does the scan tool display this DTC as active?

    Yes

- Go To 2

No

- The condition or conditions that originally set this DTC are not present at this time. Using the wiring diagrams as a guide, check all related splices and connectors for signs of water intrusion, corrosion, pushed out or bent terminals, and correct pin tension.
- Perform the POWER SEAT SYSTEM VERIFICATION TEST. Refer to **STANDARD PROCEDURE**.

2. **CHECK THE (G403) DRIVER SEAT RECLINER POSITION SENSE CIRCUIT**
   1. Turn the ignition off.
   2. Disconnect the Driver Seat Recliner Adjuster Motor harness connector.
   3. Ignition on, engine not running.
   4. Measure the voltage between ground and the (G403) Driver Seat Recliner Position Sense circuit.

   Is the voltage above 11.0 volts?

   Yes

   - Replace the Power Seat Back in accordance with the Service Information. Refer to **DESCRIPTION** . Refer to **SEAT BACK, FRONT** .
   - Perform the POWER SEAT SYSTEM VERIFICATION TEST. Refer to **STANDARD PROCEDURE**.

   No

   - Go To 3

3. **CHECK THE (G403) DRIVER SEAT RECLINER POSITION SENSE CIRCUIT FOR A SHORT TO GROUND**
   1. Turn the ignition off.
   2. Disconnect the MSMD C4 harness connector.
   3. Measure the resistance between ground and the (G403) Driver Seat Recliner Position Sense circuit.

   Is the resistance below 100K Ohms.

   Yes

   - Repair the (G403) Driver Seat Recliner Position Sense circuit for a short to ground.
   - Perform the POWER SEAT SYSTEM VERIFICATION TEST. Refer to **STANDARD PROCEDURE**.

   No

- Go To 4

4. **MEMORY SEAT MODULE (MSMD)**
   1. Using the wiring diagram/schematic as a guide, inspect the wiring and harness connectors between the Driver Seat Recliner Adjuster Motor and the MSMD.
   2. Look for any chafed, pierced, pinched, or partially broken wires.
   3. Look for broken, bent, pushed out or corroded terminals. Verify that there is good pin to terminal contact in the Driver Seat Recliner Adjuster Motor and MSMD harness connectors.
   4. Perform any Technical Service Bulletins that may apply.

   Were there any problems found?

   Yes

   - Repair as necessary.
   - Perform the POWER SEAT SYSTEM VERIFICATION TEST. Refer to **STANDARD PROCEDURE**.

   No

   - Replace and program the MSMD in accordance with the Service Information. Refer to **MODULE, MEMORY, SEAT, REMOVAL** .
   - Perform the POWER SEAT SYSTEM VERIFICATION TEST. Refer to **STANDARD PROCEDURE**.

B1D77-12-SEAT RECLINER POSITION SENSOR - CIRCUIT SHORT TO BATTERY

For a complete wiring diagram, **refer to appropriate SYSTEM WIRING DIAGRAMS article** .

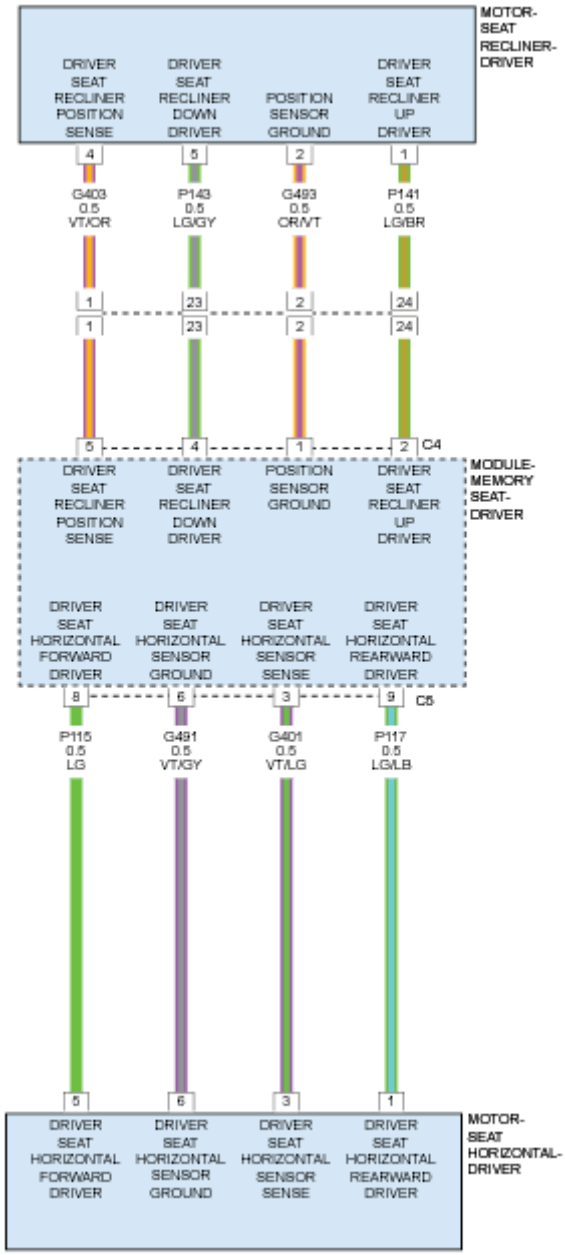

Fig. 10: Driver Memory Seat Module Circuit Diagram
Courtesy of CHRYSLER GROUP, LLC

THEORY OF OPERATION

The Memory System is made up of the Memory Seat Module-Driver (MSMD), Memory Switch, Driver Seat Switch and multiple Seat Motors. The motors each contain a hall-effect position sensor. The hall-effect position sensor provides feedback to the MSMD in relation to the motors position.

The Driver Seat Switch is a Multiplex (Mux) switch which uses set resistance levels for each switch position.

These resistances correspond to different voltages which is monitored by the MSMD over two separate circuits. When a voltage change is detected, the MSMD will command the appropriate Seat motor(s) to move the seat in the requested direction as long as the Driver Seat Switch is held in that direction or its stops have been reached.

The Memory Switch is a Mux switch that is used to set and recall the seat positions. When a Memory Switch button is pressed, the Driver Door Module (DDM) detects a voltage change and sends a request over the Controller Area Network (CAN) bus circuit to the MSMD to perform the requested command. If the SET button on the Memory Switch is pressed, followed by the 1 or 2 button, the MSMD will store the seat positions based on the position inputs received from the hall-effect position sensors. If the 1 or 2 button on the Memory Switch is pressed, the MSMD will recall the stored seat positions for that particular selection and return the seat to the stored positions. Memory position may also be recalled using a linked FOBIK transmitter. For driver safety, the MSMD will prevent the memory recall function from being initiated if the transmission gear selector lever is not in the Park position or if the vehicle is moving. For further information, refer to **MODULE, MEMORY, SEAT, OPERATION** .

WHEN MONITORED

The seat motor is activated.

SET CONDITION

If the Memory Seat Module-Driver (MSMD) detects the Recliner Position sensor voltage is not within a specified range. The DTC will only set when the seat switch is moved in the same direction three consecutive times.

POSSIBLE CAUSES

Possible Causes
DRIVER SEAT RECLINER POSITION SENSE CIRCUIT SHORTED TO VOLTAGE
DRIVER RECLINER SEAT ADJUSTER MOTOR
MEMORY SEAT MODULE-DRIVER (MSMD)

DIAGNOSTIC TEST

1. **CHECK IF THE DTC IS ACTIVE**
    1. Ignition on, engine not running.
    2. With the scan tool, record and erase Memory Seat Module-Driver (MSMD) DTCs.
    3. Cycle the ignition switch from off to on.
    4. Move the Seat Switch in the recliner position three times.
    5. With the scan tool, read MSMD DTCs.

    Does the scan tool display this DTC as active?

    Yes

- Go To 2

No

- The condition or conditions that originally set this DTC are not present at this time. Using the wiring diagrams as a guide, check all related splices and connectors for signs of water intrusion, corrosion, pushed out or bent terminals, and correct pin tension.
- Perform the POWER SEAT SYSTEM VERIFICATION TEST. Refer to **STANDARD PROCEDURE**.

2. **CHECK THE (G403) DRIVER SEAT RECLINER POSITION SENSE CIRCUIT**
   1. Disconnect the Driver Seat Recliner Adjuster Motor harness connector.
   2. Measure the voltage between the (G403) Driver Seat Recliner Position Sense circuit and ground.

      Is the voltage above 11.0 volts?

      Yes

      - Go To 3

      No

      - Replace the Power Seat Back in accordance with the Service Information. Refer to **DESCRIPTION** . Refer to **SEAT BACK, FRONT** .
      - Perform the POWER SEAT SYSTEM VERIFICATION TEST. Refer to **STANDARD PROCEDURE**.
3. **CHECK THE (G403) DRIVER SEAT RECLINER POSITION SENSE CIRCUIT FOR A SHORT TO VOLTAGE**
   1. Disconnect the MSMD C4 harness connector.
   2. Measure the voltage between ground and the (G403) Driver Seat Recliner Position Sense circuit.

      Is the voltage above 11.0 volts?

      Yes

      - Repair the (G403) Driver Seat Recliner Position Sense circuit for a short to voltage.
      - Perform the POWER SEAT SYSTEM VERIFICATION TEST. Refer to **STANDARD PROCEDURE**.

      No

      - Go To 4
4. **MEMORY SEAT MODULE (MSMD)**
   1. Using the wiring diagram/schematic as a guide, inspect the wiring and harness connectors between

the Driver Seat Recliner Adjuster Motor and the MSMD.

2. Look for any chafed, pierced, pinched, or partially broken wires.
3. Look for broken, bent, pushed out or corroded terminals. Verify that there is good pin to terminal contact in the Driver Seat Recliner Adjuster Motor and MSMD harness connectors.
4. Perform any Technical Service Bulletins that may apply.

Were there any problems found?

Yes

- Repair as necessary.
- Perform the POWER SEAT SYSTEM VERIFICATION TEST. Refer to **STANDARD PROCEDURE**.

No

- Replace and program the MSMD in accordance with the Service Information. Refer to **MODULE, MEMORY, SEAT, REMOVAL** .
- Perform the POWER SEAT SYSTEM VERIFICATION TEST. Refer to **STANDARD PROCEDURE**.

B1D7C-92-SEAT HORIZONTAL MOTOR CONTROL - PERFORMANCE OR INCORRECT OPERATION

For a complete wiring diagram, **refer to appropriate SYSTEM WIRING DIAGRAMS article** .

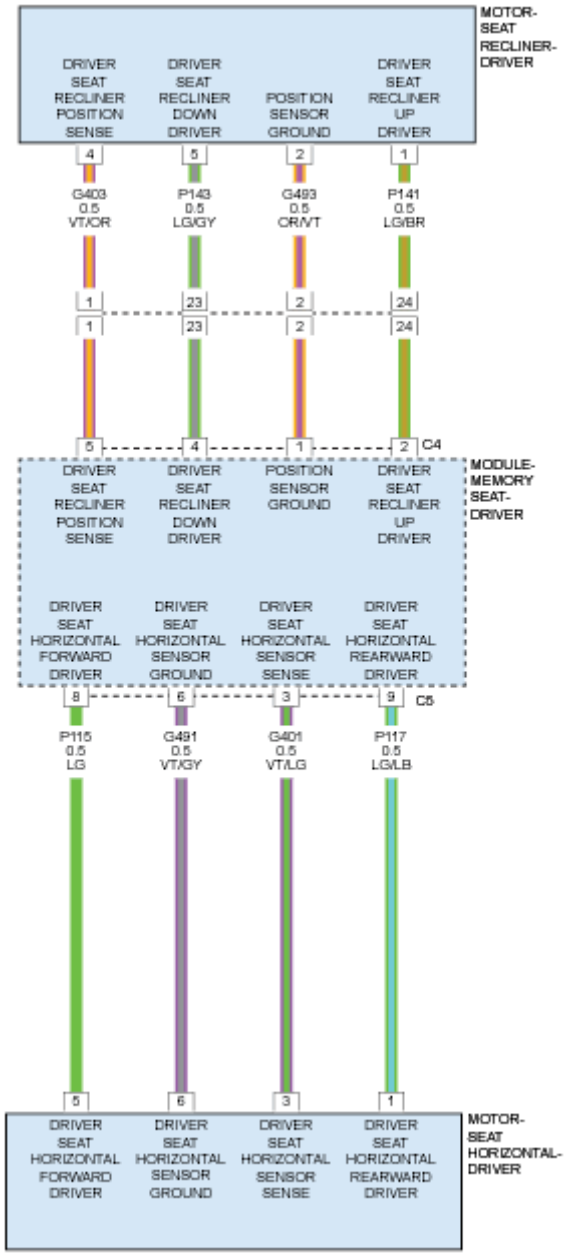

Fig. 11: Driver Memory Seat Module Circuit Diagram
Courtesy of CHRYSLER GROUP, LLC

THEORY OF OPERATION

The Memory System is made up of the Memory Seat Module-Driver (MSMD), Memory Switch, Driver Seat Switch and multiple Seat Motors. The motors each contain a hall-effect position sensor. The hall-effect position sensor provides feedback to the MSMD in relation to the motors position.

The Driver Seat Switch is a Multiplex (Mux) switch which uses set resistance levels for each switch position.

These resistances correspond to different voltages which is monitored by the MSMD over two separate circuits. When a voltage change is detected, the MSMD will command the appropriate Seat motor(s) to move the seat in the requested direction as long as the Driver Seat Switch is held in that direction or its stops have been reached.

The Memory Switch is a Mux switch that is used to set and recall the seat positions. When a Memory Switch button is pressed, the Driver Door Module (DDM) detects a voltage change and sends a request over the Controller Area Network (CAN) bus circuit to the MSMD to perform the requested command. If the SET button on the Memory Switch is pressed, followed by the 1 or 2 button, the MSMD will store the seat positions based on the position inputs received from the hall-effect position sensors. If the 1 or 2 button on the Memory Switch is pressed, the MSMD will recall the stored seat positions for that particular selection and return the seat to the stored positions. Memory position may also be recalled using a linked FOBIK transmitter. For driver safety, the MSMD will prevent the memory recall function from being initiated if the transmission gear selector lever is not in the Park position or if the vehicle is moving. For further information, refer to **MODULE, MEMORY, SEAT, OPERATION** .

WHEN MONITORED

The seat motor is activated.

SET CONDITION

The Memory Seat Module-Driver (MSMD) does not detect seat motor activation. The DTC will only set when the seat switch is moved in the same direction three consecutive times.

POSSIBLE CAUSES

Possible Causes
DRIVER SEAT HORIZONTAL POSITION SENSE CIRCUIT OPEN OR EXCESSIVE RESISTANCE
DRIVER SEAT HORIZONTAL SENSOR GROUND CIRCUIT OPEN OR EXCESSIVE RESISTANCE
DRIVER SEAT HORIZONTAL FORWARD DRIVER SHORTED TO VOLTAGE
DRIVER SEAT HORIZONTAL FORWARD DRIVER SHORTED TO GROUND
DRIVER SEAT HORIZONTAL FORWARD DRIVER OPEN OR EXCESSIVE RESISTANCE
DRIVER SEAT HORIZONTAL REARWARD DRIVER SHORTED TO VOLTAGE
DRIVER SEAT HORIZONTAL REARWARD DRIVER SHORTED TO GROUND
DRIVER SEAT HORIZONTAL REARWARD DRIVER OPEN OR EXCESSIVE RESISTANCE
DRIVER HORIZONTAL SEAT ADJUSTER MOTOR
MEMORY SEAT MODULE-DRIVER (MSMD)

DIAGNOSTIC TEST

1. **CHECK FOR RELATED DIAGNOSTIC TROUBLE CODES**
    1. Turn the ignition on.
    2. With the scan tool, read Memory Seat Module-Driver (MSMD) DTCs.

Does the scan tool display any seat position sensor DTCs?

Yes

- Refer to **DIAGNOSIS AND TESTING** and perform the appropriate diagnostic procedure.

No

- Go To 2

2. **CHECK IF THE DTC IS ACTIVE**
   1. Ignition on, engine not running.
   2. With the scan tool, record and erase Memory Seat Module-Driver (MSMD) DTCs.
   3. Cycle the ignition switch from off to on.
   4. Move the Seat Switch in the horizontal position three times.
   5. With the scan tool, read MSMD DTCs.

   Does the scan tool display this DTC as active?

   Yes

   - Go To 3

   No

   - The condition or conditions that originally set this DTC are not present at this time. Using the wiring diagrams as a guide, check all related splices and connectors for signs of water intrusion, corrosion, pushed out or bent terminals, and correct pin tension.
   - Perform the POWER SEAT SYSTEM VERIFICATION TEST. Refer to **STANDARD PROCEDURE**.

3. **CHECK THE (G401) DRIVER SEAT HORIZONTAL POSITION SENSE CIRCUIT**
   1. Turn the ignition off.
   2. Disconnect the Driver Horizontal Seat Adjuster Motor harness connector.
   3. Ignition on, engine not running.
   4. Measure the voltage between ground the (G401) Driver Seat Horizontal Position Sense circuit.

   Is the voltage above 11.0 volts?

   Yes

   - Go To 4

   No

- Go To 11

4. **CHECK THE (G491) DRIVER SEAT HORIZONTAL SENSOR GROUND CIRCUIT**
   1. Measure the voltage between the (G401) Driver Seat Horizontal Position Sense circuit and the (G491) Driver Seat Horizontal Sensor Ground circuit.

      Is the voltage above 11.0 volts?

      Yes

      - Go To 5

      No

      - Go To 12
5. **CHECK THE (P115) DRIVER SEAT HORIZONTAL FORWARD DRIVER CIRCUIT**
   1. Measure the voltage between ground and the (P115) Driver Seat Horizontal Forward Driver circuit.

      Is the voltage above 1.0 volt?

      Yes

      - Go To 13

      No

      - Go To 6
6. **CHECK THE (P117) DRIVER SEAT HORIZONTAL REARWARD DRIVER CIRCUIT**
   1. Measure the voltage between ground and the (P117) Driver Seat Horizontal Rearward Driver circuit.

      Is the voltage above 1.0 volt?

      Yes

      - Go To 14

      No

      - Go To 7
7. **CHECK THE (P115) DRIVER SEAT HORIZONTAL FORWARD DRIVER CIRCUIT**
   1. Connect a 12-volt test light between ground and the (P115) Driver Seat Horizontal Forward Driver circuit.
   2. While observing the test light, move the Driver Seat Horizontal Switch in the forward position.

NOTE: The test light must illuminate brightly. Compare the brightness to that of a direct connection to the battery.

Does the test light illuminate brightly?

Yes

- Go To 8

No

- Go To 15

8. **CHECK THE (P117) DRIVER SEAT HORIZONTAL REARWARD DRIVER CIRCUIT**
   1. Connect a 12-volt test light between ground and the (P117) Driver Seat Horizontal Rearward Driver circuit.
   2. While observing the test light, move the Driver Seat Horizontal Switch in the rearward position.

   Does the test light illuminate brightly?

   Yes

   - Go To 9

   No

   - Go To 17

9. **CHECK THE DRIVER SEAT HORIZONTAL REARWARD DRIVER**
   1. Connect a 12-volt test light between the (P115) Driver Seat Horizontal Forward Driver circuit and the (P117) Driver Seat Horizontal Rearward Driver circuit.
   2. While observing the test light, move the Driver Seat Horizontal Switch in the forward position.

   Does the test light illuminate brightly?

   Yes

   - Go To 10

   No

   - Go To 19

10. **CHECK THE DRIVER SEAT HORIZONTAL FORWARD DRIVER**
    1. While observing the test light, move the Driver Seat Horizontal Switch in the rearward position.

    Does the test light illuminate brightly?

Yes

- Replace the Power Seat Track in accordance with the Service Information. Refer to **DESCRIPTION** . Refer to **SEAT** .
- Perform POWER SEAT SYSTEM VERIFICATION TEST. Refer to **STANDARD PROCEDURE**.

No

- Go To 19

11. **CHECK THE (G401) DRIVER SEAT HORIZONTAL POSITION SENSE CIRCUIT FOR AN OPEN OR EXCESSIVE RESISTANCE**
    1. Turn the ignition off.
    2. Disconnect the MSMD C5 harness connector.
    3. Measure the resistance of the (G401) Driver Seat Horizontal Position Sense circuit between the Driver Seat Horizontal Adjuster Motor harness connector and the MSMD C5 harness connector.

    Is the resistance above 5.0 Ohms?

    Yes

    - Repair the (G401) Driver Seat Horizontal Position Sense circuit for and open or excessive resistance.
    - Perform the POWER SEAT SYSTEM VERIFICATION TEST. Refer to **STANDARD PROCEDURE**.

    No

    - Go To 19

12. **CHECK THE (G491) DRIVER SEAT HORIZONTAL SENSOR GROUND CIRCUIT FOR AN OPEN OR EXCESSIVE RESISTANCE**
    1. Turn the ignition off.
    2. Disconnect the MSMD C5 harness connector.
    3. Measure the resistance of the (G491) Driver Seat Horizontal Sensor Ground circuit between the Driver Seat Horizontal Adjuster Motor harness connector and the MSMD C5 harness connector.

    Is the resistance above 5.0 Ohms.

    Yes

    - Repair the (G491) Driver Seat Horizontal Sensor Ground circuit for an open or excessive resistance.
    - Perform the POWER SEAT SYSTEM VERIFICATION TEST. Refer to **STANDARD PROCEDURE**.

No

- Go To 19

13. **CHECK THE (P115) DRIVER SEAT HORIZONTAL FORWARD DRIVER CIRCUIT FOR A SHORT TO VOLTAGE**
    1. Disconnect the MSMD C5 harness connector.
    2. Measure the voltage between ground and the (P115) Driver Seat Horizontal Forward Driver circuit.

    Is the voltage above 1.0 volt?

    Yes

    - Repair the (P115) Driver Seat Horizontal Forward Driver circuit for a short to voltage.
    - Perform the POWER SEAT SYSTEM VERIFICATION TEST. Refer to **STANDARD PROCEDURE**.

    No

    - Go To 19

14. **CHECK THE (P117) DRIVER SEAT HORIZONTAL REARWARD DRIVER CIRCUIT FOR A SHORT TO VOLTAGE**
    1. Disconnect the MSMD C5 harness connector.
    2. Measure the voltage between ground and the (P117) Driver Seat Horizontal Rearward Driver circuit.

    Is the voltage above 1.0 volt?

    Yes

    - Repair the (P117) Driver Seat Horizontal Rearward Driver circuit for a short to voltage.
    - Perform the POWER SEAT SYSTEM VERIFICATION TEST. Refer to **STANDARD PROCEDURE**.

    No

    - Go To 19

15. **CHECK THE (P115) DRIVER SEAT HORIZONTAL FORWARD DRIVER CIRCUIT FOR A SHORT TO GROUND**
    1. Turn the ignition off.
    2. Disconnect the MSMD C5 harness connector.
    3. Measure the resistance between ground and the (P115) Driver Seat Horizontal Forward Driver circuit.

Is the resistance below 100K Ohms?

Yes

- Repair the (P115) Driver Seat Horizontal Forward Driver circuit for a short to ground.
- Perform the POWER SEAT SYSTEM VERIFICATION TEST. Refer to **STANDARD PROCEDURE**.

No

- Go To 16

16. **CHECK THE (P115) DRIVER SEAT HORIZONTAL FORWARD DRIVER CIRCUIT FOR AN OPEN OR EXCESSIVE RESISTANCE**
    1. Measure the resistance of the (P115) Driver Seat Horizontal Forward Driver circuit between the Driver Seat Horizontal Adjuster Motor harness connector and the MSMD C5 harness connector.

    Is the resistance above 5.0 Ohms?

    Yes

    - Repair the (P115) Driver Seat Horizontal Forward Driver circuit for an open or excessive resistance.
    - Perform POWER SEAT SYSTEM VERIFICATION TEST. Refer to **STANDARD PROCEDURE**.

    No

    - Go To 19

17. **CHECK THE (P117) DRIVER SEAT HORIZONTAL REARWARD DRIVER CIRCUIT FOR A SHORT TO GROUND**
    1. Turn the ignition off.
    2. Disconnect the MSMD C5 harness connector.
    3. Measure the resistance between ground and the (P117) Driver Seat Horizontal Rearward Driver circuit.

    Is the resistance below 100K Ohms?

    Yes

    - Repair the (P117) Driver Seat Horizontal Rearward Driver circuit for a short to ground.
    - Perform the POWER SEAT SYSTEM VERIFICATION TEST. Refer to **STANDARD PROCEDURE**.

    No

- Go To 18

18. **CHECK THE (P117) DRIVER SEAT HORIZONTAL REARWARD DRIVER CIRCUIT FOR AN OPEN OR EXCESSIVE RESISTANCE**
    1. Measure the resistance of the (P117) Driver Seat Horizontal Rearward Driver circuit between the Driver Seat Horizontal Adjuster Motor harness connector and the MSMD C5 harness connector.

       Is the resistance above 10 Ohms?

       Yes

       - Repair the (P117) Driver Seat Horizontal Rearward Driver circuit for an open or excessive resistance.
       - Perform the POWER SEAT SYSTEM VERIFICATION TEST. Refer to **STANDARD PROCEDURE**.

       No

       - Go To 19

19. **MEMORY SEAT MODULE (MSMD)**
    1. Using the wiring diagram/schematic as a guide, inspect the wiring and harness connectors between the Driver Seat Horizontal Adjuster Motor and the MSMD.
    2. Look for any chafed, pierced, pinched, or partially broken wires.
    3. Look for broken, bent, pushed out or corroded terminals. Verify that there is good pin to terminal contact in the Driver Seat Horizontal Adjuster Motor and MSMD harness connectors.
    4. Perform any Technical Service Bulletins that may apply.

       Were there any problems found?

       Yes

       - Repair as necessary.
       - Perform the POWER SEAT SYSTEM VERIFICATION TEST. Refer to **STANDARD PROCEDURE**.

       No

       - Replace and program the MSMD in accordance with the Service Information. Refer to **MODULE, MEMORY, SEAT, REMOVAL** .
       - Perform the POWER SEAT SYSTEM VERIFICATION TEST. Refer to **STANDARD PROCEDURE**.

B1D7F-00-SEAT FRONT VERTICAL MOTOR CONTROL CIRCUIT PERFORMANCE

For a complete wiring diagram, **refer to appropriate SYSTEM WIRING DIAGRAMS article** .

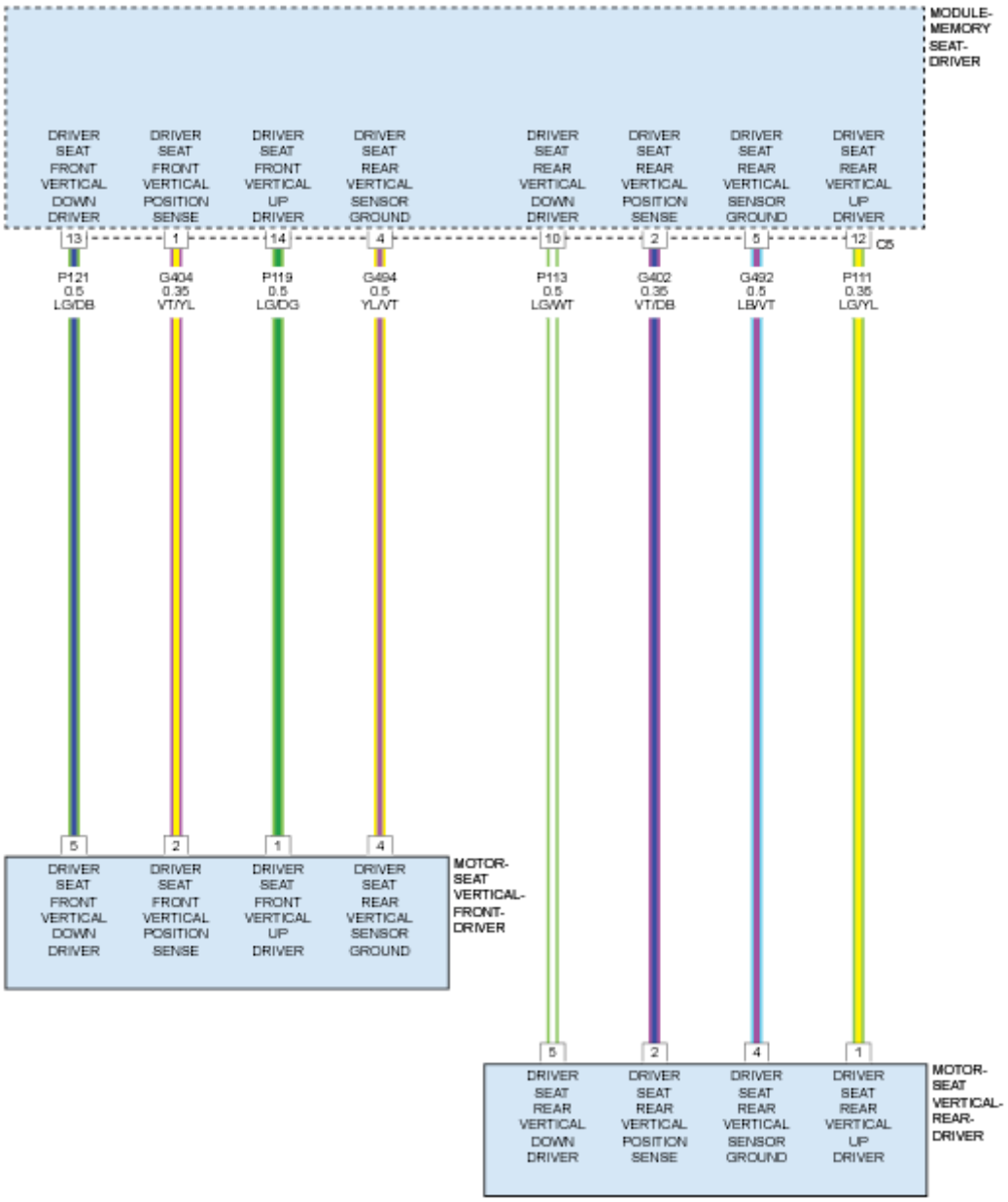

Fig. 12: Driver Vertical Seat Motor Circuit Diagram
Courtesy of CHRYSLER GROUP, LLC

THEORY OF OPERATION

The Memory System is made up of the Memory Seat Module-Driver (MSMD), Memory Switch, Driver Seat Switch and multiple Seat Motors. The motors each contain a hall-effect position sensor. The hall-effect position sensor provides feedback to the MSMD in relation to the motors position.

The Driver Seat Switch is a Multiplex (Mux) switch which uses set resistance levels for each switch position. These resistances correspond to different voltages which is monitored by the MSMD over two separate circuits. When a voltage change is detected, the MSMD will command the appropriate Seat motor(s) to move the seat in

the requested direction as long as the Driver Seat Switch is held in that direction or its stops have been reached.

The Memory Switch is a Mux switch that is used to set and recall the seat positions. When a Memory Switch button is pressed, the Driver Door Module (DDM) detects a voltage change and sends a request over the Controller Area Network (CAN) bus circuit to the MSMD to perform the requested command. If the SET button on the Memory Switch is pressed, followed by the 1 or 2 button, the MSMD will store the seat positions based on the position inputs received from the hall-effect position sensors. If the 1 or 2 button on the Memory Switch is pressed, the MSMD will recall the stored seat positions for that particular selection and return the seat to the stored positions. Memory position may also be recalled using a linked FOBIK transmitter. For driver safety, the MSMD will prevent the memory recall function from being initiated if the transmission gear selector lever is not in the Park position or if the vehicle is moving. For further information, refer to **MODULE, MEMORY, SEAT, OPERATION** .

WHEN MONITORED

The seat motor is activated.

SET CONDITION

The Memory Seat Module-Driver (MSMD) does not detect seat motor activation. The DTC will only set when the seat switch is moved in the same direction three consecutive times.

POSSIBLE CAUSES

Possible Causes
DRIVER SEAT FRONT VERTICAL POSITION SENSE CIRCUIT OPEN OR EXCESSIVE RESISTANCE
DRIVER SEAT FRONT VERTICAL SENSOR GROUND CIRCUIT OPEN OR EXCESSIVE RESISTANCE
DRIVER SEAT FRONT VERTICAL UP DRIVER CIRCUIT SHORTED TO VOLTAGE
DRIVER SEAT FRONT VERTICAL UP DRIVER CIRCUIT SHORTED TO GROUND
DRIVER SEAT FRONT VERTICAL UP DRIVER CIRCUIT OPEN OR EXCESSIVE RESISTANCE
DRIVER SEAT FRONT VERTICAL DOWN DRIVER CIRCUIT SHORTED TO VOLTAGE
DRIVER SEAT FRONT VERTICAL DOWN DRIVER CIRCUIT SHORTED TO GROUND
DRIVER SEAT FRONT VERTICAL DOWN DRIVER CIRCUIT OPEN OR EXCESSIVE RESISTANCE
DRIVER FRONT VERTICAL SEAT ADJUSTER MOTOR
MEMORY SEAT MODULE-DRIVER (MSMD)

DIAGNOSTIC TEST

1. **CHECK FOR RELATED DIAGNOSTIC TROUBLE CODES**
    1. Turn the ignition on.
    2. With the scan tool, read Memory Seat Module-Driver (MSMD) DTCs.

Does the scan tool display any seat position sensor DTCs?

Yes

- Refer to **DIAGNOSIS AND TESTING** and perform the appropriate diagnostic procedure.

No

- Go To 2

2. **CHECK IF THE DTC IS ACTIVE**
   1. Ignition on, engine not running.
   2. With the scan tool, record and erase MSMD DTCs.
   3. Cycle the ignition switch from off to on.
   4. Move the Seat Switch in the front vertical position three times.
   5. With the scan tool, read MSMD DTCs.

   Does the scan tool display this DTC as active?

   Yes

   - Go To 3

   No

   - The condition or conditions that originally set this DTC are not present at this time. Using the wiring diagrams as a guide, check all related splices and connectors for signs of water intrusion, corrosion, pushed out or bent terminals, and correct pin tension.
   - Perform the POWER SEAT SYSTEM VERIFICATION TEST. Refer to **STANDARD PROCEDURE**.

3. **CHECK THE (G404) DRIVER SEAT FRONT VERTICAL POSITION SENSE CIRCUIT**
   1. Turn the ignition off.
   2. Disconnect the Driver Front Vertical Seat Adjuster Motor harness connector.
   3. Ignition on, engine not running.
   4. Measure the voltage between ground and the (G404) Driver Seat Front Vertical Position Sense circuit in the Driver Front Vertical Seat Adjuster Motor harness connector.

   Is the voltage above 11.0 volts?

   Yes

   - Go To 4

   No

- Go To 11

4. **CHECK THE (G494) DRIVER SEAT FRONT VERTICAL SENSOR GROUND CIRCUIT**
   1. Measure the voltage between the (G404) Driver Seat Front Vertical Position Sense circuit and the (G494) Driver Seat Front Vertical Sensor Ground circuit.

      Is the voltage above 11.0 volts?

      Yes

      - Go To 5

      No

      - Go To 12
5. **CHECK THE (P119) DRIVER SEAT FRONT VERTICAL UP DRIVER CIRCUIT**
   1. Measure the voltage between ground and the (P119) Driver Seat Front Vertical Up Driver circuit.

      Is the voltage above 1.0 volt?

      Yes

      - Go To 13

      No

      - Go To 6
6. **CHECK THE (P121) DRIVER SEAT FRONT VERTICAL DOWN DRIVER CIRCUIT**
   1. Measure the voltage between ground and the (P121) Driver Seat Front Vertical Down Driver circuit.

      Is the voltage above 1.0 volt?

      Yes

      - Go To 14

      No

      - Go To 7
7. **CHECK THE (P119) DRIVER SEAT FRONT VERTICAL UP DRIVER CIRCUIT**
   1. Connect a 12-volt test light between ground and the (P119) Driver Seat Front Vertical Up Driver circuit.
   2. While observing the test light, move the Driver Seat Front Vertical Switch in the up position.

NOTE: The test light must illuminate brightly. Compare the brightness to that of a direct connection to the battery.

Does the test lamp illuminate brightly?

Yes

- Go To 8

No

- Go To 15

8. **CHECK THE (P121) DRIVER SEAT FRONT VERTICAL DOWN DRIVER CIRCUIT**
   1. Connect a 12-volt test light between ground and the (P121) Driver Seat Front Vertical Down Driver circuit.
   2. While observing the test light, move the Driver Seat Front Vertical Switch in the down position.

   Does the test light illuminate brightly?

   Yes

   - Go To 9

   No

   - Go To 17

9. **CHECK THE DRIVER SEAT FRONT VERTICAL DOWN DRIVER**
   1. Connect a 12-volt test light between the (P119) Driver Seat Front Vertical Up Driver circuit and the (P121) Driver Seat Front Vertical Down Driver circuit.
   2. While observing the test light, move the Driver Seat Front Vertical Switch in the up position.

   Does the test light illuminate brightly?

   Yes

   - Go To 10

   No

   - Go To 19

10. **CHECK THE DRIVER SEAT FRONT VERTICAL UP DRIVER**
    1. While observing the test light, move the Driver Seat Front Vertical Switch in the down position.

    Does the test light illuminate brightly?

Yes

- Replace the Power Seat Track in accordance with the Service Information. Refer to **DESCRIPTION** . Refer to **SEAT** .
- Perform the POWER SEAT SYSTEM VERIFICATION TEST. Refer to **STANDARD PROCEDURE**.

No

- Go To 19

11. **CHECK THE (G404) DRIVER SEAT FRONT VERTICAL POSITION SENSE CIRCUIT FOR AN OPEN OR EXCESSIVE RESISTANCE**
    1. Turn the ignition off.
    2. Disconnect the MSMD C5 harness connector.
    3. Measure the resistance of the (G404) Driver Seat Front Vertical Position Sense circuit between the Driver Seat Front Vertical Adjuster Motor harness connector and the MSMD C5 harness connector.

    Is the resistance above 5.0 Ohms?

    Yes

    - Repair the (G404) Driver Seat Front Vertical Position Sense circuit for an open or excessive resistance.
    - Perform the POWER SEAT SYSTEM VERIFICATION TEST. Refer to **STANDARD PROCEDURE**.

    No

    - Go To 19

12. **CHECK THE (G494) DRIVER SEAT FRONT VERTICAL SENSOR GROUND CIRCUIT FOR AN OPEN OR EXCESSIVE RESISTANCE**
    1. Turn the ignition off.
    2. Disconnect the MSMD C5 harness connector.
    3. Measure the resistance of the (G494) Driver Seat Front Vertical Sensor Ground circuit between the Driver Seat Front Vertical Adjuster Motor harness connector and the MSMD C5 harness connector.

    Is the resistance above 5.0 Ohms?

    Yes

    - Repair the (G494) Driver Seat Front Vertical Sensor Ground circuit for an open or excessive resistance.
    - Perform the POWER SEAT SYSTEM VERIFICATION TEST. Refer to **STANDARD PROCEDURE**.

No

- Go To 19

13. **CHECK THE (P119) DRIVER SEAT FRONT VERTICAL UP DRIVER CIRCUIT FOR A SHORT TO VOLTAGE**
    1. Disconnect the MSMD C5 harness connector.
    2. Measure the voltage between ground the (P119) Driver Seat Front Vertical Up Driver circuit.

    Is the voltage above 1.0 volt?

    Yes

    - Repair the (P119) Driver Seat Front Vertical Up Driver circuit for a short to voltage.
    - Perform the POWER SEAT SYSTEM VERIFICATION TEST. Refer to **STANDARD PROCEDURE**.

    No

    - Go To 19

14. **CHECK THE (P121) DRIVER SEAT FRONT VERTICAL DOWN DRIVER CIRCUIT FOR A SHORT TO VOLTAGE**
    1. Disconnect the MSMD C5 harness connector.
    2. Measure the voltage between ground and the (P121) Driver Seat Front Vertical Down Driver circuit.

    Is the voltage above 1.0 volt?

    Yes

    - Repair the (P121) Driver Seat Front Vertical Down Driver circuit for a short to voltage.
    - Perform the POWER SEAT SYSTEM VERIFICATION TEST. Refer to **STANDARD PROCEDURE**.

    No

    - Go To 19

15. **CHECK THE (P119) DRIVER SEAT FRONT VERTICAL UP DRIVER CIRCUIT FOR A SHORT TO GROUND**
    1. Turn the ignition off.
    2. Disconnect the MSMD C5 harness connector.
    3. Measure the resistance between ground and the (P119) Driver Seat Front Vertical Up Driver circuit.

Is the resistance below 100K Ohms?

Yes

- Repair the (P119) Driver Seat Front Vertical Up Driver circuit for a short to ground.
- Perform the POWER SEAT SYSTEM VERIFICATION TEST. Refer to **STANDARD PROCEDURE**.

No

- Go To 16

16. **CHECKING THE (P119) DRIVER SEAT FRONT VERTICAL UP DRIVER CIRCUIT FOR AN OPEN OR EXCESSIVE RESISTANCE**
    1. Measure the resistance of the (P119) Driver Seat Front Vertical Up Driver circuit between the Driver Seat Front Vertical Adjuster Motor harness connector and the MSMD C5 harness connector.

    Is the resistance above 5.0 Ohms?

    Yes

    - Repair the (P119) Driver Seat Front Vertical Up Driver circuit for an open or excessive resistance.
    - Perform the POWER SEAT SYSTEM VERIFICATION TEST. Refer to **STANDARD PROCEDURE**.

    No

    - Go To 19

17. **CHECK THE (P121) DRIVER SEAT FRONT VERTICAL DOWN DRIVER CIRCUIT FOR A SHORT TO GROUND**
    1. Turn the ignition off.
    2. Disconnect the MSMD C5 harness connector.
    3. Measure the resistance between ground and the (P121) Driver Seat Front Vertical Down Driver circuit.

    Is the resistance below 100K Ohms?

    Yes

    - Repair the (P121) Driver Seat Front Vertical Down Driver circuit for an open.
    - Perform the POWER SEAT SYSTEM VERIFICATION TEST. Refer to **STANDARD PROCEDURE**.

    No

- Go To 18

18. **CHECK THE (P121) DRIVER SEAT FRONT VERTICAL DOWN DRIVER CIRCUIT FOR AN OPEN OR EXCESSIVE RESISTANCE**
    1. Measure the resistance of the (P121) Driver Seat Front Vertical Down Driver circuit between the Driver Seat Front Vertical Adjuster Motor harness connector and the MSMD C5 harness connector.

       Is the resistance above 5.0 Ohms?

       Yes

       - Repair the (P121) Driver Seat Front Vertical Down Driver circuit for an open or excessive resistance.
       - Perform the POWER SEAT SYSTEM VERIFICATION TEST. Refer to **STANDARD PROCEDURE**.

       No

       - Go To 19

19. **MEMORY SEAT MODULE (MSMD)**
    1. Using the wiring diagram/schematic as a guide, inspect the wiring and harness connectors between the Driver Seat Front Vertical Adjuster Motor and the MSMD.
    2. Look for any chafed, pierced, pinched, or partially broken wires.
    3. Look for broken, bent, pushed out or corroded terminals. Verify that there is good pin to terminal contact in the Driver Seat Front Vertical Adjuster Motor and MSMD harness connectors.
    4. Perform any Technical Service Bulletins that may apply.

       Were there any problems found?

       Yes

       - Repair as necessary.
       - Perform the POWER SEAT SYSTEM VERIFICATION TEST. Refer to **STANDARD PROCEDURE**.

       No

       - Replace and program the MSMD in accordance with the Service Information. Refer to **MODULE, MEMORY, SEAT, REMOVAL** .
       - Perform the POWER SEAT SYSTEM VERIFICATION TEST. Refer to **STANDARD PROCEDURE**.

B1D84-92-SEAT REAR VERTICAL MOTOR CONTROL - PERFORMANCE OR INCORRECT OPERATION

For a complete wiring diagram, **refer to appropriate SYSTEM WIRING DIAGRAMS article** .

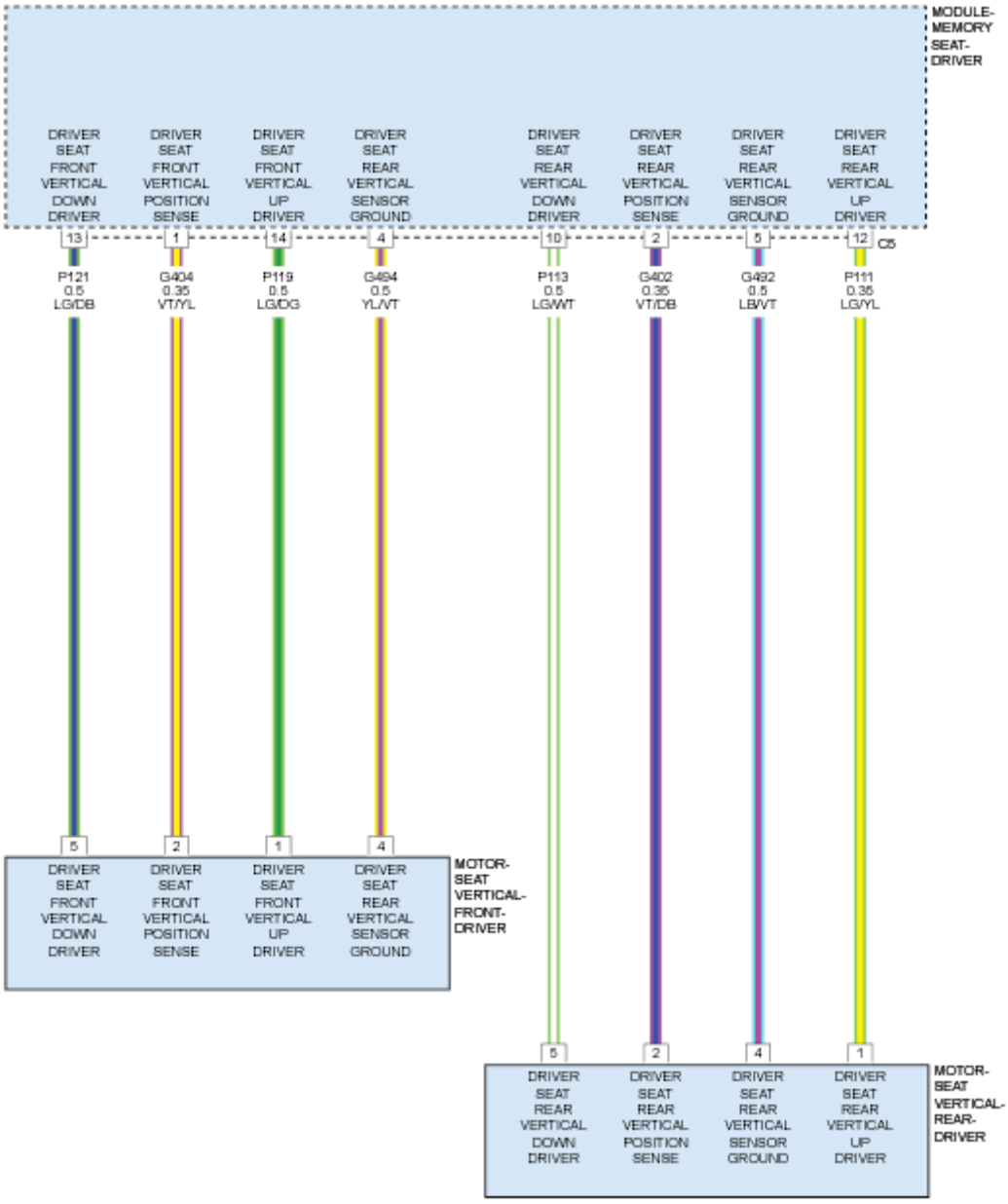

Fig. 13: Driver Vertical Seat Motor Circuit Diagram
Courtesy of CHRYSLER GROUP, LLC

THEORY OF OPERATION

The Memory System is made up of the Memory Seat Module-Driver (MSMD), Memory Switch, Driver Seat Switch and multiple Seat Motors. The motors each contain a hall-effect position sensor. The hall-effect position sensor provides feedback to the MSMD in relation to the motors position.

The Driver Seat Switch is a Multiplex (Mux) switch which uses set resistance levels for each switch position.

These resistances correspond to different voltages which is monitored by the MSMD over two separate circuits. When a voltage change is detected, the MSMD will command the appropriate Seat motor(s) to move the seat in the requested direction as long as the Driver Seat Switch is held in that direction or its stops have been reached.

The Memory Switch is a Mux switch that is used to set and recall the seat positions. When a Memory Switch button is pressed, the Driver Door Module (DDM) detects a voltage change and sends a request over the Controller Area Network (CAN) bus circuit to the MSMD to perform the requested command. If the SET button on the Memory Switch is pressed, followed by the 1 or 2 button, the MSMD will store the seat positions based on the position inputs received from the hall-effect position sensors. If the 1 or 2 button on the Memory Switch is pressed, the MSMD will recall the stored seat positions for that particular selection and return the seat to the stored positions. Memory position may also be recalled using a linked FOBIK transmitter. For driver safety, the MSMD will prevent the memory recall function from being initiated if the transmission gear selector lever is not in the Park position or if the vehicle is moving. For further information, refer to **MODULE, MEMORY, SEAT, OPERATION** .

WHEN MONITORED

The seat motor is activated.

SET CONDITION

The Memory Seat Module-Driver (MSMD) does not detect seat motor activation. The DTC will only set when the seat switch is moved in the same direction three consecutive times.

POSSIBLE CAUSES

Possible Causes
DRIVER SEAT REAR VERTICAL POSITION SENSE CIRCUIT OPEN OR EXCESSIVE RESISTANCE
DRIVER SEAT REAR VERTICAL SENSOR GROUND CIRCUIT OPEN OR EXCESSIVE RESISTANCE
DRIVER SEAT REAR VERTICAL DOWN DRIVER CIRCUIT SHORTED TO VOLTAGE
DRIVER SEAT REAR VERTICAL DOWN DRIVER CIRCUIT SHORTED TO GROUND
DRIVER SEAT REAR VERTICAL DOWN DRIVER CIRCUIT OPEN OR EXCESSIVE RESISTANCE
DRIVER SEAT REAR VERTICAL UP DRIVER CIRCUIT SHORTED TO VOLTAGE
DRIVER SEAT REAR VERTICAL UP DRIVER CIRCUIT SHORTED TO GROUND
DRIVER SEAT REAR VERTICAL UP DRIVER CIRCUIT OPEN OR EXCESSIVE RESISTANCE
DRIVER REAR VERTICAL SEAT ADJUSTER MOTOR
MEMORY SEAT MODULE-DRIVER (MSMD)

DIAGNOSTIC TEST

1. **CHECK FOR RELATED DIAGNOSTIC TROUBLE CODES**
    1. Turn the ignition on.

2. With the scan tool, read Memory Seat Module-Driver (MSMD) DTCs.

   Does the scan tool display any seat position sensor DTCs?

   Yes

   - Refer to **DIAGNOSIS AND TESTING** and perform the appropriate diagnostic procedure.

   No

   - Go To 2

2. **CHECK IF THE DTC IS ACTIVE**
   1. Ignition on, engine not running.
   2. With the scan tool, record and erase MSMD DTCs.
   3. Cycle the ignition switch from off to on.
   4. Move the Seat Switch in the rear vertical position three times.
   5. With the scan tool, read MSMD DTCs.

   Does the scan tool display this DTC as active?

   Yes

   - Go To 3

   No

   - The condition or conditions that originally set this DTC are not present at this time. Using the wiring diagrams as a guide, check all related splices and connectors for signs of water intrusion, corrosion, pushed out or bent terminals, and correct pin tension.
   - Perform the POWER SEAT SYSTEM VERIFICATION TEST. Refer to **STANDARD PROCEDURE**.

3. **CHECK THE (G402) DRIVER SEAT REAR VERTICAL POSITION SENSE CIRCUIT**
   1. Disconnect the Driver Rear Vertical Seat Adjuster Motor harness connector.
   2. Measure the voltage between ground and the (G402) Driver Seat Rear Vertical Position Sense circuit.

   Is the voltage above 11.0 volts?

   Yes

   - Go To 4

   No

- Go To 11

4. **CHECK THE (G492) DRIVER SEAT REAR VERTICAL SENSOR GROUND CIRCUIT**
   1. Measure the voltage between the (G402) Driver Seat Rear Vertical Position Sense circuit and the (G492) Driver Seat Rear Vertical Sensor Ground circuit.

      Is the voltage above 11.0 volts?

      Yes

      - Go To 5

      No

      - Go To 12
5. **CHECK THE (P111) DRIVER SEAT REAR VERTICAL DOWN DRIVER CIRCUIT**
   1. Measure the voltage between ground and the (P111) Driver Seat Rear Vertical Down Driver circuit.

      Is the voltage above 1.0 volt?

      Yes

      - Go To 13

      No

      - Go To 6
6. **CHECK THE (P113) DRIVER SEAT REAR VERTICAL UP DRIVER CIRCUIT**
   1. Measure the voltage between ground and the (P113) Driver Seat Rear Vertical Up Driver circuit.

      Is the voltage above 1.0 volt?

      Yes

      - Go To 14

      No

      - Go To 7
7. **CHECK THE (P111) DRIVER SEAT REAR VERTICAL DOWN DRIVER CIRCUIT**
   1. Connect a 12-volt test light between ground and the (P111) Driver Seat Rear Vertical Down Driver circuit.
   2. While observing the test light, move the Driver Seat Rear Vertical Switch in the down position.

NOTE: The test light must illuminate brightly. Compare the brightness to that of a direct connection to the battery.

Does the test light illuminate brightly?

Yes

- Go To 8

No

- Go To 15

8. **CHECK THE (P113) DRIVER SEAT REAR VERTICAL UP DRIVER CIRCUIT**
   1. Connect a 12-volt test light between ground and the (P113) Driver Seat Rear Vertical Up Driver circuit.
   2. While observing the test light, move the Driver Seat Rear Vertical Switch in the up position.

   Does the test light illuminate brightly?

   Yes

   - Go To 9

   No

   - Go To 17

9. **CHECK THE DRIVER SEAT REAR VERTICAL DOWN DRIVER**
   1. Connect a 12-volt test light between the (P111) Driver Seat Rear Vertical Down Driver circuit and the (P113) Driver Seat Rear Vertical Up Driver circuit.
   2. While observing the test light, move the Driver Seat Rear Vertical Switch in the down position.

   Does the test light illuminate brightly?

   Yes

   - Go To 10

   No

   - Go To 19

10. **CHECK THE DRIVER SEAT REAR VERTICAL UP DRIVER**
    1. While observing the test light, move the Driver Seat Rear Vertical Switch in the up position.

    Does the test light illuminate brightly?

Yes

- Replace the Power Seat Track in accordance with the Service Information. Refer to **DESCRIPTION** . Refer to **SEAT** .
- Perform the POWER SEAT SYSTEM VERIFICATION TEST. Refer to **STANDARD PROCEDURE**.

No

- Go To 19

11. **CHECK THE (G402) DRIVER SEAT REAR VERTICAL POSITION SENSE CIRCUIT FOR AN OPEN OR EXCESSIVE RESISTANCE**
    1. Turn the ignition off.
    2. Disconnect the MSMD C5 harness connector.
    3. Measure the resistance of the (G402) Driver Seat Rear Vertical Position Sense circuit between the Driver Seat Rear Vertical Adjuster Motor harness connector and the MSMD C5 harness connector.

    Is the resistance above 5.0 Ohms?

    Yes

    - Repair the (G402) Driver Seat Rear Vertical Position Sense circuit for an open or excessive resistance.
    - Perform the POWER SEAT SYSTEM VERIFICATION TEST. Refer to **STANDARD PROCEDURE**.

    No

    - Go To 19

12. **CHECK THE (G492) DRIVER SEAT REAR VERTICAL SENSOR GROUND CIRCUIT FOR AN OPEN OR EXCESSIVE RESISTANCE**
    1. Turn the ignition off.
    2. Disconnect the MSMD C5 harness connector.
    3. Measure the resistance of the (G492) Driver Seat Rear Vertical Sensor Ground circuit between the Driver Seat Rear Vertical Adjuster Motor harness connector and the MSMD C5 harness connector.

    Is the resistance above 5.0 Ohms?

    Yes

    - Repair the (G492) Driver Seat Rear Vertical Sensor Ground circuit for an open or excessive resistance.
    - Perform the POWER SEAT SYSTEM VERIFICATION TEST. Refer to **STANDARD PROCEDURE**.

No

- Go To 19

13. **CHECK THE (P111) DRIVER SEAT REAR VERTICAL DOWN DRIVER CIRCUIT FOR A SHORT TO VOLTAGE**
    1. Disconnect the MSMD C5 harness connector.
    2. Measure the voltage between ground and the (P111) Driver Seat Rear Vertical Down Driver circuit.

    Is the voltage above 1 volt?

    Yes

    - Repair the (P111) Driver Seat Rear Vertical Down Driver circuit for a short to voltage.
    - Perform the POWER SEAT SYSTEM VERIFICATION TEST. Refer to **STANDARD PROCEDURE**.

    No

    - Go To 19

14. **CHECK THE (P113) DRIVER SEAT REAR VERTICAL UP DRIVER CIRCUIT FOR A SHORT TO VOLTAGE**
    1. Disconnect the MSMD C5 harness connector.
    2. Measure the voltage between ground and the (P113) Driver Seat Rear Vertical Up Driver circuit.

    Is the voltage above 1.0 volt?

    Yes

    - Repair the (P113) Driver Seat Rear Vertical Up Driver circuit for a short to voltage.
    - Perform the POWER SEAT SYSTEM VERIFICATION TEST. Refer to **STANDARD PROCEDURE**.

    No

    - Go To 19

15. **CHECK THE (P111) DRIVER SEAT REAR VERTICAL DOWN DRIVER CIRCUIT FOR A SHORT TO GROUND**
    1. Turn the ignition off.
    2. Disconnect the MSMD C5 harness connector.
    3. Measure the resistance between ground and the (P111) Driver Seat Rear Vertical Down Driver circuit.

    Is the resistance below 100K Ohms?

Yes

- Repair the (P111) Driver Seat Rear Vertical Down Driver circuit for a short to ground.
- Perform the POWER SEAT SYSTEM VERIFICATION TEST. Refer to **STANDARD PROCEDURE**.

No

- Go To 16

16. **CHECK THE (P111) DRIVER SEAT REAR VERTICAL DOWN DRIVER CIRCUIT FOR AN OPEN OR EXCESSIVE RESISTANCE**
    1. Measure the resistance of the (P111) Driver Seat Rear Vertical Down Driver circuit between the Driver Seat Rear Vertical Adjuster Motor harness connector and the MSMD C5 harness connector.

    Is the resistance above 5.0 Ohms?

    Yes

    - Repair the (P111) Driver Seat Rear Vertical Down Driver circuit for an open or excessive resistance.
    - Perform the POWER SEAT SYSTEM VERIFICATION TEST. Refer to **STANDARD PROCEDURE**.

    No

    - Go To 19

17. **CHECK THE (P113) DRIVER SEAT REAR VERTICAL UP DRIVER CIRCUIT FOR A SHORT TO GROUND**
    1. Turn the ignition off.
    2. Disconnect the MSMD C5 harness connector.
    3. Measure the resistance between ground and the (P113) Driver Seat Rear Vertical Up Driver circuit.

    Is the resistance below 100K Ohms?

    Yes

    - Repair the (P113) Driver Seat Rear Vertical Up Driver circuit for a short to ground.
    - Perform POWER SEAT SYSTEM VERIFICATION TEST. Refer to **STANDARD PROCEDURE**.

    No

    - Go To 18

18. **CHECK THE (P113) DRIVER SEAT REAR VERTICAL UP DRIVER CIRCUIT FOR AN OPEN**

OR EXCESSIVE RESISTANCE

1. Measure the resistance of the (P113) Driver Seat Rear Vertical Up Driver circuit between the Driver Seat Rear Vertical Adjuster Motor harness connector and the MSMD C5 harness connector.

   Is the resistance above 5.0 Ohms?

   Yes

   - Repair the (P113) Driver Seat Rear Vertical Up Driver circuit for an open or excessive resistance.
   - Perform the POWER SEAT SYSTEM VERIFICATION TEST. Refer to **STANDARD PROCEDURE**.

   No

   - Go To 19

19. **MEMORY SEAT MODULE (MSMD)**
    1. Using the wiring diagram/schematic as a guide, inspect the wiring and harness connectors between the Driver Seat Rear Vertical Adjuster Motor and the MSMD.
    2. Look for any chafed, pierced, pinched, or partially broken wires.
    3. Look for broken, bent, pushed out or corroded terminals. Verify that there is good pin to terminal contact in the Driver Seat Rear Vertical Adjuster Motor and MSMD harness connectors.
    4. Perform any Technical Service Bulletins that may apply.

       Were there any problems found?

       Yes

       - Repair as necessary.
       - Perform the POWER SEAT SYSTEM VERIFICATION TEST. Refer to **STANDARD PROCEDURE**.

       No

       - Replace and program the Memory Seat Module (MSMD) in accordance with the Service Information. Refer to **MODULE, MEMORY, SEAT, REMOVAL** .
       - Perform the POWER SEAT SYSTEM VERIFICATION TEST. Refer to **STANDARD PROCEDURE**.

B1D87-00-SEAT BACKREST MOTOR CONTROL - CIRCUIT PERFORMANCE

For a complete wiring diagram, **refer to appropriate SYSTEM WIRING DIAGRAMS article** .

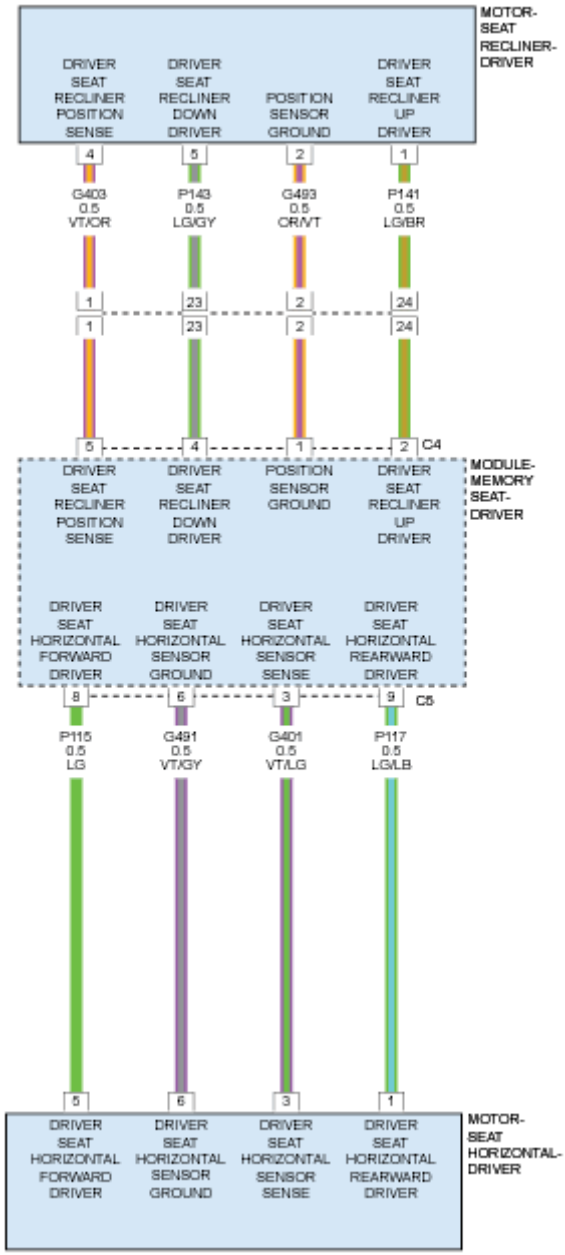

Fig. 14: Driver Memory Seat Module Circuit Diagram
Courtesy of CHRYSLER GROUP, LLC

THEORY OF OPERATION

The Memory System is made up of the Memory Seat Module-Driver (MSMD), Memory Switch, Driver Seat Switch and multiple Seat Motors. The motors each contain a hall-effect position sensor. The hall-effect position sensor provides feedback to the MSMD in relation to the motors position.

The Driver Seat Switch is a Multiplex (Mux) switch which uses set resistance levels for each switch position.

These resistances correspond to different voltages which is monitored by the MSMD over two separate circuits. When a voltage change is detected, the MSMD will command the appropriate Seat motor(s) to move the seat in the requested direction as long as the Driver Seat Switch is held in that direction or its stops have been reached.

The Memory Switch is a Mux switch that is used to set and recall the seat positions. When a Memory Switch button is pressed, the Driver Door Module (DDM) detects a voltage change and sends a request over the Controller Area Network (CAN) bus circuit to the MSMD to perform the requested command. If the SET button on the Memory Switch is pressed, followed by the 1 or 2 button, the MSMD will store the seat positions based on the position inputs received from the hall-effect position sensors. If the 1 or 2 button on the Memory Switch is pressed, the MSMD will recall the stored seat positions for that particular selection and return the seat to the stored positions. Memory position may also be recalled using a linked FOBIK transmitter. For driver safety, the MSMD will prevent the memory recall function from being initiated if the transmission gear selector lever is not in the Park position or if the vehicle is moving. For further information, refer to **MODULE, MEMORY, SEAT, OPERATION** .

WHEN MONITORED

The seat motor is activated.

SET CONDITION

The Memory Seat Module-Driver (MSMD) does not detect seat motor activation. The DTC will only set when the seat switch is moved in the same direction three consecutive times.

POSSIBLE CAUSES

Possible Causes
DRIVER SEAT RECLINER POSITION SENSE CIRCUIT OPEN OR EXCESSIVE RESISTANCE
DRIVER SEAT RECLINER POSITION SENSOR GROUND CIRCUIT OPEN OR EXCESSIVE RESISTANCE
DRIVER SEAT RECLINER UP DRIVER CIRCUIT SHORTED TO VOLTAGE
DRIVER SEAT RECLINER UP DRIVER CIRCUIT SHORTED TO GROUND
DRIVER SEAT RECLINER UP DRIVER CIRCUIT OPEN OR EXCESSIVE RESISTANCE
DRIVER SEAT RECLINER DOWN DRIVER CIRCUIT SHORTED TO VOLTAGE
DRIVER SEAT RECLINER DOWN DRIVER CIRCUIT SHORTED TO GROUND
DRIVER SEAT RECLINER DOWN DRIVER CIRCUIT OPEN OR EXCESSIVE RESISTANCE
DRIVER RECLINER SEAT ADJUSTER MOTOR
MEMORY SEAT MODULE-DRIVER (MSMD)

DIAGNOSTIC TEST

1. **CHECK FOR RELATED DIAGNOSTIC TROUBLE CODES**
    1. Turn the ignition on.
    2. With the scan tool, read Memory Seat Module-Driver (MSMD) DTCs.

Does the scan tool display any seat position sensor DTCs?

Yes

- Refer to **DIAGNOSIS AND TESTING** and perform the appropriate diagnostic procedure.

No

- Go To 2

2. **CHECK IF THE DTC IS ACTIVE**
   1. Ignition on, engine not running.
   2. With the scan tool, record and erase MSMD DTCs.
   3. Cycle the ignition switch from off to on.
   4. Move the Seat Switch in the recline position three times.
   5. With the scan tool, read MSMD DTCs.

   Does the scan tool display this DTC as active?

   Yes

   - Go To 3

   No

   - Test complete, the condition or conditions that originally set this DTC are not present at this time. Using the wiring diagrams as a guide, check all related splices and connectors for signs of water intrusion, corrosion, pushed out or bent terminals, and correct pin tension.
   - Perform the POWER SEAT SYSTEM VERIFICATION TEST. Refer to **STANDARD PROCEDURE**.

3. **CHECK THE (G403) DRIVER SEAT RECLINER POSITION SENSE CIRCUIT**
   1. Turn the ignition off.
   2. Disconnect the Driver Recliner Seat Adjuster Motor harness connector.
   3. Ignition on, engine not running.
   4. Measure the voltage between ground and the (G403) Driver Seat Recliner Position Sense circuit.

   Is the voltage above 11.0 volts?

   Yes

   - Go To 4

   No

- Go To 11

4. **CHECK THE (G493) DRIVER SEAT RECLINER POSITION SENSOR GROUND CIRCUIT**
   1. Measure the voltage between the (G403) Driver Seat Recliner Position Sense circuit and the (G493) Driver Seat Recliner Position Sensor Ground circuit.

      Is the voltage above 11.0 volts?

      Yes

      - Go To 5

      No

      - Go To 12
5. **CHECK THE (P141) DRIVER SEAT RECLINER UP DRIVER CIRCUIT**
   1. Measure the voltage between ground and the (P141) Driver Seat Recliner Up Driver circuit.

      Is the voltage above 1.0 volt?

      Yes

      - Go To 13

      No

      - Go To 6
6. **CHECK THE (P143) DRIVER SEAT RECLINER DOWN DRIVER CIRCUIT**
   1. Measure the voltage between the ground and the (P143) Driver Seat Recliner Down Driver circuit.

      Is the voltage above 1.0 volt?

      Yes

      - Go To 14

      No

      - Go To 7
7. **CHECK THE (P141) DRIVER SEAT RECLINER UP DRIVER CIRCUIT**
   1. Connect a 12-volt test light between ground and the (P141) Driver Seat Recliner Up Driver circuit.
   2. While observing the test light, move the Driver Seat Recliner Switch in the up position.

NOTE: The test light must illuminate brightly. Compare the brightness to

that of a direct connection to the battery.

Does the test light illuminate brightly?

Yes

- Go To 8

No

- Go To 15

8. **CHECK THE (P143) DRIVER SEAT RECLINER DOWN DRIVER CIRCUIT**
   1. Connect a 12-volt test light between ground and the (P143) Driver Seat Recliner Down Driver circuit.
   2. While observing the test light, move the Driver Seat Recliner Switch in the down position.

   Does the test light illuminate brightly?

   Yes

   - Go To 9

   No

   - Go To 17

9. **CHECK THE DRIVER SEAT RECLINER DOWN DRIVER**
   1. Connect a 12-volt test light between the (P141) Driver Seat Recliner Up Driver circuit and the (P143) Driver Seat Recliner Down Driver circuit.
   2. While observing the test light, move the Driver Seat Recliner Switch in the up position.

   Does the test light illuminate brightly?

   Yes

   - Go To 10

   No

   - Go To 19

10. **CHECK THE DRIVER SEAT RECLINER UP DRIVER**
    1. While observing the test light, move the Driver Seat Recliner Switch in the down position.

    Does the test light illuminate brightly?

Yes

- Replace the Power Seat Track in accordance with the Service Information. Refer to **DESCRIPTION** . Refer to **SEAT** .
- Perform the POWER SEAT SYSTEM VERIFICATION TEST. Refer to **STANDARD PROCEDURE**.

No

- Go To 19

11. **CHECK THE (G403) DRIVER SEAT RECLINER POSITION SENSE CIRCUIT FOR AN OPEN OR EXCESSIVE RESISTANCE**
    1. Turn the ignition off.
    2. Disconnect the MSMD C4 harness connector.
    3. Measure the resistance of the (G403) Driver Seat Recliner Position Sense circuit between the Driver Seat Recliner Adjuster Motor harness connector and the MSMD C4 harness connector.

    Is the resistance above 5.0 Ohms?

    Yes

    - Repair the (G403) Driver Seat Recliner Position Sense circuit for an open or excessive resistance.
    - Perform the POWER SEAT SYSTEM VERIFICATION TEST. Refer to **STANDARD PROCEDURE**.

    No

    - Go To 19

12. **CHECK THE (G493) DRIVER SEAT RECLINER POSITION SENSOR GROUND CIRCUIT FOR AN OPEN OR EXCESSIVE RESISTANCE**
    1. Turn the ignition off.
    2. Disconnect the MSMD C4 harness connector.
    3. Measure the resistance of the (G493) Driver Seat Recliner Position Sensor Ground circuit between the Driver Seat Recliner Adjuster Motor harness connector and the MSMD C4 harness connector.

    Is the resistance above 5.0 Ohms?

    Yes

    - Repair the (G493) Driver Seat Recliner Position Sensor Ground circuit for an open or excessive resistance.
    - Perform the POWER SEAT SYSTEM VERIFICATION TEST. Refer to **STANDARD PROCEDURE**.

No

- Go To 19

13. **CHECK THE (P141) DRIVER SEAT RECLINER UP DRIVER CIRCUIT FOR A SHORT TO VOLTAGE**
    1. Turn the ignition off.
    2. Disconnect the MSMD C4 harness connector.
    3. Ignition on, engine not running.
    4. Measure the voltage between ground and the (P141) Driver Seat Recliner Up Driver circuit.

    Is the voltage above 1.0 volt?

    Yes

    - Repair the (P141) Driver Seat Recliner Up Driver circuit for a short to voltage.
    - Perform the POWER SEAT SYSTEM VERIFICATION TEST. Refer to **STANDARD PROCEDURE**.

    No

    - Go To 19

14. **CHECK THE (P143) DRIVER SEAT RECLINER DOWN DRIVER CIRCUIT FOR A SHORT TO VOLTAGE**
    1. Turn the ignition off.
    2. Disconnect the MSMD C4 harness connector.
    3. Ignition on, engine not running.
    4. Measure the voltage between ground and the (P143) Driver Seat Recliner Down Driver circuit.

    Is the voltage above 1.0 volt?

    Yes

    - Repair the (P143) Driver Seat Recliner Down Driver circuit for a short to voltage.
    - Perform the POWER SEAT SYSTEM VERIFICATION TEST. Refer to **STANDARD PROCEDURE**.

    No

    - Go To 19

15. **CHECK THE (P141) DRIVER SEAT RECLINER UP DRIVER CIRCUIT FOR A SHORT TO GROUND**
    1. Turn the ignition off.
    2. Disconnect the MSMD C4 harness connector.

3. Measure the resistance between ground and the (P141) Driver Seat Recliner Up Driver circuit.

   Is the resistance below 100K Ohms?

   Yes

   - Repair the short to ground in the (P141) Driver Seat Recliner Up Driver circuit.
   - Perform the POWER SEAT SYSTEM VERIFICATION TEST. Refer to **STANDARD PROCEDURE**.

   No

   - Go To 16

16. **CHECK THE (P141) DRIVER SEAT RECLINER UP DRIVER CIRCUIT FOR AN OPEN OR EXCESSIVE RESISTANCE**
    1. Measure the resistance of the (P141) Driver Seat Recliner Up Driver circuit between the Driver Seat Recliner Adjuster Motor harness connector and the MSMD C4 harness connector.

       Is the resistance above 5.0 Ohms?

       Yes

       - Repair the (P141) Driver Seat Recliner Up Driver circuit for an open or excessive resistance.
       - Perform the POWER SEAT SYSTEM VERIFICATION TEST. Refer to **STANDARD PROCEDURE**.

       No

       - Go To 19

17. **CHECK THE (P143) DRIVER SEAT RECLINER DOWN DRIVER CIRCUIT FOR A SHORT TO GROUND**
    1. Turn the ignition off.
    2. Disconnect the MSMD C4 harness connector.
    3. Measure the resistance between ground and the (P143) Driver Seat Recliner Down Driver circuit.

       Is the resistance below 100K Ohms?

       Yes

       - Repair the (P143) Driver Seat Recliner Down Driver circuit for a short to ground.
       - Perform the POWER SEAT SYSTEM VERIFICATION TEST. Refer to **STANDARD PROCEDURE**.

       No

- Go To 18

18. **CHECK THE (P143) DRIVER SEAT RECLINER DOWN DRIVER CIRCUIT FOR AN OPEN OR EXCESSIVE RESISTANCE**
    1. Measure the resistance of the (P143) Driver Seat Recliner Down Driver circuit between the Driver Seat Recliner Adjuster Motor harness connector and the MSMD C4 harness connector.

       Is the resistance above 5.0 Ohms?

       Yes

       - Repair the (P143) Driver Seat Recliner Down Driver circuit for an open or excessive resistance.
       - Perform the POWER SEAT SYSTEM VERIFICATION TEST. Refer to **STANDARD PROCEDURE**.

       No

       - Go To 19

19. **MEMORY SEAT MODULE (MSMD)**
    1. Using the wiring diagram/schematic as a guide, inspect the wiring and harness connectors between the Driver Seat Recliner Adjuster Motor and the MSMD.
    2. Look for any chafed, pierced, pinched, or partially broken wires.
    3. Look for broken, bent, pushed out or corroded terminals. Verify that there is good pin to terminal contact in the Driver Seat Recliner Adjuster Motor and MSMD harness connectors.
    4. Perform any Technical Service Bulletins that may apply.

       Were there any problems found?

       Yes

       - Repair as necessary.
       - Perform the POWER SEAT SYSTEM VERIFICATION TEST. Refer to **STANDARD PROCEDURE**.

       No

       - Replace and program the MSMD in accordance with the Service Information. Refer to **MODULE, MEMORY, SEAT, REMOVAL** .
       - Perform the POWER SEAT SYSTEM VERIFICATION TEST. Refer to **STANDARD PROCEDURE**.

B1D9B-00-SEAT HORIZONTAL FRONT STOP NOT LEARNED

For a complete wiring diagram, **refer to appropriate SYSTEM WIRING DIAGRAMS article** .

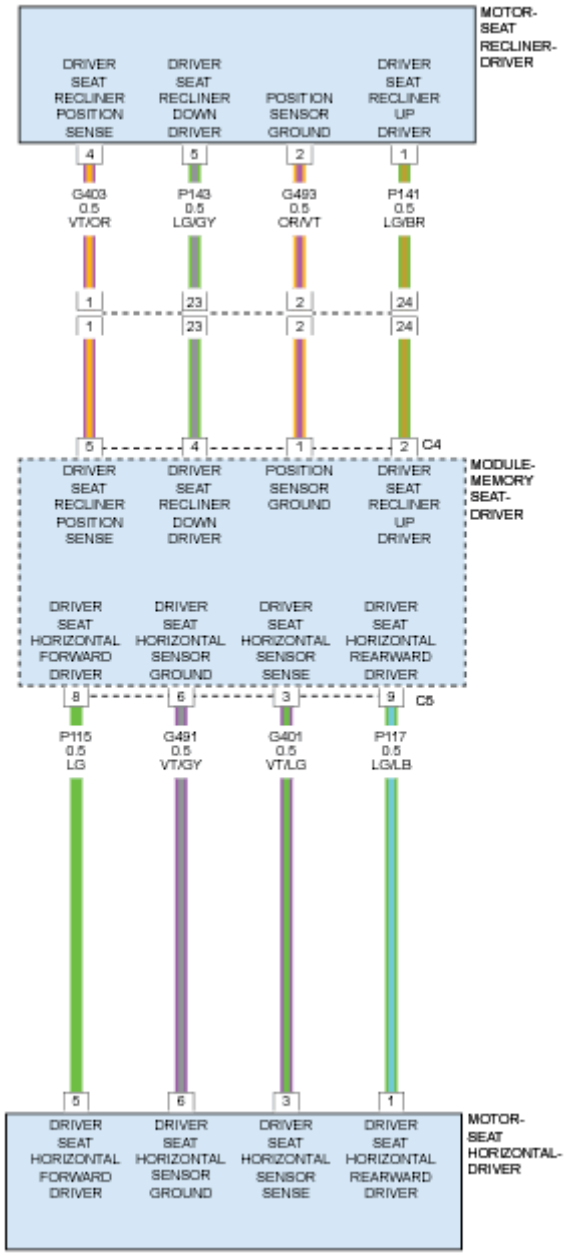

Fig. 15: Driver Memory Seat Module Circuit Diagram
Courtesy of CHRYSLER GROUP, LLC

THEORY OF OPERATION

The Memory System is made up of the Memory Seat Module-Driver (MSMD), Memory Switch, Driver Seat Switch and multiple Seat Motors. The motors each contain a hall-effect position sensor. The hall-effect position sensor provides feedback to the MSMD in relation to the motors position.

The Driver Seat Switch is a Multiplex (Mux) switch which uses set resistance levels for each switch position.

These resistances correspond to different voltages which is monitored by the MSMD over two separate circuits. When a voltage change is detected, the MSMD will command the appropriate Seat motor(s) to move the seat in the requested direction as long as the Driver Seat Switch is held in that direction or its stops have been reached.

The Memory Switch is a Mux switch that is used to set and recall the seat positions. When a Memory Switch button is pressed, the Driver Door Module (DDM) detects a voltage change and sends a request over the Controller Area Network (CAN) bus circuit to the MSMD to perform the requested command. If the SET button on the Memory Switch is pressed, followed by the 1 or 2 button, the MSMD will store the seat positions based on the position inputs received from the hall-effect position sensors. If the 1 or 2 button on the Memory Switch is pressed, the MSMD will recall the stored seat positions for that particular selection and return the seat to the stored positions. Memory position may also be recalled using a linked FOBIK transmitter. For driver safety, the MSMD will prevent the memory recall function from being initiated if the transmission gear selector lever is not in the Park position or if the vehicle is moving. For further information, refer to **MODULE, MEMORY, SEAT, OPERATION** .

WHEN MONITORED

The seat motor is activated.

SET CONDITION

Seat becomes de-standardized. The seat horizontal motor is 5% past the expected soft stop position.

POSSIBLE CAUSES

Possible Causes
OTHER DTCS SET IN THE MEMORY SEAT MODULE
SEAT STANDARDIZATION ROUTINE NOT PERFORMED
MEMORY SEAT MODULE-DRIVER (MSMD)

DIAGNOSTIC TEST

1. **CHECK FOR RELATED DTCS**
    1. Turn the ignition on.
    2. With the scan tool, read Memory Seat Module-Driver (MSMD) DTCs.

    Does the scan tool display any seat position sensor or circuit performance DTCs?

    Yes

    - Refer to **DIAGNOSIS AND TESTING** and perform the appropriate diagnostic procedure.

    No

    - Go To 2
2. **CHECK IF THE DTC IS ACTIVE**

1. Ignition on, engine not running.
2. With the scan tool, record and erase MSMD DTCs.
3. Cycle the ignition switch from off to on.
4. Move the seat in the full forward horizontal position.
5. With the scan tool, read MSMD DTCs.

   Does the scan tool display this DTC as active?

   Yes

   - With the scan tool, perform the MSMD Standardization Routine.
   - Perform POWER SEAT SYSTEM VERIFICATION TEST. Refer to **STANDARD PROCEDURE**.

   No

   - The condition or conditions that originally set this DTC are not present at this time. Using the wiring diagrams as a guide, check all related splices and connectors for signs of water intrusion, corrosion, pushed out or bent terminals, and correct pin tension.
   - Perform POWER SEAT SYSTEM VERIFICATION TEST. Refer to **STANDARD PROCEDURE**.

B2199-16-BATTERY VOLTAGE - CIRCUIT VOLTAGE BELOW THRESHOLD

For a complete wiring diagram, **refer to appropriate SYSTEM WIRING DIAGRAMS article** .

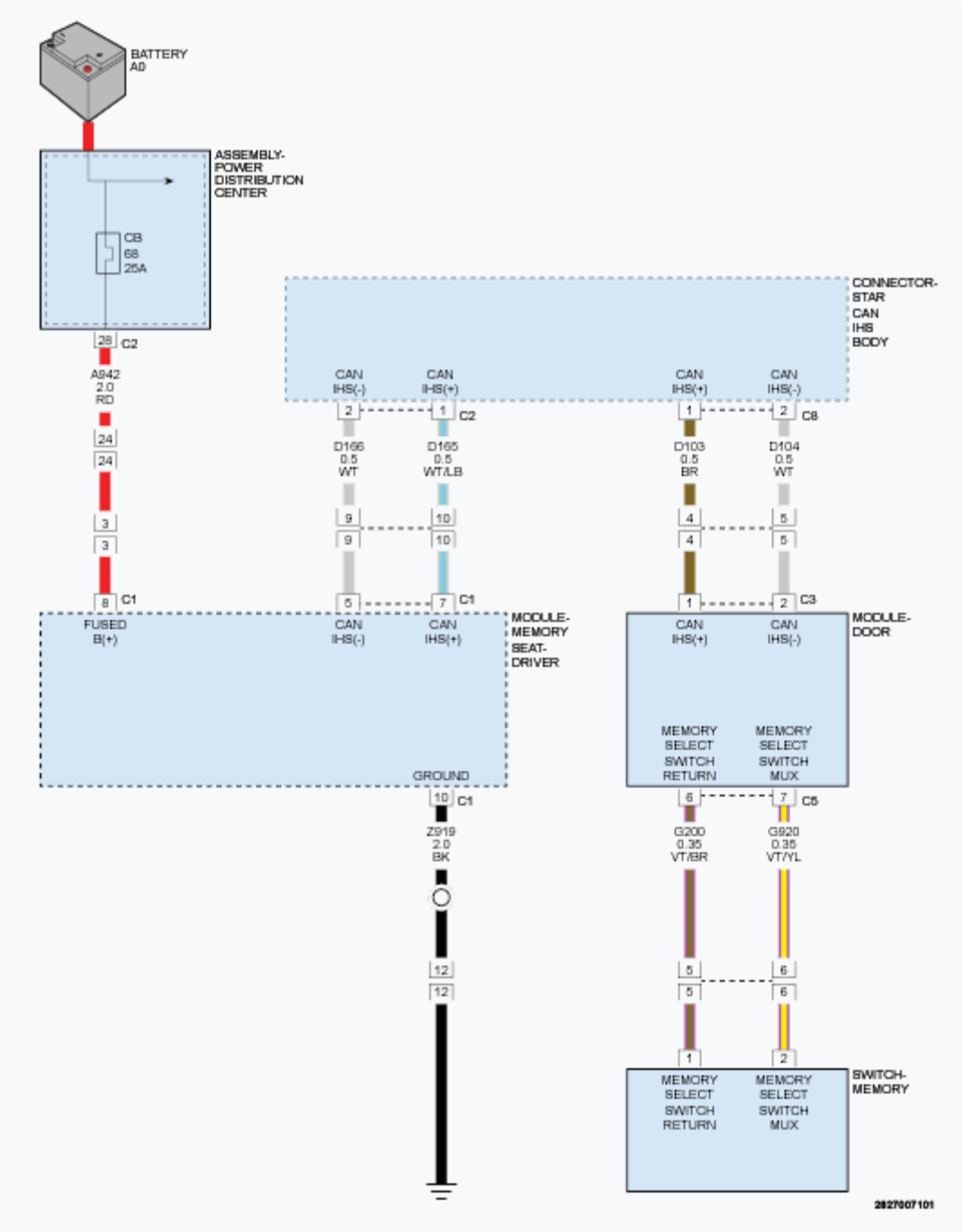

Fig. 16: MSDM CAN IHS, Fused B+ & Ground Circuit Diagram
Courtesy of CHRYSLER GROUP, LLC

THEORY OF OPERATION

The Memory System is made up of the Memory Seat Module-Driver (MSMD), Memory Switch, Driver Seat Switch and multiple Seat Motors. The motors each contain a hall-effect position sensor. The hall-effect position sensor provides feedback to the MSMD in relation to the motors position.

The Driver Seat Switch is a Multiplex (Mux) switch which uses set resistance levels for each switch position. These resistances correspond to different voltages which is monitored by the MSMD over two separate circuits. When a voltage change is detected, the MSMD will command the appropriate Seat motor(s) to move the seat in the requested direction as long as the Driver Seat Switch is held in that direction or its stops have been reached.

The Memory Switch is a Mux switch that is used to set and recall the seat positions. When a Memory Switch button is pressed, the Driver Door Module (DDM) detects a voltage change and sends a request over the Controller Area Network (CAN) bus circuit to the MSMD to perform the requested command. If the SET button on the Memory Switch is pressed, followed by the 1 or 2 button, the MSMD will store the seat positions based on the position inputs received from the hall-effect position sensors. If the 1 or 2 button on the Memory Switch is pressed, the MSMD will recall the stored seat positions for that particular selection and return the seat to the stored positions. Memory position may also be recalled using a linked FOBIK transmitter. For driver safety, the MSMD will prevent the memory recall function from being initiated if the transmission gear selector lever is not in the Park position or if the vehicle is moving. For further information, refer to **MODULE, MEMORY, SEAT, OPERATION** .

WHEN MONITORED

Engine running, during seat motor operation.

SET CONDITION

The Memory Seat Module-Driver (MSMD) detects a voltage under 9.5 volts on the Fused B(+) circuit.

POSSIBLE CAUSES

Possible Causes
CHARGING SYSTEM VOLTAGE LOW FUSED B(+) CIRCUIT MEMORY SEAT MODULE-DRIVER (MSMD)

DIAGNOSTIC TEST

1. **CHECK PCM FOR CHARGING SYSTEM DTC**
    1. With the scan tool, read the PCM DTCs.

       Are there any Charging System DTCs set in the PCM?

       Yes

       - Refer to the **DTC INDEX** article and perform the appropriate diagnostic procedure.

       No

       - Go To 2
2. **CHECK IF THE DTC IS ACTIVE**

1. Ignition on, engine not running.
2. With the scan tool, record and erase Memory Seat Module-Driver (MSMD) DTCs.
3. Cycle the ignition switch from off to on.
4. Start the engine and operate the driver power seat.
5. With the scan tool, read MSMD DTCs.

Does the scan tool display this DTC as active?

Yes

- Go To 3

No

- The condition or conditions that originally set this DTC are not present at this time. Using the wiring diagrams as a guide, check all related splices and connectors for signs of water intrusion, corrosion, pushed out or bent terminals and correct pin tension.
- Perform the POWER SEAT SYSTEM VERIFICATION TEST. Refer to **STANDARD PROCEDURE**.

3. **CHECK THE (A942) FUSED B(+) CIRCUIT FOR AN OPEN OR HIGH RESISTANCE**
   1. Turn the ignition off.
   2. Disconnect the MSMD C1 harness connector.
   3. Ignition on, engine running.
   4. Using a 12-volt test light connected to ground, check the (A942) Fused B(+) circuit in the MSMD C1 harness connector.

NOTE: The test light must illuminate brightly. Compare the brightness to that of a direct connection to the battery.

Does the test light illuminate brightly?

Yes

- Replace and program the Memory Seat Module (MSMD) in accordance with the Service Information. Refer to **MODULE, MEMORY, SEAT, REMOVAL** .
- Perform the POWER SEAT SYSTEM VERIFICATION TEST. Refer to **STANDARD PROCEDURE**.

No

- Repair the (A942) Fused B(+) circuit for an open or high resistance.
- Perform the POWER SEAT SYSTEM VERIFICATION TEST. Refer to **STANDARD PROCEDURE**.

B2199-17-BATTERY VOLTAGE-CIRCUIT VOLTAGE ABOVE THRESHOLD

For a complete wiring diagram, **refer to appropriate SYSTEM WIRING DIAGRAMS article** .

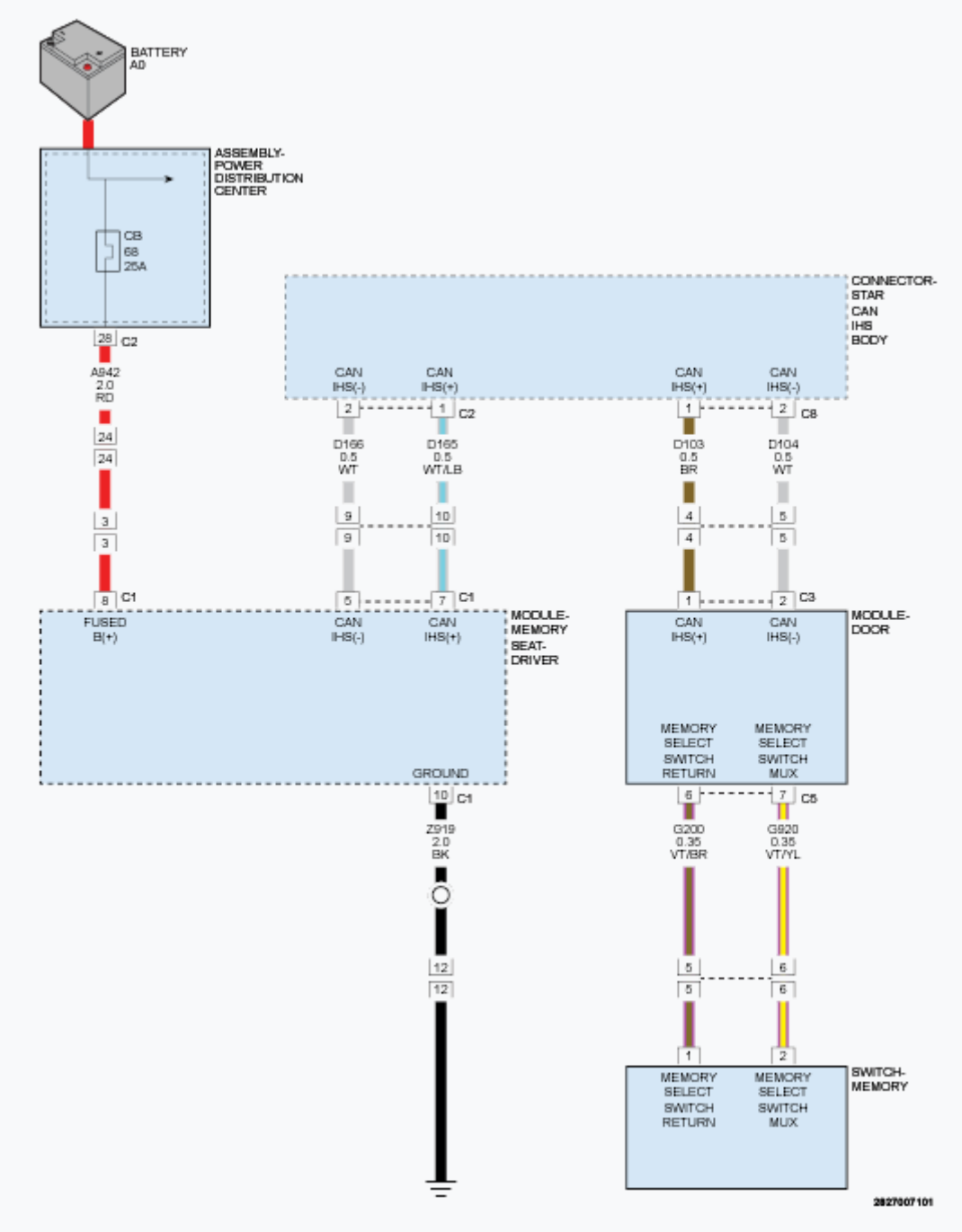

Fig. 17: MSDM CAN IHS, Fused B+ & Ground Circuit Diagram
Courtesy of CHRYSLER GROUP, LLC

THEORY OF OPERATION

The Memory System is made up of the Memory Seat Module-Driver (MSMD), Memory Switch, Driver Seat Switch and multiple Seat Motors. The motors each contain a hall-effect position sensor. The hall-effect position sensor provides feedback to the MSMD in relation to the motors position.

The Driver Seat Switch is a Multiplex (Mux) switch which uses set resistance levels for each switch position. These resistances correspond to different voltages which is monitored by the MSMD over two separate circuits. When a voltage change is detected, the MSMD will command the appropriate Seat motor(s) to move the seat in the requested direction as long as the Driver Seat Switch is held in that direction or its stops have been reached.

The Memory Switch is a Mux switch that is used to set and recall the seat positions. When a Memory Switch button is pressed, the Driver Door Module (DDM) detects a voltage change and sends a request over the Controller Area Network (CAN) bus circuit to the MSMD to perform the requested command. If the SET button on the Memory Switch is pressed, followed by the 1 or 2 button, the MSMD will store the seat positions based on the position inputs received from the hall-effect position sensors. If the 1 or 2 button on the Memory Switch is pressed, the MSMD will recall the stored seat positions for that particular selection and return the seat to the stored positions. Memory position may also be recalled using a linked FOBIK transmitter. For driver safety, the MSMD will prevent the memory recall function from being initiated if the transmission gear selector lever is not in the Park position or if the vehicle is moving. For further information, refer to **MODULE, MEMORY, SEAT, OPERATION** .

WHEN MONITORED

Engine running, during seat motor operation.

SET CONDITION

The Memory Seat Module-Driver (MSMD) detects a voltage over 16.5 volts on the Fused B(+) circuit.

POSSIBLE CAUSES

Possible Causes
CHARGING SYSTEM VOLTAGE HIGH MEMORY SEAT MODULE-DRIVER (MSMD)

DIAGNOSTIC TEST

1. **CHECK PCM FOR CHARGING SYSTEM DTC**
    1. With the scan tool, read the PCM DTCs.

       Are there any Charging System DTCs set in the PCM?

       Yes

       - Refer to the **DTC INDEX** article and perform the appropriate diagnostic procedure.

       No

- Go To 2

2. **CHECK IF THE DTC IS ACTIVE**
   1. Ignition on, engine not running.
   2. With the scan tool, record and erase Memory Seat Module-Driver (MSMD) DTCs.
   3. Cycle the ignition switch from off to on.
   4. Start the engine and operate the driver power seat.
   5. With the scan tool, read MSMD DTCs.

   Does the scan tool display this DTC as active?

   Yes

   - Replace and program the Memory Seat Module (MSMD) in accordance with the Service Information. Refer to **MODULE, MEMORY, SEAT, REMOVAL** .
   - Perform the POWER SEAT SYSTEM VERIFICATION TEST. Refer to **STANDARD PROCEDURE**.

   No

   - The condition or conditions that originally set this DTC are not present at this time. Using the wiring diagrams as a guide, check all related splices and connectors for signs of water intrusion, corrosion, pushed out or bent terminals and correct pin tension.
   - Perform the POWER SEAT SYSTEM VERIFICATION TEST. Refer to **STANDARD PROCEDURE**.

B221C-00-(MSM) MEMORY SEAT MODULE INTERNAL

For a complete wiring diagram, **refer to appropriate SYSTEM WIRING DIAGRAMS article** .

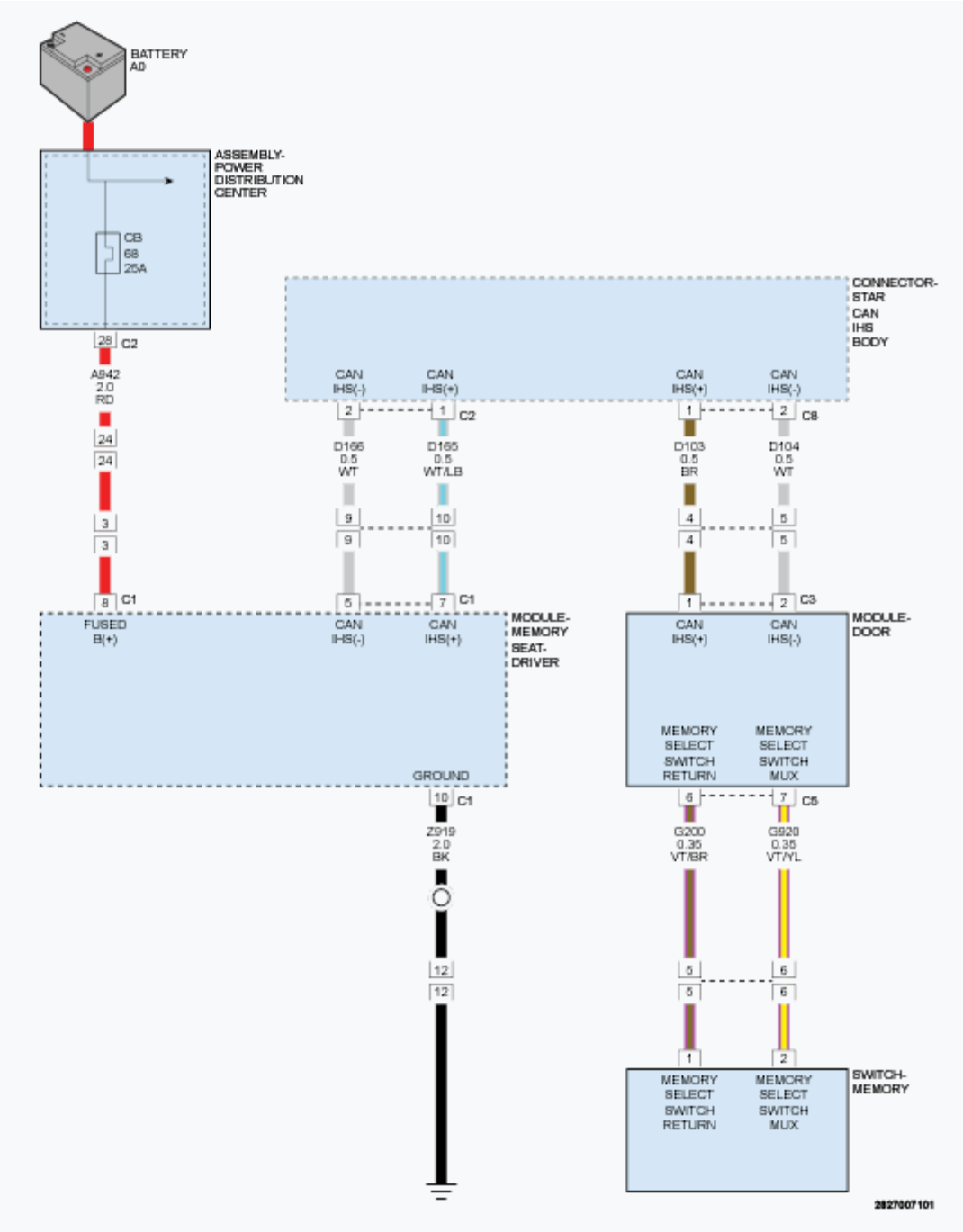

Fig. 18: MSDM CAN IHS, Fused B+ & Ground Circuit Diagram
Courtesy of CHRYSLER GROUP, LLC

WHEN MONITORED

Ignition on.

SET CONDITION

The Memory Seat Module-Driver (MSMD) internal self test has failed.

POSSIBLE CAUSES

Possible Causes
MEMORY SEAT MODULE-DRIVER (MSMD)

DIAGNOSTIC TEST

CHECK IF THE DTC IS ACTIVE

1. Ignition on, engine not running.
2. With the scan tool, record and erase Memory Seat Module-Driver (MSMD) DTCs.
3. Cycle the ignition switch from off to on.
4. With the scan tool, read MSMD DTCs.

   Does the scan tool display this DTC as active?

   Yes

   - Attempt to update (flash) the MSMD. If you are unable to update the controller, or if this DTC continues to reset after updating, replace and program the Memory Seat Module (MSMD) in accordance with the Service Information. Refer to **MODULE, MEMORY, SEAT, REMOVAL** .
   - Perform POWER SEAT SYSTEM VERIFICATION TEST. Refer to **STANDARD PROCEDURE**.

   No

   - The condition or conditions that originally set this DTC are not present at this time. Using the wiring diagrams as a guide, check all related splices and connectors for signs of water intrusion, corrosion, pushed out or bent terminals, and correct pin tension.
   - Perform POWER SEAT SYSTEM VERIFICATION TEST. Refer to **STANDARD PROCEDURE**.

U0011-00-CAN INTERIOR BUS OFF PERFORMANCE

Perform the COMMUNICATION PRE-DIAGNOSTIC PROCEDURE. Refer to **STANDARD PROCEDURE** .

U0013-00-CAN INTERIOR BUS (+) CIRCUIT LOW

For a complete wiring diagram, **refer to appropriate SYSTEM WIRING DIAGRAMS article** .

WHEN MONITORED

Continuously when the ignition is on.

The battery voltage between 10 volts and 16 volts.

Body Control Module (BCM) is configured correctly.

SET CONDITION

A short to ground is detected on the CAN Interior Bus (125K) (+) circuit.

POSSIBLE CAUSES

Possible Causes
CAN BUS CIRCUITS OPEN OR SHORTED DTCS RELATED TO BATTERY VOLTAGE, IGNITION, OR VIN MESSAGES BCM NOT CONFIGURED CORRECTLY BODY CONTROL MODULE (BCM) CONTROL MODULE THAT SET THE DTC

DIAGNOSTIC TEST

VERIFY IF THE DTC IS ACTIVE

1. Turn the ignition on.
2. With the scan tool, read DTCs.

   Is this DTC active?

   Yes

   - Refer to the **BODY CONTROL MODULE (BCM) - DIAGNOSTIC CODE INDEX** article and perform the diagnostic test procedure for CAN INTERIOR BUS.

   No

   - Refer to **DIAGNOSIS AND TESTING** and perform the STORED LOST COMMUNICATION DTCs diagnostic procedure.

U0014-00-CAN INTERIOR BUS (+) CIRCUIT HIGH

For a complete wiring diagram, **refer to appropriate SYSTEM WIRING DIAGRAMS article** .

WHEN MONITORED

Continuously when the ignition is on.

The battery voltage between 10 volts and 16 volts.

Body Control Module (BCM) is configured correctly.

SET CONDITION

A short to voltage is detected on the CAN Interior Bus (+) circuit.

POSSIBLE CAUSES

Possible Causes
CAN BUS CIRCUITS OPEN OR SHORTED
DTCS RELATED TO BATTERY VOLTAGE, IGNITION, OR VIN MESSAGES
BCM NOT CONFIGURED CORRECTLY
BODY CONTROL MODULE (BCM)
CONTROL MODULE THAT SET THE DTC

DIAGNOSTIC TEST

VERIFY IF THE DTC IS ACTIVE

1. Turn the ignition on.
2. With the scan tool, read DTCs.

   Is this DTC active?

   Yes

   - Refer to the **BODY CONTROL MODULE (BCM) - DIAGNOSTIC CODE INDEX** article and perform the diagnostic test procedure for CAN INTERIOR BUS.

   No

   - Refer to **DIAGNOSIS AND TESTING** and perform the STORED LOST COMMUNICATION DTCs diagnostic procedure.

U0016-00-CAN INTERIOR BUS (-) CIRCUIT LOW

For a complete wiring diagram, **refer to appropriate SYSTEM WIRING DIAGRAMS article** .

WHEN MONITORED

Continuously when the ignition is on.

The battery voltage between 10 volts and 16 volts.

Body Control Module (BCM) is configured correctly.

SET CONDITION

A short to ground is detected on the CAN Interior Bus (125K) (-) circuit.

POSSIBLE CAUSES

Possible Causes
CAN BUS CIRCUITS OPEN OR SHORTED
DTCS RELATED TO BATTERY VOLTAGE, IGNITION, OR VIN MESSAGES
BCM NOT CONFIGURED CORRECTLY
BODY CONTROL MODULE (BCM)
CONTROL MODULE THAT SET THE DTC

DIAGNOSTIC TEST

VERIFY IF THE DTC IS ACTIVE

1. Turn the ignition on.
2. With the scan tool, read DTCs.

   Is this DTC active?

   Yes

   - Refer to the **BODY CONTROL MODULE (BCM) - DIAGNOSTIC CODE INDEX** article and perform the diagnostic test procedure for CAN INTERIOR BUS.

   No

   - Refer to **DIAGNOSIS AND TESTING** and perform the STORED LOST COMMUNICATION DTCs diagnostic procedure.

U0017-00-CAN INTERIOR BUS (-) CIRCUIT HIGH

For a complete wiring diagram, **refer to appropriate SYSTEM WIRING DIAGRAMS article** .

WHEN MONITORED

Continuously when the ignition is on.

The battery voltage between 10 volts and 16 volts.

Body Control Module (BCM) is configured correctly.

SET CONDITION

A short to voltage is detected on the CAN Interior Bus (125K) (-) circuit.

POSSIBLE CAUSES

Possible Causes
CAN BUS CIRCUITS OPEN OR SHORTED
DTCS RELATED TO BATTERY VOLTAGE, IGNITION, OR VIN MESSAGES
BCM NOT CONFIGURED CORRECTLY
BODY CONTROL MODULE (BCM)
CONTROL MODULE THAT SET THE DTC

DIAGNOSTIC TEST

VERIFY IF THE DTC IS ACTIVE

1. Turn the ignition on.
2. With the scan tool, read DTCs.

   Is this DTC active?

   Yes

   - Refer to the **BODY CONTROL MODULE (BCM) - DIAGNOSTIC CODE INDEX** article and perform the diagnostic test procedure for CAN INTERIOR BUS.

   No

   - Refer to **DIAGNOSIS AND TESTING** and perform the STORED LOST COMMUNICATION DTCs diagnostic procedure.

U0140-00-LOST COMMUNICATION WITH BODY CONTROL MODULE

Perform the COMMUNICATION PRE-DIAGNOSTIC PROCEDURE. Refer to **STANDARD PROCEDURE** .

U0199-00-LOST COMMUNICATION WITH DRIVER DOOR MODULE

Perform the COMMUNICATION PRE-DIAGNOSTIC PROCEDURE. Refer to **STANDARD PROCEDURE** .

U0422-00-IMPLAUSIBLE DATA RECEIVED FROM BODY CONTROL MODULE

For a complete wiring diagram, **refer to appropriate SYSTEM WIRING DIAGRAMS article** .

WHEN MONITORED

With the ignition on and the vehicle in reverse.

SET CONDITION

When the Memory Seat Module-Driver (MSMD) receives communication data sent over the CAN Bus from the Body Control Module (BCM) that is missing part of the message, the message is corrupted, or the message is an irrational value.

POSSIBLE CAUSES

Possible Causes
COMMUNICATION WITH THE BODY CONTROL MODULE (BCM)
DTCS STORED OR ACTIVE IN THE BCM
BODY CONTROL MODULE (BCM)
MEMORY SEAT MODULE-DRIVER (MSMD)

DIAGNOSTIC TEST

1. **CHECK IF THE DTC IS ACTIVE**
    1. Turn the ignition on.
    2. With the scan tool, read Memory Seat Module (MSMD) DTCs.

    Does the scan tool display this DTC as active?

    Yes

    - Go To 2

    No

    - The condition that caused this DTC to set is not present at this time. Check for an intermittent condition by inspecting the related wiring harness for chafed, pierced, pinched, and partially broken wires. Also inspect the related connectors for broken, bent, pushed out, spread, corroded, or contaminated terminals.
    - Perform the POWER SEAT SYSTEM VERIFICATION TEST. Refer to **STANDARD PROCEDURE**.
2. **VERIFY BCM IS ACTIVE ON THE CAN BUS**
    1. With the scan tool, select ECU View.
    2. Verify that the BCM is active on the bus.

    Is the BCM active on the bus?

    Yes

- Go To 3

No

- Refer to **DIAGNOSIS AND TESTING** and perform the NO RESPONSE FROM BCM diagnostic procedure.
- Perform the POWER SEAT SYSTEM VERIFICATION TEST. Refer to **STANDARD PROCEDURE**.

3. **DTCS STORED OR ACTIVE IN THE BCM**
   1. With the scan tool, read BCM DTCs.

      Are any DTCs active or stored in the BCM?

      Yes

      - Refer to the **BODY CONTROL MODULE (BCM) - DIAGNOSTIC CODE INDEX** article and perform the appropriate diagnostic procedure.

      No

      - Go To 4
      - Perform the POWER SEAT SYSTEM VERIFICATION TEST. Refer to **STANDARD PROCEDURE**.
4. **DTCS STORED OR ACTIVE AGAINST THE BCM**
   1. With the scan tool, read DTCs.

      Are any other Modules reporting a implausible DTC against the BCM?

      Yes

      - Replace and program the Body Control Module (BCM) in accordance with the Service Information. Refer to **MODULE, BODY CONTROL, REMOVAL** .

      No

      - Replace and program the Memory Seat Module (MSMD) in accordance with the Service Information. Refer to **MODULE, MEMORY, SEAT, REMOVAL** .
      - Perform the POWER SEAT SYSTEM VERIFICATION TEST. Refer to **STANDARD PROCEDURE**.

STANDARD PROCEDURE

POWER SEAT SYSTEM VERIFICATION TEST

DIAGNOSTIC TEST

PERFORM POWER SEAT SYSTEM VERIFICATION TEST

1. Disconnect all jumper wires and reconnect all previously disconnected components and connectors.
2. Make sure that all accessories are turned off.
3. Make sure that the battery is fully charged.
4. Turn the ignition on.
5. If either the Memory Seat Module (MSM) or the Driver Horizontal Seat Adjuster Motor/Seat Track was replaced, then the MSM Standard Routine must be performed using a scan tool.
6. Using a scan tool, record and erase Diagnostic Trouble Codes (DTCs) from all modules.
7. Operate the driver seat in all positions.
8. Using the Memory Switch on the driver's door, program the driver's seat number 1 Button to a desired position and the driver's seat number 2 Button to a different position.
9. Verify both Memory positions can be recalled with the Remote Keyless Entry (RKE) transmitter and with the Memory Switch on the driver's door.
10. Turn the ignition off, wait 10 seconds, then turn the ignition on.
11. Using a scan tool, select ECU View.
12. Check for DTCs in the modules.

    Are DTCs present in any of the modules or is the original condition still present?

    Yes

    - The repair is not complete. Perform the appropriate diagnostic procedure for the DTC or symptom that is still present.

    No

    - The repair is complete.

2014 ACCESSORIES AND EQUIPMENT

Message Center - Service Information - Cherokee

CENTER, ELECTRONIC VEHICLE INFORMATION

DESCRIPTION

DESCRIPTION

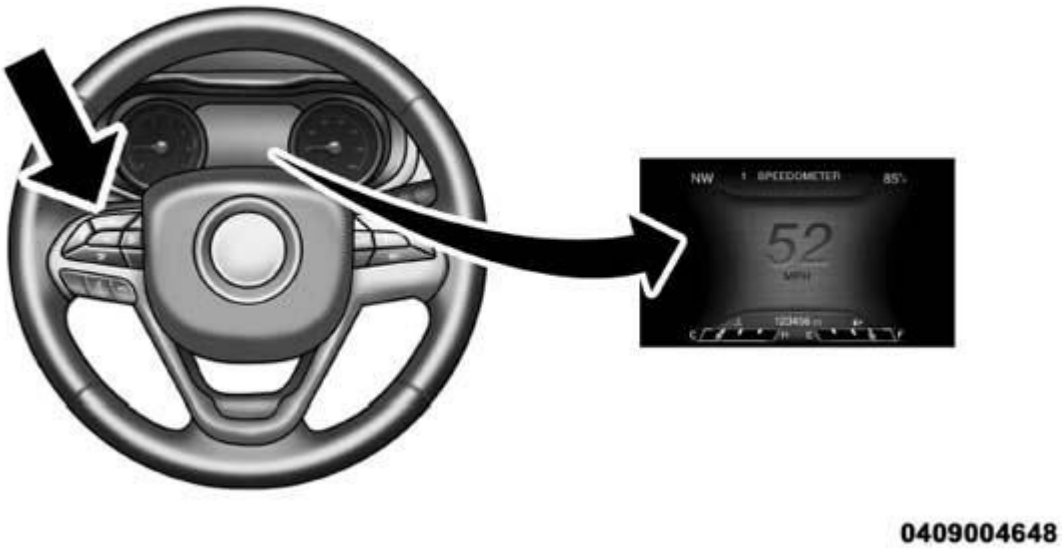

Fig. 1: Electronic Vehicle Information Center (EVIC) Driver-Interactive Display
Courtesy of CHRYSLER GROUP, LLC

The Electronic Vehicle Information Center (EVIC) features a driver-interactive display. The display is located in the middle of the instrument cluster between the speedometer and tachometer. This system conveniently allows the driver to select a variety of useful information by pressing the switches mounted on the steering wheel. The EVIC displays information related to the following:

- Audio mode display
- Compass display
- Fuel saver indicator, Economizer (ECO) display
- Navigation system screens - If Equipped
- Outside temperature display
- Park Assist System - If Equipped
- Personal Settings (customer programmable features)
- System Status

- Tire Pressure Monitor System - If Equipped
- Trip computer functions
- U-Connect™ hands-free communication system displays - If Equipped
- Vehicle information warning message displays

The EVIC system is comprised of several different components. Those components are:

- Instrument Cluster
- Steering Wheel Switches
- Ambient Temperature Sensor
- Controller Area Network (CAN) Data Bus
- Local Interface Network (LIN) Data Bus

The EVIC display is part of the Instrument Cluster assembly and is not serviced as a separate component. If the display is inoperative the complete Instrument Cluster assembly must be replaced. Refer to **REMOVAL** . If the EVIC function buttons are inoperative and require replacement, refer to **SWITCH, EVIC CONTROL, REMOVAL** for the appropriate procedure.

OPERATION

EVIC SWITCHES

Fig. 2: EVIC Function Buttons
Courtesy of CHRYSLER GROUP, LLC

The EVIC function buttons are used to operate the different functions of the EVIC system. Pressing and releasing the **Arrow** buttons allows the driver to scroll though and select the Compass/Temperature, Trip Computer, Personal Settings or System Status functions. The **OK** button allows the selection of setting or resetting of the function currently displayed at that time.

EVIC DISPLAY MODES

SYSTEM STATUS

Displays warnings and user interaction messages. Initial warnings will be displayed accompanied by a series of audible beeps. Critical text warnings will be displayed until the failure is corrected. Non-critical text warnings will be displayed for 60 seconds. The driver can scroll to view multiple messages by using the menu buttons.

When the appropriate conditions exist, the EVIC displays the following messages:

- Turn signal on
- Perform service
- Key not programmed - damaged key
- Key not programmed - invalid key
- Key not programmed - exceeded key program limit
- Programming active - new key programmed
- Service security key
- Invalid key - try alternate key
- Driver/passenger door open (with graphic)
- Left/right rear door open (with graphic)
- Doors open (with graphic)
- Liftgate open (with graphic)
- Liftgate/door open (with graphic)
- Liftgate/doors open (with graphic)
- Liftglass open (with graphic)
- Hood open (with graphic)
- Hood/door open (with graphic)
- Hood/doors open (with graphic)
- Liftgate/hood open (with graphic)
- Hood/glass/door open (with graphic)
- Hood/glass/doors open (with graphic)
- Hood/gate/door open (with graphic)
- Hood/gate/doors open (with graphic)
- Liftglass/door open (with graphic)
- Liftglass/doors open (with graphic)
- Liftglass/hood open (with graphic)
- Washer fluid low (with graphic)
- Coolant low (with graphic)
- Oil change required
- Oil change reset
- Check gauges
- Auto highbeam on
- Auto highbeam off

- Park assist disabled
- Service suspension
- Service park assist system
- Transmission over temp
- Check shift procedure
- Service 4wd system
- 4wd system in neutral
- Low brake fluid level
- Warning! Limit speed
- Check gas cap
- ESC off
- Hill descent control
- Memory #1 positions set
- Memory #2 positions set
- Memory system disabled - seatbelt fastened (with graphic)
- Memory system disabled - vehicle not in park
- Driver 1 memory
- Driver 2 memory
- Adj. Pedals disabled - cruise control set
- Adj. Pedals disabled - shifter in reverse
- Tire low pressure
- Check TPM system
- Exhaust Service Required - See Dealer Now (diesel models only)
- Exhaust System - Regeneration Required Now (diesel models only)
- Left front low pressure (premium TPM system only)
- Right front low pressure (premium TPM system only)
- Left rear low pressure (premium TPM system only)
- Right rear low pressure (premium TPM system only)
- Spare low pressure (premium TPM system only)
- Water in fuel (diesel models only)
- Service blind spot system
- Blind spot system unavailable
- Blind spot system off

TRIP COMPUTER

Press and release the **MENU** buttons until one of the following Trip Functions displays in the EVIC:

- Average Fuel Economy
- Distance To Empty
- Elapsed Time
- Display Units of Measure in

Press the **STEP** button to cycle through all the Trip Computer functions.

The Trip Functions mode displays the following information:

- **Average Fuel Economy** Shows the average fuel economy since the last reset. When the fuel economy is reset, the display will read "RESET" or show dashes for two seconds. Then, the history information will be erased, and the averaging will continue from the last fuel average reading before the reset.
- **Distance To Empty (DTE)** Shows the estimated distance that can be traveled with the fuel remaining in the tank. This estimated distance is determined by a weighted average of the instantaneous and average fuel economy, according to the current fuel tank level. DTE cannot be reset through the **RESET** button. When the DTE value is less than 30 miles (48 km) estimated driving distance, the DTE display will change to a text display of "LOW FUEL." This display will continue until the vehicle runs out of fuel. Adding a significant amount of fuel to the vehicle will turn off the "LOW FUEL" text and a new DTE value will display.
- **Elapsed Time** Shows the total elapsed time of travel since the last reset when the ignition switch is in the ACC position. Elapsed time will increment when the ignition switch is in the ON or START position.
- **Display Units of Measure in:** To make your selection, press and release the **RESET** button until "US" or "METRIC" appears.

To Reset The Display Reset will only occur while a reset function is being displayed. Press and release the **RESET** button once to clear the reset function being displayed. To reset all reset functions, press and release the **RESET** button a second time within 3 seconds of resetting the currently displayed function (>Reset ALL will display during this 3 second window).

HANDS FREE TELEPHONE - IF EQUIPPED

Provides the following information and features for the optional hands-free communications system:

- Phone status: idle, voice mail, roaming, battery strength and signal strength in increments of 20 percent
- Call status: Incoming call, connecting, connected, air time in minutes and seconds, call ended, busy, call failed, roaming and no phone connection
- UConnect Active
- Caller ID phone number display

NAVIGATION - IF EQUIPPED

Navigation Display Control Press and release the MENU button until Navigation displays in the EVIC. When the Navigation System is On, the steering wheel buttons can be used to select the Map or Menu display on the Navigation Unit. When the Menu display is active, the STEP button can be used to scroll through the list, the RESET button can be used to select an item, and the AUDIO MODE button can be used to return to the

previous menu. When the Map display is active, pressing the RESET button will change the Navigation Unit Display to the Menu.

Turn-By-Turn Directions The EVIC displays turn-by-turn directions to a programmed destination when Turn-By-Turn Navigation is enabled through Personal Settings. When enabled, the EVIC displays the name of the approaching road at the top of the screen, followed by an arrow to indicate the direction to turn the vehicle, and a count down to indicate the distance to the turn.

PERSONAL SETTINGS MODE (CUSTOMER PROGRAMMABLE FEATURES)

Allows the driver to set and recall features when the transmission is in Park by pressing and releasing the **MENU** button until Personal Settings is displayed in the EVIC. Pressing and releasing the **STEP** button will scroll through the following personal settings choices:

- **Language** When in this display you may select one of five languages for all display nomenclature, including the trip functions and the navigation system (if equipped). Press the **RESET** button while in this display to select English, Espanol, or Francais. Then, as you continue, the information will display in the selected language.

NOTE: The EVIC will not change the UConnect™ language selection.

- **Lock Doors Automatically at 15 mph (24 km/h)** When ON is selected, all doors will lock automatically when the vehicle reaches a speed of 15 mph (24 km/h). To make your selection, press and release the **RESET** button until "ON" or "OFF" appears.
- **Unlock Doors Automatically on Exit** When ON is selected, all doors will unlock when the vehicle is stopped and the transmission is in the P (Park) or N (Neutral) position and the driver's door is opened. To make your selection, press and release the **RESET** button until "ON" or "OFF" appears.
- **Remote Key Unlock** When DRIVER DOOR 1ST PRESS is selected, only the driver's door will unlock on the first press of the remote keyless entry unlock button. When Driver Door 1st Press is selected, you must press of the remote keyless entry unlock button twice to unlock the passenger's doors. When ALL DOORS 1ST PRESS is selected, all of the doors will unlock on the first press of the remote keyless entry unlock button. To make your selection, press and release the **RESET** button until "Driver Door 1st Press" or "All Doors 1st Press" appears.
- **Sound Horn with Remote Key Lock** When ON is selected, a short horn sound will occur when the remote keyless entry "Lock" button is pressed. This feature may be selected with or without the flash lights on lock/unlock feature. To make your selection, press and release the **RESET** button until "ON" or "OFF" appears.
- **Flash Lights with Remote Key Lock** When ON is selected, the front and rear turn signals will flash when the doors are locked or unlocked with the remote keyless entry transmitter. This feature may be selected with or without the sound horn on lock feature selected. To make your selection, press and release the **RESET** button until "ON" or "OFF" appears.
- **Delay Turning Headlights Off** When this feature is selected, the driver can choose to have the headlights remain on for 0, 30, 60, or 90 seconds when exiting the vehicle. To make your selection, press and release the **RESET** button until "0," "30," "60," or "90" appears.
- **Turn Headlights On with Remote Key Unlock** When this feature is selected, the headlights will

activate and remain on for up to 90 seconds when the doors are unlocked with the remote keyless entry transmitter. To make your selection, press and release the **RESET** button until "OFF," "30 sec.," "60 sec.," or "90 sec." appears.

- **Headlights On with Wipers (Available with Auto Headlights Only)** When this feature is selected and the headlight switch is in the AUTO position, the headlights will activate approximately 10 seconds after the wipers are turned on. To make your selection, press and release the **RESET** button until "ON" or "OFF" appears.
- **Delay Power Off to Accessories Until Exit** When this feature is selected, the power window switches, radio, hands-free system (if equipped), DVD video system (if equipped), power sunroof (if equipped), and power outlets will remain active for up to 10 minutes after the ignition switch is turned off. Opening a vehicle door will cancel this feature. To make your selection, press and release the **RESET** button until "Off," "45 sec.," "5 min.," or "10 min." appears.
- **Confirmation of Voice Commands - If Equipped** When ON is selected, all voice commands from the UConnect™ system are confirmed. To make your selection, press and release the **RESET** button until "ON" or "OFF" appears.
- **Display Units of Measure in** The EVIC, odometer, and navigation system (if equipped) can be changed between English and Metric units of measure. To make your selection, press and release the **RESET** button until "US" or "METRIC" appears.

COMPASS/TEMPERATURE

Compass heading and outside temperature are displayed on the EVIC display screen. One of eight compass headings to indicate the direction the vehicle is facing (N, S, E, W, NE, NW, SE, SW) and one of 15 compass variance settings can be programmed. Outside temperature is displayed in °C (degrees Celsius) or °F (degrees Fahrenheit).

For additional information regarding the compass, refer to Personal Settings (Customer Programmable Features) in this article .

DIAGNOSIS AND TESTING

DIAGNOSIS AND TESTING - ELECTRONIC VEHICLE INFORMATION CENTER

The Electronic Vehicle Information Center (EVIC) data is obtained from several components on the Controller Area Network (CAN) Data Bus circuit. The EVIC will not function properly if the bus messages from any of these components is not received. If no EVIC data is displayed, check the CAN Data Bus circuit communications, the Instrument Cluster functions and the Body Control Module (BCM).

The use of a scan tool and the proper diagnostic procedures information are recommended for further testing of the EVIC and the CAN Data Bus circuit. Refer to the appropriate wiring information for complete circuit schematic or connector pin-out information.

SENSOR, AMBIENT TEMPERATURE

DESCRIPTION

DESCRIPTION

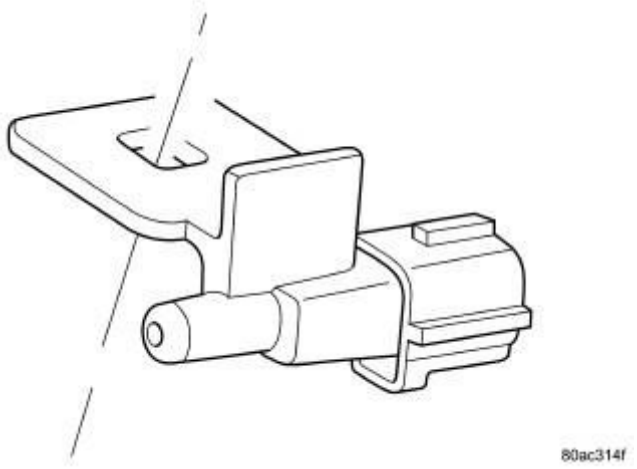

Fig. 3: Identifying Ambient Air Temperature Sensor
Courtesy of CHRYSLER GROUP, LLC

The ambient air temperature sensor is a variable resistor that monitors the air temperature outside of the vehicle. The Automatic Temperature Control (ATC) heating and A/C system uses the ambient air temperature sensor data to help maintain optimum passenger compartment temperature levels. The ambient air temperature sensor is mounted behind the front fascia.

OPERATION

OPERATION

The ambient air temperature sensor is a variable resistor that operates on a 5 volt Direct Current (DC) reference signal sent by the Body Control Module (BCM). The ambient air temperature sensor is connected to the BCM through a two-wire lead and connector of the vehicle wire harness. The ambient air temperature sensor changes its internal resistance in response to changes in the outside air temperature, which either increases or decreases the reference signal voltage read by the BCM. The BCM converts and broadcasts the sensor data over the Controller Area Network (CAN) data bus, where it is read by the A/C-heater control, Powertrain Control Module (PCM) and other vehicle control modules.

The ambient air temperature sensor is diagnosed using a scan tool. Refer to the appropriate Diagnostic Information .

The ambient air temperature sensor cannot be adjusted or repaired and must be replaced if inoperative or damaged. Refer to **SENSOR, AMBIENT TEMPERATURE, REMOVAL**.

REMOVAL

REMOVAL

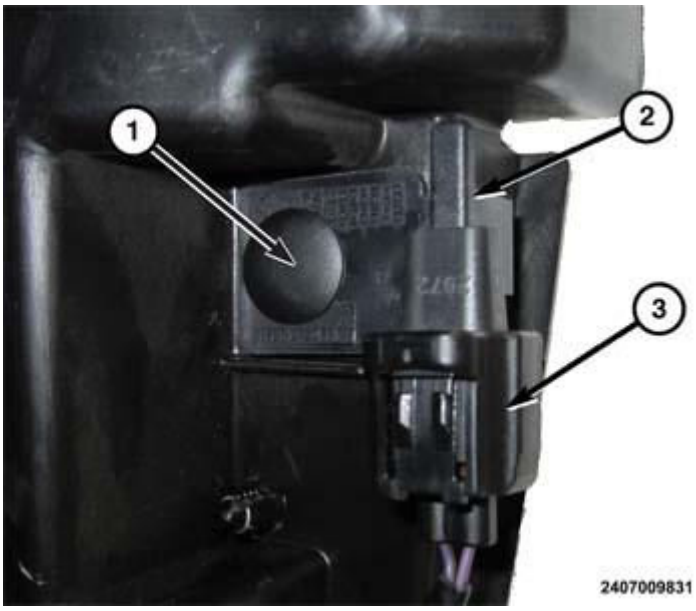

Fig. 4: Ambient Temperature Sensor, Connector & Push Pin
Courtesy of CHRYSLER GROUP, LLC

1. Disconnect and isolate the negative battery cable.
2. Disconnect the wire harness connector (3) from the ambient air temperature sensor (2).
3. Remove the push pin (1) that secures the ambient air temperature sensor and remove the sensor.

INSTALLATION

INSTALLATION

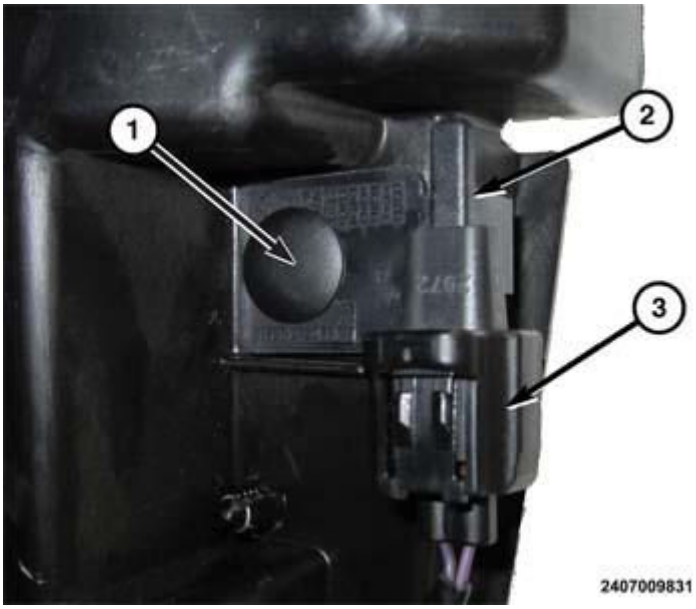

Fig. 5: Ambient Temperature Sensor, Connector & Push Pin
Courtesy of CHRYSLER GROUP, LLC

1. Install the push pin (2) that secures the ambient air temperature sensor to the vehicle.
2. Connect the wire harness connector (3) to the ambient air temperature sensor (2).
3. Connect the negative battery cable.

SWITCH, EVIC CONTROL

DESCRIPTION

DESCRIPTION

Fig. 6: EVIC Function Buttons
Courtesy of CHRYSLER GROUP, LLC

The Electronic Vehicle Information Center (EVIC) control switch pod is located in the left spoke of the steering wheel spoke bezel. This switch has up to eight push buttons. Five of the push buttons are used on all vehicles equipped with the EVIC. Three additional push buttons are found on vehicles equipped with the optional Uconnect™ Hands-Free Communication System. The only visible components of the switch pod are the switch push buttons and a decorative bezel around the push buttons, which stands slightly proud of the steering wheel spoke bezel. The remainder of the switch pod including its mounting provisions and its electrical connection are concealed beneath the spoke bezel.

The switch pod housing and push buttons are constructed of molded plastic. Each of the push buttons has white International Control and Display Symbol graphics or text applied to it, which clearly identify the function of each push button. The switch pod is secured through three integral mounting tabs to mounting bosses on the back of the spoke bezel by three screws. A connector receptacle integral to the inboard end of the switch pod housing connects the EVIC control switch pod to the vehicle electrical system through a dedicated take out and connector of the steering wheel wire harness.

The EVIC control switch pod cannot be adjusted or repaired. If any function of the switch is ineffective or damaged, the entire switch pod unit must be replaced.

OPERATION

OPERATION

The Electronic Vehicle Information Center (EVIC) control switch pod is a resistor multiplexed unit that receives source current from and provides hard wired inputs to the Local Interface Network (LIN) slave node circuitry of the LIN module or integral to the cruise control switch pod in the right spoke of the steering wheel spoke bezel. The LIN slave node circuitry communicates the switch states of the EVIC control switch pod, the remote radio switches, the horn switch and the heated steering wheel sensor (if equipped) over the LIN data bus to the LIN master node integral to the Steering Column Module (SCM) integral to the Steering Column Control Module (SCCM) mounting housing located on the top of the steering column below the clockspring. The SCM is also a gateway to the Controller Area Network (CAN) data bus.

The EVIC control switch pod contains four push buttons whose functions are:

- **Down Arrow** - Pressing and releasing the Down Arrow push button allows the operator to scroll downward through the various EVIC main menus and sub menus.
- **Left Arrow** - Pressing and releasing the Left Arrow push button returns you to the previous sub menu or main menu.
- **Right Arrow** - Pressing and releasing the Right Arrow (Select) push button allows the operator to navigate, select and reset items or settings in the currently displayed EVIC main menu or sub menu. Pressing and holding the Right Arrow (Select) push button for two seconds provides a global reset of all of those EVIC features that can be reset, whether currently displayed or not.
- **Up Arrow** - Pressing and releasing the Up Arrow push button allows the operator to scroll upward through the various EVIC main menus and sub menus.

For vehicles equipped with the Uconnect® Hands-Free Communication System, the EVIC control switch pod contains two additional switch push buttons whose functions are:

- **VR (Voice Recognition)** - This switch button activates the Uconnect® Voice Command system.
- **Phone** - This switch push button activates the Uconnect® Hands-Free Phone system.

The LIN slave node circuitry of the LIN module or the cruise control switch pod provides current for all of the switches and sensors on the rotating steering wheel as well as for the Light Emitting Diode (LED) back lighting of both the cruise control and the EVIC control switch pods. The SCM continually monitors all of the hard wired speed control switch circuits as well as the LIN bus data. The SCM will store a Signal Not Available (SNA) code for any LIN bus input errors. The SCM also communicates with other electronic modules over the CAN data bus. Therefore, any SCM DTC information can be retrieved using a diagnostic scan tool connected to the Data Link Connector (DLC).

The analog resistor multiplexed circuits of the EVIC control switch pod as well as the hard wired circuits between the switch pod and the speed control switch pod may be diagnosed using conventional diagnostic tools and procedures. Refer to the appropriate wiring information. The wiring information includes wiring diagrams, proper wire and connector repair procedures, details of wire harness routing and retention, connector pin out information and location views for the various wire harness connectors, splices and grounds.

However, conventional diagnostic methods will not prove conclusive in the diagnosis of the LIN slave or master nodes, the SCM or the electronic controls and communication between modules and other devices that provide some features of the EVIC system. The most reliable, efficient, and accurate means to diagnose the EVIC control switch pod, the LIN slave or master nodes, the SCM or the electronic controls and

communication related to EVIC system operation requires the use of a diagnostic scan tool. Refer to the appropriate diagnostic information.

REMOVAL

REMOVAL

WARNING: To avoid serious or fatal injury on vehicles equipped with airbags, disable the Supplemental Restraint System (SRS) before attempting any steering wheel, steering column, airbag, seat belt tensioner, impact sensor or instrument panel component diagnosis or service. Disconnect and isolate the battery negative (ground) cable, then wait two minutes for the system capacitor to discharge before performing further diagnosis or service. This is the only sure way to disable the SRS. Failure to take the proper precautions could result in accidental airbag deployment.

1. Disconnect and isolate the battery negative cable.
2. Remove the remote radio switch. Refer to **SWITCH, REMOTE RADIO, REMOVAL** .

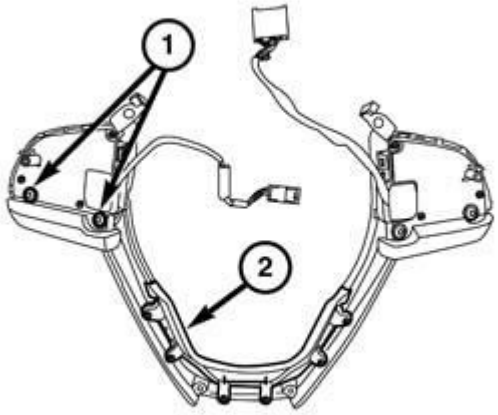

0806007482

Fig. 7: Steering Wheel Front Bezel & Screws
Courtesy of CHRYSLER GROUP, LLC

3. From the back of the steering wheel front bezel (2), remove the two screws (1) that secure the EVIC switch pod to the bezel.
4. Remove the switch from the bezel.

INSTALLATION

INSTALLATION

WARNING: To avoid serious or fatal injury on vehicles equipped with airbags, disable the Supplemental Restraint System (SRS) before attempting any steering wheel, steering column, airbag, seat belt tensioner, impact sensor or instrument panel component diagnosis or service. Disconnect and isolate the battery negative (ground) cable, then wait two minutes for the system capacitor to discharge before performing further diagnosis or service. This is the only sure way to disable the SRS. Failure to take the proper precautions could result in accidental airbag deployment.

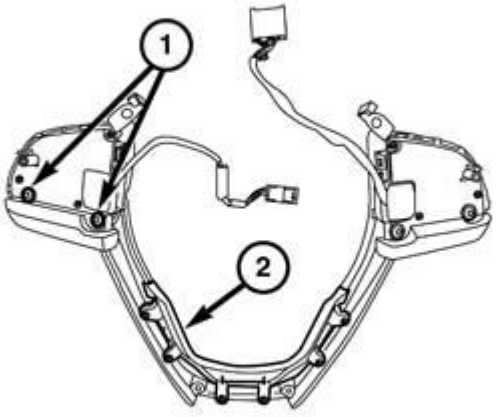

0806007482

Fig. 8: Steering Wheel Front Bezel & Screws
Courtesy of CHRYSLER GROUP, LLC

1. Position the Electronic Vehicle Information center (EVIC) switch pod to the back of the steering wheel front bezel (2).
2. Install and tighten the two screws (1) that secure the switch to the bezel. Tighten the screws securely.
3. Install the remote radio switch. Refer to **SWITCH, REMOTE RADIO, INSTALLATION** .
4. Connect the negative battery cable.

2014 ACCESSORIES AND EQUIPMENT

Navigation/Telecommunication - Service Information - Cherokee

DESCRIPTION

HANDS FREE PHONE

A Uconnect™ Hands Free Phone system is factory-installed optional equipment. This system allows hands free use of compatible mobile phones for sending and receiving phone calls and text messages as well as for streaming audio from those devices through the audio system in the vehicle. The Hands Free Phone system includes the following major components, which are described in further detail elsewhere in this service information:

- **Bluetooth™ Antenna** - A Bluetooth™ antenna is internal and integral to the Radio Receiver Module (RRM) (also known as the radio or the head unit).
- **Bluetooth™ Phone** - A customer-supplied and paired Bluetooth™ phone is a required component of the hands free phone system.
- **Body Control Module** - The Body Control Module (BCM) (also known as the Common Body Controller/CBC) is located on the right cowl side inner panel within the passenger compartment, where it is concealed behind the cowl side kick panel to the right of the instrument panel. The BCM is the configuration master node for the vehicle. Refer to **MODULE, BODY CONTROL, DESCRIPTION** .
- **Electronic Vehicle Information Center Switch Pod** - The Electronic Vehicle Information Center (EVIC) switch pod is located in the left horizontal spoke of the steering wheel. In addition to the EVIC switch buttons this switch pod contains the Uconnect™ Voice Recognition (VR) (also known as Voice Command) switch button and the Uconnect™ Phone switch button of the Hands Free Phone system. Refer to **SWITCH, EVIC CONTROL, DESCRIPTION** .
- **Microphones** - Stereo microphones are integral to the inside rear view mirror in vehicles equipped with the Uconnect™ Hands Free Phone system. These microphones are located on the top surface of the mirror housing, one to each side of center. Refer to **MICROPHONE, DESCRIPTION**.
- **Radio Receiver Module** - The Radio Receiver Module (RRM) (also known as the radio or the head unit) is located near the top of the instrument panel center stack area and is the primary component of the phone system in this vehicle. In addition to a 213 millimeter (8.4 inch) color electronic touchscreen display, a microcontroller, a Bluetooth™ transceiver, a navigation module, flash memory and sophisticated Advanced Speech Recognition (ASR) input capability through Voice Recognition (VR) software. The ASR software includes many different available languages. Each vehicle is equipped with a list of available languages, which are made available from the factory based upon languages most commonly used for the market destination. Refer to **RADIO, DESCRIPTION** .

The RRM also contains a microcontroller and programming that allows it to communicate with other electronic modules in the vehicle over the Controller Area Network - Interior High Speed (CAN-IHS) data bus. Refer to **COMMUNICATION, DESCRIPTION** .

The Uconnect™ Hands Free Phone system components cannot be adjusted or repaired. If any Hands Free Phone system component is damaged or ineffective, that component must be replaced. The Hands Free Phone

system software is flash programmable through the Universal Serial Bus (USB) port.

NAVIGATION

A factory-installed satellite navigation system based upon the Global Positioning System (GPS) is an available option on this vehicle. Depending upon the optional touchscreen Radio Receiver Module (RRM) (also known as the radio or the head unit) selected for the vehicle, there are some variations in navigation system features available. Each system provides the vehicle operator with both visual and audible guidance to a chosen destination. An available premium navigation system includes such features as one-shot Voice Recognition (VR) destination entry, three dimensional city models and landmarks, digital terrain modeling, SiriusXM™ Travel Link and SiriusXM™ Traffic.

A color touchscreen electronic display provides a graphical interface for programming, searching for and selecting destinations. In vehicles also equipped with a Uconnect™ Hands-Free telecommunication option, the available navigation systems are also equipped with Advanced Speech Recognition (ASR) input capability allowing hands-free operation. Each system provides visual guidance through dynamic maps with a turn-by-turn feature that can be enabled or disabled by the vehicle operator, while voice prompts through the audio system of the vehicle provide the vehicle operator with audible alerts and directions coordinated with the visual displays. The system also displays and logs valuable trip information such as speed, posted speed limit, distance and Estimated Time of Arrival (ETA).

The premium navigation system is activated when the vehicle is shipped from the factory, while another available system is shipped from the factory as Navigation Ready. The Navigation Ready system allows the customer to choose whether to have the dealer activate the embedded navigation module after the vehicle has been delivered.

The navigation system includes the following major components, which are described in further detail elsewhere in this service information:

- **Body Control Module** - The Body Control Module (BCM) (also known as the Common Body Controller/CBC) is located on the right cowl side inner panel within the passenger compartment, where it is concealed behind the cowl side kick panel to the right of the instrument panel. The BCM is the configuration master node for the vehicle. Refer to **MODULE, BODY CONTROL, DESCRIPTION** .
- **Combination Antenna** - The navigation module acquires GPS position data through a roof-mounted combination antenna that also receives satellite audio and cellular signals. Refer to **ANTENNA, SATELLITE, AUDIO, DESCRIPTION** .
- **Electronic Vehicle Information Center** - The Electronic Vehicle Information Center (EVIC) is an electronic display within the Instrument Cluster (IC) (also known as the Common Instrument Cluster/CIC). When Turn-By-Turn navigation is enabled through the EVIC Personal Settings menu, the EVIC displays turn-by-turn directions to the chosen destination supplemental to the navigation display within the RRM touchscreen unit. Refer to **CENTER, ELECTRONIC VEHICLE INFORMATION, DESCRIPTION** .
- **Electronic Vehicle Information Center Switch Pod** - The Electronic Vehicle Information Center (EVIC) switch pod is located in the left horizontal spoke of the steering wheel. In addition to the EVIC switch buttons this switch pod contains the Uconnect™ Voice Recognition (VR) (also known as Voice Command) switch button and the Uconnect™ Phone switch button of the Uconnect™ Hands-Free Phone

system. Refer to **SWITCH, EVIC CONTROL, DESCRIPTION** .

- **Microphones** - Stereo microphones are integral to the inside rear view mirror in vehicles equipped with the Uconnect™ Hands-Free Phone system. These microphones are located on the top surface of the mirror housing, one to each side of center. Refer to **MICROPHONE, DESCRIPTION**.
- **Radio Receiver Module** - The Radio Receiver Module (RRM) (also known as the radio or the head unit) contains the central components of the navigation system. In addition to a 213 millimeter (8.4 inch) color electronic touchscreen display, a navigation module is internal and integral to each RRM that is equipped with navigation capability. The navigation module contains all of the navigation system hardware and software. Hardware includes the GPS receiver, an electronic gyroscope, a microcontroller and flash memory for system software and map data storage. Refer to **RADIO, DESCRIPTION** .

The IC and the RRM each contain a microcontroller and programming that allow them to communicate with each other and other electronic modules in the vehicle using the Controller Area Network - Interior High Speed (CAN - IHS) data bus. Refer to **COMMUNICATION, DESCRIPTION** .

The navigation system components cannot be adjusted or repaired. If any of the navigation system components is damaged or ineffective, that component must be replaced. The external combination antenna can be repaired separately from the RRM. The navigation system software as well as the map data is flash programmable through the Universal Serial Bus (USB) port.

UCONNECT ACCESS

A Uconnect™ Access system is factory-installed optional equipment. The Uconnect™ Access system uses an embedded cellular connection and available subscription service packages to enable several mobile connectivity features. Vehicles equipped with the Uconnect™ Access system can be readily identified by two switch buttons on the inside rear view mirror identified with **ASSIST** and **9-1-1** labels.

To fully enable the Uconnect™ Access system, a Uconnect™ Access account must first be established by following the steps described in the Uconnect™ Access registration process at **www.MoparOwnerConnect.com** . Next, one of two optional subscription service packages must be selected. The two packages are:

- **Uconnect™ Access Assist Package** - This package provides one touch 9-1-1 calling and roadside assistance calling features.
- **Uconnect™ Access Advantage Package** - This package also includes the one touch 9-1-1 calling and roadside assistance calling features found in the Assist Package. In addition, this package provides features such as Bing™ hands-free search and voice-to-text hands-free text message dictation, both through the user's compatible, paired and enabled Bluetooth™ phone. Another feature of this package is remote vehicle services like remote **Lock** , **Unlock** and **Start** . The remote vehicle services can be activated through the user's compatible smart phone after the **Uconnect™ Access Mobile** smart phone app is installed on the smart phone. Download and installation of the **Uconnect™ Access Mobile** smart phone app can be done during the Uconnect™ Access registration process at **www.MoparOwnerConnect.com** or from the user's smart phone App storefront. The user can also activate the remote vehicle services feature from the Uconnect™ Access web portal.

NOTE: A free trial period of the Uconnect™ Access Assist or Advantage subscription

packages may be offered after successful completion of the Uconnect™ Access registration process.

The Uconnect™ Store Front is accessible from the appropriate Radio Receiver Module (RRM) (also known as the radio or the head unit) touch screen menu once the Uconnect™ Access registration process has been successfully completed. In the future, additional Uconnect™ Access compatible applications (also known as RRM apps) will be made available for purchase and download from the Uconnect™ Store Front.

The Uconnect™ Access system includes the following major components, which are described in further detail elsewhere in this service information:

- **Access Switches** - In vehicles equipped with Uconnect™ Access, the inside rear view mirror also contains two integral push button switches and a Light Emitting Diode (LED) indicator located on the rearward-facing housing just below the center of the mirror glass for activation of the **ASSIST** and **9-1-1** features.
- **Bluetooth™ Antennas** - Bluetooth™ antennas are internal and integral to the RRM.
- **Bluetooth™ Phone** - A customer-supplied and paired Bluetooth™ smart phone is a required component of the Uconnect™ Access system to enable remote services.
- **Body Control Module** - The Body Control Module (BCM) (also known as the Common Body Controller/CBC) is located on the right cowl side inner panel within the passenger compartment, where it is concealed behind the cowl side kick panel to the right of the instrument panel. The BCM is the configuration master node for the vehicle. Refer to **MODULE, BODY CONTROL, DESCRIPTION** .
- **Combination Antenna** - The Radio Receiver Module (RRM) (also known as the radio or the head unit) sends and receives cellular data through a roof-mounted combination antenna that also receives satellite audio and Global Positioning System (GPS) navigation signals. Refer to **ANTENNA, SATELLITE, AUDIO, DESCRIPTION** .
- **Electronic Vehicle Information Center Switch Pod** - The Electronic Vehicle Information Center (EVIC) switch pod is located in the left horizontal spoke of the steering wheel. In addition to the EVIC switch buttons this switch pod contains the Voice Recognition (VR) switch button and the Phone switch button of the hands-free phone system. Refer to **SWITCH, EVIC CONTROL, DESCRIPTION** .
- **Microphones** - Stereo microphones are integral to the inside rear view mirror in vehicles equipped with the hands-free phone system. These microphones are located on the top surface of the mirror housing, one to each side of center. Refer to **MICROPHONE, DESCRIPTION**.
- **Radio Frequency Hub Module** - The Radio Frequency Hub Module (RFHM) (also known as the RF Hub) is a key component of the Uconnect™ Access remote vehicle services feature. The RFHM is located on the left rear quarter inner panel in the cargo area within the passenger compartment and concealed behind the quarter trim panel. Refer to **MODULE, RADIO FREQUENCY (RF HUB), DESCRIPTION** .
- **Radio Receiver Module** - The Radio Receiver Module (RRM) (also known as the radio or the head unit) is located near the top of the instrument panel center stack area and is the primary component of the Uconnect™ Access system in this vehicle. The RRM includes a 213 millimeter (8.4 inch) color electronic touchscreen display, a microcontroller, a Bluetooth™ transceiver, a navigation module, flash memory and sophisticated Advanced Speech Recognition (ASR) input capability through Voice Recognition (VR) software. The ASR software includes many different available languages. Each vehicle is equipped with a list of available languages, which are made available from the factory based upon languages most

commonly used for the market destination. Refer to **RADIO, DESCRIPTION** .

- **Uconnect™ Access Registration And Applications** - Uconnect™ Access registration must be completed before individual RRM apps or Uconnect™ Access subscription packages can be purchased from the Uconnect™ Store Front. The Uconnect™ Access Mobile smart phone app must also be installed on the user's compatible smart phone for the remote vehicle services features to operate. Many additional Uconnect™ Access apps are under development for later release.

The RRM contains a microcontroller and programming that allows it to communicate with other electronic modules in the vehicle over the Controller Area Network - Interior High Speed (CAN-IHS) data bus. In vehicles equipped with Uconnect™ Access, the RRM also uses electronic message communication with other electronic modules in the vehicle over the CAN-C data bus. Refer to **COMMUNICATION, DESCRIPTION** .

The Uconnect™ Access system components cannot be adjusted or repaired. If any Uconnect™ Access system component is damaged or ineffective, that component must be replaced. The external combination antenna can be repaired separately from the RRM. The Uconnect™ Access system software is flash programmable through the Universal Serial Bus (USB) port.

WI-FI HOT SPOT

Vehicles equipped with the Uconnect™ Access system can become a Wi-Fi hot spot with payment of a daily, weekly or monthly subscription option. This system allows the use of the vehicle as a Wi-Fi hot spot for connecting consumer Wi-Fi devices to the Internet through a Wi-Fi antenna and an embedded cellular connection that are internal and integral to the Radio Receiver Module (RRM) (also known as the radio or the head unit), and the external cellular combination antenna.

The Wi-Fi Hot Spot system includes the following major components, which are described in further detail elsewhere in this service information:

- **Wi-Fi Antenna** - The Wireless Local Area Network (WLAN) (also known as Wi-Fi) antenna is internal and integral to the RRM.
- **Wi-Fi Device** - A customer-supplied Wi-Fi capable device is a required component of the Wi-Fi Hot Spot system.
- **Combination Antenna** - The RRM sends and receives cellular data through a roof-mounted combination antenna that also receives satellite audio and Global Positioning System (GPS) navigation signals. Refer to **ANTENNA, SATELLITE, AUDIO, DESCRIPTION** .
- **Radio Receiver Module** - The Radio Receiver Module (RRM) (also known as the radio or the head unit) is located near the top of the instrument panel center stack area and is the primary component of the telecommunication system in this vehicle. The RRM includes a 213 millimeter (8.4 inch) color electronic touchscreen display, a microcontroller, a Bluetooth™ transceiver, a navigation module, flash memory and sophisticated Advanced Speech Recognition (ASR) input capability through Voice Recognition (VR) software. The ASR software includes many different available languages. Each vehicle is equipped with a list of available languages, which are made available from the factory based upon languages most commonly used for the market destination. Refer to **RADIO, DESCRIPTION** .

The Uconnect™ Access Wi-Fi Hot Spot system components cannot be adjusted or repaired. If any Wi-Fi Hot Spot system component is damaged or ineffective, that component must be replaced. The external combination

antenna can be repaired separately from the RRM. The Wi-Fi Hot Spot system software is flash programmable through the Universal Serial Bus (USB) port.

OPERATION

HANDS FREE PHONE

The Uconnect™ Hands Free Phone system relies upon Bluetooth™ technology to enable wireless connectivity between Bluetooth™ compatible, paired and turned On mobile devices and the on-board entertainment system components. This system also relies upon Advanced Speech Recognition (ASR) software to enable Voice Commands to control the mobile device as well as the components and features of some other on-board systems.

The system will recognize up to ten Bluetooth™ compatible devices, each of which is identified within the system by the name acquired from the device during the pairing process. The Hands Free Phone system will communicate with a paired device that is anywhere within the vehicle. However, covering the paired device with a metal object may block the signal.

The Hands Free Phone system is operated in one of two ways: actively or passively. Active operation begins with the vehicle operator depressing a push button in the Electronic Vehicle Information Center (EVIC) switch pod on the face of the left horizontal spoke of the steering wheel. The Uconnect™ Voice Recognition (**VR**) (also known as Voice Command) button is depressed for hands free Voice Command access to available features other than the phone, or the Uconnect™ Phone (**Phone** is identified by a phone handset icon) button is depressed for hands free phone access.

The **VR** or **Phone** button press provides a resistor multiplexed input to the Local Interface Network (LIN) slave node integral to the EVIC switch pod. The LIN slave node sends an electronic **switch press** message to the LIN master node integral to the Body Control Module (BCM) (also known as the Common Body Controller/CBC). The BCM is also a gateway to the CAN - Interior High Speed (CAN-IHS) data bus and relays the message over CAN-IHS data bus to the Radio Receiver Module (RRM) (also known as the radio or the head unit).

When the RRM receives the electronic **switch press** message, the RRM suppresses any current audio output and issues an audible **beep** to indicate that the VR hardware is prepared to receive a Voice Command. Part of the Uconnect™ Hands Free Phone system hardware includes the VR stereo microphones integral to the top surface of the inside rear view mirror. The microphones provide a hard wired input of Voice Commands to the VR engine within the RRM, and the ASR software converts that input into an electronic instruction message broadcast over the CAN-IHS data bus to invoke the appropriate system response. If no appropriate Voice Command is received within a few seconds following the audible **beep** , the system will provide an audible verbal output listing a menu of the available Voice Command options.

Passive operation begins when an incoming cellular call is received. If the Bluetooth™ phone is Short Message Service (SMS) text message capable and compatible with the Uconnect™ system (see the Uconnect™ web site), passive operation will also begin when an SMS text message is received. The call or SMS text message is relayed to the Bluetooth™ transceiver embedded within the RRM. The Bluetooth™ transceiver then instructs the RRM to announce the incoming call or message. The vehicle operator presses the Uconnect™ **Phone** button in the EVIC switch pod or the soft button that will appear in the RRM display to accept the call, or the soft button that will appear in the RRM display to accept the message.

The Bluetooth™ transceiver connects the voices of the two phone parties using outputs through the audio system speakers and inputs through the Uconnect™ hands free microphones. In the case of a text message, the Bluetooth™ transceiver sends the message to the VR hardware and the ASR software converts the message from text to voice and plays it through the audio system speakers.

If the RRM has the optional 213 millimeter (8.4 inch) electronic touchscreen display, the text message can then be replied to by depressing the Uconnect™ **VR** button and giving an **SMS** Voice Command to select from several predetermined short text phrase responses. If the RRM has the 127 millimeter (5 inch) display, it can receive and display SMS text messages, but it is not equipped to reply to text messages.

The Hands Free Phone system operates on battery current received through a fused B(+) circuit, but also monitors the ignition switch (also known as the Keyless Ignition Node/KIN or IGnition Node Module/IGNM) status through electronic messages received over the CAN-IHS data bus. If a call is in progress when the status of the ignition switch transitions to Off, the system will continue to operate until the call has been completed.

The RRM receives electronic message inputs over the CAN-IHS data bus related to the Hands Free Phone system. The RRM is also connected to the CAN-C data bus; however, the RRM is not a CAN gateway. All electronic message outputs of the RRM are carried over the CAN-IHS data bus. When the RRM monitors a problem in any of the audio system circuits and components, or in any of the Bluetooth™ transceiver circuits, it stores a fault code or Diagnostic Trouble Code (DTC) in its memory circuit.

The hard wired circuits between components related to the RRM and the Hands Free Phone system may be diagnosed using conventional diagnostic tools and procedures. Refer to the appropriate wiring information. The wiring information includes wiring diagrams, proper wire and connector repair procedures, details of wire harness routing and retention, connector pin out information and location views for the various wire harness connectors, splices and grounds.

However, conventional diagnostic methods will not prove conclusive in the diagnosis of the RRM or the electronic controls and communication between modules and other devices that provide some features of the Hands Free Phone system. The most reliable, efficient and accurate means to diagnose the RRM or the electronic controls and communication related to Hands Free Phone system operation requires the use of a diagnostic scan tool. Refer to the appropriate diagnostic information.

NAVIGATION

The optional navigation system is active whenever the Radio Receiver Module (RRM) (also known as the radio or the head unit) electronic display is powered On. In vehicles equipped with a navigation system that allows activation after the vehicle has been delivered, all post delivery activations must be performed by the dealer.

If a navigation system menu or map isn't being actively displayed, the system is still operating in the background. The menu, map or route that was active when the RRM electronic display was powered Off along with all other user-relevant information is saved in nonvolatile memory by the navigation module for display again the next time the RRM electronic display is powered On and the navigation system is selected.

Once a destination is selected, the navigation system uses information from stored map data to quickly calculate a route. As the vehicle is driven along that route, the vehicle operator is guided with visual displays and voice prompts. Any variances from that route will cause the navigation system to automatically recalculate and

deliver a revised route to the chosen destination.

When Turn-By-Turn Navigation is enabled through the Personal Settings menu of the Electronic Vehicle Information Center (EVIC), the EVIC supplements the RRM display with a more focused turn-by-turn display which includes: the name of the approaching crossroad, an arrow indicating the upcoming turn direction and a countdown to indicate the distance to that turn.

All vehicles have their original map and Points-Of-Interest (POI) data stored in nonvolatile flash memory integral to the navigation module integral and internal to the RRM. Updated map and POI data as well as updated navigation software for these vehicles can be uploaded to the system using Universal Serial Bus (USB) media. The originally installed data is based upon the market for which the vehicle was manufactured. Navigation software updates are also uploaded to the system using USB media.

The Global Positioning System (GPS) receiver of the navigation module is capable of acquiring and tracking GPS signal inputs through the roof-mounted combination antenna from numerous satellites simultaneously to calculate and display the position and direction of the vehicle. However, when access to satellite signals is blocked by bridges, tunnels or other obstacles, the navigation module relies upon Dead Reckoning (DR) to aid in calculating vehicle position and direction. The navigation module uses pulse signals from the wheel speed sensors, a Reverse gear indicator input and an internal electronic gyroscope sensor to provide DR vehicle position and direction calculations to supplement GPS satellite signals.

User input mechanisms for the navigation system include the RRM touchscreen and the Uconnect™ Hands-Free Voice Recognition (VR) (also known as Voice Command) verbal commands. The VR function uses Advanced Speech Recognition (ASR) software. Master control of the VR function is handled by the VR engine internal and integral to the RRM. The VR recognizes and responds to certain global commands, while other commands are specific to the RRM or the navigation system.

For safety reasons some input, editing and setting features of the navigation system are restricted when the vehicle is in motion or when a hands-free phone call is active. This includes many features that require touchscreen inputs. However, many of those same features disabled for touchscreen inputs remain enabled for Uconnect™ Hands-Free VR inputs.

The navigation module receives electronic message inputs within the RRM over the Controller Area Network - Interior High Speed (CAN-IHS) data bus; however, the RRM is not a CAN gateway. All electronic message outputs of the navigation module and the RRM are carried over the CAN-IHS data bus. When the RRM monitors a problem in any of the audio system circuits and components, or in any of the navigation system antenna circuits, it stores a fault code or Diagnostic Trouble Code (DTC) in its memory circuit. The external combination antenna may be diagnosed separately from the RRM.

The hard wired circuits between components related to the RRM and the navigation system may be diagnosed using conventional diagnostic tools and procedures. Refer to the appropriate wiring information. The wiring information includes wiring diagrams, proper wire and connector repair procedures, details of wire harness routing and retention, connector pin out information and location views for the various wire harness connectors, splices and grounds.

However, conventional diagnostic methods will not prove conclusive in the diagnosis of the RRM or the electronic controls and communication between modules and other devices that provide some features of the

navigation system. The most reliable, efficient and accurate means to diagnose the RRM or the electronic controls and communication related to navigation system operation requires the use of a diagnostic scan tool. Refer to the appropriate diagnostic information.

UCONNECT ACCESS

The two switch buttons on the inside rear view mirror identified with **ASSIST** and **9-1-1** labels in vehicles equipped with the optional Uconnect™ Access system provide active control of the one-touch 9-1-1 calling and roadside assistance calling features. The **ASSIST** button behavior is dependent upon the Uconnect™ Assist or Advantage subscription status. If either subscription is active, pressing the **ASSIST** allows the user to contact the Chrysler Customer Care Center, the Uconnect™ Customer Care Center for Uconnect™ Access related issues or the Roadside Assistance Call Center. If both subscriptions are inactive, only the Chrysler Customer Care Center or the Roadside Assistance Call Center may be contacted. The **9-1-1** button is enabled with or without a subscription. These switches provide a resistor multiplexed input to the Local Interface Network (LIN) slave node integral to the inside rear view mirror.

The LIN slave node sends an electronic **switch press** message to the LIN master node integral to the Body Control Module (BCM) (also known as the Common Body Controller/CBC). The BCM relays the message over the Controller Area Network - Interior High Speed (CAN-IHS) data bus, where it is retrieved by the Radio Receiver Module (RRM) (also known as the radio or the head unit). There is also an **ASSIST** soft button available in a menu of the RRM that provides a direct input to the Uconnect™ Access system.

The Light Emitting Diode (LED) indicator between the push buttons provides an indication of the status of the Uconnect™ Access embedded cellular device. Any fault indication is accompanied by a pop up screen in the RRM (also known as the radio or the head unit) electronic display. The following indications are provided whenever the status of the ignition switch is On or Accessory:

- **Solid Green** - No active call.
- **Flashing Green** - A call is active.
- **Solid Red** - A CAN, embedded cellular device or cellular antenna fault has been detected.
- **Off** - No power supply to the rear view mirror.

If a Bluetooth™ phone is Short Message Service (SMS) text message capable and compatible with the Uconnect™ Access system (see the Uconnect™ web site for a phone compatibility list), a Uconnect™ Advantage subscription provides an enhanced SMS text message free form dictation feature to compose a response when a text message is received. The call or SMS text message is relayed to the Bluetooth™ transceiver embedded within the RRM. The Bluetooth™ transceiver then instructs the RRM to announce the incoming call or message. The vehicle operator presses the Uconnect™ **Phone** button in the EVIC switch pod or the soft button that will appear in the RRM display to accept the message and dictate a response.

If the vehicle has had the optional Uconnect™ Mobile application (also known as app) downloaded, installed and enabled on their smart phone the Uconnect™ Advantage subscription can provide remote door locking and unlocking, remote starting and remote horn and lights features. In the Uconnect™ Access system the Mobile app on the smart phone calls the RRM in the vehicle, the RRM communicates through electronic messages over the Controller Area Network - C (CAN-C) data bus with the Radio Frequency Hub Module (RFHM) (also known as the RF Hub) and the RFHM communicates over the CAN-C bus with the Body Control Module

(BCM) (also known as the Common Body Controller/CBC) to achieve the requested remote features. While the RRM uses electronic message communication over the CAN-C data bus and the CAN - Interior High Speed (CAN-IHS) data bus, the RRM is not a CAN gateway.

The Uconnect™ Advantage subscription also enables hands-free mobile Bing™ local search and navigation capabilities.

The hard wired circuits between components related to the RRM and the Uconnect™ Access system may be diagnosed using conventional diagnostic tools and procedures. Refer to the appropriate wiring information. The wiring information includes wiring diagrams, proper wire and connector repair procedures, details of wire harness routing and retention, connector pin out information and location views for the various wire harness connectors, splices and grounds.

However, conventional diagnostic methods will not prove conclusive in the diagnosis of the RRM or the electronic controls and communication between modules and other devices that provide some features of the Uconnect™ Access system. The most reliable, efficient and accurate means to diagnose the RRM or the electronic controls and communication related to Uconnect™ Access system operation requires the use of a diagnostic scan tool. Refer to the appropriate diagnostic information.

WI-FI HOT SPOT

Vehicles equipped with the optional Uconnect™ Access system are capable of becoming Wi-Fi hot spots with the Wi-Fi Hot Spot system. The Radio Receiver Module (RRM) (also known as the radio or the head unit) includes both an integral internal Wireless Local Area Network (WLAN) (also known as Wi-Fi) antenna and an embedded cellular connection. Along with a paid daily, weekly or monthly subscription service these features allow the vehicle to become a Wireless Access Point (WAP) for access to the Internet through Wi-Fi capable and enabled devices.

An Application Settings menu of the RRM allows the adjustment of the WAP password and security settings. The external combination antenna can be diagnosed and repaired separately from the RRM.

DIAGNOSIS AND TESTING

DIAGNOSIS AND TESTING - HANDS-FREE PHONE

WARNING: **To avoid serious or fatal injury on vehicles equipped with airbags, disable the Supplemental Restraint System (SRS) before attempting any steering wheel, steering column, airbag, seat belt tensioner, impact sensor or instrument panel component diagnosis or service. Disconnect and isolate the battery negative (ground) cable, then wait two minutes for the system capacitor to discharge before performing further diagnosis or service. This is the only sure way to disable the SRS. Failure to take the proper precautions could result in accidental airbag deployment.**

The hard wired circuits between components related to the Radio Receiver Module (RRM) (also known as the radio or the head unit) and the Uconnect™ Hands-Free Phone system may be diagnosed using conventional

diagnostic tools and procedures. Refer to the appropriate wiring information. The wiring information includes wiring diagrams, proper wire and connector repair procedures, details of wire harness routing and retention, connector pin out information and location views for the various wire harness connectors, splices and grounds.

However, conventional diagnostic methods will not prove conclusive in the diagnosis of the RRM or the electronic controls and communication between modules and other devices that provide some features of the Uconnect™ Hands-Free Phone system. The most reliable, efficient and accurate means to diagnose the RRM or the electronic controls and communication related to Uconnect™ Hands-Free Phone system operation requires the use of a diagnostic scan tool. Refer to the appropriate diagnostic information.

NOTE: **Validation and diagnosis of many of the conditions listed below will require access to both the paired Bluetooth™ device and the PIN required for that device.**

HANDS-FREE PHONE DIAGNOSIS		
CONDITION	**POSSIBLE CAUSES**	**CORRECTION**
PHONE NOT AVAILABLE	1. Bluetooth phone not paired to the RRM.	1. Be certain that the phone is Bluetooth compatible and is paired to the RRM.
	2. Bluetooth phone not present or turned Off.	2. Be certain that the paired phone is present, turned On and that the Bluetooth option is enabled in the phone.
	3. Bluetooth phone has low battery.	3. At low battery levels, some phones will turn Off Bluetooth functionality. Be certain that the phone battery is charged to an adequate level.
	4. The boot procedure for the RRM, the phone or both did not complete successfully.	4. Cycle both the RRM and the phone Off, then On again in an attempt to complete a successful boot procedure.
	5. A phone freeze has occurred.	5. Power cycle the phone. Refer to the operator's manual for the phone.
	1. The phone is not Bluetooth enabled.	1. The Bluetooth transceiver requires that the cellular phone be Bluetooth enabled. The phone must be upgraded to one that is Bluetooth enabled. A list of suggested phones is available at: **http://www.chrysler.com/uconnect**
	2. The phone does not support the Bluetooth Hands-Free Profile.	2. The Bluetooth transceiver requires that the cellular phone support the Hands-Free Profile. The phone must be upgraded to one that supports the Hands-Free Profile. A list of suggested phones is available at: **http://www.chrysler.com/uconnect**
	3. Incorrect discovered Bluetooth device selected in phone.	3. Be certain to select Uconnect in the discovered Bluetooth™ devices in the phone for pairing.
	4. The PIN of the phone is not the same as the PIN	4. The PIN assigned by the RRM during pairing

PHONE PAIRING FAILED	assigned by the RRM during pairing. 5. Phone pairing is locked (password protected). 6. The RRM has reached the maximum number of allowed devices paired. 7. The phone has reached the maximum number of allowed devices paired. 8. The boot procedure for the RRM, the phone or both did not complete successfully. 9. A phone freeze has occurred.	must match the PIN of the phone. 5. To unlock phone pairing in the phone, be certain that password protection is turned Off. 6. Remove one of the previously paired devices from the paired list of the RRM. 7. Remove one of the previously paired devices from the paired list of the phone, or delete the pairing history from the phone. Refer to the operator's manual for the phone. 8. Cycle both the RRM and the phone Off, then On again in an attempt to complete a successful boot procedure. 9. Perform a hard reset (power cycle) to the phone. Refer to the operator's manual for the phone.
PHONE WILL NOT RECONNECT AFTER PAIRING	1. Bluetooth settings in phone are incorrect. 2. Phone pairing is locked (password protected). 3. The boot procedure for the RRM, the phone or both did not complete successfully. 4. A phone freeze has occurred.	1. Bluetooth settings in phone should be set to auto-connect or select Uconnect™ as a trusted device in phone. 2. To unlock phone pairing in the phone, be certain that password protection is turned Off. 3. Cycle both the RRM and the phone Off, then On again in an attempt to complete a successful boot procedure. 4. Perform a hard reset (power cycle) to the phone. Refer to the operator's manual for the phone.
	1. User is not waiting for the **beep** tone acknowledgement before issuing Voice Commands. 2. User is not issuing Voice Commands in a smooth and consistent speaking voice. 3. User is not using proper Voice Command syntax. 4. High noise levels within the passenger	1. Be certain the user knows to wait for the acknowledgement **beep** tone prior to issuing Voice Commands. 2. Be certain the user is issuing Voice Commands in a normal, smooth and consistent speaking voice. The Advanced Speech Recognition (ASR) engine is designed to recognize normal speech patterns and at a normal tone. Some users tend to speak to a computer loud and slow, which results in reduced performance. 3. User must speak using proper Voice Command syntax. 4. ASR engine performance is increased when noise conditions in the passenger compartment are lowered. Ideal conditions include having the

	compartment.	windows closed and the blower fan set to Low or Off.
	5. Passengers are talking while the user is attempting to issue a Voice Command.	5. Although designed to focus on sounds from the driver's seated position, the directional microphones will pick up sounds from any seating position in the vehicle. ASR engine performance is increased in low noise environments.
POOR VOICE RECOGNITION	6. Foreign objects interfering with microphone input.	6. Verify that there are no foreign objects hanging from the inside rear view mirror that could be interfering with microphone reception.
	7. The inside rear view mirror is not properly attached to the mount.	7. The inside rear view mirror must be firmly mounted to the mounting location. Be certain the mirror is properly installed.
	8. The incorrect Uconnect switch button is being depressed.	8. Phone features are accessed using the Uconnect **Phone** button on the steering wheel or the **Phone** soft key in the RRM display. Other Uconnect Voice Command features are accessed using the Uconnect **VR** button or soft key.
	9. Microphone failure.	9. Use a diagnostic scan tool and the appropriate diagnostic procedures for further diagnosis of the microphone.
PHONE BOOK DOES NOT DOWNLOAD	1. Phone does not support the Phone Book Access Profile (PBAP).	1. The Uconnect system requires that the cellular phone support the PBAP profile. To enable the Uconnect phone book download feature, the phone must be upgraded to one that is PBAP enabled. A list of suggested phones is available at: **http://www.chrysler.com/uconnect**
	2. Phone book transfer not enabled in phone during pairing.	2. Be certain that phone book transfer is accepted or enabled in the phone during pairing to enable the Uconnect phone book download feature.
	3. Missing contacts from downloaded phone book.	3. Only contacts with a phone number are downloaded from phone and the number of contacts downloaded is limited to 1000.
	1. User is not waiting for the **beep** tone acknowledgement before issuing Voice Commands.	1. Be certain the user knows to wait for the acknowledgement **beep** tone prior to issuing Voice Commands.
	2. User is not issuing Voice Commands in a smooth and consistent speaking voice.	2. Be certain the user is issuing Voice Commands in a normal, smooth and consistent speaking voice. The Advanced Speech Recognition (ASR) engine is designed to recognize normal speech patterns and at a normal tone. Some users tend to speak to a computer loud and slow, which results in reduced performance.
	3. User is not using proper	3. User must speak using proper Voice Command

	Voice Command syntax.	syntax (i.e.: say **Call** - then name, or say **Dial** - then number).
	4. Phone book names too short.	4. For increased performance, it is recommended to use both first and last names for phone book entries. Example: **Daniel Johnson** as opposed to **Dan** .
	5. Name not spoken by user as it appears in the phone book.	5. Speak the full contact name as it appears in the phone book. Do not use nicknames.
	6. Multiple similar sounding names in the phone book.	6. For increased performance it is recommended that the user do not enter similar sounding names in the phone book.
	7. Phone book download not yet completed.	7. Depending upon the size of the contact list on the phone, the download may not have had time to complete. If the Phone Book button on the RRM phone screen appears grayed out, the contact list download is still in progress. Wait until download completes.
PHONE BOOK NAMES NOT RECOGNIZED CONSISTENTLY	8. High noise levels within the passenger compartment.	8. ASR engine performance is increased when noise conditions in the passenger compartment are lowered. Ideal conditions include having the windows closed and the blower fan set to Low or Off.
	9. Passengers are talking while the user is attempting to issue a Voice Command.	9. Although designed to focus on sounds from the driver's seated position, the directional microphones will pick up sounds from any seating position in the vehicle. ASR engine performance is increased in low noise environments.
	10. Foreign objects interfering with microphone input.	10. Verify that there are no foreign objects hanging from the inside rear view mirror that could be interfering with microphone reception.
	11. The inside rear view mirror is not properly attached to the mount.	11. The inside rear view mirror must be firmly mounted to the mounting location. Be certain the mirror is properly installed.
	12. The incorrect Uconnect switch button is being depressed.	12. Phone features are accessed using the Uconnect **Phone** button on the steering wheel or the **Phone** soft key in the RRM display. Other Uconnect Voice Command features are accessed using the Uconnect **VR** button or soft key.
	13. Microphone failure.	13. Use a diagnostic scan tool and the appropriate diagnostic procedures for further diagnosis of the microphone.
	1. High noise levels within the passenger	1. ASR engine performance is increased when noise conditions in the passenger compartment are lowered. Ideal conditions include having the

POOR PHONE AUDIO QUALITY	compartment. 2. Passengers are talking while the user is attempting to issue a Voice Command. 3. Foreign objects interfering with microphone input. 4. The inside rear view mirror is not properly attached to the mount. 5. Microphone failure.	windows closed and the blower fan set to Low or Off. 2. Although designed to focus on sounds from the driver's seated position, the directional microphones will pick up sounds from any seating position in the vehicle. ASR engine performance is increased in low noise environments. 3. Verify that there are no foreign objects hanging from the inside rear view mirror that could be interfering with microphone reception. 4. The inside rear view mirror must be firmly mounted to the mounting location. Be certain the mirror is properly installed. 5. Use a diagnostic scan tool and the appropriate diagnostic procedures for further diagnosis of the microphone.
NO PHONE AUDIO	1. The settings in the phone cause the phone audio to be routed to a handset.	1. Route the phone audio to the hands-free device.
CALL LOG INOPERATIVE OR INACCURATE	1. Call log not supported by phone. 2. The phone is not providing accurate call log data.	1. The Uconnect system requires that the cellular phone support the call log feature. To enable the Uconnect call log feature, the phone must be upgraded to one that is call log enabled. A list of suggested phones is available at: **http://www.chrysler.com/uconnect** 2. Refer to the operator's manual for the phone.
AUDIO OUTPUT TOO LOW	1. Volume setting on the Bluetooth device set too low. 2. Volume setting on the RRM set too low.	1. Set the volume of the phone or other Bluetooth device to about three quarters (3/4) of full or maximum volume. 2. Set the volume of the RRM to the desired level during an active Uconnect Hands-Free Phone call session.

DIAGNOSIS AND TESTING - NAVIGATION

WARNING: **To avoid serious or fatal injury on vehicles equipped with airbags, disable the Supplemental Restraint System (SRS) before attempting any steering wheel, steering column, airbag, seat belt tensioner, impact sensor or instrument panel component diagnosis or service. Disconnect and isolate the battery negative (ground) cable, then wait two minutes for the system capacitor to discharge before performing further diagnosis or service. This is the only sure way to disable the SRS. Failure to take the proper**

precautions could result in accidental airbag deployment.

The hard wired circuits between components related to the Radio Receiver Module (RRM) (also known as the radio or the head unit) and the Uconnect™ Navigation system may be diagnosed using conventional diagnostic tools and procedures. Refer to the appropriate wiring information. The wiring information includes wiring diagrams, proper wire and connector repair procedures, details of wire harness routing and retention, connector pin out information and location views for the various wire harness connectors, splices and grounds.

However, conventional diagnostic methods will not prove conclusive in the diagnosis of the RRM or the electronic controls and communication between modules and other devices that provide some features of the Uconnect™ Navigation system. The most reliable, efficient and accurate means to diagnose the RRM or the electronic controls and communication related to Uconnect™ Navigation system operation requires the use of a diagnostic scan tool. Refer to the appropriate diagnostic information.

DIAGNOSIS AND TESTING - UCONNECT ACCESS

WARNING: **To avoid serious or fatal injury on vehicles equipped with airbags, disable the Supplemental Restraint System (SRS) before attempting any steering wheel, steering column, airbag, seat belt tensioner, impact sensor or instrument panel component diagnosis or service. Disconnect and isolate the battery negative (ground) cable, then wait two minutes for the system capacitor to discharge before performing further diagnosis or service. This is the only sure way to disable the SRS. Failure to take the proper precautions could result in accidental airbag deployment.**

The hard wired circuits between components related to the Radio Receiver Module (RRM) (also known as the radio or the head unit) and the Uconnect™ Access system may be diagnosed using conventional diagnostic tools and procedures. Refer to the appropriate wiring information. The wiring information includes wiring diagrams, proper wire and connector repair procedures, details of wire harness routing and retention, connector pin out information and location views for the various wire harness connectors, splices and grounds.

However, conventional diagnostic methods will not prove conclusive in the diagnosis of the RRM or the electronic controls and communication between modules and other devices that provide some features of the Uconnect™ Access system. The most reliable, efficient and accurate means to diagnose the RRM or the electronic controls and communication related to Uconnect™ Access system operation requires the use of a diagnostic scan tool. Refer to the appropriate diagnostic information.

NOTE: **Validation and diagnosis of many of the conditions listed below will require access to both the paired Bluetooth™ device and the PIN required for that device.**

UCONNECT ACCESS DIAGNOSIS		
CONDITION	POSSIBLE CAUSES	CORRECTION
	1. User is not waiting for the **beep** tone	1. Be certain the user knows to wait for the acknowledgement **beep** tone prior to issuing

POOR VOICE RECOGNITION	acknowledgement before issuing Voice Commands.	Voice Commands.
	2. User is not issuing Voice Commands in a smooth and consistent speaking voice.	2. Be certain the user is issuing Voice Commands in a normal, smooth and consistent speaking voice. The Advanced Speech Recognition (ASR) engine is designed to recognize normal speech patterns and at a normal tone. Some users tend to speak to a computer loud and slow, which results in reduced performance.
	3. User is not using proper Voice Command syntax.	3. User must speak using proper Voice Command syntax.
	4. High noise levels within the passenger compartment.	4. ASR engine performance is increased when noise conditions in the passenger compartment are lowered. Ideal conditions include having the windows closed and the blower fan set to Low or Off.
	5. Passengers are talking while the user is attempting to issue a Voice Command.	5. Although designed to focus on sounds from the driver's seated position, the directional microphones will pick up sounds from any seating position in the vehicle. ASR engine performance is increased in low noise environments.
	6. Foreign objects interfering with microphone input.	6. Verify that there are no foreign objects hanging from the inside rear view mirror that could be interfering with microphone reception.
	7. The inside rear view mirror is not properly attached to the mount.	7. The inside rear view mirror must be firmly mounted to the mounting location. Be certain the mirror is properly installed.
	8. The incorrect Uconnect switch button is being depressed.	8. Phone features are accessed using the Uconnect **Phone** button on the steering wheel or the **Phone** soft key in the RRM (also known as the radio or head unit) display. Other Uconnect Voice Command features are accessed using the Uconnect **VR** button or soft key.
	9. Microphone failure.	9. Use a diagnostic scan tool and the appropriate diagnostic procedures for further diagnosis of the microphone.
TEXT MESSAGING INOPERATIVE	1. The Bluetooth Message Access Profile (MAP) is not supported by the phone.	1. The Uconnect system requires that the cellular phone support the Bluetooth MAP for the text messaging feature. To enable the Uconnect text messaging feature, the phone must be upgraded to one that supports Bluetooth MAP. A list of suggested phones is available at: **http://www.chrysler.com/uconnect**
	2. The Connect-To-Your-Messages setting has not	2. Accept the Connect-To-Your-Messages setting on the phone. Refer to the operator's manual for

	been accepted on the phone.	the phone.
ENHANCED VOICE-TO-TEXT (DICTATED) MESSAGING RESPONSE FEATURE INOPERATIVE	1. Uconnect registration incomplete. 2. Uconnect Access Advantage subscription service is inactive or not installed in the RRM (also known as the radio or head unit). 3. The Bluetooth Message Access Profile (MAP) is not supported by the phone. 4. The Connect-To-Your-Messages setting has not been accepted on the phone.	1. Select the **Apps** soft key in the RRM (also known as the radio or head unit) display, then select the **Uconnect Registration App** soft key from the **Apps** list. For further assistance press the **ASSIST** button on the inside rear view mirror to contact Uconnect Customer Care. 2. This feature is only available with the Uconnect Access Advantage subscription service. Be certain that the subscription service account is active and installed in the RRM (also known as the radio or head unit). 3. The Uconnect system requires that the cellular phone support the Bluetooth MAP for the text messaging feature. To enable the Uconnect text messaging feature, the phone must be upgraded to one that supports Bluetooth MAP. A list of suggested phones is available at: **http://www.chrysler.com/uconnect** 4. Accept the Connect-To-Your-Messages setting on the phone. Refer to the operator's manual for the phone.
UNABLE TO DOWNLOAD APPLICATIONS FROM UCONNECT STORE FRONT	1. Uconnect registration incomplete. 2. Cellular antenna issue.	1. Select the **Apps** soft key in the RRM (also known as the radio or head unit) display, then select the **Uconnect Registration App** soft key from the **Apps** list. For further assistance press the **ASSIST** button on the inside rear view mirror to contact Uconnect Customer Care. 2. Refer to the Audio And Video System service information for further diagnosis of the cellular (combination) antenna.
	1. Uconnect registration incomplete. 2. Uconnect Access Mobile application (app) not downloaded or not fully installed to smart	1. Select the **Apps** soft key in the RRM (also known as the radio or head unit) display, then select the **Uconnect Registration App** soft key from the **Apps** list. For further assistance press the **ASSIST** button on the inside rear view mirror to contact Uconnect Customer Care. 2. Download the Uconnect Access Mobile app to the user's smart phone from **www.MoparOwnerConnect.com** . Allow sufficient time for the Uconnect Access Mobile application (app) download to smart phone to complete. Download times will vary widely with

REMOTE SERVICES INOPERATIVE	phone. 3. Uconnect Access Advantage subscription service is inactive or not installed in the RRM (also known as the radio or head unit). 4. Cellular antenna issue. 5. Radio Frequency Hub Module (RFHM) issue.	the throughput performance of the user's smart phone and the accessibility of the user's cellular network services. 3. This feature is only available with the Uconnect Access Advantage subscription service. Be certain that the subscription service account is active and installed in the RRM (also known as the radio or head unit). 4. Refer to the Audio And Video System service information for further diagnosis of the cellular (combination) antenna. 5. Further diagnosis of the RFHM requires the use of a diagnostic scan tool and the appropriate diagnostic procedures.
AUDIO OUTPUT TOO LOW	1. Volume setting on Bluetooth device set too low. 2. Volume setting on the RRM (also known as the radio or head unit) set too low.	1. Set the volume of the phone or other Bluetooth device to about three quarters (3/4) of full or maximum volume. 2. Set the volume of the RRM (also known as the radio or head unit) to the desired level during an active Uconnect Access feature session.
UCONNECT ACCESS INOPERATIVE - NO GREEN OR RED LED INDICATOR	1. Status of ignition switch is Off. 2. Inside rear view mirror wiring not connected. 3. Ineffective ground circuit. 4. Ineffective feed circuit.	1. Ignition switch status must be On or Accessory during Uconnect Access operation. 2. Be certain the wire harness for the inside rear view mirror is connected and fully engaged. 3. Test and repair the open inside rear view mirror ground circuit if required. 4. Test and repair the open inside rear view mirror feed circuit if required.
UCONNECT ACCESS INOPERATIVE - GREEN LED INDICATOR	1. Uconnect registration incomplete. 2. Uconnect Access Assist or Advantage subscription service is inactive or not installed in the RRM (also known as the radio or head unit). 3. Uconnect Access application (app) corrupt or improperly installed.	1. Select the **Apps** soft key in the RRM (also known as the radio or head unit) display, then select the **Uconnect Registration App** soft key from the **Apps** list. For further assistance press the **ASSIST** button on the inside rear view mirror to contact Uconnect Customer Care. 2. Many Uconnect Access features are only available with the Uconnect Access Assist or Advantage subscription service. Be certain that the subscription service account is active and installed in the RRM (also known as the radio or head unit). 3. Perform the Uconnect Access System Reinstall Applications Standard Procedure. Refer to **STANDARD PROCEDURE**.
	1. Loss of Controller Area	1. Further diagnosis of CAN-IHS or CAN-C

UCONNECT ACCESS INOPERATIVE - RED LED INDICATOR	Network (CAN) - Interior High Speed (IHS) or CAN-C communication. 2. Cellular antenna issue. 3. Ineffective embedded cellular device.	communication requires the use of a diagnostic scan tool and the appropriate diagnostic procedures. 2. Refer to the Audio And Video System service information for further diagnosis of the cellular (combination) antenna. 3. Test and replace the RRM (also known as the radio or head unit) if required.

DIAGNOSIS AND TESTING - WI-FI HOT SPOT

WARNING: **To avoid serious or fatal injury on vehicles equipped with airbags, disable the Supplemental Restraint System (SRS) before attempting any steering wheel, steering column, airbag, seat belt tensioner, impact sensor or instrument panel component diagnosis or service. Disconnect and isolate the battery negative (ground) cable, then wait two minutes for the system capacitor to discharge before performing further diagnosis or service. This is the only sure way to disable the SRS. Failure to take the proper precautions could result in accidental airbag deployment.**

The hard wired circuits between components related to the Radio Receiver Module (RRM) (also known as the radio or the head unit) and the Uconnect™ Wi-Fi Hot Spot system may be diagnosed using conventional diagnostic tools and procedures. Refer to the appropriate wiring information. The wiring information includes wiring diagrams, proper wire and connector repair procedures, details of wire harness routing and retention, connector pin out information and location views for the various wire harness connectors, splices and grounds.

However, conventional diagnostic methods will not prove conclusive in the diagnosis of the RRM or the electronic controls and communication between modules and other devices that provide some features of the Uconnect™ Wi-Fi Hot Spot system. The most reliable, efficient and accurate means to diagnose the RRM or the electronic controls and communication related to Uconnect™ Wi-Fi Hot Spot system operation requires the use of a diagnostic scan tool. Refer to the appropriate diagnostic information.

NOTE: **Validation and diagnosis of many of the conditions listed below will require access to both the paired Bluetooth™ device and the PIN required for that device.**

WI-FI HOT SPOT DIAGNOSIS		
CONDITION	**POSSIBLE CAUSES**	**CORRECTION**
	1. Uconnect registration incomplete. 2. Uconnect Wi-Fi	1. Select the **Apps** soft key in the RRM display, then select the **Uconnect Registration App** soft key from the **Apps** list. For further assistance press the **ASSIST** button on the inside rear view mirror to contact Uconnect Customer Care. 2. This feature is only available with the

WI-FI HOT SPOT INOPERATIVE	subscription service is inactive, expired or not installed in the RRM. 3. Wi-Fi capability is not enabled in user's Bluetooth device. 4. Selected Wireless Access Point (WAP) is incorrect. 5. Wireless Access Point (WAP) password or security settings incorrect. 6. Cellular antenna issue.	Uconnect Wi-Fi subscription service. Be certain that the subscription service account is active and installed in the RRM. 3. Confirm Wi-Fi setting in user's Bluetooth device is enabled. Refer to the user's manual for that device. 4. Confirm that correct WAP is selected in user's Bluetooth device. Refer to the user's manual for that device. 5. Use the Application Settings menu of the RRM to confirm or adjust the WAP password and security settings. 6. Refer to the Audio And Video System service information for further diagnosis of the cellular antenna.

STANDARD PROCEDURE

NAVIGATION SYSTEM - ACTIVATION

In vehicles equipped with the optional Navigation Ready version of the Radio Receiver Module (RRM) (also known as the radio or the head unit), if the customer chooses to have the navigation system activated, the vehicle must be returned to the dealer for system activation. The dealer activates the navigation system as follows:

NOTE: Once a Radio Receiver Module (RRM) (also known as the radio or the head unit) with the Navigation Ready feature has had the Navigation feature activated, any factory replacement RRM for the same vehicle will be provided with the Navigation system already activated.

1. Place the RRM into Dealer Mode using a simultaneous 3 button press of the driver side Temperature Up, driver side Temperature Down and Front Defrost push buttons.
2. The Dealer Mode screen will appear in the RRM display showing the System Information menu. Select the **VP3 Navigation Activation** menu item.
3. A Navigation Activation screen appears advising that an Activation Code needs to be purchased and referencing Technical Service Bulletin (TSB) 08-031-12. A 16 digit alpha numeric Request Code appears just below the displayed text.
4. With the Request Code and the Vehicle Identification Number (VIN), log onto the DealerConnect web site (**https://dealerconnect.chrysler.com/**). Locate the Navigation Activation link on the web site, enter the Request Code and VIN as appropriate. The web site will respond with an alpha numeric Activation Code.

NOTE: During the initial launch of this product, the dealer will be provided with a Navigation Activation phone number (Nokia Location And Content Call Center) to use in order to obtain an Activation Code rather than the

DealerConnect link mentioned in Step 4.

5. With the Activation Code, go back to the RRM and press the **OK** button on the Navigation Activation screen. A Data Entry screen will appear. Enter the Activation Code, then press the **OK** button on the Data Entry screen.
6. The navigation system has now been activated using the hardware and software that was installed in the RRM at the time that it was manufactured. If the customer wishes to update the factory installed map and Points-Of-Interest (POI) software, it may be purchased at the customer's expense and downloaded from the Navteq Maps web site (**www.navigation.com**). See Navigation System - Restore Or Update. Refer to **STANDARD PROCEDURE**.

NAVIGATION SYSTEM - RESTORE OR UPDATE

Navigation System map and Point-Of-Interest (POI) data updates may become available occasionally through the Navteq Maps web site (www.navigation.com). The updated information as well as some additional feature applications can be downloaded and copied to Universal Serial Bus (USB) media for transfer and installation to the navigation module within the Radio Receiver Module (RRM) (also known as the radio or the head unit) in the vehicle. These are fee-based applications and updates, which are made at the option and expense of the customer.

However, a new RRM is equipped with only a standard base version of the map and POI data. Before an original RRM is replaced by the dealer with a new unit, the version of the map and POI data on the original RRM must be noted. If the version of the map and POI data found on the new RRM is not equal to or newer than the version that was found on the replaced RRM, updated data will have to be downloaded and installed to the new RRM at the expense of the dealer.

UCONNECT ACCESS SYSTEM - REINSTALL APPLICATIONS

NOTE: The following procedure may assist the dealer technician in diagnosis by reloading the applications for which the vehicle owner or operator has valid subscriptions. This is primarily used to troubleshoot any application provisioning or data corruption issues. The reinstallation process may take up to 30 minutes, depending upon the number of apps and the cellular signal strength seen on the Apps orb of the Radio Receiver Module (RRM).

The Reinstall Applications procedure can only be initiated from the touchscreen of the Radio Receiver Module (RRM) (also known as the radio or the head unit).

During this procedure, the subscribed applications are removed from the RRM and reinstalled based upon data found on the cloud server. The applications reinstalled onto the RRM will be based upon valid subscriptions and is referred to as Digital Rights.

1. Navigate through the **Apps > Uconnect Store > My Apps > Settings** on the RRM touchscreen.
2. Select **Reinstall Apps** .
3. Press the **Continue** soft key to initiate the Reinstall Applications procedure, or press the **Help** soft key for

more information.

4. When the **Apps reinstalled. Radio will restart shortly.** screen appears, press the **OK** soft key.
5. Once the request is processed, a screen will appear alerting the customer with the message, **Important: Application Data Reset Initiated. After Radio Resets, all application data will be lost. Please Wait.** After the radio reset occurs, the apps will begin to be reinstalled. The reinstallation process may take up to 30 minutes, depending upon the number of apps and the cellular signal strength seen on the Apps orb of the RRM.

NOTE: One or two ignition cycles (including bus time-outs) may speed the reloading process following the radio reset.

UCONNECT ACCESS SYSTEM - REMOVE ACCOUNTS

NOTE: The following procedure is provided to the dealer technician as INFORMATION ONLY. This procedure is intended for use by the vehicle owner or operator. This procedure is used when selling the vehicle or cancelling the Uconnect Access account. Removing the account will disassociate the Vehicle Identification Number (VIN) from the account and remove Uconnect Access features from the vehicle. The Uconnect Access features can be reinstated by repeating the registration process through the Radio Receiver Module (RRM) (also known as the radio or the head unit) and following the directions associated with registering for Uconnect Access.

The Remove Accounts procedure can be initiated by one of three methods:

- Through the touchscreen of the RRM.
- Through the Uconnect™ Call Center (**ASSIST** button on inside rear view mirror) or under **Uconnect™ Apps** selection of the RRM display.
- Through the Uconnect™ Owners information accessed through the Mopar Owner Connect web site (www.moparownerconnect.com).

The following describes the Remove Accounts procedure accomplished through the RRM touchscreen:

1. Navigate through **Apps > Uconnect Store > My Apps > Settings** on the RRM touchscreen.
2. Select **Remove Uconnect Account** .
3. Press the **Continue** soft key after each of the two **Warning** screens, or press the **Cancel** soft key to abort the procedure.
4. When the **Authentication** screen is reached, enter the 4 digit **Uconnect Access ID** .
5. Press the **Continue** soft key to continue the Remove Accounts procedure, the **Help** soft key for additional information or the **Cancel** soft key to abort the Remove Accounts procedure.
6. When the **This vehicle has been removed from your account.** screen appears, press the **OK** soft key. Once the request is processed, a screen will appear alerting the customer with the message, **Important: Application Data Reset Initiated. After Radio Resets, all application data will be lost. Please Wait.**
7. After the radio reset occurs, Uconnect Access applications will no longer be available and the **Uconnect**

Registration screen will appear each time the **Apps** soft key is selected until a new valid registration has been successfully completed.

ANTENNA, NAVIGATION

DESCRIPTION

DESCRIPTION

The navigation antenna is integrated into a roof-mounted combination antenna that also receives satellite audio and cellular signals. Refer to **ANTENNA, SATELLITE, AUDIO, DESCRIPTION** .

OPERATION

OPERATION

The navigation module acquires Global Positioning System (GPS) position data through a roof-mounted combination antenna that also receives satellite audio and cellular signals. Refer to **ANTENNA, SATELLITE, AUDIO, DESCRIPTION** .

DIAGNOSIS AND TESTING

DIAGNOSIS AND TESTING - NAVIGATION ANTENNA

Refer to **DIAGNOSIS AND TESTING** .

REMOVAL

REMOVAL

The navigation antenna is serviced as a unit with the combination antenna located on the roof panel. Refer to **ANTENNA, SATELLITE, AUDIO, REMOVAL** .

INSTALLATION

INSTALLATION

The navigation antenna is serviced as a unit with the combination antenna located on the roof panel. Refer to **ANTENNA, SATELLITE, AUDIO, INSTALLATION** .

MICROPHONE

DESCRIPTION

DESCRIPTION

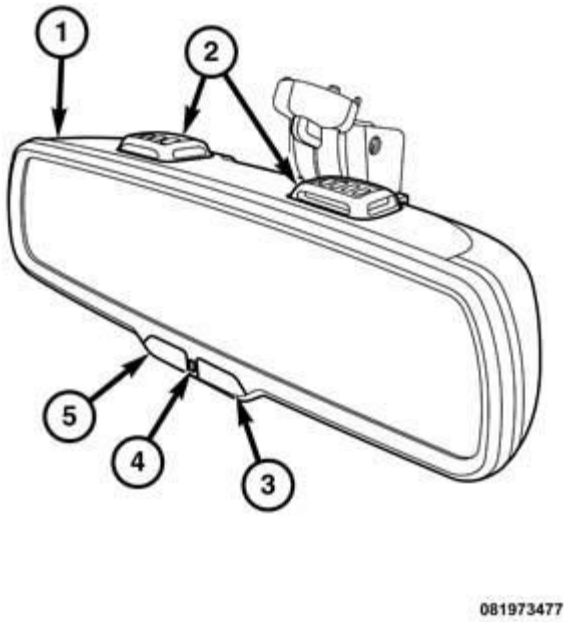

Fig. 1: Inside Rear View Mirror Housing
Courtesy of CHRYSLER GROUP, LLC

Vehicles equipped with the optional hands-free system have two stereo microphones (2) mounted in the top surface of the inside rear view mirror housing (1), one to each side of center. The two microphones are individually powered by and provide hard wired inputs to the Radio Receiver Module (RRM) (also known as the radio or the head unit) in the instrument panel whenever the Voice Recognition (VR) feature of the hands-free system is active. These two microphones are connected to the vehicle electrical system through a connector receptacle integral to the forward-facing surface of the inside rear view mirror housing by a dedicated take out and connector of the overhead wire harness.

In vehicles equipped with the optional Uconnect™ Access system, the inside rear view mirror system also houses both a **9-1-1** push button (3) and a **Assist** push button (5).

The microphones cannot be adjusted or repaired and, if damaged or ineffective, they must be replaced as a unit with the inside rear view mirror assembly.

OPERATION

OPERATION

When the hands-free Voice Recognition (VR) control circuitry integral and internal to the Radio Receiver Module (RRM) (also known as the radio or the head unit) detects the appropriate inputs or requests, it energizes the circuitry of the two stereo microphones within the inside rear view mirror housing. The microphones remain active until they are deactivated by the hands-free VR control circuitry, or until the status of the ignition switch (also known as the Keyless Ignition Node/KIN or IGnition Node Module/IGNM) transitions to Off, whichever occurs first.

The inputs from the microphones is processed, filtered and redirected by the VR control circuitry and logic as appropriate. Those inputs can be redirected to the Advanced Speech Recognition (ASR) engine or to the audio send circuitry of the Bluetooth™ transceiver. Each of these electronic modules is also integral and internal to the RRM.

The status of the Uconnect™ Access **Assist** and **9-1-1** push buttons is relayed by the Local Interface Network (LIN) slave node integral to the inside rear view mirror over the LIN data bus to the Body Control Module (BCM) (also known as the Common Body Controller/CBC), which is a LIN master node. The BCM is also a Controller Area Network (CAN) data bus gateway and relays the push button status information to the RRM over the CAN - Interior High Speed (CAN-IHS) data bus.

The hard wired inputs and outputs of the microphones in the inside rear view mirror may be diagnosed using conventional diagnostic tools and procedures. Refer to the appropriate wiring information. However, conventional diagnostic methods will not prove conclusive in the diagnosis of the microphone or the electronic controls and communication between modules and other devices that provide some features of the RRM controlled microphones. The most reliable, efficient and accurate means to diagnose the RRM or the electronic controls and communication related to RRM-controlled microphone operation requires the use of a diagnostic scan tool. Refer to the appropriate diagnostic information.

DIAGNOSIS AND TESTING

DIAGNOSIS AND TESTING - MICROPHONE

WARNING: **To avoid serious or fatal injury on vehicles equipped with airbags, disable the Supplemental Restraint System (SRS) before attempting any steering wheel, steering column, airbag, seat belt tensioner, impact sensor or instrument panel component diagnosis or service. Disconnect and isolate the battery negative (ground) cable, then wait two minutes for the system capacitor to discharge before performing further diagnosis or service. This is the only sure way to disable the SRS. Failure to take the proper precautions could result in accidental airbag deployment.**

The hard wired inputs and outputs of the microphones in the inside rear view mirror may be diagnosed using conventional diagnostic tools and procedures. Refer to the appropriate wiring information. However, conventional diagnostic methods will not prove conclusive in the diagnosis of the microphone or the electronic controls and communication between modules and other devices that provide some features of the Radio Receiver Module (RRM) (also known as the radio or the head unit) controlled microphones. The most reliable, efficient and accurate means to diagnose the RRM or the electronic controls and communication related to RRM-controlled microphone operation requires the use of a diagnostic scan tool. Refer to the appropriate diagnostic information.

REMOVAL

REMOVAL

The inside rear view mirror mounted microphones used in this vehicle are integral to and serviced only as a unit with the inside rear view mirror. Refer to **MIRROR, REARVIEW, REMOVAL** .

INSTALLATION

INSTALLATION

The inside rear view mirror mounted microphones used in this vehicle are integral to and serviced only as a unit with the inside rear view mirror. Refer to **MIRROR, REARVIEW, INSTALLATION** .

2014 ACCESSORIES AND EQUIPMENT

Occupant Classification Module (OCM) - Electrical Diagnostics - Cherokee

DIAGNOSTIC CODE INDEX

DIAGNOSTIC CODE INDEX

DTC	Description
B1B9D-00	PASSENGER BLADDER FLUID LEVEL LOW
B1BA8-00	OCM SYSTEM OUT OF CALIBRATION/NOT CALIBRATED
B210A-00	SYSTEM VOLTAGE LOW
B210B-00	SYSTEM VOLTAGE HIGH
B2206-00	CURRENT VIN MISSING-MISMATCH
B2212-00	OCCUPANT CLASSIFICATION MODULE -INTERNAL
B222D-00	ECU UNABLE TO CONFIGURE/CONFIGURATION NOT LEARNED
B222A-00	VEHICLE LINE MISMATCH
U0002-00	CAN-C-BUS-OFF-PERFORMANCE
U0140-00	LOST COMMUNICATION WITH BODY CONTROL MODULE

DIAGNOSIS AND TESTING

B1B9D-00-PASSENGER BLADDER FLUID LEVEL LOW

THEORY OF OPERATION

The OCM monitors the bladder fluid pressure to determine the occupied or empty state of the passenger seat and verify the operational status of the bladder. To determine the operational status of the bladder the OCM monitors the bladder fluid pressure and temperature. The bladder fluid pressure and temperature are analog measurements and converted to digital counts.

WHEN MONITORED

Monitored continuous when the ignition is on and temperature is above 32 F.

SET CONDITION

This DTC will set if the Occupant Classification Module (OCM) detects raw pressure less than 28 counts for more than 60 seconds with temperature above 32F.

POSSIBLE CAUSES

Possible Causes
OCCUPANT CLASSIFICATION MODULE (OCM)

Always perform the Pre-Diagnostic Troubleshooting procedure before proceeding. Refer to STANDARD PROCEDURE.

DIAGNOSTIC TEST

Replace the Occupant Classification Module (OCM)

1. Make sure the battery is fully charged.
2. Perform the OCCUPANT CLASSIFICATION MODULE (OCM) VERIFICATION TEST. Refer to **STANDARD PROCEDURE**.
3. With the scan tool, read the OCM DTC's.

   Did the scan tool display active or stored B1B9D-00-PASSENGER BLADDER FLUID LEVEL LOW DTC?

   Yes

   - Replace the OCCUPANT CLASSIFICATION MODULE (OCM)
   - Perform the OCCUPANT CLASSIFICATION MODULE (OCM) VERIFICATION TEST. Refer to **STANDARD PROCEDURE**.

   No

   - Perform the OCCUPANT CLASSIFICATION MODULE (OCM) VERIFICATION TEST. Refer to **STANDARD PROCEDURE**.

B1BA8-00-OCM SYSTEM OUT OF CALIBRATION/NOT CALIBRATED

THEORY OF OPERATION

The Occupant Classification Module (OCM), seat cushion and bladder are calibrated as one unit in the assembly plant. The OCM will automatically re-calibrate the assembly from time to time to retain the calibrated relationship between the seat, bladder and module as the seat and bladder change due to age and wear. The re-zero Occupant Classification Module Test uses a scan tool process called the Occupant Classification System Verification Test to force the OCM to re-calibrate or re-zero. To ensure the up to date calibration and functional performance the scan tool Occupant Classification System Verification Test is performed during and after servicing the system.

WHEN MONITORED

While the CAN bus ignition status is IGN_RUN or signal not available.

SET CONDITION

This DTC will set if the OCM or the scan tool initiated re-zero failed, the system verification routine was aborted or a update option table from the flash routine was incomplete or missing.

POSSIBLE CAUSES

Possible Causes
OCCUPANT CLASSIFICATION MODULE (OCM)

Always perform the Pre-Diagnostic Troubleshooting procedure before proceeding. Refer to STANDARD PROCEDURE.

DIAGNOSTIC TEST

VERIFY ACTIVE DTC

NOTE: **Make sure the battery is fully charged.**

NOTE: **Follow the ignition off warning, due to any special tools or body harness connectors that may need to be reconnected reintroducing voltage to a wire harness and component area.**

WARNING: **Turn the ignition off, disconnect the 12-volt battery and wait two minutes before proceeding. Failure to follow these instructions may result in possible serious or fatal injury.**

1. Remove any special tools or jumper wires and reconnect all previously disconnected components - except the battery.
2. Make sure the passenger seat is empty.
3. If equipped with the standard key ignition, use this ignition on warning.

WARNING: **Turn the ignition on, then reconnect the 12-volt battery and wait two minutes before proceeding. Failure to follow these instructions may result in possible serious or fatal injury.**

4. If equipped with the keyless ignition, use this ignition on warning.

WARNING: **Disconnect the 12-volt battery wait two minutes before proceeding, remove the ORC fuses, connect the 12-volt battery, wait two minutes before proceeding. Cycle the ignition to the On position, then reconnect the ORC fuses. Wait two minutes before proceeding. Failure to follow these instructions may result in possible serious or fatal injury.**

NOTE: **Failure to follow the test instructions or aborting the test causes faults to set when performing the Scan tool Occupant Classification Module System Verification Test. To prevent faults due to process errors: verify that all tests steps that led you here were performed as directed, verify**

that the ignition is in run position. Only press scan tool buttons when directed to do so and perform the scan tool Occupant Classification Module System Verification Test to completion.

5. With the scan tool in OCM, select the Miscellaneous Functions tab on the scan tool, select Empty Seat Value Relearn. Run the test by following the instructions displayed on the scan tool. When the test completes, wait two minutes and then proceed as follows.
6. With the scan tool, read active DTCs.

   Does the scan tool display active or stored B1BA8-00-OCM SYSTEM OUT OF CALIBRATION/NOT CALIBRATED active DTCs?

   Yes

   - Replace the OCCUPANT CLASSIFICATION MODULE (OCM)
   - Perform the OCCUPANT CLASSIFICATION MODULE (OCM) VERIFICATION TEST. Refer to **STANDARD PROCEDURE**.

   No

   - OCM re-zero procedure complete. Perform the Standard Procedure OCCUPANT CLASSIFICATION MODULE (OCM) VERIFICATION TEST. Refer to **STANDARD PROCEDURE**.

B210A-00-SYSTEM VOLTAGE LOW

For a complete wiring diagram, **refer to appropriate SYSTEM WIRING DIAGRAMS article** .

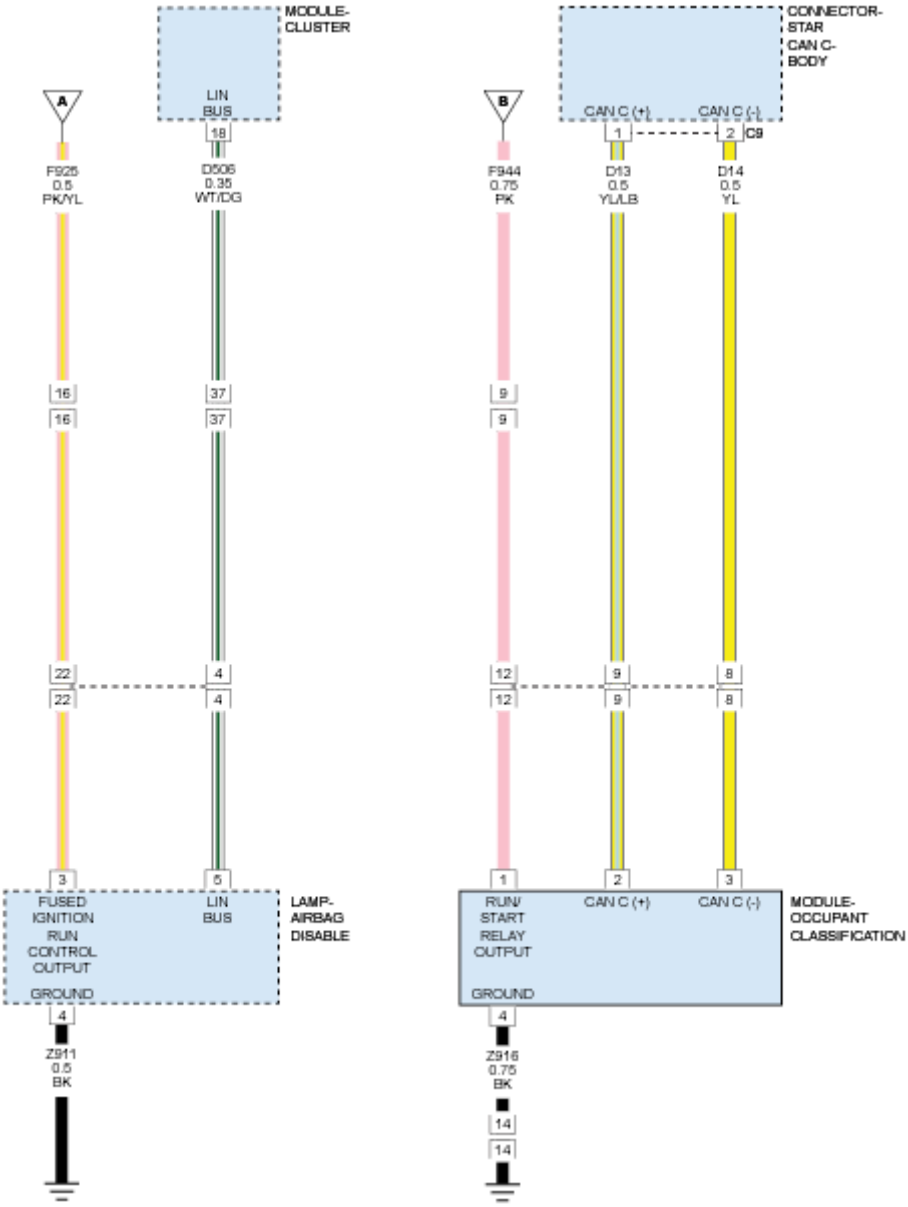

Fig. 1: Battery Voltage Circuit Diagram
Courtesy of CHRYSLER GROUP, LLC

THEORY OF OPERATION

When powered, the Occupant Classification Module (OCM) on board diagnostics monitors the CAN Bus messages from the Body Control Module (BCM) to determine the minimum and maximum system voltage.

WHEN MONITORED

With the ignition on. The Occupant Classification Module (OCM) on board diagnostics continuously monitors the CAN Bus messages.

SET CONDITION

The code will set when the Occupant Classification Module (OCM) receives the Body Control Module (BCM) Can Bus message containing the system voltage below 10.0 volts.

Refer to the **BODY CONTROL MODULE (BCM) - DIAGNOSTIC CODE INDEX** article and perform **B2199-16-BATTERY VOLTAGE-CIRCUIT VOLTAGE BELOW THRESHOLD** diagnostic procedure.

B210B-00-SYSTEM VOLTAGE HIGH

For a complete wiring diagram, **refer to appropriate SYSTEM WIRING DIAGRAMS article** .

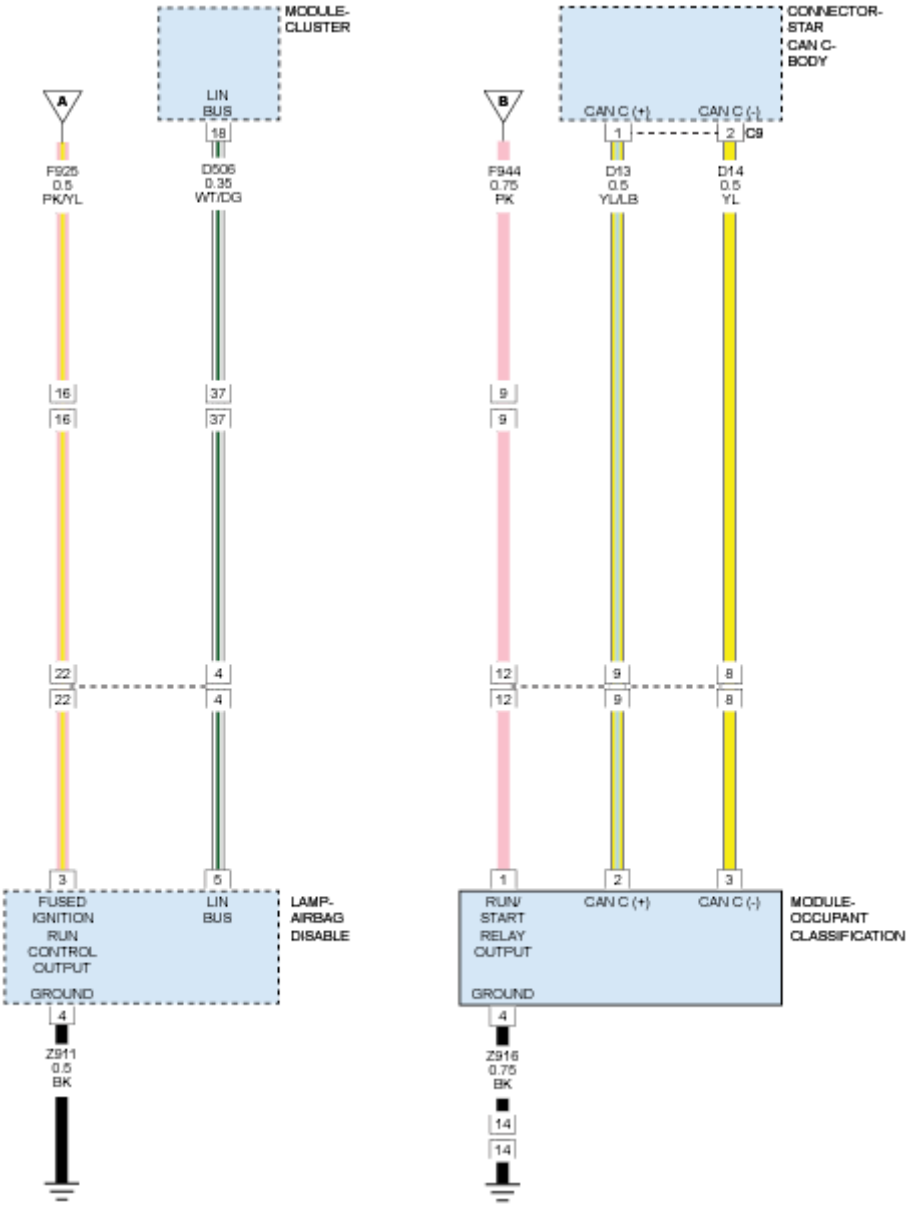

Fig. 2: Battery Voltage Circuit Diagram
Courtesy of CHRYSLER GROUP, LLC

THEORY OF OPERATION

When powered, the Occupant Classification Module (OCM) on board diagnostics monitors the CAN Bus messages from the Body Control Module (BCM) to determine the minimum and maximum system voltage.

WHEN MONITORED

With the ignition on. The Occupant Classification Module (OCM) on board diagnostics continuously monitors the CAN Bus messages.

SET CONDITION

The code will set when the Occupant Classification Module (OCM) receives the Body Control Module (BCM) Can Bus message containing the system voltage above 16.0 volts.

Refer to the **BODY CONTROL MODULE (BCM) - DIAGNOSTIC CODE INDEX** article and perform the **B2199-17-BATTERY VOLTAGE-CIRCUIT VOLTAGE ABOVE THRESHOLD** diagnostic procedure.

B2206-00-CURRENT VIN MISSING-MISMATCH

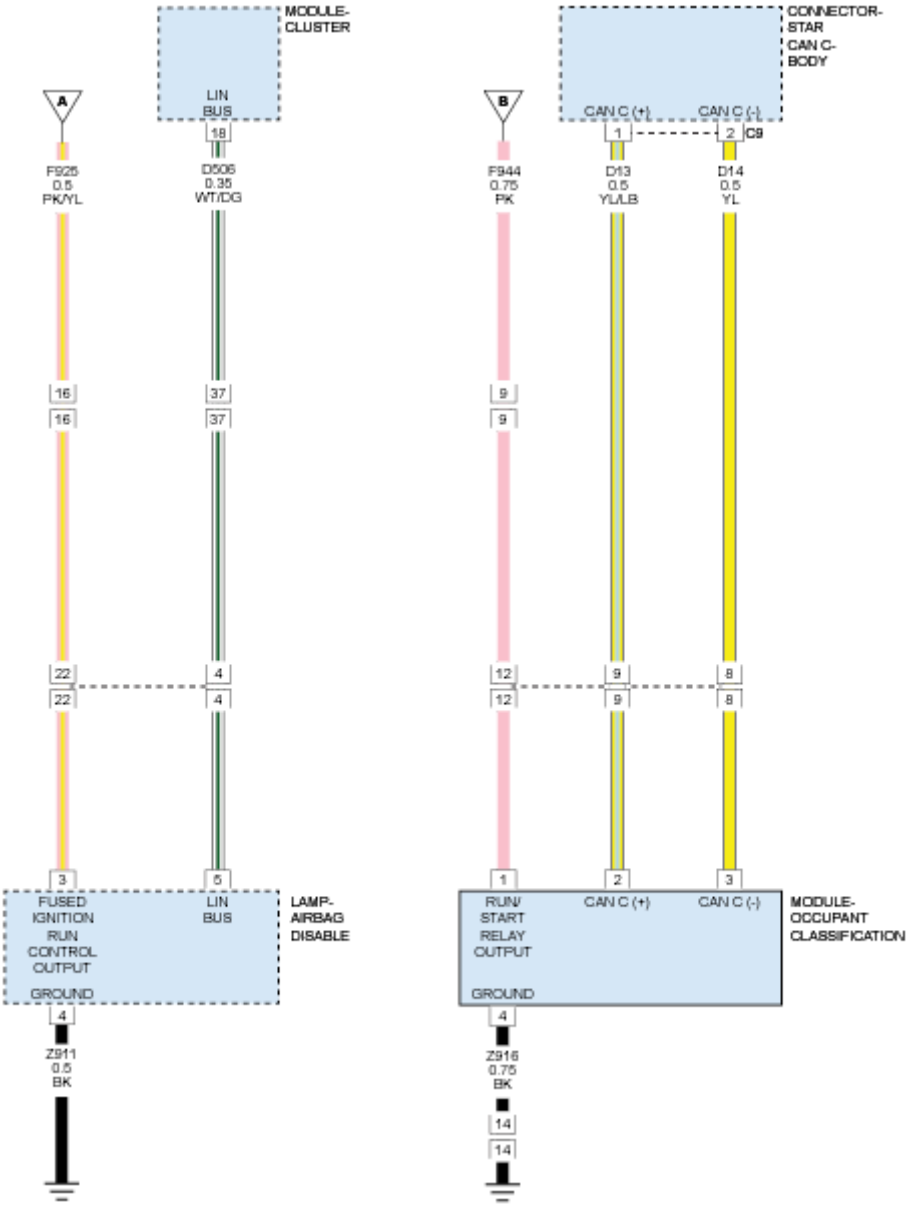

Fig. 3: Battery Voltage Circuit Diagram
Courtesy of CHRYSLER GROUP, LLC

WHEN MONITORED

Ignition on.

SET CONDITION

The VIN received via CAN message does not match the VIN stored in the TCM.

POSSIBLE CAUSES

Possible Causes
TRANSMISSION CONTROL MODULE (TCM) IS NOT PROGRAMMED PROPERLY TRANSMISSION CONTROL MODULE (TCM) INSTALLED FROM ANOTHER VEHICLE

Always perform the Pre-Diagnostic Troubleshooting procedure before proceeding. Refer to STANDARD PROCEDURE .

DIAGNOSTIC TEST

Replace the Occupant Classification Module (OCM)

1. Make sure the battery is fully charged.
2. Turn the ignition off, wait ten seconds and turn ignition on.
3. With the scan tool, read the OCM DTC.

   Did the scan tool display active or stored B2206-00-CURRENT VIN MISSING-MISMATCH DTC?

   Yes

   - Replace the OCCUPANT CLASSIFICATION MODULE (OCM)

     .

   - Perform the OCCUPANT CLASSIFICATION MODULE (OCM) VERIFICATION TEST. Refer to **STANDARD PROCEDURE**.

   No

   - Perform the OCCUPANT CLASSIFICATION MODULE (OCM) VERIFICATION TEST. Refer to **STANDARD PROCEDURE**.

B2212-00-OCCUPANT CLASSIFICATION MODULE -INTERNAL

WHEN MONITORED

While the IGN status is in the RUN position or the signal is not available, while the CAN bus system voltage is between 10 and 16 volts.

SET CONDITION

This DTC will set if the Occupant Classification Module (OCM) detects an internal failure.

POSSIBLE CAUSES

Possible Causes

OCCUPANT CLASSIFICATION MODULE (OCM)

Always perform the Pre-Diagnostic Troubleshooting procedure before proceeding. Refer to STANDARD PROCEDURE.

DIAGNOSTIC TEST

Replace the Occupant Classification Module (OCM)

1. Make sure the battery is fully charged.
2. Turn the ignition off, wait ten seconds and turn ignition on.
3. With the scan tool, read the OCM DTC.

   Did the scan tool display active or stored B2212-00-OCCUPANT CLASSIFICATION MODULE INTERNAL DTC?

   Yes

   - Replace the OCCUPANT CLASSIFICATION MODULE (OCM)

     .

   - Perform the OCCUPANT CLASSIFICATION MODULE (OCM) VERIFICATION TEST. Refer to **STANDARD PROCEDURE**.

   No

   - Perform the OCCUPANT CLASSIFICATION MODULE (OCM) VERIFICATION TEST. Refer to **STANDARD PROCEDURE**.

B222D-00-ECU UNABLE TO CONFIGURE/CONFIGURATION NOT LEARNED

WHEN MONITORED

At ignition on the Occupant Classification Module verifies the configuration parameters.

SET CONDITION

This DTC will set if the OCM configuration parameters do not match expected values.

POSSIBLE CAUSES

Possible Causes
PROXI OCM OCCUPANT CLASSIFICATION MODULE (OCM)

Always perform the Pre-Diagnostic Troubleshooting procedure before proceeding. Refer to STANDARD PROCEDURE.

DIAGNOSTIC TEST

1. **DETERMINE ACTIVE OR STORED DTC**

   Does the scan tool display active B222D-00-ECU UNABLE TO CONFIGURE/CONFIGURATION NOT LEARNED DTC?

   OCM - ACTIVE DTC

   WARNING: **If the Occupant Classification Module (OCM) is dropped at any time, it must be replaced. Failure to take the proper precautions could result in accidental airbag deployment and may result in possible serious or fatal injury.**

   WARNING: **Turn the ignition off, disconnect the 12-volt battery and wait two minutes before proceeding. Failure to follow these instructions may result in possible serious or fatal injury.**

   - Using scan tool PROXI OCM, clear code and retest. If code is still active, replace the OCM in accordance with Service Information. Refer to **MODULE, OCCUPANT CLASSIFICATION, REMOVAL** .
   - Perform the OCCUPANT CLASSIFICATION MODULE (OCM) VERIFICATION TEST. Refer to **STANDARD PROCEDURE**.

   OCM - STORED DTC

   - Go To 2

2. **STORED OCM DTC**
   1. With the scan tool, record and erase all OCM DTC's.
   2. If any ACTIVE codes are present they must be resolved before diagnosing any stored codes.

      WARNING: **Turn the ignition off, disconnect the 12-volt battery and wait two minutes before proceeding. Failure to follow these instructions may result in possible serious or fatal injury.**

   3. Using the wiring diagram/schematic as a guide, inspect the wiring and connectors.
   4. Look for chafed, pierced, pinched, or partially broken wires and broken, bent, pushed out, spread, corroded, or contaminated terminals.
   5. The following additional checks may assist you in identifying a possible intermittent problem.
   6. Reconnect any disconnected components and harness connector.

WARNING: Turn the ignition on, then reconnect the 12-volt battery and wait two minutes before proceeding. Failure to follow these instructions may result in possible serious or fatal injury.

7. With the scan tool monitor active codes as you work through the following steps.

WARNING: Maintain a safe distance from all airbags while performing the following steps. Failure to follow these instructions may result in possible serious or fatal injury.

8. Wiggle the wiring harness and connectors of the related OCM circuits or component.
9. If only stored codes return continue the test until the problem area has been isolated.
10. In the previous steps you have attempted to recreate the conditions responsible for setting active DTC in question.

    Are any ACTIVE DTC's present?

    Yes

    - Select the appropriate diagnostic procedure in this service information. Refer to the **DIAGNOSTIC CODE INDEX**.

    No

    - No problem found at this time. Erase all codes before returning vehicle to customer.

B222A-00-VEHICLE LINE MISMATCH

For a complete wiring diagram, **refer to appropriate SYSTEM WIRING DIAGRAMS article**

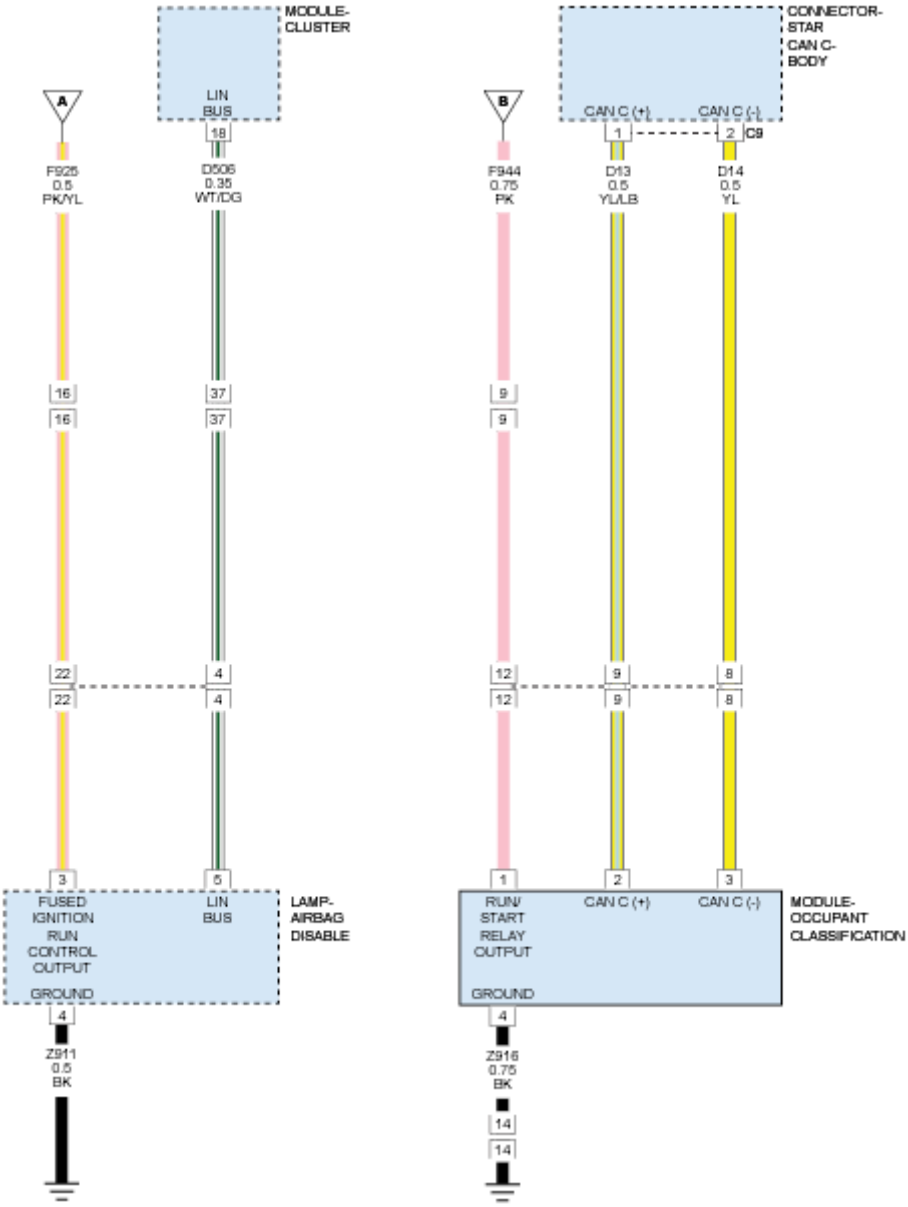

Fig. 4: Battery Voltage Circuit Diagram
Courtesy of CHRYSLER GROUP, LLC

THEORY OF OPERATION

During power-up, the Occupant Classification Module (OCM) monitors the CAN bus for the VIN message. The bus message must match the OCM vehicle line configuration stored in the OCM.

WHEN MONITORED

During power-up.

SET CONDITION

This DTC will set if the Vehicle Line information received from the Body Control Module (BCM) is different from the Occupant Classification Module (OCM) stored Vehicle Line Information.

POSSIBLE CAUSES

Possible Causes
INCORRECT VIN PROGRAMMED INTO THE BCM OCCUPANT CLASSIFICATION MODULE (OCM)

Always perform the Pre-Diagnostic Troubleshooting procedure before proceeding. Refer to STANDARD PROCEDURE.

DIAGNOSTIC TEST

1. **DETERMINE ACTIVE OR STORED DTC**
    1. Make sure the battery is fully charged.
    2. Turn the ignition on.
    3. Wait 12 seconds, then with the scan tool, read all active OCM DTCs.

    Is the DIAGNOSTIC TROUBLE CODE (DTC) active or stored?

    OCM - ACTIVE DTC

    - Go To 2

    OCM - STORED DTC

    - Perform the RESTRAINTS SYSTEM INTERMITTENT TEST. Refer to **STANDARD PROCEDURE**.
2. **CHECK BCM VEHICLE INFORMATION**
    1. Using the scan tool, check for the correct Country Code, Vehicle Line, and Body Style.

    Does the Vehicle Configuration in the BCM match the Vehicle Configuration in the OCM?

    Repair

    WARNING: **If the Occupant Classification Module (OCM) is dropped at any time, it must be replaced. Failure to take the proper precautions could result in accidental airbag deployment and may result in possible serious or fatal injury.**

    WARNING: **Turn the ignition off, disconnect the 12-volt battery and wait**

two minutes before proceeding. Failure to follow these instructions may result in possible serious or fatal injury.

- Replace the OCM in accordance with Service Information. Refer to **MODULE, OCCUPANT CLASSIFICATION, REMOVAL** .
- Perform the OCCUPANT CLASSIFICATION MODULE (OCM) VERIFICATION TEST. Refer to **STANDARD PROCEDURE**.

No

- Go To 3

3. **STORED OCM DTC**
   1. With the scan tool, record and erase all OCM DTC's.
   2. If any ACTIVE codes are present they must be resolved before diagnosing any stored codes.

      WARNING: **Turn the ignition off, disconnect the 12-volt battery and wait two minutes before proceeding. Failure to follow these instructions may result in possible serious or fatal injury.**

   3. Using the wiring diagram/schematic as a guide, inspect the wiring and connectors.
   4. Look for chafed, pierced, pinched, or partially broken wires and broken, bent, pushed out, spread, corroded, or contaminated terminals.
   5. The following additional checks may assist you in identifying a possible intermittent problem.
   6. Reconnect any disconnected components and harness connector.

      WARNING: **Turn the ignition on, then reconnect the 12-volt battery and wait two minutes before proceeding. Failure to follow these instructions may result in possible serious or fatal injury.**

   7. With the scan tool monitor active codes as you work through the following steps.

      WARNING: **Maintain a safe distance from all airbags while performing the following steps. Failure to follow these instructions may result in possible serious or fatal injury.**

   8. Wiggle the wiring harness and connectors of the related OCM circuits or component.
   9. If only stored codes return continue the test until the problem area has been isolated.
   10. In the previous steps you have attempted to recreate the conditions responsible for setting active DTC in question.

       Are any ACTIVE DTC's present?

       Yes

- Select the appropriate diagnostic procedure in this service information. Refer to the **DIAGNOSTIC CODE INDEX** .

No

- No problem found at this time. Erase all codes before returning vehicle to customer.

U0002-00-CAN-C-BUS-OFF-PERFORMANCE

For a complete wiring diagram, **refer to appropriate SYSTEM WIRING DIAGRAMS article** .

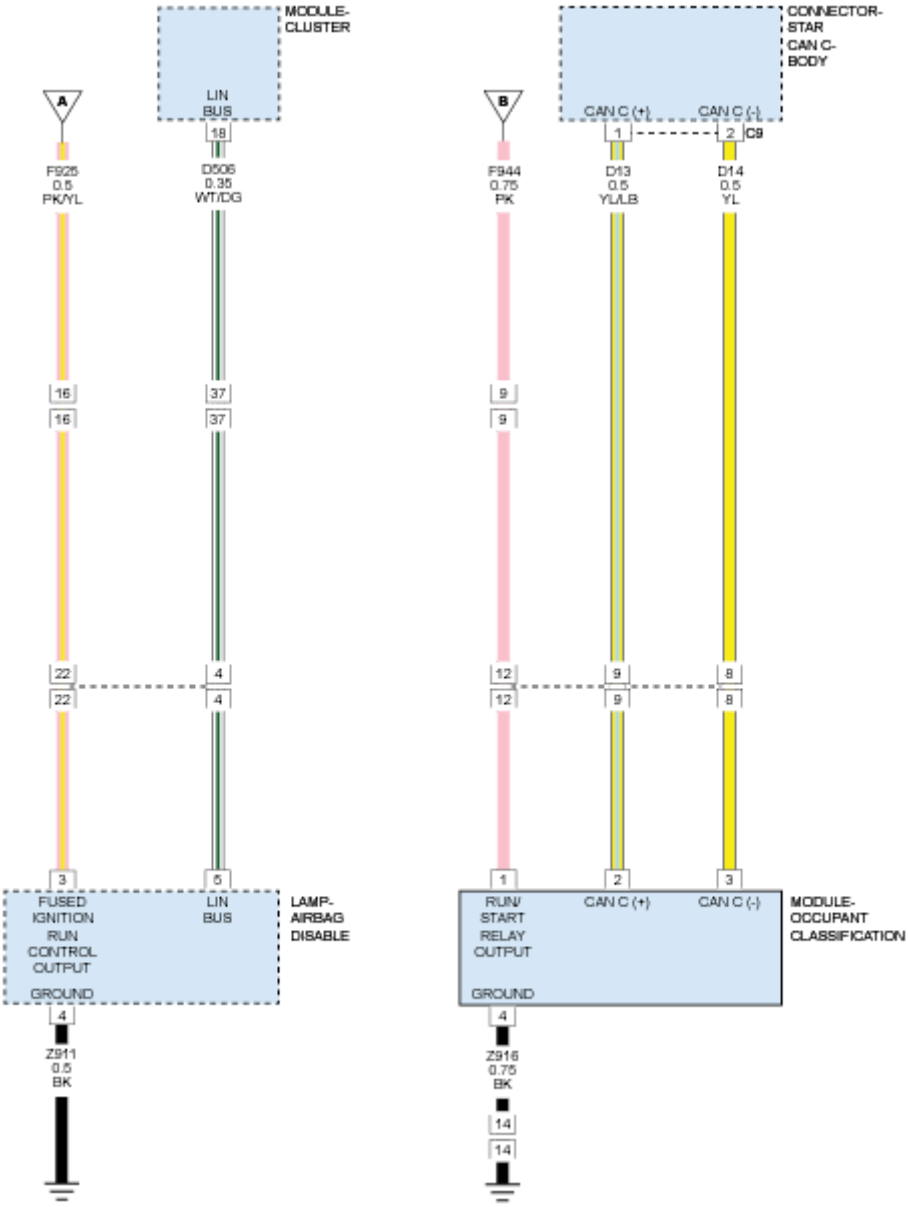

Fig. 5: Battery Voltage Circuit Diagram

Courtesy of CHRYSLER GROUP, LLC

WHEN MONITORED

The OCM checks for serial data message traffic at power up during the initialization process, and continuously through the ignition cycle.

SET CONDITION

This DTC sets when the OCM fails to detect serial data message traffic for more than 5 seconds. In the event the OCM detects serial data message traffic, this DTC will immediately transition to stored status.

POSSIBLE CAUSES

Possible Causes
OCCUPANT CLASSIFICATION MODULE (OCM)

Always perform the Pre-Diagnostic Troubleshooting procedure before proceeding. Refer to STANDARD PROCEDURE.

DIAGNOSTIC TEST

1. **DETERMINE ACTIVE OR STORED DTC**

   Is the DTC active or stored?

   OCM - ACTIVE DTC

   - Go To 2

   OCM - STORED DTC

   - Go To 3
2. **REPLACE OCCUPANT CLASSIFICATION MODULE**

   When this code is set, view repair.

   Repair

   WARNING: **If the Occupant Classification Module (OCM) is dropped at any time, it must be replaced. Failure to take the proper precautions could result in accidental airbag deployment and may result in possible serious or fatal injury.**

   WARNING: **Turn the ignition off, disconnect the 12-volt battery and wait two**

minutes before proceeding. Failure to follow these instructions may result in possible serious or fatal injury.

- Replace the OCM in accordance with Service Information. Refer to **MODULE, OCCUPANT CLASSIFICATION, REMOVAL** .
- Perform the OCCUPANT CLASSIFICATION MODULE (OCM) VERIFICATION TEST. Refer to **STANDARD PROCEDURE**.

3. **STORED OCM DTC**
   1. With the scan tool, record and erase all DTC's from all Airbag System Modules.
   2. If any ACTIVE codes are present they must be resolved before diagnosing any stored codes.

      WARNING: **Turn the ignition off, disconnect the 12-volt battery and wait two minutes before proceeding. Failure to follow these instructions may result in possible serious or fatal injury.**

   3. Using the wiring diagram/schematic as a guide, inspect the wiring and connectors.
   4. Look for chafed, pierced, pinched, or partially broken wires and broken, bent, pushed out, spread, corroded, or contaminated terminals.
   5. The following additional checks may assist you in identifying a possible intermittent problem.
   6. Reconnect any disconnected components and harness connector.

      WARNING: **Turn the ignition on, then reconnect the 12-volt battery and wait two minutes before proceeding. Failure to follow these instructions may result in possible serious or fatal injury.**

   7. With the scan tool monitor active codes as you work through the following steps.

      WARNING: **Maintain a safe distance from all airbags while performing the following steps. Failure to follow these instructions may result in possible serious or fatal injury.**

   8. Wiggle the wiring harness and connectors of the related Can C Bus circuits or component.
   9. If only stored codes return continue the test until the problem area has been isolated.
   10. In the previous steps you have attempted to recreate the conditions responsible for setting active DTC in question.

       Are any ACTIVE DTC's present?

       Yes

       - Select the appropriate diagnostic procedure in this service information. Refer to the **DIAGNOSTIC CODE INDEX** .

No

- No problem found at this time. Erase all codes before returning vehicle to customer.

U0140-00-LOST COMMUNICATION WITH BODY CONTROL MODULE

For a complete wiring diagram, **refer to appropriate SYSTEM WIRING DIAGRAMS article** .

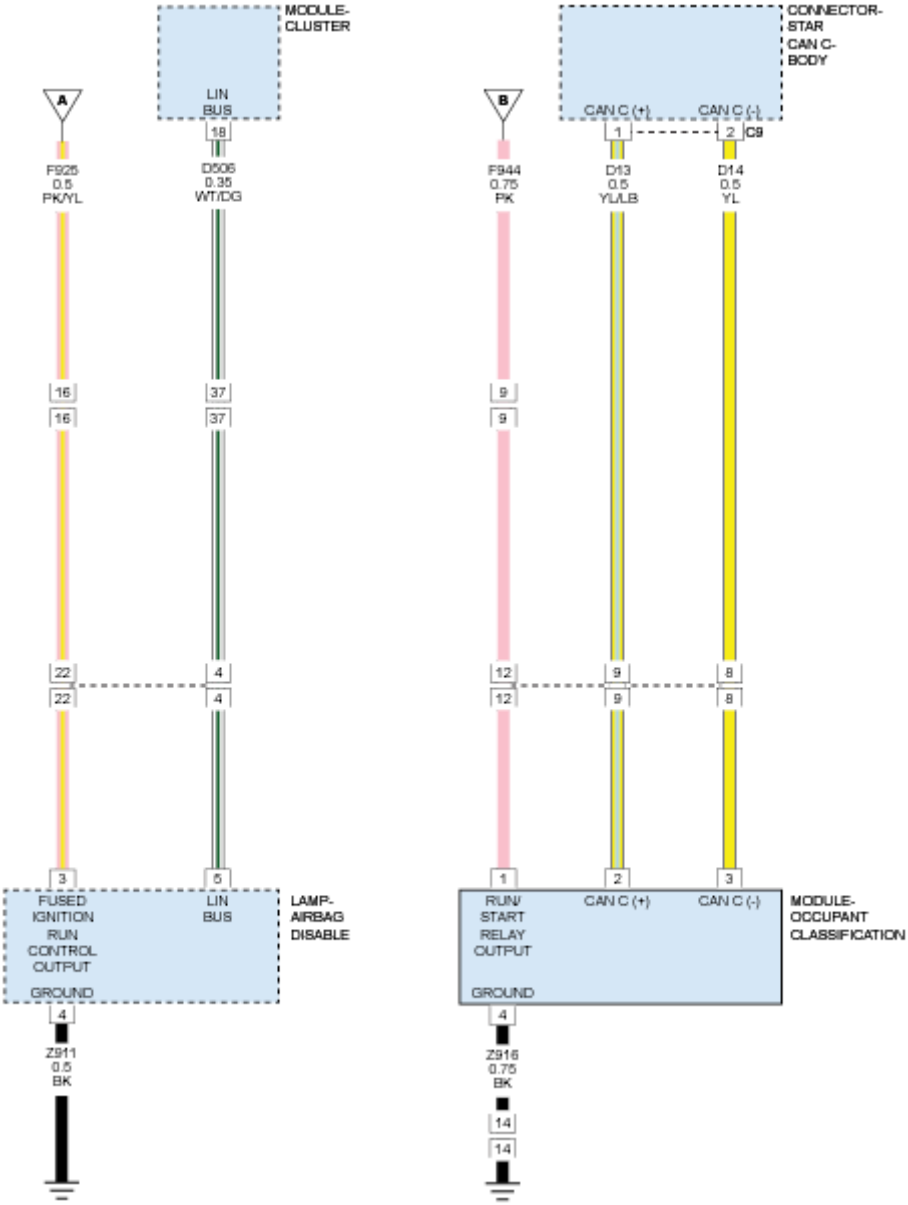

Fig. 6: Battery Voltage Circuit Diagram
Courtesy of CHRYSLER GROUP, LLC

WHEN MONITORED

Continuously when the ignition is on.

The battery voltage between 10.0 and 16.0 Volts.

Body Control Module (BCM) is configured correctly.

SET CONDITION

Bus messages not received from the Body Control Module (BCM) for 2.5 seconds.

POSSIBLE CAUSES

Possible Causes
CAN BUS CIRCUITS OPEN OR SHORTED
DTCS RELATED TO BATTERY VOLTAGE, IGNITION, OR VIN MESSAGES
BODY CONTROL MODULE POWER AND GROUND
BCM NOT CONFIGURED CORRECTLY
BODY CONTROL MODULE (BCM)
MODULE THAT SET THIS DTC

DIAGNOSTIC TEST

VERIFY DTC IS ACTIVE

1. Turn the ignition on.
2. With the scan tool, read the active DTCs.

   Does the scan tool display; U0140-00-LOST COMMUNICATION WITH BODY CONTROL MODULE as active?

   Yes

   - Refer to **DIAGNOSIS AND TESTING** and perform the NO RESPONSE FROM BCM (BODY CONTROL MODULE) diagnostic procedure.

   No

   - Refer to **DIAGNOSIS AND TESTING** and perform the STORED LOST COMMUNICATION DTC diagnostic procedure.

STANDARD PROCEDURE

OCCUPAANT-CLASSIFICATION MODULE INTERMITTENT TEST

For a complete wiring diagram, **refer to appropriate SYSTEM WIRING DIAGRAMS article** .

DIAGNOSTIC INTERMITTENT TEST

1. **RECORD AND ERASE ALL RESTRAINT SYSTEM DTCS**
    1. With the scan tool, record and erase all DTCs from all restraints system modules. Monitor for any active codes as you work through the following steps.
        - Review the code monitored and set conditions for any DTCs that are stored and attempt to reproduce the conditions listed.
        - Wiggle the wiring harness and connectors of the related airbag circuit, sensor, or component.

        WARNING: **Turn the ignition off disconnect the 12-volt battery and wait two minutes before proceeding. Failure to follow these instructions may result in possible serious or fatal injury.**

        - Disconnect components and inspect the harness and connectors for damage.
        - Reconnect components and ensure they are properly seated.

        If equipped with the keyless ignition, use this ignition on warning.

        WARNING: **Disconnect the 12-volt battery wait two minutes before proceeding, remove the ORC fuses, connect the 12-volt battery, wait two minutes before proceeding. Cycle the ignition to the On position, then reconnect the ORC fuses. Wait two minutes before proceeding. Failure to follow these instructions may result in possible serious or fatal injury.**

        If equipped with the standard key ignition, use this ignition on warning.

        WARNING: **Turn the ignition on, then reconnect the 12-volt battery and wait two minutes before proceeding. Failure to follow these instructions may result in possible serious or fatal injury.**

        - Turn the ignition off.
        - Perform any Technical Service Bulletins (TSBs) that may apply.

        Was the source of the customer complaint found or did any DTCs appear and stay active?

        Yes

        - Make the appropriate repairs and either perform the RESTRAINTS SYSTEM VERIFICATION TEST. Refer to **STANDARD PROCEDURE** or **DIAGNOSIS AND TESTING** for the appropriate diagnostic procedure.

No

- Go To 2

2. **ATTEMPT TO REPRODUCE THE CONDITION**
   1. In the event the customer complaint cannot be duplicated due to an intermittent condition in the restraints system, the following may aid in attempting to reproduce the condition.

      WARNING: **Turn the ignition off, disconnect the battery and wait two minutes before proceeding. Failure to follow these instructions may result in possible serious or fatal injury.**

      - Using the wiring diagram/schematic as a guide, inspect the wiring and connectors related to the stored code or component in question.
      - Look for chafed, pierced, pinched, or partially broken wires and broken, bent, pushed out, spread, corroded, or contaminated terminals.
      - Reconnect any disconnected components and harness connectors and ensure they are properly seated.

        If equipped with the keyless ignition, use this ignition on warning.

        WARNING: **Disconnect the 12-volt battery wait two minutes before proceeding, remove the ORC fuses, connect the 12-volt battery, wait two minutes before proceeding. Cycle the ignition to the On position, then reconnect the ORC fuses. Wait two minutes before proceeding. Failure to follow these instructions may result in possible serious or fatal injury.**

        If equipped with the standard key ignition, use this ignition on warning.

        WARNING: **Turn the ignition on, then reconnect the 12-volt battery and wait two minutes before proceeding. Failure to follow these instructions may result in possible serious or fatal injury.**

      - If numerous trouble codes were set, use a schematic and inspect any common ground or supply circuits.

      Was the source of the intermittent condition located?

      Yes

      - Make the appropriate repairs and perform the RESTRAINTS SYSTEM VERIFICATION PROCEDURE. Refer to **STANDARD PROCEDURE** .

No

- The problem cannot be found at this time.

RESTRAINTS-SYSTEM-PRE-DIAGNOSTIC-PROCEDURE

For a complete wiring diagram, **refer to appropriate SYSTEM WIRING DIAGRAMS article** .

DIAGNOSTIC PRE-TEST

1. Before attempting to repair any restraint system, technicians should be familiar with and fully understand the system operation. Refer to **RESTRAINTS - SERVICE INFORMATION** DESCRIPTION and OPERATION for complete details. The following should be used as a checklist to be completed in its entirety prior to referencing specific Restraints Diagnostic Procedures.
2. **FOLLOW THE BASIC OUTLINE SET FORTH IN THE SIX-STEP TROUBLESHOOTING PROCEDURE**
   1. Verification of complaint.
   2. Verification of any related symptoms.
   3. Symptom analysis.
   4. Problem isolation.
   5. Repair of isolated problem.
   6. Verification of proper operation.
3. **TAKE INTO ACCOUNT CURRENT VEHICLE CONDITION, REPAIR HISTORY, AND TECHNICAL SERVICE BULLETINS (TSBs)**
   - Verify that there are no outward signs of vehicle damage or effects from a collision that could impact the proper operation of the Restraints system.
   - Check for aftermarket vehicle accessories that may have been installed improperly or could interfere with the system.
   - Check the vehicle repair history for repairs that may relate to the current condition.
   - Check for current Technical Service Bulletins (TSBs) for the Restraints system related to the customer concern. If a TSB applies, follow the procedure outlined in the TSB.
4. **DIAGNOSE ONLY THOSE FAILURES THAT ARE ACTIVE AND CAN BE REPRODUCED**
   - Check the control module central to the subsystem that is exhibiting the condition for active DTCs.
   - For an intermittent failure that is not active at the time of vehicle inspection, perform the OCCUPANT CLASSIFICATION MODULE (OCM) INTERMITTENT TEST diagnostic procedure and document the event on the repair order. Refer to **STANDARD PROCEDURE**.
5. **ADDRESS ACTIVE DIAGNOSTIC TROUBLE CODES (DTCs) IN THE CORRECT ORDER**
   1. Low/High Voltage and Serial Data Loss of Communication Codes.
   2. Module Internal Failure and Configuration Mismatch Codes.
   3. Circuit specific DTC failures.
6. Should the malfunction still be present after conducting this Pre-diagnostic Procedure, technicians should continue to the appropriate DTC procedure. Refer to **STANDARD PROCEDURE**.

Was the Pre-Test reviewed and is the DTC still present?

Yes

- Perform the appropriate DTC procedure. Refer to **DIAGNOSIS AND TESTING**.

No

- Test Complete.

RE-ZERO OCCUPANT CLASSIFICATION MODULE

OCM RE-ZERO TEST

VERIFY ACTIVE DTC

NOTE: Make sure the battery is fully charged.

NOTE: Follow the ignition off warning, due to any special tools or body harness connectors that may need to be reconnected reintroducing voltage to a wire harness and component area.

WARNING: Turn the ignition off, disconnect the 12-volt battery and wait two minutes before proceeding. Failure to follow these instructions may result in possible serious or fatal injury.

1. Remove any special tools or jumper wires and reconnect all previously disconnected components - except the battery.
2. Make sure the passenger seat is empty.
3. If equipped with the standard key ignition, use this ignition on warning.

WARNING: Turn the ignition on, then reconnect the 12-volt battery and wait two minutes before proceeding. Failure to follow these instructions may result in possible serious or fatal injury.

4. If equipped with the keyless ignition, use this ignition on warning.

WARNING: Disconnect the 12-volt battery wait two minutes before proceeding, remove the ORC fuses, connect the 12-volt battery, wait two minutes before proceeding. Cycle the ignition to the On position, then reconnect the ORC fuses. Wait two minutes before proceeding. Failure to follow these instructions may result in possible serious or fatal injury.

NOTE: **Failure to follow the test instructions or aborting the test causes faults to set when performing the Scan tool Occupant Classification Module System Verification Test. To prevent faults due to process errors: verify that all tests steps that led you here were performed as directed, verify that the ignition is in run position. Only press scan tool buttons when directed to do so and perform the scan tool Occupant Classification Module System Verification Test to completion.**

5. With the scan tool in OCM, select the Miscellaneous Functions tab on the scan tool, select Empty Seat Value Relearn. Run the test by following the instructions displayed on the scan tool. When the test completes, wait two minutes and then proceed as follows.
6. With the scan tool, read active DTCs.

   Does the scan tool display any OCM active DTCs?

   Yes

   - Follow the appropriate diagnostics. Refer to **DIAGNOSIS AND TESTING**.

   No

   - OCM Re-zero procedure complete. Perform the Standard Procedure OCCUPANT CLASSIFICATION MODULE (OCM) VERIFICATION TEST. Refer to **STANDARD PROCEDURE**.

OCCUPANT CLASSIFICATION MODULE (OCM) VERIFICATION TEST

DIAGNOSTIC VERIFICATION TEST

NOTE: **Follow the ignition off warning, due to any special tools or body harness connectors that may need to be reconnected reintroducing voltage to a wire harness and component area.**

WARNING: **Turn the ignition off, disconnect the 12-volt battery and wait two minutes before proceeding. Failure to follow these instructions may result in possible serious or fatal injury.**

VERIFICATION TEST

1. Remove any special tools or jumper wires and reconnect all previously disconnected components - except the battery.
2. If equipped with the standard key ignition, use this ignition on warning.

WARNING: **Turn the ignition on, then reconnect the 12-volt battery and wait two minutes before proceeding. Failure to follow these instructions may**

result in possible serious or fatal injury.

3. If equipped with the keyless ignition, use this ignition on warning.

   WARNING: **Disconnect the 12-volt battery wait two minutes before proceeding, remove the OCM fuses, connect the 12-volt battery, wait two minutes before proceeding. Cycle the ignition to the On position, then reconnect the OCM fuses. Wait two minutes before proceeding. Failure to follow these instructions may result in possible serious or fatal injury.**

4. Connect the scan tool to the Data Link Connector - use the most current software available.
5. With the scan tool erase stored DTCs in the Restraint System or whichever subsystem DTCs set.
6. Turn the ignition off, and wait 15 seconds, then turn the ignition on.
7. Wait one minute, using the scan tool read active subsystem DTCs and if there are none present read the stored codes.
8. If the scan tool shows any active or stored codes, follow path specified for that trouble code. If no active or stored codes are present, the repair is complete.

   Are any DTCs present or is the original condition still present?

   Yes

   - Repair is not complete, whichever subsystem DTC or DTCs set and perform the appropriate diagnostic procedure. Refer to **DIAGNOSIS AND TESTING**.

   No

   WARNING: **Turn the ignition off disconnect the 12-volt battery and wait two minutes before proceeding. Failure to follow these instructions may result in possible serious or fatal injury.**

   - If equipped with the standard key ignition, use this ignition on warning.

     WARNING: **Turn the ignition on, then reconnect the 12-volt battery and wait two minutes before proceeding. Failure to follow these instructions may result in possible serious or fatal injury.**

     If equipped with the keyless ignition, use this ignition on warning.

     WARNING: **Disconnect the 12-volt battery wait two minutes before proceeding, remove the OCM fuses, connect the 12-volt battery, wait two minutes before proceeding. Cycle the ignition to the On position, then reconnect the OCM fuses. Wait two**

minutes before proceeding. Failure to follow these instructions may result in possible serious or fatal injury.

- Perform the OCCUPANT CLASSIFICATION MODULE VERIFICATION TEST. Refer to **STANDARD PROCEDURE**.

2014 ACCESSORIES AND EQUIPMENT

Park Assist Module (PAM) (PTS/PAM) - Electrical Diagnostics - Cherokee

DIAGNOSTIC CODE INDEX

DIAGNOSTIC CODE INDEX

DTC	Description
B128E-11	PTS SENSOR 1 - CIRCUIT SHORT TO GROUND
B128E-12	PTS-SENSOR 1 - CIRCUIT SHORT TO BATTERY
B128E-25	PTS SENSOR 1 - SIGNAL SHAPE / WAVEFORM FAILURE
B128E-92	PTS SENSOR 1 - PERFORMANCE OR INCORRECT OPERATION
B128F-11	PTS SENSOR 2 - CIRCUIT SHORT TO GROUND
B128F-25	PTS SENSOR 2 - SIGNAL SHAPE / WAVEFORM FAILURE
B128F-92	PTS SENSOR 2-PERFORMANCE OR INCORRECT OPERATION
B1290-11	PTS SENSOR 3-CIRCUIT SHORT TO GROUND
B1290-12	PTS SENSOR 3-CIRCUIT SHORT TO BATTERY
B1290-25	PTS SENSOR 3-SIGNAL SHAPE / WAVEFORM FAILURE
B1290-92	PTS SENSOR 3-PERFORMANCE OR INCORRECT OPERATION
B1291-11	PTS SENSOR 4-CIRCUIT SHORT TO GROUND
B128F-12	PTS SENSOR 2 - CIRCUIT SHORT TO BATTERY
B1291-12	PTS SENSOR 4 - CIRCUIT SHORT TO BATTERY
B1291-25	PTS SENSOR 4 - SIGNAL SHAPE / WAVEFORM FAILURE
B1291-92	PTS SENSOR 4 - PERFORMANCE OR INCORRECT OPERATION
B1292-11	PTS SENSOR 5 - CIRCUIT SHORT TO GROUND
B1292-12	PTS SENSOR 5 - CIRCUIT SHORT TO BATTERY
B1292-25	PTS SENSOR 5 - SIGNAL SHAPE / WAVEFORM FAILURE
B1292-92	PTS SENSOR 5 - PERFORMANCE OR INCORRECT OPERATION
B1293-11	PTS SENSOR 6 - CIRCUIT SHORT TO GROUND
B1293-12	PTS SENSOR 6 - CIRCUIT SHORT TO BATTERY
B1293-25	PTS SENSOR 6 - SIGNAL SHAPE / WAVEFORM FAILURE
B1293-92	PTS SENSOR 6 - PERFORMANCE OR INCORRECT OPERATION
B1294-11	PTS SENSOR 7 - CIRCUIT SHORT TO GROUND
B1294-12	PTS SENSOR 7 - CIRCUIT SHORT TO BATTERY
B1294-25	PTS SENSOR 7 - SIGNAL SHAPE / WAVEFORM FAILURE
B1294-92	PTS SENSOR 7 - PERFORMANCE OR INCORRECT OPERATION
B1295-11	PTS SENSOR 8 - CIRCUIT SHORT TO GROUND
B1295-12	PTS SENSOR 8 - CIRCUIT SHORT TO BATTERY
B1295-25	PTS SENSOR 8 - SIGNAL SHAPE / WAVEFORM FAILURE
B1295-92	PTS SENSOR 8 - PERFORMANCE OR INCORRECT OPERATION
B1296-11	PTS SENSOR 9 - CIRCUIT SHORT TO GROUND

B1296-12	PTS SENSOR 9 - CIRCUIT SHORT TO BATTERY
B1296-25	PTS SENSOR 9 - SIGNAL SHAPE / WAVEFORM FAILURE
B1296-92	PTS SENSOR 9 - PERFORMANCE OR INCORRECT OPERATION
B1297-11	PTS SENSOR 10 - CIRCUIT SHORT TO GROUND
B1297-12	PTS SENSOR 10 - CIRCUIT SHORT TO BATTERY
B1297-25	PTS SENSOR 10 - SIGNAL SHAPE / WAVEFORM FAILURE
B1297-92	PTS SENSOR 10 - PERFORMANCE OR INCORRECT OPERATION
B1298-11	PTS SENSOR 11 - CIRCUIT SHORT TO GROUND
B1298-12	PTS SENSOR 11 - CIRCUIT SHORT TO BATTERY
B1298-25	PTS SENSOR 11-SIGNAL SHAPE / WAVEFORM FAILURE
B1298-92	PTS SENSOR 11-PERFORMANCE OR INCORRECT OPERATION
B1299-11	PTS SENSOR 12 - CIRCUIT SHORT TO GROUND
B1299-12	PTS SENSOR 12-CIRCUIT SHORT TO BATTERY
B1299-25	PTS SENSOR 12 - SIGNAL SHAPE / WAVEFORM FAILURE
B1299-92	PTS SENSOR 12 - PERFORMANCE OR INCORRECT OPERATION
B210C-16	BATTERY VOLTAGE INPUT - CIRCUIT VOLTAGE BELOW THRESHOLD
B210C-17	BATTERY VOLTAGE INPUT - CIRCUIT VOLTAGE ABOVE THRESHOLD
B2128-16	SENSOR SUPPLY VOLTAGE - CIRCUIT VOLTAGE BELOW THRESHOLD
B2128-17	SENSOR SUPPLY VOLTAGE - CIRCUIT VOLTAGE ABOVE THRESHOLD
B21DD-16	SYSTEM VOLTAGE - CIRCUIT VOLTAGE BELOW THRESHOLD
B21DD-17	SYSTEM VOLTAGE - CIRCUIT VOLTAGE ABOVE THRESHOLD
U0002-00	CAN C BUS OFF PERFORMANCE
B222A-00	VEHICLE LINE MISMATCH
B223B-00	VEHICLE CONFIGURATION MISMATCH
B2232-00	(PTS) PARKTRONICS INTERNAL
U0100-00	LOST COMMUNICATION WITH ECM/PCM
U0102-00	LOST COMMUNICATION WITH TRANSFER CASE CONTROL MODULE / AWD
U0121-00	LOST COMMUNICATION WITH ANTI-LOCK BRAKE SYSTEM (ABS) CONTROL MODULE
U0129-00	LOST COMMUNICATION WITH BRAKE SYSTEM CONTROL MODULE
U0140-00	LOST COMMUNICATION WITH BODY CONTROL MODULE
U0151-00	LOST COMMUNICATION WITH OCCUPANT RESTRAINT CONTROLLER (ORC)
U0155-00	LOST COMMUNICATION WITH CLUSTER/CCN
U0212-00	LOST COMMUNICATION WITH SCM
U0401-00	IMPLAUSIBLE DATA RECEIVED FROM ECM/PCM
U0403-00	IMPLAUSIBLE DATA RECEIVED FROM T-CASE
U0402-00	IMPLAUSIBLE DATA RECEIVED FROM TCM
U0418-00	IMPLAUSIBLE DATA RECEIVED FROM BRAKE SYSTEM CONTROL MODULE

U0422-00	IMPLAUSIBLE DATA RECEIVED FROM BODY CONTROL MODULE
U0423-00	IMPLAUSIBLE DATA RECEIVED FROM CLUSTER/CCN
U0452-00	IMPLAUSIBLE DATA RECEIVED FROM RESTRAINTS CONTROL MODULE

DIAGNOSIS AND TESTING

B128E-11-PTS SENSOR 1 - CIRCUIT SHORT TO GROUND

For a complete wiring diagram, **refer to appropriate SYSTEM WIRING DIAGRAMS article** .

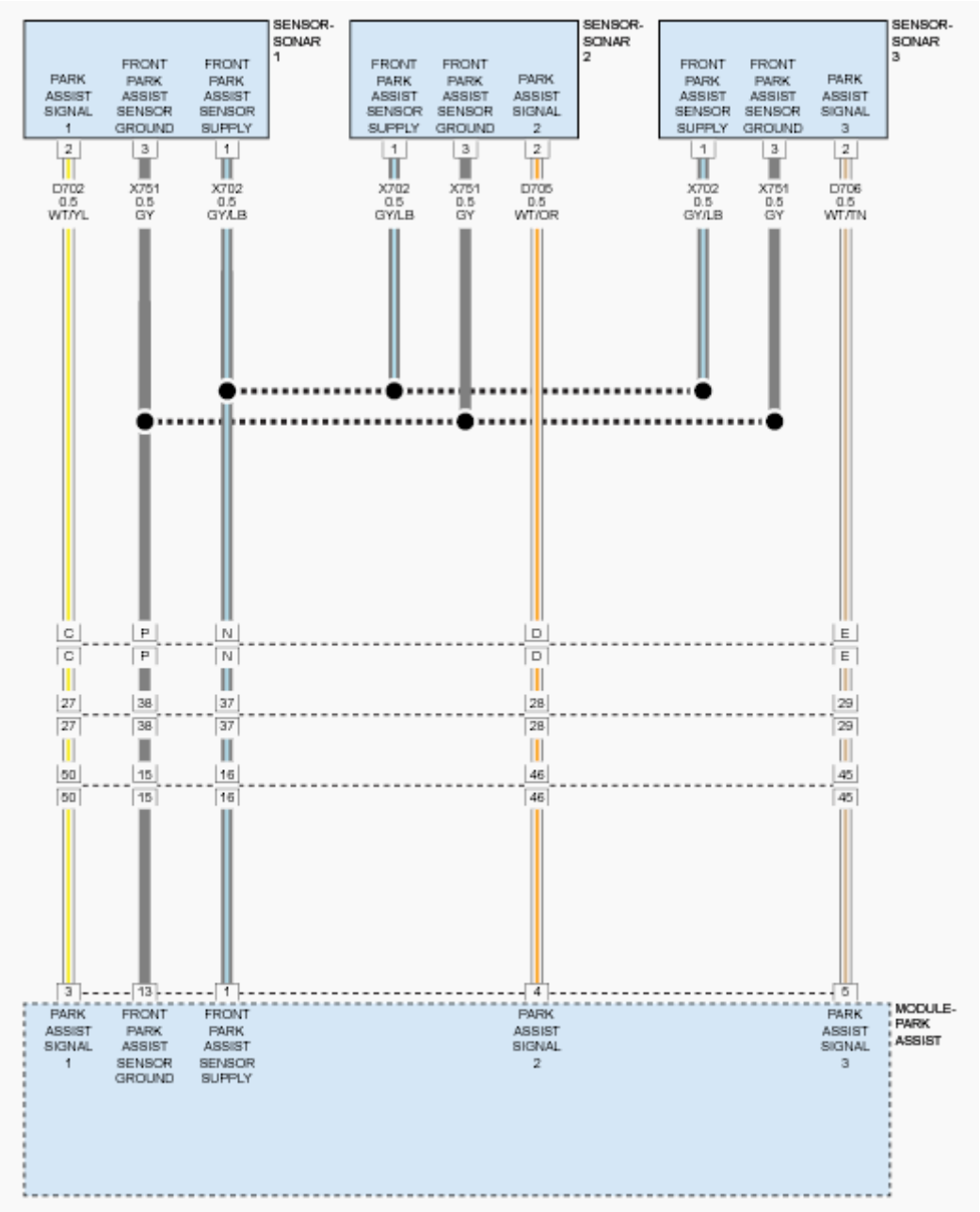

Fig. 1: Identifying Front Park Assist Circuit Diagram
Courtesy of CHRYSLER GROUP, LLC

THEORY OF OPERATION

The Park Assist Sensors are ultrasonic transceivers that are completely controlled by the Park Assist Module. The sensors transmit and receive ultrasonic signals. Each sensor has a voltage, signal, and return circuit to the module. The sensors communicate with the Park Assist Module using a dedicated serial bus communication circuit.

NOTE: The numbering system for the park assist sensors allows for up to twelve sensors on the vehicle, six front and six rear. The sensors are numbered in a clockwise manner starting at the left front bumper. The left front sensor (if equipped with front park assist) is the number 1 sensor. The numbering continues in a clockwise direction around the vehicle.

WHEN MONITORED

Vehicle in reverse and during the self-test while vehicle is in drive between 18 km/h (11 mph) and 40 km/h (25 mph).

SET CONDITION

The Park Assist Module detects a short to ground on the Park Assist Sensor Signal circuit.

POSSIBLE CAUSES

Possible Causes
PARK ASSIST SENSOR DISCONNECTED
(D702) PARK ASSIST SENSOR 1 SIGNAL CIRCUIT SHORTED TO GROUND
(D702) PARK ASSIST SENSOR 1 SIGNAL CIRCUIT SHORTED TO THE (X751) FRONT PARK ASSIST SENSOR GROUND CIRCUIT
(D702) PARK ASSIST SENSOR 1 SIGNAL CIRCUIT OPEN
(X702) FRONT PARK ASSIST SENSOR SUPPLY CIRCUIT OPEN
PARK ASSIST SENSOR
PARK ASSIST MODULE

DIAGNOSTIC TEST

1. **CHECK FOR AN ACTIVE DIAGNOSTIC TROUBLE CODE (DTC)**

NOTE: A disconnected sensor will set this DTC. Verify the Park Assist Sensor is connected before proceeding with this diagnostic procedure.

1. Turn the ignition on.

2. With the scan tool, read DTCs.

   Does the scan tool display this DTC as active?

   Yes

   - Go To 2

   No

   - Test complete, the condition or conditions that originally set this DTC are not present at this time. Using the wiring diagrams as a guide, check all related splices and connectors for signs of water intrusion, corrosion, pushed out or bent terminals, and correct pin tension.
   - Perform the BODY VERIFICATION TEST. Refer to **STANDARD PROCEDURE** .

2. **CHECK THE VOLTAGE OF THE (X702) FRONT PARK ASSIST SENSOR SUPPLY CIRCUIT**
   1. Turn the ignition off.
   2. Disconnect the Park Assist Sensor harness connector.
   3. Turn the ignition on.
   4. Measure the voltage of the (X702) Front Park Assist Sensor Supply circuit.

      Is the voltage above 8.0 volts?

      Yes

      - Go To 4

      No

      - Go To 3

3. **CHECK THE (X702) FRONT PARK ASSIST SENSOR SUPPLY CIRCUIT FOR AN OPEN OR HIGH RESISTANCE**
   1. Turn the ignition off.
   2. Disconnect the Park Assist Module C3 harness connector.
   3. Measure the resistance of the (X751) Front Park Assist Sensor Supply circuit.

      Is the resistance below 5.0 Ohms?

      Yes

      - Replace the Park Assist Module in accordance with the Service Information. Refer to **MODULE, PARK ASSIST, REMOVAL** .
      - Perform the BODY VERIFICATION TEST. Refer to **STANDARD PROCEDURE** .

No

- Repair the open or high resistance in the (X702) Front Park Assist Sensor Supply circuit.
- Perform the BODY VERIFICATION TEST. Refer to **STANDARD PROCEDURE** .

4. **CHECK THE (D702) PARK ASSIST SENSOR 1 SIGNAL CIRCUIT FOR A SHORT TO GROUND WITH THE PARK ASSIST MODULE CONNECTED**

NOTE: Perform this step with the Park Assist Module harness connected.

1. Measure the resistance between ground and the (D702) Park Assist Sensor 1 Signal circuit.

   Is the resistance below 10K Ohms?

   Yes

   - Go To 5

   No

   - Go To 7

5. **CHECK THE (D702) PARK ASSIST SENSOR 1 SIGNAL CIRCUIT FOR A SHORT TO GROUND WITH THE PARK ASSIST MODULE DISCONNECTED**
   1. Disconnect the Park Assist Module C3 harness connector.
   2. Measure the resistance between ground and the (D702) Park Assist Sensor 1 Signal circuit.

      Is the resistance below 10K Ohms?

      Yes

      - Repair the short to ground in the (D702) Park Assist Sensor 1 Signal circuit.
      - Perform the BODY VERIFICATION TEST. Refer to **STANDARD PROCEDURE** .

      No

      - Go To 6

6. **CHECK THE (D702) PARK ASSIST SENSOR 1 SIGNAL CIRCUIT FOR A SHORT TO THE (X751) FRONT PARK ASSIST SENSOR GROUND CIRCUIT**
   1. Measure the resistance between the (D702) Park Assist Sensor 1 Signal circuit and the (X751) Front Park Assist Sensor Ground circuit.

      Is the resistance below 10K Ohms?

      Yes

- Repair the short between the (D702) Park Assist Sensor 1 Signal circuit and the (X702) Front Park Assist Sensor Ground circuit.
- Perform the BODY VERIFICATION TEST. Refer to **STANDARD PROCEDURE** .

No

- Replace the Park Assist Module in accordance with the Service Information. Refer to **MODULE, PARK ASSIST, REMOVAL** .
- Perform the BODY VERIFICATION TEST. Refer to **STANDARD PROCEDURE** .

7. **CHECK THE (D702) PARK ASSIST SENSOR 1 SIGNAL CIRCUIT FOR AN OPEN**
   1. Disconnect the Park Assist Module C3 harness connector.
   2. Measure the resistance of the (D702) Park Assist Sensor 1 Signal circuit.

   Is the resistance above 5.0 Ohms?

   Yes

   - Repair the open in the (D702) Park Assist Sensor 1 Signal circuit.
   - Perform the BODY VERIFICATION TEST. Refer to **STANDARD PROCEDURE** .

   No

   - Go To 8

8. **PARK ASSIST SENSOR**
   1. Turn the ignition on.
   2. Reconnect the Park Assist Module C3 harness connector.
   3. Connect a jumper wire across the (X702) Front Park Assist Sensor Supply and (D702) Park Assist Sensor 1 Signal circuits.
   4. Turn the ignition on.
   5. With the scan tool, read DTCs.

   Does the scan tool display DTC: B128E-12-PTS SENSOR 1 - CIRCUIT SHORT TO BATTERY as active?

   Yes

   - Replace the Park Assist Sensor in accordance with the Service Information. Refer to **SENSOR, PARK ASSIST, REMOVAL** .
   - Perform the BODY VERIFICATION TEST. Refer to **STANDARD PROCEDURE** .

   No

   - Replace the Park Assist Module in accordance with the Service Information. Refer to

MODULE, PARK ASSIST, REMOVAL .

- Perform the BODY VERIFICATION TEST. Refer to **STANDARD PROCEDURE** .

B128E-12-PTS-SENSOR 1 - CIRCUIT SHORT TO BATTERY

For a complete wiring diagram, **refer to appropriate SYSTEM WIRING DIAGRAMS article** .

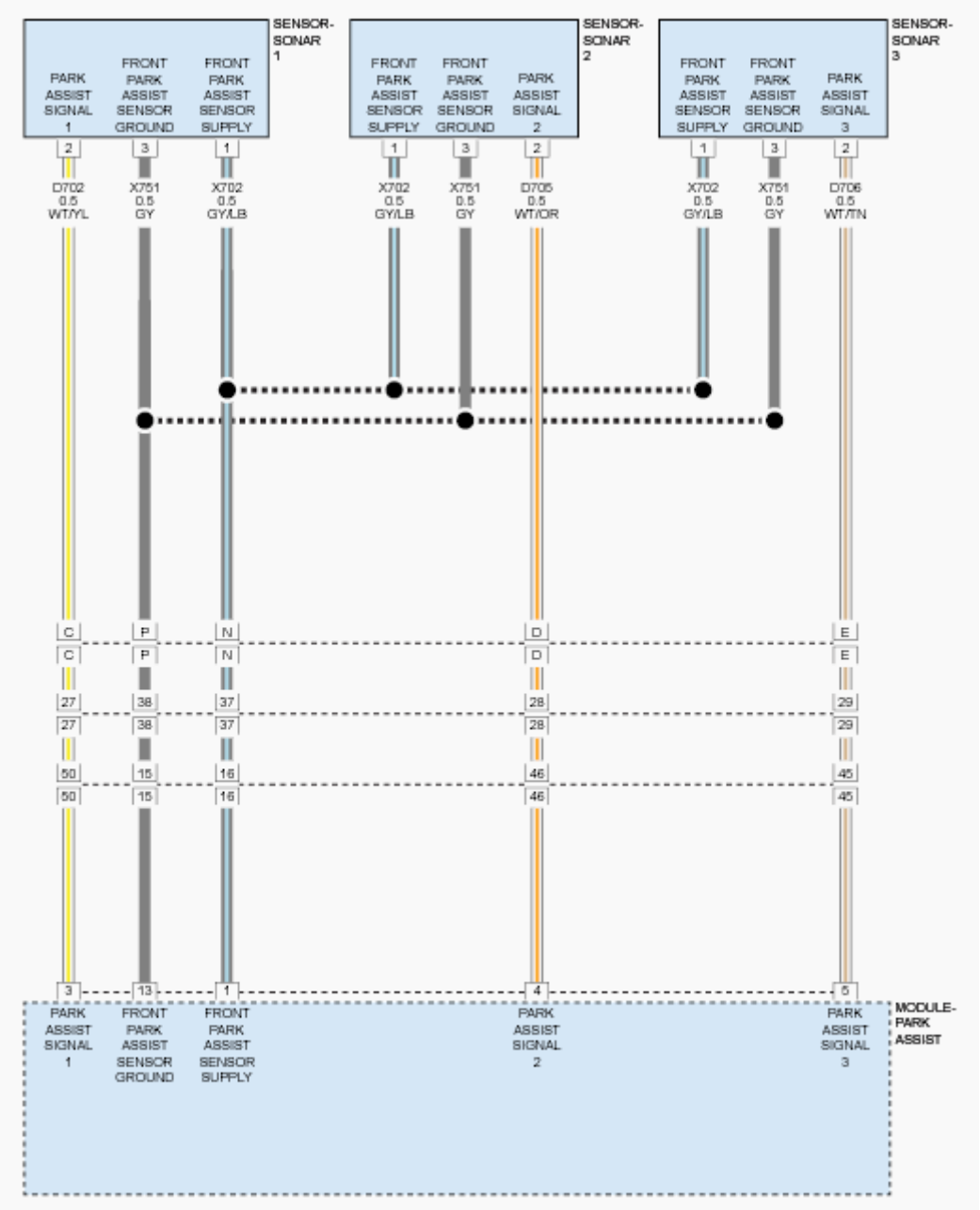

Fig. 2: Identifying Front Park Assist Circuit Diagram
Courtesy of CHRYSLER GROUP, LLC

THEORY OF OPERATION

The Park Assist Sensors are ultrasonic transceivers that are completely controlled by the Park Assist Module. The sensors transmit and receive ultrasonic signals. Each sensor has a voltage, signal, and return circuit to the module. The sensors communicate with the Park Assist Module using a dedicated serial bus communication circuit.

NOTE: The numbering system for the park assist sensors allows for up to twelve sensors on the vehicle, six front and six rear. The sensors are numbered in a clockwise manner starting at the left front bumper. The left front sensor (if equipped with front park assist) is the number 1 sensor. The numbering continues in a clockwise direction around the vehicle.

WHEN MONITORED

Vehicle in reverse and during the self-test while vehicle is in drive between 18 km/h (11 mph) and 40 km/h (25 mph).

SET CONDITION

The Park Assist Module detects an open or short to voltage on the Park Assist Sensor Signal circuit.

POSSIBLE CAUSES

Possible Causes
(D702) PARK ASSIST SENSOR 1 SIGNAL CIRCUIT SHORTED TO VOLTAGE
(D702) PARK ASSIST SENSOR 1 SIGNAL CIRCUIT SHORTED TO THE (X702) FRONT PARK ASSIST SENSOR SUPPLY CIRCUIT
(X751) FRONT PARK ASSIST SENSOR GROUND CIRCUIT OPEN
PARK ASSIST SENSOR
PARK ASSIST MODULE

DIAGNOSTIC TEST

1. **CHECK FOR AN ACTIVE DIAGNOSTIC TROUBLE CODE (DTC)**
    1. Turn the ignition on.
    2. With the scan tool, read DTCs.

    Does the scan tool display this DTC as active?

    Yes

    - Go To 2

    No

    - Test complete, the condition or conditions that originally set this DTC are not present at this

time. Using the wiring diagrams as a guide, check all related splices and connectors for signs of water intrusion, corrosion, pushed out or bent terminals, and correct pin tension.

- Perform the BODY VERIFICATION TEST. Refer to **STANDARD PROCEDURE** .

2. **(D702) PARK ASSIST SENSOR 1 SIGNAL CIRCUIT SHORTED TO BATTERY**
   1. Turn the ignition off.
   2. Disconnect the Park Assist Module C3 harness connector.
   3. Disconnect the Park Assist Sensor harness connector.
   4. Turn the ignition on.
   5. Measure the voltage of the (D702) Park Assist Sensor 1 Signal circuit.

   Is the voltage above 10.0 volts?

   Yes

   - Repair the (D702) Park Assist Sensor 1 Signal circuit for a short to battery.
   - Perform the BODY VERIFICATION TEST. Refer to **STANDARD PROCEDURE** .

   No

   - Go To 3

3. **(D702) PARK ASSIST SENSOR 1 SIGNAL CIRCUIT SHORTED TO THE (X702) FRONT PARK ASSIST SENSOR SUPPLY CIRCUIT**
   1. Turn the ignition off.
   2. Measure the resistance between the (D702) Park Assist Sensor 1 Signal circuit and the (X702) Front Park Assist Sensor Supply circuit.

   Is the resistance below 10K Ohms?

   Yes

   - Repair the (D702) Park Assist Sensor 1 Signal circuit for a short to the (X702) Front Park Assist Sensor Supply circuit.
   - Perform the BODY VERIFICATION TEST. Refer to **STANDARD PROCEDURE** .

   No

   - Go To 4

4. **(X751) FRONT PARK ASSIST SENSOR GROUND CIRCUIT OPEN**
   1. Reconnect the Park Assist Module C3 harness connector.
   2. Measure the resistance between ground and the (X751) Front Park Assist Sensor Ground circuit.

   Is the resistance above 20.0 Ohms?

Yes

- Go To 5

No

- Replace the Park Assist Sensor in accordance with the Service Information. Refer to **SENSOR, PARK ASSIST, REMOVAL** .
- Perform the BODY VERIFICATION TEST. Refer to **STANDARD PROCEDURE** .

5. **(X751) FRONT PARK ASSIST SENSOR GROUND CIRCUIT OPEN BETWEEN PARK ASSIST MODULE AND SENSOR**
   1. Disconnect the Park Assist Module C3 harness connector.
   2. Measure the resistance of the (X751) Front Park Assist Sensor Ground circuit.

   Is the resistance above 5.0 Ohms?

   Yes

   - Repair the open in the (X751) Front Park Assist Sensor Ground circuit.
   - Perform the BODY VERIFICATION TEST. Refer to **STANDARD PROCEDURE** .

   No

   - Replace the Park Assist Module in accordance with the Service Information. Refer to **MODULE, PARK ASSIST, REMOVAL** .
   - Perform the BODY VERIFICATION TEST. Refer to **STANDARD PROCEDURE** .

B128E-25-PTS SENSOR 1 - SIGNAL SHAPE / WAVEFORM FAILURE

For a complete wiring diagram, **refer to appropriate SYSTEM WIRING DIAGRAMS article** .

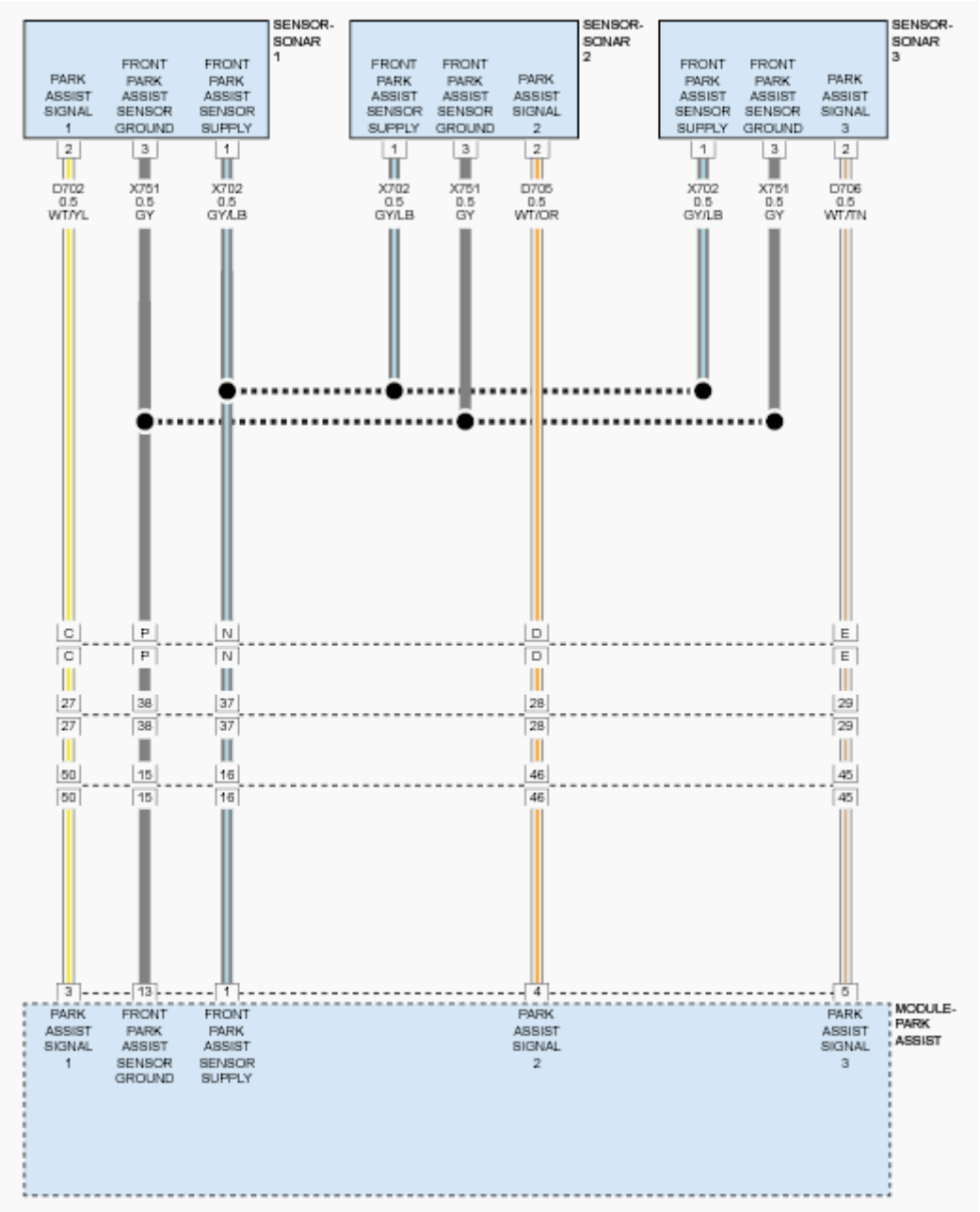

Fig. 3: Identifying Front Park Assist Circuit Diagram
Courtesy of CHRYSLER GROUP, LLC

THEORY OF OPERATION

The Park Assist Sensors are ultrasonic transceivers that are completely controlled by the Park Assist Module. The sensors transmit and receive ultrasonic signals. Each sensor has a voltage, signal, and return circuit to the module. The sensors communicate with the Park Assist Module using a dedicated serial bus communication circuit.

WHEN MONITORED

Vehicle in reverse.

During the self-test while vehicle is in drive between 11 mph (18 km/h) and 25 mph (40 km/h).

SET CONDITION

The Park Assist Module detects an internal Sensor error.

POSSIBLE CAUSES

Possible Causes
PARK ASSIST SENSOR MEMBRANE OBSTRUCTION (ICE, SNOW, MUD, DIRT COVERING FASCIA)
PARK ASSIST SENSOR CONNECTOR OBSTRUCTION (ICE, SNOW, MUD, DIRT)
DECOUPLING RING MISSING/MOUNTED WRONG
OBJECTS - SUCH AS LICENSE PLATES - IN CLOSE RANGE TO THE SENSOR
PARK ASSIST SENSOR

DIAGNOSTIC TEST

1. **CHECK FOR AN ACTIVE DIAGNOSTIC TROUBLE CODE (DTC)**

   NOTE: Before proceeding with this diagnostic procedure, remove any ice, snow, mud, dirt, or other obstructions from the front/rear fascia/bumper. Also remove any ice, snow, dirt, mud, or other obstructions from the underside of the Fascia/Bumper surrounding the sensors.

   1. Turn the ignition on.
   2. With the scan tool, read Park Assist Module DTCs.

      Does the scan tool display this DTC as active?

      Yes

      - Go To 2

      No

      - Test complete, the condition or conditions that originally set this DTC are not present at this time. Using the wiring diagrams as a guide, check all related splices and connectors for signs of water intrusion, corrosion, pushed out or bent terminals, and correct pin tension.
      - Perform the BODY VERIFICATION TEST. Refer to **STANDARD PROCEDURE** .
2. **PARK ASSIST SENSOR**
   1. Verify that none of the possible causes mentioned above are present. Repair as necessary.

If none of the possible causes mentioned above are present, view repair.

Repair

- Replace the Park Assist Sensor that caused this DTC to change from active to stored after disconnecting it in accordance with the Service Information. Refer to **SENSOR, PARK ASSIST, REMOVAL** .
- Perform the BODY VERIFICATION TEST. Refer to **STANDARD PROCEDURE** .

B128E-92-PTS SENSOR 1 - PERFORMANCE OR INCORRECT OPERATION

For a complete wiring diagram, **refer to appropriate SYSTEM WIRING DIAGRAMS article** .

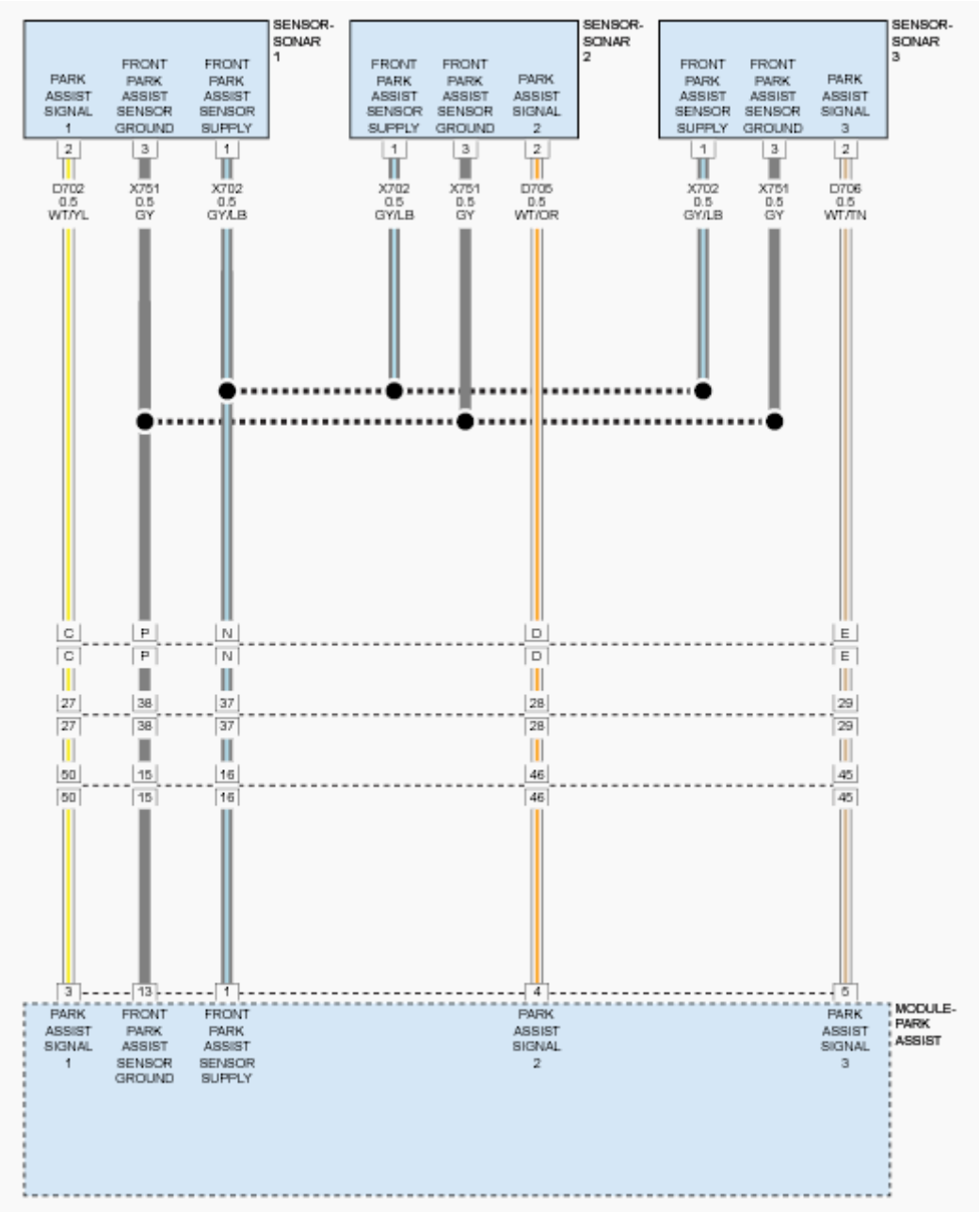

Fig. 4: Identifying Front Park Assist Circuit Diagram
Courtesy of CHRYSLER GROUP, LLC

THEORY OF OPERATION

The Park Assist Sensors are ultrasonic transceivers that are completely controlled by the Park Assist Module. The sensors transmit and receive ultrasonic signals. Each sensor has a voltage, signal, and return circuit to the module. The sensors communicate with the Park Assist Module using a dedicated serial bus communication circuit.

NOTE: The numbering system for the park assist sensors allows for up to twelve

sensors on the vehicle, six front and six rear. The sensors are numbered in a clockwise manner starting at the left front bumper. The left front sensor (if equipped with front park assist) is the number 1 sensor. The numbering continues in a clockwise direction around the vehicle.

WHEN MONITORED

Vehicle in reverse and during the self-test while vehicle is in drive between 18 km/h (11 mph) and 40 km/h (25 mph).

SET CONDITION

If the system detects data corruption in the transmission in the internal communication line between the module and sensors, this code will set.

POSSIBLE CAUSES

Possible Causes
(D702) PARK ASSIST SENSOR 1 SIGNAL CIRCUIT SHORTED TO GROUND
(D702) PARK ASSIST SENSOR 1 SIGNAL CIRCUIT SHORTED TO BATTERY
(D702) PARK ASSIST SENSOR 1 SIGNAL CIRCUIT OPEN
PARK ASSIST SENSOR
PARK ASSIST MODULE

DIAGNOSTIC TEST

1. **CHECK FOR AN ACTIVE DIAGNOSTIC TROUBLE CODE (DTC)**
    1. Turn the ignition on.
    2. With the scan tool, read DTCs.

    Does the scan tool display this DTC as active?

    Yes

    - Go To 2

    No

    - Test complete, the condition or conditions that originally set this DTC are not present at this time. Using the wiring diagrams as a guide, check all related splices and connectors for signs of water intrusion, corrosion, pushed out or bent terminals, and correct pin tension.
    - Perform the BODY VERIFICATION TEST. Refer to **STANDARD PROCEDURE** .
2. **CHECK THE PARK ASSIST SENSOR FOR AN INTERNAL SHORT**
    1. Disconnect the Park Assist Sensor harness connector.

2. With the scan tool, read DTCs.

   Does the scan tool display this DTC as active?

   Yes

   - Go To 3

   No

   - Replace Park Assist Sensor 1 in accordance with the Service Information. Refer to **SENSOR, PARK ASSIST, REMOVAL** .
   - Perform the BODY VERIFICATION TEST. Refer to **STANDARD PROCEDURE** .

3. **CHECK THE (D702) PARK ASSIST SENSOR 1 SIGNAL CIRCUIT FOR A SHORT TO GROUND**
   1. Turn the ignition off.
   2. Disconnect the Park Assist Module C3 harness connector.
   3. Measure the resistance between ground and the (D702) Park Assist Sensor 1 Signal circuit.

      Is the resistance below 10K Ohms?

      Yes

      - Repair the (D702) Park Assist Sensor 1 Signal circuit for a short to ground.
      - Perform the BODY VERIFICATION TEST. Refer to **STANDARD PROCEDURE** .

      No

      - Go To 4

4. **CHECK THE (D702) PARK ASSIST SENSOR 1 SIGNAL CIRCUIT FOR A SHORT TO BATTERY**
   1. Turn the ignition on.
   2. Measure the voltage of the (D702) Park Assist Sensor 1 Signal circuit.

      Is voltage present?

      Yes

      - Repair the (D702) Park Assist Sensor 1 Signal circuit for a short to battery.
      - Perform the BODY VERIFICATION TEST. Refer to **STANDARD PROCEDURE** .

      No

- Go To 5

5. **CHECK THE (D702) PARK ASSIST SENSOR 1 SIGNAL CIRCUIT FOR AN OPEN**
   1. Measure the resistance of the (D702) Park Assist Sensor 1 Signal circuit.

      Is the resistance above 5.0 Ohms?

      Yes

      - Repair the (D702) Park Assist Sensor 1 Signal circuit for an open.
      - Perform the BODY VERIFICATION TEST. Refer to **STANDARD PROCEDURE** .

      No

      - Replace the Park Assist Module in accordance with Service Information. Refer to **MODULE, PARK ASSIST, REMOVAL** .
      - Perform the BODY VERIFICATION TEST. Refer to **STANDARD PROCEDURE** .

B128F-11-PTS SENSOR 2 - CIRCUIT SHORT TO GROUND

For a complete wiring diagram, **refer to appropriate SYSTEM WIRING DIAGRAMS article** .

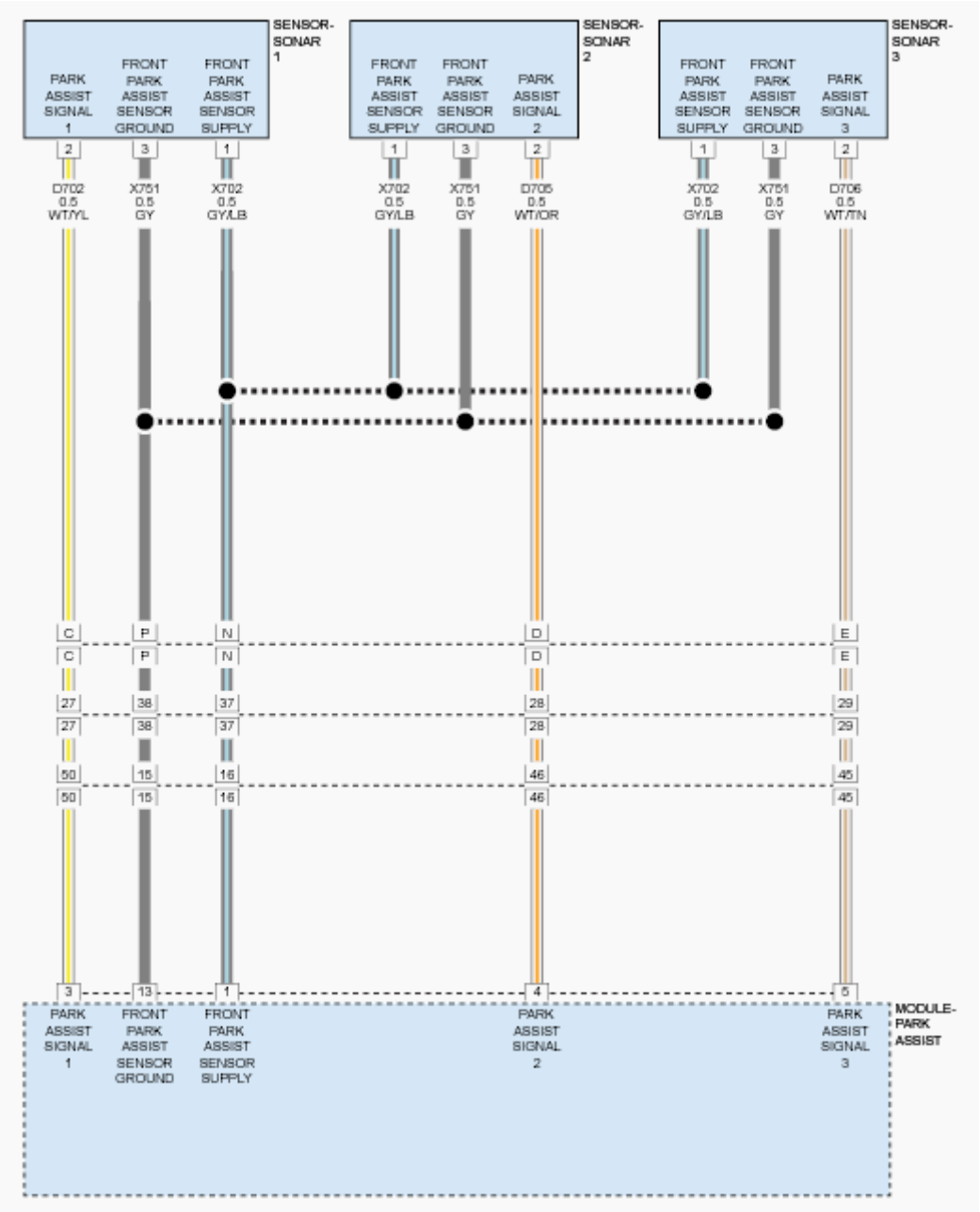

Fig. 5: Identifying Front Park Assist Circuit Diagram
Courtesy of CHRYSLER GROUP, LLC

THEORY OF OPERATION

The Park Assist Sensors are ultrasonic transceivers that are completely controlled by the Park Assist Module. The sensors transmit and receive ultrasonic signals. Each sensor has a voltage, signal, and return circuit to the module. The sensors communicate with the Park Assist Module using a dedicated serial bus communication circuit.

NOTE: The numbering system for the park assist sensors allows for up to twelve

sensors on the vehicle, six front and six rear. The sensors are numbered in a clockwise manner starting at the left front bumper. The left front sensor (if equipped with front park assist) is the number 1 sensor. The numbering continues in a clockwise direction around the vehicle.

WHEN MONITORED

Vehicle in reverse and during the self-test while vehicle is in drive between 18 km/h (11 mph) and 40 km/h (25 mph).

SET CONDITION

The Park Assist Module detects a short to ground on the Park Assist Sensor Signal circuit.

POSSIBLE CAUSES

Possible Causes
PARK ASSIST SENSOR DISCONNECTED
(D705) PARK ASSIST SENSOR 2 SIGNAL CIRCUIT SHORTED TO GROUND
(D705) PARK ASSIST SENSOR 2 SIGNAL CIRCUIT SHORTED TO THE (X751) FRONT PARK ASSIST SENSOR GROUND CIRCUIT
(D705) PARK ASSIST SENSOR 2 SIGNAL CIRCUIT OPEN
(X702) FRONT PARK ASSIST SENSOR SUPPLY CIRCUIT OPEN
PARK ASSIST SENSOR
PARK ASSIST MODULE

DIAGNOSTIC TEST

1. **CHECK FOR AN ACTIVE DIAGNOSTIC TROUBLE CODE (DTC)**

NOTE: **A disconnected sensor will set this DTC. Verify the Park Assist Sensor is connected before proceeding with this diagnostic procedure.**

1. Turn the ignition on.
2. With the scan tool, read DTCs.

   Does the scan tool display this DTC as active?

   Yes

   - Go To 2

   No

   - Test complete, the condition or conditions that originally set this DTC are not present at this

time. Using the wiring diagrams as a guide, check all related splices and connectors for signs of water intrusion, corrosion, pushed out or bent terminals, and correct pin tension.

- Perform the BODY VERIFICATION TEST. Refer to **STANDARD PROCEDURE** .

2. **CHECK THE VOLTAGE OF THE (X702) FRONT PARK ASSIST SENSOR SUPPLY CIRCUIT**
   1. Turn the ignition off.
   2. Disconnect the Park Assist Sensor harness connector.
   3. Turn the ignition on.
   4. Measure the voltage of the (X702) Front Park Assist Sensor Supply circuit.

   Is the voltage above 8.0 volts?

   Yes

   - Go To 4

   No

   - Go To 3

3. **CHECK THE (X702) FRONT PARK ASSIST SENSOR SUPPLY CIRCUIT FOR AN OPEN OR HIGH RESISTANCE**
   1. Turn the ignition off.
   2. Disconnect the Park Assist Module C3 harness connector.
   3. Measure the resistance of the (X702) Front Park Assist Sensor Supply circuit.

   Is the resistance below 5.0 Ohms?

   Yes

   - Replace the Park Assist Module in accordance with the Service Information. Refer to **MODULE, PARK ASSIST, REMOVAL** .
   - Perform the BODY VERIFICATION TEST. Refer to **STANDARD PROCEDURE** .

   No

   - Repair the open or high resistance in the (X702) Front Park Assist Sensor Supply circuit.
   - Perform the BODY VERIFICATION TEST. Refer to **STANDARD PROCEDURE** .

4. **CHECK THE (D705) PARK ASSIST SENSOR 2 SIGNAL CIRCUIT FOR A SHORT TO GROUND WITH THE PARK ASSIST MODULE CONNECTED**

   NOTE: Perform this step with the Park Assist Module connected.

   1. Measure the resistance between ground and the (D705) Park Assist Sensor 2 Signal circuit.

Is the resistance below 10K Ohms?

Yes

- Go To 5

No

- Go To 7

5. **CHECK THE (D705) PARK ASSIST SENSOR 2 SIGNAL CIRCUIT FOR A SHORT TO GROUND WITH THE PARK ASSIST MODULE DISCONNECTED**
   1. Disconnect the Park Assist Module C3 harness connector.
   2. Measure the resistance between ground and the (D705) Park Assist Sensor 2 Signal circuit.

   Is the resistance below 10K Ohms?

   Yes

   - Repair the short to ground in the (D705) Park Assist Sensor 2 Signal circuit.
   - Perform the BODY VERIFICATION TEST. Refer to **STANDARD PROCEDURE** .

   No

   - Go To 6

6. **CHECK THE (D705) PARK ASSIST SENSOR 2 SIGNAL CIRCUIT FOR A SHORT TO THE (X751) FRONT PARK ASSIST SENSOR GROUND CIRCUIT**
   1. Measure the resistance between the (D705) Park Assist Sensor 2 Signal circuit and the (X751) Front Park Assist Sensor Ground circuit.

   Is the resistance below 10K Ohms?

   Yes

   - Repair the short between the (D705) Park Assist Sensor 2 Signal circuit and the (X751) Front Park Assist Sensor Ground circuit.
   - Perform the BODY VERIFICATION TEST. Refer to **STANDARD PROCEDURE** .

   No

   - Replace the Park Assist Module in accordance with the Service Information. Refer to **MODULE, PARK ASSIST, REMOVAL** .
   - Perform the BODY VERIFICATION TEST. Refer to **STANDARD PROCEDURE** .

7. **CHECK THE (D705) PARK ASSIST SENSOR 2 SIGNAL CIRCUIT FOR AN OPEN**
   1. Disconnect the Park Assist Module C3 harness connector.

2. Measure the resistance of the (D705) Park Assist Sensor 2 Signal circuit.

   Is the resistance above 5.0 Ohms?

   Yes

   - Repair the open in the (D705) Park Assist Sensor 2 Signal circuit.
   - Perform the BODY VERIFICATION TEST. Refer to **STANDARD PROCEDURE** .

   No

   - Go To 8

8. **PARK ASSIST SENSOR**
   1. Turn the ignition on.
   2. Reconnect the Park Assist Module C3 harness connector.
   3. Connect a jumper wire across the (X702) Front Park Assist Sensor Supply and (D705) Park Assist Sensor 2 Signal circuits.
   4. Turn the ignition on.
   5. With the scan tool, read DTCs.

      Does the scan tool display DTC: B128F-12-PTS SENSOR 2 - CIRCUIT SHORT TO BATTERY as active?

      Yes

      - Replace the Park Assist Sensor in accordance with the Service Information. Refer to **SENSOR, PARK ASSIST, REMOVAL** .
      - Perform the BODY VERIFICATION TEST. Refer to **STANDARD PROCEDURE** .

      No

      - Replace the Park Assist Module in accordance with the Service Information. Refer to **MODULE, PARK ASSIST, REMOVAL** .
      - Perform the BODY VERIFICATION TEST. Refer to **STANDARD PROCEDURE** .

B128F-25-PTS SENSOR 2 - SIGNAL SHAPE / WAVEFORM FAILURE

For a complete wiring diagram, **refer to appropriate SYSTEM WIRING DIAGRAMS article** .

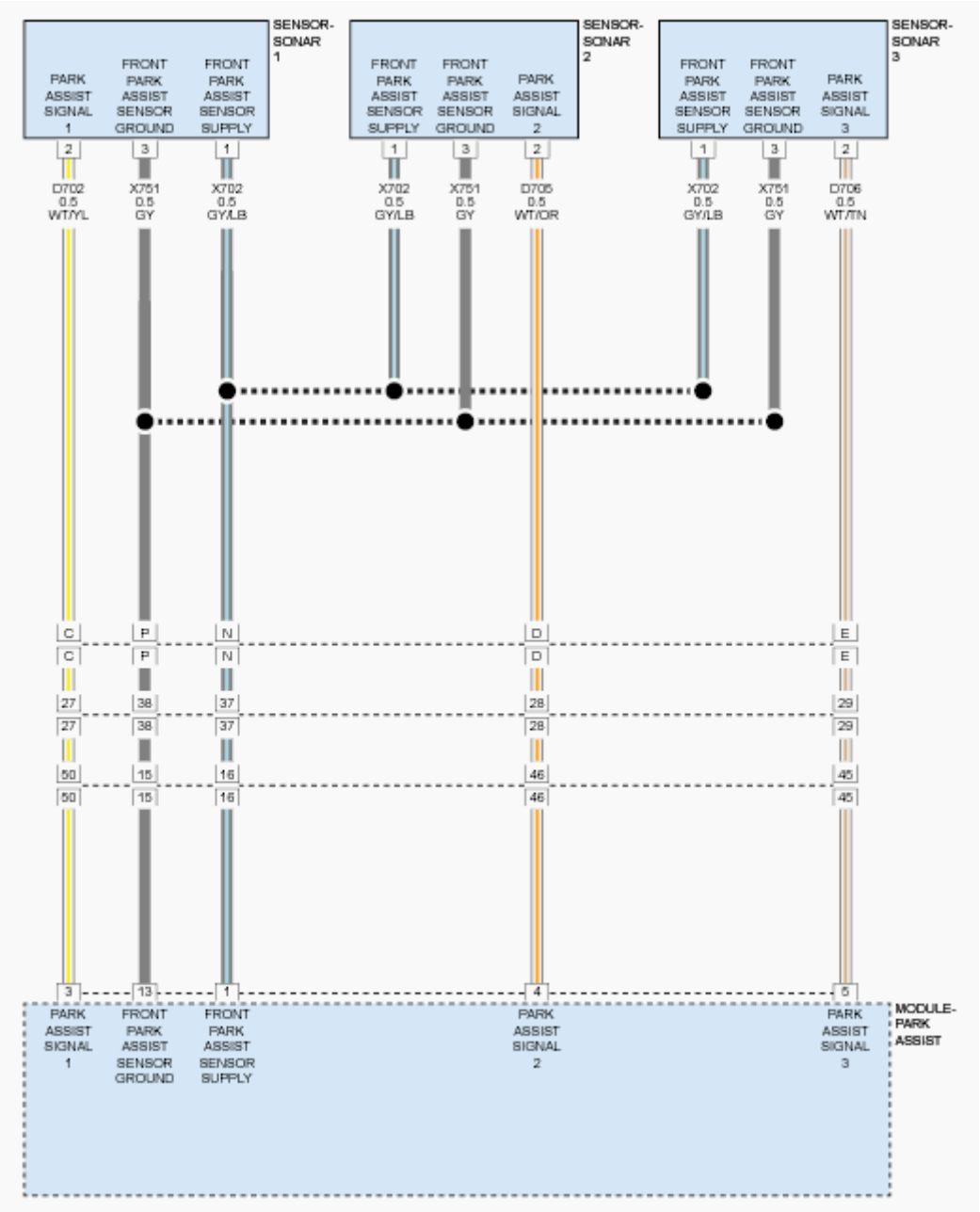

Fig. 6: Identifying Front Park Assist Circuit Diagram
Courtesy of CHRYSLER GROUP, LLC

THEORY OF OPERATION

The Park Assist Sensors are ultrasonic transceivers that are completely controlled by the Park Assist Module. The sensors transmit and receive ultrasonic signals. Each sensor has a voltage, signal, and return circuit to the module. The sensors communicate with the Park Assist Module using a dedicated serial bus communication circuit.

WHEN MONITORED

Vehicle in reverse.

During the self-test while vehicle is in drive between 11 mph (18 km/h) and 25 mph (40 km/h).

SET CONDITION

The Park Assist Module detects an internal Sensor error.

POSSIBLE CAUSES

Possible Causes
PARK ASSIST SENSOR MEMBRANE OBSTRUCTION (ICE, SNOW, MUD, DIRT COVERING FASCIA)
PARK ASSIST SENSOR CONNECTOR OBSTRUCTION (ICE, SNOW, MUD, DIRT)
DECOUPLING RING MISSING/MOUNTED WRONG
OBJECTS - SUCH AS LICENSE PLATES - IN CLOSE RANGE TO THE SENSOR
PARK ASSIST SENSOR

DIAGNOSTIC TEST

1. **CHECK FOR AN ACTIVE DIAGNOSTIC TROUBLE CODE (DTC)**

   NOTE: Before proceeding with this diagnostic procedure, remove any ice, snow, mud, dirt, or other obstructions from the front/rear fascia/bumper. Also remove any ice, snow, dirt, mud, or other obstructions from the underside of the Fascia/Bumper surrounding the sensors.

   1. Turn the ignition on.
   2. With the scan tool, read Park Assist Module DTCs.

      Does the scan tool display this DTC as active?

      Yes

      - Go To 2

      No

      - Test complete, the condition or conditions that originally set this DTC are not present at this time. Using the wiring diagrams as a guide, check all related splices and connectors for signs of water intrusion, corrosion, pushed out or bent terminals, and correct pin tension.
      - Perform the BODY VERIFICATION TEST. Refer to **STANDARD PROCEDURE** .
2. **PARK ASSIST SENSOR**
   1. Verify that none of the possible causes mentioned above are present. Repair as necessary.

If none of the possible causes mentioned above are present, view repair.

Repair

- Replace the Park Assist Sensor that caused this DTC to change from active to stored after disconnecting it in accordance with the Service Information. Refer to **SENSOR, PARK ASSIST, REMOVAL** .
- Perform the BODY VERIFICATION TEST. Refer to **STANDARD PROCEDURE** .

B128F-92-PTS SENSOR 2-PERFORMANCE OR INCORRECT OPERATION

For a complete wiring diagram, **refer to appropriate SYSTEM WIRING DIAGRAMS article** .

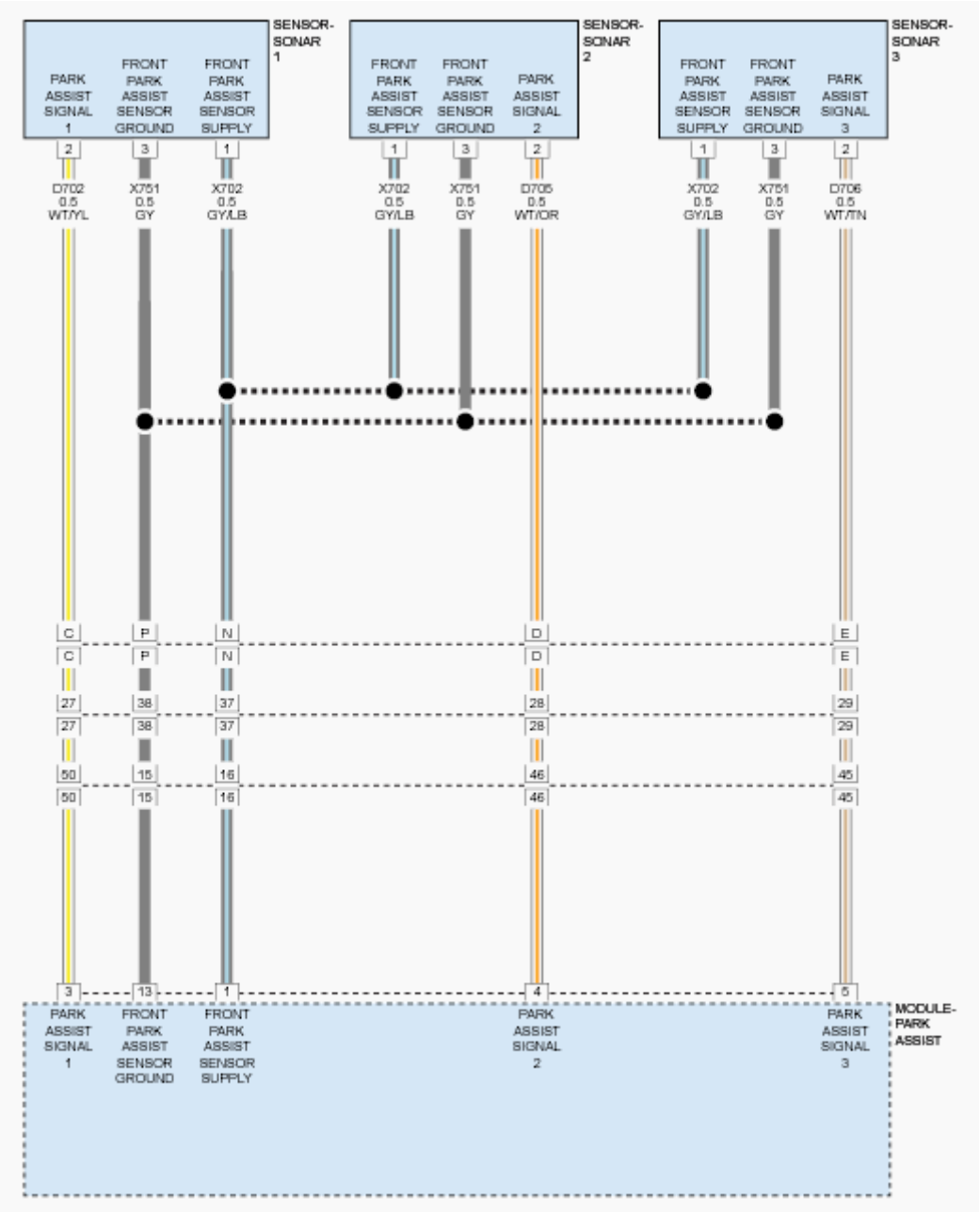

Fig. 7: Identifying Front Park Assist Circuit Diagram
Courtesy of CHRYSLER GROUP, LLC

THEORY OF OPERATION

The Park Assist Sensors are ultrasonic transceivers that are completely controlled by the Park Assist Module. The sensors transmit and receive ultrasonic signals. Each sensor has a voltage, signal, and return circuit to the module. The sensors communicate with the Park Assist Module using a dedicated serial bus communication circuit.

NOTE: The numbering system for the park assist sensors allows for up to twelve

sensors on the vehicle, six front and six rear. The sensors are numbered in a clockwise manner starting at the left front bumper. The left front sensor (if equipped with front park assist) is the number 1 sensor. The numbering continues in a clockwise direction around the vehicle.

WHEN MONITORED

Vehicle in reverse and during the self-test while vehicle is in drive between 18 km/h (11 mph) and 40 km/h (25 mph).

SET CONDITION

If the system detects data corruption in the transmission in the internal communication line between the module and sensors, this code will set.

POSSIBLE CAUSES

Possible Causes
(D705) PARK ASSIST SENSOR 2 SIGNAL CIRCUIT SHORTED TO GROUND
(D705) PARK ASSIST SENSOR 2 SIGNAL CIRCUIT SHORTED TO BATTERY
(D705) PARK ASSIST SENSOR 2 SIGNAL CIRCUIT OPEN
PARK ASSIST SENSOR
PARK ASSIST MODULE

DIAGNOSTIC TEST

1. **CHECK FOR AN ACTIVE DIAGNOSTIC TROUBLE CODE (DTC)**
    1. Turn the ignition on.
    2. With the scan tool, read DTCs.

    Does the scan tool display this DTC as active?

    Yes

    - Go To 2

    No

    - Test complete, the condition or conditions that originally set this DTC are not present at this time. Using the wiring diagrams as a guide, check all related splices and connectors for signs of water intrusion, corrosion, pushed out or bent terminals, and correct pin tension.
    - Perform the BODY VERIFICATION TEST. Refer to **STANDARD PROCEDURE** .
2. **CHECK THE PARK ASSIST SENSOR FOR AN INTERNAL SHORT**
    1. Disconnect the Park Assist Sensor harness connector.

2. With the scan tool, read DTCs.

   Does the scan tool display this DTC as active?

   Yes

   - Go To 3

   No

   - Replace Park Assist Sensor 2 in accordance with the Service Information. Refer to **SENSOR, PARK ASSIST, REMOVAL** .
   - Perform the BODY VERIFICATION TEST. Refer to **STANDARD PROCEDURE** .

3. **CHECK THE (D705) PARK ASSIST SENSOR 2 SIGNAL CIRCUIT FOR A SHORT TO GROUND**
   1. Turn the ignition off.
   2. Disconnect the Park Assist Module C3 harness connector.
   3. Measure the resistance between ground and the (D705) Park Assist Sensor 2 Signal circuit.

      Is the resistance below 10K Ohms?

      Yes

      - Repair the (D705) Park Assist Sensor 2 Signal circuit for a short to ground.
      - Perform the BODY VERIFICATION TEST. Refer to **STANDARD PROCEDURE** .

      No

      - Go To 4

4. **CHECK THE (D705) PARK ASSIST SENSOR 2 SIGNAL CIRCUIT FOR A SHORT TO BATTERY**
   1. Turn the ignition on.
   2. Measure the voltage of the (D705) Park Assist Sensor 2 Signal circuit.

      Is voltage present?

      Yes

      - Repair the (D705) Park Assist Sensor 2 Signal circuit for a short to battery.
      - Perform the BODY VERIFICATION TEST. Refer to **STANDARD PROCEDURE** .

      No

- Go To 5

5. **CHECK THE (D705) PARK ASSIST SENSOR 2 SIGNAL CIRCUIT FOR AN OPEN**
   1. Measure the resistance of the (D705) Park Assist Sensor 2 Signal circuit.

      Is the resistance above 5.0 Ohms?

      Yes

      - Repair the (D705) Park Assist Sensor 2 Signal circuit for an open.
      - Perform the BODY VERIFICATION TEST. Refer to **STANDARD PROCEDURE** .

      No

      - Replace the Park Assist Module in accordance with Service Information. Refer to **MODULE, PARK ASSIST, REMOVAL** .
      - Perform the BODY VERIFICATION TEST. Refer to **STANDARD PROCEDURE** .

B1290-11-PTS SENSOR 3-CIRCUIT SHORT TO GROUND

For a complete wiring diagram, **refer to appropriate SYSTEM WIRING DIAGRAMS article** .

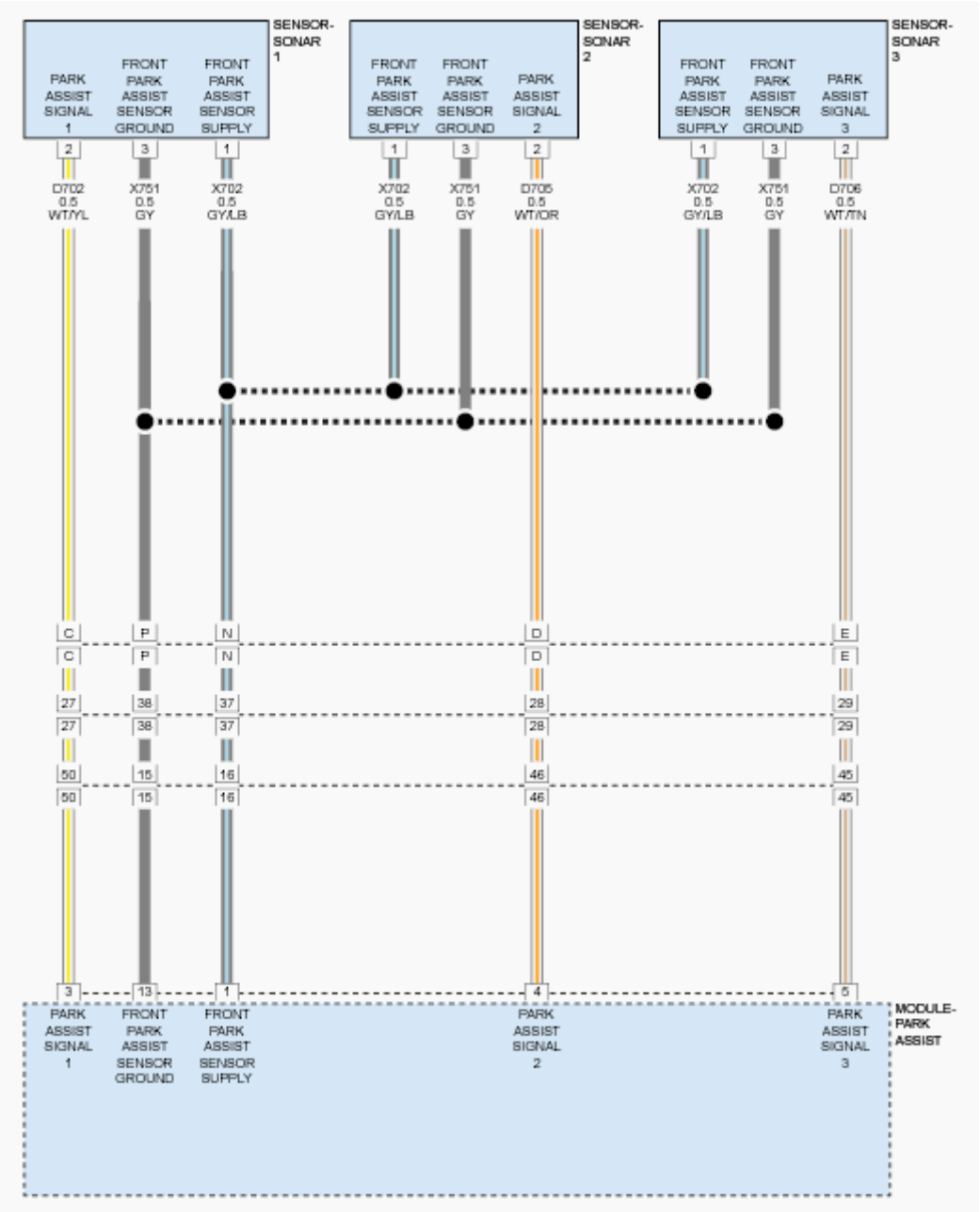

Fig. 8: Identifying Front Park Assist Circuit Diagram
Courtesy of CHRYSLER GROUP, LLC

THEORY OF OPERATION

The Park Assist Sensors are ultrasonic transceivers that are completely controlled by the Park Assist Module. The sensors transmit and receive ultrasonic signals. Each sensor has a voltage, signal, and return circuit to the module. The sensors communicate with the Park Assist Module using a dedicated serial bus communication circuit.

NOTE: The numbering system for the park assist sensors allows for up to twelve

sensors on the vehicle, six front and six rear. The sensors are numbered in a clockwise manner starting at the left front bumper. The left front sensor (if equipped with front park assist) is the number 1 sensor. The numbering continues in a clockwise direction around the vehicle.

WHEN MONITORED

Vehicle in reverse and during the self-test while vehicle is in drive between 18 km/h (11 mph) and 40 km/h (25 mph).

SET CONDITION

The Park Assist Module detects a short to ground on the Park Assist Sensor Signal circuit.

POSSIBLE CAUSES

Possible Causes
PARK ASSIST SENSOR DISCONNECTED
(D706) PARK ASSIST SENSOR 3 SIGNAL CIRCUIT SHORTED TO GROUND
(D706) PARK ASSIST SENSOR 3 SIGNAL CIRCUIT SHORTED TO THE (X751) FRONT PARK ASSIST SENSOR GROUND CIRCUIT
(D706) PARK ASSIST SENSOR 3 SIGNAL CIRCUIT OPEN
(X702) FRONT PARK ASSIST SENSOR SUPPLY CIRCUIT OPEN
PARK ASSIST SENSOR
PARK ASSIST MODULE

DIAGNOSTIC TEST

1. **CHECK FOR AN ACTIVE DIAGNOSTIC TROUBLE CODE (DTC)**

NOTE: **A disconnected sensor will set this DTC. Verify the Park Assist Sensor is connected before proceeding with this diagnostic procedure.**

1. Turn the ignition on.
2. With the scan tool, read DTCs.

Does the scan tool display this DTC as active?

Yes

- Go To 2

No

- Test complete, the condition or conditions that originally set this DTC are not present at this

time. Using the wiring diagrams as a guide, check all related splices and connectors for signs of water intrusion, corrosion, pushed out or bent terminals, and correct pin tension.

- Perform the BODY VERIFICATION TEST. Refer to **STANDARD PROCEDURE** .

2. **CHECK THE VOLTAGE OF THE (X702) FRONT PARK ASSIST SENSOR SUPPLY CIRCUIT**
   1. Turn the ignition off.
   2. Disconnect the Park Assist Sensor harness connector.
   3. Turn the ignition on.
   4. Measure the voltage of the (X702) Front Park Assist Sensor Supply circuit.

   Is the voltage above 8.0 volts?

   Yes

   - Go To 4

   No

   - Go To 3

3. **CHECK THE (X702) FRONT PARK ASSIST SENSOR SUPPLY CIRCUIT FOR AN OPEN OR HIGH RESISTANCE**
   1. Turn the ignition off.
   2. Disconnect the Park Assist Module C3 harness connector.
   3. Measure the resistance of the (X702) Front Park Assist Sensor Supply circuit.

   Is the resistance below 5.0 Ohms?

   Yes

   - Replace the Park Assist Module in accordance with the Service Information. Refer to **MODULE, PARK ASSIST, REMOVAL** .
   - Perform the BODY VERIFICATION TEST. Refer to **STANDARD PROCEDURE** .

   No

   - Repair the open or high resistance in the (X702) Front Park Assist Sensor Supply circuit.
   - Perform the BODY VERIFICATION TEST. Refer to **STANDARD PROCEDURE** .

4. **CHECK THE (D706) PARK ASSIST SENSOR 3 SIGNAL CIRCUIT FOR A SHORT TO GROUND WITH THE PARK ASSIST MODULE CONNECTED**

   NOTE: Perform this step with the Park Assist Module connected.

   1. Measure the resistance between ground and the (D706) Park Assist Sensor 3 Signal circuit.

Is the resistance below 10K Ohms?

Yes

- Go To 5

No

- Go To 7

5. **CHECK THE (D706) PARK ASSIST SENSOR 3 SIGNAL CIRCUIT FOR A SHORT TO GROUND WITH THE PARK ASSIST MODULE DISCONNECTED**

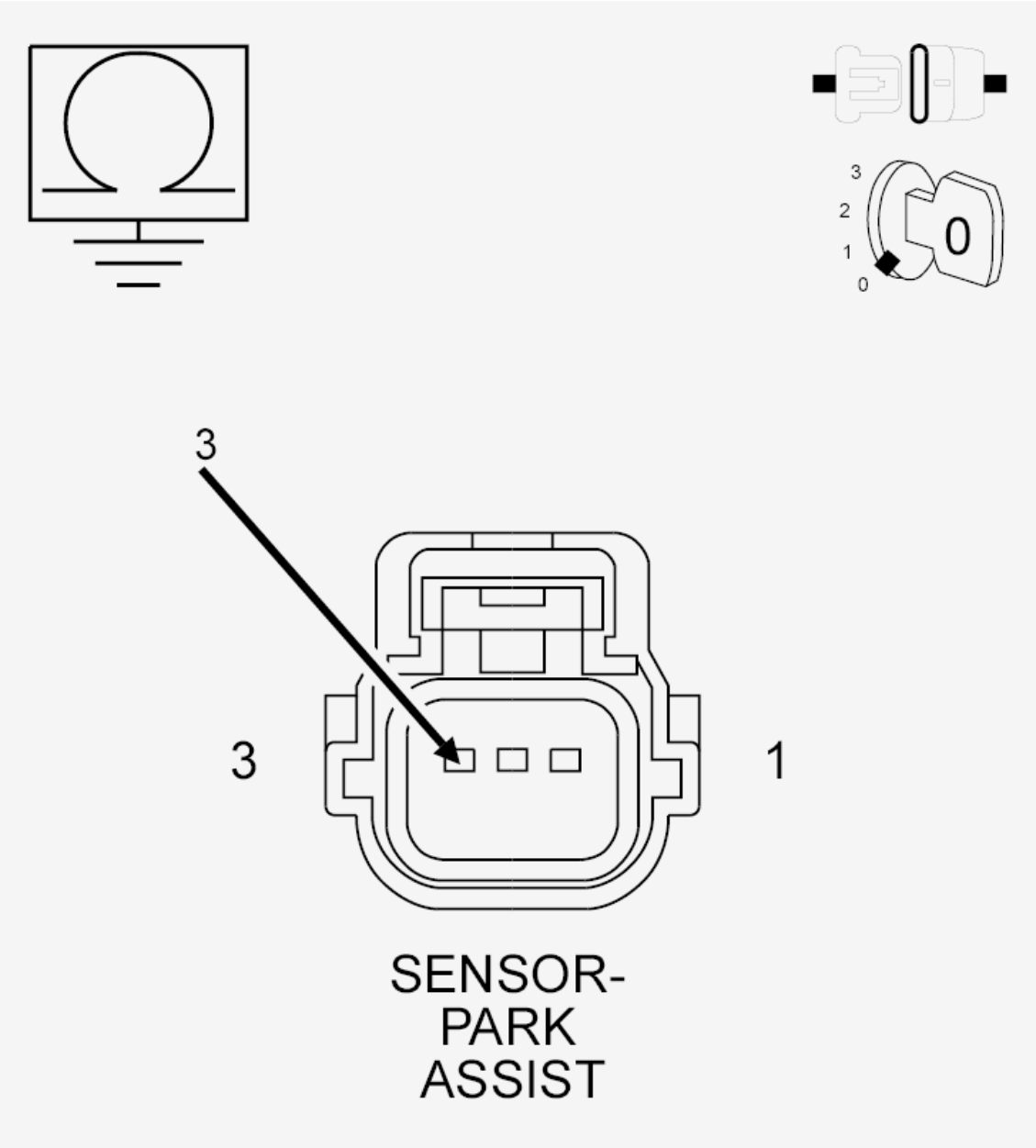

Fig. 9: Measuring Resistance Between Ground & Park Assist Sensor Signal Circuit
Courtesy of CHRYSLER GROUP, LLC

1. Disconnect the Park Assist Module C3 harness connector.
2. Measure the resistance between ground and the (D706) Park Assist Sensor 3 Signal circuit.

   Is the resistance below 10K Ohms?

   Yes

   - Repair the short to ground in the (D706) Park Assist Sensor 3 Signal circuit.
   - Perform the BODY VERIFICATION TEST. Refer to **STANDARD PROCEDURE** .

   No

   - Go To 6

6. **CHECK THE (D706) PARK ASSIST SENSOR 3 SIGNAL CIRCUIT FOR A SHORT TO THE (X751) FRONT PARK ASSIST SENSOR GROUND CIRCUIT**

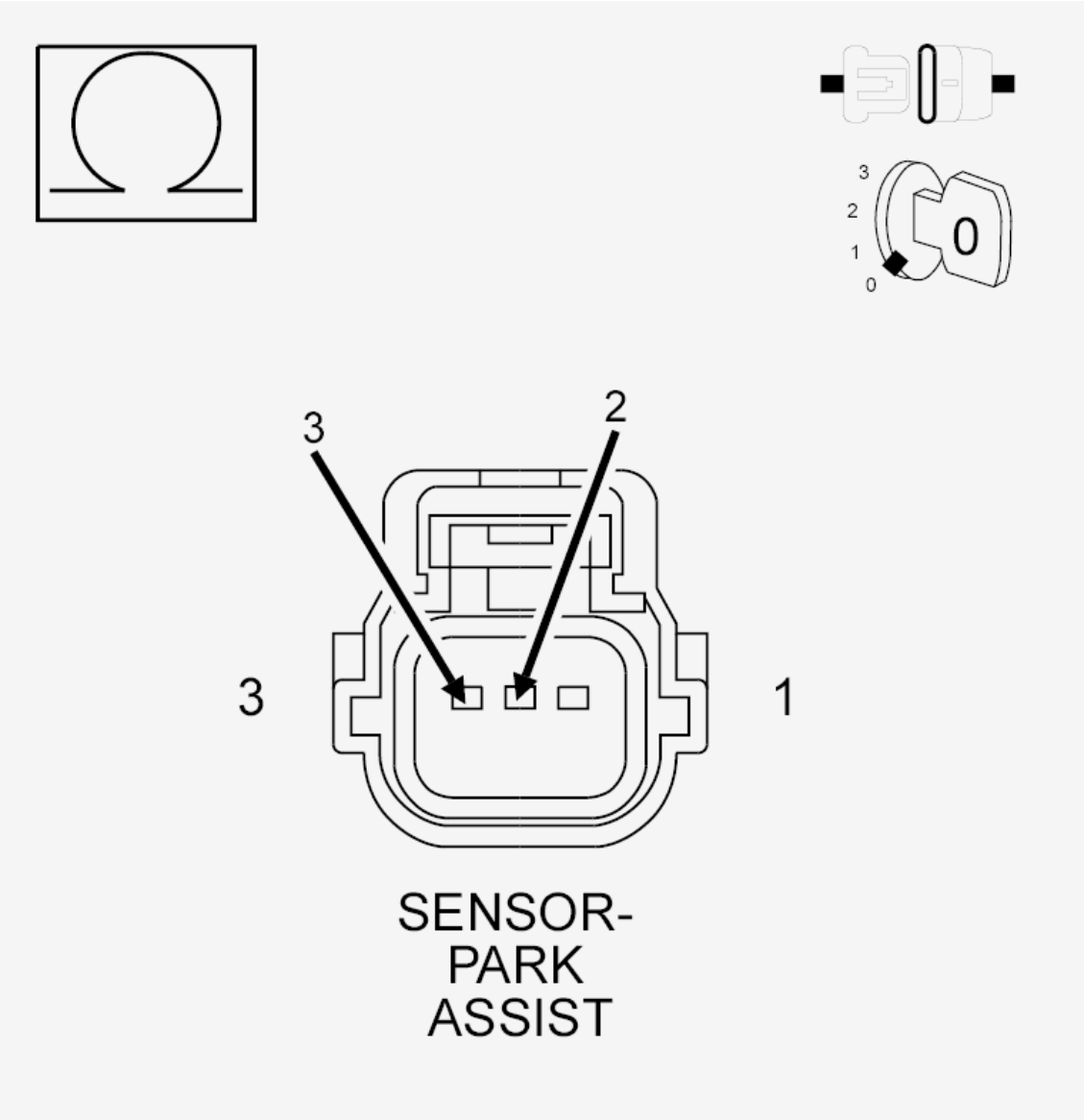

Fig. 10: Measuring Resistance Between Park Assist Sensor Signal Circuit & Park Assist Sensor Ground Circuit
Courtesy of CHRYSLER GROUP, LLC

1. Measure the resistance between the (D706) Park Assist Sensor 3 Signal circuit and the (X751) Front Park Assist Sensor Ground circuit.

   Is the resistance below 10K Ohms?

   Yes

   - Repair the short between the (D706) Park Assist Sensor 3 Signal circuit and the (X751) Front Park Assist Sensor Ground circuit.
   - Perform the BODY VERIFICATION TEST. Refer to **STANDARD PROCEDURE** .

No

- Replace the Park Assist Module in accordance with the Service Information. Refer to **MODULE, PARK ASSIST, REMOVAL** .
- Perform the BODY VERIFICATION TEST. Refer to **STANDARD PROCEDURE** .

7. **CHECK THE (D706) PARK ASSIST SENSOR 3 SIGNAL CIRCUIT FOR AN OPEN**

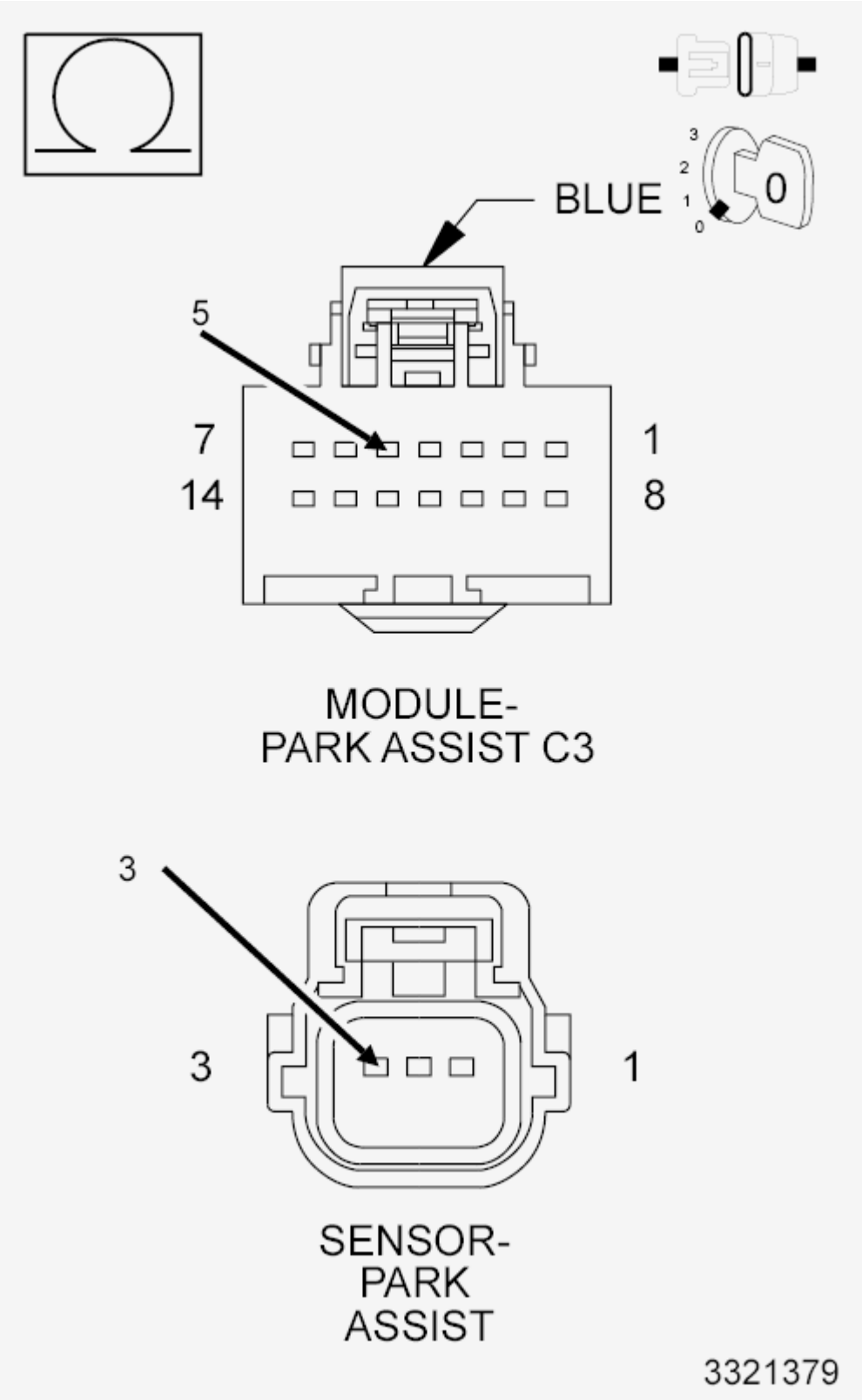

Fig. 11: Checking Park Assist Sensor 3 Signal Circuit For Open
Courtesy of CHRYSLER GROUP, LLC

1. Disconnect the Park Assist Module C3 harness connector.
2. Measure the resistance of the (D706) Park Assist Sensor 3 Signal circuit.

   Is the resistance above 5.0 Ohms?

   Yes

   - Repair the open in the (D706) Park Assist Sensor 3 Signal circuit.
   - Perform the BODY VERIFICATION TEST. Refer to **STANDARD PROCEDURE** .

   No

   - Go To 8

8. **PARK ASSIST SENSOR**

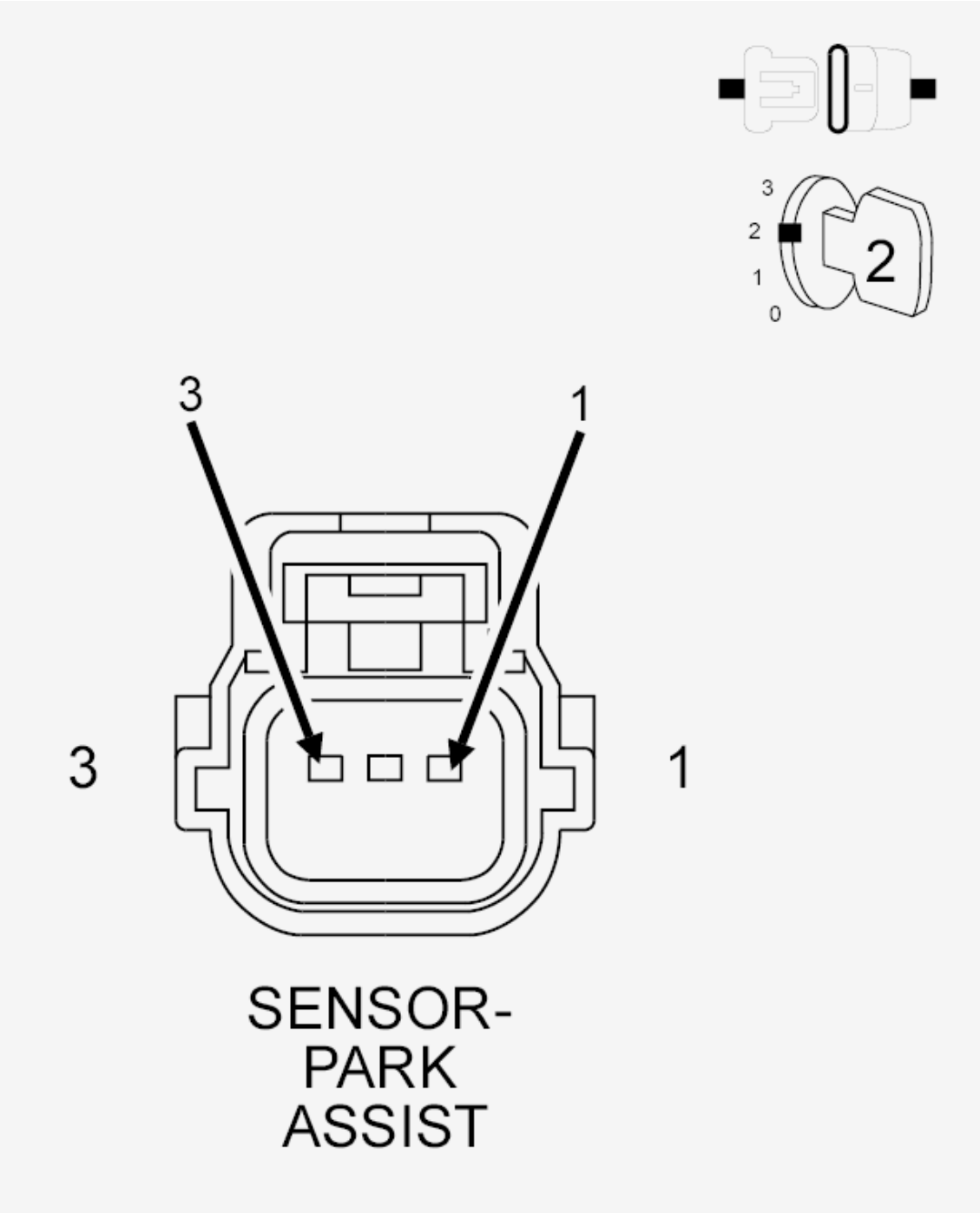

Fig. 12: Checking Park Assist Sensor
Courtesy of CHRYSLER GROUP, LLC

1. Turn the ignition on.
2. Reconnect the Park Assist Module C3 harness connector.
3. Connect a jumper wire across the (X702) Front Park Assist Sensor Supply and (D706) Park Assist Sensor 3 Signal circuits.

4. Turn the ignition on.
5. With the scan tool, read DTCs.

   Does the scan tool display DTC: B1290-12-PTS SENSOR 3 - CIRCUIT SHORT TO BATTERY as active?

   Yes

   - Replace the Park Assist Sensor in accordance with the Service Information. Refer to **SENSOR, PARK ASSIST, REMOVAL** .
   - Perform the BODY VERIFICATION TEST. Refer to **STANDARD PROCEDURE** .

   No

   - Replace the Park Assist Module in accordance with the Service Information. Refer to **MODULE, PARK ASSIST, REMOVAL** .
   - Perform the BODY VERIFICATION TEST. Refer to **STANDARD PROCEDURE** .

B1290-12-PTS SENSOR 3-CIRCUIT SHORT TO BATTERY

For a complete wiring diagram, **refer to appropriate SYSTEM WIRING DIAGRAMS article** .

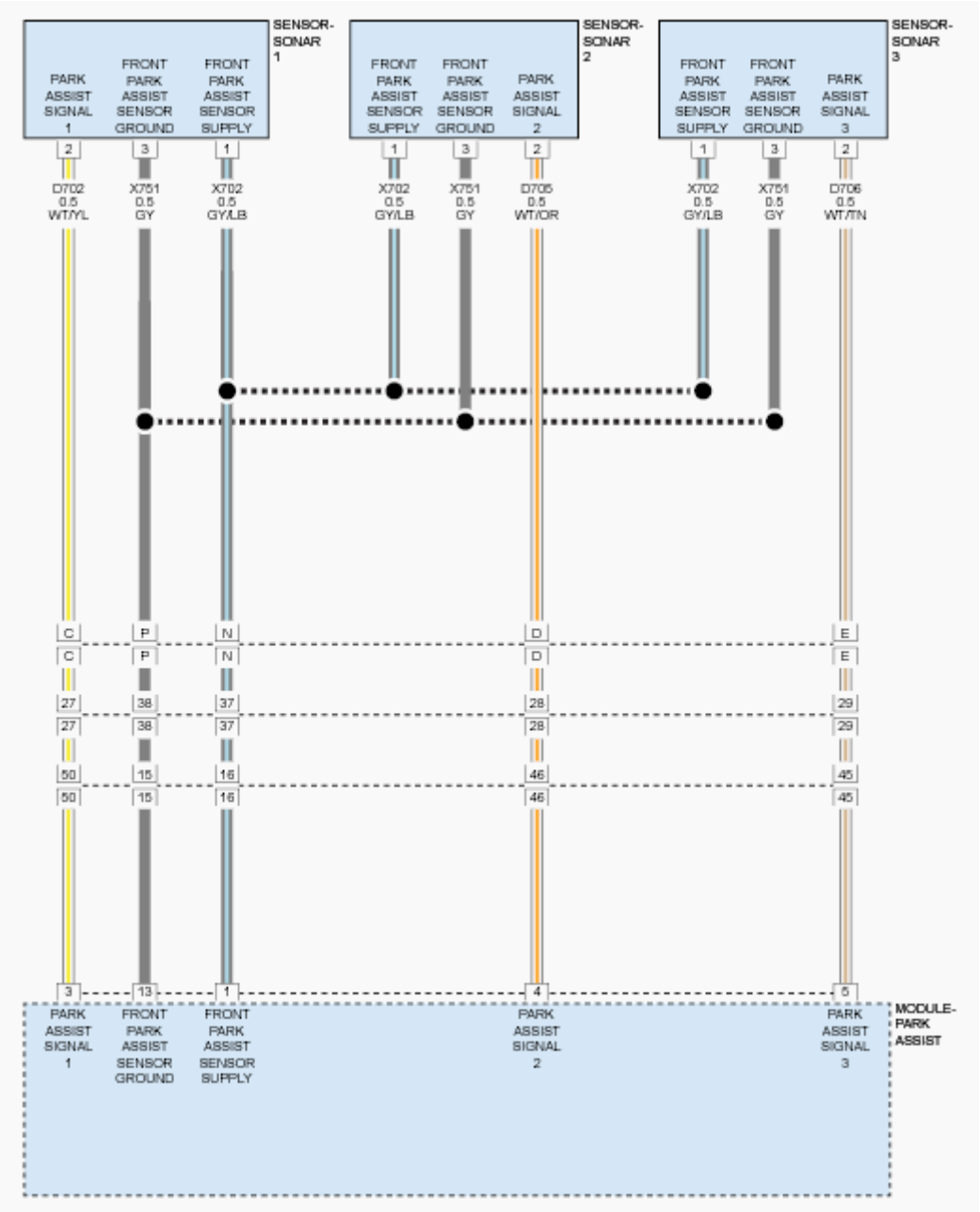

Fig. 13: Identifying Front Park Assist Circuit Diagram
Courtesy of CHRYSLER GROUP, LLC

THEORY OF OPERATION

The Park Assist Sensors are ultrasonic transceivers that are completely controlled by the Park Assist Module. The sensors transmit and receive ultrasonic signals. Each sensor has a voltage, signal, and return circuit to the module. The sensors communicate with the Park Assist Module using a dedicated serial bus communication circuit.

NOTE: The numbering system for the park assist sensors allows for up to twelve

sensors on the vehicle, six front and six rear. The sensors are numbered in a clockwise manner starting at the left front bumper. The left front sensor (if equipped with front park assist) is the number 1 sensor. The numbering continues in a clockwise direction around the vehicle.

WHEN MONITORED

Vehicle in reverse and during the self-test while vehicle is in drive between 18 km/h (11 mph) and 40 km/h (25 mph).

SET CONDITION

The Park Assist Module detects an open or short to voltage on the Park Assist Sensor Signal circuit.

POSSIBLE CAUSES

Possible Causes
(D706) PARK ASSIST SENSOR 3 SIGNAL CIRCUIT SHORTED TO VOLTAGE
(D706) PARK ASSIST SENSOR 3 SIGNAL CIRCUIT SHORTED TO THE (X702) FRONT PARK ASSIST SENSOR SUPPLY CIRCUIT
(X751) FRONT PARK ASSIST SENSOR GROUND CIRCUIT OPEN
PARK ASSIST SENSOR
PARK ASSIST MODULE

DIAGNOSTIC TEST

1. **CHECK FOR AN ACTIVE DIAGNOSTIC TROUBLE CODE (DTC)**
   1. Turn the ignition on.
   2. With the scan tool, read DTCs.

      Does the scan tool display this DTC as active?

      Yes

      - Go To 2

      No

      - Test complete, the condition or conditions that originally set this DTC are not present at this time. Using the wiring diagrams as a guide, check all related splices and connectors for signs of water intrusion, corrosion, pushed out or bent terminals, and correct pin tension.
      - Perform the BODY VERIFICATION TEST. Refer to **STANDARD PROCEDURE** .
2. **(D706) PARK ASSIST SENSOR 3 SIGNAL CIRCUIT SHORTED TO BATTERY**
   1. Turn the ignition off.

2. Disconnect the Park Assist Module C3 harness connector.
3. Disconnect the Park Assist Sensor harness connector.
4. Turn the ignition on.
5. Measure the voltage of the (D706) Park Assist Sensor 3 Signal circuit.

   Is the voltage above 10.0 volts?

   Yes

   - Repair the (D706) Park Assist Sensor 3 Signal circuit for a short to battery.
   - Perform the BODY VERIFICATION TEST. Refer to **STANDARD PROCEDURE** .

   No

   - Go To 3

3. **(D706) PARK ASSIST SENSOR 3 SIGNAL CIRCUIT SHORTED TO THE (X702) FRONT PARK ASSIST SENSOR SUPPLY CIRCUIT**
   1. Turn the ignition off.
   2. Measure the resistance between the (D706) Park Assist Sensor 3 Signal circuit and the (X702) Front Park Assist Sensor Supply circuit.

      Is the resistance below 10K Ohms?

      Yes

      - Repair the (D706) Park Assist Sensor 3 Signal circuit for a short to the (X702) Front Park Assist Sensor Supply circuit.
      - Perform the BODY VERIFICATION TEST. Refer to **STANDARD PROCEDURE** .

      No

      - Go To 4

4. **(X751) FRONT PARK ASSIST SENSOR GROUND CIRCUIT OPEN**
   1. Reconnect the Park Assist Module C3 harness connector.
   2. Measure the resistance between ground and the (X751) Front Park Assist Sensor Ground circuit.

      Is the resistance above 20.0 Ohms?

      Yes

      - Go To 5

      No

- Replace the Park Assist Sensor in accordance with the Service Information. Refer to **SENSOR, PARK ASSIST, REMOVAL** .
- Perform the BODY VERIFICATION TEST. Refer to **STANDARD PROCEDURE** .

5. **(X751) FRONT PARK ASSIST SENSOR GROUND CIRCUIT OPEN BETWEEN PARK ASSIST MODULE AND SENSOR**
   1. Disconnect the Park Assist Module C3 harness connector.
   2. Measure the resistance of the (X751) Front Park Assist Sensor Ground circuit.

      Is the resistance above 5.0 Ohms?

      Yes

      - Repair the open in the (X751) Front Park Assist Sensor Ground circuit.
      - Perform the BODY VERIFICATION TEST. Refer to **STANDARD PROCEDURE** .

      No

      - Replace the Park Assist Module in accordance with the Service Information. Refer to **MODULE, PARK ASSIST, REMOVAL** .
      - Perform the BODY VERIFICATION TEST. Refer to **STANDARD PROCEDURE** .

B1290-25-PTS SENSOR 3-SIGNAL SHAPE / WAVEFORM FAILURE

For a complete wiring diagram, **refer to appropriate SYSTEM WIRING DIAGRAMS article** .

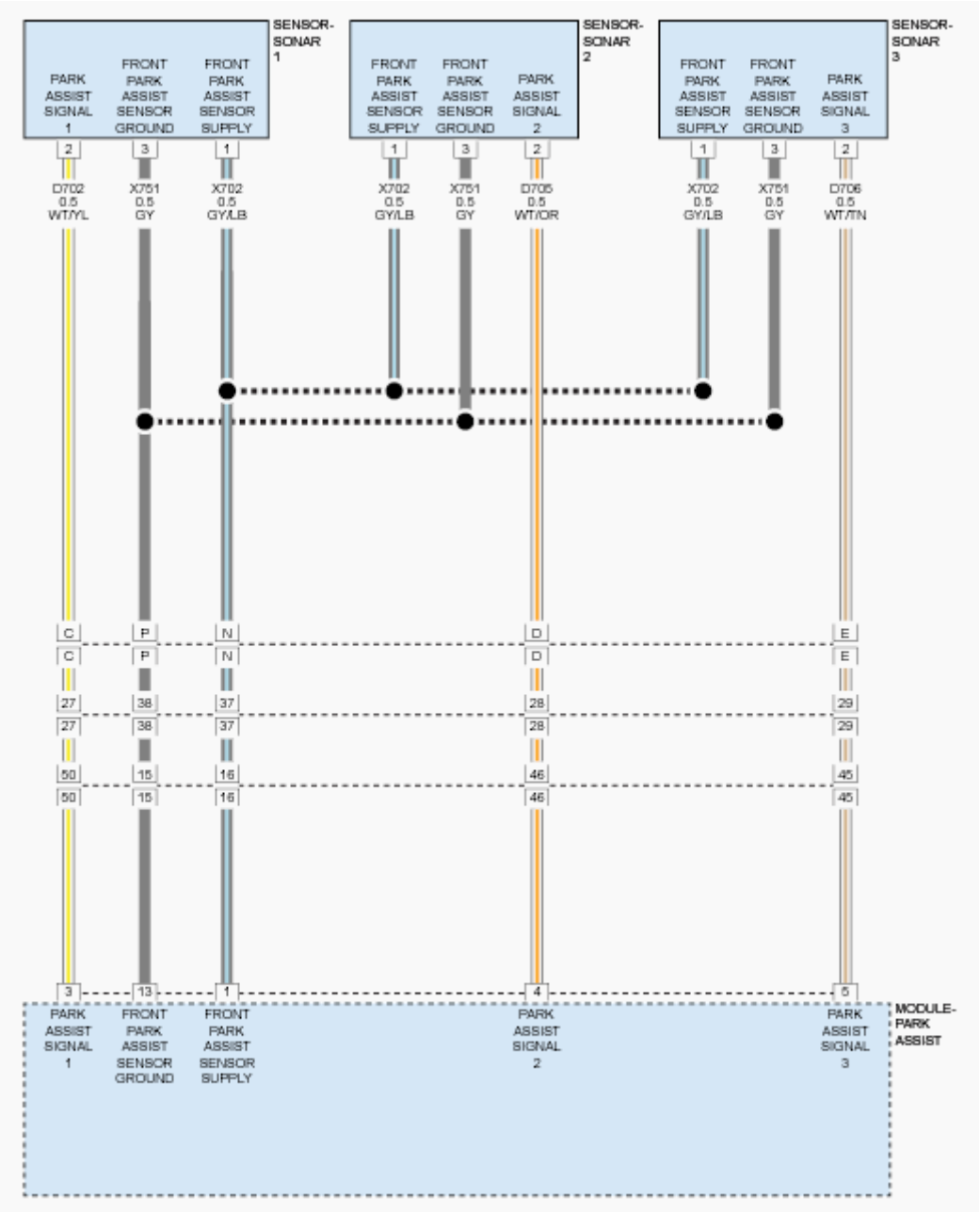

Fig. 14: Identifying Front Park Assist Circuit Diagram
Courtesy of CHRYSLER GROUP, LLC

THEORY OF OPERATION

The Park Assist Sensors are ultrasonic transceivers that are completely controlled by the Park Assist Module. The sensors transmit and receive ultrasonic signals. Each sensor has a voltage, signal, and return circuit to the module. The sensors communicate with the Park Assist Module using a dedicated serial bus communication circuit.

WHEN MONITORED

Vehicle in reverse.

During the self-test while vehicle is in drive between 11 mph (18 km/h) and 25 mph (40 km/h).

SET CONDITION

The Park Assist Module detects an internal Sensor error.

POSSIBLE CAUSES

Possible Causes
PARK ASSIST SENSOR MEMBRANE OBSTRUCTION (ICE, SNOW, MUD, DIRT COVERING FASCIA)
PARK ASSIST SENSOR CONNECTOR OBSTRUCTION (ICE, SNOW, MUD, DIRT)
DECOUPLING RING MISSING/MOUNTED WRONG
OBJECTS - SUCH AS LICENSE PLATES - IN CLOSE RANGE TO THE SENSOR
PARK ASSIST SENSOR

DIAGNOSTIC TEST

1. **CHECK FOR AN ACTIVE DIAGNOSTIC TROUBLE CODE (DTC)**

   NOTE: Before proceeding with this diagnostic procedure, remove any ice, snow, mud, dirt, or other obstructions from the front/rear fascia/bumper. Also remove any ice, snow, dirt, mud, or other obstructions from the underside of the Fascia/Bumper surrounding the sensors.

   1. Turn the ignition on.
   2. With the scan tool, read Park Assist Module DTCs.

      Does the scan tool display this DTC as active?

      Yes

      - Go To 2

      No

      - Test complete, the condition or conditions that originally set this DTC are not present at this time. Using the wiring diagrams as a guide, check all related splices and connectors for signs of water intrusion, corrosion, pushed out or bent terminals, and correct pin tension.
      - Perform the BODY VERIFICATION TEST. Refer to **STANDARD PROCEDURE** .
2. **PARK ASSIST SENSOR**
   1. Verify that none of the possible causes mentioned above are present. Repair as necessary.

If none of the possible causes mentioned above are present, view repair.

Repair

- Replace the Park Assist Sensor that caused this DTC to change from active to stored after disconnecting it in accordance with the Service Information. Refer to **SENSOR, PARK ASSIST, REMOVAL** .
- Perform the BODY VERIFICATION TEST. Refer to **STANDARD PROCEDURE** .

B1290-92-PTS SENSOR 3-PERFORMANCE OR INCORRECT OPERATION

For a complete wiring diagram, **refer to appropriate SYSTEM WIRING DIAGRAMS article** .

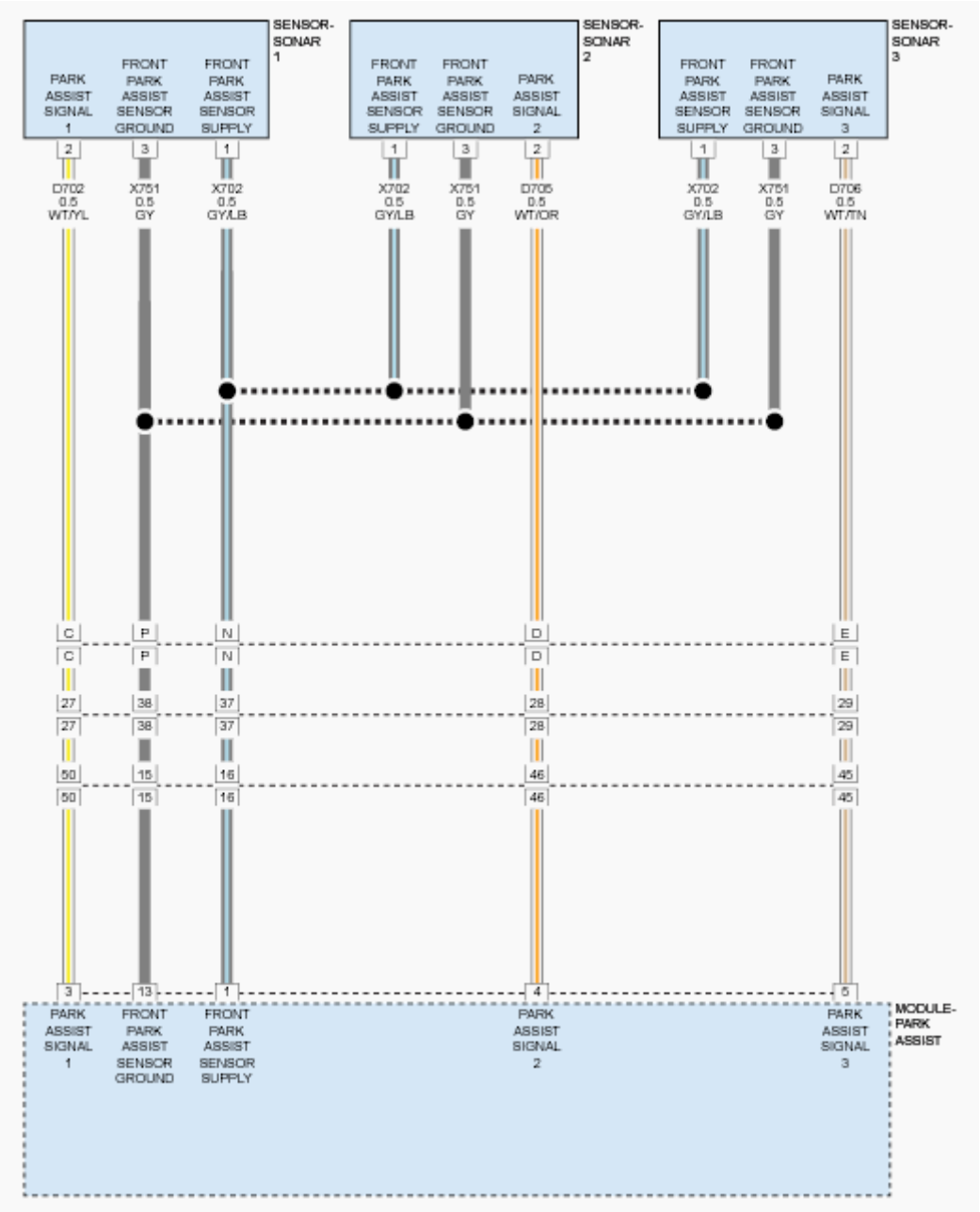

Fig. 15: Identifying Front Park Assist Circuit Diagram
Courtesy of CHRYSLER GROUP, LLC

THEORY OF OPERATION

The Park Assist Sensors are ultrasonic transceivers that are completely controlled by the Park Assist Module. The sensors transmit and receive ultrasonic signals. Each sensor has a voltage, signal, and return circuit to the module. The sensors communicate with the Park Assist Module using a dedicated serial bus communication circuit.

NOTE: The numbering system for the park assist sensors allows for up to twelve

sensors on the vehicle, six front and six rear. The sensors are numbered in a clockwise manner starting at the left front bumper. The left front sensor (if equipped with front park assist) is the number 1 sensor. The numbering continues in a clockwise direction around the vehicle.

WHEN MONITORED

Vehicle in reverse and during the self-test while vehicle is in drive between 18 km/h (11 mph) and 40 km/h (25 mph).

SET CONDITION

If the system detects data corruption in the transmission in the internal communication line between the module and sensors, this code will set.

POSSIBLE CAUSES

Possible Causes
(D706) PARK ASSIST SENSOR 3 SIGNAL CIRCUIT SHORTED TO GROUND
(D706) PARK ASSIST SENSOR 3 SIGNAL CIRCUIT SHORTED TO BATTERY
(D706) PARK ASSIST SENSOR 3 SIGNAL CIRCUIT OPEN
PARK ASSIST SENSOR
PARK ASSIST MODULE

DIAGNOSTIC TEST

1. **CHECK FOR AN ACTIVE DIAGNOSTIC TROUBLE CODE (DTC)**
    1. Turn the ignition on.
    2. With the scan tool, read DTCs.

    Does the scan tool display this DTC as active?

    Yes

    - Go To 2

    No

    - Test complete, the condition or conditions that originally set this DTC are not present at this time. Using the wiring diagrams as a guide, check all related splices and connectors for signs of water intrusion, corrosion, pushed out or bent terminals, and correct pin tension.
    - Perform the BODY VERIFICATION TEST. Refer to **STANDARD PROCEDURE** .
2. **CHECK THE PARK ASSIST SENSOR FOR AN INTERNAL SHORT**
    1. Disconnect the Park Assist Sensor harness connector.

2. With the scan tool, read DTCs.

   Does the scan tool display this DTC as active?

   Yes

   - Go To 3

   No

   - Replace Park Assist Sensor 3 in accordance with the Service Information. Refer to **SENSOR, PARK ASSIST, REMOVAL** .
   - Perform the BODY VERIFICATION TEST. Refer to **STANDARD PROCEDURE** .

3. **CHECK THE (D706) PARK ASSIST SENSOR 3 SIGNAL CIRCUIT FOR A SHORT TO GROUND**
   1. Turn the ignition off.
   2. Disconnect the Park Assist Module C3 harness connector.
   3. Measure the resistance between ground and the (D706) Park Assist Sensor 3 Signal circuit.

      Is the resistance below 10K Ohms?

      Yes

      - Repair the (D706) Park Assist Sensor 3 Signal circuit for a short to ground.
      - Perform the BODY VERIFICATION TEST. Refer to **STANDARD PROCEDURE** .

      No

      - Go To 4

4. **CHECK THE (D706) PARK ASSIST SENSOR 3 SIGNAL CIRCUIT FOR A SHORT TO BATTERY**
   1. Turn the ignition on.
   2. Measure the voltage of the (D706) Park Assist Sensor 3 Signal circuit.

      Is voltage present?

      Yes

      - Repair the (D706) Park Assist Sensor 3 Signal circuit for a short to battery.
      - Perform the BODY VERIFICATION TEST. Refer to **STANDARD PROCEDURE** .

      No

- Go To 5

5. **CHECK THE (D706) PARK ASSIST SENSOR 3 SIGNAL CIRCUIT FOR AN OPEN**
   1. Measure the resistance of the (D706) Park Assist Sensor 3 Signal circuit.

      Is the resistance above 5.0 Ohms?

      Yes

      - Repair the (D706) Park Assist Sensor 3 Signal circuit for an open.
      - Perform the BODY VERIFICATION TEST. Refer to **STANDARD PROCEDURE** .

      No

      - Replace the Park Assist Module in accordance with Service Information. Refer to **MODULE, PARK ASSIST, REMOVAL** .
      - Perform the BODY VERIFICATION TEST. Refer to **STANDARD PROCEDURE** .

B1291-11-PTS SENSOR 4-CIRCUIT SHORT TO GROUND

For a complete wiring diagram, **refer to appropriate SYSTEM WIRING DIAGRAMS article** .

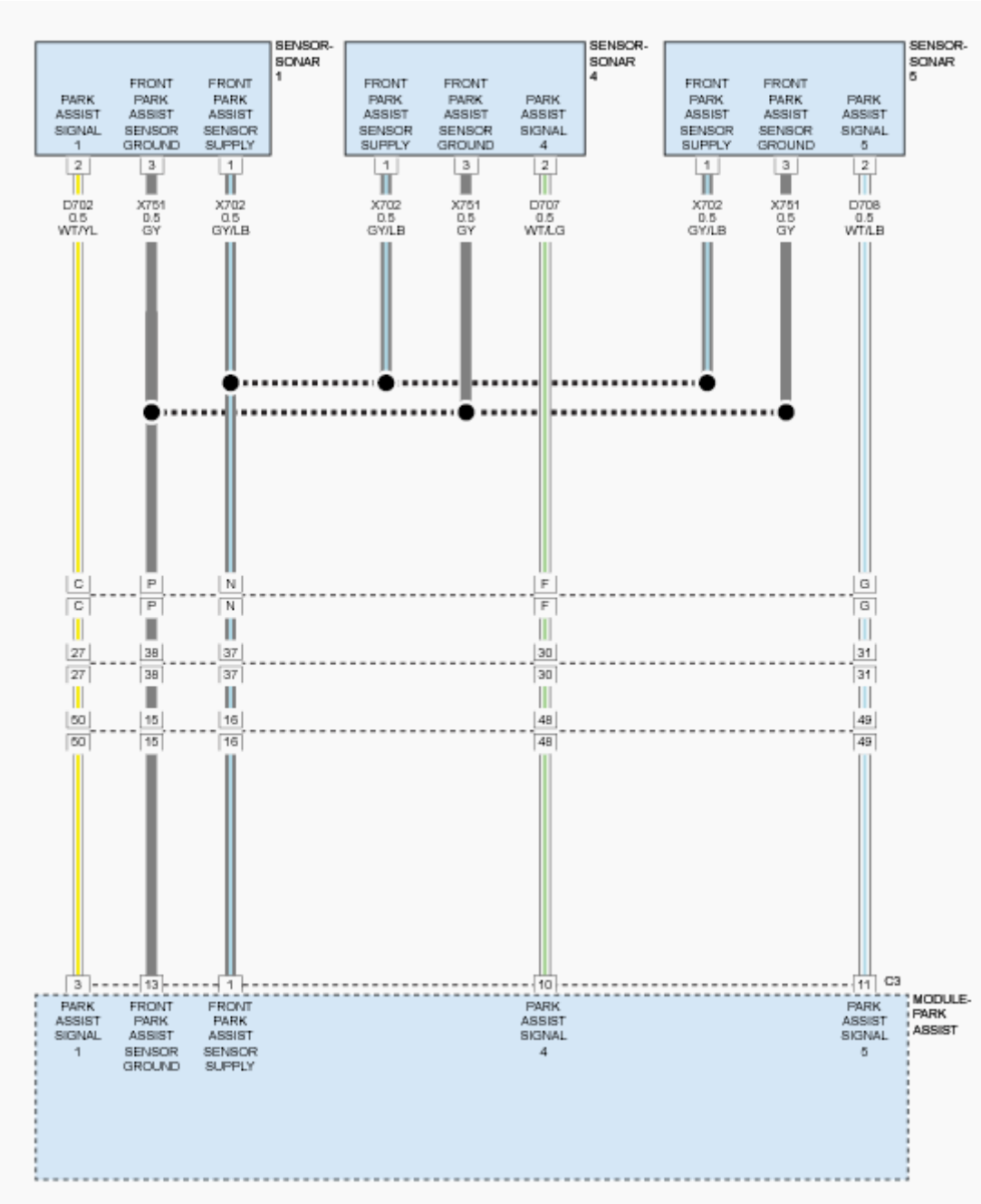

Fig. 16: Identifying Front Park Assist Circuit Diagram
Courtesy of CHRYSLER GROUP, LLC

THEORY OF OPERATION

The Park Assist Sensors are ultrasonic transceivers that are completely controlled by the Park Assist Module. The sensors transmit and receive ultrasonic signals. Each sensor has a voltage, signal, and return circuit to the module. The sensors communicate with the Park Assist Module using a dedicated serial bus communication circuit.

NOTE: The numbering system for the park assist sensors allows for up to twelve sensors on the vehicle, six front and six rear. The sensors are numbered in a clockwise manner starting at the left front bumper. The left front sensor (if equipped with front park assist) is the number 1 sensor. The numbering continues in a clockwise direction around the vehicle.

WHEN MONITORED

Vehicle in reverse and during the self-test while vehicle is in drive between 18 km/h (11 mph) and 40 km/h (25 mph).

SET CONDITION

The Park Assist Module detects a short to ground on the Park Assist Sensor Signal circuit.

POSSIBLE CAUSES

Possible Causes
PARK ASSIST SENSOR DISCONNECTED
(D707) PARK ASSIST SENSOR 4 SIGNAL CIRCUIT SHORTED TO GROUND
(D707) PARK ASSIST SENSOR 4 SIGNAL CIRCUIT SHORTED TO THE (X751) FRONT PARK ASSIST SENSOR GROUND CIRCUIT
(D707) PARK ASSIST SENSOR 4 SIGNAL CIRCUIT OPEN
(X702) FRONT PARK ASSIST SENSOR SUPPLY CIRCUIT OPEN
PARK ASSIST SENSOR
PARK ASSIST MODULE

DIAGNOSTIC TEST

1. **CHECK FOR AN ACTIVE DIAGNOSTIC TROUBLE CODE (DTC)**

   NOTE: A disconnected sensor will set this DTC. Verify the Park Assist Sensor is connected before proceeding with this diagnostic procedure.

   1. Turn the ignition on.
   2. With the scan tool, read DTCs.

   Does the scan tool display this DTC as active?

   Yes

   - Go To 2

   No

- Test complete, the condition or conditions that originally set this DTC are not present at this time. Using the wiring diagrams as a guide, check all related splices and connectors for signs of water intrusion, corrosion, pushed out or bent terminals, and correct pin tension.
- Perform the BODY VERIFICATION TEST. Refer to **STANDARD PROCEDURE** .

2. **CHECK THE VOLTAGE OF THE (X702) FRONT PARK ASSIST SENSOR SUPPLY CIRCUIT**
   1. Turn the ignition off.
   2. Disconnect the Park Assist Sensor harness connector.
   3. Turn the ignition on.
   4. Measure the voltage of the (X702) Front Park Assist Sensor Supply circuit.

   Is the voltage above 8.0 volts?

   Yes

   - Go To 4

   No

   - Go To 3

3. **CHECK THE (X702) FRONT PARK ASSIST SENSOR SUPPLY CIRCUIT FOR AN OPEN OR HIGH RESISTANCE**
   1. Turn the ignition off.
   2. Disconnect the Park Assist Module C3 harness connector.
   3. Measure the resistance of the (X702) Front Park Assist Sensor Supply circuit.

   Is the resistance below 5.0 Ohms?

   Yes

   - Replace the Park Assist Module in accordance with the Service Information. Refer to **MODULE, PARK ASSIST, REMOVAL** .
   - Perform the BODY VERIFICATION TEST. Refer to **STANDARD PROCEDURE** .

   No

   - Repair the open or high resistance in the (X702) Front Park Assist Sensor Supply circuit.
   - Perform the BODY VERIFICATION TEST. Refer to **STANDARD PROCEDURE** .

4. **CHECK THE (D707) PARK ASSIST SENSOR 4 SIGNAL CIRCUIT FOR A SHORT TO GROUND WITH THE PARK ASSIST MODULE CONNECTED**

   NOTE: Perform this step with the Park Assist Module connected.

   1. Measure the resistance between ground and the (D707) Park Assist Sensor 4 Signal circuit.

Is the resistance below 10K Ohms?

Yes

- Go To 5

No

- Go To 7

5. **CHECK THE (D707) PARK ASSIST SENSOR 4 SIGNAL CIRCUIT FOR A SHORT TO GROUND WITH THE PARK ASSIST MODULE DISCONNECTED**
   1. Disconnect the Park Assist Module C3 harness connector.
   2. Measure the resistance between ground and the (D707) Park Assist Sensor 4 Signal circuit.

   Is the resistance below 10K Ohms?

   Yes

   - Repair the short to ground in the (D707) Park Assist Sensor 4 Signal circuit.
   - Perform the BODY VERIFICATION TEST. Refer to **STANDARD PROCEDURE** .

   No

   - Go To 6

6. **CHECK THE (D707) PARK ASSIST SENSOR 4 SIGNAL CIRCUIT FOR A SHORT TO THE (X751) FRONT PARK ASSIST SENSOR GROUND CIRCUIT**
   1. Measure the resistance between the (D707) Park Assist Sensor 4 Signal circuit and the (X751) Front Park Assist Sensor Ground circuit.

   Is the resistance below 10K Ohms?

   Yes

   - Repair the short between the (D707) Park Assist Sensor 4 Signal circuit and the (X751) Front Park Assist Sensor Ground circuit.
   - Perform the BODY VERIFICATION TEST. Refer to **STANDARD PROCEDURE** .

   No

   - Replace the Park Assist Module in accordance with the Service Information. Refer to **MODULE, PARK ASSIST, REMOVAL** .
   - Perform the BODY VERIFICATION TEST. Refer to **STANDARD PROCEDURE** .

7. **CHECK THE (D707) PARK ASSIST SENSOR 4 SIGNAL CIRCUIT FOR AN OPEN**
   1. Disconnect the Park Assist Module C3 harness connector.

2. Measure the resistance of the (D707) Park Assist Sensor 4 Signal circuit.

   Is the resistance above 5.0 Ohms?

   Yes

   - Repair the open in the (D707) Park Assist Sensor 4 Signal circuit.
   - Perform the BODY VERIFICATION TEST. Refer to **STANDARD PROCEDURE** .

   No

   - Go To 8

8. **PARK ASSIST SENSOR**
   1. Turn the ignition on.
   2. Reconnect the Park Assist Module C3 harness connector.
   3. Connect a jumper wire across the (X702) Front Park Assist Sensor Supply and (D707) Park Assist Sensor 4 Signal circuits.
   4. Turn the ignition on.
   5. With the scan tool, read DTCs.

      Does the scan tool display DTC: B1291-12-PTS SENSOR 4 - CIRCUIT SHORT TO BATTERY as active?

      Yes

      - Replace the Park Assist Sensor in accordance with the Service Information. Refer to **SENSOR, PARK ASSIST, REMOVAL** .
      - Perform the BODY VERIFICATION TEST. Refer to **STANDARD PROCEDURE** .

      No

      - Replace the Park Assist Module in accordance with the Service Information. Refer to **MODULE, PARK ASSIST, REMOVAL** .
      - Perform the BODY VERIFICATION TEST. Refer to **STANDARD PROCEDURE** .

B128F-12-PTS SENSOR 2 - CIRCUIT SHORT TO BATTERY

For a complete wiring diagram, **refer to appropriate SYSTEM WIRING DIAGRAMS article** .

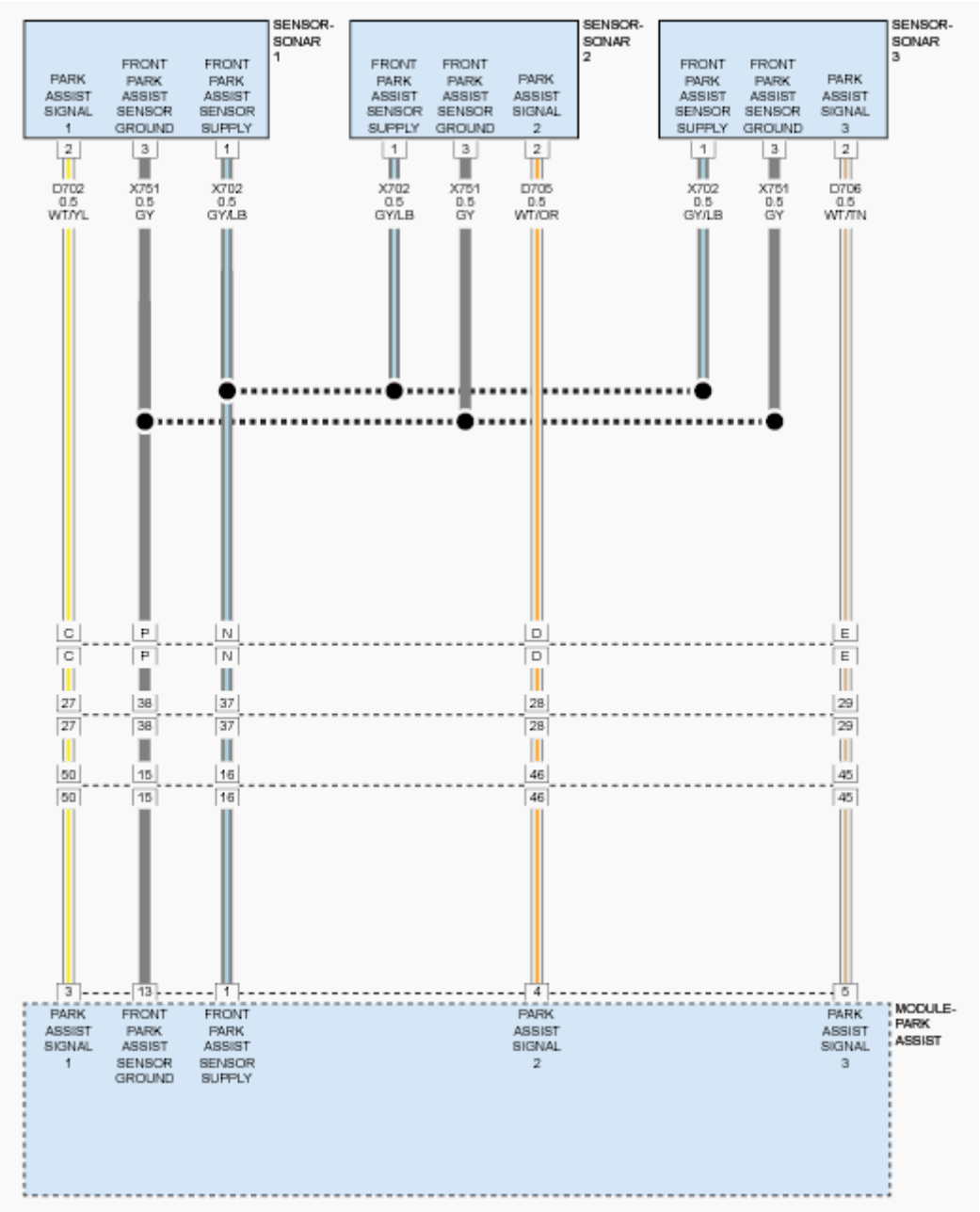

Fig. 17: Identifying Front Park Assist Circuit Diagram
Courtesy of CHRYSLER GROUP, LLC

THEORY OF OPERATION

The Park Assist Sensors are ultrasonic transceivers that are completely controlled by the Park Assist Module. The sensors transmit and receive ultrasonic signals. Each sensor has a voltage, signal and return circuit to the module. The sensors communicate with the Park Assist Module using a dedicated serial bus communication circuit.

NOTE: The numbering system for the park assist sensors allows for up to twelve

sensors on the vehicle, six front and six rear. The sensors are numbered in a clockwise manner starting at the left front bumper. The left front sensor (if equipped with front park assist) is the number 1 sensor. The numbering continues in a clockwise direction around the vehicle.

WHEN MONITORED

Vehicle in reverse and during the self-test while vehicle is in drive between 18 km/h (11 mph) and 40 km/h (25 mph).

SET CONDITION

The Park Assist Module detects an open or short to voltage on the Park Assist Sensor Signal circuit.

POSSIBLE CAUSES

Possible Causes
(D705) PARK ASSIST SENSOR 2 SIGNAL CIRCUIT SHORTED TO VOLTAGE
(D705) PARK ASSIST SENSOR 2 SIGNAL CIRCUIT SHORTED TO THE (X702) FRONT PARK ASSIST SENSOR SUPPLY CIRCUIT
(X751) FRONT PARK ASSIST SENSOR GROUND CIRCUIT OPEN
PARK ASSIST SENSOR
PARK ASSIST MODULE

DIAGNOSTIC TEST

1. **CHECK FOR AN ACTIVE DIAGNOSTIC TROUBLE CODE (DTC)**
   1. Turn the ignition on.
   2. With the scan tool, read DTCs.

      Does the scan tool display this DTC as active?

      Yes

      - Go To 2

      No

      - Test complete, the condition or conditions that originally set this DTC are not present at this time. Using the wiring diagrams as a guide, check all related splices and connectors for signs of water intrusion, corrosion, pushed out or bent terminals and correct pin tension.
      - Perform the BODY VERIFICATION TEST. Refer to **STANDARD PROCEDURE** .
2. **(D705) PARK ASSIST SENSOR 2 SIGNAL CIRCUIT SHORTED TO BATTERY**
   1. Turn the ignition off.

2. Disconnect the Park Assist Module C3 harness connector.
3. Disconnect the Park Assist Sensor harness connector.
4. Turn the ignition on.
5. Measure the voltage of the (D705) Park Assist Sensor 2 Signal circuit.

   Is the voltage above 10.0 volts?

   Yes

   - Repair the (D705) Park Assist Sensor 2 Signal circuit for a short to battery.
   - Perform the BODY VERIFICATION TEST. Refer to **STANDARD PROCEDURE** .

   No

   - Go To 3

3. **(D705) PARK ASSIST SENSOR 2 SIGNAL CIRCUIT SHORTED TO THE (X702) FRONT PARK ASSIST SENSOR SUPPLY CIRCUIT**
   1. Turn the ignition off.
   2. Measure the resistance between the (D705) Park Assist Sensor 2 Signal circuit and the (X702) Front Park Assist Sensor Supply circuit.

      Is the resistance below 10K Ohms?

      Yes

      - Repair the (D705) Park Assist Sensor 2 Signal circuit for a short to the (X702) Front Park Assist Sensor Supply circuit.
      - Perform the BODY VERIFICATION TEST. Refer to **STANDARD PROCEDURE** .

      No

      - Go To 4

4. **(X751) FRONT PARK ASSIST SENSOR GROUND CIRCUIT OPEN**
   1. Reconnect the Park Assist Module C3 harness connector.
   2. Measure the resistance between ground and the (X751) Front Park Assist Sensor Ground circuit.

      Is the resistance above 20.0 Ohms?

      Yes

      - Go To 5

      No

- Replace the Park Assist Sensor in accordance with the Service Information. Refer to **SENSOR, PARK ASSIST, REMOVAL** .
- Perform the BODY VERIFICATION TEST. Refer to **STANDARD PROCEDURE** .

5. **(X751) FRONT PARK ASSIST SENSOR GROUND CIRCUIT OPEN BETWEEN PARK ASSIST MODULE AND SENSOR**
   1. Disconnect the Park Assist Module C3 harness connector.
   2. Measure the resistance of the (X751) Front Park Assist Sensor Ground circuit.

      Is the resistance above 5.0 Ohms?

      Yes

      - Repair the open in the (X751) Front Park Assist Sensor Ground circuit.
      - Perform the BODY VERIFICATION TEST. Refer to **STANDARD PROCEDURE** .

      No

      - Replace the Park Assist Module in accordance with the Service Information. Refer to **MODULE, PARK ASSIST, REMOVAL** .
      - Perform the BODY VERIFICATION TEST. Refer to **STANDARD PROCEDURE** .

B1291-12-PTS SENSOR 4 - CIRCUIT SHORT TO BATTERY

For a complete wiring diagram, **refer to appropriate SYSTEM WIRING DIAGRAMS article** .

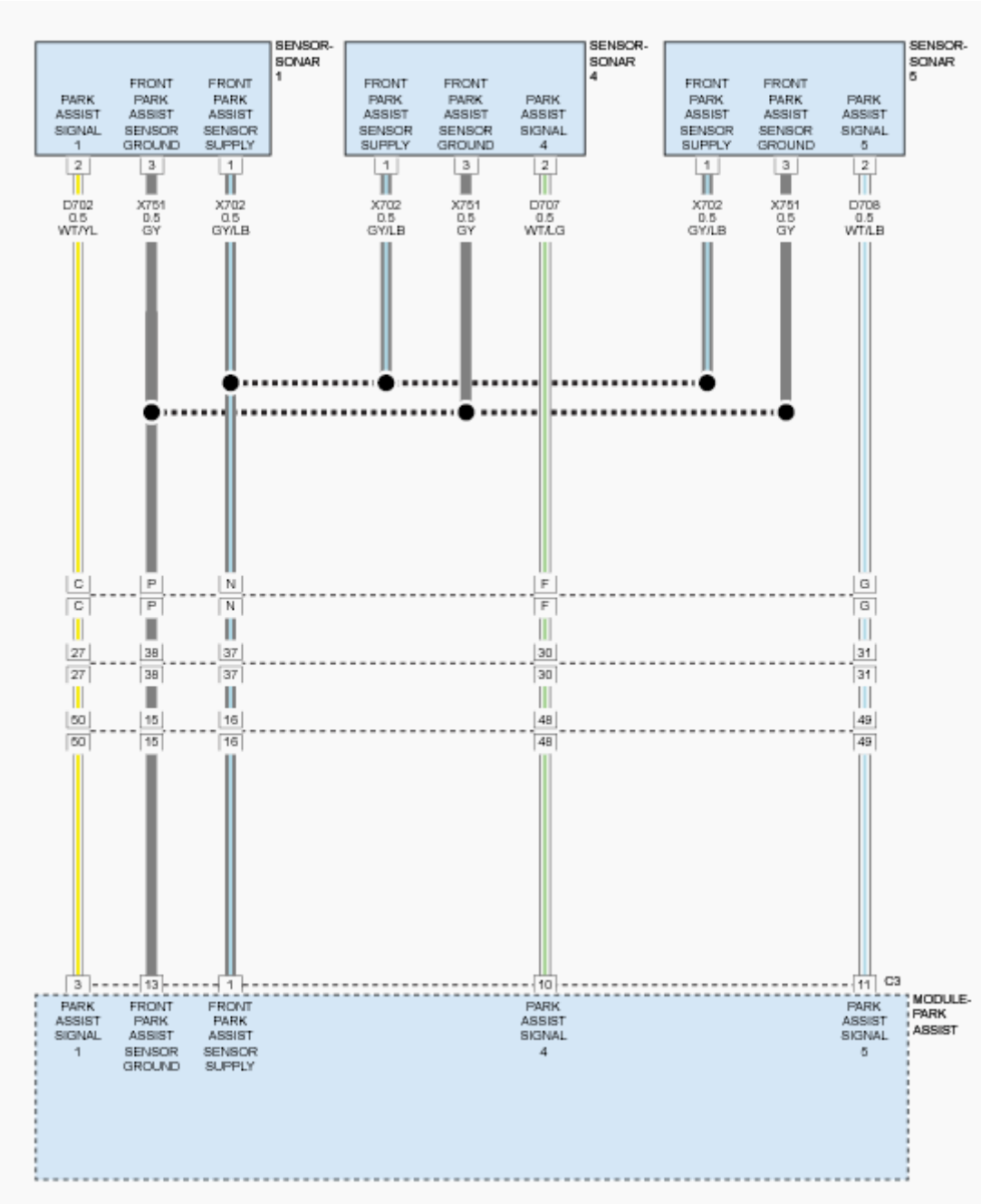

Fig. 18: Identifying Front Park Assist Circuit Diagram
Courtesy of CHRYSLER GROUP, LLC

THEORY OF OPERATION

The Park Assist Sensors are ultrasonic transceivers that are completely controlled by the Park Assist Module. The sensors transmit and receive ultrasonic signals. Each sensor has a voltage, signal, and return circuit to the module. The sensors communicate with the Park Assist Module using a dedicated serial bus communication circuit.

NOTE: **The numbering system for the park assist sensors allows for up to twelve sensors on the vehicle, six front and six rear. The sensors are numbered in a clockwise manner starting at the left front bumper. The left front sensor (if equipped with front park assist) is the number 1 sensor. The numbering continues in a clockwise direction around the vehicle.**

WHEN MONITORED

Vehicle in reverse and during the self-test while vehicle is in drive between 18 km/h (11 mph) and 40 km/h (25 mph).

SET CONDITION

The Park Assist Module detects an open or short to voltage on the Park Assist Sensor Signal circuit.

POSSIBLE CAUSES

Possible Causes
(D707) PARK ASSIST SENSOR 4 SIGNAL CIRCUIT SHORTED TO VOLTAGE
(D707) PARK ASSIST SENSOR 4 SIGNAL CIRCUIT SHORTED TO THE (X702) FRONT PARK ASSIST SENSOR SUPPLY CIRCUIT
(X751) FRONT PARK ASSIST SENSOR GROUND CIRCUIT OPEN
PARK ASSIST SENSOR
PARK ASSIST MODULE

DIAGNOSTIC TEST

1. **CHECK FOR AN ACTIVE DIAGNOSTIC TROUBLE CODE (DTC)**
    1. Turn the ignition on.
    2. With the scan tool, read DTCs.

    Does the scan tool display this DTC as active?

    Yes

    - Go To 2

    No

    - Test complete, the condition or conditions that originally set this DTC are not present at this time. Using the wiring diagrams as a guide, check all related splices and connectors for signs of water intrusion, corrosion, pushed out or bent terminals and correct pin tension.
    - Perform the BODY VERIFICATION TEST. Refer to **STANDARD PROCEDURE** .
2. **(D707) PARK ASSIST SENSOR 4 SIGNAL CIRCUIT SHORTED TO BATTERY**

1. Turn the ignition off.
2. Disconnect the Park Assist Module C3 harness connector.
3. Disconnect the Park Assist Sensor harness connector.
4. Turn the ignition on.
5. Measure the voltage of the (D707) Park Assist Sensor 4 Signal circuit.

   Is the voltage above 10.0 volts?

   Yes

   - Repair the (D707) Park Assist Sensor 4 Signal circuit for a short to battery.
   - Perform the BODY VERIFICATION TEST. Refer to **STANDARD PROCEDURE** .

   No

   - Go To 3

3. **(D707) PARK ASSIST SENSOR 4 SIGNAL CIRCUIT SHORTED TO THE (X702) FRONT PARK ASSIST SENSOR SUPPLY CIRCUIT**
   1. Turn the ignition off.
   2. Measure the resistance between the (D707) Park Assist Sensor 4 Signal circuit and the (X702) Front Park Assist Sensor Supply circuit.

      Is the resistance below 10K Ohms?

      Yes

      - Repair the (D707) Park Assist Sensor 4 Signal circuit for a short to the (X702) Front Park Assist Sensor Supply circuit.
      - Perform the BODY VERIFICATION TEST. Refer to **STANDARD PROCEDURE** .

      No

      - Go To 4

4. **(X751) FRONT PARK ASSIST SENSOR GROUND CIRCUIT OPEN**
   1. Reconnect the Park Assist Module C3 harness connector.
   2. Measure the resistance between ground and the (X751) Front Park Assist Sensor Ground circuit.

      Is the resistance above 20.0 Ohms?

      Yes

      - Go To 5

No

- Replace the Park Assist Sensor in accordance with the Service Information. Refer to **SENSOR, PARK ASSIST, REMOVAL** .
- Perform the BODY VERIFICATION TEST. Refer to **STANDARD PROCEDURE** .

5. **(X751) FRONT PARK ASSIST SENSOR GROUND CIRCUIT OPEN BETWEEN PARK ASSIST MODULE AND SENSOR**
   1. Disconnect the Park Assist Module C3 harness connector.
   2. Measure the resistance of the (X751) Front Park Assist Sensor Ground circuit.

      Is the resistance above 5.0 Ohms?

      Yes

      - Repair the open in the (X751) Front Park Assist Sensor Ground circuit.
      - Perform the BODY VERIFICATION TEST. Refer to **STANDARD PROCEDURE** .

      No

      - Replace the Park Assist Module in accordance with the Service Information. Refer to **MODULE, PARK ASSIST, REMOVAL** .
      - Perform the BODY VERIFICATION TEST. Refer to **STANDARD PROCEDURE** .

B1291-25-PTS SENSOR 4 - SIGNAL SHAPE / WAVEFORM FAILURE

For a complete wiring diagram, **refer to appropriate SYSTEM WIRING DIAGRAMS article** .

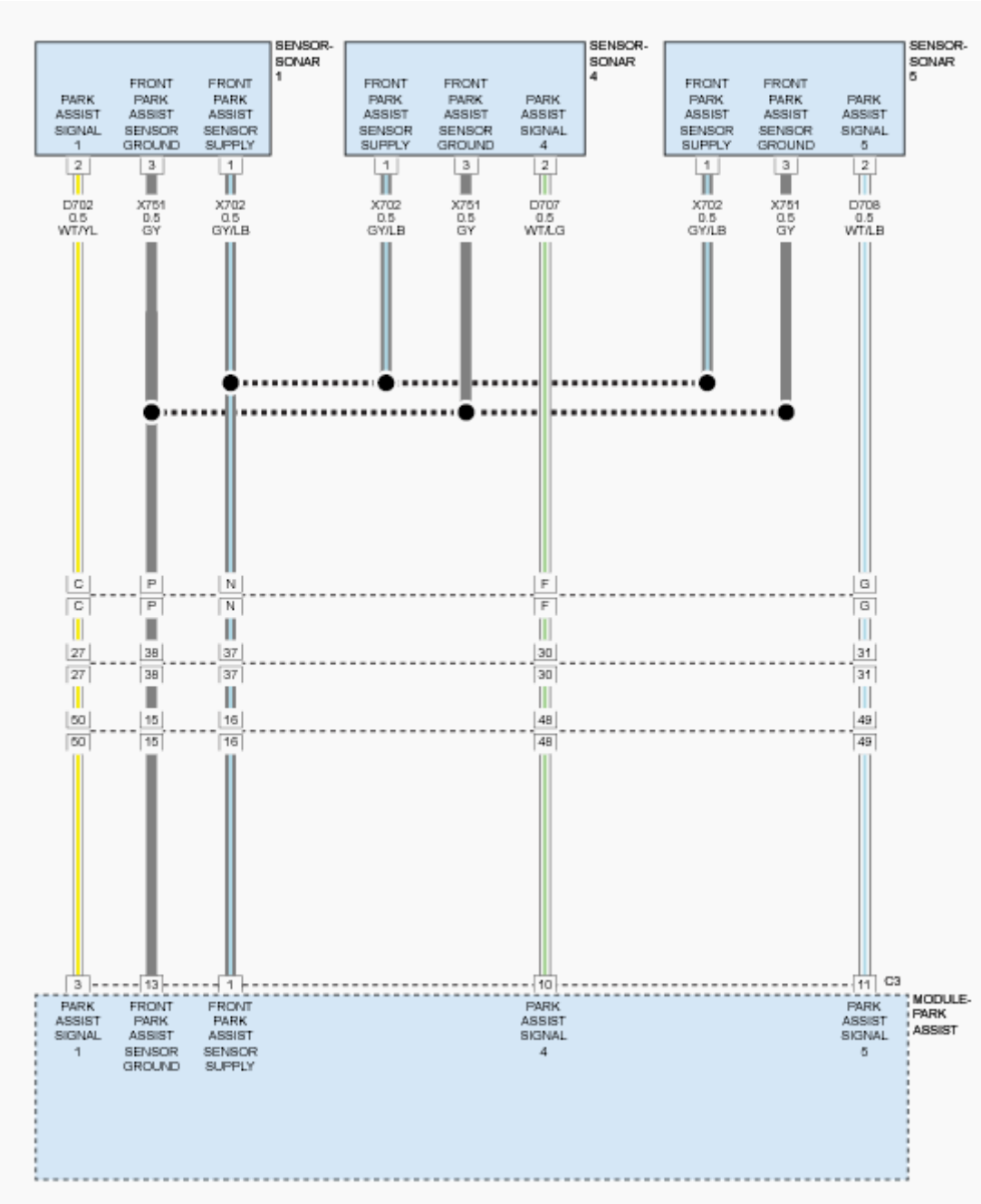

Fig. 19: Identifying Front Park Assist Circuit Diagram
Courtesy of CHRYSLER GROUP, LLC

THEORY OF OPERATION

The Park Assist Sensors are ultrasonic transceivers that are completely controlled by the Park Assist Module. The sensors transmit and receive ultrasonic signals. Each sensor has a voltage, signal, and return circuit to the module. The sensors communicate with the Park Assist Module using a dedicated serial bus communication circuit.

WHEN MONITORED

Vehicle in reverse.

During the self-test while vehicle is in drive between 11 mph (18 km/h) and 25 mph (40 km/h).

SET CONDITION

The Park Assist Module detects an internal Sensor error.

POSSIBLE CAUSES

Possible Causes
PARK ASSIST SENSOR MEMBRANE OBSTRUCTION (ICE, SNOW, MUD, DIRT COVERING FASCIA)
PARK ASSIST SENSOR CONNECTOR OBSTRUCTION (ICE, SNOW, MUD, DIRT)
DECOUPLING RING MISSING/MOUNTED WRONG
OBJECTS - SUCH AS LICENSE PLATES - IN CLOSE RANGE TO THE SENSOR
PARK ASSIST SENSOR

DIAGNOSTIC TEST

1. **CHECK FOR AN ACTIVE DIAGNOSTIC TROUBLE CODE (DTC)**

   NOTE: Before proceeding with this diagnostic procedure, remove any ice, snow, mud, dirt, or other obstructions from the front/rear fascia/bumper. Also remove any ice, snow, dirt, mud, or other obstructions from the underside of the Fascia/Bumper surrounding the sensors.

   1. Turn the ignition on.
   2. With the scan tool, read Park Assist Module DTCs.

      Does the scan tool display this DTC as active?

      Yes

      - Go To 2

      No

      - Test complete, the condition or conditions that originally set this DTC are not present at this time. Using the wiring diagrams as a guide, check all related splices and connectors for signs of water intrusion, corrosion, pushed out or bent terminals and correct pin tension.
      - Perform the BODY VERIFICATION TEST. Refer to **STANDARD PROCEDURE** .

2. **PARK ASSIST SENSOR**

1. Verify that none of the possible causes mentioned above are present. Repair as necessary.

   If none of the possible causes mentioned above are present, view repair.

   Repair

   - Replace the Park Assist Sensor that caused this DTC to change from active to stored after disconnecting it in accordance with the Service Information. Refer to **SENSOR, PARK ASSIST, REMOVAL** .
   - Perform the BODY VERIFICATION TEST. Refer to **STANDARD PROCEDURE** .

B1291-92-PTS SENSOR 4 - PERFORMANCE OR INCORRECT OPERATION

For a complete wiring diagram, **refer to appropriate SYSTEM WIRING DIAGRAMS article** .

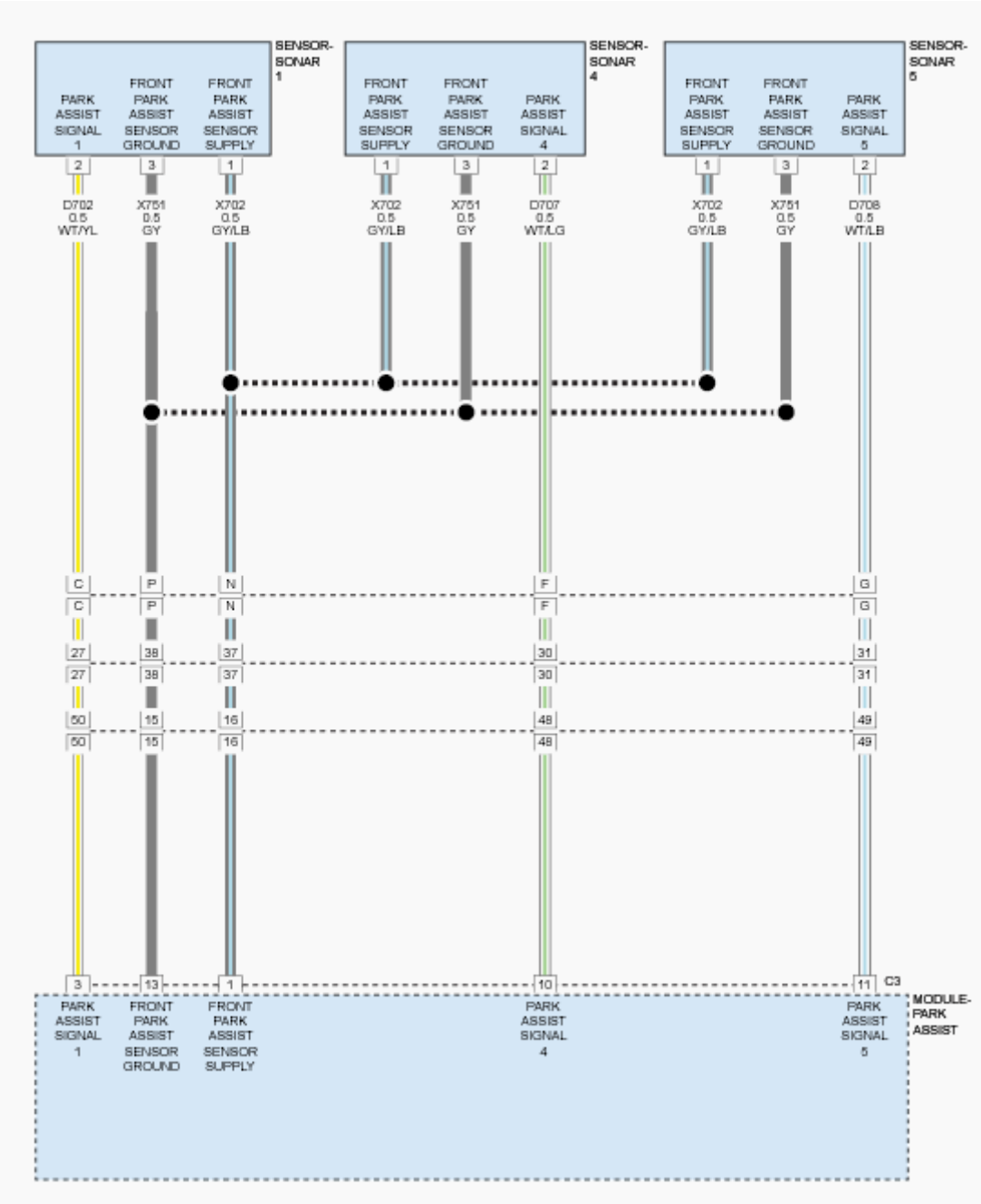

Fig. 20: Identifying Front Park Assist Circuit Diagram
Courtesy of CHRYSLER GROUP, LLC

THEORY OF OPERATION

The Park Assist Sensors are ultrasonic transceivers that are completely controlled by the Park Assist Module. The sensors transmit and receive ultrasonic signals. Each sensor has a voltage, signal, and return circuit to the module. The sensors communicate with the Park Assist Module using a dedicated serial bus communication circuit.

NOTE: **The numbering system for the park assist sensors allows for up to twelve sensors on the vehicle, six front and six rear. The sensors are numbered in a clockwise manner starting at the left front bumper. The left front sensor (if equipped with front park assist) is the number 1 sensor. The numbering continues in a clockwise direction around the vehicle.**

WHEN MONITORED

Vehicle in reverse and during the self-test while vehicle is in drive between 18 km/h (11 mph) and 40 km/h (25 mph).

SET CONDITION

If the system detects data corruption in the transmission in the internal communication line between the module and sensors, this code will set.

POSSIBLE CAUSES

Possible Causes
(D707) PARK ASSIST SENSOR 4 SIGNAL CIRCUIT SHORTED TO GROUND
(D707) PARK ASSIST SENSOR 4 SIGNAL CIRCUIT SHORTED TO BATTERY
(D707) PARK ASSIST SENSOR 4 SIGNAL CIRCUIT OPEN
PARK ASSIST SENSOR
PARK ASSIST MODULE

DIAGNOSTIC TEST

1. **CHECK FOR AN ACTIVE DIAGNOSTIC TROUBLE CODE (DTC)**
    1. Turn the ignition on.
    2. With the scan tool, read DTCs.

    Does the scan tool display this DTC as active?

    Yes

    - Go To 2

    No

    - Test complete, the condition or conditions that originally set this DTC are not present at this time. Using the wiring diagrams as a guide, check all related splices and connectors for signs of water intrusion, corrosion, pushed out or bent terminals, and correct pin tension.
    - Perform the BODY VERIFICATION TEST. Refer to **STANDARD PROCEDURE** .
2. **CHECK THE PARK ASSIST SENSOR FOR AN INTERNAL SHORT**

1. Disconnect the Park Assist Sensor harness connector.
2. With the scan tool, read DTCs.

   Does the scan tool display this DTC as active?

   Yes

   - Go To 3

   No

   - Replace Park Assist Sensor 4 in accordance with the Service Information. Refer to **SENSOR, PARK ASSIST, REMOVAL** .
   - Perform the BODY VERIFICATION TEST. Refer to **STANDARD PROCEDURE** .

3. **CHECK THE (D707) PARK ASSIST SENSOR 4 SIGNAL CIRCUIT FOR A SHORT TO GROUND**
   1. Turn the ignition off.
   2. Disconnect the Park Assist Module C3 harness connector.
   3. Measure the resistance between ground and the (D707) Park Assist Sensor 4 Signal circuit.

      Is the resistance below 10K Ohms?

      Yes

      - Repair the (D707) Park Assist Sensor 4 Signal circuit for a short to ground.
      - Perform the BODY VERIFICATION TEST. Refer to **STANDARD PROCEDURE** .

      No

      - Go To 4

4. **CHECK THE (D707) PARK ASSIST SENSOR 4 SIGNAL CIRCUIT FOR A SHORT TO BATTERY**
   1. Turn the ignition on.
   2. Measure the voltage of the (D707) Park Assist Sensor 4 Signal circuit.

      Is voltage present?

      Yes

      - Repair the (D707) Park Assist Sensor 4 Signal circuit for a short to battery.
      - Perform the BODY VERIFICATION TEST. Refer to **STANDARD PROCEDURE** .

      No

- Go To 5

5. **CHECK THE (D707) PARK ASSIST SENSOR 4 SIGNAL CIRCUIT FOR AN OPEN**
   1. Measure the resistance of the (D707) Park Assist Sensor 4 Signal circuit.

      Is the resistance above 5.0 Ohms?

      Yes

      - Repair the (D707) Park Assist Sensor 4 Signal circuit for an open.
      - Perform the BODY VERIFICATION TEST. Refer to **STANDARD PROCEDURE** .

      No

      - Replace the Park Assist Module in accordance with Service Information. Refer to **MODULE, PARK ASSIST, REMOVAL** .
      - Perform the BODY VERIFICATION TEST. Refer to **STANDARD PROCEDURE** .

B1292-11-PTS SENSOR 5 - CIRCUIT SHORT TO GROUND

For a complete wiring diagram, **refer to appropriate SYSTEM WIRING DIAGRAMS article** .

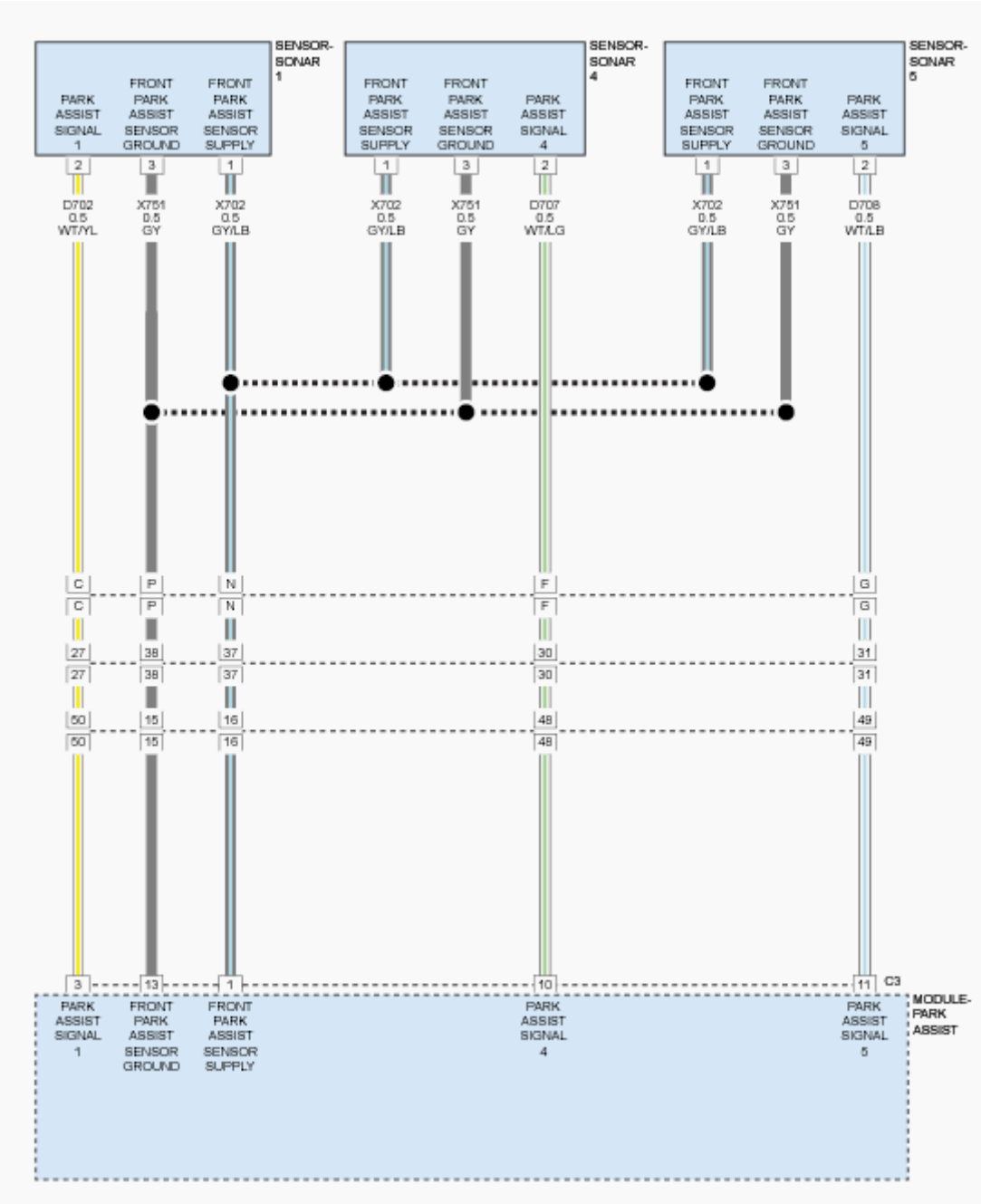

Fig. 21: Identifying Front Park Assist Circuit Diagram
Courtesy of CHRYSLER GROUP, LLC

THEORY OF OPERATION

The Park Assist Sensors are ultrasonic transceivers that are completely controlled by the Park Assist Module. The sensors transmit and receive ultrasonic signals. Each sensor has a voltage, signal, and return circuit to the module. The sensors communicate with the Park Assist Module using a dedicated serial bus communication circuit.

NOTE: The numbering system for the park assist sensors allows for up to twelve sensors on the vehicle, six front and six rear. The sensors are numbered in a clockwise manner starting at the left front bumper. The left front sensor (if equipped with front park assist) is the number 1 sensor. The numbering continues in a clockwise direction around the vehicle.

WHEN MONITORED

Vehicle in reverse and during the self-test while vehicle is in drive between 18 km/h (11 mph) and 40 km/h (25 mph).

SET CONDITION

The Park Assist Module detects a short to ground on the Park Assist Sensor Signal circuit.

POSSIBLE CAUSES

Possible Causes
PARK ASSIST SENSOR DISCONNECTED
(D708) PARK ASSIST SENSOR 5 SIGNAL CIRCUIT SHORTED TO GROUND
(D708) PARK ASSIST SENSOR 5 SIGNAL CIRCUIT SHORTED TO THE (X751) FRONT PARK ASSIST SENSOR GROUND CIRCUIT
(D708) PARK ASSIST SENSOR 5 SIGNAL CIRCUIT OPEN
(X702) FRONT PARK ASSIST SENSOR SUPPLY CIRCUIT OPEN
PARK ASSIST SENSOR
PARK ASSIST MODULE

DIAGNOSTIC TEST

1. **CHECK FOR AN ACTIVE DIAGNOSTIC TROUBLE CODE (DTC)**

   NOTE: A disconnected sensor will set this DTC. Verify the Park Assist Sensor is connected before proceeding with this diagnostic procedure.

   1. Turn the ignition on.
   2. With the scan tool, read DTCs.

   Does the scan tool display this DTC as active?

   Yes

   - Go To 2

   No

- Test complete, the condition or conditions that originally set this DTC are not present at this time. Using the wiring diagrams as a guide, check all related splices and connectors for signs of water intrusion, corrosion, pushed out or bent terminals and correct pin tension.
- Perform the BODY VERIFICATION TEST. Refer to **STANDARD PROCEDURE** .

2. **CHECK THE VOLTAGE OF THE (X702) FRONT PARK ASSIST SENSOR SUPPLY CIRCUIT**
   1. Turn the ignition off.
   2. Disconnect the Park Assist Sensor harness connector.
   3. Turn the ignition on.
   4. Measure the voltage of the (X702) Front Park Assist Sensor Supply circuit.

   Is the voltage above 8.0 volts?

   Yes

   - Go To 4

   No

   - Go To 3

3. **CHECK THE (X702) FRONT PARK ASSIST SENSOR SUPPLY CIRCUIT FOR AN OPEN OR HIGH RESISTANCE**
   1. Turn the ignition off.
   2. Disconnect the Park Assist Module C3 harness connector.
   3. Measure the resistance of the (X702) Front Park Assist Sensor Supply circuit.

   Is the resistance below 5.0 Ohms?

   Yes

   - Replace the Park Assist Module in accordance with the Service Information. Refer to **MODULE, PARK ASSIST, REMOVAL** .
   - Perform the BODY VERIFICATION TEST. Refer to **STANDARD PROCEDURE** .

   No

   - Repair the open or high resistance in the (X702) Front Park Assist Sensor Supply circuit.
   - Perform the BODY VERIFICATION TEST. Refer to **STANDARD PROCEDURE** .

4. **CHECK THE (D708) PARK ASSIST SENSOR 5 SIGNAL CIRCUIT FOR A SHORT TO GROUND WITH THE PARK ASSIST MODULE CONNECTED**

   NOTE: Perform this step with the Park Assist Module connected.

   1. Measure the resistance between ground and the (D708) Park Assist Sensor 5 Signal circuit.

Is the resistance below 10K Ohms?

Yes

- Go To 5

No

- Go To 7

5. **CHECK THE (D708) PARK ASSIST SENSOR 5 SIGNAL CIRCUIT FOR A SHORT TO GROUND WITH THE PARK ASSIST MODULE DISCONNECTED**
   1. Disconnect the Park Assist Module C3 harness connector.
   2. Measure the resistance between ground and the (D708) Park Assist Sensor 5 Signal circuit.

   Is the resistance below 10K Ohms?

   Yes

   - Repair the short to ground in the (D708) Park Assist Sensor 5 Signal circuit.
   - Perform the BODY VERIFICATION TEST. Refer to **STANDARD PROCEDURE** .

   No

   - Go To 6

6. **CHECK THE (D708) PARK ASSIST SENSOR 5 SIGNAL CIRCUIT FOR A SHORT TO THE (X751) FRONT PARK ASSIST SENSOR GROUND CIRCUIT**
   1. Measure the resistance between the (D708) Park Assist Sensor 5 Signal circuit and the (X751) Front Park Assist Sensor Ground circuit.

   Is the resistance below 10K Ohms?

   Yes

   - Repair the short between the (D708) Park Assist Sensor 5 Signal circuit and the (X751) Front Park Assist Sensor Ground circuit.
   - Perform the BODY VERIFICATION TEST. Refer to **STANDARD PROCEDURE** .

   No

   - Replace the Park Assist Module in accordance with the Service Information. Refer to **MODULE, PARK ASSIST, REMOVAL** .
   - Perform the BODY VERIFICATION TEST. Refer to **STANDARD PROCEDURE** .

7. **CHECK THE (D708) PARK ASSIST SENSOR 5 SIGNAL CIRCUIT FOR AN OPEN**
   1. Disconnect the Park Assist Module C3 harness connector.

2. Measure the resistance of the (D708) Park Assist Sensor 5 Signal circuit.

   Is the resistance above 5.0 Ohms?

   Yes

   - Repair the open in the (D708) Park Assist Sensor 5 Signal circuit.
   - Perform the BODY VERIFICATION TEST. Refer to **STANDARD PROCEDURE** .

   No

   - Go To 8

8. **PARK ASSIST SENSOR**
   1. Turn the ignition on.
   2. Reconnect the Park Assist Module C3 harness connector.
   3. Connect a jumper wire across the (X702) Front Park Assist Sensor Supply and (D708) Park Assist Sensor 5 Signal circuits.
   4. Turn the ignition on.
   5. With the scan tool, read DTCs.

      Does the scan tool display DTC: B1292-12-PTS SENSOR 5 - CIRCUIT SHORT TO BATTERY as active?

      Yes

      - Replace the Park Assist Sensor in accordance with the Service Information. Refer to **SENSOR, PARK ASSIST, REMOVAL** .
      - Perform the BODY VERIFICATION TEST. Refer to **STANDARD PROCEDURE** .

      No

      - Replace the Park Assist Module in accordance with the Service Information. Refer to **MODULE, PARK ASSIST, REMOVAL** .
      - Perform the BODY VERIFICATION TEST. Refer to **STANDARD PROCEDURE** .

B1292-12-PTS SENSOR 5 - CIRCUIT SHORT TO BATTERY

For a complete wiring diagram, **refer to appropriate SYSTEM WIRING DIAGRAMS article** .

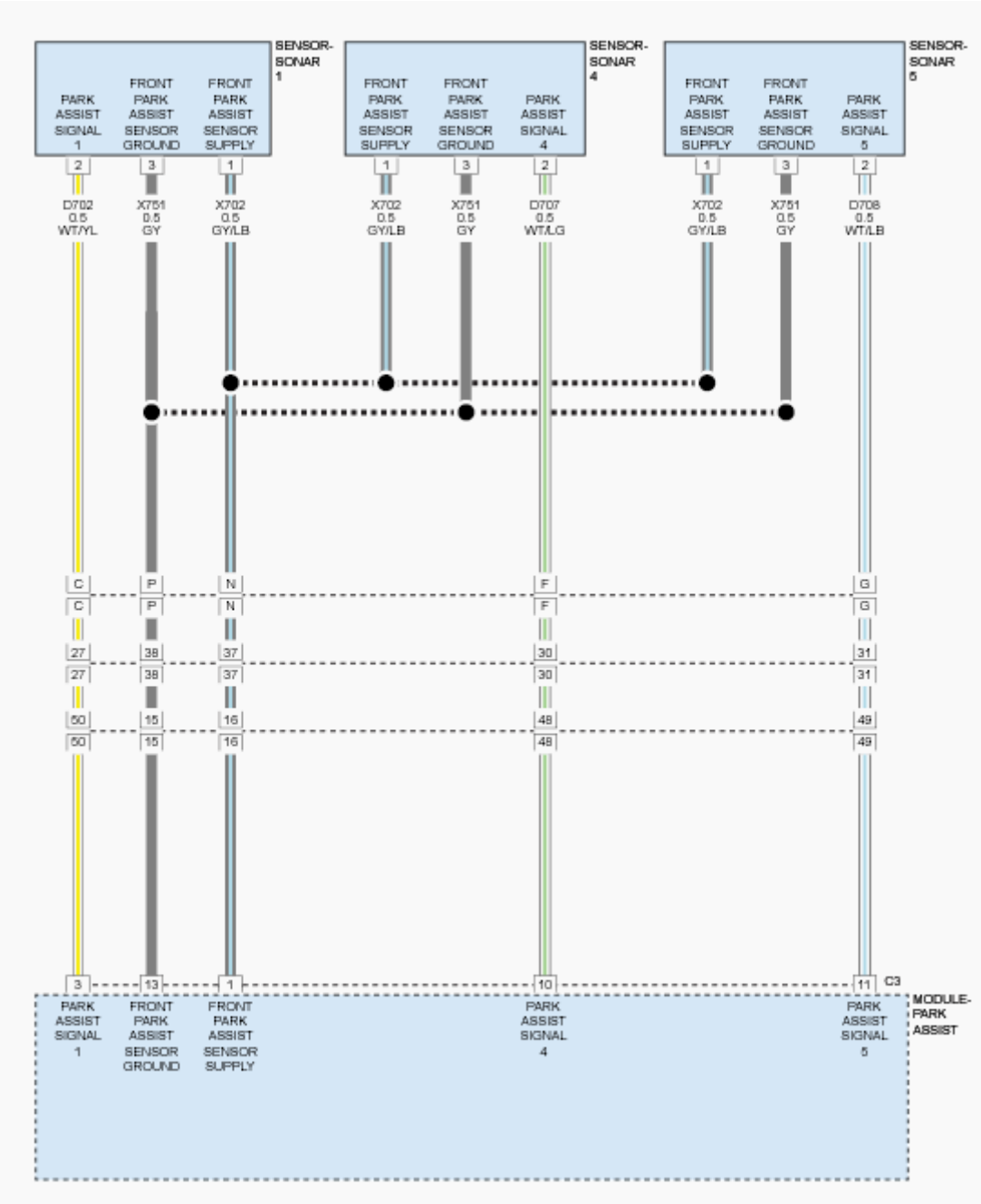

Fig. 22: Identifying Front Park Assist Circuit Diagram
Courtesy of CHRYSLER GROUP, LLC

THEORY OF OPERATION

The Park Assist Sensors are ultrasonic transceivers that are completely controlled by the Park Assist Module. The sensors transmit and receive ultrasonic signals. Each sensor has a voltage, signal, and return circuit to the module. The sensors communicate with the Park Assist Module using a dedicated serial bus communication circuit.

NOTE: **The numbering system for the park assist sensors allows for up to twelve sensors on the vehicle, six front and six rear. The sensors are numbered in a clockwise manner starting at the left front bumper. The left front sensor (if equipped with front park assist) is the number 1 sensor. The numbering continues in a clockwise direction around the vehicle. Since Chrysler Group vehicles use only four rear sensors, sensor numbers 7 and 12 are omitted, so the left rear sensor is the number 11 sensor.**

WHEN MONITORED

Vehicle in reverse and during the self-test while vehicle is in drive between 18 km/h (11 mph) and 40 km/h (25 mph).

SET CONDITION

The Park Assist Module detects an open or short to voltage on the Park Assist Sensor Signal circuit.

POSSIBLE CAUSES

Possible Causes
(D708) PARK ASSIST SENSOR 5 SIGNAL CIRCUIT SHORTED TO VOLTAGE
(D708) PARK ASSIST SENSOR 5 SIGNAL CIRCUIT SHORTED TO THE (X702) FRONT PARK ASSIST SENSOR SUPPLY CIRCUIT
(X751) FRONT PARK ASSIST SENSOR GROUND CIRCUIT OPEN
PARK ASSIST SENSOR
PARK ASSIST MODULE

DIAGNOSTIC TEST

1. **CHECK FOR AN ACTIVE DIAGNOSTIC TROUBLE CODE (DTC)**
    1. Turn the ignition on.
    2. With the scan tool, read DTCs.

    Does the scan tool display this DTC as active?

    Yes

    - Go To 2

    No

    - Test complete, the condition or conditions that originally set this DTC are not present at this time. Using the wiring diagrams as a guide, check all related splices and connectors for signs of water intrusion, corrosion, pushed out or bent terminals and correct pin tension.
    - Perform the BODY VERIFICATION TEST. Refer to **STANDARD PROCEDURE** .

2. **(D708) PARK ASSIST SENSOR 5 SIGNAL CIRCUIT SHORTED TO BATTERY**
   1. Turn the ignition off.
   2. Disconnect the Park Assist Module C3 harness connector.
   3. Disconnect the Park Assist Sensor harness connector.
   4. Turn the ignition on.
   5. Measure the voltage of the (D708) Park Assist Sensor 5 Signal circuit.

      Is the voltage above 10.0 volts?

      Yes

      - Repair the (D708) Park Assist Sensor 5 Signal circuit for a short to battery.
      - Perform the BODY VERIFICATION TEST. Refer to **STANDARD PROCEDURE** .

      No

      - Go To 3
3. **(D708) PARK ASSIST SENSOR 5 SIGNAL CIRCUIT SHORTED TO THE (X702) FRONT PARK ASSIST SENSOR SUPPLY CIRCUIT**
   1. Turn the ignition off.
   2. Measure the resistance between the (D708) Park Assist Sensor 5 Signal circuit and the (X702) Front Park Assist Sensor Supply circuit.

      Is the resistance below 10K Ohms?

      Yes

      - Repair the (D708) Park Assist Sensor 5 Signal circuit for a short to the (X702) Front Park Assist Sensor Supply circuit.
      - Perform the BODY VERIFICATION TEST. Refer to **STANDARD PROCEDURE** .

      No

      - Go To 4
4. **(X751) FRONT PARK ASSIST SENSOR GROUND CIRCUIT OPEN**
   1. Reconnect the Park Assist Module C3 harness connector.
   2. Measure the resistance between ground and the (X751) Front Park Assist Sensor Ground circuit.

      Is the resistance above 20.0 Ohms?

      Yes

      - Go To 5

No

- Replace the Park Assist Sensor in accordance with the Service Information. Refer to **SENSOR, PARK ASSIST, REMOVAL** .
- Perform the BODY VERIFICATION TEST. Refer to **STANDARD PROCEDURE** .

5. **(X751) FRONT PARK ASSIST SENSOR GROUND CIRCUIT OPEN BETWEEN PARK ASSIST MODULE AND SENSOR**
   1. Disconnect the Park Assist Module C3 harness connector.
   2. Measure the resistance of the (X751) Front Park Assist Sensor Ground circuit.

   Is the resistance above 5.0 Ohms?

   Yes

   - Repair the open in the (X751) Front Park Assist Sensor Ground circuit.
   - Perform the BODY VERIFICATION TEST. Refer to **STANDARD PROCEDURE** .

   No

   - Replace the Park Assist Module in accordance with the Service Information. Refer to **MODULE, PARK ASSIST, REMOVAL** .
   - Perform the BODY VERIFICATION TEST. Refer to **STANDARD PROCEDURE** .

B1292-25-PTS SENSOR 5 - SIGNAL SHAPE / WAVEFORM FAILURE

For a complete wiring diagram, **refer to appropriate SYSTEM WIRING DIAGRAMS article** .

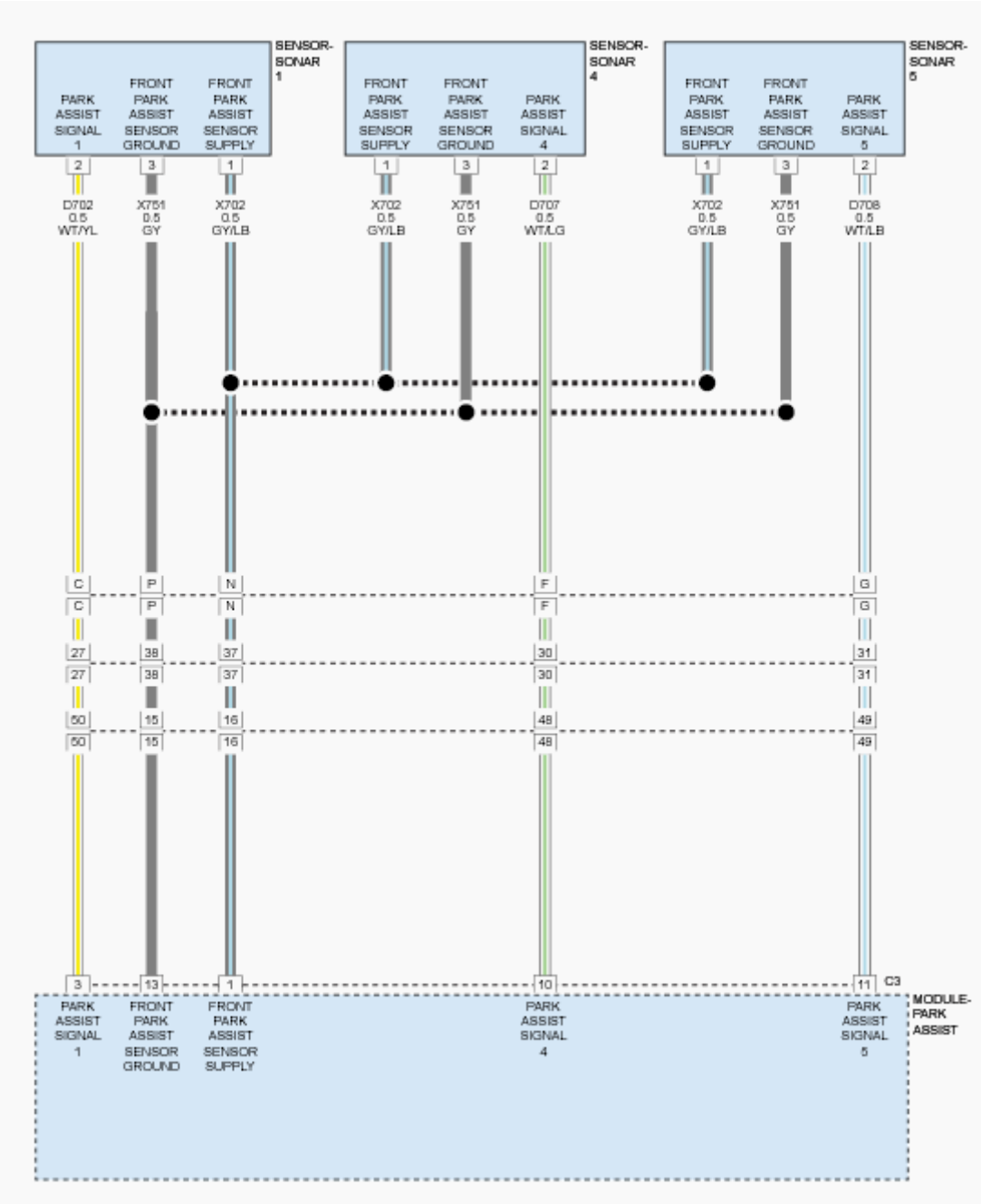

Fig. 23: Identifying Front Park Assist Circuit Diagram
Courtesy of CHRYSLER GROUP, LLC

THEORY OF OPERATION

The Park Assist Sensors are ultrasonic transceivers that are completely controlled by the Park Assist Module. The sensors transmit and receive ultrasonic signals. Each sensor has a voltage, signal, and return circuit to the module. The sensors communicate with the Park Assist Module using a dedicated serial bus communication circuit.

WHEN MONITORED

Vehicle in reverse.

During the self-test while vehicle is in drive between 11 mph (18 km/h) and 25 mph (40 km/h).

SET CONDITION

The Park Assist Module detects an internal Sensor error.

POSSIBLE CAUSES

Possible Causes
PARK ASSIST SENSOR MEMBRANE OBSTRUCTION (ICE, SNOW, MUD, DIRT COVERING FASCIA)
PARK ASSIST SENSOR CONNECTOR OBSTRUCTION (ICE, SNOW, MUD, DIRT)
DECOUPLING RING MISSING/MOUNTED WRONG
OBJECTS - SUCH AS LICENSE PLATES - IN CLOSE RANGE TO THE SENSOR
PARK ASSIST SENSOR

DIAGNOSTIC TEST

1. **CHECK FOR AN ACTIVE DIAGNOSTIC TROUBLE CODE (DTC)**

   NOTE: Before proceeding with this diagnostic procedure, remove any ice, snow, mud, dirt, or other obstructions from the front/rear fascia/bumper. Also remove any ice, snow, dirt, mud, or other obstructions from the underside of the Fascia/Bumper surrounding the sensors.

   1. Turn the ignition on.
   2. With the scan tool, read Park Assist Module DTCs.

      Does the scan tool display this DTC as active?

      Yes

      - Go To 2

      No

      - Test complete, the condition or conditions that originally set this DTC are not present at this time. Using the wiring diagrams as a guide, check all related splices and connectors for signs of water intrusion, corrosion, pushed out or bent terminals, and correct pin tension.
      - Perform the BODY VERIFICATION TEST. Refer to **STANDARD PROCEDURE** .

2. **PARK ASSIST SENSOR**

1. Verify that none of the possible causes mentioned above are present. Repair as necessary.

   If none of the possible causes mentioned above are present, view repair.

   Repair

   - Replace the Park Assist Sensor that caused this DTC to change from active to stored after disconnecting it in accordance with the Service Information. Refer to **SENSOR, PARK ASSIST, REMOVAL** .
   - Perform the BODY VERIFICATION TEST. Refer to **STANDARD PROCEDURE** .

B1292-92-PTS SENSOR 5 - PERFORMANCE OR INCORRECT OPERATION

For a complete wiring diagram, **refer to appropriate SYSTEM WIRING DIAGRAMS article** .

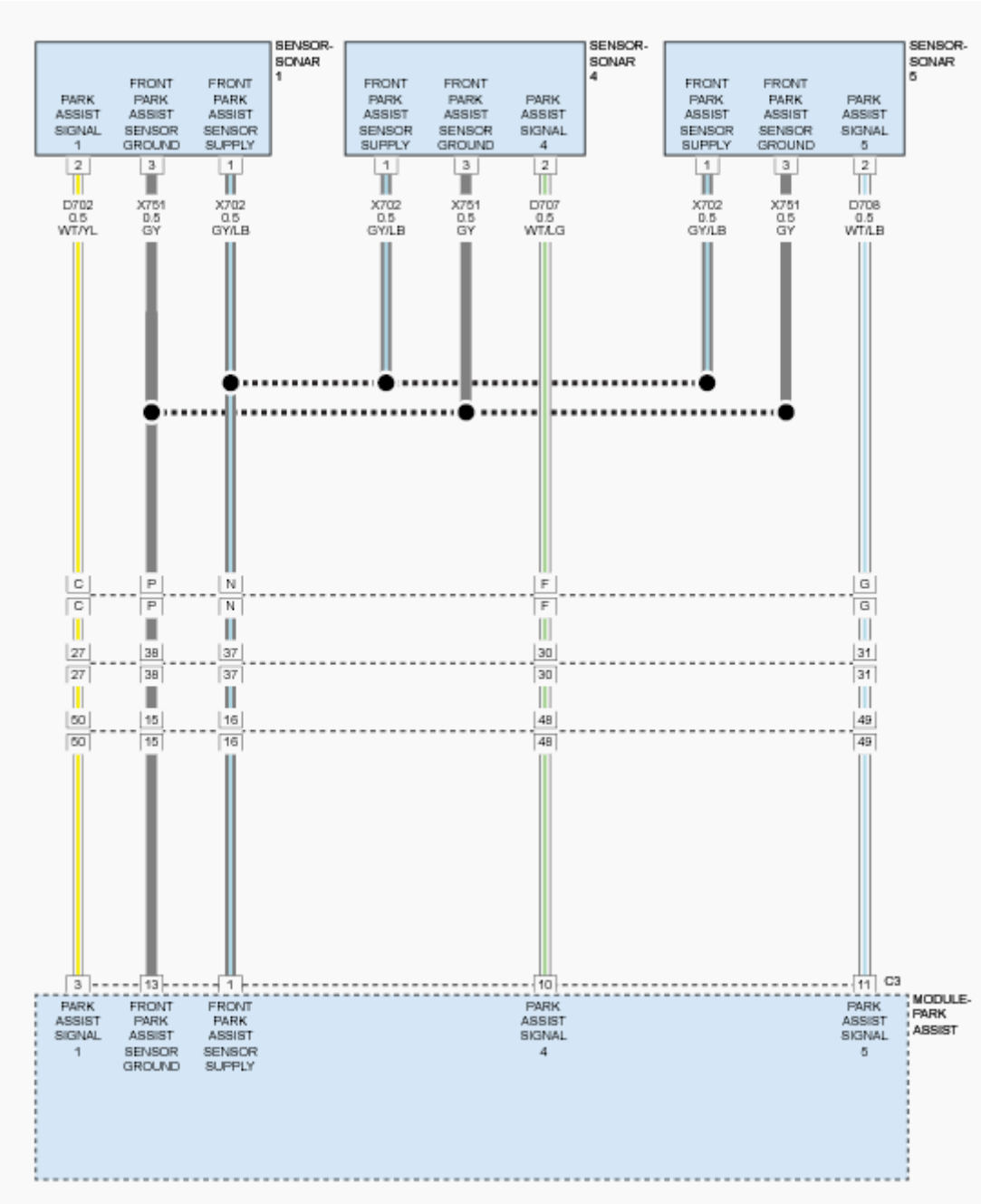

Fig. 24: Identifying Front Park Assist Circuit Diagram
Courtesy of CHRYSLER GROUP, LLC

THEORY OF OPERATION

The Park Assist Sensors are ultrasonic transceivers that are completely controlled by the Park Assist Module. The sensors transmit and receive ultrasonic signals. Each sensor has a voltage, signal, and return circuit to the module. The sensors communicate with the Park Assist Module using a dedicated serial bus communication circuit.

NOTE: **The numbering system for the park assist sensors allows for up to twelve sensors on the vehicle, six front and six rear. The sensors are numbered in a clockwise manner starting at the left front bumper. The left front sensor (if equipped with front park assist) is the number 1 sensor. The numbering continues in a clockwise direction around the vehicle.**

WHEN MONITORED

Vehicle in reverse and during the self-test while vehicle is in drive between 18 km/h (11 mph) and 40 km/h (25 mph).

SET CONDITION

If the system detects data corruption in the transmission in the internal communication line between the module and sensors, this code will set.

POSSIBLE CAUSES

Possible Causes
(D708) PARK ASSIST SENSOR 5 SIGNAL CIRCUIT SHORTED TO GROUND
(D708) PARK ASSIST SENSOR 5 SIGNAL CIRCUIT SHORTED TO BATTERY
(D708) PARK ASSIST SENSOR 5 SIGNAL CIRCUIT OPEN
PARK ASSIST SENSOR
PARK ASSIST MODULE

DIAGNOSTIC TEST

1. **CHECK FOR AN ACTIVE DIAGNOSTIC TROUBLE CODE (DTC)**
    1. Turn the ignition on.
    2. With the scan tool, read DTCs.

    Does the scan tool display this DTC as active?

    Yes

    - Go To 2

    No

    - Test complete, the condition or conditions that originally set this DTC are not present at this time. Using the wiring diagrams as a guide, check all related splices and connectors for signs of water intrusion, corrosion, pushed out or bent terminals, and correct pin tension.
    - Perform the BODY VERIFICATION TEST. Refer to **STANDARD PROCEDURE** .
2. **CHECK THE PARK ASSIST SENSOR FOR AN INTERNAL SHORT**

1. Disconnect the Park Assist Sensor harness connector.
2. With the scan tool, read DTCs.

   Does the scan tool display this DTC as active?

   Yes

   - Go To 3

   No

   - Replace Park Assist Sensor 5 in accordance with the Service Information. Refer to **SENSOR, PARK ASSIST, REMOVAL** .
   - Perform the BODY VERIFICATION TEST. Refer to **STANDARD PROCEDURE** .

3. **CHECK THE (D708) PARK ASSIST SENSOR 5 SIGNAL CIRCUIT FOR A SHORT TO GROUND**
   1. Turn the ignition off.
   2. Disconnect the Park Assist Module C3 harness connector.
   3. Measure the resistance between ground and the (D708) Park Assist Sensor 5 Signal circuit.

      Is the resistance below 10K Ohms?

      Yes

      - Repair the (D708) Park Assist Sensor 5 Signal circuit for a short to ground.
      - Perform the BODY VERIFICATION TEST. Refer to **STANDARD PROCEDURE** .

      No

      - Go To 4

4. **CHECK THE (D708) PARK ASSIST SENSOR 5 SIGNAL CIRCUIT FOR A SHORT TO BATTERY**
   1. Turn the ignition on.
   2. Measure the voltage of the (D708) Park Assist Sensor 5 Signal circuit.

      Is voltage present?

      Yes

      - Repair the (D708) Park Assist Sensor 5 Signal circuit for a short to battery.
      - Perform the BODY VERIFICATION TEST. Refer to **STANDARD PROCEDURE** .

      No

- Go To 5

5. **CHECK THE (D708) PARK ASSIST SENSOR 5 SIGNAL CIRCUIT FOR AN OPEN**
   1. Measure the resistance of the (D708) Park Assist Sensor 5 Signal circuit.

      Is the resistance above 5.0 Ohms?

      Yes

      - Repair the (D708) Park Assist Sensor 5 Signal circuit for an open.
      - Perform the BODY VERIFICATION TEST. Refer to **STANDARD PROCEDURE** .

      No

      - Replace the Park Assist Module in accordance with Service Information. Refer to **MODULE, PARK ASSIST, REMOVAL** .
      - Perform the BODY VERIFICATION TEST. Refer to **STANDARD PROCEDURE** .

B1293-11-PTS SENSOR 6 - CIRCUIT SHORT TO GROUND

For a complete wiring diagram, **refer to appropriate SYSTEM WIRING DIAGRAMS article** .

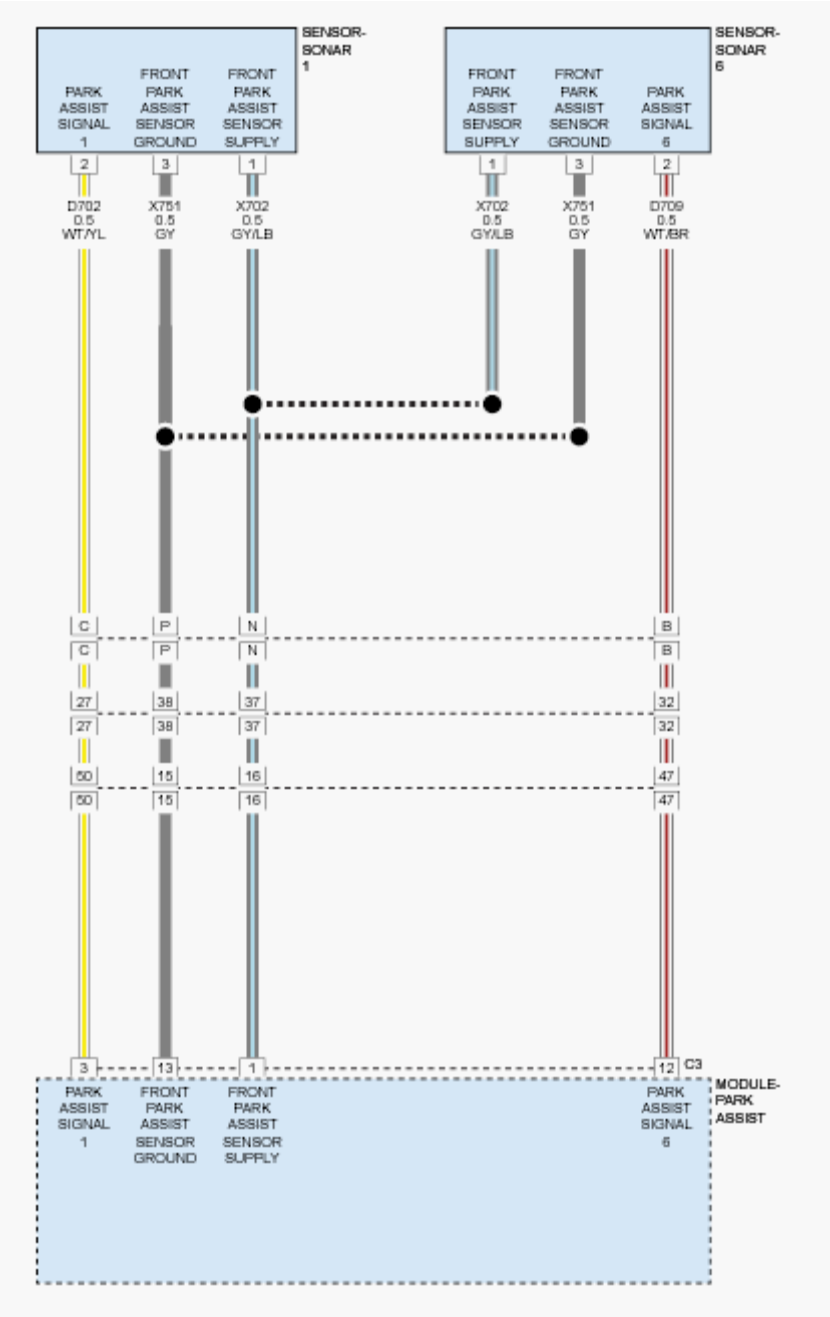

Fig. 25: Identifying Front Park Assist Circuit Diagram
Courtesy of CHRYSLER GROUP, LLC

THEORY OF OPERATION

The Park Assist Sensors are ultrasonic transceivers that are completely controlled by the Park Assist Module. The sensors transmit and receive ultrasonic signals. Each sensor has a voltage, signal, and return circuit to the module. The sensors communicate with the Park Assist Module using a dedicated serial bus communication circuit.

NOTE: The numbering system for the park assist sensors allows for up to twelve sensors on the vehicle, six front and six rear. The sensors are numbered in a clockwise manner starting at the left front bumper. The left front sensor (if equipped with front park assist) is the number 1 sensor. The numbering continues in a clockwise direction around the vehicle.

WHEN MONITORED

Vehicle in reverse and during the self-test while vehicle is in drive between 18 km/h (11 mph) and 40 km/h (25 mph).

SET CONDITION

The Park Assist Module detects a short to ground on the Park Assist Sensor Signal circuit.

POSSIBLE CAUSES

Possible Causes
PARK ASSIST SENSOR DISCONNECTED
(D709) PARK ASSIST SENSOR 6 SIGNAL CIRCUIT SHORTED TO GROUND
(D709) PARK ASSIST SENSOR 6 SIGNAL CIRCUIT SHORTED TO THE (X751) FRONT PARK ASSIST SENSOR GROUND CIRCUIT
(D709) PARK ASSIST SENSOR 6 SIGNAL CIRCUIT OPEN
(X702) FRONT PARK ASSIST SENSOR SUPPLY CIRCUIT OPEN
PARK ASSIST SENSOR
PARK ASSIST MODULE

DIAGNOSTIC TEST

1. **CHECK FOR AN ACTIVE DIAGNOSTIC TROUBLE CODE (DTC)**

   NOTE: A disconnected sensor will set this DTC. Verify the Park Assist Sensor is connected before proceeding with this diagnostic procedure.

   1. Turn the ignition on.
   2. With the scan tool, read DTCs.

   Does the scan tool display this DTC as active?

   Yes

   - Go To 2

   No

- Test complete, the condition or conditions that originally set this DTC are not present at this time. Using the wiring diagrams as a guide, check all related splices and connectors for signs of water intrusion, corrosion, pushed out or bent terminals, and correct pin tension.
- Perform the BODY VERIFICATION TEST. Refer to **STANDARD PROCEDURE** .

2. **CHECK THE VOLTAGE OF THE (X702) FRONT PARK ASSIST SENSOR SUPPLY CIRCUIT**
   1. Turn the ignition off.
   2. Disconnect the Park Assist Sensor harness connector.
   3. Turn the ignition on.
   4. Measure the voltage of the (X702) Front Park Assist Sensor Supply circuit.

   Is the voltage above 8.0 volts?

   Yes

   - Go To 4

   No

   - Go To 3

3. **CHECK THE (X702) FRONT PARK ASSIST SENSOR SUPPLY CIRCUIT FOR AN OPEN OR HIGH RESISTANCE**
   1. Turn the ignition off.
   2. Disconnect the Park Assist Module C3 harness connector.
   3. Measure the resistance of the (X702) Front Park Assist Sensor Supply circuit.

   Is the resistance below 5.0 Ohms?

   Yes

   - Replace the Park Assist Module in accordance with the Service Information. Refer to **MODULE, PARK ASSIST, REMOVAL** .
   - Perform the BODY VERIFICATION TEST. Refer to **STANDARD PROCEDURE** .

   No

   - Repair the open or high resistance in the (X702) Front Park Assist Sensor Supply circuit.
   - Perform the BODY VERIFICATION TEST. Refer to **STANDARD PROCEDURE** .

4. **CHECK THE (D709) PARK ASSIST SENSOR 6 SIGNAL CIRCUIT FOR A SHORT TO GROUND WITH THE PARK ASSIST MODULE CONNECTED**

   NOTE: Perform this step with the Park Assist Module connected.

   1. Measure the resistance between ground and the (D709) Park Assist Sensor 6 Signal circuit.

Is the resistance below 10K Ohms?

Yes

- Go To 5

No

- Go To 7

5. **CHECK THE (D709) PARK ASSIST SENSOR 6 SIGNAL CIRCUIT FOR A SHORT TO GROUND WITH THE PARK ASSIST MODULE DISCONNECTED**
   1. Disconnect the Park Assist Module C3 harness connector.
   2. Measure the resistance between ground and the (D709) Park Assist Sensor 6 Signal circuit.

   Is the resistance below 10K Ohms?

   Yes

   - Repair the short to ground in the (D709) Park Assist Sensor 6 Signal circuit.
   - Perform the BODY VERIFICATION TEST. Refer to **STANDARD PROCEDURE** .

   No

   - Go To 6

6. **CHECK THE (D709) PARK ASSIST SENSOR 6 SIGNAL CIRCUIT FOR A SHORT TO THE (X751) FRONT PARK ASSIST SENSOR GROUND CIRCUIT**
   1. Measure the resistance between the (D709) Park Assist Sensor 6 Signal circuit and the (X751) Front Park Assist Sensor Ground circuit.

   Is the resistance below 10K Ohms?

   Yes

   - Repair the short between the (D709) Park Assist Sensor 6 Signal circuit and the (X751) Front Park Assist Sensor Ground circuit.
   - Perform the BODY VERIFICATION TEST. Refer to **STANDARD PROCEDURE** .

   No

   - Replace the Park Assist Module in accordance with the Service Information. Refer to **MODULE, PARK ASSIST, REMOVAL** .
   - Perform the BODY VERIFICATION TEST. Refer to **STANDARD PROCEDURE** .

7. **CHECK THE (D709) PARK ASSIST SENSOR 6 SIGNAL CIRCUIT FOR AN OPEN**
   1. Disconnect the Park Assist Module C3 harness connector.

2. Measure the resistance of the (D709) Park Assist Sensor 6 Signal circuit.

   Is the resistance above 5.0 Ohms?

   Yes

   - Repair the open in the (D709) Park Assist Sensor 6 Signal circuit.
   - Perform the BODY VERIFICATION TEST. Refer to **STANDARD PROCEDURE** .

   No

   - Go To 8

8. **PARK ASSIST SENSOR**
   1. Turn the ignition on.
   2. Reconnect the Park Assist Module C3 harness connector.
   3. Connect a jumper wire across the (X702) Front Park Assist Sensor Supply and (D709) Park Assist Sensor 6 Signal circuits.
   4. Turn the ignition on.
   5. With the scan tool, read DTCs.

      Does the scan tool display DTC: B1291-12-PTS SENSOR 6 - CIRCUIT SHORT TO BATTERY as active?

      Yes

      - Replace the Park Assist Sensor in accordance with the Service Information. Refer to **SENSOR, PARK ASSIST, REMOVAL** .
      - Perform the BODY VERIFICATION TEST. Refer to **STANDARD PROCEDURE** .

      No

      - Replace the Park Assist Module in accordance with the Service Information. Refer to **MODULE, PARK ASSIST, REMOVAL** .
      - Perform the BODY VERIFICATION TEST. Refer to **STANDARD PROCEDURE** .

B1293-12-PTS SENSOR 6 - CIRCUIT SHORT TO BATTERY

For a complete wiring diagram, **refer to appropriate SYSTEM WIRING DIAGRAMS article** .

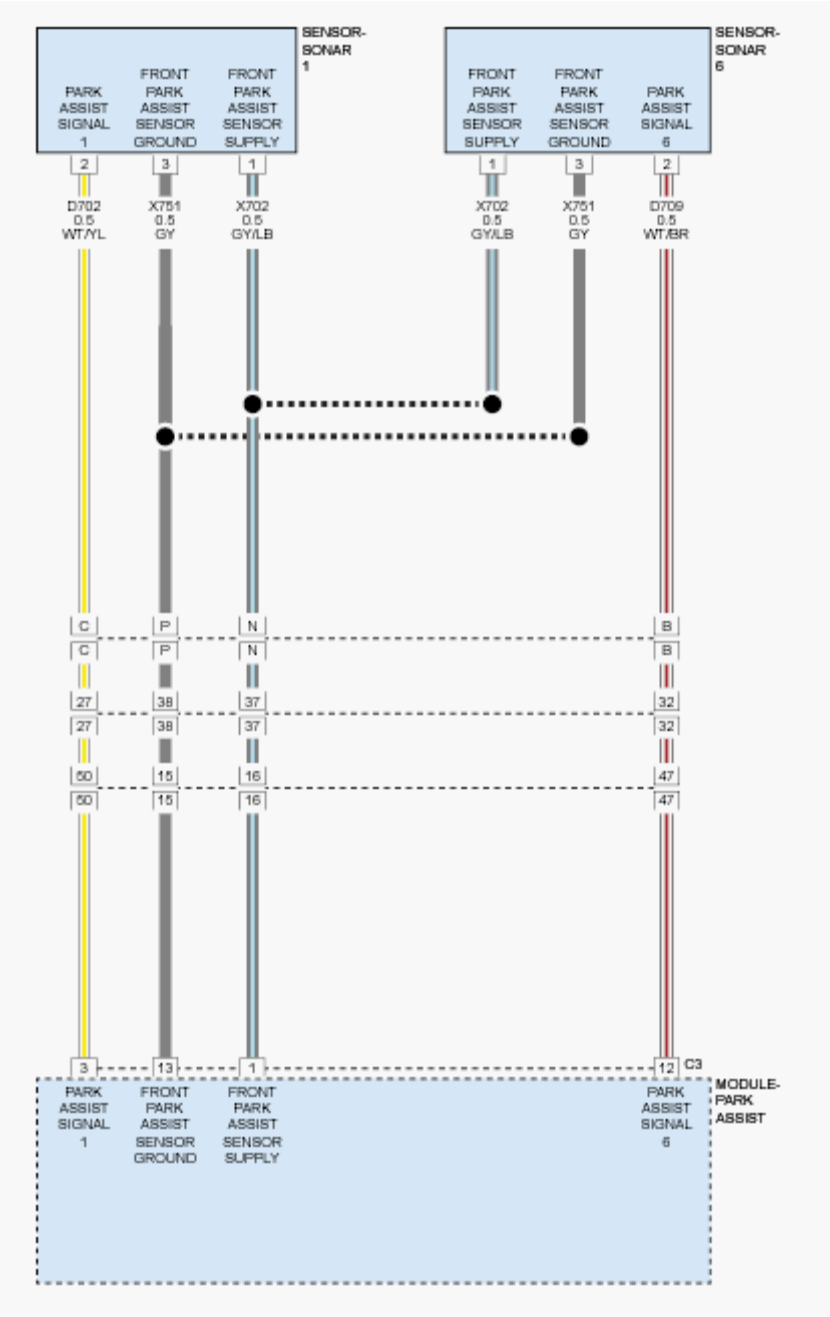

Fig. 26: Identifying Front Park Assist Circuit Diagram
Courtesy of CHRYSLER GROUP, LLC

THEORY OF OPERATION

The Park Assist Sensors are ultrasonic transceivers that are completely controlled by the Park Assist Module. The sensors transmit and receive ultrasonic signals. Each sensor has a voltage, signal, and return circuit to the module. The sensors communicate with the Park Assist Module using a dedicated serial bus communication circuit.

NOTE: **The numbering system for the park assist sensors allows for up to twelve sensors on the vehicle, six front and six rear. The sensors are numbered in a clockwise manner starting at the left front bumper. The left front sensor (if equipped with front park assist) is the number 1 sensor. The numbering continues in a clockwise direction around the vehicle.**

WHEN MONITORED

Vehicle in reverse and during the self-test while vehicle is in drive between 18 km/h (11 mph) and 40 km/h (25 mph).

SET CONDITION

The Park Assist Module detects an open or short to voltage on the Park Assist Sensor Signal circuit.

POSSIBLE CAUSES

Possible Causes
(D709) PARK ASSIST SENSOR 6 SIGNAL CIRCUIT SHORTED TO VOLTAGE
(D709) PARK ASSIST SENSOR 6 SIGNAL CIRCUIT SHORTED TO THE (X702) FRONT PARK ASSIST SENSOR SUPPLY CIRCUIT
(X751) FRONT PARK ASSIST SENSOR GROUND CIRCUIT OPEN
PARK ASSIST SENSOR
PARK ASSIST MODULE

DIAGNOSTIC TEST

1. **CHECK FOR AN ACTIVE DIAGNOSTIC TROUBLE CODE (DTC)**
   1. Turn the ignition on.
   2. With the scan tool, read DTCs.

      Does the scan tool display this DTC as active?

      Yes

      - Go To 2

      No

      - Test complete, the condition or conditions that originally set this DTC are not present at this time. Using the wiring diagrams as a guide, check all related splices and connectors for signs of water intrusion, corrosion, pushed out or bent terminals, and correct pin tension.
      - Perform the BODY VERIFICATION TEST. Refer to **STANDARD PROCEDURE** .
2. **(D709) PARK ASSIST SENSOR 6 SIGNAL CIRCUIT SHORTED TO BATTERY**

1. Turn the ignition off.
2. Disconnect the Park Assist Module C3 harness connector.
3. Disconnect the Park Assist Sensor harness connector.
4. Turn the ignition on.
5. Measure the voltage of the (D709) Park Assist Sensor 6 Signal circuit.

   Is the voltage above 10.0 volts?

   Yes

   - Repair the (D709) Park Assist Sensor 6 Signal circuit for a short to battery.
   - Perform the BODY VERIFICATION TEST. Refer to **STANDARD PROCEDURE** .

   No

   - Go To 3

3. **(D709) PARK ASSIST SENSOR 6 SIGNAL CIRCUIT SHORTED TO THE (X702) FRONT PARK ASSIST SENSOR SUPPLY CIRCUIT**
   1. Turn the ignition off.
   2. Measure the resistance between the (D709) Park Assist Sensor 6 Signal circuit and the (X702) Front Park Assist Sensor Supply circuit.

      Is the resistance below 10K Ohms?

      Yes

      - Repair the (D709) Park Assist Sensor 6 Signal circuit for a short to the (X702) Front Park Assist Sensor Supply circuit.
      - Perform the BODY VERIFICATION TEST. Refer to **STANDARD PROCEDURE** .

      No

      - Go To 4

4. **(X751) FRONT PARK ASSIST SENSOR GROUND CIRCUIT OPEN**
   1. Reconnect the Park Assist Module C3 harness connector.
   2. Measure the resistance between ground and the (X751) Front Park Assist Sensor Ground circuit.

      Is the resistance above 20.0 Ohms?

      Yes

      - Go To 5

No

- Replace the Park Assist Sensor in accordance with the Service Information. Refer to **SENSOR, PARK ASSIST, REMOVAL** .
- Perform the BODY VERIFICATION TEST. Refer to **STANDARD PROCEDURE** .

5. **(X751) FRONT PARK ASSIST SENSOR GROUND CIRCUIT OPEN BETWEEN PARK ASSIST MODULE AND SENSOR**
   1. Disconnect the Park Assist Module C3 harness connector.
   2. Measure the resistance of the (X751) Front Park Assist Sensor Ground circuit.

   Is the resistance above 5.0 Ohms?

   Yes

   - Repair the open in the (X751) Front Park Assist Sensor Ground circuit.
   - Perform the BODY VERIFICATION TEST. Refer to **STANDARD PROCEDURE** .

   No

   - Replace the Park Assist Module in accordance with the Service Information. Refer to **SENSOR, PARK ASSIST, REMOVAL** .
   - Perform the BODY VERIFICATION TEST. Refer to **STANDARD PROCEDURE** .

B1293-25-PTS SENSOR 6 - SIGNAL SHAPE / WAVEFORM FAILURE

For a complete wiring diagram, **refer to appropriate SYSTEM WIRING DIAGRAMS article** .

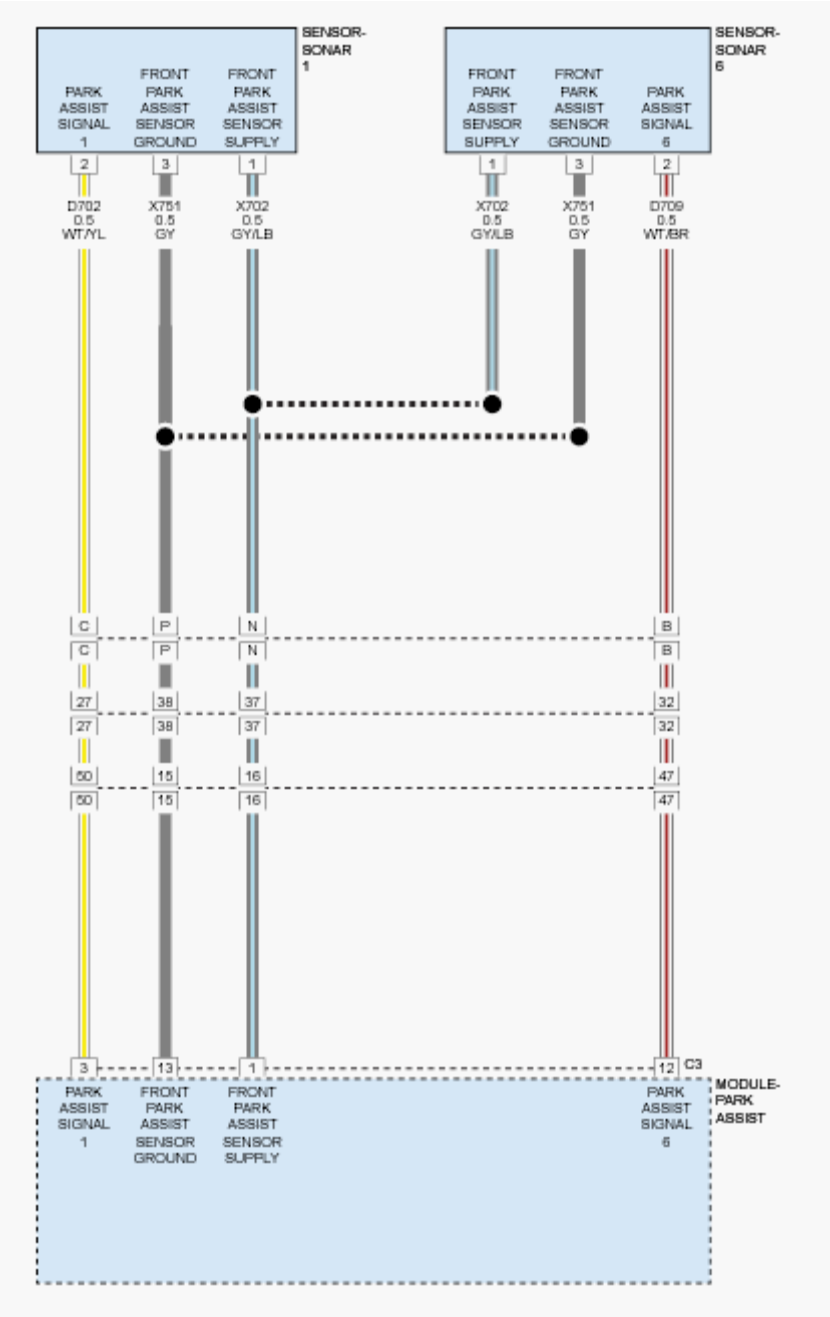

Fig. 27: Identifying Front Park Assist Circuit Diagram
Courtesy of CHRYSLER GROUP, LLC

THEORY OF OPERATION

The Park Assist Sensors are ultrasonic transceivers that are completely controlled by the Park Assist Module. The sensors transmit and receive ultrasonic signals. Each sensor has a voltage, signal, and return circuit to the module. The sensors communicate with the Park Assist Module using a dedicated serial bus communication circuit.

WHEN MONITORED

Vehicle in reverse.

During the self-test while vehicle is in drive between 11 mph (18 km/h) and 25 mph (40 km/h).

SET CONDITION

The Park Assist Module detects an internal Sensor error.

POSSIBLE CAUSES

Possible Causes
PARK ASSIST SENSOR MEMBRANE OBSTRUCTION (ICE, SNOW, MUD, DIRT COVERING FASCIA)
PARK ASSIST SENSOR CONNECTOR OBSTRUCTION (ICE, SNOW, MUD, DIRT)
DECOUPLING RING MISSING/MOUNTED WRONG
OBJECTS - SUCH AS LICENSE PLATES - IN CLOSE RANGE TO THE SENSOR
PARK ASSIST SENSOR

DIAGNOSTIC TEST

1. **CHECK FOR AN ACTIVE DIAGNOSTIC TROUBLE CODE (DTC)**

   NOTE: Before proceeding with this diagnostic procedure, remove any ice, snow, mud, dirt, or other obstructions from the front/rear fascia/bumper. Also remove any ice, snow, dirt, mud, or other obstructions from the underside of the Fascia/Bumper surrounding the sensors.

   1. Turn the ignition on.
   2. With the scan tool, read Park Assist Module DTCs.

      Does the scan tool display this DTC as active?

      Yes

      - Go To 2

      No

      - Test complete, the condition or conditions that originally set this DTC are not present at this time. Using the wiring diagrams as a guide, check all related splices and connectors for signs of water intrusion, corrosion, pushed out or bent terminals, and correct pin tension.
      - Perform the BODY VERIFICATION TEST. Refer to **STANDARD PROCEDURE** .

2. **PARK ASSIST SENSOR**

1. Verify that none of the possible causes mentioned above are present. Repair as necessary.

   If none of the possible causes mentioned above are present, view repair.

   Repair

   - Replace the Park Assist Sensor that caused this DTC to change from active to stored after disconnecting it in accordance with the Service Information. Refer to **SENSOR, PARK ASSIST, REMOVAL** .
   - Perform the BODY VERIFICATION TEST. Refer to **STANDARD PROCEDURE** .

B1293-92-PTS SENSOR 6 - PERFORMANCE OR INCORRECT OPERATION

For a complete wiring diagram, **refer to appropriate SYSTEM WIRING DIAGRAMS article** .

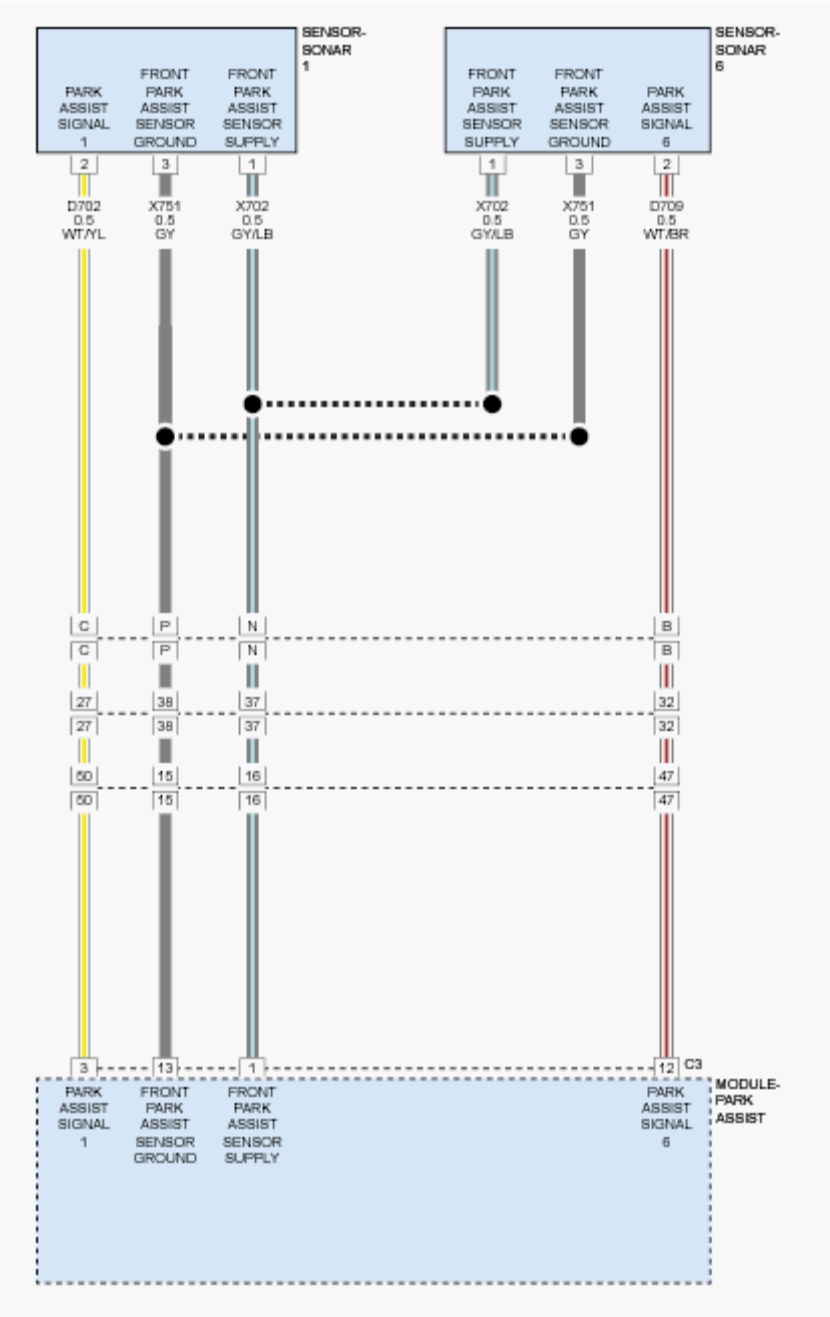

Fig. 28: Identifying Front Park Assist Circuit Diagram
Courtesy of CHRYSLER GROUP, LLC

THEORY OF OPERATION

The Park Assist Sensors are ultrasonic transceivers that are completely controlled by the Park Assist Module. The sensors transmit and receive ultrasonic signals. Each sensor has a voltage, signal, and return circuit to the module. The sensors communicate with the Park Assist Module using a dedicated serial bus communication circuit.

NOTE: **The numbering system for the park assist sensors allows for up to twelve sensors on the vehicle, six front and six rear. The sensors are numbered in a clockwise manner starting at the left front bumper. The left front sensor (if equipped with front park assist) is the number 1 sensor. The numbering continues in a clockwise direction around the vehicle.**

WHEN MONITORED

Vehicle in reverse and during the self-test while vehicle is in drive between 18 km/h (11 mph) and 40 km/h (25 mph).

SET CONDITION

If the system detects data corruption in the transmission in the internal communication line between the module and sensors, this code will set.

POSSIBLE CAUSES

Possible Causes
(D709) PARK ASSIST SENSOR 6 SIGNAL CIRCUIT SHORTED TO GROUND
(D709) PARK ASSIST SENSOR 6 SIGNAL CIRCUIT SHORTED TO BATTERY
(D709) PARK ASSIST SENSOR 6 SIGNAL CIRCUIT OPEN
PARK ASSIST SENSOR
PARK ASSIST MODULE

DIAGNOSTIC TEST

1. **CHECK FOR AN ACTIVE DIAGNOSTIC TROUBLE CODE (DTC)**
    1. Turn the ignition on.
    2. With the scan tool, read DTCs.

    Does the scan tool display this DTC as active?

    Yes

    - Go To 2

    No

    - Test complete, the condition or conditions that originally set this DTC are not present at this time. Using the wiring diagrams as a guide, check all related splices and connectors for signs of water intrusion, corrosion, pushed out or bent terminals, and correct pin tension.
    - Perform the BODY VERIFICATION TEST. Refer to **STANDARD PROCEDURE** .
2. **CHECK THE PARK ASSIST SENSOR FOR AN INTERNAL SHORT**

1. Disconnect the Park Assist Sensor harness connector.
2. With the scan tool, read DTCs.

   Does the scan tool display this DTC as active?

   Yes

   - Go To 3

   No

   - Replace Park Assist Sensor 6 in accordance with the Service Information. Refer to **SENSOR, PARK ASSIST, REMOVAL** .
   - Perform the BODY VERIFICATION TEST. Refer to **STANDARD PROCEDURE** .

3. **CHECK THE (D709) PARK ASSIST SENSOR 6 SIGNAL CIRCUIT FOR A SHORT TO GROUND**
   1. Turn the ignition off.
   2. Disconnect the Park Assist Module C3 harness connector.
   3. Measure the resistance between ground and the (D709) Park Assist Sensor 6 Signal circuit.

      Is the resistance below 10K Ohms?

      Yes

      - Repair the (D709) Park Assist Sensor 6 Signal circuit for a short to ground.
      - Perform the BODY VERIFICATION TEST. Refer to **STANDARD PROCEDURE** .

      No

      - Go To 4

4. **CHECK THE (D709) PARK ASSIST SENSOR 6 SIGNAL CIRCUIT FOR A SHORT TO BATTERY**
   1. Turn the ignition on.
   2. Measure the voltage of the (D709) Park Assist Sensor 6 Signal circuit.

      Is voltage present?

      Yes

      - Repair the (D709) Park Assist Sensor 6 Signal circuit for a short to battery.
      - Perform the BODY VERIFICATION TEST. Refer to **STANDARD PROCEDURE** .

      No

- Go To 5

5. **CHECK THE (D709) PARK ASSIST SENSOR 6 SIGNAL CIRCUIT FOR AN OPEN**
   1. Measure the resistance of the (D709) Park Assist Sensor 6 Signal circuit.

      Is the resistance above 5.0 Ohms?

      Yes

      - Repair the (D709) Park Assist Sensor 6 Signal circuit for an open.
      - Perform the BODY VERIFICATION TEST. Refer to **STANDARD PROCEDURE** .

      No

      - Replace the Park Assist Module in accordance with Service Information. Refer to **MODULE, PARK ASSIST, REMOVAL** .
      - Perform the BODY VERIFICATION TEST. Refer to **STANDARD PROCEDURE** .

B1294-11-PTS SENSOR 7 - CIRCUIT SHORT TO GROUND

For a complete wiring diagram, **refer to appropriate SYSTEM WIRING DIAGRAMS article** .

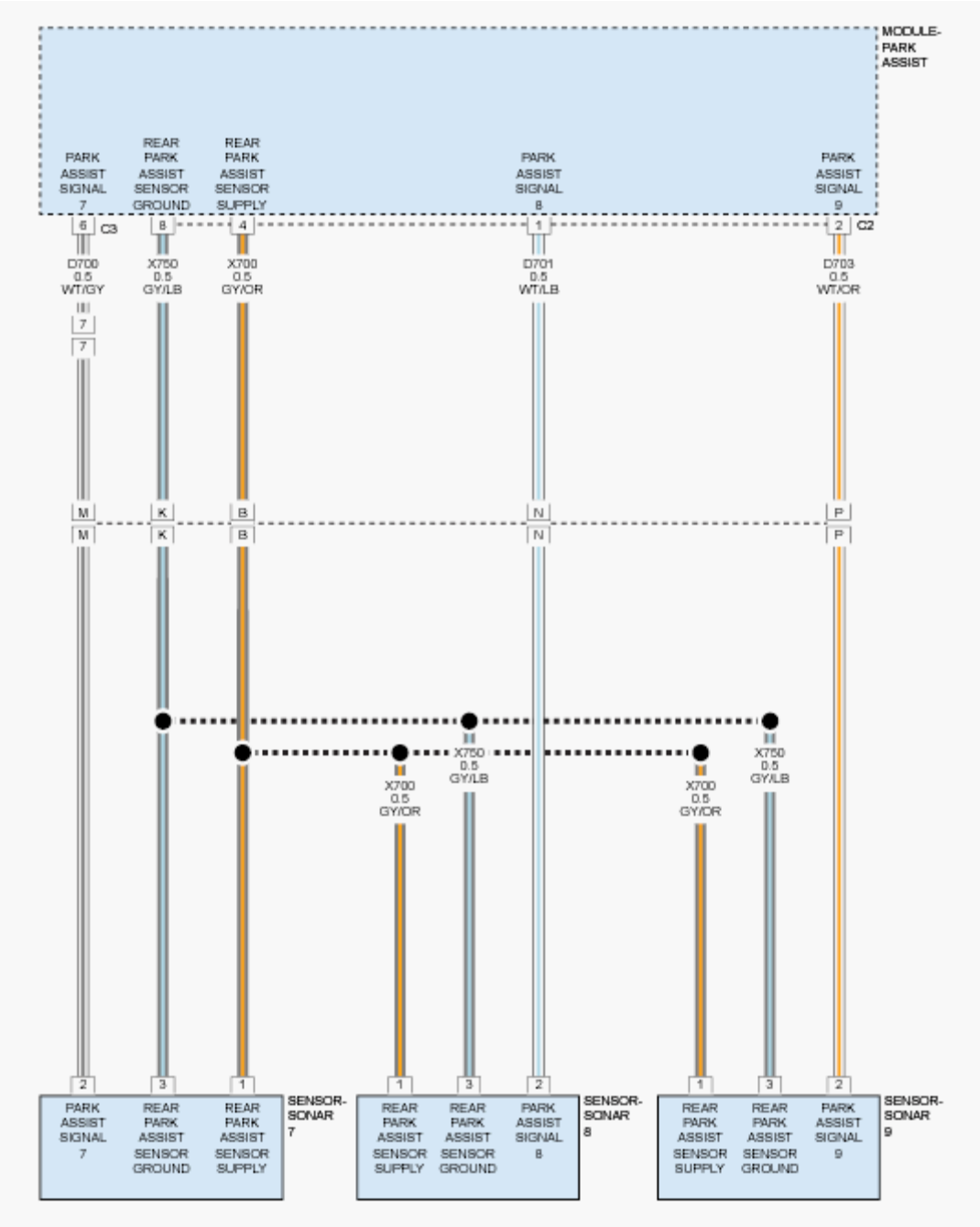

Fig. 29: Identifying Rear Park Assist Circuit Diagram
Courtesy of CHRYSLER GROUP, LLC

THEORY OF OPERATION

The Park Assist Sensors are ultrasonic transceivers that are completely controlled by the Park Assist Module. The sensors transmit and receive ultrasonic signals. Each sensor has a voltage, signal, and return circuit to the module. The sensors communicate with the Park Assist Module using a dedicated serial bus communication circuit.

NOTE: The numbering system for the park assist sensors allows for up to twelve sensors on the vehicle, six front and six rear. The sensors are numbered in a clockwise manner starting at the left front bumper. The left front sensor (if equipped with front park assist) is the number 1 sensor. The numbering continues in a clockwise direction around the vehicle.

WHEN MONITORED

Vehicle in reverse and during the self-test while vehicle is in drive between 17 km/h (11 mph) and 40 km/h (25 mph).

SET CONDITION

The Park Assist Module detects a short to ground on the Park Assist Sensor Signal circuit.

POSSIBLE CAUSES

Possible Causes
PARK ASSIST SENSOR DISCONNECTED
(D700) PARK ASSIST SENSOR 7 SIGNAL CIRCUIT SHORTED TO GROUND
(D700) PARK ASSIST SENSOR 7 SIGNAL CIRCUIT SHORTED TO THE (X750) PARK ASSIST SENSOR GROUND CIRCUIT
(D700) PARK ASSIST SENSOR 7 SIGNAL CIRCUIT OPEN
(X700) PARK ASSIST SENSOR SUPPLY CIRCUIT OPEN
PARK ASSIST SENSOR
PARK ASSIST MODULE

DIAGNOSTIC TEST

1. **CHECK FOR AN ACTIVE DIAGNOSTIC TROUBLE CODE (DTC)**

   NOTE: A disconnected sensor will set this DTC. Verify the Park Assist Sensor is connected before proceeding with this diagnostic procedure.

   1. Turn the ignition on.
   2. With the scan tool, read DTCs.

   Does the scan tool display this DTC as active?

   Yes

   - Go To 2

   No

- Test complete, the condition or conditions that originally set this DTC are not present at this time. Using the wiring diagrams as a guide, check all related splices and connectors for signs of water intrusion, corrosion, pushed out or bent terminals, and correct pin tension.
- Perform the BODY VERIFICATION TEST. Refer to **STANDARD PROCEDURE** .

2. **CHECK THE VOLTAGE OF THE (X700) PARK ASSIST SENSOR SUPPLY CIRCUIT**
   1. Turn the ignition off.
   2. Disconnect the Park Assist Sensor harness connector.
   3. Turn the ignition on.
   4. Measure the voltage of the (X700) Park Assist Sensor Supply circuit.

   Is the voltage above 8.0 volts?

   Yes

   - Go To 4

   No

   - Go To 3

3. **CHECK THE (X700) PARK ASSIST SENSOR SUPPLY CIRCUIT FOR AN OPEN OR HIGH RESISTANCE**
   1. Turn the ignition off.
   2. Disconnect the Park Assist Module C2 harness connector.
   3. Measure the resistance of the (X700) Park Assist Sensor Supply circuit.

   Is the resistance below 5.0 Ohms?

   Yes

   - Replace the Park Assist Module in accordance with the Service Information. Refer to **MODULE, PARK ASSIST, REMOVAL** .
   - Perform the BODY VERIFICATION TEST. Refer to **STANDARD PROCEDURE** .

   No

   - Repair the open or high resistance in the (X700) Park Assist Sensor Supply circuit.
   - Perform the BODY VERIFICATION TEST. Refer to **STANDARD PROCEDURE** .

4. **CHECK THE (D700) PARK ASSIST SENSOR 7 SIGNAL CIRCUIT FOR A SHORT TO GROUND WITH THE PARK ASSIST MODULE CONNECTED**

   NOTE: Perform this step with the Park Assist Module connected.

   1. Measure the resistance between ground and the (D700) Park Assist Sensor 7 Signal circuit.

Is the resistance below 10K Ohms?

Yes

- Go To 5

No

- Go To 7

5. **CHECK THE (D700) PARK ASSIST SENSOR 7 SIGNAL CIRCUIT FOR A SHORT TO GROUND WITH THE PARK ASSIST MODULE DISCONNECTED**
   1. Disconnect the Park Assist Module C2 harness connector.
   2. Measure the resistance between ground and the (D700) Park Assist Sensor 7 Signal circuit.

   Is the resistance below 10K Ohms?

   Yes

   - Repair the short to ground in the (D700) Park Assist Sensor 7 Signal circuit.
   - Perform the BODY VERIFICATION TEST. Refer to **STANDARD PROCEDURE** .

   No

   - Go To 6

6. **CHECK THE (D700) PARK ASSIST SENSOR 7 SIGNAL CIRCUIT FOR A SHORT TO THE (X750) PARK ASSIST SENSOR GROUND CIRCUIT**
   1. Measure the resistance between the (D700) Park Assist Sensor 7 Signal circuit and the (X750) Park Assist Sensor Ground circuit.

   Is the resistance below 10K Ohms?

   Yes

   - Repair the short between the (D700) Park Assist Sensor 7 Signal circuit and the (X750) Park Assist Sensor Ground circuit.
   - Perform the BODY VERIFICATION TEST. Refer to **STANDARD PROCEDURE** .

   No

   - Replace the Park Assist Module in accordance with the Service Information. Refer to **MODULE, PARK ASSIST, REMOVAL** .
   - Perform the BODY VERIFICATION TEST. Refer to **STANDARD PROCEDURE** .

7. **CHECK THE (D700) PARK ASSIST SENSOR 7 SIGNAL CIRCUIT FOR AN OPEN**
   1. Disconnect the Park Assist Module C2 harness connector.

2. Measure the resistance of the (D700) Park Assist Sensor 7 Signal circuit.

   Is the resistance above 5.0 Ohms?

   Yes

   - Repair the open in the (D700) Park Assist Sensor 7 Signal circuit.
   - Perform the BODY VERIFICATION TEST. Refer to **STANDARD PROCEDURE** .

   No

   - Go To 8

8. **PARK ASSIST SENSOR**
   1. Turn the ignition on.
   2. Reconnect the Park Assist Module C2 harness connector.
   3. Connect a jumper wire across the (X700) Park Assist Sensor Supply and (D700) Park Assist Sensor 7 Signal circuits.
   4. Turn the ignition on.
   5. With the scan tool, read DTCs.

      Does the scan tool display DTC: B1294-12-PTS SENSOR 7-CIRCUIT SHORT TO BATTERY as active?

      Yes

      - Replace the Park Assist Sensor in accordance with the Service Information. Refer to **SENSOR, PARK ASSIST, REMOVAL** .
      - Perform the BODY VERIFICATION TEST. Refer to **STANDARD PROCEDURE** .

      No

      - Replace the Park Assist Module in accordance with the Service Information. Refer to **MODULE, PARK ASSIST, REMOVAL** .
      - Perform the BODY VERIFICATION TEST. Refer to **STANDARD PROCEDURE** .

B1294-12-PTS SENSOR 7 - CIRCUIT SHORT TO BATTERY

For a complete wiring diagram, **refer to appropriate SYSTEM WIRING DIAGRAMS article** .

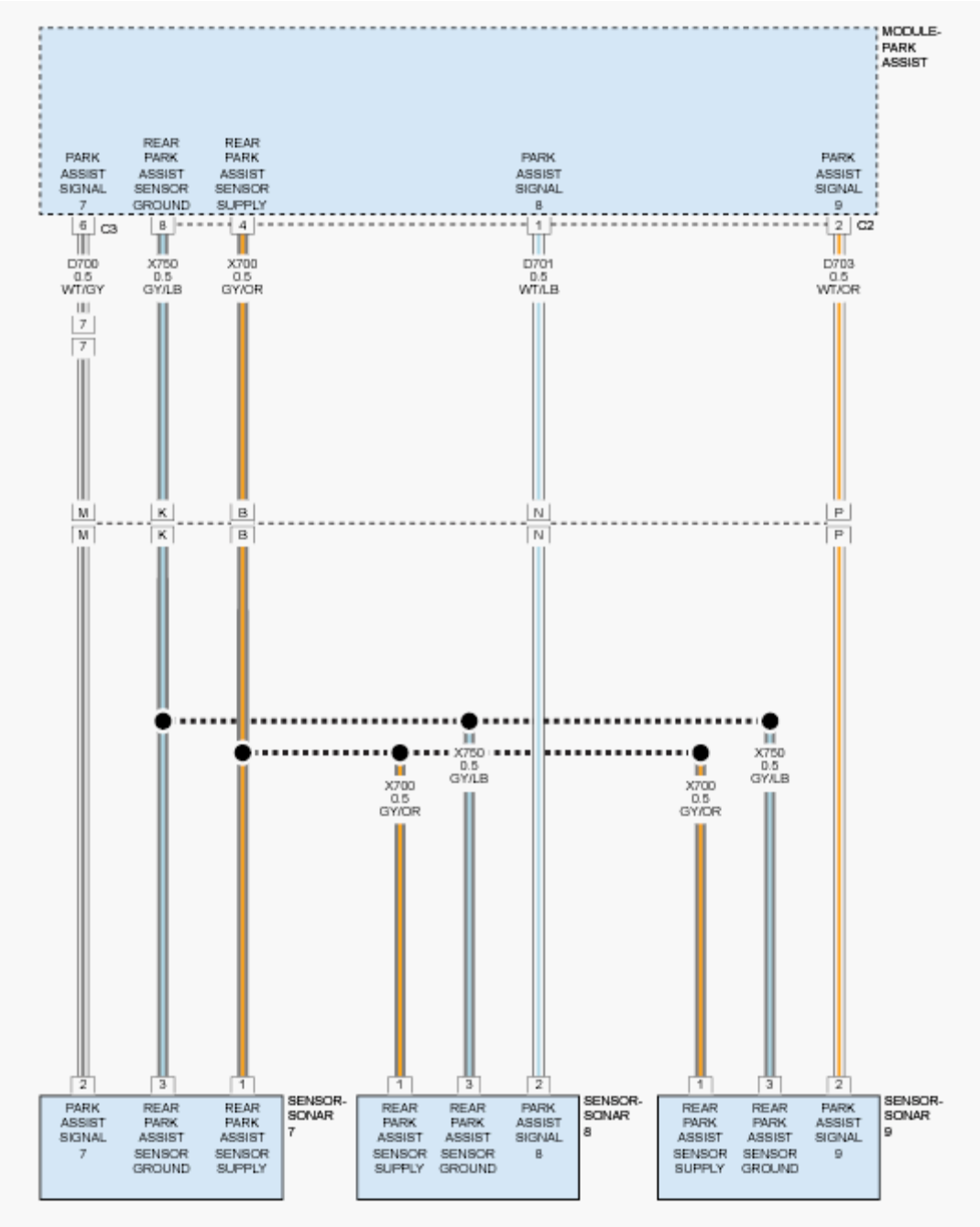

Fig. 30: Identifying Rear Park Assist Circuit Diagram
Courtesy of CHRYSLER GROUP, LLC

THEORY OF OPERATION

The Park Assist Sensors are ultrasonic transceivers that are completely controlled by the Park Assist Module. The sensors transmit and receive ultrasonic signals. Each sensor has a voltage, signal, and return circuit to the module. The sensors communicate with the Park Assist Module using a dedicated serial bus communication circuit.

NOTE: **The numbering system for the park assist sensors allows for up to twelve sensors on the vehicle, six front and six rear. The sensors are numbered in a clockwise manner starting at the left front bumper. The left front sensor (if equipped with front park assist) is the number 1 sensor. The numbering continues in a clockwise direction around the vehicle.**

WHEN MONITORED

Vehicle in reverse and during the self-test while vehicle is in drive between 18 km/h (11 mph) and 40 km/h (25 mph).

SET CONDITION

The Park Assist Module detects an open or short to voltage on the Park Assist Sensor Signal circuit.

POSSIBLE CAUSES

Possible Causes
(D700) PARK ASSIST SENSOR 7 SIGNAL CIRCUIT SHORTED TO VOLTAGE
(D700) PARK ASSIST SENSOR 7 SIGNAL CIRCUIT SHORTED TO THE (X700) PARK ASSIST SENSOR SUPPLY CIRCUIT
(X750) PARK ASSIST SENSOR GROUND CIRCUIT OPEN
PARK ASSIST SENSOR
PARK ASSIST MODULE

DIAGNOSTIC TEST

1. **CHECK FOR AN ACTIVE DIAGNOSTIC TROUBLE CODE (DTC)**
    1. Turn the ignition on.
    2. With the scan tool, read DTCs.

    Does the scan tool display this DTC as active?

    Yes

    - Go To 2

    No

    - Test complete, the condition or conditions that originally set this DTC are not present at this time. Using the wiring diagrams as a guide, check all related splices and connectors for signs of water intrusion, corrosion, pushed out or bent terminals, and correct pin tension.
    - Perform the BODY VERIFICATION TEST. Refer to **STANDARD PROCEDURE** .
2. **(D700) PARK ASSIST SENSOR 7 SIGNAL CIRCUIT SHORTED TO BATTERY**

1. Turn the ignition off.
2. Disconnect the Park Assist Module C2 harness connector.
3. Disconnect the Park Assist Sensor harness connector.
4. Turn the ignition on.
5. Measure the voltage of the (D700) Park Assist Sensor 7 Signal circuit.

   Is the voltage above 10.0 volts?

   Yes

   - Repair the (D700) Park Assist Sensor 7 Signal circuit for a short to battery.
   - Perform the BODY VERIFICATION TEST. Refer to **STANDARD PROCEDURE** .

   No

   - Go To 3

3. **(D700) PARK ASSIST SENSOR 7 SIGNAL CIRCUIT SHORTED TO THE (X700) PARK ASSIST SENSOR SUPPLY CIRCUIT**
   1. Turn the ignition off.
   2. Measure the resistance between the (D700) Park Assist Sensor 7 Signal circuit and the (X700) Park Assist Sensor Supply circuit.

      Is the resistance below 10K Ohms?

      Yes

      - Repair the (D700) Park Assist Sensor 7 Signal circuit for a short to the (X700) Park Assist Sensor Supply circuit.
      - Perform the BODY VERIFICATION TEST. Refer to **STANDARD PROCEDURE** .

      No

      - Go To 4

4. **(X750) PARK ASSIST SENSOR GROUND CIRCUIT OPEN**
   1. Reconnect the Park Assist Module C2 harness connector.
   2. Measure the resistance between ground and the (X750) Park Assist Sensor Ground circuit.

      Is the resistance above 20.0 Ohms?

      Yes

      - Go To 5

No

- Replace the Park Assist Sensor in accordance with the Service Information. Refer to **SENSOR, PARK ASSIST, REMOVAL** .
- Perform the BODY VERIFICATION TEST. Refer to **STANDARD PROCEDURE** .

5. **(X750) PARK ASSIST SENSOR GROUND CIRCUIT OPEN BETWEEN PARK ASSIST MODULE AND SENSOR**
   1. Disconnect the Park Assist Module C2 harness connector.
   2. Measure the resistance of the (X750) Park Assist Sensor Ground circuit.

   Is the resistance above 5.0 Ohms?

   Yes

   - Repair the open in the (X750) Park Assist Sensor Ground circuit.
   - Perform the BODY VERIFICATION TEST. Refer to **STANDARD PROCEDURE** .

   No

   - Replace the Park Assist Module in accordance with the Service Information. Refer to **MODULE, PARK ASSIST, REMOVAL** .
   - Perform the BODY VERIFICATION TEST. Refer to **STANDARD PROCEDURE** .

B1294-25-PTS SENSOR 7 - SIGNAL SHAPE / WAVEFORM FAILURE

For a complete wiring diagram, **refer to appropriate SYSTEM WIRING DIAGRAMS article** .

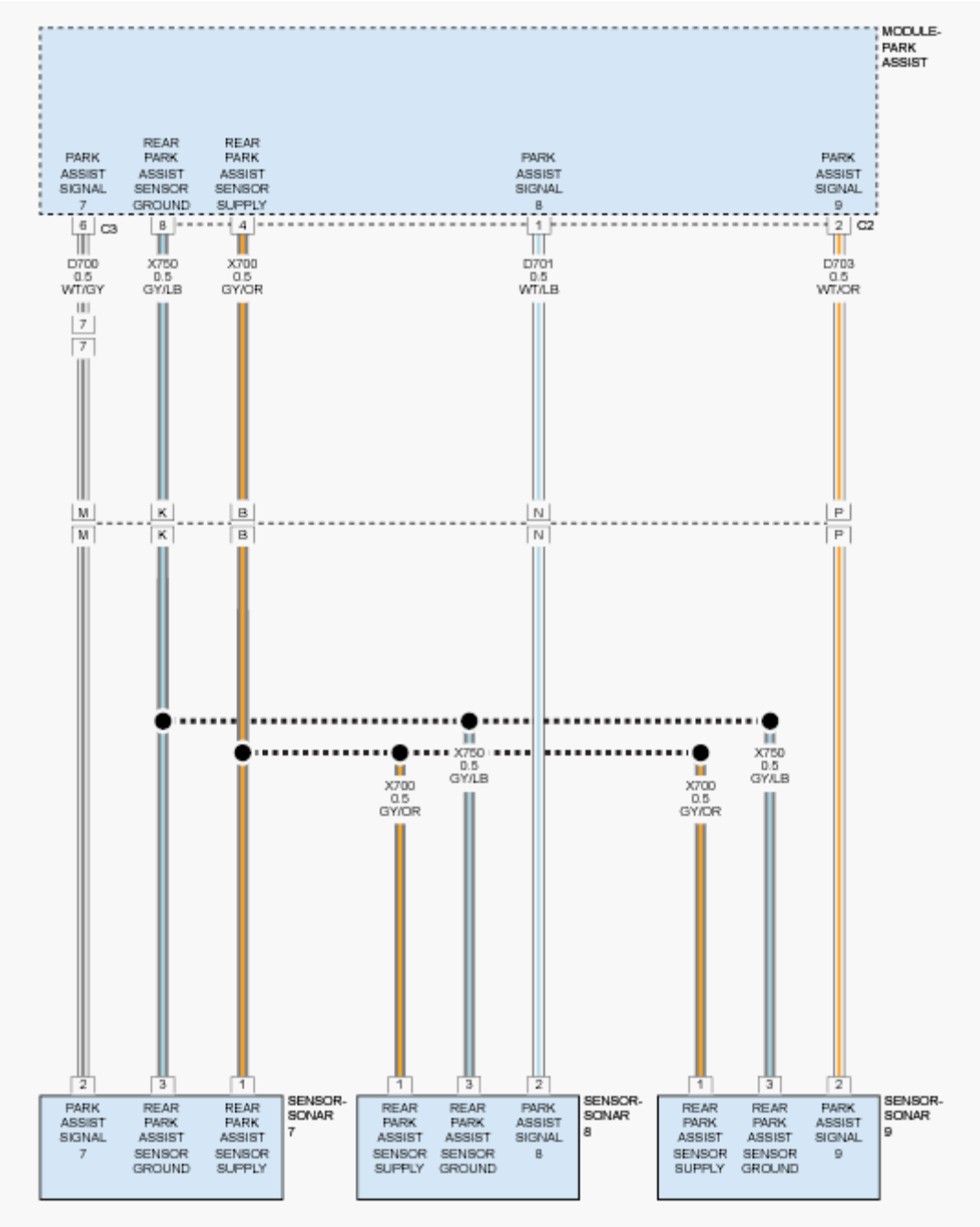

Fig. 31: Identifying Rear Park Assist Circuit Diagram
Courtesy of CHRYSLER GROUP, LLC

WHEN MONITORED

Vehicle in reverse.

During the self-test while vehicle is in drive between 11 mph (18 km/h) and 25 mph (40 km/h).

SET CONDITION

The Park Assist Module detects an internal Sensor error.

POSSIBLE CAUSES

Possible Causes
PARK ASSIST SENSOR MEMBRANE OBSTRUCTION (ICE, SNOW, MUD, DIRT COVERING FASCIA)
PARK ASSIST SENSOR CONNECTOR OBSTRUCTION (ICE, SNOW, MUD, DIRT)
DECOUPLING RING MISSING/MOUNTED WRONG
OBJECTS - SUCH AS LICENSE PLATES - IN CLOSE RANGE TO THE SENSOR
PARK ASSIST SENSOR

THEORY OF OPERATION

The Park Assist Sensors are ultrasonic transceivers that are completely controlled by the Park Assist Module. The sensors transmit and receive ultrasonic signals. Each sensor has a voltage, signal, and return circuit to the module. The sensors communicate with the Park Assist Module using a dedicated serial bus communication circuit.

DIAGNOSTIC TEST

1. **CHECK FOR AN ACTIVE DIAGNOSTIC TROUBLE CODE (DTC)**

   NOTE: Before proceeding with this diagnostic procedure, remove any ice, snow, mud, dirt, or other obstructions from the front/rear fascia/bumper. Also remove any ice, snow, dirt, mud, or other obstructions from the underside of the Fascia/Bumper surrounding the sensors.

   1. Turn the ignition on.
   2. With the scan tool, read Park Assist Module DTCs.

      Does the scan tool display this DTC as active?

      Yes

      - Go To 2

      No

      - Test complete, the condition or conditions that originally set this DTC are not present at this time. Using the wiring diagrams as a guide, check all related splices and connectors for signs of water intrusion, corrosion, pushed out or bent terminals, and correct pin tension.
      - Perform the BODY VERIFICATION TEST. Refer to **STANDARD PROCEDURE** .

2. **PARK ASSIST SENSOR**
   1. Verify that none of the possible causes mentioned above are present. Repair as necessary.

If none of the possible causes mentioned above are present, view repair.

Repair

- Replace the Park Assist Sensor that caused this DTC to change from active to stored after disconnecting it in accordance with the Service Information. Refer to **SENSOR, PARK ASSIST, REMOVAL** .
- Perform the BODY VERIFICATION TEST. Refer to **STANDARD PROCEDURE** .

B1294-92-PTS SENSOR 7 - PERFORMANCE OR INCORRECT OPERATION

For a complete wiring diagram, **refer to appropriate SYSTEM WIRING DIAGRAMS article** .

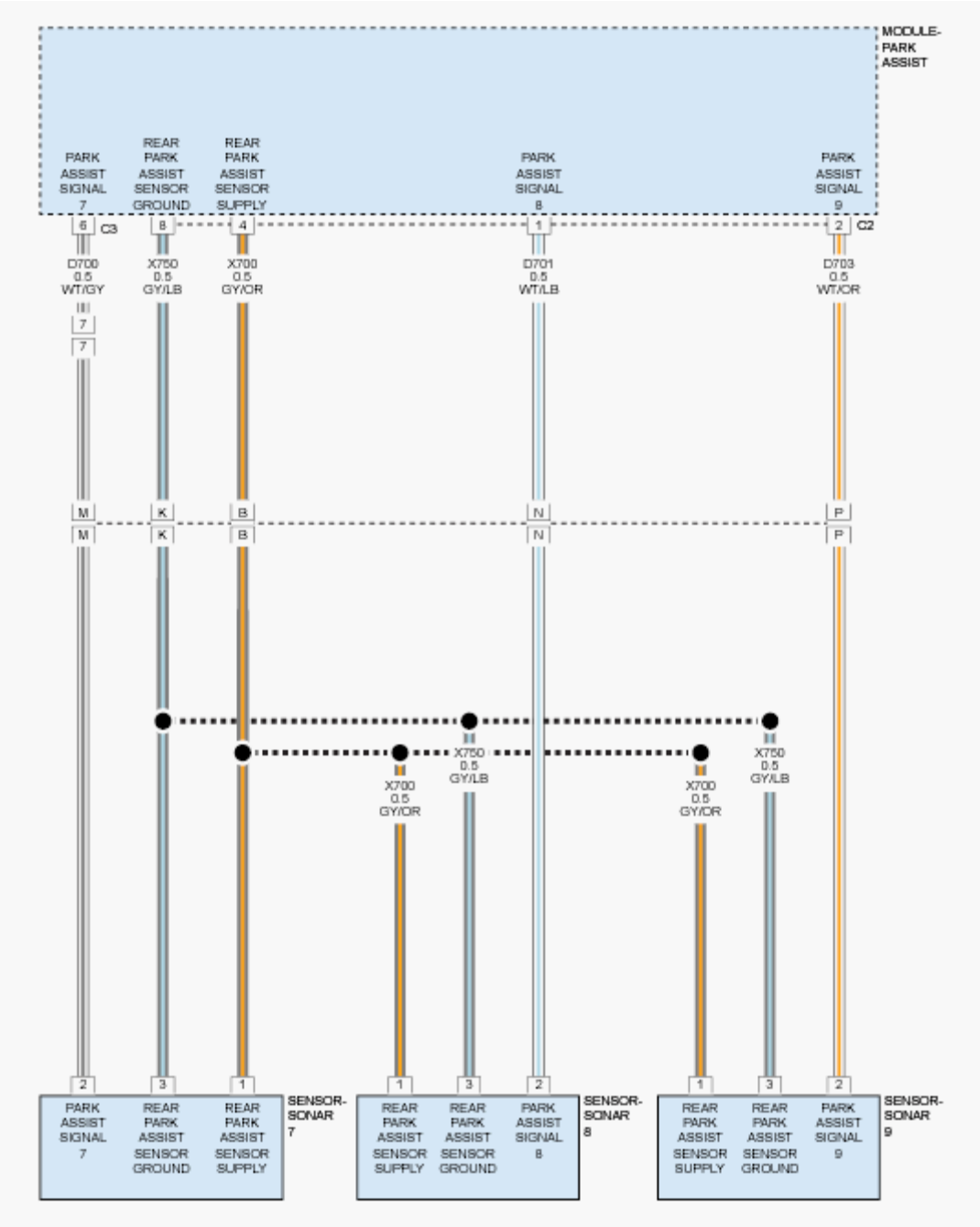

Fig. 32: Identifying Rear Park Assist Circuit Diagram
Courtesy of CHRYSLER GROUP, LLC

THEORY OF OPERATION

The Park Assist Sensors are ultrasonic transceivers that are completely controlled by the Park Assist Module. The sensors transmit and receive ultrasonic signals. Each sensor has a voltage, signal, and return circuit to the module. The sensors communicate with the Park Assist Module using a dedicated serial bus communication circuit.

NOTE: **The numbering system for the park assist sensors allows for up to twelve sensors on the vehicle, six front and six rear. The sensors are numbered in a clockwise manner starting at the left front bumper. The left front sensor (if equipped with front park assist) is the number 1 sensor. The numbering continues in a clockwise direction around the vehicle.**

WHEN MONITORED

Vehicle in reverse and during the self-test while vehicle is in drive between 18 km/h (11 mph) and 40 km/h (25 mph).

SET CONDITION

If the system detects data corruption in the transmission in the internal communication line between the module and sensors, this code will set.

POSSIBLE CAUSES

Possible Causes
(D700) PARK ASSIST SENSOR 7 SIGNAL CIRCUIT SHORTED TO GROUND
(D700) PARK ASSIST SENSOR 7 SIGNAL CIRCUIT SHORTED TO BATTERY
(D700) PARK ASSIST SENSOR 7 SIGNAL CIRCUIT OPEN
PARK ASSIST SENSOR 7
PARK ASSIST MODULE

DIAGNOSTIC TEST

1. **CHECK FOR AN ACTIVE DIAGNOSTIC TROUBLE CODE (DTC)**
    1. Turn the ignition on.
    2. With the scan tool, read Park Assist Module DTCs.

    Does the scan tool display this DTC as active?

    Yes

    - Go To 2

    No

    - Test complete, the condition or conditions that originally set this DTC are not present at this time. Using the wiring diagrams as a guide, check all related splices and connectors for signs of water intrusion, corrosion, pushed out or bent terminals, and correct pin tension.
    - Perform the BODY VERIFICATION TEST. Refer to **STANDARD PROCEDURE** .
2. **CHECK PARK ASSIST SENSOR 7 FOR INTERNAL SHORT**

1. Disconnect Park Assist Sensor 7.
2. With the scan tool, read Park Assist Module DTCs.

   Does the scan tool display this DTC as active?

   Yes

   - Go To 3

   No

   - Replace Park Assist Sensor 7 in accordance with the Service Information. Refer to **SENSOR, PARK ASSIST, REMOVAL** .
   - Perform the BODY VERIFICATION TEST. Refer to **STANDARD PROCEDURE** .

3. **CHECK THE (D700) PARK ASSIST SENSOR 7 SIGNAL CIRCUIT FOR A SHORT TO GROUND**
   1. Turn the ignition off.
   2. Disconnect the Park Assist Module C2 harness connector.
   3. Using a 12-volt test light connected to 12-volts check the (D700) Park Assist Sensor 7 Signal circuit at the Park Assist Module C2 harness connector.

      Does the test light illuminate brightly?

      Yes

      - Repair the (D700) Park Assist Sensor 7 Signal circuit for a short to ground.
      - Perform the BODY VERIFICATION TEST. Refer to **STANDARD PROCEDURE** .

      No

      - Go To 4

4. **CHECK THE (D700) PARK ASSIST SENSOR 7 SIGNAL CIRCUIT FOR A SHORT TO BATTERY**
   1. Turn the ignition on.
   2. Using a 12-volt test light connected to ground check the (D700) Park Assist Sensor 7 Signal circuit at the Park Assist Module C2 harness connector for a short to battery.

      Does the test light illuminate brightly?

      Yes

      - Repair the (D700) Park Assist Sensor 7 Signal circuit for a short to battery.
      - Perform the BODY VERIFICATION TEST. Refer to **STANDARD PROCEDURE** .

No

- Go To 5

5. **CHECK THE (D700) PARK ASSIST SENSOR 7 SIGNAL CIRCUIT FOR AN OPEN**
   1. Measure the resistance of the (D700) Park Assist Sensor 7 Signal circuit between the Park Assist Module C2 harness connector and the Park Assist Sensor 7 harness connector.

      Is the resistance below 5.0 Ohms?

      No

      - Repair the (D700) Park Assist Sensor 7 Signal circuit for an open.
      - Perform the BODY VERIFICATION TEST. Refer to **STANDARD PROCEDURE** .

      Yes

      - Replace the Park Assist Module in accordance with Service Information. Refer to **MODULE, PARK ASSIST, REMOVAL** .
      - Perform the BODY VERIFICATION TEST. Refer to **STANDARD PROCEDURE** .

B1295-11-PTS SENSOR 8 - CIRCUIT SHORT TO GROUND

For a complete wiring diagram, **refer to appropriate SYSTEM WIRING DIAGRAMS article** .

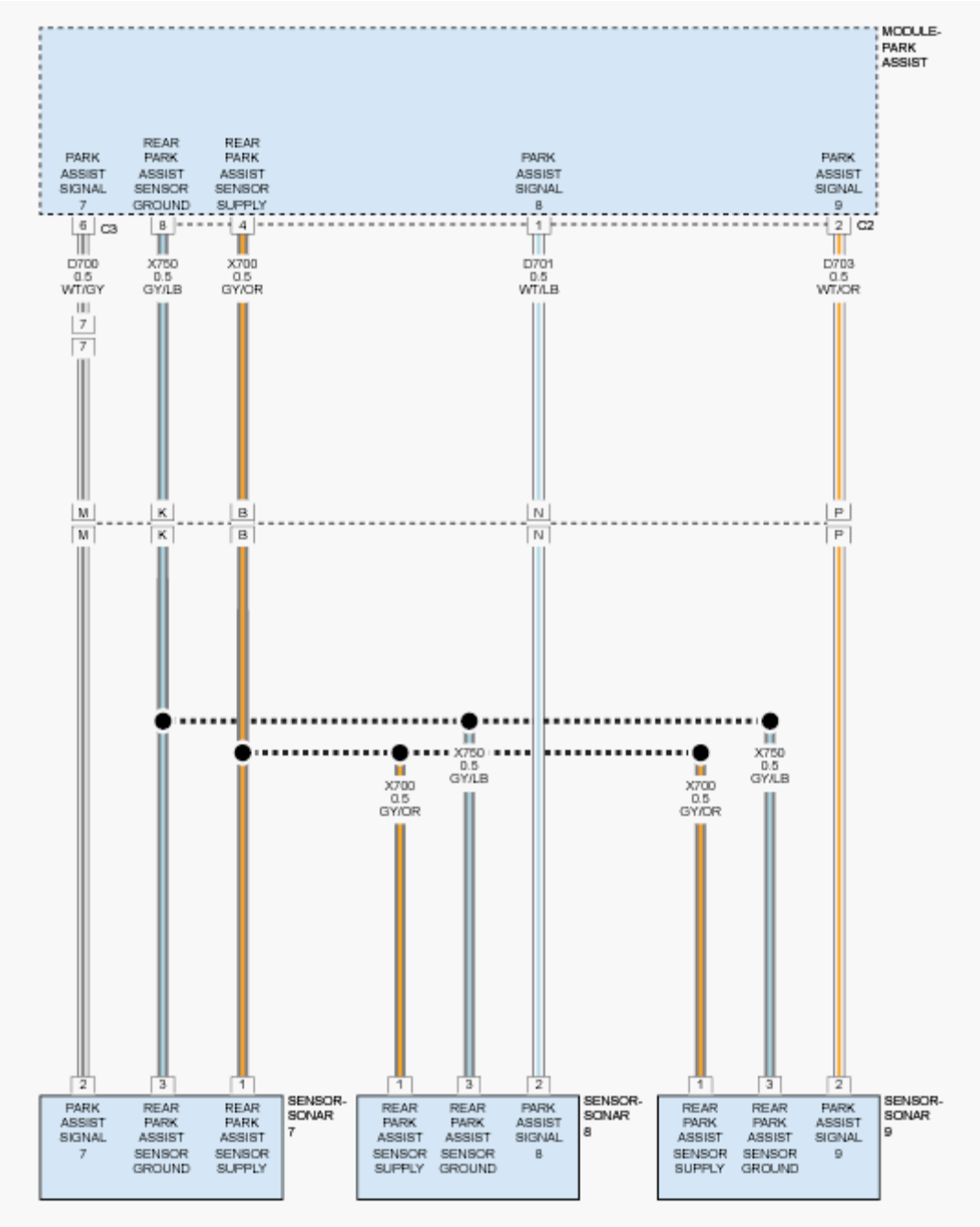

Fig. 33: Identifying Rear Park Assist Circuit Diagram
Courtesy of CHRYSLER GROUP, LLC

THEORY OF OPERATION

The Park Assist Sensors are ultrasonic transceivers that are completely controlled by the Park Assist Module. The sensors transmit and receive ultrasonic signals. Each sensor has a voltage, signal, and return circuit to the module. The sensors communicate with the Park Assist Module using a dedicated serial bus communication circuit.

NOTE: The numbering system for the park assist sensors allows for up to twelve sensors on the vehicle, six front and six rear. The sensors are numbered in a clockwise manner starting at the left front bumper. The left front sensor (if equipped with front park assist) is the number 1 sensor. The numbering continues in a clockwise direction around the vehicle.

WHEN MONITORED

Vehicle in reverse and during the self-test while vehicle is in drive between 18 km/h (11 mph) and 40 km/h (25 mph).

SET CONDITION

The Park Assist Module detects a short to ground on the Park Assist Sensor Signal circuit.

POSSIBLE CAUSES

Possible Causes
PARK ASSIST SENSOR DISCONNECTED
(D701) PARK ASSIST SENSOR 8 SIGNAL CIRCUIT SHORTED TO GROUND
(D701) PARK ASSIST SENSOR 8 SIGNAL CIRCUIT SHORTED TO THE (X750) PARK ASSIST SENSOR GROUND CIRCUIT
(D701) PARK ASSIST SENSOR 8 SIGNAL CIRCUIT OPEN
(X700) PARK ASSIST SENSOR SUPPLY CIRCUIT OPEN
PARK ASSIST SENSOR
PARK ASSIST MODULE

DIAGNOSTIC TEST

1. **CHECK FOR AN ACTIVE DIAGNOSTIC TROUBLE CODE (DTC)**

   NOTE: A disconnected sensor will set this DTC. Verify the Park Assist Sensor is connected before proceeding with this diagnostic procedure.

   1. Turn the ignition on.
   2. With the scan tool, read DTCs.

   Does the scan tool display this DTC as active?

   Yes

   - Go To 2

   No

- Test complete, the condition or conditions that originally set this DTC are not present at this time. Using the wiring diagrams as a guide, check all related splices and connectors for signs of water intrusion, corrosion, pushed out or bent terminals, and correct pin tension.
- Perform the BODY VERIFICATION TEST. Refer to **STANDARD PROCEDURE** .

2. **CHECK THE VOLTAGE OF THE (X700) PARK ASSIST SENSOR SUPPLY CIRCUIT**
   1. Turn the ignition off.
   2. Disconnect the Park Assist Sensor harness connector.
   3. Turn the ignition on.
   4. Measure the voltage of the (X700) Park Assist Sensor Supply circuit.

   Is the voltage above 8.0 volts?

   Yes

   - Go To 4

   No

   - Go To 3

3. **CHECK THE (X700) PARK ASSIST SENSOR SUPPLY CIRCUIT FOR AN OPEN OR HIGH RESISTANCE**
   1. Turn the ignition off.
   2. Disconnect the Park Assist Module C2 harness connector.
   3. Measure the resistance of the (X700) Park Assist Sensor Supply circuit.

   Is the resistance below 5.0 Ohms?

   Yes

   - Replace the Park Assist Module in accordance with the Service Information. Refer to **MODULE, PARK ASSIST, REMOVAL** .
   - Perform the BODY VERIFICATION TEST. Refer to **STANDARD PROCEDURE** .

   No

   - Repair the open or high resistance in the (X700) Park Assist Sensor Supply circuit.
   - Perform the BODY VERIFICATION TEST. Refer to **STANDARD PROCEDURE** .

4. **CHECK THE (D701) PARK ASSIST SENSOR 8 SIGNAL CIRCUIT FOR A SHORT TO GROUND WITH THE PARK ASSIST MODULE CONNECTED**

   NOTE: Perform this step with the Park Assist Module connected.

   1. Measure the resistance between ground and the (D701) Park Assist Sensor 8 Signal circuit.

Is the resistance below 10K Ohms?

Yes

- Go To 5

No

- Go To 7

5. **CHECK THE (D701) PARK ASSIST SENSOR 8 SIGNAL CIRCUIT FOR A SHORT TO GROUND WITH THE PARK ASSIST MODULE DISCONNECTED**
   1. Disconnect the Park Assist Module C2 harness connector.
   2. Measure the resistance between ground and the (D701) Park Assist Sensor 8 Signal circuit.

   Is the resistance below 10K Ohms?

   Yes

   - Repair the short to ground in the (D701) Park Assist Sensor 8 Signal circuit.
   - Perform the BODY VERIFICATION TEST. Refer to **STANDARD PROCEDURE** .

   No

   - Go To 6

6. **CHECK THE (D701) PARK ASSIST SENSOR 8 SIGNAL CIRCUIT FOR A SHORT TO THE (X750) PARK ASSIST SENSOR GROUND CIRCUIT**
   1. Measure the resistance between the (D701) Park Assist Sensor 8 Signal circuit and the (X750) Park Assist Sensor Ground circuit.

   Is the resistance below 10K Ohms?

   Yes

   - Repair the short between the (D701) Park Assist Sensor 8 Signal circuit and the (X750) Park Assist Sensor Ground circuit.
   - Perform the BODY VERIFICATION TEST. Refer to **STANDARD PROCEDURE** .

   No

   - Replace the Park Assist Module in accordance with the Service Information. Refer to **MODULE, PARK ASSIST, REMOVAL** .
   - Perform the BODY VERIFICATION TEST. Refer to **STANDARD PROCEDURE** .

7. **CHECK THE (D701) PARK ASSIST SENSOR 8 SIGNAL CIRCUIT FOR AN OPEN**
   1. Disconnect the Park Assist Module C2 harness connector.

2. Measure the resistance of the (D701) Park Assist Sensor 8 Signal circuit.

   Is the resistance above 5.0 Ohms?

   Yes

   - Repair the open in the (D701) Park Assist Sensor 8 Signal circuit.
   - Perform the BODY VERIFICATION TEST. Refer to **STANDARD PROCEDURE** .

   No

   - Go To 8

8. **PARK ASSIST SENSOR**
   1. Turn the ignition on.
   2. Reconnect the Park Assist Module C2 harness connector.
   3. Connect a jumper wire across the (X700) Park Assist Sensor Supply and (D701) Park Assist Sensor 8 Signal circuits.
   4. Turn the ignition on.
   5. With the scan tool, read DTCs.

      Does the scan tool display DTC: B1295-12-PTS SENSOR 8 - CIRCUIT SHORT TO BATTERY as active?

      Yes

      - Replace the Park Assist Sensor in accordance with the Service Information. Refer to **SENSOR, PARK ASSIST, REMOVAL** .
      - Perform the BODY VERIFICATION TEST. Refer to **STANDARD PROCEDURE** .

      No

      - Replace the Park Assist Module in accordance with the Service Information. Refer to **MODULE, PARK ASSIST, REMOVAL** .
      - Perform the BODY VERIFICATION TEST. Refer to **STANDARD PROCEDURE** .

B1295-12-PTS SENSOR 8 - CIRCUIT SHORT TO BATTERY

For a complete wiring diagram, **refer to appropriate SYSTEM WIRING DIAGRAMS article** .

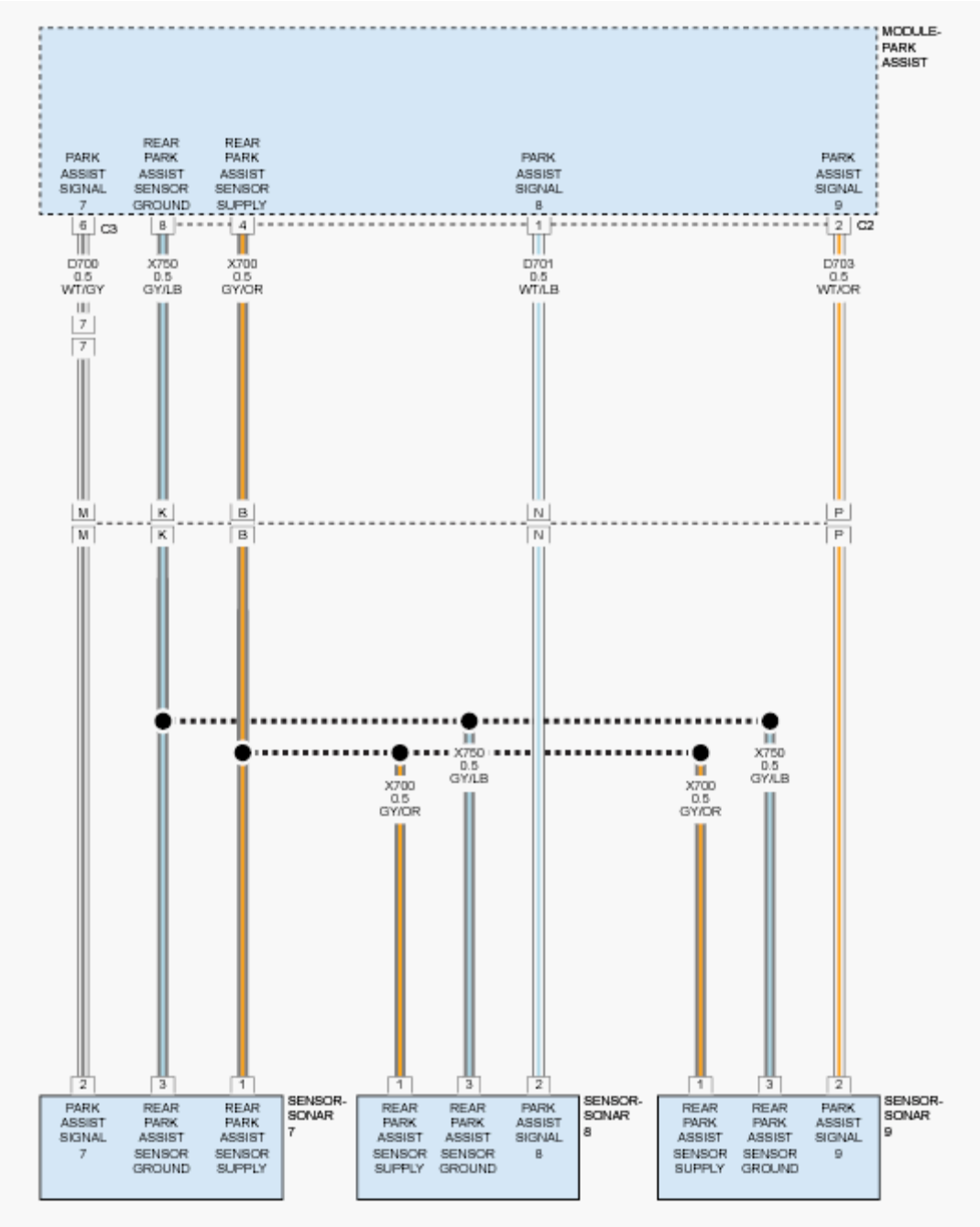

Fig. 34: Identifying Rear Park Assist Circuit Diagram
Courtesy of CHRYSLER GROUP, LLC

THEORY OF OPERATION

The Park Assist Sensors are ultrasonic transceivers that are completely controlled by the Park Assist Module. The sensors transmit and receive ultrasonic signals. Each sensor has a voltage, signal, and return circuit to the module. The sensors communicate with the Park Assist Module using a dedicated serial bus communication circuit.

NOTE: **The numbering system for the park assist sensors allows for up to twelve sensors on the vehicle, six front and six rear. The sensors are numbered in a clockwise manner starting at the left front bumper. The left front sensor (if equipped with front park assist) is the number 1 sensor. The numbering continues in a clockwise direction around the vehicle.**

WHEN MONITORED

Vehicle in reverse and during the self-test while vehicle is in drive between 18 km/h (11 mph) and 40 km/h (25 mph).

SET CONDITION

The Park Assist Module detects an open or short to voltage on the Park Assist Sensor Signal circuit.

POSSIBLE CAUSES

Possible Causes
(D701) PARK ASSIST SENSOR 8 SIGNAL CIRCUIT SHORTED TO VOLTAGE
(D701) PARK ASSIST SENSOR 8 SIGNAL CIRCUIT SHORTED TO THE (X700) PARK ASSIST SENSOR SUPPLY CIRCUIT
(X750) PARK ASSIST SENSOR GROUND CIRCUIT OPEN
PARK ASSIST SENSOR
PARK ASSIST MODULE

DIAGNOSTIC TEST

1. **CHECK FOR AN ACTIVE DIAGNOSTIC TROUBLE CODE (DTC)**
   1. Turn the ignition on.
   2. With the scan tool, read DTCs.

      Does the scan tool display this DTC as active?

      Yes

      - Go To 2

      No

      - Test complete, the condition or conditions that originally set this DTC are not present at this time. Using the wiring diagrams as a guide, check all related splices and connectors for signs of water intrusion, corrosion, pushed out or bent terminals, and correct pin tension.
      - Perform the BODY VERIFICATION TEST. Refer to **STANDARD PROCEDURE** .
2. **(D701) PARK ASSIST SENSOR 8 SIGNAL CIRCUIT SHORTED TO BATTERY**

1. Turn the ignition off.
2. Disconnect the Park Assist Module C2 harness connector.
3. Disconnect the Park Assist Sensor harness connector.
4. Turn the ignition on.
5. Measure the voltage of the (D701) Park Assist Sensor 8 Signal circuit.

   Is the voltage above 10.0 volts?

   Yes

   - Repair the (D701) Park Assist Sensor 8 Signal circuit for a short to battery.
   - Perform the BODY VERIFICATION TEST. Refer to **STANDARD PROCEDURE** .

   No

   - Go To 3

3. **(D701) PARK ASSIST SENSOR 8 SIGNAL CIRCUIT SHORTED TO THE (X700) PARK ASSIST SENSOR SUPPLY CIRCUIT**
   1. Turn the ignition off.
   2. Measure the resistance between the (D701) Park Assist Sensor 8 Signal circuit and the (X700) Park Assist Sensor Supply circuit.

      Is the resistance below 10K Ohms?

      Yes

      - Repair the (D701) Park Assist Sensor 8 Signal circuit for a short to the (X700) Park Assist Sensor Supply circuit.
      - Perform the BODY VERIFICATION TEST. Refer to **STANDARD PROCEDURE** .

      No

      - Go To 4

4. **(X750) PARK ASSIST SENSOR GROUND CIRCUIT OPEN**
   1. Reconnect the Park Assist Module C2 harness connector.
   2. Measure the resistance between ground and the (X750) Park Assist Sensor Ground circuit.

      Is the resistance above 20.0 Ohms?

      Yes

      - Go To 5

No

- Replace the Park Assist Sensor in accordance with the Service Information. Refer to **SENSOR, PARK ASSIST, REMOVAL** .
- Perform the BODY VERIFICATION TEST. Refer to **STANDARD PROCEDURE** .

5. **(X750) PARK ASSIST SENSOR GROUND CIRCUIT OPEN BETWEEN PARK ASSIST MODULE AND SENSOR**
   1. Disconnect the Park Assist Module C2 harness connector.
   2. Measure the resistance of the (X750) Park Assist Sensor Ground circuit.

   Is the resistance above 5.0 Ohms?

   Yes

   - Repair the open in the (X750) Park Assist Sensor Ground circuit.
   - Perform the BODY VERIFICATION TEST. Refer to **STANDARD PROCEDURE** .

   No

   - Replace the Park Assist Module in accordance with the Service Information. Refer to **MODULE, PARK ASSIST, REMOVAL** .
   - Perform the BODY VERIFICATION TEST. Refer to **STANDARD PROCEDURE** .

B1295-25-PTS SENSOR 8 - SIGNAL SHAPE / WAVEFORM FAILURE

For a complete wiring diagram, **refer to appropriate SYSTEM WIRING DIAGRAMS article** .

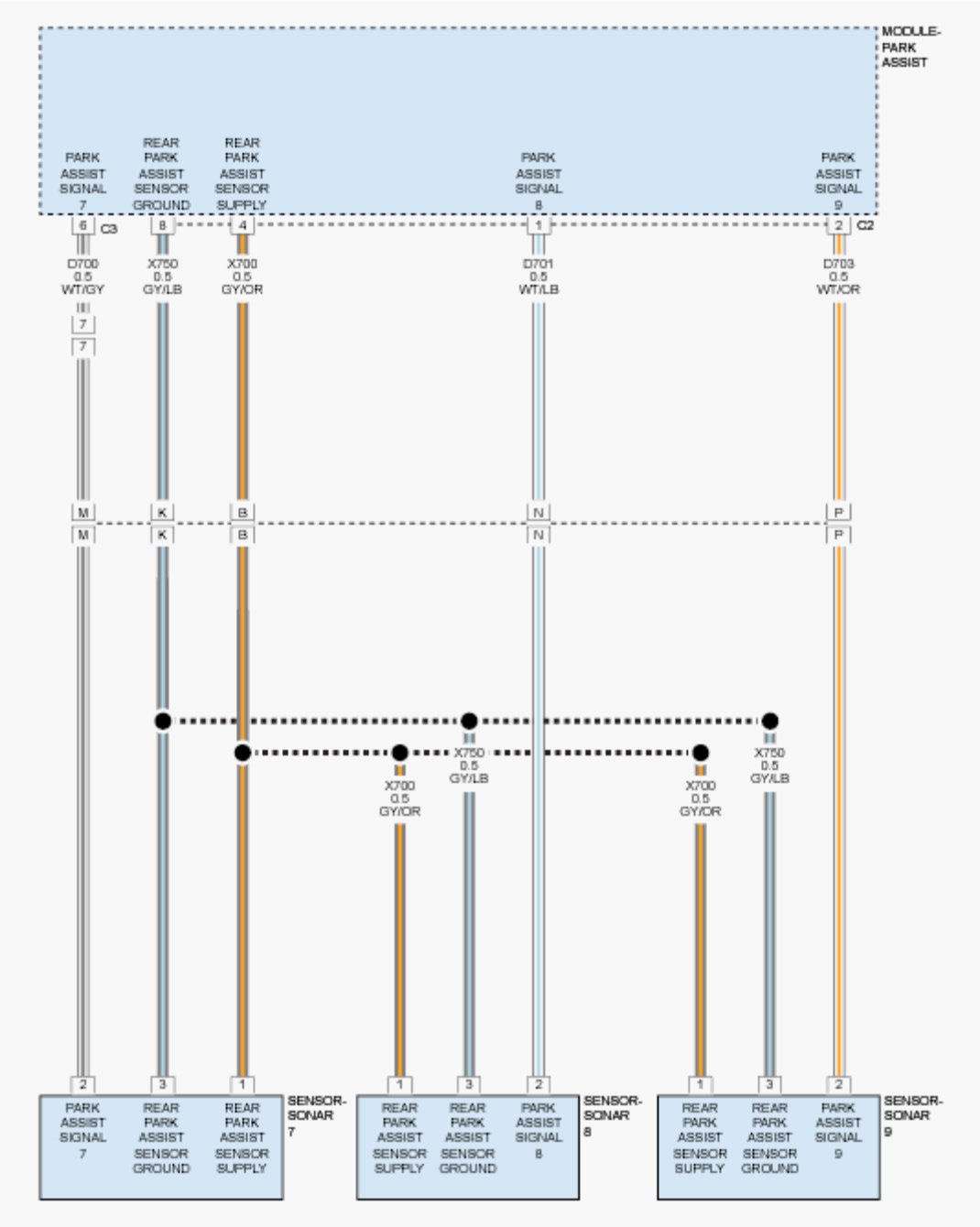

Fig. 35: Identifying Rear Park Assist Circuit Diagram
Courtesy of CHRYSLER GROUP, LLC

THEORY OF OPERATION

The Park Assist Sensors are ultrasonic transceivers that are completely controlled by the Park Assist Module. The sensors transmit and receive ultrasonic signals. Each sensor has a voltage, signal, and return circuit to the module. The sensors communicate with the Park Assist Module using a dedicated serial bus communication circuit.

WHEN MONITORED

Vehicle in reverse.

During the self-test while vehicle is in drive between 11 mph (18 km/h) and 25 mph (40 km/h).

SET CONDITION

The Park Assist Module detects an internal Sensor error.

POSSIBLE CAUSES

Possible Causes
PARK ASSIST SENSOR MEMBRANE OBSTRUCTION (ICE, SNOW, MUD, DIRT COVERING FASCIA)
PARK ASSIST SENSOR CONNECTOR OBSTRUCTION (ICE, SNOW, MUD, DIRT)
DECOUPLING RING MISSING/MOUNTED WRONG
OBJECTS - SUCH AS LICENSE PLATES - IN CLOSE RANGE TO THE SENSOR
PARK ASSIST SENSOR

DIAGNOSTIC TEST

1. **CHECK FOR AN ACTIVE DIAGNOSTIC TROUBLE CODE (DTC)**

   NOTE: Before proceeding with this diagnostic procedure, remove any ice, snow, mud, dirt, or other obstructions from the front/rear fascia/bumper. Also remove any ice, snow, dirt, mud, or other obstructions from the underside of the Fascia/Bumper surrounding the sensors.

   1. Turn the ignition on.
   2. With the scan tool, read Park Assist Module DTCs.

      Does the scan tool display this DTC as active?

      Yes

      - Go To 2

      No

      - Test complete, the condition or conditions that originally set this DTC are not present at this time. Using the wiring diagrams as a guide, check all related splices and connectors for signs of water intrusion, corrosion, pushed out or bent terminals, and correct pin tension.
      - Perform the BODY VERIFICATION TEST. Refer to **STANDARD PROCEDURE** .
2. **PARK ASSIST SENSOR**

1. Verify that none of the possible causes mentioned above are present. Repair as necessary.

   If none of the possible causes mentioned above are present, view repair.

   Repair

   - Replace the Park Assist Sensor that caused this DTC to change from active to stored after disconnecting it in accordance with the Service Information. Refer to **SENSOR, PARK ASSIST, REMOVAL** .
   - Perform the BODY VERIFICATION TEST. Refer to **STANDARD PROCEDURE** .

B1295-92-PTS SENSOR 8 - PERFORMANCE OR INCORRECT OPERATION

For a complete wiring diagram, **refer to appropriate SYSTEM WIRING DIAGRAMS article** .

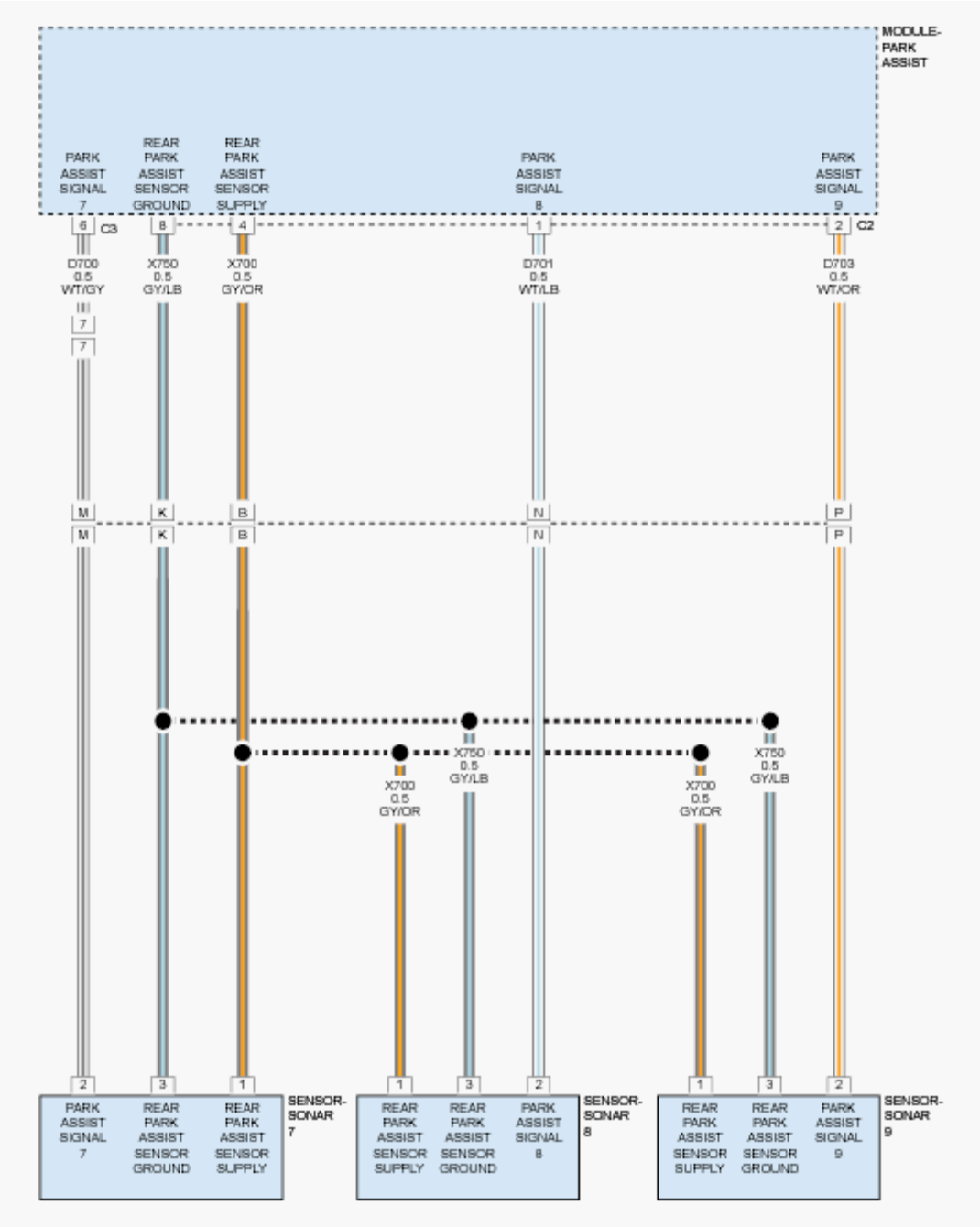

Fig. 36: Identifying Rear Park Assist Circuit Diagram
Courtesy of CHRYSLER GROUP, LLC

THEORY OF OPERATION

The Park Assist Sensors are ultrasonic transceivers that are completely controlled by the Park Assist Module. The sensors transmit and receive ultrasonic signals. Each sensor has a voltage, signal, and return circuit to the module. The sensors communicate with the Park Assist Module using a dedicated serial bus communication circuit.

NOTE: **The numbering system for the park assist sensors allows for up to twelve sensors on the vehicle, six front and six rear. The sensors are numbered in a clockwise manner starting at the left front bumper. The left front sensor (if equipped with front park assist) is the number 1 sensor. The numbering continues in a clockwise direction around the vehicle.**

WHEN MONITORED

Vehicle in reverse and during the self-test while vehicle is in drive between 18 km/h (11 mph) and 40 km/h (25 mph).

SET CONDITION

If the system detects data corruption in the transmission in the internal communication line between the module and sensors, this code will set.

POSSIBLE CAUSES

Possible Causes
(D701) PARK ASSIST SENSOR 8 SIGNAL CIRCUIT SHORTED TO GROUND
(D701) PARK ASSIST SENSOR 8 SIGNAL CIRCUIT SHORTED TO BATTERY
(D701) PARK ASSIST SENSOR 8 SIGNAL CIRCUIT OPEN
PARK ASSIST SENSOR 8
PARK ASSIST MODULE

DIAGNOSTIC TEST

1. **CHECK FOR AN ACTIVE DIAGNOSTIC TROUBLE CODE (DTC)**
    1. Turn the ignition on.
    2. With the scan tool, read Park Assist Module DTCs.

    Does the scan tool display this DTC as active?

    Yes

    - Go To 2

    No

    - Test complete, the condition or conditions that originally set this DTC are not present at this time. Using the wiring diagrams as a guide, check all related splices and connectors for signs of water intrusion, corrosion, pushed out or bent terminals, and correct pin tension.
    - Perform the BODY VERIFICATION TEST. Refer to **STANDARD PROCEDURE** .
2. **CHECK PARK ASSIST SENSOR 8 FOR INTERNAL SHORT**

1. Disconnect Park Assist Sensor 8.
2. With the scan tool, read Park Assist Module DTCs.

   Does the scan tool display this DTC as active?

   Yes

   - Go To 3

   No

   - Replace Park Assist Sensor 8 in accordance with the Service Information. Refer to **SENSOR, PARK ASSIST, REMOVAL** .
   - Perform the BODY VERIFICATION TEST. Refer to **STANDARD PROCEDURE** .

3. **CHECK THE (D701) PARK ASSIST SENSOR 8 SIGNAL CIRCUIT FOR A SHORT TO GROUND**
   1. Turn the ignition off.
   2. Disconnect the Park Assist Module C2 harness connector.
   3. Using a 12-volt test light connected to 12-volts check the (D701) Park Assist Sensor 8 Signal circuit at the Park Assist Module C2 harness connector.

      Does the test light illuminate brightly?

      Yes

      - Repair the (D701) Park Assist Sensor 8 Signal circuit for a short to ground.
      - Perform the BODY VERIFICATION TEST. Refer to **STANDARD PROCEDURE** .

      No

      - Go To 4

4. **CHECK THE (D701) PARK ASSIST SENSOR 8 SIGNAL CIRCUIT FOR A SHORT TO BATTERY**
   1. Turn the ignition on.
   2. Using a 12-volt test light connected to ground check the (D701) Park Assist Sensor 8 Signal circuit at the Park Assist Module C2 harness connector for a short to battery.

      Does the test light illuminate brightly?

      Yes

      - Repair the (D701) Park Assist Sensor 8 Signal circuit for a short to battery.
      - Perform the BODY VERIFICATION TEST. Refer to **STANDARD PROCEDURE** .

No

- Go To 5

5. **CHECK THE (D701) PARK ASSIST SENSOR 8 SIGNAL CIRCUIT FOR AN OPEN**
   1. Measure the resistance of the (D701) Park Assist Sensor 8 Signal circuit between the Park Assist Module C2 harness connector and the Park Assist Sensor 8 harness connector.

      Is the resistance below 5.0 Ohms?

      No

      - Repair the (D701) Park Assist Sensor 8 Signal circuit for an open.
      - Perform the BODY VERIFICATION TEST. Refer to **STANDARD PROCEDURE** .

      Yes

      - Replace the Park Assist Module in accordance with Service Information. Refer to **MODULE, PARK ASSIST, REMOVAL** .
      - Perform the BODY VERIFICATION TEST. Refer to **STANDARD PROCEDURE** .

B1296-11-PTS SENSOR 9 - CIRCUIT SHORT TO GROUND

For a complete wiring diagram, **refer to appropriate SYSTEM WIRING DIAGRAMS article** .

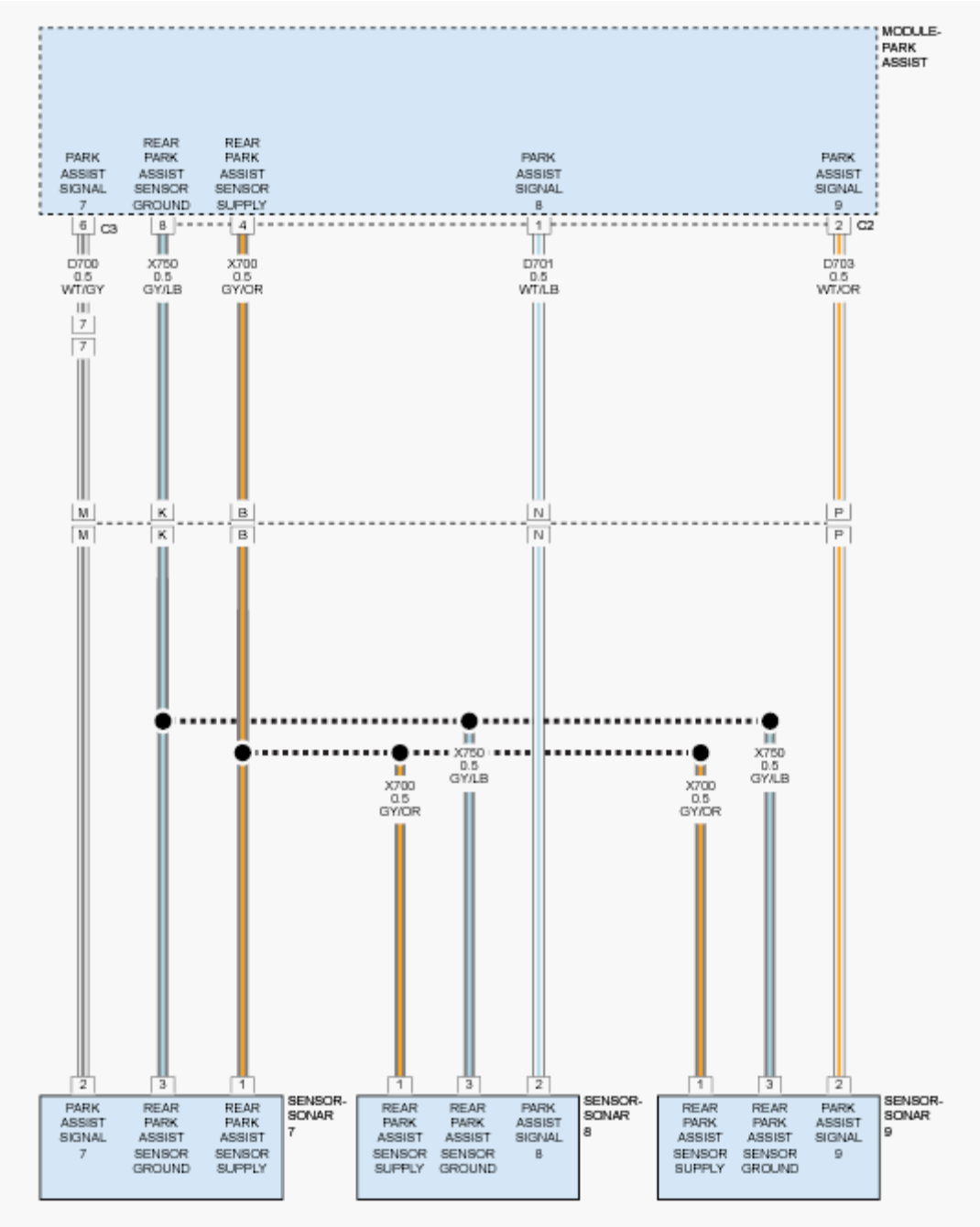

Fig. 37: Identifying Rear Park Assist Circuit Diagram
Courtesy of CHRYSLER GROUP, LLC

THEORY OF OPERATION

The Park Assist Sensors are ultrasonic transceivers that are completely controlled by the Park Assist Module. The sensors transmit and receive ultrasonic signals. Each sensor has a voltage, signal, and return circuit to the module. The sensors communicate with the Park Assist Module using a dedicated serial bus communication circuit.

NOTE: The numbering system for the park assist sensors allows for up to twelve sensors on the vehicle, six front and six rear. The sensors are numbered in a clockwise manner starting at the left front bumper. The left front sensor (if equipped with front park assist) is the number 1 sensor. The numbering continues in a clockwise direction around the vehicle.

WHEN MONITORED

Vehicle in reverse and during the self-test while vehicle is in drive between 18 km/h (11 mph) and 40 km/h (25 mph).

SET CONDITION

The Park Assist Module detects a short to ground on the Park Assist Sensor Signal circuit.

POSSIBLE CAUSES

Possible Causes
PARK ASSIST SENSOR DISCONNECTED
(D703) PARK ASSIST SENSOR 9 SIGNAL CIRCUIT SHORTED TO GROUND
(D703) PARK ASSIST SENSOR 9 SIGNAL CIRCUIT SHORTED TO THE (X750) PARK ASSIST SENSOR GROUND CIRCUIT
(D703) PARK ASSIST SENSOR 9 SIGNAL CIRCUIT OPEN
(X700) PARK ASSIST SENSOR SUPPLY CIRCUIT OPEN
PARK ASSIST SENSOR
PARK ASSIST MODULE

DIAGNOSTIC TEST

1. **CHECK FOR AN ACTIVE DIAGNOSTIC TROUBLE CODE (DTC)**

   NOTE: A disconnected sensor will set this DTC. Verify the Park Assist Sensor is connected before proceeding with this diagnostic procedure.

   1. Turn the ignition on.
   2. With the scan tool, read DTCs.

   Does the scan tool display this DTC as active?

   Yes

   - Go To 2

   No

- Test complete, the condition or conditions that originally set this DTC are not present at this time. Using the wiring diagrams as a guide, check all related splices and connectors for signs of water intrusion, corrosion, pushed out or bent terminals, and correct pin tension.
- Perform the BODY VERIFICATION TEST. Refer to **STANDARD PROCEDURE** .

2. **CHECK THE VOLTAGE OF THE (X700) PARK ASSIST SENSOR SUPPLY CIRCUIT**
   1. Turn the ignition off.
   2. Disconnect the Park Assist Sensor.
   3. Turn the ignition on.
   4. Measure the voltage of the (X700) Park Assist Sensor Supply circuit.

   Is the voltage above 8.0 volts?

   Yes

   - Go To 4

   No

   - Go To 3

3. **CHECK THE (X700) PARK ASSIST SENSOR SUPPLY CIRCUIT FOR AN OPEN OR HIGH RESISTANCE**
   1. Turn the ignition off.
   2. Disconnect the Park Assist Module C2 harness connector.
   3. Measure the resistance of the (X700) Park Assist Sensor Supply circuit.

   Is the resistance below 5.0 Ohms?

   Yes

   - Replace the Park Assist Module in accordance with the Service Information. Refer to **MODULE, PARK ASSIST, REMOVAL** .
   - Perform the BODY VERIFICATION TEST. Refer to **STANDARD PROCEDURE** .

   No

   - Repair the open or high resistance in the (X700) Park Assist Sensor Supply circuit.
   - Perform the BODY VERIFICATION TEST. Refer to **STANDARD PROCEDURE** .

4. **CHECK THE (D703) PARK ASSIST SENSOR 9 SIGNAL CIRCUIT FOR A SHORT TO GROUND WITH THE PARK ASSIST MODULE CONNECTED**

   NOTE: Perform this step with the Park Assist Module connected.

   1. Measure the resistance between ground and the (D703) Park Assist Sensor 9 Signal circuit.

Is the resistance below 10K Ohms?

Yes

- Go To 5

No

- Go To 7

5. **CHECK THE (D703) PARK ASSIST SENSOR 9 SIGNAL CIRCUIT FOR A SHORT TO GROUND WITH THE PARK ASSIST MODULE DISCONNECTED**
   1. Disconnect the Park Assist Module C2 harness connector.
   2. Measure the resistance between ground and the (D703) Park Assist Sensor 9 Signal circuit.

   Is the resistance below 10K Ohms?

   Yes

   - Repair the short to ground in the (D703) Park Assist Sensor 9 Signal circuit.
   - Perform the BODY VERIFICATION TEST. Refer to **STANDARD PROCEDURE** .

   No

   - Go To 6

6. **CHECK THE (D703) PARK ASSIST SENSOR 9 SIGNAL CIRCUIT FOR A SHORT TO THE (X750) PARK ASSIST SENSOR GROUND CIRCUIT**
   1. Measure the resistance between the (D703) Park Assist Sensor 9 Signal circuit and the (X750) Park Assist Sensor Ground circuit.

   Is the resistance below 10K Ohms?

   Yes

   - Repair the short between the (D703) Park Assist Sensor 9 Signal circuit and the (X750) Park Assist Sensor Ground circuit.
   - Perform the BODY VERIFICATION TEST. Refer to **STANDARD PROCEDURE** .

   No

   - Replace the Park Assist Module in accordance with the Service Information. Refer to **MODULE, PARK ASSIST, REMOVAL** .
   - Perform the BODY VERIFICATION TEST. Refer to **STANDARD PROCEDURE** .

7. **CHECK THE (D703) PARK ASSIST SENSOR 9 SIGNAL CIRCUIT FOR AN OPEN**
   1. Disconnect the Park Assist Module C2 harness connector.

2. Measure the resistance of the (D703) Park Assist Sensor 9 Signal circuit.

   Is the resistance above 5.0 Ohms?

   Yes

   - Repair the open in the (D703) Park Assist Sensor 9 Signal circuit.
   - Perform the BODY VERIFICATION TEST. Refer to **STANDARD PROCEDURE** .

   No

   - Go To 8

8. **PARK ASSIST SENSOR**
   1. Turn the ignition on.
   2. Reconnect the Park Assist Module C2 harness connector.
   3. Connect a jumper wire across the (X700) Park Assist Sensor Supply and (D703) Park Assist Sensor 9 Signal circuits.
   4. Turn the ignition on.
   5. With the scan tool, read DTCs.

      Does the scan tool display DTC: B1296-12-PTS SENSOR 9-CIRCUIT SHORT TO BATTERY as active?

      Yes

      - Replace the Park Assist Sensor in accordance with the Service Information. Refer to **SENSOR, PARK ASSIST, REMOVAL** .
      - Perform the BODY VERIFICATION TEST. Refer to **STANDARD PROCEDURE** .

      No

      - Replace the Park Assist Module in accordance with the Service Information. Refer to **MODULE, PARK ASSIST, REMOVAL** .
      - Perform the BODY VERIFICATION TEST. Refer to **STANDARD PROCEDURE** .

B1296-12-PTS SENSOR 9 - CIRCUIT SHORT TO BATTERY

For a complete wiring diagram, **refer to appropriate SYSTEM WIRING DIAGRAMS article** .

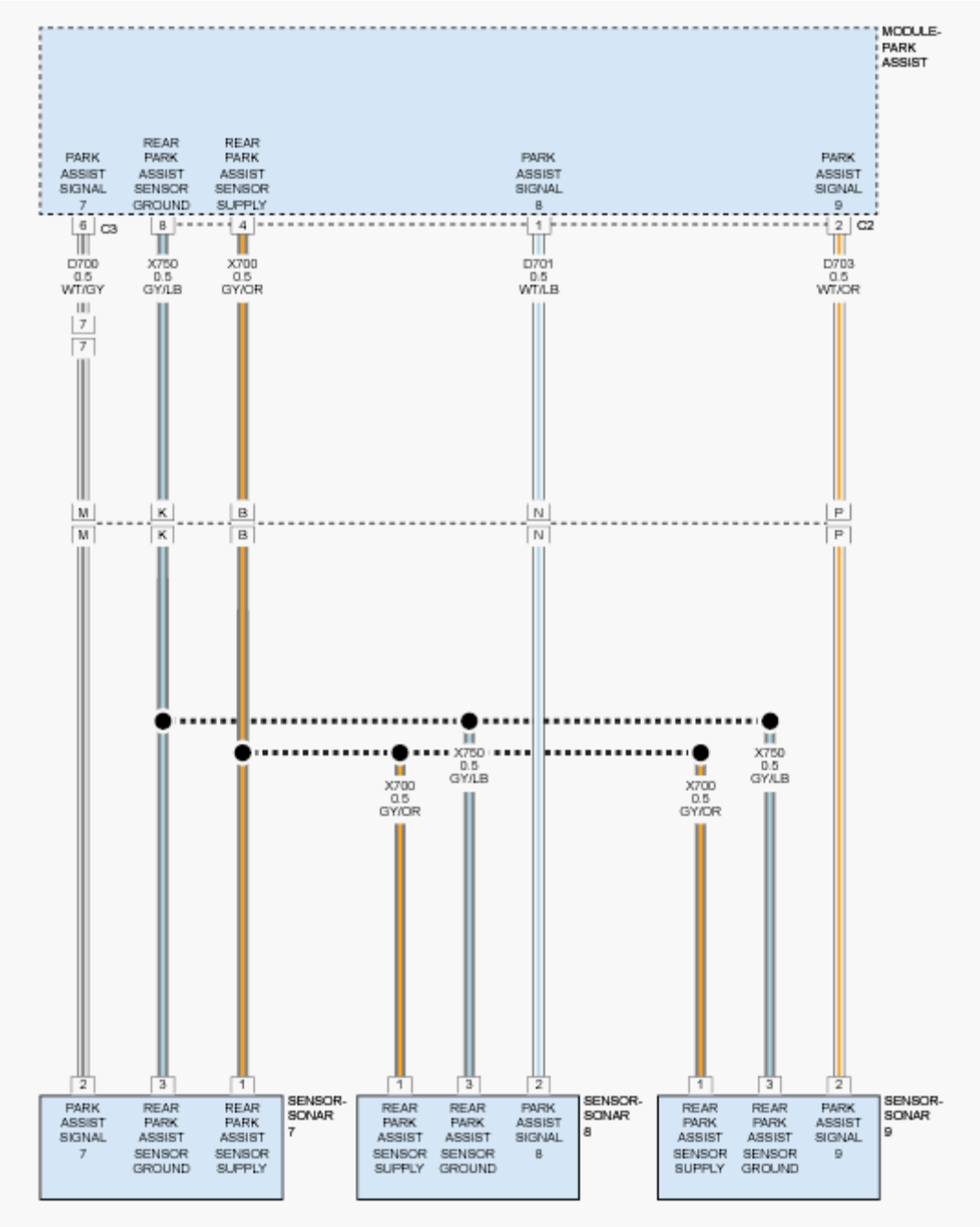

Fig. 38: Identifying Rear Park Assist Circuit Diagram
Courtesy of CHRYSLER GROUP, LLC

THEORY OF OPERATION

The Park Assist Sensors are ultrasonic transceivers that are completely controlled by the Park Assist Module. The sensors transmit and receive ultrasonic signals. Each sensor has a voltage, signal, and return circuit to the module. The sensors communicate with the Park Assist Module using a dedicated serial bus communication circuit.

NOTE: **The numbering system for the park assist sensors allows for up to twelve sensors on the vehicle, six front and six rear. The sensors are numbered in a clockwise manner starting at the left front bumper. The left front sensor (if equipped with front park assist) is the number 1 sensor. The numbering continues in a clockwise direction around the vehicle.**

WHEN MONITORED

Vehicle in reverse and during the self-test while vehicle is in drive between 18 km/h (11 mph) and 40 km/h (25 mph).

SET CONDITION

The Park Assist Module detects an open or short to voltage on the Park Assist Sensor Signal circuit.

POSSIBLE CAUSES

Possible Causes
(D703) PARK ASSIST SENSOR 9 SIGNAL CIRCUIT SHORTED TO VOLTAGE
(D703) PARK ASSIST SENSOR 9 SIGNAL CIRCUIT SHORTED TO THE (X700) PARK ASSIST SENSOR SUPPLY CIRCUIT
(X750) PARK ASSIST SENSOR GROUND CIRCUIT OPEN
PARK ASSIST SENSOR
PARK ASSIST MODULE

DIAGNOSTIC TEST

1. **CHECK FOR AN ACTIVE DIAGNOSTIC TROUBLE CODE (DTC)**
    1. Turn the ignition on.
    2. With the scan tool, read DTCs.

    Does the scan tool display this DTC as active?

    Yes

    - Go To 2

    No

    - Test complete, the condition or conditions that originally set this DTC are not present at this time. Using the wiring diagrams as a guide, check all related splices and connectors for signs of water intrusion, corrosion, pushed out or bent terminals, and correct pin tension.
    - Perform the BODY VERIFICATION TEST. Refer to **STANDARD PROCEDURE** .
2. **(D703) PARK ASSIST SENSOR 9 SIGNAL CIRCUIT SHORTED TO BATTERY**

1. Turn the ignition off.
2. Disconnect the Park Assist Module C2 harness connector.
3. Disconnect the Park Assist Sensor harness connector.
4. Turn the ignition on.
5. Measure the voltage of the (D703) Park Assist Sensor 9 Signal circuit.

   Is the voltage above 10.0 volts?

   Yes

   - Repair the (D703) Park Assist Sensor 9 Signal circuit for a short to battery.
   - Perform the BODY VERIFICATION TEST. Refer to **STANDARD PROCEDURE** .

   No

   - Go To 3

3. **(D703) PARK ASSIST SENSOR 9 SIGNAL CIRCUIT SHORTED TO THE (X700) PARK ASSIST SENSOR SUPPLY CIRCUIT**
   1. Turn the ignition off.
   2. Measure the resistance between the (D703) Park Assist Sensor 9 Signal circuit and the (X700) Park Assist Sensor Supply circuit.

      Is the resistance below 10K Ohms?

      Yes

      - Repair the (D703) Park Assist Sensor 9 Signal circuit for a short to the (X700) Park Assist Sensor Supply circuit.
      - Perform the BODY VERIFICATION TEST. Refer to **STANDARD PROCEDURE** .

      No

      - Go To 4

4. **(X750) PARK ASSIST SENSOR GROUND CIRCUIT OPEN**
   1. Reconnect the Park Assist Module C2 harness connector.
   2. Measure the resistance between ground and the (X750) Park Assist Sensor Ground circuit.

      Is the resistance above 20.0 Ohms?

      Yes

      - Go To 5

No

- Replace the Park Assist Sensor that caused this DTC to change from active to stored after disconnecting it in accordance with the Service Information. Refer to **SENSOR, PARK ASSIST, REMOVAL** .
- Perform the BODY VERIFICATION TEST. Refer to **STANDARD PROCEDURE** .

5. **(X750) PARK ASSIST SENSOR GROUND CIRCUIT OPEN BETWEEN PARK ASSIST MODULE AND SENSOR**
   1. Disconnect the Park Assist Module C2 harness connector.
   2. Measure the resistance of the (X750) Park Assist Sensor Ground circuit.

   Is the resistance above 5.0 Ohms?

   Yes

   - Repair the open in the (X750) Park Assist Sensor Ground circuit.
   - Perform the BODY VERIFICATION TEST. Refer to **STANDARD PROCEDURE** .

   No

   - Replace the Park Assist Module in accordance with the Service Information. Refer to **MODULE, PARK ASSIST, REMOVAL** .
   - Perform the BODY VERIFICATION TEST. Refer to **STANDARD PROCEDURE** .

B1296-25-PTS SENSOR 9 - SIGNAL SHAPE / WAVEFORM FAILURE

For a complete wiring diagram, **refer to appropriate SYSTEM WIRING DIAGRAMS article** .

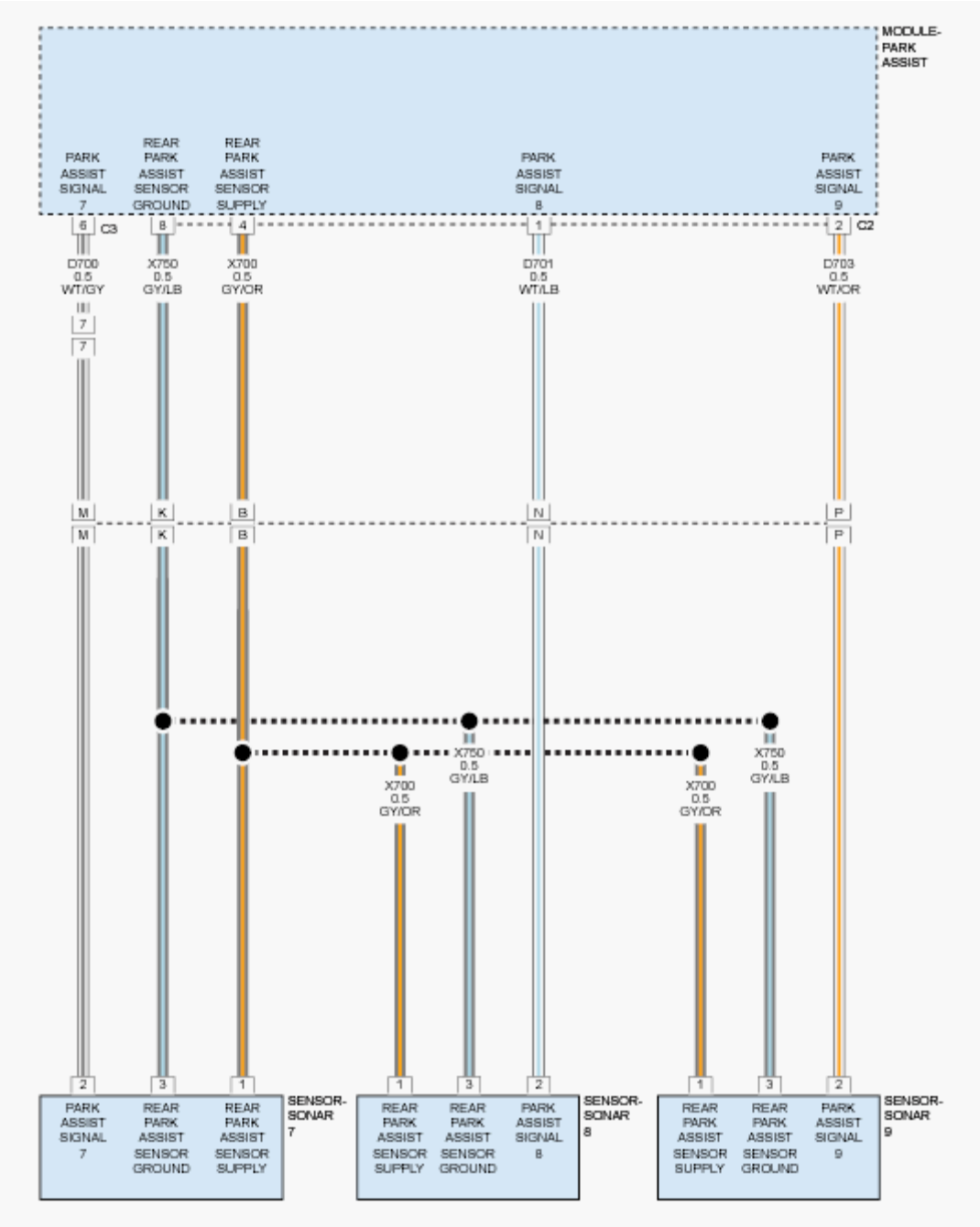

Fig. 39: Identifying Rear Park Assist Circuit Diagram
Courtesy of CHRYSLER GROUP, LLC

THEORY OF OPERATION

The Park Assist Sensors are ultrasonic transceivers that are completely controlled by the Park Assist Module. The sensors transmit and receive ultrasonic signals. Each sensor has a voltage, signal, and return circuit to the module. The sensors communicate with the Park Assist Module using a dedicated serial bus communication circuit.

WHEN MONITORED

Vehicle in reverse.

During the self-test while vehicle is in drive between 11 mph (18 km/h) and 25 mph (40 km/h).

SET CONDITION

The Park Assist Module detects an internal Sensor error.

POSSIBLE CAUSES

Possible Causes
PARK ASSIST SENSOR MEMBRANE OBSTRUCTION (ICE, SNOW, MUD, DIRT COVERING FASCIA)
PARK ASSIST SENSOR CONNECTOR OBSTRUCTION (ICE, SNOW, MUD, DIRT)
DECOUPLING RING MISSING/MOUNTED WRONG
OBJECTS - SUCH AS LICENSE PLATES - IN CLOSE RANGE TO THE SENSOR
PARK ASSIST SENSOR

DIAGNOSTIC TEST

1. **CHECK FOR AN ACTIVE DIAGNOSTIC TROUBLE CODE (DTC)**

   NOTE: Before proceeding with this diagnostic procedure, remove any ice, snow, mud, dirt, or other obstructions from the front/rear fascia/bumper. Also remove any ice, snow, dirt, mud, or other obstructions from the underside of the Fascia/Bumper surrounding the sensors.

   1. Turn the ignition on.
   2. With the scan tool, read Park Assist Module DTCs.

      Does the scan tool display this DTC as active?

      Yes

      - Go To 2

      No

      - Test complete, the condition or conditions that originally set this DTC are not present at this time. Using the wiring diagrams as a guide, check all related splices and connectors for signs of water intrusion, corrosion, pushed out or bent terminals, and correct pin tension.
      - Perform the BODY VERIFICATION TEST. Refer to **STANDARD PROCEDURE** .

2. **PARK ASSIST SENSOR**

1. Verify that none of the possible causes mentioned above are present. Repair as necessary.

   If none of the possible causes mentioned above are present, view repair.

   Repair

   - Replace the Park Assist Sensor that caused this DTC to change from active to stored after disconnecting it in accordance with the Service Information. Refer to **SENSOR, PARK ASSIST, REMOVAL** .
   - Perform the BODY VERIFICATION TEST. Refer to **STANDARD PROCEDURE** .

B1296-92-PTS SENSOR 9 - PERFORMANCE OR INCORRECT OPERATION

For a complete wiring diagram, **refer to appropriate SYSTEM WIRING DIAGRAMS article** .

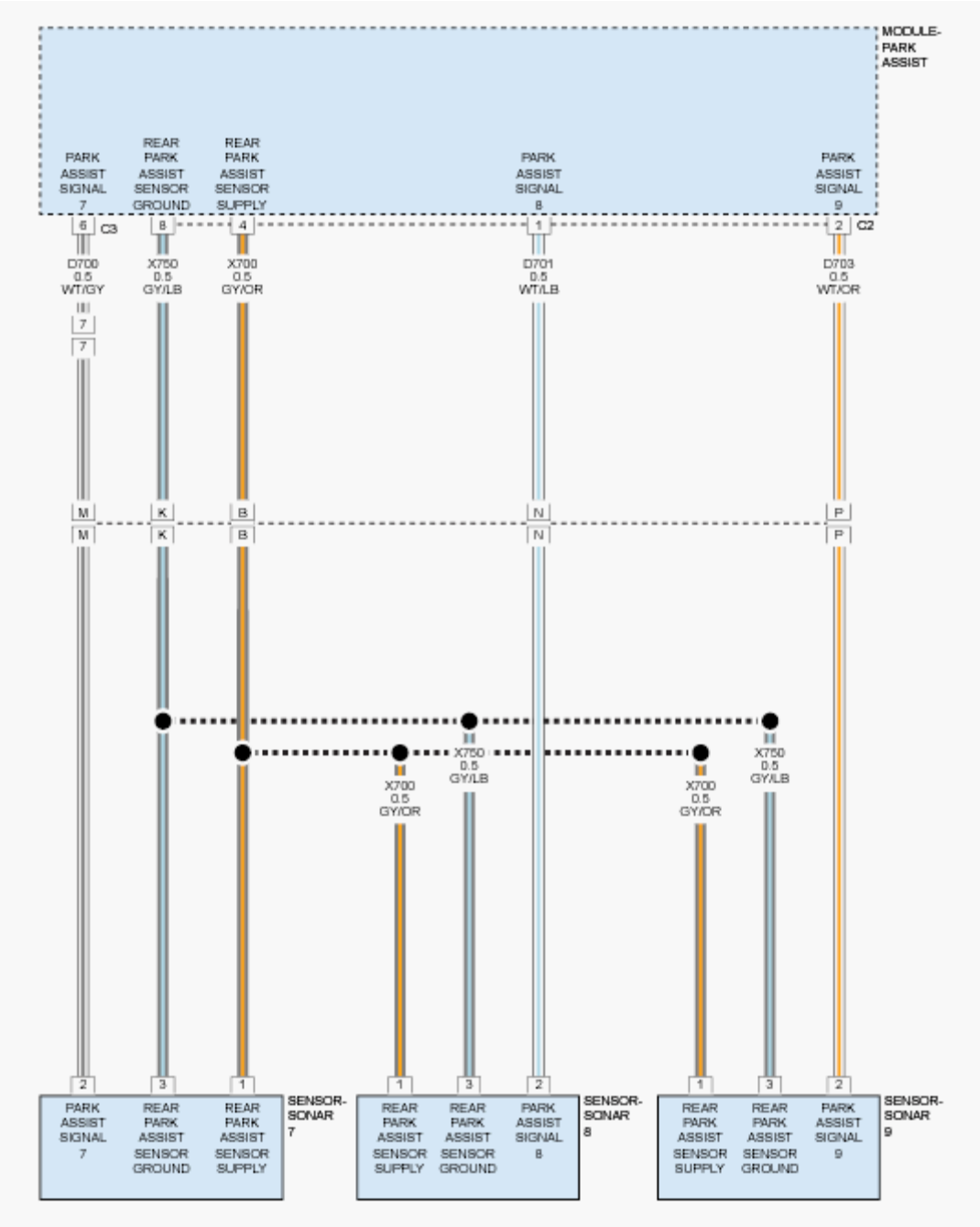

Fig. 40: Identifying Rear Park Assist Circuit Diagram
Courtesy of CHRYSLER GROUP, LLC

THEORY OF OPERATION

The Park Assist Sensors are ultrasonic transceivers that are completely controlled by the Park Assist Module. The sensors transmit and receive ultrasonic signals. Each sensor has a voltage, signal, and return circuit to the module. The sensors communicate with the Park Assist Module using a dedicated serial bus communication circuit.

NOTE: **The numbering system for the park assist sensors allows for up to twelve sensors on the vehicle, six front and six rear. The sensors are numbered in a clockwise manner starting at the left front bumper. The left front sensor (if equipped with front park assist) is the number 1 sensor. The numbering continues in a clockwise direction around the vehicle.**

WHEN MONITORED

Vehicle in reverse and during the self-test while vehicle is in drive between 18 km/h (11 mph) and 40 km/h (25 mph).

SET CONDITION

If the system detects data corruption in the transmission in the internal communication line between the module and sensors, this code will set.

POSSIBLE CAUSES

Possible Causes
(D703) PARK ASSIST SENSOR 9 SIGNAL CIRCUIT SHORTED TO GROUND
(D703) PARK ASSIST SENSOR 9 SIGNAL CIRCUIT SHORTED TO BATTERY
(D703) PARK ASSIST SENSOR 9 SIGNAL CIRCUIT OPEN
PARK ASSIST SENSOR 9
PARK ASSIST MODULE

DIAGNOSTIC TEST

1. **CHECK FOR AN ACTIVE DIAGNOSTIC TROUBLE CODE (DTC)**
    1. Turn the ignition on.
    2. With the scan tool, read Park Assist Module DTCs.

    Does the scan tool display this DTC as active?

    Yes

    - Go To 2

    No

    - Test complete, the condition or conditions that originally set this DTC are not present at this time. Using the wiring diagrams as a guide, check all related splices and connectors for signs of water intrusion, corrosion, pushed out or bent terminals, and correct pin tension.
    - Perform the BODY VERIFICATION TEST. Refer to **STANDARD PROCEDURE** .
2. **CHECK PARK ASSIST SENSOR 9 FOR INTERNAL SHORT**

1. Disconnect Park Assist Sensor 9.
2. With the scan tool, read Park Assist Module DTCs.

   Does the scan tool display this DTC as active?

   Yes

   - Go To 3

   No

   - Replace Park Assist Sensor 9 in accordance with the Service Information. Refer to **SENSOR, PARK ASSIST, REMOVAL** .
   - Perform the BODY VERIFICATION TEST. Refer to **STANDARD PROCEDURE** .

3. **CHECK THE (D703) PARK ASSIST SENSOR 9 SIGNAL CIRCUIT FOR A SHORT TO GROUND**
   1. Turn the ignition off.
   2. Disconnect the Park Assist Module C2 harness connector.
   3. Using a 12-volt test light connected to 12-volts check the (D703) Park Assist Sensor 9 Signal circuit for a short to ground at the Park Assist Module C2 harness connector.

      Does the test light illuminate brightly?

      Yes

      - Repair the (D703) Park Assist Sensor 9 Signal circuit for a short to ground.
      - Perform the BODY VERIFICATION TEST. Refer to **STANDARD PROCEDURE** .

      No

      - Go To 4

4. **CHECK THE (D703) PARK ASSIST SENSOR 9 SIGNAL CIRCUIT FOR A SHORT TO BATTERY**
   1. Turn the ignition on.
   2. Using a 12-volt test light connected to ground check the (D703) Park Assist Sensor 9 Signal circuit at the Park Assist Module C2 harness connector for a short to battery.

      Does the test light illuminate brightly?

      Yes

      - Repair the (D703) Park Assist Sensor 9 Signal circuit for a short to battery.
      - Perform the BODY VERIFICATION TEST. Refer to **STANDARD PROCEDURE** .

No

- Go To 5

5. **CHECK THE (D703) PARK ASSIST SENSOR 9 SIGNAL CIRCUIT FOR AN OPEN**
   1. Measure the resistance of the (D703) Park Assist Sensor 9 Signal circuit between the Park Assist Module C2 harness connector and the Park Assist Sensor 9 harness connector.

      Is the resistance below 5.0 Ohms?

      No

      - Repair the (D703) Park Assist Sensor 9 Signal circuit for an open.
      - Perform the BODY VERIFICATION TEST. Refer to **STANDARD PROCEDURE** .

      Yes

      - Replace the Park Assist Module in accordance with Service Information. Refer to **MODULE, PARK ASSIST, REMOVAL** .
      - Perform the BODY VERIFICATION TEST. Refer to **STANDARD PROCEDURE** .

B1297-11-PTS SENSOR 10 - CIRCUIT SHORT TO GROUND

For a complete wiring diagram, **refer to appropriate SYSTEM WIRING DIAGRAMS article** .

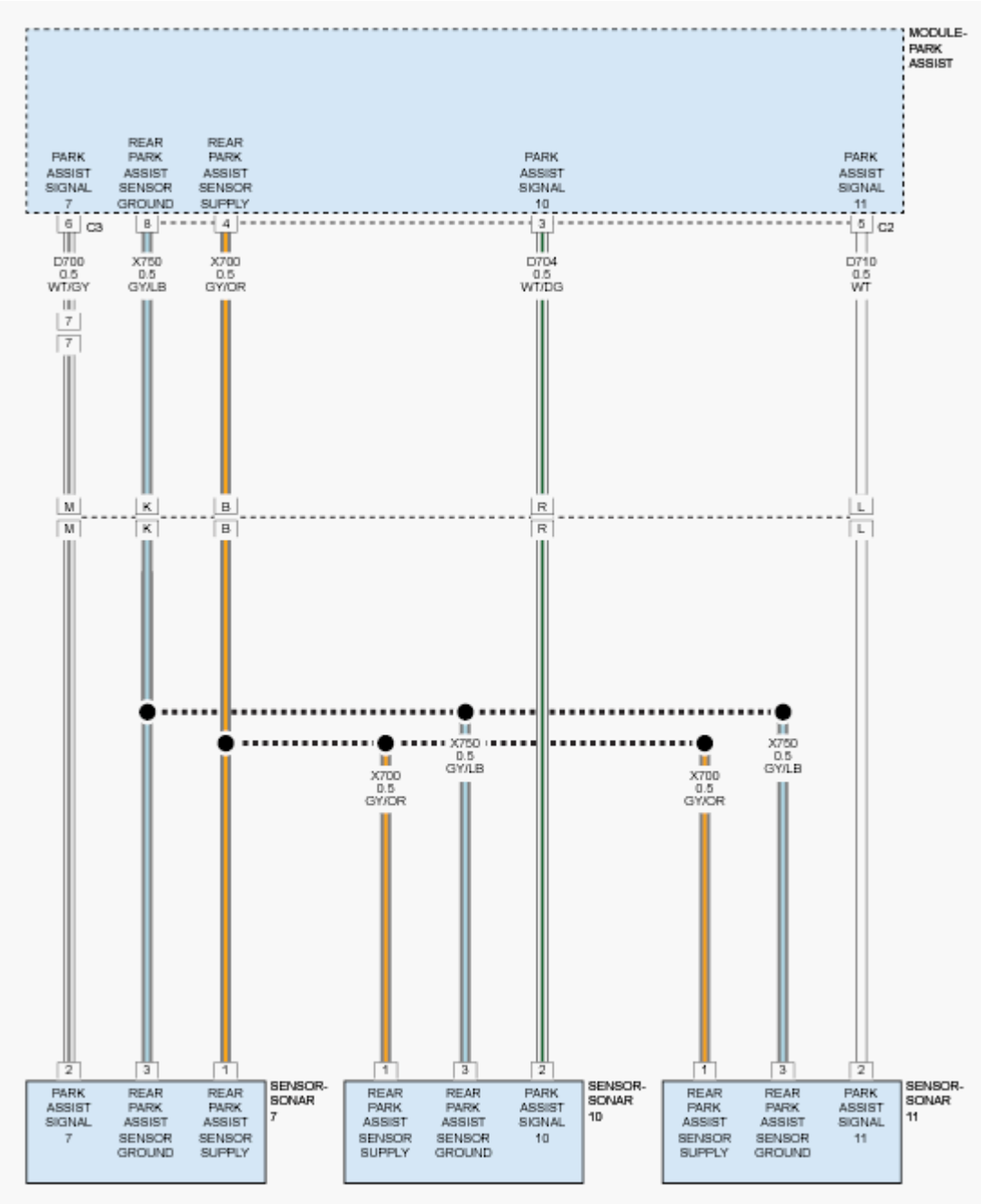

Fig. 41: Identifying Rear Park Assist Circuit Diagram
Courtesy of CHRYSLER GROUP, LLC

THEORY OF OPERATION

The Park Assist Sensors are ultrasonic transceivers that are completely controlled by the Park Assist Module. The sensors transmit and receive ultrasonic signals. Each sensor has a voltage, signal and return circuit to the module. The sensors communicate with the Park Assist Module using a dedicated serial bus communication circuit.

NOTE: The numbering system for the park assist sensors allows for up to twelve sensors on the vehicle, six front and six rear. The sensors are numbered in a clockwise manner starting at the left front bumper. The left front sensor (if equipped with front park assist) is the number 1 sensor. The numbering continues in a clockwise direction around the vehicle.

WHEN MONITORED

Vehicle in reverse and during the self-test while vehicle is in drive between 18 km/h (11 mph) and 40 km/h (25 mph).

SET CONDITION

The Park Assist Module detects a short to ground on the Park Assist Sensor Signal circuit.

POSSIBLE CAUSES

Possible Causes
PARK ASSIST SENSOR DISCONNECTED
(D704) PARK ASSIST SENSOR 10 SIGNAL CIRCUIT SHORTED TO GROUND
(D704) PARK ASSIST SENSOR 10 SIGNAL CIRCUIT SHORTED TO THE (X750) PARK ASSIST SENSOR GROUND CIRCUIT
(D704) PARK ASSIST SENSOR 10 SIGNAL CIRCUIT OPEN
(X700) PARK ASSIST SENSOR SUPPLY CIRCUIT OPEN
PARK ASSIST SENSOR
PARK ASSIST MODULE

DIAGNOSTIC TEST

1. **CHECK FOR AN ACTIVE DIAGNOSTIC TROUBLE CODE (DTC)**

   NOTE: A disconnected sensor will set this DTC. Verify the Park Assist Sensor is connected before proceeding with this diagnostic procedure.

   1. Turn the ignition on.
   2. With the scan tool, read DTCs.

   Does the scan tool display this DTC as active?

   Yes

   - Go To 2

   No

- Test complete, the condition or conditions that originally set this DTC are not present at this time. Using the wiring diagrams as a guide, check all related splices and connectors for signs of water intrusion, corrosion, pushed out or bent terminals, and correct pin tension.
- Perform the BODY VERIFICATION TEST. Refer to **STANDARD PROCEDURE** .

2. **CHECK THE VOLTAGE OF THE (X700) PARK ASSIST SENSOR SUPPLY CIRCUIT**
   1. Turn the ignition off.
   2. Disconnect the Park Assist Sensor harness connector.
   3. Turn the ignition on.
   4. Measure the voltage of the (X700) Park Assist Sensor Supply circuit.

   Is the voltage above 8.0 volts?

   Yes

   - Go To 4

   No

   - Go To 3

3. **CHECK THE (X700) PARK ASSIST SENSOR SUPPLY CIRCUIT FOR AN OPEN OR HIGH RESISTANCE**
   1. Turn the ignition off.
   2. Disconnect the Park Assist Module C2 harness connector.
   3. Measure the resistance of the (X700) Park Assist Sensor Supply circuit.

   Is the resistance below 5.0 Ohms?

   Yes

   - Replace the Park Assist Module in accordance with the Service Information. Refer to **MODULE, PARK ASSIST, REMOVAL** .
   - Perform the BODY VERIFICATION TEST. Refer to **STANDARD PROCEDURE** .

   No

   - Repair the open or high resistance in the (X700) Park Assist Sensor Supply circuit.
   - Perform the BODY VERIFICATION TEST. Refer to **STANDARD PROCEDURE** .

4. **CHECK THE (D704) PARK ASSIST SENSOR 10 SIGNAL CIRCUIT FOR A SHORT TO GROUND WITH THE PARK ASSIST MODULE CONNECTED**

   NOTE: Perform this step with the Park Assist Module connected.

   1. Measure the resistance between ground and the (D704) Park Assist Sensor 10 Signal circuit.

Is the resistance below 10K Ohms?

Yes

- Go To 5

No

- Go To 7

5. **CHECK THE (D704) PARK ASSIST SENSOR 10 SIGNAL CIRCUIT FOR A SHORT TO GROUND WITH THE PARK ASSIST MODULE DISCONNECTED**
   1. Disconnect the Park Assist Module C2 harness connector.
   2. Measure the resistance between ground and the (D704) Park Assist Sensor 10 Signal circuit.

   Is the resistance below 10K Ohms?

   Yes

   - Repair the short to ground in the (D704) Park Assist Sensor 10 Signal circuit.
   - Perform the BODY VERIFICATION TEST. Refer to **STANDARD PROCEDURE** .

   No

   - Go To 6

6. **CHECK THE (D704) PARK ASSIST SENSOR 10 SIGNAL CIRCUIT FOR A SHORT TO THE (X750) PARK ASSIST SENSOR GROUND CIRCUIT**
   1. Measure the resistance between the (D704) Park Assist Sensor 10 Signal circuit and the (X750) Park Assist Sensor Ground circuit.

   Is the resistance below 10K Ohms?

   Yes

   - Repair the short between the (D704) Park Assist Sensor 10 Signal circuit and the (X750) Park Assist Sensor Ground circuit.
   - Perform the BODY VERIFICATION TEST. Refer to **STANDARD PROCEDURE** .

   No

   - Replace the Park Assist Module in accordance with the Service Information. Refer to **MODULE, PARK ASSIST, REMOVAL** .
   - Perform the BODY VERIFICATION TEST. Refer to **STANDARD PROCEDURE** .

7. **CHECK THE (D704) PARK ASSIST SENSOR 10 SIGNAL CIRCUIT FOR AN OPEN**
   1. Disconnect the Park Assist Module C2 harness connector.

2. Measure the resistance of the (D704) Park Assist Sensor 10 Signal circuit.

   Is the resistance above 5.0 Ohms?

   Yes

   - Repair the open in the (D704) Park Assist Sensor 10 Signal circuit.
   - Perform the BODY VERIFICATION TEST. Refer to **STANDARD PROCEDURE** .

   No

   - Go To 8

8. **PARK ASSIST SENSOR**
   1. Turn the ignition on.
   2. Reconnect the Park Assist Module C2 harness connector.
   3. Connect a jumper wire across the (X700) Park Assist Sensor Supply and (D704) Park Assist Sensor 10 Signal circuits.
   4. Turn the ignition on.
   5. With the scan tool, read DTCs.

      Does the scan tool display DTC: B1297-12-PTS SENSOR 10 - CIRCUIT SHORT TO BATTERY as active?

      Yes

      - Replace the Park Assist Sensor in accordance with the Service Information. Refer to **SENSOR, PARK ASSIST, REMOVAL** .
      - Perform the BODY VERIFICATION TEST. Refer to **STANDARD PROCEDURE** .

      No

      - Replace the Park Assist Module in accordance with the Service Information. Refer to **MODULE, PARK ASSIST, REMOVAL** .
      - Perform the BODY VERIFICATION TEST. Refer to **STANDARD PROCEDURE** .

B1297-12-PTS SENSOR 10 - CIRCUIT SHORT TO BATTERY

For a complete wiring diagram, **refer to appropriate SYSTEM WIRING DIAGRAMS article** .

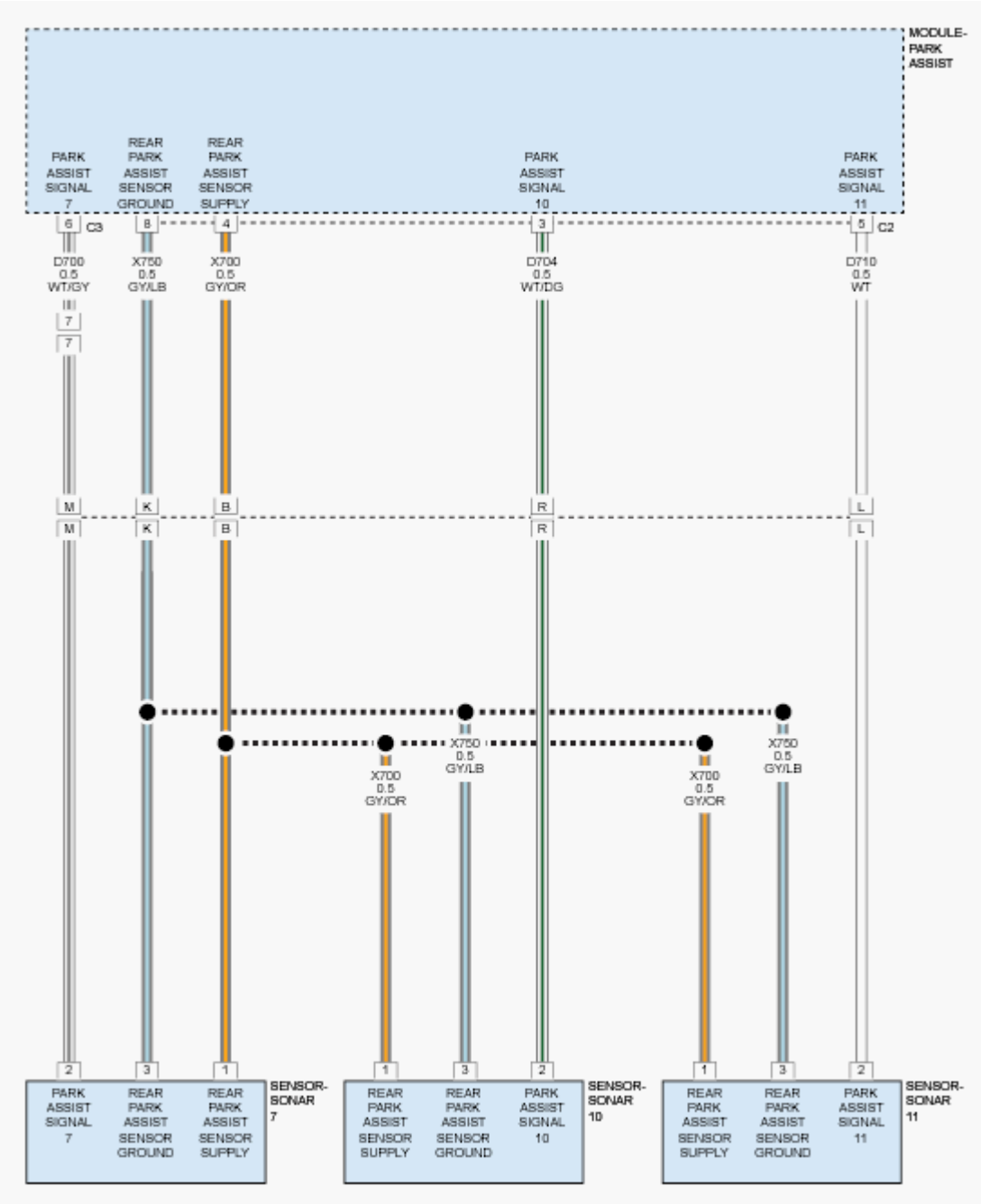

Fig. 42: Identifying Rear Park Assist Circuit Diagram
Courtesy of CHRYSLER GROUP, LLC

THEORY OF OPERATION

The Park Assist Sensors are ultrasonic transceivers that are completely controlled by the Park Assist Module. The sensors transmit and receive ultrasonic signals. Each sensor has a voltage, signal, and return circuit to the module. The sensors communicate with the Park Assist Module using a dedicated serial bus communication circuit.

NOTE: **The numbering system for the park assist sensors allows for up to twelve sensors on the vehicle, six front and six rear. The sensors are numbered in a clockwise manner starting at the left front bumper. The left front sensor (if equipped with front park assist) is the number 1 sensor. The numbering continues in a clockwise direction around the vehicle.**

WHEN MONITORED

Vehicle in reverse and during the self-test while vehicle is in drive between 18 km/h (11 mph) and 40 km/h (25 mph).

SET CONDITION

The Park Assist Module detects an open or short to voltage on the Park Assist Sensor Signal circuit.

POSSIBLE CAUSES

Possible Causes
(D704) PARK ASSIST SENSOR 10 SIGNAL CIRCUIT SHORTED TO VOLTAGE
(D704) PARK ASSIST SENSOR 10 SIGNAL CIRCUIT SHORTED TO THE (X700) PARK ASSIST SENSOR SUPPLY CIRCUIT
(X750) PARK ASSIST SENSOR GROUND CIRCUIT OPEN
PARK ASSIST SENSOR
PARK ASSIST MODULE

DIAGNOSTIC TEST

1. **CHECK FOR AN ACTIVE DIAGNOSTIC TROUBLE CODE (DTC)**
    1. Turn the ignition on.
    2. With the scan tool, read DTCs.

    Does the scan tool display this DTC as active?

    Yes

    - Go To 2

    No

    - Test complete, the condition or conditions that originally set this DTC are not present at this time. Using the wiring diagrams as a guide, check all related splices and connectors for signs of water intrusion, corrosion, pushed out or bent terminals, and correct pin tension.
    - Perform the BODY VERIFICATION TEST. Refer to **STANDARD PROCEDURE** .
2. **(D704) PARK ASSIST SENSOR 10 SIGNAL CIRCUIT SHORTED TO BATTERY**

1. Turn the ignition off.
2. Disconnect the Park Assist Module C2 harness connector.
3. Disconnect the Park Assist Sensor harness connector.
4. Turn the ignition on.
5. Measure the voltage of the (D704) Park Assist Sensor 10 Signal circuit.

   Is the voltage above 10.0 volts?

   Yes

   - Repair the (D704) Park Assist Sensor 10 Signal circuit for a short to battery.
   - Perform the BODY VERIFICATION TEST. Refer to **STANDARD PROCEDURE** .

   No

   - Go To 3

3. **(D704) PARK ASSIST SENSOR 10 SIGNAL CIRCUIT SHORTED TO THE (X700) PARK ASSIST SENSOR SUPPLY CIRCUIT**
   1. Turn the ignition off.
   2. Measure the resistance between the (D704) Park Assist Sensor 10 Signal circuit and the (X700) Park Assist Sensor Supply circuit.

      Is the resistance below 10K Ohms?

      Yes

      - Repair the (D704) Park Assist Sensor 10 Signal circuit for a short to the (X700) Park Assist Sensor Supply circuit.
      - Perform the BODY VERIFICATION TEST. Refer to **STANDARD PROCEDURE** .

      No

      - Go To 4

4. **(X750) PARK ASSIST SENSOR GROUND CIRCUIT OPEN**
   1. Reconnect the Park Assist Module C2 harness connector.
   2. Measure the resistance between ground and the (X750) Park Assist Sensor Ground circuit.

      Is the resistance above 20.0 Ohms?

      Yes

      - Go To 5

No

- Replace the Park Assist Sensor in accordance with the Service Information. Refer to **SENSOR, PARK ASSIST, REMOVAL** .
- Perform the BODY VERIFICATION TEST. Refer to **STANDARD PROCEDURE** .

5. **(X750) PARK ASSIST SENSOR GROUND CIRCUIT OPEN BETWEEN PARK ASSIST MODULE AND SENSOR**
   1. Disconnect the Park Assist Module C2 harness connector.
   2. Measure the resistance of the (X750) Park Assist Sensor Ground circuit.

   Is the resistance above 5.0 Ohms?

   Yes

   - Repair the open in the (X750) Park Assist Sensor Ground circuit.
   - Perform the BODY VERIFICATION TEST. Refer to **STANDARD PROCEDURE** .

   No

   - Replace the Park Assist Module in accordance with the Service Information. Refer to **MODULE, PARK ASSIST, REMOVAL** .
   - Perform the BODY VERIFICATION TEST. Refer to **STANDARD PROCEDURE** .

B1297-25-PTS SENSOR 10 - SIGNAL SHAPE / WAVEFORM FAILURE

For a complete wiring diagram, **refer to appropriate SYSTEM WIRING DIAGRAMS article** .

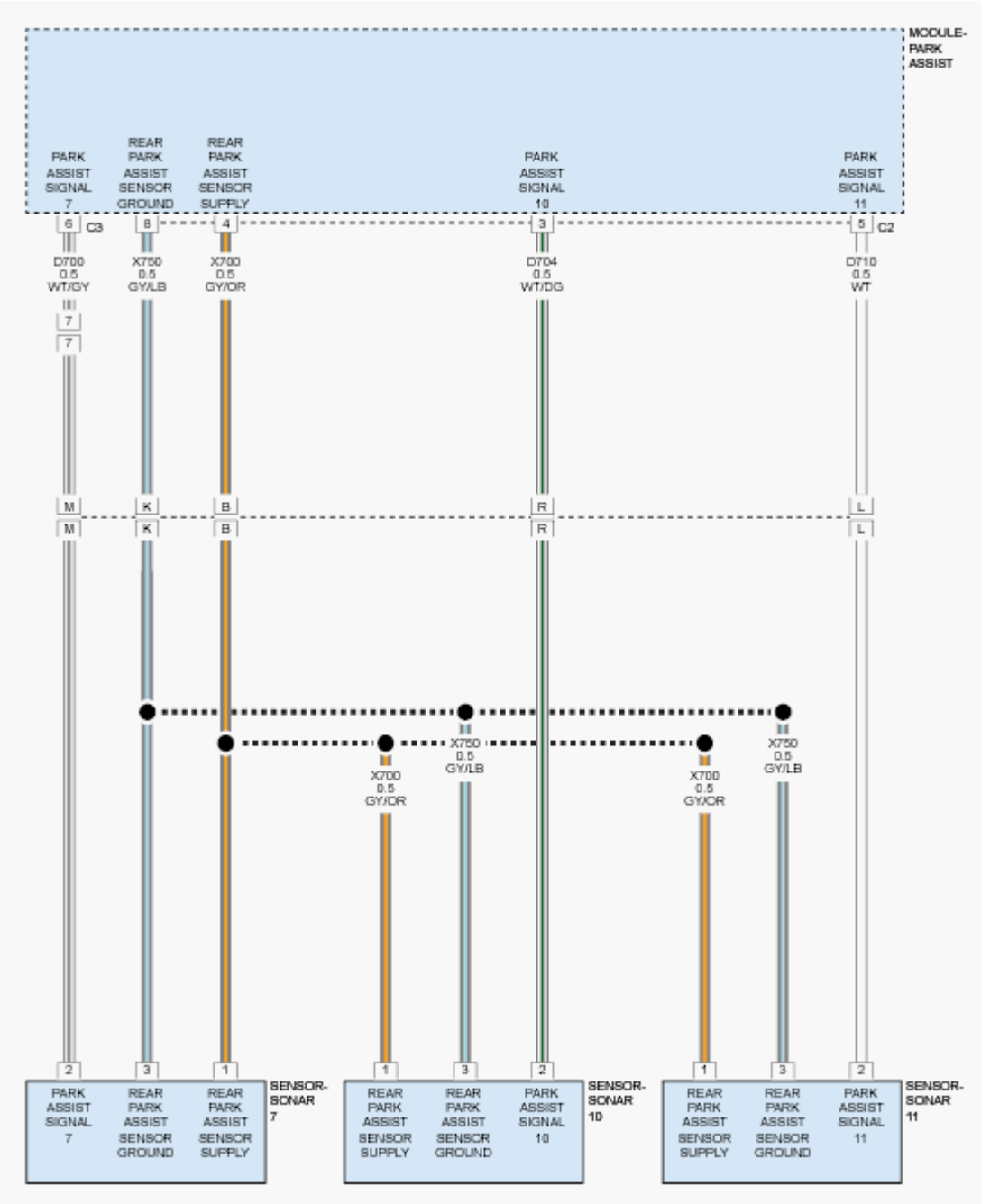

Fig. 43: Identifying Rear Park Assist Circuit Diagram
Courtesy of CHRYSLER GROUP, LLC

THEORY OF OPERATION

The Park Assist Sensors are ultrasonic transceivers that are completely controlled by the Park Assist Module. The sensors transmit and receive ultrasonic signals. Each sensor has a voltage, signal, and return circuit to the module. The sensors communicate with the Park Assist Module using a dedicated serial bus communication circuit.

WHEN MONITORED

Vehicle in reverse.

During the self-test while vehicle is in drive between 11 mph (18 km/h) and 25 mph (40 km/h).

SET CONDITION

The Park Assist Module detects an internal Sensor error.

POSSIBLE CAUSES

Possible Causes
PARK ASSIST SENSOR MEMBRANE OBSTRUCTION (ICE, SNOW, MUD, DIRT COVERING FASCIA)
PARK ASSIST SENSOR CONNECTOR OBSTRUCTION (ICE, SNOW, MUD, DIRT)
DECOUPLING RING MISSING/MOUNTED WRONG
OBJECTS - SUCH AS LICENSE PLATES - IN CLOSE RANGE TO THE SENSOR
PARK ASSIST SENSOR

DIAGNOSTIC TEST

1. **CHECK FOR AN ACTIVE DIAGNOSTIC TROUBLE CODE (DTC)**

   NOTE: Before proceeding with this diagnostic procedure, remove any ice, snow, mud, dirt, or other obstructions from the front/rear fascia/bumper. Also remove any ice, snow, dirt, mud, or other obstructions from the underside of the Fascia/Bumper surrounding the sensors.

   1. Turn the ignition on.
   2. With the scan tool, read Park Assist Module DTCs.

      Does the scan tool display this DTC as active?

      Yes

      - Go To 2

      No

      - Test complete, the condition or conditions that originally set this DTC are not present at this time. Using the wiring diagrams as a guide, check all related splices and connectors for signs of water intrusion, corrosion, pushed out or bent terminals, and correct pin tension.
      - Perform the BODY VERIFICATION TEST. Refer to **STANDARD PROCEDURE** .

2. **PARK ASSIST SENSOR**

1. Verify that none of the possible causes mentioned above are present. Repair as necessary.

   If none of the possible causes mentioned above are present, view repair.

   Repair

   - Replace the Park Assist Sensor in accordance with the Service Information. Refer to **SENSOR, PARK ASSIST, REMOVAL** .
   - Perform the BODY VERIFICATION TEST. Refer to **STANDARD PROCEDURE** .

B1297-92-PTS SENSOR 10 - PERFORMANCE OR INCORRECT OPERATION

For a complete wiring diagram, **refer to appropriate SYSTEM WIRING DIAGRAMS article** .

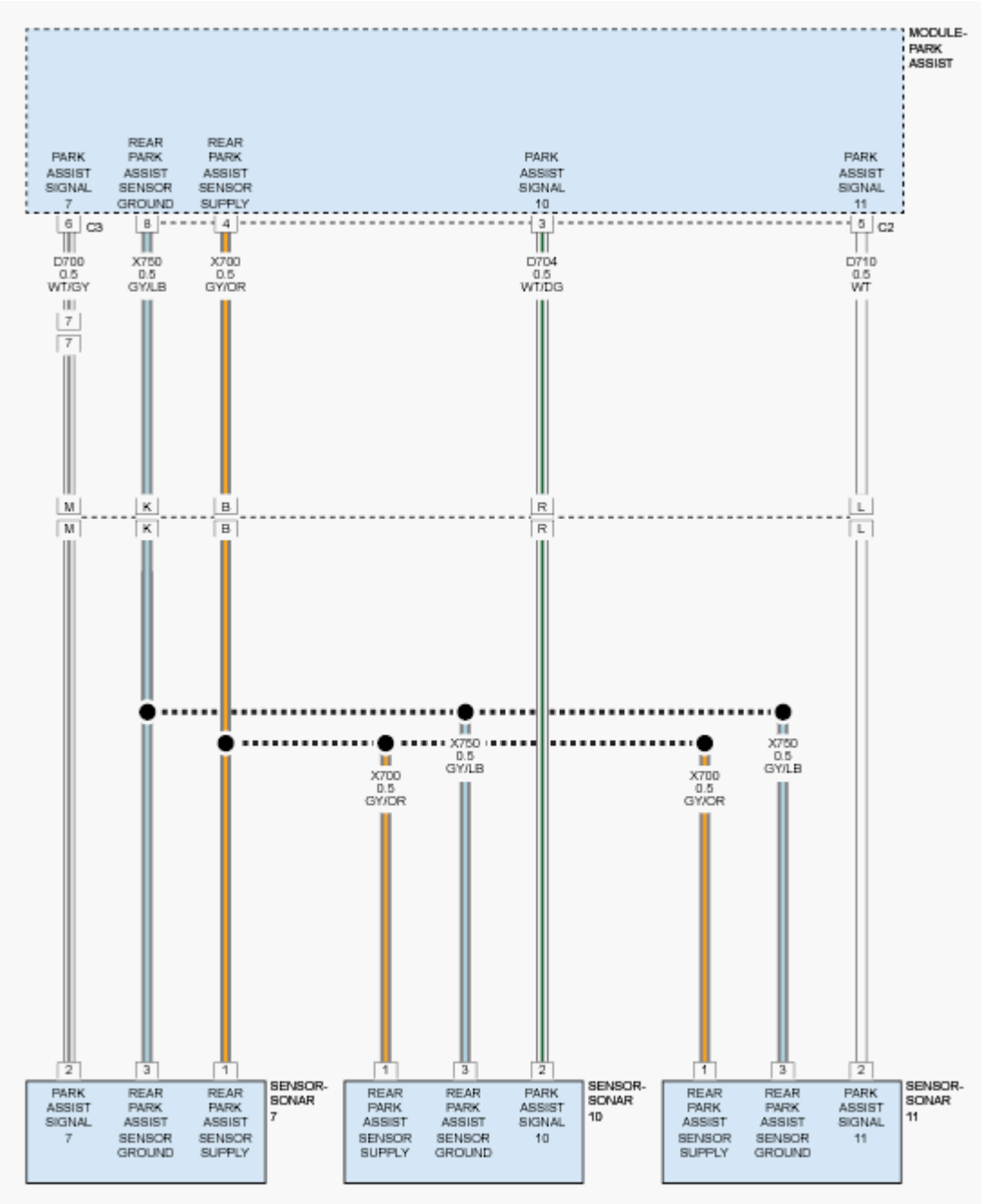

Fig. 44: Identifying Rear Park Assist Circuit Diagram
Courtesy of CHRYSLER GROUP, LLC

THEORY OF OPERATION

The Park Assist Sensors are ultrasonic transceivers that are completely controlled by the Park Assist Module. The sensors transmit and receive ultrasonic signals. Each sensor has a voltage, signal, and return circuit to the module. The sensors communicate with the Park Assist Module using a dedicated serial bus communication circuit.

NOTE: **The numbering system for the park assist sensors allows for up to twelve sensors on the vehicle, six front and six rear. The sensors are numbered in a clockwise manner starting at the left front bumper. The left front sensor (if equipped with front park assist) is the number 1 sensor. The numbering continues in a clockwise direction around the vehicle.**

WHEN MONITORED

Vehicle in reverse and during the self-test while vehicle is in drive between 18 km/h (11 mph) and 40 km/h (25 mph).

SET CONDITION

If the system detects data corruption in the transmission in the internal communication line between the module and sensors, this code will set.

POSSIBLE CAUSES

Possible Causes
(D704) PARK ASSIST SENSOR 10 SIGNAL CIRCUIT SHORTED TO GROUND
(D704) PARK ASSIST SENSOR 10 SIGNAL CIRCUIT SHORTED TO BATTERY
(D704) PARK ASSIST SENSOR 10 SIGNAL CIRCUIT OPEN
PARK ASSIST SENSOR 10
PARK ASSIST MODULE

DIAGNOSTIC TEST

1. **CHECK FOR AN ACTIVE DIAGNOSTIC TROUBLE CODE (DTC)**
    1. Turn the ignition on.
    2. With the scan tool, read Park Assist Module DTCs.

    Does the scan tool display this DTC as active?

    Yes

    - Go To 2

    No

    - Test complete, the condition or conditions that originally set this DTC are not present at this time. Using the wiring diagrams as a guide, check all related splices and connectors for signs of water intrusion, corrosion, pushed out or bent terminals, and correct pin tension.
    - Perform the BODY VERIFICATION TEST. Refer to **STANDARD PROCEDURE** .
2. **CHECK PARK ASSIST SENSOR 10 FOR INTERNAL SHORT**

1. Disconnect Park Assist Sensor 10.
2. With the scan tool, read Park Assist Module DTCs.

   Does the scan tool display this DTC as active?

   Yes

   - Go To 3

   No

   - Replace Park Assist Sensor 10 in accordance with the Service Information. Refer to **SENSOR, PARK ASSIST, REMOVAL** .
   - Perform the BODY VERIFICATION TEST. Refer to **STANDARD PROCEDURE** .

3. **CHECK THE (D704) PARK ASSIST SENSOR 10 SIGNAL CIRCUIT FOR A SHORT TO GROUND**
   1. Turn the ignition off.
   2. Disconnect the Park Assist Module C2 harness connector.
   3. Using a 12-volt test light connected to 12-volts check the (D704) Park Assist Sensor 10 Signal circuit at the Park Assist Module C2 harness connector.

      Does the test light illuminate brightly?

      Yes

      - Repair the (D704) Park Assist Sensor 10 Signal circuit for a short to ground.
      - Perform the BODY VERIFICATION TEST. Refer to **STANDARD PROCEDURE** .

      No

      - Go To 4

4. **CHECK THE (D704) PARK ASSIST SENSOR 10 SIGNAL CIRCUIT FOR A SHORT TO BATTERY**
   1. Turn the ignition on.
   2. Using a 12-volt test light connected to ground check the (D704) Park Assist Sensor 10 Signal circuit at the Park Assist Module C2 harness connector for a short to battery.

      Does the test light illuminate brightly?

      Yes

      - Repair the (D704) Park Assist Sensor 10 Signal circuit for a short to battery.
      - Perform the BODY VERIFICATION TEST. Refer to **STANDARD PROCEDURE** .

No

- Go To 5

5. **CHECK THE (D704) PARK ASSIST SENSOR 10 SIGNAL CIRCUIT FOR AN OPEN**
   1. Turn the ignition off.
   2. Measure the resistance of the (D704) Park Assist Sensor 10 Signal circuit between the Park Assist Module C2 harness connector and the Park Assist Sensor 10 harness connector.

      Is the resistance below 5.0 Ohms?

      No

      - Repair the (D704) Park Assist Sensor 10 Signal circuit for an open.
      - Perform the BODY VERIFICATION TEST. Refer to **STANDARD PROCEDURE** .

      Yes

      - Replace the Park Assist Module in accordance with Service Information. Refer to **MODULE, PARK ASSIST, REMOVAL** .
      - Perform the BODY VERIFICATION TEST. Refer to **STANDARD PROCEDURE** .

B1298-11-PTS SENSOR 11 - CIRCUIT SHORT TO GROUND

For a complete wiring diagram, **refer to appropriate SYSTEM WIRING DIAGRAMS article** .

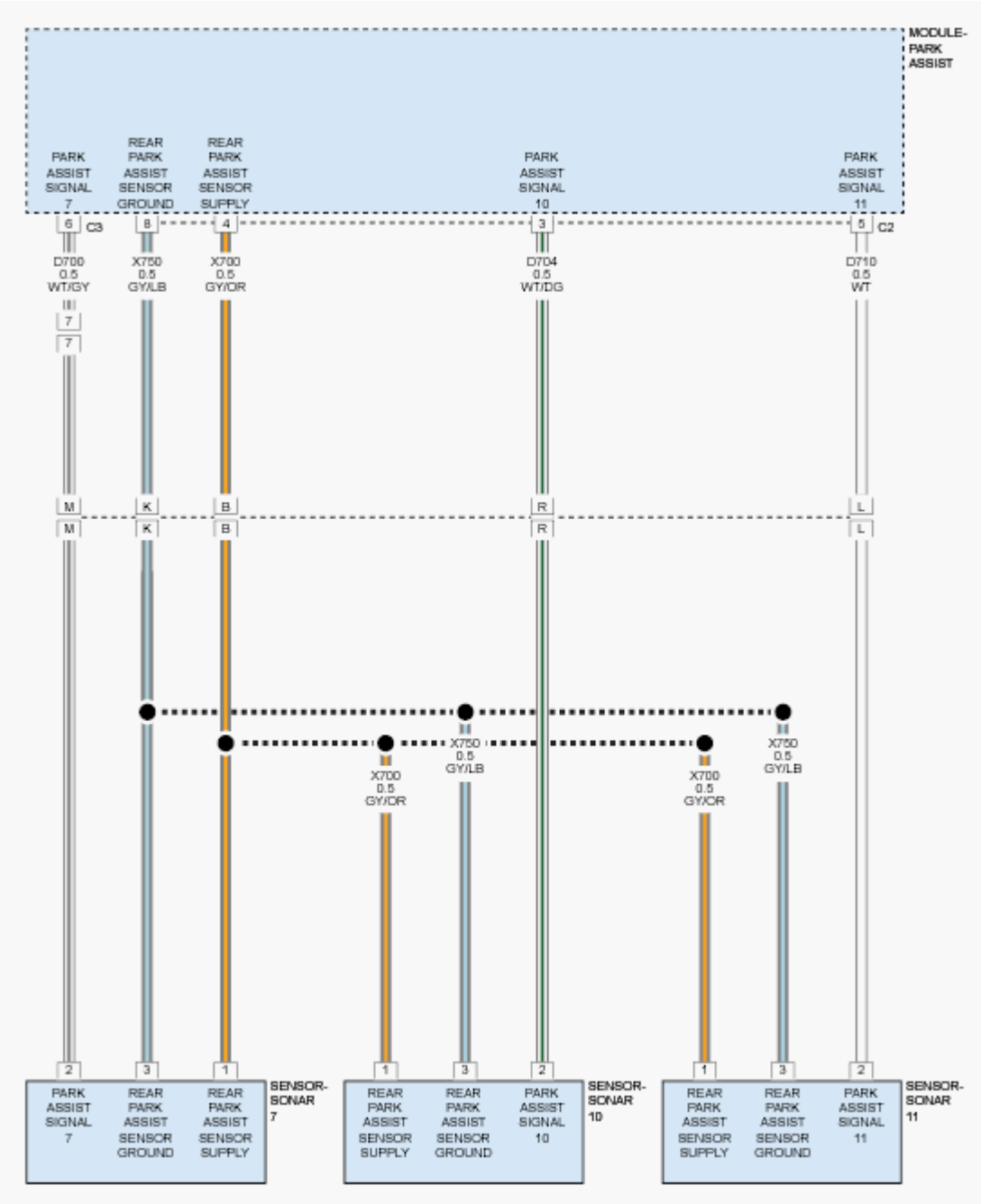

Fig. 45: Identifying Rear Park Assist Circuit Diagram
Courtesy of CHRYSLER GROUP, LLC

THEORY OF OPERATION

The Park Assist Sensors are ultrasonic transceivers that are completely controlled by the Park Assist Module. The sensors transmit and receive ultrasonic signals. Each sensor has a voltage, signal, and return circuit to the module. The sensors communicate with the Park Assist Module using a dedicated serial bus communication circuit.

NOTE: The numbering system for the park assist sensors allows for up to twelve sensors on the vehicle, six front and six rear. The sensors are numbered in a clockwise manner starting at the left front bumper. The left front sensor (if equipped with front park assist) is the number 1 sensor. The numbering continues in a clockwise direction around the vehicle.

WHEN MONITORED

Vehicle in reverse and during the self-test while vehicle is in drive between 18 km/h (11 mph) and 40 km/h (25 mph).

SET CONDITION

The Park Assist Module detects a short to ground on the Park Assist Sensor Signal circuit.

POSSIBLE CAUSES

Possible Causes
PARK ASSIST SENSOR DISCONNECTED
(D710) PARK ASSIST SENSOR 11 SIGNAL CIRCUIT SHORTED TO GROUND
(D710) PARK ASSIST SENSOR 11 SIGNAL CIRCUIT SHORTED TO THE (X750) PARK ASSIST SENSOR GROUND CIRCUIT
(D710) PARK ASSIST SENSOR 11 SIGNAL CIRCUIT OPEN
(X700) PARK ASSIST SENSOR SUPPLY CIRCUIT OPEN
PARK ASSIST SENSOR
PARK ASSIST MODULE

DIAGNOSTIC TEST

1. **CHECK FOR AN ACTIVE DIAGNOSTIC TROUBLE CODE (DTC)**

   NOTE: A disconnected sensor will set this DTC. Verify the Park Assist Sensor is connected before proceeding with this diagnostic procedure.

   1. Turn the ignition on.
   2. With the scan tool, read DTCs.

   Does the scan tool display this DTC as active?

   Yes

   - Go To 2

   No

- Test complete, the condition or conditions that originally set this DTC are not present at this time. Using the wiring diagrams as a guide, check all related splices and connectors for signs of water intrusion, corrosion, pushed out or bent terminals, and correct pin tension.
- Perform the BODY VERIFICATION TEST. Refer to **STANDARD PROCEDURE** .

2. **CHECK THE VOLTAGE OF THE (X700) PARK ASSIST SENSOR SUPPLY CIRCUIT**
   1. Turn the ignition off.
   2. Disconnect the Park Assist Sensor 11 harness connector.
   3. Turn the ignition on.
   4. Measure the voltage of the (X700) Park Assist Sensor Supply circuit.

   Is the voltage above 8.0 volts?

   Yes

   - Go To 4

   No

   - Go To 3

3. **CHECK THE (X700) PARK ASSIST SENSOR SUPPLY CIRCUIT FOR AN OPEN OR HIGH RESISTANCE**
   1. Turn the ignition off.
   2. Disconnect the Park Assist Module C2 harness connector.
   3. Measure the resistance of the (X700) Park Assist Sensor Supply circuit.

   Is the resistance below 5.0 Ohms?

   Yes

   - Replace the Park Assist Module in accordance with the Service Information. Refer to **MODULE, PARK ASSIST, REMOVAL** .
   - Perform the BODY VERIFICATION TEST. Refer to **STANDARD PROCEDURE** .

   No

   - Repair the open or high resistance in the (X700) Park Assist Sensor Supply circuit.
   - Perform the BODY VERIFICATION TEST. Refer to **STANDARD PROCEDURE** .

4. **CHECK THE (D711) PARK ASSIST SENSOR 11 SIGNAL CIRCUIT FOR A SHORT TO GROUND WITH THE PARK ASSIST MODULE CONNECTED**

   NOTE: Perform this step with the Park Assist Module connected.

   1. Measure the resistance between ground and the (D711) Park Assist Sensor 11 Signal circuit.

Is the resistance below 10K Ohms?

Yes

- Go To 5

No

- Go To 7

5. **CHECK THE (D711) PARK ASSIST SENSOR 11 SIGNAL CIRCUIT FOR A SHORT TO GROUND WITH THE PARK ASSIST MODULE DISCONNECTED**
   1. Disconnect the Park Assist Module C2 harness connector.
   2. Measure the resistance between ground and the (D711) Park Assist Sensor 11 Signal circuit.

   Is the resistance below 10K Ohms?

   Yes

   - Repair the short to ground in the (D711) Park Assist Sensor 11 Signal circuit.
   - Perform the BODY VERIFICATION TEST. Refer to **STANDARD PROCEDURE** .

   No

   - Go To 6

6. **CHECK THE (D711) PARK ASSIST SENSOR 11 SIGNAL CIRCUIT FOR A SHORT TO THE (X750) PARK ASSIST SENSOR GROUND CIRCUIT**
   1. Measure the resistance between the (D711) Park Assist Sensor 11 Signal circuit and the (X750) Park Assist Sensor Ground circuit.

   Is the resistance below 10K Ohms?

   Yes

   - Repair the short between the (D711) Park Assist Sensor 11 Signal circuit and the (X750) Park Assist Sensor Ground circuit.
   - Perform the BODY VERIFICATION TEST. Refer to **STANDARD PROCEDURE** .

   No

   - Replace the Park Assist Module in accordance with the Service Information. Refer to **MODULE, PARK ASSIST, REMOVAL** .
   - Perform the BODY VERIFICATION TEST. Refer to **STANDARD PROCEDURE** .

7. **CHECK THE (D711) PARK ASSIST SENSOR 11 SIGNAL CIRCUIT FOR AN OPEN**
   1. Disconnect the Park Assist Module C2 harness connector.

2. Measure the resistance of the (D711) Park Assist Sensor 11 Signal circuit.

   Is the resistance above 5.0 Ohms?

   Yes

   - Repair the open in the (D711) Park Assist Sensor 11 Signal circuit.
   - Perform the BODY VERIFICATION TEST. Refer to **STANDARD PROCEDURE** .

   No

   - Go To 8

8. **PARK ASSIST SENSOR**
   1. Turn the ignition on.
   2. Reconnect the Park Assist Module C2 harness connector.
   3. Connect a jumper wire across the (X700) Park Assist Sensor Supply and (D711) Park Assist Sensor 11 Signal circuits.
   4. Turn the ignition on.
   5. With the scan tool, read DTCs.

      Does the scan tool display DTC: B1298-12 PTS SENSOR 11-CIRCUIT SHORT TO BATTERY as active?

      Yes

      - Replace the Park Assist Sensor in accordance with the Service Information. Refer to **SENSOR, PARK ASSIST, REMOVAL** .
      - Perform the BODY VERIFICATION TEST. Refer to **STANDARD PROCEDURE** .

      No

      - Replace the Park Assist Module in accordance with the Service Information. Refer to **MODULE, PARK ASSIST, REMOVAL** .
      - Perform the BODY VERIFICATION TEST. Refer to **STANDARD PROCEDURE** .

B1298-12-PTS SENSOR 11 - CIRCUIT SHORT TO BATTERY

For a complete wiring diagram, **refer to appropriate SYSTEM WIRING DIAGRAMS article** .

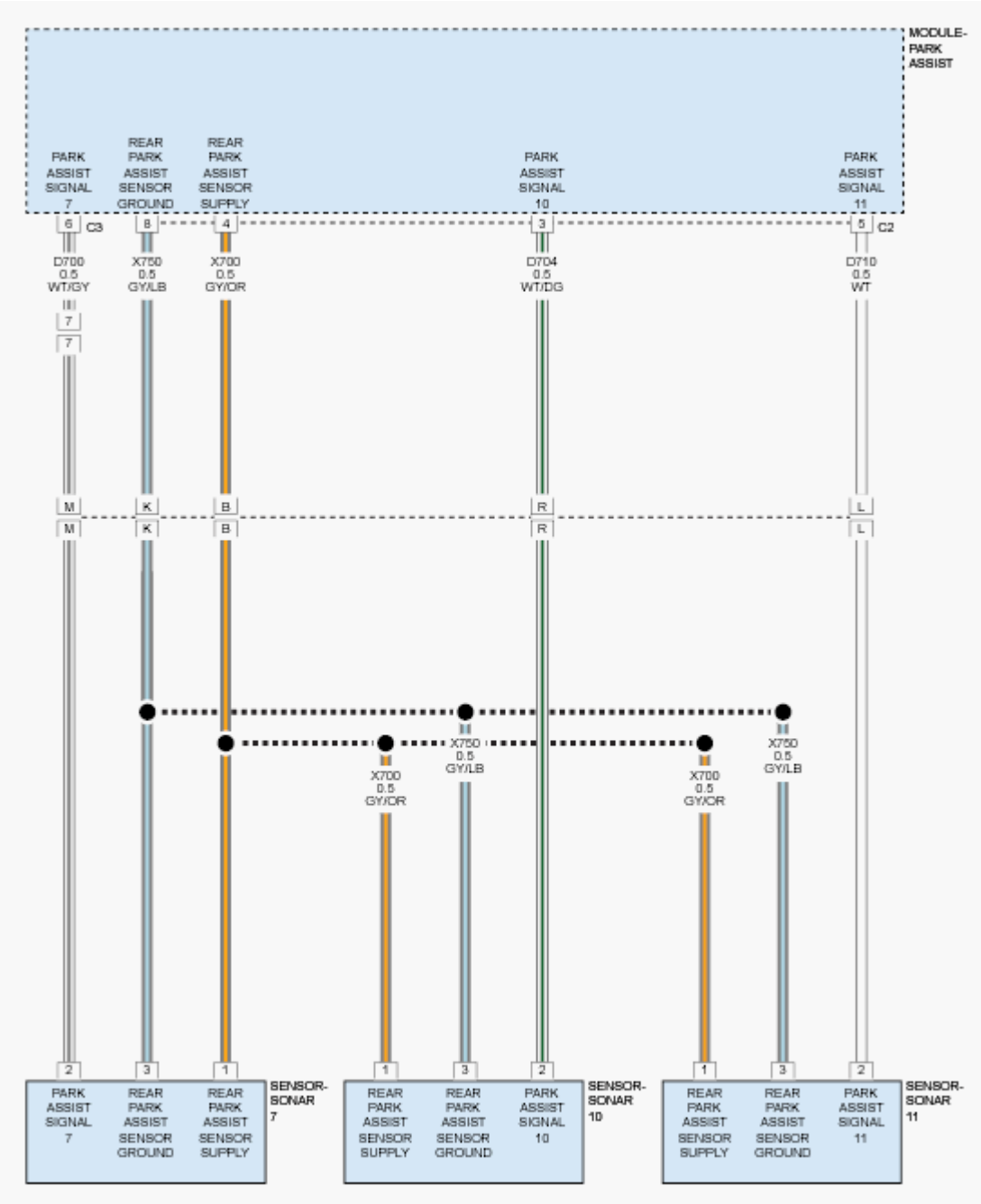

Fig. 46: Identifying Rear Park Assist Circuit Diagram
Courtesy of CHRYSLER GROUP, LLC

THEORY OF OPERATION

The Park Assist Sensors are ultrasonic transceivers that are completely controlled by the Park Assist Module. The sensors transmit and receive ultrasonic signals. Each sensor has a voltage, signal, and return circuit to the module. The sensors communicate with the Park Assist Module using a dedicated serial bus communication circuit.

NOTE: **The numbering system for the park assist sensors allows for up to twelve sensors on the vehicle, six front and six rear. The sensors are numbered in a clockwise manner starting at the left front bumper. The left front sensor (if equipped with front park assist) is the number 1 sensor. The numbering continues in a clockwise direction around the vehicle.**

WHEN MONITORED

Vehicle in reverse and during the self-test while vehicle is in drive between 18 km/h (11 mph) and 40 km/h (25 mph).

SET CONDITION

The Park Assist Module detects an open or short to voltage on the Park Assist Sensor Signal circuit.

POSSIBLE CAUSES

Possible Causes
(D710) PARK ASSIST SENSOR 11 SIGNAL CIRCUIT SHORTED TO VOLTAGE
(D710) PARK ASSIST SENSOR 11 SIGNAL CIRCUIT SHORTED TO THE (X700) PARK ASSIST SENSOR SUPPLY CIRCUIT
(X750) PARK ASSIST SENSOR GROUND CIRCUIT OPEN
PARK ASSIST SENSOR
PARK ASSIST MODULE

DIAGNOSTIC TEST

1. **CHECK FOR AN ACTIVE DIAGNOSTIC TROUBLE CODE (DTC)**
    1. Turn the ignition on.
    2. With the scan tool, read DTCs.

    Does the scan tool display this DTC as active?

    Yes

    - Go To 2

    No

    - Test complete, the condition or conditions that originally set this DTC are not present at this time. Using the wiring diagrams as a guide, check all related splices and connectors for signs of water intrusion, corrosion, pushed out or bent terminals, and correct pin tension.
    - Perform the BODY VERIFICATION TEST. Refer to **STANDARD PROCEDURE** .
2. **(D710) PARK ASSIST SENSOR 11 SIGNAL CIRCUIT SHORTED TO BATTERY**

1. Turn the ignition off.
2. Disconnect the Park Assist Module C2 harness connector.
3. Disconnect the Park Assist Sensor 11 harness connector.
4. Turn the ignition on.
5. Measure the voltage of the (D710) Park Assist Sensor 11 Signal circuit.

   Is the voltage above 10.0 volts?

   Yes

   - Repair the (D710) Park Assist Sensor 11 Signal circuit for a short to battery.
   - Perform the BODY VERIFICATION TEST. Refer to **STANDARD PROCEDURE** .

   No

   - Go To 3

3. **(D710) PARK ASSIST SENSOR 11 SIGNAL CIRCUIT SHORTED TO THE (X700) PARK ASSIST SENSOR SUPPLY CIRCUIT**
   1. Turn the ignition off.
   2. Measure the resistance between the (D710) Park Assist Sensor 11 Signal circuit and the (X700) Park Assist Sensor Supply circuit.

      Is the resistance below 10K Ohms?

      Yes

      - Repair the (D710) Park Assist Sensor 11 Signal circuit for a short to the (X700) Park Assist Sensor Supply circuit.
      - Perform the BODY VERIFICATION TEST. Refer to **STANDARD PROCEDURE** .

      No

      - Go To 4

4. **(X750) PARK ASSIST SENSOR GROUND CIRCUIT OPEN**
   1. Reconnect the Park Assist Module C2 harness connector.
   2. Measure the resistance between ground and the (X750) Park Assist Sensor Ground circuit.

      Is the resistance above 20.0 Ohms?

      Yes

      - Go To 5

No

- Replace the Park Assist Sensor in accordance with the Service Information. Refer to **SENSOR, PARK ASSIST, REMOVAL** .
- Perform the BODY VERIFICATION TEST. Refer to **STANDARD PROCEDURE** .

5. **(X750) PARK ASSIST SENSOR GROUND CIRCUIT OPEN BETWEEN PARK ASSIST MODULE AND SENSOR**
   1. Disconnect the Park Assist Module C2 harness connector.
   2. Measure the resistance of the (X750) Park Assist Sensor Ground circuit.

   Is the resistance above 5.0 Ohms?

   Yes

   - Repair the open in the (X750) Park Assist Sensor Ground circuit.
   - Perform the BODY VERIFICATION TEST. Refer to **STANDARD PROCEDURE** .

   No

   - Replace the Park Assist Module in accordance with the Service Information. Refer to **MODULE, PARK ASSIST, REMOVAL** .
   - Perform the BODY VERIFICATION TEST. Refer to **STANDARD PROCEDURE** .

B1298-25-PTS SENSOR 11-SIGNAL SHAPE / WAVEFORM FAILURE

For a complete wiring diagram, **refer to appropriate SYSTEM WIRING DIAGRAMS article** .

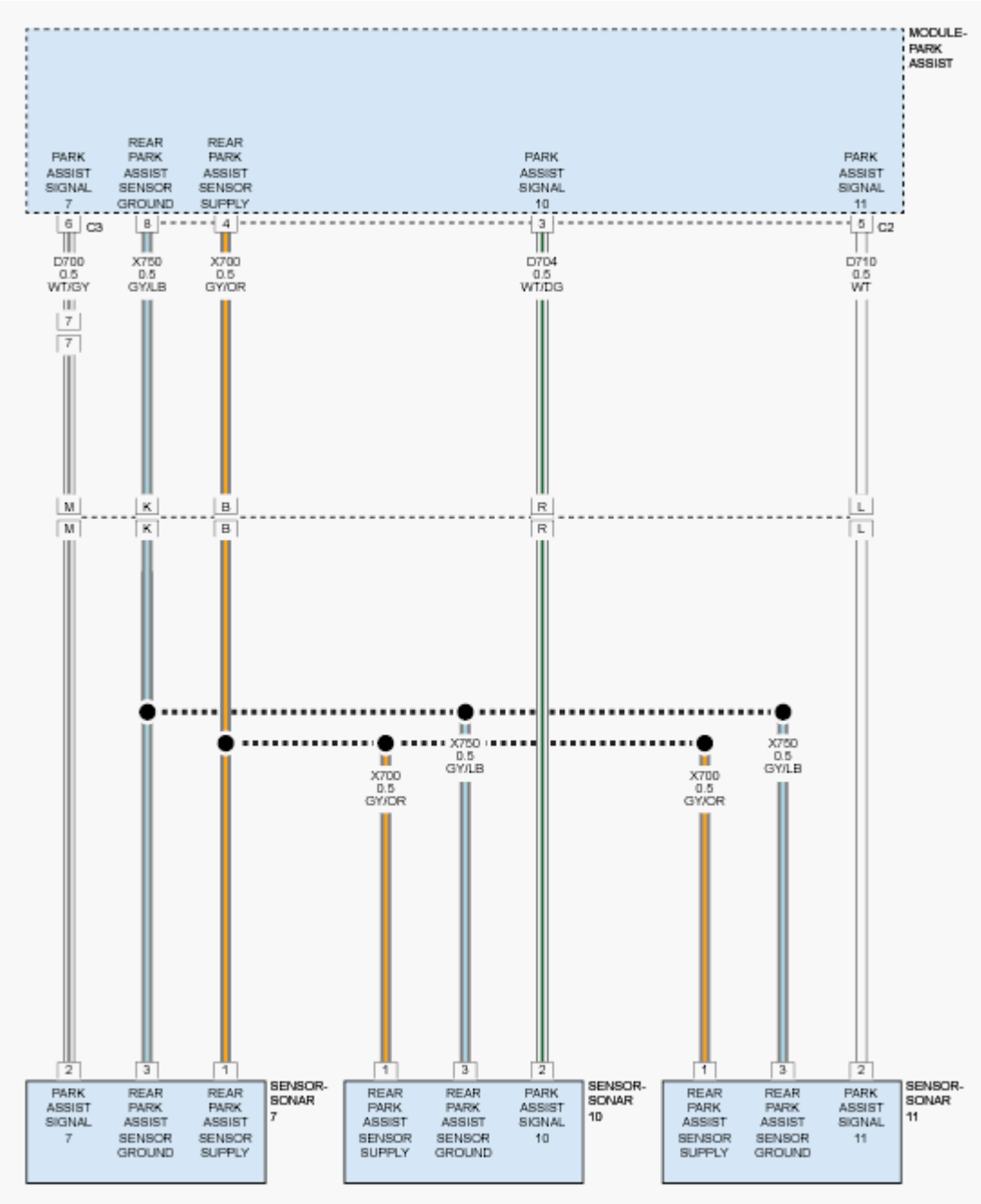

Fig. 47: Identifying Rear Park Assist Circuit Diagram
Courtesy of CHRYSLER GROUP, LLC

THEORY OF OPERATION

The Park Assist Sensors are ultrasonic transceivers that are completely controlled by the Park Assist Module. The sensors transmit and receive ultrasonic signals. Each sensor has a voltage, signal, and return circuit to the module. The sensors communicate with the Park Assist Module using a dedicated serial bus communication circuit.

WHEN MONITORED

Vehicle in reverse.

During the self-test while vehicle is in drive between 11 mph (18 km/h) and 25 mph (40 km/h).

SET CONDITION

The Park Assist Module detects an internal Sensor error.

POSSIBLE CAUSES

Possible Causes
PARK ASSIST SENSOR MEMBRANE OBSTRUCTION (ICE, SNOW, MUD, DIRT COVERING FASCIA)
PARK ASSIST SENSOR CONNECTOR OBSTRUCTION (ICE, SNOW, MUD, DIRT)
DECOUPLING RING MISSING/MOUNTED WRONG
OBJECTS - SUCH AS LICENSE PLATES - IN CLOSE RANGE TO THE SENSOR
PARK ASSIST SENSOR

DIAGNOSTIC TEST

1. **CHECK FOR AN ACTIVE DIAGNOSTIC TROUBLE CODE (DTC)**

   NOTE: Before proceeding with this diagnostic procedure, remove any ice, snow, mud, dirt, or other obstructions from the front/rear fascia/bumper. Also remove any ice, snow, dirt, mud, or other obstructions from the underside of the Fascia/Bumper surrounding the sensors.

   1. Turn the ignition on.
   2. With the scan tool, read Park Assist Module DTCs.

      Does the scan tool display this DTC as active?

      Yes

      - Go To 2

      No

      - Test complete, the condition or conditions that originally set this DTC are not present at this time. Using the wiring diagrams as a guide, check all related splices and connectors for signs of water intrusion, corrosion, pushed out or bent terminals, and correct pin tension.
      - Perform the BODY VERIFICATION TEST. Refer to **STANDARD PROCEDURE** .

2. **PARK ASSIST SENSOR**

1. Verify that none of the possible causes mentioned above are present. Repair as necessary.

   If none of the possible causes mentioned above are present, view repair.

   Repair

   - Replace the Park Assist Sensor in accordance with the Service Information. Refer to **SENSOR, PARK ASSIST, REMOVAL** .
   - Perform the BODY VERIFICATION TEST. Refer to **STANDARD PROCEDURE** .

B1298-92-PTS SENSOR 11-PERFORMANCE OR INCORRECT OPERATION

For a complete wiring diagram, **refer to appropriate SYSTEM WIRING DIAGRAMS article** .

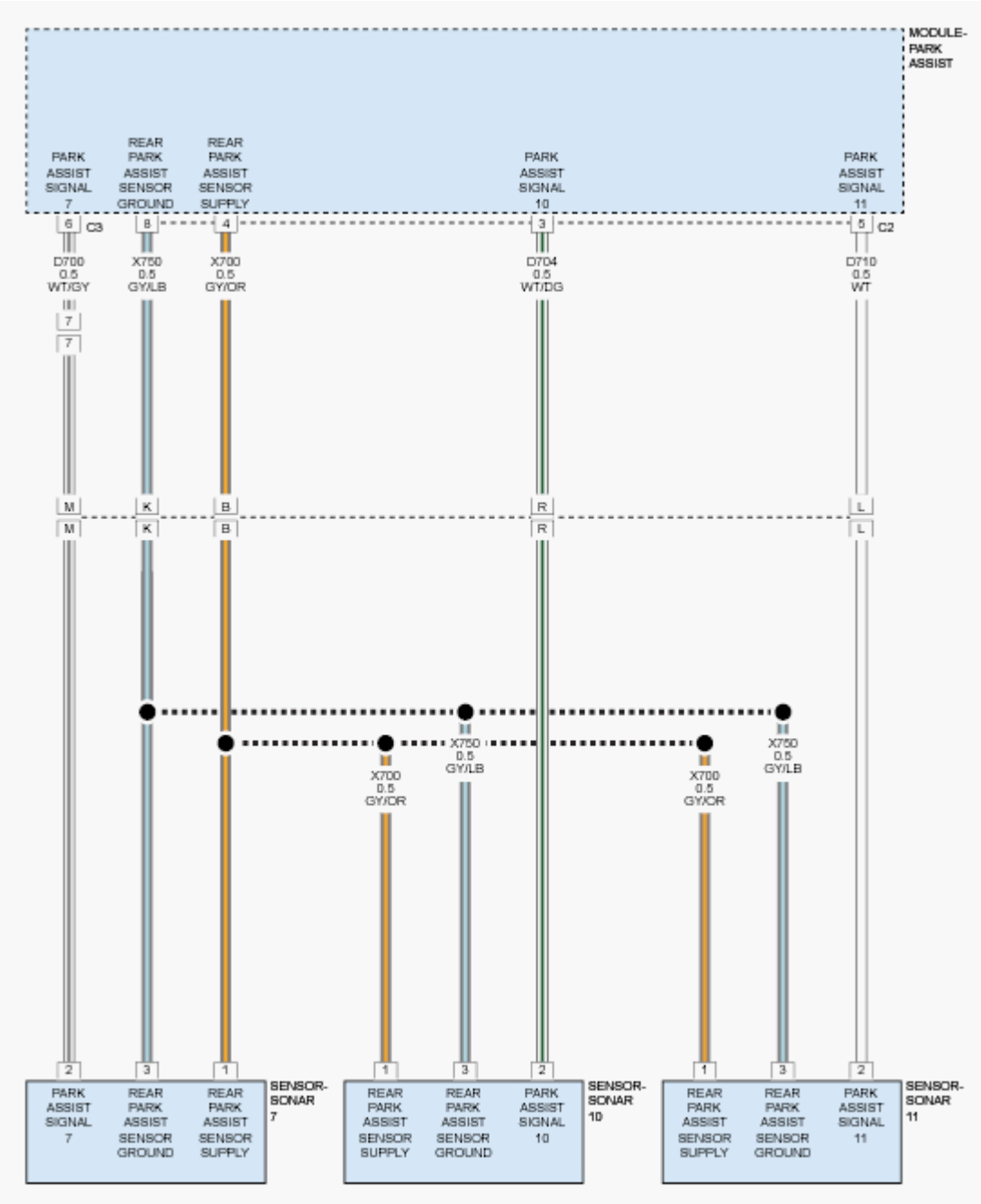

Fig. 48: Identifying Rear Park Assist Circuit Diagram
Courtesy of CHRYSLER GROUP, LLC

THEORY OF OPERATION

The Park Assist Sensors are ultrasonic transceivers that are completely controlled by the Park Assist Module. The sensors transmit and receive ultrasonic signals. Each sensor has a voltage, signal, and return circuit to the module. The sensors communicate with the Park Assist Module using a dedicated serial bus communication circuit.

NOTE: **The numbering system for the park assist sensors allows for up to twelve sensors on the vehicle, six front and six rear. The sensors are numbered in a clockwise manner starting at the left front bumper. The left front sensor (if equipped with front park assist) is the number 1 sensor. The numbering continues in a clockwise direction around the vehicle.**

WHEN MONITORED

Vehicle in reverse and during the self-test while vehicle is in drive between 18 km/h (11 mph) and 40 km/h (25 mph).

SET CONDITION

If the system detects data corruption in the transmission in the internal communication line between the module and sensors, this code will set.

POSSIBLE CAUSES

Possible Causes
(D710) PARK ASSIST SENSOR 11 SIGNAL CIRCUIT SHORTED TO GROUND
(D710) PARK ASSIST SENSOR 11 SIGNAL CIRCUIT SHORTED TO BATTERY
(D710) PARK ASSIST SENSOR 11 SIGNAL CIRCUIT OPEN
PARK ASSIST SENSOR 11
PARK ASSIST MODULE

DIAGNOSTIC TEST

1. **CHECK FOR AN ACTIVE DIAGNOSTIC TROUBLE CODE (DTC)**
    1. Turn the ignition on.
    2. With the scan tool, read Park Assist Module DTCs.

    Does the scan tool display this DTC as active?

    Yes

    - Go To 2

    No

    - Test complete, the condition or conditions that originally set this DTC are not present at this time. Using the wiring diagrams as a guide, check all related splices and connectors for signs of water intrusion, corrosion, pushed out or bent terminals, and correct pin tension.
    - Perform the BODY VERIFICATION TEST. Refer to **STANDARD PROCEDURE** .
2. **CHECK PARK ASSIST SENSOR 11 FOR INTERNAL SHORT**

1. Disconnect Park Assist Sensor 11 harness connector.
2. With the scan tool, read Park Assist Module DTCs.

   Does the scan tool display this DTC as active?

   Yes

   - Go To 3

   No

   - Replace Park Assist Sensor 11 in accordance with the Service Information. Refer to **SENSOR, PARK ASSIST, REMOVAL** .
   - Perform the BODY VERIFICATION TEST. Refer to **STANDARD PROCEDURE** .

3. **CHECK THE (D710) PARK ASSIST SENSOR 11 SIGNAL CIRCUIT FOR A SHORT TO GROUND**
   1. Turn the ignition off.
   2. Disconnect the Park Assist Module C2 harness connector.
   3. Using a 11-volt test light connected to 11-volts check the (D710) Park Assist Sensor 11 Signal circuit at the Park Assist Module C2 harness connector.

      Does the test light illuminate brightly?

      Yes

      - Repair the (D710) Park Assist Sensor 11 Signal circuit for a short to ground.
      - Perform the BODY VERIFICATION TEST. Refer to **STANDARD PROCEDURE** .

      No

      - Go To 4

4. **CHECK THE (D710) PARK ASSIST SENSOR 11 SIGNAL CIRCUIT FOR A SHORT TO BATTERY**
   1. Turn the ignition on.
   2. Using a 11-volt test light connected to ground check the (D710) Park Assist Sensor 11 Signal circuit at the Park Assist Module C2 harness connector for a short to battery.

      Does the test light illuminate brightly?

      Yes

      - Repair the (D710) Park Assist Sensor 11 Signal circuit for a short to battery.
      - Perform the BODY VERIFICATION TEST. Refer to **STANDARD PROCEDURE** .

No

- Go To 5

5. **CHECK THE (D710) PARK ASSIST SENSOR 11 SIGNAL CIRCUIT FOR AN OPEN**
   1. Measure the resistance of the (D710) Park Assist Sensor 11 Signal circuit between the Park Assist Module C2 harness connector and the Park Assist Sensor 11 harness connector.

      Is the resistance below 5.0 Ohms?

      No

      - Repair the (D710) Park Assist Sensor 11 Signal circuit for an open.
      - Perform the BODY VERIFICATION TEST. Refer to **STANDARD PROCEDURE** .

      Yes

      - Replace the Park Assist Module in accordance with Service Information. Refer to **MODULE, PARK ASSIST, REMOVAL** .
      - Perform the BODY VERIFICATION TEST. Refer to **STANDARD PROCEDURE** .

B1299-11-PTS SENSOR 12 - CIRCUIT SHORT TO GROUND

For a complete wiring diagram, **refer to appropriate SYSTEM WIRING DIAGRAMS article** .

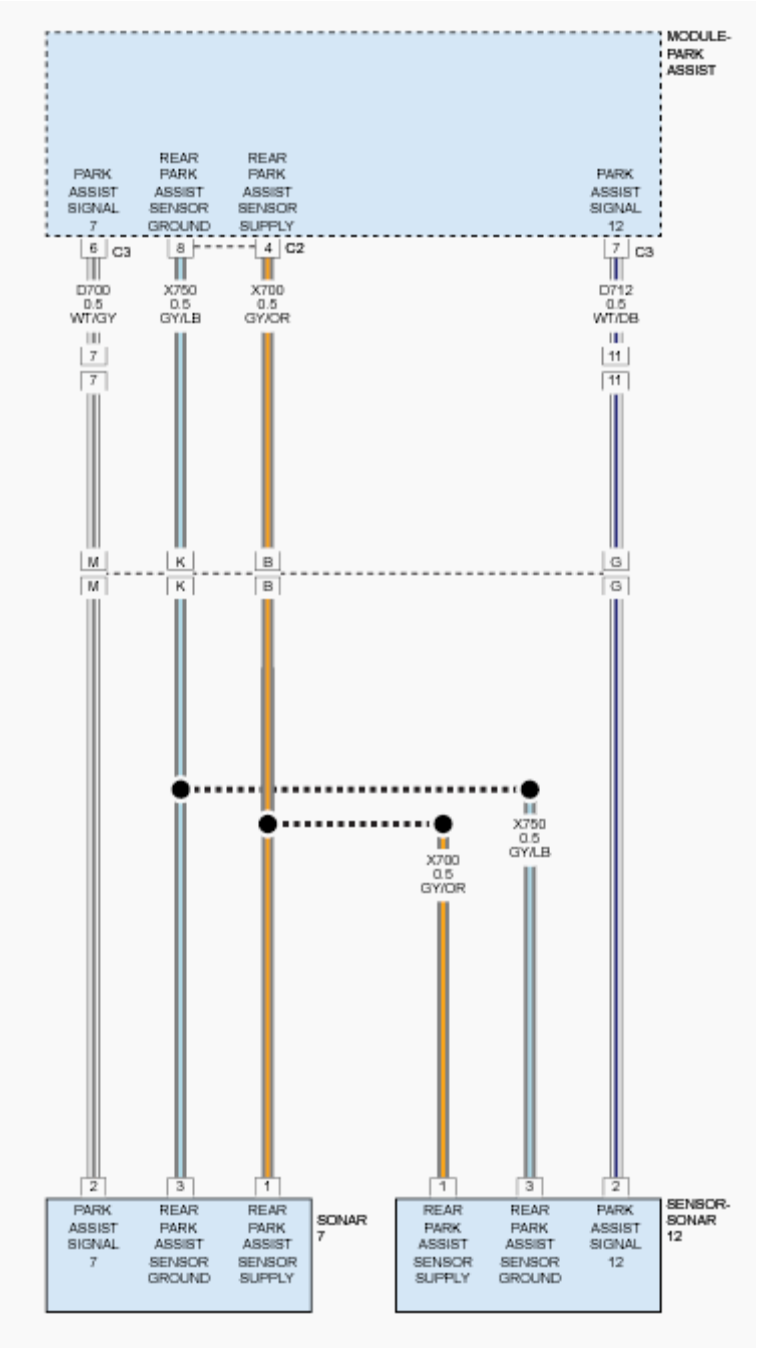

Fig. 49: Identifying Rear Park Assist Circuit Diagram
Courtesy of CHRYSLER GROUP, LLC

THEORY OF OPERATION

The Park Assist Sensors are ultrasonic transceivers that are completely controlled by the Park Assist Module. The sensors transmit and receive ultrasonic signals. Each sensor has a voltage, signal, and return circuit to the module. The sensors communicate with the Park Assist Module using a dedicated serial bus communication circuit.

NOTE: The numbering system for the park assist sensors allows for up to twelve sensors on the vehicle, six front and six rear. The sensors are numbered in a clockwise manner starting at the left front bumper. The left front sensor (if equipped with front park assist) is the number 1 sensor. The numbering continues in a clockwise direction around the vehicle.

WHEN MONITORED

Vehicle in reverse and during the self-test while vehicle is in drive between 18 km/h (11 mph) and 40 km/h (25 mph).

SET CONDITION

The Park Assist Module detects a short to ground on the Park Assist Sensor Signal circuit.

POSSIBLE CAUSES

Possible Causes
PARK ASSIST SENSOR DISCONNECTED
(D712) PARK ASSIST SENSOR 12 SIGNAL CIRCUIT SHORTED TO GROUND
(D712) PARK ASSIST SENSOR 12 SIGNAL CIRCUIT SHORTED TO THE (X750) PARK ASSIST SENSOR GROUND CIRCUIT
(D712) PARK ASSIST SENSOR 12 SIGNAL CIRCUIT OPEN
(X700) PARK ASSIST SENSOR SUPPLY CIRCUIT OPEN
PARK ASSIST SENSOR
PARK ASSIST MODULE

DIAGNOSTIC TEST

1. **CHECK FOR AN ACTIVE DIAGNOSTIC TROUBLE CODE (DTC)**

   NOTE: A disconnected sensor will set this DTC. Verify the Park Assist Sensor is connected before proceeding with this diagnostic procedure.

   1. Turn the ignition on.
   2. With the scan tool, read DTCs.

   Does the scan tool display this DTC as active?

   Yes

   - Go To 2

   No

- Test complete, the condition or conditions that originally set this DTC are not present at this time. Using the wiring diagrams as a guide, check all related splices and connectors for signs of water intrusion, corrosion, pushed out or bent terminals, and correct pin tension.
- Perform the BODY VERIFICATION TEST. Refer to **STANDARD PROCEDURE** .

2. **CHECK THE VOLTAGE OF THE (X700) PARK ASSIST SENSOR SUPPLY CIRCUIT**
   1. Turn the ignition off.
   2. Disconnect the Park Assist Sensor 12 harness connector.
   3. Turn the ignition on.
   4. Measure the voltage of the (X700) Park Assist Sensor Supply circuit.

   Is the voltage above 8.0 volts?

   Yes

   - Go To 4

   No

   - Go To 3

3. **CHECK THE (X700) PARK ASSIST SENSOR SUPPLY CIRCUIT FOR AN OPEN OR HIGH RESISTANCE**
   1. Turn the ignition off.
   2. Disconnect the Park Assist Module C2 harness connector.
   3. Measure the resistance of the (X700) Park Assist Sensor Supply circuit.

   Is the resistance below 5.0 Ohms?

   Yes

   - Replace the Park Assist Module in accordance with the Service Information. Refer to **MODULE, PARK ASSIST, REMOVAL** .
   - Perform the BODY VERIFICATION TEST. Refer to **STANDARD PROCEDURE** .

   No

   - Repair the open or high resistance in the (X700) Park Assist Sensor Supply circuit.
   - Perform the BODY VERIFICATION TEST. Refer to **STANDARD PROCEDURE** .

4. **CHECK THE (D712) PARK ASSIST SENSOR 12 SIGNAL CIRCUIT FOR A SHORT TO GROUND WITH THE PARK ASSIST MODULE CONNECTED**

   NOTE: Perform this step with the Park Assist Module connected.

   1. Measure the resistance between ground and the (D712) Park Assist Sensor 12 Signal circuit.

Is the resistance below 10K Ohms?

Yes

- Go To 5

No

- Go To 7

5. **CHECK THE (D712) PARK ASSIST SENSOR 12 SIGNAL CIRCUIT FOR A SHORT TO GROUND WITH THE PARK ASSIST MODULE DISCONNECTED**
   1. Disconnect the Park Assist Module C2 harness connector.
   2. Measure the resistance between ground and the (D712) Park Assist Sensor 12 Signal circuit.

   Is the resistance below 10K Ohms?

   Yes

   - Repair the short to ground in the (D712) Park Assist Sensor 12 Signal circuit.
   - Perform the BODY VERIFICATION TEST. Refer to **STANDARD PROCEDURE** .

   No

   - Go To 6

6. **CHECK THE (D712) PARK ASSIST SENSOR 12 SIGNAL CIRCUIT FOR A SHORT TO THE (X750) PARK ASSIST SENSOR GROUND CIRCUIT**
   1. Measure the resistance between the (D712) Park Assist Sensor 12 Signal circuit and the (X750) Park Assist Sensor Ground circuit.

   Is the resistance below 10K Ohms?

   Yes

   - Repair the short between the (D712) Park Assist Sensor 12 Signal circuit and the (X750) Park Assist Sensor Ground circuit.
   - Perform the BODY VERIFICATION TEST. Refer to **STANDARD PROCEDURE** .

   No

   - Replace the Park Assist Module in accordance with the Service Information. Refer to **MODULE, PARK ASSIST, REMOVAL** .
   - Perform the BODY VERIFICATION TEST. Refer to **STANDARD PROCEDURE** .

7. **CHECK THE (D712) PARK ASSIST SENSOR 12 SIGNAL CIRCUIT FOR AN OPEN**
   1. Disconnect the Park Assist Module C2 harness connector.

2. Measure the resistance of the (D712) Park Assist Sensor 12 Signal circuit.

   Is the resistance above 5.0 Ohms?

   Yes

   - Repair the open in the (D712) Park Assist Sensor 12 Signal circuit.
   - Perform the BODY VERIFICATION TEST. Refer to **STANDARD PROCEDURE** .

   No

   - Go To 8

8. **PARK ASSIST SENSOR**
   1. Turn the ignition on.
   2. Reconnect the Park Assist Module C2 harness connector.
   3. Connect a jumper wire across the (X700) Park Assist Sensor Supply and (D712) Park Assist Sensor 12 Signal circuits.
   4. Turn the ignition on.
   5. With the scan tool, read DTCs.

      Does the scan tool display DTC: B1299-12-PTS SENSOR 12 CIRCUIT SHORT TO BATTERY as active?

      Yes

      - Replace the Park Assist Sensor in accordance with the Service Information. Refer to **SENSOR, PARK ASSIST, REMOVAL** .
      - Perform the BODY VERIFICATION TEST. Refer to **STANDARD PROCEDURE** .

      No

      - Replace the Park Assist Module in accordance with the Service Information. Refer to **MODULE, PARK ASSIST, REMOVAL** .
      - Perform the BODY VERIFICATION TEST. Refer to **STANDARD PROCEDURE** .

B1299-12-PTS SENSOR 12-CIRCUIT SHORT TO BATTERY

For a complete wiring diagram, **refer to appropriate SYSTEM WIRING DIAGRAMS article** .

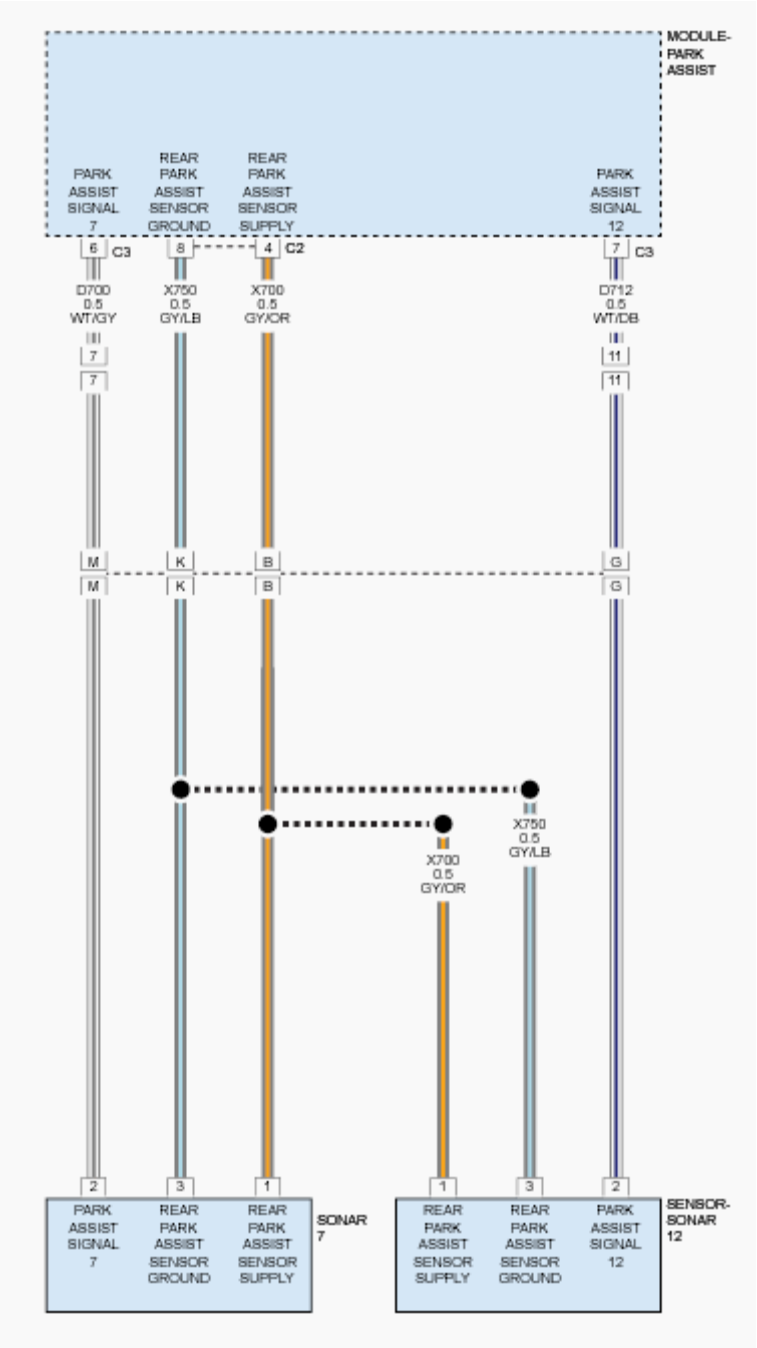

Fig. 50: Identifying Rear Park Assist Circuit Diagram
Courtesy of CHRYSLER GROUP, LLC

THEORY OF OPERATION

The Park Assist Sensors are ultrasonic transceivers that are completely controlled by the Park Assist Module. The sensors transmit and receive ultrasonic signals. Each sensor has a voltage, signal, and return circuit to the module. The sensors communicate with the Park Assist Module using a dedicated serial bus communication circuit.

NOTE: **The numbering system for the park assist sensors allows for up to twelve sensors on the vehicle, six front and six rear. The sensors are numbered in a clockwise manner starting at the left front bumper. The left front sensor (if equipped with front park assist) is the number 1 sensor. The numbering continues in a clockwise direction around the vehicle.**

WHEN MONITORED

Vehicle in reverse and during the self-test while vehicle is in drive between 18 km/h (11 mph) and 40 km/h (25 mph).

SET CONDITION

The Park Assist Module detects an open or short to voltage on the Park Assist Sensor Signal circuit.

POSSIBLE CAUSES

Possible Causes
(D712) PARK ASSIST SENSOR 12 SIGNAL CIRCUIT SHORTED TO VOLTAGE
(D712) PARK ASSIST SENSOR 12 SIGNAL CIRCUIT SHORTED TO THE (X700) PARK ASSIST SENSOR SUPPLY CIRCUIT
(X750) PARK ASSIST SENSOR GROUND CIRCUIT OPEN
PARK ASSIST SENSOR
PARK ASSIST MODULE

DIAGNOSTIC TEST

1. **CHECK FOR AN ACTIVE DIAGNOSTIC TROUBLE CODE (DTC)**
    1. Turn the ignition on.
    2. With the scan tool, read Park Assist Module DTCs.

    Does the scan tool display this DTC as active?

    Yes

    - Go To 2

    No

    - Test complete, the condition or conditions that originally set this DTC are not present at this time. Using the wiring diagrams as a guide, check all related splices and connectors for signs of water intrusion, corrosion, pushed out or bent terminals, and correct pin tension.
    - Perform the BODY VERIFICATION TEST. Refer to **STANDARD PROCEDURE** .
2. **CHECK PARK ASSIST SENSOR 12 FOR INTERNAL SHORT**

1. Disconnect Park Assist Sensor 12 harness connector.
2. With the scan tool, read Park Assist Module DTCs.

   Does the scan tool display this DTC as active?

   Yes

   - Go To 3

   No

   - Replace Park Assist Sensor 12 in accordance with the Service Information. Refer to **SENSOR, PARK ASSIST, REMOVAL** .
   - Perform the BODY VERIFICATION TEST. Refer to **STANDARD PROCEDURE** .

3. **CHECK THE (D712) PARK ASSIST SENSOR 12 SIGNAL CIRCUIT FOR A SHORT TO GROUND**
   1. Turn the ignition off.
   2. Disconnect the Park Assist Module C2 harness connector.
   3. Using a 12-volt test light connected to 12-volts check the (D712) Park Assist Sensor 12 Signal circuit at the Park Assist Module C2 harness connector.

      Does the test light illuminate brightly?

      Yes

      - Repair the (D712) Park Assist Sensor 12 Signal circuit for a short to ground.
      - Perform the BODY VERIFICATION TEST. Refer to **STANDARD PROCEDURE** .

      No

      - Go To 4

4. **CHECK THE (D712) PARK ASSIST SENSOR 12 SIGNAL CIRCUIT FOR A SHORT TO BATTERY**
   1. Turn the ignition on.
   2. Using a 12-volt test light connected to ground check the (D712) Park Assist Sensor 12 Signal circuit at the Park Assist Module C2 harness connector for a short to battery.

      Does the test light illuminate brightly?

      Yes

      - Repair the (D712) Park Assist Sensor 12 Signal circuit for a short to battery.
      - Perform the BODY VERIFICATION TEST. Refer to **STANDARD PROCEDURE** .

No

- Go To 5

5. **CHECK THE (D712) PARK ASSIST SENSOR 12 SIGNAL CIRCUIT FOR AN OPEN**
   1. Measure the resistance of the (D712) Park Assist Sensor 12 Signal circuit between the Park Assist Module C2 harness connector and the Park Assist Sensor 12 harness connector.

      Is the resistance below 5.0 Ohms?

      No

      - Repair the (D712) Park Assist Sensor 12 Signal circuit for an open.
      - Perform the BODY VERIFICATION TEST. Refer to **STANDARD PROCEDURE** .

      Yes

      - Replace the Park Assist Module in accordance with Service Information. Refer to **MODULE, PARK ASSIST, REMOVAL** .
      - Perform the BODY VERIFICATION TEST. Refer to **STANDARD PROCEDURE** .

B1299-25-PTS SENSOR 12 - SIGNAL SHAPE / WAVEFORM FAILURE

For a complete wiring diagram, **refer to appropriate SYSTEM WIRING DIAGRAMS article** .

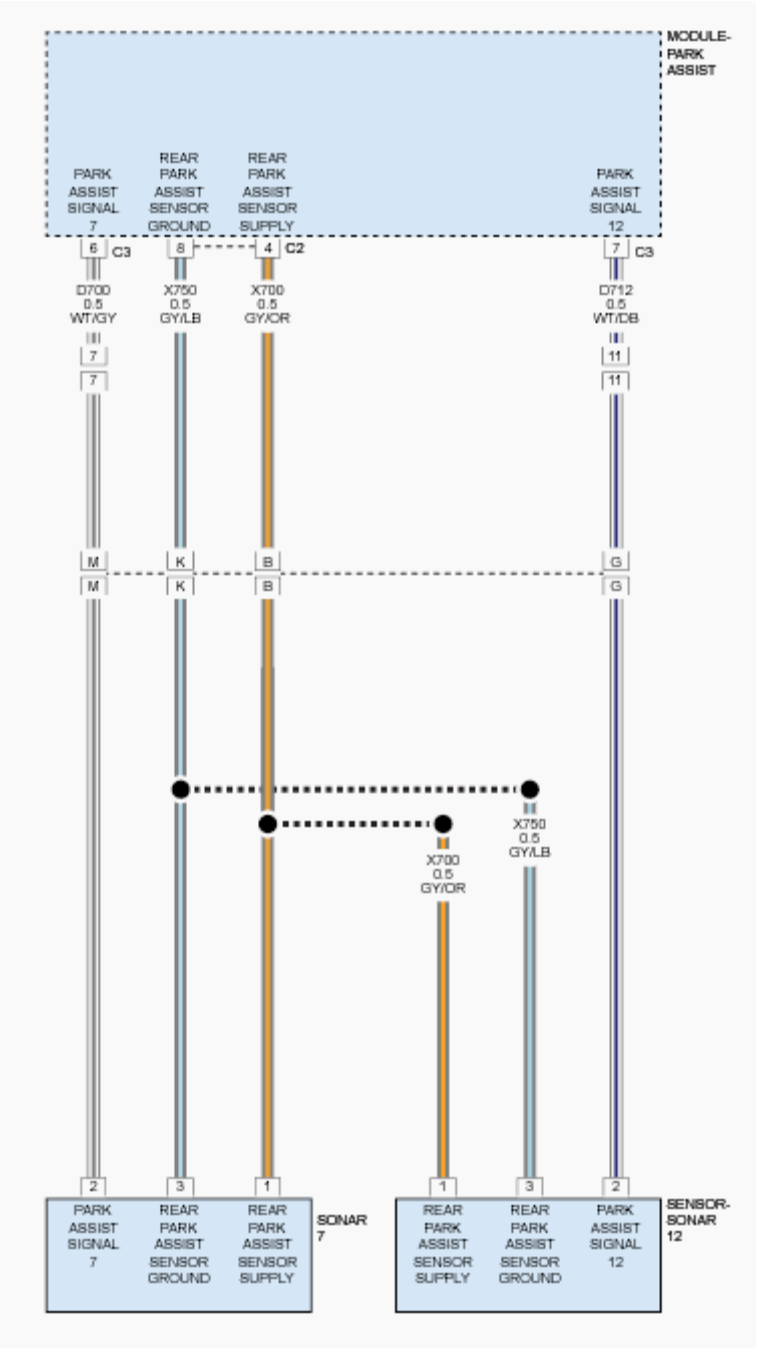

Fig. 51: Identifying Rear Park Assist Circuit Diagram
Courtesy of CHRYSLER GROUP, LLC

THEORY OF OPERATION

The Park Assist Sensors are ultrasonic transceivers that are completely controlled by the Park Assist Module. The sensors transmit and receive ultrasonic signals. Each sensor has a voltage, signal, and return circuit to the module. The sensors communicate with the Park Assist Module using a dedicated serial bus communication circuit.

WHEN MONITORED

Vehicle in reverse.

During the self-test while vehicle is in drive between 11 mph (18 km/h) and 25 mph (40 km/h).

SET CONDITION

The Park Assist Module detects an internal Sensor error.

POSSIBLE CAUSES

Possible Causes
PARK ASSIST SENSOR MEMBRANE OBSTRUCTION (ICE, SNOW, MUD, DIRT COVERING FASCIA)
PARK ASSIST SENSOR CONNECTOR OBSTRUCTION (ICE, SNOW, MUD, DIRT)
DECOUPLING RING MISSING/MOUNTED WRONG
OBJECTS - SUCH AS LICENSE PLATES - IN CLOSE RANGE TO THE SENSOR
PARK ASSIST SENSOR

DIAGNOSTIC TEST

1. **CHECK FOR AN ACTIVE DIAGNOSTIC TROUBLE CODE (DTC)**

   NOTE: Before proceeding with this diagnostic procedure, remove any ice, snow, mud, dirt, or other obstructions from the front/rear fascia/bumper. Also remove any ice, snow, dirt, mud, or other obstructions from the underside of the Fascia/Bumper surrounding the sensors.

   1. Turn the ignition on.
   2. With the scan tool, read Park Assist Module DTCs.

      Does the scan tool display this DTC as active?

      Yes

      - Go To 2

      No

      - Test complete, the condition or conditions that originally set this DTC are not present at this time. Using the wiring diagrams as a guide, check all related splices and connectors for signs of water intrusion, corrosion, pushed out or bent terminals, and correct pin tension.
      - Perform the BODY VERIFICATION TEST. Refer to **STANDARD PROCEDURE** .

2. **PARK ASSIST SENSOR**

1. Verify that none of the possible causes mentioned above are present. Repair as necessary.

   If none of the possible causes mentioned above are present, view repair.

   Repair

   - Replace the Park Assist Sensor in accordance with the Service Information. Refer to **SENSOR, PARK ASSIST, REMOVAL** .
   - Perform the BODY VERIFICATION TEST. Refer to **STANDARD PROCEDURE** .

B1299-92 PTS SENSOR 12-PERFORMANCE OR INCORRECT OPERATION

For a complete wiring diagram, **refer to appropriate SYSTEM WIRING DIAGRAMS article** .

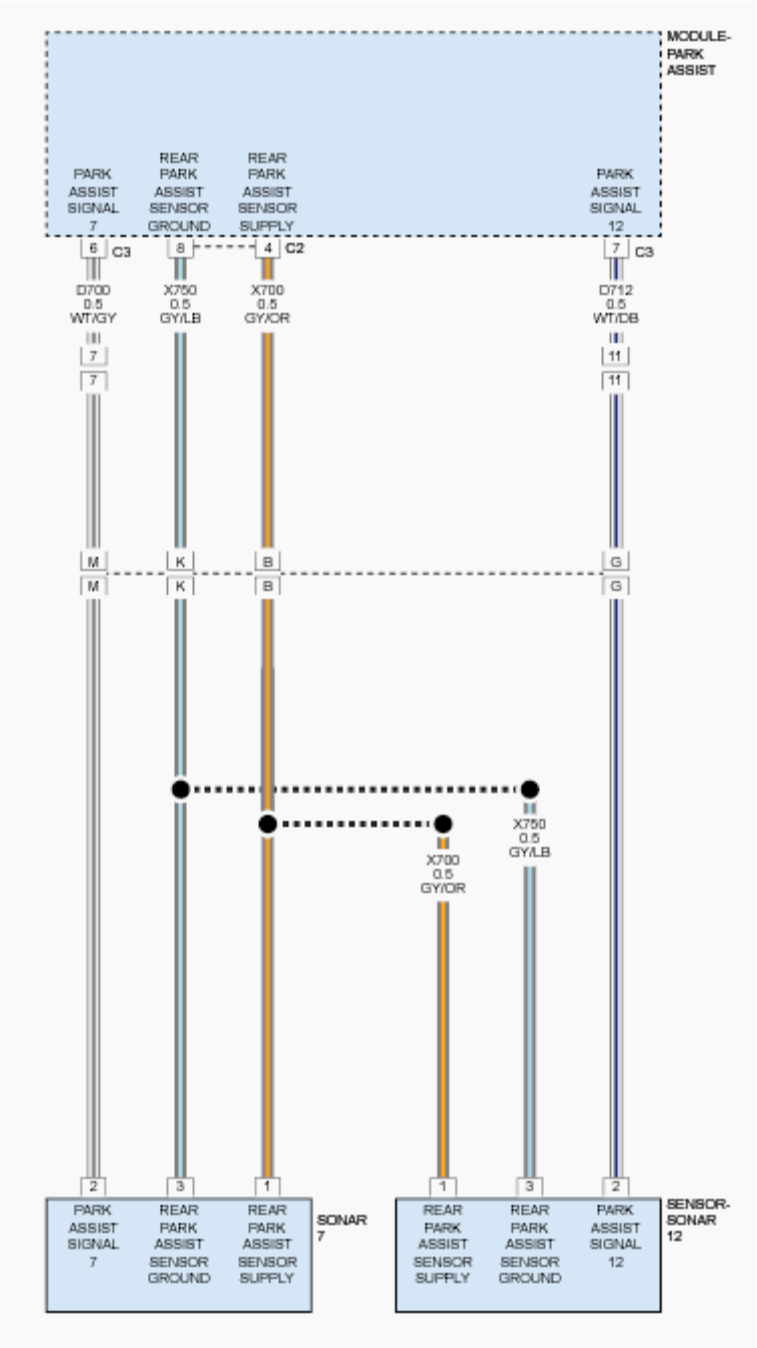

Fig. 52: Identifying Rear Park Assist Circuit Diagram
Courtesy of CHRYSLER GROUP, LLC

THEORY OF OPERATION

The Park Assist Sensors are ultrasonic transceivers that are completely controlled by the Park Assist Module. The sensors transmit and receive ultrasonic signals. Each sensor has a voltage, signal, and return circuit to the module. The sensors communicate with the Park Assist Module using a dedicated serial bus communication circuit.

NOTE: **The numbering system for the park assist sensors allows for up to twelve sensors on the vehicle, six front and six rear. The sensors are numbered in a clockwise manner starting at the left front bumper. The left front sensor (if equipped with front park assist) is the number 1 sensor. The numbering continues in a clockwise direction around the vehicle.**

WHEN MONITORED

Vehicle in reverse and during the self-test while vehicle is in drive between 18 km/h (11 mph) and 40 km/h (25 mph).

SET CONDITION

If the system detects data corruption in the transmission in the internal communication line between the module and sensors, this code will set.

POSSIBLE CAUSES

Possible Causes
(D712) PARK ASSIST SENSOR 12 SIGNAL CIRCUIT SHORTED TO GROUND
(D712) PARK ASSIST SENSOR 12 SIGNAL CIRCUIT SHORTED TO BATTERY
(D712) PARK ASSIST SENSOR 12 SIGNAL CIRCUIT OPEN
PARK ASSIST SENSOR 12
PARK ASSIST MODULE

DIAGNOSTIC TEST

1. **CHECK FOR AN ACTIVE DIAGNOSTIC TROUBLE CODE (DTC)**
    1. Turn the ignition on.
    2. With the scan tool, read Park Assist Module DTCs.

    Does the scan tool display this DTC as active?

    Yes

    - Go To 2

    No

    - Test complete, the condition or conditions that originally set this DTC are not present at this time. Using the wiring diagrams as a guide, check all related splices and connectors for signs of water intrusion, corrosion, pushed out or bent terminals, and correct pin tension.
    - Perform the BODY VERIFICATION TEST. Refer to **STANDARD PROCEDURE** .
2. **CHECK PARK ASSIST SENSOR 12 FOR INTERNAL SHORT**

1. Disconnect Park Assist Sensor 12 harness connector.
2. With the scan tool, read Park Assist Module DTCs.

   Does the scan tool display this DTC as active?

   Yes

   - Go To 3

   No

   - Replace Park Assist Sensor 12 in accordance with the Service Information. Refer to **SENSOR, PARK ASSIST, REMOVAL** .
   - Perform the BODY VERIFICATION TEST. Refer to **STANDARD PROCEDURE** .

3. **CHECK THE (D712) PARK ASSIST SENSOR 12 SIGNAL CIRCUIT FOR A SHORT TO GROUND**
   1. Turn the ignition off.
   2. Disconnect the Park Assist Module C2 harness connector.
   3. Using a 12-volt test light connected to 12-volts check the (D712) Park Assist Sensor 12 Signal circuit at the Park Assist Module C2 harness connector.

      Does the test light illuminate brightly?

      Yes

      - Repair the (D712) Park Assist Sensor 12 Signal circuit for a short to ground.
      - Perform the BODY VERIFICATION TEST. Refer to **STANDARD PROCEDURE** .

      No

      - Go To 4

4. **CHECK THE (D712) PARK ASSIST SENSOR 12 SIGNAL CIRCUIT FOR A SHORT TO BATTERY**
   1. Turn the ignition on.
   2. Using a 12-volt test light connected to ground check the (D712) Park Assist Sensor 12 Signal circuit at the Park Assist Module C2 harness connector for a short to battery.

      Does the test light illuminate brightly?

      Yes

      - Repair the (D712) Park Assist Sensor 12 Signal circuit for a short to battery.
      - Perform the BODY VERIFICATION TEST. Refer to **STANDARD PROCEDURE** .

No

- Go To 5

5. **CHECK THE (D712) PARK ASSIST SENSOR 12 SIGNAL CIRCUIT FOR AN OPEN**
   1. Measure the resistance of the (D712) Park Assist Sensor 12 Signal circuit between the Park Assist Module C2 harness connector and the Park Assist Sensor 12 harness connector.

      Is the resistance below 5.0 Ohms?

      No

      - Repair the (D712) Park Assist Sensor 12 Signal circuit for an open.
      - Perform the BODY VERIFICATION TEST. Refer to **STANDARD PROCEDURE** .

      Yes

      - Replace the Park Assist Module in accordance with Service Information. Refer to **MODULE, PARK ASSIST, REMOVAL** .
      - Perform the BODY VERIFICATION TEST. Refer to **STANDARD PROCEDURE** .

B210C-16-BATTERY VOLTAGE INPUT - CIRCUIT VOLTAGE BELOW THRESHOLD

For a complete wiring diagram, **refer to appropriate SYSTEM WIRING DIAGRAMS article** .

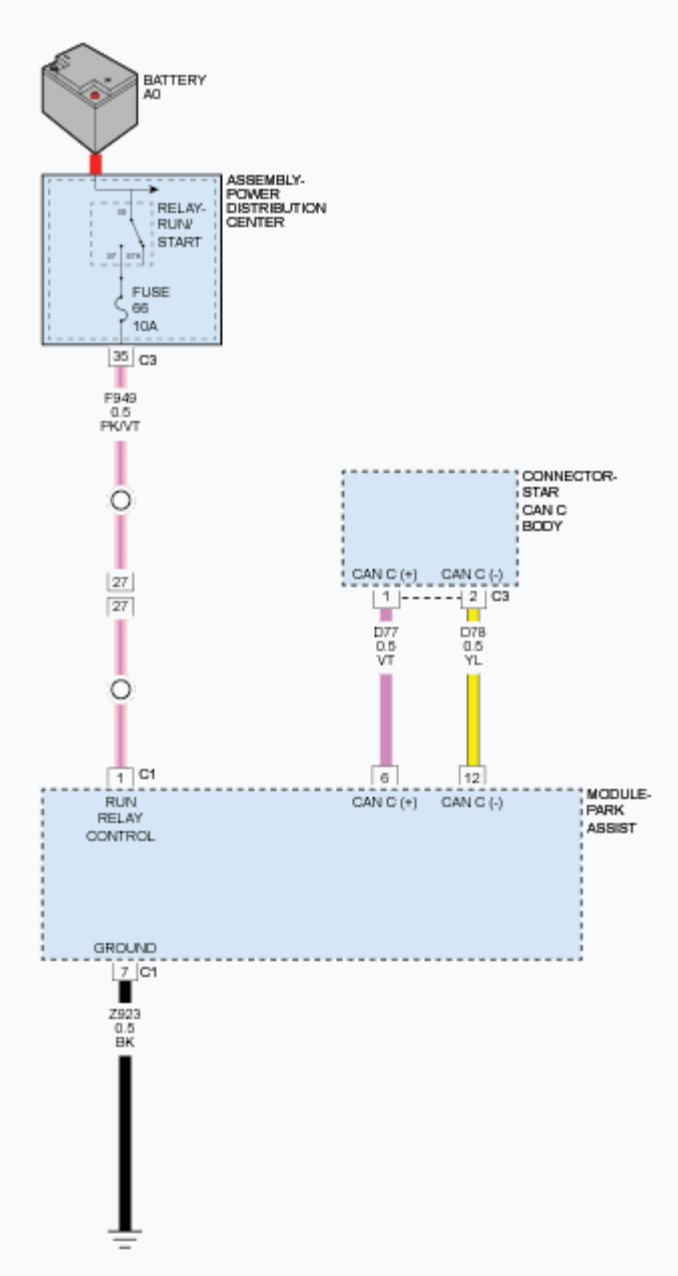

Fig. 53: PAM CAN C, Run Relay Control & Ground Circuit Diagram
Courtesy of CHRYSLER GROUP, LLC

WHEN MONITORED

Vehicle in reverse and during the self-test while vehicle is in drive between 18 km/h (11 mph) and 40 km/h (25 mph).

SET CONDITION

Park Assist Module supply voltage less than 6.5 volts.

POSSIBLE CAUSES

Possible Causes
VEHICLE CHARGING SYSTEM PARK ASSIST MODULE

DIAGNOSTIC TEST

1. **CHECK FOR AN ACTIVE DIAGNOSTIC TROUBLE CODE (DTC)**
   1. Turn the ignition on.
   2. With the scan tool, read Park Assist Module DTCs.

      Does the scan tool display this DTC as active?

      Yes

      - Go To 2

      No

      - The condition that caused this code to set is not present at this time. Check for an intermittent condition by inspecting the related wiring harness for chafed, pierced, pinched, and partially broken wires. Also inspect the related connectors for broken, bent, pushed out, spread, corroded, or contaminated terminals.
      - Perform the BODY VERIFICATION TEST. Refer to **STANDARD PROCEDURE** .
2. **VERIFY OPERATION OF THE VEHICLE CHARGING SYSTEM**

   NOTE: Troubleshoot any PCM charging/cranking DTCs before proceeding.

   NOTE: Make sure the battery is fully charged.

   Are any charging system DTCs present?

   Yes

   - Refer to the **DTC INDEX** article and perform the appropriate diagnostic procedure.

   No

   - Replace the Park Assist Module in accordance with the Service Information. Refer to **MODULE, PARK ASSIST, REMOVAL** .
   - Perform the BODY VERIFICATION TEST. Refer to **STANDARD PROCEDURE** .

B210C-17-BATTERY VOLTAGE INPUT - CIRCUIT VOLTAGE ABOVE THRESHOLD

For a complete wiring diagram, **refer to appropriate SYSTEM WIRING DIAGRAMS article** .

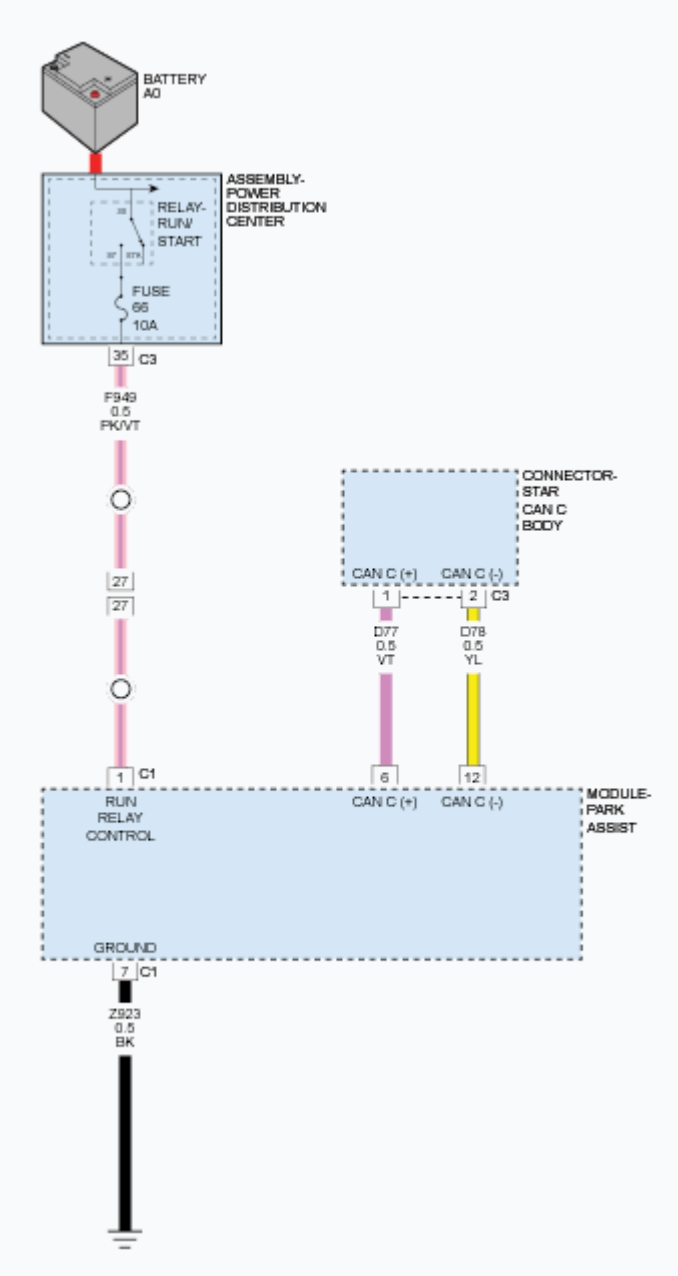

Fig. 54: PAM CAN C, Run Relay Control & Ground Circuit Diagram
Courtesy of CHRYSLER GROUP, LLC

WHEN MONITORED

Vehicle in reverse and during the self-test while vehicle is in drive between 18 km/h (11 mph) and 40 km/h (25 mph).

SET CONDITION

Park Assist Module supply voltage greater than 16.0 volts.

POSSIBLE CAUSES

Possible Causes
VEHICLE CHARGING SYSTEM PARK ASSIST MODULE

DIAGNOSTIC TEST

1. **CHECK FOR AN ACTIVE DIAGNOSTIC TROUBLE CODE (DTC)**
   1. Turn the ignition on.
   2. With the scan tool, read Park Assist Module DTCs.

      Does the scan tool display this DTC as active?

      Yes

      - Go To 2

      No

      - Test complete, the condition or conditions that originally set this DTC are not present at this time. Using the wiring diagrams as a guide, check all related splices and connectors for signs of water intrusion, corrosion, pushed out or bent terminals, and correct pin tension.
      - Perform the BODY VERIFICATION TEST. Refer to **STANDARD PROCEDURE** .
2. **VERIFY OPERATION OF THE VEHICLE CHARGING SYSTEM**

   NOTE: Troubleshoot any PCM charging/cranking DTCs before proceeding.

   NOTE: Make sure the battery is fully charged.

   Are any charging system DTCs present?

   Yes

   - Refer to the **DTC INDEX** article and perform the appropriate diagnostic procedure.

   No

   - Replace the Park Assist Module in accordance with the Service Information. Refer to **MODULE, PARK ASSIST, REMOVAL** .
   - Perform the BODY VERIFICATION TEST. Refer to **STANDARD PROCEDURE** .

B2128-16-SENSOR SUPPLY VOLTAGE - CIRCUIT VOLTAGE BELOW THRESHOLD

For a complete wiring diagram, **refer to appropriate SYSTEM WIRING DIAGRAMS article** .

THEORY OF OPERATION

The Park Assist Sensors are ultrasonic transceivers that are completely controlled by the Park Assist Module. The sensors transmit and receive ultrasonic signals. Each sensor has a voltage, signal, and return circuit to the module. The sensors communicate with the Park Assist Module using a dedicated serial bus communication circuit.

WHEN MONITORED

Vehicle in reverse and during the self-test while vehicle is in drive between 18 km/h (11 mph) and 40 km/h (25 mph).

SET CONDITION

Park Assist Sensor supply voltage less than 7.2 volts.

POSSIBLE CAUSES

Possible Causes
FRONT PARK ASSIST SENSOR SUPPLY CIRCUIT SHORTED TO GROUND (IF EQUIPPED)
PARK ASSIST SENSOR SUPPLY CIRCUIT SHORTED TO GROUND
PARK ASSIST SENSOR
PARK ASSIST MODULE

DIAGNOSTIC TEST

1. **CHECK FOR AN ACTIVE DTC**
    1. Turn the ignition on.
    2. With the scan tool, read DTCs.

    Does the scan tool display this DTC as active?

    Yes

    - Go To 2

    No

    - Test complete, the condition or conditions that originally set this DTC are not present at this time. Using the wiring diagrams as a guide, check all related splices and connectors for signs of water intrusion, corrosion, pushed out or bent terminals, and correct pin tension.

- Perform the BODY VERIFICATION TEST. Refer to **STANDARD PROCEDURE** .

2. **CHECK EACH PARK ASSIST SENSOR FOR A SHORT TO GROUND**
   1. Turn the ignition off.
   2. Disconnect one Park Assist Sensor.
   3. Turn the ignition on.
   4. With the scan tool, read Park Assist Module DTCs. If this DTC is still active, repeat this procedure by disconnecting another Park Assist Sensor. However, if this DTC changes from active to stored, or if all sensors have been disconnected, proceed as follows:

      Does the scan tool still display this DTC as active?

      Yes

      - Go To 3

      No

      - Replace the Park Assist Sensor that caused this DTC to change from active to stored after disconnecting it in accordance with the Service Information. Refer to **SENSOR, PARK ASSIST, REMOVAL** .
      - Perform the BODY VERIFICATION TEST. Refer to **STANDARD PROCEDURE** .

3. **CHECK THE (X702) FRONT PARK ASSIST SENSOR SUPPLY CIRCUIT SHORTED TO GROUND (IF EQUIPPED)**

   NOTE: If vehicle is not equipped with Front Park Assist, proceed to next test step.

   NOTE: Perform this test with all Front Park Assist Sensors disconnected.

   1. Disconnect the Park Assist Module C3 harness connector.
   2. Measure the resistance between ground and the (X702) Front Park Assist Sensor Supply circuit.

      Is the resistance below 10K Ohms?

      Yes

      - Repair the short to ground in the (X702) Front Park Assist Sensor Supply circuit.
      - Perform the BODY VERIFICATION TEST. Refer to **STANDARD PROCEDURE** .

      No

      - Go To 4

4. **CHECK THE (X700) PARK ASSIST SENSOR SUPPLY CIRCUIT FOR A SHORT TO GROUND**

NOTE: Perform this test with all Rear Park Assist Sensors disconnected.

1. Disconnect the Park Assist Module C2 harness connector.
2. Measure the resistance between ground and the (X700) Park Assist Sensor Supply circuit.

   Is the resistance below 10K Ohms?

   Yes

   - Repair the (X700) Park Assist Sensor Supply circuit for a short to ground.
   - Perform the BODY VERIFICATION TEST. Refer to **STANDARD PROCEDURE** .

   No

   - Replace the Park Assist Module in accordance with the Service Information. Refer to **MODULE, PARK ASSIST, REMOVAL** .
   - Perform the BODY VERIFICATION TEST. Refer to **STANDARD PROCEDURE** .

B2128-17-SENSOR SUPPLY VOLTAGE - CIRCUIT VOLTAGE ABOVE THRESHOLD

For a complete wiring diagram, **refer to appropriate SYSTEM WIRING DIAGRAMS article** .

THEORY OF OPERATION

The Park Assist Sensors are ultrasonic transceivers that are completely controlled by the Park Assist Module. The sensors transmit and receive ultrasonic signals. Each sensor has a voltage, signal, and return circuit to the module. The sensors communicate with the Park Assist Module using a dedicated serial bus communication circuit.

WHEN MONITORED

Vehicle in reverse and during the self-test while vehicle is in drive between 18 km/h (11 mph) and 40 km/h (25 mph).

SET CONDITION

Park Assist Sensor supply voltage greater than 9.2 volts.

POSSIBLE CAUSES

Possible Causes
FRONT PARK ASSIST SENSOR SUPPLY CIRCUIT SHORTED TO VOLTAGE (IF EQUIPPED)
PARK ASSIST SENSOR SUPPLY CIRCUIT SHORTED TO VOLTAGE
PARK ASSIST MODULE

DIAGNOSTIC TEST

1. **CHECK FOR ACTIVE DTC**
   1. Turn the ignition on.
   2. With the scan tool, read Park Assist Module DTCs.

      Does the scan tool display this DTC as active?

      Yes

      - Go To 2

      No

      - Test complete, the condition or conditions that originally set this DTC are not present at this time. Using the wiring diagrams as a guide, check all related splices and connectors for signs of water intrusion, corrosion, pushed out or bent terminals, and correct pin tension.
      - Perform the BODY VERIFICATION TEST. Refer to **STANDARD PROCEDURE** .
2. **CHECK THE (X702) FRONT PARK ASSIST SENSOR SUPPLY CIRCUIT FOR A SHORT TO VOLTAGE (IF EQUIPPED)**

   NOTE: If vehicle is not equipped with Front Park Assist, proceed to next test step.

   1. Turn the ignition off.
   2. Disconnect the Park Assist Module C3 harness connector.
   3. Turn the ignition on.
   4. Measure the voltage on the (X702) Front Park Assist Sensor Supply circuit.

      Is the voltage above 9.2 volts?

      Yes

      - Repair the (X702) Front Park Assist Sensor Supply circuit for a short to voltage.
      - Perform the BODY VERIFICATION TEST. Refer to **STANDARD PROCEDURE** .

      No

      - Go To 3
3. **CHECK THE (X700) PARK ASSIST SENSOR SUPPLY CIRCUIT FOR A SHORT TO VOLTAGE**
   1. Turn the ignition off.
   2. Disconnect the Park Assist Module C2 harness connector.
   3. Turn the ignition on.

4. Measure the voltage on the (X700) Park Assist Sensor Supply circuit.

   Is the voltage above 9.2 volts?

   Yes

   - Repair the (X700) Park Assist Sensor Supply circuit for a short to voltage.
   - Perform the BODY VERIFICATION TEST. Refer to **STANDARD PROCEDURE** .

   No

   - Replace the Park Assist Module in accordance with the Service Information. Refer to **MODULE, PARK ASSIST, REMOVAL** .
   - Perform the BODY VERIFICATION TEST. Refer to **STANDARD PROCEDURE** .

B21DD-16-SYSTEM VOLTAGE - CIRCUIT VOLTAGE BELOW THRESHOLD

For a complete wiring diagram, **refer to appropriate SYSTEM WIRING DIAGRAMS article** .

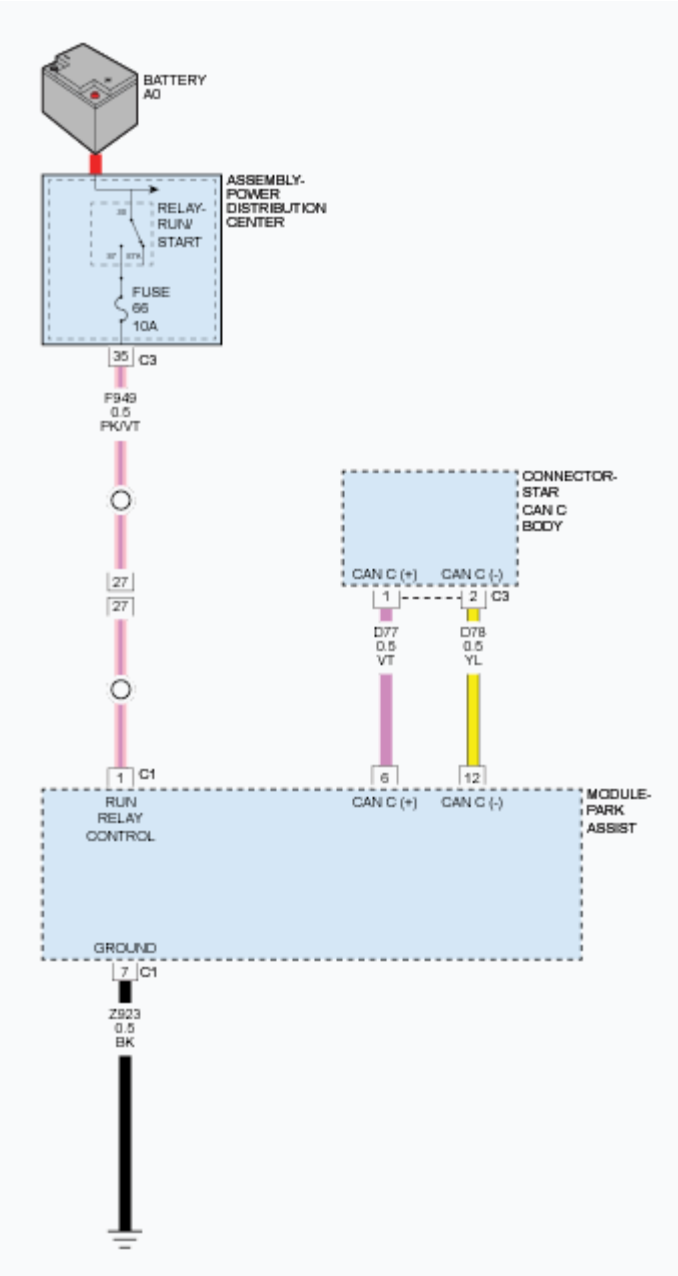

Fig. 55: PAM CAN C, Run Relay Control & Ground Circuit Diagram
Courtesy of CHRYSLER GROUP, LLC

WHEN MONITORED

Vehicle in reverse and during the self-test while vehicle is in drive between 18 km/h (11 mph) and 40 km/h (25 mph).

SET CONDITION

Vehicle System voltage less than 6.5 volts.

POSSIBLE CAUSES

Possible Causes
VEHICLE CHARGING SYSTEM PARK ASSIST MODULE

DIAGNOSTIC TEST

1. **CHECK FOR AN ACTIVE DIAGNOSTIC TROUBLE CODE (DTC)**
   1. Turn the ignition on.
   2. With the scan tool, read Park Assist Module DTCs.

      Does the scan tool display this DTC as active?

      Yes

      - Go To 2

      No

      - Test complete, the condition or conditions that originally set this DTC are not present at this time. Using the wiring diagrams as a guide, check all related splices and connectors for signs of water intrusion, corrosion, pushed out or bent terminals, and correct pin tension.
      - Perform the BODY VERIFICATION TEST. Refer to **STANDARD PROCEDURE** .
2. **VERIFY OPERATION OF THE VEHICLE CHARGING SYSTEM**

   NOTE: Troubleshoot any PCM charging/cranking DTCs before proceeding.

   NOTE: Make sure the battery is fully charged.

   Are any charging system DTCs present?

   Yes

   - Refer to the **DTC INDEX** article and perform the appropriate diagnostic procedure.

   No

   - Replace the Park Assist Module in accordance with the Service Information. Refer to **MODULE, PARK ASSIST, REMOVAL** .
   - Perform the BODY VERIFICATION TEST. Refer to **STANDARD PROCEDURE** .

B21DD-17-SYSTEM VOLTAGE - CIRCUIT VOLTAGE ABOVE THRESHOLD

For a complete wiring diagram, **refer to appropriate SYSTEM WIRING DIAGRAMS article** .

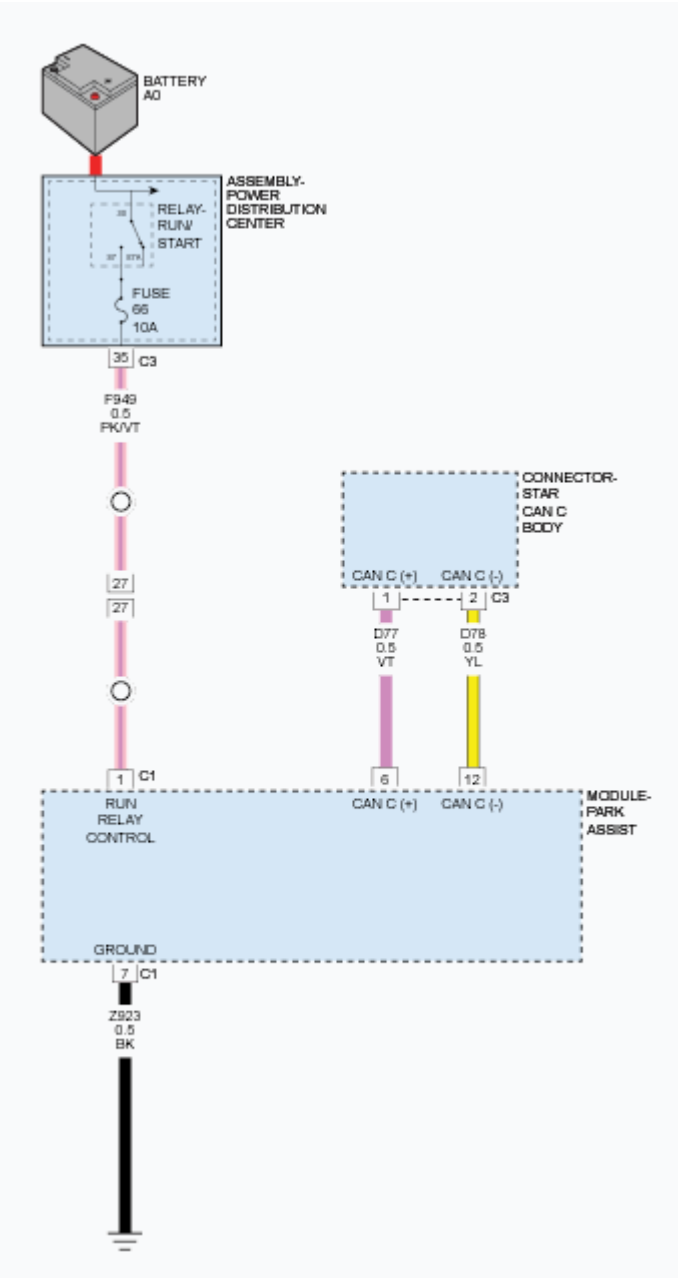

Fig. 56: PAM CAN C, Run Relay Control & Ground Circuit Diagram
Courtesy of CHRYSLER GROUP, LLC

WHEN MONITORED

Vehicle in reverse and during the self-test while vehicle is in drive between 18 km/h (11 mph) and 40 km/h (25 mph).

SET CONDITION

Vehicle System voltage greater than 16.0 volts.

POSSIBLE CAUSES

Possible Causes
VEHICLE CHARGING SYSTEM PARK ASSIST MODULE

DIAGNOSTIC TEST

1. **CHECK FOR AN ACTIVE DIAGNOSTIC TROUBLE CODE (DTC)**
   1. Turn the ignition on.
   2. With the scan tool, read Park Assist Module DTCs.

      Does the scan tool display this DTC as active?

      Yes

      - Go To 2

      No

      - Test complete, the condition or conditions that originally set this DTC are not present at this time. Using the wiring diagrams as a guide, check all related splices and connectors for signs of water intrusion, corrosion, pushed out or bent terminals, and correct pin tension.
      - Perform the BODY VERIFICATION TEST. Refer to **STANDARD PROCEDURE** .
2. **VERIFY OPERATION OF THE VEHICLE CHARGING SYSTEM**

   NOTE: Troubleshoot any PCM charging/cranking DTCs before proceeding.

   NOTE: Make sure the battery is fully charged.

   Are any charging system DTCs present?

   Yes

   - Refer to the **DTC INDEX** article and perform the appropriate diagnostic procedure.

   No

   - Replace the Park Assist Module in accordance with the Service Information. Refer to **MODULE, PARK ASSIST, REMOVAL** .
   - Perform the BODY VERIFICATION TEST. Refer to **STANDARD PROCEDURE** .

U0002-00-CAN C BUS OFF PERFORMANCE

For a complete wiring diagram, **refer to appropriate SYSTEM WIRING DIAGRAMS article** .

WHEN MONITORED

Ignition run time is greater than one second.

Battery voltage between 9 and 16 volts.

Engine run time greater than three seconds.

SET CONDITION

The Steering Column Control Module (SCCM) detects a short condition on one of the CAN C Bus circuits.

POSSIBLE CAUSES

Possible Causes
CAN C BUS (+) CIRCUIT SHORTED TO GROUND
CAN C BUS (-) CIRCUIT SHORTED TO VOLTAGE
CAN C BUS (+) CIRCUIT SHORTED TO THE CAN C BUS (-) CIRCUIT
STAR CONNECTOR
ANY MODULE CONNECTED TO THE CAN C BUS

DIAGNOSTIC TEST

CHECK FOR AN ACTIVE DTC

1. Ignition on, engine not running.
2. With the scan tool, select view DTCs.

   Does the scan tool display this DTC as active?

   Yes

   - Refer to the **DTC INDEX** article and perform the U0002-00-CAN C BUS OFF PERFORMANCE diagnostic procedure.

   No

   - Refer to **DIAGNOSIS AND TESTING** and perform the STORED LOST COMMUNICATION DTCs diagnostic procedure.

B222A-00-VEHICLE LINE MISMATCH

For a complete wiring diagram, **refer to appropriate SYSTEM WIRING DIAGRAMS article** .

WHEN MONITORED

With the ignition on.

SET CONDITION

If the Vehicle Line data transmitted on the CAN C Interior bus doesn't correspond with the data stored in the Park Assist Module.

POSSIBLE CAUSES

Possible Causes
PARK ASSIST MODULE

DIAGNOSTIC TEST

CHECK VEHICLE LINE IN THE BCM

1. With the scan tool, compare the vehicle line that is programmed in to the BCM to the vehicle line of the vehicle.

   Does the vehicle line programmed into the BCM match the vehicle?

   Yes

   - Replace the Park Assist Module in accordance with the Service Information. Refer to **MODULE, PARK ASSIST, REMOVAL** .
   - Perform the BODY VERIFICATION TEST. Refer to **STANDARD PROCEDURE** .

   No

   - Use the scan tool to read DTCs in all other modules. If any communication DTCs are present, perform the appropriate diagnostic procedure. Perform any Technical Service Bulletins that apply. If no problems are found, test is complete.
   - Perform the BODY VERIFICATION TEST. Refer to **STANDARD PROCEDURE** .

B223B-00-VEHICLE CONFIGURATION MISMATCH

For a complete wiring diagram, **refer to appropriate SYSTEM WIRING DIAGRAMS article** .

WHEN MONITORED

With the ignition on.

SET CONDITION

This DTC will set if the vehicle type is not identified or incorrectly identified.

POSSIBLE CAUSES

Possible Causes
INCORRECT VEHICLE CONFIGURATION IN THE BODY CONTROL MODULE (BCM)

DIAGNOSTIC TEST

CHECK FOR AN ACTIVE DIAGNOSTIC TROUBLE CODE (DTC)

NOTE: Diagnose and repair any BCM VIN or Communication DTCs before continuing with this test.

1. Turn the ignition on.
2. With the scan tool, select View DTCs.

   Does the scan tool display this DTC as active?

   Yes

   - Verify the correct vehicle configuration in the BCM.
   - Perform the BODY VERIFICATION TEST. Refer to **STANDARD PROCEDURE** .

   No

   - Use the scan tool to read DTCs in all other modules. If any communication DTCs are present, perform the appropriate diagnostic procedure. Perform any Technical Service Bulletins that apply. If no problems are found, test is complete.
   - Perform the BODY VERIFICATION TEST. Refer to **STANDARD PROCEDURE** .

B2232-00-(PTS) PARKTRONICS INTERNAL

For a complete wiring diagram, **refer to appropriate SYSTEM WIRING DIAGRAMS article** .

WHEN MONITORED

With the ignition on.

SET CONDITION

The Park Assist Module detects an internal failure.

POSSIBLE CAUSES

Possible Causes
PARK ASSIST MODULE

DIAGNOSTIC TEST

REPLACE THE PARK ASSIST MODULE

View Repair

Repair

- Replace the Park Assist Module in accordance with the Service Information. Refer to **MODULE, PARK ASSIST, REMOVAL** .
- Perform the BODY VERIFICATION TEST. Refer to **STANDARD PROCEDURE** .

U0100-00-LOST COMMUNICATION WITH ECM/PCM

For a complete wiring diagram, **refer to appropriate SYSTEM WIRING DIAGRAMS article** .

WHEN MONITORED

Continuously when the ignition is on.

The battery voltage between 10 and 16 Volts.

Body Control Module (BCM) is configured correctly.

SET CONDITION

Bus messages not received from the Powertrain Control Module (PCM) for approximately two to five seconds.

POSSIBLE CAUSES

Possible Causes
CAN C BUS CIRCUITS OPEN OR SHORTED DTCS RELATED TO BATTERY VOLTAGE, IGNITION, OR VIN MESSAGES POWERTRAIN CONTROL MODULES POWER AND GROUND BCM NOT CONFIGURED CORRECTLY POWERTRAIN CONTROL MODULE (PCM) ANY MODULE THAT SET THIS DTC

DIAGNOSTIC TEST

VERIFY IF THE DTC IS ACTIVE

NOTE: **Make sure the battery is fully charged before performing any diagnostic procedure.**

With the scan tool, refer to the Network Review Screen to display a high level view of the vehicle communication network. Modules shown in red are problem areas.

Always diagnose any Body Control Module (BCM) DTCs first before proceeding.

1. Turn the ignition on.
2. Using the scan tool, read DTCs.

   Does the scan tool display this DTC as active?

   Yes

   - Refer to the **BODY CONTROL MODULE (BCM) - DIAGNOSTIC CODE INDEX** article and perform the U0100 LOST COMMUNICATION WITH PCM diagnostic procedure.

   No

   - Refer to **DIAGNOSIS AND TESTING** and perform the STORED LOST COMMUNICATION DTCs diagnostic procedure.

U0102-00-LOST COMMUNICATION WITH TRANSFER CASE CONTROL MODULE / AWD

Perform the COMMUNICATION PRE-DIAGNOSTIC PROCEDURE. Refer to **STANDARD PROCEDURE** .

U0121-00-LOST COMMUNICATION WITH ANTI-LOCK BRAKE SYSTEM (ABS) CONTROL MODULE

For a complete wiring diagram, **refer to appropriate SYSTEM WIRING DIAGRAMS article** .

WHEN MONITORED

Continuously when the ignition is on.

The battery voltage between 10 and 16 volts.

Body Control Module (BCM) is configured correctly.

SET CONDITION

Bus messages not received from the Anti-lock Brake System (ABS) Module for approximately two to five seconds.

POSSIBLE CAUSES

Possible Causes
CAN C BUS CIRCUITS OPEN OR SHORTED
DTCS RELATED TO BATTERY VOLTAGE, IGNITION, OR VIN MESSAGES
ANTI LOCK BRAKE MODULE (ABS) POWER AND GROUND
BCM NOT CONFIGURED CORRECTLY
ANTI LOCK BRAKE MODULE (ABS)
MODULE THAT SET THIS DTC

DIAGNOSTIC TEST

VERIFY DTC IS ACTIVE

NOTE: Make sure the battery is fully charged before proceeding.

1. Cycle the ignition on.
2. With the scan tool, read the active DTCs.

   Does the scan tool display: U0121-00-LOST COMMUNICATION WITH ANTI-LOCK BRAKE SYSTEM (ABS) CONTROL MODULE?

   Yes

   - Refer to the **BODY CONTROL MODULE (BCM) - DIAGNOSTIC CODE INDEX** article and perform the U0121-00 LOST COMMUNICATION WITH ANTI-LOCK BRAKE SYSTEM (ABS) CONTROL MODULE diagnostic procedure.

   No

   - Refer to **DIAGNOSIS AND TESTING** and perform the STORED LOST COMMUNICATION DTCs diagnostic procedure.

U0129-00-LOST COMMUNICATION WITH BRAKE SYSTEM CONTROL MODULE

For a complete wiring diagram, **refer to appropriate SYSTEM WIRING DIAGRAMS article** .

WHEN MONITORED

With the ignition on.

The battery voltage between 10 and 16 volts.

Body Control Module (BCM) is configured correctly.

SET CONDITION

Bus messages not received from the Anti-lock Brake System (ABS) Module.

POSSIBLE CAUSES

Possible Causes
CAN C BUS CIRCUITS OPEN OR SHORTED
DTCS RELATED TO BATTERY VOLTAGE, IGNITION, OR VIN MESSAGES
ANTI LOCK BRAKE MODULE (ABS) POWER AND GROUND
BCM NOT CONFIGURED CORRECTLY
ANTI LOCK BRAKE MODULE (ABS)
MODULE THAT SET THIS DTC

DIAGNOSTIC TEST

VERIFY DTC IS ACTIVE

NOTE: Make sure the battery is fully charged before proceeding.

1. Turn the ignition on.
2. With the scan tool, read the active DTCs.

   Does the scan tool display this DTC as active?

   Yes

   - Refer to the **BODY CONTROL MODULE (BCM) - DIAGNOSTIC CODE INDEX** article and perform the U0121-87-LOST COMMUNICATION WITH ANTI-LOCK BRAKE SYSTEM (ABS) CONTROL MODULE diagnostic procedure.

   No

   - Refer to **DIAGNOSIS AND TESTING** and perform the STORED LOST COMMUNICATION DTCs diagnostic procedure.

U0140-00-LOST COMMUNICATION WITH BODY CONTROL MODULE

For a complete wiring diagram, **refer to appropriate SYSTEM WIRING DIAGRAMS article** .

WHEN MONITORED

Continuously when the ignition is on.

The battery voltage between 10.0 and 16.0 Volts.

Body Control Module (BCM) is configured correctly.

SET CONDITION

Bus messages not received from the Body Control Module (BCM) for approximately two to five seconds.

POSSIBLE CAUSES

Possible Causes
CAN BUS CIRCUITS OPEN OR SHORTED
DTCS RELATED TO BATTERY VOLTAGE, IGNITION, OR VIN MESSAGES
BODY CONTROL MODULE POWER AND GROUND
BCM NOT CONFIGURED CORRECTLY
BODY CONTROL MODULE (BCM)
MODULE THAT SET THIS DTC

DIAGNOSTIC TEST

VERIFY IF THE DTC IS ACTIVE

NOTE: **Make sure the battery is fully charged before performing any diagnostic procedure.**

With the scan tool, refer to the Network Review Screen to display a high level view of the vehicle communication network. Modules shown in red are problem areas.

Always diagnose any Body Control Module (BCM) DTCs first before proceeding.

1. Turn the ignition on.
2. With the scan tool, read DTCs.

   Does the scan tool display this DTC as active?

   Yes

   - Refer to **DIAGNOSIS AND TESTING** and perform the NO RESPONSE FROM BCM (BODY CONTROL MODULE) diagnostic procedure.

   No

   - Refer to **DIAGNOSIS AND TESTING** and perform the STORED LOST COMMUNICATION DTCs diagnostic procedure.

U0151-00-LOST COMMUNICATION WITH OCCUPANT RESTRAINT CONTROLLER (ORC)

For a complete wiring diagram, **refer to appropriate SYSTEM WIRING DIAGRAMS article** .

WHEN MONITORED

Continuously when the ignition is on.

The battery voltage between 10 and 16 volts.

Body Control Module (BCM) is configured correctly.

SET CONDITION

Bus messages not received from the Occupant Restraint Controller (ORC) for approximately two to five seconds.

POSSIBLE CAUSES

Possible Causes
CAN BUS CIRCUITS OPEN OR SHORTED
DTCS RELATED TO BATTERY VOLTAGE, IGNITION, OR VIN MESSAGES
OCCUPANT RESTRAINT CONTROLLER (ORC) POWER AND GROUND
BCM NOT CONFIGURED CORRECTLY
OCCUPANT RESTRAINT CONTROLLER (ORC)
MODULE THAT SET THIS DTC

DIAGNOSTIC TEST

VERIFY IF THE DTC IS ACTIVE

NOTE: **Make sure the battery is fully charged before performing any diagnostic procedure.**

With the scan tool, refer to the Network Review Screen to display a high level view of the vehicle communication network. Modules shown in red are problem areas.

Always diagnose any Body Control Module (BCM) DTCs first before proceeding.

1. Turn the ignition on.
2. With the scan tool, read DTCs.

   Does the scan tool display this DTC as active?

Yes

- Refer to the **BODY CONTROL MODULE (BCM) - DIAGNOSTIC CODE INDEX** article and perform the U0151-00 LOST COMMUNICATION WITH OCCUPANT RESTRAINT CONTROLLER (ORC) diagnostic procedure.

No

- Refer to **DIAGNOSIS AND TESTING** and perform the STORED LOST COMMUNICATION DTCs diagnostic procedure.

U0155-00-LOST COMMUNICATION WITH CLUSTER/CCN

For a complete wiring diagram, **refer to appropriate SYSTEM WIRING DIAGRAMS article** .

WHEN MONITORED

Continuously when the ignition is on.

Battery voltage between 10 and 16 volts.

Body Control Module (BCM) is configured correctly.

SET CONDITION

Bus messages not received from the Instrument Cluster (IC) for approximately two to five seconds.

POSSIBLE CAUSES

Possible Causes
CAN C BUS (+) CIRCUIT SHORTED TO VOLTAGE
CAN C BUS (-) CIRCUIT SHORTED TO GROUND
INSTRUMENT CLUSTER (IC) POWER AND GROUND
BCM NOT CONFIGURED CORRECTLY
INSTRUMENT CLUSTER (IC)
MODULE THAT SET THIS DTC

DIAGNOSTIC TEST

VERIFY IF THE DTC IS ACTIVE

NOTE: Make sure the battery is fully charged before proceeding.

1. Turn the ignition on.
2. With the scan tool, read active DTCs.

Does the scan tool display this DTC as active?

Yes

- Refer to the **BODY CONTROL MODULE (BCM) - DIAGNOSTIC CODE INDEX** article and perform the U0155-LOST COMMUNICATION WITH CLUSTER/CCN diagnostic procedure.

No

- Refer to **DIAGNOSIS AND TESTING** and perform the STORED LOST COMMUNICATION DTCs diagnostic procedure.

U0212-00-LOST COMMUNICATION WITH SCM

For a complete wiring diagram, **refer to appropriate SYSTEM WIRING DIAGRAMS article** .

WHEN MONITORED

With the ignition on for at least five seconds.

Battery voltage between 10 and 16 volts.

SET CONDITION

Bus messages not received from the Steering Column Control Module (SCM) for approximately two to five seconds.

POSSIBLE CAUSES

Possible Causes
STEERING COLUMN CONTROL MODULE (SCM) POWERS AND GROUNDS
STEERING COLUMN CONTROL MODULE (SCM)
CAN C BUS (+) CIRCUIT OPEN
CAN C BUS (-) CIRCUIT OPEN
MODULE THAT SET THIS DTC

DIAGNOSTIC TEST

CHECK FOR AN ACTIVE DTC

NOTE: If DTC U0010-00-CAN INTERIOR BUS or U0011-00-CAN INTERIOR BUS OFF PERFORMANCE is set in the Body Control Module (BCM), diagnose this DTC before continuing with this diagnostic procedure.

1. Turn the ignition on.

2. With the scan tool, read active DTCs.

   Does the scan tool display this DTC as active?

   Yes

   - Refer to **DIAGNOSIS AND TESTING** and perform the NO RESPONSE FROM SCM (STEERING COLUMN CONTROL MODULE) diagnostic procedure.

   No

   - Refer to **DIAGNOSIS AND TESTING** and perform the STORED LOST COMMUNICATION DTCS diagnostic procedure.

U0401-00- IMPLAUSIBLE DATA RECEIVED FROM ECM/PCM

For a complete wiring diagram, **refer to appropriate SYSTEM WIRING DIAGRAMS article** .

WHEN MONITORED

With the ignition on and the vehicle in reverse.

SET CONDITION

VIN data not received from Powertrain Control Module (PCM).

POSSIBLE CAUSES

Possible Causes
NO COMMUNICATION WITH POWERTRAIN CONTROL MODULE (PCM)
DTCS STORED OR ACTIVE IN THE PCM
ACTIVE COMMUNICATION DTCS IN THE BCM
PARK ASSIST MODULE

DIAGNOSTIC TEST

1. **CHECK FOR AN ACTIVE DIAGNOSTIC TROUBLE CODE (DTC)**
   1. Turn the ignition on.
   2. With the scan tool, read Park Assist Module DTCs.

      Does the scan tool display this DTC as active?

      Yes

      - Go To 2

No

- The condition that caused this code to set is not present at this time. Check for an intermittent condition by inspecting the related wiring harness for chafed, pierced, pinched, and partially broken wires. Also inspect the related connectors for broken, bent, pushed out, spread, corroded, or contaminated terminals.
- Perform the BODY VERIFICATION TEST. Refer to **STANDARD PROCEDURE** .

2. **VERIFY PCM IS ACTIVE ON THE CAN BUS**
   1. With the scan tool, select ECU View.
   2. Verify that the PCM is active on the bus.

   Is the PCM active on the bus?

   Yes

   - Go To 3

   No

   - Refer to **DIAGNOSIS AND TESTING** and perform the NO RESPONSE FROM PCM diagnostic procedure.
   - Perform the BODY VERIFICATION TEST. Refer to **STANDARD PROCEDURE** .

3. **DTCS STORED OR ACTIVE IN THE PCM**
   1. With the scan tool, read PCM DTCs.

   Are any DTCs active or stored in the PCM?

   Yes

   - Refer to the **DTC INDEX** article and perform the appropriate diagnostic procedure.

   No

   - Go To 4

4. **ACTIVE COMMUNICATION DTCS IN THE BCM**
   1. With the scan tool, select ECU View and select BCM.
   2. With the scan tool, read active DTCs.

   Are any Communication DTCs active in the BCM?

   Yes

   - Refer to the **BODY CONTROL MODULE (BCM) - DIAGNOSTIC CODE INDEX** article and perform the appropriate diagnostic procedure.

No

- Replace and program the Park Assist Module in accordance with the Service Information. Refer to **MODULE, PARK ASSIST, REMOVAL** .
- Perform the BODY VERIFICATION TEST. Refer to **STANDARD PROCEDURE** .

U0403-00- IMPLAUSIBLE DATA RECEIVED FROM T-CASE

For a complete wiring diagram, **refer to appropriate SYSTEM WIRING DIAGRAMS article** .

WHEN MONITORED

Continuously with the ignition on.

SET CONDITION

When the Park Assist Module (PAM) receives an implausible (default/error value, toggle error or parity error) message from the Drive Train Control Module (DTCM).

POSSIBLE CAUSES

Possible Causes
DRIVE TRAIN CONTROL MODULE (DTCM) DTCS PRESENT
BODY CONTROL MODULE (BCM) DTCS PRESENT
DRIVE TRAIN CONTROL MODULE (DTCM)
PARK ASSIST MODULE (PAM)

DIAGNOSTIC TEST

1. **VERIFY THE DTC IS ACTIVE**
    1. Turn the ignition on.
    2. With the scan tool, record and erase DTCs.
    3. Cycle the ignition from off to on.
    4. With the scan tool, read DTCs.

    Is the DTC active at this time?

    Yes

    - Go To 2

    No

    - Go To 5

2. **CHECK FOR BODY CONTROL MODULE (BCM) DTCS**
   1. With the scan tool, read BCM DTCs.

      Are there any BCM CAN Bus DTCs present?

      Yes

      - Perform the appropriate diagnostic procedure. Refer to the **BODY CONTROL MODULE (BCM) - DIAGNOSTIC CODE INDEX** article .

      No

      - Go To 3
3. **CHECK FOR DRIVE TRAIN CONTROL MODULE (DTCM) DTCS**
   1. With the scan tool, read DTCM DTCs.

      Are there any DTCM DTCs present?

      Yes

      - Perform the appropriate diagnostic procedure. Refer to **DIAGNOSIS AND TESTING** .

      No

      - Go To 4
4. **CHECK OTHER MODULES FOR DTCS**
   1. With the scan tool, read DTCs.

      Are there any other modules reporting implausible communication DTCs against the DTCM?

      Yes

      - Replace the Drive Train Control Module (DTCM) in accordance with the Service Information. Refer to **MODULE, DRIVETRAIN CONTROL, REMOVAL** .
      - Perform the BODY VERIFICATION TEST. Refer to **STANDARD PROCEDURE** .

      No

      - Using the schematics as a guide, check the Park Assist Module (PAM) pins, terminals, and connectors for corrosion, damage, or terminal push out. Pay particular attention to all power and ground circuits. If no problems are found, replace the Park Assist Module (PAM) in accordance with the Service Information.

        Perform the BODY VERIFICATION TEST. Refer to **STANDARD PROCEDURE** .

5. **CHECK THE WIRING AND CONNECTORS**
    1. The conditions necessary to set the DTC are not present at this time.
    2. Using the schematics as a guide, inspect the wiring and connectors specific to this module. Wiggle the wiring and connectors while checking for shorted and open circuits.
    3. Check all related splices and connectors for signs of water intrusion, corrosion, pushed out or bent terminals, and correct pin tension.
    4. Check Service Bulletins for any possible causes that may apply.

    Were there any problems found?

    Yes

    - Repair as necessary.
    - Perform the BODY VERIFICATION TEST. Refer to **STANDARD PROCEDURE** .

    No

    - Test complete.

U0402-00- IMPLAUSIBLE DATA RECEIVED FROM TCM

For a complete wiring diagram, **refer to appropriate SYSTEM WIRING DIAGRAMS article** .

WHEN MONITORED

With the ignition on and the vehicle in reverse.

SET CONDITION

Shift Lever data not received from the Transmission Control Module (TCM).

POSSIBLE CAUSES

Possible Causes
NO COMMUNICATION WITH THE TRANSMISSION CONTROL MODULE (TCM)
DTCS STORED OR ACTIVE IN THE TCM
PARK ASSIST MODULE (PAM)

DIAGNOSTIC TEST

1. **CHECK FOR AN ACTIVE DIAGNOSTIC TROUBLE CODE (DTC)**
    1. Turn the ignition on.
    2. With the scan tool, read Park Assist Module DTCs.

Does the scan tool display this DTC as active?

Yes

- Go To 2

No

- The condition that caused this code to set is not present at this time. Check for an intermittent condition by inspecting the related wiring harness for chafed, pierced, pinched, and partially broken wires. Also inspect the related connectors for broken, bent, pushed out, spread, corroded, or contaminated terminals.
- Perform the BODY VERIFICATION TEST. Refer to **STANDARD PROCEDURE** .

2. **VERIFY TCM IS ACTIVE ON THE CAN BUS**
   1. With the scan tool, select ECU View.
   2. Verify that the TCM is active on the bus.

   Is the TCM active on the bus?

   Yes

   - Go To 3

   No

   - Refer to **DIAGNOSIS AND TESTING** and perform the NO RESPONSE FROM TCM diagnostic procedure.
   - Perform the BODY VERIFICATION TEST. Refer to **STANDARD PROCEDURE** .

3. **DTCS STORED OR ACTIVE IN THE TCM**
   1. With the scan tool, read TCM DTCs.

   Are any DTCs active or stored in the TCM?

   Yes

   - Perform the appropriate diagnostic procedure.

   No

   - Go To 4

4. **ACTIVE COMMUNICATION DTCS IN THE BCM**
   1. With the scan tool, select ECU View and select BCM.
   2. With the scan tool, read active DTCs.

Are any Communication DTCs active in the BCM?

Yes

- Refer to the **BODY CONTROL MODULE (BCM) - DIAGNOSTIC CODE INDEX** article and perform the appropriate diagnostic procedure.

No

- Replace and program the Park Assist Module in accordance with the Service Information. Refer to **MODULE, PARK ASSIST, REMOVAL** .
- Perform the BODY VERIFICATION TEST. Refer to **STANDARD PROCEDURE** .

U0418-00-IMPLAUSIBLE DATA RECEIVED FROM BRAKE SYSTEM CONTROL MODULE

For a complete wiring diagram, **refer to appropriate SYSTEM WIRING DIAGRAMS article** .

WHEN MONITORED

With the ignition on and the vehicle in reverse.

SET CONDITION

Vehicle speed data not received from Antilock Brake Module (ABS).

POSSIBLE CAUSES

Possible Causes
NO COMMUNICATION WITH ANTILOCK BRAKE MODULE (ABS)
DTCS STORED OR ACTIVE IN THE ANTILOCK BRAKE MODULE (ABS)
ACTIVE COMMUNICATION DTCS IN THE BCM
PARK ASSIST MODULE

DIAGNOSTIC TEST

1. **CHECK FOR AN ACTIVE DIAGNOSTIC TROUBLE CODE (DTC)**
    1. Turn the ignition on.
    2. With the scan tool, read Park Assist Module DTCs.

    Does the scan tool display this DTC as active?

    Yes

    - Go To 2

No

- The condition that caused this code to set is not present at this time. Check for an intermittent condition by inspecting the related wiring harness for chafed, pierced, pinched, and partially broken wires. Also inspect the related connectors for broken, bent, pushed out, spread, corroded, or contaminated terminals.
- Perform the BODY VERIFICATION TEST. Refer to **STANDARD PROCEDURE** .

2. **VERIFY ABS IS ACTIVE ON THE CAN BUS**
   1. With the scan tool, select ECU View.
   2. Verify that the ABS is active on the bus.

   Is the ABS active on the bus?

   Yes

   - Go To 3

   No

   - Refer to **DIAGNOSIS AND TESTING** and perform the NO RESPONSE FROM ABS diagnostic procedure.
   - Perform the BODY VERIFICATION TEST. Refer to **STANDARD PROCEDURE** .

3. **DTCS STORED OR ACTIVE IN THE ANTILOCK BRAKE MODULE (ABS)**
   1. With the scan tool, read ABS DTCs.

   Are any DTCs active or stored in the ABS?

   Yes

   - Refer to **DIAGNOSIS AND TESTING** and perform the appropriate diagnostic procedure.

   No

   - Go To 4

4. **ACTIVE COMMUNICATION DTCS IN THE BCM**
   1. With the scan tool, select ECU View and select BCM.
   2. With the scan tool, read active DTCs.

   Are any Communication DTCs active in the BCM?

   Yes

   - Refer to the **BODY CONTROL MODULE (BCM) - DIAGNOSTIC CODE INDEX** article and perform the appropriate diagnostic procedure.

No

- Replace and program the Park Assist Module in accordance with the Service Information. Refer to **MODULE, PARK ASSIST, REMOVAL** .
- Perform the BODY VERIFICATION TEST. Refer to **STANDARD PROCEDURE** .

U0422-00-IMPLAUSIBLE DATA RECEIVED FROM BODY CONTROL MODULE

For a complete wiring diagram, **refer to appropriate SYSTEM WIRING DIAGRAMS article** .

WHEN MONITORED

With the ignition on and the vehicle in reverse.

SET CONDITION

Data not received from the Body Control Module (BCM).

POSSIBLE CAUSES

Possible Causes
NO COMMUNICATION WITH THE BODY CONTROL MODULE (BCM)
DTCS STORED OR ACTIVE IN THE BCM
PARK ASSIST MODULE

DIAGNOSTIC TEST

1. **CHECK FOR AN ACTIVE DIAGNOSTIC TROUBLE CODE (DTC)**
   1. Turn the ignition on.
   2. With the scan tool, read Park Assist Module DTCs.

      Does the scan tool display this DTC as active?

      Yes

      - Go To 2

      No

      - The condition that caused this code to set is not present at this time. Check for an intermittent condition by inspecting the related wiring harness for chafed, pierced, pinched, and partially broken wires. Also inspect the related connectors for broken, bent, pushed out, spread, corroded, or contaminated terminals.
      - Perform the BODY VERIFICATION TEST. Refer to **STANDARD PROCEDURE** .
2. **VERIFY BCM IS ACTIVE ON THE CAN BUS**

1. With the scan tool, select ECU View.
2. Verify that the BCM is active on the bus.

   Is the BCM active on the bus?

   Yes

   - Go To 3

   No

   - Refer to **DIAGNOSIS AND TESTING** and perform the NO RESPONSE FROM BCM diagnostic procedure.
   - Perform the BODY VERIFICATION TEST. Refer to **STANDARD PROCEDURE** .

3. **DTCS STORED OR ACTIVE IN THE BCM**
   1. With the scan tool, read BCM DTCs.

      Are any DTCs active or stored in the BCM?

      Yes

      - Refer to the **BODY CONTROL MODULE (BCM) - DIAGNOSTIC CODE INDEX** article and perform the appropriate diagnostic procedure.

      No

      - Replace and program the Park Assist Module in accordance with the Service Information. Refer to **MODULE, PARK ASSIST, REMOVAL** .
      - Perform the BODY VERIFICATION TEST. Refer to **STANDARD PROCEDURE** .

U0423-00-IMPLAUSIBLE DATA RECEIVED FROM CLUSTER/CCN

For a complete wiring diagram, **refer to appropriate SYSTEM WIRING DIAGRAMS article** .

WHEN MONITORED

Park Assist Module supply voltage between 9-16 volts. Ignition in Run/Start.

SET CONDITION

Incorrect ignition status received from the Cluster

POSSIBLE CAUSES

Possible Causes

NO COMMUNICATION WITH CLUSTER
DTCS STORED OR ACTIVE IN THE CLUSTER
ACTIVE COMMUNICATION DTCS IN THE BODY CONTROL MODULE (BCM)
PARK ASSIST MODULE

DIAGNOSTIC TEST

1. **CHECK FOR AN ACTIVE DIAGNOSTIC TROUBLE CODE (DTC)**
    1. Turn the ignition on.
    2. With the scan tool, read Park Assist Module DTCs.

    Does the scan tool display this DTC as active?

    Yes

    - Go To 2

    No

    - The condition that caused this code to set is not present at this time. Check for an intermittent condition by inspecting the related wiring harness for chafed, pierced, pinched, and partially broken wires. Also inspect the related connectors for broken, bent, pushed out, spread, corroded, or contaminated terminals.
    - Perform the BODY VERIFICATION TEST. Refer to **STANDARD PROCEDURE** .
2. **VERIFY CLUSTER IS ACTIVE ON THE CAN BUS**
    1. With the scan tool, select ECU View.
    2. Verify that the Cluster is active on the bus.

    Is the Cluster active on the bus?

    Yes

    - Go To 3

    No

    - Refer to **DIAGNOSIS AND TESTING** and perform the NO RESPONSE FROM CLUSTER/CCN diagnostic procedure.
    - Perform the BODY VERIFICATION TEST. Refer to **STANDARD PROCEDURE** .
3. **DTCS STORED OR ACTIVE IN THE CLUSTER**
    1. Check for active DTCs in the Cluster.

    Are any DTCs active or stored in the Cluster?

Yes

- Refer to **DIAGNOSIS AND TESTING** and perform the appropriate diagnostic procedure.

No

- Go To 4

4. **ACTIVE COMMUNICATION DTCS IN THE BCM**
   1. With the scan tool, select ECU View and select BCM.
   2. With the scan tool, read active DTCs.

   Are any Communication DTCs active in the BCM?

   Yes

   - Refer to the **BODY CONTROL MODULE (BCM) - DIAGNOSTIC CODE INDEX** article and perform the appropriate diagnostic procedure.

   No

   - Replace and program the Park Assist Module in accordance with the Service Information. Refer to **MODULE, PARK ASSIST, REMOVAL** .
   - Perform the BODY VERIFICATION TEST. Refer to **STANDARD PROCEDURE** .

U0452-00-IMPLAUSIBLE DATA RECEIVED FROM RESTRAINTS CONTROL MODULE

For a complete wiring diagram, **refer to appropriate SYSTEM WIRING DIAGRAMS article** .

WHEN MONITORED

With the ignition on for at least five seconds.

Battery voltage between 10 and 16 volts.

Body Control Module (BCM) is configured correctly.

SET CONDITION

Whenever the communication data sent over the CAN BUS from the Occupant Restraint Controller (ORC) is missing part of the message, the message is corrupted, or the message is an irrational value.

POSSIBLE CAUSES

Possible Causes
DTCS RELATED TO BATTERY VOLTAGE, IGNITION, OR VIN MESSAGES

BCM NOT CONFIGURED CORRECTLY
ORC POWER AND GROUND
OCCUPANT RESTRAINT CONTROLLER (ORC)
MODULE THAT SET THIS DTC

DIAGNOSTIC TEST

1. **VERIFY DTC IS ACTIVE**

   NOTE: Make sure the battery voltage is between 10 and 16 volts before proceeding.

   1. With the scan tool, read active DTCs.

      Is this DTC active?

      Yes

      - Go To 2

      No

      - Refer to **DIAGNOSIS AND TESTING** and perform the STORED LOST COMMUNICATION DTCS diagnostic procedure.
2. **CHECK FOR ANY OF THE FOLLOWING ACTIVE DTCS**
   1. With the scan tool, read all active DTCs from all modules.

      NOTE: Check for BCM configuration, CAN Bus hardware electrical, VIN Missing/Mismatch, battery or ignition related DTCs.

      Does the scan tool display any active DTCs to the conditions listed above?

      Yes

      - Refer to the **DTC INDEX** article and perform the appropriate diagnostic procedure.

      No

      - Go To 3
3. **VERIFY THE ORC IS ACTIVE ON THE BUS**
   1. Turn the ignition on.
   2. With the scan tool, verify the ORC is active on the bus.

      Is the ORC active on the bus?

Yes

- Go To 4

No

- Refer to **DIAGNOSIS AND TESTING** and perform the NO RESPONSE FROM ORC diagnostic procedure.

4. **CHECK FOR ADDITIONAL COMMUNICATION RELATED DTCS**
   1. With the scan tool, read all the DTCs.

   Is there more than one module with active DTCs "Logged Against" the ORC?

   Yes

   - Replace/update the ORC in accordance with the Service Information. Refer to **MODULE, OCCUPANT RESTRAINT CONTROLLER, REMOVAL** .
   - Perform the RESTRAINTS SYSTEM VERIFICATION TEST. Refer to **STANDARD PROCEDURE** .

   No

   - Go To 5

5. **CLEAR DTC IN MODULE SETTING FAULT**
   1. With the scan tool, select the module setting the DTC against the ORC.
   2. Clear active DTCs.

   Is this DTC still active?

   Yes

   - Replace/update the module that set this DTC in accordance with the Service Information.
   - Perform the appropriate verification test for the module being replaced. If there is no verification test for the associated module, perform the BODY VERIFICATION TEST. Refer to **STANDARD PROCEDURE** .

   No

   - The condition is not present at this time. Using the wiring diagrams as a guide, check all related splices and connectors for signs of water intrusion, corrosion, pushed out or bent terminals, and correct pin tension.
   - Perform the appropriate verification test for the module. If there is no verification test for the associated module perform the BODY VERIFICATION TEST. Refer to **STANDARD PROCEDURE** .

2014 ACCESSORIES AND EQUIPMENT

Passenger Door Module (PDM) (DMFL/R) - Electrical Diagnostics - Cherokee

DIAGNOSTIC CODE INDEX

DIAGNOSTIC CODE INDEX

DTC	Description
B173D-11	MIRROR SIGNAL LAMP CONTROL - CIRCUIT SHORT TO GROUND
B173D-12	MIRROR SIGNAL LAMP CONTROL - CIRCUIT SHORT TO BATTERY
B173D-13	MIRROR SIGNAL LAMP CONTROL - CIRCUIT OPEN
B18BA-11	WINDOW CONTROL - CIRCUIT SHORT TO GROUND
B18BA-12	WINDOW CONTROL - CIRCUIT SHORT TO BATTERY
B18BA-13	WINDOW CONTROL - CIRCUIT OPEN
B18BA-4B	WINDOW CONTROL-OVER TEMPERATURE
B1DD0-11	MIRROR HEATER CONTROL - CIRCUIT SHORT TO GROUND
B1DD0-15	MIRROR HEATER CONTROL - CIRCUIT SHORT TO BATTERY OR OPEN
B1F02-11	MIRROR VERTICAL MOTOR CONTROL - CIRCUIT SHORT TO GROUND
B1F02-12	MIRROR VERTICAL MOTOR CONTROL - CIRCUIT SHORT TO BATTERY
B1F02-13	MIRROR VERTICAL MOTOR CONTROL - CIRCUIT OPEN
B1F03-11	MIRROR HORIZONTAL MOTOR CONTROL - CIRCUIT SHORT TO GROUND
B1F03-12	MIRROR HORIZONTAL MOTOR CONTROL - CIRCUIT SHORT TO BATTERY
B1F03-13	MIRROR HORIZONTAL MOTOR CONTROL - CIRCUIT OPEN
B1F04-11	MIRROR FOLD CONTROL - CIRCUIT SHORT TO GROUND
B1F04-15	MIRROR FOLD CONTROL - CIRCUIT SHORT TO BATTERY OR OPEN
B1F06-12	MIRROR CONTROL SENSOR POSITION CIRCUIT - CIRCUIT SHORT TO BATTERY
B1F06-14	MIRROR CONTROL SENSOR POSITION CIRCUIT - CIRCUIT SHORT TO GROUND OR OPEN
B210C-16	BATTERY VOLTAGE INPUT - CIRCUIT VOLTAGE BELOW THRESHOLD
B210C-17	BATTERY VOLTAGE INPUT - CIRCUIT VOLTAGE ABOVE THRESHOLD
B21DD-84	SYSTEM VOLTAGE - SIGNAL BELOW ALLOWABLE RANGE
B21DD-85	SYSTEM VOLTAGE - SIGNAL ABOVE ALLOWABLE RANGE

B224F-54	DOOR MODULE INTERNAL - MISSING CALIBRATION
B224F-96	DOOR MODULE INTERNAL - COMPONENT INTERNAL FAILURE
B25AF-2A	DOOR LOCK/UNLOCK SWITCH - STUCK
B25B0-31	WINDOW POSITION SENSOR - NO SIGNAL
B25B1-11	WINDOW POSITION SENSOR POWER SUPPLY - CIRCUIT SHORT TO GROUND
B285F-11	BLIND SPOT WARNING LIGHT CONTROL - CIRCUIT SHORT TO GROUND
B285F-15	BLIND SPOT WARNING LIGHT CONTROL - CIRCUIT SHORT TO BATTERY OR OPEN
B2860-11	DOOR AMBIENT LIGHT CONTROL - CIRCUIT SHORT TO GROUND
B2860-15	DOOR AMBIENT LIGHT CONTROL-CIRCUIT SHORT TO BATTERY OR OPEN
B2861-11	MIRROR APPROACH LIGHT CONTROL - CIRCUIT SHORT TO GROUND
B2861-15	MIRROR APPROACH LIGHT CONTROL - CIRCUIT SHORT TO BATTERY OR OPEN
U0010-00	CAN INTERIOR BUS
U0011-00	CAN INTERIOR BUS OFF PERFORMANCE
U0140-00	LOST COMMUNICATION WITH BODY CONTROL MODULE
U0164-00	LOST COMMUNICATION WITH HVAC CONTROL MODULE
U0199-00	LOST COMMUNICATION WITH DRIVER DOOR MODULE
U0209-00	LOST COMMUNICATION WITH MEMORY SEAT CONTROL MODULE
U0422-00	IMPLAUSIBLE DATA RECEIVED FROM BODY CONTROL MODULE
U050A-00	IMPLAUSIBLE DATA RECEIVED FROM MEMORY SEAT CONTROL MODULE
U11FA-00	LOST COMMUNICATION WITH RIGHT BLIND SPOT SENSOR
U11FB-00	LOST COMMUNICATION WITH LEFT BLIND SPOT SENSOR
U147D-00	IMPLAUSIBLE DATA RECEIVED FROM RIGHT BLIND SPOT SENSOR
U147E-00	IMPLAUSIBLE DATA RECEIVED FROM LEFT BLIND SPOT SENSOR

DIAGNOSIS AND TESTING

B173D-11-MIRROR SIGNAL LAMP CONTROL - CIRCUIT SHORT TO GROUND

For a complete wiring diagram, **refer to appropriate SYSTEM WIRING DIAGRAMS article** .

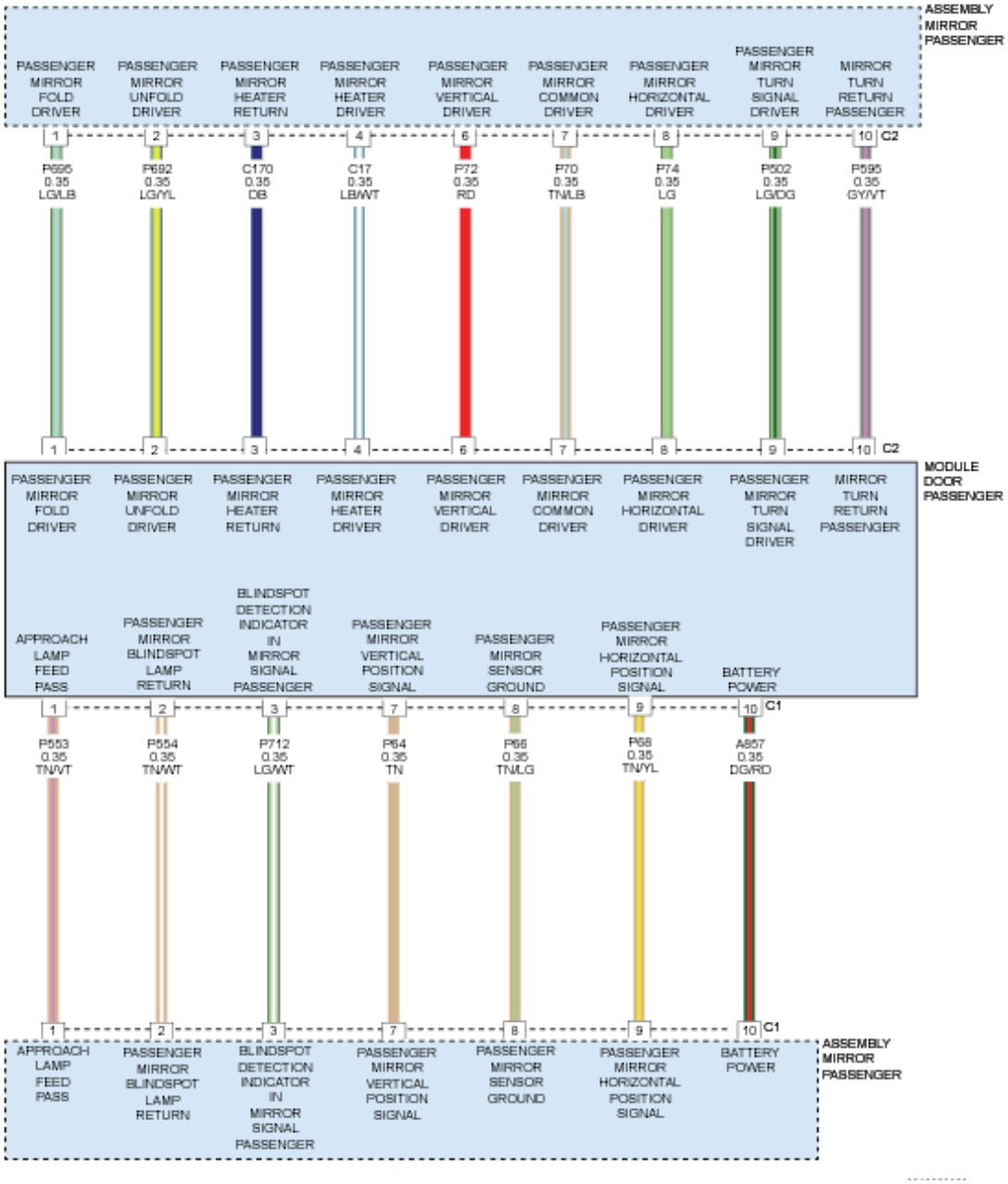

Fig. 1: Passenger Mirror Assembly - Circuit Diagram
Courtesy of CHRYSLER GROUP, LLC

WHEN MONITORED

Continuously.

SET CONDITION

The Door Module senses a short low on the Mirror Turn Signal Driver circuit for more than two seconds with the turn signal switched on.

POSSIBLE CAUSES

Possible Causes
OUTSIDE REARVIEW MIRROR DOOR MODULE

DIAGNOSTIC TEST

1. **TEST FOR INTERMITTENT CONDITION**
    1. Cycle the ignition on.
    2. With the scan tool, record and erase the DTCs.
    3. Turn the passenger side turn signal on.
    4. Turn the park lamps on.
    5. Turn the rear defogger on, if equipped with heated mirror.
    6. Press and release the Mirror Select switch to select the Passenger Outside Rearview Mirror.
    7. Operate the Mirror Adjust switch in all directions several times while monitoring the scan tool for DTCs.

    NOTE: After adjusting the mirror in one direction wait at least two seconds before adjusting the mirror in the opposite direction, as this will allow time for an active fault to set if present.

    8. With the scan tool, read the DTCs.

    Does the scan tool display: B173D-11-MIRROR SIGNAL LAMP CONTROL - CIRCUIT SHORT TO GROUND?

    Yes

    - Go To 2

    No

    - Test complete, the condition or conditions that originally set this DTC are not present at this time. For vehicle's equipped with folding outside rearview mirrors, repeat the above test with the mirror folded. If this DTC is now active, Go To 2. Otherwise, using the wiring diagrams as a guide, check all related splices and connectors for signs of water intrusion, corrosion, pushed out or bent terminals, and correct pin tension.
    - Perform the BODY VERIFICATION TEST. Refer to **STANDARD PROCEDURE** .

2. **INSPECT MIRROR CONNECTIONS**
    1. Cycle the ignition off.
    2. Disconnect the Passenger Outside Rearview Mirror C1 and C2 connectors at the Passengers Door Module.

3. Inspect the wiring harness, connectors and the Passengers Door Module.

   Were there any problems found?

   Yes

   - Repair as necessary.
   - Perform the BODY VERIFICATION TEST. Refer to **STANDARD PROCEDURE** .

   No

   - Go To 3

3. **MIRROR OR MODULE**
   1. Cycle the ignition on.
   2. With the scan tool, record and erase DTCs.
   3. Turn the passengers side turn signal on.
   4. Operate the Fold and Unfold switch several time, if equipped with folding mirrors.
   5. Turn the rear defogger on, if equipped with heated mirror.
   6. Turn the park lamps on.
   7. Press and release the Mirror Select switch to select the Passenger Outside Rearview Mirror.
   8. Operate the Mirror Adjust switch in all directions several times while monitoring the scan tool for DTCs.

      NOTE: After adjusting the mirror in one direction wait at least two seconds before adjusting the mirror in the opposite direction, as this will allow time for an active fault to set if present.

   9. With the scan tool, read DTCs.

      NOTE: Check for a change in DTCs.

      Does the scan tool display: B173D-13-MIRROR SIGNAL LAMP CONTROL - CIRCUIT OPEN as active?

      Yes

      - With the circuit now OPEN that indicates the short is NOT in the Module. Replace the mirror in accordance with the Service Information. Refer to **MIRROR, OUTSIDE REARVIEW, REMOVAL** and **MIRROR, OUTSIDE REARVIEW, GLASS, REMOVAL** .
      - Perform the BODY VERIFICATION TEST. Refer to **STANDARD PROCEDURE** .

      No

- Replace the Door Module in accordance with the Service Information. Refer to **MODULE, DOOR, REMOVAL** .
- Perform the BODY VERIFICATION TEST. Refer to **STANDARD PROCEDURE** .

B173D-12-MIRROR SIGNAL LAMP CONTROL - CIRCUIT SHORT TO BATTERY

For a complete wiring diagram, **refer to appropriate SYSTEM WIRING DIAGRAMS article** .

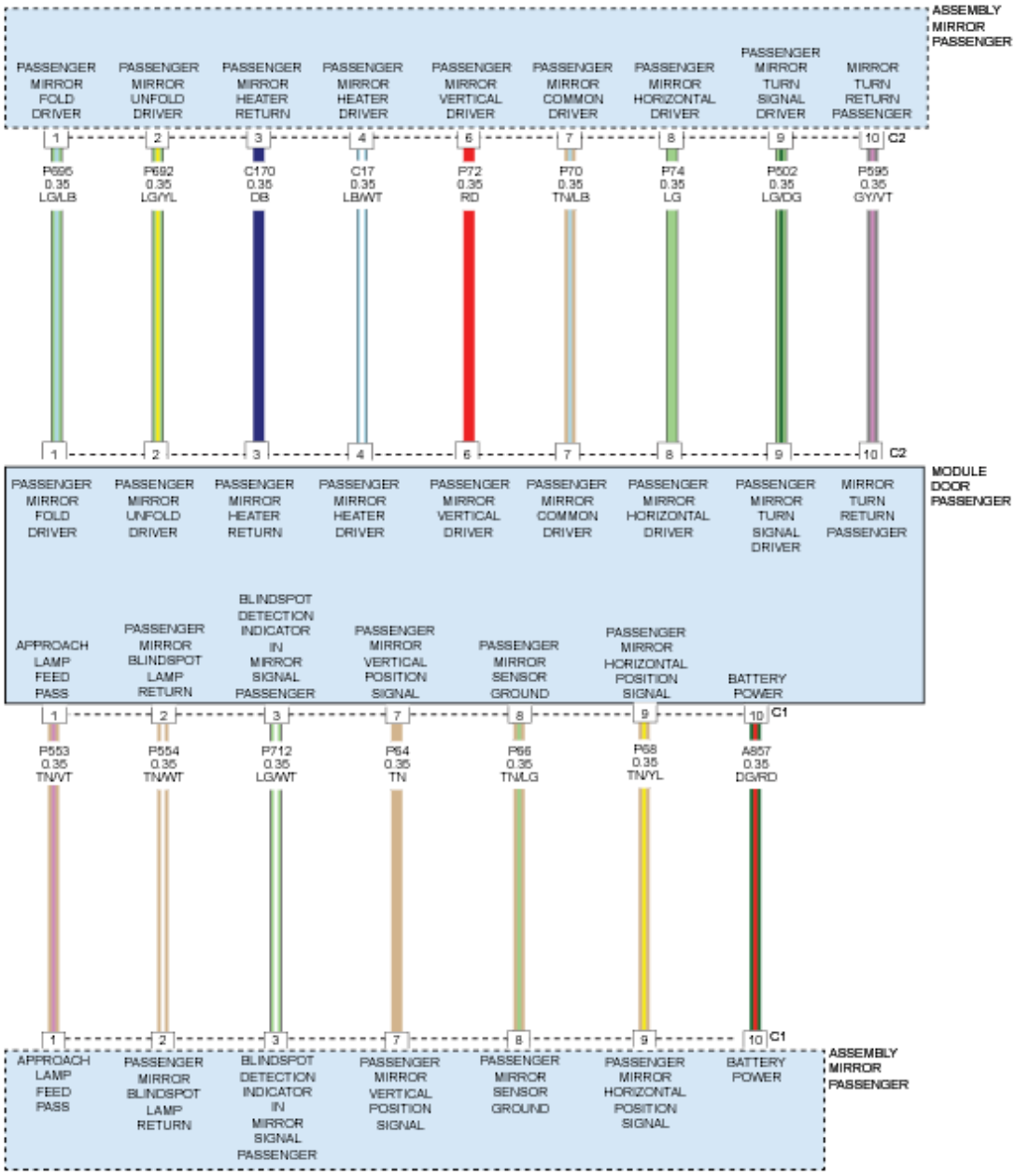

Fig. 2: Passenger Mirror Assembly - Circuit Diagram
Courtesy of CHRYSLER GROUP, LLC

WHEN MONITORED

Continuously.

SET CONDITION

The Door Module senses a short high on the Mirror Turn Signal Driver circuit for more than two seconds with the turn signal switched on.

POSSIBLE CAUSES

Possible Causes
MIRROR TURN SIGNAL DRIVER CIRCUIT FOR A SHORT TO ANY SIGNAL OR DRIVER CIRCUIT
OUTSIDE REARVIEW MIRROR
DOOR MODULE

DIAGNOSTIC TEST

1. **TEST FOR INTERMITTENT CONDITION**

NOTE: Check the turn signals to be sure they are flashing properly before proceeding.

1. Cycle the ignition on.
2. With the scan tool, record and erase DTCs.
3. Turn the passenger side turn signal on.
4. Turn the park lamps on.
5. Turn the rear defogger on, if equipped with heated mirror.
6. Press and release the Mirror Select switch to select the Passenger Outside Rearview Mirror.
7. Operate the Mirror Adjust switch in all directions several times while monitoring the scan tool for DTCs.

NOTE: After adjusting the mirror in one direction wait at least two seconds before adjusting the mirror in the opposite direction, as this will allow time for an active fault to set if present.

8. With the scan tool, read the active DTCs.

   Does the scan tool display: B173D-12-MIRROR SIGNAL LAMP CONTROL - CIRCUIT SHORT TO BATTERY as active?

   Yes

- Go To2

No

- Test complete, the condition or conditions that originally set this DTC are not present at this time. For vehicle's equipped with folding outside rearview mirrors, repeat the above test with the mirror folded. If this DTC is now active, Go To 2. For others, using the wiring diagrams as a guide, check all related splices and connectors for signs of water intrusion, corrosion, pushed out or bent terminals, and correct pin tension.
- Perform the BODY VERIFICATION TEST. Refer to **STANDARD PROCEDURE** .

2. **CHECK (P502) PASSENGER MIRROR TURN SIGNAL DRIVER CIRCUIT FOR A SHORT TO ANY SIGNAL OR DRIVER CIRCUIT**

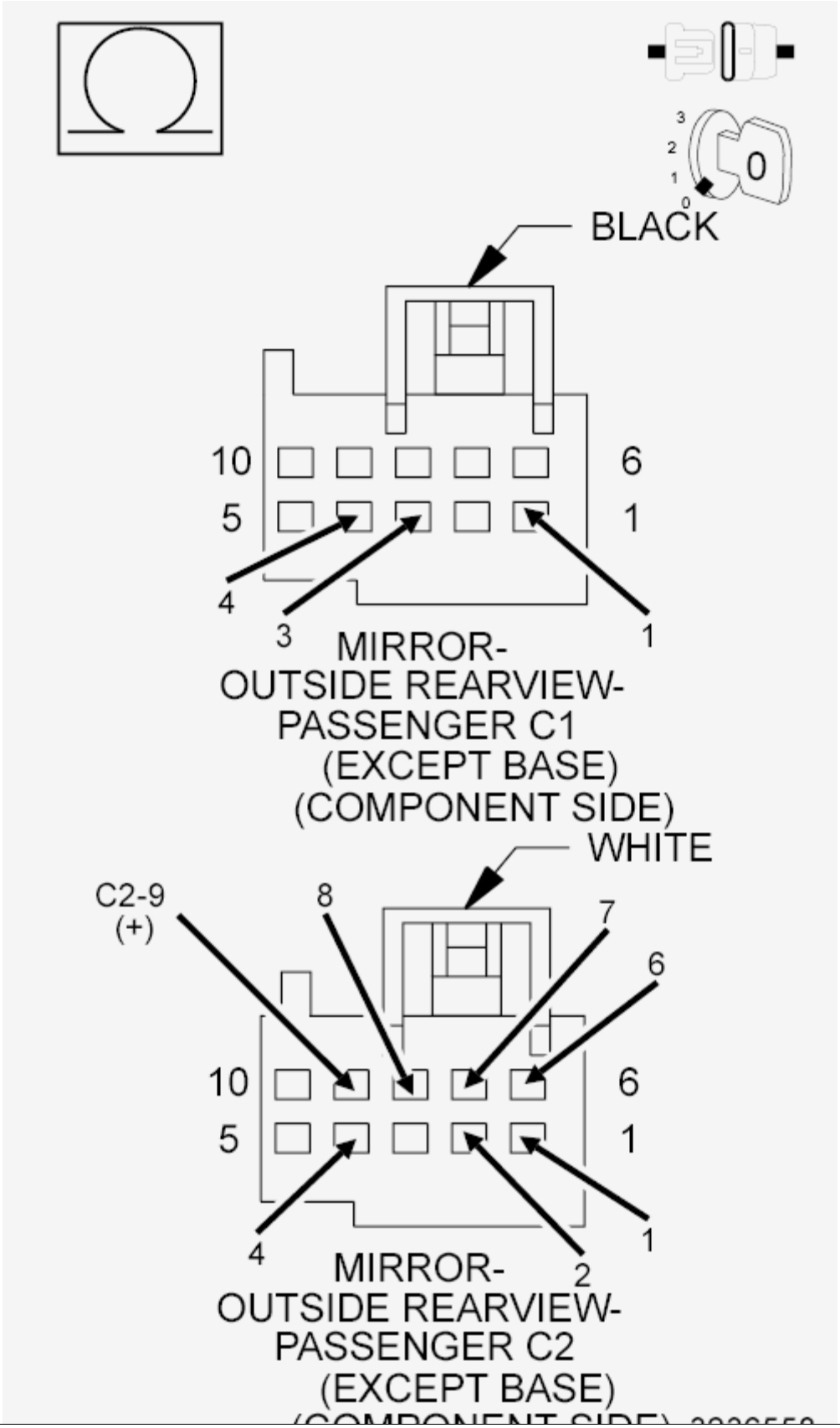
3
2
1
0
0
BLACK
10
6
5
1
4
3
1
MIRROR-
OUTSIDE REARVIEW-
PASSENGER C1
(EXCEPT BASE)
(COMPONENT SIDE)
WHITE
C2-9
(+)
8
7
6
10
6
5
1
4
2
1
MIRROR-
OUTSIDE REARVIEW-
PASSENGER C2
(EXCEPT BASE)

Fig. 3: Checking Passenger Mirror Turn Signal Driver Circuit For Short To Any Signal Or Driver Circuit
Courtesy of CHRYSLER GROUP, LLC

1. Cycle the ignition off.
2. Turn all accessories off.
3. Disconnect the Passenger Outside Rearview Mirror C1 (Component Side) and C2 (Component Side) harness connectors from the Door Module.
4. Measure the resistance between the (P502) Passenger Mirror Turn Signal Driver circuit (C2-9) and each designated Signal or Driver circuit in the Passenger Outside Rearview Mirror C1 and C2 (Component Side) harness connectors.

   Is the resistance below 10K Ohms for any measurement?

   Yes

   - Repair the (P502) Passenger Mirror Turn Signal Driver circuit for a short to a Signal or Driver circuit. If the wiring harness and harness connectors are okay, replace the Passenger Outside Rearview Mirror in accordance with the Service Information. Refer to **MIRROR, OUTSIDE REARVIEW, REMOVAL** and **MIRROR, OUTSIDE REARVIEW, GLASS, REMOVAL** .
   - Perform the BODY VERIFICATION TEST. Refer to **STANDARD PROCEDURE** .

   No

   - Inspect the wiring harness and harness connectors for damage and repair as necessary. If the wiring harness and harness connectors are okay, replace the Door Module in accordance with the Service Information. Refer to **MODULE, DOOR, REMOVAL** .
   - Perform the BODY VERIFICATION TEST. Refer to **STANDARD PROCEDURE** .

B173D-13-MIRROR SIGNAL LAMP CONTROL - CIRCUIT OPEN

For a complete wiring diagram, **refer to appropriate SYSTEM WIRING DIAGRAMS article** .

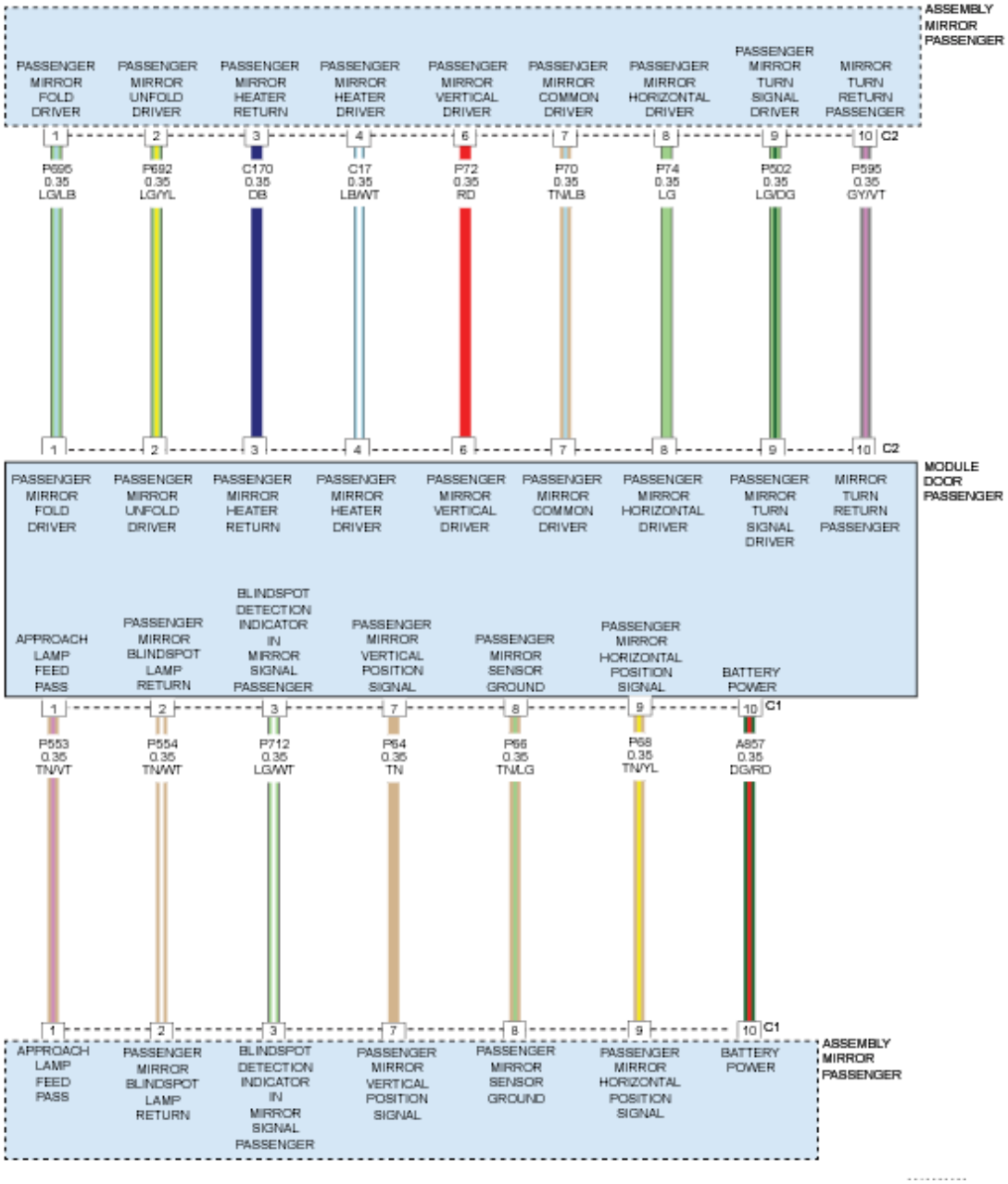

Fig. 4: Passenger Mirror Assembly - Circuit Diagram
Courtesy of CHRYSLER GROUP, LLC

WHEN MONITORED

Continuously.

SET CONDITION

The Door Module senses an open between the Mirror Turn Signal Driver circuit and the Mirror Turn Signal Return circuit for more than two seconds with the turn signal switched on.

POSSIBLE CAUSES

Possible Causes
MIRROR TURN SIGNAL DRIVER CIRCUIT OPEN TO THE MIRROR TURN SIGNAL LAMP RETURN CIRCUIT
OUTSIDE REARVIEW MIRROR
DOOR MODULE

DIAGNOSTIC TEST

1. **TEST FOR INTERMITTENT CONDITION**
    1. Cycle the ignition on.
    2. With the scan tool, record and erase DTCs.
    3. Turn the passenger side turn signal on.
    4. Press and release the Mirror Select switch to select the Passenger Outside Rearview Mirror.
    5. With the scan tool, read the active DTCs.

    Does the scan tool display: B173D-13-MIRROR SIGNAL LAMP CONTROL - CIRCUIT OPEN?

    Yes

    - Go To 2

    No

    - Test complete, the condition or conditions that originally set this DTC are not present at this time. Using the wiring diagrams as a guide, check all related splices and connectors for signs of water intrusion, corrosion, pushed out or bent terminals, and correct pin tension.
    - Perform the BODY VERIFICATION TEST. Refer to **STANDARD PROCEDURE** .
2. **CHECK (P502) PASSENGER MIRROR TURN SIGNAL DRIVER CIRCUIT FOR AN OPEN TO THE (P595) PASSENGER MIRROR TURN SIGNAL RETURN CIRCUIT**

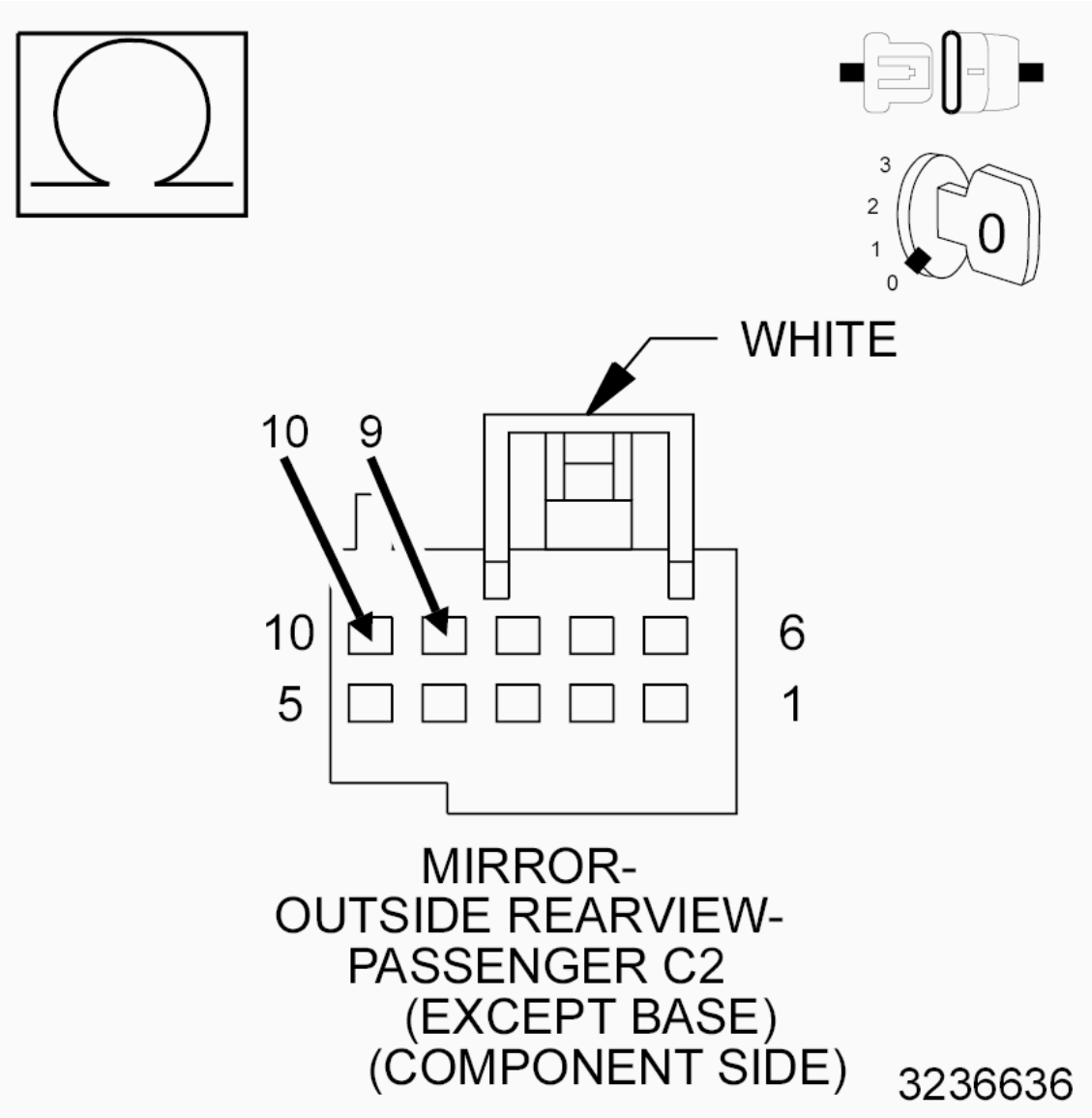

Fig. 5: Checking Passenger Mirror Turn Signal Driver Circuit For Open To Passenger Mirror Turn Signal Return Circuit
Courtesy of CHRYSLER GROUP, LLC

1. Measure the resistance between the (P502) Passenger Mirror Turn Signal Driver circuit and the (P595) Passenger Mirror Turn Signal Return circuit in the Passenger Outside Rearview Mirror C2 (Component Side) harness connector.

   Is the resistance below 30.0 Ohms?

   Yes

   - Replace the Door Module in accordance with the Service Information. Refer to **MODULE, DOOR, REMOVAL** .

- Perform the BODY VERIFICATION TEST. Refer to **STANDARD PROCEDURE** .

No

- Repair the open in the (P502) Passenger Mirror Turn Signal Driver circuit. If the wiring harness and harness connectors are okay, replace the Passenger Outside Rearview Mirror in accordance with the Service Information. Refer to **MIRROR, OUTSIDE REARVIEW, REMOVAL** and **MIRROR, OUTSIDE REARVIEW, GLASS, REMOVAL** .
- Perform the BODY VERIFICATION TEST. Refer to **STANDARD PROCEDURE** .

B18BA-11-WINDOW CONTROL - CIRCUIT SHORT TO GROUND

For a complete wiring diagram, **refer to appropriate SYSTEM WIRING DIAGRAMS article** .

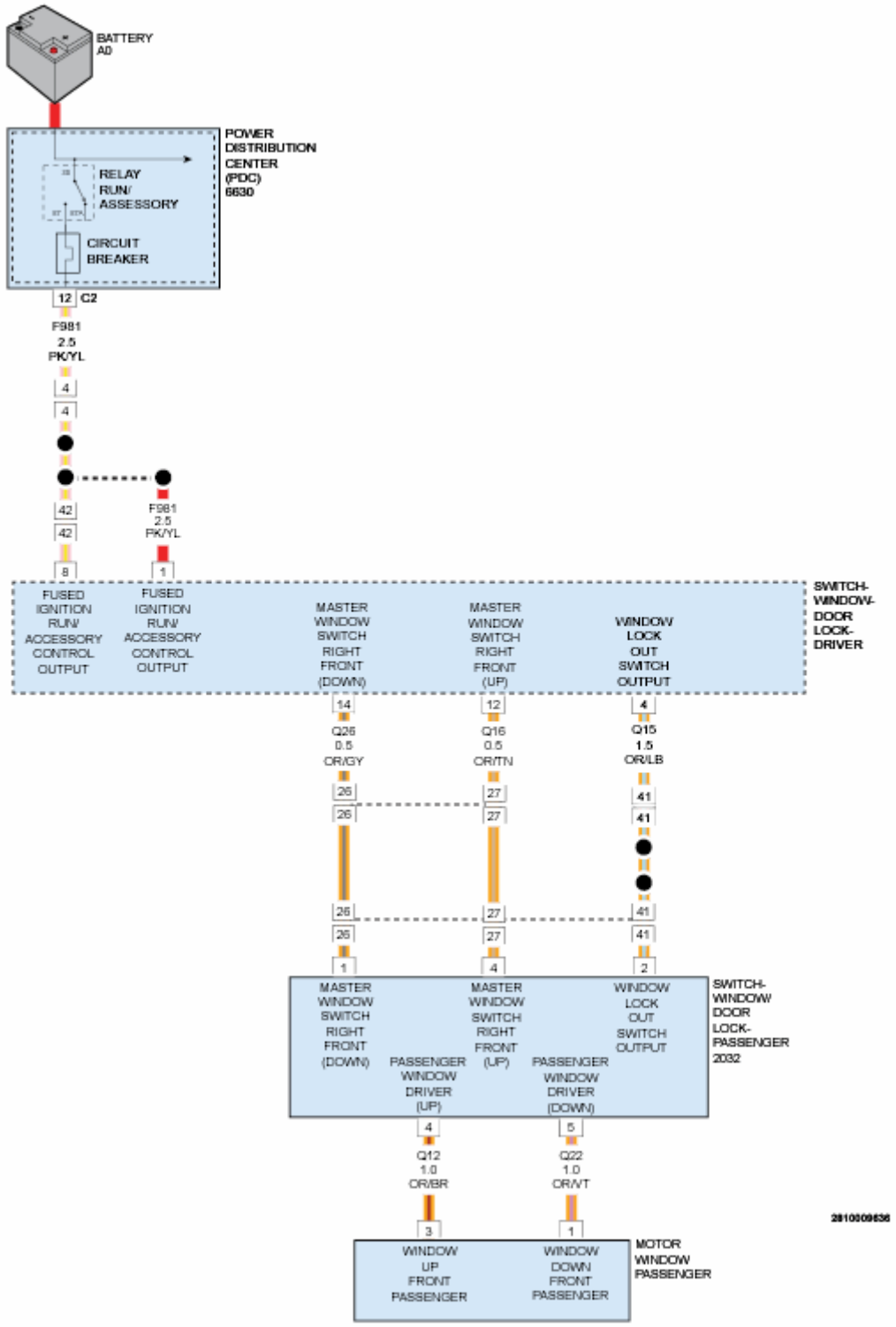

Fig. 6: Window Motor - Circuit Diagram
Courtesy of CHRYSLER GROUP, LLC

WHEN MONITORED

Whenever the module is awake.

SET CONDITION

When both Window Driver circuits (Up and Down) are grounded during a window movement command, this code will set.

POSSIBLE CAUSES

Possible Causes
WINDOW DRIVER DOWN CIRCUIT SHORTED TO GROUND
WINDOW DRIVER UP CIRCUIT SHORTED TO GROUND
WINDOW DRIVER DOWN CIRCUIT SHORTED TO THE WINDOW DRIVER UP CIRCUIT
WINDOW MOTOR
DOOR MODULE

DIAGNOSTIC TEST

1. **TEST FOR INTERMITTENT CONDITION**
    1. Cycle the ignition on.
    2. With the scan tool, record and erase DTCs.
    3. Try to operate the Passenger Window up and down several times.
    4. Wait 30 seconds.
    5. With the scan tool, read DTCs.

    Does the scan tool display; B18BA-11-WINDOW CONTROL - CIRCUIT SHORT TO GROUND?

    Yes

    - Go To 2

    No

    - Test complete, the condition or conditions that originally set this DTC are not present at this time. Using the wiring diagrams as a guide, check all related splices and connectors for signs of water intrusion, corrosion, pushed out or bent terminals and correct pin tension.
    - Perform the BODY VERIFICATION TEST. Refer to **STANDARD PROCEDURE** .
2. **WINDOW MOTOR SHORTED**

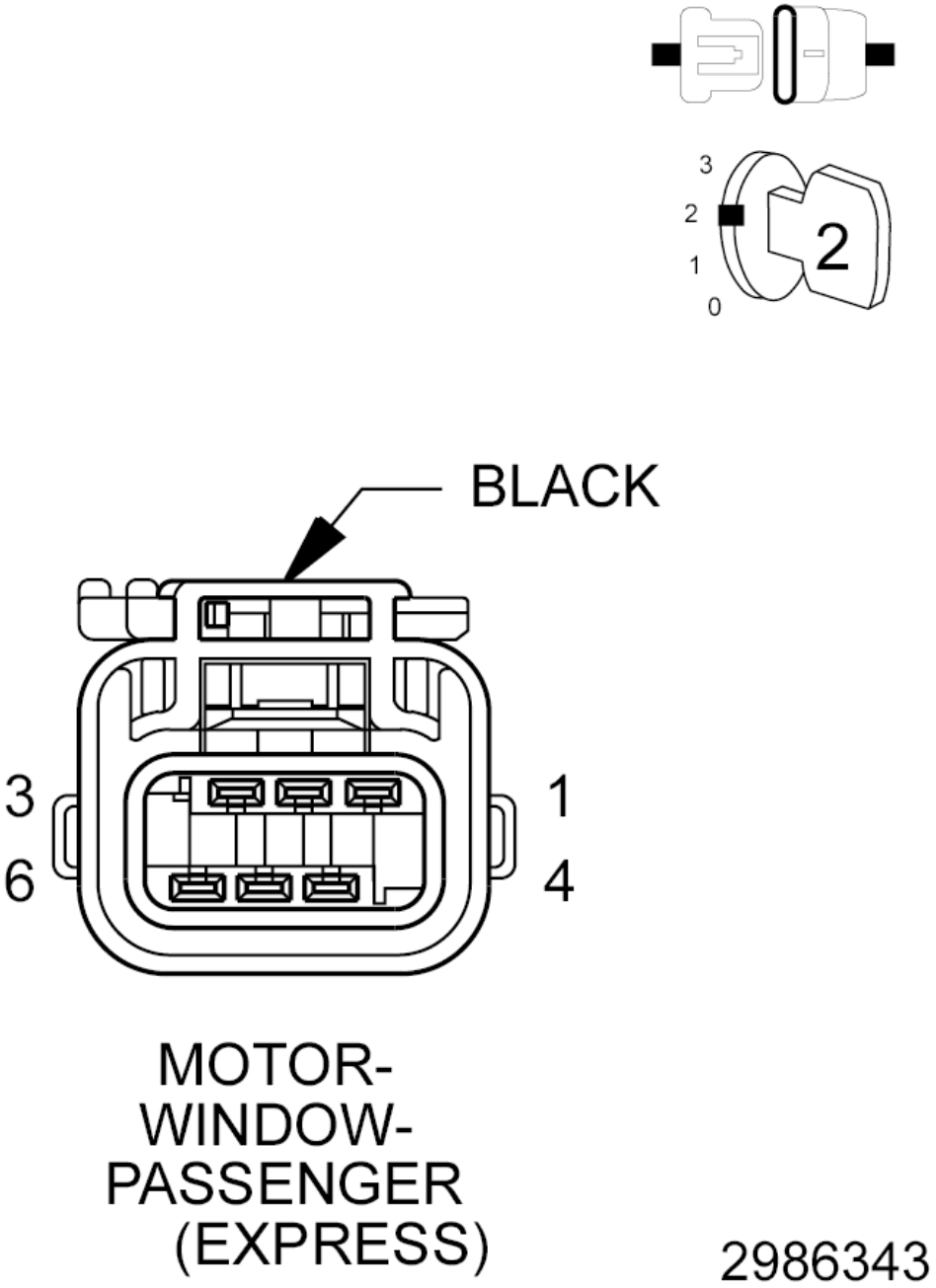

Fig. 7: View Of Passenger Window Motor Connector
Courtesy of CHRYSLER GROUP, LLC

1. With the scan tool, erase the DTCs.
2. Cycle the ignition off.
3. Disconnect the Passenger Window Motor connector.
4. Cycle the ignition on.
5. Operate the passenger window switch up and down several times.

6. Wait 30 seconds.
7. With the scan tool, read the active DTCs.

   Does the scan tool display; B18BA-11-WINDOW CONTROL - CIRCUIT SHORT TO GROUND?

   Yes

   - Go To 3

   No

   - Replace the Window Motor in accordance with the Service Information. Refer to **MOTOR, WINDOW REGULATOR, REMOVAL** .
   - Perform the BODY VERIFICATION TEST. Refer to **STANDARD PROCEDURE** .

3. **(Q22) PASSENGER WINDOW DRIVER DOWN CIRCUIT SHORTED TO GROUND**

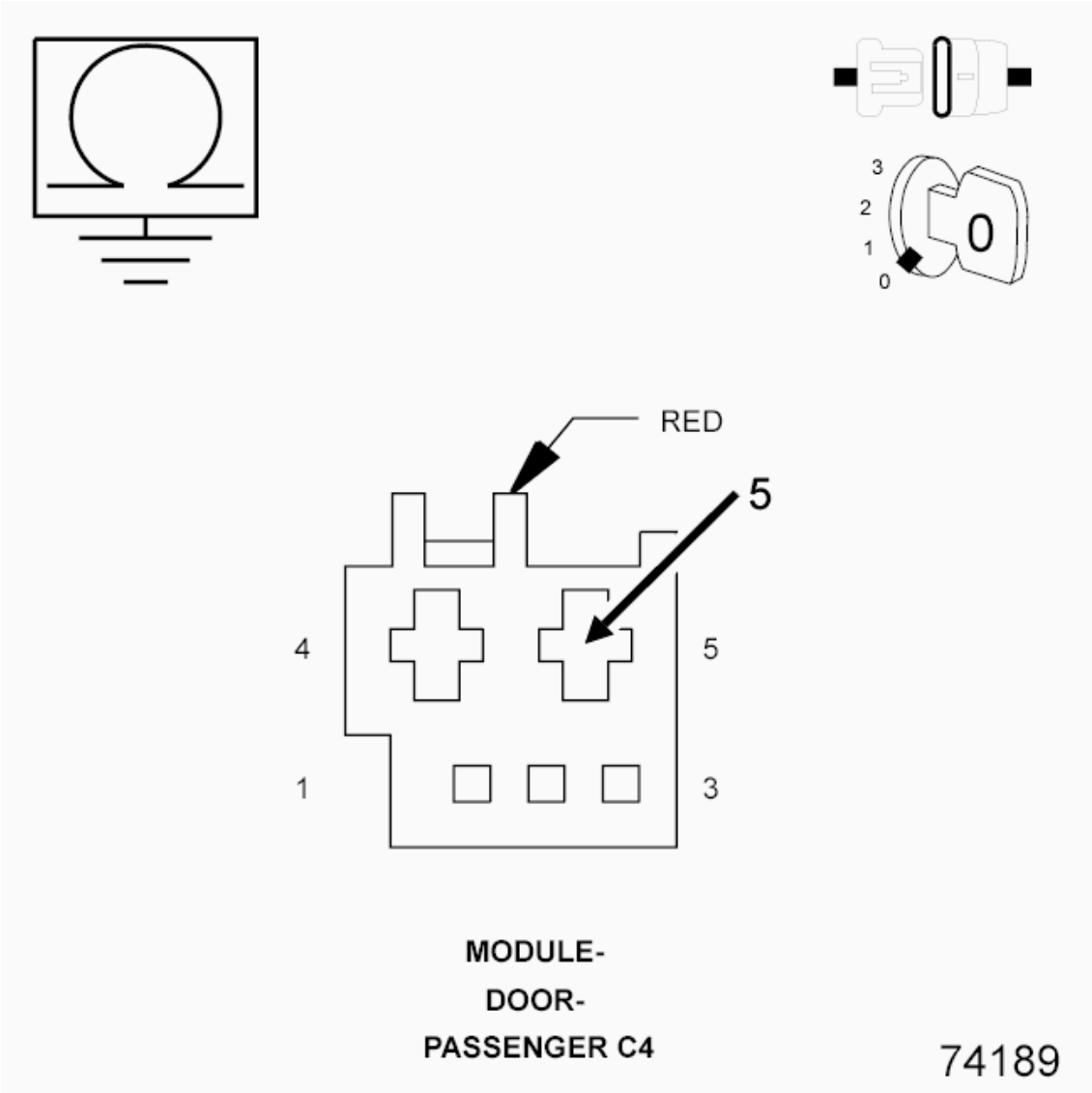

Fig. 8: Checking Passenger Window Driver (Down) Circuit For Short To Ground
Courtesy of CHRYSLER GROUP, LLC

1. Cycle the ignition off.
2. Disconnect the Passenger Door Module C4 harness connector.
3. Measure the resistance between Ground and the (Q22) Passenger Window Driver Down circuit.

   Is the resistance below 10k Ohms?

   Yes

   - Repair the short to ground in the (Q22) Passenger Window Driver Down circuit.
   - Perform the BODY VERIFICATION TEST. Refer to **STANDARD PROCEDURE** .

No

- Go To 4

4. **(Q12) PASSENGER WINDOW DRIVER UP CIRCUIT SHORTED TO GROUND**

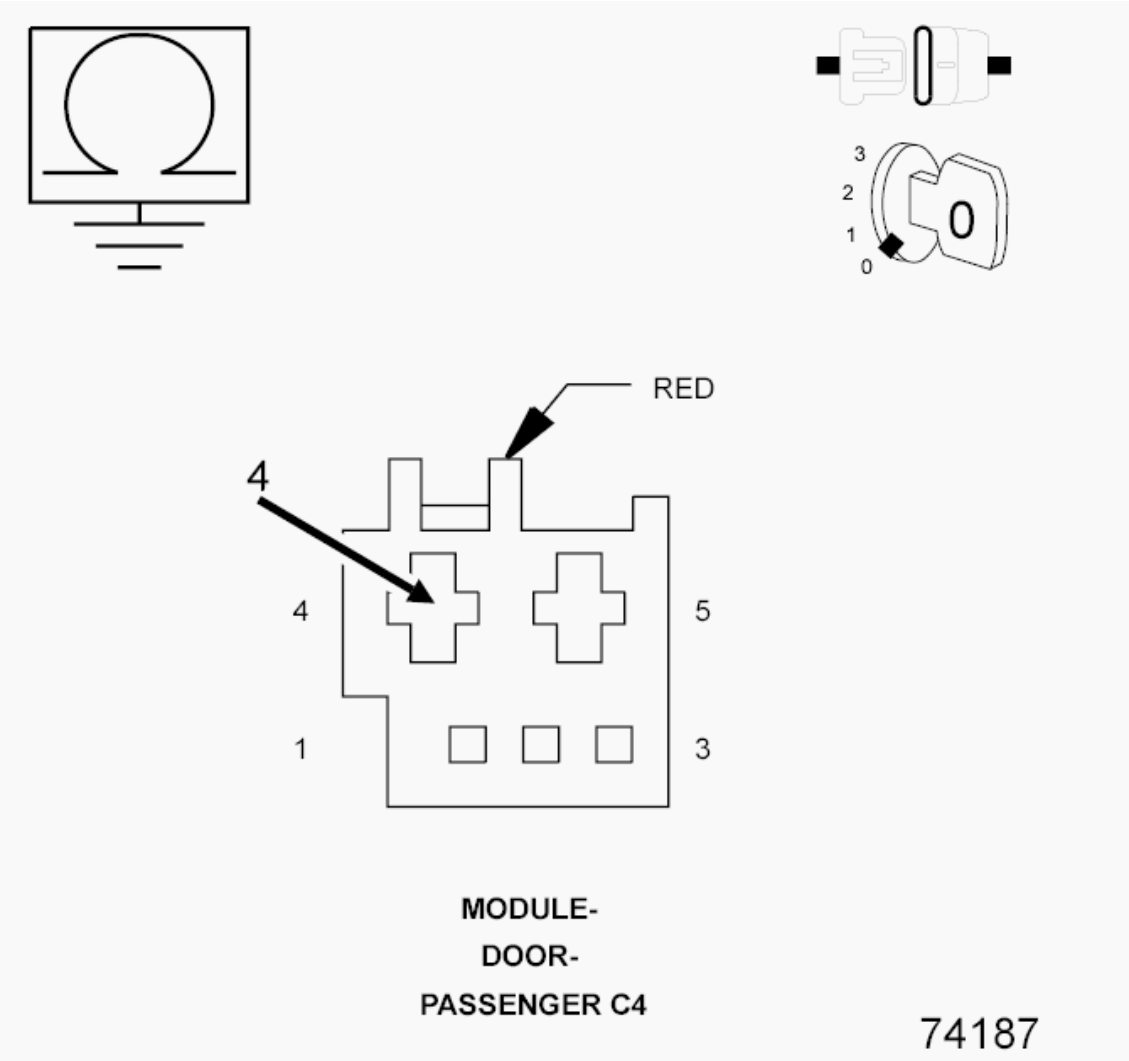

Fig. 9: Checking Passenger Window Driver (Up) Circuit For Short To Ground
Courtesy of CHRYSLER GROUP, LLC

1. Measure the resistance between Ground and the (Q12) Passenger Window Driver Up circuit.

   Is the resistance below 10k Ohms?

   Yes

   - Repair the short to ground in the (Q12) Passenger Window Driver Up circuit.
   - Perform the BODY VERIFICATION TEST. Refer to **STANDARD PROCEDURE** .

No

- Go To 5

5. **(Q22) PASSENGER WINDOW DRIVER DOWN CIRCUIT SHORTED TO (Q12) PASSENGER WINDOW DRIVER UP CIRCUIT**

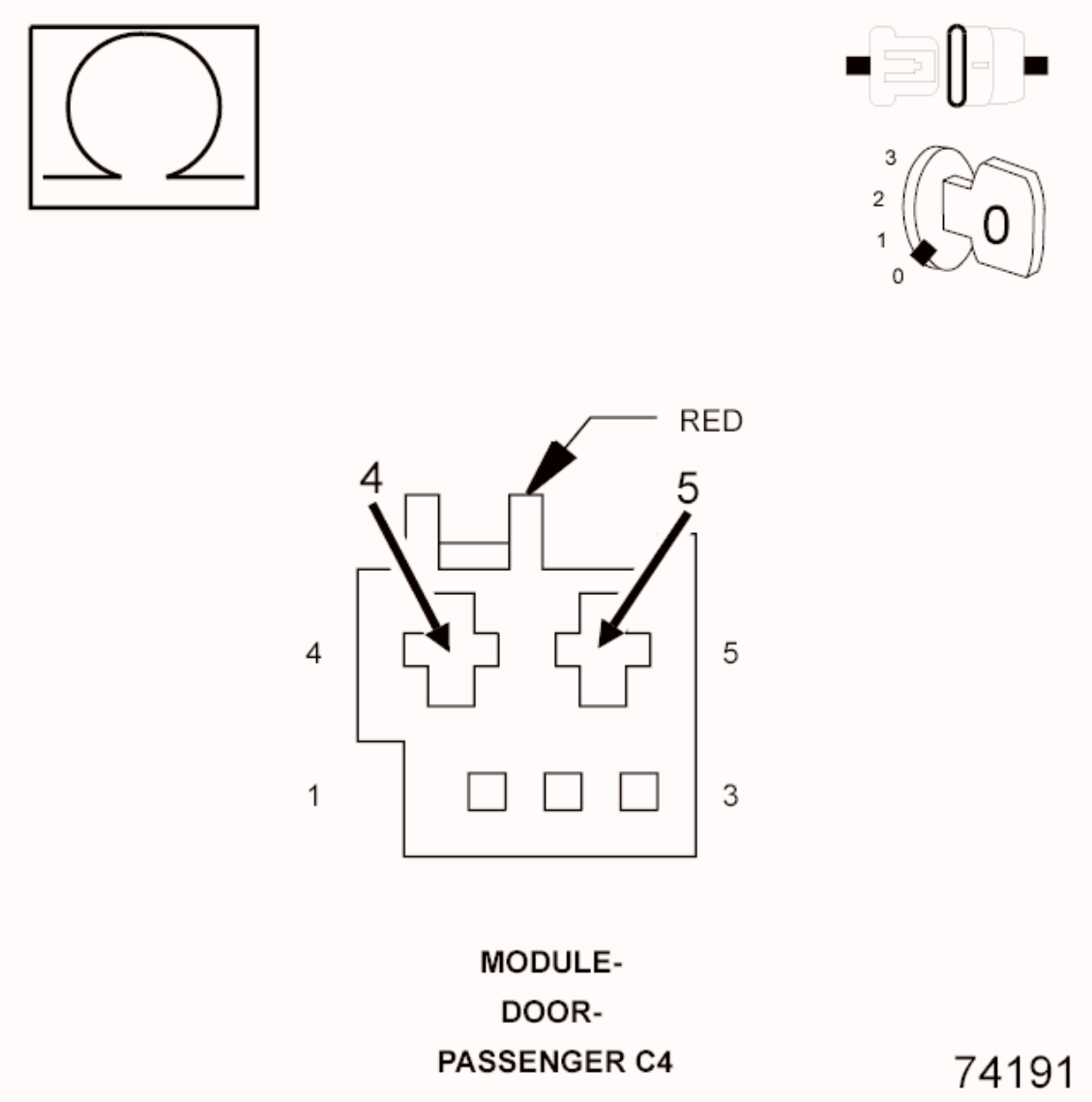

Fig. 10: Checking Passenger Window Driver Down Circuit For Short To Passenger Window Driver Up Circuit
Courtesy of CHRYSLER GROUP, LLC

1. Measure the resistance between the (Q22) Passenger Window Driver Down circuit and the (Q12) Passenger Window Driver Up circuit.

   Is the resistance below 10k Ohms?

Yes

- Repair the short between the (Q22) Passenger Window Driver Down circuit and the (Q12) Passenger Window Driver Up circuit.
- Perform the BODY VERIFICATION TEST. Refer to **STANDARD PROCEDURE** .

No

- Replace the Passenger Door Module in accordance with the Service Information. Refer to **MODULE, DOOR, REMOVAL** .
- Perform the BODY VERIFICATION TEST. Refer to **STANDARD PROCEDURE** .

B18BA-12-WINDOW CONTROL - CIRCUIT SHORT TO BATTERY

For a complete wiring diagram, **refer to appropriate SYSTEM WIRING DIAGRAMS article** .

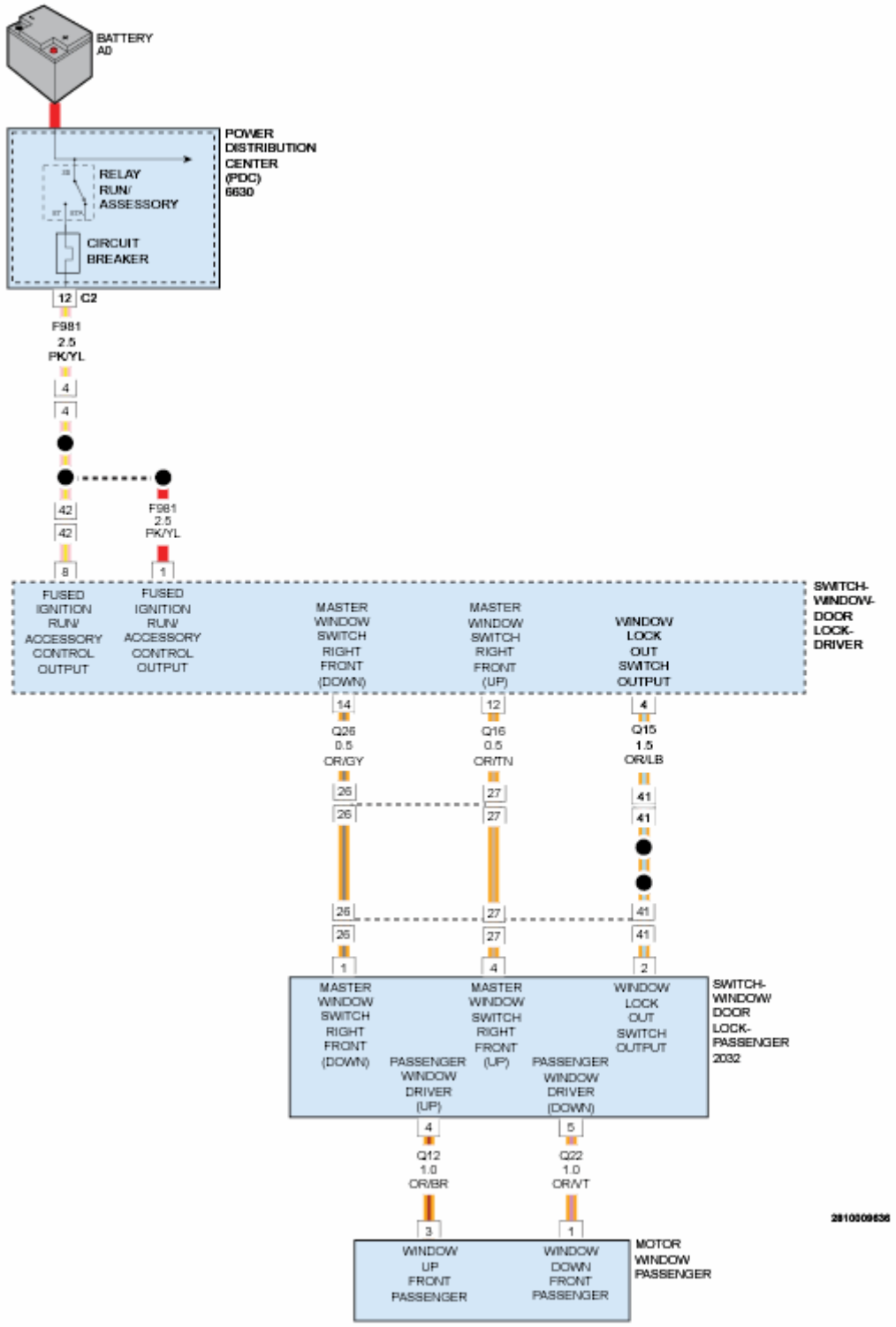

Fig. 11: Window Motor - Circuit Diagram
Courtesy of CHRYSLER GROUP, LLC

WHEN MONITORED

Whenever the module is awake.

SET CONDITION

When both Window Driver circuits (Up and Down) are supplied with voltage during a window movement command for more than five ms., this code will set.

POSSIBLE CAUSES

Possible Causes
WINDOW DRIVER DOWN CIRCUIT SHORTED TO VOLTAGE
WINDOW DRIVER UP CIRCUIT SHORTED TO VOLTAGE
WINDOW MOTOR
DOOR MODULE

DIAGNOSTIC TEST

1. **TEST FOR INTERMITTENT CONDITION**
    1. Cycle the ignition on.
    2. With the scan tool, record and erase the DTCs.
    3. Try to operate the Passenger Window up and down several times.
    4. Wait 30 seconds.
    5. With the scan tool, read the DTCs.

    Does the scan tool display; B18BA-12-WINDOW CONTROL - CIRCUIT SHORT TO BATTERY?

    Yes

    - Go To 2

    No

    - Test complete, the condition or conditions that originally set this DTC are not present at this time. Using the wiring diagrams as a guide, check all related splices and connectors for signs of water intrusion, corrosion, pushed out or bent terminals and correct pin tension.
    - Perform the BODY VERIFICATION TEST. Refer to **STANDARD PROCEDURE** .
2. **WINDOW MOTOR SHORTED**
    1. With the scan tool, erase the DTCs.
    2. Cycle the ignition off.
    3. Disconnect the Passenger Window Motor harness connector.
    4. Cycle the ignition on.
    5. Operate the Passenger window switch up and down several times.

6. Wait 30 seconds.
7. With the scan tool, read the DTCs.

   Does the scan tool display; B18BA-12-WINDOW CONTROL - CIRCUIT SHORT TO BATTERY?

   Yes

   - Go To 3

   No

   - Replace the Passenger Window Motor in accordance with service information.
   - Perform the BODY VERIFICATION TEST. Refer to **STANDARD PROCEDURE** .

3. **(Q22) PASSENGER WINDOW DRIVER DOWN CIRCUIT SHORTED TO VOLTAGE**

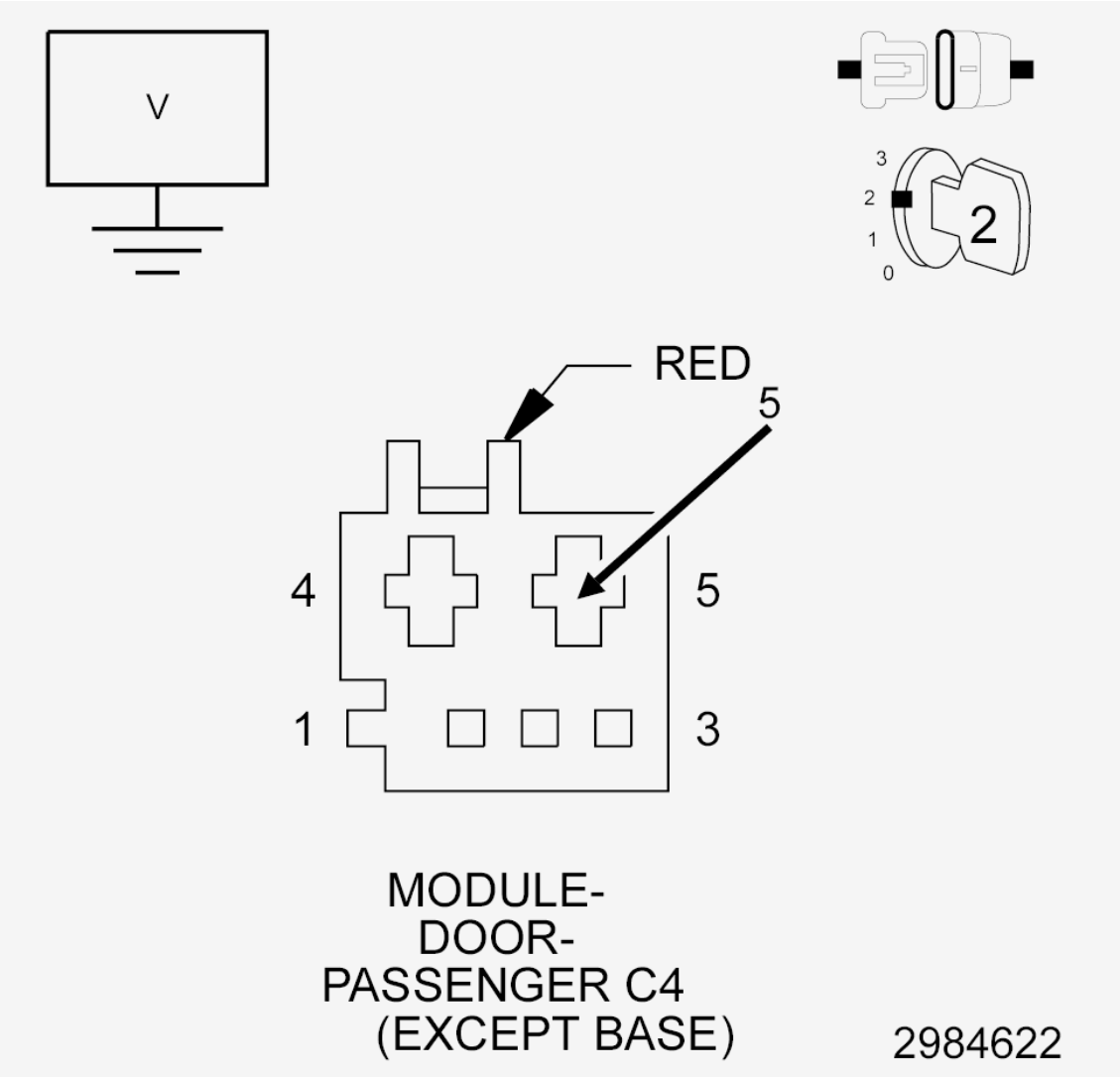

Fig. 12: Measuring Voltage Between Ground & Passenger Window Driver Down Circuit
Courtesy of CHRYSLER GROUP, LLC

1. Cycle the ignition off.
2. Disconnect the Passenger Door Module C4 harness connector.
3. Cycle the ignition on.
4. Measure the voltage between ground and the (Q22) Passenger Window Driver Down circuit.

   Is there any voltage present?

   Yes

   - Repair the (Q22) Passenger Window Driver Down circuit for a short to voltage.
   - Perform the BODY VERIFICATION TEST. Refer to **STANDARD PROCEDURE** .

No

- Go To 4

4. **(Q12) PASSENGER WINDOW DRIVER UP CIRCUIT SHORTED TO VOLTAGE**

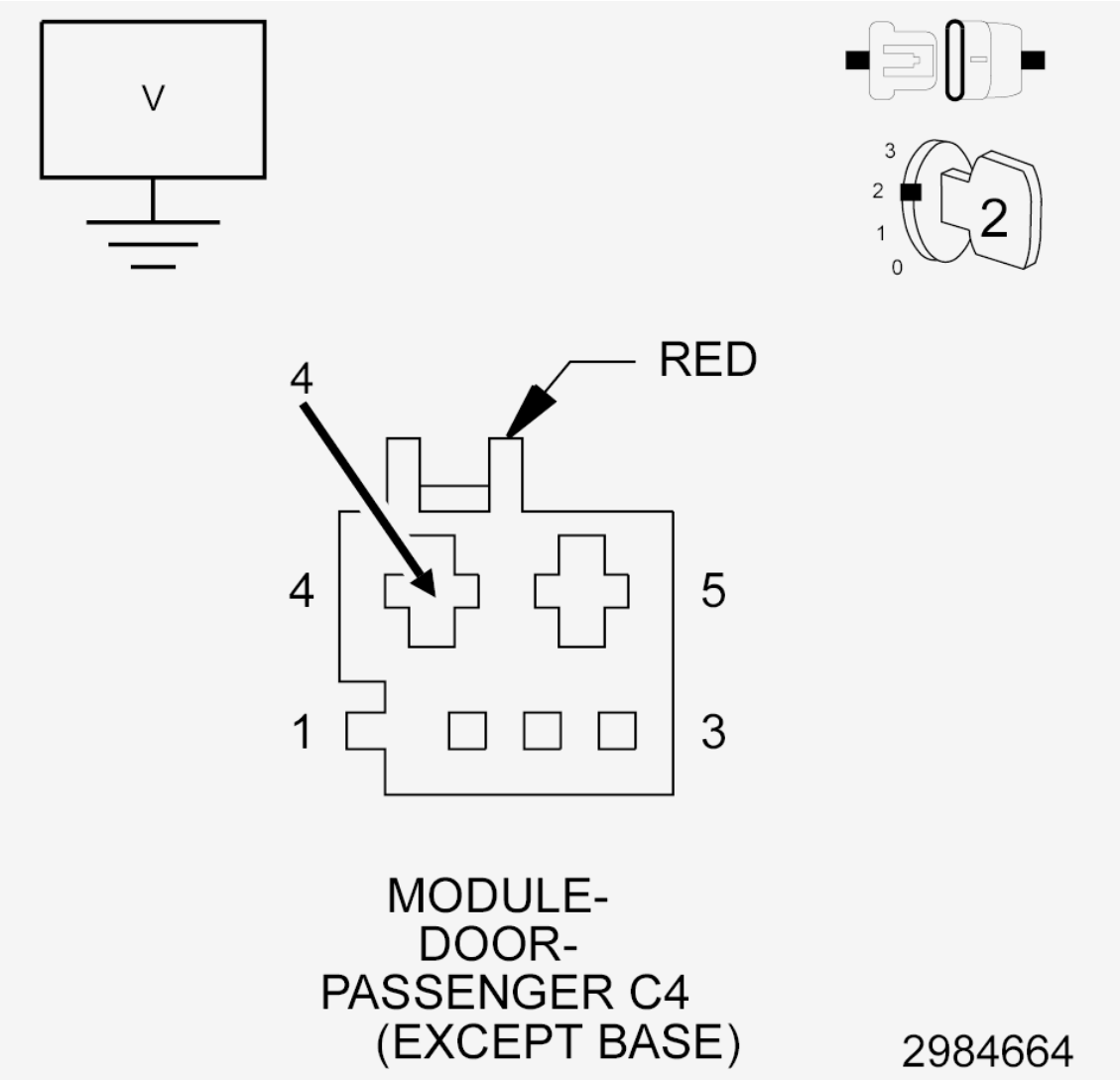

Fig. 13: Measuring Voltage Between Passenger Window Driver Up Circuit & Ground
Courtesy of CHRYSLER GROUP, LLC

1. Measure the voltage between the (Q12) Passenger Window Driver Up circuit and Ground.

   Is there any voltage present?

   Yes

   - Repair the (Q12) Passenger Window Driver Up circuit for a short to voltage.
   - Perform the BODY VERIFICATION TEST. Refer to **STANDARD PROCEDURE** .

No

- Replace the Passenger Door Module in accordance with the Service Information. Refer to **MODULE, DOOR, REMOVAL** .
- Perform the BODY VERIFICATION TEST. Refer to **STANDARD PROCEDURE** .

B18BA-13-WINDOW CONTROL - CIRCUIT OPEN

For a complete wiring diagram, **refer to appropriate SYSTEM WIRING DIAGRAMS article** .

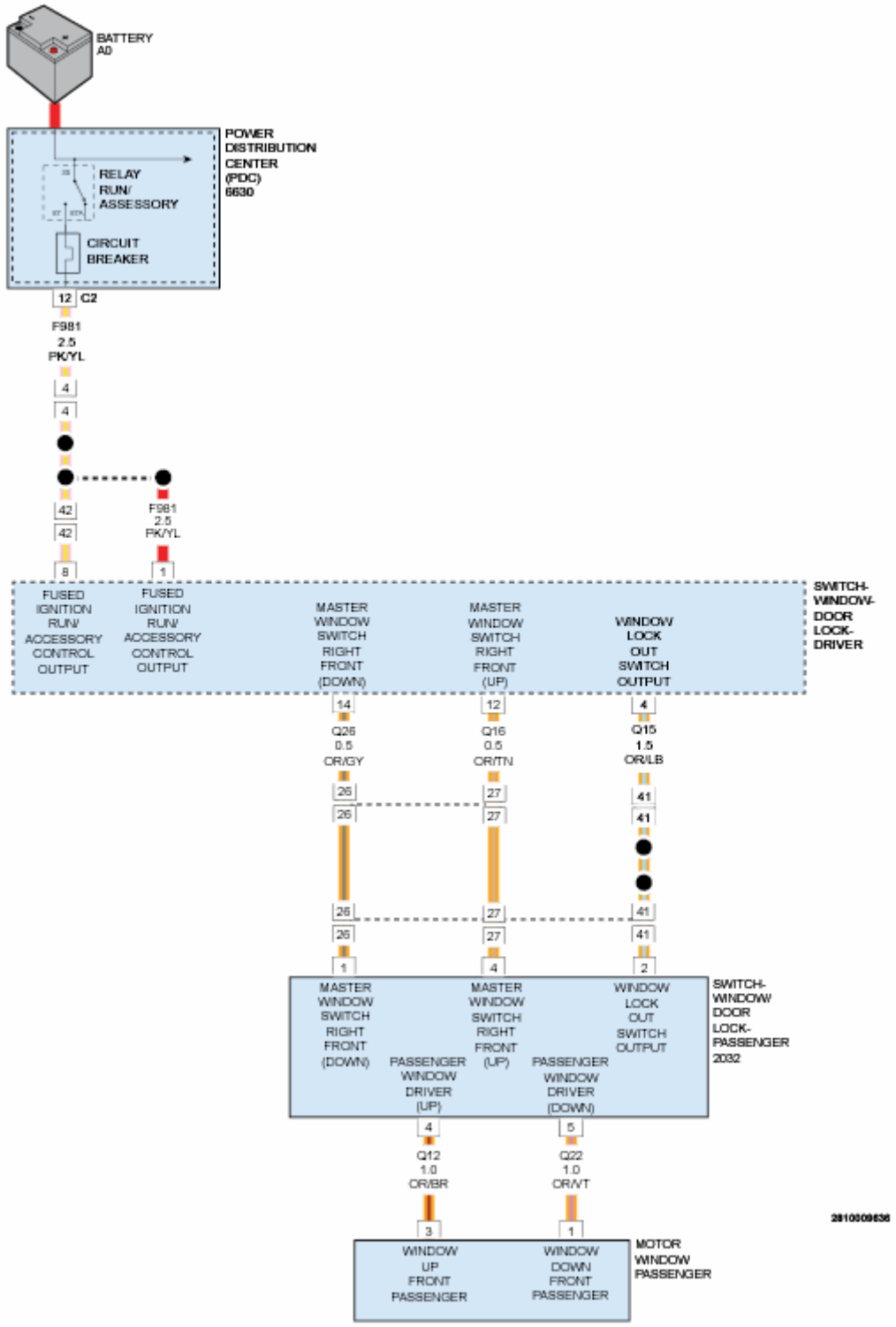

Fig. 14: Window Motor - Circuit Diagram
Courtesy of CHRYSLER GROUP, LLC

WHEN MONITORED

Whenever the module is awake.

SET CONDITION

When one or both Window circuits (Up and Down) are not supplied with voltage, when they should be, during a window movement command for more than five ms., this code will set.

POSSIBLE CAUSES

Possible Causes
WINDOW DOWN CIRCUIT OPEN
WINDOW UP CIRCUIT OPEN
WINDOW MOTOR
DOOR MODULE

DIAGNOSTIC TEST

1. **TEST FOR INTERMITTENT CONDITION**
    1. Cycle the ignition on.
    2. With the scan tool, record and erase the DTCs.
    3. Try to operate the Passenger Window up and down several times.
    4. Wait 30 seconds.
    5. With the scan tool, read the DTCs.

    Does the scan tool display; B18BA-13-WINDOW CONTROL - CIRCUIT OPEN?

    Yes

    - Go To 2

    No

    - Test complete, the condition or conditions that originally set this DTC are not present at this time. Using the wiring diagrams as a guide, check all related splices and connectors for signs of water intrusion, corrosion, pushed out or bent terminals and correct pin tension.
    - Perform the BODY VERIFICATION TEST. Refer to **STANDARD PROCEDURE** .
2. **WINDOW MOTOR OR CIRCUIT OPEN**
    1. Cycle the ignition off.
    2. Disconnect the Passenger Window Motor harness connector.
    3. Connect a test light between the (Q12) Passenger Window Driver Up circuit and the (Q22) Passenger Window Driver Down circuit.
    4. Cycle the ignition on.
    5. Operate the passenger window switch up and down several times while observing the test light.

Does the test light illuminate brightly when the switch is pressed in both directions? With the express up window, the test light will only flash momentarily each time the switch is actuated.

Yes

- Replace the Passenger Window Motor in accordance with the Service Information.
- Perform the BODY VERIFICATION TEST. Refer to **STANDARD PROCEDURE** .

No

- Go To 3

3. **(Q22) PASSENGER WINDOW DRIVER DOWN CIRCUIT OPEN**
   1. Cycle the ignition off.
   2. Disconnect the Passenger Door Module C4 harness connector.
   3. Measure the resistance of the (Q22) Passenger Window Driver Down circuit between the C4 module connector and the motor connector.

   Is the resistance below 2.0 Ohms?

   Yes

   - Go To 4

   No

   - Repair the open in the (Q22) Passenger Window Driver Down circuit.
   - Perform the BODY VERIFICATION TEST. Refer to **STANDARD PROCEDURE** .

4. **(Q12) PASSENGER WINDOW DRIVER UP CIRCUIT OPEN**
   1. Measure the resistance of the (Q12) Passenger Window Driver Up circuit between the C4 module connector and the motor connector.

   Is the resistance below 2.0 Ohms?

   No

   - Repair the open in the (Q12) Passenger Window Driver Up circuit.
   - Perform the BODY VERIFICATION TEST. Refer to **STANDARD PROCEDURE** .

   Yes

   - Replace the Passenger Door Module in accordance with the Service Information. Refer to **MODULE, DOOR, REMOVAL** .
   - Perform the BODY VERIFICATION TEST. Refer to **STANDARD PROCEDURE** .

B18BA-4B WINDOW CONTROL-OVER TEMPERATURE

For a complete wiring diagram, **refer to appropriate SYSTEM WIRING DIAGRAMS article** .

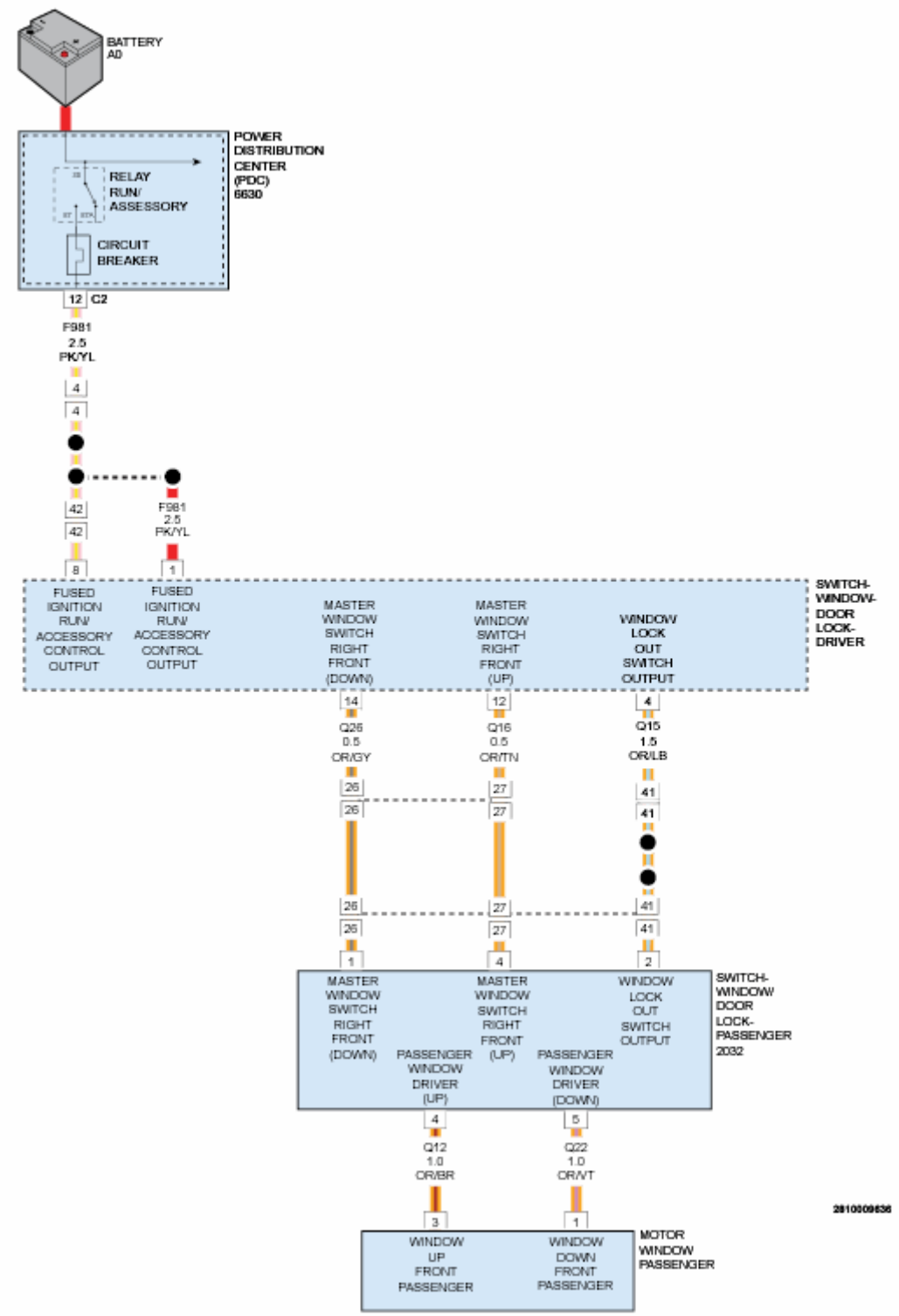

Fig. 15: Window Motor - Circuit Diagram

Courtesy of CHRYSLER GROUP, LLC

WHEN MONITORED

Continuously.

SET CONDITION

This DTC sets when the window motor is continuously requested to move repeatedly without a sufficient cooling time (1-2 seconds). The Driver Door Module logic has determined the temperature has exceeded 80°C (176°F) and inhibits window operation.

POSSIBLE CAUSES

Possible Causes
HIGH TEMPERATURE FAILURE
PASSENGER DOOR WINDOW MOTOR
PASSENGER DOOR MODULE

DIAGNOSTIC TEST

1. **TEST FOR INTERMITTENT CONDITION**
   1. Cycle the ignition on.
   2. With the scan tool, read and record the DTCs.

      Does the scan tool display; B18BA-4B WINDOW CONTROL-OVER TEMPERATURE as **ACTIVE** ?

      Yes

      - Go To 2

      No

      - Test complete, the conditions that caused this code to set is not present at this time.
      - Perform the BODY VERIFICATION TEST. Refer to **STANDARD PROCEDURE** .
2. **CONFIRM WINDOW OPERATION**

   NOTE: This step is being performed only when DTC B18BA-4B is ACTIVE.

   1. Run the window to the full up position and continue to hold the switch for an additional two

seconds.

2. Run the window to the full down position and continue to hold the switch for an additional two seconds.
3. Again run the window to the full up position and continue to hold the switch for an additional two seconds.
4. Lower the window to the full down position then press and release the switch to the express up position.

   Did the window move to the full up position?

   Yes

   - Replace the Passenger Door Module in accordance with the Service Information. Refer to **MODULE, DOOR, REMOVAL** .
   - Perform the BODY VERIFICATION TEST. Refer to **STANDARD PROCEDURE** .

   No

   - Go To 3

3. **CHECKING THE (Q12) PASSENGER WINDOW PASSENGER UP CIRCUIT AND THE (Q22) PASSENGER WINDOW PASSENGER DOWN CIRCUIT FOR VOLTAGE**

NOTE: This step is being performed only when DTC B18BA-4B is ACTIVE.

1. Cycle the ignition off.
2. Disconnect the Passenger Window Motor harness connector.
3. Connect a test light between the (Q12) Passenger Window Passenger Up circuit and the (Q22) Passenger Window Passenger Down circuit.
4. Cycle the ignition on.
5. Trip the Passenger door latch to the closed position.
6. Operate the Passenger window switch up and down several times while observing the test light.

   Does the test light illuminate brightly when the switch is pressed in both directions? With the express up window, the test light will only flash momentarily each time the switch is activated.

   Yes

   - Replace the Passenger Window Motor in accordance with the Service Information.
   - Perform the BODY VERIFICATION TEST. Refer to **STANDARD PROCEDURE** .

No

- Replace the Passenger Door Module in accordance with the Service Information. Refer to **MODULE, DOOR, REMOVAL** .
- Perform the BODY VERIFICATION TEST. Refer to **STANDARD PROCEDURE** .

B1DD0-11-MIRROR HEATER CONTROL - CIRCUIT SHORT TO GROUND

For a complete wiring diagram, **refer to appropriate SYSTEM WIRING DIAGRAMS article** .

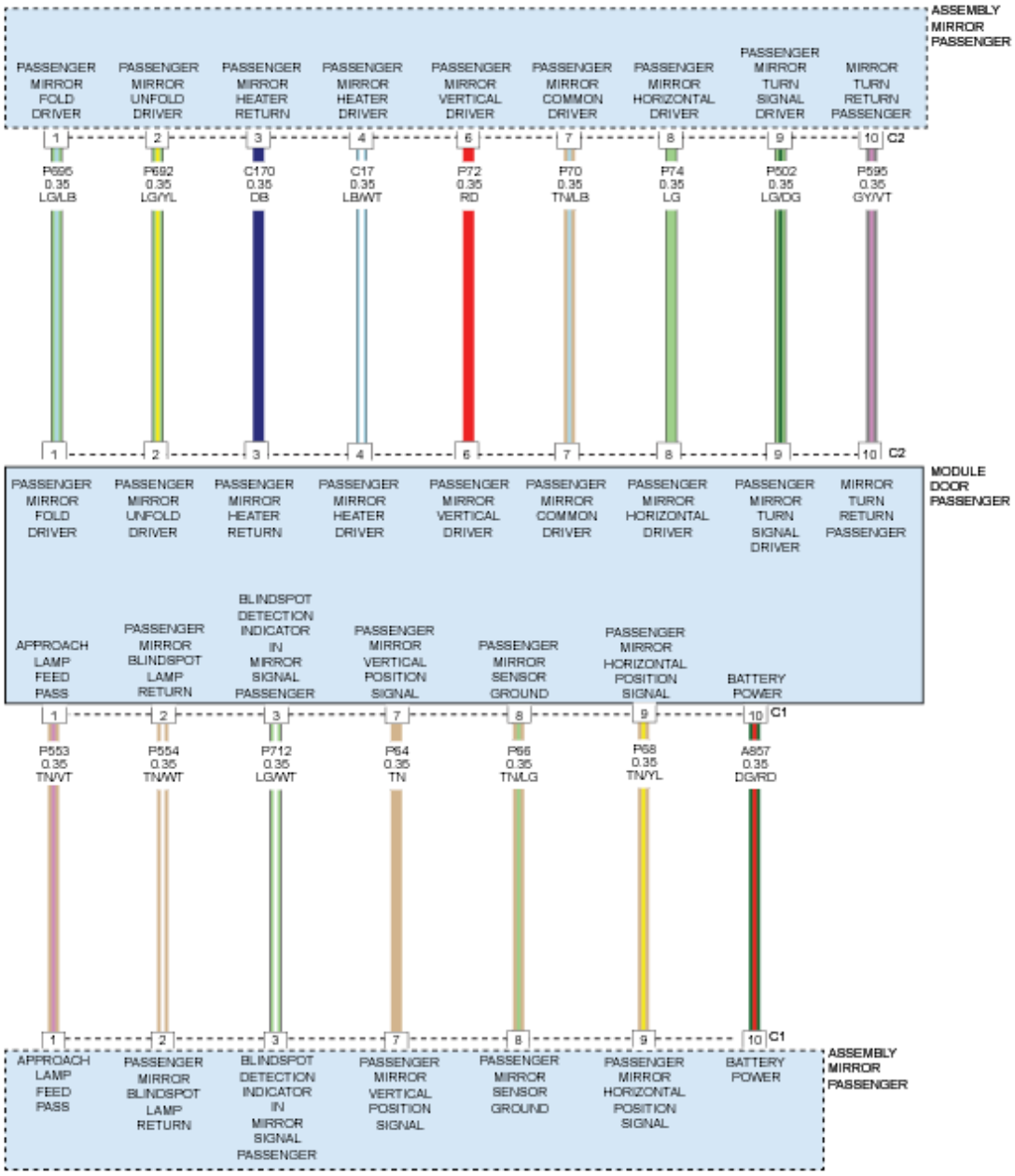

Fig. 16: Passenger Mirror Assembly - Circuit Diagram
Courtesy of CHRYSLER GROUP, LLC

WHEN MONITORED

Continuously.

SET CONDITION

The Door Module senses a short low on the Mirror Heater Driver circuit for more than two seconds with the heater switched on.

POSSIBLE CAUSES

Possible Causes
MIRROR HEATER DRIVER CIRCUIT SHORTED TO GROUND
MIRROR HEATER DRIVER CIRCUIT SHORTED TO ANY DRIVER MIRROR DRIVER CIRCUIT
MIRROR HEATER DRIVER CIRCUIT SHORTED TO THE MIRROR HEATER RETURN CIRCUIT
MIRROR HEATER DRIVER CIRCUIT SHORTED TO ANY SENSOR GROUND OR RETURN CIRCUIT
OUTSIDE REARVIEW MIRROR
DOOR MODULE

DIAGNOSTIC TEST

1. **TEST FOR INTERMITTENT CONDITION**
    1. Cycle the ignition on.
    2. With the scan tool, record and erase the Diagnostic Trouble Codes (DTCs).
    3. Turn the rear defogger ON.
    4. Press and release the Mirror Select switch to select the Passenger Outside Rearview Mirror.
    5. Operate the Mirror Adjust switch in all directions several times.
    6. With the scan tool, read the active DTCs.

    Does the scan tool display; B1DD0-11-MIRROR HEATER CONTROL - CIRCUIT SHORT TO GROUND as active?

    Yes

    - Go To 2

    No

    - The conditions that caused this code to set are not present at this time. For vehicle's equipped with folding outside rearview mirrors, repeat test with mirror folded. If DTC is now active,

Go To 2. Otherwise, use the wiring diagram/schematic as a guide and inspect the wiring and connectors.

- Perform the BODY VERIFICATION TEST. Refer to **STANDARD PROCEDURE** .

2. **CHECK (C17) PASSENGER MIRROR HEATER DRIVER CIRCUIT FOR A SHORT TO GROUND OR TO THE (C170) PASSENGER MIRROR HEATER RETURN CIRCUIT**

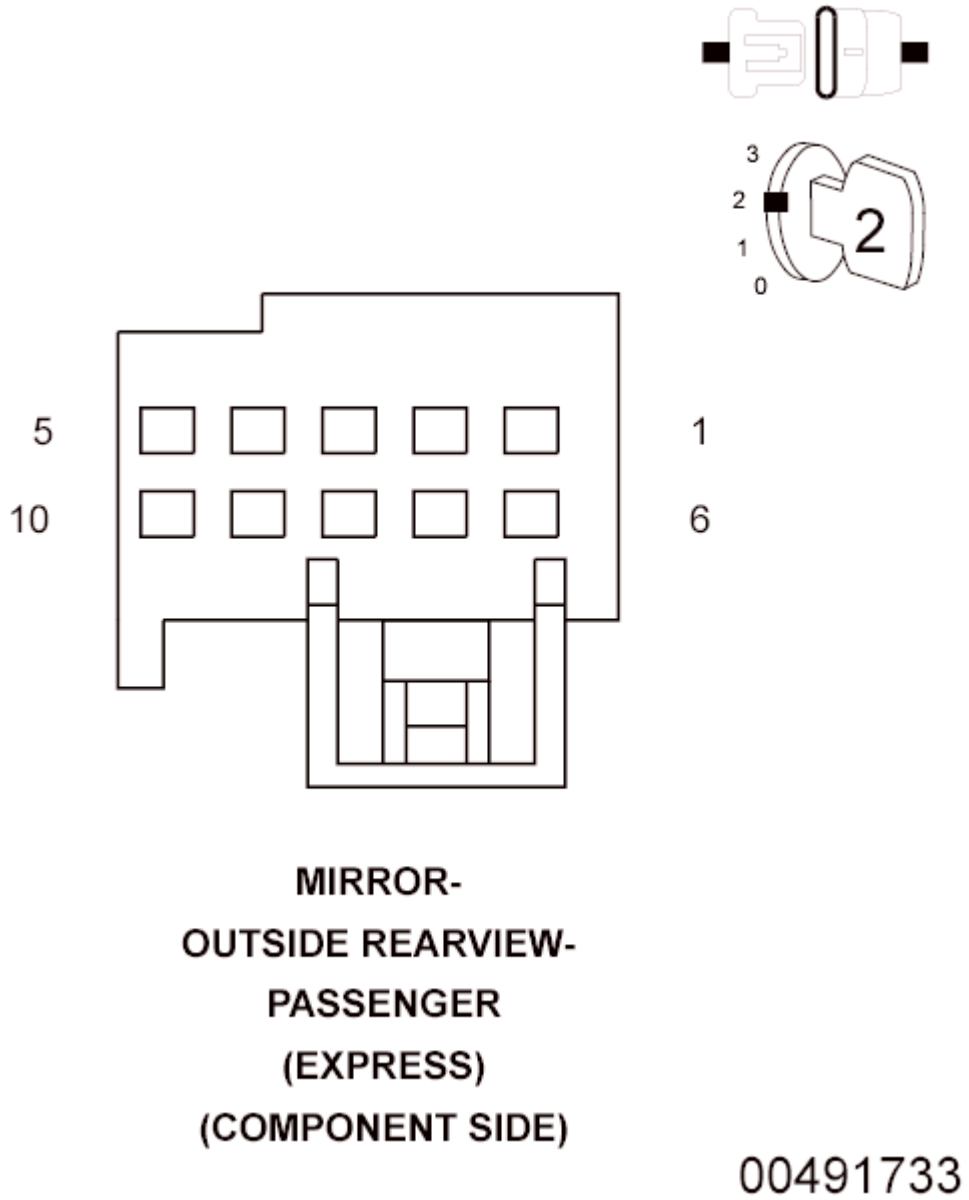

Fig. 17: Passenger Outside Rearview Mirror Connector End View
Courtesy of CHRYSLER GROUP, LLC

1. Cycle the ignition off.
2. Disconnect the Passenger Outside Rearview Mirror (Component Side) connector from the PDM C2 harness connector.

3. Cycle the ignition on.
4. With the scan tool, erase the DTCs.
5. Turn the rear defogger ON.
6. Press and release the Mirror Select switch to select the Passenger Outside Rearview Mirror.
7. Operate the Mirror Adjust switch in all directions several times.
8. With the scan tool, read the active DTCs.

   Does the scan tool display; B1DD0-11-MIRROR HEATER CONTROL - CIRCUIT SHORT TO GROUND as active?

   Yes

   - Replace the Passenger Door Module (PDM) in accordance with the Service Information. Refer to **MODULE, DOOR, REMOVAL** .
   - Perform the BODY VERIFICATION TEST. Refer to **STANDARD PROCEDURE** .

   No

   - Repair the (C17) Passenger Mirror Heater Driver circuit for a short to ground or to the (C170) Passenger Mirror Heater Return circuit. If the wiring harness and connector are okay, replace the Passenger Outside Rearview Mirror in accordance with the Service Information. Refer to **MIRROR, OUTSIDE REARVIEW, REMOVAL** and **MIRROR, OUTSIDE REARVIEW, GLASS, REMOVAL** .
   - Perform the BODY VERIFICATION TEST. Refer to **STANDARD PROCEDURE** .

B1DD0-15-MIRROR HEATER CONTROL - CIRCUIT SHORT TO BATTERY OR OPEN

For a complete wiring diagram, **refer to appropriate SYSTEM WIRING DIAGRAMS article** .

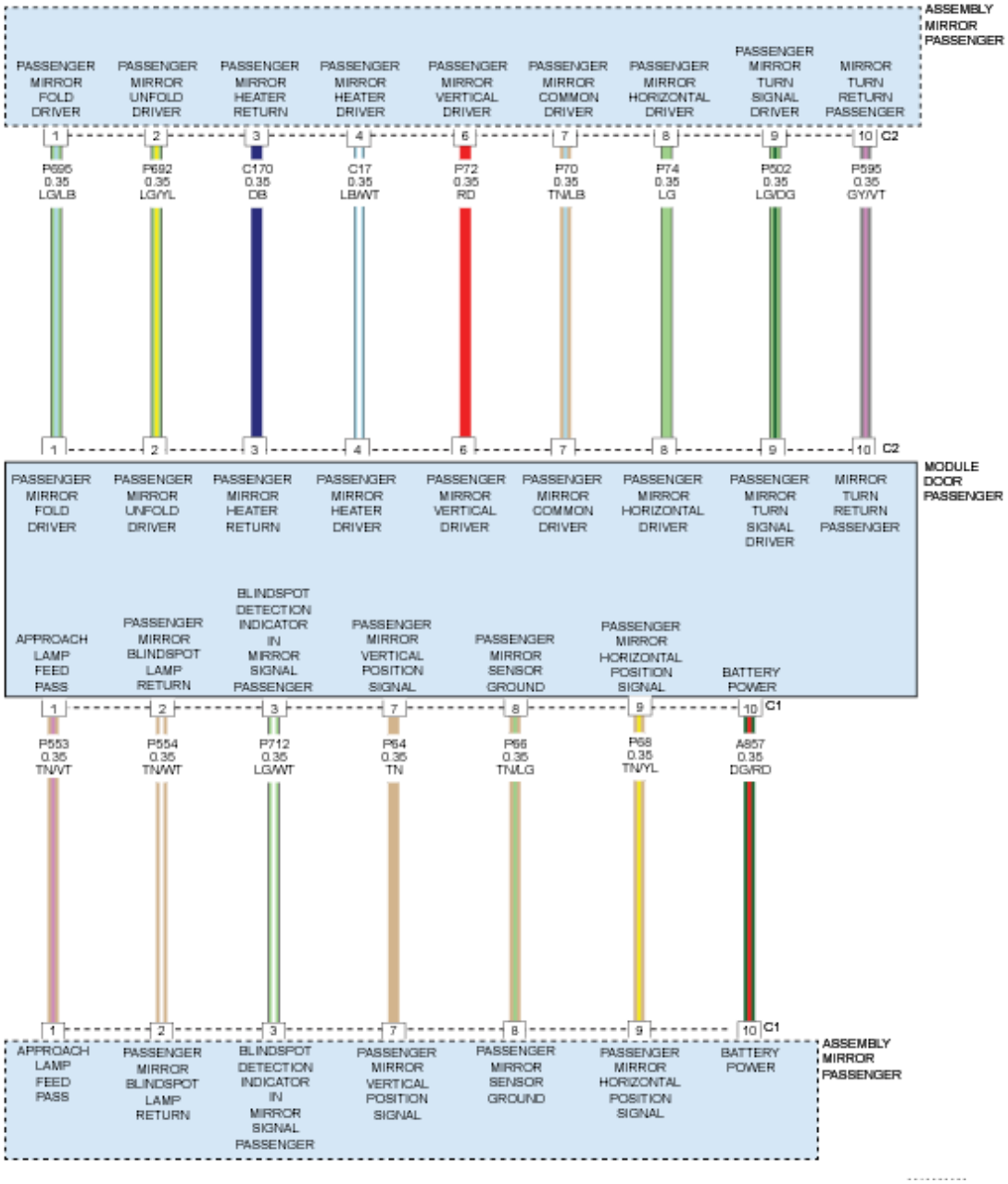

Fig. 18: Passenger Mirror Assembly - Circuit Diagram
Courtesy of CHRYSLER GROUP, LLC

WHEN MONITORED

Continuously.

SET CONDITION

The Door Module senses an open or a short high on the Mirror Heater Driver circuit for more than two seconds.

POSSIBLE CAUSES

Possible Causes
MIRROR HEATER DRIVER CIRCUIT SHORTED TO VOLTAGE
MIRROR HEATER DRIVER CIRCUIT OPEN
MIRROR HEATER RETURN CIRCUIT OPEN
MIRROR HEATER DRIVER CIRCUIT SHORTED TO THE MIRROR HEATER RETURN CIRCUIT
MIRROR HEATER DRIVER CIRCUIT SHORTED TO ANOTHER DRIVER CIRCUIT
OUTSIDE REARVIEW MIRROR
DOOR MODULE

DIAGNOSTIC TEST

1. **TEST FOR INTERMITTENT CONDITION**
    1. Cycle the ignition on.
    2. With the scan tool, record and erase the Diagnostic Trouble Codes (DTCs).
    3. Turn the rear defogger OFF.
    4. Press and release the Mirror Select switch to select the Passenger Outside Rearview Mirror.
    5. Operate the Mirror Adjust switch in all directions several times.
    6. With the scan tool, read the active DTCs.

    Does the scan tool display; B1DD0-15-MIRROR HEATER CONTROL - CIRCUIT SHORT TO BATTERY OR OPEN as active?

    Yes

    - Go To 2

    No

    - The conditions that caused this code to set are not present at this time. For vehicle's equipped with folding outside rearview mirrors, repeat test with mirror folded. If DTC is now active, Go To 2. Otherwise, use the wiring diagram/schematic as a guide and inspect the wiring and connectors.
    - Perform the BODY VERIFICATION TEST. Refer to **STANDARD PROCEDURE** .
2. **CHECK (C17) PASSENGER MIRROR HEATER DRIVER CIRCUIT FOR A SHORT TO VOLTAGE**

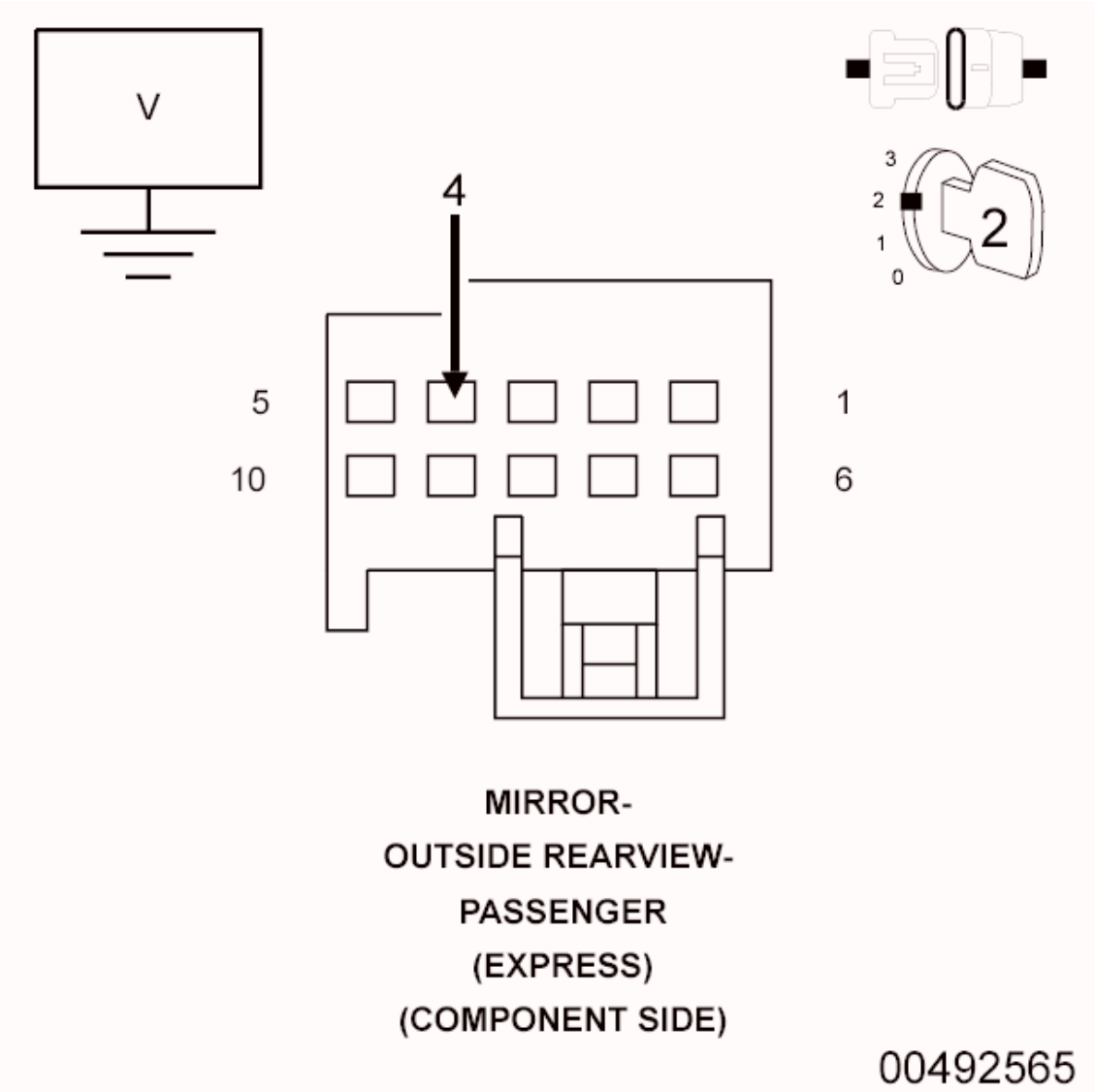

Fig. 19: Checking Passenger Mirror Heater Driver Circuit For Short To Voltage
Courtesy of CHRYSLER GROUP, LLC

1. Cycle the ignition off.
2. Disconnect the Passenger Outside Rearview Mirror (Component Side) connector from the PDM C2 harness connector.
3. Cycle the ignition on.
4. Measure the voltage of the (C17) Passenger Mirror Heater Driver circuit between the Passenger Outside Rearview Mirror (Component Side) connector and ground.

   Is there any voltage present?

   Yes

   - Repair the (C17) Passenger Mirror Heater Driver circuit for a short to voltage. If the wiring

harness and connector are okay, replace the Passenger Outside Rearview Mirror in accordance with the Service Information. Refer to **MIRROR, OUTSIDE REARVIEW, REMOVAL** and **MIRROR, OUTSIDE REARVIEW, GLASS, REMOVAL** .

- Perform the BODY VERIFICATION TEST. Refer to **STANDARD PROCEDURE** .

No

- Go To 3

3. **CHECK (C17) PASSENGER MIRROR HEATER DRIVER CIRCUIT AND (C170) PASSENGER MIRROR HEATER RETURN CIRCUIT FOR AN OPEN**

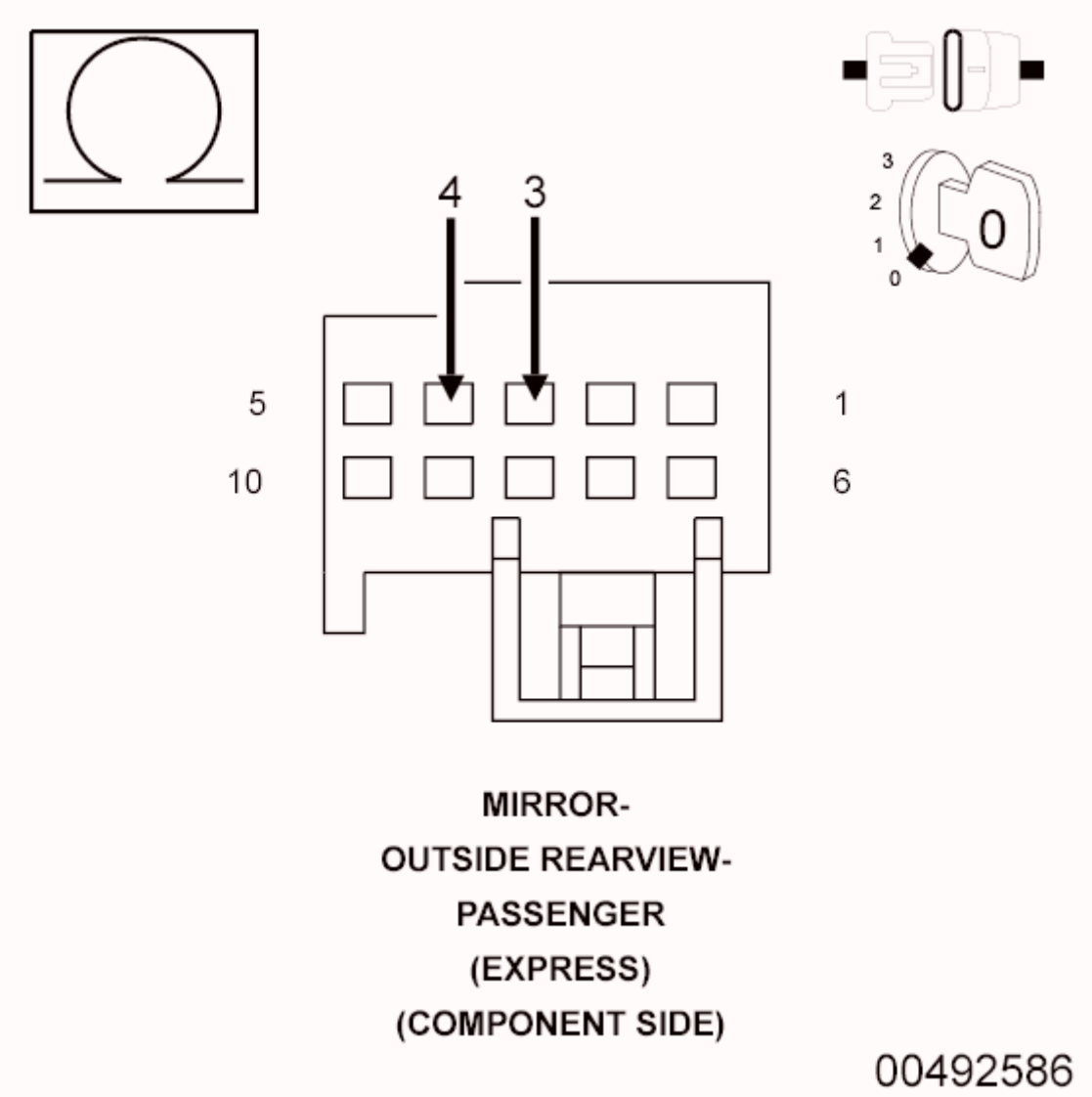

Fig. 20: Checking Passenger Mirror Heater Driver Circuit Or Passenger Mirror Heater Return Circuit For Open
Courtesy of CHRYSLER GROUP, LLC

1. Cycle the ignition off.
2. Measure the resistance between the (C17) Passenger Mirror Heater Driver circuit and the (C170) Passenger Mirror Heater Return circuit at the Passenger Outside Rearview Mirror (Component Side) connector.

   Is the resistance approximately 10.0 Ohms?

   Yes

   - Replace the Passenger Door Module (PDM) in accordance with the Service Information. Refer to **MODULE, DOOR, REMOVAL** .
   - Perform the BODY VERIFICATION TEST. Refer to **STANDARD PROCEDURE** .

   No

   - Repair the (C17) Passenger Mirror Heater Driver circuit or the (C170) Passenger Mirror Heater Return circuit for an open. If the wiring harness and connector are okay, replace the Passenger Outside Rearview Mirror in accordance with the Service Information. Refer to **MIRROR, OUTSIDE REARVIEW, REMOVAL** and **MIRROR, OUTSIDE REARVIEW, GLASS, REMOVAL** .
   - Perform the BODY VERIFICATION TEST. Refer to **STANDARD PROCEDURE** .

B1F02-11-MIRROR VERTICAL MOTOR CONTROL - CIRCUIT SHORT TO GROUND

For a complete wiring diagram, **refer to appropriate SYSTEM WIRING DIAGRAMS article** .

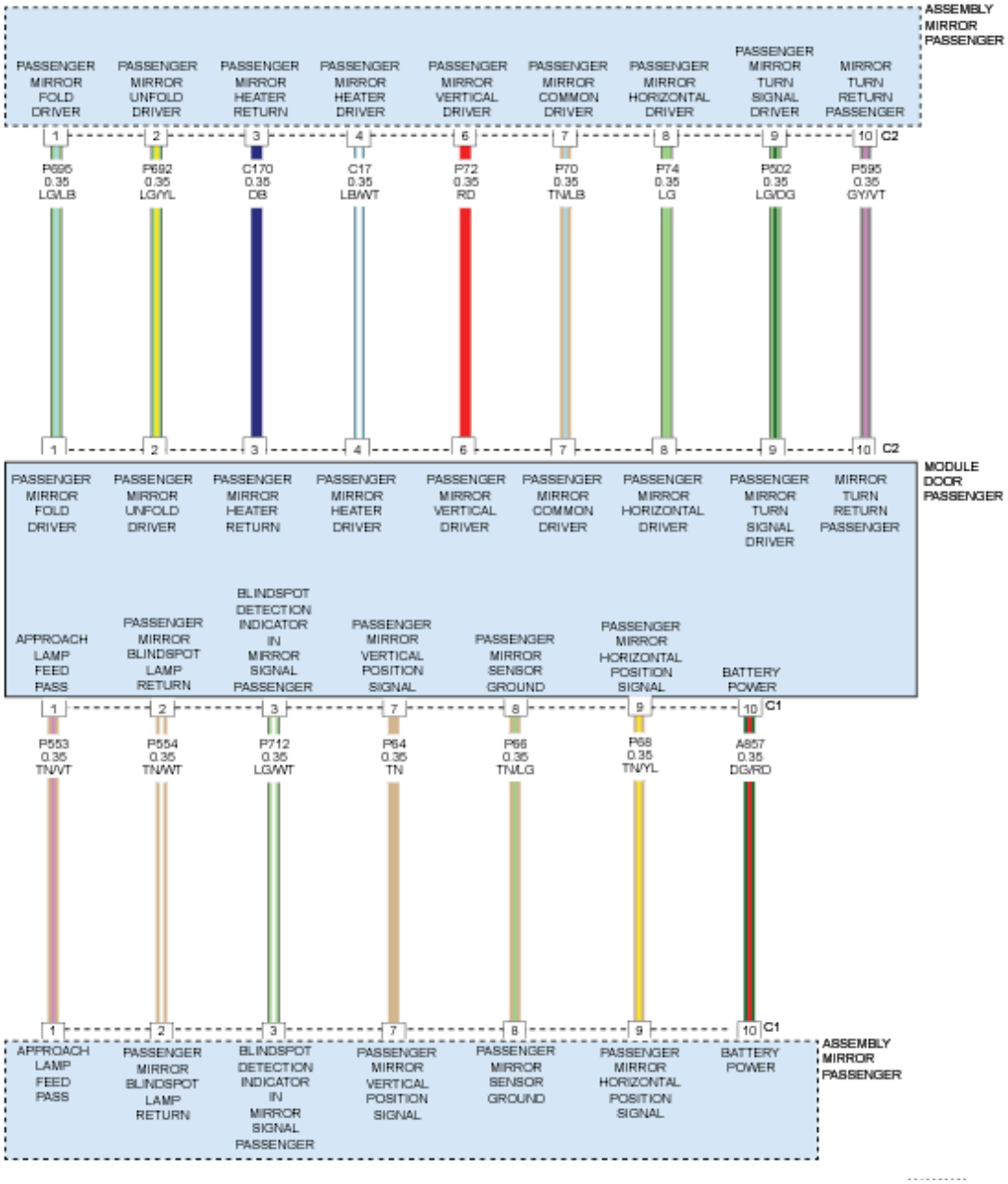

Fig. 21: Passenger Mirror Assembly - Circuit Diagram
Courtesy of CHRYSLER GROUP, LLC

THEORY OF OPERATION

The Mirror Vertical Driver circuit supplies battery voltage for the mirror up position and ground for the mirror down position. The Mirror Common Driver supplies battery voltage for the mirror Down position and ground for the mirror up position.

WHEN MONITORED

Continuously.

SET CONDITION

The Door Module senses a short low on the Mirror Vertical Driver circuit for more than 10 ms.

POSSIBLE CAUSES

Possible Causes
MIRROR VERTICAL DRIVER CIRCUIT SHORTED TO GROUND
MIRROR VERTICAL DRIVER CIRCUIT SHORTED TO THE MIRROR HEATER RETURN CIRCUIT
OUTSIDE REARVIEW MIRROR
DOOR MODULE

DIAGNOSTIC TEST

1. **TEST FOR INTERMITTENT CONDITION**
    1. Cycle the ignition on.
    2. With the scan tool, record and erase Diagnostic Trouble Codes (DTCs).
    3. Press and release the Mirror Select switch to select the Passenger Outside Rearview Mirror.
    4. Turn the hazard lamps on.
    5. Turn on the park lamps (if equipped with auto dimming mirrors).
    6. Turn the rear defogger on, if equipped with heated mirror.
    7. Operate the Mirror Adjust switch in all directions several times while monitoring the scan tool for DTCs.

    NOTE: After adjusting the mirror in one direction wait at least two seconds before adjusting the mirror in the opposite direction, as this will allow time for an active fault to set if present.

    Does the scan tool display; B1F02-11-MIRROR VERTICAL MOTOR CONTROL - CIRCUIT SHORT TO GROUND?

    Yes

    - Go To 2

    No

    - The conditions that caused this code to set are not present at this time. For vehicle's equipped with folding outside rearview mirrors, repeat test with mirror folded. If DTC is now active, Go To 2. Otherwise, use the wiring diagram/schematic as a guide and inspect the wiring and connectors.

- Perform the BODY VERIFICATION TEST. Refer to **STANDARD PROCEDURE** .

2. **INSPECT MIRROR CONNECTIONS**
   1. Cycle the ignition off.
   2. Disconnect the Passenger Outside Rearview Mirror C1 and C2 connectors at the Passengers Door Module.
   3. Inspect the wiring harness, connectors and the Passengers Door Module.

      Were there any problems found?

      Yes

      - Repair as necessary.
      - Perform the BODY VERIFICATION TEST. Refer to **STANDARD PROCEDURE** .

      No

      - Go To 3

3. **MIRROR OR MODULE**
   1. Cycle the ignition on.
   2. With the scan tool, record and erase DTCs.
   3. Press and release the Mirror Select switch to select the Passenger Outside Rearview Mirror.
   4. Operate the Mirror Adjust switch in all directions several times while monitoring the scan tool for DTCs.

      NOTE: After adjusting the mirror in one direction wait at least two seconds before adjusting the mirror in the opposite direction, as this will allow time for an active fault to set if present.

   5. With the scan tool, read DTCs.

      NOTE: Check for a change in DTCs.

      Does the scan tool display: B1F02-13-MIRROR VERTICAL MOTOR CONTROL - CIRCUIT OPEN as active?

      Yes

      - With the circuit now OPEN that indicates the short is NOT in the Module. Replace the mirror in accordance with the Service Information. Refer to **MIRROR, OUTSIDE REARVIEW, REMOVAL** and **MIRROR, OUTSIDE REARVIEW, GLASS, REMOVAL** .
      - Perform the BODY VERIFICATION TEST. Refer to **STANDARD PROCEDURE** .

      No

- Replace the Door Module in accordance with the Service Information. Refer to **MODULE, DOOR, REMOVAL** .
- Perform the BODY VERIFICATION TEST. Refer to **STANDARD PROCEDURE** .

B1F02-12-MIRROR VERTICAL MOTOR CONTROL - CIRCUIT SHORT TO BATTERY

For a complete wiring diagram, **refer to appropriate SYSTEM WIRING DIAGRAMS article** .

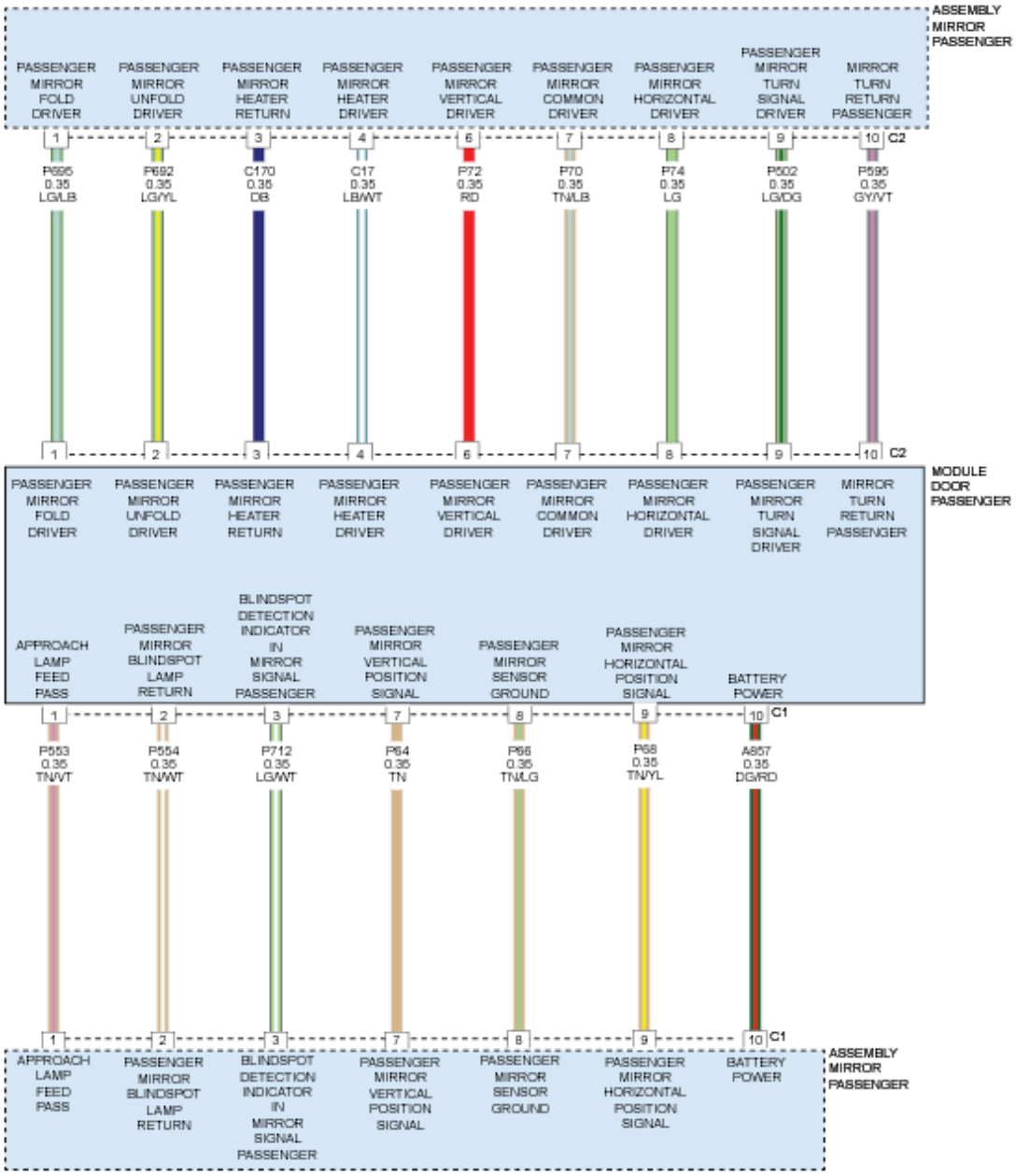

Fig. 22: Passenger Mirror Assembly - Circuit Diagram
Courtesy of CHRYSLER GROUP, LLC

THEORY OF OPERATION

The Mirror Vertical Driver circuit supplies battery voltage for the mirror up position and ground for the mirror down position. The Mirror Common Driver supplies battery voltage for the mirror Down position and ground for the mirror up position.

WHEN MONITORED

Continuously.

SET CONDITION

The Door Module senses a short to voltage on the Mirror Vertical Driver circuit during a mirror movement for more than 10 ms.

POSSIBLE CAUSES

Possible Causes
OUTSIDE REARVIEW MIRROR
DOOR MODULE

DIAGNOSTIC TEST

1. **TEST FOR INTERMITTENT CONDITION**
    1. Cycle the ignition on.
    2. With the scan tool, record and erase the Diagnostic Trouble Codes (DTCs).
    3. Press and release the Mirror Select switch to select the Passenger Outside Rearview Mirror.
    4. Operate the Mirror Adjust switch in all directions several times.
    5. Cycle the ignition from on to off three times.
    6. Cycle the ignition on.
    7. With the scan tool, read the DTCs.

    Does the scan tool display; B1F02-12-MIRROR VERTICAL MOTOR CONTROL - CIRCUIT SHORT TO BATTERY?

    Yes

    - Go To 2

    No

    - The conditions that caused this code to set are not present at this time. For vehicles equipped with folding outside rearview mirrors, repeat test with mirror folded. If DTC is now active, Go To 2. Otherwise, use the wiring diagram/schematic as a guide and inspect the wiring and connectors.

- Perform the BODY VERIFICATION TEST. Refer to **STANDARD PROCEDURE** .

2. **CHECK (P695) PASSENGER MIRROR FOLD DRIVER CIRCUIT AND (P692) PASSENGER MIRROR UNFOLD DRIVER CIRCUIT FOR A SHORT TO (P72) PASSENGER MIRROR VERTICAL DRIVER CIRCUIT**

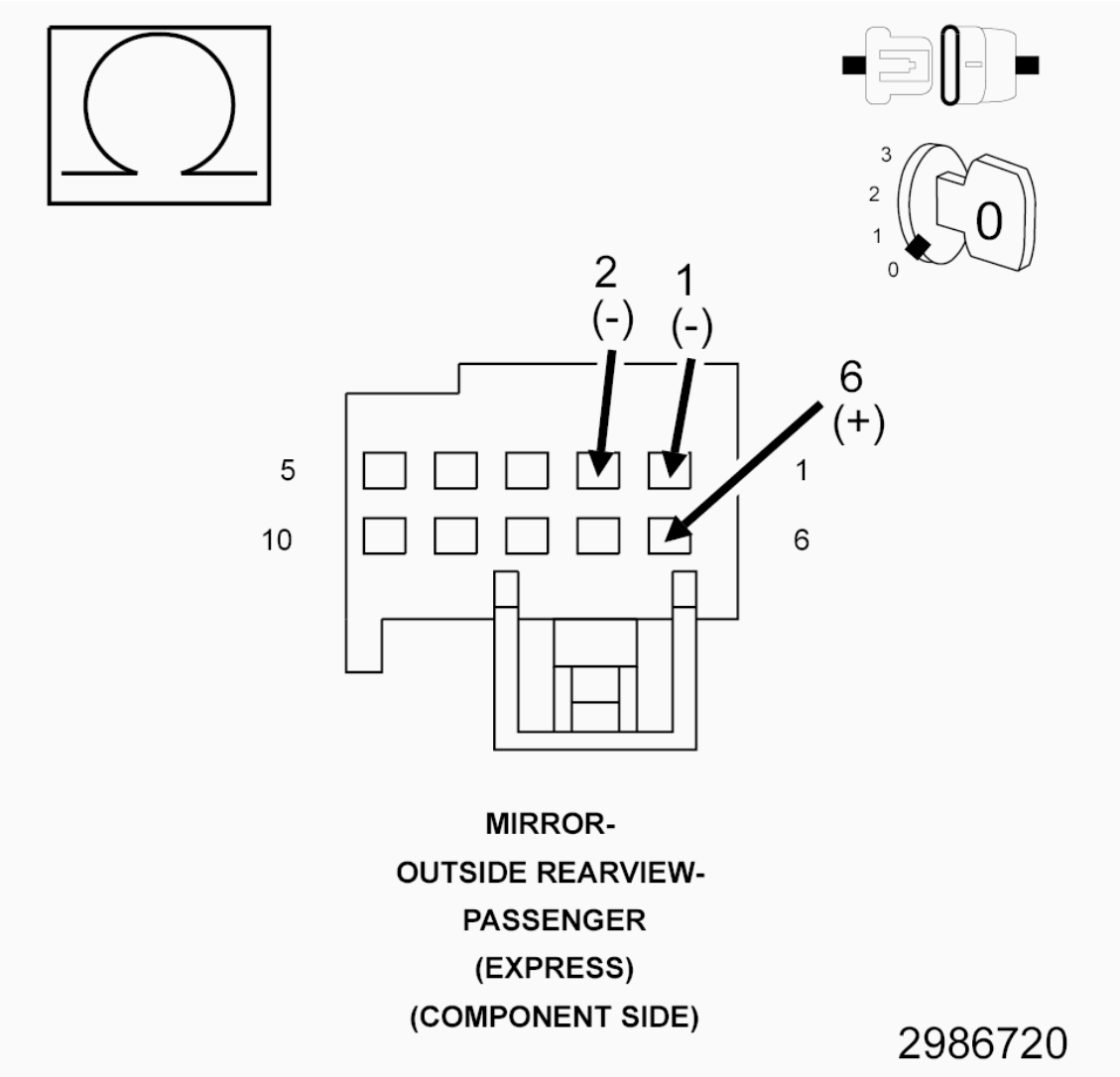

Fig. 23: Checking Passenger Mirror Fold Driver Circuit & Passenger Mirror Unfold Driver Circuit For A Short To Passenger Mirror Vertical Driver Circuit
Courtesy of CHRYSLER GROUP, LLC

1. Cycle the ignition off.
2. Disconnect the Passenger Outside Rearview Mirror (Component Side) C2 harness connector from the PDM.
3. Measure the resistance between the (P72) Passenger Mirror Vertical Driver circuit and the (P695) Passenger Mirror Fold Driver circuitat the Passenger Outside Rearview Mirror (Component Side) connector.

4. Measure the resistance between the (P72) Passenger Mirror Vertical Driver circuit and the (P692) Passenger Mirror Unfold Driver circuit at the Passenger Outside Rearview Mirror (Component Side) connector.

   Is the resistance below 10k Ohms for either measurement?

   Yes

   - Repair all circuits with a resistance below 10k Ohms for a short to the (P72) Passenger Mirror Vertical Driver circuit. If the wiring harness and connector are okay, replace the Passenger Outside Rearview Mirror in accordance with the Service Information. Refer to **MIRROR, OUTSIDE REARVIEW, REMOVAL** and **MIRROR, OUTSIDE REARVIEW, GLASS, REMOVAL** .
   - Perform the BODY VERIFICATION TEST. Refer to **STANDARD PROCEDURE** .

   No

   - Go To 3

3. **CHECK (P72) PASSENGER MIRROR VERTICAL DRIVER CIRCUIT FOR A SHORT TO THE (C17) PASSENGER MIRROR HEATER DRIVER CIRCUIT**

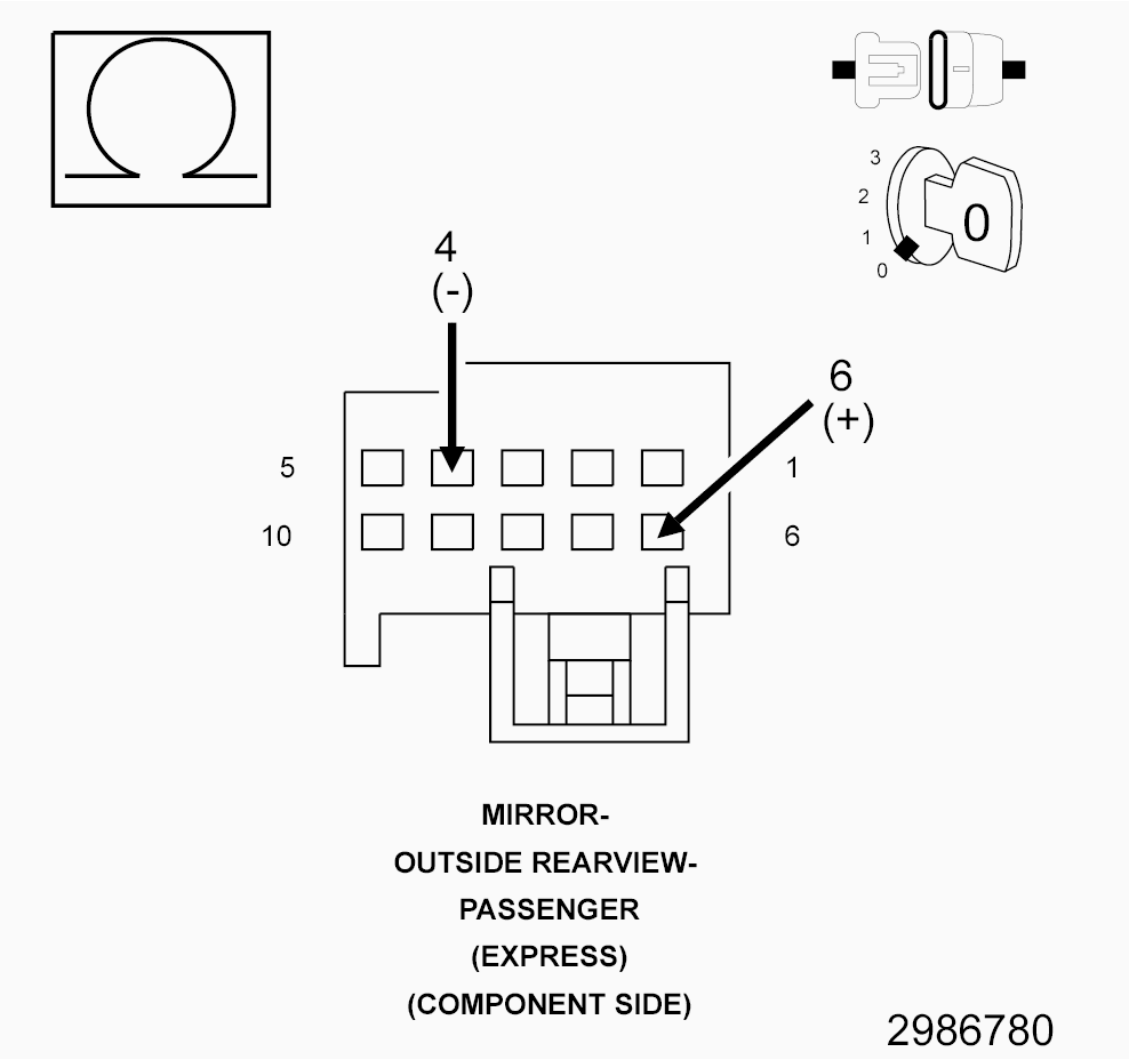

Fig. 24: Checking Passenger Mirror Vertical Driver Circuit For A Short To Passenger Mirror Heater Driver Circuit
Courtesy of CHRYSLER GROUP, LLC

1. Measure the resistance between the (P72) Passenger Mirror Vertical Driver circuit and the (C17) Passenger Mirror Heater Driver circuit at the Passenger Outside Rearview Mirror (Component Side) connector.

   Is the resistance below 10k Ohms?

   Yes

   - Repair the (P72) Passenger Mirror Vertical Driver circuit for a short to the (C17) Passenger Mirror Heater Driver circuit. If the wiring harness and connector are okay, replace the Passenger Outside Rearview Mirror in accordance with the Service Information. Refer to **MIRROR, OUTSIDE REARVIEW, REMOVAL** and **MIRROR, OUTSIDE REARVIEW, GLASS, REMOVAL** .

- Perform the BODY VERIFICATION TEST. Refer to **STANDARD PROCEDURE** .

No

- Replace the Passenger Door Module (PDM) in accordance with the Service Information. Refer to **MODULE, DOOR, REMOVAL** .
- Perform the BODY VERIFICATION TEST. Refer to **STANDARD PROCEDURE** .

B1F02-13-MIRROR VERTICAL MOTOR CONTROL - CIRCUIT OPEN

For a complete wiring diagram, **refer to appropriate SYSTEM WIRING DIAGRAMS article** .

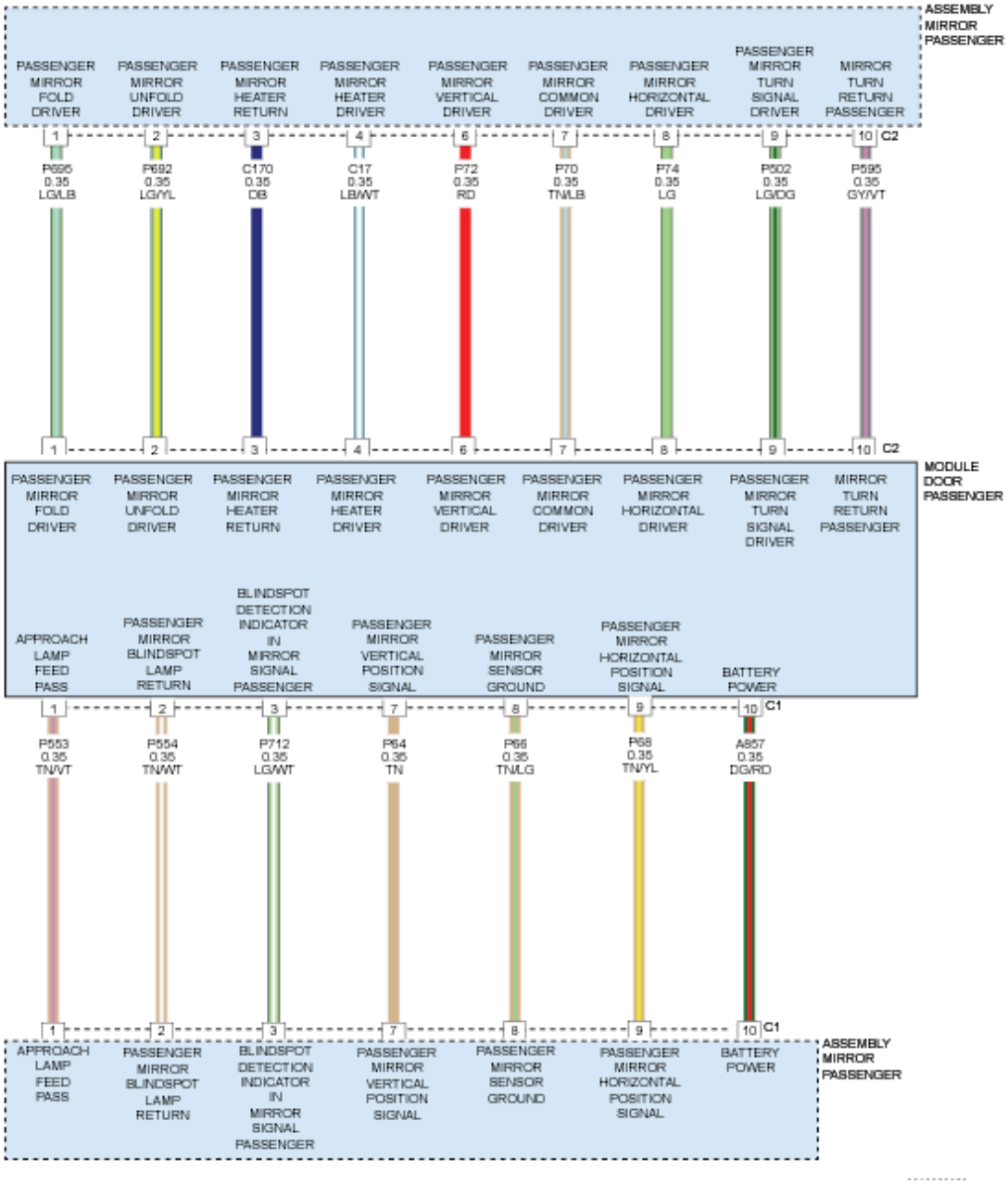

Fig. 25: Passenger Mirror Assembly - Circuit Diagram
Courtesy of CHRYSLER GROUP, LLC

THEORY OF OPERATION

The Mirror Vertical Driver circuit supplies battery voltage for the mirror up position and ground for the mirror down position. The Mirror Common Driver supplies battery voltage for the mirror Down position and ground for the mirror up position.

WHEN MONITORED

Continuously.

SET CONDITION

When the Door Module senses a short high on the Mirror Vertical Driver circuit for more than 10 ms.

POSSIBLE CAUSES

Possible Causes
MIRROR VERTICAL DRIVER CIRCUIT OPEN
MIRROR COMMON DRIVER CIRCUIT OPEN
OUTSIDE REARVIEW MIRROR
DOOR MODULE

DIAGNOSTIC TEST

1. **TEST FOR INTERMITTENT CONDITION**
    1. Cycle the ignition on.
    2. With the scan tool, record and erase the Diagnostic Trouble Codes (DTCs).
    3. Press and release the Mirror Select switch to select the Passenger Outside Rearview Mirror.
    4. Operate the Mirror Adjust switch in all directions several times.
    5. Cycle the ignition from on to off three times.
    6. Cycle the ignition on.
    7. With the scan tool, read the active DTCs.

    Does the scan tool display; B1F02-13-MIRROR VERTICAL MOTOR CONTROL - CIRCUIT OPEN as active?

    Yes

    - Go To 2

    No

    - The conditions that caused this code to set are not present at this time. For vehicles equipped with folding outside rearview mirrors, repeat the test with the mirror folded. If the DTC is now active, Go To 2. Otherwise, use the wiring diagram/schematic as a guide and inspect the wiring and connectors.
    - Perform the BODY VERIFICATION TEST. Refer to **STANDARD PROCEDURE** .
2. **CHECK MIRROR AND HARNESS FOR AN OPEN**

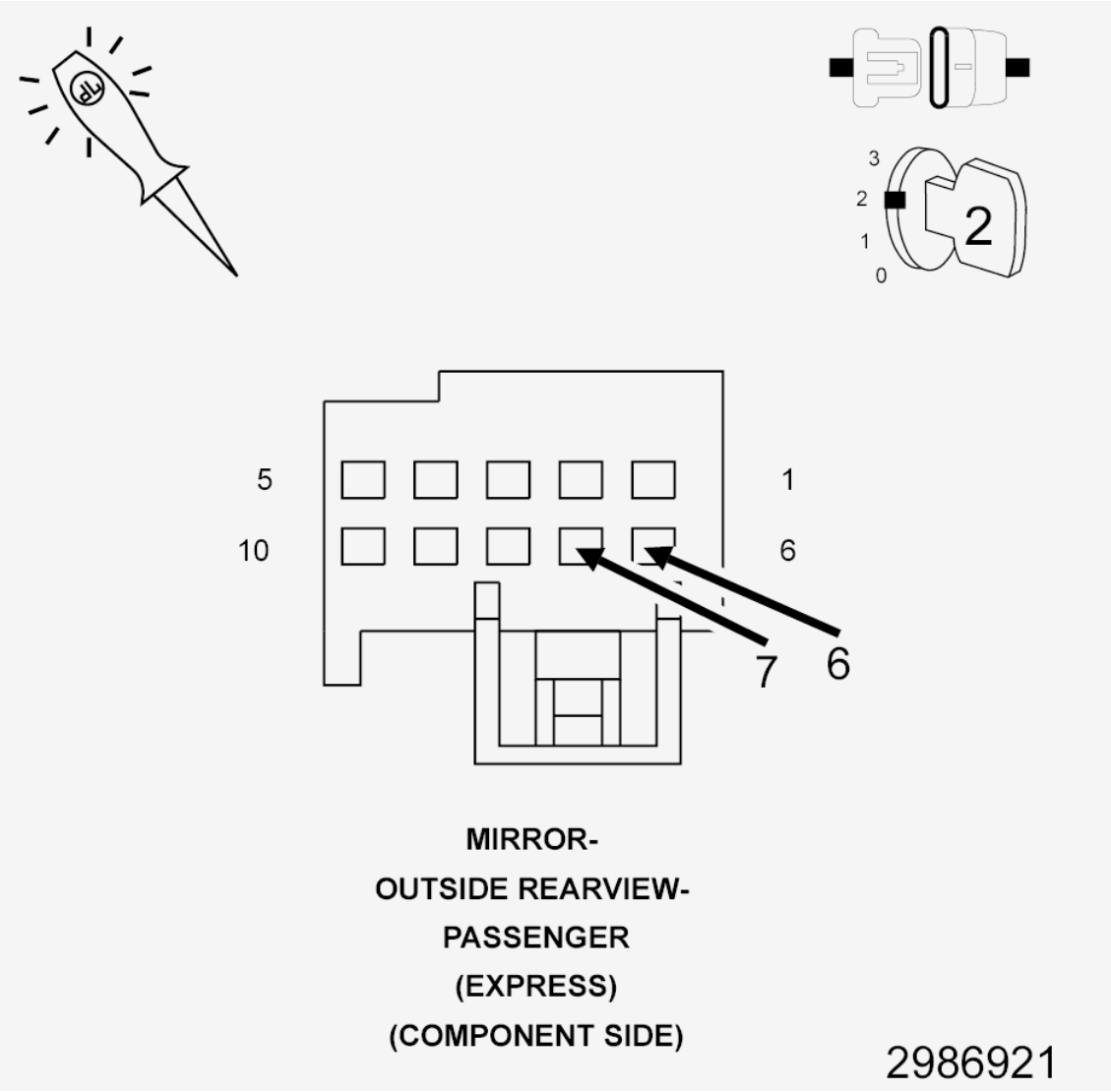

Fig. 26: Checking Mirror & Harness For Open
Courtesy of CHRYSLER GROUP, LLC

1. Gain access to the Passenger Door Module but do not disconnect the Mirror (PDM) C2 harness connector.

   NOTE: The graphic shows the terminal side of the connector. Back probe the wire side.

2. Using a 12 volt test light, back probe and connect one lead to the (P72) Passenger Mirror Vertical Driver circuit and the other lead to the (P70) Passenger Mirror Common Driver circuit in the Passenger Outside Rearview Mirror (Component Side) C2 connector in the PDM.
3. Operate the Mirror Adjust Switch up and down and observe the test light.

   Does the test light illuminate brightly when the switch is moved in either direction?

Yes

- Examine and repair the mirror harness for any breaks or damage. If the wiring harness and connector are okay, replace the Passenger Outside Rearview Mirror in accordance with the Service Information. Refer to **MIRROR, OUTSIDE REARVIEW, REMOVAL** and **MIRROR, OUTSIDE REARVIEW, GLASS, REMOVAL** .
- Perform the BODY VERIFICATION TEST. Refer to **STANDARD PROCEDURE** .

No

- Replace the Passenger Door Module (PDM) in accordance with the Service Information. Refer to **MODULE, DOOR, REMOVAL** .
- Perform the BODY VERIFICATION TEST. Refer to **STANDARD PROCEDURE** .

B1F03-11-MIRROR HORIZONTAL MOTOR CONTROL - CIRCUIT SHORT TO GROUND

For a complete wiring diagram, **refer to appropriate SYSTEM WIRING DIAGRAMS article** .

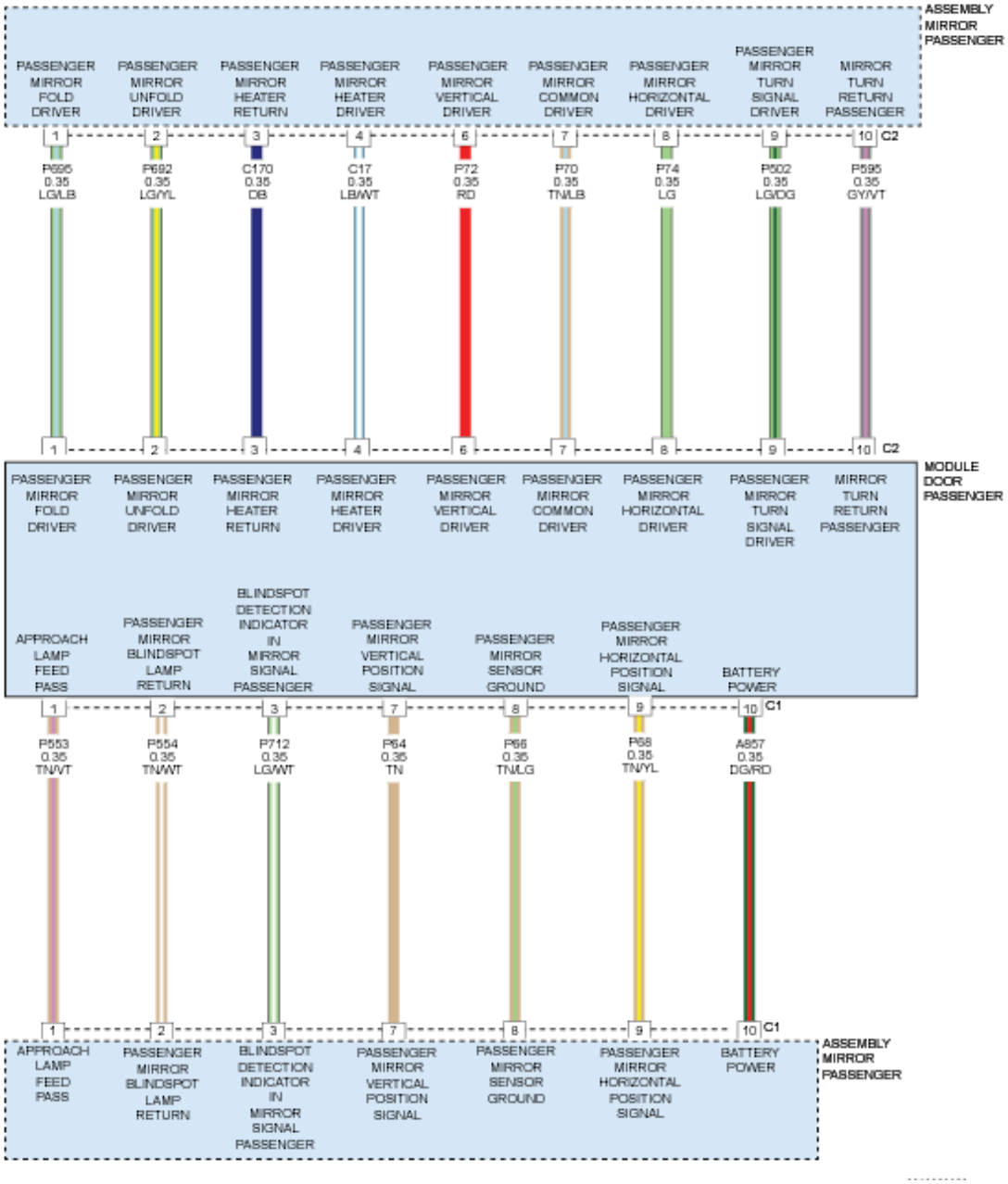

Fig. 27: Passenger Mirror Assembly - Circuit Diagram
Courtesy of CHRYSLER GROUP, LLC

THEORY OF OPERATION

The Mirror Horizontal Driver circuit supplies battery voltage for the mirror left position and ground for the mirror right position. The Mirror Common Driver supplies battery voltage for the mirror right position and ground for the mirror left.

WHEN MONITORED

Continuously.

SET CONDITION

The Door Module senses a short low on the Mirror Horizontal Driver circuit for more than two seconds.

POSSIBLE CAUSES

Possible Causes
MIRROR HORIZONTAL DRIVER CIRCUIT SHORTED TO GROUND
MIRROR HORIZONTAL DRIVER CIRCUIT SHORTED TO ANOTHER DRIVER MIRROR DRIVER CIRCUIT
MIRROR HORIZONTAL DRIVER CIRCUIT FOR A SHORT TO ANY RETURN OR GROUND CIRCUITS
OUTSIDE REARVIEW MIRROR
DOOR MODULE

DIAGNOSTIC TEST

1. **TEST FOR INTERMITTENT CONDITION**
    1. Cycle the ignition on.
    2. With the scan tool, record and erase Diagnostic Trouble Codes (DTCs).
    3. Press and release the Mirror Select switch to select the Driver Outside Rearview Mirror.
    4. Operate the Mirror Adjust switch in all directions several times while monitoring the scan tool for DTCs.

    NOTE: After adjusting the mirror in one direction wait at least two seconds before adjusting the mirror in the opposite direction, as this will allow time for an active fault to set if present.

    Does the scan tool display; B1F03-11-MIRROR HORIZONTAL MOTOR CONTROL - CIRCUIT SHORT TO GROUND?

    Yes

    - Go To 2

    No

    - The conditions that caused this code to set are not present at this time. Use the wiring diagram/schematic as a guide and inspect the wiring and connectors.
    - Perform the BODY VERIFICATION TEST. Refer to **STANDARD PROCEDURE** .
2. **INSPECT MIRROR CONNECTIONS**
    1. Cycle the ignition off.

2. Disconnect the Passenger Outside Rearview Mirror C2 connector at the Passenger Door Module.
3. Inspect the wiring harness, connectors and the Passenger Door Module for any pin problems, shorted or broken wiring.

   Were there any problems found?

   Yes

   - Repair as necessary.
   - Perform the BODY VERIFICATION TEST. Refer to **STANDARD PROCEDURE** .

   No

   - Go To 3

3. **MIRROR OR MODULE**
   1. Cycle the ignition on.
   2. With the scan tool, record and erase DTCs.
   3. Press and release the Mirror Select switch to select the Passenger Outside Rearview Mirror.
   4. Operate the Mirror Adjust switch in all directions several times while monitoring the scan tool for DTCs.

      NOTE: After adjusting the mirror in one direction wait at least two seconds before adjusting the mirror in the opposite direction, as this will allow time for an active fault to set if present.

   5. With the scan tool, read DTCs.

      NOTE: Check for a change in DTCs.

      Does the scan tool display: B1F03-13-MIRROR HORIZONTAL MOTOR CONTROL - CIRCUIT OPEN as active?

      Yes

      - With the circuit now OPEN that indicates the short is NOT in the Module. Replace the mirror in accordance with the Service Information. Refer to **MIRROR, OUTSIDE REARVIEW, REMOVAL** and **MIRROR, OUTSIDE REARVIEW, GLASS, REMOVAL** .
      - Perform the BODY VERIFICATION TEST. Refer to **STANDARD PROCEDURE** .

      No

      - Replace the Door Module in accordance with the Service Information. Refer to **MODULE, DOOR, REMOVAL** .

- Perform the BODY VERIFICATION TEST. Refer to **STANDARD PROCEDURE** .

B1F03-12-MIRROR HORIZONTAL MOTOR CONTROL - CIRCUIT SHORT TO BATTERY

For a complete wiring diagram, **refer to appropriate SYSTEM WIRING DIAGRAMS article** .

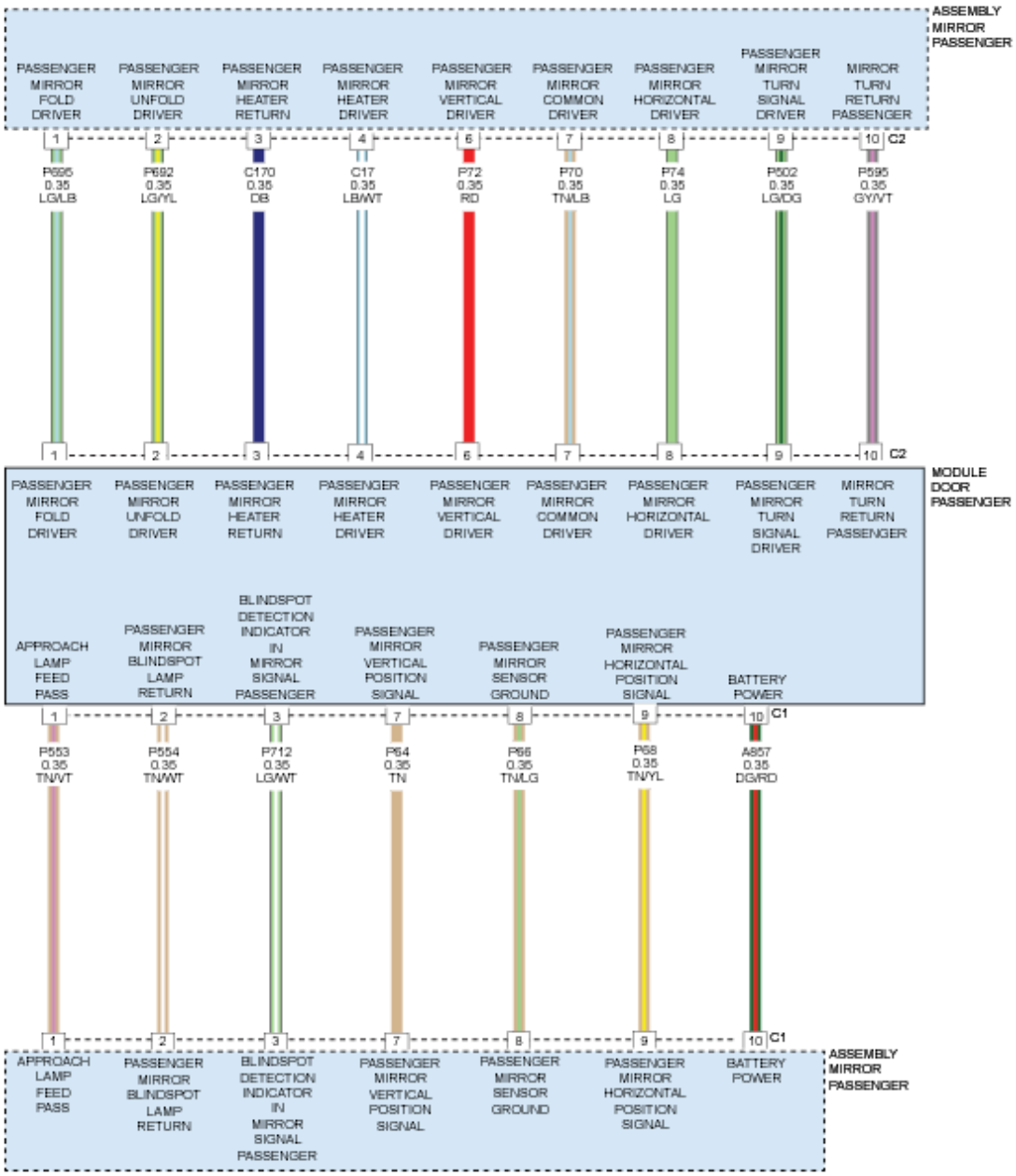

Fig. 28: Passenger Mirror Assembly - Circuit Diagram
Courtesy of CHRYSLER GROUP, LLC

THEORY OF OPERATION

The Mirror Horizontal Driver circuit supplies battery voltage for the mirror left position and ground for the mirror right position. The Mirror Common Driver supplies battery voltage for the mirror right position and ground for the mirror left.

WHEN MONITORED

Continuously.

SET CONDITION

When the Door Module (DDM) senses a short high on the Mirror Horizontal Driver circuit for more than 10 ms.

POSSIBLE CAUSES

Possible Causes
MIRROR HORIZONTAL DRIVER CIRCUIT SHORTED TO THE MIRROR FOLD DRIVER CIRCUIT
MIRROR HORIZONTAL DRIVER CIRCUIT SHORTED TO THE MIRROR UNFOLD DRIVER CIRCUIT
MIRROR HORIZONTAL DRIVER CIRCUIT SHORTED TO THE MIRROR HEATER DRIVER CIRCUIT
OUTSIDE REARVIEW MIRROR
DOOR MODULE

DIAGNOSTIC TEST

1. **TEST FOR INTERMITTENT CONDITION**
    1. Cycle the ignition on.
    2. With the scan tool, record and erase the Diagnostic Trouble Codes (DTCs).
    3. Press and release the Mirror Select switch to select the Passenger Outside Rearview Mirror.
    4. Operate the Mirror Adjust switch in all directions several times.
    5. Cycle the ignition from on to off three times.
    6. Cycle the ignition on.
    7. With the scan tool, read the active DTCs.

    Does the scan tool display; B1F03-12-MIRROR HORIZONTAL MOTOR CONTROL - CIRCUIT SHORT TO BATTERY as active?

    Yes

    - Go To 2

    No

- The conditions that caused this code to set are not present at this time. For vehicles equipped with folding outside rearview mirrors, repeat test with mirror folded. If DTC is now active, Go To 2. Otherwise, use the wiring diagram/schematic as a guide and inspect the wiring and connectors.
- Perform the BODY VERIFICATION TEST. Refer to **STANDARD PROCEDURE** .

2. **CHECK (P695) PASSENGER MIRROR FOLD DRIVER CIRCUIT AND (P692) PASSENGER MIRROR UNFOLD DRIVER CIRCUIT FOR A SHORT TO (P74) PASSENGER MIRROR HORIZONTAL DRIVER CIRCUIT**

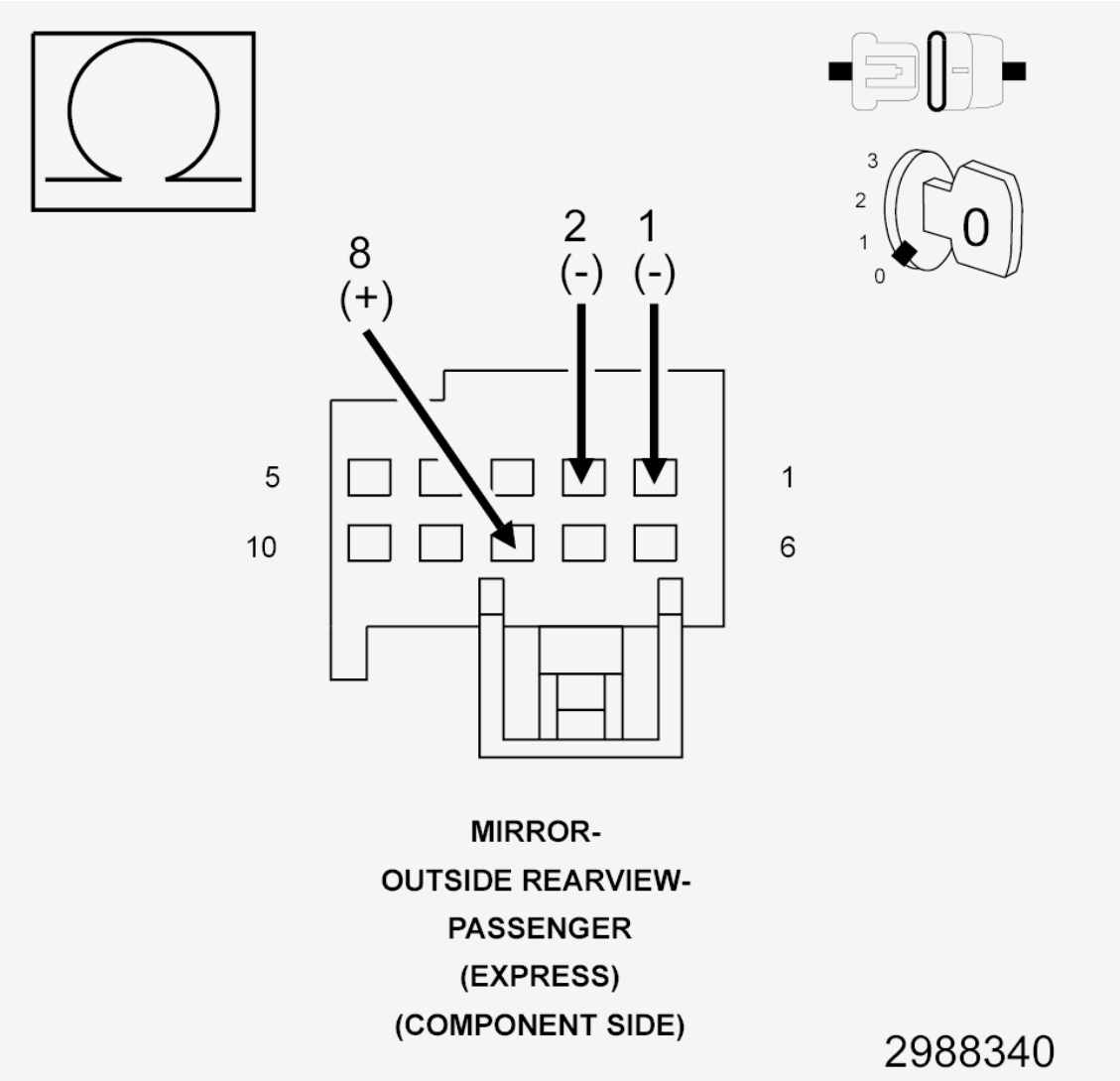

Fig. 29: Checking Passenger Mirror Fold Driver Circuit & Passenger Mirror Unfold Driver Circuit For Short To Passenger Mirror Horizontal Driver Circuit
Courtesy of CHRYSLER GROUP, LLC

1. Cycle the ignition off.
2. Disconnect the Passenger Outside Rearview Mirror (Component Side) C2 connector from the

PDM.

3. Measure the resistance between the (P74) Passenger Mirror Horizontal Driver circuit and the (P695) Passenger Mirror Fold Driver circuit at the Passenger Outside Rearview Mirror (Component Side) connector.
4. Measure the resistance between the (P74) Passenger Mirror Horizontal Driver circuit and the (P692) Passenger Mirror Unfold Driver circuit at the Passenger Outside Rearview Mirror (Component Side) connector.

Is the resistance below 10k Ohms for either measurement?

Yes

- Repair all circuits with a resistance below 10k Ohms for a short to the (P74) Passenger Mirror Horizontal Driver circuit. If the wiring harness and connector are okay, replace the Passenger Outside Rearview Mirror in accordance with the Service Information. Refer to **MIRROR, OUTSIDE REARVIEW, REMOVAL** and **MIRROR, OUTSIDE REARVIEW, GLASS, REMOVAL** .
- Perform the BODY VERIFICATION TEST. Refer to **STANDARD PROCEDURE** .

No

- Go To 3

3. **CHECK (P74) PASSENGER MIRROR HORIZONTAL DRIVER CIRCUIT FOR A SHORT TO THE (C17) PASSENGER MIRROR HEATER DRIVER CIRCUIT**

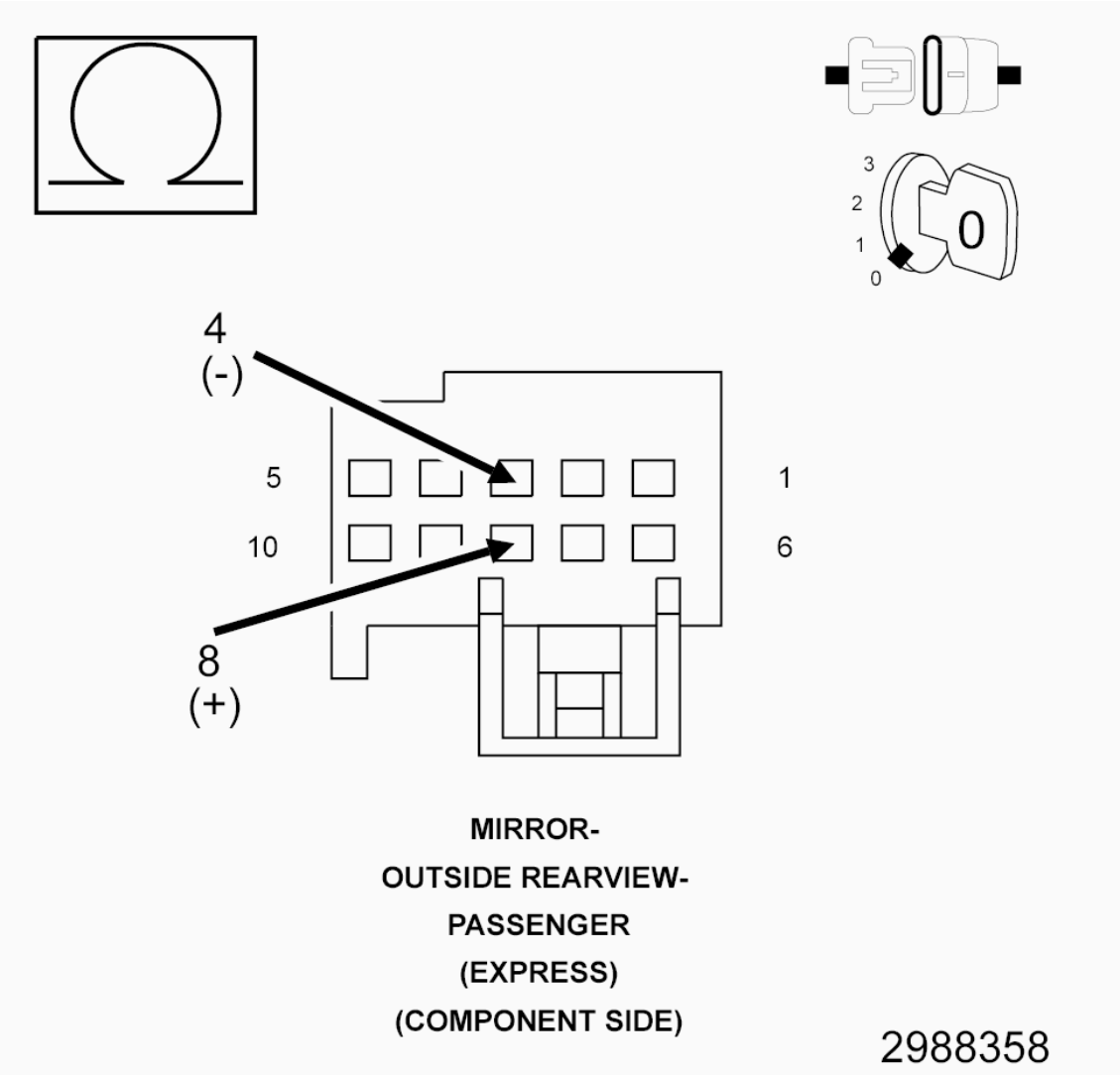

Fig. 30: Checking Passenger Mirror Horizontal Driver Circuit For Short To Passenger Mirror Heater Driver Circuit
Courtesy of CHRYSLER GROUP, LLC

1. Measure the resistance between the (P74) Passenger Mirror Horizontal Driver circuit and the (C17) Passenger Mirror Heater Driver circuit at the Passenger Outside Rearview Mirror (Component Side) connector.

   Is the resistance below 10k Ohms?

   Yes

   - Repair the short between the (P74) Passenger Mirror Horizontal Driver circuit and the (C17) Passenger Mirror Heater Driver circuit. If the wiring harness and connector are okay, replace the Passenger Outside Rearview Mirror in accordance with the Service Information. Refer to **MIRROR, OUTSIDE REARVIEW, REMOVAL** and **MIRROR, OUTSIDE REARVIEW, GLASS, REMOVAL** .

- Perform the BODY VERIFICATION TEST. Refer to **STANDARD PROCEDURE** .

No

- Replace the Passenger Door Module (PDM) in accordance with the Service Information. Refer to **MODULE, DOOR, REMOVAL** .
- Perform the BODY VERIFICATION TEST. Refer to **STANDARD PROCEDURE** .

B1F03-13-MIRROR HORIZONTAL MOTOR CONTROL - CIRCUIT OPEN

For a complete wiring diagram, **refer to appropriate SYSTEM WIRING DIAGRAMS article** .

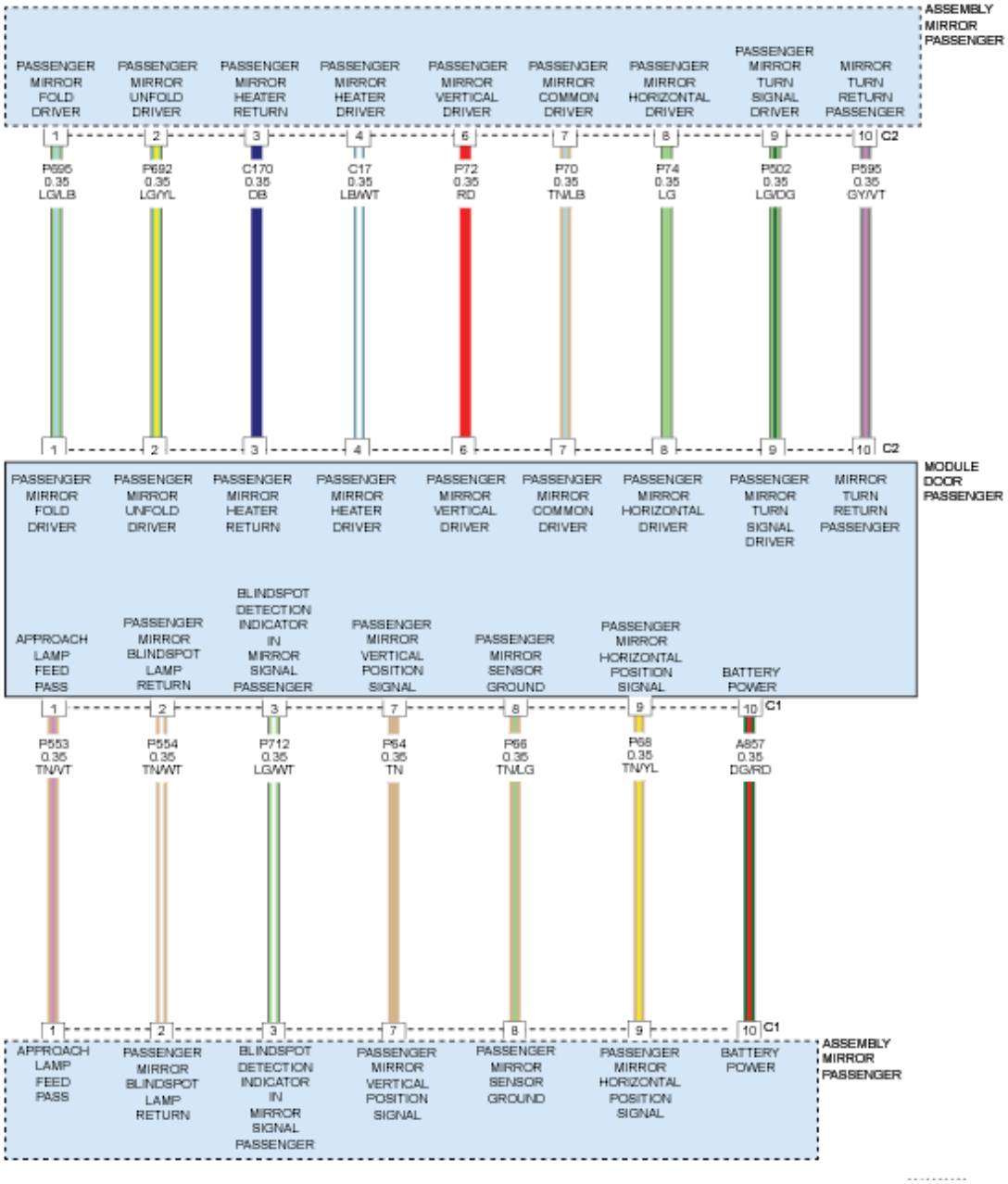

Fig. 31: Passenger Mirror Assembly - Circuit Diagram
Courtesy of CHRYSLER GROUP, LLC

THEORY OF OPERATION

The Mirror Horizontal Driver circuit supplies battery voltage for the mirror left position and ground for the mirror right position. The Mirror Common Driver supplies battery voltage for the mirror right position and ground for the mirror left.

WHEN MONITORED

Continuously.

SET CONDITION

When the Door Module senses a short high on the Mirror Horizontal Driver circuit for more than 10 ms.

POSSIBLE CAUSES

Possible Causes
MIRROR HORIZONTAL DRIVER CIRCUIT OPEN
MIRROR COMMON DRIVER CIRCUIT OPEN
OUTSIDE REARVIEW MIRROR
DOOR MODULE

DIAGNOSTIC TEST

1. **TEST FOR INTERMITTENT CONDITION**
    1. Cycle the ignition on.
    2. With the scan tool, record and erase the Diagnostic Trouble Codes (DTCs).
    3. Press and release the Mirror Select switch to select the Passenger Outside Rearview Mirror.
    4. Operate the Mirror Adjust switch in all directions several times.
    5. Cycle the ignition from on to off three times.
    6. Cycle the ignition on.
    7. With the scan tool, read the active DTCs.

    Does the scan tool display; B1F03-13-MIRROR HORIZONTAL MOTOR CONTROL - CIRCUIT OPEN as active?

    Yes

    - Go To 2

    No

    - The conditions that caused this code to set are not present at this time. For vehicle's equipped with folding outside rearview mirrors, repeat test with mirror folded. If DTC is now active, Go To 2. Otherwise, use the wiring diagram/schematic as a guide and inspect the wiring and connectors.
    - Perform the BODY VERIFICATION TEST. Refer to **STANDARD PROCEDURE** .
2. **CHECK MIRROR AND HARNESS FOR AN OPEN**

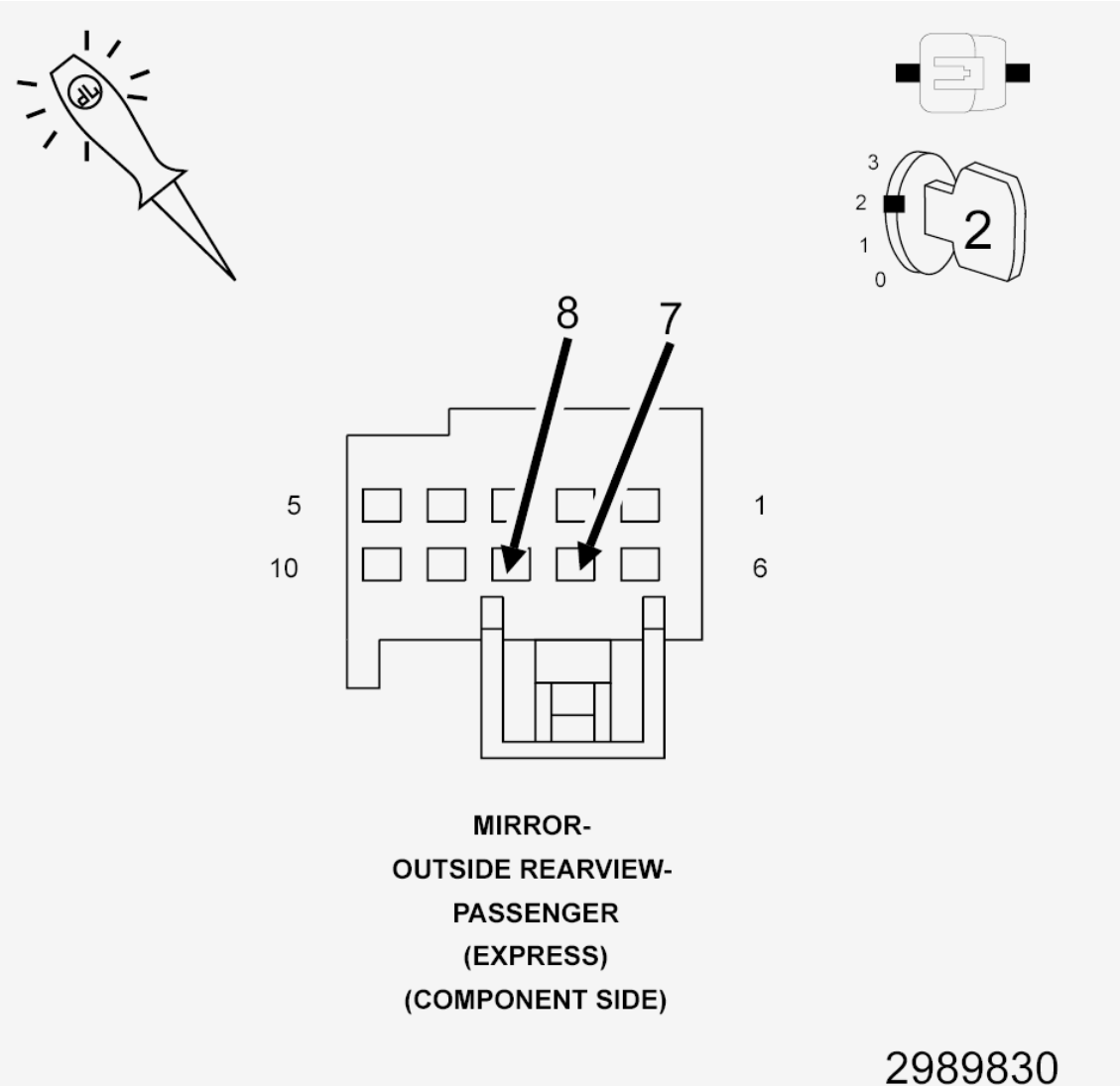

Fig. 32: Checking Mirror & Harness For Open
Courtesy of CHRYSLER GROUP, LLC

1. Gain access to the Passenger Door Module but do not disconnect the Mirror C2 connector.

   NOTE: The graphic shows the terminal side of the connector. Back probe the wire side.

2. Using a 12 volt test light, back probe and connect one lead to the (P74) Passenger Mirror Horizontal Driver circuit and the other lead to the (P70) Passenger Mirror Common Driver circuit in the Passenger Outside Rearview Mirror (Component Side) connector (PDM C2).
3. While moving the mirror adjust switch left and right, observe the test light.

   Does the test light illuminate brightly when the switch is moved in either direction?

   Yes

- Examine and repair the mirror harness for any breaks or damage. If the wiring harness and connector are okay, replace the Passenger Outside Rearview Mirror in accordance with the Service Information. Refer to **MIRROR, OUTSIDE REARVIEW, REMOVAL** and **MIRROR, OUTSIDE REARVIEW, GLASS, REMOVAL** .
- Perform the BODY VERIFICATION TEST. Refer to **STANDARD PROCEDURE** .

No

- Replace the Passenger Door Module (PDM) in accordance with the Service Information. Refer to **MODULE, DOOR, REMOVAL** .
- Perform the BODY VERIFICATION TEST. Refer to **STANDARD PROCEDURE** .

B1F04-11-MIRROR FOLD CONTROL - CIRCUIT SHORT TO GROUND

For a complete wiring diagram, **refer to appropriate SYSTEM WIRING DIAGRAMS article** .

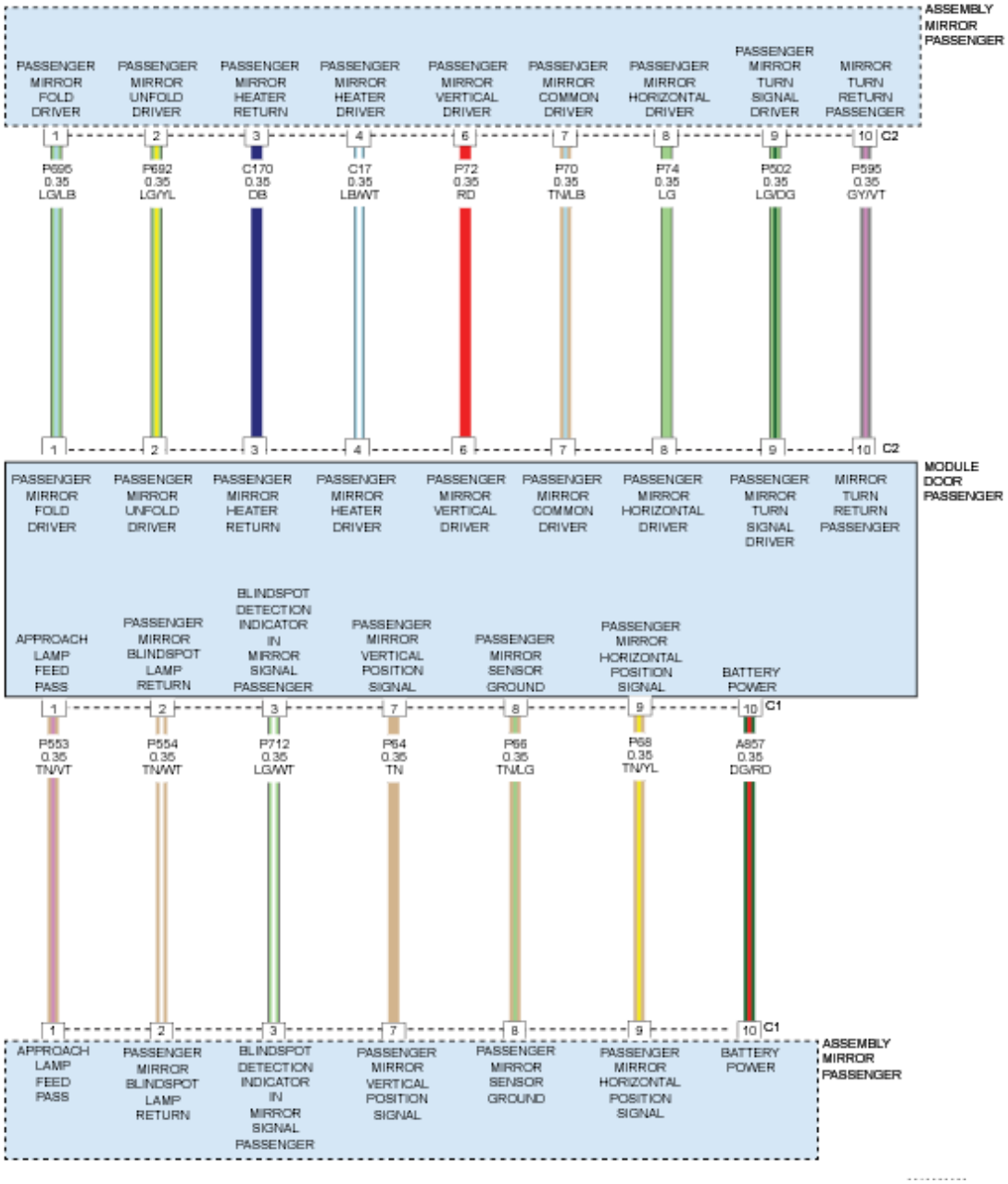

Fig. 33: Passenger Mirror Assembly - Circuit Diagram
Courtesy of CHRYSLER GROUP, LLC

WHEN MONITORED

Continuously.

SET CONDITION

When the Door Module senses a short low on the Mirror Fold Driver circuit or the Mirror Unfold Driver circuit for more than 10 ms.

POSSIBLE CAUSES

Possible Causes
MIRROR FOLD DRIVER CIRCUIT SHORTED TO GROUND
MIRROR UNFOLD DRIVER CIRCUIT SHORTED TO GROUND
MIRROR FOLD DRIVER CIRCUIT SHORTED TO THE MIRROR HEATER RETURN CIRCUIT
MIRROR UNFOLD DRIVER CIRCUIT SHORTED TO THE MIRROR HEATER RETURN CIRCUIT
OUTSIDE REARVIEW MIRROR
DOOR MODULE

DIAGNOSTIC TEST

1. **TEST FOR INTERMITTENT CONDITION**
    1. Turn the ignition on.
    2. With the scan tool, record and erase the Diagnostic Trouble Codes (DTCs).
    3. Operate the Mirror Fold switch several times.
    4. Cycle the ignition from on to off three times.
    5. Turn the ignition on.
    6. With the scan tool, read the active DTCs.

    Does the scan tool display; B1F04-11-MIRROR FOLD CONTROL - CIRCUIT SHORT TO GROUND as active?

    Yes

    - Go To 2

    No

    - The conditions that caused this code to set are not present at this time. Repeat the test with the mirror adjusted in several different positions. If the DTC is now active, Go To 2. Otherwise, use the wiring diagram/schematic as a guide and inspect the wiring and connectors.
    - Perform the BODY VERIFICATION TEST. Refer to **STANDARD PROCEDURE** .
2. **CHECK (P695) PASSENGER MIRROR FOLD DRIVER CIRCUIT AND (P692) PASSENGER MIRROR UNFOLD DRIVER CIRCUIT FOR A SHORT TO GROUND**

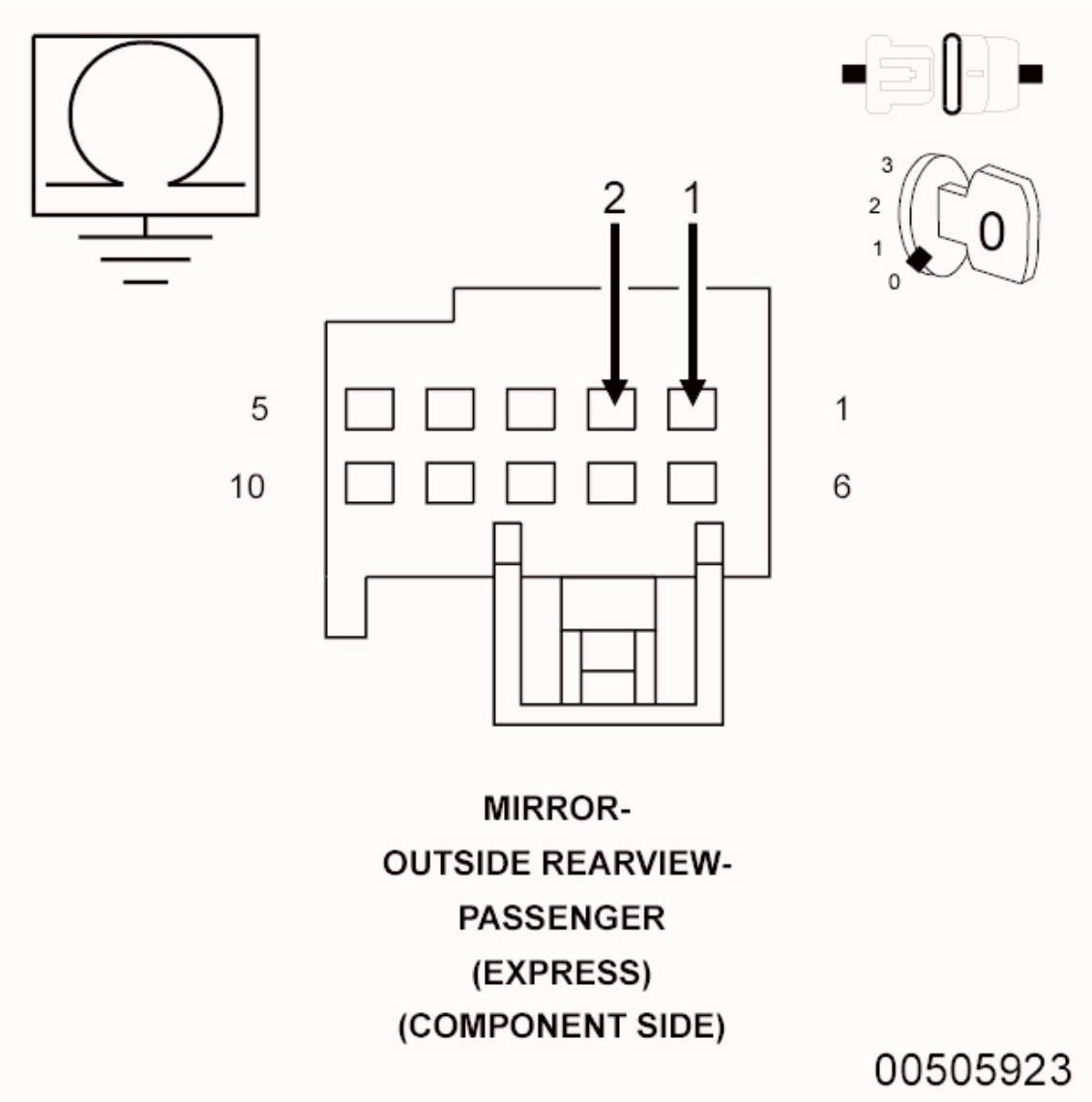

Fig. 34: Checking Passenger Mirror Fold Driver Circuit & Passenger Mirror Unfold Driver Circuit For Short To Ground
Courtesy of CHRYSLER GROUP, LLC

1. Turn the ignition off.
2. Disconnect the Passenger Outside Rearview Mirror (Component Side) connector from the PDM C2 harness connector.
3. Measure the resistance of the (P695) Passenger Mirror Fold Driver circuit between ground and the Passenger Outside Rearview Mirror (Component Side) connector.
4. Measure the resistance of the (P692) Passenger Mirror Unfold Driver circuit between ground and the Passenger Outside Rearview Mirror (Component Side) connector.

   Is the resistance below 10k Ohms for either measurement?

Yes

- Repair all circuits with a resistance below 10k ohms for a short to ground. If the wiring harness and connector are okay, replace the Passenger Outside Rearview Mirror in accordance with the Service Information. Refer to **MIRROR, OUTSIDE REARVIEW, REMOVAL** and **MIRROR, OUTSIDE REARVIEW, GLASS, REMOVAL** .
- Perform the BODY VERIFICATION TEST. Refer to **STANDARD PROCEDURE** .

No

- Go To 3

3. **CHECK (P695) PASSENGER MIRROR FOLD DRIVER CIRCUIT AND (P692) PASSENGER MIRROR UNFOLD DRIVER CIRCUIT FOR A SHORT TO THE (C170) PASSENGER MIRROR HEATER RETURN CIRCUIT**

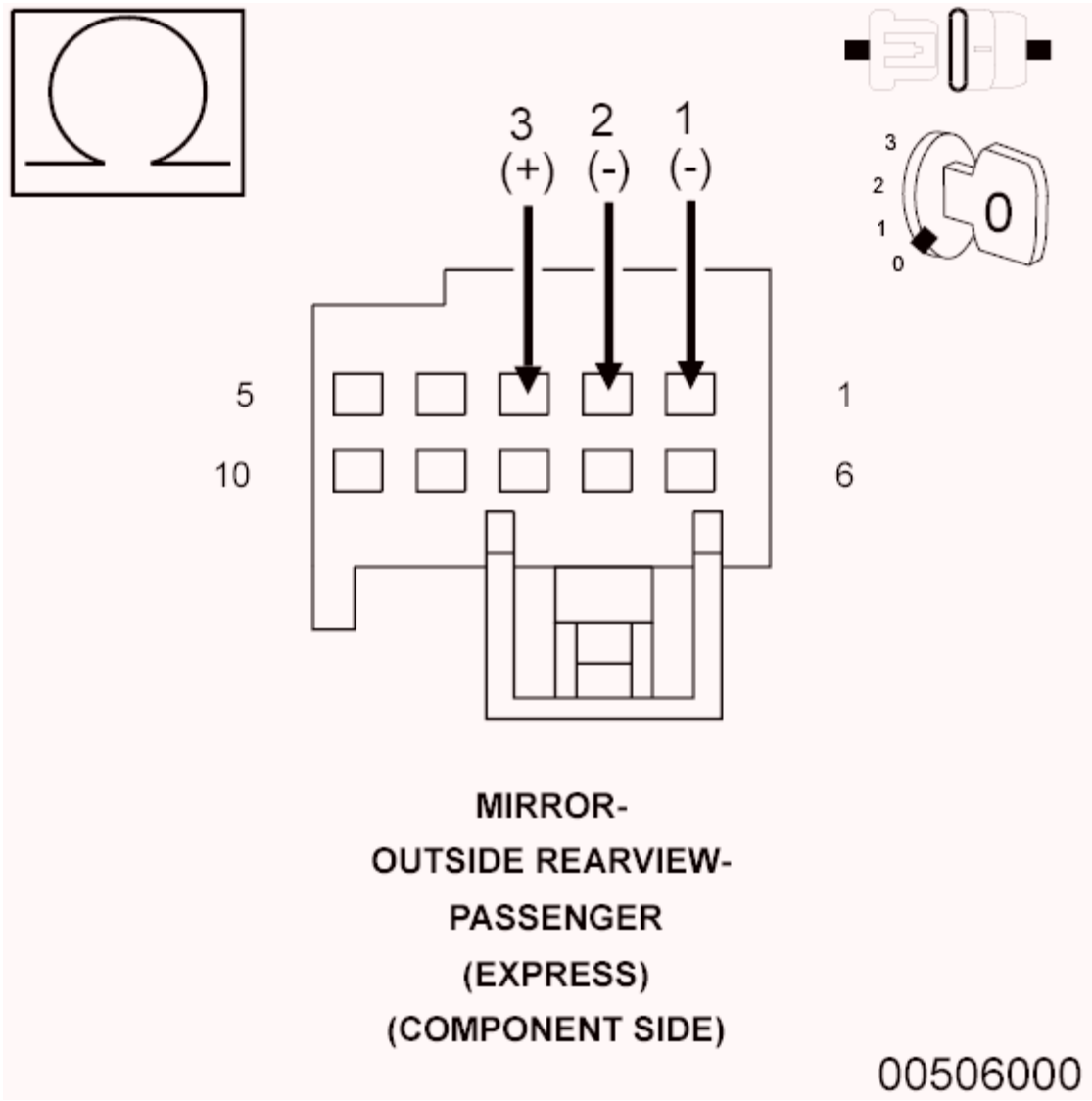

Fig. 35: Checking Passenger Mirror Fold/Unfold Driver Circuit For Short To Passenger Mirror Heater Return Circuit
Courtesy of CHRYSLER GROUP, LLC

1. Measure the resistance between the (P695) Passenger Mirror Fold Driver circuit and the (C170) Passenger Mirror Heater Return circuit at the Passenger Outside Rearview Mirror (Component Side) connector.
2. Measure the resistance between the (P692) Passenger Mirror Unfold Driver circuit and the (C170) Passenger Mirror Heater Return circuit at the Passenger Outside Rearview Mirror (Component Side) connector.

Is the resistance below 10k Ohms for either measurement?

Yes

- Repair all circuits with a resistance below 10k ohms for a short to the (C170) Passenger Mirror Heater Return circuit. If the wiring harness and connector are okay, replace the Passenger Outside Rearview Mirror in accordance with the Service Information. Refer to **MIRROR, OUTSIDE REARVIEW, REMOVAL** and **MIRROR, OUTSIDE REARVIEW, GLASS, REMOVAL** .
- Perform the BODY VERIFICATION TEST. Refer to **STANDARD PROCEDURE** .

No

- Go To 4.

4. **MODULE OR MIRROR**
   1. Turn the ignition on.
   2. With the scan tool, record and erase the Diagnostic Trouble Codes (DTCs).
   3. Operate the Mirror Fold switch several times.
   4. Operate the mirror switch in all directions.
   5. Cycle the ignition from on to off three times.
   6. Turn the ignition on.
   7. Wait 30 seconds.
   8. With the scan tool, read the active DTCs.

NOTE: Check for a CHANGE in the DTCs.

Does the scan tool display; B1F04-15-MIRROR FOLD CONTROL - CIRCUIT SHORT TO BATTERY OR OPEN as active?

Yes

- Check and repair any damaged wiring in the C2 harness. If the wiring harness and connectors are okay, replace the Outside Rearview Mirror in accordance with the Service Information.

Refer to **MIRROR, OUTSIDE REARVIEW, REMOVAL** and **MIRROR, OUTSIDE REARVIEW, GLASS, REMOVAL** .

- Perform the BODY VERIFICATION TEST. Refer to **STANDARD PROCEDURE** .

No

- Replace the Passenger Door Module (PDM) in accordance with the Service Information. Refer to **MODULE, DOOR, REMOVAL** .
- Perform the BODY VERIFICATION TEST. Refer to **STANDARD PROCEDURE** .

B1F04-15-MIRROR FOLD CONTROL - CIRCUIT SHORT TO BATTERY OR OPEN

For a complete wiring diagram, **refer to appropriate SYSTEM WIRING DIAGRAMS article** .

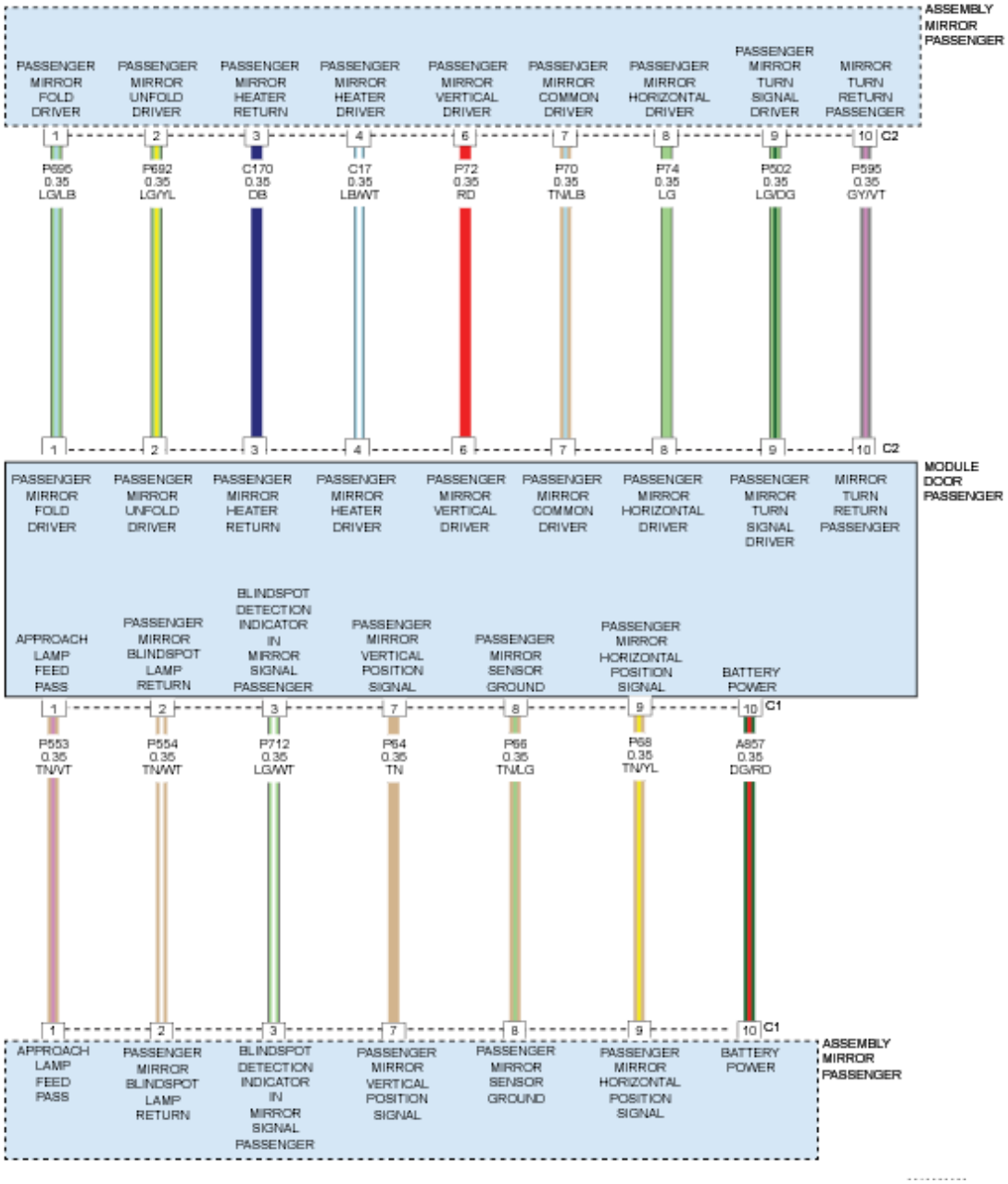

Fig. 36: Passenger Mirror Assembly - Circuit Diagram
Courtesy of CHRYSLER GROUP, LLC

WHEN MONITORED

Continuously.

SET CONDITION

When the Door Module senses voltage on the Mirror Fold Driver circuit or the Mirror Unfold Driver circuit for more than 10 ms when no voltage should be present or the Fold or Unfold Driver circuit is open.

POSSIBLE CAUSES

Possible Causes
MIRROR FOLD DRIVER CIRCUIT SHORTED TO THE MIRROR HEATER DRIVER CIRCUIT
MIRROR UNFOLD DRIVER CIRCUIT SHORTED TO THE MIRROR HEATER DRIVER CIRCUIT
MIRROR FOLD DRIVER CIRCUIT SHORTED TO VOLTAGE
MIRROR UNFOLD DRIVER CIRCUIT SHORTED TO VOLTAGE
MIRROR FOLD DRIVER CIRCUIT OPEN
MIRROR UNFOLD DRIVER CIRCUIT OPEN
OUTSIDE REARVIEW MIRROR SHORTED
DOOR MODULE

DIAGNOSTIC TEST

1. **TEST FOR INTERMITTENT CONDITION**
    1. Cycle the ignition on.
    2. With the scan tool, record and erase the Diagnostic Trouble Codes (DTCs).
    3. For vehicles equipped with heated mirrors, turn the rear defogger ON.
    4. Operate the Mirror Fold switch several times.
    5. With the scan tool, read the DTCs.

    Does the scan tool display; B1F04-15-MIRROR FOLD CONTROL - CIRCUIT SHORT TO BATTERY OR OPEN?

    Yes

    - Go To 2

    No

    - The conditions that caused this code to set are not present at this time. Repeat the test with the mirror adjusted in several different positions. If the DTC is now active, Go To2 Otherwise, use the wiring diagram/schematic as a guide and inspect the wiring and connectors.
    - Perform the BODY VERIFICATION TEST. Refer to **STANDARD PROCEDURE** .
2. **CHECK THE (P695) PASSENGER MIRROR FOLD DRIVER CIRCUIT AND THE (P692) PASSENGER MIRROR UNFOLD DRIVER CIRCUIT FOR A SHORT TO THE (C17) PASSENGER MIRROR HEATER DRIVER CIRCUIT**

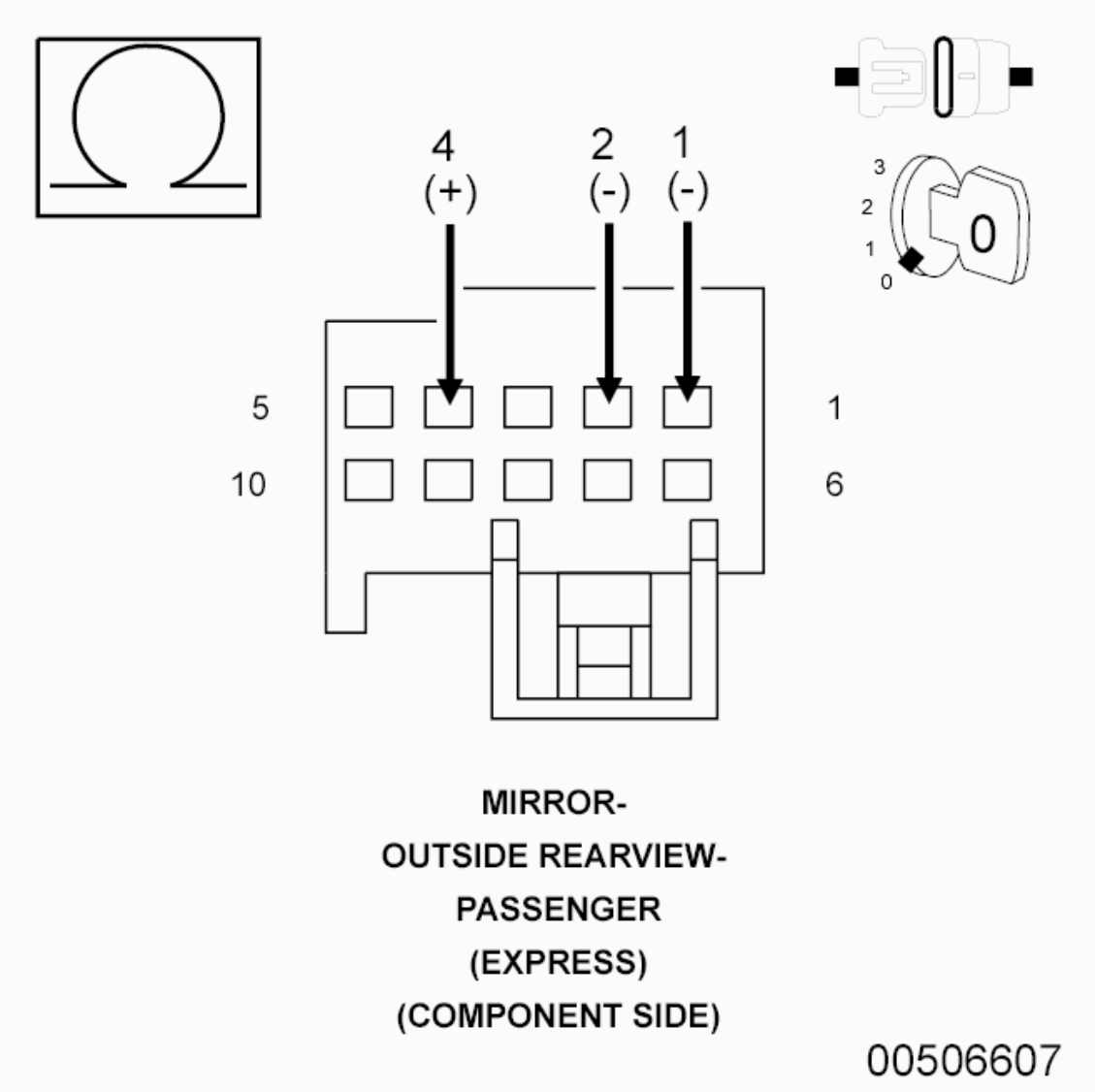

Fig. 37: Checking Passenger Mirror Fold/Unfold Driver Circuit For Short To Passenger Mirror Heater Driver Circuit
Courtesy of CHRYSLER GROUP, LLC

1. Cycle the ignition off.
2. Disconnect the Passenger Outside Rearview Mirror (Component Side) connector from the PDM C2 harness connector.
3. Measure the resistance between the (P695) Passenger Mirror Fold Driver circuit and the (C17) Passenger Mirror Heater Driver circuit at the Passenger Outside Rearview Mirror (Component Side) connector.
4. Measure the resistance between the (P692) Passenger Mirror Unfold Driver circuit and the (C17) Passenger Mirror Heater Driver circuit at the Passenger Outside Rearview Mirror (Component Side) connector.

   Is the resistance below 10k Ohms for either measurement?

Yes

- Repair all circuits with a resistance below 10k Ohms for a short to the (C17) Passenger Mirror Heater Driver circuit. If the wiring harness and connector are okay, replace the Passenger Outside Rearview Mirror in accordance with the Service Information. Refer to **MIRROR, OUTSIDE REARVIEW, REMOVAL** and **MIRROR, OUTSIDE REARVIEW, GLASS, REMOVAL** .
- Perform the BODY VERIFICATION TEST. Refer to **STANDARD PROCEDURE** .

No

- Go To 3

3. **CHECK THE (P695) PASSENGER MIRROR FOLD DRIVER CIRCUIT AND THE (P692) PASSENGER MIRROR UNFOLD DRIVER CIRCUIT FOR AN OPEN**

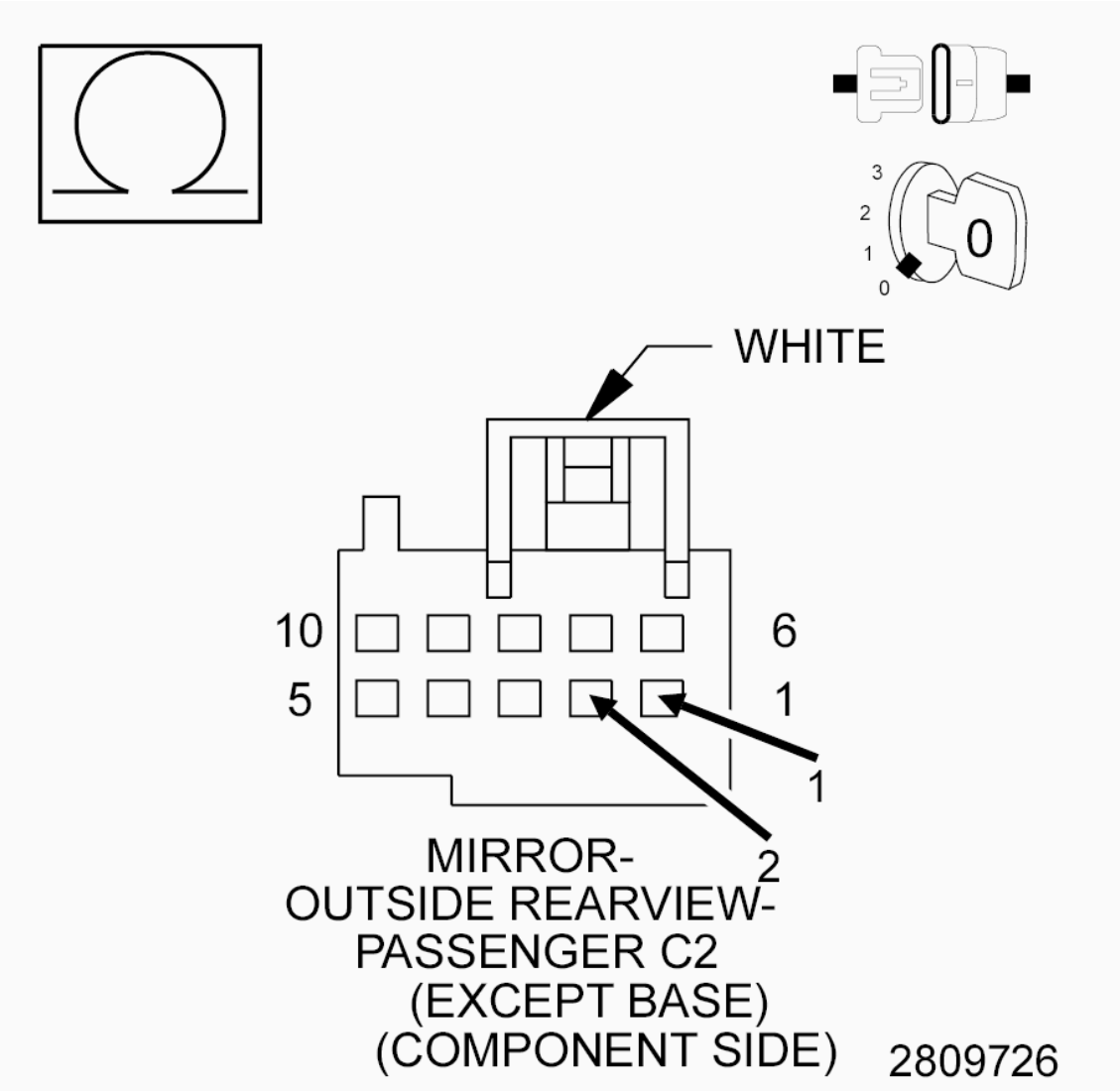

Fig. 38: Checking Passenger Mirror Fold Driver Circuit & Passenger Mirror Unfold Driver Circuit

For Open
Courtesy of CHRYSLER GROUP, LLC

1. Measure the resistance between the (P695) Passenger Mirror Fold Driver circuit and the (P692) Passenger Mirror Unfold Driver circuit at the Passenger Outside Rearview Mirror C2 (Component Side) connector.

   Is the resistance below 9.0 Ohms?

   Yes

   - Go To 4

   No

   - Replace the Passenger Power Folding Mirror Assembly in accordance with the Service Information. Refer to **MIRROR, OUTSIDE REARVIEW, REMOVAL** and **MIRROR, OUTSIDE REARVIEW, GLASS, REMOVAL** .
   - Perform the BODY VERIFICATION TEST. Refer to **STANDARD PROCEDURE** .

4. **CHECK THE (P695) PASSENGER MIRROR FOLD DRIVER CIRCUIT AND THE (P692) PASSENGER MIRROR UNFOLD DRIVER CIRCUIT FOR A SHORT TO VOLTAGE**

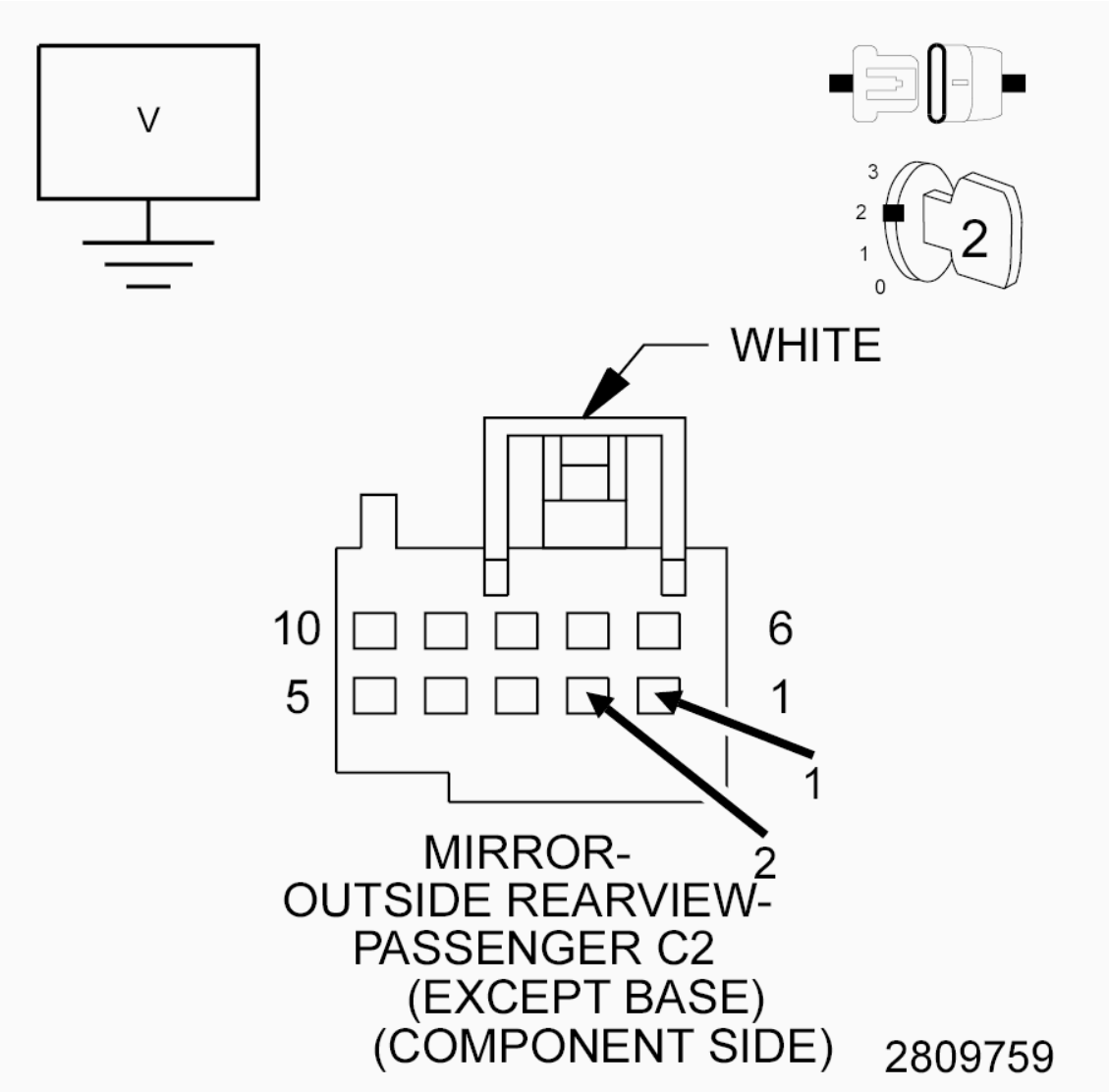

Fig. 39: Checking Passenger Mirror Fold Driver Circuit & Passenger Mirror Unfold Driver Circuit For Short To Voltage
Courtesy of CHRYSLER GROUP, LLC

1. Cycle the ignition on.
2. Measure the voltage between ground and the (P695) Passenger Mirror Fold Driver circuit in the Passenger Outside Rearview Mirror C2 (Component Side) connector.
3. Measure the voltage between ground and the (P692) Passenger Mirror Unfold Driver circuit in the Passenger Outside Rearview Mirror C2 (Component Side) connector.

   Is there any voltage present in either terminal?

   Yes

   - Replace the Passenger Outside Rearview Folding Mirror in accordance with the Service

Information. Refer to **MIRROR, OUTSIDE REARVIEW, REMOVAL** and **MIRROR, OUTSIDE REARVIEW, GLASS, REMOVAL** .

- Perform the BODY VERIFICATION TEST. Refer to **STANDARD PROCEDURE** .

No

- Replace the Passenger Door Module (PDM) in accordance with the Service Information. Refer to **MODULE, DOOR, REMOVAL** .
- Perform the BODY VERIFICATION TEST. Refer to **STANDARD PROCEDURE** .

B1F06-12-MIRROR CONTROL SENSOR POSITION CIRCUIT - CIRCUIT SHORT TO BATTERY

For a complete wiring diagram, **refer to appropriate SYSTEM WIRING DIAGRAMS article** .

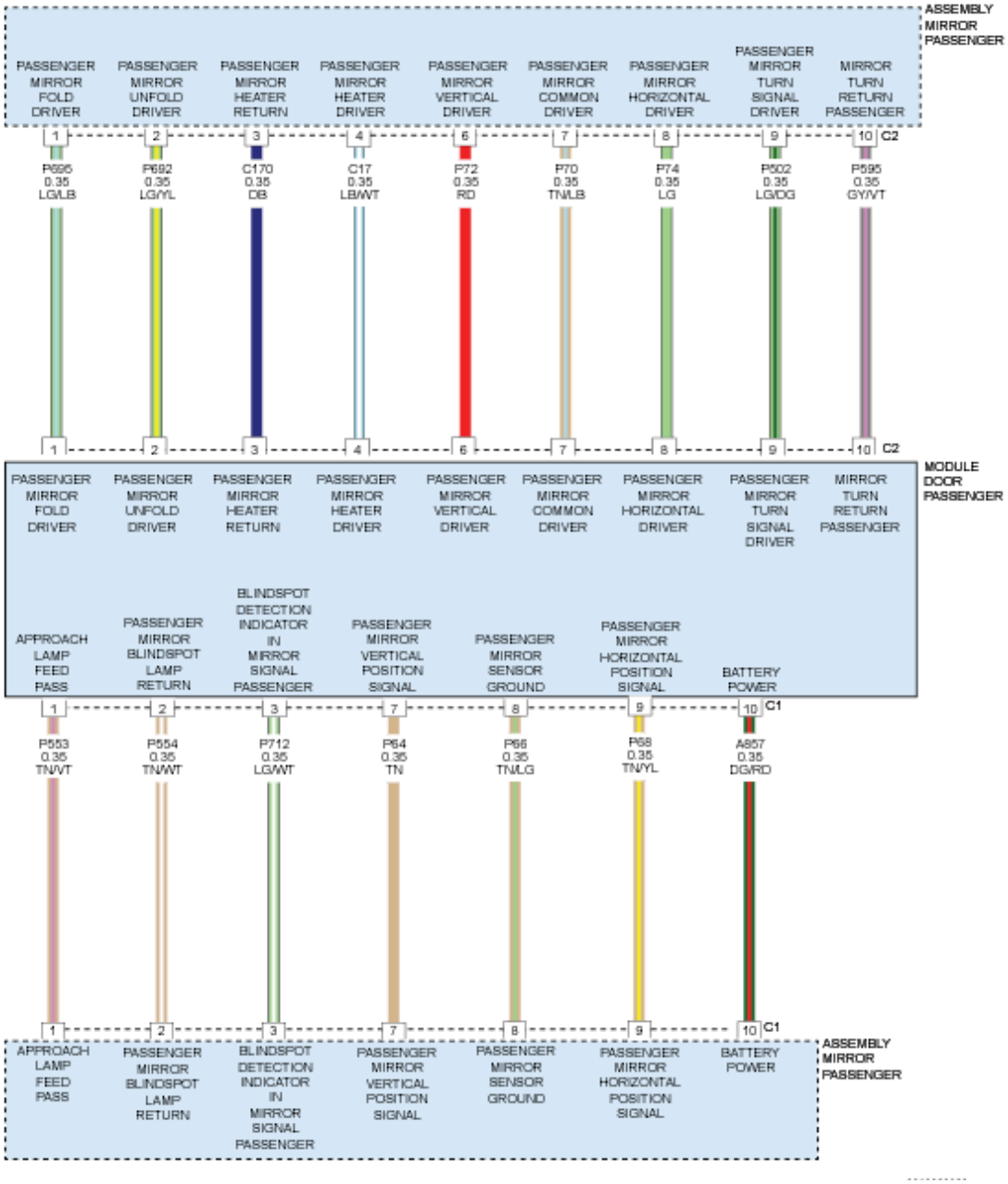

Fig. 40: Passenger Mirror Assembly - Circuit Diagram
Courtesy of CHRYSLER GROUP, LLC

WHEN MONITORED

Continuously with ignition on.

SET CONDITION

When the Door Module senses a short to battery on either the 5-volt supply, the mirror horizontal signal or the mirror vertical position signal circuit for more than two seconds, this code will set.

POSSIBLE CAUSES

Possible Causes
MIRROR VERTICAL POSITION SIGNAL CIRCUIT SHORTED TO VOLTAGE
MIRROR VERTICAL POSITION SIGNAL CIRCUIT SHORTED TO ANY DRIVER OR SIGNAL CIRCUIT
MIRROR HORIZONTAL POSITION SIGNAL CIRCUIT SHORTED TO VOLTAGE
MIRROR HORIZONTAL POSITION SIGNAL CIRCUIT SHORTED TO ANY DRIVER OR SIGNAL CIRCUIT
5 VOLT SUPPLY CIRCUIT SHORTED TO ANY CIRCUIT DRIVER CIRCUIT
5 VOLT SUPPLY CIRCUIT SHORTED TO BATTERY
OUTSIDE REARVIEW MIRROR
DOOR MODULE

DIAGNOSTIC TEST

1. **TEST FOR INTERMITTENT CONDITION**

NOTE: Before proceeding be sure this vehicle is equipped with Memory Mirrors and the configuration is set to = True.

1. Cycle the ignition on.
2. Using a scan tool, record and erase the Diagnostic Trouble Codes (DTCs).
3. Turn the passenger side turn signal on.
4. Turn the approach lamps on, if equipped.
5. Turn the rear defogger on, if equipped with heated mirror.
6. Press and release the Mirror Select switch to select the Passenger Outside Rearview Mirror.
7. Operate the Mirror Adjust Switch in all directions several times while monitoring the scan tool for DTCs.

NOTE: After adjusting the mirror in one direction wait at least two seconds before adjusting the mirror in the opposite direction, as this will allow time for an active DTC to set, if present.

Does the scan tool display: B1F06-12-MIRROR CONTROL SENSOR POSITION CIRCUIT - CIRCUIT SHORT TO BATTERY as active?

Yes

- Go To 2

No

- The conditions that caused this code to set are not present at this time. For vehicle's equipped with folding outside rearview mirrors, repeat this test with the mirror folded. If this DTC is now active, Go To 2. Otherwise, using the wiring diagrams as a guide, check all related connectors for signs of water intrusion, corrosion, pushed out or bent terminals and poor pin fit.
- Perform the BODY VERIFICATION TEST. Refer to **STANDARD PROCEDURE** .

2. **CHECK (A857) 5-VOLT SUPPLY CIRCUIT IN THE MODULE FOR A SHORT TO BATTERY**

NOTE: In this step we are measuring the 5-Volt Supply voltage at the Door Module. It should not be over 5.5 volts.

1. Cycle the ignition off.
2. Disconnect the Passenger Outside Rearview Mirror C1 and C2 (Component Side) harness connectors from the Door Module C1 and C2 sockets.
3. Cycle the ignition on.
4. Measure the voltage between Ground and the (A857) 5-volt Supply circuit at the Door Module (C1-Pin 10) (Module Side) socket.

   Is the Voltage above 5.5 Volts?

   Yes

   - Replace the Door Module in accordance with the Service Information. Refer to **MODULE, DOOR, REMOVAL** .
   - Perform the BODY VERIFICATION TEST. Refer to **STANDARD PROCEDURE** .

   No

   - Go To 3

3. **CHECK (A857) 5-VOLT SUPPLY CIRCUIT FOR A SHORT TO ANY OF THE CIRCUIT DRIVER OR SIGNAL CIRCUITS**

NOTE: We are now checking the wiring and the mirror for any crossed circuits.

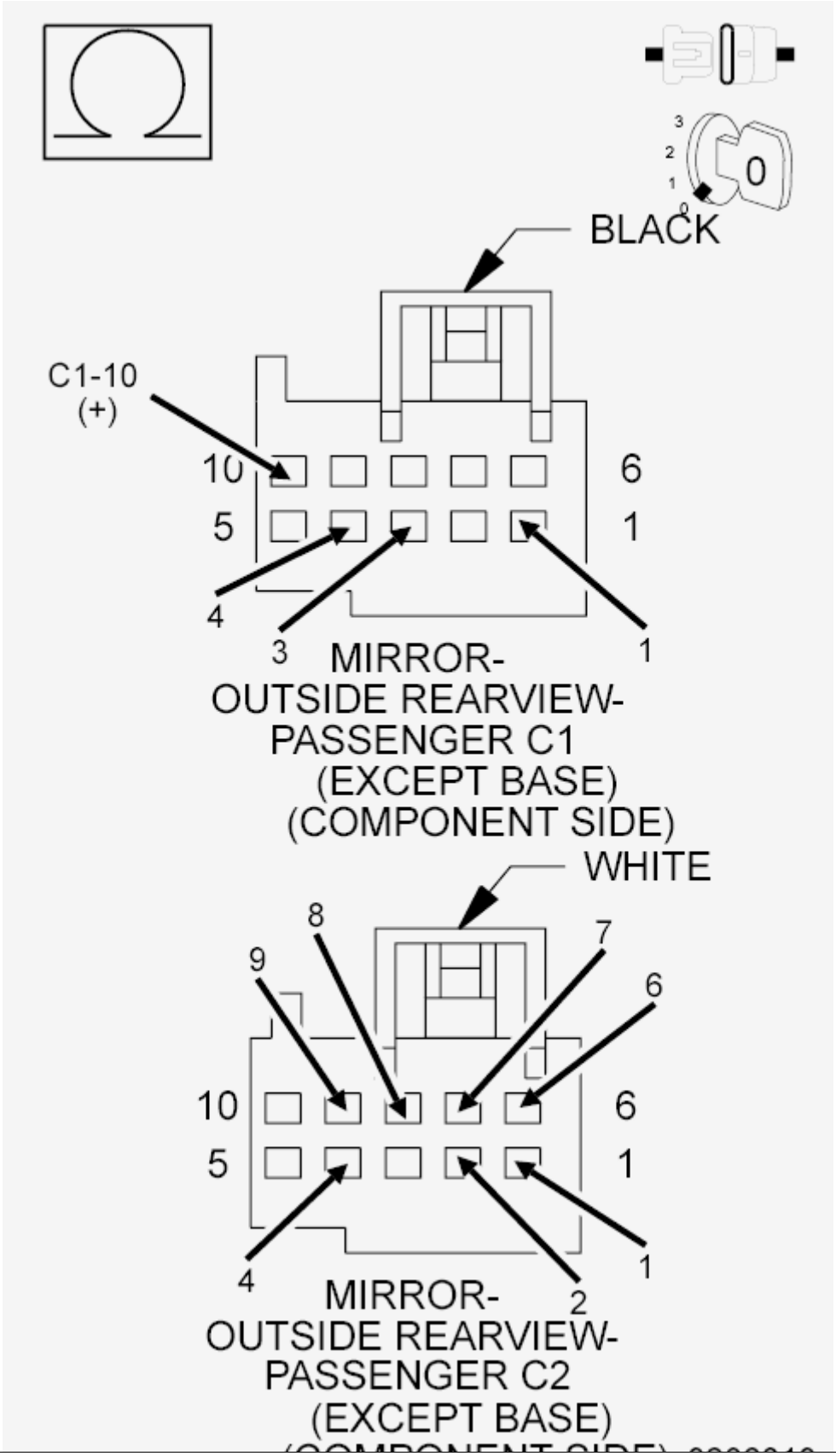
3
2
1
0
BLACK
C1-10
(+)
10
6
5
1
4
3
1
MIRROR-
OUTSIDE REARVIEW-
PASSENGER C1
(EXCEPT BASE)
(COMPONENT SIDE)
WHITE
8
7
9
6
10
6
5
1
4
2
1
MIRROR-
OUTSIDE REARVIEW-
PASSENGER C2
(EXCEPT BASE)

Fig. 41: Checking 5-Volt Supply Circuit For Short To Any Circuit Driver Or Signal Circuits
Courtesy of CHRYSLER GROUP, LLC

1. Cycle the ignition off.
2. Measure the resistance between the (A857) 5-Volt Supply circuit (C1-Cavity 10) and all designated circuit Driver or Signal circuits in the Passenger Outside Rearview Mirror C1 and C2 (Component Side) harness connectors.

   Is the resistance below 20K Ohms between the (A857) 5-Volt Supply and any of the designated Driver circuits?

   Yes

   - Repair all circuits with a resistance below 20K Ohms for a short to the (A857) 5-Volt Supply circuit. If the wiring harness and connectors are okay, replace the Passenger Outside Rearview Mirror in accordance with the Service Information. Refer to **MIRROR, OUTSIDE REARVIEW, REMOVAL** and **MIRROR, OUTSIDE REARVIEW, GLASS, REMOVAL** .
   - Perform the BODY VERIFICATION TEST. Refer to **STANDARD PROCEDURE** .

   No

   - Go To 4

4. **CHECK (P64) PASSENGER MIRROR VERTICAL POSITION SIGNAL CIRCUIT FOR A SHORT TO ANY CIRCUIT DRIVER OR SIGNAL CIRCUITS**

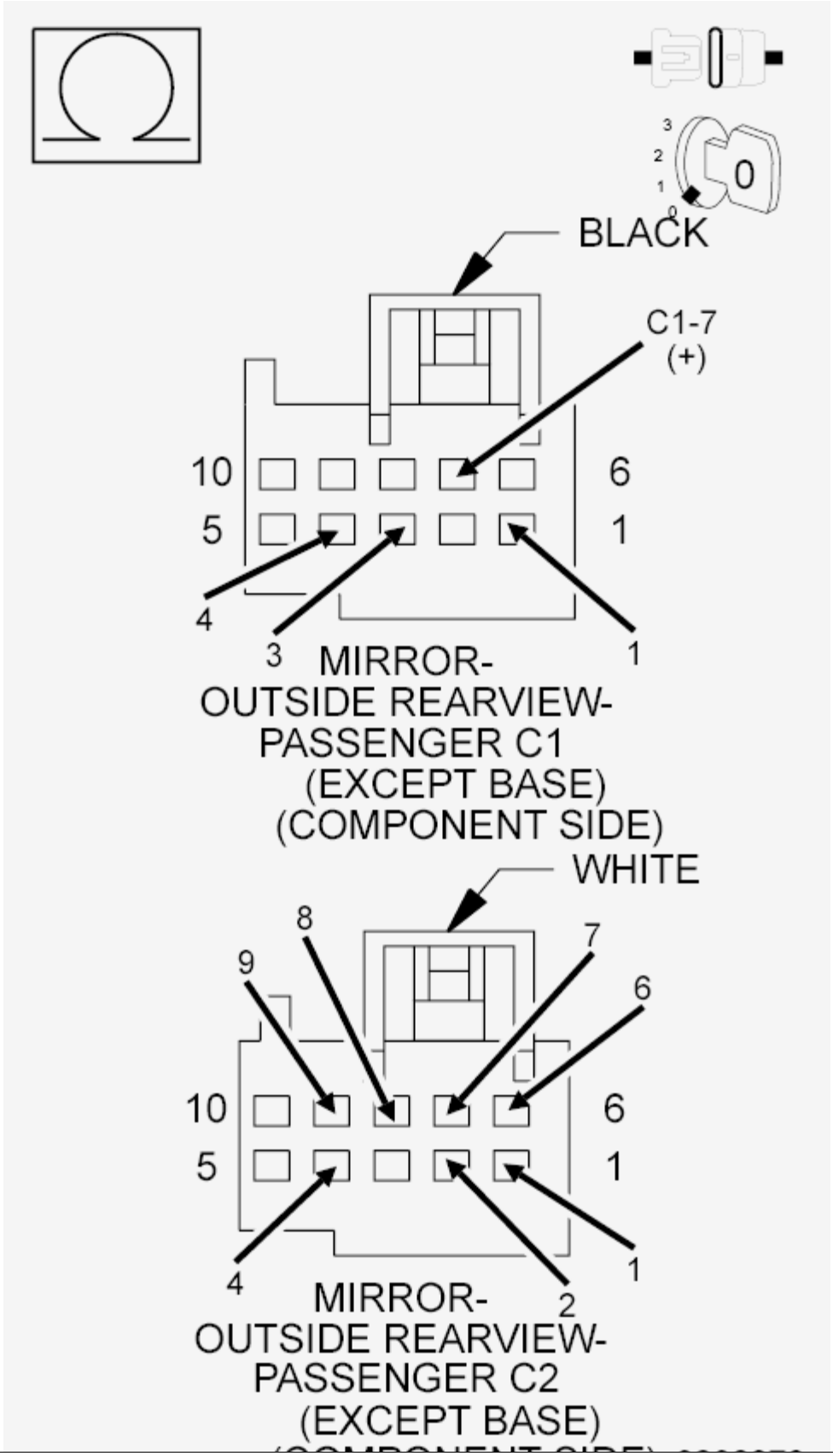
3
2
1
0
BLACK
C1-7
(+)
10
6
5
1
4
3
1
MIRROR-
OUTSIDE REARVIEW-
PASSENGER C1
(EXCEPT BASE)
(COMPONENT SIDE)
WHITE
8
7
9
6
10
6
5
1
4
1
2
MIRROR-
OUTSIDE REARVIEW-
PASSENGER C2
(EXCEPT BASE)

Fig. 42: Checking Passenger Mirror Vertical Position Signal Circuit For Short To Any Circuit Driver Or Signal Circuits
Courtesy of CHRYSLER GROUP, LLC

1. Measure the resistance between the (P64) Passenger Mirror Vertical Position Signal circuit (C1-Cavity 7) and all designated circuit Driver or Signal circuits in the Passenger Outside Rearview Mirror C1 and C2 (Component Side) harness connectors.

   Is the resistance below 20K Ohms between the (P64) circuit and any of the designated Driver or Signal circuits?

   Yes

   - Repair all circuits with a resistance below 20K Ohms for a short to the (P64) Passenger Mirror Vertical Position Signal circuit. If the wiring harness and connectors are okay, replace the Passenger Outside Rearview Mirror in accordance with the Service Information. Refer to **MIRROR, OUTSIDE REARVIEW, REMOVAL** and **MIRROR, OUTSIDE REARVIEW, GLASS, REMOVAL** .
   - Perform the BODY VERIFICATION TEST. Refer to **STANDARD PROCEDURE** .

   No

   - Go To 5

5. **CHECK (P68) PASSENGER MIRROR HORIZONTAL POSITION SIGNAL CIRCUIT FOR A SHORT TO ANY CIRCUIT DRIVER OR SIGNAL CIRCUITS**

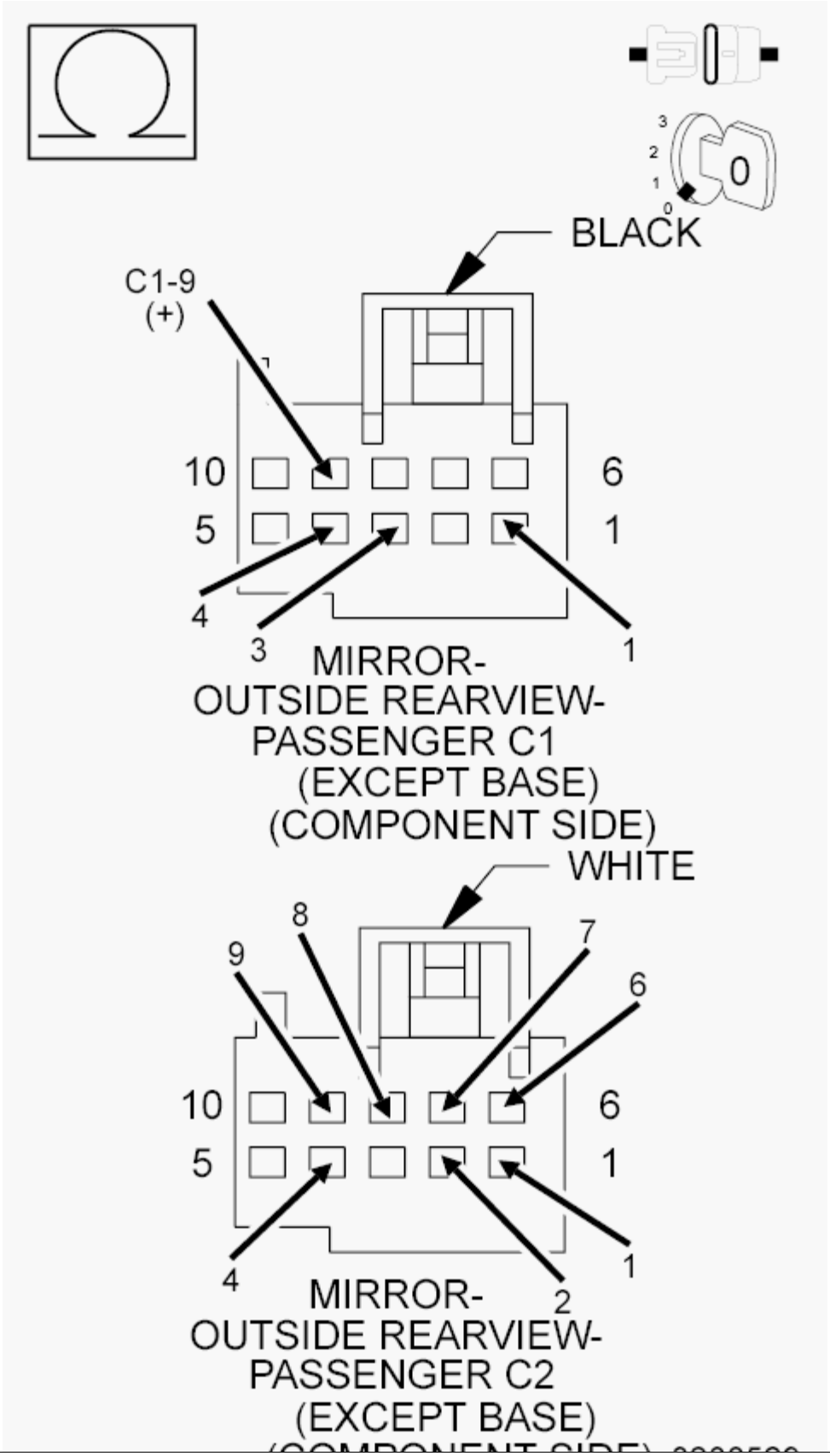
3
2
1
0
0
BLACK
C1-9
(+)
10
6
5
1
4
3
1
MIRROR-
OUTSIDE REARVIEW-
PASSENGER C1
(EXCEPT BASE)
(COMPONENT SIDE)
WHITE
8
9
7
6
10
6
5
1
4
2
1
MIRROR-
OUTSIDE REARVIEW-
PASSENGER C2
(EXCEPT BASE)

Fig. 43: Checking Passenger Mirror Horizontal Position Signal Circuit For Short To Any Circuit Driver Or Signal Circuits
Courtesy of CHRYSLER GROUP, LLC

1. Measure the resistance between the (P68) Passenger Mirror Horizontal Position Signal circuit (C1-Cavity 9) and all the designated circuit Driver or Signal circuits in the Passenger Outside Rearview Mirror C1 and C2 (Component Side) harness connectors.

   Is the resistance below 20K Ohms between the (P68) circuit and any of the designated circuit Driver or Signal circuits?

   Yes

   - Repair all circuits with a resistance below 20K Ohms for a short to the (P68) Passenger Mirror Horizontal Position Signal circuit. If the wiring harness and connectors are okay, replace the Passenger Outside Rearview Mirror in accordance with the Service Information. Refer to **MIRROR, OUTSIDE REARVIEW, REMOVAL** and **MIRROR, OUTSIDE REARVIEW, GLASS, REMOVAL** .
   - Perform the BODY VERIFICATION TEST. Refer to **STANDARD PROCEDURE** .

   No

   - Inspect the wiring and connectors for damage and repair as necessary. If the wiring and connectors are okay, replace the Passenger Door Module in accordance with the Service Information. Refer to **MODULE, DOOR, REMOVAL** .
   - Perform the BODY VERIFICATION TEST. Refer to **STANDARD PROCEDURE** .

B1F06-14-MIRROR CONTROL SENSOR POSITION CIRCUIT - CIRCUIT SHORT TO GROUND OR OPEN

For a complete wiring diagram, **refer to appropriate SYSTEM WIRING DIAGRAMS article** .

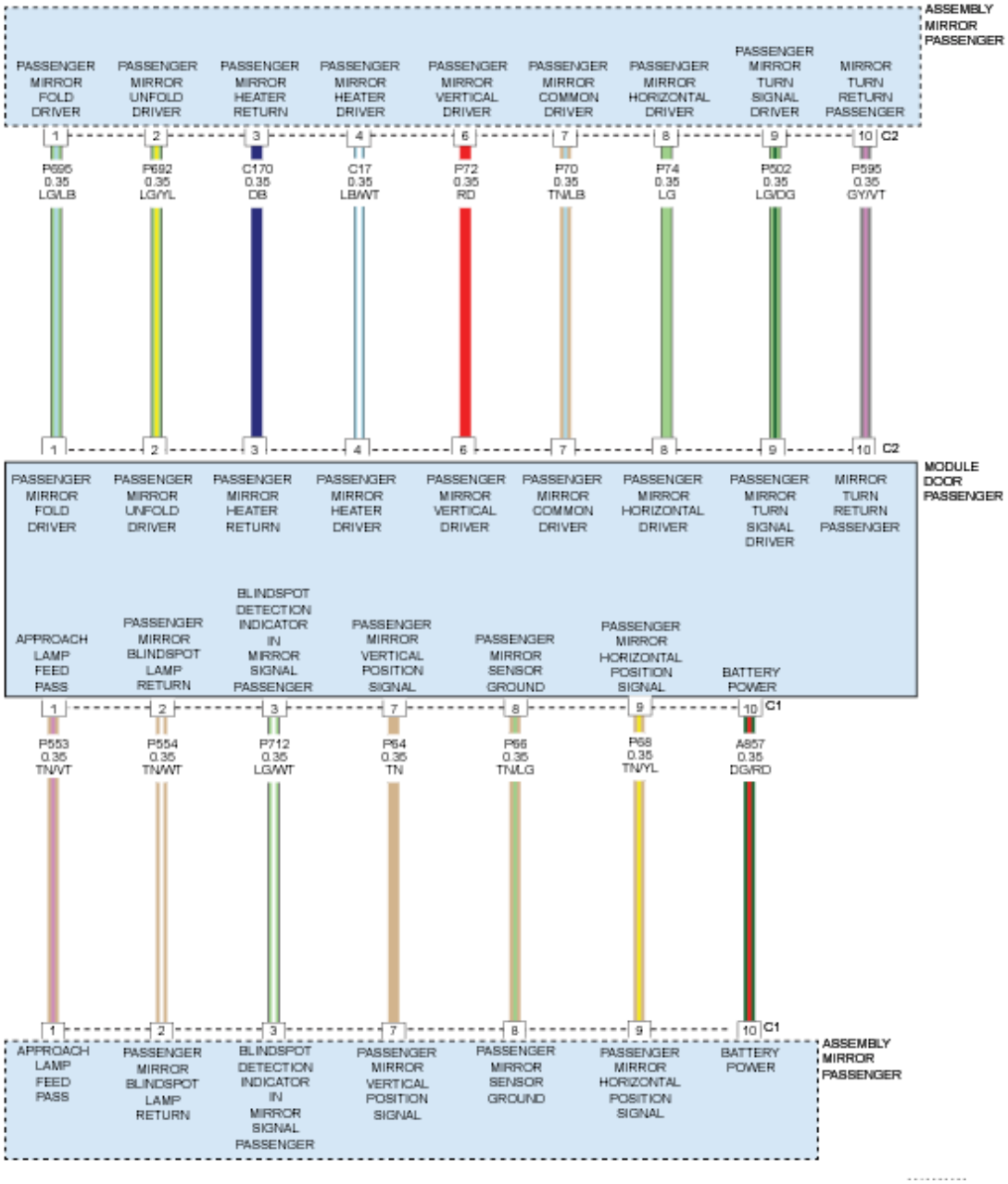

Fig. 44: Passenger Mirror Assembly - Circuit Diagram
Courtesy of CHRYSLER GROUP, LLC

WHEN MONITORED

Continuously with ignition on.

SET CONDITION

When the Door Module senses an open or short to ground on either the 5-volt supply, the mirror horizontal signal or the mirror vertical position signal circuit for more than two seconds, this code will set.

POSSIBLE CAUSES

Possible Causes
MIRROR VERTICAL POSITION SIGNAL CIRCUIT SHORTED TO GROUND
MIRROR VERTICAL POSITION SIGNAL CIRCUIT SHORTED TO ANY SENSOR GROUND OR RETURN CIRCUIT
MIRROR HORIZONTAL POSITION SIGNAL CIRCUIT SHORTED TO GROUND
MIRROR HORIZONTAL POSITION SIGNAL CIRCUIT SHORTED TO ANY SENSOR GROUND OR RETURN CIRCUIT
5 VOLT SUPPLY CIRCUIT SHORTED TO ANY SENSOR GROUND OR RETURN CIRCUIT
5 VOLT SUPPLY CIRCUIT SHORTED TO GROUND
5-VOLT SUPPLY CIRCUIT OPEN AT THE MODULE
MIRROR VERTICAL POSITION SIGNAL CIRCUIT OPEN
MIRROR HORIZONTAL POSITION SIGNAL CIRCUIT OPEN
5-VOLT SUPPLY CIRCUIT OPEN
OUTSIDE REARVIEW MIRROR
DOOR MODULE

DIAGNOSTIC TEST

1. **TEST FOR INTERMITTENT CONDITION**
    1. Cycle the ignition on.
    2. Using a scan tool, record and erase the Diagnostic Trouble Codes (DTCs).
    3. Turn the passenger side turn signal on.
    4. Turn the approach lamps on, if equipped.
    5. Turn the rear defogger on, if equipped with heated mirror.
    6. Press and release the Mirror Select switch to select the Passenger Outside Rearview Mirror.
    7. Operate the Mirror Adjust Switch in all directions several times while monitoring the scan tool for DTCs.

    NOTE: After adjusting the mirror in one direction wait at least two seconds before adjusting the mirror in the opposite direction, as this will allow time for an active DTC to set, if present.

    Does the scan tool display: B1F06-14-MIRROR CONTROL SENSOR POSITION CIRCUIT - CIRCUIT SHORT TO GROUND OR OPEN as active?

    Yes

    - Go To 2

    No

- The conditions that caused this code to set are not present at this time. For vehicle's equipped with folding outside rearview mirrors, repeat this test with the mirror folded. If this DTC is now active, Go To 2. Otherwise, using the wiring diagrams as a guide, check all related connectors for signs of water intrusion, corrosion, pushed out or bent terminals and poor pin fit.
- Perform the BODY VERIFICATION TEST. Refer to **STANDARD PROCEDURE** .

2. **CHECK (A857) 5-VOLT SUPPLY CIRCUIT FOR AN OPEN AT THE MODULE**

NOTE: In this step we are measuring the 5-Volt Supply voltage at the Door Module. It should be over 4.5 volts.

1. Cycle the ignition off.
2. Disconnect the Passenger Outside Rearview Mirror C1 and C2 (Component Side) harness connectors from the Door Module C1 and C2 sockets.
3. Cycle the ignition on.
4. Measure the voltage between Ground and the (A857) 5-volt Supply circuit at the Door Module (C1-Pin 10) (Module Side) socket.

   Is the Voltage above 4.5 Volts?

   Yes

   - Go To 3

   No

   - Replace the Door Module in accordance with the Service Information. Refer to **MODULE, DOOR, REMOVAL** .
   - Perform the BODY VERIFICATION TEST. Refer to **STANDARD PROCEDURE** .

3. **CHECK (A857) 5-VOLT SUPPLY CIRCUIT FOR A SHORT TO GROUND**

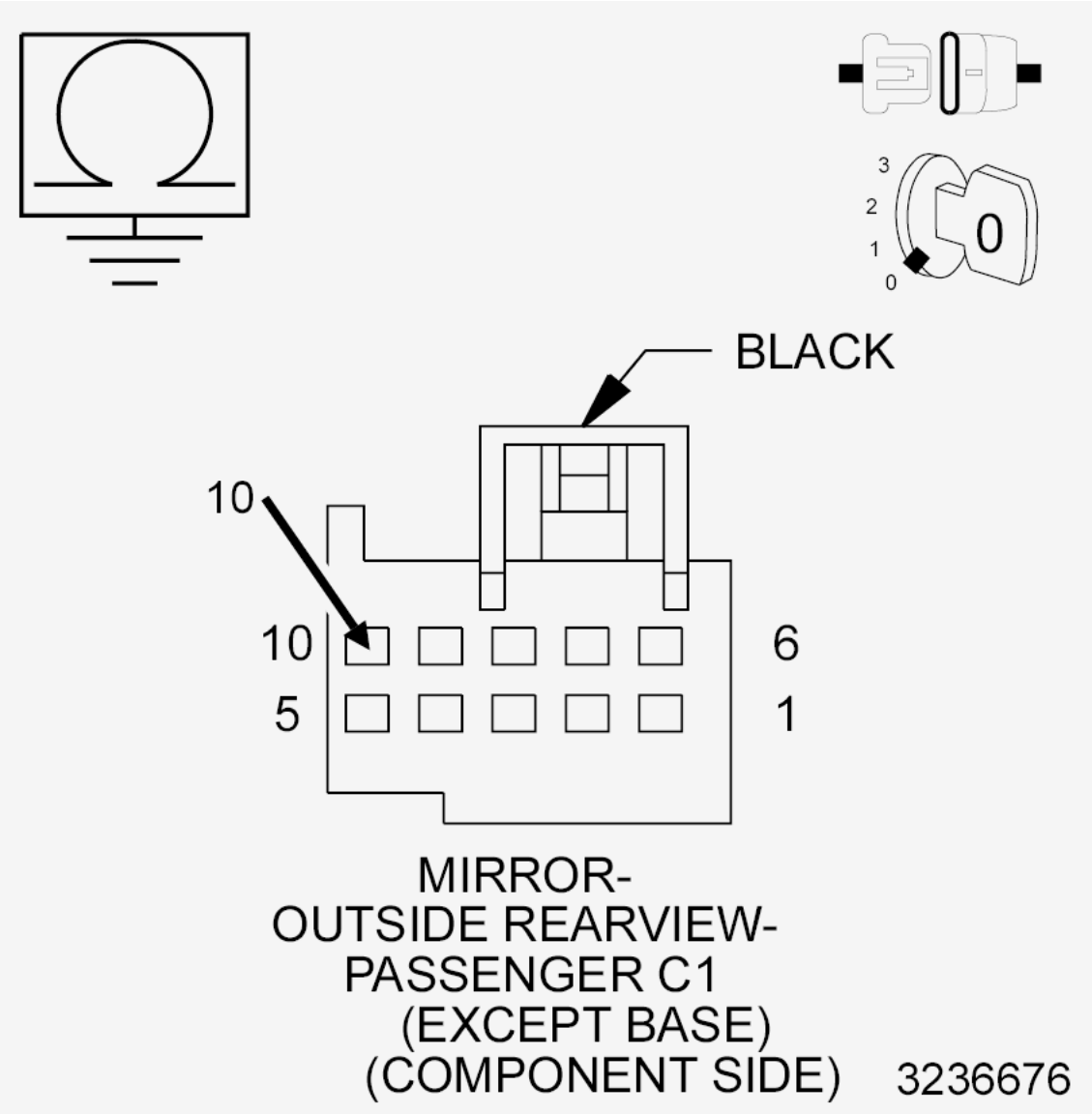

Fig. 45: Checking 5-Volt Supply Circuit For Short To Ground
Courtesy of CHRYSLER GROUP, LLC

1. Cycle the ignition off.
2. Measure the resistance between Ground and the (A857) 5-Volt Supply circuit in the Passenger Outside Rearview Mirror C1 connector.

   Is the resistance below 10K Ohms

   Yes

   - Repair the short to ground in the (A857) 5-Volt Supply circuit. If the wiring harness and connector is okay, replace the Passenger Outside Rearview Mirror in accordance with the Service Information. Refer to **MIRROR, OUTSIDE REARVIEW, REMOVAL** and

MIRROR, OUTSIDE REARVIEW, GLASS, REMOVAL .

- Perform the BODY VERIFICATION TEST. Refer to **STANDARD PROCEDURE** .

No

- Go To 4

4. **CHECK (P64) PASSENGER MIRROR VERTICAL POSITION SIGNAL CIRCUIT FOR A SHORT TO GROUND**

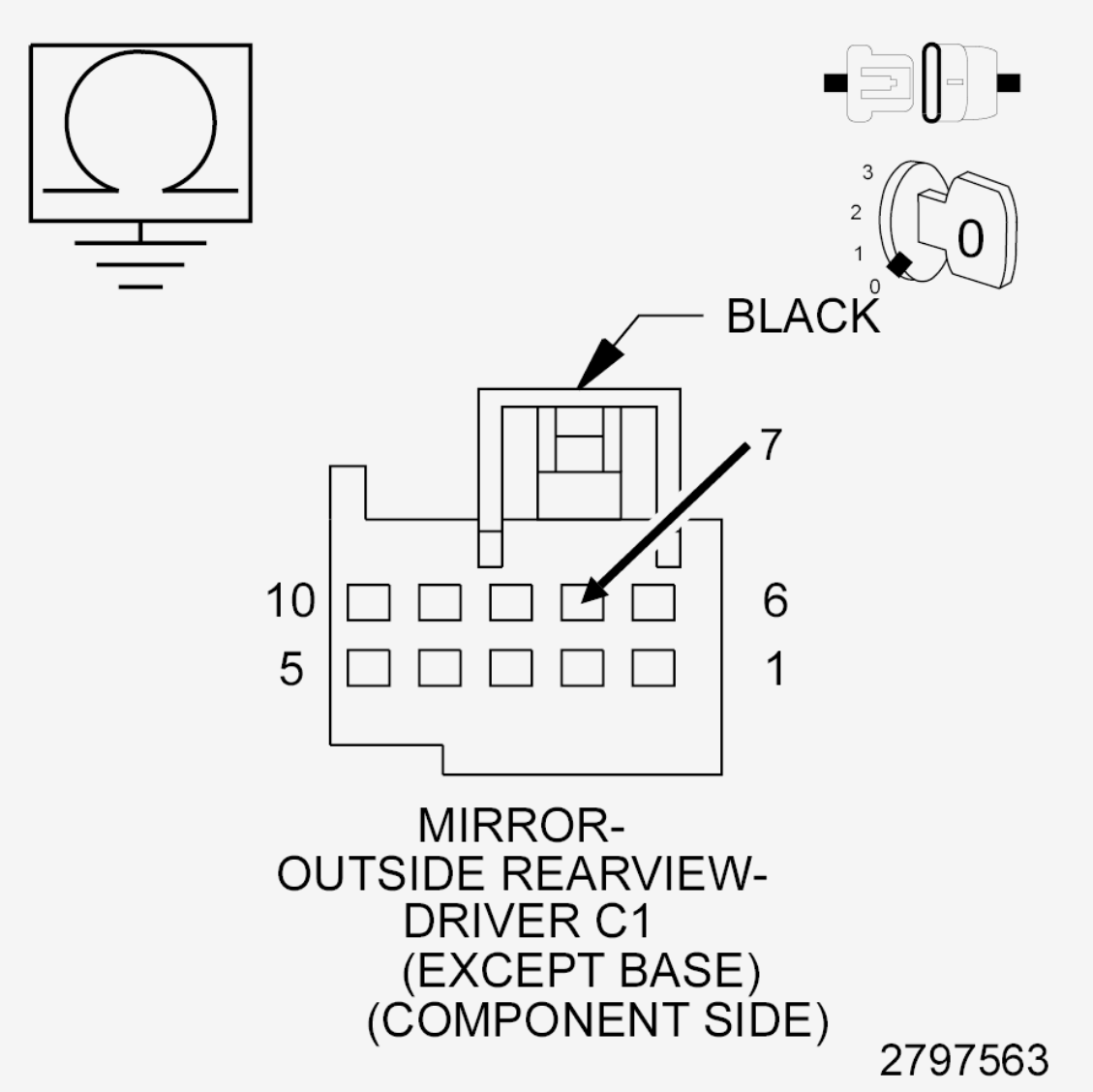

Fig. 46: Checking Passenger Mirror Vertical Position Signal Circuit For Short To Ground
Courtesy of CHRYSLER GROUP, LLC

1. Measure the resistance between Ground and the (P64) Passenger Mirror Vertical Position Signal circuit in the Passenger Outside Rearview Mirror C1 harness connector.

Is the resistance below 10K Ohms?

Yes

- Repair the (P64) Passenger Mirror Vertical Position Signal circuit for a short to ground. If the wiring harness and connector are okay, replace the Passenger Outside Rearview Mirror in accordance with the Service Information. Refer to **MIRROR, OUTSIDE REARVIEW, REMOVAL** and **MIRROR, OUTSIDE REARVIEW, GLASS, REMOVAL** .
- Perform the BODY VERIFICATION TEST. Refer to **STANDARD PROCEDURE** .

No

- Go To 5

5. **CHECK (P68) PASSENGER MIRROR HORIZONTAL POSITION SIGNAL CIRCUIT FOR A SHORT TO GROUND**

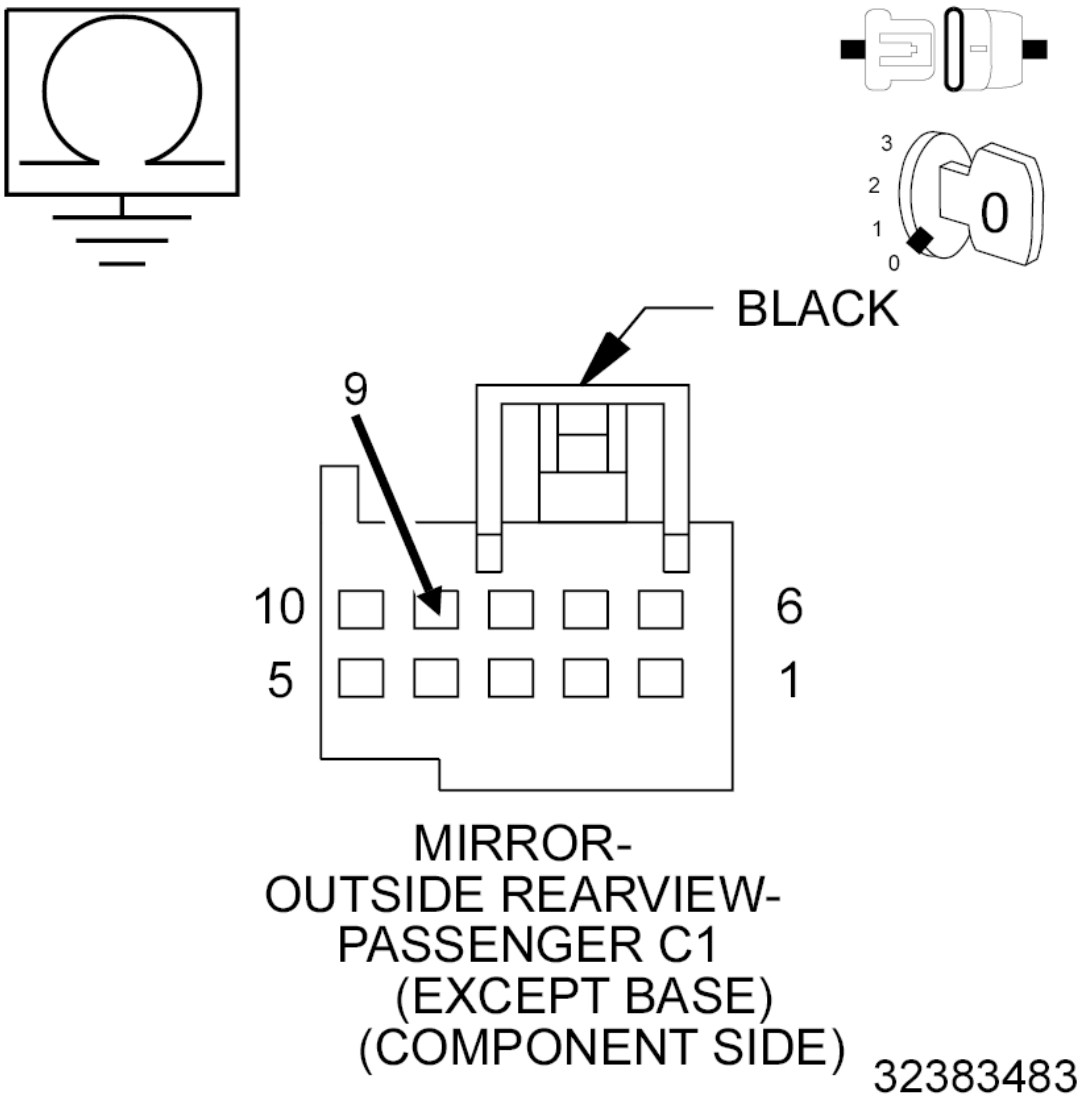

Fig. 47: Checking Passenger Mirror Horizontal Position Signal Circuit For Short To Ground
Courtesy of CHRYSLER GROUP, LLC

1. Measure the resistance between Ground and the (P68) Passenger Mirror Horizontal Position Signal circuit in the Passenger Outside Rearview Mirror C1 harness connector.

   Is the resistance below 10K Ohms?

   Yes

   - Repair the (P68) Passenger Mirror Horizontal Position Signal circuit for a short to ground. If the wiring harness and connector are okay, replace the Passenger Outside Rearview Mirror in accordance with the Service Information. Refer to **MIRROR, OUTSIDE REARVIEW, REMOVAL** and **MIRROR, OUTSIDE REARVIEW, GLASS, REMOVAL** .
   - Perform the BODY VERIFICATION TEST. Refer to **STANDARD PROCEDURE** .

No

- Go To 6

6. **CHECK (P64) PASSENGER MIRROR VERTICAL POSITION SIGNAL CIRCUIT FOR AN OPEN**

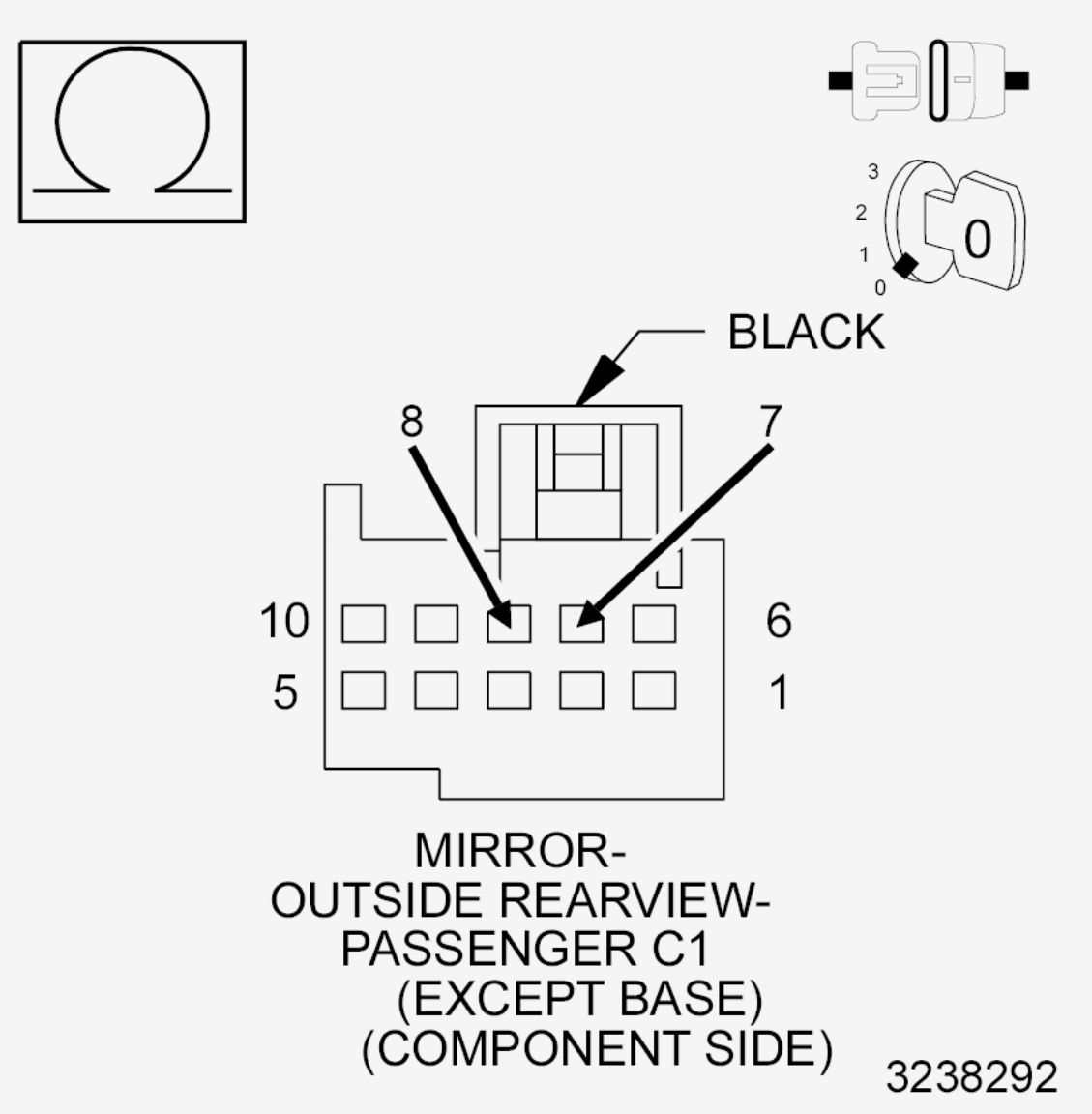

Fig. 48: Checking Passenger Mirror Vertical Position Signal Circuit For Open
Courtesy of CHRYSLER GROUP, LLC

1. Connect an ohmmeter between the (P64) Passenger Mirror Vertical Position Signal circuit and the (P69) Passenger Mirror Sensor Ground circuit in the Passenger Outside Rearview Mirror C1 (Component Side) harness connector.
2. Manually move the mirror Up and Down while observing the ohmmeter.

Does the resistance measure between approximately 1.2K Ohms and 2.4K Ohms as you move the mirror from Up to Down?

Yes

- Go To 7

No

- Replace the Passenger Outside Rearview Mirror in accordance with the Service Information. Refer to **MIRROR, OUTSIDE REARVIEW, REMOVAL** and **MIRROR, OUTSIDE REARVIEW, GLASS, REMOVAL** .
- Perform the BODY VERIFICATION TEST. Refer to **STANDARD PROCEDURE** .

7. **CHECK (P68) PASSENGER MIRROR HORIZONTAL POSITION SIGNAL CIRCUIT FOR AN OPEN**

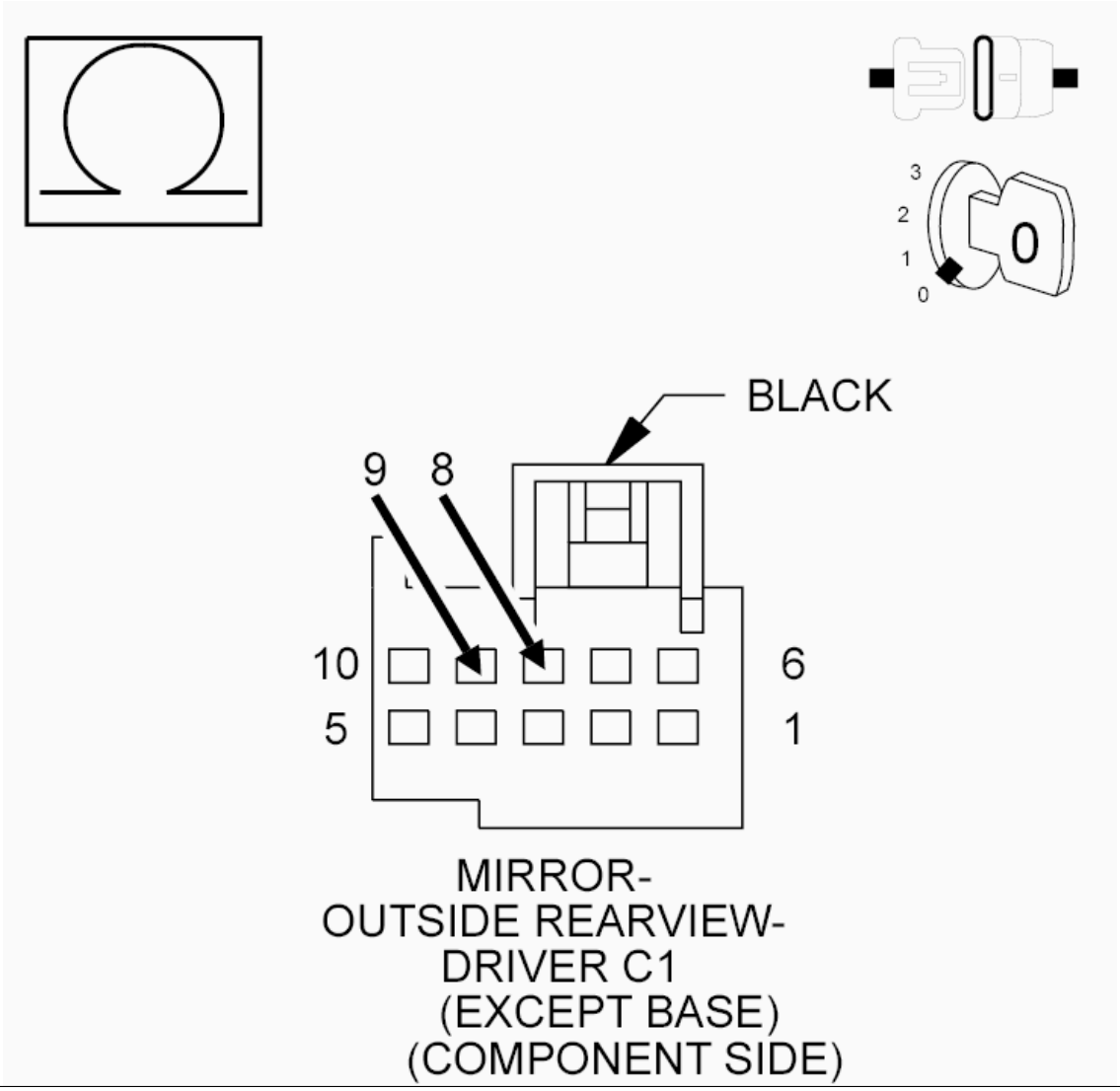

Fig. 49: Checking Passenger Mirror Horizontal Position Signal Circuit For Open
Courtesy of CHRYSLER GROUP, LLC

1. Connect an ohmmeter between the (P68) Passenger Mirror Horizontal Position Signal circuit and the (P69) Passenger Mirror Sensor Ground circuit in the Passenger Outside Rearview Mirror C1 (Component Side) harness connector.
2. Manually move the mirror Left to Right while observing the ohmmeter.

   Does the resistance measure between approximately 1.5K Ohms and 2.4K Ohms as you move the mirror from Left to Right?

   Yes

   - Go To 8

   No

   - Replace the Passenger Outside Rearview Mirror in accordance with the Service Information. Refer to **MIRROR, OUTSIDE REARVIEW, REMOVAL** and **MIRROR, OUTSIDE REARVIEW, GLASS, REMOVAL** .
   - Perform the BODY VERIFICATION TEST. Refer to **STANDARD PROCEDURE** .

8. **CHECK (A857) 5-VOLT SUPPLY CIRCUIT FOR A SHORT TO ANY GROUND OR RETURN CIRCUIT**

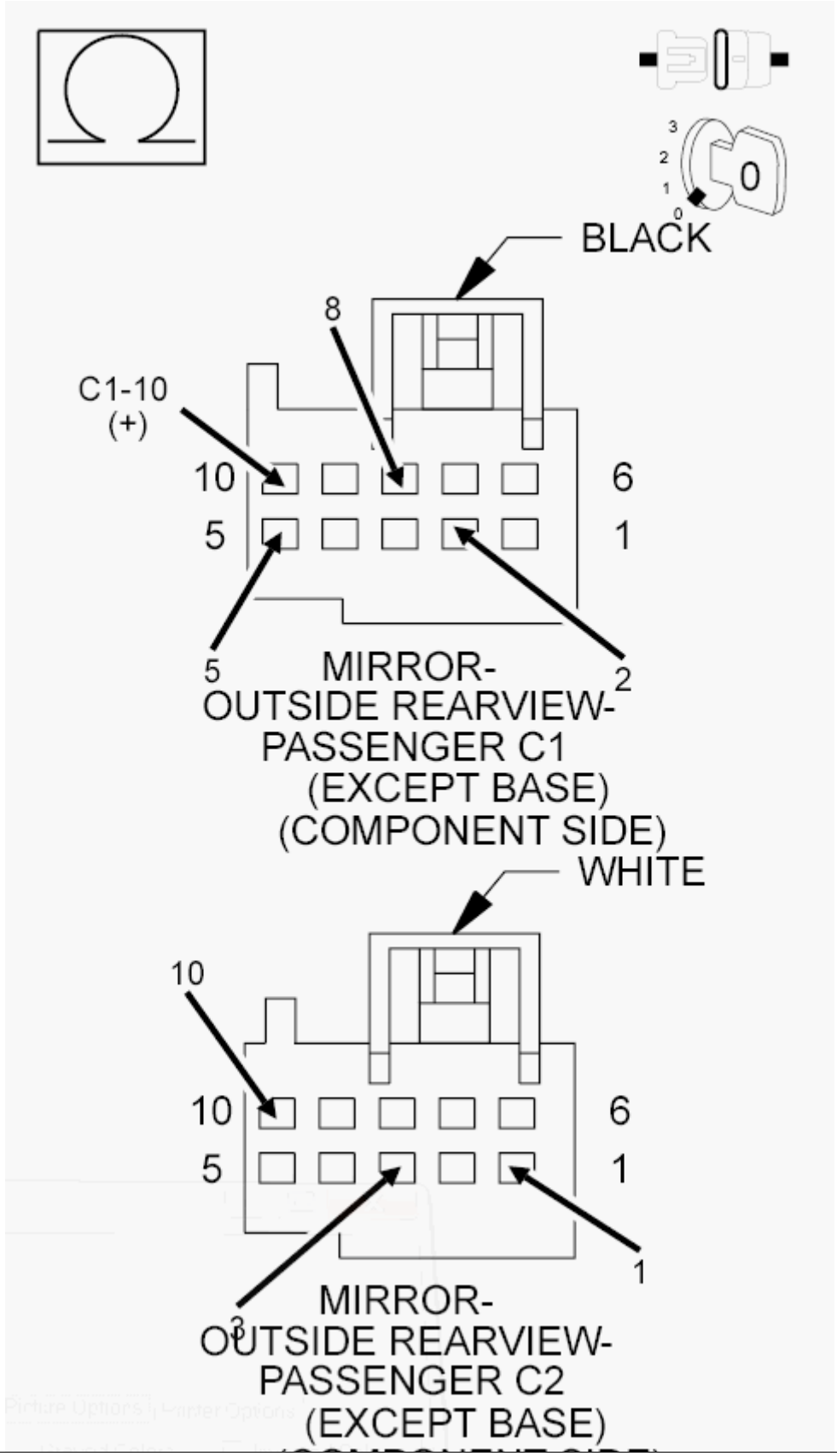
3
2
1
0
0
BLACK
8
C1-10
(+)
10
6
5
1
5
2
MIRROR-
OUTSIDE REARVIEW-
PASSENGER C1
(EXCEPT BASE)
(COMPONENT SIDE)
WHITE
10
10
6
5
1
1
3
MIRROR-
OUTSIDE REARVIEW-
PASSENGER C2
(EXCEPT BASE)

Fig. 50: Checking 5-Volt Supply Circuit For Short To Any Ground Or Return Circuit, Or For Open
Courtesy of CHRYSLER GROUP, LLC

1. Measure the resistance between the (A857) 5-Volt Supply circuit (C1-10) and all designated Ground and Return circuits in the Passenger Outside Rearview Mirror C1 and C2 (Component Side) connectors.

   Is the resistance below 1.2K Ohms between the (A857) 5-Volt Supply circuit and any Ground or Return circuit?

   Yes

   - Repair the (A857) 5-Volt Supply circuit for a short to the Ground or Return circuit. If the wiring harness and connector are okay, replace the Passenger Outside Rearview Mirror in accordance with the Service Information. Refer to **MIRROR, OUTSIDE REARVIEW, REMOVAL** and **MIRROR, OUTSIDE REARVIEW, GLASS, REMOVAL** .
   - Perform the BODY VERIFICATION TEST. Refer to **STANDARD PROCEDURE** .

   No

   - Go To 9

9. **CHECK (A857) 5-VOLT SUPPLY CIRCUIT FOR AN OPEN**

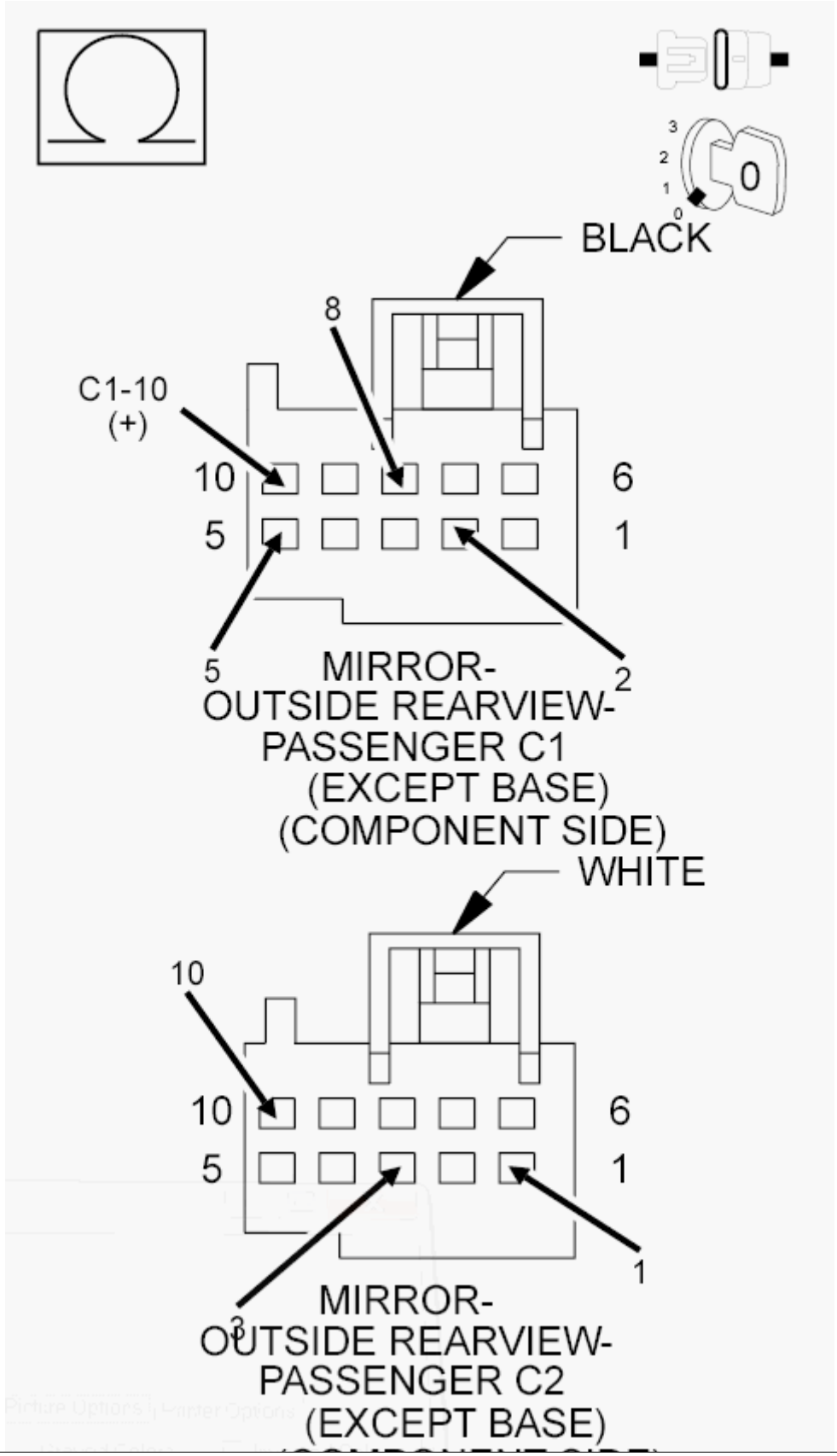
3
2
1
0
0
BLACK
8
C1-10
(+)
10
6
5
1
5
2
MIRROR-
OUTSIDE REARVIEW-
PASSENGER C1
(EXCEPT BASE)
(COMPONENT SIDE)
WHITE
10
10
6
5
1
1
3
MIRROR-
OUTSIDE REARVIEW-
PASSENGER C2
(EXCEPT BASE)

Fig. 51: Checking 5-Volt Supply Circuit For Short To Any Ground Or Return Circuit, Or For Open
Courtesy of CHRYSLER GROUP, LLC

1. Measure the resistance between the (A857) 5-Volt Supply circuit (C1-10) and all designated Ground and Return circuits in the Passenger Outside Rearview Mirror C1 and C2 (Component Side) connectors.

   Is the resistance between 1.2K and 5.0K Ohms between the (A857) 5-Volt Supply circuit and one or more of the Ground or Return circuits?

   Yes

   - Go To 10

   No

   - Repair the (A857) 5-Volt Supply circuit for an open. If the wiring harness and connector are okay, replace the Passenger Outside Rearview Mirror in accordance with the Service Information. Refer to **MIRROR, OUTSIDE REARVIEW, REMOVAL** and **MIRROR, OUTSIDE REARVIEW, GLASS, REMOVAL** .
   - Perform the BODY VERIFICATION TEST. Refer to **STANDARD PROCEDURE** .

10. **CHECK (P64) PASSENGER MIRROR VERTICAL POSITION SIGNAL CIRCUIT FOR A SHORT TO ANY CIRCUIT GROUND OR RETURN CIRCUITS**

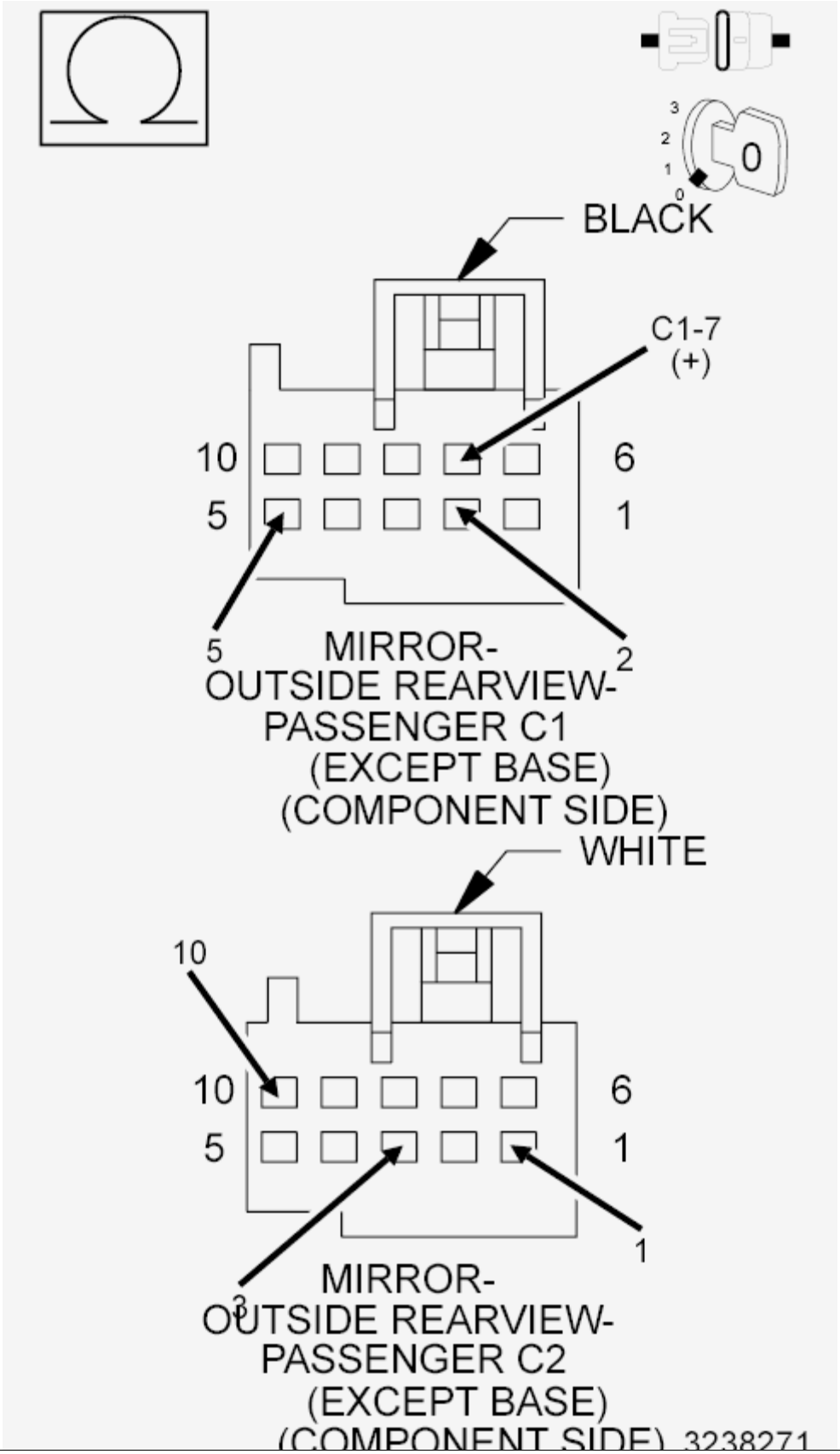
3
2
1
0
0
BLACK
C1-7
(+)
10
6
5
1
5
2
MIRROR-
OUTSIDE REARVIEW-
PASSENGER C1
(EXCEPT BASE)
(COMPONENT SIDE)
WHITE
10
10
6
5
1
1
3
MIRROR-
OUTSIDE REARVIEW-
PASSENGER C2
(EXCEPT BASE)
(COMPONENT SIDE)
3238271

Fig. 52: Checking Passenger Mirror Vertical Position Signal Circuit For Short To Any Circuit Ground Or Return Circuits
Courtesy of CHRYSLER GROUP, LLC

1. Measure the resistance between the (P64) Passenger Mirror Vertical Position Signal circuit (C1-Cavity 7) and all designated circuit Ground or Return circuits in the Passenger Outside Rearview Mirror C1 and C2 (Component Side) harness connectors.

   Is the resistance below 20K Ohms between the (P64) circuit and any of the designated circuit Ground or Return circuits?

   Yes

   - Repair all circuits with a resistance below 20K Ohms for a short to the (P64) Passenger Mirror Vertical Position Signal circuit. If the wiring harness and connectors are okay, replace the Passenger Outside Rearview Mirror in accordance with the Service Information. Refer to **MIRROR, OUTSIDE REARVIEW, REMOVAL** and **MIRROR, OUTSIDE REARVIEW, GLASS, REMOVAL** .
   - Perform the BODY VERIFICATION TEST. Refer to **STANDARD PROCEDURE** .

   No

   - Go To 11

11. **CHECK (P68) PASSENGER MIRROR HORIZONTAL POSITION SIGNAL CIRCUIT FOR A SHORT TO ANY CIRCUIT GROUND OR RETURN CIRCUITS**

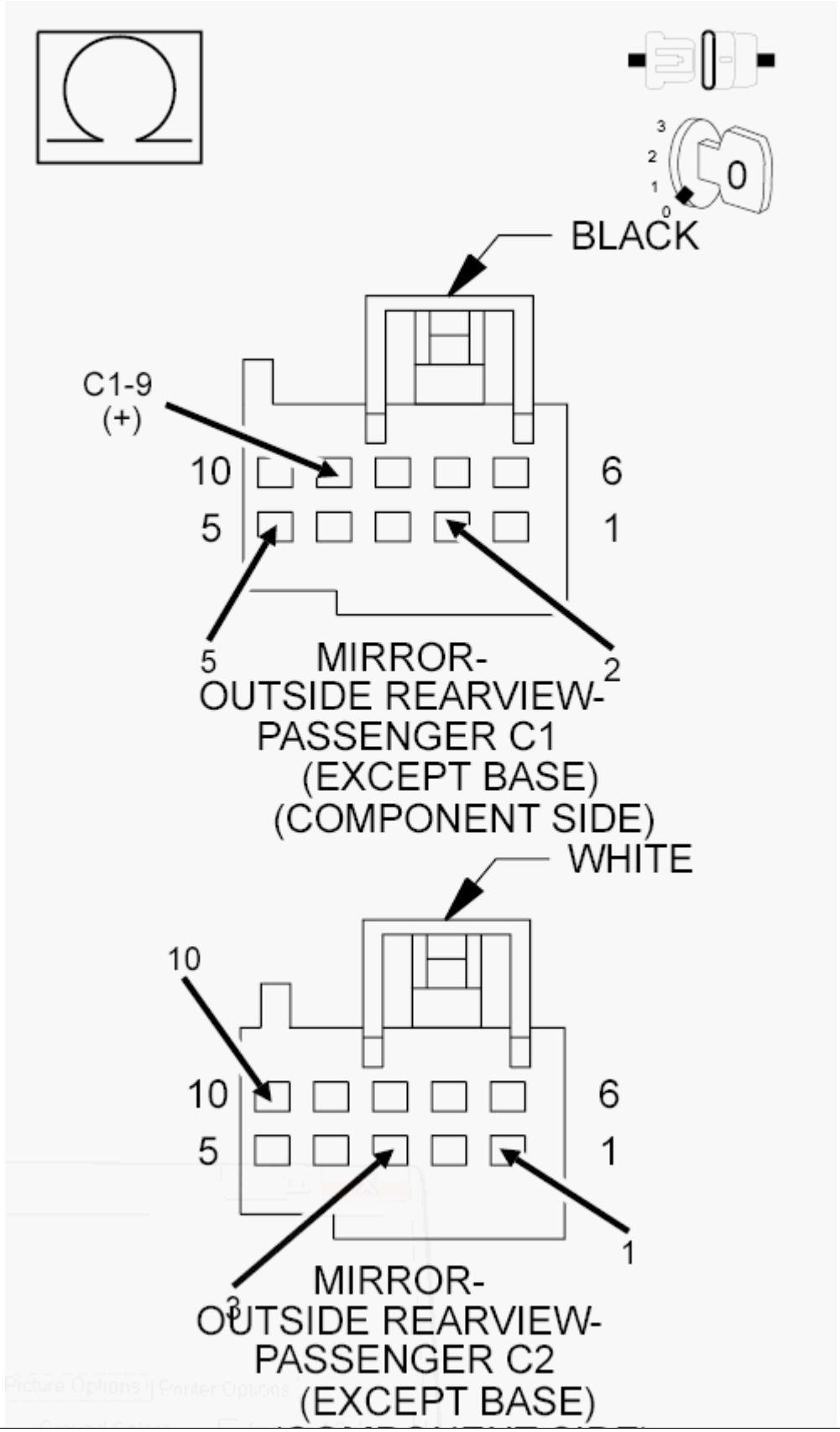
3
2
1
0
0
BLACK
C1-9
(+)
10
6
5
1
5
2
MIRROR-
OUTSIDE REARVIEW-
PASSENGER C1
(EXCEPT BASE)
(COMPONENT SIDE)
WHITE
10
10
6
5
1
1
3
MIRROR-
OUTSIDE REARVIEW-
PASSENGER C2
(EXCEPT BASE)

Fig. 53: Checking Passenger Mirror Horizontal Position Signal Circuit For Short To Any Circuit Ground Or Return Circuits
Courtesy of CHRYSLER GROUP, LLC

1. Measure the resistance between the (P68) Passenger Mirror Horizontal Position Signal circuit (C1-Cavity 9) and all designated circuit Ground or Return circuits in the Passenger Outside Rearview Mirror C1 and C2 (Component Side) harness connectors.

   Is the resistance below 20K Ohms between the (P68) circuit and any of the designated circuit Ground or Return circuits?

   Yes

   - Repair all circuits with a resistance below 20K Ohms for a short to the (P68) Passenger Mirror Horizontal Position Signal circuit. If the wiring harness and connectors are okay, replace the Passenger Outside Rearview Mirror in accordance with the Service Information. Refer to **MIRROR, OUTSIDE REARVIEW, REMOVAL** and **MIRROR, OUTSIDE REARVIEW, GLASS, REMOVAL** .
   - Perform the BODY VERIFICATION TEST. Refer to **STANDARD PROCEDURE** .

   No

   - Inspect the wiring and connectors for damage and repair as necessary. If the wiring and connectors are okay, replace the Passenger Door Module in accordance with the Service Information. Refer to **MODULE, DOOR, REMOVAL** .
   - Perform the BODY VERIFICATION TEST. Refer to **STANDARD PROCEDURE** .

B210C-16-BATTERY VOLTAGE INPUT - CIRCUIT VOLTAGE BELOW THRESHOLD

For a complete wiring diagram, **refer to appropriate SYSTEM WIRING DIAGRAMS article** .

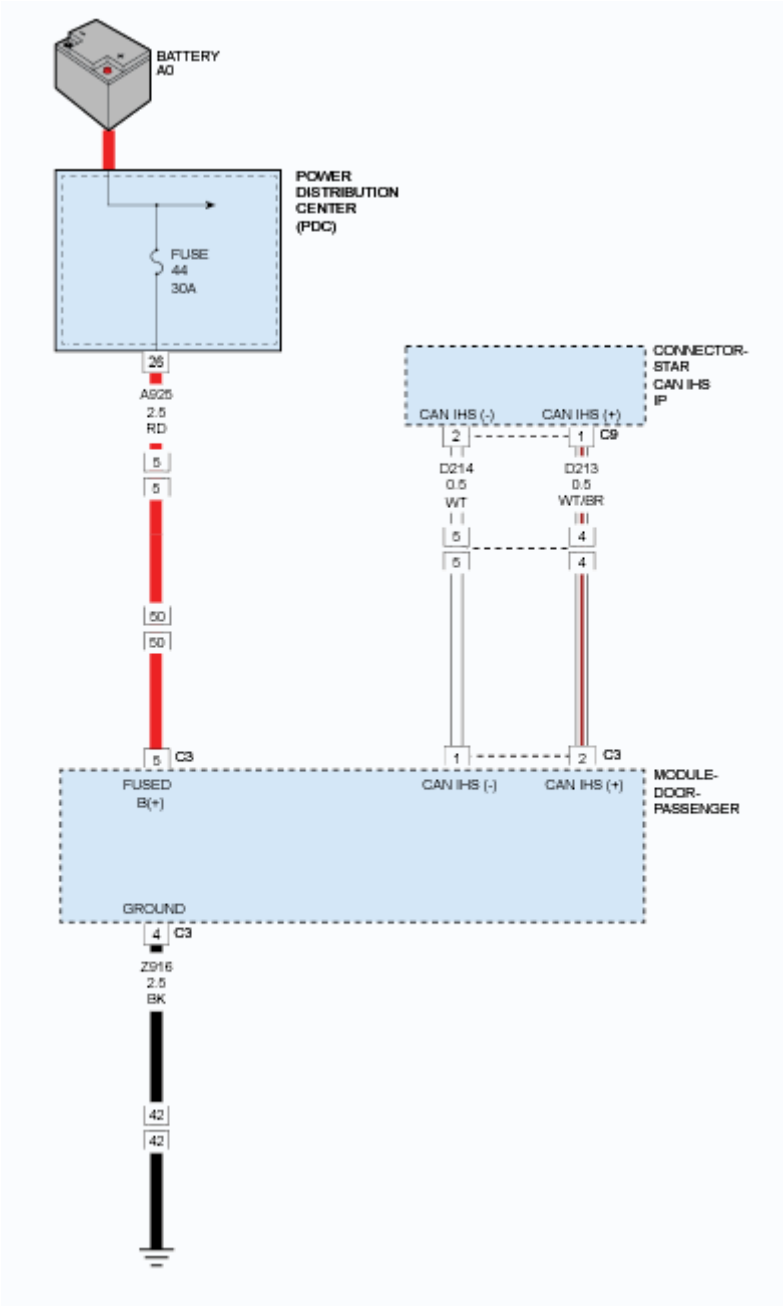

Fig. 54: PDM CAN IHS, Fused B+ & Ground Circuit Diagram
Courtesy of CHRYSLER GROUP, LLC

WHEN MONITORED

At all times.

SET CONDITION

Anytime the module senses a voltage input below 9.0 volts, this code will set.

POSSIBLE CAUSES

POSSIBLE CAUSES
LOW VOLTAGE ENGINE DTC
FUSED B (+) CIRCUIT HAS HIGH RESISTANCE
GROUND CIRCUIT HAS HIGH RESISTANCE
DOOR MODULE

DIAGNOSTIC TEST

1. **CHECK POWERTRAIN CONTROL MODULE (PCM) DTCs**
   1. With the scan tool, read PCM DTCs

      Are there any PCM Charging or Battery DTCs present?

      Yes

      - Refer to **DTC INDEX** and perform the appropriate diagnostic procedures.

      No

      - Go To 2
2. **TEST FOR INTERMITTENT CONDITION**
   1. With the scan tool, record and erase the DTCs.
   2. Start the engine and run for two minutes.
   3. With the scan tool, read the DTCs in the Door Module.

      Does the scan tool display; B210C-16-BATTERY VOLTAGE INPUT - CIRCUIT VOLTAGE BELOW THRESHOLD?

      Yes

      - Go To 3

      No

      - Test complete, the condition or conditions that originally set this DTC are not present at this time. Using the wiring diagrams as a guide, check all related splices and connectors for signs of water intrusion, corrosion, pushed out or bent terminals and correct pin tension.
      - Perform the BODY VERIFICATION TEST. Refer to **STANDARD PROCEDURE** .
3. **(A925) FUSED B(+) OR GROUND CIRCUITS RESISTED**

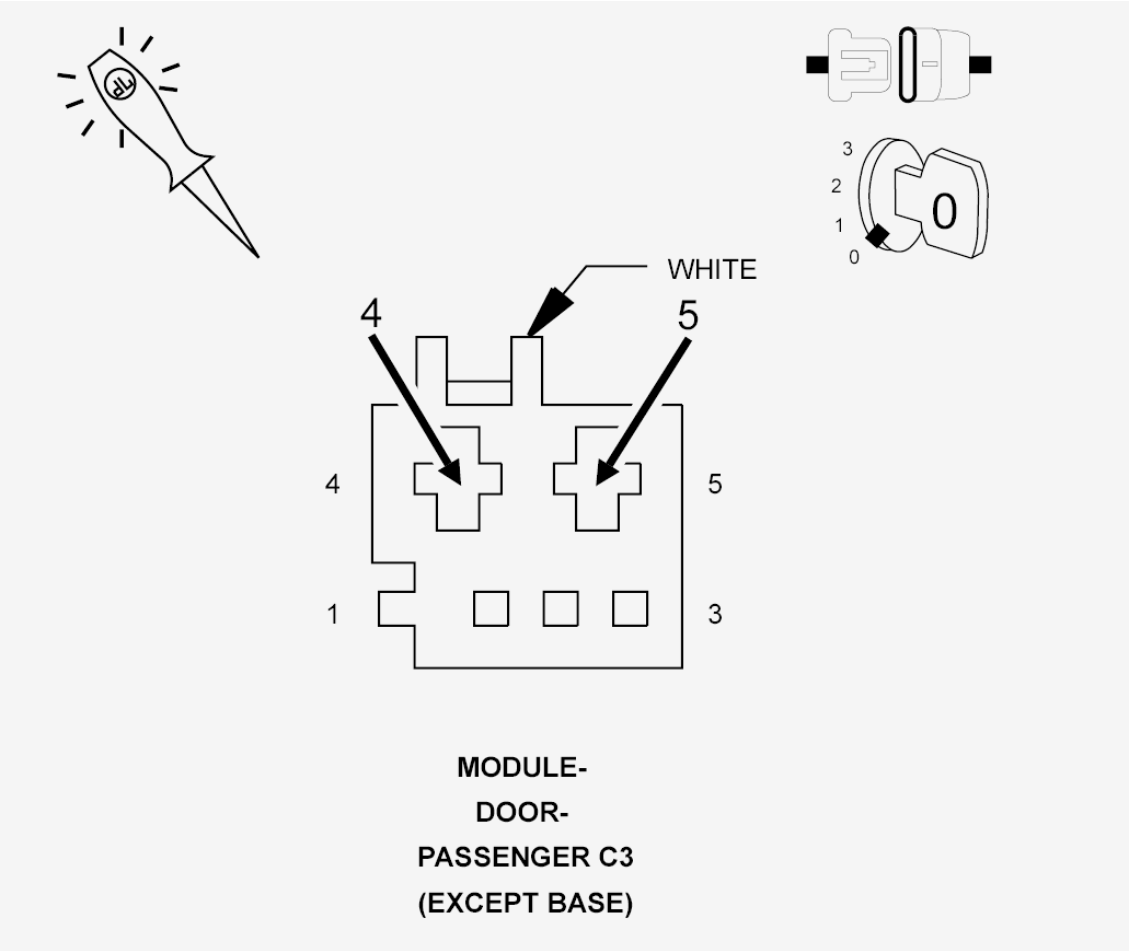

Fig. 55: Checking Fused B(+) Or Ground Circuits For Resistance
Courtesy of CHRYSLER GROUP, LLC

1. Turn the ignition off.
2. Disconnect the Passenger Door Module C3 harness connector.
3. Test the circuits by connecting a 12-volt test light between the (A925) Fused B(+) circuit and the Ground circuits in the door module C3 harness connector. The test light must illuminate brightly. Compare the brightness to that of a direct connection to the battery.

   Does the test light illuminate brightly?

   Yes

   - Replace the Passenger Door Module in accordance with Service Information. Refer to **MODULE, DOOR, REMOVAL** .
   - Perform the BODY VERIFICATION TEST. Refer to **STANDARD PROCEDURE** .

   No

- Test the Fused B(+) and the Ground circuits to determine which one has the high resistance. Repair the circuit for high resistance.
- Perform the BODY VERIFICATION TEST. Refer to **STANDARD PROCEDURE** .

B210C-17-BATTERY VOLTAGE INPUT - CIRCUIT VOLTAGE ABOVE THRESHOLD

For a complete wiring diagram, **refer to appropriate SYSTEM WIRING DIAGRAMS article** .

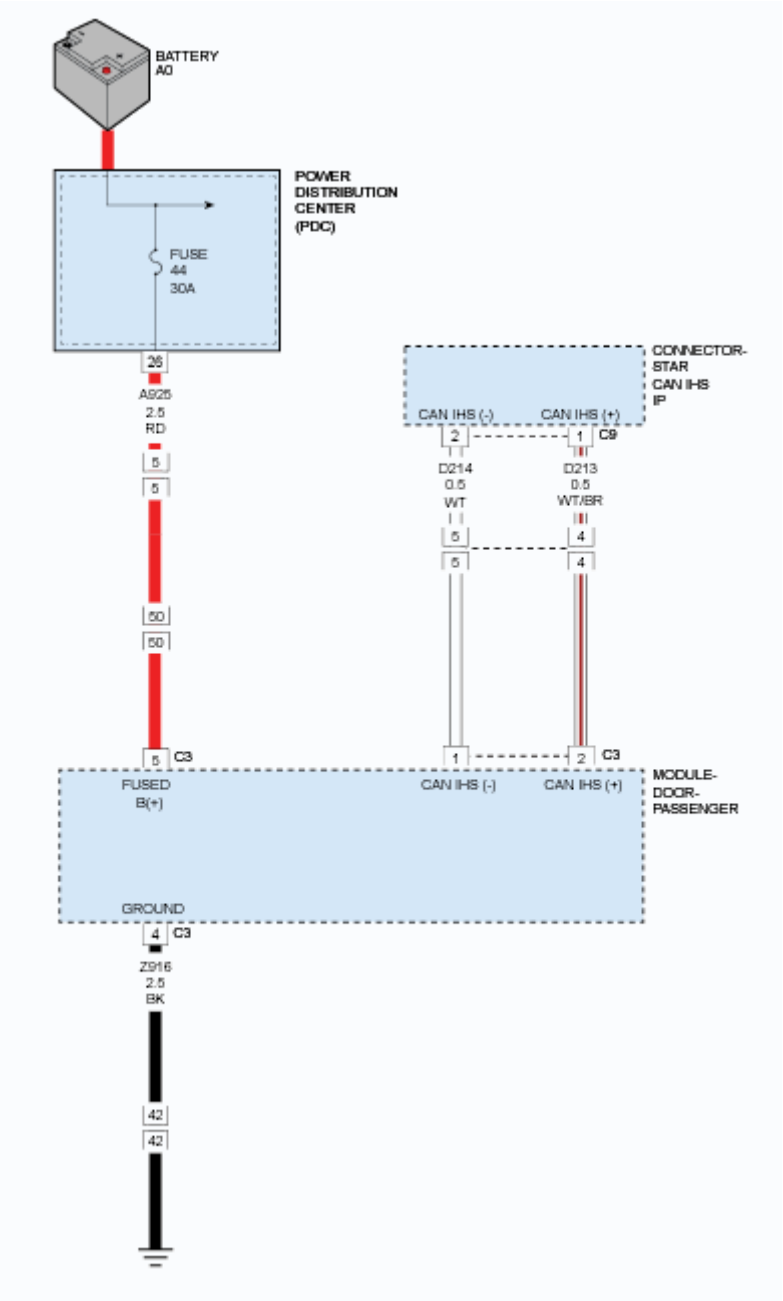

Fig. 56: PDM CAN IHS, Fused B+ & Ground Circuit Diagram
Courtesy of CHRYSLER GROUP, LLC

WHEN MONITORED

At all times.

SET CONDITION

Anytime the module senses voltage input above 15.9 volts, this code will set.

POSSIBLE CAUSES

POSSIBLE CAUSES
HIGH VOLTAGE POWERTRAIN CONTROL MODULE (PCM) DTC DOOR MODULE

DIAGNOSTIC TEST

1. **CHECK PCM DTCs**
    1. With the scan tool, read PCM DTCs.

       Are there any PCM Charging or Battery DTCs present?

       Yes

       - Refer to **DTC INDEX** and perform the appropriate diagnostic procedure.

       No

       - Go To 2
2. **TEST FOR INTERMITTENT CONDITION**
    1. With the scan tool, record and erase the DTCs.
    2. Start the engine and run for two minutes.
    3. With the scan tool, read the Door Module DTCs.

       Does the scan tool display; B210C-17-BATTERY VOLTAGE INPUT - CIRCUIT VOLAGE ABOVE THRESHOLD?

       Yes

       - Replace the Passenger Door Module in accordance with the Service Information. Refer to **MODULE, DOOR, REMOVAL** .
       - Perform the BODY VERIFICATION TEST. Refer to **STANDARD PROCEDURE** .

       No

       - Test complete, the condition or conditions that originally set this DTC are not present at this

time. Using the wiring diagrams as a guide, check all related splices and connectors for signs of water intrusion, corrosion, pushed out or bent terminals and correct pin tension.

- Perform the BODY VERIFICATION TEST. Refer to **STANDARD PROCEDURE** .

B21DD-84-SYSTEM VOLTAGE - SIGNAL BELOW ALLOWABLE RANGE

For a complete wiring diagram, **refer to appropriate SYSTEM WIRING DIAGRAMS article** .

WHEN MONITORED

At all times.

SET CONDITION

This is a Controller Area Network (CAN) message that the battery voltage was below 7.3 volts for over 10 seconds.

POSSIBLE CAUSES

POSSIBLE CAUSES
LOW SYSTEM VOLTAGE BATTERY OR CHARGING SYSTEM

DIAGNOSTIC TEST

CHECK ENGINE DTCs

1. With the scan tool, read Powertrain Control Module (PCM) DTCs.

   Are there any PCM Charging or Battery DTCs present?

   Yes

   - Refer to **DTC INDEX** and perform the appropriate diagnostic procedure.

   No

   - This code is for information only. At some time there was a low battery system voltage. Check the battery and charging system in accordance with the Service Information.

B21DD-85-SYSTEM VOLTAGE - SIGNAL ABOVE ALLOWABLE RANGE

For a complete wiring diagram, **refer to appropriate SYSTEM WIRING DIAGRAMS article** .

WHEN MONITORED

At all times.

SET CONDITION

This is a CAN message that the system voltage was above 18.4 volts for over 10 seconds.

POSSIBLE CAUSES

POSSIBLE CAUSES
HIGH BATTERY SYSTEM VOLTAGE CHARGING SYSTEM

DIAGNOSTIC TEST

CHECK ENGINE DTCs

1. With the scan tool, read the Powertrain Control Module (PCM) DTCs.

   Are there any PCM Charging or Battery DTCs present?

   Yes

   - Refer to **DTC INDEX** and perform the appropriate diagnostic procedure.

   No

   - This code is a CAN system message for information only. Check the charging system in accordance with the Service Information.

B224F-54-DOOR MODULE INTERNAL - MISSING CALIBRATION

For a complete wiring diagram, **refer to appropriate SYSTEM WIRING DIAGRAMS article** .

WHEN MONITORED

Whenever the window motor is operating.

SET CONDITION

When the Door Module has lost the parameters for window travel, this code will set.

POSSIBLE CAUSES

Possible Causes
MODULE NOT CALIBRATED
EXPRESS WINDOW SWITCH

DOOR MODULE

DIAGNOSTIC TEST

1. **TEST FOR INTERMITTENT CONDITION**
    1. Cycle the ignition on.
    2. With the scan tool, record and erase the DTCs.
    3. Operate the Passenger Window up and down several times.
    4. Wait 30 seconds.
    5. With the scan tool, read the active DTCs.

    Does the scan tool display; B224F-54 DOOR MODULE INTERNAL - MISSING CALIBRATION?

    Yes

    - Go To 2

    No

    - Test complete, the condition or conditions that originally set this DTC are not present at this time. Using the wiring diagrams as a guide, check all related splices and connectors for signs of water intrusion, corrosion, pushed out or bent terminals and poor pin fit.
    - Perform the BODY VERIFICATION TEST. Refer to **STANDARD PROCEDURE** .
2. **DENORMALIZE THE WINDOW MODULE**
    1. With the scan tool in Passenger Door Module, select "Miscellaneous Functions" and perform the "Denormalize Window/Reset ECU" routine.
    2. Start the engine or connect a battery charger and set at charging voltage.
    3. Sit in the driver seat.
    4. Using the window switch, move the passenger window part way down.
    5. Using the window switch, raise the window to the full up position and continue to hold the switch for an additional two seconds.
    6. Lower the window to the full down position by pushing down on the window switch to its second detent and continue to hold the switch for an additional two seconds.
    7. Lift the window switch to the express up position and release.

    Did the window move to the full up position?

    Yes

    - Test complete.
    - Perform the BODY VERIFICATION TEST. Refer to **STANDARD PROCEDURE** .

No

- Go To 3

3. **EXPRESS SWITCH**

   Is the express feature inoperative from both front door switches?

   Yes

   - Replace the Passenger Door Module in accordance with the Service Information. Refer to **MODULE, DOOR, REMOVAL** .
   - Perform the BODY VERIFICATION TEST. Refer to **STANDARD PROCEDURE** .

   No

   - Replace the defective Express Window Switch assembly. Refer to **SWITCH, POWER WINDOW, REMOVAL** .
   - Perform the BODY VERIFICATION TEST. Refer to **STANDARD PROCEDURE** .

B224F-96-DOOR MODULE INTERNAL - COMPONENT INTERNAL FAILURE

For a complete wiring diagram, **refer to appropriate SYSTEM WIRING DIAGRAMS article** .

WHEN MONITORED

At all times.

SET CONDITION

Whenever the module detects an EEPROM failure.

POSSIBLE CAUSES

POSSIBLE CAUSES
DOOR MODULE

DIAGNOSTIC TEST

Replace the Passenger Door Module

NOTE: Anytime this code is logged (active or stored), the module must be replaced.

Repair

- Replace the Passenger Door Module in accordance with the Service Information. Refer to **MODULE,**

DOOR, REMOVAL .

- Perform the BODY VERIFICATION TEST. Refer to **STANDARD PROCEDURE** .

B25AF-2A-DOOR LOCK/UNLOCK SWITCH - STUCK

For a complete wiring diagram, **refer to appropriate SYSTEM WIRING DIAGRAMS article** .

WHEN MONITORED

Continuously whenever the door module is awake.

SET CONDITION

When the Door Lock Switch Mux circuit is shorted low for over five seconds.

POSSIBLE CAUSES

Possible Causes
PASSENGER DOOR LOCK SWITCH MUX CIRCUIT SHORTED TO GROUND
PASSENGER DOOR LOCK SWITCH MUX CIRCUIT SHORT TO THE PASSENGER WINDOW EXPRESS SWITCH RETURN CIRCUIT
DOOR LOCK SWITCH
DOOR MODULE

DIAGNOSTIC TEST

1. **TEST FOR INTERMITTENT CONDITION**
    1. With the scan tool, record and erase the DTCs.
    2. Operate the Passenger Door Lock Switch in all positions several times.
    3. Cycle the ignition on and wait 30 seconds.
    4. With the scan tool, read the DTCs.

    Does the scan tool display; B25AF-2A-DOOR LOCK/UNLOCK SWITCH - STUCK?

    Yes

    - Go To 2

    No

    - Test complete, the condition or conditions that originally set this DTC are not present at this time. Using the wiring diagrams as a guide, check all related splices and connectors for signs of water intrusion, corrosion, pushed out or bent terminals and correct pin tension.
    - Perform the BODY VERIFICATION TEST. Refer to **STANDARD PROCEDURE** .

2. **DOOR LOCK SWITCH SHORTED**

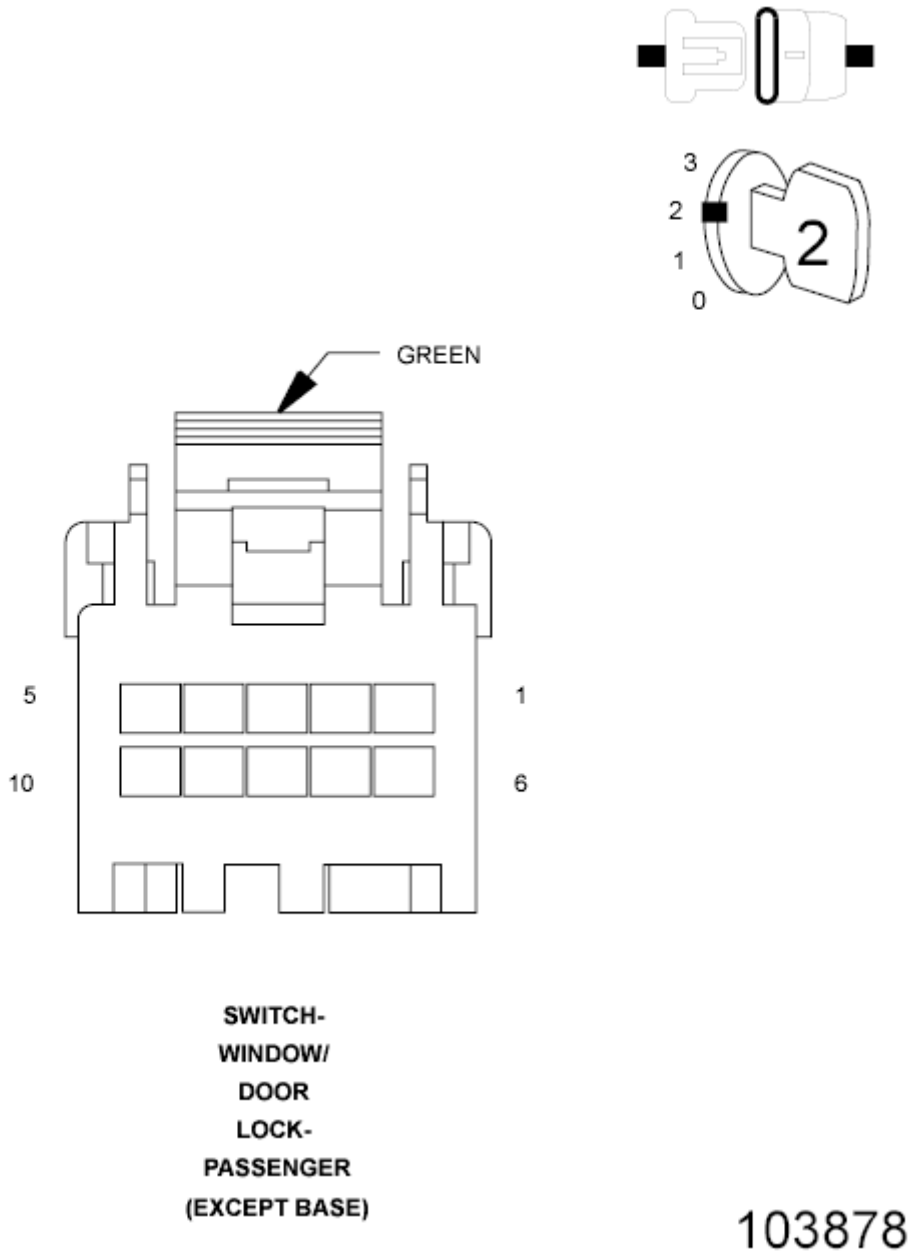

Fig. 57: Passenger Window/Door Lock Switch Connector End View
Courtesy of CHRYSLER GROUP, LLC

1. With the scan tool, erase the DTCs.
2. Disconnect the Passenger Window/Door Lock Switch harness connector.
3. With the scan tool, read the DTCs.

Does the scan tool display; B25AF-2A- DOOR LOCK/UNLOCK SWITCH - STUCK?

Yes

- Go To 3

No

- Replace the Passenger Window/Door Lock Switch in accordance with the Service Information. Refer to **SWITCH, POWER WINDOW, REMOVAL** .
- Perform the BODY VERIFICATION TEST. Refer to **STANDARD PROCEDURE** .

3. **(G160) PASSENGER DOOR LOCK SWITCH MUX CIRCUIT SHORTED TO GROUND**

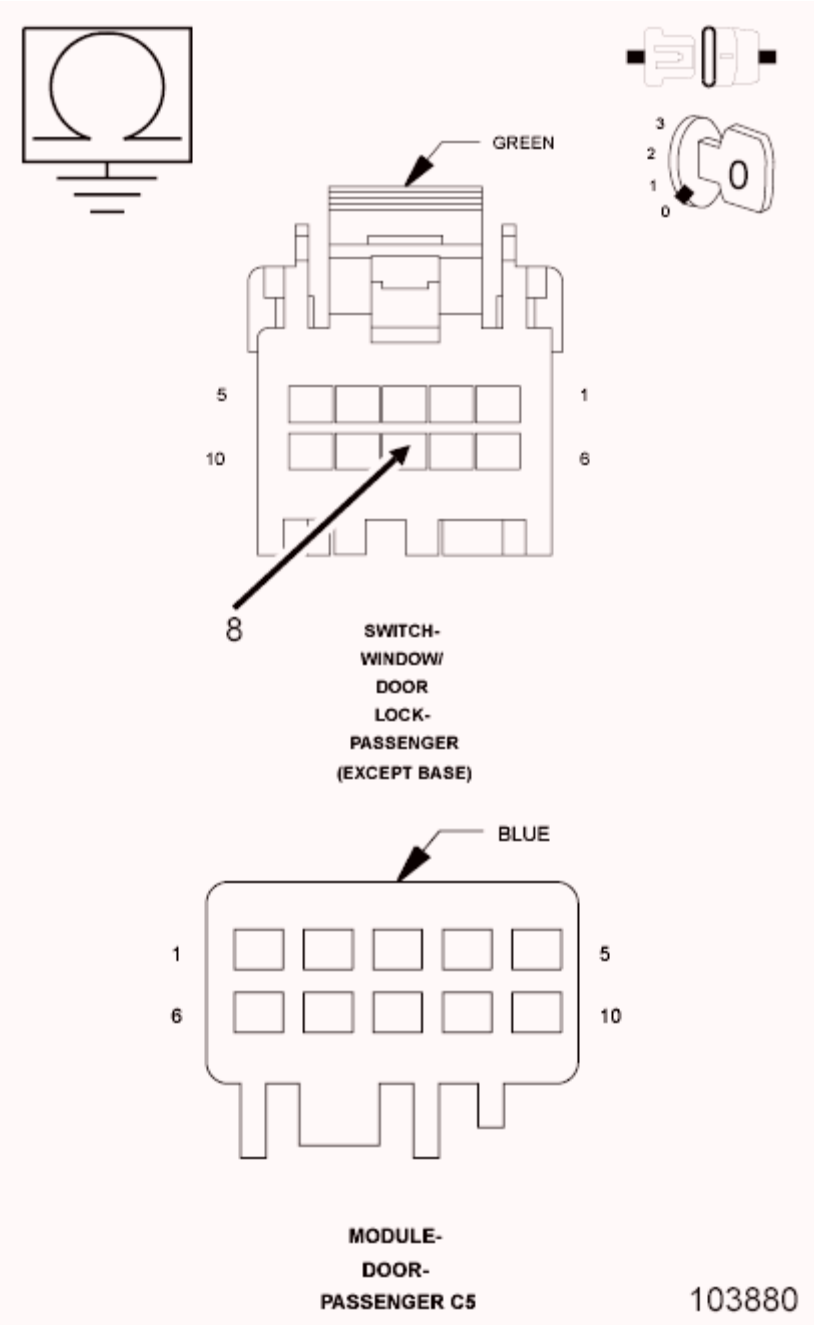

Fig. 58: Checking Passenger Door Lock Switch MUX Circuit For Short To Ground
Courtesy of CHRYSLER GROUP, LLC

1. Cycle the ignition off.
2. Disconnect the Passenger Door Module C5 harness connector.
3. Measure the resistance between ground and the (G160) Passenger Door Lock Switch Mux circuit in the Passenger Window/Door Lock Switch harness connector.

   Is the resistance below 10k Ohms?

Yes

- Repair the (G160) Passenger Door Lock Switch Mux circuit for a short to ground.
- Perform the BODY VERIFICATION TEST. Refer to **STANDARD PROCEDURE** .

No

- Go To 4

4. **(G160) PASSENGER DOOR LOCK SWITCH MUX CIRCUIT SHORT TO THE (Q936) PASSENGER WINDOW EXPRESS SWITCH RETURN CIRCUIT**

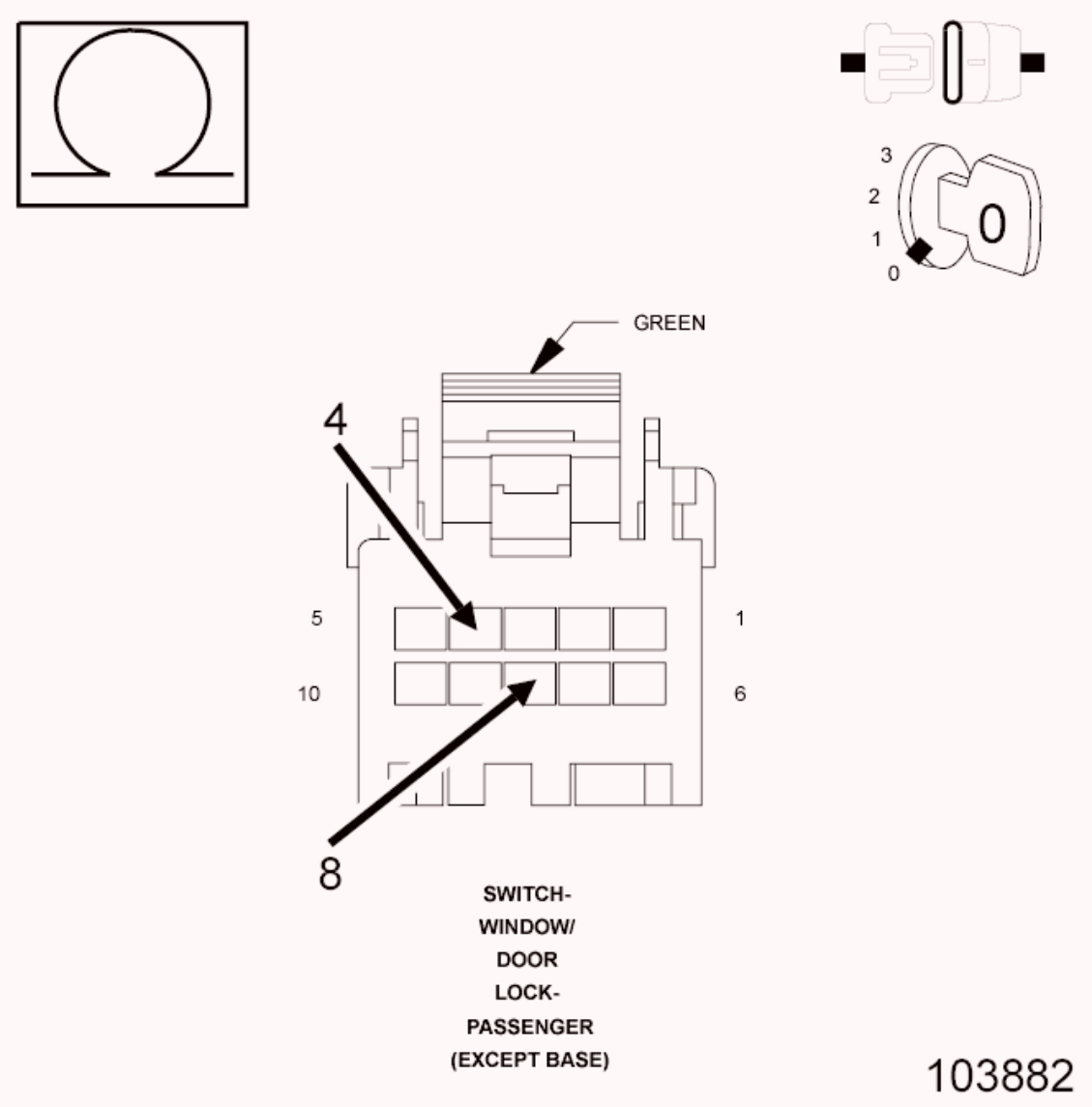

Fig. 59: Checking Passenger Door Lock Switch MUX Circuit For Short To Passenger Window Express Switch Return Circuit
Courtesy of CHRYSLER GROUP, LLC

1. Measure the resistance between the (G160) Passenger Door Lock Switch Mux circuit and the (Q936) Passenger Window Express Switch Return circuit.

   Is the resistance below 10k Ohms?

   Yes

   - Repair the (G160) Passenger Door Lock Switch Mux circuit for a short to the (Q936) Passenger Window Express Switch Return circuit.
   - Perform the BODY VERIFICATION TEST. Refer to **STANDARD PROCEDURE** .

   No

   - Replace the Passenger Door Module in accordance with the Service Information. Refer to **MODULE, DOOR, REMOVAL** .
   - Perform the BODY VERIFICATION TEST. Refer to **STANDARD PROCEDURE** .

B25B0-31-WINDOW POSITION SENSOR - NO SIGNAL

For a complete wiring diagram, **refer to appropriate SYSTEM WIRING DIAGRAMS article** .

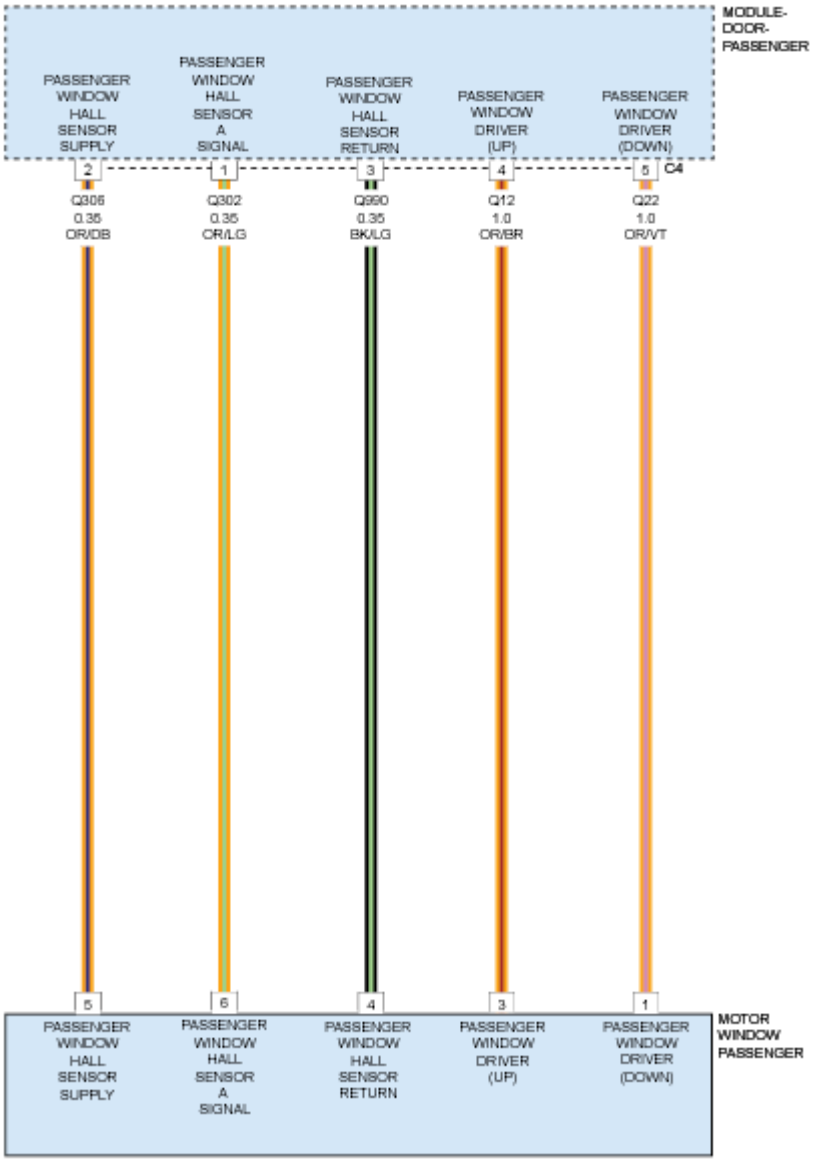

Fig. 60: Window Position Sensor - Circuit Diagram
Courtesy of CHRYSLER GROUP, LLC

THEORY OF OPERATION

The window motor contains a hall effect sensor to detect the window position. A hall effect sensor is a transducer that varies its output voltage in response to changes in magnetic field. If the motor loses its counts, it may perform erratically or in very short movements.

WHEN MONITORED

Whenever the module is awake.

SET CONDITION

When the window motor hall sensor does not generate a signal during a window movement.

POSSIBLE CAUSES

Possible Causes
WINDOW HALL SENSOR SUPPLY CIRCUIT SHORTED TO VOLTAGE
WINDOW HALL SENSOR A SIGNAL CIRCUIT SHORTED TO GROUND
WINDOW HALL SENSOR RETURN CIRCUIT OPEN
WINDOW HALL SENSOR A SIGNAL CIRCUIT SHORTED TO THE WINDOW HALL SENSOR RETURN CIRCUIT
WINDOW HALL SENSOR A SIGNAL CIRCUIT OPEN
WINDOW HALL SENSOR SUPPLY CIRCUIT OPEN
WINDOW HALL SENSOR RETURN CIRCUIT OPEN
WINDOW MOTOR

DIAGNOSTIC TEST

1. **TEST FOR INTERMITTENT CONDITION**
    1. Cycle the ignition on.
    2. With the scan tool, record and erase the DTCs.
    3. Operate the Passenger Window up and down several times.
    4. Wait 30 seconds.
    5. With the scan tool, read the DTCs.

    Does the scan tool display; B25B0-31-WINDOW POSITION SENSOR - NO SIGNAL?

    Yes

    - Go To 2

    No

    - Test complete, the condition or conditions that originally set this DTC are not present at this time. Using the wiring diagrams as a guide, check all related splices and connectors for signs of water intrusion, corrosion, pushed out or bent terminals and correct pin tension.
    - Perform the BODY VERIFICATION TEST. Refer to **STANDARD PROCEDURE** .
2. **(Q306) PASSENGER WINDOW HALL SENSOR SUPPLY CIRCUIT SHORTED TO VOLTAGE**

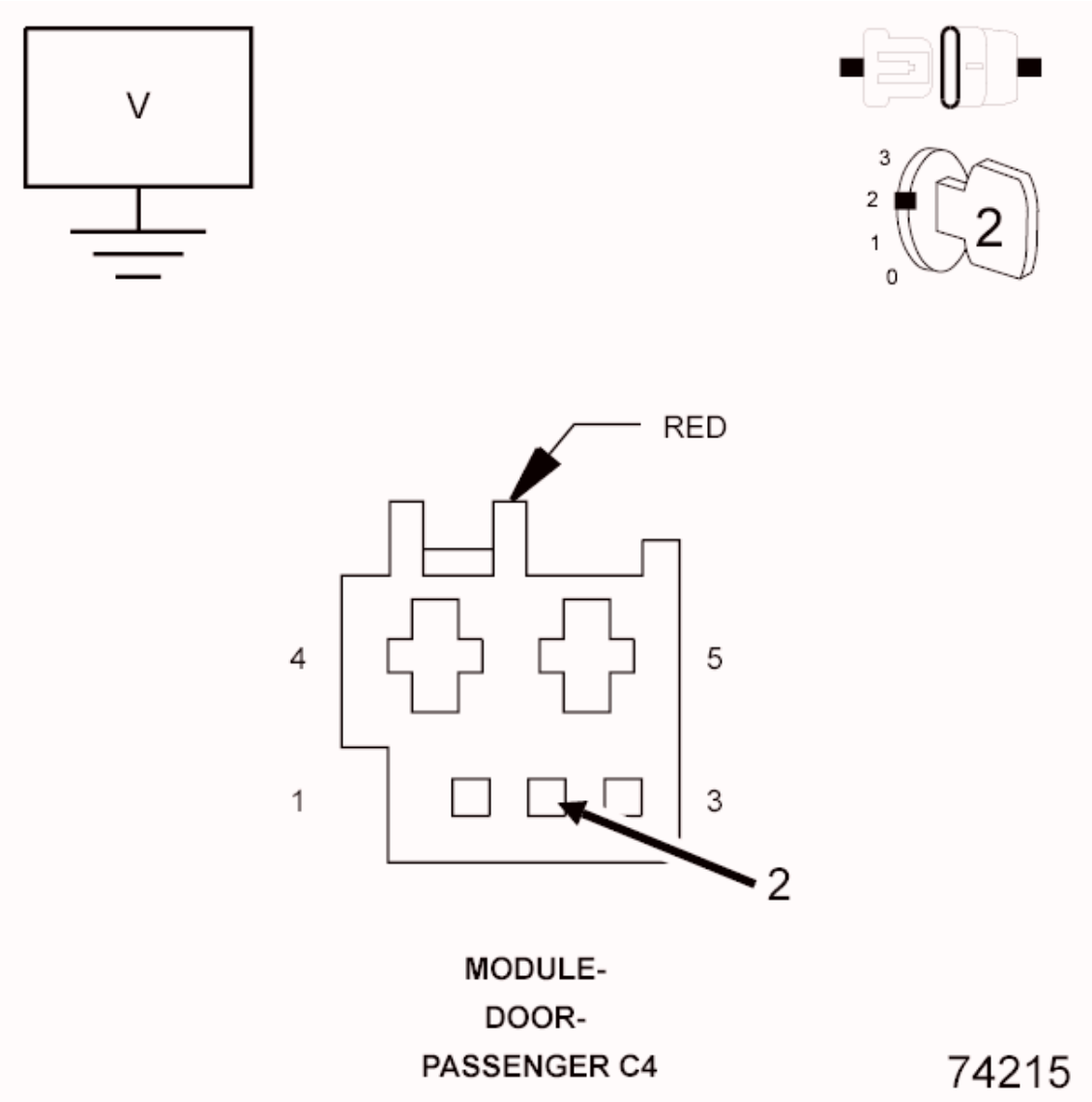

Fig. 61: Checking Passenger Window Hall Sensor Supply Circuit For Short To Voltage
Courtesy of CHRYSLER GROUP, LLC

1. Cycle the ignition off.
2. Disconnect the Passenger Door Module C4 harness connector.
3. Cycle the ignition on.
4. Measure the voltage between ground and the (Q306) Passenger Window Hall Sensor Supply circuit.

   Is there any voltage present?

   Yes

   - Repair the short to voltage in the (Q306) Passenger Window Hall Sensor Supply circuit.

- Perform the BODY VERIFICATION TEST. Refer to **STANDARD PROCEDURE** .

No

- Go To 3

3. **(Q302) PASSENGER WINDOW HALL SENSOR A SIGNAL SHORTED TO GROUND**
   1. Cycle the ignition off.
   2. Disconnect the Passenger Window Motor harness connector.
   3. Measure the resistance between ground and the (Q302) Passenger Window Hall Sensor A Signal circuit in the Passenger Window Motor harness connector.

      Is the resistance below 10K Ohms?

      Yes

      - Repair the short to ground in the Passenger Window Hall Sensor A signal circuit.
      - Perform the BODY VERIFICATION TEST. Refer to **STANDARD PROCEDURE** .

      No

      - Go To 4

4. **(Q306) PASSENGER WINDOW HALL SENSOR SUPPLY CIRCUIT OPEN**
   1. Measure the resistance of the (Q306) Passenger Window Hall Sensor Supply circuit between the Passenger Door Module C4 harness connector and the Passenger Window Motor harness connector.

      Is the resistance above 2.0 Ohms?

      Yes

      - Repair the open in the (Q306) Passenger Window Hall Sensor Supply circuit.
      - Perform the BODY VERIFICATION TEST. Refer to **STANDARD PROCEDURE** .

      No

      - Go To 5

5. **(Q990) PASSENGER WINDOW HALL SENSOR RETURN CIRCUIT OPEN**
   1. Measure the resistance of the (Q990) Passenger Window Hall Sensor Return circuit between the Passenger Door Module C4 harness connector and the Passenger Window Motor harness connector.

      Is the resistance above 2.0 Ohms?

      Yes

- Repair the open in the (Q990) Passenger Window Hall Sensor Return circuit.
- Perform the BODY VERIFICATION TEST. Refer to **STANDARD PROCEDURE** .

No

- Go To 6

6. **(Q302) DRIVER WINDOW HALL SENSOR A SIGNAL CIRCUIT OPEN**
   1. Measure the resistance of the (Q302) Passenger Window Hall Sensor A Signal circuit between the Passenger Door Module C4 harness connector and the Passenger Window Motor harness connector.

      Is the resistance above 2.0 Ohms?

      Yes

      - Repair the open in the (Q302) Passenger Window Hall Sensor A Signal circuit.
      - Perform the BODY VERIFICATION TEST. Refer to **STANDARD PROCEDURE** .

      No

      - Go To 7

7. **(Q302) PASSENGER WINDOW HALL SENSOR A SIGNAL CIRCUIT SHORTED TO THE (Q990) PASSENGER WINDOW HALL SENSOR RETURN CIRCUIT**
   1. Measure the resistance between the (Q302) Passenger Window Hall Sensor A Signal circuit and the (Q990) Passenger Window Hall Sensor Return circuit in the Passenger Window Motor harness connector.

      Is the resistance below 10K Ohms?

      Yes

      - Repair the (Q302) Passenger Window Hall Sensor A Signal circuit for a short to the (Q990) Passenger Window Hall Sensor Return circuit.
      - Perform the BODY VERIFICATION TEST. Refer to **STANDARD PROCEDURE** .

      No

      - Replace the Window Motor in accordance with the Service Information.
      - Perform the BODY VERIFICATION TEST. Refer to **STANDARD PROCEDURE** .

B25B1-11-WINDOW POSITION SENSOR POWER SUPPLY - CIRCUIT SHORT TO GROUND

For a complete wiring diagram, **refer to appropriate SYSTEM WIRING DIAGRAMS article** .

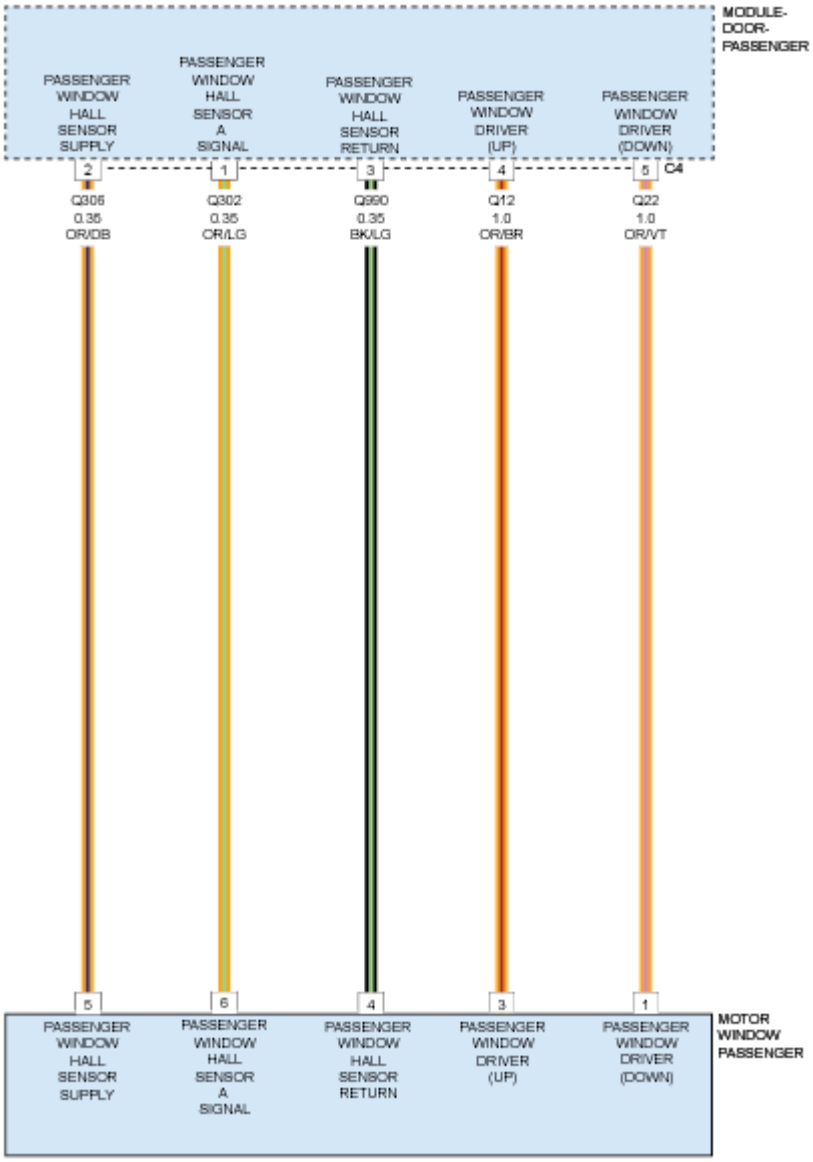

Fig. 62: Window Position Sensor - Circuit Diagram
Courtesy of CHRYSLER GROUP, LLC

THEORY OF OPERATION

The window motor contains a hall effect sensor to detect the window position. A hall effect sensor is a transducer that varies its output voltage in response to changes in magnetic field. If the motor loses its counts, it may perform erratically or in very short movements.

WHEN MONITORED

Whenever the module is awake.

SET CONDITION

When the Window Hall Sensor Supply circuit falls below 0.8 of a volt for over 480 ms., this code will set.

POSSIBLE CAUSES

Possible Causes
WINDOW HALL SENSOR SUPPLY CIRCUIT SHORTED TO GROUND
WINDOW MOTOR
DOOR MODULE

DIAGNOSTIC TEST

1. **TEST FOR INTERMITTENT CONDITION**
    1. Cycle the ignition on.
    2. With the scan tool, record and erase the DTCs.
    3. Operate the Passenger Window up and down several times.
    4. Wait 30 seconds.
    5. With the scan tool, read the DTCs.

    Does the scan tool display; B25B1-11-WINDOW POSITION SENSOR POWER SUPPLY - CIRCUIT SHORT TO GROUND?

    Yes

    - Go To 2

    No

    - Test complete, the condition or conditions that originally set this DTC are not present at this time. Using the wiring diagrams as a guide, check all related splices and connectors for signs of water intrusion, corrosion, pushed out or bent terminals and correct pin tension.
    - Perform the BODY VERIFICATION TEST. Refer to **STANDARD PROCEDURE** .
2. **WINDOW MOTOR SHORTED**
    1. With the scan tool, erase the DTCs.
    2. Cycle the ignition off.
    3. Disconnect the Passenger Window Motor connector.
    4. Cycle the ignition on.
    5. Operate the passenger window switch up and down several times.
    6. With the scan tool, read the DTCs.

    Does the scan tool display; B25B1-11-WINDOW POSITION SENSOR POWER SUPPLY - CIRCUIT SHORT TO GROUND?

Yes

- Go To 3

No

- Replace the Window Motor in accordance with the Service Information.
- Perform the BODY VERIFICATION TEST. Refer to **STANDARD PROCEDURE** .

3. **(Q306) PASSENGER WINDOW HALL SENSOR SUPPLY CIRCUIT SHORTED TO GROUND**

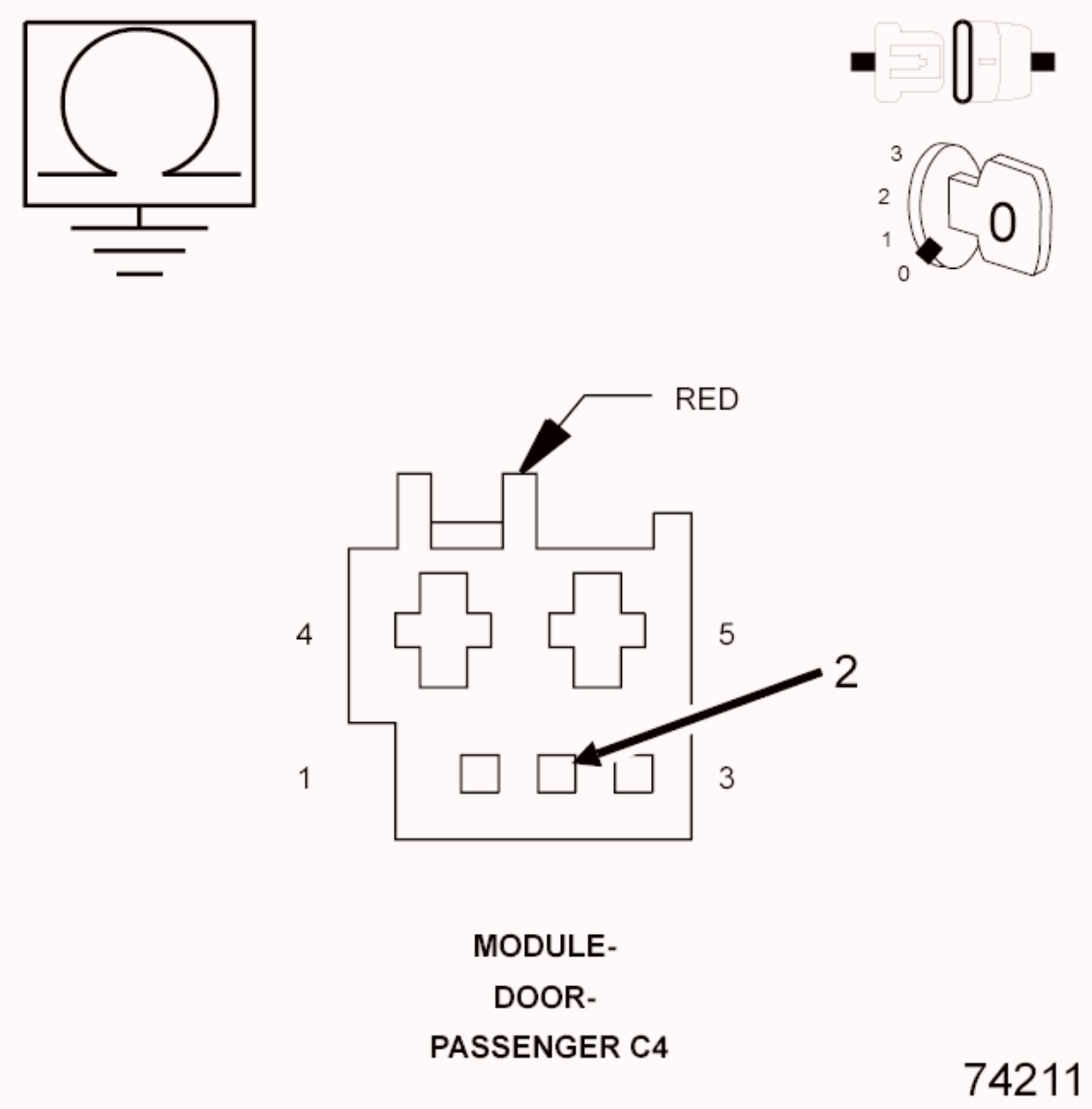

Fig. 63: Checking Passenger Window Hall Sensor Supply Circuit For Short To Ground
Courtesy of CHRYSLER GROUP, LLC

1. Cycle the ignition off.

2. Disconnect the Passenger Door Module C4 harness connector.
3. Measure the resistance between Ground and the (Q306) Passenger Window Hall Sensor Supply circuit.

   Is the resistance below 10k Ohms?

   Yes

   - Repair the short to ground in the (Q306) Passenger Window Hall Sensor Supply circuit.
   - Perform the BODY VERIFICATION TEST. Refer to **STANDARD PROCEDURE** .

   No

   - Replace the Passenger Door Module in accordance with the Service Information. Refer to **MODULE, DOOR, REMOVAL** .
   - Perform the BODY VERIFICATION TEST. Refer to **STANDARD PROCEDURE** .

B285F-11-BLIND SPOT WARNING LIGHT CONTROL - CIRCUIT SHORT TO GROUND

For a complete wiring diagram, **refer to appropriate SYSTEM WIRING DIAGRAMS article** .

WHEN MONITORED

Continuously with the ignition in the run position.

SET CONDITION

When the Blind Spot Indicator circuit senses that the voltage is below 4.0 volts for over 155 ms., this code will set.

POSSIBLE CAUSES

Possible Causes
MIRROR ASSEMBLY
PASSENGER DOOR MODULE

Always perform the Pre-Diagnostic Troubleshooting procedure before proceeding.

DIAGNOSTIC TEST

1. **TEST FOR INTERMITTENT CONDITION**
   1. Cycle the ignition on.
   2. With the scan tool, erase all DTCs.
   3. Cycle the ignition from on to off three times.

4. Cycle the ignition on.
5. With the scan tool, read the active DTCs.

   Does the scan tool display: B285F-11-BLIND SPOT WARNING LIGHT CONTROL - CIRCUIT SHORT TO GROUND as Active?

   Yes

   - Go To 2

   No

   - Test complete, the condition or conditions that originally set this DTC are not present at this time. Using the wiring diagrams as a guide, check all relate splices and connectors for signs of water intrusion, corrosion, pushed out or bent terminals and correct pin tension. Repair as necessary.
   - Perform the BODY VERIFICATION TEST. Refer to **STANDARD PROCEDURE** .

2. **INSPECT MIRROR CONNECTIONS**
   1. Cycle the ignition off.
   2. Disconnect the Passenger Door Module C1 harness connector.
   3. Inspect the wiring and connectors between the mirror and the Passenger Door Module.

      Were there any problems found?

      Yes

      - Repair as necessary.
      - Perform the BODY VERIFICATION TEST. Refer to **STANDARD PROCEDURE** .

      No

      - Go To 3

3. **MIRROR ASSEMBLY**
   1. Cycle the ignition on
   2. With the scan tool, erase the DTCs.
   3. Cycle the ignition from on to off three times.
   4. Cycle the ignition on.
   5. Make sure the PDM C1 harness connector is still disconnected.
   6. With the scan tool, read the active DTCs.
   7. Look for a change in DTCs.

      Does the scan tool display: B285F-15-BLIND SPOT WARNING LIGHT CONTROL - CIRCUIT

SHORT TO BATTERY OR OPEN as Active?

Yes

- Replace the Passenger Mirror Assembly in accordance with the Service Information. Refer to **MIRROR, OUTSIDE REARVIEW, REMOVAL** and **MIRROR, OUTSIDE REARVIEW, GLASS, REMOVAL** .
- Perform the BODY VERIFICATION TEST. Refer to **STANDARD PROCEDURE** .

No

- Replace the Passenger Door Module in accordance with the Service Information. Refer to **MODULE, BODY CONTROL, REMOVAL** .
- Perform the BODY VERIFICATION TEST. Refer to **STANDARD PROCEDURE** .

B285F-15-BLIND SPOT WARNING LIGHT CONTROL - CIRCUIT SHORT TO BATTERY OR OPEN

For a complete wiring diagram, **refer to appropriate SYSTEM WIRING DIAGRAMS article** .

WHEN MONITORED

Continuously.

SET CONDITION

When the Blind Spot Indicator circuit senses high voltage or an open circuit for over 55 ms., this code will set.

POSSIBLE CAUSES

Possible Causes
MIRROR ASSEMBLY
PASSENGER DOOR MODULE

Always perform the Pre-Diagnostic Troubleshooting procedure before proceeding.

DIAGNOSTIC TEST

1. **TEST FOR INTERMITTENT CONDITION**
    1. Cycle the ignition on.
    2. With the scan tool, erase all DTCs.
    3. Cycle the ignition from on to off three times.
    4. Cycle the ignition on.
    5. With the scan tool, read the DTCs.

Does the scan tool display active: B285F-15-BLIND SPOT WARNING LIGHT CONTROL - CIRCUIT SHORT TO BATTERY OR OPEN?

Yes

- Go To 2

No

- Test complete, the condition or conditions that originally set this DTC are not present at this time. Using the wiring diagrams as a guide, check all related splices and connectors for signs of water intrusion, corrosion, pushed out or bent terminals and correct pin tension. Repair as necessary.
- Perform the BODY VERIFICATION TEST. Refer to **STANDARD PROCEDURE** .

2. **INSPECT MIRROR CONNECTIONS**
   1. Cycle the ignition off.
   2. Disconnect the Passengers Door Module C1 harness connector.
   3. Inspect the wiring and connectors between the mirror and the Passengers Door Module.

   Were there any problems found?

   Yes

   - Repair as necessary.
   - Perform the BODY VERIFICATION TEST. Refer to **STANDARD PROCEDURE** .

   No

   - Go To 3

3. **MIRROR ASSEMBLY**
   1. Measure the resistance between the (P554) Passenger Blind Spot/Approach Return circuit and the (P712) Passenger Blind Spot Signal Driver circuit in the PDM C1 harness connector.

   Is the resistance between 550.0 and 650.0 Ohms?

   Yes

   - Replace the Passenger Door Module in accordance with the Service Information. Refer to **MODULE, DOOR, REMOVAL** .
   - Perform the BODY VERIFICATION TEST. Refer to **STANDARD PROCEDURE** .

   No

   - Replace the Passenger Mirror Assembly in accordance with the Service Information. Refer to

MIRROR, OUTSIDE REARVIEW, REMOVAL and **MIRROR, OUTSIDE REARVIEW, GLASS, REMOVAL** .

- Perform the BODY VERIFICATION TEST. Refer to **STANDARD PROCEDURE** .

B2860-11-DOOR AMBIENT LIGHT CONTROL - CIRCUIT SHORT TO GROUND

For a complete wiring diagram, **refer to appropriate SYSTEM WIRING DIAGRAMS article** .

THEORY OF OPERATION

An ambient lamp can be a: map pocket, door handle, halo ring, cup holder, etc. It is a LED with a built in circuit board.

WHEN MONITORED

Whenever the ambient lamp is commanded to be on.

SET CONDITION

When the Door Ambient Lamp Driver circuit falls below 3.0 volts for over 2000 ms. and the above conditions are met, this code will set.

POSSIBLE CAUSES

Possible Causes
DOOR AMBIENT LAMP DRIVER CIRCUIT SHORTED TO GROUND
DOOR AMBIENT LAMP DRIVER CIRCUIT SHORTED TO THE DOOR LIGHTING RETURN CIRCUIT
MAP POCKET LAMP
DOOR MODULE

DIAGNOSTIC TEST

1. **TEST FOR INTERMITTENT CONDITION**

NOTE: It is recommended that a battery charger be connected and set on low during this test.

NOTE: Be sure the thumbwheels on the Dimmer Module are turned fully on during this test.

1. Turn the ignition on.
2. With the scan tool, record and erase the DTCs.
3. Cycle the ignition on to off three times.

4. Turn the park lamps on.
5. Wait 30 seconds.
6. With the scan tool, read the active DTCs.

   Does the scan tool display: B2860-11-DOOR AMBIENT LAMP CONTROL - CIRCUIT SHORT TO GROUND?

   Yes

   - Go To 2

   No

   - Test complete, the condition or conditions that originally set this DTC are not present at this time. Using the wiring diagrams as a guide, check all related splices and connectors for signs of water intrusion, corrosion, pushed out or bent terminals and correct pin tension.
   - Perform the BODY VERIFICATION TEST. Refer to **STANDARD PROCEDURE** .

2. **PASSENGER DOOR AMBIENT LAMP SHORTED**

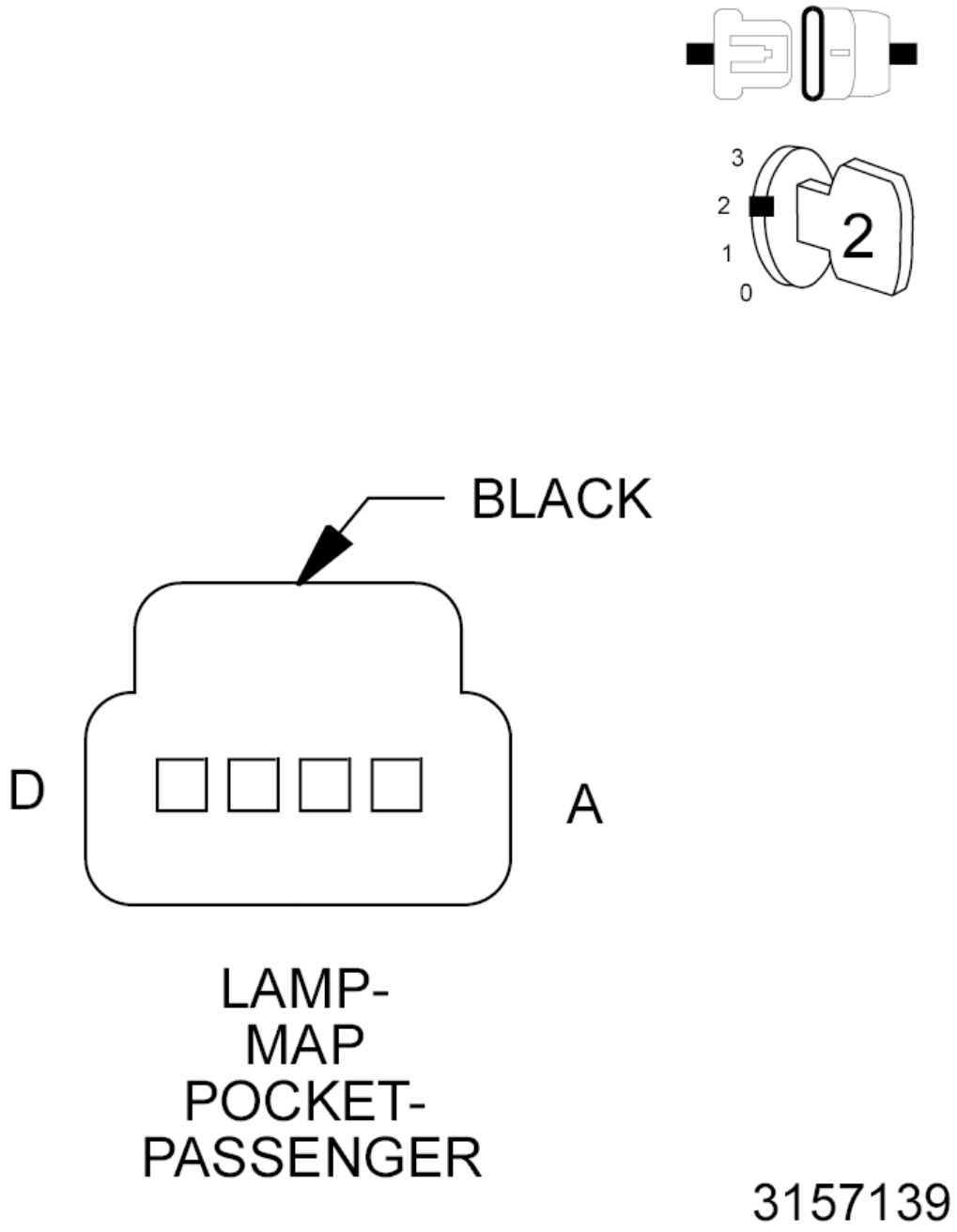

Fig. 64: Passenger Map Pocket Lamp Connector End View
Courtesy of CHRYSLER GROUP, LLC

1. With the scan tool, erase the DTCs.
2. Turn the ignition off.
3. Remove the inner door panel trim in accordance with the Service Information. Refer to **PANEL, DOOR TRIM, REMOVAL** .
4. Ensure the Passenger Door Map Pocket/Courtesy Lamp connector is disconnected.

5. Turn the ignition on.
6. Be sure the park lamps are still on.
7. Wait one minute.
8. With the scan tool, read the active DTCs.

   Does the scan tool display: B2860-11-DOOR AMBIENT LAMP - CONTROL CIRCUIT SHORT TO GROUND as Active?

   Yes

   - Go To 3

   No

   - Replace the Passenger Door Ambient Lamp Assembly.
   - Perform the BODY VERIFICATION TEST. Refer to **STANDARD PROCEDURE** .

3. **(M35) PASSENGER DOOR AMBIENT LAMP DRIVER CIRCUIT SHORTED TO GROUND**

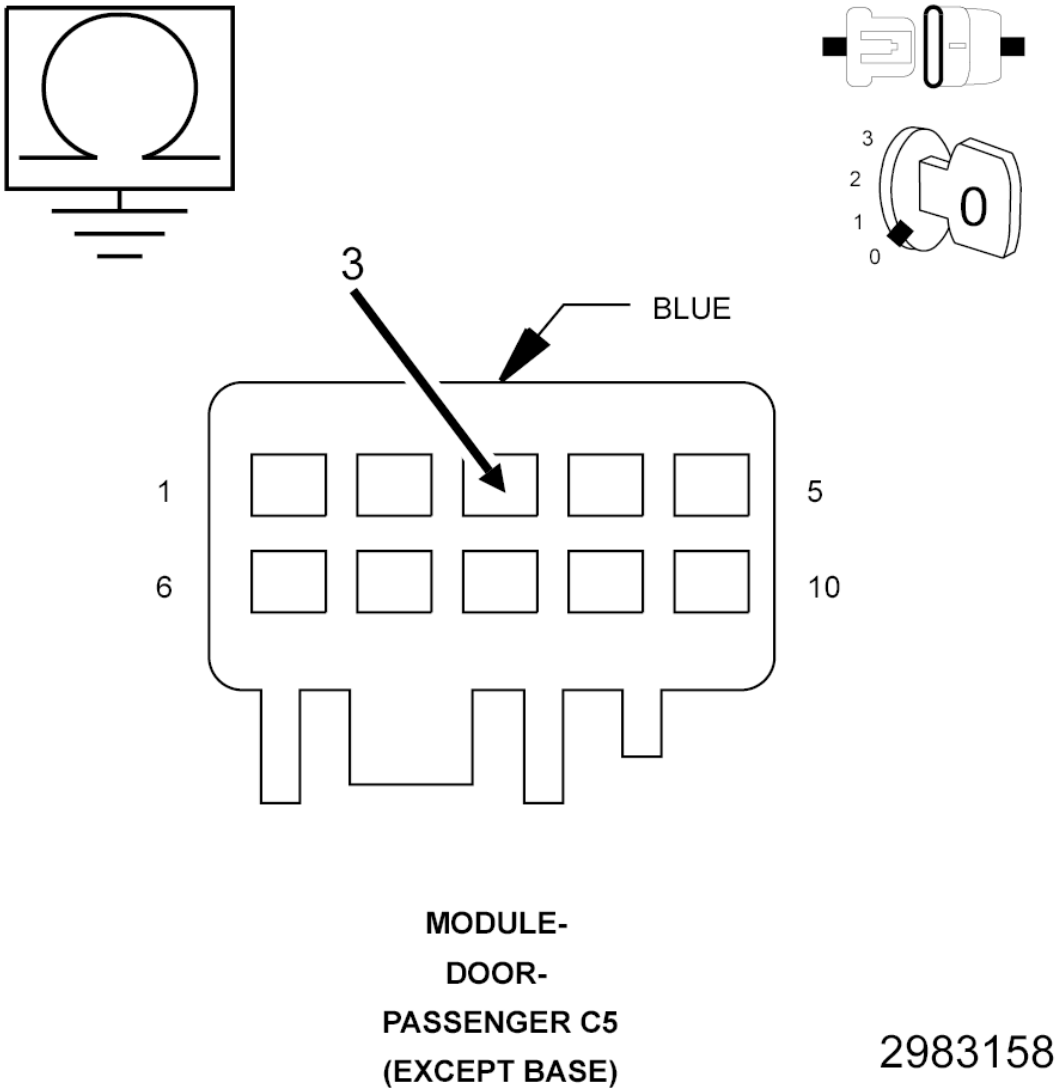

Fig. 65: Checking Passenger Door Ambient Lamp Driver Circuit For Short To Ground
Courtesy of CHRYSLER GROUP, LLC

1. Turn the ignition off.
2. Turn the park lamps off.
3. Disconnect the Passenger Door Module C5 harness connector.
4. Measure the resistance between Ground and the (M35) Passenger Door Ambient Lamp Driver circuit in the PDM C5 harness connector.

   Is the resistance below 20K Ohms?

   Yes

   - Repair the short to ground in the (M35) Passenger Door Ambient Lamp Driver circuit.

- Perform the BODY VERIFICATION TEST. Refer to **STANDARD PROCEDURE** .

No

- Go To 4

4. **(M35) PASSENGER DOOR AMBIENT LAMP DRIVER CIRCUIT SHORTED TO THE (M36) PASSENGER DOOR LIGHTING RETURN CIRCUIT**

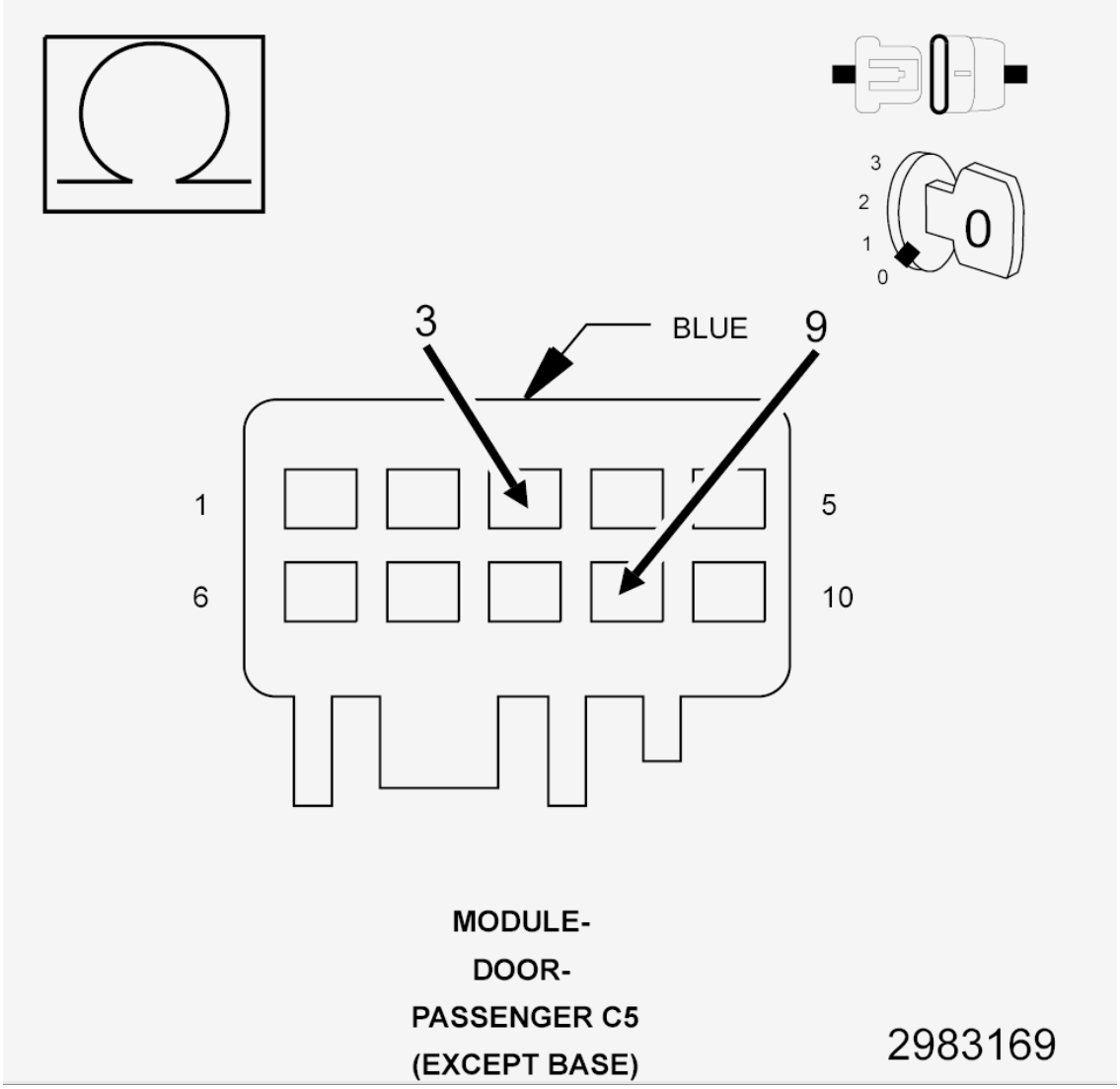

Fig. 66: Measuring Resistance Between Passenger Door Ambient Lamp Driver Circuit & Passenger Door Lighting Return Circuit
Courtesy of CHRYSLER GROUP, LLC

1. Measure the resistance between the (M35) Passenger Door Ambient Lamp Driver circuit and the (M36) Passenger Door Lighting Return circuit in the PDM C5 harness connector.

   Is the resistance below 20K Ohms?

Yes

- Repair the short between the (M35) Passenger Door Ambient Lamp Driver circuit and the (M36) Passenger Door Lighting Return circuit.
- Perform the BODY VERIFICATION TEST. Refer to **STANDARD PROCEDURE** .

No

- Replace the Passenger Door Module in accordance with the Service Information. Refer to **MODULE, DOOR, REMOVAL** .
- Perform the BODY VERIFICATION TEST. Refer to **STANDARD PROCEDURE** .

B2860-15-DOOR AMBIENT LIGHT CONTROL-CIRCUIT SHORT TO BATTERY OR OPEN

For a complete wiring diagram, **refer to appropriate SYSTEM WIRING DIAGRAMS article** .

THEORY OF OPERATION

An ambient lamp can be a: map pocket, door handle, halo ring, cup holder, etc. It is a LED with a built in circuit board.

WHEN MONITORED

Whenever the ambient lamp is commanded to be on.

SET CONDITION

When the Door Ambient Lamp Driver circuit is on when it should be off or off when it should be on, for over 2000 ms. and the above conditions are met, this code will set.

POSSIBLE CAUSES

Possible Causes
DOOR AMBIENT LAMP DRIVER CIRCUIT SHORTED TO BATTERY VOLTAGE
DOOR AMBIENT LAMP DRIVER CIRCUIT OPEN
DOOR MAP POCKET LAMP
DOOR MODULE

DIAGNOSTIC TEST

1. **TEST FOR INTERMITTENT CONDITION**

NOTE: **Be sure the thumbwheels on the Dimmer Module are turned fully on until instructed to turn them off.**

1. Turn the ignition on.
2. With the scan tool, record and erase the DTCs.
3. Cycle the ignition on to off three times.
4. Turn the park lamps on.
5. Wait 30 seconds then turn the ignition on.
6. With the scan tool, read the active DTCs.

   Does the scan tool display: B2860-15-DOOR AMBIENT LAMP CONTROL - CIRCUIT SHORT TO BATTERY OR OPEN?

   Yes

   - Go To 2

   No

   - Test complete, the condition or conditions that originally set this DTC are not present at this time. Using the wiring diagrams as a guide, check all related splices and connectors for signs of water intrusion, corrosion, pushed out or bent terminals and correct pin tension.
   - Perform the BODY VERIFICATION TEST. Refer to **STANDARD PROCEDURE** .

2. **(M35) PASSENGER DOOR AMBIENT LAMP DRIVER CIRCUIT SHORTED TO VOLTAGE**

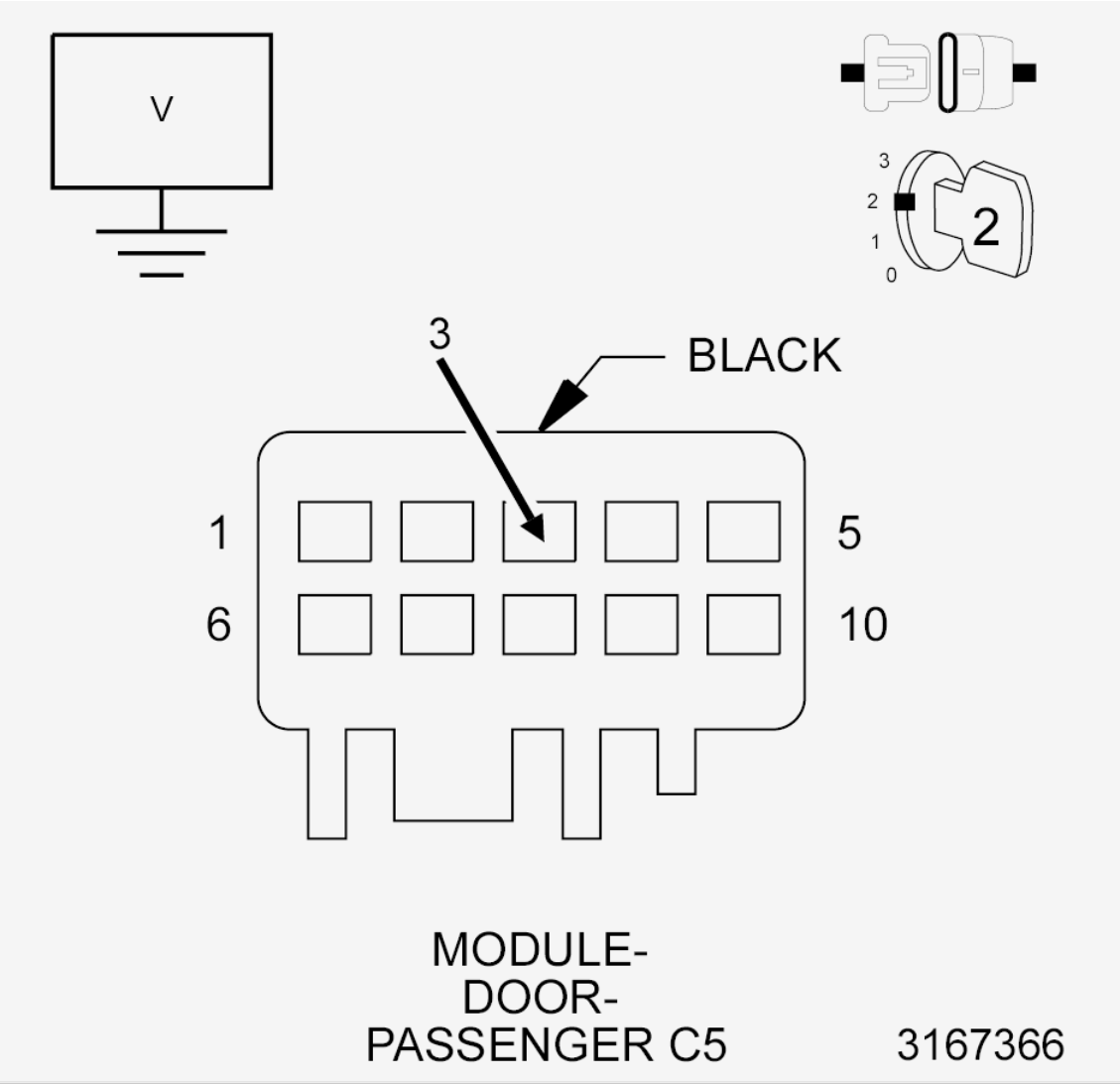

Fig. 67: Checking Passenger Door Ambient Lamp Driver Circuit For Short To Voltage
Courtesy of CHRYSLER GROUP, LLC

1. Turn the ignition off.
2. Remove the inner door panel trim in accordance with the Service Information. Refer to **PANEL, DOOR TRIM, REMOVAL** .
3. Leave the Passenger Door Map Pocket/Courtesy Lamp connector connected.
4. Disconnect the Passenger Door Module C5 harness connector.
5. Turn the ignition on.
6. Measure the voltage between ground and the (M35) Passenger Door Ambient Lamp Driver circuit in the Passenger Door Module C5 harness connector.

   Is there any voltage present?

   Yes

- Repair the (M35) Passenger Door Ambient Lamp Driver circuit for a short to voltage.
- Perform the BODY VERIFICATION TEST. Refer to **STANDARD PROCEDURE** .

No

- Go To 3

3. **(M35) PASSENGER DOOR AMBIENT LAMP DRIVER CIRCUIT OPEN**

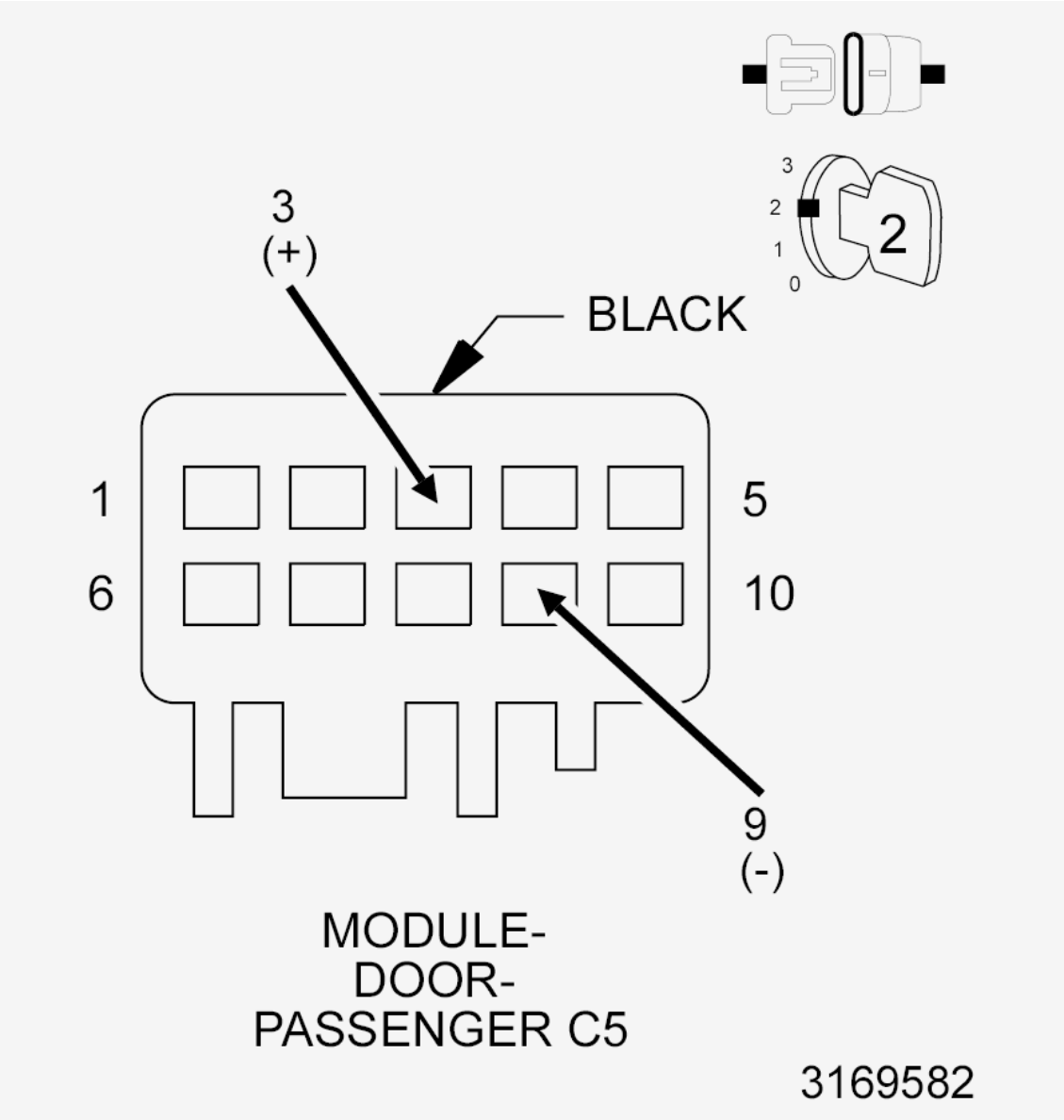

Fig. 68: Passenger Door Module Connector End View
Courtesy of CHRYSLER GROUP, LLC

1. Turn the ignition off.

2. Be sure the Passenger Door Map Pocket/Courtesy Lamp connector is still connected.
3. Turn the ignition on.
4. Connect a fused jumper wire to the (M35) Passenger Door Ambient Lamp Driver circuit in the PDM C5 harness connector.
5. Connect a jumper wire to the (M36) Passenger Door Lighting Return circuit in the PDM C5 harness connector.

   Does the Passenger Door Ambient Lamp illuminate brightly?

   Yes

   - Replace the Passenger Door Module in accordance with the Service Information. Refer to **MODULE, DOOR, REMOVAL** .
   - Perform the BODY VERIFICATION TEST. Refer to **STANDARD PROCEDURE** .

   No

   - Go To 4

4. **(M35) PASSENGER DOOR AMBIENT LAMP DRIVER CIRCUIT OPEN**

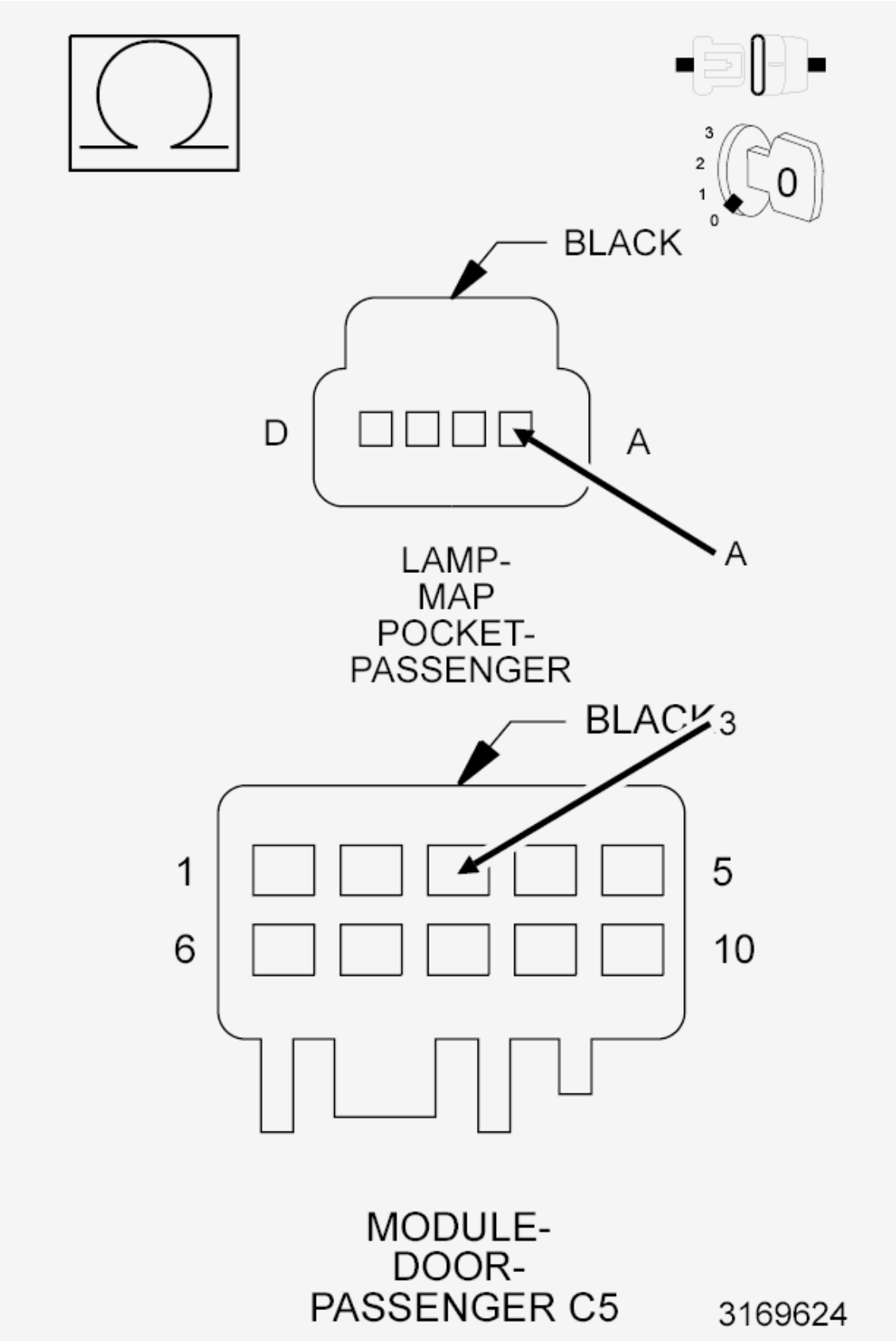
3
2
1
0
0
BLACK
D
A
A
LAMP-
MAP
POCKET-
PASSENGER
BLACK
3
1
5
6
10
MODULE-
DOOR-
PASSENGER C5
3169624

Fig. 69: Checking Passenger Door Ambient Lamp Driver Circuit For An Open
Courtesy of CHRYSLER GROUP, LLC

1. Disconnect the Passenger Door Map Pocket/Courtesy Lamp harness connector.
2. Measure the resistance of the (M35) Passenger Door Ambient Lamp Driver circuit between the PDM C5 harness connector and the Passenger Door Map Pocket/Courtesy Lamp harness connector.

   Is the resistance below 2.0 Ohms?

   Yes

   - Go To 5

   No

   - Repair the open in the (M35) Passenger Door Courtesy Lamp Driver circuit.
   - Perform the BODY VERIFICATION TEST. Refer to **STANDARD PROCEDURE** .

5. **(M36) PASSENGER DOOR LIGHTING RETURN CIRCUIT OPEN**

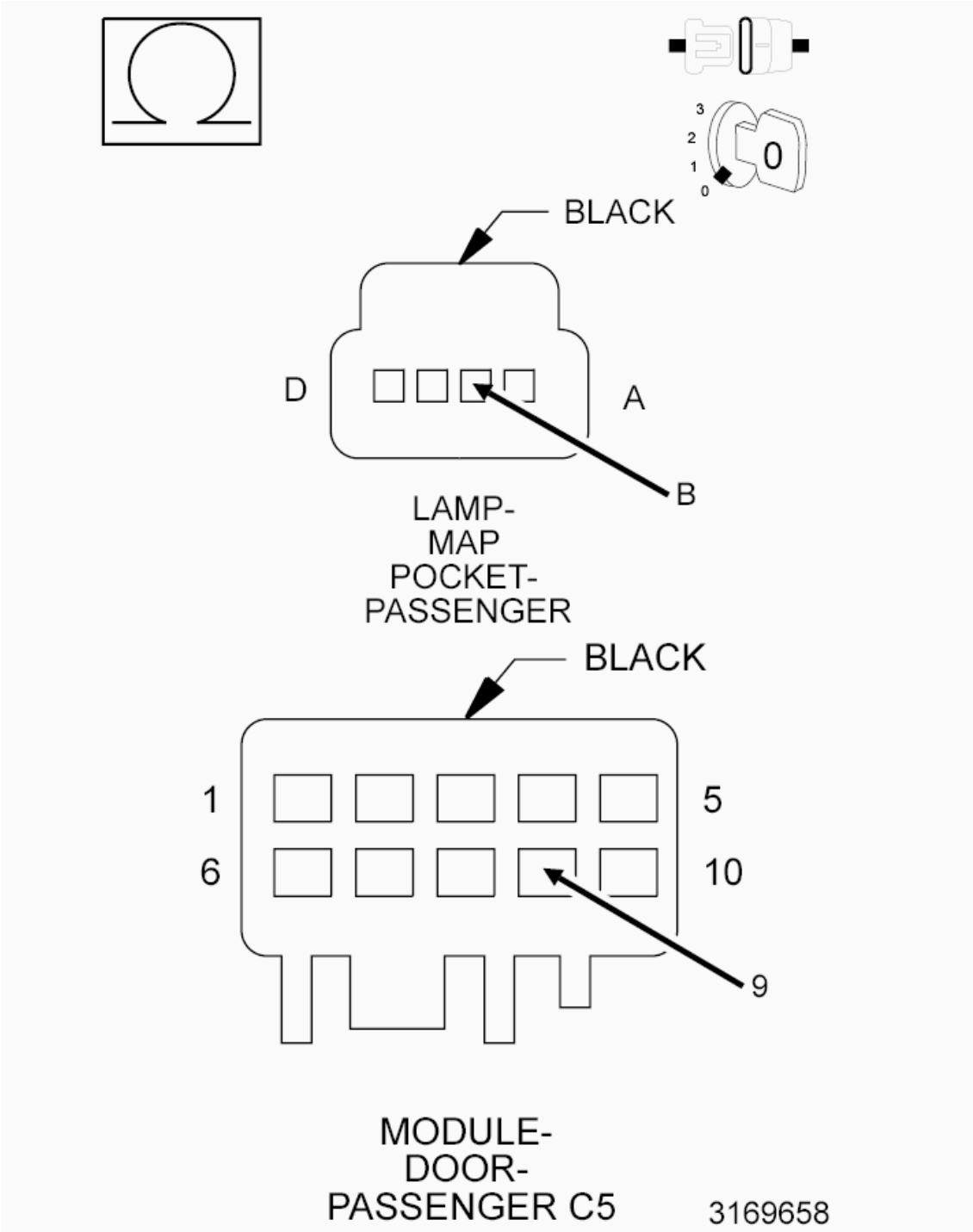

Fig. 70: Checking Passenger Door Lighting Return Circuit For An Open
Courtesy of CHRYSLER GROUP, LLC

1. Measure the resistance of the (M36) Passenger Door Lighting Return circuit between the PDM C5 harness connector and the Passenger Door Map Pocket/Courtesy Lamp harness connector.

   Is the resistance below 2.0 Ohms?

Yes

- Replace the Passenger Door Ambient Lamp.
- Perform the BODY VERIFICATION TEST. Refer to **STANDARD PROCEDURE** .

No

- Repair the open in the (M36) Passenger Door Lighting Return circuit.
- Perform the BODY VERIFICATION TEST. Refer to **STANDARD PROCEDURE** .

B2861-11-MIRROR APPROACH LIGHT CONTROL - CIRCUIT SHORT TO GROUND

For a complete wiring diagram, **refer to appropriate SYSTEM WIRING DIAGRAMS article** .

WHEN MONITORED

Continuously.

SET CONDITION

The Door Module senses a short low on the Approach Lamp Driver circuit for more than two seconds with the approach lights switched on.

POSSIBLE CAUSES

Possible Causes
MIRROR APPROACH LAMP DRIVER CIRCUIT SHORTED TO GROUND
MIRROR APPROACH LAMP DRIVER CIRCUIT SHORTED TO THE APPROACH LAMP RETURN CIRCUIT
MIRROR APPROACH LAMP DRIVER CIRCUIT SHORTED TO ANY SENSOR GROUND OR RETURN CIRCUIT
OUTSIDE REARVIEW MIRROR
DOOR MODULE

DIAGNOSTIC TEST

1. **TEST FOR INTERMITTENT CONDITION**
    1. Cycle the ignition on.
    2. Using a scan tool, record and erase Diagnostic Trouble Codes (DTCs).
    3. Cycle the ignition off then on.
    4. Press and release the Mirror Select switch to select the Passenger Outside Rearview Mirror.
    5. Open the passenger door to turn the approach lights on.
    6. Turn the passenger side turn signal on.
    7. Fold and unfold the mirrors (if equipped).

8. Turn the rear defogger on (if equipped with heated mirrors).
9. Operate the Mirror Adjust switch in all directions several times while monitoring the scan tool for DTCs.

NOTE: After adjusting the mirror in one direction wait at least two seconds before adjusting the mirror in the opposite direction, as this will allow time for an active fault to set if present.

10. With the scan tool, read the DTCs.

    Does the scan tool display: B2861-11-MIRROR APPROACH LAMP CONTROL - CIRCUIT SHORT TO GROUND?

    Yes

    - Go To 2

    No

    - The conditions that caused this code to set are not present at this time. Repeat this test again. If this DTC is now present, Go To 2. Otherwise, use the wiring diagram/schematic as a guide and inspect the wiring and connectors.
    - Perform the BODY VERIFICATION TEST. Refer to **STANDARD PROCEDURE** .

2. **CHECK (P553) PASSENGER MIRROR APPROACH LAMP DRIVER CIRCUIT FOR A SHORT TO GROUND**

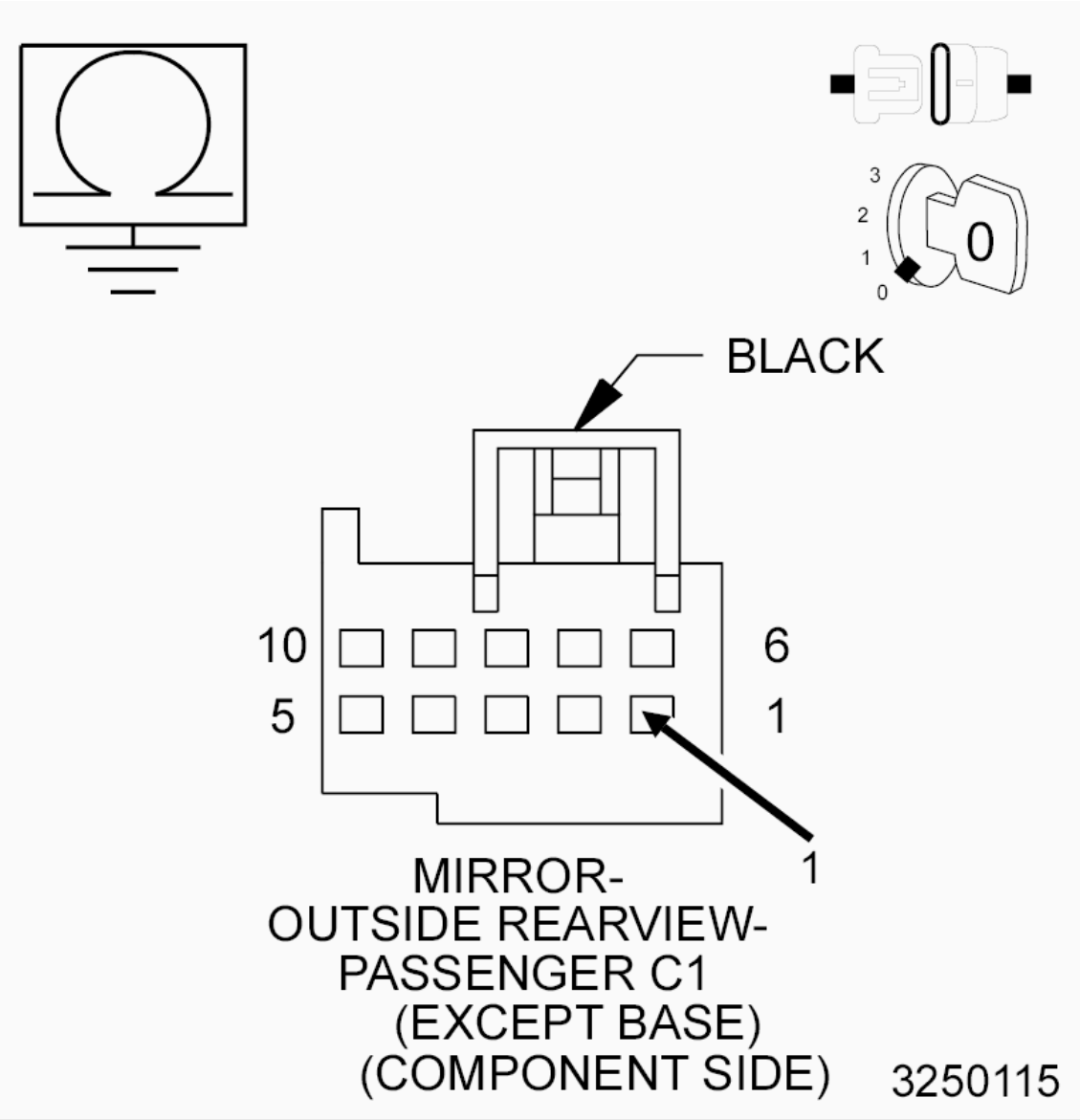

Fig. 71: Checking Passenger Mirror Approach Lamp Driver Circuit For Short To Ground
Courtesy of CHRYSLER GROUP, LLC

1. Cycle the ignition off.
2. Disconnect the Passenger Outside Rearview Mirror C1 and C2 (Component Side) harness connectors from the Door Module.
3. Measure the resistance between ground and the (P553) Passenger Approach Lamp Driver circuit at the Passenger Outside Rearview Mirror C1 (Component Side) connector.

   Is the resistance below 10k Ohms?

   Yes

   - Repair the (P553) Passenger Approach Lamp Driver circuit for a short to ground. If the

wiring harness and connector are okay, replace the Passenger Outside Rearview Mirror in accordance with the Service Information. Refer to **MIRROR, OUTSIDE REARVIEW, REMOVAL** and **MIRROR, OUTSIDE REARVIEW, GLASS, REMOVAL** .

- Perform the BODY VERIFICATION TEST. Refer to **STANDARD PROCEDURE** .

No

- Go To 3

3. **CHECK (P553) PASSENGER MIRROR APPROACH LAMP DRIVER CIRCUIT FOR A SHORT TO THE (P554) PASSENGER APPROACH LAMP RETURN CIRCUIT**

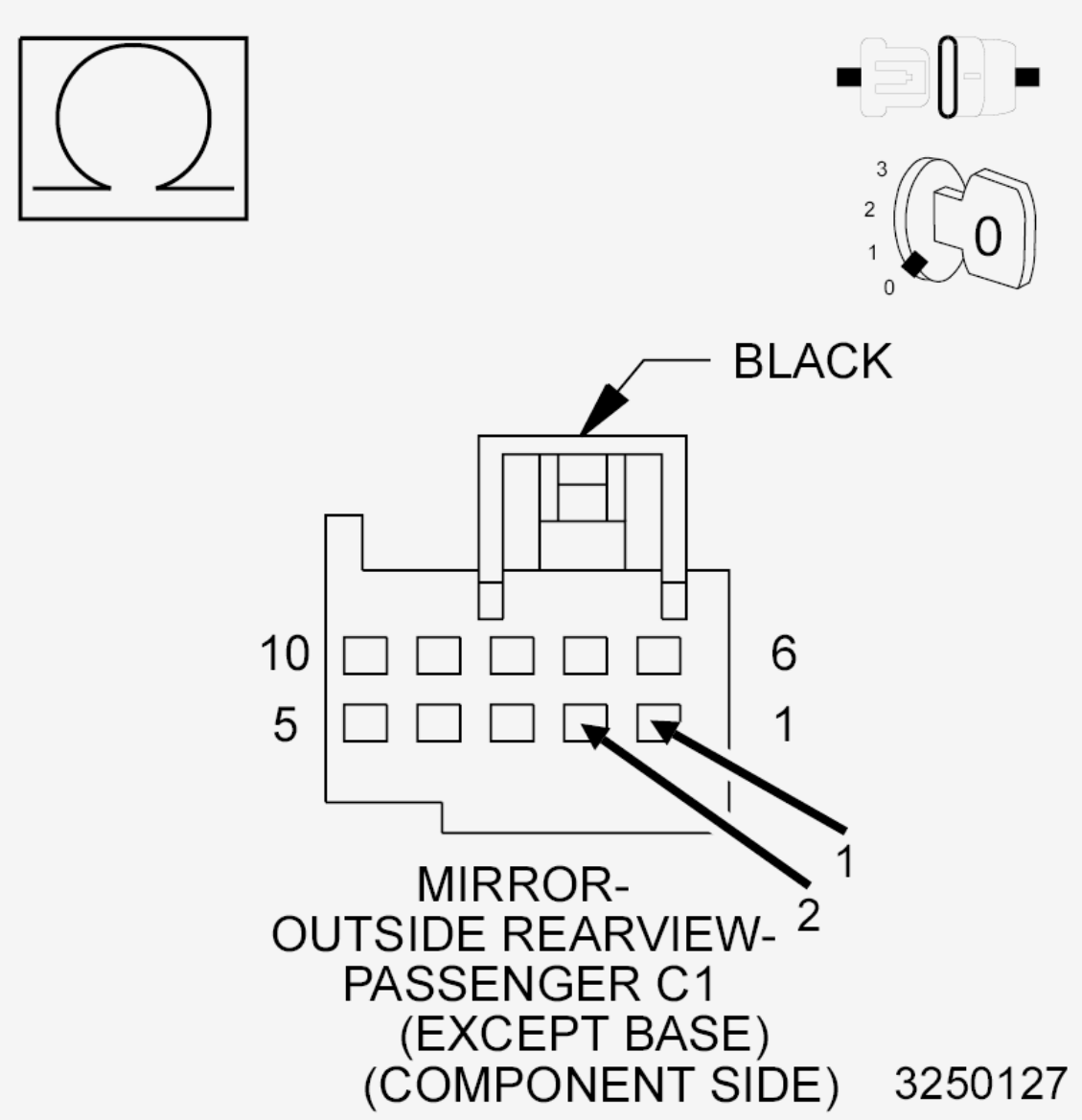

Fig. 72: Checking Passenger Mirror Approach Lamp Driver Circuit For Short To Passenger Blind Spot/Approach Return Circuit
Courtesy of CHRYSLER GROUP, LLC

1. Measure the resistance between the (P553) Passenger Approach Lamp Driver circuit and the (P554) Passenger Blind Spot/Approach Return circuit at the Passenger Outside Rearview Mirror C1 (Component Side) harness connector.

   Is the resistance below 2.0 Ohm?

   Yes

   - Repair the (P553) Passenger Approach Lamp Driver circuit for a short to the (P554) Passenger Approach Lamp Return circuit. If the wiring harness and connector are okay, replace the Passenger Outside Rearview Mirror in accordance with the Service Information. Refer to **MIRROR, OUTSIDE REARVIEW, REMOVAL** and **MIRROR, OUTSIDE REARVIEW, GLASS, REMOVAL** .
   - Perform the BODY VERIFICATION TEST. Refer to **STANDARD PROCEDURE** .

   No

   - Go To 4

4. **CHECK (P553) PASSENGER MIRROR APPROACH LAMP DRIVER CIRCUIT FOR A SHORT TO ANY PASSENGER MIRROR GROUND OR RETURN CIRCUIT**

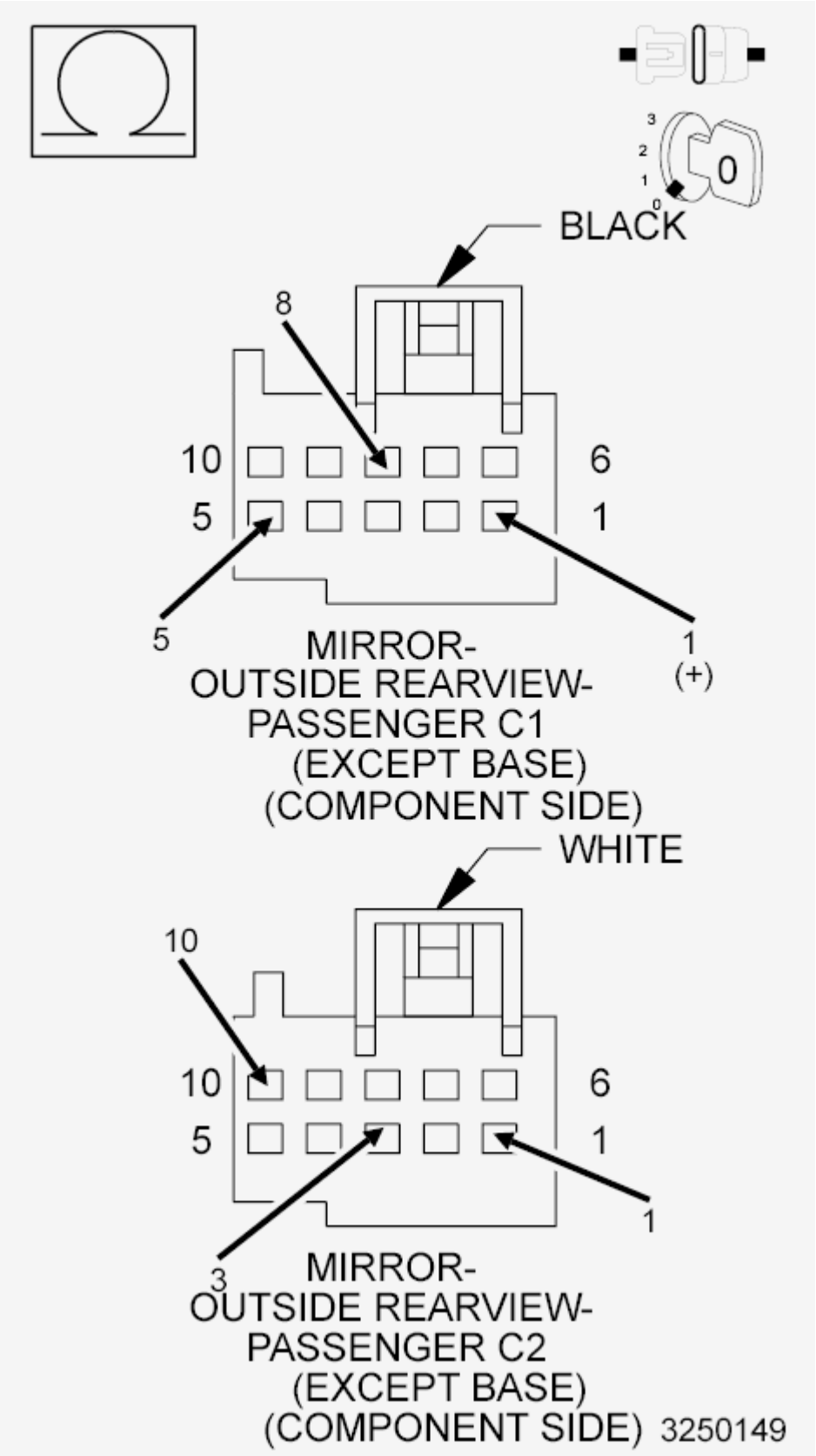
3
2
1
0
0
BLACK
8
10
6
5
1
5
1
(+)
MIRROR-
OUTSIDE REARVIEW-
PASSENGER C1
(EXCEPT BASE)
(COMPONENT SIDE)
WHITE
10
10
6
5
1
1
3
MIRROR-
OUTSIDE REARVIEW-
PASSENGER C2
(EXCEPT BASE)
(COMPONENT SIDE)
3250149

Fig. 73: Checking Passenger Mirror Approach Lamp Driver Circuit For Short To Any Passenger Mirror Ground Or Return Circuit
Courtesy of CHRYSLER GROUP, LLC

1. Measure the resistance between the (P553) Passenger Approach Lamp Driver circuit (C1-1) and each of the Passenger Mirror Ground and Return circuits in the Passenger Outside Rearview Mirror C1 and C2 (Component Side) connectors.

   Is the resistance below 10k Ohms for any measurement?

   Yes

   - Repair all circuits with a resistance below 10k Ohms for a short to the (P553) Passenger Approach Lamp Driver circuit. If the wiring harness and connector are okay, replace the Passenger Outside Rearview Mirror in accordance with the Service Information. Refer to **MIRROR, OUTSIDE REARVIEW, REMOVAL** and **MIRROR, OUTSIDE REARVIEW, GLASS, REMOVAL** .
   - Perform the BODY VERIFICATION TEST. Refer to **STANDARD PROCEDURE** .

   No

   - Inspect the wiring and connectors for damage and repair as necessary. If the wiring and connectors are okay, replace the Door Module in accordance with the Service Information. Refer to **MODULE, DOOR, REMOVAL** .
   - Perform the BODY VERIFICATION TEST. Refer to **STANDARD PROCEDURE** .

B2861-15-MIRROR APPROACH LIGHT CONTROL - CIRCUIT SHORT TO BATTERY OR OPEN

For a complete wiring diagram, **refer to appropriate SYSTEM WIRING DIAGRAMS article** .

WHEN MONITORED

Continuously.

SET CONDITION

The Door Module senses an open or a short high on the Mirror Approach Lamp Driver circuit for more than two seconds.

POSSIBLE CAUSES

Possible Causes
MIRROR APPROACH LAMP DRIVER CIRCUIT SHORTED TO VOLTAGE
MIRROR APPROACH LAMP DRIVER CIRCUIT OPEN
MIRROR APPROACH LAMP RETURN CIRCUIT OPEN

MIRROR APPROACH LAMP DRIVER CIRCUIT OPEN TO THE APPROACH LAMP RETURN CIRCUIT
MIRROR APPROACH LAMP DRIVER CIRCUIT SHORTED TO ANOTHER DRIVER OR SIGNAL CIRCUIT
OUTSIDE REARVIEW MIRROR
DOOR MODULE

DIAGNOSTIC TEST

1. **TEST FOR INTERMITTENT CONDITION**
   1. Cycle the ignition on.
   2. Using a scan tool, record and erase Diagnostic Trouble Codes (DTCs).
   3. Cycle the ignition off then back to on.
   4. Open the passenger door to turn the approach lights on.
   5. Turn the passenger side turn signal on.
   6. Fold and unfold the mirrors (if equipped).
   7. Turn the rear defogger on (if equipped with heated mirrors).
   8. Operate the Mirror Adjust switch in all directions several times while monitoring the scan tool for DTCs.

      NOTE: After adjusting the mirror in one direction wait at least two seconds before adjusting the mirror in the opposite direction, as this will allow time for an active fault to set if present.

   9. With the scan tool, read the DTCs.

      Does the scan tool display: B2861-15-MIRROR APPROACH LIGHT CONTROL - CIRCUIT SHORT TO BATTERY OR OPEN as active?

      Yes

      - Go To 2

      No

      - The conditions that caused this code to set are not present at this time. Repeat this test again. If this DTC is now present, Go To 2. Otherwise, use the wiring diagram/schematic as a guide and inspect the wiring and connectors.
      - Perform the BODY VERIFICATION TEST. Refer to **STANDARD PROCEDURE** .
2. **CHECK (P553) PASSENGER MIRROR APPROACH LAMP DRIVER CIRCUIT FOR A SHORT TO VOLTAGE**

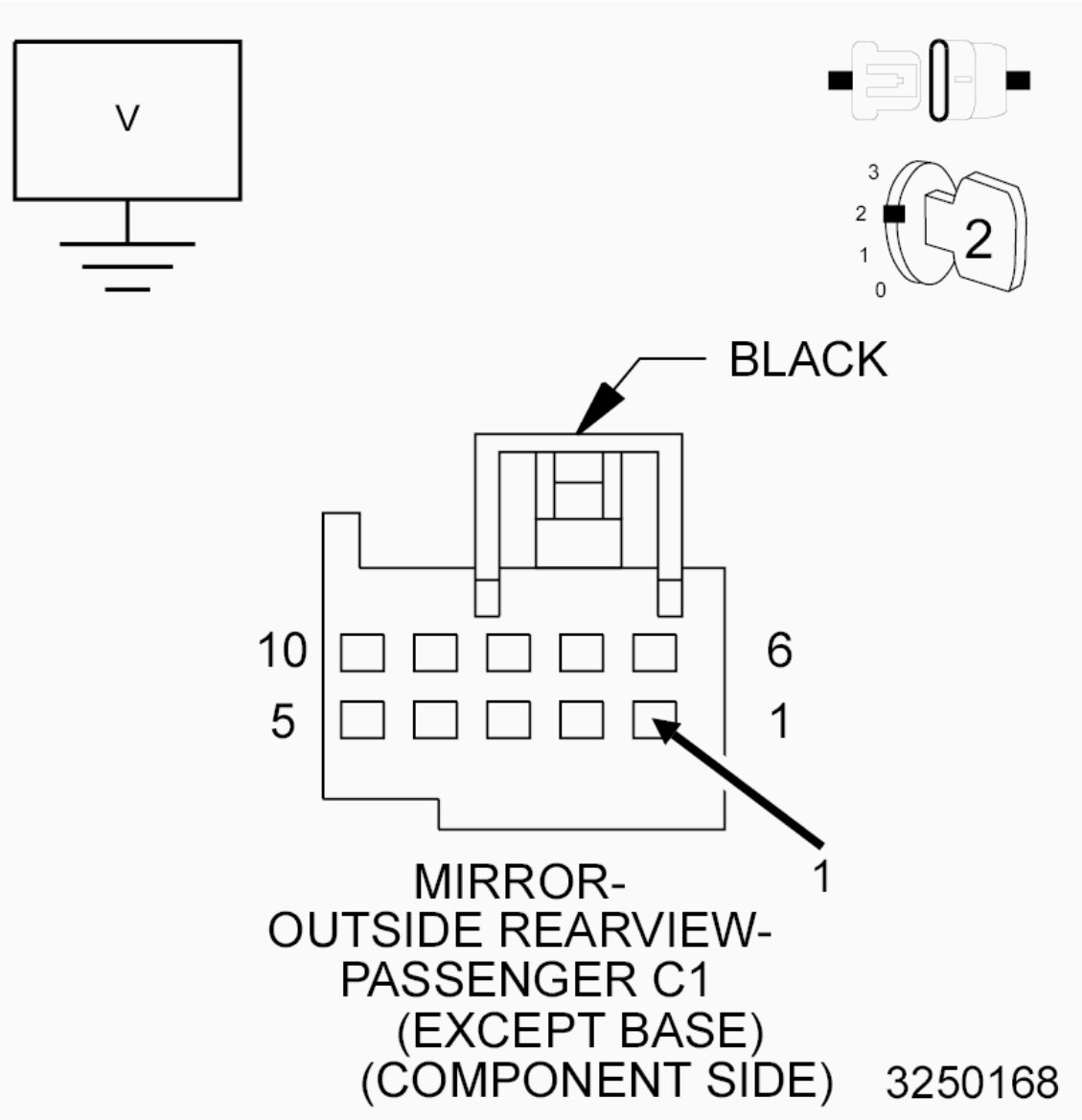

Fig. 74: Checking Passenger Mirror Approach Lamp Driver Circuit For Short To Voltage
Courtesy of CHRYSLER GROUP, LLC

1. Cycle the ignition off.
2. Disconnect the Passenger Outside Rearview Mirror C1 and C2 (Component Side) harness connectors from the Door Module.
3. Cycle the ignition on.
4. Measure the voltage between ground and the (P553) Passenger Mirror Approach Lamp Driver circuit in the Passenger Outside Rearview Mirror C1 (Component Side) harness connector.

   Is there any voltage present?

   Yes

- Repair the (P553) Passenger Mirror Approach Lamp Driver circuit for a short to voltage. If the wiring harness and connector are okay, replace the Passenger Outside Rearview Mirror in accordance with the Service Information. Refer to **MIRROR, OUTSIDE REARVIEW, REMOVAL** and **MIRROR, OUTSIDE REARVIEW, GLASS, REMOVAL** .
- Perform the BODY VERIFICATION TEST. Refer to **STANDARD PROCEDURE** .

No

- Go To 3

3. **CHECK (P553) PASSENGER MIRROR APPROACH LAMP DRIVER CIRCUIT AND (P554) PASSENGER APPROACH LAMP RETURN CIRCUIT FOR AN OPEN**

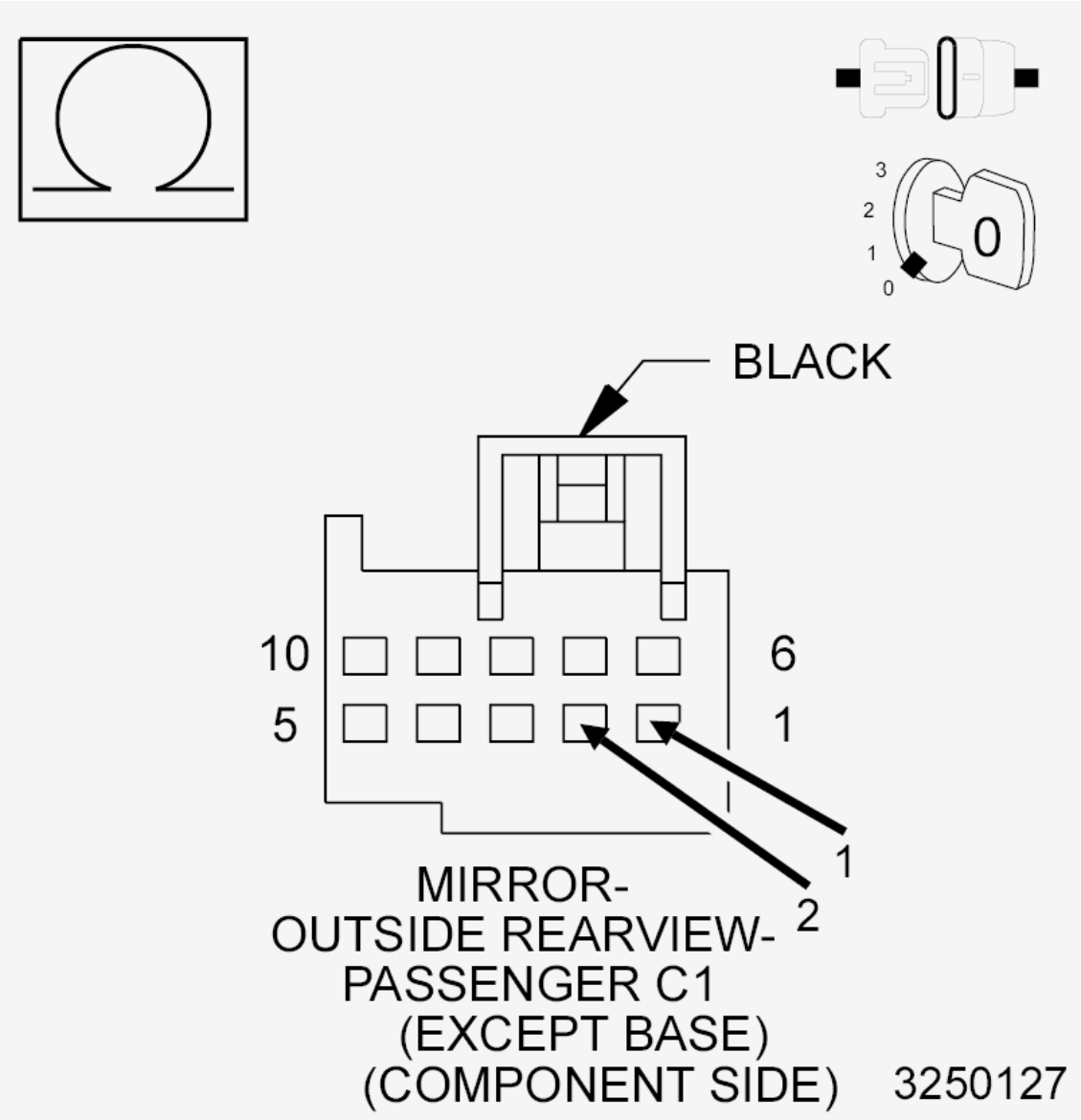

Fig. 75: Checking Passenger Mirror Approach Lamp Driver Circuit For Short To Passenger Blind

Spot/Approach Return Circuit
Courtesy of CHRYSLER GROUP, LLC

1. Cycle the ignition off.
2. Measure the resistance between the (P553) Passenger Mirror Approach Lamp Driver circuit and the (P554) Passenger Blind Spot/Approach Return circuit at the Passenger Outside Rearview Mirror C1 (Component Side) connector.

   Is the resistance below 10.0 Ohms?

   Yes

   - Go To 4

   No

   - Repair the (P553) Passenger Mirror Approach Lamp Driver circuit or the (P554) Passenger Blind Spot/Approach Return circuit for an open. If the wiring harness and connector are okay, replace the Passenger Outside Rearview Mirror in accordance with the Service Information. Refer to **MIRROR, OUTSIDE REARVIEW, REMOVAL** and **MIRROR, OUTSIDE REARVIEW, GLASS, REMOVAL** .
   - Perform the BODY VERIFICATION TEST. Refer to **STANDARD PROCEDURE** .

4. **CHECK (P553) PASSENGER MIRROR APPROACH LAMP DRIVER CIRCUIT FOR A SHORT TO ANOTHER MIRROR DRIVER OR SIGNAL CIRCUIT**

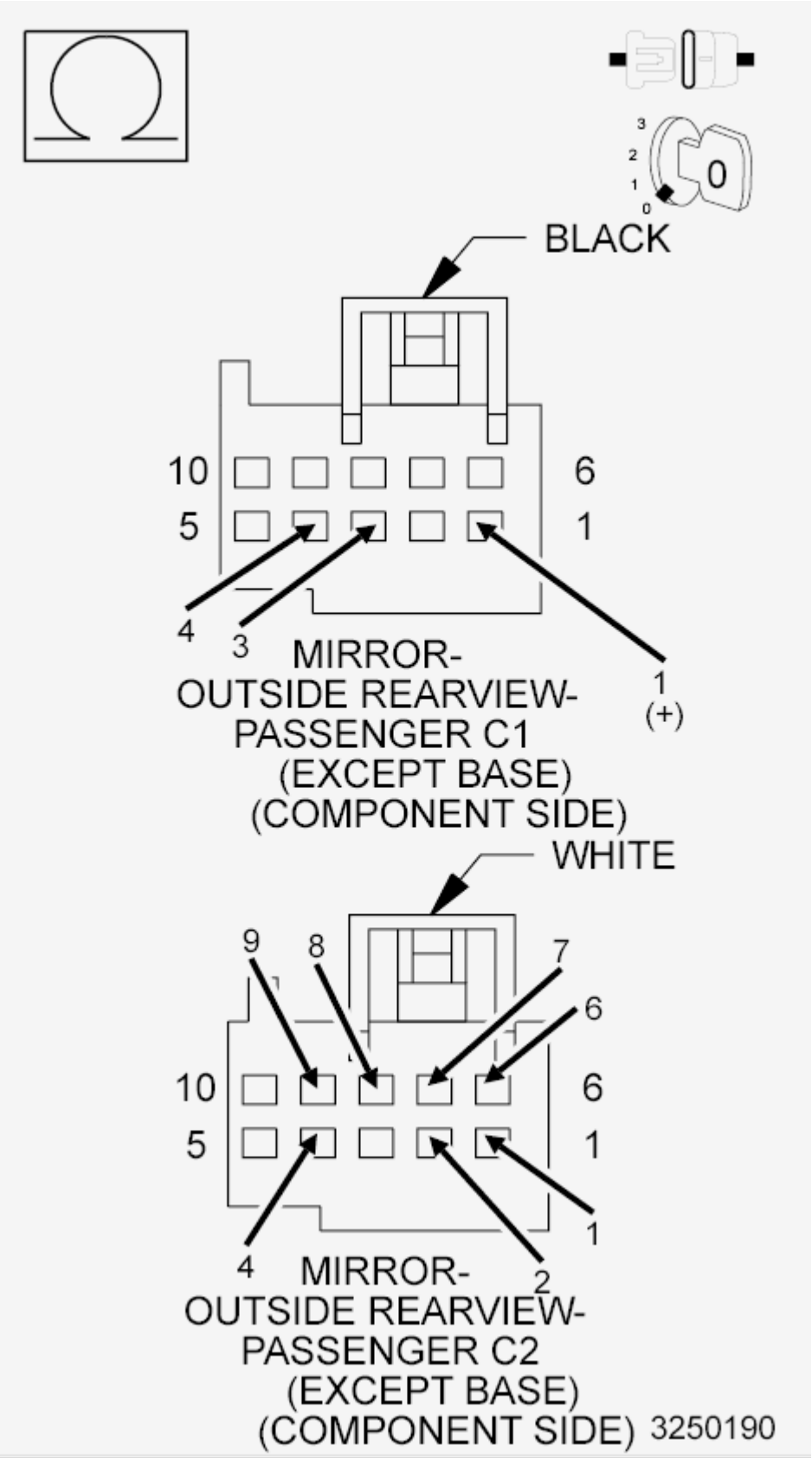
3
2
1
0
0
BLACK
10
6
5
1
4
3
1
(+)
MIRROR-
OUTSIDE REARVIEW-
PASSENGER C1
(EXCEPT BASE)
(COMPONENT SIDE)
WHITE
9
8
7
6
10
6
5
1
1
4
2
MIRROR-
OUTSIDE REARVIEW-
PASSENGER C2
(EXCEPT BASE)
(COMPONENT SIDE)
3250190

Fig. 76: Checking Passenger Mirror Approach Lamp Driver Circuit For Short To Another Mirror Driver Or Signal Circuit
Courtesy of CHRYSLER GROUP, LLC

1. Measure the resistance between the (P553) Passenger Mirror Approach Lamp Driver circuit (C1-1) and each of the designated Mirror Driver and Signal circuits in the Passenger Outside Rearview Mirror C1 and C2 (Component Side) connectors.

   Is the resistance below 10k Ohms for any measurement?

   Yes

   - Repair all circuits with a resistance below 10k Ohms for a short to the (P553) Passenger Mirror Approach Lamp Driver circuit. If the wiring harness and connector are okay, replace the Passenger Outside Rearview Mirror in accordance with the Service Information. Refer to **MIRROR, OUTSIDE REARVIEW, REMOVAL** and **MIRROR, OUTSIDE REARVIEW, GLASS, REMOVAL** .
   - Perform the BODY VERIFICATION TEST. Refer to **STANDARD PROCEDURE** .

   No

   - Inspect the wiring and connectors for damage and repair as necessary. If the wiring and connectors are okay, replace the Door Module in accordance with the Service Information. Refer to **MODULE, DOOR, REMOVAL** .
   - Perform the BODY VERIFICATION TEST. Refer to **STANDARD PROCEDURE** .

U0010-00-CAN INTERIOR BUS

For a complete wiring diagram, **refer to appropriate SYSTEM WIRING DIAGRAMS article** .

WHEN MONITORED

Continuously when the ignition is on.

Battery voltage between 10 and 16 volts.

SET CONDITION

The Body Control Module (BCM) detects a short to ground on the CAN Interior Bus (+) circuit or a short to voltage on the CAN Interior Bus (-) circuit.

POSSIBLE CAUSES

Possible Causes
CAN INTERIOR BUS (+) CIRCUIT SHORTED TO GROUND
CAN INTERIOR BUS (-) CIRCUIT SHORTED TO VOLTAGE

ANY CAN INTERIOR BUS MODULE
BODY CONTROL MODULE (BCM)

DIAGNOSTIC TEST

VERIFY IF THE DTC IS ACTIVE

1. Cycle the ignition on.
2. With the scan tool, read the active DTCs.

   Does the scan tool display this DTC as Active?

   Yes

   - Refer to **DTC INDEX** and perform the U0010-00 CAN Interior Bus diagnostic procedure.

   No

   - Refer to **DIAGNOSIS AND TESTING** and perform the Stored Lost Communication DTCs diagnostic procedure.

U0011-00-CAN INTERIOR BUS OFF PERFORMANCE

For a complete wiring diagram, **refer to appropriate SYSTEM WIRING DIAGRAMS article** .

WHEN MONITORED

With the ignition on.

SET CONDITION

The Body Control Module (BCM) detects a short condition in one of the CAN IHS Bus (125K) circuits for less than one second.

POSSIBLE CAUSES

Possible Causes
CAN IHS BUS (125K) (+) CIRCUIT SHORTED TO GROUND
CAN IHS BUS (125K) (-) CIRCUIT SHORTED TO VOLTAGE
CAN IHS BUS (125K) (+) CIRCUIT SHORTED TO THE CAN IHS BUS (125K) (-) CIRCUIT
ANY CAN IHS BUS MODULE
BODY CONTROL MODULE (BCM)

DIAGNOSTIC TEST

1. **TEST FOR INTERMITTENT CONDITION**
   1. Turn the ignition on.
   2. With the scan tool, record and erase DTCs.
   3. Cycle the ignition from on to off three times.
   4. Turn the ignition on and wait 10 seconds.
   5. With the scan tool, read active DTCs.

   Does the scan tool display this DTC as active?

   Yes

   - Go To 2

   No

   - Test complete. The condition or conditions that originally set this DTC are not present at this time. Using the wiring diagrams as a guide, check all related splices and connectors for signs of water intrusion, corrosion, pushed out or bent terminals and correct pin tension.
   - Perform the BODY VERIFICATION TEST. Refer to **STANDARD PROCEDURE** .
2. **CHECK THE CAN IHS BUS CIRCUITS FOR THE CAN IHS BUS (125K) MODULES**

   NOTE: When performing this step, turn the ignition off (wait one minute) before disconnecting any module. When the module is disconnected turn the ignition on.

   NOTE: This step is to determine if the fault is a module or the circuits between the module and the Star Connector.

   1. While monitoring the scan tool, disconnect each CAN IHS Bus (125K) module at the Front CAN IHS Star Connector (except for the BCM and DLC), one at a time.
   2. Check for this DTC to become stored after disconnecting each CAN IHS Bus (125K) module the vehicle is equipped with.

      NOTE: If the DTC becomes stored when a particular module is disconnected, that module or related circuits are causing the DTC to set.

      With all the CAN IHS Bus modules disconnected at the Star Connector (except for BCM and DLC), does the scan tool display this DTC as active?

      Yes

      - Go To 3

No

- Diagnose the wiring and connectors between the Front CAN IHS Star Connector and the module that when disconnected caused this DTC to become stored for damage or shorted circuits. If OK, replace the module that when disconnected caused this DTC to become stored in accordance with the Service Information.
- Perform the BODY VERIFICATION TEST. Refer to **STANDARD PROCEDURE** .

3. **CHECK THE CAN IHS BUS (125K) (-) CIRCUIT FOR A SHORT TO VOLTAGE**
   1. Turn the ignition off.
   2. Disconnect the scan tool.
   3. Disconnect the Front CAN IHS Star Connector for the DLC.
   4. Turn the ignition on.
   5. Measure the voltage between ground and the CAN IHS Bus (125K) (-) circuit.

   Is there any voltage present?

   Yes

   - Repair the short to voltage in the CAN IHS Bus (-) circuit.
   - Perform the BODY VERIFICATION TEST. Refer to **STANDARD PROCEDURE** .

   No

   - Go To 4

4. **CHECK THE CAN IHS BUS (125K) (+) CIRCUIT FOR A SHORT TO GROUND**
   1. Turn the ignition off.
   2. Measure the resistance between ground and the CAN IHS Bus (125K) (+) circuit.

   Is the resistance above 10k Ohms?

   Yes

   - Go To 5

   No

   - Repair the short to ground in the CAN IHS Bus (125K) (+) circuit.
   - Perform the BODY VERIFICATION TEST. Refer to **STANDARD PROCEDURE** .

5. **CHECK FOR A SHORT BETWEEN THE CAN IHS BUS (125K) (+) CIRCUIT AND CAN IHS BUS (125K) (-) CIRCUIT**
   1. Measure the resistance between the CAN IHS Bus (125K) (-) and the CAN IHS Bus (125K) (+) circuits.

Is the resistance above 10k Ohms?

Yes

- Go To 6

No

- Repair the short between the CAN IHS Bus (125K) (+) circuit and the CAN IHS Bus (125K) (-) circuit.
- Perform the BODY VERIFICATION TEST. Refer to **STANDARD PROCEDURE** .

6. **CHECK THE CAN IHS BUS CIRCUITS FOR A BCM CONCERN**
   1. Disconnect the Front CAN IHS Star Connector for the BCM.
   2. Reconnect all other connectors.
   3. Cycle the ignition from on to off three times.
   4. Turn the ignition on and wait 10 seconds.
   5. With the scan tool, read all DTCs.

   Do any modules on the CAN IHS BUS (125K) display this DTC or U0010-00-CAN INTERIOR BUS as active?

   Yes

   - Reconnect all the connectors and retest. If the concern is still present, replace the Star Connector.
   - Perform the BODY VERIFICATION TEST. Refer to **STANDARD PROCEDURE** .

   No

   - Diagnose the wiring and connectors between the Front CAN IHS Star Connector and the BCM. If OK, replace the Body Control Module (BCM) in accordance with the Service Information. Refer to **MODULE, BODY CONTROL, REMOVAL** .
   - Perform the BODY VERIFICATION TEST. Refer to **STANDARD PROCEDURE** .

U0140-00-LOST COMMUNICATION WITH BODY CONTROL MODULE

For a complete wiring diagram, **refer to appropriate SYSTEM WIRING DIAGRAMS article** .

WHEN MONITORED

Continuously when the ignition is on.

The battery voltage between 10.0 and 16.0 Volts.

Body Control Module (BCM) is configured correctly.

SET CONDITION

Bus messages not received from the Body Control Module (BCM) for approximately two to five seconds.

POSSIBLE CAUSES

Possible Causes
CAN BUS CIRCUITS OPEN OR SHORTED
DTCS RELATED TO BATTERY VOLTAGE, IGNITION, OR VIN MESSAGES
BODY CONTROL MODULE POWER AND GROUND
BCM NOT CONFIGURED CORRECTLY
BODY CONTROL MODULE (BCM)
MODULE THAT SET THIS DTC

DIAGNOSTIC TEST

VERIFY IF THE DTC IS ACTIVE

NOTE: **Make sure the battery is fully charged before performing any diagnostic procedure.**

With the scan tool, refer to the Network Review Screen to display a high level view of the vehicle communication network. Modules shown in red are problem areas.

Always diagnose any Body Control Module (BCM) DTCs first before proceeding.

1. Turn the ignition on.
2. With the scan tool, read DTCs.

   Does the scan tool display this DTC as active?

   Yes

   - Refer to **DIAGNOSIS AND TESTING** and perform the No Response from BCM (Body Control Module) diagnostic procedure.

   No

   - Refer to **DIAGNOSIS AND TESTING** and perform the Stored Lost Communication DTC diagnostic procedure.

U0164-00-LOST COMMUNICATION WITH HVAC CONTROL MODULE

For a complete wiring diagram, **refer to appropriate SYSTEM WIRING DIAGRAMS article** .

WHEN MONITORED

Continuously when the ignition is on.

Battery voltage between 9 and 16 volts.

SET CONDITION

Bus messages not received from the HVAC Control Module for approximately two to five seconds.

POSSIBLE CAUSES

Possible Causes
CAN BUS (+) CIRCUIT SHORTED TO VOLTAGE
CAN BUS (-) CIRCUIT SHORTED TO GROUND
DTCS RELATED TO BATTERY VOLTAGE, IGNITION, OR VIN MESSAGES
BODY CONTROL MODULE (BCM) NOT CONFIGURED CORRECTLY
HVAC POWER AND GROUND
HVAC CONTROL MODULE
MODULE THAT SET THE DTC

DIAGNOSTIC TEST

VERIFY DTC IS ACTIVE

1. Cycle the ignition on.
2. With the scan tool, read the active DTCs.

   Does the scan tool display; U0164-00-LOST COMMUNICATION WITH HVAC CONTROL MODULE as Active?

   Yes

   - **Refer to DTC INDEX** and perform the U0164-00-Lost Communication with HVAC Control Module.

   No

   - **Refer to DIAGNOSIS AND TESTING** and perform the Stored Lost Communication DTCs diagnostic procedure.

U0199-00-LOST COMMUNICATION WITH DRIVER DOOR MODULE

For a complete wiring diagram, **refer to appropriate SYSTEM WIRING DIAGRAMS article** .

WHEN MONITORED

With the ignition on.

Battery voltage between 10 and 16 volts.

Body Control Module (BCM) is configured correctly.

SET CONDITION

Bus messages not received from the Driver Door Module for approximately two to five seconds.

POSSIBLE CAUSES

Possible Causes
CAN BUS (+) CIRCUIT SHORTED TO VOLTAGE
CAN BUS (-) CIRCUIT SHORTED TO GROUND
DTCS RELATED TO BATTERY VOLTAGE, IGNITION, OR VIN MESSAGES
DRIVER DOOR MODULE POWER AND GROUND
BCM NOT CONFIGURED CORRECTLY
DRIVER DOOR MODULE
MODULE THAT SET THIS DTC

DIAGNOSTIC TEST

VERIFY DTC IS ACTIVE

1. Cycle the ignition on.
2. With the scan tool, read the active DTCs.

   Does the scan tool display; U0199-00-LOST COMMUNICATION WITH DRIVER DOOR MODULE as active?

   Yes

   - Refer to **DTC INDEX** and perform the U0199-00-Lost Communication with Driver Door Module diagnostic procedure.

   No

   - Refer to **DIAGNOSIS AND TESTING** and perform the Stored Lost Communication DTCs diagnostic procedure.

U0209-00-LOST COMMUNICATION WITH MEMORY SEAT CONTROL MODULE

For a complete wiring diagram, **refer to appropriate SYSTEM WIRING DIAGRAMS article** .

WHEN MONITORED

Continuously when the ignition is on.

Battery voltage between 9 and 16 volts.

Ignition Off Draw (IOD) fuse installed.

Body Control Module (BCM) is configured correctly.

SET CONDITION

Bus messages not received from the Memory Seat Module for approximately two to five seconds.

POSSIBLE CAUSES

Possible Causes
CAN INTERIOR BUS(+) (125k) CIRCUIT SHORTED TO VOLTAGE
CAN INTERIOR BUS(-) (125k) CIRCUIT SHORTED TO GROUND
MEMORY SEAT MODULE POWER AND GROUND
BCM NOT CONFIGURED CORRECTLY
MEMORY SEAT MODULE
MODULE THAT SET THIS DTC

Always perform the Pre-Diagnostic Troubleshooting procedure before proceeding.

DIAGNOSTIC TEST

VERIFY DTC IS ACTIVE

NOTE: Make sure the IOD fuse is installed and the battery is fully charged before proceeding.

1. Turn the ignition on.
2. With the scan tool, read active DTCs.

   Is this DTC active?

   Yes

   - **Refer to DTC INDEX** and perform the U0209-Lost Communication with Memory Seat Control

Module diagnostic procedure.

No

- **Refer to DIAGNOSIS AND TESTING** and perform the Stored Lost Communication DTCs diagnostic procedure.

U0422-00-IMPAUSIBLE DATA RECEIVED FROM BODY CONTROL MODULE

For a complete wiring diagram, **refer to appropriate SYSTEM WIRING DIAGRAMS article** .

WHEN MONITORED

With the ignition on and the vehicle in reverse.

SET CONDITION

Ambient Temperature data not received from the Body Control Module (BCM).

POSSIBLE CAUSES

Possible Causes
NO COMMUNICATION WITH THE BODY CONTROL MODULE (BCM)
DTCS STORED OR ACTIVE IN THE BCM
DRIVER DOOR MODULE

Always perform the Pre-Diagnostic Troubleshooting procedure before proceeding.

DIAGNOSTIC TEST

1. **CHECK FOR AN ACTIVE DIAGNOSTIC TROUBLE CODE (DTC)**
   1. Turn the ignition on.
   2. With the scan tool, read Drivers Door Module DTCs.

      Does the scan tool display this DTC as active?

      Yes

      - Go To 2

      No

      - The condition that caused this code to set is not present at this time. Check for an intermittent condition by inspecting the related wiring harness for chafed, pierced, pinched, and partially broken wires. Also inspect the related connectors for broken, bent, pushed out, spread,

corroded, or contaminated terminals.
- Perform the BODY VERIFICATION TEST. Refer to **STANDARD PROCEDURE** .

2. **VERIFY BCM IS ACTIVE ON THE CAN BUS**
   1. With the scan tool, select ECU View.
   2. Verify that the BCM is active on the bus.

   Is the BCM active on the bus?

   Yes

   - Go To 3

   No

   - Refer to **DIAGNOSIS AND TESTING** and perform the No Response from BCM diagnostic procedure.
   - Perform the BODY VERIFICATION TEST. Refer to **STANDARD PROCEDURE** .

3. **DTCS STORED OR ACTIVE IN THE BCM**
   1. With the scan tool, read BCM DTCs.

   Are any DTCs active or stored in the BCM?

   Yes

   - Refer to **DIAGNOSIS AND TESTING** and perform the appropriate diagnostic procedure.

   No

   - Replace and program the Driver Door Module in accordance with the Service Information. Refer to **MODULE, DOOR, REMOVAL** .
   - Perform the BODY VERIFICATION TEST. Refer to **STANDARD PROCEDURE** .

U050A-00-IMPLAUSIBLE DATA RECEIVED FROM MEMORY SEAT CONTROL MODULE

For a complete wiring diagram, **refer to appropriate SYSTEM WIRING DIAGRAMS article** .

WHEN MONITORED

With the ignition on for at least five seconds.

Battery voltage between 9 and 16 volts.

Body Control Module (BCM) is configured correctly.

SET CONDITION

Whenever the communication data sent over the CAN BUS from the Memory Seat (MSMD) Module is missing part of the message, the message is corrupted, or the message is an irrational value.

POSSIBLE CAUSES

Possible Causes
DTCS RELATED TO BATTERY VOLTAGE, IGNITION, OR VIN MESSAGES
BCM NOT CONFIGURED CORRECTLY
MEMORY SEAT MODULE POWER AND GROUND
MEMORY SEAT MODULE
MODULE THAT SET THE DTC

Always perform the Pre-Diagnostic Troubleshooting procedure before proceeding.

DIAGNOSTIC TEST

1. **VERIFY DTC IS ACTIVE**

   NOTE: Make sure the battery voltage is between 9 and 16 volts before proceeding.

   1. With the scan tool, read active DTCs.

      Is this DTC active?

      Yes

      - Go To 2

      No

      - Refer to **DIAGNOSIS AND TESTING** and perform the Stored Lost Communication DTC diagnostic procedure.

2. **CHECK FOR ANY OF THE FOLLOWING ACTIVE DTCS**
   1. With the scan tool, read active DTCs from all modules.

      NOTE: Check for BCM configuration, Bus hardware electrical issues, VIN Missing/Mismatch, battery or ignition related DTCs.

      Does the scan tool display any active DTCs to the conditions listed above?

      Yes

- Refer to **DTC INDEX** and perform the appropriate diagnostic procedure.

No

- Go To 3

3. **VERIFY THE MSMD IS ACTIVE ON THE BUS**
   1. Turn the ignition on.
   2. With the scan tool, verify the MSMD is active on the bus.

   Is the MSMD active on the bus?

   Yes

   - Go To 4

   No

   - Refer to **DIAGNOSIS AND TESTING** and perform the NO RESPONSE FROM MSMD diagnostic procedure.

4. **CHECK FOR ADDITIONAL COMMUNICATION RELATED DTCS**
   1. With the scan tool, read all the DTCs.

   Is there more than one module with active DTCs "Logged Against" the MSMD?

   Yes

   - Replace/update the MSMD Module in accordance with the Service Information. Refer to **MODULE, MEMORY, SEAT, REMOVAL** .
   - Perform the appropriate verification test for the module. If there is no verification test for the associated module perform the BODY VERIFICATION TEST. Refer to **STANDARD PROCEDURE** .

   No

   - Go To 5

5. **CLEAR DTC IN MODULE SETTING FAULT**
   1. With the scan tool, select the module setting the DTC against the MSMD.
   2. Clear active DTCs.

   Is this DTC still active?

   Yes

   - Replace/update the module that set this DTC in accordance with the Service Information.

- Perform the appropriate verification test for the module being replaced. If there is no verification test for the associated module perform the BODY VERIFICATION TEST. Refer to **STANDARD PROCEDURE** .

No

- The condition is not present at this time. Using the wiring diagrams as a guide, check all related splices and connectors for signs of water intrusion, corrosion, pushed out or bent terminals, and correct pin tension.
- Perform the appropriate verification test for the module. If there is no verification test for the associated module perform the BODY VERIFICATION TEST. Refer to **STANDARD PROCEDURE** .

U11FA-00-LOST COMMUNICATION WITH RIGHT BLIND SPOT SENSOR

For a complete wiring diagram, **refer to appropriate SYSTEM WIRING DIAGRAMS article** .

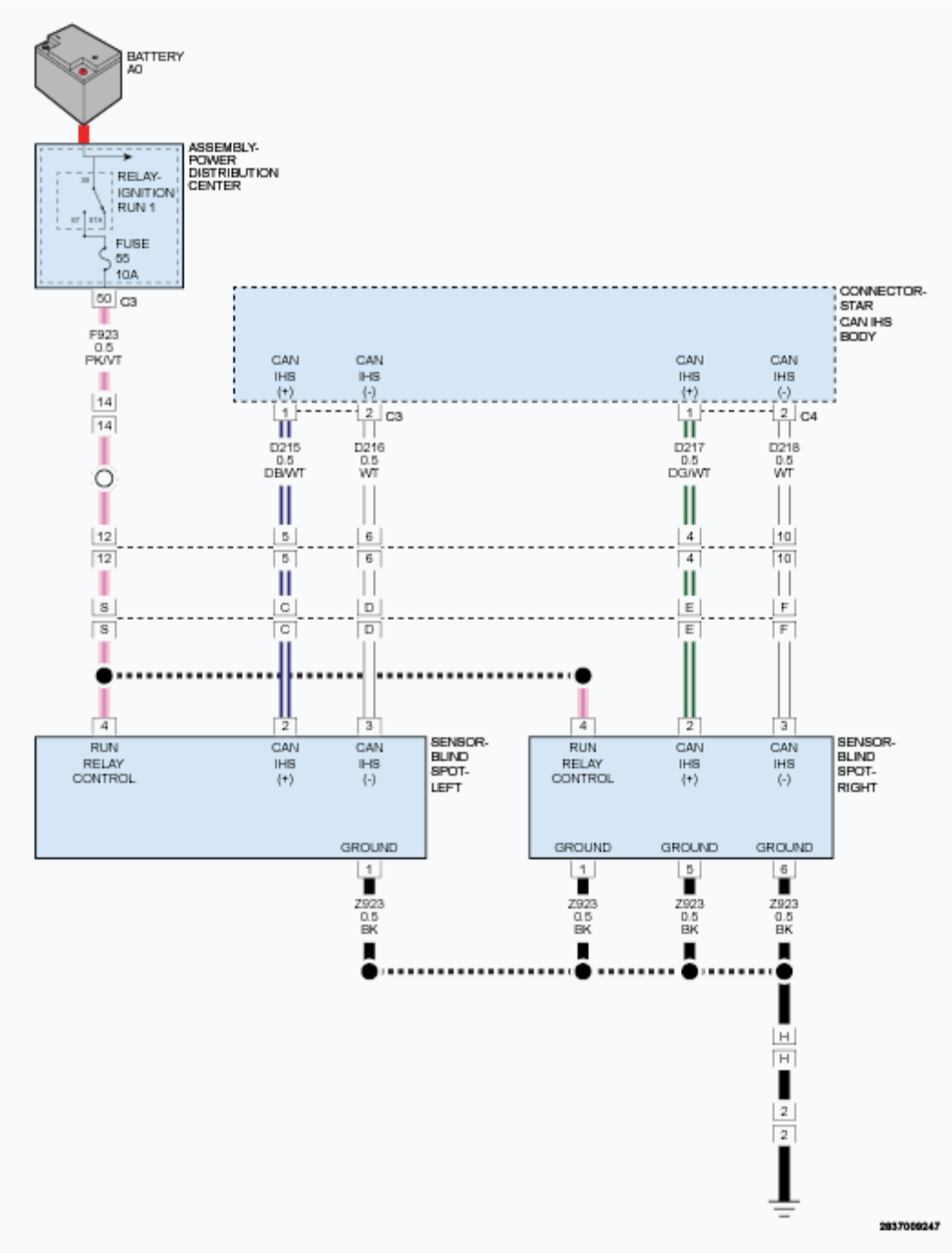

Fig. 77: Identifying Left/Right Blind Spot Sensor Circuit Diagram
Courtesy of CHRYSLER GROUP, LLC

THEORY OF OPERATION

The Blind Spot Monitor (BSM) system has two primary components; a Left Blind Spot Sensor (LBSS) and Right Blind Spot Sensor (RBSS). Each sensor includes an internal microprocessor that monitors and controls both the sensor and the blind spot indicator. The two sensors are concealed behind the outboard ends of the rear bumper fascia.

The microprocessor analyzes the sensor data to determine whether any detected objects should be reported. When it is determined that an object should be reported, the Sensor controls its respective left or right BSM display directly through a hard wired output to the Outside Rearview Mirrors. The sensor also sends an electronic request message over the CAN IHS Bus to the radio. The Radio then mutes any current output through the speakers and generates a chime as an audible alert.

Each sensor performs a bulb test by illuminating the triangle icon in the Outside Rearview Mirror at each ignition ON cycle.

WHEN MONITORED

With the ignition on.

SET CONDITION

The Left Blind Spot Sensor (LBSS) does not receive messages from the Right Blind Spot Sensor (RBSS).

POSSIBLE CAUSES

Possible Causes
FUSED IGNITION OUTPUT (RUN) CIRCUIT OPEN OR SHORTED TO GROUND
GROUND CIRCUIT(S) OPEN
CAN IHS BUS CIRCUIT(S) OPEN
RIGHT BLIND SPOT SENSOR (RBSS)

DIAGNOSTIC TEST

1. **CHECK FOR AN ACTIVE DIAGNOSTIC TROUBLE CODE (DTC)**
    1. Turn the ignition on.
    2. With the scan tool, read DTCs.

    Does the scan tool display this DTC as active?

    Yes

    - Go To 2

    No

    - The condition that caused this code to set is not present at this time. Check for an intermittent condition by inspecting the related wiring harness for chafed, pierced, pinched, and partially broken wires. Also inspect the related connectors for broken, bent, pushed out, spread, corroded, or contaminated terminals.
    - Perform the BODY VERIFICATION TEST. Refer to **STANDARD PROCEDURE** .
2. **(F923) FUSED IGNITION OUTPUT (RUN) CIRCUIT OPEN**

1. Disconnect the Right Blind Spot Sensor (RBSS) harness connector.
2. Turn the ignition on.
3. Using a volt meter, measure the voltage of the (F923) Fused Ignition Output (RUN) circuit.

   Is voltage present?

   Yes

   - Go To 3

   No

   - Repair the (F923) Fused Ignition Switch Output (RUN) circuit for an open or short to ground.
   - Perform the BODY VERIFICATION TEST. Refer to **STANDARD PROCEDURE** .

3. **(Z923) GROUND CIRCUIT(S) OPEN**
   1. Turn the ignition off.
   2. Using an ohm meter, measure the resistance between ground and the (Z923) Ground circuits at the RBSS harness connector.

      Is the resistance below 5.0 Ohms?

      Yes

      - Go To 4

      No

      - Repair the (Z923) Ground circuit(s) for an open.
      - Perform the BODY VERIFICATION TEST. Refer to **STANDARD PROCEDURE** .

4. **CHECK THE (D217) AND (D218) CAN IHS BUS CIRCUITS FOR AN OPEN**
   1. Turn the ignition on.
   2. Measure the resistance of the (D217) CAN IHS Bus (-) circuit between the Rear CAN IHS Star Connector C4 harness connector and the RBSS harness connector
   3. Measure the resistance of the (D218) CAN IHS Bus (+) circuit between the Rear CAN IHS Star Connector C4 harness connector and the RBSS harness connector.

      Is resistance below 5.0 Ohms on both circuits?

      Yes

      - Replace the Right Blind Spot Sensor in accordance with the Service Information. Refer to **SENSOR, BLIND SPOT, REMOVAL** .

- Perform the BODY VERIFICATION TEST. Refer to **STANDARD PROCEDURE** .

No

- Repair the (D218) or (D217) CAN IHS Bus circuit for an open. Inspect the connector for damage.
- Perform the BODY VERIFICATION TEST. Refer to **STANDARD PROCEDURE** .

U11FB-00-LOST COMMUNICATION WITH LEFT BLIND SPOT SENSOR

For a complete wiring diagram, **refer to appropriate SYSTEM WIRING DIAGRAMS article** .

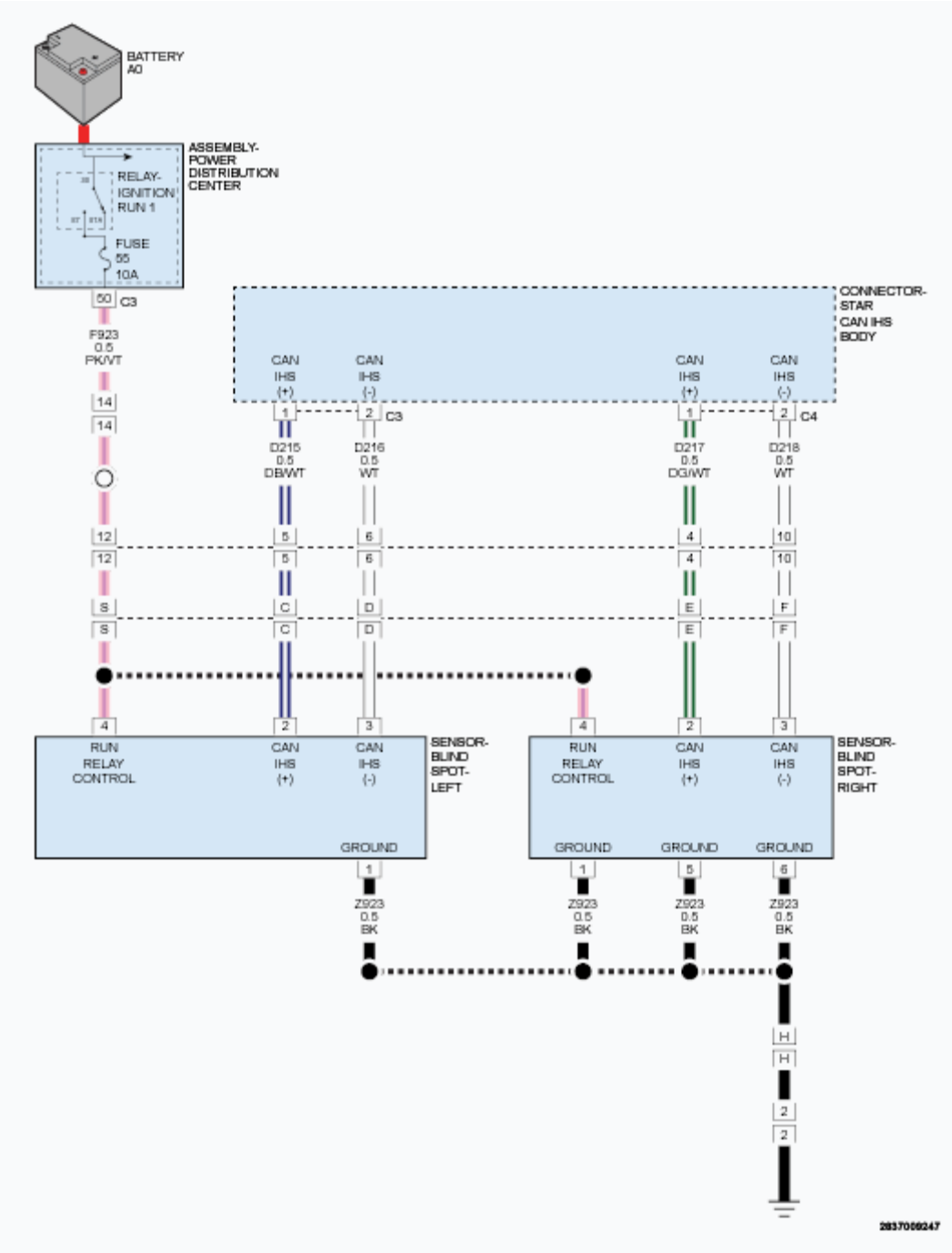

Fig. 78: Identifying Left/Right Blind Spot Sensor Circuit Diagram
Courtesy of CHRYSLER GROUP, LLC

THEORY OF OPERATION

The Blind Spot Monitor (BSM) system has two primary components; a Left Blind Spot Sensor (LBSS) and Right Blind Spot Sensor (RBSS). Each sensor includes an internal microprocessor that monitors and controls both the sensor and the blind spot indicator. The two sensors are concealed behind the outboard ends of the rear bumper fascia.

The microprocessor analyzes the sensor data to determine whether any detected objects should be reported. When it is determined that an object should be reported, the Sensor controls its respective left or right BSM display directly through a hard wired output to the Outside Rearview Mirrors. The sensor also sends an electronic request message over the CAN IHS Bus to the radio. The Radio then mutes any current output through the speakers and generates a chime as an audible alert.

Each sensor performs a bulb test by illuminating the triangle icon in the Outside Rearview Mirror at each ignition ON cycle.

WHEN MONITORED

With the ignition on.

SET CONDITION

The Right Blind Spot Sensor (LBSS) does not receive messages from the Left Blind Spot Sensor (RBSS).

POSSIBLE CAUSES

Possible Causes
FUSED IGNITION OUTPUT (RUN) CIRCUIT OPEN OR SHORTED TO GROUND
GROUND CIRCUIT(S) OPEN
CAN IHS BUS CIRCUIT(S) OPEN
LEFT BLIND SPOT SENSOR (RBSS)

DIAGNOSTIC TEST

VERIFY DTC IS ACTIVE

1. Cycle the ignition on.
2. With the scan tool, read the active DTCs.

   Does the scan tool display; U11FB-00- LOST COMMUNICATION WITH LEFT BLIND SPOT SENSOR as Active?

   Yes

   - **Refer to DTC INDEX** and perform the U11FB-00- LOST COMMUNICATION WITH LEFT BLIND SPOT SENSOR.

   No

   - **Refer to DIAGNOSIS AND TESTING** and perform the Stored Lost Communication DTCs diagnostic procedure.

U147D-00-IMPLAUSIBLE DATA RECEIVED FROM RIGHT BLIND SPOT SENSOR

For a complete wiring diagram, **refer to appropriate SYSTEM WIRING DIAGRAMS article** .

WHEN MONITORED

With the ignition on.

SET CONDITION

Incorrect data received from the Right Blind Spot Sensor (RBSS).

POSSIBLE CAUSES

Possible Causes
NO COMMUNICATION WITH THE RIGHT BLIND SPOT SENSOR (RBSS)
DTCS STORED OR ACTIVE IN THE RBSS
RIGHT BLIND SPOT SENSOR (RBSS)

DIAGNOSTIC TEST

1. **CHECK FOR AN ACTIVE DIAGNOSTIC TROUBLE CODE (DTC)**

   NOTE: Diagnose and repair any Right Blind Spot Sensor DTCs before proceeding with this diagnostic procedure.

   1. Turn the ignition on.
   2. With the scan tool, read active DTCs.

      Does the scan tool display this DTC as active?

      Yes

      - Go To 2

      No

      - The condition that caused this code to set is not present at this time. Check for an intermittent condition by inspecting the related wiring harness for chafed, pierced, pinched, and partially broken wires. Also inspect the related connectors for broken, bent, pushed out, spread, corroded, or contaminated terminals.
      - Perform the BODY VERIFICATION TEST. Refer to **STANDARD PROCEDURE** .
2. **VERIFY THE RBSS IS ACTIVE ON THE CAN BUS**
   1. With the scan tool, verify that the RBSS is active on the bus.

      Is the RBSS active on the bus?

Yes

- Replace and program the Blind Spot Sensor in accordance with the Service Information. Refer to **SENSOR, BLIND SPOT, REMOVAL** .
- Perform the BODY VERIFICATION TEST. Refer to **STANDARD PROCEDURE** .

No

- Refer to **DIAGNOSIS AND TESTING** and perform the No Response from RBSS diagnostic procedure.
- Perform the BODY VERIFICATION TEST. Refer to **STANDARD PROCEDURE** .

U147E-00-IMPLAUSIBLE DATA RECEIVED FROM LEFT BLIND SPOT SENSOR

For a complete wiring diagram, **refer to appropriate SYSTEM WIRING DIAGRAMS article** .

WHEN MONITORED

With the ignition on.

SET CONDITION

Incorrect data received from the Left Blind Spot Sensor (LBSS).

POSSIBLE CAUSES

Possible Causes
NO COMMUNICATION WITH THE LEFT BLIND SPOT SENSOR (LBSS)
DTCS STORED OR ACTIVE IN THE LBSS
LEFT BLIND SPOT SENSOR (LBSS)

DIAGNOSTIC TEST

1. **CHECK FOR AN ACTIVE DIAGNOSTIC TROUBLE CODE (DTC)**

NOTE: Diagnose and repair any Left Blind Spot Sensor DTCs before proceeding with this diagnostic procedure.

1. Turn the ignition on.
2. With the scan tool, read active DTCs.

Does the scan tool display this DTC as active?

Yes

- Go To 2

No

- The condition that caused this code to set is not present at this time. Check for an intermittent condition by inspecting the related wiring harness for chafed, pierced, pinched, and partially broken wires. Also inspect the related connectors for broken, bent, pushed out, spread, corroded, or contaminated terminals.
- Perform the BODY VERIFICATION TEST. Refer to **STANDARD PROCEDURE** .

2. **VERIFY THE LBSS IS ACTIVE ON THE CAN IHS BUS**
   1. With the scan tool, verify that the LBSS is active on the bus.

      Is the LBSS active on the bus?

      Yes

      - Replace and program the Blind Spot Sensor in accordance with the Service Information. Refer to **SENSOR, BLIND SPOT, REMOVAL** .
      - Perform the BODY VERIFICATION TEST. Refer to **STANDARD PROCEDURE** .

      No

      - Refer to **DIAGNOSIS AND TESTING** and perform the No Response from LBSS diagnostic procedure.
      - Perform the BODY VERIFICATION TEST. Refer to **STANDARD PROCEDURE** .

2014 ACCESSORIES AND EQUIPMENT

Power Liftgate - Service Information - Cherokee

WARNING

WARNING

WARNING: There is a small area located on each side of the liftgate from about the belt line down to the sill which is not protected by the power liftgate system pinch sensors. Extreme caution must be taken to prevent body extremities or other objects from entering this area once the liftgate reaches the secondary latch contact position, which is about 13 millimeters (1/2 inch) before the liftgate is fully closed. Failure to observe this warning may result in serious or fatal injury.

WARNING: Never attempt to enter, exit or reach through the liftgate opening with the power liftgate in motion. You could cause damage to the power liftgate system or components, and serious or fatal injuries may result.

CAUTION: Never attempt to operate the power liftgate system while the Power Drive Unit (PDU) or a gas-charged hydraulic strut or prop is removed or disconnected. Damage to the power liftgate system or components may result.

DESCRIPTION

DESCRIPTION

A power operated liftgate system is an available option on this vehicle. The power liftgate system includes the following major components, which are described in further detail elsewhere in this service information:

- **Chime** - An electronic power liftgate chime tone generator is located on the inside of the left inner D-pillar just below the belt line, where it is concealed behind the interior D-pillar trim.
- **D-Pillar Switch** - A power liftgate D-pillar switch (also known as the rear zone switch) is located in a bezel near the back of the left quarter inside trim panel near the D-pillar.
- **Exterior Latch Handle Switch** - A power liftgate exterior latch handle switch (also known as the outside handle switch) is integral to the unique power liftgate exterior latch handle.
- **Latch** - A unique, electrically actuated power liftgate latch and latch cinching mechanism is installed in place of the latch used on vehicles without the power liftgate system option.
- **Overhead Console Switch** - A power liftgate overhead console switch (also known as the front zone switch) is located between the two front reading lamp switches in the overhead console.
- **Pinch Sensors** - A power liftgate pinch sensor is located on each side shut face of the liftgate and extends from about the belt line to just below the liftgate opening header. The right side pinch sensor includes an

integral thermistor.

- **Power Drive Unit** - An electrically operated Power Drive Unit (PDU) is installed on the left side of the liftgate between the liftgate and the liftgate opening trough. It is secured to the same ball studs that are used for the conventional gas-charged hydraulic strut or prop that the PDU replaces.
- **Power Liftgate Module** - The Power LiftGate Module (PLGM) (also known as the Power Liftgate/PLG control module) is concealed behind the liftgate sill scuff plate and trim, on the inside of the back rear cargo area. The PLGM is secured by two integral mounting tabs and an integral latch tab to slots in the sheet metal. Refer to **MODULE, POWER LIFTGATE CONTROL, DESCRIPTION** .
- **Thermistor** - A thermistor is internal and integral to the right side pinch sensor.

Hard wired circuitry connects the power liftgate system components to the electrical system of the vehicle. These hard wired circuits are integral to several wire harnesses, which are routed throughout the vehicle and retained by many different methods. These circuits may be connected to each other, to the vehicle electrical system and to the power liftgate components through the use of a combination of soldered splices, splice block connectors, and many different types of wire harness terminal connectors and insulators. Refer to the appropriate wiring information. The wiring information includes wiring diagrams, proper wire and connector repair procedures, further details on wire harness routing and retention, as well as pin out and location views for the various wire harness connectors, splices and grounds.

OPERATION

OPERATION

The components and features of the power liftgate system are designed to provide the vehicle operator with convenient and safe access to the cargo area of the vehicle. The power liftgate components convert electrical energy produced by the electrical system of the vehicle into the mechanical action necessary to latch, unlatch, raise and lower the liftgate with the simple touch of a button or the slight pull of the exterior liftgate latch handle.

Battery voltage is supplied to the Power LiftGate Module (PLGM) through a fused B(+) fuse in the Power Distribution Center (PDC) so the PLGM can operate regardless of the ignition switch status. The PLGM monitors many hard wired switch and sensor inputs from the liftgate latch and cinch mechanisms, the Power Drive Unit (PDU), the D-pillar power liftgate switch, the exterior latch handle power liftgate switch, the overhead console power liftgate switch, both pinch sensors and the thermistor in the right pinch sensor.

The PLGM also monitors many electronic message inputs received over the Controller Area Network (CAN) data bus network. Electronic message inputs include: ignition switch status, Transmission Range Sensor (TRS) status, vehicle speed, Remote Keyless Entry (RKE) commands, vehicle theft alarm status, power lock system status and (if equipped) liftgate flip-up glass ajar switch status. In response to those many inputs, the PLGM logic allows it to properly control numerous hard wired outputs that operate the power liftgate latch and cinch mechanisms and the PDU that opens and closes the liftgate as well as the chime tone generator that provides audible indications of the power liftgate status. The PLGM will also place electronic messages on the CAN data bus indicating the liftgate status and many of the hard wired sensor inputs it receives for use by other electronic modules in the vehicle.

Operation of the power liftgate requires the transmission be in the Park or Neutral positions, the vehicle speed

not be greater than zero and that the liftgate flip-up glass is closed. When the vehicle is also unlocked, the power liftgate can be opened by lifting the exterior liftgate latch handle. If the vehicle is locked, a single press of the overhead console power liftgate button or two presses within five seconds of the RKE Liftgate button on the FOB with Integrated Key (FOBIK) will unlock and open the liftgate. The fully open liftgate can be closed automatically by depressing the D-Pillar switch or the overhead console switch one time or by depressing the RKE Liftgate button on the FOBIK twice within five seconds. The fully open liftgate can also be closed manually by pulling it down in the same manner as a non-power liftgate.

The PLGM also confirms safety requirements are met before supplying power to the PDU to begin any power cycle. The PLGM software detects obstructions through inputs from the two pinch sensors as well as by monitoring the resistance to travel of the PDU. When a sufficient obstruction is detected, the PLGM will reverse the direction of the liftgate. Also, an exterior liftgate handle pull during an automatic **Close** cycle will reverse the power liftgate operation to **Open** , while an exterior liftgate handle pull during an automatic **Open** cycle will cancel the cycle and put the power liftgate into full manual operation. In addition to the Electronic Vehicle Information Center (EVIC) customer programmable audible power liftgate chime alerts, when a customer programmable feature is set to **Flash Lamps With Lock** , two flashes of the exterior signal lamps will occur at the beginning of each power liftgate **Open** or **Close** cycle.

The PLGM continually monitors all of the power liftgate system circuits and components, and will store a Diagnostic Trouble Code (DTC) for any problem it detects. The PLGM uses an adaptive memory which allows it to relearn and adapt to changes in the system that might occur due to component wear or ambient conditions. If a power liftgate system component is replaced or a liftgate adjustment is made, the PLGM is required to relearn the effort and time required to open or close the liftgate. This learn cycle can be initiated with a diagnostic scan tool. Refer to **MODULE, POWER LIFTGATE CONTROL, STANDARD PROCEDURE** .

The hard wired circuits and components of the power liftgate system may be diagnosed using conventional diagnostic tools and procedures. Refer to the appropriate wiring information. However, conventional diagnostic methods will not prove conclusive in the diagnosis of the power liftgate system or the electronic controls or communication between other modules and devices that provide some features of the system. The most reliable, efficient, and accurate means to diagnose the power liftgate system or the electronic controls and communication related to system operation requires the use of a diagnostic scan tool. Refer to the appropriate diagnostic information.

DIAGNOSIS AND TESTING

DIAGNOSIS AND TESTING - POWER LIFTGATE SYSTEM

NOTE: Before any testing of the power liftgate system is attempted, the battery should be fully-charged.

The latch, the sensors, the switches and the hard wired circuits between components related to the power liftgate system may be diagnosed using conventional diagnostic tools and procedures. Refer to the appropriate wiring information. The wiring information includes wiring diagrams, proper wire and connector repair procedures, details of wire harness routing and retention, connector pin out information and location views for the various wire harness connectors, splices and grounds.

However, conventional diagnostic methods will not prove conclusive in the diagnosis of the electronic controls or communication between modules and other devices that provide some features of the power liftgate system. The most reliable, efficient, and accurate means to diagnose the power liftgate system or the electronic controls and communication related to power liftgate system operation requires the use of a diagnostic scan tool. Refer to the appropriate diagnostic information.

Following are quick reference diagnostic tables to help when diagnosing and testing the power liftgate system.

SYMPTOM DRIVEN POWER LIFTGATE SYSTEM DIAGNOSIS

CONDITION	POSSIBLE CAUSES	CORRECTION
LIFTGATE WILL NOT INITIATE POWER OPEN/POWER CLOSE WITH EITHER FOBIK OR OVERHEAD CONSOLE SWITCH	1. Power Liftgate System Inhibitors preventing operation.	1. Check Inhibit Monitors using a diagnostic scan tool. Refer to **POWER LIFTGATE SYSTEM INHIBIT MONITORS** . Repair if required.
	2. Power Liftgate Input/Output status incorrect.	2. Check power liftgate input - output status using a diagnostic scan tool. Refer to **POWER LIFTGATE INPUT - OUTPUT TABLE** . Repair if required.
	3. Binding or sticking of components.	3. Establish location of binding or sticking components. Repair or replace if required.
	4, Wiring problems (system or vehicle).	4. Refer to the appropriate wiring information. Repair if required.
	5. Ineffective Power LiftGate Module (PLGM).	5. Test the PLGM using a diagnostic scan tool. Replace if required.
	6. Ineffective power liftgate latch assembly.	6. Check for foreign matter or damaged components preventing proper latch operation. Use diagnostic scan tool to cycle the latch. Replace if required.
	7. Ineffective liftgate Power Drive Unit (PDU).	7. Use a diagnostic scan tool to cycle the PDU. Replace if required.
FOBIK DOES NOT OPERATE POWER LIFTGATE, BUT OVERHEAD CONSOLE SWITCH DOES	1. Power Liftgate System Inhibitors preventing operation.	1. Check Inhibit Monitors using a diagnostic scan tool. Refer to **POWER LIFTGATE SYSTEM INHIBIT MONITORS** . Repair if required.
	2. Power Liftgate Input/Output status incorrect.	2. Check power liftgate input - output status using a diagnostic scan tool. Refer to **POWER LIFTGATE INPUT - OUTPUT TABLE** . Repair if required.
	3. Key in ignition.	3. FOB with Integrated Key (FOBIK) buttons do not function while key is in ignition by design. Remove key from ignition and retry.
	4. Ineffective FOBIK.	4. Reprogram FOBIK and retry. Replace if required.

	5. Ineffective Keyless Ignition Node (KIN).	5. Test the KIN using a diagnostic scan tool. Replace if required.
	6. Wiring problems (system or vehicle).	6. Refer to the appropriate wiring information. Repair if required.
	7 Ineffective Controller Area Network (CAN) data bus.	7. Test the CAN data bus using a diagnostic scan tool. Repair if required.
	8. Ineffective PLGM.	8. Test the PLGM using a diagnostic scan tool. Replace if required.
OVERHEAD CONSOLE SWITCH DOES NOT OPERATE POWER LIFTGATE - BUT FOBIK DOES	1. Power Liftgate System Inhibitors preventing operation.	1. Check Inhibit Monitors using a diagnostic scan tool. Refer to **POWER LIFTGATE SYSTEM INHIBIT MONITORS** . Repair if required.
	2. Power Liftgate Input/Output status incorrect.	2. Check power liftgate input - output status using a diagnostic scan tool. Refer to **POWER LIFTGATE INPUT - OUTPUT TABLE** . Repair if required.
	3. Ineffective power liftgate overhead console switch.	3. Test the overhead console switch. Replace if required.
	4. Wiring problems (system or vehicle).	4. Refer to the appropriate wiring information. Repair if required.
	5. Ineffective PLGM.	5. Test the PLGM using a diagnostic scan tool. Replace if required.
LATCH WILL NOT RELEASE WITH EXTERIOR HANDLE, POWER-OPEN CYCLE MAY OR MAY NOT INITIATE	1. Power Liftgate System Inhibitors preventing operation.	1. Check Inhibit Monitors using a diagnostic scan tool. Refer to **POWER LIFTGATE SYSTEM INHIBIT MONITORS** . Repair if required.
	2. Power Liftgate Input/Output status incorrect.	2. Check power liftgate input - output status using a diagnostic scan tool. Refer to **POWER LIFTGATE INPUT - OUTPUT TABLE** . Repair if required.
	3. Ineffective power liftgate exterior handle switch.	3. Test the exterior handle switch. Replace if required.
	4. Ineffective power liftgate latch assembly.	4. Check for foreign matter or damaged components preventing proper latch operation. Use diagnostic scan tool to cycle the latch. Replace if required.
	5. Wiring problems (system or vehicle).	5. Refer to the appropriate wiring information. Repair if required.
	6. Binding or sticking of components.	6. Establish location of binding or sticking components. Repair or replace if required.
		7. Test the PLGM using a diagnostic scan

	7. Ineffective PLGM.	tool. Replace if required.
LIFTGATE REVERSES DIRECTION DURING POWER OPEN - POWER CLOSE CYCLE	1. FOBIK button being hit more than the two times, or overhead console switch being hit more than once.	1. By design, the liftgate will reverse direction if the FOBIK button is depressed more than twice or the overhead console switch button is depressed more than once.
	2. Power Liftgate System Inhibitors preventing operation.	2. Check Inhibit Monitors using a diagnostic scan tool. Refer to **POWER LIFTGATE SYSTEM INHIBIT MONITORS** . Repair if required.
	3. Power Liftgate Input/Output status incorrect.	3. Check power liftgate input - output status using a diagnostic scan tool. Refer to **POWER LIFTGATE INPUT - OUTPUT TABLE** . Repair if required.
	4. Binding or sticking of components.	4. Establish location of binding or sticking components. Repair or replace if required.
	5. Wiring problems (system or vehicle).	5. Refer to the appropriate wiring information. Repair if required.
	6. Ineffective liftgate PDU.	6. Use a diagnostic scan tool to cycle the PDU. Replace if required.
	7. Ineffective PLGM.	7. Test the PLGM using a diagnostic scan tool. Replace if required.
LATCH WILL NOT POWER-CINCH TO PRIMARY POSITION DURING MANUAL OR POWER OPERATION	1. Power Liftgate System Inhibitors preventing operation.	1. Check Inhibit Monitors using a diagnostic scan tool. Refer to **POWER LIFTGATE SYSTEM INHIBIT MONITORS** . Repair if required.
	2. Pinch sensor activated or opened shorted circuit.	2. Check pinch sensor status using a diagnostic scan tool. Repair or replace if required.
	3. Power Liftgate Input/Output status incorrect.	3. Check power liftgate input - output status using a diagnostic scan tool. Refer to **POWER LIFTGATE INPUT - OUTPUT TABLE** . Repair if required.
	4. Binding or sticking of components.	4. Establish location of binding or sticking components. Repair or replace if required.
	5. Liftgate weather seal force too high.	5. Inspect weather seals for damage, improper installation, foreign matter or other possible obstructions. Repair if required.
	6. Wiring problems (system or vehicle).	6. Refer to the appropriate wiring information. Repair if required.
	7. Ineffective power liftgate latch assembly.	7. Check for foreign matter or damaged components preventing proper latch operation. Use diagnostic scan tool to cycle the latch. Replace if required.
		8. Test the PLGM using a diagnostic scan

	8. Ineffective PLGM.	tool. Replace if required.
LIFTGATE SAGS AFTER COMPLETION OF POWER OPEN CYCLE OR MANUAL OPENING	1. Loose or damaged PDU or strut mounts.	1. Check for loose or broken PDU (left side) or strut (right side) ball stud attachments. Repair or replace if required.
	2. Ineffective liftgate gas-charged strut (prop rod).	2. Check gas-charged strut (prop rod) on right side of liftgate. Replace if required.
HIGH OPENING EFFORT - LIFTGATE OPENS VERY SLOWLY DURING MANUAL OR POWER OPERATION	1. Power Liftgate System Inhibitors preventing operation.	1. Check Inhibit Monitors using a diagnostic scan tool. Refer to **POWER LIFTGATE SYSTEM INHIBIT MONITORS** . Repair if required.
	2. Loose or damaged PDU or strut mounts.	2. Check for loose or broken PDU (left side) or strut (right side) ball stud attachments. Repair or replace if required.
	3. Ineffective liftgate gas-charged strut (prop rod).	3. Check gas-charged strut (prop rod) on right side of liftgate. Replace if required.
	4. Binding or sticking of components.	4. Establish location of binding or sticking components. Repair or replace if required.
	5. Wiring problems (system or vehicle).	5. Refer to the appropriate wiring information. Repair if required.
	6. Vehicle located on too steep of a grade for power liftgate operation.	6. Operate liftgate manually.
	7. Ineffective liftgate PDU.	7. Use a diagnostic scan tool to cycle the PDU. Replace if required.
LIFTGATE CONTINUES TO POWER-CLOSE AFTER REACHING FULL-CLOSED POSITION	1. Power Liftgate Input/Output status incorrect.	1. Check power liftgate input - output status using a diagnostic scan tool. Refer to **POWER LIFTGATE INPUT - OUTPUT TABLE** . Repair if required.
	2. Wiring problems (system or vehicle).	2. Refer to the appropriate wiring information. Repair if required.
	3. Binding or sticking of components.	3. Establish location of binding or sticking components. Repair or replace if required.
	4. Ineffective power liftgate latch assembly.	4. Check for foreign matter or damaged components preventing proper latch operation. Use diagnostic scan tool to cycle the latch. Replace if required.
	5. Ineffective PLGM.	5. Test the PLGM using a diagnostic scan tool. Replace if required.
LIFTGATE CONTINUES TO POWER-OPEN AFTER REACHING FULL-OPEN POSITION - MAY PULSE SEVERAL TIMES	1. Power Liftgate Input/Output status incorrect.	1. Check power liftgate input - output status using a diagnostic scan tool. Refer to **POWER LIFTGATE INPUT - OUTPUT TABLE** . Repair if required.

	2. Wiring problems (system or vehicle).	2. Refer to the appropriate wiring information. Repair if required.
	3. Ineffective full open switch (liftgate PDU).	3. Use a diagnostic scan tool to check the switch status and cycle the PDU. Replace if required.
	4. Ineffective PLGM.	4. Test the PLGM using a diagnostic scan tool. Replace if required.
SQUEAKS, NOISES AND RATTLES	1. Foreign material within liftgate panel.	1. Remove foreign material from within liftgate if required.
	2. Worn or loose liftgate components.	2. Inspect and tighten or replace loose liftgate components if required.
LIFTGATE UNLATCHES OR INITIATES POWER OPEN OR POWER CLOSE CYCLE UNEXPECTEDLY	1. Inadvertent power liftgate activation.	1. Use a diagnostic scan tool to read and record PLGM activation history.
	2. Power Liftgate System Inhibitors preventing operation.	2. Check Inhibit Monitors using a diagnostic scan tool. Refer to **POWER LIFTGATE SYSTEM INHIBIT MONITORS** . Repair if required.
	3. Power Liftgate Input/Output status incorrect.	3. Check power liftgate input - output status using a diagnostic scan tool. Refer to **POWER LIFTGATE INPUT - OUTPUT TABLE** . Repair if required.
	4. Wiring problems (system or vehicle).	4. Refer to the appropriate wiring information. Repair if required.
	5. Ineffective power liftgate overhead console switch.	5. Test the overhead console switch. Replace if required.
	6. Ineffective FOBIK.	6. Reprogram FOBIK and retry. Replace if required.
	7. Ineffective power liftgate latch assembly.	7. Check for foreign matter or damaged components preventing proper latch operation. Use diagnostic scan tool to cycle the latch. Replace if required.
	8. Ineffective PLGM.	8. Test the PLGM using a diagnostic scan tool. Replace if required.

POWER LIFTGATE SYSTEM CONTROL PARAMETERS

The power liftgate system is designed with a number of control parameters, which are conditions that must be fulfilled to allow operation. These control parameters are listed below:

- The Power LiftGate Module (PLGM) will inhibit operation of the power liftgate in extreme ambient temperatures. These temperatures are at or below about -30° C (-22° F) and at or above about 65° C (149° F). The pinch sensor/thermistor assembly on the right side of the liftgate monitors the ambient temperature.

- The transmission must be in the **Park** (P) or **Neutral** (N) positions for the power liftgate system to operate.
- The vehicle speed input must be zero (0) for the power liftgate system to operate.
- The electrical system voltage must be within minimum and maximum specifications for the power liftgate system to operate. A low-voltage cut off is built into the power liftgate system to prevent the battery from discharging to the point where the vehicle cannot be operated.
- If the ignition switch is in the **Start** position, the power liftgate system will not initiate a power cycle.
- If the ignition switch is moved to the **Start** position during a power cycle, the power liftgate will pause.
- If the vehicle is locked, the exterior liftgate handle will not release the latch. The FOB with Integrated Key (FOBIK) and the overhead console switch will work for power open or close cycles.
- If the vehicle theft alarm is armed, the overhead console switch will not open the liftgate; however, the FOBIK will.
- If a liftgate pinch sensor is activated during a power close, the liftgate will reverse direction. If a pinch sensor is already active, the power liftgate system will not initiate a power close. A pinch activation during latch cinch will stop the cinch operation.
- If something sufficiently impedes liftgate travel, the power liftgate will detect an obstacle and reverse direction, traveling to full open or full closed.
- If multiple obstacles are detected during the same power open or close cycle, the liftgate will abort that power cycle and go into full manual operation.
- The power liftgate components are protected by the power liftgate system fuse. If the fuse is ineffective, the power liftgate system will not function.
- Some Diagnostic Trouble Codes (DTC) stored in the PLGM may cause the power liftgate system not to operate. Always use a diagnostic scan tool to check and clear DTCs from the PLGM before and after servicing any power liftgate system components.

POWER LIFTGATE INPUT - OUTPUT TABLE

POWER LIFTGATE INPUT - OUTPUT TABLE

INPUT	NORMAL READINGS			
	FULLY CLOSED AND LATCHED	FULLY OPEN	BETWEEN FULLY OPEN AND CLOSED	DESCRIPTION
PRIMARY RATCHET - AJAR SWITCH CLOSED	FALSE	TRUE	TRUE	Primary/Ajar switch, internal to the liftgate latch. **Open** when latch is in primary. **Closed** when latch is out of primary.
SECONDARY RATCHET SWITCH CLOSED	FALSE	TRUE	TRUE	Internal to the liftgate latch. Indicates when the latch is in secondary position. **Open** when in secondary position. **Closed** when out of secondary

				position.
SECTOR GEAR SWITCH CLOSED	FALSE	FALSE	FALSE	Internal to the liftgate latch. Essentially a park switch for the latch. When latch is running a cinch or release, this switch is **Closed** . After cinch or release is complete, the Power LiftGate Module (PLGM) will reverse direction of the latch until the switch is **Open** .
FULL OPEN SWITCH CLOSED	FALSE	TRUE	FALSE	Internal to the Power Drive Unit (PDU). Indicates when the liftgate is a few degrees from full open. **Closed** when full open. **Open** when not full open.
POSITION SENSOR NUMBER 1 AND NUMBER 2 CLOSED	FALSE OR TRUE	FALSE OR TRUE	FALSE OR TRUE	When in motion, these signals will toggle between **Open** and **Closed** . The two signals together tell the PLGM the speed and distance of liftgate travel. These inputs are also used by the PLGM to sense obstacles encountered by the liftgate.
POSITION SENSOR PULSE COUNTS	100	1600 TO 1800	100 TO 1600	This is a counter derived from the pulses coming from Position Sensors number 1 and 2. This count represents total travel of the liftgate (to mechanical end of travel).
GATE FULL OPEN SWITCH POSITION COUNTS	ABOUT 1600	ABOUT 1600	ABOUT 1600	This is a counter derived from the pulses coming from Position Sensors number 1 and 2. This count represents the position of the full open switch in the PDU.

INPUT	NORMAL (NOT PRESSED)	PRESSED	DESCRIPTION
LEFT PINCH SENSOR	About 4.1 Volts (10 Kilohms)	Less than 1 Volt	Pinch sensor reads 10 kilohms when not pinched. When pinched, shorts out the 10 kilohm resistor and should read from 0 to about 200 ohms.
			Right pinch sensor has a 10 kilohm at room

RIGHT PINCH SENSOR	About 1.7 Volts at 21° C (70° F)	Less than 1 Volt	temperature thermistor in place of the resistor. When not pinched, resistance is proportional to the ambient temperature. When pinched, shorts out the thermistor and should read from 0 to about 200 ohms.
EXTERIOR HANDLE SWITCH	5 Volts (Normally Open)	About 3.4 Volts (4.7 Kilohms)	Located in the liftgate latch. Open circuit when not active. 4.7 kilohms to ground when handle is activated.
OVERHEAD CONSOLE SWITCH	About 4.7 Volts	About 3.4 Volts	When not pressed, should read about 810 kilohms. When pressed, should read about 4.7 kilohms.
D-PILLAR (REAR ZONE) SWITCH	About 4.7 Volts	About 3.4 Volts	When not pressed, should read about 810 kilohms. When pressed, should read about 4.7 kilohms.

OUTPUT	DESCRIPTION	DIAGNOSE
HALL EFFECT POWER	Provides +5 Volts to the Hall sensors in the PDU	As long as the PLGM is awake it should read approximately +5 volts.
LATCH MOTOR	Provides +/- 12 Volts to latch motor for cinch and release	Actuate with diagnostic scan tool. Should see positive voltage on the cinch wiring connector terminal for cinch direction. Should see positive voltage on the release wiring connector terminal for release direction. Refer to the appropriate wiring information for specific harness and connector pinout information.
DRIVE MOTOR	Provides +/- 12 Volts to PDU for power Open or Close	Actuate with diagnostic scan tool. Should see positive voltage on the open wiring connector terminal for open direction. Should see positive voltage on the close wiring connector terminal for close direction. Refer to the appropriate wiring information for specific harness and connector pinout information.
CHIME	Provides signal to output sound	Actuate with diagnostic scan tool. While monitoring with a digital multimeter some activity should be present, but not much voltage.

POWER LIFTGATE SYSTEM INHIBIT MONITORS

The following is a list of inhibit monitors that may be observed using an appropriate diagnostic scan tool.

INHIBIT MONITOR	POSSIBLE CAUSES	CORRECTION
$80 OPEN INHIBIT - VOLTAGE TOO LOW	1. Low or dead battery.	1. Test and charge battery. Replace if required.
	2. Ineffective power or ground circuits to the Power LiftGate Module (PLGM).	2. Check the power and ground circuits for the PLGM. Repair if required.

$82 CLOSE INHIBIT - VOLTAGE TOO LOW	3. Inaccurate voltage reading from the PLGM.	3. Compare the PLGM battery reading using a diagnostic scan tool with a voltmeter reading at the PLGM wiring connections. If a voltage difference of 0.5 Volt or greater is obtained, replace the PLGM.
$81 OPEN INHIBIT - VOLTAGE TOO HIGH	1. Charging system over voltage.	1. Test the charging system. Repair if required.
$83 CLOSE INHIBIT - VOLTAGE TOO HIGH	2. Inaccurate voltage reading from the PLGM.	2. Compare the PLGM battery reading using a diagnostic scan tool with a voltmeter reading at the PLGM wiring connections. If a voltage difference of 0.5 Volt or greater is obtained, replace the PLGM.
$84 OPEN INHIBIT - TEMPERATURE TOO LOW	1. Temperature was below -30° C (-22° F) when the operation was attempted.	1. Inform customer of power liftgate system temperature operating range.
$86 CLOSE INHIBIT - TEMPERATURE TOO LOW	2. Open or high resistance to right pinch sensor thermistor through signal or ground circuit.	2. Check the signal and ground circuits between the pinch sensor and the PLGM including the in-line connectors. Repair if required.
	3. Ineffective right pinch sensor or thermistor.	3. Allow vehicle to sit in a constant temperature environment for one hour with the liftgate open. Test the resistance of the right pinch sensor and thermistor compared to specification. Replace if required.
	4. Inaccurate temperature reading from the PLGM.	4. Allow vehicle to sit in a constant temperature environment for one hour with the liftgate open. Compare the PLGM temperature reading using a diagnostic scan tool with the temperature indicated by the resistance specification of the right pinch sensor and thermistor. If the right pinch sensor and thermistor are within range of specification and the temperature difference at the PLGM is greater than 4.5° C (8° F), replace the PLGM.
$85 OPEN INHIBIT - TEMPERATURE TOO HIGH	1. Temperature was above 65° C (149° F) when the operation was attempted.	1. Inform customer of power liftgate system temperature operating range.
	2. Shorted or partially shorted right pinch sensor thermistor through signal or ground circuit.	2. Check the signal and ground circuits between the pinch sensor and the PLGM including the in-line connectors. Repair if required.
	3. Ineffective right pinch sensor or thermistor.	3. Allow vehicle to sit in a constant temperature environment for one hour with the liftgate open. Test the resistance of the right pinch sensor and thermistor compared to

		specification. Replace if required.
$87 CLOSE INHIBIT - TEMPERATURE TOO HIGH	4. Inaccurate temperature reading from the PLGM.	4. Allow vehicle to sit in a constant temperature environment for one hour with the liftgate open. Compare the PLGM temperature reading using a diagnostic scan tool with the temperature indicated by the resistance specification of the right pinch sensor and thermistor. If the right pinch sensor and thermistor are within range of specification and the temperature difference at the PLGM is greater than 4.5° C (8° F), replace the PLGM.
$88 CLOSE INHIBIT - LEFT PINCH SENSOR ACTIVE	1. Left pinch sensor was activated prior to activation of power close cycle.	1. Check for obstructions causing pinch sensor activation. Repair if required. If no obstructions found, inform customer of pinch sensor operation.
	2. Short to ground on left pinch sensor signal circuit.	2. Check the signal circuit between the pinch sensor and the PLGM including the in-line connectors. Repair if required.
	3. Ineffective left pinch sensor.	3. Test the resistance of the left pinch sensor in an unpinched state. If the resistance is less than 9 kilohms, replace the left pinch sensor.
	4. Ineffective PLGM.	4. Use a diagnostic scan tool to observe the voltage of the left pinch sensor input. With the sensor disconnected the reading should be approximately 5 volts. Short the pinch sensor circuit to ground and the reading should be approximately 0 volts. If the readings are not okay, replace the PLGM.
$89 CLOSE INHIBIT - RIGHT PINCH SENSOR ACTIVE	1. Right pinch sensor was activated prior to activation of power close cycle.	1. Check for obstructions causing pinch sensor activation. Repair if required. If no obstructions found, inform customer of pinch sensor operation.
	2. Short to ground on right pinch sensor signal circuit.	2. Check the signal circuit between the pinch sensor and the PLGM including the in-line connectors. Repair if required.
	3. Ineffective right pinch sensor.	3. Test the resistance of the right pinch sensor in an unpinched state. If the resistance is less than 9 kilohms, replace the right pinch sensor.
	4. Ineffective PLGM.	4. Use a diagnostic scan tool to observe the voltage of the right pinch sensor input. With the sensor disconnected the reading should be approximately 5 volts. Short the pinch sensor circuit to ground and the reading should be approximately 0 volts. If the readings are not

		okay, replace the PLGM.
$8A OPEN INHIBIT - NOT IN PARK OR NEUTRAL	1. Operator attempted power open cycle when vehicle was not in Park or Neutral.	1. Inform customer of power liftgate system operating restrictions.
	2. Operator attempted manual latch release with exterior handle when vehicle was not in Park or Neutral.	2. Inform customer of power liftgate system operating restrictions.
	3. Ignition switch status problem.	3. Use a diagnostic scan tool to observe the electronic message inputs received by the PLGM over the CAN data bus. Verify the ignition switch status reads correctly. Repair if required.
	4. Transmission Range Sensor (TRS) problem.	4. Use a diagnostic scan tool to observe the electronic message inputs received by the PLGM over the CAN data bus. Verify PRNDL status reads correctly. If not okay, repair or replace the TRS if required.
	5. Overhead console power liftgate switch problem.	5. Use a diagnostic scan tool to observe the overhead console liftgate switch inputs to the PLGM. Verify the inputs are correct under different voltage and driving conditions. If not okay, repair or replace the switch if required.
	6. FOB with Integrated Key (FOBIK) or Keyless Ignition Node (KIN) (also known as Wireless Control Module/WCM) problem.	6. Verify proper operation of the FOBIK and the Remote Keyless Entry (RKE) system. Repair or replace if required.
	7. Exterior liftgate latch handle switch problem.	7. Use a diagnostic scan tool to observe the exterior liftgate latch handle switch inputs to the PLGM. Verify the inputs are correct under different voltage and driving conditions. If not okay, repair or replace the switch if required.
$8B CLOSE INHIBIT -	1. Operator attempted power close cycle when vehicle was not in Park or Neutral.	1. Inform customer of power liftgate system operating restrictions.
	2. Ignition switch status problem.	2. Use a diagnostic scan tool to observe the electronic message inputs received by the PLGM over the CAN data bus. Verify the ignition switch status reads correctly. Repair if required.
	3. TRS problem.	3. Use a diagnostic scan tool to observe the electronic message inputs received by the PLGM over the CAN data bus. Verify

NOT IN PARK OR NEUTRAL		PRNDL status reads correctly. If not okay, repair or replace the TRS if required.
	4. Overhead console power liftgate switch problem.	4. Use a diagnostic scan tool to observe the overhead console liftgate switch inputs to the PLGM. Verify the inputs are correct under different voltage and driving conditions. If not okay, repair or replace the switch if required.
	5. FOBIK or KIN problem.	5. Verify proper operation of the FOBIK and the RKE system. Repair or replace if required.
$8C OPEN INHIBIT - NON-ZERO VEHICLE SPEED	1. Operator attempted power open cycle when vehicle is in Neutral and rolling.	1. Inform customer of power liftgate system operating restrictions.
	2. Ignition switch status problem.	2. Use a diagnostic scan tool to observe the electronic message inputs received by the PLGM over the CAN data bus. Verify the ignition switch status reads correctly. Repair if required.
	3. Vehicle Speed Sensor (VSS) problem.	3. Use a diagnostic scan tool to observe the electronic message inputs received by the PLGM over the CAN data bus. Verify the vehicle speed status reads correctly. If not okay, repair or replace the VSS if required.
	4. Overhead console power liftgate switch problem.	4. Use a diagnostic scan tool to observe the overhead console liftgate switch inputs to the PLGM. Verify the inputs are correct under different voltage and driving conditions. If not okay, repair or replace the switch if required.
	5. FOBIK or KIN problem.	5. Verify proper operation of the FOBIK and the RKE system. Repair or replace if required.
	6. Exterior liftgate latch handle switch problem.	6. Use a diagnostic scan tool to observe the exterior liftgate latch handle switch inputs to the PLGM. Verify the inputs are correct under different voltage and driving conditions. If not okay, repair or replace the switch if required.
	1. Operator attempted power close cycle when vehicle is in Neutral and rolling.	1. Inform customer of power liftgate system operating restrictions.
	2. Ignition switch status problem.	2. Use a diagnostic scan tool to observe the electronic message inputs received by the PLGM over the CAN data bus. Verify the ignition switch status reads correctly. Repair

		if required.
$8D CLOSE INHIBIT - NON-ZERO VEHICLE SPEED	3. VSS problem.	3. Use a diagnostic scan tool to observe the electronic message inputs received by the PLGM over the CAN data bus. Verify the vehicle speed status reads correctly. If not okay, repair or replace the VSS if required.
	4. Overhead console power liftgate switch problem.	4. Use a diagnostic scan tool to observe the overhead console liftgate switch inputs to the PLGM. Verify the inputs are correct under different voltage and driving conditions. If not okay, repair or replace the switch if required.
	5. FOBIK or KIN problem.	5. Verify proper operation of the FOBIK and the RKE system. Repair or replace if required.
$8E OPEN INHIBIT - IGNITION IN START POSITION	1. Operator attempted power open cycle with the ignition switch in the Start position.	1. Inform customer of power liftgate system operating restrictions.
	2. Ignition switch status problem.	2. Use a diagnostic scan tool to observe the electronic message inputs received by the PLGM over the CAN data bus. Verify the ignition switch status reads correctly. Repair if required.
	3. Overhead console power liftgate switch problem.	3. Use a diagnostic scan tool to observe the overhead console liftgate switch inputs to the PLGM. Verify the inputs are correct under different voltage and driving conditions. If not okay, repair or replace the switch if required.
	4. FOBIK or KIN problem.	4. Verify proper operation of the FOBIK and the RKE system. Repair or replace if required.
$8F CLOSE INHIBIT - IGNITION IN START POSITION	1. Operator attempted power close cycle with the ignition switch in the Start position.	1. Inform customer of power liftgate system operating restrictions.
	2. Ignition switch status problem.	2. Use a diagnostic scan tool to observe the electronic message inputs received by the PLGM over the CAN data bus. Verify the ignition switch status reads correctly. Repair if required.
	3. Overhead console power liftgate switch problem.	3. Use a diagnostic scan tool to observe the overhead console liftgate switch inputs to the PLGM. Verify the inputs are correct under different voltage and driving conditions. If not okay, repair or replace the switch if required.

	4. FOBIK or KIN problem.	4. Verify proper operation of the FOBIK and the RKE system. Repair or replace if required.
$90 OPEN INHIBIT - IN-PLANT MODE	1. Power open cycle will not function because the PLGM is in the in-plant mode.	1. Use a diagnostic scan tool to perform the PLGM learn cycle. Refer to **MODULE, POWER LIFTGATE CONTROL, STANDARD PROCEDURE** . If learn cycle does not correct the problem, replace the PLGM if required.
$91 CLOSE INHIBIT - IN-PLANT MODE	1. Power close cycle will not function because the PLGM is in the in-plant mode.	1. Use a diagnostic scan tool to perform the PLGM learn cycle. Refer to **MODULE, POWER LIFTGATE CONTROL, STANDARD PROCEDURE** . If learn cycle does not correct the problem, replace the PLGM if required.
$92 OPEN INHIBIT - GEAR/SPEED MISMATCH	1. Power open cycle will not function because of a conflict between the TRS and VSS inputs.	1. Use a diagnostic scan tool to observe the electronic message inputs to the PLGM over the CAN data bus. Verify the vehicle speed and the PRNDL status read correctly. If not okay, repair or replace the TRS or VSS if required. **NOTE:** This inhibitor could also have been operator induced by placing the transmission in Park when the vehicle is still rolling and immediately attempting a power open cycle command.
	2. Ignition switch status problem.	2. Use a diagnostic scan tool to observe the electronic message inputs received by the PLGM over the CAN data bus. Verify the ignition switch status reads correctly. Repair if required.
$93 CLOSE INHIBIT - GEAR/SPEED MISMATCH	1. Power close cycle will not function because of a conflict between the TRS and VSS inputs.	1. Use a diagnostic scan tool to observe the electronic message inputs to the PLGM over the CAN data bus. Verify the vehicle speed and the PRNDL status read correctly. If not okay, repair or replace the TRS or VSS if required. **NOTE:** This inhibitor could also have been operator induced by placing the transmission in Park when the vehicle is still rolling and immediately attempting a power close cycle command.
	2. Ignition switch status problem.	2. Use a diagnostic scan tool to observe the electronic message inputs received by the PLGM over the CAN data bus. Verify the ignition switch status reads correctly. Repair if required.
	1. Operator induced by	

$94 OPEN INHIBIT - NOT FULLY OPEN OR FULLY CLOSED	placing the liftgate latch in the primary or secondary latch position while the liftgate was open.	1. Inform customer of proper power liftgate and latch operation.
	2. Conflict between power liftgate latch switches and PDU full open switch inputs to the PLGM.	2. Use a diagnostic scan tool to observe the liftgate latch full open, primary, secondary, sector and pawl switch readings with the liftgate in the fully open position. Verify that the full open, primary, secondary and pawl switch readings are all **Closed** and the sector switch reading is **Open** . Then, with the liftgate in the fully closed position, verify that the full open, primary, secondary and pawl switch readings are all **Open** and the sector switch reading is **Closed** . Repair if required.
	3. PDU full open switch problem.	3. Use a diagnostic scan tool to verify proper operation of the full open switch during a power liftgate cycle. Repeat during a manual liftgate cycle. In each case the switch reading should be **Closed** with the liftgate a few degrees below fully opened and **Open** in all other positions. Repair if required.
$95 LATCH RELEASE INHIBIT - LOCK ENGAGED	1. Vehicle was locked when the operator attempted to release the power liftgate latch using the exterior latch handle.	1. Inform customer of proper power liftgate and latch operation.
	2. Invalid lock status received by the PLGM.	2. Use a diagnostic scan tool to observe the electronic message inputs to the PLGM over the CAN data bus. Cycle the power door locks using the FOBIK, the interior lock switches and the automatic (or rolling) lock feature. Verify that the lock status reads correctly. Repair if required.
$96 LATCH CINCH ABORTED - LEFT PINCH SENSOR ACTIVE	1. Left pinch sensor was activated when power liftgate latch was cinching.	1. Check for obstructions causing pinch sensor activation. Check the pinch sensor for areas that may be coming into contact with other parts of the vehicle. Ensure the pinch sensor is properly secured to the liftgate. Repair if required. If no obstructions found, inform customer of pinch sensor operation.
	2. Short to ground on left pinch sensor signal circuit.	2. Check the signal circuit between the pinch sensor and the PLGM including the in-line connectors. Repair if required.
	3. Ineffective left pinch sensor.	3. Test the resistance of the left pinch sensor in an unpinched state. If the resistance is less

		than 9 kilohms, replace the left pinch sensor.
	4. Ineffective PLGM.	4. Use a diagnostic scan tool to observe the voltage of the left pinch sensor input. With the sensor disconnected the reading should be approximately 5 volts. Short the pinch sensor circuit to ground and the reading should be approximately 0 volts. If the readings are not okay, replace the PLGM.
$97 LATCH CINCH ABORTED - RIGHT PINCH SENSOR ACTIVE	1. Right pinch sensor was activated when power liftgate latch was cinching.	1. Check for obstructions causing pinch sensor activation. Check the pinch sensor for areas that may be coming into contact with other parts of the vehicle. Ensure the pinch sensor is properly secured to the liftgate. Repair if required. If no obstructions found, inform customer of pinch sensor operation.
	2. Short to ground on right pinch sensor signal circuit.	2. Check the signal circuit between the pinch sensor and the PLGM including the in-line connectors. Repair if required.
	3. Ineffective right pinch sensor.	3. Test the resistance of the right pinch sensor in an unpinched state. If the resistance is less than 9 kilohms, replace the right pinch sensor.
	4. Ineffective PLGM.	4. Use a diagnostic scan tool to observe the voltage of the right pinch sensor input. With the sensor disconnected the reading should be approximately 5 volts. Short the pinch sensor circuit to ground and the reading should be approximately 0 volts. If the readings are not okay, replace the PLGM.
$98 OPEN CANCELLED - HANDLE ACTIVE	1. Operator induced by grabbing the exterior handle while a power open cycle was taking place.	1. Inform customer of power liftgate system operating restrictions.
	2. Exterior liftgate latch handle switch problem.	2. Use a diagnostic scan tool to observe the exterior liftgate latch handle switch inputs to the PLGM. Verify the liftgate latch handle switch (located in the exterior latch handle assembly) reading is approximately 2.4 volts with handle activated and greater than 4.6 volts when released. Using a digital multimeter, measure the resistance of the liftgate latch handle switch. The multimeter should read approximately 4.7 kilohms activated, and open with the handle released. If not okay, repair or replace the switch if required.

$99 OPEN CANCELLED - RKE ACTIVE	1. A power open cycle was cancelled during the first two seconds (while chiming) by an RKE signal.	1. Inform customer of power liftgate system operating restrictions. FOBIK buttons may get inadvertently pressed when in a pocket or purse. Rapid pressing of the buttons may also be the cause.
	2. FOBIK or KIN problem.	2. Verify proper operation of the FOBIK and the RKE system. Repair or replace if required.
$9A OPEN CANCELLED - OVERHEAD/IP ACTIVE	1. A power open cycle was cancelled during the first two seconds (while chiming) by an overhead console power liftgate switch signal.	1. Inform customer of power liftgate system operating restrictions. The overhead console power liftgate switch may have been double pressed.
	2. Overhead console power liftgate switch problem.	2. Use a diagnostic scan tool to observe the overhead console liftgate switch inputs to the PLGM. Verify the inputs are correct under different voltage and driving conditions. If not okay, repair or replace the switch if required.
$9B CLOSE CANCELLED - HANDLE ACTIVE	1. Operator induced by grabbing the exterior handle while a power close cycle was taking place.	1. Inform customer of power liftgate system operating restrictions.
	2. Exterior liftgate latch handle switch problem.	2. Use a diagnostic scan tool to observe the exterior liftgate latch handle switch inputs to the PLGM. Verify the liftgate latch handle switch (located in the exterior latch handle assembly) reading is approximately 2.4 volts with handle activated and greater than 4.6 volts when released. Using a digital multimeter, measure the resistance of the liftgate latch handle switch. The multimeter should read approximately 4.7 kilohms activated, and open with the handle released. If not okay, repair or replace the switch if required.
$9C CLOSE CANCELLED - RKE ACTIVE	1. A power close cycle was cancelled during the first two seconds (while chiming) by an RKE signal.	1. Inform customer of power liftgate system operating restrictions. FOBIK buttons may get inadvertently pressed when in a pocket or purse. Rapid pressing of the buttons may also be the cause.
	2. FOBIK or KIN problem.	2. Verify proper operation of the FOBIK and the RKE system. Repair or replace if required.
	1. A power close cycle was cancelled during the first two	1. Inform customer of power liftgate system

$9D CLOSE CANCELLED - OVERHEAD/IP ACTIVE	seconds (while chiming) by an overhead console power liftgate switch signal.	operating restrictions. The overhead console power liftgate switch may have been double pressed.
	2. Overhead console power liftgate switch problem.	2. Use a diagnostic scan tool to observe the overhead console liftgate switch inputs to the PLGM. Verify the inputs are correct under different voltage and driving conditions. If not okay, repair or replace the switch if required.
$9E CLOSE CANCELLED - LEFT PINCH SENSOR DETECTED	1. A power close cycle was cancelled during the first two seconds (while chiming) by a left pinch sensor signal.	1. Check for obstructions causing pinch sensor activation. Check the pinch sensor for areas that may be coming into contact with other parts of the vehicle. Ensure the pinch sensor is properly secured to the liftgate. Repair if required. If no obstructions found, inform customer of pinch sensor operation.
	2. Short to ground on left pinch sensor signal circuit.	2. Check the signal circuit between the pinch sensor and the PLGM including the in-line connectors. Repair if required.
	3. Ineffective left pinch sensor.	3. Test the resistance of the left pinch sensor in an unpinched state. If the resistance is less than 9 kilohms, replace the left pinch sensor.
	4. Ineffective PLGM.	4. Use a diagnostic scan tool to observe the voltage of the left pinch sensor input. With the sensor disconnected the reading should be approximately 5 volts. Short the pinch sensor circuit to ground and the reading should be approximately 0 volts. If the readings are not okay, replace the PLGM.
$9F CLOSE CANCELLED - RIGHT PINCH SENSOR DETECTED	1. A power close cycle was cancelled during the first two seconds (while chiming) by a right pinch sensor signal.	1. Check for obstructions causing pinch sensor activation. Check the pinch sensor for areas that may be coming into contact with other parts of the vehicle. Ensure the pinch sensor is properly secured to the liftgate. Repair if required. If no obstructions found, inform customer of pinch sensor operation.
	2. Short to ground on right pinch sensor signal circuit.	2. Check the signal circuit between the pinch sensor and the PLGM including the in-line connectors. Repair if required.
	3. Ineffective right pinch sensor.	3. Test the resistance of the right pinch sensor in an unpinched state. If the resistance is less than 9 kilohms, replace the right pinch sensor.
		4. Use a diagnostic scan tool to observe the voltage of the right pinch sensor input. With the sensor disconnected the reading should be

	4. Ineffective PLGM.	approximately 5 volts. Short the pinch sensor circuit to ground and the reading should be approximately 0 volts. If the readings are not okay, replace the PLGM.
$A0 OPEN REVERSAL - GEAR OR SPEED STATE CHANGE	1. Operator shifted vehicle out of Park or Neutral while a power open cycle was in progress.	1. Inform customer of power liftgate system operating restrictions.
	2. VSS problem.	2. Use a diagnostic scan tool to observe the electronic message inputs received by the PLGM over the CAN data bus. Verify the vehicle speed status reads correctly. If not okay, repair or replace the VSS if required.
	3. TRS problem.	3. Use a diagnostic scan tool to observe the electronic message inputs received by the PLGM over the CAN data bus. Verify PRNDL status reads correctly. If not okay, repair or replace the TRS if required.
$A1 OPEN REVERSAL - USER INPUT	1. Operator activated either a FOBIK button or the overhead console power liftgate switch while a power open or power close cycle was in progress	1. Inform customer of power liftgate system operating restrictions. The overhead console power liftgate switch may have been double pressed or the FOBIK buttons may get inadvertently pressed when in a pocket or purse. Rapid pressing of the buttons may also be the cause.
	2. Overhead console power liftgate switch problem.	2. Use a diagnostic scan tool to observe the overhead console liftgate switch inputs to the PLGM. Verify the inputs are correct under different voltage and driving conditions. If not okay, repair or replace the switch if required.
	3. FOBIK or KIN problem.	3. Verify proper operation of the FOBIK and the RKE system. Repair or replace if required.
$A2 CLOSE REVERSAL - USER INPUT	1. Operator activated either a FOBIK button or the overhead console power liftgate switch while a power open or power close cycle was in progress.	1. Inform customer of power liftgate system operating restrictions. The overhead console power liftgate switch may have been double pressed or the FOBIK buttons may get inadvertently pressed when in a pocket or purse. Rapid pressing of the buttons may also be the cause.
	2. Overhead console power liftgate switch problem.	2. Use a diagnostic scan tool to observe the overhead console liftgate switch inputs to the PLGM. Verify the inputs are correct under different voltage and driving conditions. If not okay, repair or replace the switch if

		required.
	3. FOBIK or KIN problem.	3. Verify proper operation of the FOBIK and the RKE system. Repair or replace if required.
$A3 CLOSE REVERSAL - LEFT PINCH SENSOR DETECTED	1. A power close cycle reversed direction due to a left pinch sensor signal.	1. Check for obstructions causing pinch sensor activation. Check the pinch sensor for areas that may be coming into contact with other parts of the vehicle. Ensure the pinch sensor is properly secured to the liftgate. Repair if required. If no obstructions found, inform customer of pinch sensor operation.
	2. Short to ground on left pinch sensor signal circuit.	2. Check the signal circuit between the pinch sensor and the PLGM including the in-line connectors. Repair if required.
	3. Ineffective left pinch sensor.	3. Test the resistance of the left pinch sensor in an unpinched state. If the resistance is less than 9 kilohms, replace the left pinch sensor.
	4. Ineffective PLGM.	4. Use a diagnostic scan tool to observe the voltage of the left pinch sensor input. With the sensor disconnected the reading should be approximately 5 volts. Short the pinch sensor circuit to ground and the reading should be approximately 0 volts. If the readings are not okay, replace the PLGM.
$A4 CLOSE REVERSAL - RIGHT PINCH SENSOR DETECTED	1. A power close cycle reversed direction due to a right pinch sensor signal.	1. Check for obstructions causing pinch sensor activation. Check the pinch sensor for areas that may be coming into contact with other parts of the vehicle. Ensure the pinch sensor is properly secured to the liftgate. Repair if required. If no obstructions found, inform customer of pinch sensor operation.
	2. Short to ground on right pinch sensor signal circuit.	2. Check the signal circuit between the pinch sensor and the PLGM including the in-line connectors. Repair if required.
	3. Ineffective right pinch sensor.	3. Test the resistance of the right pinch sensor in an unpinched state. If the resistance is less than 9 kilohms, replace the right pinch sensor.
	4. Ineffective PLGM.	4. Use a diagnostic scan tool to observe the voltage of the right pinch sensor input. With the sensor disconnected the reading should be approximately 5 volts. Short the pinch sensor circuit to ground and the reading should be approximately 0 volts. If the readings are not okay, replace the PLGM.
	1. A power close cycle	

$A5 CLOSE REVERSAL - HANDLE ACTIVE	reversed direction due to the operator grabbing the exterior handle while the cycle was taking place.	1. Inform customer of power liftgate system operating restrictions.
	2. Exterior liftgate latch handle switch problem.	2. Use a diagnostic scan tool to observe the exterior liftgate latch handle switch inputs to the PLGM. Verify the liftgate latch handle switch (located in the exterior latch handle assembly) reading is approximately 2.4 volts with handle activated and greater than 4.6 volts when released. Using a digital multimeter, measure the resistance of the liftgate latch handle switch. The multimeter should read approximately 4.7 kilohms activated, and open with the handle released. If not okay, repair or replace the switch if required.
$A6 OPEN ABORTED - HANDLE ACTIVE	1. A power open cycle was aborted due to the operator grabbing the exterior handle while the cycle was taking place.	1. Inform customer of power liftgate system operating restrictions.
	2. Exterior liftgate latch handle switch problem.	2. Use a diagnostic scan tool to observe the exterior liftgate latch handle switch inputs to the PLGM. Verify the liftgate latch handle switch (located in the exterior latch handle assembly) reading is approximately 2.4 volts with handle activated and greater than 4.6 volts when released. Using a digital multimeter, measure the resistance of the liftgate latch handle switch. The multimeter should read approximately 4.7 kilohms activated, and open with the handle released. If not okay, repair or replace the switch if required.
$A7 OPEN OBSTACLE	1. A power open cycle reversed direction due to an obstacle detected while the cycle was taking place.	1. Normal operation. Inform customer of power liftgate system operating restrictions.
	2. Binding or sticking of components.	2. Use a diagnostic scan tool to determine the Gate Position indicated in the Inhibit Monitor record. Move the liftgate manually to that location and note the components involved in the obstruction or binding. Repair or replace the components if required.
		3. Use a diagnostic scan tool to perform the

	3. The PLGM is not properly calibrated.	PLGM learn cycle. Refer to **MODULE, POWER LIFTGATE CONTROL, STANDARD PROCEDURE** . If learn cycle does not correct the problem, replace the PLGM if required.
$A8 CLOSE OBSTACLE	1. A power close cycle reversed direction due to an obstacle detected while the cycle was taking place.	1. Normal operation. Inform customer of power liftgate system operating restrictions.
	2. Binding or sticking of components.	2. Use a diagnostic scan tool to determine the Gate Position indicated in the Inhibit Monitor record. Move the liftgate manually to that location and note the components involved in the obstruction or binding. Repair or replace the components if required.
	3. The PLGM is not properly calibrated.	3. Use a diagnostic scan tool to perform the PLGM learn cycle. Refer to **MODULE, POWER LIFTGATE CONTROL, STANDARD PROCEDURE** . If learn cycle does not correct the problem, replace the PLGM if required.
$AA LATCH IS NOT NEAR SECONDARY STATE	1. Operator induced by placing the liftgate latch in the primary or secondary latch position while the liftgate was open.	1. Inform customer of proper power liftgate and latch operation.
	2. Wiring problem.	Use a diagnostic scan tool to observe and verify that the position sensor 1 and 2 in the PDU toggle between **Open** and **Closed** . If readings are inaccurate, diagnose the wiring for possible opens or shorts to ground or voltage. Refer to the appropriate wiring information. Repair if required.
	3. PDU position sensor problem.	3. Manually open the liftgate to the fully open position. Bring the liftgate down to just before the latch contacts the striker. Using a diagnostic scan tool observe the Gate Position counts. If the count is greater than 20, replace the ineffective PDU.
	4. PLGM problem.	Use a diagnostic scan tool to observe the position sensor 1 and 2 status. Disconnect the PDU electrical connector. Apply opens and grounds to the position sensor signal circuits. Verify that the PLGM reads the correct **Open** and **Closed** status. If not okay, replace the PLGM if required.

$AB OPEN INHIBIT - VTA ARMED	1. The overhead console power liftgate switch would not initiate a power open cycle because the Vehicle Theft Alarm (VTA) was armed.	1. Normal operation. Inform customer of power liftgate system operating restrictions.
	2. Invalid VTA status.	2. Use a diagnostic scan tool to observe and verify that electronic messages from the instrument cluster (also known as the Cab Compartment Node/CCN) over the CAN data bus indicate proper operation of the VTA system. If not okay, repair or replace components if required.
$AC OPEN INHIBIT - INVALID INPUT	1. The power liftgate D-pillar switch would not initiate a power open cycle because a power open is not allowed from that input.	1. Normal operation. Inform customer of power liftgate system operating restrictions.
$AD OPEN INHIBIT - FLIPPER GLASS AJAR	1. Operator attempted a power open cycle while the liftgate flip-up glass was ajar.	1. Normal operation. Inform customer of power liftgate system operating restrictions.
	2. Liftgate flip-up glass ajar switch problem.	2. Use a diagnostic scan tool to observe and verify that electronic messages from the Body Control Module (BCM) over the CAN data bus indicate the proper status of the liftgate flip-up glass. If not okay, repair or replace flip-up glass ajar switch if required.
$AE CLOSE INHIBIT - FLIPPER GLASS AJAR	1. Operator attempted a power close cycle while the liftgate flip-up glass was ajar.	1. Normal operation. Inform customer of power liftgate system operating restrictions.
	2. Liftgate flip-up glass ajar switch problem.	2. Use a diagnostic scan tool to observe and verify that electronic messages from the Body Control Module (BCM) over the CAN data bus indicate the proper status of the liftgate flip-up glass. If not okay, repair or replace flip-up glass ajar switch if required.

STANDARD PROCEDURE

STANDARD PROCEDURE - LIFTGATE OPERATION

The liftgate must open and close freely and smoothly in order for the power liftgate system to function properly. The power liftgate system is designed to compensate for some minor changes in opening and closing effort caused by moderate changes in temperature or vehicle attitude. However, if there are extreme deficiencies in the alignment of the liftgate to the liftgate opening causing mechanical interference, or if there is extreme binding in a liftgate hinge or liftgate prop rod, appropriate adjustments or mechanical repairs may be required.

Manually operate the liftgate of another vehicle of the same model that is known to be in good condition for a comparison of liftgate opening and closing effort. Liftgate adjustment procedures and specifications are the same for vehicles with or without the optional power liftgate system. Refer to **LIFTGATE, ADJUSTMENTS** .

SPECIFICATIONS

SPECIFICATIONS

TORQUE SPECIFICATIONS

DESCRIPTION	N.m	Ft. Lbs.	In. Lbs.
Power Drive Unit (PDU) Ball Studs	30	22	-
Power Liftgate Latch Mounting Screws	12	-	106

CHIME

DESCRIPTION

DESCRIPTION

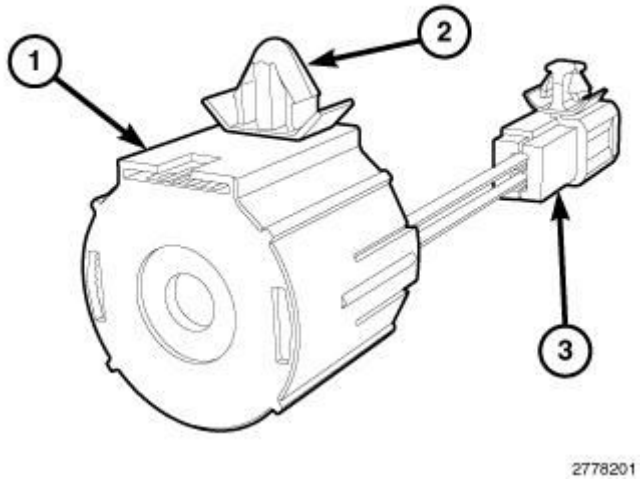

Fig. 1: Power Liftgate, Chime, Retainer & Connector
Courtesy of CHRYSLER GROUP, LLC

Vehicles equipped with an optional power operated liftgate have a power liftgate chime (1). The chime is concealed behind the left quarter inner trim panel. The chime is contained within small cylindrically-shaped molded plastic housing that is secured to the left inner D-pillar sheet metal by an integral molded plastic retainer (2).

The chime has a pigtail wire and connector (3) that connects it to the vehicle electrical system through a

dedicated take out and connector of the body wire harness.

The chime cannot be adjusted or repaired and, if damaged or ineffective, the entire chime unit must be replaced.

OPERATION

OPERATION

The power liftgate chime can produce either single or repetitive, audible chime tones as an alert heard at the rear of the vehicle at the start of any power liftgate opening or closing cycle. The chime is completely controlled by and receives both a path to ground and current through hard wired circuits from the Power LiftGate Module (PLGM) (also known as the Power LiftGate/PLG control module). The PLGM outputs a Pulse Width Modulated (PWM) signal to drive the chime. When activated in the repetitive mode the chime is pulsed ON and OFF in 0.5 second intervals.

If the power liftgate chime is enabled through the Electronic Vehicle Information Center (EVIC) customer programmable features, there are four chime tones generated at the beginning of a power **Close** cycle. There are also four chime tones generated in response to a power **Open** cycle from all operator inputs except the exterior liftgate handle switch, which is associated with three chime tones only. Any reversal during a power cycle operation will result in two chime tones being generated.

The power liftgate chime as well as the hard wired circuits to the chime unit may be diagnosed using conventional diagnostic tools and procedures. Refer to the appropriate wiring information.

REMOVAL

REMOVAL

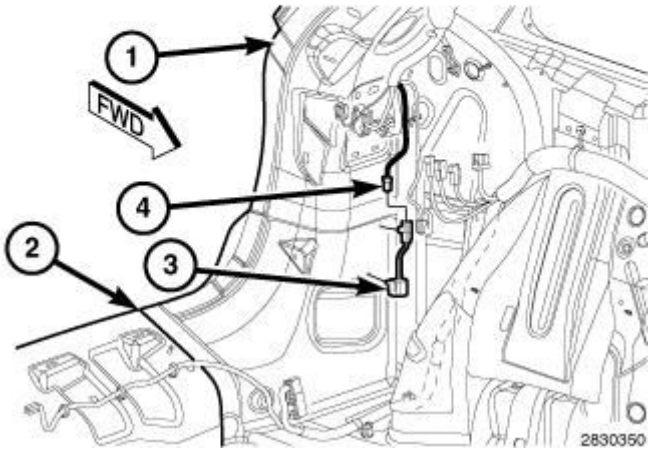

Fig. 2: Sill, D-Pillar, Power Liftgate, Chime & Harness Connector

Courtesy of CHRYSLER GROUP, LLC

1. Disconnect and isolate the battery negative cable.
2. Remove the scuff plate from the liftgate opening sill (2). Refer to **PLATE, SCUFF, DOOR SILL, REMOVAL** .
3. Move the quarter trim panel away from the lower left inner D-pillar (1) far enough to access the power liftgate chime (3). Refer to **PANEL, QUARTER TRIM, REMOVAL** .
4. Disconnect the body wire harness connector (4) from the chime pigtail wire connector.
5. Disengage the retainer integral to the chime pigtail wire connector from the body sheet metal.
6. Disengage the retainer integral to the chime housing from the body sheet metal.
7. Remove the chime from the vehicle.

INSTALLATION

INSTALLATION

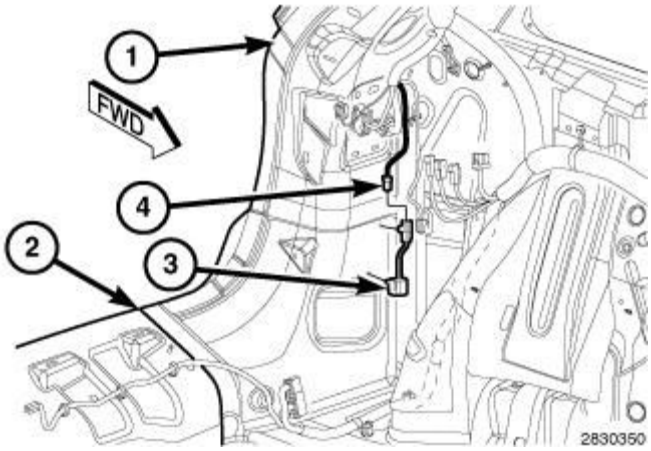

Fig. 3: Sill, D-Pillar, Power Liftgate, Chime & Harness Connector
Courtesy of CHRYSLER GROUP, LLC

1. Position the power liftgate chime (3) to the left inner D-pillar (1) in the vehicle.
2. Engage the retainer integral to the chime housing into the hole in the inner D-pillar.
3. Reconnect the chime pigtail wire connector to the body wire harness connector (4) for the chime.
4. Engage the retainer integral to the chime pigtail wire connector with the hole in the inner D-pillar.
5. Reinstall the quarter trim panel to the lower left inner D-pillar. Refer to **PANEL, QUARTER TRIM, INSTALLATION** .
6. Reinstall the scuff plat onto the liftgate opening sill (2). Refer to **PLATE, SCUFF, DOOR SILL,**

INSTALLATION .

7. Reconnect the battery negative cable.

DRIVE UNIT, POWER

DESCRIPTION

DESCRIPTION

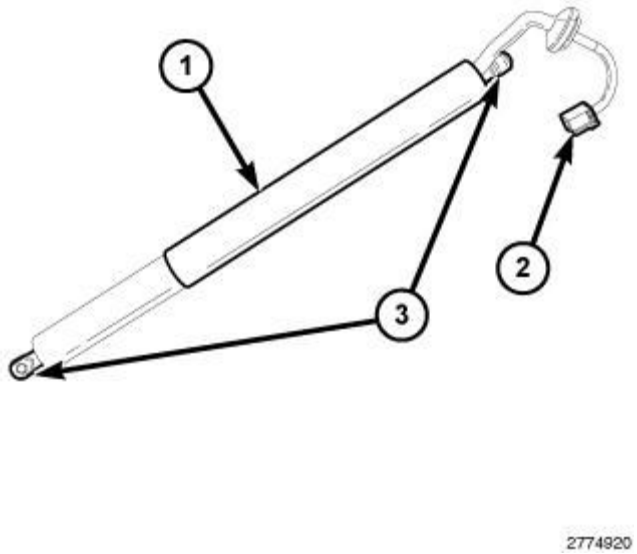

Fig. 4: Socket-Type Pivot End & Connector
Courtesy of CHRYSLER GROUP, LLC

Vehicles equipped with an optional power liftgate system, are equipped with a single Power Drive Unit (PDU) mounted in place of the standard equipment gas-charged lift strut on the left side of the liftgate. The PDU is equipped with a socket-type pivot end (3) with spring clip retainer at both the top and bottom and is mounted using the same ball studs at the top of the left liftgate opening side trough and near the belt line of the left liftgate shut face as are used for securing a conventional gas-charged lift strut.

The PDU appears similar in construction to a conventional gas-charged lift strut, but has both upper and lower cylinders or tubes that are noticeably larger in diameter than the cylinder and rod found on most conventional gas-charged lift struts. This larger diameter accommodates a small, but powerful reversible electric motor, a small planetary gear set transmission, a full-open switch, a screw-type drive unit and two Hall effect sensors. There are also two coil-type springs within the PDU; one long spring with large diameter coils, and one short spring with smaller diameter coils.

The PDU has a pigtail wire harness and connector (2) that exits the top of the larger upper cylinder. The pigtail harness is equipped with a large rubber grommet where the harness passes through the sheet metal of the left liftgate opening side trough. The PDU wiring is connected to the vehicle electrical system through a dedicated

takeout and connector of the body wire harness near the top of the inner D-pillar.

The PDU cannot be adjusted or repaired and, if damaged or inoperative, it must be replaced with a new unit.

OPERATION

OPERATION

The motor, transmission and screw-drive portions of the power liftgate Power Drive Unit (PDU) provide the power and torque required to open or close the liftgate under most conditions. The Hall effect sensors provide the Power LiftGate Module (PLGM) (also known as the Power LiftGate/PLG control module) with both a speed signal and a direction signal. These Hall effect inputs allow the PLGM to monitor and respond appropriately to any irregularities in liftgate travel and or operation. The full-open switch is used to let the PLGM know when the liftgate is approaching the full open position.

The long, large diameter coil spring within the PDU is strong enough to assist in opening and, in combination with the gas-charged lift cylinder on the right side of the liftgate, will support the liftgate in any open position. The short, small-diameter spring provides an initial lift-off that moves the liftgate latch away from the latch striker after the power liftgate latch is initially released.

The hard wired input and output circuits of the PDU may be diagnosed using conventional diagnostic tools and procedures. Refer to the appropriate wiring information. However, conventional diagnostic methods will not prove conclusive in the diagnosis of the electronic controls that provide many features of the power liftgate system. The most reliable, efficient and accurate means to diagnose the PDU or the electronic controls related to operation of the power liftgate system requires the use of a diagnostic scan tool. Refer to the appropriate diagnostic information.

REMOVAL

REMOVAL

WARNING: **To avoid serious or fatal injury, during service lift the ball socket end retaining clip only far enough to release the socket from the ball stud. Excessive prying or removal of the clip may result in improper clip spring tension. Improper clip tension may result in the support cylinder separating from the ball stud causing sudden, unexpected loss of liftgate support.**

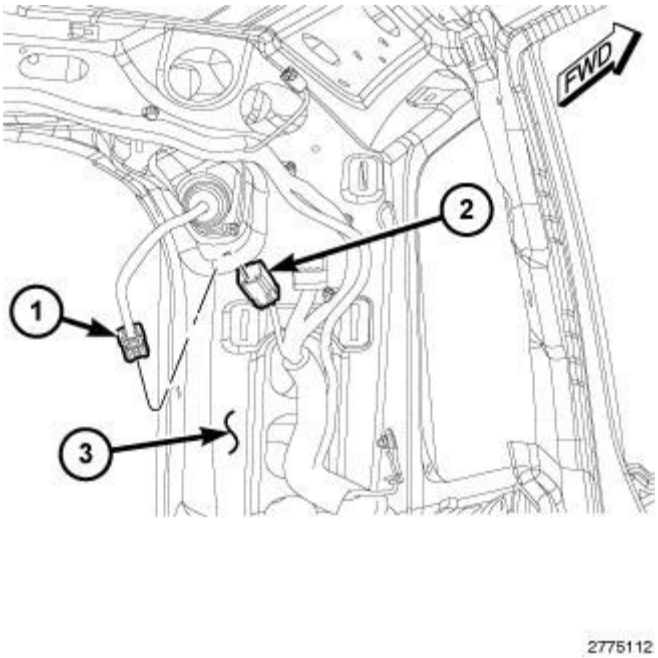

Fig. 5: Pigtail Wire Connector & Wire Harness Connector
Courtesy of CHRYSLER GROUP, LLC

1. Disconnect and isolate the battery negative cable.
2. Open and support the liftgate with a suitable prop.
3. Remove the trim from the inside of the rear quarter trim panel (3). Refer to **PANEL, QUARTER TRIM, REMOVAL** .
4. Disconnect the power liftgate Power Drive Unit (PDU) pigtail wire connector (1) from the body wire harness connector (2) on the inside of the trim panel.

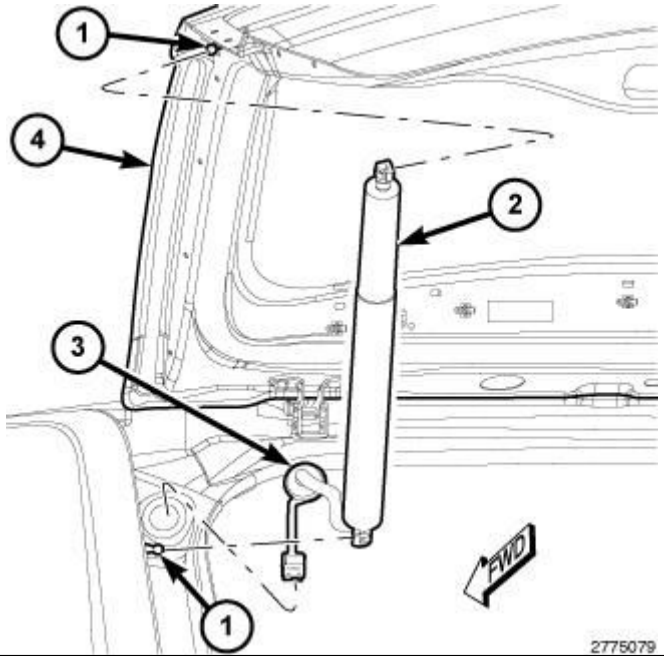

Fig. 6: Grommet & PDU
Courtesy of CHRYSLER GROUP, LLC

5. Unseat the grommet (3) of the PDU (2) pigtail wire from the clearance hole in the upper left liftgate opening trough and pull the connector through the clearance hole.

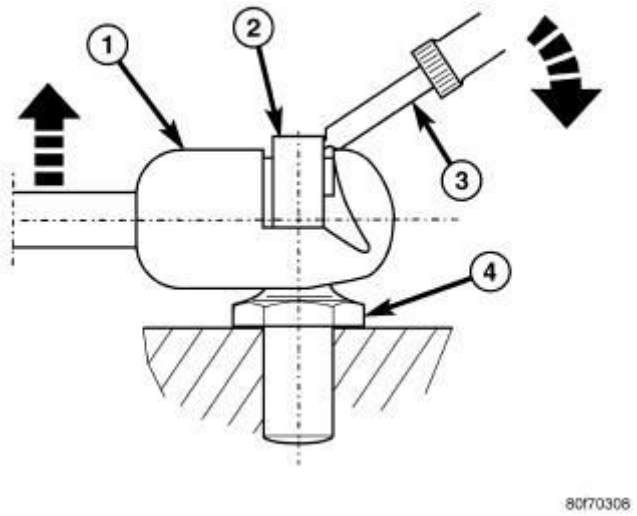

Fig. 7: Removing PDU Ball Socket From Ball Stud
Courtesy of CHRYSLER GROUP, LLC

6. Insert a small flat-bladed tool (3) into the notch on the outer face of the ball socket end (1) on the lower end of the PDU and carefully pry the retaining clip (2) outward while pulling the ball socket away from the ball stud (4) on the liftgate.
7. Release the retaining clip to its installed position.
8. Repeat Step 6 and Step 7 for the ball socket on the upper end of the PDU at the left liftgate opening trough.
9. Remove the PDU from the vehicle as a unit.

INSTALLATION

INSTALLATION

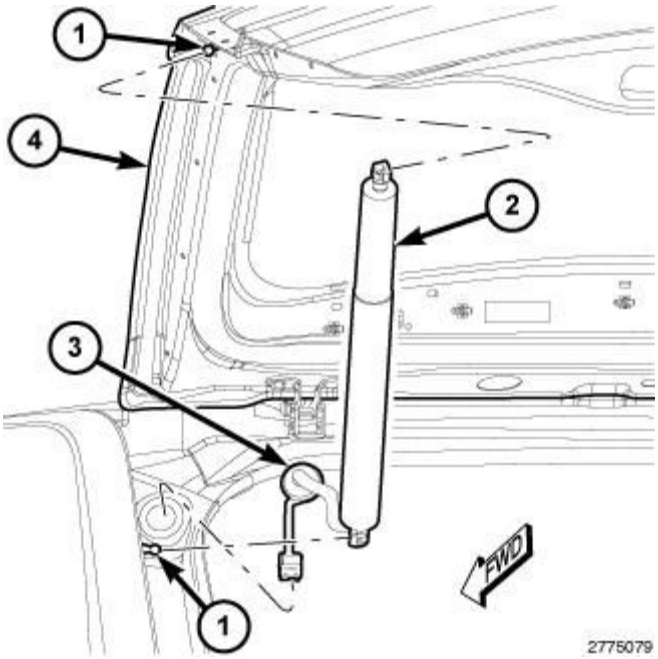

Fig. 8: Grommet & PDU
Courtesy of CHRYSLER GROUP, LLC

1. Check to be certain that the ball studs (1) on the liftgate trough and the liftgate are both in good condition and properly tightened. Tighten the ball studs to 30 N.m (22 ft. lbs.).
2. Position the ball socket on the upper end of the power liftgate Power Drive Unit (PDU) (2) to the ball stud on the left liftgate opening trough.
3. Using hand pressure, press the ball socket onto the ball stud until the retainer clip snaps into place.
4. Repeat Step 2 and Step 3 for the ball socket on the lower end of the PDU at the ball stud on the liftgate (4).
5. Inspect to be certain that the retaining clip on each of the PDU ball socket ends is fully seated.
6. Insert the PDU pigtail wire and connector through the clearance hole in the upper left liftgate opening trough and seat the grommet (3).

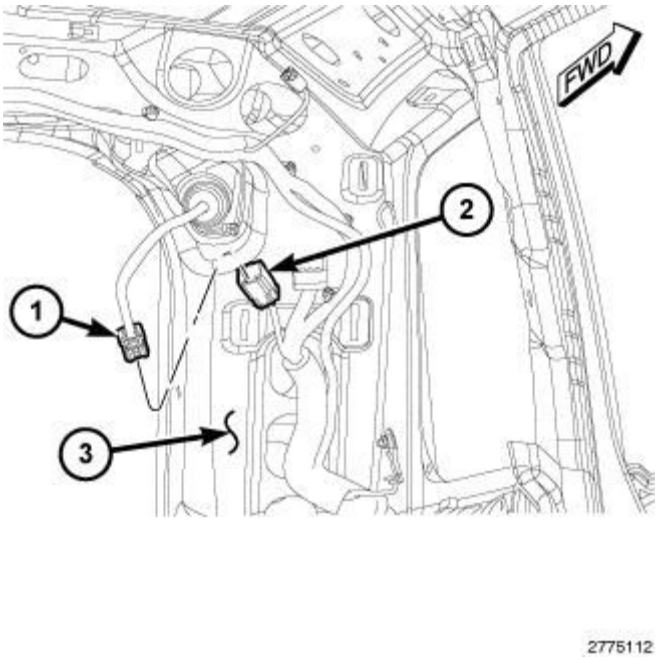

Fig. 9: Pigtail Wire Connector & Wire Harness Connector
Courtesy of CHRYSLER GROUP, LLC

7. Reconnect the PDU pigtail wire connector (1) to the body wire harness connector (2) on the inside of the trim panel.
8. Install the trim onto the inside of the left quarter trim pillar/panel (3). Refer to **PANEL, QUARTER TRIM, INSTALLATION** .
9. Remove the service support prop from the liftgate.
10. Reconnect the battery negative cable.
11. Perform the Power Liftgate Learn/Relearn Cycle standard procedure. Refer to **STANDARD PROCEDURE**.

LATCH, LIFTGATE

DESCRIPTION

DESCRIPTION

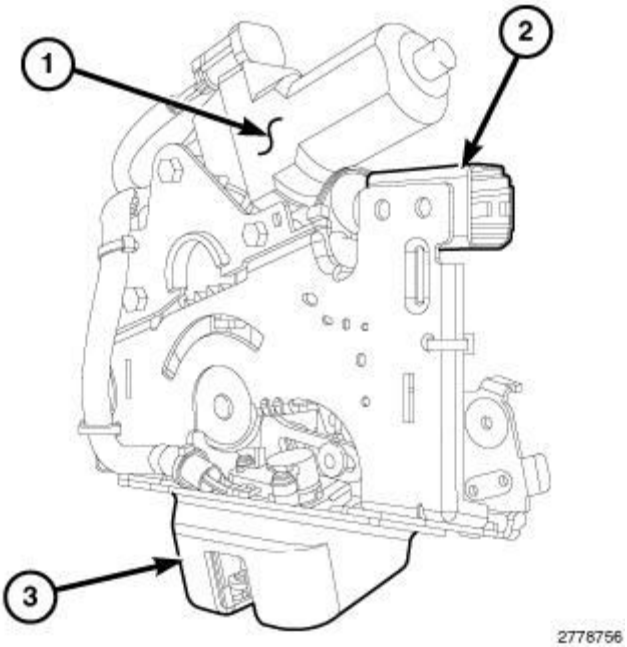

Fig. 10: Latch Assembly, Actuator Motor & Connector
Courtesy of CHRYSLER GROUP, LLC

Vehicles equipped with an optional power liftgate are equipped with a unique latch assembly (3) that performs the same function as a manual liftgate latch, but includes a Direct Current (DC) electric cinch and release actuator motor (1). This latch also includes three integral switches: a sector switch, a secondary ratchet switch and a primary ratchet switch. The primary ratchet switch also provides the liftgate ajar signal from the power liftgate latch.

Only the lower latch housing is visible on the lower center of the liftgate shut face, where the latch is secured with three screws. The remainder of the latch mechanism extends upward into the interior of the liftgate shell, where it is concealed between the liftgate outer panel and the lower liftgate trim panel. An integral pigtail wire harness and connector (2) connects the latch to the vehicle electrical system through a dedicated take out and connector of the liftgate wire harness.

The power liftgate latch cannot be repaired. If the latch mechanism, the actuator motor or any one of the three latch switches is damaged or ineffective, the entire power liftgate latch unit must be replaced.

OPERATION

OPERATION

The power cinching liftgate latch actuator motor (cinch/release motor) provides the torque required to close the liftgate from the secondary to the primary closed and latched position. The actuator also releases the liftgate from the primary closed and latched position to the fully unlatched and movable position. The actuator motor includes a small drive gear that meshes with the internal gear mechanism of the latch assembly to drive the latch and perform the power cinch and release functions.

The latch actuator is controlled by the Power LiftGate Module (PLGM) (also known as the Power LiftGate/PLG

control module), which controls the cinch and release functions and limits actuator current draw to protect the assembly. The PLGM also monitors the latch and latch pawl positions through hard wired inputs from the sector, primary ratchet and secondary ratchet switches integral to the latch. If the power liftgate pinch sensors are damaged or ineffective, the PLGM will disable the cinching function of the latch.

Following every cinch or release sequence, the power liftgate latch will return to a **home** or neutral position. If for any reason the latch is unable to return to the **home** position, the PLGM will sense this through the integral latch switch inputs and prevent the latch from releasing. If this condition exists, activation of the power liftgate using the front or rear switches, the exterior handle, Passive Entry or the Remote Keyless Entry (RKE) FOB with Integrated Key (FOBIK) will result in a short, audible beep tone being issued from the power liftgate chime. This indicates that the Power Liftgate Latch Homing standard procedure must be performed. Refer to **LATCH, LIFTGATE, STANDARD PROCEDURE**.

The hard wired input and output circuits of the power liftgate latch may be diagnosed using conventional diagnostic tools and procedures. Refer to the appropriate wiring information. However, conventional diagnostic methods will not prove conclusive in the diagnosis of the electronic controls that provide some features of the power liftgate system. The most reliable, efficient and accurate means to diagnose the power liftgate latch or the electronic controls related to operation of the power liftgate system requires the use of a diagnostic scan tool. Refer to the appropriate diagnostic information.

STANDARD PROCEDURE

POWER LIFTGATE LATCH HOMING

Following every power liftgate cinch or release sequence, the latch returns to a **home** or neutral position. If for any reason the latch is unable to return to the **home** position, the Power LiftGate Module (PLGM) (also known as the Power LiftGate/PLG control module) will sense this through hard wired inputs from the sector, primary ratchet and secondary ratchet switches integral to the latch and prevent the latch from releasing. If this condition exists, activation of the power liftgate using the front or rear switches, or the Remote Keyless Entry (RKE) FOB with Integrated Key (FOBIK) will result in a short, audible beep tone being issued from the power liftgate chime. This indicates that it is necessary to perform a latch homing routine. Latch homing in many cases can be initiated by pulling on the exterior liftgate handle. If unsuccessful, then a diagnostic scan tool must be used to run a routine that allows the latch to be returned to the **home** position as follows:

1. Connect a diagnostic scan tool to the Data Link Connector (DLC).
2. Follow the programming steps outlined in the diagnostic scan tool for **Latch Home Position Test** under the **PLGM/Power LiftGate Module** menu item.
3. If the **Latch Home Position Test** is unsuccessful, disconnect the battery for 60 seconds. Reconnect the battery, then lift the outside liftgate handle and hold it for at least 20 seconds to actuate the handle switch.
4. If the liftgate latch still does not release, use the diagnostic scan tool to select **Actuators** and **Latch Motor Release Direction** . This will drive the latch motor for longer than actuating the outside handle switch.
5. If driving the latch motor using the **Latch Motor Release Direction** works to release the latch, perform the **Latch Home Position Test** again before returning the vehicle to the owner. If driving the latch motor using the **Latch Motor Release Direction** does not work to release the latch, use the Power Liftgate Latch Manual Override standard procedure to open the liftgate and continue the diagnosis as required.

Refer to **LATCH, LIFTGATE, STANDARD PROCEDURE**.

POWER LIFTGATE LATCH MANUAL OVERRIDE

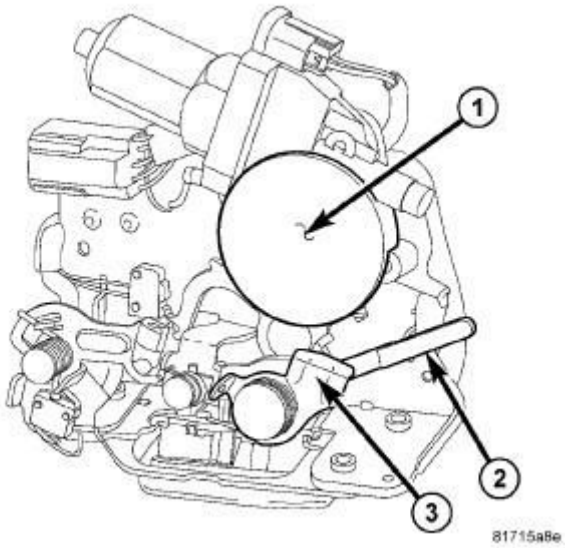

Fig. 11: View Of Power Liftgate Latch Assembly
Courtesy of CHRYSLER GROUP, LLC

NOTE: **If the power liftgate latch (1) latch release function becomes inoperative, it may be released manually by operating the manual latch release lever (3). If the power liftgate latch cinch release function becomes inoperative, it may be overridden by pushing downward on the manual cinch override lever (2).**

1. Remove the access cover from the center of the lower liftgate trim panel.
2. Reach around to the rearward face of the latch assembly to access and manually actuate the appropriate release lever for the current latch condition.

REMOVAL

REMOVAL

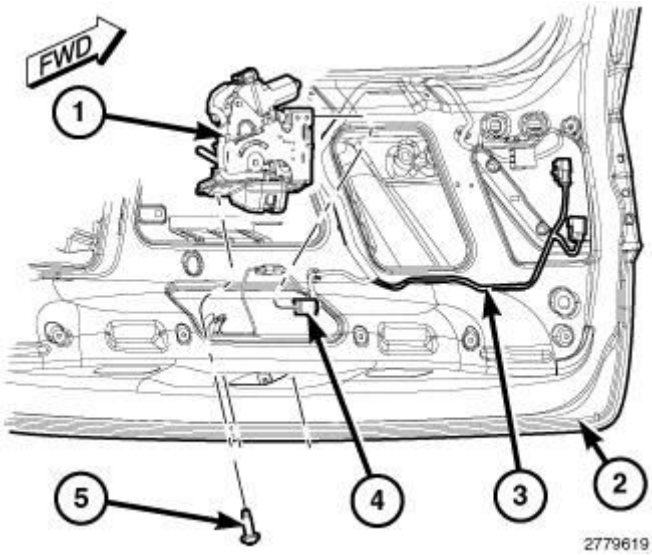

Fig. 12: Liftgate, Screws & Liftgate Latch, Connector, Wire Harness
Courtesy of CHRYSLER GROUP, LLC

1. Open the liftgate.
2. Disconnect and isolate the battery negative cable.
3. Remove the lower trim panel from the inside of the liftgate (2). Refer to **PANEL, TRIM, REMOVAL** .
4. Remove the three screws (5) that secure the power liftgate latch (1) to the lower shut face of the liftgate.
5. Disconnect the connector (4) of the liftgate wire harness (3) from the pigtail wire connector of the latch.
6. Remove the latch from the inside of the liftgate.

INSTALLATION

INSTALLATION

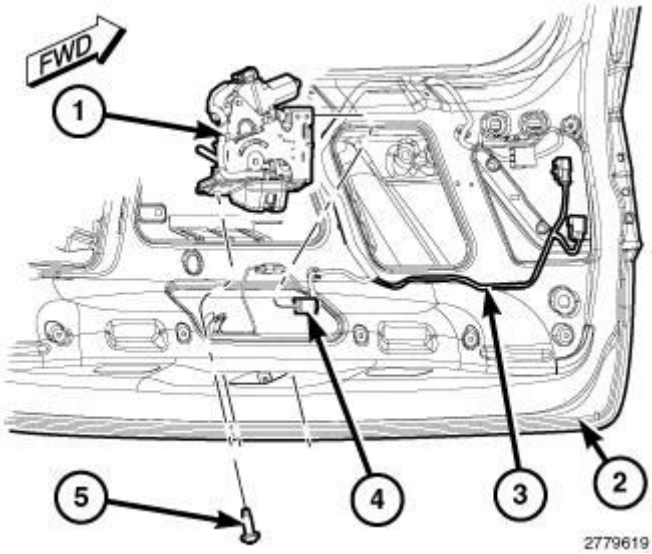

Fig. 13: Liftgate, Screws & Liftgate Latch, Connector, Wire Harness

Courtesy of CHRYSLER GROUP, LLC

1. Position the power liftgate latch (1) into the inside of the liftgate (2).
2. Reconnect the connector (4) of the liftgate wire harness (3) to the pigtail wire connector of the latch.
3. Loosely install the screw (5) into the right rear mounting hole that secures the latch to the lower shut face of the liftgate.
4. Install and tighten the two screws into the front mounting holes that secure the latch to the liftgate. Tighten the screws to 12 N.m (106 in. lbs.).
5. Tighten the left rear latch mounting screw to 12 N.m (106 in. lbs.).
6. Reinstall the lower trim panel onto the inside of the liftgate. Refer to **PANEL, TRIM, INSTALLATION** .
7. Reconnect the battery negative cable.
8. Perform the Power Liftgate Learn/Relearn Cycle standard procedure. Refer to **STANDARD PROCEDURE**.

SENSOR, PINCH

DESCRIPTION

DESCRIPTION

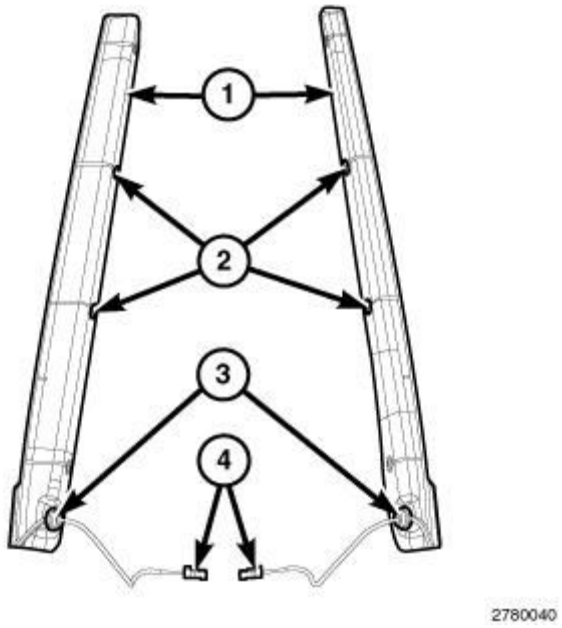

Fig. 14: Two Pinch Sensors, Five Plastic Clips, Wire And Connector & Grommet
Courtesy of CHRYSLER GROUP, LLC

Vehicles equipped with an optional power operated liftgate system use two pinch sensors (1) (also known as anti-pinch sensors). One sensor is located on each side jamb of the liftgate, extending from the belt line to just below the liftgate header. Externally, these pinch sensors appear very similar to a synthetic rubber weather strip

that is secured by five plastic clips (2) to the side jamb of the liftgate. However, internally each pinch sensor has two electrically conductive membranes (also known as tape switches), a diagnostic resistor and a plastic carrier. The right side pinch sensor also contains a thermistor.

Each pinch sensor has a short pigtail wire and connector (4) that exits through a grommet (3) on the lower end of the inboard side of each unit and passes through a dedicated hole in the side jamb of the liftgate near the belt line into the interior of the liftgate. Concealed within the liftgate each sensor is connected to the vehicle electrical system through a dedicated take out and connector of the liftgate wire harness.

A pinch sensor cannot be adjusted or repaired. If damaged or ineffective, the entire sensor unit must be replaced.

OPERATION

OPERATION

The two pinch sensors (also known as anti-pinch sensors) are tactile sensors that are able to react to the slightest pressure. They are used to provide additional protection against vehicle damage or personal injury caused by obstructions between the liftgate and the liftgate opening of the vehicle. The interior of each sensor contains two electrically conductive polymer material membranes that will close a circuit when the sensor is contacted.

During a **close** cycle of the power liftgate, if either of the two pinch sensors come in contact with an obstacle, the pinch sensor circuit is closed. The closed sensor circuit provides a sense input to the Power LiftGate Module (PLGM) (also known as the Power LiftGate/PLG control module) indicating there is an obstruction in the path of the closing liftgate. The PLGM will then stop the liftgate **close** cycle immediately and return the liftgate to the full open position.

The thermistor integral to the right pinch sensor provides a temperature sense input that allows the PLGM to monitor and compensate for extreme temperature conditions and provide proper power liftgate operation. This temperature sense input is only provided when the pinch sensor is an open circuit because, when the sensor is a closed circuit, the thermistor is shorted. As the outside temperature increases, the resistance reading decreases. As temperature decreases, the resistance reading increases.

The pinch sensors are wired in series with the PLGM, so if either pinch sensor becomes a closed or shorted circuit the module will act as though both sensors are closed circuits. Each sensor also contains a diagnostic resistor, which allows the PLGM to diagnose a problem in the pinch sensor circuits and store a Diagnostic Trouble Code (DTC) for any problem it detects.

The hard wired input and output circuits of the power liftgate pinch sensors may be diagnosed using conventional diagnostic tools and procedures. Refer to the appropriate wiring information. However, conventional diagnostic methods will not prove conclusive in the diagnosis of the electronic controls and communication that provide some features of the power liftgate system. The most reliable, efficient and accurate means to diagnose the power liftgate pinch sensors or the electronic controls and communication related to operation of the power liftgate system requires the use of a diagnostic scan tool. Refer to the appropriate diagnostic information.

DIAGNOSIS AND TESTING

DIAGNOSIS AND TESTING - PINCH SENSOR

SENSOR

WARNING: To avoid serious or fatal injury during testing of pinch sensor operation, use extreme caution to keep away from the closing liftgate.

To verify power liftgate system pinch sensor operation:

1. Remove the liftgate trim panel to access and disconnect the inoperable pinch sensor's electrical connector. Using an ohmmeter, check for continuity on the two wires leading from the pinch sensor. While depressing either pinch sensor, continuity should be less than 400 ohms. While NOT depressing the left pinch sensor, continuity should be 10, 000 ohms ± 500 ohms. While NOT depressing the right pinch sensor, continuity will vary with ambient temperature (see table below), but should always be greater than 4000 ohms. If the measured pinch sensor meets the stated continuity, then it is OK at this time. If the measured continuity is outside of the stated ranges, replace the pinch sensor.
2. Remove the lower trim from the inside of the liftgate to access and disconnect the pinch sensor pigtail wire connectors from the liftgate wire harness. Using an ohmmeter, check the resistance between the two pins of each pinch sensor pigtail wire connector. When the sensor is depressed (contacts are closed), the resistance should be 300 ohms maximum. When the pinch sensor is released (contacts are open) the resistance should be 10, 000 ohms minimum. If not OK, replace the ineffective pinch sensor.

THERMISTOR

The thermistor portion of the right pinch sensor provides a temperature sense input to the Power LiftGate Module (PLGM) (also known as the Power LiftGate/PLG control module). The temperature input is only provided when the pinch sensor is in a non-pinched (contacts are open) condition. When the pinch sensor contacts are closed (sensor is pinched) this input is unavailable because the thermistor is shorted. Remove the lower trim from the inside of the liftgate to access and disconnect the right pinch sensor pigtail wire connector from the liftgate wire harness. Refer to the **Right Pinch Sensor Thermistor Resistance** table and check between the two terminals of the sensor connector for the proper thermistor resistance at the listed temperatures. If the sensor fails this test, replace the right pinch sensor unit.

RIGHT PINCH SENSOR THERMISTOR RESISTANCE TABLE

RIGHT PINCH SENSOR THERMISTOR RESISTANCE	
TEMPERATURE	**RESISTANCE**
0°C (32°F)	29330 - 35990 Ohms
25°C (77°F)	9120 - 10880 Ohms
40°C (104°F)	4900 - 5750 Ohms

REMOVAL

REMOVAL

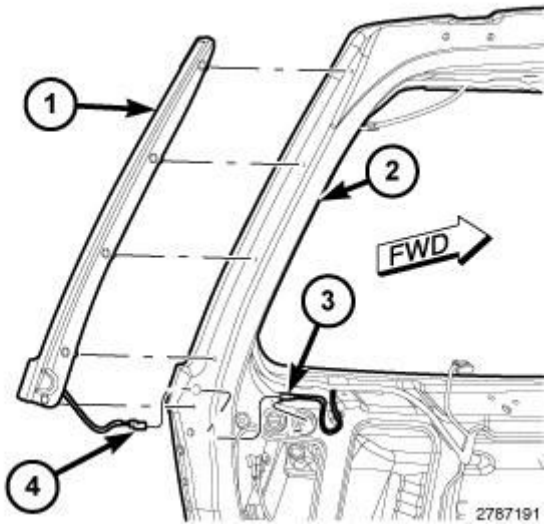

Fig. 15: Liftgate, Pigtail Wire Connector, Harness Connector & Pinch Sensor
Courtesy of CHRYSLER GROUP, LLC

1. Open the liftgate (2).
2. Disconnect and isolate the battery negative cable.
3. Remove the lower trim from the liftgate inner panel. Refer to **PANEL, TRIM, REMOVAL** .
4. Reach through the access hole in the liftgate inner panel to access and disconnect the pinch sensor pigtail wire connector (4) from the liftgate wire harness connector (3).
5. Disengage the five plastic retainers of the pinch sensor (1) from the liftgate shut face.
6. Disengage the pigtail wire grommet on the lower end of the pinch sensor from the clearance hole in the liftgate shut face.
7. While guiding the pigtail wire out through the clearance hole, remove the pinch sensor from the liftgate.

INSTALLATION

INSTALLATION

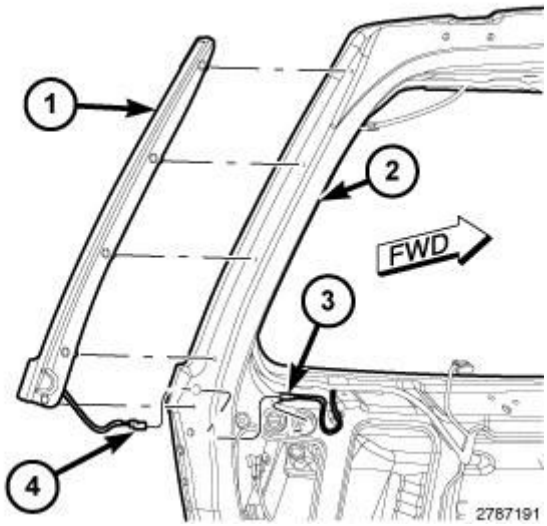

Fig. 16: Liftgate, Pigtail Wire Connector, Harness Connector & Pinch Sensor
Courtesy of CHRYSLER GROUP, LLC

1. While guiding the pinch sensor pigtail wire and connector (4) through the clearance hole in the liftgate (2) shut face, position the sensor to the liftgate.
2. Engage the pigtail wire grommet on the lower end of the pinch sensor into the clearance hole in the liftgate shut face.
3. Engage the five plastic retainers of the pinch sensor (1) to the holes in the liftgate shut face.
4. Reach through the access hole in the liftgate inner panel to access and reconnect the pinch sensor pigtail wire connector to the liftgate wire harness connector (3).
5. Reinstall the lower trim onto the liftgate inner panel. Refer to **PANEL, TRIM, INSTALLATION** .
6. Reconnect the battery negative cable.

SWITCH, D-PILLAR

DESCRIPTION

DESCRIPTION

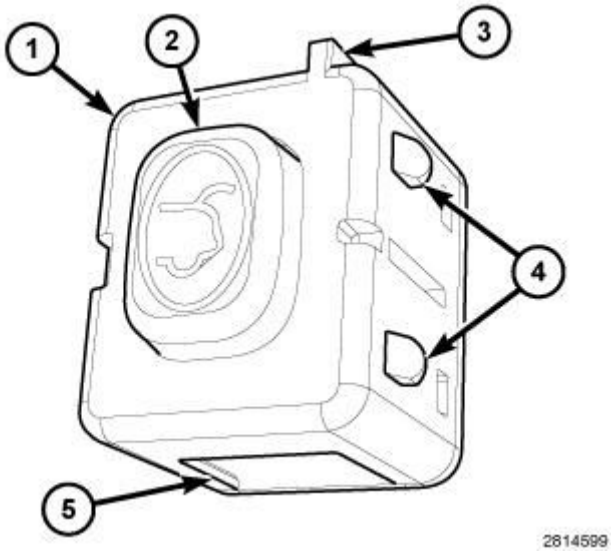

Fig. 17: Power Liftgate Switch, Push Button, Snap Features & Connector Receptacle
Courtesy of CHRYSLER GROUP, LLC

The rear power liftgate switch (1) (also known as the D-pillar switch) is located on the left quarter trim panel, in a mounting hole bezel located between the left rear inner wheel housing and the D-pillar. This switch has a single momentary push button (2) and is used to provide a **Close** request to the Power LiftGate Module (PLGM).

The switch is constructed of molded plastic and the push button has a smooth, concave face with an International Control and Display Symbol icon for **Liftgate Release** or **Liftgate Open** applied to it. The switch housing is secured within the receptacle on the back of the switch mounting bezel by two snap features (4) integral to each side of the switch housing. The top of the switch housing has an integral spline (3) that ensures proper switch orientation when it engages a keyway integral to the switch bezel receptacle.

The bottom of the switch housing has an integral connector receptacle (5) containing terminal pins that connect the switch to the vehicle electrical system through a dedicated take out and connector of the body wire harness.

The rear power liftgate switch cannot be repaired and, if ineffective or damaged, it must be replaced.

OPERATION

OPERATION

The rear power liftgate switch (also known as the D-pillar switch) is a momentary, push button actuated, resistor multiplexed switch. The switch receives source voltage from the Power LiftGate Module (PLGM) through an internal pull up on a power liftgate logic return circuit. The switch then provides a multiplexed output to the PLGM on a liftgate switch rear signal circuit. The output to the PLGM indicates whether the switch push button is depressed or released.

When the switch push button is depressed, it provides a **Close** request to the PLGM. If the push button is depressed a second time, while the PLGM is in the process of closing the liftgate, the PLGM will automatically

reverse the liftgate to the full open position. This switch will NOT open the liftgate if it is already closed.

The rear power liftgate switch as well as the hard wired inputs and outputs of the switch may be diagnosed using conventional diagnostic tools and procedures. Refer to the appropriate wiring information. However, conventional diagnostic methods will not prove conclusive in the diagnosis of the power liftgate system or the electronic controls and communication between other modules and devices that provide some features of the power liftgate system. The most reliable, efficient, and accurate means to diagnose the power liftgate system or the electronic controls and communication related to rear power liftgate switch operation requires the use of a diagnostic scan tool. Refer to the appropriate diagnostic information.

REMOVAL

REMOVAL

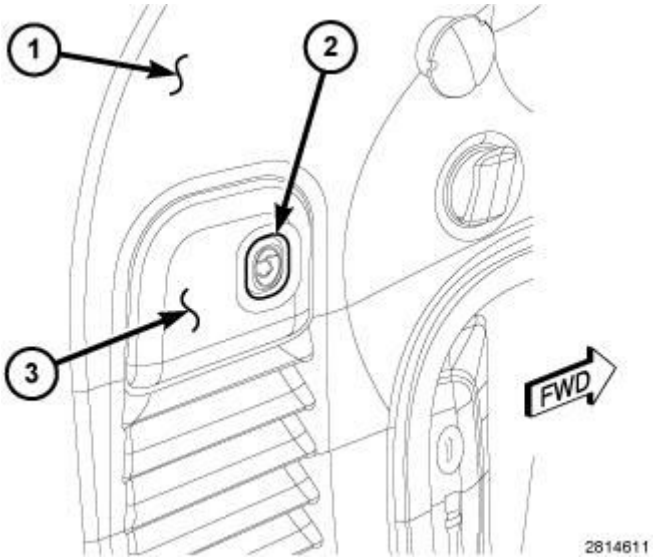

Fig. 18: Power Liftgate Switch, Bezel & Quarter Trim Panel
Courtesy of CHRYSLER GROUP, LLC

1. Disconnect and isolate the battery negative cable.
2. Using a trim stick or another suitable wide flat-bladed tool, carefully pry the edges of the rear power liftgate switch (2) bezel (3) away from the left quarter trim panel (1) far enough to disengage the two integral latch features of the bezel from the quarter trim panel bezel opening.
3. Pull the switch and bezel unit away from the quarter trim panel far enough to access and disconnect the body wire harness connector from the connector receptacle on the bottom of the switch.

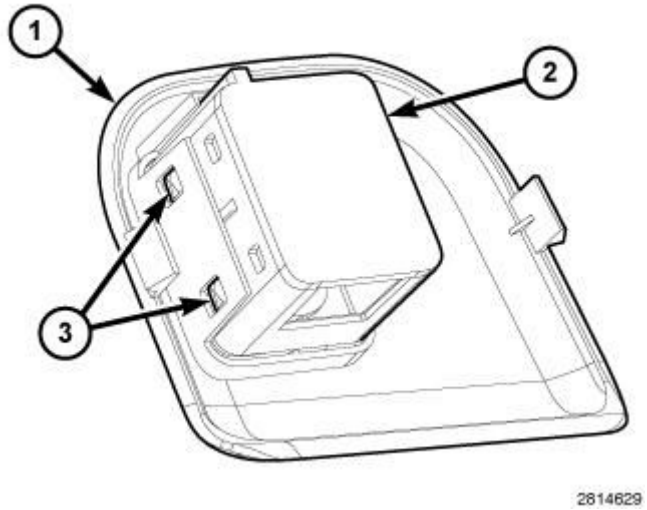

Fig. 19: Bezel, Switch & Two Snap Features
Courtesy of CHRYSLER GROUP, LLC

4. Using a trim stick or another suitable wide flat-bladed tool, carefully pry the sides of the switch receptacle on the back of the bezel (1) away from the switch (2) far enough to release the two snap features (3) on each side of the switch housing.
5. Remove the rear power liftgate switch from the receptacle on the back of the switch bezel.

INSTALLATION

INSTALLATION

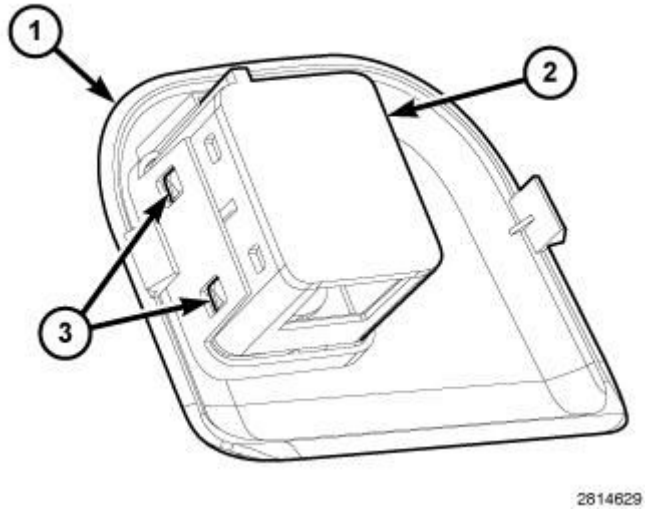

Fig. 20: Bezel, Switch & Two Snap Features
Courtesy of CHRYSLER GROUP, LLC

1. Position the rear power liftgate switch (2) to the receptacle on the back of the switch bezel (1) being

certain to align the spline on the top of the switch housing with the keyway at the top of the receptacle.

2. Using hand pressure, press the switch firmly and evenly into the receptacle until the two snap features (3) on each side of the switch housing snap into place and the switch is fully engaged in the receptacle.

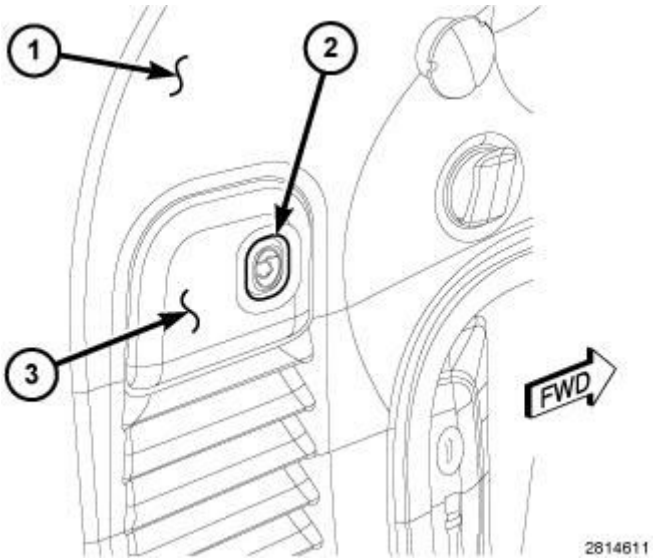

Fig. 21: Power Liftgate Switch, Bezel & Quarter Trim Panel
Courtesy of CHRYSLER GROUP, LLC

3. Position the switch (2) and switch bezel (3) unit close enough to the bezel opening in the left quarter trim panel (1) to access and connect the body wire harness connector to the connector receptacle on the bottom of the switch housing.
4. Align the switch bezel to the quarter trim panel bezel opening and, using hand pressure, press the bezel firmly and evenly into the opening until the two latch features integral to the back of the bezel are fully engaged.
5. Reconnect the battery negative cable.

SWITCH, EXTERIOR HANDLE

DESCRIPTION

DESCRIPTION

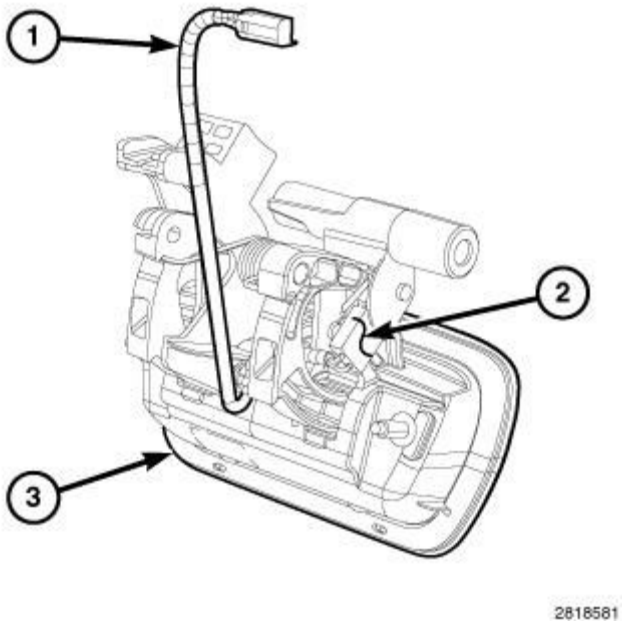

Fig. 22: Power Liftgate Exterior Handle Switch, Latch Handle Assembly & Wire
Courtesy of CHRYSLER GROUP, LLC

The power liftgate exterior handle switch (2) is integral to a unique liftgate exterior latch handle assembly (3). Externally the latch handle and the handle bezel or housing appear identical to the latch handle used without a power liftgate option. However, within the liftgate the power liftgate handle includes the dedicated exterior handle switch and it has no mechanical cables or linkage connecting it to the liftgate latch. The exterior handle switch is mechanically actuated by the exterior latch handle, and is used to provide an **Open** request to the Power LiftGate Module (PLGM).

The exterior handle switch is a micro switch. The switch housing is constructed of molded plastic and includes a short pigtail wire (1) and connector. The switch housing is secured to one of the pivot stanchions on the back of the handle bezel or housing. The switch pigtail wire and connector connect the switch to the vehicle electrical system through a dedicated take out and connector of the liftgate wire harness.

The power liftgate exterior handle switch cannot be repaired or adjusted. If the switch is ineffective or damaged, the entire liftgate exterior latch handle unit must be replaced.

OPERATION

OPERATION

The power liftgate exterior handle switch is a momentary, plunger actuated, resistor multiplexed micro switch. The switch receives source voltage from the Power LiftGate Module (PLGM) through an internal pull up on a power liftgate logic return circuit. The switch then provides a multiplexed output to the PLGM on a liftgate switch MUX input 2 circuit. The output to the PLGM indicates whether the switch plunger is depressed or extended. When the switch plunger is extended, it provides an **Open** request to the PLGM.

An exterior handle switch input to the PLGM will begin a power **Open** cycle of the liftgate if the liftgate is fully

closed when it occurs, will cancel a power **Open** cycle and put the power liftgate in manual operating mode if the liftgate is already in a power **Open** cycle when it occurs, will reverse the liftgate to open if it occurs during a power **Close** cycle, or may be used to home the latch as described in the Power Liftgate Latch Homing standard procedure. Refer to **LATCH, LIFTGATE, STANDARD PROCEDURE**.

The power liftgate exterior handle switch as well as the hard wired inputs and outputs of the switch may be diagnosed using conventional diagnostic tools and procedures. Refer to the appropriate wiring information. However, conventional diagnostic methods will not prove conclusive in the diagnosis of the power liftgate system or the electronic controls and communication between other modules and devices that provide some features of the power liftgate system. The most reliable, efficient, and accurate means to diagnose the power liftgate system or the electronic controls and communication related to power liftgate exterior handle switch operation requires the use of a diagnostic scan tool. Refer to the appropriate diagnostic information.

REMOVAL

REMOVAL

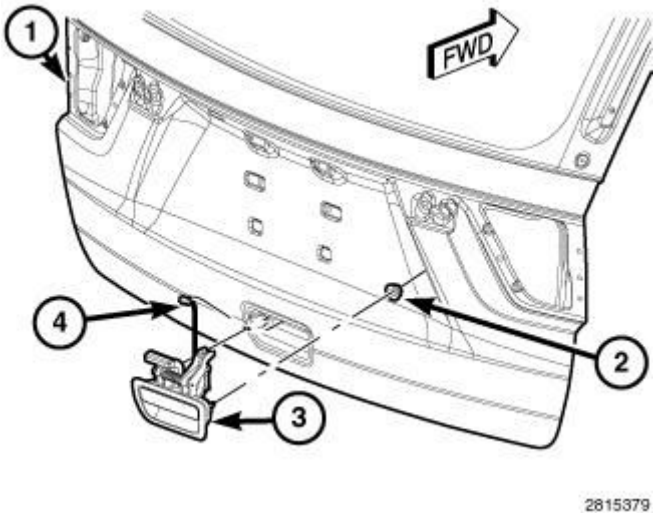

Fig. 23: Liftgate, Exterior Handle, Two Nuts & Wire Connector
Courtesy of CHRYSLER GROUP, LLC

1. Open the liftgate.
2. Disconnect and isolate the battery negative cable.
3. Remove the power liftgate latch from the liftgate (1) inner panel. Refer to **LATCH, LIFTGATE, REMOVAL**.
4. Disconnect the power liftgate exterior handle (3) switch pigtail wire connector (4) from the liftgate wire harness connector.
5. Remove the two nuts (2) that secure the two studs on the back of the handle housing to the inside of the liftgate outer panel.
6. From the outside of the liftgate, remove the power liftgate exterior handle and switch through the liftgate outer panel latch handle pocket as a unit.

INSTALLATION

INSTALLATION

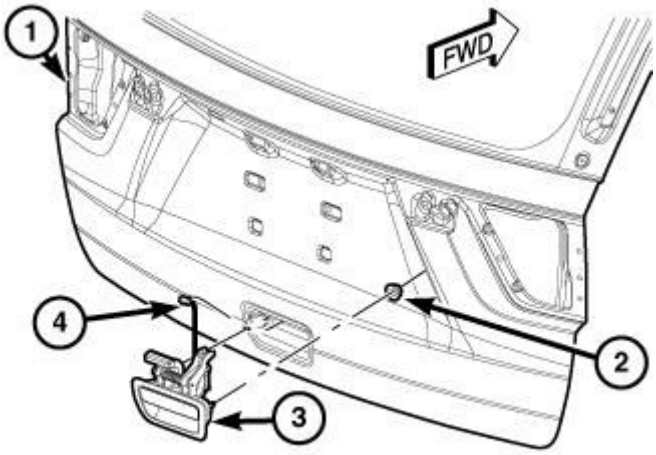

2815379

Fig. 24: Liftgate, Exterior Handle, Two Nuts & Wire Connector
Courtesy of CHRYSLER GROUP, LLC

1. Position the power liftgate exterior handle (3) and switch into the liftgate outer panel (1) latch handle pocket as a unit. Be certain not to pinch the exterior handle switch pigtail wire (4) between the handle housing and the liftgate outer panel.
2. Install and tighten the two nuts (2) that secure the two studs on the back of the handle housing to the inside of the liftgate outer panel. Tighten the nuts securely.
3. Reconnect the power liftgate exterior handle switch pigtail wire connector to the liftgate wire harness connector.
4. Reinstall the power liftgate latch onto the liftgate. Refer to **LATCH, LIFTGATE, INSTALLATION**.
5. Reconnect the battery negative cable.

SWITCH, OVERHEAD CONSOLE

DESCRIPTION

DESCRIPTION

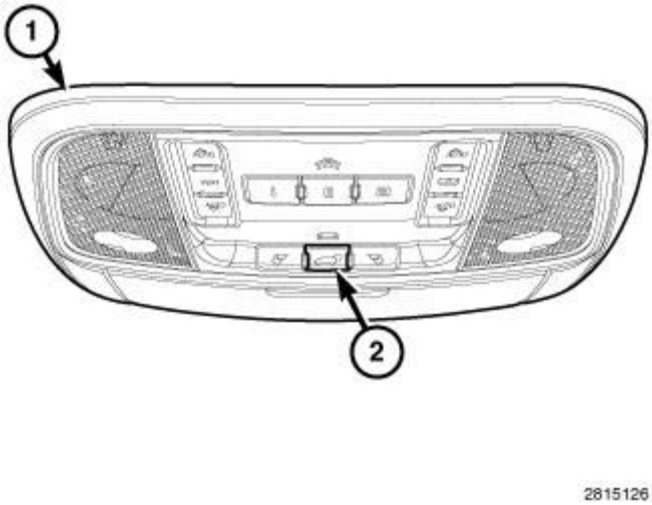

Fig. 25: Front Power Liftgate Switch
Courtesy of CHRYSLER GROUP, LLC

The front power liftgate switch (2) (also known as the overhead console switch) is located in the forward switch pod of the overhead console (1), between the two reading lamp switches. This switch has a single momentary push button and is used to provide a toggling **Open** or **Close** request to the Power LiftGate Module (PLGM).

The switch is constructed of molded plastic and the push button has a smooth face with an International Control and Display Symbol icon for **Liftgate Release** or **Liftgate Open** applied to it. The switch button has instrument panel dimmer controlled Light Emitting Diode (LED) back lighting for night visibility.

The front power liftgate switch is integral to the overhead console switch pod assembly on the printed circuit board for the overhead console. The switch cannot be repaired or adjusted and, if ineffective or damaged, the entire overhead console unit must be replaced. Refer to **CONSOLE, OVERHEAD, FRONT, REMOVAL** .

OPERATION

OPERATION

The front power liftgate switch (also known as the overhead console switch) is a momentary, push button actuated, resistor multiplexed switch. The switch has a path to ground at all times through an eyelet terminal secured by a screw to the body sheet metal within the passenger compartment. The switch provides a multiplexed output to the PLGM on a liftgate switch front signal circuit. The PLGM reads the switch output through an internal pull up. The output to the PLGM indicates whether the switch push button is depressed or released.

When the switch push button is depressed, it provides an **Open** or a **Close** request to the PLGM. The PLGM interprets the request based upon the present status of the liftgate. If the monitored status of the liftgate is not closed, the front switch input is interpreted as a **Close** request. If the status of the liftgate is not opened, the front switch input is interpreted as an **Open** request. If the switch button is depressed a second time, while the PLGM is in the process of opening or closing the liftgate, the PLGM will automatically reverse the liftgate to the full open position.

The front power liftgate switch as well as the hard wired inputs and outputs of the switch may be diagnosed using conventional diagnostic tools and procedures. Refer to the appropriate wiring information. However, conventional diagnostic methods will not prove conclusive in the diagnosis of the power liftgate system or the electronic controls and communication between other modules and devices that provide some features of the power liftgate system. The most reliable, efficient, and accurate means to diagnose the power liftgate system or the electronic controls and communication related to front power liftgate switch operation requires the use of a diagnostic scan tool. Refer to the appropriate diagnostic information.

2014 ACCESSORIES AND EQUIPMENT

Power Liftgate Module (PLGM) - Electrical Diagnostics - Cherokee

DIAGNOSTIC CODE INDEX

DIAGNOSTIC CODE INDEX

DTC	Description
B1882-92	LIFTGATE POSITION SENSOR - PERFORMANCE OR INCORRECT OPERATION
B1886-11	LIFTGATE PINCH SENSOR - CIRCUIT SHORT TO GROUND
B1886-12	LIFTGATE PINCH SENSOR - CIRCUIT SHORT TO BATTERY
B188C-11	LIFTGATE CONTROL CIRCUIT 1 - CIRCUIT SHORT TO GROUND
B188C-12	LIFTGATE CONTROL CIRCUIT 1 - CIRCUIT SHORT TO BATTERY
B188C-13	LIFTGATE CONTROL CIRCUIT 1 - CIRCUIT OPEN
B18E1-12	POWER LIFTGATE FRONT ZONE SWITCH - CIRCUIT SHORT TO BATTERY
B18E1-2A	POWER LIFTGATE FRONT ZONE SWITCH - STUCK
B1941-92	POWER LIFTGATE POSITION SENSOR 2 - PERFORMANCE OR INCORRECT OPERATION
B1945-11	POWER LIFTGATE PINCH SENSOR 2 - CIRCUIT SHORT TO GROUND
B1945-12	POWER LIFTGATE PINCH SENSOR 2 - CIRCUIT SHORT TO BATTERY
B1949-12	POWER LIFTGATE REAR ZONE SWITCH - CIRCUIT SHORT TO BATTERY
B1949-2A	POWER LIFTGATE REAR ZONE SWITCH - STUCK
B1952-00	POWER LIFTGATE DRIVE MOTOR - INCORRECT DIRECTION
B195F-11	POWER LIFTGATE CHIME CONTROL - CIRCUIT SHORT TO GROUND
B195F-12	POWER LIFTGATE CHIME CONTROL - CIRCUIT SHORT TO BATTERY
B1963-00	POWER LIFTGATE STRUT PERFORMANCE
B1964-11	POWER LIFTGATE SENSOR SUPPLY - CIRCUIT SHORT TO GROUND
B1964-12	POWER LIFTGATE SENSOR SUPPLY - CIRCUIT SHORT TO BATTERY
B1967-00	POWER LIFTGATE OPEN DIRECTION OVERCURRENT
B1968-00	POWER LIFTGATE OPEN DIRECTION - EXCESSIVE TIME
B1969-00	POWER LIFTGATE OPEN DIRECTION EXCESSIVE POSITION SENSOR COUNTS
B196A-00	POWER LIFTGATE CLOSE DIRECTION OVERCURRENT
B196B-00	POWER LIFTGATE CLOSE DIRECTION - EXCESSIVE TIME

B196C-00	POWER LIFTGATE CLOSE DIRECTION EXCESSIVE POSITION SENSOR COUNTS
B197F-11	POWER LIFTGATE LATCH CONTROL 1 - CIRCUIT SHORT TO GROUND
B197F-12	POWER LIFTGATE LATCH CONTROL 1 - CIRCUIT SHORT TO BATTERY
B197F-13	POWER LIFTGATE LATCH CONTROL 1 - CIRCUIT OPEN
B2199-16	BATTERY VOLTAGE CIRCUIT VOLTAGE BELOW THRESHOLD
B2199-17	BATTERY VOLTAGE - CIRCUIT VOLTAGE ABOVE THRESHOLD
B21DD-16	SYSTEM VOLTAGE - CIRCUIT VOLTAGE BELOW THRESHOLD
B21DD-17	SYSTEM VOLTAGE - CIRCUIT VOLTAGE ABOVE THRESHOLD
B224E-00	POWER LIFTGATE MODULE INTERNAL
B25B7-00	POWER LIFTGATE CLOSE DIRECTION - RATCHET PRIMARY SWITCH INVALID STATE
B25B8-00	POWER LIFTGATE OPEN DIRECTION - RATCHET SECONDARY SWITCH INVALID STATE
B25B9-00	POWER LIFTGATE CLOSE DIRECTION - RATCHET SECONDARY SWITCH INVALID STATE
B25BA-00	POWER LIFTGATE OPEN DIRECTION - SECTOR SWITCH INVALID STATE
B25BB-00	POWER LIFTGATE CLOSE DIRECTION - SECTOR SWITCH INVALID STATE
U0010-00	CAN INTERIOR BUS
U0011-00	CAN INTERIOR BUS OFF PERFORMANCE
U0140-00	LOST COMMUNICATION WITH BODY CONTROL MODULE
U0422-00	IMPLAUSIBLE DATA RECEIVED FROM BODY CONTROL MODULE

DIAGNOSIS AND TESTING

B1882-92-LIFTGATE POSITION SENSOR - PERFORMANCE OR INCORRECT OPERATION

For a complete wiring diagram, **refer to appropriate SYSTEM WIRING DIAGRAMS article** .

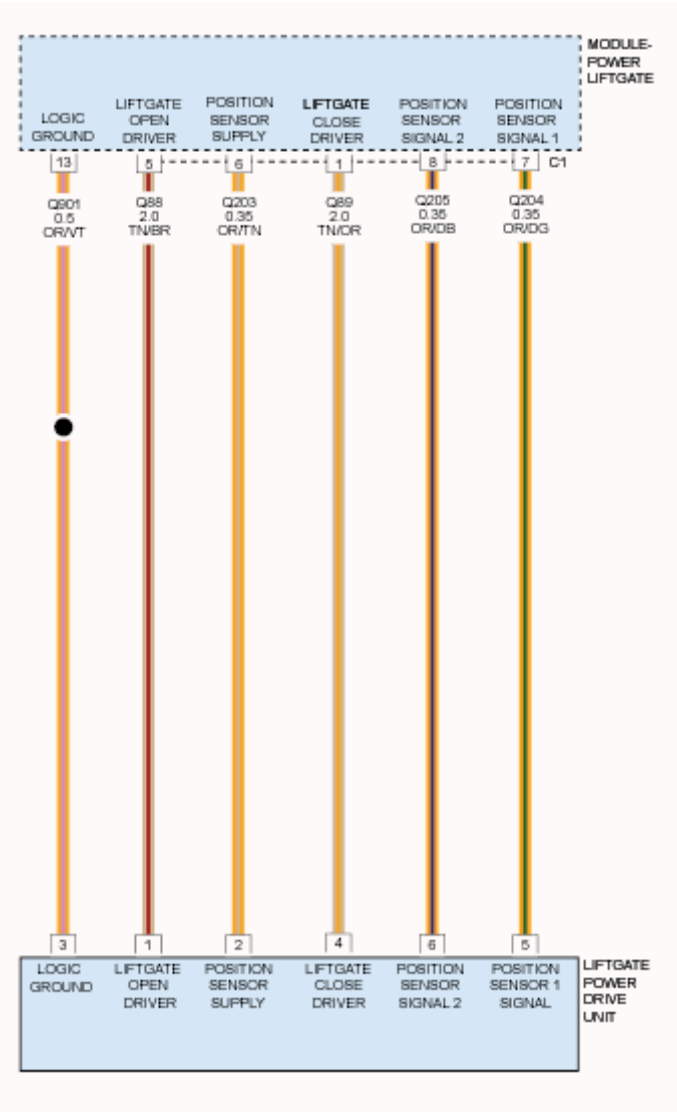

Fig. 1: Power Liftgate Position Sensor Signal, Supply, Liftgate Drive & Ground Circuit Diagram
Courtesy of CHRYSLER GROUP, LLC

WHEN MONITORED

Whenever the Power Liftgate Module is power opening or closing.

SET CONDITION

When the Power Liftgate Module senses the (Q204) Position Sensor Signal 1 circuit not pulsing during motor operation, this code will set.

POSSIBLE CAUSES

Possible Causes
(Q204) POSITION SENSOR SIGNAL 1 CIRCUIT SHORTED TO GROUND

(Q204) POSITION SENSOR SIGNAL 1 CIRCUIT OPEN
(Q204) POSITION SENSOR SIGNAL 1 CIRCUIT SHORTED TO VOLTAGE
(Q204) POSITION SENSOR SIGNAL 1 CIRCUIT SHORTED TO (Q205) POSITION SENSOR SIGNAL 2 CIRCUIT
(Q901) LOGIC GROUND CIRCUIT OPEN
(Q203) POSITION SENSOR SUPPLY CIRCUIT OPEN
(Q203) POSITION SENSOR SUPPLY CIRCUIT SHORTED TO GROUND
POWER LIFTGATE DRIVE UNIT
POWER LIFTGATE MODULE

DIAGNOSTIC TEST

1. **CHECK FOR DTCS**
    1. With the scan tool, record and erase the DTCs.
    2. Turn the ignition off, wait 10 seconds, then turn the ignition on.
    3. If possible, operate the liftgate several times.
    4. With the scan tool, read the Active DTCs.

    Does the scan tool display; B1882-92-LIFTGATE POSITION SENSOR - PERFORMANCE OR INCORRECT OPERATION?

    Yes

    - Go To 2.

    No

    - Test complete, the condition or conditions that originally set this DTC are not present at this time. Using the wiring diagrams as a guide, check all related splices and connectors for signs of water intrusion, corrosion, pushed out or bent terminals and poor pin fit.
    - Perform the BODY VERIFICATION TEST. Refer to **BODY VERIFICATION TEST** .
2. **(Q901) LOGIC GROUND OPEN**
    1. Turn the ignition off.
    2. Turn all lights off.
    3. Disconnect the Power Liftgate Drive Unit harness connector.
    4. Disconnect the Power Liftgate Module C2 harness connector.
    5. Measure the resistance of the (Q901) Logic Ground circuit between the Power Liftgate Drive Unit harness connector and the Power Liftgate Module C2 harness connector.

    Is the resistance below 5.0 Ohms between the (Q901) Logic Ground circuit?

    Yes

- Go To 3.

No

- Repair the (Q901) Logic Ground circuit for an open.
- Perform the BODY VERIFICATION TEST. Refer to **BODY VERIFICATION TEST** .

3. **(Q204) POSITION SENSOR SIGNAL 1 CIRCUIT SHORTED TO GROUND**
   1. Disconnect the Power Liftgate Module C1 harness connector.
   2. Measure the resistance between ground and the (Q204) Position Sensor Signal 1 circuit.

   Is the resistance below 10K Ohms?

   Yes

   - Repair the (Q204) Position Sensor Signal 1 circuit for a short to ground.
   - Perform the BODY VERIFICATION TEST. Refer to **BODY VERIFICATION TEST** .

   No

   - Go To 4.

4. **(Q204) POSITION SENSOR SIGNAL 1 CIRCUIT SHORTED TO VOLTAGE**
   1. Turn the ignition on.
   2. Measure the voltage between ground and the (Q204) Position Sensor Signal 1 circuit.

   Is there any voltage present?

   Yes

   - Repair the (204) Position Sensor Signal 1 circuit for a short to voltage.
   - Perform the BODY VERIFICATION TEST. Refer to **BODY VERIFICATION TEST** .

   No

   - Go To 5.

5. **(Q204) POSITION SENSOR SIGNAL 1 CIRCUIT OPEN**
   1. Turn the ignition off.
   2. Measure the resistance of the (Q204) Position Sensor Signal 1 circuit between the PLG C1 connector and the Drive Unit connector.

   Is the resistance below 5.0 Ohms?

   Yes

- Go To 6.

No

- Repair the (Q204) Position Sensor Signal 1 circuit for an open.
- Perform the BODY VERIFICATION TEST. Refer to **BODY VERIFICATION TEST** .

6. **(Q203) POSITION SENSOR SUPPLY CIRCUIT OPEN**

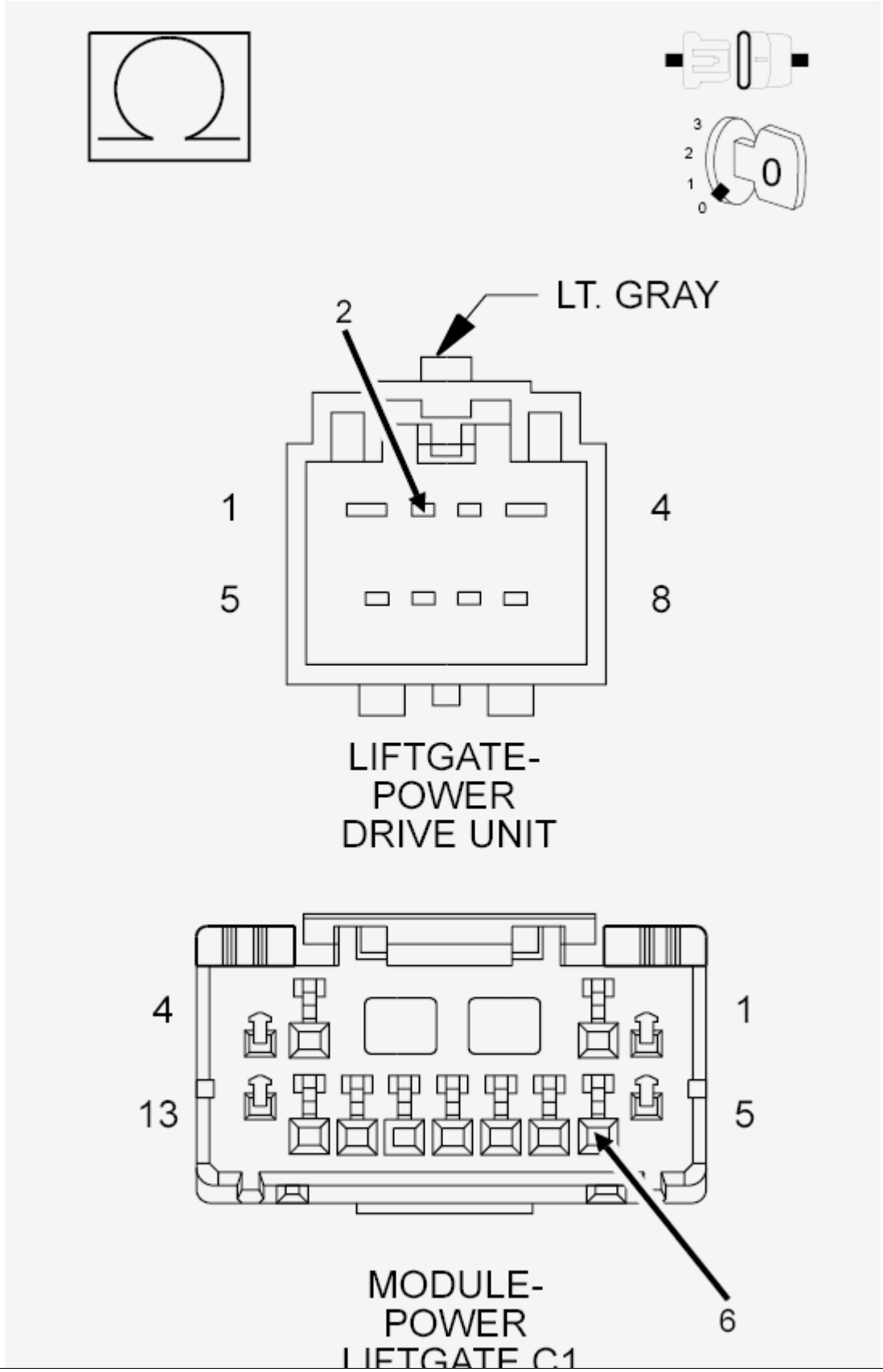
3
2
1
0
0
LT. GRAY
2
1
4
5
8
LIFTGATE-
POWER
DRIVE UNIT
4
1
13
5
6
MODULE-
POWER

Fig. 2: Checking Position Sensor Supply Circuit For Open
Courtesy of CHRYSLER GROUP, LLC

1. Measure the resistance of the (Q203) Position Sensor Supply circuit between the Power Liftgate Module C1 connector and the Power Liftgate Drive Unit connector.

   Is the resistance below 2.0 Ohms?

   Yes

   - Go To 7.

   No

   - Repair the (Q203) Position Sensor Supply circuit for an open.
   - Perform the BODY VERIFICATION TEST. Refer to **BODY VERIFICATION TEST** .

7. **(Q203) POSITION SENSOR SUPPLY CIRCUIT SHORTED TO GROUND**

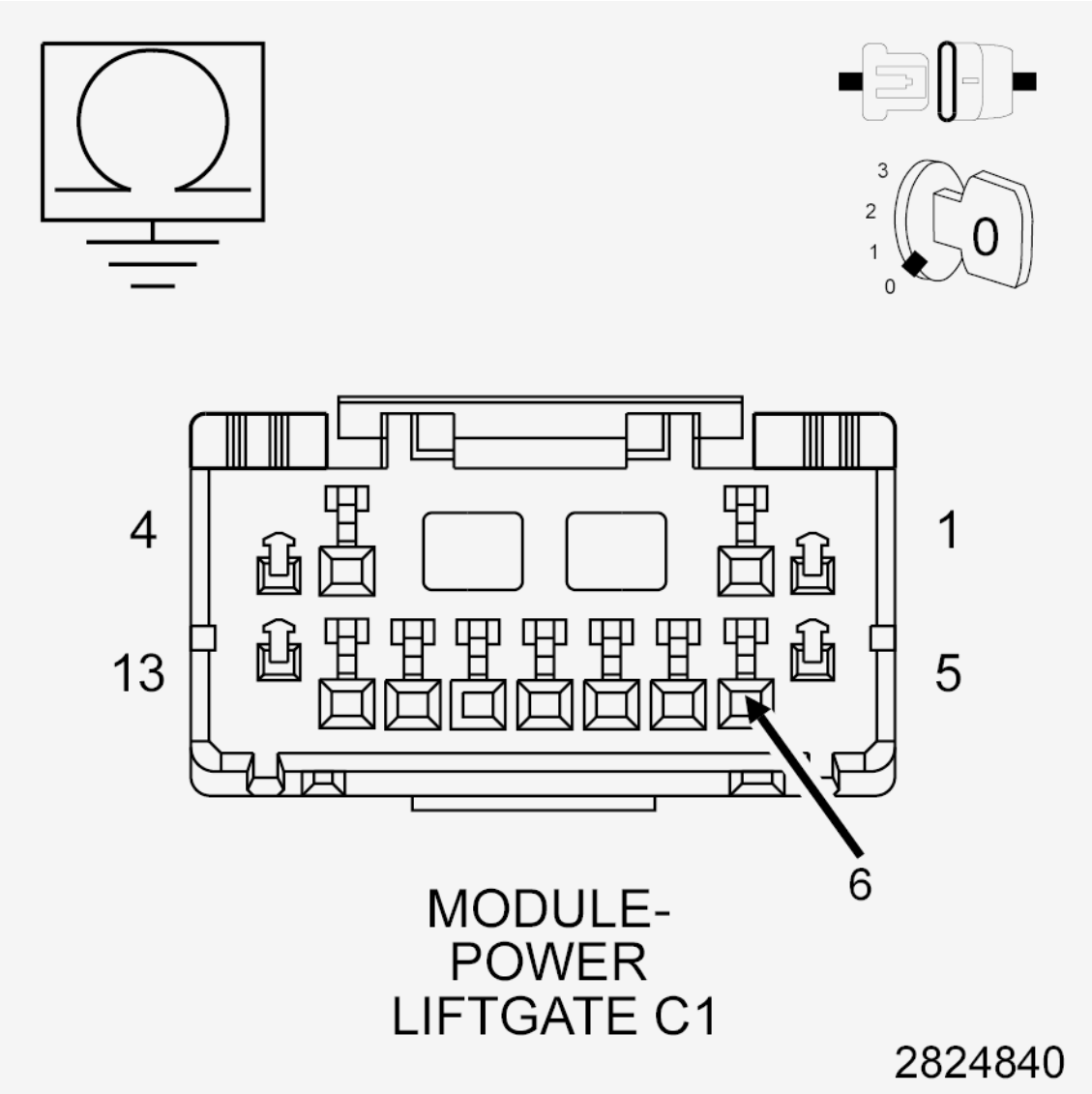

Fig. 3: Checking Position Sensor Supply Circuit For Short To Ground
Courtesy of CHRYSLER GROUP, LLC

1. Measure the resistance between ground and the (Q203) Position Sensor Supply circuit.

   Is the resistance below 10K Ohms?

   Yes

   - Repair the (Q203) Position Sensor Supply circuit for a short to ground.
   - Perform the BODY VERIFICATION TEST. Refer to **BODY VERIFICATION TEST** .

   No

   - Go To 8.

8. **(Q204) POSITION SENSOR SIGNAL 1 CIRCUIT SHORTED TO THE (Q205) POSITION SENSOR SIGNAL 2 CIRCUIT**
    1. Measure the resistance between the (Q204) Position Sensor Signal 1 circuit and the (Q205) Position Sensor Signal 2 circuit.

       Is the resistance below 10K Ohms?

       Yes

       - Repair the (Q204) Position Sensor Signal 1 circuit for a short to the (Q205) Position Sensor Signal 2 circuit.
       - Perform the BODY VERIFICATION TEST. Refer to **BODY VERIFICATION TEST** .

       No

       - Go To 9.
9. **POWER LIFTGATE MODULE**

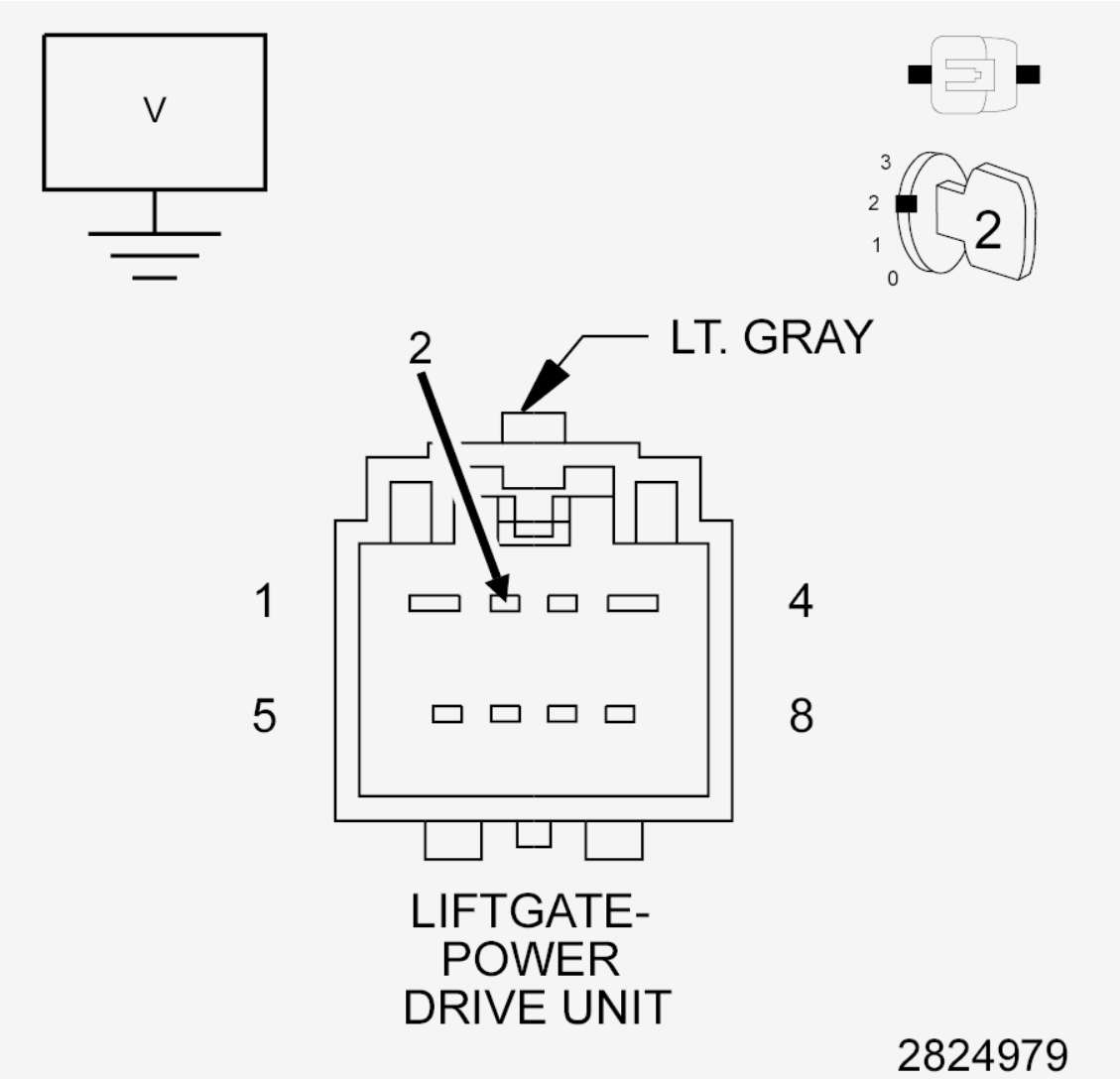

Fig. 4: Checking Power Liftgate Module Supply Circuit
Courtesy of CHRYSLER GROUP, LLC

1. Reconnect the Power Liftgate Module C1 harness connector.
2. Reconnect the Power Liftgate Module C2 harness connector.
3. Reconnect the Power Liftgate Drive Unit harness connector.
4. Turn the ignition on.
5. While back probing, measure the voltage between ground and the (Q203) Position Sensor Supply circuit in the Power Liftgate Drive Unit harness connector.

NOTE: **The graphic shows the terminal end of the connector, back probe the wire end.**

Is the voltage approximately 5.0 volts?

Yes

- Go To 10.

No

- Replace the Power Liftgate Module in accordance with the Service Information. Refer to **MODULE, POWER LIFTGATE CONTROL, REMOVAL** .
- Perform the BODY VERIFICATION TEST. Refer to **BODY VERIFICATION TEST** .

10. **POWER LIFTGATE MODULE**

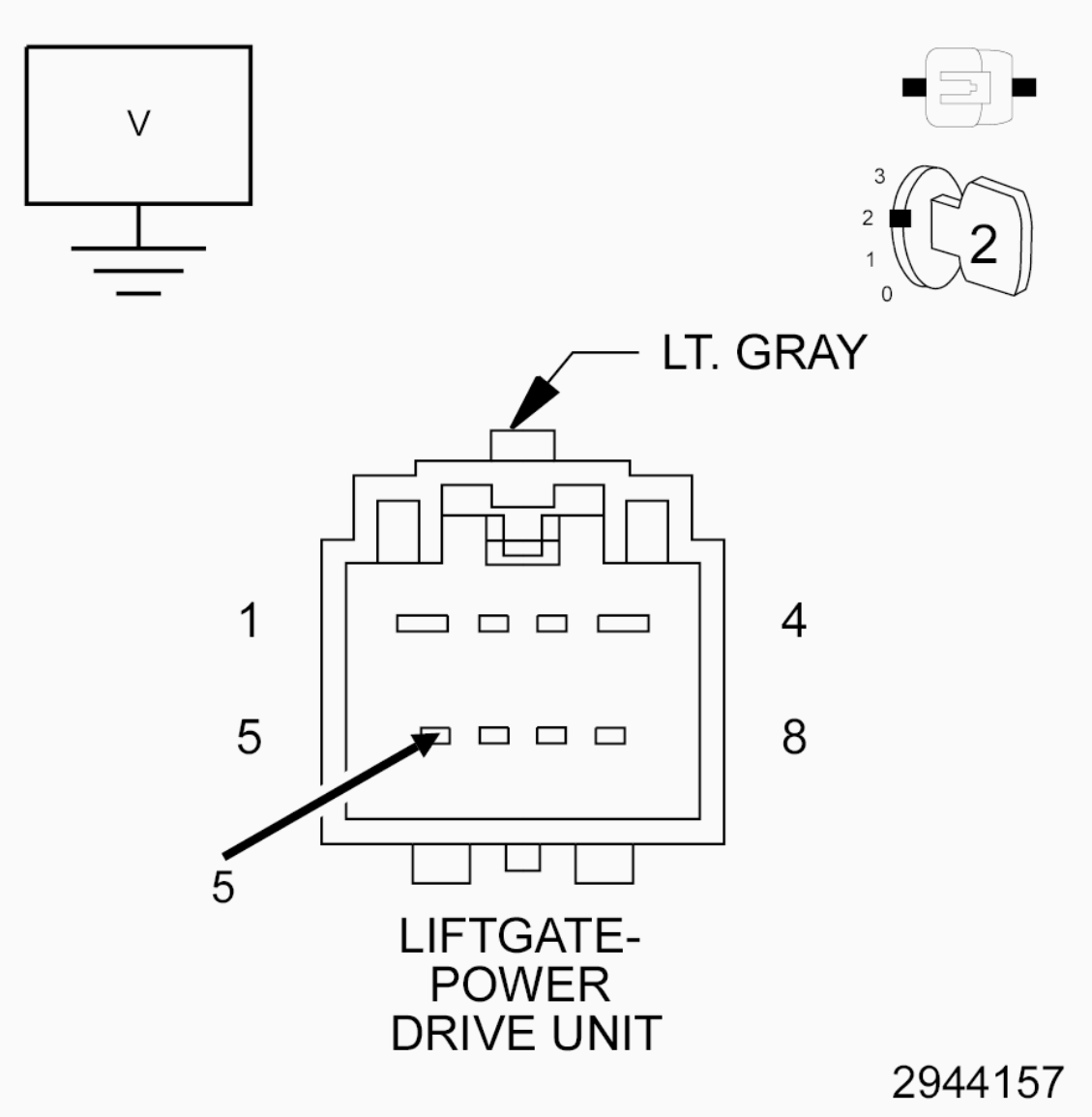

Fig. 5: Checking The Voltage Between Ground And The Position Sensor Signal 1 Circuit In The Power Liftgate Drive Unit Harness Connector
Courtesy of CHRYSLER GROUP, LLC

1. While back probing, measure the voltage between ground and the (Q204) Position Sensor Signal 1 circuit in the Power Liftgate Drive Unit harness connector.

   NOTE: The graphic shows the terminal end of the connector, back probe the wire end.

2. Slowly lower and raise the liftgate while observing the voltmeter.

   Does the voltage change from approximately 0.0 volts to 4.7 volts as the liftgate is moved?

   Yes

   - Test complete.
   - Perform the BODY VERIFICATION TEST. Refer to **BODY VERIFICATION TEST** .

   No

   - Replace the Power Liftgate Drive Unit in accordance with the Service Information. Refer to **DRIVE UNIT, POWER, REMOVAL** .
   - Perform the BODY VERIFICATION TEST. Refer to **BODY VERIFICATION TEST** .

B1886-11-LIFTGATE PINCH SENSOR - CIRCUIT SHORT TO GROUND

For a complete wiring diagram, **refer to appropriate SYSTEM WIRING DIAGRAMS article** .

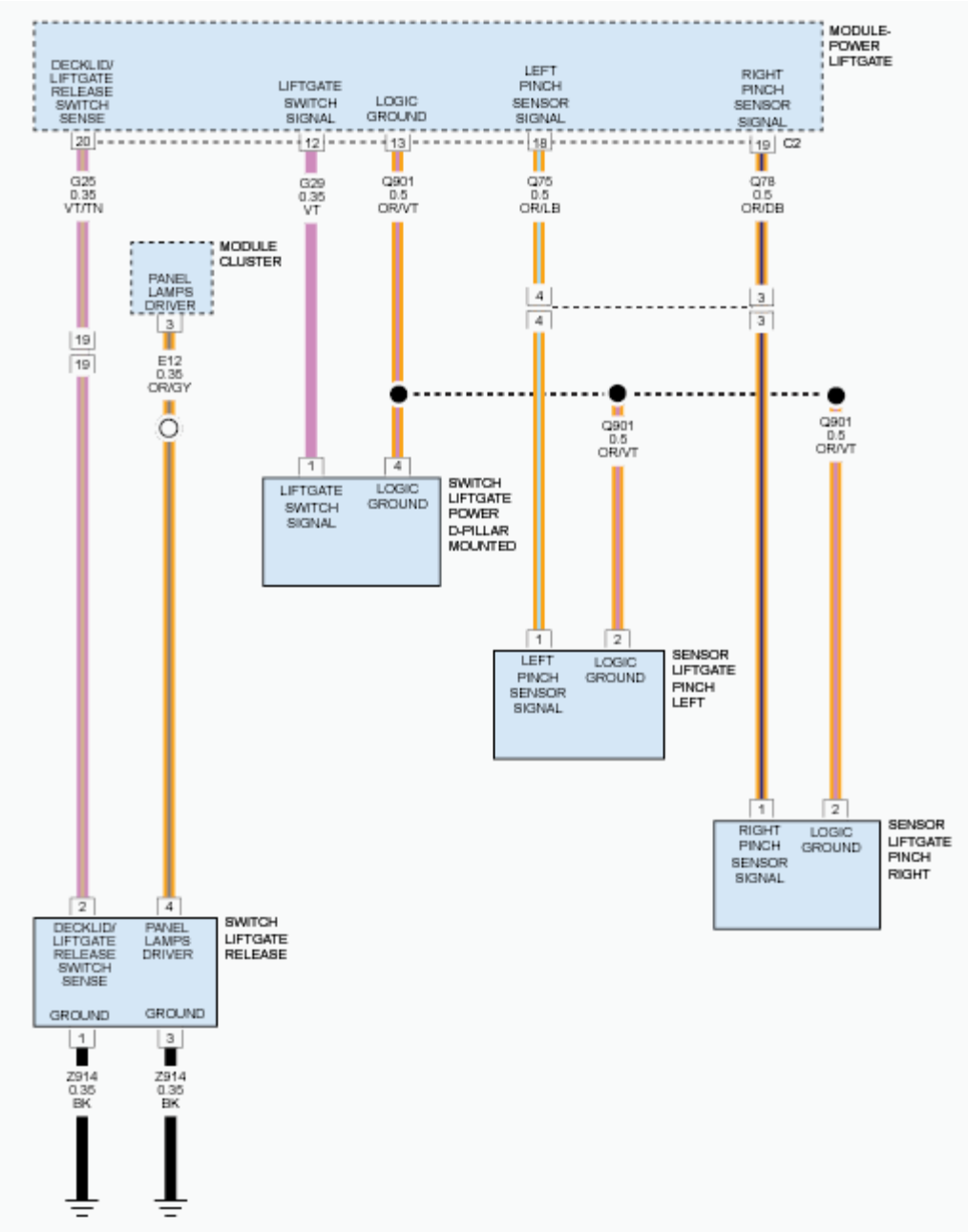

Fig. 6: Power Liftgate Module Pinch Sensor & Liftgate Switch Signal, Release Switch Sense & Ground Circuit Diagram
Courtesy of CHRYSLER GROUP, LLC

WHEN MONITORED

Whenever the Power Liftgate Module is awake.

SET CONDITION

The Power Liftgate Module has detected the Right Liftgate Pinch Sensor circuit voltage is under 0.5 of a volt

for over 15 seconds.

POSSIBLE CAUSES

Possible Causes
(Q78) RIGHT PINCH SENSOR SIGNAL CIRCUIT SHORTED TO GROUND
(Q78) RIGHT PINCH SENSOR SIGNAL CIRCUIT SHORTED TO THE (Q901) LOGIC GROUND CIRCUIT
RIGHT LIFTGATE PINCH SENSOR
POWER LIFTGATE MODULE

DIAGNOSTIC TEST

1. **DTC PRESENT**

   NOTE: The vehicle should be at room temperature when this test is performed.

   1. With the scan tool, record and erase the DTCs and any liftgate inhibitors.
   2. Cycle the ignition off, wait 20 seconds, then cycle the ignition on.
   3. Be sure the liftgate is closed.
   4. Open and close the liftgate several times.
   5. With the scan tool, read the Active DTCs.

   Does the scan tool display; B1886-11-LIFTGATE PINCH SENSOR - CIRCUIT SHORT TO GROUND?

   Yes

   - Go To 2

   No

   - Test complete, the condition or conditions that originally set this DTC are not present at this time. Using the wiring diagrams as a guide, check all related splices and connectors for signs of water intrusion, corrosion, pushed out or bent terminals and correct pin tension.
   - Perform the BODY VERIFICATION TEST. Refer to **STANDARD PROCEDURE** .

2. **RIGHT LIFTGATE PINCH SENSOR SHORTED**

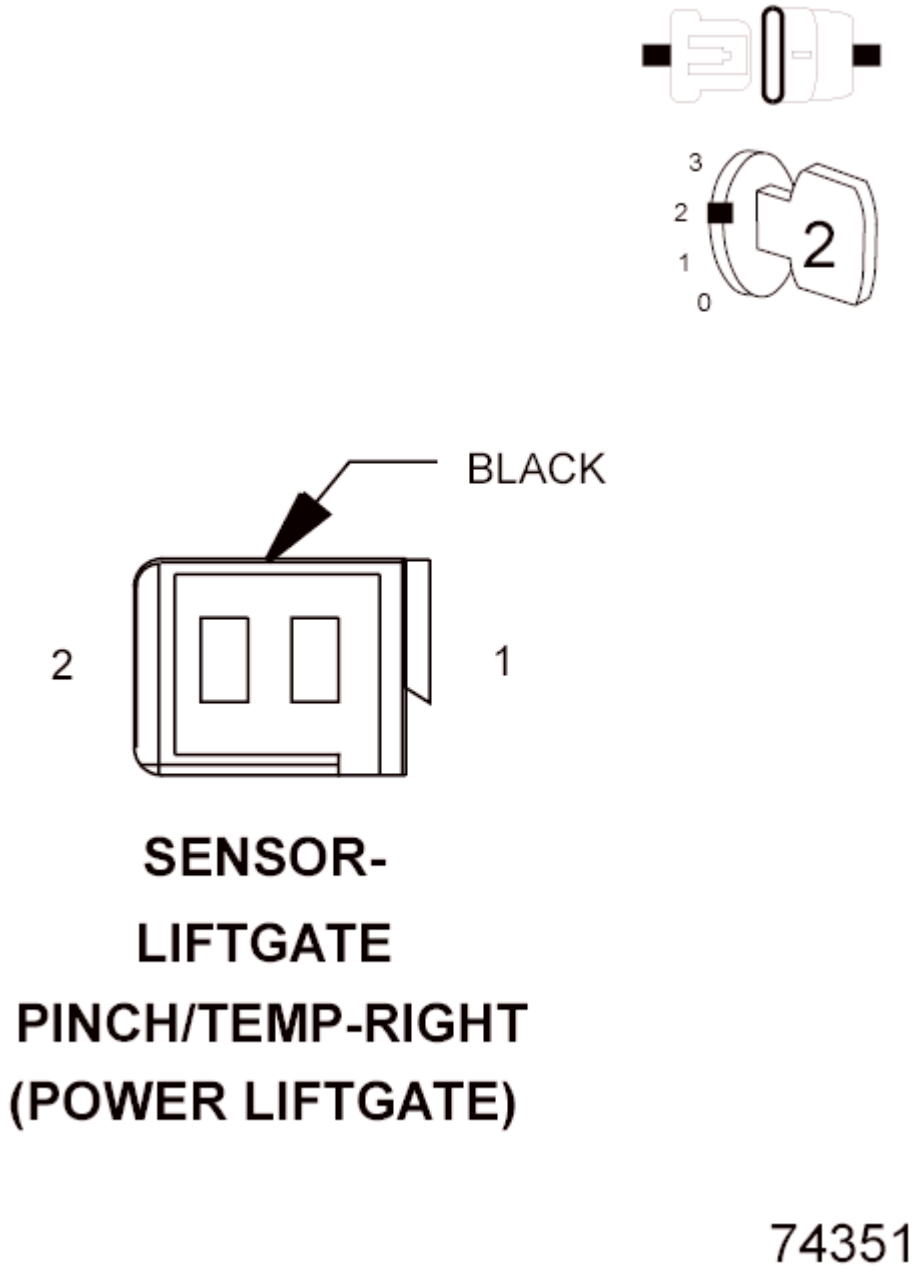

Fig. 7: Right Liftgate Pinch Sensor Harness Connector
Courtesy of CHRYSLER GROUP, LLC

1. Disconnect the Right Liftgate Pinch Sensor harness connector.
2. Erase the DTCs.
3. Cycle the ignition off, wait 10 seconds, then cycle the ignition on.
4. With the scan tool, read the Active DTCs.

   Does the scan tool display; B1886-11-LIFTGATE PINCH SENSOR - CIRCUIT SHORT TO GROUND?

Yes

- Go To3

No

- Replace the Right Liftgate Pinch Sensor in accordance with the service information. Refer to **SENSOR, PINCH, REMOVAL** .
- Perform the BODY VERIFICATION TEST. Refer to **STANDARD PROCEDURE** .

3. **(Q78) RIGHT PINCH SENSOR SIGNAL CIRCUIT SHORTED TO GROUND**

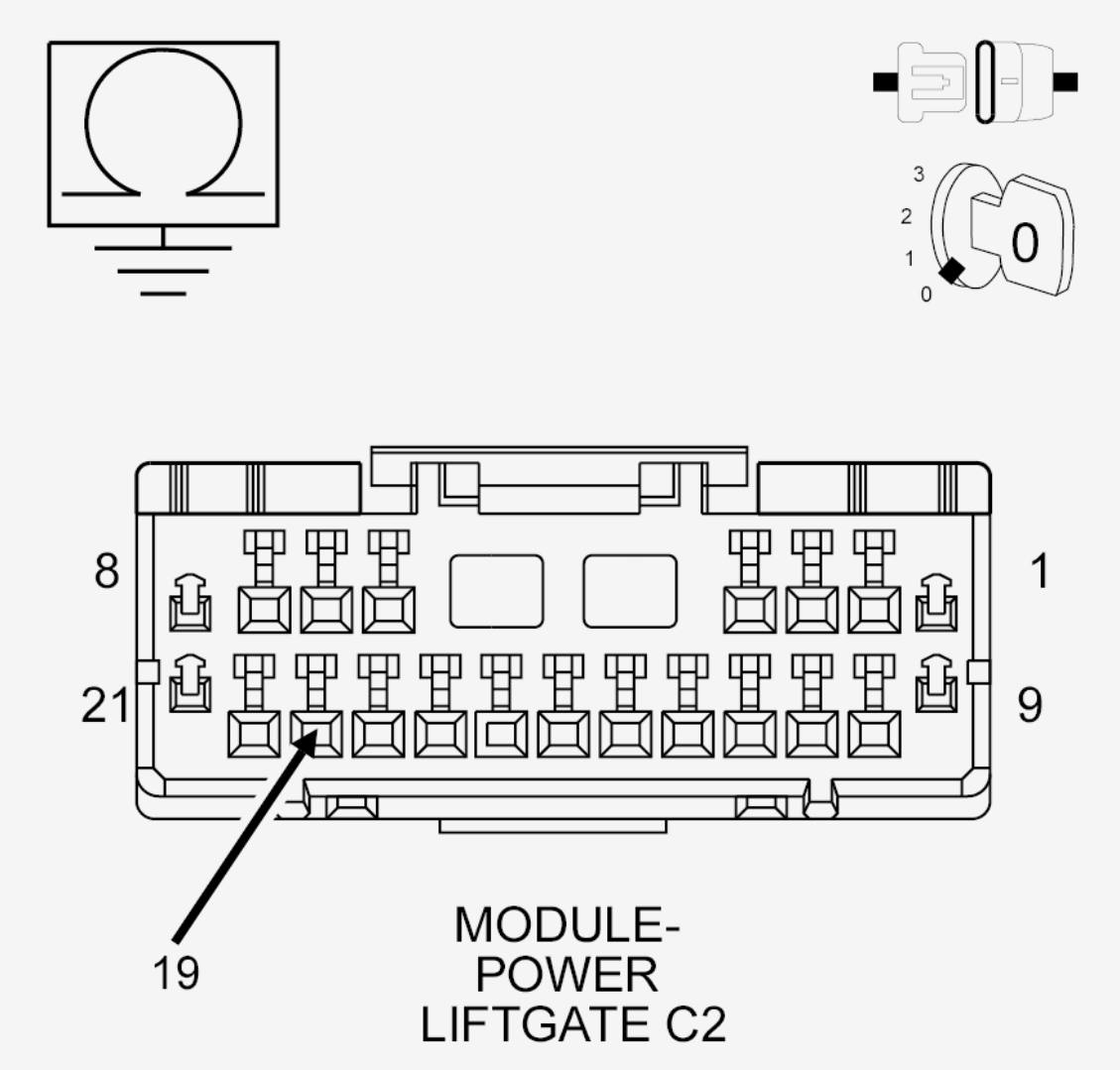

Fig. 8: Checking Right Pinch Sensor Signal Circuit For Short To Ground
Courtesy of CHRYSLER GROUP, LLC

1. Cycle the ignition off.
2. Disconnect the Power Liftgate Module C2 harness connector.

3. Measure the resistance between ground and the (Q78) Right Pinch Sensor Signal circuit.

   Is the resistance below 20K Ohms?

   Yes

   - Repair the (Q78) Right Pinch Sensor Signal circuit for a short to ground.
   - Perform the BODY VERIFICATION TEST. Refer to **STANDARD PROCEDURE** .

   No

   - Go To 4

4. **(Q78) RIGHT PINCH SENSOR SIGNAL CIRCUIT SHORTED TO THE (Q901) LOGIC GROUND CIRCUIT**

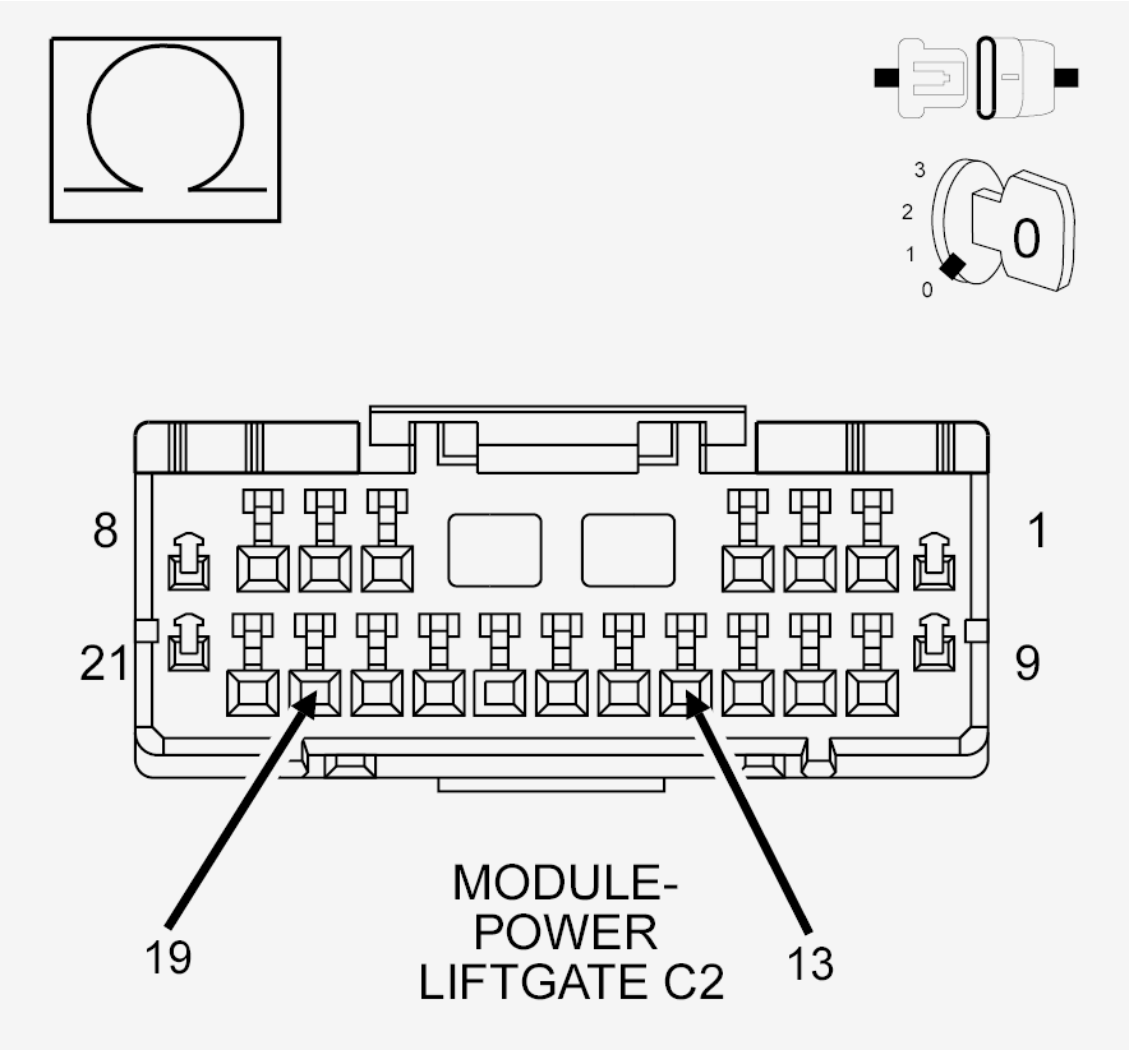

Fig. 9: Checking Right Pinch Sensor Signal Circuit For Short To Logic Ground Circuit
Courtesy of CHRYSLER GROUP, LLC

1. Measure the resistance between the (Q78) Right Pinch Sensor Signal circuit and the (Q901) Logic Ground circuit.

   Is the resistance below 20K Ohms?

   Yes

   - Repair the (Q78) Right Pinch Sensor Signal circuit for a short to the (Q901) Logic ground.
   - Perform the BODY VERIFICATION TEST. Refer to **STANDARD PROCEDURE** .

   No

   - Replace the Power Liftgate Module in accordance with the Service Information. Refer to **MODULE, POWER LIFTGATE CONTROL, REMOVAL** .
   - Perform the BODY VERIFICATION TEST. Refer to **STANDARD PROCEDURE** .

B1886-12-LIFTGATE PINCH SENSOR - CIRCUIT SHORT TO BATTERY

For a complete wiring diagram, **refer to appropriate SYSTEM WIRING DIAGRAMS article** .

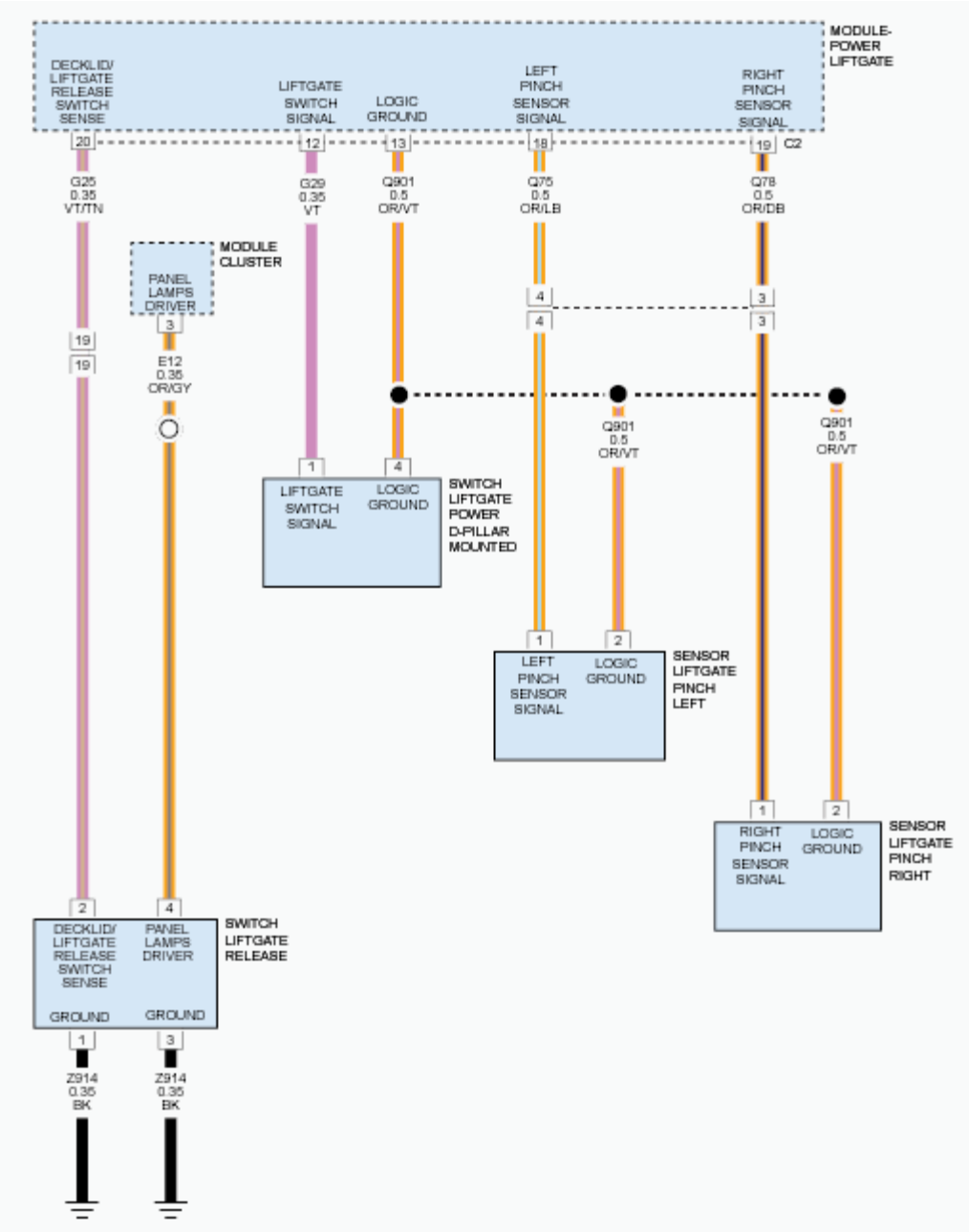

Fig. 10: Power Liftgate Module Pinch Sensor & Liftgate Switch Signal, Release Switch Sense & Ground Circuit Diagram
Courtesy of CHRYSLER GROUP, LLC

WHEN MONITORED

Whenever the Power Liftgate Module is awake.

SET CONDITION

The Power Liftgate Module has detected the Right Liftgate Pinch Sensor circuit voltage is above 4.6 volts for

over 15 seconds.

POSSIBLE CAUSES

Possible Causes
(Q901) LOGIC GROUND OPEN
(Q78) RIGHT PINCH SENSOR SIGNAL CIRCUIT OPEN
(Q78) RIGHT PINCH SENSOR SIGNAL CIRCUIT SHORTED TO VOLTAGE
RIGHT LIFTGATE PINCH SENSOR
POWER LIFTGATE MODULE

DIAGNOSTIC TEST

1. **DTC PRESENT**

   NOTE: The vehicle should be at room temperature when this test is performed.

   1. With the scan tool, record and erase the DTCs and any liftgate inhibitors.
   2. Cycle the ignition off, wait 10 seconds, then cycle the ignition on.
   3. Open and close the liftgate several times.
   4. With the scan tool, read the Active DTCs.

   Does the scan tool display; B1886-12-LIFTGATE PINCH SENSOR - CIRCUIT SHORT TO BATTERY?

   Yes

   - Go To 2

   No

   - Test complete, the condition or conditions that originally set this DTC are not present at this time. Using the wiring diagrams as a guide, check all related splices and connectors for signs of water intrusion, corrosion, pushed out or bent terminals and correct pin tension.
   - Perform the BODY VERIFICATION TEST. Refer to **STANDARD PROCEDURE** .

2. **(Q901) LOGIC GROUND OPEN**

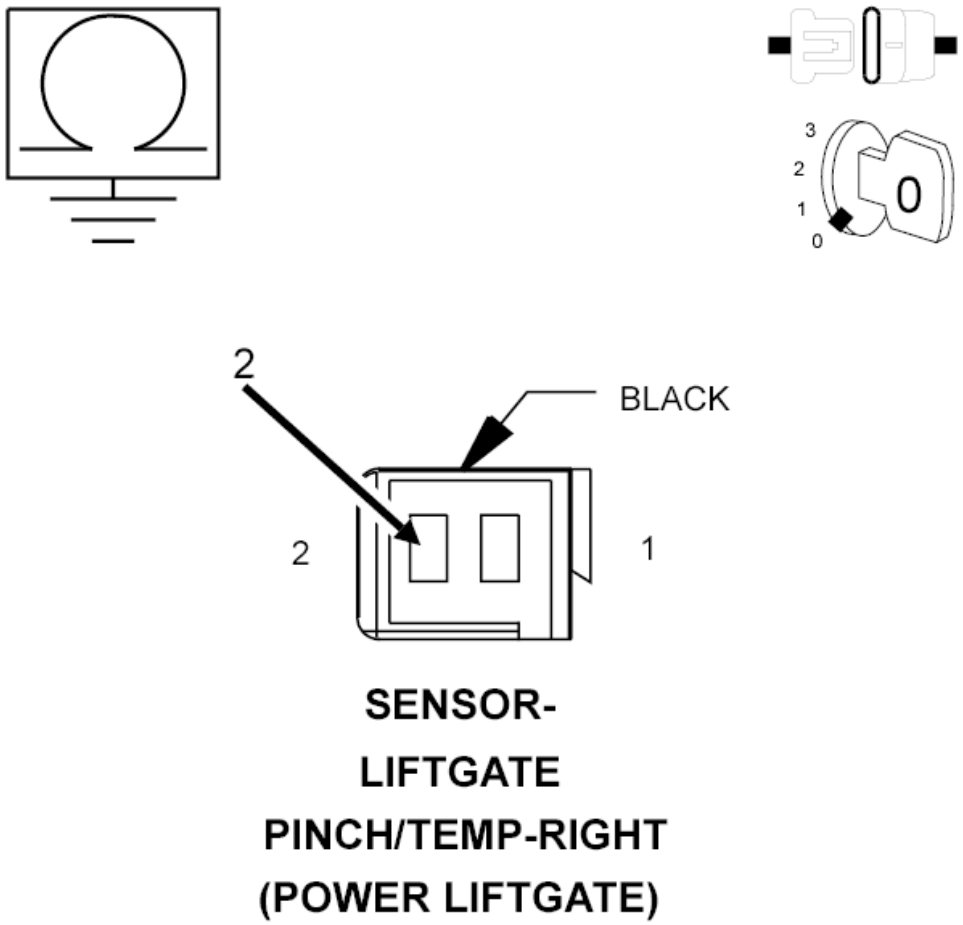

Fig. 11: Checking Logic Ground Circuit For Open
Courtesy of CHRYSLER GROUP, LLC

1. Cycle the ignition off.
2. Disconnect the Right Liftgate Pinch Sensor connector.
3. Measure the resistance between ground and the (Q901) Logic Ground circuit in the Right Pinch Sensor harness connector.

   Is the resistance below 9.5 Ohms?

   Yes

   - Go To 3

   No

   - Repair the (Q901) Logic Ground circuit for an open.
   - Perform the BODY VERIFICATION TEST. Refer to **STANDARD PROCEDURE** .

3. **CHECK THE RIGHT LIFTGATE PINCH SENSOR**

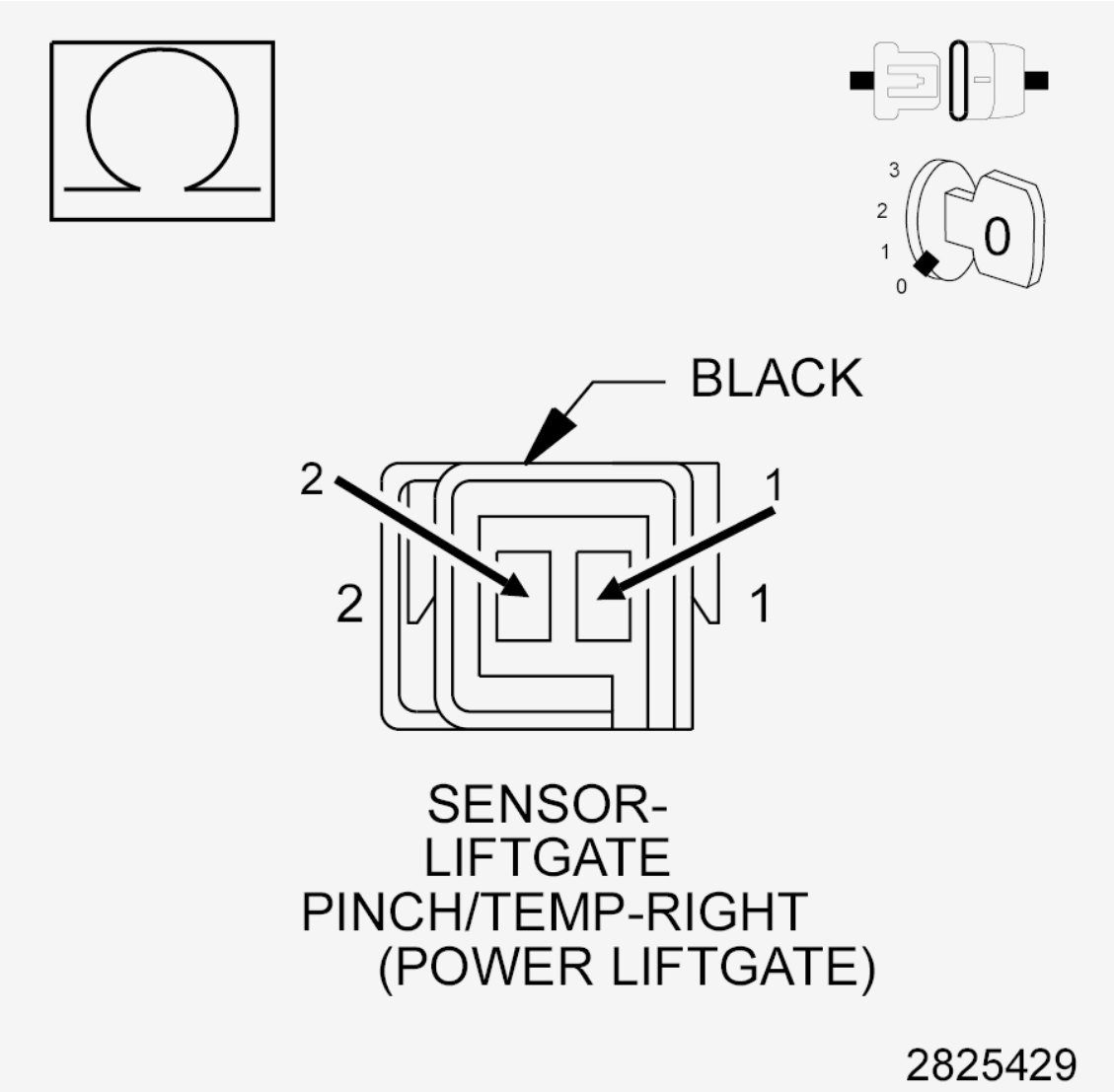

Fig. 12: Checking Right Liftgate Pinch Sensor
Courtesy of CHRYSLER GROUP, LLC

1. Measure the resistance between the (Q901) Logic Ground circuit and the (Q78) Right Pinch Sensor Signal circuit in the Right Liftgate Pinch/Temp Sensor (Component Side) connector.

NOTE: **The graphic shows the harness side - the component side is the male connector.**

NOTE: **The vehicle should be at room temperature when this test is performed. At 50 °F the reading should be between 18K and 22K. At 77 ° F the reading should be between 9.12K and 10.88K. At 104 ° F the reading should be between 4.90K and 5.75K.**

Is the resistance between 4.9K and 22K Ohms depending on the temperature?

Yes

- Go To 4

No

- Replace the Right Liftgate Pinch/Temp Sensor in accordance with the service information. Refer to **SENSOR, PINCH, REMOVAL** .
- Perform the BODY VERIFICATION TEST. Refer to **STANDARD PROCEDURE** .

4. **(Q78) RIGHT PINCH SENSOR SIGNAL CIRCUIT OPEN**

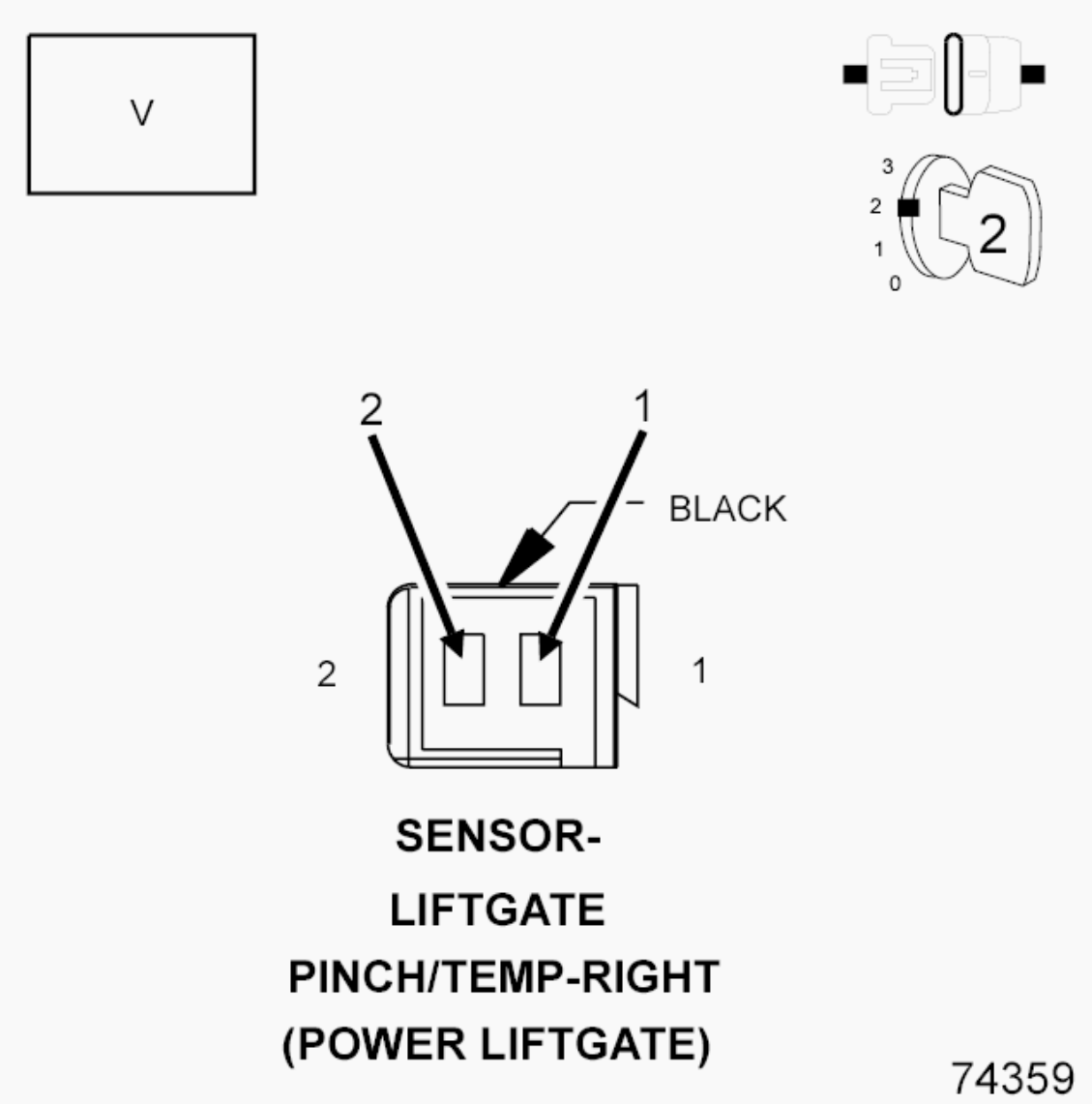

Fig. 13: Checking Right Pinch Sensor Signal Circuit For Open

Courtesy of CHRYSLER GROUP, LLC

1. Cycle the ignition on.
2. Measure the voltage between the (Q901) Logic Ground circuit and the (Q78) Right Pinch Sensor Signal circuit in the Right Pinch Sensor harness connector.

   Is the voltage below 4.5 volts?

   Yes

   - Go To 5

   No

   - Go To 6

5. **CHECK THE (Q78) RIGHT PINCH SENSOR SIGNAL CIRCUIT FOR AN OPEN**

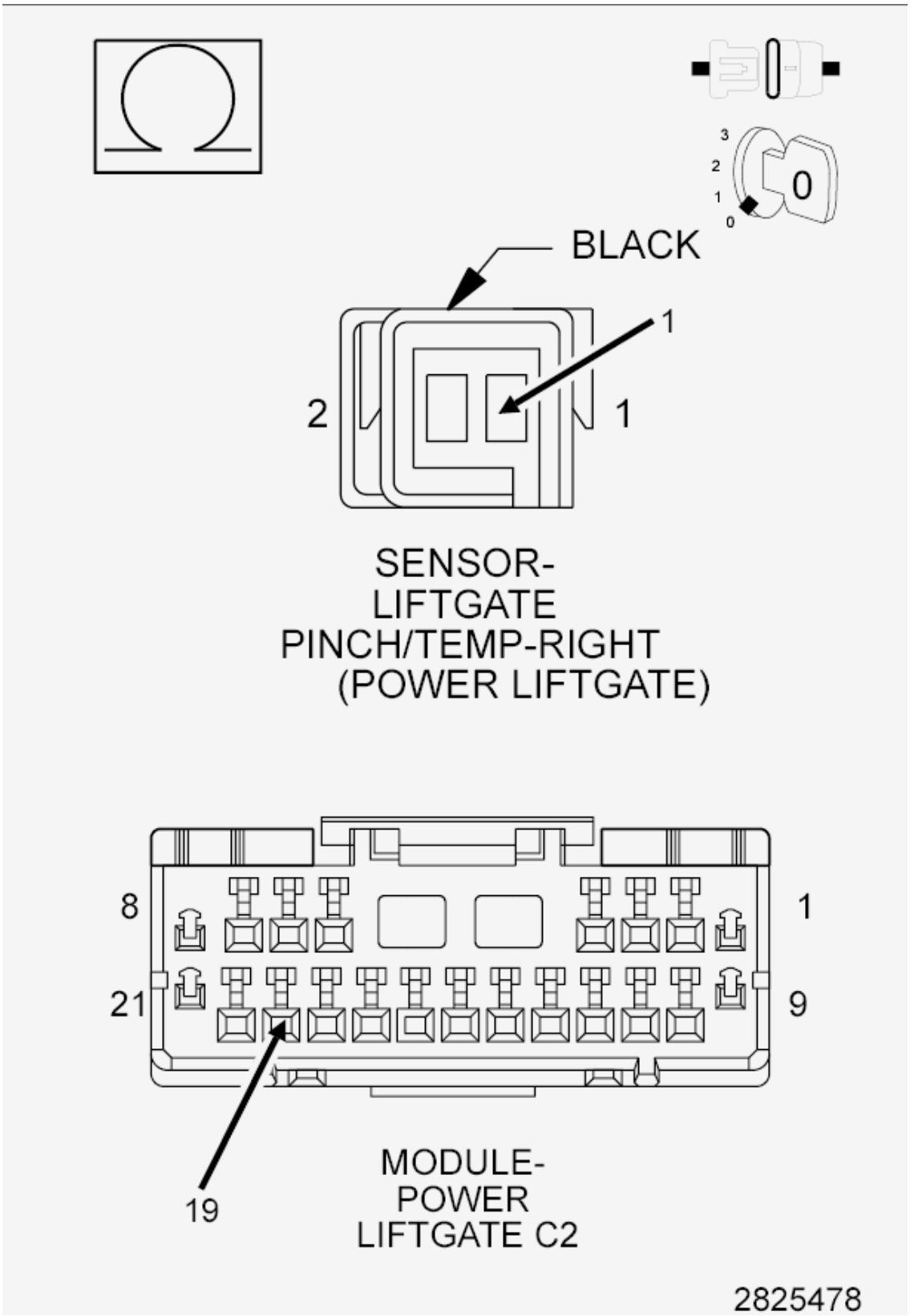

Fig. 14: Checking Right Pinch Sensor Signal Circuit For Open

Courtesy of CHRYSLER GROUP, LLC

1. Cycle the ignition off.
2. Disconnect the Power Liftgate Module C2 harness connector.
3. Measure the resistance of the (Q78) Right Pinch Sensor Signal circuit between the Power Liftgate Module C2 harness connector and the Right Liftgate Pinch Sensor harness connector.

   Is the resistance below 2.0 Ohms?

   Yes

   - Replace the Power Liftgate Module in accordance with the service information. Refer to **MODULE, POWER LIFTGATE CONTROL, REMOVAL** .
   - Perform the BODY VERIFICATION TEST. Refer to **STANDARD PROCEDURE** .

   No

   - Repair the (Q78) Right Pinch Sensor Signal circuit for an open.
   - Perform the BODY VERIFICATION TEST. Refer to **STANDARD PROCEDURE** .

6. **(Q78) RIGHT PINCH SENSOR SIGNAL CIRCUIT SHORTED TO VOLTAGE**

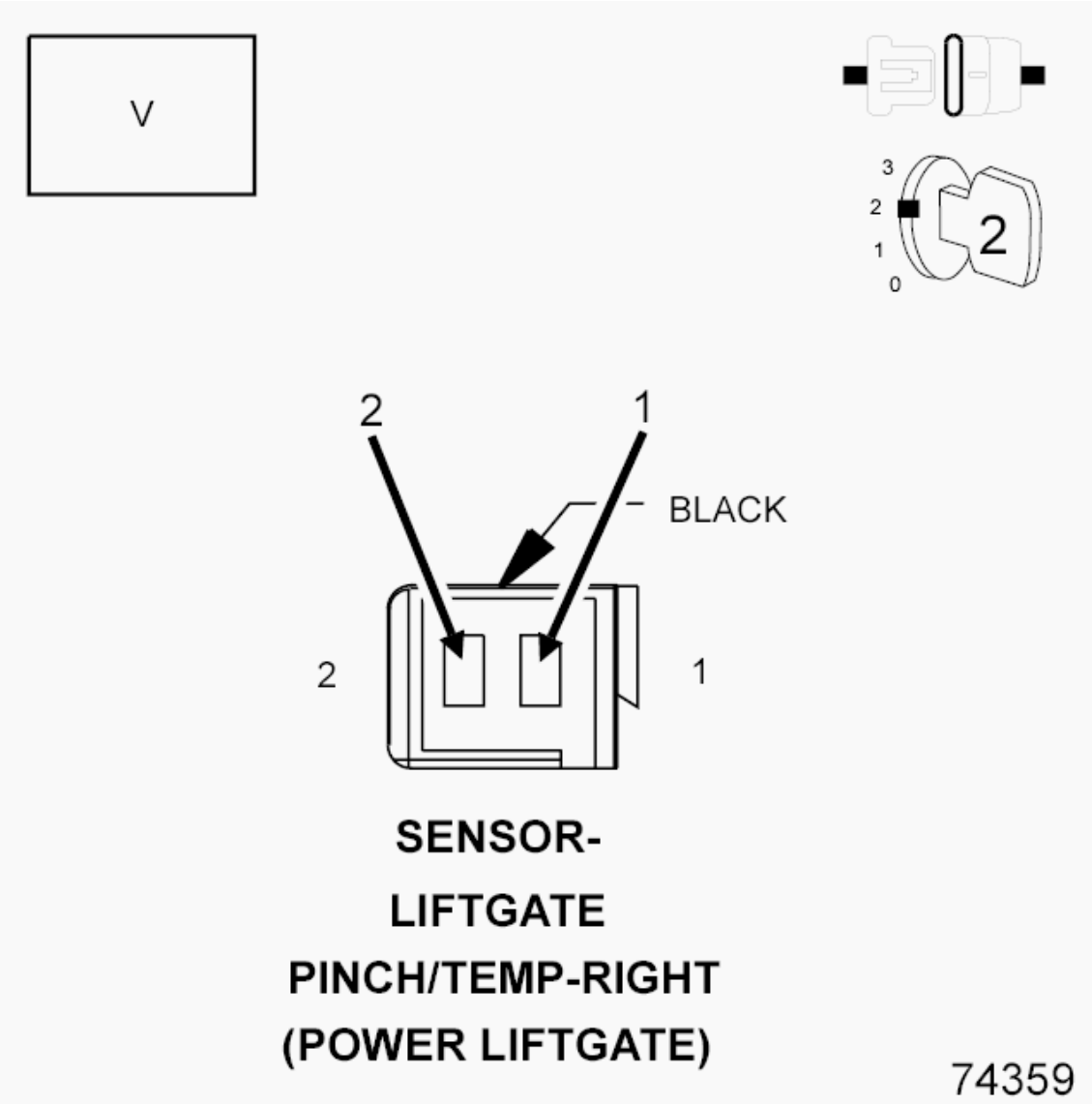

Fig. 15: Checking Right Pinch Sensor Signal Circuit For Open
Courtesy of CHRYSLER GROUP, LLC

1. Measure the voltage between the (Q901) Logic Ground circuit and the (Q78) Right Pinch Sensor Signal circuit in the Right Pinch Sensor harness connector.

   Is the voltage above 5.0 volts?

   Yes

   - Go To 7

   No

   - Replace the Right Liftgate Pinch Sensor in accordance with the Service Information. Refer to

SENSOR, PINCH, REMOVAL .

- Perform the BODY VERIFICATION TEST. Refer to **STANDARD PROCEDURE** .

7. **(Q78) RIGHT PINCH SENSOR SIGNAL WIRE SHORTED TO VOLTAGE**

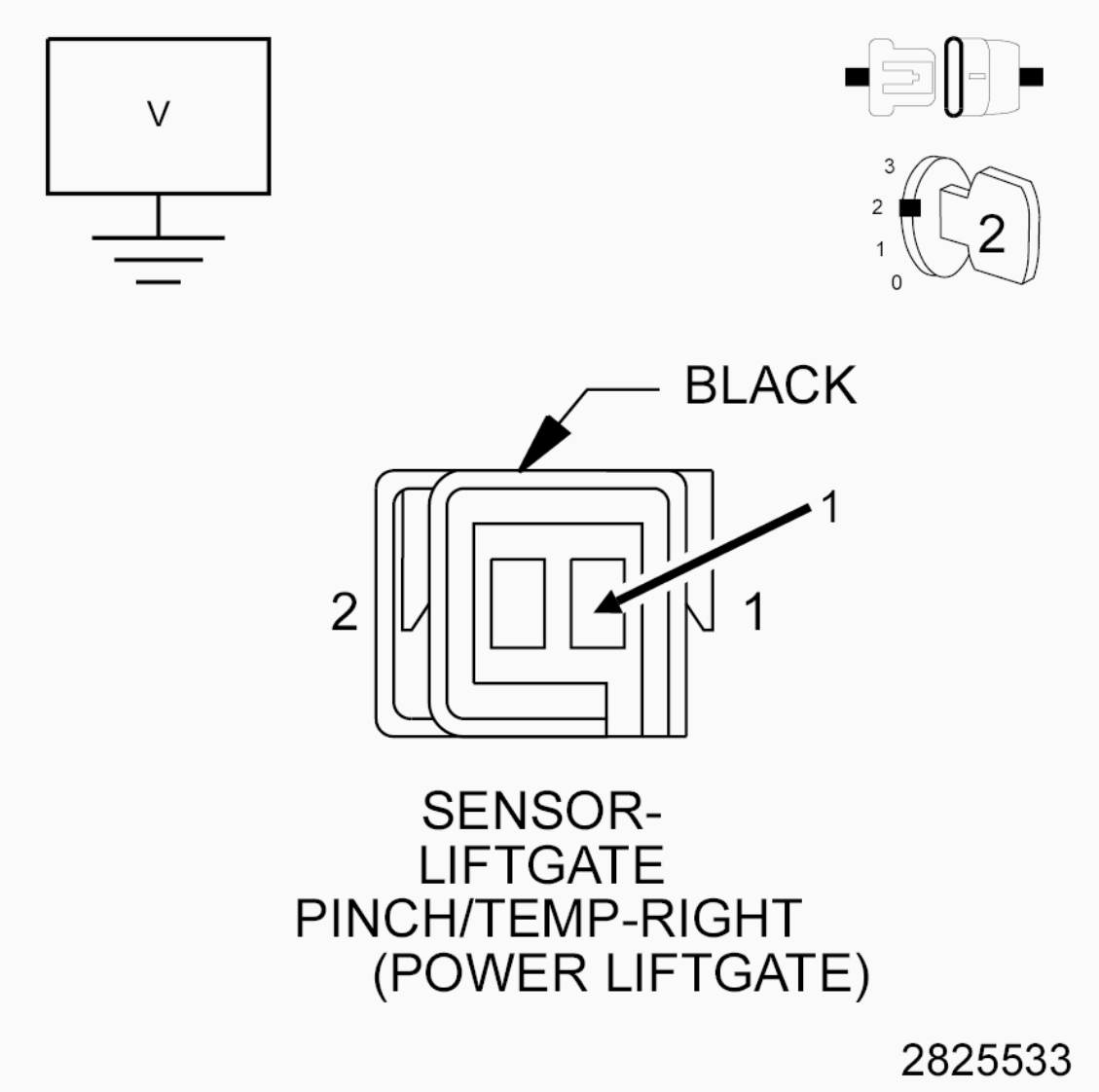

Fig. 16: Checking Right Pinch Sensor Signal Wire Short To Voltage
Courtesy of CHRYSLER GROUP, LLC

1. Disconnect the Power Liftgate Module C2 harness connector.
2. Measure the voltage between ground and the (Q78) Right Pinch Sensor Signal circuit in the Right Pinch Sensor harness connector.

   Is there any voltage present?

   Yes

- Repair the (Q78) Right Pinch Sensor Signal circuit for a short to voltage.
- Perform the BODY VERIFICATION TEST. Refer to **STANDARD PROCEDURE** .

No

- Replace the Power Liftgate Module in accordance with the service information. Refer to **MODULE, POWER LIFTGATE CONTROL, REMOVAL** .
- Perform the BODY VERIFICATION TEST. Refer to **STANDARD PROCEDURE** .

B188C-11-LIFTGATE CONTROL CIRCUIT 1 - CIRCUIT SHORT TO GROUND

For a complete wiring diagram, **refer to appropriate SYSTEM WIRING DIAGRAMS article** .

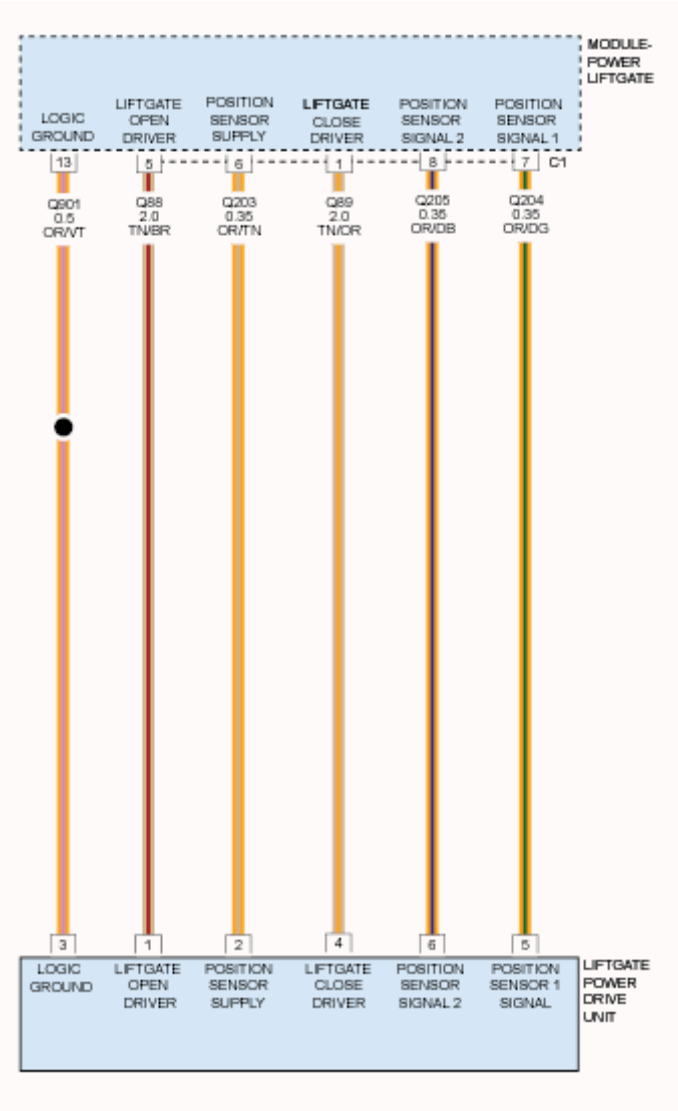

Fig. 17: Power Liftgate Position Sensor Signal, Supply, Liftgate Drive & Ground Circuit Diagram
Courtesy of CHRYSLER GROUP, LLC

WHEN MONITORED

Whenever the Power Liftgate is power opening or closing.

SET CONDITION

When the Power Liftgate Module senses voltage less than 1.5 volts on the (Q88) Liftgate Open Driver circuit, prior to starting a power cycle, this code will set.

POSSIBLE CAUSES

Possible Causes
(Q88) LIFTGATE OPEN DRIVER CIRCUIT SHORTED TO GROUND
(Q88) LIFTGATE OPEN DRIVER CIRCUIT SHORTED TO THE (Q89) LIFTGATE CLOSE DRIVER CIRCUIT
(Q89) LIFTGATE CLOSE DRIVER CIRCUIT SHORTED TO GROUND
POWER LIFTGATE DRIVE UNIT SHORTED
POWER LIFTGATE MODULE

DIAGNOSTIC TEST

1. **DTC PRESENT**
    1. With the scan tool, record and erase the DTCs.
    2. Cycle the ignition off, wait 10 seconds, then cycle the ignition on.
    3. If possible, operate the liftgate several times.
    4. With the scan tool, read the Active DTCs.

    Does the scan tool display; B188C-11-LIFTGATE CONTROL CIRCUIT 1 - CIRCUIT SHORT TO GROUND?

    Yes

    - Go To 2.

    No

    - Test complete, the condition or conditions that originally set this DTC are not present at this time. Using the wiring diagrams as a guide, check all related splices and connectors for signs of water intrusion, corrosion, pushed out or bent terminals and correct pin tension.
    - Perform the BODY VERIFICATION TEST. Refer to **BODY VERIFICATION TEST** .
2. **(Q88) LIFTGATE OPEN DRIVER CIRCUIT SHORTED TO GROUND**

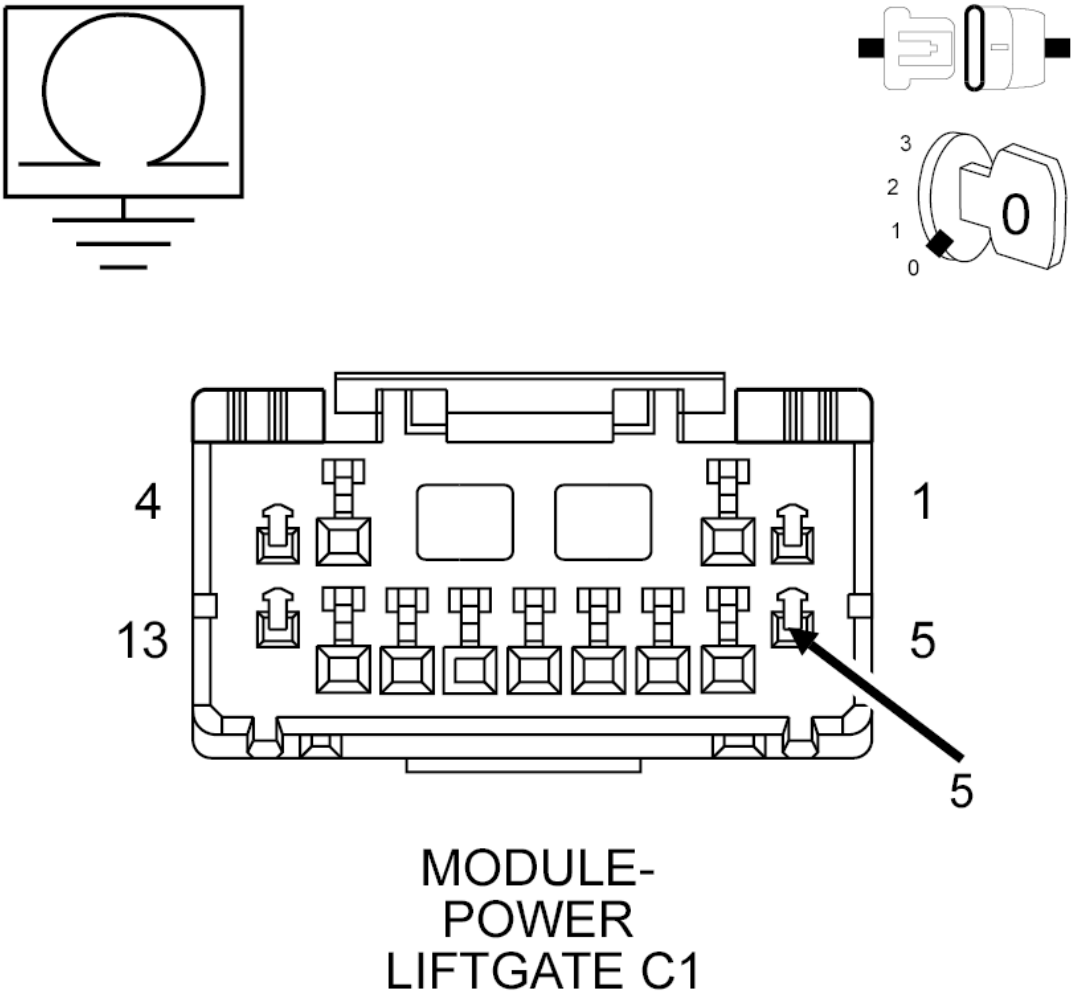

Fig. 18: Checking Liftgate Open Driver Circuit For Short To Ground
Courtesy of CHRYSLER GROUP, LLC

1. Cycle the ignition off.
2. Disconnect the Power Liftgate Module C1 harness connector.
3. Measure the resistance between ground and the (Q88) Liftgate Open Driver circuit.

   Is the resistance below 10K Ohms?

   Yes

   - Go To 4.

   No

   - Go To 3.

3. **(Q88) LIFTGATE OPEN DRIVER CIRCUIT SHORTED TO THE (Q89) LIFTGATE CLOSE DRIVER CIRCUIT**

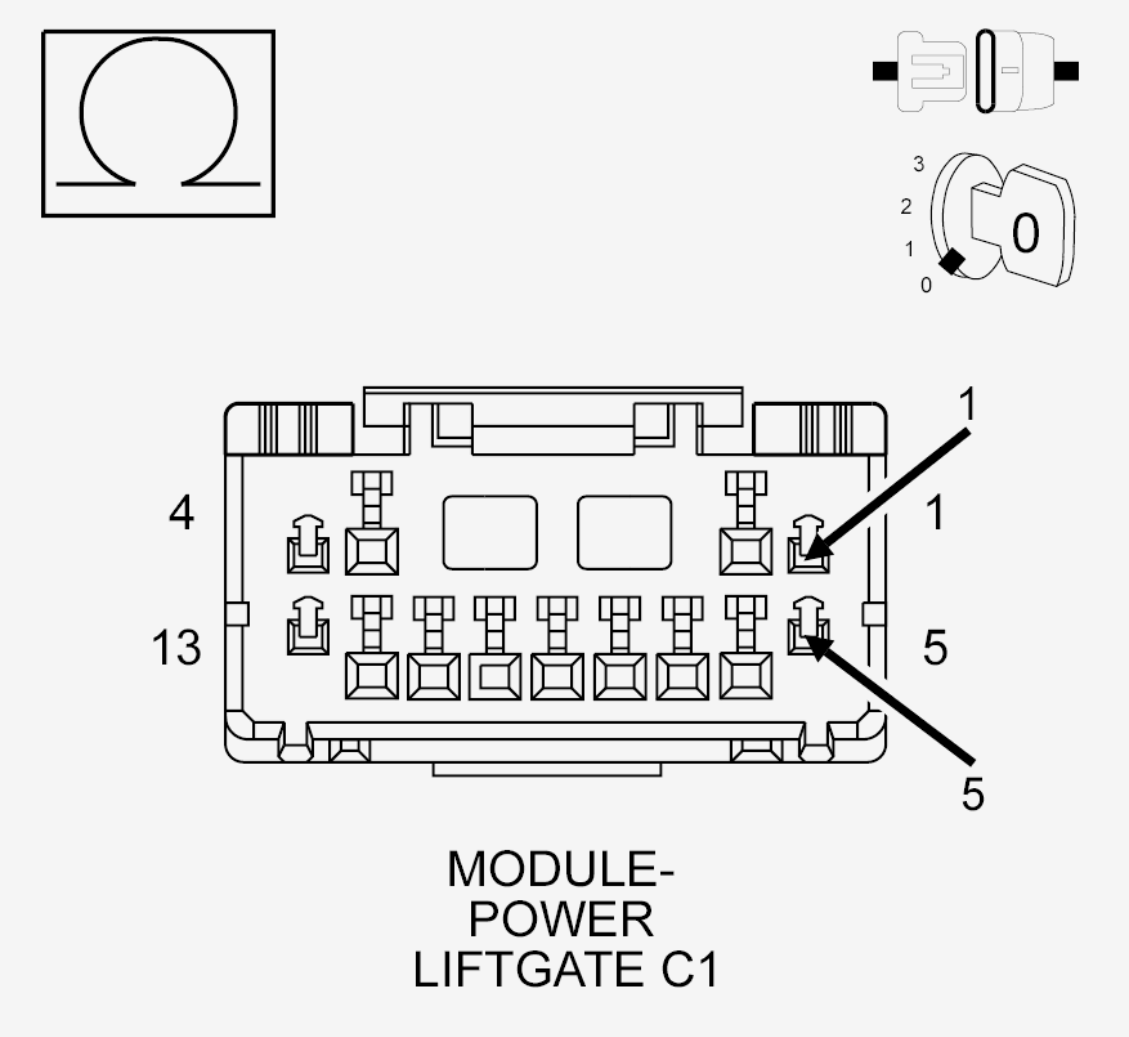

Fig. 19: Checking Liftgate Open Driver Circuit For Short To Liftgate Close Driver Circuit
Courtesy of CHRYSLER GROUP, LLC

1. Measure the resistance (with the Power Liftgate Drive Unit still connected) between the (Q88) Liftgate Open Driver circuit and the (Q89) Liftgate Close Driver circuit.

NOTE: **Be sure to use an accurate DVOM in the following step. Zero the meter before beginning.**

Is the resistance below 0.5 Ohms?

Yes

- Go To 6.

No

- Replace the Power Liftgate Module in accordance with service information. Refer to **MODULE, POWER LIFTGATE CONTROL, REMOVAL** .
- Perform the BODY VERIFICATION TEST. Refer to **BODY VERIFICATION TEST** .

4. **(Q88) LIFTGATE OPEN DRIVER WIRE SHORTED TO GROUND**

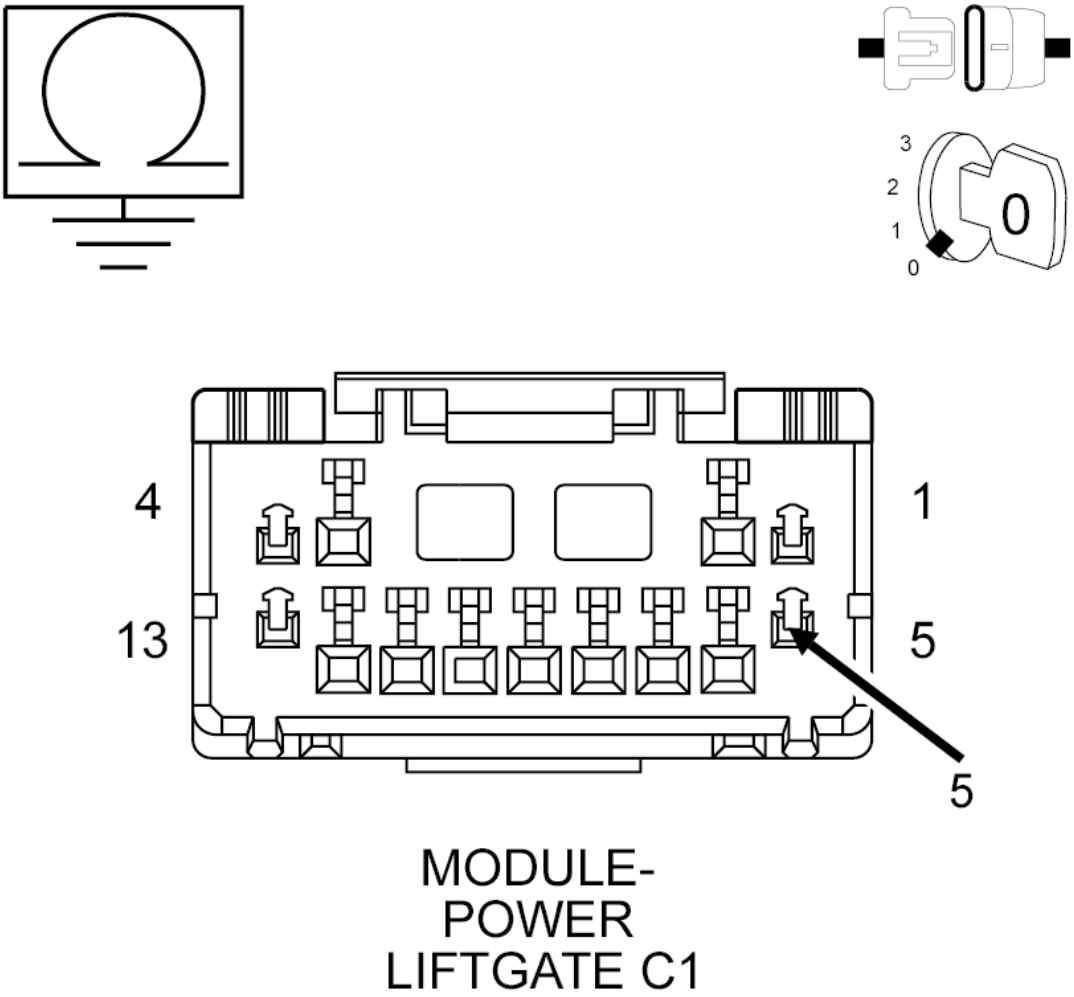

Fig. 20: Checking Liftgate Open Driver Circuit For Short To Ground
Courtesy of CHRYSLER GROUP, LLC

1. Disconnect the Power Liftgate Drive Unit connector.
2. Measure the resistance between ground and the (Q88) Liftgate Open Driver circuit.

   Is the resistance below 10K Ohms?

   Yes

- Repair the (Q88) Liftgate Open Driver circuit for a short to ground.
- Perform the BODY VERIFICATION TEST. Refer to **BODY VERIFICATION TEST** .

No

- Go To 5.

5. **(Q89) LIFTGATE CLOSE DRIVER WIRE SHORTED TO GROUND**

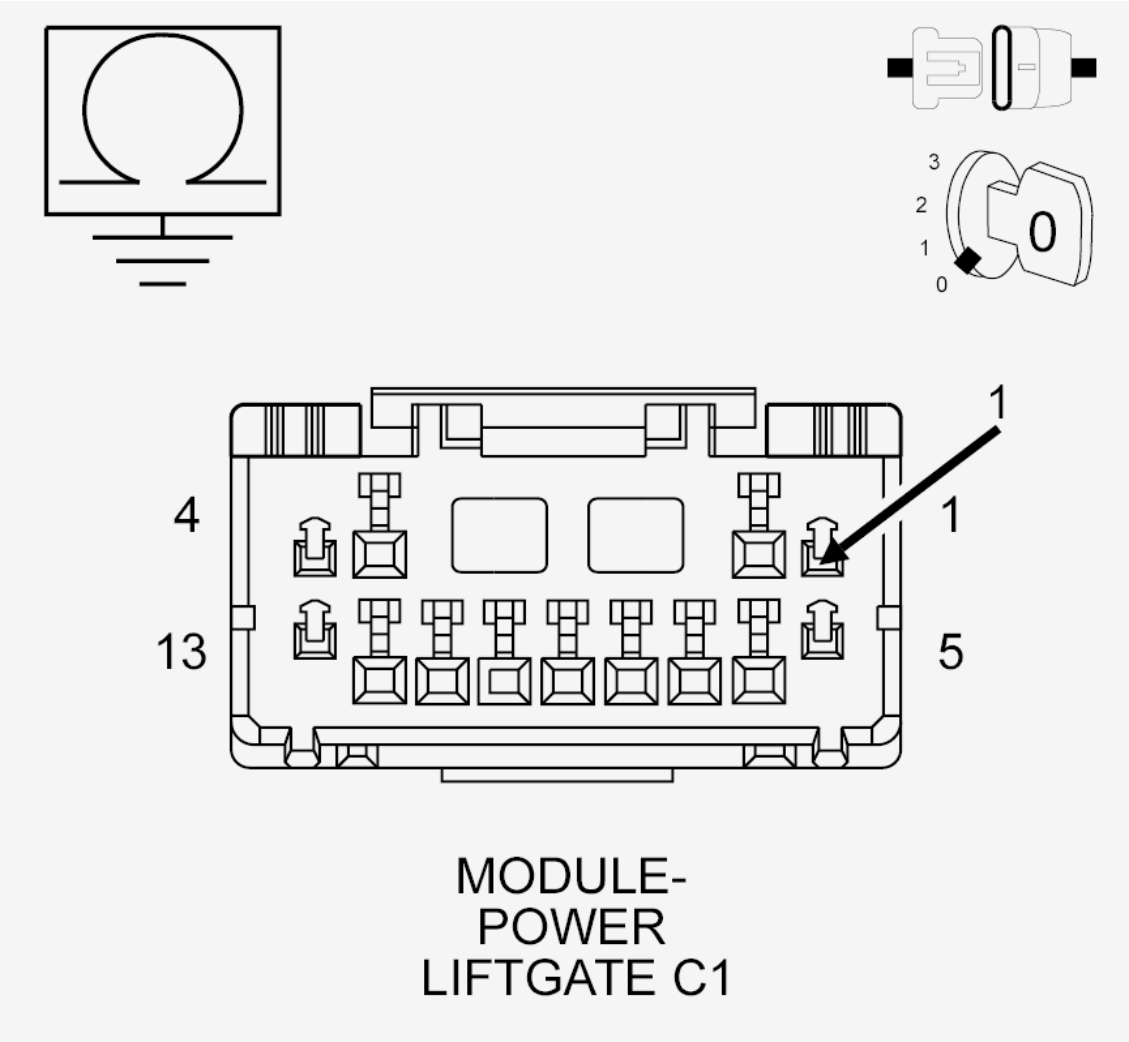

Fig. 21: Checking Liftgate Close Driver Wire For Short To Ground
Courtesy of CHRYSLER GROUP, LLC

1. Measure the resistance between ground and the (Q89) Liftgate Close Driver circuit in the Power Liftgate Module C1 connector.

   Is the resistance below 10K Ohms?

   Yes

- Repair the (Q89) Liftgate Close Driver circuit for a short to ground.
- Perform the BODY VERIFICATION TEST. Refer to **BODY VERIFICATION TEST** .

No

- Replace the Power Liftgate Drive Unit in accordance with the Service Information. Refer to **DRIVE UNIT, POWER, REMOVAL** .
- Perform the BODY VERIFICATION TEST. Refer to **BODY VERIFICATION TEST** .

6. **(Q88) LIFTGATE OPEN DRIVER WIRE SHORTED TO THE (Q89) LIFTGATE CLOSE DRIVER WIRE**

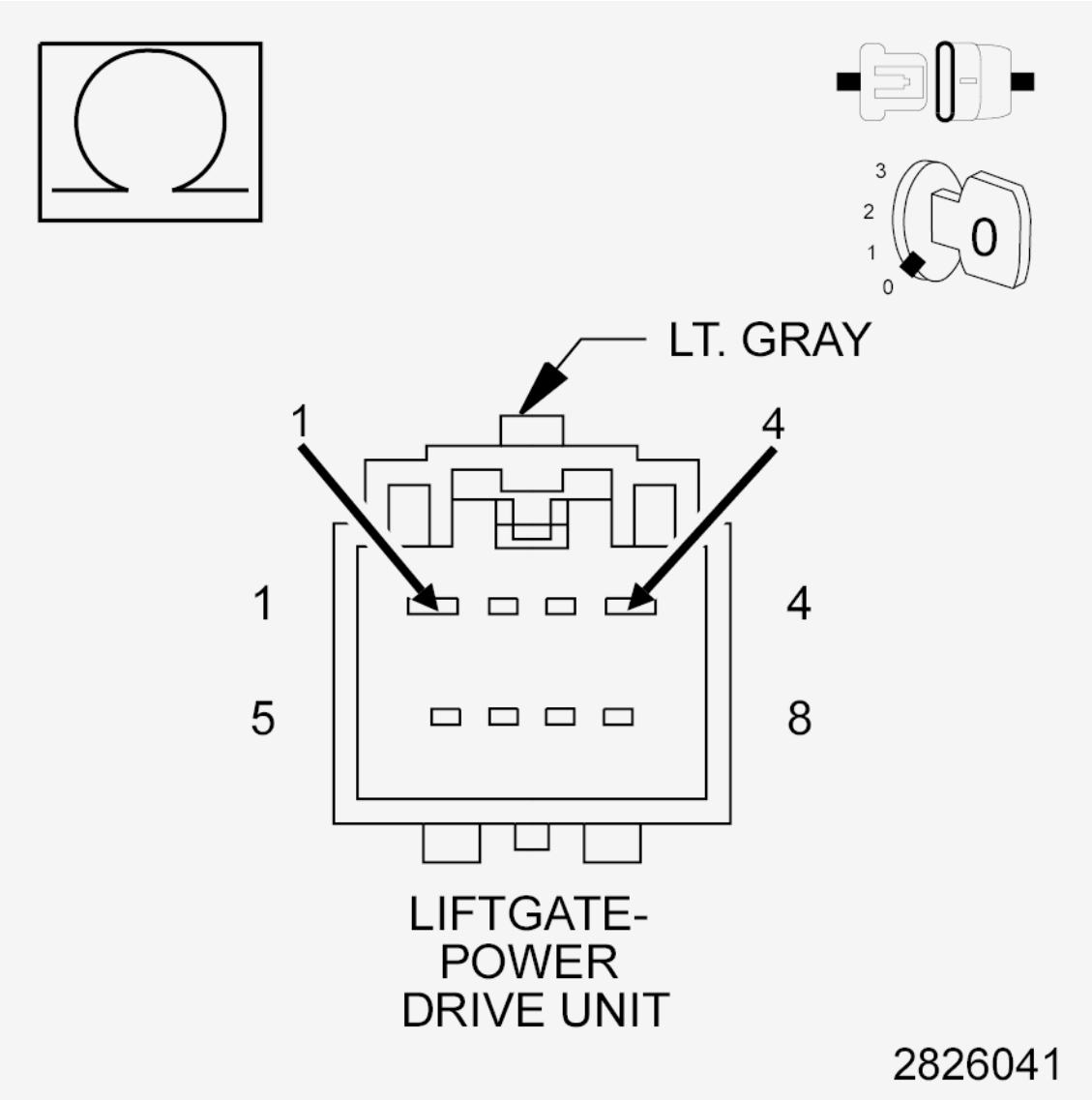

Fig. 22: Checking Liftgate Open Driver Wire For Short To Liftgate Close Driver Wire
Courtesy of CHRYSLER GROUP, LLC

1. Disconnect the Power Liftgate Drive Unit harness connector.
2. Measure the resistance between the (Q88) Liftgate Open Driver circuit and the (Q89) Liftgate Close Driver circuit.

   Is the resistance below 10K Ohms?

   Yes

   - Repair the (Q88) Liftgate Open Driver circuit for a short to the (Q89) Liftgate Close Driver circuit.
   - Perform the BODY VERIFICATION TEST. Refer to **BODY VERIFICATION TEST** .

   No

   - Replace the Power Liftgate Drive Unit in accordance with the Service Information. Refer to **DRIVE UNIT, POWER, REMOVAL** .
   - Perform the BODY VERIFICATION TEST. Refer to **BODY VERIFICATION TEST** .

B188C-12-LIFTGATE CONTROL CIRCUIT 1 - CIRCUIT SHORT TO BATTERY

For a complete wiring diagram, **refer to appropriate SYSTEM WIRING DIAGRAMS article** .

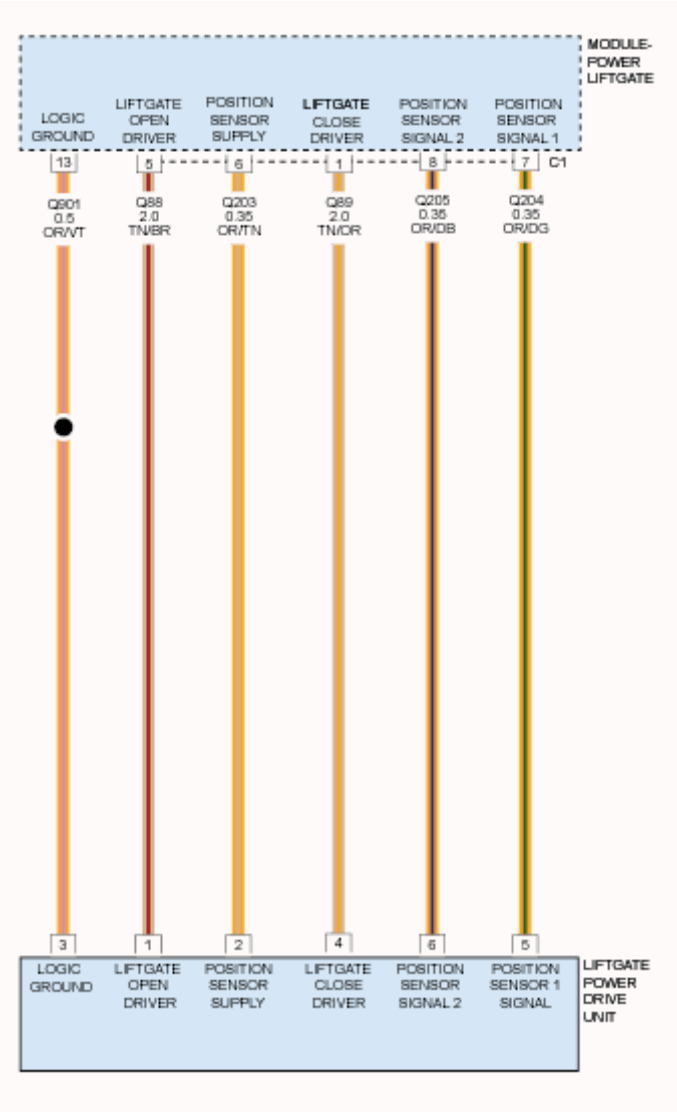

Fig. 23: Power Liftgate Position Sensor Signal, Supply, Liftgate Drive & Ground Circuit Diagram
Courtesy of CHRYSLER GROUP, LLC

WHEN MONITORED

Whenever the Power Liftgate is power opening or closing.

SET CONDITION

When the Power Liftgate Module senses voltage more than 9.5 volts on the (Q88) Liftgate Open Driver circuit prior to starting a liftgate power cycle, this code will set.

POSSIBLE CAUSES

Possible Causes
(Q88) LIFTGATE OPEN DRIVER CIRCUIT SHORTED TO VOLTAGE

(Q89) LIFTGATE CLOSE DRIVER CIRCUIT SHORTED TO VOLTAGE
(Q88) LIFTGATE OPEN DRIVER CIRCUIT SHORT TO THE (Q89) LIFTGATE CLOSE DRIVER CIRCUIT
POWER LIFTGATE MODULE

DIAGNOSTIC TEST

1. **DTC PRESENT**
    1. With the scan tool, record and erase the DTCs.
    2. Cycle the ignition off, wait 10 seconds, then cycle the ignition on.
    3. If possible, operate the liftgate several times.
    4. With the scan tool, read the Active DTCs.

    Does the scan tool display; B188C-12-LIFTGATE CONTROL CIRCUIT 1 - CIRCUIT SHORT TO BATTERY?

    Yes

    - Go To 2.

    No

    - Test complete, the condition or conditions that originally set this DTC are not present at this time. Using the wiring diagrams as a guide, check all related splices and connectors for signs of water intrusion, corrosion, pushed out or bent terminals and correct pin tension.
    - Perform the BODY VERIFICATION TEST. Refer to **BODY VERIFICATION TEST** .
2. **(Q88) LIFTGATE OPEN DRIVER CIRCUIT SHORTED TO VOLTAGE**

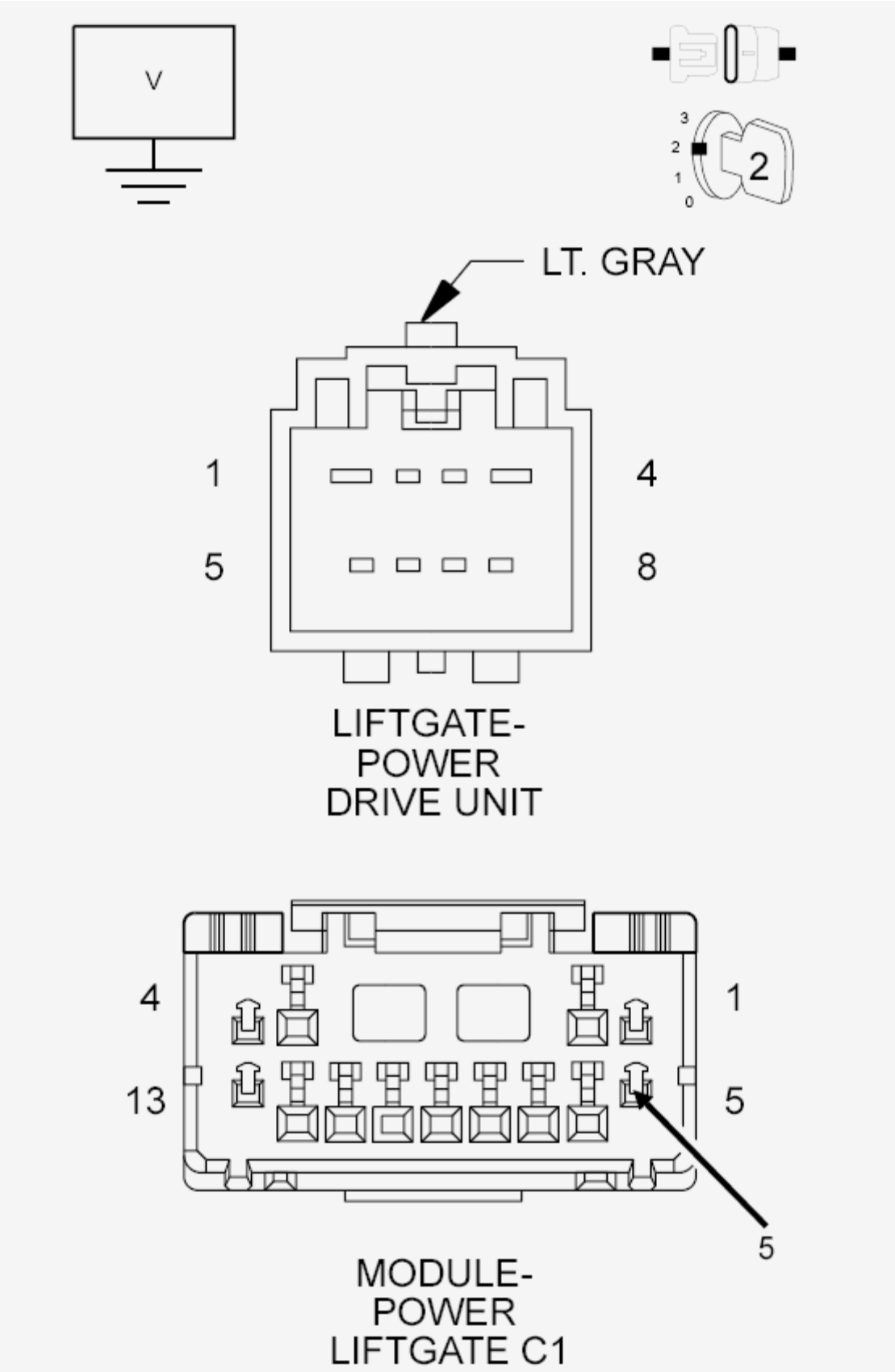
V
3
2
1
0
2
LT. GRAY
1
4
5
8
LIFTGATE-
POWER
DRIVE UNIT
4
1
13
5
5
MODULE-
POWER
LIFTGATE C1

Fig. 24: Checking Liftgate Open Driver Circuit For Short To Voltage
Courtesy of CHRYSLER GROUP, LLC

1. Cycle the ignition off.
2. Disconnect the Power Liftgate Module C1 harness connector.
3. Disconnect the Power Liftgate Drive Unit harness connector.
4. Cycle the ignition on.
5. Measure the voltage between ground and the (Q88) Liftgate Open Driver circuit in the PLGM C1 harness connector.

   Is there any voltage present?

   Yes

   - Repair the (Q88) Liftgate Open Driver circuit for a short to voltage.
   - Perform the BODY VERIFICATION TEST. Refer to **BODY VERIFICATION TEST** .

   No

   - Go To 3.

3. **(Q89) LIFTGATE CLOSE DRIVER CIRCUIT SHORTED TO VOLTAGE**

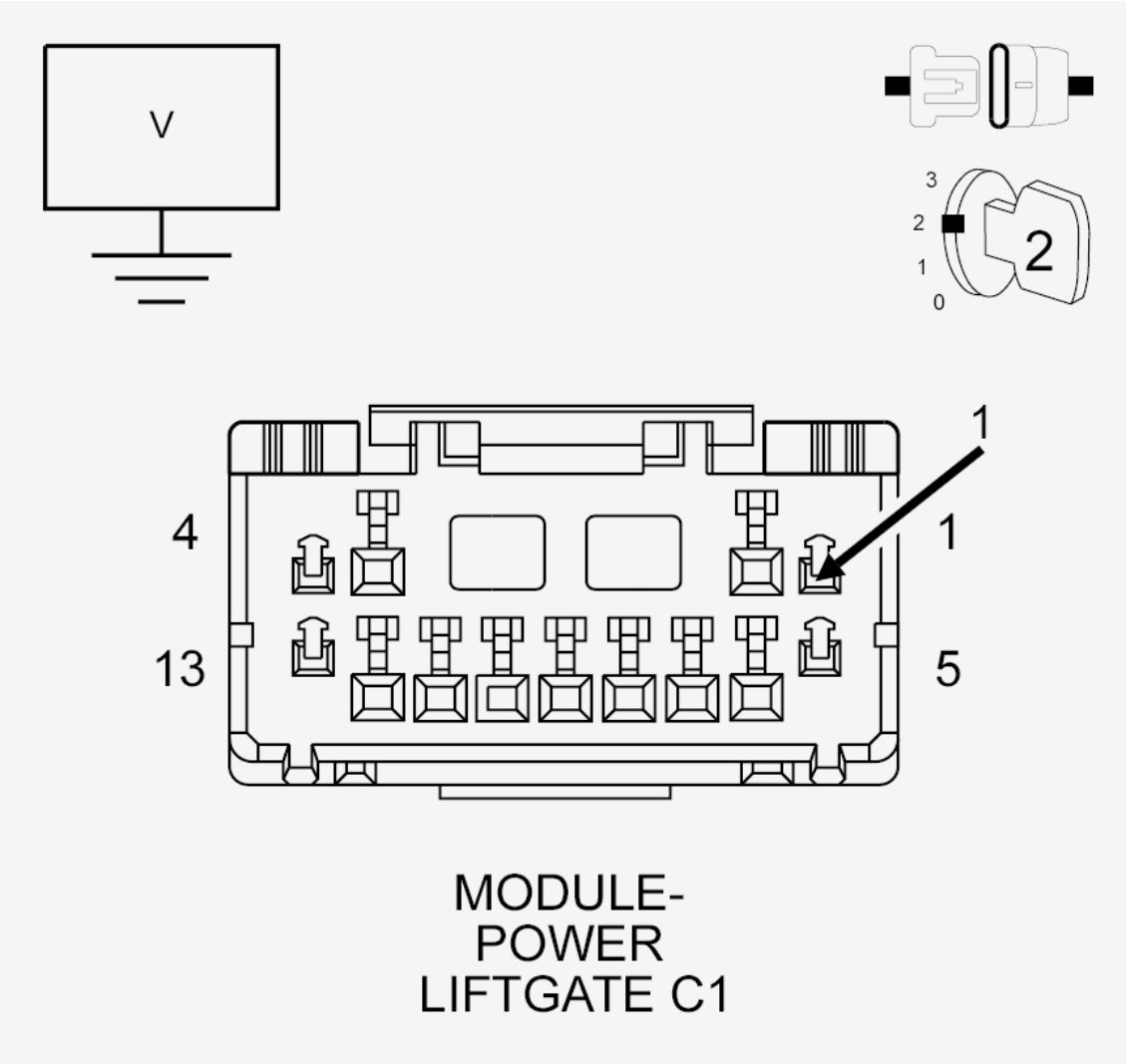

Fig. 25: Checking Liftgate Close Driver Circuit For Short To Voltage
Courtesy of CHRYSLER GROUP, LLC

1. Measure the voltage between the (Q89) Liftgate Close Driver circuit and ground.

   Is there any voltage present?

   Yes

   - Repair the (Q89) Liftgate Close Driver circuit for a short to voltage.
   - Perform the BODY VERIFICATION TEST. Refer to **BODY VERIFICATION TEST** .

   No

   - Go To 4.

4. **(Q88) LIFTGATE OPEN DRIVER CIRCUIT SHORTED TO THE (Q89) LIFTGATE CLOSE**

DRIVER CIRCUIT

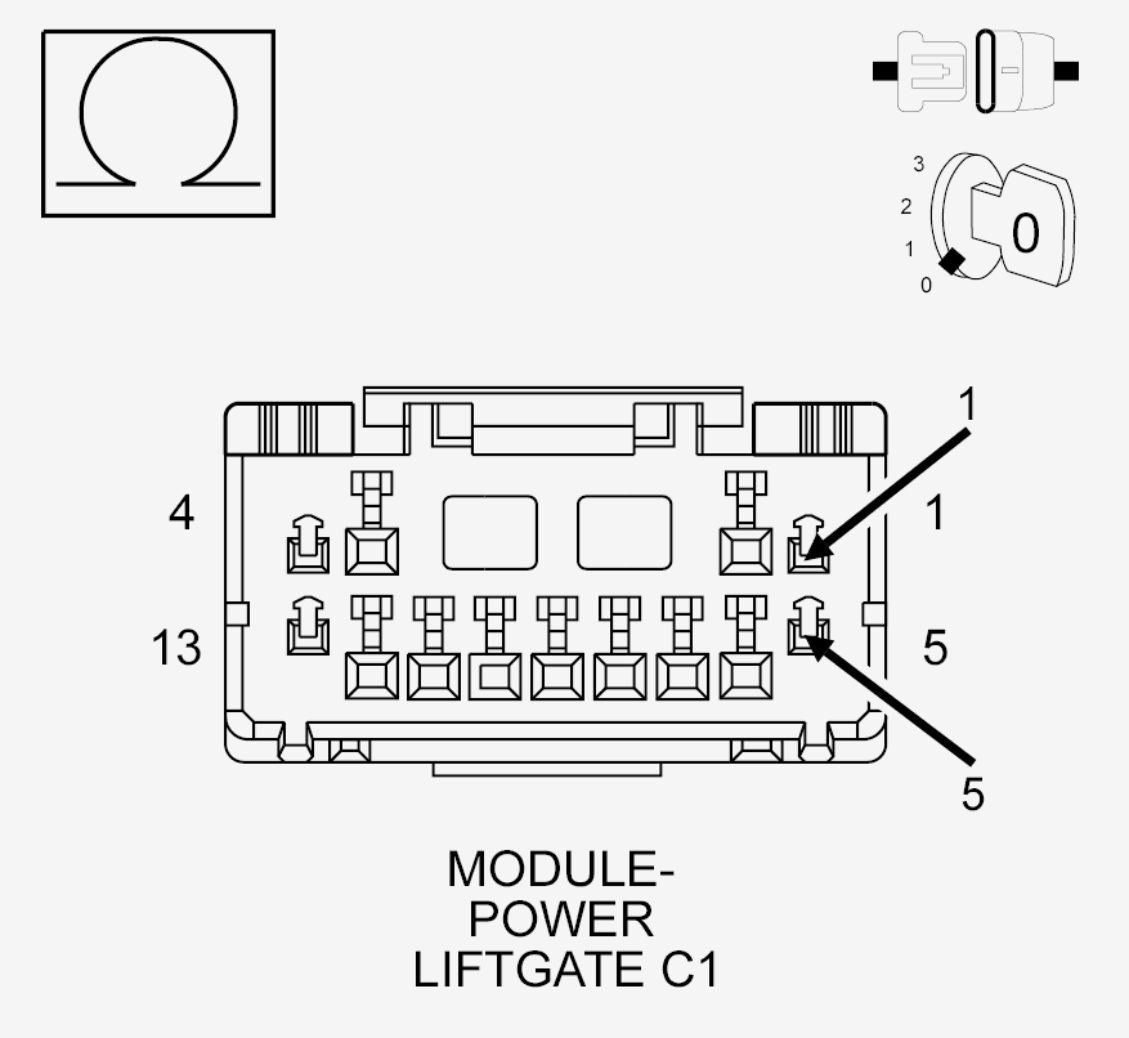

Fig. 26: Checking Liftgate Open Driver Circuit For Short To Liftgate Close Driver Circuit
Courtesy of CHRYSLER GROUP, LLC

1. Cycle the ignition off.
2. Measure the resistance between the (Q88) Liftgate Open Driver circuit and the (Q89) Liftgate Close Driver circuit.

   Is the resistance below 10K Ohms?

   Yes

   - Repair the (Q88) Liftgate Open Driver circuit for a short to the (Q89) Liftgate Close Driver circuit.
   - Perform the BODY VERIFICATION TEST. Refer to **BODY VERIFICATION TEST** .

No

- Replace the Power Liftgate Module in accordance with the Service Information. Refer to **MODULE, POWER LIFTGATE CONTROL, REMOVAL** .
- Perform the BODY VERIFICATION TEST. Refer to **BODY VERIFICATION TEST** .

B188C-13-LIFTGATE CONTROL CIRCUIT 1 - CIRCUIT OPEN

For a complete wiring diagram, **refer to appropriate SYSTEM WIRING DIAGRAMS article** .

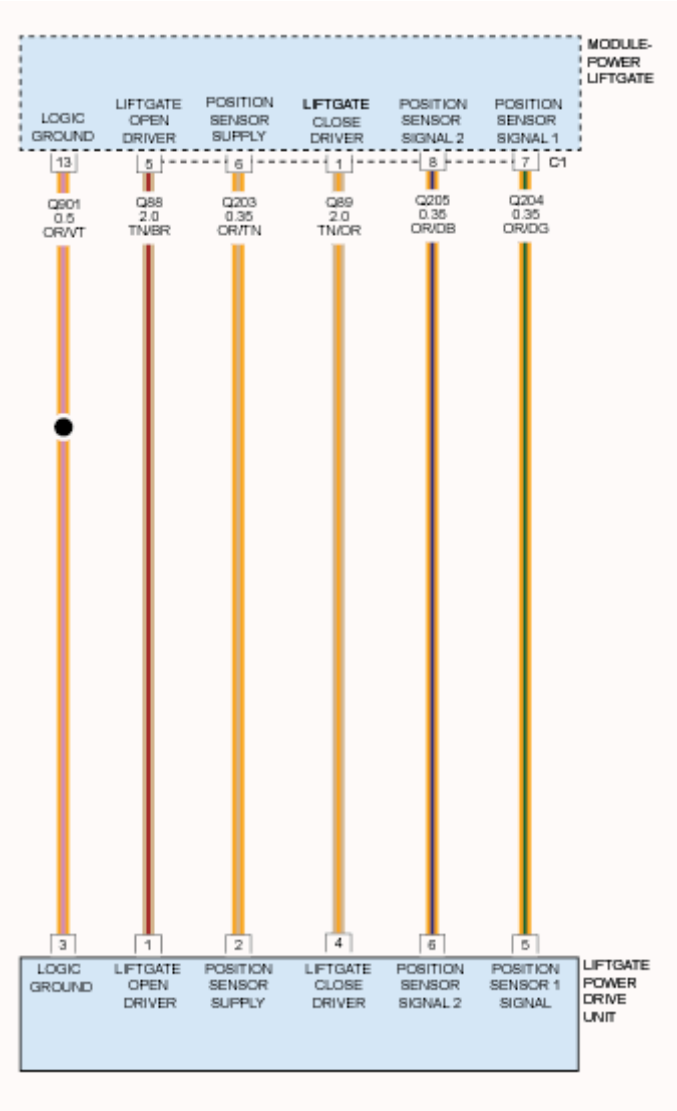

Fig. 27: Power Liftgate Position Sensor Signal, Supply, Liftgate Drive & Ground Circuit Diagram
Courtesy of CHRYSLER GROUP, LLC

WHEN MONITORED

Whenever the Power Liftgate is power opening or power closing.

SET CONDITION

When the Power Liftgate Module senses no current on the (Q88) Liftgate Open Driver circuit and no liftgate movement, this code will set. It is also possible for this code to set if the liftgate has been run several times and the internal circuit breaker (Thermo Protection Device) has opened up.

POSSIBLE CAUSES

Possible Causes
(Q88) LIFTGATE OPEN DRIVER CIRCUIT OPEN
(Q89) LIFTGATE CLOSE DRIVER CIRCUIT OPEN
POWER LIFTGATE DRIVE UNIT
POWER LIFTGATE MODULE

DIAGNOSTIC TEST

1. **DTC PRESENT**
    1. With the scan tool, record and erase the DTCs.
    2. Cycle the ignition off, wait 10 seconds, then cycle the ignition on.
    3. If possible, operate the liftgate several times.
    4. With the scan tool, read the Active DTCs.

    Does the scan tool display; B188C-13-LIFTGATE CONTROL CIRCUIT 1 - CIRCUIT OPEN?

    Yes

    - Go To 2

    No

    - Test complete, the condition or conditions that originally set this DTC are not present at this time. Using the wiring diagrams as a guide, check all related splices and connectors for signs of water intrusion, corrosion, pushed out or bent terminals and poor pin fit.
    - Perform the BODY VERIFICATION TEST. Refer to **BODY VERIFICATION TEST** .
2. **POWER LIFTGATE MODULE**

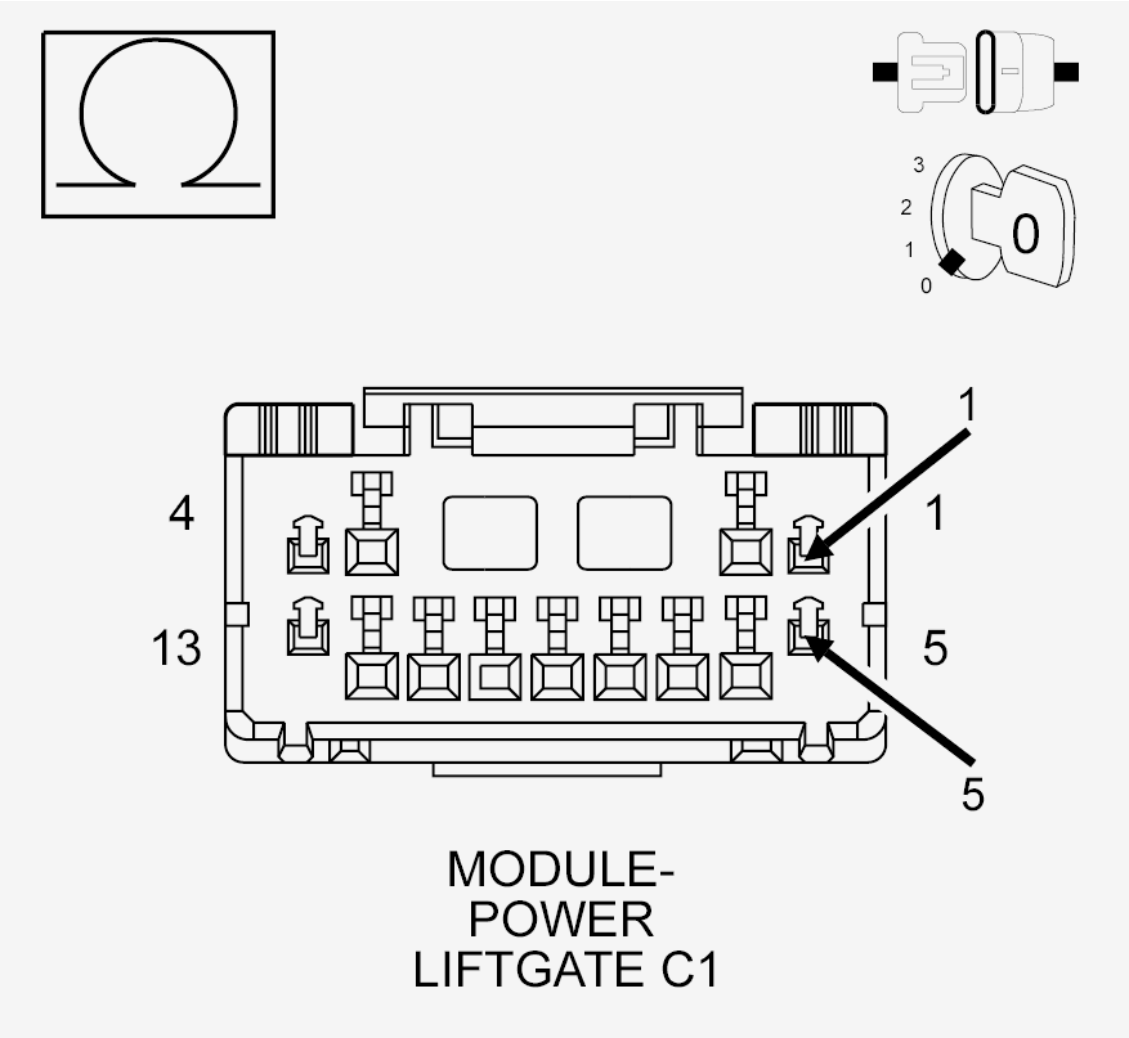

Fig. 28: Checking Liftgate Open Driver Circuit For Short To Liftgate Close Driver Circuit
Courtesy of CHRYSLER GROUP, LLC

1. Cycle the ignition off.
2. Disconnect the Power Liftgate Module C1 harness connector.
3. Measure the resistance between the (Q88) Liftgate Open Driver circuit and the (Q89) Liftgate Close Driver circuit.

NOTE: **Be sure to use an accurate DVOM in the following step. Zero the meter before beginning.**

Is the resistance approximately 0.5 of an Ohm?

Yes

- Replace the Power Liftgate Module in accordance with the service information. Refer to **MODULE, POWER LIFTGATE CONTROL, REMOVAL** .

- Perform the BODY VERIFICATION TEST. Refer to **BODY VERIFICATION TEST** .

No

- Go To 3

3. **(Q88) LIFTGATE OPEN DRIVER CIRCUIT OPEN**

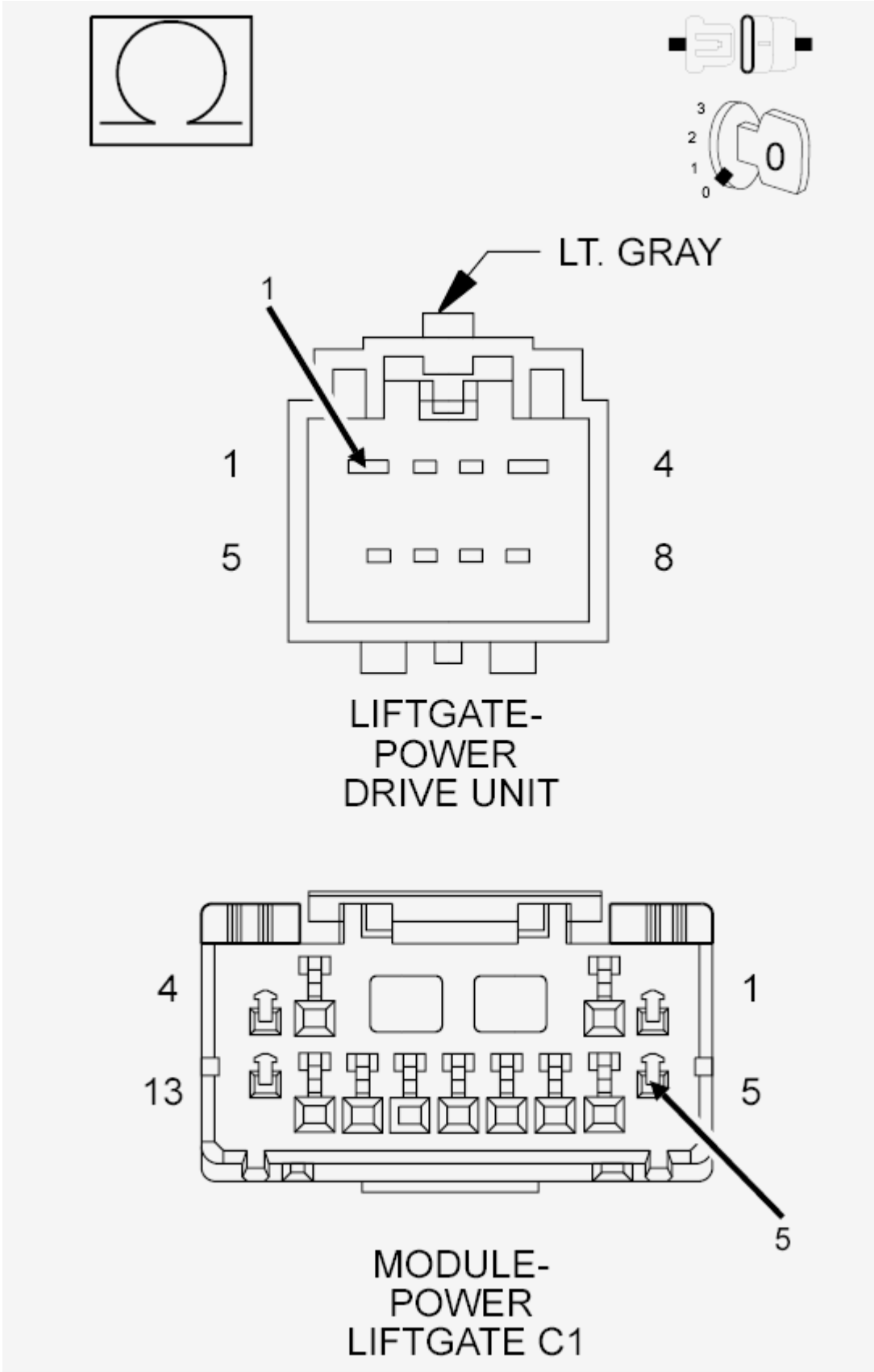
3
2
1
0
0
LT. GRAY
1
1
4
5
8
LIFTGATE-
POWER
DRIVE UNIT
4
1
13
5
5
MODULE-
POWER
LIFTGATE C1

Fig. 29: Checking Liftgate Open Driver Circuit For Open
Courtesy of CHRYSLER GROUP, LLC

1. Disconnect the Power Liftgate Drive Unit harness connector.
2. Measure the resistance of the (Q88) Liftgate Open Driver circuit between the PLG C1 connector and the PLG Drive Unit connector.

   Is the resistance below 2.0 Ohms?

   Yes

   - Go To 4

   No

   - Repair the (Q88) Liftgate Open Driver circuit for an open.
   - Perform the BODY VERIFICATION TEST. Refer to **BODY VERIFICATION TEST** .

4. **(Q89) LIFTGATE CLOSE DRIVER CIRCUIT OPEN**

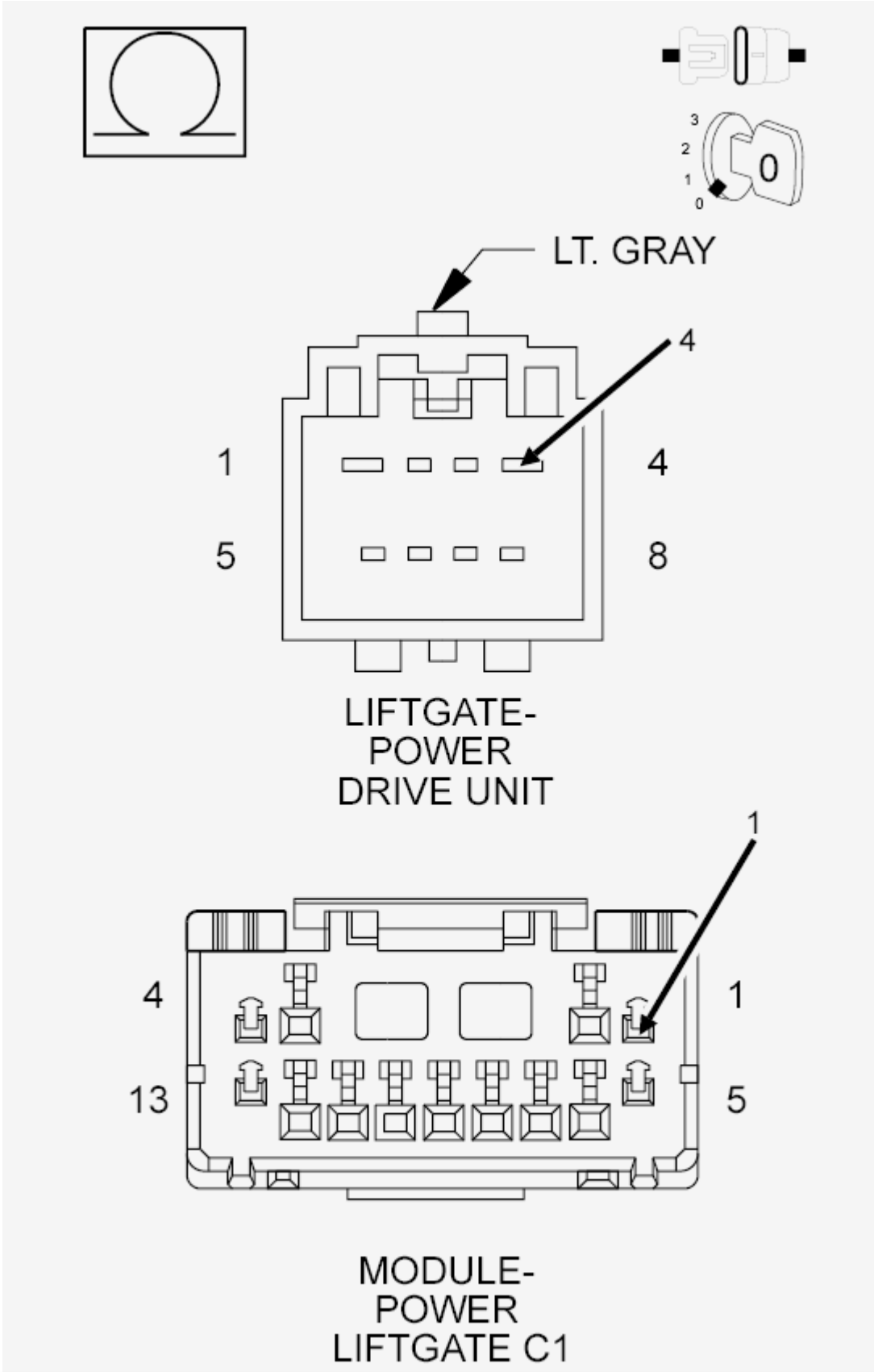
3
2
1
0
0
LT. GRAY
4
1
4
5
8
LIFTGATE-
POWER
DRIVE UNIT
1
4
1
13
5
MODULE-
POWER
LIFTGATE C1

Fig. 30: Checking Liftgate Close Driver Circuit For Open
Courtesy of CHRYSLER GROUP, LLC

1. Measure the resistance of the (Q89) Liftgate Close Driver circuit between the PLG C1 connector and the PLG Drive Unit connector.

   Is the resistance below 2.0 Ohms?

   Yes

   - Replace the Power Liftgate Drive Unit in accordance with the Service Information. Refer to **DRIVE UNIT, POWER, REMOVAL** .
   - Perform the BODY VERIFICATION TEST. Refer to **BODY VERIFICATION TEST** .

   No

   - Repair the (Q89) Liftgate Close Driver circuit for an open.
   - Perform the BODY VERIFICATION TEST. Refer to **BODY VERIFICATION TEST** .

B18E1-12-POWER LIFTGATE FRONT ZONE SWITCH - CIRCUIT SHORT TO BATTERY

For a complete wiring diagram, **refer to appropriate SYSTEM WIRING DIAGRAMS article** .

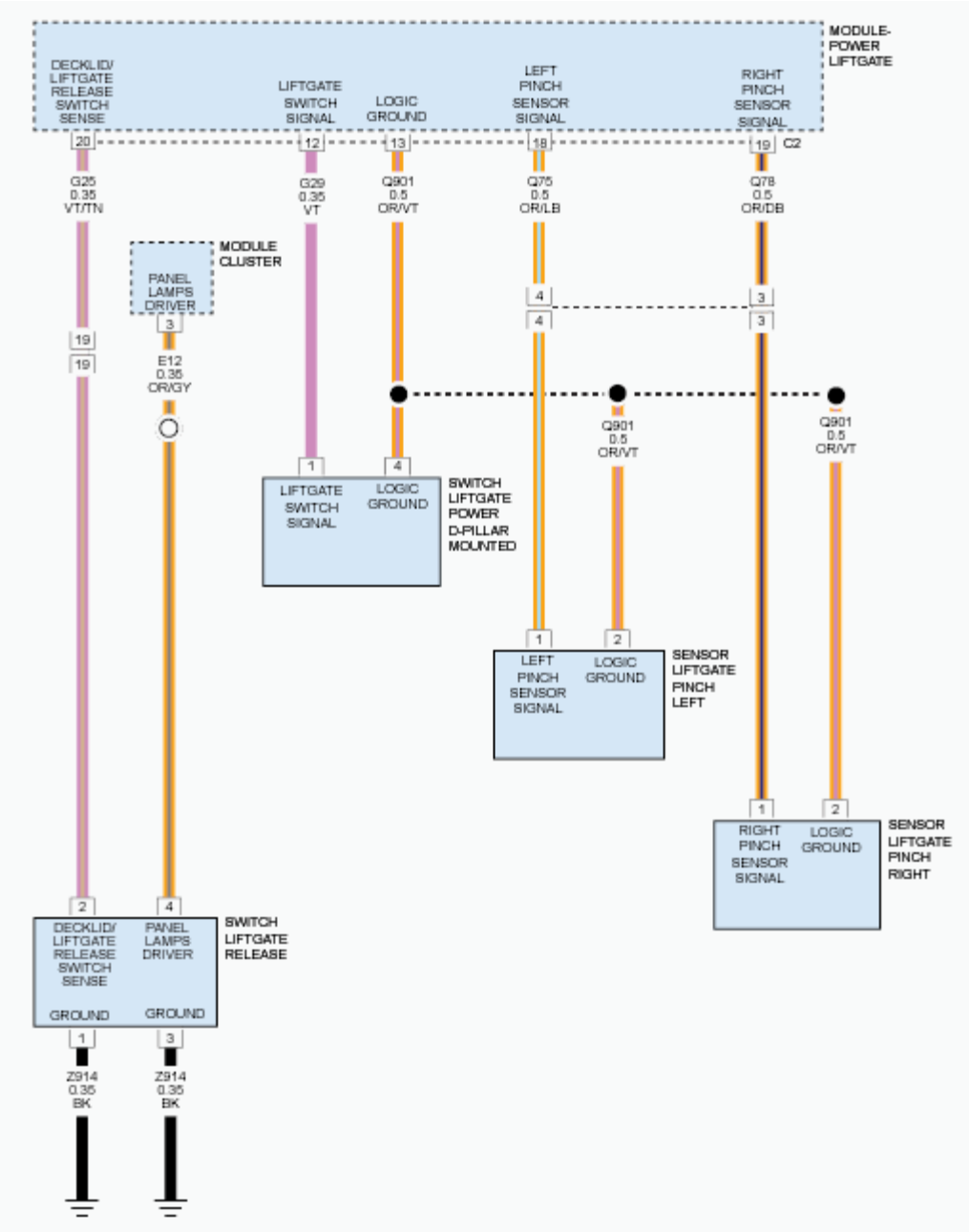

Fig. 31: Power Liftgate Module Pinch Sensor & Liftgate Switch Signal, Release Switch Sense & Ground Circuit Diagram
Courtesy of CHRYSLER GROUP, LLC

WHEN MONITORED

Whenever the Power Liftgate Module is awake.

SET CONDITION

When the Power Liftgate Module senses a voltage over 4.7 volts on the (G25) Liftgate Release Switch Sense

circuit for longer than 15 seconds, this code will set.

POSSIBLE CAUSES

Possible Causes
(G25) LIFTGATE RELEASE SWITCH SENSE CIRCUIT SHORTED TO VOLTAGE
(G25) LIFTGATE SWITCH SENSE CIRCUIT OPEN
FRONT POWER LIFTGATE SWITCH
POWER LIFTGATE MODULE

DIAGNOSTIC TEST

1. **DTC PRESENT**
    1. With the scan tool, record the DTCs.
    2. Erase the DTCs.
    3. Turn the ignition off, wait 10 seconds, then turn the ignition on.
    4. Operate the liftgate several times from the front switch.
    5. With the scan tool, read the Active DTCs.

    Does the scan tool display; B18E1-12-POWER LIFTGATE FRONT ZONE SWITCH - CIRCUIT SHORT TO BATTERY?

    Yes

    - Go To 2.

    No

    - Test complete, the condition or conditions that originally set this DTC are not present at this time. Using the wiring diagrams as a guide, check all related splices and connectors for signs of water intrusion, corrosion, pushed out or bent terminals and correct pin tension.
    - Perform the BODY VERIFICATION TEST. Refer to **STANDARD PROCEDURE** .
2. **FRONT POWER LIFTGATE SWITCH SHORTED**
    1. Disconnect the Front Power Liftgate Switch harness connector in the overhead console.
    2. Erase the DTCs.
    3. Turn the ignition off, wait 15 seconds, then turn the ignition on.
    4. With the scan tool, read the DTCs.

    Does the scan tool display; B18E1-12-POWER LIFTGATE FRONT ZONE SWITCH - CIRCUIT SHORT TO BATTERY?

    Yes

- Go To3.

No

- Replace the Front Power Liftgate Switch (Overhead Console) in accordance with the Service Information. Refer to **CONSOLE, OVERHEAD, FRONT, REMOVAL** .
- Perform the BODY VERIFICATION TEST. Refer to **STANDARD PROCEDURE** .

3. **(G25) LIFTGATE RELEASE SWITCH SENSE CIRCUIT SHORTED TO VOLTAGE**
   1. Disconnect the Power Liftgate Module C2 harness connector.
   2. Measure the voltage between ground and the (G25) Liftgate Release Switch Sense circuit.

   Is there any voltage present?

   Yes

   - Repair the (G25) Liftgate Release Switch Sense circuit for a short to voltage.
   - Perform the BODY VERIFICATION TEST. Refer to **STANDARD PROCEDURE** .

   No

   - Go To 4.
4. **(G25) LIFTGATE RELEASE SWITCH SENSE CIRCUIT OPEN**
   1. Turn the ignition off.
   2. Measure the resistance of the (G25) Liftgate Release Switch Sense circuit between the Switch connector and the Power Liftgate C2 harness connector.

   Is the resistance below 2.0 Ohms?

   Yes

   - Replace the Power Liftgate Module in accordance with the Service Information. Refer to **MODULE, POWER LIFTGATE CONTROL, REMOVAL** .
   - Perform the BODY VERIFICATION TEST. Refer to **STANDARD PROCEDURE** .

   No

   - Repair the (G25) Liftgate Release Switch Sense circuit for an open.
   - Perform the BODY VERIFICATION TEST. Refer to **STANDARD PROCEDURE** .

B18E1-2A-POWER LIFTGATE FRONT ZONE SWITCH - STUCK

For a complete wiring diagram, **refer to appropriate SYSTEM WIRING DIAGRAMS article** .

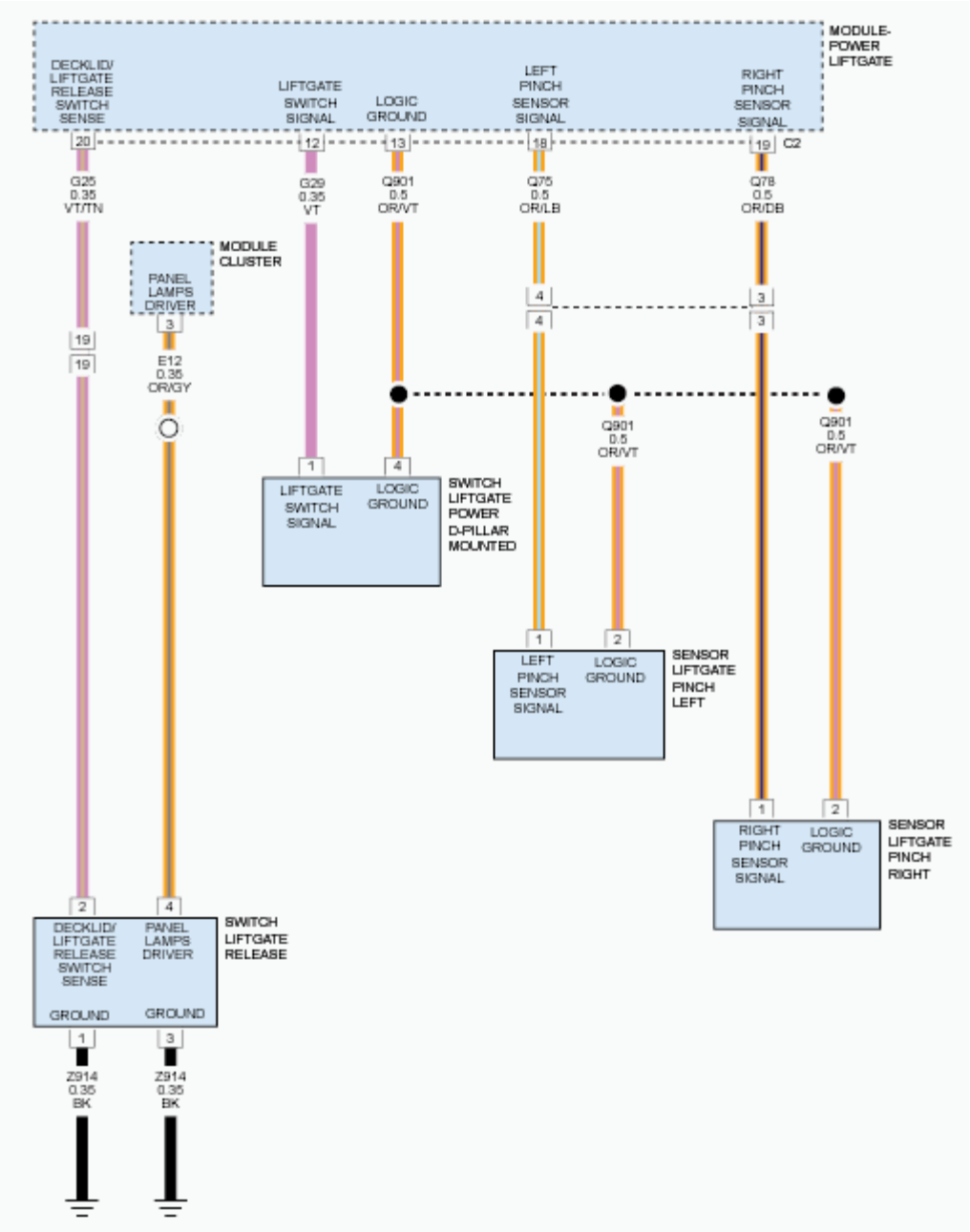

Fig. 32: Power Liftgate Module Pinch Sensor & Liftgate Switch Signal, Release Switch Sense & Ground Circuit Diagram
Courtesy of CHRYSLER GROUP, LLC

WHEN MONITORED

Whenever the Power Liftgate Module is awake.

SET CONDITION

When the Power Liftgate Module senses the (G25) Liftgate Switch Sense circuit active (2.0 to 3.5 volts) for

longer than 15 seconds, this code will set.

POSSIBLE CAUSES

Possible Causes
(G25) LIFTGATE RELEASE SWITCH SENSE CIRCUIT PARTIALLY SHORTED TO GROUND
FRONT POWER LIFTGATE SWITCH STUCK
POWER LIFTGATE MODULE

DIAGNOSTIC TEST

1. **DTC PRESENT**
    1. With the scan tool, record the DTCs.
    2. Erase the DTCs.
    3. Cycle the ignition off, wait 15 seconds, then cycle the ignition on.
    4. Operate the liftgate several times from the overhead switch.
    5. With the scan tool, read the DTCs.

    Does the scan tool display; B18E1-2A-POWER LIFTGATE FRONT ZONE SWITCH - STUCK?

    Yes

    - Go To 2.

    No

    - Test complete, the condition or conditions that originally set this DTC are not present at this time. Using the wiring diagrams as a guide, check all related splices and connectors for signs of water intrusion, corrosion, pushed out or bent terminals and correct pin tension.
    - Perform the BODY VERIFICATION TEST. Refer to **STANDARD PROCEDURE** .
2. **FRONT POWER LIFTGATE SWITCH STUCK**
    1. Disconnect the Front Power Liftgate Switch harness connector.
    2. Erase the DTCs.
    3. Cycle the ignition off, wait 15 seconds, then cycle the ignition on.
    4. With the scan tool, read the Active DTCs.

    Does the scan tool display; B18E1-2A-POWER LIFTGATE FRONT ZONE SWITCH - STUCK?

    Yes

    - Go To 3.

    No

- Replace the Front Power Liftgate Switch (Overhead Console) in accordance with the Service Information. Refer to **CONSOLE, OVERHEAD, FRONT, REMOVAL** .
- Perform the BODY VERIFICATION TEST. Refer to **STANDARD PROCEDURE** .

3. **(G25) LIFTGATE RELEASE SWITCH SENSE CIRCUIT SHORTED TO GROUND**

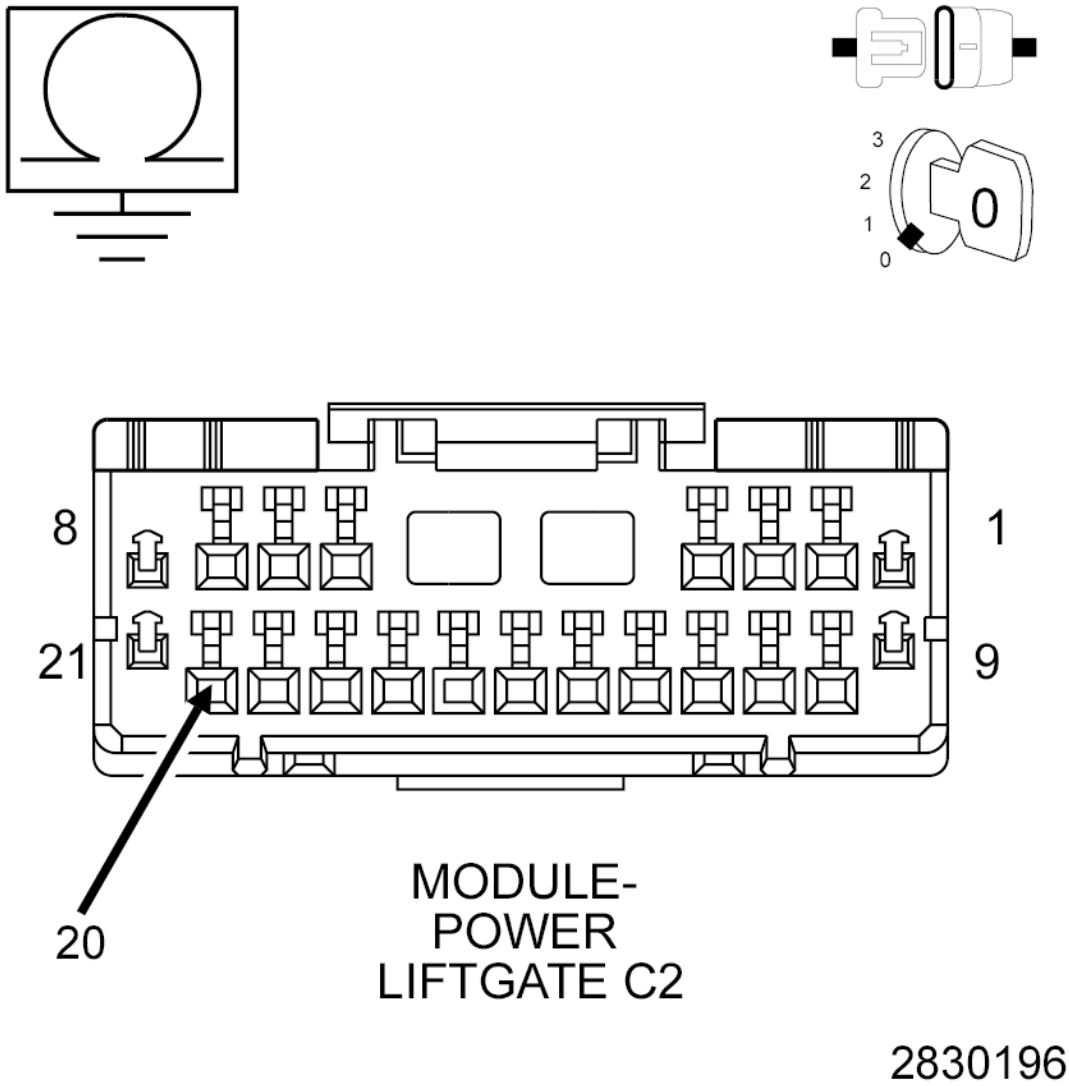

Fig. 33: Checking Liftgate Switch Sense Circuit For Short To Ground
Courtesy of CHRYSLER GROUP, LLC

1. Cycle the ignition off.
2. Disconnect the Power Liftgate Module C2 harness connector.
3. Measure the resistance between ground and the (G25) Liftgate Release Switch Sense circuit.

   Is the resistance below 10K Ohms?

Yes

- Repair the (G25) Liftgate Release Switch Sense circuit for a partial short to ground.
- Perform the BODY VERIFICATION TEST. Refer to **STANDARD PROCEDURE** .

No

- Replace the Power Liftgate Module in accordance with the Service Information. Refer to **MODULE, POWER LIFTGATE CONTROL, REMOVAL** .
- Perform the BODY VERIFICATION TEST. Refer to **STANDARD PROCEDURE** .

B1941-92-POWER LIFTGATE POSITION SENSOR 2 - PERFORMANCE OR INCORRECT OPERATION

For a complete wiring diagram, **refer to appropriate SYSTEM WIRING DIAGRAMS article** .

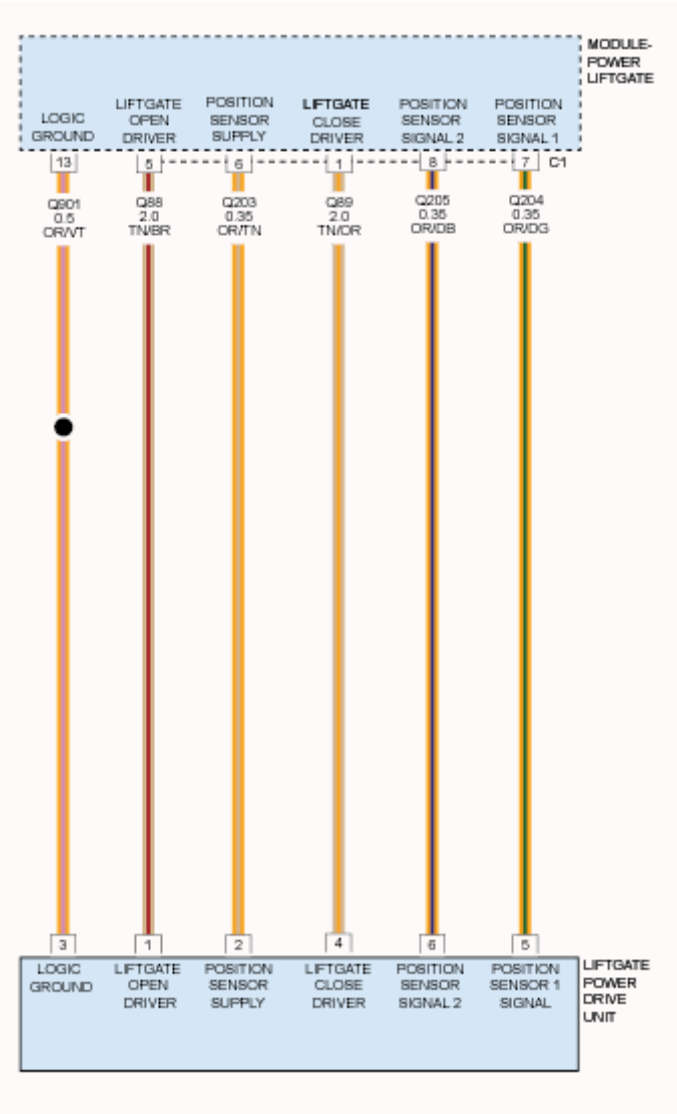

Fig. 34: Power Liftgate Position Sensor Signal, Supply, Liftgate Drive & Ground Circuit Diagram
Courtesy of CHRYSLER GROUP, LLC

WHEN MONITORED

Whenever the Power Liftgate is power opening or closing.

SET CONDITION

When the Power Liftgate Module senses the (Q205) Position Sensor Signal 2 circuit not pulsing during motor operation, this code will set.

POSSIBLE CAUSES

Possible Causes
(Q901) LOGIC GROUND OPEN

(Q205) POSITION SENSOR SIGNAL 2 CIRCUIT SHORTED TO GROUND
(Q205) POSITION SENSOR SIGNAL 2 CIRCUIT OPEN
Q205) POSITION SENSOR SIGNAL 2 CIRCUIT SHORTED TO VOLTAGE
(Q203) POSITION SENSOR SUPPLY CIRCUIT OPEN
(Q203) POSITION SENSOR SUPPLY CIRCUIT SHORTED TO GROUND
Q205) POSITION SENSOR SIGNAL 2 CIRCUIT SHORTED TO THE (Q204) POSITION SENSOR SIGNAL 1 CIRCUIT
POWER LIFTGATE DRIVE UNIT
POWER LIFTGATE MODULE

DIAGNOSTIC TEST

1. **DTC PRESENT**
    1. With the scan tool, record the DTCs.
    2. Erase the DTCs.
    3. Turn the ignition off, wait 10 seconds, then turn the ignition on.
    4. If possible, operate the liftgate several times.
    5. With the scan tool, read the Active DTCs.

    Does the scan tool display; B1941-92-POWER LIFTGATE POSITION SENSOR 2 - PERFORMANCE OR INCORRECT OPERATION?

    Yes

    - Go To 2.

    No

    - Test complete, the condition or conditions that originally set this DTC are not present at this time. Using the wiring diagrams as a guide, check all related splices and connectors for signs of water intrusion, corrosion, pushed out or bent terminals and correct pin tension.
    - Perform the BODY VERIFICATION TEST. Refer to **STANDARD PROCEDURE** .
2. **(Q901) LOGIC GROUND OPEN**
    1. Turn the ignition off.
    2. Disconnect the Power Liftgate Drive Unit harness connector.
    3. Disconnect the Power Liftgate Module C2 harness connector.
    4. Measure the resistance of (Q901) Logic Ground circuit between the Power Liftgate Drive Unit harness connector and the Power Liftgate Module C2 harness connector.

    Is the resistance below 1.0 Ohm?

    Yes

- Go To 3.

No

- Repair the (Q901) Logic Ground circuit for an open.
- Perform the BODY VERIFICATION TEST. Refer to **STANDARD PROCEDURE** .

3. **(Q205) POSITION SENSOR SIGNAL 2 CIRCUIT SHORTED TO GROUND**

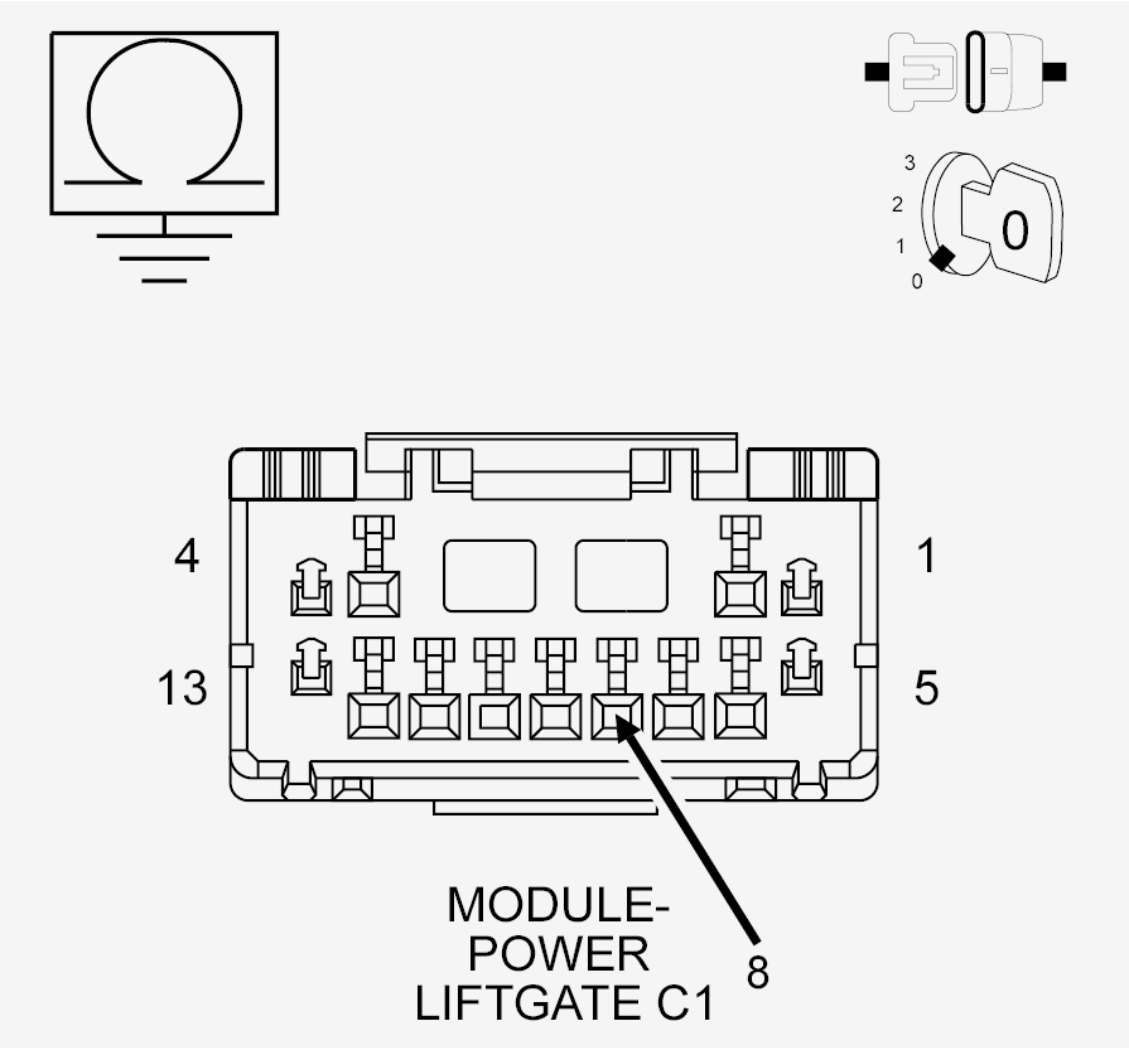

Fig. 35: Checking Position Sensor Signal 2 Circuit For Short To Ground
Courtesy of CHRYSLER GROUP, LLC

1. Disconnect the Power Liftgate Module C1 harness connector.
2. Measure the resistance between ground and the (Q205) Position Sensor Signal 2 circuit.

   Is the resistance below 10K Ohms?

Yes

- Repair the (Q205) Position Sensor Signal 2 circuit for a short to ground.
- Perform the BODY VERIFICATION TEST. Refer to **STANDARD PROCEDURE** .

No

- Go To4

4. **(Q205) POSITION SENSOR SIGNAL 2 CIRCUIT SHORTED TO VOLTAGE**

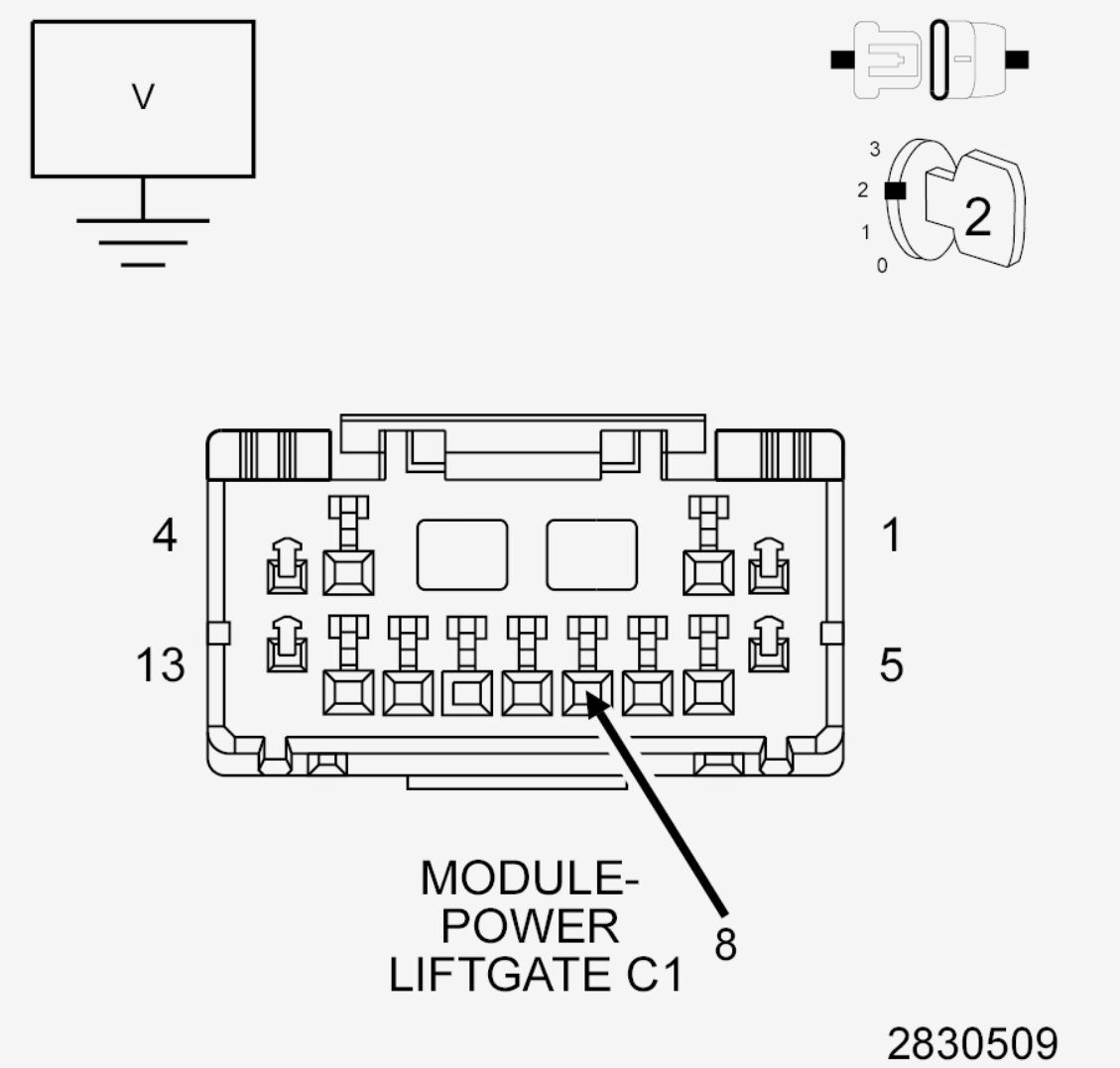

Fig. 36: Checking Position Sensor Signal 2 Circuit For Short To Voltage
Courtesy of CHRYSLER GROUP, LLC

1. Turn the ignition on.
2. Measure the voltage between ground and the (Q205) Position Sensor Signal 2 circuit.

Is there any voltage present?

Yes

- Repair the (204) Position Sensor Signal 2 circuit for a short to voltage.
- Perform the BODY VERIFICATION TEST. Refer to **STANDARD PROCEDURE** .

No

- Go To 5.

5. **(Q205) POSITION SENSOR SIGNAL 2 CIRCUIT OPEN**

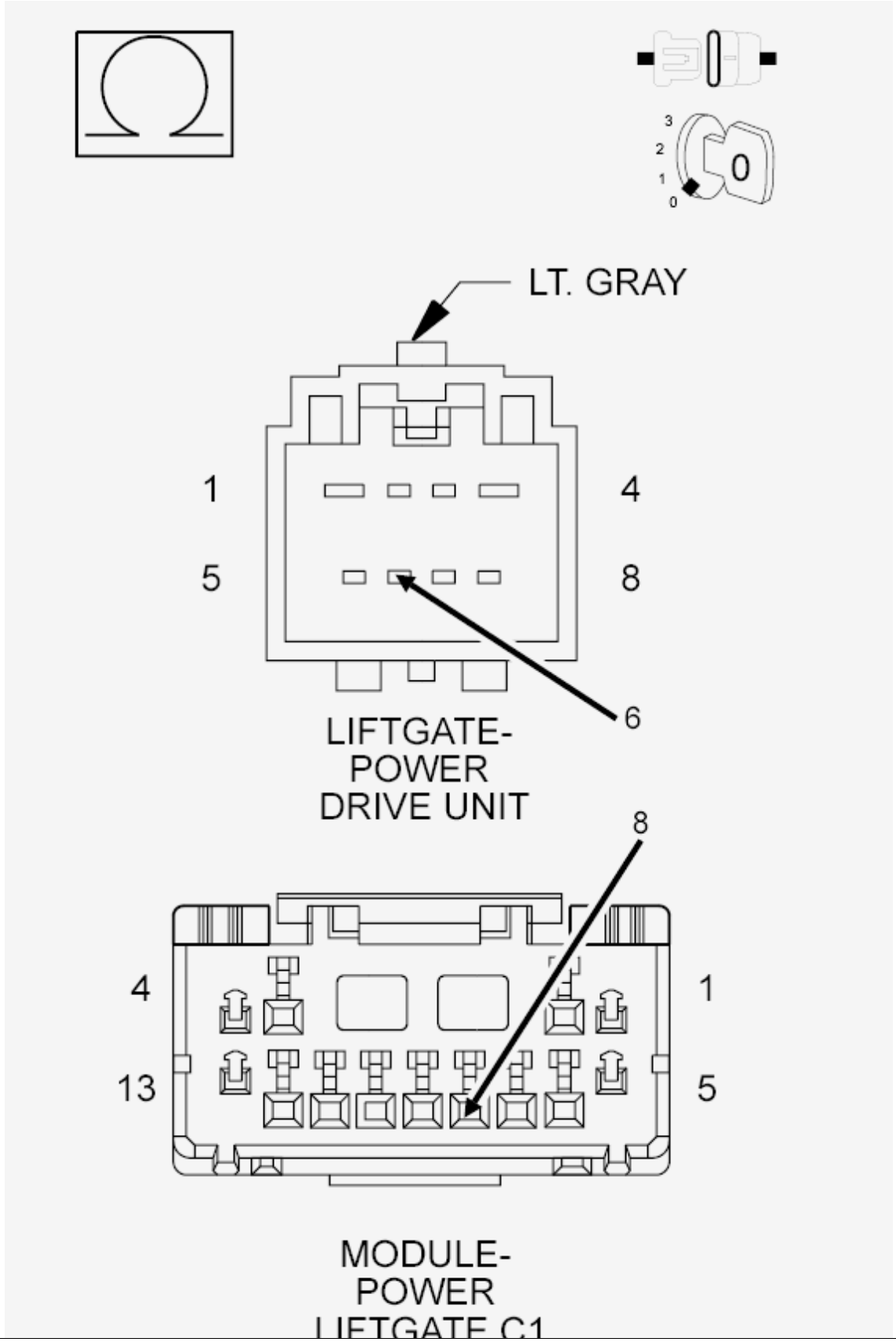
3
2
1
0
0
LT. GRAY
1
4
5
8
6
LIFTGATE-
POWER
DRIVE UNIT
8
4
1
13
5
MODULE-
POWER
LIFTGATE C1

Fig. 37: Checking Position Sensor Signal 2 Circuit For Open
Courtesy of CHRYSLER GROUP, LLC

1. Turn the ignition off.
2. Measure the resistance of the (Q205) Position Sensor Signal 2 circuit between the PLG C1 connector and the Power Drive Unit connector.

   Is the resistance below 1.0 Ohms?

   Yes

   - Go To 6.

   No

   - Repair the (Q205) Position Sensor Signal 2 circuit for an open.
   - Perform the BODY VERIFICATION TEST. Refer to **STANDARD PROCEDURE** .

6. **(Q203) POSITION SENSOR SUPPLY CIRCUIT OPEN**

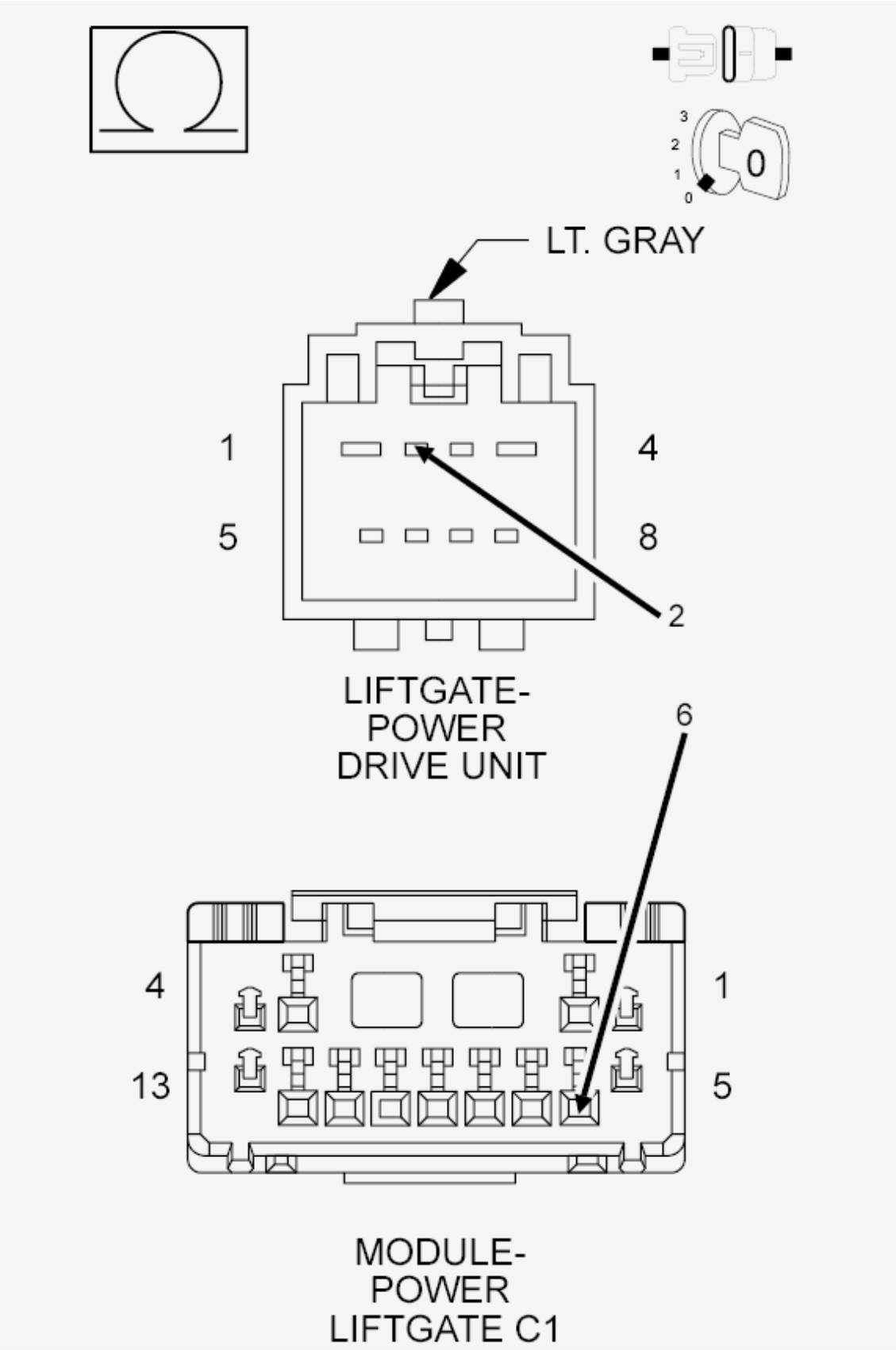
3
2
1
0
0
LT. GRAY
1
4
5
8
2
LIFTGATE-
POWER
DRIVE UNIT
6
4
1
13
5
MODULE-
POWER
LIFTGATE C1

Fig. 38: Checking Position Sensor Supply Circuit For Open Or Short To Ground
Courtesy of CHRYSLER GROUP, LLC

1. Measure the resistance of the (Q203) Position Sensor Supply circuit between the Power Liftgate Module C1 harness connector and the Power Liftgate Drive Unit harness connector.

   Is the resistance below 2.0 Ohms?

   Yes

   - Go To 7.

   No

   - Repair the (Q203) Position Sensor Supply circuit for an open.
   - Perform the BODY VERIFICATION TEST. Refer to **STANDARD PROCEDURE** .

7. **(Q203) POSITION SENSOR SUPPLY CIRCUIT SHORTED TO GROUND**

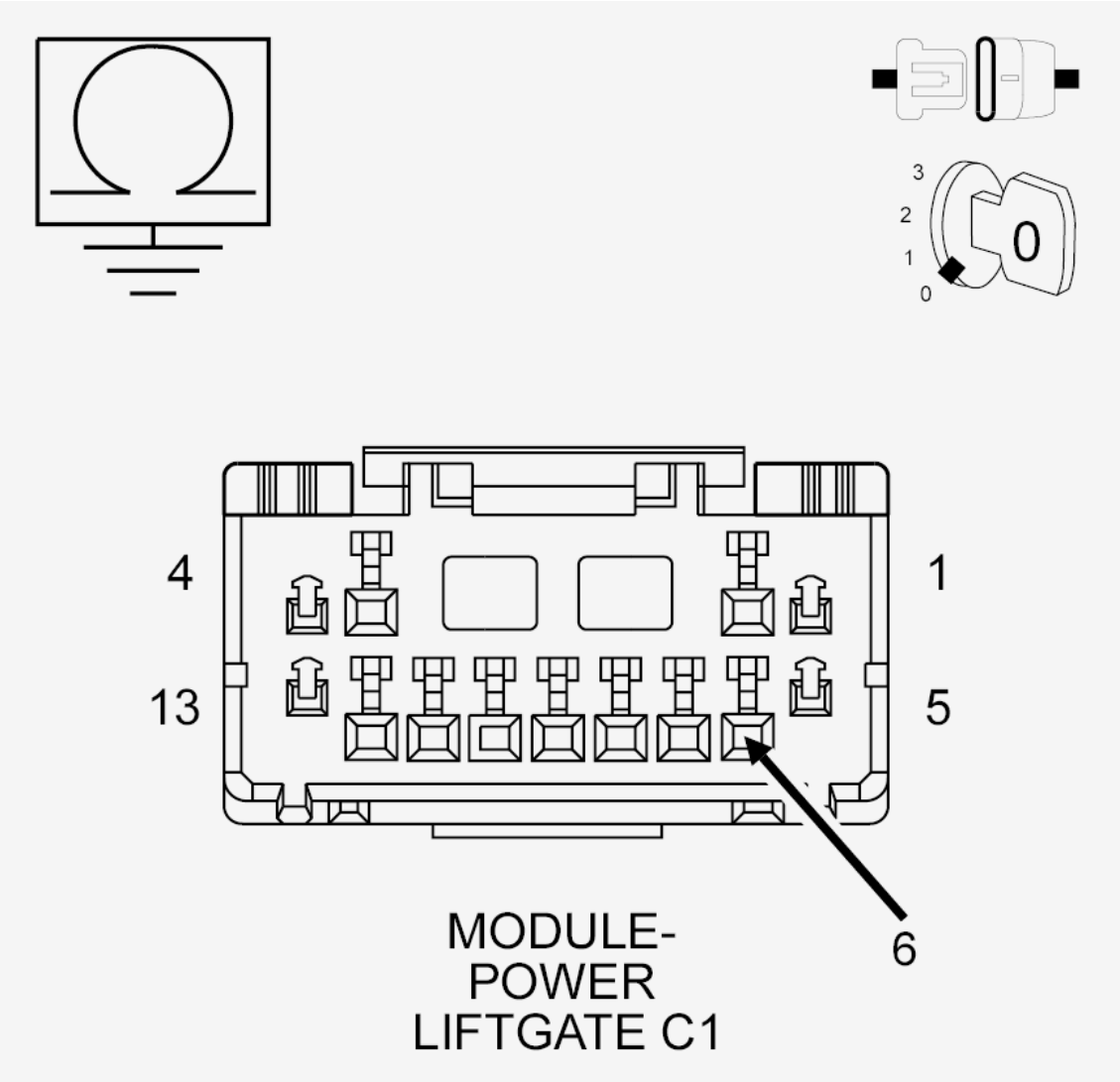

Fig. 39: Checking Position Sensor Supply Circuit For Short To Ground
Courtesy of CHRYSLER GROUP, LLC

1. Measure the resistance between ground and the (Q203) Position Sensor Supply circuit.

   Is the resistance below 10K Ohms?

   Yes

   - Repair the (Q203) Position Sensor Supply circuit for a short to ground.
   - Perform the BODY VERIFICATION TEST. Refer to **STANDARD PROCEDURE** .

   No

   - Go To 8

8. **(Q205) POSITION SENSOR SIGNAL 2 CIRCUIT SHORTED TO THE (Q204) POSITION**

SENSOR SIGNAL 1 CIRCUIT

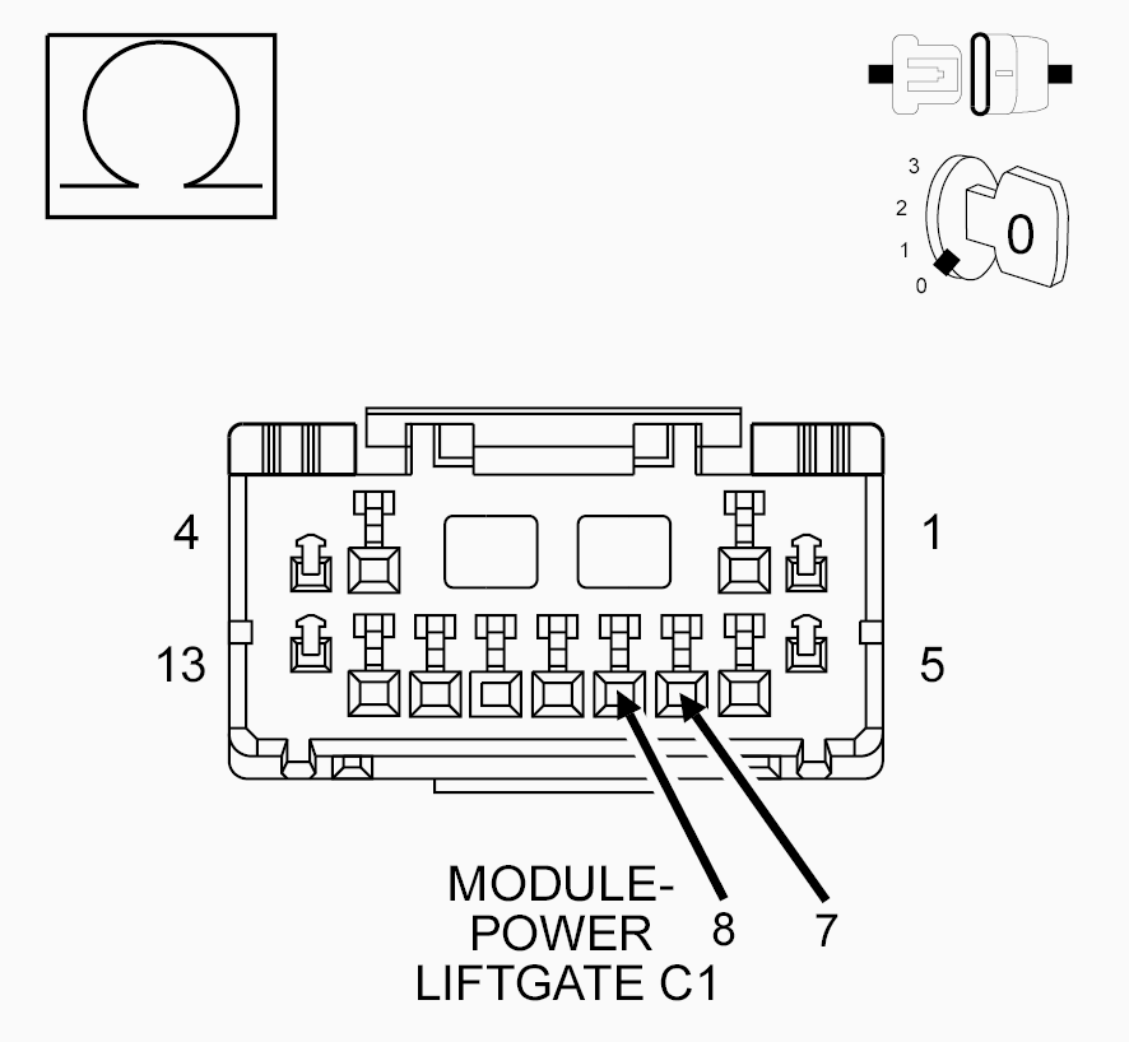

Fig. 40: Measuring Resistance Between Position Sensor Signal 2 Circuit And Position Sensor Signal 1 Circuit
Courtesy of CHRYSLER GROUP, LLC

1. Measure the resistance between the (Q205) Position Sensor Signal 2 circuit and the (Q204) Position Sensor Signal 1 circuit.

   Is the resistance below 10K Ohms?

   Yes

   - Repair the (Q205) Position Sensor Signal 2 circuit for a short to the (Q204) Position Sensor Signal 1 circuit.
   - Perform the BODY VERIFICATION TEST. Refer to **STANDARD PROCEDURE** .

No

- Go To 9

9. **POWER LIFTGATE MODULE**

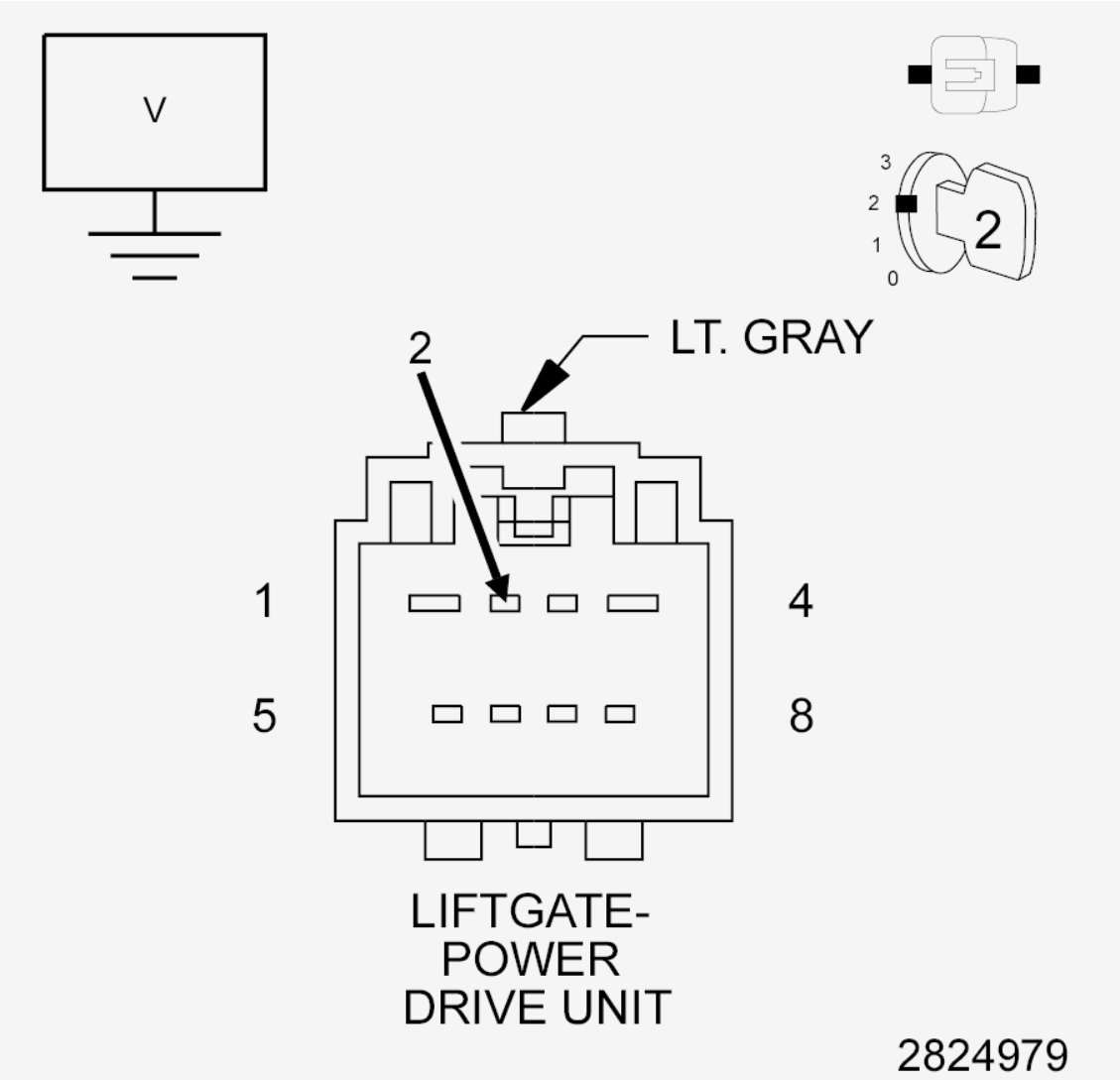

Fig. 41: Checking Power Liftgate Module Supply Circuit
Courtesy of CHRYSLER GROUP, LLC

1. Reconnect the Power Liftgate Module C1 harness connector.
2. Reconnect the Power Liftgate Module C2 harness connector.
3. Reconnect the Power Liftgate Drive Unit harness connector.
4. Turn the ignition on.
5. While back probing, measure the voltage between ground and the (Q203) Position Sensor Supply circuit in the Power Liftgate Drive Unit harness connector.

NOTE: The graphic shows the terminal end of the connector, back probe the wire end.

Is the voltage approximately 5.0 volts?

Yes

- Go To 10

No

- Replace the Power Liftgate Module in accordance with the Service Information. Refer to **MODULE, POWER LIFTGATE CONTROL, REMOVAL** .
- Perform the BODY VERIFICATION TEST. Refer to **STANDARD PROCEDURE** .

10. **POWER LIFTGATE MODULE**

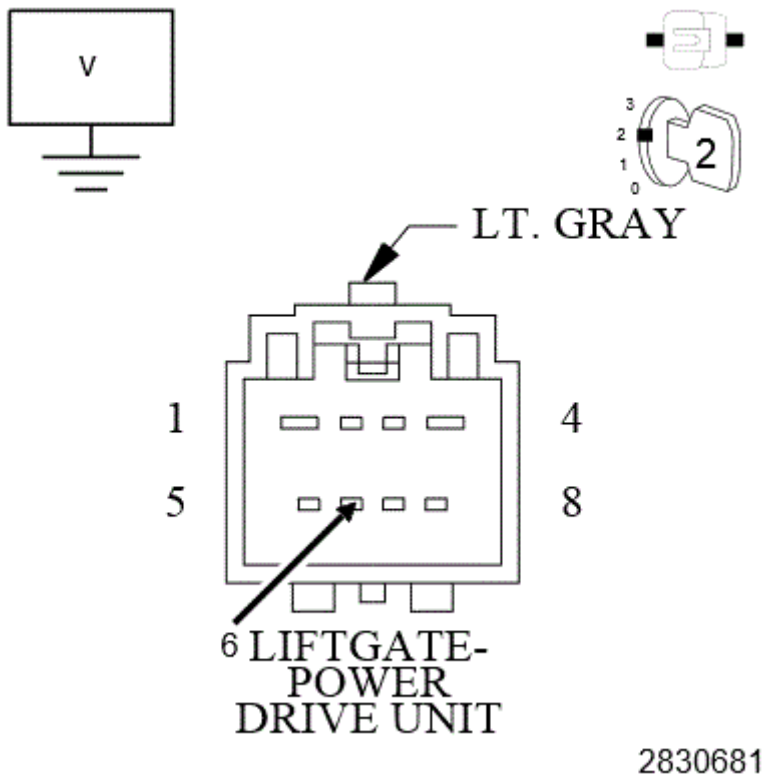

Fig. 42: Checking Liftgate Position Sensor Voltage
Courtesy of CHRYSLER GROUP, LLC

1. While back probing, measure the voltage between ground and the (Q205) Liftgate Position Sensor 2 Signal circuit in the Power Liftgate Drive Unit harness connector.

NOTE: The graphic shows the terminal end of the connector, back probe the

wire end.

2. Slowly lower and raise the liftgate while observing the voltmeter.

   Does the voltage change from approximately 0.0 volts to 4.7 volts as the liftgate is moved?

   Yes

   - Test Complete.
   - Perform the BODY VERIFICATION TEST. Refer to **STANDARD PROCEDURE** .

   No

   - Replace the Power Liftgate Drive Unit in accordance with the Service Information. Refer to **DRIVE UNIT, POWER, REMOVAL** .
   - Perform the BODY VERIFICATION TEST. Refer to **STANDARD PROCEDURE** .

B1945-11-POWER LIFTGATE PINCH SENSOR 2 - CIRCUIT SHORT TO GROUND

For a complete wiring diagram, **refer to appropriate SYSTEM WIRING DIAGRAMS article** .

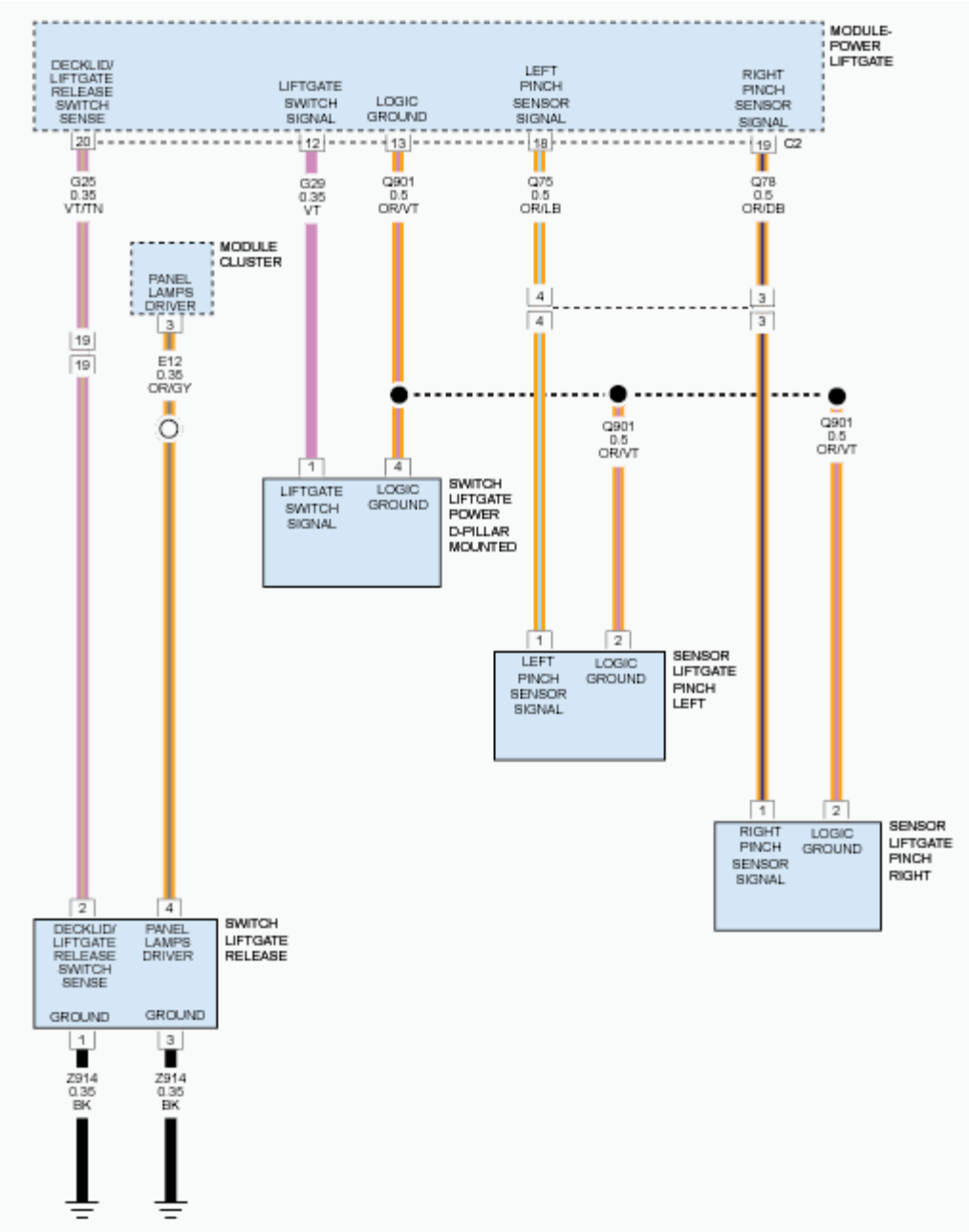

Fig. 43: Power Liftgate Module Pinch Sensor & Liftgate Switch Signal, Release Switch Sense & Ground Circuit Diagram
Courtesy of CHRYSLER GROUP, LLC

WHEN MONITORED

Whenever the Power Liftgate Module is awake.

SET CONDITION

The Power Liftgate Module has detected the Left Liftgate Pinch Sensor circuit voltage is under 0.5 of a volt for

over 15 seconds.

POSSIBLE CAUSES

Possible Causes
(Q75) LEFT PINCH SENSOR SIGNAL CIRCUIT SHORTED TO GROUND
(Q75) LEFT PINCH SENSOR SIGNAL CIRCUIT SHORTED TO THE (Q901) LOGIC GROUND CIRCUIT
LEFT LIFTGATE PINCH SENSOR
POWER LIFTGATE MODULE

DIAGNOSTIC TEST

1. **DTC PRESENT**
    1. With the scan tool, record and erase the DTCs and any liftgate inhibitors.
    2. Cycle the ignition off, wait 10 seconds, then cycle the ignition on.
    3. Operate the liftgate several times.
    4. With the scan tool, read the Active DTCs.

    Does the scan tool display; B1945-11-POWER LIFTGATE PINCH SENSOR 2 - CIRCUIT SHORT TO GROUND?

    Yes

    - Go To 2

    No

    - Test complete, the condition or conditions that originally set this DTC are not present at this time. Using the wiring diagrams as a guide, check all related splices and connectors for signs of water intrusion, corrosion, pushed out or bent terminals and correct pin tension.
    - Perform the BODY VERIFICATION TEST. Refer to **BODY VERIFICATION TEST** .
2. **LEFT PINCH SENSOR SHORTED**

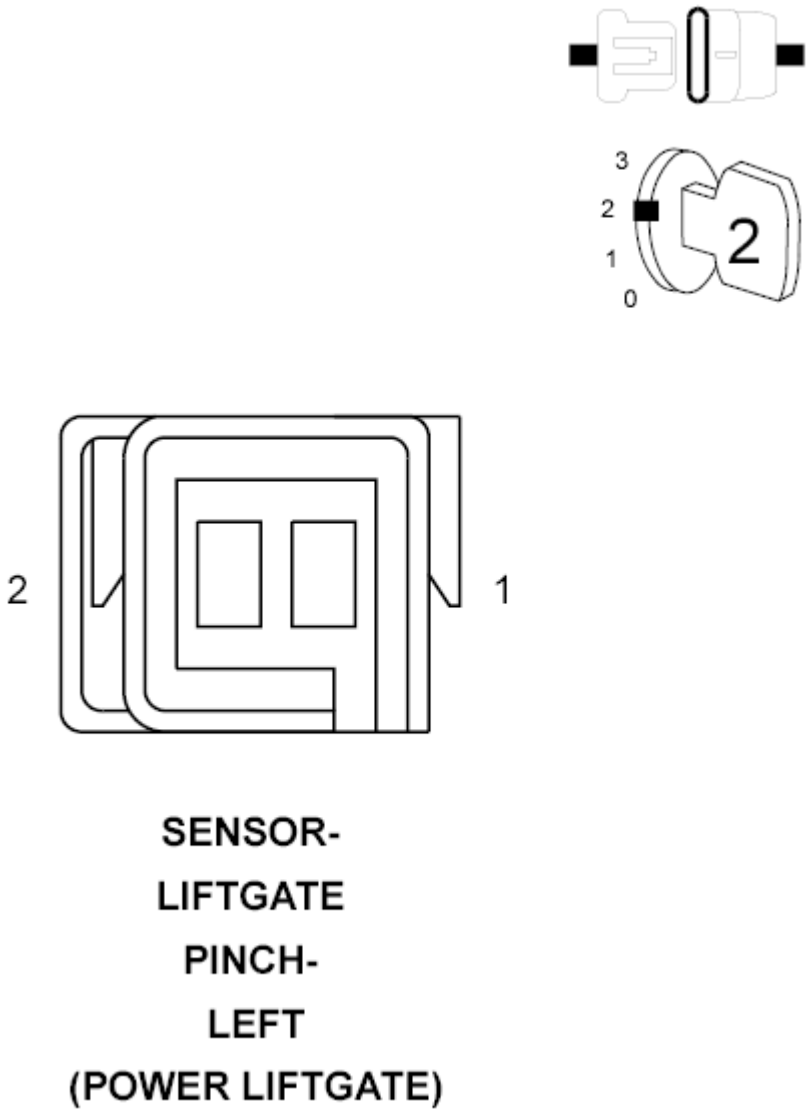

Fig. 44: Left Pinch Sensor Harness Connector End View
Courtesy of CHRYSLER GROUP, LLC

1. Disconnect the Left Liftgate Pinch Sensor harness connector.
2. Erase the DTCs.
3. Cycle the ignition off, wait 20 seconds, then cycle the ignition on.
4. With the scan tool, read the Active DTCs.

   Does the scan tool display; B1945-11-POWER LIFTGATE PINCH SENSOR 2 - CIRCUIT SHORT TO GROUND?

   Yes

- Go To 3

No

- Replace the Left Liftgate Pinch Sensor in accordance with the Service Information. Refer to **SENSOR, PINCH, REMOVAL** .
- Perform the BODY VERIFICATION TEST. Refer to **BODY VERIFICATION TEST** .

3. **CHECK THE (Q75) LEFT PINCH SENSOR SIGNAL FOR A SHORT TO GROUND**

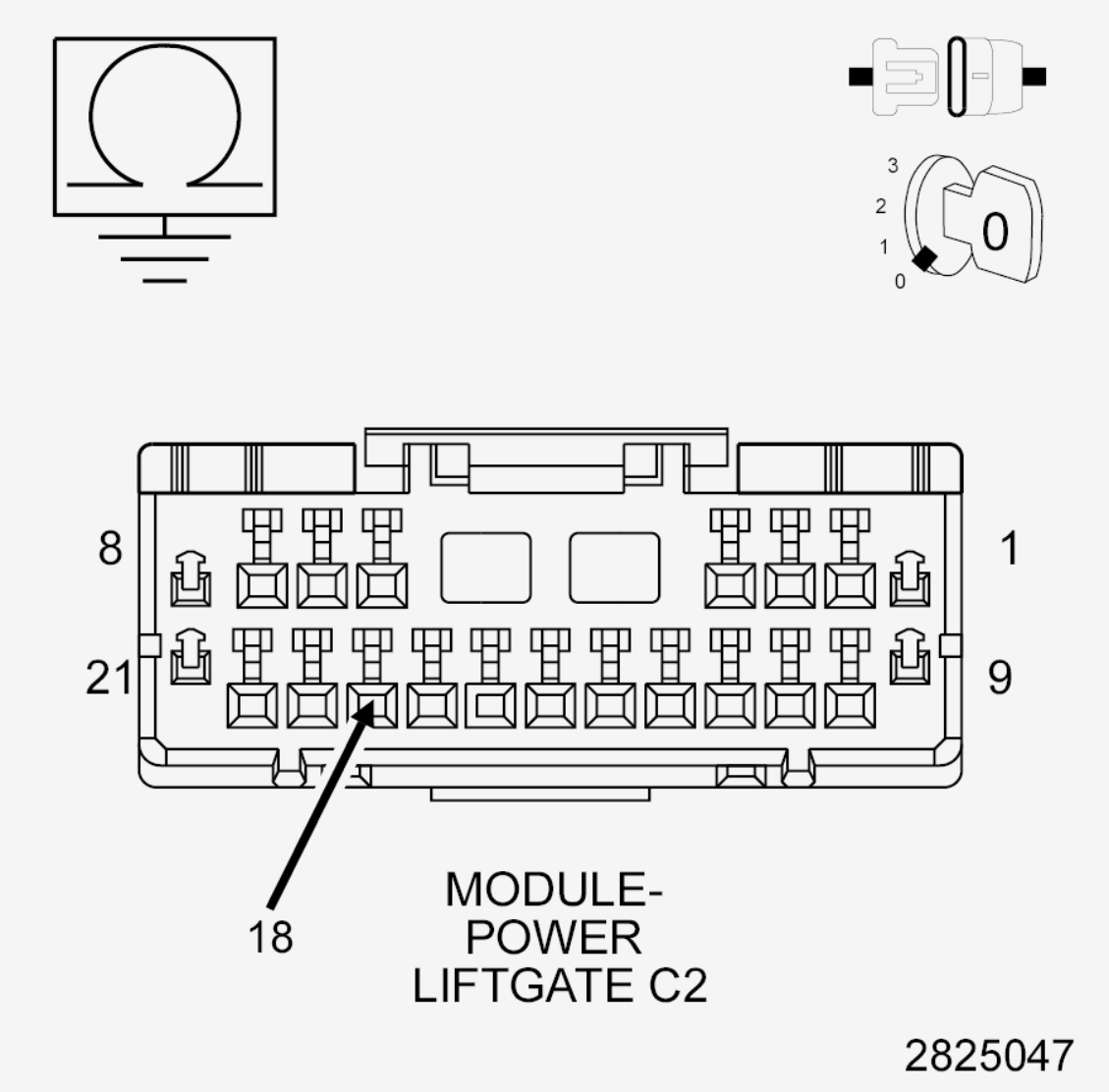

Fig. 45: Checking Left Pinch Sensor Signal For A Short To Ground
Courtesy of CHRYSLER GROUP, LLC

1. Cycle the ignition off.
2. Disconnect the Power Liftgate Module C2 harness connector.

3. Measure the resistance between ground and the (Q75) Left Pinch Sensor Signal harness circuit.

   Is the resistance below 10K Ohms?

   Yes

   - Repair the (Q75) Left Pinch Sensor Signal circuit for a short to ground.
   - Perform the BODY VERIFICATION TEST. Refer to **BODY VERIFICATION TEST** .

   No

   - Go To 4

4. **CHECK THE (Q75) LEFT PINCH SENSOR SIGNAL FOR A SHORT TO THE (Q901) LOGIC GROUND CIRCUIT**

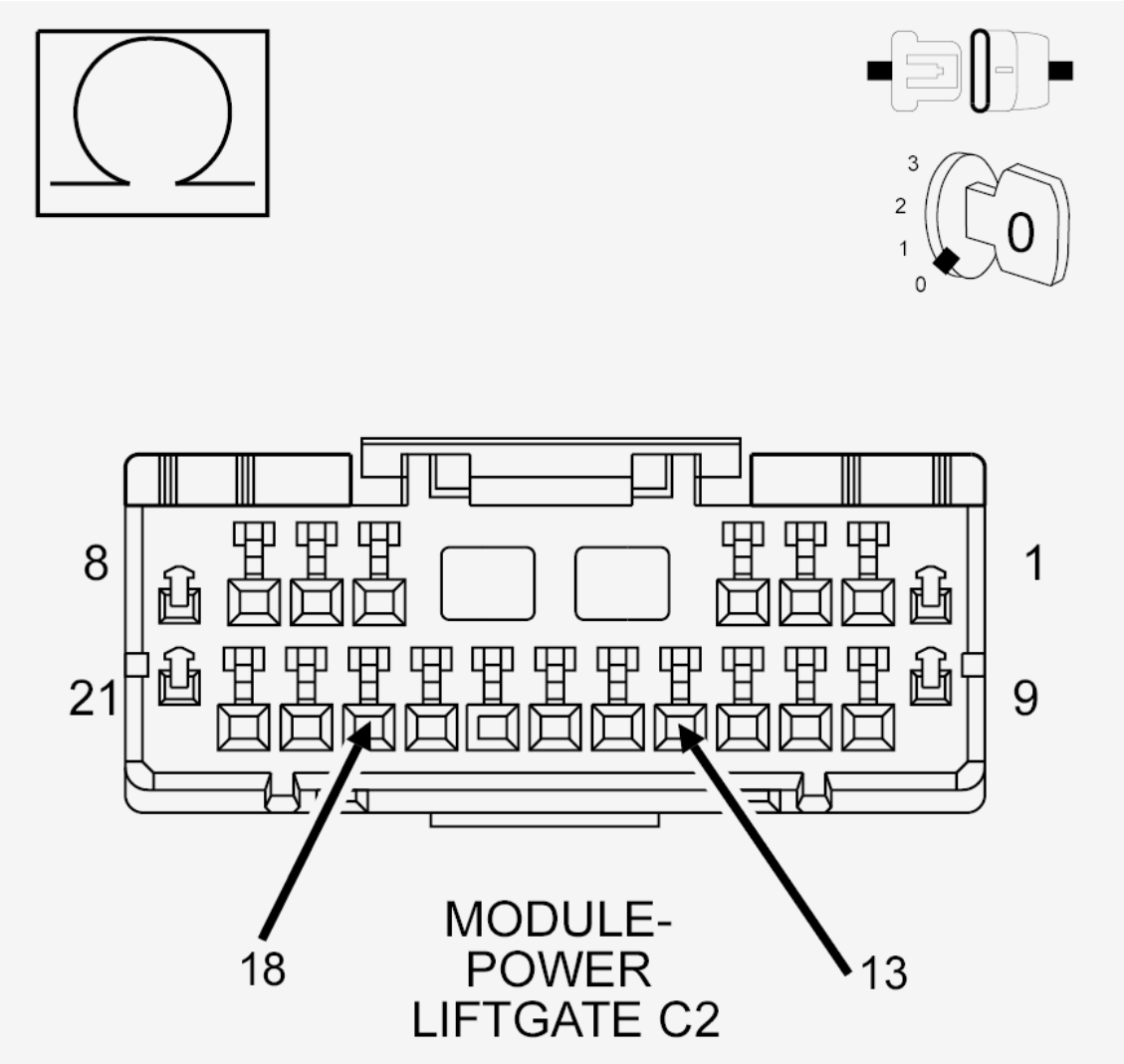

Fig. 46: Checking Left Pinch Sensor Signal For A Short To Logic Ground Circuit

Courtesy of CHRYSLER GROUP, LLC

1. Measure the resistance between the (Q75) Left Pinch Sensor Signal circuit and the (Q901) Logic Ground circuit.

   Is the resistance below 10K Ohms?

   Yes

   - Repair the (Q75) Left Pinch Sensor Signal circuit for a short to the (Q901) Logic Ground circuit.
   - Perform the BODY VERIFICATION TEST. Refer to **BODY VERIFICATION TEST** .

   No

   - Replace the Power Liftgate Module in accordance with the Service Information. Refer to **MODULE, POWER LIFTGATE CONTROL, REMOVAL** .
   - Perform the BODY VERIFICATION TEST. Refer to **BODY VERIFICATION TEST** .

B1945-12-POWER LIFTGATE PINCH SENSOR 2 - CIRCUIT SHORT TO BATTERY

For a complete wiring diagram, **refer to appropriate SYSTEM WIRING DIAGRAMS article** .

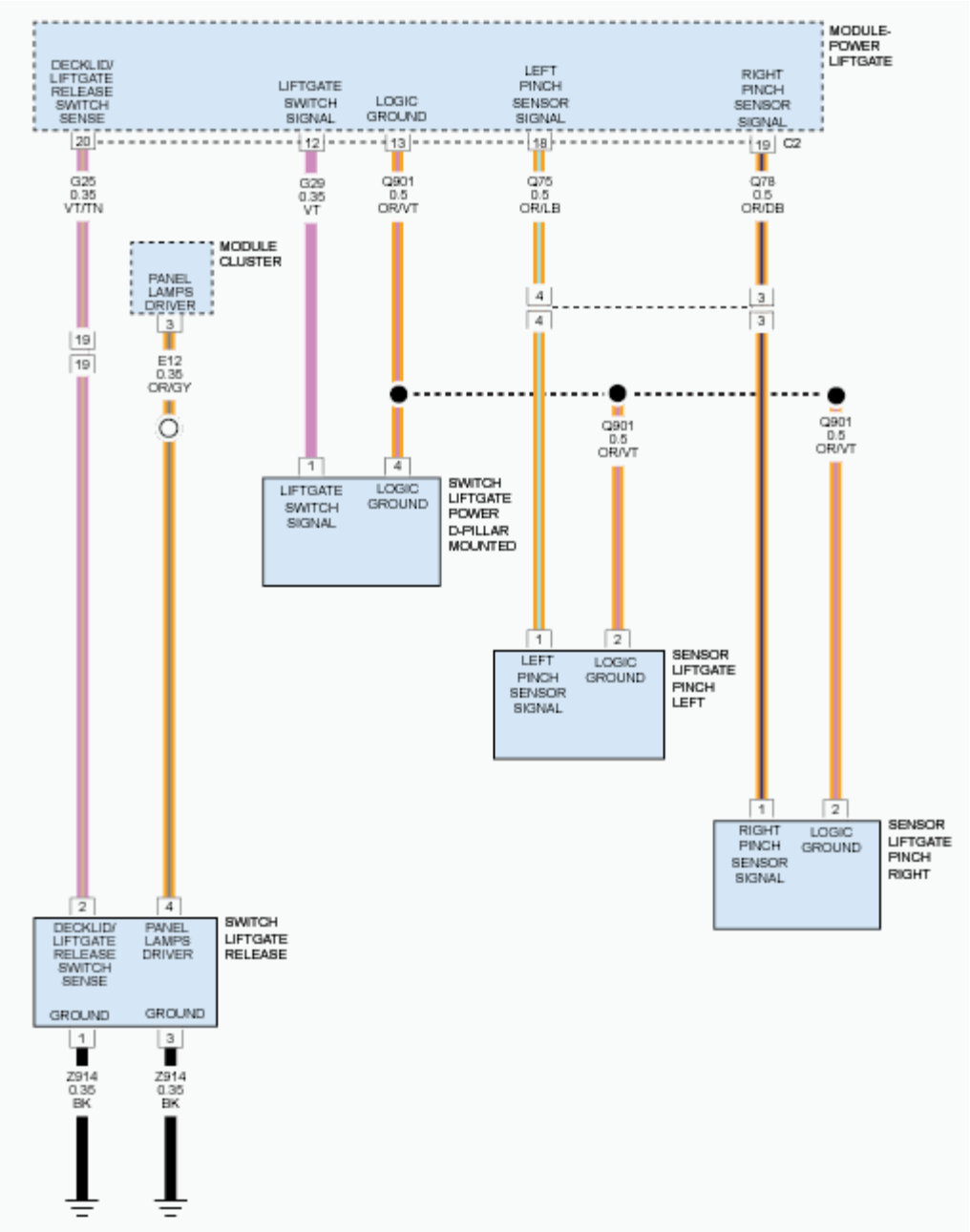

Fig. 47: Power Liftgate Module Pinch Sensor & Liftgate Switch Signal, Release Switch Sense & Ground Circuit Diagram
Courtesy of CHRYSLER GROUP, LLC

WHEN MONITORED

Whenever the Power Liftgate Module is awake.

SET CONDITION

The Power Liftgate Module has detected the Left Power Liftgate Pinch Sensor circuit voltage is above 4.6 volts

for over 15 seconds.

POSSIBLE CAUSES

Possible Causes
(Q901) LOGIC GROUND CIRCUIT OPEN
(Q75) LEFT PINCH SENSOR SIGNAL CIRCUIT OPEN
(Q75) LEFT PINCH SENSOR SIGNAL CIRCUIT SHORTED TO VOLTAGE
LEFT LIFTGATE PINCH SENSOR
POWER LIFTGATE MODULE

DIAGNOSTIC TEST

1. **DTC PRESENT**
    1. With the scan tool, record and erase the DTCs and any liftgate inhibitors.
    2. Cycle the ignition off, wait 10 seconds, then cycle the ignition on.
    3. Operate the liftgate several times.
    4. With the scan tool, read the Active DTCs.

    Does the scan tool display; B1945-12-POWER LIFTGATE PINCH SENSOR 2 - CIRCUIT SHORT TO BATTERY?

    Yes

    - Go To 2

    No

    - Test complete, the condition or conditions that originally set this DTC are not present at this time. Using the wiring diagrams as a guide, check all related splices and connectors for signs of water intrusion, corrosion, pushed out or bent terminals and correct pin tension.
    - Perform the BODY VERIFICATION TEST. Refer to **BODY VERIFICATION TEST** .
2. **(Q901) LOGIC GROUND OPEN**

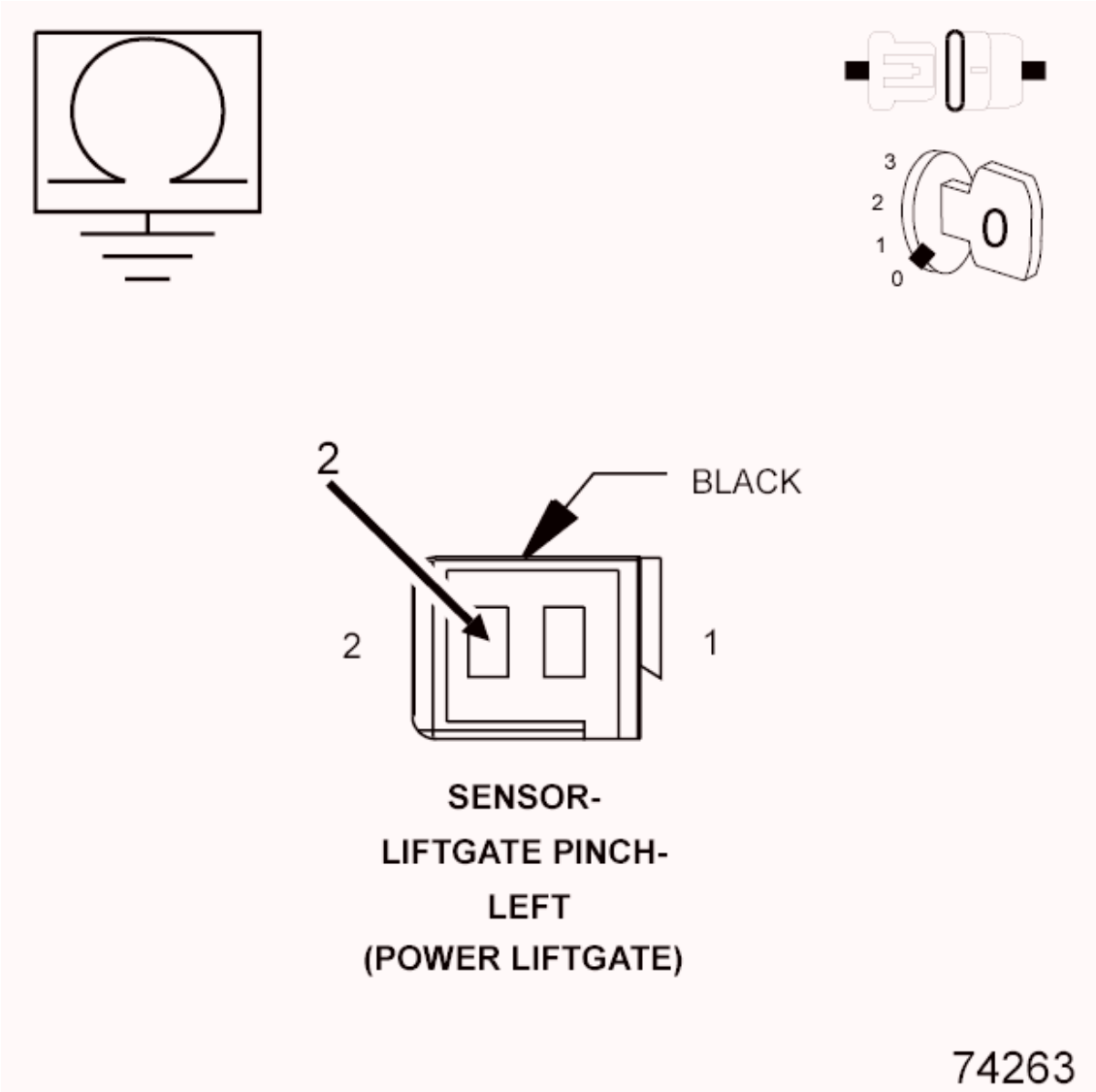

Fig. 48: Checking Logic Ground Circuit For Open
Courtesy of CHRYSLER GROUP, LLC

1. Cycle the ignition off.
2. Disconnect the Left Liftgate Pinch Sensor harness connector.
3. Measure the resistance of the (Q901) Logic Ground circuit in the Left Pinch Sensor harness connector.

   Is the resistance below 5 Ohms?

   Yes

   - Go To 3

   No

- Repair the (Q901) Logic Ground circuit for an open.
- Perform the BODY VERIFICATION TEST. Refer to **BODY VERIFICATION TEST** .

3. **LEFT PINCH SENSOR OPEN**

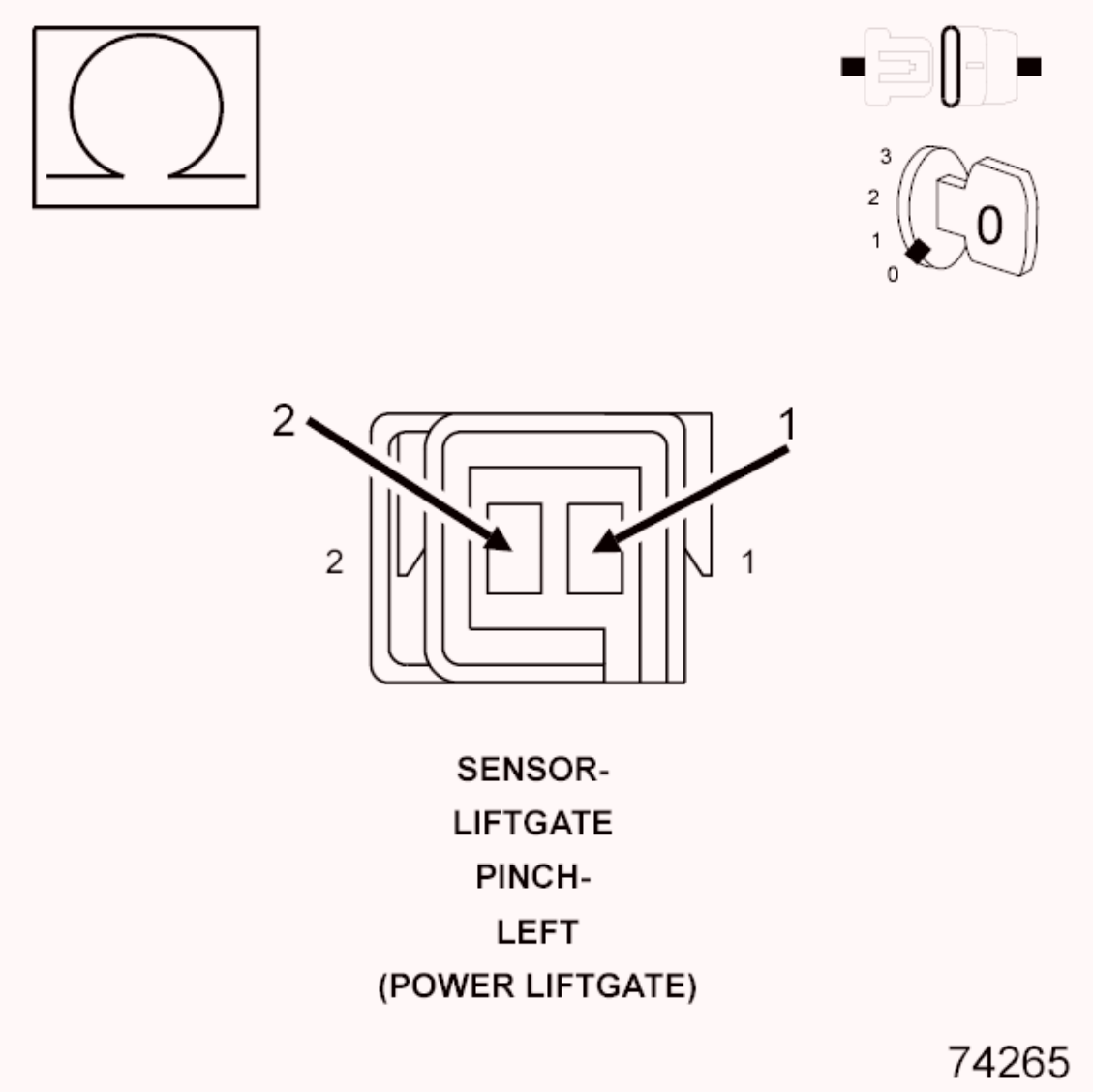

Fig. 49: Checking Left Pinch Sensor For An Open
Courtesy of CHRYSLER GROUP, LLC

1. Measure the resistance of the Left Pinch Sensor in the Component Side connector.

NOTE: **The graphic shows the harness side - component side is the mate connector of the pinch sensor.**

Is the resistance between 9K and 11K Ohms?

Yes

- Go To 4

No

- Replace the Left Pinch Sensor in accordance with the Service Information. Refer to **SENSOR, PINCH, REMOVAL** .
- Perform the BODY VERIFICATION TEST. Refer to **BODY VERIFICATION TEST** .

4. **(Q75) LEFT PINCH SENSOR SIGNAL CIRCUIT OPEN**

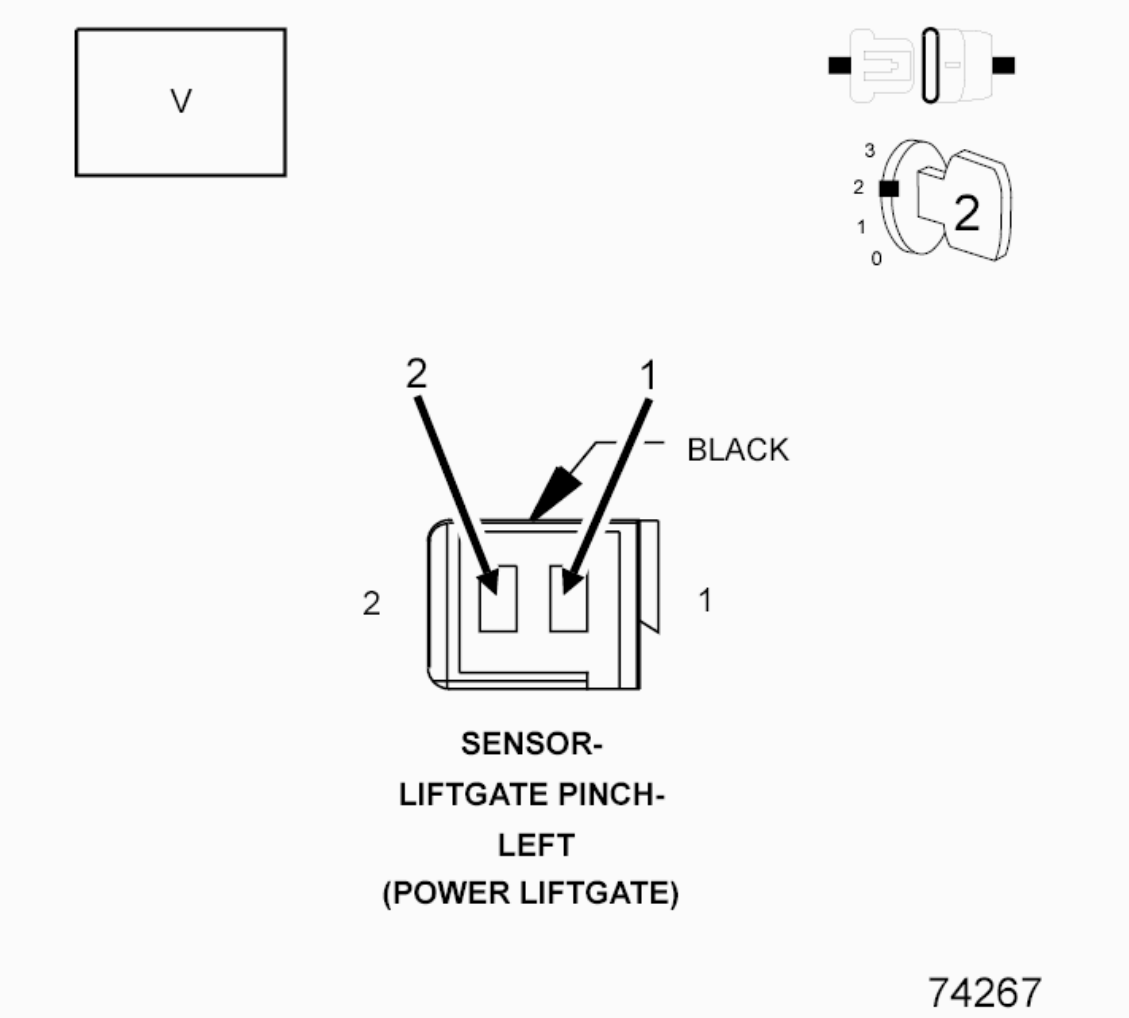

Fig. 50: Checking Left Pinch Sensor Signal Circuit For An Open
Courtesy of CHRYSLER GROUP, LLC

1. Cycle the ignition on.
2. Measure the voltage between the (Q901) Logic Ground circuit and the (Q75) Left Pinch Sensor Signal circuit in the Left Pinch Sensor harness connector.

Is the voltage below 4.5 volts?

Yes

- Go To 5

No

- Go To 6

5. **(Q75) LEFT PINCH SENSOR SIGNAL CIRCUIT OPEN**

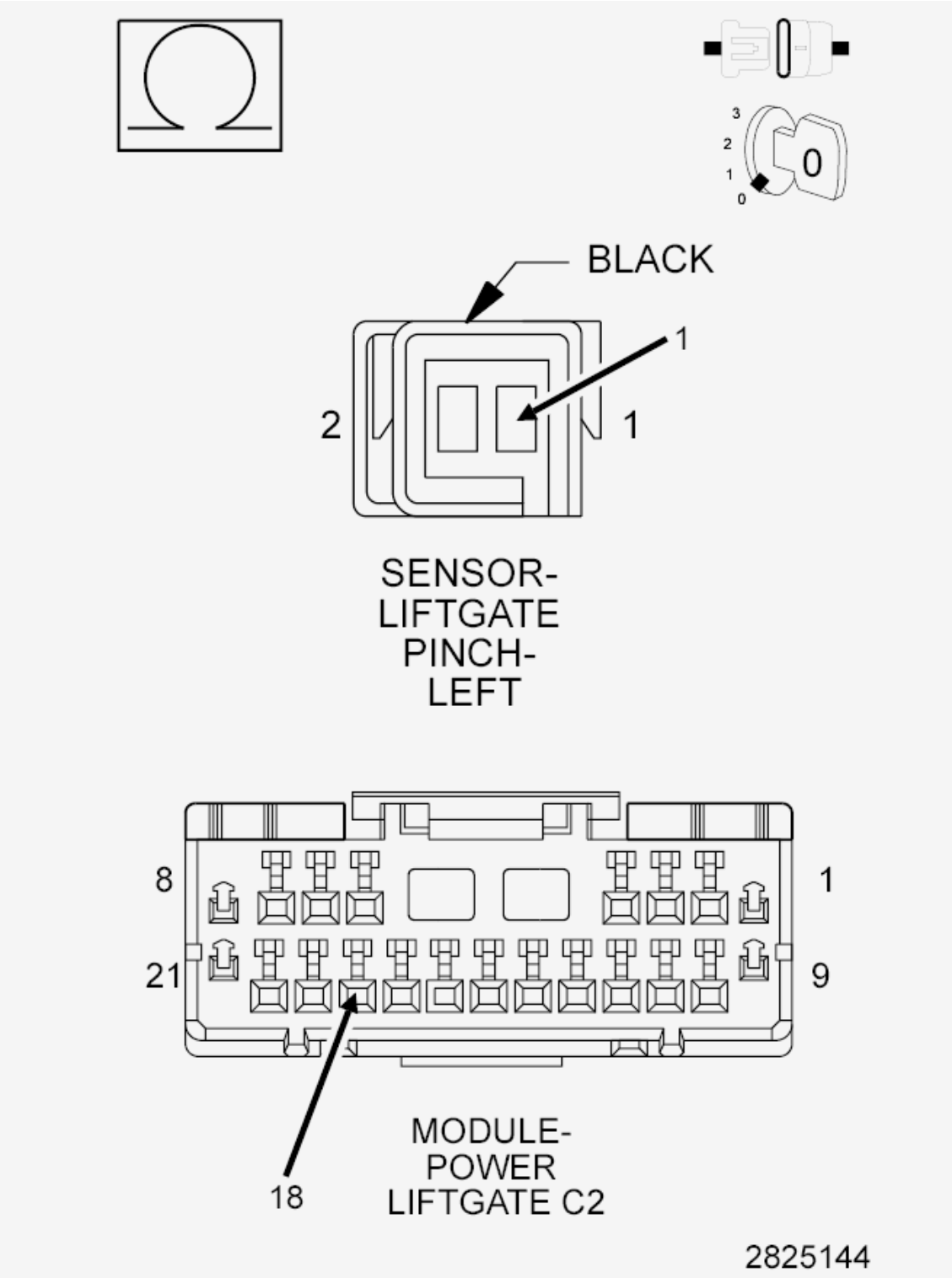

Fig. 51: Checking Left Pinch Sensor Signal Circuit For Open
Courtesy of CHRYSLER GROUP, LLC

1. Cycle the ignition off.

2. Disconnect the Power Liftgate Module C2 harness connector.
3. Measure the resistance of the (Q75) Left Pinch Sensor Signal circuit between the Power Liftgate Module C2 connector and the Left Liftgate Pinch Sensor connector.

   Is the resistance below 5.0 Ohms?

   Yes

   - Replace the Power Liftgate Module in accordance with the Service Information. Refer to **MODULE, POWER LIFTGATE CONTROL, REMOVAL** .
   - Perform the BODY VERIFICATION TEST. Refer to **BODY VERIFICATION TEST** .

   No

   - Repair the (Q75) Left Pinch Sensor Signal circuit for an open.
   - Perform the BODY VERIFICATION TEST. Refer to **BODY VERIFICATION TEST** .

6. **(Q75) LEFT PINCH SENSOR SIGNAL CIRCUIT SHORTED TO VOLTAGE**

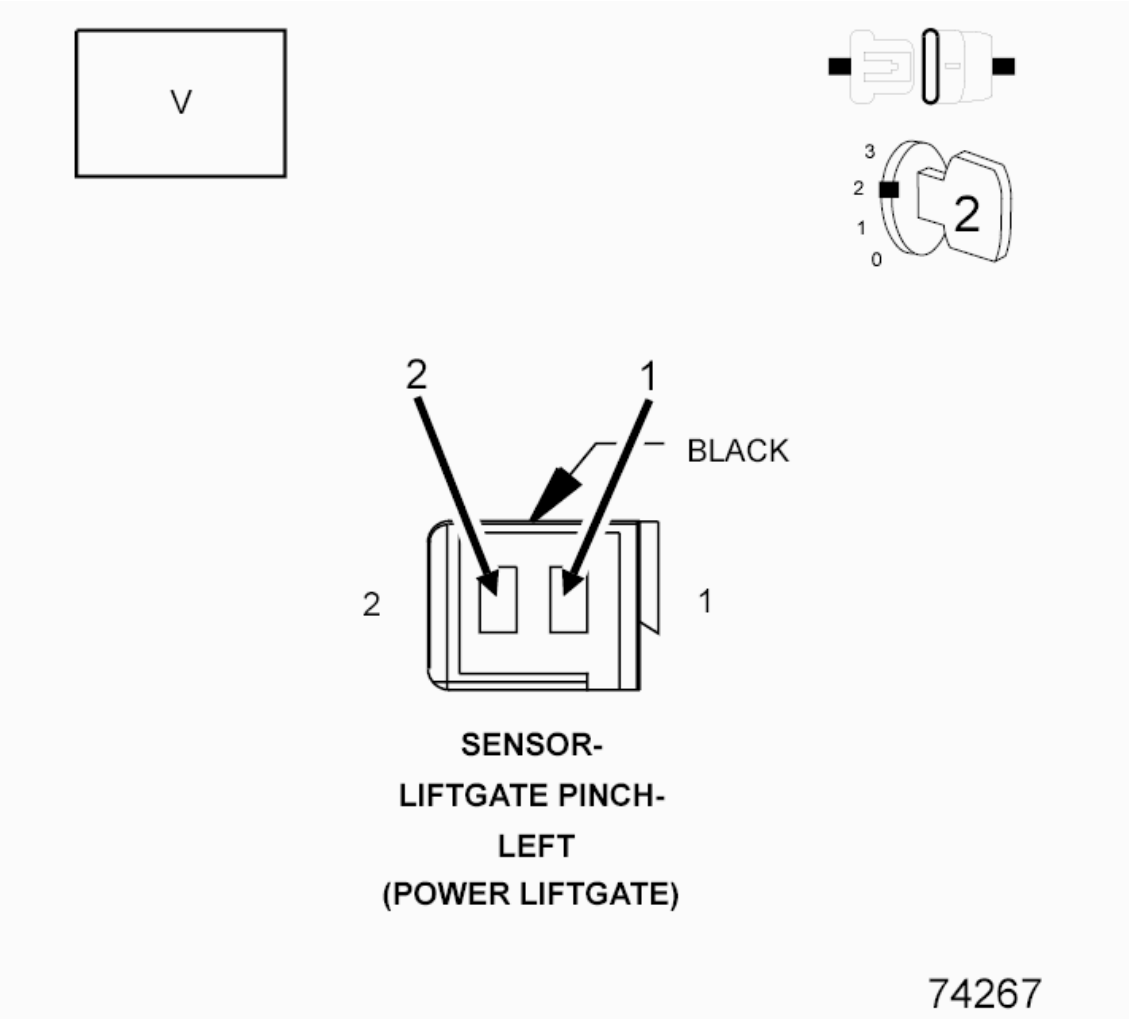

Fig. 52: Checking Left Pinch Sensor Signal Circuit For An Open
Courtesy of CHRYSLER GROUP, LLC

1. Measure the voltage between the (Q901) Logic Ground circuit and the (Q75) Left Pinch Sensor Signal circuit.

   Is the voltage above 4.5 volts?

   Yes

   - Go To 7

   No

   - Replace the Left Liftgate Pinch Sensor in accordance with the Service Information. Refer to **SENSOR, PINCH, REMOVAL** .
   - Perform the BODY VERIFICATION TEST. Refer to **BODY VERIFICATION TEST** .

7. **(Q75) LEFT PINCH SENSOR SIGNAL WIRE SHORTED TO VOLTAGE**

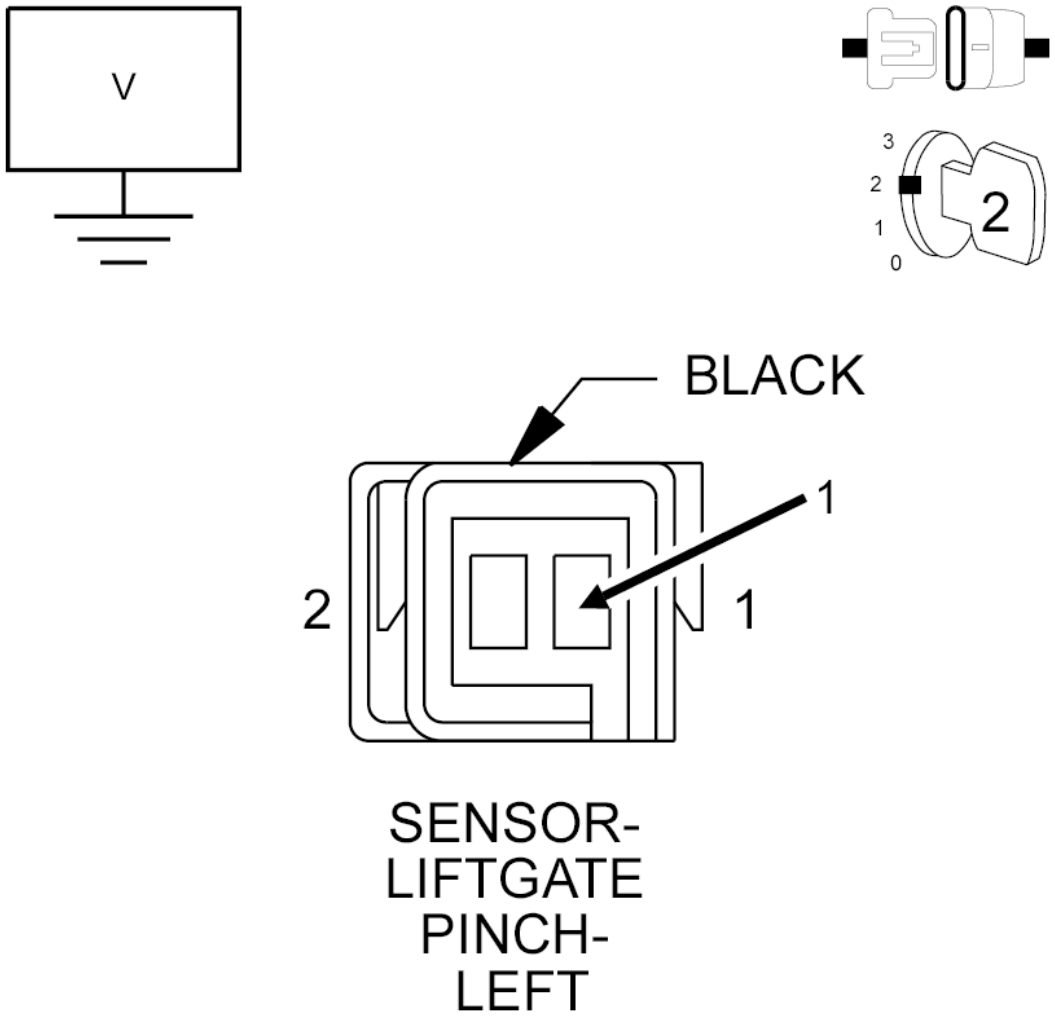

Fig. 53: Checking Left Pinch Sensor Signal Wire For Short To Voltage
Courtesy of CHRYSLER GROUP, LLC

1. Disconnect the Power Liftgate Module C2 harness connector.
2. Measure the voltage between ground and the (Q75) Left Pinch Sensor Signal circuit.

   Is there any voltage present?

   Yes

   - Repair the (Q75) Left Pinch Sensor Signal circuit for a short to voltage.
   - Perform the BODY VERIFICATION TEST. Refer to **BODY VERIFICATION TEST** .

   No

   - Replace the Power Liftgate Module in accordance with the Service Information. Refer to

MODULE, POWER LIFTGATE CONTROL, REMOVAL .

- Perform the BODY VERIFICATION TEST. Refer to **BODY VERIFICATION TEST** .

B1949-12-POWER LIFTGATE REAR ZONE SWITCH - CIRCUIT SHORT TO BATTERY

For a complete wiring diagram, **refer to appropriate SYSTEM WIRING DIAGRAMS article** .

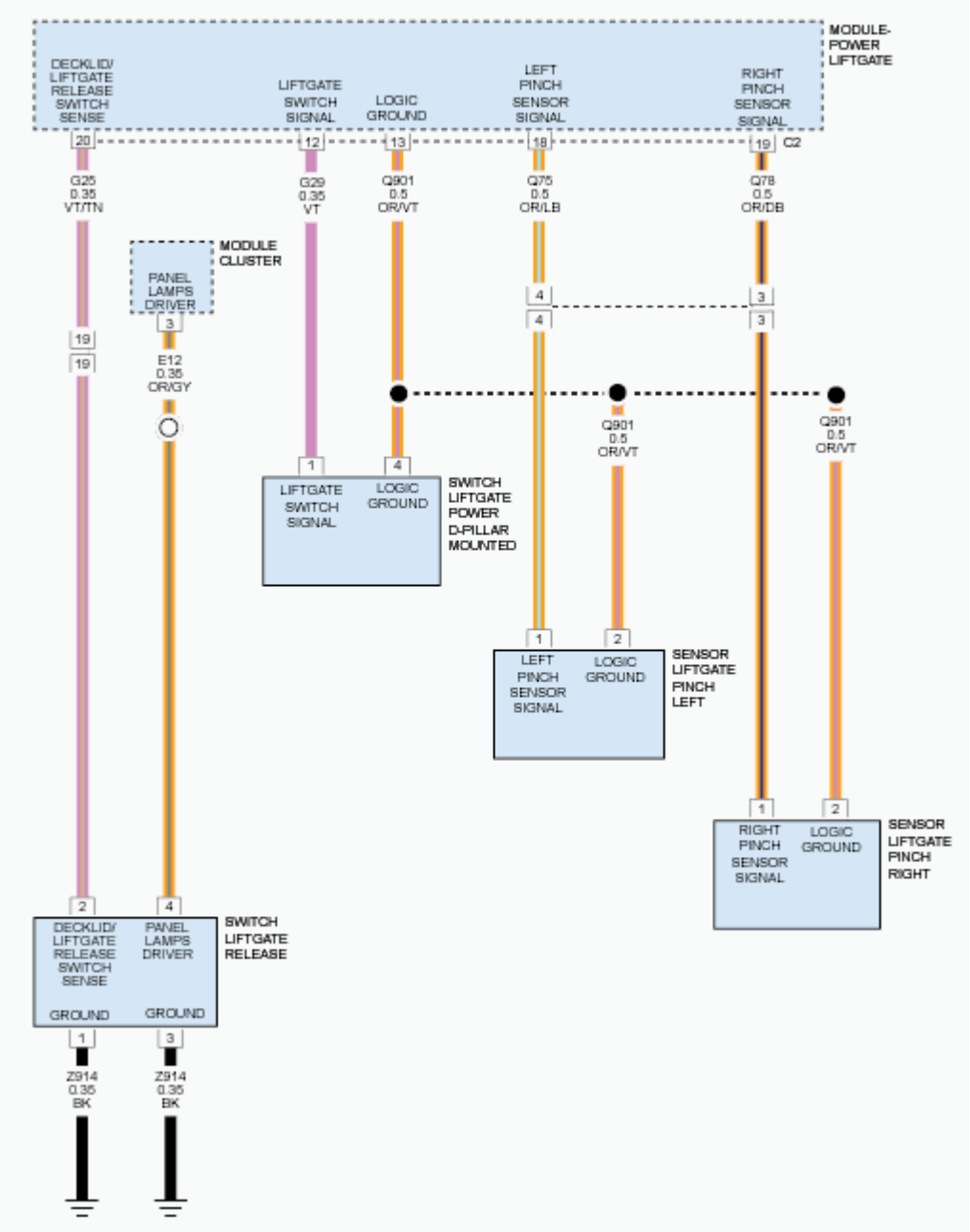

Fig. 54: Power Liftgate Module Pinch Sensor & Liftgate Switch Signal, Release Switch Sense & Ground Circuit Diagram
Courtesy of CHRYSLER GROUP, LLC

WHEN MONITORED

Whenever the Power Liftgate Module is awake.

SET CONDITION

When the Power Liftgate Module senses a voltage over 4.7 volts on the (G29) Liftgate Switch Signal circuit for longer than 15 seconds, this code will set.

POSSIBLE CAUSES

Possible Causes
(G29) LIFTGATE SWITCH SIGNAL CIRCUIT SHORTED TO VOLTAGE
LIFTGATE SWITCH
POWER LIFTGATE MODULE

DIAGNOSTIC TEST

1. **DTC PRESENT**
    1. With the scan tool, record and erase the DTCs.
    2. Cycle the ignition off, wait 10 seconds, then cycle the ignition on.
    3. Operate the liftgate several times from the rear switch.
    4. With the scan tool, read the Active DTCs.

    Does the scan tool display; B1949-12-POWER LIFTGATE REAR ZONE SWITCH - CIRCUIT SHORT TO BATTERY?

    Yes

    - Go To 2

    No

    - Test complete, the condition or conditions that originally set this DTC are not present at this time. Using the wiring diagrams as a guide, check all related splices and connectors for signs of water intrusion, corrosion, pushed out or bent terminals and poor pin fit.
    - Perform the BODY VERIFICATION TEST. Refer to **STANDARD PROCEDURE** .
2. **LIFTGATE REAR SWITCH SHORTED**

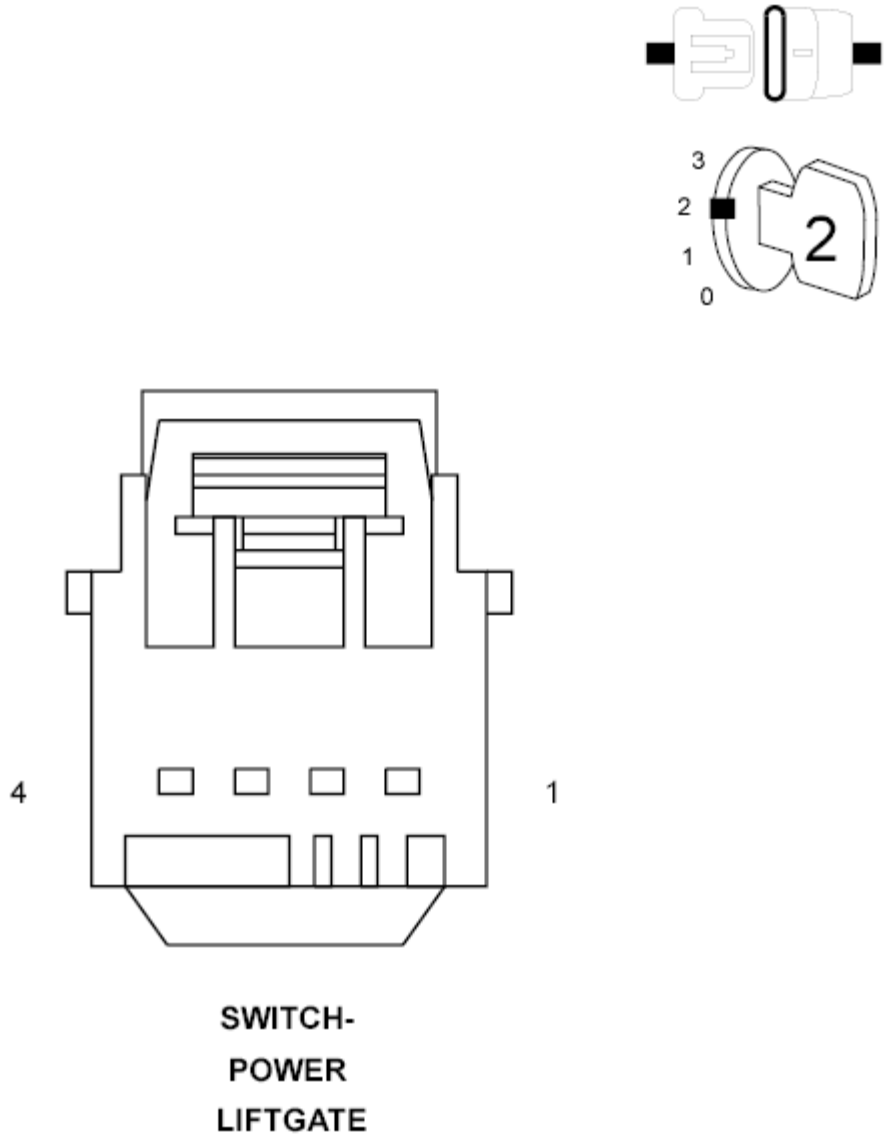

Fig. 55: Power Liftgate Rear Switch Connector End View
Courtesy of CHRYSLER GROUP, LLC

1. Disconnect the Power Liftgate Rear Switch connector.
2. Erase the DTCs.
3. Cycle the ignition off, wait 15 seconds, then cycle the ignition on.
4. With the scan tool, read the DTCs.

   Does the scan tool display; B1949-12-POWER LIFTGATE REAR ZONE SWITCH - CIRCUIT SHORT TO BATTERY?

   Yes

- Go To 3

No

- Replace the Power Liftgate Rear Switch in accordance with the Service Information. Refer to **SWITCH, D-PILLAR, REMOVAL** .
- Perform the BODY VERIFICATION TEST. Refer to **STANDARD PROCEDURE** .

3. **(G29) LIFTGATE SWITCH SIGNAL CIRCUIT SHORTED TO VOLTAGE**

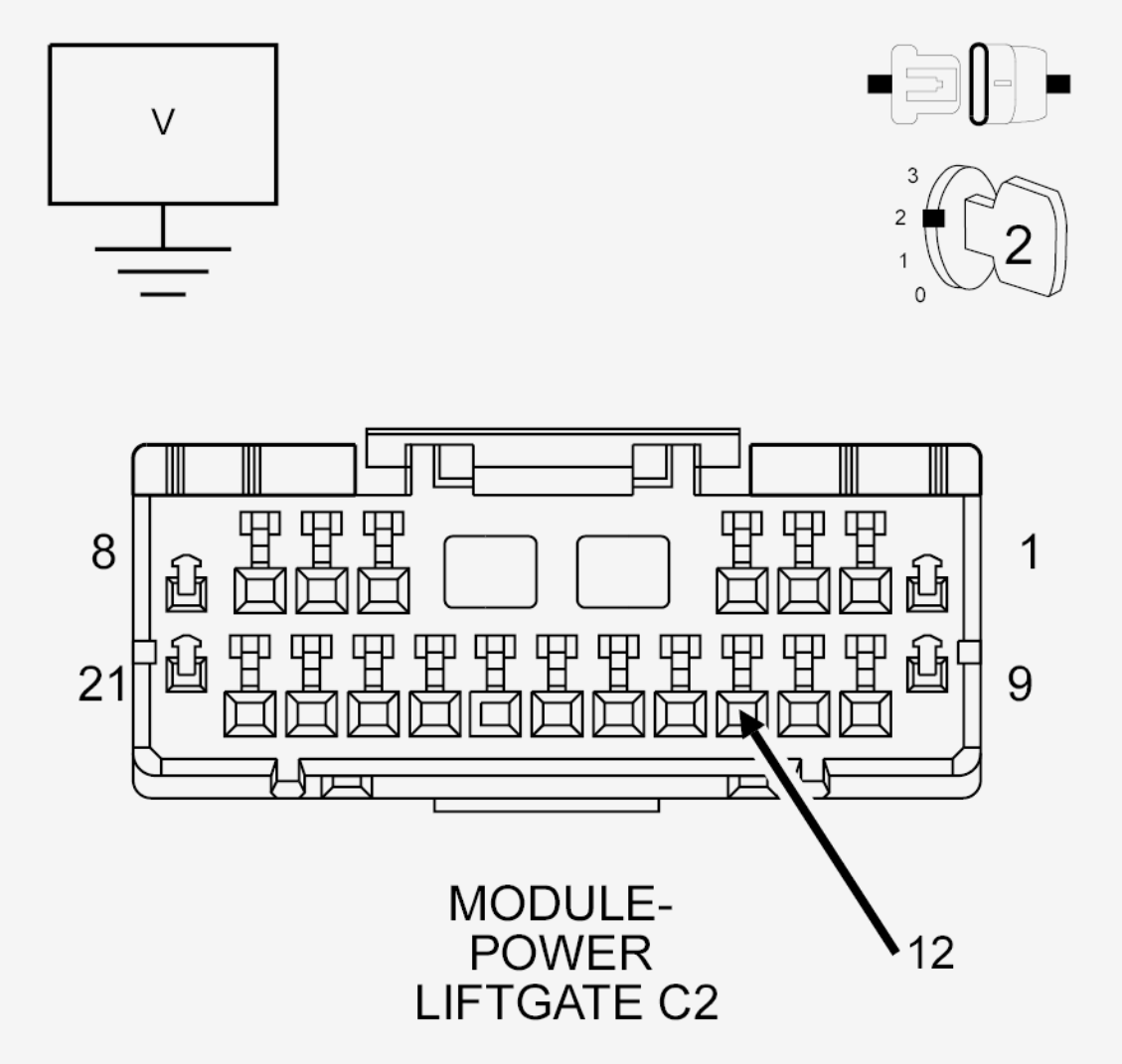

Fig. 56: Checking Liftgate Switch Signal Circuit For Short To Voltage
Courtesy of CHRYSLER GROUP, LLC

1. Cycle the ignition off.
2. Disconnect the Power Liftgate Module C2 harness connector.
3. Cycle the ignition on.

4. Measure the voltage between ground and the (G29) Liftgate Switch Signal circuit.

   Is there any voltage present?

   Yes

   - Repair the (G29) Liftgate Switch Signal circuit for a short to voltage.
   - Perform the BODY VERIFICATION TEST. Refer to **STANDARD PROCEDURE** .

   No

   - Replace the Power Liftgate Module in accordance with the Service Information. Refer to **MODULE, POWER LIFTGATE CONTROL, REMOVAL** .
   - Perform the BODY VERIFICATION TEST. Refer to **STANDARD PROCEDURE** .

B1949-2A-POWER LIFTGATE REAR ZONE SWITCH - STUCK

For a complete wiring diagram, **refer to appropriate SYSTEM WIRING DIAGRAMS article** .

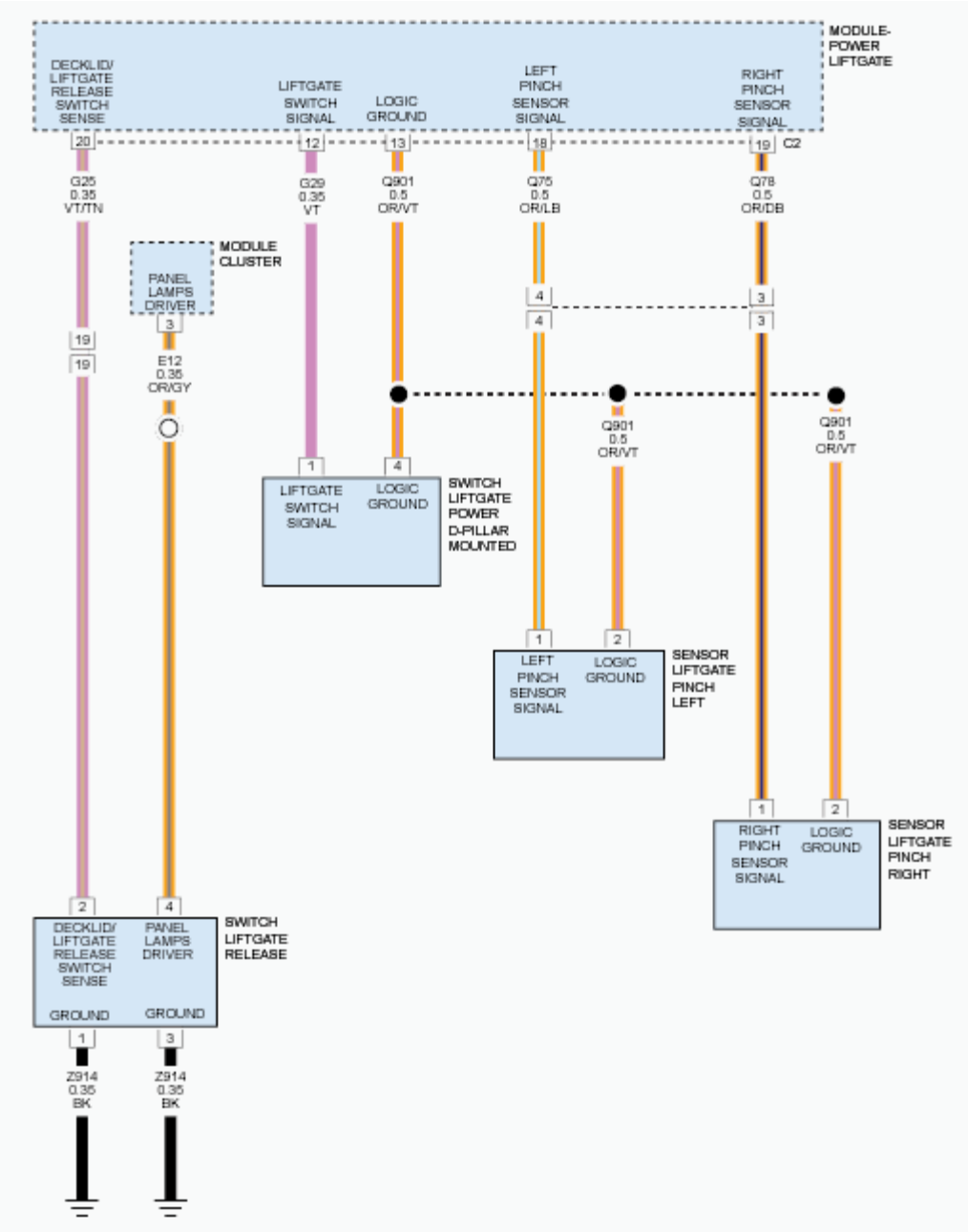

Fig. 57: Power Liftgate Module Pinch Sensor & Liftgate Switch Signal, Release Switch Sense & Ground Circuit Diagram
Courtesy of CHRYSLER GROUP, LLC

WHEN MONITORED

Whenever the Power Liftgate Module is awake.

SET CONDITION

When the Power Liftgate Module senses a voltage between 2.0 volts and 3.5 volts on the (G29) Liftgate Switch

Signal circuit for longer than 15 seconds, this code will set.

POSSIBLE CAUSES

Possible Causes
(G29) LIFTGATE SWITCH SIGNAL CIRCUIT PARTIAL SHORTED TO GROUND
LIFTGATE SWITCH
POWER LIFTGATE MODULE

DIAGNOSTIC TEST

1. **DTC PRESENT**
    1. With the scan tool, record and erase the DTCs.
    2. Cycle the ignition off, wait 10 seconds, then cycle the ignition on.
    3. Operate the liftgate several times from the rear switch.
    4. With the scan tool, read the Active DTCs.

    Does the scan tool display; B1949-2A-POWER LIFTGATE REAR ZONE SWITCH - STUCK?

    Yes

    - Go To 2.

    No

    - Test complete, the condition or conditions that originally set this DTC are not present at this time. Using the wiring diagrams as a guide, check all related splices and connectors for signs of water intrusion, corrosion, pushed out or bent terminals and poor pin fit.
    - Perform the BODY VERIFICATION TEST. Refer to **STANDARD PROCEDURE** .
2. **LIFTGATE REAR SWITCH SHORTED**

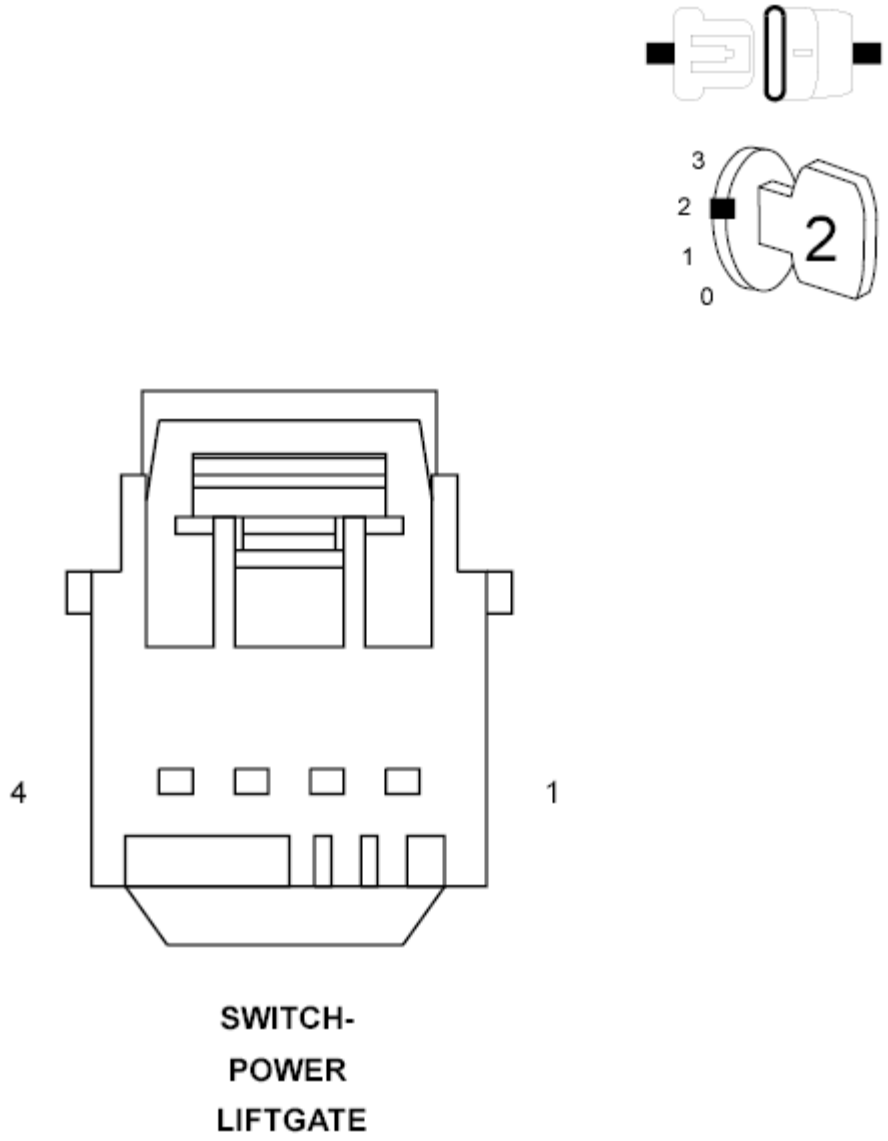

Fig. 58: Power Liftgate Rear Switch Connector End View
Courtesy of CHRYSLER GROUP, LLC

1. Disconnect the Power Liftgate Rear Switch connector.
2. Erase the DTCs.
3. Cycle the ignition off, wait 15 seconds, then cycle the ignition on.
4. With the scan tool, read the Active DTCs.

   Does the scan tool display; B1949-2A-POWER LIFTGATE REAR ZONE SWITCH - STUCK?

   Yes

- Go To 3.

No

- Replace the Liftgate Rear Switch in accordance with the Service Information. Refer to **SWITCH, D-PILLAR, REMOVAL** .
- Perform the BODY VERIFICATION TEST. Refer to **STANDARD PROCEDURE** .

3. **(G29 LIFTGATE SWITCH SIGNAL CIRCUIT SHORTED TO GROUND**

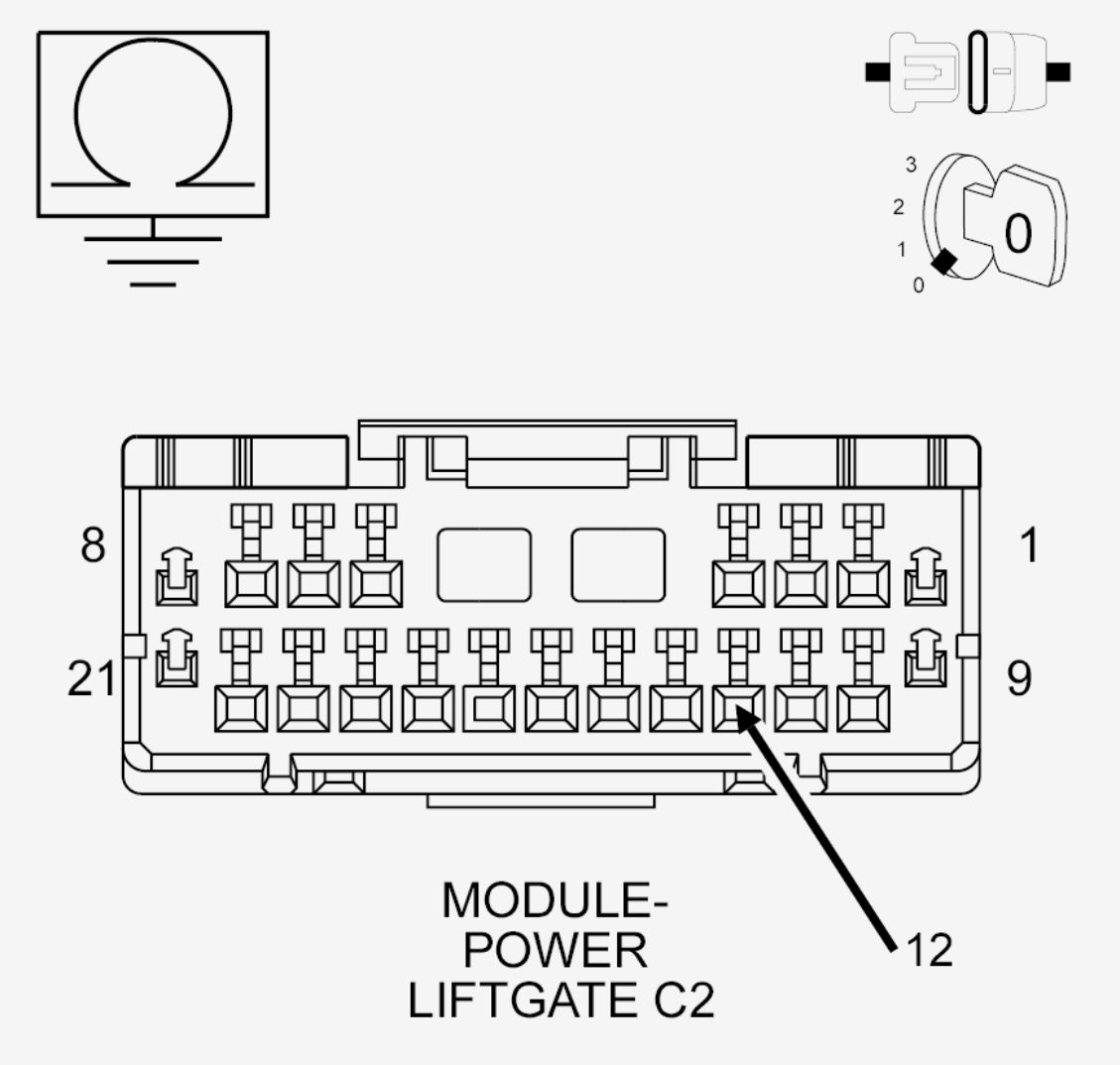

Fig. 59: Checking Liftgate Switch Signal Circuit For Short To Ground
Courtesy of CHRYSLER GROUP, LLC

1. Cycle the ignition off.
2. Disconnect the Power Liftgate Module C2 harness connector.
3. Measure the resistance between ground and the (G29) Liftgate Switch Signal circuit.

Is the resistance below 10K Ohms?

Yes

- Repair the (G29) Liftgate Switch Signal circuit for a short to ground.
- Perform the BODY VERIFICATION TEST. Refer to **STANDARD PROCEDURE** .

No

- Replace the Power Liftgate Module in accordance with the Service Information. Refer to **MODULE, POWER LIFTGATE CONTROL, REMOVAL** .
- Perform the BODY VERIFICATION TEST. Refer to **STANDARD PROCEDURE** .

B1952-00-POWER LIFTGATE DRIVE MOTOR - INCORRECT DIRECTION

For a complete wiring diagram, **refer to appropriate SYSTEM WIRING DIAGRAMS article** .

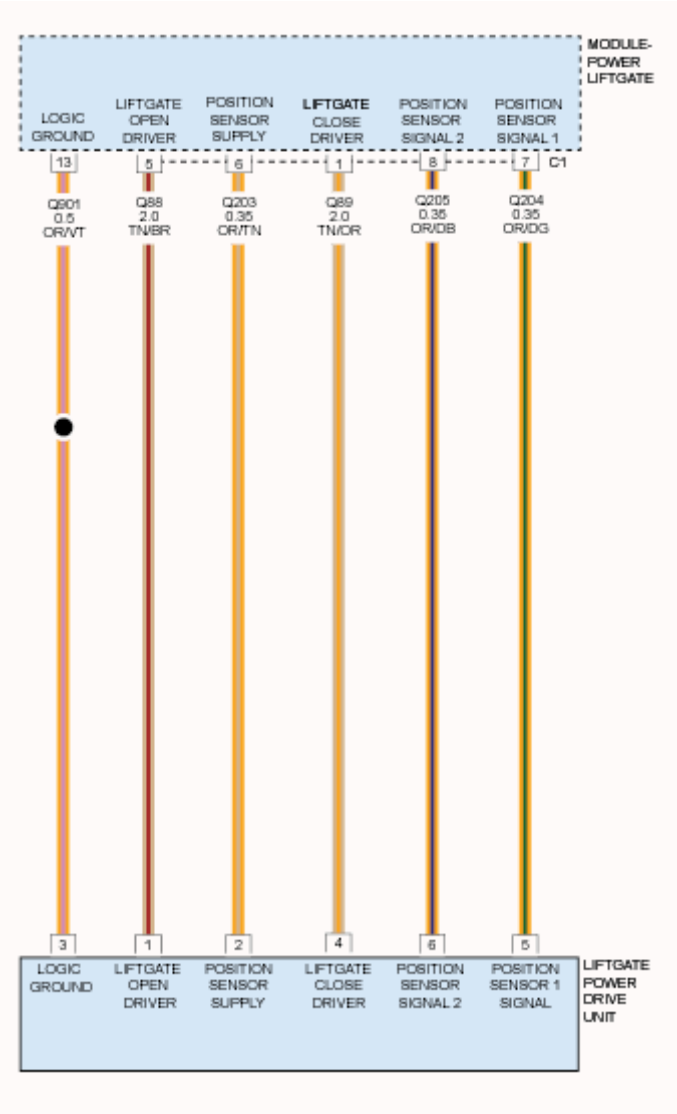

Fig. 60: Power Liftgate Position Sensor Signal, Supply, Liftgate Drive & Ground Circuit Diagram
Courtesy of CHRYSLER GROUP, LLC

WHEN MONITORED

Whenever the Power Liftgate Motor is in operation.

SET CONDITION

When the Power Liftgate Module senses the direction of the drive motor is in opposition to the direction it is trying to drive the liftgate, this code will set.

POSSIBLE CAUSES

Possible Causes
(Q88) LIFTGATE OPEN DRIVER CIRCUIT AND THE (Q89) LIFTGATE CLOSE DRIVER

CIRCUITS ARE CROSSED
(Q204) LIFTGATE POSITION SENSOR 1 SIGNAL AND THE (Q205) LIFTGATE POSITION SENSOR 2 SIGNAL CIRCUITS ARE CROSSED
POWER LIFTGATE DRIVE UNIT
POWER LIFTGATE MODULE

DIAGNOSTIC TEST

1. **DTC PRESENT**
    1. With the scan tool, record the DTCs.
    2. Erase the DTCs.
    3. Cycle the ignition off, wait 10 seconds, then cycle the ignition on.
    4. If possible, operate the liftgate several times.
    5. With the scan tool, read the Active DTCs.

    Does the scan tool display; B1952-00-POWER LIFTGATE DRIVE MOTOR - INCORRECT DIRECTION?

    Yes

    - Go To 2

    No

    - Test complete, the condition or conditions that originally set this DTC are not present at this time. Using the wiring diagrams as a guide, check all related splices and connectors for signs of water intrusion, corrosion, pushed out or bent terminals and poor pin fit.
    - Perform the BODY VERIFICATION TEST. Refer to **STANDARD PROCEDURE** .
2. **(Q88) LIFTGATE OPEN DRIVER CIRCUIT AND THE (Q89) LIFTGATE CLOSE DRIVER CIRCUITS ARE CROSSED**

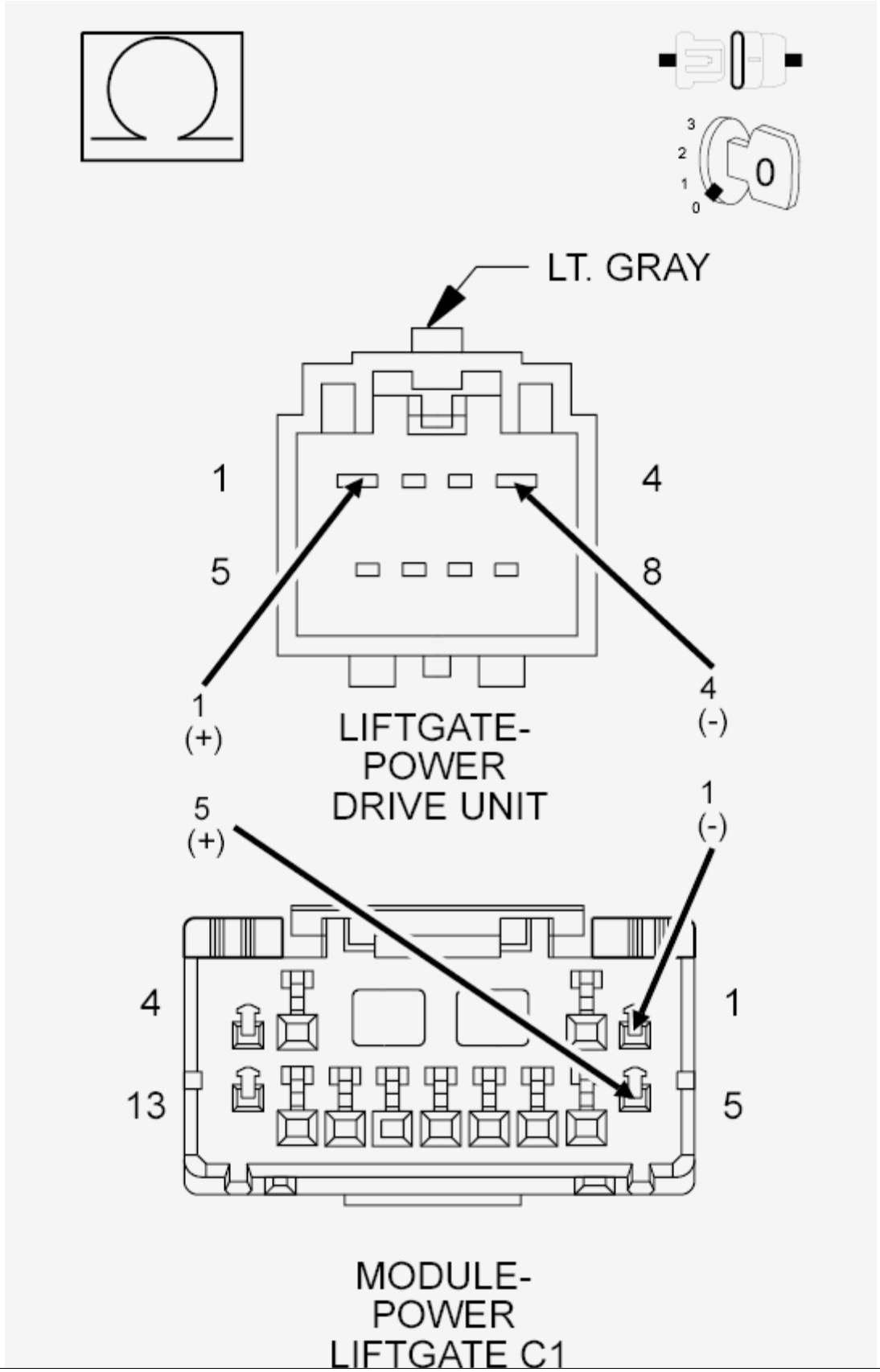
3
2
1
0
0
LT. GRAY
1
4
5
8
1
(+)
4
(-)
LIFTGATE-
POWER
DRIVE UNIT
5
(+)
1
(-)
4
1
13
5
MODULE-
POWER
LIFTGATE C1

Fig. 61: Checking Liftgate Open Driver Circuit & Liftgate Close Driver Circuits Are Crossed
Courtesy of CHRYSLER GROUP, LLC

1. Cycle the ignition off.
2. Disconnect the Power Liftgate Module C1 harness connector.
3. Disconnect the Power Liftgate Drive Unit harness connector.
4. Inspect the Power Liftgate Drive Unit and Power Liftgate Module connectors, terminals and harness for damaged or pushed out terminals, or pinched/broken wires. Repair any obvious problems.
5. Trace the (Q88) Liftgate Open Driver circuit and the (Q89) Liftgate Close Driver circuits between the PLG C1 harness connector and the Drive Unit harness connector.

NOTE: In the graphic, the Open Driver is shown as (+) and the Close Driver is shown as (-).

Are the circuits crossed at either connector?

Yes

- Correct the wiring as necessary.
- Perform the BODY VERIFICATION TEST. Refer to **STANDARD PROCEDURE** .

No

- Go To 3

3. **(Q204) LIFTGATE POSITION SENSOR 1 SIGNAL AND THE (Q205) LIFTGATE POSITION SENSOR 2 SIGNAL CIRCUITS ARE CROSSED**

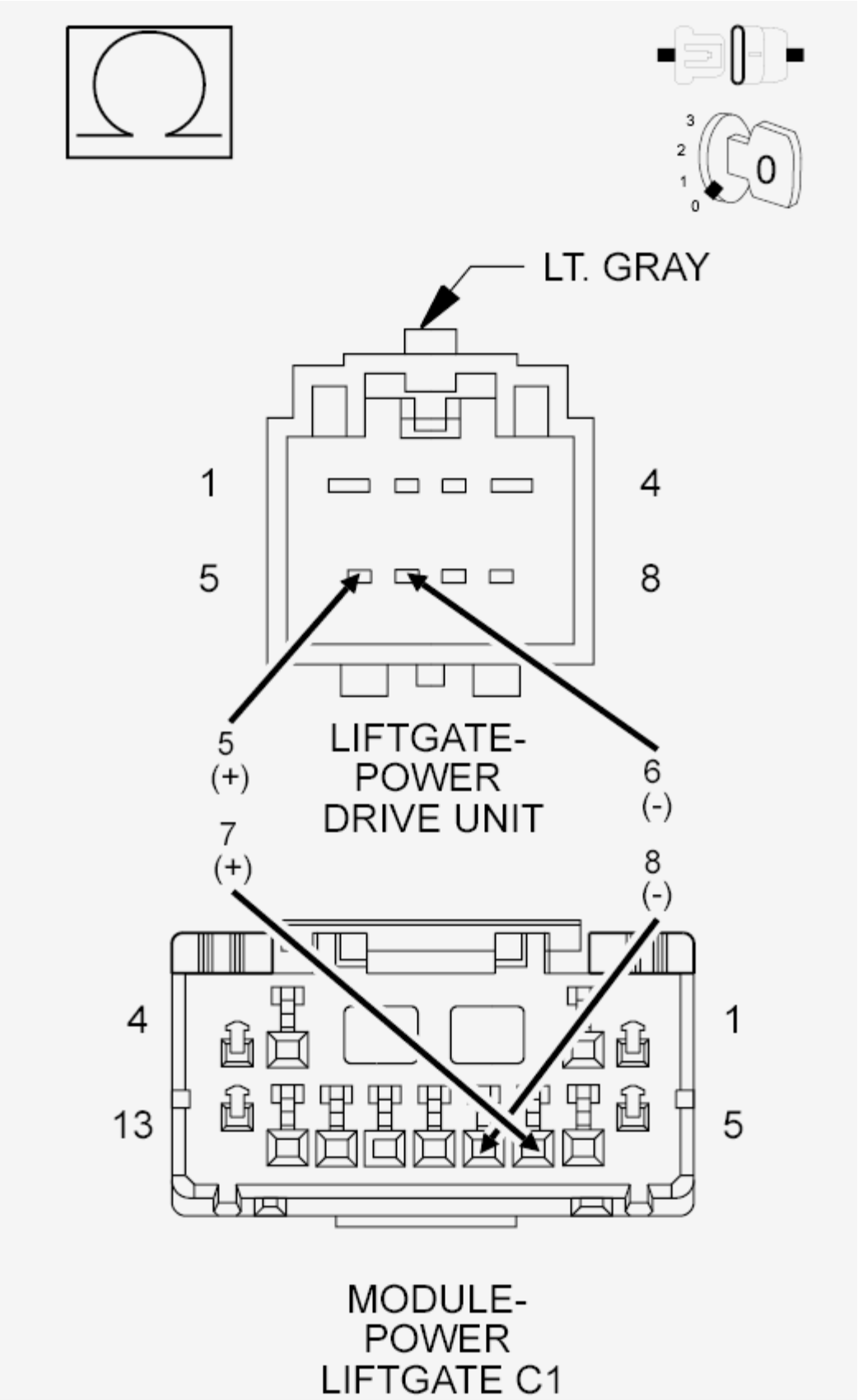
3
2
1
0
0
LT. GRAY
1
4
5
8
5
(+)
LIFTGATE-
POWER
DRIVE UNIT
6
(-)
7
(+)
8
(-)
4
1
13
5
MODULE-
POWER
LIFTGATE C1

Fig. 62: Checking Liftgate Position Sensor 1 Signal & Liftgate Position Sensor 2 Signal Circuits Are Crossed
Courtesy of CHRYSLER GROUP, LLC

1. Inspect the Power Liftgate Drive Unit and Power Liftgate Module connectors, terminals and harness for damaged or pushed out terminals, or pinched/broken wires. Repair any obvious problems.
2. Trace the (Q204) Liftgate Position Sensor 1 Signal circuit and the (Q205) Liftgate Position Sensor 2 Signal circuits between the Power Liftgate Module C1 harness connector and the Power Liftgate Drive Unit harness connector.

NOTE: In the graphic, the Sensor 1 Signal is shown as (+) and the Sensor 2 Signal is shown as (-).

Are the circuits crossed at either connector?

Yes

- Correct the wiring as necessary.
- Perform the BODY VERIFICATION TEST. Refer to **STANDARD PROCEDURE** .

No

- Replace the Power Liftgate Drive Unit in accordance with the Service Information. Refer to **DRIVE UNIT, POWER, REMOVAL** .
- Perform the BODY VERIFICATION TEST. Refer to **STANDARD PROCEDURE** .

B195F-11-POWER LIFTGATE CHIME CONTROL - CIRCUIT SHORT TO GROUND

For a complete wiring diagram, **refer to appropriate SYSTEM WIRING DIAGRAMS article** .

WHEN MONITORED

Whenever the Power Liftgate Module is activating the chime.

SET CONDITION

The power liftgate module has detected the internal chime circuit voltage is low.

POSSIBLE CAUSES

Possible Causes
POWER LIFTGATE MODULE

DIAGNOSTIC TEST

DTC PRESENT

1. With the scan tool, record the DTCs.
2. Erase the DTCs.
3. Turn the ignition off, wait 10 seconds, then turn the ignition on.
4. Operate the liftgate several times.
5. With the scan tool, read the Active DTCs.

   Does the scan tool display; B195F-11-POWER LIFTGATE CHIME CONTROL - CIRCUIT SHORT TO GROUND?

   Yes

   - Replace the Power Liftgate Module in accordance with the Service Information. Refer to **MODULE, POWER LIFTGATE CONTROL, REMOVAL** .
   - Perform the BODY VERIFICATION TEST. Refer to **STANDARD PROCEDURE** .

   No

   - Test complete, the condition or conditions that originally set this DTC are not present at this time. Using the wiring diagrams as a guide, check all related splices and connectors for signs of water intrusion, corrosion, pushed out or bent terminals and correct pin tension.
   - Perform the BODY VERIFICATION TEST. Refer to **STANDARD PROCEDURE** .

B195F-12-POWER LIFTGATE CHIME CONTROL - CIRCUIT SHORT TO BATTERY

For a complete wiring diagram, **refer to appropriate SYSTEM WIRING DIAGRAMS article** .

WHEN MONITORED

Whenever the Power Liftgate Module is awake.

SET CONDITION

The latch release operation is longer than 4 seconds and/or the power liftgate module has detected the internal chime circuit voltage is over 4.0 volts during operation or over 1.5 volts when not operating

POSSIBLE CAUSES

Possible Causes
POWER LIFTGATE MODULE (PLGM)

DIAGNOSTIC TEST

DTC PRESENT

1. With the scan tool, record the DTCs.
2. Erase the DTCs.
3. Turn the ignition off, wait 10 seconds, then turn the ignition on.
4. Operate the liftgate several times.
5. With the scan tool, read the Active DTCs.

   Does the scan tool display; B195F-12-POWER LIFTGATE CHIME CONTROL - CIRCUIT SHORT TO BATTERY?

   Yes

   - Replace the Power Liftgate Module in accordance with the Service Information. Refer to **MODULE, POWER LIFTGATE CONTROL, REMOVAL** .
   - Perform the BODY VERIFICATION TEST. Refer to **STANDARD PROCEDURE** .

   No

   - Test complete, the condition or conditions that originally set this DTC are not present at this time. Using the wiring diagrams as a guide, check all related splices and connectors for signs of water intrusion, corrosion, pushed out or bent terminals and correct pin tension.
   - Perform the BODY VERIFICATION TEST. Refer to **STANDARD PROCEDURE** .

B1963-00-POWER LIFTGATE STRUT PERFORMANCE

For a complete wiring diagram, **refer to appropriate SYSTEM WIRING DIAGRAMS article** .

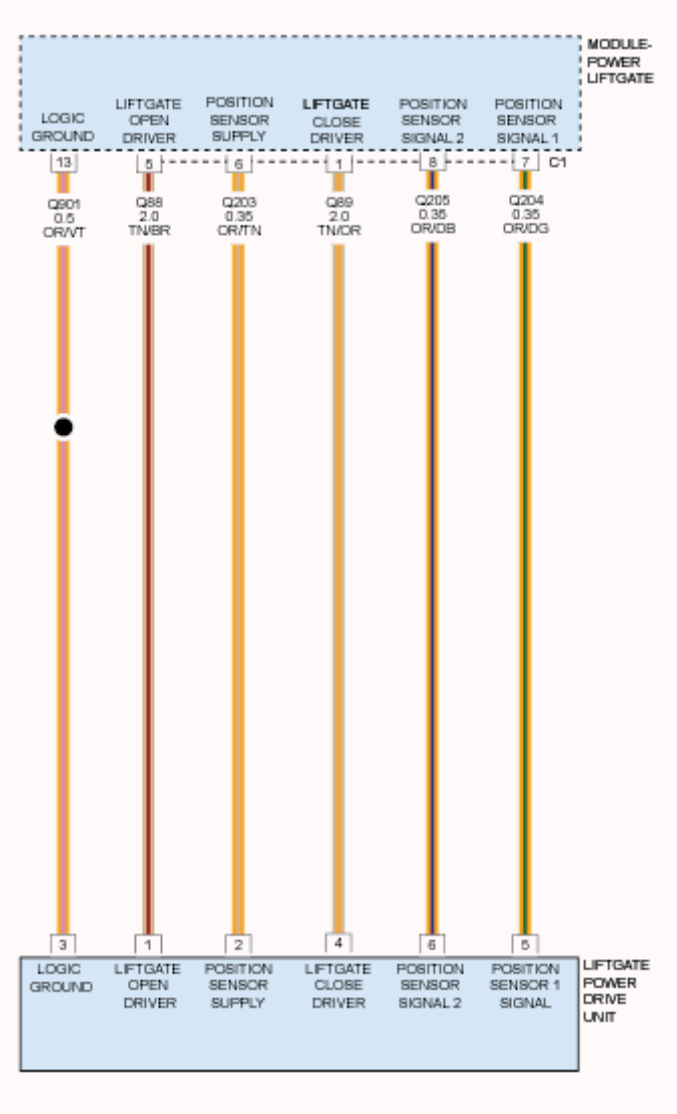

Fig. 63: Power Liftgate Position Sensor Signal, Supply, Liftgate Drive & Ground Circuit Diagram
Courtesy of CHRYSLER GROUP, LLC

THEORY OF OPERATION

This DTC is designed to detect a failed gas prop which will cause the liftgate to free fall at the top of an open cycle. This is accomplished by the liftgate position sensors 1 and 2 transmitting that information to the power liftgate module. This DTC can also be set by the operator pulling on the opened liftgate and closing it down to quickly (less than one second).

WHEN MONITORED

One second after the liftgate completes a power opening operation.

SET CONDITION

The PLGM has detected that the gate does not remain open (25 pulses in 1 second) after disengaging the drive unit. If the liftgate starts to drop after a complete opening operation, the Power Liftgate Module will set this code.

POSSIBLE CAUSES

Possible Causes
WEAK STRUT
COLD WEATHER CONDITION

DIAGNOSTIC TEST

1. **DTC PRESENT**
    1. With the scan tool, record the PLG DTCs and any liftgate inhibitors.
    2. Erase the DTCs.
    3. Turn the ignition off, wait 10 seconds, then turn the ignition on.
    4. Operate the liftgate to the full up position and wait 30 seconds.
    5. Close the liftgate and repeat the previous step.
    6. With the scan tool, read the Active DTCs.

    Does the scan tool display; B1963-00-POWER LIFTGATE STRUT PERFORMANCE?

    Yes

    - Go To 2.

    No

    - Make sure there is no intermittent binding or cold weather condition which may have caused this code to set.
    - Perform the BODY VERIFICATION TEST. Refer to **STANDARD PROCEDURE** .
2. **WEAK STRUT**
    1. Manually open the liftgate to approximately 1/4 open position.
    2. Let go of the liftgate and see if it will slam shut.
    3. If necessary, compare the effort to open and close the liftgate with a known good vehicle.

    NOTE: At this point the liftgate should hold in this position but it may slip down very slowly which is passable.

    Does the liftgate hold in position or lower very slowly?

    Yes

- Go To 3.

No

- Replace the Liftgate Gas Prop (strut) in accordance with the Service Information. Refer to **PROP ASSEMBLY, POWER, REMOVAL** .
- Perform the BODY VERIFICATION TEST. Refer to **STANDARD PROCEDURE** .

3. **WEAK STRUT**
   1. Manually open the liftgate to the full open position.
   2. Leave go of the liftgate and see if it will stay in the full up position.

   Does the liftgate stay in the full up position as it should?

   Yes

   - No trouble found at this time. If this vehicle continues to set this DTC, replace the Liftgate Gas Prop (strut) in accordance with the Service Information. Refer to **PROP ASSEMBLY, POWER, REMOVAL** .
   - Perform the BODY VERIFICATION TEST. Refer to **STANDARD PROCEDURE** .

   No

   - Replace the Liftgate Gas Prop (strut) in accordance with the Service Information. Refer to **PROP ASSEMBLY, POWER, REMOVAL** .
   - Perform the BODY VERIFICATION TEST. Refer to **STANDARD PROCEDURE** .

B1964-11-POWER LIFTGATE SENSOR SUPPLY - CIRCUIT SHORT TO GROUND

For a complete wiring diagram, **refer to appropriate SYSTEM WIRING DIAGRAMS article** .

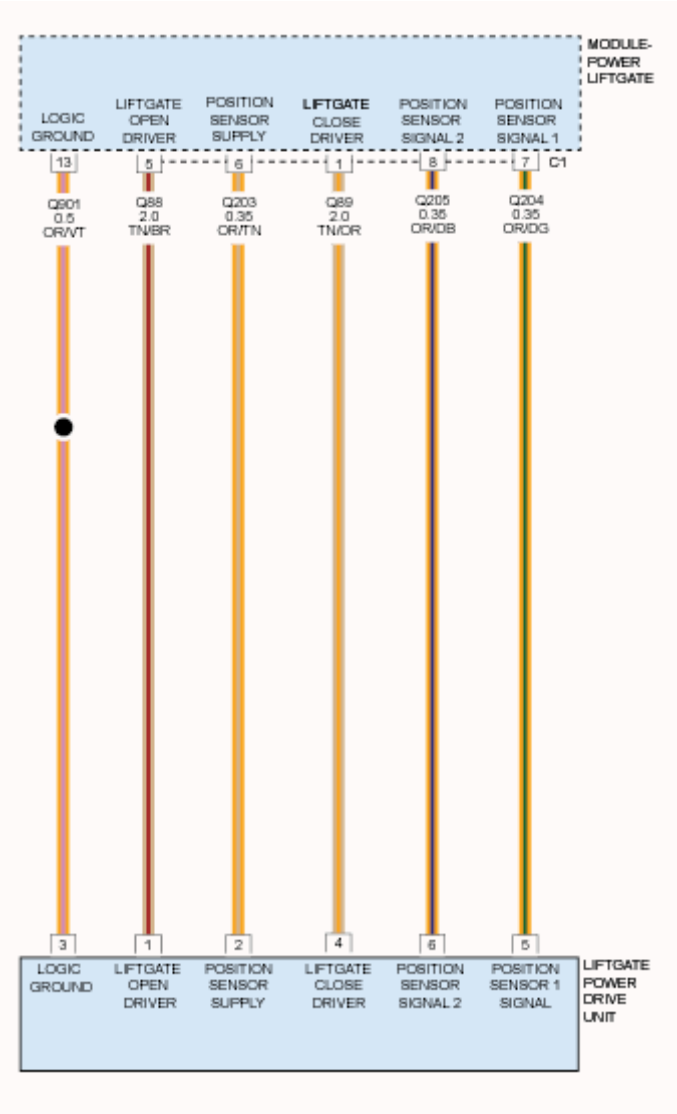

Fig. 64: Power Liftgate Position Sensor Signal, Supply, Liftgate Drive & Ground Circuit Diagram
Courtesy of CHRYSLER GROUP, LLC

WHEN MONITORED

Whenever the Power Liftgate Module is awake.

SET CONDITION

The Power Liftgate Module has detected the sensor supply circuit voltage is under 4.0 volts.

POSSIBLE CAUSES

Possible Causes
(Q203) POSITION SENSOR SUPPLY CIRCUIT SHORTED TO GROUND

POWER LIFTGATE DRIVE UNIT
POWER LIFTGATE MODULE

DIAGNOSTIC TEST

1. **DTC PRESENT**
    1. With the scan tool, record the DTCs and any liftgate inhibitors.
    2. Erase the DTCs.
    3. Cycle the ignition off, wait 10 seconds, then cycle the ignition on.
    4. Operate the liftgate several times.
    5. With the scan tool, read the Active DTCs.

    Does the scan tool display; B1964-11-POWER LIFTGATE SENSOR SUPPLY - CIRCUIT SHORT TO GROUND?

    Yes

    - Go To 2

    No

    - Test complete, the condition or conditions that originally set this DTC are not present at this time. Using the wiring diagrams as a guide, check all related splices and connectors for signs of water intrusion, corrosion, pushed out or bent terminals and poor pin fit.
    - Perform the BODY VERIFICATION TEST. Refer to **STANDARD PROCEDURE** .
2. **POWER LIFTGATE DRIVE UNIT**

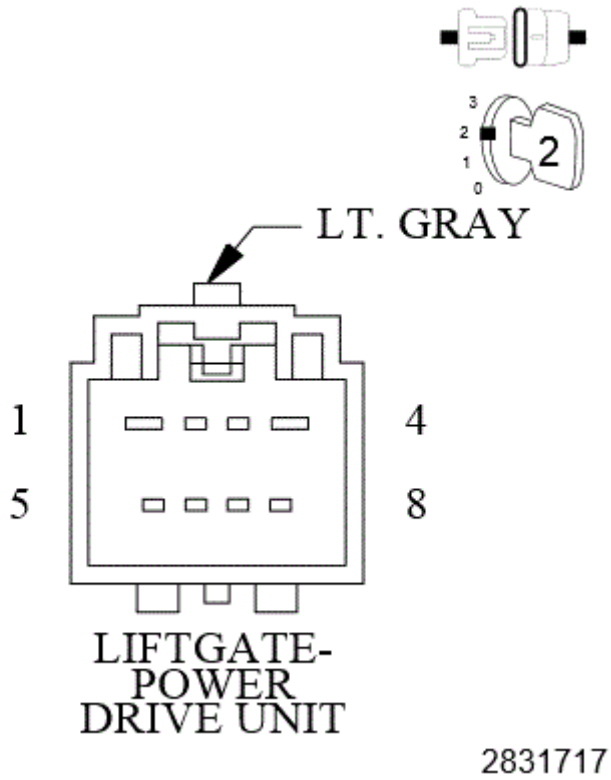

Fig. 65: Power Liftgate Drive Unit Connector End View
Courtesy of CHRYSLER GROUP, LLC

1. Disconnect and inspect the Power Liftgate Drive Unit harness connector. Clean and repair if necessary and repeat step 1. If the connector is okay, continue testing.
2. Erase the DTCs.
3. Cycle the ignition off, wait 10 seconds, then cycle the ignition on.
4. With the scan tool, read the Active DTCs.

   Does the scan tool display; B1964-11-POWER LIFTGATE SENSOR SUPPLY - CIRCUIT SHORT TO GROUND?

   Yes

   - Go To 3

   No

   - Replace the Power Liftgate Drive Unit in accordance with the service information.
   - Perform the BODY VERIFICATION TEST. Refer to **STANDARD PROCEDURE** .

3. **(Q203) POSITION SENSOR SUPPLY CIRCUIT SHORTED TO GROUND**

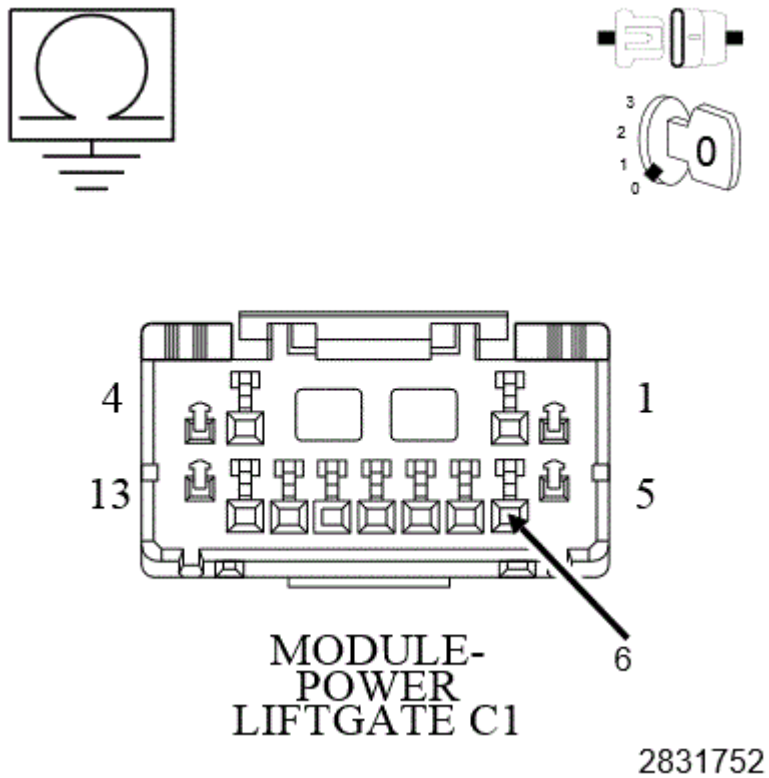

Fig. 66: Checking Position Sensor Supply Circuit For Short To Ground
Courtesy of CHRYSLER GROUP, LLC

1. Cycle the ignition off.
2. Disconnect the Power Liftgate Module C1 harness connector.
3. Measure the resistance between ground and the (Q203) Position Sensor Supply circuit.

   Is the resistance below 10K Ohms?

   Yes

   - Replace the Power Liftgate Module in accordance with service information. Refer to **MODULE, POWER LIFTGATE CONTROL, REMOVAL** .
   - Perform the BODY VERIFICATION TEST. Refer to **STANDARD PROCEDURE** .

   No

   - Repair the (Q203) Position Sensor Supply circuit for a short to ground.
   - Perform the BODY VERIFICATION TEST. Refer to **STANDARD PROCEDURE** .

B1964-12-POWER LIFTGATE SENSOR SUPPLY - CIRCUIT SHORT TO BATTERY

For a complete wiring diagram, **refer to appropriate SYSTEM WIRING DIAGRAMS article** .

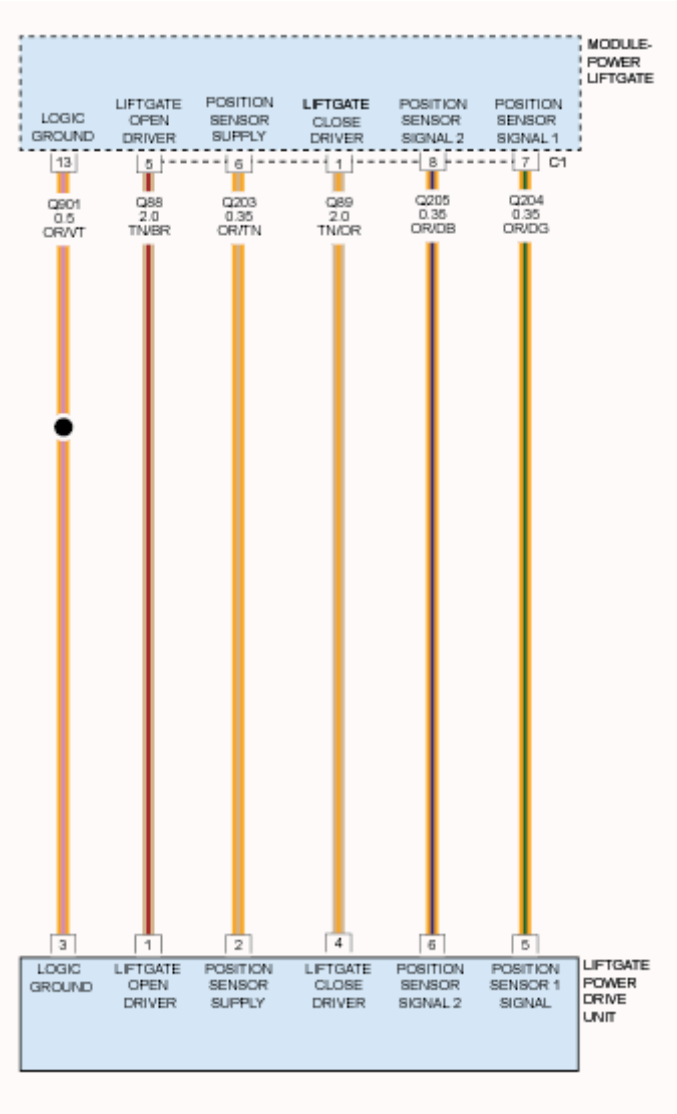

Fig. 67: Power Liftgate Position Sensor Signal, Supply, Liftgate Drive & Ground Circuit Diagram
Courtesy of CHRYSLER GROUP, LLC

WHEN MONITORED

Whenever the Power Liftgate Module is awake.

SET CONDITION

The Power Liftgate Module has detected the Position Sensor Supply voltage is above 5.5 volts.

POSSIBLE CAUSES

Possible Causes
(Q901) LOGIC GROUND OPEN

(Q203) POSITION SENSOR SUPPLY CIRCUIT OPEN
(Q203) POSITION SENSOR SUPPLY CIRCUIT SHORTED TO BATTERY
POWER LIFTGATE DRIVE UNIT
POWER LIFTGATE MODULE

DIAGNOSTIC TEST

1. **DTC PRESENT**
    1. With the scan tool, record the DTCs and any liftgate inhibitors.
    2. Erase the DTCs.
    3. Turn the ignition off, wait 10 seconds, then turn the ignition on.
    4. Operate the liftgate several times.
    5. With the scan tool, read the Active DTCs.

    Does the scan tool display; B1964-12-POWER LIFTGATE SENSOR SUPPLY - CIRCUIT SHORT TO BATTERY?

    Yes

    - Go To 2

    No

    - Test complete, the condition or conditions that originally set this DTC are not present at this time. Using the wiring diagrams as a guide, check all related splices and connectors for signs of water intrusion, corrosion, pushed out or bent terminals and poor pin fit.
    - Perform the BODY VERIFICATION TEST. Refer to **STANDARD PROCEDURE** .
2. **(Q901) LOGIC GROUND CIRCUIT OPEN**
    1. Turn the ignition off.
    2. Disconnect the Power Liftgate Module C2 harness connector.
    3. Disconnect the Power Liftgate Drive Unit harness connector.
    4. Measure the resistance of the (Q901) Logic Ground circuit between the Power Liftgate Module C2 harness connector and the Power Liftgate Drive Unit connector.

    Is the resistance below 1.0 Ohm on both?

    Yes

    - Go To 3

    No

    - Repair the (Q901) Logic Ground circuit for an open.

- Perform the BODY VERIFICATION TEST. Refer to **STANDARD PROCEDURE** .

3. **(Q203) POSITION SENSOR SUPPLY CIRCUIT SHORTED TO VOLTAGE**

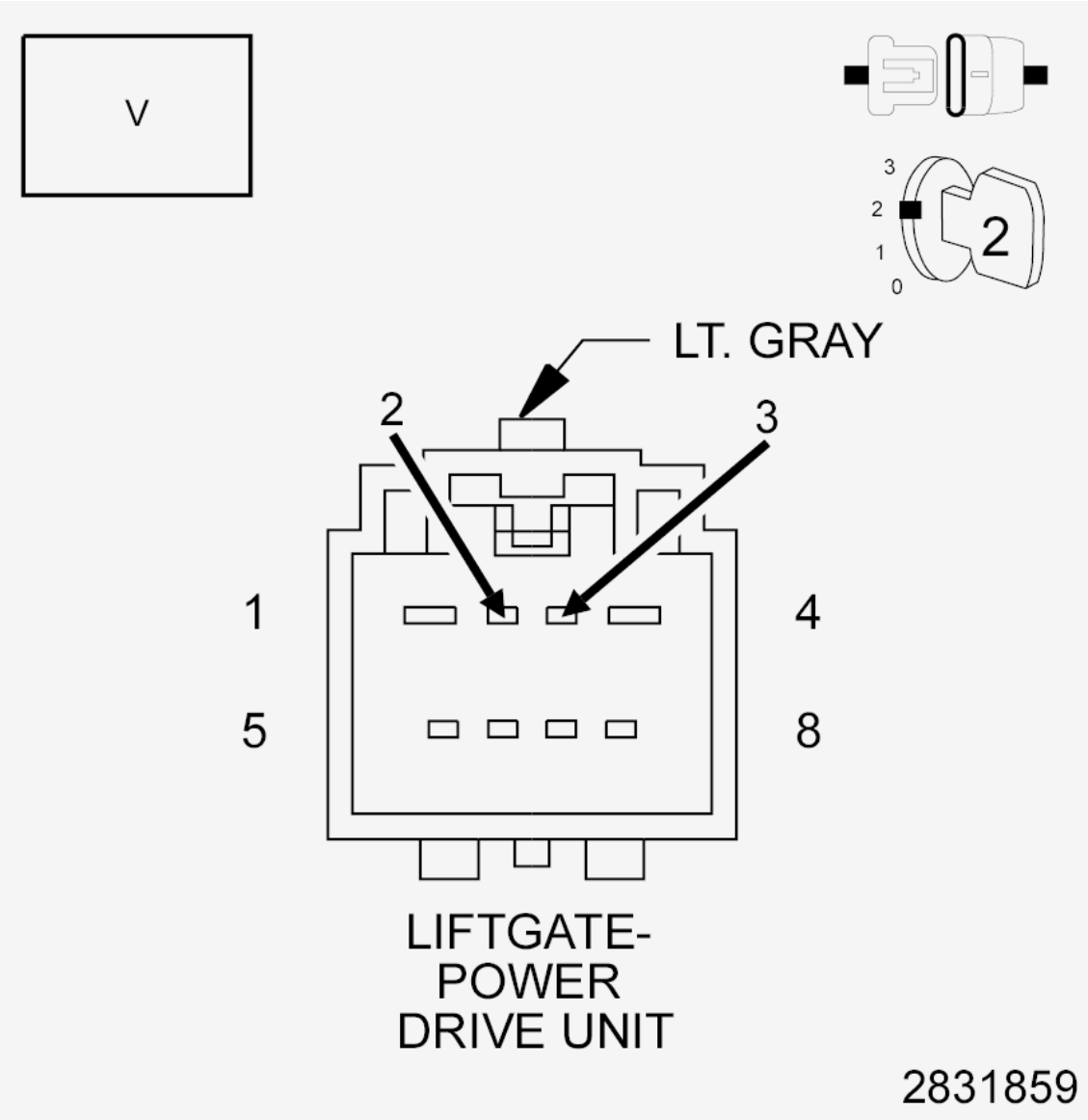

Fig. 68: Checking Position Sensor Supply Circuit For Short To Voltage
Courtesy of CHRYSLER GROUP, LLC

1. Connect the Power Liftgate Module C2 harness connector.
2. Turn the ignition on.
3. Measure the voltage between the (Q901) Logic Ground circuit and the (Q203) Position Sensor Supply circuit in the Power Liftgate Drive Unit connector.

   Is the voltage above 5.5 volts?

Yes

- Repair the (Q203) Position Sensor Supply circuit for a short to voltage. If the power liftgate is inoperative after repairing the (Q203) Position Sensor Supply circuit, replace the Power Liftgate Drive Unit in accordance with the service information.
- Perform the BODY VERIFICATION TEST. Refer to **STANDARD PROCEDURE** .

No

- Go To 4

4. **(Q203) POSITION SENSOR SUPPLY CIRCUIT OPEN**

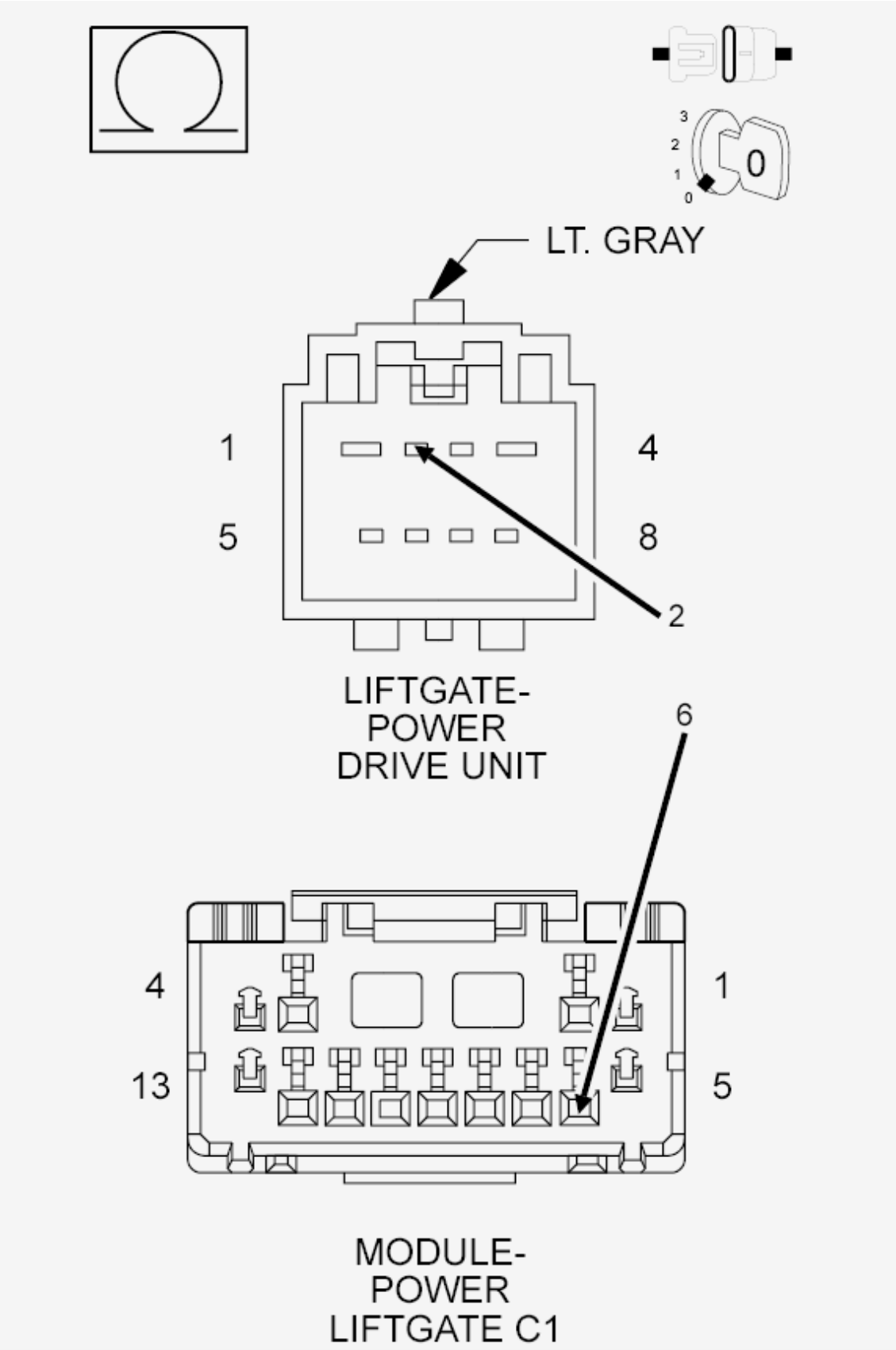
3
2
1
0
LT. GRAY
1
4
5
8
2
LIFTGATE-
POWER
DRIVE UNIT
6
4
1
13
5
MODULE-
POWER
LIFTGATE C1

Fig. 69: Checking Position Sensor Supply Circuit For Open Or Short To Ground
Courtesy of CHRYSLER GROUP, LLC

1. Turn the ignition off.
2. Disconnect the Power Liftgate Module C1 harness connector.
3. Measure the resistance of the (Q203) Position Sensor Supply circuit between the Power Liftgate Module C1 harness connector and the Power Liftgate Drive Unit harness connector.

   Is the resistance below 1.0 Ohm?

   Yes

   - Replace the Power Liftgate Module in accordance with the Service Information. Refer to **MODULE, POWER LIFTGATE CONTROL, REMOVAL** .
   - Perform the BODY VERIFICATION TEST. Refer to **STANDARD PROCEDURE** .

   No

   - Repair the (Q203) Position Sensor Supply circuit for an open.
   - Perform the BODY VERIFICATION TEST. Refer to **STANDARD PROCEDURE** .

B1967-00-POWER LIFTGATE OPEN DIRECTION OVERCURRENT

For a complete wiring diagram, **refer to appropriate SYSTEM WIRING DIAGRAMS article** .

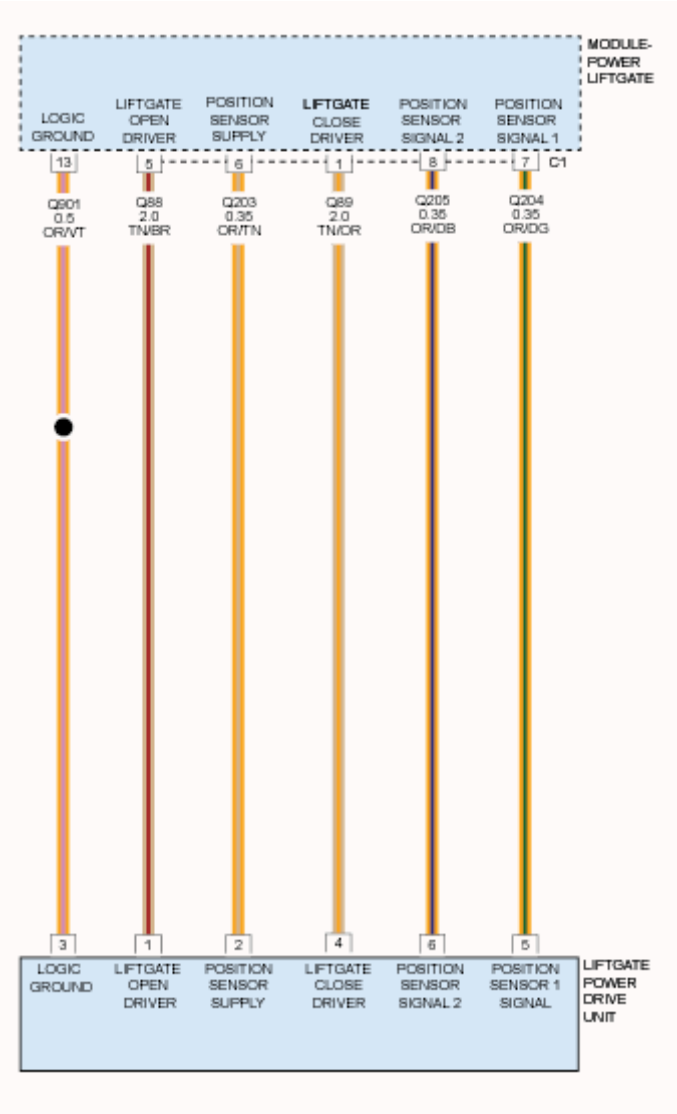

Fig. 70: Power Liftgate Position Sensor Signal, Supply, Liftgate Drive & Ground Circuit Diagram
Courtesy of CHRYSLER GROUP, LLC

WHEN MONITORED

Anytime the Power Liftgate is in a power open operation.

SET CONDITION

The drive motor stall current of over 24 amps has been detected for over 500 ms. during the power opening operation.

POSSIBLE CAUSES

Possible Causes
BINDING LIFTGATE OR OVERLOADING

(Q88) LIFTGATE OPEN DRIVER CIRCUIT SHORTED TO THE (Q89) LIFTGATE CLOSE DRIVER CIRCUIT
(Q89) LIFTGATE CLOSE DRIVER CIRCUIT SHORTED TO VOLTAGE
(Q76) LATCH SECONDARY POSITION SENSE CIRCUIT SHORTED TO GROUND
(Q76) LATCH SECONDARY POSITION SENSE CIRCUIT OPEN
(Q76) LATCH SECONDARY POSITION SENSE WIRE SHORTED TO VOLTAGE
WEAK STRUT
LATCH ASSEMBLY
POWER LIFTGATE MODULE
POWER LIFTGATE DRIVE UNIT

DIAGNOSTIC TEST

1. **DTC PRESENT**
    1. With the scan tool, record and erase the DTCs.
    2. Turn the ignition off, wait 10 seconds, then turn the ignition on.
    3. Operate the power liftgate several times if possible.
    4. With the scan tool, read the Active DTCs.

    Does the scan tool display; B1967-00-POWER LIFTGATE OPEN DIRECTION OVERCURRENT?

    Yes

    - Go To 2

    No

    - Using the wiring diagram/schematic as a guide, inspect the wiring and connectors for an intermittent condition. Operate the liftgate several times and check for any binding conditions.
    - Perform the BODY VERIFICATION TEST. Refer to **STANDARD PROCEDURE** .
2. **BINDING LIFTGATE**
    1. Examine the liftgate for proper alignment, worn or binding hinges, weak liftgate prop assembly, or loose/hard weatherstrip for wear or anything that would cause an obstruction to proper operation. Check for the possibility of the liftgate having been overloaded due to ice or heavy snow.
    2. Raise the liftgate and check the struts for proper operation.
    3. If necessary manually operate the liftgate of a known good vehicle and notice the effort needed.
    4. Compare the effort needed on the disabled vehicle.

    Were there any mechanical problems found?

    Yes

- Refer to **STANDARD PROCEDURE** for the related symptom(s).
- Perform the BODY VERIFICATION TEST. Refer to **STANDARD PROCEDURE** .

No

- Go To 3

3. **CHECK THE SECONDARY RATCHET SWITCH**
   1. Open the liftgate to the middle position.
   2. With the scan tool, monitor the Secondary Ratchet Switch.
   3. Using a screwdriver, click the latch to the fully closed position while observing the scan tool.
   4. Unlatch the latch by pressing the handle switch and observe the scan tool for a change of state.
   5. Repeat this step several times while moving the liftgate in different positions and wiggling the harness to check for an intermittent shorted circuit.

   Did the scan tool show the switch state changing correctly every time?

   Yes

   - Go To 4

   No

   - Go To 8

4. **(Q89) LIFTGATE CLOSE DRIVER CIRCUIT SHORTED TO VOLTAGE**

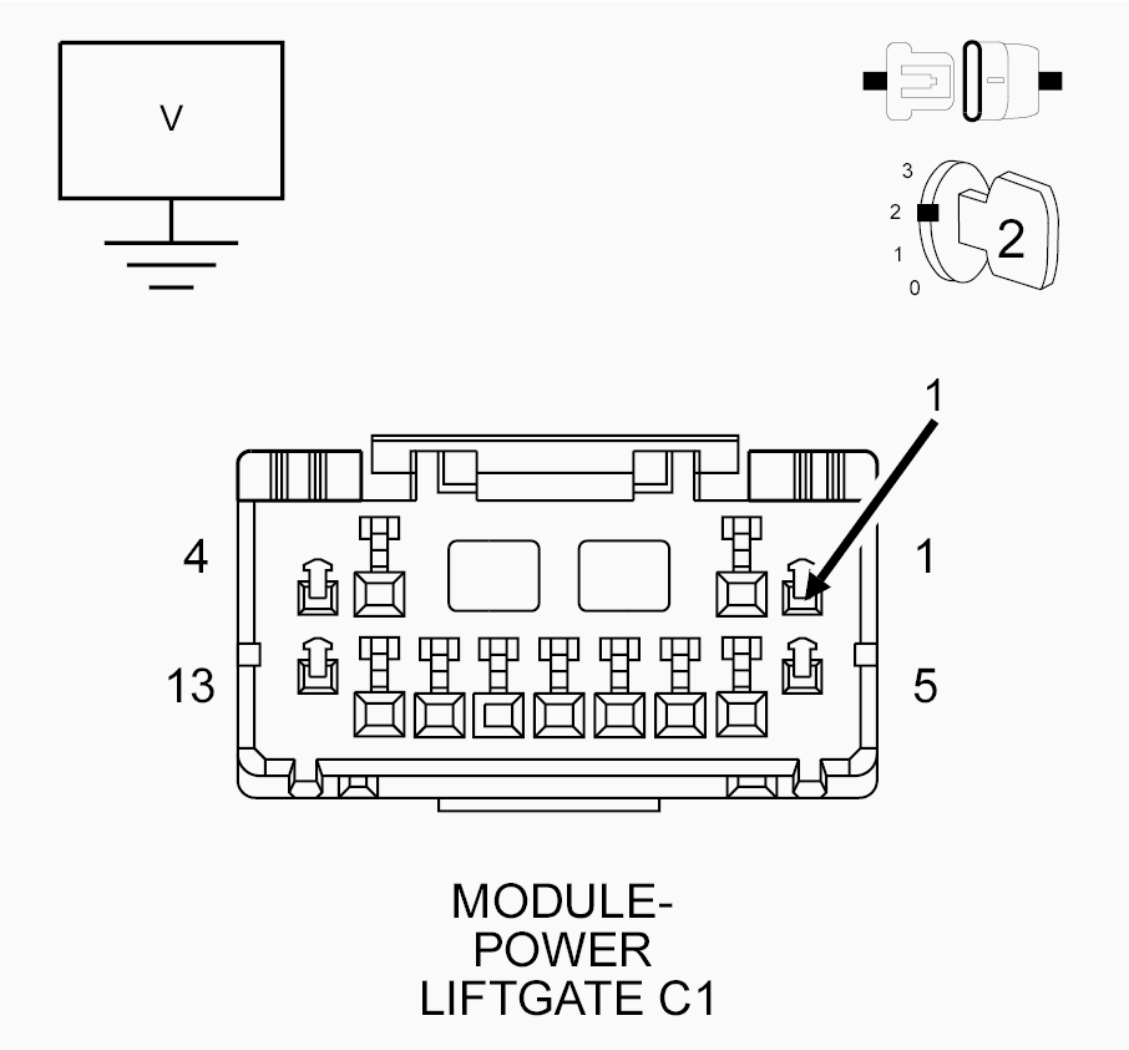

Fig. 71: Checking Liftgate Close Driver Circuit For Short To Voltage
Courtesy of CHRYSLER GROUP, LLC

1. Turn the ignition off.
2. Disconnect the Power Liftgate Module C1 connector.
3. Turn the ignition on.
4. Measure the voltage between the (Q89) Liftgate Close Driver circuit and ground.

   Is there any voltage present?

   Yes

   - Repair the (Q89) Liftgate Close Driver circuit for a short to voltage.
   - Perform the BODY VERIFICATION TEST. Refer to **STANDARD PROCEDURE** .

   No

- Go To 5

5. **(Q88) LIFTGATE OPEN DRIVER CIRCUIT SHORTED TO THE (Q89) LIFTGATE CLOSE DRIVER CIRCUIT**

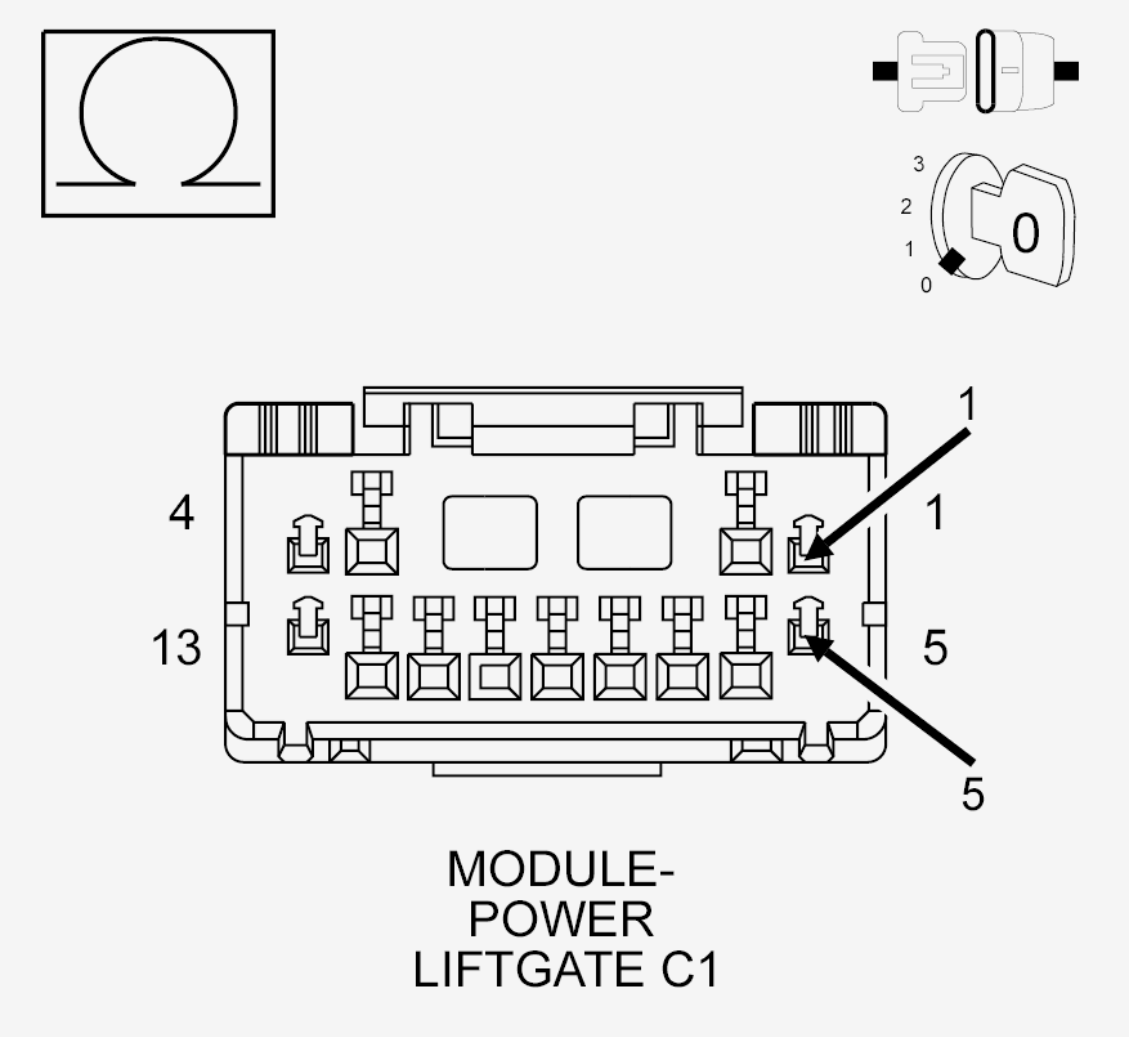

Fig. 72: Checking Liftgate Open Driver Circuit For Short To Liftgate Close Driver Circuit
Courtesy of CHRYSLER GROUP, LLC

1. Turn the ignition off.
2. Measure the resistance between the (Q88) Liftgate Open Driver circuit and the (Q89) Liftgate Close Driver circuit.

NOTE: **Be sure to use an accurate DVOM in the following step. Zero the meter before beginning.**

Is the resistance below 0.5 of an Ohm?

Yes

- Go To 6

No

- Go To 7

6. **(Q88) LIFTGATE OPEN DRIVER CIRCUIT SHORTED TO THE (Q89) LIFTGATE CLOSE DRIVER CIRCUIT**

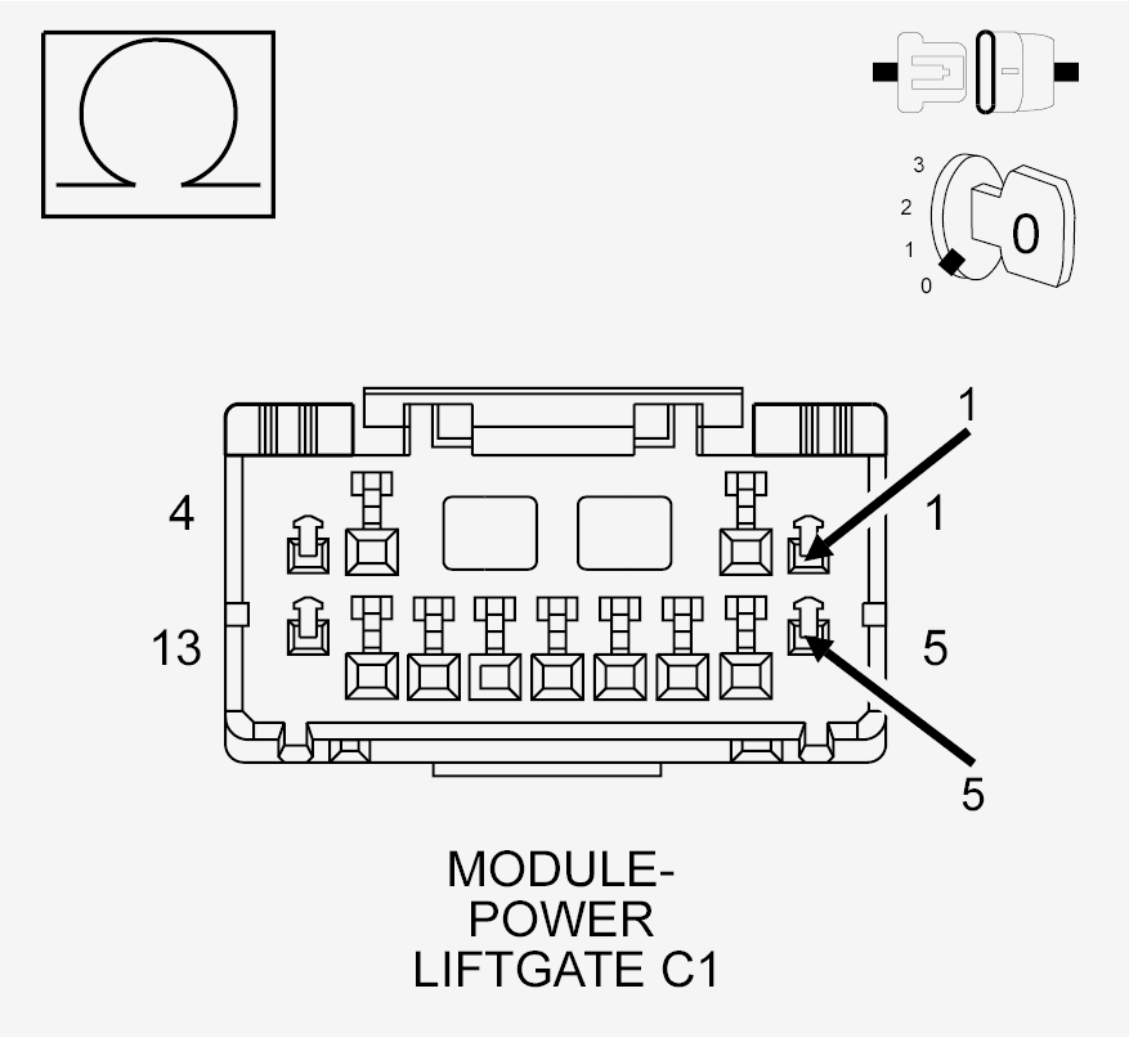

Fig. 73: Checking Liftgate Open Driver Circuit For Short To Liftgate Close Driver Circuit
Courtesy of CHRYSLER GROUP, LLC

1. Disconnect the Power Liftgate Drive Unit connector.
2. Measure the resistance between the (Q88) Liftgate Open Driver circuit and the (Q89) Liftgate Close Driver circuit.

   Is the resistance below 10K Ohms?

Yes

- Repair the (Q88) Liftgate Open Driver circuit for a short to the (Q89) Liftgate Close Driver circuit.
- Perform the BODY VERIFICATION TEST. Refer to **STANDARD PROCEDURE** .

No

- Replace the Power Liftgate Drive Unit in accordance with service information. Refer to **DRIVE UNIT, POWER, REMOVAL** .
- Perform the BODY VERIFICATION TEST. Refer to **STANDARD PROCEDURE** .

7. **POWER LIFTGATE DRIVE UNIT**
   1. Reconnect the Power Liftgate Module C1 connector.
   2. Operate the Power Liftgate in both directions if possible.

   Does the motor start to lift the liftgate but is very slow and labors extensively?

   Yes

   - Replace the Power Liftgate Drive Unit assembly in accordance with the service information. Refer to **DRIVE UNIT, POWER, REMOVAL** .
   - Perform the BODY VERIFICATION TEST. Refer to **STANDARD PROCEDURE** .

   No

   - Replace the Power Liftgate Module in accordance with the Service Information. Refer to **MODULE, POWER LIFTGATE CONTROL, REMOVAL** .
   - Perform the BODY VERIFICATION TEST. Refer to **STANDARD PROCEDURE** .
8. **CHECK THE (Q76) LATCH SECONDARY POSITION SENSE CIRCUIT FOR A SHORT TO GROUND**

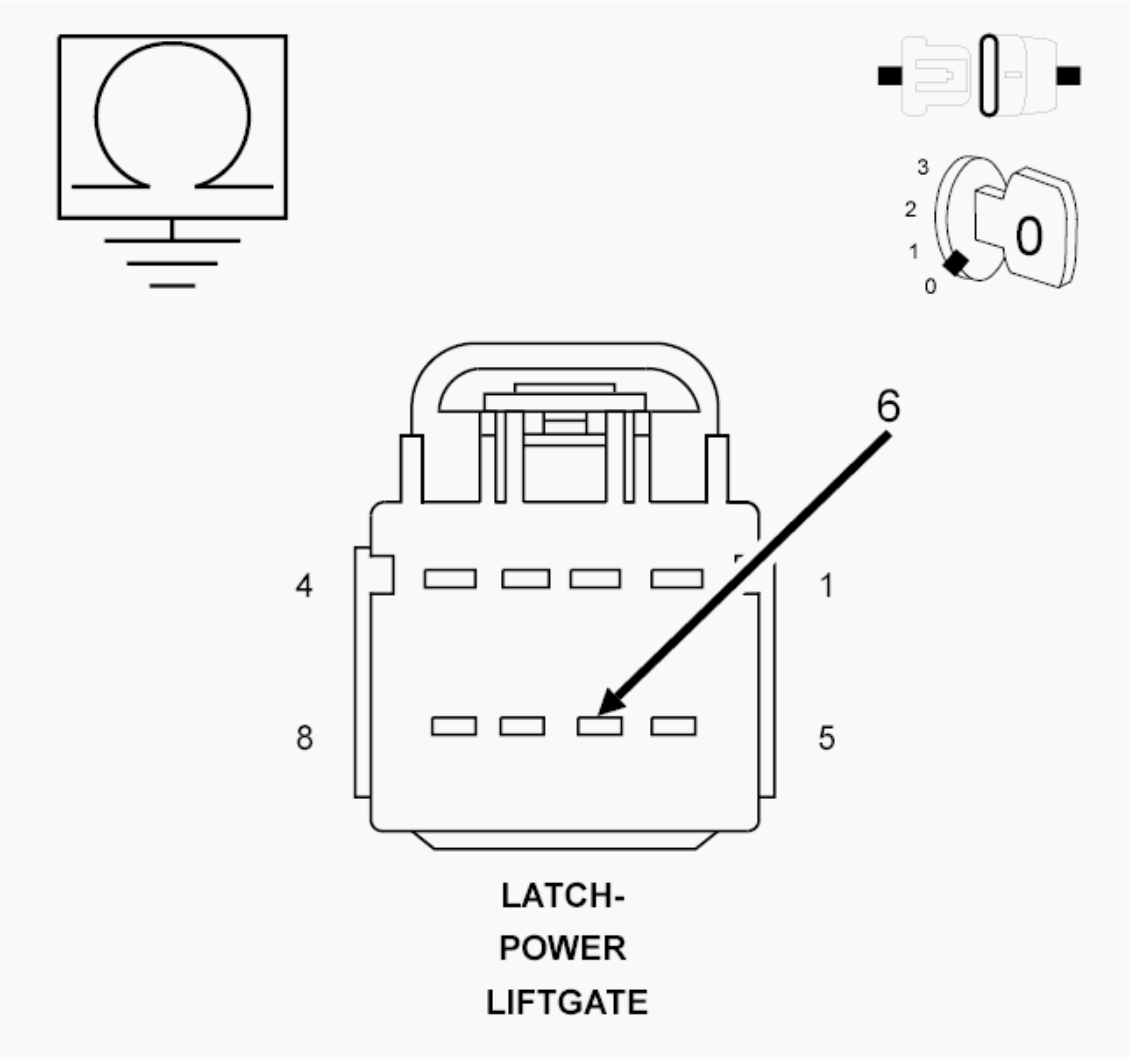

Fig. 74: Checking Latch Secondary Position Sense Circuit For A Short To Ground
Courtesy of CHRYSLER GROUP, LLC

1. Turn the ignition off.
2. Disconnect the Power Liftgate Latch connector.
3. Measure the resistance between ground and the (Q76) Latch Secondary Position Sense circuit.
4. Wiggle the harness while observing the Ohmmeter.

   Is the resistance below 1K Ohms?

   Yes

   - Repair the (Q76) Latch Secondary Position Sense circuit for a short to ground.
   - Perform the BODY VERIFICATION TEST. Refer to **STANDARD PROCEDURE** .

   No

- Go To 9

9. **CHECK THE (Q76) LATCH SECONDARY POSITION SENSE CIRCUIT FOR AN OPEN**

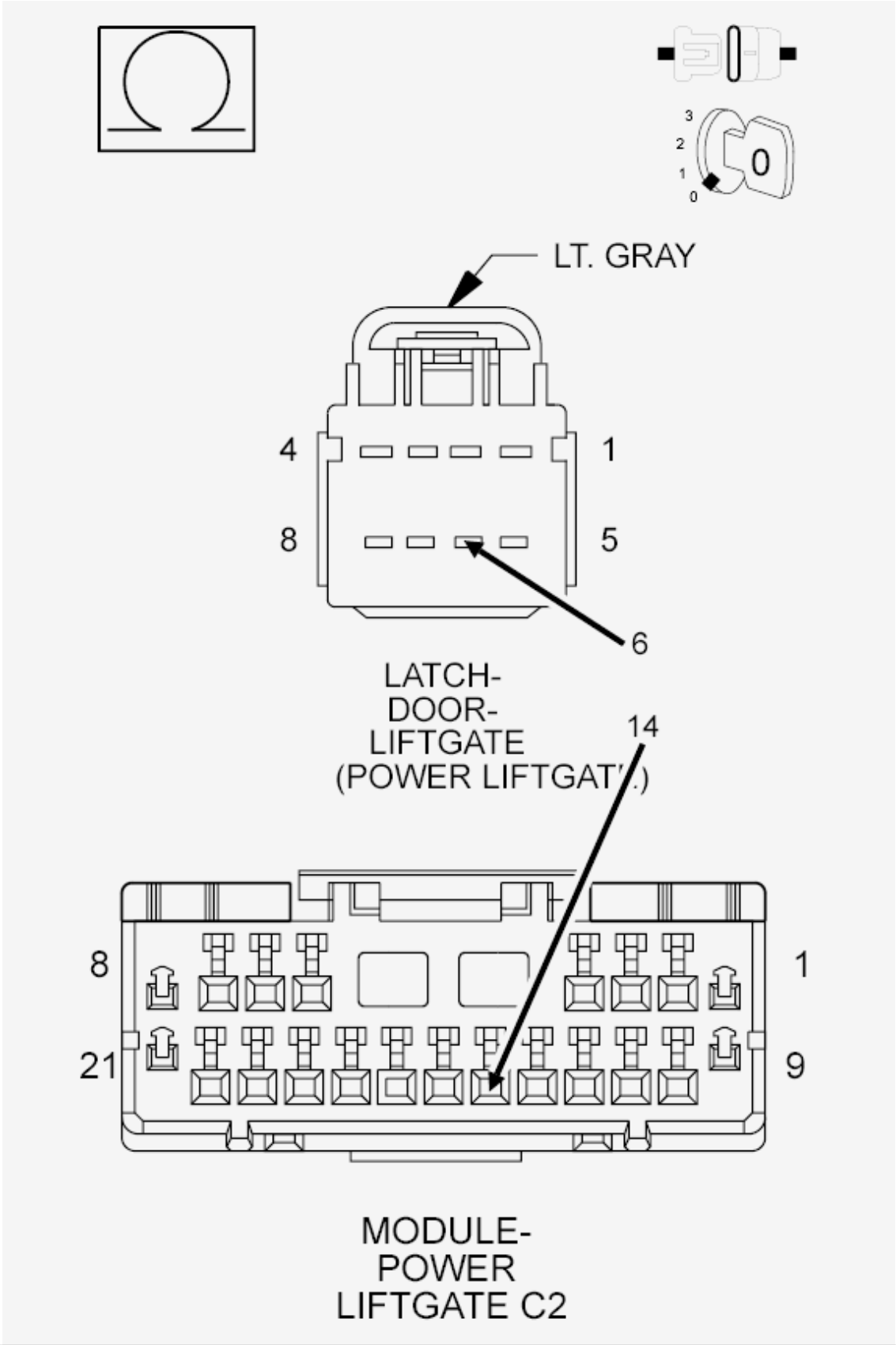
3
2
1
0
0
LT. GRAY
4
1
8
5
6
LATCH-
DOOR-
LIFTGATE
(POWER LIFTGAT
14
8
1
21
9
MODULE-
POWER
LIFTGATE C2

Fig. 75: Checking Latch Secondary Position Sense Circuit For An Open
Courtesy of CHRYSLER GROUP, LLC

1. Disconnect the Power Liftgate Module C2 harness connector.
2. Measure the resistance of the (Q76) Latch Secondary Position Sense between the Power Liftgate Module C2 harness connector and the Power Liftgate Latch harness connector.
3. Wiggle the harness while observing the Ohmmeter.

   Is the resistance below 1.0 Ohm?

   Yes

   - Go To 10

   No

   - Repair the (Q76) Latch Secondary Position Sense circuit for an open.
   - Perform the BODY VERIFICATION TEST. Refer to **STANDARD PROCEDURE** .

10. **(Q76) LATCH SECONDARY POSITION SENSE WIRE SHORTED TO VOLTAGE**

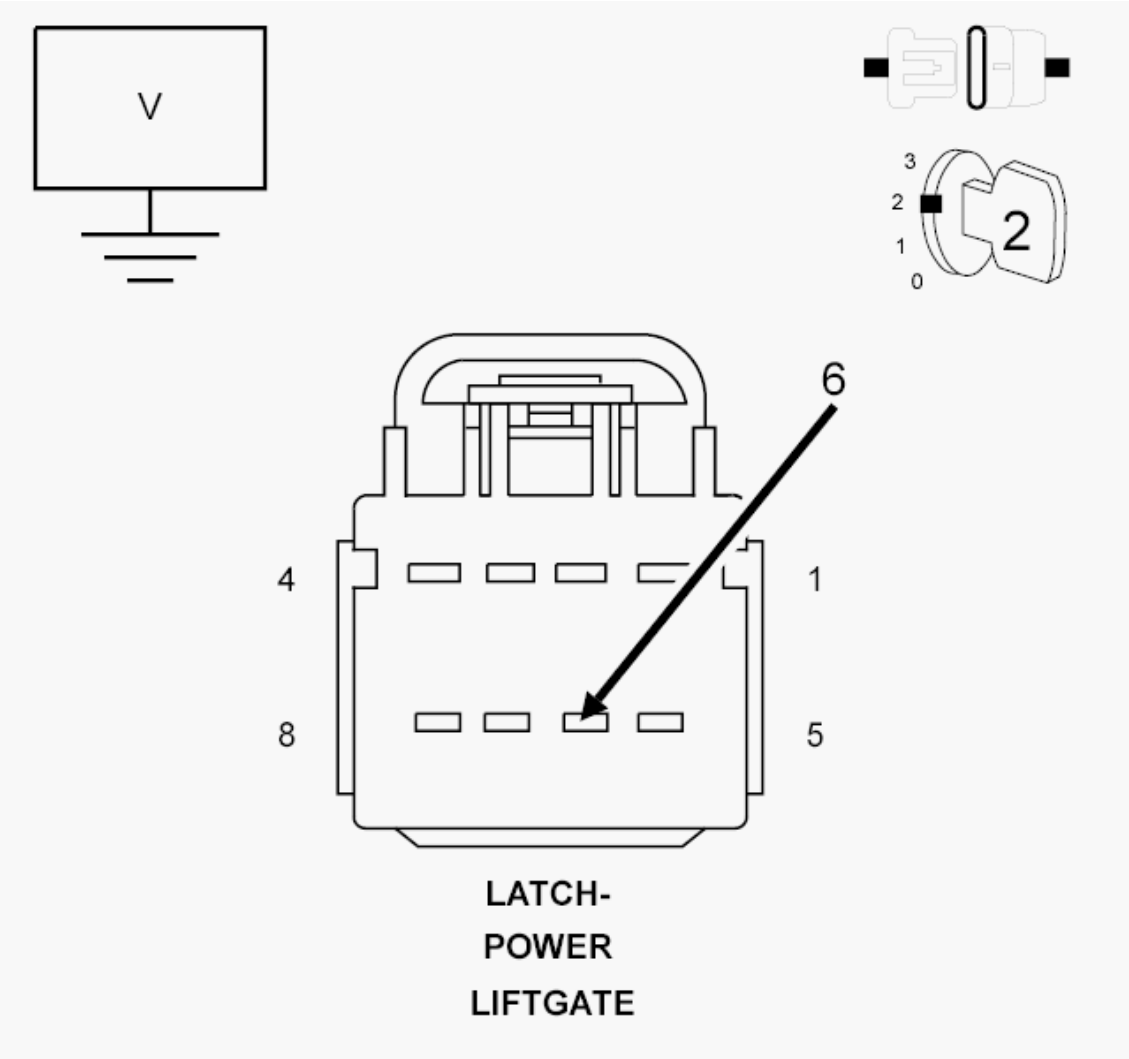

Fig. 76: Checking Latch Secondary Position Sense Circuit For Short To Voltage
Courtesy of CHRYSLER GROUP, LLC

1. Turn the ignition on.
2. Measure the voltage between ground and the (Q76) Latch Secondary Position Sense circuit.
3. Wiggle the harness while observing the voltmeter.

   Is there any voltage present?

   Yes

   - Repair the (Q76) Latch Secondary Position Sense circuit for a short to voltage.
   - Perform the BODY VERIFICATION TEST. Refer to **STANDARD PROCEDURE** .

   No

- Replace the Power Liftgate Latch in accordance with the Service Information. Refer to **LATCH, LIFTGATE, REMOVAL** .
- Perform the BODY VERIFICATION TEST. Refer to **STANDARD PROCEDURE** .

B1968-00-POWER LIFTGATE OPEN DIRECTION - EXCESSIVE TIME

For a complete wiring diagram, **refer to appropriate SYSTEM WIRING DIAGRAMS article** .

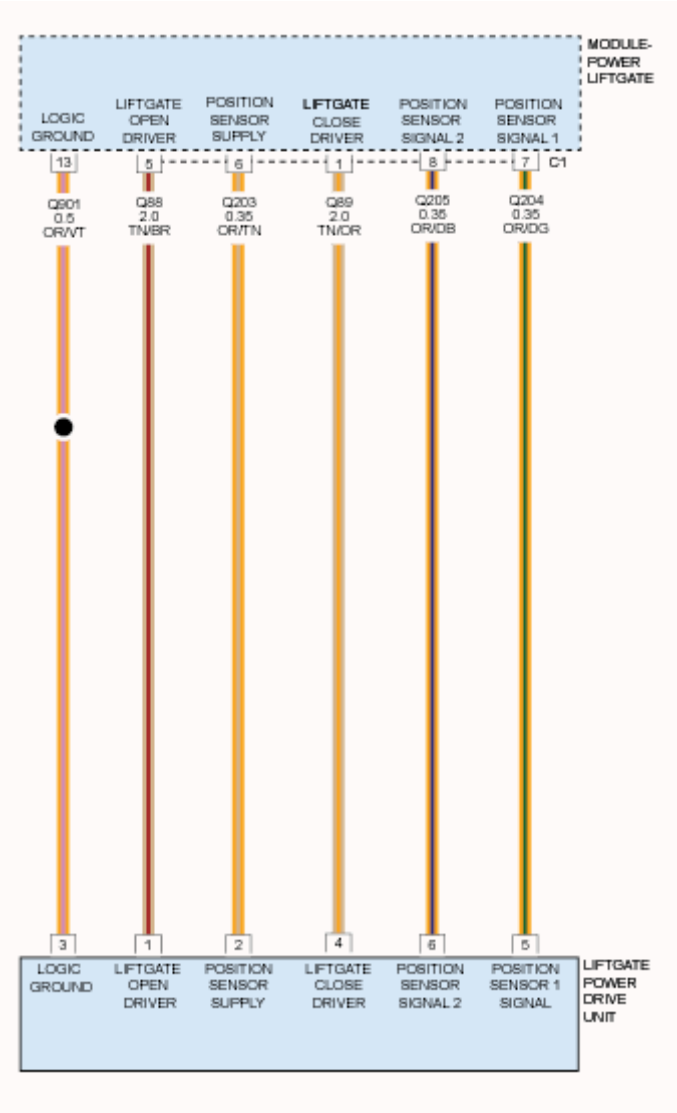

Fig. 77: Power Liftgate Position Sensor Signal, Supply, Liftgate Drive & Ground Circuit Diagram
Courtesy of CHRYSLER GROUP, LLC

WHEN MONITORED

Anytime the Power Liftgate is in a power open operation.

SET CONDITION

The drive motor has taken longer than 15 seconds to complete an open command.

POSSIBLE CAUSES

Possible Causes
BINDING LIFTGATE
EXCESSIVE CIRCUIT RESISTANCE ON THE (A111) POWER LIFTGATE MODULE FUSED B(+) CIRCUIT, THE Q88 LIFTGATE OPEN DRIVER CIRCUIT, OR THE Q89 LIFTGATE CLOSE DRIVER CIRCUIT
POWER LIFTGATE DRIVE UNIT
INCORRECT POWER LIFTGATE MODULE IS INSTALLED IN THE VEHICLE

DIAGNOSTIC TEST

1. **DTC PRESENT**
    1. With the scan tool, record and erase the DTCs.
    2. Cycle the ignition off, wait 10 seconds, then cycle the ignition on.
    3. Operate the power liftgate several times if possible.
    4. With the scan tool, read the Active DTCs.

    Does the scan tool display; B1968-00-POWER LIFTGATE OPEN DIRECTION - EXCESSIVE TIME?

    Yes

    - Go To 2

    No

    - Using the wiring diagram/schematic as a guide, inspect the wiring and connectors for an intermittent condition. Operate the liftgate several times and check for any binding conditions.
    - Perform the BODY VERIFICATION TEST. Refer to **STANDARD PROCEDURE** .
2. **BINDING LIFTGATE**
    1. Examine the liftgate for proper alignment, worn or binding hinges, weak liftgate prop assembly, or loose/hard weatherstrip or anything that would cause an obstruction to proper operation.
    2. If necessary manually operate the liftgate of a known good vehicle and notice the effort needed.
    3. Compare the effort needed on the disabled vehicle.

    Were there any mechanical problems found?

    Yes

- Refer to **STANDARD PROCEDURE** for the related symptom(s).
- Perform the BODY VERIFICATION TEST. Refer to **STANDARD PROCEDURE** .

No

- Go To 3

3. **CHECK FOR EXCESSIVE CIRCUIT RESISTANCE**
   1. Disconnect all Power Liftgate Module harness connectors.
   2. Disconnect the Power Liftgate Drive Unit harness connector.
   3. Check all connectors and terminals for corrosion.

   Do any connectors or terminals need repairing?

   Yes

   - Clean and repair wiring as necessary.
   - Perform the BODY VERIFICATION TEST. Refer to **STANDARD PROCEDURE** .

   No

   - Replace the Power Liftgate Drive Unit in accordance with the Service Information. Refer to **DRIVE UNIT, POWER, REMOVAL** .
   - Perform the BODY VERIFICATION TEST. Refer to **STANDARD PROCEDURE** .

B1969-00-POWER LIFTGATE OPEN DIRECTION EXCESSIVE POSITION SENSOR COUNTS

For a complete wiring diagram, **refer to appropriate SYSTEM WIRING DIAGRAMS article** .

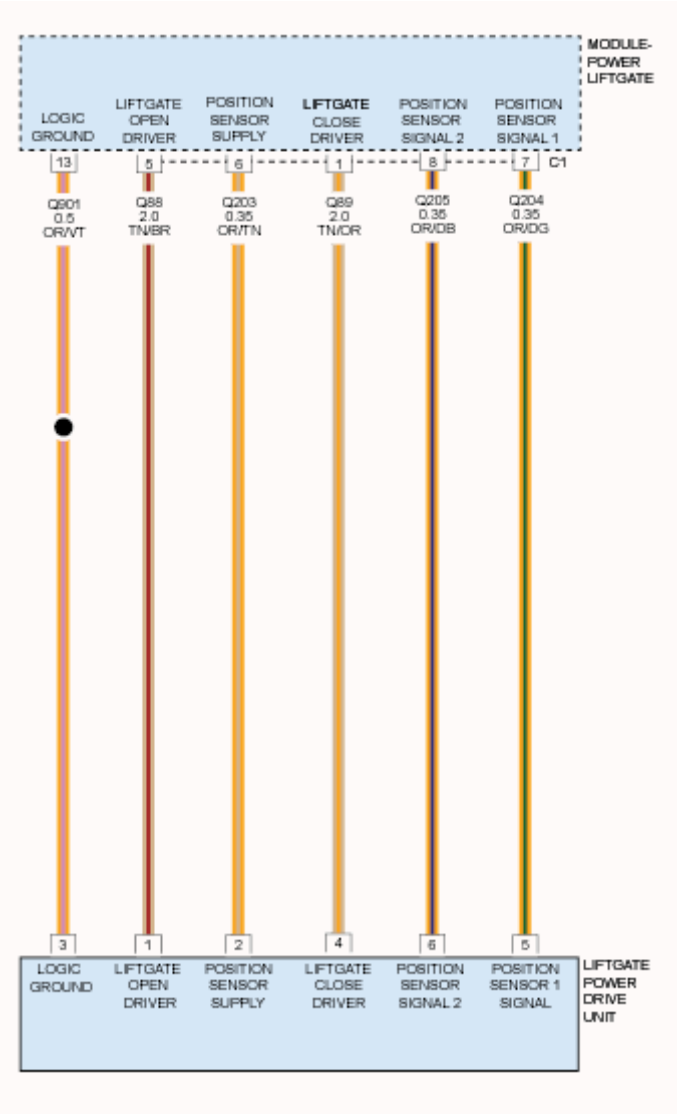

Fig. 78: Power Liftgate Position Sensor Signal, Supply, Liftgate Drive & Ground Circuit Diagram
Courtesy of CHRYSLER GROUP, LLC

WHEN MONITORED

During Power Liftgate opening cycle.

SET CONDITION

If the Power Liftgate (PLG) Module detects that the Power Liftgate Drive Unit has generated excessive pulses during a full power cycle, this code will set.

POSSIBLE CAUSES

Possible Causes
BINDING LIFTGATE

(Q901) LOGIC GROUND OPEN
POWER LIFTGATE DRIVE UNIT
POWER LIFTGATE MODULE

DIAGNOSTIC TEST

1. **DTC PRESENT**
    1. With the scan tool, record and erase DTCs.
    2. Turn the ignition off, wait 10 seconds, then turn the ignition on.
    3. Operate the Power Liftgate several times from stop to stop if possible.
    4. With the scan tool, read the Active DTCs.

    Does the scan tool display; B1969-00-POWER LIFTGATE OPEN DIRECTION EXCESSIVE POSITION SENSOR COUNTS?

    Yes

    - Go To 2

    No

    - Using the wiring diagram/schematic as a guide, inspect the wiring and connectors for an intermittent condition. Operate the liftgate several times and check for any binding conditions.
    - Perform the BODY VERIFICATION TEST. Refer to **STANDARD PROCEDURE** .
2. **BINDING LIFTGATE**
    1. Examine the liftgate for proper alignment, worn or binding hinges, weak liftgate prop assembly, loose/hard weatherstrip, for wear or anything that would cause an obstruction to proper operation.
    2. If necessary manually operate the power liftgate on a known good vehicle and notice the effort needed to open and close for comparison.

    Were there any mechanical problems found?

    Yes

    - Refer to **STANDARD PROCEDURE** for the related symptom(s).
    - Perform the BODY VERIFICATION TEST. Refer to **STANDARD PROCEDURE** .

    No

    - Go To 3
3. **POWER LIFTGATE MODULE - POSITION SENSE OPEN**
    1. Operate the liftgate from the full closed position and put an obstacle in its path to make it reverse.

Did the liftgate reverse back to the closed position?

Yes

- Go To 4

No

- Check to see if there is an updated flash for this module. If there is not an updated flash available, replace the Power Liftgate Module in accordance with the service information. Refer to **MODULE, POWER LIFTGATE CONTROL, REMOVAL** .
- Perform the BODY VERIFICATION TEST. Refer to **STANDARD PROCEDURE** .

4. **(Q901) LOGIC GROUND OPEN**
   1. Turn the ignition off.
   2. Disconnect the Power Liftgate Drive Unit harness connector.
   3. Disconnect the Power Liftgate Module C2 harness connector.
   4. Measure and note the resistance of the (Q901) Logic Ground circuit between the Power Liftgate Drive Unit harness connector and the Power Liftgate Module C2 harness connector.
   5. Connect a jumper between the (Q901) Logic Ground circuit and ground in the Power Liftgate Drive Unit harness connector.
   6. Using a 12-volt test light connected to 12 volts, check the (Q901) Logic Ground circuit at the Power Liftgate Module C2 harness connector.

   Is the resistance below 1.0 Ohm and does the test light illuminate as bright when compared to that of a direct connection to the battery?

   Yes

   - Replace the Power Liftgate Drive Unit in accordance with Service Information. Refer to **DRIVE UNIT, POWER, REMOVAL** .
   - Perform the BODY VERIFICATION TEST. Refer to **STANDARD PROCEDURE** .

   No

   - Repair the (Q901) Logic Ground circuit for an open / excessive resistance.
   - Perform the BODY VERIFICATION TEST. Refer to **STANDARD PROCEDURE** .

B196A-00-POWER LIFTGATE CLOSE DIRECTION OVERCURRENT

For a complete wiring diagram, **refer to appropriate SYSTEM WIRING DIAGRAMS article** .

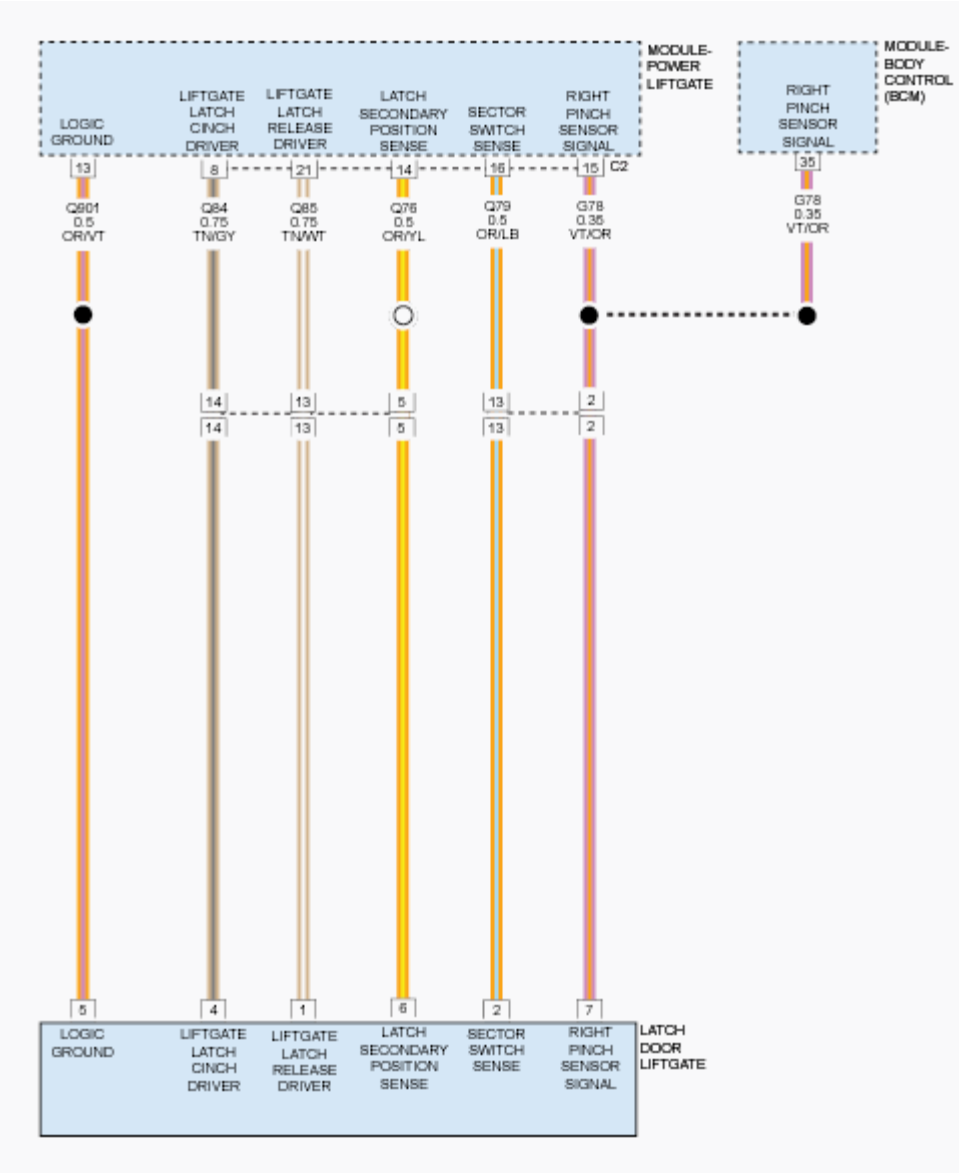

Fig. 79: Power Liftgate Right Pinch Sensor Signal, Sector Switch Sense, Secondary Position Latch Sense, Driver & Ground Circuit Diagram
Courtesy of CHRYSLER GROUP, LLC

WHEN MONITORED

Anytime the Power Liftgate is in a power closing operation.

SET CONDITION

The drive motor stall current of over 20 amps has been detected for over 500 ms. during a power closing operation.

POSSIBLE CAUSES

Possible Causes
BINDING LIFTGATE
STRUT BINDING
(Q88) LIFTGATE OPEN DRIVER CIRCUIT SHORTED TO THE (Q89) LIFTGATE CLOSE DRIVER CIRCUIT
(Q88) LIFTGATE OPEN DRIVER CIRCUIT SHORT TO VOLTAGE
(Q76) LATCH SECONDARY POSITION SENSE CIRCUIT SHORTED TO GROUND
(Q76) LATCH SECONDARY POSITION SENSE CIRCUIT OPEN
(Q76) LATCH SECONDARY POSITION SENSE WIRE SHORTED TO VOLTAGE
POWER LIFTGATE MODULE
LIFTGATE LATCH
POWER LIFTGATE DRIVE UNIT

DIAGNOSTIC TEST

1. **DTC PRESENT**
    1. With the scan tool, record and erase the DTCs.
    2. Cycle the ignition off, wait 10 seconds, then cycle the ignition on.
    3. Operate the power liftgate several times if possible.
    4. With the scan tool, read the Active DTCs.

    Does the scan tool display; B196A-00-POWER LIFTGATE CLOSE DIRECTION OVERCURRENT?

    Yes

    - Go To 2

    No

    - Using the wiring diagram/schematic as a guide, inspect the wiring and connectors for an intermittent condition. Operate the liftgate several times and check for any binding conditions.
    - Perform the BODY VERIFICATION TEST. Refer to **STANDARD PROCEDURE** .
2. **BINDING LIFTGATE**
    1. Examine the liftgate for proper alignment, worn or binding hinges, weak liftgate prop assembly, or loose/hard weatherstrip for wear or anything that would cause an obstruction to proper operation.
    2. Check the struts to be sure they are not binding when the liftgate is closing.
    3. If necessary manually operate the liftgate of a known good vehicle and notice the effort needed.
    4. Compare the effort needed on the disabled vehicle.

    Were there any mechanical problems found?

Yes

- Refer to **STANDARD PROCEDURE** for the related symptom(s).
- Perform the BODY VERIFICATION TEST. Refer to **STANDARD PROCEDURE** .

No

- Go To 3

3. **CHECK THE SECONDARY RATCHET SWITCH**
   1. With the scan tool, monitor the Secondary Ratchet Switch.
   2. Using a screwdriver, click the latch to the fully closed position while observing the scan tool.
   3. Unlatch the latch by pressing the handle switch and observe the scan tool for a change of state.
   4. Repeat this step several times while moving the liftgate in different positions and wiggling the harness to check for an intermittent shorted circuit.

   Did the scan tool show the switch state changing correctly every time?

   Yes

   - Go To 4

   No

   - Go To 8

4. **CHECK THE (Q88) LIFTGATE OPEN DRIVER CIRCUIT FOR A SHORT TO VOLTAGE**

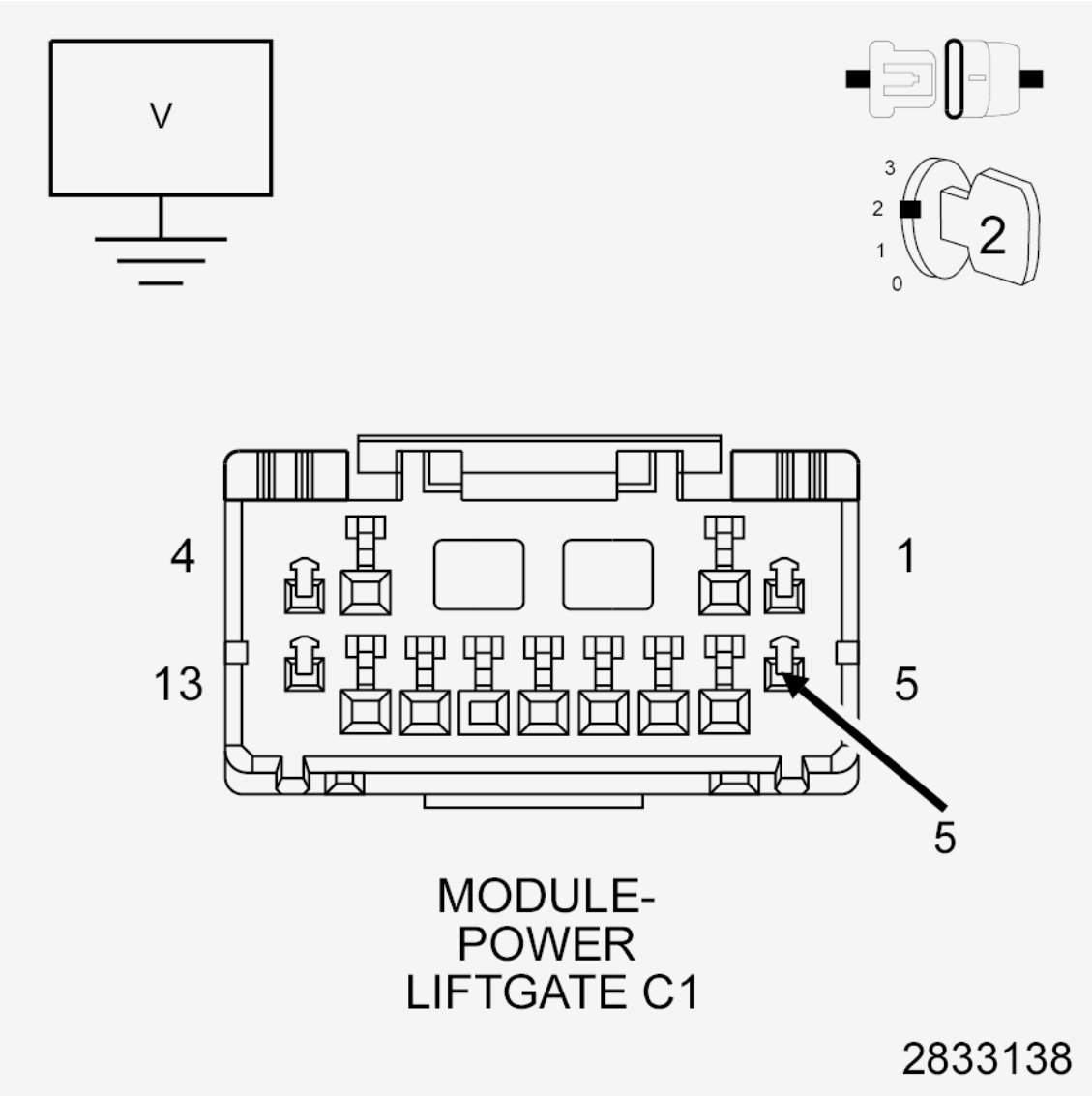

Fig. 80: Checking Liftgate Open Driver Circuit For A Short To Voltage
Courtesy of CHRYSLER GROUP, LLC

1. Cycle the ignition off.
2. Disconnect the Power Liftgate Module C1 connector.
3. Cycle the ignition on.
4. Measure the voltage between ground and the (Q88) Liftgate Open Driver circuit.

   Is there any voltage present?

   Yes

   - Repair the (Q88) Liftgate Open Driver circuit for a short to voltage.
   - Perform the BODY VERIFICATION TEST. Refer to **STANDARD PROCEDURE** .

No

- Go To 5

5. **(Q88) LIFTGATE OPEN DRIVER CIRCUIT SHORTED TO THE (Q89) LIFTGATE CLOSE DRIVER CIRCUIT**

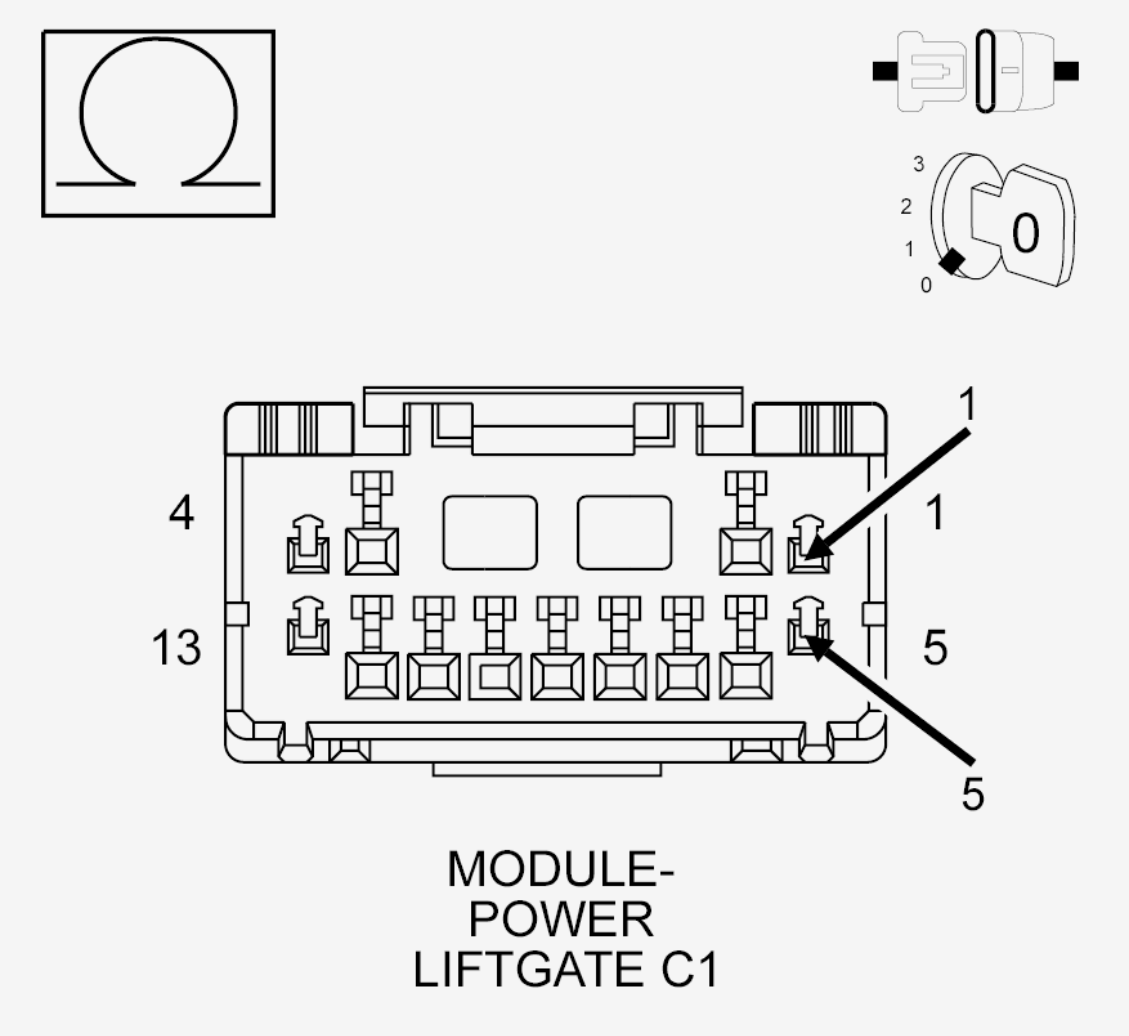

Fig. 81: Checking Liftgate Open Driver Circuit For Short To Liftgate Close Driver Circuit
Courtesy of CHRYSLER GROUP, LLC

1. Cycle the ignition off.
2. Measure the resistance between the (Q88) Liftgate Open Driver circuit and the (Q89) Liftgate Close Driver circuit.
3. Wiggle the harness and check for an intermittent shorted condition.

NOTE: **Be sure to use an accurate DVOM in the following step. Zero the meter before beginning.**

Is the resistance below 0.35 of an Ohm (should be approximately 0.5 of an Ohm)?

Yes

- Go To 6

No

- Go To 7

6. **(Q88) LIFTGATE OPEN DRIVER WIRE SHORTED TO THE (Q89) LIFTGATE CLOSE DRIVER WIRE**

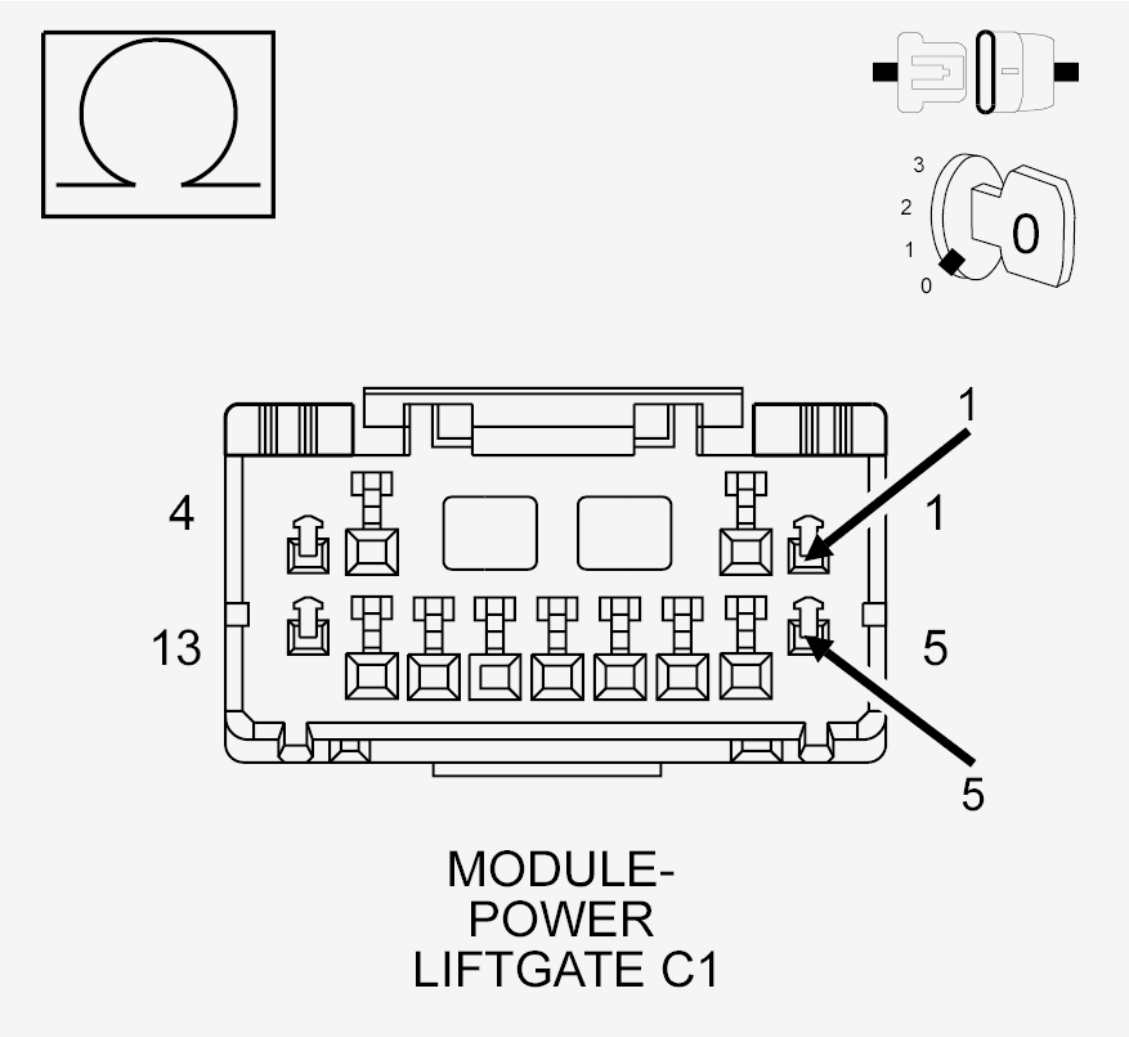

Fig. 82: Checking Liftgate Open Driver Circuit For Short To Liftgate Close Driver Circuit
Courtesy of CHRYSLER GROUP, LLC

1. Disconnect the Power Liftgate Drive Unit connector.
2. Measure the resistance between the (Q88) Liftgate Open Driver circuit and the (Q89) Liftgate

Close Driver circuit.

3. Wiggle the harness and check for an intermittent short circuit condition.

   Is the resistance below 10K Ohms?

   Yes

   - Repair the (Q88) Liftgate Open Driver circuit for a short to the (Q89) Liftgate Close Driver circuit.
   - Perform the BODY VERIFICATION TEST. Refer to **STANDARD PROCEDURE** .

   No

   - Replace the Power Liftgate Drive Unit in accordance with service information. Refer to **DRIVE UNIT, POWER, REMOVAL** .
   - Perform the BODY VERIFICATION TEST. Refer to **STANDARD PROCEDURE** .

7. **POWER LIFTGATE DRIVE UNIT**
   1. Reconnect all connectors.
   2. Operate the Power Liftgate in both directions if possible.

      Does the motor start to lift or lower the liftgate but moves very slow and labors extensively?

      Yes

      - Replace the Power Liftgate Drive Unit assembly in accordance with the service information. Refer to **DRIVE UNIT, POWER, REMOVAL** .
      - Perform the BODY VERIFICATION TEST. Refer to **STANDARD PROCEDURE** .

      No

      - Replace the Power Liftgate Module in accordance with the Service Information. Refer to **MODULE, POWER LIFTGATE CONTROL, REMOVAL** .
      - Perform the BODY VERIFICATION TEST. Refer to **STANDARD PROCEDURE** .

8. **CHECK THE (Q76) LATCH SECONDARY POSITION SENSE CIRCUIT FOR A SHORT TO GROUND**

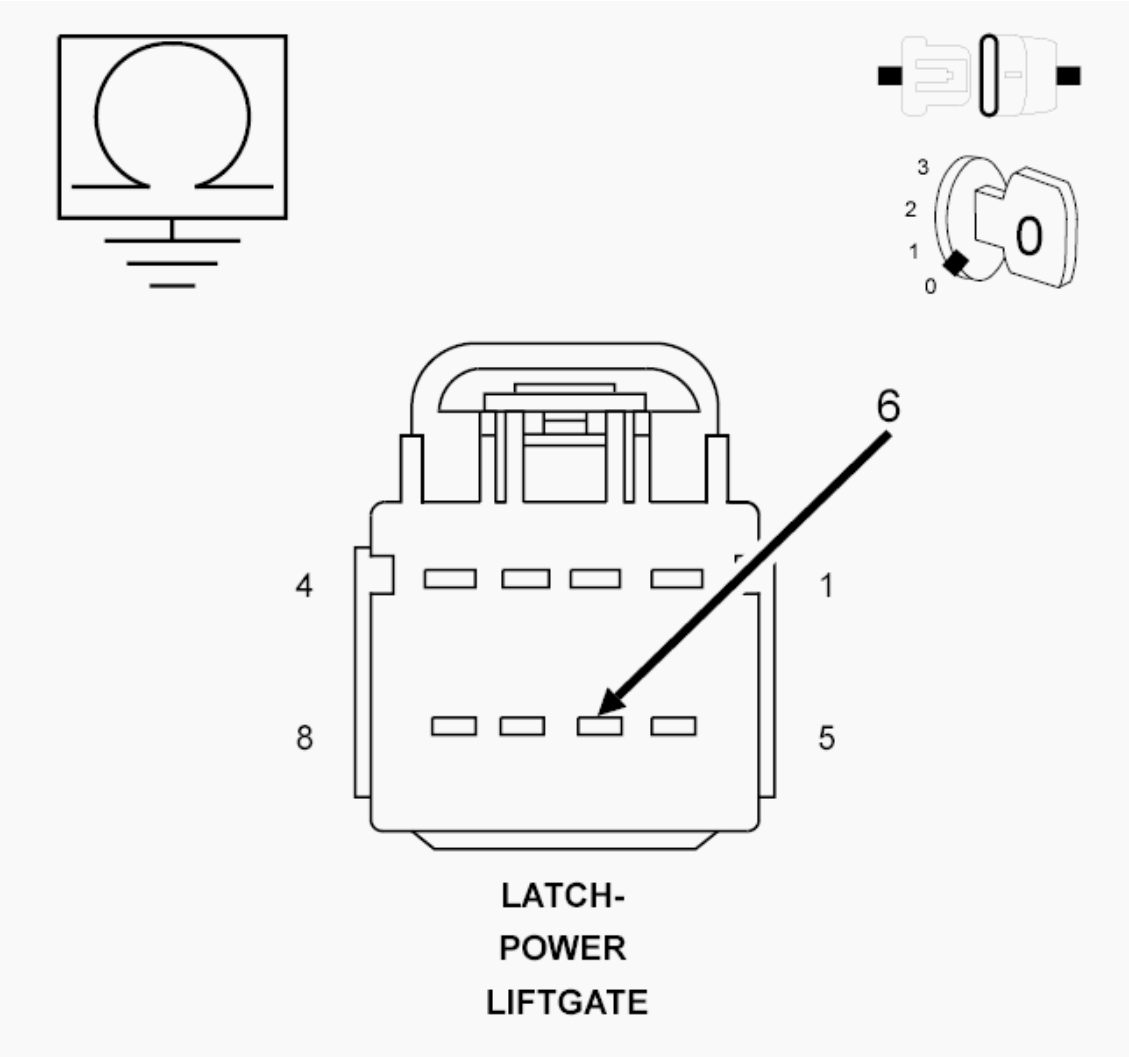

Fig. 83: Checking Latch Secondary Position Sense Circuit For A Short To Ground
Courtesy of CHRYSLER GROUP, LLC

1. Cycle the ignition off.
2. Disconnect the Power Liftgate Latch connector.
3. Measure the resistance between ground and the (Q76) Latch Secondary Position Sense circuit.
4. Wiggle the harness while observing the Ohmmeter.

   Is the resistance below 1, 000 Ohms?

   Yes

   - Repair the (Q76) Latch Secondary Position Sense circuit for a short to ground.
   - Perform the BODY VERIFICATION TEST. Refer to **STANDARD PROCEDURE** .

   No

- Go To 9

9. **CHECK THE (Q76) LATCH SECONDARY POSITION SENSE CIRCUIT FOR AN OPEN**

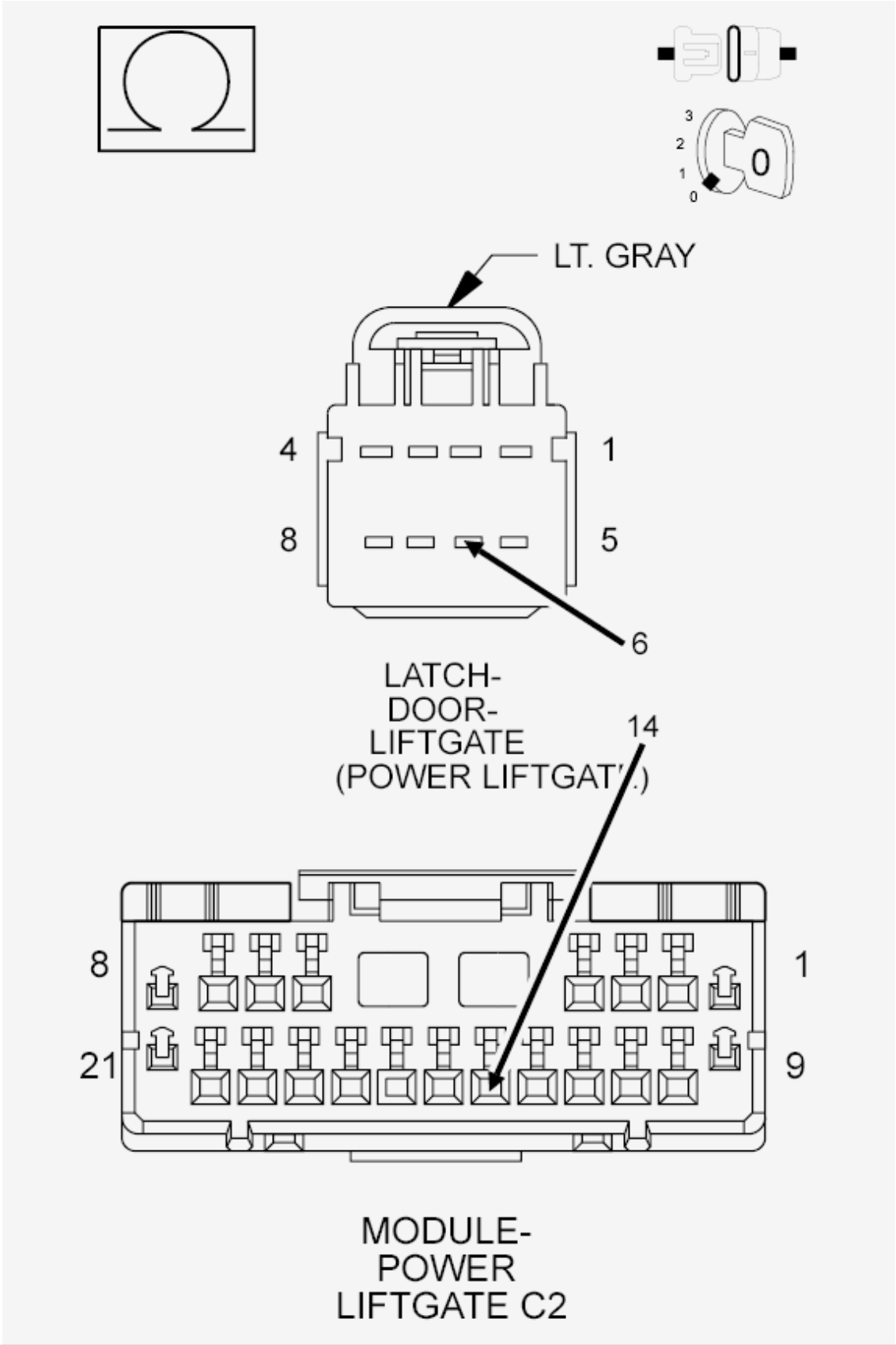
3
2
1
0
0
LT. GRAY
4
1
8
5
6
LATCH-
DOOR-
LIFTGATE
(POWER LIFTGAT
14
8
1
21
9
MODULE-
POWER
LIFTGATE C2

Fig. 84: Checking Latch Secondary Position Sense Circuit For An Open
Courtesy of CHRYSLER GROUP, LLC

1. Disconnect the Power Liftgate Module C2 harness connector.
2. Measure the resistance of the (Q76) Latch Secondary Position Sense between the Power Liftgate Module C2 harness connector and the Power Liftgate Latch harness connector.
3. Wiggle the harness while observing the Ohmmeter.

   Is the resistance below 2.0 Ohms?

   Yes

   - Go To 10

   No

   - Repair the (Q76) Latch Secondary Position Sense circuit for an open.
   - Perform the BODY VERIFICATION TEST. Refer to **STANDARD PROCEDURE** .

10. **(Q76) LATCH SECONDARY POSITION SENSE WIRE SHORTED TO VOLTAGE**

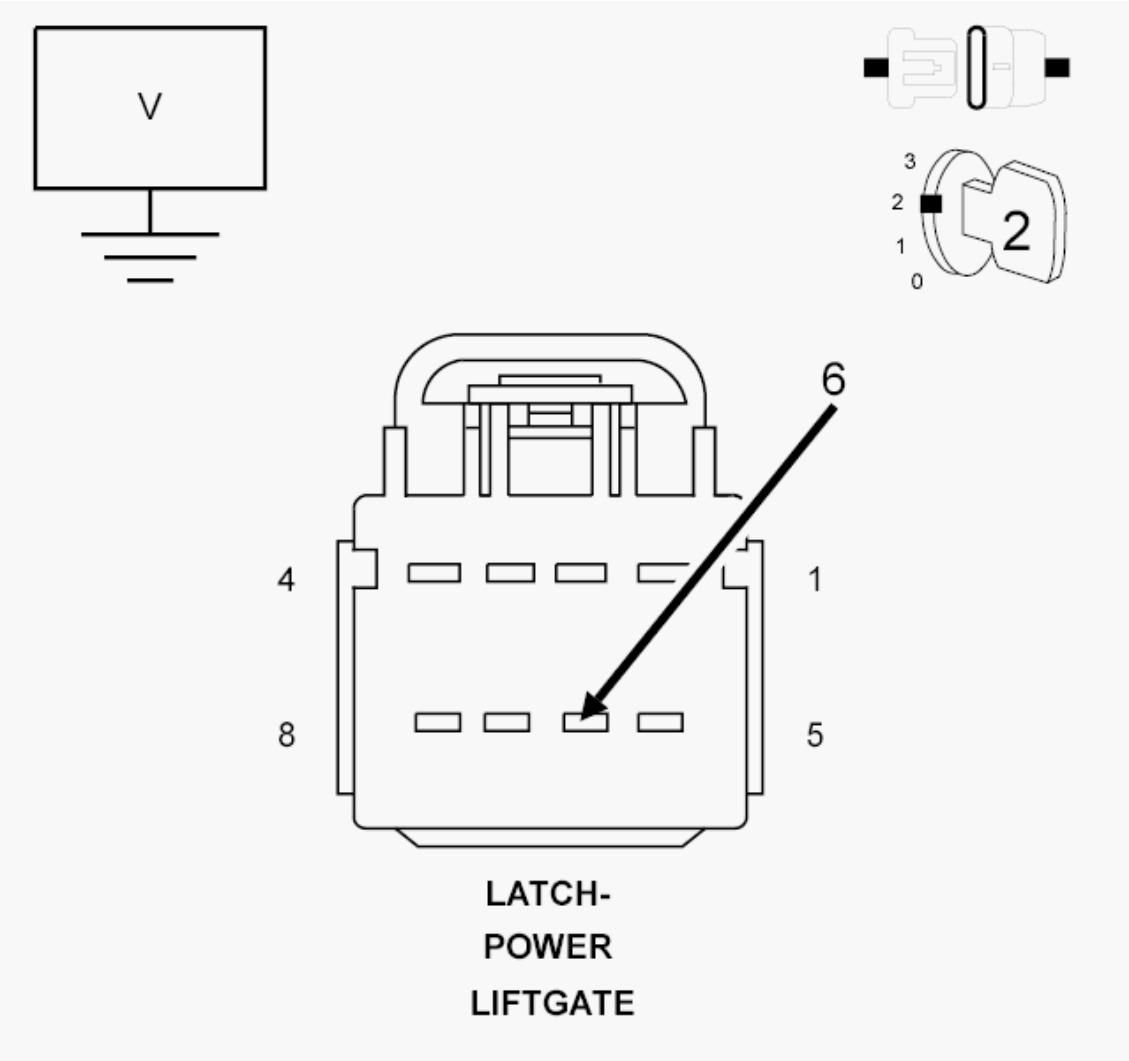

Fig. 85: Checking Latch Secondary Position Sense Circuit For Short To Voltage
Courtesy of CHRYSLER GROUP, LLC

1. Cycle the ignition on.
2. Measure the voltage of the (Q76) Latch Secondary Position Sense circuit in accordance with the service information.
3. Wiggle the harness while observing the voltmeter.

   Is there any voltage present?

   Yes

   - Repair the (Q76) Latch Secondary Position Sense circuit for a short to voltage.
   - Perform the BODY VERIFICATION TEST. Refer to **STANDARD PROCEDURE** .

   No

- Replace the Power Liftgate Latch in accordance with Service Information. Refer to **LATCH, LIFTGATE, REMOVAL** .
- Perform the BODY VERIFICATION TEST. Refer to **STANDARD PROCEDURE** .

B196B-00-POWER LIFTGATE CLOSE DIRECTION - EXCESSIVE TIME

For a complete wiring diagram, **refer to appropriate SYSTEM WIRING DIAGRAMS article** .

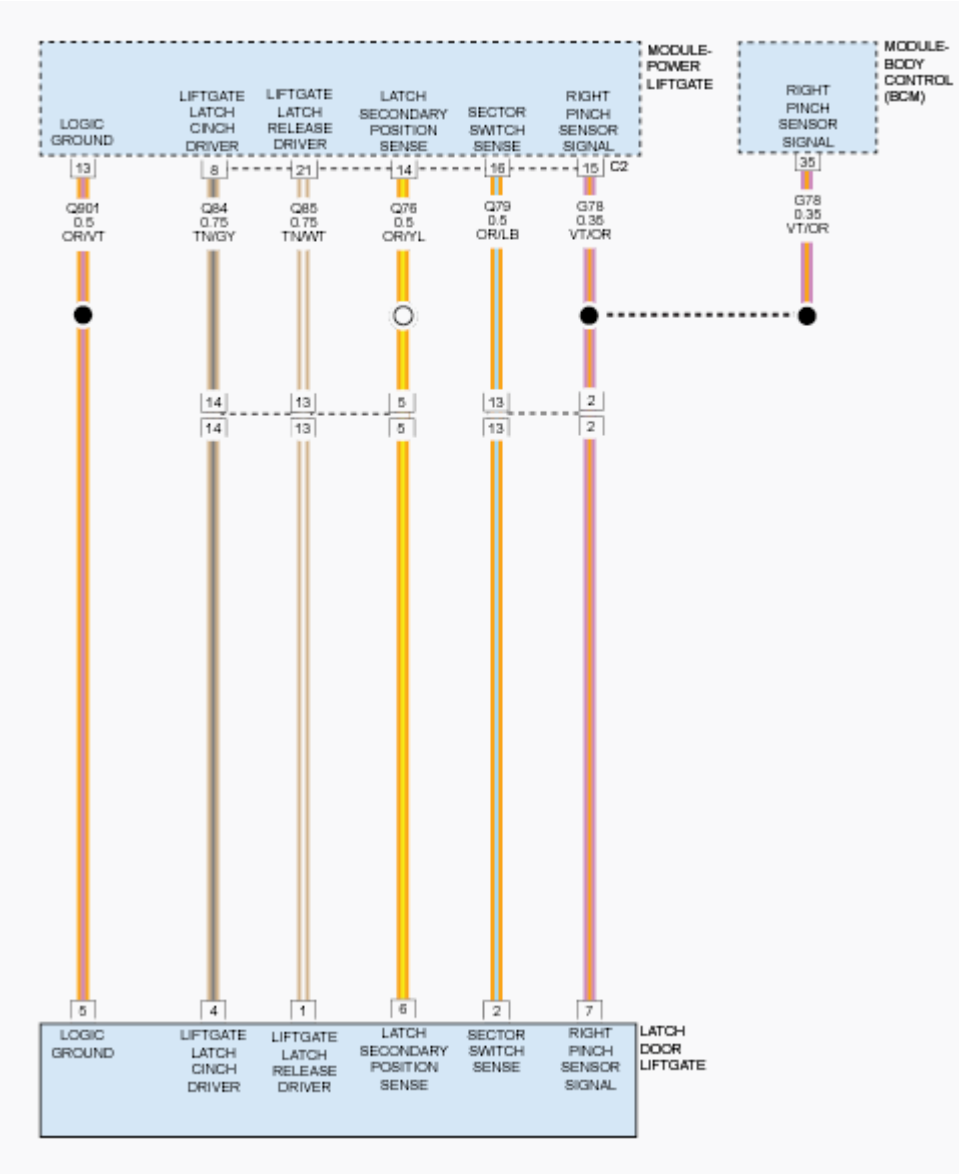

Fig. 86: Power Liftgate Right Pinch Sensor Signal, Sector Switch Sense, Secondary Position Latch Sense, Driver & Ground Circuit Diagram
Courtesy of CHRYSLER GROUP, LLC

WHEN MONITORED

Anytime the Power Liftgate is in a power close operation.

SET CONDITION

The drive motor has taken longer than 15 seconds to complete a close command or 20 seconds with the engine cranking.

POSSIBLE CAUSES

Possible Causes
BINDING LIFTGATE
EXCESSIVE CIRCUIT RESISTANCE ON THE (A111) POWER LIFTGATE MODULE FUSED B(+) CIRCUIT, THE Q88 LIFTGATE OPEN DRIVER CIRCUIT, OR THE Q89 LIFTGATE CLOSE DRIVER CIRCUIT
POWER LIFTGATE DRIVE UNIT
INCORRECT POWER LIFTGATE MODULE WAS INSTALLED

DIAGNOSTIC TEST

1. **DTC PRESENT**
    1. With the scan tool, record and erase the DTCs.
    2. Cycle the ignition off, wait 10 seconds, then cycle the ignition on.
    3. Operate the power liftgate several times if possible.
    4. With the scan tool, read the Active DTCs.

    Does the scan tool display; B196B-00-POWER LIFTGATE CLOSE DIRECTION - EXCESSIVE TIME?

    Yes

    - Go To 2

    No

    - Using the wiring diagram/schematic as a guide, inspect the wiring and connectors for an intermittent condition. Operate the liftgate several times and check for any binding conditions.
    - Perform the BODY VERIFICATION TEST. Refer to **STANDARD PROCEDURE** .
2. **BINDING LIFTGATE**
    1. Examine the liftgate for proper alignment, worn or binding hinges, stiff liftgate prop assembly, or loose/hard weatherstrip or anything that would cause an obstruction to proper operation.
    2. If necessary manually operate the liftgate of a known good vehicle and notice the effort needed.
    3. Compare the effort needed on the disabled vehicle.

Were there any mechanical problems found?

Yes

- Refer to **STANDARD PROCEDURE** for the related symptom(s).
- Perform the BODY VERIFICATION TEST. Refer to **STANDARD PROCEDURE** .

No

- Go To 3

3. **CHECK POWER LIFTGATE CONNECTORS FOR EXCESSIVE CIRCUIT RESISTANCE**
   1. Disconnect all Power Liftgate Module harness connectors.
   2. Disconnect the Power Liftgate Drive Unit harness connector.
   3. Check all connectors for damage or corroded/pushed out terminals.

   Do any connectors or terminals need repairing?

   Yes

   - Repair as necessary.
   - Perform the BODY VERIFICATION TEST. Refer to **STANDARD PROCEDURE** .

   No

   - Replace the Power Liftgate Drive Unit in accordance with the Service Information. Refer to **DRIVE UNIT, POWER, REMOVAL** .
   - Perform the BODY VERIFICATION TEST. Refer to **STANDARD PROCEDURE** .

B196C-00-POWER LIFTGATE CLOSE DIRECTION EXCESSIVE POSITION SENSOR COUNTS

For a complete wiring diagram, **refer to appropriate SYSTEM WIRING DIAGRAMS article** .

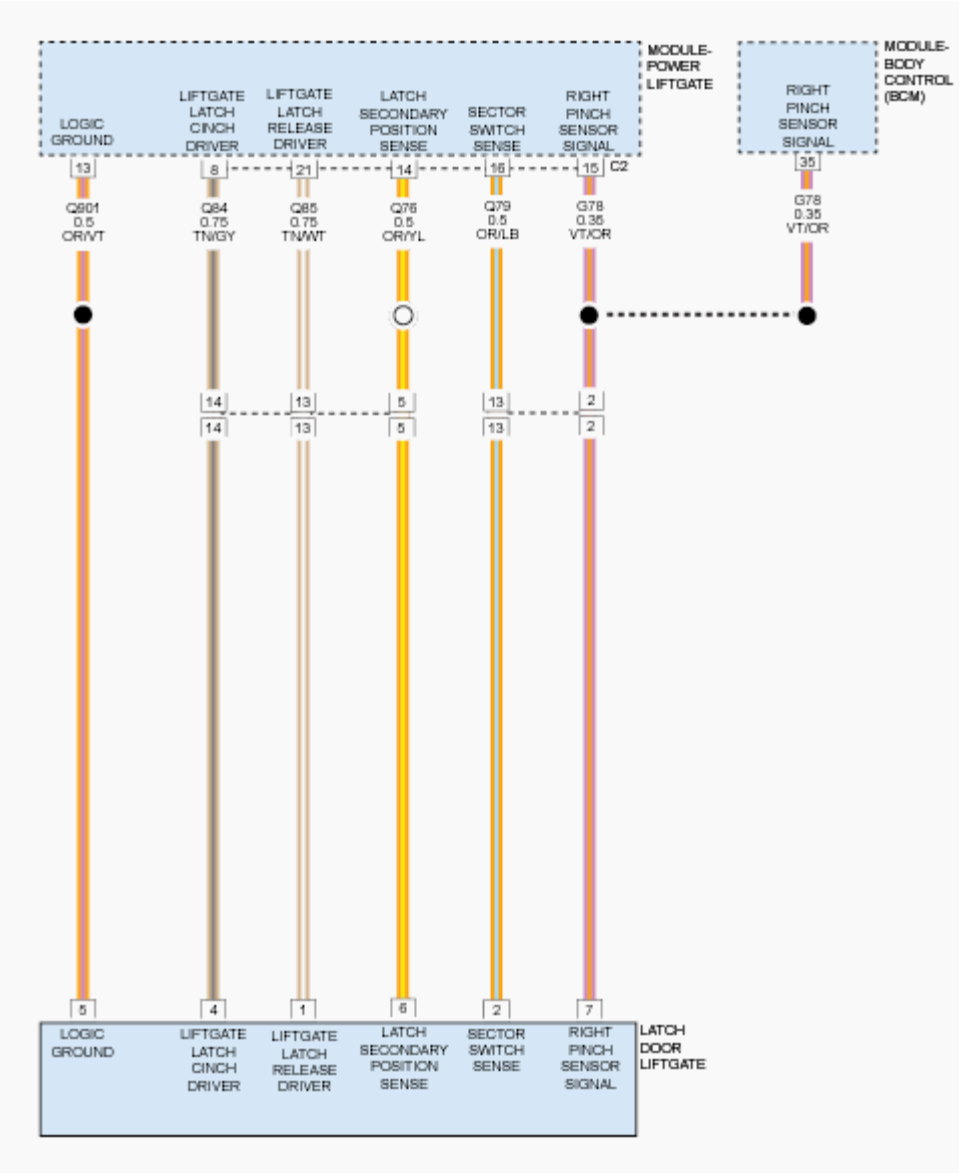

Fig. 87: Power Liftgate Right Pinch Sensor Signal, Sector Switch Sense, Secondary Position Latch Sense, Driver & Ground Circuit Diagram
Courtesy of CHRYSLER GROUP, LLC

WHEN MONITORED

During Power Liftgate closing cycle.

SET CONDITION

If the Power Liftgate (PLG) Module detects that the Power Liftgate Drive Unit has generated excessive pulses during a full power cycle, this code will set.

POSSIBLE CAUSES

Possible Causes
BINDING LIFTGATE
(Q76) LATCH SECONDARY POSITION SENSE CIRCUIT SHORTED TO GROUND
LATCH ASSEMBLY
POWER LIFTGATE DRIVE UNIT
POWER LIFTGATE MODULE

DIAGNOSTIC TEST

1. **DTC PRESENT**
    1. With the scan tool, record and erase DTCs.
    2. Cycle the ignition off, wait 10 seconds, then cycle the ignition on.
    3. Operate the Power Liftgate several times from stop to stop if possible.
    4. With the scan tool, read ACTIVE DTCs.

    Does the scan tool display; B196C-00-POWER LIFTGATE CLOSE DIRECTION EXCESSIVE POSITION SENSOR COUNTS?

    Yes

    - Go To 2

    No

    - Using the wiring diagram/schematic as a guide, inspect the wiring and connectors for an intermittent condition. Operate the liftgate several times and check for any binding conditions.
    - Perform the BODY VERIFICATION TEST. Refer to **STANDARD PROCEDURE** .
2. **BINDING LIFTGATE**
    1. Examine the liftgate for proper alignment, worn or binding hinges, weak liftgate prop assembly, loose/hard weatherstrip seal, for wear or anything that would cause an obstruction to proper operation.
    2. If necessary manually operate the power liftgate on a known good vehicle and notice the effort needed to open and close for comparison.

    Were there any mechanical problems found?

    Yes

    - Refer to **STANDARD PROCEDURE** .
    - Perform the BODY VERIFICATION TEST. for the related symptom(s). Refer to **STANDARD PROCEDURE** .

No

- Go To 3

3. **POWER LIFTGATE LATCH**
   1. With the scan tool, monitor the SECONDARY RATCHET SWITCH CLOSED.
   2. Using a screwdriver, click the latch to the closed position while observing the scan tool.
   3. Unlatch the latch by pressing the handle switch and observe the scan tool for a change of state.
   4. Repeat this step several times while moving the liftgate in different positions and wiggling the harness to check for an intermittent open or shorted circuit.

   Did the scan tool show the switch state changing correctly every time?

   Yes

   - Go To 5

   No

   - Go To 4
4. **CHECK THE (Q76) LATCH SECONDARY POSITION SENSE CIRCUIT FOR A SHORT TO GROUND**

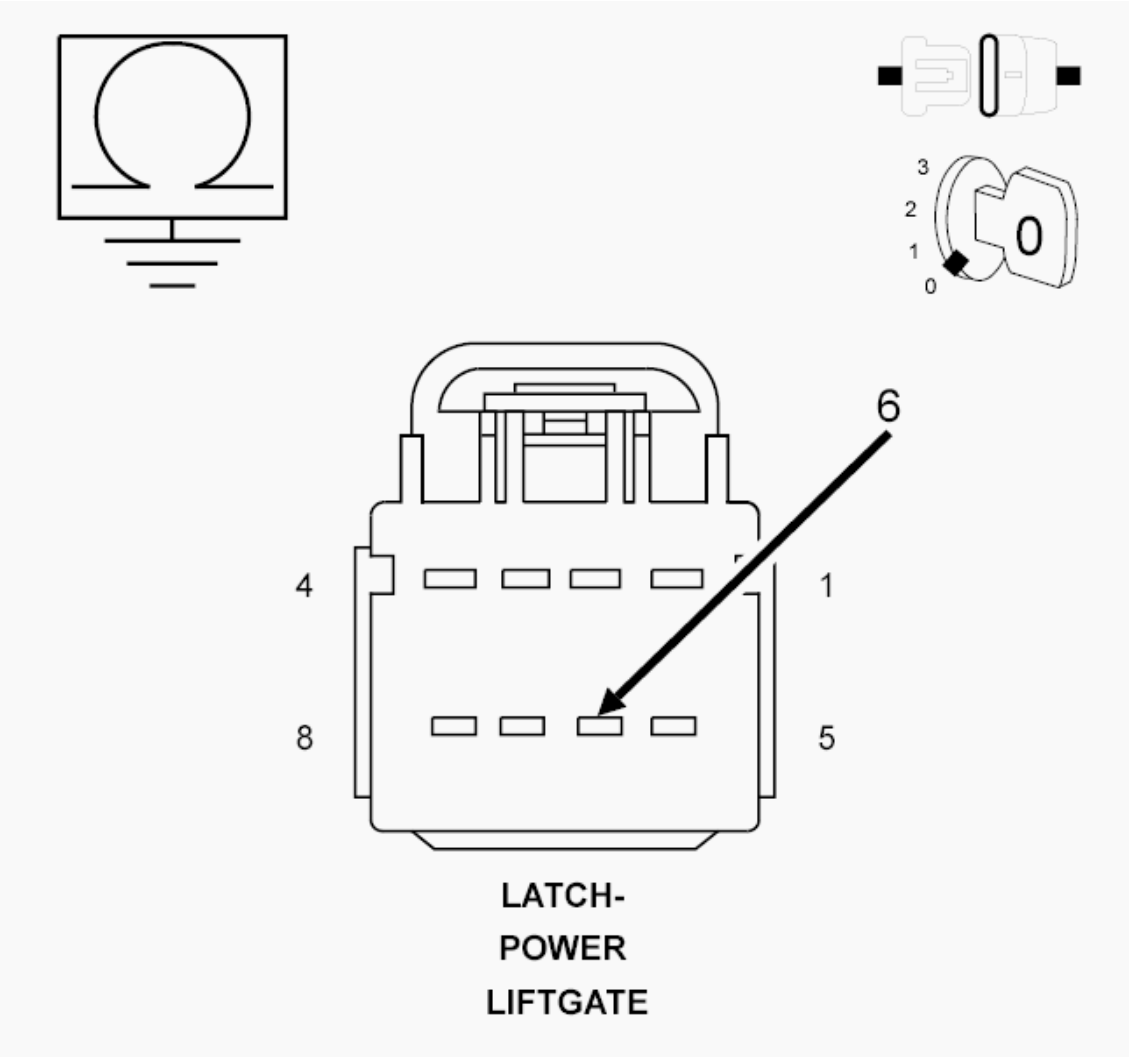

Fig. 88: Checking Latch Secondary Position Sense Circuit For A Short To Ground
Courtesy of CHRYSLER GROUP, LLC

1. Cycle the ignition off.
2. Disconnect the Power Liftgate Latch harness connector.
3. Measure the resistance between ground and the (Q76) Latch Secondary Position Sense circuit.
4. Wiggle the harness while observing the Ohmmeter.

   Is the resistance below 1K Ohm?

   Yes

   - Repair the (Q76) Latch Secondary Position Sense circuit for a short to ground.
   - Perform the BODY VERIFICATION TEST. Refer to **STANDARD PROCEDURE** .

   No

- Replace the Power Liftgate Latch assembly in accordance with the Service Information. Refer to **LATCH, LIFTGATE, REMOVAL** .
- Perform the BODY VERIFICATION TEST. Refer to **STANDARD PROCEDURE** .

5. **POWER LIFTGATE MODULE - POSITION SENSE OPEN**
   1. Operate the liftgate from the full closed position and put an obstacle in its path to make it reverse.

      Did the liftgate reverse back to the closed position?

      Yes

      - Replace the Power Liftgate Drive Unit in accordance with the service information. Refer to **DRIVE UNIT, POWER, REMOVAL** .
      - Perform the BODY VERIFICATION TEST. Refer to **STANDARD PROCEDURE** .

      No

      - Replace the Power Liftgate Module in accordance with the Service Information. Refer to **MODULE, POWER LIFTGATE CONTROL, REMOVAL** .
      - Perform the BODY VERIFICATION TEST. Refer to **STANDARD PROCEDURE** .

B197F-11-POWER LIFTGATE LATCH CONTROL 1 - CIRCUIT SHORT TO GROUND

For a complete wiring diagram, **refer to appropriate SYSTEM WIRING DIAGRAMS article** .

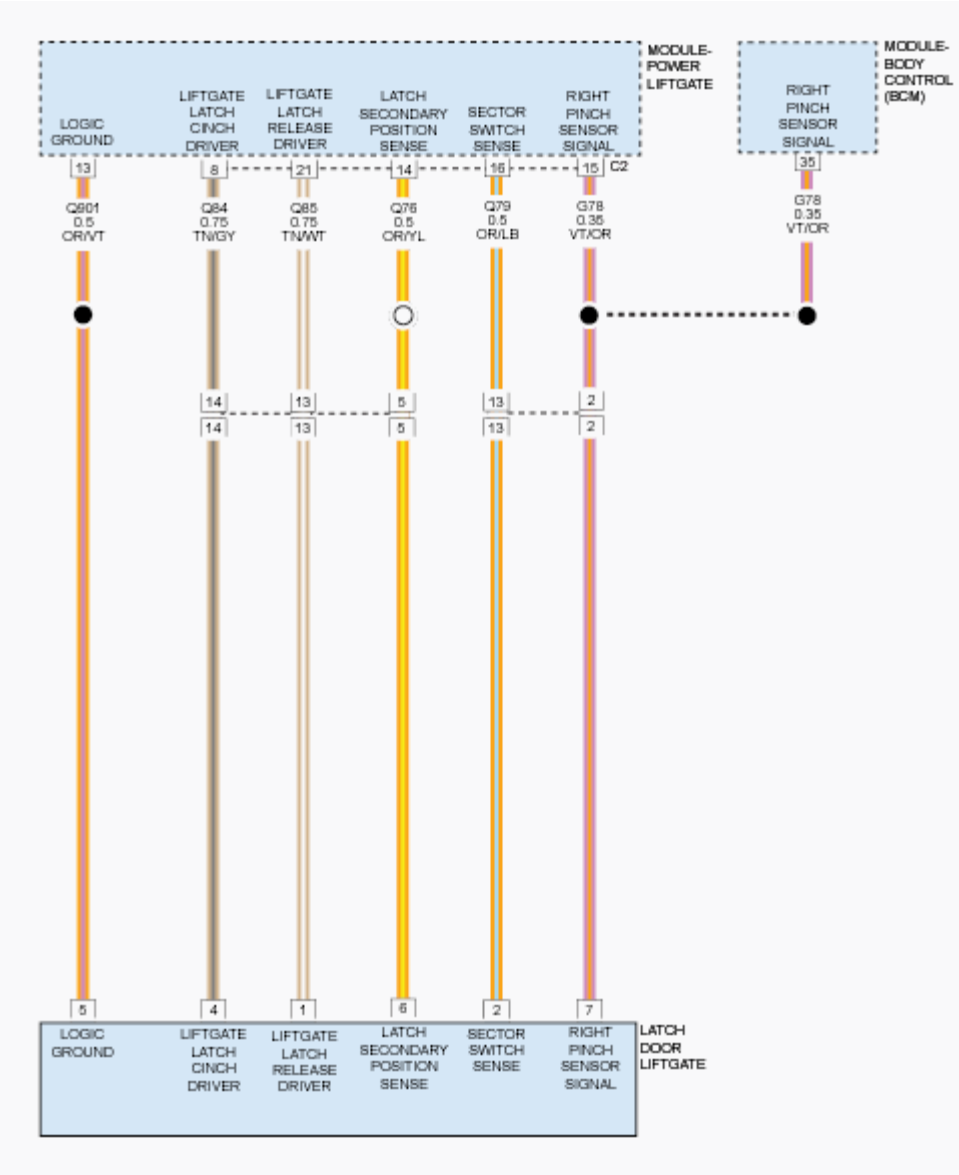

Fig. 89: Power Liftgate Right Pinch Sensor Signal, Sector Switch Sense, Secondary Position Latch Sense, Driver & Ground Circuit Diagram
Courtesy of CHRYSLER GROUP, LLC

WHEN MONITORED

Anytime the Power Liftgate is in a latch cinch or release operation.

SET CONDITION

When the liftgate latch motor cinch or release output is pulled low prior to or during a latch cinch or release operation, this code will set.

POSSIBLE CAUSES

Possible Causes
BINDING LATCH
LOW BATTERY VOLTAGE
(Q84) LIFTGATE LATCH CINCH DRIVER CIRCUIT SHORTED TO GROUND
(Q85) LIFTGATE LATCH RELEASE DRIVER CIRCUIT SHORTED TO GROUND
(Q84) LIFTGATE LATCH CINCH DRIVER CIRCUIT SHORTED TO THE (Q85) LIFTGATE LATCH RELEASE DRIVER CIRCUIT
LATCH ASSEMBLY
POWER LIFTGATE MODULE

DIAGNOSTIC TEST

1. **DTC PRESENT**
    1. With the scan tool, record and erase DTCs.
    2. Cycle the ignition off, wait 10 seconds, then cycle the ignition on.
    3. Operate the power liftgate several times if possible.
    4. With the scan tool, read DTCs.
    5. If the B2199-16-BATTERY VOLTAGE LOW DTC is present, repair that code before proceeding.

    Does the scan tool display; B197F-11-POWER LIFTGATE LATCH CONTROL 1 - CIRCUIT SHORT TO GROUND?

    Yes

    - Go To 2

    No

    - Using the wiring diagram/schematic as a guide, inspect the wiring and connectors for an intermittent condition. Operate the liftgate several times and check for any binding conditions in the latch assembly.
    - Perform the BODY VERIFICATION TEST. Refer to **STANDARD PROCEDURE** .
2. **BINDING LIFTGATE LATCH**
    1. Examine the liftgate for proper alignment, worn or binding hinges, latch alignment or anything that would cause an obstruction to proper operation.
    2. With an open liftgate, manually close the latch and open it with the handle switch several times.

    Were there any mechanical problems found?

    Yes

    - Refer to the Service information for the related symptom(s). Refer to **STANDARD PROCEDURE** .

- Perform the BODY VERIFICATION TEST. Refer to **STANDARD PROCEDURE** .

No

- Go To 3

3. **CHECK THE (Q84) LIFTGATE LATCH CINCH DRIVER CIRCUIT FOR A SHORT TO THE (Q901) LOGIC GROUND**

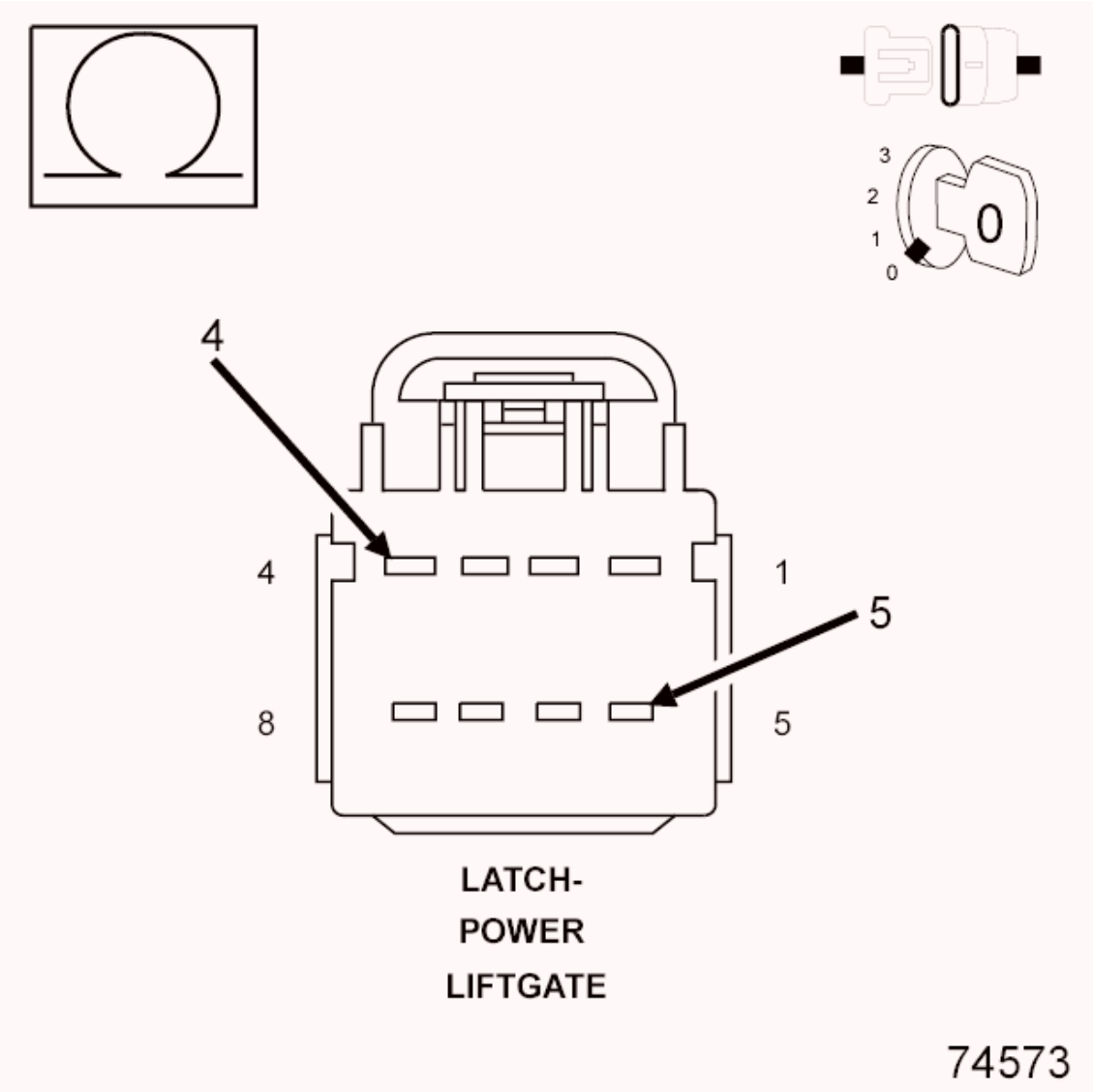

Fig. 90: Checking Liftgate Latch Cinch Driver Circuit For A Short To Logic Ground
Courtesy of CHRYSLER GROUP, LLC

1. Cycle the ignition off.
2. Disconnect the Power Liftgate Latch connector.
3. Measure the resistance between the (Q901) Logic Ground circuit and the (Q84) Liftgate Latch

Cinch Driver circuit in the latch connector.

4. Wiggle the harness and check for an intermittent short circuit condition.

   Is the resistance below 100.0 Ohms?

   Yes

   - Go To 6

   No

   - Go To 4

4. **CHECK THE (Q85) LIFTGATE LATCH RELEASE DRIVER CIRCUIT FOR A SHORT TO THE (Q901) LOGIC GROUND**

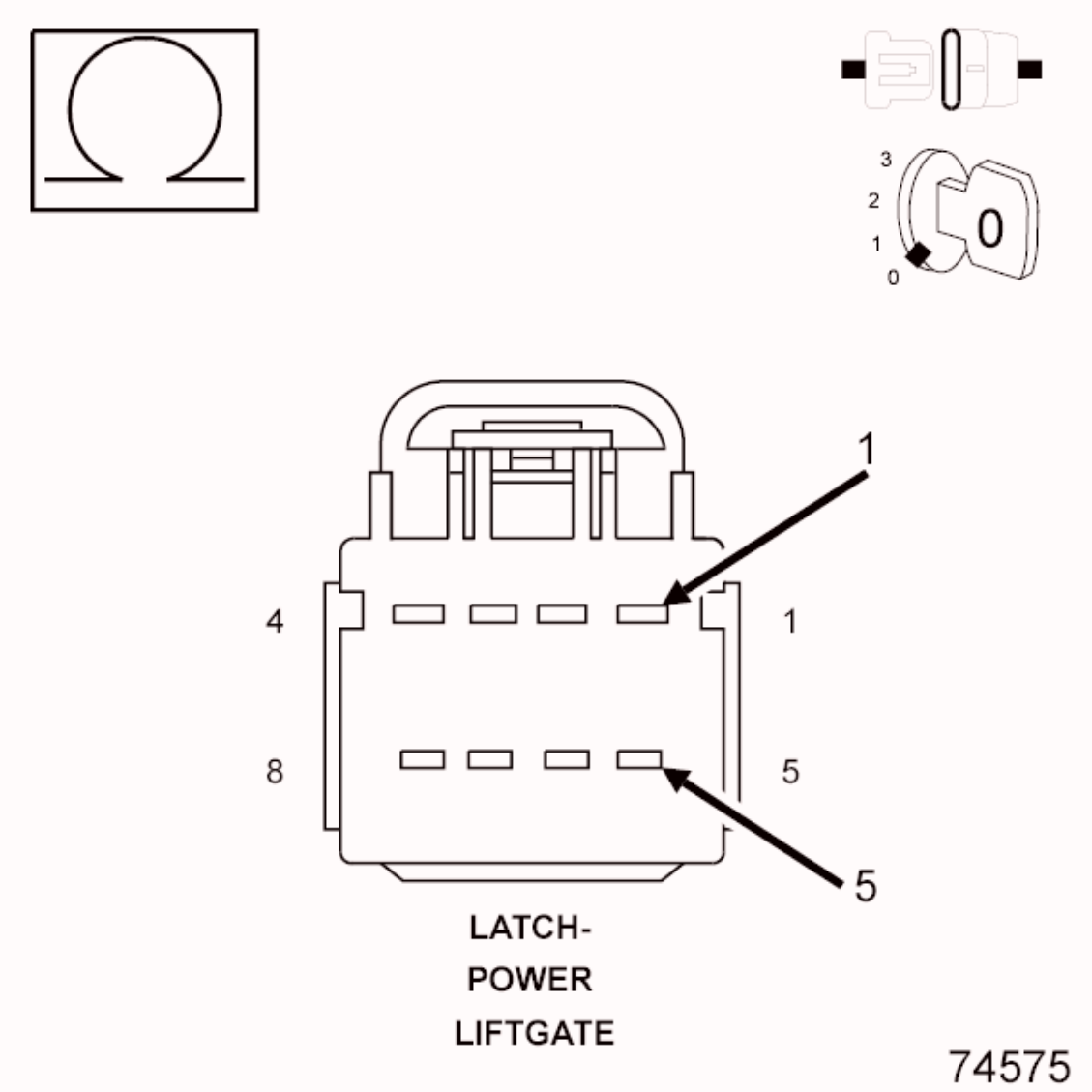

Fig. 91: Checking Liftgate Latch Release Driver Circuit For A Short To Logic Ground
Courtesy of CHRYSLER GROUP, LLC

1. Measure the resistance between the (Q901) Logic Ground circuit and the (Q85) Liftgate Latch Release Driver circuit in the latch connector.
2. Wiggle the harness and check for an intermittent short circuit condition.

   Is the resistance below 100.0 Ohms?

   Yes

   - Go To 6

   No

   - Go To 5

5. **CHECK THE (Q84) LIFTGATE LATCH CINCH DRIVER CIRCUIT FOR A SHORT TO THE (Q85) LIFTGATE LATCH RELEASE DRIVER CIRCUIT**

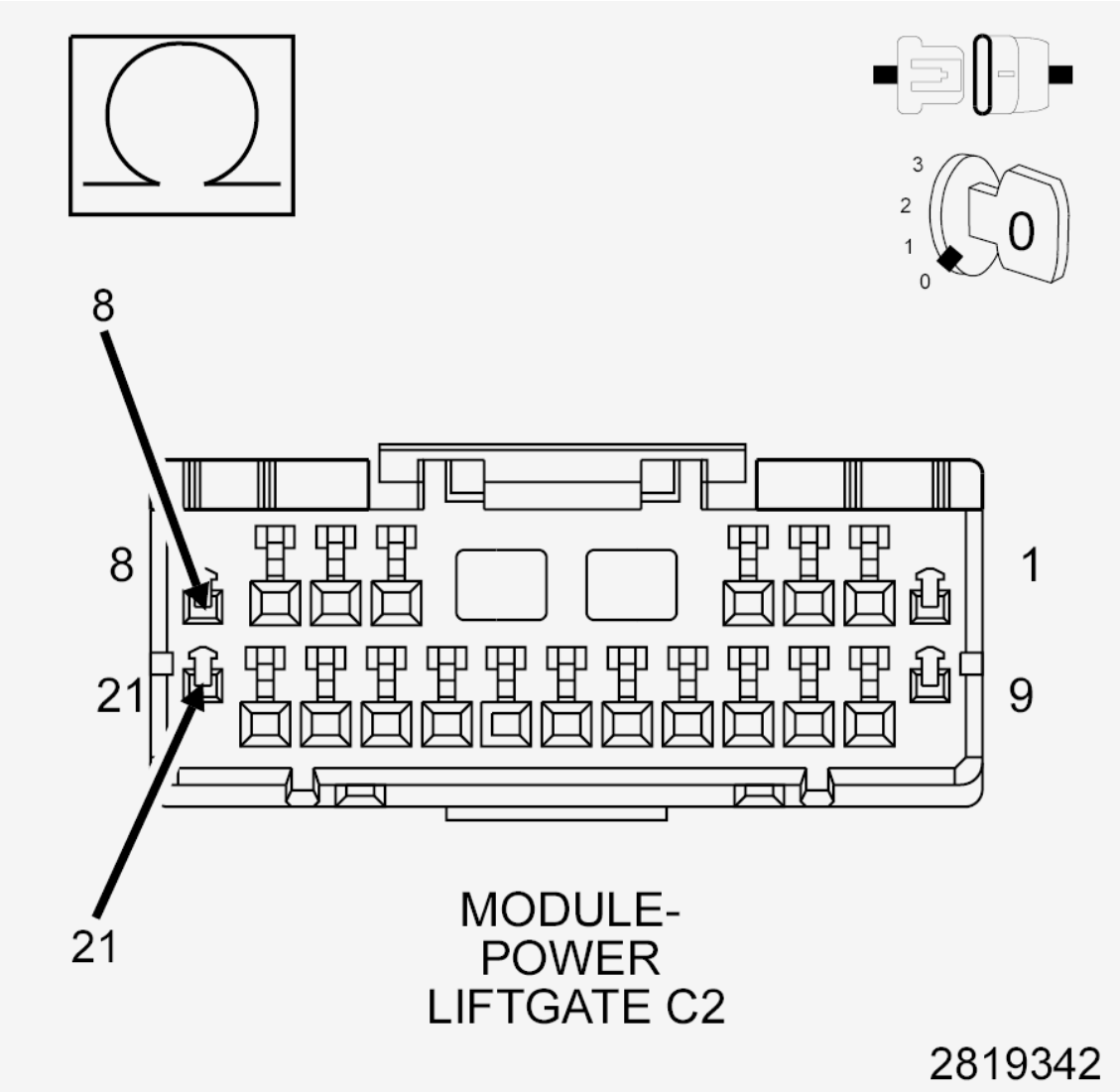

Fig. 92: Measuring Resistance Between Liftgate Latch Cinch Driver Circuit & Liftgate Latch Release Driver
Courtesy of CHRYSLER GROUP, LLC

1. Disconnect the Power Liftgate Module C2 harness connector.
2. Measure the resistance between the (Q84) Liftgate Latch Cinch Driver circuit and the (Q85) Liftgate Latch Release Driver circuit.

   Is the resistance below 10K Ohms?

   Yes

   - Repair the (Q84) Liftgate Latch Cinch Driver circuit for a short to the (Q85) Liftgate Latch Release Driver Circuit.
   - Perform the BODY VERIFICATION TEST. Refer to **STANDARD PROCEDURE** .

No

- Replace the Power Liftgate Latch assembly in accordance with the Service Information and using the scan tool, run the "Latch Home Sector Test". Refer to **LATCH, LIFTGATE, REMOVAL** .
- Perform the BODY VERIFICATION TEST. Refer to **STANDARD PROCEDURE** .

6. **CHECK THE (Q85) LIFTGATE LATCH RELEASE DRIVER CIRCUIT FOR A SHORT TO GROUND**

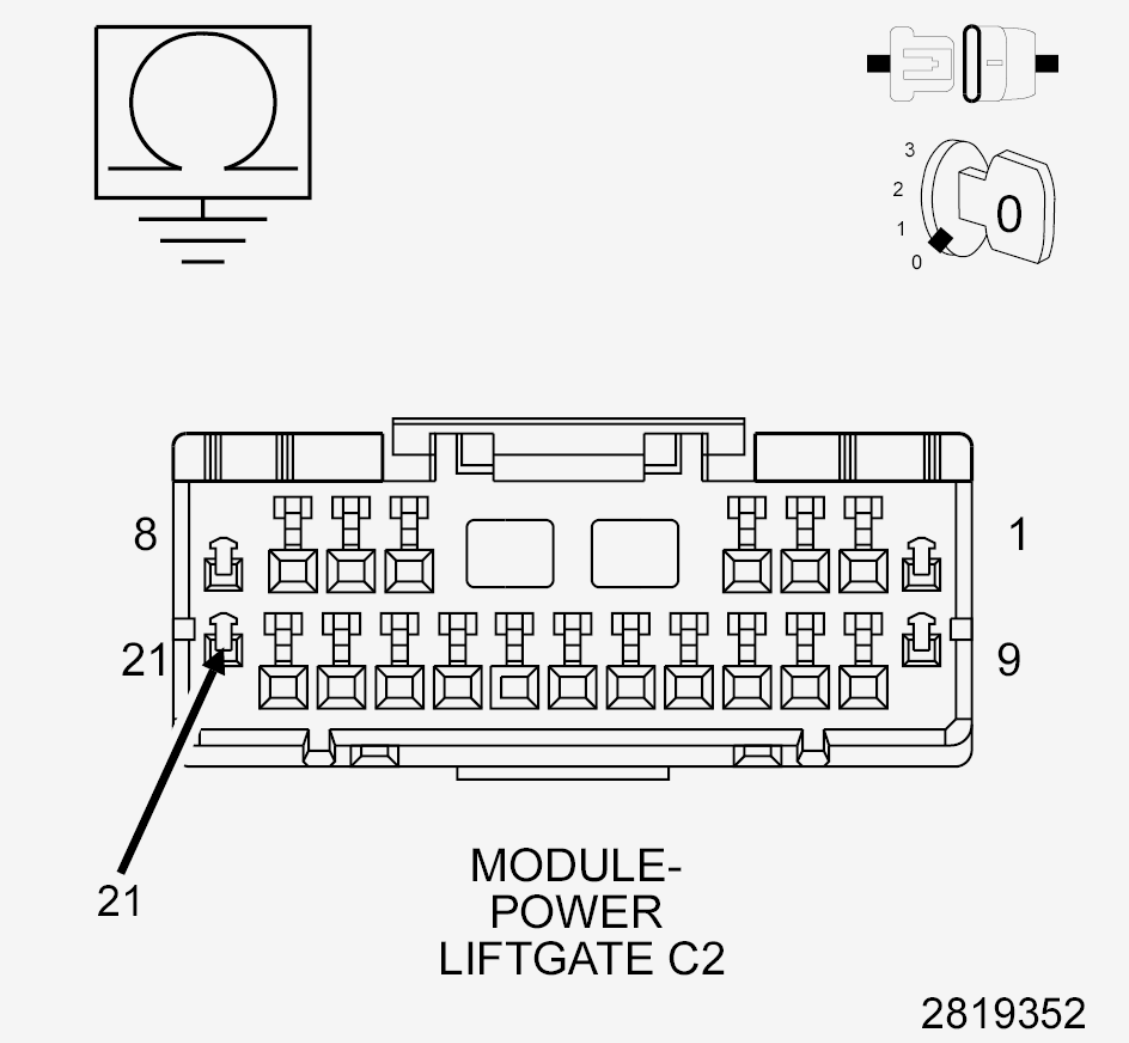

Fig. 93: Checking Liftgate Latch Release Driver Circuit For A Short To Ground
Courtesy of CHRYSLER GROUP, LLC

1. Disconnect the Power Liftgate Module C2 harness connector.
2. Measure the resistance between ground and the (Q85) Liftgate Latch Release Driver circuit.
3. Wiggle the harness and check for an intermittent short circuit condition.

Is the resistance below 10K Ohms?

Yes

- Repair the (Q85) Liftgate Latch Release Driver circuit for a short to ground.
- Perform the BODY VERIFICATION TEST. Refer to **STANDARD PROCEDURE** .

No

- Go To 7

7. **CHECK THE (Q84) LIFTGATE LATCH CINCH DRIVER CIRCUIT FOR A SHORT TO GROUND**

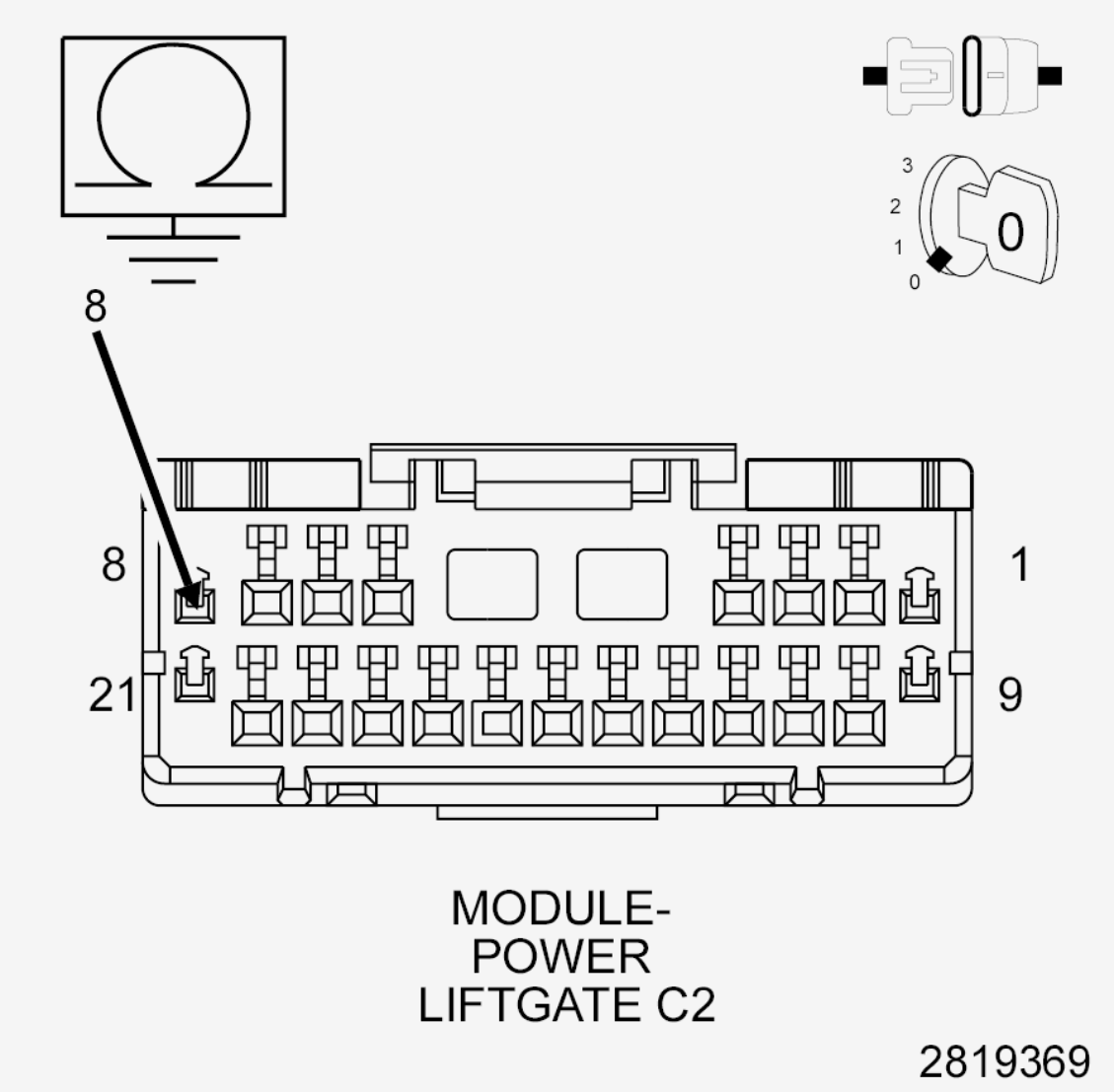

Fig. 94: Checking Liftgate Latch Cinch Driver Circuit For A Short To Ground
Courtesy of CHRYSLER GROUP, LLC

1. Measure the resistance between ground and the (Q84) Liftgate Latch Cinch Driver circuit.

2. Wiggle the harness and check for an intermittent short circuit condition.

   Is the resistance below 10K Ohms?

   Yes

   - Repair the (Q84) Liftgate Latch Cinch Driver circuit for a short to ground.
   - Perform the BODY VERIFICATION TEST. Refer to **STANDARD PROCEDURE** .

   No

   - Replace the Power Liftgate Module in accordance with service information. Refer to **MODULE, POWER LIFTGATE CONTROL, REMOVAL** .
   - Perform the BODY VERIFICATION TEST. Refer to **STANDARD PROCEDURE** .

B197F-12-POWER LIFTGATE LATCH CONTROL 1 - CIRCUIT SHORT TO BATTERY

For a complete wiring diagram, **refer to appropriate SYSTEM WIRING DIAGRAMS article** .

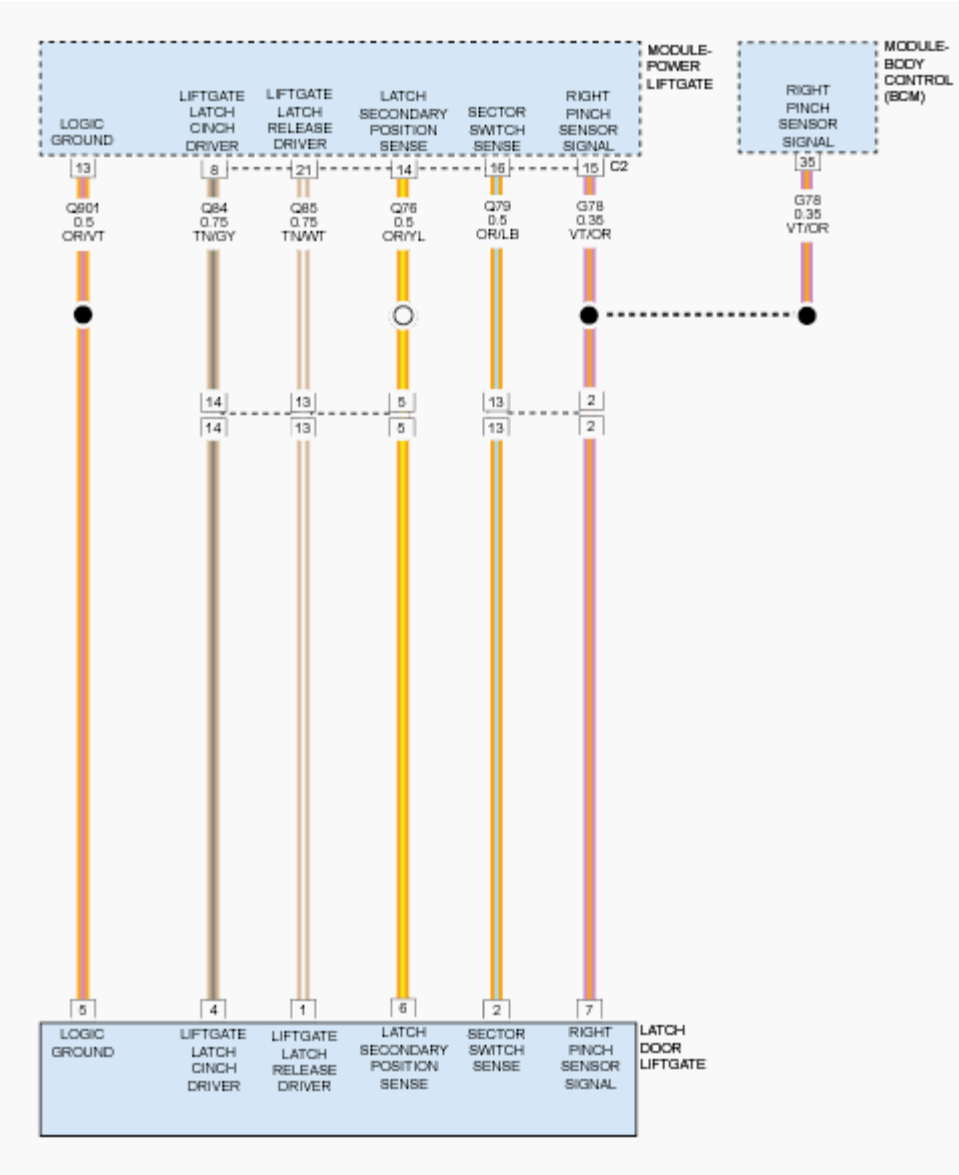

Fig. 95: Power Liftgate Right Pinch Sensor Signal, Sector Switch Sense, Secondary Position Latch Sense, Driver & Ground Circuit Diagram
Courtesy of CHRYSLER GROUP, LLC

WHEN MONITORED

Anytime the Power Liftgate is in a latch cinch or release operation.

SET CONDITION

When the liftgate latch motor cinch or release output is pulled high prior to or during a latch cinch or release operation, this code will set.

POSSIBLE CAUSES

Possible Causes
HIGH BATTERY VOLTAGE
(Q84) LIFTGATE LATCH CINCH DRIVER CIRCUIT SHORTED TO VOLTAGE
(Q85) LIFTGATE LATCH RELEASE DRIVER CIRCUIT SHORTED TO VOLTAGE
POWER LIFTGATE MODULE

DIAGNOSTIC TEST

1. **DTC PRESENT**
    1. With the scan tool, record and erase DTCs.
    2. Cycle the ignition off, wait 10 seconds, then cycle the ignition on.
    3. Operate the power liftgate several times if possible.
    4. With the scan tool, read DTCs.
    5. If the B2199-17-BATTERY VOLTAGE - CIRCUIT VOLTAGE ABOVE THRESHOLD DTC is present, repair that code before proceeding.

    Does the scan tool display; B197F-12-POWER LIFTGATE LATCH CONTROL 1 - CIRCUIT SHORT TO BATTERY?

    Yes

    - Go To 2

    No

    - Using the wiring diagram/schematic as a guide, inspect the wiring and connectors for an intermittent condition. Operate the liftgate several times and check for any binding conditions in the latch assembly.
    - Perform the BODY VERIFICATION TEST. Refer to **STANDARD PROCEDURE** .
2. **POWER LIFTGATE MODULE**

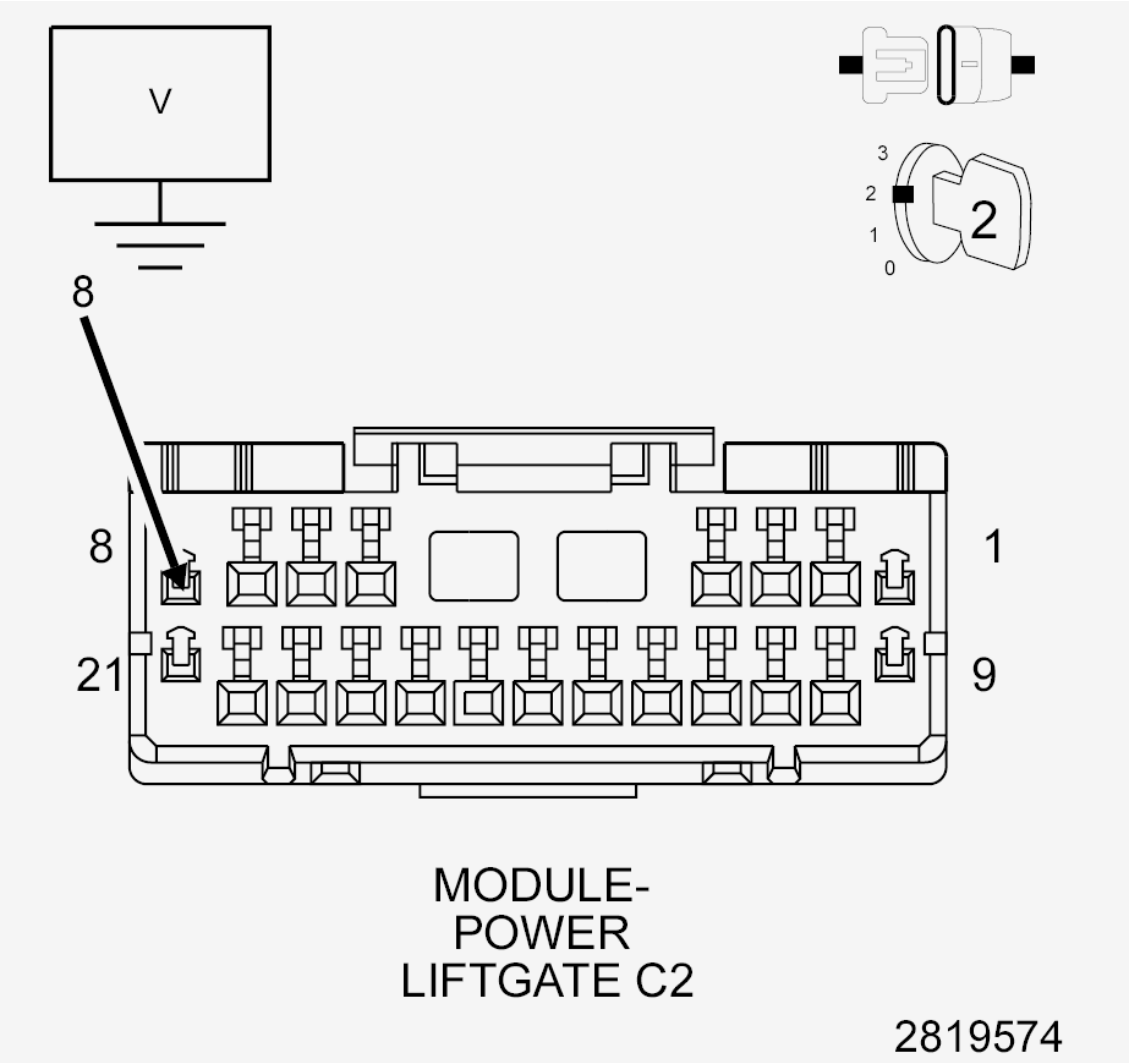

Fig. 96: Checking Power Liftgate Module
Courtesy of CHRYSLER GROUP, LLC

1. Cycle the ignition off.
2. Disconnect the Power Liftgate Module C2 harness connector.
3. Cycle the ignition on.
4. Measure the voltage of the (Q84) Liftgate Latch Cinch Driver circuit.

   Is there any voltage present?

   Yes

   - Go To 3

   No

- Replace the Power Liftgate Module in accordance with the service information. Refer to **MODULE, POWER LIFTGATE CONTROL, REMOVAL** .
- Perform the BODY VERIFICATION TEST. Refer to **STANDARD PROCEDURE** .

3. **(Q84) LIFTGATE LATCH CINCH DRIVER CIRCUIT SHORTED TO VOLTAGE**

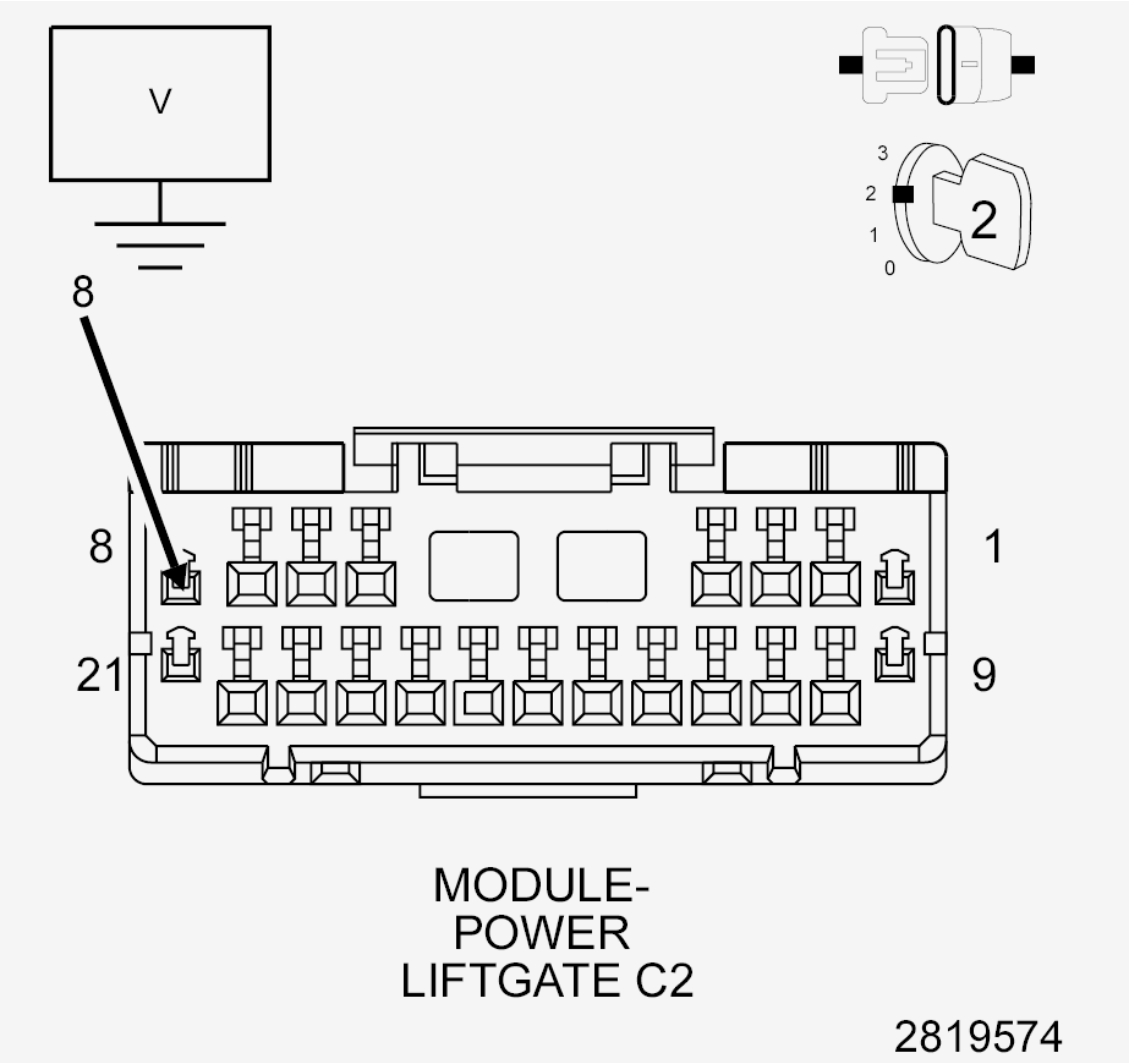

Fig. 97: Checking Power Liftgate Module
Courtesy of CHRYSLER GROUP, LLC

1. Disconnect the Power Liftgate Latch harness connector.
2. Measure the voltage of the (Q84) Liftgate Latch Cinch Driver circuit.

   Is there any voltage present?

   Yes

   - Repair the (Q84) Liftgate Latch Cinch Driver circuit for a short to voltage.

- Perform the BODY VERIFICATION TEST. Refer to **STANDARD PROCEDURE** .

No

- Repair the (Q85) Liftgate Latch Release Driver circuit for a short to voltage.
- Perform the BODY VERIFICATION TEST. Refer to **STANDARD PROCEDURE** .

B197F-13-POWER LIFTGATE LATCH CONTROL 1 - CIRCUIT OPEN

For a complete wiring diagram, **refer to appropriate SYSTEM WIRING DIAGRAMS article** .

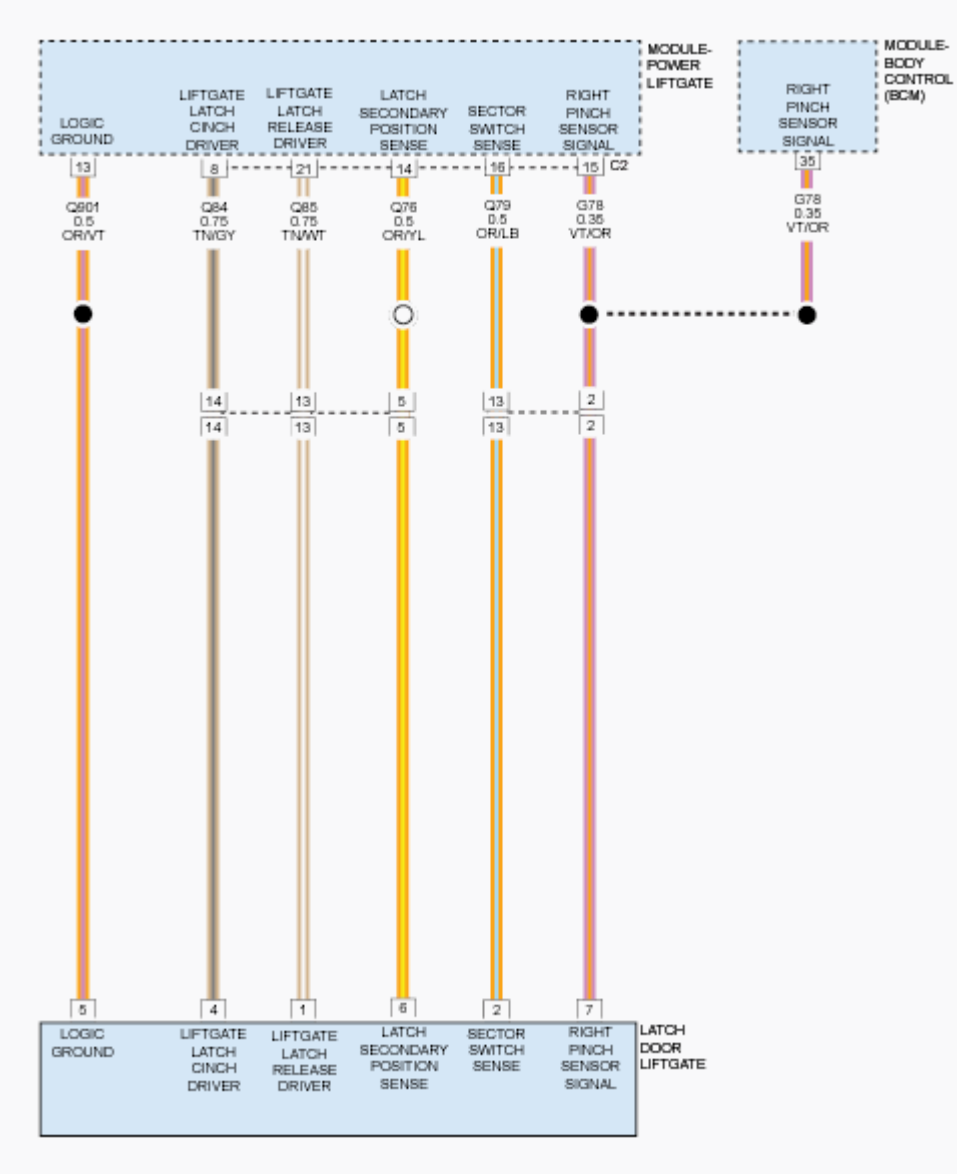

Fig. 98: Power Liftgate Right Pinch Sensor Signal, Sector Switch Sense, Secondary Position Latch Sense, Driver & Ground Circuit Diagram

Courtesy of CHRYSLER GROUP, LLC

WHEN MONITORED

Anytime the Power Liftgate is performing a power cinching or releasing operation.

SET CONDITION

When the power liftgate latch motor control circuit voltage is below the low voltage threshold.

POSSIBLE CAUSES

Possible Causes
(Q84) LIFTGATE LATCH CINCH DRIVER CIRCUIT OPEN
(Q85) LIFTGATE LATCH RELEASE DRIVER CIRCUIT OPEN
POWER LIFTGATE LATCH
POWER LIFTGATE MODULE

DIAGNOSTIC TEST

1. **DTC PRESENT**
    1. With the scan tool, record and erase DTCs.
    2. Cycle the ignition off, wait 10 seconds, then cycle the ignition on.
    3. Operate the power liftgate several times if possible.
    4. With the scan tool, read the active DTCs.

    Does the scan tool display; B197F-13-POWER LIFTGATE LATCH CONTROL 1 - CIRCUIT OPEN?

    Yes

    - Go To 2

    No

    - Using the wiring diagram/schematic as a guide, inspect the wiring and connectors for an intermittent condition. Operate the liftgate several times and check for any binding conditions in the latch assembly.
    - Perform the BODY VERIFICATION TEST. Refer to **STANDARD PROCEDURE** .
2. **LIFTGATE LATCH CIRCUIT OPEN**

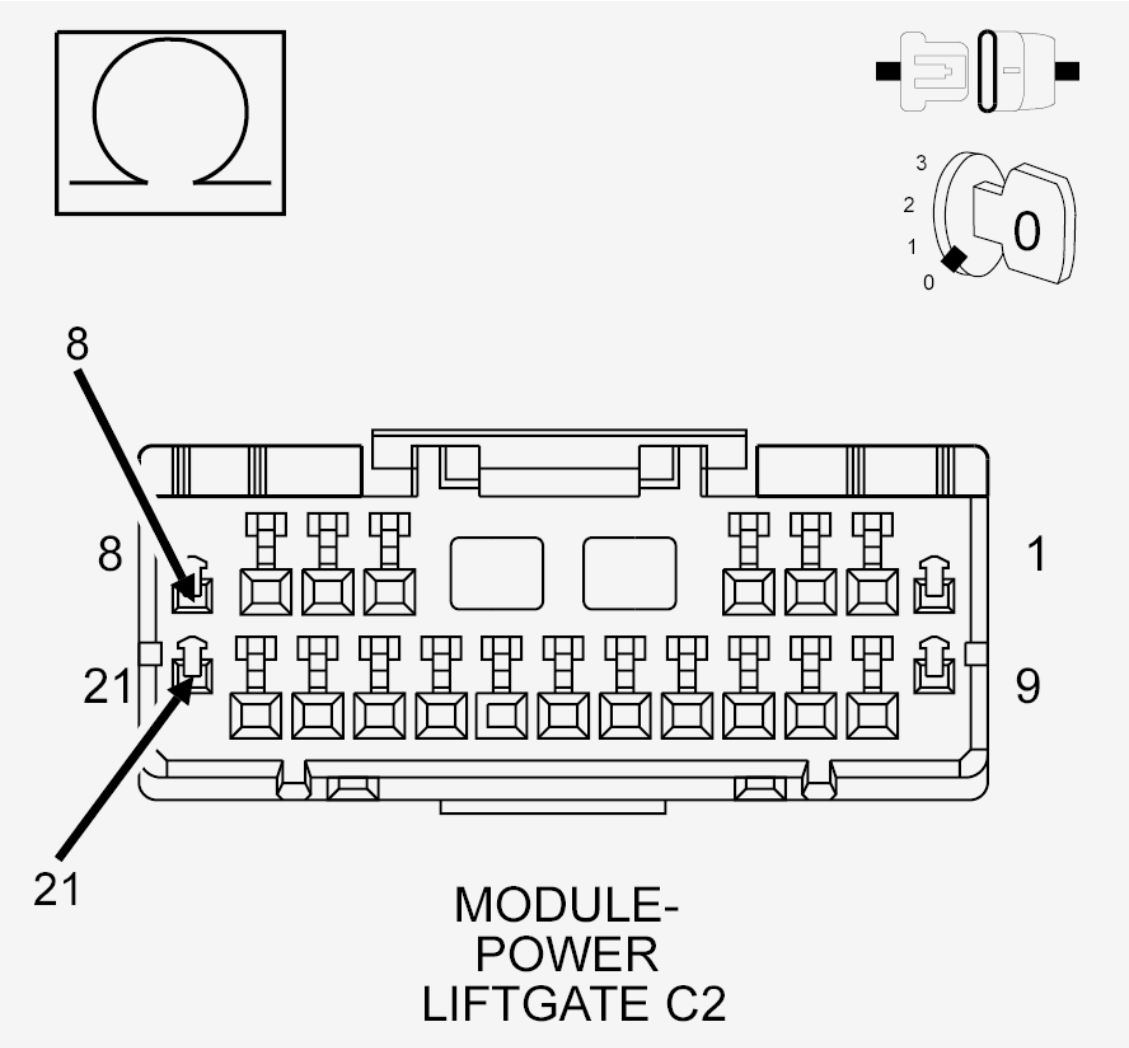

Fig. 99: Checking Liftgate Latch Circuit For Open
Courtesy of CHRYSLER GROUP, LLC

1. Cycle the ignition off.
2. Disconnect the Power Liftgate Module C2 harness connector.
3. Measure the resistance between the (Q84) Liftgate Latch Cinch Driver circuit and the (Q85) Liftgate Latch Release Driver circuit.

   Is the resistance approximately 4.0 Ohms?

   Yes

   - Replace the Power Liftgate Module in accordance with the service information. Refer to **MODULE, POWER LIFTGATE CONTROL, REMOVAL** .
   - Perform the BODY VERIFICATION TEST. Refer to **STANDARD PROCEDURE** .

   No

- Go To 3

3. **(Q84) LIFTGATE LATCH CINCH DRIVER CIRCUIT OPEN**

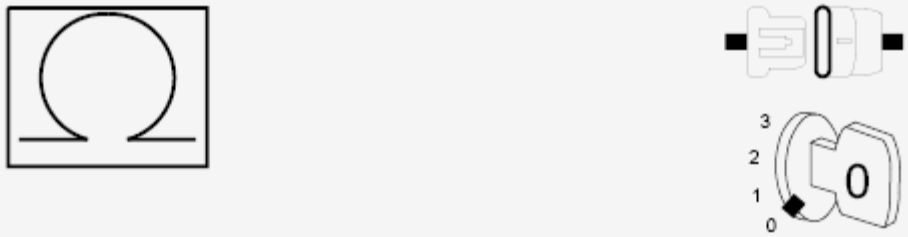

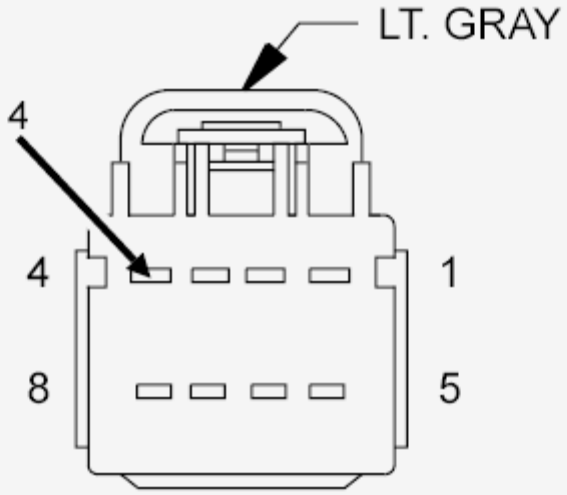

LATCH-
DOOR-
LIFTGATE
(POWER LIFTGATE)

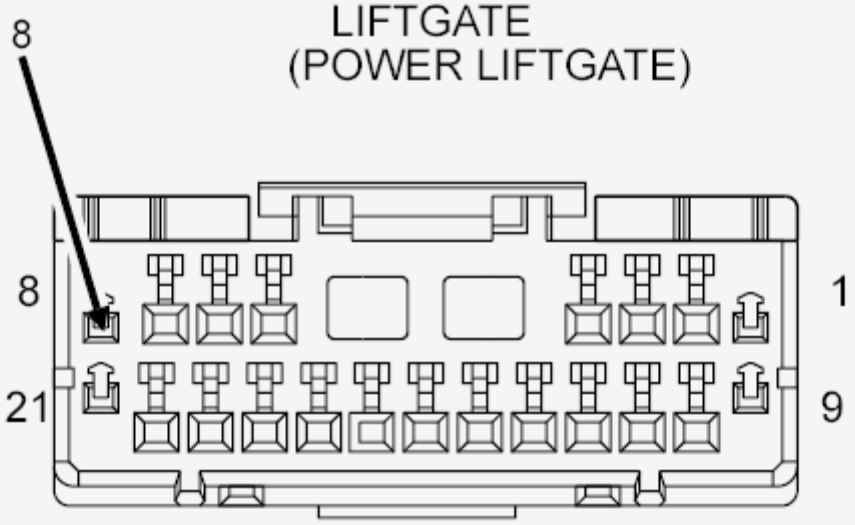

MODULE-
POWER
LIFTGATE C2

Fig. 100: Checking Liftgate Latch Cinch Driver Circuit For Open
Courtesy of CHRYSLER GROUP, LLC

1. Disconnect the Power Liftgate Latch harness connector.
2. Measure the resistance of the (Q84) Liftgate Latch Cinch Driver circuit between the Power Liftgate Module C2 harness connector and the Power Liftgate Latch harness connector.

   Is the resistance below 2.0 Ohms?

   Yes

   - Go To 4

   No

   - Repair the (Q84) Liftgate Latch Cinch Driver circuit for an open.
   - Perform the BODY VERIFICATION TEST. Refer to **STANDARD PROCEDURE** .

4. **(Q85) LIFTGATE LATCH RELEASE DRIVER CIRCUIT OPEN**

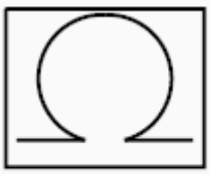

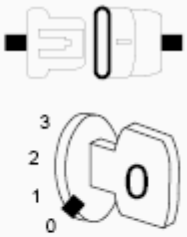

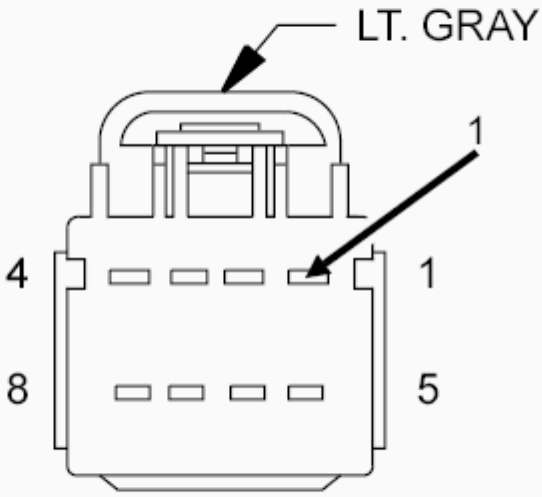

LATCH-
DOOR-
LIFTGATE
(POWER LIFTGATE)

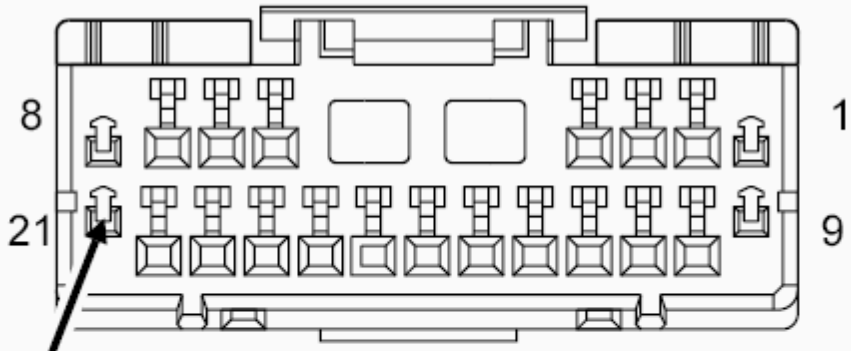

MODULE-
POWER
LIFTGATE C2

Fig. 101: Checking Liftgate Latch Release Driver Circuit For An Open Or High Resistance
Courtesy of CHRYSLER GROUP, LLC

1. Measure the resistance of the (Q85) Liftgate Latch Release Driver circuit between the Power Liftgate Module C2 harness connector and the Power Liftgate Latch harness connector.

   Is the resistance below 2.0 Ohms?

   Yes

   - Replace the Power Liftgate Latch assembly in accordance with the Service Information and using the scan tool, run the "Latch Home Sector Test". Refer to **LATCH, LIFTGATE, REMOVAL** .
   - Perform the BODY VERIFICATION TEST. Refer to **STANDARD PROCEDURE** .

   No

   - Repair the (Q85) Liftgate Latch Release Driver circuit for an open.
   - Perform the BODY VERIFICATION TEST. Refer to **STANDARD PROCEDURE** .

B2199-16-BATTERY VOLTAGE CIRCUIT VOLTAGE BELOW THRESHOLD

For a complete wiring diagram, **refer to appropriate SYSTEM WIRING DIAGRAMS article** .

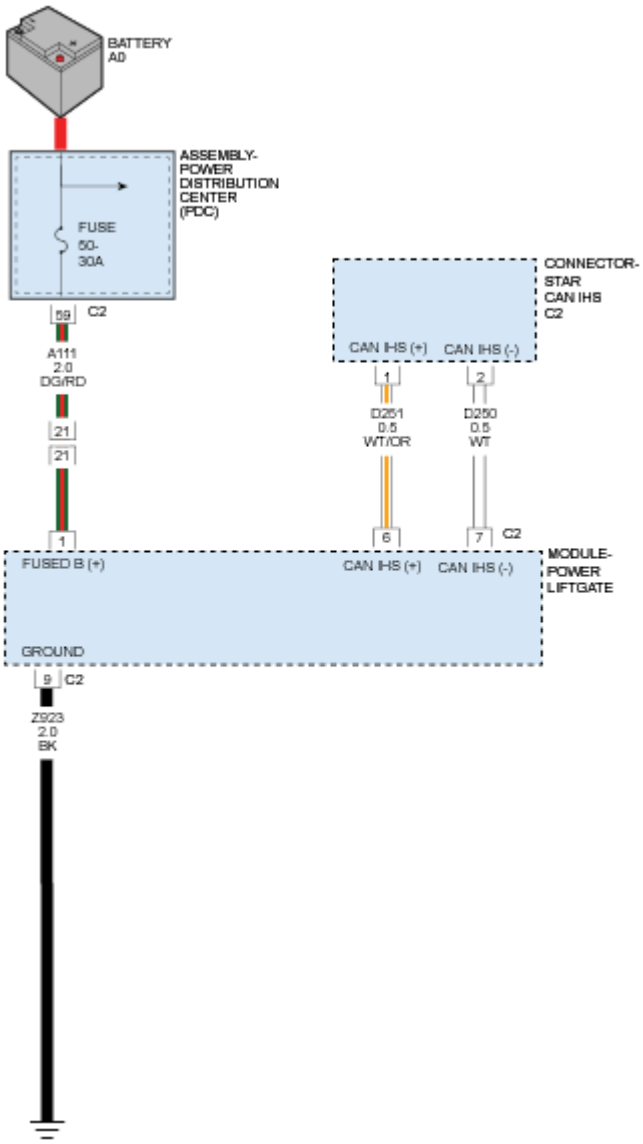

Fig. 102: PLGM CAN IHS, Fused B+ & Ground Circuit Diagram
Courtesy of CHRYSLER GROUP, LLC

WHEN MONITORED

At all times.

SET CONDITION

Whenever the liftgate is activated, if the voltage is below 10.5 volts, within 15 seconds prior to power operation, this code will set.

POSSIBLE CAUSES

POSSIBLE CAUSES
PCM LOW VOLTAGE DTC (A111) FUSED B+ CIRCUIT OPEN OR HIGH RESISTANCE (Z923) GROUND CIRCUIT OPEN OR HIGH RESISTANCE POWER LIFTGATE MODULE

DIAGNOSTIC TEST

1. **CHECK FOR PCM DTCS**

   NOTE: Make sure the battery is fully charged and serviceable before proceeding.

   1. With the scan tool, read the PCM DTCs

      Are there any PCM Battery or Charging System DTCs present?

      Yes

      - Refer to the appropriate Testing & Diagnostics article under ENGINE PERFORMANCE and perform the appropriate Diagnostic Procedure. Also refer to the **DTC INDEX** article.

      No

      - Go To 2.
2. **TEST FOR INTERMITTENT CONDITION**
   1. With the scan tool, record and erase the DTCs.
   2. Start the engine and run for two minutes.
   3. With the scan tool, read Power Liftgate Module Active DTCs.

      Does the scan tool display; B2199-16-BATTERY VOLTAGE - CIRCUIT VOLTAGE BELOW THRESHOLD?

      Yes

      - Go To 3

      No

      - Test complete, the condition or conditions that originally set this DTC are not present at this time. Using the wiring diagrams as a guide, check all related splices and connectors for signs of water intrusion, corrosion, pushed out or bent terminals and poor pin fit.
      - Perform the BODY VERIFICATION TEST. Refer to **STANDARD PROCEDURE** .
3. **CHECK THE (A111) FUSED B(+) CIRCUIT FOR AN OPEN OR HIGH RESISTANCE**

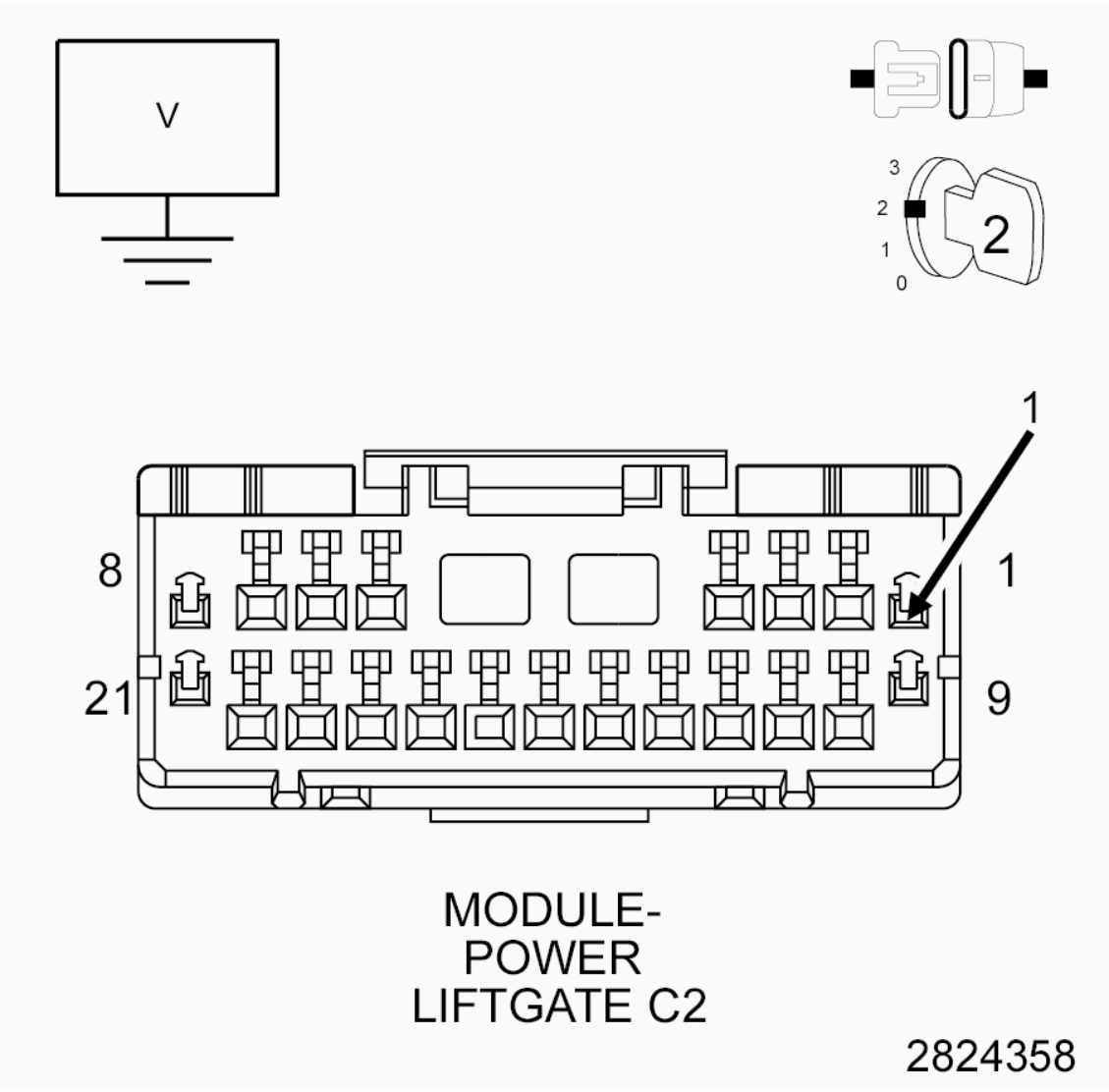

Fig. 103: Checking Fused B(+) Circuit For An Open Or High Resistance
Courtesy of CHRYSLER GROUP, LLC

1. Cycle the ignition off.
2. Disconnect the Power Liftgate Module C2 harness connector.
3. Start the engine.
4. Measure the voltage between ground and the (A111) Fused B(+) circuit in the Power Liftgate C2 connector.
5. Compare the voltage read at the PLG C2 connector with a direct connection at the battery.

   Is the voltage at the PLG C2 connector within 0.5 of a volt of the battery voltage?

   Yes

   - Go To 4

No

- Repair the (A111) Fused B(+) circuit for an open or high resistance.
- Perform the BODY VERIFICATION TEST. Refer to **STANDARD PROCEDURE** .

4. **CHECK THE (Z923) GROUND CIRCUIT FOR AN OPEN OR HIGH RESISTANCE**

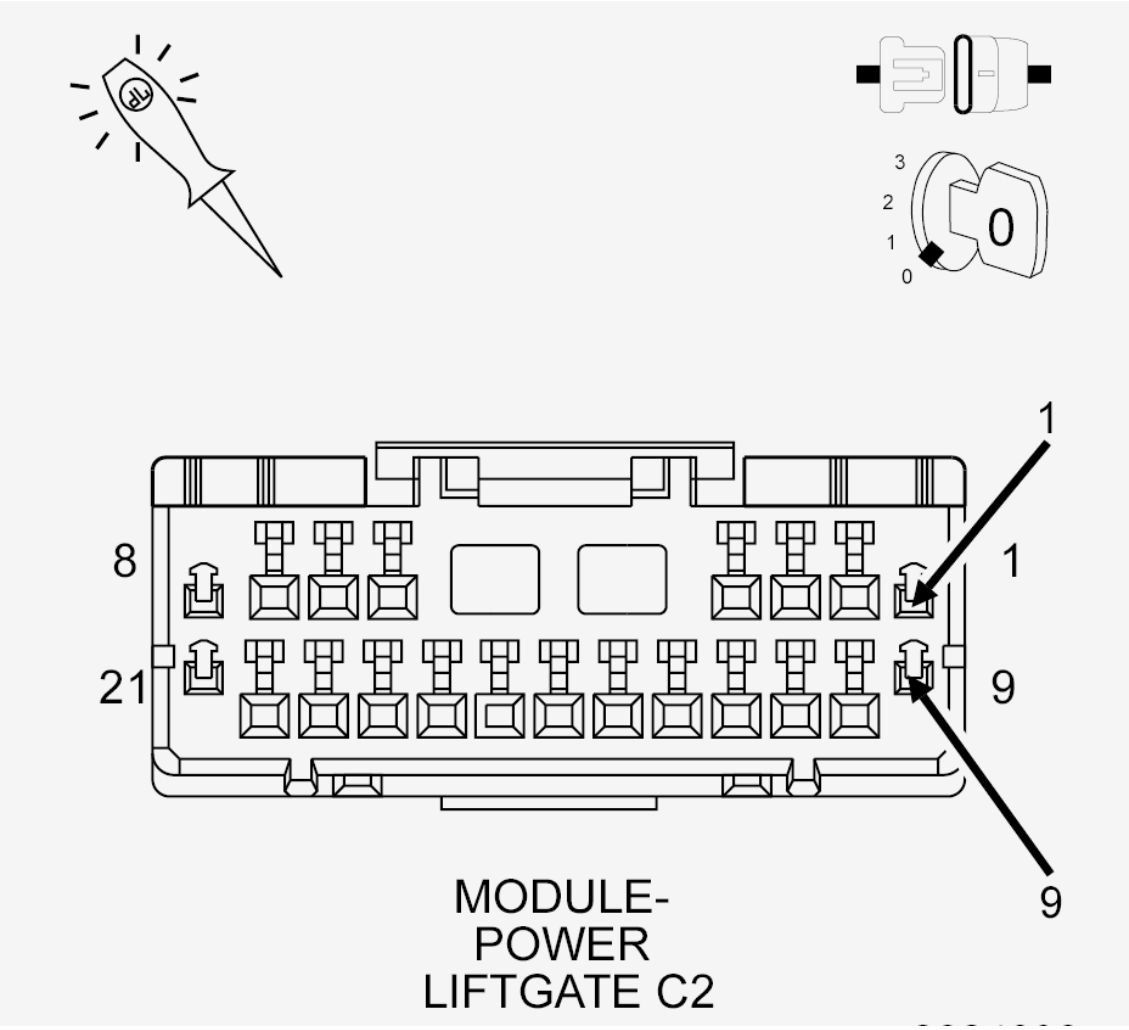

Fig. 104: Checking Ground Circuit For An Open Or High Resistance
Courtesy of CHRYSLER GROUP, LLC

1. Cycle the ignition off.
2. Using a 12 volt test light, connect one end to the (A111) Fused B(+) circuit and the other end to the (Z923) Ground in the Liftgate C2 harness connector.

NOTE: The test light must illuminate brightly. Compare the brightness to that of a direct connection to the battery

Does the test tight illuminate brightly?

Yes

- Replace the Power Liftgate Module in accordance with the Service Information. Refer to **MODULE, POWER LIFTGATE CONTROL, REMOVAL** .
- Perform BODY VERIFICATION TEST. Refer to **STANDARD PROCEDURE** .

No

- Repair the (Z923) Ground circuit for an open or high resistance.
- Perform BODY VERIFICATION TEST. Refer to **STANDARD PROCEDURE** .

B2199-17-BATTERY VOLTAGE - CIRCUIT VOLTAGE ABOVE THRESHOLD

For a complete wiring diagram, **refer to appropriate SYSTEM WIRING DIAGRAMS article** .

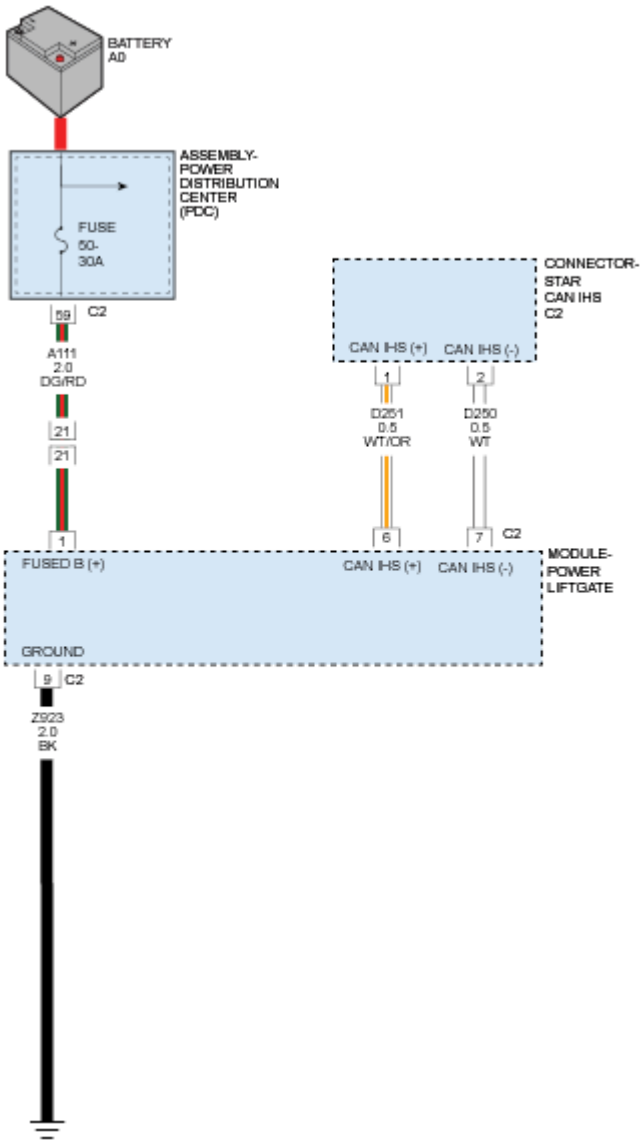

Fig. 105: PLGM CAN IHS, Fused B+ & Ground Circuit Diagram
Courtesy of CHRYSLER GROUP, LLC

WHEN MONITORED

At all times.

SET CONDITION

Anytime the Power Liftgate is activated and the module senses voltage input above 16.0 volts, this code will set.

POSSIBLE CAUSES

POSSIBLE CAUSES
HIGH VOLTAGE POWERTRAIN CONTROL MODULE DTC POWER LIFTGATE MODULE

DIAGNOSTIC TEST

1. **CHECK ENGINE DTCs**
   1. With the scan tool, read PCM DTCs.

      Are there any Battery or Charging System DTCs present?

      Yes

      - Refer to the appropriate Testing & Diagnostics article under ENGINE PERFORMANCE and perform the applicable Diagnostic Procedure. Also refer to the **DTC INDEX** article.

      No

      - Go To 2
2. **TEST FOR INTERMITTENT CONDITION**
   1. With the scan tool, record and erase the DTCs.
   2. Start the engine and run for two minutes.
   3. With the scan tool, read the Active PLG DTCs.

      Does the scan tool display; B2199-17-BATTERY VOLTAGE - CIRCUIT VOLTAGE ABOVE THRESHOLD?

      Yes

      - Replace the Power Liftgate Module in accordance with service information. Refer to **MODULE, POWER LIFTGATE CONTROL, REMOVAL** .
      - Perform the BODY VERIFICATION TEST. Refer to **STANDARD PROCEDURE** .

      No

      - Test complete, the condition or conditions that originally set this DTC are not present at this time. Using the wiring diagrams as a guide, check all related splices and connectors for signs of water intrusion, corrosion, pushed out or bent terminals and correct pin tension.
      - Perform the BODY VERIFICATION TEST. Refer to **STANDARD PROCEDURE** .

B21DD-16-SYSTEM VOLTAGE - CIRCUIT VOLTAGE BELOW THRESHOLD

For a complete wiring diagram, **refer to appropriate SYSTEM WIRING DIAGRAMS article** .

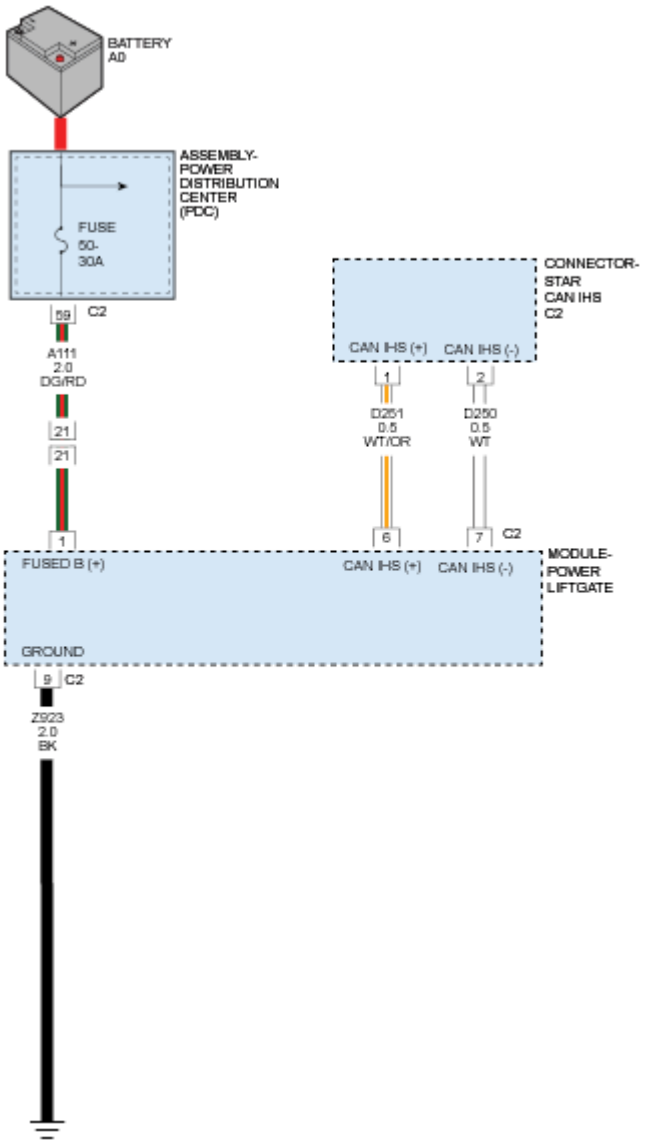

Fig. 106: PLGM CAN IHS, Fused B+ & Ground Circuit Diagram
Courtesy of CHRYSLER GROUP, LLC

WHEN MONITORED

Anytime the power liftgate module is awake

SET CONDITION

The Power Liftgate Module senses the input voltage is below 10.5 volts.

POSSIBLE CAUSES

Possible Causes

BATTERY OR VEHICLE CHARGING SYSTEM
LOW SYSTEM VOLTAGE

DIAGNOSTIC TEST

CHECK FOR ACTIVE DIAGNOSTIC TROUBLE CODE (DTC)

1. Check the ignition on.
2. With the scan tool, read the ENGINE DTCs.

   Are there any ENGINE Charging or Battery DTCs present?

   Yes

   - Perform the appropriate charging system or battery diagnostic procedure. Refer to the appropriate Testing & Diagnostics article under ENGINE PERFORMANCE. Also refer to the **DTC INDEX** article.

   No

   - This code is for information only. At some time there was a low battery system voltage. Check the battery and charging system in accordance with the Service Information.
   - Perform the BODY VERIFICATION TEST. Refer to **STANDARD PROCEDURE** .

B21DD-17-SYSTEM VOLTAGE - CIRCUIT VOLTAGE ABOVE THRESHOLD

For a complete wiring diagram, **refer to appropriate SYSTEM WIRING DIAGRAMS article** .

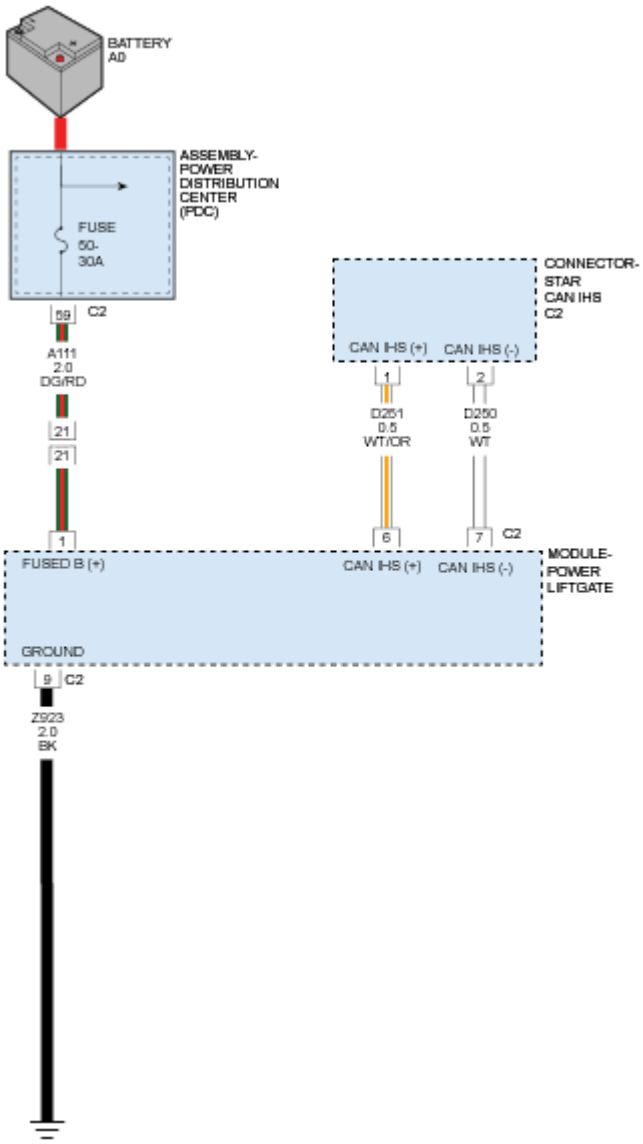

Fig. 107: PLGM CAN IHS, Fused B+ & Ground Circuit Diagram
Courtesy of CHRYSLER GROUP, LLC

WHEN MONITORED

Anytime the Power Liftgate Module is awake.

SET CONDITION

The Power Liftgate Module senses that the system voltage was above 16 volts.

POSSIBLE CAUSES

Possible Causes

VEHICLE CHARGING SYSTEM HIGH BATTERY SYSTEM VOLTAGE

DIAGNOSTIC TEST

CHECK FOR ACTIVE DIAGNOSTIC TROUBLE CODE (DTC)

1. Cycle the ignition on.
2. Using the scan tool, read the Engine DTCs.

   Are there any ENGINE Charging or Battery DTCs present?

   Yes

   - Refer to the appropriate Testing & Diagnostics article under ENGINE PERFORMANCE and perform the appropriate diagnostic procedure. Also refer to the **DTC INDEX** article.

   No

   - This code is a CAN system message for information only. At some time the battery system was over 18.4 volts. Check the charging system and system grounds in accordance with the Service Information.
   - Perform the BODY VERIFICATION TEST. Refer to **STANDARD PROCEDURE** .

B224E-00-POWER LIFTGATE MODULE INTERNAL

For a complete wiring diagram, **refer to appropriate SYSTEM WIRING DIAGRAMS article** .

WHEN MONITORED

Whenever the battery is connected.

SET CONDITION

When the module senses an internal problem, this code will set.

POSSIBLE CAUSES

Possible Causes
TROUBLE CODE PRESENT POWER LIFTGATE MODULE

DIAGNOSTIC TEST

DTC PRESENT

1. With the scan tool, record and erase the DTCs.
2. Cycle the ignition switch from On to Off.
3. Wait 30 seconds.
4. Turn the ignition on.
5. With the scan tool, read the Active DTCs.

   Does the scan tool display; B224E-00 POWER LIFTGATE MODULE INTERNAL?

   No

   - Operate the power liftgate open and closed several times. With the scan tool, read the DTCs. If this code appears, replace the Power Liftgate Module in accordance with the Service Information. Refer to **MODULE, POWER LIFTGATE CONTROL, REMOVAL** .
   - Perform the BODY VERIFICATION TEST. Refer to **STANDARD PROCEDURE** .

   Yes

   - Replace the Power Liftgate Module in accordance with the Service Information. Refer to **MODULE, POWER LIFTGATE CONTROL, REMOVAL** .
   - Perform the BODY VERIFICATION TEST. Refer to **STANDARD PROCEDURE** .

B25B7-00-POWER LIFTGATE CLOSE DIRECTION - RATCHET PRIMARY SWITCH INVALID STATE

For a complete wiring diagram, **refer to appropriate SYSTEM WIRING DIAGRAMS article** .

WHEN MONITORED

Whenever the power liftgate in performing a power close operation.

SET CONDITION

The ratchet primary (Ajar) switch is detected as open before the power cinching operation is started.

POSSIBLE CAUSES

Possible Causes
BINDING LIFTGATE
(Q901) LOGIC GROUND CIRCUIT OPEN
(G78) LIFTGATE AJAR SWITCH SENSE CIRCUIT OPEN
POWER LIFTGATE LATCH
POWER LIFTGATE MODULE

DIAGNOSTIC TEST

1. **DTC PRESENT**

NOTE: This DTC will only set during the cinching operation after the four second time out. This may make it difficult to reproduce.

1. With the scan tool, record and erase the DTCs.
2. Turn the ignition off, wait 10 seconds, then turn the ignition on.
3. Operate the power liftgate several times if possible.
4. With the scan tool, read the Active DTCs.

Does the scan tool display; B25B7-00 - POWER LIFTGATE CLOSE DIRECTION - RATCHET PRIMARY SWITCH INVALID STATE?

Yes

- Go To 2

No

- Using the wiring diagram/schematic as a guide, inspect the wiring and connectors for an intermittent condition. Operate the door several times and check for any binding or other obstructions.
- Perform the BODY VERIFICATION TEST. Refer to **STANDARD PROCEDURE** .

2. **BINDING LIFTGATE**

1. Examine the liftgate for proper fit and alignment, loose/hard or torn seals, misaligned latch striker or anything that would cause an obstruction to proper operation.
2. Manually operate the liftgate of a known good vehicle and notice the effort needed to open and close.
3. Compare the effort needed on the disabled liftgate.
4. Especially notice the effort needed to unlatch and close the liftgate.

Does it take more effort to operate the liftgate than it should?

Yes

- Refer to the Service information for the related symptom(s). Refer to **STANDARD PROCEDURE** .
- Perform the BODY VERIFICATION TEST. Refer to **STANDARD PROCEDURE** .

No

- Go To 3

3. **POWER LIFTGATE MODULE**

1. With the scan tool, monitor the PRIMARY RATCHET SWITCH.
2. Using a screwdriver, click the latch to the second detent while observing the scan tool.
3. Unlatch the latch by pressing the handle switch and observe the scan tool for a change of state.
4. Repeat this step several times while moving the liftgate in different positions and wiggling the harness to check for an intermittent open or shorted circuit.

   Did the scan tool show the switch state changing correctly every time?

   Yes

   - Go To 4

   No

   - Replace the Power Liftgate Module in accordance with the service information. Refer to **MODULE, POWER LIFTGATE CONTROL, REMOVAL** .
   - Perform the BODY VERIFICATION TEST. Refer to **STANDARD PROCEDURE** .

4. **CHECK THE (Q901) LOGIC GROUND CIRCUIT FOR AN OPEN**

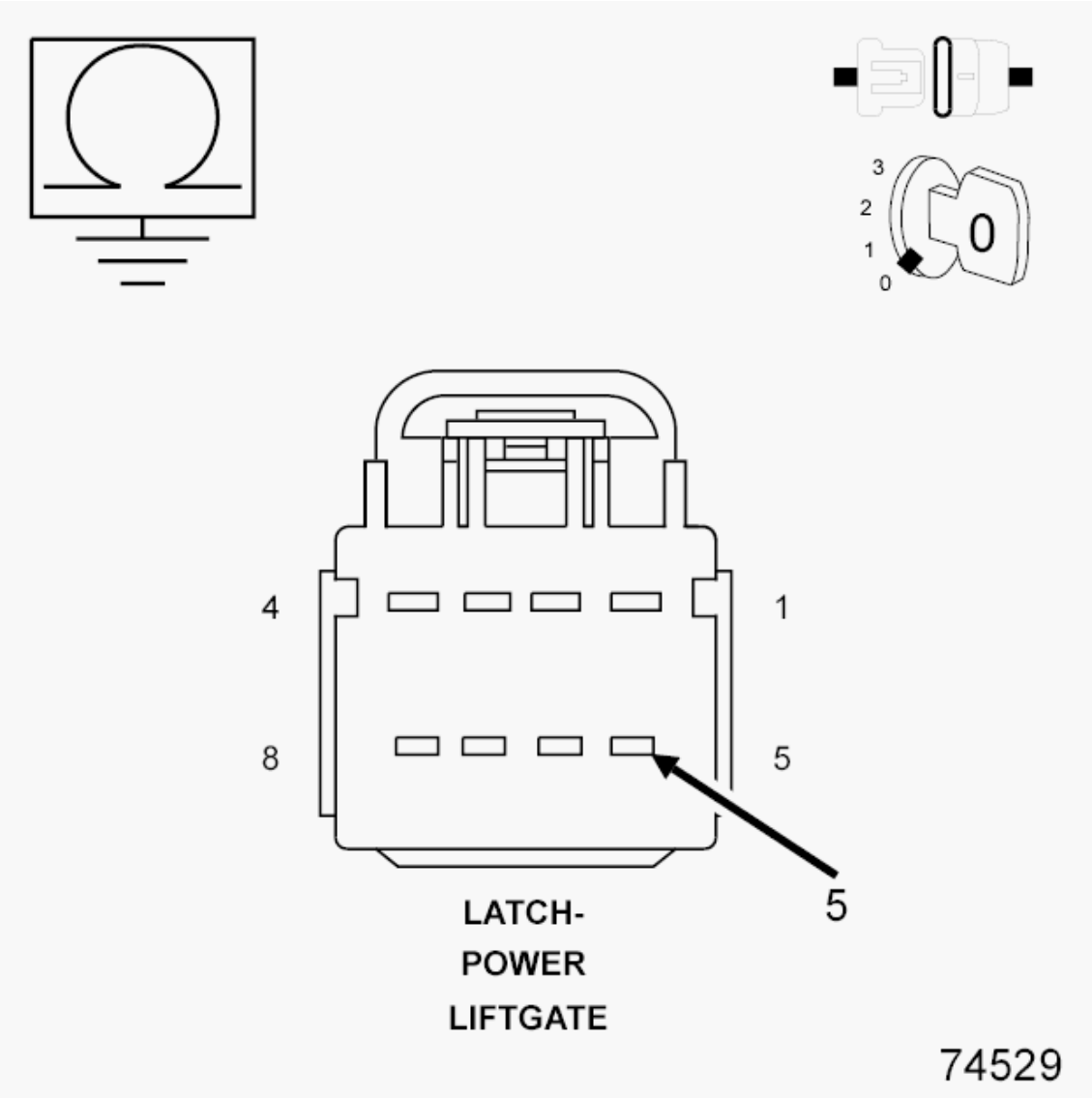

Fig. 108: Checking Logic Ground Circuit For An Open
Courtesy of CHRYSLER GROUP, LLC

1. Turn the ignition off.
2. Disconnect the Power Liftgate Latch harness connector.
3. Measure the resistance between ground and the (Q901) Logic Ground circuit.
4. Wiggle the harness while observing the ohmmeter.

   Is the resistance below 9.5 Ohms?

   Yes

   - Go To 5

No

- Repair the (Q901) Logic Ground circuit for an open.
- Perform the BODY VERIFICATION TEST. Refer to **STANDARD PROCEDURE** .

5. **(G78) LIFTGATE AJAR SWITCH SENSE CIRCUIT OPEN**

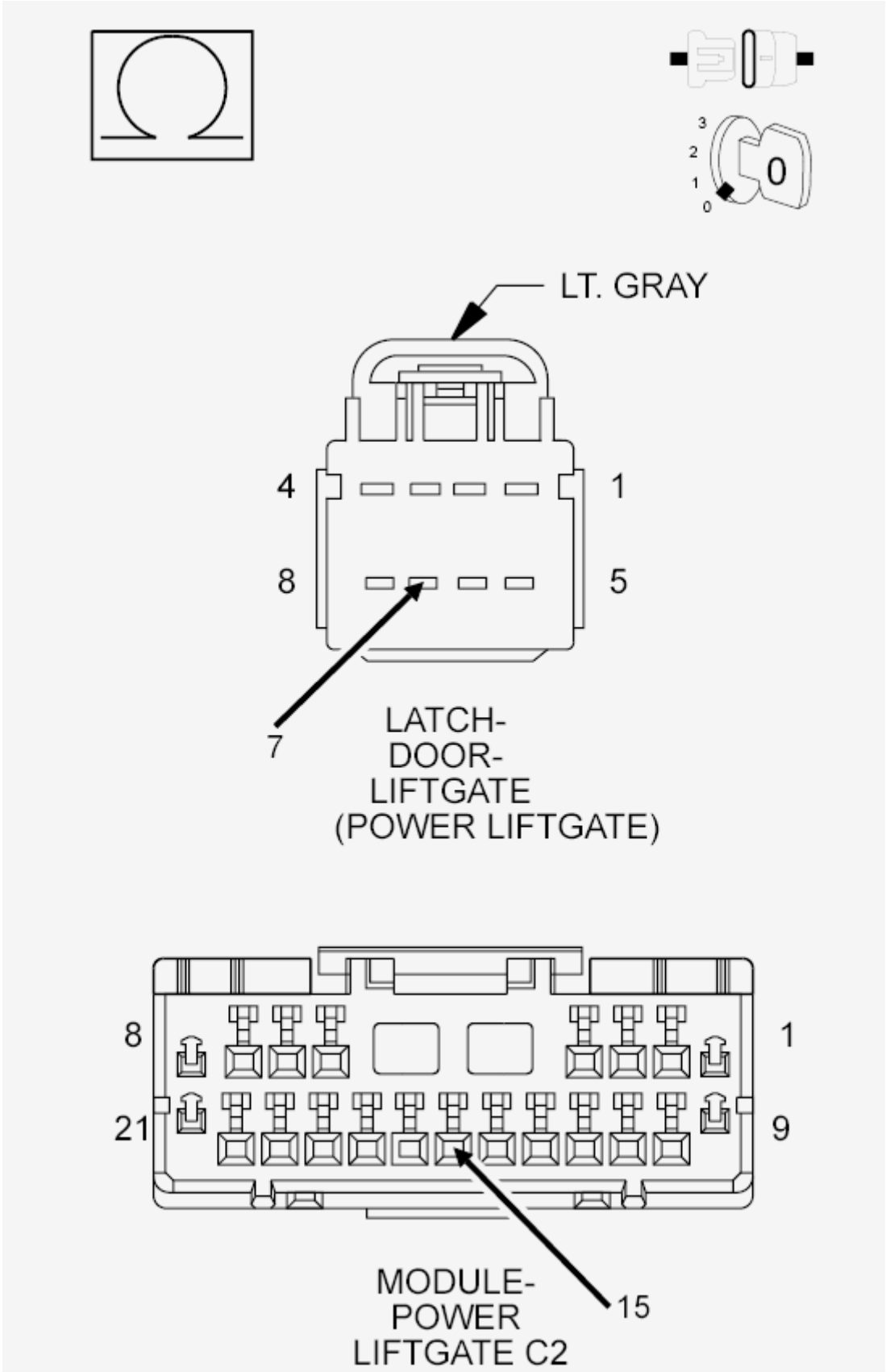
3
2
1
0
0
LT. GRAY
4
1
8
5
7
LATCH-
DOOR-
LIFTGATE
(POWER LIFTGATE)
8
1
21
9
15
MODULE-
POWER
LIFTGATE C2

Fig. 109: Checking Liftgate Ajar Switch Sense Circuit For An Open Or High Resistance
Courtesy of CHRYSLER GROUP, LLC

1. Disconnect the Power Liftgate Module C2 harness connector.
2. Measure the resistance of the (G78) Liftgate Ajar Switch Sense circuit between the Power Liftgate C2 connector and the Power Liftgate Latch connector.
3. Wiggle the harness while observing the ohmmeter.

   Is the resistance below 1.0 Ohms?

   Yes

   - Replace the Power Liftgate Latch assembly in accordance with the Service Information and using the scan tool, run the "Latch Home Sector Test". Refer to **LATCH, LIFTGATE, REMOVAL** .
   - Perform the BODY VERIFICATION TEST. Refer to **STANDARD PROCEDURE** .

   No

   - Repair the (G78) Liftgate Ajar Switch Sense circuit for an open.
   - Perform the BODY VERIFICATION TEST. Refer to **STANDARD PROCEDURE** .

B25B8-00-POWER LIFTGATE OPEN DIRECTION - RATCHET SECONDARY SWITCH INVALID STATE

For a complete wiring diagram, **refer to appropriate SYSTEM WIRING DIAGRAMS article** .

WHEN MONITORED

Whenever the power liftgate is performing an opening operation.

SET CONDITION

The ratchet secondary switch is still detected as open after 10% of liftgate travel during an opening operation.

POSSIBLE CAUSES

Possible Causes
BINDING LIFTGATE
(Q901) LOGIC GROUND CIRCUIT OPEN
(Q76) LATCH SECONDARY POSITION SENSE CIRCUIT OPEN
(Q76) LATCH SECONDARY POSITION SENSE CIRCUIT SHORTED TO VOLTAGE
POWER LIFTGATE LATCH
POWER LIFTGATE MODULE

Always perform the Pre-Diagnostic Troubleshooting procedure before proceeding. Refer to COMMUNICATION PRE-DIAGNOSTIC PROCEDURE .

DIAGNOSTIC TEST

1. **DTC PRESENT**

   NOTE: This DTC will only set during the releasing operation after the four second time out. This may make it difficult to reproduce.

   1. With the scan tool, record and erase DTCs.
   2. Turn the ignition off, wait 10 seconds, then turn the ignition on.
   3. Operate the power liftgate several times if possible.
   4. With the scan tool, read ACTIVE DTCs.

      Does the scan tool display; B25B8-00 - POWER LIFTGATE OPEN DIRECTION - RATCHET SECONDARY SWITCH INVALID STATE?

      Yes

      - Go To 2

      No

      - Using the wiring diagram/schematic as a guide, inspect the wiring and connectors for an intermittent condition. Operate the door several times and check for any binding or other obstructions.
      - Perform the BODY VERIFICATION TEST. Refer to **STANDARD PROCEDURE** .
2. **BINDING LIFTGATE**
   1. Examine the liftgate for proper fit and alignment, loose/hard or torn seals, misaligned latch striker or anything that would cause an obstruction to proper operation.
   2. Manually operate the liftgate of a known good vehicle and notice the effort needed to open and close.
   3. Compare the effort needed on the disabled liftgate.
   4. Especially notice the effort needed to unlatch and close the liftgate.

      Does it take more effort to operate the liftgate than it should?

      Yes

      - Refer to the Service information for the related symptom(s). Refer to **STANDARD PROCEDURE** .
      - Perform the BODY VERIFICATION TEST. Refer to **STANDARD PROCEDURE** .

No

- Go To 3

3. **POWER LIFTGATE MODULE**
   1. With the scan tool, monitor the SECONDARY RATCHET SWITCH CLOSED.
   2. Using a screwdriver, click the latch to the first detent while observing the scan tool.
   3. Unlatch the latch by pressing the handle switch and observe the scan tool for a change of state.
   4. Repeat this step several times while moving the liftgate in different positions and wiggling the harness to check for an intermittent open or shorted circuit.

   Did the scan tool show the switch state changing correctly every time?

   No

   - Go To 4

   Yes

   - Replace the Power Liftgate Module in accordance with the service information. Refer to **MODULE, POWER LIFTGATE CONTROL, REMOVAL** .
   - Perform the BODY VERIFICATION TEST. Refer to **STANDARD PROCEDURE** .
4. **CHECK THE (Q901) LOGIC GROUND CIRCUIT FOR AN OPEN**

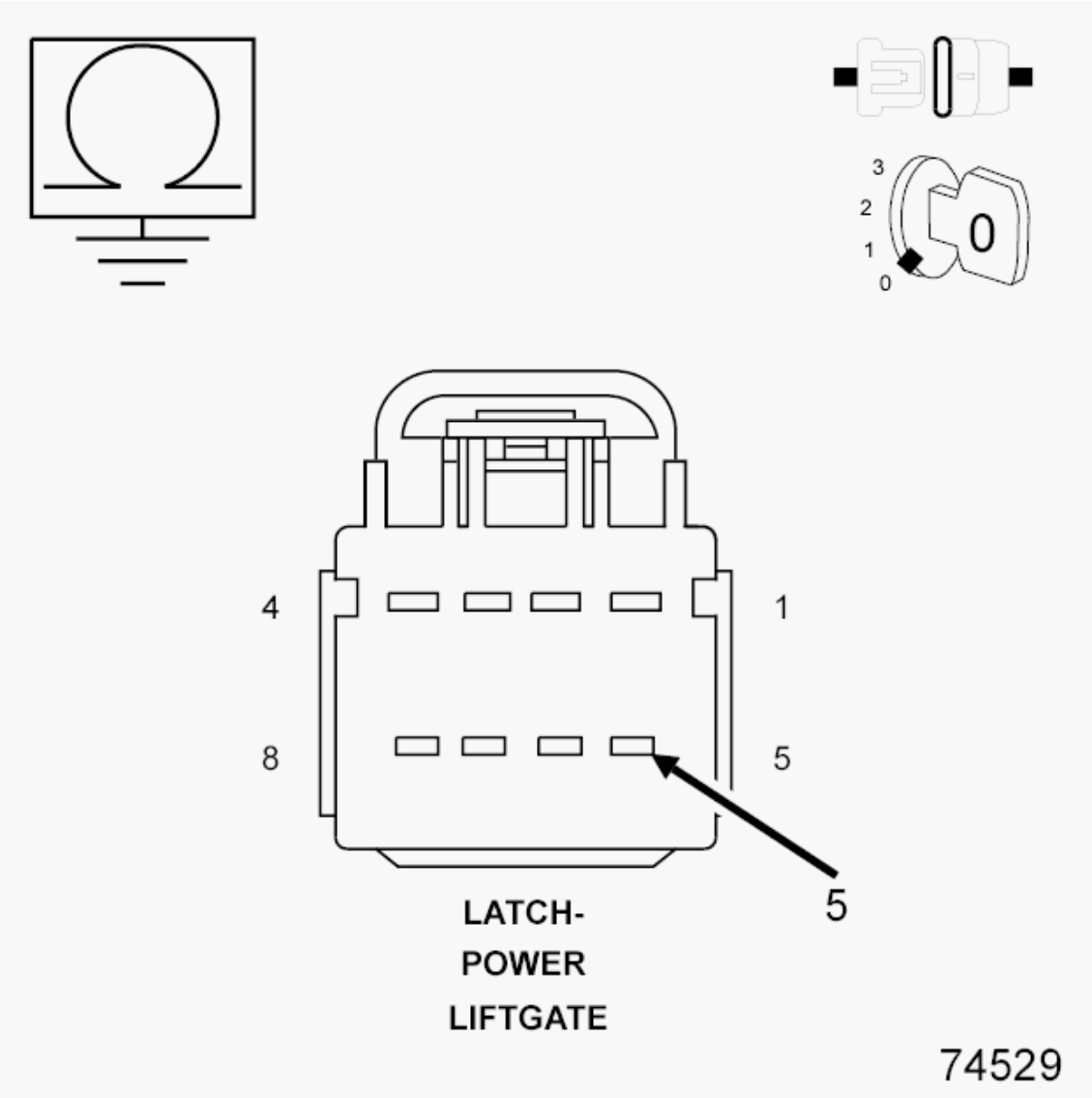

Fig. 110: Checking Logic Ground Circuit For An Open
Courtesy of CHRYSLER GROUP, LLC

1. Turn the ignition off.
2. Disconnect the Power Liftgate Latch harness connector.
3. Measure the resistance between ground and the (Q901) Logic Ground circuit.
4. Wiggle the harness while observing the ohmmeter.

   Is the resistance below 9.5 Ohms?

   Yes

   - Go To 5

No

- Repair the (Q901) Logic Ground circuit for an open.
- Perform the BODY VERIFICATION TEST. Refer to **STANDARD PROCEDURE** .

5. **CHECK THE (Q76) LATCH SECONDARY POSITION SENSE CIRCUIT OPEN**

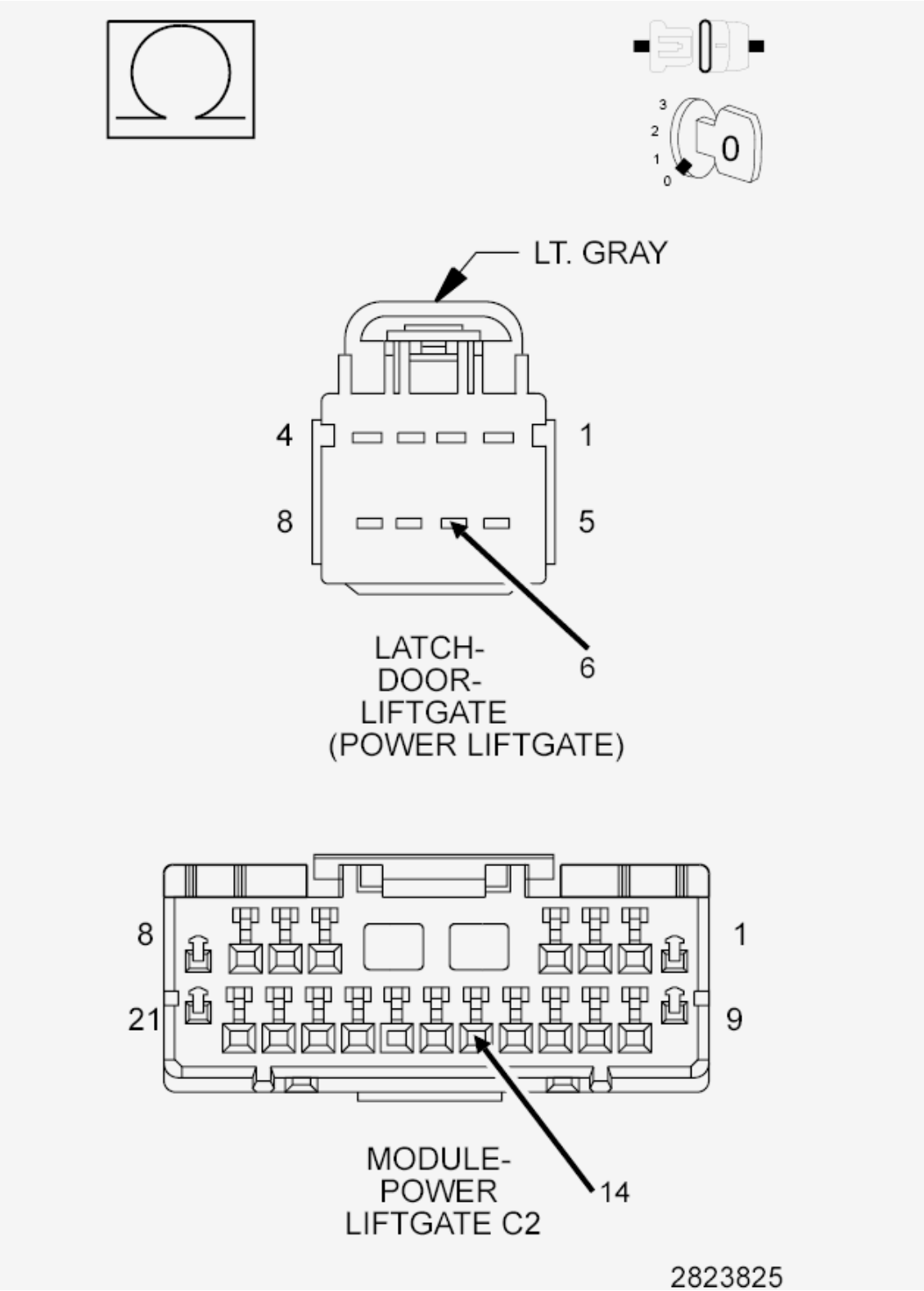

Fig. 111: Checking Latch Secondary Position Sense Circuit For Open
Courtesy of CHRYSLER GROUP, LLC

1. Disconnect the Power Liftgate Module C2 harness connector.
2. Measure the resistance of the (Q76) Latch Secondary Position Sense between the Power Liftgate Module C2 connector and the Power Liftgate Latch connector.
3. Wiggle the harness while observing the ohmmeter.

   Is the resistance below 1.0 Ohm?

   No

   - Repair the (Q76) Latch Secondary Position Sense circuit for an open.
   - Perform the BODY VERIFICATION TEST. Refer to **STANDARD PROCEDURE** .

   Yes

   - Go To 6

6. **(Q76) LATCH SECONDARY POSITION SENSE CIRCUIT SHORTED TO VOLTAGE**

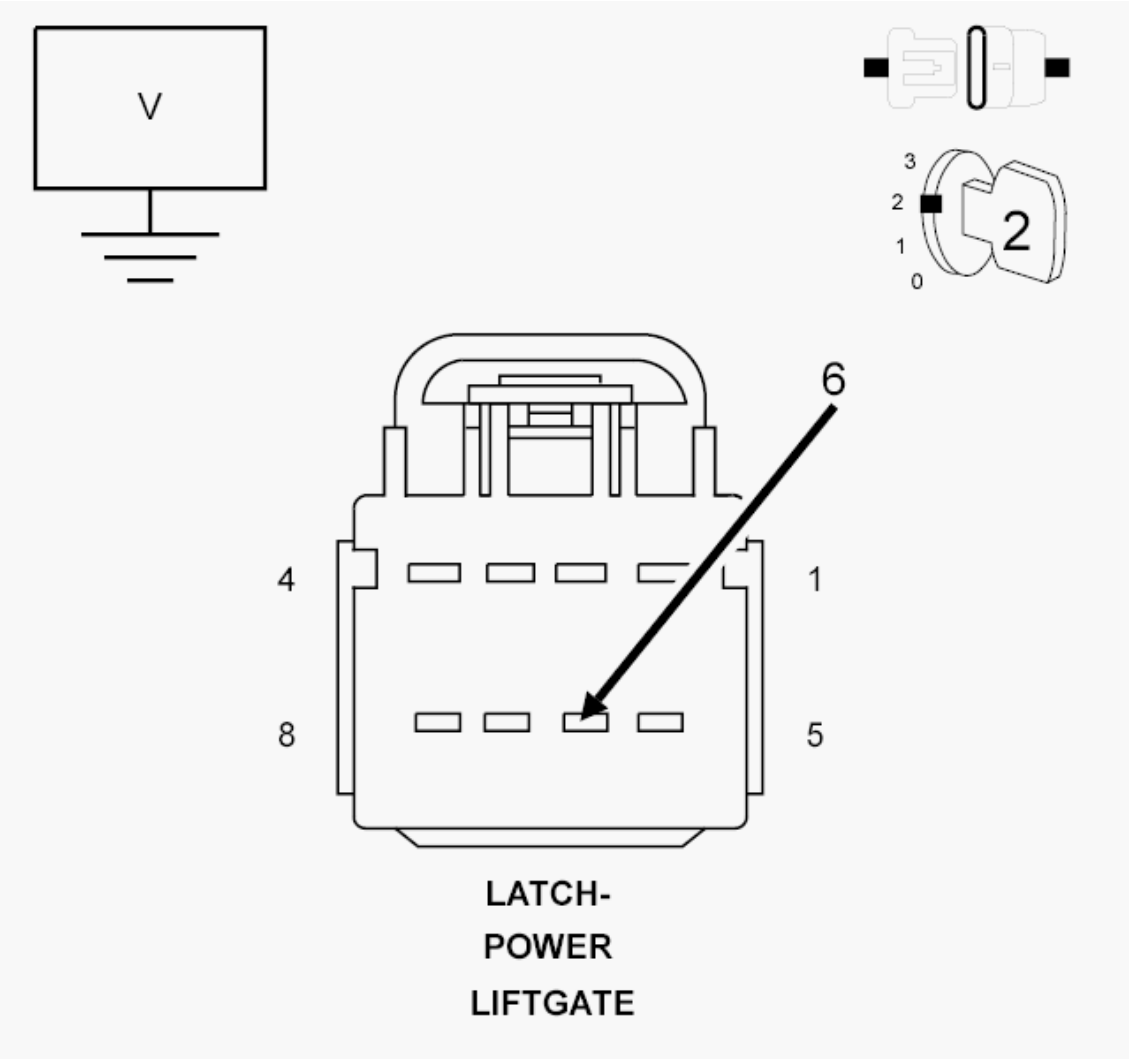

Fig. 112: Checking Latch Secondary Position Sense Circuit For Short To Voltage
Courtesy of CHRYSLER GROUP, LLC

1. Turn the ignition on.
2. Measure the voltage of the (Q76) Latch Secondary Position Sense circuit.
3. Wiggle the harness while observing the voltmeter.

   Is there any voltage present?

   No

   - Replace the Power Liftgate Latch assembly in accordance with the Service Information and using the scan tool, run the "Latch Home Sector Test". Refer to **LATCH, LIFTGATE, REMOVAL** .
   - Perform the BODY VERIFICATION TEST. Refer to **STANDARD PROCEDURE** .

Yes

- Repair the (Q76) Latch Secondary Position Sense circuit for a short to voltage.
- Perform the BODY VERIFICATION TEST. Refer to **STANDARD PROCEDURE** .

B25B9-00-POWER LIFTGATE CLOSE DIRECTION - RATCHET SECONDARY SWITCH INVALID STATE

For a complete wiring diagram, **refer to appropriate SYSTEM WIRING DIAGRAMS article** .

WHEN MONITORED

Whenever the power liftgate is performing a closing operation.

SET CONDITION

The ratchet secondary switch is detected as open to early in the power close operation.

POSSIBLE CAUSES

Possible Causes
BINDING LIFTGATE
(Q901) LOGIC GROUND CIRCUIT OPEN
(Q76) LATCH SECONDARY POSITION SENSE CIRCUIT OPEN
(Q76) LATCH SECONDARY POSITION SENSE CIRCUIT SHORTED TO VOLTAGE
POWER LIFTGATE LATCH
POWER LIFTGATE MODULE

DIAGNOSTIC TEST

1. **DTC PRESENT**

NOTE: This DTC will only set during the releasing operation after the four second time out. This may make it difficult to reproduce.

1. With the scan tool, record and erase DTCs.
2. Turn the ignition off, wait 10 seconds, then turn the ignition on.
3. Operate the power liftgate several times if possible.
4. With the scan tool, read ACTIVE DTCs.

   Does the scan tool display; B25B9-00 POWER LIFTGATE CLOSE DIRECTION - RATCHET SECONDARY SWITCH INVALID STATE?

   Yes

- Go To 2

No

- Using the wiring diagram/schematic as a guide, inspect the wiring and connectors for an intermittent condition. Operate the door several times and check for any binding or other obstructions.
- Perform the BODY VERIFICATION TEST. Refer to **STANDARD PROCEDURE** .

2. **BINDING LIFTGATE**
   1. Examine the liftgate for proper fit and alignment, loose/hard or torn seals, misaligned latch striker or anything that would cause an obstruction to proper operation.
   2. Manually operate the liftgate of a known good vehicle and notice the effort needed to open and close.
   3. Compare the effort needed on the disabled liftgate.
   4. Especially notice the effort needed to unlatch and close the liftgate.

   Does it take more effort to operate the liftgate than it should?

   Yes

   - Refer to the Service information for the related symptom(s). Refer to **STANDARD PROCEDURE** .
   - Perform the BODY VERIFICATION TEST. Refer to **STANDARD PROCEDURE** .

   No

   - Go To 3
3. **POWER LIFTGATE MODULE**
   1. With the scan tool, monitor the SECONDARY RATCHET SWITCH CLOSED.
   2. Using a screwdriver, click the latch to the first detent while observing the scan tool.
   3. Unlatch the latch by pressing the handle switch and observe the scan tool for a change of state.
   4. Repeat this step several times while moving the liftgate in different positions and wiggling the harness to check for an intermittent open or shorted circuit.

   Did the scan tool show the switch state changing correctly every time?

   No

   - Go To 4

   Yes

   - Replace the Power Liftgate Module in accordance with the service information.

- Perform the BODY VERIFICATION TEST. Refer to **STANDARD PROCEDURE** .

4. **CHECK THE (Q901) LOGIC GROUND CIRCUIT FOR AN OPEN**

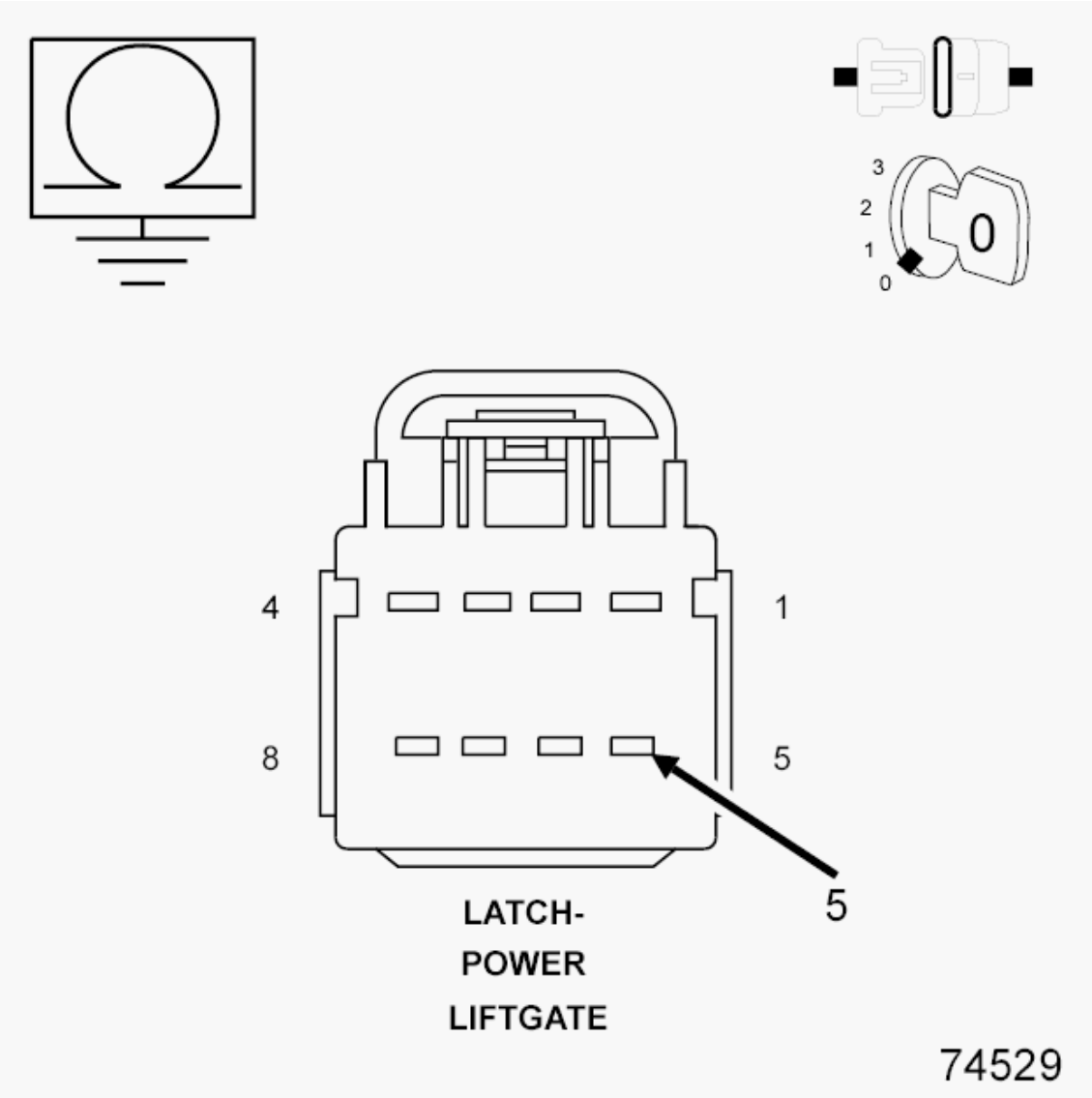

Fig. 113: Checking Logic Ground Circuit For An Open
Courtesy of CHRYSLER GROUP, LLC

1. Turn the ignition off.
2. Disconnect the Power Liftgate Latch harness connector.
3. Measure the resistance between ground and the (Q901) Logic Ground circuit.
4. Wiggle the harness while observing the ohmmeter.

   Is the resistance below 9.5 Ohms?

   Yes

- Go To 5

No

- Repair the (Q901) Logic Ground circuit for an open.
- Perform the BODY VERIFICATION TEST. Refer to **STANDARD PROCEDURE** .

5. **CHECK THE (Q76) LATCH SECONDARY POSITION SENSE CIRCUIT FOR AN OPEN**

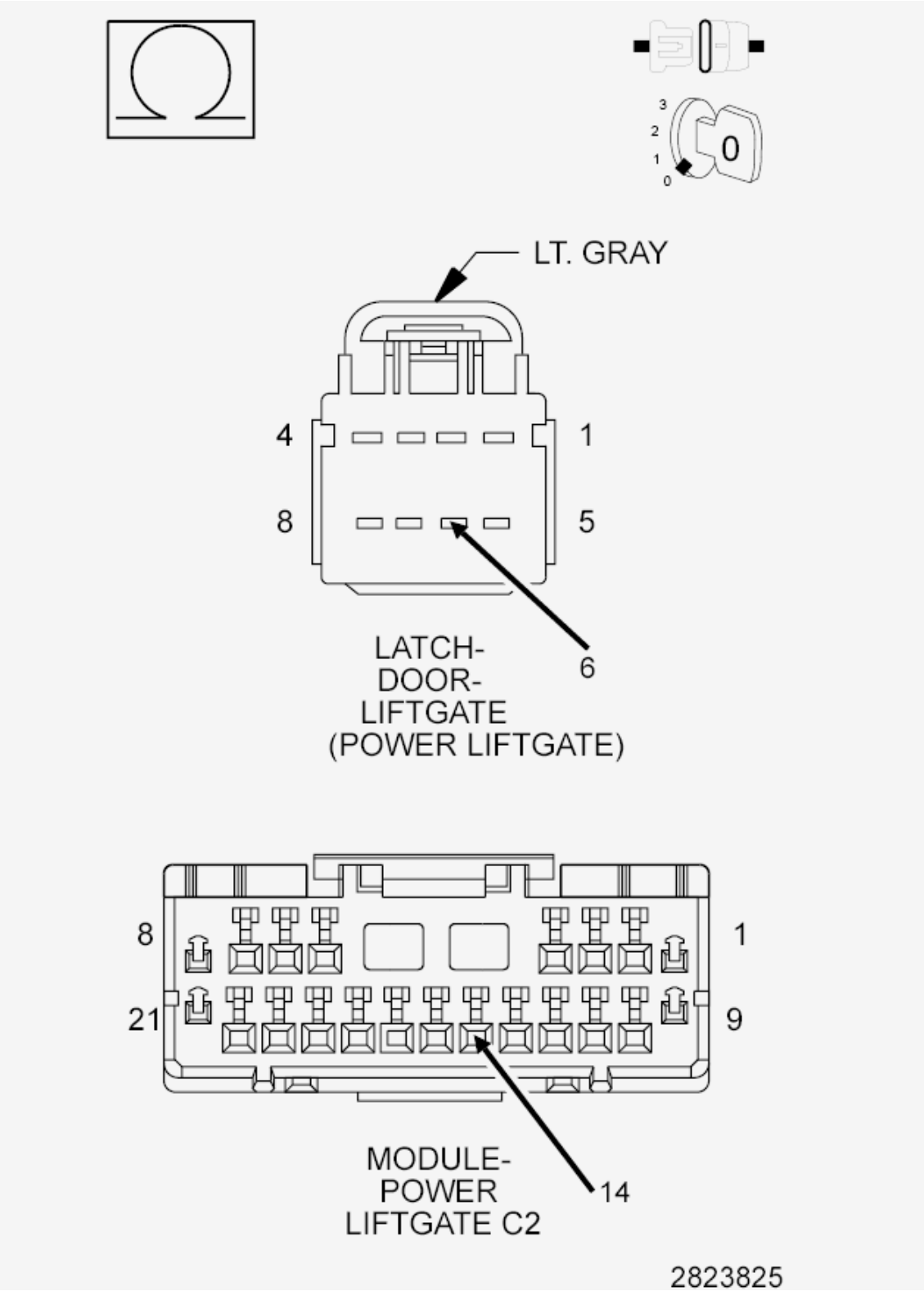

Fig. 114: Checking Latch Secondary Position Sense Circuit For Open
Courtesy of CHRYSLER GROUP, LLC

1. Disconnect the Power Liftgate Module C2 harness connector.
2. Measure the resistance of the (Q76) Latch Secondary Position Sense between the Power Liftgate Module C2 connector and the Power Liftgate Latch connector.
3. Wiggle the harness while observing the ohmmeter.

   Is the resistance below 1.0 Ohm?

   No

   - Repair the (Q76) Latch Secondary Position Sense circuit for an open.
   - Perform the BODY VERIFICATION TEST. Refer to **STANDARD PROCEDURE** .

   Yes

   - Go To 6

6. **CHECK THE (Q76) LATCH SECONDARY POSITION SENSE CIRCUIT FOR A SHORT TO VOLTAGE**

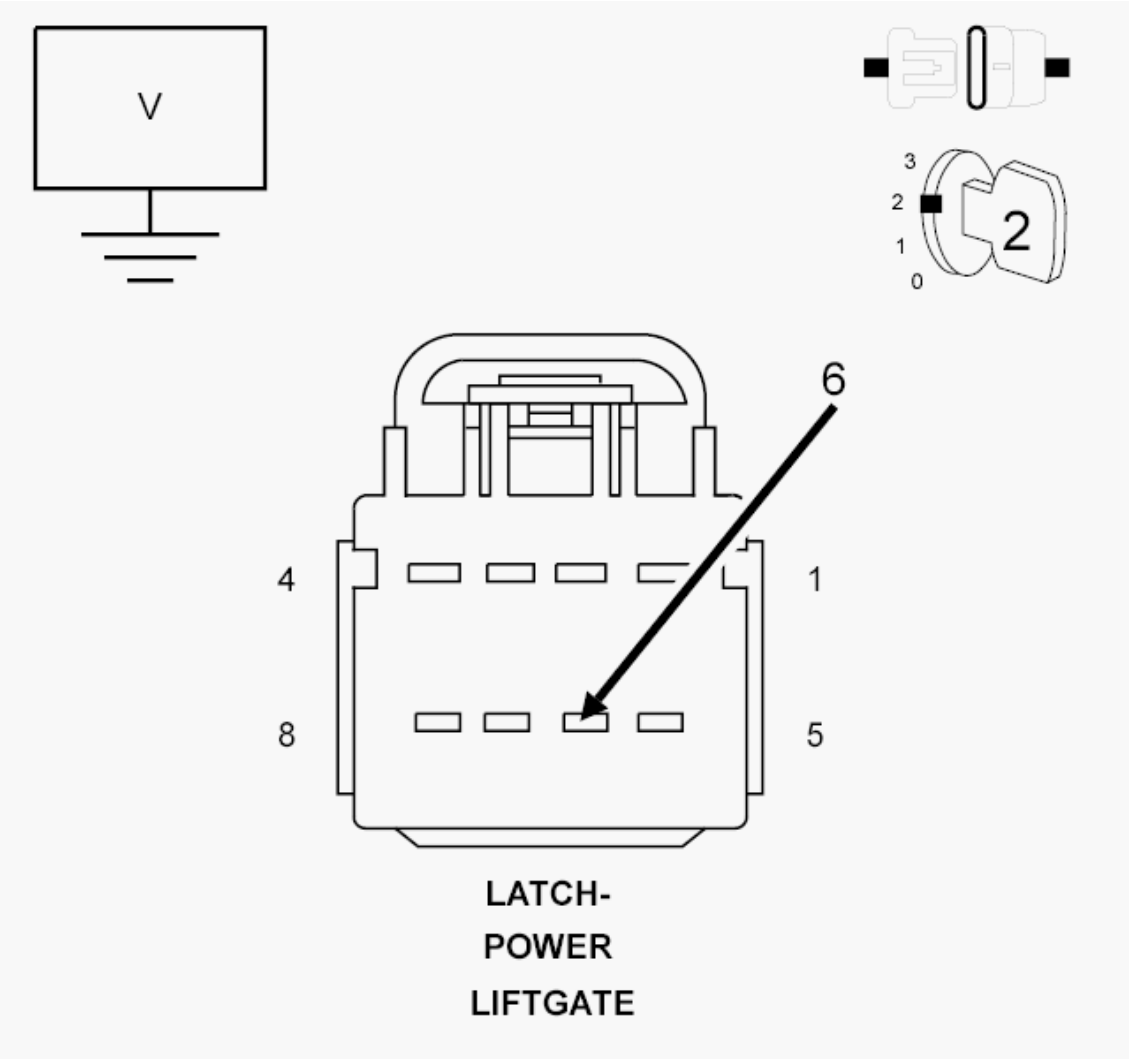

Fig. 115: Checking Latch Secondary Position Sense Circuit For Short To Voltage
Courtesy of CHRYSLER GROUP, LLC

1. Turn the ignition on.
2. Measure the voltage of the (Q76) Latch Secondary Position Sense circuit.
3. Wiggle the harness while observing the voltmeter.

   Is there any voltage present?

   No

   - Replace the Power Liftgate Latch assembly in accordance with the Service Information and using the scan tool, run the "Latch Home Sector Test".
   - Perform the BODY VERIFICATION TEST. Refer to **STANDARD PROCEDURE** .

   Yes

- Repair the (Q76) Latch Secondary Position Sense circuit for a short to voltage.
- Perform the BODY VERIFICATION TEST. Refer to **STANDARD PROCEDURE** .

B25BA-00-POWER LIFTGATE OPEN DIRECTION - SECTOR SWITCH INVALID STATE

For a complete wiring diagram, **refer to appropriate SYSTEM WIRING DIAGRAMS article** .

WHEN MONITORED

Whenever the power liftgate is performing a power open operation.

SET CONDITION

The Sector switch was NOT detected in the home / normal position, prior to an opening operation.

POSSIBLE CAUSES

Possible Causes
BINDING LIFTGATE
LATCH NOT IN HOME POSITION
(Q901) LOGIC GROUND CIRCUIT OPEN
(Q79) SECTOR SWITCH SENSE CIRCUIT OPEN
(Q79) SECTOR SWITCH SENSE CIRCUIT SHORTED TO VOLTAGE
(Q79) SECTOR SWITCH SENSE CIRCUIT SHORTED TO GROUND
POWER LIFTGATE LATCH
POWER LIFTGATE MODULE

DIAGNOSTIC TEST

1. **CHECK FOR DTCS**

NOTE: This DTC will only set during the power open operation.

1. With the scan tool, record and erase DTCs.
2. Turn the ignition off, wait 10 seconds, then turn the ignition on.
3. Operate the power liftgate several times if possible.
4. With the scan tool, read Active DTCs.

Does the scan tool display; B25BA-00 - POWER LIFTGATE OPEN DIRECTION - SECTOR SWITCH INVALID STATE?

Yes

- Go To 2

No

- Using the wiring diagram/schematic as a guide, inspect the wiring and connectors for an intermittent condition. Operate the door several times and check for any binding or other obstructions.
- Perform the BODY VERIFICATION TEST. Refer to **STANDARD PROCEDURE** .

2. **BINDING LIFTGATE**
   1. Examine the liftgate for proper fit and alignment, loose/hard or torn seals, misaligned latch striker or anything that would cause an obstruction to proper operation.
   2. Manually operate the liftgate of a known good vehicle and notice the effort needed to open and close.
   3. Compare the effort needed on the disabled liftgate.
   4. Especially notice the effort needed to unlatch and close the liftgate.

   Does it take more effort to operate the liftgate than it should?

   Yes

   - Refer to the Service information for the related symptom(s). Refer to **STANDARD PROCEDURE** .
   - Perform the BODY VERIFICATION TEST. Refer to **STANDARD PROCEDURE** .

   No

   - Go To 3

3. **LATCH HOME POSITION**
   1. With the scan tool in Inputs/Outputs, read the "Sector Gear Switch Closed" state.

   Does the scan tool display; YES?

   Yes

   - Go To 9

   No

   - Go To 4

4. **POWER LIFTGATE LATCH**

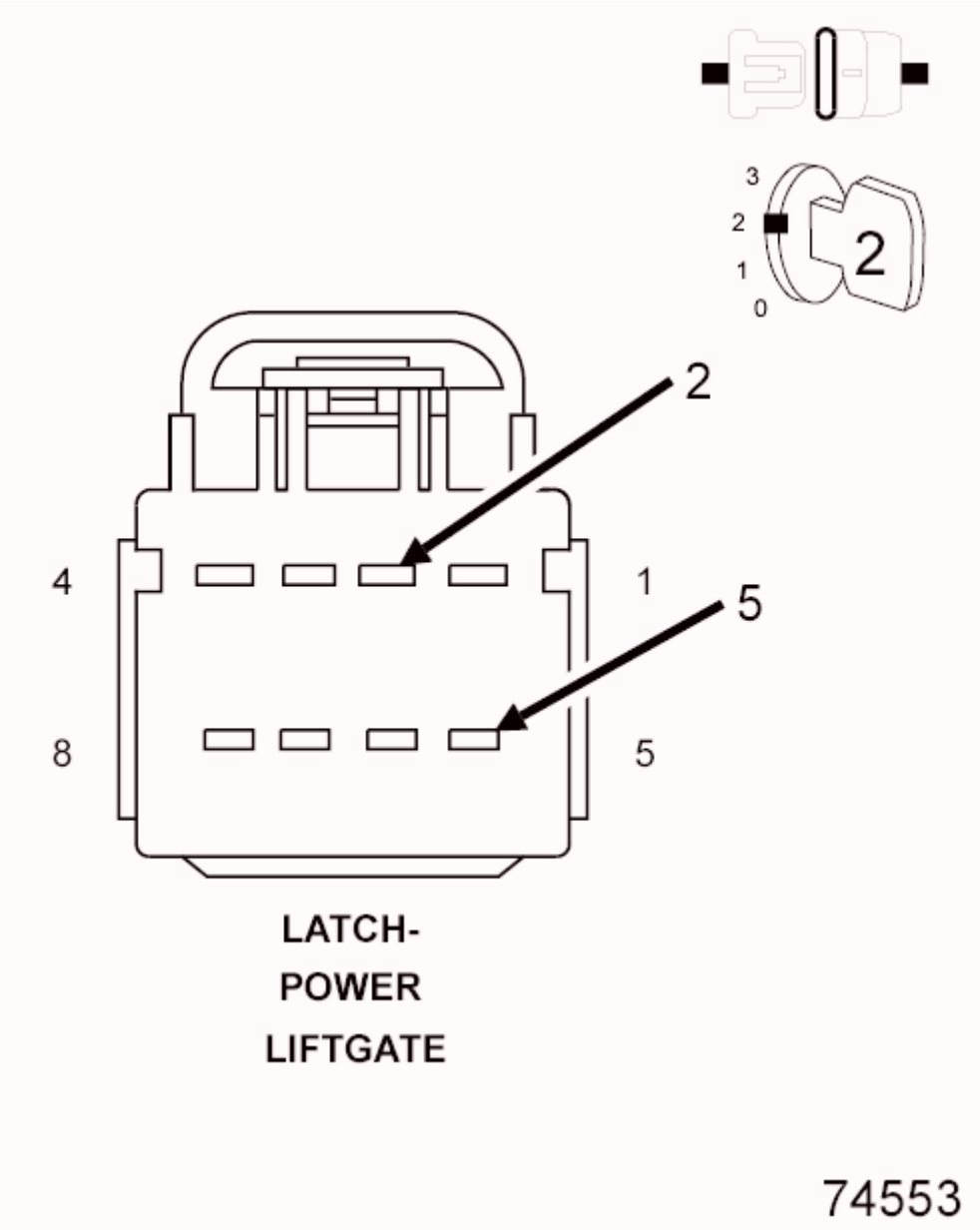

Fig. 116: Power Liftgate Latch Connector End View
Courtesy of CHRYSLER GROUP, LLC

1. Disconnect the Power Liftgate Latch harness connector.
2. With the scan tool, monitor the Sector Gear Switch Closed state.
3. Connect a jumper wire between the (Q79) Sector Switch Sense circuit and the (Q901) Sensor Ground circuit.
4. Repeat the previous step several times by disconnecting and connecting the jumper while observing the scan tool.

   Did the scan tool show the switch state changing correctly every time the jumper was connected and disconnected?

Yes

- Replace the Power Liftgate Latch in accordance with the service information and using the scan tool, run the "Latch Home Sector Test". Refer to **LATCH, LIFTGATE, REMOVAL** .
- Perform the BODY VERIFICATION TEST. Refer to **STANDARD PROCEDURE** .

No

- Go To 5

5. **CHECK THE (Q901) LOGIC GROUND CIRCUIT FOR AN OPEN**

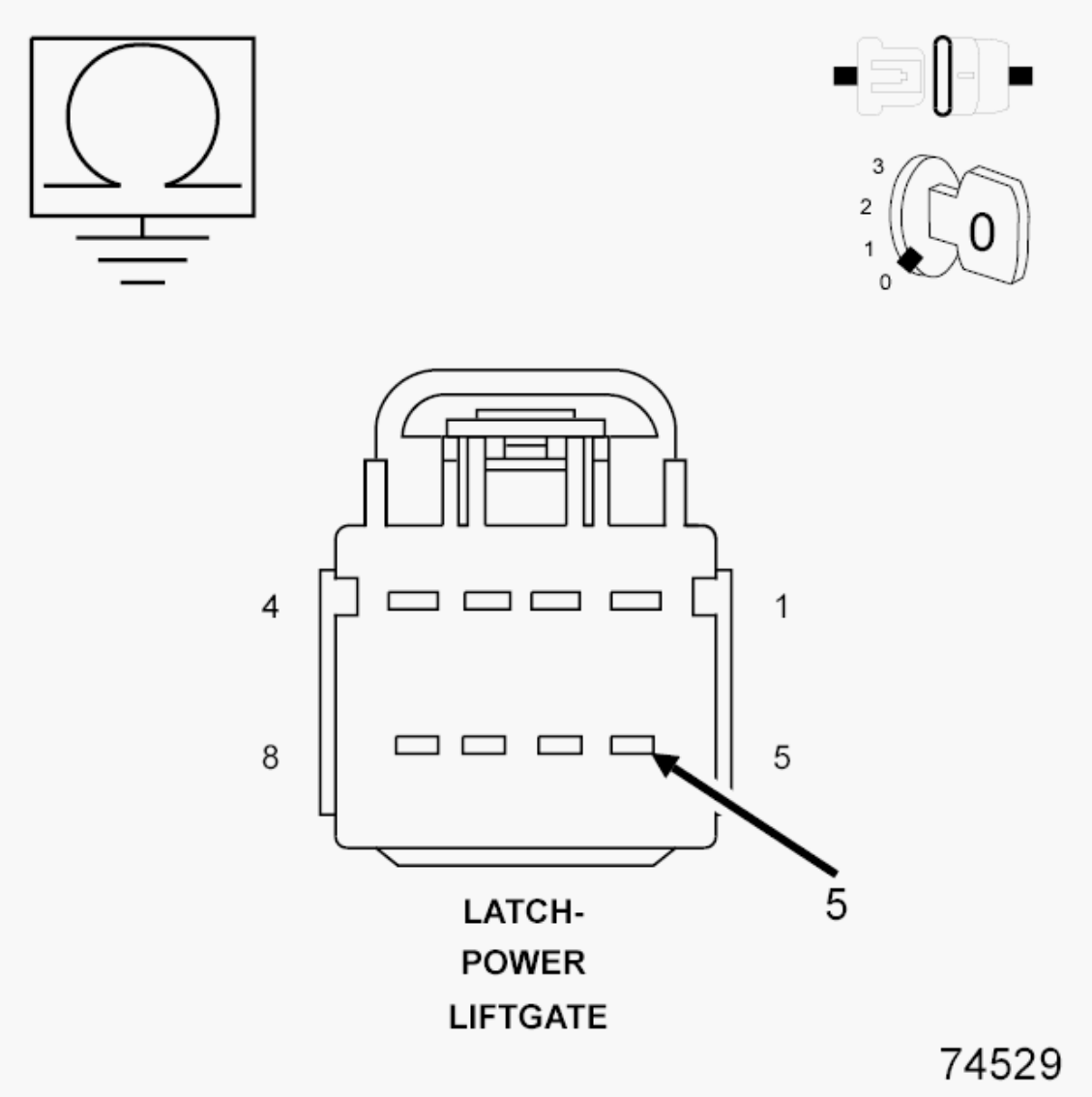

Fig. 117: Checking Logic Ground Circuit For An Open
Courtesy of CHRYSLER GROUP, LLC

1. Turn the ignition off.

2. Turn all lights off.
3. Measure the resistance between ground and the (Q901) Logic Ground circuit.
4. Wiggle the harness while observing the ohmmeter.

   Is the resistance below 9.5 Ohms?

   Yes

   - Go To 6

   No

   - Repair the (Q901) Logic Ground circuit for an open.
   - Perform the BODY VERIFICATION TEST. Refer to **STANDARD PROCEDURE** .

6. **CHECK THE (Q79) SECTOR SWITCH SENSE CIRCUIT FOR A SHORT TO GROUND**

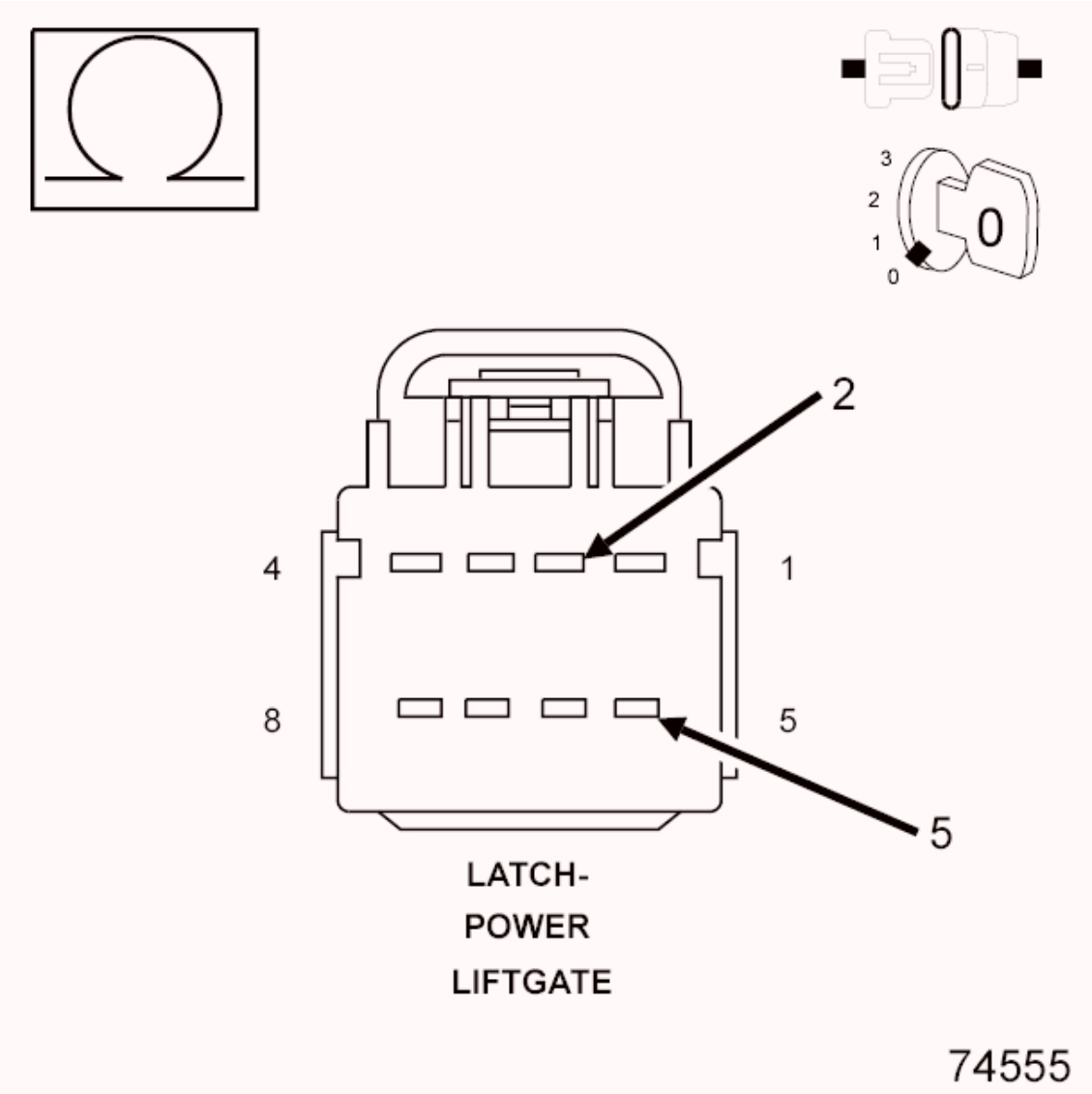

Fig. 118: Checking Sector Switch Sense Circuit For A Short To Ground
Courtesy of CHRYSLER GROUP, LLC

1. Measure the resistance between the (Q901) Logic Ground circuit and the (Q79) Sector Switch Sense circuit.
2. Wiggle the harness while observing the ohmmeter.

   Is the resistance below 100.0 Ohms?

   Yes

   - Go To 11

   No

- Go To7

7. **CHECK THE (Q79) SECTOR SWITCH SENSE CIRCUIT FOR AN OPEN**

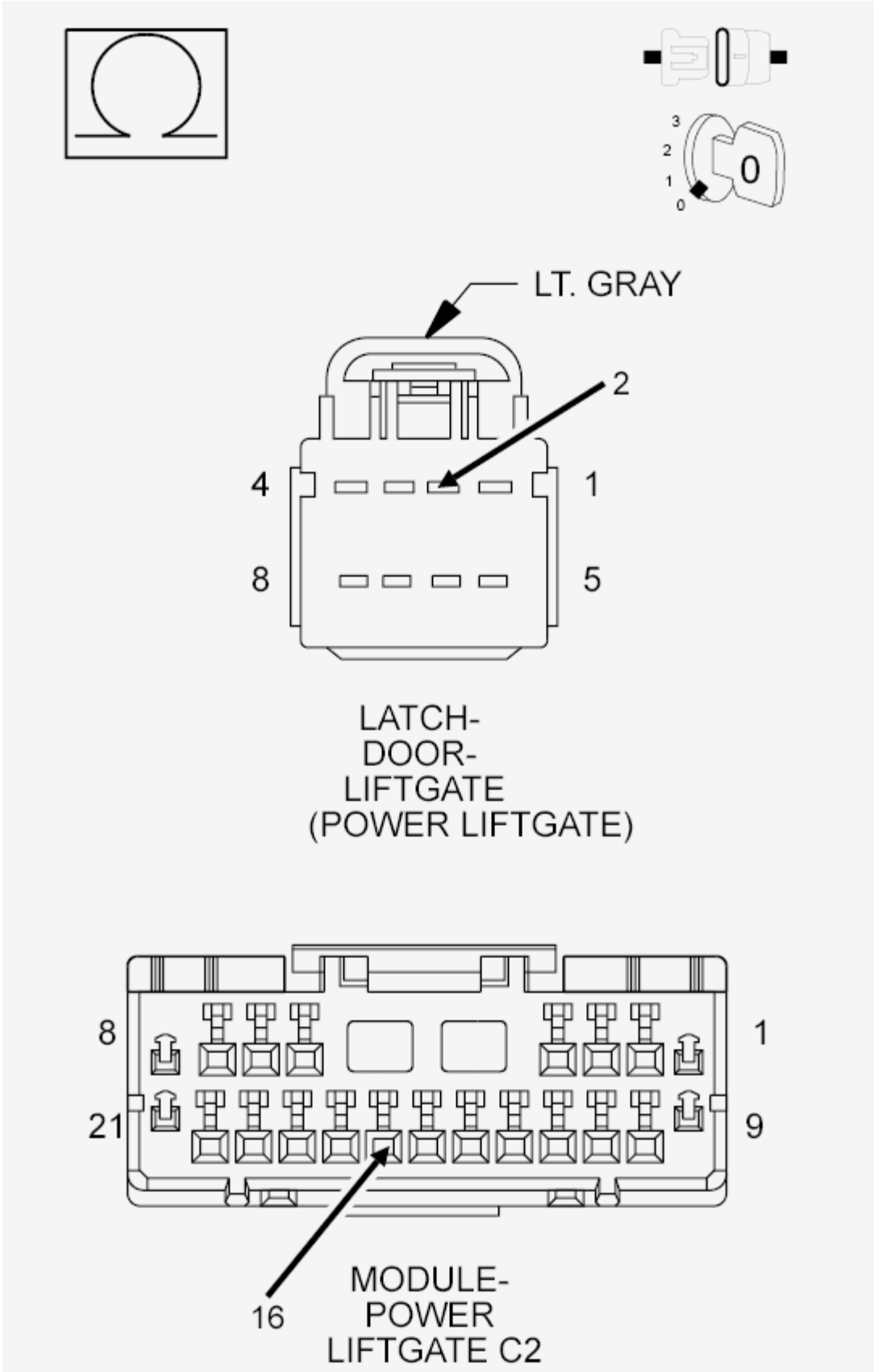
3
2
1
0
0
LT. GRAY
2
4
1
8
5
LATCH-
DOOR-
LIFTGATE
(POWER LIFTGATE)
8
1
21
9
16
MODULE-
POWER
LIFTGATE C2

Fig. 119: Checking Sector Switch Sense Circuit For An Open
Courtesy of CHRYSLER GROUP, LLC

1. Disconnect the Power Liftgate Module C2 harness connector.
2. Measure the resistance of the (Q79) Sector Switch Sense circuit between the Power Liftgate C2 harness connector and the Power Liftgate Latch harness connector.
3. Wiggle the harness while observing the ohmmeter.

   Is the resistance below 1.0 Ohm?

   No

   - Repair the (Q79) Sector Switch Sense circuit for an open.
   - Perform the BODY VERIFICATION TEST. Refer to **STANDARD PROCEDURE** .

   Yes

   - Go To 8

8. **CHECK THE (Q79) SECTOR SWITCH SENSE CIRCUIT FOR A SHORT TO VOLTAGE**

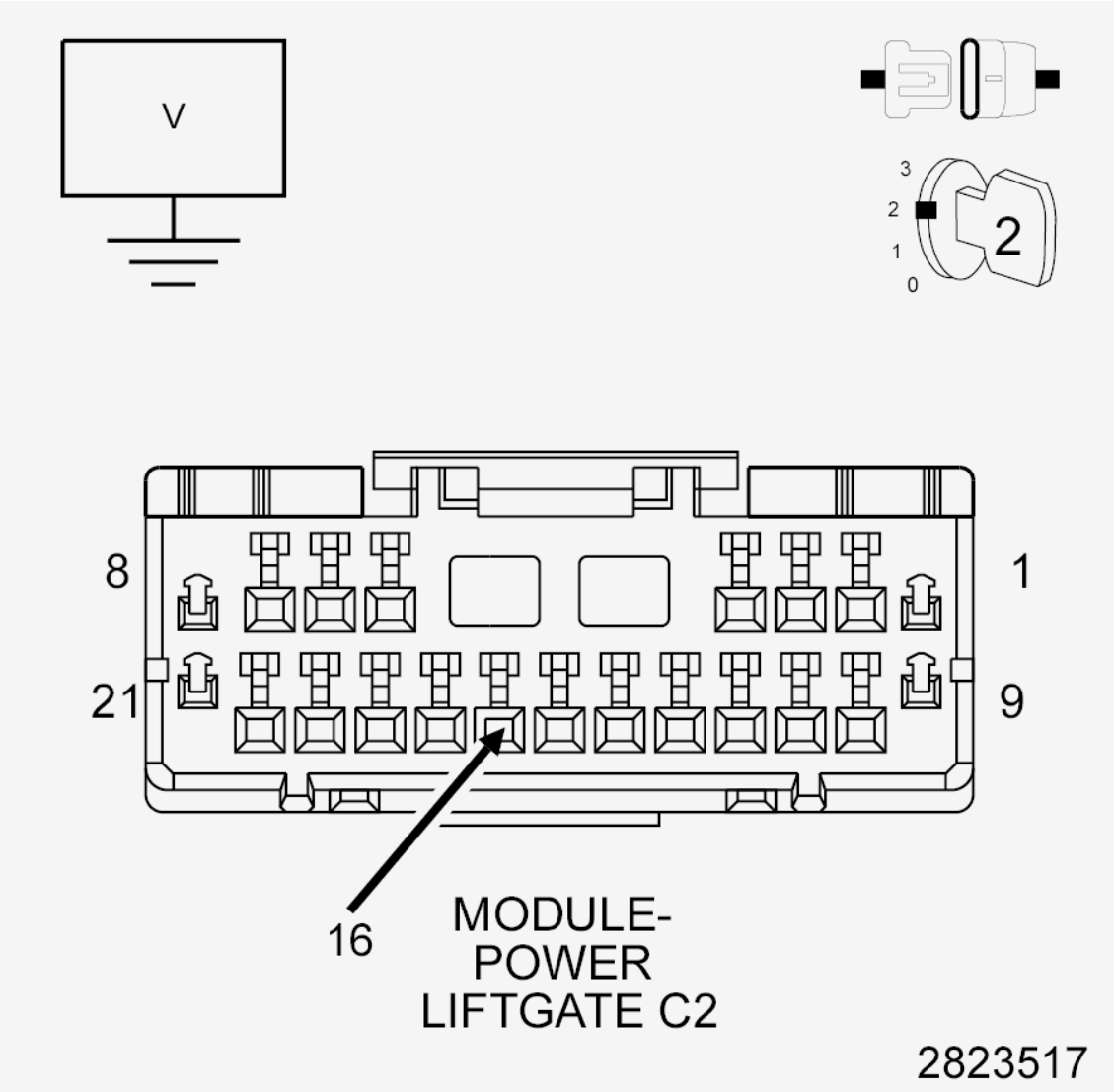

Fig. 120: Checking Sector Switch Sense Circuit For A Short To Voltage
Courtesy of CHRYSLER GROUP, LLC

1. Turn the ignition on.
2. Measure the voltage of the (Q79) Sector Switch Sense circuit.
3. Wiggle the harness while observing the voltmeter.

   Is there any voltage present?

   No

   - Replace the Power Liftgate Module in accordance with the service information. Refer to **MODULE, POWER LIFTGATE CONTROL, REMOVAL** .
   - Perform the BODY VERIFICATION TEST. Refer to **STANDARD PROCEDURE** .

Yes

- Repair the (Q79) Sector Switch Sense circuit for a short to voltage.
- Perform the BODY VERIFICATION TEST. Refer to **STANDARD PROCEDURE** .

9. **ADJUST LATCH TO HOME POSITION**
   1. With the scan tool run the "Latch Home Sector Test".

      NOTE: This test will try to adjust the sector gear to the Home Position.

   2. With the scan tool in Inputs/Outputs, read the "Sector Gear Switch Closed" state.

      Does the scan tool display: NO?

      Yes

      - Repair is complete. The latch was not in the Home position.
      - Perform the BODY VERIFICATION TEST. Refer to **STANDARD PROCEDURE** .

      No

      - Go To 10

10. **CHECK THE (Q79) SECTOR SWITCH SENSE CIRCUIT FOR A SHORT TO THE (Q901) LOGIC GROUND CIRCUIT**

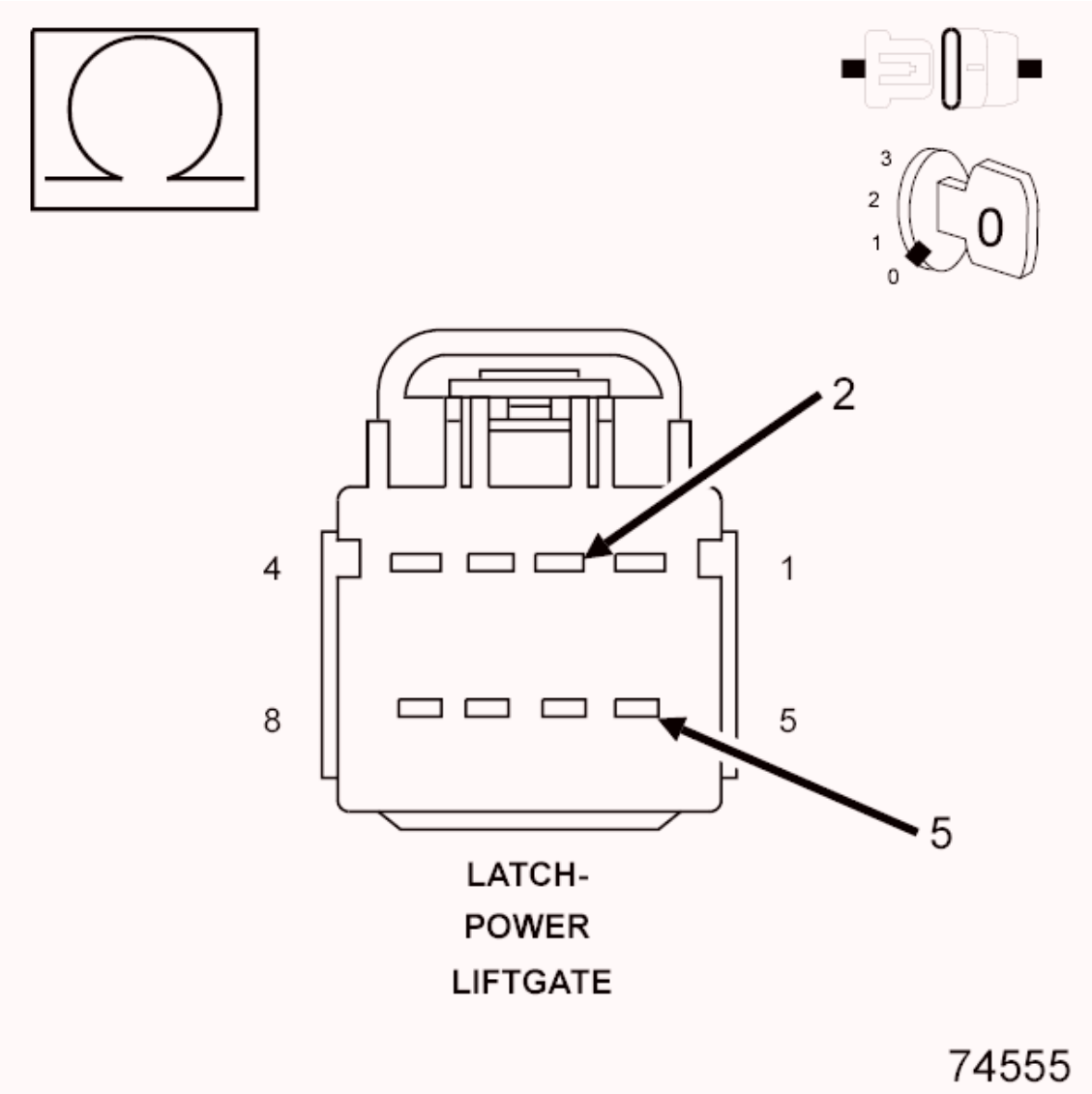

Fig. 121: Checking Sector Switch Sense Circuit For A Short To Ground
Courtesy of CHRYSLER GROUP, LLC

1. Disconnect the Power Liftgate Latch harness connector.
2. Measure the resistance between the (Q901) Logic Ground circuit and the (Q79) Sector Switch Sense circuit.
3. Wiggle the harness while observing the ohmmeter.

   Is the resistance below 1, 000 Ohms?

   Yes

   - Go To 11

   No

- Replace the Power Liftgate Latch assembly in accordance with the Service Information and using the scan tool, run the "Latch Home Sector Test". Refer to **LATCH, LIFTGATE, REMOVAL** .
- Perform the BODY VERIFICATION TEST. Refer to **STANDARD PROCEDURE** .

11. **CHECK THE (Q79) SECTOR SWITCH SENSE CIRCUIT FOR A SHORT TO GROUND**

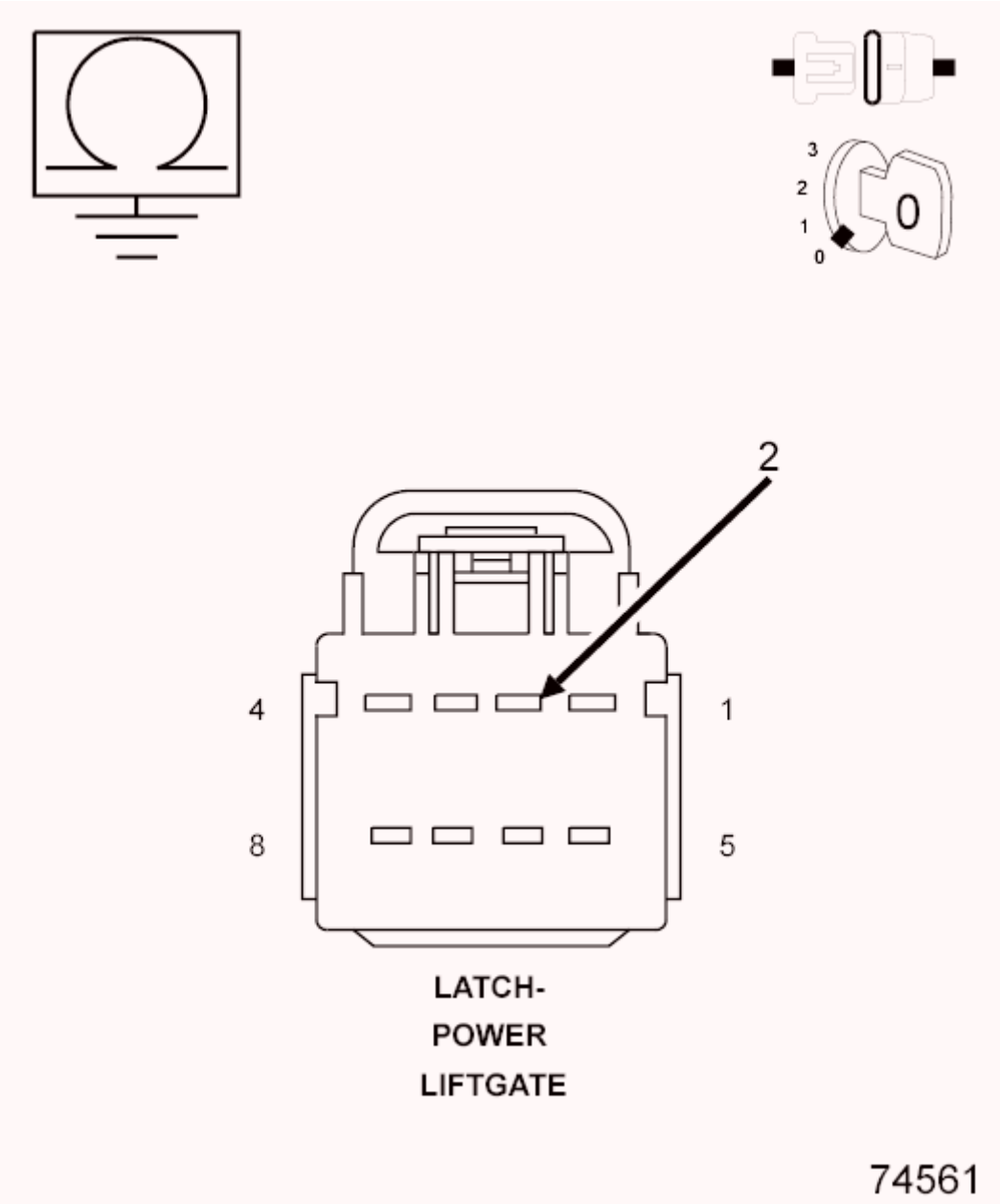

Fig. 122: Checking Sector Switch Sense Circuit For A Short To Ground
Courtesy of CHRYSLER GROUP, LLC

1. Disconnect the Power Liftgate Module C2 harness connector.
2. Measure the resistance between ground and the (Q79) Sector Switch Sense circuit.

3. Wiggle the harness while observing the ohmmeter.

   Is the resistance below 1, 000 Ohms?

   Yes

   - Repair the (Q79) Sector Switch Sense circuit for a short to ground.
   - Perform the BODY VERIFICATION TEST. Refer to **STANDARD PROCEDURE** .

   No

   - Replace the Power Liftgate Module in accordance with the service information. Refer to **MODULE, POWER LIFTGATE CONTROL, REMOVAL** .
   - Perform the BODY VERIFICATION TEST. Refer to **STANDARD PROCEDURE** .

B25BB-00-POWER LIFTGATE CLOSE DIRECTION - SECTOR SWITCH INVALID STATE

For a complete wiring diagram, **refer to appropriate SYSTEM WIRING DIAGRAMS article** .

WHEN MONITORED

Whenever the Power Liftgate is performing a closing operation.

SET CONDITION

The Sector switch was NOT detected in the home / normal - Full OPEN position, prior to a closing operation.

POSSIBLE CAUSES

Possible Causes
BINDING LIFTGATE
LATCH NOT IN HOME POSITION
(Q901) LOGIC GROUND CIRCUIT OPEN
(Q79) SECTOR SWITCH SENSE CIRCUIT OPEN
(Q79) SECTOR SWITCH SENSE CIRCUIT SHORTED TO VOLTAGE
(Q79) SECTOR SWITCH SENSE CIRCUIT SHORTED TO GROUND
POWER LIFTGATE LATCH
POWER LIFTGATE MODULE

DIAGNOSTIC TEST

1. **DTC PRESENT**
   1. With the scan tool, record and erase DTCs.
   2. Turn the ignition off, wait 10 seconds, then turn the ignition on.

3. Operate the power liftgate several times if possible.
4. With the scan tool, read the Active DTCs.

   Does the scan tool display; B1978-00-POWER LIFTGATE CLOSING OPERATION - SECTOR SWITCH PERFORMANCE?

   Yes

   - Go To 2

   No

   - Using the wiring diagram/schematic as a guide, inspect the wiring and connectors for an intermittent condition. Operate the door several times and check for any binding or other obstructions.
   - Perform the BODY VERIFICATION TEST. Refer to **STANDARD PROCEDURE** .

2. **BINDING LIFTGATE**
   1. Examine the liftgate for proper fit and alignment, loose/hard or torn seals, misaligned latch striker or anything that would cause an obstruction to proper operation.
   2. Manually operate the liftgate of a known good vehicle and notice the effort needed to open and close.
   3. Compare the effort needed on the disabled liftgate.
   4. Especially notice the effort needed to unlatch and close the liftgate.

      Does it take more effort to operate the liftgate than it should?

      Yes

      - Refer to the Service information for the related symptom(s). Refer to **STANDARD PROCEDURE** .
      - Perform the BODY VERIFICATION TEST. Refer to **STANDARD PROCEDURE** .

      No

      - Go To 3

3. **LATCH HOME POSITION**
   1. Make sure the liftgate is closed.
   2. With the scan tool in Inputs/Outputs, read the "Sector Gear Switch Closed" state.

      Does the scan tool display; YES?

      Yes

- Go To 9

No

- Go To 4

4. **POWER LIFTGATE LATCH**

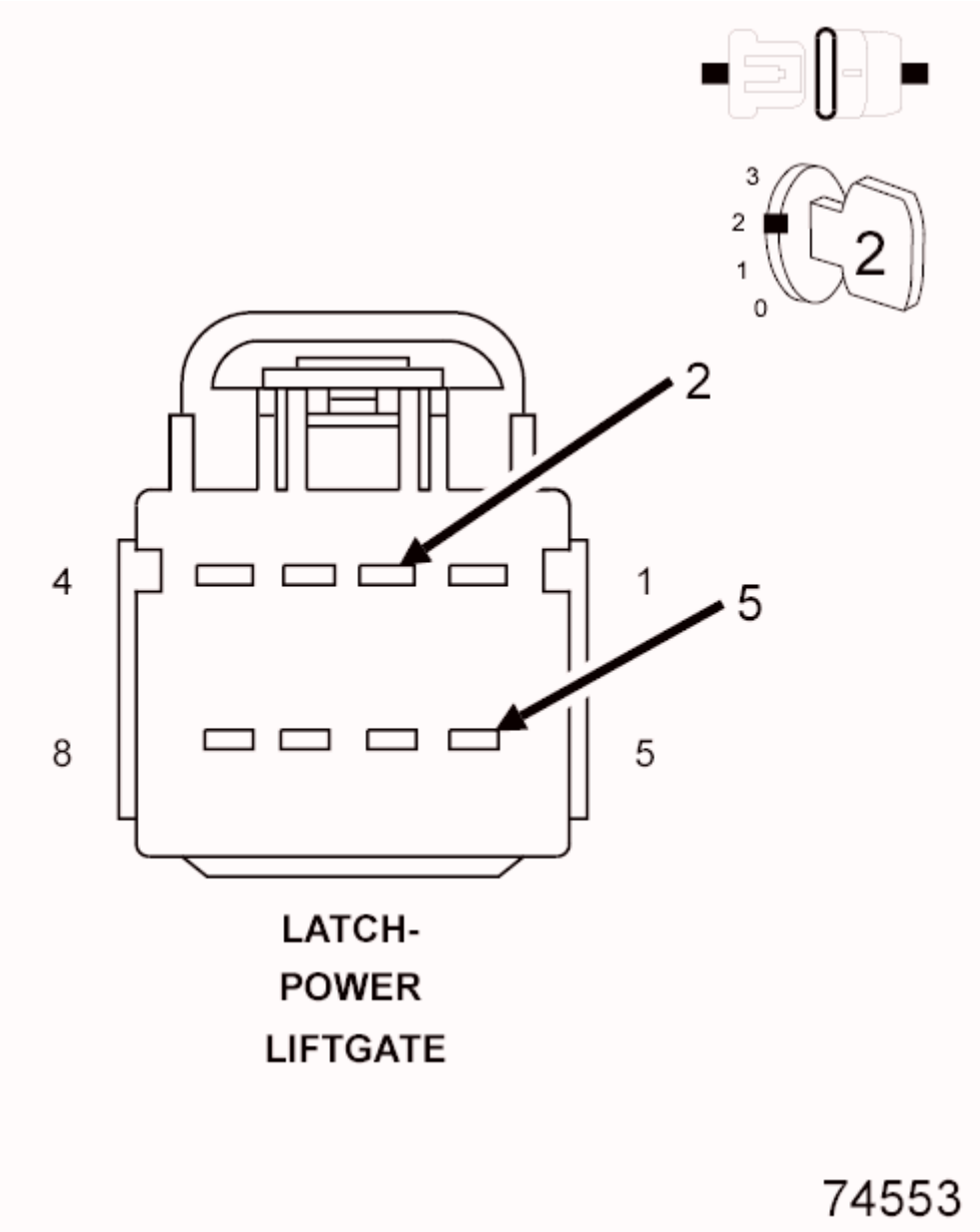

Fig. 123: Power Liftgate Latch Connector End View
Courtesy of CHRYSLER GROUP, LLC

1. Disconnect the Power Liftgate Latch harness connector.
2. With the scan tool, monitor the Sector Gear Switch Closed.

3. Connect a jumper wire between the (Q79) Sector Switch Sense circuit and the (Q901) Logic Ground circuit.
4. Repeat the previous step several times by disconnecting and connecting the jumper while observing the scan tool.

   Did the scan tool show the switch state changing correctly every time the jumper was connected and disconnected?

   Yes

   - Replace the Power Liftgate Latch in accordance with the service information and using the scan tool, run the power liftgate "Latch Home Sector Test" procedure. Refer to **LATCH, LIFTGATE, REMOVAL** .
   - Perform the BODY VERIFICATION TEST. Refer to **STANDARD PROCEDURE** .

   No

   - Go To 5

5. **CHECK THE (Q901) LOGIC GROUND CIRCUIT FOR AN OPEN**

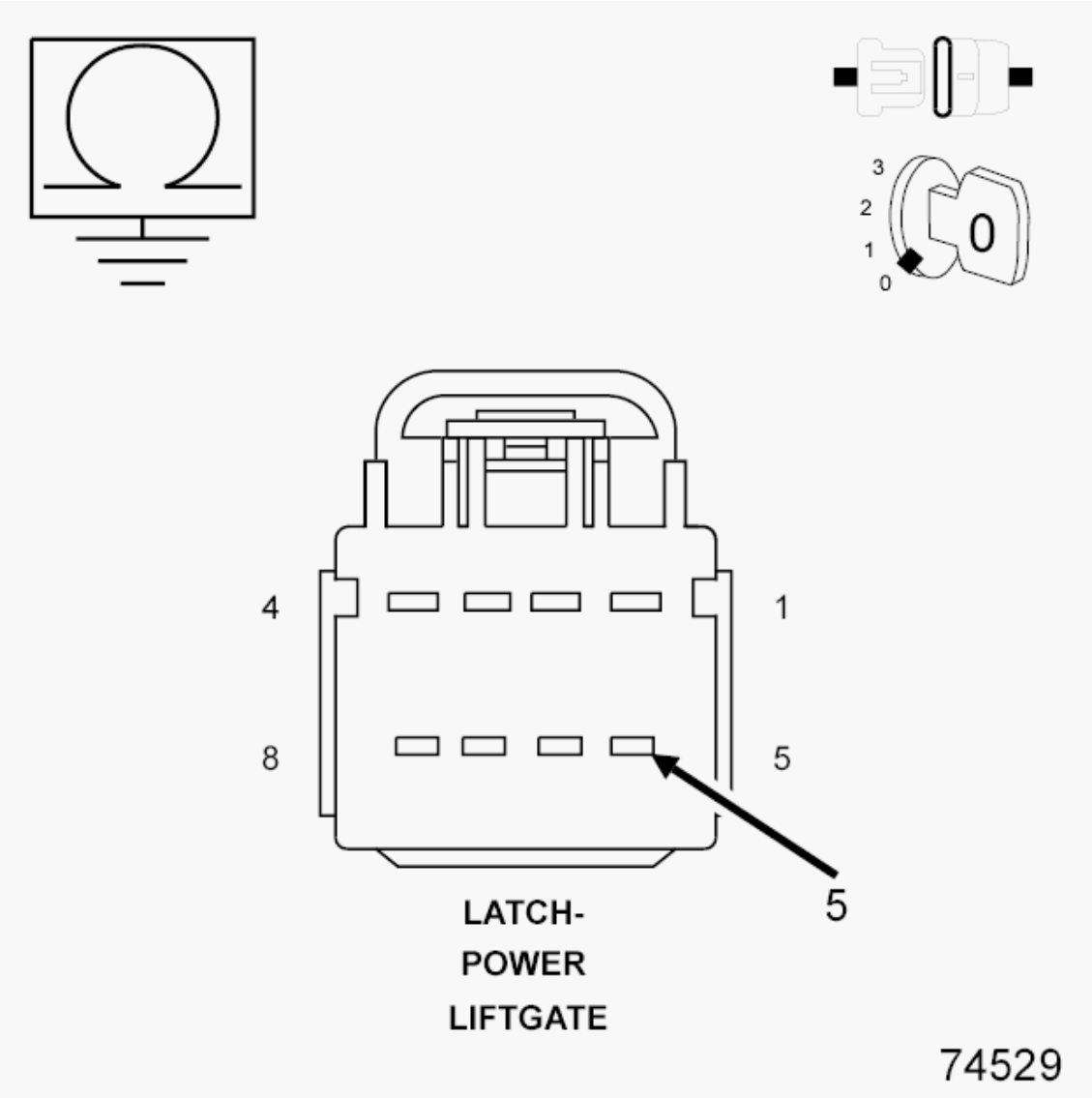

Fig. 124: Checking Logic Ground Circuit For An Open
Courtesy of CHRYSLER GROUP, LLC

1. Turn the ignition off.
2. Turn all lights off.
3. Measure the resistance between ground and the (Q901) Logic Ground circuit.
4. Wiggle the harness while observing the ohmmeter.

   Is the resistance below 9.5 Ohms?

   Yes

   - Go To 5

No

- Repair the (Q901) Logic Ground circuit for an open.
- Perform the BODY VERIFICATION TEST. Refer to **STANDARD PROCEDURE** .

6. **CHECK THE (Q79) SECTOR SWITCH SENSE CIRCUIT FOR A SHORT TO GROUND**

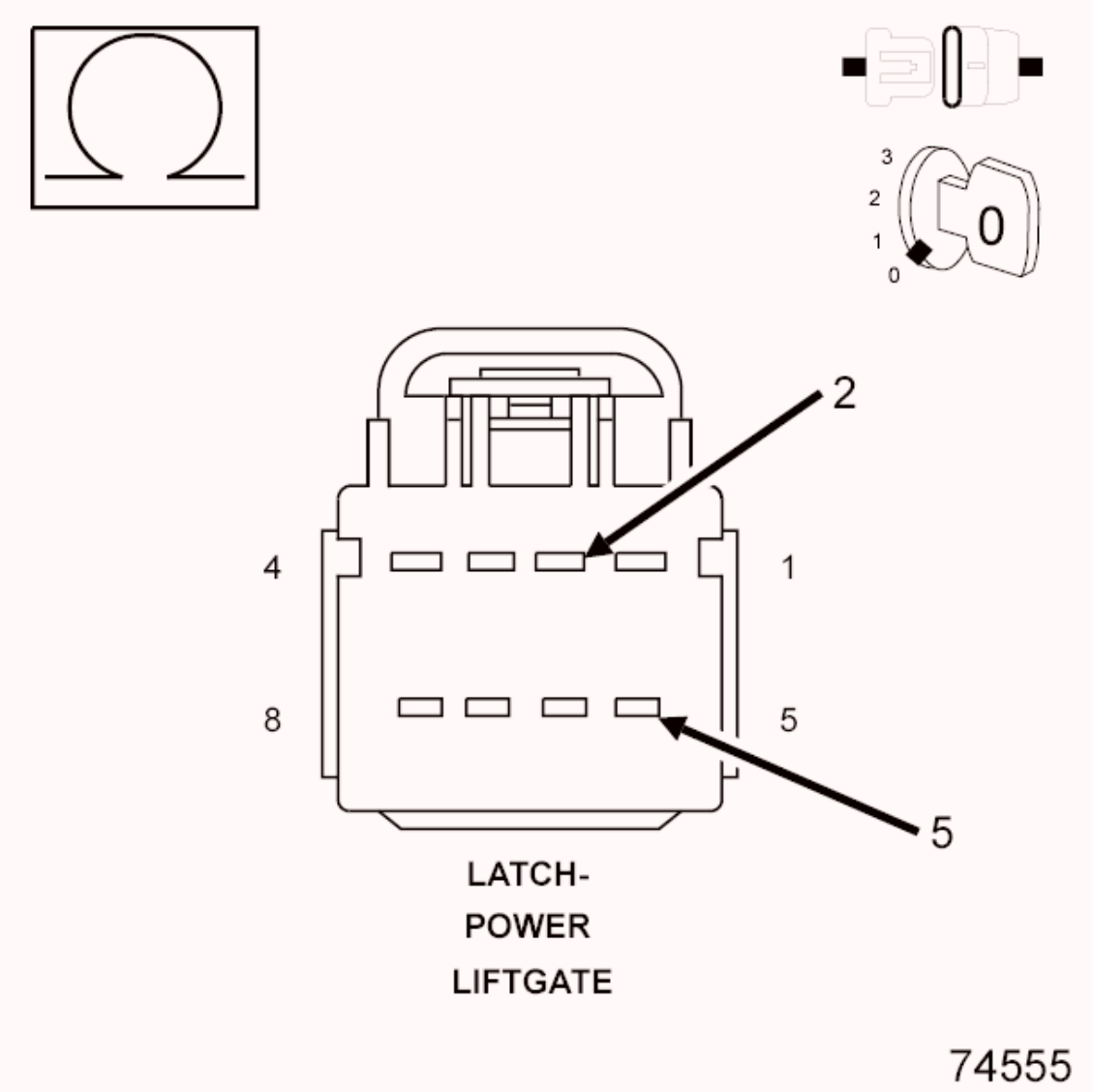

Fig. 125: Checking Sector Switch Sense Circuit For A Short To Ground
Courtesy of CHRYSLER GROUP, LLC

1. Measure the resistance between the (Q901) Sensor Ground circuit and the (Q79) Sector Switch Sense circuit in the Liftgate Latch connector.
2. Wiggle the harness while observing the ohmmeter.

   Is the resistance below 100.0 Ohms?

Yes

- Go To 7

No

- Go To 11

7. **CHECK THE (Q79) SECTOR SWITCH SENSE CIRCUIT FOR AN OPEN**

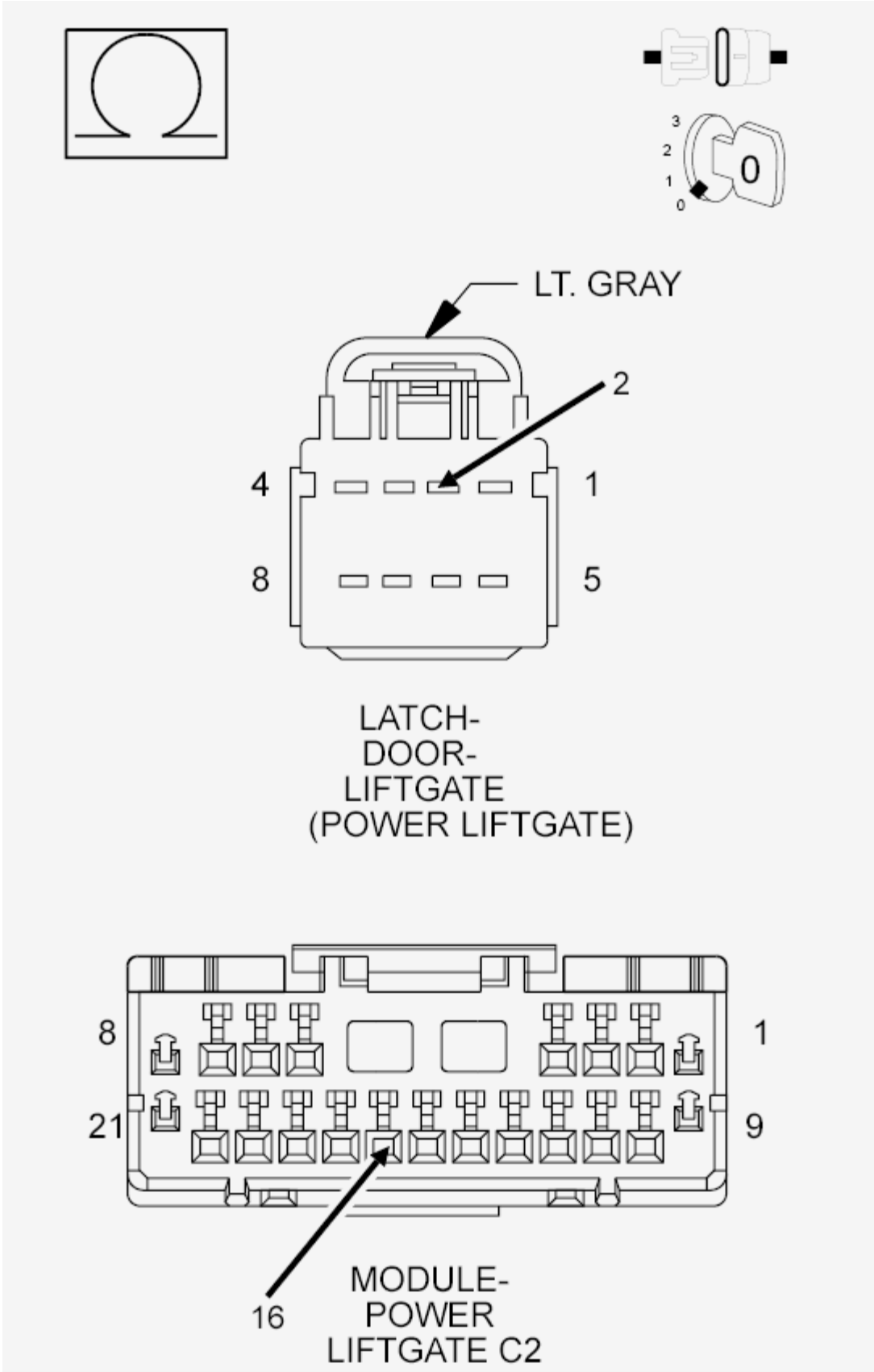
3
2
1
0
0
LT. GRAY
2
4
1
8
5
LATCH-
DOOR-
LIFTGATE
(POWER LIFTGATE)
8
1
21
9
16
MODULE-
POWER
LIFTGATE C2

Fig. 126: Checking Sector Switch Sense Circuit For An Open
Courtesy of CHRYSLER GROUP, LLC

1. Disconnect the Power Liftgate Module C2 harness connector.
2. Measure the resistance of the (Q79) Sector Switch Sense circuit between the Power Liftgate C2 harness connector and the Power Liftgate Latch harness connector.
3. Wiggle the harness while observing the ohmmeter.

   Is the resistance below 1.0 Ohm?

   Yes

   - Go To 8

   No

   - Repair the (Q79) Sector Switch Sense circuit for an open.
   - Perform the BODY VERIFICATION TEST. Refer to **STANDARD PROCEDURE** .

8. **CHECK THE (Q79) SECTOR SWITCH SENSE CIRCUIT FOR A SHORT TO VOLTAGE**

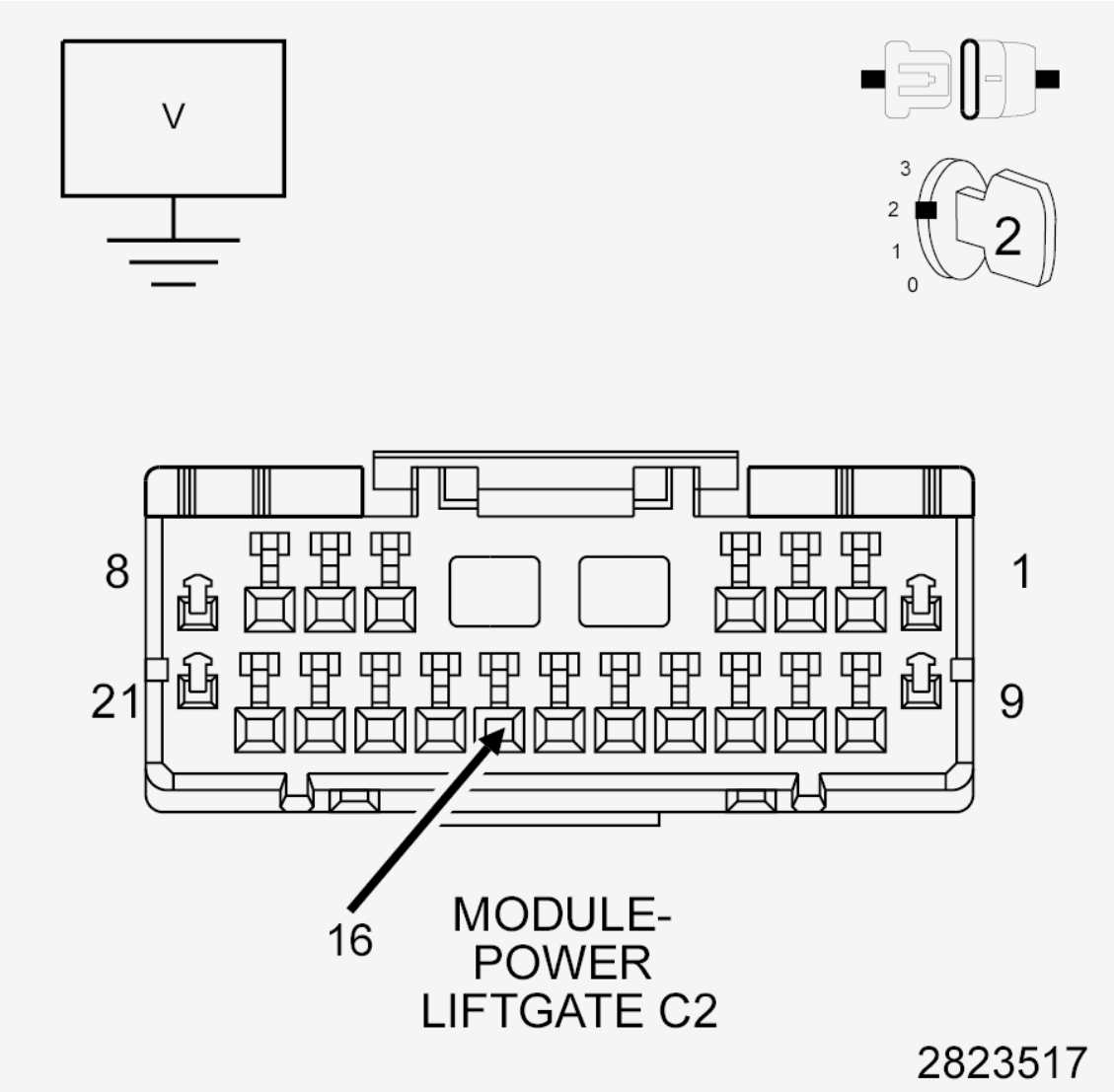

Fig. 127: Checking Sector Switch Sense Circuit For A Short To Voltage
Courtesy of CHRYSLER GROUP, LLC

1. Turn the ignition on.
2. Measure the voltage of the (Q79) Sector Switch Sense circuit.
3. Wiggle the harness while observing the voltmeter.

   Is there any voltage present?

   Yes

   - Repair the (Q79) Sector Switch Sense circuit for a short to voltage.
   - Perform the BODY VERIFICATION TEST. Refer to **STANDARD PROCEDURE** .

   No

- Replace the Power Liftgate Module in accordance with service information. Refer to **MODULE, POWER LIFTGATE CONTROL, REMOVAL** .
- Perform the BODY VERIFICATION TEST. Refer to **STANDARD PROCEDURE** .

9. **ADJUST LATCH TO HOME POSITION**
   1. With the scan tool run the "Latch Home Sector Test".

      NOTE: This test will try to adjust the sector gear to the Home Position.

   2. With the scan tool in Inputs/Outputs, read the "Sector Gear Switch Closed" state.

      Does the scan tool display: NO?

      Yes

      - Repair complete. The latch was not in the Home position.
      - Perform the BODY VERIFICATION TEST. Refer to **STANDARD PROCEDURE** .

      No

      - Go To 10

10. **CHECK THE (Q79) SECTOR SWITCH SENSE CIRCUIT FOR A SHORT TO THE (Q901) LOGIC GROUND CIRCUIT**

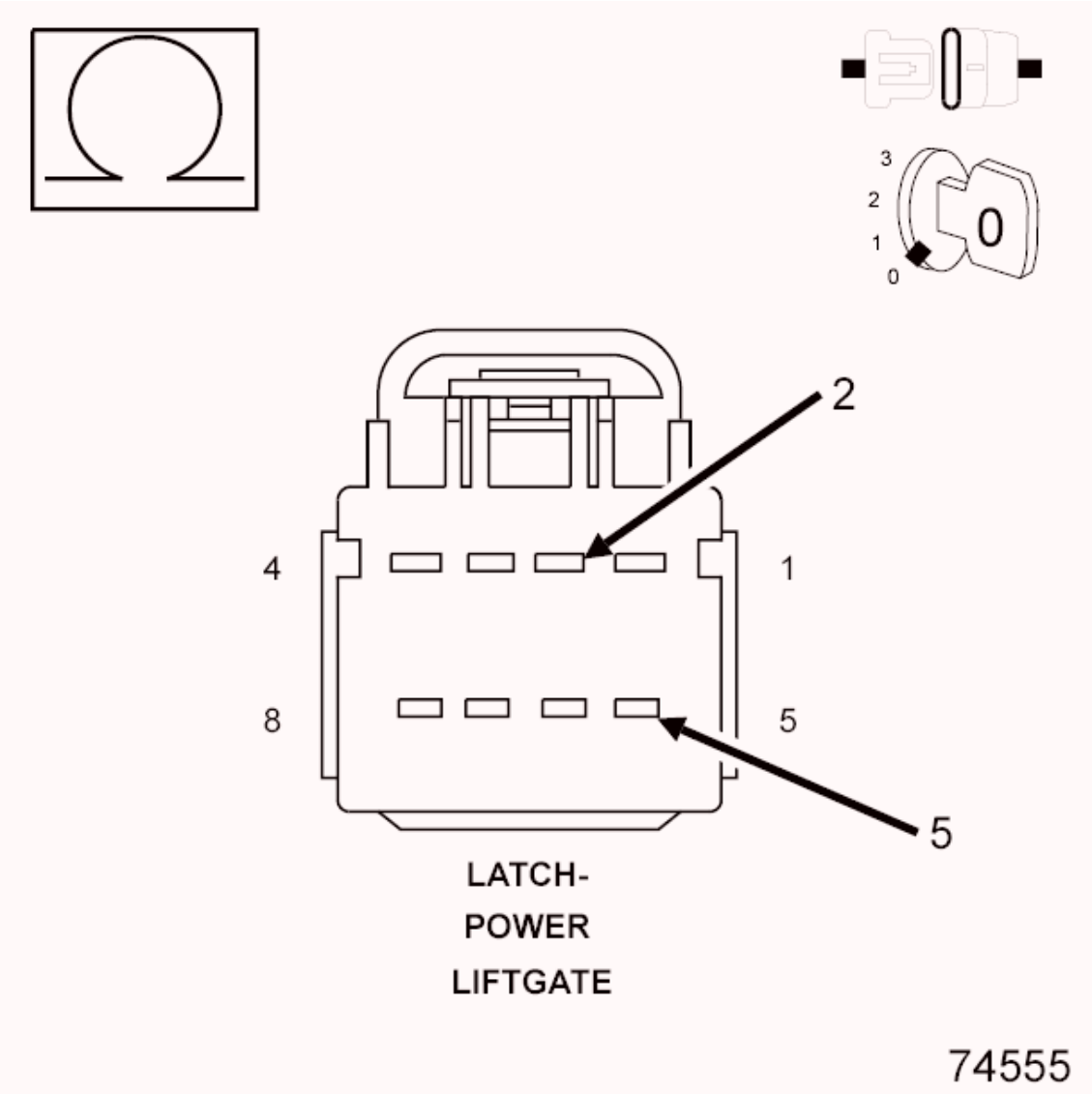

Fig. 128: Checking Sector Switch Sense Circuit For A Short To Ground
Courtesy of CHRYSLER GROUP, LLC

1. Disconnect the Power Liftgate Latch harness connector.
2. Measure the resistance between the (Q901) Logic Ground circuit and the (Q79) Sector Switch Sense circuit in the Power Liftgate Latch connector.
3. Wiggle the harness while observing the ohmmeter.

   Is the resistance below 1000.0 Ohms?

   Yes

   - Go To 11

   No

- Replace the Power Liftgate Latch assembly in accordance with the Service Information and using the scan tool, run the power liftgate "Latch Home Sector Test" procedure. Refer to **LATCH, LIFTGATE, REMOVAL** .
- Perform the BODY VERIFICATION TEST. Refer to **STANDARD PROCEDURE** .

11. **CHECK THE (Q79) SECTOR SWITCH SENSE CIRCUIT FOR A SHORT TO GROUND**

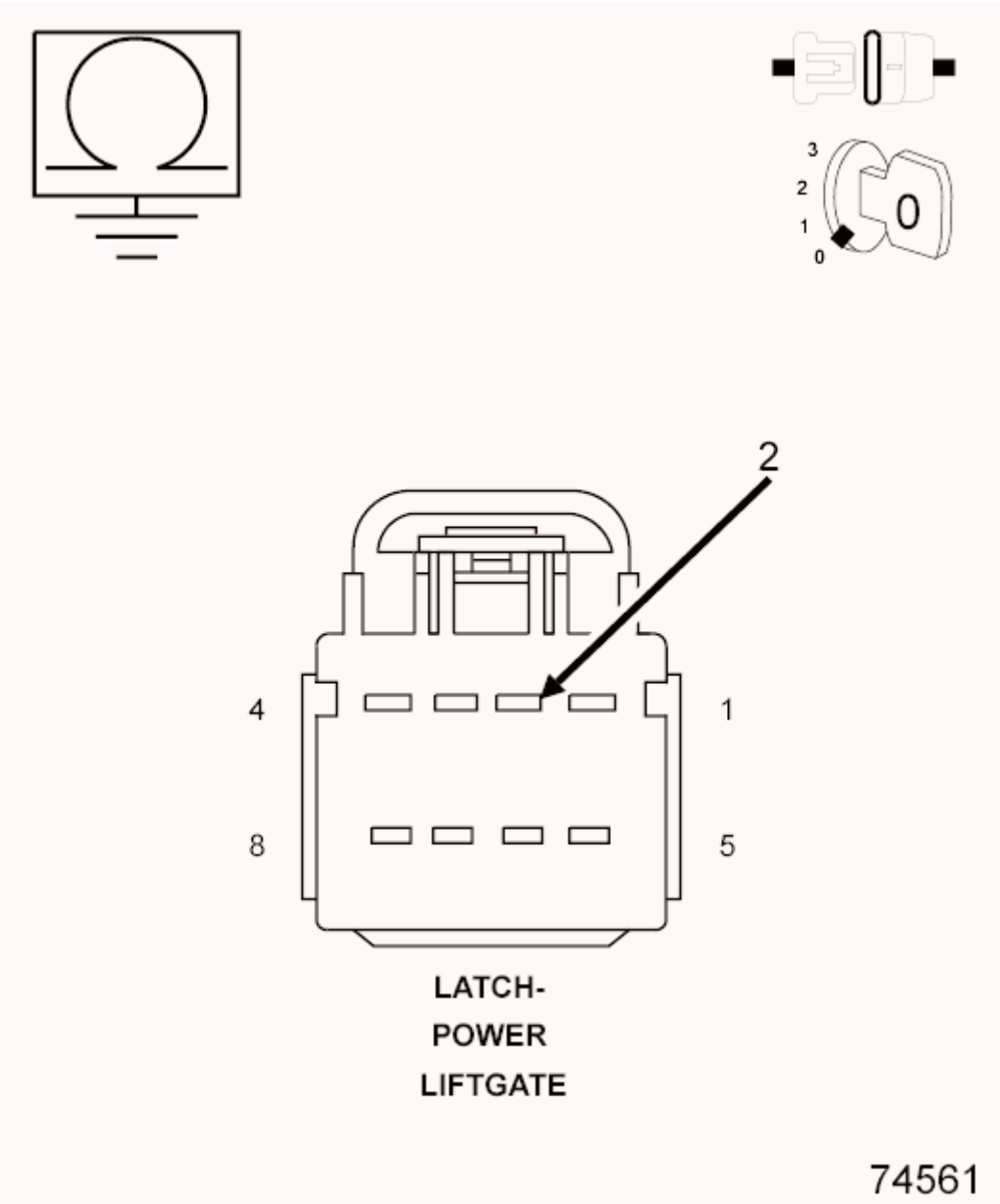

Fig. 129: Checking Sector Switch Sense Circuit For A Short To Ground
Courtesy of CHRYSLER GROUP, LLC

1. Disconnect the Power Liftgate Module C2 harness connector.
2. Measure the resistance between ground and the (Q79) Sector Switch Sense circuit.

3. Wiggle the harness while observing the ohmmeter.

   Is the resistance below 1K Ohms?

   Yes

   - Repair the (Q79) Sector Switch Sense wire for a short to ground.
   - Perform the BODY VERIFICATION TEST. Refer to **STANDARD PROCEDURE** .

   No

   - Replace the Power Liftgate Module in accordance with service information. Refer to **MODULE, POWER LIFTGATE CONTROL, REMOVAL** .
   - Perform the BODY VERIFICATION TEST. Refer to **STANDARD PROCEDURE** .

U0010-00-CAN INTERIOR BUS

For a complete wiring diagram, **refer to appropriate SYSTEM WIRING DIAGRAMS article** .

WHEN MONITORED

With the ignition on.

SET CONDITION

The Integrated Center Stack (ICS) detects that the CAN IHS Bus has been off for more than five seconds when activity was expected.

POSSIBLE CAUSES

Possible Causes
CAN IHS BUS (125K) (+) CIRCUIT SHORTED TO GROUND
CAN IHS BUS (125K) (-) CIRCUIT SHORTED TO VOLTAGE
CAN IHS BUS (125K) (+) CIRCUIT SHORTED TO THE CAN IHS BUS (125K) (-) CIRCUIT
ANY CAN IHS BUS MODULE
INTEGRATED CENTER STACK (ICS)

DIAGNOSTIC TEST

VERIFY IF THE DTC IS ACTIVE

1. Cycle the ignition on.
2. With the scan tool, read the active DTCs.

   Does the scan tool display this DTC as Active?

Yes

- Refer to the **DTC INDEX** article and perform the U0010-00 CAN INTERIOR BUS diagnostic procedure.

No

- Refer to **DIAGNOSIS AND TESTING** and perform the STORED LOST COMMUNICATION DTCs diagnostic procedure.

U0011-00-CAN INTERIOR BUS OFF PERFORMANCE

For a complete wiring diagram, **refer to appropriate SYSTEM WIRING DIAGRAMS article** .

WHEN MONITORED

With the ignition on.

SET CONDITION

The Body Control Module (BCM) detects a short condition in one of the CAN IHS Bus (125K) circuits for less than one second.

POSSIBLE CAUSES

Possible Causes
CAN IHS BUS (125K) (+) CIRCUIT SHORTED TO GROUND
CAN IHS BUS (125K) (-) CIRCUIT SHORTED TO VOLTAGE
CAN IHS BUS (125K) (+) CIRCUIT SHORTED TO THE CAN IHS BUS (125K) (-) CIRCUIT
ANY CAN IHS BUS MODULE
BODY CONTROL MODULE (BCM)

DIAGNOSTIC TEST

1. **TEST FOR INTERMITTENT CONDITION**
    1. Turn the ignition on.
    2. With the scan tool, record and erase DTCs.
    3. Cycle the ignition from on to off three times.
    4. Turn the ignition on and wait 10 seconds.
    5. With the scan tool, read active DTCs.

    Does the scan tool display this DTC as active?

    Yes

- Go To 2

No

- Test complete. The condition or conditions that originally set this DTC are not present at this time. Using the wiring diagrams as a guide, check all related splices and connectors for signs of water intrusion, corrosion, pushed out or bent terminals and correct pin tension.
- Perform the BODY VERIFICATION TEST. Refer to **STANDARD PROCEDURE** .

2. **CHECK THE CAN IHS BUS CIRCUITS FOR THE CAN IHS BUS (125K) MODULES**

NOTE: When performing this step, turn the ignition off (wait one minute) before disconnecting any module. When the module is disconnected turn the ignition on.

NOTE: This step is to determine if the fault is a module or the circuits between the module and the Star Connector.

1. While monitoring the scan tool, disconnect each CAN IHS Bus (125K) module at the Front CAN IHS Star Connector (except for the BCM and DLC), one at a time.
2. Check for this DTC to become stored after disconnecting each CAN IHS Bus (125K) module the vehicle is equipped with.

NOTE: If the DTC becomes stored when a particular module is disconnected, that module or related circuits are causing the DTC to set.

With all the CAN IHS Bus modules disconnected at the Star Connector (except for BCM and DLC), does the scan tool display this DTC as active?

Yes

- Go To 3

No

- Diagnose the wiring and connectors between the Front CAN IHS Star Connector and the module that when disconnected caused this DTC to become stored for damage or shorted circuits. If OK, replace the module that when disconnected caused this DTC to become stored in accordance with the Service Information.
- Perform the BODY VERIFICATION TEST. Refer to **STANDARD PROCEDURE** .

3. **CHECK THE CAN IHS BUS (125K) (-) CIRCUIT FOR A SHORT TO VOLTAGE**
   1. Turn the ignition off.
   2. Disconnect the scan tool.
   3. Disconnect the Front CAN IHS Star Connector for the DLC.

4. Turn the ignition on.
5. Measure the voltage between ground and the CAN IHS Bus (125K) (-) circuit.

   Is there any voltage present?

   Yes

   - Repair the short to voltage in the CAN IHS Bus (-) circuit.
   - Perform the BODY VERIFICATION TEST. Refer to **STANDARD PROCEDURE** .

   No

   - Go To 4

4. **CHECK THE CAN IHS BUS (125K) (+) CIRCUIT FOR A SHORT TO GROUND**
   1. Turn the ignition off.
   2. Measure the resistance between ground and the CAN IHS Bus (125K) (+) circuit.

      Is the resistance above 10k Ohms?

      Yes

      - Go To 5

      No

      - Repair the short to ground in the CAN IHS Bus (125K) (+) circuit.
      - Perform the BODY VERIFICATION TEST. Refer to **STANDARD PROCEDURE** .

5. **CHECK FOR A SHORT BETWEEN THE CAN IHS BUS (125K) (+) CIRCUIT AND CAN IHS BUS (125K) (-) CIRCUIT**
   1. Measure the resistance between the CAN IHS Bus (125K) (-) and the CAN IHS Bus (125K) (+) circuits.

      Is the resistance above 10k Ohms?

      Yes

      - Go To 6

      No

      - Repair the short between the CAN IHS Bus (125K) (+) circuit and the CAN IHS Bus (125K) (-) circuit.
      - Perform the BODY VERIFICATION TEST. Refer to **STANDARD PROCEDURE** .

6. **CHECK THE CAN IHS BUS CIRCUITS FOR A BCM CONCERN**
    1. Disconnect the Front CAN IHS Star Connector for the BCM.
    2. Reconnect all other connectors.
    3. Cycle the ignition from on to off three times.
    4. Turn the ignition on and wait 10 seconds.
    5. With the scan tool, read all DTCs.

    Do any modules on the CAN IHS BUS (125K) display this DTC or U0010-00-CAN INTERIOR BUS as active?

    Yes

    - Reconnect all the connectors and retest. If the concern is still present, replace the Star Connector.
    - Perform the BODY VERIFICATION TEST. Refer to **STANDARD PROCEDURE** .

    No

    - Diagnose the wiring and connectors between the Front CAN IHS Star Connector and the BCM. If OK, replace the Body Control Module (BCM) in accordance with the Service Information. Refer to **MODULE, BODY CONTROL, REMOVAL** .
    - Perform the BODY VERIFICATION TEST. Refer to **STANDARD PROCEDURE** .

U0140-00-LOST COMMUNICATION WITH BODY CONTROL MODULE

For a complete wiring diagram, **refer to appropriate SYSTEM WIRING DIAGRAMS article** .

WHEN MONITORED

Continuously when the ignition is on.

The battery voltage between 10.0 and 16.0 Volts.

Body Control Module (BCM) is configured correctly.

SET CONDITION

Bus messages not received from the Body Control Module (BCM) for approximately two to five seconds.

POSSIBLE CAUSES

Possible Causes
CAN BUS CIRCUITS OPEN OR SHORTED
DTCS RELATED TO BATTERY VOLTAGE, IGNITION, OR VIN MESSAGES

BODY CONTROL MODULE POWER AND GROUND
BCM NOT CONFIGURED CORRECTLY
BODY CONTROL MODULE (BCM)
MODULE THAT SET THIS DTC

DIAGNOSTIC TEST

VERIFY DTC IS ACTIVE

1. Cycle the ignition on.
2. With the scan tool, read the active DTCs.

   Does the scan tool display; U0140-00-LOST COMMUNICATION WITH BODY CONTROL MODULE as active?

   Yes

   - Refer to the **DTC INDEX** article and perform the U0140-LOST COMMUNICATION WITH BODY CONTROL MODULE diagnostic procedure.

   No

   - Refer to **DIAGNOSIS AND TESTING** and perform the STORED LOST COMMUNICATION DTCs diagnostic procedure.

U0422-00-IMPLAUSIBLE DATA RECEIVED FROM BODY CONTROL MODULE

For a complete wiring diagram, **refer to appropriate SYSTEM WIRING DIAGRAMS article** .

WHEN MONITORED

With the ignition on and the vehicle in reverse.

SET CONDITION

Ambient Temperature data not received from the Body Control Module (BCM).

POSSIBLE CAUSES

Possible Causes
NO COMMUNICATION WITH THE BODY CONTROL MODULE (BCM)
DTCS STORED OR ACTIVE IN THE BCM
POWER LIFTGATE MODULE

Always perform the Pre-Diagnostic Troubleshooting procedure before proceeding. Refer to

COMMUNICATION PRE-DIAGNOSTIC PROCEDURE .

DIAGNOSTIC TEST

1. **CHECK FOR AN ACTIVE DIAGNOSTIC TROUBLE CODE (DTC)**
    1. Cycle the ignition on.
    2. With the scan tool, read Power Liftgate Module DTCs.

    Does the scan tool display this DTC as active?

    Yes

    - Go To 2

    No

    - The condition that caused this code to set is not present at this time. Check for an intermittent condition by inspecting the related wiring harness for chafed, pierced, pinched, and partially broken wires. Also inspect the related connectors for broken, bent, pushed out, spread, corroded, or contaminated terminals.
    - Perform the BODY VERIFICATION TEST. Refer to **STANDARD PROCEDURE** .
2. **VERIFY BCM IS ACTIVE ON THE CAN BUS**
    1. With the scan tool, select ECU View.
    2. Verify that the BCM is active on the bus.

    Is the BCM active on the bus?

    Yes

    - Go To 3

    No

    - Refer to **DIAGNOSIS AND TESTING** and perform the NO RESPONSE FROM BCM diagnostic procedure.
    - Perform the BODY VERIFICATION TEST. Refer to **STANDARD PROCEDURE** .
3. **DTCS STORED OR ACTIVE IN THE BCM**
    1. With the scan tool, read BCM DTCs.

    Are any DTCs active or stored in the BCM?

    Yes

    - Refer to the **DTC INDEX** article and perform the appropriate diagnostic procedure.

No

- Replace and program the Power Liftgate Module in accordance with the Service Information. Refer to **MODULE, POWER LIFTGATE CONTROL, REMOVAL** .
- Perform the BODY VERIFICATION TEST. Refer to **STANDARD PROCEDURE** .

2014 ACCESSORIES AND EQUIPMENT

Power Locks - Service Information - Cherokee

DESCRIPTION

DESCRIPTION

A power operated door lock system is available factory-installed equipment on this vehicle. The power lock system allows all of the doors to be locked or unlocked electrically. Locking or unlocking the vehicle using the power lock system can be accomplished by up to three different methods:

- **Power Lock System** - Operating a power lock system switch on either front door inside trim panel will lock or unlock the latches of all four doors. Operating the power liftgate switch on the front overhead console will unlatch and open the liftgate. Operating a fuel door release switch on the driver side front door trim panel will unlatch the fuel filler door in the right quarter outside panel.
- **Remote Keyless Entry System** - Depressing the **Lock** or **Unlock** button of the optional Remote Keyless Entry (RKE) system transmitter (also known as the FOB with Integrated Key/FOBIK) can also be used to lock or unlock the latches of the doors. Depressing the **Liftgate Release** button of the RKE transmitter two times will unlatch the liftgate. The specific locks operated and the number of FOBIK button presses required varies depending upon the Customer Programmable settings chosen by the vehicle operator.
- **Passive Entry System** - On vehicles with the optional Passive Entry Keyless Go (PEKG) system, contacting the capacitive **Unlock** switch on the inside of either exterior front door Smart handle pull or depressing the tactile **Lock** button of either front door Smart handle while a valid FOBIK is identified in that same zone can be used to lock or unlock the doors. Also depressing the tactile electronic liftgate handle while a valid FOBIK is identified in that same zone can be used to unlatch the deck lid. The specific locks operated varies depending upon the Customer Programmable settings chosen by the vehicle operator.

Additional details of each of these subsystems and their components can be found in the subheadings and paragraphs that follow.

PASSIVE ENTRY SYSTEM

A Passive Entry Keyless Go (PEKG) system is available factory-installed equipment for this vehicle. The PEKG system allows the vehicle to be unlocked without the use of a mechanical key, as long as an authorized FOB with Integrated Key (FOBIK) is in the possession of the individual or in close proximity to the aperture of the vehicle that is to be unlocked. All other features and Customer Programmable feature settings of the power lock system and the Remote Keyless Entry (RKE) system function the same as they would on vehicles without the PEKG system option.

The PE system includes the following major components, which are described in further detail elsewhere in this service information:

- **Electronic Liftgate Latch Release Switch** - A tactile liftgate release switch is located where you normally would find a mechanical latch mechanism.

- **Door Handle Switches** - Each PE door outside handle (also known as a Smart handle) is equipped with three switches and an Integrated Circuit (IC). A tactile **Lock** switch is located on the outer horizontal surface of each door handle pull, a capacitive **Unlock** switch membrane is located on the inner vertical surface of the handle pull, while a Hall effect switch and an IC are concealed within the handle pull unit.
- **Low Frequency Antennas** - The PE system includes four Low Frequency (LF) antennas, one mounted beneath the front of the center floor console, one on each rear door hardware module carrier concealed behind the inside trim panel, one in front of the left rear seat floor and one concealed behind the rear fascia at the rear of the vehicle.
- **Radio Frequency Hub Module** - The Radio Frequency Hub Module (RFHM) (also known as the RF Hub) is the Passive Entry Keyless Go (PEKG) system control module and RF receiver located in the rear cargo area headliner. Refer to **MODULE, RADIO FREQUENCY (RF HUB), DESCRIPTION** .

Hard wired circuitry connects many of the PE system components to the electrical system of the vehicle. These hard wired circuits are integral to several wire harnesses, which are routed throughout the vehicle and retained by many different methods. These circuits may be connected to each other, to the vehicle electrical system and to the PE system components through the use of a combination of soldered splices, splice block connectors, and many different types of wire harness terminal connectors and insulators. Refer to the appropriate wiring information. The wiring information includes wiring diagrams, proper wire and connector repair procedures, further details on wire harness routing and retention, as well as pin-out and location views for the various wire harness connectors, splices and grounds.

POWER LOCK SYSTEM

The power lock system includes the following major components, which are described in further detail elsewhere in this service information:

- **Body Control Module** - The Body Control Module (BCM) is located beneath the instrument panel on the driver side of the vehicle. Refer to **MODULE, BODY CONTROL, DESCRIPTION** .
- **Electronic Vehicle Information Center** - The Electronic Vehicle Information Center (EVIC) includes the EVIC switches and the U-Connect Touch™ screen module in the Integrated Center Stack (ICS) located in the center stack area of the instrument panel. Refer to **CENTER, ELECTRONIC VEHICLE INFORMATION, DESCRIPTION** .
- **Fuel Door Release Switch** - A switch in the map pocket on the driver side front door inside trim panel will unlatch the fuel filler door in the right outside quarter panel.
- **Power Lock Motors** - A reversible electric power lock motor is integral to the latch of each front and rear door and the liftgate.
- **Power Lock Switches** - A power lock switch is integral to the switch module located on the forward end of the arm rest of each front door inside trim panel.

These components and their controls are combined to provide the following power lock system central locking and unlocking features:

- **Automatic Door Locking** - Automatic door locking (also known as rolling door locks) automatically locks any unlocked door when the vehicle speed exceeds about 25.7 kilometers per hour (15 miles per hour). This is a Customer Programmable feature.

- **Automatic Door Unlocking** - Automatic door unlocking (also known as automatic unlock doors on exit) automatically unlocks the doors after they were automatically locked when the vehicle speed exceeded about 25.7 kilometers per hour (15 miles per hour), the vehicle speed has returned to zero, the transmission shift lever is in the **Neutral** or **Park** positions and the driver side front door is opened. This is a Customer Programmable feature.
- **Customer Programmable Features** - The vehicle operator interfaces with the BCM, which is the power lock system controller, using the EVIC. EVIC switches allow the vehicle operator to set or change the power lock system Customer Programmable Features through the EVIC display.
- **Door Lock Inhibit** - Prevents locking the doors using a power door lock switch or the **Lock** button of the Remote Keyless Entry (RKE) system transmitter (also known as the FOB with Integrated Key/FOBIK) if the key is in the ignition and the driver side front door is open.
- **Enhanced Accident Response System** - In the event of a vehicle impact that causes airbag deployment but leaves vehicle electrical power intact, the Enhanced Accident Response System (EARS) automatically turns OFF the supply of fuel to the engine, turns ON the interior courtesy lamps, turns ON the hazard warning flashers and unlocks the doors after the vehicle speed has returned to zero. This helps emergency responders in their efforts to render the appropriate assistance. The courtesy lamps and hazard flashers remain ON as long as the battery has power or until the key is removed from the ignition.
- **Illuminated Entry** - Automatic illumination of the interior courtesy lamps when the vehicle is unlocked using the power lock system.

Hard wired circuitry connects the power lock system components to the electrical system of the vehicle. These hard wired circuits are integral to several wire harnesses, which are routed throughout the vehicle and retained by many different methods. These circuits may be connected to each other, to the vehicle electrical system and to the power lock system components through the use of a combination of soldered splices, splice block connectors, and many different types of wire harness terminal connectors and insulators. Refer to the appropriate wiring information. The wiring information includes wiring diagrams, proper wire and connector repair procedures, further details on wire harness routing and retention, as well as pin-out and location views for the various wire harness connectors, splices and grounds.

REMOTE KEYLESS ENTRY SYSTEM

The Remote Keyless Entry (RKE) system is available factory-installed equipment on this vehicle. The RKE system includes the following major components, which are described in further detail elsewhere in this service information:

- **Electronic Vehicle Information Center** - The Electronic Vehicle Information Center (EVIC) is a digital display integral to the Instrument Cluster (IC) (also known as the Instrument Panel Cluster/IPC). The EVIC includes the EVIC switch pod in the right horizontal spoke of the steering wheel. Refer to **CENTER, ELECTRONIC VEHICLE INFORMATION, DESCRIPTION** .
- **Radio Frequency Hub Module** - The Radio Frequency Hub Module (RFHM) (also known as the RF Hub) is the RKE system control module and RF receiver located up in the rear cargo headliner. Refer to **MODULE, RADIO FREQUENCY (RF HUB), DESCRIPTION** .
- **Remote Keyless Entry System Transmitter** - The RKE system transmitter (also known as the FOB with Integrated Key/FOBIK) is the battery powered, wireless and portable Radio Frequency (RF) user controller for all of the features of the RKE system.

These components and their controls are combined to provide the following RKE system features:

- **Customer Programmable Features** - The vehicle operator interfaces with the RFHM, which is the RKE system controller, using the EVIC. EVIC switches allow the vehicle operator to set or change the RKE system Customer Programmable Features through the EVIC display.
- **Flash Lights With Lock And Unlock** - This is a Customer Programmable feature of the RKE system. The first option has the park lamps flash as an optical verification that the RKE system has received a valid **Lock** or **Unlock** request from the FOBIK. The second option disables the optical verification feature.
- **Panic Feature** - In certain markets the FOBIK may also be equipped with a red **Panic** button. Depressing the **Panic** button of the FOBIK while within transmitter range will sound the vehicle signal horn and flash the exterior lighting of the vehicle for about three minutes or until the **Panic** button is depressed a second time, whichever occurs first. Attaining a vehicle speed of about 25.7 kilometers per hour (15 miles per hour) will also cancel the Panic event.
- **Programming Additional Transmitters** - Two RKE transmitters are shipped with the vehicle from the factory, but the RKE system can retain the vehicle access codes of up to a total of eight transmitters. The transmitter codes are retained in the RKE system controller memory, even if the battery is disconnected. If a FOBIK is ineffective, lost or an additional FOBIK is desired, new transmitter vehicle access codes can be programmed into the system using a diagnostic scan tool.
- **Remote Liftgate Unlatching** - Depressing the **Liftgate Release** button of the FOBIK twice within 5 seconds while within transmitter range will unlatch and open the liftgate of the vehicle.
- **Remote Engine Start** - On vehicles equipped with the optional Remote Starting System, depressing the **Remote Start** button of the FOBIK twice while within transmitter range will lock all of the vehicle doors and start the engine of the vehicle.
- **Remote Locking** - Depressing the **Lock** button of the FOBIK while within transmitter range will lock all of the vehicle doors.
- **Remote Unlocking** - Depressing the **Unlock** button of the FOBIK while within transmitter range will unlock the vehicle and activate the Illuminated Entry System. The specific locks operated and the number of FOBIK button presses required varies depending upon the Customer Programmable settings chosen by the vehicle operator.
- **Remote Unlock Sequence** - This is a Customer Programmable feature of the RKE system. There are two options available. The first option allows only the driver side front door to unlock when the FOBIK **Unlock** button is depressed one time, and the remaining doors unlock when the button is depressed a second time within 5 seconds of the first press. The second option allows all doors to unlock upon a single press of the FOBIK **Unlock** button.
- **Sound Horn On Lock** - This is a Customer Programmable feature of the RKE system. There are two options available. The first option has the signal horn of the vehicle sound a short chirp as an audible verification that the RKE system received a valid **Lock** request from the FOBIK. The second option disables the audible verification feature.
- **Vehicle Theft Alarm Arming** - If the vehicle is equipped with the optional Vehicle Theft Alarm (VTA), depressing the **Lock** button of the FOBIK while within transmitter range will arm the VTA in addition to activating the remote locking feature.
- **Vehicle Theft Alarm Disarming** - If the vehicle is equipped with the optional Vehicle Theft Alarm (VTA), depressing the **Unlock** button of the FOBIK while within transmitter range will disarm the VTA in addition to activating the remote unlocking feature.

Hard wired circuitry connects many of the RKE system components to the electrical system of the vehicle. These hard wired circuits are integral to several wire harnesses, which are routed throughout the vehicle and retained by many different methods. These circuits may be connected to each other, to the vehicle electrical system and to the RKE system components through the use of a combination of soldered splices, splice block connectors, and many different types of wire harness terminal connectors and insulators. Refer to the appropriate wiring information. The wiring information includes wiring diagrams, proper wire and connector repair procedures, further details on wire harness routing and retention, as well as pin-out and location views for the various wire harness connectors, splices and grounds.

OPERATION

OPERATION

PASSIVE ENTRY SYSTEM

In the Passive Entry Keyless Go (PEKG) system the doors are unlocked passively; however, they must still be locked actively after exiting the vehicle using the tactile **Lock** button on either front door Smart handle. When the system senses a hand approaching the capacitive switch in the door Smart handle pull or detects a button press of the liftgate release switch, it sends out challenge messages through the Low Frequency (LF) antennas to authenticate the presence and location of a valid FOB with Integrated Key (FOBIK).

The FOBIK responds by sending a Very High Frequency (VHF) message back to the receiver within the Radio Frequency Hub Module (RFHM) (also known as the RF Hub). If the RFHM determines the FOBIK is valid and that it is located outside the vehicle in the same zone or vicinity as the door handle or liftgate switch being activated, it sends an electronic **Unlock Request** message over the Controller Area Network (CAN) data bus to the Body Control Module (BCM) to automatically unlock and allow entry to that aperture.

The PEKG system circuits and FOBIK inputs are continually monitored by the microprocessor and software contained within the RFHM. When the RFHM monitors a problem in any of the PEKG system circuits or FOBIK inputs, it stores a Diagnostic Trouble Code (DTC) in its memory circuit. The hard wired circuits between components related to the PEKG system may be diagnosed using conventional diagnostic tools and procedures. Refer to the appropriate wiring information. The wiring information includes wiring diagrams, proper wire and connector repair procedures, details of wire harness routing and retention, connector pin-out information and location views for the various wire harness connectors, splices and grounds.

However, conventional diagnostic methods will not prove conclusive in the diagnosis of the PEKG system or the electronic controls or communication between other modules and devices that provide features of the PEKG system. The most reliable, efficient, and accurate means to diagnose the PEKG system or the electronic controls and communication related to PEKG system operation, as well as the retrieval or erasure of a DTC requires the use of a diagnostic scan tool. Refer to the appropriate diagnostic information.

POWER LOCK SYSTEM

The power lock system uses non-switched battery current received through a fused B(+) fuse in the Body Control Module (BCM) so that the system remains operational regardless of the status of the ignition switch. The BCM is the primary power lock system controller. On vehicles equipped with a Drivers Door Module (DDM), the power lock switches are hard wired direct to the DDM. The DDM then sends the switch status via

CAN to the BCM. For those vehicles equipped with a Smart Motor instead of the DDM, the power door lock switches are hardwired directly to the BCM. The BCM, DDM and PDM all communicate with each other and with other electronic modules in the vehicle over the Controller Area Network (CAN) data bus.

When the BCM receives an input from a door module or from a switch on a Smart motor system, it responds to these request messages by providing the appropriate outputs to each of the power lock motors to lock or unlock each of the door latches. The BCM also monitors a hard wired input from the power liftgate module and electronic message inputs indicating automatic transmission gear selector position and vehicle speed. The BCM uses all of these inputs and internal programming to determine whether or not to provide the output necessary to operate the liftgate latch release motor.

The BCM also stores the power lock system Customer Programmable feature settings received over the CAN data bus from the Electronic Vehicle Information Center (EVIC). The BCM uses these settings and internal programming along with hard wired and electronic message inputs to determine the proper outputs needed to produce each of the appropriate power lock system features.

The power lock system circuits are continually monitored and controlled by the microprocessor and software contained within the BCM. When the BCM monitors a problem in any of the power lock system circuits or components, it stores a fault code or Diagnostic Trouble Code (DTC) in its memory circuit. The hard wired circuits between components related to the power lock system may be diagnosed using conventional diagnostic tools and procedures. Refer to the appropriate wiring information. The wiring information includes wiring diagrams, proper wire and connector repair procedures, details of wire harness routing and retention, connector pin-out information and location views for the various wire harness connectors, splices and grounds.

However, conventional diagnostic methods will not prove conclusive in the diagnosis of the power lock system or the electronic controls or communication between other modules and devices that provide features of the power lock system. The most reliable, efficient, and accurate means to diagnose the power lock system or the electronic controls and communication related to power lock system operation, as well as the retrieval or erasure of a DTC requires the use of a diagnostic scan tool. Refer to the appropriate diagnostic information.

REMOTE KEYLESS ENTRY SYSTEM

The Remote Keyless Entry (RKE) system uses non-switched battery current received through a fused B(+) fuse in the Body Control Module (BCM) so that the system remains operational regardless of the ignition switch position. The Radio Frequency Hub Module (RFHM) (also known as the RF Hub) is the primary RKE system controller as well as the Radio Frequency (RF) RKE receiver. The RFHM validates the vehicle access code of each RKE transmitter (also known as FOB with Integrated Key/FOBIK) from which it receives RF signal inputs. It ignores requests from any transmitter for which it has no stored vehicle access code.

The RFHM communicates and shares resources with the BCM and many other electronic modules in the vehicle over the CAN data bus. The RFHM also stores the RKE system Customer Programmable feature settings received over the CAN data bus from the Electronic Vehicle Information Center (EVIC). When the RFHM receives an input from a valid transmitter source, it uses these settings and internal programming to send the appropriate electronic request messages to the BCM and other electronic modules over the CAN data bus to invoke the proper RKE system features and responses.

The RKE system circuits and transmitter inputs are continually monitored by the microprocessor and software

contained within the RFHM. When the RFHM monitors a problem in any of the RKE system circuits or transmitters, it stores a Diagnostic Trouble Code (DTC) in its memory circuit. The hard wired circuits between components related to the RKE system may be diagnosed using conventional diagnostic tools and procedures. Refer to the appropriate wiring information. The wiring information includes wiring diagrams, proper wire and connector repair procedures, details of wire harness routing and retention, connector pin-out information and location views for the various wire harness connectors, splices and grounds.

However, conventional diagnostic methods will not prove conclusive in the diagnosis of the RKE system or the electronic controls or communication between other modules and devices that provide features of the RKE system. The most reliable, efficient, and accurate means to diagnose the RKE system or the electronic controls and communication related to RKE system operation, as well as the retrieval or erasure of a DTC requires the use of a diagnostic scan tool. Refer to the appropriate diagnostic information.

DIAGNOSIS AND TESTING

DIAGNOSIS AND TESTING - POWER LOCK SYSTEMS

PASSIVE ENTRY SYSTEM

As a preliminary diagnosis for the Passive Entry Keyless Go (PEKG) system, first check using the Electronic Vehicle Information Center (EVIC) or with a diagnostic scan tool to be certain that this Customer Programmable feature is enabled. Next, confirm that the power lock system and the RKE system operate satisfactorily. If the power lock system or the RKE system fails to operate correctly, repair that problem before attempting to diagnose the PEKG system.

The most reliable, efficient, and accurate means to diagnose the PEKG system requires the use of a diagnostic scan tool and the appropriate diagnostic information. The diagnostic scan tool can provide confirmation that the CAN data bus is functional, that all of the proper electronic modules are sending and receiving the proper electronic messages over the CAN data bus, and that the Radio Frequency Hub Module (RFHM) (also known as the RF Hub) is sending the proper Radio Frequency (RF) signals to and receiving the proper RF signals from the RKE transmitters (also known as FOB with Integrated Key/FOBIK) to perform its PEKG system functions.

Refer to the appropriate wiring information. The wiring information includes wiring diagrams, proper wire and connector repair procedures, details of wire harness routing and retention, connector pin-out information and location views for the various wire harness connectors, splices and grounds.

POWER LOCK SYSTEM

Following are tests that may help to diagnose the hard wired components and circuits of the power lock system. However, these tests may not prove conclusive in the diagnosis of this system. In order to obtain conclusive testing of the power lock system, the Controller Area Network (CAN) data bus and all of the electronic modules that provide inputs to, or receive outputs from the power lock system components must also be tested.

The most reliable, efficient, and accurate means to diagnose the power lock system requires the use of a diagnostic scan tool and the appropriate diagnostic information. The diagnostic scan tool can provide confirmation that the CAN data bus is functional, that all of the proper electronic modules are sending and receiving the proper electronic messages over the CAN data bus, and that the power lock motors are receiving

the proper hard wired outputs from the Body Control Module (BCM) (also known as the Common Body Controller/CBC) for them to perform their power lock system functions.

Refer to the appropriate wiring information. The wiring information includes wiring diagrams, proper wire and connector repair procedures, details of wire harness routing and retention, connector pin-out information and location views for the various wire harness connectors, splices and grounds.

PRELIMINARY DIAGNOSIS

As a preliminary diagnosis for the power lock system, note the system operation while you actuate both the **Lock** and **Unlock** functions with the power lock switches and with the Remote Keyless Entry (RKE) transmitter (also known as the FOB with Integrated Key/FOBIK). Then, proceed as follows:

1. If the entire power lock system fails to function with either the power lock switches or the FOBIK, check the fused B(+) fuse for the power lock system.
2. If the power lock system functions with both power lock switches, but not with the FOBIK, proceed to diagnosis of the RKE system.
3. If the power lock system functions with the FOBIK, but not with one or both power lock switches, proceed to diagnosis of the door lock switches.
4. If only one power lock motor fails to operate with both power lock switches and the RKE transmitter, proceed to diagnosis of the power lock motor.

REMOTE KEYLESS ENTRY SYSTEM

Following are tests that may help to diagnose the Remote Keyless Entry (RKE) system. However, these tests may not prove conclusive in the diagnosis of this system. In order to obtain conclusive testing of the RKE system, the Controller Area Network (CAN) data bus network and all of the electronic modules that provide inputs to, or receive outputs from the RKE system components must also be tested.

The most reliable, efficient, and accurate means to diagnose the RKE system requires the use of a diagnostic scan tool and the appropriate diagnostic information. The diagnostic scan tool can provide confirmation that the CAN data bus is functional, that all of the proper electronic modules are sending and receiving the proper electronic messages over the CAN data bus, and that the Radio Frequency Hub Module (RFHM) (also known as the RF Hub) is being sent the proper Radio Frequency (RF) signals by the RKE transmitters (also known as FOB with Integrated Key/FOBIK) to perform its RKE system functions.

Refer to the appropriate wiring information. The wiring information includes wiring diagrams, proper wire and connector repair procedures, details of wire harness routing and retention, connector pin-out information and location views for the various wire harness connectors, splices and grounds.

PRELIMINARY DIAGNOSIS

As a preliminary diagnosis for the RKE system, first confirm that the power lock system operates satisfactorily. If the power lock system fails to operate correctly, repair that problem before attempting to diagnose the RKE system. If the problem being diagnosed involves only one or more Customer Programmable features, check using the Electronic Vehicle Information Center (EVIC) or with a diagnostic scan tool to be certain that these programmable features are enabled. If the features are enabled and still fail to operate, the RFHM and the CAN

data bus must be tested. Next, note the RKE system operation while you perform both the **Lock** and **Unlock** functions with the FOBIK. Then, proceed as follows:

1. If the power lock system functions with both power lock switches, but not with the FOBIK, proceed to diagnosis of the FOBIK.
2. If the FOBIK checks okay, proceed to diagnosis of the RFHM or the CAN data bus. The use of a diagnostic scan tool and the appropriate diagnostic information are required.

ACTUATOR, FUEL DOOR

DESCRIPTION

DESCRIPTION

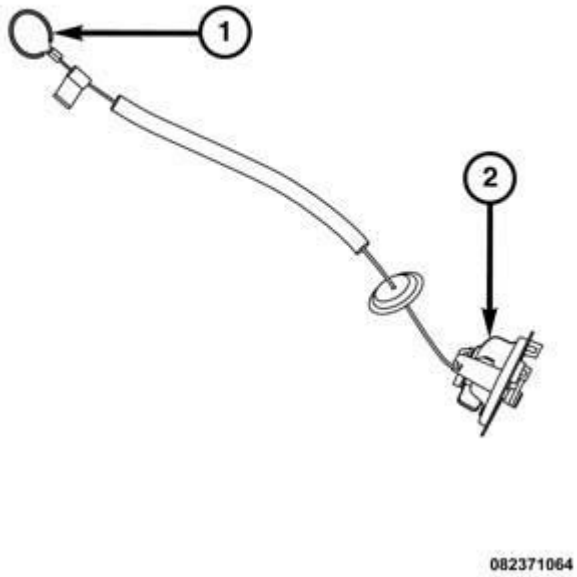

Fig. 1: Mechanical Emergency Release Cable & Actuator Mechanism
Courtesy of CHRYSLER GROUP, LLC

An electronically actuated fuel door release mechanism is standard equipment in this vehicle. A striker on the fuel door is engaged by a latch and actuator mechanism (2) integral to the fuel filler housing located behind the fuel door opening of the outer quarter panel. The actuator mechanism is operated by an electronic solenoid that is also integral to the fuel filler housing. A short wire harness connected to the solenoid passes through a rubber grommet and a hole in the body sheet metal into the trunk compartment along with a mechanical emergency release cable (1). The solenoid is connected to the vehicle electrical system through a dedicated take out and connector of the body wire harness located on the right side of the trunk.

OPERATION

OPERATION

The fuel filler door actuator solenoid is energized by fused battery feed received from the fuel filler door switch located within the map pocket of the driver side front door inside trim panel whenever the momentary switch button is depressed. The solenoid is connected to a path to ground at all times through a take out of the body wire harness that is secured to the body sheet metal. These connections allow the solenoid to operate regardless of the ignition switch status.

If the vehicle electrical system, the fuel filler release solenoid, the switch or the release solenoid electrical circuits are damaged or ineffective, pulling the mechanical emergency release cable located within the trunk compartment will manually release the fuel filler door.

REMOVAL

REMOVAL

Fuel Door Actuator Removal.

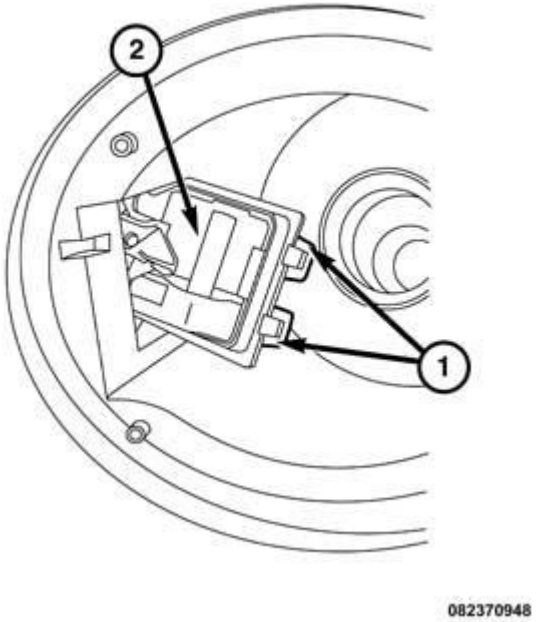

Fig. 2: Lock Tabs & Fuel Door Actuator
Courtesy of CHRYSLER GROUP, LLC

1. Disconnect and isolate the battery negative cable.
2. Open the fuel door using the push button switch within the map pocket of the drivers door panel. If unable to actuate the fuel door with the switch then open the trunk and pull the mechanical emergency release cable to release the fuel door manually. The mechanical emergency release cable is located on the right side within the trunk compartment.
3. Once the fuel door is open you can access the fuel door actuator (2). There are two lock tabs (1) holding

the actuator in place. Use a screw driver or like object to pop the fuel door actuator out from underneath the tabs.

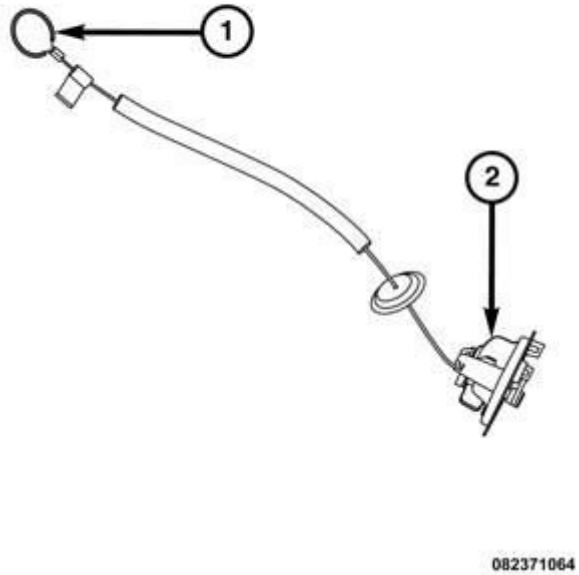

Fig. 3: Mechanical Emergency Release Cable & Actuator Mechanism
Courtesy of CHRYSLER GROUP, LLC

4. Once the fuel door actuator is free of the tabs, remove the rubber grommet and maneuver the actuator through the opening that the actuator is fed through so that you are feeding the actuator back into the trunk.
5. Disconnect the fuel door actuator harness from the solenoid assembly.
6. Disconnect the mechanical emergency fuel door release cable from the interior wall of the trunk and pull the actuator and cable out from the trunk, fully removing the actuator and cable from the vehicle.

INSTALLATION

INSTALLATION

Fuel Door Actuator Installation.

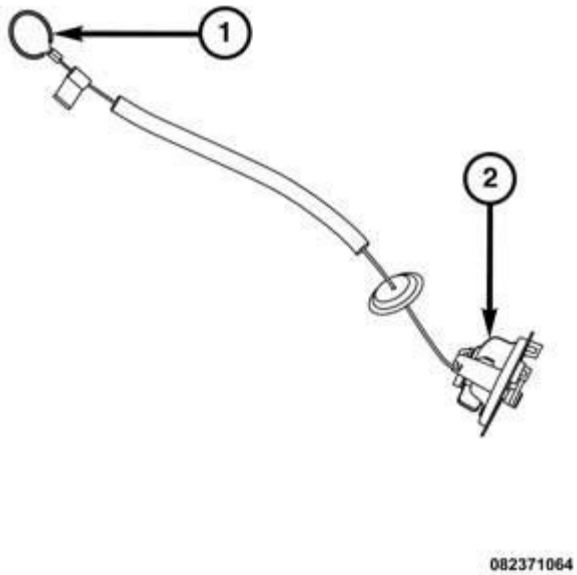

Fig. 4: Mechanical Emergency Release Cable & Actuator Mechanism
Courtesy of CHRYSLER GROUP, LLC

1. The fuel door actuator is routed through the passenger side interior of the trunk through the opening in the body sheet metal that allows the actuator to pass through and reside within filler housing. Feed the actuator through this opening while maneuvering the actuator.

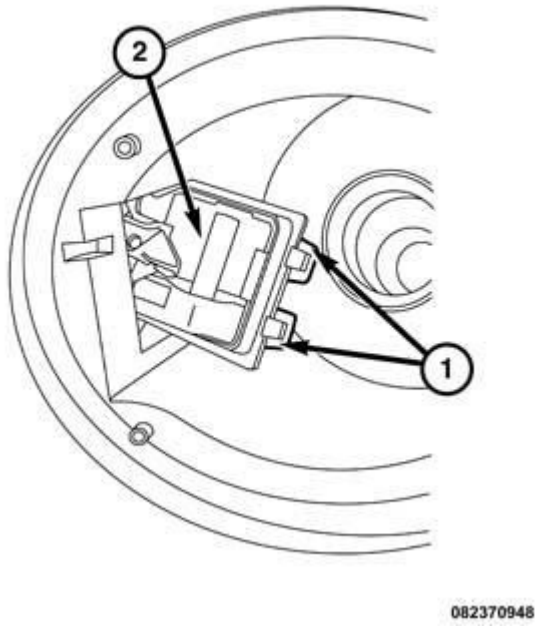

Fig. 5: Lock Tabs & Fuel Door Actuator

Courtesy of CHRYSLER GROUP, LLC

2. Once the actuator is inserted through the hole and into the housing area, position the actuator so that the lock tabs on the housing will mesh with the tabs on the actuator. Snap/secure the actuator into place.
3. Connect the fuel door actuator harness connector to the solenoid assembly.
4. Connect the mechanical emergency release cable into position on the passenger side of the trunk compartment.
5. Reconnect the battery negative cable and test for proper fuel door actuation.

ANTENNA, PASSIVE ENTRY

DESCRIPTION

DESCRIPTION

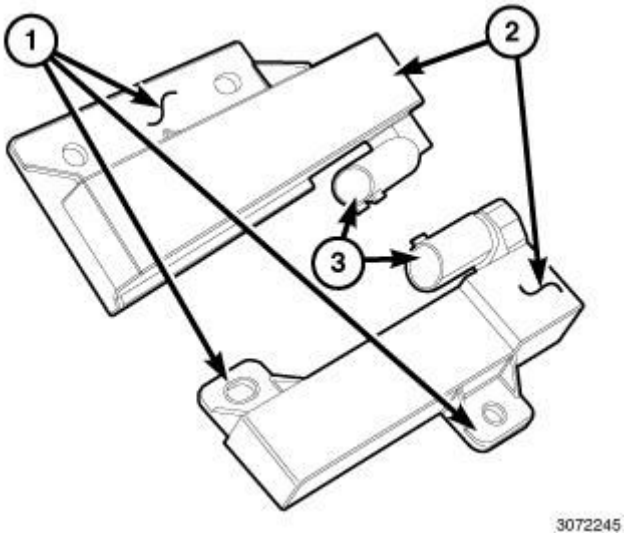

Fig. 6: Integral Connector Receptacle, Ferrite Antenna Units & Flanges
Courtesy of CHRYSLER GROUP, LLC

Vehicles equipped with the Passive Entry (PE) and Keyless Go (KG) systems have several Low Frequency (LF), ferrite antenna units (2) located within the vehicle. Each ferrite PE antenna unit is contained within a molded black plastic housing with an integral connector receptacle (3) molded into one end. The connector receptacle contains terminal pins that connect the antenna to the vehicle electrical system through a twisted pair of conductors and a connector that are part of the adjacent wire harness.

Each antenna housing also includes an integral mounting flange or flanges (1) which can be used to mount the unit with screws. However, in some applications the antenna mounting flanges are snapped into a spring steel adapter or retainer, which allows the antenna unit to be securely clipped in place over a body flange rather than being secured with screws. This vehicle platform uses five PE antenna units. One is secured to the underside of the center floor console, one is secured to each rear door hardware module carrier concealed behind the inside door trim panels, one is secured in front of the rear seat to the floor and one is concealed behind the rear fascia

to the bracket.

The antennas are each connected to the Radio Frequency Hub Module (RFHM) (also known as the RF Hub) on dedicated and sequentially numbered circuits. The left rear door antenna is connected through the antenna 1 circuits, the right rear door antenna is connected through the antenna 2 circuits, the trunk antenna is connected through the antenna 3 circuits, the center floor console is connected through the antenna 4 circuits and the rear fascia bracket antenna is connected through the antenna 5 circuits.

PASSIVE ENTRY LOW FREQUENCY ANTENNA AND CIRCUIT NUMBERING	
Location	**Antenna And Circuit Number**
Left Rear Door	1
Right Rear Door	2
Center Floor Console	3
Left Rear Floor	4
Rear Fascia Bracket	5

An LF antenna unit cannot be adjusted or repaired. If ineffective or damaged, it must be replaced with a new unit. For applications where it is used, the antenna unit adapter or retainer may be serviced only as a unit with the LF antenna.

OPERATION

OPERATION

The Passive Entry (PE) antenna units allow the transmitter within the Radio Frequency Hub Module (RFHM) (also known as the RF Hub) to communicate via Low Frequency (LF) radio transmission with a FOB with Integrated Key (FOBIK) that is located inside the vehicle or, at most, about 0.7 meters (2.5 feet) horizontally in all directions around the outside of the vehicle. The RFHM uses communication through the antenna units to wake up and challenge a FOBIK that is within range in order to authenticate whether that FOBIK is valid (programmed) to the vehicle. The RFHM communication with the FOBIK is on 125 kilohertz using Frequency-Shift Keying (FSK) modulation.

Each antenna unit has two dedicated connections to the RFHM. One connection is the LF antenna output circuit, while the other connection Is the LF antenna return circuit. These circuits to each antenna unit are a twisted pair to help reduce the potential for induced electrical interference. The RFHM microprocessor continuously monitors all of the antenna units and will store a Diagnostic Trouble Code (DTC) for any fault that it detects.

The hard wired inputs and outputs of the LF antenna units may be diagnosed using conventional diagnostic tools and procedures. Refer to the appropriate wiring information. However, the most reliable, efficient, and accurate means to diagnose the LF antenna units requires the use of a diagnostic scan tool. Refer to the appropriate diagnostic information.

REMOVAL

CENTER FLOOR CONSOLE

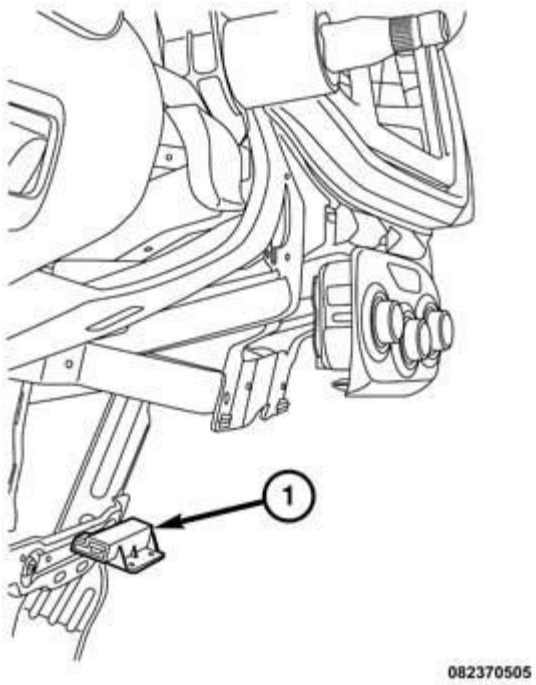

Fig. 7: Low Frequency (LF) Antenna
Courtesy of CHRYSLER GROUP, LLC

1. Disconnect and isolate the battery negative cable.
2. Remove the center floor console from the vehicle. Refer to **CONSOLE, FLOOR, REMOVAL** .
3. Disconnect the wire harness connector from the connector receptacle for the Low Frequency (LF) antenna (1) beneath the front of the console.
4. Remove the two screws that secure the antenna to the bracket beneath the front of the console.
5. Remove the antenna from the console.

REAR DOOR

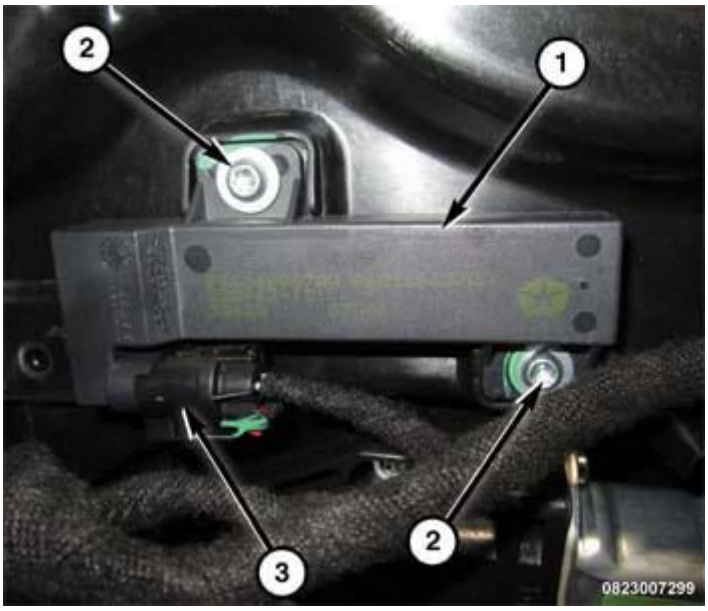

Fig. 8: Antenna, Connector & Screws
Courtesy of CHRYSLER GROUP, LLC

1. Disconnect and isolate the battery negative cable.
2. Remove the trim panel from the inside of the rear door. Refer to **PANEL, REAR DOOR TRIM, REMOVAL** .
3. Disconnect the door wire harness connector (3) from the Low Frequency (LF) antenna connector receptacle.
4. Remove the two screws that secure the antenna (2) to the inside of the rear door hardware module carrier.
5. Remove the antenna (1) from the carrier.

REAR FASCIA BRACKET

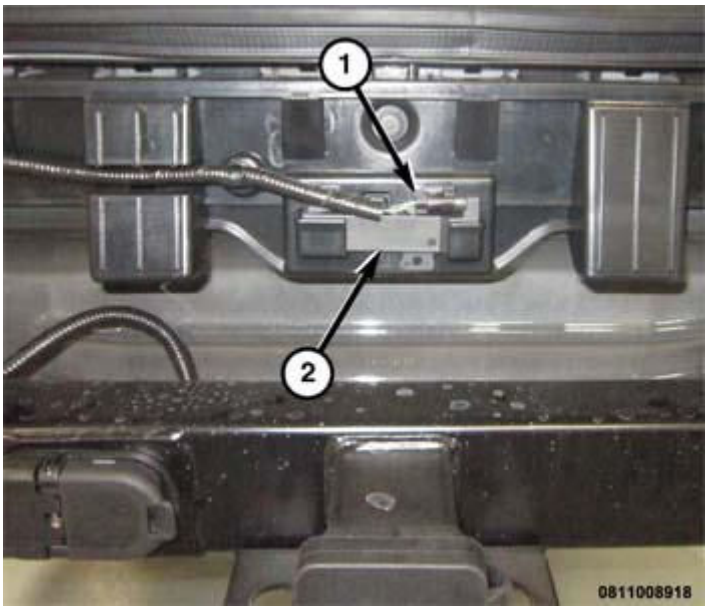

Fig. 9: Low Frequency Antenna & Connector
Courtesy of CHRYSLER GROUP, LLC

1. Disconnect and isolate the battery negative cable.
2. Remove the rear fascia from the vehicle. Refer to **FASCIA, REAR, REMOVAL** .
3. Disconnect the wire harness connector (1) from the connector receptacle for the Low Frequency (LF) antenna (2) located in a pocket near the center of the rear fascia bracket.
4. Unsnap the antenna from the retainer integral to the rear fascia bracket.
5. Remove the LF antenna from the vehicle.

TRUNK

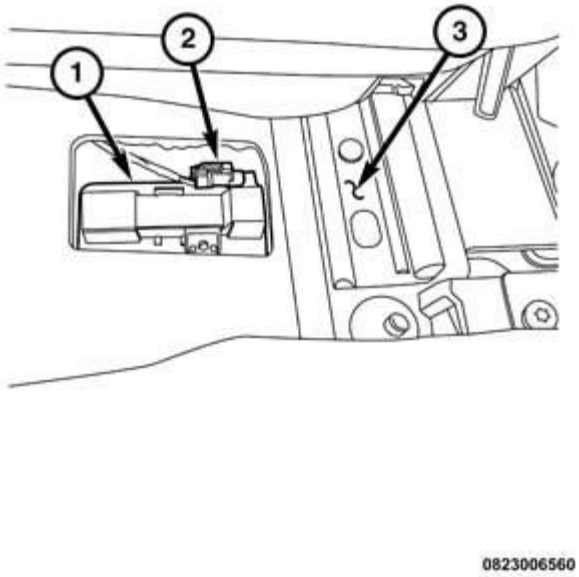

Fig. 10: LF Antenna, Connector & Cover
Courtesy of CHRYSLER GROUP, LLC

1. Disconnect and isolate the battery negative cable.
2. Fold and move forward the drivers side second row set. Next to the left side of the right side seat track (3) is a cover cut into the carpet. Fold this cover up to expose the LF antenna (1).
3. Disconnect the body wire harness connector from the Low Frequency (LF) antenna connector receptacle (2).
4. Remove the fasteners that secure the antenna in position.
5. Remove the LF antenna.

INSTALLATION

CENTER FLOOR CONSOLE

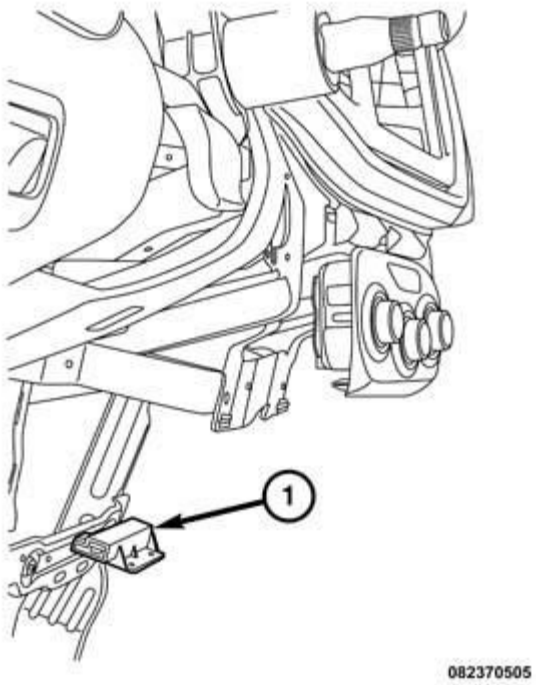

Fig. 11: Low Frequency (LF) Antenna
Courtesy of CHRYSLER GROUP, LLC

1. Position the Low Frequency (LF) antenna (1) to the bracket beneath the front of the center floor console.
2. Install and tighten the two screws that secure the antenna to the bracket beneath the front of the console. Tighten the screws securely.
3. Reconnect the wire harness connector to the antenna connector receptacle.
4. Reinstall the console into the vehicle. Refer to **CONSOLE, FLOOR, INSTALLATION** .
5. Reconnect the battery negative cable.

REAR DOOR

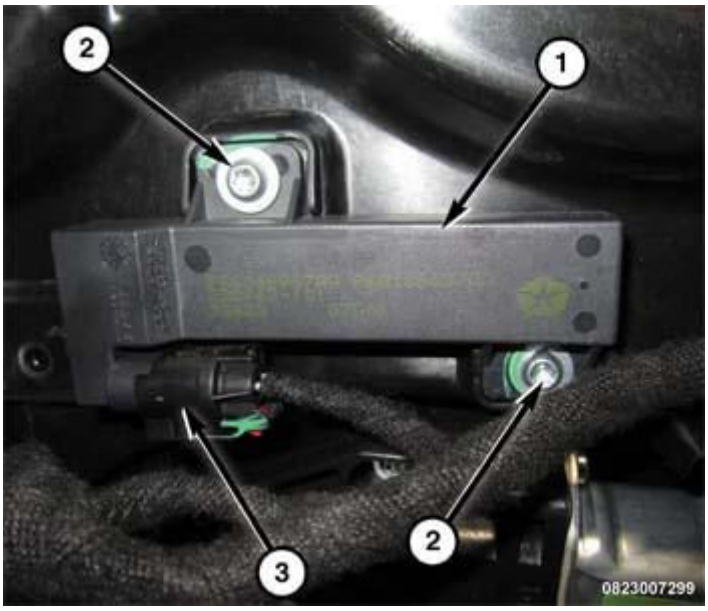

Fig. 12: Antenna, Connector & Screws
Courtesy of CHRYSLER GROUP, LLC

1. Position the Low Frequency (LF) antenna (1) to the rear door hardware module carrier.
2. Install and tighten the two screws (2) that secure the antenna to the carrier. Tighten the screws securely.
3. Reconnect the door wire harness connector (3) to the antenna connector receptacle.
4. Reinstall the trim panel onto the inside of the rear door. Refer to **PANEL, REAR DOOR TRIM, INSTALLATION** .
5. Reconnect the battery negative cable.

REAR FASCIA BRACKET

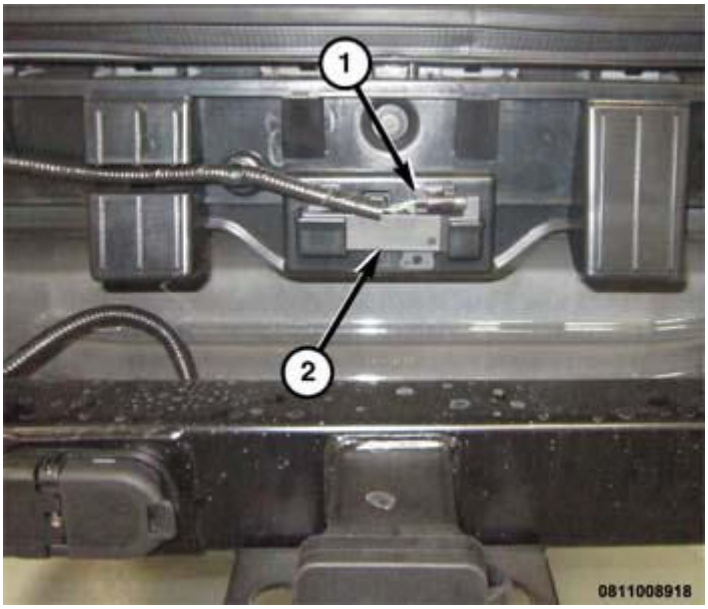

Fig. 13: Low Frequency Antenna & Connector
Courtesy of CHRYSLER GROUP, LLC

1. Position the Low Frequency (LF) antenna (2) in the pocket near the center of the rear fascia bracket.
2. Reconnect the wire harness connector (1) to the connector receptacle for the antenna.
3. Align the antenna with the retainers integral to the rear fascia bracket, then slide it downward until it snaps into place.
4. Reinstall the rear fascia onto the vehicle. Refer to **FASCIA, REAR, INSTALLATION** .
5. Reconnect the battery negative cable.

FORWARD CARGO FLOOR

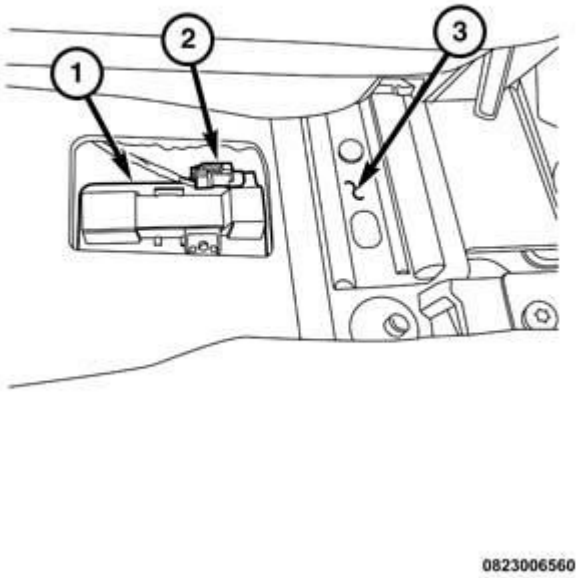

Fig. 14: LF Antenna, Connector & Cover
Courtesy of CHRYSLER GROUP, LLC

1. Position the Low Frequency (LF) antenna (1) into position in the opening on the floor behind the drivers second row seat, to the left of the right side seat track (3).
2. Install the fasteners that secure the antenna to the floor.
3. Reconnect the body wire harness connector to the antenna connector receptacle (2).
4. Reconnect the battery negative cable.

MOTOR, DOOR LOCK

DESCRIPTION

DESCRIPTION

Power operated door locking and liftgate latching mechanisms are available equipment in this vehicle. The lock mechanisms of each door and the liftgate latch of vehicles with the power lock system are actuated by a reversible electric motor integral to each latch unit. A connector receptacle integral to each latch connects the power lock motor and the integral door or liftgate ajar micro switch to the vehicle electrical system through a dedicated take out and connector of the door or body wire harness.

The power lock motors cannot be adjusted or repaired and, if ineffective or damaged, the entire door or liftgate latch unit must be replaced.

OPERATION

OPERATION

The power lock motors are controlled by outputs received from the Body Control Module (BCM). The BCM acts upon programming, hard wired inputs from the driver or passenger door lock switches as well as electronic **lock** or **unlock** command message inputs received over the Controller Area Network (CAN) data bus from the Radio Frequency Hub Module (RFHM) (also known as the RF Hub) based upon inputs from the Remote Keyless Entry (RKE) or FOB with Integrated Key (FOBIK) transmitters.

A positive and negative battery connection to the two lock motor terminals will cause the motor to move in one direction, locking or unlocking the latch. Reversing the current will cause the motor to move in the opposite direction.

The power lock motors and the hard wired circuits between the motors and the BCM may be diagnosed using conventional diagnostic tools and procedures. Refer to the appropriate wiring information. However, conventional diagnostic methods will not prove conclusive in the diagnosis of the power lock system or the electronic controls or communication between other modules and devices that provide some features of the power lock system. The most reliable, efficient, and accurate means to diagnose the power lock motors or the electronic controls and communication related to power lock motor operation requires the use of a diagnostic scan tool. Refer to the appropriate diagnostic information.

DIAGNOSIS AND TESTING

DIAGNOSIS AND TESTING - POWER LOCK MOTOR

Remember, the Body Control Module (BCM) circuitry controls the outputs to the power lock motors. If both the power lock motors and the circuits between the motors and the BCM test okay, the use of a diagnostic scan tool is required for further power lock system diagnosis. Refer to the appropriate diagnostic information.

Refer to the appropriate wiring information. The wiring information includes wiring diagrams, proper wire and connector repair procedures, details of wire harness routing and retention, connector pin-out information and location views for the various wire harness connectors, splices and grounds.

1. Check the power lock motor for correct operation while moving a power lock switch to both the **Lock** and **Unlock** positions.

2. Disconnect the door or body wire harness connector from the inoperative power lock motor.
3. Apply 12 volts to the lock and unlock driver circuit cavities of the power lock motor connector to check its operation in one direction.
4. Reverse the connection polarity to check the motor operation in the opposite direction.
5. If motor operation is okay in both directions, check both the lock and unlock circuits between the lock motor and the BCM and repair if required. If motor operation is not okay in both directions, replace the latch unit containing the ineffective power lock motor.

SWITCH, DOOR HANDLE

DESCRIPTION

DESCRIPTION

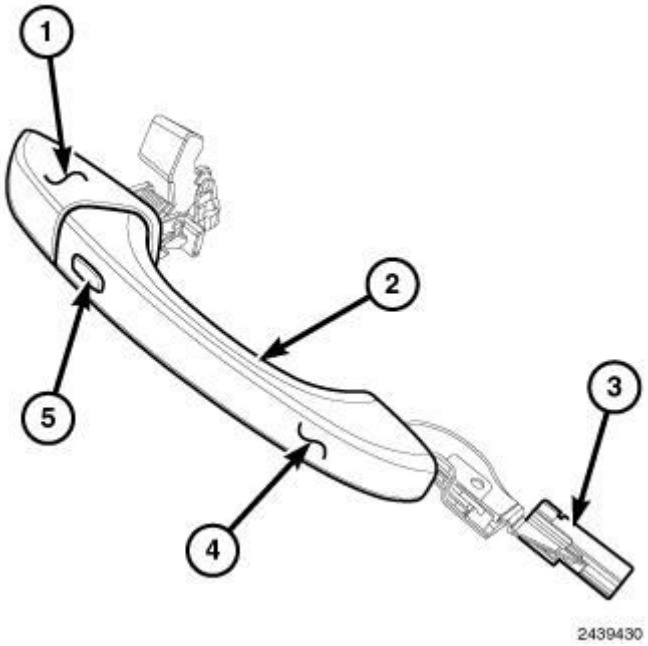

Fig. 15: Front Door Handle Components
Courtesy of CHRYSLER GROUP, LLC

Vehicles equipped with the optional Passive Entry (PE) system have unique outside front door handles that incorporate three switches and a logic circuit. These unique PE door handles are sometimes referred to as smart handles. The handle itself is very similar in appearance to those used in conventional non-PE applications, consisting primarily of a grip (4) and a base (1).

The PE door handles can be readily identified by a tactile, resistive membrane lock switch (5) located on the outward facing vertical surface at the rearward end of the handle grip, and by a capacitive sensor or switch membrane patch on the inside surface (2) of the grip. A third, Hall-effect type switch as well as an Integrated Circuit (IC) chip are concealed within the grip near the handle base.

The mechanical functions and mounting provisions of the PE handle are identical to those of a conventional outside door handle. However, an integral connector receptacle (3) is located at the forward end of the handle grip where it is concealed within the door interior. The PE handle is connected to the vehicle electrical system through a dedicated take out and connector of the door wire harness.

The individual switches of the PE outside front door handles cannot be adjusted or repaired. If any one of the switches, the IC or any of the mechanical handle components is damaged or ineffective, the entire handle unit must be replaced. Refer to **HANDLE, EXTERIOR, REMOVAL** and **HANDLE, INTERIOR, REMOVAL** .

OPERATION

OPERATION

The three switches of each Passive Entry (PE) outside front door handles are each powered by and provide a direct input to the Integrated Circuit (IC) of that door handle. The IC of each PE outside front door handle receives power from the Radio Frequency Hub Module (RFHM) (also known as the RF Hub) on a signal circuit, and a clean ground from the RFHM on a return circuit. The PE handle IC and the RFHM communicate with each other by modulating the current in the signal circuit.

Each PE outside front door handle has three switches. The inputs from those three switches and the handle logic circuit allow each handle to send the RFHM up to four different signals: Unlock Request, Hall, Lock Request and Error. The RFHM determines the system response based upon the inputs it receives from each handle as well as the inputs it receives through the authentication process with each detected FOB with Integrated Key (FOBIK).

The tactile, mechanical, resistive membrane lock switch allows the user to actively lock the vehicle. The capacitive switch senses a hand approaching the handle grip to passively unlock the vehicle. The Hall-effect switch senses handle grip movement. An adaptation algorithm in the logic circuit of each handle can modify the sensitivity of the capacitive switches as well as system responses to the Hall-effect switch inputs to compensate for sensed repeated or continuous actuations such as might be caused by the switch membrane being wetted, but restores normal sensitivity about one minute after the repeated or continuous actuation input ceases.

The hard wired inputs and outputs of the PE outside front door handle may be diagnosed using conventional diagnostic tools and procedures. Refer to the appropriate wiring information. However, the most reliable, efficient and accurate means to diagnose this component requires the use of a diagnostic scan tool. Refer to the appropriate diagnostic information.

SWITCH, FUEL DOOR

DESCRIPTION

DESCRIPTION

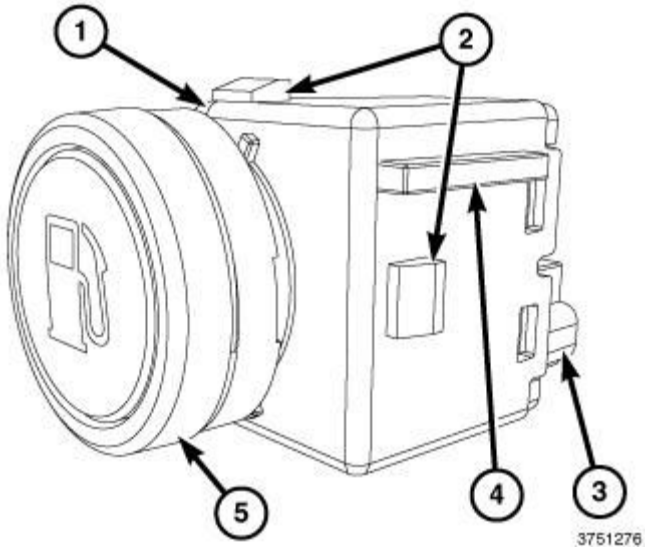

Fig. 16: Switch, Latch Features, Receptacle & Alignment Spline
Courtesy of CHRYSLER GROUP, LLC

The fuel door release switch (1) is mounted in the map pocket of the driver side front door inside trim panel. Only the switch button is visible on the outer surface of the trim panel. The black plastic switch button has a white International Control and Display Symbol icon applied to it, which clearly identifies its function. A Light Emitting Diode (LED) unit within the switch illuminates the icon on the switch button for improved visibility.

The black, molded plastic switch housing encloses the switch button mechanism and the switch circuitry including the switch contacts. A connector receptacle (3) is integral to the back of the switch housing, while integral latch features (2) and an alignment spline (4) on the sides of the housing are used to secure and locate the switch within a mounting receptacle integral to a reinforcement on the back side of the door trim panel. The fuel door release switch is connected to the vehicle electrical system through a dedicated take out and connector of the door wire harness.

The fuel door release switch cannot be adjusted or repaired and, if ineffective or damaged, the unit must be replaced.

OPERATION

OPERATION

The fuel door release switch is a normally open, momentary switch that is connected to fused battery feed at all times. When the switch button is depressed, it provides a battery feed signal to the fuel door release actuator solenoid on the fuel filler housing through a fuel door control circuit.

The hard wired circuit between the fuel door release switch and the fuel door release actuator solenoid may be diagnosed using conventional diagnostic tools and procedures. Refer to the appropriate wiring information.

REMOVAL

REMOVAL

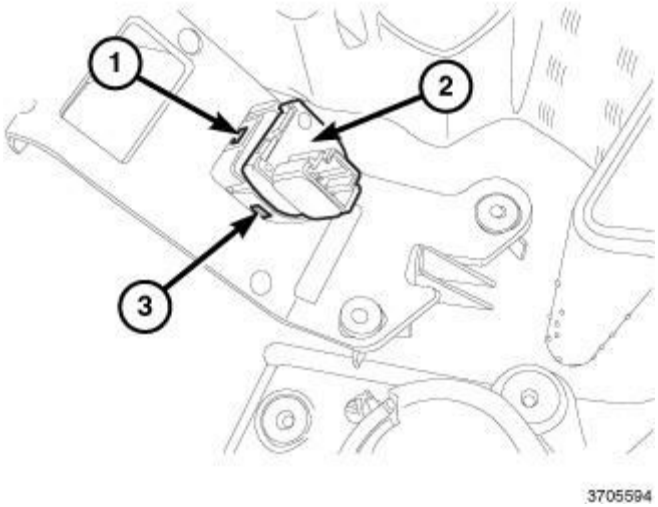

Fig. 17: Latch Tabs & Release Switch
Courtesy of CHRYSLER GROUP, LLC

1. Disconnect and isolate the battery negative cable.
2. Remove the trim panel from the inside of the driver side front door. Refer to **PANEL, DOOR TRIM, REMOVAL** .
3. Working from the back side of the door trim panel, disengage the latch tabs (1 and 3) that secure the fuel door release switch (2) to the receptacle integral to the trim panel reinforcement.
4. Remove the switch from the door trim panel.

INSTALLATION

INSTALLATION

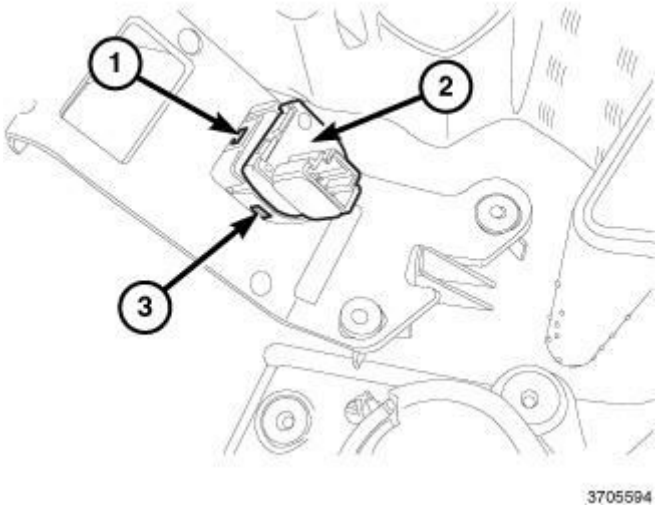

Fig. 18: Latch Tabs & Release Switch

Courtesy of CHRYSLER GROUP, LLC

1. Align the fuel door release switch (2) with the receptacle integral to the reinforcement on the back side of the driver side front door trim panel.
2. Using hand pressure, push the switch into the receptacle until each of the switch latch tabs (1 and 3) are fully engaged.
3. Reinstall the trim panel onto the inside of the driver side front door. Refer to **PANEL, DOOR TRIM, INSTALLATION** .
4. Reconnect the battery negative cable.

SWITCH, LOCK

DESCRIPTION

DESCRIPTION

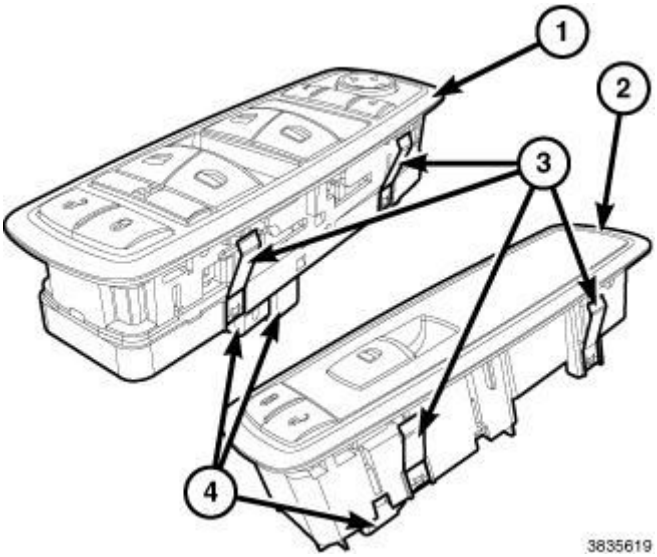

Fig. 19: Driver Side & Passenger Side Front Door Power Switch Module & Bezel Unit
Courtesy of CHRYSLER GROUP, LLC

A front door power switch module and bezel unit is located near the forward end of the arm rest of each front door trim panel. Separate modules are used for the driver side (1) and the passenger side (2) front doors. In addition, there are three versions of each module to accommodate power window and power mirror options. Each switch button in both modules is identified with either an International Control and Display Symbol icon or text that clearly identifies the switch function, and each switch button has a Light Emitting Diode (LED) unit soldered to the switch circuit board that provides back lighting of the icon or text for night visibility.

The Driver Door Switch Assembly contains window lift switches for front windows (driver and passenger) including auto-down or an auto-down and auto-up (also known as one-touch down or up and express down or up) features for both front door windows, window lift switches for rear windows (as equipped), window lockout switch (as equipped), power mirror switch with mirror select (as equipped), and a power fold button (as

equipped - LIN & Hybrid only). The passenger side power door switch module may combine power lock switches with a passenger side front door power window switch with the auto-down or the auto down and auto-up features. Each power switch module housing is secured within the trim panel armrest by four spring clip retainers (3), two on each side of the module housing. A connector receptacle (4) integral to each module housing connects the switches to the vehicle electrical system through dedicated take outs and connectors of the door wire harnesses.

Each front door power switch module may include the following switches:

- **Power Lock Switch** - A momentary switch button to control the **Lock** function of the power lock system is standard equipment in each front door power switch module in vehicles equipped with the optional power lock system.
- **Power Unlock Switch** - A momentary switch button to control the **Unlock** function of the power lock system is standard equipment in each front door power switch module in vehicles equipped with the optional power lock system.
- **Power Mirror Selector Switch (Driver Side Switch Only)** - In vehicles equipped with the power outside rear view mirror option, two latching mirror selector switch buttons choose the power mirror to be adjusted, **R** (right) or **L** (left).
- **Power Mirror Control Switch (Driver Side Switch Only)** - In vehicles equipped with the power outside rear view mirror option, after a power mirror is selected, pressing down on one of the four arrowheads on the circular, concave momentary mirror control switch pad will move the selected mirror in that direction for as long as the pad is held down or until the limit of the mirror travel is reached.
- **Power Window Lockout Switch (Driver Side Switch Only)** - In vehicles equipped with the power window option, a latching push-button power window lockout switch allows the vehicle operator to lock out the power window switches on each front and rear passenger door so that those windows may be operated only from the driver side front door master switches. When the lockout switch is engaged, the LED back lighting for each front and rear passenger door power window switch is extinguished.
- **Power Window Switches** - In vehicles equipped with the power window option, a single two-way, momentary power window switch with a push-to-open and a lift-to-close tab is provide for each front and rear passenger door window. The driver side switch module contains four of these power window switches, one switch dedicated to each door window. In vehicles with the base power window system, all power window switches are of a high current design and the switch tabs for the driver and passenger side front door power windows have an intermediate detent in the down direction which is used to activate the **Auto-Down** (also known as express down or one-touch down) feature. In vehicles equipped with the premium power window system, the front door power window switches are a low current design and a time based (less than 800 milliseconds) activation in the up or down direction on either front door power window switch activates the **Auto-Down** or **Auto-Up** (also known as express up and down, or one-touch up and down) feature.

The front door power switch modules cannot be adjusted or repaired. If damaged or ineffective, the entire driver side or passenger side front door power switch module must be replaced as a unit.

OPERATION

OPERATION

The Main function of the this switch assembly is to control the opening or closing of the Power windows and power locks based on the manual input given. The Driver Door Switch Assemblies are classified as high current, low current (LIN) or "hybrid." High current Door Switch Assemblies directly control windows and mirrors through high current switched contacts within the switch assembly. Low current (LIN) Door Switch Assemblies control windows and mirrors via messages sent over the LIN bus to a module which directly controls the windows and mirrors. Hybrid Door Switch Assemblies control front windows and mirrors via LIN messages, while controlling rear windows through high current switched contacts. In all cases, Door Locks are controlled by an RMUX signal to the module which directly controls the door lock solenoids.

The front door power switch module provides resistor multiplexed outputs to the Body Control Module (BCM) indicating the power lock switch selection, and the BCM operates the lock motors accordingly. On vehicles with the power outside rear view mirror option, the driver side front door power switch module also provides hard wired analog outputs directly from the power mirror selector and control switches to the power mirrors.

On vehicles with a base power window system option, the driver side front door power switch module provides high current hard wired analog outputs directly to the driver side front power window motor, or to the front and rear passenger door power window motors through the power window switch for that door. In the base power window system, an integrated circuit within each front door power switch module monitors inputs from the auto-down detent of the front door power window switches to invoke that feature.

On vehicles with a premium power window system option, the driver and passenger side front door power switch modules provide low current hard wired outputs to the driver or passenger side front r window motors, while the rear passenger power window motors still rely upon high current hard wired outputs from the switches. In the premium power window system, the BCM monitors the front door power window switches to invoke the auto-down and auto-up features through the smart power window motors.

The hard wired inputs and outputs of the driver and passenger side front door power switch modules may be diagnosed using conventional diagnostic tools and procedures. Refer to the appropriate wiring information. However, conventional diagnostic methods will not prove conclusive in the diagnosis of the electronic controls of the power switch modules or in the diagnosis of the other modules and electronic controls that provide some features of the power lock, power mirror or power window systems. The most reliable, efficient, and accurate means to diagnose the driver side power switch module or the electronic controls and communication related to power lock, power mirror or power window system operation requires the use of a diagnostic scan tool. Refer to the appropriate diagnostic information.

DIAGNOSIS AND TESTING

DIAGNOSIS AND TESTING - POWER FRONT DOOR SWITCH MODULES

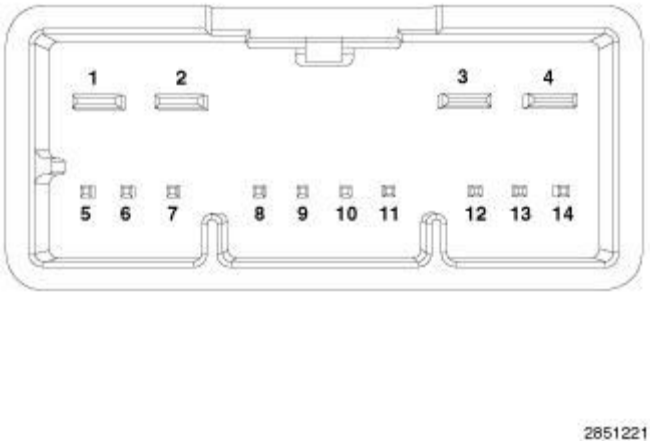

Fig. 20: Driver Front Door Switch Module Connector Receptacle
Courtesy of CHRYSLER GROUP, LLC

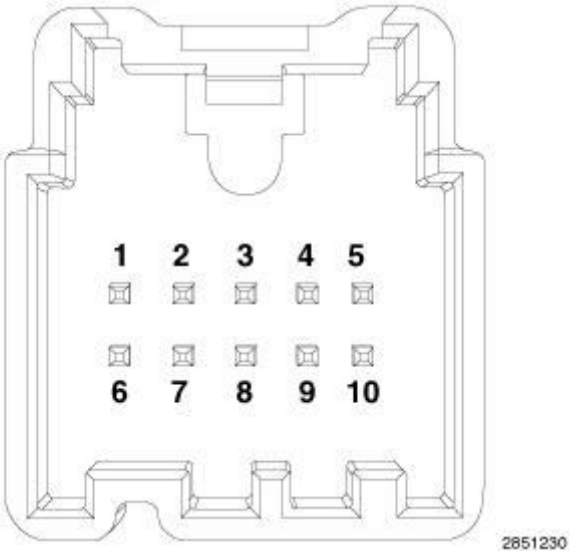

Fig. 21: Passenger Front Door Switch Module Connector Receptacle
Courtesy of CHRYSLER GROUP, LLC

1. Remove the power switch module and bezel unit from the front door trim panel. Refer to **SWITCH, LOCK, REMOVAL**.
2. Disconnect the door wire harness connector from the power switch module.
3. Using an ohmmeter, test the resistance between the terminals of the front door power lock or power window switch as shown in the Power Lock or Power Window Switch Tests chart .

NOTE: **The switches in the driver front door switch module not listed in the Switch Test Tables provide inputs to the Driver Door Module (DDM) over a Local Interface Network (LIN) data bus and cannot be resistance tested.**

The use of a diagnostic scan tool and the appropriate diagnostic information is required for further testing of those switches.

POWER LOCK SWITCH TESTS - PASSENGER DOOR	
SWITCH POSITION (PINS)	**RESISTANCE RANGE (OHMS)**
LOCK (4 and 8)	326 - 341
UNLOCK (4 and 8)	99 - 103
NEUTRAL (4 and 8)	>1 megohm

POWER WINDOW SWITCH TESTS - DRIVER DOOR	
SWITCH POSITION (PINS)	**RESISTANCE (OHMS)**
MASTER LEFT REAR WINDOW	
UP SWITCH - NEUTRAL (2 and 5)	>1 megohm
UP SWITCH - UP (2 and 5)	<2
DOWN SWITCH - NEUTRAL (2 and 7)	>1 megohm
DOWN SWITCH - DOWN (2 and 7)	<2
MASTER RIGHT REAR WINDOW	
UP SWITCH - NEUTRAL (2 and 12)	>1 megohm
UP SWITCH - UP (2 and 12)	<2
DOWN SWITCH - NEUTRAL (2 and 14)	>1 megohm
DOWN SWITCH - DOWN (2 and 14)	<2

POWER WINDOW SWITCH TESTS - PASSENGER DOOR	
SWITCH POSITION (PINS)	**RESISTANCE RANGE (OHMS)**
UP (4 and 8)	990 - 1022
AUTO UP (4 and 8)	329 - 349
DOWN (4 and 8)	2970 - 3042
AUTO DOWN (4 and 8)	0 - 12
NEUTRAL (4 and 8)	>1 megohm

4. If a switch fails any of the tests, replace the ineffective front door power switch module and bezel unit as required.

REMOVAL

REMOVAL

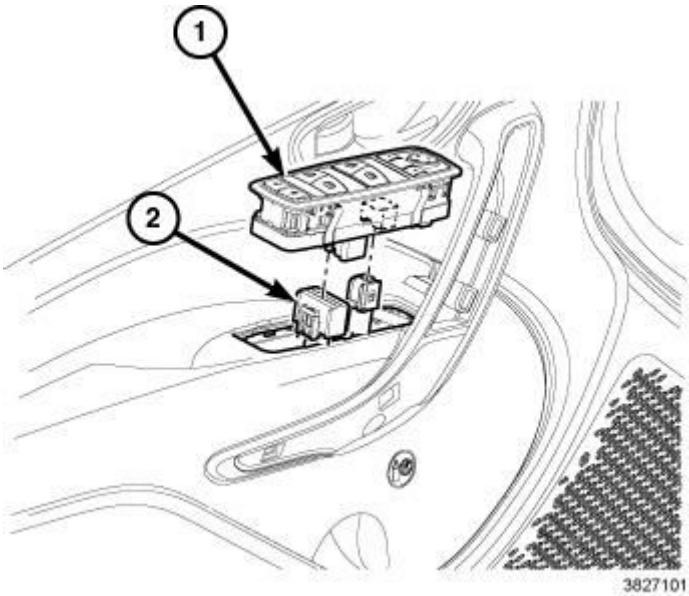

Fig. 22: Front Door Switch Module & Door Wire Harness Connector
Courtesy of CHRYSLER GROUP, LLC

1. Disconnect and isolate the battery negative cable.
2. Using (special tool #C-4755, Trim Stick), pry the bezel of the front door switch module (1) up and away from the front door trim panel arm rest far enough to disengage the four spring steel retainers of the switch from the arm rest opening.
3. Pull the switch module away from the mounting hole of the arm rest far enough to access and disconnect the door wire harness connector (2) from the switch connector receptacle.
4. Remove the switch module from the vehicle.

INSTALLATION

INSTALLATION

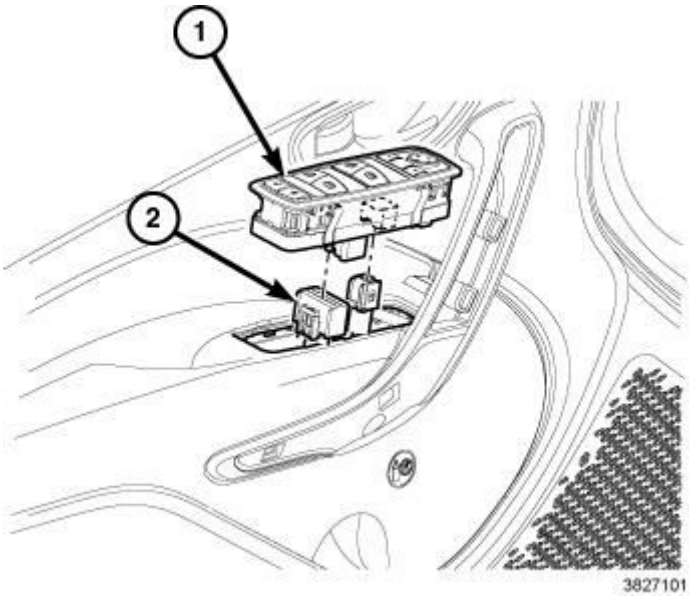

Fig. 23: Front Door Switch Module & Door Wire Harness Connector
Courtesy of CHRYSLER GROUP, LLC

1. Position the front door switch module (1) close enough to the mounting hole in the arm rest of the front door trim panel to access and reconnect the front door wire harness connector (2) to the switch connector receptacle.
2. Align the switch module to the arm rest mounting hole.
3. Using hand pressure, press the switch module firmly and evenly into the mounting hole until the four spring steel retainers of the switch are fully engaged and the switch bezel is fully seated against the arm rest.
4. Reconnect the battery negative cable.

TRANSMITTER, INTEGRATED KEY FOB

DESCRIPTION

DESCRIPTION

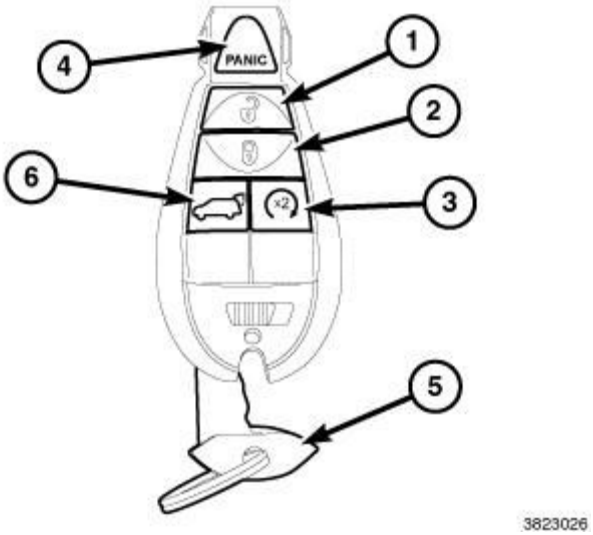

Fig. 24: FOBIK Transmitter - Without Passive Entry Keyless Go System
Courtesy of CHRYSLER GROUP, LLC

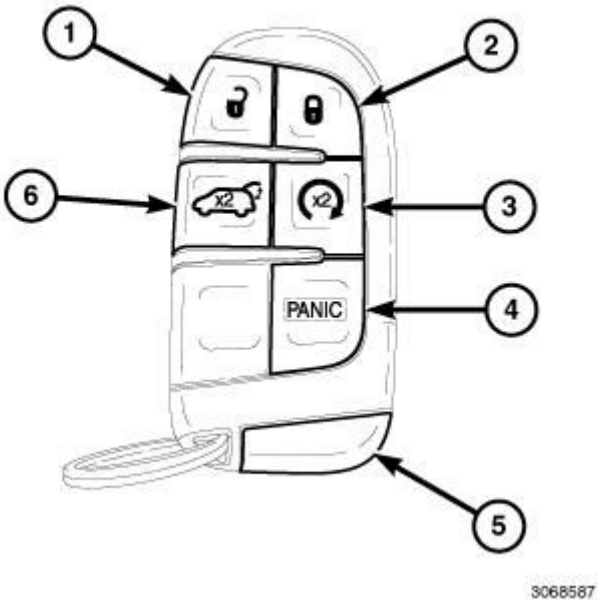

Fig. 25: FOBIK Transmitter - With Passive Entry Keyless Go System
Courtesy of CHRYSLER GROUP, LLC

Vehicles equipped with the power lock system may also have the optional Remote Keyless Entry (RKE) or the optional Passive Entry Keyless Go (PEKG) system. These vehicles are each shipped from the factory with two FOB with Integrated Key (FOBIK) Remote Keyless Entry (RKE) transmitters programmed to the vehicle as standard equipment. Although either type of transmitter can be programmed for compatibility with the power lock, Vehicle Theft Alarm (VTA) and remote start system features of the other, the FOBIK for vehicles without the PEKG system will not operate the passive entry system features, and neither FOBIK is compatible with the ignition switch design of the other.

The transmitter circuitry of both FOBIK types is contained and protected within a molded black plastic case with a black soft rubber touch pad on the face divided into six sections. The rearward end of the FOBIK case has a key ring and houses a mechanically coded, metal emergency key (5) that is released by sliding a latch button on the FOBIK case.

Depending upon vehicle equipment, each FOBIK has at least three and no more than five functional resistive membrane switches located beneath the six touch pad sections. Each functional touch pad section is clearly identified by white icons or white text and icons identifying the specific function obtained by pushing that button. Domestic market vehicles also include either a hard red plastic button with the white text **PANIC** , or a touch pad section on the FOBIK with the red text **PANIC** applied to it. Not counting the **PANIC** button or touch pad (4), the available switches include:

- **Unlock (1)** - Standard Equipment.
- **Lock (2)** - Standard equipment.
- **Remote Start (3)** - Only for vehicles equipped with the factory-installed remote start system.
- **Trunk (6)** - Standard equipment.

The FOBIK RKE transmitter is the primary customer active interface for remotely operating the power lock system, the RKE system, the VTA system and the remote start system components and features. However, the FOBIK also has an important passive role in each of the following vehicle systems:

- **Keyless Go System** - Refer to **DESCRIPTION** .
- **Passive Entry System** - Refer to **DESCRIPTION**.
- **Sentry Key® Theft Deterrent System** - Refer to **DESCRIPTION** .
- **Vehicle Theft Security System (VTSS)** - Refer to **DESCRIPTION** .

Other than battery replacement, the FOBIK cannot be adjusted or repaired. Once a FOBIK has been programmed to a vehicle, it cannot be reprogrammed for use on any other vehicle. If damaged or ineffective, the FOBIK must be replaced with a new unit. A new and unused FOBIK unit must be properly programmed in order to function properly with the systems of the vehicle. The mechanical emergency key of the new FOBIK must also be cut to match the coding of the lock cylinders in the vehicle.

OPERATION

OPERATION

The FOB with Integrated Key (FOBIK) incorporates many useful functions into a single, compact unit. The transducer on the internal circuit board of the FOBIK uses low frequency Radio Frequency (RF) communication to ensure vehicle security through an electronic validation or handshake process that is performed with the Radio Frequency Hub Module (RFHM) (also known as the RF Hub) each time the engine is started.

When any one of the Remote Keyless Entry (RKE) buttons of the FOBIK is depressed, the on-board transmitter of the FOBIK generates a high frequency RF request signal that is received and validated by the RFHM. If the RFHM determines that the RF signal was generated by a FOBIK that is valid for the vehicle, the RFHM relays

electronic request messages to the appropriate electronic modules in the vehicle over the Controller Area Network (CAN) data bus to invoke the functions or features associated with the request.

The integrated mechanical emergency key of the FOBIK provides emergency access to the vehicle in case the battery in the vehicle or the transmitter becomes discharged. The emergency key can also be retained to keep any locked on-board vehicle storage compartments such as the glove box secured, for example: While the vehicle is being attended to by a parking valet.

Each vehicle owner is provided with a four-digit Personal Identification Number (PIN) by the dealer at the time of vehicle purchase. This number is required along with a diagnostic scan tool for the dealer to program an additional or replacement FOBIK into the electronics of the vehicle. The emergency key included with a new additional or replacement blank FOBIK must also be cut to match the coding of the lock cylinders in the vehicle.

Diagnosis of a FOBIK transmitter requires the use of a Radio Frequency Detector such as special tool (special tool #9001, RF Detector). Refer to the appropriate diagnostic information.

DIAGNOSIS AND TESTING

DIAGNOSIS AND TESTING - FOBIK TRANSMITTER

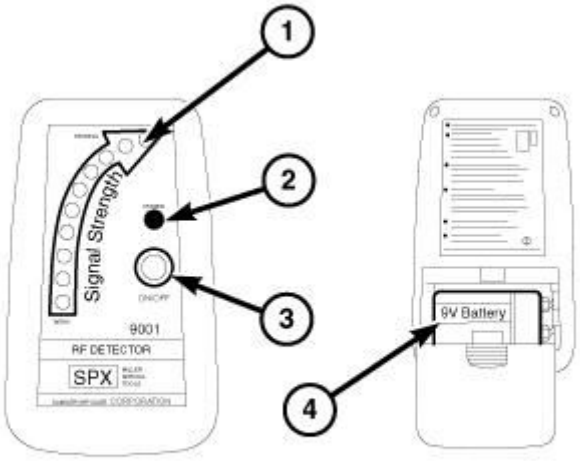

Fig. 26: Radio Frequency Detector #9001
Courtesy of CHRYSLER GROUP, LLC

Use a Radio Frequency Detector such as special tool (special tool #9001, RF Detector) to confirm that the Remote Keyless Entry (RKE) transmitter is functioning. Typical testing distance is 2.5 centimeters (1 inch) for the transmitters of vehicles manufactured for Asian markets, and 30.5 centimeters (12 inches) for all others.

1. Position the transmitter the appropriate distance from the special tool.

2. Depress any transmitter button, then test each button individually. The special tool will issue an audible beep tone if a satisfactory radio signal strength that lights five or more Signal Strength Light Emitting Diode (LED) units is detected.
3. Repeat Step 2 three times. If the transmitter fails any of the signal strength tests, use a diagnostic scan tool and the appropriate diagnostic information to complete further diagnosis.

STANDARD PROCEDURE

STANDARD PROCEDURE - FOBIK TRANSMITTER BATTERY REPLACEMENT

WITHOUT PASSIVE ENTRY KEYLESS GO SYSTEM

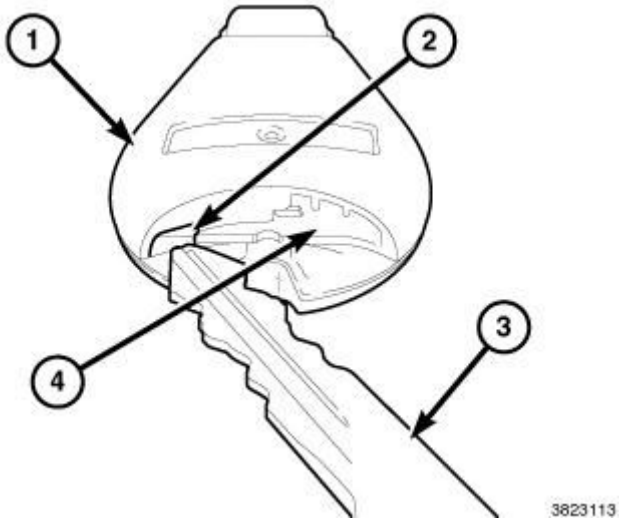

Fig. 27: Case, Notch, Emergency Key & Storage Slot
Courtesy of CHRYSLER GROUP, LLC

CAUTION: Do not touch or disturb the metal contacts for the battery. Avoid touching the new battery. Battery contamination from oils on your skin may result in shortened battery life. If the battery or contacts are contaminated, clean them thoroughly with rubbing alcohol.

1. Unlatch and remove the emergency key (3) from the storage slot (4) of the FOB with Integrated Key (FOBIK) case (1).
2. With the back of the FOBIK case facing upward, insert the tip of the emergency key into the notch (2) between the case halves and twist the key to unsnap and separate the front case half from the back case half.

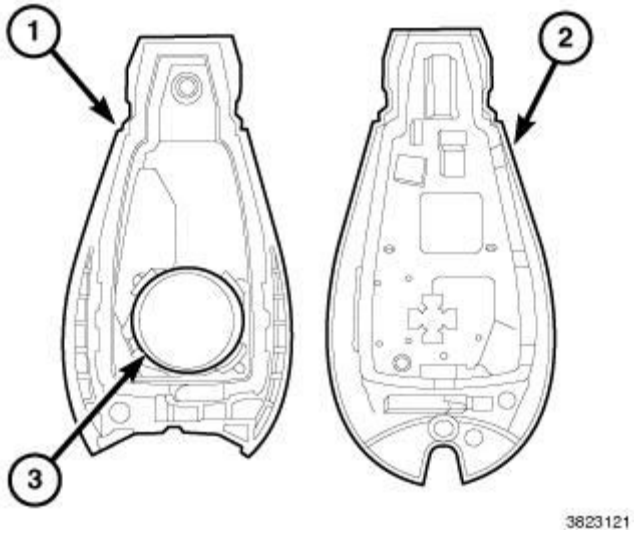

Fig. 28: Back Half Of FOBIK Case, Front Half Of FOBIK Case & Battery
Courtesy of CHRYSLER GROUP, LLC

3. Lift the battery (3) out of the receptacle in the back half of the FOBIK case (1).
4. Replace the battery with a recommended replacement battery. Refer to **TRANSMITTER, INTEGRATED KEY FOB, SPECIFICATIONS**.
5. Install the new battery into the receptacle in the back half of the FOBIK case with the negative terminal facing upward.
6. Align the front half of the FOBIK case (2) with the back half.
7. Using hand pressure, squeeze the two FOBIK case halves around their perimeters until they snap back together.
8. Reinsert the emergency key into the storage slot of the FOBIK case.
9. Test the FOBIK operation.

WITH PASSIVE ENTRY KEYLESS GO SYSTEM

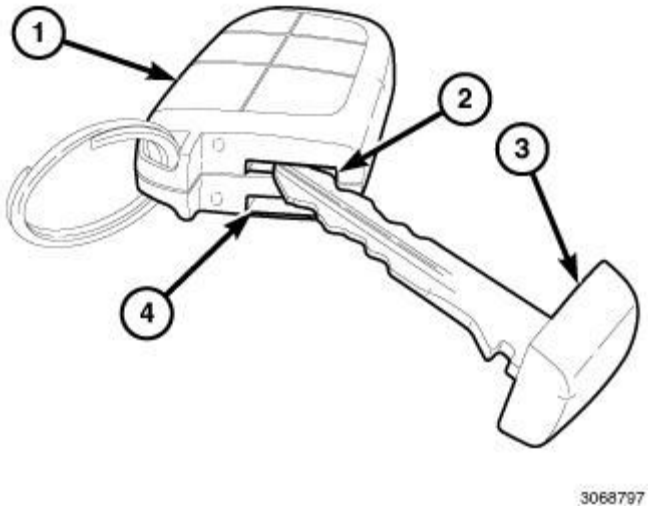

Fig. 29: Emergency Key, Storage Slot & Integrated Key (FOBIK) Case
Courtesy of CHRYSLER GROUP, LLC

CAUTION: Do not touch or disturb the metal contacts for the battery. Avoid touching the new battery. Battery contamination from oils on your skin may result in shortened battery life. If the battery or contacts are contaminated, clean them thoroughly with rubbing alcohol.

1. Unlatch and remove the emergency key (3) from the storage slot (4) of the FOB with Integrated Key (FOBIK) case (1).
2. With the front of the FOBIK case facing upward, insert the tip of the emergency key into the notch (2) between the case halves and twist the key to unsnap and separate the front case half from the back case half.

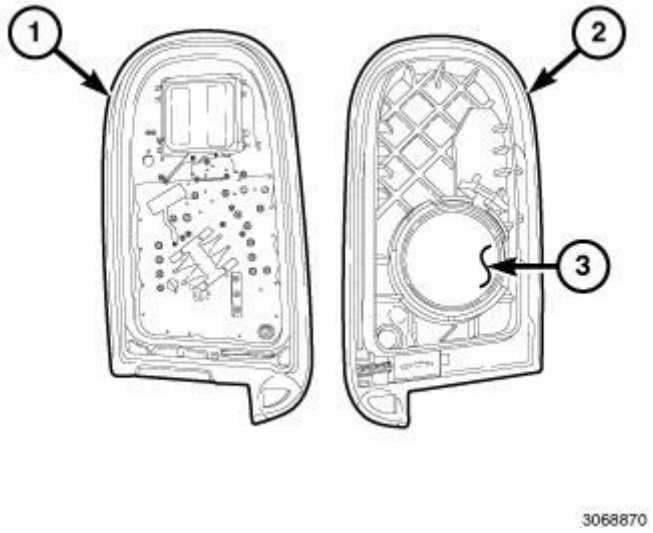

Fig. 30: FOBIK Case & Battery

Courtesy of CHRYSLER GROUP, LLC

3. Lift the battery (3) out of the receptacle in the back half of the FOBIK case (2).
4. Replace the battery with a recommended replacement battery. Refer to **TRANSMITTER, INTEGRATED KEY FOB, SPECIFICATIONS**.
5. Install the new battery into the receptacle in the back half of the FOBIK case with the negative terminal facing upward.
6. Align the front half of the FOBIK case (1) with the back half.
7. Using hand pressure, squeeze the two FOBIK case halves around their perimeters until they snap back together.
8. Reinsert the emergency key into the storage slot of the FOBIK case.
9. Test the FOBIK operation.

STANDARD PROCEDURE - FOBIK TRANSMITTER PROGRAMMING

FOB with Integrated Key (FOBIK) transmitter programming may require the use of the Personal Identification Number PIN) for the vehicle, a diagnostic scan tool and the appropriate diagnostic information. Also be certain that the FOBIK and any replaced electronic modules are programmed in the proper sequence. Refer to **STANDARD PROCEDURE** .

SPECIFICATIONS

SPECIFICATIONS - FOBIK TRANSMITTER

BATTERY

The FOB with Integrated Key (FOBIK) transmitter is powered by a single 3-volt lithium and manganese dioxide button cell battery, which can be removed and replaced without special tools. Refer to **TRANSMITTER, INTEGRATED KEY FOB, STANDARD PROCEDURE**. The international standard battery type designation is: **CR2032** . This battery type is available at many local retail stores. Typical battery life is approximately three years.

CAUTION: Do not handle the batteries any more than necessary. Hands must be clean and dry.

RANGE

Normal FOBIK Remote Keyless Entry (RKE) transmitter operation range for vehicles manufactured for domestic markets is up to 20 meters (66 feet) away from the vehicle. On vehicles manufactured for export markets, normal FOBIK transmitter operation range is up to 10 meters (33 feet) away from the vehicle. If a domestic market vehicle is equipped with the optional factory-installed Remote Start System, the normal FOBIK transmitter operation range is increased to up to 91 meters (300 feet). Please note that the actual FOBIK transmitter range values may be better or worse than specified above, depending upon many possible variables in the environment at the specific time and location that any FOBIK transmission is attempted.

SWITCH, LIFTGATE RELEASE

DESCRIPTION

DESCRIPTION

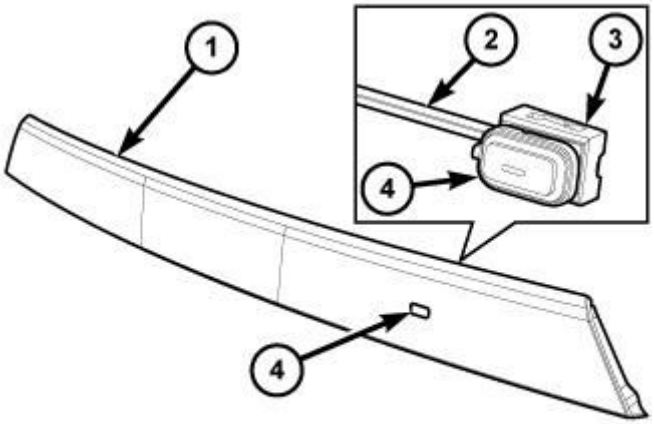

2810385

Fig. 31: Liftgate Handle And Light Bar Unit, PE Liftgate Lock And Unlock Switch And Push Button
Courtesy of CHRYSLER GROUP, LLC

Vehicles equipped with the optional Passive Entry (PE) system have a unique liftgate handle and light bar unit (1) that incorporates a PE liftgate lock and unlock switch (3) and push button (4). This tactile switch is secured to the back of the right side of the handle and light bar unit by three latch features integral to the back of the handle housing. The switch button extends through a clearance hole in the handle housing so that it can be accessed on the outer surface of the handle to the right side of center.

The switch is soldered to the handle and light bar unit wire harness secured to the back of the handle housing that connects the switch along with the liftgate flip-up glass latch release switch, the two license plate lamps and, if the vehicle is so equipped, the rear view camera to the vehicle electrical system through a dedicated take out and connector of the liftgate wire harness.

The PE liftgate lock and unlock switch cannot be adjusted or repaired. If the switch is damaged or ineffective, the entire liftgate handle and light bar unit wire harness must be replaced.

OPERATION

OPERATION

The Passive Entry (PE) liftgate lock and unlock switch is a normally open switch that is hard wired to the Remote Frequency Hub (RFHUB) through a signal circuit and a return circuit. The RFHUB continually monitors the condition of the PE liftgate lock and unlock switch and circuits, and will store a Diagnostic Trouble Code (DTC) for any fault that is detected in these circuits.

When the switch button is depressed, it provides a signal to the RFHUB. The RFHUB determines the system response based upon the inputs it receives through the authentication process with each detected FOB with Integrated Key (FOBIK). If the authentication process is successful, the RFHUB sends an electronic **lock request** or **unlock request** message to the Body Control Module (BCM) over the Controller Area Network (CAN) data bus, and the BCM energizes the liftgate lock and unlock relay accordingly.

The hard wired circuits between the PE liftgate lock and unlock switch and the RFHUB may be diagnosed using conventional diagnostic tools and procedures. Refer to the appropriate wiring information. However, conventional diagnostic methods will not prove conclusive in the diagnosis of the switch or the electronic controls and communication between other modules and devices that provide some features of the PE system. The most reliable, efficient, and accurate means to diagnose the PE system or the electronic controls and communication related to liftgate lock and unlock switch operation requires the use of a diagnostic scan tool. Refer to the appropriate diagnostic information.

2014 ACCESSORIES AND EQUIPMENT

Power Mirrors - Service Information - Cherokee

DESCRIPTION

AUTOMATIC DIMMING INSIDE REAR VIEW MIRROR SYSTEM

The automatic dimming inside rear view mirror is available factory-installed equipment on this vehicle. This mirror is also known as the ElectroChromic Mirror Module (ECMM). This mirror system uses an ElectroChromic (EC) material and will automatically adjust the reflectance of the mirror glass to reduce glare from the headlamps of following vehicles during dark or night time driving conditions. Reducing glare will improve driver comfort and vision under these driving conditions. The components of the automatic dimming inside rear view mirror system are completely self-contained within the inside rear view mirror. Refer to **MIRROR, AUTOMATIC DAY AND NIGHT, DESCRIPTION**.

Certain functions and features of the EC mirror system may rely upon resources shared by other electronic modules in the vehicle over a Local Interface Network (LIN) data bus as well as over the Controller Area Network (CAN) data bus. Other electronic modules in the vehicle that may affect EC mirror operation are:

- **Body Control Module** - The Body Control Module (BCM) is located beneath the instrument panel on the driver side of the vehicle. The BCM controls many of the body electrical system components. The BCM is both a LIN master node and a gateway to the CAN data bus. Refer to **MODULE, BODY CONTROL, DESCRIPTION** .
- **Powertrain Control Module** - The Powertrain Control Module (PCM) (also known as the Engine Control Module/ECM) is located beneath the hood in the engine compartment of the vehicle. The PCM controls many of the powertrain electrical system components. The PCM communicates on the CAN data bus. Refer to **MODULE, POWERTRAIN CONTROL, DESCRIPTION** .
- **Transmission Control Module** - On vehicles with an automatic transmission, the Transmission Control Module (TCM) (also known as the Engine Control Module/ECM) is located beneath the hood in the engine compartment of the vehicle. The TCM controls many of the automatic transmission electrical system components. The TCM communicates on the CAN data bus. Refer to **MODULE, TRANSMISSION CONTROL, OPERATION** .

These components and their controls are combined to provide the following EC mirror system feature:

- **Dimming Disabled In Reverse** - The automatic dimming feature of the EC mirrors is disabled anytime the Reverse position of the transmission is selected.

POWER OPERATED OUTSIDE REAR VIEW MIRROR SYSTEM

The power operated outside rear view mirror system is available factory-installed equipment on this vehicle. This system allows the driver to adjust both the driver and passenger side outside rear view mirrors electrically from the driver seat by operating switches on the arm rest of the driver side front door inside trim panel. These switches allow the vehicle operator a convenient means of adjusting the mirrors to optimize peripheral vision to include the areas at the sides and rear corners of the vehicle, those blind spot areas that are generally blocked

from the view of the vehicle operator by the vehicle structure.

The power operated outside rear view mirror system includes the following major components, which are described in further detail elsewhere in this service information:

- **Power Mirror** - Vehicles equipped with the power operated outside rear mirror system have a power operated mirror secured to the mirror flag area at the front of each front door glass opening. Refer to **MIRROR, OUTSIDE REARVIEW, DESCRIPTION**.
- **Power Mirror Switch** - Vehicles equipped with the power operated outside rear view mirror system have a power mirror selector switch, a power mirror control switch, and a power folding mirror switch integral to the power switch module located near the front of the arm rest on the driver side front door interior trim panel. Refer to **SWITCH, LOCK, DESCRIPTION** .

Certain functions and features of the power operated outside rear view mirror system may rely upon resources shared by other electronic modules in the vehicle over a Local Interface Network (LIN) data bus as well as over the Controller Area Network (CAN) data bus. Other electronic modules in the vehicle that may affect power operated outside rear view mirror operation are:

- **Blind Spot Sensors** - Vehicles equipped with the BSM system have both a Left Blind Spot Sensor (LBSS) and a Right Blind Spot Sensor (RBSS). The LBSS and the RBSS each include a RAdio Detection And Ranging (RADAR) sensor and an integral electronic control unit. Each of the two control units is independent, communicates on the Controller Area Network (CAN) data bus and is hard wired to its respective right or left blind spot display. The LBSS and the RBSS are concealed behind their respective right and left outboard ends of the rear bumper fascia, just behind the rear wheel openings.
- **Body Control Module** - The Body Control Module (BCM) is located beneath the instrument panel on the driver side of the vehicle. The BCM controls many of the body electrical system components. The BCM is both a LIN master node and a gateway to the CAN data bus. Refer to **MODULE, BODY CONTROL, DESCRIPTION** .
- **Radio Frequency Hub Module** - The Radio Frequency Hub Module (RFHM) (also known as the RF Hub) is the RKE system control module and RF receiver located in the rear cargo area headliner. Refer to **MODULE, RADIO FREQUENCY (RF HUB), DESCRIPTION** .

These components and their controls are combined to provide the following power operated outside rear view mirror system features:

- **Blind Spot Monitor Display** - In vehicles also equipped with the optional Blind Spot Monitor (BSM) system, an amber Light Emitting Diode (LED) unit behind a small, triangular translucent icon in each outside rear view mirror glass is illuminated each time the right or left blind spot sensor detects an object of interest in one of the monitored vehicle blind spots. Refer to **DISPLAY, BLIND SPOT, DESCRIPTION** .
- **Heated Mirrors** - The heated mirror option includes an electric heating grid behind the mirror glass in each outside rear view mirror, which can clear the mirror glass of ice, snow, or fog. Refer to **DESCRIPTION** .
- **Puddle Lamps** - In vehicles equipped with this option, white Light Emitting Diode (LED) units behind a small round lens on the underside of each outside rear view mirror illuminate the ground outside each front door when a door is opened. Refer to **DESCRIPTION** .

- **Signal Lamps** - In vehicles equipped with this option, two amber Light Emitting Diode (LED) units illuminate a light pipe behind a clear lens that wraps around the lower outward and forward-facing surfaces of each mirror shell in concert with the turn signals. Refer to **DESCRIPTION** .

OPERATION

OPERATION

AUTOMATIC DIMMING INSIDE REAR VIEW MIRROR SYSTEM

The ElectroChromic Mirror Module (ECMM) of the automatic dimming inside rear view mirror system receives battery current on a fused ignition output (run) circuit from a fuse in the Junction Block (JB) (also known as the interior Power Distribution Center/PDC). The ECCM has a path to ground at all times through a take out and eyelet terminal of the body wire harness that is secured to the body sheet metal. These connections allow the automatic dimming inside rear view mirror system to operate. When the automatic dimming mirror system is on, a green power indicator within the mirror housing is illuminated by an integral Light-Emitting Diode (LED) unit.

POWER OPERATED OUTSIDE REAR VIEW MIRRORS

The power operated outside rear view mirrors are connected to battery current at all times. Each mirror head contains two electric motors, two drive mechanisms, an electric heating element and the mirror glass. First, a mirror selector switch button is depressed in the driver door power switch module to determine whether the mirror adjuster switch will have control over the right or left mirror. If the vehicle is equipped with the high current door power switch module configuration, hard wired ground and battery current outputs to each power mirror motor determine whether the horizontal or the vertical motor will be operated and the polarity of those outputs control the direction in which the motor will move the drive unit and mirror glass.

Power mirror and mirror switch functionality is the same with the low current configuration; however, the driver door power switch module sends power mirror switch status messages over the Local Interface Network (LIN) data bus to the driver front door control module. The driver front door control module then controls the high current outputs to the driver door mirror motors or sends electronic request messages over the Controller Area Network (CAN) Interior High Speed (IHS) data bus to the passenger front door control module to control high current outputs to the passenger door mirror motors.

The power mirror switch is diagnosed using a scan tool, refer to **DIAGNOSIS AND TESTING** for the appropriate information.

MIRROR, AUTOMATIC DAY AND NIGHT

DESCRIPTION

DESCRIPTION

INSIDE MIRROR - An automatic dimming inside rear view mirror is an available factory-installed option on this vehicle. This mirror features a thin layer of ElectroChromic (EC) material sandwiched between two pieces

of conductive glass to make up the face of the mirror. The EC material explains how this mirror also became known as the ElectroChromic Mirror Module (ECMM). The ECMM will automatically change the reflectance of the inside rear view mirror glass to reduce the glare of headlamps approaching the vehicle from the rear while driving during dark or night time conditions. The ability to turn this option ON or OFF will be found in the U-Connect touch screen as a soft button select switch.

The ECMM is a completely self-contained unit that replaces the standard equipment prismatic inside rear view mirror. Besides the mirror glass, the ECMM includes two photocell sensors, the electronic mirror control circuitry and the hardware necessary to communicate as a Local Interface Network (LIN) slave node on the LIN data bus.

Hard wired circuitry connects the ECMM to the electrical system of the vehicle. These hard wired circuits are integral to several wire harnesses, which are routed throughout the vehicle and retained by many different methods. These circuits may be connected to each other, to the vehicle electrical system and to the ECMM through the use of a combination of soldered splices, splice block connectors and many different types of wire harness terminal connectors and insulators. Refer to the appropriate wiring information. The wiring information includes wiring diagrams, proper wire and connector repair procedures, further details on wire harness routing and retention as well as pin-out and location views for the various wire harness connectors, splices and grounds.

The ECMM cannot be repaired or adjusted. If any component of this unit is ineffective or damaged, the entire ECMM unit must be replaced.

OUTSIDE MIRROR - The automatic dimming driver side outside rear view mirror is able to automatically change its reflectance. The automatic dimming outside rear view mirror replaces the standard equipment outside rear view mirror. The two layers of conductive mirror glass with a thin layer of electrochromic material between them is contained within the outside rear view mirror glass case. However, this mirror relies upon the photocells and mirror control circuitry of the automatic dimming inside rear view mirror to control its reflectance.

The automatic dimming outside rear view mirror is secured to the same mounting flag on the front door panel and in the same manner that is used to mount the standard equipment outside rear view mirrors. The mirror is connected to the vehicle electrical system through a dedicated take out and connector of the front door wire harness. The automatic dimming circuitry of the outside rear view mirror receives current through auto day/night mirror feed (+) and return (-) circuits from the inside rear view mirror, and will only operate when the ignition switch is in the ON or START positions.

The automatic dimming outside rear view mirror sensitivity cannot be repaired or adjusted. If any component of this unit is ineffective or damaged, the entire outside rear view mirror unit must be replaced. For service procedures, refer to **MIRROR, OUTSIDE REARVIEW, REMOVAL** , **MIRROR, OUTSIDE REARVIEW, GLASS, REMOVAL** , **MIRROR, OUTSIDE REARVIEW, INSTALLATION** and **MIRROR, OUTSIDE REARVIEW, GLASS, INSTALLATION** .

OPERATION

OPERATION

Both the inside and outside automatic dimming mirrors receive battery current through a fused ignition switch output (run/start) circuit and fuse in the Body Control Module (BCM), and will only operate when the ignition

switch is in the ON or START positions.

INSIDE

The soft switch located in the U-Connect touch screen provides the vehicle operator with a manual control of whether the automatic dimming feature is operational. If the dimming is turned to the off position, the mirror will always turn back ON by default at the onset of a new ignition ON cycle. The automatic dimming mirror circuitry also senses the backup lamp circuit, and will automatically disable its self-dimming feature whenever the transmission gear selector is in the REVERSE position.

The ambient photocell sensor of the mirror faces forward, to detect the outside light levels through the windshield glass. A second headlamp photocell sensor is located in the upper right quadrant of the mirror face, to detect the light level received at the rear window side of the mirror. When the mirror control circuitry detects that the difference between the two sensed light levels has become too great (the light level received at the rear of the mirror is much higher than that at the front of the mirror) the mirror begins to darken. A thin layer of electrochromic material between two pieces of conductive glass make up the face of the mirror.

On vehicles equipped with an optional driver side automatic dimming outside rear view mirror, the signal to control the dimming of that mirror is generated by the automatic dimming inside rear view mirror circuitry. That signal is then delivered to the driver side outside rear view mirror on two hard wired circuits.

The BCM determines the ignition status and the gear status. Once determined, the BCM sends an enable/disable signal over the LIN bus to the electrochromic mirror. The electrochromic mirror reads the internal message for the sensor value and determines the ratio between forward/backward light intensity, along with the enable signal coming from the BCM, to determine the reflecting mode to be used.

OUTSIDE

The driver side automatic dimming outside mirror is operated by the same controls and circuitry as the automatic inside rear view mirror. When the automatic inside rear view mirror is switched ON or OFF, the automatic dimming outside mirror is likewise switched ON or OFF. Just as in the automatic inside rear view mirror, a thin layer of electrochromic material between two pieces of conductive glass make up the face of the automatic dimming outside mirror. However, the signal to control the dimming of the outside mirror is generated by the automatic dimming inside rear view mirror control circuitry based upon the inputs from the two photocell sensors integral to the inside mirror. That signal is then delivered to the driver side outside rear view mirror on two hard wired circuits.

DIAGNOSIS AND TESTING

DIAGNOSIS AND TESTING - AUTOMATIC DIMMING INSIDE REAR VIEW MIRROR

For complete circuit diagrams, refer to **SYSTEM WIRING DIAGRAMS** .

1. With the status of the ignition switch Of, disconnect and isolate the battery negative cable. Unplug the wire harness connector from the ElectroChromic Mirror Module (ECMM). Reconnect the battery negative cable, then transition the status of the ignition switch to On. Check for battery voltage at the fused ignition output (run) circuit cavity of the wire harness connector for the ECMM. If OK, go to step

2. If not OK, repair the open circuit as required.

2. Transition the status of the ignition switch to Off. Disconnect and isolate the battery negative cable. Check for continuity between the ground circuit cavity of the wire harness connector for the ECMM and a good ground. There should be continuity. If OK, go to step 3. If not OK, repair the open circuit to ground as required.
3. Reconnect the wire harness connector for the ECMM. Reconnect the battery negative cable. Cover the forward facing ambient photocell sensor to keep out any ambient light. Transition the status of the ignition switch to On. Place the transmission gear selector lever in the Neutral position.

NOTE: The ambient photocell sensor must be covered completely, so that no light reaches the sensor. Use a finger pressed tightly against the sensor, or cover the sensor completely with electrical tape.

4. Shine a light into the rearward facing headlamp photocell sensor. The mirror glass should darken. Turn the light Off. The mirror glass should return to normal reflectance. If OK, go to step 5. If not OK, replace the ineffective ECMM unit.
5. Use a diagnostic scan tool and the appropriate diagnostic procedure to perform further ECMM diagnosis.

MIRROR, OUTSIDE REARVIEW

DESCRIPTION

DESCRIPTION

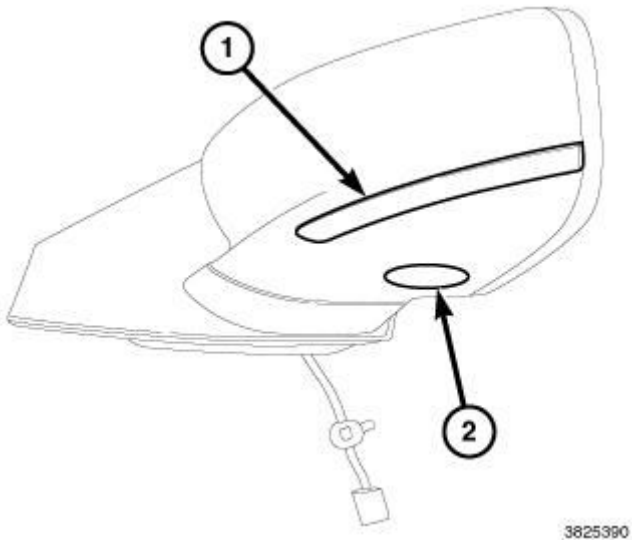

Fig. 1: Signal Lamps & Puddle Lamps
Courtesy of CHRYSLER GROUP, LLC

Vehicles equipped with the optional power operated outside rear view mirror system are equipped with a power mirror head unit located on the outside of each front door. Each power mirror has a molded plastic housing and bezel that faces rearward and a molded plastic decorative cover or shell that faces forward. The shell may also

include openings to accommodate Light Emitting Diode (LED) signal lamps (1) and puddle lamps (2) on vehicles equipped with those optional features.

The housing and shell are secured to a molded plastic arm with an integral, hollow pivot pin that is secured to the mirror mounting bracket. This pivot pin features a spring-loaded detent mechanism that allows the mirror to be manually folded toward the door glass for additional clearance during vehicle shipping or storage. The mirror mounting bracket has three threaded studs that are used to secure the mirror assembly to the flag area at the front of each front door glass opening.

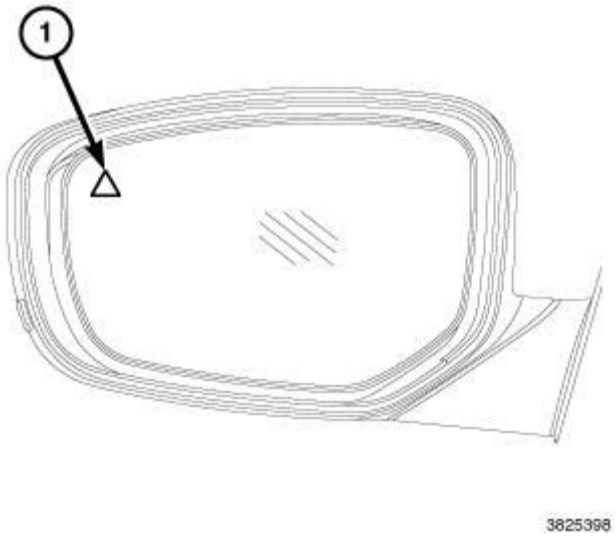

Fig. 2: Blind Spot Monitor (BSM) LED Indicator Lamp Unit
Courtesy of CHRYSLER GROUP, LLC

The open rearward-facing side of the housing and bezel unit serves as a seat within which the mirror glass is exposed to the view of the vehicle operator. The mirror glass is mounted within a molded plastic case. In vehicles with the heated mirror option, a glass heating grid locked within a plastic membrane is sandwiched between the back of the mirror glass and the case. A Blind Spot Monitor (BSM) LED indicator lamp unit (1) is also integral to the case in vehicles with that option.

The mirror glass case snaps onto a swivel assembly integral to the mirror articulation mechanism on the arm within the mirror housing. The mirror articulation mechanism includes two small Direct Current (DC) electric motors with gear drives and clutch units that connect them to the swivel assembly. A mirror wire harness is connected to each of the electrical elements within the mirror housing and is routed through the hollow pivot pin and the mounting bracket to the interior of the front door, where it connects the mirror to the vehicle electrical system through a dedicated take out and connector of the door wire harness.

The power operated outside rear view mirror housing and bezel, mounting bracket, arm and articulation mechanism cannot be adjusted or repaired. If damaged or ineffective, the entire mirror unit must be replaced. Refer to **MIRROR, OUTSIDE REARVIEW, REMOVAL** and **MIRROR, OUTSIDE REARVIEW, GLASS, REMOVAL** . The puddle lamp and the signal lamp are available for separate service replacement. Refer to **LAMP, MIRROR, REMOVAL** . The mirror shell as well as a mirror glass and case unit with an integral heating grid and BSM indicator lamp are available for separate service replacement. Refer to **MIRROR, OUTSIDE REARVIEW, REMOVAL** and **MIRROR, OUTSIDE REARVIEW, GLASS,**

REMOVAL .

OPERATION

OPERATION

Each power mirror articulation mechanism is driven by two individual Direct Current (DC) reversible electric motors. Each motor also features Positive Temperature Coefficient (PTC) protection. One motor in each mirror controls horizontal (left and right) movement, while the second motor controls vertical (up and down) movement. The power mirror selector switch setting determines which mirror is to receive the output from the power mirror control switch.

The power mirror control switch determines which motor will be energized and the direction in which the motor will be driven. When battery current and ground are output from the control switch to the two motor terminals, the motor rotates in one direction. When the switch output polarity to the motor connections is reversed, the motor rotates in the opposite direction. The mirror articulation mechanism also incorporates clutches that protect the mechanism by disengaging the drive whenever the travel limits of the articulation swivel have been reached.

The power mirrors as well as the hard wired input circuits for the mirrors may be diagnosed using conventional diagnostic tools and procedures. Refer to the appropriate wiring information.

DIAGNOSIS AND TESTING

DIAGNOSIS AND TESTING - POWER OUTSIDE REAR VIEW MIRROR

The following tests will confirm whether the power mirror horizontal and vertical motors and articulation mechanisms are functional in either a driver or passenger outside rear view mirror. If the mirror motors and mechanisms pass the following tests, but a mirror fails to operate using the power mirror switch integral to the power lock and power window switch pod on the driver side front door, be certain to test the switch and the wiring between the switch and the mirror before considering component replacement.

Refer to **SWITCH, LOCK, DIAGNOSIS AND TESTING** and refer to the appropriate wiring information. The wiring information includes wiring diagrams, proper wire and connector repair procedures, details of wire harness routing and retention, connector pin-out information and location views for the various wire harness connectors, splices and grounds.

1. Disconnect and isolate the battery negative cable.
2. Remove the trim panel from the inside of the door to which the ineffective power mirror is secured. Refer to **PANEL, DOOR TRIM, REMOVAL** .
3. Disconnect the door wire harness connector from the connector for the mirror to bet tested.
4. Reconnect the battery negative cable.
5. Connect a jumper wire to a good body ground.
6. Connect a second jumper wire to a source of fused 12-volt battery current.
7. See the Power Mirror Motor Test table below for the correct jumper wire connections to the power mirror wire harness connector.

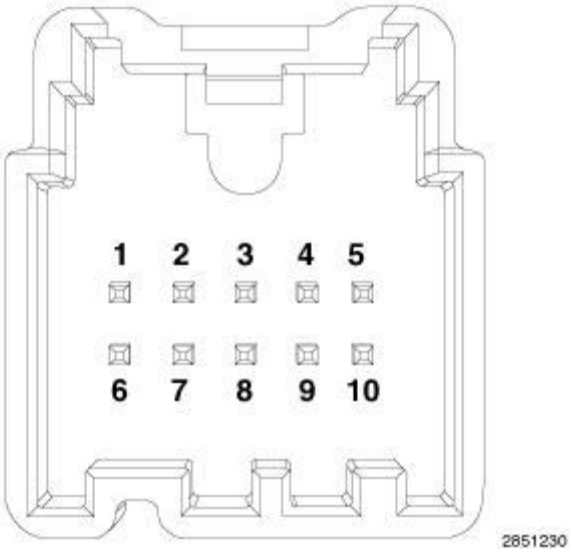

Fig. 3: Passenger Front Door Switch Module Connector Terminal Identification
Courtesy of CHRYSLER GROUP, LLC

POWER MIRROR MOTOR TEST TABLE

POWER MIRROR MOTOR TEST			
MIRROR CONNECTOR PINS		MIRROR REACTION	
12 VOLTS	GROUND	RIGHT MIRROR	LEFT MIRROR
Pin 1	Pin 2	-	Up
Pin 6	Pin 2	-	Left
Pin 2	Pin 1	-	Down
Pin 2	Pin 6	-	Right
Pin 7	Pin 2	Up	-
Pin 4	Pin 2	Left	-
Pin 2	Pin 7	Down	-
Pin 2	Pin 4	Right	-

NOTE: **If either the horizontal or the vertical power mirror motor and articulation mechanism do not respond as indicated in the table, replace the ineffective power mirror assembly. If both power mirror motors and mechanisms respond as indicated in the table, test the power mirror switch. If the switch tests okay, test and repair the wiring between the power mirror switch and the power mirror for a short or open circuit as required.**

SWITCH, MIRROR

DESCRIPTION

DESCRIPTION

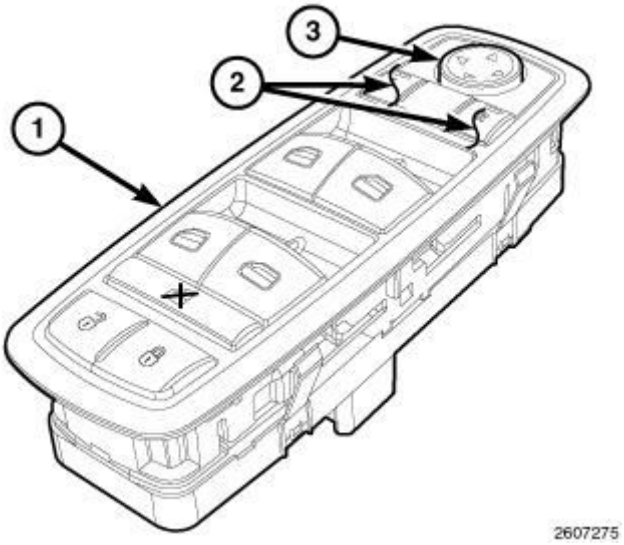

Fig. 4: Driver Front Door Power Switch Module
Courtesy of CHRYSLER GROUP, LLC

The power mirror switch includes the mirror selector switch (2) and the mirror control switch (3), which are both integral to the driver side front door power switch module (1) located near the forward end of the arm rest on the driver side front door inside trim panel. The mirror selector switch includes two momentary push buttons marked **R** (Right) and **L** (Left). The mirror control switch includes a momentary selector disc marked with four directional arrow heads.

There are two unique versions of the driver side front door power switch module. One version is for use in vehicles equipped with the base power window system and is a high current design. The other version is for use in vehicles equipped with the premium power window system and is a low current design. Either version will operate the power mirror system correctly, but an incorrect version will not be compatible with the front door power window system components.

The power mirror switch is serviced only as a unit with the driver side front door power switch module (1). If any part of this switch module is ineffective or damaged, the entire module must be replaced with a new unit. Refer to **SWITCH, LOCK, REMOVAL** .

OPERATION

OPERATION

The power mirror switch circuitry within the driver side front door power switch module is connected to battery current through a non-switched fused B(+) circuit received from a fused B(+) fuse in the underhood Power Distribution Center (PDC). The power mirror switch circuitry also has a path to ground at all times through a take out and eyelet terminal of the body wire harness that is secured to the body sheet metal. These connections allow the power mirror switch to remain operational regardless of the status of the ignition switch.

A latching push button power mirror selector switch has three positions, **L** (left), **R** (right) and **N** (neutral). After the right or left mirror is selected, one of the four directional arrows on the momentary power mirror control switch disc is depressed to move the selected mirror up, down, right or left. The power mirror control

switch directs the appropriate battery current and ground feeds to the proper horizontal or vertical motor within the mirror articulating mechanism of the selected power mirror.

The power mirror switches as well as the hard wired input and output circuits of the switches may be diagnosed using conventional diagnostic tools and procedures. Refer to **SWITCH, LOCK, DIAGNOSIS AND TESTING** .

2014 ACCESSORIES AND EQUIPMENT

Power Seats - Service Information - Cherokee

DESCRIPTION

DESCRIPTION

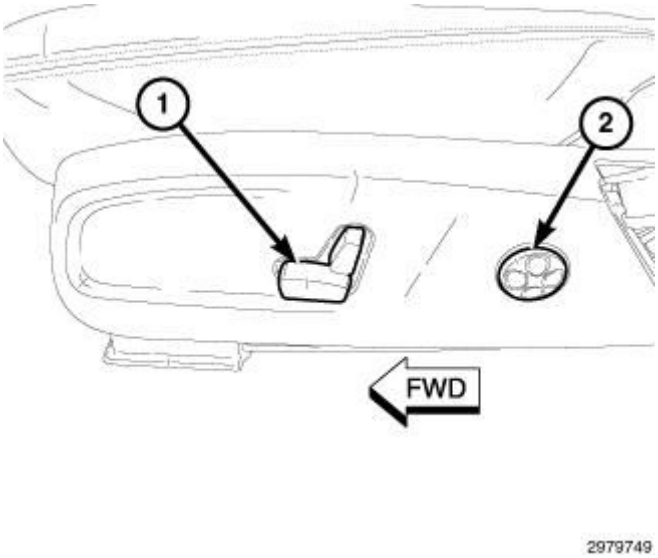

Fig. 1: Seat Position Switch & Lumbar Switch
Courtesy of CHRYSLER GROUP, LLC

A driver side six-way power seat is available on this vehicle. The power seat system allows the driver to electrically adjust the seating position using the power seat switch (1) located on the outboard seat cushion side shield. This graphic also shows the available lumbar option if equipped (2).

The six-way power seat can be adjusted forward, rearward, front up and front down. This power seat system may also be equipped with heated seats.

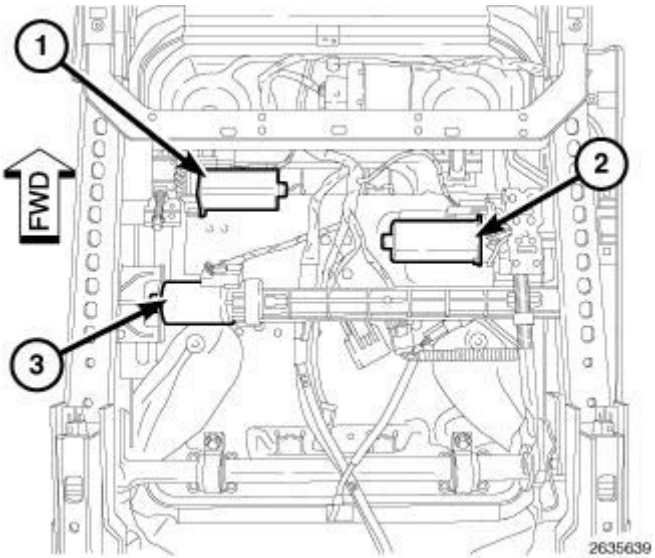

Fig. 2: Reversible Motor, Up/Down Seat Motor & Forward/Rearward Seat Motor
Courtesy of CHRYSLER GROUP, LLC

The power seat adjuster assembly is made up of an upper and a lower power seat adjuster. The upper power seat adjuster contains one reversible motor (1) that is connected to a gearbox that tilts the front of the seat cushion up and down. The lower power seat adjusted contains two reversible motors connected to gearboxes. One motor (2) tilts the rear of the seat up and down and the other motor (3) moves the seat assembly forward and rearward. When the rear and front tilt motors are activated together, the height of the driver seat raises and lowers. Each motor contains a self-resetting circuit breaker to protect it from overload. Consecutive or frequent resetting of the circuit breakers may damage the motors.

The power seat motors cannot be adjusted or repaired and if inoperative or damaged, the entire power seat adjuster assembly must be replaced.

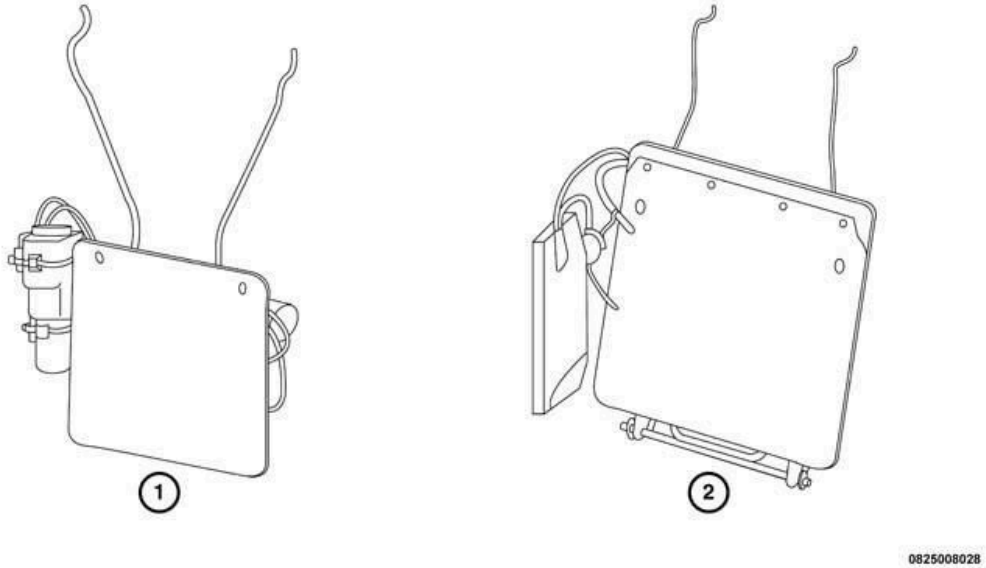

Fig. 3: Heated & Vented Seat System (HVS Equipped) Lumbar System & Heated Only Or Non Heated Or Non Vented Seat (non-HVS) Lumbar System
Courtesy of CHRYSLER GROUP, LLC

There are two possible lumbar systems available for this vehicle.

- **HEATED AND VENTED SEAT SYSTEM (HVS equipped) LUMBAR SYSTEM (1)**
- **HEATED ONLY OR NON HEATED OR NON VENTED SEAT (non-HVS) LUMBAR SYSTEM (2).**

OPERATION

OPERATION

The power seat system receives battery current through a fuse in the Power Distribution Center (PDC) and remains operational, regardless of ignition position.

When a power seat switch is actuated, a battery feed and a ground path are applied through the power seat switch contacts to the appropriate motor or motors. The motor and drive unit operate to move the seat in the selected direction until the switch is released, or until the travel limit of the gearbox and linkage is reached. When the switch is moved in the opposite direction, the battery feed and ground path to the motor is reversed through the switch contacts. This causes the motor to run in the opposite direction.

The power seat motors, gearboxes and linkage cannot be adjusted or repaired and if inoperative or damaged, the entire power seat adjuster and seat cushion pan, or the power reclining seat back must be replaced as an assembly.

DIAGNOSIS AND TESTING

DIAGNOSIS AND TESTING - POWER SEAT SYSTEM

NOTE: For complete circuit diagrams, refer to SYSTEM WIRING DIAGRAMS . Wiring Information includes wiring diagrams, connector pin-out and location views, details of wire harness routing and retention, splice and ground locations and proper wire and connector repair procedures.

Operate the power seat switches and power lumbar support switch. Move the seat, seat back and power lumbar support in all directions. The seat and lumbar support should move in each of the selected directions. If any of the power seat and/or lumbar support motors fail to operate in more than one direction, proceed as follows:

1. Inspect the power seat and power lumbar pneumatic motor to ensure the electrical connectors are fully connected to the motor. If OK, go to Step 2. If not OK, reconnect the electrical connector(s).
2. Check the power seat fuse in the Power Distribution Center (PDC). If OK, go to Step 3. If not OK, replace the fuse.
3. Remove the power seat switch and/or power lumbar switch from the seat cushion side panel. Check for

battery voltage at the fused B(+) circuit cavity of the switch wire harness connector. If OK, go to Step 4. If not OK, repair the open circuit as required.

4. Check for continuity between the ground circuit cavity of the power seat switch and/or power lumbar switch wire harness connector and a good ground. There should be continuity. If OK, go to Step 5. If not OK, repair the open circuit to ground as required.
5. Test the power seat switch and/or power lumbar switch. Refer to **SWITCH, SEAT, DIAGNOSIS AND TESTING** and **SWITCH, LUMBAR CONTROL, DIAGNOSIS AND TESTING**. If the switch tests OK, check the wire harness between the switch and the motor(s) (refer to **SYSTEM WIRING DIAGRAMS**). If the circuits check OK, replace the inoperative power seat track or the seat back assembly (Refer to **SEATS, FRONT** or **SEATS, REAR**). If the circuits are not OK, repair the wire harness as required.

SWITCH, MEMORY

DESCRIPTION

DESCRIPTION

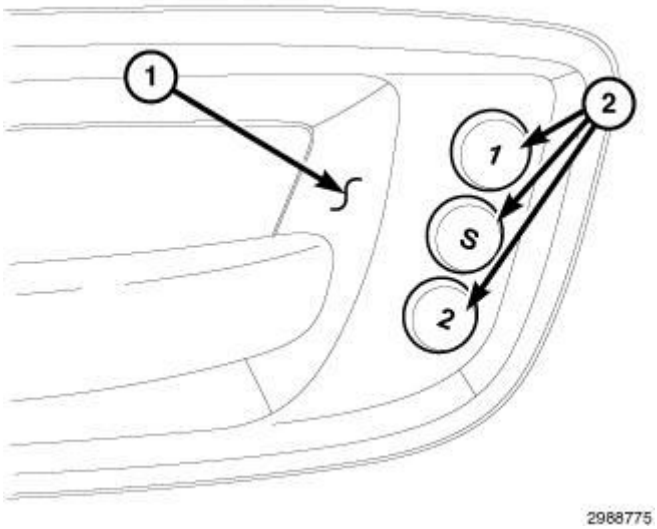

Fig. 4: Memory Switch & Driver Door Trim Panel
Courtesy of CHRYSLER GROUP, LLC

When equipped, the memory seat switch (2) is located on the driver door trim panel (1). The driver seating position can be automatically adjusted for two different driver preference settings using the memory seat switch. The memory seat system is able to store and recall all driver power seat positions (fore/aft, up/down, tilt and recline), driver side power rear view mirror position and the power adjustable steering column position, when equipped. The memory system is also able to store and recall up to twenty radio station presets for two drivers (ten AM and ten FM). The memory system also will store and recall the last station listened to for each driver, even if it is not one of the twenty preset stations.

OPERATION

OPERATION

When one of the two driver memory seat switches is pressed, a resistance signal is sent to the Memory Seat Module (MSM) over the Controller Area Network (CAN) data bus. The MSM is responsible for the 12 volt Direct Current (DC) feed and ground path to the power seat motors.

The MSM receives the memory seat switch set and selection inputs through the CAN bus circuit, along with input signals from the hall effect sensors in the driver side mirror and power adjustable steering column (when equipped), and hardwired input signals from the hall effect sensors mounted in each of the driver power seat motors. The programmed software in the module allow it to know where the driver seat, driver side mirror and power adjustable steering column (when equipped) are located in their designed travel, by the pulse count generated from each hall effect sensor. This way, when a memory switch is pressed, the MSM powers the driver seat, driver side mirror and power adjustable steering column (when equipped), until each correct preset location is achieved. The MSM will prevent seat memory recall function from being initiated if the transmission gear selector lever is not in the Park position or if the driver seat belt is latched. These inputs are monitored by the MSM over the CAN bus.

- A memory setting is saved by pressing the "set" button, then pressing either the memory "1" or "2" button within five seconds of pressing the "set" button.
- A memory setting is recalled by pressing either the memory "1" or "2" button, or by pressing the unlock button on a "linked" Remote Keyless Entry (RKE) transmitter.

The memory seat switch is diagnosed using a scan tool. Refer to **DIAGNOSIS AND TESTING** .

The memory seat switch cannot be adjusted or repaired and must be replaced if damaged or inoperative.

REMOVAL

REMOVAL

NOTE: Take the proper precautions to protect the door handle and bezel from cosmetic damage while performing this procedure.

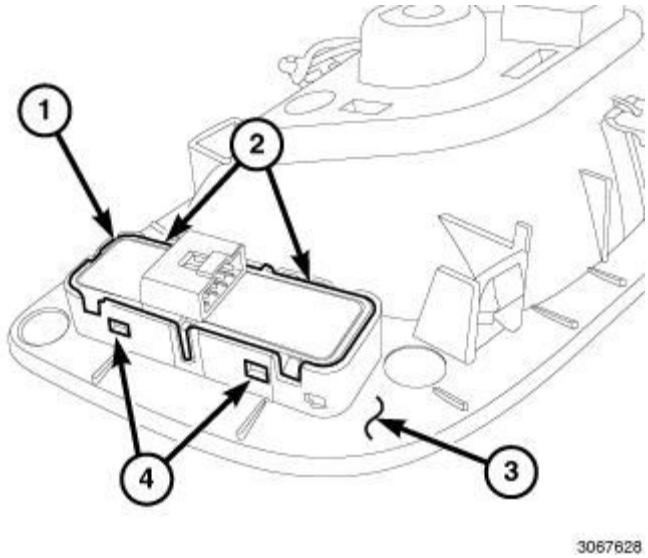

Fig. 5: Memory Seat Switch & Retaining Tabs
Courtesy of CHRYSLER GROUP, LLC

1. Disconnect and isolate the negative battery cable.
2. Remove the driver door handle and place it on a workbench. Refer to **PANEL, DOOR TRIM, REMOVAL** .
3. Using an appropriate flat bladed tool, gently disengage the four retaining tabs (2 and 4) that secure the memory seat switch (1) to the back of the driver door handle bezel (3).
4. Remove the memory seat switch from the driver door handle bezel.

INSTALLATION

INSTALLATION

NOTE: Take the proper precautions to protect the door handle and bezel from cosmetic damage while performing this procedure.

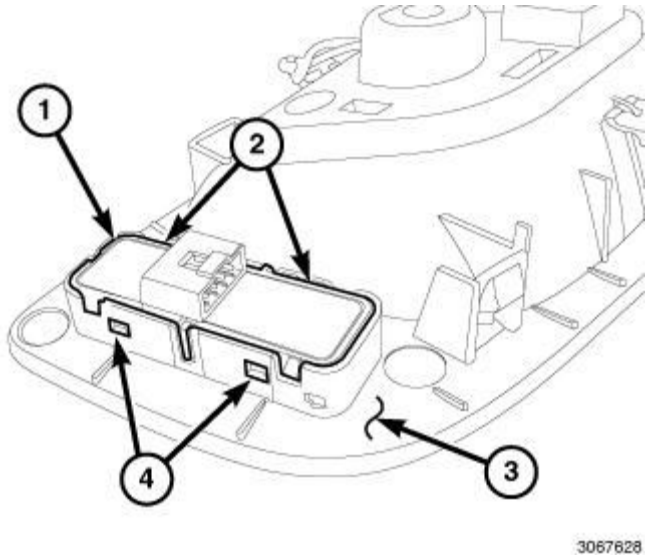

Fig. 6: Memory Seat Switch & Retaining Tabs
Courtesy of CHRYSLER GROUP, LLC

1. Install the memory seat switch (1) into the driver door handle bezel (3). Push the switch firmly into the bezel until the retaining tabs (2 and 4) are fully engaged.
2. Install the driver door handle and bezel. Refer to **PANEL, DOOR TRIM, INSTALLATION** .
3. Reconnect the negative battery cable.
4. Using a scan tool, perform the Power Seat System Verification test. Refer to **STANDARD PROCEDURE** .
5. Verify proper memory seat system operation.

MOTOR, SEAT

REMOVAL

REMOVAL- SEAT HEIGHT ADJUSTMENT MOTOR

WARNING: Disable the airbag system before attempting any component diagnosis or service of the front seats, when equipped with front seat air bags. Disconnect and isolate the negative battery (ground) cable, then wait two minutes for the airbag system capacitor to discharge before performing further diagnosis or service. This is the only sure way to disable the airbag system. Failure to follow these instructions may result in accidental airbag deployment and possible serious or fatal injury.

WARNING: Use caution when removing the height adjust motor and gearbox assembly (2) if the motor is inoperative, and the power seat is not in the full up position. The seat adjuster assembly is under load from the height adjust assist spring and may cause the motor to rotate under pressure

when the fasteners are removed. The seat adjuster assembly also may spring upward when the motor is removed. If the height adjust motor is operative, move the power seat to the full up position prior to disconnecting the battery.

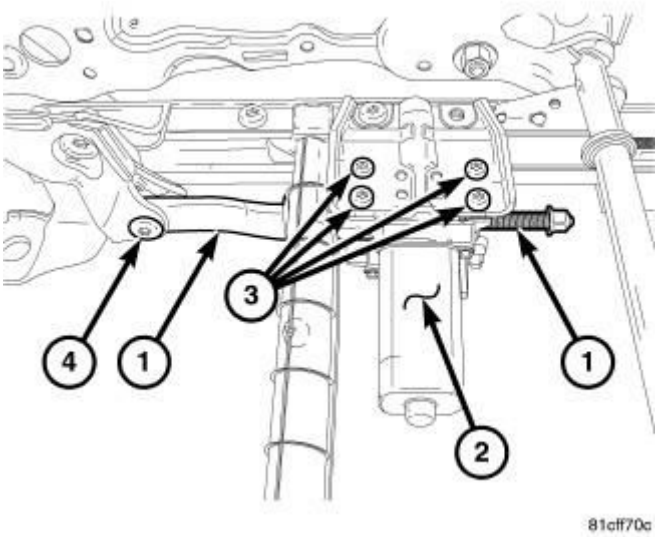

Fig. 7: Height Adjust Motor And Gearbox Assembly
Courtesy of CHRYSLER GROUP, LLC

1. Disconnect and isolate the negative battery cable.
2. Remove the inoperative front seat. Refer to **SEAT, REMOVAL** .
3. Disconnect the height adjust motor electrical connector.
4. Remove the height adjust motor gearbox spindle (1) retaining screw (4).
5. Remove the motor retaining screws (3).
6. Remove the height adjust motor and gearbox assembly (2) from the seat track.

REMOVAL- SEAT FORWARD/AFT MOTOR

WARNING: **Disable the airbag system before attempting any component diagnosis or service of the front seats, when equipped with front seat air bags. Disconnect and isolate the negative battery (ground) cable, then wait two minutes for the airbag system capacitor to discharge before performing further diagnosis or service. This is the only sure way to disable the airbag system. Failure to follow these instructions may result in accidental airbag deployment and possible serious or fatal injury.**

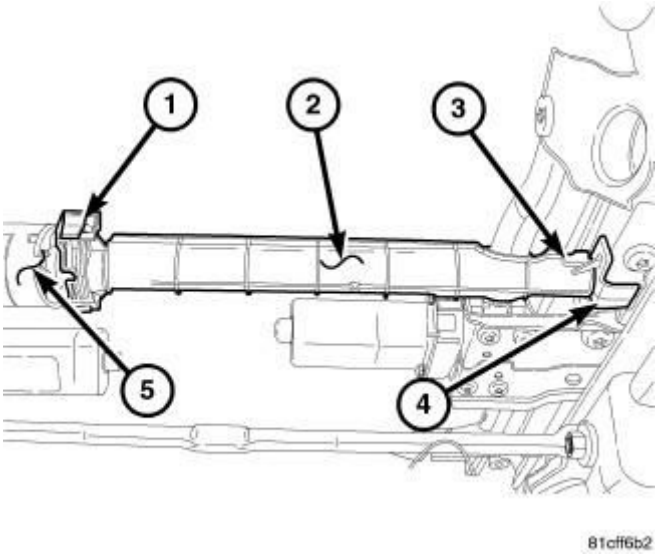

Fig. 8: Identifying Power Seat Fore/Aft Motor
Courtesy of CHRYSLER GROUP, LLC

1. Disconnect and isolate the negative battery cable.
2. Remove the inoperative front seat. Refer to **SEAT, REMOVAL** .
3. Remove the flex drive cable cover (2).
   a. Using a small flat bladed tool, release the mounting strap (1) that secures the flex drive cable cover (2) to the fore/aft motor (5).
   b. Pivot the cover away from the cable and pull it away from the seat frame (4) to disengage the cover slot from the mounting tab (3).

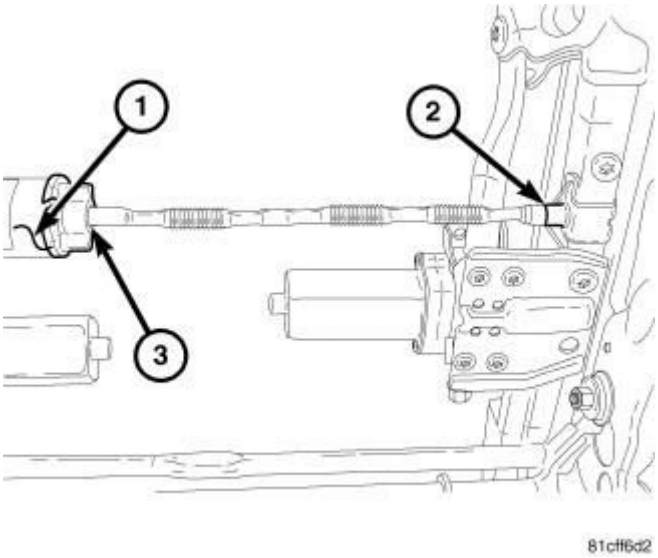

Fig. 9: Flex Drive Cable
Courtesy of CHRYSLER GROUP, LLC

4. Remove the flex drive cable.

a. Carefully bend the flex drive cable at the center and pull the motor end (3) away from the fore/aft motor (1) to disengage.
b. Pull the cable out of the screw drive assembly (2) and remove from seat track.

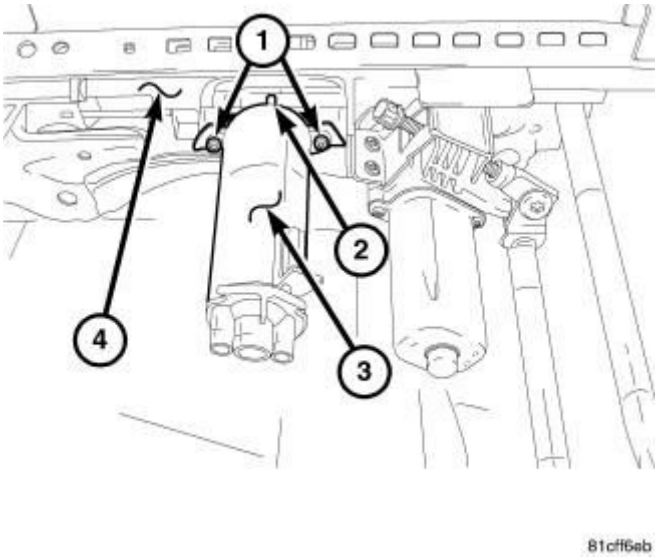

Fig. 10: Seat Frame Assembly
Courtesy of CHRYSLER GROUP, LLC

5. Disconnect the fore aft motor electrical connector.
6. Remove the fore/aft motor to mounting bracket retaining screws (1).
7. Remove the fore/aft motor (3).
8. Remove the short flex drive cable (2) from the seat frame assembly (4).

INSTALLATION

INSTALLATION - SEAT FORWARD/AFT MOTOR

WARNING: Disable the airbag system before attempting any component diagnosis or service of the front seats, when equipped with front seat air bags. Disconnect and isolate the negative battery (ground) cable, then wait two minutes for the airbag system capacitor to discharge before performing further diagnosis or service. This is the only sure way to disable the airbag system. Failure to take the proper precautions may result in accidental airbag deployment and possible serious or fatal injury.

CAUTION: Seat track side to side timing may be off if the fore aft motor was completely inoperative prior to removal. In the event the track timing is in question, proceed to for track timing procedure. If track timing is not in question proceed to.

1. Using the square drive end of the old flex drive cable and a variable speed drill motor, drive the seat track screw drive assemblies reward until they reach the rear stops.
   a. Clamp one end of the old cable into the drill motor chuck.
   b. Put the other cable end into the seat track screw drive cable slot and slowly drive the seat track assembly reward until it reaches the rear stops. Take care not to bind the cable when the drive reaches the stop.
   c. Repeat this procedure for the other seat track.

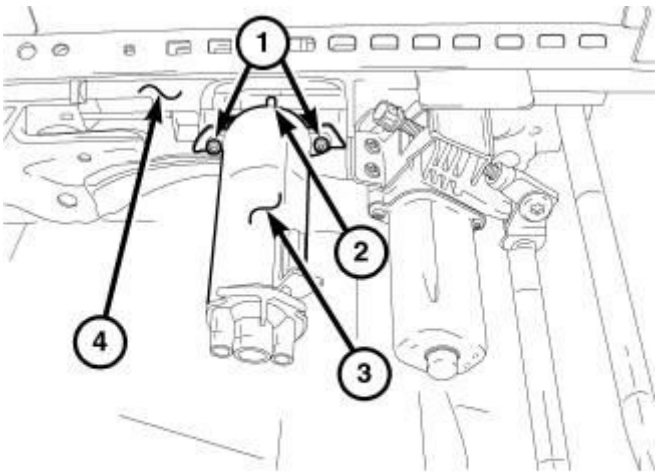

81cff6eb

Fig. 11: Removing/Installing Short Flex Drive Cable & Fore/Aft Motor
Courtesy of CHRYSLER GROUP, LLC

2. Install the short flex drive cable (2) into the seat frame assembly (4). Ensure the square cable end is properly aligned and fully inserted into the square drive slot of the screw drive assembly.
3. Install the fore/aft motor (3) ensuring the square cable end is properly aligned and fully inserted into the square drive slot of the motor.
4. Install the motor retaining screws (1). Tighten the screws to 5 N.m (45 in. lbs.).

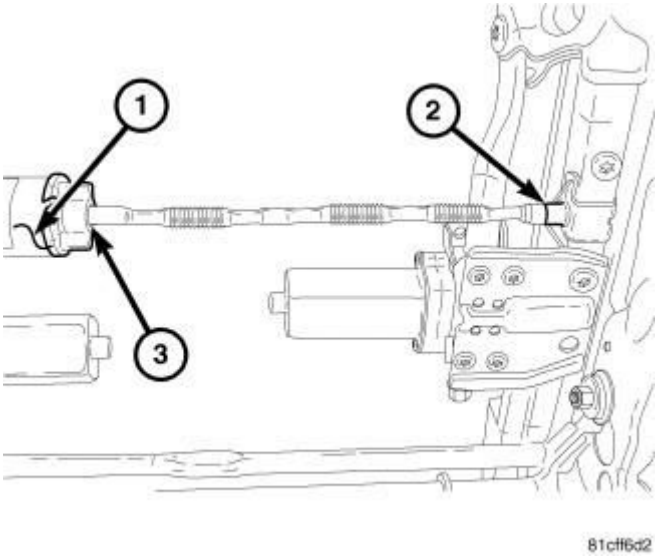

Fig. 12: Flex Drive Cable
Courtesy of CHRYSLER GROUP, LLC

5. Install the flex drive cable.
   a. Install the flex drive cable into the seat frame assembly (2). Ensure the square cable end is properly aligned and fully inserted into the square drive slot of the screw drive assembly.
   b. Install the flex drive cable into the fore/aft motor (1). Ensure the square cable end is properly aligned and fully inserted into the square drive slot of the motor assembly (3).

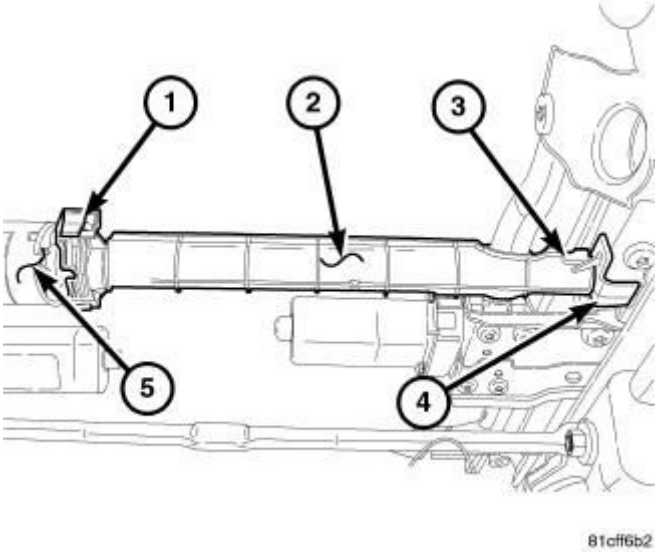

Fig. 13: Identifying Power Seat Fore/Aft Motor
Courtesy of CHRYSLER GROUP, LLC

6. Position the flex drive cable cover (2) onto the seat track assembly (4). Ensure the cover slots are properly aligned and fully inserted onto the mounting tabs (3).
7. Pivot the cable cover towards the cable and onto the fore/aft motor (5).

8. Secure the cover to the motor with the retaining strap (1).
9. Connect the fore/aft motor electrical connector.
10. Install the power seat. Refer to **SEAT, INSTALLATION** .
11. Verify proper power seat operation.

INSTALLATION

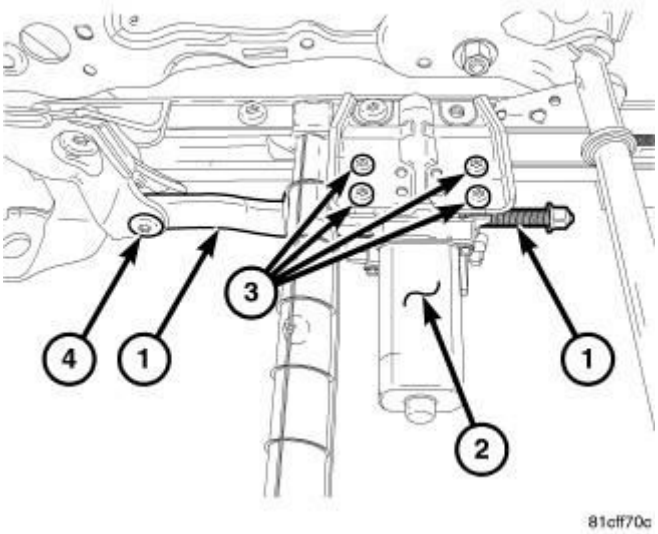

Fig. 14: Height Adjust Motor And Gearbox Assembly
Courtesy of CHRYSLER GROUP, LLC

1. Screw the height adjust motor gearbox spindle (1) in or out as necessary until the motor retaining screws (3) and spindle screw (4) holes are aligned and all fasteners can be installed.
2. Position the height adjust motor and gearbox assembly (2) onto the seat track.
3. Install the motor retaining screws (3). Tighten the screws to 12 N.m (106 in. lbs.).
4. Install the height adjust motor gearbox spindle (1) retaining screw (4). Tighten the screw to 17 N.m (150 in. lbs.).
5. Connect the motor electrical connector.
6. Install the seat. Refer to **SEAT, INSTALLATION** .
7. Reconnect the negative battery cable.
8. Verify proper power seat operation.

SWITCH, SEAT

DESCRIPTION

DESCRIPTION

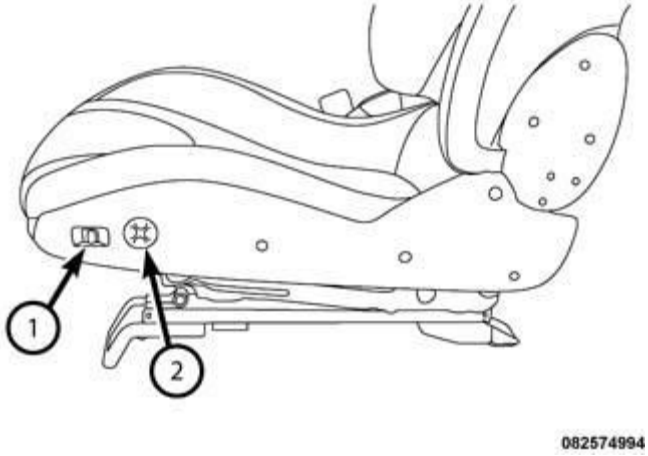

Fig. 15: Seat Position Switch & Power Seat Recliner Switch
Courtesy of CHRYSLER GROUP, LLC

NOTE: Driver power seat switch shown.

The standard driver power seat and available power front passenger seats can be adjusted using the power seat switch located on the outboard seat cushion side shield.

The power seat adjuster switch assembly is used for adjusting the front seats (both driver and passenger) position, it could have one or two knobs depending on the different versions (4-way, 6-way, 8-way).

Both the high current and low current versions of the power seat adjuster switch assemblies is to provide a means to electrically adjust the position of the front driver and passenger seats, high current switch feeds the Seat motors directly whilst low current is used in vehicles with Memory Recall feature so the signal travel to an ECU which controls the motors.

OPERATION

OPERATION

When a power seat switch is actuated, a battery feed and a ground path are applied through the switch contacts to the power seat track adjuster motor. The selected adjuster motor operates to move the seat through its drive unit in the selected direction until the switch is released, or until the travel limit of the adjuster is reached. When the switch is moved in the opposite direction, the battery feed and ground path to the motor are reversed through the switch contacts. This causes the adjuster motor to run in the opposite direction.

On vehicles equipped with the memory seat system, the driver memory seat switch provides a resistive signal/input to the Memory Seat Module (MSM). The MSM is responsible for the 12 volt battery feed and ground path to the power seat adjuster motors.

No power seat switch should be held applied in any direction after the adjuster has reached its travel limit. The

power seat adjuster motors each contain a self-resetting circuit breaker to protect them from overload. However, consecutive or frequent resetting of the circuit breaker may result in motor damage.

The individual switches in the power seat switch cannot be adjusted or repaired. If a switch is damaged or inoperative, the entire power seat switch must be replaced.

DIAGNOSIS AND TESTING

DIAGNOSIS AND TESTING - POWER SEAT SWITCH

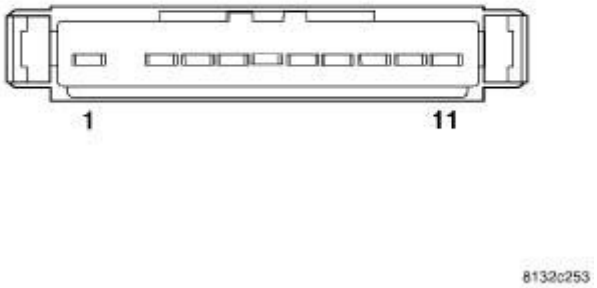

Fig. 16: Power Seat Switch Terminals
Courtesy of CHRYSLER GROUP, LLC

1. Disconnect and isolate the battery negative cable.
2. Remove the power seat switch from the power seat. Refer to **SWITCH, SEAT, REMOVAL**.
3. Use an ohmmeter to test the continuity of the power seat switch. If not OK, replace the faulty power seat switch. If switch tests OK, refer to **DIAGNOSIS AND TESTING**.

POWER SEAT SWITCH CONTINUITY

SWITCH POSITION	CONTINUITY BETWEEN
OFF	7-1, 7-3, 7-4, 7-5, 7-8, 7-9, 7-10, 7-11
RECLINER UP	6-3, 7-1, 7-4, 7-5, 7-8, 7-9, 7-10, 7-11
RECLINER DOWN	6-1, 7-3, 7-4, 7-5, 7-8, 7-9, 7-10, 7-11
HORIZONTAL FORWARD	6-8, 7-1, 7-3, 7-4, 7-5, 7-9, 7-10, 7-11
HORIZONTAL REARWARD	6-4, 7-1, 7-3, 7-5, 7-8, 7-9, 7-10, 7-11

REMOVAL

REMOVAL

WARNING: Disable the airbag system before attempting any front seat diagnosis or

service. Disconnect and isolate the negative battery (ground) cable and wait two minutes for the airbag system capacitor to discharge before performing further diagnosis or service. This is the only sure way to disable the airbag system. Failure to follow these instructions may result in accidental airbag deployment and possible serious or fatal injury.

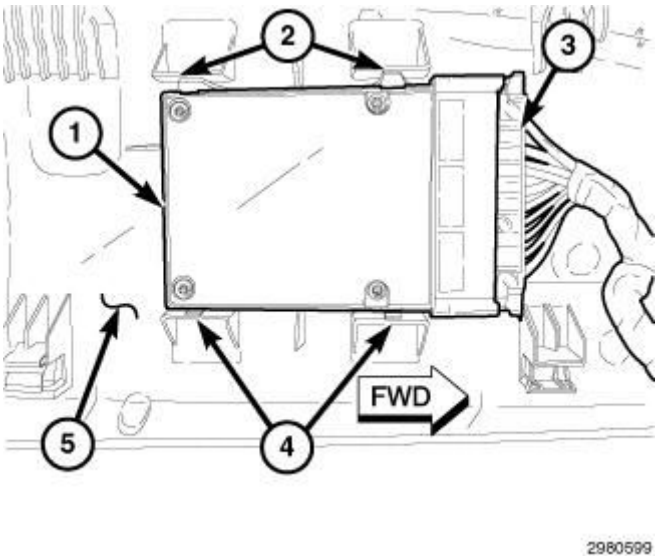

Fig. 17: Electrical Connector, Power Seat Switch, Seat Cushion Side Trim Panel & Four Retaining Tabs
Courtesy of CHRYSLER GROUP, LLC

1. Position the seat being serviced all the way forward.
2. Disconnect and isolate the negative battery cable.

NOTE: It is not necessary to remove the seat belt anchor from the seat when servicing the power seat switch.

3. Remove the outboard seat cushion side trim panel (5) from the seat. Refer to **SIDE SHIELDS, SEAT CUSHION, FRONT, REMOVAL** .
4. Using Trim Stick (special tool #C-4755, Trim Stick) or equivalent, carefully disengage the four tabs (2 and 4) that secure the power seat switch (1) to the seat cushion side trim panel.
5. Disconnect the electric connector (3) from the power seat switch and remove the switch.

INSTALLATION

INSTALLATION

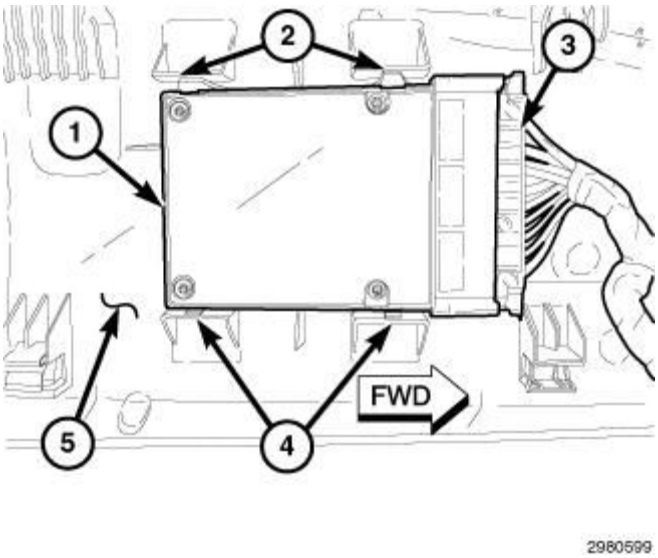

Fig. 18: Electrical Connector, Power Seat Switch, Seat Cushion Side Trim Panel & Four Retaining Tabs
Courtesy of CHRYSLER GROUP, LLC

1. Connect the electrical connector (3) to the power seat switch (1). Make sure the connector is fully engaged to the switch.
2. Position the power seat switch to the seat cushion side trim panel (5) and engage the four retaining tabs (2 and 4) that secure the switch to the trim panel. Make sure the retaining tabs are fully engaged.
3. Install the outboard seat cushion side trim panel. Refer to **SIDE SHIELDS, SEAT CUSHION, FRONT, INSTALLATION** .
4. Connect the negative battery cable.
5. Verify proper power seat operation.

SWITCH, LUMBAR CONTROL

DESCRIPTION

DESCRIPTION

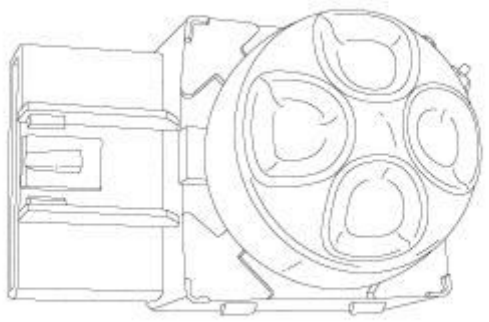

2733809

Fig. 19: Power Lumbar Switch
Courtesy of CHRYSLER GROUP, LLC

The Power Lumbar Switch which is located at the side bottom of both driver and front passenger seat. It is used to provide a means to electrically adjust the position of the front driver and passenger seats to make it more comfortable. It is able to adjust the Seat Back Rest Lumbar support forward and Rearward. It is also able to adjust the Lumbar Support position upward and downward. It's a high current switch driving the seat motors directly from battery feed.

There are two available lumbar systems available for this model. Vehicles with Heated and Vented Seats (HVS) receive a motor and cable driver lumbar system. Vehicle with heated seat or no heating or cooled accessories will receive a non-HVS system which involves a pneumatic pump and bladder.

OPERATION

OPERATION

HEATED ONLY OR NON HEATED OR NON VENTED SEAT (non-HVS) LUMBAR SYSTEM - When a power lumbar support switch is actuated, a battery feed and a ground path are applied through the switch contacts to the power lumbar pneumatic pump. The pneumatic pump operates the lumbar support bladder in the selected direction until the switch is released, or until the fill limit of the bladder is reached. When the switch is moved in the opposite direction, the battery feed and ground path to the motor are reversed through the switch contacts. This causes the pneumatic pump motor to run in the opposite direction.

The power lumbar support switch should not be held applied in any direction after the bladder has reached its travel limit. The power lumbar support pneumatic motor contains a self-resetting circuit breaker to protect from overload. However, consecutive or frequent resetting of the circuit breaker may result in motor damage.

The power lumbar switch cannot be adjusted or repaired and must be replaced if damaged or inoperative.

HEATED AND VENTED SEAT SYSTEM (HVS equipped) LUMBAR SYSTEM - When a power lumbar

support switch is actuated, a battery feed and a ground path are applied through the switch contacts to the power lumbar support adjuster. The selected lumbar support adjuster motor operates the lumbar support adjuster mechanism through its drive unit in the selected direction until the switch is released, or until the travel limit of the adjuster is reached. When the switch is moved in the opposite direction, the battery feed and ground path to the motor are reversed through the switch contacts. This causes the selected power lumbar support adjuster motor to run in the opposite direction.

No power lumbar support switch should be held applied in any direction after the adjuster has reached its travel limit. The power lumbar support adjuster motors each contain a self-resetting circuit breaker to protect them from overload. However, consecutive or frequent resetting of the circuit breaker may result in motor damage.

The power lumbar switch cannot be adjusted or repaired and must be replaced if damaged or inoperative.

DIAGNOSIS AND TESTING

DIAGNOSIS AND TESTING - POWER LUMBAR SWITCH

NOTE: For complete circuit diagrams, refer to SYSTEM WIRING DIAGRAMS . Wiring Information includes wiring diagrams, connector pin-out and location views, details of wire harness routing and retention, splice and ground locations and proper wire and connector repair procedures.

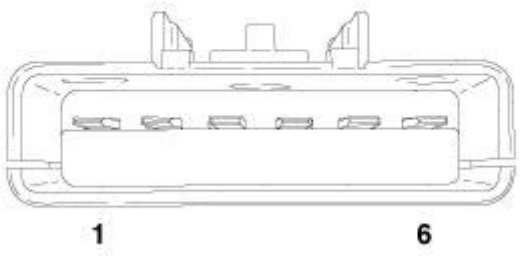

2834249

Fig. 20: Power Lumbar Switch Connector Terminals
Courtesy of CHRYSLER GROUP, LLC

1. Disconnect and isolate the battery negative cable.
2. Remove the power lumbar support switch from the seat. Refer to **SWITCH, LUMBAR CONTROL, REMOVAL**.
3. Use an ohmmeter to test the continuity of the power lumbar support switch using the following table. If not OK, replace the inoperative power lumbar support switch. If switch tests OK, check for an open or short in the power lumbar support circuit wiring. If no open or short is found, replace the power lumbar

support adjuster motor(s) as required.

LUMBAR SWITCH CONTINUITY

SWITCH POSITION	CONTINUITY BETWEEN
OFF	1-2, 1-3, 1-4, 1-5, 2-3, 2-4, 2-5, 3-4, 3-5, 4-5
UP	1-2, 1-3, 1-4, 2-3, 2-4, 3-4, 5-6
DOWN	1-3, 1-4, 1-5, 2-3, 2-4, 2-5, 3-4, 3-5, 4-5
IN	1-2, 1-4, 1-5, 2-6, 3-4, 3-5, 4-5
OUT	2-4, 2-5, 3-6, 4-5

REMOVAL

REMOVAL

WARNING: Disable the airbag system before attempting any front seat diagnosis or service. Disconnect and isolate the negative battery (ground) cable and wait two minutes for the airbag system capacitor to discharge before performing further diagnosis or service. This is the only sure way to disable the airbag system. Failure to follow these instructions may result in accidental airbag deployment and possible serious or fatal injury.

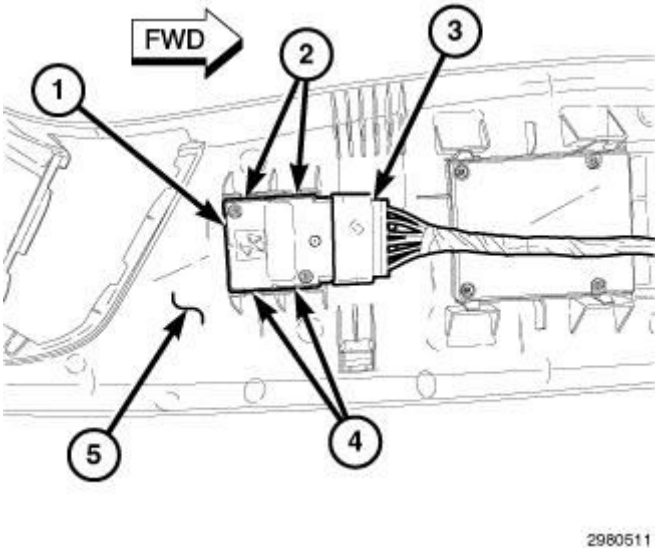

Fig. 21: Electrical Connector, Power Lumbar Control Switch, Seat Cushion Side Trim Panel & Four Retaining Tabs
Courtesy of CHRYSLER GROUP, LLC

1. Position the seat being serviced all the way forward.
2. Disconnect and isolate the negative battery cable.

NOTE: It is not necessary to remove the seat belt anchor from the seat when

servicing the power lumbar control switch.

3. Remove the outboard seat cushion side trim panel (5) from the seat. Refer to **SIDE SHIELDS, SEAT CUSHION, FRONT, REMOVAL** .
4. Using Trim Stick (special tool #C-4755, Trim Stick) or equivalent, carefully disengage the four tabs (2 and 4) that secure the lumbar control switch (1) to the seat cushion side trim panel.
5. Disconnect the electric connector (3) from the lumbar control switch and remove the switch.

INSTALLATION

INSTALLATION

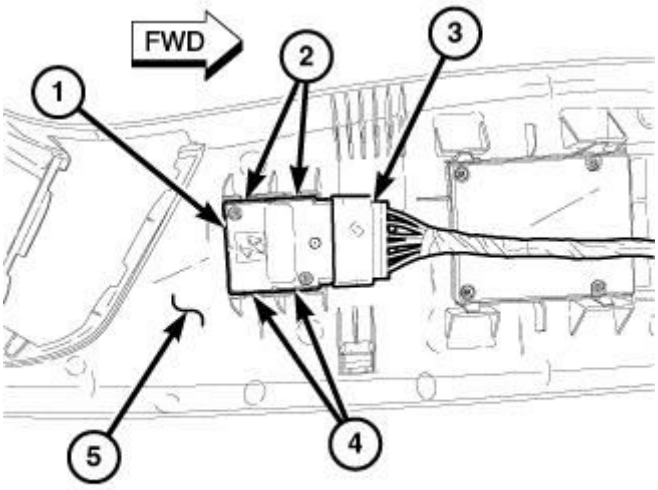

Fig. 22: Electrical Connector, Power Lumbar Control Switch, Seat Cushion Side Trim Panel & Four Retaining Tabs
Courtesy of CHRYSLER GROUP, LLC

1. Connect the electrical connector (3) to the power lumbar control switch (1). Make sure the connector is fully engaged to the switch.
2. Position the lumbar control switch to the seat cushion side trim panel (5) and engage the four retaining tabs (2 and 4) that secure the switch to the trim panel. Make sure the retaining tabs are fully engaged.
3. Install the outboard seat cushion side trim panel. Refer to **SIDE SHIELDS, SEAT CUSHION, FRONT, INSTALLATION** .
4. Connect the negative battery cable.
5. Verify proper power lumbar support operation.

2014 ACCESSORIES AND EQUIPMENT

Power Top/Sunroof - Service Information - Cherokee

DESCRIPTION

DUAL PANE SUNROOF

The optional dual pane (also known as the CommandView®) sunroof has one movable deep tinted glass pane over the front row seating and one fixed deep tinted glass pane over the second row seating. This unit also features a power operated sunshade that extends over both the front and rear glass panes when closed. If one of the switch push buttons for the movable pane is actuated while the sunshade is extended over the front glass opening, the system will automatically retract the sunshade to behind the front glass opening before moving the sunroof glass pane. Therefore, the sunshade can never cover the movable glass pane opening unless the pane is in the fully closed position.

The dual pane power sunroof system allows the sliding glass sunroof panel to be opened, closed or placed in a ventilation position electrically by actuating one of three switch push buttons located in the overhead console. The electronic controls integral to the sunroof motor and module unit provide an express (also known as one-touch) feature to simplify sunroof opening and closing while driving. The electronics also provide an Excess Force Limitation (EFL) feature, which detects obstacles trapped between the glass and the opening in the vehicle roof panel during closing.

A second two push button switch in the overhead console provides separate express features for opening and closing the sunshade. The power operated sunshade electronics also provide an EFL feature, which detects obstacles trapped between the sunshade and the opening in the vehicle roof panel during closing.

The sliding sunroof glass panel tilts upward at the rear for the ventilation position, or slides downward and rearward beneath the fixed glass panel for the open position. The sliding glass panel seals flush with the roof in the closed position to eliminate wind noise, and an integrated mesh wind deflector reduces wind buffeting at low speeds with the sunroof open.

The major components of the dual pane power sunroof system include:

- **Fixed Glass Panel** - Refer to **SUNROOF, DUAL PANE, DESCRIPTION** .
- **Frame and Mechanism** - Refer to **SUNROOF, DUAL PANE, DESCRIPTION** .
- **Motor And Electronic Module Units** - The dual pane power sunroof and power sunshade motor and electronic module units are secured to each side of center on the front frame member of the sunroof, between the outer roof panel and the headliner.
- **Power Sunshade** - Refer to **SUNROOF, DUAL PANE, DESCRIPTION** .
- **Sliding Glass Panel** - Refer to **SUNROOF, DUAL PANE, DESCRIPTION** .
- **Switches** - The dual pane power sunroof and power sunshade switches are integral to the overhead console centered in the headliner between the windshield upper header and the front of the sunroof opening.
- **Wind Deflector** - Refer to **SUNROOF, DUAL PANE, DESCRIPTION** .

Hard wired circuitry connects the dual pane power sunroof system components to the electrical system of the vehicle. These hard wired circuits are integral to several wire harnesses, which are routed throughout the vehicle and retained by many different methods. These circuits may be connected to each other, to the vehicle electrical system and to the dual pane power sunroof system components through the use of a combination of soldered splices, splice block connectors, and many different types of wire harness terminal connectors and insulators. Refer to the appropriate wiring information. The wiring information includes wiring diagrams, proper wire and connector repair procedures, further details on wire harness routing and retention, as well as pin-out and location views for the various wire harness connectors, splices and grounds.

OPERATION

DUAL PANE SUNROOF AND SUNSHADE

The dual pane power sunroof sliding glass panel and power sunshade motors both receive battery feed through a fused B(+) circuit from the Power Distribution Center (PDC). However, the on-board electronic module of each sunroof or sunshade motor monitors an input on a fused ignition (run - accessory) circuit and is configured to only allow the power sunroof and the power sunshade to be operated with the switches in the overhead console when the ignition switch is in the ON or ACCESSORY positions, or using the accessory delay feature for a timed interval after the ignition is turned to the OFF position as long as neither front door has been opened.

The electric motor and electronic module unit of the sunroof or sunshade moves the sliding glass panel or the sunshade through the use of mechanical drive cables as well as mechanical linkages and guides. Refer to **SUNROOF, DUAL PANE, DESCRIPTION** for additional information on these components..

The on-board electronic modules integral to the power sunroof and sunshade motors provide both express (also known as one-touch) and manual opening and closing for their respective motors based upon module programming and the inputs received from the sunroof and sunshade switches integral to the overhead console. The electronic modules store and recall a sliding glass panel or a power sunshade hard stop position, then counts the direction and number of motor rotations from that hard stop to enable the express open and close features. These hard stops must be learned by a service replacement motor and electronic module unit during an initialization procedure.

In addition, the electronic modules are programmed to move only one motor at a time. The two motors communicate switch input information as well as sunroof and sunshade position information with each other through a serial bus circuit, but do not communicate with any other electronic modules in the vehicle. The electronic modules are programmed to move the sunshade out of the way into a safe mid-open position automatically before allowing the sliding glass panel to move. Likewise, if the sunshade switch is depressed to close the sunshade while the sliding glass panel is in an open position, the electronic modules are programmed to automatically close the glass panel before closing the sunshade.

The electronic modules also provide an obstacle detection (also known as Excess Force Limitation/EFL) feature for both the sliding glass panel and the sunshade. The modules each monitor motor closing load through motor speed. When an obstacle is detected due to a significant decrease in motor speed, the module will stop the motor closing motion while limiting the forces applied to the obstacle, then reverse the motor direction to allow the obstacle to be removed.

The electronic modules provide a thermal protection feature to protect the motors from abuse or overheating. If

the motor is cycled enough to cause overheating, the software will allow one final closing cycle before it stops responding to further switch inputs. Once a motor has cooled sufficiently, normal operation will be automatically restored. However, the ignition switch must remain in the ON or ACCESSORY positions so that the module remains awake long enough to monitor the cool down of the motor.

The power sunroof and sunshade circuits and switches may be diagnosed using conventional diagnostic tools and procedures. Refer to the appropriate wiring information. However, conventional diagnostic methods will not prove conclusive in the diagnosis of the on-board electronic modules or the power sunroof and power sunshade motors. If there are no issues with the power sunroof and sunshade mechanisms and the power sunroof or power sunshade switches and circuitry test okay, but the motor and express or EFL features are still ineffective following the initialization procedure, the motor and electronic module unit must be replaced.

STANDARD PROCEDURE

STANDARD PROCEDURE - DRIVE MOTOR TEACH PROCEDURE

REPLACEMENT DRIVE MOTOR

1. Operate the sunroof manually and continuously through one full Vent and Slide cycle.
2. After completion of complete cycle, release sunroof switch. Sunroof will now operate normally.
3. Verify sunroof express function operation.

ORIGINAL DRIVE MOTOR

1. Press and hold sunroof Vent switch until the sunroof glass vents and stops.
2. Release sunroof switch.
3. Press and hold sunroof Vent switch once again for at least 15 seconds. After 15 seconds of pressing the Vent switch, the sunroof glass will automatically move and stop at a new location.
4. Release sunroof switch.
5. Operate the sunroof manually and continuously through one full Vent and Slide cycle.
6. After completion of complete cycle, release sunroof switch. Sunroof will now operate normally.
7. Verify sunroof express function operation.

DIAGNOSIS AND TESTING

DIAGNOSIS AND TESTING - POWER SUNROOF SYSTEM

The hard wired circuits between components related to the operation of the single pane power sunroof system may be diagnosed using conventional diagnostic tools and procedures. Refer to the appropriate wiring information. The wiring information includes wiring diagrams, proper wire and connector repair procedures, details of wire harness routing and retention, connector pin-out information and location views for the various wire harness connectors, splices and grounds.

However, conventional diagnostic methods will not prove conclusive in the diagnosis of the electronic module

integral to the power sunroof motor. If the power sunroof switches, motors and circuitry test okay, but the express or Excess Force Limitation (EFL) features are still ineffective following the calibration and initialization procedures, the motor and module unit must be replaced.

NOTE: **If there is no sliding sunroof panel movement when the power sunroof switch OPEN or CLOSE push button is depressed, but there is movement when the VENT push button is depressed, the sunroof module requires calibration. Complete the Single Pane Sunroof Motor And Module Initialization procedure prior to performing any further sunroof diagnosis. Refer to MOTOR, SUNROOF, STANDARD PROCEDURE.**

CONDITION	POSSIBLE CAUSES	CORRECTION
POWER SUNROOF COMPLETELY INOPERATIVE	1. Ineffective ground circuit.	1. Test and repair the open sunroof motor ground circuit if required.
	2. Ineffective feed circuit.	2. Test and repair the open sunroof motor feed circuit if required.
	3. Ineffective sunroof switch.	3. Test and replace the sunroof switch (overhead console assembly) if required.
	4. Ineffective sunroof motor and module unit.	4. Replace the sunroof motor and module unit if required.
AUDIBLE WHINE WHEN POWER SUNROOF SWITCH IS ACTUATED	1. Binding drive cable.	1. Replace the binding drive cable if required.
	2. Ineffective sunroof motor and module unit.	2. Replace the sunroof motor and module unit if required.
AUDIBLE CLICKING OR RATCHETING WHEN POWER SUNROOF SWITCH IS ACTUATED	1. Improperly adjusted sliding glass panel.	1. Adjust the sunroof glass panel if required. Refer to **ADJUSTMENTS** or **ADJUSTMENTS** .
	2. Damaged or worn drive cable.	2. Replace the broken or worn drive cable if required.
	3. Damaged or worn motor drive gear.	3. Replace the sunroof motor and module unit if required.
POWER SUNROOF VENTS AND OPENS BUT DOES NOT CLOSE	1. Damaged or disengaged trough guide.	1. Replace or reinstall trough guide if required.
	2. Binding drive cable.	2. Replace the binding drive cable if required.
	3. Ineffective CLOSE circuit.	3. Repair the sunroof CLOSE circuit between the switch and the motor if required.
	4. Ineffective sunroof switch.	4. Test and replace the sunroof switch (overhead console assembly) if required.
	5. Ineffective sunroof motor and module unit.	5. Replace the sunroof motor and module unit if required.
	1. Binding drive cable.	1. Replace the binding drive cable if required.

POWER SUNROOF VENTS AND CLOSES BUT DOES NOT OPEN	2. Ineffective OPEN circuit.	2. Repair the sunroof OPEN circuit between the switch and the motor if required.
	3. Ineffective sunroof switch.	3. Test and replace the sunroof switch (overhead console assembly) if required.
	4. Ineffective sunroof motor and module unit.	4. Replace the sunroof motor and module unit if required.
POWER SUNROOF DOES NOT VENT	1. Binding drive cable.	1. Replace the binding drive cable if required.
	2. Ineffective VENT circuit.	2. Repair the sunroof VENT circuit between the switch and the motor if required.
	3. Ineffective sunroof switch.	3. Test and replace the sunroof switch (overhead console assembly) if required.
	4. Ineffective sunroof motor and module unit.	4. Replace the sunroof motor and module unit if required.
POWER SUNROOF GLASS MOVEMENT INCONSISTENT - NOT SMOOTH AND UNIFORM	1. Improperly adjusted sliding glass panel.	1. Adjust the sunroof glass panel if required. Refer to **ADJUSTMENTS** or **ADJUSTMENTS** .

SPECIFICATIONS

SPECIFICATIONS

TORQUE SPECIFICATIONS

DESCRIPTION	N.m	Ft. Lbs.	In. Lbs.
Dual Pane Sunroof Or Sunshade Motor And Module Mounting Screws	3.8	-	34
Single Pane Sunroof Motor And Module Mounting Screws	4	-	35

MOTOR, SUNROOF

DESCRIPTION

DESCRIPTION

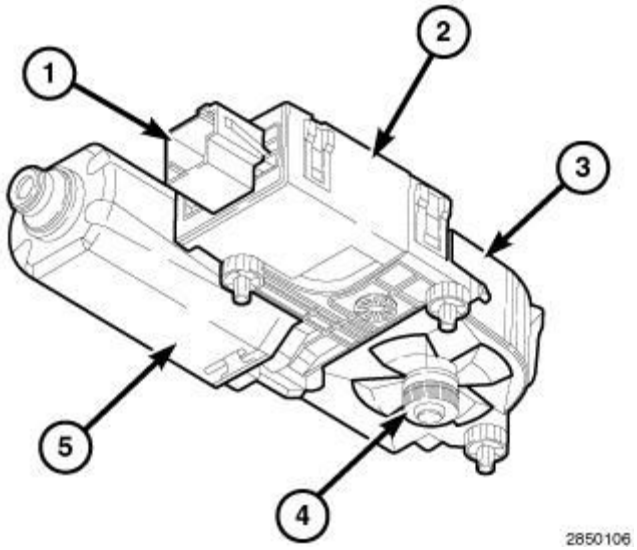

Fig. 1: Single Pane Sunroof Motor
Courtesy of CHRYSLER GROUP, LLC

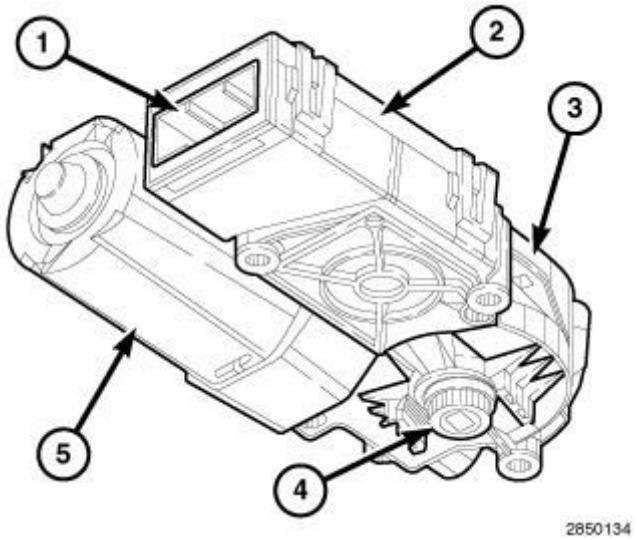

Fig. 2: Dual Pane Sunroof Or Sunshade Motor
Courtesy of CHRYSLER GROUP, LLC

The motor and electronic module units for both the single pane sunroof and the dual pane sunroof or sunshade are quite similar, but are not interchangeable. However, the dual pane sunroof and sunshade motor and module units are interchangeable and configure themselves to either sunroof or sunshade operation through a configuration pin in the sunshade connector of the sunroof wire harness. Each sunroof motor (5) is a reversible, 12-volt Direct Current (DC), permanent magnet motor with internal thermal protection.

The single panel sunroof has a single motor and electronic module unit secured by three screws near the center of the underside of the front sunroof frame member where it is concealed above the headliner. The dual pane sunroof has two motor and electronic modules, each secured by three screws to the underside of the front sunroof frame member and concealed above the headliner. The motor to the left of center operates the sliding

glass mechanism, while the motor to the right of center operates the power sunshade mechanism.

Each motor is connected mechanically to the sunroof or sunshade drive gear (4) through a right angle drive, gear reduction transmission (3). Each motor also is connected electrically to an on-board electronic control unit (2) that has an integral connector receptacle (1) that connects the unit to the vehicle electrical system through a dedicated take out and connector of the sunroof wire harness.

The sunroof motor or sunshade motor and electronic module units cannot be repaired. If ineffective or damaged, the entire motor and module unit must be replaced.

OPERATION

OPERATION

The single pane and dual pane power sunroof and power sunshade motors are each completely controlled by the circuitry of their respective on-board electronic module. The module receives battery current on a fused B(+) circuit from the Power Distribution Center (PDC) and has a path to ground at all times through a take out and eyelet terminal connector secured by a ground screw to the body sheet metal. These connections allow the module to function regardless of the ignition switch position.

However, the modules both monitor an input on a fused ignition switch output (run - accessory) circuit, and provide a source current to the sunroof and sunshade switches in the overhead console only when the ignition switch is in the ON or ACCESSORY positions, or while the accessory delay feature is active. The modules then monitor a separate input circuit for each switch position, which it uses to determine the proper outputs to the power sunroof or power sunshade motor. A positive and negative battery connection to the two motor brushes will cause the power sunroof or sunshade motor to rotate in one direction. Reversing the current through these same two brushes will cause the motor to rotate in the opposite direction.

The hard wired circuits of the power sunroof and power sunshade motors as well as those between the electronic modules and switches may be diagnosed using conventional diagnostic tools and procedures. Refer to the appropriate wiring information. However, conventional diagnostic methods will not prove conclusive in the diagnosis of the electronic module integral to the power sunroof and power sunshade motors. If the power sunroof or power sunshade switches and the hard wired circuitry test okay, but the motor or the express or Excess Force Limitation (EFL) features are still ineffective following the calibration and initialization procedures, the motor and module must be replaced as a unit.

STANDARD PROCEDURE

DUAL PANE SUNROOF OR SUNSHADE OVERRIDE POSITION CALIBRATION

SLIDING GLASS

The sliding glass panel motor stalls when the glass reaches the fully vented position and the electronic motor module learns that position (hard stop), then counts the number of motor rotations to know where the fully closed and fully open positions of the glass are located. The following procedure causes a previously calibrated and properly operating electronic motor module to relearn the fully vented motor stall position.

1. Be certain electrical system voltage is at or above 12.5 volts.
2. Be certain the key is in the ignition switch and the switch is in the ON position.
3. Be certain the power sunshade is open at least beyond the back of the sliding glass panel opening.
4. Depress and hold the VENT push button of the sunroof switch until the sliding glass panel is in the fully vented position or until the motor will not drive the glass any further towards the fully vented position.
5. Open the driver side front door.
6. Turn the ignition switch to the OFF position.
7. Within 2 seconds, turn the ignition switch back to the ON position.
8. Within 2 seconds, depress and hold the VENT push button of the sunroof switch for about ten seconds. At the end of ten seconds, the motor will try to drive the sliding glass panel to the fully vented position. Once motor stall is detected the electronic module will write that stall position to memory as the new glass position.
9. Verify sliding glass panel motor operation by cycling the glass to fully opened, fully closed, fully vented, then fully closed again.

SUNSHADE

The sunshade motor stalls when the shade reaches the fully closed position and the electronic motor module learns that position (hard stop), then counts the number of motor rotations to know where the mid-opened and fully opened positions of the shade are located. The following procedure causes a previously calibrated and properly operating electronic motor module to relearn the fully closed motor stall position.

1. Be certain electrical system voltage is at or above 12.5 volts.
2. Be certain the key is in the ignition switch and the switch is in the ON position.
3. Be certain the sliding glass panel is in the fully closed position.
4. Depress and hold the CLOSE push button of the sunshade switch until the shade is in the fully closed position or until the motor will not drive the shade any further towards the fully closed position.
5. Open the driver side front door.
6. Turn the ignition switch to the OFF position.
7. Within 2 seconds, turn the ignition switch back to the ON position.
8. Within 2 seconds, depress and hold the CLOSE push button of the sunshade switch for about ten seconds. At the end of ten seconds, the motor will try to drive the shade to the fully closed position. Once motor stall is detected, the electronic module will write that stall position to memory as the new shade position.
9. Verify sunshade motor operation by cycling the shade to mid-opened, fully opened, then fully closed again.

DUAL PANE SUNROOF OR SUNSHADE OBSTACLE DETECTION UPDATE

The obstacle detection function (also known as Excessive Force Limitation/EFL) updates the sunroof sliding glass panel and sunshade closing profiles after each successful CLOSE event as long as temperature and voltage are within a normal range. Being certain that these parameters are within range and cycling the sliding glass panel and sunshade will update the obstacle detection settings in the electronic module software.

- Be certain electrical system voltage is at or above 12.5 volts.
- Be certain vehicle is in an area that is near room temperature - 20 to 25° C (68 to 77° F).
- Be certain the key is in the ignition switch and the switch is in the ON position.
- Be certain there are no physical binds or blockages to sliding glass panel or sunshade travel.

SLIDING GLASS

1. Be certain the power sunshade is in the fully open position.
2. Depress the VENT push button of the sunroof switch so that the sliding glass panel travels to the fully vented position.
3. Depress the CLOSE push button of the sunroof switch so that the sliding glass panel travels to the fully closed position.
4. Depress the OPEN push button of the sunroof switch so that the sliding glass panel travels to the fully opened position.
5. Depress the CLOSE push button of the sunroof switch so that the sliding glass panel travels to the fully closed position.
6. Repeat Steps 2 through 5 for at least 5 complete sliding glass panel cycles (VENT, CLOSE, OPEN, CLOSE).

SUNSHADE

1. Be certain the sunroof sliding glass is in the fully closed position.
2. Depress the OPEN push button of the sunshade switch so that the shade travels to the mid-open position.
3. Depress the OPEN push button of the sunshade switch again so that the shade travels to the fully opened position.
4. Depress the CLOSE push button of the sunshade switch so that the shade travels to the fully closed position.
5. Repeat Steps 2 through 4 for at least 5 complete sunshade panel cycles (MID-OPEN, FULL-OPEN, CLOSE).

SUNROOF MOTOR AND MODULE INITIALIZATION

SINGLE PANE SUNROOF

INITIALIZATION

A new motor is shipped uncalibrated with no vehicle cycles having been run. After installation and connection of the wire harness, the following steps must be taken to initialize the new motor and module unit.

NOTE: **Verify that the battery is in good condition prior to performing this procedure. Do not leave the vehicle on a battery charger while performing this procedure. If the voltage at the sunroof motor and module unit drops below 11 volts or exceeds 15 volts at anytime while this procedure is being performed, the motor and module initialization procedure will not be properly completed.**

NOTE: If at any point during the following procedure the sunroof does not respond as expected, restart the procedure at Step 1.

1. Depress and hold the CLOSE push button of the sunroof switch until the sunroof sliding glass panel moves to the fully closed hard stop and then back to the tilt (VENT) position.
2. Release the CLOSE push button of the sunroof switch, then depress and hold the CLOSE push button again within 5 seconds.
3. As the CLOSE push button of the sunroof switch is held, the sunroof sliding glass panel will move to the fully closed position, then to the fully opened position and then fully closed again.
4. Initialization is complete. Release the sunroof switch push button.

REINITIALIZATION

The following procedure causes a previously calibrated and properly operating electronic motor module to relearn and update motor stall position and obstacle detection.

NOTE: If at any point during the following procedure the sunroof does not respond as expected, restart the procedure at Step 1.

1. Depress and hold the CLOSE push button of the sunroof switch until the sliding glass panel is fully closed.
2. Continue to hold the CLOSE push button of the sunroof switch. It will take at least 10 seconds for the initialization process to begin.
3. The sunroof sliding glass panel will move to the hard stop and then back to the tilt (VENT) position.
4. Release the CLOSE push button of the sunroof switch, then depress and hold the CLOSE push button again within 5 seconds.
5. As the CLOSE push button of the sunroof switch is held, the sunroof sliding glass panel will move to the fully closed position, then to the fully opened position and then fully closed again.
6. Initialization is complete. Release the sunroof switch push button.

DUAL PANE SUNROOF

A new motor is shipped uncalibrated with no vehicle cycles having been run. After installation and connection of the wire harness, the following steps must be taken to initialize the new motor and module unit.

NOTE: Verify that the battery is in good condition prior to performing this procedure. Do not leave the vehicle on a battery charger while performing this procedure. If the voltage at the sunroof motor and module unit drops below 11 volts or exceeds 15 volts at anytime while this procedure is being performed, the motor and module initialization procedure will not be properly completed.

SUNROOF

1. Turn the ignition switch to the ON position.

2. Depress and hold the VENT push button of the sunroof switch until the sliding glass panel has moved to the fully vented position.
3. Be certain that the sunshade has opened to at least beyond the back of the sliding glass panel opening before finishing the sunroof motor and module initialization.
4. Depress the VENT push button of the sunroof switch and release. The sliding glass panel should travel to the fully vented position.
5. Depress the CLOSE push button of the sunroof switch and release. The sliding glass panel should travel past the fully closed position, then reverse direction back to fully closed to set the sunroof seal.
6. Depress the OPEN push button of the sunroof switch and release. The sliding glass panel should travel to the fully opened position.
7. Depress the CLOSE push button of the sunroof switch and release. The sliding glass panel should travel to the fully closed position.
8. Repeat Steps 4 through 7 for at least 5 complete sliding glass panel cycles (VENT, CLOSE, OPEN, CLOSE).

SUNSHADE

1. Turn the ignition switch to the ON position.
2. Depress and hold the CLOSE push button of the sunroof switch until the sliding sunshade panel has moved to the fully closed position.
3. Be certain that the sunroof sliding glass panel is in the fully closed position before finishing the sunshade motor and module initialization.
4. Depress the OPEN push button of the sunshade switch and release. The sunshade panel should travel to the mid-open position at least beyond the back of the sliding glass panel opening.
5. Depress the OPEN push button of the sunshade switch again and release. The sunshade panel should travel to the fully opened position.
6. Depress the CLOSE push button of the sunshade switch and release. The sunshade panel should travel to the fully closed position.
7. Repeat Steps 4 through 6 for at least 5 complete sunshade panel cycles (MID-OPEN, FULL-OPEN, CLOSE).

SUNROOF OR SUNSHADE OBSTACLE DETECTION REVERSAL OVERRIDE

SINGLE PANE

There are two methods for overriding the obstacle detection feature if the single pane sunroof sliding glass is unable to close due to a known blockage condition (ice, leaves, debris in track).

OVERRIDE - METHOD 1

Depress and hold the CLOSE push button of the sunroof switch during the close. The sunroof will be in override mode during the close.

OVERRIDE - METHOD 2

Once the sunroof encounters and reverses on an obstacle during express (one touch) closing three consecutive times, the sunroof will be in override mode. All push button commands will be in manual mode (no one-touch or express mode) while the obstacle detection feature is in override mode.

EXITING OVERRIDE MODE

Any sunroof obstacle detection override mode is exited by reaching the close position. Once the override has been exited, all normal operations will resume including the obstacle detection feature.

DUAL PANE

There are two methods for overriding the obstacle detection feature if the dual pane sunroof sliding glass panel or sunshade is unable to close due to a known blockage condition (ice, leaves, debris in track).

OVERRIDE - METHOD 1

Depress and hold the CLOSE push button of the sunroof or sunshade switch during the initial close, during the reversal and for 2 seconds after the reversal stops. If the CLOSE push button is released at any time between the initial close and the end of the 2 seconds after the reversal stops, the sunroof or sunshade will not enter override mode. Once the CLOSE push button has been held through these events, the sunroof or sunshade will be in primary override mode. All CLOSE push button commands will be in manual mode (no one-touch or express mode) while the obstacle detection feature is in primary override mode.

OVERRIDE - METHOD 2

Once the sunroof or sunshade encounters and reverses on an obstacle during closing three consecutive times with no other sunroof or sunshade push button switches being depressed, the fourth time the CLOSE push button is depressed, the sunroof or sunshade will be in override mode. All push button commands will be in manual mode (no one-touch or express mode) while the obstacle detection feature is in override mode.

EXITING OVERRIDE MODE

Any sunroof or sunshade obstacle detection override mode is exited by either reaching the close position or by depressing any sunroof or sunshade switch push button except CLOSE to remove the obstacle. Once the override has been exited, all normal operations will resume including the obstacle detection feature.

REMOVAL

REMOVAL

WARNING: **Do not attempt to move or reposition the sunroof glass panel or drive cables with the sunroof motor and module unit removed. Damage to the vehicle, to the sunroof or personal injuries may result.**

WARNING: **The Sunroof Motor And Module Initialization procedure must be completed any time a sunroof motor and module unit is replaced with a new component. Failure to perform this procedure may result in damage**

to the vehicle, to the sunroof or in serious or fatal injuries.

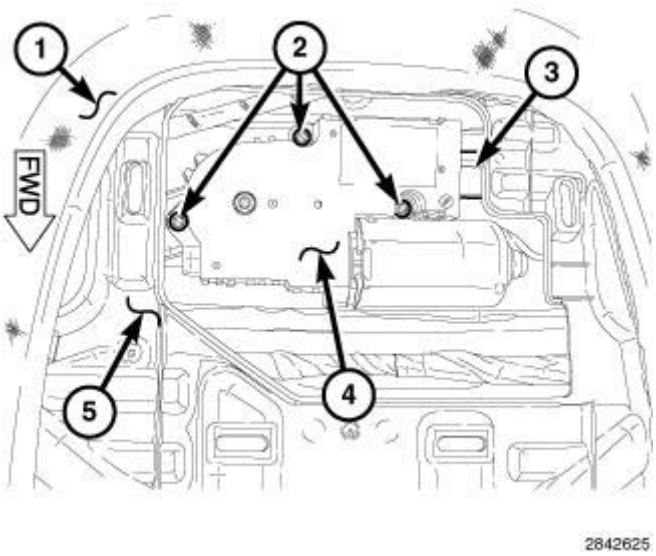

Fig. 3: Headliner, Bracket, Module Unit, Screws & Module Connector Receptacle
Courtesy of CHRYSLER GROUP, LLC

1. Disconnect and isolate the battery negative cable.
2. Lower the headliner (1) from the inner roof panel. Refer to **HEADLINER, REMOVAL** .
3. Remove the three screws (2) that secure the motor and module to the sunroof frame.
4. Lower the motor and module unit far enough to access and disconnect the sunroof wire harness connector from the motor and module connector receptacle (3).
5. Remove the sunroof motor and module unit from the vehicle.

INSTALLATION

INSTALLATION

WARNING: **Do not attempt to move or reposition the sunroof glass panel or drive cables with the sunroof motor and module unit removed. Damage to the vehicle, to the sunroof or personal injuries may result.**

WARNING: **The Sunroof Motor And Module Initialization procedure must be completed any time a sunroof motor and module unit is replaced with a new component. Failure to perform this procedure may result in damage to the vehicle, to the sunroof or in serious or fatal injuries.**

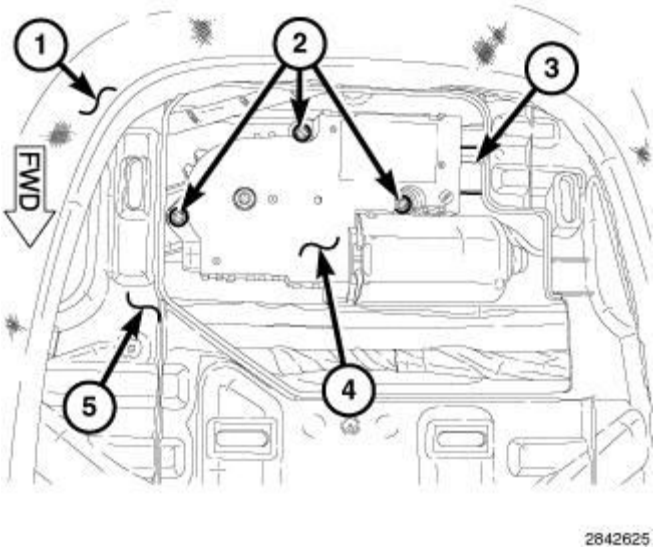

Fig. 4: Headliner, Bracket, Module Unit, Screws & Module Connector Receptacle
Courtesy of CHRYSLER GROUP, LLC

1. Position the sunroof motor and module unit (4) close enough to the sunroof frame to access and reconnect the sunroof wire harness connector to the motor and module connector receptacle (3).
2. Position the motor and module through the headliner bracket opening and onto the sunroof frame.
3. Install and tighten the three screws (2) that secure the motor and module to the sunroof frame. Tighten the screws to 4 N.m (35 in. lbs.).
4. Reinstall the headliner (1) to the inner roof panel. Refer to **HEADLINER, INSTALLATION** .
5. Reconnect the battery negative cable.
6. Perform the Sunroof Motor And Module Initialization standard procedure. Refer to **MOTOR, SUNROOF, STANDARD PROCEDURE**.

SWITCH, SUNROOF

DESCRIPTION

DESCRIPTION

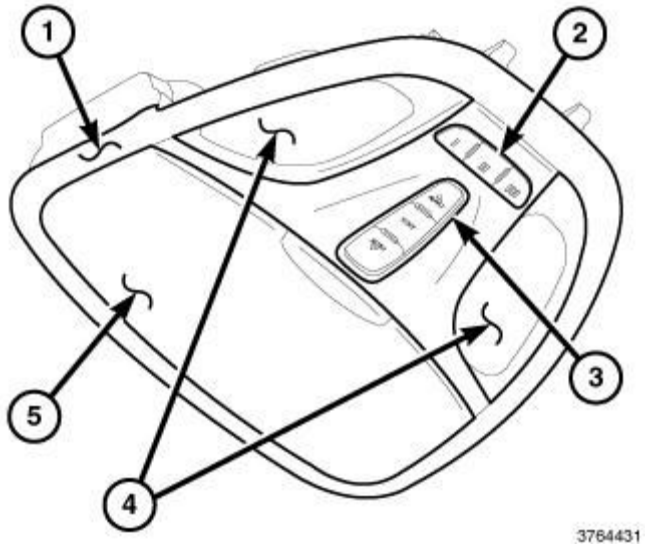

Fig. 5: Overhead Console Components
Courtesy of CHRYSLER GROUP, LLC

Vehicles equipped with a power sunroof have a power sunroof switch (3) integral to the overhead console (1) located in the headliner just forward of the sunroof opening. The switch buttons are centered between the two map/reading lamps (4), forward of the sunglasses storage bin (5) and, if equipped, rearward of the universal transmitter (Homelink®) push buttons (2). This switch has three momentary push buttons clearly identified by either text or icons indicating their functions. The three functions are from front-to-back: AUTO (CLOSE), VENT and AUTO (OPEN). The switch push buttons also have instrument panel dimmer controlled Light Emitting Diode (LED) units that provide back lighting for visibility at night.

The power sunroof switch is connected to the vehicle electrical system through the printed circuit board of the overhead console, which is connected to a dedicated take out and connector of the overhead wire harness. If the switch is ineffective or damaged, the entire overhead console must be replaced.

OPERATION

OPERATION

The power sunroof switch is hard wired to the electronic module integral to the power sunroof motor. The electronic module provides the switch with a source current whenever the status of the ignition switch is ON or ACCESSORY. When one of the switch push buttons is depressed, it sends a signal back to the electronic module and the electronic module controls the motor to move the sunroof panel to the appropriate position.

A short duration (less than 800 milliseconds) press of the switch push button is interpreted by the electronic module as an AUTO (also known as express or one touch) command, where the motor will automatically move the glass panel to the fully open, fully closed or the ventilation position. A long duration (greater than 800 milliseconds) press of the push button is interpreted by the electronic module as a manual command, where the motor moves only as long as the push button is held in the depressed position. During an AUTO event, any new switch input will immediately stop the event in progress which, as in the manual mode, allows the customer to stop the sliding glass panel at any desired location.

The power sunroof switch may be diagnosed using conventional diagnostic tools and procedures. Refer to the appropriate wiring information.

DIAGNOSIS AND TESTING

DIAGNOSIS AND TESTING - POWER SUNROOF SWITCH

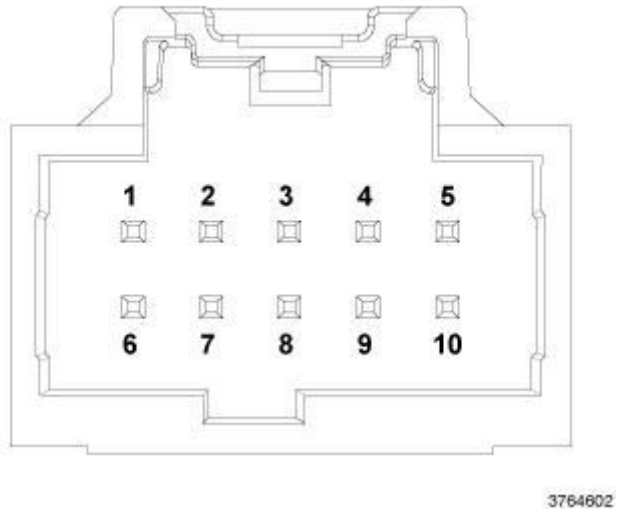

Fig. 6: Overhead Console Wire Harness Connector End View
Courtesy of CHRYSLER GROUP, LLC

1. Disconnect and isolate the battery negative cable.
2. Remove the overhead console from the headliner. Refer to **CONSOLE, OVERHEAD, FRONT, REMOVAL** .
3. Disconnect the overhead wire harness connector from the overhead console connector receptacle.
4. Using a multimeter, test the continuity between the terminals of the overhead console connector receptacle while actuating the power sunroof switch as shown in the Sunroof Switch Tests chart .

SUNROOF SWITCH TESTS	
SWITCH POSITION	**CONTINUITY BETWEEN PINS**
NO BUTTONS PRESSED (OFF)	NO CONTINUITY BETWEEN PINS 7, 8 or 9 and PIN 10
AUTO (OPEN)	7 and 10
AUTO (CLOSE)	9 and 10
VENT	8 and 10

5. If the switch fails any of the tests, replace the overhead console and the switch as a unit.

REMOVAL

REMOVAL

The power sunroof switch is serviced only as a unit with the overhead console. Refer to **CONSOLE, OVERHEAD, FRONT, REMOVAL** .

INSTALLATION

INSTALLATION

The power sunroof switch is serviced only as a unit with the overhead console. Refer to **CONSOLE, OVERHEAD, FRONT, INSTALLATION** .

2014 ACCESSORIES AND EQUIPMENT

Power Windows - Service Information - Cherokee

DESCRIPTION

DESCRIPTION

The power window system allows each of the door windows to be raised and lowered electrically by actuating a switch on the trim panel of each respective door. A master switch on the driver side front door trim panel allows the driver to raise or lower each of the passenger door windows, and to lock out the individual switches on the passenger doors from operation. The power window system receives battery feed only when the ignition switch is in the RUN or ACCESSORY position. The power window system will also operate when in power accessory delay

Vehicles equipped with Express Up Windows are equipped with a door module. Refer to **OPERATION** for further information.

Vehicle equipped with One Touch Down (OTD) employ a Smart Window Motor. Refer to **OPERATION** for further information.

For service of mechanical components, such as the regulator, lift plate, window tracks, or glass refer to **BODY - INTERIOR & EXTERIOR** .

OPERATION

OPERATION

Power Window Switch - The power windows are controlled by a window/lock switch on the trim panel of each front door. Switches in the driver door window/lock switch allows the driver to control the passenger windows. The power window switch for the driver side front door window has a second detent position beyond the normal Down position, that provides an automatic one-touch window down feature. Some vehicles may be equipped with an express closing feature (front windows only). During an express closing, anytime an obstacle is detected in the way of the glass, the motor will stop and reverses travel to avoid pinching an occupant fingers. Modules in the doors are programmed to compare the position of the glass to the amount of current being used to drive up the glass. The system also includes various features to manage the perceived forces on the glass as it travels up. If the express closing calibration is lost, the system will self-calibrate itself after the windows are moved up and down two cycles. The power window switches control the battery and ground feeds to the power window motors. All passenger door power window switches receive their battery and ground feeds through the circuitry of the window/lock switch. When the power window lockout switch is in the Lock position, the battery feed for the individual passenger door power window switches is interrupted. Please review the power window switch service information for further operation detail. Refer to **SWITCH, POWER WINDOW, DESCRIPTION**.

Door Control Modules (DCM) - The (Driver Door Module (DDM) and Passenger Door Module (PDM)) opens or closes the windows when a actuation input signal from the window switch is received. This is only

powered when the ignition switch is in the RUN or ACCESSORY position. Power is supplied to the modules through the Power Distribution Center (PDC). For further DCM/DDM/PDM operation, refer to **MODULE, DOOR, DESCRIPTION** .

Power Window Motor - A permanent magnet reversible motor moves the window regulator through an integral gearbox mechanism. A positive and negative battery connection to the two motor terminals will cause the motor to rotate in one direction. Reversing the current through these same two connections will cause the motor to rotate in the opposite direction. Each individual motor is grounded through the master switch. In addition, each power window motor is equipped with an integral self-resetting circuit breaker to protect the motor from overloads. The power window motor and gearbox assembly cannot be adjusted or repaired. If damaged or ineffective, the entire unit must be replaced. Refer to **MOTOR, WINDOW REGULATOR, REMOVAL**.

EXPRESS UP/DOWN WINDOW FEATURE

Express operation is time-driven. If the window button is pressed for more than 50 milliseconds but less than 800 milliseconds, the window motor activates express operation. The smart motors will ignore any switch input lasting longer than 15 seconds. Vehicles may be equipped with either express down or express up and down.

EXPRESS AUTO-UP FEATURE WITH ANTI-PINCH PROTECTION

AUTO-Up Feature With Anti-Pinch Protection - If Equipped Lift the window switch to the second detent, release, and the window will go up automatically. To stop the window from going all the way up during the AUTO-up operation, push down on the switch briefly. To close the window part way, lift the window switch to the first detent and release it when you want the window to stop.

Anti-Pinch Functionality - The Anti-Pinch strategy is only active after the system has been initialized. This function will work during manual and express window functions. If the window runs into any obstacle during auto-closure, it will reverse direction and then go back down. Remove the obstacle and use the window switch again to close the window. Any impact due to rough road conditions may trigger the auto-reverse function unexpectedly during auto-closure. If this happens, pull the switch lightly to the first detent and hold to close the window manually.

EXPRESS DOWN WINDOW FEATURE

This feature allows the driver or front passenger to lower the door glass to its full-down position without holding the switch while the glass is in motion. To activate the Expess-down feature depress the window switch to its second detent and release, the door glass will lower automatically. This feature may also be controlled and allows you to remotely lower both front door windows at the same time. To use this feature, press and release the UNLOCK button on the Remote Keyless Entry (RKE) transmitter and then immediately press and hold the UNLOCK button until the windows lower to the desired level or until they lower completely.

DIAGNOSIS AND TESTING

DIAGNOSIS AND TESTING - POWER WINDOWS

For complete circuit diagrams, refer to SYSTEM WIRING DIAGRAMS .

ALL WINDOWS INOPERATIVE

1. Check the circuit breaker. If OK, go to Step 2. If not OK, replace the inoperative circuit breaker.
2. Disconnect and isolate the battery negative cable. Remove the window/lock switch from the driver side front door trim panel. Unplug the wire harness connector.
3. Check for continuity between the ground circuit cavity of the door module wire harness connector and a good ground. If OK, go to Step 4. If not OK, repair the circuit to ground as required.
4. Connect the battery negative cable. Turn the ignition switch to the On position. Check for battery voltage at the fused ignition switch output (run) circuit cavity of the window/lock switch wire harness connector. If OK, refer to **SWITCH, LOCK, DIAGNOSIS AND TESTING** . If not OK, repair the circuit as required.

ONE WINDOW INOPERATIVE

The window glass must be free to slide up and down for the power window motor to function properly. If the glass is not free to move up and down, the motor will overload and trip the integral circuit breaker. To determine if the glass is free, disconnect the regulator from the glass. Then slide the window up and down by hand.

There is an alternate method to check if the glass is free. Position the glass between the up and down stops. Then, shake the glass in the door. Check that the glass can be moved slightly from side to side, front to rear, and up and down. Then check that the glass is not bound tight in the tracks. If the glass is free, proceed with the diagnosis that follows. If the glass is not free, determine the cause of the condition.

If the only inoperative window is in the driver or passenger side front door and the preceding checks have not identified a problem. Refer to **MOTOR, WINDOW REGULATOR, DIAGNOSIS AND TESTING**. If the problem being diagnosed involves only the Auto-down feature for the driver side front door window, but all of the power windows are operational, replace the driver's side window/lock switch. For diagnosis of the window/lock switch, refer to **SWITCH, LOCK, DIAGNOSIS AND TESTING** . For a rear power window problem, proceed with the following:

1. Disconnect and isolate the battery negative cable. Unplug the wire harness connector from the power window switch unit on the door with the inoperative power window. Check for continuity between the ground circuit cavity of the power window switch wire harness connector and a good ground. There should be continuity. If OK, go to Step 2. If not OK, repair the open circuit to the power window and door lock master switch as required.
2. Connect the battery negative cable. Turn the ignition switch to the On position. Check for battery voltage at the fused ignition switch output (run) circuit cavity in the body half of the power window switch unit wire harness connector. If OK, go to Step 3. If not OK, repair the open circuit to the power window and door lock master switch as required.
3. Test the power window switch continuity. Refer to **SWITCH, POWER WINDOW, DIAGNOSIS AND TESTING**. If OK, go to Step 4. If not OK, replace the power window switch.
4. Check the continuity in each circuit between the inoperative power window switch wire harness connector cavities and the corresponding power window motor wire harness connector cavities. If OK, refer to **MOTOR, WINDOW REGULATOR, DIAGNOSIS AND TESTING**. If not OK, repair the open circuit(s) as required.

NOTE: **All passenger door power window switches receive their battery and ground feed for operating the passenger door power window motors through the driver side power window and lock master switch and wire harness connector.**

STANDARD PROCEDURE

DOOR MODULE LEARN PROCEDURES

NOTE:

- **This procedure must be performed anytime the power window system has been serviced in either front door or when there is a possible concern with a door module calibration.**
- **The battery must be fully charged or the vehicle running before proceeding with the learn procedure.**
- **All doors must be completely closed before proceeding.**
- **It is suggested to sit inside the vehicle in the drivers seat and close the door.**

Express-up / Express-down possible concerns.

- Glass will not lower all the way down flush to the belt-line.
- Glass will not raise fully; wind noise / water leak.
- Glass will not raise automatically (Expess-up) after lifting the switch to the second detent and releasing.

To relearn the door module memory after module replacement, perform the following procedure:

1. Check and repair any door module Diagnostic Trouble Code (DTC) (s) unrelated to missing calibration before proceeding.
2. Using the window switch, lower the door glass to the full-down position by pushing down (depress) the window switch to its second detent and hold the switch until the door glass is fully open. Continue to hold the window switch down for two seconds after the door glass is fully open.
3. Raise the door glass to the full-up position by pulling up on the window switch and hold the switch until the door glass is fully closed. Continue to hold the window switch up for two seconds after the door glass is full closed.
4. Code should now be stored. Clear code and test window operations.

To relearn the door module memory after window/regulator replacement, perform the following procedure:

1. Using the scan tool, go to the network topology screen.
2. Click on the Diagnostic Procedures tab at the lower portion of the screen.
3. Run ECU Reset for DDM/PDM.
4. DDM/PDM calibration missing DTC will now set.

5. Using the window switch, lower the door glass to the full-down position by pushing down (depress) the window switch to its second detent and hold the switch until the door glass is fully open. Continue to hold the window switch down for two seconds after the door glass is fully open.
6. Raise the door glass to the full-up position by pulling up on the window switch and hold the switch until the door glass is fully closed. Continue to hold the window switch up for two seconds after the door glass is full closed.
7. DTC will now be stored. Clear code and test window operations.

MOTOR, WINDOW REGULATOR

DESCRIPTION

DESCRIPTION

The power window system allows each of the door windows to be raised and lowered electrically by actuating a switch on the trim panel of each respective door. A master switch on the driver side front door trim panel allows the driver to raise or lower each of the passenger door windows, and to lock out the individual switches on the passenger doors from operation. The power window system receives battery feed only when the ignition switch is in the RUN or ACCESSORY position. The power window system will also operate when in power accessory delay

Vehicles equipped with Express Up Windows are equipped with a door module. Refer to **OPERATION** for further information.

Vehicle equipped with One Touch Down (OTD) employ a Smart Window Motor. Refer to **OPERATION** for further information.

For service of mechanical components, such as the regulator, lift plate, window tracks, or glass refer to **BODY - INTERIOR & EXTERIOR** .

OPERATION

POWER WINDOW MOTOR - STANDARD

A positive and negative battery connection to the two motor terminals will cause the power window motor to rotate in one direction. Reversing the current through these same two connections will cause the motor to rotate in the opposite direction.

Because the Drivers Door Module (DDM) drives the window, it can sense when the top and bottom travel has been reached and stop driving the window regardless of the window switch position (no hall pulses within 50 ms). The DDM considers the Hall Effect faulted if no pulses are sensed when the window is driven up and down. When this condition is detected, the DDM will activate the motor until the switch is released or a stuck fault is set (10 seconds). In addition, each power window motor is equipped with an integral self-resetting circuit breaker to protect the motor from overloads.

The driver side motor is controlled directly by the DDM. The passenger side motor receives current through a

window up relay and a window down relay. The up and down window relays are controlled by the DDM.

There is also a fuse in the Power Distribution Center (PDC) to protect the passenger window circuits and a fuse in the PDC to protect the drivers window circuits.

POWER WINDOW MOTOR - SMART

Vehicles equipped with the One Touch Down (OTD) option use a "smart" window motor assembly. The smart window motors contain the electronics required to provide express up or down operation without the use of separate door modules.

The smart window motor will enter sleep mode after 20 seconds if ALL of the following conditions are true:

- No motor movement (stall condition previously detected)
- No switch input is active or the stuck switch condition has not been detected
- No stuck relay condition has been detected
- Window thermal protection is not in severe or activated mode

The smart window motor wakes up based on the following inputs:

- Any switch input becomes active
- Hardware reset
- Voltage is detected in any output from the relay to the motor terminals

The smart window motor does not communicate with the other modules on the vehicle. The rear windows on vehicles equipped with one-touch power front windows operate in the same manner used for the standard power window system. The one tough feature is not available for the rear windows.

DIAGNOSIS AND TESTING

DIAGNOSIS AND TESTING - WINDOW SMART MOTOR

When a window motor is installed, it must be initialized to program the up and down stops. The initialization procedure is to manually drive the window motor to both the top and bottom of the window travel. Initialization is performed by holding the switch for two seconds after the window reaches the full up position.

Diagnosing a motor concern requires the technician to diagnose by the process of elimination. If a window motor is inoperative, verify that all switch signals to the motor are correct. Verify power and ground at the window motor. If the switch signals, power and ground are okay and there are no obstructions, attempt to initialize the motor prior to replacement.

DIAGNOSIS AND TESTING - WINDOW MOTOR

1. Remove door trim panel. Refer to **PANEL, DOOR TRIM, REMOVAL** .
2. Connect positive (+) lead from a test battery to either of the two motor terminals.

3. Connect negative (-) lead from test battery to remaining motor terminal.
4. The motor should now rotate in one direction to either move window up or down.
   a. If window happens to already be in full UP position and motor is connected so as to move it in UP direction no movement will be observed.
   b. Likewise, motor connected to move window in DOWN direction no movement will be observed if window is already in full DOWN position.
   c. Reverse battery leads in Step 2 and Step 3 and window should now move. If window does not move, replace motor.
5. If window moved completely up or down, the test leads should be reversed one more time to complete a full window travel inspection.
6. If window does not move, check to make sure that it is free.
7. It is necessary that the window be free to slide up and down in the glass channels. If the window is not free to move up and down, the window lift motor will not be able to move the glass.
8. To determine if the glass is free, disconnect the regulator from the glass lift plate. Remove the two attaching screws, and slide the window up and down by hand.

REMOVAL

REMOVAL

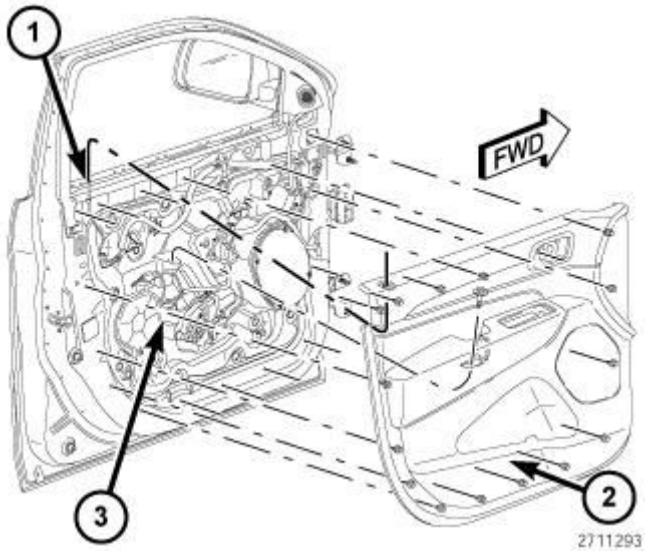

Fig. 1: Interior Trim panel
Courtesy of CHRYSLER GROUP, LLC

1. Disconnect and isolate the negative battery cable.
2. Remove the door interior trim panel (2). Refer to **PANEL, DOOR TRIM, REMOVAL** or **PANEL, REAR DOOR TRIM, REMOVAL** for the appropriate procedure.

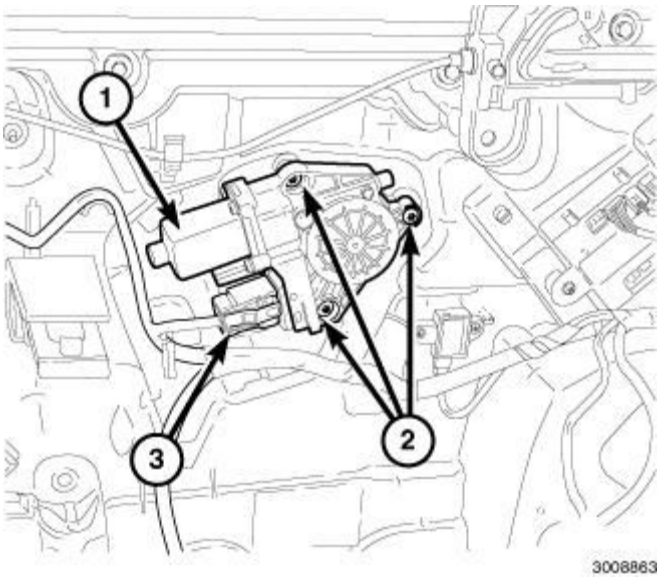

Fig. 2: Power Window Motor Electrical Connector, Three Fasteners, Power Window Motor And Gear Assembly
Courtesy of CHRYSLER GROUP, LLC

3. Disconnect the power window motor electrical connector (3).
4. Remove the three fasteners (2) that secure the power window motor and gear assembly (1) to the carrier plate and remove the motor and gear assembly.

INSTALLATION

INSTALLATION

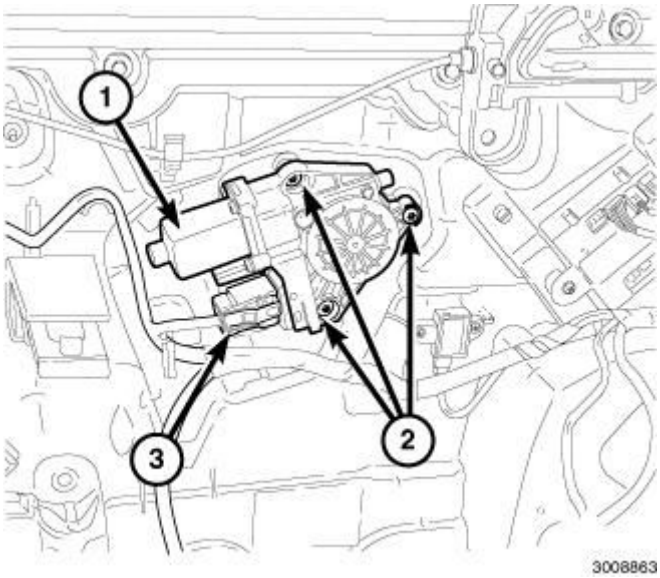

Fig. 3: Power Window Motor Electrical Connector, Three Fasteners, Power Window Motor And Gear Assembly
Courtesy of CHRYSLER GROUP, LLC

NOTE: The power window motor may need to actuated momentarily to line up the gear in the drive assembly with the regulator.

1. Connect the power window motor electrical connector to the motor electrical connector receptacle (3).
2. Position the power window motor and gear assembly (2) on the carrier plate (1) aligning the drive gear with the regulator.
3. If necessary, temporarily connect the window switch assembly and battery to actuate the motor.
4. Install and tighten the three fasteners (4) that secure the power window motor and gear assembly to the carrier plate.

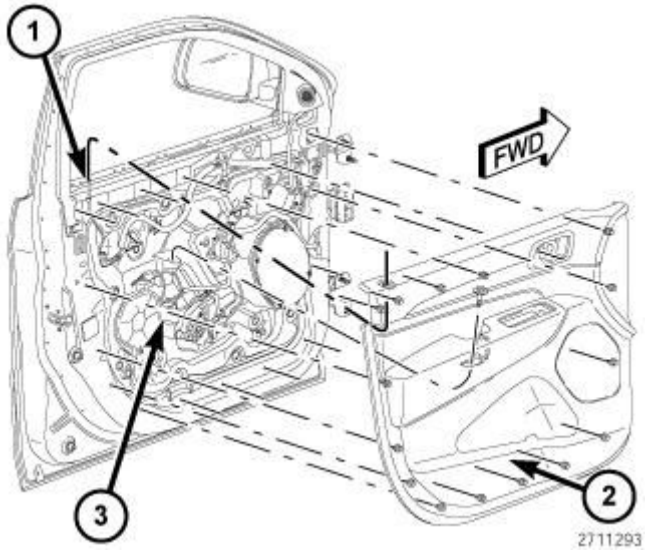

Fig. 4: Interior Trim panel
Courtesy of CHRYSLER GROUP, LLC

5. Reinstall the door interior trim panel (2). Refer to **PANEL, DOOR TRIM, INSTALLATION** or **PANEL, REAR DOOR TRIM, INSTALLATION** for the appropriate procedure.
6. Connect the negative battery cable.

SWITCH, POWER WINDOW

DESCRIPTION

DESCRIPTION

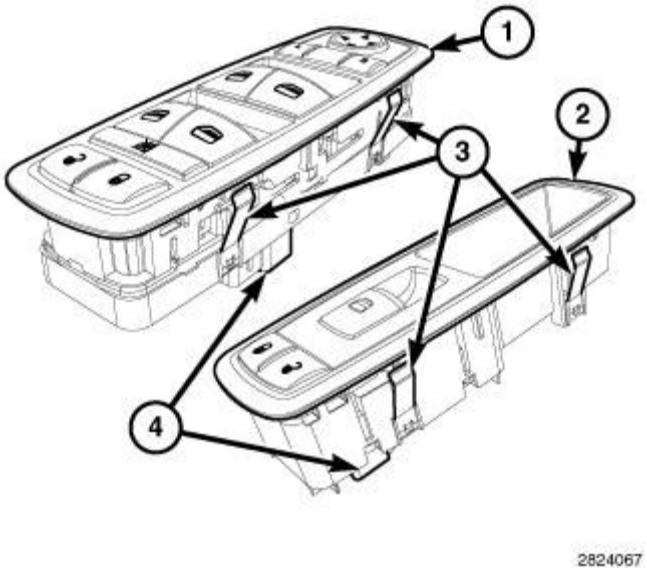

Fig. 5: Driver Side Module, Passenger Side Module, Four Spring Clip Retainers & Connector Receptacle
Courtesy of CHRYSLER GROUP, LLC

A front door power switch module and bezel unit is located near the forward end of the arm rest of each front door trim panel. Two different modules are used: a driver side module (1), and a passenger side module (2). Each switch button in both modules is identified with either an International Control and Display Symbol icon or text that clearly identifies the switch function, and each switch button has a Light Emitting Diode (LED) unit soldered to the switch circuit board that provides back lighting of the icon or text for night visibility.

Each switch module housing is secured within the trim panel armrest by four spring clip retainers (3), two on each side of the switch module housing. The passenger side switch module includes a small cubby bin. A connector receptacle (4) integral to the switch module housing connect the switches to the vehicle electrical system through dedicated take outs and connectors of the door wire harness.

The front door power switch modules include the following switches:

- **Power Lock Switch** - A momentary switch button to control the **Lock** function of the power lock system.
- **Power Unlock Switch** - A momentary switch button to control the **Unlock** function of the power lock system.
- **Power Mirror Selector Switch (Driver Side Switch Only)** - Three mirror selector switch buttons choose the power mirror to be adjusted, **R** (right), **L** (left) or a power fold position (both mirrors).
- **Power Mirror Direction Control Switch (Driver Side Switch Only)** - After a power mirror is selected, pressing down on one of the arrows on the momentary mirror direction switch will move the selected mirror in that direction for as long as it is held down until the limit of the mirror travel is reached.
- **Power Window Lockout Switch (Driver Side Switch Only)** - A latching push-button power window lockout switch allows the vehicle operator to lock out the power window switches on each front and rear passenger door so that those windows may be operated only from the driver side front door master switches. When the lockout switch is engaged, the LED back lighting for each front and rear passenger

door power window switch is extinguished.

- **Power Window Switches** - A single two-way, momentary power window switch with a push-to-open and a lift-to-close tab is provide for each passenger door window while the driver side switch module contains four of these power window switches, one switch dedicated to each door window. The switch tab for the driver side front door power window has a second detent in the down direction which is used to activate the **Auto-Down** (also known as express down or one-touch down) feature. A second detent in the up direction on both front door power window switches activates the **Express-Up** feature.

The front door power switch modules cannot be adjusted or repaired. If damaged or ineffective, the entire driver side or passenger side front door switch module must be replaced as a unit.

There are 3 available driver door switch assemblies :

- 1-touch up and down driver window control
- 1-touch down only driver window control
- 1-touch down only driver window control and manual door locks and mirrors

There are 3 available passenger door switch assemblies:

- 1-touch up and down passenger window control
- Manual passenger window control
- Manual passenger window control and manual door locks.

OPERATION

OPERATION

WITH SMART MOTOR

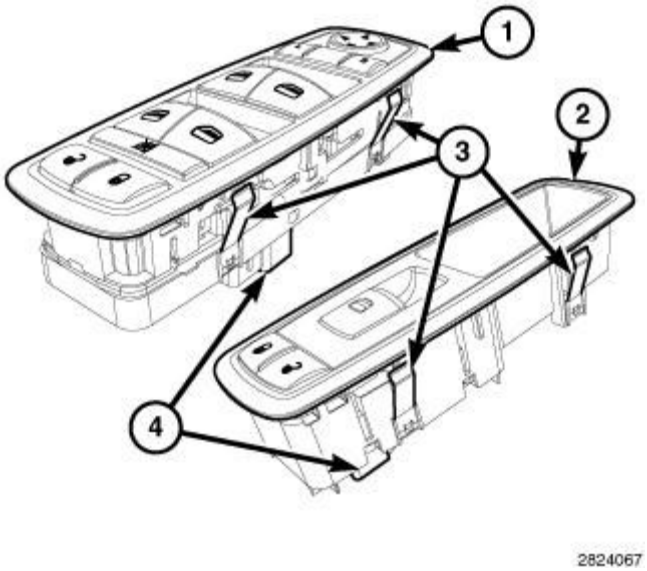

Fig. 6: Driver Side Module, Passenger Side Module, Four Spring Clip Retainers & Connector Receptacle
Courtesy of CHRYSLER GROUP, LLC

The driver side front door power switch module combines a power lock switch, a power window switch for each of the four door windows including auto-down (also known as one-touch down or express down) and express up features for both front door windows, a power window lockout switch, a power mirror selector switch, and a power mirror adjustment switch in a single unit. The passenger side power door switch module combines a power lock switch and a passenger side front door power window switch with the auto-down and express up features.

The driver side front door power switch module provides resistor multiplexed outputs to the driver smart motor indicating the power lock switch selection, hard wired analog outputs indicating the power mirror selector switch and adjustment switch selections, and electronic message outputs over a Local Interface Network (LIN) data bus connection indicating the power window switch selections. The passenger side front door power switch module provides resistor multiplexed outputs to the passenger door module indicating both the power lock and power window switch selections.

The hard-wired circuits between the driver side front door power switch module and the driver side door smart motor or the rear door power window switches may be diagnosed using conventional diagnostic tools and procedures. Refer to the appropriate wiring information. However, conventional diagnostic methods will not prove conclusive in the diagnosis of the electronic controls and communication between the switch module and the smart motor. **The smart window motor does not communicate with other modules on the vehicle** . The most reliable, efficient, and accurate means to diagnose the driver side power switch module or the electronic controls and communication related to power lock, power mirror or power window system operation requires the use of a diagnostic scan tool. Refer to the appropriate diagnostic information.

The hard-wired circuits between the passenger side front door power switch module and the passenger side smart motor may be diagnosed using conventional diagnostic tools and procedures. Refer to the appropriate wiring information. The most reliable, efficient, and accurate means to diagnose the power switch module or the

electronic controls and communication related to power lock or power window system operation requires the use of a diagnostic scan tool. Refer to the appropriate diagnostic information.

WITH DOOR MODULE

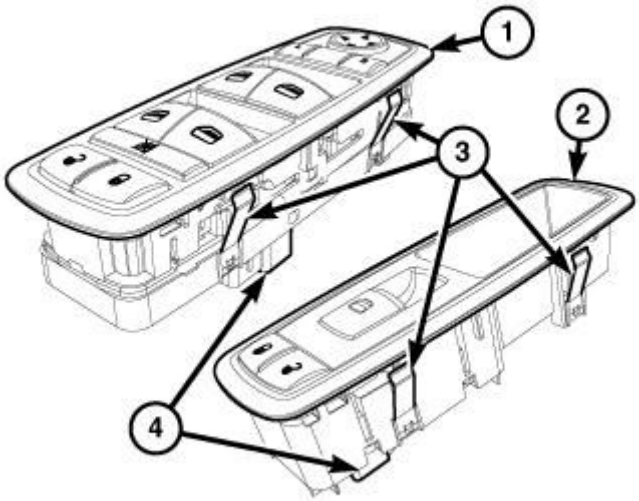

2824067

Fig. 7: Driver Side Module, Passenger Side Module, Four Spring Clip Retainers & Connector Receptacle
Courtesy of CHRYSLER GROUP, LLC

The driver side front door power switch module combines a power lock switch, a power window switch for each of the four door windows including auto-down (also known as one-touch down or express down) and express up features for both front door windows, a power window lockout switch, a power mirror selector switch, and a power mirror adjustment switch in a single unit. The passenger side power door switch module combines a power lock switch and a passenger side front door power window switch with the auto-down and express up features.

The driver side front door power switch module provides resistor multiplexed outputs to the driver door module indicating the power lock switch selection, hard wired analog outputs indicating the power mirror selector switch and adjustment switch selections, and electronic message outputs over a Local Interface Network (LIN) data bus connection indicating the power window switch selections. The passenger side front door power switch module provides resistor multiplexed outputs to the passenger door module indicating both the power lock and power window switch selections.

The hard-wired circuits between the driver side front door power switch module and the driver side door module or the rear door power window switches may be diagnosed using conventional diagnostic tools and procedures. Refer to the appropriate wiring information. However, conventional diagnostic methods will not prove conclusive in the diagnosis of the electronic controls and communication between the switch module and the door module or in the diagnosis of the electronic controls and communication between other modules and the door module that provide some features of the power lock, power mirror or power window systems. The most reliable, efficient, and accurate means to diagnose the driver side power switch module or the electronic

controls and communication related to power lock, power mirror or power window system operation requires the use of a diagnostic scan tool. Refer to the appropriate diagnostic information.

DIAGNOSIS AND TESTING

DIAGNOSIS AND TESTING - POWER WINDOW SWITCHES

The master window switch has an Auto-Down feature. Actuation of the master switch to the second down position will move the drivers side window completely down. The electronic switch will automatically disconnect the motor approximately one second after the window bottoms out. Failure of the electronic switch to detect stall current, will cause the switch to disconnect after approximately 13 seconds. The auto down function can be canceled by any movement of that switch.

MASTER WINDOW SWITCH TEST

SWITCH POSITION	CONTINUITY BETWEEN
OFF	5/13 AND 2
	5/13 AND 3
	5/13 AND 6
	5/13 AND 7
LEFT FRONT UP-NON EXPRESS	1 AND 10
LEFT FRONT DOWN-NON EXPRESS	1 AND 9
RIGHT FRONT UP-NON EXPRESS	1 AND 12
RIGHT FRONT DOWN-NON EXPRESS	1 AND 14
LEFT REAR UP	1 AND 2
LEFT REAR DOWN	1 AND 3
RIGHT REAR UP	1 AND 6
RIGHT REAR DOWN	1 AND 7
LOCKOUT SWITCH (SWITCH NOT DEPRESSED)	1 AND 4

PASSENGER WINDOW SWITCH TEST

SWITCH POSITION	CONTINUITY BETWEEN	RESISTANCE VALUE
UP	4 AND 8	330 ? ± 10%
DOWN	4 AND 8	3000 ? ± 10%

FRONT DOOR - DRIVER SIDE

Any diagnosis of the power window system should begin with the use of the scan tool. For information on the use of the scan tool, refer to the appropriate Diagnostic Service Information .

The diagnosis found here applies to the passenger power window switches. If the problem being diagnosed is an inoperative power window switch illumination lamp, but the power window switch operates as designed, replace the faulty door power window switch.

For complete circuit diagrams, refer to **SYSTEM WIRING DIAGRAMS** .

1. Disconnect and isolate the battery negative cable.
2. Remove the power window switch from the door trim panel. Refer to **SWITCH, POWER WINDOW, REMOVAL**.
3. Check the door power window switch continuity as shown in the power window switch test table below.

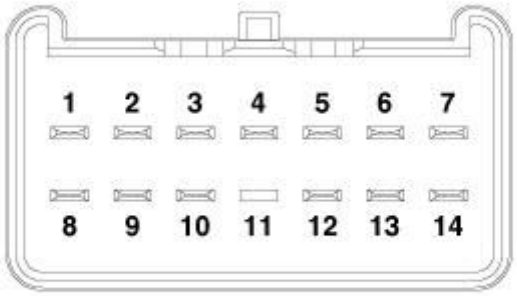

3834819

Fig. 8: Driver Window Switch Connector End View
Courtesy of CHRYSLER GROUP, LLC

BASE HIGH CURRENT WINDOW SWITCH

CAVITY	CIRCUIT
1	F30 - PWR - GENERIC IGN RUN/ACC
2	Q411 - WDO - MASTER CTRL UP RR LT
3	Q611 - WDO - MASTER CTRL DN RR LT
4	Q15 -WDO - PWR WINDOW SW LOCK OUT FEED
5	Z919 - GND - GENERIC 19
6	Q412 - WDO - MASTER CTRL UP RR RT
7	Q412 - WDO - MASTER CTRL DN RR RT
8	F30 - PWR - GENERIC IGN RUN/ACC
9	Q21 - WDO - WINDOW DOWN FT DRIV
10	Q11 - WDO - WINDOW UP FT DRIVE
11	EMPTY
12	Q414 - WDOMASTER CTRL UP PASS
13	Z919 - GND - GENERIC 19
14	Q614 - WDO - MASTER CTRL DN PASS

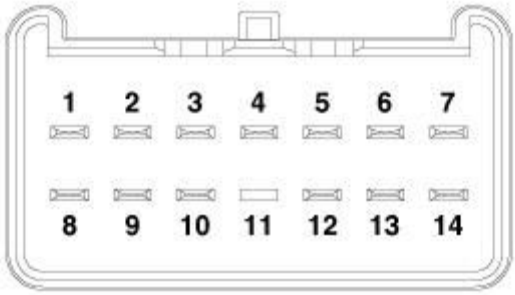

3834819

Fig. 9: Driver Window Switch Connector End View
Courtesy of CHRYSLER GROUP, LLC

SMART WINDOW LOW CURRENT SWITCH

CAVITY	CIRCUIT
1	F30 - PWR - GENERIC IGN RUN/ACC
2	Q411 - WDO - MASTER CTRL UP RR LT
3	Q611 - WDO - MASTER CTRL DN RR LT
4	Q15 -WDO - PWR WINDOW SW LOCK OUT FEED
5	Z919 - GND - GENERIC 19
6	Q412 - WDO - MASTER CTRL UP RR RT
7	Q412 - WDO - MASTER CTRL DN RR RT
8	F30 - PWR - GENERIC IGN RUN/ACC
9	Q21 - WDO - WINDOW DOWN FT DRIV
10	Q11 - WDO - WINDOW UP FT DRIVE
11	EMPTY
12	Q414 - WDOMASTER CTRL UP PASS
13	Z919 - GND - GENERIC 19
14	Q614 - WDO - MASTER CTRL DN PASS

All SMART MOTOR WINDOW SWITCH RESISTANCE VALUES			
Mode	Low Limit	Nominal	High Limit
Up / Auto Up	228 Ohm	235 Ohm	240 Ohm
Down / Auto Down	228 Ohm	235 Ohm	240 Ohm

FRONT DOOR - PASSENGER SIDE

Any diagnosis of the power window system should begin with the use of the scan tool. For information on

the use of the scan tool, refer to the appropriate Diagnostic Service Information .

The diagnosis found here applies to the passenger power window switches. If the problem being diagnosed is an inoperative power window switch illumination lamp, but the power window switch operates as designed, replace the faulty door power window switch.

For complete circuit diagrams, refer to **SYSTEM WIRING DIAGRAMS**

1. Disconnect and isolate the battery negative cable.
2. Remove the power window switch from the door trim panel. Refer to **SWITCH, POWER WINDOW, REMOVAL**.
3. Check the door power window switch continuity as shown in the power window switch test table below.

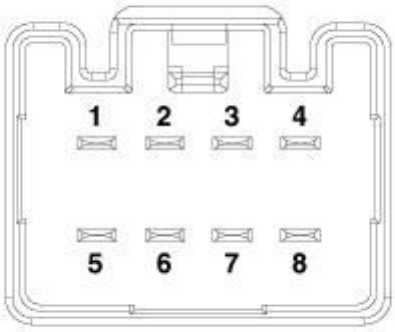

3835020

Fig. 10: Passenger Window Switch Connector End View
Courtesy of CHRYSLER GROUP, LLC

BASE SWITCH W/O POWER LOCKS

CAVITY	CIRCUIT
1	Q614 - WDO - MASTER CTRL DN PASS
2	F30 - PWR - GENERIC IGN RUN/ACC
3	Q12 - WDO - WINDOW UP FT PASS
4	Q414 - WDO - MASTER CTRL UP PASS
5	Q22 - WDO - WINDOW DOWN FT PASS
6	EMPTY
7	EMPTY
8	Z916 - GND - GENERIC 16

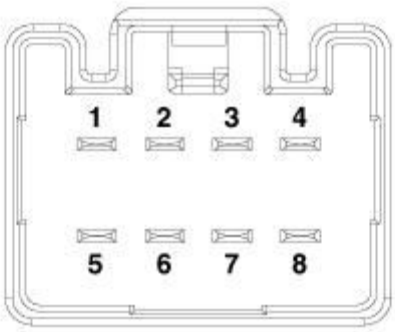

3835020

Fig. 11: Passenger Window Switch Connector End View
Courtesy of CHRYSLER GROUP, LLC

BASE SWITCH WITH POWER LOCKS

CAVITY	CIRCUIT
1	Q614 - WDO - MASTER CTRL DN PASS
2	F30 - PWR - GENERIC IGN RUN/ACC
3	Q12 - WDO - WINDOW UP FT PASS
4	Q414 - WDO - MASTER CTRL UP PASS
5	Q22 - WDO - WINDOW DOWN FT PASS
6	G160 - DRL - DOORLOCK SW SIG FT PASS
7	F30 - PWR - GENERIC IGN RUN/ACC
8	P371 - DRL - DOOR LOCK SW RTN DRIV

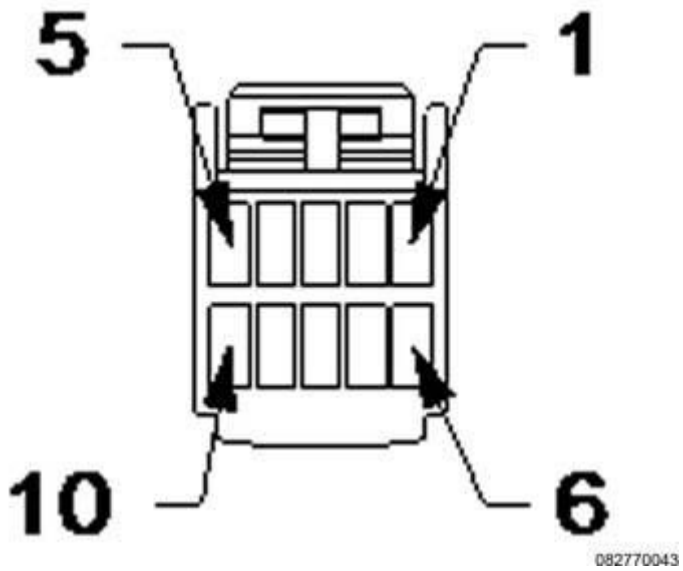

Fig. 12: Power Window Switch Smart Motor Connector End View
Courtesy of CHRYSLER GROUP, LLC

POWER WINDOW SWITCH SMART MOTOR

CAVITY	CIRCUIT
1	F981 - PWR - GENERIC IGN RUN/ACC
2	Q12 - WDO - WINDOW UP FT PASS
3	Q414 - WDO - MASTER CTRL UP PASS
4	P371 - DRL - DOOR LOCK SW RTN DRIV
5	EMPTY
6	Q22 - WDO - WINDOW DOWN FT PASS
7	Q614 - WDO - MASTER CTRL DN PASS
8	G160 - DRL - DOOR LOCK SW SIG FT PASS
9	EMPTY
10	EMPTY

POWER WINDOW SWITCH TESTS - PASSENGER DOOR WINDOW

Passenger Window Switch Functions and (Pin#'s)	RESISTANCE RANGE (OHMS)
UP (4 and 8)	990 - 1022
AUTO UP (4 and 8)	329 - 349
DOWN (4 and 8)	2970 - 3042
AUTO DOWN (4 and 8)	0 - 12
NEUTRAL (4 and 8)	1 megohm

POWER LOCK SWITCH TESTS - PASSENGER DOOR LOCK

Door Lock Switches functions and (Pin #'s)	RESISTANCE RANGE (OHMS)
NEUTRAL (4 and 8)	1 megohm

LOCK (4 and 8)	326 - 341
UNLOCK (4 and 8)	99 - 103

REAR DOOR

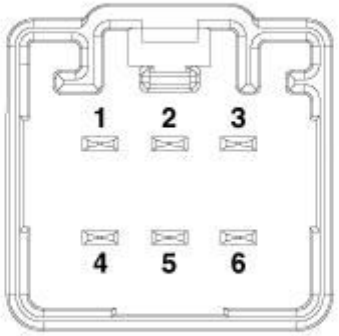

3835039

Fig. 13: Rear Power Window Switch Connector End View
Courtesy of CHRYSLER GROUP, LLC

The following test procedure applies to the rear door power window switches on all vehicles equipped with power windows, with or without power locks.

1. Remove the power window switch from the rear door trim panel. Refer to **SWITCH, POWER WINDOW, REMOVAL**.
2. Using an ohmmeter, test the continuity between the terminals of the rear door power window switch as shown in the Rear Door Power Window Switch Tests table.

REAR DOOR POWER WINDOW SWITCH TESTS TABLE

REAR DOOR POWER WINDOW SWITCH TESTS	
SWITCH POSITION	**CONTINUITY BETWEEN (PINS)**
NEUTRAL	1 and 4, 3 and 6
UP	2 and 4, 3 and 5
DOWN	2 and 3, 4 and 5
SWITCH ILLUMINATION	LEDs - SET MULTIMETER TO DIODE MODE - CONNECT PIN 2 TO PLUS (+), CONNECT PIN 5 TO MINUS (-) - LEDs SHOULD BARELY GLOW

3. If a switch fails any of the tests, replace the ineffective rear door power window switch as required.

REMOVAL

REMOVAL

FRONT DOOR

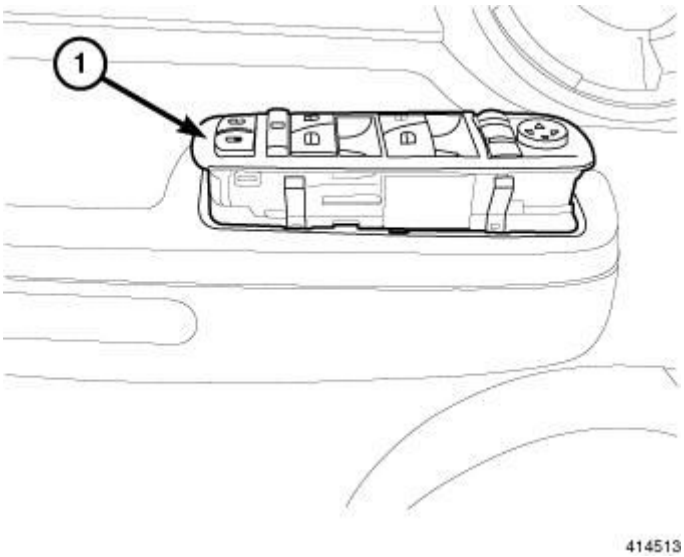

Fig. 14: Power Window Switch
Courtesy of CHRYSLER GROUP, LLC

1. Disconnect and isolate the negative battery cable.
2. Remove door trim panel. Refer to **PANEL, DOOR TRIM, REMOVAL** .
3. Disconnect switch wire connector.
4. Remove switch assembly (1).

REAR DOOR

1. Disconnect and isolate the negative battery cable.
2. Remove the interior handle. Refer to **HANDLE, EXTERIOR, REMOVAL** .
3. Disconnect the electrical connector.
4. Remove the switch from the handle.

INSTALLATION

INSTALLATION

FRONT DOOR

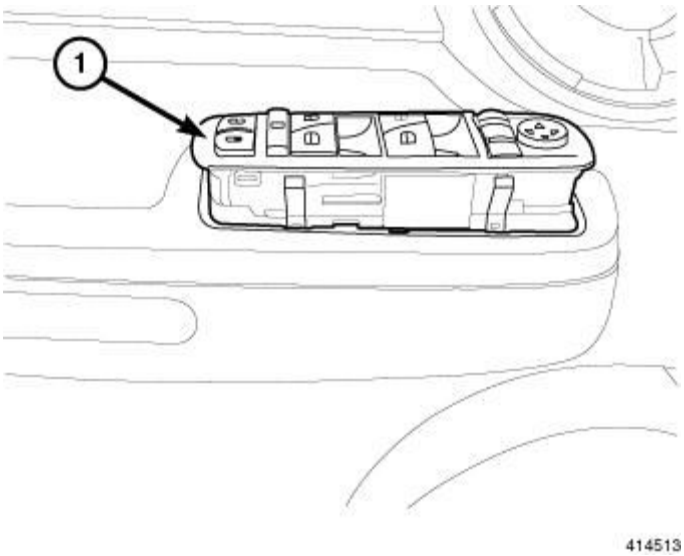

Fig. 15: Power Window Switch
Courtesy of CHRYSLER GROUP, LLC

1. Install the switch (1) by snapping into place.
2. Connect switch wire connector.
3. Install the door trim panel. Refer to **PANEL, DOOR TRIM, INSTALLATION** .
4. Connect the negative battery cable.

REAR DOOR

1. Install the switch to the handle.
2. Connect the electrical connector.
3. Install the interior door handle. Refer to **HANDLE, EXTERIOR, INSTALLATION** .
4. Connect the negative battery cable.

2014 ACCESSORIES AND EQUIPMENT

Radio Frequency (RF Hub) Module - Electrical Diagnostics - Cherokee

DIAGNOSTIC CODE INDEX

DIAGNOSTIC CODE INDEX

DTC	Description
B1A08-00	RKE FOB 1 PERFORMANCE
B1A09-00	RKE FOB 2 PERFORMANCE
B1A0A-00	RKE FOB 3 PERFORMANCE
B1A0B-00	RKE FOB 4 PERFORMANCE
B1A0C-00	RKE FOB 5 PERFORMANCE
B1A0D-00	RKE FOB 6 PERFORMANCE
B1A0E-00	RKE FOB 7 PERFORMANCE
B1A0F-00	RKE FOB 8 PERFORMANCE
B1A10-00	RKE FOB 1 BATTERY LOW
B1A11-00	RKE FOB 2 BATTERY LOW
B1A12-00	RKE FOB 3 BATTERY LOW
B1A13-00	RKE FOB 4 BATTERY LOW
B1A14-00	RKE FOB 5 BATTERY LOW
B1A15-00	RKE FOB 6 BATTERY LOW
B1A16-00	RKE FOB 7 BATTERY LOW
B1A17-00	RKE FOB 8 BATTERY LOW
B1A24-00	KEY NOT PROGRAMMED
B1A25-00	INVALID KEY
B1A35-00	UNIDENTIFIED KEY COMMUNICATION ERROR
B1A71-11	PASSIVE ENTRY ANTENNA 1 - CIRCUIT SHORT TO GROUND
B1A71-12	PASSIVE ENTRY ANTENNA 1 - CIRCUIT SHORT TO BATTERY
B1A71-13	PASSIVE ENTRY ANTENNA 1 - CIRCUIT OPEN
B1A72-11	PASSIVE ENTRY ANTENNA 2 - CIRCUIT SHORT TO GROUND
B1A72-12	PASSIVE ENTRY ANTENNA 2 - CIRCUIT SHORT TO BATTERY
B1A72-13	PASSIVE ENTRY ANTENNA 2 - CIRCUIT OPEN
B1A73-11	PASSIVE ENTRY ANTENNA 3 - CIRCUIT SHORT TO GROUND
B1A73-12	PASSIVE ENTRY ANTENNA 3 - CIRCUIT SHORT TO BATTERY
B1A73-13	PASSIVE ENTRY ANTENNA 3 - CIRCUIT OPEN
B1A74-11	PASSIVE ENTRY ANTENNA 4 - CIRCUIT SHORT TO GROUND
B1A74-12	PASSIVE ENTRY ANTENNA 4 - CIRCUIT SHORT TO BATTERY
B1A74-13	PASSIVE ENTRY ANTENNA 4 - CIRCUIT OPEN
B1A75-11	PASSIVE ENTRY ANTENNA 5 - CIRCUIT SHORT TO GROUND
B1A75-12	PASSIVE ENTRY ANTENNA 5 - CIRCUIT SHORT TO BATTERY

B1A75-13	PASSIVE ENTRY ANTENNA 5 - CIRCUIT OPEN
B1A76-11	REMOTE START ANTENNA CIRCUIT - CIRCUIT SHORT TO GROUND
B1A76-13	REMOTE START ANTENNA CIRCUIT - CIRCUIT OPEN
B1A7B-00	IMMOBILIZER ANTENNA (IGNM)
B1A7B-01	IMMOBILIZER ANTENNA (KIN/IGNM) - GENERAL ELECTRICAL FAILURE
B1A7B-62	IMMOBILIZER ANTENNA (KIN/IGNM)-SIGNAL COMPARE FAILURE
B1A7D-2A	START BUTTON - STUCK
B1A8F-00	IGNM PHOTO POSITION FAILURE
B18A9-00	TRUNK/GATE LOCK CONTROL CIRCUIT 1
B215B-11	IGNITION RUN/START 2 CONTROL-CIRCUIT SHORT TO GROUND
B215B-12	IGNITION RUN/START 2 CONTROL - CIRCUIT SHORT TO BATTERY
B215B-13	IGNITION RUN/START 2 CONTROL-CIRCUIT OPEN
B2199-16	BATTERY VOLTAGE - CIRCUIT VOLTAGE BELOW THRESHOLD
B2199-17	BATTERY VOLTAGE - CIRCUIT VOLTAGE ABOVE THRESHOLD
B21DD-84	SYSTEM VOLTAGE - SIGNAL BELOW ALLOWABLE RANGE
B21DD-85	SYSTEM VOLTAGE - SIGNAL ABOVE ALLOWABLE RANGE
B222C-00	VEHICLE CONFIGURATION NOT PROGRAMMED
B2205-00	ORIGINAL VIN MISSING/MISMATCH
B22A9-00	ECU INTERNAL PERFORMANCE
B25A9-00	FRONT DRIVER DOOR HANDLE SENSE
B25A9-01	FRONT DRIVER DOOR HANDLE SENSE - GENERAL ELECTRICAL FAILURE
B25AA-00	FRONT PASSENGER DOOR HANDLE SENSE
B25AA-01	FRONT PASSENGER DOOR HANDLE SENSE-GENERAL ELECTRICAL FAILURE
B285F-11	BLIND SPOT WARNING LIGHT CONTROL - CIRCUIT SHORT TO GROUND
B285F-15	BLIND SPOT WARNING LIGHT CONTROL - CIRCUIT SHORT TO BATTERY OR OPEN
C1501-07	TIRE PRESSURE SENSOR 1 - MECHANICAL FAILURE
C1501-31	TIRE PRESSURE SENSOR 1 - NO SIGNAL
C1502-07	TIRE PRESSURE SENSOR 2 - MECHANICAL FAILURE
C1502-31	TIRE PRESSURE SENSOR 2 - NO SIGNAL
C1503-07	TIRE PRESSURE SENSOR 3 - MECHANICAL FAILURE
C1503-31	TIRE PRESSURE SENSOR 3 - NO SIGNAL

C1504-07	TIRE PRESSURE SENSOR 4 - MECHANICAL FAILURE
C1504-31	TIRE PRESSURE SENSOR 4 - NO SIGNAL
C151C-51	TIRE PRESSURE SENSOR ID MISSING - NOT PROGRAMMED
C151D-00	TIRE PRESSURE SENSOR LOCATION UNDETERMINED
C1570-00	DUPLICATE TIRE PRESSURE SENSOR IDS
C1597-00	TPM SYSTEM DEACTIVATED-WINTER MODE
C15CB-00	FRONT AXLE TIRE PRESSURE PLACARD VALUE IMPLAUSIBLE
C15CC-00	REAR AXLE TIRE PRESSURE PLACARD VALUE IMPLAUSIBLE
P0704-2A	CLUTCH SWITCH INPUT CIRCUIT-STUCK
P081C-01	PARK INPUT CIRCUIT-GENERAL ELECTRICAL FAILURE
P0928-11	BTSI CONTROL - CIRCUIT SHORT TO GROUND
P0928-12	BTSI CONTROL - CIRCUIT SHORT TO BATTERY
P0928-13	BTSI CONTROL - CIRCUIT OPEN
U0001-00	CAN C BUS
U0002-00	CAN C BUS OFF PERFORMANCE
U0037-00	LIN BUS
U0100-00	LOST COMMUNICATION WITH PCM
U0101-00	LOST COMMUNICATION WITH TCM
U103C-00	KIN/IGNM COMMUNICATION
U0121-00	LOST COMMUNICATION WITH ANTI-LOCK BRAKE SYSTEM (ABS) CONTROL MODULE
U0140-00	LOST COMMUNICATION WITH BODY CONTROL MODULE
U1415-00	IMPLAUSIBLE/MISSING VEHICLE CONFIGURATION DATA
U1433-00	IMPLAUSIBLE IGNITION SWITCH STATUS MESSAGE RECEIVED
U1433-01	IMPLAUSIBLE IGNITION SWITCH STATUS MESSAGE RECEIVED - GENERAL ELECTRICAL FAILURE
U1454-00	IMPLAUSIBLE DATA RECEIVED FROM THE GATED PARK SWITCH
U1517-62	BODY CONTROLLER SECRET CODE - SIGNAL COMPARE FAILURE

DIAGNOSIS AND TESTING

B1A08-00-RKE FOB 1 PERFORMANCE

For a complete wiring diagram, **refer to appropriate SYSTEM WIRING DIAGRAMS article** .

WHEN MONITORED

At every RKE message reception.

SET CONDITION

Upon detection of an out of sync condition between the Radio Frequency (RF Hub) and the FOBIK transceiver.

NOTE: **The most probable cause that sets this code is the RKE transceiver (FOBIK) being pressed over 1024 times when it is out of range of the RF Hub and it loses synchronization with the rolling code. Re-syncing automatically takes place in the background after the vehicle has been started and driven above 5 mph. This happens once per ignition cycle above 5 mph to all FOBIKs located inside the vehicle, just in case one of the FOBIKs was de-activated during a FOBIK safe lock procedure.**

POSSIBLE CAUSES

Possible Causes
EXCESSIVE PRESSES FROM TRANSMITTER WHEN OUT OF RANGE
FOBIK TRANSCEIVER

DIAGNOSTIC TEST

1. **TEST FOR INTERMITTENT CONDITION**

NOTE: **All FOBIKs used with this vehicle should be present during this test.**

NOTE: **Verify that the battery is fully charged with a DVOM and use the scan tool to compare the Battery Voltage listed under "Data" in the RFH View to that of the BCM. If the battery is not fully charged, correct this condition before proceeding.**

1. Use the alleged inoperative FOBIK, cycle/press (if equipped with Keyless Go, the KIN button) the ignition on.

NOTE: **On the Passive Entry Keyless Go (PEKG)/Keyless Ignition Node (KIN) system, using the rounded end of the FOBIK to press the Stop/Start button can cycle the ignition even if the battery in the FOBIK is inop.**

2. With the scan tool, record and erase the DTCs.
3. Press the lock/unlock button of the alleged inoperative FOBIK several times.
4. With the scan tool, read the DTCs.

Does the scan tool display this DTC as active?

Yes

- Go To 2

No

- The conditions that caused this code to set are not present at this time. The FOBIK may have already been re-synchronized by being in the vehicle while it was being driven. Inform the owner of the most probable cause for this code to set and therefore causing the FOBIK to be inoperative.

2. **CYCLE THE IGNITION**
   1. With the scan tool, erase the DTCs.
   2. Cycle the ignition off.
   3. Put the inoperative FOBIK in the vehicle.
   4. With the good FOBIK, start and drive the vehicle above five miles per hour for one mile.
   5. Cycle the ignition off.
   6. Operate the inoperative FOBIK in all positions several times.
   7. With the scan tool, read the DTCs.

   Does the scan tool display this DTC as active?

   Yes

   - Replace the FOBIK and program using the scan tool.

   No

   - Test complete.

B1A09-00-RKE FOB 2 PERFORMANCE

For a complete wiring diagram, **refer to appropriate SYSTEM WIRING DIAGRAMS article** .

WHEN MONITORED

At every RKE message reception.

SET CONDITION

Upon detection of an out of sync condition between the Radio Frequency (RF Hub) and the FOBIK transceiver.

NOTE: **The most probable cause that sets this code is the RKE transceiver (FOBIK) being pressed over 1024 times when it is out of range of the RF Hub and it loses synchronization with the rolling code. Re-syncing automatically takes place in the background after the vehicle has been started and driven above 5 mph. This happens once per ignition cycle above 5 mph to all FOBIKs located inside the**

vehicle, just in case one of the FOBIKs was de-activated during a FOBIK safe lock procedure.

POSSIBLE CAUSES

Possible Causes
EXCESSIVE PRESSES FROM TRANSMITTER WHEN OUT OF RANGE
FOBIK TRANSCEIVER

DIAGNOSTIC TEST

1. **TEST FOR INTERMITTENT CONDITION**

NOTE: **All FOBIKs used with this vehicle should be present during this test.**

NOTE: **Verify that the battery is fully charged with a DVOM and use the scan tool to compare the Battery Voltage listed under "Data" in the RFH View to that of the BCM. If the battery is not fully charged, correct this condition before proceeding.**

1. Use the alleged inoperative FOBIK, cycle/press (if equipped with Keyless Go, the KIN button) the ignition on.

NOTE: **On the Passive Entry Keyless Go (PEKG)/Keyless Ignition Node (KIN) system, using the rounded end of the FOBIK to press the Stop/Start button can cycle the ignition even if the battery in the FOBIK is inop.**

2. With the scan tool, record and erase the DTCs.
3. Press the lock/unlock button of the alleged inoperative FOBIK several times.
4. With the scan tool, read the DTCs.

Does the scan tool display this DTC as active?

Yes

- Go To 2

No

- The conditions that caused this code to set are not present at this time. The FOBIK may have already been re-syncronized by being in the vehicle while it was being driven. Inform the owner of the most probable cause for this code to set and therefore causing the FOBIK to be inoperative.

2. **CYCLE THE IGNITION**

1. With the scan tool, erase the DTCs.
2. Cycle the ignition off.
3. Put the inoperative FOBIK in the vehicle.
4. With the good FOBIK, start and drive the vehicle above five miles per hour for one mile.
5. Cycle the ignition off.
6. Operate the inoperative FOBIK in all positions several times.
7. With the scan tool, read the DTCs.

   Does the scan tool display this DTC as active?

   Yes

   - Replace the FOBIK and program using the scan tool.

   No

   - Test complete.

B1A0A-00-RKE FOB 3 PERFORMANCE

For a complete wiring diagram, **refer to appropriate SYSTEM WIRING DIAGRAMS article** .

WHEN MONITORED

At every RKE message reception.

SET CONDITION

Upon detection of an out of sync condition between the Radio Frequency (RF Hub) and the FOBIK transceiver.

NOTE: **The most probable cause that sets this code is the RKE transceiver (FOBIK) being pressed over 1024 times when it is out of range of the RF Hub and it loses synchronization with the rolling code. Re-syncing automatically takes place in the background after the vehicle has been started and driven above 5 mph. This happens once per ignition cycle above 5 mph to all FOBIKs located inside the vehicle, just in case one of the FOBIKs was de-activated during a FOBIK safe lock procedure.**

POSSIBLE CAUSES

Possible Causes
EXCESSIVE PRESSES FROM TRANSMITTER WHEN OUT OF RANGE
FOBIK TRANSCEIVER

DIAGNOSTIC TEST

1. **TEST FOR INTERMITTENT CONDITION**

NOTE: All FOBIKs used with this vehicle should be present during this test.

NOTE: Verify that the battery is fully charged with a DVOM and use the scan tool to compare the Battery Voltage listed under "Data" in the RFH View to that of the BCM. If the battery is not fully charged, correct this condition before proceeding.

1. Use the alleged inoperative FOBIK, cycle/press (if equipped with Keyless Go, the KIN button) the ignition on.

NOTE: On the Passive Entry Keyless Go (PEKG)/Keyless Ignition Node (KIN) system, using the rounded end of the FOBIK to press the Stop/Start button can cycle the ignition even if the battery in the FOBIK is inop.

2. With the scan tool, record and erase the DTCs.
3. Press the lock/unlock button of the alleged inoperative FOBIK several times.
4. With the scan tool, read the DTCs.

Does the scan tool display this DTC as active?

Yes

- Go To 2

No

- The conditions that caused this code to set are not present at this time. The FOBIK may have already been re-syncronized by being in the vehicle while it was being driven. Inform the owner of the most probable cause for this code to set and therefore causing the FOBIK to be inoperative.

2. **CYCLE THE IGNITION**
   1. With the scan tool, erase the DTCs.
   2. Cycle the ignition off.
   3. Put the inoperative FOBIK in the vehicle.
   4. With the good FOBIK, start and drive the vehicle above five miles per hour for one mile.
   5. Cycle the ignition off.
   6. Operate the inoperative FOBIK in all positions several times.
   7. With the scan tool, read the DTCs.

Does the scan tool display this DTC as active?

Yes

- Replace the FOBIK and program using the scan tool.

No

- Test complete.

B1A0B-00-RKE FOB 4 PERFORMANCE

For a complete wiring diagram, **refer to appropriate SYSTEM WIRING DIAGRAMS article** .

WHEN MONITORED

At every RKE message reception.

SET CONDITION

Upon detection of an out of sync condition between the Radio Frequency (RF Hub) and the FOBIK transceiver.

NOTE: The most probable cause that sets this code is the RKE transceiver (FOBIK) being pressed over 1024 times when it is out of range of the RF Hub and it loses synchronization with the rolling code. Re-syncing automatically takes place in the background after the vehicle has been started and driven above 5 mph. This happens once per ignition cycle above 5 mph to all FOBIKs located inside the vehicle, just in case one of the FOBIKs was de-activated during a FOBIK safe lock procedure.

POSSIBLE CAUSES

Possible Causes
EXCESSIVE PRESSES FROM TRANSMITTER WHEN OUT OF RANGE
FOBIK TRANSCEIVER

DIAGNOSTIC TEST

1. **TEST FOR INTERMITTENT CONDITION**

NOTE: All FOBIKs used with this vehicle should be present during this test.

NOTE: Verify that the battery is fully charged with a DVOM and use the scan tool to compare the Battery Voltage listed under "Data" in the RFH View to that of the BCM. If the battery is not fully charged, correct this condition before

proceeding.

1. Use the alleged inoperative FOBIK, cycle/press (if equipped with Keyless Go, the KIN button) the ignition on.

   NOTE: On the Passive Entry Keyless Go (PEKG)/Keyless Ignition Node (KIN) system, using the rounded end of the FOBIK to press the Stop/Start button can cycle the ignition even if the battery in the FOBIK is inop.

2. With the scan tool, record and erase the DTCs.
3. Press the lock/unlock button of the alleged inoperative FOBIK several times.
4. With the scan tool, read the DTCs.

   Does the scan tool display this DTC as active?

   Yes

   - Go To 2

   No

   - The conditions that caused this code to set are not present at this time. The FOBIK may have already been re-syncronized by being in the vehicle while it was being driven. Inform the owner of the most probable cause for this code to set and therefore causing the FOBIK to be inoperative.

2. **CYCLE THE IGNITION**
   1. With the scan tool, erase the DTCs.
   2. Cycle the ignition off.
   3. Put the inoperative FOBIK in the vehicle.
   4. With the good FOBIK, start and drive the vehicle above five miles per hour for one mile.
   5. Cycle the ignition off.
   6. Operate the inoperative FOBIK in all positions several times.
   7. With the scan tool, read the DTCs.

   Does the scan tool display this DTC as active?

   Yes

   - Replace the FOBIK and program using the scan tool.

   No

   - Test complete.

B1A0C-00-RKE FOB 5 PERFORMANCE

For a complete wiring diagram, **refer to appropriate SYSTEM WIRING DIAGRAMS article** .

WHEN MONITORED

At every RKE message reception.

SET CONDITION

Upon detection of an out of sync condition between the Radio Frequency (RF Hub) and the FOBIK transceiver.

NOTE: The most probable cause that sets this code is the RKE transceiver (FOBIK) being pressed over 1024 times when it is out of range of the RF Hub and it loses synchronization with the rolling code. Re-syncing automatically takes place in the background after the vehicle has been started and driven above 5 mph. This happens once per ignition cycle above 5 mph to all FOBIKs located inside the vehicle, just in case one of the FOBIKs was de-activated during a FOBIK safe lock procedure.

POSSIBLE CAUSES

Possible Causes
EXCESSIVE PRESSES FROM TRANSMITTER WHEN OUT OF RANGE
FOBIK TRANSCEIVER

DIAGNOSTIC TEST

1. **TEST FOR INTERMITTENT CONDITION**

NOTE: All FOBIKs used with this vehicle should be present during this test.

NOTE: Verify that the battery is fully charged with a DVOM and use the scan tool to compare the Battery Voltage listed under "Data" in the RFH View to that of the BCM. If the battery is not fully charged, correct this condition before proceeding.

1. Use the alleged inoperative FOBIK, cycle/press (if equipped with Keyless Go, the KIN button) the ignition on.

NOTE: On the Passive Entry Keyless Go (PEKG)/Keyless Ignition Node (KIN) system, using the rounded end of the FOBIK to press the Stop/Start button can cycle the ignition even if the battery in the FOBIK is inop.

2. With the scan tool, record and erase the DTCs.

3. Press the lock/unlock button of the alleged inoperative FOBIK several times.
4. With the scan tool, read the DTCs.

   Does the scan tool display this DTC as active?

   Yes

   - Go To 2

   No

   - The conditions that caused this code to set are not present at this time. The FOBIK may have already been re-syncronized by being in the vehicle while it was being driven. Inform the owner of the most probable cause for this code to set and therefore causing the FOBIK to be inoperative.

2. **CYCLE THE IGNITION**
   1. With the scan tool, erase the DTCs.
   2. Cycle the ignition off.
   3. Put the inoperative FOBIK in the vehicle.
   4. With the good FOBIK, start and drive the vehicle above five miles per hour for one mile.
   5. Cycle the ignition off.
   6. Operate the inoperative FOBIK in all positions several times.
   7. With the scan tool, read the DTCs.

      Does the scan tool display this DTC as active?

      Yes

      - Replace the FOBIK and program using the scan tool.

      No

      - Test complete.

B1A0D-00-RKE FOB 6 PERFORMANCE

For a complete wiring diagram, **refer to appropriate SYSTEM WIRING DIAGRAMS article** .

WHEN MONITORED

At every RKE message reception.

SET CONDITION

Upon detection of an out of sync condition between the Radio Frequency (RF Hub) and the FOBIK transceiver.

NOTE: **The most probable cause that sets this code is the RKE transceiver (FOBIK) being pressed over 1024 times when it is out of range of the RF Hub and it loses synchronization with the rolling code. Re-syncing automatically takes place in the background after the vehicle has been started and driven above 5 mph. This happens once per ignition cycle above 5 mph to all FOBIKs located inside the vehicle, just in case one of the FOBIKs was de-activated during a FOBIK safe lock procedure.**

POSSIBLE CAUSES

Possible Causes
EXCESSIVE PRESSES FROM TRANSMITTER WHEN OUT OF RANGE
FOBIK TRANSCEIVER

DIAGNOSTIC TEST

1. **TEST FOR INTERMITTENT CONDITION**

NOTE: **All FOBIKs used with this vehicle should be present during this test.**

NOTE: **Verify that the battery is fully charged with a DVOM and use the scan tool to compare the Battery Voltage listed under "Data" in the RFH View to that of the BCM. If the battery is not fully charged, correct this condition before proceeding.**

1. Use the alleged inoperative FOBIK, cycle/press (if equipped with Keyless Go, the KIN button) the ignition on.

NOTE: **On the Passive Entry Keyless Go (PEKG)/Keyless Ignition Node (KIN) system, using the rounded end of the FOBIK to press the Stop/Start button can cycle the ignition even if the battery in the FOBIK is inop.**

2. With the scan tool, record and erase the DTCs.
3. Press the lock/unlock button of the alleged inoperative FOBIK several times.
4. With the scan tool, read the DTCs.

Does the scan tool display this DTC as active?

Yes

- Go To 2

No

- The conditions that caused this code to set are not present at this time. The FOBIK may have already been re-syncronized by being in the vehicle while it was being driven. Inform the owner of the most probable cause for this code to set and therefore causing the FOBIK to be inoperative.

2. **CYCLE THE IGNITION**
   1. With the scan tool, erase the DTCs.
   2. Cycle the ignition off.
   3. Put the inoperative FOBIK in the vehicle.
   4. With the good FOBIK, start and drive the vehicle above five miles per hour for one mile.
   5. Cycle the ignition off.
   6. Operate the inoperative FOBIK in all positions several times.
   7. With the scan tool, read the DTCs.

   Does the scan tool display this DTC as active?

   Yes

   - Replace the FOBIK and program using the scan tool.

   No

   - Test complete.

B1A0E-00-RKE FOB 7 PERFORMANCE

For a complete wiring diagram, **refer to appropriate SYSTEM WIRING DIAGRAMS article** .

WHEN MONITORED

At every RKE message reception.

SET CONDITION

Upon detection of an out of sync condition between the Radio Frequency (RF Hub) and the FOBIK transceiver.

NOTE: **The most probable cause that sets this code is the RKE transceiver (FOBIK) being pressed over 1024 times when it is out of range of the RF Hub and it loses synchronization with the rolling code. Re-syncing automatically takes place in the background after the vehicle has been started and driven above 5 mph. This happens once per ignition cycle above 5 mph to all FOBIKs located inside the vehicle, just in case one of the FOBIKs was de-activated during a FOBIK safe lock procedure.**

POSSIBLE CAUSES

Possible Causes
EXCESSIVE PRESSES FROM TRANSMITTER WHEN OUT OF RANGE
FOBIK TRANSCEIVER

DIAGNOSTIC TEST

1. **TEST FOR INTERMITTENT CONDITION**

   NOTE: All FOBIKs used with this vehicle should be present during this test.

   NOTE: Verify that the battery is fully charged with a DVOM and use the scan tool to compare the Battery Voltage listed under "Data" in the RFH View to that of the BCM. If the battery is not fully charged, correct this condition before proceeding.

   1. Use the alleged inoperative FOBIK, cycle/press (if equipped with Keyless Go, the KIN button) the ignition on.

      NOTE: On the Passive Entry Keyless Go (PEKG)/Keyless Ignition Node (KIN) system, using the rounded end of the FOBIK to press the Stop/Start button can cycle the ignition even if the battery in the FOBIK is inop.

   2. With the scan tool, record and erase the DTCs.
   3. Press the lock/unlock button of the alleged inoperative FOBIK several times.
   4. With the scan tool, read the DTCs.

      Does the scan tool display this DTC as active?

      Yes

      - Go To 2

      No

      - The conditions that caused this code to set are not present at this time. The FOBIK may have already been re-syncronized by being in the vehicle while it was being driven. Inform the owner of the most probable cause for this code to set and therefore causing the FOBIK to be inoperative.

2. **CYCLE THE IGNITION**
   1. With the scan tool, erase the DTCs.
   2. Cycle the ignition off.
   3. Put the inoperative FOBIK in the vehicle.

4. With the good FOBIK, start and drive the vehicle above five miles per hour for one mile.
5. Cycle the ignition off.
6. Operate the inoperative FOBIK in all positions several times.
7. With the scan tool, read the DTCs.

   Does the scan tool display this DTC as active?

   Yes

   - Replace the FOBIK and program using the scan tool.

   No

   - Test complete.

B1A0F-00-RKE FOB 8 PERFORMANCE

For a complete wiring diagram, **refer to appropriate SYSTEM WIRING DIAGRAMS article** .

WHEN MONITORED

At every RKE message reception.

SET CONDITION

Upon detection of an out of sync condition between the Radio Frequency (RF Hub) and the FOBIK transceiver.

NOTE: **The most probable cause that sets this code is the RKE transceiver (FOBIK) being pressed over 1024 times when it is out of range of the RF Hub and it loses synchronization with the rolling code. Re-syncing automatically takes place in the background after the vehicle has been started and driven above 5 mph. This happens once per ignition cycle above 5 mph to all FOBIKs located inside the vehicle, just in case one of the FOBIKs was de-activated during a FOBIK safe lock procedure.**

POSSIBLE CAUSES

Possible Causes
EXCESSIVE PRESSES FROM TRANSMITTER WHEN OUT OF RANGE
FOBIK TRANSCEIVER

DIAGNOSTIC TEST

1. **TEST FOR INTERMITTENT CONDITION**

NOTE: All FOBIKs used with this vehicle should be present during this test.

NOTE: Verify that the battery is fully charged with a DVOM and use the scan tool to compare the Battery Voltage listed under "Data" in the RFH View to that of the BCM. If the battery is not fully charged, correct this condition before proceeding.

1. Use the alleged inoperative FOBIK, cycle/press (if equipped with Keyless Go, the KIN button) the ignition on.

   NOTE: On the Passive Entry Keyless Go (PEKG)/Keyless Ignition Node (KIN) system, using the rounded end of the FOBIK to press the Stop/Start button can cycle the ignition even if the battery in the FOBIK is inop.

2. With the scan tool, record and erase the DTCs.
3. Press the lock/unlock button of the alleged inoperative FOBIK several times.
4. With the scan tool, read the DTCs.

   Does the scan tool display this DTC as active?

   Yes

   - Go To 2

   No

   - The conditions that caused this code to set are not present at this time. The FOBIK may have already been re-syncronized by being in the vehicle while it was being driven. Inform the owner of the most probable cause for this code to set and therefore causing the FOBIK to be inoperative.

2. **TEST DRIVE THE VEHICLE**
   1. With the scan tool, erase the DTCs.
   2. Cycle the ignition off.
   3. Put the inoperative FOBIK in the vehicle.
   4. With the good FOBIK, start and drive the vehicle above five miles per hour for one mile.
   5. Cycle the ignition off.
   6. Operate the inoperative FOBIK in all positions several times.
   7. With the scan tool, read the DTCs.

   Does the scan tool display this DTC as active?

   Yes

- Replace the FOBIK and program using the scan tool.

No

- Test complete.

B1A10-00-RKE FOB 1 BATTERY LOW

For a complete wiring diagram, **refer to appropriate SYSTEM WIRING DIAGRAMS article** .

WHEN MONITORED

At every RKE message reception (Lock, Unlock and Keyless Go).

SET CONDITION

If the battery in the Fob-Integrated-Key (FOBIK) is low during key interrogation, with a valid key, this code will set. It may also set during a valid RKE button press.

POSSIBLE CAUSES

Possible Causes
LOW BATTERY
FOBIK TRANSCEIVER

DIAGNOSTIC TEST

TEST FOR INTERMITTENT CONDITION

NOTE: Verify that the vehicle's battery is fully charged with a DVOM and use the scan tool to compare the Battery Voltage listed under "Data" in the RFH View to that of the BCM. If the vehicle's battery is not fully charged, correct this condition before proceeding.

NOTE: Verify that the FOBIK in use is the FOBIK causing the DTC to set.

NOTE: All FOBIKs used with this vehicle should be present during this test.

1. With one of the owners known good FOBIKs in the vehicle, cycle (or press the KIN button with Keyless Go) the ignition on.
2. Using the scan tool, record and erase the DTCs.
3. Cycle the ignition off.
4. From inside the vehicle, operate the alleged inoperative FOBIK in all positions several times.
5. Cycle the ignition on.

6. Using the scan tool, read the active DTCs.

   Does the scan tool display: B1A10-00-RKE FOB 1 BATTERY LOW as active?

   Yes

   - Replace the FOBIK battery. Test the FOBIK using the (special tool #9001, Rf Detector). If the Strength Display does not display "Strong", replace and program the FOBIK using the scan tool.

   No

   - Test complete. The conditions that caused this code to set are not present at this time.

B1A11-00-RKE FOB 2 BATTERY LOW

For a complete wiring diagram, **refer to appropriate SYSTEM WIRING DIAGRAMS article** .

WHEN MONITORED

At every RKE message reception (Lock, Unlock and Keyless Go).

SET CONDITION

If the battery in the Fob-Integrated-Key (FOBIK) is low during key interrogation, with a valid key, this code will set. It may also set during a valid RKE button press.

POSSIBLE CAUSES

Possible Causes
LOW BATTERY
FOBIK TRANSCEIVER

DIAGNOSTIC TEST

TEST FOR INTERMITTENT CONDITION

NOTE: **Verify that the vehicle's battery is fully charged with a DVOM and use the scan tool to compare the Battery Voltage listed under "Data" in the RFH View to that of the BCM. If the vehicle's battery is not fully charged, correct this condition before proceeding.**

NOTE: **Verify that the FOBIK in use is the FOBIK causing the DTC to set.**

NOTE: **All FOBIKs used with this vehicle should be present during this test.**

1. With one of the owners known good FOBIKs in the vehicle, cycle (or press the KIN button with Keyless Go) the ignition on.
2. Using the scan tool, record and erase the DTCs.
3. Cycle the ignition off.
4. From inside the vehicle, operate the alleged inoperative FOBIK in all positions several times.
5. Cycle the ignition on.
6. Using the scan tool, read the active DTCs.

   Does the scan tool display: B1A11-00-RKE FOB 2 BATTERY LOW as active?

   Yes

   - Replace the FOBIK battery. Test the FOBIK using the (special tool #9001, Rf Detector). If the Strength Display does not display "Strong", replace and program the FOBIK using the scan tool.

   No

   - Test complete. The conditions that caused this code to set are not present at this time.

B1A12-00-RKE FOB 3 BATTERY LOW

For a complete wiring diagram, **refer to appropriate SYSTEM WIRING DIAGRAMS article** .

WHEN MONITORED

At every RKE message reception (Lock, Unlock and Keyless Go).

SET CONDITION

If the battery in the Fob-Integrated-Key (FOBIK) is low during key interrogation, with a valid key, this code will set. It may also set during a valid RKE button press.

POSSIBLE CAUSES

Possible Causes
LOW BATTERY
FOBIK TRANSCEIVER

DIAGNOSTIC TEST

TEST FOR INTERMITTENT CONDITION

NOTE: **Verify that the vehicle's battery is fully charged with a DVOM and use the scan tool to compare the Battery Voltage listed under "Data" in the RFH View to that**

of the BCM. If the vehicle's battery is not fully charged, correct this condition before proceeding.

NOTE: Verify that the FOBIK in use is the FOBIK causing the DTC to set.

NOTE: All FOBIKs used with this vehicle should be present during this test.

1. With one of the owners known good FOBIKs in the vehicle, cycle (or press the KIN button with Keyless Go) the ignition on.
2. Using the scan tool, record and erase the DTCs.
3. Cycle the ignition off.
4. From inside the vehicle, operate the alleged inoperative FOBIK in all positions several times.
5. Cycle the ignition on.
6. Using the scan tool, read the active DTCs.

   Does the scan tool display: B1A12-00-RKE FOB 3 BATTERY LOW as active?

   Yes

   - Replace the FOBIK battery. Test the FOBIK using the (special tool #9001, Rf Detector). If the Strength Display does not display "Strong", replace and program the FOBIK using the scan tool.

   No

   - Test complete. The conditions that caused this code to set are not present at this time.

B1A13-00-RKE FOB 4 BATTERY LOW

For a complete wiring diagram, **refer to appropriate SYSTEM WIRING DIAGRAMS article** .

WHEN MONITORED

At every RKE message reception (Lock, Unlock and Keyless Go).

SET CONDITION

If the battery in the Fob-Integrated-Key (FOBIK) is low during key interrogation, with a valid key, this code will set. It may also set during a valid RKE button press.

POSSIBLE CAUSES

Possible Causes
LOW BATTERY
FOBIK TRANSCEIVER

DIAGNOSTIC TEST

TEST FOR INTERMITTENT CONDITION

NOTE: Verify that the vehicle's battery is fully charged with a DVOM and use the scan tool to compare the Battery Voltage listed under "Data" in the RFH View to that of the BCM. If the vehicle's battery is not fully charged, correct this condition before proceeding.

NOTE: Verify that the FOBIK in use is the FOBIK causing the DTC to set.

NOTE: All FOBIKs used with this vehicle should be present during this test.

1. With one of the owners known good FOBIKs in the vehicle, cycle (or press the KIN button with Keyless Go) the ignition on.
2. Using the scan tool, record and erase the DTCs.
3. Cycle the ignition off.
4. From inside the vehicle, operate the alleged inoperative FOBIK in all positions several times.
5. Cycle the ignition on.
6. Using the scan tool, read the active DTCs.

   Does the scan tool display: B1A13-00-RKE FOB 4 BATTERY LOW as active?

   Yes

   - Replace the FOBIK battery. Test the FOBIK using the (special tool #9001, Rf Detector). If the Strength Display does not display "Strong", replace and program the FOBIK using the scan tool.

   No

   - Test complete. The conditions that caused this code to set are not present at this time.

B1A14-00-RKE FOB 5 BATTERY LOW

For a complete wiring diagram, **refer to appropriate SYSTEM WIRING DIAGRAMS article** .

WHEN MONITORED

At every RKE message reception (Lock, Unlock and Keyless Go).

SET CONDITION

If the battery in the Fob-Integrated-Key (FOBIK) is low during key interrogation, with a valid key, this code will set. It may also set during a valid RKE button press.

POSSIBLE CAUSES

Possible Causes
LOW BATTERY
FOBIK TRANSCEIVER

DIAGNOSTIC TEST

TEST FOR INTERMITTENT CONDITION

NOTE: Verify that the vehicle's battery is fully charged with a DVOM and use the scan tool to compare the Battery Voltage listed under "Data" in the RFH View to that of the BCM. If the vehicle's battery is not fully charged, correct this condition before proceeding.

NOTE: Verify that the FOBIK in use is the FOBIK causing the DTC to set.

NOTE: All FOBIKs used with this vehicle should be present during this test.

1. With one of the owners known good FOBIKs in the vehicle, cycle (or press the KIN button with Keyless Go) the ignition on.
2. Using the scan tool, record and erase the DTCs.
3. Cycle the ignition off.
4. From inside the vehicle, operate the alleged inoperative FOBIK in all positions several times.
5. Cycle the ignition on.
6. Using the scan tool, read the active DTCs.

   Does the scan tool display: B1A14-00-RKE FOB 5 BATTERY LOW as active?

   Yes

   - Replace the FOBIK battery. Test the FOBIK using the (special tool #9001, Rf Detector). If the Strength Display does not display "Strong", replace and program the FOBIK using the scan tool.

   No

   - Test complete. The conditions that caused this code to set are not present at this time.

B1A15-00-RKE FOB 6 BATTERY LOW

For a complete wiring diagram, **refer to appropriate SYSTEM WIRING DIAGRAMS article** .

WHEN MONITORED

At every RKE message reception (Lock, Unlock and Keyless Go).

SET CONDITION

If the battery in the Fob-Integrated-Key (FOBIK) is low during key interrogation, with a valid key, this code will set. It may also set during a valid RKE button press.

POSSIBLE CAUSES

Possible Causes
LOW BATTERY
FOBIK TRANSCEIVER

DIAGNOSTIC TEST

TEST FOR INTERMITTENT CONDITION

NOTE: Verify that the vehicle's battery is fully charged with a DVOM and use the scan tool to compare the Battery Voltage listed under "Data" in the RFH View to that of the BCM. If the vehicle's battery is not fully charged, correct this condition before proceeding.

NOTE: Verify that the FOBIK in use is the FOBIK causing the DTC to set.

NOTE: All FOBIKs used with this vehicle should be present during this test.

1. With one of the owners known good FOBIKs in the vehicle, cycle (or press the KIN button with Keyless Go) the ignition on.
2. Using the scan tool, record and erase the DTCs.
3. Cycle the ignition off.
4. From inside the vehicle, operate the alleged inoperative FOBIK in all positions several times.
5. Cycle the ignition on.
6. Using the scan tool, read the active DTCs.

   Does the scan tool display: B1A15-00-RKE FOB 6 BATTERY LOW as active?

   Yes

   - Replace the FOBIK battery. Test the FOBIK using the (special tool #9001, Rf Detector). If the Strength Display does not display "Strong", replace and program the FOBIK using the scan tool.

   No

   - Test complete. The conditions that caused this code to set are not present at this time.

B1A16-00-RKE FOB 7 BATTERY LOW

For a complete wiring diagram, **refer to appropriate SYSTEM WIRING DIAGRAMS article** .

WHEN MONITORED

At every RKE message reception (Lock, Unlock and Keyless Go).

SET CONDITION

If the battery in the Fob-Integrated-Key (FOBIK) is low during key interrogation, with a valid key, this code will set. It may also set during a valid RKE button press.

POSSIBLE CAUSES

Possible Causes
LOW BATTERY
FOBIK TRANSCEIVER

DIAGNOSTIC TEST

TEST FOR INTERMITTENT CONDITION

NOTE: Verify that the vehicle's battery is fully charged with a DVOM and use the scan tool to compare the Battery Voltage listed under "Data" in the RFH View to that of the BCM. If the vehicle's battery is not fully charged, correct this condition before proceeding.

NOTE: Verify that the FOBIK in use is the FOBIK causing the DTC to set.

NOTE: All FOBIKs used with this vehicle should be present during this test.

1. With one of the owners known good FOBIKs in the vehicle, cycle (or press the KIN button with Keyless Go) the ignition on.
2. Using the scan tool, record and erase the DTCs.
3. Cycle the ignition off.
4. From inside the vehicle, operate the alleged inoperative FOBIK in all positions several times.
5. Cycle the ignition on.
6. Using the scan tool, read the active DTCs.

   Does the scan tool display: B1A16-00-RKE FOB 7 BATTERY LOW as active?

   Yes

- Replace the FOBIK battery. Test the FOBIK using the (special tool #9001, Rf Detector). If the Strength Display does not display "Strong", replace and program the FOBIK using the scan tool.

No

- Test complete. The conditions that caused this code to set are not present at this time.

B1A17-00-RKE FOB 8 BATTERY LOW

For a complete wiring diagram, **refer to appropriate SYSTEM WIRING DIAGRAMS article** .

WHEN MONITORED

At every RKE message reception (Lock, Unlock and Keyless Go).

SET CONDITION

If the battery in the Fob-Integrated-Key (FOBIK) is low during key interrogation, with a valid key, this code will set. It may also set during a valid RKE button press.

POSSIBLE CAUSES

Possible Causes
LOW BATTERY
FOBIK TRANSCEIVER

DIAGNOSTIC TEST

TEST FOR INTERMITTENT CONDITION

NOTE: Verify that the vehicle's battery is fully charged with a DVOM and use the scan tool to compare the Battery Voltage listed under "Data" in the RFH View to that of the BCM. If the vehicle's battery is not fully charged, correct this condition before proceeding.

NOTE: Verify that the FOBIK in use is the FOBIK causing the DTC to set.

NOTE: All FOBIKs used with this vehicle should be present during this test.

1. With one of the owners known good FOBIKs in the vehicle, cycle (or press the KIN button with Keyless Go) the ignition on.
2. Using the scan tool, record and erase the DTCs.
3. Cycle the ignition off.
4. From inside the vehicle, operate the alleged inoperative FOBIK in all positions several times.

5. Cycle the ignition on.
6. Using the scan tool, read the active DTCs.

   Does the scan tool display: B1A17-00-RKE FOB 8 BATTERY LOW as active?

   Yes

   - Replace the FOBIK battery. Test the FOBIK using the (special tool #9001, Rf Detector). If the Strength Display does not display "Strong", replace and program the FOBIK using the scan tool.

   No

   - Test complete. The conditions that caused this code to set are not present at this time.

B1A24-00-KEY NOT PROGRAMMED

For a complete wiring diagram, **refer to appropriate SYSTEM WIRING DIAGRAMS article** .

THEORY OF OPERATION

Whenever a Fob-Integrated-Key (FOBIK) is inserted in the Ignition Node Module (IGNM); or the Keyless Ignition Node (KIN) push button is pressed with the key inside the vehicle, the Radio Frequency Hub (RF-Hub) performs a self test and resynchronization routine. During the routine, the RF-Hub interrogates the FOBIK, performing various validity and performance tests. The repair of this fault condition relies on the programmed status of the FOBIK.

WHEN MONITORED

Interrogation of the FOBIK is completed in two ways, the IGnition Node Module or Keyless Ignition Node. The IGNM, uses low frequency communication between the FOBIK and RFHM through the LIN to the IGNM coil. The KIN, on the passive entry keyless go system uses low frequency communication between the LF antennas, FOBIK and Radio Frequency Hub Module. It will also use radio frequency communication between the FOBIK and RFHM.

SET CONDITION

This DTC sets if the RF-Hub receives the default, secret key status from a FOBIK. Once set, this DTC will remain active until two valid FOBIKs are recognized by the RF-Hub.

POSSIBLE CAUSES

Possible Causes
NO FOBIK PROGRAMMED
RADIO FREQUENCY HUB
REPLACEMENT RADIO FREQUENCY HUB

DIAGNOSTIC TEST

PROGRAM ALL FOBIKS

NOTE: All FOBIKs that are to be used in this vehicle must remain on the front seat near the console during programming.

NOTE: The RF-Hub

must have a minimum of two

programmed FOBIKs for this DTC to be stored.

1. With the scan tool, select "Misc. Functions", "Program Ignition FOBIKs" and follow the instructions on the screen.
2. Program all FOBIKs that are used with this vehicle.
3. Try each FOBIK that was programmed.

   Do all FOBIKs operate properly?

   Yes

   - Test complete.

   No

   - With the scan tool perform the "RFH", "Reset ECU" and repeat this test from the beginning.

B1A25-00-INVALID KEY

For a complete wiring diagram, **refer to appropriate SYSTEM WIRING DIAGRAMS article** .

WHEN MONITORED

At ignition on and during FOBIK programming mode.

SET CONDITION

When the RF Hub (RFHM) does not receive a valid FOBIK response from the IGnition Node Module (IGNM), or the key that is being used is programmed for a different vehicle.

POSSIBLE CAUSES

Possible Causes
PREVIOUSLY PROGRAMMED FOBIK TO A DIFFERENT VEHICLE

FOBIK
IGNITION NODE MODULE (IGNM)
RADIO FREQUENCY HUB MODULE (RF HUB)

DIAGNOSTIC TEST

1. **DETERMINING IF DIAGNOSTIC TROUBLE CODE (DTC) IS CURRENT**

   NOTE: Verify the FOBIK being used is correct for this vehicle and unprogrammed. If the FOBIK being programmed is not blank (already programmed to another vehicle) this fault will set.

   NOTE: Verify that the battery is fully charged with a DVOM and use the scan tool to compare the Battery Voltage listed under "Data" in the RFH View to that of the BCM. If the battery is not fully charged, correct this condition before proceeding.

   1. With the scan tool, read and record the RFH DTCs.
   2. With the scan tool, erase the RFH DTCs.

      NOTE: Perform the following test several times to make sure the DTC is current.

   3. Use the alleged FOBIK and try to cycle the ignition.
   4. Wait 10 seconds.
   5. With the scan tool, read the RFH DTCs.

      Does the scan tool display the DTC that was previously erased?

      Yes

      - Go To 2

      No

      - Test complete.

2. **CHECKING FOR MULTIPLE KEYS**

   Are there multiple vehicle FOBIK's available?

   Yes

   - Go To 3

No

- Go To 4

3. **MULTIPLE KEY OPERATION**

NOTE: Perform the following steps using one of the vehicles FOBIK's. When finished, repeat the procedure using each of the other FOBIK's, one at a time.

1. With the scan tool, erase the RFH DTCs.
2. Cycle the ignition off.
3. Wait 10 seconds.
4. Cycle the ignition on.
5. With the scan tool, read the RFH DTCs.

Is the DTC present for **all** ignition keys?

Yes

- Go To 5

No

- Replace the FOBIK that caused the RFH DTC.
- Perform the RFH VERIFICATION TEST. Refer to **STANDARD PROCEDURE**.

4. **REPROGRAM KEY**

1. With the scan tool, attempt to reprogram the FOBIK to the RFH.
2. With the scan tool, erase the RFH DTCs.
3. Wait 10 seconds.
4. Cycle the ignition on.
5. With the scan tool, read the RFH DTCs.

Does the DTC set again?

Yes

- Go To 5

No

- Test complete.

5. **REPLACE FOBIK**

1. Replace the FOBIK that caused the RFH DTC.
2. With the scan tool, erase the RFH DTCs.
3. Wait 10 seconds.
4. Cycle the ignition on.
5. With the scan tool, read the RFH DTCs.

   Does the DTC set again?

   Yes

   - Go To 6

   No

   - Test complete.

6. **REPLACE THE IGNM**
   1. Replace the IGNM in accordance with Service Information.
   2. With the scan tool, erase the RFH DTCs.
   3. Wait 10 seconds.
   4. Cycle the ignition on.
   5. With the scan tool, read the RFH DTCs.

      Does the DTC set again?

      Yes

      - Replace and program the Radio Frequency Hub Module in accordance with the Service Information.
      - Perform the RFH VERIFICATION TEST. Refer to **STANDARD PROCEDURE**.

      No

      - Test complete.

B1A35-00-UNIDENTIFIED KEY COMMUNICATION ERROR

For a complete wiring diagram, **refer to appropriate SYSTEM WIRING DIAGRAMS article** .

WHEN MONITORED

With the ignition state in Off, the IGNM is rotated or KIN button is pressed, LF authentication is attempted but no valid RF response is received from a key.

SET CONDITION

This Diagnostic Trouble Code (DTC) sets when the Operator rotates/presses the IGNM/KIN button to start the vehicle. Depending upon the ignition type (KIN or IGNM) the Cluster/EVIC message "Fob not Detected" or "Damaged Key" will display.

POSSIBLE CAUSES

Possible Causes
FOBIK
IGNITION NODE MODULE (IGNM) OR KEYLESS IGNITION NODE (KIN)

DIAGNOSTIC TEST

1. **CHECK FOR AN INTERMITTENT CONDITION**

NOTE: **Verify that the battery is fully charged with a DVOM and use the scan tool to compare the Battery Voltage listed under "Data" in the RFH View to that of the BCM. If the battery is not fully charged, correct this condition before proceeding.**

NOTE: **An external Radio-Frequency Identification (RFID) key (and/or pass/radio key), such as one used to gain access to a 24 hour gym, can cause this DTC to set and create a no start condition. Inspect the customer's key chain for any type of RFID key. If one is not found, question the customer to see if a spare key chain has this RFID key on it or if it was removed from the original key chain before the vehicle was released for service. If a RFID key is present, remove the ignition key from the vehicle and remove the RFID key from the key chain. For GPEC equipped vehicles, disconnect the battery and wait a minimum of five minutes, reconnect and attempt to start the vehicle.**

NOTE: **Verify the FOBIK in use is the FOBIK causing this DTC to set.**

1. Cycle the ignition on.
2. With the scan tool, record and erase the RFH DTCs.
3. Cycle the ignition switch from on to off, wait five seconds and then crank the engine.
4. Cycle the engine off, key on.
5. With the scan tool, read the active RFH DTCs.

   Does the scan tool display: B1A35-00 UNIDENTIFIED KEY COMMUNICATION ERROR as Active?

   Yes

- Go To 2

No

- Perform the RFH VERIFICATION TEST. Refer to **STANDARD PROCEDURE**.

2. **TEST LF COMMUNICATION**
   1. With the scan tool, in the RFH menu, go to Data Display, Bussed Outputs and check the status for the current FOBIK that is being used and record that status.
   2. Cycle the ignition off.
   3. Use the other known good FOBIKs programmed with this vehicle,

      NOTE: If another FOBIK is not available, insert a new FOBIK (Do not program) to test the RF Hub modules LF communication.

   4. Check the status of the current FOBIK being used and verify that the status changed from the first FOBIK

      Does the status change ?

      Yes

      - Replace and program the FOBIK in accordance with the Service Information.
      - Perform the RFH VERIFICATION TEST. Refer to **STANDARD PROCEDURE**.

      No

      - Replace the IGNM/KIN in accordance with Service Information.
      - Perform the RFH VERIFICATION TEST. Refer to **STANDARD PROCEDURE**.

B1A71-11-PASSIVE ENTRY ANTENNA 1 - CIRCUIT SHORT TO GROUND

For a complete wiring diagram, **refer to appropriate SYSTEM WIRING DIAGRAMS article** .

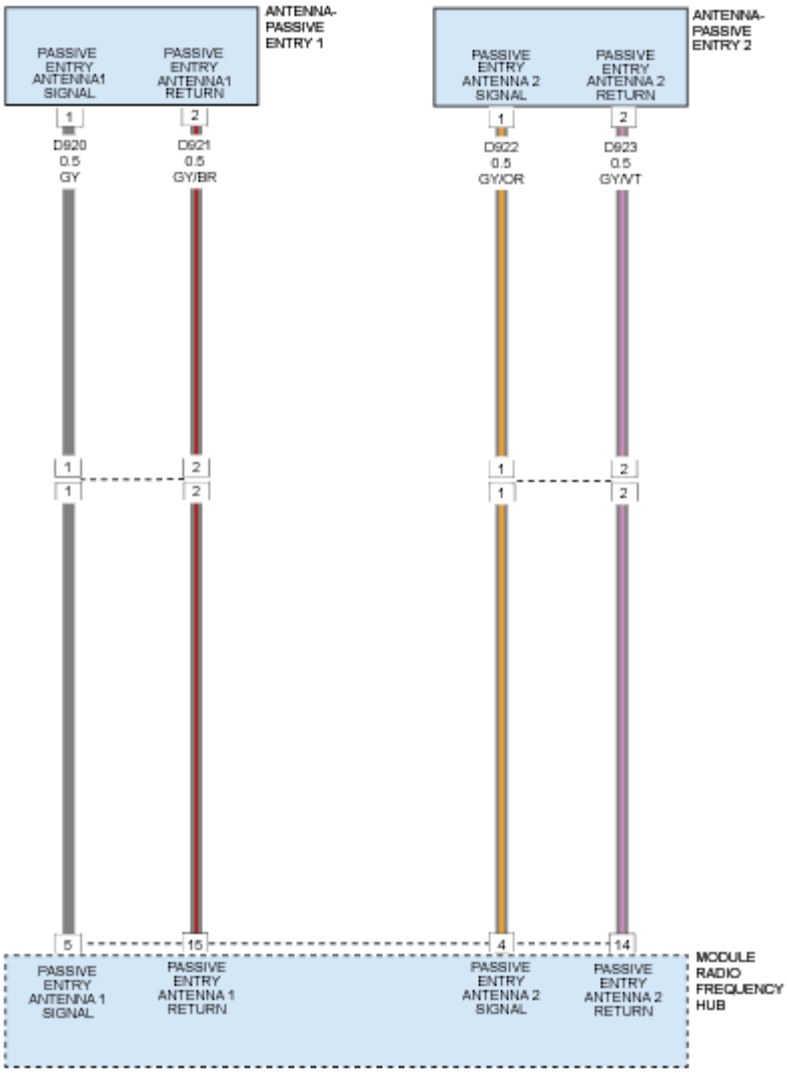

Fig. 1: Passive Entry Antenna 1 & 2 - Circuit Diagram
Courtesy of CHRYSLER GROUP, LLC

THEORY OF OPERATION

The Passive Entry (PE) antenna units allow the transmitter within the Radio Frequency Hub (also known as the RF Hub) to communicate via Low Frequency (LF) radio transmission with a FOB with Integrated Key (FOBIK) that is located inside the vehicle or, at most, about 2 meters (6.5 feet) horizontally in all directions around the outside of the vehicle. The RF Hub uses communication through the antenna units to wake up and challenge a FOBIK that is within range in order to authenticate whether that FOBIK is valid (programmed) to the vehicle. The RF Hub communicates with the FOBIK using Frequency-Shift Keying (FSK) modulation.

Each antenna unit has two dedicated connections to the RF Hub. One connection is the LF antenna output circuit, while the other connection Is the LF antenna return circuit. These circuits to each antenna unit are a twisted pair to help reduce the potential for induced electrical interference. The RF Hub microcontroller

monitors all of the antenna units and will store a Diagnostic Trouble Code (DTC) for any fault that it detects.

The hard wired inputs and outputs of the antenna units may be diagnosed using conventional diagnostic tools and procedures. Refer to the appropriate wiring information. However, the most reliable, efficient, and accurate means to diagnose the antenna units requires the use of a diagnostic scan tool. Refer to the appropriate diagnostic information.

WHEN MONITORED

At every Passive Entry or Keyless Go action.

SET CONDITION

When Antenna 1 Signal circuit is shorted to ground. If another Antenna Signal circuit is Open and there are no other Antennas that have a Short to Battery DTC, both Antennas will set this Short to Ground DTC.

POSSIBLE CAUSES

Possible Causes
ANOTHER ANTENNA SIGNAL CIRCUIT MAY BE SETTING AN OPEN DTC
(D920) PASSIVE ENTRY ANTENNA 1 SIGNAL CIRCUIT SHORTED TO GROUND
(D921) PASSIVE ENTRY ANTENNA 1 RETURN CIRCUIT SHORTED TO GROUND
PASSIVE ENTRY ANTENNA
RADIO FREQUENCY HUB (RF HUB) MODULE

DIAGNOSTIC TEST

1. **TEST FOR INTERMITTENT CONDITION**

NOTE: **Verify that the vehicle's battery is fully charged with a DVOM and use the scan tool to compare the Battery Voltage listed under "Data" in the RFH View to that of the BCM. If the vehicle's battery is not fully charged, correct this condition before proceeding.**

1. Cycle the ignition on.
2. Using the scan tool, record and erase the DTCs.
3. With the scan tool, select: RF Hub, More Options and System Tests.
4. Perform the RF Hub LF Antenna Verification Tests. Refer to **STANDARD PROCEDURE**.
5. With the scan tool, read the Active DTCs.

   Does the scan tool display: B1A71-11-PASSIVE ENTRY ANTENNA 1 - CIRCUIT SHORT TO GROUND as active?

   Yes

- Go To 2

No

- Test complete, the condition or conditions that originally set this DTC are not present at this time. Using the wiring diagrams as a guide, check all related splices and connectors for signs of water intrusion, corrosion, pushed out or bent terminals and correct pin tension.
- Perform the BODY VERIFICATION TEST. Refer to **STANDARD PROCEDURE** .

2. **(D920) PASSIVE ENTRY ANTENNA SHORTED**
   1. Cycle the ignition off.
   2. Disconnect the Passive Entry Antenna 1 harness connector.

      NOTE: Antenna 1 is located in the Left Rear Door. Refer to ANTENNA, PASSIVE ENTRY, REMOVAL .

   3. Cycle the ignition on.
   4. Using the scan tool, record and erase the DTCs.
   5. With the scan tool, select: RF Hub, More Options and System Tests.
   6. Perform the RF Hub LF Antenna Verification Tests. Refer to **STANDARD PROCEDURE**.
   7. With the scan tool, read the Active DTCs.

      Does the scan tool display: B1A71-11-PASSIVE ENTRY ANTENNA 1 - CIRCUIT SHORT TO GROUND as active?

      Yes

      - Go To 3

      No

      - Replace the Antenna in accordance with the service information. Refer to **ANTENNA, PASSIVE ENTRY, REMOVAL** .
      - Perform the BODY VERIFICATION TEST. Refer to **STANDARD PROCEDURE** .

3. **(D920) PASSIVE ENTRY ANTENNA 1 SIGNAL CIRCUIT SHORTED TO GROUND**

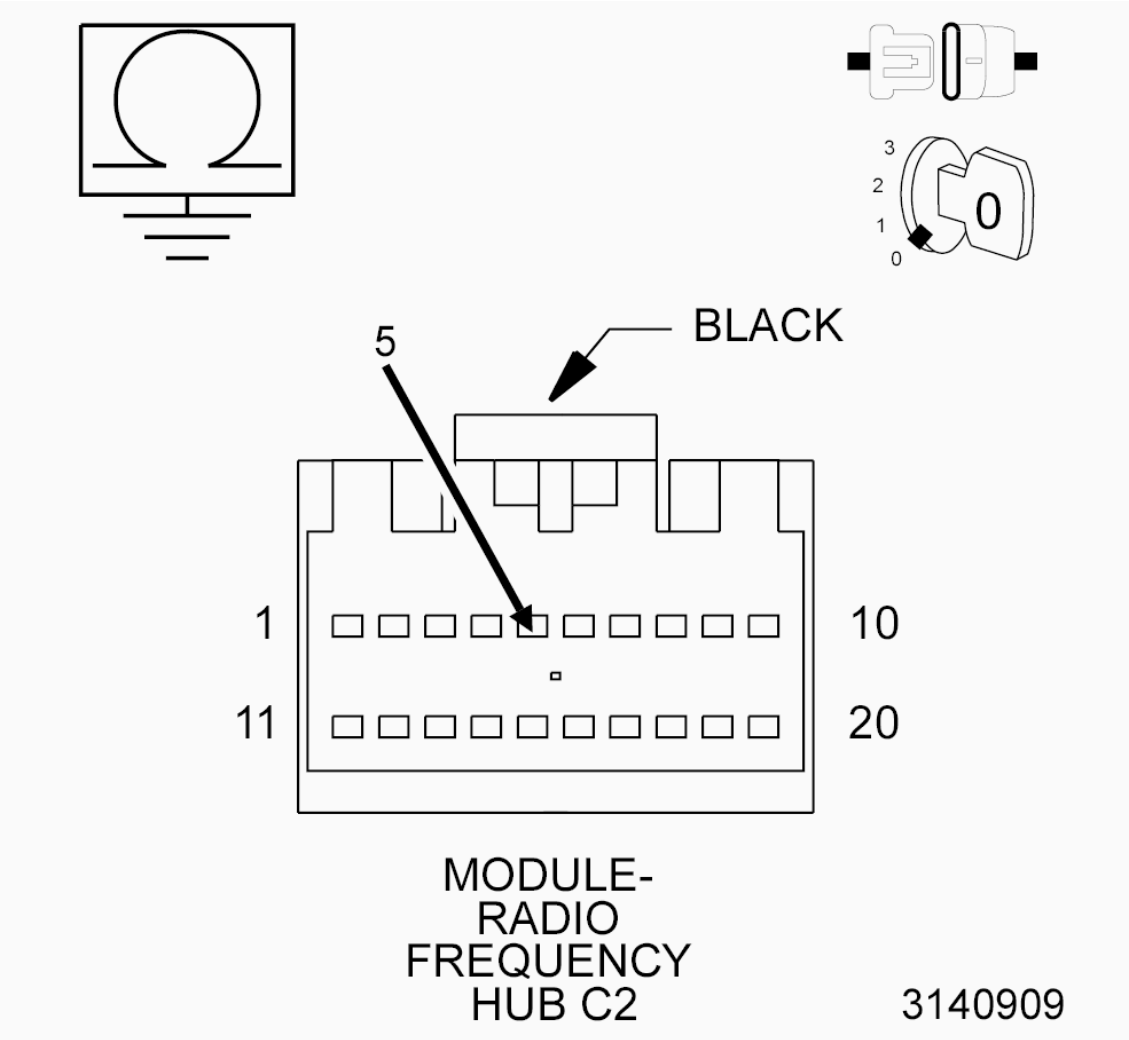

Fig. 2: Checking Passive Entry Antenna 1 Signal Circuit For Short To Ground
Courtesy of CHRYSLER GROUP, LLC

1. Cycle the ignition off.
2. Disconnect the RF Hub Module C2 harness connector.
3. Measure the resistance between ground and the (D920) Passive Entry Antenna 1 Signal circuit.

   Is the resistance below 30K Ohms?

   Yes

   - Repair the short to ground in the (D920) Passive Entry Antenna 1 Signal circuit.
   - Perform the BODY VERIFICATION TEST. Refer to **STANDARD PROCEDURE** .

   No

   - Go To 4

4. **(D921) PASSIVE ENTRY ANTENNA 1 RECycle CIRCUIT SHORTED TO GROUND**

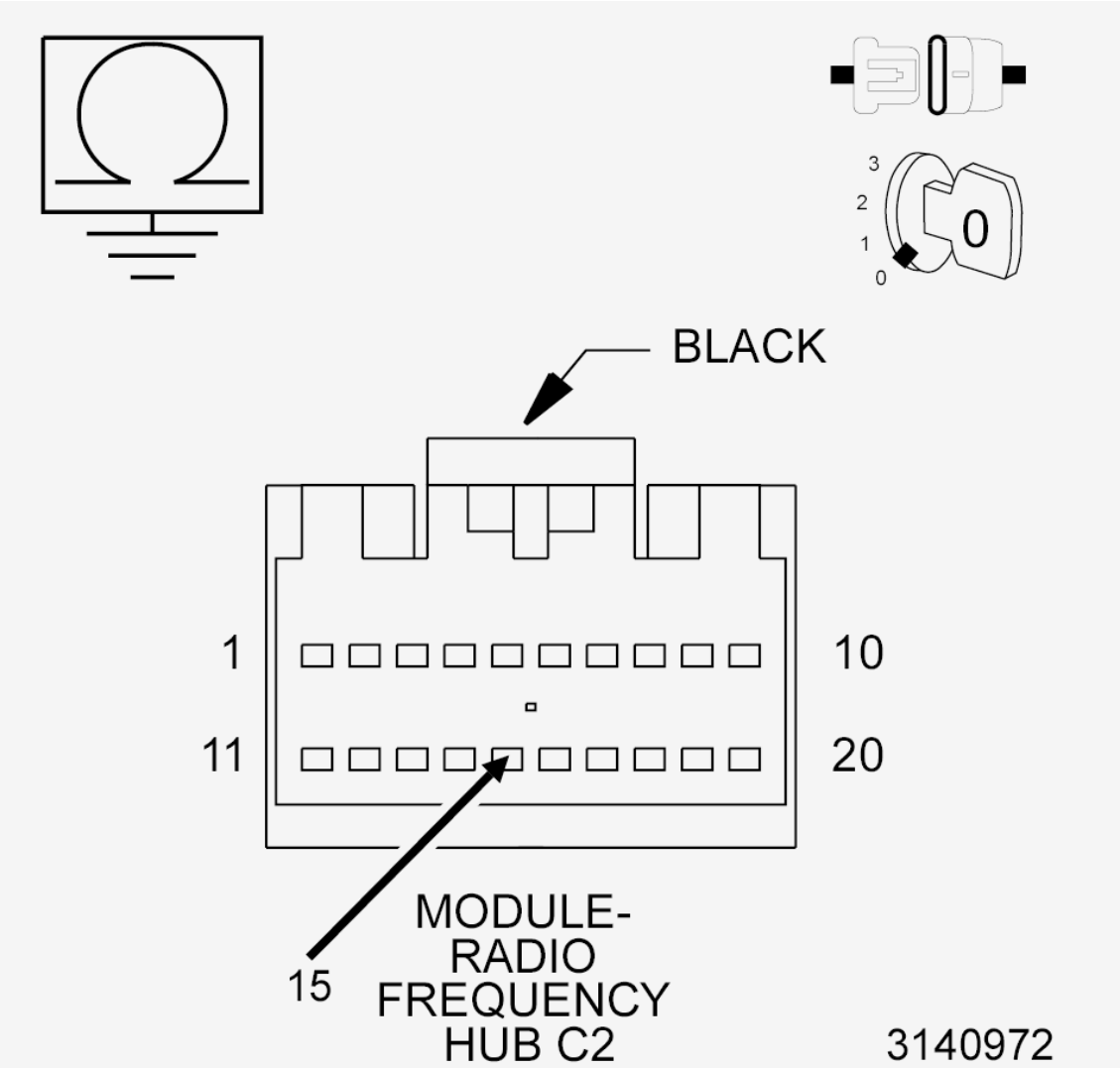

Fig. 3: Measuring Resistance Between Ground & Passive Entry Antenna 1 Return Circuit
Courtesy of CHRYSLER GROUP, LLC

1. Measure the resistance between ground and the (D921) Passive Entry Antenna 1 ReCycle circuit.

   Is the resistance below 30K Ohms?

   Yes

   - Repair the short to ground in the (D921) Passive Entry Antenna 1 ReCycle circuit.
   - Perform the BODY VERIFICATION TEST. Refer to **STANDARD PROCEDURE** .

   No

- Replace the appropriate Passive Entry antenna in accordance with Service Information. Perform the RADIO FREQUENCY HUB (RF HUB) VERIFICATION TEST. Refer to **STANDARD PROCEDURE**.
- If replacing the Passive Entry antenna for this DTC did not repair the concern, replace the RF Hub in accordance with the Service Information. Refer to **MODULE, RADIO FREQUENCY (RF HUB), REMOVAL** .
- Perform the RADIO FREQUENCY HUB (RF HUB) VERIFICATION TEST. Refer to **STANDARD PROCEDURE**.

B1A71-12-PASSIVE ENTRY ANTENNA 1 - CIRCUIT SHORT TO BATTERY

For a complete wiring diagram, **refer to appropriate SYSTEM WIRING DIAGRAMS article** .

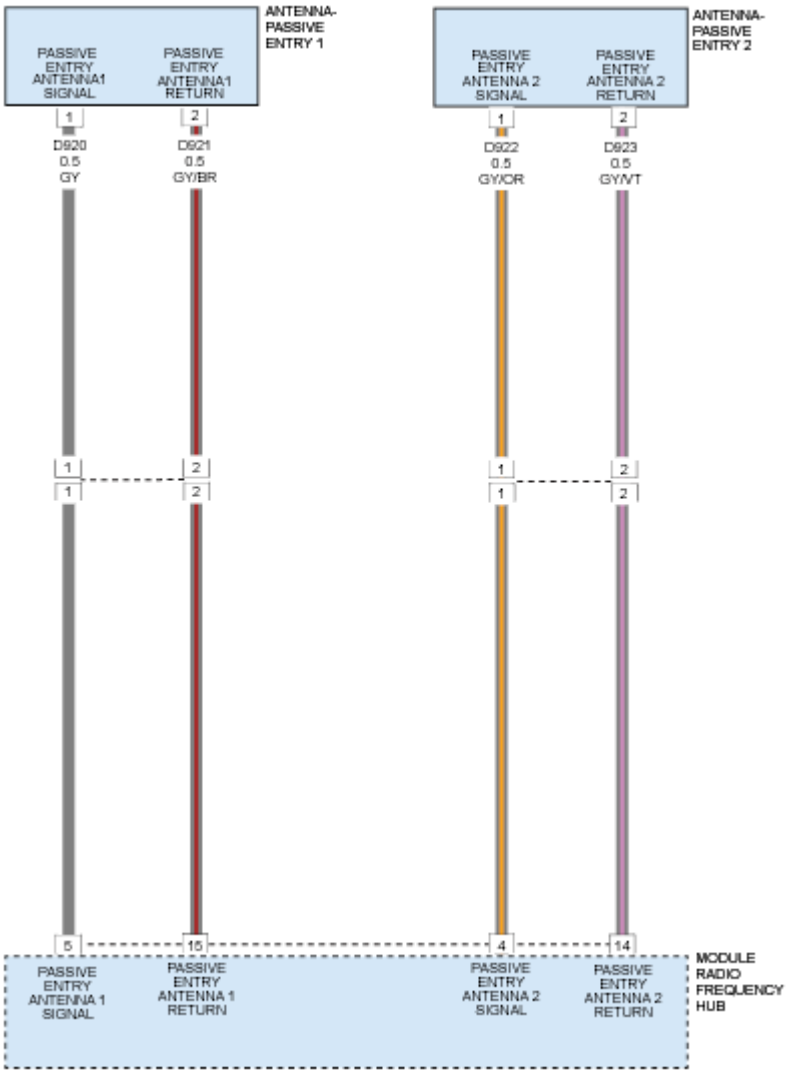

Fig. 4: Passive Entry Antenna 1 & 2 - Circuit Diagram

Courtesy of CHRYSLER GROUP, LLC

THEORY OF OPERATION

The Passive Entry (PE) antenna units allow the transmitter within the Radio Frequency Hub (also known as the RF Hub) to communicate via Low Frequency (LF) radio transmission with a FOB with Integrated Key (FOBIK) that is located inside the vehicle or, at most, about 2 meters (6.5 feet) horizontally in all directions around the outside of the vehicle. The RF Hub uses communication through the antenna units to wake up and challenge a FOBIK that is within range in order to authenticate whether that FOBIK is valid (programmed) to the vehicle. The RF Hub communicates with the FOBIK using Frequency-Shift Keying (FSK) modulation.

Each antenna unit has two dedicated connections to the RF Hub. One connection is the LF antenna output circuit, while the other connection Is the LF antenna return circuit. These circuits to each antenna unit are a twisted pair to help reduce the potential for induced electrical interference. The RF Hub microcontroller monitors all of the antenna units and will store a Diagnostic Trouble Code (DTC) for any fault that it detects.

The hard wired inputs and outputs of the antenna units may be diagnosed using conventional diagnostic tools and procedures. Refer to the appropriate wiring information. However, the most reliable, efficient, and accurate means to diagnose the antenna units requires the use of a diagnostic scan tool. Refer to the appropriate diagnostic information.

WHEN MONITORED

At every Passive Entry or Keyless Go action.

SET CONDITION

When the Antenna 1 Signal Circuit is shorted to Battery. If another Antenna has a Short to Ground, a General Electrical Failure or Open DTC, both Antennas will set this Short to Battery DTC.

POSSIBLE CAUSES

Possible Causes
ANOTHER ANTENNA SIGNAL CIRCUIT MAY BE SHORTED TO GROUND, GENERAL FAILURE OR OPEN DTC
(D920) PASSIVE ENTRY ANTENNA 1 SIGNAL CIRCUIT SHORTED TO VOLTAGE
(D921) PASSIVE ENTRY ANTENNA 1 RETURN CIRCUIT SHORT TO VOLTAGE
RADIO FREQUENCY HUB (RF HUB) MODULE

DIAGNOSTIC TEST

1. **TEST FOR INTERMITTENT CONDITION**

NOTE: **Verify that the vehicle's battery is fully charged with a DVOM and use the scan tool to compare the Battery Voltage listed under "Data" in the RFH View to that of the BCM. If the vehicle's battery is not fully charged, correct**

this condition before proceeding.

NOTE: If another antenna has a Short to Ground, General Electrical Failure or Open DTC, both antennas will set this Short to Voltage DTC.

1. Cycle the ignition on.
2. Using the scan tool, record and erase the DTCs.
3. With the scan tool, select: RF Hub, More Options and System Tests.
4. Perform the RF Hub LF Antenna Verification Tests. Refer to **STANDARD PROCEDURE**.
5. With the scan tool, read the Active DTCs.

   Does the scan tool display: B1A71-12-PASSIVE ENTRY ANTENNA 1 - CIRCUIT SHORT TO BATTERY as active?

   Yes

   - Go To 2

   No

   - Test complete, the condition or conditions that originally set this DTC are not present at this time. Using the wiring diagrams as a guide, check all related splices and connectors for signs of water intrusion, corrosion, pushed out or bent terminals and correct pin tension.

2. **(D920) PASSIVE ENTRY ANTENNA 1 SIGNAL CIRCUIT SHORTED TO VOLTAGE**

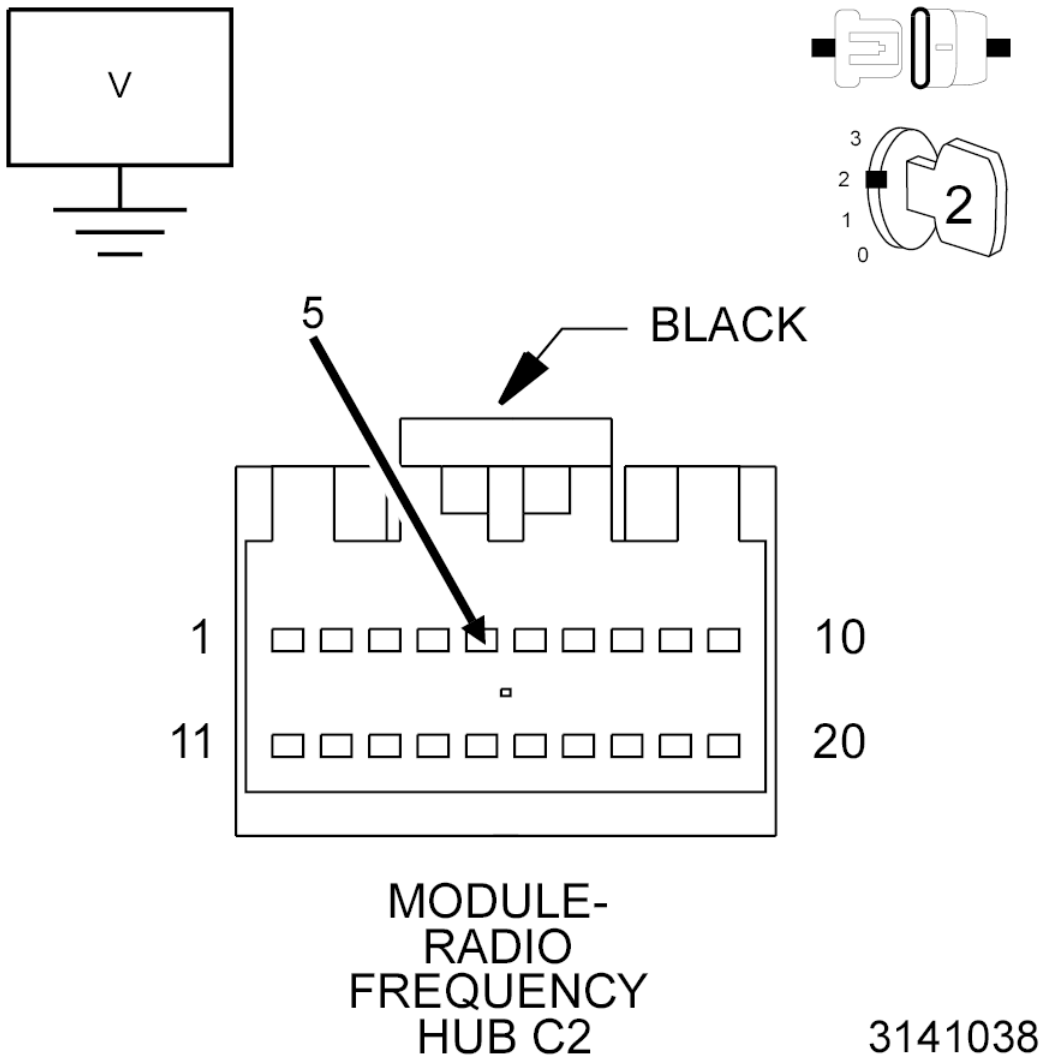

Fig. 5: Measuring Voltage Between Ground & Passive Entry Antenna 1 Signal Circuit
Courtesy of CHRYSLER GROUP, LLC

1. Cycle the ignition off.
2. Disconnect the Radio Frequency Hub C2 harness connector.
3. Cycle the ignition on.
4. Measure the voltage between ground and the (D920) Passive Entry Antenna 1 Signal circuit.

   Is there any voltage present?

   Yes

   - Repair the short to voltage in the (D920) Passive Entry Antenna 1 Signal circuit.

   No

- Go To 3

3. **(D921) PASSIVE ENTRY ANTENNA 1 RETURN CIRCUIT SHORT TO VOLTAGE**
   1. Be sure the ignition is still on.
   2. Measure the voltage between ground and the (D921) Passive Entry Antenna 1 Return circuit (Cavity 15 in the C2 connector).

      Is there any voltage present?

      Yes

      - Repair the short to voltage in the (D921) Passive Entry Antenna 1 Return circuit.

      No

      - Replace the RF HUB in accordance with the Service Information. Refer to **MODULE, RADIO FREQUENCY (RF HUB), REMOVAL** .
      - Perform the RADIO FREQUENCY HUB (RF HUB) VERIFICATION TEST. Refer to **STANDARD PROCEDURE**.

B1A71-13-PASSIVE ENTRY ANTENNA 1 - CIRCUIT OPEN

For a complete wiring diagram, **refer to appropriate SYSTEM WIRING DIAGRAMS article** .

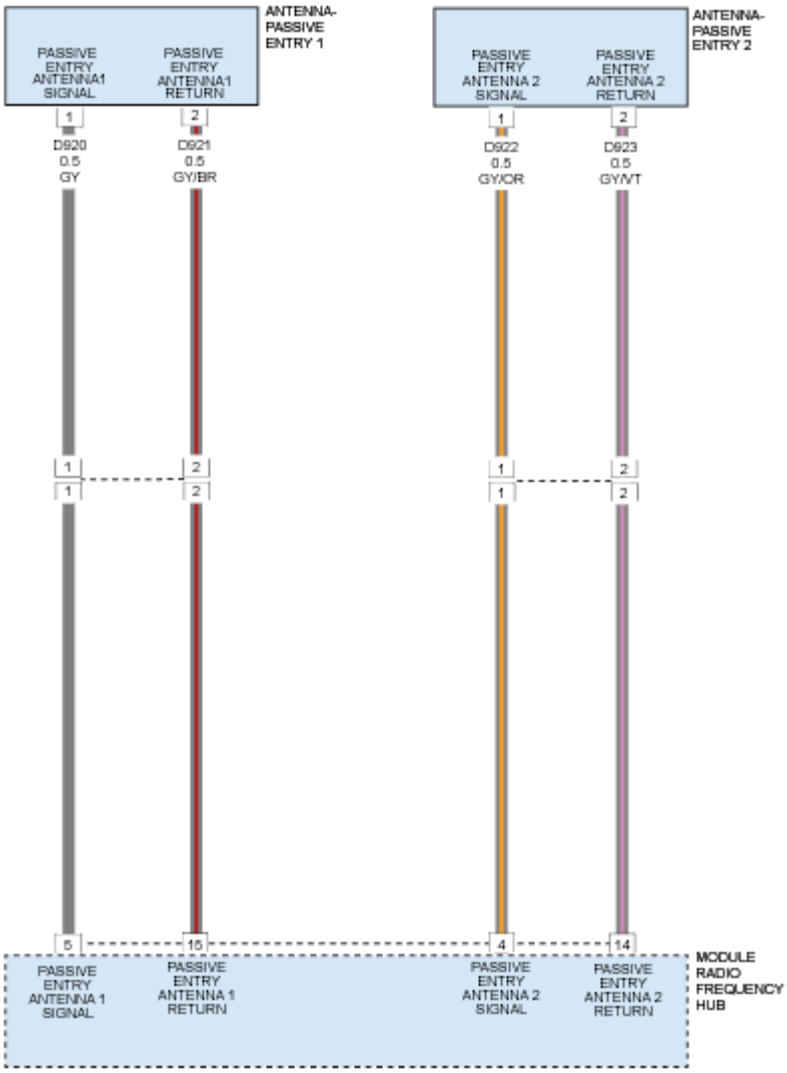

Fig. 6: Passive Entry Antenna 1 & 2 - Circuit Diagram
Courtesy of CHRYSLER GROUP, LLC

THEORY OF OPERATION

The Passive Entry (PE) antenna units allow the transmitter within the Radio Frequency Hub (also known as the RF Hub) to communicate via Low Frequency (LF) radio transmission with a FOB with Integrated Key (FOBIK) that is located inside the vehicle or, at most, about 2 meters (6.5 feet) horizontally in all directions around the outside of the vehicle. The RF Hub uses communication through the antenna units to wake up and challenge a FOBIK that is within range in order to authenticate whether that FOBIK is valid (programmed) to the vehicle. The RF Hub communicates with the FOBIK using Frequency-Shift Keying (FSK) modulation.

Each antenna unit has two dedicated connections to the RF Hub. One connection is the LF antenna output circuit, while the other connection Is the LF antenna return circuit. These circuits to each antenna unit are a twisted pair to help reduce the potential for induced electrical interference. The RF Hub microcontroller

monitors all of the antenna units and will store a Diagnostic Trouble Code (DTC) for any fault that it detects.

The hard wired inputs and outputs of the antenna units may be diagnosed using conventional diagnostic tools and procedures. Refer to the appropriate wiring information. However, the most reliable, efficient, and accurate means to diagnose the antenna units requires the use of a diagnostic scan tool. Refer to the appropriate diagnostic information.

WHEN MONITORED

At every Passive Entry or Keyless Go action.

SET CONDITION

When Antenna 1 Signal circuit is Open and there are no other Antennas that have a Short to Battery or Short to Ground DTC.

POSSIBLE CAUSES

Possible Causes
(D920) PASSIVE ENTRY ANTENNA 1 SIGNAL CIRCUIT OPEN
(D921) PASSIVE ENTRY ANTENNA 1 RETURN CIRCUIT OPEN
(D920) PASSIVE ENTRY ANTENNA 1 SIGNAL CIRCUIT SHORTED TO THE (D921) PASSIVE ENTRY ANTENNA 1 RETURN CIRCUIT
PASSIVE ENTRY ANTENNA
RADIO FREQUENCY HUB (RF HUB) MODULE

DIAGNOSTIC TEST

1. **TEST FOR INTERMITTENT CONDITION**

NOTE: **Verify that the vehicle's battery is fully charged with a DVOM and use the scan tool to compare the Battery Voltage listed under "Data" in the RFH View to that of the BCM. If the vehicle's battery is not fully charged, correct this condition before proceeding.**

1. Cycle the ignition on.
2. Using the scan tool, record and erase the DTCs.
3. With the scan tool, select: RF Hub, More Options and System Tests.
4. Perform the RF Hub LF Antenna Verification Tests. Refer to **STANDARD PROCEDURE**.
5. With the scan tool, read the Active DTCs.

   Does the scan tool display: B1A71-13-PASSIVE ENTRY ANTENNA 1- CIRCUIT OPEN as active?

   Yes

- Go To 2

No

- Test complete, the condition or conditions that originally set this DTC are not present at this time. Using the wiring diagrams as a guide, check all related splices and connectors for signs of water intrusion, corrosion, pushed out or bent terminals and correct pin tension.
- Perform the BODY VERIFICATION TEST. Refer to **STANDARD PROCEDURE** .

2. **(D920) PASSIVE ENTRY ANTENNA 1 CIRCUIT OPEN**

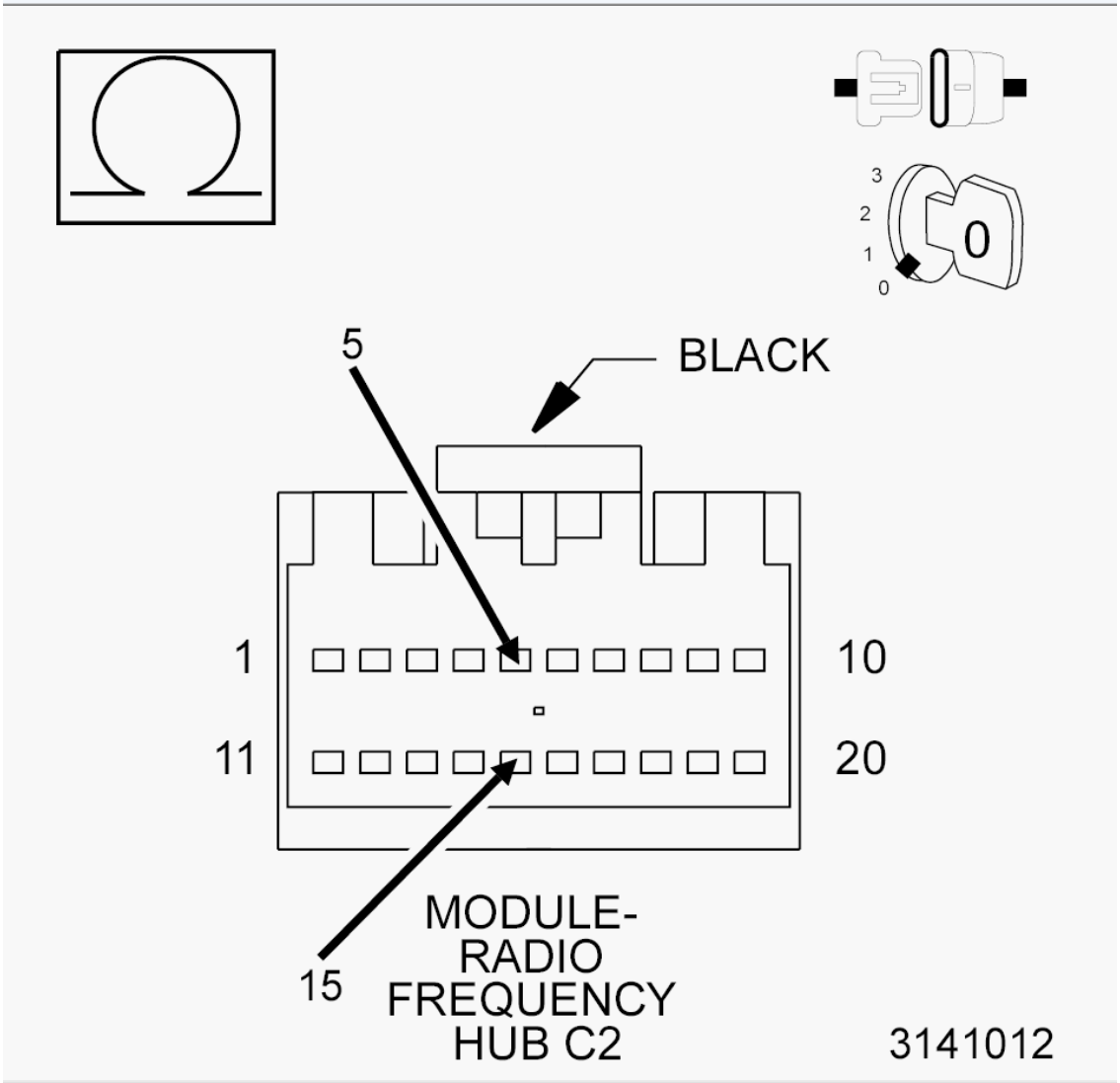

Fig. 7: Measuring Resistance Between Passive Entry Antenna 1 Signal Circuit & Passive Entry Antenna 1 Return Circuit
Courtesy of CHRYSLER GROUP, LLC

1. Cycle the ignition off.

2. Disconnect the Radio frequency Hub (RF HUB) C2 harness connector.
3. Measure the resistance between the (D920) Passive Entry Antenna 1 Signal circuit and the (D921) Passive Entry Antenna 1 Return circuit.

   Is the resistance between 1.5 and 3.5 Ohms?

   Yes

   - Replace the RF Hub in accordance with the Service Information. Refer to **MODULE, RADIO FREQUENCY (RF HUB), REMOVAL** .
   - Perform the RADIO FREQUENCY HUB (RF HUB) VERIFICATION TEST. Refer to **STANDARD PROCEDURE**.

   No

   - Go To 3

3. **(D920) PASSIVE ENTRY ANTENNA 1 SIGNAL CIRCUIT OPEN**

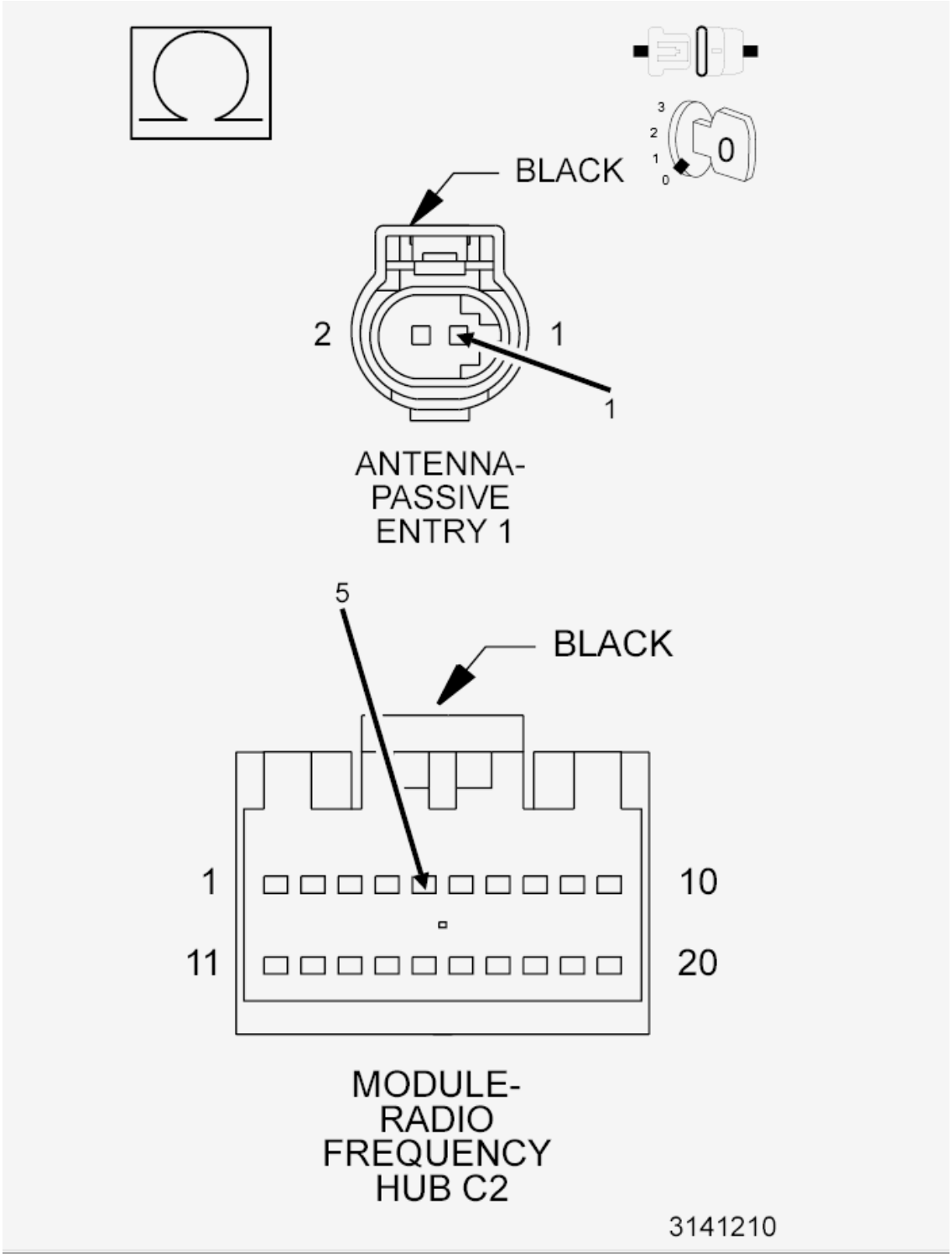

Fig. 8: Checking Passive Entry Antenna 1 Signal Circuit For Open
Courtesy of CHRYSLER GROUP, LLC

1. Disconnect the Passive Entry Antenna 1 harness connector.

NOTE: **For antenna locations, refer to ANTENNA, PASSIVE ENTRY, DESCRIPTION .**

2. Measure the resistance of the (D920) Passive Entry Antenna 1 Signal circuit between the RF HUB C2 connector and the Passive Entry Antenna 1 connector.

   Is the resistance below 2.0 Ohms?

   Yes

   - Go To 4

   No

   - Repair the open in the (D920) Passive Entry Antenna 1 Signal circuit.
   - Perform the BODY VERIFICATION TEST. Refer to **STANDARD PROCEDURE** .

4. **(D921) PASSIVE ENTRY ANTENNA 1 RETURN CIRCUIT OPEN**

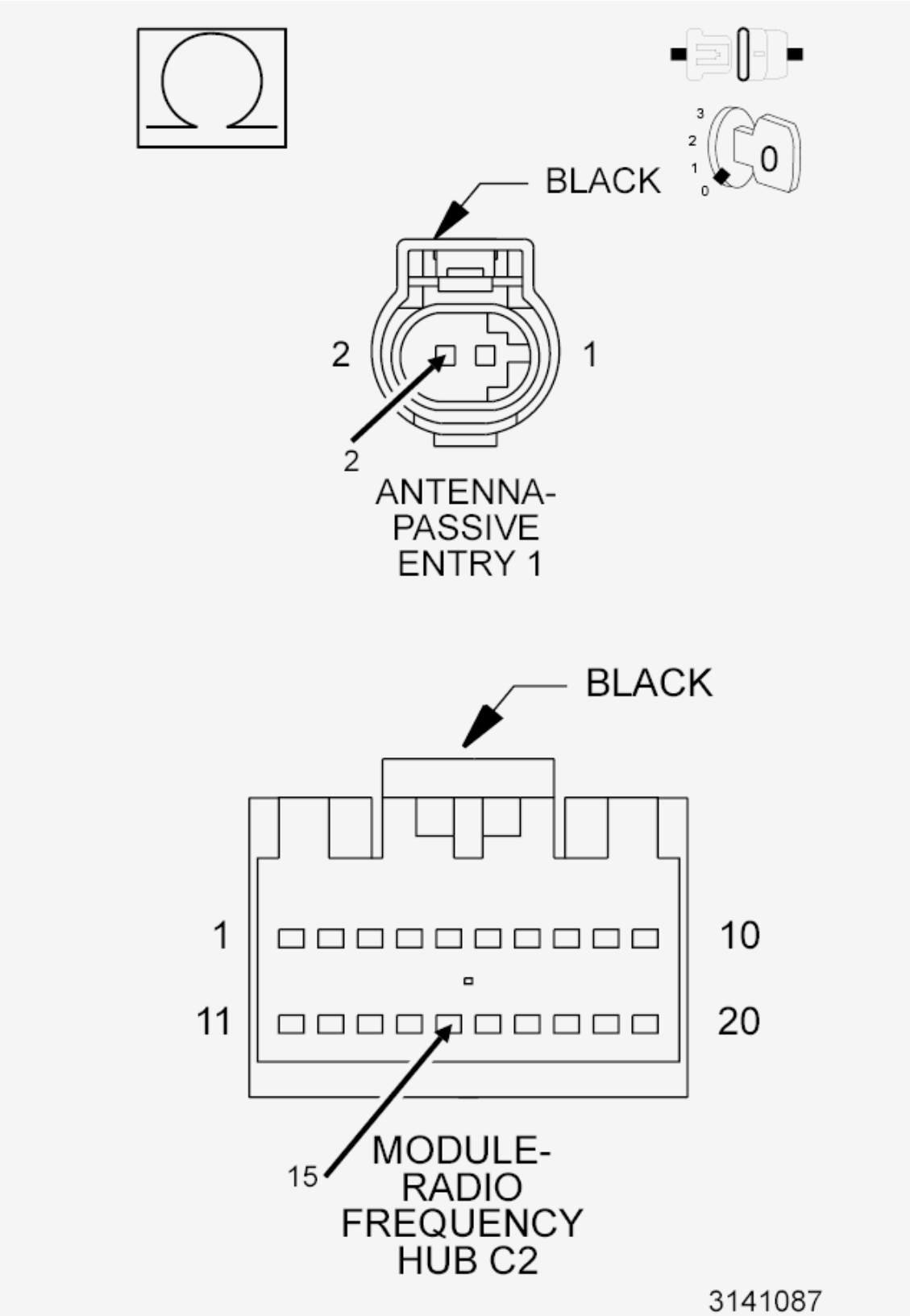

Fig. 9: Checking Passive Entry Antenna 1 Return Circuit For Open

Courtesy of CHRYSLER GROUP, LLC

1. Measure the resistance of the (D921) Passive Entry Antenna 1 Return circuit between the RF HUB C2 connector and the Passive Entry Antenna 1 connector.

   Is the resistance below 2.0 Ohms?

   Yes

   - Go To 5
   - Perform the BODY VERIFICATION TEST. Refer to **STANDARD PROCEDURE** .

   No

   - Repair the open in the (D921) Passive Entry Antenna 1 Return circuit.
   - Perform the BODY VERIFICATION TEST. Refer to **STANDARD PROCEDURE** .

5. **(D920) PASSIVE ENTRY ANTENNA 1 SIGNAL CIRCUIT SHORTED TO THE (D921) PASSIVE ENTRY ANTENNA 1 RETURN CIRCUIT**

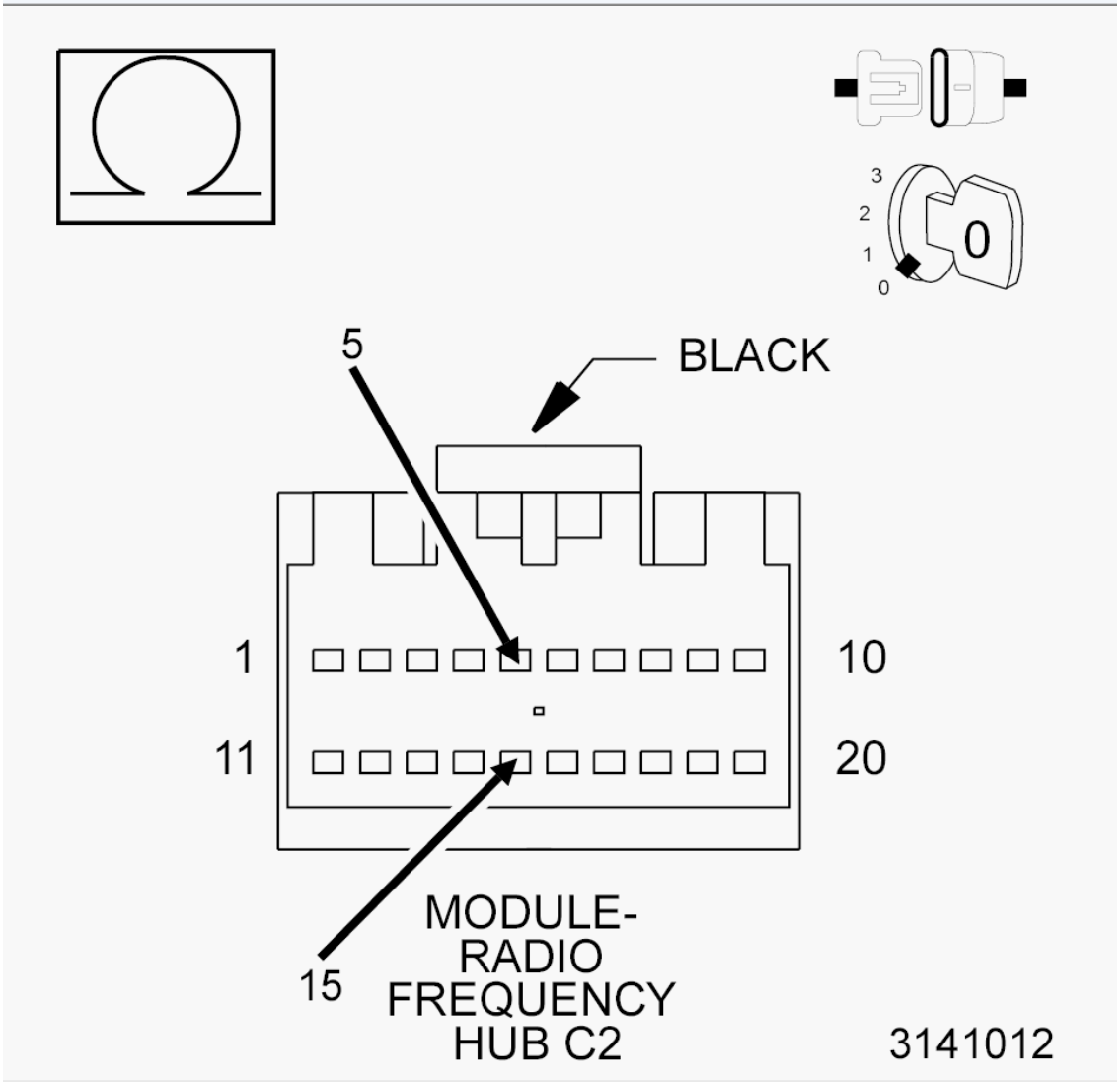

Fig. 10: Measuring Resistance Between Passive Entry Antenna 1 Signal Circuit & Passive Entry Antenna 1 Return Circuit
Courtesy of CHRYSLER GROUP, LLC

Measure the resistance between the (D920) Passive Entry Antenna 1 Signal circuit and the (D921) Passive Entry Antenna 1 Return circuit in the RF Hub C2 harness connector.

Is the resistance below 30K Ohms?

Yes

- Repair the short between the (D920) Passive Entry Antenna 1 Signal circuit and the (D921) Passive Entry Antenna 1 Return circuit.
- Perform the BODY VERIFICATION TEST. Refer to **STANDARD PROCEDURE** .

No

- Replace the Antenna in accordance with the Service Information. Refer to **ANTENNA, PASSIVE ENTRY, INSTALLATION** .
- Perform the BODY VERIFICATION TEST. Refer to **STANDARD PROCEDURE** .

B1A72-11-PASSIVE ENTRY ANTENNA 2 - CIRCUIT SHORT TO GROUND

For a complete wiring diagram, **refer to appropriate SYSTEM WIRING DIAGRAMS article** .

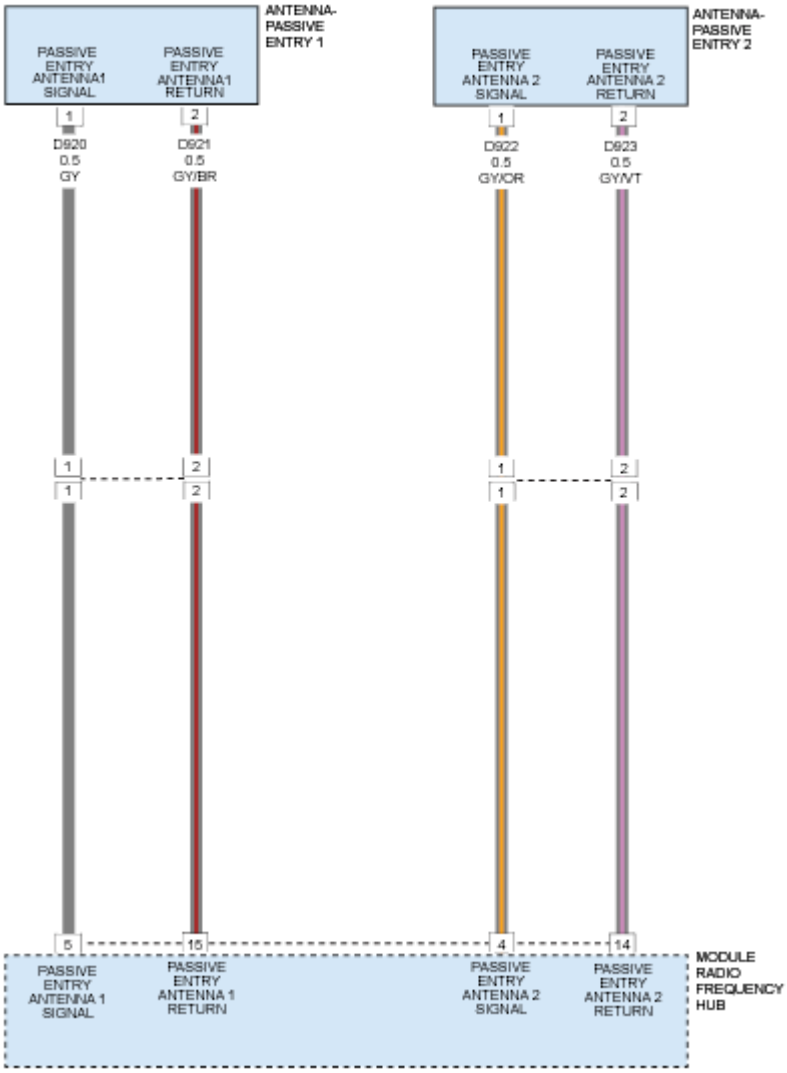

Fig. 11: Passive Entry Antenna 1 & 2 - Circuit Diagram
Courtesy of CHRYSLER GROUP, LLC

THEORY OF OPERATION

The Passive Entry (PE) antenna units allow the transmitter within the Radio Frequency Hub (also known as the

RF Hub) to communicate via Low Frequency (LF) radio transmission with a FOB with Integrated Key (FOBIK) that is located inside the vehicle or, at most, about 2 meters (6.5 feet) horizontally in all directions around the outside of the vehicle. The RF Hub uses communication through the antenna units to wake up and challenge a FOBIK that is within range in order to authenticate whether that FOBIK is valid (programmed) to the vehicle. The RF Hub communicates with the FOBIK using Frequency-Shift Keying (FSK) modulation.

Each antenna unit has two dedicated connections to the RF Hub. One connection is the LF antenna output circuit, while the other connection Is the LF antenna return circuit. These circuits to each antenna unit are a twisted pair to help reduce the potential for induced electrical interference. The RF Hub microcontroller monitors all of the antenna units and will store a Diagnostic Trouble Code (DTC) for any fault that it detects.

The hard wired inputs and outputs of the antenna units may be diagnosed using conventional diagnostic tools and procedures. Refer to the appropriate wiring information. However, the most reliable, efficient, and accurate means to diagnose the antenna units requires the use of a diagnostic scan tool. Refer to the appropriate diagnostic information.

WHEN MONITORED

At every Passive Entry or Keyless Go action.

SET CONDITION

When Antenna 2 Signal circuit is shorted to ground. If another Antenna Signal circuit is Open and there are no other Antennas that have a Short to Battery DTC, both Antennas will set this Short to Ground DTC.

POSSIBLE CAUSES

Possible Causes
ANOTHER ANTENNA SIGNAL CIRCUIT MAY BE SETTING AN OPEN DTC
(D922) PASSIVE ENTRY ANTENNA 2 SIGNAL CIRCUIT SHORTED TO GROUND
(D923) PASSIVE ENTRY ANTENNA 2 RETURN CIRCUIT SHORTED TO GROUND
PASSIVE ENTRY ANTENNA
RADIO FREQUENCY HUB (RF HUB) MODULE

DIAGNOSTIC TEST

1. **TEST FOR INTERMITTENT CONDITION**

NOTE: **Verify that the vehicle's battery is fully charged with a DVOM and use the scan tool to compare the Battery Voltage listed under "Data" in the RFH View to that of the BCM. If the vehicle's battery is not fully charged, correct this condition before proceeding.**

1. Cycle the ignition on.
2. Using the scan tool, record and erase the DTCs.

3. With the scan tool, select: RF Hub, More Options and System Tests.
4. Perform the RF Hub LF Antenna Verification Tests. Refer to **STANDARD PROCEDURE**.
5. With the scan tool, read the Active DTCs.

   Does the scan tool display: B1A72-11-PASSIVE ENTRY ANTENNA 2 - CIRCUIT SHORT TO GROUND as active?

   Yes

   - Go To 2

   No

   - Test complete, the condition or conditions that originally set this DTC are not present at this time. Using the wiring diagrams as a guide, check all related splices and connectors for signs of water intrusion, corrosion, pushed out or bent terminals and correct pin tension.
   - Perform the BODY VERIFICATION TEST. Refer to **STANDARD PROCEDURE** .

2. **(D922) PASSIVE ENTRY ANTENNA SHORTED**
   1. Cycle the ignition off.
   2. Disconnect the Passive Entry Antenna 2 connector.

      NOTE: Antenna 2 is located in the Right Rear Door. Refer to ANTENNA, PASSIVE ENTRY, REMOVAL .

   3. Cycle the ignition on.
   4. Using the scan tool, record and erase the DTCs.
   5. With the scan tool, select: RF Hub, More Options and System Tests.
   6. Perform the RF Hub LF Antenna Verification Tests. Refer to **STANDARD PROCEDURE**.
   7. With the scan tool, read the Active DTCs.

      Does the scan tool display: B1A72-11-PASSIVE ENTRY ANTENNA 2 - CIRCUIT SHORT TO GROUND as active?

      Yes

      - Go To 3

      No

      - Replace the Antenna in accordance with the service information. Refer to **ANTENNA, PASSIVE ENTRY, REMOVAL** .
      - Perform the BODY VERIFICATION TEST. Refer to **STANDARD PROCEDURE** .

3. **(D922) PASSIVE ENTRY ANTENNA 2 SIGNAL CIRCUIT SHORTED TO GROUND**

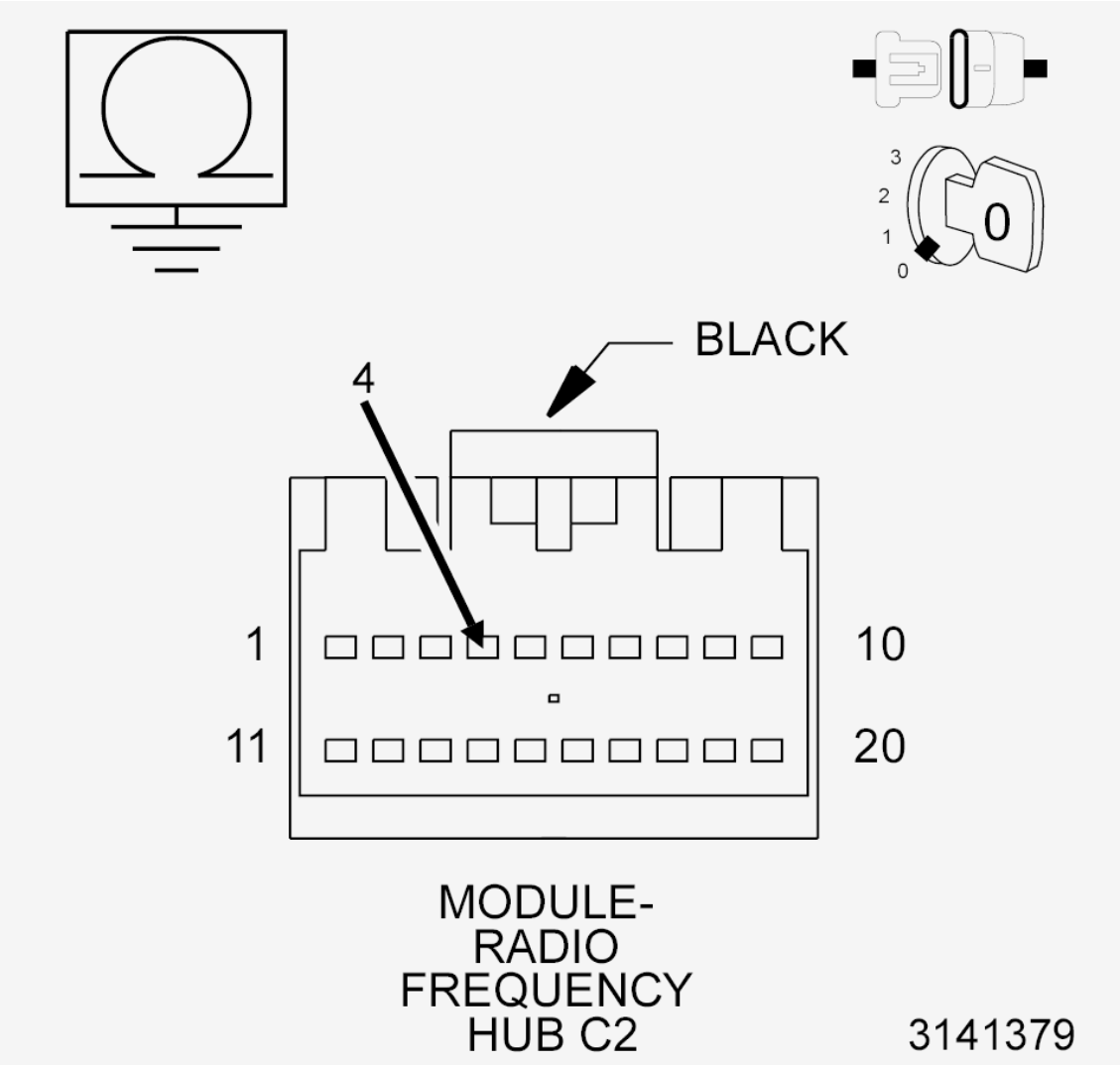

Fig. 12: Measuring Resistance Between Ground & Passive Entry Antenna 2 Signal Circuit
Courtesy of CHRYSLER GROUP, LLC

1. Cycle the ignition off.
2. Disconnect the RF Hub Module C2 harness connector.
3. Measure the resistance between ground and the (D922) Passive Entry Antenna 2 Signal circuit.

   Is the resistance below 30K Ohms?

   Yes

   - Repair the short to ground in the (D922) Passive Entry Antenna 2 Signal circuit.
   - Perform the BODY VERIFICATION TEST. Refer to **STANDARD PROCEDURE** .

   No

- Go To 4

4. **(D923) PASSIVE ENTRY ANTENNA 2 RETURN CIRCUIT SHORTED TO GROUND**

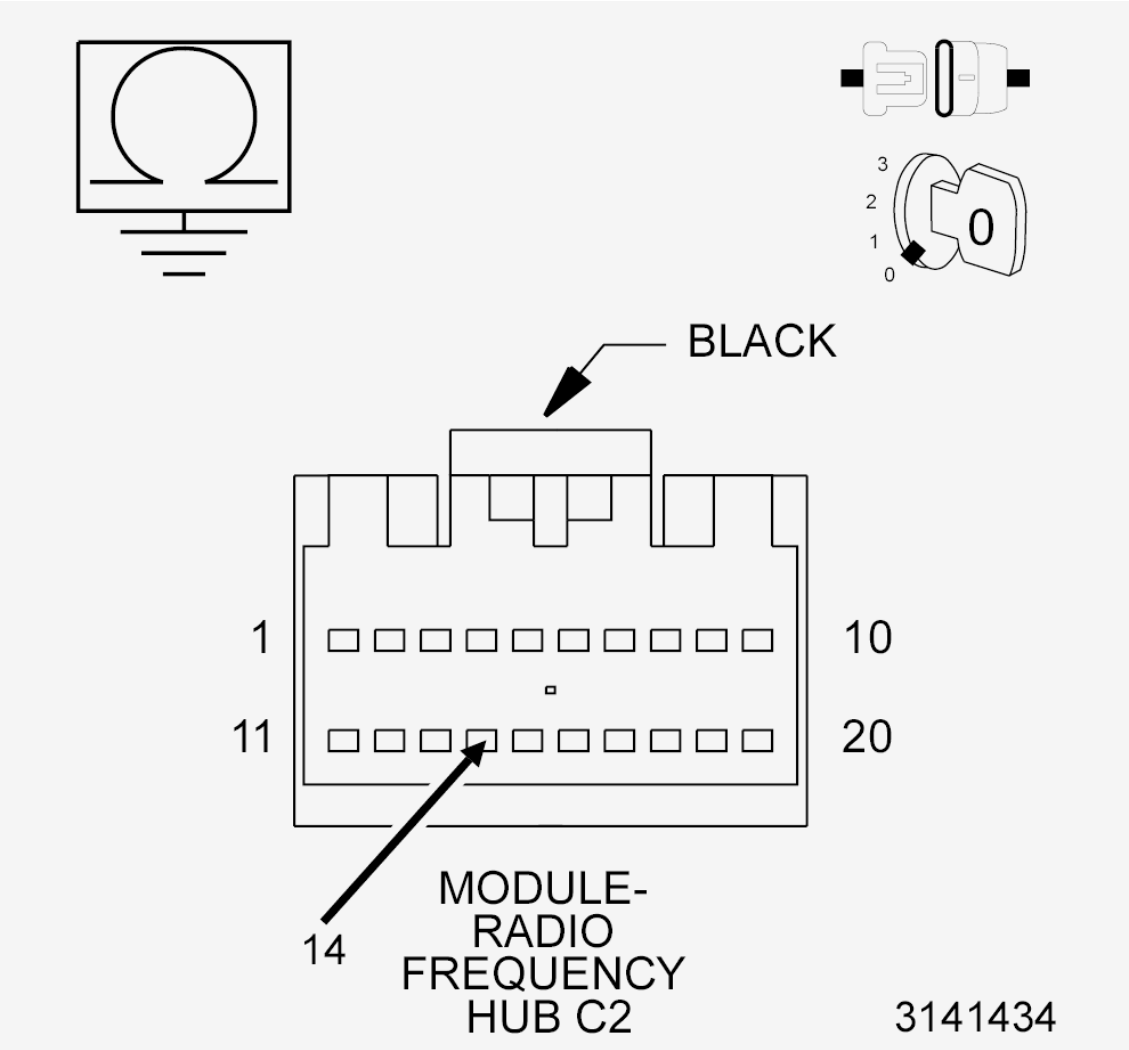

Fig. 13: Measuring Resistance Between Ground & Passive Entry Antenna 2 Return Circuit
Courtesy of CHRYSLER GROUP, LLC

1. Measure the resistance between ground and the (D923) Passive Entry Antenna 2 Return circuit.

   Is the resistance below 30K Ohms?

   Yes

   - Repair the short to ground in the (D923) Passive Entry Antenna 2 Return circuit.
   - Perform the BODY VERIFICATION TEST. Refer to **STANDARD PROCEDURE** .

   No

- Replace the appropriate Passive Entry antenna in accordance with Service Information. Perform the RADIO FREQUENCY HUB (RF HUB) VERIFICATION TEST. Refer to **STANDARD PROCEDURE**.
- If replacing the Passive Entry antenna for this DTC did not repair the concern, replace the RF Hub in accordance with the Service Information. Refer to **MODULE, RADIO FREQUENCY (RF HUB), REMOVAL** .
- Perform the RADIO FREQUENCY HUB (RF HUB) VERIFICATION TEST. Refer to **STANDARD PROCEDURE**.

B1A72-12-PASSIVE ENTRY ANTENNA 2 - CIRCUIT SHORT TO BATTERY

For a complete wiring diagram, **refer to appropriate SYSTEM WIRING DIAGRAMS article** .

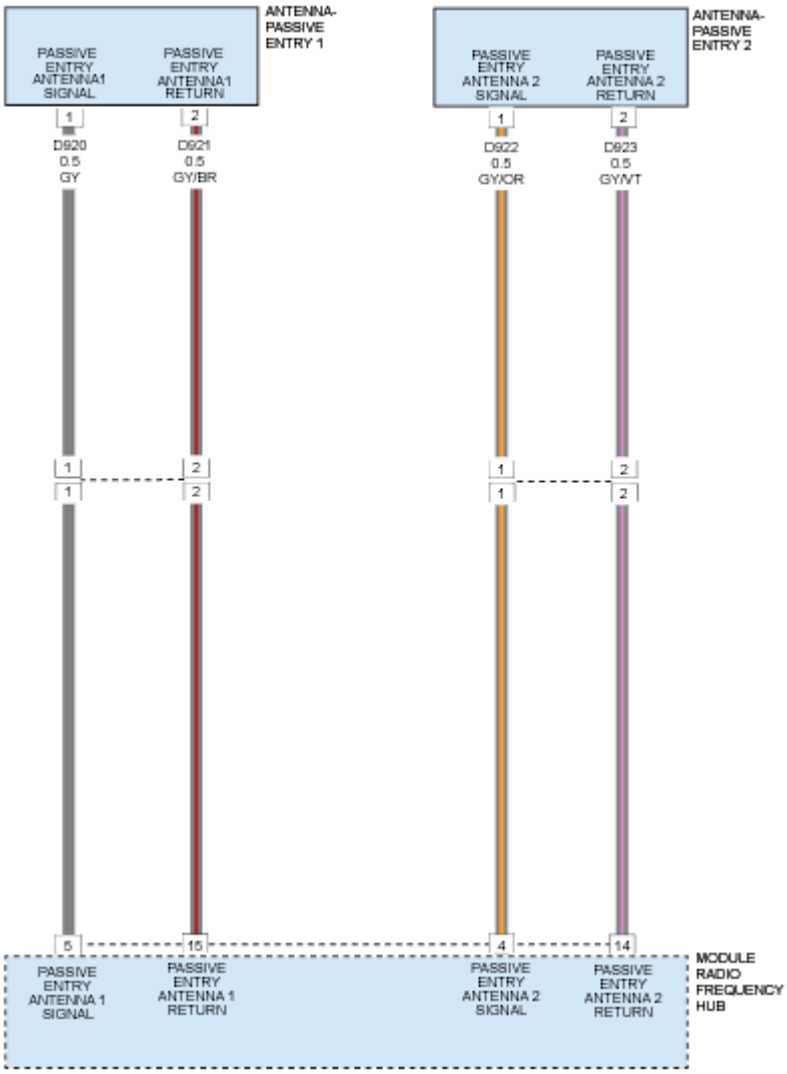

Fig. 14: Passive Entry Antenna 1 & 2 - Circuit Diagram

Courtesy of CHRYSLER GROUP, LLC

THEORY OF OPERATION

The Passive Entry (PE) antenna units allow the transmitter within the Radio Frequency Hub (also known as the RF Hub) to communicate via Low Frequency (LF) radio transmission with a FOB with Integrated Key (FOBIK) that is located inside the vehicle or, at most, about 2 meters (6.5 feet) horizontally in all directions around the outside of the vehicle. The RF Hub uses communication through the antenna units to wake up and challenge a FOBIK that is within range in order to authenticate whether that FOBIK is valid (programmed) to the vehicle. The RF Hub communicates with the FOBIK using Frequency-Shift Keying (FSK) modulation.

Each antenna unit has two dedicated connections to the RF Hub. One connection is the LF antenna output circuit, while the other connection Is the LF antenna return circuit. These circuits to each antenna unit are a twisted pair to help reduce the potential for induced electrical interference. The RF Hub microcontroller monitors all of the antenna units and will store a Diagnostic Trouble Code (DTC) for any fault that it detects.

The hard wired inputs and outputs of the antenna units may be diagnosed using conventional diagnostic tools and procedures. Refer to the appropriate wiring information. However, the most reliable, efficient, and accurate means to diagnose the antenna units requires the use of a diagnostic scan tool. Refer to the appropriate diagnostic information.

WHEN MONITORED

At every Passive Entry or Keyless Go action.

SET CONDITION

When the Antenna 2 Signal Circuit is shorted to Battery. If another Antenna has a Short to Ground, a General Electrical Failure or Open DTC, both Antennas will set this Short to Battery DTC.

POSSIBLE CAUSES

Possible Causes
ANOTHER ANTENNA SIGNAL CIRCUIT MAY BE SHORTED TO GROUND, GENERAL FAILURE OR OPEN DTC
(D922) PASSIVE ENTRY ANTENNA 2 SIGNAL CIRCUIT SHORTED TO VOLTAGE
(D923) PASSIVE ENTRY ANTENNA 2 RETURN CIRCUIT SHORTED TO VOLTAGE
RADIO FREQUENCY HUB (RF HUB) MODULE

DIAGNOSTIC TEST

1. **TEST FOR INTERMITTENT CONDITION**

NOTE: **Verify that the vehicle's battery is fully charged with a DVOM and use the scan tool to compare the Battery Voltage listed under "Data" in the RFH View to that of the BCM. If the vehicle's battery is not fully charged, correct**

this condition before proceeding.

NOTE: If another antenna has a Short to Ground, General Electrical Failure or Open DTC, both antennas will set this Short to Voltage DTC.

1. Cycle the ignition on.
2. Using the scan tool, record and erase the DTCs.
3. With the scan tool, select: RF Hub, More Options and System Tests.
4. Perform the RF Hub LF Antenna Verification Tests. Refer to **STANDARD PROCEDURE**.
5. With the scan tool, read the Active DTCs.

   Does the scan tool display: B1A72-12-PASSIVE ENTRY ANTENNA 2 - CIRCUIT SHORT TO BATTERY as active?

   Yes

   - Go To 2

   No

   - Test complete, the condition or conditions that originally set this DTC are not present at this time. Using the wiring diagrams as a guide, check all related splices and connectors for signs of water intrusion, corrosion, pushed out or bent terminals and correct pin tension.

2. **(D922) PASSIVE ENTRY ANTENNA 2 SIGNAL CIRCUIT SHORTED TO VOLTAGE**

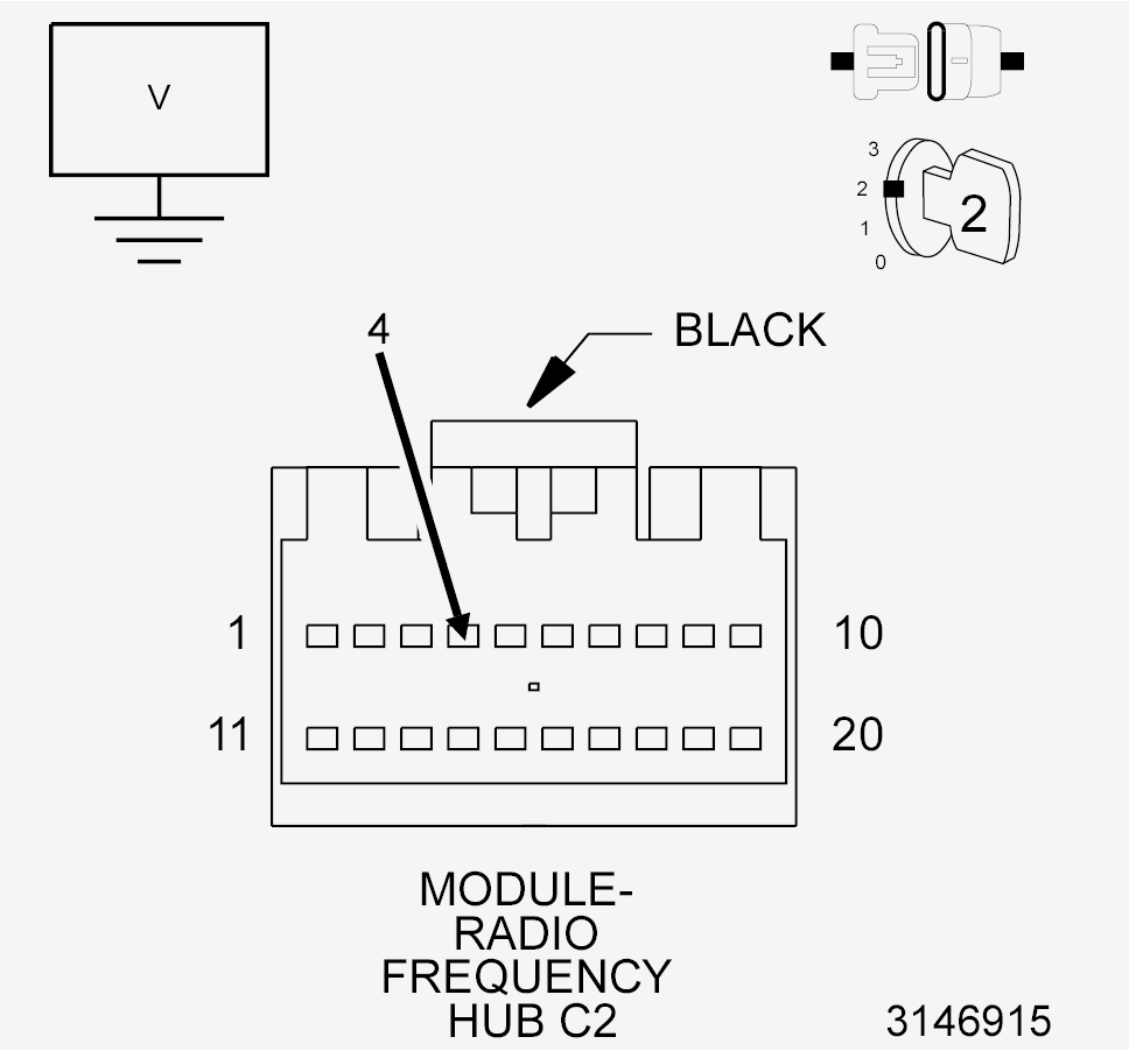

Fig. 15: Measuring Voltage Between Ground & Passive Entry Antenna 2 Signal Circuit
Courtesy of CHRYSLER GROUP, LLC

1. Cycle the ignition off.
2. Disconnect the RF Hub C2 harness connector.
3. Cycle the ignition on.
4. Measure the voltage between ground and the (D922) Passive Entry Antenna 2 Signal circuit.

   Is there any voltage present?

   Yes

   - Repair the short to voltage in the (D922) Passive Entry Antenna 2 Signal circuit.

   No

   - Go To 3

3. **(D923) PASSIVE ENTRY ANTENNA 2 RETURN CIRCUIT SHORTED TO VOLTAGE**
    1. Be sure the ignition is still on.
    2. Measure the voltage between ground and the (D923) Passive Entry Antenna 2 Return circuit (cavity 14 in the C2 connector).

       Is there any voltage present?

       Yes

       - Repair the short to voltage in the (D923) Passive Entry Antenna 2 Return circuit.

       No

       - Replace the RF HUB in accordance with the Service Information. Refer to **MODULE, RADIO FREQUENCY (RF HUB), REMOVAL** .
       - Perform the RADIO FREQUENCY HUB (RF HUB) VERIFICATION TEST. Refer to **STANDARD PROCEDURE**.

B1A72-13-PASSIVE ENTRY ANTENNA 2 - CIRCUIT OPEN

For a complete wiring diagram, **refer to appropriate SYSTEM WIRING DIAGRAMS article** .

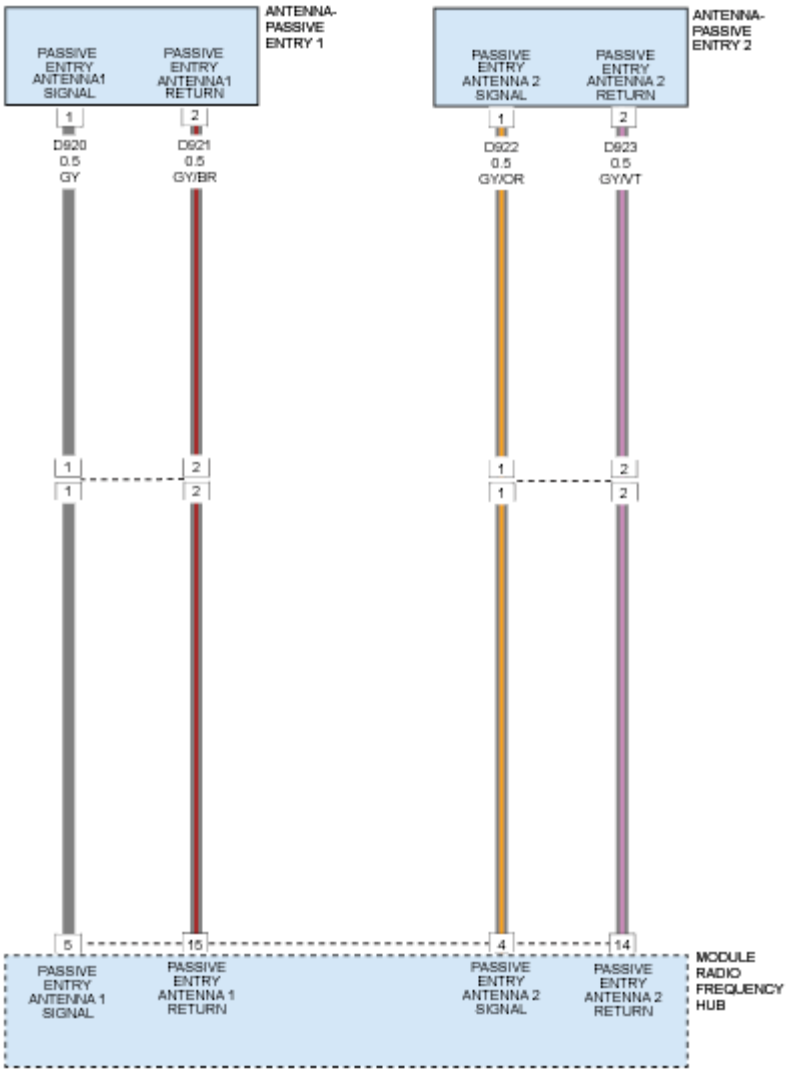

Fig. 16: Passive Entry Antenna 1 & 2 - Circuit Diagram
Courtesy of CHRYSLER GROUP, LLC

THEORY OF OPERATION

The Passive Entry (PE) antenna units allow the transmitter within the Radio Frequency Hub (also known as the RF Hub) to communicate via Low Frequency (LF) radio transmission with a FOB with Integrated Key (FOBIK) that is located inside the vehicle or, at most, about 2 meters (6.5 feet) horizontally in all directions around the outside of the vehicle. The RF Hub uses communication through the antenna units to wake up and challenge a FOBIK that is within range in order to authenticate whether that FOBIK is valid (programmed) to the vehicle. The RF Hub communicates with the FOBIK using Frequency-Shift Keying (FSK) modulation.

Each antenna unit has two dedicated connections to the RF Hub. One connection is the LF antenna output circuit, while the other connection Is the LF antenna return circuit. These circuits to each antenna unit are a twisted pair to help reduce the potential for induced electrical interference. The RF Hub microcontroller

monitors all of the antenna units and will store a Diagnostic Trouble Code (DTC) for any fault that it detects.

The hard wired inputs and outputs of the antenna units may be diagnosed using conventional diagnostic tools and procedures. Refer to the appropriate wiring information. However, the most reliable, efficient, and accurate means to diagnose the antenna units requires the use of a diagnostic scan tool. Refer to the appropriate diagnostic information.

WHEN MONITORED

At every Passive Entry or Keyless Go action.

SET CONDITION

When Antenna 2 Signal Circuit is Open and there are no other Antennas that have a Short to Battery or Short to Ground DTC.

POSSIBLE CAUSES

Possible Causes
(D922) PASSIVE ENTRY ANTENNA 2 SIGNAL CIRCUIT OPEN
(D923) PASSIVE ENTRY ANTENNA 2 RETURN CIRCUIT OPEN
(D922) PASSIVE ENTRY ANTENNA 2 SIGNAL CIRCUIT SHORTED TO THE (D923) PASSIVE ENTRY ANTENNA 2 RETURN CIRCUIT
PASSIVE ENTRY ANTENNA
RADIO FREQUENCY HUB (RF HUB) MODULE

DIAGNOSTIC TEST

1. **TEST FOR INTERMITTENT CONDITION**

NOTE: **Verify that the vehicle's battery is fully charged with a DVOM and use the scan tool to compare the Battery Voltage listed under "Data" in the RFH View to that of the BCM. If the vehicle's battery is not fully charged, correct this condition before proceeding.**

1. Cycle the ignition on.
2. Using the scan tool, record and erase the DTCs.
3. With the scan tool, select: RF Hub, More Options and System Tests.
4. Perform the RF Hub LF Antenna Verification Tests. Refer to **STANDARD PROCEDURE**.
5. With the scan tool, read the Active DTCs.

   Does the scan tool display: B1A72-13-PASSIVE ENTRY ANTENNA 2 - CIRCUIT OPEN as active?

   Yes

- Go To 2

No

- Test complete, the condition or conditions that originally set this DTC are not present at this time. Using the wiring diagrams as a guide, check all related splices and connectors for signs of water intrusion, corrosion, pushed out or bent terminals and correct pin tension.
- Perform the BODY VERIFICATION TEST. Refer to **STANDARD PROCEDURE** .

2. **(D922) PASSIVE ENTRY ANTENNA 2 CIRCUIT OPEN**

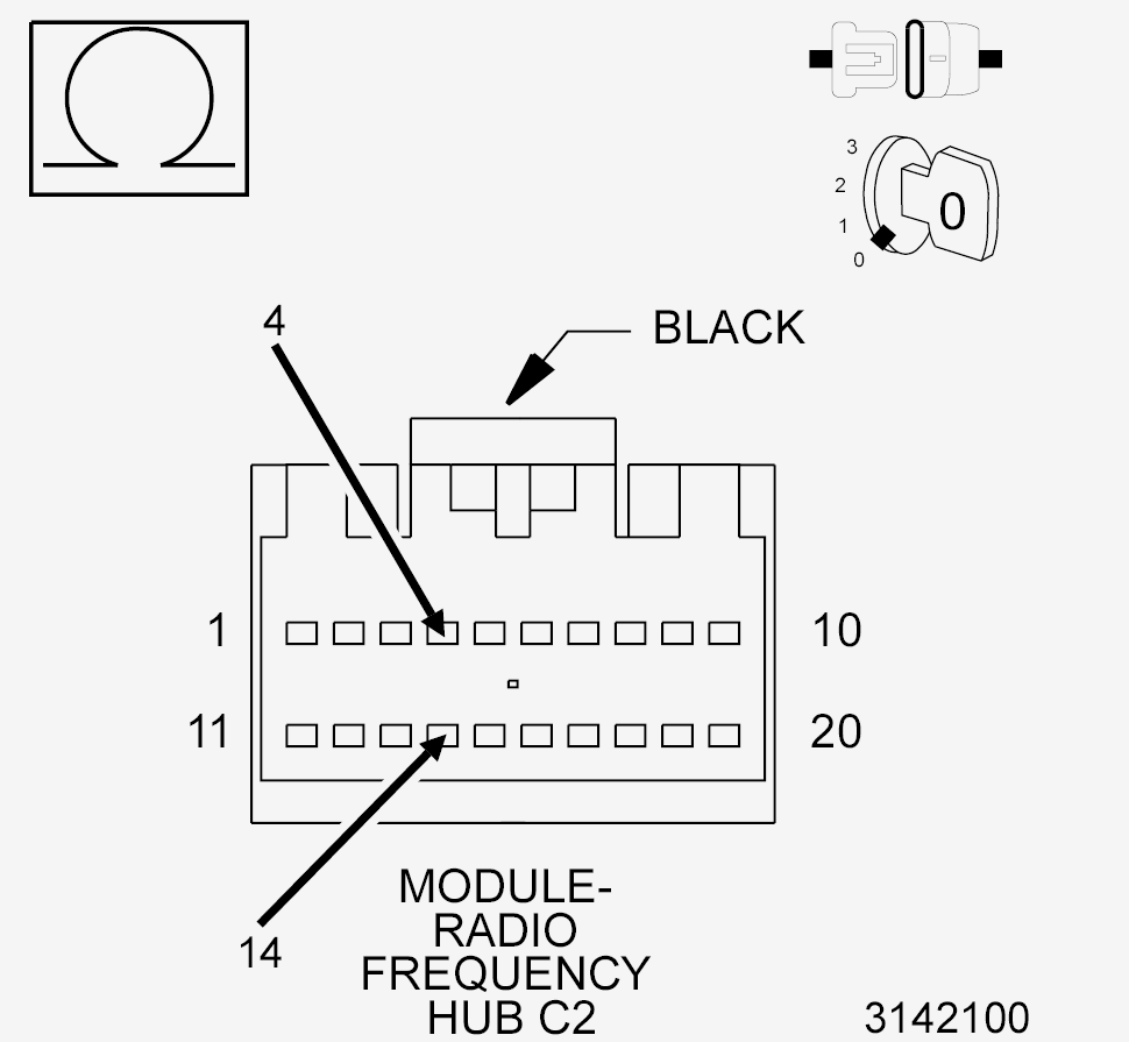

Fig. 17: Checking Passive Entry Antenna 2 Circuit For Open
Courtesy of CHRYSLER GROUP, LLC

1. Cycle the ignition off.
2. Disconnect the Radio frequency Hub (RF HUB) C2 harness connector.
3. Measure the resistance between the (D922) Passive Entry Antenna 2 Signal circuit and the (D923)

Passive Entry Antenna 2 Return circuit.

Is the resistance between 1.5 and 3.5 Ohms?

Yes

- Replace the RF Hub in accordance with the Service Information. Refer to **MODULE, RADIO FREQUENCY (RF HUB), REMOVAL** .
- Perform the RADIO FREQUENCY HUB (RF HUB) VERIFICATION TEST. Refer to **STANDARD PROCEDURE**.

No

- Go To 3

3. **(D922) PASSIVE ENTRY ANTENNA 2 SIGNAL CIRCUIT OPEN**

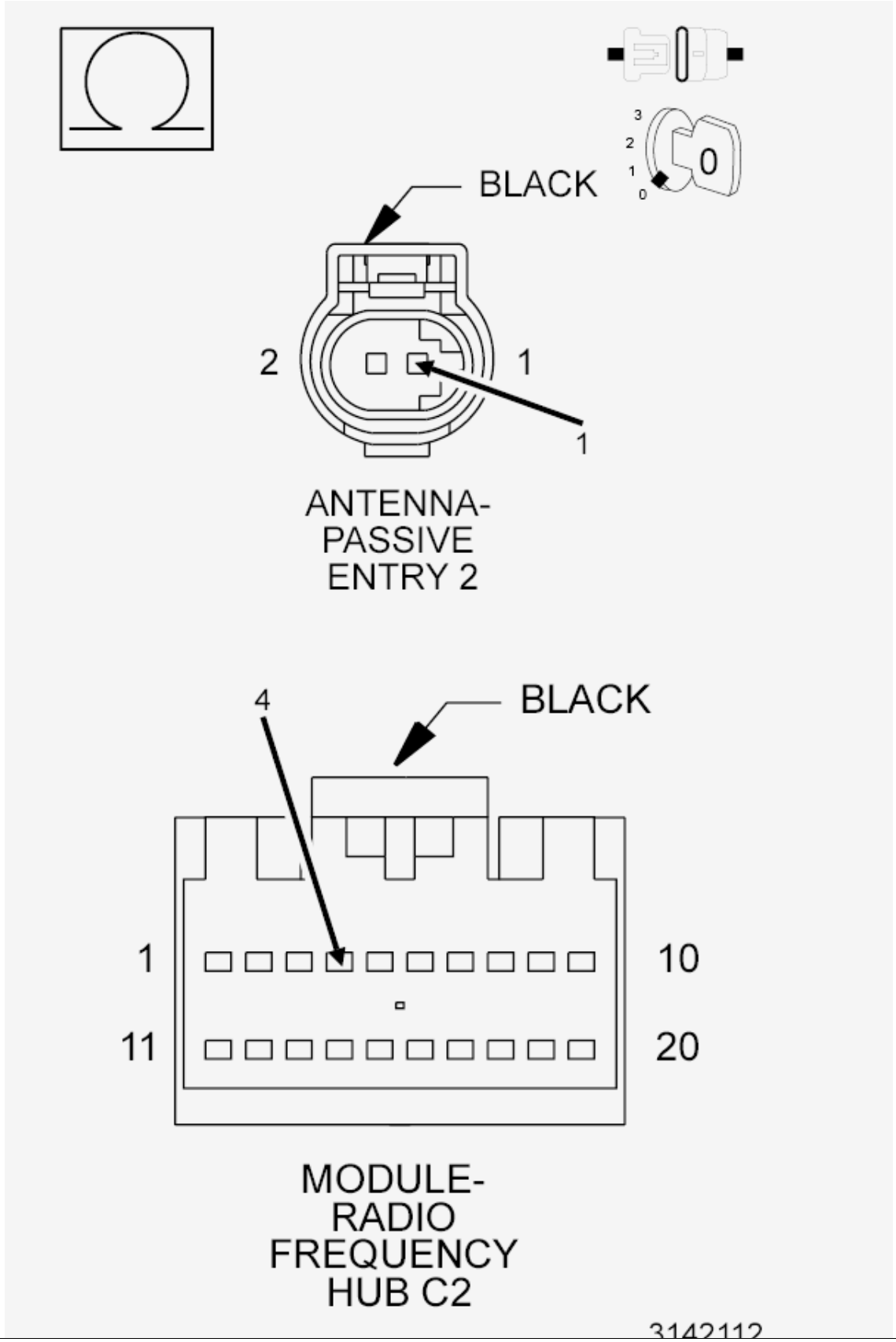
3
2
1
0
0
BLACK
2
1
1
ANTENNA-
PASSIVE
ENTRY 2
4
BLACK
1
10
11
20
MODULE-
RADIO
FREQUENCY
HUB C2
3142112

Fig. 18: Checking Passive Entry Antenna 2 Signal Circuit For Open
Courtesy of CHRYSLER GROUP, LLC

1. Disconnect the Passive Entry Antenna 2 harness connector.

   NOTE: Antenna 2 is located in the Right Rear Door. Refer to ANTENNA, PASSIVE ENTRY, REMOVAL .

2. Measure the resistance of the (D922) Passive Entry Antenna 2 Signal circuit between the RF HUB C2 harness connector and the Passive Entry Antenna 2 harness connector.

   Is the resistance below 2.0 Ohms?

   Yes

   - Go To 4

   No

   - Repair the open in the (D922) Passive Entry Antenna 2 Signal circuit.
   - Perform the BODY VERIFICATION TEST. Refer to **STANDARD PROCEDURE** .

4. **(D923) PASSIVE ENTRY ANTENNA 2 RETURN CIRCUIT OPEN**

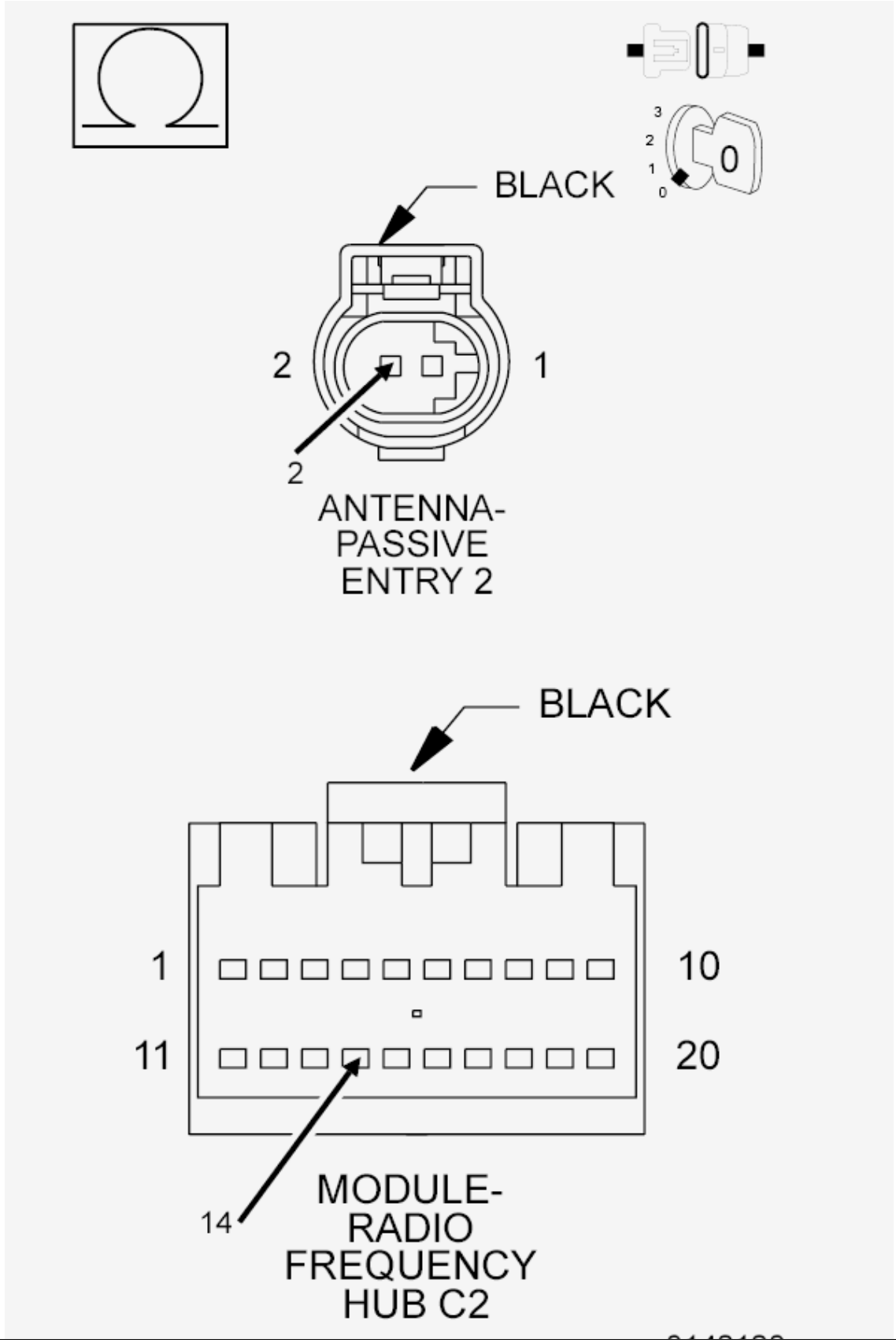
3
2
1
0
0
BLACK
2
1
2
ANTENNA-
PASSIVE
ENTRY 2
BLACK
1
10
11
20
14
MODULE-
RADIO
FREQUENCY
HUB C2

Fig. 19: Checking Passive Entry Antenna 2 Return Circuit For Open
Courtesy of CHRYSLER GROUP, LLC

1. Measure the resistance of the (D923) Passive Entry Antenna 2 Return circuit between the RF HUB C2 harness connector and the Passive Entry Antenna 2 harness connector.

   Is the resistance below 2.0 Ohms?

   Yes

   - Go To 5

   No

   - Repair the open in the (D923) Passive Entry Antenna 2 Return circuit.
   - Perform the BODY VERIFICATION TEST. Refer to **STANDARD PROCEDURE** .

5. **(D922) PASSIVE ENTRY ANTENNA 2 SIGNAL CIRCUIT SHORTED TO THE (D923) PASSIVE ENTRY ANTENNA 2 RETURN CIRCUIT**

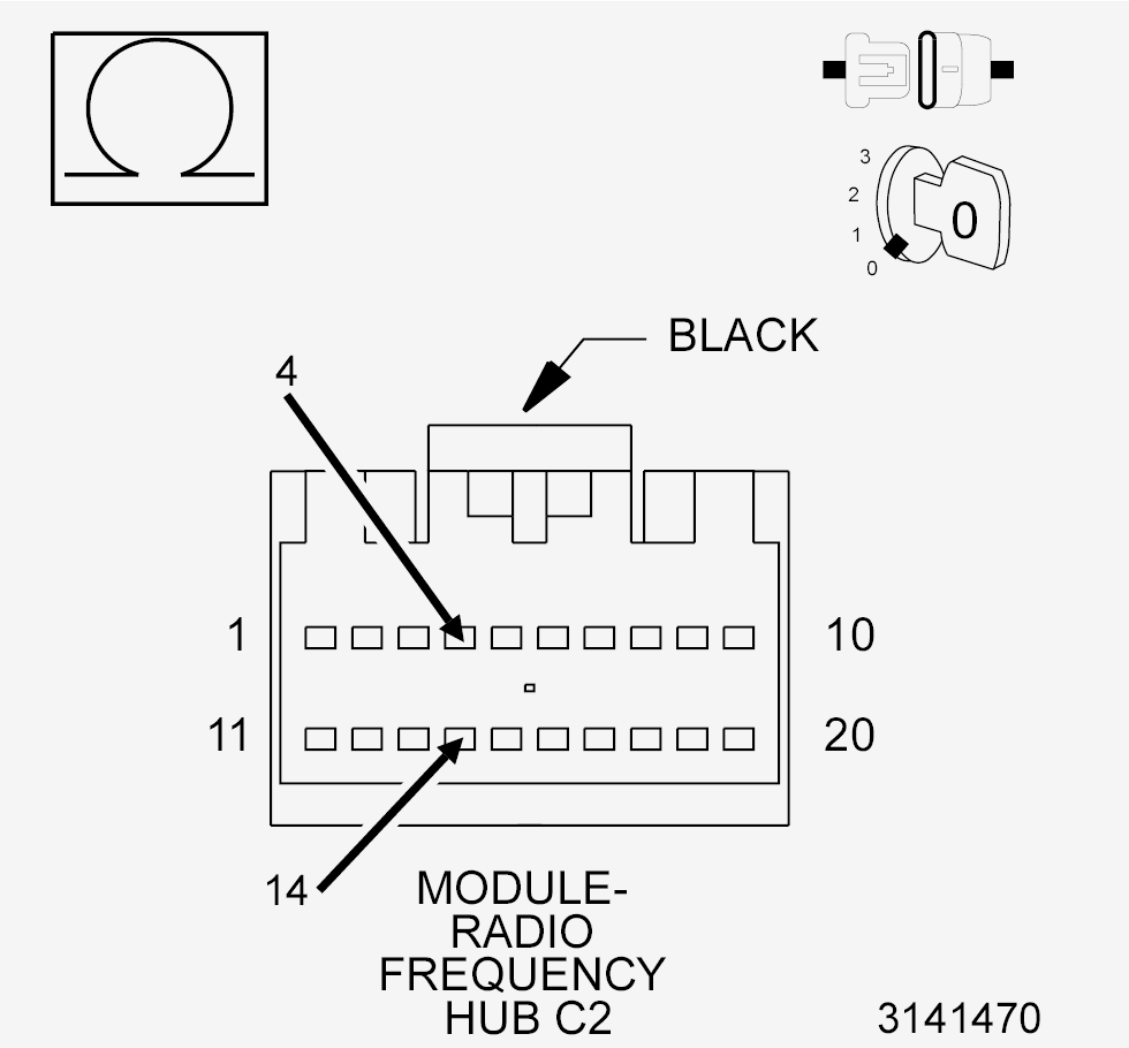

Fig. 20: Measuring Resistance Between Passive Entry Antenna 2 Signal Circuit & Passive Entry Antenna 2 Return Circuit
Courtesy of CHRYSLER GROUP, LLC

1. Measure the resistance between the (D922) Passive Entry Antenna 2 Signal circuit and the (D923) Passive Entry Antenna 2 Return circuit.

   Is the resistance below 30K Ohms?

   Yes

   - Repair the short between the (D922) Passive Entry Antenna 2 Signal circuit and the (D923) Passive Entry Antenna 2 Return circuit.
   - Perform the BODY VERIFICATION TEST. Refer to **STANDARD PROCEDURE** .

   No

- Replace the Antenna in accordance with the Service Information. Refer to **ANTENNA, PASSIVE ENTRY, REMOVAL** .
- Perform the RADIO FREQUENCY HUB (RF HUB) VERIFICATION TEST. Refer to **STANDARD PROCEDURE**.

B1A73-11-PASSIVE ENTRY ANTENNA 3 - CIRCUIT SHORT TO GROUND

For a complete wiring diagram, **refer to appropriate SYSTEM WIRING DIAGRAMS article** .

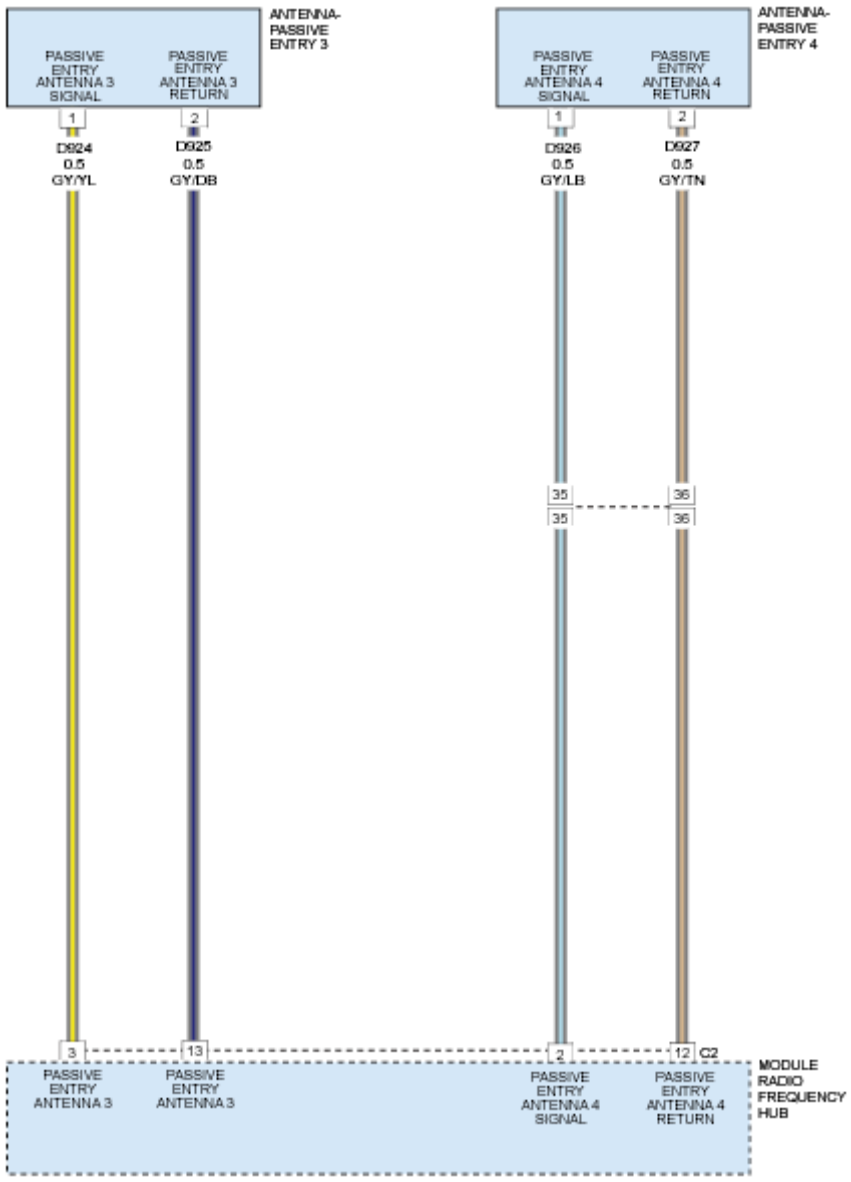

Fig. 21: Passive Entry Antenna 3 & 4 - Circuit Diagram
Courtesy of CHRYSLER GROUP, LLC

THEORY OF OPERATION

The Passive Entry (PE) antenna units allow the transmitter within the Radio Frequency Hub (also known as the RF Hub) to communicate via Low Frequency (LF) radio transmission with a FOB with Integrated Key (FOBIK) that is located inside the vehicle or, at most, about 2 meters (6.5 feet) horizontally in all directions around the outside of the vehicle. The RF Hub uses communication through the antenna units to wake up and challenge a FOBIK that is within range in order to authenticate whether that FOBIK is valid (programmed) to the vehicle. The RF Hub communicates with the FOBIK using Frequency-Shift Keying (FSK) modulation.

Each antenna unit has two dedicated connections to the RF Hub. One connection is the LF antenna output circuit, while the other connection Is the LF antenna return circuit. These circuits to each antenna unit are a twisted pair to help reduce the potential for induced electrical interference. The RF Hub microcontroller monitors all of the antenna units and will store a Diagnostic Trouble Code (DTC) for any fault that it detects.

The hard wired inputs and outputs of the antenna units may be diagnosed using conventional diagnostic tools and procedures. Refer to the appropriate wiring information. However, the most reliable, efficient, and accurate means to diagnose the antenna units requires the use of a diagnostic scan tool. Refer to the appropriate diagnostic information.

WHEN MONITORED

At every Passive Entry or Keyless Go action.

SET CONDITION

When Antenna 3 Signal circuit is shorted to ground. If another Antenna Signal circuit is Open and there are no other Antennas that have a Short to Battery DTC, both Antennas will set this Short to Ground DTC.

POSSIBLE CAUSES

Possible Causes
ANOTHER ANTENNA SIGNAL CIRCUIT MAY BE SETTING AN OPEN DTC
(D924) PASSIVE ENTRY ANTENNA 3 SIGNAL CIRCUIT SHORTED TO GROUND
(D925) PASSIVE ENTRY ANTENNA 3 RETURN CIRCUIT SHORTED TO GROUND
PASSIVE ENTRY ANTENNA
RADIO FREQUENCY HUB (RF HUB) MODULE

DIAGNOSTIC TEST

1. **TEST FOR INTERMITTENT CONDITION**

NOTE: **Verify that the vehicle's battery is fully charged with a DVOM and use the scan tool to compare the Battery Voltage listed under "Data" in the RFH View to that of the BCM. If the vehicle's battery is not fully charged, correct this condition before proceeding.**

1. Cycle the ignition on.
2. Using the scan tool, record and erase the DTCs.
3. With the scan tool, select: RF Hub, More Options and System Tests.
4. Perform the RF Hub LF Antenna Verification Tests. Refer to **STANDARD PROCEDURE**.
5. With the scan tool, read the Active DTCs.

   Does the scan tool display: B1A73-11-PASSIVE ENTRY ANTENNA 3 - CIRCUIT SHORT TO GROUND as active?

   Yes

   - Go To 2

   No

   - Test complete, the condition or conditions that originally set this DTC are not present at this time. Using the wiring diagrams as a guide, check all related splices and connectors for signs of water intrusion, corrosion, pushed out or bent terminals and correct pin tension.
   - Perform the BODY VERIFICATION TEST. Refer to **STANDARD PROCEDURE** .

2. **(D924) PASSIVE ENTRY ANTENNA SHORTED**
   1. Cycle the ignition off.
   2. Disconnect the Passive Entry Antenna 3 harness connector.

      NOTE: For antenna locations, refer to ANTENNA, PASSIVE ENTRY, DESCRIPTION .

   3. Cycle the ignition on.
   4. Using the scan tool, record and erase the DTCs.
   5. With the scan tool, select: RF Hub, More Options and System Tests.
   6. Perform the RF Hub LF Antenna Verification Tests. Refer to **STANDARD PROCEDURE**.
   7. With the scan tool, read the Active DTCs.

      Does the scan tool display: B1A73-11-PASSIVE ENTRY ANTENNA 3- CIRCUIT SHORT TO GROUND as active?

      Yes

      - Go To 3

      No

      - Replace the Antenna in accordance with the service information.
      - Perform the BODY VERIFICATION TEST. Refer to **STANDARD PROCEDURE** .

3. **(D924) PASSIVE ENTRY ANTENNA 3 SIGNAL CIRCUIT SHORTED TO GROUND**

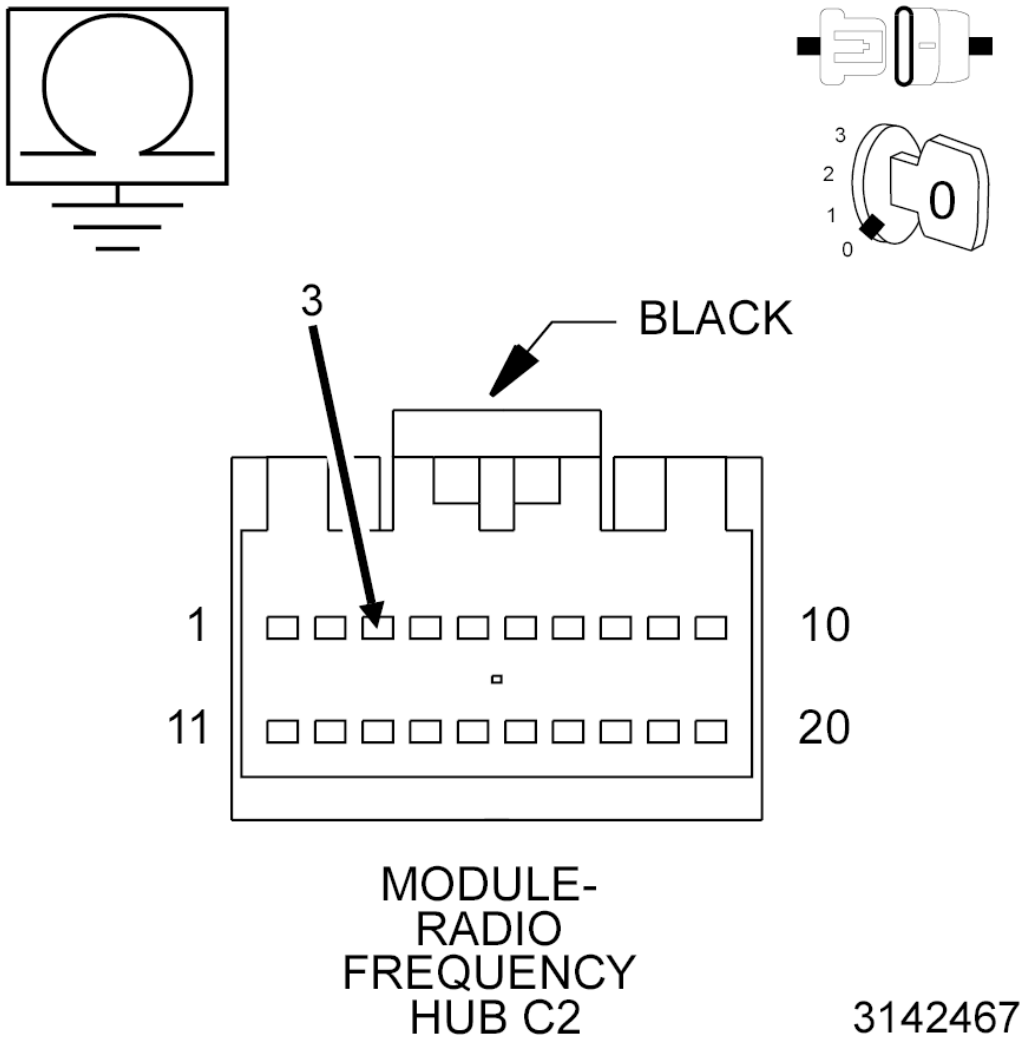

Fig. 22: Measuring Resistance Between Ground & Passive Entry Antenna 3 Signal Circuit
Courtesy of CHRYSLER GROUP, LLC

1. Cycle the ignition off.
2. Disconnect the RF Hub Module C2 harness connector.
3. Measure the resistance between ground and the (D924) Passive Entry Antenna 3 Signal circuit.

   Is the resistance below 30K Ohms?

   Yes

   - Repair the short to ground in the (D924) Passive Entry Antenna 3 Signal circuit.
   - Perform the BODY VERIFICATION TEST. Refer to **STANDARD PROCEDURE** .

No

- Go To 4

4. **(D925) PASSIVE ENTRY ANTENNA 3 RETURN CIRCUIT SHORTED TO GROUND**

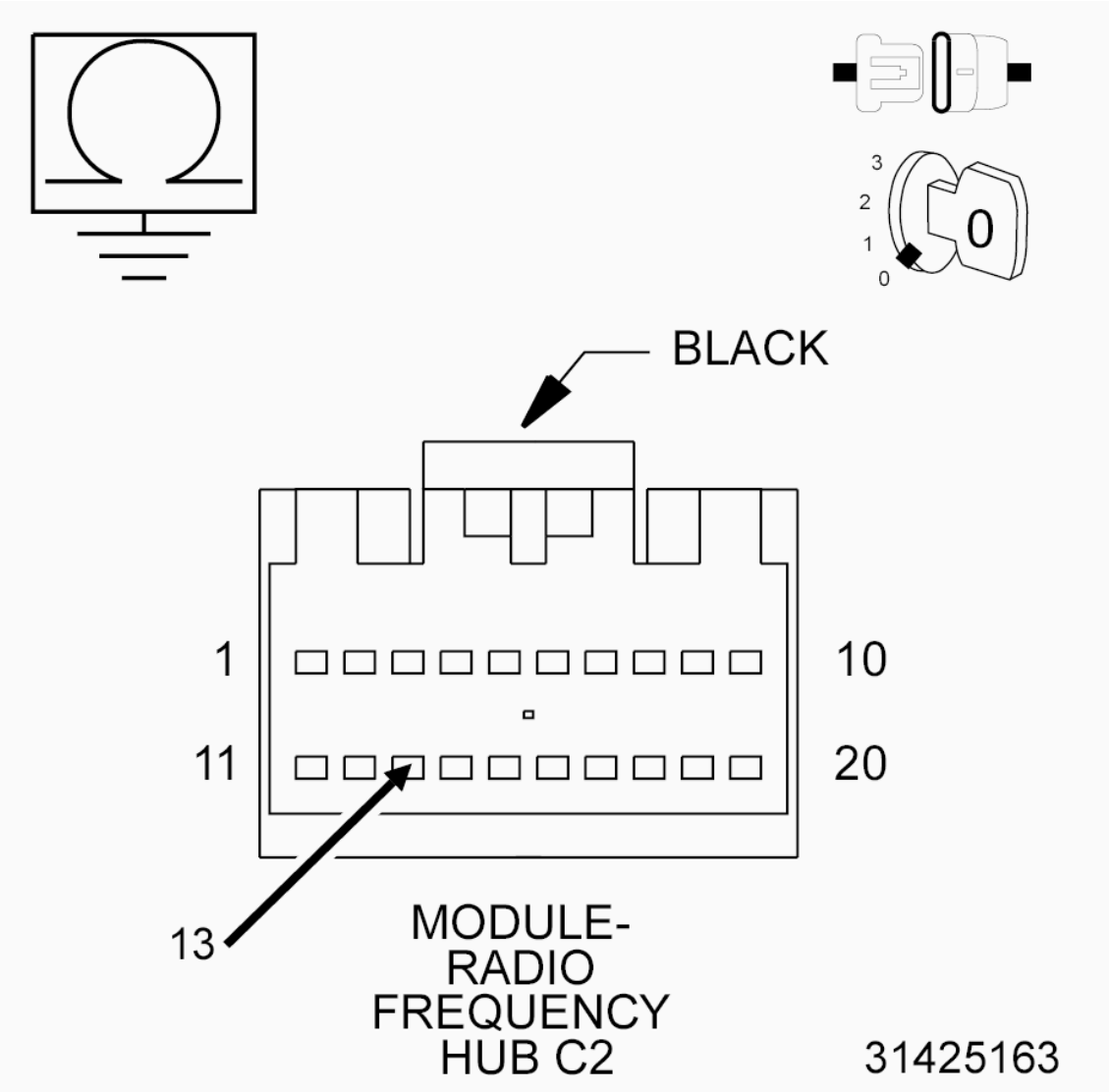

Fig. 23: Measuring Resistance Between Ground & Passive Entry Antenna 3 Return Circuit
Courtesy of CHRYSLER GROUP, LLC

1. Measure the resistance between ground and the (D925) Passive Entry Antenna 3 Return circuit.

   Is the resistance below 30K Ohms?

   Yes

   - Repair the short to ground in the (D925) Passive Entry Antenna 3 Return circuit.

- Perform the BODY VERIFICATION TEST. Refer to **STANDARD PROCEDURE** .

No

- Replace the appropriate Passive Entry antenna in accordance with Service Information. Perform the RADIO FREQUENCY HUB (RF HUB) VERIFICATION TEST. Refer to **STANDARD PROCEDURE**.
- If replacing the Passive Entry antenna for this DTC did not repair the concern, replace the RF Hub in accordance with the Service Information. Refer to **MODULE, RADIO FREQUENCY (RF HUB), REMOVAL** .
- Perform the RADIO FREQUENCY HUB (RF HUB) VERIFICATION TEST. Refer to **STANDARD PROCEDURE**.

B1A73-12-PASSIVE ENTRY ANTENNA 3 - CIRCUIT SHORT TO BATTERY

For a complete wiring diagram, **refer to appropriate SYSTEM WIRING DIAGRAMS article** .

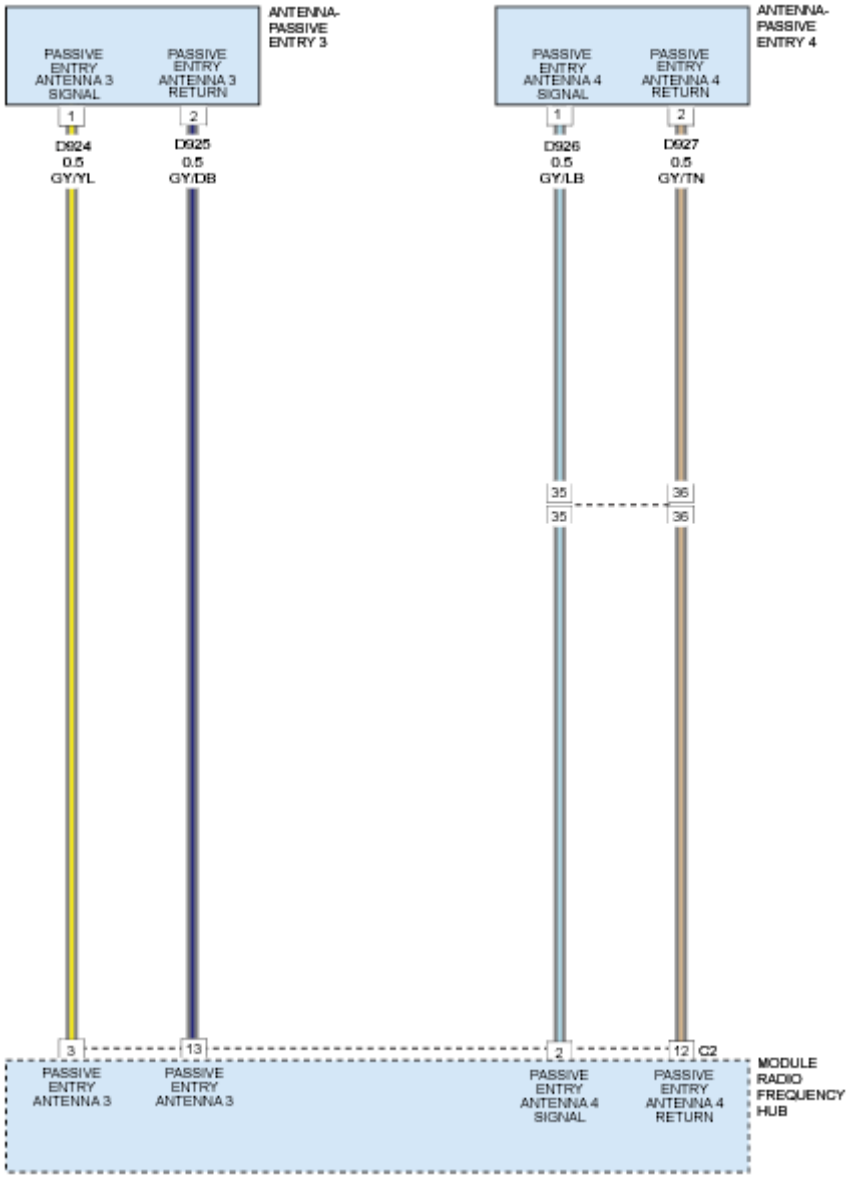

Fig. 24: Passive Entry Antenna 3 & 4 - Circuit Diagram
Courtesy of CHRYSLER GROUP, LLC

THEORY OF OPERATION

The Passive Entry (PE) antenna units allow the transmitter within the Radio Frequency Hub (also known as the RF Hub) to communicate via Low Frequency (LF) radio transmission with a FOB with Integrated Key (FOBIK) that is located inside the vehicle or, at most, about 2 meters (6.5 feet) horizontally in all directions around the outside of the vehicle. The RF Hub uses communication through the antenna units to wake up and challenge a FOBIK that is within range in order to authenticate whether that FOBIK is valid (programmed) to the vehicle. The RF Hub communicates with the FOBIK using Frequency-Shift Keying (FSK) modulation.

Each antenna unit has two dedicated connections to the RF Hub. One connection is the LF antenna output circuit, while the other connection Is the LF antenna return circuit. These circuits to each antenna unit are a twisted pair to help reduce the potential for induced electrical interference. The RF Hub microcontroller monitors all of the antenna units and will store a Diagnostic Trouble Code (DTC) for any fault that it detects.

The hard wired inputs and outputs of the antenna units may be diagnosed using conventional diagnostic tools and procedures. Refer to the appropriate wiring information. However, the most reliable, efficient, and accurate means to diagnose the antenna units requires the use of a diagnostic scan tool. Refer to the appropriate diagnostic information.

WHEN MONITORED

At every Passive Entry or Keyless Go action.

SET CONDITION

When the Antenna 3 Signal Circuit is shorted to Battery. If another Antenna has a Short to Ground, a General Electrical Failure or Open DTC, both Antennas will set this Short to Battery DTC.

POSSIBLE CAUSES

Possible Causes
ANOTHER ANTENNA SIGNAL CIRCUIT MAY BE SHORTED TO GROUND, GENERAL FAILURE OR OPEN DTC
(D924) PASSIVE ENTRY ANTENNA 3 SIGNAL CIRCUIT SHORTED TO VOLTAGE
(D925) PASSIVE ENTRY ANTENNA 3 RETURN CIRCUIT SHORTED TO VOLTAGE
RADIO FREQUENCY HUB (RF HUB) MODULE

DIAGNOSTIC TEST

1. **TEST FOR INTERMITTENT CONDITION**

NOTE: **Verify that the vehicle's battery is fully charged with a DVOM and use the scan tool to compare the Battery Voltage listed under "Data" in the RFH View to that of the BCM. If the vehicle's battery is not fully charged, correct this condition before proceeding.**

NOTE: **If another antenna has a Short to Ground, General Electrical Failure or Open DTC, both antennas will set this Short to Voltage DTC.**

1. Cycle the ignition on.
2. Using the scan tool, record and erase the DTCs.
3. With the scan tool, select: RF Hub, More Options and System Tests.
4. Perform the RF Hub LF Antenna Verification Tests. Refer to **STANDARD PROCEDURE**.

5. With the scan tool, read the Active DTCs.

   Does the scan tool display: B1A73-12-PASSIVE ENTRY ANTENNA 3 - CIRCUIT SHORT TO BATTERY as active?

   Yes

   - Go To 2

   No

   - Test complete, the condition or conditions that originally set this DTC are not present at this time. Using the wiring diagrams as a guide, check all related splices and connectors for signs of water intrusion, corrosion, pushed out or bent terminals and correct pin tension.

2. **(D924) PASSIVE ENTRY ANTENNA 3 SIGNAL CIRCUIT SHORTED TO VOLTAGE**

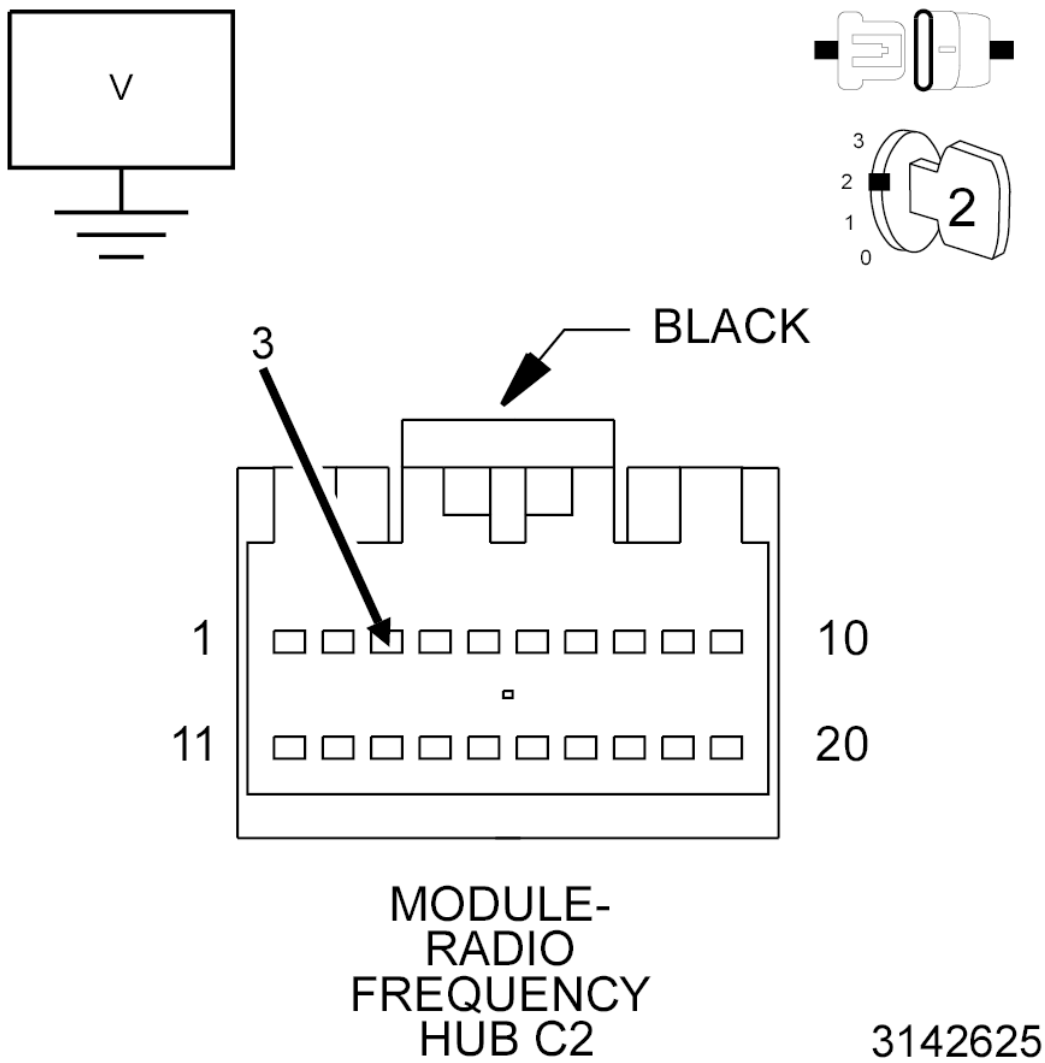

Fig. 25: Measuring Voltage Between Ground & Passive Entry Antenna 3 Signal Circuit
Courtesy of CHRYSLER GROUP, LLC

1. Cycle the ignition off.
2. Disconnect the RF Hub C2 harness connector.
3. Cycle the ignition on.
4. Measure the voltage between ground and the (D924) Passive Entry Antenna 3 Signal circuit.

   Is there any voltage present?

   Yes

   - Repair the short to voltage in the (D924) Passive Entry Antenna 3 Signal circuit.

   No

   - Go To 3

3. **(D925) PASSIVE ENTRY ANTENNA 3 RETURN CIRCUIT SHORTED TO VOLTAGE**
   1. Be sure the ignition is still on.
   2. Measure the voltage between ground and the (D925) Passive Entry Antenna 3 Return circuit.

      Is there any voltage present?

      Yes

      - Repair the short to voltage in the (D925) Passive Entry Antenna 3 Return circuit.

      No

      - Replace the RF HUB in accordance with the Service Information. Refer to **MODULE, RADIO FREQUENCY (RF HUB), REMOVAL** .
      - Perform the RADIO FREQUENCY HUB (RF HUB) VERIFICATION TEST. Refer to **STANDARD PROCEDURE**.

B1A73-13-PASSIVE ENTRY ANTENNA 3 - CIRCUIT OPEN

For a complete wiring diagram, **refer to appropriate SYSTEM WIRING DIAGRAMS article** .

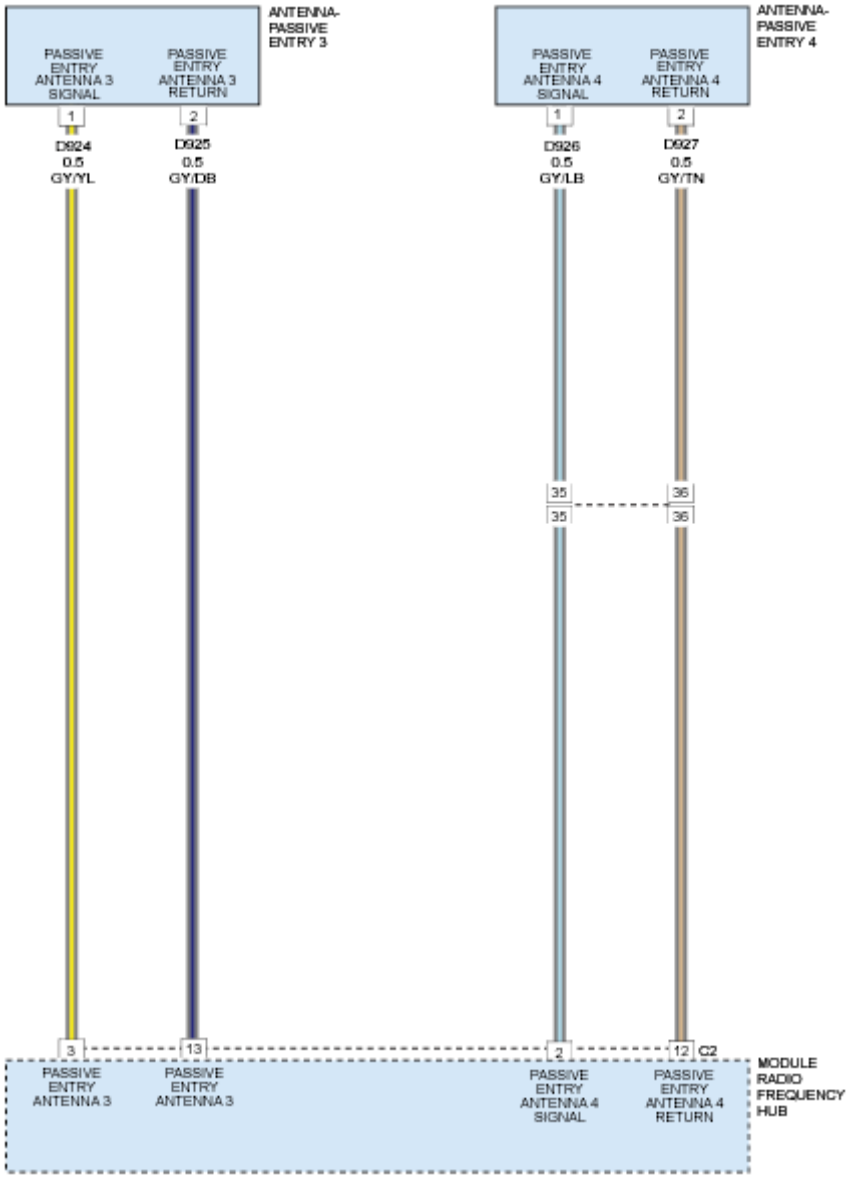

Fig. 26: Passive Entry Antenna 3 & 4 - Circuit Diagram
Courtesy of CHRYSLER GROUP, LLC

THEORY OF OPERATION

The Passive Entry (PE) antenna units allow the transmitter within the Radio Frequency Hub (also known as the RF Hub) to communicate via Low Frequency (LF) radio transmission with a FOB with Integrated Key (FOBIK) that is located inside the vehicle or, at most, about 2 meters (6.5 feet) horizontally in all directions around the outside of the vehicle. The RF Hub uses communication through the antenna units to wake up and challenge a FOBIK that is within range in order to authenticate whether that FOBIK is valid (programmed) to the vehicle. The RF Hub communicates with the FOBIK using Frequency-Shift Keying (FSK) modulation.

Each antenna unit has two dedicated connections to the RF Hub. One connection is the LF antenna output circuit, while the other connection Is the LF antenna return circuit. These circuits to each antenna unit are a twisted pair to help reduce the potential for induced electrical interference. The RF Hub microcontroller monitors all of the antenna units and will store a Diagnostic Trouble Code (DTC) for any fault that it detects.

The hard wired inputs and outputs of the antenna units may be diagnosed using conventional diagnostic tools and procedures. Refer to the appropriate wiring information. However, the most reliable, efficient, and accurate means to diagnose the antenna units requires the use of a diagnostic scan tool. Refer to the appropriate diagnostic information.

WHEN MONITORED

At every Passive Entry or Keyless Go action.

SET CONDITION

When Antenna 3 Signal Circuit is Open and there are no other Antennas that have a Short to Battery or Short to Ground DTC.

POSSIBLE CAUSES

Possible Causes
(D924) PASSIVE ENTRY ANTENNA 3 SIGNAL CIRCUIT OPEN
(D925) PASSIVE ENTRY ANTENNA 3 RETURN CIRCUIT OPEN
(D924) PASSIVE ENTRY ANTENNA 3 SIGNAL CIRCUIT SHORTED TO THE (D925) PASSIVE ENTRY ANTENNA 3 RETURN CIRCUIT
PASSIVE ENTRY ANTENNA
RADIO FREQUENCY HUB (RF HUB) MODULE

DIAGNOSTIC TEST

1. **TEST FOR INTERMITTENT CONDITION**

NOTE: **Verify that the vehicle's battery is fully charged with a DVOM and use the scan tool to compare the Battery Voltage listed under "Data" in the RFH View to that of the BCM. If the vehicle's battery is not fully charged, correct this condition before proceeding.**

1. Cycle the ignition on.
2. Using the scan tool, record and erase the DTCs.
3. With the scan tool, select: RF Hub, More Options and System Tests.
4. Perform the RF Hub LF Antenna Verification Tests. Refer to **STANDARD PROCEDURE**.
5. With the scan tool, read the Active DTCs.

Does the scan tool display: B1A73-13-PASSIVE ENTRY ANTENNA 3 - CIRCUIT OPEN as

active?

Yes

- Go To 2

No

- Test complete, the condition or conditions that originally set this DTC are not present at this time. Using the wiring diagrams as a guide, check all related splices and connectors for signs of water intrusion, corrosion, pushed out or bent terminals and correct pin tension.
- Perform the BODY VERIFICATION TEST. Refer to **STANDARD PROCEDURE** .

2. **(D924) PASSIVE ENTRY ANTENNA 3 CIRCUIT OPEN**

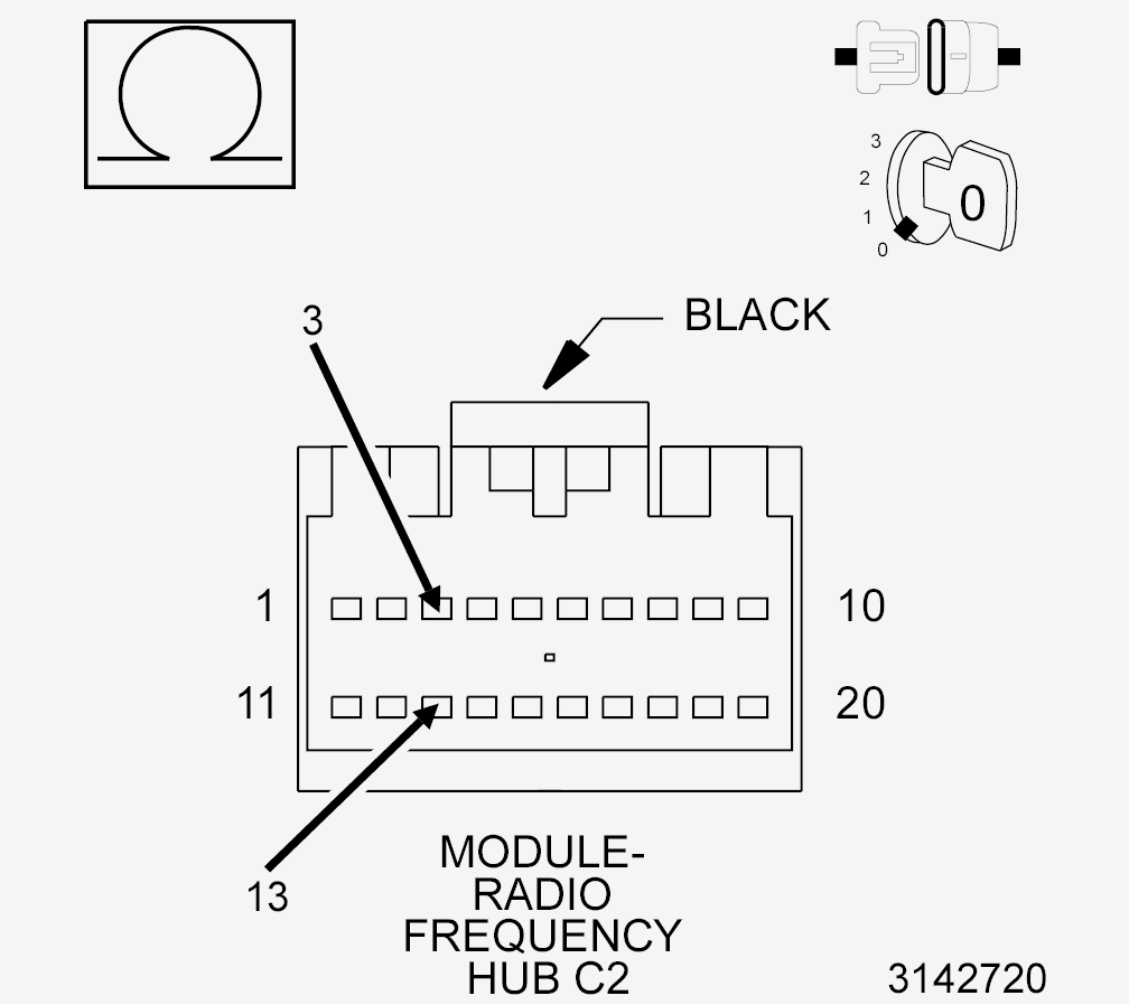

Fig. 27: Checking Passive Entry Antenna 3 Circuit For Open
Courtesy of CHRYSLER GROUP, LLC

1. Cycle the ignition off.

2. Disconnect the Radio frequency Hub (RF HUB) C2 harness connector.
3. Measure the resistance between the (D924) Passive Entry Antenna 3 Signal circuit and the (D925) Passive Entry Antenna 3 Return circuit.

   Is the resistance between 1.5 and 3.5 Ohms?

   Yes

   - Replace the RF Hub in accordance with the Service Information. Refer to **MODULE, RADIO FREQUENCY (RF HUB), REMOVAL** .
   - Perform the RADIO FREQUENCY HUB (RF HUB) VERIFICATION TEST. Refer to **STANDARD PROCEDURE**.

   No

   - Go To 3

3. **(D924) PASSIVE ENTRY ANTENNA 3 SIGNAL CIRCUIT OPEN**

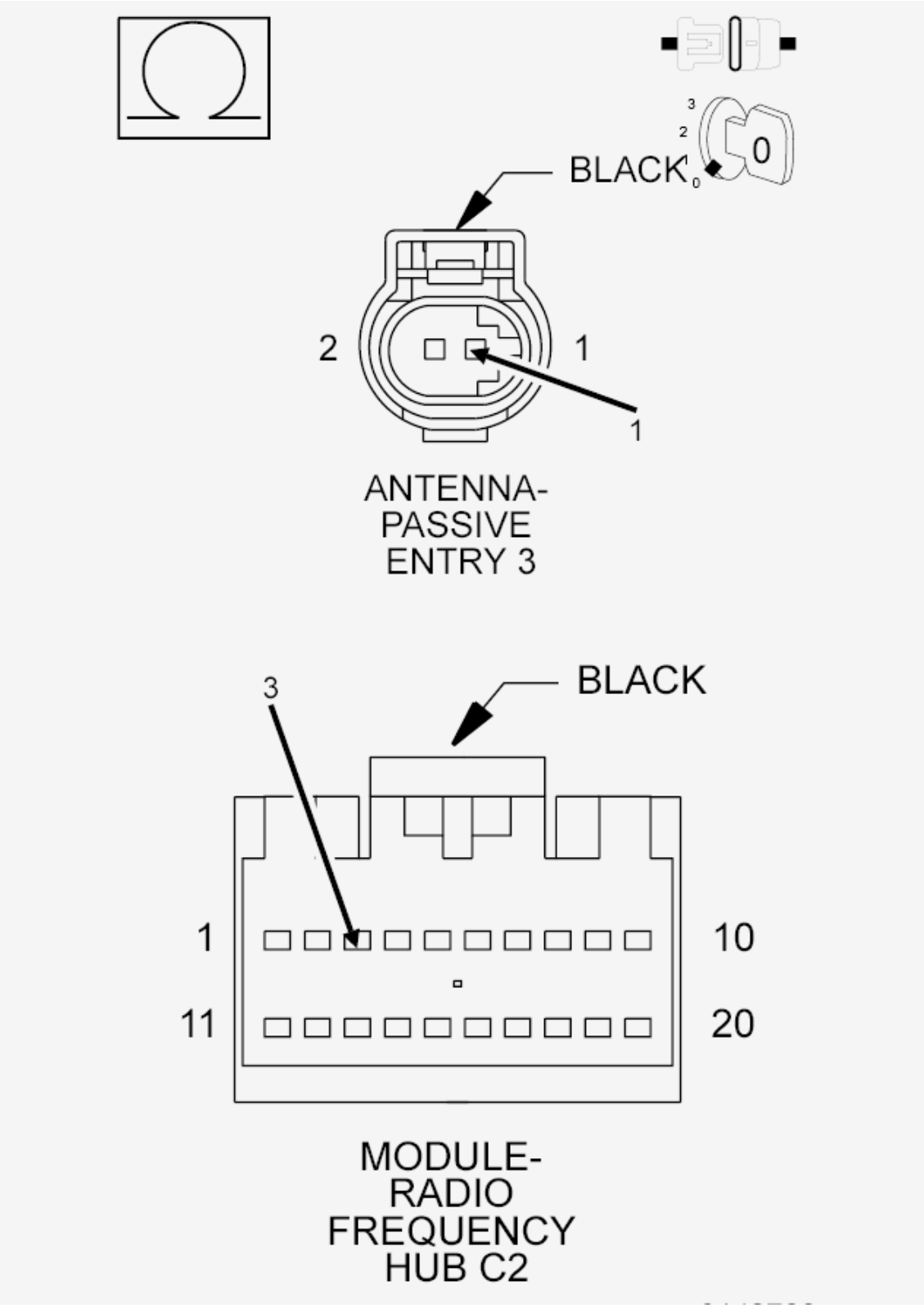

Fig. 28: Checking Passive Entry Antenna 3 Signal Circuit For Open
Courtesy of CHRYSLER GROUP, LLC

1. Disconnect the Passive Entry Antenna 3 harness connector.

   NOTE: For antenna locations, refer to ANTENNA, PASSIVE ENTRY, DESCRIPTION .

2. Measure the resistance of the (D924) Passive Entry Antenna 3 Signal circuit between the RF HUB C2 harness connector and the Passive Entry Antenna 3 harness connector.

   Is the resistance below 2.0 Ohms?

   Yes

   - Go To 4

   No

   - Repair the open in the (D924) Passive Entry Antenna 3 Signal circuit.
   - Perform the BODY VERIFICATION TEST. Refer to **STANDARD PROCEDURE** .

4. **(D925) PASSIVE ENTRY ANTENNA 3 RETURN CIRCUIT OPEN**

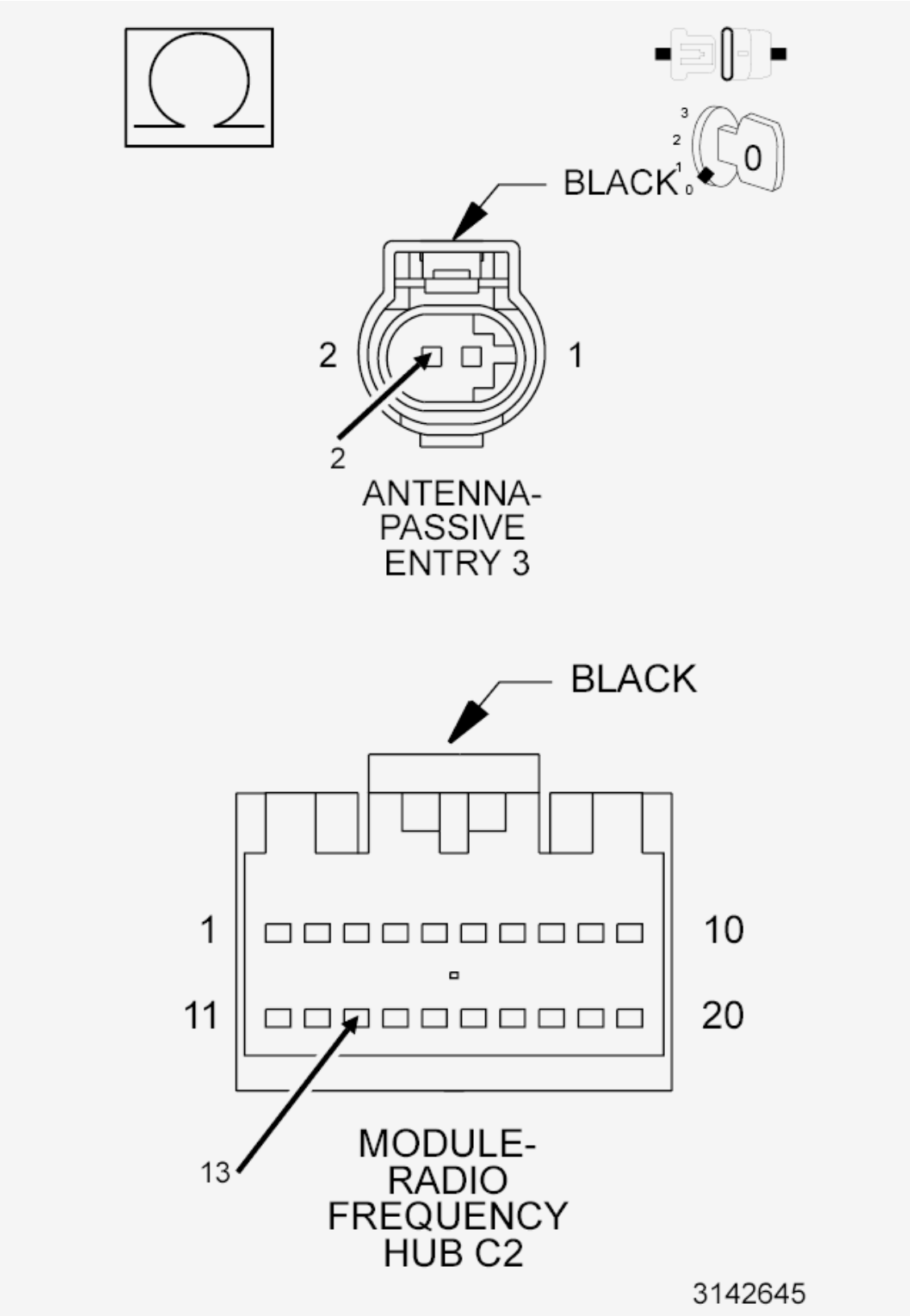

Fig. 29: Checking Passive Entry Antenna 3 Return Circuit For Open

Courtesy of CHRYSLER GROUP, LLC

1. Measure the resistance of the (D925) Passive Entry Antenna 3 Return circuit between the RF HUB C2 harness connector and the Passive Entry Antenna 3 harness connector.

   Is the resistance below 2.0 Ohms?

   Yes

   - Go To 5

   No

   - Repair the open in the (D925) Passive Entry Antenna 3 Return circuit.
   - Perform the BODY VERIFICATION TEST. Refer to **STANDARD PROCEDURE** .

5. **(D924) PASSIVE ENTRY ANTENNA 3 SIGNAL CIRCUIT SHORTED TO THE (D925) PASSIVE ENTRY ANTENNA 3 RETURN CIRCUIT**

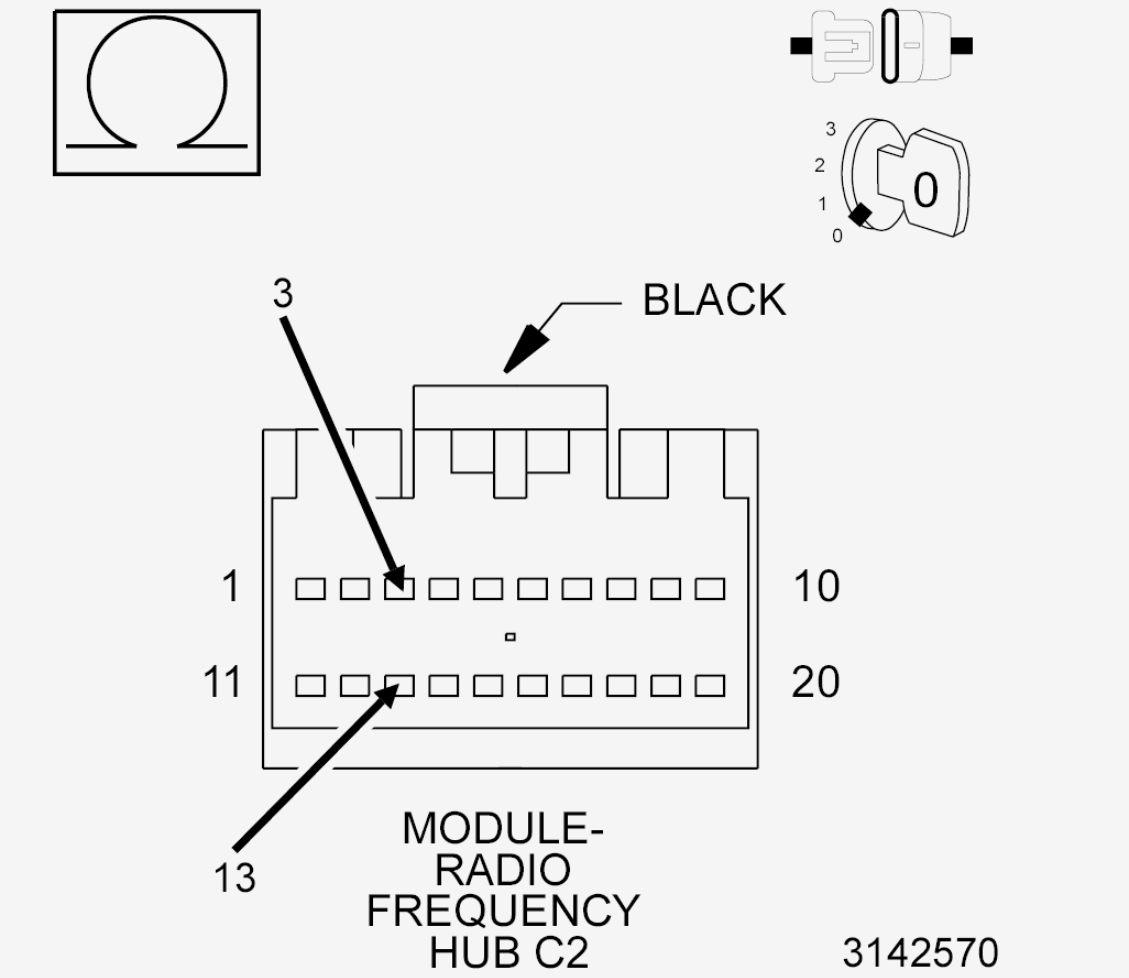

Fig. 30: Measuring Resistance Between Passive Entry Antenna 3 Signal Circuit & Passive Entry

Antenna 3 Return Circuit
Courtesy of CHRYSLER GROUP, LLC

1. Measure the resistance between the (D924) Passive Entry Antenna 3 Signal circuit and the (D925) Passive Entry Antenna 3 Return circuit.

   Is the resistance below 30K Ohms?

   Yes

   - Repair the short between the (D924) Passive Entry Antenna 3 Signal circuit and the (D925) Passive Entry Antenna 3 Return circuit.
   - Perform the BODY VERIFICATION TEST. Refer to **STANDARD PROCEDURE** .

   No

   - Replace the Antenna in accordance with the service information. Refer to **ANTENNA, PASSIVE ENTRY, REMOVAL** .
   - Perform the BODY VERIFICATION TEST. Refer to **STANDARD PROCEDURE** .

B1A74-11-PASSIVE ENTRY ANTENNA 4 - CIRCUIT SHORT TO GROUND

For a complete wiring diagram, **refer to appropriate SYSTEM WIRING DIAGRAMS article** .

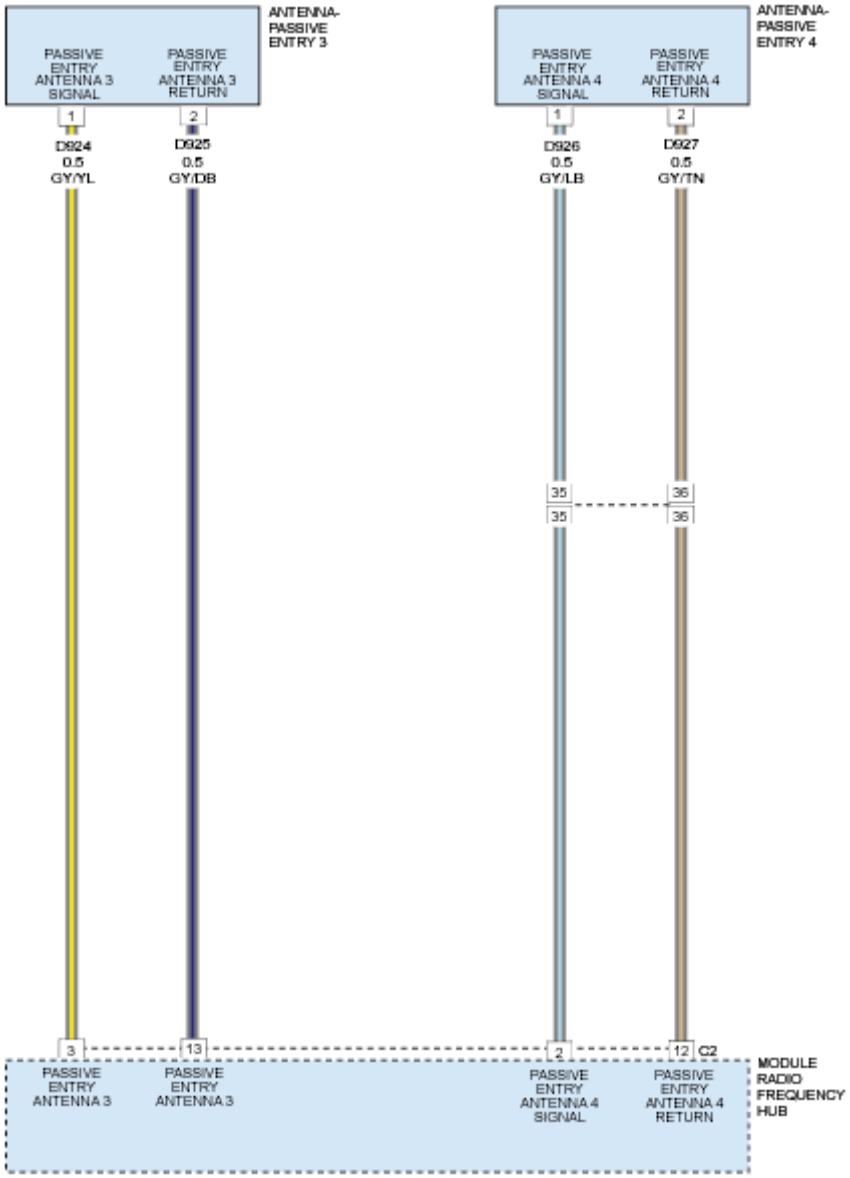

Fig. 31: Passive Entry Antenna 3 & 4 - Circuit Diagram
Courtesy of CHRYSLER GROUP, LLC

THEORY OF OPERATION

The Passive Entry (PE) antenna units allow the transmitter within the Radio Frequency Hub (also known as the RF Hub) to communicate via Low Frequency (LF) radio transmission with a FOB with Integrated Key (FOBIK) that is located inside the vehicle or, at most, about 2 meters (6.5 feet) horizontally in all directions around the outside of the vehicle. The RF Hub uses communication through the antenna units to wake up and challenge a FOBIK that is within range in order to authenticate whether that FOBIK is valid (programmed) to the vehicle. The RF Hub communicates with the FOBIK using Frequency-Shift Keying (FSK) modulation.

Each antenna unit has two dedicated connections to the RF Hub. One connection is the LF antenna output circuit, while the other connection Is the LF antenna return circuit. These circuits to each antenna unit are a twisted pair to help reduce the potential for induced electrical interference. The RF Hub microcontroller monitors all of the antenna units and will store a Diagnostic Trouble Code (DTC) for any fault that it detects.

The hard wired inputs and outputs of the antenna units may be diagnosed using conventional diagnostic tools and procedures. Refer to the appropriate wiring information. However, the most reliable, efficient, and accurate means to diagnose the antenna units requires the use of a diagnostic scan tool. Refer to the appropriate diagnostic information.

WHEN MONITORED

At every Passive Entry or Keyless Go action.

SET CONDITION

When Antenna 4 Signal circuit is shorted to ground. If another Antenna Signal circuit is Open and there are no other Antennas that have a Short to Battery DTC, both Antennas will set this Short to Ground DTC.

POSSIBLE CAUSES

Possible Causes
ANOTHER ANTENNA SIGNAL CIRCUIT MAY BE SETTING AN OPEN DTC
(D926) PASSIVE ENTRY ANTENNA 4 SIGNAL CIRCUIT SHORTED TO GROUND
(D927) PASSIVE ENTRY ANTENNA 4 RETURN CIRCUIT SHORTED TO GROUND
PASSIVE ENTRY ANTENNA
RADIO FREQUENCY HUB (RF HUB) MODULE

DIAGNOSTIC TEST

1. **TEST FOR INTERMITTENT CONDITION**

NOTE: **Verify that the vehicle's battery is fully charged with a DVOM and use the scan tool to compare the Battery Voltage listed under "Data" in the RFH View to that of the BCM. If the vehicle's battery is not fully charged, correct this condition before proceeding.**

1. Cycle the ignition on.
2. Using the scan tool, record and erase the DTCs.
3. With the scan tool, select: RF Hub, More Options and System Tests.
4. Perform the RF Hub LF Antenna Verification Tests. Refer to **STANDARD PROCEDURE**.
5. With the scan tool, read the Active DTCs.

Does the scan tool display: B1A74-11-PASSIVE ENTRY ANTENNA 4- CIRCUIT SHORT TO GROUND as active?

Yes

- Go To 2

No

- Test complete, the condition or conditions that originally set this DTC are not present at this time. Using the wiring diagrams as a guide, check all related splices and connectors for signs of water intrusion, corrosion, pushed out or bent terminals and correct pin tension.
- Perform the BODY VERIFICATION TEST. Refer to **STANDARD PROCEDURE** .

2. **(D926) PASSIVE ENTRY ANTENNA SHORTED**
   1. Cycle the ignition off.
   2. Disconnect the Passive Entry Antenna 4 harness connector.

      NOTE: For antenna locations, refer to ANTENNA, PASSIVE ENTRY, DESCRIPTION .

   3. Cycle the ignition on.
   4. Using the scan tool, record and erase the DTCs.
   5. With the scan tool, select: RF Hub, More Options and System Tests.
   6. Perform the RF Hub LF Antenna Verification Tests. Refer to **STANDARD PROCEDURE**.
   7. With the scan tool, read the Active DTCs.

      Does the scan tool display: B1A74-11-PASSIVE ENTRY ANTENNA 4 - CIRCUIT SHORT TO GROUND as active?

      Yes

      - Go To 3

      No

      - Replace the Antenna in accordance with the service information. Refer to **ANTENNA, PASSIVE ENTRY, REMOVAL** .
      - Perform the BODY VERIFICATION TEST. Refer to **STANDARD PROCEDURE** .

3. **(D926) PASSIVE ENTRY ANTENNA 4 SIGNAL CIRCUIT SHORTED TO GROUND**

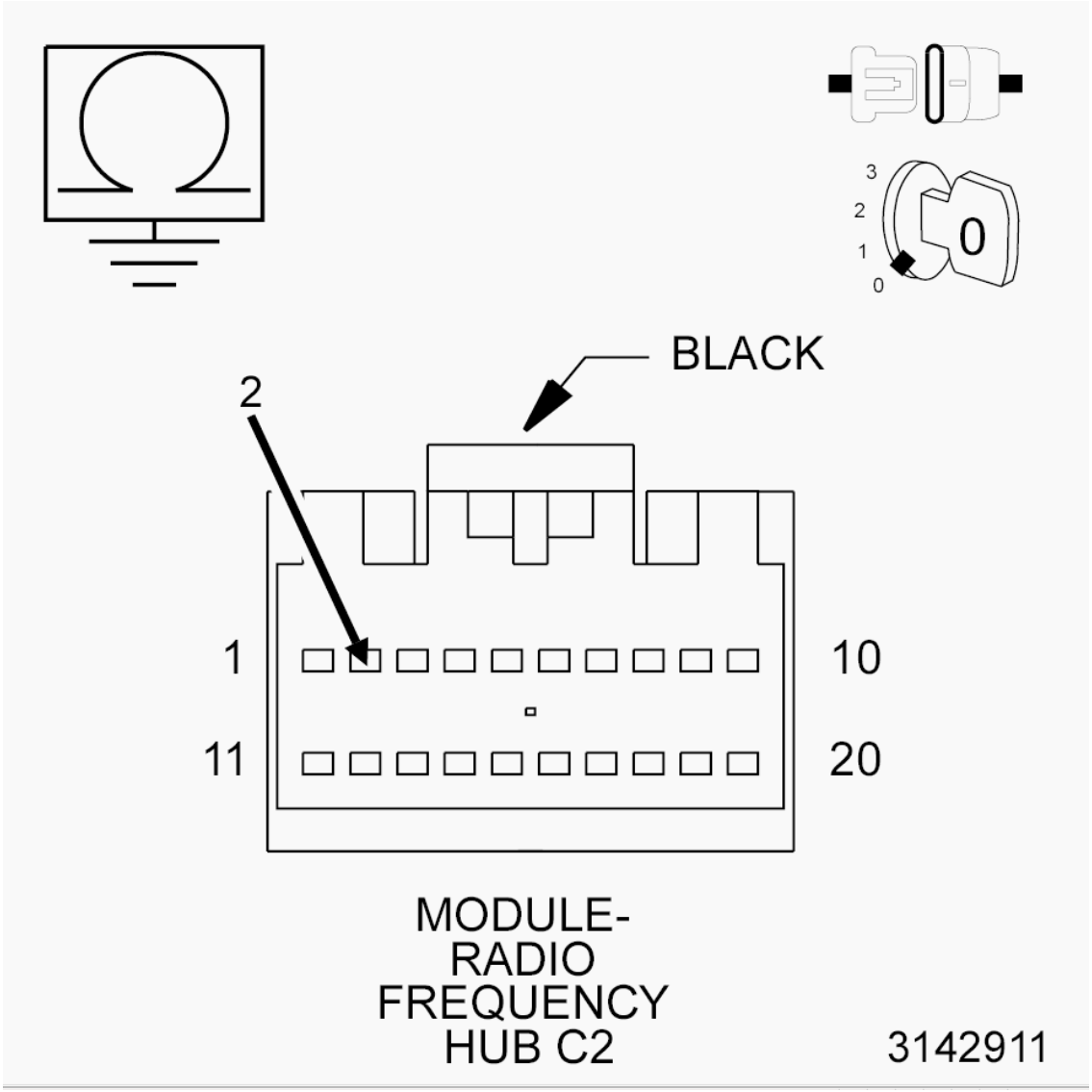

Fig. 32: Measuring Resistance Between Ground & Passive Entry Antenna 4 Signal Circuit
Courtesy of CHRYSLER GROUP, LLC

1. Cycle the ignition off.
2. Disconnect the RF Hub Module C2 harness connector.
3. Measure the resistance between ground and the (D926) Passive Entry Antenna 4 Signal circuit.

   Is the resistance below 30K Ohms?

   Yes

   - Repair the short to ground in the (D926) Passive Entry Antenna 4 Signal circuit.
   - Perform the BODY VERIFICATION TEST. Refer to **STANDARD PROCEDURE** .

No

- Go To 4

4. **(D927) PASSIVE ENTRY ANTENNA 4 RETURN CIRCUIT SHORTED TO GROUND**

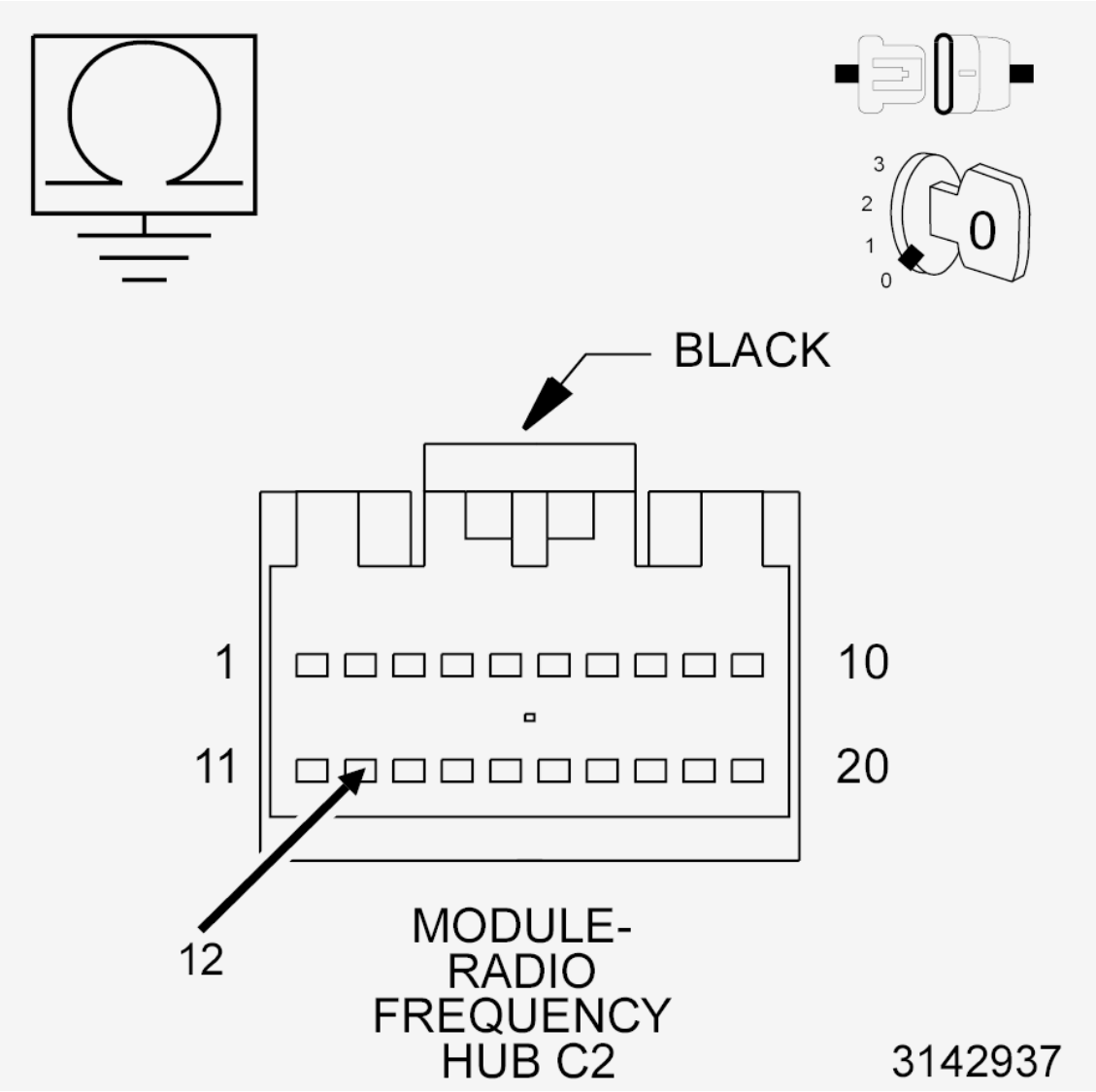

Fig. 33: Measuring Resistance Between Ground & Passive Entry Antenna 4 Return Circuit
Courtesy of CHRYSLER GROUP, LLC

1. Measure the resistance between ground and the (D927) Passive Entry Antenna 4 Return circuit.

   Is the resistance below 30K Ohms?

   Yes

   - Repair the short to ground in the (D927) Passive Entry Antenna 4 Return circuit.

- Perform the BODY VERIFICATION TEST. Refer to **STANDARD PROCEDURE** .

No

- Replace the appropriate Passive Entry antenna in accordance with Service Information. Perform the RADIO FREQUENCY HUB (RF HUB) VERIFICATION TEST. Refer to **STANDARD PROCEDURE**.
- If replacing the Passive Entry antenna for this DTC did not repair the concern, replace the RF Hub in accordance with the Service Information. Refer to **MODULE, RADIO FREQUENCY (RF HUB), REMOVAL** .
- Perform the RADIO FREQUENCY HUB (RF HUB) VERIFICATION TEST. Refer to **STANDARD PROCEDURE**.

B1A74-12-PASSIVE ENTRY ANTENNA 4 - CIRCUIT SHORT TO BATTERY

For a complete wiring diagram, **refer to appropriate SYSTEM WIRING DIAGRAMS article** .

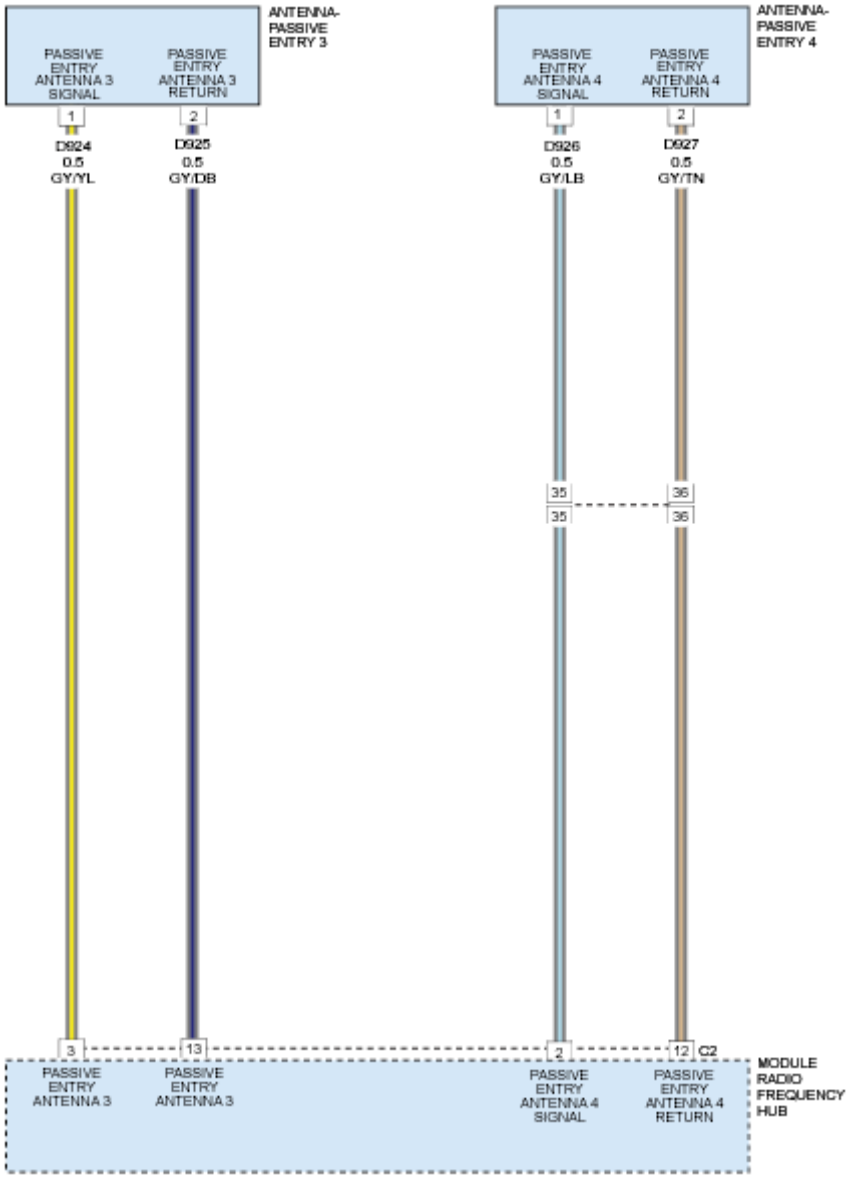

Fig. 34: Passive Entry Antenna 3 & 4 - Circuit Diagram
Courtesy of CHRYSLER GROUP, LLC

THEORY OF OPERATION

The Passive Entry (PE) antenna units allow the transmitter within the Radio Frequency Hub (also known as the RF Hub) to communicate via Low Frequency (LF) radio transmission with a FOB with Integrated Key (FOBIK) that is located inside the vehicle or, at most, about 2 meters (6.5 feet) horizontally in all directions around the outside of the vehicle. The RF Hub uses communication through the antenna units to wake up and challenge a FOBIK that is within range in order to authenticate whether that FOBIK is valid (programmed) to the vehicle. The RF Hub communicates with the FOBIK using Frequency-Shift Keying (FSK) modulation.

Each antenna unit has two dedicated connections to the RF Hub. One connection is the LF antenna output circuit, while the other connection Is the LF antenna return circuit. These circuits to each antenna unit are a twisted pair to help reduce the potential for induced electrical interference. The RF Hub microcontroller monitors all of the antenna units and will store a Diagnostic Trouble Code (DTC) for any fault that it detects.

The hard wired inputs and outputs of the antenna units may be diagnosed using conventional diagnostic tools and procedures. Refer to the appropriate wiring information. However, the most reliable, efficient, and accurate means to diagnose the antenna units requires the use of a diagnostic scan tool. Refer to the appropriate diagnostic information.

WHEN MONITORED

At every Passive Entry or Keyless Go action.

SET CONDITION

When the Antenna 4 Signal Circuit is shorted to Battery. If another Antenna has a Short to Ground, a General Electrical Failure or Open DTC, both Antennas will set this Short to Battery DTC.

POSSIBLE CAUSES

Possible Causes
ANOTHER ANTENNA SIGNAL CIRCUIT MAY BE SHORTED TO GROUND, GENERAL FAILURE OR OPEN DTC
(D926) PASSIVE ENTRY ANTENNA 4 SIGNAL CIRCUIT SHORTED TO VOLTAGE
(D927) PASSIVE ENTRY ANTENNA 4 RETURN CIRCUIT SHORTED TO VOLTAGE
RADIO FREQUENCY HUB (RF HUB) MODULE

DIAGNOSTIC TEST

1. **TEST FOR INTERMITTENT CONDITION**

NOTE: **Verify that the vehicle's battery is fully charged with a DVOM and use the scan tool to compare the Battery Voltage listed under "Data" in the RFH View to that of the BCM. If the vehicle's battery is not fully charged, correct this condition before proceeding.**

NOTE: **If another antenna has a Short to Ground, General Electrical Failure or Open DTC, both antennas will set this Short to Voltage DTC.**

1. Cycle the ignition on.
2. Using the scan tool, record and erase the DTCs.
3. With the scan tool, select: RF Hub, More Options and System Tests.
4. Perform the RF Hub LF Antenna Verification Tests. Refer to **STANDARD PROCEDURE**.

5. With the scan tool, read the Active DTCs.

   Does the scan tool display: B1A74-12-PASSIVE ENTRY ANTENNA 4 - CIRCUIT SHORT TO BATTERY as active?

   Yes

   - Go To 2

   No

   - Test complete, the condition or conditions that originally set this DTC are not present at this time. Using the wiring diagrams as a guide, check all related splices and connectors for signs of water intrusion, corrosion, pushed out or bent terminals and correct pin tension.

2. **(D926) PASSIVE ENTRY ANTENNA 4 SIGNAL CIRCUIT SHORTED TO VOLTAGE**

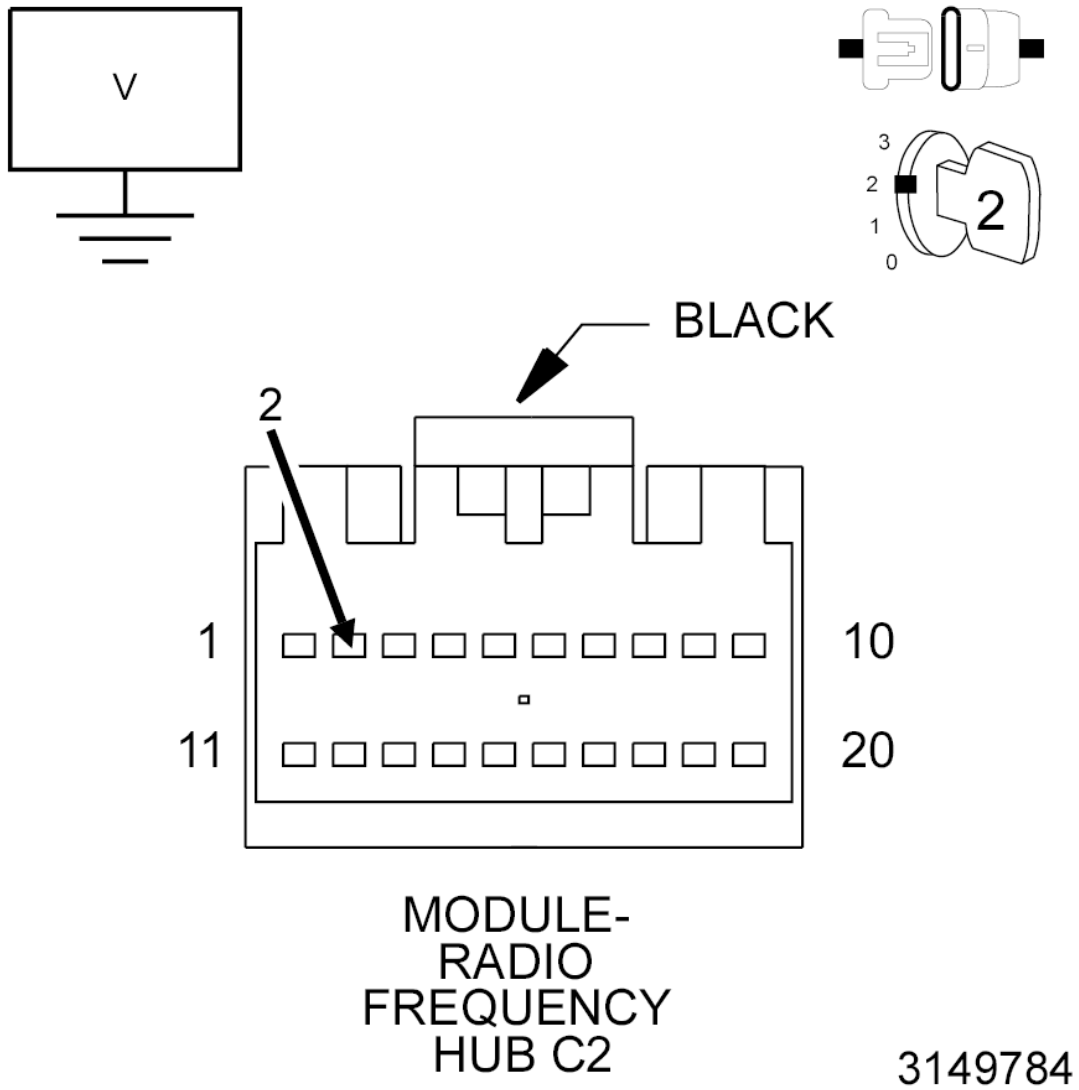

Fig. 35: Measuring Voltage Between Ground & Passive Entry Antenna 4 Signal Circuit
Courtesy of CHRYSLER GROUP, LLC

1. Cycle the ignition off.
2. Disconnect the RF Hub C2 harness connector.
3. Cycle the ignition on.
4. Measure the voltage between ground and the (D926) Passive Entry Antenna 4 Signal circuit.

   Is there any voltage present?

   Yes

   - Repair the short to voltage in the (D926) Passive Entry Antenna 4 Signal circuit.

   No

- Go To 3

3. **(D927) PASSIVE ENTRY ANTENNA 4 RETURN CIRCUIT SHORTED TO VOLTAGE**
   1. Be sure the ignition is still on.
   2. Measure the voltage between ground and the (D927) Passive Entry Antenna 4 Return circuit (Cavity 12 in the RF Hub C2 connector).

      Is there any voltage present?

      Yes

      - Repair the short to voltage in the (D927) Passive Entry Antenna 4 Return circuit.

      No

      - Replace the RF HUB in accordance with the Service Information. Refer to **MODULE, RADIO FREQUENCY (RF HUB), REMOVAL** .
      - Perform the RADIO FREQUENCY HUB (RF HUB) VERIFICATION TEST. Refer to **STANDARD PROCEDURE**.

B1A74-13-PASSIVE ENTRY ANTENNA 4 - CIRCUIT OPEN

For a complete wiring diagram, **refer to appropriate SYSTEM WIRING DIAGRAMS article** .

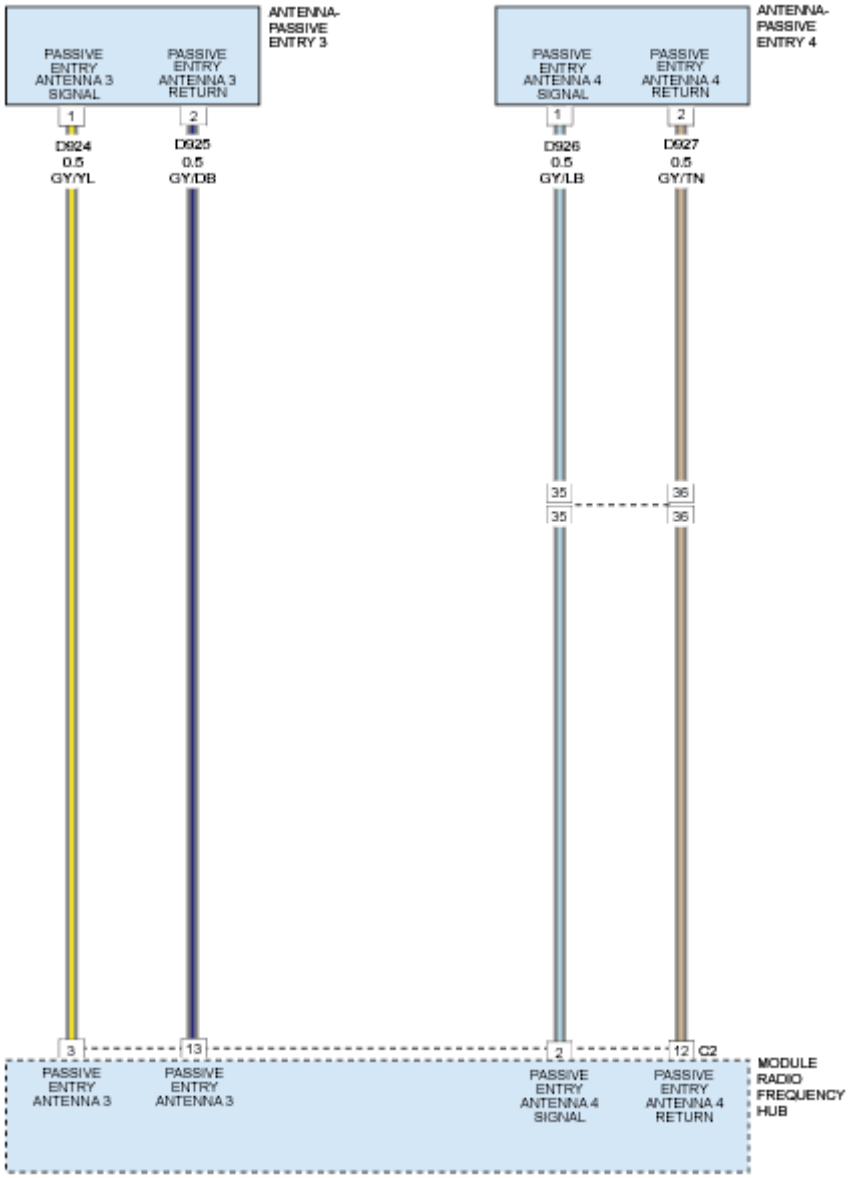

Fig. 36: Passive Entry Antenna 3 & 4 - Circuit Diagram
Courtesy of CHRYSLER GROUP, LLC

THEORY OF OPERATION

The Passive Entry (PE) antenna units allow the transmitter within the Radio Frequency Hub (also known as the RF Hub) to communicate via Low Frequency (LF) radio transmission with a FOB with Integrated Key (FOBIK) that is located inside the vehicle or, at most, about 2 meters (6.5 feet) horizontally in all directions around the outside of the vehicle. The RF Hub uses communication through the antenna units to wake up and challenge a FOBIK that is within range in order to authenticate whether that FOBIK is valid (programmed) to the vehicle. The RF Hub communicates with the FOBIK using Frequency-Shift Keying (FSK) modulation.

Each antenna unit has two dedicated connections to the RF Hub. One connection is the LF antenna output circuit, while the other connection Is the LF antenna return circuit. These circuits to each antenna unit are a twisted pair to help reduce the potential for induced electrical interference. The RF Hub microcontroller monitors all of the antenna units and will store a Diagnostic Trouble Code (DTC) for any fault that it detects.

The hard wired inputs and outputs of the antenna units may be diagnosed using conventional diagnostic tools and procedures. Refer to the appropriate wiring information. However, the most reliable, efficient, and accurate means to diagnose the antenna units requires the use of a diagnostic scan tool. Refer to the appropriate diagnostic information.

WHEN MONITORED

At every Passive Entry or Keyless Go action.

SET CONDITION

When Antenna 4 Signal Circuit is Open and there are no other Antennas that have a Short to Battery or Short to Ground DTC.

POSSIBLE CAUSES

Possible Causes
(D926) PASSIVE ENTRY ANTENNA 4 SIGNAL CIRCUIT OPEN
(D927) PASSIVE ENTRY ANTENNA 4 RETURN CIRCUIT OPEN
(D926) PASSIVE ENTRY ANTENNA 4 SIGNAL CIRCUIT SHORTED TO THE (D927) PASSIVE ENTRY ANTENNA 4 RETURN CIRCUIT
PASSIVE ENTRY ANTENNA
RADIO FREQUENCY HUB (RF HUB) MODULE

DIAGNOSTIC TEST

1. **TEST FOR INTERMITTENT CONDITION**

NOTE: **Verify that the vehicle's battery is fully charged with a DVOM and use the scan tool to compare the Battery Voltage listed under "Data" in the RFH View to that of the BCM. If the vehicle's battery is not fully charged, correct this condition before proceeding.**

1. Cycle the ignition on.
2. Using the scan tool, record and erase the DTCs.
3. With the scan tool, select: RF Hub, More Options and System Tests.
4. Perform the RF Hub LF Antenna Verification Tests. Refer to **STANDARD PROCEDURE**.
5. With the scan tool, read the Active DTCs.

Does the scan tool display: B1A74-13-PASSIVE ENTRY ANTENNA 4 - CIRCUIT OPEN as

active?

Yes

- Go To 2

No

- Test complete, the condition or conditions that originally set this DTC are not present at this time. Using the wiring diagrams as a guide, check all related splices and connectors for signs of water intrusion, corrosion, pushed out or bent terminals and correct pin tension.
- Perform the BODY VERIFICATION TEST. Refer to **STANDARD PROCEDURE** .

2. **(D926) PASSIVE ENTRY ANTENNA 4 CIRCUIT OPEN**

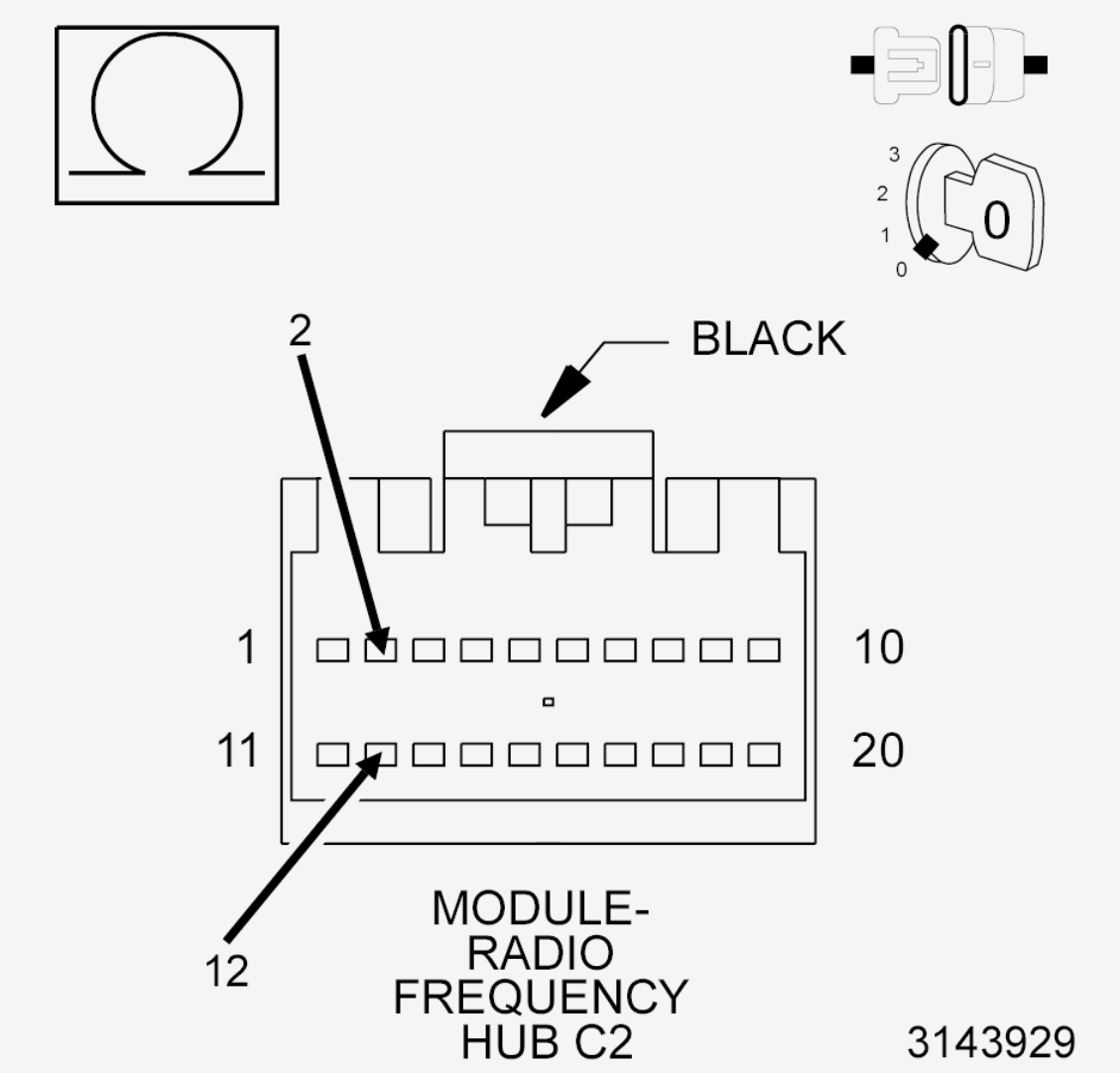

Fig. 37: Checking Passive Entry Antenna 4 Circuit For Open
Courtesy of CHRYSLER GROUP, LLC

1. Cycle the ignition off.
2. Disconnect the Radio frequency Hub (RF HUB) C2 harness connector.
3. Measure the resistance between the (D926) Passive Entry Antenna 4 Signal circuit and the (D927) Passive Entry Antenna 4 Return circuit.

   Is the resistance between 1.5 and 3.5 Ohms?

   Yes

   - Replace the RF Hub in accordance with the Service Information. Refer to **MODULE, RADIO FREQUENCY (RF HUB), REMOVAL** .
   - Perform the RADIO FREQUENCY HUB (RF HUB) VERIFICATION TEST. Refer to **STANDARD PROCEDURE**.

   No

   - Go To 3

3. **(D926) PASSIVE ENTRY ANTENNA 4 SIGNAL CIRCUIT OPEN**

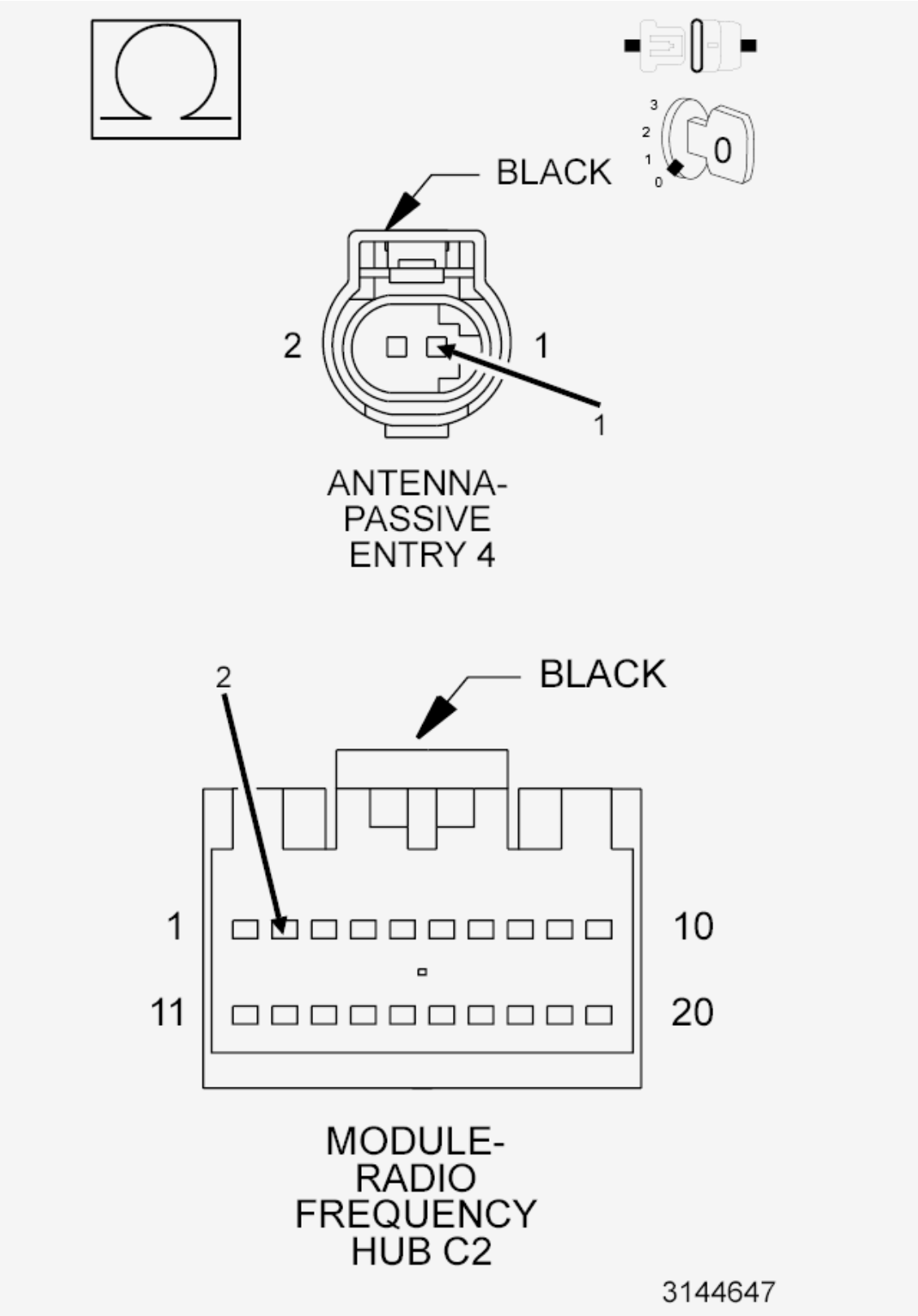

Fig. 38: Checking Passive Entry Antenna 4 Signal Circuit For Open
Courtesy of CHRYSLER GROUP, LLC

1. Disconnect the Passive Entry Antenna 4 harness connector.

   NOTE: For antenna locations, refer to ANTENNA, PASSIVE ENTRY, DESCRIPTION .

2. Measure the resistance of the (D926) Passive Entry Antenna 4 Signal circuit between the RF HUB C2 harness connector and the Passive Entry Antenna 4 harness connector.

   Is the resistance below 2.0 Ohms?

   Yes

   - Go To 4

   No

   - Repair the open in the (D926) Passive Entry Antenna 4 Signal circuit.
   - Perform the BODY VERIFICATION TEST. Refer to **STANDARD PROCEDURE** .

4. **(D927) PASSIVE ENTRY ANTENNA 4 RETURN CIRCUIT OPEN**

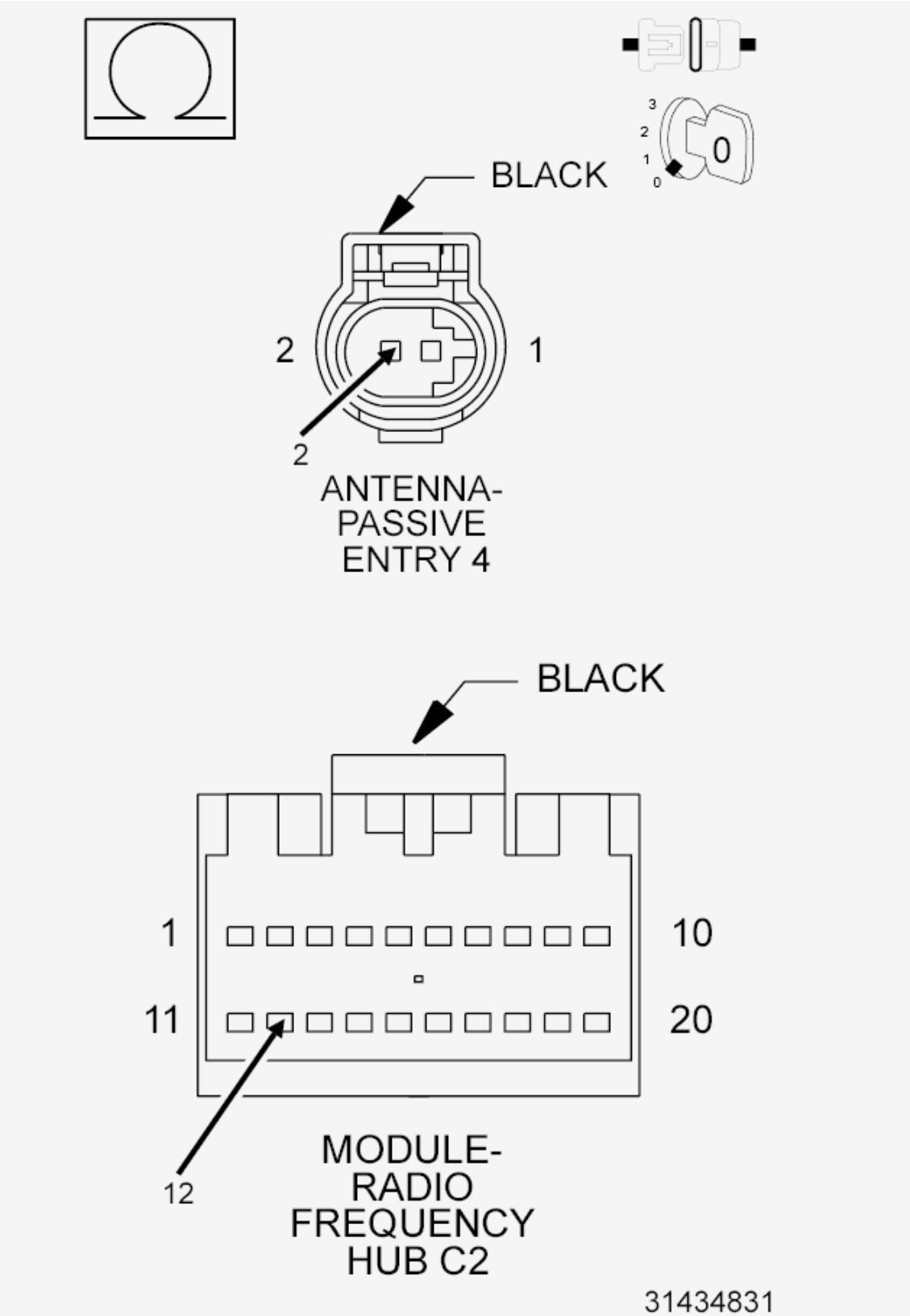

Fig. 39: Checking Passive Entry Antenna 4 Return Circuit For Open

Courtesy of CHRYSLER GROUP, LLC

1. Measure the resistance of the (D927) Passive Entry Antenna 4 Return circuit between the RF HUB C2 harness connector and the Passive Entry Antenna 4 harness connector.

   Is the resistance below 2.0 Ohms?

   Yes

   - Go To 5

   No

   - Repair the open in the (D927) Passive Entry Antenna 4 Return circuit.
   - Perform the BODY VERIFICATION TEST. Refer to **STANDARD PROCEDURE** .

5. **(D926) PASSIVE ENTRY ANTENNA 4 SIGNAL CIRCUIT SHORTED TO THE (D927) PASSIVE ENTRY ANTENNA 4 RETURN CIRCUIT**

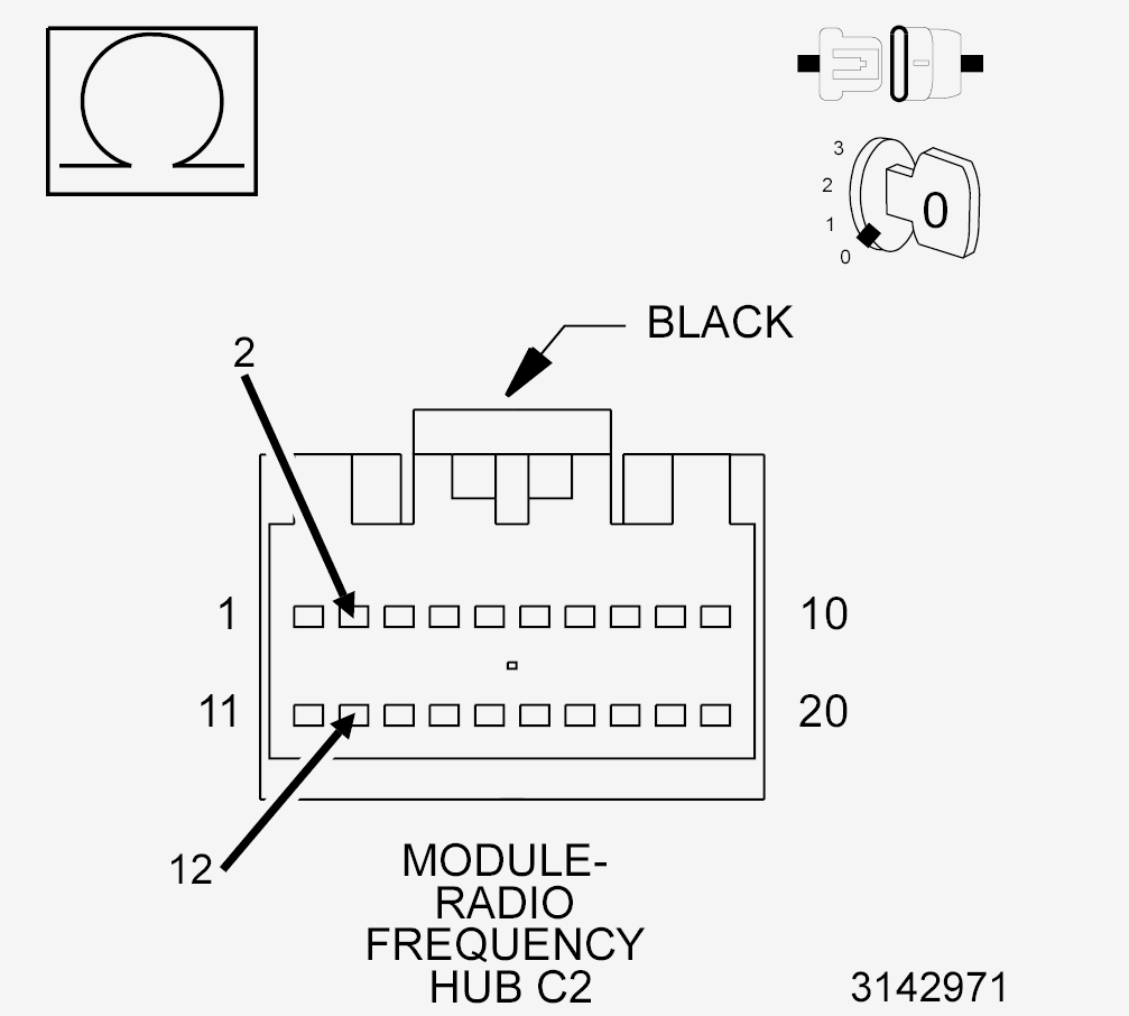

Fig. 40: Measuring Resistance Between Passive Entry Antenna 4 Signal Circuit & Passive Entry Antenna 4 Return Circuit
Courtesy of CHRYSLER GROUP, LLC

1. Measure the resistance between the (D926) Passive Entry Antenna 4 Signal circuit and the (D927) Passive Entry Antenna 4 Return circuit.

   Is the resistance below 30K Ohms?

   Yes

   - Repair the short between the (D926) Passive Entry Antenna 4 Signal circuit and the (D927) Passive Entry Antenna 4 Return circuit.
   - Perform the BODY VERIFICATION TEST. Refer to **STANDARD PROCEDURE** .

   No

   - Replace the Antenna in accordance with the service information. Refer to **ANTENNA, PASSIVE ENTRY, REMOVAL** .
   - Perform the BODY VERIFICATION TEST. Refer to **STANDARD PROCEDURE** .

B1A75-11-PASSIVE ENTRY ANTENNA 5 - CIRCUIT SHORT TO GROUND

For a complete wiring diagram, **refer to appropriate SYSTEM WIRING DIAGRAMS article** .

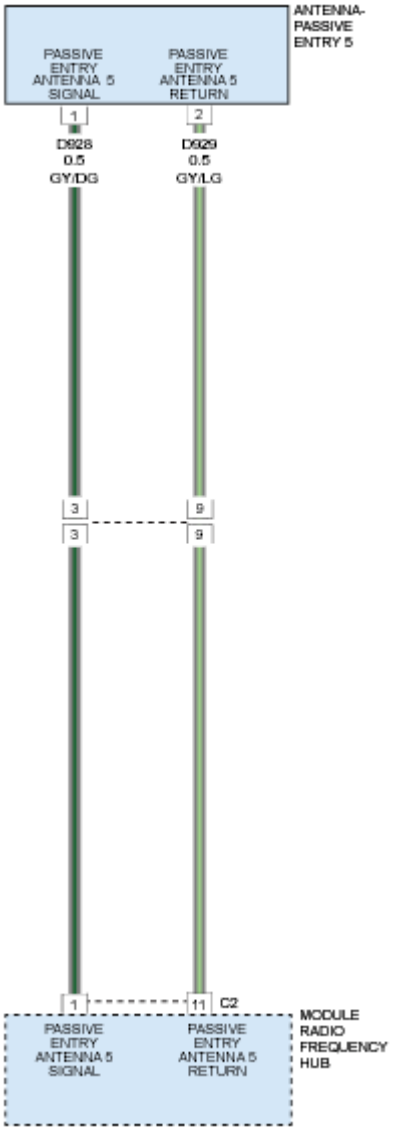

Fig. 41: Passive Entry Antenna 5 - Circuit Diagram
Courtesy of CHRYSLER GROUP, LLC

THEORY OF OPERATION

The Passive Entry (PE) antenna units allow the transmitter within the Radio Frequency Hub (also known as the RF Hub) to communicate via Low Frequency (LF) radio transmission with a FOB with Integrated Key (FOBIK) that is located inside the vehicle or, at most, about 2 meters (6.5 feet) horizontally in all directions around the outside of the vehicle. The RF Hub uses communication through the antenna units to wake up and challenge a FOBIK that is within range in order to authenticate whether that FOBIK is valid (programmed) to the vehicle. The RF Hub communicates with the FOBIK using Frequency-Shift Keying (FSK) modulation.

Each antenna unit has two dedicated connections to the RF Hub. One connection is the LF antenna output circuit, while the other connection Is the LF antenna return circuit. These circuits to each antenna unit are a

twisted pair to help reduce the potential for induced electrical interference. The RF Hub microcontroller monitors all of the antenna units and will store a Diagnostic Trouble Code (DTC) for any fault that it detects.

The hard wired inputs and outputs of the antenna units may be diagnosed using conventional diagnostic tools and procedures. Refer to the appropriate wiring information. However, the most reliable, efficient, and accurate means to diagnose the antenna units requires the use of a diagnostic scan tool. Refer to the appropriate diagnostic information.

WHEN MONITORED

At every Passive Entry or Keyless Go action.

SET CONDITION

When Antenna 5 Signal Circuit is shorted to ground. If another Antenna Signal Circuit is Open and there are no other Antennas that have a Short to Battery DTC, both Antennas will set this Short to Ground DTC.

POSSIBLE CAUSES

Possible Causes
ANOTHER ANTENNA SIGNAL CIRCUIT MAY BE SETTING AN OPEN DTC
(D928) PASSIVE ENTRY ANTENNA 5 SIGNAL CIRCUIT SHORTED TO GROUND
(D929) PASSIVE ENTRY ANTENNA 5 RETURN CIRCUIT SHORTED TO GROUND
PASSIVE ENTRY ANTENNA
RADIO FREQUENCY HUB (RF HUB) MODULE

DIAGNOSTIC TEST

1. **TEST FOR INTERMITTENT CONDITION**

NOTE: Verify that the vehicle's battery is fully charged with a DVOM and use the scan tool to compare the Battery Voltage listed under "Data" in the RFH View to that of the BCM. If the vehicle's battery is not fully charged, correct this condition before proceeding.

1. Cycle the ignition on.
2. Using the scan tool, record and erase the DTCs.
3. With the scan tool, select: RF Hub, More Options and System Tests.
4. Perform the RF Hub LF Antenna Verification Tests. Refer to **STANDARD PROCEDURE**.
5. With the scan tool, read the Active DTCs.

   Does the scan tool display: B1A75-11-PASSIVE ENTRY ANTENNA 5- CIRCUIT SHORT TO GROUND as active?

   Yes

- Go To 2

No

- Test complete, the condition or conditions that originally set this DTC are not present at this time. Using the wiring diagrams as a guide, check all related splices and connectors for signs of water intrusion, corrosion, pushed out or bent terminals and correct pin tension.
- Perform the BODY VERIFICATION TEST. Refer to **STANDARD PROCEDURE** .

2. **(D928) PASSIVE ENTRY ANTENNA SHORTED**
   1. Cycle the ignition off.
   2. Disconnect the Passive Entry Antenna 5 harness connector.

      NOTE: For antenna locations, refer to ANTENNA, PASSIVE ENTRY, DESCRIPTION .

   3. Cycle the ignition on.
   4. Using the scan tool, record and erase the DTCs.
   5. With the scan tool, select: RF Hub, More Options and System Tests.
   6. Perform the RF Hub LF Antenna Verification Tests. Refer to **STANDARD PROCEDURE**.
   7. With the scan tool, read the Active DTCs.

      Does the scan tool display: B1A75-11-PASSIVE ENTRY ANTENNA 5- CIRCUIT SHORT TO GROUND as active?

      Yes

      - Go To 3

      No

      - Replace the Antenna in accordance with the service information. Refer to **ANTENNA, PASSIVE ENTRY, REMOVAL** .
      - Perform the BODY VERIFICATION TEST. Refer to **STANDARD PROCEDURE** .

3. **(D928) PASSIVE ENTRY ANTENNA 5 SIGNAL CIRCUIT SHORTED TO GROUND**

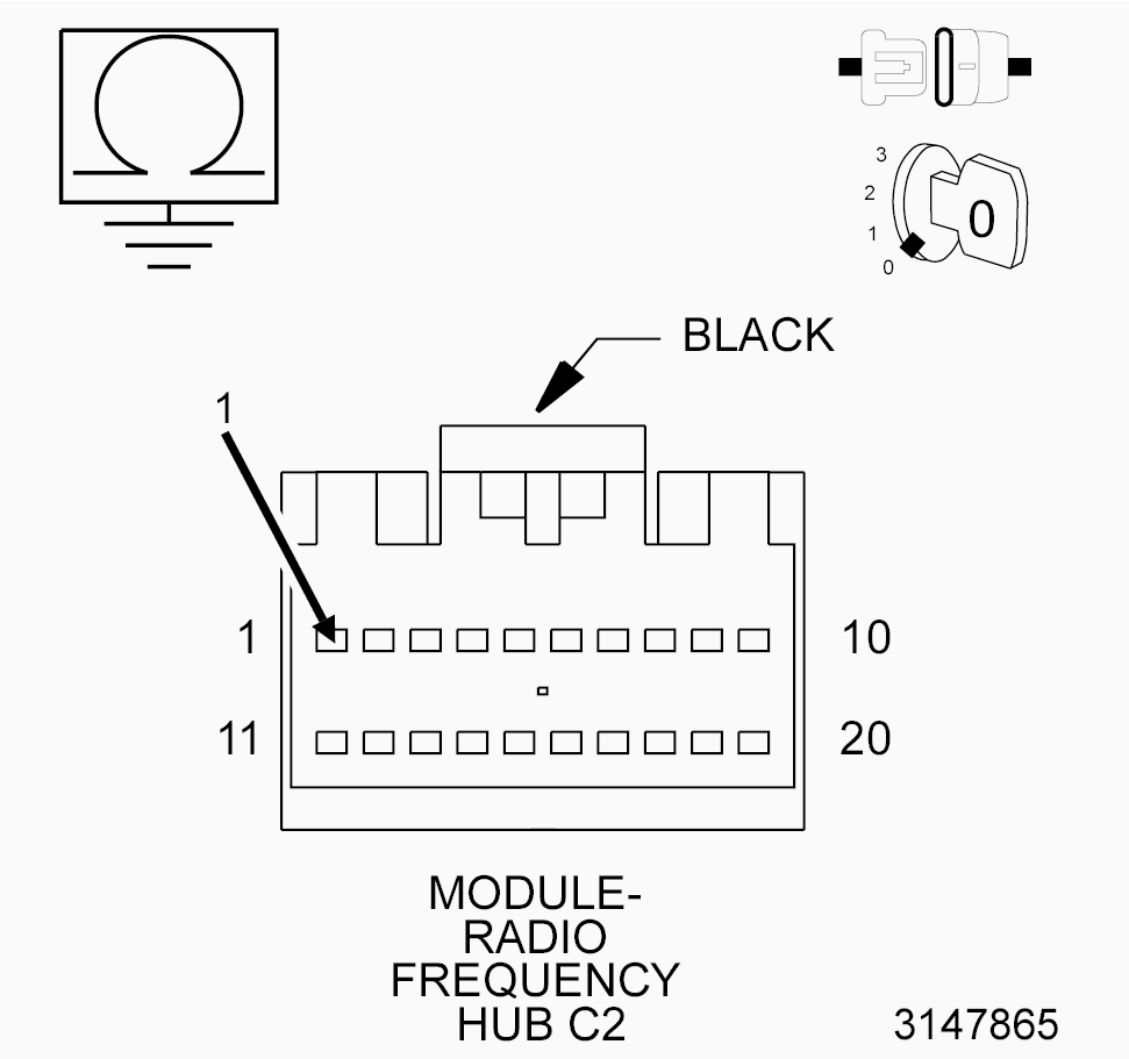

Fig. 42: Measuring Resistance Between Ground & Passive Entry Antenna 5 Signal Circuit
Courtesy of CHRYSLER GROUP, LLC

1. Cycle the ignition off.
2. Disconnect the RF Hub Module C2 harness connector.
3. Measure the resistance between ground and the (D928) Passive Entry Antenna 5 Signal circuit.

   Is the resistance below 30K Ohms?

   Yes

   - Repair the short to ground in the (D928) Passive Entry Antenna 5 Signal circuit.
   - Perform the BODY VERIFICATION TEST. Refer to **STANDARD PROCEDURE** .

   No

- Go To 4

4. **(D929) PASSIVE ENTRY ANTENNA 5 RETURN CIRCUIT SHORTED TO GROUND**

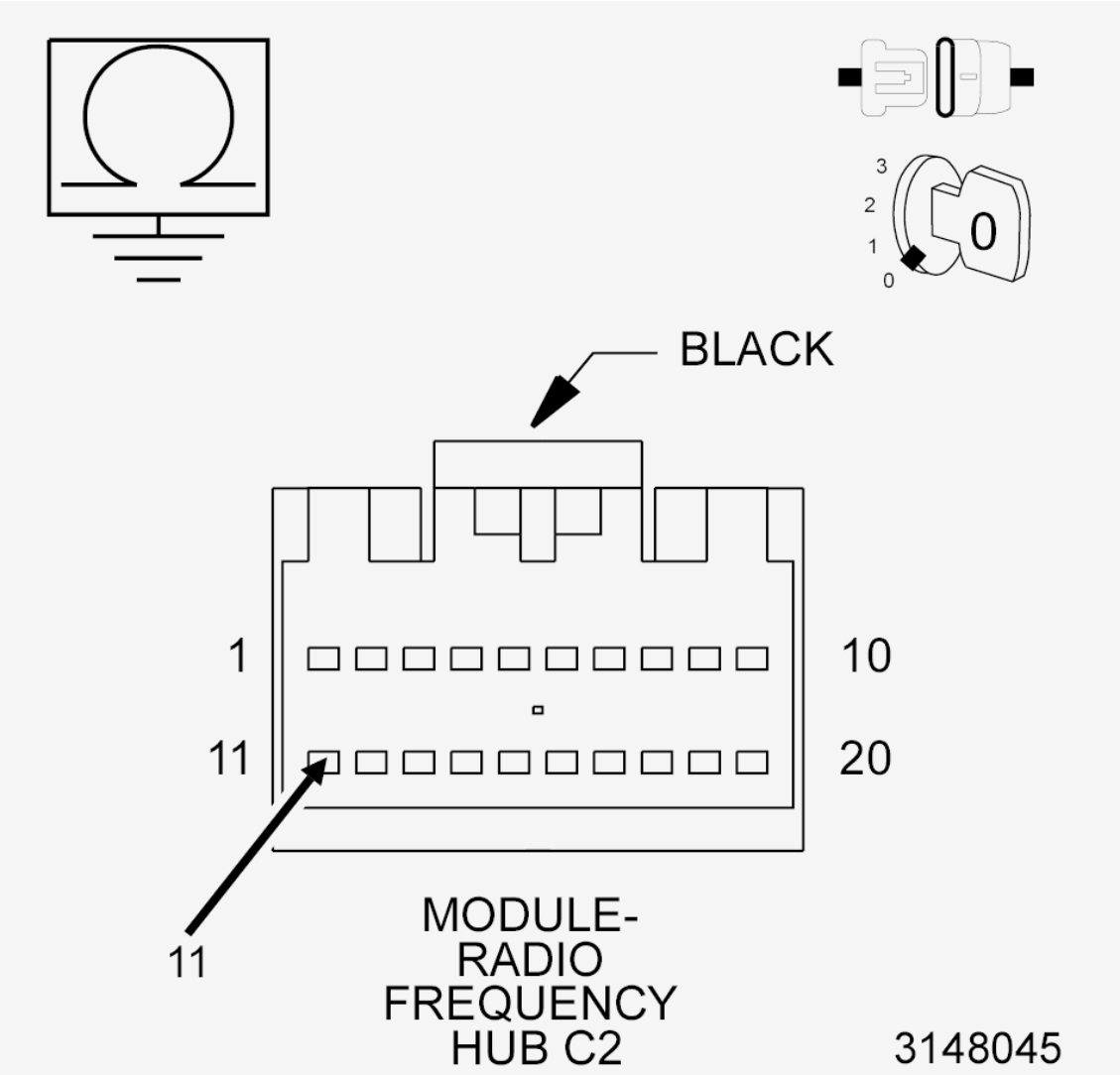

Fig. 43: Measuring Resistance Between Ground & Passive Entry Antenna 5 Return Circuit
Courtesy of CHRYSLER GROUP, LLC

1. Measure the resistance between ground and the (D929) Passive Entry Antenna 5 Return circuit.

   Is the resistance below 30K Ohms?

   Yes

   - Repair the short to ground in the (D929) Passive Entry Antenna 5 Return circuit.
   - Perform the BODY VERIFICATION TEST. Refer to **STANDARD PROCEDURE** .

   No

- Replace the appropriate Passive Entry antenna in accordance with Service Information. Perform the RADIO FREQUENCY HUB (RF HUB) VERIFICATION TEST. Refer to **STANDARD PROCEDURE**.
- If replacing the Passive Entry antenna for this DTC did not repair the concern, replace the RF Hub in accordance with the Service Information. Refer to **MODULE, RADIO FREQUENCY (RF HUB), REMOVAL** .
- Perform the RADIO FREQUENCY HUB (RF HUB) VERIFICATION TEST. Refer to **STANDARD PROCEDURE**.

B1A75-12-PASSIVE ENTRY ANTENNA 5 - CIRCUIT SHORT TO BATTERY

For a complete wiring diagram, **refer to appropriate SYSTEM WIRING DIAGRAMS article** .

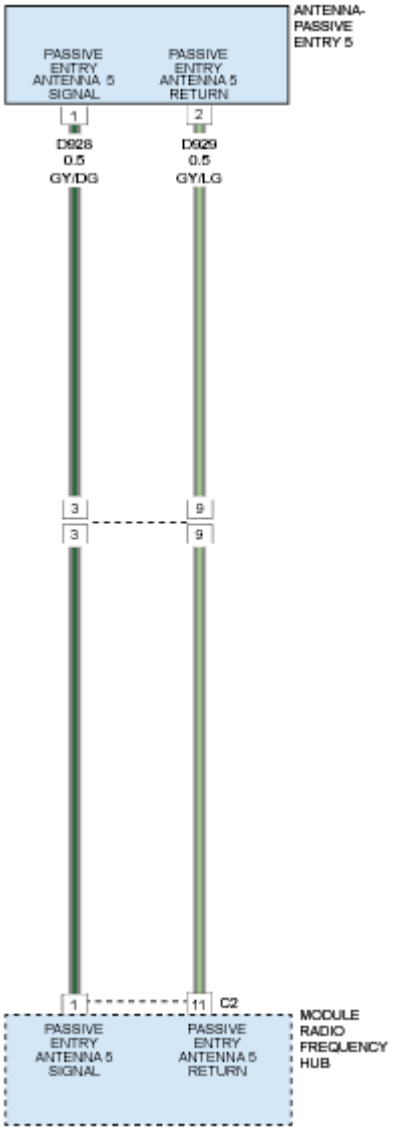

Fig. 44: Passive Entry Antenna 5 - Circuit Diagram
Courtesy of CHRYSLER GROUP, LLC

THEORY OF OPERATION

The Passive Entry (PE) antenna units allow the transmitter within the Radio Frequency Hub (also known as the RF Hub) to communicate via Low Frequency (LF) radio transmission with a FOB with Integrated Key (FOBIK) that is located inside the vehicle or, at most, about 2 meters (6.5 feet) horizontally in all directions around the outside of the vehicle. The RF Hub uses communication through the antenna units to wake up and challenge a FOBIK that is within range in order to authenticate whether that FOBIK is valid (programmed) to the vehicle. The RF Hub communicates with the FOBIK using Frequency-Shift Keying (FSK) modulation.

Each antenna unit has two dedicated connections to the RF Hub. One connection is the LF antenna output circuit, while the other connection Is the LF antenna return circuit. These circuits to each antenna unit are a twisted pair to help reduce the potential for induced electrical interference. The RF Hub microcontroller monitors all of the antenna units and will store a Diagnostic Trouble Code (DTC) for any fault that it detects.

The hard wired inputs and outputs of the antenna units may be diagnosed using conventional diagnostic tools and procedures. Refer to the appropriate wiring information. However, the most reliable, efficient, and accurate means to diagnose the antenna units requires the use of a diagnostic scan tool. Refer to the appropriate diagnostic information.

WHEN MONITORED

At every Passive Entry or Keyless Go action.

SET CONDITION

When the Antenna 5 Signal Circuit is shorted to Battery. If another Antenna has a Short to Ground, a General Electrical Failure or Open DTC, both Antennas will set this Short to Battery DTC.

POSSIBLE CAUSES

Possible Causes
ANOTHER ANTENNA SIGNAL CIRCUIT MAY BE SHORTED TO GROUND, GENERAL FAILURE OR OPEN DTC
(D928) PASSIVE ENTRY ANTENNA 5 SIGNAL CIRCUIT SHORTED TO VOLTAGE
(D929) PASSIVE ENTRY ANTENNA 5 RETURN CIRCUIT SHORTED TO VOLTAGE
RADIO FREQUENCY HUB (RF HUB) MODULE

DIAGNOSTIC TEST

1. **TEST FOR INTERMITTENT CONDITION**

NOTE: **Verify that the vehicle's battery is fully charged with a DVOM and use the scan tool to compare the Battery Voltage listed under "Data" in the RFH**

View to that of the BCM. If the vehicle's battery is not fully charged, correct this condition before proceeding.

NOTE: If another antenna has a Short to Ground, General Electrical Failure or Open DTC, both antennas will set this Short to Voltage DTC.

1. Cycle the ignition on.
2. Using the scan tool, record and erase the DTCs.
3. With the scan tool, select: RF Hub, More Options and System Tests.
4. Perform the RF Hub LF Antenna Verification Tests. Refer to **STANDARD PROCEDURE**.
5. With the scan tool, read the Active DTCs.

   Does the scan tool display: B1A75-12-PASSIVE ENTRY ANTENNA 5 - CIRCUIT SHORT TO BATTERY as active?

   Yes

   - Go To 2

   No

   - Test complete, the condition or conditions that originally set this DTC are not present at this time. Using the wiring diagrams as a guide, check all related splices and connectors for signs of water intrusion, corrosion, pushed out or bent terminals and correct pin tension.
   - Perform the BODY VERIFICATION TEST. Refer to **STANDARD PROCEDURE** .

2. **(D928) PASSIVE ENTRY ANTENNA 5 SIGNAL CIRCUIT SHORTED TO VOLTAGE**

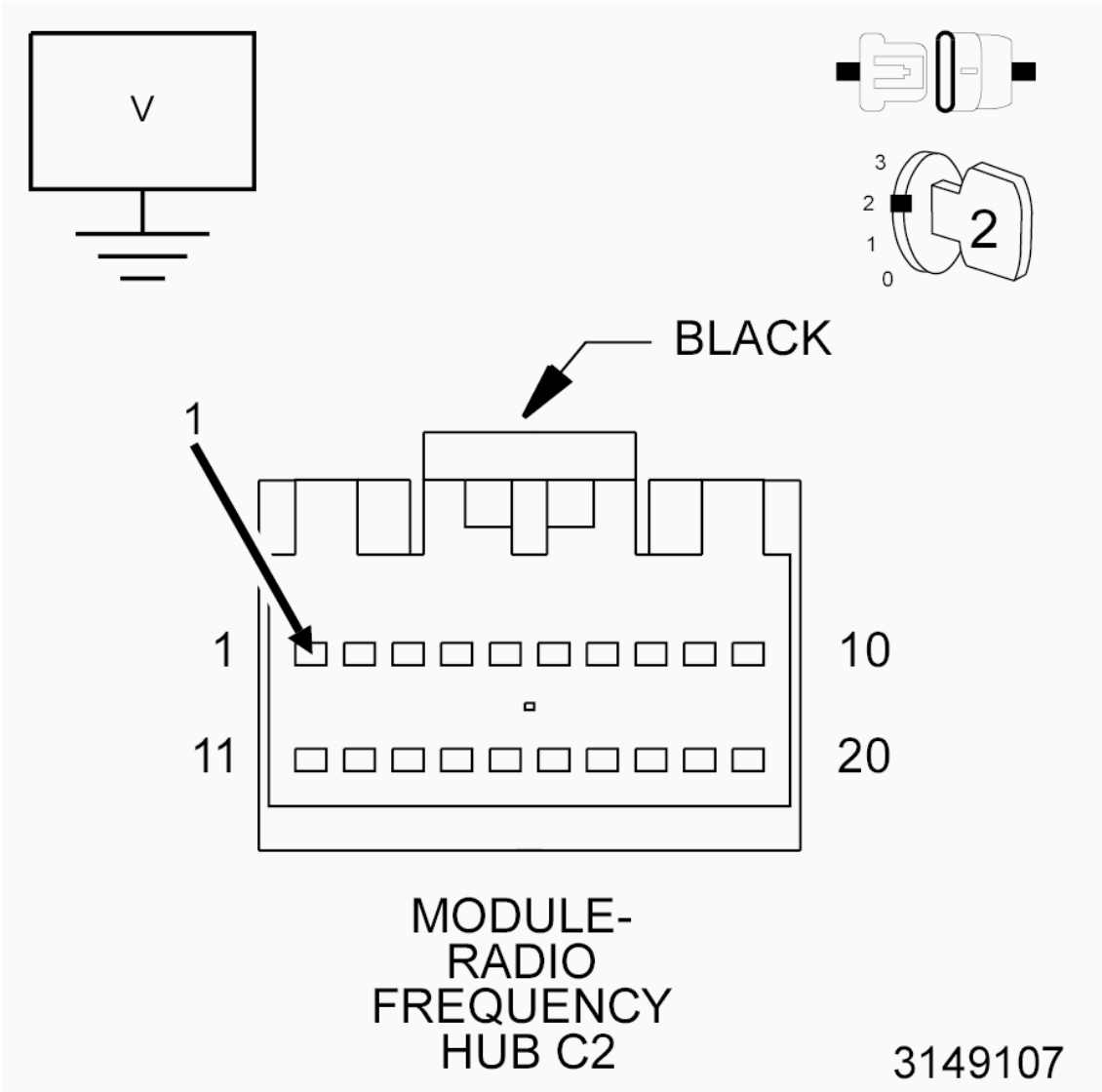

Fig. 45: Measuring Voltage Between Ground & Passive Entry Antenna 5 Signal Circuit
Courtesy of CHRYSLER GROUP, LLC

1. Cycle the ignition off.
2. Disconnect the RF Hub C2 harness connector.
3. Cycle the ignition on.
4. Measure the voltage between ground and the (D928) Passive Entry Antenna 5 Signal circuit.

   Is there any voltage present?

   Yes

   - Repair the short to voltage in the (D928) Passive Entry Antenna 5 Signal circuit.
   - Perform the BODY VERIFICATION TEST. Refer to **STANDARD PROCEDURE** .

No

- Go To 3

3. **(D929) PASSIVE ENTRY ANTENNA 5 RETURN CIRCUIT SHORTED TO VOLTAGE**
   1.
   2. Be sure the ignition is still on.
   3. Measure the voltage of the (D929) Passive Entry Antenna 5 Return circuit (cavity 11 in the RF-Hub C2 harness connector).

      Is there any voltage present?

      Yes

      - Repair the short to voltage in the (D929) Passive Entry Antenna 5 Return circuit.
      - Perform the BODY VERIFICATION TEST. Refer to **STANDARD PROCEDURE** .

      No

      - Replace the RF HUB in accordance with the Service Information. Refer to **MODULE, RADIO FREQUENCY (RF HUB), REMOVAL** .
      - Perform the RADIO FREQUENCY HUB (RF HUB) VERIFICATION TEST. Refer to **STANDARD PROCEDURE**.

B1A75-13-PASSIVE ENTRY ANTENNA 5 - CIRCUIT OPEN

For a complete wiring diagram, **refer to appropriate SYSTEM WIRING DIAGRAMS article** .

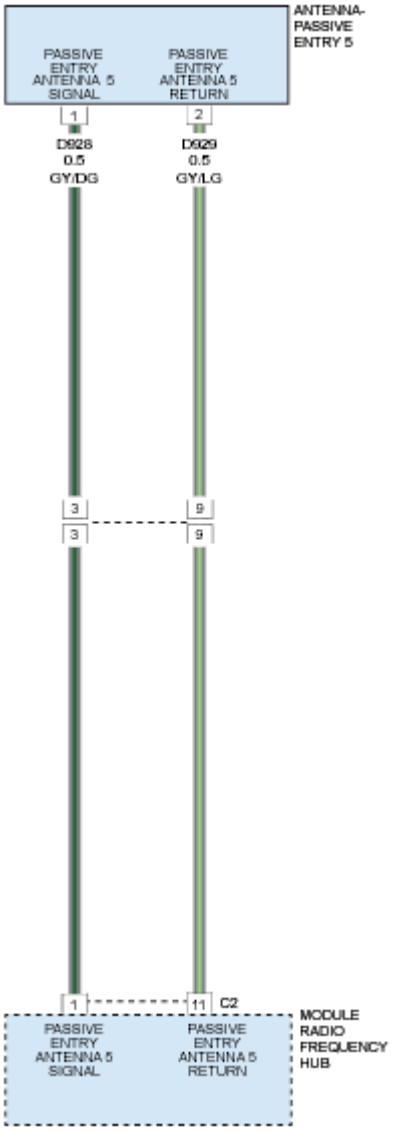

Fig. 46: Passive Entry Antenna 5 - Circuit Diagram
Courtesy of CHRYSLER GROUP, LLC

THEORY OF OPERATION

The Passive Entry (PE) antenna units allow the transmitter within the Radio Frequency Hub (also known as the RF Hub) to communicate via Low Frequency (LF) radio transmission with a FOB with Integrated Key (FOBIK) that is located inside the vehicle or, at most, about 2 meters (6.5 feet) horizontally in all directions around the outside of the vehicle. The RF Hub uses communication through the antenna units to wake up and challenge a FOBIK that is within range in order to authenticate whether that FOBIK is valid (programmed) to the vehicle. The RF Hub communicates with the FOBIK using Frequency-Shift Keying (FSK) modulation.

Each antenna unit has two dedicated connections to the RF Hub. One connection is the LF antenna output circuit, while the other connection Is the LF antenna return circuit. These circuits to each antenna unit are a

twisted pair to help reduce the potential for induced electrical interference. The RF Hub microcontroller monitors all of the antenna units and will store a Diagnostic Trouble Code (DTC) for any fault that it detects.

The hard wired inputs and outputs of the antenna units may be diagnosed using conventional diagnostic tools and procedures. Refer to the appropriate wiring information. However, the most reliable, efficient, and accurate means to diagnose the antenna units requires the use of a diagnostic scan tool. Refer to the appropriate diagnostic information.

WHEN MONITORED

At every Passive Entry or Keyless Go action.

SET CONDITION

When Antenna 5 Signal Circuit is Open and there are no other Antennas that have a Short to Battery or Short to Ground DTC.

POSSIBLE CAUSES

Possible Causes
(D928) PASSIVE ENTRY ANTENNA 5 SIGNAL CIRCUIT OPEN
(D929) PASSIVE ENTRY ANTENNA 5 RETURN CIRCUIT OPEN
(D928) PASSIVE ENTRY ANTENNA 5 SIGNAL CIRCUIT SHORTED TO THE (D929) PASSIVE ENTRY ANTENNA 5 RETURN CIRCUIT
PASSIVE ENTRY ANTENNA
RADIO FREQUENCY HUB (RF HUB) MODULE

DIAGNOSTIC TEST

1. **TEST FOR INTERMITTENT CONDITION**

NOTE: **Verify that the vehicle's battery is fully charged with a DVOM and use the scan tool to compare the Battery Voltage listed under "Data" in the RFH View to that of the BCM. If the vehicle's battery is not fully charged, correct this condition before proceeding.**

1. Cycle the ignition on.
2. Using the scan tool, record and erase the DTCs.
3. With the scan tool, select: RF Hub, More Options and System Tests.
4. Perform the RF Hub LF Antenna Verification Tests. Refer to **STANDARD PROCEDURE**.
5. With the scan tool, read the Active DTCs.

   Does the scan tool display: B1A75-13-PASSIVE ENTRY ANTENNA 5 - CIRCUIT OPEN as active?

Yes

- Go To 2

No

- Test complete, the condition or conditions that originally set this DTC are not present at this time. Using the wiring diagrams as a guide, check all related splices and connectors for signs of water intrusion, corrosion, pushed out or bent terminals and correct pin tension.
- Perform the BODY VERIFICATION TEST. Refer to **STANDARD PROCEDURE** .

2. **(D928) PASSIVE ENTRY ANTENNA 5 CIRCUIT OPEN**

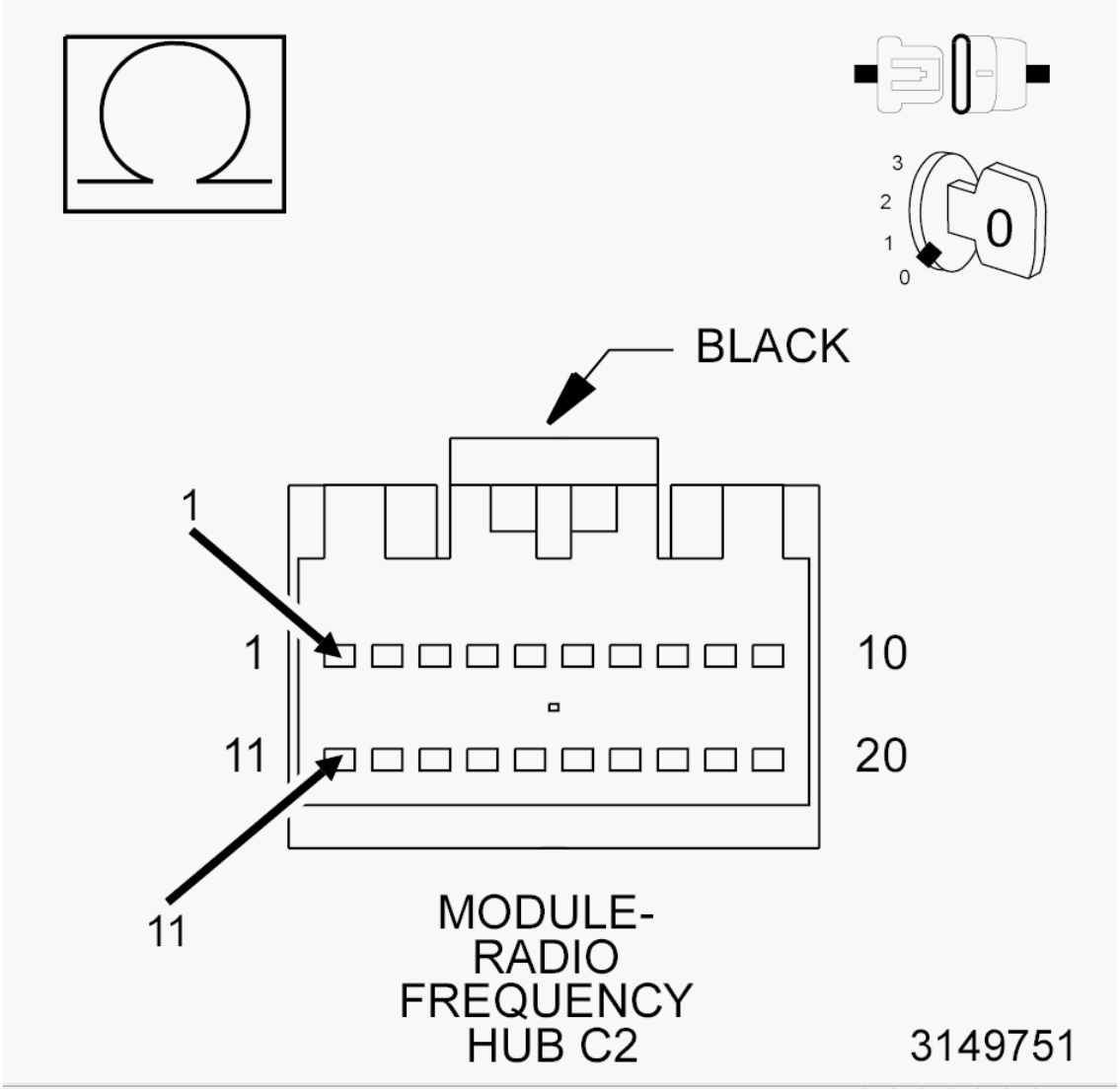

Fig. 47: Checking Passive Entry Antenna 5 Circuit For Open
Courtesy of CHRYSLER GROUP, LLC

1. Cycle the ignition off.
2. Disconnect the Radio frequency Hub (RF HUB) C2 connector.
3. Measure the resistance between the (D928) Passive Entry Antenna 5 Signal circuit and the (D929) Passive Entry Antenna 5 Return circuit.

   Is the resistance between 1.5 and 3.5 Ohms?

   Yes

   - Replace the RF Hub in accordance with the Service Information. Refer to **MODULE, RADIO FREQUENCY (RF HUB), REMOVAL** .
   - Perform the RADIO FREQUENCY HUB (RF HUB) VERIFICATION TEST. Refer to **STANDARD PROCEDURE**.

   No

   - Go To 3

3. **(D928) PASSIVE ENTRY ANTENNA 5 SIGNAL CIRCUIT OPEN**

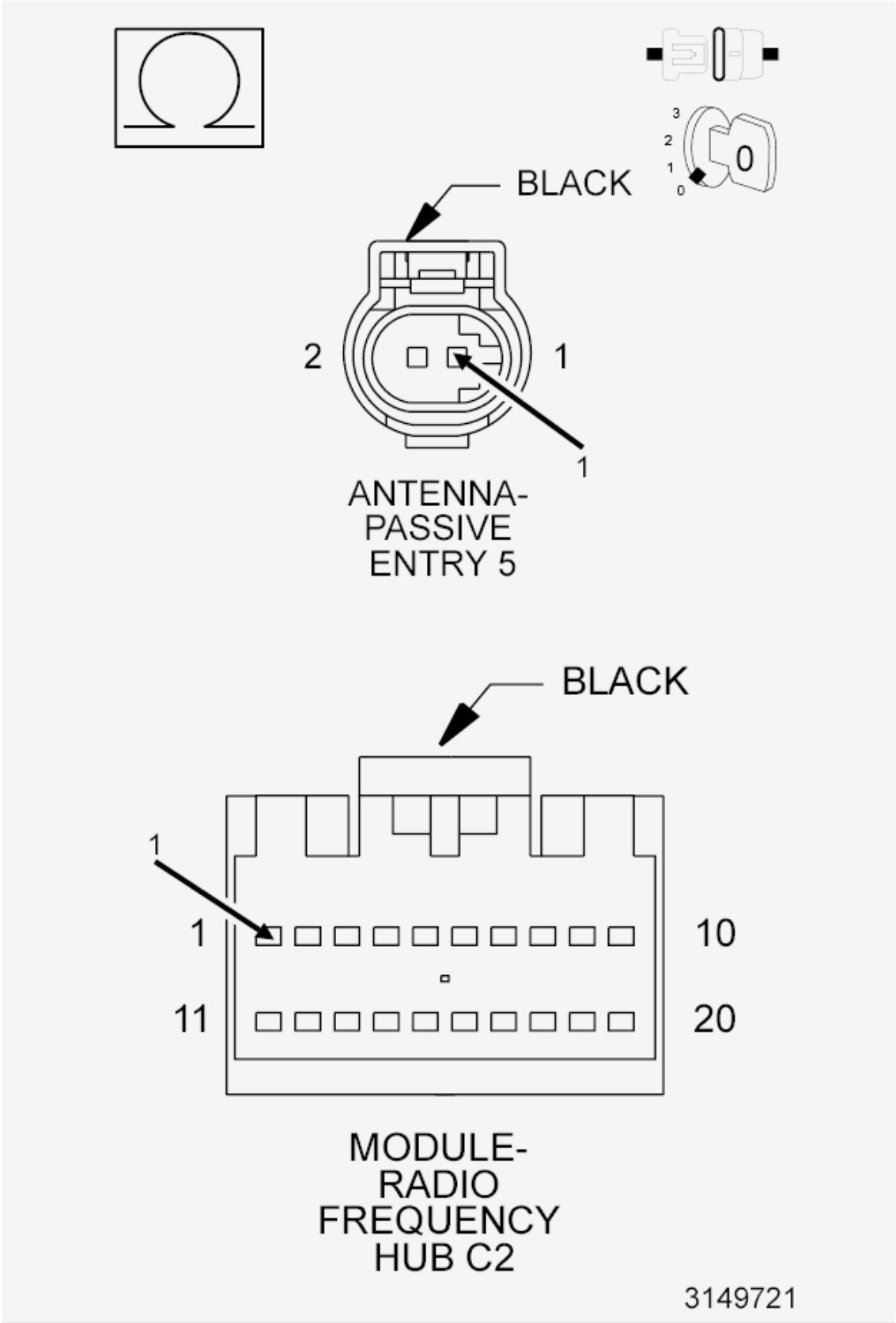
3
2
1
0
0
BLACK
2
1
1
ANTENNA-
PASSIVE
ENTRY 5
BLACK
1
1
10
11
20
MODULE-
RADIO
FREQUENCY
HUB C2
3149721

Fig. 48: Checking Passive Entry Antenna 5 Signal Circuit For Open
Courtesy of CHRYSLER GROUP, LLC

1. Disconnect the Passive Entry Antenna 5 harness connector.

   NOTE: For antenna locations, refer to ANTENNA, PASSIVE ENTRY, DESCRIPTION .

2. Measure the resistance of the (D928) Passive Entry Antenna 5 Signal circuit between the RF HUB C2 connector and the Passive Entry Antenna 5 harness connector.

   Is the resistance below 2.0 Ohms?

   Yes

   - Go To 4

   No

   - Repair the open in the (D928) Passive Entry Antenna 5 Signal circuit.
   - Perform the BODY VERIFICATION TEST. Refer to **STANDARD PROCEDURE** .

4. **(D929) PASSIVE ENTRY ANTENNA 5 RETURN CIRCUIT OPEN**

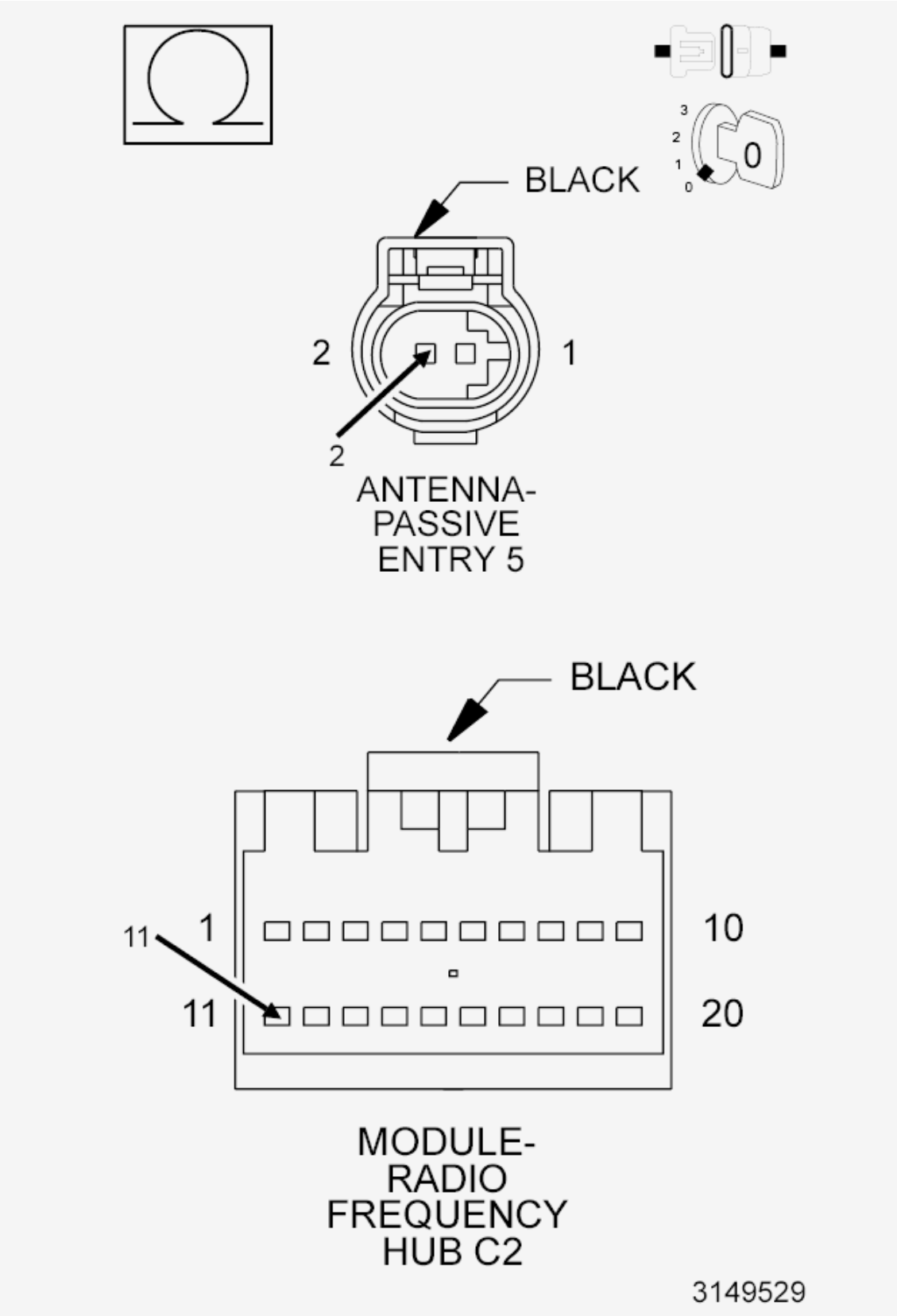

Fig. 49: Checking Passive Entry Antenna 5 Return Circuit For Open

Courtesy of CHRYSLER GROUP, LLC

1. Measure the resistance of the (D929) Passive Entry Antenna 5 Return circuit between the RF HUB C2 connector and the Passive Entry Antenna 5 harness connector.

   Is the resistance below 2.0 Ohms?

   Yes

   - Go To 5

   No

   - Repair the open in the (D929) Passive Entry Antenna 5 Return circuit.
   - Perform the BODY VERIFICATION TEST. Refer to **STANDARD PROCEDURE** .

5. **(D928) PASSIVE ENTRY ANTENNA 5 SIGNAL CIRCUIT SHORTED TO THE (D929) PASSIVE ENTRY ANTENNA 5 RETURN CIRCUIT**

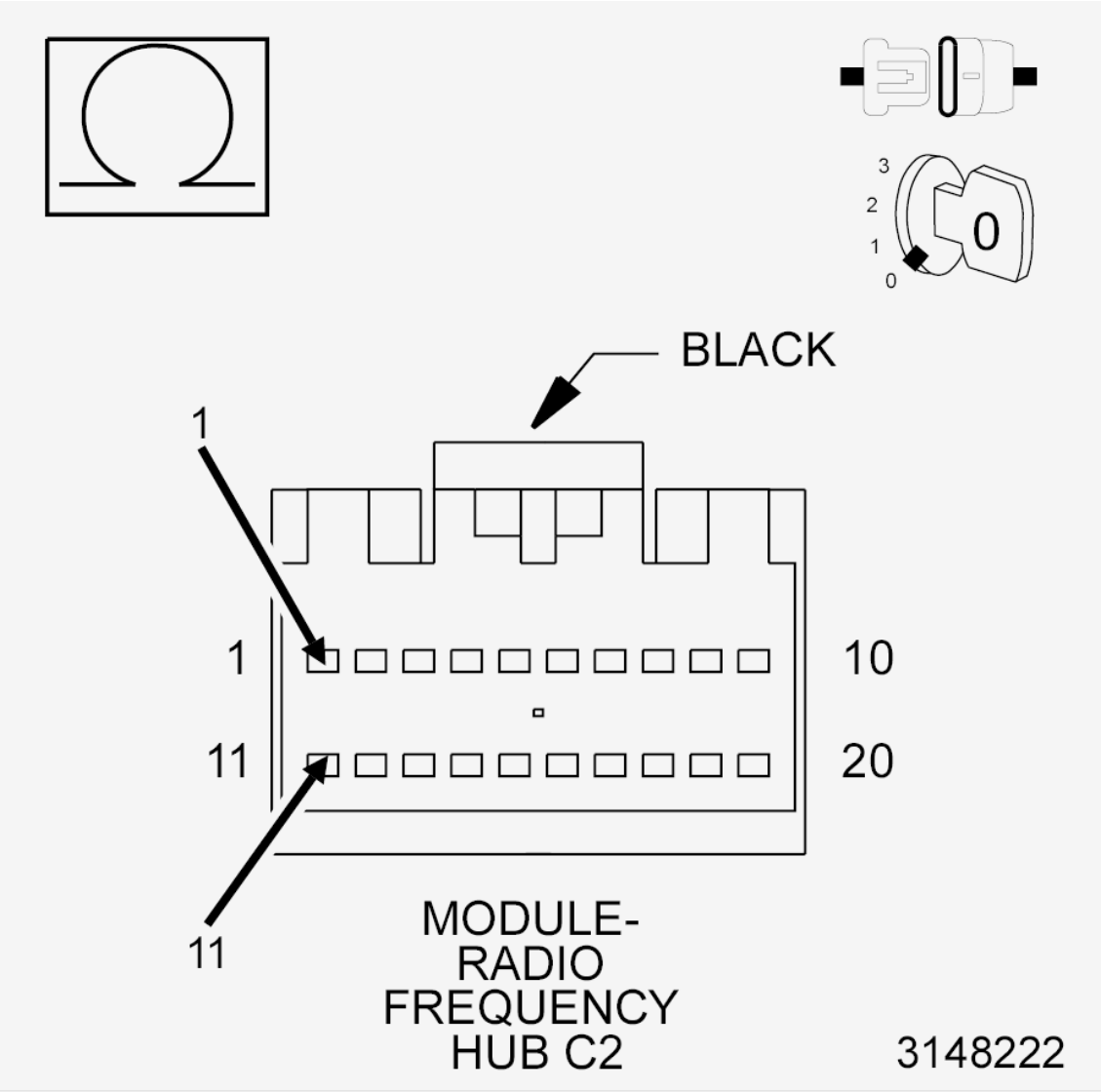

Fig. 50: Measuring Resistance Between Passive Entry Antenna 5 Signal Circuit & Passive Entry Antenna 5 Return Circuit
Courtesy of CHRYSLER GROUP, LLC

1. Measure the resistance between the (D928) Passive Entry Antenna 5 Signal circuit and the (D929) Passive Entry Antenna 5 Return circuit.

   Is the resistance below 30K Ohms?

   Yes

   - Repair the short between the (D928) Passive Entry Antenna 5 Signal circuit and the (D929) Passive Entry Antenna 5 Return circuit.
   - Perform the BODY VERIFICATION TEST. Refer to **STANDARD PROCEDURE** .

No

- Replace the Antenna in accordance with the service information. Refer to **ANTENNA, PASSIVE ENTRY, REMOVAL** .
- Perform the BODY VERIFICATION TEST. Refer to **STANDARD PROCEDURE** .

B1A76-11-REMOTE START ANTENNA CIRCUIT - CIRCUIT SHORT TO GROUND

For a complete wiring diagram, **refer to appropriate SYSTEM WIRING DIAGRAMS article** .

WHEN MONITORED

Continuously.

SET CONDITION

The Antenna Test Circuit is driven high but the feedback from the test circuit is low (less than 3.67 volts) 3 consecutive times. Each test sequence takes 95ms.

POSSIBLE CAUSES

POSSIBLE CAUSES
REMOTE START ANTENNA RADIO FREQUENCY HUB (RF HUB)

DIAGNOSTIC TEST

1. **CHECK THE REMOTE START ANTENNA CONNECTION**

NOTE: **Verify that the battery is fully charged with a DVOM and use the scan tool to compare the Battery Voltage listed under "Data" in the RFH View to that of the BCM. If the battery is not fully charged, correct this condition before proceeding.**

1. Gain access to the RF Hub connectors (under the rear shelf cover).
2. Disconnect and reconnect the Remote Start Antenna at the RF Hub module.
3. Using the scan tool, record and erase the DTCs.
4. Turn the ignition to the Lock position.
5. Start the engine and allow to run for 30 seconds.
6. Using the scan tool, read the active DTCs.

   Does the scan tool display; B1A76-11-REMOTE START ANTENNA CIRCUIT - CIRCUIT SHORT TO GROUND?

Yes

- Go To 2

No

- Test complete.
- Perform the BODY VERIFICATION TEST. Refer to **STANDARD PROCEDURE** .

2. **CHECK THE REMOTE START ANTENNA CONNECTION**
   1. Disconnect the Remote Start Antenna.
   2. Replace the antenna with a known good antenna.
   3. Turn the ignition to the Lock position.
   4. Start the engine and allow to run for 30 seconds.
   5. Using the scan tool, read the active DTCs.

   Does the scan tool display; B1A76-11-REMOTE START ANTENNA CIRCUIT - CIRCUIT SHORT TO GROUND?

   Yes

   - Replace the Radio Frequency Hub in accordance with the Service Information. Refer to **MODULE, RADIO FREQUENCY (RF HUB), REMOVAL** .
   - Perform the RADIO FREQUENCY HUB VERIFICATION TEST. Refer to **STANDARD PROCEDURE**.

   No

   - Replace the Remote Start Antenna in accordance with the Service Information.
   - Perform the BODY VERIFICATION TEST. Refer to **STANDARD PROCEDURE** .

B1A76-13-REMOTE START ANTENNA CIRCUIT - CIRCUIT OPEN

For a complete wiring diagram, **refer to appropriate SYSTEM WIRING DIAGRAMS article** .

WHEN MONITORED

Continuously.

SET CONDITION

The Antenna Test Circuit is driven high but the feedback from the test circuit is low (less than 0.85 volts for 3 consecutive times). Each test sequence takes 95ms.

POSSIBLE CAUSES

POSSIBLE CAUSES
ANTENNA DISCONNECTED REMOTE START ANTENNA RADIO FREQUENCY HUB (RF HUB)

DIAGNOSTIC TEST

1. **CHECK THE REMOTE START ANTENNA CONNECTION**
    1. Gain access to the RF Hub connectors (under the rear shelf cover).
    2. Disconnect and reconnect the Remote Start Antenna at the RF Hub module.
    3. Using the scan tool, record and erase the DTCs.
    4. Turn the ignition to the Lock position.
    5. Start the engine and allow to run for 30 seconds.
    6. Using the scan tool, read the active DTCs.

    Does the scan tool display; B1A76-13-REMOTE START ANTENNA CIRCUIT - CIRCUIT OPEN?

    Yes

    - Go To 2

    No

    - Test complete.
    - Perform the BODY VERIFICATION TEST. Refer to **STANDARD PROCEDURE** .
2. **CHECK THE REMOTE START ANTENNA CONNECTION**
    1. Disconnect the Remote Start Antenna.
    2. Replace the antenna with a known good antenna.
    3. Turn the ignition to the Lock position.
    4. Start the engine and allow to run for 30 seconds.
    5. Using the scan tool, read the active DTCs.

    Does the scan tool display; B1A76-13-REMOTE START ANTENNA CIRCUIT - CIRCUIT OPEN?

    Yes

    - Replace the Radio Frequency Hub in accordance with the Service Information. Refer to **MODULE, RADIO FREQUENCY (RF HUB), REMOVAL** .
    - Perform the RADIO FREQUENCY HUB VERIFICATION TEST. Refer to **STANDARD PROCEDURE**.

No

- Replace the Remote Start Antenna in accordance with the Service Information.
- Perform the BODY VERIFICATION TEST. Refer to **STANDARD PROCEDURE** .

B1A7B-00-IMMOBILIZER ANTENNA (IGNM)

For a complete wiring diagram, **refer to appropriate SYSTEM WIRING DIAGRAMS article** .

WHEN MONITORED

Continuously

SET CONDITION

The IGNM uses a motor to prevent the driver removing the FOBIK from the IGNM. If the motor is driven and the motor driver IC reports a fault or over-current condition, then this condition is relayed to the RFHM. The fault shall mature if the RFHM sees this condition for 3 times in a row.

POSSIBLE CAUSES

Possible Causes
IGNITION NODE MODULE (IGNM)

DIAGNOSTIC TEST

REPLACE THE IGNM IF THE DTC IS ACTIVE

1. Turn the ignition on.
2. With the scan tool, record and erase the RF-Hub DTCs.
3. Turn the ignition off.
4. Turn the ignition on and wait 30 seconds.
5. With the scan tool, read the active DTCs.

   Does the scan tool display: B1A7B-00-IMMOBILIZER ANTENNA (IGNM) as ACTIVE?

   Yes

   - Replace the Ignition Node Module (IGNM) in accordance with the Service Information. Refer to **MODULE, IGNITION NODE, REMOVAL** .
   - Perform the BODY VERIFICATION TEST. Refer to **STANDARD PROCEDURE** .

   No

   - Test complete, the condition or conditions that originally set this DTC are not present at this time.

Using the wiring diagrams as a guide, check all related splices and connectors for signs of water intrusion, corrosion, pushed out or bent terminals, and correct pin tension.

- Perform the BODY VERIFICATION TEST. Refer to **STANDARD PROCEDURE** .

B1A7B-01-IMMOBILIZER ANTENNA (KIN/IGNM) - GENERAL ELECTRICAL FAILURE

For a complete wiring diagram, **refer to appropriate SYSTEM WIRING DIAGRAMS article** .

WHEN MONITORED

Whenever the ignition is put in the start position or the Loop test for the immobilizer is run.

SET CONDITION

If the internal antenna is shorted to ground, open, shorted to battery or the internal terminals are shorted together, this code will set.

POSSIBLE CAUSES

POSSIBLE CAUSES
KEYLESS IGNITION NODE (KIN) OR IGNITION MODULE (IGNM)

DIAGNOSTIC TEST

CHECK INTERMITTENT CONDITION

NOTE: Verify that the battery is fully charged with a DVOM and use the scan tool to compare the Battery Voltage listed under "Data" in the RFH View to that of the BCM. If the battery is not fully charged, correct this condition before proceeding.

1. Cycle the ignition on.
2. Using the scan tool, record and erase the DTCs.
3. Cycle the ignition off and wait 30 seconds.
4. Cycle the ignition on and attempt to start the engine.
5. If the engine started, wait 10 seconds then cycle the ignition off.
6. Cycle the ignition on.
7. Using the scan tool, read the active DTCs.

   Does the scan tool display; B1A7B-01-IMMOBILIZER ANTENNA (KIN/IGNM) - GENERAL ELECTRICAL FAILURE?

   Yes

- If equipped with a Keyless Ignition Node (KIN), replace it in accordance with Service Information. Refer to **MODULE, KEYLESS IGNITION NODE, REMOVAL** .
- If equipped with an Ignition Node Module (IGNM), replace it in accordance with Service Information. Refer to **MODULE, IGNITION NODE, REMOVAL** .
- Perform the BODY VERIFICATION TEST. Refer to **STANDARD PROCEDURE** .

No

- Test complete. If the DTC ever repeats, replace the Keyless Ignition Node (KIN) or the Ignition Module (IGNM) in accordance with the Service Information. Refer to **MODULE, KEYLESS IGNITION NODE, REMOVAL** .
- Perform the BODY VERIFICATION TEST. Refer to **STANDARD PROCEDURE** .

B1A7B-62-IMMOBILIZER ANTENNA (KIN/IGNM)-SIGNAL COMPARE FAILURE

For a complete wiring diagram, **refer to appropriate SYSTEM WIRING DIAGRAMS article** .

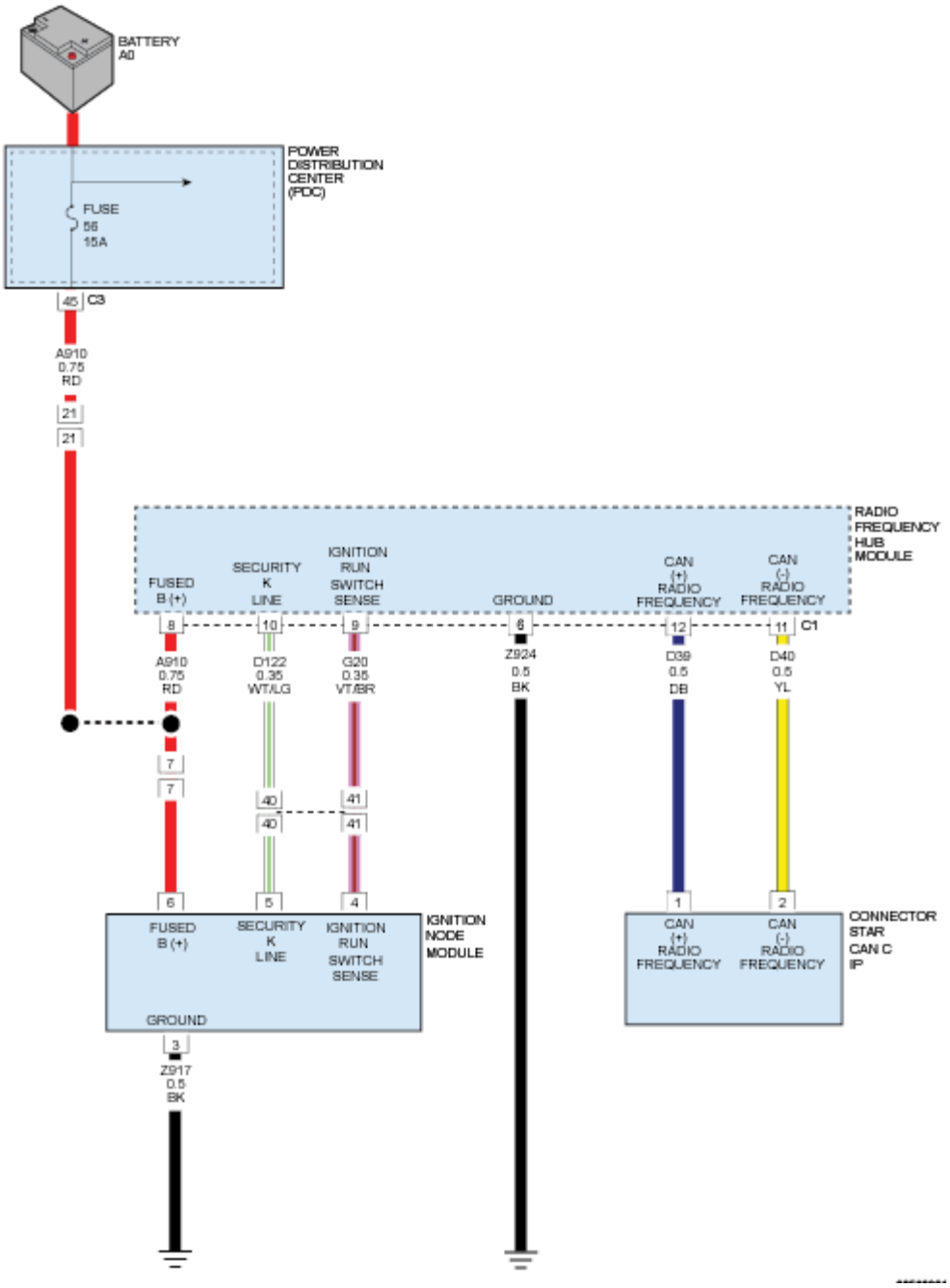

Fig. 51: Security K Line Communication Circuit Diagram
Courtesy of CHRYSLER GROUP, LLC

WHEN MONITORED

Whenever the ignition is put in the start position or the Loop test for the immobilizer is run.

SET CONDITION

When the hard-wired ignition run/start line between the KIN / IGNM and RFH indicates a different ignition

position from the received signal of the LIN bus between the KIN / IGNM and the RFH.

POSSIBLE CAUSES

POSSIBLE CAUSES
KEYLESS IGNITION NODE (KIN) OR IGNITION MODULE (IGNM)
RADIO FREQUENCY HUB (RFH) MODULE
IGNITION RUN / START SWITCH SENSE CIRCUIT
LIN BUS CIRCUIT

DIAGNOSTIC TEST

1. **CHECK INTERMITTENT CONDITION**

NOTE: **Verify that the battery is fully charged with a DVOM and use the scan tool to compare the Battery Voltage listed under "Data" in the RFH View to that of the BCM. If the battery is not fully charged, correct this condition before proceeding.**

NOTE: **Perform any Radio Frequency Hub (RFH) Module LIN bus communication DTC's before continuing.**

1. Turn the ignition on.
2. Using the scan tool, record and erase the DTCs.
3. Turn the ignition off and wait 30 seconds.
4. Turn the ignition on and attempt to start the engine.
5. If the engine started, wait 10 seconds then turn the ignition off.
6. Turn the ignition on.
7. Using the scan tool, read the active DTCs.

Does the scan tool display the B1A7B-62-IMMOBILIZER ANTENNA (KIN/IGNM)-SIGNAL COMPARE FAILURE as an ACTIVE fault?

Yes

- Go to 2

No

- Test complete, the condition or conditions that originally set this DTC are not present at this time. Using the wiring diagrams as a guide, check all related splices and connectors for signs of water intrusion, corrosion, pushed out or bent terminals, and correct pin tension.
- Perform the BODY VERIFICATION TEST. Refer to **STANDARD PROCEDURE** .

2. **(G20) IGNITION RUN / START SWITCH SENSE CIRCUIT SHORTED TO VOLTAGE**
   1. Turn the ignition off.
   2. Disconnect the Ignition Node Module (IGNM) connector.
   3. Check the G20 Ignition Run / Start Switch Sense circuit for a short to voltage.

      Is there any voltage present?

      Yes

      - Repair the (G20) Ignition Run / Start Switch Sense circuit for a short to voltage.
      - Perform the BODY VERIFICATION TEST. Refer to **STANDARD PROCEDURE** .

      No

      - Go to 3
3. **(G20) IGNITION RUN / START SWITCH SENSE CIRCUIT SHORTED TO GROUND**
   1. Measure the resistance between ground and the (G20) Ignition Run / Start Switch Sense circuit.

      Is the resistance below 10K Ohms?

      Yes

      - Repair the (G20) Ignition Run / Start Switch Sense circuit for a short to ground.
      - Perform the BODY VERIFICATION TEST. Refer to **STANDARD PROCEDURE** .

      No

      - Go to 4
4. **CHECK THE (G20) IGNITION RUN / START SWITCH SENSE CIRCUIT**
   1. If equipped with a Keyless Ignition Node (KIN), replace it in accordance with Service Information. Refer to **MODULE, KEYLESS IGNITION NODE, REMOVAL** .
   2. If equipped with an Ignition Node Module (IGNM), replace it in accordance with Service Information.
   3. Turn the ignition on and attempt to start the engine.
   4. If the engine started, wait 10 seconds then turn the ignition off.
   5. Turn the ignition on.
   6. Using the scan tool, read the active DTCs.

      Does the scan tool display the B1A7B-62-IMMOBILIZER ANTENNA (KIN/IGNM)-SIGNAL COMPARE FAILURE as an ACTIVE fault?

      Yes

- Replace the RF Hub in accordance with the Service Information. Refer to **MODULE, RADIO FREQUENCY (RF HUB), REMOVAL** .
- Perform the RADIO FREQUENCY HUB (RF HUB) VERIFICATION TEST. Refer to **STANDARD PROCEDURE**.

No

- Test complete. If the DTC ever repeats, replace the Keyless Ignition Node (KIN) or the Ignition Module (IGNM) in accordance with the Service Information. Refer to **MODULE, KEYLESS IGNITION NODE, REMOVAL** .
- Perform the BODY VERIFICATION TEST. Refer to **STANDARD PROCEDURE** .

B1A7D-2A-START BUTTON - STUCK

For a complete wiring diagram, **refer to appropriate SYSTEM WIRING DIAGRAMS article** .

WHEN MONITORED

Each time the Start/Stop Button is pressed.

SET CONDITION

If the (D122) Security K Line Communication circuit and the (G20) Ignition Switch Sense circuit match, during a button press, but are On for longer than 25 seconds, this code will set.

POSSIBLE CAUSES

POSSIBLE CAUSES
FOREIGN OBJECT STUCK IN SWITCH KEYLESS IGNITION NODE (KIN)

DIAGNOSTIC TEST

1. **CHECK FOR AN ACTIVE DTC**
   1. Using the scan tool, record and erase the DTCs.
   2. Cycle the ignition to the Lock position.

      NOTE: Do not apply the brake or the clutch in the next step.

   3. Press the KIN in all positions several times.
   4. Cycle the ignition off and then back on.
   5. Using the scan tool, read the active DTCs.

      Does the scan tool display; B1A7D-2A-START BUTTON - STUCK?

Yes

- Go To 2

No

- Test complete, the condition or conditions that originally set this DTC are not present at this time. Using the wiring diagrams as a guide, check all related splices and connectors for signs of water intrusion, corrosion, pushed out or bent terminals and poor pin fit.
- Perform the BODY VERIFICATION TEST. Refer to **STANDARD PROCEDURE** .

2. **EXAMINE THE KEYLESS IGNITION NODE**
   1. Check for anything that could cause the button to stick.

      Could you find anything that would cause a sticking condition?

      Yes

      - Repair as necessary.
      - Perform the BODY VERIFICATION TEST. Refer to **STANDARD PROCEDURE** .

      No

      - Replace the Keyless Ignition Node (KIN) in accordance with the Service Information. Refer to **MODULE, KEYLESS IGNITION NODE, REMOVAL** .
      - Perform the BODY VERIFICATION TEST. Refer to **STANDARD PROCEDURE** .

B1A8F-00-IGNM PHOTO POSITION FAILURE

For a complete wiring diagram, **refer to appropriate SYSTEM WIRING DIAGRAMS article** .

WHEN MONITORED

Continuously.

SET CONDITION

The Radio Frequency Hub (RF-Hub) detects an internal fault in the Ignition Node Module (IGNM).

POSSIBLE CAUSES

Possible Causes
IGNITION NODE MODULE (IGNM) RADIO FREQUENCY HUB MODULE (RF HUB)

DIAGNOSTIC TEST

1. **CHECK FOR ACTIVE DTC**
    1. Cycle the ignition on.
    2. With the scan tool, record and erase the RF-Hub DTCs.
    3. Cycle the ignition off then back on.
    4. Wait 30 seconds.
    5. With the scan tool, read the active DTCs.

    Does the scan tool display: B1A8F-00 IGNM PHOTO SENSOR FAILURE as active?

    Yes

    - Go To 2

    No

    - Test complete, the condition or conditions that originally set this DTC are not present at this time. Using the wiring diagrams as a guide, check all related splices and connectors for signs of water intrusion, corrosion, pushed out or bent terminals, and correct pin tension. If this DTC ever reCycles, replace the Ignition Node Module in accordance with the Service Information.
    - Perform the BODY VERIFICATION TEST. Refer to **STANDARD PROCEDURE** .
2. **REPLACE THE IGNM IF THE DTC IS ACTIVE**
    1. Replace the Ignition Node Module in accordance with Service Information.
    2. With the scan tool, record and erase the RF-Hub DTCs.
    3. Cycle the ignition off then back on.
    4. Wait 30 seconds.
    5. With the scan tool, read the active DTCs.

    Does the scan tool display: B1A8F-00 IGNM PHOTO SENSOR FAILURE as active?

    Yes

    - Replace the Radio Frequency Hub Module (RFHM) in accordance with the Service Information. Refer to **MODULE, RADIO FREQUENCY (RF HUB), REMOVAL** .
    - Perform the BODY VERIFICATION TEST. Refer to **STANDARD PROCEDURE** .

    No

    - Test complete, the condition or conditions that originally set this DTC are not present at this time. Using the wiring diagrams as a guide, check all related splices and connectors for signs of water intrusion, corrosion, pushed out or bent terminals, and correct pin tension. If this DTC ever reCycles, replace the Ignition Node Module in accordance with the Service Information.

- Perform the BODY VERIFICATION TEST. Refer to **STANDARD PROCEDURE** .

B18A9-00-TRUNK/GATE LOCK CONTROL CIRCUIT 1

For a complete wiring diagram, **refer to appropriate SYSTEM WIRING DIAGRAMS article** .

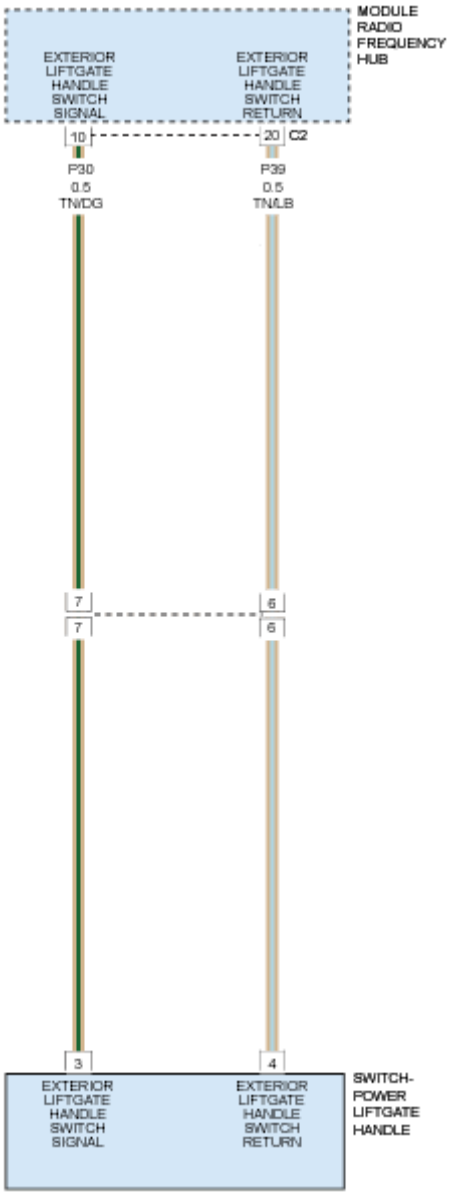

Fig. 52: Exterior Liftgate Handle Switch - Circuit Diagram
Courtesy of CHRYSLER GROUP, LLC

WHEN MONITORED

Continuously

SET CONDITION

When the Exterior Liftgate Handle Switch Signal/Return circuit(s) are shorted to ground/together; or the Exterior Liftgate Handle Switch is stuck, this DTC will set.

POSSIBLE CAUSES

Possible Causes
POWER LIFTGATE HANDLE SWITCH (P30) EXTERIOR LIFTGATE HANDLE SWITCH SIGNAL CIRCUIT SHORTED TO GROUND (P39) EXTERIOR LIFTGATE HANDLE SWITCH RETURN CIRCUIT SHORTED TO GROUND (P30) EXTERIOR LIFTGATE HANDLE SWITCH SIGNAL CIRCUIT SHORTED TO (P39) EXTERIOR LIFTGATE HANDLE SWITCH RETURN CIRCUIT

DIAGNOSTIC TEST

1. **TEST FOR INTERMITTENT CONDITION**
    1. Cycle the ignition on.
    2. Using the scan tool, record and erase the DTCs.
    3. With the scan tool, read the Active DTCs.

    Does the scan tool display: B18A9-00-TRUNK/GATE LOCK CONTROL CIRCUIT 1 as active?

    Yes

    - Go To 3

    No

    - Test complete, the condition or conditions that originally set this DTC are not present at this time. Using the wiring diagrams as a guide, check all related splices and connectors for signs of water intrusion, corrosion, pushed out or bent terminals and correct pin tension.
2. **CHECKING THE EXTERIOR LIFTGATE HANDLE SWITCH**
    1. Cycle the ignition off.
    2. Disconnect the Exterior Liftgate Handle Switch.
    3. Cycle the ignition on.
    4. Using the scan tool, record and erase the DTCs.
    5. With the scan tool, read the Active DTCs.

    Does the scan tool display: B18A9-00-TRUNK/GATE LOCK CONTROL CIRCUIT 1 as active?

    Yes

    - Go to 3

No

- Check the connection at the Exterior Liftgate Handle Switch for signs of water intrusion, corrosion, pushed out or bent terminals and correct pin tension.
- If no problem found with the connection, replace the Exterior Liftgate Handle Switch in accordance with Service Information. Refer to **SWITCH, EXTERIOR HANDLE, REMOVAL** .

3. **CHECKING THE EXTERIOR LIFTGATE HANDLE SWITCH SIGNAL CIRCUIT FOR A SHORT TO GROUND**
   1. Cycle the ignition off.
   2. Disconnect the RF Hub Module C2 harness connector.
   3. Measure the resistance between ground and the (P30) Exterior Liftgate Handle Switch Signal circuit.

      Is the resistance below 30K Ohms?

      Yes

      - Repair the short to ground in the (P30) Exterior Liftgate Handle Switch Signal circuit.

      No

      - Go To 4
4. **CHECKING THE EXTERIOR LIFTGATE HANDLE SWITCH RETURN CIRCUIT FOR A SHORT TO GROUND**
   1. Measure the resistance between ground and the (P39) Exterior Liftgate Handle Switch Return circuit.

      Is the resistance below 30K Ohms?

      Yes

      - Repair the short to ground in the (P39) Exterior Liftgate Handle Switch Return circuit.

      No

      - Go To 5
5. **CHECKING THE EXTERIOR LIFTGATE HANDLE SWITCH SIGNAL CIRCUIT BEING SHORTED TO THE EXTERIOR LIFTGATE HANDLE SWITCH RETURN CIRCUIT**

NOTE: **The RF Hub Module C2 harness connector and the Exterior Liftgate Handle Switch**

should still be disconnected

when performing this test.

1. Measure the resistance between the (P30) Exterior Liftgate Handle Switch Signal circuit and the (P39) Exterior Liftgate Handle Switch Return circuit at the RF Hub C2 harness connector.

   Is the resistance below 30K Ohms?

   Yes

   - Repair the short between the (P30) Exterior Liftgate Handle Switch Signal circuit and the (P39) Exterior Liftgate Handle Switch Return circuit.

   No

   - Check the connection at the RF Hub Module for signs of water intrusion, corrosion, pushed out or bent terminals and correct pin tension.
   - If no problem found at the connection, replace the RF Hub in accordance with the Service Information. Refer to **MODULE, RADIO FREQUENCY (RF HUB), REMOVAL** .

B215B-11-IGNITION RUN/START 2 CONTROL-CIRCUIT SHORT TO GROUND

For a complete wiring diagram, **refer to appropriate SYSTEM WIRING DIAGRAMS article** .

Fig. 53: Ignition Run/Start Output Circuit Diagram
Courtesy of CHRYSLER GROUP, LLC

WHEN MONITORED

During a Passive Entry or Keyless Go event.

SET CONDITION

Whenever the Radio Frequency Hub (RF Hub) senses a short to ground on the F20 Ignition Run/Start Output circuit, this code will set.

NOTE: This F20 circuit is a sense circuit from the Radio Frequency Hub to the Body Control Module. It has a maximum draw of 10mA.

POSSIBLE CAUSES

Possible Causes
(F20) IGNITION SWITCH OUTPUT CIRCUIT SHORTED TO GROUND
RADIO FREQUENCY HUB (RF HUB)

DIAGNOSTIC TEST

1. **TEST FOR INTERMITTENT CONDITION**

NOTE: Verify that the battery is fully charged with a DVOM and use the scan tool to compare the Battery Voltage listed under "Data" in the RFH View to that of the BCM. If the battery is not fully charged, correct this condition before proceeding.

1. Turn the ignition on.
2. Using the scan tool, record and erase the DTCs.
3. Try to start the engine.
4. With the scan tool, read the Active DTCs and wait one minute.

   Does the scan tool display: B215B-11-IGNITION RUN/START 2 CONTROL - CIRCUIT SHORT TO GROUND as active?

   Yes

   - Go To 2

   No

   - Test complete, the condition or conditions that originally set this DTC are not present at this time. Using the wiring diagrams as a guide, check all related splices and connectors for signs of water intrusion, corrosion, pushed out or bent terminals and correct pin tension.
   - Perform the BODY VERIFICATION TEST. Refer to **STANDARD PROCEDURE** .

2. **(F20) IGNITION SWITCH OUTPUT CIRCUIT SHORT TO GROUND**

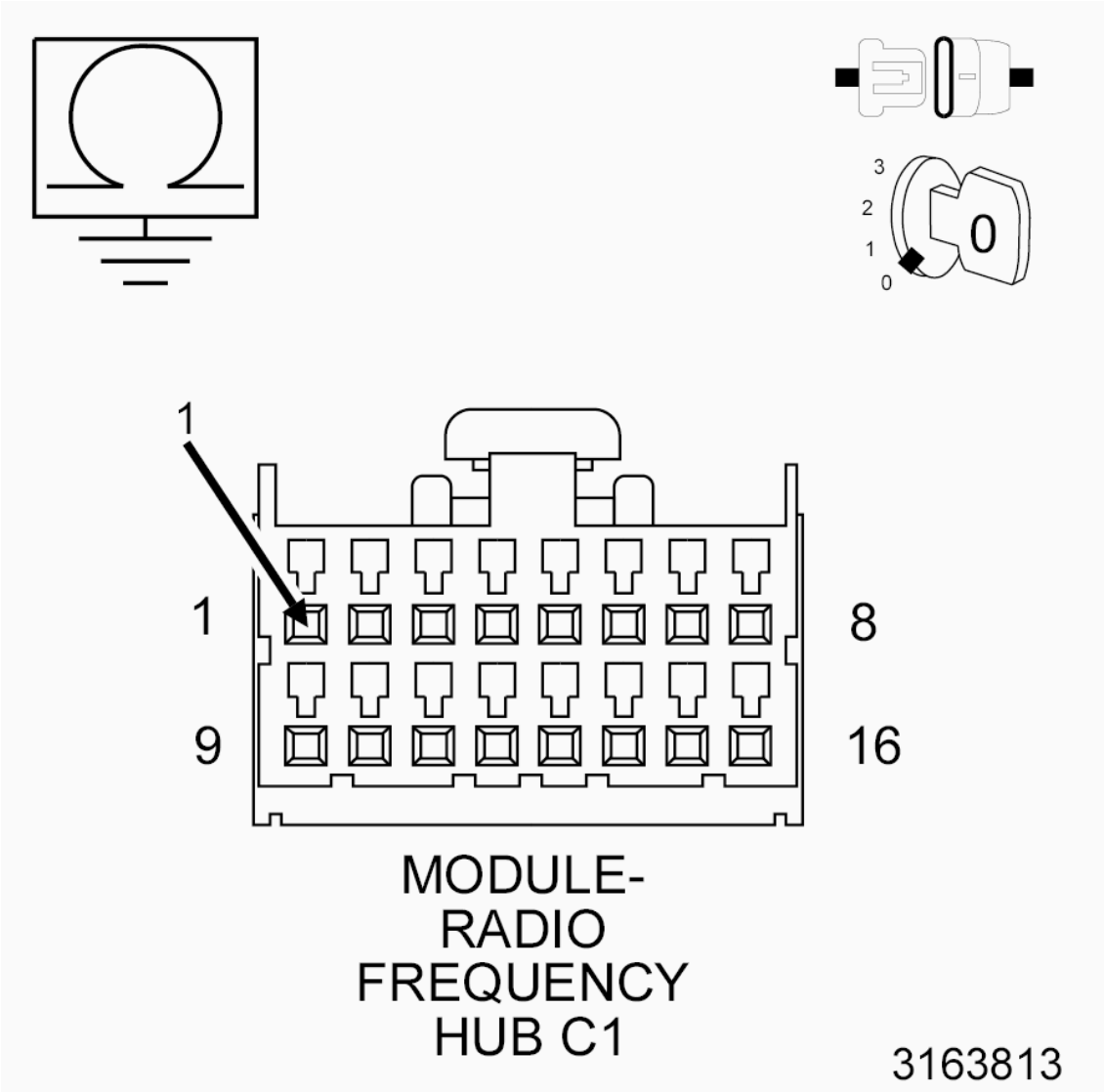

Fig. 54: Measuring Resistance Between Ground & Ignition Switch Output Circuit
Courtesy of CHRYSLER GROUP, LLC

1. Turn the ignition off.
2. Disconnect the Radio Frequency Hub (RF Hub) C1 harness connector.
3. Measure the resistance between ground and the (F20) Ignition Switch Output circuit.

   Is the resistance below 30k Ohms?

   Yes

   - Repair the short to ground in the (F20) Ignition Switch Output circuit.
   - Perform the BODY VERIFICATION TEST. Refer to **STANDARD PROCEDURE** .

   No

- Replace the Radio Frequency Hub (RF Hub) Module in accordance with the Service Information. Refer to **MODULE, RADIO FREQUENCY (RF HUB), REMOVAL** .
- Perform the Radio Frequency Hub Verification test. Refer to **STANDARD PROCEDURE**.

B215B-12-IGNITION RUN/START 2 CONTROL - CIRCUIT SHORT TO BATTERY

For a complete wiring diagram, **refer to appropriate SYSTEM WIRING DIAGRAMS article** .

Fig. 55: Ignition Run/Start Output Circuit Diagram
Courtesy of CHRYSLER GROUP, LLC

WHEN MONITORED

During a Passive Entry or Keyless Go event.

SET CONDITION

Whenever the Radio Frequency Hub (RF Hub) senses a short to battery on the F20 Ignition Run/Start Output circuit, this code will set.

NOTE: The F20 circuit is a sense circuit from the Radio Frequency Hub to the Body Control Module. It has a maximum draw of 100mA.

POSSIBLE CAUSES

Possible Causes
(F20) IGNITION SWITCH OUTPUT CIRCUIT SHORTED TO VOLTAGE
BODY CONTROL MODULE (BCM)
RADIO FREQUENCY HUB (RF HUB)

DIAGNOSTIC TEST

1. **TEST FOR INTERMITTENT CONDITION**

   NOTE: Verify that the battery is fully charged with a DVOM and use the scan tool to compare the Battery Voltage listed under "Data" in the RFH View to that of the BCM. If the battery is not fully charged, correct this condition before proceeding.

   1. Cycle the ignition on.
   2. Using the scan tool, record and erase the DTCs.
   3. Try to start the engine.
   4. With the scan tool, read the Active DTCs and wait one minute.

      Does the scan tool display: B215B-12-IGNITION RUN/START 2 CONTROL - CIRCUIT SHORT TO BATTERY as active?

      Yes

      - Go To 2

      No

      - Test complete, the condition or conditions that originally set this DTC are not present at this time. Using the wiring diagrams as a guide, check all related splices and connectors for signs of water intrusion, corrosion, pushed out or bent terminals and correct pin tension.
      - Perform the BODY VERIFICATION TEST. Refer to **STANDARD PROCEDURE** .

2. **(F20) IGNITION SWITCH OUTPUT CIRCUIT SHORT TO VOLTAGE**
   1. Cycle the ignition off.
   2. Disconnect the Body Control Module C8 harness connector.
   3. Leave the ignition off.
   4. Cycle the park lamps on.
   5. Measure the voltage between ground and the (F20) Ignition Switch Output circuit in the Body Control Module E harness connector.

      Is there any voltage present?

Yes

- Go To 3

No

- Replace the Body Control Module in accordance with the Service Information. Refer to **MODULE, BODY CONTROL, REMOVAL** .
- Perform the BODY VERIFICATION TEST. Refer to **STANDARD PROCEDURE** .

3. **(F20) IGNITION SWITCH OUTPUT WIRE SHORTED TO VOLTAGE**
   1. Disconnect the Radio Frequency Hub (RF Hub) C1 harness connector.
   2. Measure the voltage between ground and the (F20) Ignition Switch Output circuit.

   Is there any voltage present?

   Yes

   - Repair the short to voltage in the (F20) Ignition Switch Output circuit.
   - Perform the BODY VERIFICATION TEST. Refer to **STANDARD PROCEDURE** .

   No

   - Replace the Radio Frequency Hub (RF Hub) Module in accordance with the Service Information. Refer to **MODULE, RADIO FREQUENCY (RF HUB), REMOVAL** .
   - Perform the RADIO FREQUENCY HUB VERIFICATION TEST. Refer to **STANDARD PROCEDURE**.

B215B-13-IGNITION RUN/START 2 CONTROL-CIRCUIT OPEN

For a complete wiring diagram, **refer to appropriate SYSTEM WIRING DIAGRAMS article** .

Fig. 56: Ignition Run/Start Output Circuit Diagram
Courtesy of CHRYSLER GROUP, LLC

WHEN MONITORED

During a Passive Entry or Keyless Go event.

SET CONDITION

Whenever the Radio Frequency Hub (RF Hub) senses an open on the F20 Ignition Run/Start Output circuit, this code will set.

NOTE: This F20 circuit is a sense circuit from the Radio Frequency Hub to the Body Control Module. It has a maximum draw of 10mA.

POSSIBLE CAUSES

Possible Causes
(F20) IGNITION SWITCH OUTPUT CIRCUIT OPEN
RADIO FREQUENCY HUB (RF HUB)

DIAGNOSTIC TEST

1. **TEST FOR INTERMITTENT CONDITION**

NOTE: Verify that the battery is fully charged with a DVOM and use the scan tool to compare the Battery Voltage listed under "Data" in the RFH View to that of the BCM. If the battery is not fully charged, correct this condition before proceeding.

1. Turn the ignition on.
2. Using the scan tool, record and erase the DTCs.
3. Try to start the engine.
4. With the scan tool, read the Active DTCs and wait one minute.

   Does the scan tool display: B215B-13-IGNITION RUN/START 2 CONTROL - CIRCUIT OPEN as active?

   Yes

   - Go To 2

   No

   - Test complete, the condition or conditions that originally set this DTC are not present at this time. Using the wiring diagrams as a guide, check all related splices and connectors for signs of water intrusion, corrosion, pushed out or bent terminals and correct pin tension.
   - Perform the BODY VERIFICATION TEST. Refer to **STANDARD PROCEDURE** .

2. **(F20) IGNITION SWITCH OUTPUT CIRCUIT WIRE OPEN**

1.
2. Turn the ignition off.
3. Disconnect the Radio Frequency Hub (RF Hub) C1 harness connector.
4. Disconnect the Body Control Module C8 harness connector.
5. Measure the resistance of the (F20) Ignition Switch Output wire between the Body Control Module C8 harness connector and the RF Hub C1 harness connector.

   Is the resistance below 2.0 Ohms?

   Yes

   - Replace the Radio Frequency Hub (RF Hub) Module in accordance with the Service Information. Refer to **MODULE, RADIO FREQUENCY (RF HUB), REMOVAL** .
   - Perform the RADIO FREQUENCY HUB VERIFICATION TEST. Refer to **STANDARD PROCEDURE**.

   No

- Repair the open in the (F20) Ignition Switch Output wire.
- Perform the BODY VERIFICATION TEST. Refer to **STANDARD PROCEDURE** .

B2199-16-BATTERY VOLTAGE - CIRCUIT VOLTAGE BELOW THRESHOLD

For a complete wiring diagram, **refer to appropriate SYSTEM WIRING DIAGRAMS article** .

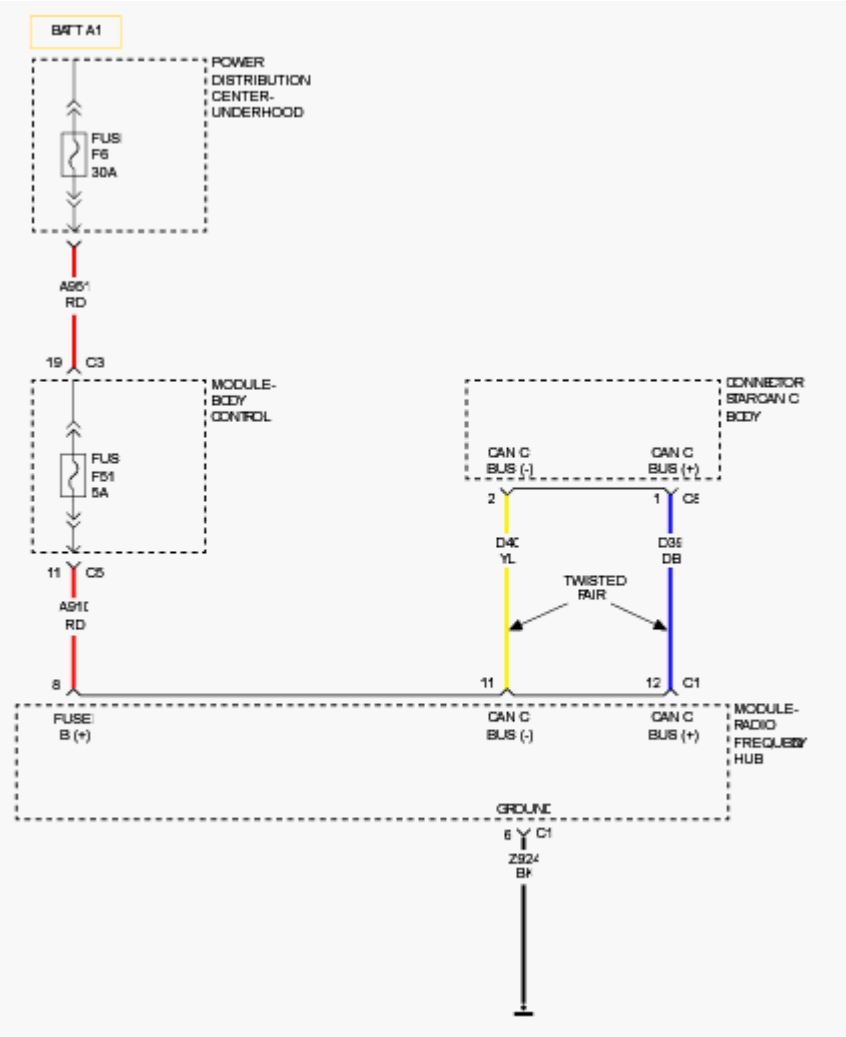

Fig. 57: RF Hub Supply Circuit Diagram
Courtesy of CHRYSLER GROUP, LLC

WHEN MONITORED

At all times.

SET CONDITION

Anytime the module senses voltage input below 8.0 Volts for over two seconds, this code will set.

POSSIBLE CAUSES

POSSIBLE CAUSES
LOW VOLTAGE ENGINE DTC (A910A) FUSED B(+) OR (Z924) GROUND CIRCUIT HAS HIGH RESISTANCE RADIO FREQUENCY HUB (RF HUB) MODULE

DIAGNOSTIC TEST

1. **CHECK POWERTRAIN DTCs**

   NOTE: Verify that the battery is fully charged with a DVOM and use the scan tool to compare the Battery Voltage listed under "Data" in the RFH View to that of the BCM. If the battery is not fully charged, correct this condition before proceeding.

   1. Using the scan tool, read the active PCM DTCs.

      Are there any Battery or Charging System DTCs?

      Yes

      - Refer to **DTC INDEX** and perform the appropriate diagnostic procedure for the charging system DTCs.

      No

      - Go To 2

2. **TEST FOR INTERMITTENT CONDITION**
   1. Using the scan tool, record and erase the DTCs.
   2. Start the engine and run for two minutes.
   3. Using the scan tool, read the Active DTCs.

      Does the scan tool display B2199-16-BATTERY VOLTAGE - CIRCUIT VOLTAGE BELOW THRESHOLD as active?

      Yes

      - Go To 3

      No

      - Test complete, the condition or conditions that originally set this DTC are not present at this time. Using the wiring diagrams as a guide, check all related splices and connectors for signs of water intrusion, corrosion, pushed out or bent terminals and correct pin tension.

- Perform the BODY VERIFICATION TEST. Refer to **STANDARD PROCEDURE** .

3. **(A910A) FUSED B(+) OR (Z924) GROUND CIRCUIT RESISTED**

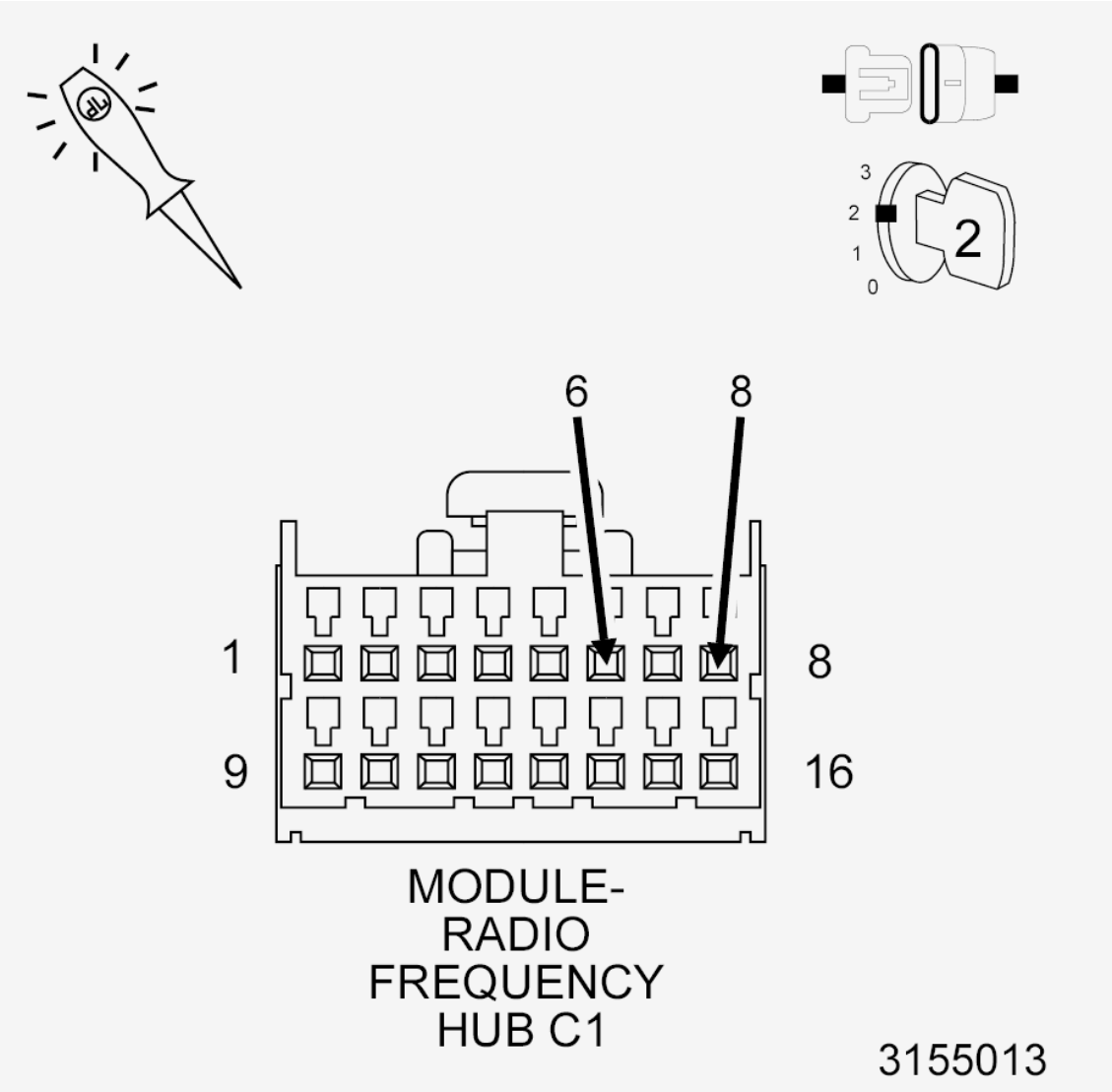

Fig. 58: Checking Fused B(+) Circuit For High Resistance
Courtesy of CHRYSLER GROUP, LLC

1. Disconnect the Radio Frequency Hub (RF Hub) Module C1 harness connector.
2. Test the (A910A) Fused B(+) circuit for high resistance by connecting a 12-volt test light between the (A910) Fused B(+) circuit and the (Z924) Ground circuit in the RF Hub C1 harness connector. The test light must illuminate brightly. Compare the brightness to that of a direct connection to the battery.

   Does the test light illuminate brightly?

   Yes

- Replace the Radio Frequency Hub (RF Hub) module in accordance with the Service Information. Refer to **MODULE, RADIO FREQUENCY (RF HUB), REMOVAL** .
- Perform the RADIO FREQUENCY HUB VERIFICATION TEST. Refer to **STANDARD PROCEDURE**.

No

- Test the (A910A) Fused B(+) and the (Z924) Ground circuits to determine which one has the high resistance. Repair the (A910A) Fused B(+) circuit or the (Z924) Ground circuit for high resistance.
- Perform the BODY VERIFICATION TEST. Refer to **STANDARD PROCEDURE** .

B2199-17-BATTERY VOLTAGE - CIRCUIT VOLTAGE ABOVE THRESHOLD

For a complete wiring diagram, **refer to appropriate SYSTEM WIRING DIAGRAMS article** .

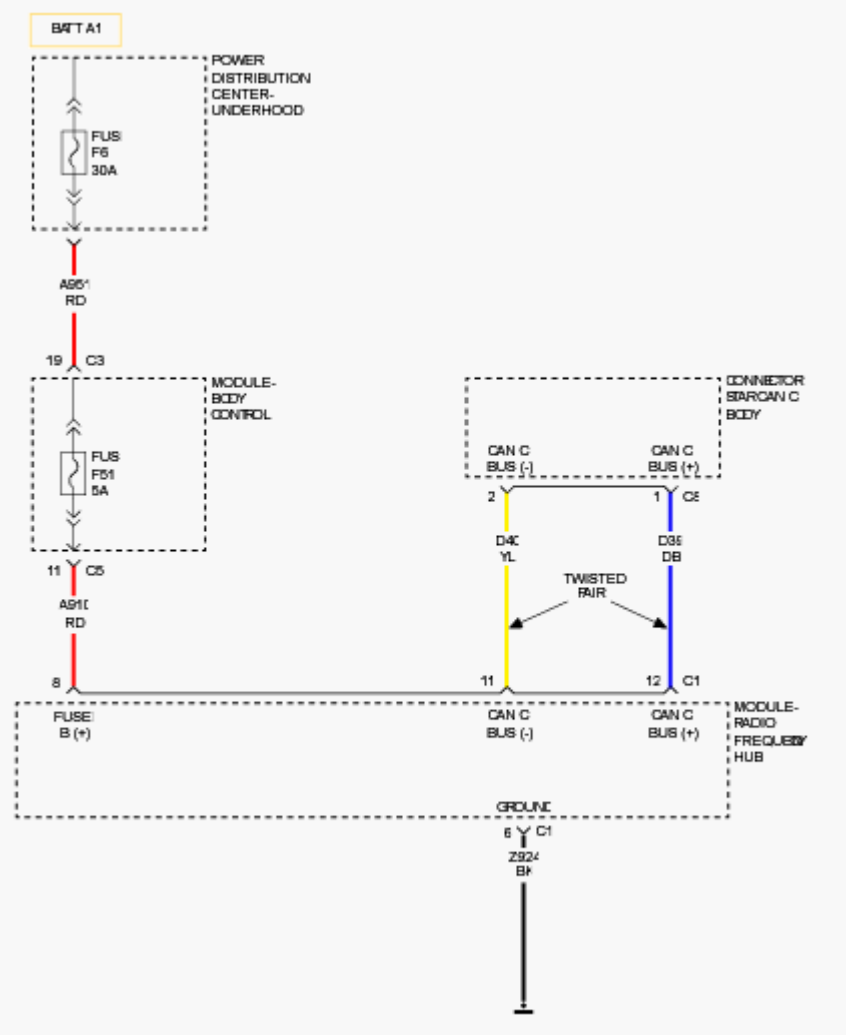

Fig. 59: RF Hub Supply Circuit Diagram

Courtesy of CHRYSLER GROUP, LLC

WHEN MONITORED

At all times.

SET CONDITION

Anytime the module senses voltage input above 16.0 Volts for over two seconds, this code will set.

POSSIBLE CAUSES

POSSIBLE CAUSES
HIGH VOLTAGE PCM DTC RADIO FREQUENCY HUB (RF HUB)

DIAGNOSTIC TEST

1. **CHECK PCM DTCs**

   NOTE: Verify that the battery is fully charged with a DVOM and use the scan tool to compare the Battery Voltage listed under "Data" in the RFH View to that of the BCM. If the battery is not fully charged, correct this condition before proceeding.

   1. Using the scan tool, read the active Powertrain DTCs.

      Are there any active Battery or Charging system DTCs present?

      Yes

      - Refer to **DTC INDEX** and perform the diagnostic procedure for the battery or charging system DTCs.

      No

      - Go To 2

2. **TEST FOR INTERMITTENT CONDITION**
   1. Using the scan tool, record and erase the DTCs.
   2. Start the engine and run for two minutes.
   3. Using the scan tool, read the active DTCs.

      Does the scan tool display; B2199-17-BATTERY VOLTAGE - CIRCUIT VOLTAGE ABOVE THRESHOLD as active?

Yes

- Replace the Radio Frequency Hub (RF Hub) in accordance with the Service Information. Refer to **MODULE, RADIO FREQUENCY (RF HUB), REMOVAL** .
- Perform the RADIO FREQUENCY HUB VERIFICATION TEST. Refer to **STANDARD PROCEDURE**.

No

- Test complete, the condition or conditions that originally set this DTC are not present at this time. Using the wiring diagrams as a guide, check all related splices and connectors for signs of water intrusion, corrosion, pushed out or bent terminals and correct pin tension.
- Perform the BODY VERIFICATION TEST. Refer to **STANDARD PROCEDURE** .

B21DD-84-SYSTEM VOLTAGE - SIGNAL BELOW ALLOWABLE RANGE

For a complete wiring diagram, **refer to appropriate SYSTEM WIRING DIAGRAMS article** .

WHEN MONITORED

The first 10 seconds after the ignition is turned to run.

SET CONDITION

When the Body Control Module (BCM) sends a message that the system voltage is below 10.0 volts for over 15 seconds, this code will set.

POSSIBLE CAUSES

POSSIBLE CAUSES
LOW SYSTEM VOLTAGE
BATTERY OR CHARGING SYSTEM

DIAGNOSTIC TEST

CHECK POWERTRAIN CONTROL MODULE (PCM) DTCs

NOTE: Verify that the battery is fully charged with a DVOM and use the scan tool to compare the Battery Voltage listed under "Data" in the RFH View to that of the BCM. If the battery is not fully charged, correct this condition before proceeding.

1. With the scan tool, read PCM DTCs.

   Are there any PCM Charging or Battery DTCs present?

Yes

- Refer to **DTC INDEX** and perform the appropriate diagnostic procedure.

No

- This code is for information only. At some time there was a low battery system voltage. Check the battery and charging system for an intermittent failure.

B21DD-85-SYSTEM VOLTAGE - SIGNAL ABOVE ALLOWABLE RANGE

For a complete wiring diagram, **refer to appropriate SYSTEM WIRING DIAGRAMS article** .

WHEN MONITORED

The first 10 seconds after the ignition is turned to run.

SET CONDITION

When the Body Control Module (BCM) sends a message that the system voltage is above 16.0 volts for over 15 seconds, this code will set.

POSSIBLE CAUSES

POSSIBLE CAUSES
HIGH SYSTEM VOLTAGE BATTERY OR CHARGING SYSTEM

DIAGNOSTIC TEST

CHECK POWERTRAIN CONTROL MODULE (PCM) DTCs

NOTE: Verify that the battery is fully charged with a DVOM and use the scan tool to compare the Battery Voltage listed under "Data" in the RFH View to that of the BCM. If the battery is not fully charged, correct this condition before proceeding.

1. With the scan tool, read PCM DTCs.

   Are there any PCM Charging or Battery DTCs present?

   Yes

   - Refer to **DTC INDEX** and perform the appropriate diagnostic procedure.

   No

- This code is for information only. At some time there was a high battery system voltage. Check the battery and charging system for an intermittent failure.

B222C-00-VEHICLE CONFIGURATION NOT PROGRAMMED

For a complete wiring diagram, **refer to appropriate SYSTEM WIRING DIAGRAMS article** .

WHEN MONITORED

Continuously in all ignition modes.

SET CONDITION

When the RFHM has not learned proxi at least once. This can take place at end of the assembly line or at dealership when the RF-Hub module is replaced and the proxi is not performed or not accepted.

POSSIBLE CAUSES

Possible Causes
PROXI NOT PERFORMED ON THE RF HUB

DIAGNOSTIC TEST

1. **CHECK FOR ACTIVE DTC**
    1. Cycle the ignition on.
    2. With the scan tool, record and erase the RF-Hub Module DTCs.
    3. Cycle the ignition switch from on to off, wait five seconds and then back to on.
    4. With the scan tool, read the active RF-Hub Module DTCs.

    Does the scan tool display this DTC as active?

    Yes

    - Go To 2

    No

    - Test complete, the condition or conditions that originally set this DTC are not present at this time. Using the wiring diagrams as a guide, check all related splices and connectors for signs of water intrusion, corrosion, pushed out or bent terminals and correct pin tension.
2. **PROGRAM THE RF HUB MODULE**
    1. With the scan tool, reprogram and proxi the RF-Hub Module in accordance with Service Information. Refer to **MODULE, RADIO FREQUENCY (RF HUB), REMOVAL** .
    2. With the scan tool, record and erase the RF-Hub Module DTCs.

3. Cycle the ignition switch from on to off, wait five seconds and then back to on.
4. With the scan tool, read the active RF-Hub Module DTCs.

   Does the scan tool display this DTC as active?

   Yes

   - Replace the RF-Hub Module in accordance with the Service Information. Refer to **MODULE, RADIO FREQUENCY (RF HUB), REMOVAL** .
   - Perform the BODY VERIFICATION TEST. Refer to **STANDARD PROCEDURE** .

   No

   - Test complete, the condition or conditions that originally set this DTC are not present at this time.
   - Perform the BODY VERIFICATION TEST. Refer to **STANDARD PROCEDURE** .

B2205-00-ORIGINAL VIN MISSING/MISMATCH

For a complete wiring diagram, **refer to appropriate SYSTEM WIRING DIAGRAMS article** .

WHEN MONITORED

During a Passive Entry or Keyless Go event.

SET CONDITION

The Radio Frequency Hub (RF Hub) will receive and monitor the VIN message from the PCM and record the VIN if different from the last VIN. If the module was used on a previous vehicle, the VIN will be set to that vehicle and the module will have to be replaced.

NOTE: Do not attempt to swap RF Hub modules. If a RF Hub module has been used on one vehicle, it cannot be used on another vehicle.

POSSIBLE CAUSES

Possible Causes
RF HUB RECEIVED INVALID VIN
RADIO FREQUENCY HUB (RF HUB) NOT PROGRAMMED
RADIO FREQUENCY HUB (RF HUB)

DIAGNOSTIC TEST

1. **CHECK THE VEHICLE VIN**
   1. Cycle the ignition on.

2. With the scan tool, select: RF Hub, "REPORTS", "ECU Details Report".
3. Scroll down to "RF Hub", read the "VIN Original" and compare it to the actual vehicle VIN.

   Does the RF Hub VIN Original match the vehicle VIN?

   Yes

   - Go To 2

   No

   - Go To 3

2. **CHECK FOR ACTIVE DIAGNOSTIC TROUBLE CODE (DTC)**
   1. With the scan tool, record and erase the DTCs.
   2. With the scan tool, select: RF Hub, "System Tests".
   3. Perform the "RF Hub LF Antennas Verification Test".
   4. With the scan tool, read the Active DTCs.

   Does the scan tool display: B2205-00-ORIGINAL VIN MISSING/MISMATCH as active?

   Yes

   - Replace the RF Hub module in accordance with the Service Information. Refer to **MODULE, RADIO FREQUENCY (RF HUB), REMOVAL** .
   - Perform the RADIO FREQUENCY HUB (RF HUB) VERIFICATION TEST. Refer to **STANDARD PROCEDURE**.

   No

   - Test complete, the condition or conditions that originally set this DTC are not present at this time. Using the wiring diagrams as a guide, check all related splices and connectors for signs of water intrusion, corrosion, pushed out or bent terminals and correct pin tension.
   - Perform the BODY VERIFICATION TEST. Refer to **STANDARD PROCEDURE** .

3. **RESET ECU**
   1. With the scan tool, select "Misc Functions"
   2. With the scan tool, perform the "Reset ECU" routine.
   3. Cycle the ignition off and wait 30 seconds.
   4. Try to start the engine three times.

   Did the engine start?

   Yes

- Test complete.
- Perform the BODY VERIFICATION TEST. Refer to **STANDARD PROCEDURE** .

No

- Replace the Radio Frequency Hub module in accordance with the Service Information. Refer to **MODULE, RADIO FREQUENCY (RF HUB), REMOVAL** .
- Perform the RADIO FREQUENCY HUB VERIFICATION TEST. Refer to **STANDARD PROCEDURE**.

B22A9-00-ECU INTERNAL PERFORMANCE

For a complete wiring diagram, **refer to appropriate SYSTEM WIRING DIAGRAMS article** .

THEORY OF OPERATION

The RADIO FREQUENCY HUB (RF-HUB) performs an internal self test. The repair of this fault condition does not involve any external circuitry and centers on verifying the integrity of the internal circuitry and software validity.

WHEN MONITORED

Continuously.

SET CONDITION

The RADIO FREQUENCY HUB (RF-HUB) detects an internal fault.

POSSIBLE CAUSES

Possible Causes
RADIO FREQUENCY HUB (RF-HUB)

DIAGNOSTIC TEST

REPLACE THE RF-HUB IF THE DTC IS ACTIVE

NOTE: **Verify that the battery is fully charged with a DVOM and use the scan tool to compare the Battery Voltage listed under "Data" in the RFH View to that of the BCM. If the battery is not fully charged, correct this condition before proceeding.**

1. Cycle the ignition on.
2. With the scan tool, record and erase the RF-Hub DTCs.
3. Cycle the ignition off.

4. Cycle the ignition on and wait 30 seconds.
5. With the scan tool, read the active DTCs.

   Does the scan tool display this DTC as active?

   Yes

   - Replace the Radio Frequency Hub (RF-Hub) in accordance with the Service Information. Refer to **MODULE, RADIO FREQUENCY (RF HUB), REMOVAL** .
   - Perform the RADIO FREQUENCY HUB (RF-HUB) VERIFICATION TEST. Refer to **STANDARD PROCEDURE**.

   No

   - Test complete, the condition or conditions that originally set this DTC are not present at this time. Using the wiring diagrams as a guide, check all related splices and connectors for signs of water intrusion, corrosion, pushed out or bent terminals, and correct pin tension.

B25A9-00-FRONT DRIVER DOOR HANDLE SENSE

For a complete wiring diagram, **refer to appropriate SYSTEM WIRING DIAGRAMS article** .

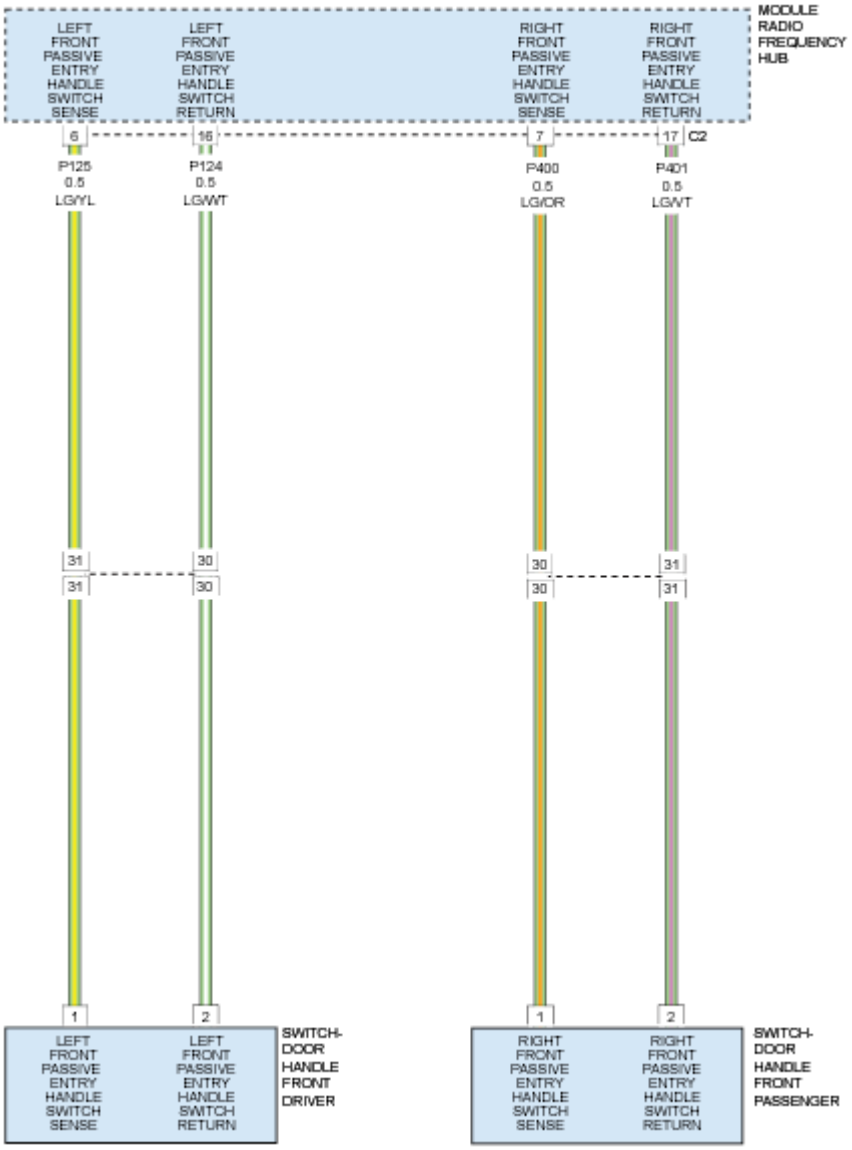

Fig. 60: Front Driver & Passenger Door Handle Sense - Circuit Diagram
Courtesy of CHRYSLER GROUP, LLC

WHEN MONITORED

During the Passive Entry or Keyless Go event.

SET CONDITION

When the RF Hub module senses a door handle hall sensor, a lock switch failure or a continuous activation for over four (4) minutes, this code will set.

POSSIBLE CAUSES

Possible Causes
DOOR HANDLE CAP
DRIVER EXTERIOR DOOR HANDLE (PASSIVE ENTRY)
RADIO FREQUENCY HUB (RF- HUB)

DIAGNOSTIC TEST

1. **TEST FOR INTERMITTENT CONDITION**

NOTE: **Verify that the vehicle's battery is fully charged with a DVOM and use the scan tool to compare the Battery Voltage listed under "Data" in the RFH View to that of the BCM. If the vehicle's battery is not fully charged, correct this condition before proceeding.**

NOTE: **Before proceeding, check the handle for any foreign material, or binding, that could cause a sticking situation to the handle or switch.**

NOTE: **If there are any other active RF Hub DTCs, perform the diagnostic procedure for them before proceeding.**

1. Cycle the ignition on.
2. Using the scan tool, record and erase the DTCs.
3. Make sure that the door handle is in the home position (not pulled).
4. With the scan tool, select "Diagnostic Procedures", "Reset ECU" and "RFH" and perform the routine.
5. With the scan tool, select "RFH", "Data" and scroll to "Last Message: Left Front Door Handle Hall Signal".
6. Observe the value field.

Does the scan tool display: YES?

Yes

NOTE: **Verify that the magnet is present in the Door Handle Cap. If the magnet is present, then continue with the diagnostic procedure. If the magnet is NOT present, replace the Door Handle Cap first.**

- Replace the Left Front Exterior Door Handle in accordance with the Service Information. Refer to **HANDLE, EXTERIOR, REMOVAL** and **HANDLE, INTERIOR, REMOVAL** .
- With the scan tool, select "Diagnostic Procedures", "Reset ECU" and "RFH" and perform the routine.
- Perform the BODY VERIFICATION TEST. Refer to **STANDARD PROCEDURE** .

No

- Go To 2

2. **TEST FOR STUCK LOCK SWITCH**
   1. With the scan tool, select "RFH", "Data" and scroll to "Last Message: Left Front Door Handle Lock".
   2. Observe the value field.

      Does the scan tool display: YES?

      Yes

      - Replace the Left Front Exterior Door Handle in accordance with the Service Information. Refer to **HANDLE, EXTERIOR, REMOVAL** and **HANDLE, INTERIOR, REMOVAL** .
      - With the scan tool, select "Diagnostic Procedures", "Reset ECU" and "RFH" and perform the routine.
      - Perform the BODY VERIFICATION TEST. Refer to **STANDARD PROCEDURE** .

      No

      - Go To 3

3. **DOOR HANDLE OPERATION**
   1. Open the Left Front Door window.
   2. Cycle the ignition off, remove the FOBIK and close all doors.
   3. Have the FOBIK outside and within 10 cm. and 1.5 m. (4 in. and 5 ft.) of the Left Front door handle.

      NOTE: In the next step, wait two (2) seconds between each Lock and Unlock activation as there is a two second delay after each Lock action.

   4. Lock and Unlock the Left Front Door by the outside handle four (4) times.
   5. Open the Left Front Door by pulling the handle.

      Did the Door Handle Lock and Unlock the door as it should?

      Yes

      - Test complete, the condition or conditions that originally set this DTC are not present at this time. Using the wiring diagrams as a guide, check all related splices and connectors for signs of water intrusion, corrosion, pushed out or bent terminals and correct pin tension. Record the findings on the work order.
      - Perform the BODY VERIFICATION TEST. Refer to **STANDARD PROCEDURE** .

No

- Go To 4

4. **DOOR HANDLE OR RF HUB**
   1. Cycle the ignition on and open the Right Front window.
   2. Cycle the ignition off, remove the FOBIK and close all doors.
   3. Have the FOBIK outside the car and within 10cm. and 1.5 m. (4 in. and 5 ft.) from the Right Front door handle.

      NOTE: In the next steps, wait two (2) seconds between each Lock and Unlock activation as there is a two second delay after each Lock action.

   4. Lock and Unlock the Right Front Door by the outside handle four (4) times.
   5. Using the handle lock switch, lock the doors.
   6. Open the Right Front Door by pulling the handle.

      Did the Right Front Door Handle Lock and Unlock the door as it should?

      Yes

      - Replace the Left Front Exterior Door Handle in accordance with the Service Information. Refer to **HANDLE, EXTERIOR, REMOVAL** and **HANDLE, INTERIOR, REMOVAL** .
      - With the scan tool, select "Diagnostic Procedures", "Reset ECU" and "RFH" and perform the routine.
      - Perform the BODY VERIFICATION TEST. Refer to **STANDARD PROCEDURE** .

      No

      - Replace the RF-HUB in accordance with the Service Information. Refer to **MODULE, RADIO FREQUENCY (RF HUB), REMOVAL** .
      - Perform the RADIO FREQUENCY HUB VERIFICATION TEST. Refer to **STANDARD PROCEDURE**.

B25A9-01-FRONT DRIVER DOOR HANDLE SENSE - GENERAL ELECTRICAL FAILURE

For a complete wiring diagram, **refer to appropriate SYSTEM WIRING DIAGRAMS article** .

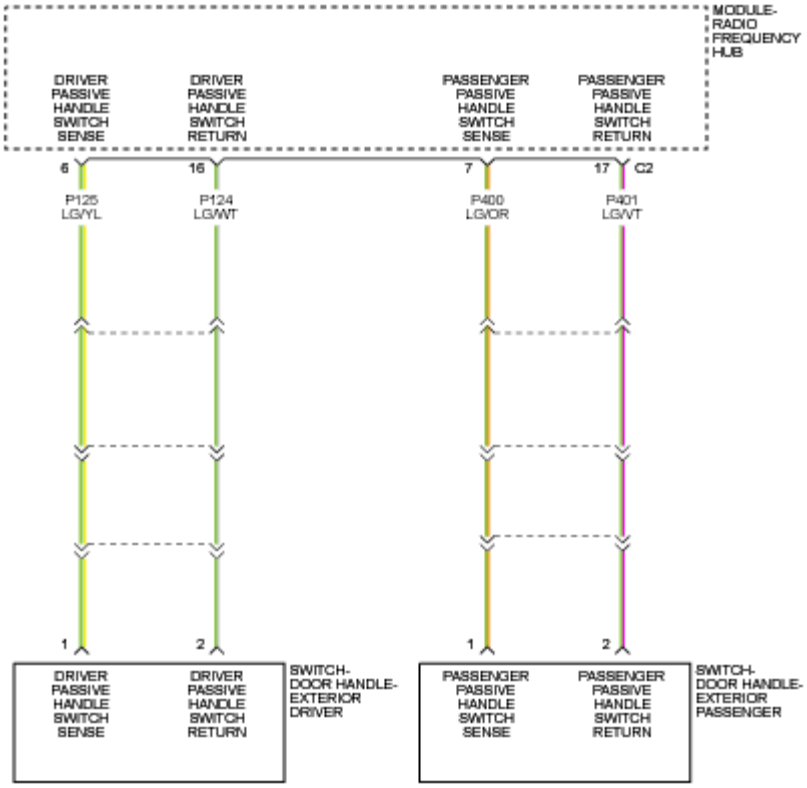

Fig. 61: Door Handle Sense Circuit Diagram
Courtesy of CHRYSLER GROUP, LLC

WHEN MONITORED

During the Passive Entry or Keyless Go event.

SET CONDITION

Whenever the Radio Frequency Hub (RF Hub) senses an open, a short to ground or a short to battery on the Passive Handle Switch Sense circuit for over one (1) minute, this code will set.

POSSIBLE CAUSES

Possible Causes
(P125) DRIVER PASSIVE ENTRY HANDLE SWITCH SENSE CIRCUIT SHORTED TO GROUND
(P124) DRIVER PASSIVE ENTRY HANDLE SWITCH RETURN CIRCUIT OPEN
(P125) DRIVER PASSIVE ENTRY HANDLE SWITCH SENSE CIRCUIT SHORTED TO BATTERY
(P125) DRIVER PASSIVE ENTRY HANDLE SWITCH SENSE CIRCUIT OPEN
(P125) DRIVER PASSIVE ENTRY HANDLE SWITCH SENSE CIRCUIT SHORTED TO THE (P124) DRIVER PASSIVE ENTRY HANDLE SWITCH RETURN CIRCUIT
DRIVER EXTERIOR DOOR HANDLE (PASSIVE ENTRY)

RADIO FREQUENCY HUB (RF HUB)
DOOR HANDLE CAP

DIAGNOSTIC TEST

1. **TEST FOR INTERMITTENT CONDITION**

NOTE: **Verify that the vehicle's battery is fully charged with a DVOM and use the scan tool to compare the Battery Voltage listed under "Data" in the RFH View to that of the BCM. If the vehicle's battery is not fully charged, correct this condition before proceeding.**

NOTE: **Before proceeding, check the handle for any foreign material, or binding, that could cause a sticking situation to the handle or switch.**

1. Cycle the ignition on and leave on until instructed to "Cycle the ignition off".
2. Using the scan tool, record and erase the DTCs.
3. With the scan tool, select: "RFH" and "System Tests".
4. Perform the Door Handle Verification Test. This will activate the module to retest for DTCs.
5. With the scan tool, read the Active DTCs and wait one (1) minute.

Does the scan tool display: B25A9-01-FRONT DRIVER DOOR HANDLE SENSE - GENERAL ELECTRICAL FAILURE as active?

Yes

NOTE: **Verify that the magnet is present in the Door Handle Cap. If the magnet is present, then continue with the diagnostic procedure. If the magnet is NOT present, replace the Door Handle Cap first.**

- Go To 2

No

- Test complete, the condition or conditions that originally set this DTC are not present at this time. Using the wiring diagrams as a guide, check all related splices and connectors for signs of water intrusion, corrosion, pushed out or bent terminals and correct pin tension.
- Perform the BODY VERIFICATION TEST. Refer to **STANDARD PROCEDURE** .

2. **(P125) DRIVER PASSIVE ENTRY HANDLE SWITCH SENSE CIRCUIT**
   1. With the scan tool, select "RFH", "Data" and scroll to "Left Front Door Handle Power".
   2. Observe the Value field.

What does the Value field display?

OFF

- Go To 3

ON

- Go To 8

3. **(P125) DRIVER PASSIVE ENTRY HANDLE SWITCH SENSE CIRCUIT OPEN OR SHORTED**
   1. With the scan tool, select "Diagnostic Procedures", "Reset ECU" and "RFH" and perform the routine.
   2. With the scan tool, select "RFH", "Data" and scroll to "Left Front Door Handle Power".
   3. Double click on the Value field to start the graph.
   4. Observe the graph for a pulsating line.

   Is the graph pulsating between high and low on the screen?

   Yes

   - Go To 4

   No

   - Go To 7

4. **DRIVER EXTERIOR DOOR HANDLE (PASSIVE ENTRY)**
   1. Cycle the ignition off.
   2. Disconnect the Driver Exterior Door Handle Switch harness connector. Refer to **HANDLE, EXTERIOR, REMOVAL** and **HANDLE, INTERIOR, REMOVAL** .
   3. Cycle the ignition on.
   4. With the scan tool, select "Diagnostic Procedures", "Reset ECU" and "RFH" and perform the routine.
   5. With the scan tool, select "RFH", "Data" and scroll to "Left Front Door Handle Power".
   6. Double click on the Value field to start the graph.
   7. Observe the graph for a pulsating line.

   Is the graph pulsating between high and low on the screen?

   Yes

   - Go To 5

   No

   - Replace the Driver External Door Handle. Refer to **HANDLE, EXTERIOR,**

INSTALLATION and **HANDLE, INTERIOR, INSTALLATION** .

- With the scan tool, select "Diagnostic Procedures", "Reset ECU" and "RFH" and perform the routine.
- Perform the BODY VERIFICATION TEST. Refer to **STANDARD PROCEDURE** .

5. **(P125) DRIVER PASSIVE HANDLE SWITCH SENSE WIRE SHORTED TO GROUND**

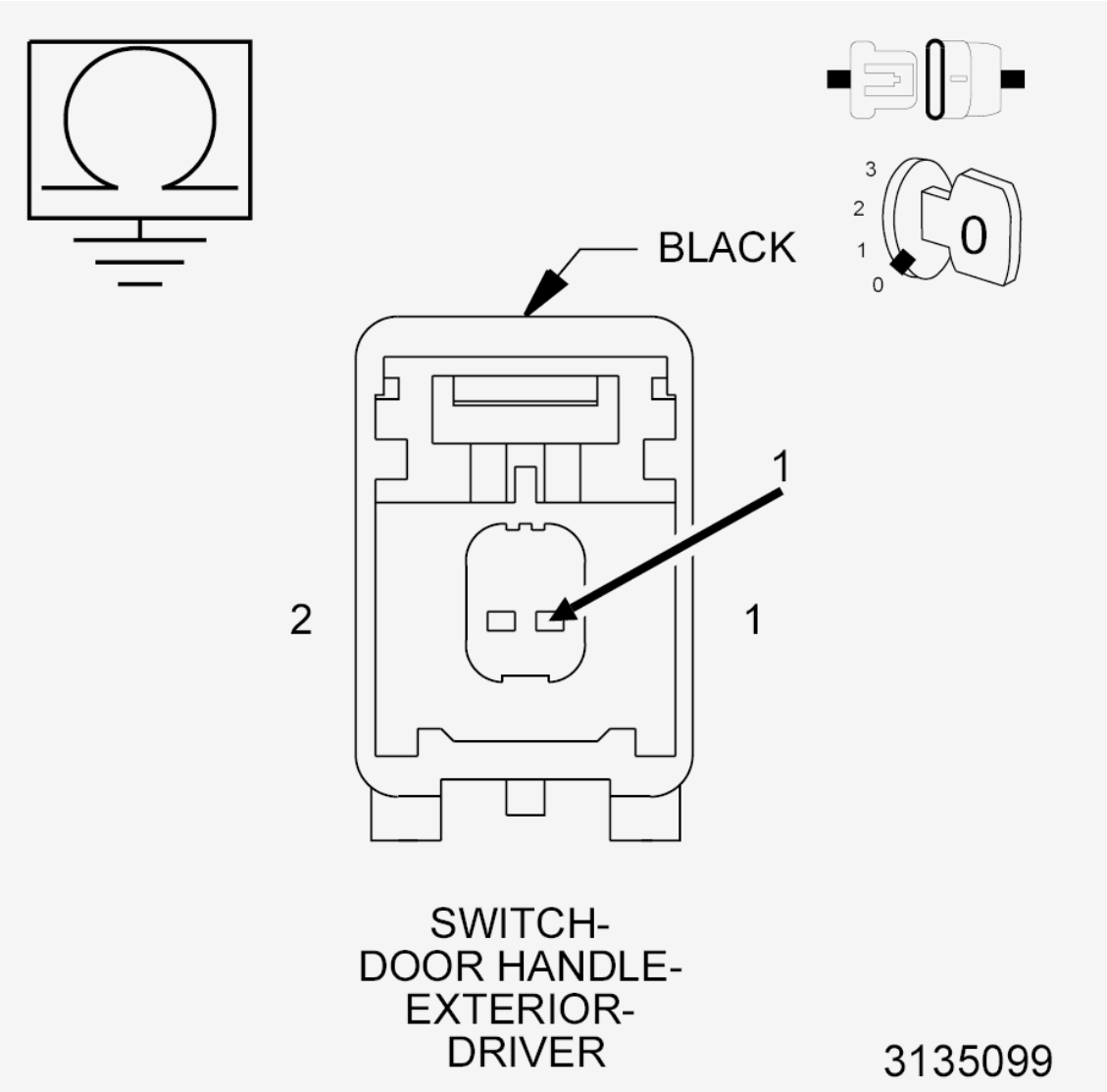

Fig. 62: Checking Driver Passive Handle Switch Sense Wire For Short To Ground
Courtesy of CHRYSLER GROUP, LLC

1. Cycle the ignition off.
2. Disconnect the Radio Frequency Hub (RF Hub) Module C2 harness connector.
3. Check the connectors for signs of water intrusion, corrosion, pushed out or bent terminals and correct pin tension. Repair as necessary. If repairs were made, return to Step 1.
4. Measure the resistance between ground and the (P125) Driver Passive Handle Switch Sense wire in

the Handle Switch harness connector.

Is the resistance below 30K Ohms?

Yes

- Repair the short to ground in the (P125) Driver Passive Handle Switch Sense circuit.
- With the scan tool, select "Diagnostic Procedures", "Reset ECU" and "RFH" and perform the routine.
- Perform the BODY VERIFICATION TEST. Refer to **STANDARD PROCEDURE** .

No

- Go To 6

6. **(P125) DRIVER PASSIVE HANDLE SWITCH SENSE CIRCUIT SHORTED TO THE (P124) DRIVER PASSIVE HANDLE SWITCH RETURN CIRCUIT**

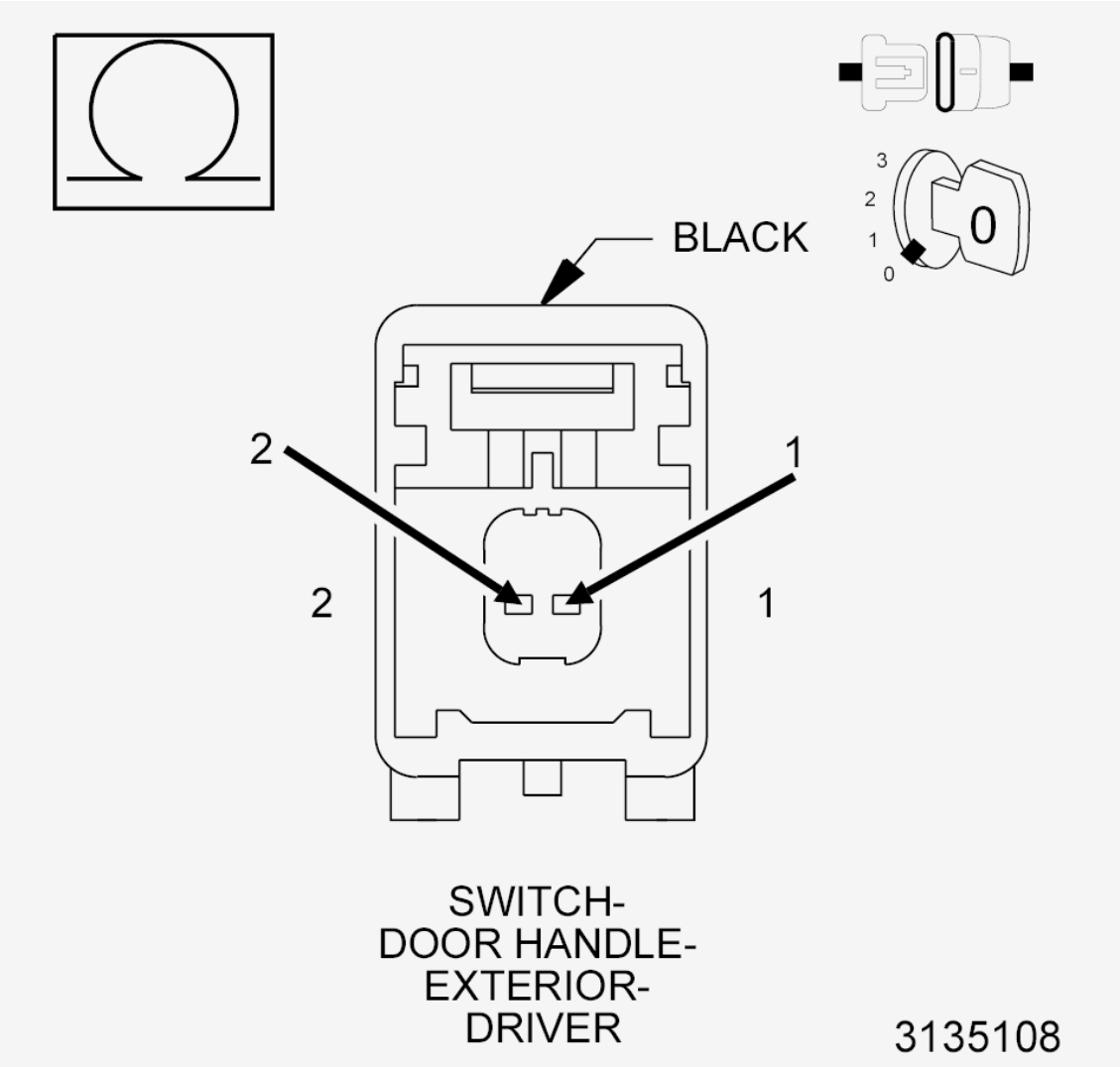

Fig. 63: Measuring Resistance Between Driver Passive Handle Switch Sense Circuit & Driver Passive Handle Switch Return Circuit
Courtesy of CHRYSLER GROUP, LLC

1. Measure the resistance between the (P125) Driver Passive Handle Switch Sense circuit and the (P124) Driver Passive Handle Switch Return circuit.

   Is the resistance below 30K Ohms?

   Yes

   - Repair the short between the (P125) Driver Passive Handle Switch Sense circuit and the (P124) Driver Passive Handle Switch Return circuit.
   - With the scan tool, select "Diagnostic Procedures", "Reset ECU" and "RFH" and perform the routine.
   - Perform the BODY VERIFICATION TEST. Refer to **STANDARD PROCEDURE** .

No

- Replace the Radio Frequency Hub (RF Hub) Module in accordance with the Service Information. Refer to **MODULE, RADIO FREQUENCY (RF HUB), REMOVAL** .
- Perform the RADIO FREQUENCY HUB VERIFICATION TEST. Refer to **STANDARD PROCEDURE**.

7. **(P125) DRIVER PASSIVE ENTRY HANDLE SWITCH SENSE CIRCUIT**
   1. Continue with the scan tool still on "Left Front Door Handle Power".
   2. Observe the Value field.

   What does the Value field display?

   OFF

   - Replace the Radio Frequency Hub (RF Hub) Module in accordance with the Service Information. Refer to **MODULE, RADIO FREQUENCY (RF HUB), REMOVAL** .
   - Perform the RADIO FREQUENCY HUB VERIFICATION TEST. Refer to **STANDARD PROCEDURE**.

   ON

   - Test complete, the condition or conditions that originally set this DTC are not present at this time. Using the wiring diagrams as a guide, check all related splices and connectors for signs of water intrusion, corrosion, pushed out or bent terminals and correct pin tension.
   - Perform the BODY VERIFICATION TEST. Refer to **STANDARD PROCEDURE** .
8. **DRIVER PASSIVE ENTRY HANDLE SWITCH SENSE OR RETURN CIRCUIT OPEN**
   1. Continue with the scan tool still on "Left Front Door Handle Power".
   2. Double click on the Value field to start the graph.
   3. Observe the graph for a pulsating line.

   Is the graph pulsating between high and low on the screen?

   Yes

   - Go To 4

   No

   - Go To 9
9. **TEST HANDLE FUNCTIONS**
   1. Stop the graph.
   2. Lower the driver door window.
   3. Cycle the ignition off, remove the FOBIK and close all doors.

4. With the scan tool, select "RFH", "Data" and scroll to "Passive Entry Function Carried Out".
5. Have the FOBIK within 1.5 m (5 ft.) of the driver door handle.

NOTE: In the next steps, wait two (2) seconds between each Lock and Unlock activation as there is a two second delay after each Lock action.

6. Press the Lock button on the handle and observe the screen for "Passive lock at left front door".
7. Grab the door handle and observe the screen for "Passive entry at left front door".
8. Repeat steps 6 and 7 two more times.

Is the module receiving the inputs on the screen as you do them?

Yes

- Test complete, the condition or conditions that originally set this DTC are not present at this time. Using the wiring diagrams as a guide, check all related splices and connectors for signs of water intrusion, corrosion, pushed out or bent terminals and correct pin tension.
- Perform the BODY VERIFICATION TEST. Refer to **STANDARD PROCEDURE** .

No

- Go To 10

10. **HANDLE OR CIRCUIT PROBLEM**

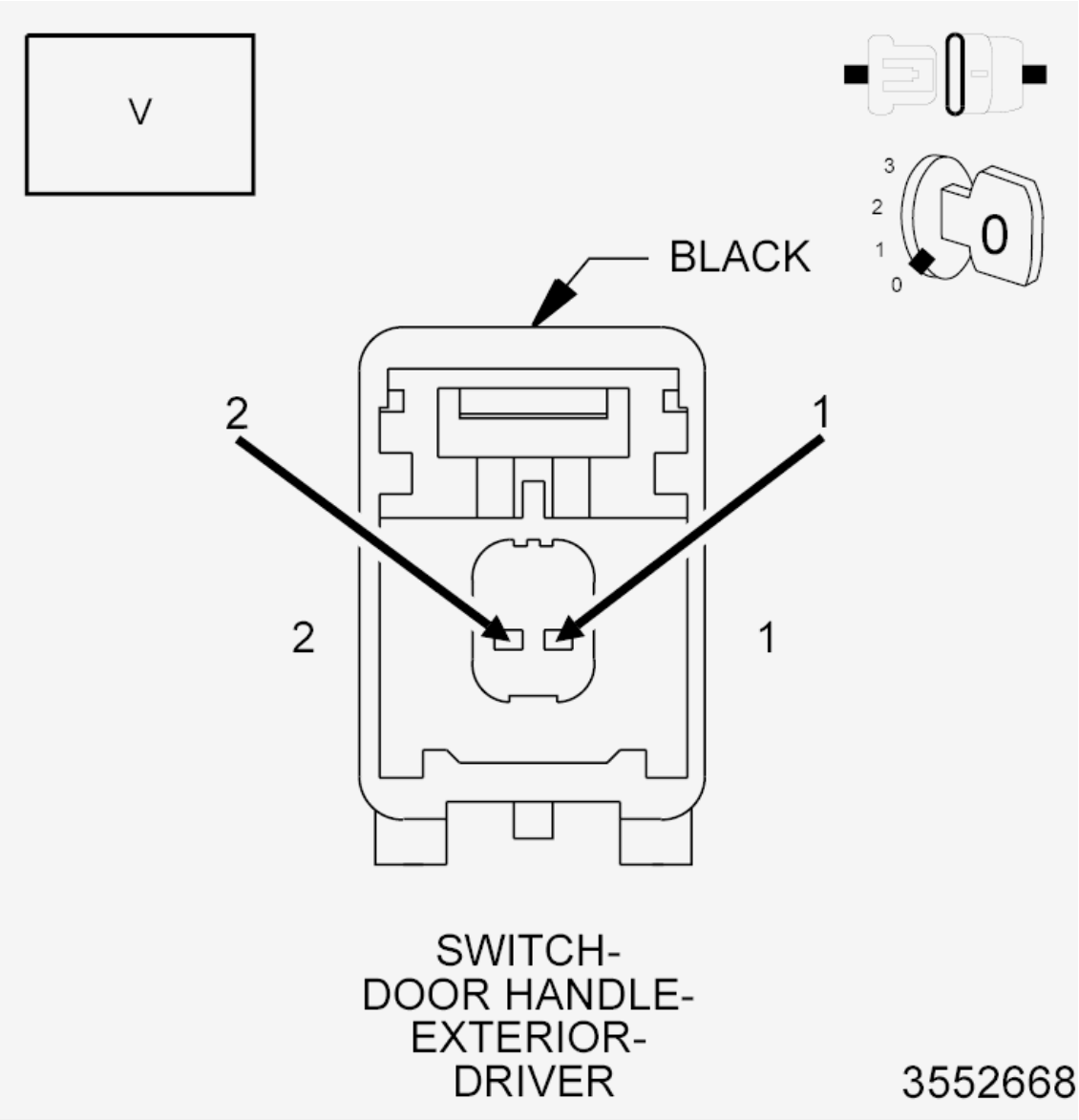

Fig. 64: Measuring Voltage Between Passenger Passive Handle Switch Return & Passenger Passive Handle Sense Circuits
Courtesy of CHRYSLER GROUP, LLC

1. Disconnect the Driver Exterior Door Handle Switch harness connector. Refer to **HANDLE, EXTERIOR, REMOVAL** and **HANDLE, INTERIOR, REMOVAL** .
2. Measure the voltage between the (P124) Driver Passive Handle Switch Return and the (P125) Driver Passive Handle Sense circuits in the Driver Exterior Door Handle Switch connector.

   Is the voltage above 11.8 volts?

   Yes

   - Replace the Driver External Door Handle in accordance with the Service Information. Refer

to **HANDLE, EXTERIOR, INSTALLATION** and **HANDLE, INTERIOR, INSTALLATION** .

- With the scan tool, select "Diagnostic Procedures", "Reset ECU" and "RFH" and perform the routine.
- Perform the BODY VERIFICATION TEST. Refer to **STANDARD PROCEDURE** .

No

- Go To 11

11. **(P124) DRIVER PASSIVE HANDLE SWITCH RETURN CIRCUIT OPEN**

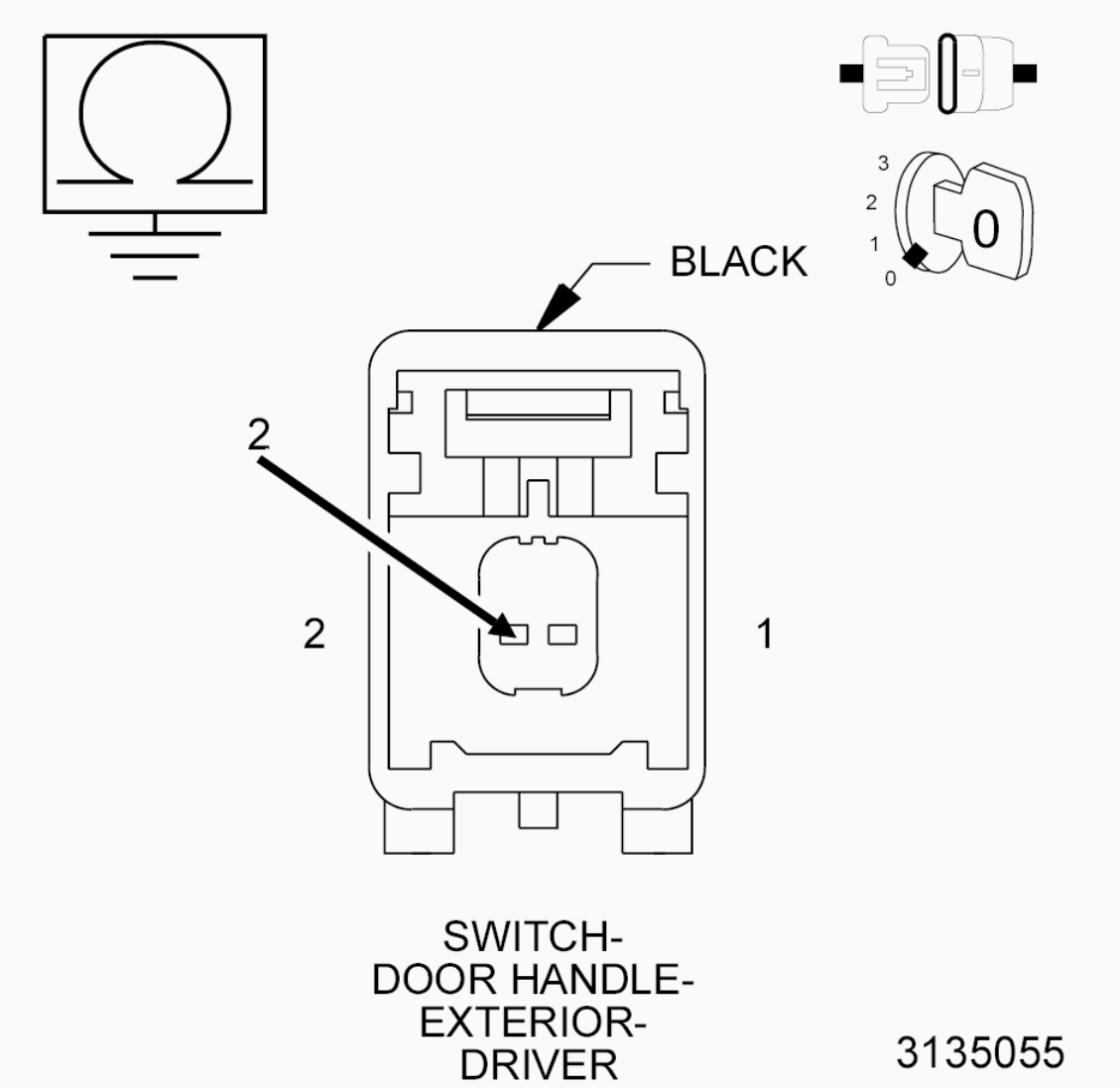

Fig. 65: Measuring Resistance Between Ground Driver Passive Handle Switch Return Circuit
Courtesy of CHRYSLER GROUP, LLC

1. Measure the resistance between ground and the (P124) Driver Passive Handle Switch Return circuit

in the Driver Exterior Door Handle Switch harness connector.

Is the resistance below 12.0 Ohms?

Yes

- Go To 14

No

- Go To 12

12. **(P124) DRIVER PASSIVE HANDLE SWITCH RETURN WIRE OPEN**

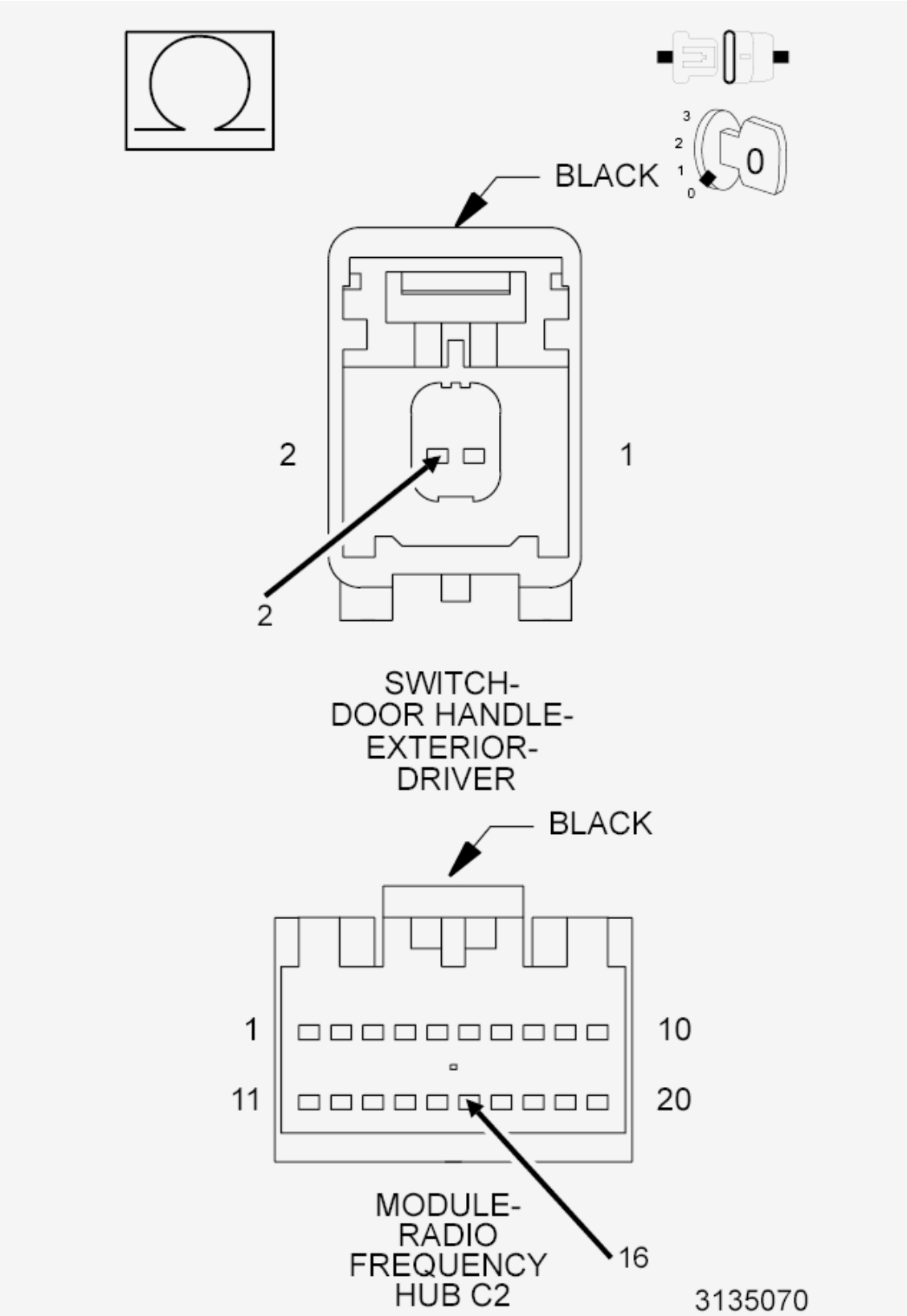

Fig. 66: Checking Driver Passive Handle Switch Return Wire For Open

Courtesy of CHRYSLER GROUP, LLC

1. Disconnect the Radio Frequency Hub (RF Hub) Module C2 harness connector.
2. Check the connectors for signs of water intrusion, corrosion, pushed out or bent terminals and correct pin tension. Repair as necessary. If repairs were made, return to Step 1.
3. Measure the resistance of the (P124) Driver Passive Handle Switch Return circuit between the RF Hub Module C2 harness connector and the Driver Exterior Door Handle Switch harness connector.

   Is the resistance below 2.0 Ohms?

   Yes

   - Go To 13

   No

   - Repair the open in the (P124) Driver Passive Handle Switch Return wire.
   - With the scan tool, select "Diagnostic Procedures", "Reset ECU" and "RFH" and perform the routine.
   - Perform the BODY VERIFICATION TEST. Refer to **STANDARD PROCEDURE** .

13. **GROUND WIRE OPEN**

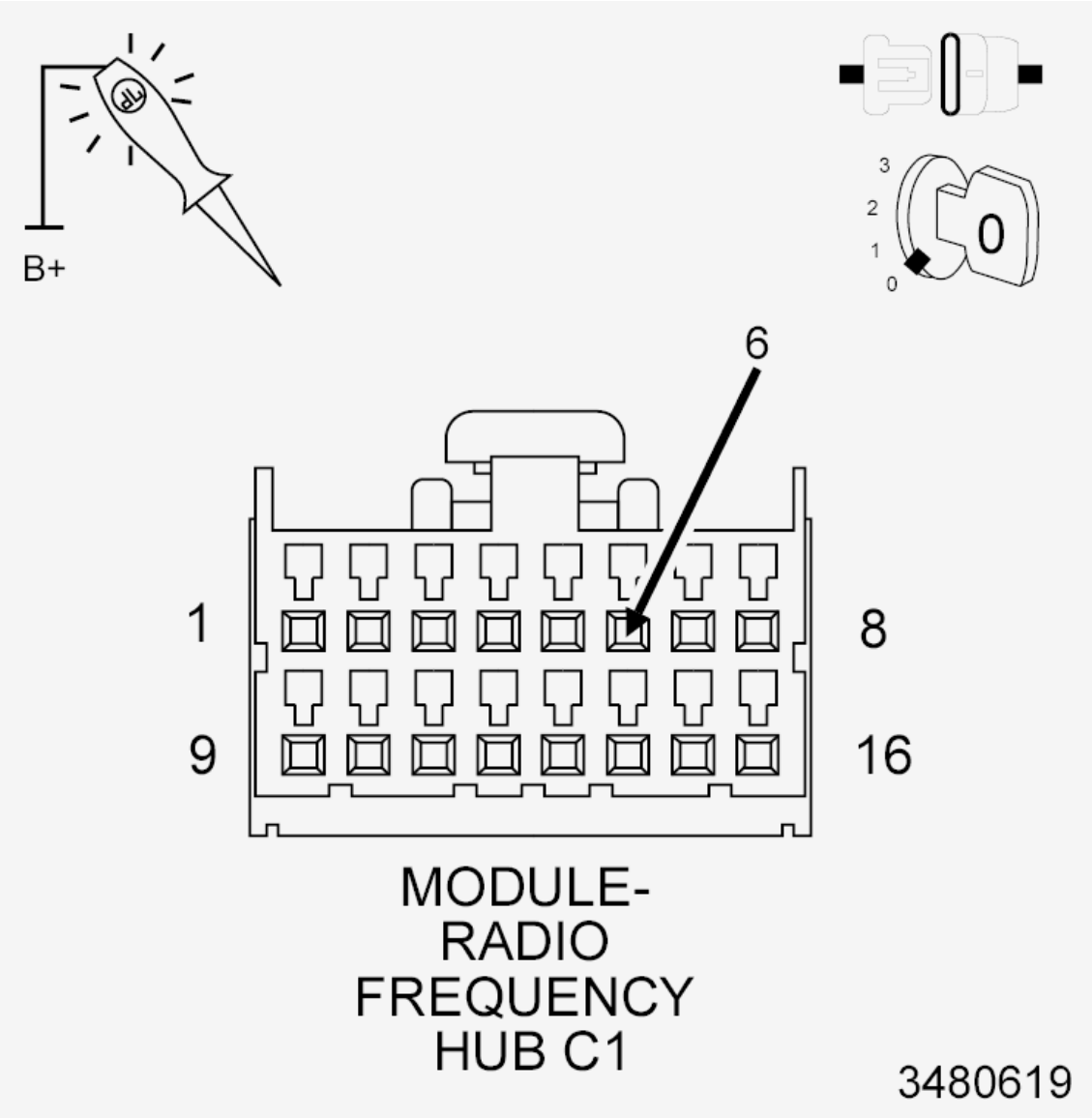

Fig. 67: Checking Ground Wire For Open
Courtesy of CHRYSLER GROUP, LLC

1. Disconnect the Radio Frequency Hub (RF Hub) Module C1 harness connector.
2. Check the connectors for signs of water intrusion, corrosion, pushed out or bent terminals and correct pin tension. Repair as necessary. If repairs were made, return to Step 1.
3. Using a 12-volt test light connected to 12-volts, check the RF-Hub Ground circuit in the C1 harness connector.

NOTE: **The test light must illuminate brightly. Compare the brightness to that of a direct connection to the battery.**

Does the test light illuminate brightly?

Yes

- Replace the Radio Frequency Hub (RF Hub) Module in accordance with the Service Information. Refer to **MODULE, RADIO FREQUENCY (RF HUB), REMOVAL** .
- Perform the RADIO FREQUENCY HUB VERIFICATION TEST. Refer to **STANDARD PROCEDURE**.

No

- Repair the open in the RF-Hub Ground circuit.
- With the scan tool, select "Diagnostic Procedures", "Reset ECU" and "RFH" and perform the routine.
- Perform the BODY VERIFICATION TEST. Refer to **STANDARD PROCEDURE** .

14. **(P125) DRIVER PASSIVE HANDLE SWITCH SENSE WIRE OPEN**

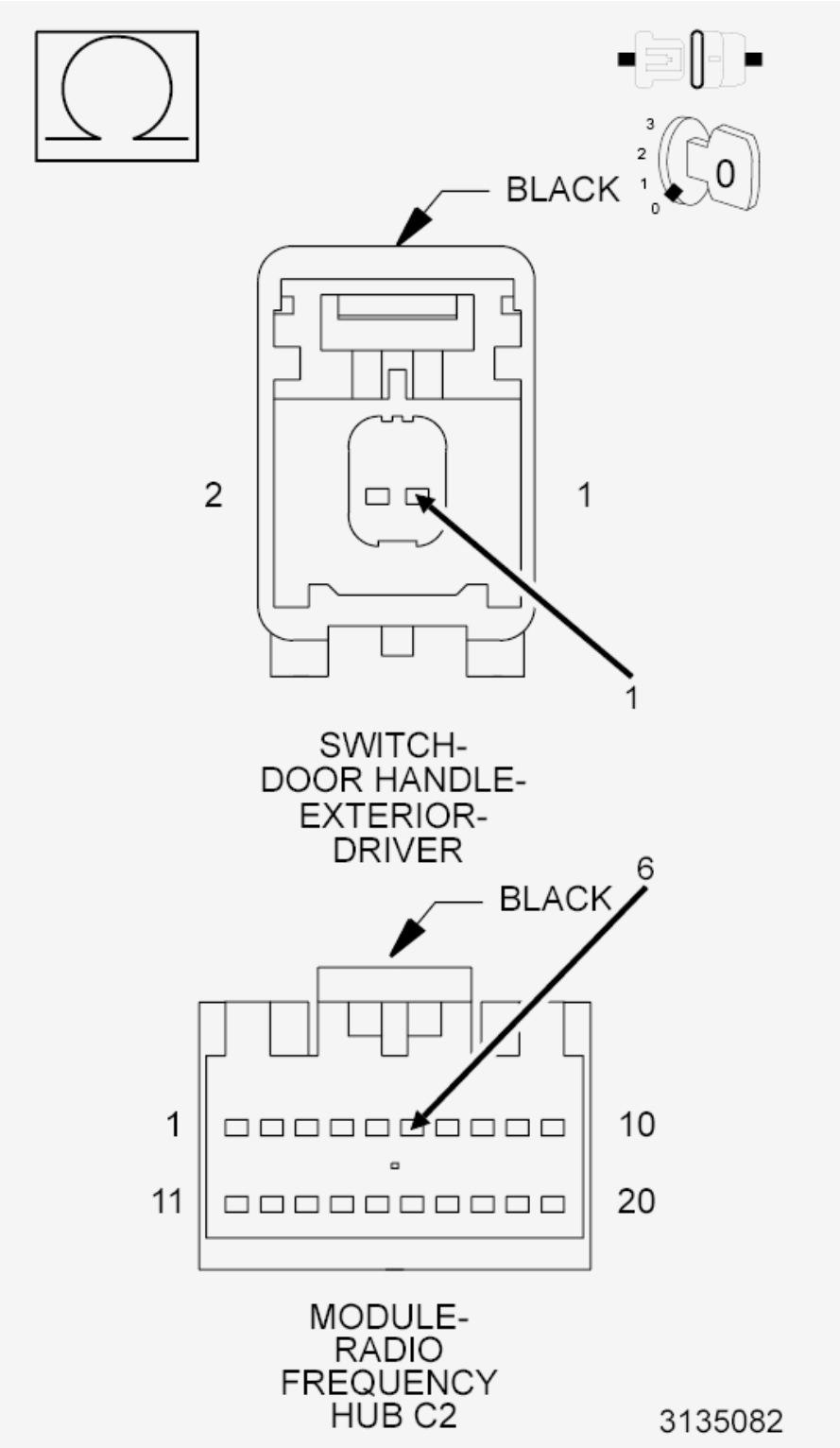

Fig. 68: Checking Driver Passive Handle Switch Sense Wire For Open
Courtesy of CHRYSLER GROUP, LLC

1. Disconnect the RF Hub Module C2 harness connector.

2. Check the connectors for signs of water intrusion, corrosion, pushed out or bent terminals and correct pin tension. Repair as necessary. If repairs were made, return to Step 1.
3. Measure the resistance of the (P125) Driver Passive Handle Switch Sense wire between the RF Hub C2 harness connector and the Driver Exterior Door Handle Switch harness connector.

   Is the resistance below 2.0 Ohms?

   Yes

   - Go To 15

   No

   - Repair the open in the (P125) Driver Passive Handle Sense wire.
   - With the scan tool, select "Diagnostic Procedures", "Reset ECU" and "RFH" and perform the routine.
   - Perform the BODY VERIFICATION TEST. Refer to **STANDARD PROCEDURE** .

15. **(P125) DRIVER PASSIVE HANDLE SWITCH SENSE WIRE SHORT TO VOLTAGE**

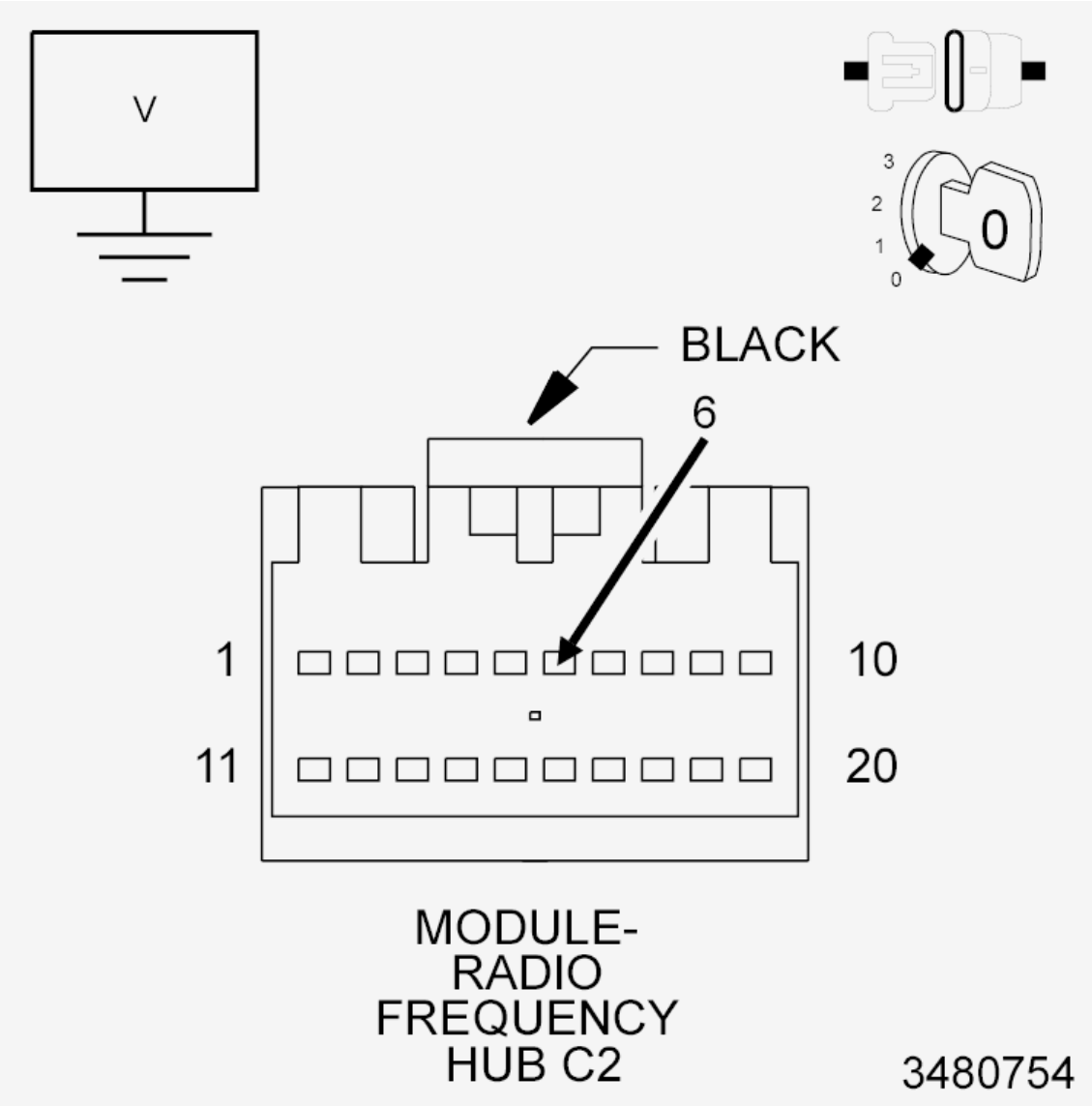

Fig. 69: Checking Driver Passive Handle Switch Sense Wire For Short To Voltage
Courtesy of CHRYSLER GROUP, LLC

1. Measure the voltage between ground and the (P125) Driver Passive Handle Switch Sense circuit in the C2 harness connector.

   Is there any voltage present?

   Yes

   - Repair the short to voltage in the (P125) Driver Passive Handle Sense circuit.
   - With the scan tool, select "Diagnostic Procedures", "Reset ECU" and "RFH" and perform the routine.
   - Perform the BODY VERIFICATION TEST. Refer to **STANDARD PROCEDURE** .

No

- Replace the Radio Frequency Hub (RF Hub) Module in accordance with the Service Information. Refer to **MODULE, RADIO FREQUENCY (RF HUB), REMOVAL** .
- Perform the RADIO FREQUENCY HUB VERIFICATION TEST. Refer to **STANDARD PROCEDURE**.

B25AA-00-FRONT PASSENGER DOOR HANDLE SENSE

For a complete wiring diagram, **refer to appropriate SYSTEM WIRING DIAGRAMS article** .

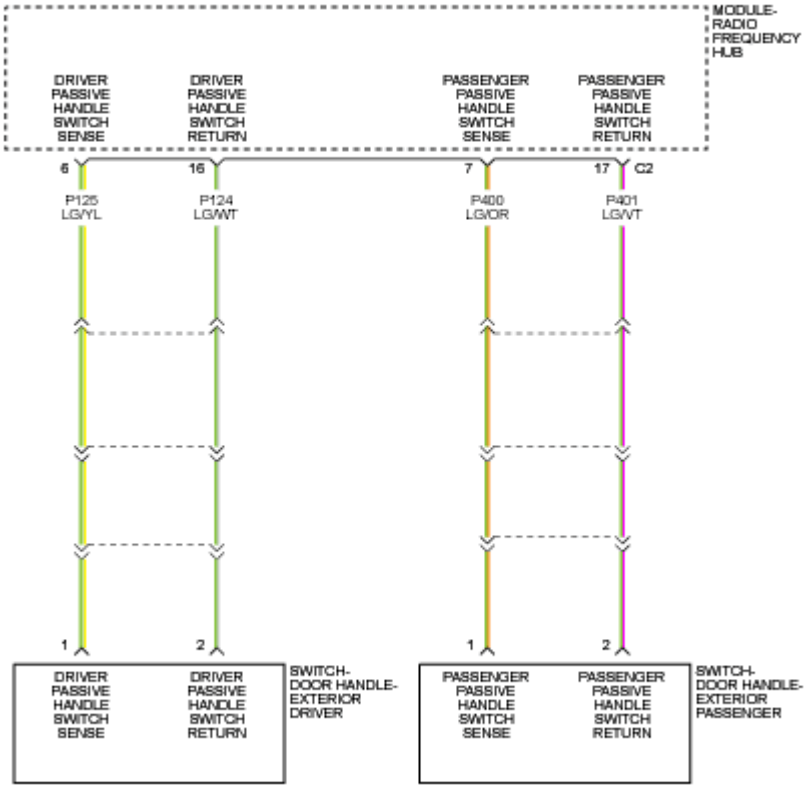

Fig. 70: Door Handle Sense Circuit Diagram
Courtesy of CHRYSLER GROUP, LLC

WHEN MONITORED

During a Passive Entry or Keyless Go event.

SET CONDITION

When the RF Hub module senses a door handle hall sensor, a lock switch failure or a continuous activation for over four (4) minutes, this code will set.

POSSIBLE CAUSES

Possible Causes
DOOR HANDLE CAP
PASSENGER EXTERIOR DOOR HANDLE (PASSIVE ENTRY)
RADIO FREQUENCY HUB (RF HUB)

DIAGNOSTIC TEST

1. **TEST HANDLE HALL SENSOR**

NOTE: **Verify that the vehicle's battery is fully charged with a DVOM and use the scan tool to compare the Battery Voltage listed under "Data" in the RFH View to that of the BCM. If the vehicle's battery is not fully charged, correct this condition before proceeding.**

NOTE: **Before proceeding, check the handle for any foreign material, or binding, that could cause a sticking situation to the handle or switch.**

NOTE: **If there are any other active RF Hub DTCs, perform the diagnostic procedure for them before proceeding.**

1. Cycle the ignition on.
2. Using the scan tool, record and erase the DTCs.
3. Make sure that the door handle is in the home position (not pulled).
4. With the scan tool, select "Diagnostic Procedures", "Reset ECU" and "RFH" and perform the routine.
5. With the scan tool, select "RFH", "Data" and scroll to "Last Message: Passenger Door Handle Hall Signal".
6. Observe the value field.

Does the scan tool display: YES?

Yes

NOTE: **Verify that the magnet is present in the Door Handle Cap. If the magnet is present, then continue with the diagnostic procedure. If the magnet is NOT present, replace the Door Handle Cap first.**

- Replace the Passenger Exterior Door Handle in accordance with the Service Information. Refer to **HANDLE, EXTERIOR, REMOVAL** and **HANDLE, INTERIOR, REMOVAL** .
- With the scan tool, select "Diagnostic Procedures", "Reset ECU" and "RFH" and perform the routine.

- Perform the BODY VERIFICATION TEST. Refer to **STANDARD PROCEDURE** .

No

- Go To 2

2. **TEST FOR STUCK LOCK SWITCH**
   1. With the scan tool, select "RFH", "Data" and scroll to "Last Message: Passenger Door Handle Lock Signal".
   2. Observe the value field.

      Does the scan tool display: YES?

      Yes

      - Replace the Passenger Exterior Door Handle in accordance with the Service Information. Refer to **HANDLE, EXTERIOR, REMOVAL** and **HANDLE, INTERIOR, REMOVAL** .
      - With the scan tool, select "Diagnostic Procedures", "Reset ECU" and "RFH" and perform the routine.
      - Perform the BODY VERIFICATION TEST. Refer to **STANDARD PROCEDURE** .

      No

      - Go To 3

3. **DOOR HANDLE OPERATION**
   1. Open the Passenger door window.
   2. Cycle the ignition off, remove the FOBIK and close all doors.
   3. Have the FOBIK outside the car and within 10 cm. and 1.5 m. (4 in. and 5 ft.) of the Passenger door handle.

      NOTE: In the next steps, wait two (2) seconds between each Lock and Unlock activation as there is a two second delay after each Lock action.

   4. Lock and Unlock the Passenger Door by the outside handle four (4) times.
   5. Open the Passenger Door by pulling the handle.

      Did the Door Handle Lock and Unlock the door as it should?

      Yes

      - Test complete, the condition or conditions that originally set this DTC are not present at this time. Using the wiring diagrams as a guide, check all related splices and connectors for signs of water intrusion, corrosion, pushed out or bent terminals and correct pin tension.

- Perform the BODY VERIFICATION TEST. Refer to **STANDARD PROCEDURE** .

No

- Go To 4

4. **DOOR HANDLE OR RF HUB**
   1. Cycle the ignition on and open the Driver door window.
   2. Cycle the ignition off, remove the FOBIK and close all doors.
   3. Have the FOBIK outside the car and within 10cm. and 1.5 m. (4 in. and 5 ft.) from the Driver door handle.

      NOTE: In the next steps, wait two (2) seconds between each Lock and Unlock activation as there is a two second delay after each Lock action.

   4. Lock and Unlock the Driver Door by the outside handle four (4) times.
   5. Using the handle lock switch, lock the doors.
   6. Open the Driver Door by pulling the handle.

   Did the Driver Door Handle Lock and Unlock the door as it should?

   Yes

   - Replace the Passenger Exterior Door Handle in accordance with the Service Information. Refer to **HANDLE, EXTERIOR, REMOVAL** and **HANDLE, INTERIOR, REMOVAL** .
   - With the scan tool, select "Diagnostic Procedures", "Reset ECU" and "RFH" and perform the routine.
   - Perform the BODY VERIFICATION TEST. Refer to **STANDARD PROCEDURE** .

   No

   - Replace the RF HUB Module in accordance with the Service Information. Refer to **MODULE, RADIO FREQUENCY (RF HUB), REMOVAL** .
   - Perform the RADIO FREQUENCY HUB VERIFICATION TEST. Refer to **STANDARD PROCEDURE**.

B25AA-01-FRONT PASSENGER DOOR HANDLE SENSE-GENERAL ELECTRICAL FAILURE

For a complete wiring diagram, **refer to appropriate SYSTEM WIRING DIAGRAMS article** .

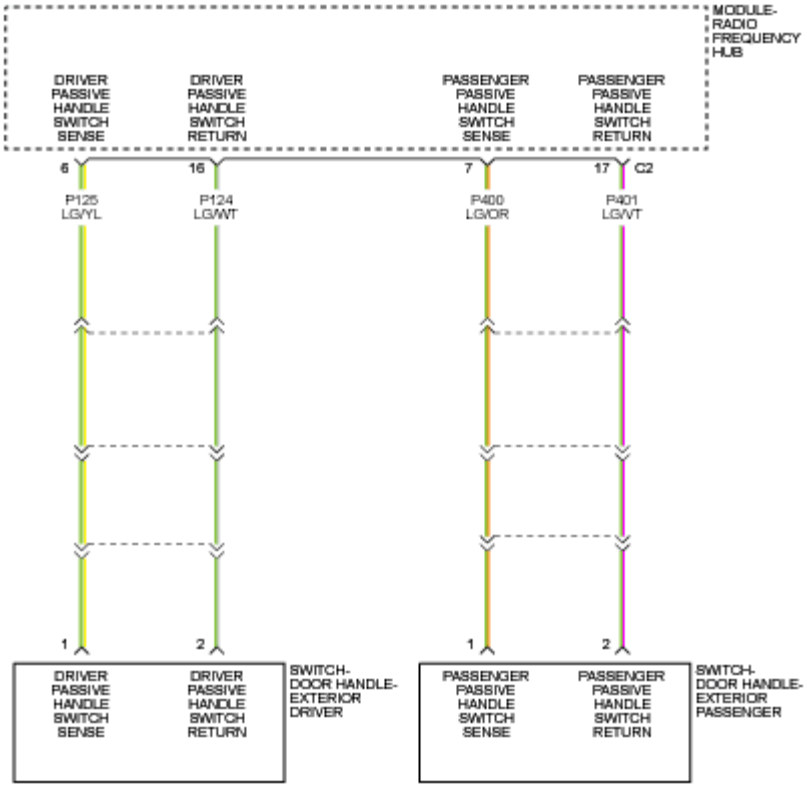

Fig. 71: Door Handle Sense Circuit Diagram
Courtesy of CHRYSLER GROUP, LLC

WHEN MONITORED

During a Passive Entry or Keyless Go Event.

SET CONDITION

Whenever the Radio Frequency Hub (RF Hub) senses an open, a short to ground or a short to battery on the Passive Handle Switch Sense circuit for over one (1) minute, this code will set.

POSSIBLE CAUSES

Possible Causes
(P400) PASSENGER PASSIVE HANDLE SWITCH SENSE CIRCUIT SHORTED TO VOLTAGE
(P400) PASSENGER PASSIVE HANDLE SWITCH SENSE CIRCUIT SHORTED TO GROUND
(P401) PASSENGER PASSIVE HANDLE SWITCH RETURN CIRCUIT OPEN
(P400) PASSENGER PASSIVE HANDLE SWITCH SENSE CIRCUIT OPEN
(P400) PASSENGER PASSIVE HANDLE SWITCH SENSE CIRCUIT SHORTED TO THE (P401) PASSENGER PASSIVE HANDLE SWITCH RETURN CIRCUIT
PASSENGER EXTERIOR DOOR HANDLE (PASSIVE ENTRY)

RADIO FREQUENCY HUB (RF HUB)
DOOR HANDLE CAP

DIAGNOSTIC TEST

1. **TEST FOR INTERMITTENT CONDITION**

NOTE: **Verify that the vehicle's battery is fully charged with a DVOM and use the scan tool to compare the Battery Voltage listed under "Data" in the RFH View to that of the BCM. If the vehicle's battery is not fully charged, correct this condition before proceeding.**

NOTE: **Before proceeding, check the handle for any foreign material, or binding that could cause a sticking situation to the handle or switch.**

1. Cycle the ignition on and leave on until instructed to "Cycle the ignition off".
2. Using the scan tool, record and erase the DTCs.
3. With the scan tool, select: "RFH" and "System Tests".
4. Perform the Door Handle Verification Test. This will activate the module to retest for DTCs.
5. With the scan tool, read the Active DTCs and wait one (1) minute.

Does the scan tool display: B25AA-01-FRONT PASSENGER DOOR HANDLE SENSE - GENERAL ELECTRICAL FAILURE as active?

Yes

NOTE: **Verify that the magnet is present in the Door Handle Cap. If the magnet is present, then continue with the diagnostic procedure. If the magnet is NOT present, replace the Door Handle Cap first.**

- Go To 2

No

- Test complete, the condition or conditions that originally set this DTC are not present at this time. Using the wiring diagrams as a guide, check all related splices and connectors for signs of water intrusion, corrosion, pushed out or bent terminals and correct pin tension.
- Perform the BODY VERIFICATION TEST. Refer to **STANDARD PROCEDURE** .

2. **(P400) PASSENGER PASSIVE ENTRY HANDLE SWITCH SENSE CIRCUIT**
   1. With the scan tool, select "RFH", "Data" and scroll to "Right Front Door Handle Power".
   2. Observe the Value field.

What does the value field display?

OFF

- Go To 3

ON

- Go To 8

3. **(P400) PASSENGER PASSIVE ENTRY HANDLE SWITCH SENSE CIRCUIT OPEN OR SHORTED**
   1. With the scan tool, select "Diagnostic Procedures", "Reset ECU" and "RFH" and perform the routine.
   2. With the scan tool, select "RFH", "Data" and scroll to "Right Front Door Handle Power".
   3. Double click on the Value field to start the graph.
   4. Observe the graph for a pulsating line.

   Is the graph pulsating between high and low on the screen?

   Yes

   - Go To 4

   No

   - Go To 7

4. **PASSENGER EXTERIOR DOOR HANDLE (PASSIVE ENTRY)**
   1. Cycle the ignition off.
   2. Disconnect the Passenger Exterior Door Handle Switch harness connector. Refer to **HANDLE, EXTERIOR, REMOVAL** and **HANDLE, INTERIOR, REMOVAL** .
   3. Cycle the ignition on.
   4. With the scan tool, select "Diagnostic Procedures", "Reset ECU" and "RFH" and perform the routine.
   5. With the scan tool, select "RFH", "Data" and scroll to "Right Front Door Handle Power".
   6. Double click on the Value field to start the graph.
   7. Observe the graph for a pulsating line.

   Is the graph pulsating between high and low on the screen?

   Yes

   - Go To 5

   No

- Replace the Passenger External Door Handle. Refer to **HANDLE, EXTERIOR, INSTALLATION** and **HANDLE, INTERIOR, INSTALLATION** .
- With the scan tool, select "Diagnostic Procedures", "Reset ECU" and "RFH" and perform the routine.
- Perform the BODY VERIFICATION TEST. Refer to **STANDARD PROCEDURE** .

5. **(P400) PASSENGER PASSIVE HANDLE SWITCH SENSE WIRE SHORTED TO GROUND**

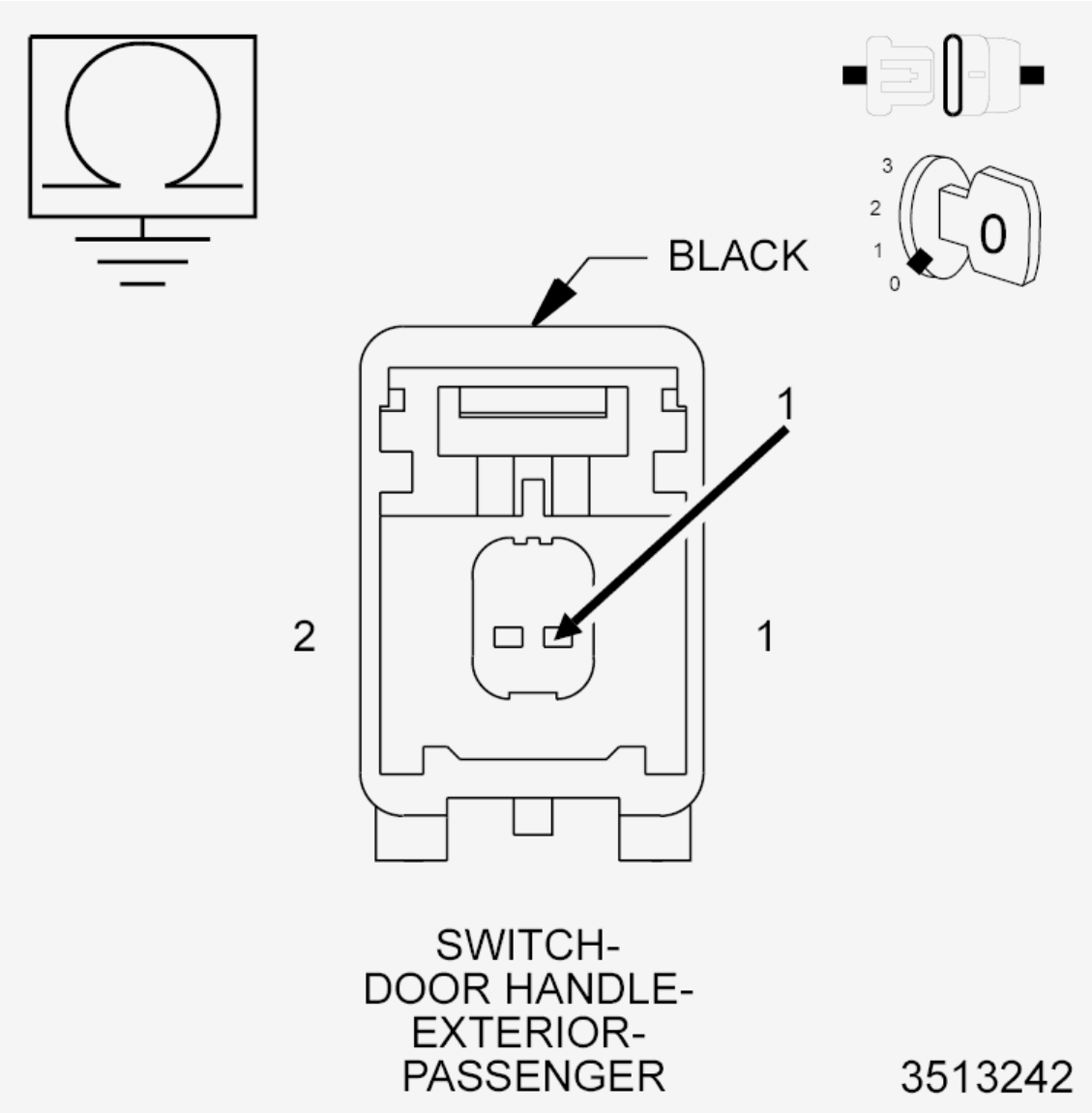

Fig. 72: Checking Passenger Passive Handle Switch Sense Wire For Short To Ground
Courtesy of CHRYSLER GROUP, LLC

1. Cycle the ignition off.
2. Disconnect the Radio Frequency Hub (RF Hub) Module C2 harness connector.
3. Check the connectors for signs of water intrusion, corrosion, pushed out or bent terminals and

correct pin tension. Repair as necessary. If repairs were made, return to Step 1.

4. Measure the resistance between ground and the (P400) Passenger Passive Handle Switch Sense wire in the Handle Switch harness connector.

   Is the resistance below 30K Ohms?

   Yes

   - Repair the short to ground in the (P400) Passenger Passive Handle Switch Sense circuit.
   - With the scan tool, select "Diagnostic Procedures", "Reset ECU" and "RFH" and perform the routine.
   - Perform the BODY VERIFICATION TEST. Refer to **STANDARD PROCEDURE** .

   No

   - Go To 6

6. **(P400) PASSENGER PASSIVE HANDLE SWITCH SENSE CIRCUIT SHORTED TO THE (P401) PASSENGER PASSIVE HANDLE SWITCH RETURN CIRCUIT**

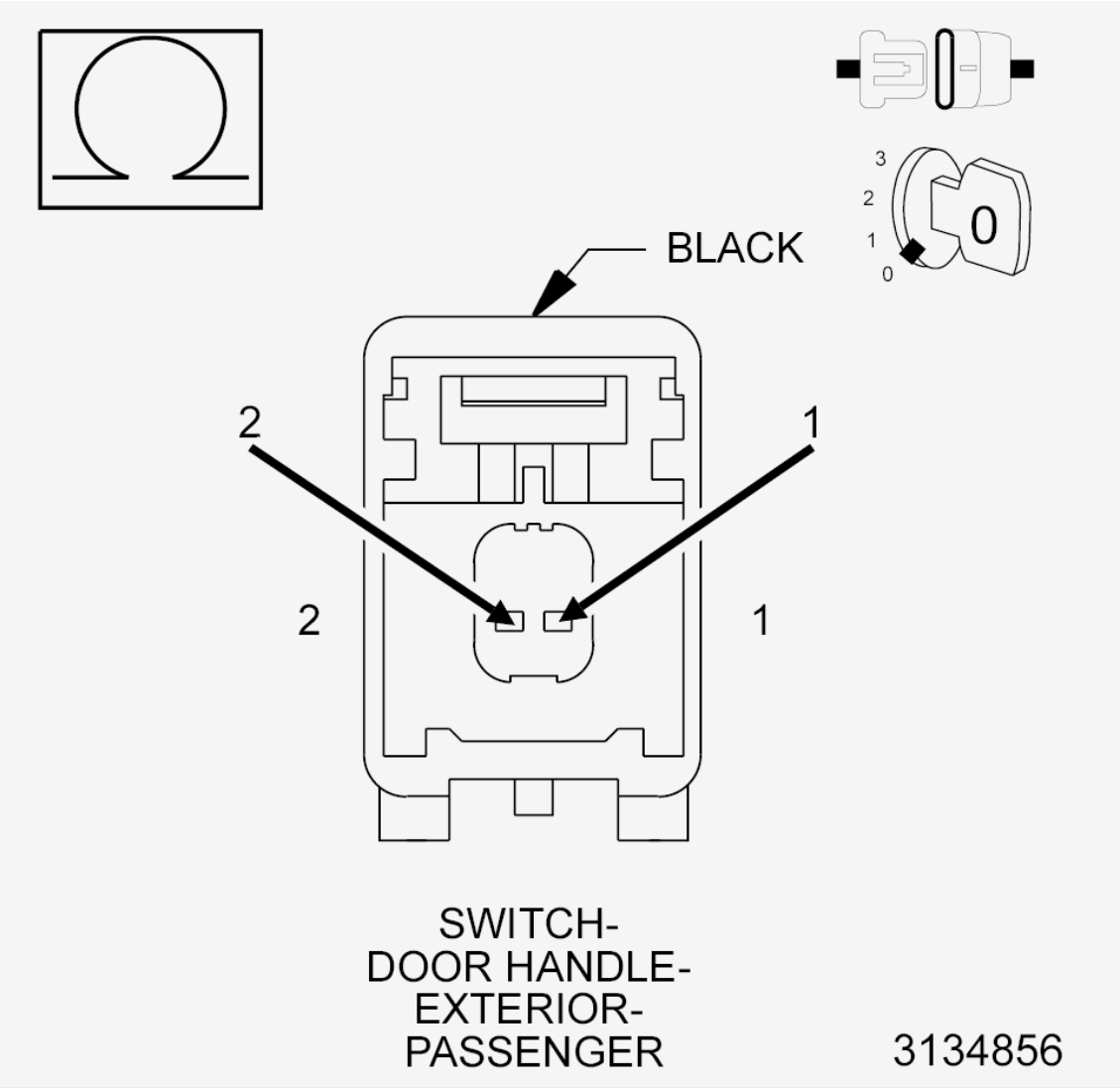

Fig. 73: Measuring Resistance Between Passenger Passive Handle Switch Sense Circuit & Passenger Passive Handle Switch Return Circuit
Courtesy of CHRYSLER GROUP, LLC

1. Measure the resistance between the (P400) Passenger Passive Handle Switch Sense circuit and the (P401) Passenger Passive Handle Switch Return circuit.

   Is the resistance below 30K Ohms?

   Yes

   - Repair the short between the (P400) Passenger Passive Handle Switch Sense circuit and the (P401) Passenger Passive Handle Switch Return circuit.
   - With the scan tool, select "Diagnostic Procedures", "Reset ECU" and "RFH" and perform the routine.
   - Perform the BODY VERIFICATION TEST. Refer to **STANDARD PROCEDURE** .

No

- Replace the Radio Frequency Hub (RF Hub) Module in accordance with the Service Information. Refer to **MODULE, RADIO FREQUENCY (RF HUB), REMOVAL** .
- Perform the RADIO FREQUENCY HUB VERIFICATION TEST. Refer to **STANDARD PROCEDURE**.

7. **(P400) PASSENGER PASSIVE ENTRY HANDLE SWITCH SENSE CIRCUIT**
   1. Continue with the scan tool still on "Right Front Door Handle Power".
   2. Observe the Value field.

   What does the Value field display?

   OFF

   - Replace the Radio Frequency Hub (RF Hub) Module in accordance with the Service Information. Refer to **MODULE, RADIO FREQUENCY (RF HUB), REMOVAL** .
   - Perform the RADIO FREQUENCY HUB VERIFICATION TEST. Refer to **STANDARD PROCEDURE**.

   ON

   - Test complete, the condition or conditions that originally set this DTC are not present at this time. Using the wiring diagrams as a guide, check all related splices and connectors for signs of water intrusion, corrosion, pushed out or bent terminals and correct pin tension.
   - Perform the BODY VERIFICATION TEST. Refer to **STANDARD PROCEDURE** .
8. **PASSENGER PASSIVE ENTRY HANDLE SWITCH SENSE OR RETURN CIRCUIT OPEN**
   1. Continue with the scan tool still on "Right Front Door Handle Power".
   2. Double click on the Value field to start the graph.
   3. Observe the graph for a pulsating line.

   Is the graph pulsating between high and low on the screen?

   Yes

   - Go To 4

   No

   - Go To 9
9. **TEST HANDLE FUNCTIONS**
   1. Stop the graph.
   2. Lower the passenger door window.
   3. Cycle the ignition off, remove the FOBIK and close all doors.

4. With the scan tool, select "RFH", "Data" and scroll to "Passive Entry Function Carried Out".
5. Have the FOBIK within 1.5 m (5 ft.) of the passenger door handle.

NOTE: In the next steps, wait two (2) seconds between each Lock and Unlock activation as there is a two second delay after each Lock action.

6. Press the Lock button on the handle and observe "Passive lock at right front door".
7. Grab the door handle and observe "Passive entry at right front door".
8. Repeat steps 6 and 7 two more times.

Is the module receiving the inputs on the screen as you do them?

Yes

- Test complete, the condition or conditions that originally set this DTC are not present at this time. Using the wiring diagrams as a guide, check all related splices and connectors for signs of water intrusion, corrosion, pushed out or bent terminals and correct pin tension.
- Perform the BODY VERIFICATION TEST. Refer to **STANDARD PROCEDURE** .

No

- Go To 10

10. **HANDLE OR CIRCUIT PROBLEM**

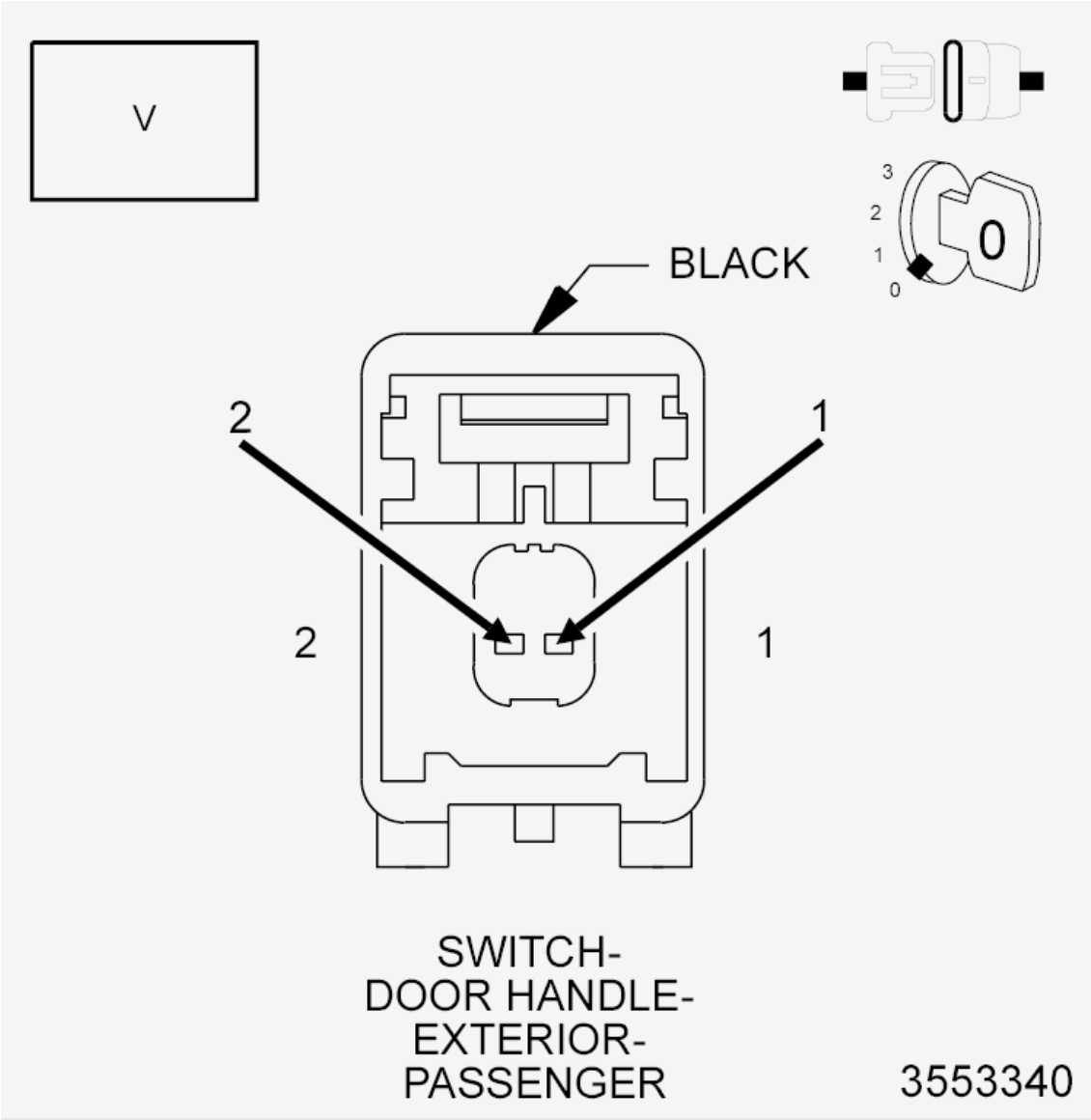

Fig. 74: Measuring Voltage Between Passenger Passive Handle Switch Return And Passenger Passive Handle Sense Circuits
Courtesy of CHRYSLER GROUP, LLC

1. Disconnect the Passenger Exterior Door Handle Switch harness connector. Refer to **HANDLE, EXTERIOR, REMOVAL** and **HANDLE, INTERIOR, REMOVAL** .
2. Measure the voltage between the (P401) Passenger Passive Handle Switch Return and the (P400) Passenger Passive Handle Sense circuits in the Passenger Exterior Door Handle Switch connector.

   Is the voltage above 11.8 volts?

   Yes

   - Replace the Passenger External Door Handle in accordance with the Service Information.

Refer to **HANDLE, EXTERIOR, INSTALLATION** and **HANDLE, INTERIOR, INSTALLATION** .

- With the scan tool, select "Diagnostic Procedures", "Reset ECU" and "RFH" and perform the routine.
- Perform the BODY VERIFICATION TEST. Refer to **STANDARD PROCEDURE** .

No

- Go To 11

11. **(P401) PASSENGER PASSIVE HANDLE SWITCH RETURN CIRCUIT OPEN**

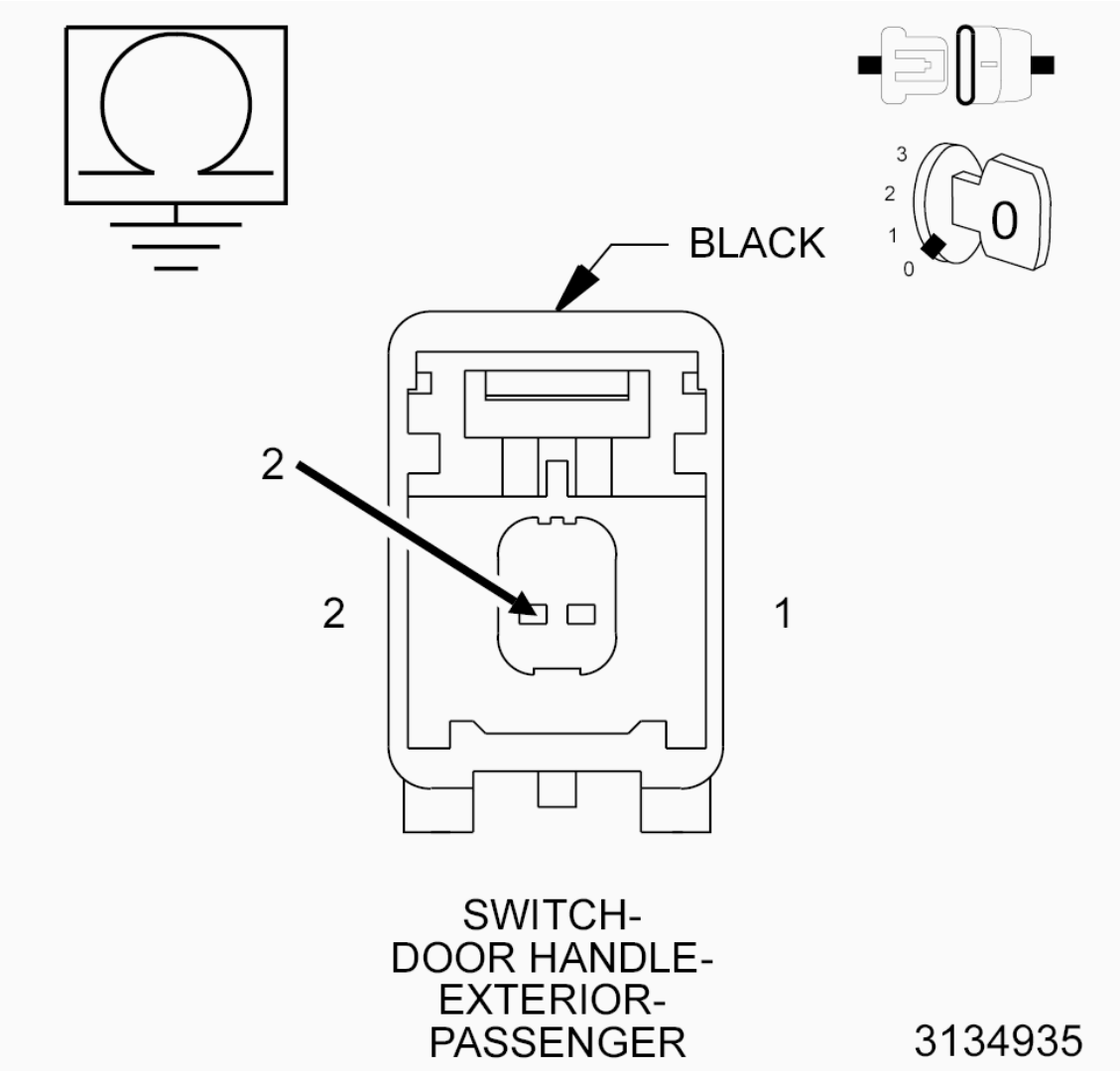

Fig. 75: Measuring Resistance Between Ground Passenger Passive Handle Switch Return Circuit
Courtesy of CHRYSLER GROUP, LLC

1. Measure the resistance between ground and the (P401) Passenger Passive Handle Switch Return circuit.

Is the resistance below 12.0 Ohms?

Yes

- Go To 14

No

- Go To 12

12. **(P401) PASSENGER PASSIVE HANDLE SWITCH RETURN WIRE OPEN**

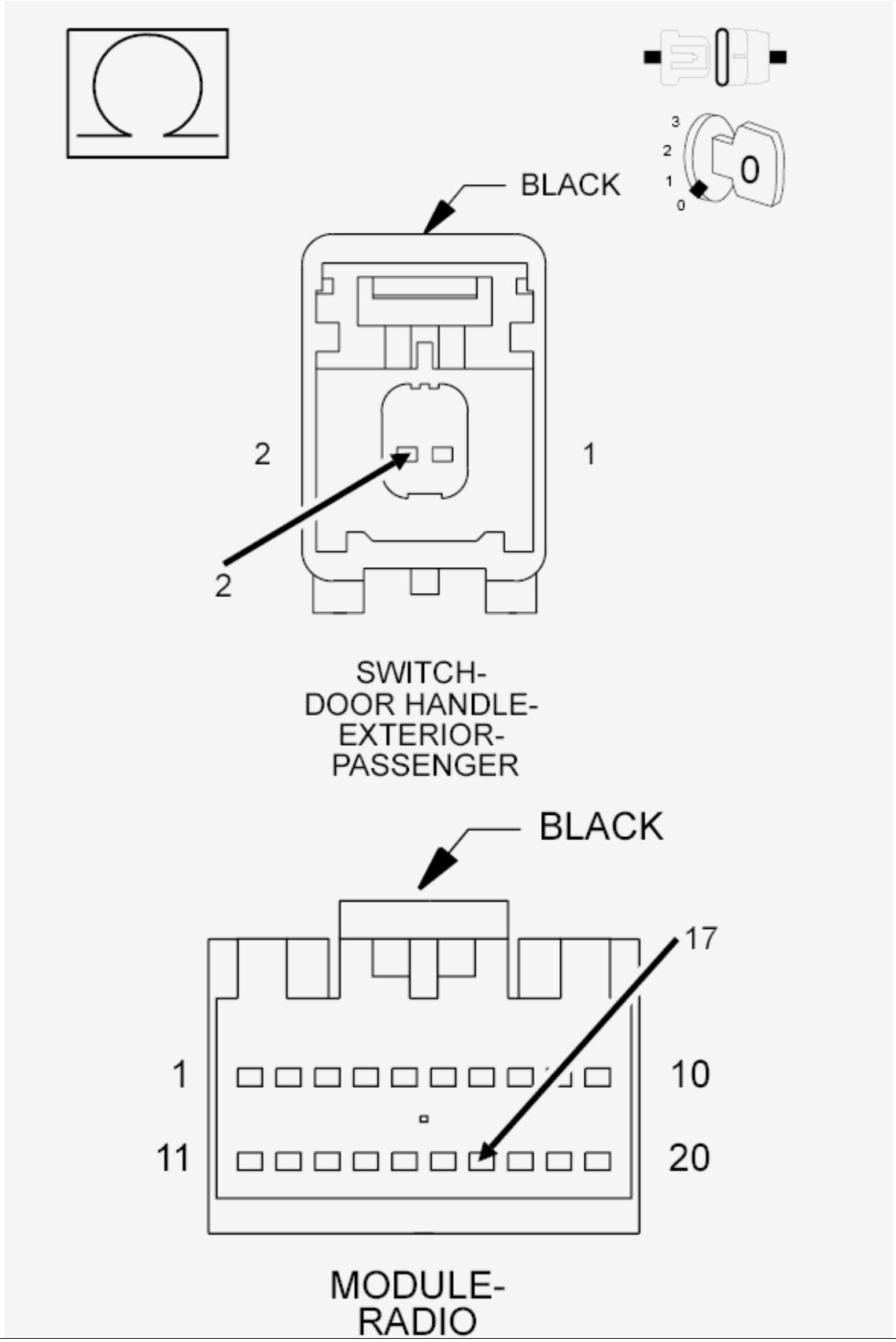
3
2
1
0
0
BLACK
2
1
2
SWITCH-
DOOR HANDLE-
EXTERIOR-
PASSENGER
BLACK
17
1
10
11
20
MODULE-
RADIO

Fig. 76: Checking Passenger Passive Handle Switch Return Wire For Open
Courtesy of CHRYSLER GROUP, LLC

1. Disconnect the Radio Frequency Hub (RF Hub) Module C2 harness connector.
2. Check the connectors for signs of water intrusion, corrosion, pushed out or bent terminals and correct pin tension. Repair as necessary. If repairs were made, return to Step 1.
3. Measure the resistance of the (P401) Passenger Passive Handle Switch Return circuit between the RF Hub Module C2 harness connector and the Passenger Exterior Door Handle Switch harness connector.

   Is the resistance below 2.0 Ohms?

   Yes

   - Go To 13

   No

   - Repair the open in the (P401) Passenger Passive Handle Switch Return wire.
   - With the scan tool, select "Diagnostic Procedures", "Reset ECU" and "RFH" and perform the routine.
   - Perform the BODY VERIFICATION TEST. Refer to **STANDARD PROCEDURE** .

13. **GROUND WIRE OPEN**

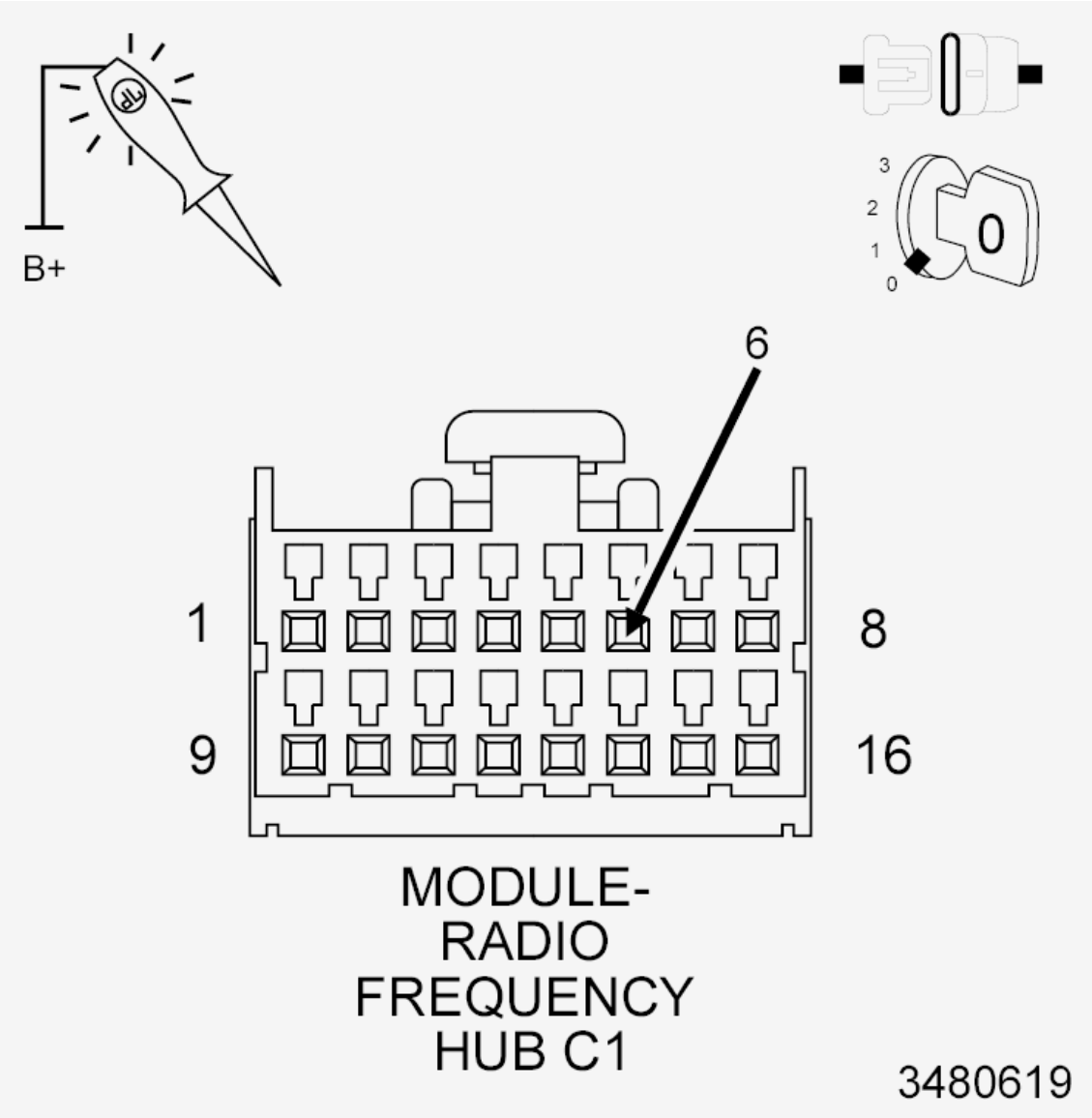

Fig. 77: Checking Ground Wire For Open
Courtesy of CHRYSLER GROUP, LLC

1. Disconnect the Radio Frequency Hub (RF Hub) Module C1 harness connector.
2. Check the connectors for signs of water intrusion, corrosion, pushed out or bent terminals and correct pin tension. Repair as necessary. If repairs were made, return to Step 1.
3. Using a 12-volt test light connected to 12-volts, check the RF-Hub Ground circuit in the C1 harness connector.

NOTE: **The test light must illuminate brightly. Compare the brightness to that of a direct connection to the battery.**

Does the test light illuminate brightly?

Yes

- Replace the Radio Frequency Hub (RF Hub) Module in accordance with the Service Information. Refer to **MODULE, RADIO FREQUENCY (RF HUB), REMOVAL** .
- Perform the RADIO FREQUENCY HUB VERIFICATION TEST. Refer to **STANDARD PROCEDURE**.

No

- Repair the open in the RF-Hub Ground circuit.
- With the scan tool, select "Diagnostic Procedures", "Reset ECU" and "RFH" and perform the routine.
- Perform the BODY VERIFICATION TEST. Refer to **STANDARD PROCEDURE** .

14. **(P400) PASSENGER PASSIVE HANDLE SWITCH SENSE WIRE OPEN**

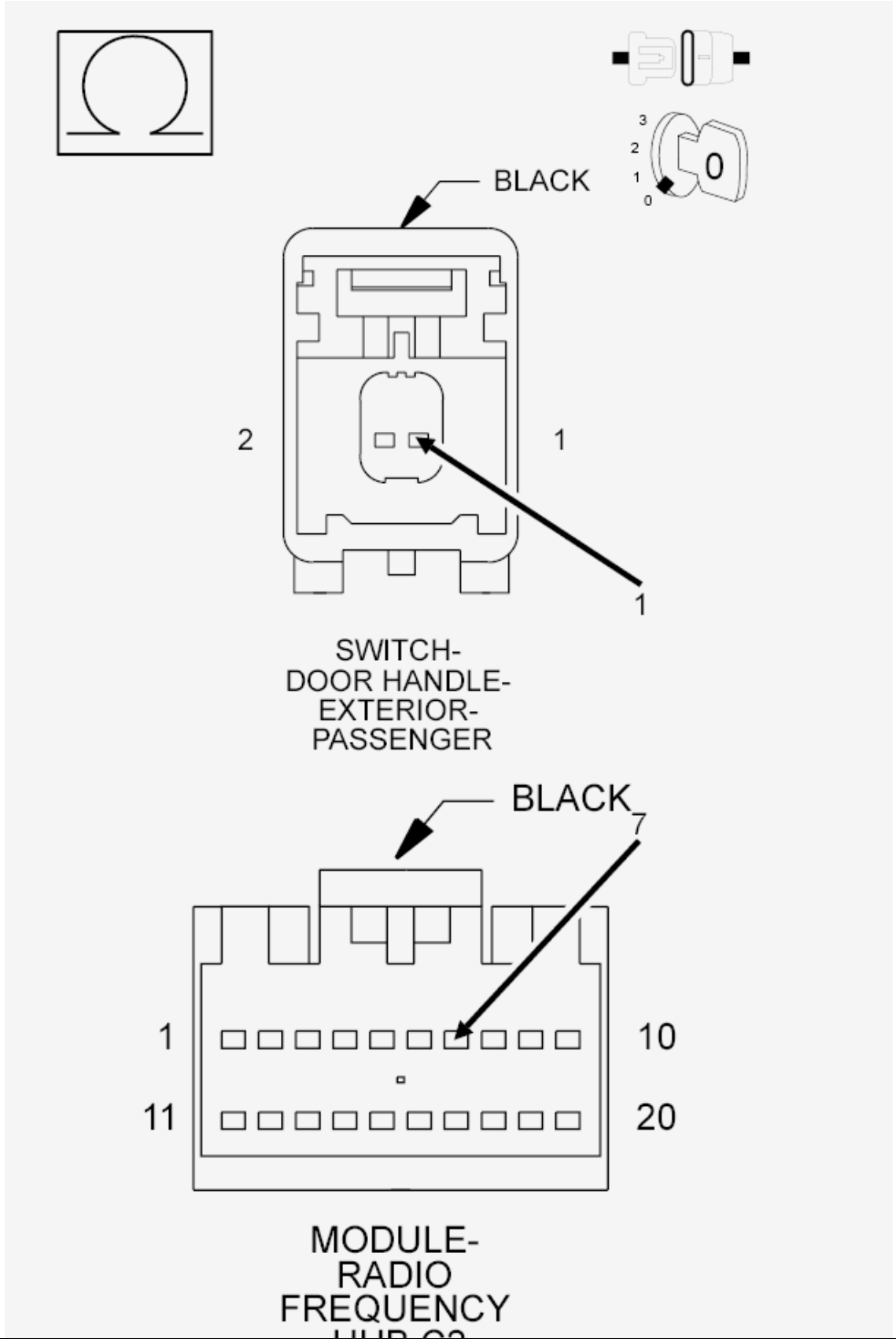
3
2
1
0
0
BLACK
2
1
1
SWITCH-
DOOR HANDLE-
EXTERIOR-
PASSENGER
BLACK
7
1
10
11
20
MODULE-
RADIO
FREQUENCY

Fig. 78: Checking Passenger Passive Handle Switch Sense Wire For Open
Courtesy of CHRYSLER GROUP, LLC

1. Disconnect the RF Hub Module C2 harness connector.
2. Check the connectors for signs of water intrusion, corrosion, pushed out or bent terminals and correct pin tension. Repair as necessary. If repairs were made, return to Step 1.
3. Measure the resistance of the (P400) Passenger Passive Handle Switch Sense wire between the RF Hub C2 harness connector and the Passenger Exterior Door Handle Switch harness connector.

   Is the resistance below 2.0 Ohms?

   Yes

   - Go To 15

   No

   - Repair the open in the (P400) Passenger Passive Handle Sense wire.
   - With the scan tool, select "Diagnostic Procedures", "Reset ECU" and "RFH" and perform the routine.
   - Perform the BODY VERIFICATION TEST. Refer to **STANDARD PROCEDURE** .

15. **(P400) PASSENGER PASSIVE HANDLE SWITCH SENSE WIRE SHORTED TO VOLTAGE**

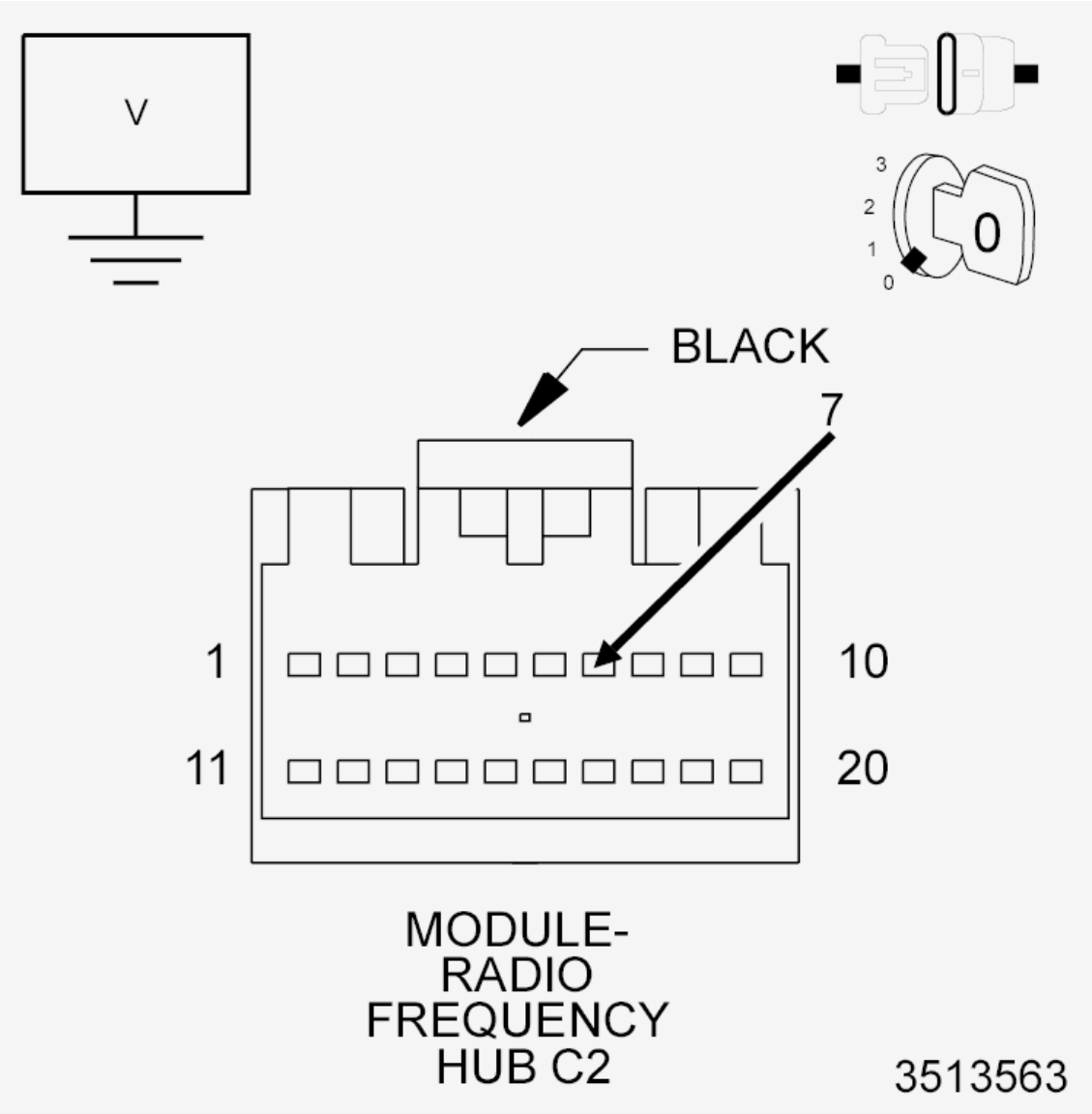

Fig. 79: Checking Passenger Passive Handle Switch Sense Wire For Short To Voltage
Courtesy of CHRYSLER GROUP, LLC

1. Measure the voltage between ground and the (P400) Passenger Passive Handle Switch Sense circuit in the C2 harness connector.

   Is there any voltage present?

   Yes

   - Repair the short to voltage in the (P400) Passenger Passive Handle Sense circuit.
   - With the scan tool, select "Diagnostic Procedures", "Reset ECU" and "RFH" and perform the routine.
   - Perform the BODY VERIFICATION TEST. Refer to **STANDARD PROCEDURE** .

No

- Replace the Radio Frequency Hub (RF Hub) Module in accordance with the Service Information. Refer to **MODULE, RADIO FREQUENCY (RF HUB), REMOVAL** .
- Perform the RADIO FREQUENCY HUB VERIFICATION TEST. Refer to **STANDARD PROCEDURE**.

B285F-11-BLIND SPOT WARNING LIGHT CONTROL - CIRCUIT SHORT TO GROUND

For a complete wiring diagram, **refer to appropriate SYSTEM WIRING DIAGRAMS article** .

WHEN MONITORED

When the Driver Door Module (DDM) turns the Blind Spot Indicator on.

SET CONDITION

When the Driver Door Module (DDM) detects a short to ground on the Blind Spot Indicator circuit, this code will set.

POSSIBLE CAUSES

Possible Causes
MIRROR ASSEMBLY
DOOR MODULE

DIAGNOSTIC TEST

1. **TEST FOR INTERMITTENT CONDITION**
    1. Turn the ignition on.
    2. With the scan tool, erase all DTCs.
    3. Cycle the ignition from on to off three times.
    4. Turn the ignition on.
    5. Wait one minute.
    6. With the scan tool, read the active DTCs.

    Does the scan tool display: B285F-11-BLIND SPOT WARNING LIGHT CONTROL - CIRCUIT SHORT TO GROUND as Active?

    Yes

    - Go To 2

    No

- Test complete, the condition or conditions that originally set this DTC are not present at this time. Using the wiring diagrams as a guide, check all relate splices and connectors for signs of water intrusion, corrosion, pushed out or bent terminals and correct pin tension. Repair as necessary.
- Perform the BODY VERIFICATION TEST. Refer to **STANDARD PROCEDURE** .

2. **INSPECT MIRROR CONNECTIONS**
   1. Turn the ignition off.
   2. Disconnect the Driver Door Module C1 harness connector.
   3. Inspect the wiring and connectors between the mirror and the Drivers Door Module.

      Were there any problems found?

      Yes

      - Repair as necessary.
      - Perform the BODY VERIFICATION TEST. Refer to **STANDARD PROCEDURE** .

      No

      - Go To 3

3. **MIRROR ASSEMBLY**
   1. Turn the ignition on
   2. With the scan tool, erase the DTCs.
   3. Cycle the ignition from on to off three times.
   4. Turn the ignition on.
   5. Make sure the DDM C1 harness connector is still disconnected.
   6. Wait one minute.

      NOTE: Look for a change in DTCs.

   7. With the scan tool, read the active DTCs.

      Does the scan tool display: B285F-15-BLIND SPOT WARNING LIGHT CONTROL - CIRCUIT SHORT TO BATTERY OR OPEN as Active?

      Yes

      - Replace the Driver Mirror Assembly in accordance with the Service Information. Refer to **MIRROR, OUTSIDE REARVIEW, REMOVAL** and **MIRROR, OUTSIDE REARVIEW, GLASS, REMOVAL** .
      - Perform the BODY VERIFICATION TEST. Refer to **STANDARD PROCEDURE** .

No

- Replace the Driver Door Module in accordance with the Service Information. Refer to **MODULE, BODY CONTROL, REMOVAL** .
- Perform the BODY VERIFICATION TEST. Refer to **STANDARD PROCEDURE** .

B285F-15-BLIND SPOT WARNING LIGHT CONTROL - CIRCUIT SHORT TO BATTERY OR OPEN

For a complete wiring diagram, **refer to appropriate SYSTEM WIRING DIAGRAMS article** .

WHEN MONITORED

Continuously.

SET CONDITION

When the Blind Spot Indicator circuit senses high voltage or an open circuit for over 55 ms., this code will set.

POSSIBLE CAUSES

Possible Causes
MIRROR ASSEMBLY
DOOR MODULE

DIAGNOSTIC TEST

1. **TEST FOR INTERMITTENT CONDITION**
    1. Cycle the ignition on.
    2. With the scan tool, erase all DTCs.
    3. Cycle the ignition from on to off three times.
    4. Cycle the ignition on.
    5. Wait one minute.
    6. With the scan tool, read the DTCs.

    Does the scan tool display active: B285F-15-BLIND SPOT WARNING LIGHT CONTROL - CIRCUIT SHORT TO BATTERY OR OPEN?

    Yes

    - Go To 2

    No

- Test complete, the condition or conditions that originally set this DTC are not present at this time. Using the wiring diagrams as a guide, check all related splices and connectors for signs of water intrusion, corrosion, pushed out or bent terminals and correct pin tension. Repair as necessary.
- Perform the BODY VERIFICATION TEST. Refer to **STANDARD PROCEDURE** .

2. **INSPECT MIRROR CONNECTIONS**
   1. Cycle the ignition off.
   2. Disconnect the Drivers Door Module C1 harness connector.
   3. Inspect the wiring and connectors between the mirror and the Drivers Door Module.

      Were there any problems found?

      Yes

      - Repair as necessary.
      - Perform the BODY VERIFICATION TEST. Refer to **STANDARD PROCEDURE** .

      No

      - Go To 3
3. **MIRROR ASSEMBLY**
   1. Measure the resistance between the (P552) Driver Blind Spot/Approach Return circuit and the (P711) Driver Blind Spot Signal Driver circuit in the DDM C1 harness connector.

      Is the resistance between 550.0 and 650.0 Ohms?

      Yes

      - Replace the Driver Door Module in accordance with the Service Information. Refer to **MODULE, DOOR, REMOVAL** .
      - Perform the BODY VERIFICATION TEST. Refer to **STANDARD PROCEDURE** .

      No

      - Replace the Driver Mirror Assembly in accordance with the Service Information. Refer to **MIRROR, OUTSIDE REARVIEW, REMOVAL** and **MIRROR, OUTSIDE REARVIEW, GLASS, REMOVAL** .
      - Perform the BODY VERIFICATION TEST. Refer to **STANDARD PROCEDURE** .

C1501-07-TIRE PRESSURE SENSOR 1 - MECHANICAL FAILURE

For a complete wiring diagram, **refer to appropriate SYSTEM WIRING DIAGRAMS article** .

NOTE: Check for and remove any non-FCC compliant components, and verify that the tire pressures are correct, before beginning this diagnostic procedure.

THEORY OF OPERATION

The Tire Pressure Monitoring (TPM) Sensor actively monitors the air pressure, air temperature inside the tire, and the internal battery status. Each sensor has a unique ID code. The TPM Sensor transmits the data at regular intervals via an encoded signal to a receiver circuit located in the Radio Frequency Hub Module (RF-Hub).

WHEN MONITORED

With vehicle speed greater than 32 km/h (20 mph).

SET CONDITION

The RF Hub will monitor the signals from the active road tire TPM Sensors. This code sets if pressure, temperature, or acceleration data is not received or cannot be accurately decoded for a maximum of 20 minutes.

POSSIBLE CAUSES

Possible Causes
TIRE PRESSURE MONITORING (TPM) SENSOR

DIAGNOSTIC TEST

1. **DTC STATUS IS ACTIVE**

NOTE: Before beginning the diagnostic procedure, verify that the tire pressures are correct, the 9936 TPM-RKE analyzer is up to date and the correct application has been chosen on the tool.

1. Cycle the ignition on.
2. With the scan tool, read and record the RF-Hub Module DTCs.
3. With the scan tool, erase the RF-Hub Module DTCs.
4. Test drive the vehicle at a speed greater than 32 km/h (20 mph) up to 20 minutes in order to receive TPM Sensor data and allow for the system to update.
5. With the scan tool, read the DTCs in the RF-Hub Module.

Is this DTC status Active at this time?

Yes

- Go To 2

No

- Go To 5

2. **TIRE PRESSURE MONITORING (TPM) SENSOR INTERNAL FAULT SET USING TPM-RKE ANALYZER**

NOTE: **The following procedure is used to locate the TPM Sensor that is setting the internal fault. If the tires have been rotated, the TPM Sensor is no longer in sequence from the factory. Faults are linked to the TPM Sensor IDs. You MUST locate the TPM Sensor that set the fault before continuing. Use the following method below at every tire location.**

NOTE: **If the TPM Sensor IDs do not match, it may be necessary to move the vehicle to a location away from other TPM Sensors and repeat this step.**

NOTE: **Always be certain to select the proper vehicle line and model year when using this tool, as the tool will automatically use the correct protocol to attempt to read the TPM Sensor. If the incorrect vehicle line and/or model year is selected, the TPM Sensor will not respond to the tool.**

1. Use a TPM-RKE Analyzer (special tool #CH9936, Analyzer, TPM/RKE) to scan each TPM Sensor for a response, and store in the proper location in the TPM-RKE Analyzer. If you receive no response from any of the TPM Sensors, check to make sure that the TPM-RKE Analyzer is set correctly and repeat the process on each non-responsive wheel.
2. Replace the TPM Sensor in accordance with the Service Information. Refer to **SENSOR, TIRE PRESSURE MONITORING (TPM), REMOVAL** . Perform the TPM SENSOR VERIFICATION TEST. Refer to **STANDARD PROCEDURE**.
3. With the scan tool, select Data Display for the RF-Hub Module.
4. Check to see if the Sensor IDs match what is programmed into the RF-Hub Module.

   Has the TPM Sensor been located?

   Yes

   - Install the Tire Pressure Monitoring (TPM) Sensor in accordance with the Service Information. Refer to **SENSOR, TIRE PRESSURE MONITORING (TPM), REMOVAL** .
   - Perform the TPM SENSOR VERIFICATION TEST. Refer to **STANDARD PROCEDURE**.

   No

   - Go To 3

3. **TIRE PRESSURE MONITORING (TPM) SENSOR INTERNAL FAULT - MISMATCHED ID**

NOTE: **If the TPM Sensor IDs do not match, it may be necessary to move the vehicle to a location away from other TPM Sensors and repeat this step.**

1. Use a TPM-RKE Analyzer (special tool #CH9936, Analyzer, TPM/RKE) to verify the TPM Sensor IDs match what is programmed into the RF-Hub Module. The TPM Sensor Identifications are located under "Data Display" for the RF-Hub Module.

   Do the TPM Sensor IDs match what is stored in the RF-Hub Module?

   Yes

   - Replace the Radio Frequency (RF Hub) Module in accordance with the Service Information. Refer to **MODULE, RADIO FREQUENCY (RF HUB), REMOVAL** .
   - Perform the TPM SENSOR VERIFICATION TEST. Refer to **STANDARD PROCEDURE**.

   No

   - Test complete.
   - Perform the TPM SENSOR VERIFICATION TEST. Refer to **STANDARD PROCEDURE**.

4. **TIRE PRESSURE MONITORING (TPM) SENSOR INTERNAL FAULT SET**

   NOTE: Some vehicles will not receive the TPM Sensor data when the vehicle is stationary. The vehicle may need to be driven at speeds greater than 32 km/h (20 mph) for about a minute in order to receive TPM Sensor data.

   1. Starting with the left front wheel, deflate the tire to 20 PSI, wait two minutes, and check the scan tool for changes to any compensated tire pressure values.
   2. Look for a tire location with a non-responsive TPM Sensor ID.
   3. Repeat this test on each wheel on the vehicle until the TPM Sensor in question has been identified.

      Has the TPM Sensor been located?

      Yes

      - Install the Tire Pressure Monitoring (TPM) Sensor in accordance with the Service Information. Refer to **SENSOR, TIRE PRESSURE MONITORING (TPM), REMOVAL** .
      - Perform the TPM SENSOR VERIFICATION TEST. Refer to **STANDARD PROCEDURE**.

      No

      - Test complete.
      - Perform the TPM SENSOR VERIFICATION TEST. Refer to **STANDARD PROCEDURE**.

5. **INTERMITTENT TIRE PRESSURE MONITORING (TPM) SENSOR DTC**
   1. The conditions necessary to set this DTC are not present at this time.
   2. Perform any Technical Service Bulletins that may apply to this condition.

3. With the scan tool, clear DTCs in the Radio Frequency Hub (RF-Hub) Module.
4. Test drive the vehicle for a minimum of 20 minutes with vehicle speed greater than 32 km/h (20 mph).
5. With the scan tool, rear the DTCs in the Radio Frequency Hub (RF-Hub) Module.

   Does the DTC reset or is the status Active for this DTC?

   Yes

   - Return to the beginning of this test and perform the diagnostic procedure as necessary.

   No

   - Test complete.
   - Perform the TPM SENSOR VERIFICATION TEST. Refer to **STANDARD PROCEDURE**.

C1501-31-TIRE PRESSURE SENSOR 1 - NO SIGNAL

For a complete wiring diagram, **refer to appropriate SYSTEM WIRING DIAGRAMS article** .

NOTE: Check for and remove any non-FCC compliant components before beginning this diagnostic procedure.

THEORY OF OPERATION

The Tire Pressure Monitoring (TPM) Sensor actively monitors the air pressure, air temperature inside the tire, and the internal battery status. Each sensor has a unique ID code. The TPM Sensor transmits the data at regular intervals via an encoded signal to a receiver circuit located in the Radio Frequency Hub (RF Hub) Module.

WHEN MONITORED

With vehicle speed greater than 32 km/h (20 mph).

SET CONDITION

The RF Hub Module will monitor the signals from the four active road tire TPM Sensors. This code sets if RF data is not received or cannot be accurately decoded for a maximum of 20 minutes, if localization has completed.

POSSIBLE CAUSES

Possible Causes
NON-FCC COMPLIANT COMPONENTS
AFTERMARKET TIRES/WHEELS
INTERMITTENT TIRE PRESSURE MONITORING (TPM) SENSOR INTERNAL DTC

TIRE PRESSURE MONITORING (TPM) SENSOR
RADIO FREQUENCY HUB (RF-HUB) MODULE

DIAGNOSTIC TEST

1. **DTC STATUS IS ACTIVE**

NOTE: **Before beginning the diagnostic procedure, verify that the tire pressures are correct, the 9936 TPM-RKE analyzer is up to date and the correct application has been chosen on the tool.**

1. Cycle the ignition on.
2. With the scan tool, read and record RF-Hub Module DTCs.
3. Test drive the vehicle at a speed greater than 32 km/h (20 mph) up to 20 minutes in order to receive TPM Sensor data and allow for the system to update.
4. With the scan tool, read DTCs in the RF-Hub Module.

Is this DTC status Active at this time?

Yes

- Go To 2

No

- Go To 6

2. **TIRE PRESSURE MONITORING (TPM) SENSOR INTERNAL DTC**

NOTE: **This fault can be set if the incorrect or no TPM Sensor is installed on the vehicle.**

1. Perform a visual inspection to verify that all road wheels are equipped with a TPM Sensor.
2. With the TPM-RKE Analyzer (special tool #CH9936, Analyzer, TPM/RKE) verify the correct TPM Sensor is on the vehicle.

Is the correct TPM Sensor installed on the vehicle?

Yes

- Go To 3

No

- Install the correct Tire Pressure Monitoring (TPM) Sensor in accordance with the Service

Information. Refer to **SENSOR, TIRE PRESSURE MONITORING (TPM), REMOVAL** .

- Perform the TPM SENSOR VERIFICATION TEST. Refer to **STANDARD PROCEDURE**.

3. **TIRE PRESSURE MONITORING (TPM) SENSOR INTERNAL FAULT SET USING TPM-RKE ANALYZER**

NOTE: The following procedure is used to locate the TPM Sensor that is setting the internal fault. If the tires have been rotated, the TPM Sensor is no longer in sequence from the factory. Faults are linked to the TPM Sensor IDs. You MUST locate the TPM Sensor that set the fault before continuing. Use the following method below at every tire location.

NOTE: If the TPM Sensor IDs do not match, it may be necessary to move the vehicle to a location away from other TPM Sensors and repeat this step.

NOTE: Always be certain to select the proper vehicle line and model year when using this tool, as the tool will automatically use the correct protocol to attempt to read the TPM Sensor. If the incorrect vehicle line and/or model year is selected, the TPM Sensor will not respond to the tool.

1. Use a TPM-RKE Analyzer (special tool #CH9936, Analyzer, TPM/RKE) to scan each TPM Sensor for a response, and store in the proper location in the TPM-RKE Analyzer. If you receive a no response from any of the TPM Sensors, check to make sure that the TPM-RKE Analyzer is set correctly and repeat the process on each non-responsive wheel. If all sensors respond, continue this step.
2. Replace any non-responsive TPM Sensors in accordance with the Service Information. Refer to **SENSOR, TIRE PRESSURE MONITORING (TPM), REMOVAL** . Perform the TPM SENSOR VERIFICATION TEST. Refer to **STANDARD PROCEDURE**.
3. With the scan tool, select Data Display for the RF-Hub Module.
4. Check to see if the Sensor IDs match what is programmed into the RF-Hub Module.

Has the TPM Sensor been located?

Yes

- Install the Tire Pressure Monitoring (TPM) Sensor in accordance with the Service Information. Refer to **SENSOR, TIRE PRESSURE MONITORING (TPM), REMOVAL** .
- Perform the TPM SENSOR VERIFICATION TEST. Refer to **STANDARD PROCEDURE**.

No

- Go To 4

4. **TIRE PRESSURE MONITORING (TPM) SENSOR INTERNAL FAULT - MISMATCHED ID**

NOTE: If the TPM Sensor IDs do not match, it may be necessary to move the vehicle to a location away from other TPM Sensors and repeat this step.

1. Use a TPM-RKE Analyzer (special tool #CH9936, Analyzer, TPM/RKE) to verify the TPM Sensor IDs match what is programmed into the RF-Hub Module. The TPM Sensor Identifications are located under "Data Display" for the RF-Hub Module.

   Do the TPM Sensor IDs match what is stored in the RF-Hub Module?

   Yes

   - Replace the Radio Frequency (RF Hub) Module in accordance with the Service Information. Refer to **MODULE, RADIO FREQUENCY (RF HUB), REMOVAL** .
   - Perform the RADIO FREQUENCY HUB (RF-HUB) VERIFICATION TEST. Refer to **STANDARD PROCEDURE**.

   No

   - Test complete.
   - Perform the TPM SENSOR VERIFICATION TEST. Refer to **STANDARD PROCEDURE**.

5. **TIRE PRESSURE MONITORING (TPM) SENSOR INTERNAL FAULT SET**

NOTE: Some vehicles will not receive the TPM Sensor data when the vehicle is stationary. The vehicle may need to be driven at speeds greater than 32 km/h (20 mph) for about five minutes in order to receive TPM Sensor data.

1. Starting with the left front wheel, deflate the tire to 20 PSI, wait two minutes, and check the scan tool for changes to any compensated tire pressure values.
2. Look for a tire location with a non-responsive TPM Sensor ID.
3. Repeat this test on each wheel on the vehicle until the TPM Sensor in question has been identified.

   Has the TPM Sensor been located?

   Yes

   - Replace the Tire Pressure Monitoring (TPM) Sensor in accordance with the Service Information. Refer to **SENSOR, TIRE PRESSURE MONITORING (TPM), REMOVAL** .
   - Perform the TPM SENSOR VERIFICATION TEST. Refer to **STANDARD PROCEDURE**.

   No

   - Repeat this test until the defective sensor has been located.
   - Perform the TPM SENSOR VERIFICATION TEST. Refer to **STANDARD PROCEDURE**.

6. **INTERMITTENT TIRE PRESSURE MONITORING (TPM) SENSOR DTC**
    1. The conditions necessary to set this DTC are not present at this time.
    2. Perform any Technical Service Bulletins that may apply to this condition.
    3. With the scan tool, clear DTCs in the Radio Frequency Hub (RF-Hub) Module.
    4. Test drive the vehicle for a minimum of 20 minutes with vehicle speed greater than 32 km/h (20 mph).
    5. With the scan tool, read active DTCs in the Radio Frequency Hub (RF-Hub) Module.

    Does the DTC reset or is the status Active for this DTC?

    Yes

    - Return to the beginning of this test and perform the diagnostic procedure as necessary.

    No

    - Test complete.
    - Perform the TPM SENSOR VERIFICATION TEST. Refer to **STANDARD PROCEDURE**.

C1502-07-TIRE PRESSURE SENSOR 2 - MECHANICAL FAILURE

For a complete wiring diagram, **refer to appropriate SYSTEM WIRING DIAGRAMS article** .

NOTE: Check for and remove any non-FCC compliant components, and verify that the tire pressures are correct, before beginning this diagnostic procedure.

THEORY OF OPERATION

The Tire Pressure Monitoring (TPM) Sensor actively monitors the air pressure, air temperature inside the tire, and the internal battery status. Each sensor has a unique ID code. The TPM Sensor transmits the data at regular intervals via an encoded signal to a receiver circuit located in the Radio Frequency Hub Module (RF-Hub).

WHEN MONITORED

With vehicle speed greater than 32 km/h (20 mph).

SET CONDITION

The RF Hub will monitor the signals from the four active road tire TPM Sensors. This code sets if pressure, temperature, or acceleration data is not received or cannot be accurately decoded for a maximum of 20 minutes.

POSSIBLE CAUSES

Possible Causes

TIRE PRESSURE MONITORING (TPM) SENSOR

DIAGNOSTIC TEST

1. **DTC STATUS IS ACTIVE**

NOTE: **Before beginning the diagnostic procedure, verify that the tire pressures are correct, the 9936 TPM-RKE analyzer is up to date and the correct application has been chosen on the tool.**

1. Cycle the ignition on.
2. With the scan tool, read and record the RF-Hub Module DTCs.
3. With the scan tool, erase the RF-Hub Module DTCs.
4. Test drive the vehicle at a speed greater than 32 km/h (20 mph) up to 20 minutes in order to receive TPM Sensor data and allow for the system to update.
5. With the scan tool, read the DTCs in the RF-Hub Module.

Is this DTC status Active at this time?

Yes

- Go To 2

No

- Go To 5

2. **TIRE PRESSURE MONITORING (TPM) SENSOR INTERNAL FAULT SET USING TPM-RKE ANALYZER**

NOTE: **The following procedure is used to locate the TPM Sensor that is setting the internal fault. If the tires have been rotated, the TPM Sensor is no longer in sequence from the factory. Faults are linked to the TPM Sensor IDs. You MUST locate the TPM Sensor that set the fault before continuing. Use the following method below at every tire location.**

NOTE: **If the TPM Sensor IDs do not match, it may be necessary to move the vehicle to a location away from other TPM Sensors and repeat this step.**

NOTE: **Always be certain to select the proper vehicle line and model year when using this tool, as the tool will automatically use the correct protocol to attempt to read the TPM Sensor. If the incorrect vehicle line and/or model year is selected, the TPM Sensor will not respond to the tool.**

1. Use a TPM-RKE Analyzer (special tool #CH9936, Analyzer, TPM/RKE) to scan each TPM Sensor

for a response, and store in the proper location in the TPM-RKE Analyzer. If you receive no response from any of the TPM Sensors, check to make sure that the TPM-RKE Analyzer is set correctly and repeat the process on each non-responsive wheel.

2. Replace the TPM Sensor in accordance with the Service Information. Refer to **SENSOR, TIRE PRESSURE MONITORING (TPM), REMOVAL** . Perform the TPM SENSOR VERIFICATION TEST. Refer to **STANDARD PROCEDURE**.
3. With the scan tool, select Data Display for the RF-Hub Module.
4. Check to see if the Sensor IDs match what is programmed into the RF-Hub Module.

   Has the TPM Sensor been located?

   Yes

   - Install the Tire Pressure Monitoring (TPM) Sensor in accordance with the Service Information. Refer to **SENSOR, TIRE PRESSURE MONITORING (TPM), REMOVAL** .
   - Perform the TPM SENSOR VERIFICATION TEST. Refer to **STANDARD PROCEDURE**.

   No

   - Go To 3

3. **TIRE PRESSURE MONITORING (TPM) SENSOR INTERNAL FAULT - MISMATCHED ID**

   NOTE: If the TPM Sensor IDs do not match, it may be necessary to move the vehicle to a location away from other TPM Sensors and repeat this step.

   1. Use a TPM-RKE Analyzer (special tool #CH9936, Analyzer, TPM/RKE) to verify the TPM Sensor IDs match what is programmed into the RF-Hub Module. The TPM Sensor Identifications are located under "Data Display" for the RF-Hub Module.

      Do the TPM Sensor IDs match what is stored in the RF-Hub Module?

      Yes

      - Replace the Radio Frequency (RF Hub) Module in accordance with the Service Information. Refer to **MODULE, RADIO FREQUENCY (RF HUB), REMOVAL** .
      - Perform the TPM SENSOR VERIFICATION TEST. Refer to **STANDARD PROCEDURE**.

      No

      - Test complete.
      - Perform the TPM SENSOR VERIFICATION TEST. Refer to **STANDARD PROCEDURE**.

4. **TIRE PRESSURE MONITORING (TPM) SENSOR INTERNAL FAULT SET**

NOTE: Some vehicles will not receive the TPM Sensor data when the vehicle is stationary. The vehicle may need to be driven at speeds greater than 32 km/h (20 mph) for about a minute in order to receive TPM Sensor data.

1. Starting with the left front wheel, deflate the tire to 20 PSI, wait two minutes, and check the scan tool for changes to any compensated tire pressure values.
2. Look for a tire location with a non-responsive TPM Sensor ID.
3. Repeat this test on each wheel on the vehicle until the TPM Sensor in question has been identified.

   Has the TPM Sensor been located?

   Yes

   - Install the Tire Pressure Monitoring (TPM) Sensor in accordance with the Service Information. Refer to **SENSOR, TIRE PRESSURE MONITORING (TPM), REMOVAL** .
   - Perform the TPM SENSOR VERIFICATION TEST. Refer to **STANDARD PROCEDURE**.

   No

   - Test complete.
   - Perform the TPM SENSOR VERIFICATION TEST. Refer to **STANDARD PROCEDURE**.

5. **INTERMITTENT TIRE PRESSURE MONITORING (TPM) SENSOR DTC**
   1. The conditions necessary to set this DTC are not present at this time.
   2. Perform any Technical Service Bulletins that may apply to this condition.
   3. With the scan tool, clear DTCs in the Radio Frequency Hub (RF-Hub) Module.
   4. Test drive the vehicle for a minimum of 20 minutes with vehicle speed greater than 24km/h (20 mph).
   5. With the scan tool, rear the DTCs in the Radio Frequency Hub (RF-Hub) Module.

      Does the DTC reset or is the status Active for this DTC?

      Yes

      - Return to the beginning of this test and perform the diagnostic procedure as necessary.

      No

      - Test complete.
      - Perform the TPM SENSOR VERIFICATION TEST. Refer to **STANDARD PROCEDURE**.

C1502-31-TIRE PRESSURE SENSOR 2 - NO SIGNAL

For a complete wiring diagram, **refer to appropriate SYSTEM WIRING DIAGRAMS article** .

NOTE: Check for and remove any non-FCC compliant components before beginning this diagnostic procedure.

THEORY OF OPERATION

The Tire Pressure Monitoring (TPM) Sensor actively monitors the air pressure, air temperature inside the tire, and the internal battery status. Each sensor has a unique ID code. The TPM Sensor transmits the data at regular intervals via an encoded signal to a receiver circuit located in the Radio Frequency Hub (RF Hub) Module.

WHEN MONITORED

With vehicle speed greater than 32 km/h (20 mph).

SET CONDITION

The RF Hub Module will monitor the signals from the four active road tire TPM Sensors. This code sets if RF data is not received or cannot be accurately decoded for a maximum of 20 minutes, if localization has completed.

POSSIBLE CAUSES

Possible Causes
NON-FCC COMPLIANT COMPONENTS
AFTERMARKET TIRES/WHEELS
INTERMITTENT TIRE PRESSURE MONITORING (TPM) SENSOR INTERNAL DTC
TIRE PRESSURE MONITORING (TPM) SENSOR
RADIO FREQUENCY HUB (RF-HUB) MODULE

DIAGNOSTIC TEST

1. **DTC STATUS IS ACTIVE**

NOTE: Before beginning the diagnostic procedure, verify that the tire pressures are correct, the 9936 TPM-RKE analyzer is up to date and the correct application has been chosen on the tool.

1. Turn the ignition on.
2. With the scan tool, read and record RF-Hub Module DTCs.
3. Test drive the vehicle at a speed greater than 32 km/h (20 mph) up to 20 minutes in order to receive TPM Sensor data and allow for the system to update.
4. With the scan tool, read DTCs in the RF-Hub Module.

Is this DTC status Active at this time?

Yes

- Go To 2

No

- Go To 6

2. **TIRE PRESSURE MONITORING (TPM) SENSOR INTERNAL DTC**

NOTE: This fault can be set if the incorrect or no TPM Sensor is installed on the vehicle.

1. Perform a visual inspection to verify that all road wheels are equipped with a TPM Sensor.
2. With the TPM-RKE Analyzer (special tool #CH9936, Analyzer, TPM/RKE) verify the correct TPM Sensor is on the vehicle.

Is the correct TPM Sensor installed on the vehicle?

Yes

- Go To 3

No

- Install the correct Tire Pressure Monitoring (TPM) Sensor in accordance with the Service Information. Refer to **SENSOR, TIRE PRESSURE MONITORING (TPM), REMOVAL** .
- Perform the TPM SENSOR VERIFICATION TEST. Refer to **STANDARD PROCEDURE**.

3. **TIRE PRESSURE MONITORING (TPM) SENSOR INTERNAL FAULT SET USING TPM-RKE ANALYZER**

NOTE: The following procedure is used to locate the TPM Sensor that is setting the internal fault. If the tires have been rotated, the TPM Sensor is no longer in sequence from the factory. Faults are linked to the TPM Sensor IDs. You MUST locate the TPM Sensor that set the fault before continuing. Use the following method below at every tire location.

NOTE: If the TPM Sensor IDs do not match, it may be necessary to move the vehicle to a location away from other TPM Sensors and repeat this step.

NOTE: Always be certain to select the proper vehicle line and model year when using this tool, as the tool will automatically use the correct protocol to attempt to read the TPM Sensor. If the incorrect vehicle line and/or model year is selected, the TPM Sensor will not respond to the tool.

1. Use a TPM-RKE Analyzer (special tool #CH9936, Analyzer, TPM/RKE) to scan each TPM Sensor for a response, and store in the proper location in the TPM-RKE Analyzer. If you receive a no response from any of the TPM Sensors, check to make sure that the TPM-RKE Analyzer is set correctly and repeat the process on each non-responsive wheel. If all sensors respond, continue this step.
2. Replace any non-responsive TPM Sensors in accordance with the Service Information. Refer to **SENSOR, TIRE PRESSURE MONITORING (TPM), REMOVAL** . Perform the TPM SENSOR VERIFICATION TEST. Refer to **STANDARD PROCEDURE**.
3. With the scan tool, select Data Display for the RF-Hub Module.
4. Check to see if the Sensor IDs match what is programmed into the RF-Hub Module.

   Has the TPM Sensor been located?

   Yes

   - Install the Tire Pressure Monitoring (TPM) Sensor in accordance with the Service Information. Refer to **SENSOR, TIRE PRESSURE MONITORING (TPM), REMOVAL** .
   - Perform the TPM SENSOR VERIFICATION TEST. Refer to **STANDARD PROCEDURE**.

   No

   - Go To 4

4. **TIRE PRESSURE MONITORING (TPM) SENSOR INTERNAL FAULT - MISMATCHED ID**

NOTE: **If the TPM Sensor IDs do not match, it may be necessary to move the vehicle to a location away from other TPM Sensors and repeat this step.**

1. Use a TPM-RKE Analyzer (special tool #CH9936, Analyzer, TPM/RKE) to verify the TPM Sensor IDs match what is programmed into the RF-Hub Module. The TPM Sensor Identifications are located under "Data Display" for the RF-Hub Module.

   Do the TPM Sensor IDs match what is stored in the RF-Hub Module?

   Yes

   - Replace the Radio Frequency (RF Hub) Module in accordance with the Service Information. Refer to **MODULE, RADIO FREQUENCY (RF HUB), REMOVAL** .
   - Perform the RADIO FREQUENCY HUB (RF-HUB) VERIFICATION TEST. Refer to **STANDARD PROCEDURE**.

   No

   - Test complete.

- Perform the TPM SENSOR VERIFICATION TEST. Refer to **STANDARD PROCEDURE**.

5. **TIRE PRESSURE MONITORING (TPM) SENSOR INTERNAL FAULT SET**

NOTE: Some vehicles will not receive the TPM Sensor data when the vehicle is stationary. The vehicle may need to be driven at speeds greater than 32 km/h (20 mph) for about five minutes in order to receive TPM Sensor data.

1. Starting with the left front wheel, deflate the tire to 20 PSI, wait two minutes, and check the scan tool for changes to any compensated tire pressure values.
2. Look for a tire location with a non-responsive TPM Sensor ID.
3. Repeat this test on each wheel on the vehicle until the TPM Sensor in question has been identified.

Has the TPM Sensor been located?

Yes

- Replace the Tire Pressure Monitoring (TPM) Sensor in accordance with the Service Information. Refer to **SENSOR, TIRE PRESSURE MONITORING (TPM), REMOVAL** .
- Perform the TPM SENSOR VERIFICATION TEST. Refer to **STANDARD PROCEDURE**.

No

- Repeat this test until the defective sensor has been located.
- Perform the TPM SENSOR VERIFICATION TEST. Refer to **STANDARD PROCEDURE**.

6. **INTERMITTENT TIRE PRESSURE MONITORING (TPM) SENSOR DTC**

1. The conditions necessary to set this DTC are not present at this time.
2. Perform any Technical Service Bulletins that may apply to this condition.
3. With the scan tool, clear DTCs in the Radio Frequency Hub (RF-Hub) Module.
4. Test drive the vehicle for a minimum of 20 minutes with vehicle speed greater than 32 km/h (20 mph).
5. With the scan tool, read active DTCs in the Radio Frequency Hub (RF-Hub) Module.

Does the DTC reset or is the status Active for this DTC?

Yes

- Return to the beginning of this test and perform the diagnostic procedure as necessary.

No

- Test complete.
- Perform the TPM SENSOR VERIFICATION TEST. Refer to **STANDARD PROCEDURE**.

C1503-07-TIRE PRESSURE SENSOR 3 - MECHANICAL FAILURE

For a complete wiring diagram, **refer to appropriate SYSTEM WIRING DIAGRAMS article** .

NOTE: Check for and remove any non-FCC compliant components, and verify that the tire pressures are correct, before beginning this diagnostic procedure.

THEORY OF OPERATION

The Tire Pressure Monitoring (TPM) Sensor actively monitors the air pressure, air temperature inside the tire, and the internal battery status. Each sensor has a unique ID code. The TPM Sensor transmits the data at regular intervals via an encoded signal to a receiver circuit located in the Radio Frequency Hub Module (RF-Hub).

WHEN MONITORED

With vehicle speed greater than 32 km/h (20 mph).

SET CONDITION

The RF Hub will monitor the signals from the four active road tire TPM Sensors. This code sets if pressure, temperature, or acceleration data is not received or cannot be accurately decoded for a maximum of 20 minutes.

POSSIBLE CAUSES

Possible Causes
TIRE PRESSURE MONITORING (TPM) SENSOR

DIAGNOSTIC TEST

1. **DTC STATUS IS ACTIVE**

NOTE: Before beginning the diagnostic procedure, verify that the tire pressures are correct, the 9936 TPM-RKE analyzer is up to date and the correct application has been chosen on the tool.

1. Cycle the ignition on.
2. With the scan tool, read and record the RF-Hub Module DTCs.
3. With the scan tool, erase the RF-Hub Module DTCs.
4. Test drive the vehicle at a speed greater than 32 km/h (20 mph) up to 20 minutes in order to receive TPM Sensor data and allow for the system to update.
5. With the scan tool, read the DTCs in the RF-Hub Module.

   Is this DTC status Active at this time?

   Yes

- Go To 2

No

- Go To 5

2. **TIRE PRESSURE MONITORING (TPM) SENSOR INTERNAL FAULT SET USING TPM-RKE ANALYZER**

NOTE: **The following procedure is used to locate the TPM Sensor that is setting the internal fault. If the tires have been rotated, the TPM Sensor is no longer in sequence from the factory. Faults are linked to the TPM Sensor IDs. You MUST locate the TPM Sensor that set the fault before continuing. Use the following method below at every tire location.**

NOTE: **If the TPM Sensor IDs do not match, it may be necessary to move the vehicle to a location away from other TPM Sensors and repeat this step.**

NOTE: **Always be certain to select the proper vehicle line and model year when using this tool, as the tool will automatically use the correct protocol to attempt to read the TPM Sensor. If the incorrect vehicle line and/or model year is selected, the TPM Sensor will not respond to the tool.**

1. Use a TPM-RKE Analyzer (special tool #CH9936, Analyzer, TPM/RKE) to scan each TPM Sensor for a response, and store in the proper location in the TPM-RKE Analyzer. If you receive no response from any of the TPM Sensors, check to make sure that the TPM-RKE Analyzer is set correctly and repeat the process on each non-responsive wheel.
2. Replace the TPM Sensor in accordance with the Service Information. Refer to **SENSOR, TIRE PRESSURE MONITORING (TPM), REMOVAL** . Perform the TPM SENSOR VERIFICATION TEST. Refer to **STANDARD PROCEDURE**.
3. With the scan tool, select Data Display for the RF-Hub Module.
4. Check to see if the Sensor IDs match what is programmed into the RF-Hub Module.

   Has the TPM Sensor been located?

   Yes

   - Install the Tire Pressure Monitoring (TPM) Sensor in accordance with the Service Information. Refer to **SENSOR, TIRE PRESSURE MONITORING (TPM), REMOVAL** .
   - Perform the TPM SENSOR VERIFICATION TEST. Refer to **STANDARD PROCEDURE**.

   No

   - Go To 3

3. **TIRE PRESSURE MONITORING (TPM) SENSOR INTERNAL FAULT - MISMATCHED ID**

NOTE: If the TPM Sensor IDs do not match, it may be necessary to move the vehicle to a location away from other TPM Sensors and repeat this step.

1. Use a TPM-RKE Analyzer (special tool #CH9936, Analyzer, TPM/RKE) to verify the TPM Sensor IDs match what is programmed into the RF-Hub Module. The TPM Sensor Identifications are located under "Data Display" for the RF-Hub Module.

   Do the TPM Sensor IDs match what is stored in the RF-Hub Module?

   Yes

   - Replace the Radio Frequency (RF Hub) Module in accordance with the Service Information. Refer to **MODULE, RADIO FREQUENCY (RF HUB), REMOVAL** .
   - Perform the TPM SENSOR VERIFICATION TEST. Refer to **STANDARD PROCEDURE**.

   No

   - Test complete.
   - Perform the TPM SENSOR VERIFICATION TEST. Refer to **STANDARD PROCEDURE**.

4. **TIRE PRESSURE MONITORING (TPM) SENSOR INTERNAL FAULT SET**

NOTE: Some vehicles will not receive the TPM Sensor data when the vehicle is stationary. The vehicle may need to be driven at speeds greater than 32 km/h (20 mph) for about a minute in order to receive TPM Sensor data.

1. Starting with the left front wheel, deflate the tire to 20 PSI, wait two minutes, and check the scan tool for changes to any compensated tire pressure values.
2. Look for a tire location with a non-responsive TPM Sensor ID.
3. Repeat this test on each wheel on the vehicle until the TPM Sensor in question has been identified.

   Has the TPM Sensor been located?

   Yes

   - Install the Tire Pressure Monitoring (TPM) Sensor in accordance with the Service Information. Refer to **SENSOR, TIRE PRESSURE MONITORING (TPM), REMOVAL** .
   - Perform the TPM SENSOR VERIFICATION TEST. Refer to **STANDARD PROCEDURE**.

   No

   - Test complete.

- Perform the TPM SENSOR VERIFICATION TEST. Refer to **STANDARD PROCEDURE**.

5. **INTERMITTENT TIRE PRESSURE MONITORING (TPM) SENSOR DTC**
    1. The conditions necessary to set this DTC are not present at this time.
    2. Perform any Technical Service Bulletins that may apply to this condition.
    3. With the scan tool, clear DTCs in the Radio Frequency Hub (RF-Hub) Module.
    4. Test drive the vehicle for a minimum of 20 minutes with vehicle speed greater than 24km/h (20 mph).
    5. With the scan tool, rear the DTCs in the Radio Frequency Hub (RF-Hub) Module.

    Does the DTC reset or is the status Active for this DTC?

    Yes

    - Return to the beginning of this test and perform the diagnostic procedure as necessary.

    No

    - Test complete.
    - Perform the TPM SENSOR VERIFICATION TEST. Refer to **STANDARD PROCEDURE**.

C1503-31-TIRE PRESSURE SENSOR 3 - NO SIGNAL

For a complete wiring diagram, **refer to appropriate SYSTEM WIRING DIAGRAMS article** .

NOTE: Check for and remove any non-FCC compliant components before beginning this diagnostic procedure.

THEORY OF OPERATION

The Tire Pressure Monitoring (TPM) Sensor actively monitors the air pressure, air temperature inside the tire, and the internal battery status. Each sensor has a unique ID code. The TPM Sensor transmits the data at regular intervals via an encoded signal to a receiver circuit located in the Radio Frequency Hub (RF Hub) Module.

WHEN MONITORED

With vehicle speed greater than 32 km/h (20 mph).

SET CONDITION

The RF Hub Module will monitor the signals from the four active road tire TPM Sensors. This code sets if RF data is not received or cannot be accurately decoded for a maximum of 20 minutes, if localization has completed.

POSSIBLE CAUSES

Possible Causes
NON-FCC COMPLIANT COMPONENTS
AFTERMARKET TIRES/WHEELS
INTERMITTENT TIRE PRESSURE MONITORING (TPM) SENSOR INTERNAL DTC
TIRE PRESSURE MONITORING (TPM) SENSOR
RADIO FREQUENCY HUB (RF-HUB) MODULE

DIAGNOSTIC TEST

1. **DTC STATUS IS ACTIVE**

NOTE: Before beginning the diagnostic procedure, verify that the tire pressures are correct, the 9936 TPM-RKE analyzer is up to date and the correct application has been chosen on the tool.

1. Cycle the ignition on.
2. With the scan tool, read and record RF-Hub Module DTCs.
3. Test drive the vehicle at a speed greater than 32 km/h (20 mph) up to 20 minutes in order to receive TPM Sensor data and allow for the system to update.
4. With the scan tool, read DTCs in the RF-Hub Module.

Is this DTC status Active at this time?

Yes

- Go To 2

No

- Go To 6

2. **TIRE PRESSURE MONITORING (TPM) SENSOR INTERNAL DTC**

NOTE: This fault can be set if the incorrect or no TPM Sensor is installed on the vehicle.

1. Perform a visual inspection to verify that all road wheels are equipped with a TPM Sensor.
2. With the TPM-RKE Analyzer (special tool #CH9936, Analyzer, TPM/RKE) verify the correct TPM Sensor is on the vehicle.

Is the correct TPM Sensor installed on the vehicle?

Yes

- Go To 3

No

- Install the correct Tire Pressure Monitoring (TPM) Sensor in accordance with the Service Information. Refer to **SENSOR, TIRE PRESSURE MONITORING (TPM), REMOVAL** .
- Perform the TPM SENSOR VERIFICATION TEST. Refer to **STANDARD PROCEDURE**.

3. **TIRE PRESSURE MONITORING (TPM) SENSOR INTERNAL FAULT SET USING TPM-RKE ANALYZER**

NOTE: The following procedure is used to locate the TPM Sensor that is setting the internal fault. If the tires have been rotated, the TPM Sensor is no longer in sequence from the factory. Faults are linked to the TPM Sensor IDs. You MUST locate the TPM Sensor that set the fault before continuing. Use the following method below at every tire location.

NOTE: If the TPM Sensor IDs do not match, it may be necessary to move the vehicle to a location away from other TPM Sensors and repeat this step.

NOTE: Always be certain to select the proper vehicle line and model year when using this tool, as the tool will automatically use the correct protocol to attempt to read the TPM Sensor. If the incorrect vehicle line and/or model year is selected, the TPM Sensor will not respond to the tool.

1. Use a TPM-RKE Analyzer (special tool #CH9936, Analyzer, TPM/RKE) to scan each TPM Sensor for a response, and store in the proper location in the TPM-RKE Analyzer. If you receive a no response from any of the TPM Sensors, check to make sure that the TPM-RKE Analyzer is set correctly and repeat the process on each non-responsive wheel. If all sensors respond, continue this step.
2. Replace any non-responsive TPM Sensors in accordance with the Service Information. Refer to **SENSOR, TIRE PRESSURE MONITORING (TPM), REMOVAL** . Perform the TPM SENSOR VERIFICATION TEST. Refer to **STANDARD PROCEDURE**.
3. With the scan tool, select Data Display for the RF-Hub Module.
4. Check to see if the Sensor IDs match what is programmed into the RF-Hub Module.

Has the TPM Sensor been located?

Yes

- Install the Tire Pressure Monitoring (TPM) Sensor in accordance with the Service Information. Refer to **SENSOR, TIRE PRESSURE MONITORING (TPM), REMOVAL** .
- Perform the TPM SENSOR VERIFICATION TEST. Refer to **STANDARD PROCEDURE**.

No

- Go To 4

4. **TIRE PRESSURE MONITORING (TPM) SENSOR INTERNAL FAULT - MISMATCHED ID**

NOTE: If the TPM Sensor IDs do not match, it may be necessary to move the vehicle to a location away from other TPM Sensors and repeat this step.

1. Use a TPM-RKE Analyzer (special tool #CH9936, Analyzer, TPM/RKE) to verify the TPM Sensor IDs match what is programmed into the RF-Hub Module. The TPM Sensor Identifications are located under "Data Display" for the RF-Hub Module.

   Do the TPM Sensor IDs match what is stored in the RF-Hub Module?

   Yes

   - Replace the Radio Frequency (RF Hub) Module in accordance with the Service Information. Refer to **MODULE, RADIO FREQUENCY (RF HUB), REMOVAL** .
   - Perform the RADIO FREQUENCY HUB (RF-HUB) VERIFICATION TEST. Refer to **STANDARD PROCEDURE**.

   No

   - Test complete.
   - Perform the TPM SENSOR VERIFICATION TEST. Refer to **STANDARD PROCEDURE**.

5. **TIRE PRESSURE MONITORING (TPM) SENSOR INTERNAL FAULT SET**

NOTE: Some vehicles will not receive the TPM Sensor data when the vehicle is stationary. The vehicle may need to be driven at speeds greater than 32 km/h (20 mph) for about five minutes in order to receive TPM Sensor data.

1. Starting with the left front wheel, deflate the tire to 20 PSI, wait two minutes, and check the scan tool for changes to any compensated tire pressure values.
2. Look for a tire location with a non-responsive TPM Sensor ID.
3. Repeat this test on each wheel on the vehicle until the TPM Sensor in question has been identified.

   Has the TPM Sensor been located?

   Yes

   - Replace the Tire Pressure Monitoring (TPM) Sensor in accordance with the Service Information. Refer to **SENSOR, TIRE PRESSURE MONITORING (TPM), REMOVAL** .
   - Perform the TPM SENSOR VERIFICATION TEST. Refer to **STANDARD PROCEDURE**.

No

- Repeat this test until the defective sensor has been located.
- Perform the TPM SENSOR VERIFICATION TEST. Refer to **STANDARD PROCEDURE**.

6. **INTERMITTENT TIRE PRESSURE MONITORING (TPM) SENSOR DTC**
   1. The conditions necessary to set this DTC are not present at this time.
   2. Perform any Technical Service Bulletins that may apply to this condition.
   3. With the scan tool, clear DTCs in the Radio Frequency Hub (RF-Hub) Module.
   4. Test drive the vehicle for a minimum of 20 minutes with vehicle speed greater than 32 km/h (20 mph).
   5. With the scan tool, read active DTCs in the Radio Frequency Hub (RF-Hub) Module.

   Does the DTC reset or is the status Active for this DTC?

   Yes

   - Return to the beginning of this test and perform the diagnostic procedure as necessary.

   No

   - Test complete.
   - Perform the TPM SENSOR VERIFICATION TEST. Refer to **STANDARD PROCEDURE**.

C1504-07-TIRE PRESSURE SENSOR 4 - MECHANICAL FAILURE

For a complete wiring diagram, **refer to appropriate SYSTEM WIRING DIAGRAMS article** .

NOTE: Check for and remove any non-FCC compliant components, and verify that the tire pressures are correct, before beginning this diagnostic procedure.

THEORY OF OPERATION

The Tire Pressure Monitoring (TPM) Sensor actively monitors the air pressure, air temperature inside the tire, and the internal battery status. Each sensor has a unique ID code. The TPM Sensor transmits the data at regular intervals via an encoded signal to a receiver circuit located in the Radio Frequency Hub Module (RF-Hub).

WHEN MONITORED

With vehicle speed greater than 24 km/h (15mph).

SET CONDITION

The RF Hub will monitor the signals from the four active road tire TPM Sensors. This code sets if pressure, temperature, or acceleration data is not received or cannot be accurately decoded for a maximum of 20 minutes.

POSSIBLE CAUSES

Possible Causes
TIRE PRESSURE MONITORING (TPM) SENSOR

DIAGNOSTIC TEST

1. **DTC STATUS IS ACTIVE**

NOTE: **Before beginning the diagnostic procedure, verify that the tire pressures are correct, the 9936 TPM-RKE analyzer is up to date and the correct application has been chosen on the tool.**

1. Cycle the ignition on.
2. With the scan tool, read and record the RF-Hub Module DTCs.
3. With the scan tool, erase the RF-Hub Module DTCs.
4. Test drive the vehicle at a speed greater than 32 km/h (20 mph) up to 20 minutes in order to receive TPM Sensor data and allow for the system to update.
5. With the scan tool, read the DTCs in the RF-Hub Module.

Is this DTC status Active at this time?

Yes

- Go To 2

No

- Go To 5

2. **TIRE PRESSURE MONITORING (TPM) SENSOR INTERNAL FAULT SET USING TPM-RKE ANALYZER**

NOTE: **The following procedure is used to locate the TPM Sensor that is setting the internal fault. If the tires have been rotated, the TPM Sensor is no longer in sequence from the factory. Faults are linked to the TPM Sensor IDs. You MUST locate the TPM Sensor that set the fault before continuing. Use the following method below at every tire location.**

NOTE: **If the TPM Sensor IDs do not match, it may be necessary to move the vehicle to a location away from other TPM Sensors and repeat this step.**

NOTE: **Always be certain to select the proper vehicle line and model year when using this tool, as the tool will automatically use the correct protocol to attempt to read the TPM Sensor. If the incorrect vehicle line and/or model**

year is selected, the TPM Sensor will not respond to the tool.

1. Use a TPM-RKE Analyzer (special tool #CH9936, Analyzer, TPM/RKE) to scan each TPM Sensor for a response, and store in the proper location in the TPM-RKE Analyzer. If you receive no response from any of the TPM Sensors, check to make sure that the TPM-RKE Analyzer is set correctly and repeat the process on each non-responsive wheel.
2. Replace the TPM Sensor in accordance with the Service Information. Refer to **SENSOR, TIRE PRESSURE MONITORING (TPM), REMOVAL** . Perform the TPM SENSOR VERIFICATION TEST. Refer to **STANDARD PROCEDURE**.
3. With the scan tool, select Data Display for the RF-Hub Module.
4. Check to see if the Sensor IDs match what is programmed into the RF-Hub Module.

   Has the TPM Sensor been located?

   Yes

   - Install the Tire Pressure Monitoring (TPM) Sensor in accordance with the Service Information. Refer to **SENSOR, TIRE PRESSURE MONITORING (TPM), REMOVAL** .
   - Perform the TPM SENSOR VERIFICATION TEST. Refer to **STANDARD PROCEDURE**.

   No

   - Go To 3

3. **TIRE PRESSURE MONITORING (TPM) SENSOR INTERNAL FAULT - MISMATCHED ID**

NOTE: **If the TPM Sensor IDs do not match, it may be necessary to move the vehicle to a location away from other TPM Sensors and repeat this step.**

1. Use a TPM-RKE Analyzer (special tool #CH9936, Analyzer, TPM/RKE) to verify the TPM Sensor IDs match what is programmed into the RF-Hub Module. The TPM Sensor Identifications are located under "Data Display" for the RF-Hub Module.

   Do the TPM Sensor IDs match what is stored in the RF-Hub Module?

   Yes

   - Replace the Radio Frequency (RF Hub) Module in accordance with the Service Information. Refer to **MODULE, RADIO FREQUENCY (RF HUB), REMOVAL** .
   - Perform the TPM SENSOR VERIFICATION TEST. Refer to **STANDARD PROCEDURE**.

   No

   - Test complete.

- Perform the TPM SENSOR VERIFICATION TEST. Refer to **STANDARD PROCEDURE**.

4. **TIRE PRESSURE MONITORING (TPM) SENSOR INTERNAL FAULT SET**

NOTE: Some vehicles will not receive the TPM Sensor data when the vehicle is stationary. The vehicle may need to be driven at speeds greater than 32 km/h (20 mph) for about a minute in order to receive TPM Sensor data.

1. Starting with the left front wheel, deflate the tire to 20 PSI, wait two minutes, and check the scan tool for changes to any compensated tire pressure values.
2. Look for a tire location with a non-responsive TPM Sensor ID.
3. Repeat this test on each wheel on the vehicle until the TPM Sensor in question has been identified.

Has the TPM Sensor been located?

Yes

- Install the Tire Pressure Monitoring (TPM) Sensor in accordance with the Service Information. Refer to **SENSOR, TIRE PRESSURE MONITORING (TPM), REMOVAL** .
- Perform the TPM SENSOR VERIFICATION TEST. Refer to **STANDARD PROCEDURE**.

No

- Test complete.
- Perform the TPM SENSOR VERIFICATION TEST. Refer to **STANDARD PROCEDURE**.

5. **INTERMITTENT TIRE PRESSURE MONITORING (TPM) SENSOR DTC**

1. The conditions necessary to set this DTC are not present at this time.
2. Perform any Technical Service Bulletins that may apply to this condition.
3. With the scan tool, clear DTCs in the Radio Frequency Hub (RF-Hub) Module.
4. Test drive the vehicle for a minimum of 20 minutes with vehicle speed greater than 24km/h (20 mph).
5. With the scan tool, rear the DTCs in the Radio Frequency Hub (RF-Hub) Module.

Does the DTC reset or is the status Active for this DTC?

Yes

- Return to the beginning of this test and perform the diagnostic procedure as necessary.

No

- Test complete.
- Perform the TPM SENSOR VERIFICATION TEST. Refer to **STANDARD PROCEDURE**.

C1504-31-TIRE PRESSURE SENSOR 4 - NO SIGNAL

For a complete wiring diagram, **refer to appropriate SYSTEM WIRING DIAGRAMS article** .

NOTE: Check for and remove any non-FCC compliant components before beginning this diagnostic procedure.

THEORY OF OPERATION

The Tire Pressure Monitoring (TPM) Sensor actively monitors the air pressure, air temperature inside the tire, and the internal battery status. Each sensor has a unique ID code. The TPM Sensor transmits the data at regular intervals via an encoded signal to a receiver circuit located in the Radio Frequency Hub (RF Hub) Module.

WHEN MONITORED

With vehicle speed greater than 32 km/h (20 mph).

SET CONDITION

The RF Hub Module will monitor the signals from the four active road tire TPM Sensors. This code sets if RF data is not received or cannot be accurately decoded for a maximum of 20 minutes, if localization has completed.

POSSIBLE CAUSES

Possible Causes
NON-FCC COMPLIANT COMPONENTS
AFTERMARKET TIRES/WHEELS
INTERMITTENT TIRE PRESSURE MONITORING (TPM) SENSOR INTERNAL DTC
TIRE PRESSURE MONITORING (TPM) SENSOR
RADIO FREQUENCY HUB (RF-HUB) MODULE

DIAGNOSTIC TEST

1. **DTC STATUS IS ACTIVE**

NOTE: Before beginning the diagnostic procedure, verify that the tire pressures are correct, the 9936 TPM-RKE analyzer is up to date and the correct application has been chosen on the tool.

1. Cycle the ignition on.
2. With the scan tool, read and record RF-Hub Module DTCs.
3. Test drive the vehicle at a speed greater than 32 km/h (20 mph) up to 20 minutes in order to receive TPM Sensor data and allow for the system to update.
4. With the scan tool, read DTCs in the RF-Hub Module.

Is this DTC status Active at this time?

Yes

- Go To 2

No

- Go To 6

2. **TIRE PRESSURE MONITORING (TPM) SENSOR INTERNAL DTC**

NOTE: This fault can be set if the incorrect or no TPM Sensor is installed on the vehicle.

1. Perform a visual inspection to verify that all road wheels are equipped with a TPM Sensor.
2. With the TPM-RKE Analyzer (special tool #CH9936, Analyzer, TPM/RKE) verify the correct TPM Sensor is on the vehicle.

Is the correct TPM Sensor installed on the vehicle?

Yes

- Go To 3

No

- Install the correct Tire Pressure Monitoring (TPM) Sensor in accordance with the Service Information. Refer to **SENSOR, TIRE PRESSURE MONITORING (TPM), REMOVAL** .
- Perform the TPM SENSOR VERIFICATION TEST. Refer to **STANDARD PROCEDURE**.

3. **TIRE PRESSURE MONITORING (TPM) SENSOR INTERNAL FAULT SET USING TPM-RKE ANALYZER**

NOTE: The following procedure is used to locate the TPM Sensor that is setting the internal fault. If the tires have been rotated, the TPM Sensor is no longer in sequence from the factory. Faults are linked to the TPM Sensor IDs. You MUST locate the TPM Sensor that set the fault before continuing. Use the following method below at every tire location.

NOTE: If the TPM Sensor IDs do not match, it may be necessary to move the vehicle to a location away from other TPM Sensors and repeat this step.

NOTE: Always be certain to select the proper vehicle line and model year when using this tool, as the tool will automatically use the correct protocol to

attempt to read the TPM Sensor. If the incorrect vehicle line and/or model year is selected, the TPM Sensor will not respond to the tool.

1. Use a TPM-RKE Analyzer (special tool #CH9936, Analyzer, TPM/RKE) to scan each TPM Sensor for a response, and store in the proper location in the TPM-RKE Analyzer. If you receive a no response from any of the TPM Sensors, check to make sure that the TPM-RKE Analyzer is set correctly and repeat the process on each non-responsive wheel. If all sensors respond, continue this step.
2. Replace any non-responsive TPM Sensors in accordance with the Service Information. Refer to **SENSOR, TIRE PRESSURE MONITORING (TPM), REMOVAL** . Perform the TPM SENSOR VERIFICATION TEST. Refer to **STANDARD PROCEDURE**.
3. With the scan tool, select Data Display for the RF-Hub Module.
4. Check to see if the Sensor IDs match what is programmed into the RF-Hub Module.

   Has the TPM Sensor been located?

   Yes

   - Install the Tire Pressure Monitoring (TPM) Sensor in accordance with the Service Information. Refer to **SENSOR, TIRE PRESSURE MONITORING (TPM), REMOVAL** .
   - Perform the TPM SENSOR VERIFICATION TEST. Refer to **STANDARD PROCEDURE**.

   No

   - Go To 4

4. **TIRE PRESSURE MONITORING (TPM) SENSOR INTERNAL FAULT - MISMATCHED ID**

NOTE: **If the TPM Sensor IDs do not match, it may be necessary to move the vehicle to a location away from other TPM Sensors and repeat this step.**

1. Use a TPM-RKE Analyzer (special tool #CH9936, Analyzer, TPM/RKE) to verify the TPM Sensor IDs match what is programmed into the RF-Hub Module. The TPM Sensor Identifications are located under "Data Display" for the RF-Hub Module.

   Do the TPM Sensor IDs match what is stored in the RF-Hub Module?

   Yes

   - Replace the Radio Frequency (RF Hub) Module in accordance with the Service Information. Refer to **MODULE, RADIO FREQUENCY (RF HUB), REMOVAL** .
   - Perform the RADIO FREQUENCY HUB (RF-HUB) VERIFICATION TEST. Refer to **STANDARD PROCEDURE**.

No

- Test complete.
- Perform the TPM SENSOR VERIFICATION TEST. Refer to **STANDARD PROCEDURE**.

5. **TIRE PRESSURE MONITORING (TPM) SENSOR INTERNAL FAULT SET**

NOTE: Some vehicles will not receive the TPM Sensor data when the vehicle is stationary. The vehicle may need to be driven at speeds greater than 32 km/h (20 mph) for about five minutes in order to receive TPM Sensor data.

1. Starting with the left front wheel, deflate the tire to 20 PSI, wait two minutes, and check the scan tool for changes to any compensated tire pressure values.
2. Look for a tire location with a non-responsive TPM Sensor ID.
3. Repeat this test on each wheel on the vehicle until the TPM Sensor in question has been identified.

Has the TPM Sensor been located?

Yes

- Replace the Tire Pressure Monitoring (TPM) Sensor in accordance with the Service Information. Refer to **SENSOR, TIRE PRESSURE MONITORING (TPM), REMOVAL** .
- Perform the TPM SENSOR VERIFICATION TEST. Refer to **STANDARD PROCEDURE**.

No

- Repeat this test until the defective sensor has been located.
- Perform the TPM SENSOR VERIFICATION TEST. Refer to **STANDARD PROCEDURE**.

6. **INTERMITTENT TIRE PRESSURE MONITORING (TPM) SENSOR DTC**

1. The conditions necessary to set this DTC are not present at this time.
2. Perform any Technical Service Bulletins that may apply to this condition.
3. With the scan tool, clear DTCs in the Radio Frequency Hub (RF-Hub) Module.
4. Test drive the vehicle for a minimum of 20 minutes with vehicle speed greater than 32 km/h (20 mph).
5. With the scan tool, read active DTCs in the Radio Frequency Hub (RF-Hub) Module.

Does the DTC reset or is the status Active for this DTC?

Yes

- Return to the beginning of this test and perform the diagnostic procedure as necessary.

No

- Test complete.
- Perform the TPM SENSOR VERIFICATION TEST. Refer to **STANDARD PROCEDURE**.

C151C-51-TIRE PRESSURE SENSOR ID MISSING - NOT PROGRAMMED

For a complete wiring diagram, **refer to appropriate SYSTEM WIRING DIAGRAMS article** .

NOTE: FF is the default value. If this value is found, the RF-Hub has not been programmed.

NOTE: Check for and remove any non-FCC compliant components before beginning this diagnostic procedure.

THEORY OF OPERATION

When installing a new Radio Frequency Hub (RF-Hub) Module, the module is programed with universal IDs for the Tire Pressure Monitoring (TPM) Sensors. The RF-Hub Module must be programmed with the correct TPM Sensor IDs or drive the vehicle for a minimum of 20 minutes with vehicle speed greater than 32 km/h (20 mph).

WHEN MONITORED

During vehicle TPM Sensor ID locate process.

SET CONDITION

At least one or more wheel unit IDs have not been programmed.

POSSIBLE CAUSES

Possible Causes
NON-FCC COMPLIANT COMPONENTS
SENSOR IDS NOT DOWNLOADED INTO RADIO FREQUENCY HUB (RF-HUB) MODULE
INCORRECT TIRE PRESSURE MONITORING (TPM) SENSOR IDS
TIRE PRESSURE MONITORING (TPM) SENSOR

DIAGNOSTIC TEST

1. **VERIFY DTC IS ACTIVE**

NOTE: Before beginning the diagnostic procedure, verify that the tire pressures are correct, the 9936 TPM-RKE analyzer is up to date and the correct application has been chosen on the tool.

1. Cycle the ignition on.
2. With the scan tool, read and record RF-Hub Module DTCs.
3. Test drive the vehicle at a speed greater than 32 km/r (20 mph) for 20 minutes in order to receive TPM data and allow for the system to update.
4. With the scan tool, read DTCs in the Radio Frequency Hub (RF-Hub) Module.

   Is the DTC status Active at this time?

   Yes

   - Go To 2

   No

   - Test complete.
   - Perform the TPM SENSOR VERIFICATION TEST. Refer to **STANDARD PROCEDURE**.

2. **TPM-RKE ANALYZER CH9936**

   Is there a TPM-RKE Analyzer CH9936 available?

   Yes

   - Go To 3

   No

   - Go To 4

3. **WITH TPM-RKE TOOL CHECK TIRE PRESSURE MONITORING (TPM) SENSOR IDS**

   NOTE: Always be certain to select the proper vehicle line and model year when using this tool, as the tool will automatically use the correct protocol to attempt to read the Sensor. If the incorrect vehicle line and/or model year is selected, the Sensor will not respond to the tool.

   NOTE: If you receive no response from any of the tire pressure sensors, check to make sure that the TPM-RKE Analyzer is set correctly, and repeat the process on each of the non-responsive wheel(s)

   1. Use a TPM-RKE Analyzer (special tool #CH9936, Analyzer, TPM/RKE) to scan each TPM Sensor for an ID, store in the proper location in the TPM-RKE Analyzer.
   2. Use a TPM-RKE Analyzer to upload the correct IDs and proper locations in the scan tool.
   3. With the scan tool, select the RF-Hub Module under "Miscellaneous Functions", follow the procedure for uploading TPM Sensor IDs.

4. With the scan tool, erase RF-Hub Module DTCs.
5. Test drive the vehicle at a speed greater than 32 km/r (20 mph) for 20 minutes in order to receive TPM data and allow for the system to update.
6. With the scan tool, check to see if the TPM sensor IDs match what is programmed into the RF-Hub Module.

   Do the TPM IDs match?

   Yes

   - Test complete.
   - Perform the TPM SENSOR VERIFICATION TEST. Refer to **STANDARD PROCEDURE**.

   No

   - With the scan tool, read RF-Hub DTCs. If any displayed, perform the appropriate diagnostic procedure. If there are none, repeat this test. A bad RF-Hub will have other DTCs set.
   - Perform the TPM SENSOR VERIFICATION TEST. Refer to **STANDARD PROCEDURE**.

4. **WITHOUT TPM-RKE TOOL CHECK TIRE PRESSURE MONITORING (TPM) SENSOR IDS**
   1. Cycle the ignition on.
   2. Starting with the left front wheel, deflate the tire to 20 PSI, wait two minutes, and check the scan tool for changes to any compensated tire pressure values.
   3. Repeat the above step on each wheel of the vehicle.
   4. With the scan tool, erase RF-Hub Module DTCs.
   5. Test drive the vehicle at a speed greater than 32 km/r (20 mph) for 20 minutes in order to receive TPM data and allow for the system to update.
   6. With the scan tool, check to see if the TPM sensor IDs are programmed into the RF-Hub Module.

      Are the TPM Sensor IDs in the RF-Hub Module?

      Yes

      - Test complete.
      - Perform the TPM SENSOR VERIFICATION TEST. Refer to **STANDARD PROCEDURE**.

      No

      - With the scan tool, read RF-Hub DTCs. If any displayed, perform the appropriate diagnostic procedure. If there are none, repeat this test. A bad RF-Hub will have other DTCs set.
      - Perform the TPM SENSOR VERIFICATION TEST. Refer to **STANDARD PROCEDURE**.

C151D-00-TIRE PRESSURE SENSOR LOCATION UNDETERMINED

For a complete wiring diagram, **refer to appropriate SYSTEM WIRING DIAGRAMS article** .

NOTE: Check for and remove any non-FCC compliant components before beginning this diagnostic procedure.

THEORY OF OPERATION

The vehicle Tire Pressure Monitoring (TPM) Sensor locate process occurs after the vehicle is stationary for more than 20 min. The TPM system will determine the sensor positions while driving at speeds above 32 km/h (20 mph). This process can take up to 20 min to determine TPM Sensor positions.

WHEN MONITORED

During vehicle TPM Sensor locate process.

SET CONDITION

When the localization sequence is not completed successfully. Must fail multiple vehicle TPM Sensor locate processes if localization fails due to Left/Right fail or Front/Rear fail or if the Radio Frequency Hub (RF-Hub) Module is new and has never attempted localization. If missing TPM Sensors are present on first drive, this DTC will set to show that the TPM Sensor location cannot be determined/guaranteed (cannot revert to last known good locations).

POSSIBLE CAUSES

Possible Causes
NON-FCC COMPLIANT COMPONENTS
TPM SENSOR ID AUTO LEARNING NOT COMPLETED
ANTILOCK BRAKE SYSTEM DTC
TIRE PRESSURE MONITORING (TPM) SENSOR
RADIO FREQUENCY HUB (RF-HUB) MODULE

DIAGNOSTIC TEST

1. **ANTILOCK BRAKE (ABS) DTC**
    1. Cycle the ignition on.
    2. With the scan tool, read Antilock Brake System (ABS) DTCs.

       Does the scan tool display any ABS DTCs?

       Yes

       - Repair all Antilock Brake System DTCs. Refer to **DIAGNOSIS AND TESTING** .

       No

- Go To 2

2. **VERIFY DTC IS ACTIVE**

NOTE: If a new RF-Hub Module was replaced, the vehicle must remain stationary for 20 minutes before proceeding with this diagnostic procedure.

1. Cycle the ignition on.
2. With the scan tool, read and record RF-Hub Module DTCs.
3. Test drive the vehicle at a speed greater than 32 km/h (20 mph) for 20 minutes in order to receive TPM Sensor data and allow for the system to update.
4. With the scan tool, read the active DTCs in the RF-Hub Module.

Does the scan tool display: C151D-00 Active at this time?

Yes

- Replace the Radio Frequency (RF Hub) Module in accordance with the Service Information. Refer to **MODULE, RADIO FREQUENCY (RF HUB), REMOVAL** .
- Perform the RADIO FREQUENCY HUB (RF-HUB) VERIFICATION TEST. Refer to **STANDARD PROCEDURE**.

No

- Test complete, the condition or conditions that originally set this DTC are not present at this time. Using the wiring diagrams as a guide, check all related splices and connectors for signs of water intrusion, corrosion, pushed out or bent terminals, and correct pin tension.
- Perform the TPM SENSOR VERIFICATION TEST. Refer to **STANDARD PROCEDURE**.

C1570-00-DUPLICATE TIRE PRESSURE SENSOR IDS

For a complete wiring diagram, **refer to appropriate SYSTEM WIRING DIAGRAMS article** .

NOTE: FF is the default value. If this value is found, the RF-Hub has not been programmed.

NOTE: Check for and remove any non-FCC compliant components before beginning this diagnostic procedure.

THEORY OF OPERATION

When installing a new Tire Pressure Monitoring (TPM) Module, the module is programed with universal IDs for the Tire Pressure Monitoring (TPM) Sensors. The TPM Module must be programmed with the correct TPM Sensor IDs or drive the vehicle for a minimum of 20 minutes with vehicle speed greater than 32 km/h (20 mph).

WHEN MONITORED

During vehicle TPM Sensor ID locate process.

SET CONDITION

At least one or more wheel unit IDs are duplicated.

POSSIBLE CAUSES

Possible Causes
NON-FCC COMPLIANT COMPONENTS
SENSOR IDS NOT DOWNLOADED INTO RADIO FREQUENCY HUB (RF-HUB) MODULE
INCORRECT TIRE PRESSURE MONITORING (TPM) SENSOR IDS
TIRE PRESSURE MONITORING (TPM) SENSOR

DIAGNOSTIC TEST

1. **VERIFY DTC IS ACTIVE**

   NOTE: Before beginning the diagnostic procedure, verify that the tire pressures are correct, the 9936 TPM-RKE analyzer is up to date and the correct application has been chosen on the tool.

   1. Cycle the ignition on.
   2. With the scan tool, read and record RF-Hub Module DTCs.
   3. Test drive the vehicle at a speed greater than 32 km/r (20 mph) for 20 minutes in order to receive TPM data and allow for the system to update.
   4. With the scan tool, read DTCs in the Radio Frequency Hub (RF-Hub) Module.

      Is the DTC status Active at this time?

      Yes

      - Go To 2

      No

      - Test complete.
      - Perform the TPM SENSOR VERIFICATION TEST. Refer to **STANDARD PROCEDURE**.

2. **WITH TPM-RKE TOOL CHECK TIRE PRESSURE MONITORING (TPM) SENSOR IDS**

   NOTE: Always be certain to select the proper vehicle line and model year when using this tool, as the tool will automatically use the correct protocol to

attempt to read the Sensor. If the incorrect vehicle line and/or model year is selected, the Sensor will not respond to the tool.

NOTE: If you receive no response from any of the tire pressure sensors, check to make sure that the TPM-RKE Analyzer is set correctly, and repeat the process on each of the non-responsive wheel(s)

1. Use a TPM-RKE Analyzer (special tool #CH9936, Analyzer, TPM/RKE) to scan each TPM Sensor for an ID, store in the proper location in the TPM-RKE Analyzer.
2. Use a TPM-RKE Analyzer to upload the correct IDs and proper locations in the scan tool.
3. With the scan tool, select the RF-Hub Module under "Miscellaneous Functions", follow the procedure for uploading TPM Sensor IDs.
4. With the scan tool, erase RF-Hub Module DTCs.
5. Test drive the vehicle at a speed greater than 32 km/r (20 mph) for 20 minutes in order to receive TPM data and allow for the system to update.
6. With the scan tool, check to see if the TPM sensor IDs match what is programmed into the RF-Hub Module.

   Do the TPM IDs match?

   Yes

   - Test complete.
   - Perform the TPM SENSOR VERIFICATION TEST. Refer to **STANDARD PROCEDURE**.

   No

   - With the scan tool, read RF-Hub DTCs. If any displayed, perform the appropriate diagnostic procedure. If there are none, repeat this test. A bad RF-Hub will have other DTCs set.
   - Perform the TPM SENSOR VERIFICATION TEST. Refer to **STANDARD PROCEDURE**.

3. **WITHOUT TPM-RKE TOOL CHECK TIRE PRESSURE MONITORING (TPM) SENSOR IDS**
   1. Cycle the ignition on.
   2. Starting with the left front wheel, deflate the tire to 20 PSI, wait two minutes, and check the scan tool for changes to any compensated tire pressure values.
   3. Repeat the above step on each wheel of the vehicle.
   4. With the scan tool, erase RF-Hub Module DTCs.
   5. Test drive the vehicle at a speed greater than 32 km/r (20 mph) for 20 minutes in order to receive TPM data and allow for the system to update.
   6. With the scan tool, check to see if the TPM sensor IDs are programmed into the RF-Hub Module.

      Are the TPM Sensor IDs in the RF-Hub Module?

Yes

- Test complete.
- Perform the TPM SENSOR VERIFICATION TEST. Refer to **STANDARD PROCEDURE**.

No

- With the scan tool, read RF-Hub DTCs. If any displayed, perform the appropriate diagnostic procedure. If there are none, repeat this test. A bad RF-Hub will have other DTCs set.
- Perform the TPM SENSOR VERIFICATION TEST. Refer to **STANDARD PROCEDURE**.

C1597-00-TPM SYSTEM DEACTIVATED-WINTER MODE

For a complete wiring diagram, **refer to appropriate SYSTEM WIRING DIAGRAMS article** .

NOTE: Check for and remove any non-FCC compliant components before beginning this diagnostic procedure.

THEORY OF OPERATION

NOTE: When this DTC is active the TPM Module will enter a deactivation mode (Winter Mode) and the TPM system becomes deactivated. If winter tires and wheel assemblies are installed no repair is required.

The Tire Pressure Monitor (TPM) Module determines the TPM Sensor positions by performing the vehicle Tire Pressure Monitoring (TPM) Sensor locate procedure. This procedure is run after the vehicle has been stationary for 20 minutes. After driving the vehicle at speeds greater than 32 km/h (20 mph) for a minimum of 10 minutes without the TPM Sensor installed, the TPM Module sends a bus message commanding the TPM telltale lamp to flash for 75 seconds. After the 75 seconds of flashing, the lamp will remain on solid and a chime will be heard. The message center will display SERVICE TPM SYSTEM for five seconds and shut off, all while the tire pressure values will be displayed as dashes. After the ignition has been cycled off and on the TPM telltail lamp will remain off, the message center will no longer display SERVICE TPM SYSTEM, and the tire pressures continue to be displayed as dashes.

WHEN MONITORED

During vehicle TPM Sensor locate process.

SET CONDITION

For BUX/Canada vehicles only where all four TPM Sensors fail the locate processes at the same time because the TPM sensors are not installed on winter tire and wheel assemblies.

POSSIBLE CAUSES

Possible Causes
NON-FCC COMPLIANT COMPONENTS
TIRE PRESSURE MONITORING (TPM) SENSORS NOT PRESENT
TIRE PRESSURE MONITORING (TPM) SENSORS
RADIO FREQUENCY HUB (RF-HUB) MODULE

DIAGNOSTIC TEST

1. **DTC STATUS IS ACTIVE**

NOTE: **Before beginning the diagnostic procedure, verify that the tire pressures are correct, the 9936 TPM-RKE analyzer is up to date and the correct application has been chosen on the tool.**

1. Cycle the ignition on.
2. With the scan tool, read and record the RF-Hub Module DTCs.
3. With the scan tool, erase stored RF-Hub Module DTCs.
4. Drive the vehicle at speeds greater than 32 km/h (20 mph) for 10 minutes.
5. With the scan tool, read DTCs in the RF-Hub Module.

Is this DTC Active at this time?

Yes

- Go To 2

No

- Go To 4

2. **TIRE PRESSURE MONITORING (TPM) WINTER MODE**

NOTE: **Repair all other RF -Hub Module DTCs before continuing with this test procedure.**

1. Cycle the ignition off.
2. Cycle the ignition from off to on.
3. Check for the following conditions:
   - The telltale lamp is off.
   - The tire pressure values in the Instrument Cluster are displayed as dashes.
   - The message center **is not** displaying "SERVICE TPM SYSTEM".

Are all of the above conditions correct?

Yes

- The Tire Pressure Monitoring (TPM) Module is now in deactivation mode (Winter Mode). This DTC will remain active until the correct tire and wheel assemblies are installed back on the vehicle. Once one of the correct tire and wheel assemblies are reinstalled, the other three must also be reinstalled prior to turning the ignition on.

No

- Go To 3

3. **TIRE PRESSURE MONITORING (TPM) SENSORS**
   1. Cycle the ignition off.
   2. Verify the correct TPM Sensors are installed in all of the tire and wheel assemblies.

   Are the correct TPM Sensors installed?

   Yes

   - Replace the Radio Frequency (RF Hub) Module in accordance with the Service Information. Refer to **MODULE, RADIO FREQUENCY (RF HUB), REMOVAL** .
   - Perform the RADIO FREQUENCY HUB (RF HUB) VERIFICATION TEST. Refer to **STANDARD PROCEDURE**.

   No

   - Install all new Tire Pressure Monitoring (TPM) Sensors in accordance with the Service Information. Refer to **SENSOR, TIRE PRESSURE MONITORING (TPM), REMOVAL** .
   - Perform the TPM SENSOR VERIFICATION TEST. Refer to **STANDARD PROCEDURE**.
4. **INTERMITTENT TIRE PRESSURE MONITORING (TPM) SENSOR DTC**
   1. The conditions necessary to set this DTC are not present at this time.
   2. Perform any Technical Service Bulletins that may apply to this condition.
   3. With the scan tool, clear DTCs in the Radio Frequency Hub (RF-Hub) Module.
   4. Test drive the vehicle for a minimum of 10 minutes with vehicle speed greater than 32 km/h (20 mph).
   5. With the scan tool, read DTCs in the Radio Frequency Hub (RF-Hub) Module.

   Does the DTC reset or is the status Active for this DTC?

   Yes

   - With the scan tool, read RF-Hub DTCs. If any displayed, perform the appropriate diagnostic procedure. If there are none, repeat this test. A bad RF-Hub will have other DTCs set.
   - Perform the TPM SENSOR VERIFICATION TEST. Refer to **STANDARD PROCEDURE**.

No

- Test complete.
- Perform the TPM SENSOR VERIFICATION TEST. Refer to **STANDARD PROCEDURE**.

C15CB-00-FRONT AXLE TIRE PRESSURE PLACARD VALUE IMPLAUSIBLE

For a complete wiring diagram, **refer to appropriate SYSTEM WIRING DIAGRAMS article** .

WHEN MONITORED

Continuously while driving.

SET CONDITION

Placard values not programmed into the Radio Frequency Hub (RF Hub) Module.

POSSIBLE CAUSES

Possible Causes
MISSING PLACARD VALUES IN THE RADIO FREQUENCY HUB (RF HUB) MODULE

DIAGNOSTIC TEST

TIRE PRESSURE VALUES

NOTE: Before beginning the diagnostic procedure, verify that the tire pressures are correct, the 9936 TPM-RKE analyzer is up to date and the correct application has been chosen on the tool.

1. With the scan tool, select "RFH", "Data Display", "Tire Placard Pressure - Front" under each of the TPM Sensor Identification locations.
2. Compare the pressure values with the "Tire Inflation Pressure (Placard) Label located on the driver's side B-Pillar.
3. With the scan tool, select "RFH", "Miscellaneous Functions", "Update Pressure Threshold" and follow the instructions on the scan tool.
4. Enter the front and rear placard pressure values as seen on the Tire Inflation Pressure (Placard) Label.

   Do the tire pressure values match the Placard Values?

   Yes

   - Test complete.
   - Perform the TPM SENSOR VERIFICATION TEST. Refer to **STANDARD PROCEDURE**.

No

- Repeat this test.
- Perform the TPM SENSOR VERIFICATION TEST. Refer to **STANDARD PROCEDURE**.

C15CC-00-REAR AXLE TIRE PRESSURE PLACARD VALUE IMPLAUSIBLE

For a complete wiring diagram, **refer to appropriate SYSTEM WIRING DIAGRAMS article** .

WHEN MONITORED

Continuously while driving.

SET CONDITION

Placard values not programmed into the Radio Frequency Hub (RF Hub) Module.

POSSIBLE CAUSES

Possible Causes
MISSING PLACARD VALUES IN THE RADIO FREQUENCY HUB (RF HUB) MODULE

DIAGNOSTIC TEST

TIRE PRESSURE VALUES

NOTE: Before beginning the diagnostic procedure, verify that the tire pressures are correct, the 9936 TPM-RKE analyzer is up to date and the correct application has been chosen on the tool.

1. With the scan tool, select "RFH", "Data Display", "Tire Placard Pressure - Rear" under each of the TPM Sensor Identification locations.
2. Compare the pressure values with the "Tire Inflation Pressure (Placard) Label located on the driver's side B-Pillar.
3. With the scan tool, select "RFH", "Miscellaneous Functions", "Update Pressure Threshold" and follow the instructions on the scan tool.
4. Enter the front and rear placard pressure values as seen on the Tire Inflation Pressure (Placard) Label.

   Do the tire pressure values match the Placard Values?

   Yes

   - Test complete.
   - Perform the TPM SENSOR VERIFICATION TEST. Refer to **STANDARD PROCEDURE**.

No

- Repeat this test.
- Perform the TPM SENSOR VERIFICATION TEST. Refer to **STANDARD PROCEDURE**.

P0704-2A-CLUTCH SWITCH INPUT CIRCUIT-STUCK

For a complete wiring diagram, **refer to appropriate SYSTEM WIRING DIAGRAMS article** .

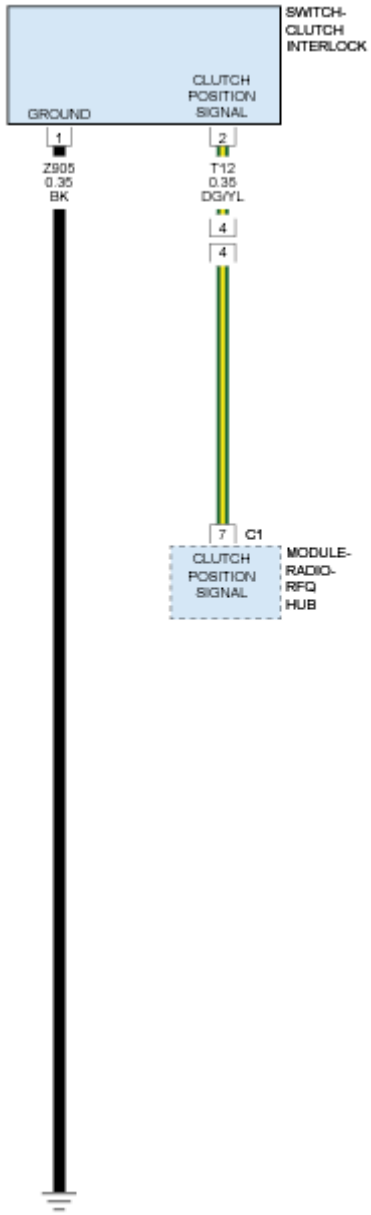

Fig. 80: Clutch Position Signal - Circuit Diagram
Courtesy of CHRYSLER GROUP, LLC

WHEN MONITORED

Cycling the ignition to start.

SET CONDITION

This DTC applies to manual transmission only, when the KIN button is pushed to START, the vehicle will crank without the driver pressing the clutch pedal; and will not be able to set the ignition state to ACCESSORY.

POSSIBLE CAUSES

Possible Causes
(T12) CLUTCH POSITION SIGNAL CIRCUIT SHORTED
CLUTCH INTERLOCK SWITCH
RADIO FREQUENCY HUB (RF HUB) MODULE

DIAGNOSTIC TEST

1. **TEST FOR INTERMITTENT CONDITION**
    1. Cycle the ignition on.
    2. Using the scan tool, record and erase the DTCs.
    3. With the scan tool, read the Active DTCs.

    Does the scan tool display: P0704-2A-CLUTCH SWITCH INPUT CIRCUIT-STUCK as active?

    Yes

    - Go To 2

    No

    - Test complete, the condition or conditions that originally set this DTC are not present at this time. Using the wiring diagrams as a guide, check all related splices and connectors for signs of water intrusion, corrosion, pushed out or bent terminals and correct pin tension.
2. **CHECK THE CLUTCH SWITCH CONNECTION**
    1. Cycle the ignition off.
    2. Disconnect the Clutch Switch connector.
    3. Cycle the ignition on.
    4. Using the scan tool, record and erase the DTCs.
    5. With the scan tool, read the Active DTCs.

    Does the scan tool display: P0704-2A-CLUTCH SWITCH INPUT CIRCUIT-STUCK as active?

    Yes

- Go To 3

No

- Check the Clutch Switch connection for signs of water intrusion, corrosion, pushed out or bent terminals and correct pin tension.
- If no problem found with the connection, replace the Clutch Switch in accordance with the service information.

3. **CHECK THE (T12) CLUTCH POSITION SIGNAL CIRCUIT SHORTED TO GROUND**
   1. Cycle the ignition off.
   2. Disconnect the RF Hub Module C1 harness connector.
   3. Measure the resistance between ground and the (T12) Clutch Position Signal Circuit.

   Is the resistance below 30K Ohms?

   Yes

   - Repair the short to ground in the (T12) Clutch Position Signal Circuit.

   No

   - Check the RF Hub Module connection for signs of water intrusion, corrosion, pushed out or bent terminals and correct pin tension.
   - If no problem found with the connection, replace the RF Hub in accordance with the Service Information. Refer to **MODULE, RADIO FREQUENCY (RF HUB), REMOVAL** .
   - Perform the RADIO FREQUENCY HUB (RF HUB) VERIFICATION TEST. Refer to **STANDARD PROCEDURE**.

P081C-01-PARK INPUT CIRCUIT-GENERAL ELECTRICAL FAILURE

For a complete wiring diagram, **refer to appropriate SYSTEM WIRING DIAGRAMS article** .

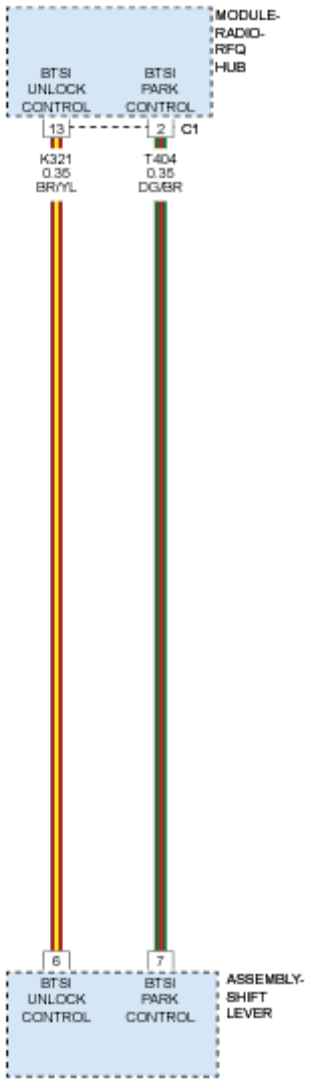

Fig. 81: BTSI Park Control - Circuit Diagram
Courtesy of CHRYSLER GROUP, LLC

WHEN MONITORED

Continuously and the vehicle may not start (ignition cannot go to run).

SET CONDITION

There are two possible conditions that could take place in setting this fault: 1) The RF Hub has received CAN message that the transmission is in Park **AND** the hard wired input from the gated park switch to the RFHM indicates the transmission is **NOT** in Park. 2) The RF Hub has received a CAN message that the transmission is **NOT** in Park **AND** the hard wired input from the gated park switch to the RF Hub indicates the transmission is in Park.

POSSIBLE CAUSES

Possible Causes
BTSI PARK CONTROL CIRCUIT SHORTED OR OPEN
BTSI UNLOCK CONTROL CIRCUIT SHORTED OR OPEN
RADIO FREQUENCY HUB (RF HUB) MODULE

DIAGNOSTIC TEST

1. **TEST FOR INTERMITTENT CONDITION**
   1. Cycle the ignition on.
   2. Using the scan tool, record and erase the DTCs.
   3. With the scan tool, read the Active DTCs.

      NOTE: If any of the following DTC's are Active: P0928-11, P0928-12, P0928-13 or U1454-00, perform these diagnostic test(s) first before continuing.

      Does the scan tool display: P081C-01-PARK INPUT CIRCUIT-GENERAL ELECTRICAL FAILURE as active?

      Yes

      - Go To 2

      No

      - Test complete, the condition or conditions that originally set this DTC are not present at this time. Using the wiring diagrams as a guide, check all related splices and connectors for signs of water intrusion, corrosion, pushed out or bent terminals and correct pin tension.
2. **CHECKING THE BTSI PARK CONTROL CIRCUIT FOR A SHORT TO GROUND**
   1. Cycle the ignition off.

      NOTE: Before proceeding check all related connections for not being fully connected, signs of water intrusion, corrosion, pushed out or bent terminals and correct pin tension.

   2. Disconnect the RF Hub Module C1 harness connector and Electronic Shift Module connector.
   3. Measure the resistance between ground and the (T404) BTSI Park Control circuit.

      Is the resistance below 30K Ohms?

      Yes

      - Repair the short to ground in the (T404) BTSI Park Control circuit.

No

- Go To 3

3. **CHECKING THE BTSI UNLOCK CONTROL CIRCUIT FOR A SHORT TO GROUND**
   1. Measure the resistance between ground and the (K321) BTSI Unlock Control circuit.

      Is the resistance below 30K Ohms?

      Yes

      - Repair the short to ground in the (K321) BTSI Unlock Control circuit.

      No

      - Go To 4

4. **CHECKING THE BTSI PARK CONTROL CIRCUIT FOR AN OPEN**
   1. Measure the resistance of the (T404) BTSI Park Control circuit between the RF HUB C1 connector and the Electronic Shift Module connector.

      Is the resistance below 2.0 Ohms?

      Yes

      - Go To 5

      No

      - Repair the open in the (T404) BTSI Park Control circuit.

5. **CHECKING THE BTSI UNLOCK CONTROL CIRCUIT FOR AN OPEN**
   1. Measure the resistance of the (K321) BTSI Unlock Control circuit between the RF HUB C1 connector and the Electronic Shift Module connector.

      Is the resistance below 2.0 Ohms?

      Yes

      - Go To 6

      No

      - Repair the open in the (K321) BTSI Unlock Control circuit.

6. **CHECKING THE BTSI PARK CONTROL CIRCUIT BEING SHORTED TO THE BTSI UNLOCK CONTROL CIRCUIT**
   1. Measure the resistance between the (T404) BTSI Park Control circuit and the (K321) BTSI Unlock

Control circuit in the RF Hub C1 harness connector.

Is the resistance below 30K Ohms?

Yes

- Repair the short between the (T404) BTSI Park Control circuit and the (K321) BTSI Unlock Control circuit.

No

- Replace the RF Hub in accordance with the Service Information. Refer to **MODULE, RADIO FREQUENCY (RF HUB), REMOVAL** .

P0928-11-BTSI CONTROL - CIRCUIT SHORT TO GROUND

For a complete wiring diagram, **refer to appropriate SYSTEM WIRING DIAGRAMS article** .

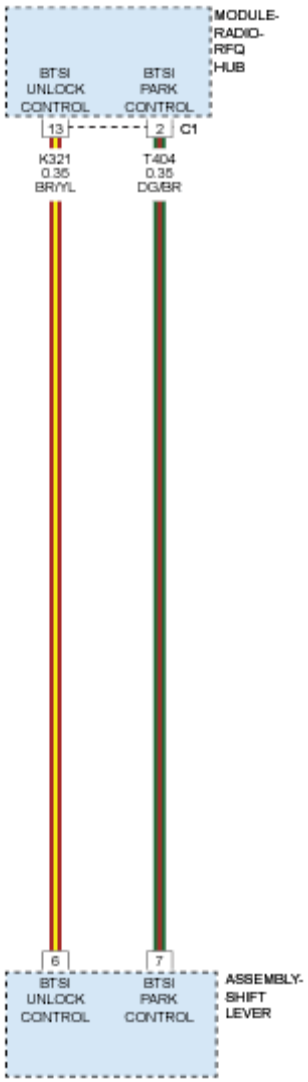

Fig. 82: BTSI Park Control - Circuit Diagram
Courtesy of CHRYSLER GROUP, LLC

THEORY OF OPERATION

The Brake Transmission Safety Interlock (BTSI) is a safety feature that prohibits movement of the shift lever out of park unless certain conditions are met. The Radio Frequency Hub (RF-Hub) controls the BTSI solenoid. The RF-Hub module will engage the BTSI solenoid when the shifter is in Park, the module detects the depression of the brake pedal and the ignition position is in Run or Start, thus allowing the transmission shift lever to move from the park position to any other position.

WHEN MONITORED

When the ignition is in accessory, run or start position.

SET CONDITION

This DTC will set if the Radio Frequency Hub (RF-Hub) module detects a short to ground on the BTSI solenoid control circuit.

POSSIBLE CAUSES

Possible Causes
(K321) BRAKE TRANSMISSION SHIFT INTERLOCK (BTSI) CONTROL CIRCUIT SHORT TO GROUND
TRANSMISSION SHIFTER ASSEMBLY
RADIO FREQUENCY HUB (RF-HUB)

DIAGNOSTIC TEST

1. **DETERMINE IF THE DTC IS ACTIVE**
    1. Turn the ignition on.
    2. With the scan tool, record and erase the RF-Hub DTCs.
    3. Apply the service brakes and try to shift the transmission from park to all other gears several times.
    4. Turn the ignition off.
    5. Turn the ignition on and wait 30 seconds.
    6. With the scan tool, read the active RF-Hub DTCs.

    Does the scan tool display: P0928-14-BTSI CONTROL - CIRCUIT SHORT TO GROUND OR OPEN as active?

    Yes

    - Go To 2

    No

    - Perform the THEFT AND SECURITY SYSTEM INTERMITTENT TEST. Refer to **STANDARD PROCEDURE**.
2. **CHECK THE BTSI SOLENOID FOR AN OPEN OR A SHORT TO GROUND**
    1. Turn the ignition off.
    2. Be sure the transmission is in Park.
    3. Disconnect the Shifter Lever Assembly harness connector.
    4. Connect a 12-volt test light between the (K321) BTSI Control circuit and the Ground circuit in the shifter harness connector.
    5. Turn the ignition on.
    6. Step on the brake pedal and observe the test light.

    Does the test light illuminate brightly?

Yes

- Replace the Shifter Assembly in accordance with the Service Information.
- Perform the BODY VERIFICATION TEST. Refer to **STANDARD PROCEDURE** .

No

- Go To 3

3. **CHECK THE (K321) BTSI CONTROL CIRCUIT FOR A SHORT TO GROUND**
   1. Turn the ignition off.
   2. Disconnect the RF-Hub C1 harness connector.
   3. Measure the resistance between ground and the (K321) BTSI Control circuit in the shifter harness connector.

   Is the resistance below 100K Ohms?

   Yes

   - Repair the (K321) BTSI Control circuit for a short to ground.
   - Perform the BODY VERIFICATION TEST. Refer to **STANDARD PROCEDURE** .

   No

   - **Replace the Radio Frequency Hub (RF-Hub) in accordance with the Service Information. Refer to MODULE, RADIO FREQUENCY (RF HUB), REMOVAL .**
   - Perform the RADIO FREQUENCY HUB (RF-HUB) VERIFICATION TEST. Refer to **STANDARD PROCEDURE**.

P0928-12-BTSI CONTROL - CIRCUIT SHORT TO BATTERY

For a complete wiring diagram, **refer to appropriate SYSTEM WIRING DIAGRAMS article** .

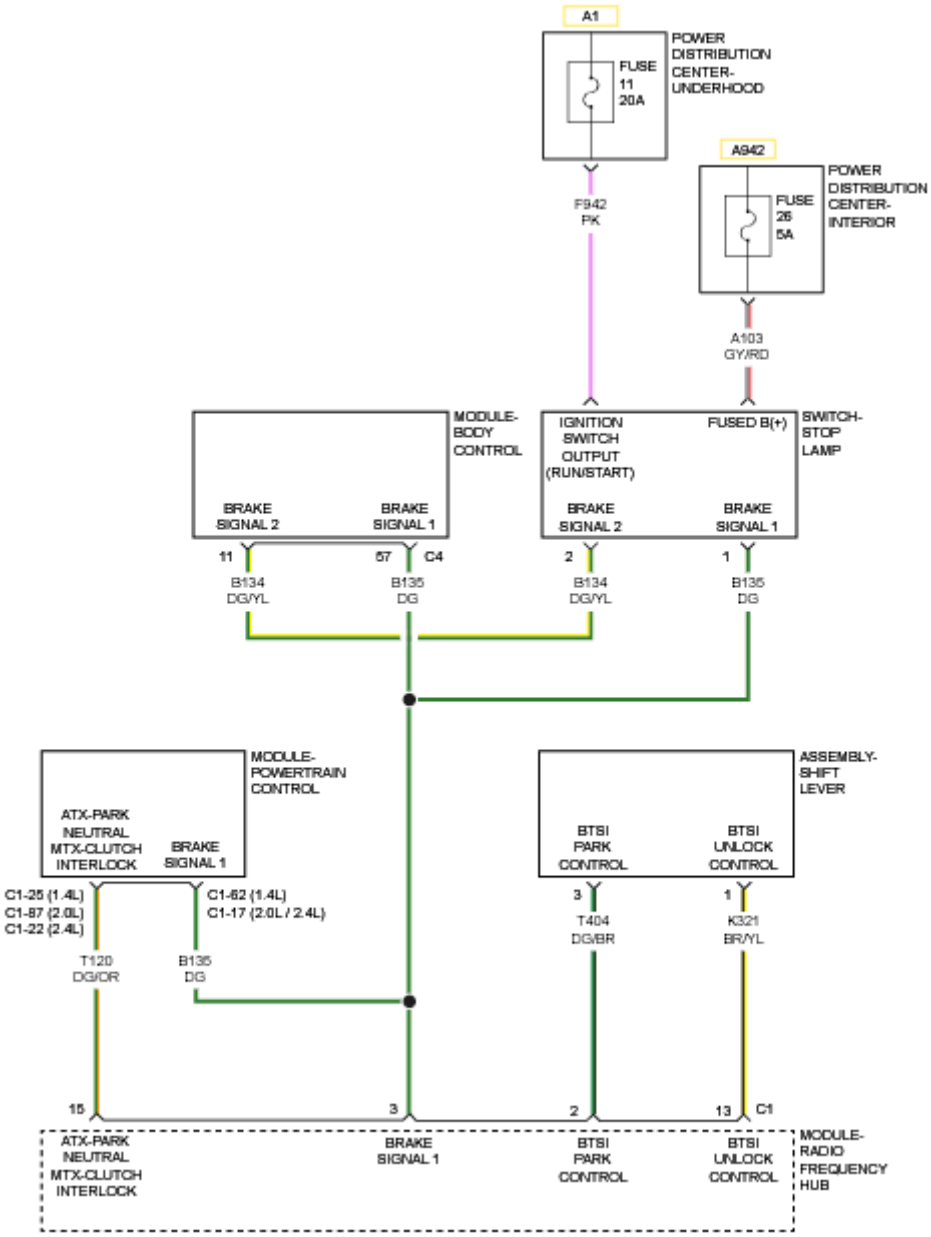

Fig. 83: Brake Transmission Safety Interlock (BTSI) Circuit Diagram
Courtesy of CHRYSLER GROUP, LLC

THEORY OF OPERATION

The Brake Transmission Safety Interlock (BTSI) is a safety feature that prohibits movement of the shift lever out of park unless certain conditions are met. The Radio Frequency Hub (RF-Hub) controls the BTSI solenoid. The RF-Hub module will engage the BTSI solenoid when the shifter is in Park, the module detects the depression of the brake pedal and the ignition position is in Run or Start, thus allowing the transmission shift lever to move from the park position to any other position. A voltage on the control circuit, when it should be locked, can cause this DTC to set.

WHEN MONITORED

When the ignition is in accessory, run or start position.

SET CONDITION

This DTC will set if the Radio Frequency Hub (RF-Hub) module detects a voltage on the BTSI solenoid control circuit when there should not be any voltage there.

POSSIBLE CAUSES

Possible Causes
(K321) BRAKE TRANSMISSION SHIFT INTERLOCK (BTSI) CONTROL CIRCUIT SHORT TO VOLTAGE
RADIO FREQUENCY HUB (RF-HUB)

DIAGNOSTIC TEST

1. **DETERMINE IF THE DTC IS ACTIVE**
    1. Cycle the ignition on.
    2. With the scan tool, record and erase RF-Hub DTCs.
    3. Apply the service brakes and shift the transmission from park to all other gears several times.
    4. Cycle the ignition off.
    5. Apply the service brakes and try to shift the transmission from park to other gears.
    6. Cycle the ignition on and wait 30 seconds.
    7. With the scan tool, read the active RF-Hub DTCs.

    Does the scan tool display: P0928-12-BTSI CONTROL - CIRCUIT SHORT TO BATTERY?

    Yes

    - Go To 2

    No

    - Perform the THEFT AND SECURITY SYSTEM INTERMITTENT TEST. Refer to **STANDARD PROCEDURE**.
2. **CHECK THE (K321) BTSI CONTROL CIRCUIT FOR A SHORT TO VOLTAGE**
    1. Cycle the ignition off.
    2. Disconnect the Shifter Lever Assembly harness connector.
    3. Cycle the ignition on.
    4. Measure the voltage between ground and the (K321) BTSI Control circuit in the RF-Hub C1 harness connector.

Is there any voltage present?

Yes

- Repair the (K321) BTSI Control circuit for a short to voltage.
- Perform the BODY VERIFICATION TEST. Refer to **STANDARD PROCEDURE** .

No

- Replace the Radio Frequency Hub in accordance with the Service Information. Refer to **MODULE, RADIO FREQUENCY (RF HUB), REMOVAL** .
- Perform the RADIO FREQUENCY HUB (RF-HUB) VERIFICATION TEST. Refer to **STANDARD PROCEDURE**.

P0928-13-BTSI CONTROL - CIRCUIT OPEN

For a complete wiring diagram, **refer to appropriate SYSTEM WIRING DIAGRAMS article** .

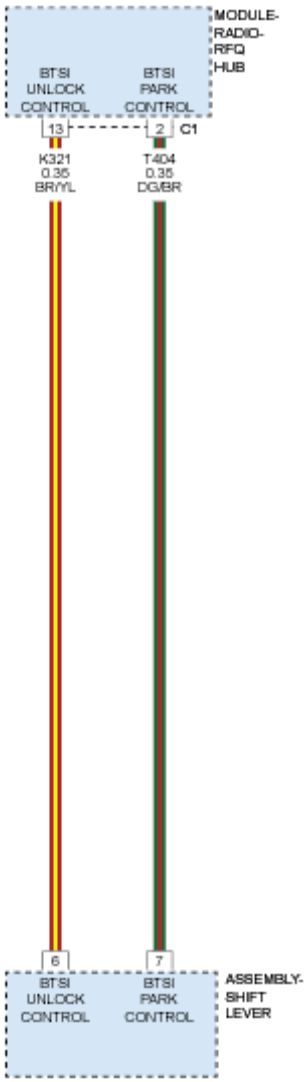

Fig. 84: BTSI Park Control - Circuit Diagram
Courtesy of CHRYSLER GROUP, LLC

THEORY OF OPERATION

The Brake Transmission Safety Interlock (BTSI) is a safety feature that prohibits movement of the shift lever out of park unless certain conditions are met. The Radio Frequency Hub (RF-Hub) controls the BTSI solenoid. The RF-Hub module will engage the BTSI solenoid when the shifter is in Park, the module detects the depression of the brake pedal and the ignition position is in Run or Start, thus allowing the transmission shift lever to move from the park position to any other position.

WHEN MONITORED

When the ignition is in accessory, run or start position.

SET CONDITION

This DTC will set if the Radio Frequency Hub (RF-Hub) module detects an open on the BTSI solenoid control circuit.

POSSIBLE CAUSES

Possible Causes
(K321) BRAKE TRANSMISSION SHIFT INTERLOCK (BTSI) CONTROL CIRCUIT OPEN
TRANSMISSION SHIFTER ASSEMBLY
RADIO FREQUENCY HUB (RF-HUB)

DIAGNOSTIC TEST

1. **DETERMINE IF THE DTC IS ACTIVE**
    1. Turn the ignition on.
    2. With the scan tool, record and erase the RF-Hub DTCs.
    3. Apply the service brakes and try to shift the transmission from park to all other gears several times.
    4. Turn the ignition off.
    5. Turn the ignition on and wait 30 seconds.
    6. With the scan tool, read the active RF-Hub DTCs.

    Does the scan tool display: P0928-14-BTSI CONTROL - CIRCUIT SHORT TO GROUND OR OPEN as active?

    Yes

    - Go To 2

    No

    - Perform the THEFT AND SECURITY SYSTEM INTERMITTENT TEST. Refer to **STANDARD PROCEDURE**.
2. **CHECK THE (K321) BTSI CONTROL CIRCUIT FOR AN OPEN**
    1. Measure the resistance of the (K321) BTSI Control circuit between the Shifter harness connector and the RF-Hub C1 harness connector.

    Is the resistance below 1.0 Ohms?

    Yes

    - Replace the Radio Frequency Hub in accordance with the Service Information. Refer to **MODULE, RADIO FREQUENCY (RF HUB), REMOVAL** .
    - Perform the RADIO FREQUENCY HUB (RF-HUB) VERIFICATION TEST. Refer to **STANDARD PROCEDURE**.

No

- Repair the (K321) BTSI Control circuit for an open.
- Perform the BODY VERIFICATION TEST. Refer to **STANDARD PROCEDURE** .

U0001-00-CAN C BUS

For a complete wiring diagram, **refer to appropriate SYSTEM WIRING DIAGRAMS article** .

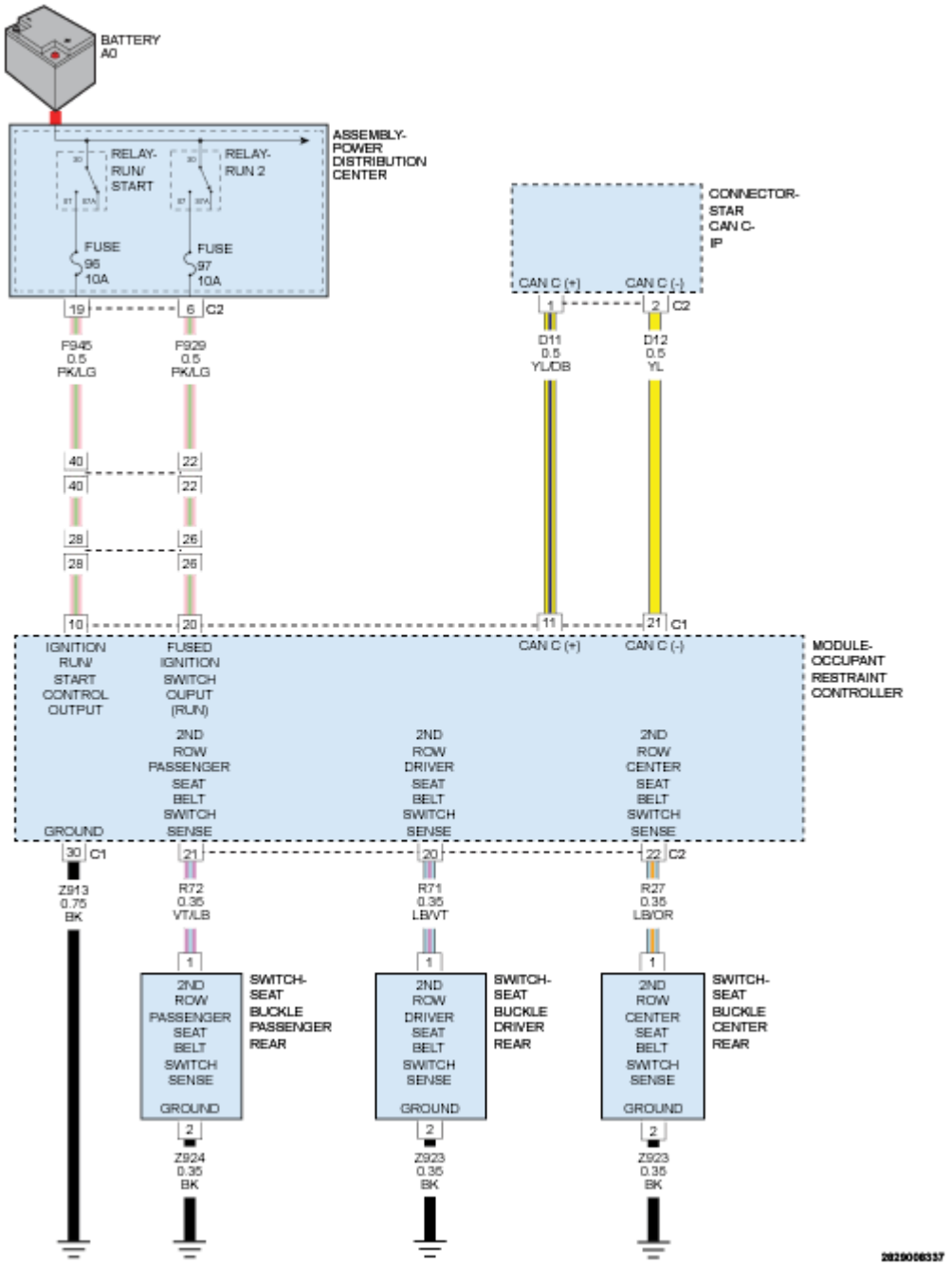

Fig. 85: Occupant Restraint Controller Module (ORC) Circuit Diagram
Courtesy of CHRYSLER GROUP, LLC

WHEN MONITORED

Continuously when the ignition is on.

Battery voltage between 10 and 16 volts.

SET CONDITION

The controller detects an open, short to ground or a short to voltage on the CAN C Bus circuit.

POSSIBLE CAUSES

Possible Causes
CAN C BUS CIRCUITS OPEN OR SHORTED
DTCS RELATED TO BATTERY VOLTAGE, IGNITION, OR VIN MESSAGES
BODY CONTROL MODULE (BCM) POWER AND GROUND
BODY CONTROL MODULE (BCM)
MODULE THAT SET THIS DTC

DIAGNOSTIC TEST

VERIFY DIAGNOSTIC TROUBLE CODE (DTC) IS ACTIVE

NOTE: Make sure the battery voltage is between 10 and 16 volts before proceeding.

1. Cycle the ignition on.
2. With the scan tool, read the active DTCs.

   Does the scan tool display: U0001-00-CAN C BUS?

   Yes

   - For the DTC U0001-00 Can C Bus, use the U0002-00 Can C Bus Off Performance diagnostic procedure.
   - **Refer to DTC INDEX** and perform the U0002-CAN C Bus Off Performance diagnostic procedure.

   No

   - **Refer to DIAGNOSIS AND TESTING** and perform the Stored Lost Communication DTCs diagnostic procedure.

U0002-00-CAN C BUS OFF PERFORMANCE

For a complete wiring diagram, **refer to appropriate SYSTEM WIRING DIAGRAMS article** .

WHEN MONITORED

Ignition run time is greater than one second. Battery voltage between 10 and 16 volts. Engine run time greater than three seconds.

SET CONDITION

Bus messages not received from the Body Control Module (BCM) for approximately two to five seconds.

POSSIBLE CAUSES

Possible Causes
CAN BUS CIRCUITS OPEN OR SHORTED
DTCS RELATED TO BATTERY VOLTAGE, IGNITION, OR VIN MESSAGES
BODY CONTROL MODULE (BCM) POWER AND GROUND
BCM NOT CONFIGURED CORRECTLY
BODY CONTROL MODULE (BCM)
MODULE THAT SET THIS DTC

DIAGNOSTIC TEST

ACTIVE DTC

NOTE: For vehicle communication problems, use the scan tool to refer to the Network Review Screen. The screen depicts a high level view of the vehicle network. Fault and problem areas appear in red. Selecting any of the network components allows access to the source of the problem.

1. Cycle the ignition on.
2. With a scan tool, read the active DTCs.

   Does the scan tool display: U0002-00-CAN C BUS OFF PERFORMANCE?

   Yes

   - **Refer to DIAGNOSIS AND TESTING** and perform the CAN C BUS NO RESPONSE diagnostic procedure.

   No

   - **Refer to DIAGNOSIS AND TESTING** and perform the Stored Lost Communication DTCs diagnostic procedure.

U0037-00-LIN BUS

For a complete wiring diagram, **refer to appropriate SYSTEM WIRING DIAGRAMS article** .

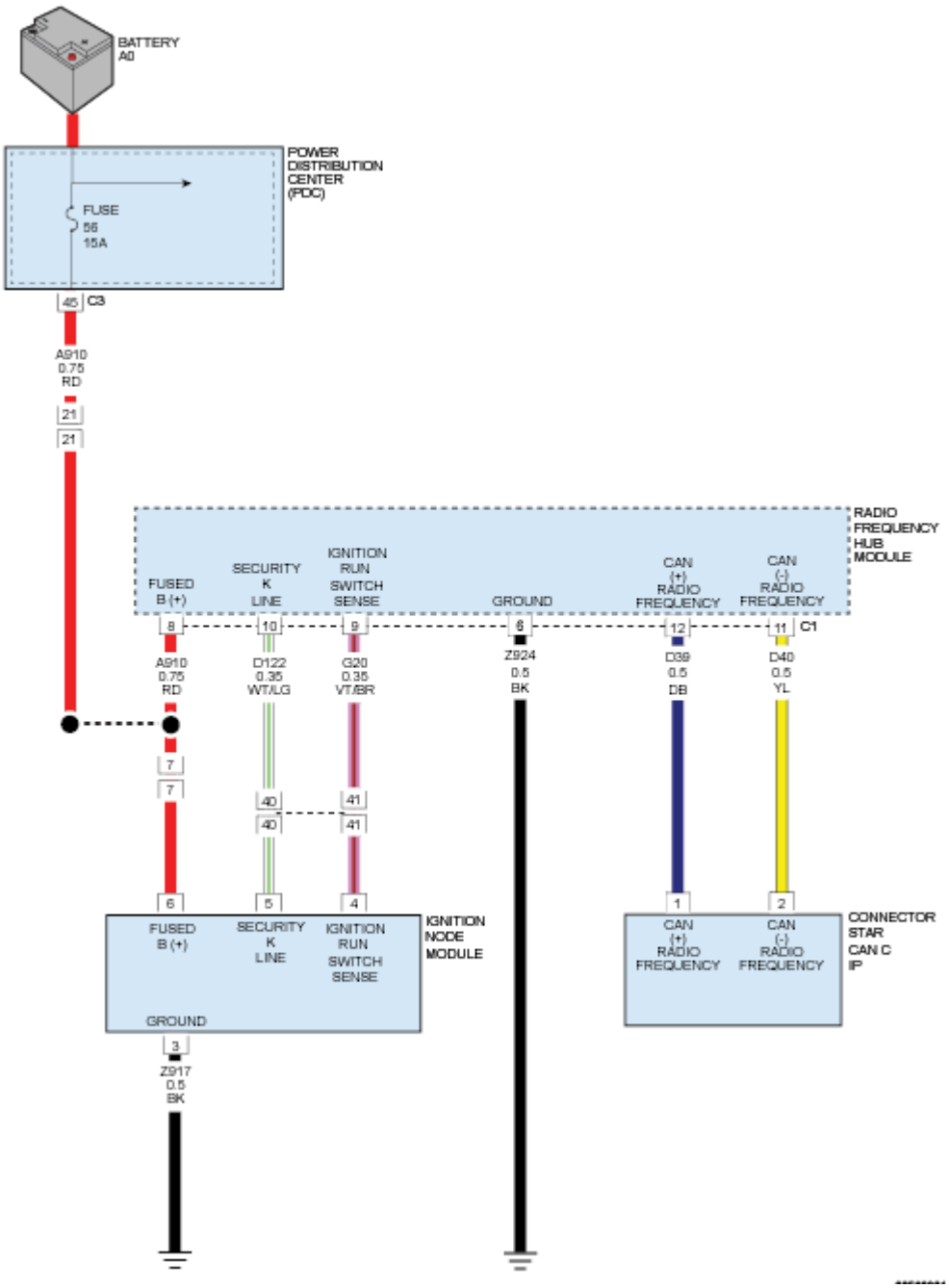

Fig. 86: Security K Line Communication Circuit Diagram
Courtesy of CHRYSLER GROUP, LLC

WHEN MONITORED

Continuously when the ignition is on.

SET CONDITION

A short to ground OR short to battery condition is identified on the SECURITY K LINE Bus by the Radio Frequency Hub (RFH) Module 10 times consecutively that a fault exists.

POSSIBLE CAUSES

Possible Causes
RADIO FREQUENCY HUB (RFH) SECURITY K LINE BUS CIRCUIT SHORTED TO GROUND OR SHORTED TO BATTERY
KEYLESS IGNITION NODE (KIN) / IGNITION NODE MODULE (IGNM) INTERNAL FAULT
RADIO FREQUENCY HUB (RFH) MODULE INTERNAL FAULT

DIAGNOSTIC TEST

1. **VERIFY DTC IS ACTIVE**

   NOTE: Verify that the vehicles battery is fully charged before proceeding.

   NOTE: If DTC U103C-KIN/IGNM COMMUNICATION is Active perform the diagnostics for this fault before proceeding. Refer to U103C-00-KIN/IGNM COMMUNICATION.

   1. Turn the ignition on.
   2. With the scan tool, read active Radio Frequency Hub (RFH) Module DTCs.

      Does the scan tool display: U0037-00-LIN BUS as Active?

      Yes

      - Go To 2

      No

      - **Refer to DIAGNOSIS AND TESTING** and perform the Stored Lost Communication DTCs diagnostic procedure.
2. **CHECK THE (D122) SECURITY K LINE BUS CIRCUIT**
   1. Turn the ignition off.
   2. Disconnect the Keyless Ignition Node (KIN) / Ignition Control Module (IGNM) C1 harness connector.
   3. Turn the ignition on.
   4. Measure the voltage of the (D122) RFH Module SECURITY K LINE Bus circuit at the KIN /

IGNM connector.

Is the voltage above 7.0 volts?

Yes

- If equipped with a Keyless Ignition Node (KIN), replace it in accordance with Service Information. Refer to **MODULE, KEYLESS IGNITION NODE, REMOVAL** .
- If equipped with an Ignition Node Module (IGNM), replace it in accordance with Service Information. Refer to **MODULE, IGNITION NODE, REMOVAL** .
- Perform the BODY VERIFICATION TEST. Refer to **STANDARD PROCEDURE** .

No

- Go To 3

3. **(D122) RFH MODULE LIN BUS CIRCUIT SHORTED TO GROUND**
   1. Turn the ignition off.
   2. Disconnect the RFH Module C1 harness connector.
   3. Measure the resistance between Ground and the (D122) RFH Module SECURITY K LINE Bus circuit.

   Is the resistance below 10K Ohms?

   Yes

   - Repair the (D122) RFH Module SECURITY K LINE Bus circuit for a short to the ground.
   - Perform the BODY VERIFICATION TEST. Refer to **STANDARD PROCEDURE** .

   No

   - Go To 4

4. **(D122) RFH MODULE SECURITY K LINE BUS CIRCUIT SHORTED TO VOLTAGE**
   1. Measure the voltage on the (D122) RFH Module SECURITY K LINE Bus circuit.

   Is there any voltage?

   Yes

   - Repair the (D122) RFH Module SECURITY K LINE Bus circuit for a short to voltage.
   - Perform the BODY VERIFICATION TEST. Refer to **STANDARD PROCEDURE** .

   No

   - Replace the Radio Frequency Hub (RFH) Module in accordance with the Service

Information. Refer to **MODULE, RADIO FREQUENCY (RF HUB), REMOVAL** .
- Perform the BODY VERIFICATION TEST. Refer to **STANDARD PROCEDURE** .

U0100-00-LOST COMMUNICATION WITH PCM

For a complete wiring diagram, **refer to appropriate SYSTEM WIRING DIAGRAMS article** .

WHEN MONITORED

Continuously when the ignition is on.

The battery voltage between 10 and 16 Volts.

Body Control Module (BCM) is configured correctly.

SET CONDITION

Bus messages not received from the Powertrain Control Module (PCM) for approximately two to five seconds.

POSSIBLE CAUSES

Possible Causes
CAN BUS CIRCUITS OPEN OR SHORTED
DTCS RELATED TO BATTERY VOLTAGE, IGNITION, OR VIN MESSAGES
POWERTRAIN CONTROL MODULES POWER AND GROUND
BCM NOT CONFIGURED CORRECTLY
POWERTRAIN CONTROL MODULE (PCM)
ANY MODULE THAT SET THIS DTC

DIAGNOSTIC TEST

VERIFY THE DIAGNOSTIC TROUBLE CODE (DTC) IS ACTIVE

NOTE: Make sure the battery is fully charged before proceeding.

1. Cycle the ignition on.
2. Using the scan tool, read the active DTCs.

   Does the scan tool display: U0100-00-LOST COMMUNICATION WITH PCM?

   Yes

   - **Refer to DIAGNOSIS AND TESTING** and perform the U0100-87-Lost Communication with ECM/PCM diagnostic procedure.

No

- **Refer to DIAGNOSIS AND TESTING** and perform the Stored Lost Communication DTCs diagnostic procedure.

U0101-00-LOST COMMUNICATION WITH TCM

For a complete wiring diagram, **refer to appropriate SYSTEM WIRING DIAGRAMS article** .

WHEN MONITORED

With the ignition on.

Battery voltage between 10 and 16 volts.

Body Control Module (BCM) is configured correctly.

SET CONDITION

Bus messages not received from the Transmission Control Module (TCM) for approximately 500ms.

POSSIBLE CAUSES

Possible Causes
CAN BUS CIRCUITS OPEN OR SHORTED
DTCS RELATED TO BATTERY VOLTAGE, IGNITION, OR VIN MESSAGES
TRANSMISSION CONTROL MODULE (TCM) POWER AND GROUND
BCM NOT CONFIGURED CORRECTLY
TRANSMISSION CONTROL MODULE (TCM)
MODULE THAT SET THIS DTC

DIAGNOSTIC TEST

VERIFY DTC IS ACTIVE

NOTE: Make sure the battery is fully charged before proceeding.

1. Cycle the ignition on.
2. With the scan tool, read the active DTCs.

   Does the scan tool display: U0101-00-LOST COMMUNICATION WITH TCM?

   Yes

   - **Refer to DIAGNOSIS AND TESTING** and perform the U0101-87-Lost Communication with

TCM diagnostic procedure.

No

- **Refer to DIAGNOSIS AND TESTING** and perform the Stored Lost Communication DTCs diagnostic procedure.

U103C-00-KIN/IGNM COMMUNICATION

For a complete wiring diagram, **refer to appropriate SYSTEM WIRING DIAGRAMS article** .

WHEN MONITORED

Any time the module is awake.

SET CONDITION

Whenever the Radio Frequency Hub (RF Hub) senses an open, or a short to ground on the (D122) Security K Line Communication circuit, this code will set.

POSSIBLE CAUSES

Possible Causes
FUSED B+ CIRCUIT OR GROUND CIRCUIT
SECURITY K LINE COMMUNICATION CIRCUIT SHORTED TO GROUND
SECURITY K LINE COMMUNICATION CIRCUIT OPEN
KEYLESS IGNITION NODE (KIN) OR IGNITION MODULE (IGNM)
RADIO FREQUENCY HUB (RF HUB)

DIAGNOSTIC TEST

1. **TEST FOR INTERMITTENT CONDITION**

NOTE: Be sure the battery is fully charged before continuing.

1. Cycle the ignition on.
2. Using the scan tool, record and erase the DTCs.
3. Try to start the engine.
4. With the scan tool, read the Active DTCs and wait one minute.

Does the scan tool display: U103C-00-KIN/IGNM COMMUNICATION as active?

Yes

- Go To 2

No

- Test complete, the condition or conditions that originally set this DTC are not present at this time. Using the wiring diagrams as a guide, check all related splices and connectors for signs of water intrusion, corrosion, pushed out or bent terminals and correct pin tension.
- Perform the BODY VERIFICATION TEST. Refer to **STANDARD PROCEDURE** .

2. **(A910) FUSED B+ OR (Z924) GROUND CIRCUIT OPEN**
   1. Cycle the ignition off.
   2. Disconnect the Keyless Ignition Node harness connector.
   3. Connect a 12 volt test light between the (A910) Fused B+ circuit and the (Z924) Ground circuit.

   Does the test light illuminate brightly? Compare the brightness to that of a direct connection to the battery.

   Yes

   - Go To 3

   No

   - Test the (A910) Fused B+ and (Z924) Ground circuits to determine where the high resistance is. Repair the high resisted circuit as necessary.
   - Perform the BODY VERIFICATION TEST. Refer to **STANDARD PROCEDURE** .

3. **(D122) SECURITY K LINE COMMUNICATION CIRCUIT OPEN**
   1. Measure the voltage between ground and the (D122) Security K Line Communication circuit.

   Is the voltage above 12.0 volts?

   Yes

   - If equipped with a Keyless Ignition Node (KIN), replace it in accordance with Service Information. Refer to **MODULE, KEYLESS IGNITION NODE, REMOVAL** .
   - If equipped with an Ignition Node Module (IGNM), replace it in accordance with Service Information. Refer to **MODULE, IGNITION NODE, REMOVAL** .
   - Perform the BODY VERIFICATION TEST. Refer to **STANDARD PROCEDURE** .

   No

   - Go To 4

4. **(D122) SECURITY K LINE COMMUNICATION WIRE OPEN**
   1. Disconnect the Radio Frequency Hub C1 harness connector.
   2. Measure the resistance of the (D122) Security K Line Communication wire between the Keyless Ignition Node harness connector and the RF Hub C1 harness connector.

Is the resistance below 1.0 Ohms?

Yes

- Go To 5

No

- Repair the open in the (D122) Security K Line Communication wire.
- Perform the BODY VERIFICATION TEST. Refer to **STANDARD PROCEDURE** .

5. **(D122) SECURITY K LINE COMMUNICATION SHORT TO GROUND**
   1. Measure the resistance between ground and the (D122) Security K Line Communication circuit in the KIN or IGNM harness connector.

      Is the resistance below 10K Ohms?

      Yes

      - Repair the short to ground in the (D122) Security K Line Communication circuit.
      - Perform the BODY VERIFICATION TEST. Refer to **STANDARD PROCEDURE** .

      No

      - Replace the Radio Frequency Hub (RF Hub) Module in accordance with the Service Information. Refer to **MODULE, RADIO FREQUENCY (RF HUB), REMOVAL** .
      - Perform the RADIO FREQUENCY HUB VERIFICATION TEST. Refer to **STANDARD PROCEDURE**.

U0121-00-LOST COMMUNICATION WITH ANTI-LOCK BRAKE SYSTEM (ABS) CONTROL MODULE

For a complete wiring diagram, **refer to appropriate SYSTEM WIRING DIAGRAMS article** .

WHEN MONITORED

Continuously when the ignition is on.

The battery voltage between 10 and 16 volts.

Body Control Module (BCM) is configured correctly.

SET CONDITION

Bus messages not received from the Anti-lock Brake System (ABS) Module for approximately two to five seconds.

POSSIBLE CAUSES

Possible Causes
CAN BUS CIRCUITS OPEN OR SHORTED
DTCS RELATED TO BATTERY VOLTAGE, IGNITION, OR VIN MESSAGES
ANTI LOCK BRAKE MODULE (ABS) POWER AND GROUND
BCM NOT CONFIGURED CORRECTLY
ANTI LOCK BRAKE MODULE (ABS)
MODULE THAT SET THIS DTC

DIAGNOSTIC TEST

VERIFY DTC IS ACTIVE

NOTE: Make sure the battery is fully charged before proceeding.

1. Cycle the ignition on.
2. With the scan tool, read the active DTCs.

   Does the scan tool display: U0121-00-LOST COMMUNICATION WITH ANTI-LOCK BRAKE SYSTEM (ABS) CONTROL MODULE?

   Yes

   - **Refer to DIAGNOSIS AND TESTING** and perform the U0121-87-Lost Communication with Anti-lock Brake System (ABS) Control Module diagnostic procedure.

   No

   - **Refer to DIAGNOSIS AND TESTING** and perform the Stored Lost Communication DTCs diagnostic procedure.

U0140-00-LOST COMMUNICATION WITH BODY CONTROL MODULE

For a complete wiring diagram, **refer to appropriate SYSTEM WIRING DIAGRAMS article** .

WHEN MONITORED

Continuously when the ignition is on.

The battery voltage between 10.0 and 16.0 Volts.

Body Control Module (BCM) is configured correctly.

SET CONDITION

Bus messages not received from the Body Control Module (BCM) for approximately two to five seconds.

POSSIBLE CAUSES

Possible Causes
CAN BUS CIRCUITS OPEN OR SHORTED
DTCS RELATED TO BATTERY VOLTAGE, IGNITION, OR VIN MESSAGES
BODY CONTROL MODULE POWER AND GROUND
BCM NOT CONFIGURED CORRECTLY
BODY CONTROL MODULE (BCM)
MODULE THAT SET THIS DTC

DIAGNOSTIC TEST

VERIFY IF THE DTC IS ACTIVE

NOTE: **Make sure the battery is fully charged before performing any diagnostic procedure.**

With the scan tool, refer to the Network Review Screen to display a high level view of the vehicle communication network. Modules shown in red are problem areas.

Always diagnose any Body Control Module (BCM) DTCs first before proceeding.

1. Turn the ignition on.
2. With the scan tool, read DTCs.

   Does the scan tool display this DTC as active?

   Yes

   - Refer to **DIAGNOSIS AND TESTING** and perform the No Response from BCM (Body Control Module) diagnostic procedure.

   No

   - Refer to **DIAGNOSIS AND TESTING** and perform the Stored Lost Communication DTC diagnostic procedure.

U1415-00-IMPLAUSIBLE/MISSING VEHICLE CONFIGURATION DATA

For a complete wiring diagram, **refer to appropriate SYSTEM WIRING DIAGRAMS article** .

WHEN MONITORED

Continuous with the ignition on.

SET CONDITION

The fault when the ignition status reported by the Body Control Module (BCM) module is in RUN and no PROXI message is received by the Radio Frequency Hub (RFH) Module.

POSSIBLE CAUSES

Possible Causes
RADIO FREQUENCY HUB (RFH) MODULE
BODY CONTROL MODULE (BCM)

DIAGNOSTIC TEST

1. **CHECK FOR AN ACTIVE DIAGNOSTIC TROUBLE CODE (DTC)**
    1. Turn the ignition on.
    2. With the scan tool, record and erase the RF Hub DTCs.
    3. Turn the ignition off and wait one minute.
    4. Turn the ignition on.
    5. With the scan tool, read the RF Hub DTCs.

    Does the scan tool display; U1415-00-IMPLAUSIBLE/MISSING VEHICLE CONFIGURATION DATA as active?

    Yes

    - Go To 2

    No

    - Test complete, the condition or conditions that originally set this DTC are not present at this time. Using the wiring diagrams as a guide, check all related splices and connectors for signs of water intrusion, corrosion, pushed out or bent terminals, and correct pin tension.
    - Perform the BODY VERIFICATION TEST. Refer to **STANDARD PROCEDURE** .
2. **CAN BUS DTCS SET IN BODY CONTROL MODULE (BCM)**

    NOTE: Verify that the BCM has the correct vehicle configuration before proceeding with this test step.

    1. With the scan tool, read the DTCs in the BCM.

    Are there any active CAN Bus DTCs present?

Yes

- Refer to **DIAGNOSIS AND TESTING** and perform the appropriate diagnostic procedure.

No

- Replace the Radio Frequency Hub in accordance with the Service Information. Refer to **MODULE, RADIO FREQUENCY (RF HUB), REMOVAL** .
- Perform the RADIO FREQUENCY HUB VERIFICATION TEST. Refer to **STANDARD PROCEDURE**.

U1433-00-IMPLAUSIBLE IGNITION SWITCH STATUS MESSAGE RECEIVED

For a complete wiring diagram, **refer to appropriate SYSTEM WIRING DIAGRAMS article** .

WHEN MONITORED

Anytime the ignition is in the Run, Start or Accessory position.

SET CONDITION

The Radio Frequency Hub (RF Hub) receives a Bussed Input message of the Ignition Switch status from the Body Control Module (BCM). If that message does not agree with the RF Hub Ignition Switch status, this code will set. The BCM also sends a Ignition Switch "Sensor" message (hard wired F20 circuit). If the RF Hub and the BCM do not agree on Both of those messages, the PCM will not allow the engine to start.

POSSIBLE CAUSES

Possible Causes
BODY CONTROL MODULE (BCM) RADIO FREQUENCY HUB (RF HUB)

DIAGNOSTIC TEST

1. **CHECK FOR ACTIVE DIAGNOSTIC TROUBLE CODE (DTC)**
    1. With the scan tool, record and erase the DTCs.
    2. Cycle the ignition off and wait one minute.
    3. Cycle the ignition on.
    4. With the scan tool, select: RF Hub.
    5. With the scan tool, read the Active DTCs.

    Does the scan tool display: U1433-00-IMPLAUSIBLE IGNITION SWITCH STATUS MESSAGE RECEIVED as active?

    Yes

- Go To 2

No

- Test complete, the condition or conditions that originally set this DTC are not present at this time. Using the wiring diagrams as a guide, check all related splices and connectors for signs of water intrusion, corrosion, pushed out or bent terminals and correct pin tension.
- Perform the BODY VERIFICATION TEST. Refer to **STANDARD PROCEDURE** .

2. **CHECK THE IGNITION SWITCH STATUS**
   1. Cycle the ignition on.
   2. With the scan tool select; RF Hub, Data.
   3. Move the ignition in all positions.
   4. Read and record the Ignition Switch Status, Bussed Input.
   5. With the scan tool select; BCM, Data.
   6. Move the ignition in all positions.
   7. Read and record the Ignition Switch Status, Bussed Input.
   8. Compare the messages from both modules with the actual Ignition Switch position.

   Which module is displaying the wrong Ignition Switch status?

   Body Control Module

   - Replace the Body Control Module in accordance with the Service Information. Refer to **MODULE, BODY CONTROL, REMOVAL** .
   - Perform the BODY VERIFICATION TEST. Refer to **STANDARD PROCEDURE** .

   Radio Frequency Hub

   - Replace the RF Hub module in accordance with the Service Information. Refer to **MODULE, RADIO FREQUENCY (RF HUB), REMOVAL** .
   - Perform the RADIO FREQUENCY HUB (RF HUB) VERIFICATION TEST. Refer to **STANDARD PROCEDURE**.

U1433-01-IMPLAUSIBLE IGNITION SWITCH STATUS MESSAGE RECEIVED - GENERAL ELECTRICAL FAILURE

For a complete wiring diagram, **refer to appropriate SYSTEM WIRING DIAGRAMS article** .

WHEN MONITORED

During a Passive Entry or Keyless Go event.

SET CONDITION

The Radio Frequency Hub (RF Hub) receives a Bussed Input message of the Ignition Switch status from the Body Control Module (BCM). If that message does not agree with the RF Hub Ignition Switch status, this code will set. The BCM also sends a Ignition Switch "Sensor" message (hard wired F20 circuit). If the RF Hub and the BCM do not agree on Both of those messages, the PCM will not allow the engine to start.

POSSIBLE CAUSES

Possible Causes
BODY CONTROL MODULE (BCM)
RADIO FREQUENCY HUB (RF HUB)

DIAGNOSTIC TEST

1. **CHECK FOR ACTIVE DIAGNOSTIC TROUBLE CODE (DTC)**
    1. With the scan tool, record and erase the DTCs.
    2. Cycle the ignition off and wait one minute.
    3. Cycle the ignition on.
    4. With the scan tool, select: RF Hub.
    5. With the scan tool, read the Active DTCs.

    Does the scan tool display: U1433-01-IMPLAUSIBLE IGNITION SWITCH STATUS MESSAGE RECEIVED - GENERAL ELECTRICAL FAILURE as active?

    Yes

    - Go To 2

    No

    - Test complete, the condition or conditions that originally set this DTC are not present at this time. Using the wiring diagrams as a guide, check all related splices and connectors for signs of water intrusion, corrosion, pushed out or bent terminals and correct pin tension.
    - Perform the BODY VERIFICATION TEST. Refer to **STANDARD PROCEDURE** .
2. **CHECK THE IGNITION SWITCH STATUS**
    1. Cycle the ignition on.
    2. With the scan tool select; RF Hub, Data.
    3. Read and record the Ignition Switch Status, Bussed Input.
    4. With the scan tool select; BCM, Data.
    5. Read and record the Ignition Switch Status, Bussed Input.
    6. Compare the messages from both modules with the actual Ignition Switch position.

    Which module is displaying the wrong Ignition Switch status?

Body Control Module

- Replace the Body Control Module in accordance with the Service Information. Refer to **MODULE, BODY CONTROL, REMOVAL** .
- Perform the BODY VERIFICATION TEST. Refer to **STANDARD PROCEDURE** .

Radio Frequency Hub

- Replace the RF Hub module in accordance with the Service Information. Refer to **MODULE, RADIO FREQUENCY (RF HUB), REMOVAL** .
- Perform the RADIO FREQUENCY HUB (RF HUB) VERIFICATION TEST. Refer to **STANDARD PROCEDURE**.

U1454-00-IMPLAUSIBLE DATA RECEIVED FROM THE GATED PARK SWITCH

For a complete wiring diagram, **refer to appropriate SYSTEM WIRING DIAGRAMS article** .

THEORY OF OPERATION

When the Radio Frequency Hub (RF Hub) is awake, it sends a 12-volt reference signal on the T404 Transmission (TRS) Park Signal circuit. When that circuit is grounded or ungrounded by the shifter, transmission module or brake shift interlock solenoid (depending on the model) the RF-Hub broadcasts the hard wired park position message on the CAN Bus.

WHEN MONITORED

When the vehicle is being driven over 10 mph (16 km/h).

SET CONDITION

This DTC will set when the vehicle speed received over the CAN Bus indicates that the vehicle is moving but the hardware gated park input indicates that the vehicle is in park.

POSSIBLE CAUSES

Possible Causes
TRANSMISSION (TRS) PARK SIGNAL CIRCUIT SHORT TO GROUND
TRANSMISSION (TRS) PARK SIGNAL CIRCUIT SHORT TO VOLTAGE
TRANSMISSION (TRS) PARK SIGNAL CIRCUIT OPEN
GROUND CIRCUIT OPEN
SHIFTER COMPONENT
RADIO FREQUENCY HUB (RF HUB)

DIAGNOSTIC TEST

1. **CHECK FOR ACTIVE DIAGNOSTIC TROUBLE CODE (DTC)**

1. With the scan tool, record and erase the DTCs.
2. Turn the ignition off and wait one minute.
3. Cycle the ignition from on to off three times then to on.
4. Road test the vehicle over 10 mph (16 km/h) and shift gears several times.
5. With the scan tool, read the RF Hub active DTCs.

   Does the scan tool display: U1454-00-IMPLAUSIBLE DATA RECEIVED FROM THE GATED PARK SWITCH as active?

   Yes

   - Go To 2

   No

   - Test complete, the condition or conditions that originally set this DTC are not present at this time. Using the wiring diagrams as a guide, check all related splices and connectors for signs of water intrusion, corrosion, pushed out or bent terminals and correct pin tension.
   - Perform the BODY VERIFICATION TEST. Refer to **STANDARD PROCEDURE** .

2. **CHECK (T404) TRANSMISSION (TRS) PARK SIGNAL CIRCUIT FOR A SHORT TO GROUND**
   1.

   NOTE: Using the mini schematic at the beginning of this test, identify the type of appropriate shifter component the vehicle has before proceeding.

   2.
   3. Turn the ignition off.
   4. Disconnect the appropriate component harness connector.
   5. Turn all lights off and close all doors.
   6. Wait 90 seconds to allow the modules to go to sleep.
   7. Measure the resistance between ground and the (T404) TRS Park Signal circuit in the appropriate component harness connector.

   NOTE: As long as the module is asleep the resistance should be approximately 200K Ohms.

   Is the resistance below 100K Ohms?

   Yes

   - Repair the short to ground in the (T404) TRS Park Signal circuit.
   - Perform the BODY VERIFICATION TEST. Refer to **STANDARD PROCEDURE** .

No

- Go To 3

3. **CHECK (T404) TRANSMISSION (TRS) PARK SIGNAL CIRCUIT FOR A SHORT TO VOLTAGE**
   1. **NOTE: The RF Hub must NOT be awake for the result of this test to be valid.**
   2. Measure the voltage between ground and the (T404) TRS Park Signal circuit in the appropriate component harness connector.

      Is the voltage above 0.05 volts?

      Yes

      - Go To 7

      No

      - Go To 4

4. **CHECK (Z924) GROUND CIRCUIT FOR AN OPEN**
   1.
   2. Turn the ignition on.
   3. Using a 12-volt test light connected to 12-volts, test the (Z924) Ground circuit in the appropriate component harness connector.

      Does the test light illuminate brightly?

      Yes

      - Go To 5

      No

      - Repair the open in the (Z924) Ground circuit.
      - Perform the BODY VERIFICATION TEST. Refer to **STANDARD PROCEDURE** .

5. **CHECK (T404) TRANSMISSION (TRS) PARK SIGNAL CIRCUIT FOR AN OPEN CIRCUIT**
   1.
   2. Measure the voltage between ground and the (T404) TRS Park Signal circuit in the appropriate component harness connector.

      Is the voltage above 12.0 volts?

      Yes

- Replace the appropriate component in accordance with the Service Information.
- Perform the BODY VERIFICATION TEST. Refer to **STANDARD PROCEDURE** .

No

- Go To 6

6. **CHECK (T404) TRANSMISSION (TRS) PARK SIGNAL CIRCUIT FOR AN OPEN WIRE**
   1.
   2. Turn the ignition off.
   3. Disconnect the Radio Frequency Hub C1 harness connector.
   4. Measure the resistance of the (T404) TRS Park Signal circuit between the appropriate component harness connector and the RF Hub C1 connector.

   Is the resistance below 2.0 ohms?

   Yes

   - Replace the Radio Frequency Hub module in accordance with the Service Information. Refer to **MODULE, RADIO FREQUENCY (RF HUB), REMOVAL** .
   - Perform the RADIO FREQUENCY HUB VERIFICATION TEST. Refer to **STANDARD PROCEDURE**.

   No

   - Repair the open in the (T404) TRS Park Signal circuit.
   - Perform the BODY VERIFICATION TEST. Refer to **STANDARD PROCEDURE** .

7. **CHECK (T404) TRANSMISSION (TRS) PARK SIGNAL WIRE FOR A SHORT TO VOLTAGE**
   1.
   2. Turn the ignition off.
   3. Disconnect the Radio Frequency Hub C1 harness connector.
   4. Open the driver door and turn the park lamps on.
   5. Try to turn the ignition on.
   6. Measure the voltage between ground and the (T404) TRS Park Signal circuit in the appropriate component harness connector.

   Is there any voltage present?

   Yes

   - Repair the (T404) TRS Park Signal circuit for a short to voltage
   - Perform the BODY VERIFICATION TEST. Refer to **STANDARD PROCEDURE** .

No

- Replace the Radio Frequency Hub module in accordance with the Service Information. Refer to **MODULE, RADIO FREQUENCY (RF HUB), REMOVAL** .
- Perform the RADIO FREQUENCY HUB VERIFICATION TEST. Refer to **STANDARD PROCEDURE**.

U1517-62-BODY CONTROLLER SECRET CODE - SIGNAL COMPARE FAILURE

For a complete wiring diagram, **refer to appropriate SYSTEM WIRING DIAGRAMS article** .

WHEN MONITORED

Continuous

SET CONDITION

When the secret code signal during activation from the BCM to the RF Hub fails.

POSSIBLE CAUSES

Possible Causes
LOSS OF COMMUNICATION WITH RF HUB/PCM/BCM/ESL
FOBIK
RF HUB (RADIO FREQUENCY HUB) MODULE
BCM (BODY CONTROL MODULE)

DIAGNOSTIC TEST

1. **CHECKING FOR ACTIVE DTCS IN THE RFHM, BCM, ESL AND PCM**
    1. With the scan tool perform a complete Vehicle Scan Report and save this information for continued reference throughout this diagnostic test.
    2. Check the following modules for active DTCs:
        - Radio Frequency Hub Module (RFHM) : B1A24-00, B1A25-00, B1A35-00, or U1517-62
        - Radio Frequency Hub Module (RFHM): any SKIM related faults listed between the RF Hub and BCM, the BCM and ESL, or the BCM and PCM
        - Body Control Module (BCM): U1514-64, U1515-64 or U1517-64
        - Powertrain Control Module (PCM): P0513 or U0426
        - Electronic Steering Lock Module (ESL): U1517-62

    Do any of the specific faults noted appear in the corresponding module?

    Yes

- Go To 3

No

- Go To 2

2. **CHECKING FOR RELATED RFHM AND BCM DTCs**
   1. Use the Vehicle Scan Report to check for active DTCs in the RFHM and BCM.

      Does the RFHM have active fault U1517-87 (OR) does the BCM have active fault U1516-87 and are there any Loss of Communication or CAN Bus faults between the RFHM and BCM?

      Yes

      - Perform the diagnostic for the active DTC in accordance with Service Information.

      No

      - There is no concern with BCM or RFHM perform the U1517-87 diagnostic procedure.

3. **CHECKING THE RFHM VIN AND STATUS**
   1. Use the Vehicle Scan Report; and if needed the scan tool to check the module status and VIN number in the RFHM.

      Is the RFHM locked and does it have the incorrect VIN?

      Yes

      - Replace the RFHM in accordance with Service Information. Refer to **MODULE, RADIO FREQUENCY (RF HUB), REMOVAL** .

      No

      - Go To 4

4. **RFHM STATUS CHECK**
   1. Use the Vehicle Scan Report and if needed the scan tool, to check the module status.

      Did the scan tool show the RFHM unlocked?

      Yes

      - Perform the RFHM replacement procedure in accordance with Service Information. Refer to **MODULE, RADIO FREQUENCY (RF HUB), REMOVAL** .

      No

- Go To 5

5. **RFHM DTC CHECK**
   1. Use the Vehicle Scan Report to check for active DTCs in the RFHM.

      Does the RFHM have active fault B1A24-00, B1A25-00 or B1A35-00?

      Yes

      - Perform the FOBIK replacement/programming procedure in accordance with Service Information.

        Refer to **TRANSMITTER, INTEGRATED KEY FOB, STANDARD PROCEDURE** .

      - If there is any problem with the FOBIK (i.e. Key Not Programmed, Invalid Key or Unidentified Key Communication Error) then replace the FOBIK in accordance with Service Information.

        Refer to **TRANSMITTER, INTEGRATED KEY FOB, STANDARD PROCEDURE** .

      No

      - Go To 6

6. **RFHM AND BCM DTC CHECK**
   1. Use the Vehicle Scan Report to check for active DTCs in the RFHM and BCM.

      Does the RFHM have active fault U1517-87 or the BCM active fault U1516-87 or are the any Loss of Communication or CAN Bus faults between the RFHM and BCM?

      Yes

      - Perform diagnostic for the active DTC found in accordance with Service Information. Refer to **DTC INDEX** .

      No

      - Go To 7

7. **RFHM AND BCM DTC CHECK**
   1. Use the Vehicle Scan Report to check for active DTCs in the RFHM and BCM.

      Does the RFHM have active fault U1517-62 or the BCM active fault U1517-64 or did the RFHM and BCM have a failed handshake?

      Yes

      - Go To 8

No

- There is no concern with BCM or RFHM. Refer to **DTC INDEX** and perform the U1517-87 diagnostic procedure .

8. **BCM PROGRAMMING CHECK**
   1. With the Scan Tool, verify the BCM is programmed.

      Is the BCM programmed?

      Yes

      - Replace the BCM in accordance with Service Information.

        Refer to **MODULE, BODY CONTROL, REMOVAL** .

      No

      - Perform the BCM replacement procedure in accordance with Service Information.

        Refer to **MODULE, BODY CONTROL, REMOVAL** .

STANDARD PROCEDURE

TPM SENSOR VERIFICATION TEST

For a complete wiring diagram, **refer to appropriate SYSTEM WIRING DIAGRAMS article** .

DIAGNOSTIC TEST

TPM SENSOR REPLACEMENT

NOTE: If a TPM-RKE Tool is not available, let the vehicle sit stationary for more then 20 minutes, and then proceed to step 4 .

1. Using an updated TPM-RKE Analyzer Tool, select TPM Functions, then enter the Model Year and the Body Style of the vehicle, and for the Trigger Selection select PARK SENSOR
2. Scan each TPM Sensor at each road wheel, and store each TPM Sensor ID in the correct location. (LEFT FRONT, LEFT REAR, RIGHT FRONT, RIGHT REAR, and SPARE TIRE (if equipped).)
3. Connect the TPM-RKE Analyzer Tool to the scan tool, and then follow the programming steps outlined in the diagnostic scan tool for "Program Tire Pressure Sensor ID w/ TPM Tool" under "MISC" for the TPM.
4. Drive the vehicle for a minimum of 20 minutes while maintaining a continuous speed above 24 km/h (15 mph).
5. With the scan tool, read TPM DTCs.

Are there any TPM DTCs present?

Yes

- Perform the appropriate diagnostic procedure. Refer to **DIAGNOSIS AND TESTING**.

No

- Repair complete.

THEFT AND SECURITY SYSTEMS PRE-DIAGNOSTIC PROCEDURE

Before attempting to repair any theft or security system, technicians should be familiar with and fully understand the system operation. Refer to the Theft and Security System **DESCRIPTION** and **OPERATION** for complete details.

The following should be used as a checklist to be completed in its entirety prior to referencing specific Theft and Security Diagnostic Procedures.

1. **FOLLOW THE BASIC OUTLINE SET FORTH IN THE SIX-STEP TROUBLESHOOTING PROCEDURE**
    1. Verification of complaint.
    2. Verification of any related symptoms.
    3. Symptom analysis.
    4. Problem isolation.
    5. Repair of isolated problem.
    6. Verification of proper operation.
2. **TAKE INTO ACCOUNT CURRENT VEHICLE CONDITION, REPAIR HISTORY, AND TECHNICAL SERVICE BULLETINS (TSB's)**
    1. Verify there are no outward signs of vehicle damage that could impact the proper operation of the theft or security system. Check for aftermarket vehicle accessories that may have been installed improperly or could interfere with the system
    2. Check the vehicle repair history for repairs that may relate to the current condition.
    3. Perform a check of current Technical Service Bulletins (TSB) for the Theft/Security system related to the customer concern. If a TSB applies, follow the procedure outlined in the TSB.
3. **DIAGNOSE ONLY THOSE FAILURES THAT ARE ACTIVE AND CAN BE REPRODUCED**
    1.
        - Check the control module central to the subsystem that is exhibiting the condition for active DTCs
        - For an intermittent failure that is not current at the time of vehicle inspection, refer to the THEFT AND SECURITY SYSTEM INTERMITTENT TEST and document the event on the repair order. Refer to **STANDARD PROCEDURE**.
4. **ADDRESS ACTIVE DIAGNOSTIC TROUBLE CODES (DTCS) IN THE CORRECT ORDER**

1. As a general rule, for any theft/security system control module that exhibits more than one active DTC, address the codes in the order indicated:
    1. Low/High Voltage and Serial Data Loss of Communication Codes
    2. Module Internal Failure and Configuration Mismatch Codes
    3. Circuit specific DTC failures
2. Should the malfunction still be present after conducting this Pre-diagnostic Procedure, technicians should continue to the appropriate DTC procedure or symptom diagnostic.
3. For DTC Procedures, refer to **DIAGNOSIS AND TESTING** and perform the appropriate Diagnostic Procedure.
4. For Symptom Diagnostics, refer to **DIAGNOSIS AND TESTING** .

THEFT AND SECURITY SYSTEM INTERMITTENT TEST

For a complete wiring diagram, **refer to appropriate SYSTEM WIRING DIAGRAMS article** .

DIAGNOSTIC TEST

1. **RECORD AND ERASE ALL THEFT AND SECURITY SYSTEM DTC'S**
    1. With the scan tool, record and erase all DTCs from all theft/security system modules. Monitor for any active codes as you work through the following steps.
        - Review the code monitor and set conditions for any DTCs that are stored and attempt to reproduce the conditions listed
        - Wiggle the wiring harness and connectors of the related circuit, sensor or component
        - Cycle the ignition off. Refer to any Technical Service Bulletins (TSBs) that may apply

    Was the source of the customer complaint found or did any DTCs appear and stay active?

    Yes

        - Make the appropriate repairs and perform the THEFT AND SECURITY SYSTEM VERIFICATION TEST. Refer to **STANDARD PROCEDURE**.
        - For DTC procedures, refer to **DIAGNOSIS AND TESTING**.

    No

        - Go To 2
2. **ATTEMPT TO REPRODUCE THE CONDITION**
    1. In the event the customer complaint cannot be duplicated due to an intermittent condition in the theft/security system, the following may aid in attempting to reproduce the condition.
        - Using the wiring diagram/schematic as a guide, inspect the wiring and connectors related to the stored code or component in question.
        - Look for chafed, pierced, pinched, or partially broken wires and broken, bent, pushed out, spread, corroded, or contaminated terminals.

- If the customer concern was related to a specific FOBIK, ensure the FOBIK in question is used while attempting reproduce the condition.
- Reconnect any disconnected components and harness connectors and ensure they are properly seated.
- If numerous trouble codes were set, use a schematic and inspect any common ground or supply circuits

Was the source of the intermittent condition located?

Yes

- Make the appropriate repairs and perform the THEFT AND SECURITY SYSTEM VERIFICATION PROCEDURE. Refer to **STANDARD PROCEDURE**.

No

- The problem cannot be found at this time. If repeated intermittent failures are encountered that cannot be reproduced and the condition has prompted multiple customer visits to the dealership, document any findings on the repair order.

THEFT AND SECURITY SYSTEM VERIFICATION TEST

For a complete wiring diagram, **refer to appropriate SYSTEM WIRING DIAGRAMS article** .

DIAGNOSTIC TEST

1. **DETERMINE REQUIRED PROGRAMMING AND SET UP**

NOTE: Due the numerous functions performed by the Radio Frequency Hub (RF Hub) it is essential to follow all instructions carefully and be aware of the effects this module has on the Theft and Security and Remote Keyless Entry (RKE) subsystems. Service replacement will also affect a customers personalization settings.

Was the Radio Frequency Hub replaced?

Yes

- Perform the RADIO FREQUENCY HUB VERIFICATION TEST. Refer to **STANDARD PROCEDURE**.

No

- Go To 2

2. **RF HUB REPAIR VERIFICATION**

1. Reconnect the previously disconnected components and connectors.
2. Connect the scan tool to the Data Link Connector - use the most current software available.
3. With the scan tool, erase stored DTCs in the RF Hub module.
4. Cycle the ignition off, and wait 15 seconds, then cycle the ignition on. If the customer complaint was due to a specific FOBIK, use the suspect FOBIK.
5. Exercise the Theft and Security System to duplicate the appropriate monitor conditions for any DTCs that were set
6. Wait one minute, and read the active codes.

   Are any DTCs present or, is the original condition still present?

   Yes

   - For DTC Diagnostics, refer to **DIAGNOSIS AND TESTING**.
   - For Symptom Diagnostics, refer to **DIAGNOSIS AND TESTING** .

   No

   - Repair is complete.

RADIO FREQUENCY HUB (RF HUB) VERIFICATION TEST

NOTE: If other electronic modules need to be replaced, besides the RF-Hub, see the "Replacement and Programming Order Guide" before proceeding. Refer to STANDARD PROCEDURE .

For a complete wiring diagram, **refer to appropriate SYSTEM WIRING DIAGRAMS article** .

Perform the following after completion of a diagnostic repair:

VERIFICATION TEST

1. Reconnect the previously disconnected components and connectors.
2. It may be necessary to obtain the vehicle's unique Personal Identification Number (PIN) assigned to the vehicle. This number can be obtained from the original vehicle invoice or from your Service Manager or Parts Manager.

   NOTE: If, during programming, the scan tool instructs to "Enter the vehicle PIN number", care should be taken because the RF Hub will only allow 3 consecutive attempts to enter the correct PIN. If 3 consecutive incorrect PIN's are entered, the RF Hub will Lock Out the scan tool. To exit Lock Mode, the ignition must remain in the On position for 25 minutes. All accessories must be off. A battery charger connected to the battery during this time period is recommended.

NOTE: The Body Control Module (BCM) stores the secret key information on the IGNM only. When the RF Hub needs to be replaced, the secret key information will be retrieved from the BCM and then transferred to the new RF Hub for security use.

NOTE: If the BCM is also being replaced at this time, refer to the RF-HUB, BCM, FOBIK Replacement and Programming Guide and follow the proper order before proceeding. Refer to STANDARD PROCEDURE .

3. Cycle the ignition on.
4. With the scan tool select: RFH (Radio Frequency Hub).

NOTE: If the scan tool displays a message indicating a "PROXI Configuration issue" press "Continue" and follow the directions on the scan tool.

5. Cycle the ignition off.
6. If the RF-Hub was replaced or any un-programmed or new FOBIKs, program all FOBIKs that are to be used with this vehicle. With the scan tool, select "Misc. Functions", "Program Ignition FOBIKs" and follow the instructions on the screen.

NOTE: All FOBIKs that are to be used in this vehicle must remain on the front seat near the console during programming.

NOTE: If the RF-Hub is being replaced with a new unit, a diagnostic scan tool MUST be used to align the PROXI configuration data into the new ECU. Follow the routine outlined in the diagnostic scan tool for PROXI Configuration Alignment under Body Control Module (BCM) Miscellaneous Functions menu.

7. If the RF-Hub module was replaced, with the scan tool select "RFH", "Misc. Functions", "RF-HUB Replace" and follow the instructions on the screen.
8. Cycle the ignition on then off leaving the key in the On position.
9. If the RF Hub was replaced; Update the Front and Rear Axle Normal Tire Pressure Values.
10. If the RF Hub was replaced; Program the Tire Sensor IDs.
11. With the scan tool, erase all RF Hub DTCs.
12. Operate all equipped RF-Hub functions (Passive Entry, Remote Start, Ignition Positions etc.).
13. Wait four minutes.
14. With the scan tool, read the RF Hub DTCs.

Are there any RF Hub DTCs present or any RF-Hub functions not operating properly?

Yes

- Repair not complete, refer to **DIAGNOSIS AND TESTING** and perform the appropriate diagnostic procedure.

No

- Repair is complete.

2014 ACCESSORIES AND EQUIPMENT

Right Blind Spot Sensor Module (BSM) (RBSS) - Electrical Diagnostics - Cherokee

DIAGNOSTIC CODE INDEX

DIAGNOSTIC CODE INDEX

DTC	Description
B129D-2A	RIGHT BLIND SPOT SENSOR - STUCK
B129D-48	RIGHT BLIND SPOT SENSOR - SUPERVISION SOFTWARE FAILURE
B129D-98	RIGHT BLIND SPOT SENSOR - COMPONENT OR SYSTEM OVER TEMPERATURE
B12A1-00	RBSS RADAR SENSOR ADDRESS FAULT
B2199-16	BATTERY VOLTAGE - CIRCUIT VOLTAGE BELOW THRESHOLD
B2199-17	BATTERY VOLTAGE - CIRCUIT VOLTAGE ABOVE THRESHOLD
B21DD-84	SYSTEM VOLTAGE - SIGNAL BELOW ALLOWABLE RANGE
B21DD-85	SYSTEM VOLTAGE - SIGNAL ABOVE ALLOWABLE RANGE
B223B-00	VEHICLE CONFIGURATION MISMATCH
B2599-00	DOOR MODULE FRONT RIGHT
U0020-00	CAN B BUS OFF PERFORMANCE
U0140-00	LOST COMMUNICATION WITH BODY CONTROL MODULE
U0155-00	LOST COMMUNICATION WITH CLUSTER/CCN
U0203-00	LOST COMMUNICATION WITH LEFT FRONT DOOR MODULE
U0204-00	LOST COMMUNICATION WITH RIGHT FRONT DOOR MODULE
U0422-00	IMPLAUSIBLE DATA RECEIVED FROM BODY CONTROL MODULE
U11FB-00	LOST COMMUNICATION WITH LEFT BLIND SPOT SENSOR
U147E-00	IMPLAUSIBLE DATA RECEIVED FROM LEFT BLIND SPOT SENSOR

DIAGNOSIS AND TESTING

B129D-2A-RIGHT BLIND SPOT SENSOR - STUCK

For a complete wiring diagram, **refer to appropriate SYSTEM WIRING DIAGRAMS article** .

WHEN MONITORED

With the ignition on.

SET CONDITION

The Blind Spot Sensor detects an internal failure.

POSSIBLE CAUSES

Possible Causes
RIGHT BLIND SPOT SENSOR (RBSS)

DIAGNOSTIC TEST

CHECK FOR AN ACTIVE DIAGNOSTIC TROUBLE CODE (DTC)

1. Turn the ignition on.
2. With the scan tool, read DTCs.

   Does the scan tool display this DTC as active?

   Yes

   - Replace the Right Blind Spot Sensor in accordance with the Service Information. Refer to **SENSOR, BLIND SPOT, REMOVAL** .
   - Perform the BODY VERIFICATION TEST. Refer to **STANDARD PROCEDURE** .

   No

   - Test complete, the condition or conditions that originally set this DTC are not present at this time. Using the wiring diagrams as a guide, check all related splices and connectors for signs of water intrusion, corrosion, pushed out or bent terminals, and correct pin tension.
   - Perform the BODY VERIFICATION TEST. Refer to **STANDARD PROCEDURE** .

B129D-48-RIGHT BLIND SPOT SENSOR - SUPERVISION SOFTWARE FAILURE

For a complete wiring diagram, **refer to appropriate SYSTEM WIRING DIAGRAMS article** .

WHEN MONITORED

With the ignition on.

SET CONDITION

The Blind Spot Sensor detects an internal failure.

POSSIBLE CAUSES

Possible Causes
RIGHT BLIND SPOT SENSOR (RBSS)

DIAGNOSTIC TEST

CHECK FOR AN ACTIVE DIAGNOSTIC TROUBLE CODE (DTC)

1. Turn the ignition on.
2. With the scan tool, read DTCs.

   Does the scan tool display this DTC as active?

   Yes

   - Replace the Right Blind Spot Sensor in accordance with the Service Information. Refer to **SENSOR, BLIND SPOT, REMOVAL** .
   - Perform the BODY VERIFICATION TEST. Refer to **STANDARD PROCEDURE** .

   No

   - Test complete, the condition or conditions that originally set this DTC are not present at this time. Using the wiring diagrams as a guide, check all related splices and connectors for signs of water intrusion, corrosion, pushed out or bent terminals, and correct pin tension.
   - Perform the BODY VERIFICATION TEST. Refer to **STANDARD PROCEDURE** .

B129D-98-RIGHT BLIND SPOT SENSOR - COMPONENT OR SYSTEM OVER TEMPERATURE

For a complete wiring diagram, **refer to appropriate SYSTEM WIRING DIAGRAMS article** .

THEORY OF OPERATION

The Blind Spot Monitor (BSM) system has two primary components; a Left Blind Spot Sensor (LBSS) and Right Blind Spot Sensor (RBSS). Each sensor includes an internal microprocessor that monitors and controls both the sensor and the blind spot indicator. The two sensors are concealed behind the outboard ends of the rear bumper fascia.

The microprocessor analyzes the sensor data to determine whether any detected objects should be reported. When it is determined that an object should be reported, the Sensor controls its respective left or right BSM display directly through a hard wired output to the Outside Rearview Mirrors. The sensor also sends an electronic request message over the CAN IHS Bus to the radio. The Radio then mutes any current output through the speakers and generates a chime as an audible alert.

Each sensor performs a bulb test by illuminating the triangle icon in the Outside Rearview Mirror at each ignition ON cycle.

WHEN MONITORED

With the ignition on.

SET CONDITION

The Blind Spot Sensor detects the internal temperature is too high.

POSSIBLE CAUSES

Possible Causes
BLIND SPOT SENSOR OBSTRUCTED (MUD OR DIRT COVERING INNER FASCIA)
BLIND SPOT SENSOR

DIAGNOSTIC TEST

1. **CHECK FOR AN ACTIVE DIAGNOSTIC TROUBLE CODE (DTC)**

   NOTE: Before proceeding with this diagnostic procedure, remove any ice mud, dirt, or other obstructions from the underside of the Fascia/Bumper surrounding the sensors.

   1. Turn the ignition on.
   2. With the scan tool, read DTCs.

      Does the scan tool display this DTC as active?

      Yes

      - Go To 2

      No

      - Test complete, the condition or conditions that originally set this DTC are not present at this time. Using the wiring diagrams as a guide, check all related splices and connectors for signs of water intrusion, corrosion, pushed out or bent terminals, and correct pin tension.
      - Perform the BODY VERIFICATION TEST. Refer to **STANDARD PROCEDURE** .
2. **BLIND SPOT SENSOR**
   1. Verify that none of the possible causes mentioned above are present. Repair as necessary.

      If none of the possible causes mentioned above are present, view repair.

      Repair

      - Replace the Blind Spot Sensor in accordance with the Service Information. Refer to **SENSOR, BLIND SPOT, REMOVAL** .
      - Perform the BODY VERIFICATION TEST. Refer to **STANDARD PROCEDURE** .

B12A1-00-RBSS RADAR SENSOR ADDRESS FAULT

For a complete wiring diagram, **refer to appropriate SYSTEM WIRING DIAGRAMS article** .

WHEN MONITORED

With the ignition on.

SET CONDITION

This DTC will set if the Blind Spot Sensor detects an extra ground circuit in the harness connector.

POSSIBLE CAUSES

Possible Causes
RIGHT BLIND SPOT SENSOR (RBSS)

DIAGNOSTIC TEST

CHECK FOR AN ACTIVE DIAGNOSTIC TROUBLE CODE (DTC)

NOTE: Before proceeding, disconnect the Right Blind Spot Sensor harness connector. Inspect the wiring harness, harness connector and module pins for any damage or corrosion. Repair as necessary.

1. Turn the ignition on.
2. With the scan tool, read DTCs.

   Does the scan tool display this DTC as active?

   Yes

   - Replace the Right Blind Spot Sensor in accordance with the Service Information. Refer to **SENSOR, BLIND SPOT, REMOVAL** .
   - Perform the BODY VERIFICATION TEST. Refer to **STANDARD PROCEDURE** .

   No

   - Test complete, the condition or conditions that originally set this DTC are not present at this time. Using the wiring diagrams as a guide, check all related splices and connectors for signs of water intrusion, corrosion, pushed out or bent terminals, and correct pin tension.
   - Perform the BODY VERIFICATION TEST. Refer to **STANDARD PROCEDURE** .

B2199-16-BATTERY VOLTAGE - CIRCUIT VOLTAGE BELOW THRESHOLD

For a complete wiring diagram, **refer to appropriate SYSTEM WIRING DIAGRAMS article** .

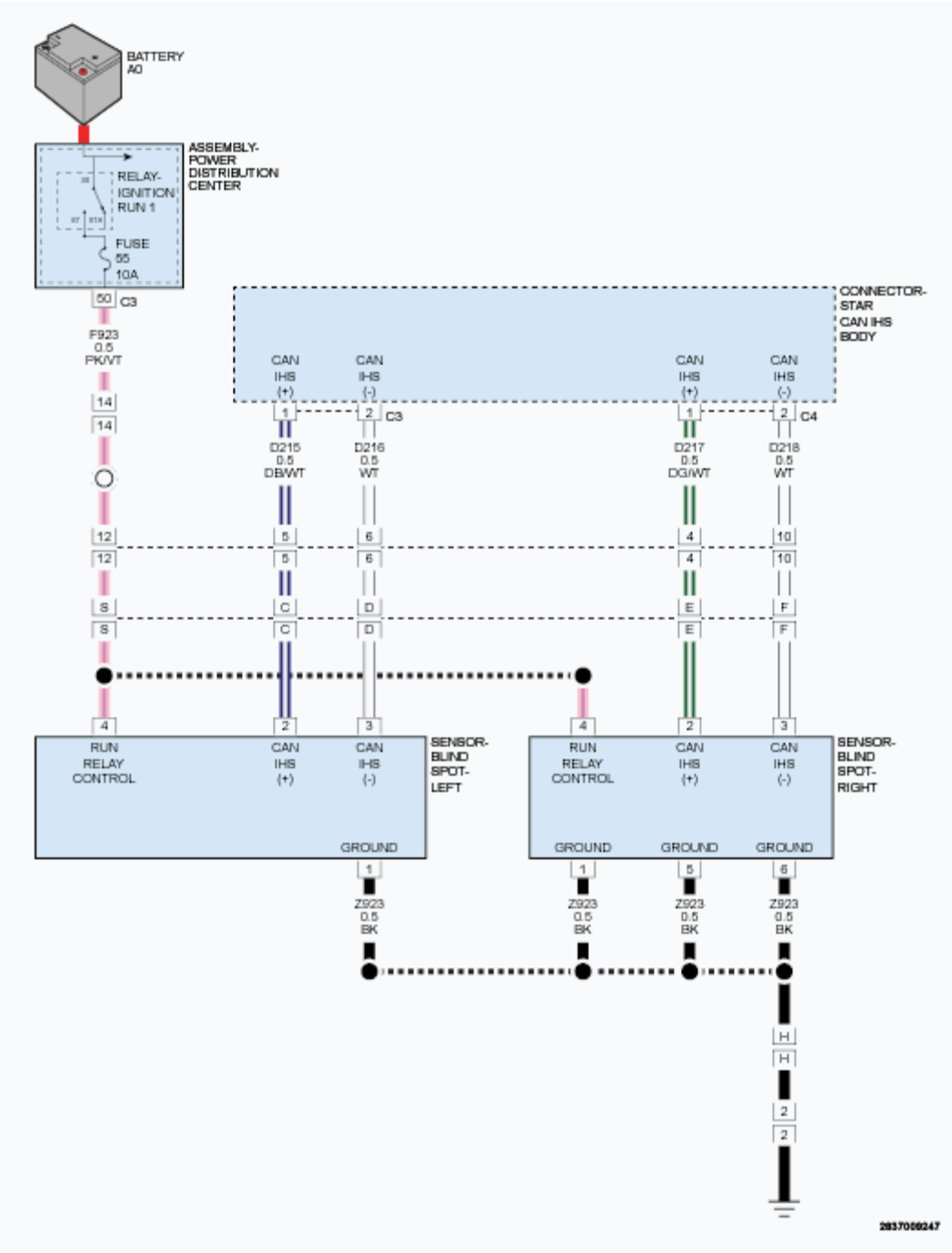

Fig. 1: Identifying Left/Right Blind Spot Sensor Circuit Diagram
Courtesy of CHRYSLER GROUP, LLC

WHEN MONITORED

With the ignition on.

SET CONDITION

Blind Spot Sensor supply voltage less than 9.5 volts.

POSSIBLE CAUSES

Possible Causes
FUSED IGNITION OUTPUT CIRCUIT EXCESSIVE RESISTANCE
GROUND CIRCUIT EXCESSIVE RESISTANCE
VEHICLE CHARGING SYSTEM
BLIND SPOT SENSOR

DIAGNOSTIC TEST

1. **CHECK FOR AN ACTIVE DIAGNOSTIC TROUBLE CODE (DTC)**
   1. Turn the ignition on.
   2. With the scan tool, read DTCs.

      Does the scan tool display this DTC as active?

      Yes

      - Go To 2

      No

      - Test complete, the condition or conditions that originally set this DTC are not present at this time. Using the wiring diagrams as a guide, check all related splices and connectors for signs of water intrusion, corrosion, pushed out or bent terminals, and correct pin tension.
      - Perform the BODY VERIFICATION TEST. Refer to **STANDARD PROCEDURE** .
2. **VERIFY OPERATION OF THE VEHICLE CHARGING SYSTEM**

   NOTE: Troubleshoot any PCM charging/cranking DTCs before proceeding.

   NOTE: Make sure the battery is fully charged.

   Are any charging system DTCs present?

   Yes

   - Refer to the **DTC INDEX** article and perform the appropriate diagnostic procedure.

   No

   - Go To 3
3. **CHECK THE (F923) FUSED IGNITION OUTPUT (RUN) CIRCUIT FOR EXCESSIVE**

RESISTANCE

1. Turn the ignition off.
2. Disconnect the Right Blind Spot Sensor harness connector.
3. Turn the ignition on.
4. Measure the voltage of the (F923) Fused Ignition Output (RUN) circuit.

   Is the voltage below 9.5 volts?

   Yes

   - Repair the (F923) Fused Ignition Output (RUN) circuit for excessive resistance.
   - Perform the BODY VERIFICATION TEST. Refer to **STANDARD PROCEDURE** .

   No

   - Go To 4

4. **CHECK THE (Z923) GROUNDS CIRCUIT FOR EXCESSIVE RESISTANCE**
   1. Measure the resistance between ground and the (Z923) Grounds circuit.

      Is the resistance above 10.0 Ohms?

      Yes

      - Repair the (Z923) Grounds circuit for excessive resistance.
      - Perform the BODY VERIFICATION TEST. Refer to **STANDARD PROCEDURE** .

      No

      - Replace the Blind Spot Sensor in accordance with the Service Information. Refer to **SENSOR, BLIND SPOT, REMOVAL** .
      - Perform the BODY VERIFICATION TEST. Refer to **STANDARD PROCEDURE** .

B2199-17-BATTERY VOLTAGE - CIRCUIT VOLTAGE ABOVE THRESHOLD

For a complete wiring diagram, **refer to appropriate SYSTEM WIRING DIAGRAMS article** .

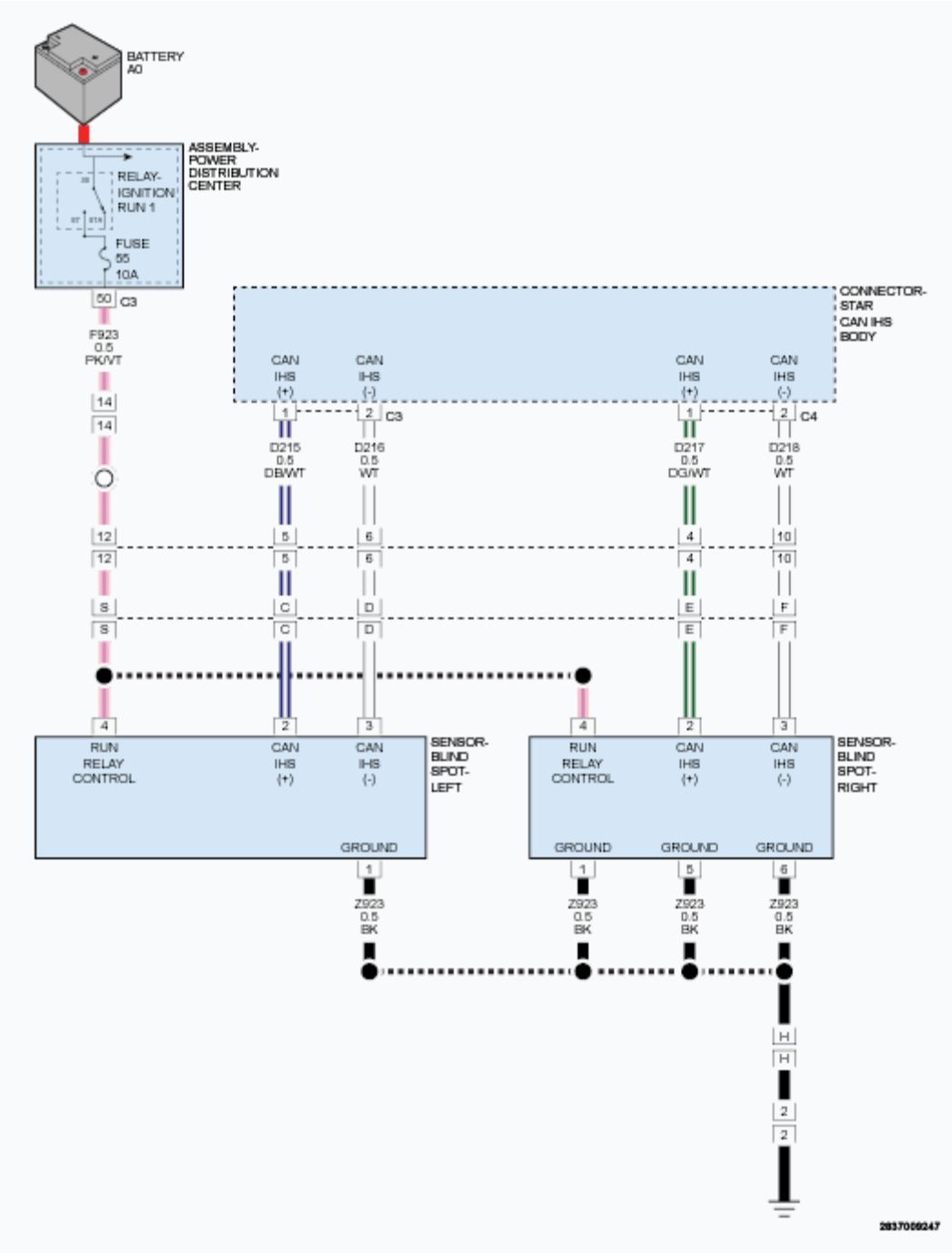

Fig. 2: Identifying Left/Right Blind Spot Sensor Circuit Diagram
Courtesy of CHRYSLER GROUP, LLC

WHEN MONITORED

With the ignition on.

SET CONDITION

Blind Spot Sensor supply voltage greater than 16.0 volts.

POSSIBLE CAUSES

Possible Causes
VEHICLE CHARGING SYSTEM BLIND SPOT SENSOR

DIAGNOSTIC TEST

1. **CHECK FOR AN ACTIVE DIAGNOSTIC TROUBLE CODE (DTC)**
   1. Turn the ignition on.
   2. With the scan tool, read DTCs.

      Does the scan tool display this DTC as active?

      Yes

      - Go To 2

      No

      - Test complete, the condition or conditions that originally set this DTC are not present at this time. Using the wiring diagrams as a guide, check all related splices and connectors for signs of water intrusion, corrosion, pushed out or bent terminals, and correct pin tension.
      - Perform the BODY VERIFICATION TEST. Refer to **STANDARD PROCEDURE** .
2. **VERIFY OPERATION OF THE VEHICLE CHARGING SYSTEM**

   NOTE: Troubleshoot any PCM charging/cranking DTCs before proceeding.

   NOTE: Make sure the battery is fully charged.

   Are any charging system DTCs present?

   Yes

   - Refer to the **DTC INDEX** article and perform the appropriate diagnostic procedure.

   No

   - Replace the Blind Spot Sensor in accordance with the Service Information. Refer to **SENSOR, BLIND SPOT, REMOVAL** .
   - Perform the BODY VERIFICATION TEST. Refer to **STANDARD PROCEDURE** .

B21DD-84-SYSTEM VOLTAGE - SIGNAL BELOW ALLOWABLE RANGE

For a complete wiring diagram, **refer to appropriate SYSTEM WIRING DIAGRAMS article** .

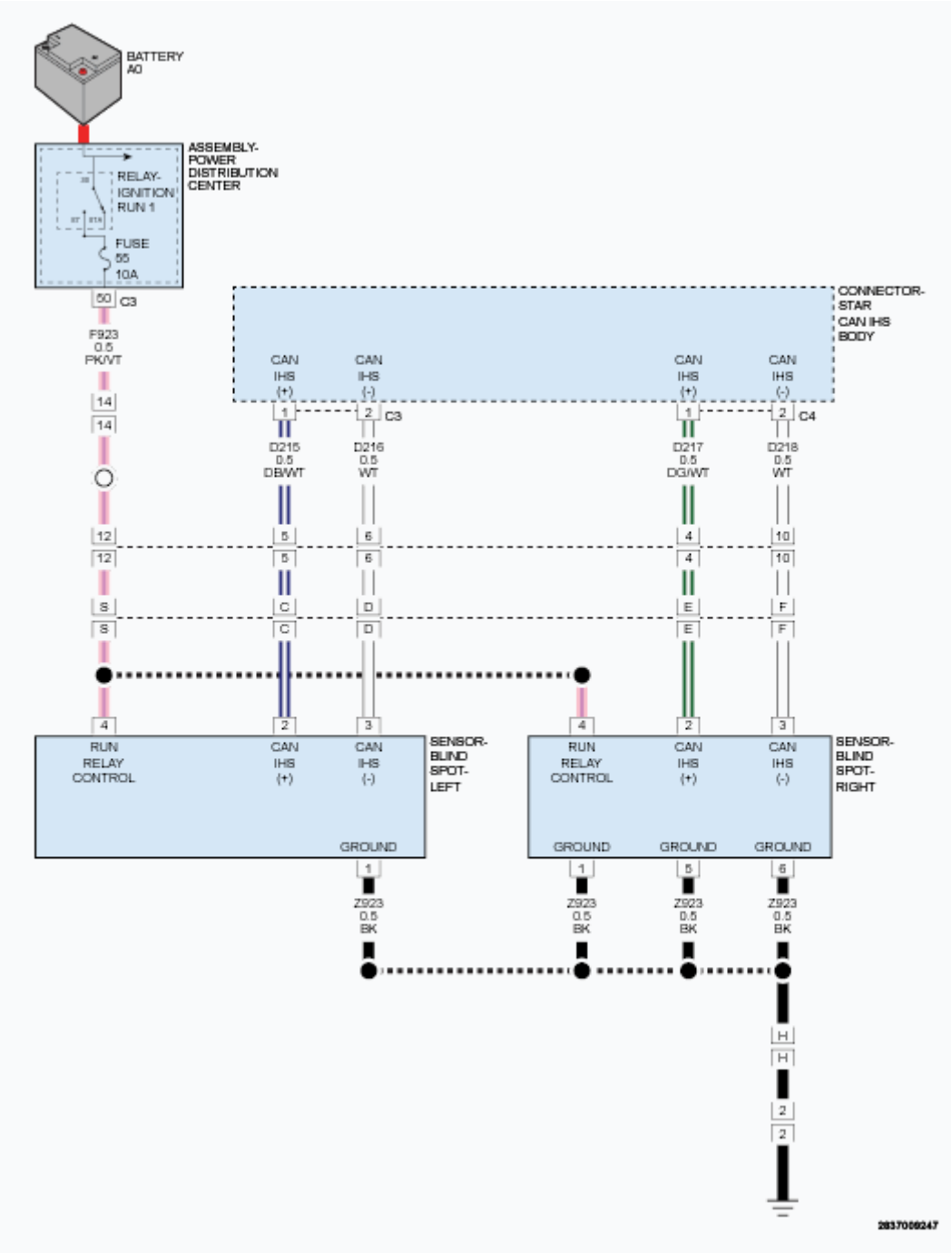

Fig. 3: Identifying Left/Right Blind Spot Sensor Circuit Diagram
Courtesy of CHRYSLER GROUP, LLC

WHEN MONITORED

Ignition on.

SET CONDITION

Monitored battery voltage is below 9.0 volts for over 5 seconds.

POSSIBLE CAUSES

Possible Causes
LOW SYSTEM VOLTAGE BATTERY OR CHARGING SYSTEM

DIAGNOSTIC TEST

1. **CHECK FOR AN ACTIVE DIAGNOSTIC TROUBLE CODE (DTC)**
    1. Turn the ignition on.
    2. With the scan tool, read DTCs.

    Does the scan tool display this DTC as active?

    Yes

    - Go To 2

    No

    - Test complete, the condition or conditions that originally set this DTC are not present at this time. Using the wiring diagrams as a guide, check all related splices and connectors for signs of water intrusion, corrosion, pushed out or bent terminals, and correct pin tension.
    - Perform the BODY VERIFICATION TEST. Refer to **STANDARD PROCEDURE** .
2. **VERIFY OPERATION OF THE VEHICLE CHARGING SYSTEM**

    NOTE: Troubleshoot any PCM charging/cranking DTCs before proceeding.

    NOTE: Make sure the battery is fully charged.

    Are any charging system DTCs present?

    Yes

    - Refer to the **DTC INDEX** article and perform the appropriate diagnostic procedure.

    No

- Replace the Blind Spot Sensor in accordance with the Service Information. Refer to **SENSOR, BLIND SPOT, REMOVAL** .
- Perform the BODY VERIFICATION TEST. Refer to **STANDARD PROCEDURE** .

B21DD-85-SYSTEM VOLTAGE - SIGNAL ABOVE ALLOWABLE RANGE

For a complete wiring diagram, **refer to appropriate SYSTEM WIRING DIAGRAMS article** .

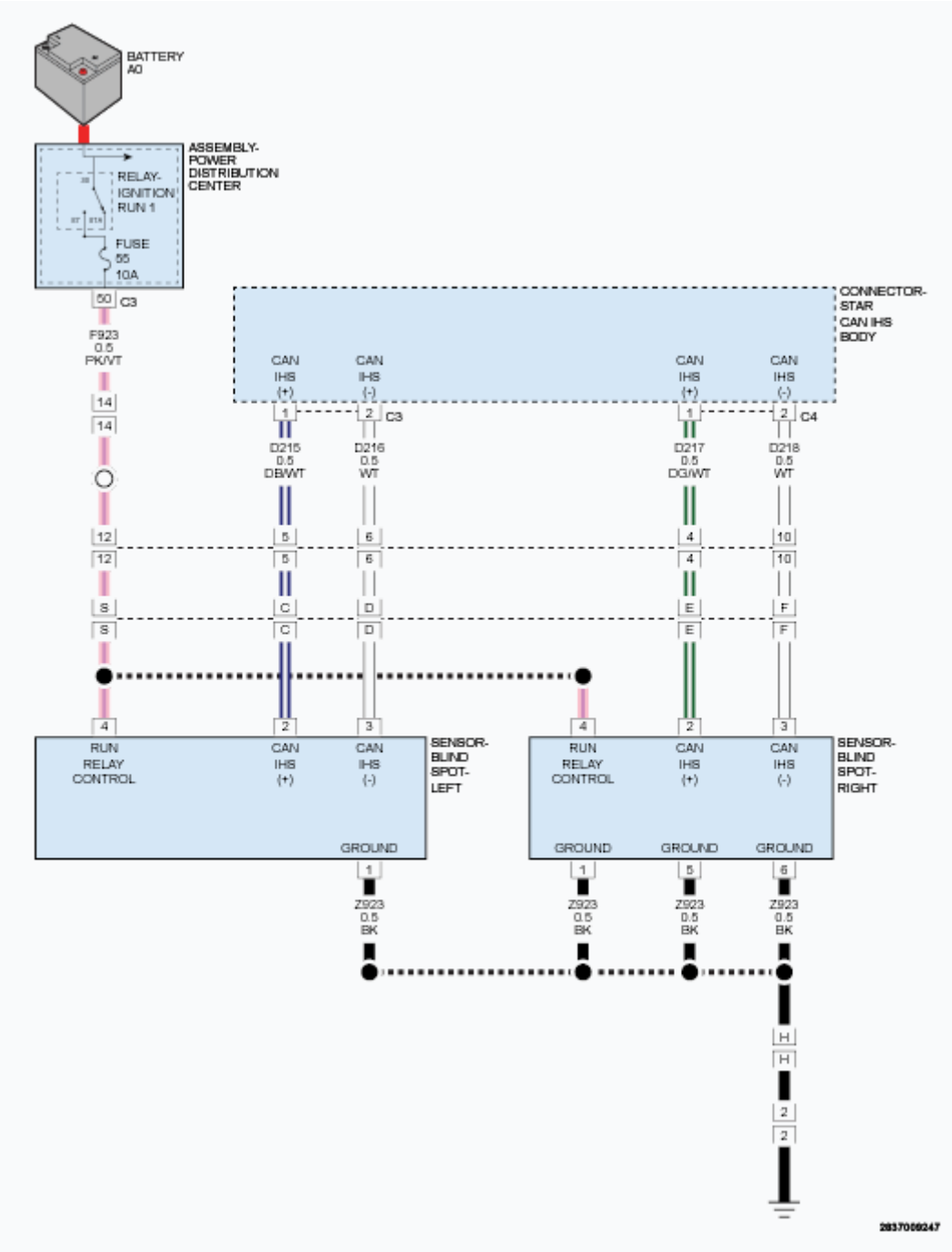

Fig. 4: Identifying Left/Right Blind Spot Sensor Circuit Diagram
Courtesy of CHRYSLER GROUP, LLC

WHEN MONITORED

Ignition on

SET CONDITION

This is a Controller Monitored system voltage was above 16 volts for 5 seconds or more.

POSSIBLE CAUSES

Possible Causes
HIGH BATTERY SYSTEM VOLTAGE CHARGING SYSTEM

DIAGNOSTIC TEST

CHECK ENGINE DTCs

1. With the scan tool, read the Powertrain Control Module (PCM) DTCs.

   Are there any PCM Charging or Battery DTCs present?

   Yes

   - Refer to the **DTC INDEX** article and perform the appropriate diagnostic procedure.

   No

   - This code is a CAN system message for information only. Check the charging system in accordance with the Service Information.

B223B-00-VEHICLE CONFIGURATION MISMATCH

For a complete wiring diagram, **refer to appropriate SYSTEM WIRING DIAGRAMS article** .

WHEN MONITORED

With the ignition on.

SET CONDITION

This DTC will set if the vehicle type is not identified or incorrectly identified.

POSSIBLE CAUSES

Possible Causes
INCORRECT VEHICLE CONFIGURATION IN THE BODY CONTROL MODULE (BCM)

DIAGNOSTIC TEST

CHECK FOR AN ACTIVE DIAGNOSTIC TROUBLE CODE (DTC)

NOTE: Diagnose and repair any BCM VIN or Communication DTCs before continuing with this test.

1. Turn the ignition on.
2. With the scan tool, select View DTCs.

   Does the scan tool display this DTC as active?

   Yes

   - Verify the correct vehicle configuration in the BCM.
   - Perform the BODY VERIFICATION TEST. Refer to **STANDARD PROCEDURE** .

   No

   - Use the scan tool to read DTCs in all other modules. If any communication DTCs are present, perform the appropriate diagnostic procedure. Perform any Technical Service Bulletins that apply. If no problems are found, test is complete.
   - Perform the BODY VERIFICATION TEST. Refer to **STANDARD PROCEDURE** .

B2599-00-DOOR MODULE FRONT RIGHT

For a complete wiring diagram, **refer to appropriate SYSTEM WIRING DIAGRAMS article** .

WHEN MONITORED

With the ignition on.

Vehicle speed greater than 6 mph (9.6 km/h).

SET CONDITION

The door module is reporting a DTC.

POSSIBLE CAUSES

Possible Causes
DTC IN FRONT RIGHT DOOR MODULE

DIAGNOSTIC TEST

CHECK FOR ACTIVE DTC

1. Turn the ignition on.
2. With the scan tool, read DTCs.

   Does the scan tool display this DTC as active?

   Yes

   - Refer to **DIAGNOSIS AND TESTING** and perform the appropriate diagnostic procedure.

   No

   - The condition that caused this code to set is not present at this time. Check for an intermittent condition by inspecting the related wiring harness for chafed, pierced, pinched, and partially broken wires. Also inspect the related connectors for broken, bent, pushed out, spread, corroded, or contaminated terminals.
   - Perform the BODY VERIFICATION TEST. Refer to **STANDARD PROCEDURE** .

U0020-00-CAN B BUS OFF PERFORMANCE

For a complete wiring diagram, **refer to appropriate SYSTEM WIRING DIAGRAMS article** .

WHEN MONITORED

Continuously when the ignition is on.

The battery voltage between 10.0 and 16.0 Volts.

Body Control Module (BCM) is configured correctly.

SET CONDITION

Bus messages not received from the Body Control Module (BCM) for approximately two to five seconds.

POSSIBLE CAUSES

Possible Causes
CAN IHS BUS (125K) CIRCUITS OPEN OR SHORTED DTCS RELATED TO BATTERY VOLTAGE, IGNITION, OR VIN MESSAGES

BODY CONTROL MODULE (BCM) POWER AND GROUND
BCM NOT CONFIGURED CORRECTLY
BODY CONTROL MODULE (BCM)
MODULE THAT SET THIS DTC

DIAGNOSTIC TEST

VERIFY DTC IS ACTIVE

NOTE: Make sure the battery is fully charged before proceeding.

1. Turn the ignition on.
2. With the scan tool, read the active DTCs.

   Does the scan tool display; U0020-00-CAN B BUS OFF PERFORMANCE as active?

   Yes

   - **For this code, perform the U0011-00-CAN INTERIOR BUS OFF PERFORMANCE diagnostic procedure.** Refer to the **DTC INDEX** article.

   No

   - Refer to **DIAGNOSIS AND TESTING** and perform the STORED LOST COMMUNICATION DTCs diagnostic procedure.

U0140-00-LOST COMMUNICATION WITH BODY CONTROL MODULE

For a complete wiring diagram, **refer to appropriate SYSTEM WIRING DIAGRAMS article** .

WHEN MONITORED

Continuously when the ignition is on.

The battery voltage between 10.0 and 16.0 Volts.

Body Control Module (BCM) is configured correctly.

SET CONDITION

Bus messages not received from the Body Control Module (BCM) for approximately two to five seconds.

POSSIBLE CAUSES

Possible Causes

CAN BUS CIRCUITS OPEN OR SHORTED
DTCS RELATED TO BATTERY VOLTAGE, IGNITION, OR VIN MESSAGES
BODY CONTROL MODULE POWER AND GROUND
BCM NOT CONFIGURED CORRECTLY
BODY CONTROL MODULE (BCM)
MODULE THAT SET THIS DTC

DIAGNOSTIC TEST

VERIFY IF THE DTC IS ACTIVE

NOTE: **Make sure the battery is fully charged before performing any diagnostic procedure.**

With the scan tool, refer to the Network Review Screen to display a high level view of the vehicle communication network. Modules shown in red are problem areas.

Always diagnose any Body Control Module (BCM) DTCs first before proceeding.

1. Turn the ignition on.
2. With the scan tool, read DTCs.

   Does the scan tool display this DTC as active?

   Yes

   - Refer to **DIAGNOSIS AND TESTING** and perform the NO RESPONSE FROM BCM (BODY CONTROL MODULE) diagnostic procedure.

   No

   - Refer to **DIAGNOSIS AND TESTING** and perform the STORED LOST COMMUNICATION DTCs diagnostic procedure.

U0155-00-LOST COMMUNICATION WITH CLUSTER/CCN

Perform the COMMUNICATION PRE-DIAGNOSTIC PROCEDURE. Refer to **STANDARD PROCEDURE** .

WHEN MONITORED

Continuously when the ignition is on.

Battery voltage between 10 and 16 volts.

Body Control Module (BCM) is configured correctly.

SET CONDITION

Bus messages not received from the Instrument Cluster (IC) for approximately two to five seconds.

POSSIBLE CAUSES

Possible Causes
CAN BUS (+) CIRCUIT SHORTED TO VOLTAGE
CAN BUS (-) CIRCUIT SHORTED TO GROUND
INSTRUMENT CLUSTER (IPC) POWER AND GROUND
BCM NOT CONFIGURED CORRECTLY
INSTRUMENT CLUSTER (IPC)
MODULE THAT SET THIS DTC

DIAGNOSTIC TEST

VERIFY DTC IS ACTIVE

NOTE: Make sure the battery is fully charged before proceeding.

1. Turn the ignition on.
2. With the scan tool, read the active DTCs.

   Does the scan tool display: U0155-00-LOST COMMUNICATION WITH CLUSTER/CCN?

   Yes

   - Refer to the **BODY CONTROL MODULE (BCM) - DIAGNOSTIC CODE INDEX** article and perform the U0155-87-LOST COMMUNICATION WITH CLUSTER/CCN diagnostic procedure.

   No

   - Refer to **DIAGNOSIS AND TESTING** and perform the STORED LOST COMMUNICATION DTCs diagnostic procedure.

U0203-00-LOST COMMUNICATION WITH LEFT FRONT DOOR MODULE

For a complete wiring diagram, **refer to appropriate SYSTEM WIRING DIAGRAMS article** .

WHEN MONITORED

With the ignition on.

Battery voltage between 10 and 16 volts.

Body Control Module (BCM) is configured correctly.

SET CONDITION

Bus messages not received from the Driver Door Module for approximately two to five seconds.

POSSIBLE CAUSES

Possible Causes
CAN INTERIOR BUS (+) CIRCUIT SHORTED TO VOLTAGE
CAN INTERIOR BUS (-) CIRCUIT SHORTED TO GROUND
DTCS RELATED TO BATTERY VOLTAGE, IGNITION, OR VIN MESSAGES
DRIVER DOOR MODULE POWER AND GROUND
BCM NOT CONFIGURED CORRECTLY
DRIVER DOOR MODULE
MODULE THAT SET THIS DTC

DIAGNOSTIC TEST

VERIFY DTC IS ACTIVE

NOTE: Make sure the fuse is installed and the battery is fully charged before proceeding.

1. Turn the ignition on.
2. With the scan tool, read active DTCs.

   Is this DTC active?

   Yes

   - Refer to the **DTC INDEX** article and perform the U0203-00 LOST COMMUNICATION WITH DOOR MODULE FRONT LEFT diagnostic procedure.

   No

   - Refer to **DIAGNOSIS AND TESTING** and perform the STORED LOST COMMUNICATION DTCs diagnostic procedure.

U0204-00-LOST COMMUNICATION WITH RIGHT FRONT DOOR MODULE

For a complete wiring diagram, **refer to appropriate SYSTEM WIRING DIAGRAMS article** .

WHEN MONITORED

With the ignition on.

Battery voltage between 10 and 16 volts.

Body Control Module (BCM) is configured correctly.

SET CONDITION

Bus messages not received from the Passenger Door Module for approximately two to five seconds.

POSSIBLE CAUSES

Possible Causes
CAN INTERIOR BUS (+) CIRCUIT SHORTED TO VOLTAGE
CAN INTERIOR BUS (-) CIRCUIT SHORTED TO GROUND
DTCS RELATED TO BATTERY VOLTAGE, IGNITION, OR VIN MESSAGES
PASSENGER DOOR MODULE POWER AND GROUND
BCM NOT CONFIGURED CORRECTLY
PASSENGER DOOR MODULE
MODULE THAT SET THIS DTC

DIAGNOSTIC TEST

CHECK FOR AN ACTIVE DIAGNOSTIC TROUBLE CODE (DTC)

1. Turn the ignition on.
2. With the scan tool, read the active DTCs.

   Does the scan tool display this DTC as active?

   Yes

   - Refer to the **BODY CONTROL MODULE (BCM) - DIAGNOSTIC CODE INDEX** article and perform the U0200-00-LOST COMMUNICATION WITH PASSENGER DOOR MODULE diagnostic procedure.

   No

   - Refer to **DIAGNOSIS AND TESTING** and perform the STORED LOST COMMUNICATION DTCs diagnostic procedure.

U0422-00-IMPLAUSIBLE DATA RECEIVED FROM BODY CONTROL MODULE

For a complete wiring diagram, **refer to appropriate SYSTEM WIRING DIAGRAMS article** .

WHEN MONITORED

With the ignition on.

SET CONDITION

Incorrect data received from the Body Control Module (BCM).

POSSIBLE CAUSES

Possible Causes
NO COMMUNICATION WITH THE BODY CONTROL MODULE (BCM)
DTCS STORED OR ACTIVE IN THE BCM
BLIND SPOT SENSORS

DIAGNOSTIC TEST

1. **CHECK FOR AN ACTIVE DIAGNOSTIC TROUBLE CODE (DTC)**

   NOTE: Diagnose and repair any Body Control Module DTCs before proceeding with this diagnostic procedure.

   1. Turn the ignition on.
   2. With the scan tool, read active DTCs.

      Does the scan tool display this DTC as active?

      Yes

      - Go To 2

      No

      - The condition that caused this code to set is not present at this time. Check for an intermittent condition by inspecting the related wiring harness for chafed, pierced, pinched, and partially broken wires. Also inspect the related connectors for broken, bent, pushed out, spread, corroded, or contaminated terminals.
      - Perform the BODY VERIFICATION TEST. Refer to **STANDARD PROCEDURE** .
2. **VERIFY THE BCM IS ACTIVE ON THE CAN BUS**
   1. With the scan tool, verify that the BCM is active on the bus.

      Is the BCM active on the bus?

Yes

- Replace and program the Blind Spot Sensor in accordance with the Service Information. Refer to **SENSOR, BLIND SPOT, REMOVAL** .
- Perform the BODY VERIFICATION TEST. Refer to **STANDARD PROCEDURE** .

No

- Refer to **DIAGNOSIS AND TESTING** and perform the NO RESPONSE FROM BCM diagnostic procedure.
- Perform the BODY VERIFICATION TEST. Refer to **STANDARD PROCEDURE** .

U11FB-00-LOST COMMUNICATION WITH LEFT BLIND SPOT SENSOR

For a complete wiring diagram, **refer to appropriate SYSTEM WIRING DIAGRAMS article** .

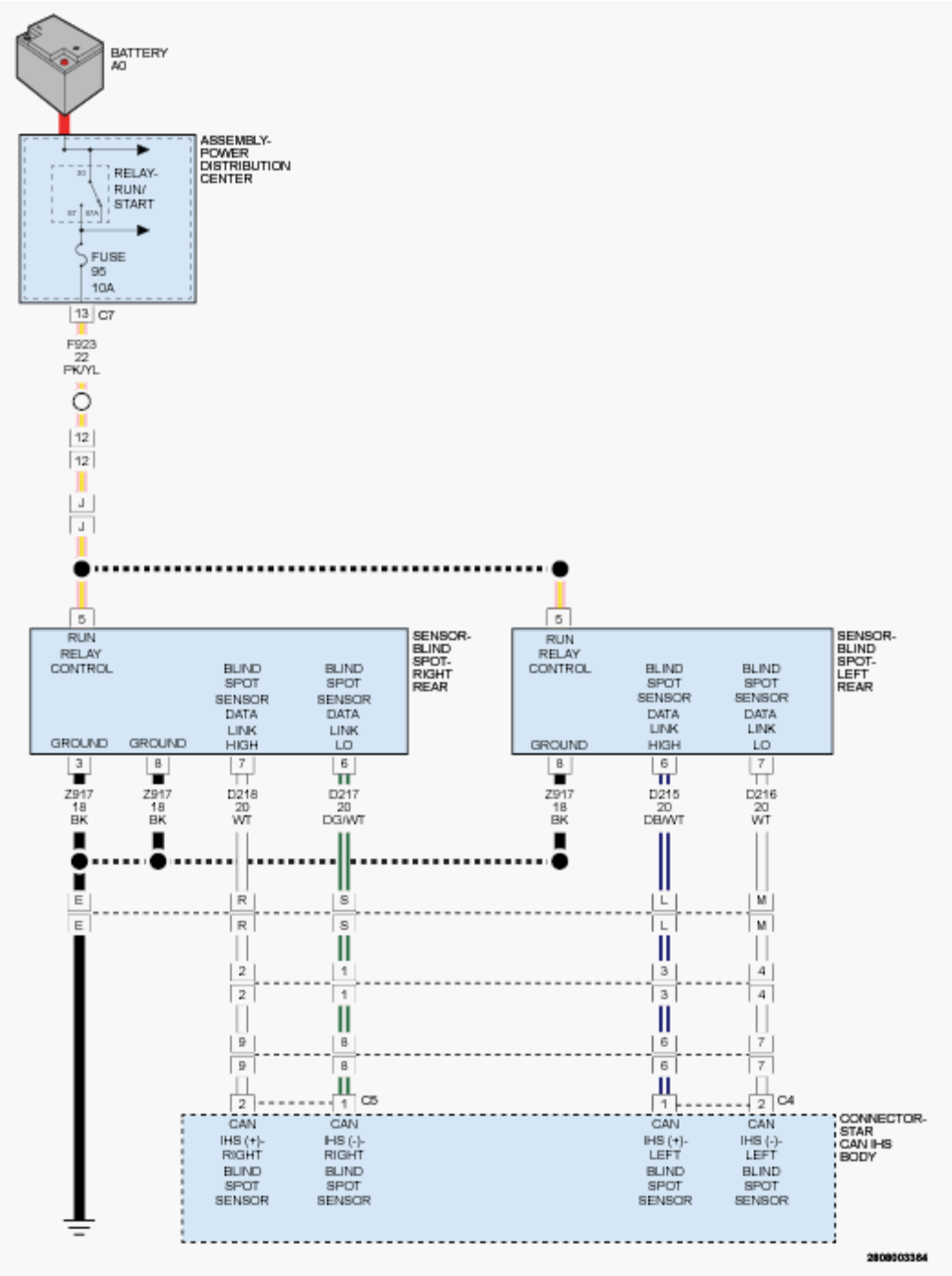

Fig. 5: Rear Blind Spot Sensor Circuit Diagram
Courtesy of CHRYSLER GROUP, LLC

THEORY OF OPERATION

The Blind Spot Monitor (BSM) system has two primary components; a Left Blind Spot Sensor (LBSS) and Right Blind Spot Sensor (RBSS). Each sensor includes an internal microprocessor that monitors and controls both the sensor and the blind spot indicator. The two sensors are concealed behind the outboard ends of the rear

bumper fascia.

The microprocessor analyzes the sensor data to determine whether any detected objects should be reported. When it is determined that an object should be reported, the Sensor controls its respective left or right BSM display directly through a hard wired output to the Outside Rearview Mirrors. The sensor also sends an electronic request message over the CAN IHS Bus to the radio. The Radio then mutes any current output through the speakers and generates a chime as an audible alert.

Each sensor performs a bulb test by illuminating the triangle icon in the Outside Rearview Mirror at each ignition ON cycle.

WHEN MONITORED

With the ignition on.

SET CONDITION

No BUS messages from the Left Blind Spot Sensor (LBSS) are received for greater than 1.05 seconds.

POSSIBLE CAUSES

Possible Causes
FUSED RUN RELAY CONTROL CIRCUIT OPEN
GROUND CIRCUIT OPEN
CAN IHS BUS CIRCUITS OPEN
LEFT BLIND SPOT SENSOR (LBSS)

DIAGNOSTIC TEST

1. **TEST FOR INTERMITTENT CONDITION**
   1. Turn the ignition on.

      NOTE: Make sure the battery voltage is between 10.0 and 16.0 volts.

   2. With the scan tool, read the module status.

      Does the scan tool indicate that the module is active on the bus?

      Yes

      - The no response condition is not present at this time. Using the wiring diagram/schematic as a guide, inspect the wiring for chafed, pierced, pinched, and partially broken wires and the wiring harness connectors for broken, bent, pushed out, and corroded terminals.
      - Perform the BODY VERIFICATION TEST. Refer to **STANDARD PROCEDURE** .

No

- Go To 2

2. **CHECK THE (F923) FUSED RUN RELAY CONTROL CIRCUIT FOR AN OPEN OR SHORT**
   1. Turn the ignition off.
   2. Disconnect the LBSS harness connector.
   3. Using a 12-volt test light connected to ground, check the (F923) Fused Run Relay Control circuit.

      Does the test light illuminate brightly?

      Yes

      - Go To 3

      No

      - Repair the open or short in the (F923) Fused Run Relay Control circuit.
      - Perform the BODY VERIFICATION TEST. Refer to **STANDARD PROCEDURE** .
3. **CHECK THE (Z923) GROUND CIRCUIT FOR AN OPEN**
   1. Using a 12-volt test light connected to 12-volts, check the (Z923) Ground circuit.

      Does the test light illuminate brightly?

      Yes

      - Go To 4

      No

      - Repair the open in the (Z923) Ground circuit.
      - Perform the BODY VERIFICATION TEST. Refer to **STANDARD PROCEDURE** .
4. **CHECK THE (D215) OR (D216) CAN IHS BUS CIRCUIT FOR AN OPEN**
   1. Disconnect the CAN IHS Body Star connector.
   2. Measure the resistance of the (D216) CAN IHS Bus (-) circuit between the CAN IHS Body Star connector and the LBSS harness connector.
   3. Measure the resistance of the (D215) CAN IHS Bus (+) circuit between the CAN IHS Body Star connector and the LBSS harness connector.

      Is resistance below 5.0 Ohms on both circuits?

      Yes

      - Replace the LBSS in accordance with the Service Information. Refer to **SENSOR, BLIND**

SPOT, REMOVAL .

- Perform the BODY VERIFICATION TEST. Refer to **STANDARD PROCEDURE** .

No

- Repair the open in the (D215) or (D216) CAN IHS Bus circuit. Inspect the connector for damage.
- Perform the BODY VERIFICATION TEST. Refer to **STANDARD PROCEDURE** .

U147E-00-IMPLAUSIBLE DATA RECEIVED FROM LEFT BLIND SPOT SENSOR

For a complete wiring diagram, **refer to appropriate SYSTEM WIRING DIAGRAMS article** .

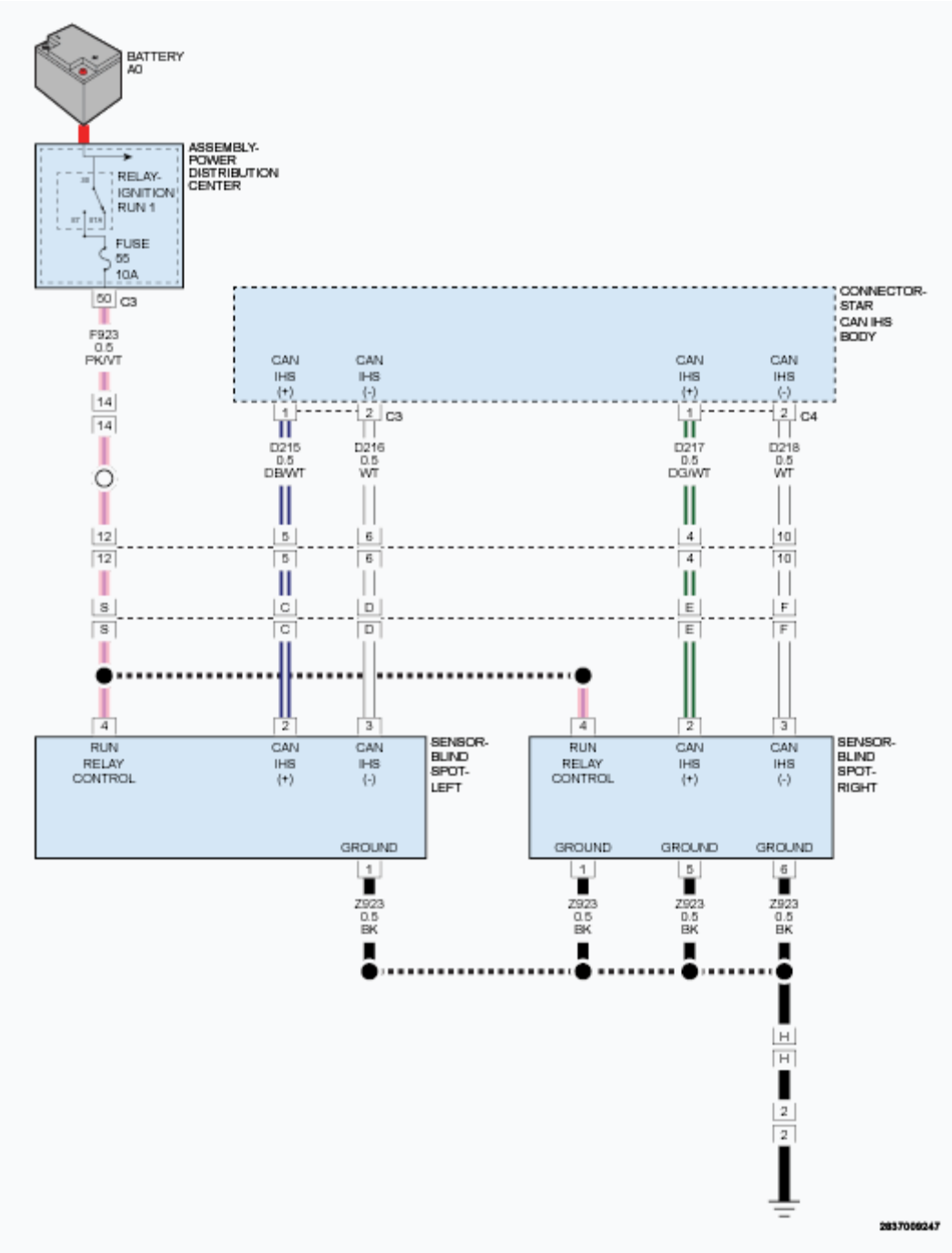

Fig. 6: Identifying Left/Right Blind Spot Sensor Circuit Diagram
Courtesy of CHRYSLER GROUP, LLC

THEORY OF OPERATION

The Blind Spot Monitor (BSM) system has two primary components; a Left Blind Spot Sensor (LBSS) and Right Blind Spot Sensor (RBSS). Each sensor includes an internal microprocessor that monitors and controls both the sensor and the blind spot indicator. The two sensors are concealed behind the outboard ends of the rear bumper fascia.

The microprocessor analyzes the sensor data to determine whether any detected objects should be reported. When it is determined that an object should be reported, the Sensor controls its respective left or right BSM display directly through a hard wired output to the Outside Rearview Mirrors. The sensor also sends an electronic request message over the CAN IHS Bus to the radio. The Radio then mutes any current output through the speakers and generates a chime as an audible alert.

Each sensor performs a bulb test by illuminating the triangle icon in the Outside Rearview Mirror at each ignition ON cycle.

WHEN MONITORED

With the ignition on.

SET CONDITION

Incorrect data received from the Left Blind Spot Sensor (LBSS).

POSSIBLE CAUSES

Possible Causes
NO COMMUNICATION WITH THE LEFT BLIND SPOT SENSOR (LBSS)
DTCS STORED OR ACTIVE IN THE LBSS
LEFT BLIND SPOT SENSOR (LBSS)

DIAGNOSTIC TEST

1. **CHECK FOR AN ACTIVE DIAGNOSTIC TROUBLE CODE (DTC)**

   NOTE: Diagnose and repair any Left Blind Spot Sensor DTCs before proceeding with this diagnostic procedure.

   1. Turn the ignition on.
   2. With the scan tool, read active DTCs.

      Does the scan tool display this DTC as active?

      Yes

      - Go To 2

      No

      - The condition that caused this code to set is not present at this time. Check for an intermittent condition by inspecting the related wiring harness for chafed, pierced, pinched, and partially broken wires. Also inspect the related connectors for broken, bent, pushed out, spread, corroded, or contaminated terminals.

- Perform the BODY VERIFICATION TEST. Refer to **STANDARD PROCEDURE** .

2. **VERIFY THE LBSS IS ACTIVE ON THE CAN IHS BUS**
   1. With the scan tool, verify that the LBSS is active on the bus.

      Is the LBSS active on the bus?

      Yes

      - Replace and program the Blind Spot Sensor in accordance with the Service Information. Refer to **SENSOR, BLIND SPOT, REMOVAL** .
      - Perform the BODY VERIFICATION TEST. Refer to **STANDARD PROCEDURE** .

      No

      - Refer to **DIAGNOSIS AND TESTING** and perform the NO RESPONSE FROM LBSS diagnostic procedure.
      - Perform the BODY VERIFICATION TEST. Refer to **STANDARD PROCEDURE** .

2014 ACCESSORIES AND EQUIPMENT

Speed Control - Service Information - Cherokee

DESCRIPTION

DESCRIPTION

Two electronic speed control systems are available factory-installed equipment on this vehicle: a conventional system and an adaptive system. Additional details of these two systems and their components can be found under the subheadings and paragraphs that follow.

ADAPTIVE SPEED CONTROL STOP AND GO

Quick Overview:

- Utilizes Radar and camera sensors to identify vehicles in forward path and maintains a selectable distance between the vehicle and the one in front of it;
- ACC with stop and go has full functionality between 0 and 100 mph;
- After ACC with stop and go brings the vehicle to a stop, the driver must indicate the intention to resume by either pressing the resume button or tapping the accelerator pedal;
- Driver can select one of four following distances depending on driver preference.

Functional Overview - The optional **ACC Plus (ACC +)** system (also known as ACC Stop and Go) has functionality beyond that of Normal Cruise Control and Adaptive Cruise Control. This system has the functionality of the cruise control system of maintaining a driver defined Set Speed without the driver needing to press the throttle. This system also has the functionality of the regular ACC system of increasing and decreasing the vehicle speed based on target vehicles moving slower than the ACC Set Speed. Beyond the functionality of the regular ACC system, this system offers a larger operational speed range, which constitutes of speeds from 0 mph to a configurable upper bound. If a target vehicle comes to a standstill, the ACC+ system will also bring the ACC+ host vehicle to a stop, and will keep the vehicle at a standstill for an undetermined period of time by first applying the brakes, and after the brakes time-out, cancelling the ACC+ system and applying the Electronic Park Brake (EPB). The ACC with stop and go system will also incorporate Forward Collision Warning-Plus (FCW). With grade braking, the transmission will automatically downshift to maintain selected vehicle speed and distance, preventing overheating of brakes.

The ACC sensor, the FFC, the ABM, the EMIC, the EVIC, the PCM and the SCM each contain a microprocessor and programming that allow them to communicate with each other using the Controller Area Network (CAN) data bus. This method of communication is used by the ACC module to provide inputs to the ABM, the EVIC and the PCM. This is also is used by the ABM to provide inputs to the PCM, by the SCM to relay the status of the speed control switches to the PCM and by the PCM for control of the indicators in the EMIC and the indications in the EVIC. Refer to **COMMUNICATION, DESCRIPTION** .

The ACC with stop and go system used also incorporates grade braking and Forward Collision Warning-Plus (FCW). With grade braking, the transmission will automatically downshift to maintain selected vehicle speed and distance, preventing overheating of brakes.

The optional equipment ACC+ system includes the following major components, which are described in further detail elsewhere in this service information:

- **Adaptive Speed Control Module** - An adaptive speed control sensor (also known as the Adaptive Cruise Control/ACC sensor or module and the radar sensor or module) is located on a bracket secured near the center of the underside of the front bumper support member of the Front End Module (FEM) behind the front fascia. Refer to **MODULE, ADAPTIVE CRUISE CONTROL, DESCRIPTION** .
- **Antilock Brake Module** - An Antilock Brake Module (ABM) (also known as Controller Antilock Brake/CAB or the Electronic Stability Control/ESC module) is located on the antilock brake Hydraulic Control Unit (HCU) in the engine compartment. Refer to **MODULE, ANTI-LOCK BRAKE SYSTEM, DESCRIPTION** .
- **Brake Lamp Switch** - The brake (also known as stop) lamp switch is located on the brake pedal support bracket under the driver side of the instrument panel. Refer to **SWITCH, STOP LAMP, DESCRIPTION** .
- **ElectroMechanical Instrument Cluster** - A CRUISE indicator is located in the fixed segment display of the ElectroMechanical Instrument Cluster (EMIC) (also known as the Cab Compartment Node/CCN) that provides an indication to the vehicle operator when the speed control system is turned ON. Refer to **DESCRIPTION** .
- **Electronic Vehicle Information Center** - The Electronic Vehicle Information Center (EVIC) is located in the ElectroMechanical Instrument Cluster (EMIC) (also known as the Cab Compartment Node/CCN) and provides an interface to the vehicle operator for setting the adaptive speed control customer preferences as well as a display of the adaptive speed control and Forward Collision Warning (FCW) system status messages. Refer to **CENTER, ELECTRONIC VEHICLE INFORMATION, DESCRIPTION** .
- **Forward Facing Camera** - The Forward Facing Camera (FFC) is located inside the Combined Rear View Mirror Module (CRVMM) housing assembly. The FFC provides input for data fusion purposes allowing the ACC sensor radar data to be redundancy checked. Refer to **MODULE, FORWARD FACING CAMERA, DESCRIPTION** .
- **Powertrain Control Module** - The Powertrain Control Module (PCM) located in the right front corner of the engine compartment contains the software and hardware that monitors all of the speed control system inputs and controls all of the speed control system outputs. Refer to **MODULE, POWERTRAIN CONTROL, DESCRIPTION** .
- **Speed Control Switches** - A speed control switch pod containing six momentary switch push buttons is located in the right horizontal spoke of the steering wheel. Refer to **SWITCH, SPEED CONTROL, DESCRIPTION**.
- **Steering Control Module** - A Steering Control Module (SCM) is integral to the Steering Column Control Module (SCCM) located at the top of the steering column just below the steering wheel. Refer to **MODULE, STEERING COLUMN, DESCRIPTION** .
- **Wheel Speed Sensors** - A wheel speed sensor is located on the knuckle of each front and rear wheel. Refer to **SENSOR, WHEEL SPEED, FRONT, DESCRIPTION** .

Hard wired circuitry connects the adaptive electronic speed control system components to the electrical system of the vehicle. These hard wired circuits are integral to several wire harnesses, which are routed throughout the vehicle and retained by many different methods. These circuits may be connected to each other, to the vehicle electrical system and to the speed control system components through the use of a combination of soldered

splices, splice block connectors, and many different types of wire harness terminal connectors and insulators. Refer to the appropriate wiring information. The wiring information includes wiring diagrams, proper wire and connector repair procedures, further details on wire harness routing and retention, as well as pin-out and location views for the various wire harness connectors, splices and grounds.

CONVENTIONAL SPEED CONTROL

The standard equipment conventional electronic speed control system includes the following major components, which are described in further detail elsewhere in this service information:

- **Antilock Brake Module** - An Antilock Brake Module (ABM) (also known as Controller Antilock Brake/CAB or the Electronic Stability Control/ESC module) is located on the antilock brake Hydraulic Control Unit (HCU) in the engine compartment. Refer to **MODULE, ANTI-LOCK BRAKE SYSTEM, DESCRIPTION** .
- **Brake Lamp Sensor** - The brake (also known as stop) lamp sensor is located on the brake pedal support bracket under the driver side of the instrument panel. (Refer to **SWITCH, STOP LAMP**).
- **ElectroMechanical Instrument Cluster** - A CRUISE indicator is located in the fixed segment display of the ElectroMechanical Instrument Cluster (EMIC) (also known as the Cab Compartment Node/CCN) that provides an indication to the vehicle operator when the speed control system is turned ON. Refer to **DESCRIPTION** .
- **Powertrain Control Module** - The Powertrain Control Module (PCM) in the right front corner of the engine compartment contains the software and hardware that monitors all of the speed control system inputs and controls all of the speed control system outputs. Refer to **MODULE, POWERTRAIN CONTROL, DESCRIPTION** .
- **Speed Control Switches** - A speed control switch pod containing four momentary switch push buttons is located in the right horizontal spoke of the steering wheel. Refer to **SWITCH, SPEED CONTROL, DESCRIPTION**.
- **Steering Control Module** - A Steering Control Module (SCM) is integral to the Steering Column Control Module (SCCM) located at the top of the steering column just below the steering wheel. Refer to **MODULE, STEERING COLUMN, DESCRIPTION** .
- **Wheel Speed Sensors** - A wheel speed sensor is located on the knuckle of each front and rear wheel. Refer to **SENSOR, WHEEL SPEED, FRONT, DESCRIPTION** .

The ABM, the EMIC, the PCM and the SCM each contain a microprocessor and programming that allow them to communicate with each other using the Controller Area Network (CAN) data bus. This method of communication is used by the SCM to relay the status of the speed control switches to the PCM, and by the PCM for control of the CRUISE indicator in the EMIC. Refer to **COMMUNICATION, DESCRIPTION** .

Hard wired circuitry connects the conventional electronic speed control system components to the electrical system of the vehicle. These hard wired circuits are integral to several wire harnesses, which are routed throughout the vehicle and retained by many different methods. These circuits may be connected to each other, to the vehicle electrical system and to the speed control system components through the use of a combination of soldered splices, splice block connectors, and many different types of wire harness terminal connectors and insulators. Refer to the appropriate wiring information. The wiring information includes wiring diagrams, proper wire and connector repair procedures, further details on wire harness routing and retention, as well as pin-out and location views for the various wire harness connectors, splices and grounds.

OPERATION

OPERATION

ADAPTIVE SPEED CONTROL

The vehicle operator controls all adaptive speed control system (ACC) features through the speed control switch pod on the face of the right horizontal spoke of the steering wheel. When a push button of the switch pod is depressed, it provides a hard wired resistor multiplexed analog input to the Steering Control Module (SCM).

The SCM reads the speed control switch input, then relays an electronic **speed control switch** status message to the Powertrain Control Module (PCM) and to the adaptive speed control sensor (also known as the Adaptive Cruise Control/ACC sensor or module, or as the radar sensor or module) over the Controller Area Network (CAN) data bus. The PCM and ACC sensor microprocessors continually monitor these inputs as well as electronic **wheel speed** message inputs from the Antilock Brake Module (ABM) (also known as the Controller Antilock Brake/CAB, the Electronic Stability Control/ESC module or the Antilock Brake System/ABS module), electronic **gear selector** message inputs from the Transmission Control Module TCM, video data from the Forward Facing Camera (FFC) and numerous hard wired inputs including the brake (or stop) lamp switch, then provides the appropriate electronic message and hard wired outputs to invoke the requested electronic speed control features.

Using the MODE push button of the speed control switch pod on the face of the right horizontal spoke of the steering wheel, the vehicle operator can choose between adaptive speed control and conventional speed control modes of operation. As the name implies, when in the conventional speed control mode the speed control system is used and functions exactly like a conventional speed control system. When in the adaptive speed control mode, the vehicle operator can use the DISTANCE push button of the speed control switch pod to select from one of three distance settings for the adaptive cruise system to maintain. These settings equate to the time in seconds separating the vehicle from a preceding vehicle. The FFC and the ACC sensor share a private bus allowing data fusion to occur within the ACC sensor. The ACC sensor then uses this information to send electronic message outputs to the ABM, the TCM and the PCM to maintain the selected separation distance. The available distance settings are:

- **1** - 1.0 second
- **2** - 1.5 seconds
- **3** - 2.0 seconds

If the ECM/PCM detects a fault on one of the following systems, it will disable the cruise control system. The ECM/PCM will store an appropriate DTC.

- Engine Speed Sensor
- Sensor or actuators of the electric throttle (only for gasoline engines)
- Accelerator Pedal Potentiometer (APP Sensor)
- Brake Pedal Position
- Clutch Switch rationality
- Engine Load sensor (only for gasoline engines)

- Ignition Coils (only for gasoline engines)
- Fuel Injectors
- High pressure system components (only for GDI and Diesel engines)
- Turbo sensors or actuators.

The PCM and ACC sensor microprocessors continuously monitor all of the speed control system electrical circuits to determine the system readiness and accuracy. If the PCM or ACC sensor detects a monitored system fault, it sets and stores a Diagnostic Trouble Code (DTC). The PCM and ACC components use On-Board Diagnostics (OBD) and can communicate with other electronic modules in the vehicle as well as with the diagnostic scan tool using the CAN data bus. This method of communication is used for control of the Malfunction Indicator Lamp (MIL) (also known as the Check Engine lamp) in the ElectroMechanical Instrument Cluster (EMIC) (also known as the Cab Compartment Node/CCN) and for system diagnosis and testing through the 16-way data link connector located on the driver side lower edge of the instrument panel.

The hard wired inputs and outputs for the PCM and the ACC sensor may be diagnosed using conventional diagnostic tools and procedures. Refer to the appropriate wiring information. However, conventional diagnostic methods will not prove conclusive in the diagnosis of the PCM, the ACC sensor or the electronic controls or communication between other modules and devices that provide features of the adaptive speed control system. The most reliable, efficient, and accurate means to diagnose the PCM, the ACC sensor or the electronic controls and communication related to speed control system operation requires the use of a diagnostic scan tool. Refer to the appropriate diagnostic information.

CONVENTIONAL SPEED CONTROL

The vehicle operator controls all conventional speed control system features through the speed control switch pod on the face of the right horizontal spoke of the steering wheel. When a push button of the switch pod is depressed, it provides a hard wired resistor multiplexed analog input to the Steering Control Module (SCM).

The SCM reads the speed control switch input via LIN, then relays an electronic **speed control switch** status message to the Powertrain Control Module (PCM) over the Controller Area Network (CAN) C data bus. The PCM software continually monitors these inputs as well as electronic **vehicle distance** message inputs from the Antilock Brake Module (ABM) (also known as the Controller Antilock Brake/CAB, the Electronic Stability Control/ESC module or the Antilock Brake System/ABS module) and numerous hard wired inputs including the brake (or stop) lamp switch, then provides the appropriate electronic message and hard wired outputs to invoke the requested electronic speed control features.

The PCM microprocessor continuously monitors all of the speed control system electrical circuits to determine the system readiness. If the PCM detects a monitored system fault, it sets and stores a Diagnostic Trouble Code (DTC). The PCM uses On-Board Diagnostics (OBD) and can communicate with other electronic modules in the vehicle as well as with the diagnostic scan tool using the CAN data bus. This method of communication is used for control of the Malfunction Indicator Lamp (MIL) (also known as the Check Engine lamp) in the ElectroMechanical Instrument Cluster (EMIC) (also known as the Cab Compartment Node/CCN) and for system diagnosis and testing through the 16-way data link connector located on the driver side lower edge of the instrument panel.

If the ECM/PCM detects a fault on one of the following systems, it will disable the cruise control system. The

ECM/PCM will store an appropriate DTC.

- Engine Speed Sensor
- Sensor or actuators of the electric throttle (only for gasoline engines)
- Accelerator Pedal Potentiometer (APP Sensor)
- Brake Pedal Position
- Clutch Switch rationality
- Engine Load sensor (only for gasoline engines)
- Ignition Coils (only for gasoline engines)
- Fuel Injectors
- High pressure system components (only for GDI and Diesel engines)
- Turbo sensors or actuators.

The hard wired inputs and outputs for the PCM may be diagnosed using conventional diagnostic tools and procedures. Refer to the appropriate wiring information. However, conventional diagnostic methods will not prove conclusive in the diagnosis of the PCM or the electronic controls or communication between other modules and devices that provide features of the conventional speed control system. The most reliable, efficient, and accurate means to diagnose the PCM or the electronic controls and communication related to speed control system operation requires the use of a diagnostic scan tool. Refer to the appropriate diagnostic information.

SWITCH, SPEED CONTROL

DESCRIPTION

DESCRIPTION

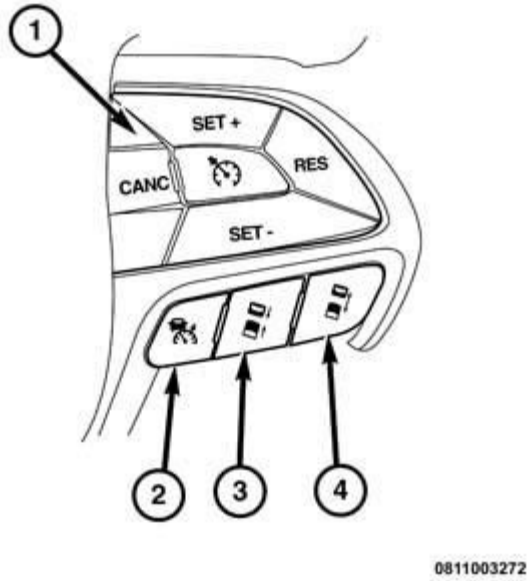

Fig. 1: Speed Control Switch Pod
Courtesy of CHRYSLER GROUP, LLC

The speed control switch pod (1) is located in the right spoke of the steering wheel spoke bezel. Two different switches are used. One switch has five buttons and is used on vehicles not equipped with the optional adaptive speed control (also known as the Adaptive Cruise Control/ACC) system. The other switch has eight buttons and is used on vehicles equipped with the ACC system option. These switches are the primary control used by the vehicle operator to manage the particular speed control system installed in the vehicle. The only visible components of the switch pod are the switch push buttons and a decorative bezel around the push buttons, which stands slightly proud of the steering wheel spoke bezel. The remainder of the switch pod including its mounting provisions and its electrical connection are concealed beneath the spoke bezel.

The switch pod housing and push buttons are constructed of molded plastic. Each of the push buttons has white International Control and Display Symbol graphics or text applied to it, which clearly identify the function of each push button. The switch pod is secured through three integral mounting tabs to mounting bosses on the back of the spoke bezel by three screws. A connector receptacle integral to the inboard end of the switch pod housing connects the speed control switch and the Local Interface Network (LIN) slave node circuitry integral to the switch pod to the vehicle electrical system through a dedicated take out and connector of the steering wheel wire harness.

The speed control switch pod cannot be adjusted or repaired. If any function of the switch or the LIN slave node is ineffective or damaged, the entire switch pod unit must be replaced.

OPERATION

OPERATION

The speed control switch pod is a resistor multiplexed unit that provides LIN bussed inputs to the Steering Control Module (SCM) microprocessor integral to the Steering Column Control Module (SCCM). The speed control switch pod also contains the circuitry of a Local Interface Network (LIN) slave node, which provides source current for and communicates the switch or sensor states of the Electronic Vehicle Information Center (EVIC) switches, the remote radio switches, the paddle shifter switches (if equipped), the horn switch and the heated steering wheel sensor (if equipped) over the LIN data bus to the SCM, which is the LIN master node.

The speed control switch pod for vehicles equipped with a conventional electronic speed control system and not equipped with the optional adaptive speed control (also known as the Adaptive Cruise Control/ACC) system contains four switch push buttons whose functions are:

- **On/Off** - This switch button enables or disables the speed control system and clears any previous speed control set speed from system memory.
- **Resume / +** - This switch button restores the vehicle to a previously stored set speed or accelerates the vehicle from an already attained set speed.
- **Cancel** - This switch button cancels the current speed control event, but does not turn the system OFF or clear the currently stored set speed.
- **Set / -** - This switch button sets the current vehicle speed as the stored set speed or decelerates (coasts) the vehicle to a speed that is slower than the already attained set speed.

The optional adaptive speed control switch pod for vehicles equipped with the ACC system option contains the same four switch push buttons as the conventional speed control switch pod, then adds two buttons whose functions are:

- **Mode** - This switch button toggles the speed control system between adaptive (ACC) or conventional (non-ACC) modes of operation.
- **Distance Buttons** - These switch buttons select the separation or following distance (in seconds) that the ACC system maintains between this vehicle and any preceding vehicle.

The SCM LIN master node provides a clean ground and fused B(+) current for all of the switches and sensors on the rotating steering wheel through the LIN slave node circuitry of the speed control switch pod as well as for the Light Emitting Diode (LED) back lighting of both the speed control and the EVIC switch pods. The SCM continually monitors all of the hard wired speed control switch circuits as well as the LIN bus data. The SCM will set a Diagnostic Trouble Code (DTC) for any problem it detects in the speed control switch circuits, and will store a Signal Not Available (SNA) code for any LIN bus input errors. The SCM also communicates with other electronic modules over the Controller Area Network (CAN) data bus. Therefore, any SCM DTC information can be retrieved using a diagnostic scan tool connected to the Data Link Connector (DLC).

The analog resistor multiplexed circuits of the speed control switch pod as well as the hard wired circuits between the switch pod and the SCM may be diagnosed using conventional diagnostic tools and procedures. Refer to the appropriate wiring information. The wiring information includes wiring diagrams, proper wire and connector repair procedures, details of wire harness routing and retention, connector pin-out information and location views for the various wire harness connectors, splices and grounds.

However, conventional diagnostic methods will not prove conclusive in the diagnosis of the LIN slave or master nodes, the SCM, the SCCM or the electronic controls and communication between modules and other

devices that provide some features of the speed control system. The most reliable, efficient, and accurate means to diagnose the speed control switch pod, the LIN slave or master nodes, the SCM or the electronic controls and communication related to speed control system operation requires the use of a diagnostic scan tool. Refer to the appropriate diagnostic information.

DIAGNOSIS AND TESTING

DIAGNOSIS AND TESTING - SPEED CONTROL SWITCH

WARNING: To avoid serious or fatal injury on vehicles equipped with airbags, disable the Supplemental Restraint System (SRS) before attempting any steering wheel, steering column, airbag, seat belt tensioner, impact sensor or instrument panel component diagnosis or service. Disconnect and isolate the battery negative (ground) cable, then wait two minutes for the system capacitor to discharge before performing further diagnosis or service. This is the only sure way to disable the SRS. Failure to take the proper precautions could result in accidental airbag deployment.

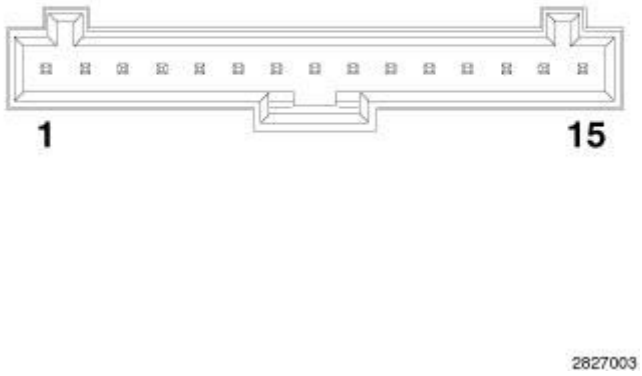

Fig. 2: Speed Control Switch Harness Connector Terminal Identification
Courtesy of CHRYSLER GROUP, LLC

NOTE: The following test confirms only correct speed control switch functions. It does not test or confirm any of the Local Interface Network (LIN) slave node inputs, outputs or functions. LIN slave node testing requires the use of a diagnostic scan tool. Refer to the appropriate diagnostic information.

1. Remove the speed control switch pod from the steering wheel. Refer to **SWITCH, SPEED CONTROL, REMOVAL**.
2. Disconnect the steering wheel wire harness connector from the back of the speed control switch pod.
3. Using an ohmmeter, test the resistance between the terminals of the switch as shown in the Speed Control

Switch Tests table.

SPEED CONTROL SWITCH TESTS TABLE

SPEED CONTROL SWITCH TESTS	
SWITCH POSITION	**PINS (*RESISTANCE - OHMS)**
NO PUSH BUTTONS DEPRESSED	13 and 14 (20708) 14 and 15 (20591)
ON / OFF	13 and 14 (464) 14 and 15 (133)
CANCEL	13 and 14 (896) 14 and 15 (457)
DISTANCE (WITH ADAPTIVE SPEED CONTROL ONLY)	13 and 14 (1515) 14 and 15 (899)
MODE (WITH ADAPTIVE SPEED CONTROL ONLY)	13 and 14 (2468) 14 and 15 (1518)
SET / - (DECEL)	13 and 14 (4088) 14 and 15 (2471)
RESUME / + (ACCEL)	13 and 14 (7408) 14 and 15 (4091)
*All resistance values are plus or minus 5%.	

4. If the switch fails any of the tests, replace the ineffective speed control switch pod as required.

REMOVAL

REMOVAL

WARNING: To avoid serious or fatal injury on vehicles equipped with airbags, disable the Supplemental Restraint System (SRS) before attempting any steering wheel, steering column, airbag, seat belt tensioner, impact sensor or instrument panel component diagnosis or service. Disconnect and isolate the battery negative (ground) cable, then wait two minutes for the system capacitor to discharge before performing further diagnosis or service. This is the only sure way to disable the SRS. Failure to take the proper precautions could result in accidental airbag deployment.

1. Disconnect and isolate the battery negative cable.
2. Remove the remote radio switch. Refer to **SWITCH, REMOTE RADIO, REMOVAL** .

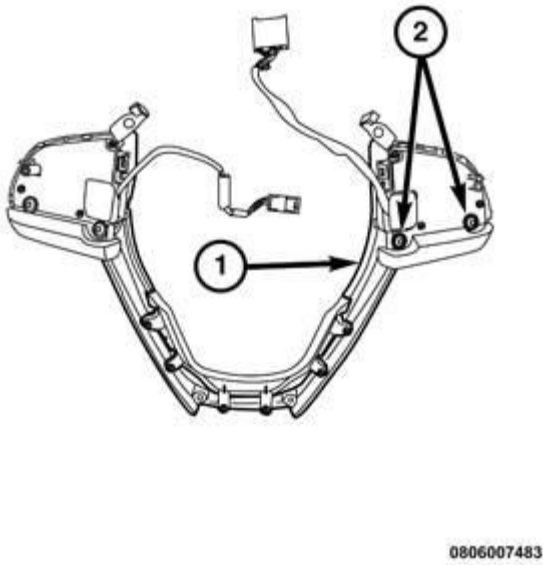

Fig. 3: Steering Wheel Bezel & Screws
Courtesy of CHRYSLER GROUP, LLC

3. From the back of the steering wheel front bezel (2), remove the two screws (1) that secure the speed control switch pod to the bezel.
4. Remove the switch from the bezel.

INSTALLATION

INSTALLATION

WARNING: To avoid serious or fatal injury on vehicles equipped with airbags, disable the Supplemental Restraint System (SRS) before attempting any steering wheel, steering column, airbag, seat belt tensioner, impact sensor or instrument panel component diagnosis or service. Disconnect and isolate the battery negative (ground) cable, then wait two minutes for the system capacitor to discharge before performing further diagnosis or service. This is the only sure way to disable the SRS. Failure to take the proper precautions could result in accidental airbag deployment.

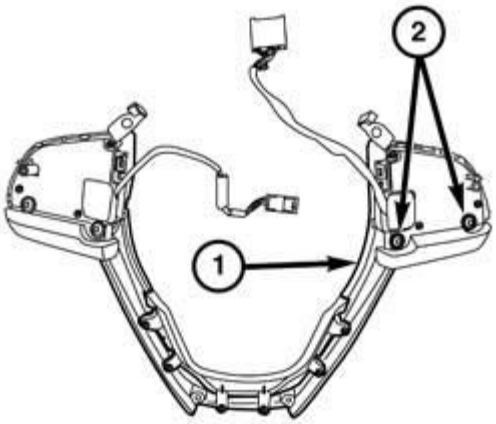

0806007483

Fig. 4: Steering Wheel Bezel & Screws
Courtesy of CHRYSLER GROUP, LLC

1. Position the Speed Control switch pod to the back of the steering wheel front bezel (2).
2. Install and tighten the two screws (1) that secure the switch to the bezel. Tighten the screws securely.
3. Install the remote radio switch. Refer to **SWITCH, REMOTE RADIO, INSTALLATION** .
4. Connect the negative battery cable.

2014 ACCESSORIES AND EQUIPMENT

Universal Transmitter - Cherokee

DESCRIPTION

DESCRIPTION

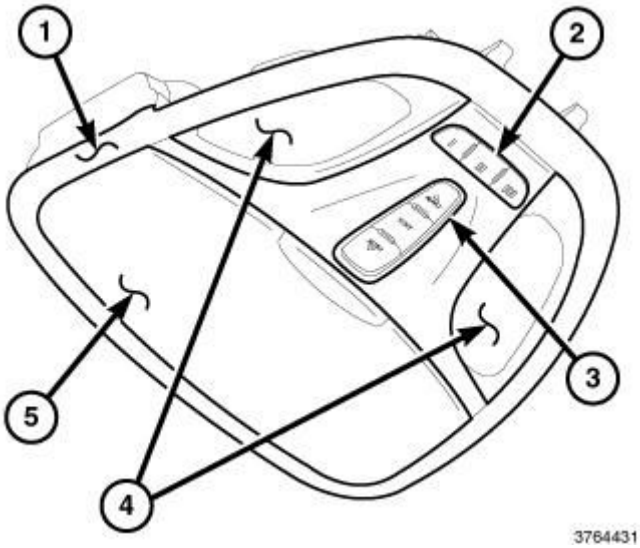

Fig. 1: Overhead Console Components
Courtesy of CHRYSLER GROUP, LLC

Vehicles equipped with the optional universal transmitter (also known as the HomeLink® transmitter or Universal Garage Door Opener/UGDO) have a universal transmitter switch pod (2) integral to the overhead console (1) located in the headliner just behind the windshield opening header. The switch buttons are centered between the two map/reading lamps (4), forward of the sunglasses storage bin (5) and, if equipped, the power sunroof switch (3). This switch has three momentary push buttons clearly marked by the Roman numerals **I** , **II** and **III** for identification of each of the three transmitter channels. A single transmission indicator illuminated by a red Light Emitting Diode (LED) unit is also integral to the switch pod in the overhead console. The switch push buttons have instrument panel dimmer controlled LED units that provide back lighting for visibility at night.

Each of the three universal transmitter push buttons controls an independent radio transmitter channel. Each of these three channels can be trained to transmit a different Radio Frequency (RF) signal for the remote operation of garage door openers, motorized gate openers, home or office lighting, security systems or most any other device equipped with a RF receiver operating in the 280 to 418 MegaHertz (MHz) frequency range. The transmitter is capable of operating systems using either rolling code or non-rolling code security technology.

The universal transmitter switch pod cannot be repaired and is only serviced as a unit with the overhead console. If the transmitter or any of the switches are ineffective or damaged, the entire overhead console unit must be replaced.

OPERATION

OPERATION

The universal transmitter (also known as the HomeLink® transmitter or Universal Garage Door Opener/UGDO) operates on a non-switched source of battery current received on a fused B(+) circuit through a fused B(+) fuse located in the Junction Block (JB) (also known as the interior Power Distribution Center/PDC). The universal transmitter has a path to ground through a security ground circuit received through the Body Control Module (BCM). These connections allow the universal transmitter to remain functional, regardless of the status of the ignition switch; however, the unit will become disabled any time the Vehicle Theft Alarm (VTA) is armed.

The universal transmitter has several modes of operation:

- **Cleared Memory Mode** - When Non-Volatile Memory (NVM) has been cleared by depressing and holding the channel 1 and 3 buttons simultaneously for about 20 seconds, successful erasure is indicated by the red transmission indicator being flashed at a fast rate. If the buttons are continuously pressed for about another 10 seconds, the transmission indicator is extinguished and all three channels are set to their respective factory default mode settings.
- **Default Mode** - The default mode of the universal transmitter is when only the factory preset codes are stored in NVM for any given channel, prior to a channel having been programmed. When the button for any such channel is depressed, the transmitter will transmit the factory preset code for that channel and illuminate the red transmission indicator as in Transmit Mode.
- **Emulate Mode** - While in the emulate mode (also known as the training or programming mode) the universal transmitter is capable of emulating and storing an original garage door opener transmitter Radio Frequency (RF) signal in one of the three selected channels. While in this mode, the universal transmitter will flash the red transmission indicator at a slow rate. Once in this mode all programming must be completed within 2.5 minutes. After successfully determining the frequency and code for the selected channel, the universal transmitter will flash the red transmission indicator at a fast rate to indicate that the selected transmitter button has been programmed. Once programmed, the universal transmitter stores the necessary emulation information in NVM.
- **Stuck Button Mode** - If one or more of the universal transmitter buttons has been depressed continually for over about 1 minute, the universal transmitter will enter a reduced power mode. If the button is held depressed for over about another 2 minutes, the universal transmitter will also flag the button in NVM as stuck and exit the current operating mode for as long as the transmitter is connected to power. To reset the universal transmitter from the reduced power or stuck button mode, the transmitter power feed must be disconnected, then reconnected.
- **Transmit Mode** - The universal transmitter activates the transmit mode when any of the three transmitter buttons is depressed. The transmitter will transmit the programmed code over the programmed frequency repeatedly while the button is being pressed, for up to about 20 seconds. The universal transmitter will also illuminate the red transmission indicator solid while the transmission is in process. The transmission will cease immediately when the transmitter button is released.

The hard wired input circuits for the universal transmitter may be diagnosed using conventional diagnostic tools and procedures. Refer to the appropriate wiring information. The RF signal strength of the universal transmitter may also be tested. Refer to **DIAGNOSIS AND TESTING**.

DIAGNOSIS AND TESTING

DIAGNOSIS AND TESTING - UNIVERSAL TRANSMITTER

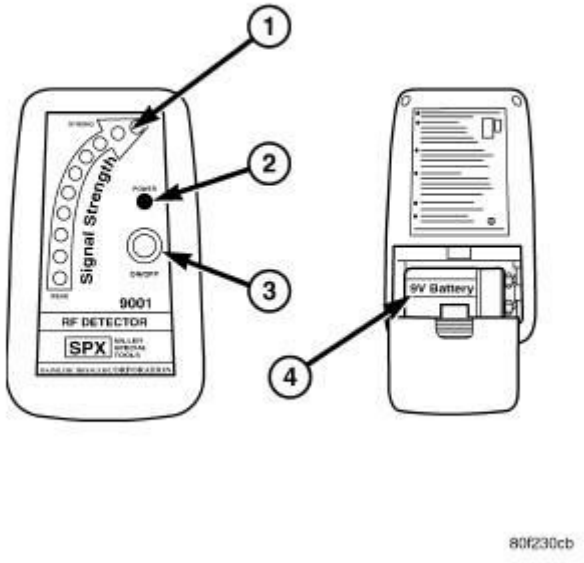

Fig. 2: Identifying Radio Frequency Detector
Courtesy of CHRYSLER GROUP, LLC

If the universal transmitter (also known as the HomeLink® transmitter or Universal Garage Door Opener/UGDO) is inoperative, retrain the transmitter using a known good transmitter containing a known good battery. Refer to **STANDARD PROCEDURE**. Test the universal transmitter operation again. If the unit is still inoperative, test the universal transmitter with a Radio Frequency Detector special tool as follows:

1. Turn On the Radio Frequency (RF) detector special tool by depressing the ON/OFF button (3). An audible **chirp** will sound and the green Power indicator (2) will illuminate. If the Power indicator does not illuminate, replace the RF detector battery (4).
2. Hold the RF detector within 2.54 centimeters (1 inch) of the **trained** universal transmitter, then depress any one of the three universal transmitter channel push buttons.
3. The red Signal Strength Light Emitting Diode (LED) units (1) will illuminate and the tool will generate an audible **beep** if a radio signal is detected. Repeat this test for all three universal transmitter channel push buttons. If the tool does not detect a radio signal for any of the three push buttons, replace the ineffective universal transmitter unit. Refer to **CONSOLE, OVERHEAD, FRONT, REMOVAL** .

STANDARD PROCEDURE

ERASING UNIVERSAL TRANSMITTER CODES

NOTE: **Individual channels cannot be erased. Erasing any universal transmitter (also known as HomeLink® transmitter or Universal Garage Door Opener/UGDO) code will erase ALL programmed codes.**

The programming from all three channel push buttons can be erased using the following procedure. Individual channel push buttons cannot be erased, but can be reprogrammed.

1. Depress and hold the two outer universal transmitter push buttons until the red transmission indicator begins to flash slowly (about 20 seconds). Do not hold the buttons depressed for longer than 30 seconds.
2. Release both buttons.
3. The universal transmitter is now in the Emulate Mode (also known as the train or learning mode) and can be programmed at any time using the Programming standard procedure. Refer to **STANDARD PROCEDURE**.

PROGRAMMING UNIVERSAL TRANSMITTER CODES

WARNING: **Vehicle exhaust contains carbon monoxide, a dangerous gas. Do not run the engine while training the universal transmitter. Failure to follow these instructions may result in possible serious or fatal injury.**

WARNING: **A motorized door or gate may open and close while you are training the universal transmitter if the vehicle is within range of the device. Do not train the universal transmitter if people or pets are in the path of the door or gate. Failure to follow these instructions may result in possible serious or fatal injury.**

NOTE: **When programming a garage door opener, it is advised to park outside the garage. It is also recommended that a new battery be placed in the hand-held transmitter of the device being programmed to the universal transmitter for quicker training and accurate transmission of the Radio Frequency (RF) signal.**

NOTE: **If programing the universal transmitter is unsuccessful using the following procedure, refer to the Owner's Manual for the current customer assistance phone number.**

PROGRAMMING COMMON UNIVERSAL TRANSMITTER CODES

1. Press and hold the two outer universal transmitter (also known as HomeLink® transmitter or Universal Garage Door Opener/UGDO) buttons, and release only when the red transmission indicator begins to flash slowly (after 20 seconds). **Do not** hold the buttons for longer than 30 seconds and **do not** repeat Step 1 to program a second and/or third hand-held transmitter to the remaining two universal transmitter buttons.
2. Position the end of your hand-held transmitter 3 to 8 centimeters (1 to 3 inches) away from the universal transmitter buttons while keeping the red transmission indicator within view.

NOTE: Some gate operators and garage door openers may require that you replace Steps 3 and 4 with the Step noted in the CANADIAN PROGRAMMING OR GATE PROGRAMMING procedure, which follows this procedure.

3. Simultaneously depress and hold both the universal transmitter button that you want to program and the hand-held transmitter button. **Do not release these buttons until Step 4 has been completed.**
4. The universal transmitter red transmission indicator will transition from flashing slowly to flashing rapidly after the transmitter successfully acquires the frequency signal from the hand-held transmitter. Release both buttons after the transmission indicator begins flashing rapidly.
5. Press and hold the universal transmitter button just programmed and observe the red transmission indicator. If the transmission indicator stays on **solid** (not flashing), programming is complete. The newly programmed device should activate when this universal transmitter button is pressed and released.

NOTE: If the red transmission indicator flashes rapidly for two seconds and then changes to solid, proceed to Steps 6 through 8 to complete programming of a rolling code equipped device. Rolling code is most commonly found on garage door openers.

NOTE: To program the remaining two universal transmitter buttons, begin with Step 2. Do not repeat Step 1.

6. At the garage door opener receiver on the motor or head unit in the garage, locate the **Learn** or **Smart** button. This can usually be found near where the hanging antenna wire is attached to the motor or head unit. The name and color of the button varies by manufacturer.
7. Firmly press and release the **Learn** or **Smart** button.

NOTE: You have about 30 seconds after completing Step 7 in which to initiate Step 8.

8. Return to the vehicle and firmly depress, hold for two seconds then release the programmed universal transmitter button. Repeat the depress, hold, then release sequence a second time. Depending upon the brand of the garage door opener (or other rolling code equipped device), it may be necessary to repeat this sequence a third time to complete the programming. The newly programmed rolling code equipped device should now activate when this universal transmitter button is pressed and released.

NOTE: To program the remaining two universal transmitter buttons, begin with Step 2. Do not repeat Step 1.

CANADIAN PROGRAMMING OR GATE PROGRAMMING

Canadian Radio Frequency (RF) laws require transmitter signals to time-out (or cease) after several seconds of transmission, which may not be long enough for the universal transmitter to acquire the signal during programming. Similar to this Canadian law, some U.S. gate operators are designed to time-out in the same

manner. If you are located in Canada or if you are having difficulties programming a gate operator (regardless of where you live) using the PROGRAMMING COMMON UNIVERSAL TRANSMITTER CODES procedure, replace Steps 3 and 4 of that procedure with the following:

NOTE: **When programming a garage door opener or gate operator, it is advised to unplug the device or move the vehicle out of range during the Cycle process described in the following Step to prevent possible overheating and damage to that device.**

- **3 & 4** - Continue to depress and hold the universal transmitter button while every two seconds you press and release (Cycle) your hand-held transmitter until the frequency signal has been successfully acquired. The universal transmitter red transmission indicator will transition from flashing slowly to flashing rapidly after the transmitter successfully acquires the frequency signal from the hand-held transmitter. Release both buttons after the transmission indicator begins flashing rapidly.

REPROGRAMMING UNIVERSAL TRANSMITTER CODES

WARNING: **Vehicle exhaust contains carbon monoxide, a dangerous gas. Do not run the engine while training the universal transmitter. Failure to follow these instructions may result in possible serious or fatal injury.**

WARNING: **A motorized door or gate may open and close while you are training the universal transmitter if the vehicle is within range of the device. Do not train the universal transmitter if people or pets are in the path of the door or gate. Failure to follow these instructions may result in possible serious or fatal injury.**

NOTE: **When programming a garage door opener, it is advised to park outside the garage. It is also recommended that a new battery be placed in the hand-held transmitter of the device being programmed to the universal transmitter for quicker training and accurate transmission of the Radio Frequency (RF) signal.**

NOTE: **If programing the universal transmitter is unsuccessful using the following procedure, refer to the Owner's Manual for the current customer assistance phone number.**

REPROGRAMMING COMMON UNIVERSAL TRANSMITTER CODES

Program a device to the universal transmitter (also known as the HomeLink® transmitter or the Universal Garage Door Opener/UGDO) using a button previously trained, as follows:

1. Press and hold the universal transmitter button that you want to reprogram. **Do not** release the button. The red transmission indicator will begin to flash slowly after 20 seconds. Without releasing the transmitter button, proceed to Step 2.
2. Position the end of your hand-held transmitter 3 to 8 centimeters (1 to 3 inches) away from the universal

transmitter buttons while keeping the red transmission indicator within view.

NOTE: Some gate operators and garage door openers may require that you replace Steps 3 and 4 with the Step noted in the CANADIAN REPROGRAMMING OR GATE REPROGRAMMING procedure, which follows this procedure.

3. Simultaneously depress and hold both the universal transmitter button that you want to reprogram and the hand-held transmitter button. **Do not release these buttons until Step 4 has been completed.**
4. The universal transmitter red transmission indicator will transition from flashing slowly to flashing rapidly after the transmitter successfully acquires the frequency signal from the hand-held transmitter. Release both buttons after the transmission indicator begins flashing rapidly.
5. Press and hold the universal transmitter button just programmed and observe the red transmission indicator. If the transmission indicator stays on **solid** (not flashing), reprogramming is complete. The newly programmed device should activate when this universal transmitter button is pressed and released.

NOTE: If the red transmission indicator flashes rapidly for two seconds and then changes to solid, proceed to Steps 6 through 8 to complete programming of a rolling code equipped device. Rolling code is most commonly found on garage door openers.

6. At the garage door opener receiver on the motor or head unit in the garage, locate the **Learn** or **Smart** button. This can usually be found near where the hanging antenna wire is attached to the motor or head unit. The name and color of the button varies by manufacturer.
7. Firmly press and release the **Learn** or **Smart** button.

NOTE: You have about 30 seconds after completing Step 7 in which to initiate Step 8.

8. Return to the vehicle and firmly depress, hold for two seconds then release the reprogrammed universal transmitter button. Repeat the depress, hold, then release sequence a second time. Depending upon the brand of the garage door opener (or other rolling code equipped device), it may be necessary to repeat this sequence a third time to complete the programming. The newly programmed rolling code equipped device should now activate when this universal transmitter button is pressed and released.

CANADIAN REPROGRAMMING OR GATE REPROGRAMMING

Canadian Radio Frequency (RF) laws require transmitter signals to time-out (or cease) after several seconds of transmission, which may not be long enough for the universal transmitter to acquire the signal during programming. Similar to this Canadian law, some U.S. gate operators are designed to time-out in the same manner. If you are located in Canada or if you are having difficulties programming a gate operator (regardless of where you live) using the REPROGRAMMING COMMON UNIVERSAL TRANSMITTER CODES procedure, replace Steps 3 and 4 of that procedure with the following:

NOTE: When programming a garage door opener or gate operator, it is advised to

unplug the device or move the vehicle out of range during the Cycle process described in the following Step to prevent possible overheating and damage to that device.

- **3 & 4** - Continue to depress and hold the universal transmitter button while every two seconds you press and release (Cycle) your hand-held transmitter until the frequency signal has been successfully acquired. The universal transmitter red transmission indicator will transition from flashing slowly to flashing rapidly after the transmitter successfully acquires the frequency signal from the hand-held transmitter. Release both buttons after the transmission indicator begins flashing rapidly.

2014 ACCESSORIES AND EQUIPMENT

Vehicle Theft Security - Service Information - Cherokee

DESCRIPTION

VEHICLE THEFT SECURITY SYSTEM

The Vehicle Theft Security System (VTSS) is available factory-installed equipment for this vehicle. The VTSS includes various standard and optional features that provide protection against unauthorized vehicle access, operation and intrusion. The VTSS is comprised of two primary subsystems: The Sentry Key Immobilizer System (SKIS) and the Vehicle Theft Alarm (VTA). Additional details of each of these subsystems and their components can be found elsewhere within this service information.

Except for the Sentry Key transponders which rely upon Radio Frequency (RF) communication, hard wired circuitry connects the VTA and SKIS components to the electrical system of the vehicle. These hard wired circuits are integral to several wire harnesses, which are routed throughout the vehicle and retained by many different methods. These circuits may be connected to each other, to the vehicle electrical system and to the SKIS or VTA components through the use of a combination of soldered splices, splice block connectors and many different types of wire harness terminal connectors and insulators. Refer to the appropriate wiring information. The wiring information includes wiring diagrams, proper wire and connector repair procedures, further details on wire harness routing and retention, as well as pin out and location views for the various wire harness connectors, splices and grounds.

SENTRY KEY IMMOBILIZER SYSTEM

The Sentry Key Immobilizer System (SKIS) is factory-installed standard equipment on this model. The SKIS provides passive vehicle protection, immobilizing the vehicle by preventing the engine from operating unless a valid electronically encoded key or FOB with Integrated Key (FOBIK) is detected. In vehicles not equipped with the Passive Entry Keyless Go (PEKG) system, a valid encoded key or FOBIK must be present within the IGnition Node Module (IGNM) (also known as the Keyless Ignition Node/KIN) for the engine to continue to operate. In vehicles equipped with the optional PEKG system, the FOBIK must only be present somewhere within the passenger compartment of the vehicle for the engine to continue to operate.

The SKIS used in combination with the export premium version of the Vehicle Theft Alarm (VTA) adds a steering shaft lock feature that provides passive protection by preventing the vehicle from being steered unless a valid encoded key or FOBIK is present within the IGNM (without PEKG), or a valid FOBIK is present somewhere within the passenger compartment of the vehicle (with PEKG). The export premium version of the VTA is only available in vehicles manufactured for sale in certain markets where it is required equipment.

The SKIS includes the following major components, which are described in further detail elsewhere in this service information:

- **Body Control Module** - The Body Control Module (BCM) is concealed within the instrument panel outboard of the steering column. Refer to **MODULE, BODY CONTROL, DESCRIPTION** .
- **Ignition Node Module** - The IGnition Node Module (IGNM) (also known as the Keyless Ignition

Node/KIN) is located in the instrument panel just inboard of the steering column. Refer to **MODULE, IGNITION NODE, DESCRIPTION** .

- **Instrument Cluster** - The Instrument Cluster (IC) (also known as the Instrument Panel Cluster/IPC) is located in the instrument panel, above the steering column and directly in front of the vehicle operator. Refer to **DESCRIPTION** .
- **Low Frequency Antenna** - Vehicles equipped with the optional Passive Entry Keyless Go (PEKG) system have several low frequency antenna units strategically placed within the vehicle. Refer to **ANTENNA, PASSIVE ENTRY, DESCRIPTION** .
- **Powertrain Control Module** - The Powertrain Control Module (PCM) (also known as the Engine Control Module/ECM) is located on the inboard side of the battery tray in the left front corner of the engine compartment. Refer to **MODULE, POWERTRAIN CONTROL, DESCRIPTION** .
- **Radio Frequency Hub Module** - The Radio Frequency Hub Module (RFHM) (also known as the RF Hub) is located on the upper right D-pillar near the liftgate opening upper header where it is concealed behind the interior trim. Refer to **MODULE, RADIO FREQUENCY (RF HUB), DESCRIPTION** .
- **Sentry Key Transponder** - A Sentry Key transponder microchip is located within each key or FOB with Integrated Key (FOBIK). Refer to **KEY, TRANSPONDER, DESCRIPTION**.
- **Shaft Lock Module** - A shaft lock module (also known as the Electronic Steering Column Lock/ESCL module) is located on the steering column below the instrument panel in the passenger compartment of vehicles built for sale in certain export markets where it is required equipment and equipped with the export premium version of the VTA. Refer to **MODULE, SHAFT LOCK, DESCRIPTION**.

VEHICLE THEFT ALARM

The Vehicle Theft Alarm (VTA) is factory-installed optional equipment in this vehicle. The VTA is available in different configurations and versions. One configuration is designed for vehicles manufactured for sale in domestic markets; while, another configuration is designed for vehicles manufactured for sale in export markets. In addition, the VTA for export markets is available in two versions: base and premium.

Each of these systems provide perimeter vehicle protection by monitoring the vehicle doors, the liftgate and the status of the ignition (also known as the IGnition Node Module/IGNM or Keyless Ignition Node/KIN). In vehicles manufactured for some markets the VTA also monitors the hood. If unauthorized vehicle access, intrusion or tampering is detected with any of these systems, the vehicle horn is pulsed as an audible deterrent and certain exterior lamps are flashed as a visual deterrent.

The export premium version of the VTA system is only available in vehicles manufactured for sale in certain markets where it is required equipment. The export premium version of the VTA provides the same perimeter protection features as the base version, but adds interior vehicle intrusion and vehicle anti-tilt protection. The export premium VTA also replaces the pulsing horn feature of the base version with an alarm siren module providing the audible deterrent, while retaining the flashing exterior lamps as the visual deterrent.

The VTA includes the following major components, which are described in further detail elsewhere in this service information:

- **Alarm Siren Module** - An alarm siren module is located on the engine compartment side of the Front End Module (FEM) carrier between the right front lamp unit housing and the cooling module. The alarm siren is used only in vehicles built for sale in certain export markets where it is required equipment. Refer

to **SIREN, DESCRIPTION**.

- **Body Control Module** - The Body Control Module (BCM) is concealed within the instrument panel outboard of the steering column. The BCM is both a LIN bus master node and a gateway to the CAN data bus. Refer to **MODULE, BODY CONTROL, DESCRIPTION** .
- **Door Ajar Switches** - A door ajar switch is integral to the door latch mechanism of each front and rear door. Refer to **LATCH, LIFTGATE, REMOVAL** .
- **Hood Ajar Switch** - A hood ajar switch is integral to the hood latch assembly of vehicles manufactured for certain export markets. Refer to **SWITCH, HOOD AJAR, DESCRIPTION**.
- **Ignition Node Module** - The IGnition Node Module (IGNM) (also known as the Keyless Ignition Node/KIN) is located in the instrument panel just inboard of the upper steering column opening. Refer to **MODULE, KEYLESS IGNITION NODE, DESCRIPTION** .
- **Instrument Cluster** - The Instrument Cluster (IC) (also known as the Instrument Panel Cluster/IPC) is located in the instrument panel above the steering column and directly in front of the driver. Refer to **DESCRIPTION** .
- **Liftgate Ajar Switch** - A liftgate ajar switch is integral to the latch for the liftgate in the vehicle. Refer to **LATCH, LIFTGATE, REMOVAL** .
- **Radio Frequency Hub Module** - The Radio Frequency Hub Module (RFHM) (also known as the RF Hub) is located on the upper right D-pillar near the liftgate opening upper header where it is concealed behind the interior trim. Refer to **MODULE, RADIO FREQUENCY (RF HUB), DESCRIPTION** .
- **Ultrasonic And Anti-tilt Module** - In vehicles equipped with the premium VTA, an Ultrasonic and Anti-tilt Module (UAM) (also known as the Intrusion Transceiver Module/ITM) is located on and concealed above the overhead console trim cover on the headliner near the center of the upper windshield opening. Refer to **MODULE, ULTRASONIC AND ANTI-TILT, DESCRIPTION**.

OPERATION

VEHICLE THEFT SECURITY SYSTEM

The Vehicle Theft Security System (VTSS) is comprised of two primary subsystems: Sentry Key Immobilizer System (SKIS) and Vehicle Theft Alarm (VTA). Additional operational details on each of these two subsystems of the VTSS can be found elsewhere within this service information.

SENTRY KEY IMMOBILIZER SYSTEM

The Sentry Key Immobilizer System (SKIS) is designed to provide passive protection against unauthorized vehicle use by disabling the engine whenever an attempt is made to operate the vehicle using anything other than a key or FOB with Integrated Key (FOBIK) equipped with a valid Sentry Key transponder microchip. The SKIS is considered a passive protection system because it is always active when the ignition system is energized and does not require any customer intervention.

The microcontroller-based Radio Frequency Hub Module (RFHM) (also known as the RF Hub) uses Radio Frequency (RF) communication to challenge and obtain confirmation that the key or FOBIK being used is a valid key or FOBIK for operating the vehicle. The microcontroller-based RFHM hardware and software also uses electronic messages to communicate with the IGnition Node Module (IGNM) (also known as the Keyless Ignition Node/KIN) over a private serial bus and with other electronic modules in the vehicle over the

Controller Area Network (CAN) data bus. Refer to **COMMUNICATION, OPERATION** .

Pre-programmed Sentry Key transponders are provided with the vehicle from the factory. Each RFHM will recognize a maximum of eight Sentry Keys or FOBIK units. If the customer would like additional Sentry Keys or FOBIK units other than those provided with the vehicle, they may be purchased from any authorized dealer. These additional Sentry Keys or FOBIK units must be programmed to the RFHM in the vehicle in order for the system to recognize them as valid keys. This can be done by the dealer using a diagnostic scan tool. Refer to **STANDARD PROCEDURE**.

In vehicles equipped with an export premium version of the Vehicle Theft Alarm (VTA), the Body Control Module (BCM) controls an electronic shaft lock module (also known as the Electronic Steering Lock/ESL or the Electronic Steering Column Lock/ESCL) on the steering column that locks the steering shaft from rotation unless the BCM receives a electronic **valid key** message from the RFHM. The BCM also communicates with the electronic shaft lock module over the CAN data bus to monitor and control the shaft lock function.

The BCM performs a self-test of the SKIS and the shaft lock module each time the ignition status transitions to On, and will store fault information in the form of a Diagnostic Trouble Code (DTC) for any system or component malfunction that is detected. If a fault is detected, the BCM will illuminate the security indicator in the Instrument Cluster (IC) (also known as the Instrument Panel Cluster/IPC) or the IC will display a textual **SHAFT LOCK ERROR** message in the Electronic Vehicle Information Center (EVIC) display as appropriate.

The hard wired circuits between components related to the SKIS may be diagnosed using conventional diagnostic tools and procedures. Refer to the appropriate wiring information. The wiring information includes wiring diagrams, proper wire and connector repair procedures, details of wire harness routing and retention, connector pin out information and location views for the various wire harness connectors, splices and grounds.

However, conventional diagnostic methods will not prove conclusive in the diagnosis of the SKIS or the electronic controls and communication between other modules and devices that provide some features of the SKIS. The most reliable, efficient and accurate means to diagnose the SKIS or the electronic controls and communication related to SKIS operation requires the use of a diagnostic scan tool. Refer to the appropriate diagnostic information.

VEHICLE THEFT ALARM

The base version of the Vehicle Theft Alarm (VTA) is designed to provide either active or passive perimeter protection of the vehicle by monitoring the vehicle doors, the ignition and the liftgate. In vehicles built for certain markets where it is required equipment, the perimeter protection also includes monitoring of the hood. If the VTA system detects any attempt to compromise a monitored vehicle system or feature, the vehicle horn is pulsed as an audible deterrent and certain exterior lamps are flashed as a visual deterrent.

The Body Control Module (BCM) includes the logic and control circuits for the base versions of the VTA. Each of the ajar switches provides hard wired inputs to the BCM, while the BCM provides control outputs to the vehicle horns and lighting systems. The Radio Frequency Hub Module (RFHM) (also known as the RF Hub) monitors the status of the IGnition Node Module (IGNM) (also known as the Keyless Ignition Node/KIN) through a private serial bus and relays this information to the BCM as electronic messages transmitted over the Controller Area Network (CAN) data bus.

The premium version of the VTA includes an Ultrasonic and Anti-tilt Module (UAM) (also known as the Intrusion Transceiver Module/ITM). The UAM provides interior intrusion protection as well as vehicle tow-away and tire theft protection. The UAM includes the logic and control circuits for these features of the VTA and is also a slave node communicating over the Local Interface Network (LIN) data bus. The UAM is armed and disarmed by electronic messages received over the LIN data bus from the BCM, which is a LIN master node. While armed, the UAM uses external ultrasonic transmit and receive transducers to monitor the vehicle interior for movement as well as internal accelerometers to monitor vehicle pitch and roll. When an exception is detected, the UAM relays this information to the BCM over the LIN bus, and the BCM invokes the VTA audible and visual alerts. In vehicles with an ITM, the horn output function of the BCM is replaced by an output of the alarm siren module that is controlled by the BCM over the LIN data bus.

The hard wired circuits between components related to the VTA system may be diagnosed using conventional diagnostic tools and procedures. Refer to the appropriate wiring information. The wiring information includes wiring diagrams, proper wire and connector repair procedures, details of wire harness routing and retention, connector pin out information and location views for the various wire harness connectors, splices and grounds.

However, conventional diagnostic methods will not prove conclusive in the diagnosis of the VTA system or the electronic controls and communication between modules and devices that provide some features of the VTA system. The most reliable, efficient and accurate means to diagnose the VTA system or the electronic controls and communication related to VTA system operation requires the use of a diagnostic scan tool. Refer to the appropriate diagnostic information.

OPERATING MODES

Following are paragraphs that briefly describe the operation of each of the Vehicle Theft Alarm (VTA) operating modes.

- **Enabling** - The Body Control Module (BCM) and the Radio Frequency Hub Module (RFHM) (also known as the RF Hub) must have the Vehicle Theft Alarm (VTA) function electronically enabled in order for the VTA to perform as designed. The BCM stores and compares vehicle configuration data with other Electronic Control Units (ECU) in the vehicle, including the RFHM. This process is referred to as PRogramming Of Configuration of Systems Integrated (PROCSI) (also known as PROXI). If a configuration mismatch is detected, the BCM sets a Diagnostic Trouble Code (DTC). A configuration mismatch will require the performance of a Restore BCM PROXI Configuration routine, or a PROXI Configuration Alignment routine using a diagnostic scan tool.
- **Arming** - Passive arming of the VTA occurs when the vehicle is exited with the key or FOB with Integrated Key (FOBIK) removed from the ignition, the headlamps are turned Off and the doors are locked while they are open using the power lock switch. Active arming occurs when the Lock button on the Remote Keyless Entry (RKE) transmitter is depressed to lock the vehicle. For active arming to occur, the doors and the liftgate must be closed and the status of the ignition must be Off when the RKE transmitter Lock button is depressed. The power lock switch will not function if a key or FOBIK is in the ignition with the driver side front door open.

  Pre-arming of the VTA is initiated when the vehicle is locked using a power door lock switch or when the RKE transmitter Lock button is depressed. Pre-arming will not occur if the key or FOBIK is in the ignition with the driver side front door open. When the VTA is pre-armed, the arming sequence is delayed until all of the doors and the liftgate have been closed. The VTA will remain in pre-armed mode

for up to 16 seconds after all doors and the liftgate have been closed.

Once the VTA begins the passive or active arming sequence, the security indicator in the Instrument Cluster (IC) (also known as the Instrument Panel Cluster/IPC) will flash rapidly for about 16 seconds. This indicates that VTA arming is in progress. If the ignition status transitions to On, if a door or the liftgate is unlocked or opened by any means, or if the RKE Panic button (if equipped) is depressed during the 16 second arming process, the security indicator will stop flashing and the arming process will abort. Once the arming sequence is successfully completed, the security indicator will flash at a slower rate, indicating that the VTA is armed.

On vehicles equipped with the hood ajar switch, the VTA arming sequence will occur regardless of whether the hood is open or closed, but the security indicator will illuminate solid and the engine compartment will not be protected unless the hood is closed when the VTA arming sequence first begins. Also, if the status of the hood ajar switch changes from open to closed during the 16 second arming process, the security indicator will switch from solid to flashing. Once the arming process is successfully completed, the security indicator will flash at a slower rate, indicating that the VTA is armed.

- **Disarming** - Passive disarming of the Vehicle Theft Alarm (VTA) occurs by inserting a valid Sentry Key Immobilizer System (SKIS) key or FOB with Integrated Key (FOBIK) into the ignition or when the ignition status transitions to On. Active disarming of the VTA for all markets occurs when the vehicle is unlocked by depressing the Unlock button of the Remote Keyless Entry (RKE) transmitter. Once the alarm has been activated, either disarming method will also deactivate the alarm. Depressing the Panic button (if equipped) on the RKE transmitter will **not** disarm the VTA.
- **Alarm** - The Vehicle Theft Alarm (VTA) alarm output provides both visual and audible outputs; however, the time intervals of these outputs vary by the requirements of the market for which the vehicle is manufactured. In all cases, the visual output will be a flashing On and Off of the exterior lamps, while the audible output will be either a pulsing of the horn or, if the vehicle is so equipped, the siren. For vehicles with the base version of the VTA, the inputs that will trigger the alarm include a change in the status of the ignition, the door ajar switches, the liftgate ajar switch and, in vehicles built for certain markets where they are required, the hood ajar switch. In vehicles with the premium version of the VTA, the inputs that will trigger the alarm also include any movement detected within the vehicle passenger compartment, or a change in the vehicle pitch or roll of greater than about 0.5 degrees.
- **Power-Up Mode** - When the armed Vehicle Theft Alarm (VTA) senses that the battery has been disconnected and reconnected, it enters its power-up mode. In the power-up mode the armed alarm system remains armed following a battery failure or disconnect. If the VTA was armed prior to a battery disconnect or failure, the technician or vehicle operator will have to actively or passively disarm the alarm system after the battery is reconnected. The power-up mode will also apply if the battery goes dead while the system is armed, and battery jump-starting is attempted. The VTA will be armed until the technician or vehicle operator has actively or passively disarmed the alarm system.

  If the VTA is in the disarmed mode prior to a battery disconnect or failure, it will remain disarmed after the battery is reconnected or replaced, or if jump-starting is attempted.

- **Tamper Alert** - The Vehicle Theft Alarm (VTA) tamper alert feature will pulse the horn three times upon VTA disarming if the alarm was triggered and has since timed out, or if the battery has been disconnected and reconnected. This feature alerts the vehicle operator that the VTA alarm was activated while the vehicle was unattended. This feature is disabled in vehicles manufactured for certain export

markets where it is required.

- **Anti-tilt And Intrusion Alarm Disabling** - The anti-tilt and intrusion alarm is an exclusive feature of the premium version of the Vehicle Theft Alarm (VTA). When this version of the VTA is armed, the Ultrasonic and Anti-tilt Module (UAM) (also known as the Intrusion Transceiver Module/ITM) uses ultrasonic transmit and receive transducers to monitor the interior of the vehicle for movement and low gravity accelerometers to monitor vehicle pitch and roll. If interior motion or change in vehicle attitude are detected, the UAM sends an electronic message to the Body Control Module (BCM) over the Local Interface Network (LIN) data bus to invoke the audible and visual alarm features.

  The anti-tilt and intrusion alarm features of the premium VTA can be disabled by depressing the Lock button on the Remote Keyless Entry (RKE) transmitter 3 times within 15 seconds during VTA pre-arming, while the security indicator is still flashing rapidly. The VTA provides a single short siren chirp as an audible confirmation that the anti-tilt and intrusion alarm features disable request has been received. The default for the UAM features is enabled; therefore, the disable procedure must be repeated each time the VTA is disarmed, then armed again to prevent the system from monitoring interior movement and vehicle pitch and roll.

DIAGNOSIS AND TESTING

DIAGNOSIS AND TESTING - VEHICLE THEFT SECURITY SYSTEM

The Vehicle Theft Security System (VTSS) is divided into two basic subsystems: Sentry Key Immobilizer System (SKIS) and Vehicle Theft Alarm (VTA). The recommended procedures for diagnosis and testing of each of these two VTSS subsystems can be found elsewhere within this service information.

DIAGNOSIS AND TESTING - SENTRY KEY IMMOBILIZER SYSTEM

WARNING: **To avoid serious or fatal injury on vehicles equipped with airbags, disable the Supplemental Restraint System (SRS) before attempting any steering wheel, steering column, airbag, Occupant Classification System (OCS), seat belt tensioner, impact sensor or instrument panel component diagnosis or service. Disconnect and isolate the battery negative (ground) cable, then wait two minutes for the system capacitor to discharge before performing further diagnosis or service. This is the only sure way to disable the SRS. Failure to follow these instructions may result in accidental airbag deployment.**

The hard wired circuits between modules and components related to the Sentry Key Immobilizer System (SKIS) may be diagnosed using conventional diagnostic tools and procedures. Refer to the appropriate wiring information. The wiring information includes wiring diagrams, proper wire and connector repair procedures, details of wire harness routing and retention, connector pin out information and location views for the various wire harness connectors, splices and grounds.

However, conventional diagnostic methods will not prove conclusive in the diagnosis of the SKIS or the electronic controls and communication between other modules and devices that provide features of the SKIS. The most reliable, efficient and accurate means to diagnose the SKIS or the electronic controls and

communication related to SKIS operation requires the use of a diagnostic scan tool. Refer to the appropriate diagnostic information.

SENTRY KEY IMMOBILIZER SYSTEM DIAGNOSIS		
CONDITION	**POSSIBLE CAUSES**	**CORRECTION**
SECURITY INDICATOR FAILS TO LIGHT DURING BULB TEST	1. Ineffective Light-Emitting Diode (LED).	1. Use a diagnostic scan tool to perform the Instrument Cluster (IC) (also known as the Instrument Panel Cluster/IPC) actuator test. Refer to the appropriate diagnostic information.
	2. Ineffective security indicator circuit.	2. Check the security indicator circuit between the Body Control Module (BCM) and the IC for an open or short. Repair the circuit, if required.
	3. Ineffective ground circuit.	3. Test and repair the open ground circuit at the connector for the IC, if required.
	4. Ineffective battery feed circuit.	4. Test and repair the open battery feed circuit at the connector for the IC, if required.
	5. Ineffective ignition feed circuit.	5. Test and repair the open ignition feed circuit at the connector for the IC, if required.
SECURITY INDICATOR FLASHES FOLLOWING BULB TEST	1. Invalid key or FOB with Integrated Key (FOBIK) in the ignition.	1. Replace the invalid key or FOBIK with a known valid key or FOBIK.
	2. Key-related fault.	2. Use a diagnostic scan tool and the appropriate diagnostic information for further diagnosis.
SECURITY INDICATOR LIGHTS SOLID FOLLOWING BULB TEST	1. SKIS system malfunction/fault detected.	1. Use a diagnostic scan tool and the appropriate diagnostic information for further diagnosis.
	2. SKIS system ineffective.	2. Use a diagnostic scan tool and the appropriate diagnostic information for further diagnosis.

DIAGNOSIS AND TESTING - VEHICLE THEFT ALARM

WARNING: **To avoid serious or fatal injury on vehicles equipped with airbags, disable the Supplemental Restraint System (SRS) before attempting any steering wheel, steering column, airbag, Occupant Classification System (OCS), seat belt tensioner, impact sensor or instrument panel component diagnosis or service. Disconnect and isolate the battery negative (ground) cable, then wait two minutes for the system capacitor to discharge before performing further diagnosis or service. This is the only sure way to disable the SRS. Failure to follow these instructions may result in**

accidental airbag deployment.

The hard wired circuits between modules and components related to the Vehicle Theft Alarm (VTA) system may be diagnosed using conventional diagnostic tools and procedures. Refer to the appropriate wiring information. The wiring information includes wiring diagrams, proper wire and connector repair procedures, details of wire harness routing and retention, connector pin out information and location views for the various wire harness connectors, splices and grounds.

However, conventional diagnostic methods will not prove conclusive in the diagnosis of the VTA or the electronic controls and communication between other modules and devices that provide features of the VTA. The most reliable, efficient and accurate means to diagnose the VTA or the electronic controls and communication related to VTA operation requires the use of a diagnostic scan tool. Refer to the appropriate diagnostic information.

STANDARD PROCEDURE

SENTRY KEY IMMOBILIZER SYSTEM INITIALIZATION

The Sentry Key Immobilizer System (SKIS) must be initialized following the service replacement of a Body Control Module (BCM), a Radio Frequency Hub Module (RFHM) (also known as the RF Hub), a Powertrain Control Module (PCM) (also known as the Engine Control Module/ECM) or a electronic shaft lock module (also known as the Electronic Steering Lock/ESL or the Electronic Steering Column Lock/ESCL). SKIS initialization requires the use of a diagnostic scan tool. Initialization will also require that you have security access and a temporary authorization PIN code. The PIN code **MUST** be used to enter the Secured Access Mode. Refer to **STANDARD PROCEDURE** . This procedure will require you to log into DealerCONNECT and enter a PIN when requested. The PIN is temporary and will be active for 12 hours. After 12 hours, a new PIN will need to be obtained from DealerCONNECT.

NOTE: **If the Body Control Module (BCM) is replaced in a vehicle equipped with the Sentry Key Immobilizer System (SKIS), the unique Secret Key data must be transferred from the Radio Frequency Hub Module (RFHM) (also known as the RF Hub) to the new BCM using the appropriate programming procedure. This procedure also requires the use of a diagnostic scan tool to enter the Secured Access Mode in the RFHM.**

NOTE: **If the electronic shaft lock module (also known as the Electronic Steering Lock/ESL or the Electronic Steering Column Lock/ESCL) is replaced in a vehicle equipped with the Sentry Key Immobilizer System (SKIS), the unique Secret Key data must be transferred from the Body Control Module (BCM) to the new electronic shaft lock module using the appropriate programming procedure. This procedure also requires the use of a diagnostic scan tool to enter the Secured Access Mode in the BCM.**

NOTE: **If the Powertrain Control Module (PCM) (also known as the Engine Control Module/ECM) is replaced in a vehicle equipped with the Sentry Key Immobilizer**

System (SKIS), the unique Secret Key data must be transferred from the Body Control Module (BCM) to the new PCM using the appropriate programming procedure. This procedure also requires the use of a diagnostic scan tool to enter the Secured Access Mode in the BCM.

SENTRY KEY TRANSPONDER PROGRAMMING

All Sentry Keys or FOB with Integrated Key (FOBIK) units included with the vehicle are pre-programmed to work with the Radio Frequency Hub Module (RFHM) (also known as the RF Hub) when the vehicle is shipped from the factory. The RFHM can be programmed to recognize up to a total of eight Sentry Key or FOBIK transponder units. When programming a blank transponder, the Sentry Key mechanical key must first be cut to match the ignition lock cylinder (if equipped) or the FOBIK mechanical key must be cut to match the door lock cylinder in the vehicle for which it will be used. Once the mechanical key has been cut, the RFHM must be programmed to recognize it as a valid key transponder. To program the RFHM to recognize a new or additional valid key transponder, the Secured Access Method must be used. The details of this programming method can be found under **FOBIK Programming** elsewhere in this service information using the link that follows. Refer to **STANDARD PROCEDURE** . This procedure will require you to log into DealerCONNECT and enter a PIN when requested. The PIN is temporary and will be active for 12 hours. After 12 hours, a new PIN will need to be obtained from DealerCONNECT.

SPECIFICATIONS

SPECIFICATIONS

TORQUE SPECIFICATIONS

TORQUE SPECIFICATIONS			
DESCRIPTION	**N.m**	**Ft. Lbs.**	**In. Lbs.**
Alarm Siren Module Mounting Nut	6	-	53
Stand Alone Hood Ajar Switch Bracket Mounting Screw	5.5	4	-

KEY, TRANSPONDER

DESCRIPTION

DESCRIPTION

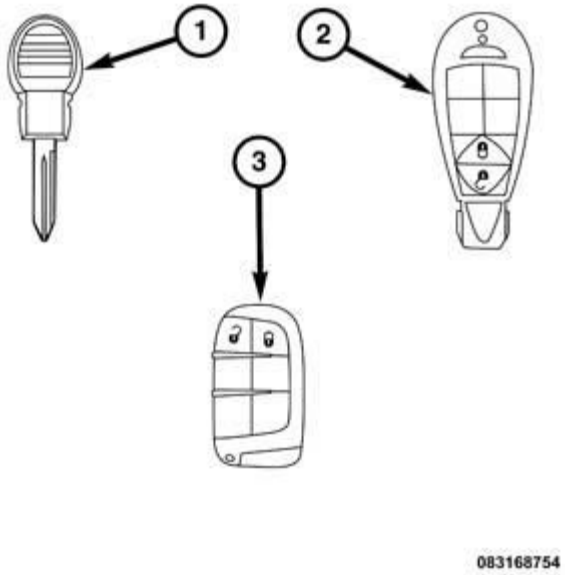

Fig. 1: Transponder Keys
Courtesy of CHRYSLER GROUP, LLC

Three unique variations of a transponder key are available for this vehicle. They are:

- **Sentry Key Immobilizer System Transponder Key** - The Sentry Key Immobilizer System (SKIS) transponder key (1) is used in combination with an IGnition Node Module (IGNM) (also known as the Wireless Ignition Node/WIN) featuring a rotary-type ignition switch. This transponder key is used only for vehicles that are not equipped with the optional Remote Keyless Entry (RKE) system.
- **Remote Keyless Entry System Transponder Key** - The Remote Keyless Entry (RKE) system transponder key (2) is also known as a FOB with Integrated Key (FOBIK). Like the SKIS transponder key, the RKE FOBIK transponder key is used in combination with an IGnition Node Module (IGNM) (also known as the Wireless Ignition Node/WIN) featuring a rotary-type ignition switch. This transponder key is used for vehicles that are equipped with the RKE system, but not with the optional Passive Entry Keyless Go (PEKG) system.
- **Passive Entry Keyless Go System Transponder Key** - The Passive Entry Keyless Go (PEKG) system transponder key (3) is also known as a FOB with Integrated Key (FOBIK). However, unlike the SKIS transponder key and RKE FOBIK transponder key, the PEKG transponder key is used in combination with an IGnition Node Module (IGNM) (also known as the Keyless Ignition Node/KIN) featuring a push button-type ignition switch. This transponder key is used only for vehicles that are equipped with the PEKG system.

Regardless of the type of transponder key used for this vehicle, in addition to having to be cut to match the mechanical coding of the lock cylinders and programmed for operation of the RKE system, each ignition key has a transponder microchip included that carries a unique transponder identification code. This identification code that is permanently programmed into it by the manufacturer must be programmed into the Radio Frequency Hub Module (RFHM) (also known as the RF Hub) to be recognized by the SKIS as a valid key.

The Sentry Key transponder key cannot be adjusted or repaired. If ineffective or damaged, the entire transponder key or FOBIK and RKE transmitter unit must be replaced.

OPERATION

OPERATION

When the status of the ignition switch transitions to On the IGnition Node Module (IGNM) sends an electronic **ignition switch status** message over a private serial bus to the Radio Frequency Hub Module (RFHM) (also known as the RF-Hub). In vehicles not equipped with the Passive Entry Keyless Go (PEKG) system, the IGNM uses an internal antenna to communicate with the Sentry Key transponder based upon inputs received from the RFHM through the private serial bus. In vehicles that are equipped with the PEKG system, the RFHM relies upon several Low Frequency (LF) antenna units to challenge the Sentry Key transponders using a LF signal, then monitors responses from the Sentry Key transponders received as Very High Frequency (VHF) signals.

The RFHM determines whether a valid key is present based upon the response from the transponder. If a valid key is detected, that fact is communicated by the RFHM to the Body Control Module (BCM), and by the BCM to the Powertrain Control Module (PCM) (also known as the Engine Control Module/ECM) over the Controller Area Network (CAN) data bus, and the PCM allows the engine to continue running. If the BCM receives an electronic **invalid key** message or no message, or if the PCM receives an electronic **invalid key** message or no message over the CAN data bus, the engine will be disabled. The Instrument Cluster (IC) (also known as the Instrument Panel Cluster/IPC) will also respond to the **invalid key** message on the CAN data bus by flashing the security indicator On and Off.

Each Sentry Key has a unique transponder identification code permanently programmed into it by the manufacturer. Likewise, the RFHM has a unique Secret Key code programmed into it by the manufacturer. When a Sentry Key is programmed into the memory of the RFHM, the RFHM stores the transponder identification code from the Sentry Key and the Sentry Key learns the Secret Key code from the RFHM. Once the Sentry Key learns the Secret Key code of the RFHM, it is permanently stored in the memory of the transponder. Therefore, once a Sentry Key has been programmed to a particular vehicle, it cannot be used on any other vehicle. Refer to **STANDARD PROCEDURE**.

The Sentry Key Immobilizer System (SKIS) performs a self-test each time the ignition switch status transitions to On, and will store key-related fault information in the form of a Diagnostic Trouble Code (DTC) in RFHM memory if a Sentry Key transponder problem is detected. The Sentry Key transponder chip can be diagnosed, and any stored DTC can be retrieved using a diagnostic scan tool. Refer to the appropriate diagnostic information.

Common communication problems:

- Two transponder keys too close to each other.
- Another transponder device (i.e.: Speed Pass) too close to the Sentry Key transponder.

A security indicator illuminated solid (not flashing) in the IC indicates that there is a system failure.

- Loss of PCM/CAN data bus communication.
- Failed antenna circuit.

NOTE: **After a RFHM is replaced with a new unit, the Sentry Key transponders need to be programmed to the new RFHM. Follow the instructions found in the diagnostic scan tool for the Replace RFHM Routine . The Sentry Key transponders and the Remote Keyless Entry (RKE) transmitters (if equipped) will both be programmed during this operation. There is no need to program the RKE transmitter again once the Sentry Key transponder key has been programmed to the new RFHM. This procedure will require you to log into DealerCONNECT and enter a PIN when requested. The PIN is temporary and will be active for 12 hours. After 12 hours, a new PIN will need to be obtained from DealerCONNECT.**

MODULE, SENTRY KEY IMMOBILIZER (SKIM)

DESCRIPTION

DESCRIPTION

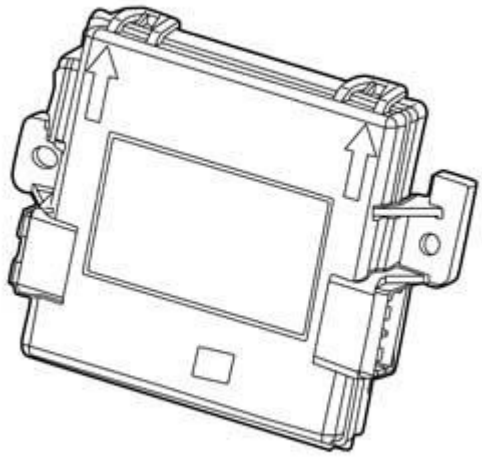

0831002982

Fig. 2: Sentry Key Immobilizer Module (SKIM)
Courtesy of CHRYSLER GROUP, LLC

The functions and features of the Sentry Key Immobilizer Module (SKIM) (also previously known as the Sentry Key REmote Entry Module/SKREEM, the Wireless Control Module/WCM or the Wireless Ignition Node/WIN) are all integral to the Radio Frequency Hub Module (RFHM) (also known as the RF Hub) and either the Keyless Ignition Node (KIN) in vehicles equipped with the push button ignition Keyless Go (KG) system or the IGnition Node Module (IGNM) in vehicles equipped with a rotary ignition key or FOB with Integrated Key (FOBIK).

The RFHM is the primary component of the Sentry Key Immobilizer System (SKIS). It is also the receiver for the Remote Keyless Entry (RKE) system, the Passive Entry (PE) system, the remote start system and the Tire Pressure Monitor (TPM) system on vehicles so equipped. The RFHM is located on the inner roof panel reinforcement near the liftgate opening within the passenger compartment, where it is concealed above the headliner trim. Refer to **MODULE, RADIO FREQUENCY (RF HUB), DESCRIPTION** .

The KIN includes the integral ignition push button. The IGNM includes the ignition rotary FOBIK switch or key cylinder switch. The KIN or the IGNM is located in the instrument panel, just to the right of the steering column. The remainder of the KIN or IGNM including its mounting provisions and electrical connections are concealed within the instrument panel. Refer to **MODULE, KEYLESS IGNITION NODE, DESCRIPTION** or **MODULE, IGNITION NODE, DESCRIPTION** .

OPERATION

OPERATION

The functions and features of the Sentry Key Immobilizer Module (SKIM) (also previously known as the Sentry Key REmote Entry Module/SKREEM, the Wireless Control Module/WCM or the Wireless Ignition Node/WIN) are all integral to the Radio Frequency Hub Module (RFHM) (also known as the RF Hub) and the IGnition Node Module/IGNM or the Keyless Ignition Node (KIN) in this vehicle. The RFHM contains a Radio Frequency (RF) transceiver and a microcontroller.

In vehicles with a rotary ignition switch the RFHM controls Low Frequency (LF) signaling with the Sentry Key transponder integral to the mechanical key or FOB with Integrated Key (FOBIK) through a tuned antenna internal to the IGNM. The IGNM transmits the received LF signal and the selected ignition switch status back to the RFHM. In vehicles with the push button Keyless Go (KG) system, the RFHM transmits LF signals to, and receives LF signals from the Sentry Key transponder integral to the FOBIK through a tuned antenna internal to the RFHM housing, while the KIN allows the vehicle operator to select and monitor the status of the ignition switch and also transmits the selected ignition switch status back to the RFHM.

The RFHM also serves as the Remote Keyless Entry (RKE) RF receiver and, if the vehicle is so equipped, the receiver for the remote start system and for the Tire Pressure Monitoring (TPM) system. Refer to **DESCRIPTION** , **OPERATION** and **TIRE PRESSURE MONITORING, DESCRIPTION** . The RFHM communicates over the Controller Area Network (CAN) data bus with the Body Control Module (BCM), the Instrument Cluster (IC) (also known as the Instrument Panel Cluster/IPC), the Powertrain Control Module (PCM) (also known as the Engine Control Module/ECM) or the diagnostic scan tool. It also communicates over a dedicated Local Interface Network (LIN) data bus circuit with the IGNM or the KIN.

The RFHM and the PCM both use software that includes a rolling code algorithm strategy, which helps to reduce the possibility of unauthorized Sentry Key Immobilizer System (SKIS) disarming. The rolling code algorithm ensures security by preventing an override of the SKIS through the unauthorized substitution of the RFHM or the PCM. However, the use of this strategy also means that replacement of either the RFHM or the PCM units will require a system initialization procedure to restore system operation.

The RFHM retains in memory the ID numbers of any Sentry Key or FOBIK transponder that is programmed into it. A maximum of eight Sentry Key transponders can be programmed into the RFHM. For added system security, each RFHM is programmed with a unique Secret Key code. This code is stored in memory, sent over

the CAN data bus to the PCM, and is encoded to the transponder of every Sentry Key that is programmed into the RFHM. Therefore, the Secret Key code is a common element that is found in every component of the SKIS.

Another security code called a PIN is used to gain access to the RFHM Secured Access Mode. The Secured Access Mode is required during service to perform the SKIS initialization and Sentry Key transponder programming procedures. The RFHM also stores the Vehicle Identification Number (VIN) in its memory, which it learns through a CAN data bus message from the PCM during SKIS initialization.

In the event that a RFHM replacement is required, the Secret Key code can be transferred to the new RFHM from the PCM using the diagnostic scan tool and the SKIS initialization procedure. Proper completion of the SKIS initialization will allow the existing Sentry Key transponder units to be programmed into the new RFHM so that new Sentry Key units will not be required. In the event that the original Secret Key code cannot be recovered, RFHM replacement will also require new Sentry Key units. The diagnostic scan tool will alert the technician during the SKIS initialization procedure if new Sentry Key units are required. Refer to **STANDARD PROCEDURE** .

When the status of the ignition switch transitions to On, the RFHM transmits a LF signal to excite the transponder in the FOBIK. The RFHM then waits for a LF signal response from the transponder. If the response received identifies the key or FOBIK as valid, the RFHM sends an electronic **valid key** message to the PCM over the CAN data bus. If the response received identifies the key or FOBIK as invalid or if no response is received from the key or FOBIK transponder, the RFHM sends an **invalid key** message to the PCM. The PCM will enable or disable engine operation based upon the status of the RFHM messages. It is important to note that the default condition in the PCM is an **invalid key** ; therefore, if no message is received from the RFHM by the PCM, the engine will be disabled and the vehicle immobilized after two seconds of running.

The RFHM also sends electronic **security indicator** request messages to the IC over the CAN data bus to tell the IC how to operate the security indicator. The **security indicator** request message from the RFHM tells the IC to turn the indicator On for about three seconds each time the status of the ignition switch transitions to On as a bulb test. After completion of the bulb test, the RFHM sends **security indicator** request messages to the IC to turn the indicator Off, turn the indicator On or to flash the indicator On and Off. If the security indicator flashes or stays On solid after the bulb test, it signifies a SKIS fault. If the RFHM detects a system malfunction or the SKIS has become ineffective, the security indicator will stay On solid. If the RFHM detects an invalid key or FOBIK, or if a key or FOBIK transponder-related fault exists, the security indicator will flash.

The SKIS performs a self-test each time the status of the ignition switch transitions to On, and will store fault information in the form of a Diagnostic Trouble Code (DTC) in RFHM memory if a system malfunction is detected. The hard wired circuits of the RFHM may be diagnosed using conventional diagnostic tools and procedures. Refer to the appropriate wiring information. However, conventional diagnostic methods will not prove conclusive in the diagnosis of the RFHM or the electronic controls and communication between other modules and devices that provide some features of the SKIS. The most reliable, efficient and accurate means to diagnose the RFHM or the electronic controls and communication related to RFHM operation requires the use of a diagnostic scan tool.

MODULE, SHAFT LOCK

DESCRIPTION

DESCRIPTION

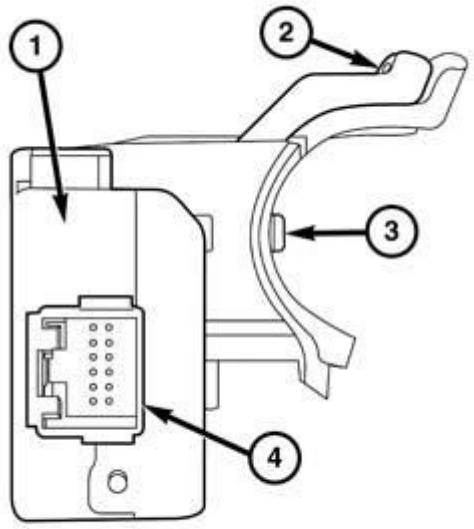

0831005390

Fig. 3: Shaft Lock Module, Locking Bolt, Mounting Bracket & Connector Receptacle
Courtesy of CHRYSLER GROUP, LLC

A shaft lock module (1) (also known as the Electronic Steering Column Lock/ESCL or the Elektronische Lenkungs Verriegelung/ELV) is part of the premium version of the Sentry Key Immobilizer System (SKIS) in the Vehicle Theft Security System (VTSS). The premium version of the SKIS is only available in vehicles built for certain markets, where the additional features offered by this system are required. The module is located near the upper end of the steering column housing below the instrument panel in the passenger compartment.

The shaft lock module includes a die cast aluminum cover that conceals and protects the electronic circuitry of the module, which includes a single integral connector receptacle (4). The electronics of the module are connected to the vehicle electrical system through a dedicated take out and connector of the instrument panel wire harness. The bi-directional electric motor that actuates the locking bolt (3) is also contained within a die cast metal housing. That housing includes an integral saddle type mounting bracket (2) that is clamped securely to the steering column housing by two tamper resistant screws.

The mounting provisions for the shaft lock module are designed to resist unauthorized tampering. The module cannot be removed from the steering column while the steering column is installed in the vehicle. The shaft lock module cannot be adjusted or repaired and, if ineffective or damaged it must be replaced.

OPERATION

OPERATION

The electronic shaft lock module (also known as the Electronic Steering Column Lock/ESCL or the

Elektronische Lenkungs Verriegelung/ELV) is designed to work in conjunction with the Body Control Module (BCM) to control a locking bolt that engages a machined slot in the steering shaft to prevent shaft rotation whenever a valid key is not present in the Ignition Node Module (IGNM) (without Keyless Go/KG), or when the status of the Keyless Ignition Node/KIN transitions to Off (with KG). The shaft lock module can only be unlocked if the presence of a valid FOB with Integrated Key (FOBIK) unit is detected within the IGNM (without KG), or when the status of the KIN (with KG) transitions from Off to any other status.

The electronic circuitry within the shaft lock module contains all of the logic circuits and components to monitor and control the operation of the shaft locking bolt. The module uses the Controller Area Network (CAN) data bus for bi-directional communication with the BCM. If the module detects a problem with the positioning or operation of the locking bolt, it sends an error message to the BCM. The BCM then sets and stores a Diagnostic Trouble Code (DTC) and sends an electronic error message over the CAN data bus to other electronic modules in the vehicle.

The shaft lock module continuously monitors inputs from the BCM and the Antilock Brake System module (ABS) (also known as the Antilock Brake Module/ABM or the Brake System Module/BSM), then energizes the electric motor to move the locking bolt to the locked or unlocked position based upon those inputs. If the BCM receives an input from the Radio Frequency Hub Module (RFHM) (also known as the RF Hub) indicating that an invalid FOBIK has been detected, the locking bolt remains in the locked position.

When the RFHM indicates that a valid FOBIK has been detected within the IGNM (without KG), or within the vehicle when the status of the KIN (with KG) transitions from Off to any other status, the BCM has the shaft lock module operate a motor to move the locking bolt to the unlocked position. However, to prevent inadvertent column locking due to a failure while the vehicle is being operated, the module cannot move the locking bolt from the unlocked position to the locked position while a vehicle speed input indicates that the vehicle is still moving.

The hard wired circuits of the shaft lock module may be diagnosed using conventional diagnostic tools and procedures. Refer to the appropriate wiring information. However, conventional diagnostic methods will not prove conclusive in the diagnosis of the shaft lock module or the electronic controls and communication between other modules and devices that provide some features of the SKIS. The most reliable, efficient and accurate means to diagnose the shaft lock module or the electronic controls and communication related to SKIS operation requires the use of a diagnostic scan tool.

REMOVAL

REMOVAL

WARNING: To avoid serious or fatal injury on vehicles equipped with airbags, disable the Supplemental Restraint System (SRS) before attempting any steering wheel, steering column, airbag, Occupant Classification System (OCS), seat belt tensioner, impact sensor or instrument panel component diagnosis or service. Disconnect and isolate the battery negative (ground) cable, then wait two minutes for the system capacitor to discharge before performing further diagnosis or service. This is the only sure way to disable the SRS. Failure to follow these instructions may result in accidental airbag deployment.

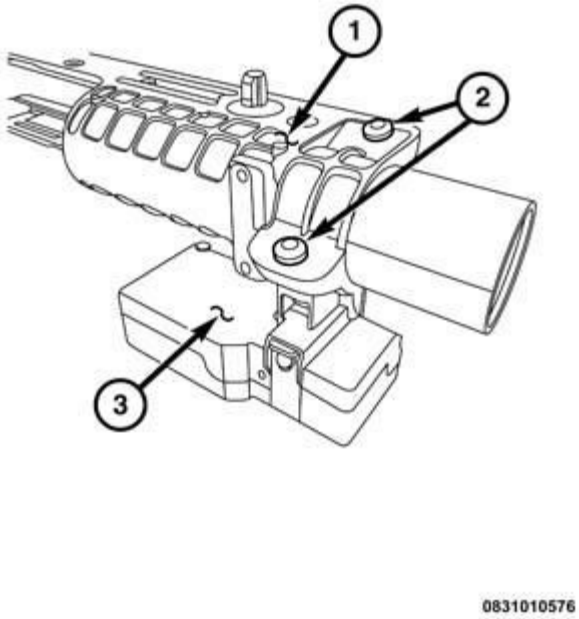

Fig. 4: Steering Column Housing, Tamper Resistant Screws & Shaft Lock Module
Courtesy of CHRYSLER GROUP, LLC

1. Disconnect and isolate the negative cable from the battery.
2. Remove the steering column from the vehicle. Refer to **COLUMN, REMOVAL** .
3. Remove and discard the two tamper resistant screws (2) that secure the shaft lock module (3) to the steering column housing (1). One of three methods is suggested:
   - Cut a straight slot in the top of each screw to enable removal with a screw driver.
   - Use a drift punch and a hammer to rotate each screw counterclockwise far enough to grasp and complete removal using locking pliers.
   - Use an appropriate drill bit to bore a hole in the center of each screw, then use an appropriate screw extractor to complete screw removal.
4. Remove the shaft lock module from the steering column.

INSTALLATION

INSTALLATION

WARNING: To avoid serious or fatal injury on vehicles equipped with airbags, disable the Supplemental Restraint System (SRS) before attempting any steering wheel, steering column, airbag, Occupant Classification System (OCS), seat belt tensioner, impact sensor or instrument panel component diagnosis or service. Disconnect and isolate the battery negative (ground) cable, then wait two minutes for the system capacitor to discharge before performing further diagnosis or service. This is the only sure way to

disable the SRS. Failure to follow these instructions may result in accidental airbag deployment.

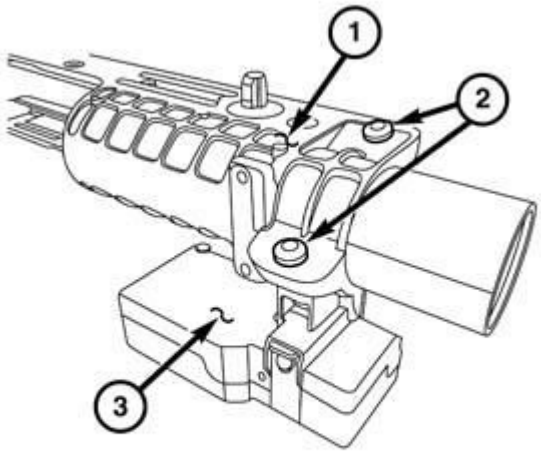

0831010576

Fig. 5: Steering Column Housing, Tamper Resistant Screws & Shaft Lock Module
Courtesy of CHRYSLER GROUP, LLC

1. Carefully inspect the shaft lock module (also known as the Electronic Steering Column Lock/ESCL or the Elektronische Lenkungs Verriegelung/ELV) interface area of the module, the steering shaft and the steering column housing for damage or debris. Remove debris or replace damaged components that could hinder proper shaft lock module operation as required.
2. Position the shaft lock module (3) onto the steering column housing (1).
3. Install and tighten two new tamper resistant screws (2) to secure the shaft lock module to the steering column housing. Tighten the screws until the heads shear off.
4. Reinstall the steering column into the vehicle. Refer to **COLUMN, INSTALLATION** .
5. Reconnect the negative cable to the battery.

MODULE, ULTRASONIC AND ANTI-TILT

DESCRIPTION

DESCRIPTION

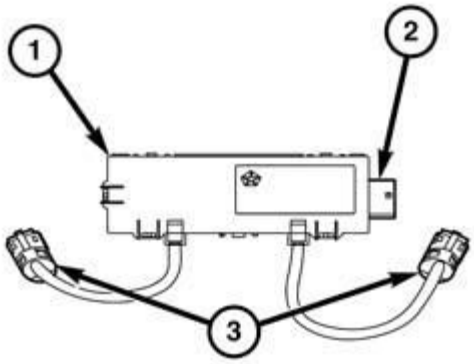

0831005635

Fig. 6: UAM Housing, Transducer & Connector Receptacle
Courtesy of CHRYSLER GROUP, LLC

The Ultrasonic and Anti-tilt Module (UAM) (also known as the Ultrasonic Alarm Module/UAM or the Intrusion Transceiver Module/ITM) is part of the premium version of the Vehicle Theft Alarm (VTA) available only in Right-Hand Drive (RHD) vehicles manufactured for certain export markets where it is required equipment. The UAM is concealed above the overhead console trim cover at the front center of the headliner. Only the rearward-facing transmit and receive ultrasonic transducer membranes are visible within small grilled openings on the outboard rear corners of the overhead console trim cover within the passenger compartment of the vehicle.

The molded black plastic UAM housing (1) and both transducers (3) are fit into mounts and fittings integral to and concealed on the inside surface of the overhead console trim cover. Each of the transducers is hard wired to the UAM housing. The overhead console trim cover is secured by snap clips that pass through the console opening in the headliner into the overhead console mounting bracket above the headliner substrate. A connector receptacle (2) integral to the right end of the UAM housing contains terminal pins that are connected to the vehicle electrical system through a dedicated take out and connector of the overhead wire harness.

Concealed within the center of the UAM housing is the electronic circuitry of the module. The UAM housing is sealed to enclose and protect the internal components of the module including a microcontroller, anti-tilt sensors and electronic communication circuitry. The UAM is also a Local Interface Network (LIN) slave node and communicates over the LIN data bus with the Body Control Module (BCM), which is a LIN master node.

The UAM and the two ultrasonic transducers cannot be adjusted or repaired. If ineffective or damaged, the entire UAM and both transducers must be replaced as a unit.

OPERATION

OPERATION

The Ultrasonic and Anti-tilt Module (UAM) (also known as the Ultrasonic Alarm Module/UAM or the Intrusion Transceiver Module/ITM) controls all of the added features of the premium version of the Vehicle Theft Alarm (VTA). The UAM adds personal property theft protection by detecting movement within the interior of the vehicle and provides tire-theft and tow-away protection by monitoring the pitch and roll of the vehicle. The microcontroller within the UAM contains both motion detection and anti-tilt logic and is also a Local Interface Network (LIN) slave node that communicates over the LIN data bus with the Body Control Module (BCM), which is a LIN master node.

The UAM receives battery voltage on a fused B+ circuit through a fuse in the Power Distribution Center (PDC) and is grounded at all times through a take out and connector of the body wire harness that is secured to the body sheet metal at a remote ground point. These connections allow the UAM to remain operational, regardless of the status of the ignition switch. The UAM receives an electronic **arm request** message from the BCM over the LIN data bus whenever the VTA is armed. However, the UAM features may be disarmed by the customer by pressing and releasing the Lock button of the Remote Keyless Entry (RKE) transmitter three additional times during the 16 second pre-arm period of the VTA, while the security indicator in the Instrument Cluster (IC) (also known as the Instrument Panel Cluster/IPC) is still flashing rapidly.

While the VTA is armed, the UAM generates ultra high frequency sound bursts into the vehicle interior through an ultrasonic transmit transducer and monitors the return signal input through an ultrasonic receive transducer. The UAM logic uses an algorithm to detect movement in the vehicle interior through modulation of the ultrasonic echo that occurs due to the Doppler effect. The UAM also monitors internal low gravity (also known as low G) accelerometers to detect changes in vehicle pitch and roll. If interior movement or changes in vehicle pitch and roll are detected, the UAM sends electronic **alarm request** messages to the BCM over the LIN data bus, and the BCM invokes the VTA visual and audible alerts. Vehicle operators must be made aware that items in the vehicle that could move or sway due to environmental conditions or external vibrations may cause nuisance or phantom alarms.

The hard wired circuits of the UAM may be diagnosed using conventional diagnostic tools and procedures. Refer to the appropriate wiring information. However, conventional diagnostic methods will not prove conclusive in the diagnosis of the UAM or the electronic controls and communication between modules and other devices that provide some features of the VTA. The most reliable, efficient and accurate means to diagnose the UAM or the electronic controls and communication related to VTA operation requires the use of a diagnostic scan tool. Refer to the appropriate diagnostic information.

DIAGNOSIS AND TESTING

DIAGNOSIS AND TESTING - ULTRASONIC AND ANTITILT MODULE

The hard wired circuits between the Ultrasonic and Anti-tilt Module (UAM) (also known as the Ultrasonic Alarm Module/UAM or the Intrusion Transceiver Module/ITM) and the Body Control Module (BCM) may be diagnosed using conventional diagnostic tools and procedures. Refer to the appropriate wiring information. The wiring information includes wiring diagrams, proper wire and connector repair procedures, details of wire harness routing and retention, connector pin out information and location views for the various wire harness connectors, splices and grounds.

However, conventional diagnostic methods will not prove conclusive in the diagnosis of the UAM or the electronic controls and communication between other modules and devices that provide some features of the Vehicle Theft Alarm (VTA) system. The most reliable, efficient and accurate means to diagnose the UAM or the electronic controls and communication related to VTA system operation requires the use of a diagnostic scan tool. Refer to the appropriate diagnostic information.

REMOVAL

REMOVAL

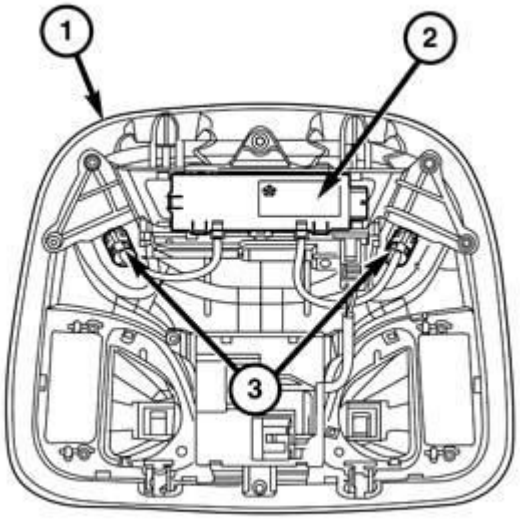

0831005636

Fig. 7: Console Trim Cover, Transducer & UAM
Courtesy of CHRYSLER GROUP, LLC

1. Disconnect and isolate the negative cable from the battery.
2. Remove the overhead console from the headliner. Refer to **CONSOLE, OVERHEAD, FRONT, REMOVAL** .
3. Working from above the overhead console trim cover (1) rotate each of the two Ultrasonic and Anti-tilt Module (UAM) transducers (3) counterclockwise about 30 degrees to disengage them from the rearward-facing receptacles on each side of the console trim cover inside surface.
4. Unlatch the UAM (2) from the mounting provisions integral to the inside surface of the console trim cover.
5. Remove the UAM and both transducers from the overhead console as a unit.

INSTALLATION

INSTALLATION

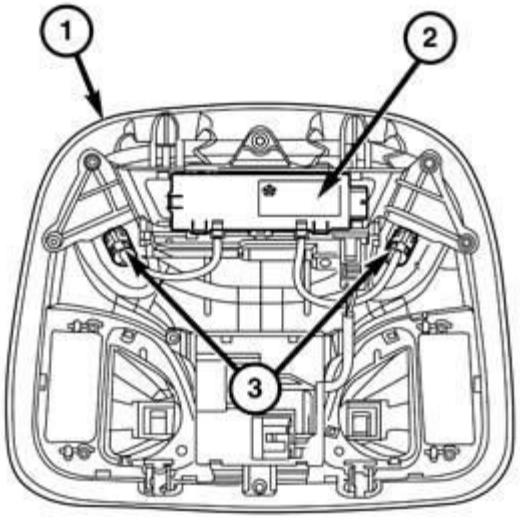

0831005636

Fig. 8: Console Trim Cover, Transducer & UAM
Courtesy of CHRYSLER GROUP, LLC

1. Position the Ultrasonic and Anti-tilt Module (UAM) (2) and both transducers (3) to the inside surface of the overhead console trim cover (1).
2. Latch the UAM into the mounting provisions integral to the inside surface of the console trim cover.
3. Carefully insert and rotate each of the two UAM transducers about 30 degrees clockwise into the rearward-facing receptacles on each side of the console trim cover inside surface.
4. Reinstall the overhead console onto the headliner. Refer to **CONSOLE, OVERHEAD, FRONT, INSTALLATION** .
5. Reconnect the negative cable to the battery.

SIREN

DESCRIPTION

DESCRIPTION

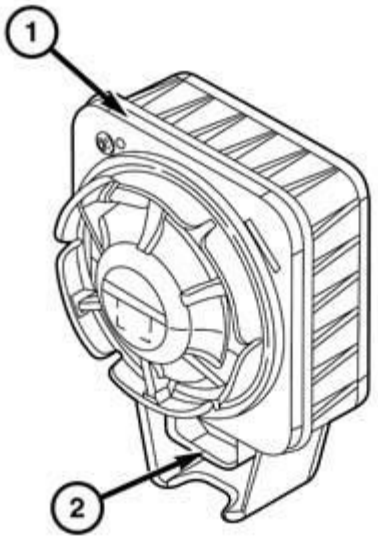

0831005296

Fig. 9: Siren Housing & Integral Connector Receptacle
Courtesy of CHRYSLER GROUP, LLC

An alarm siren module is part of the premium version of the Vehicle Theft Alarm (VTA) in the Vehicle Theft Security System (VTSS). The premium version of the VTA is only available in vehicles built for certain markets, where the additional features offered by this system are required. This unit is designed to provide the audible alert requirements for the premium VTA.

The alarm siren module consists of microcontroller based electronic control circuitry, the piezoelectric siren and a nickel metal hydride backup battery. All of the alarm module components are protected and sealed within a molded plastic housing (1). An integral connector receptacle (2) is integral to a stanchion that extends from the bottom of the housing and connects the unit to the vehicle electrical system through a dedicated take out and connector of the Front End Module (FEM) wire harness.

The back of the alarm siren module housing includes a threaded stud that is used to secure the unit to the vehicle. The siren is located on the engine compartment side of the Front End Module (FEM) carrier, below the upper radiator cross member between the right side of the cooling module and the right front lamp unit housing.

The alarm siren module cannot be repaired or adjusted and, if ineffective or damaged, it must be replaced.

OPERATION

OPERATION

The microcontroller within the alarm siren module provides the siren unit features and functions based upon internal programming and electronic **arm** and **disarm** messages received from the Body Control Module (BCM) over a Local Interface Network (LIN) data bus connection. The BCM monitors inputs from the

Intrusion Transceiver Module (ITM) to control the output to the alarm siren module. The siren module receives battery voltage on a fused B(+) circuit through a fuse in the BCM and receives a path to ground through a ground circuit in the Front End Module (FEM) wire harness. These connections allow the siren to remain operational, regardless of the status of the ignition switch.

When the premium version of the Vehicle Theft Alarm (VTA) is armed, the siren module continuously monitors electronic message inputs from the BCM to sound its internal siren. While armed, the siren also enters its auto-detect mode. While in the auto-detect mode, if the siren module detects that its power supply or communication circuits are being tampered with or have been sabotaged, it will sound an audible alarm and continue to operate through an on-board backup battery. If the siren module is in its disarmed mode when its power supply or communication circuits are interrupted, the siren will not sound.

The alarm siren module will also notify the BCM when the backup battery requires charging, and the BCM will send electronic messages that will allow the backup battery to be recharged through the battery voltage and ground circuits to the alarm siren module only while the status of the ignition switch is On and the engine is running. This prevents the potential discharge of the main battery while the vehicle is not being operated.

The alarm siren module will self-detect problems with its internal and external power supply and communication circuits, then send electronic messages indicating the problem to the BCM upon receiving an **arm** or **disarm** request message. The BCM will store a Diagnostic Trouble Code (DTC) for any detected alarm siren module fault. The DTC can then be retrieved with a diagnostic scan tool through the 16-way Data Link Connector (DLC) located under the driver side lower edge of the instrument panel over the Controller Area Network (CAN) data bus.

The hard wired inputs and outputs for the alarm siren module may be diagnosed using conventional diagnostic tools and procedures. Refer to the appropriate wiring information. However, conventional diagnostic methods will not prove conclusive in the diagnosis of the alarm siren module or the electronic controls and communication between other modules and devices that provide some features of the VTA system. The most reliable, efficient and accurate means to diagnose the alarm siren module or the electronic controls and communication related to alarm siren module operation requires the use of a diagnostic scan tool. Refer to the appropriate diagnostic information.

REMOVAL

REMOVAL

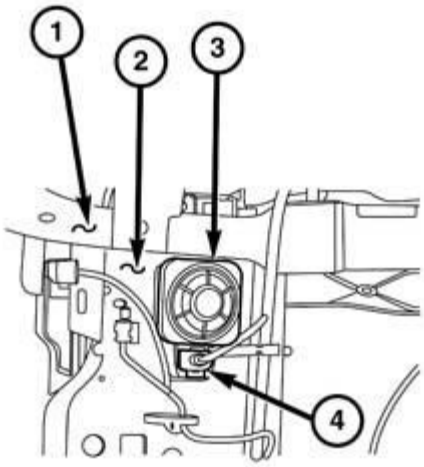

0831005389

Fig. 10: Upper Radiator Cross Member, FEM Carrier, Alarm Siren Module & Connector
Courtesy of CHRYSLER GROUP, LLC

1. Disconnect and isolate the negative cable from the battery.
2. Remove the engine air cleaner housing from the right side of the engine compartment. Refer to **BODY, AIR CLEANER, REMOVAL** for 2.0L Diesel, **BODY, AIR CLEANER, REMOVAL** for 2.4L or **BODY, AIR CLEANER, REMOVAL** for 3.2L.
3. Locate the alarm siren module (3) on the engine compartment side of the Front End Module (FEM) carrier (2), below the upper radiator cross member (1) between the right side of the cooling module and the back of the right front lamp unit housing.
4. Disconnect the FEM wire harness connector (4) from the connector receptacle for the siren.
5. Remove the appearance shield from the upper radiator cross member.
6. From the front of the FEM carrier, remove the nut that secures the siren to the FEM carrier located between the right side of the cooling module and the right front lamp unit housing.
7. Remove the siren from the engine compartment side of the FEM carrier.

INSTALLATION

INSTALLATION

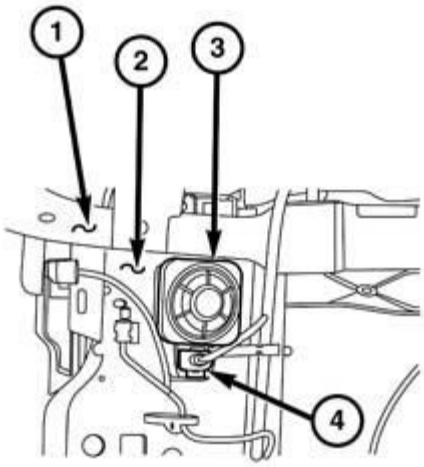

0831005389

Fig. 11: Upper Radiator Cross Member, FEM Carrier, Alarm Siren Module & Connector
Courtesy of CHRYSLER GROUP, LLC

NOTE: **If the alarm siren module has been replaced with a new unit, a diagnostic scan tool MUST be used to initialize and configure the new unit in the Body Control Module (BCM) before the Vehicle Theft Security System (VTSS) can operate as designed. Follow the programming steps outlined in the diagnostic scan tool for INITIALIZE SIREN under MISCELLANEOUS FUNCTIONS for the BODY CONTROL MODULE/BCM menu item as appropriate.**

1. Position the alarm siren module (3) to the engine compartment side of the Front End Module (FEM) carrier (2), below the upper radiator cross member (1) between the right side of the cooling module and the back of the right front lamp unit housing.
2. From the front of the FEM carrier, install and tighten the nut that secures the siren to the FEM carrier located between the right side of the cooling module and the right front lamp unit housing. Tighten the nut to 6 N.m (53 in. lbs.).
3. Reinstall the appearance shield onto the upper radiator cross member.
4. Reconnect the FEM wire harness connector (4) to the connector receptacle of the siren.
5. Reinstall the engine air cleaner housing into the right side of the engine compartment. Refer to **BODY, AIR CLEANER, INSTALLATION** for 2.0L Diesel, **BODY, AIR CLEANER, INSTALLATION** for 2.4L or **BODY, AIR CLEANER, INSTALLATION** for 3.2L.
6. Reconnect the negative cable to the battery.

SWITCH, HOOD AJAR

DESCRIPTION

LATCH MOUNTED SWITCH

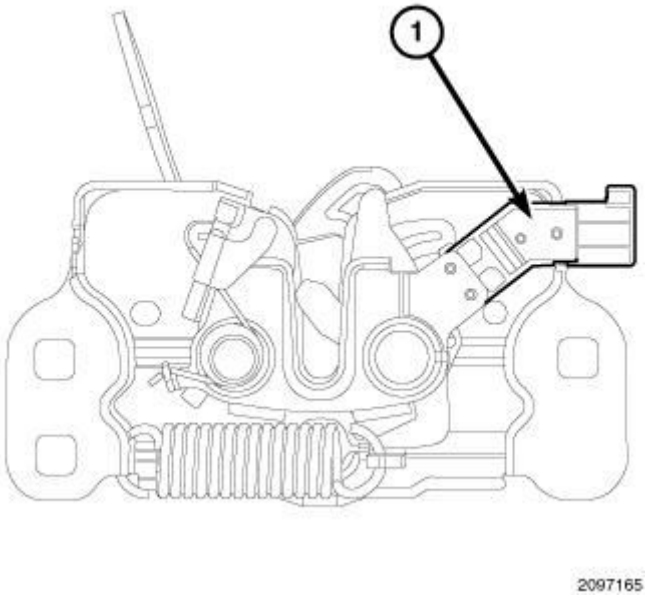

Fig. 12: Hood Latch Mounted Hood Ajar Switch
Courtesy of CHRYSLER GROUP, LLC

There are two types of hood ajar switches used on this vehicle. This information covers the hood latch mounted hood ajar switch (1) that is standard equipment on all vehicles. A stand alone switch is also used on some vehicles in addition to the latch mounted switch, but is discussed elsewhere in this service information.

The latch mounted hood ajar switch is integrated into the hood latch assembly and is a normally open, single pole, spring-loaded plunger actuated switch. The input of this switch may be used for the Vehicle Theft Alarm (VTA) system as well as for the optional remote start system. The switch is connected to the vehicle electrical system through a dedicated take out and connector of the headlamp and dash wire harness.

The latch mounted hood ajar switch can not be adjusted or repaired. If damaged or ineffective this switch type must be replaced as a unit with the hood latch assembly.

STAND ALONE SWITCH

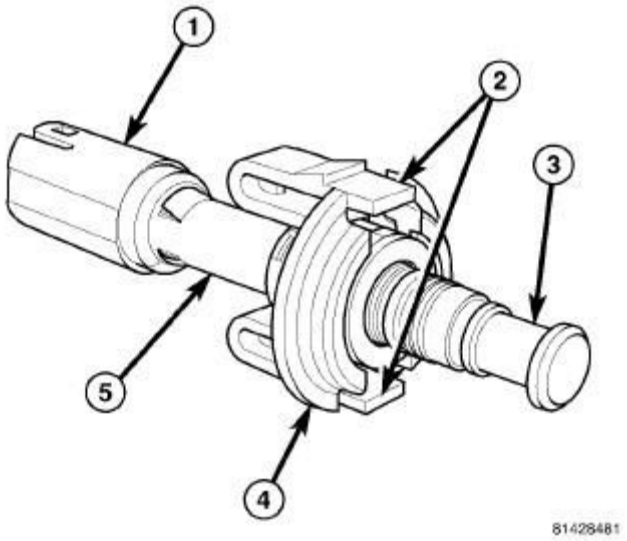

Fig. 13: Hood Ajar Switch
Courtesy of CHRYSLER GROUP, LLC

There are two types of hood ajar switches used on this vehicle. This information covers the stand alone hood ajar switch (1) that is optional equipment on some vehicles. A latch mounted hood ajar switch is standard on most vehicles, but is discussed elsewhere in this service information.

The stand alone switch has a molded plastic switch body (5) with an integral molded connector receptacle (1) on the lower end containing two terminal pins. The switch is connected to the vehicle electrical system through a dedicated take out and connector of the headlamp and dash wire harness. Two integral latches (2) lock the switch into a keyed mounting hole in the switch mounting bracket. The mounting bracket is secured to the left front fender load beam. The switch plunger (3) extends through a mounting collar (4) and a sleeve-like retainer ring on the upper end of the switch body. The retainer ring has a one time, self-adjustment feature that is activated after the switch is installed by closing the hood. The input of this switch is used exclusively for the start-stop system, which is optional equipment with certain optional engines.

Once a stand alone hood ajar switch is installed it cannot be readjusted or repaired. If the switch is damaged, ineffective or requires readjustment, it must be replaced with a new unit. The stand alone hood ajar switch bracket is available for separate service replacement.

OPERATION

LATCH MOUNTED SWITCH

The hood latch mounted hood ajar switch is actuated by the hood latch mechanism and the hood latch striker. When the hood is closed and properly latched, the latch mounted hood ajar switch is an open circuit. When the hood is open or only partially latched, the hood ajar switch is a closed circuit. The switch has two 500 ohm diagnostic resistors connected in parallel to the switch contacts located between the two switch terminals. The hood ajar switch is hard wired in series between a return circuit and a signal circuit of the Body Control Module (BCM).

The BCM reads the hard wired hood ajar switch input through an internal pull-up resistor, then uses this input to control other electronic functions and features of the vehicle. Some of these features may include the remote start system and the Vehicle Theft Alarm (VTA). The BCM may also send electronic **hood ajar switch status** messages to other electronic modules in the vehicle over the Controller Area Network (CAN) data bus.

The latch mounted hood ajar switch as well as the hard wired inputs and outputs of the switch may be diagnosed using conventional diagnostic tools and procedures. Refer to the appropriate wiring information.

STAND ALONE SWITCH

The plunger of the optional stand alone hood ajar switch is actuated by the underside of the hood panel inner reinforcement as the hood panel is closed. When the hood is closed and properly latched, the hood ajar switch is an open circuit. When the hood is open or only partially latched, the hood ajar switch is a closed circuit. The switch has a 1 kilohm diagnostic resistor connected in parallel to the switch contacts located between the two switch terminals. The stand alone hood ajar switch is hard wired in series between a return circuit and a signal circuit of the Powertrain Control Module (PCM) (also known as the Engine Control Module/ECM).

The PCM reads the hard wired hood ajar switch input through an internal pull-up resistor, then uses this input to control certain features of the start-stop system. The PCM may also send electronic **hood ajar switch status** messages to other electronic modules in the vehicle over the CAN data bus.

The stand alone hood ajar switch as well as the hard wired inputs and outputs of the switch may be diagnosed using conventional diagnostic tools and procedures. Refer to the appropriate wiring information.

DIAGNOSIS AND TESTING

DIAGNOSIS AND TESTING - LATCH MOUNTED HOOD AJAR SWITCH

1. Disconnect and isolate the negative cable from the battery.
2. Disconnect the wire harness connector from the hood ajar switch.
3. Check for continuity between the two terminals of the hood ajar switch. There should be continuity with the hood latch open, and only the continuity of the two 500 ohm diagnostic resistors with the hood latch closed. If OK, use a diagnostic scan tool and the appropriate diagnostic procedure to complete testing of the Body Control Module (BCM) as well as the circuits between the BCM and the hood ajar switch. If not OK, replace the ineffective hood ajar switch.

DIAGNOSIS AND TESTING - STAND ALONE HOOD AJAR SWITCH

1. Disconnect and isolate the negative cable from the battery.
2. Disconnect the wire harness connector from the hood ajar switch.
3. Check for continuity between the two terminals of the hood ajar switch. There should be continuity with the switch plunger extended, and only the continuity of the 1 kilohm diagnostic resistor with the switch plunger depressed. If OK, use a diagnostic scan tool and the appropriate diagnostic procedure to complete testing of the Powertrain Control Module (PCM) (also known as the Engine Control Module/ECM) as well as the circuits between the PCM and the hood ajar switch. If not OK, replace the ineffective hood ajar switch.

REMOVAL

STAND ALONE SWITCH BRACKET

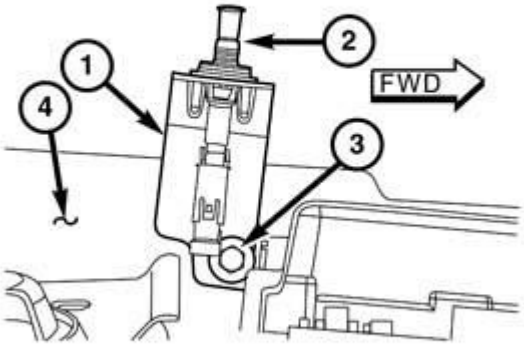

0831005684

Fig. 14: Mounting Bracket, Hood Ajar Switch, Screws & Load Beam
Courtesy of CHRYSLER GROUP, LLC

1. Remove the stand alone hood ajar switch (2) from the mounting bracket (1). Refer to **SWITCH, HOOD AJAR, REMOVAL**.
2. Remove the screw (3) that secures the mounting bracket to the left front fender load beam (4).
3. Remove the mounting bracket from the left front fender load beam.

LATCH MOUNTED SWITCH

The latch mounted hood ajar switch used in this vehicle is integral to and serviced only as a unit with the hood latch. Refer to **LATCH, HOOD, REMOVAL** .

STAND ALONE SWITCH

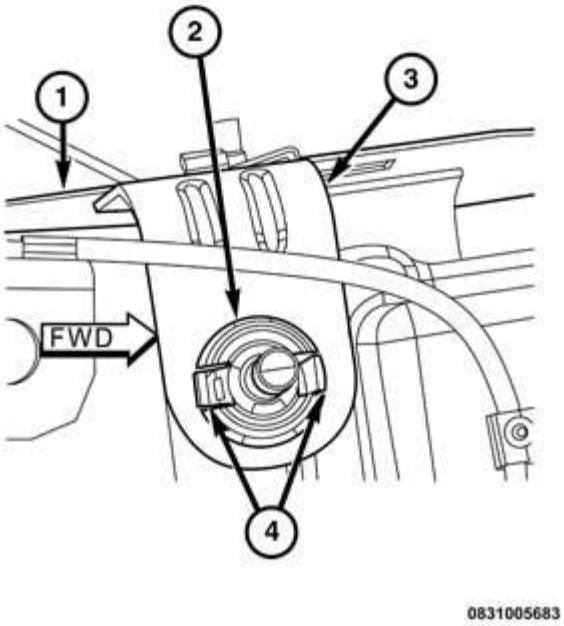

Fig. 15: Mounting Bracket, Load Beam, Latch Tabs & Switch
Courtesy of CHRYSLER GROUP, LLC

1. Unlatch and open the hood.
2. Disconnect and isolate the negative cable from the battery.
3. Working from the top of the mounting bracket (3) on the left front fender load beam (1), squeeze the two stand alone hood ajar switch latch tabs (4) together far enough to pull the switch (2) upward.
4. Pull the switch up through the hole in the mounting bracket far enough to access and disconnect the wire harness connector from the switch connector receptacle.
5. Remove the stand alone hood ajar switch from the vehicle.

INSTALLATION

STAND ALONE SWITCH BRACKET

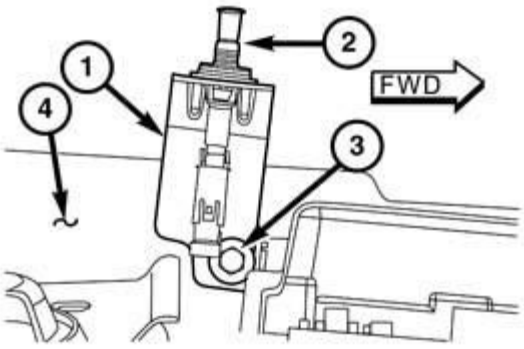

0831005684

Fig. 16: Mounting Bracket, Hood Ajar Switch, Screws & Load Beam
Courtesy of CHRYSLER GROUP, LLC

1. Position the stand alone hood ajar switch mounting bracket (1) onto the left front fender load beam (4).
2. Install and tighten the screw (3) that secures the mounting bracket to the left front fender load beam. Tighten the screw to 5.5 N.m (4 ft. lbs.).
3. Reinstall the stand alone hood ajar switch (2) into the mounting bracket. Refer to **SWITCH, HOOD AJAR, INSTALLATION**.

LATCH MOUNTED SWITCH

The latch mounted hood ajar switch used in this vehicle is integral to and serviced only as a unit with the hood latch. Refer to **LATCH, HOOD, INSTALLATION** .

STAND ALONE SWITCH

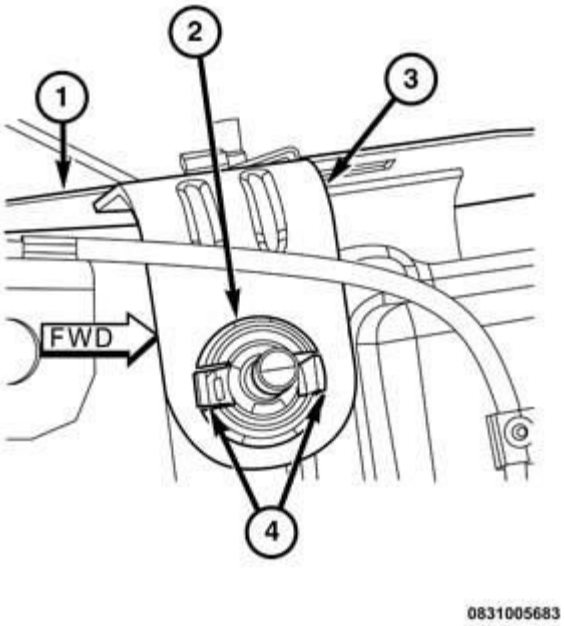

Fig. 17: Mounting Bracket, Load Beam, Latch Tabs & Switch
Courtesy of CHRYSLER GROUP, LLC

1. Position the stand alone hood ajar switch (2) near the mounting bracket (3) on the left front fender load beam (1).
2. Route the wire harness connector for the switch through the mounting hole in the mounting bracket from beneath and reconnect it to the switch connector receptacle.
3. From the top of the mounting bracket, align and insert the switch through the mounting hole and press it downward until the two integral switch latch tabs (4) snap into place.
4. Reconnect the negative cable to the battery.
5. Close and latch the hood.

2014 ACCESSORIES AND EQUIPMENT

Wiper System & Washer System - Service Information - Cherokee

DESCRIPTION

FRONT

An electrically operated intermittent front wiper and washer system is standard factory-installed safety equipment on this vehicle. The wiper and washer system includes the following major components, which are described in further detail elsewhere in this service information:

- **Front Washer Nozzle** - Two fluidic front washer nozzles with integral check valves are secured by latch features to dedicated openings in the hood panel near the base of the windshield.
- **Front Washer Plumbing** - The plumbing for the front washer system consists of rubber hoses, hard plastic tubing and molded rubber or plastic fittings. The plumbing is routed to the dash panel from the washer reservoir along the outboard side of the left front fender load beam. From the dash panel the washer plumbing is routed along the left hood hinge to the hood, then across the underside of the hood panel to the washer nozzles.
- **Front Wiper Arms And Blades** - The two front wiper arms are secured with nuts to the threaded ends of the two wiper pivot shafts, which extend through the cowl plenum cover/grille panel located near the base of the windshield. The two front wiper blades are each secured to their wiper arm with an integral latch, and are parked on the glass near the bottom of the windshield when the front wiper system is not in operation. The left and right wiper arms and wiper blades are unique and are not interchangeable.
- **Front Wiper Module** - The wiper pivot shafts are the only visible components of the front wiper module. The remainder of the module is concealed within the cowl plenum beneath the cowl plenum cover/grille panel. The wiper module includes the wiper module bracket, three rubber-isolated wiper module mounts, the wiper motor, the wiper motor crank arm, the wiper drive link, the wiper connector link and the two wiper pivots.
- **Washer Fluid Level Switch** - The washer fluid level switch is located in a dedicated hole on the lower, outboard side of the washer reservoir, ahead of the left front fender wheel house splash shield.
- **Washer Pump/Motor** - The reversible electric washer pump/motor unit is located in a dedicated hole in a sump area on the lower, outboard side of the washer reservoir, ahead of the left front fender wheel house splash shield. This single reversible washer pump/motor provides washer fluid to either the front or the rear washer system plumbing, depending upon the direction of the pump motor rotation.
- **Washer Reservoir** - The washer reservoir is secured to the left outboard end of the Front End Module (FEM) where it is concealed between the left inner fender shield and the left outer fender panel, ahead of the left front fender wheel house splash shield. The filler neck and cap are the only visible components of the reservoir and, can be easily accessed from the left front corner of the engine compartment.

Certain functions and features of the front wiper and washer systems rely upon resources shared with other electronic modules in the vehicle over a Local Interface Network (LIN) data bus as well as over the Controller Area Network (CAN) data bus. Other electronic modules in the vehicle that may affect front wiper and washer system operation are:

- **Body Control Module** - The Body Control Module (BCM) is located within the instrument panel on the driver side of the vehicle. Refer to **MODULE, BODY CONTROL, DESCRIPTION** .
- **Light Rain Sensor Module** - A Light Rain Sensor Module (LRSM) (also known as the Rain Light Sensor Module/RLSM, the Light Sensor Module/LSM or the Rain Sensor Module/RSM) is used on vehicles equipped with the optional automatic wiper feature. The LRSM is located on a bracket bonded to the inside surface of the windshield glass, near the inside rear view mirror mount.
- **Right Multifunction Switch** - The right multifunction switch is integral to the Steering Column Control Module (SCCM) mounting housing along with the clockspring and the left multifunction switch on the top of the steering column just below the steering wheel. The right multifunction switch is connected to the Steering Control Module (SCM), which is also internal and integral to the SCCM mounting housing. Only the switch control stalk extending from the right side of the steering column is visible, while the remainder of the switch is concealed beneath the steering column shrouds. The right multifunction switch provides all of the driver controls for the front and rear wiper and washer systems.
- **Steering Control Module** - The Steering Control Module (SCM) is internal and integral to the Steering Column Control Module (SCCM) mounting housing which, along with the left and right multifunction switches and the clockspring, is located on the top of the steering column just below the steering wheel. The SCM is completely concealed within the SCCM mounting housing beneath the steering column shrouds. Refer to **MODULE, STEERING COLUMN, DESCRIPTION** .

The BCM and the SCM each contain a microcontroller and programming that allow them to communicate with each other and other electronic modules in the vehicle using the Controller Area Network (CAN) data bus. In addition the BCM and the RLSM communicate with each other using the Local Interface Network data bus. Refer to **COMMUNICATION, DESCRIPTION** .

Hard wired circuitry connects the front wiper and washer system components to the electrical system of the vehicle. These hard wired circuits are integral to several wire harnesses, which are routed throughout the vehicle and retained by many different methods. These circuits may be connected to each other, to the vehicle electrical system and to the front wiper and washer system components through the use of a combination of soldered splices, splice block connectors, and many different types of wire harness terminal connectors and insulators. Refer to the appropriate wiring information. The wiring information includes wiring diagrams, proper wire and connector repair procedures, further details on wire harness routing and retention, as well as pin out and location views for the various wire harness connectors, splices and grounds.

HEADLAMP

An electrically operated headlamp washer system is standard factory-installed equipment on this vehicle when it is manufactured for certain markets with High Intensity Discharge (HID) headlamps. The headlamp washer system includes the following major components, which are described in further detail elsewhere in this service information:

- **Headlamp Washer Nozzle** - A headlamp washer nozzle is secured to the front fascia beneath each front lamp unit.
- **Headlamp Washer Pump/Motor** - The electric headlamp washer pump/motor unit is located in a dedicated hole on the lower, outboard side of the washer reservoir, ahead of the left front fender wheel house splash shield. This high pressure pump is located above and rearward of the reversible front and rear washer pump/motor unit on the reservoir.

- **Headlamp Washer Plumbing** - The plumbing for the headlamp washer system consists of large diameter rubber hoses and molded plastic fittings. The plumbing is routed to the washer nozzles on the front fascia from the washer reservoir. The connections at the headlamp washer pump and the two headlamp washer nozzles feature unique quick-connect fittings.
- **Headlamp Washer Relay** - The headlamp washer relay is soldered onto the Printed Circuit Board (PCB) located within the Power Distribution Center (PDC) and is not serviceable. The PDC is located within the engine compartment near the battery.
- **Washer Reservoir** - A unique washer reservoir is used on vehicles with the optional headlamp washer system, which has dedicated provisions for the headlamp washer pump and plumbing. This reservoir is mounted in the same location and using the same mounting hardware as is used for vehicles without the headlamp washers. The reservoir is concealed between the left inner fender shield and the left outer fender panel, ahead of the left front fender wheel house splash shield. The filler neck and cap are the only visible components of the reservoir and, are accessed from the left front corner of the engine compartment.

Certain functions and features of the headlamp washer system rely upon resources shared with other electronic modules in the vehicle over the Controller Area Network (CAN) data bus. Other electronic modules in the vehicle that may affect headlamp washer system operation are:

- **Body Control Module** - The Body Control Module (BCM) is located within the instrument panel on the driver side of the vehicle. Refer to **MODULE, BODY CONTROL, DESCRIPTION** .
- **Right Multifunction Switch** - The right multifunction switch is integral to the Steering Column Control Module (SCCM) along with the clockspring and the left multifunction switch on the top of the steering column just below the steering wheel. The right multifunction switch is connected to the Steering Control Module (SCM), which is also internal and integral to the SCCM mounting housing. Only the switch control stalk extending from the right side of the steering column is visible, while the remainder of the switch is concealed beneath the steering column shrouds. The right multifunction switch provides all of the driver controls for the headlamp washer system.
- **Steering Control Module** - The Steering Control Module (SCM) is internal and integral to the Steering Column Control Module (SCCM) mounting housing which, along with the left and right multifunction switches and the clockspring, is located on the top of the steering column just below the steering wheel. The SCM is completely concealed within the SCCM mounting housing beneath the steering column shrouds. Refer to **MODULE, STEERING COLUMN, DESCRIPTION** .

The BCM and the SCM each contain a microcontroller and programming that allow them to communicate with each other and other electronic modules in the vehicle using the Controller Area Network (CAN) data bus. Refer to **COMMUNICATION, DESCRIPTION** .

Hard wired circuitry connects the headlamp washer system components to the electrical system of the vehicle. These hard wired circuits are integral to several wire harnesses, which are routed throughout the vehicle and retained by many different methods. These circuits may be connected to each other, to the vehicle electrical system and to the headlamp washer system components through the use of a combination of soldered splices, splice block connectors, and many different types of wire harness terminal connectors and insulators. Refer to the appropriate wiring information. The wiring information includes wiring diagrams, proper wire and connector repair procedures, further details on wire harness routing and retention, as well as pin out and location views for the various wire harness connectors, splices and grounds.

REAR

An electrically operated rear wiper and washer system is standard factory equipment on this vehicle. The rear wiper and washer system includes the following major components which are described in further detail elsewhere in this service information:

- **Rear Washer Nozzle** - The rear washer nozzle and the integrated rear washer system check valve are located in the spoiler on the outer liftgate panel above the center of the liftgate glass opening.
- **Rear Washer Plumbing** - The plumbing for the rear washer system consists of rubber hoses, hard plastic tubing and molded rubber or plastic fittings. The plumbing is routed to the dash panel from the washer reservoir along the outboard side of the left front fender load beam. The plumbing is then routed through the dash into the passenger compartment, up the inner A-pillar to the headliner, above the headliner to the upper liftgate opening header, then through the upper liftgate opening header and the upper liftgate to the rear washer nozzle in the spoiler on the upper liftgate.
- **Rear Wiper Arm and Blade** - The single rear wiper arm and blade assembly is secured by a nut directly to the rear wiper motor output shaft which extends through a rubber grommet inserted through a hole in the liftgate glass and is parked near the base of the liftgate glass when the rear wiper system is not in operation.
- **Rear Wiper Motor** - The rear wiper motor includes the motor and three rubber-isolated wiper motor mounts. The wiper motor output shaft is the only visible component of the rear wiper motor. The remainder of the motor is concealed by the inner liftgate trim panel on the inside of the liftgate beneath the liftgate glass opening.
- **Washer Pump/Motor** - The reversible electric washer pump/motor unit is located in a dedicated hole in a sump area on the lower, outboard surface of the washer reservoir, ahead of the left front fender wheel house. This single reversible washer pump/motor provides washer fluid to either the front or the rear washer system plumbing, depending upon the direction of the pump motor rotation.
- **Washer Reservoir** - The washer reservoir is secured to the left outboard end of the Front End Module (FEM) where it is concealed between the left inner fender shield and the left outer fender panel, ahead of the left front fender wheel house splash shield. The filler neck and cap are the only visible components of the reservoir and, can be easily accessed from the left front corner of the engine compartment.

Certain functions and features of the rear wiper and washer systems rely upon resources shared with other electronic modules in the vehicle over a Local Interface Network (LIN) data bus as well as over the Controller Area Network (CAN) data bus. Other electronic modules in the vehicle that may affect rear wiper and washer system operation are:

- **Body Control Module** - The Body Control Module (BCM) is located within the instrument panel on the driver side of the vehicle. Refer to **MODULE, BODY CONTROL, DESCRIPTION** .
- **Right Multifunction Switch** - The right multifunction switch is integral to the Steering Column Control Module (SCCM) mounting housing along with the clockspring and the left multifunction switch on the top of the steering column just below the steering wheel. The right multifunction switch is connected to the Steering Control Module (SCM), which is also internal and integral to the SCCM mounting housing. Only the switch control stalk extending from the right side of the steering column is visible, while the remainder of the switch is concealed beneath the steering column shrouds. The right multifunction switch provides all of the driver controls for the front and rear wiper and washer systems.

- **Steering Control Module** - The Steering Control Module (SCM) is internal and integral to the Steering Column Control Module (SCCM) mounting housing which, along with the left and right multifunction switches and the clockspring, is located on the top of the steering column just below the steering wheel. The SCM is completely concealed within the SCCM mounting housing beneath the steering column shrouds. Refer to **MODULE, STEERING COLUMN, DESCRIPTION** .

Hard wired circuitry connects the rear wiper and washer system components to the electrical system of the vehicle. These hard wired circuits are integral to several wire harnesses which are routed throughout the vehicle and retained by many different methods. These circuits may be connected to each other, to the vehicle electrical system and to the rear wiper and washer system components through the use of a combination of soldered splices, splice block connectors and many different types of wire harness terminal connectors and insulators. Refer to the appropriate wiring information. The wiring information includes wiring diagrams, proper wire and connector repair procedures, further details on wire harness routing and retention, as well as pin out and location views for the various wire harness connectors, splices and grounds.

OPERATION

FRONT

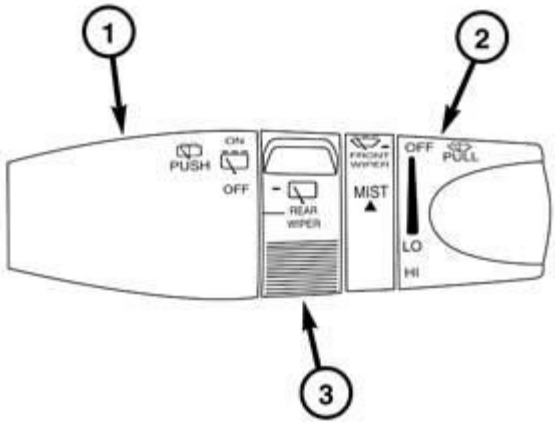

0833005928

Fig. 1: Control Knob, Control Stalk & Right Multifunction Switch
Courtesy of CHRYSLER GROUP, LLC

The front wiper and washer system is designed to provide the vehicle operator with a convenient, safe and reliable means of maintaining visibility through the windshield glass. The various components of this system are designed to convert electrical energy produced and stored by the vehicle electrical system into the mechanical action of the wiper blades to wipe the outside surface of the glass, as well as into the hydraulic action of the washer system to apply washer fluid stored in an on-board reservoir to the area of the glass to be

wiped. When combined, these components provide the means to effectively maintain clear visibility for the vehicle operator by removing excess accumulations of rain, snow, bugs, mud or other minor debris from the outer surface of the windshield glass that might be encountered while driving the vehicle under numerous types of inclement operating conditions.

The vehicle operator initiates all front and rear wiper and washer system functions with the control knob (2) and control sleeve (3) on the control stalk (1) of the right multifunction switch that extends from the right side of the steering column, just below the steering wheel. Rotating the control knob on the end of the control stalk, selects the Off, Delay (except with the optional automatic wiper system), Automatic (with the optional automatic wiper system only), Low or High front wiper system operating modes. In the Delay mode, the control knob also allows the vehicle operator to select from one of four intermittent wipe Delay intervals. In the Automatic mode, the control knob allows the vehicle operator to select from one of four automatic wiper sensitivity levels.

Pulling the control stalk rearward actuates the momentary front washer system switch, which selects the Wash and Wipe-After-Wash modes depending upon when and how long the switch is held closed. Raising the control stalk upward actuates another momentary switch and selects the Mist mode, which cycles the wiper blades for as long as the switch is held closed then completes the current cycle and parks the blades at the base of the windshield after the control stalk is released.

The right multifunction switch provides hard wired digital inputs to the Steering Control Module (SCM) internal to the Steering Column Control Module (SCCM) mounting housing for all of the wiper and washer system functions. The SCM then sends electronic **wiper switch** and **washer switch** status messages to the Body Control Module (BCM) over the Controller Area Network (CAN) data bus requesting the appropriate wiper and washer system operating modes.

Front wiper and washer system operation is completely controlled by the SCM and BCM logic circuits, and that logic will only allow these systems to operate when the status of the ignition is Accessory or On. The BCM uses intelligent, high current, self-protected high side switches to control integrated wiper relays that control wiper system operation by energizing or de-energizing the wiper motor low and high speed brushes. The right multifunction switch circuitry receives battery current and a clean ground output from the SCM, then provides digital inputs to the SCM to indicate the selected wiper and washer system mode.

The hard wired circuits and components of the front wiper and washer system may be diagnosed using conventional diagnostic tools and procedures. Refer to the appropriate wiring information. However, conventional diagnostic methods will not prove conclusive in the diagnosis of the electronic controls and communication between other modules and devices that provide some features of the front wiper and washer system. The most reliable, efficient and accurate means to diagnose the front wiper and washer system or the electronic controls and communication related to front wiper and washer system operation requires the use of a diagnostic scan tool. Refer to the appropriate diagnostic information.

OPERATING MODES

Following are paragraphs that briefly describe the operation of each of the front wiper and washer system operating modes.

- **Continuous Wipe Mode** - When the Low position of the control knob on the control stalk of the right multifunction switch is selected the SCM sends an electronic **wiper switch low** status message to the

BCM over the CAN data bus. The BCM then directs battery current to the low speed brush of the wiper motor, causing the wipers to cycle at low speed.

When the High position of the control knob is selected the SCM sends an electronic **wiper switch high** status message to the BCM. The BCM then directs battery current to the high speed brush of the wiper motor, causing the wipers to cycle at high speed.

When the Off position of the right multifunction switch control knob is selected, the SCM sends an electronic **wiper switch off** status message to the BCM, then one of two events will occur. The event that occurs depends upon the position of the wiper blades on the windshield at the moment that the control knob Off position is selected.

If the wiper blades are in the down position on the windshield when the Off position is selected, the park switch that is integral to the wiper motor is closed to ground, which provides a hard wired park switch sense input to the BCM. The BCM then de-energizes the wiper motor and the wiper motor ceases to operate.

If the wiper blades are not in the down position on the windshield at the moment the Off position is selected, the park switch is an open circuit and the BCM continues running the wiper motor at low speed until the wiper blades are in the down position on the windshield and the park switch input to the BCM is again closed to ground.

- **Intermittent Wipe Mode** - The following applies to vehicles not equipped with the optional automatic wiper system, or to vehicles equipped with the automatic wiper system that have had that feature disabled using the customer programmable features function.

  When the control knob on the control stalk of the right multifunction switch is moved to one of the four Delay interval positions the SCM sends an electronic **wiper switch delay interval** status message to the BCM. Then the BCM electronic intermittent wipe logic circuit responds by calculating the correct length of time between wiper sweeps based upon the selected delay interval input.

  The BCM monitors the changing state of the wiper motor park switch through a hard wired park switch sense input. This input allows the BCM to determine the proper intervals at which to energize and de-energize the wiper motor low speed brush to operate the wiper motor intermittently for one low speed cycle at a time.

  The BCM logic is also programmed to provide vehicle speed sensitivity to the selected intermittent wipe delay intervals. In order to provide this feature, the BCM monitors electronic **vehicle speed** messages from the Controller Antilock Brake (CAB) (also known as the Antilock Brake Module/ABM, the Antilock Brake System/ABS module or the Electronic Stability Control/ESC module) and doubles the selected delay interval whenever the vehicle speed is about 16 kilometers-per-hour (10 miles-per-hour) or less.

- **Automatic Wipe Mode** - If the vehicle is equipped with the optional automatic wiper system and it is enabled, when the control knob on the control stalk of the right multifunction switch is moved to one of the four sensitivity positions, the SCM sends an electronic **wiper switch sensitivity** message to the BCM over the CAN data bus. The BCM, which is also a Local Interface Network (LIN) data bus master node,

relays the **wiper switch sensitivity** message to the Light Rain Sensor Module (LRSM) (also known as the Rain Light Sensor Module/RLSM, the Light Sensor Module/LSM or the Rain Sensor Module/RSM), which is a LIN slave node over the LIN data bus.

The LRSM monitors an area within the wipe pattern of the windshield glass for the accumulation of moisture. Based upon internal programming and the selected sensitivity level, when sufficient moisture has accumulated the LRSM sends the appropriate electronic **wipe command** messages back to the BCM over the LIN data bus. Then the BCM operates the wiper system accordingly.

As the sensitivity level is set higher, the LRSM is more sensitive to moisture accumulation and will send **wipe commands** more frequently. The third (middle) sensitivity position of the control knob is designed to provide optimal wiper performance for most typical driving requirements. The BCM logic is also programmed to provide an immediate wipe cycle each time the control knob on the control stalk of the multifunction switch is moved from the Off position to one of the four sensitivity positions, and another immediate wipe cycle each time the control knob is moved from a lower sensitivity position to a higher sensitivity position.

Also, if a vehicle is equipped with automatic wipers but the feature has been disabled using the customer programmable features function, when any sensitivity position is selected with the right multifunction switch control knob the system will respond in the same manner as in the intermittent wipe mode. The automatic wiper system has features designed to protect the mechanical components of the wiper system, and will not allow automatic wiper operation under the following conditions:

- **Low Ambient Temperature** - When the ambient temperature is below 0° C (32° F), the automatic wipers will not operate during a new ignition cycle until the wiper switch has been moved to a different position than that which was selected at the moment the current ignition cycle began, or until a vehicle speed input is detected.
- **Transmission In Neutral** - When the transmission gear selector is placed in the Neutral **N** position while the ignition status is On, the automatic wipers will not operate during the current ignition cycle until the wiper switch has been moved to a different position than that which was selected at the moment that Neutral **N** was selected, until the vehicle speed is greater than 8 kilometers-per-hour (5 miles-per-hour) or until the transmission gear selector is moved out of the Neutral **N** position, whichever occurs first.

- **Mist Wipe Mode** - When the control stalk of the right multifunction switch is lifted upward to the momentary Mist position, the SCM sends an electronic **wiper mist mode** status message to the BCM. The BCM then energizes the low speed brush of the wiper motor for as long as the switch is held closed, then de-energizes the motor when the state of the switch changes to open, parking the wiper blades near the base of the windshield. The BCM can operate the wiper motor in this mode for only one low speed cycle at a time, or for an indefinite number of sequential low speed cycles, depending upon how long the switch is held closed.
- **Headlamps On With Wipers Mode** - The circuitry of the BCM provides an automatic Headlamps On With Wipers mode for vehicles equipped with the optional automatic headlamps. This is a customer programmable feature that can be enabled or disabled through the Electronic Vehicle Information Center (EVIC). If this feature is enabled, when the headlamp switch is in the Auto position, the headlamps will turn On automatically whenever the windshield wipers are turned On; and, if the headlamps were turned On automatically when the wipers were turned On, they will also turn Off automatically when the wipers are turned Off.

If this feature is enabled in vehicles equipped with the optional automatic wiper feature, when the automatic wiper mode is selected the headlamps will turn On automatically only after the wipers complete three automatic wipe cycles within about 30 seconds, and they will turn Off automatically after 3 minutes elapse without any automatic wipe cycles unless ambient light conditions dictate otherwise.

- **Wash Mode** - When the control stalk of the right multifunction switch is pulled rearward to the momentary Wash position for more than about one-half second with the wiper system operating, the SCM sends an electronic **washer switch** status message to the BCM. Then the BCM directs battery current and ground to the washer pump/motor. This will cause the washer pump/motor to be energized for as long as the switch is held closed (up to approximately 20 seconds) and to be de-energized when the control stalk is released.

  When the control stalk is pulled to the momentary Wash position while the wiper system is operating in one of the Delay interval (or sensitivity level with automatic wipers) positions, the washer pump/motor operation is the same. However, the BCM logic also overrides the selected delay interval or sensitivity level and operates the wiper motor in a continuous low speed mode for as long as the control stalk is held in the momentary Wash position, then reverts to the selected delay interval or sensitivity level several wipe cycles after the control stalk is released. If the Wash switch is held closed for more than about 20 seconds, the BCM will suspend washer pump/motor operation until the control stalk is released for about 2 seconds, then cycled back to the Wash position.

- **Wipe-After-Wash Mode** - When the control stalk of the right multifunction switch is pulled rearward to the momentary Wash position for more than about one-half second while the wiper system is not operating, the SCM sends an electronic **washer switch** status message to the BCM. Then the BCM directs battery current and ground to operate the washer pump/motor and energizes the wiper motor in a continuous low speed mode for as long as the switch is held closed (up to approximately 20 seconds). When the control stalk is released, the BCM de-energizes the washer pump/motor immediately, but allows the wiper motor to operate for two or three additional wipe cycles before it de-energizes the wiper motor and parks the wiper blades near the base of the windshield.

  If the control stalk is pulled rearward for more than about 20 seconds, the BCM will suspend washer pump/motor operation until the stalk is released for about 2 seconds and then cycled back to the Wash position; however, the wipers will continue to operate for as long as the switch is held closed. The BCM monitors the changing state of the wiper motor park switch through a hard wired wiper park switch sense circuit input. This input allows the BCM to count the number of wipe cycles that occur after the control stalk is released, and to determine the proper interval at which to de-energize the wiper motor to complete the Wipe-After-Wash mode cycle.

HEADLAMP

The headlamp washer system is designed to provide the vehicle operator with a convenient, safe, and reliable means of maintaining High Intensity Discharge (HID) headlamp lighting performance. The various components of this system are designed to convert electrical energy produced by the vehicle electrical system into the hydraulic action of the washer system to apply washer fluid stored in an on-board reservoir to the lenses of the two front lamp units, removing excess accumulations of snow, ice, bugs, mud, or other minor debris from the front lamps that might be encountered while driving the vehicle under numerous types of inclement operating conditions.

The vehicle operator initiates the headlamp washer system function using the control stalk of the right multifunction switch that extends from the right side of the steering column, just below the steering wheel. While the HID headlamp low beams are turned On, pulling the control stalk rearward towards the steering wheel beyond the actuation point for more than about 100 milliseconds (0.10 second) activates the front washer pump/motor. During any ignition cycle, the first time the front washer pump/motor is activated and; thereafter, each eleventh time the front washer pump/motor is activated, the headlamp washer pump/motor cycle is also activated.

Each time the headlamp washers are employed, the headlamp washer pump/motor is activated using a two shot strategy. The initial shot wets the lenses of the HID headlamps. The lenses are then allowed to soak for a short interval before a second shot is dispensed to rinse the lenses. Each shot results in several high pressure streams of washer fluid being dispensed upon the headlamp lenses by the headlamp washer nozzles.

Headlamp washer system operation is completely controlled by the Body Control Module (BCM) logic circuits based upon programming and electronic **wash command** message inputs received from the Steering Control Module (SCM) internal to the Steering Column Control Module (SCCM) for all of the wiper and washer system functions. The SCM then sends electronic **wiper switch** and **washer switch** status messages to the BCM over the Controller Area Network (CAN) data bus requesting the appropriate wiper and washer system operating modes.

The BCM will only allow this system to operate when the status of the ignition is On and the headlamp low beams are turned On. When the appropriate inputs are monitored and the appropriate programming requirements have been met, the BCM provides the appropriate output to the headlamp washer relay integral to the Printed Circuit Board (PCB) within the Power Distribution Center (PDC). The BCM uses a Low Side Driver (LSD) to energize or de-energize the headlamp washer relay which, in turn, controls the operation of the headlamp washer pump/motor unit.

The hard wired circuits and components of the headlamp washer system may be diagnosed using conventional diagnostic tools and procedures. Refer to the appropriate wiring information. However, conventional diagnostic methods will not prove conclusive in the diagnosis of the headlamp washer system or the electronic controls and communication between other modules and devices that provide some features of the headlamp washer system. The most reliable, efficient and accurate means to diagnose the headlamp washer system or the electronic controls and communication related to headlamp washer system operation requires the use of a diagnostic scan tool. Refer to the appropriate diagnostic information.

REAR

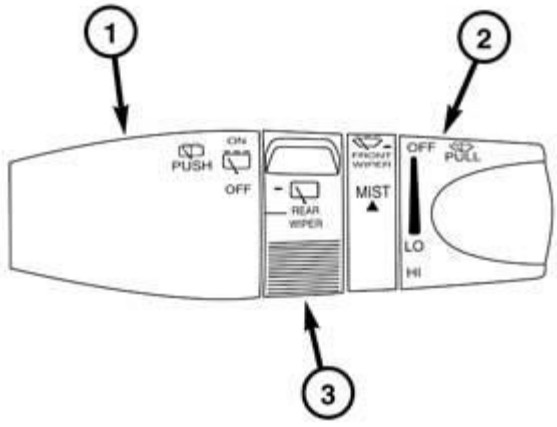

0833005928

Fig. 2: Control Knob, Control Stalk & Right Multifunction Switch
Courtesy of CHRYSLER GROUP, LLC

The rear wiper and washer system is designed to provide the vehicle operator with a convenient, safe, and reliable means of maintaining visibility through the liftgate glass. The various components of this system are designed to convert electrical energy produced by the vehicle electrical system into the mechanical action of the wiper blade to wipe the outside surface of the glass, as well as into the hydraulic action of the washer system to apply washer fluid stored in an on-board reservoir to the area of the glass to be wiped. When combined, these components provide the means to effectively maintain clear visibility for the vehicle operator by removing excess accumulations of rain, snow, bugs, mud, or other minor debris from the outer surface of the liftgate glass that might be encountered while driving the vehicle under numerous types of inclement operating conditions.

The vehicle operator initiates all rear wiper and washer system functions with the control sleeve (3) and the control stalk (1) of the right (wiper) multifunction switch that extends from the right side of the steering column, just below the steering wheel. Rotating the control sleeve to a detent position selects the Off or Delay (Intermittent) rear wiper system operating modes. Pushing the control stalk to a momentary forward position actuates the rear washer system switch, which selects the rear wash mode and dispenses washer fluid in the wipe pattern on the liftgate glass for as long as the switch is held closed.

The right multifunction switch provides hard wired digital inputs to the Steering Control Module (SCM) internal to the Steering Column Control Module (SCCM) mounting housing for all of the wiper and washer system functions. The SCM then sends electronic **wiper switch** and **washer switch** status messages to the Body Control Module (BCM) over the Controller Area Network (CAN) data bus requesting the appropriate wiper and washer system operating modes.

Rear wiper and washer system operation is completely controlled by the SCM and BCM logic circuits, and that logic will only allow these systems to operate when the status of the ignition is Accessory or On. The BCM uses

a High Side Driver (HSD) to control rear wiper system operation by energizing or de-energizing the rear wiper motor. The right multifunction switch circuitry receives battery current and a clean ground output from the SCM, then provides digital inputs to the SCM to indicate the selected wiper and washer system mode.

The hard wired circuits and components of the rear wiper and washer system may be diagnosed using conventional diagnostic tools and procedures. Refer to the appropriate wiring information. However, conventional diagnostic methods will not prove conclusive in the diagnosis of the rear wiper and washer system or the electronic controls and communication between other modules and devices that provide some features of the rear wiper and washer system. The most reliable, efficient and accurate means to diagnose the rear wiper and washer system or the electronic controls and communication related to rear wiper and washer system operation requires the use of a diagnostic scan tool. Refer to the appropriate diagnostic information.

OPERATING MODES

Following are paragraphs that briefly describe the operation of each of the rear wiper and washer system operating modes.

- **Intermittent Wipe Mode** - When the right (wiper) multifunction switch control sleeve is moved to the Delay (Intermittent) position, the SCM sends an electronic **rear wiper switch on** status message to the BCM over the CAN data bus. The BCM responds by energizing a High Side Driver (HSD) that directs battery current to the rear wiper motor. If the front wiper system is inactive, the BCM will cycle the rear wiper at a fixed intermittent speed. If the front wiper system is active, the BCM cycles the rear wiper in a synchronous manner, at one-half the speed of the front wipers. If Reverse (**R**) has been selected with the transmission gear selector, the BCM operates the rear wiper in a continuous manner.

  When the Off position of the right multifunction switch control sleeve is selected, the SCM sends an electronic **rear wiper switch off** status message to the BCM over the CAN data bus. The event that occurs depends upon the position of the wiper blade on the liftgate glass at the moment that the control sleeve Off position is selected.

  If the rear wiper blade is in the down position on the glass when the Off position is selected, the park switch that is integral to the rear wiper motor is an open circuit, which provides a hard wired park switch sense input to the BCM. The internal BCM circuitry pulls the park switch sense input to ground when the switch is open so that the microcontroller sees a ground when the wiper blade is parked. The BCM then de-energizes the rear wiper motor and the wiper motor ceases to operate.

  If the rear wiper blade is not in the down position on the liftgate glass at the moment the Off position is selected, the park switch is closed to fused ignition output and the BCM continues running the wiper motor at low speed until the rear wiper blade is in the down position on the liftgate glass and the park switch input to the BCM is again pulled to ground.

- **Wash Mode** - When the control stalk of the right (wiper) multifunction switch is pushed forward to the momentary rear Wash position, the SCM sends an electronic **washer switch** status message to the BCM. Then the BCM directs battery current and ground to the washer pump/motor. This will cause the washer pump/motor to be energized for as long as the switch is held closed (up to approximately 20 seconds) and to be de-energized when the control stalk is released.

When the control stalk is pushed forward to the momentary Wash position while the rear wiper system is operating the washer pump/motor operation is the same. However, the BCM logic also overrides the selected wiper operating mode and operates the wiper motor in a continuous low speed mode for as long as the control stalk is held in the momentary Wash position, then reverts to the selected operating mode several wipe cycles after the control stalk is released. If the Wash switch is held closed for more than about 20 seconds, the BCM will suspend washer pump/motor operation until the control stalk is released for about 2 seconds, then cycled back to the Wash position.

- **Wipe-After-Wash Mode** - When the control stalk of the right (wiper) multifunction switch is pushed forward to the momentary rear Wash position for more than about one-half second while the rear wiper system is not operating, the BCM directs battery current and ground to the washer pump/motor and energizes the rear wiper motor in a continuous mode for as long as the switch is held closed. When the control stalk is released, the BCM de-energizes the washer pump/motor immediately, but allows the rear wiper motor to operate for about three additional wipe cycles. An additional wipe cycle is performed about six seconds later before the BCM de-energizes the rear wiper motor and parks the wiper blade near the base of the liftgate glass.

  The BCM monitors the changing state of the wiper motor park switch through a hard wired wiper park switch sense circuit input. This input allows the BCM to monitor the number of wipe cycles that occur after the control stalk is released, and to determine the proper interval at which to de-energize the wiper motor to complete the Wipe-After-Wash mode cycle.

DIAGNOSIS AND TESTING

DIAGNOSIS AND TESTING - FRONT WIPER AND WASHER SYSTEM

WARNING: **To avoid serious or fatal injury on vehicles equipped with airbags, disable the Supplemental Restraint System (SRS) before attempting any steering wheel, steering column, airbag, Occupant Classification System (OCS), seat belt tensioner, impact sensor or instrument panel component diagnosis or service. Disconnect and isolate the battery negative (ground) cable, then wait two minutes for the system capacitor to discharge before performing further diagnosis or service. This is the only sure way to disable the SRS. Failure to follow these instructions may result in accidental airbag deployment.**

If the front wiper motor operates, but the wipers do not move on the windshield, replace the ineffective front wiper motor or wiper linkage module. If the washer pump/motor operates, but no washer fluid is dispensed on the glass; or, if the wipers operate, but chatter, lift or do not clear the glass, clean and inspect the front wiper and washer system components as required. Refer to **CLEANING** and **INSPECTION**.

The hard wired front wiper and washer system circuits and components may be diagnosed using conventional diagnostic tools and procedures. Refer to the appropriate wiring information. The wiring information includes wiring diagrams, proper wire and connector repair procedures, details of wire harness routing and retention, connector pin out information and location views for the various wire harness connectors, splices and grounds.

However, conventional diagnostic methods will not prove conclusive in the diagnosis of the front wiper and washer system or the electronic controls and communication between other modules and devices that provide some features of the front wiper and washer system. The most reliable, efficient and accurate means to diagnose the front wiper and washer system or the electronic controls and communication related to front wiper and washer system operation requires the use of a diagnostic scan tool. Refer to the appropriate diagnostic information.

NOTE: **The front wiper and washer switches are integral to the right multifunction switch in the Steering Column Control Module (SCCM) mounting housing. The right multifunction switch communicates with the Steering Control Module (SCM), which is also internal and integral to the SCCM mounting housing. The SCM communicates with the Body Control Module (BCM) over the Controller Area Network (CAN) data bus. The BCM controls front wiper motor operation through wiper relays that are integral to the Printed Circuit Board (PCB) within the BCM.**

Before performing any of the following tests, determine whether the other functions of the right multifunction switch are operational. If other right multifunction switch functions are ineffective, diagnose and repair that problem before attempting to repair the Wiper and Washer System.

FRONT WIPER AND WASHER SYSTEM DIAGNOSIS		
CONDITION	POSSIBLE CAUSES	CORRECTION
WIPER MOTOR DOES NOT OPERATE IN ANY SWITCH POSITION	1. Ineffective motor ground circuit.	1. Test and repair open wiper motor ground circuit if required.
	2. Ineffective motor feed circuits.	2. Test and repair low speed and high speed feed circuits between BCM and wiper motor if required.
	3. Ineffective SCM inputs or outputs.	3. Use a diagnostic scan tool and the appropriate diagnostic information for further SCM diagnosis.
	4. Ineffective BCM inputs or outputs.	4. Use a diagnostic scan tool and the appropriate diagnostic information for further BCM diagnosis.
	5. Ineffective wiper motor.	5. Test and replace open or shorted wiper motor as required.
WIPERS DO NOT PARK CORRECTLY	1. Ineffective wiper motor park switch input circuit.	1. Test and repair wiper park switch input circuit between BCM and wiper motor if required.
	2. Ineffective BCM inputs or outputs.	2. Use a diagnostic scan tool and the appropriate diagnostic information for further BCM diagnosis.
	3. Ineffective wiper motor park switch.	3. Test and replace wiper motor if required.
	1. Ineffective wiper motor.	1. Check amperage draw with linkage

WIPER MOTOR OPERATES SLOWLY IN ALL SWITCH POSITIONS		disconnected from wiper motor output shaft. Correct draw should be about 2 amperes on Low speed, or 3 amperes on High speed. If incorrect, refer to the appropriate Possible Cause that follows:
	2. Amperage draw too low.	2. Test and repair shorted low and high speed feed circuits if required.
	3. Amperage draw too high.	3. With linkage disconnected from wiper motor output shaft, check linkage and pivots for binding. If binding is detected, repair or replace wiper linkage module if required. If no linkage binding detected, replace the wiper motor if required.
WIPERS RUN AT HIGH SPEED WITH SWITCH LOW SPEED SELECTED OR AT LOW SPEED WITH SWITCH HIGH SPEED SELECTED	1. Ineffective motor feed circuit wiring.	1. Test and repair low speed and high speed feed circuits between BCM and wiper motor if required.
AUTOMATIC WIPERS ONLY ARE INOPERATIVE	1. Automatic wipers (Rain Sensing) feature has been disabled.	1. Be certain that the automatic wipers (Rain Sensing) feature is enabled in the Customer Programmable Features Settings menu.
WASHER PUMP DOES NOT OPERATE	1. Ineffective washer pump ground circuit.	1. Test and repair open washer pump ground circuit if required.
	2. Ineffective washer pump feed circuits.	2. Test and repair washer pump feed circuits between BCM and washer pump if required.
	3. Ineffective SCM inputs or outputs.	3. Use a diagnostic scan tool and the appropriate diagnostic information for further SCM diagnosis.
	4. Ineffective BCM inputs or outputs.	4. Use a diagnostic scan tool and the appropriate diagnostic information for further BCM diagnosis.
	5. Ineffective washer pump.	5. Test and replace open or shorted washer pump if required.

DIAGNOSING FALSE WIPES (AUTOMATIC WIPER ONLY)

False wipes are unnecessary wipes that occur when the control knob of the right multifunction switch is in one of the four automatic wiper sensitivity positions and no rain or moisture is apparent within the wipe pattern on the windshield glass. Because this system is designed to operate whenever it detects moisture, if the switch is in one of the automatic wiper sensitivity positions any road spray, bug splatters or mist from passing cars or trucks may occasionally cause the wipers to cycle. These are normal characteristics of this system and are not false wipes.

False wipes generally are the result of foreign material or flaws that interfere with the system optics. The optics for this system allow the Light Rain Sensor Module (LRSM) (also known as the Rain Light Sensor Module/RLSM, the Light Sensor Module/LSM or the Rain Sensor Module/RSM) to precisely transmit several

InfraRed (IR) light beams and monitor the intensity of these beams reflected from the outer surface of the windshield glass to determine the presence of moisture. The sensitivity of this system is such that anything that distorts the focus or intensity of the IR light beams or impacts the ability of the photo diodes within the LRSM to see and accurately measure these light beams can result in the LRSM logic misinterpreting the resulting input data as moisture on the windshield. The optics for this system include the lenses of the LRSM, the adhesive silicone gelatin (SilGel) layer that bonds the LRSM to the inside of the windshield and the windshield glass.

The following procedure should only be used if false wipe occurrences are frequent and persistent. Perform diagnosis of the wiper system, the right multifunction switch, the Steering Control Module (SCM) and the LRSM using a diagnostic scan tool and the appropriate diagnostic procedures before performing the following:

NOTE: The Light Rain Sensor Module (LRSM) mounting bracket is serviced as a unit with the windshield glass. If either the bracket or the glass is ineffective or damaged, the entire LRSM bracket and windshield glass unit must be replaced. Also, if the LRSM is removed from the mounting bracket for any reason, the integrity of the adhesive silicone gelatin (SilGel) layer of the LRSM will be compromised and the silicone gelatin pad must be replaced with a new unit.

1. Carefully inspect the outer surface of the windshield glass for physical damage, including scratches, cracks or chips in the vicinity of the LRSM mounting bracket. **Scratches, cracks or chips in the windshield glass outside the area of the LRSM mounting bracket lenses will not cause false wipes.** If OK, go to Step 2. If not OK, replace the damaged windshield.
2. From the outside of the windshield glass, carefully inspect the adhesive layer between the windshield glass and the LRSM bracket for any large voids (air pockets). If an adhesive void greater than about 1 millimeter (0.04 inch) is observed, replace the flawed silicone gelatin pad. If OK, go to Step 3.
3. Lightly pull the LRSM away from the windshield bracket to confirm that both sides of the spring steel LRSM mounting band are fully engaged with the mounting bracket on the inside of the windshield glass. If OK, go to Step 4. If not OK, install the LRSM mounting band onto the bracket as required.
4. Remove the LRSM from the mounting bracket. Carefully inspect the LRSM mounting bracket for any physical damage and inspect the windshield glass area within the LRSM mounting bracket for contamination. If OK, go to Step 5. If contaminated, clean any foreign material from the windshield glass using rubbing alcohol and a lint-free cloth. If damaged, replace the damaged LRSM bracket and windshield as a unit.
5. Carefully replace the LRSM with a new unit. Refer to **MODULE, LIGHT RAIN SENSOR, INSTALLATION**.

DIAGNOSIS AND TESTING - HEADLAMP WASHER SYSTEM

WARNING: To avoid serious or fatal injury on vehicles equipped with airbags, disable the Supplemental Restraint System (SRS) before attempting any steering wheel, steering column, airbag, Occupant Classification System (OCS), seat belt tensioner, impact sensor or instrument panel component diagnosis or service. Disconnect and isolate the battery negative (ground) cable, then wait two minutes for the system capacitor to discharge before performing further diagnosis or service. This is the only sure way to

disable the SRS. Failure to follow these instructions may result in accidental airbag deployment.

Before attempting to diagnose the headlamp washer system, confirm whether the front washer system operates satisfactorily. If the front washer system is ineffective or operates improperly, diagnose and repair that problem before attempting to repair the headlamp washer system. If the front washer system operates satisfactorily and the headlamp washer pump/motor unit operates, but both headlamp washer nozzles do not dispense washer fluid on the front lamp unit lenses, inspect the headlamp washer plumbing for pinched or leaking hoses and fittings. If the headlamp washer pump/motor unit does not operate, check the headlamp washer system fuse.

The hard wired headlamp washer system circuits and components may be diagnosed using conventional diagnostic tools and procedures. Refer to the appropriate wiring information. The wiring information includes wiring diagrams, proper wire and connector repair procedures, details of wire harness routing and retention, connector pin out information and location views for the various wire harness connectors, splices and grounds.

However, conventional diagnostic methods will not prove conclusive in the diagnosis of the headlamp washer system or the electronic controls and communication between other modules and devices that provide some features of the headlamp washer system. The most reliable, efficient and accurate means to diagnose the headlamp washer system or the electronic controls and communication related to headlamp washer system operation requires the use of a diagnostic scan tool. Refer to the appropriate diagnostic information.

DIAGNOSIS AND TESTING - REAR WIPER AND WASHER SYSTEM

WARNING: **To avoid serious or fatal injury on vehicles equipped with airbags, disable the Supplemental Restraint System (SRS) before attempting any steering wheel, steering column, airbag, Occupant Classification System (OCS), seat belt tensioner, impact sensor or instrument panel component diagnosis or service. Disconnect and isolate the battery negative (ground) cable, then wait two minutes for the system capacitor to discharge before performing further diagnosis or service. This is the only sure way to disable the SRS. Failure to follow these instructions may result in accidental airbag deployment.**

If the rear wiper motor operates, but the wiper motor output shaft does not move, replace the ineffective rear wiper motor. If the washer pump/motor operates, but no washer fluid is dispensed on the glass; or, if the wiper operates, but chatters, lifts, or does not clear the glass, clean and inspect the rear wiper and washer system components as required. Refer to **CLEANING** and **INSPECTION**.

The hard wired rear wiper and washer system circuits and components may be diagnosed using conventional diagnostic tools and procedures. Refer to the appropriate wiring information. The wiring information includes wiring diagrams, proper wire and connector repair procedures, details of wire harness routing and retention, connector pin out information and location views for the various wire harness connectors, splices and grounds.

However, conventional diagnostic methods will not prove conclusive in the diagnosis of the electronic controls and communication between other modules and devices that provide some features of the rear wiper and washer system. The most reliable, efficient and accurate means to diagnose the rear wiper and washer system or the

electronic controls and communication related to rear wiper and washer system operation requires the use of a diagnostic scan tool. Refer to the appropriate diagnostic information.

NOTE: **The rear wiper and washer switches are integral to the right multifunction switch in the Steering Column Control Module (SCCM). The right multifunction switch communicates with the Steering Control Module (SCM), which is also integral to the SCCM. The SCM communicates with the Body Control Module (BCM) over the Controller Area Network (CAN) data bus. The BCM controls rear wiper motor operation through the rear wiper relay that is integral to the Printed Circuit Board (PCB) within the BCM.**

Before performing any of the following tests, determine whether the other functions of the right multifunction switch are operational. If other right multifunction switch functions are ineffective, diagnose and repair that problem before attempting to repair the Rear Wiper and Washer System.

REAR WIPER AND WASHER SYSTEM DIAGNOSIS		
CONDITION	**POSSIBLE CAUSES**	**CORRECTION**
WIPER MOTOR DOES NOT OPERATE IN ANY SWITCH POSITION	1. Ineffective motor ground circuit.	1. Test and repair open wiper motor ground circuit if required.
	2. Ineffective motor feed circuits.	2. Test and repair motor feed circuit between BCM and rear wiper motor if required.
	3. Ineffective SCM inputs or outputs.	3. Use a diagnostic scan tool and the appropriate diagnostic information for further SCM diagnosis.
	4. Ineffective BCM inputs or outputs.	4. Use a diagnostic scan tool and the appropriate diagnostic information for further BCM diagnosis.
	5. Ineffective wiper motor.	5. Test and replace open or shorted wiper motor if required.
WIPER DOES NOT PARK CORRECTLY	1. Ineffective wiper motor park switch input circuit.	1. Test and repair wiper park switch input circuit between BCM and rear wiper motor if required.
	2. Ineffective BCM inputs or outputs.	2. Use a diagnostic scan tool and the appropriate diagnostic information for further BCM diagnosis.
	3. Ineffective wiper motor park switch.	3. Test and replace rear wiper motor if required.
	1. Ineffective wiper motor.	1. Check amperage draw with wiper arm disconnected from rear wiper motor output shaft. Correct draw should be about 6 amperes. If incorrect, refer to the appropriate Possible Cause that follows:

WIPER MOTOR OPERATES SLOWLY	2. Amperage draw too low.	2. Test and repair shorted rear wiper motor signal and fused ignition switch output (run - accessory) circuits if required.
	3. Amperage draw too high.	3. With wiper arm disconnected from wiper motor output shaft check for binding between output shaft and motor output shaft housing. If binding is detected, lubricate if required. If no binding is detected, replace the wiper motor if required.
WASHER PUMP DOES NOT OPERATE	1. Ineffective washer pump ground circuit.	1. Test and repair open washer pump ground circuit if required.
	2. Ineffective washer pump feed circuit.	2. Test and repair washer pump feed circuit between BCM and washer pump if required.
	3. Ineffective SCM inputs or outputs.	3. Use a diagnostic scan tool and the appropriate diagnostic information for further SCM diagnosis.
	4. Ineffective BCM inputs or outputs.	4. Use a diagnostic scan tool and the appropriate diagnostic information for further BCM diagnosis.
	5. Ineffective washer pump.	5. Test and replace open or shorted washer pump if required.

SPECIFICATIONS

SPECIFICATIONS

TORQUE SPECIFICATIONS			
DESCRIPTION	**N.m**	**Ft. Lbs.**	**In. Lbs.**
Front Wiper Arm Mounting Nuts	20	15	-
Rear Wiper Arm Mounting Nut	9	-	80
Front Wiper Module Mounting Screws	5.5	-	49
Front Wiper Motor Mounting Screws	7.5	-	66
Washer Reservoir Mounting Nuts	7	-	60
Washer Reservoir Mounting Screws	7	-	60

CLEANING

FRONT WASHER SYSTEM

CAUTION: Never introduce petroleum-based cleaners, solvents, or contaminants into the washer system. These products can rapidly deteriorate the rubber

seals and hoses of the washer system, as well as the rubber squeegees of the wiper blades.

CAUTION: Never use compressed air to flush the washer system plumbing. Compressed air pressures are too great for the washer system plumbing components and will result in further system damage. Never use sharp instruments to clear a plugged washer nozzle or damage to the nozzle orifice and improper nozzle spray patterns will result.

If the washer system is contaminated with foreign material, drain the washer reservoir by removing the washer pump/motor unit from the reservoir. Clean foreign material from the inside of the washer pump inlet filter screen and the washer reservoir using clean washer fluid, a mild detergent or a non-abrasive cleaner. Flush foreign material from the washer system plumbing by first disconnecting the washer hoses from the washer nozzles, then running the washer pump/motor to run clean washer fluid or water through the system. Plugged or restricted front washer nozzles cannot be back-flushed due to the integral check valve mechanism. If the washer nozzle obstruction cannot be cleared, replace the washer nozzle.

FRONT WIPER SYSTEM

CAUTION: Protect the rubber squeegees of the wiper blades from any petroleum-based cleaners, solvents, or contaminants. These products can rapidly deteriorate the rubber squeegees.

The squeegees of wiper blades exposed to the elements for a long time tend to lose their wiping effectiveness. Periodic cleaning of the squeegees is suggested to remove any deposits of salt or road film. The wiper blades, arms and windshield glass should only be cleaned using a sponge or soft cloth and windshield washer fluid, a mild detergent or a non-abrasive cleaner. If the wiper blades continue to leave streaks, smears, hazing or beading on the glass after thorough cleaning of the squeegees and the glass, the entire wiper blade assembly must be replaced.

REAR WASHER SYSTEM

CAUTION: Never introduce petroleum-based cleaners, solvents or contaminants into the washer system. These products can rapidly deteriorate the rubber seals and hoses of the washer system, as well as the rubber squeegee of the wiper blade.

CAUTION: Never use compressed air to flush the washer system plumbing. Compressed air pressures are too great for the washer system plumbing components and will result in further system damage. Never use sharp instruments to clear a plugged washer nozzle or damage to the nozzle orifice and improper nozzle spray patterns will result.

If the washer system is contaminated with foreign material, drain the washer reservoir by removing the washer pump/motor from the reservoir. Clean foreign material from the inside of the washer pump/motor inlet filter

screen and the washer reservoir using clean washer fluid, a mild detergent, or a non-abrasive cleaner. Flush foreign material from the washer system plumbing by first disconnecting the washer hose from the rear washer nozzle, then running the washer pump/motor to run clean washer fluid or water through the system. A plugged or restricted rear washer nozzle cannot be back-flushed due to the integral check valve mechanism. If the rear washer nozzle obstruction cannot be cleared, replace the rear washer nozzle.

REAR WIPER SYSTEM

CAUTION: Protect the rubber squeegee of the wiper blade from any petroleum-based cleaners, solvents or contaminants. These products can rapidly deteriorate the rubber squeegee.

The squeegee of a wiper blade exposed to the elements for a long time tends to lose its wiping effectiveness. Periodic cleaning of the squeegee is suggested to remove any deposits of salt or road film. The wiper blade, arm, and liftgate glass should only be cleaned using a sponge or soft cloth and windshield washer fluid, a mild detergent, or a non-abrasive cleaner. If the wiper blade continues to leave streaks, smears, hazing, or beading on the glass after thorough cleaning of the squeegees and the glass, the entire wiper blade assembly must be replaced.

INSPECTION

FRONT WASHER SYSTEM

The washer system components should be inspected periodically, not just when washer performance problems are experienced. This inspection should include the following points:

1. Check for ice or other foreign material in the washer reservoir. If contaminated, clean and flush the washer system. Refer to **CLEANING**.
2. Inspect the washer plumbing for pinched, leaking, deteriorated or incorrectly routed hoses and damaged or disconnected hose fittings. Replace damaged or deteriorated hoses and hose fittings. Leaking washer hoses can sometimes be repaired by cutting the hose at the leak and splicing it back together using an in-line connector fitting. Similarly, sections of deteriorated hose can be cut out and replaced by splicing in new sections of hose using in-line connector fittings. Whenever routing a washer hose or a wire harness containing a washer hose, it must be routed away from hot, sharp, or moving parts. Also, sharp bends that might pinch the washer hose must be avoided.

FRONT WIPER SYSTEM

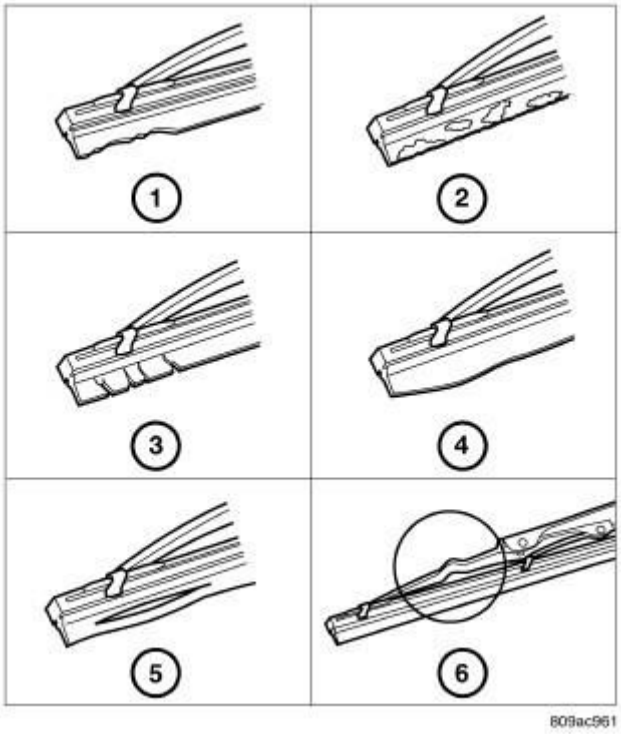

Fig. 3: Wiper Blades And Wiper Arms
Courtesy of CHRYSLER GROUP, LLC

The wiper blades and wiper arms should be inspected periodically, not just when wiper performance problems are experienced. This inspection should include the following points:

1. Carefully inspect the wiper blades for any indications of worn or uneven edges (1), foreign material deposits (2), hardening or cracking (3), deformation or fatigue (4) or splitting (5). Inspect the wiper blade support components and the wiper arms for damage (6) or corrosion. If the wiper arms and blades are contaminated with any foreign material, clean them and the glass as required. Refer to **CLEANING**. If a wiper blade or arm is damaged, or if corrosion is evident, replace the affected wiper arm or blade with a new unit. Do not attempt to repair a wiper arm or blade that is damaged or corroded.
2. Carefully lift the wiper blade off of the glass. Note the action of the wiper arm hinge. The wiper arm should pivot freely at the hinge, but with no lateral looseness evident. If there is any binding evident in the wiper arm hinge, or if there is evident lateral play in the wiper arm hinge, replace the wiper arm.

CAUTION: Do not allow the wiper arm to spring back against the glass without the wiper blade in place or the glass may be damaged.

3. Once proper hinge action of the wiper arm is confirmed, check the hinge for proper spring tension. Remove the wiper blade from the wiper arm. Either place a small postal scale between the blade end of the wiper arm and the glass, or carefully lift the blade end of the arm away from the glass using a small fish scale. On vehicles with unequal wiper arm lengths, be certain that measurements on both arms are taken at a point an equal distance from their wiper arm hinge pins. Compare the scale readings between

the right and left wiper arms. Replace a wiper arm if it has comparatively lower spring tension, as evidenced by a lower scale reading.

4. After cleaning and inspecting the wiper components and the glass, if the wiper blade still fails to clear the glass without smearing, streaking, chattering, hazing or beading, replace the wiper blade.

REAR WASHER SYSTEM

The washer system components should be inspected periodically, not just when washer performance problems are experienced. This inspection should include the following points:

1. Check for ice or other foreign material in the washer reservoir. If contaminated, clean and flush the washer system. Refer to **CLEANING**.
2. Inspect the washer plumbing for pinched, leaking, deteriorated, or incorrectly routed hoses and damaged or disconnected hose fittings. Replace damaged or deteriorated hoses and hose fittings. Leaking washer hoses can sometimes be repaired by cutting the hose at the leak and splicing it back together using an in-line connector fitting. Similarly, sections of deteriorated hose can be cut out and replaced by splicing in new sections of hose using in-line connector fittings. Whenever routing a washer hose or a wire harness containing a washer hose, it must be routed away from hot, sharp, or moving parts. Also, sharp bends that might pinch the washer hose must be avoided.

REAR WIPER SYSTEM

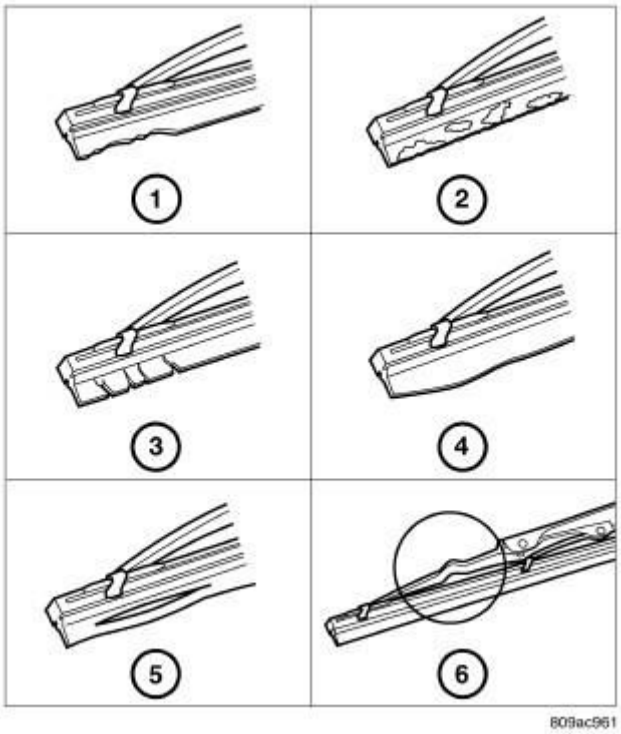

Fig. 4: Inspecting Wiper Blades
Courtesy of CHRYSLER GROUP, LLC

The rear wiper blade and wiper arm should be inspected periodically, not just when wiper performance problems are experienced. This inspection should include the following points:

1. Carefully inspect the wiper blade for any indications of worn or uneven edges (1), foreign material deposits (2), hardening or cracking (3), deformation or fatigue (4), or splitting (5). Inspect the wiper blade support components and the wiper arm for damage (6). If the wiper arm and blade are contaminated with any foreign material, clean them and the glass as required. Refer to **CLEANING**. If the wiper blade or arm is damaged, replace it with a new unit. Do not attempt to repair a wiper arm or blade that is damaged or corroded.
2. Carefully lift the wiper blade off of the glass. Note the action of the wiper arm hinge. The wiper arm should pivot freely at the hinge, but with no lateral looseness evident. If there is any binding evident in the wiper arm hinge, or there is evident lateral play in the wiper arm hinge, replace the wiper arm.

CAUTION: Do not allow the wiper arm to spring back against the glass without the wiper blade in place or the glass may be damaged.

3. Once proper hinge action of the wiper arm is confirmed, check the hinge for proper spring tension. The spring tension of the wiper arm should be sufficient to cause the rubber squeegee to conform to the curvature of the glass. Replace a wiper arm if it has insufficient spring tension to maintain contact between the squeegee and the glass.
4. After cleaning and inspecting the wiper components and the glass, if the wiper blade still fails to clear the glass without smearing, streaking, chattering, hazing, or beading, replace the wiper blade.

ARM, WIPER

DESCRIPTION

FRONT

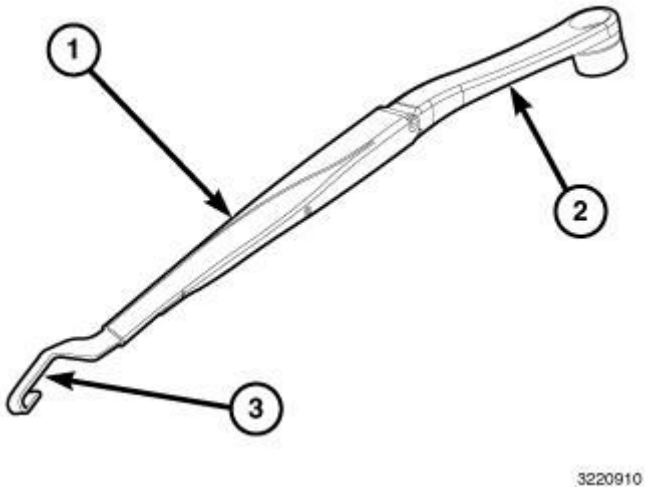

Fig. 5: Stamped Steel Channel, Aluminum Pivot End & Stamped Steel Strap

Courtesy of CHRYSLER GROUP, LLC

The front wiper arms are the rigid members located between the wiper pivots that protrude from the cowl plenum cover/grille panel near the base of the windshield and the wiper blades on the windshield glass. These wiper arms have a somewhat sculpted appearance that actually has a functional purpose. The sculpting is designed to reduce wind buffeting, which helps to reduce wind noise within the passenger compartment of the vehicle.

These wiper arms feature an over-center hinge design that allows easy access to the windshield glass for cleaning. The wiper arm has a die cast aluminum pivot end (2) with a large, internally tapered mounting hole at one end. A molded black plastic cap snaps over the pivot end to conceal the wiper arm retaining nut and the mounting hole following wiper arm installation.

The wide end of a tapered, stamped steel channel (1) hinges on and is secured with a hinge pin to the blade end of the wiper arm pivot end. One end of a rigid stamped steel strap (3), is riveted and crimped within the narrow end of the stamped steel channel. The tip of the wiper blade end of this strap is bent back under itself to form a small hook to cradle the pivot block of the front wiper blade. The entire wiper arm has a satin black finish applied to all of its visible surfaces.

Concealed within the stamped steel channel is a long tension spring which is engaged with a formed wire link hooked over a metal dowel pin that passes through the underside of the pivot end. The opposite end of the spring is hooked over another metal dowel pin that passes through the underside of the steel channel.

The driver and passenger side wiper arms are unique and are not interchangeable. A wiper arm cannot be adjusted or repaired. If damaged or ineffective, the entire wiper arm unit must be replaced.

REAR

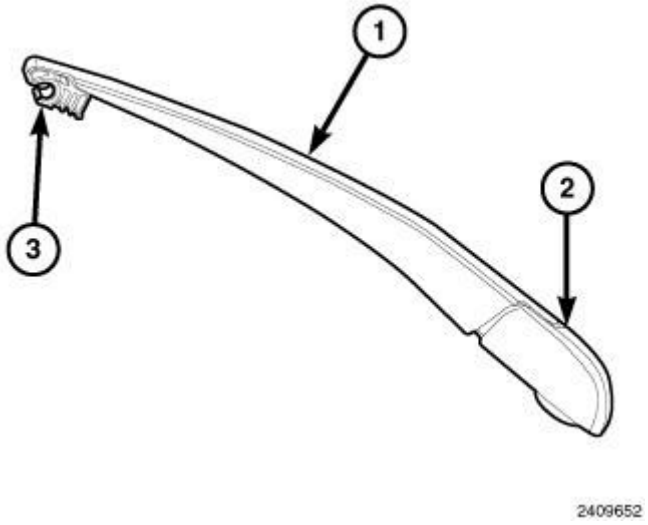

Fig. 6: Rear Wiper Arm
Courtesy of CHRYSLER GROUP, LLC

The rear wiper arm is the rigid member located between the rear wiper motor output shaft that protrudes through the liftgate glass above the center of the liftgate glass opening and the wiper blade on the outside of the glass. The wiper arm is constructed of molded black plastic. A hinged pivot end is also molded plastic.

A molded black plastic nut cover (2) with two pivot pins on the back end and snap features on the end nearest the wiper blade fits over the wiper arm retaining nut to conceal the nut and mounting hole following wiper arm installation. The wiper arm hinge and tension spring are concealed on the underside of the wide end of the arm (1), while an integral latch feature (3) concealed on the underside of the narrow end of the wiper arm accepts the pivot pin of the matching molded plastic wiper blade unit.

The rear wiper arm cannot be adjusted or repaired. If damaged or ineffective, the entire wiper arm unit must be replaced.

OPERATION

FRONT

The front wiper arms are designed to mechanically transmit the motion from the wiper pivots to the front wiper blades. The front wiper arm must be properly indexed to the wiper pivot in order to maintain the proper wiper blade travel on the glass. The tapered mounting hole in the wiper arm pivot end interlocks with the serrations on the tapered outer circumference of the wiper pivot shaft, allowing positive engagement and finite adjustment of this connection.

The mounting nut locks the front wiper arm to the threaded stud of the wiper pivot shaft. The spring-loaded wiper arm hinge controls the down-force applied through the tip of the wiper arm to the front wiper blade on the glass. The hook formation on the tip of the wiper arm provides a cradle for securing and latching the wiper blade pivot block to the wiper arm.

REAR

The rear wiper arm is designed to mechanically transmit the motion from the rear wiper motor output shaft to the rear wiper blade. The wiper arm must be properly indexed to the motor output shaft in order to maintain the proper wiper blade travel on the glass. The tapered hole in the wiper arm pivot end interlocks with the serrations on the outer circumference of the tapered motor output shaft, allowing positive engagement and finite adjustment of this connection.

A hex nut secures the wiper arm pivot end to the threads on the rear wiper motor output shaft and the plastic cover snaps over this connection for a neat appearance. The spring-loaded wiper arm hinge controls the down-force applied through the tip of the wiper arm to the wiper blade on the glass. The latch formation on the tip of the wiper arm provides a cradle for securing and latching the wiper blade pivot pin to the wiper arm.

REMOVAL

FRONT

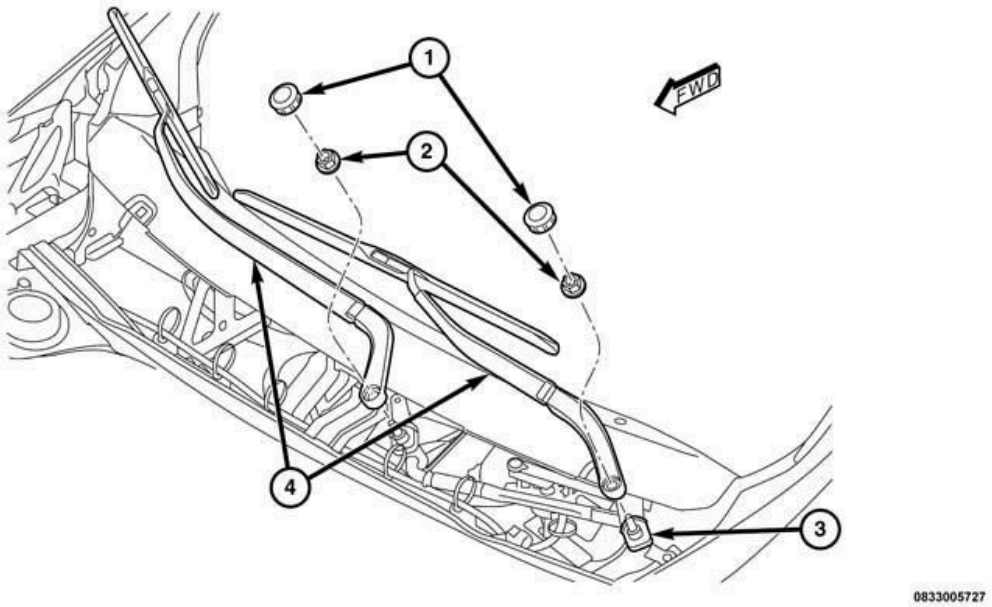

Fig. 7: Front Wiper Arm, Pivot Shaft, Nuts & Caps
Courtesy of CHRYSLER GROUP, LLC

1. Carefully pry the plastic nut cap (1) off of the pivot end of the wiper arm (4).
2. Remove the nut (2) that secures the wiper arm to the wiper pivot shaft (3).
3. Lift the front wiper arm to its over-center position to hold the wiper blade off of the glass and relieve the spring tension on the wiper arm to pivot shaft connection.
4. Use a slight rocking action to disengage the front wiper arm pivot end from the pivot shaft and remove the wiper arm.

CAUTION: The use of a battery terminal puller when removing the front wiper arm is NOT recommended except as a last resort, as this may damage the front wiper arm.

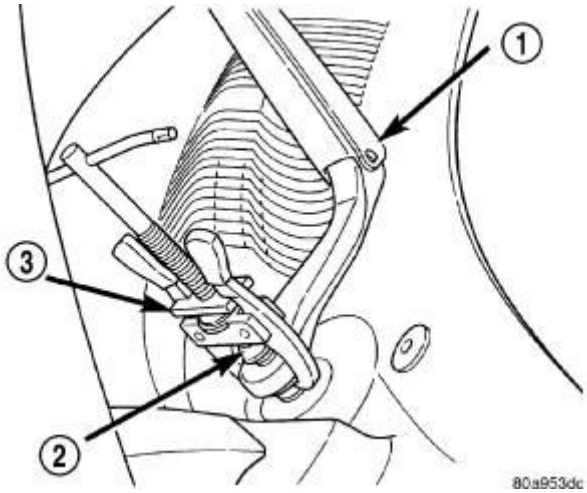

Fig. 8: Disengaging Wiper Arm From Pivot Shaft

Courtesy of CHRYSLER GROUP, LLC

5. If the rocking action failed to free the wiper arm from the pivot shaft, use a suitable battery terminal puller (3) to disengage the wiper arm (1) from the pivot shaft (2).
6. Remove the wiper arm pivot end from the pivot shaft.

REAR

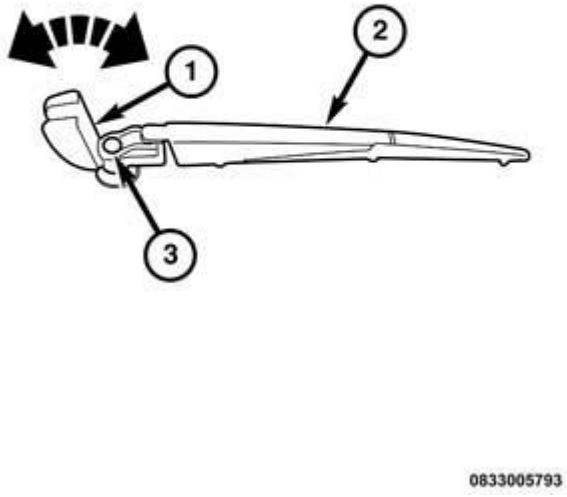

Fig. 9: Wiper Arm, Pivot Cover & Nut
Courtesy of CHRYSLER GROUP, LLC

1. Unsnap and swing the molded plastic pivot cover (1) off of the pivot end of the wiper arm (2).
2. Remove the nut (3) that secures the wiper arm to the rear wiper motor output shaft.

CAUTION: The use of a battery terminal puller when removing the rear wiper arm is NOT recommended as this may damage the rear wiper arm.

3. Use a slight rocking action to disengage the rear wiper arm pivot end from the output shaft and remove the wiper arm.

INSTALLATION

FRONT

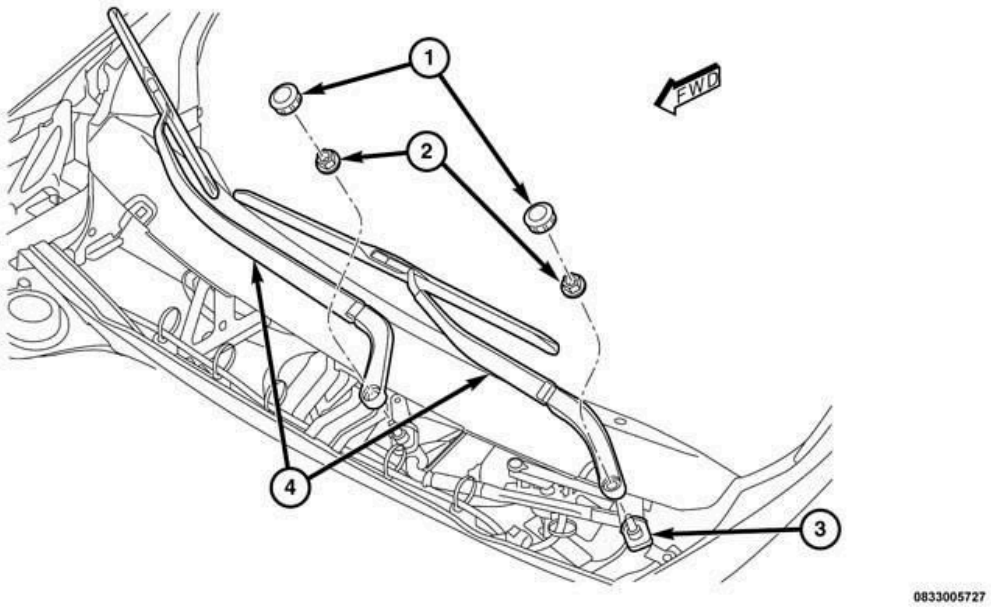

Fig. 10: Front Wiper Arm, Pivot Shaft, Nuts & Caps
Courtesy of CHRYSLER GROUP, LLC

NOTE: Be certain that the wiper motor is in the park position before attempting to install the front wiper arms. Transition the status of the ignition switch to On and move the right multifunction switch control knob to its front wiper Off position. If the wiper pivots move, wait until they stop moving, then transition the ignition switch status back to Off. The front wiper motor is now in its park position.

1. The front wiper arms must be indexed to the pivot shafts with the front wiper motor in the park position to be properly installed. Position the wiper arm pivot end onto the wiper pivot shaft so that the lower edge of the wiper blade is aligned with the wiper alignment marks located near or within the lower margin of the windshield.
2. Once the wiper blade is aligned, lift the wiper arm away from the windshield slightly to relieve the spring tension on the pivot end and push the pivot end of the wiper arm (4) down firmly and evenly over the pivot shaft (3).
3. Install and tighten the nut (2) that secures the wiper arm to the pivot shaft. Tighten the nut to 20 N.m (15 ft. lbs.).
4. Wet the windshield glass, then operate the front wipers. Turn the wiper switch to the Off position, then check for the correct wiper arm alignment position and readjust as required.
5. Reinstall the plastic cap (1) onto the wiper arm pivot end.

REAR

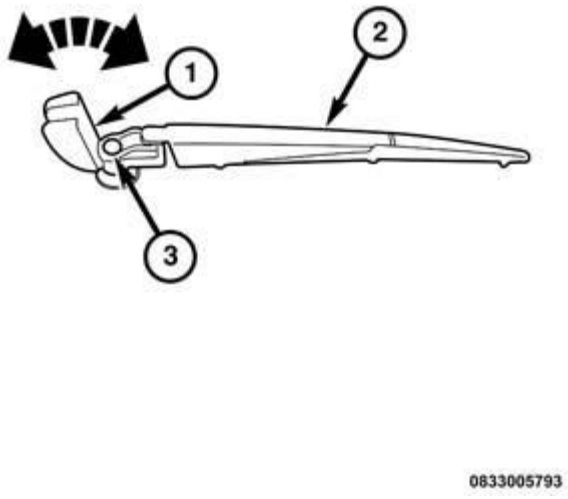

Fig. 11: Wiper Arm, Pivot Cover & Nut
Courtesy of CHRYSLER GROUP, LLC

NOTE: **Be certain that the rear wiper motor is in the park position before attempting to install the rear wiper arm. Transition the status of the ignition switch to On and move the rear wiper switch to its Off position. If the wiper motor output shaft moves, wait until it stops moving, then transition the status of the ignition switch back to Off. The wiper motor is now in its park position.**

1. The rear wiper arm (2) must be indexed to the rear wiper motor output shaft with the motor in the park position to be properly installed. Position the wiper arm pivot end onto the output shaft so that the tip of the wiper blade is horizontal and parallel with the sine wave rear window defogger grid line at the bottom of the liftgate glass.
2. With the rear wiper arm properly indexed, push the tapered mounting hole on the pivot end of the wiper arm down over the output shaft.
3. Install and tighten the nut (3) that secures the rear wiper arm to the output shaft. Tighten the nut to 9 N.m (80 in. lbs.).
4. Fold and snap the molded plastic pivot cover (1) over the nut on the pivot end of the rear wiper arm.
5. Wet the liftgate glass and operate the rear wiper. Turn the rear wiper switch to the Off position, then check for correct wiper arm position and readjust as required.

BLADE, WIPER

DESCRIPTION

FRONT

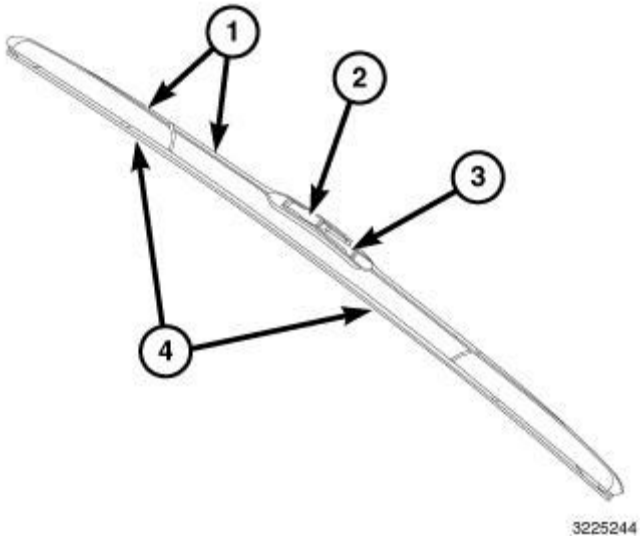

Fig. 12: Blade Covers, Integral Latch & Pivot Block
Courtesy of CHRYSLER GROUP, LLC

Each front wiper blade is secured by an integral latch (2) and an integral pivot block (3) to the hook formation on the tip of each wiper arm, and rests on the glass near the base of the windshield when the wipers are not in operation. These wiper blades have a somewhat sculpted appearance that actually has a functional purpose. The sculpted appearance is due to molded plastic blade covers (1) securely fastened over the bridges and links of the wiper blade. This sculpting is designed to reduce wind buffeting, which helps to reduce wind noise within the passenger compartment of the vehicle.

The wiper blade consists of the following components:

- **Blade Covers** - The molded plastic blade covers shield the wiper superstructure and elements to reduce wind buffeting.
- **Element (4)** - The wiper element or squeegee is the resilient rubber member of the wiper blade that contacts the glass.
- **Flexor** - The flexor is a rigid metal component running along the length of each side of the wiper element where it is gripped by the claws of the superstructure.
- **Superstructure** - The superstructure includes several stamped steel bridges and links with claw formations that grip the wiper blade element. Also included in this unit is the latching, molded plastic pivot block that secures the superstructure to the wiper arm. All of the metal components of the wiper blade have a satin black finish applied.

The passenger side wiper blades are 45.00 centimeters (17.71 inches) long. The driver side wiper blades are 65.00 centimeters (25.59 inches) long. They have non-replaceable rubber elements (squeegees). The wiper blades cannot be adjusted or repaired. If ineffective, worn or damaged the entire wiper blade unit must be replaced.

REAR

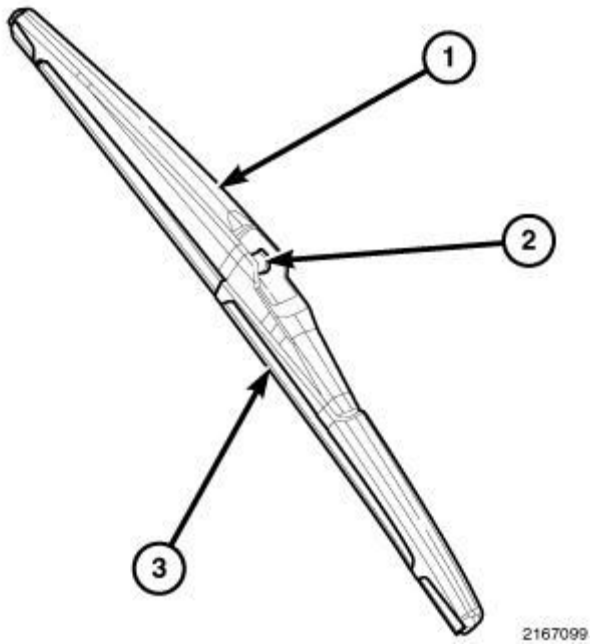

Fig. 13: Rear Wiper Blade Is Secured By An Integral Pivot Pin
Courtesy of CHRYSLER GROUP, LLC

The rear wiper blade is secured by an integral pivot pin (2) to a receptacle at the tip of the rear wiper arm, and rests near the base of the liftgate glass when the wiper is not in operation. The rear wiper blade consists of the following components:

- **Superstructure (1)** - The superstructure includes a molded black plastic bridge and plastic links with claw formations that grip the wiper blade element. Also included in this unit is the pivot pin that secures the superstructure to the wiper arm.
- **Element (3)** - The wiper element or squeegee is the resilient rubber member of the wiper blade that contacts the glass.
- **Flexor** - The flexor is a rigid metal component running along the length of each side of the wiper element where it is gripped by the claws of the superstructure.

The rear wiper blade is 35 centimeters (13.78 inches) long with a non-replaceable element (squeegee). The wiper blade superstructure cannot be adjusted or repaired. If ineffective, worn or damaged the entire wiper blade unit must be replaced.

OPERATION

FRONT

The wiper blades are moved back and forth across the glass by the wiper arms when the wipers are being operated. The wiper blade superstructure is the flexible frame that grips the wiper blade element and evenly distributes the force of the spring-loaded wiper arm along the length of the element. The combination of the wiper arm force and the flexibility of the superstructure makes the element conform to and maintain proper contact with the glass, even as the blade is moved over the varied curvature that may be encountered across the

glass surface.

The wiper element flexor provides the claws of the blade superstructure with a rigid, yet flexible component on the element which can be gripped. The rubber element is designed to be stiff enough to maintain an even cleaning edge as it is drawn across the glass, yet be resilient enough to conform to the glass surface and flip from one cleaning edge to the other each time the wiper blade changes directions.

REAR

The rear wiper blade is moved back and forth across the liftgate glass by the wiper arm when the rear wiper system is in operation. The wiper blade superstructure is the flexible frame that grips the wiper blade element and evenly distributes the force of the spring-loaded wiper arm along the length of the element. The combination of the wiper arm force and the flexibility of the superstructure makes the element conform to and maintain proper contact with the glass, even as the blade is moved over the varied curvature found across the glass surface.

The wiper element flexor provides the claws of the blade superstructure with a rigid, yet flexible component on the element which can be gripped. The rubber element is designed to be stiff enough to maintain an even cleaning edge as it is drawn across the glass, but resilient enough to conform to the glass surface and flip from one cleaning edge to the other each time the wiper blade changes directions.

REMOVAL

FRONT

CAUTION: Do not allow the wiper arm to spring back against the glass without the wiper blade in place or the glass may be damaged.

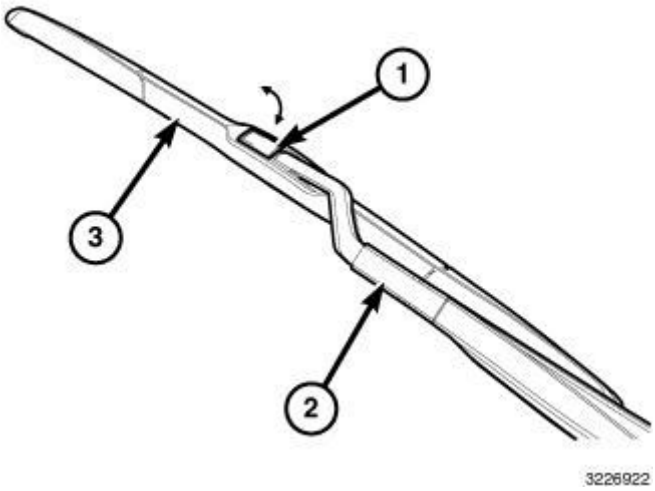

Fig. 14: Tab, Wiper Arm & Element
Courtesy of CHRYSLER GROUP, LLC

NOTE: The notched end of the wiper element flexor should always be oriented towards the end of the wiper blade that is nearest to the wiper pivot.

1. Lift the wiper arm (2) to raise the wiper blade and element (3) off of the glass, until the wiper arm hinge is in its over-center position.
2. To remove the blade from the arm, lift or gently pry the latch release tab (1) located just in front of the pivot block at the tip of the arm upward until it stands perpendicular to the wiper arm.
3. Rotate the lower end of the blade slightly downward (toward the wiper element and away from the wiper arm), then slide the blade away from the tip towards the pivot end of the arm far enough to disengage the pivot block from the hook formation on the end of the arm.
4. Extract the hook formation on the tip of the wiper arm through the opening in the wiper blade superstructure between the latch and the pivot block.
5. Gently lower the tip of the wiper arm onto the glass.

REAR

0833005794

Fig. 15: Rear Wiper Arm & Cover
Courtesy of CHRYSLER GROUP, LLC

1. Lift the rear wiper arm pivot cover (1) upward to allow the rear wiper blade to be raised off of the glass.

NOTE: The rear wiper arm cannot be raised to its over-center hinge position unless the pivot cover is raised first.

2. Lift the rear wiper arm (2) to its over-center hinge position to raise the wiper blade and element off of the liftgate glass.

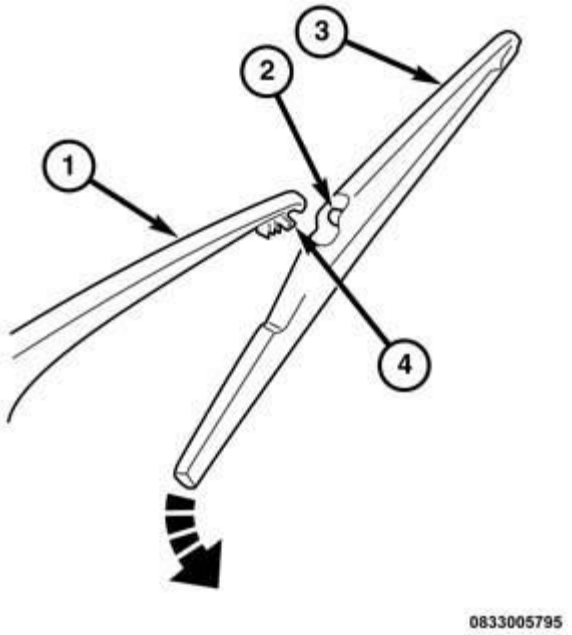

Fig. 16: Wiper Blade, Wiper Arm, Pivot Pin & Receptacle
Courtesy of CHRYSLER GROUP, LLC

3. To remove the wiper blade (3) from the wiper arm (1), grasp the end of the blade nearest to the motor output shaft, then over-rotate it out from under the arm and past its stop far enough to unsnap the blade pivot pin (2) from the receptacle (4) on the end of the arm.
4. Gently lower the tip of the wiper arm onto the glass.

INSTALLATION

FRONT

CAUTION: Do not allow the wiper arm to spring back against the glass without the wiper blade in place or the glass may be damaged.

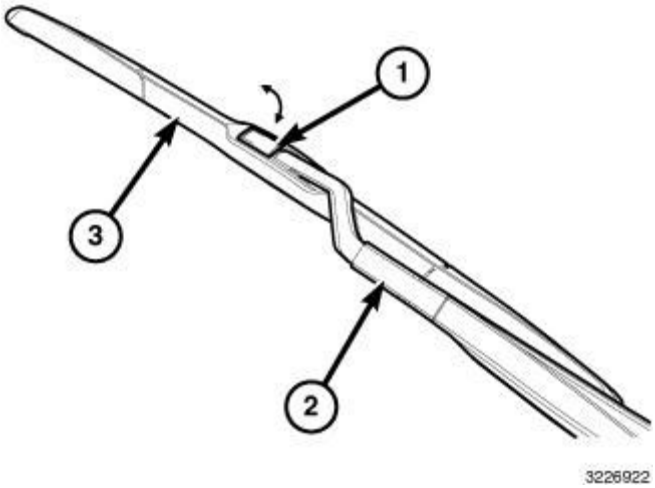

Fig. 17: Tab, Wiper Arm & Element
Courtesy of CHRYSLER GROUP, LLC

NOTE: The notched end of the wiper element flexor should always be oriented towards the end of the wiper blade that is nearest to the wiper pivot.

1. Lift the wiper arm (2) off of the windshield glass, until the wiper arm hinge is in its over-center position.
2. Position the wiper blade and element unit (3) near the hook formation on the tip of the arm with the notched end of the wiper element flexor oriented towards the end of the wiper arm that is nearest to the wiper pivot.
3. Insert the hook formation on the tip of the arm through the opening in the blade superstructure between the latch (1) and the pivot block far enough to engage the pivot block into the hook.
4. Slide the pivot block up into the hook formation on the tip of the wiper arm until it is fully engaged.
5. Rotate the latch release tab down into the blade until it snaps into its locked position. Latch engagement will be accompanied by an audible click.
6. Gently lower the wiper blade and element onto the glass.

REAR

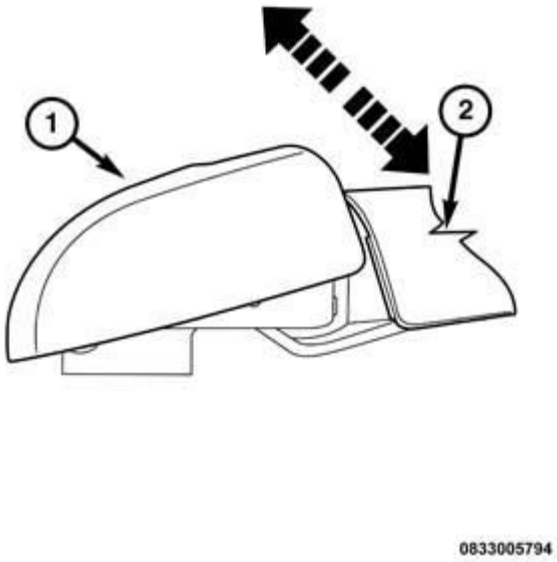

Fig. 18: Rear Wiper Arm & Cover
Courtesy of CHRYSLER GROUP, LLC

1. Lift the rear wiper arm pivot cap (1) upward to allow the rear wiper arm to be raised off of the glass.

NOTE: **The rear wiper arm cannot be raised to its over-center hinge position unless the pivot cover is raised first.**

2. Lift the rear wiper arm (2) to its over-center hinge position and off of the liftgate glass.

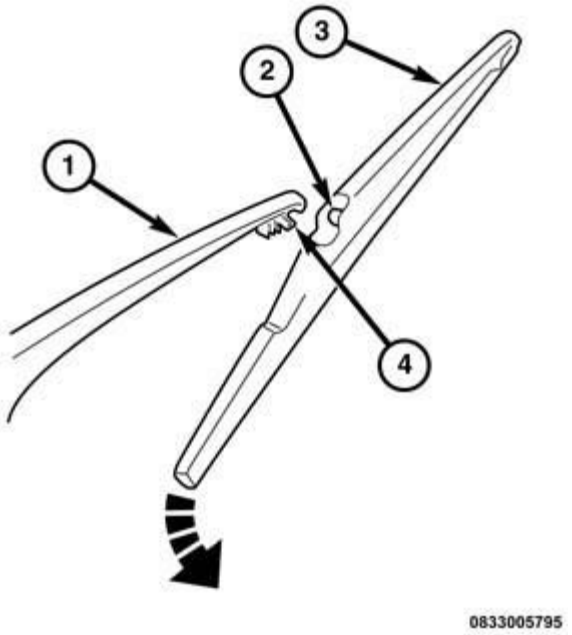

Fig. 19: Wiper Blade, Wiper Arm, Pivot Pin & Receptacle
Courtesy of CHRYSLER GROUP, LLC

3. Position the rear wiper blade (3) with the pivot pin (2) aligned with the opening of the receptacle (4) on the tip of the wiper arm (1).
4. Using hand pressure, press the wiper blade pivot pin firmly and evenly into the wiper arm receptacle until it snaps into place.
5. Lower the wiper blade onto the glass and snap the pivot cover back into place.

CHECK VALVE, WASHER

DESCRIPTION

DESCRIPTION

Diaphragm-type washer system check valves are standard equipment in this vehicle. The check valves for the washer system are integral to their respective front and rear washer nozzles. Refer to **NOZZLE, WASHER, DESCRIPTION**.

OPERATION

OPERATION

Diaphragm-type washer system check valves are standard equipment in this vehicle. The check valves for the washer system are integral to their respective front and rear washer nozzles. Refer to **NOZZLE, WASHER, OPERATION**.

HOSES AND TUBES, WASHER

DESCRIPTION

FRONT

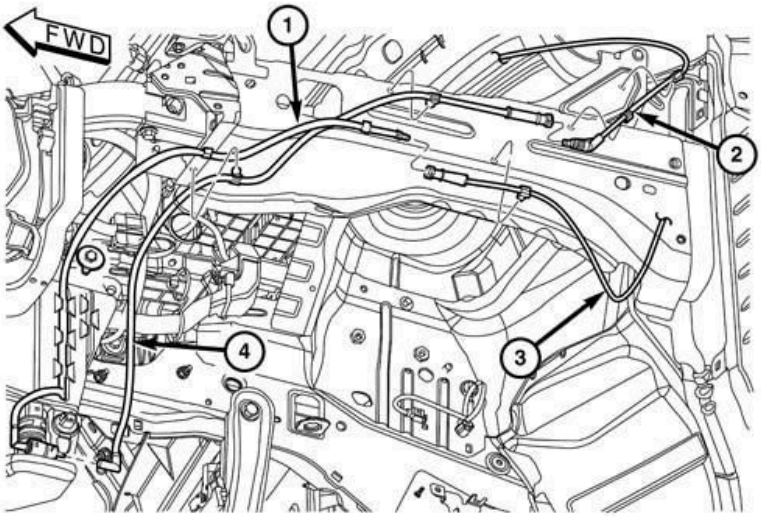

0833005485

Fig. 20: Front Washer Plumbing, Rear Washer Plumbing, Hood Plumbing & Body Plumbing
Courtesy of CHRYSLER GROUP, LLC

The reservoir front washer plumbing (4) consists of small diameter rubber hose or hard plastic tubing that is routed along with the reservoir rear washer plumbing (1) from the washer reservoir located on the left outboard Front End Module (FEM) hydroform ahead of the left front wheel housing. The plumbing is attached to its respective front or rear barbed outlet nipple of the washer pump/motor unit near the bottom of the reservoir, then routed through dedicated troughs integral to the reservoir to the left front fender load beam.

Plastic push-in type retainers secure the plumbing to the underside and the outboard side of the load beam. The front and rear plumbing are then connected by molded plastic quick-connect fittings above the left front wheel house. The front plumbing is connected to the hood plumbing (2). The rear plumbing is connected to the body plumbing (3), which is routed through a grommet and a hole in the dash panel into the passenger compartment.

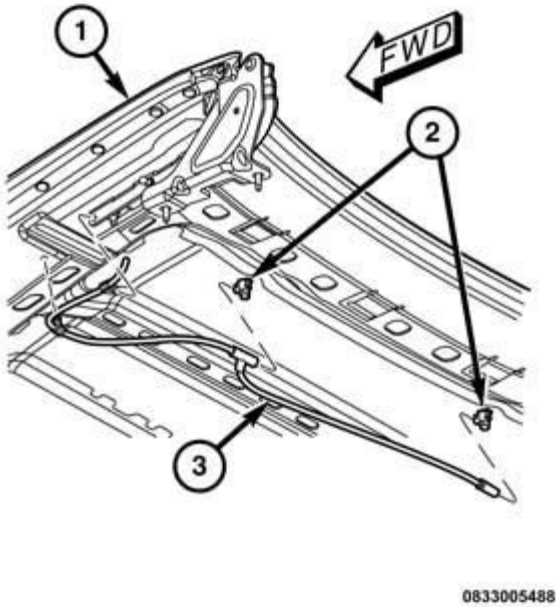

Fig. 21: Hood Plumbing, Hood Panel & Front Washer Nozzle
Courtesy of CHRYSLER GROUP, LLC

The hood plumbing (3) is routed from the load beam to the left hood hinge lower bracket, then to the left hood hinge upper bracket to the hood panel (1) and the inner hood reinforcement. The plumbing is then connected by molded rubber fittings to the barbed nipple of each front washer nozzle (2). The hood plumbing is also secured by plastic push-in type retainers to the load beam, the hood hinge and the inner hood reinforcement.

Washer hose or tube is available for service only as roll stock, which must then be cut to length. The molded plastic washer hose fittings and routing clips cannot be repaired. If these fittings or clips are ineffective or damaged, they must be replaced.

HEADLAMP

The headlamp washer system plumbing consists of a large diameter high pressure rubber supply line that is routed from the outlet nipple of the headlamp washer pump/motor unit on the washer reservoir to one barbed nipple of a wye fitting behind the center of the front fascia. The other two barbed nipples of the wye fitting are connected to two short lengths of supply line that each terminate at a headlamp washer nozzle behind the fascia and below the two front lamp units. The supply line connections at the nozzles and at the headlamp washer pump are secured using molded plastic quick-connect fittings.

Washer hose or tube is available for service only as roll stock, which must then be cut to length. The molded plastic washer plumbing fittings and routing clips cannot be repaired. If these fittings or clips are ineffective or damaged, they must be replaced.

REAR

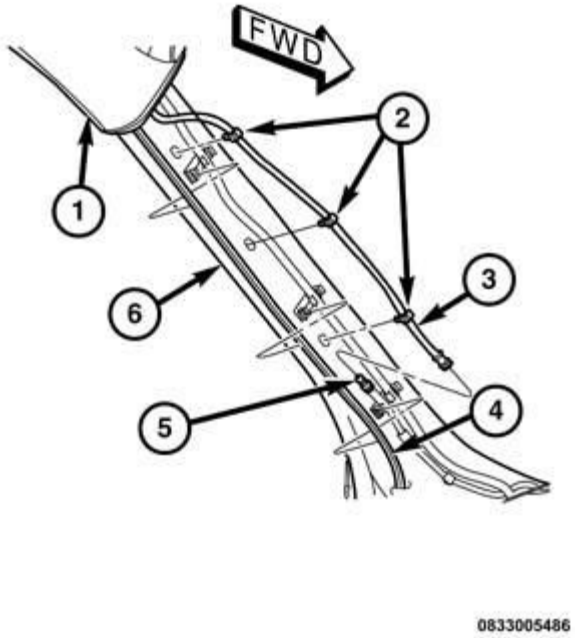

Fig. 22: Rear Washer Plumbing
Courtesy of CHRYSLER GROUP, LLC

The reservoir rear washer plumbing consists of a small diameter rubber hose or hard plastic tubing that is routed along with the reservoir front washer plumbing from the washer reservoir under the left front fender ahead of the left front wheel house to the outboard side of the left front fender load beam. The plumbing is attached to its respective front or rear barbed outlet nipple of the washer pump/motor unit near the bottom of the reservoir. The plumbing is then secured by plastic push-in type retainers to the load beam.

The reservoir rear washer plumbing is connected by a molded plastic quick-connect fitting to the body rear washer plumbing above the left front wheel house. The body rear washer plumbing then passes from the engine compartment through a hole with a rubber grommet in the dash panel near the belt line to the left cowl side area within the passenger compartment.

The body rear washer plumbing (5) is routed up the inner left A-pillar (6), where it is connected by a molded plastic quick-connect fitting to the headliner rear washer plumbing (3). The plumbing is secured by plastic push-in type retainers (2) to the inner A-pillar. The headliner rear washer hose is secured to the headliner (1) substrate and routed along with the antenna wiring (4) toward the back of the vehicle.

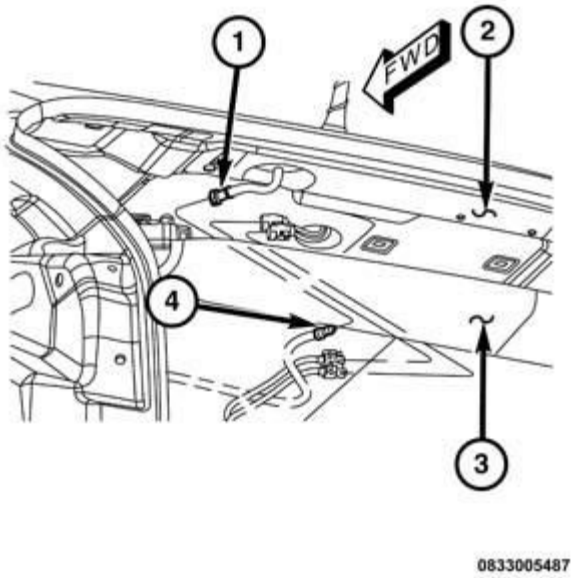

Fig. 23: Headliner, Rear Washer Plumbing & Upper Liftgate Opening Header
Courtesy of CHRYSLER GROUP, LLC

Above the headliner (3) at the back of the vehicle the headliner rear washer plumbing (4) is connected to the liftgate rear washer plumbing (1) by another molded plastic quick-connect fitting. The liftgate rear washer plumbing is routed along with the liftgate wire harness through a clearance hole in the upper liftgate opening header (2) and rubber grommets in the upper liftgate opening trough and the liftgate inner and outer panels to the rear spoiler. The hose is secured to routing clips integral to the Center High Mounted Stop Lamp (CHMSL) housing within the spoiler to the barbed quick-connect nipple of the rear washer nozzle within the liftgate spoiler.

Washer hose or tube is available for service only as roll stock, which must then be cut to length. Portions of the rear washer plumbing is integral to the headliner. The molded plastic washer hose fittings and routing clips cannot be repaired. If these fittings or clips are ineffective or damaged, they must be replaced.

OPERATION

FRONT

Washer fluid in the washer reservoir is pressurized and fed by the washer pump/motor unit through the front washer system plumbing and fittings to the two front washer nozzles. Whenever routing the washer plumbing or a wire harness containing washer plumbing, it must be routed away from hot, sharp, or moving parts; and, sharp bends that might pinch the plumbing must be avoided.

HEADLAMP

Washer fluid in the washer reservoir is pressurized and fed by the headlamp washer pump/motor unit through

the headlamp washer system plumbing and fittings to the two telescopic headlamp washer nozzles. Whenever routing the washer plumbing, it must be routed away from hot, sharp, or moving parts; and, sharp bends that might pinch the plumbing must be avoided.

REAR

Washer fluid in the washer reservoir is pressurized and fed by the washer pump/motor unit through the rear washer system plumbing and fittings to the rear washer nozzle. Whenever routing the washer plumbing or a wire harness containing washer plumbing, it must be routed away from hot, sharp or moving parts; and, any sharp bends that might pinch the plumbing must be avoided.

STANDARD PROCEDURE

DISCONNECTING HIGH PRESSURE WASHER PLUMBING QUICK-CONNECT FITTINGS

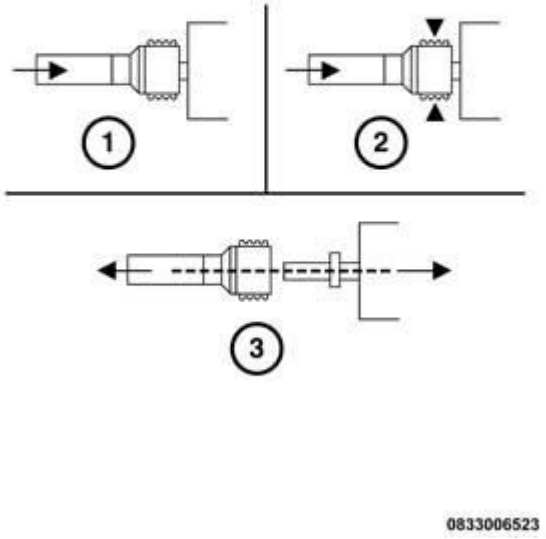

Fig. 24: Disconnecting High Pressure Washer Plumbing Quick-Connect Fittings
Courtesy of CHRYSLER GROUP, LLC

Molded plastic quick-connect fittings join sections of the high pressure headlamp washer plumbing. To disconnect this fitting:

1. Push the molded plastic female half of the quick-connect fitting toward the male half quick-connect nipple of the headlamp washer pump, headlamp washer nozzle or other plumbing fitting.
2. While still pushing the two halves of the connector toward each other, squeeze or pinch the ribbed retainers on each side of the female half of the quick-connect between your thumb and forefinger.
3. Finally, pull the female half of the quick-connect fitting straight back from the male half quick-connect nipple to disconnect.

NOTE: **When reconnecting the quick-connect fitting, align the female half of the fitting to the male half of the fitting. Do not attempt to reconnect using an angled approach. Push the two halves together until an audible click is heard.**

DISCONNECTING LOW PRESSURE WASHER PLUMBING QUICK-CONNECT FITTINGS

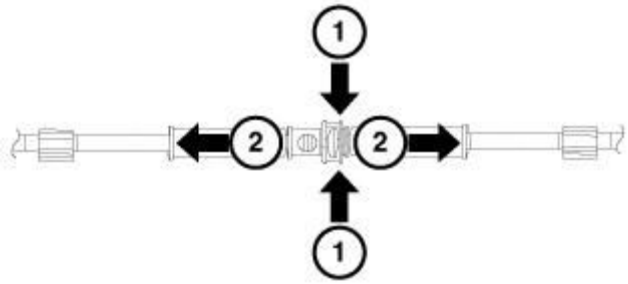

3318084

Fig. 25: Molded Plastic Quick-Connect & Washer Hose Tubes
Courtesy of CHRYSLER GROUP, LLC

Molded plastic quick-connect fittings join sections of the low pressure front and rear washer plumbing. To disconnect this fitting:

1. Squeeze the two solid sides (not the open sides) of the female half of the quick-connect fitting at the outer edge.
2. While still squeezing the female half of the fitting, pull the two sections of the washer plumbing away from each other.

DISCONNECTING REAR WASHER NOZZLE QUICK-CONNECT FITTING

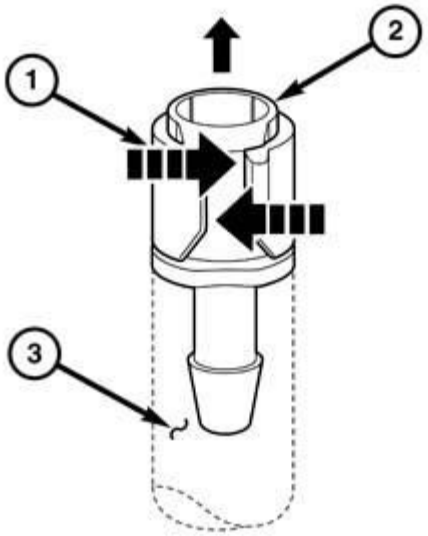

0833006926

Fig. 26: Rear Washer Nozzle Quick-Connect Fitting
Courtesy of CHRYSLER GROUP, LLC

A molded plastic quick-connect fitting (2) joins the rear washer nozzle to the rear washer hose (3). To disconnect this fitting:

1. Spread apart the two ends of the quick-connect fitting retention collar (1) far enough to release the quick-connect nipple fitting of the rear washer nozzle.
2. With the quick-connect nipple fitting of the rear washer nozzle released, pull the nozzle and the rear washer hose away from each other to disconnect them.

NOTE: **When reconnecting the quick-connect fitting, align the female half of the fitting to the male half of the fitting. Do not attempt to reconnect using an angled approach. Push the two halves together until an audible click is heard.**

LINKAGE, WIPER ARM

DESCRIPTION

DESCRIPTION

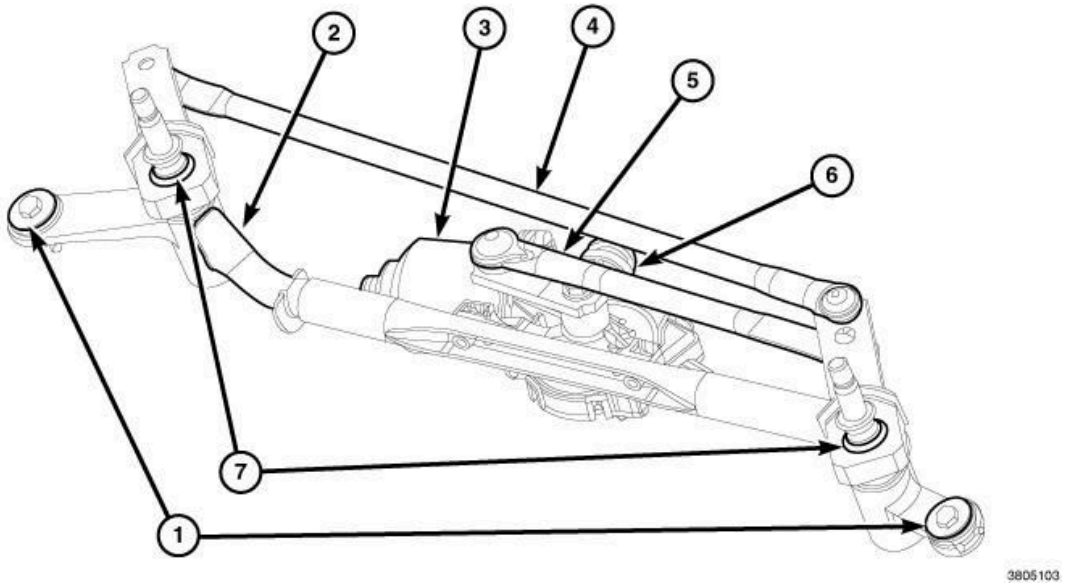

Fig. 27: Wiper Arm Linkage Components
Courtesy of CHRYSLER GROUP, LLC

The wiper linkage module is secured within the cowl plenum panel beneath the cowl plenum cover/grille panel. The ends of the wiper pivot shafts protrude through dedicated openings in the cowl plenum cover/grille panel to drive the wiper arms and blades and are the only visible components of the wiper linkage module.

The wiper linkage module consists of the following major components:

- **Bracket** - The wiper linkage module bracket (2) consists of two tubular members that extend from opposite sides of a die cast center section that serves as the wiper motor mount. Each tubular member has a die cast pivot bracket formation secured at the outboard end where the wiper pivots are secured. The wiper linkage module bracket is secured within the cowl plenum by two screws through two rubber insulators (1).
- **Crank Arm** - The wiper motor crank arm is a stamped steel unit with a slotted hole on the driven end that is secured to the wiper motor output shaft with a nut, and has a ball stud secured to the drive end.
- **Linkage** - A stamped steel drive link (5) connects the wiper motor crank arm to the left wiper pivot lever arm. A stamped steel connector link (4) connects the left wiper pivot lever arm to the right wiper pivot lever arm. Each link has a plastic socket-type bushing on each end. The bushing on the pivot end of each link is snap-fit over a ball stud on the crank arm or the pivot lever arm.
- **Motor** - The wiper motor (3) is secured by a bracket integral to the motor transmission housing with two screws and nuts near the center of the wiper linkage module bracket. A knob-like rubber insulator (6) on a stud integral to the motor transmission housing is engaged in a slot in a stamped bracket on the cowl plenum panel. The two-speed permanent magnet wiper motor features an integral transmission, an internal park switch and an internal automatic resetting circuit breaker. An integral connector receptacle connects the motor to the vehicle electrical system.
- **Pivots** - The two front wiper pivots (7) are secured to the ends of the wiper module bracket. The lever arm that extends from the lower end of the left pivot shaft has two ball studs that are engaged with the bushings of the drive and connector links. The lever arm of the right pivot shaft has a single ball stud that

is engaged with the bushing of the connector link. The upper end of each pivot shaft where the wiper arms will be fastened each is tapered and serrated with a threaded stud formation at the tip.

The wiper motor and crank arm unit is available for separate service replacement. Any other component of the wiper linkage module cannot be adjusted or repaired. If any component of the module other than the motor is ineffective or damaged, the entire wiper linkage module unit must be replaced.

OPERATION

OPERATION

The wiper linkage module operation is controlled by the battery current inputs received by the wiper motor through the Body Control Module (BCM). The wiper motor speed is controlled by current flow to either the low speed or the high speed set of brushes. The park switch is a single pole, single throw, momentary switch within the wiper motor that is mechanically actuated by the wiper motor transmission components. The park switch alternately closes the wiper park switch sense circuit to ground or to battery current, depending upon the position of the wipers on the glass. This feature allows the motor to complete its current wipe cycle after the wiper system has been turned Off, and to park the wiper blades in the lowest portion of the wipe pattern. The automatic resetting circuit breaker protects the motor from overloads.

The wiper motor crank arm, the two wiper linkage members and the two wiper pivots mechanically convert the rotary output of the wiper motor to the back and forth wiping motion of the wiper arms and blades on the glass.

The hard wired inputs and outputs of the wiper motor may be diagnosed using conventional diagnostic tools and procedures. Refer to the appropriate wiring information. However, conventional diagnostic methods will not prove conclusive in the diagnosis of the wiper motor or the electronic controls and communication between other modules and devices that provide some features of the wiper and washer system. The most reliable, efficient and accurate means to diagnose the wiper motor, the BCM or the electronic controls and communication related to wiper motor operation requires the use of a diagnostic scan tool. Refer to **DIAGNOSIS AND TESTING** .

REMOVAL

REMOVAL

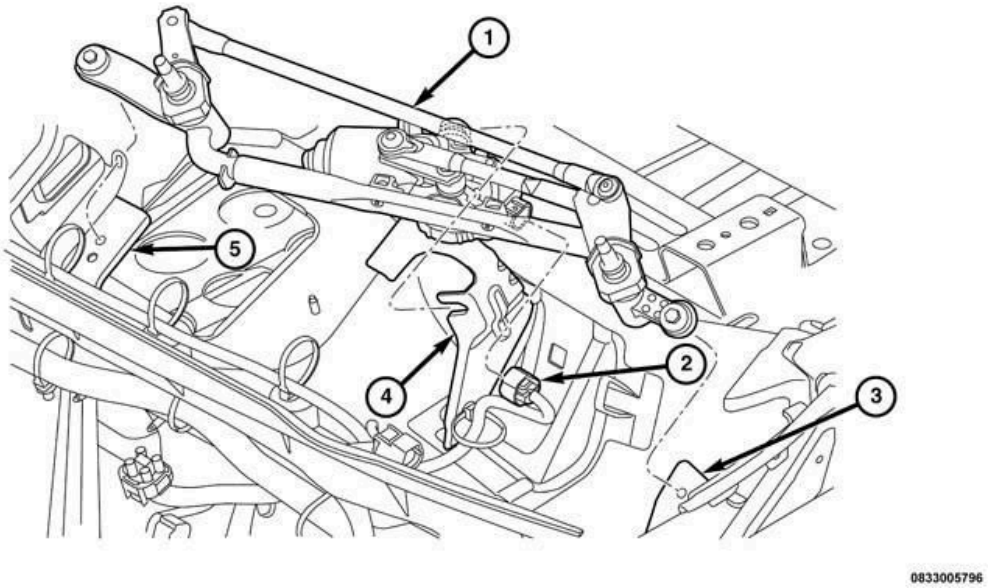

Fig. 28: Front Wiper Module, Brackets & Fasteners
Courtesy of CHRYSLER GROUP, LLC

1. Disconnect and isolate the negative cable from the battery.
2. Remove both front wiper arms from the wiper pivots. Refer to **ARM, WIPER, REMOVAL**.
3. Remove the cowl plenum cover/grille panel from over the front wiper module.
4. Disconnect the wire harness (2) connector from the connector receptacle for the front wiper motor.
5. Remove the two screws that secure the ends of the front wiper module (1) bracket to the stamped brackets (3 and 5) within the cowl plenum.
6. Pull the front wiper module inboard far enough to disengage the knob-like rubber isolator from the slotted bracket (4) on the rearward wall of the cowl plenum.
7. Remove the front wiper module from the cowl plenum as a unit.

INSTALLATION

INSTALLATION

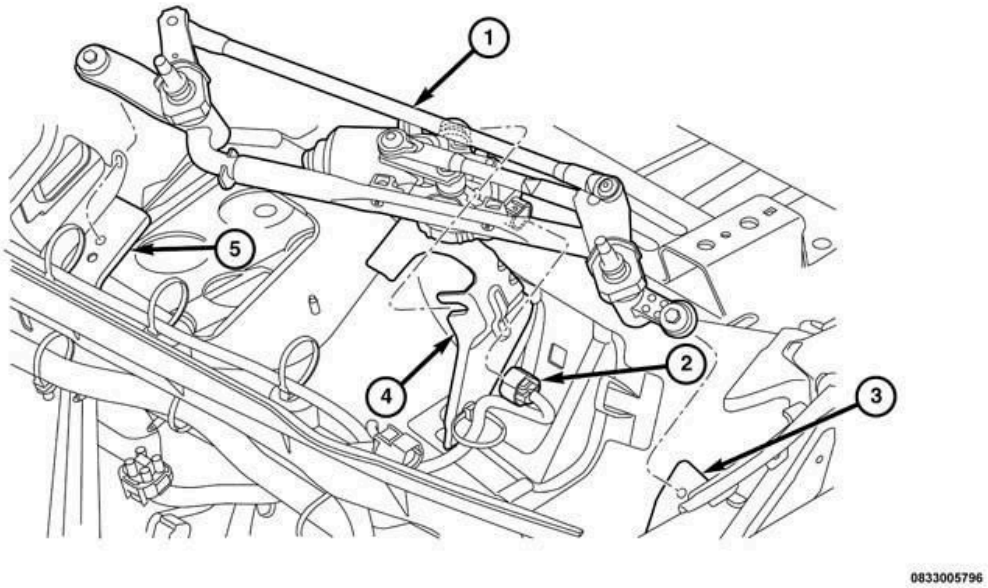

Fig. 29: Front Wiper Module, Brackets & Fasteners
Courtesy of CHRYSLER GROUP, LLC

NOTE: The wiper motor can be removed from the wiper linkage module and is serviced independently from the remainder of the wiper linkage module for this vehicle. Refer to MOTOR, WIPER, REMOVAL.

1. Position the wiper linkage module (1) to the cowl as a unit.
2. Position the knob-like rubber isolator to the slotted bracket (4) on the rear wall of the cowl plenum panel and pull the module outboard far enough to seat the isolator into the bracket.
3. Starting on the outboard side, install and tighten the two screws that secure the wiper linkage module to the stamped brackets (3 and 5) within the cowl plenum. Tighten the screws to 5.5 N.m (49 in. lbs.).
4. Reconnect the wire harness connector (2) to the connector receptacle for the wiper motor. Be certain that the connector is fully engaged and locked.
5. Reinstall the cowl plenum cover/grille panel over the wiper linkage module. Refer to **COVER, COWL PANEL, INSTALLATION** .
6. Reinstall both wiper arms onto the wiper pivots. Refer to **ARM, WIPER, INSTALLATION**.
7. Reconnect the negative cable to the battery.

MODULE, LIGHT RAIN SENSOR

DESCRIPTION

DESCRIPTION

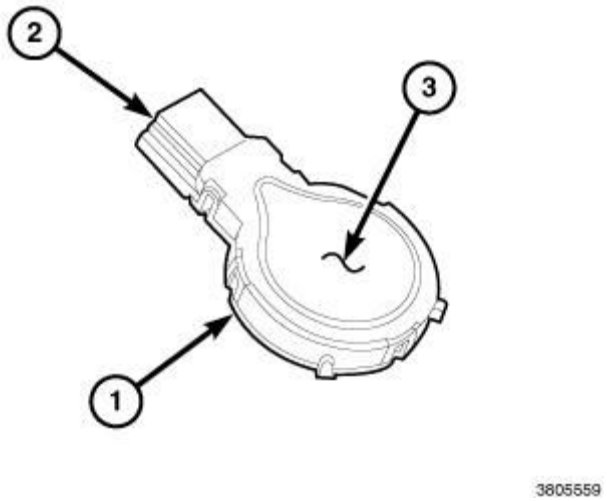

Fig. 30: Light Rain Sensor Module Components
Courtesy of CHRYSLER GROUP, LLC

The Light Rain Sensor Module (LRSM) (1) is the primary component of the automatic wiper system. The LRSM is also capable of performing an ambient light sensor function; therefore, it is alternately referred to as the Rain Light Sensor Module (RLSM), the Light Sensor Module (LSM) or the Rain Sensor Module (RSM). The LRSM is located on the inside of the windshield glass just below and to the right of the inside rear view mirror mounting button. The LRSM is concealed from view within the vehicle interior by a molded plastic inside rear view mirror bracket trim cover that fits over the top of the LRSM housing and the LRSM mounting bracket, but the LRSM is visible through the windshield glass from the exterior of the vehicle.

The molded black plastic LRSM housing has an integral connector receptacle (2) with three terminal pins. These terminal pins connect the LRSM to the vehicle electrical system through a dedicated take out and connector of the overhead wire harness that extends from above the headliner. The windshield side of the housing is filled with a clear, silicone gelatin (also known as SilGel) adhesive membrane pad (3), which serves as an optical coupler between the sensor and the inside of the windshield glass. A spring steel retaining strap or clip extends forward on each side of the housing to latch the LRSM to a molded black plastic mounting bracket, which is permanently bonded to the inside of the windshield glass.

Concealed and protected within the LRSM housing is the electronic circuitry of the module, which includes an InfraRed (IR) diode and photocell based light and rain sensors, control electronics and Local Interface Network (LIN) data bus communication management hardware. The LRSM is a LIN slave node and communicates over a single LIN bus circuit with the Body Control Module (BCM). The BCM is a LIN master node and a gateway to the Controller Area Network (CAN) data bus. The BCM controls the exchange of electronic messages back and forth between the LRSM and other electronic modules in the vehicle, as well as with a diagnostic scan tool connected to the Data Link Connector (DLC).

The LRSM cannot be adjusted or repaired. If ineffective or damaged, the entire module must be replaced. The silicone gelatin adhesive membrane pad is available for separate service replacement. The LRSM mounting bracket is serviced only as a unit with the windshield glass.

OPERATION

OPERATION

The Light Rain Sensor Module (LRSM) (1) (also known as the Rain Light Sensor Module/RLSM, the Light Sensor Module/LSM or the Rain Sensor Module/RSM) senses moisture and ambient light levels on the outside of the windshield glass and sends electronic messages to the Body Control Module (BCM) over the Local Interface Network (LIN) data bus to give an indication of the monitored conditions. The BCM relays messages back and forth between the LRSM and other electronic modules in the vehicle.

For the rain sensor function, InfraRed (IR) diodes within the LRSM generate infrared light beams that are aimed by the optics of the sensor through the windshield glass, while an IR photo diode monitors the infrared light reflected back from the windshield glass. When sufficient moisture accumulates within the wipe pattern on the windshield glass, less of the infrared light is reflected back and the sensor detects a change in the monitored infrared light intensity. For the light sensor function, an IR photo diode within the sensor monitors the intensity of the ambient infrared light received through the windshield glass and the sensor optics.

The internal programming of the LRSM sends the appropriate electronic **wipe command** messages to the BCM over the LIN data bus. The BCM then responds by activating or deactivating the wiper system. Similarly, the LRSM provides electronic **ambient light level** messages to the BCM, and the BCM relays these messages to other electronic modules in the vehicle.

The Steering Control Module (SCM) sends electronic **wiper switch status** and **automatic wipe sensitivity level** messages over the Controller Area Network (CAN) data bus to the BCM based upon the driver-selected settings of the control knob on the control stalk of the right multifunction switch. The higher the selected wipe sensitivity setting the more sensitive the LRSM is to the accumulated moisture on the windshield glass, and the more frequently the LRSM will send **wipe commands** to the BCM to operate the wiper system. The BCM also monitors electronic **automatic display brightness level** messages based upon the driver-selected settings of the Electronic Vehicle Information Center (EVIC) as well as electronic messages from other electronic modules in the vehicle received over the CAN data bus, then relays the messages to the LRSM over the LIN bus.

The LRSM operates on battery current received through a fused ignition output (run/accessory) circuit. The LRSM has a path to ground at all times through a take out of the body wire harness with an eyelet terminal that is secured to the body sheet metal. Therefore, the LRSM is operational only when the ignition switch status is On or Accessory.

If the BCM receives an electronic status message from the LRSM indicating a sensor failure condition, a **Rain Sensor Failure** message should be displayed by the Instrument Cluster (IC) (also known as the Instrument Panel Cluster/IPC). It is important to note that the default operation of the automatic wiper system is continuous wipe On, while the default operation for automatic lighting is On. Therefore, if no command message is received by the BCM from the LRSM for more than about five seconds when the Automatic wipe mode is selected, the wipers will default to Low Speed or High Speed continuous wipe operation. Likewise, if no command message is received by the BCM from the LRSM when the Automatic lighting mode is selected, the exterior lighting will default to On. The BCM must be properly configured for the automatic wipers and automatic lighting options in order for these systems to function.

The hard wired circuits of the LRSM may be diagnosed using conventional diagnostic tools and procedures. Refer to the appropriate wiring information. However, conventional diagnostic methods will not prove conclusive in the diagnosis of the LRSM or the electronic controls and communication between other modules

and devices that provide some features of the automatic wiper and automatic lighting systems. The most reliable, efficient and accurate means to diagnose the LRSM or the electronic controls and communication related to LRSM operation requires the use of a diagnostic scan tool. Refer to the appropriate diagnostic information.

STANDARD PROCEDURE

PROTECTIVE CAP REMOVAL

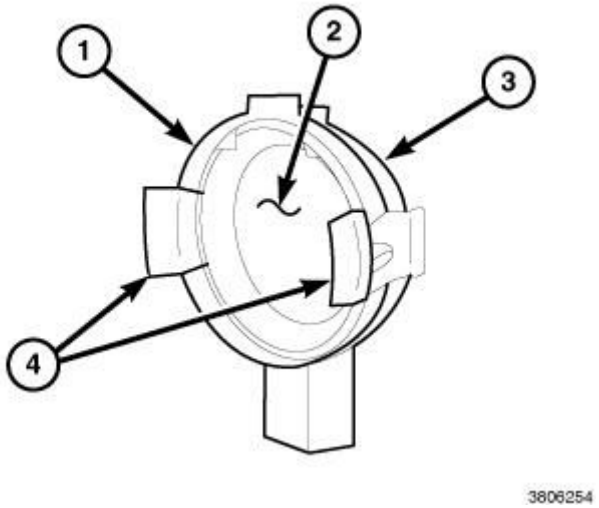

Fig. 31: Protective Cap, Adhesive Membrane, LRSM & Latches
Courtesy of CHRYSLER GROUP, LLC

CAUTION: The Light Rain Sensor Module (LRSM) (3) is equipped with a clear, silicone gelatin (SilGel) adhesive membrane (2) that serves as an optical coupler between the sensor and the windshield glass. Extreme care must be exercised to protect this membrane from contamination before it is installed in the vehicle. The LRSM should always be serviced only in a dust-free environment. Do not touch the membrane with your fingers or tools. The membrane should only come into contact with the clean and dry inside surface of the glass within the mounting bracket bonded to the windshield. The service replacement LRSM is shipped with a clear plastic protective cap (1) installed and secured to the outer circumference of the LRSM by two latch features (4). This protective cap should not be removed until immediately before the LRSM is to be installed using the following procedure.

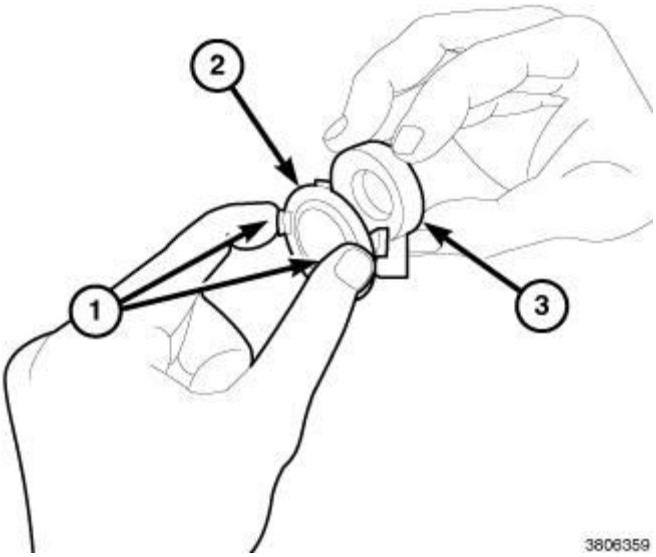

Fig. 32: Tabs, Protective Cap & LRSM
Courtesy of CHRYSLER GROUP, LLC

1. Firmly grasp the LRSM (3) by the outer circumference from the side opposite the SilGel membrane pad.
2. Firmly grasp the protective shipping cap (2) of the LRSM by the two latch release tabs (1) between your thumb and index finger from the SilGel membrane pad side of the module.
3. Firmly pinch the two latch release tabs together between your thumb and index finger far enough to release the two latch features of the protective cap from the outer circumference of the LRSM.
4. Pull the protective cap off of the LRSM.
5. Install the LRSM into the mounting bracket bonded onto the windshield as instructed in the Installation procedure. Refer to **MODULE, LIGHT RAIN SENSOR, INSTALLATION**.

SILICONE GELATIN PAD REPLACEMENT

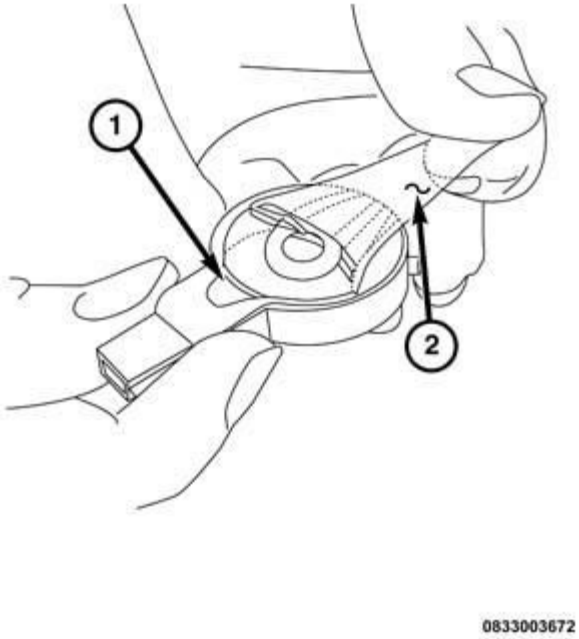

Fig. 33: LRSM & Adhesive Membrane
Courtesy of CHRYSLER GROUP, LLC

CAUTION: The Light Rain Sensor Module (LRSM) is equipped with a clear, silicone gelatin (SilGel) adhesive membrane that serves as an optical coupler between the sensor and the windshield glass. Extreme care must be exercised to protect this membrane from contamination before it is installed in the vehicle. The LRSM should always be serviced only in a dust-free environment. Do not touch the membrane with your fingers or tools. The membrane should only come into contact with the clean and dry inside surface of the glass within the mounting bracket bonded to the windshield. If contaminated, clean any foreign material from the windshield glass using rubbing alcohol and a lint-free cloth. A contaminated SilGel membrane will negatively impact LRSM performance.

CAUTION: When installing the replacement silicone gelatin (SilGel) adhesive membrane pad onto the Light Rain Sensor Module (LRSM), it is necessary to minimize air pockets trapped between the SilGel membrane and the LRSM. Excessive air pockets will negatively impact LRSM performance. It is important to adhere to the procedure steps in a deliberate manner to achieve satisfactory results.

1. Carefully peel away the old silicone gelatin adhesive membrane pad (2) from the windshield (optics) side of the Light Rain Sensor Module (LRSM) (1).
2. Thoroughly clean the windshield (optics) side of the LRSM using isopropyl alcohol and a clean, lint-free cloth.

3. Using care not to contaminate, touch or damage the replacement pad, peel off the yellow protective foil.

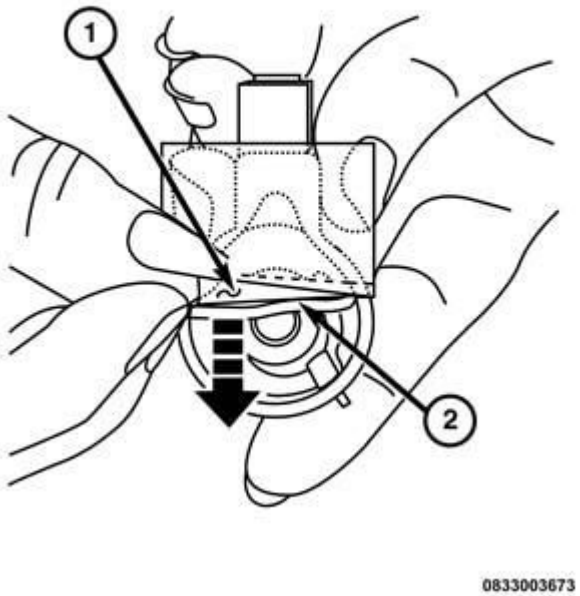

Fig. 34: Protective Film & Replacement Pad
Courtesy of CHRYSLER GROUP, LLC

4. Looking through the transparent protective film (1), align and center the replacement pad (2) over the windshield (optics) side of the LRSM. Then use a slow, smooth and deliberate motion to roll the pad onto the windshield (optics) side of the LRSM.
5. With the transparent protective film still in place, use a thumb and a firm wiping motion to press the entire surface pad against the windshield (optics) side of the LRSM.
6. To avoid contamination or damage of the replacement pad, do not remove the transparent protective film until just before reinstalling the LRSM onto the windshield. Refer to **MODULE, LIGHT RAIN SENSOR, INSTALLATION**.

REMOVAL

REMOVAL

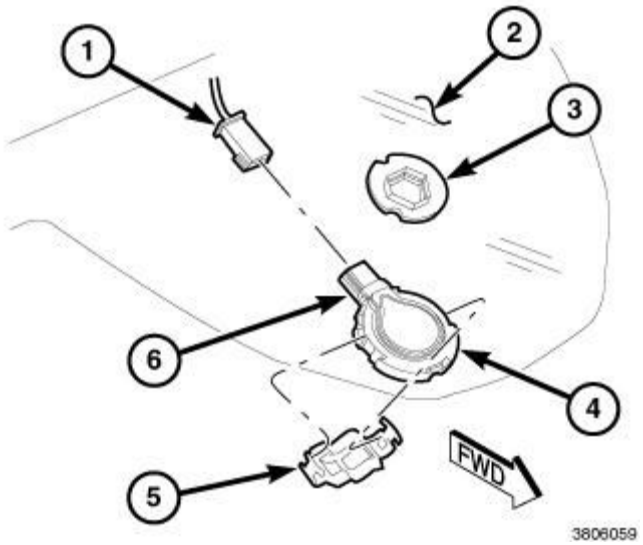

Fig. 35: LRSM, Harness Connector, Mount Bracket & Retaining Strap
Courtesy of CHRYSLER GROUP, LLC

1. Disconnect and isolate the negative cable from the battery.
2. Remove the inside rear view mirror from the mounting button (3) on the inside of the windshield glass (2). Refer to **MIRROR, REARVIEW, REMOVAL** .
3. Disconnect the wire harness connector (1) from the connector receptacle for the Light Rain Sensor Module (LRSM) (6).
4. Insert the tip of a small screwdriver into the rectangular cutout on one side of the spring steel retaining strap (5) on the LRSM and carefully pry the end of the strap closest to the glass away from the groove in the mounting bracket (4) on the windshield. Now rotate the loose side of the strap away from the glass far enough to disengage the other side of the strap from the mounting bracket groove.
5. Firmly grasp the connector receptacle of the LRSM to pull the module away from the windshield glass and the mounting bracket.
6. If the LRSM will be reinstalled, the silicone gelatin (also known as SilGel) adhesive membrane pad MUST be removed, discarded and replaced with a new unit as described in: Standard Procedure - Silicone Gelatin Pad Replacement. Refer to **MODULE, LIGHT RAIN SENSOR, STANDARD PROCEDURE**.

INSTALLATION

INSTALLATION

CAUTION: The Light Rain Sensor Module (LRSM) is equipped with a clear, silicone gelatin (SilGel) adhesive membrane that serves as an optical coupler between the sensor and the windshield glass. Extreme care must be exercised to protect this membrane from contamination before it is installed in the vehicle. The LRSM should always be serviced only in a dust-free environment. Do not touch the membrane with your fingers or tools. The membrane should only come into contact with the clean and dry

inside surface of the glass within the mounting bracket bonded to the windshield. If contaminated, clean any foreign material from the windshield glass using rubbing alcohol and a lint-free cloth. A contaminated SilGel membrane will negatively impact LRSM performance.

CAUTION: When installing the Light Rain Sensor Module (LRSM) it is necessary to minimize air pockets trapped between the SilGel membrane and the windshield glass. Excessive air pockets will negatively impact LRSM performance. It is important to adhere to the procedure steps in a deliberate manner to achieve satisfactory results.

CAUTION: To avoid excessive air pockets, do not try to install the spring steel retaining strap until AFTER the Light Rain Sensor Module (LRSM) has been successfully positioned to the glass within the mounting bracket bonded to the windshield.

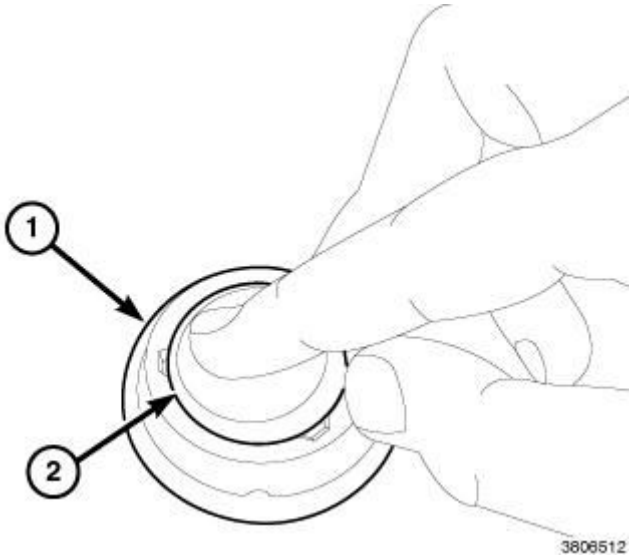

Fig. 36: LRSM & Mounting Bracket
Courtesy of CHRYSLER GROUP, LLC

1. If a new Light Rain Sensor Module (LRSM) is being installed, remove the protective shipping cap from the LRSM as described in: Standard Procedure - Protective Cap Removal. Refer to **MODULE, LIGHT RAIN SENSOR, STANDARD PROCEDURE**. If an existing LRSM is being reused, the silicone gelatin (also known as SilGel) adhesive membrane pad MUST be removed, discarded and replaced with a new unit as described in: Standard Procedure - Silicone Gelatin Pad Replacement. Refer to **MODULE, LIGHT RAIN SENSOR, STANDARD PROCEDURE**.
2. Grasp the LRSM (2) by the connector receptacle between your thumb and middle finger. Place your index finger on the back of the LRSM at the point opposite the connector receptacle.
3. Align the LRSM with the mounting bracket (1) bonded onto the inside of the windshield glass near the inside rear view mirror mounting button.
4. Slowly insert the LRSM into the mounting bracket at a slight angle so that the edge of the module nearest

the tip of your index finger makes the initial contact with the windshield glass.

5. Using a slow, deliberate motion and light pressure, draw your index finger across the back of the LRSM toward the connector receptacle until the silicone gelatin adhesive membrane pad is in full contact with the windshield glass.

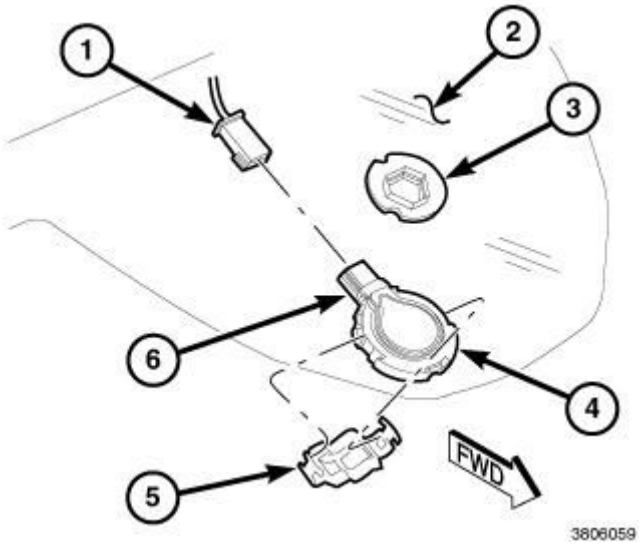

Fig. 37: LRSM, Harness Connector, Mount Bracket & Retaining Strap
Courtesy of CHRYSLER GROUP, LLC

6. Engage one side of the spring steel retaining strap (5) into the groove on one side of the LRSM mounting bracket (4) on the inside of the windshield glass (2).
7. Depress the opposite side of the retaining strap over the LRSM firmly and evenly until it fully engages the groove of the mounting bracket with an audible click.
8. Looking through the windshield from outside the vehicle, inspect the silicone gelatin adhesive membrane pad for air pockets. If air pockets are observed, let the vehicle stand for about four hours at room temperature to allow the air pockets to dissipate. If an adhesive void (air pocket) greater than about 1 millimeter (0.04 inch) is observed, replace the flawed silicone gelatin adhesive membrane pad with a new unit as described in: Standard Procedure - Silicone Gelatin Pad Replacement. Refer to **MODULE, LIGHT RAIN SENSOR, STANDARD PROCEDURE**.
9. Reconnect the wire harness connector (1) to the LRSM connector receptacle (6).
10. Reinstall the inside rear view mirror to the mounting button (3) on the inside of the windshield glass. Refer to **MIRROR, REARVIEW, INSTALLATION** .
11. Reconnect the negative cable to the battery.

NOZZLE, WASHER

DESCRIPTION

FRONT

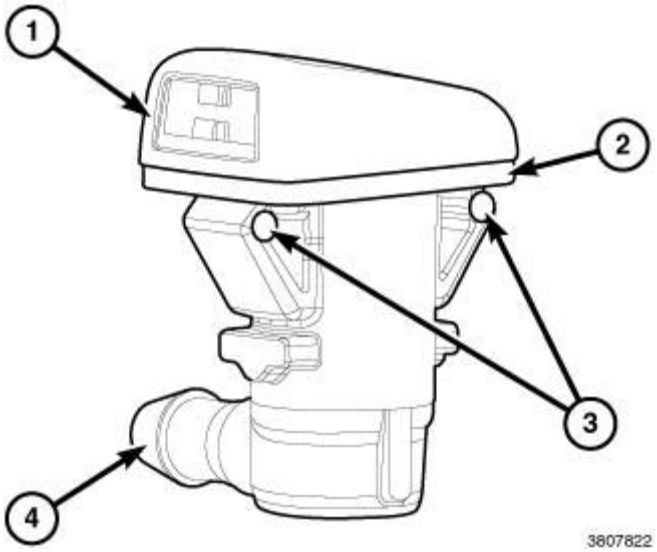

Fig. 38: Washer Nozzle Components
Courtesy of CHRYSLER GROUP, LLC

The fluidic front washer nozzles (1) are constructed of molded plastic and include an integral check valve. Each nozzle has two integral latches (3) that secure it in a dedicated hole in the hood panel near the base of the windshield. A resilient rubber gasket (2) seals the nozzle to the outer hood panel. The domed upper surface of the washer nozzle is visible on the outside of the hood panel and the nozzle orifices are oriented towards the windshield glass.

An integral diaphragm type check valve is contained within the body of each nozzle. The barbed washer plumbing fittings (4) for the nozzles extend below the hood panel and are accessible from the engine compartment when the hood is opened.

A front washer nozzle cannot be adjusted or repaired and, if ineffective or damaged, it must be replaced.

HEADLAMP

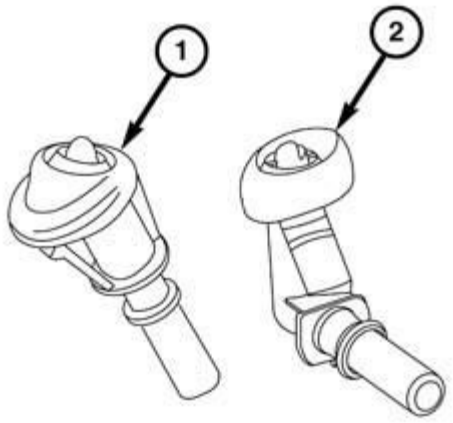

0833005537

Fig. 39: On-Road Nozzle & Off-Road Nozzle
Courtesy of CHRYSLER GROUP, LLC

Vehicles equipped with the optional headlamp washer system have two static headlamp washer nozzles mounted in the front bumper fascia, one beneath each front lamp unit. Two unique versions of the nozzle are used and they are not interchangeable. The on-road version of the nozzle (1) used in vehicles that are not equipped with the optional off-road front bumper fascia can be identified by a more rounded bezel appearance and a straight quick-connect inlet nipple. The off-road version of the nozzle (2) used in vehicles that are equipped with the optional off-road front bumper fascia can be identified by a more elongated bezel appearance and a right angle quick-connect inlet nipple.

The fixed body of both molded plastic nozzles have a fixed integral mounting clip on the rearward side just below the bezel, and a movable integral mounting clip on the opposite side. Both also have an integral index tab that engages a notch in the front bumper fascia mounting hole. A large diameter high pressure washer fluid supply line from the dedicated headlamp washer pump/motor unit is connected to the inlet nipple on the nozzle body using a molded plastic quick-connect fitting.

The headlamp washer nozzle cannot be adjusted or repaired and, if ineffective or damaged, the nozzle must be replaced with a new unit.

REAR

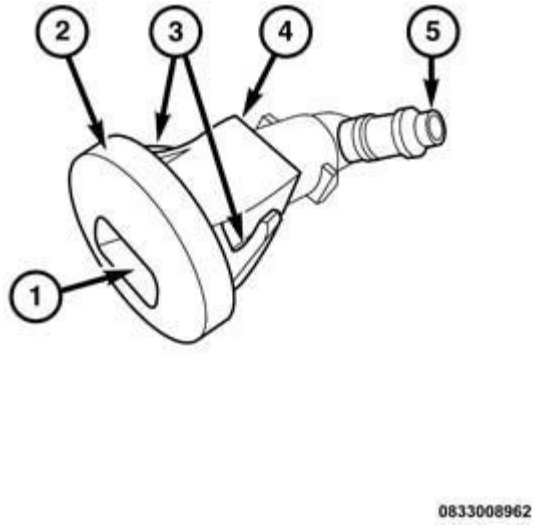

Fig. 40: Fluidic Rear Washer Nozzle
Courtesy of CHRYSLER GROUP, LLC

The fluidic rear washer nozzle (4) is constructed of molded plastic and includes an integral check valve. The rear washer nozzle is secured by two integral latch features (3) within a mounting hole near the Center High-Mounted Stop Lamp (CHMSL) in the lower surface of the rear spoiler above the liftgate glass opening on the outer liftgate panel.

The outer surface of the washer nozzle is visible on the lower exterior surface of the spoiler, and a rubber gasket seals the nozzle bezel or flange (2) to the spoiler mounting hole. The nozzle orifice (1) is oriented downward towards the liftgate glass. The barbed washer plumbing quick-connect nipple fitting (5) is concealed between the spoiler and the liftgate outer panel.

The rear washer nozzle cannot be adjusted or repaired and, if ineffective or damaged, it must be replaced.

OPERATION

FRONT

The two washer nozzles are designed to dispense washer fluid into the wiper pattern area on the outside of the windshield glass. Pressurized washer fluid is fed to each nozzle from the washer reservoir by the washer pump/motor unit through a single supply line, which is attached to a barbed nipple on each washer nozzle below the hood panel. A fluidic matrix within the washer nozzle causes the pressurized washer fluid to be emitted from the nozzle orifice as an oscillating stream to more effectively cover a larger area of the glass to be cleaned.

The integral check valve in each nozzle prevents washer fluid from draining out of the washer supply lines back to the washer reservoir. This drain-back would result in a lengthy delay after the washer switch is actuated until

washer fluid was dispensed through the nozzles, because the washer pump would have to refill the washer plumbing from the reservoir to the nozzles. Such a drain-back condition could also result in water, dirt, or other outside contaminants being drawn into the washer system by a siphoning action through the washer nozzle orifice. This water could subsequently freeze and plug the nozzle, while other contaminants could interfere with proper nozzle operation and cause improper nozzle spray patterns. In addition, the check valve prevents washer fluid from siphoning out through the washer nozzles after the washer system is turned Off.

When the washer pump pressurizes and pumps washer fluid from the reservoir through the washer plumbing, the fluid pressure unseats a diaphragm from over a sump well within the nozzle by overriding the spring pressure applied to it by a piston. With the diaphragm unseated, washer fluid is allowed to flow toward the nozzle orifice. When the washer pump stops operating, the spring pressure on the piston seats the diaphragm over the sump well in the nozzle and fluid flow in either direction within the washer plumbing is prevented.

HEADLAMP

Each time the headlamp washer pump/motor unit is activated, pressure builds within the high pressure supply lines to each headlamp washer nozzle. As the hydraulic pressure is delivered to the nozzle, the nozzle sprays several high pressure streams against the lens of the front lamp unit.

REAR

The rear washer nozzle is designed to dispense washer fluid into the wiper pattern area on the outside of the liftgate glass. Pressurized washer fluid is fed to the nozzle from the washer reservoir by the washer pump/motor through a single supply line, which is attached to a barbed nipple on the back of the nozzle. A fluidic matrix within the nozzle causes the pressurized washer fluid to be emitted from the nozzle orifice as an oscillating stream to more effectively cover a larger area of the glass to be cleaned.

The integral check valve in the nozzle prevents washer fluid from draining out of the washer supply hose back to the washer reservoir. This drain-back would result in a lengthy delay after the washer switch is actuated until washer fluid was dispensed through the nozzle because the washer pump would have to refill the washer plumbing from the reservoir to the nozzle. Such a drain-back condition could also result in water, dirt, or other outside contaminants being siphoned into the washer system through the washer nozzle orifice. This water could subsequently freeze and plug the nozzle, while other contaminants could interfere with proper nozzle operation and cause improper nozzle spray patterns. In addition, the check valve prevents washer fluid from siphoning through the washer nozzle after the washer system is turned Off.

When the washer pump pressurizes and pumps washer fluid from the reservoir through the washer plumbing, the fluid pressure unseats a diaphragm from over a sump well within the nozzle by overriding the spring pressure applied to it by a piston. With the diaphragm unseated, washer fluid is allowed to flow toward the nozzle orifice. When the washer pump stops operating, the spring pressure on the piston seats the diaphragm over the sump well within the nozzle and fluid flow in either direction within the washer plumbing is prevented.

REMOVAL

FRONT

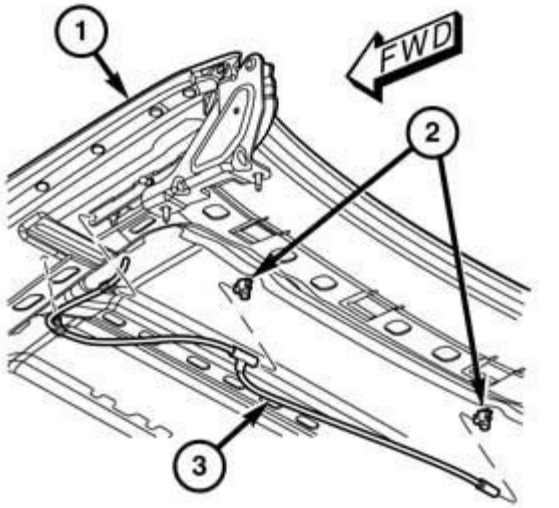

Fig. 41: Hood Plumbing, Hood Panel & Front Washer Nozzle
Courtesy of CHRYSLER GROUP, LLC

1. From the underside of the hood (1), remove the push-in retainers that secure the rear edge of the hood silencer pad to the inner hood reinforcement as necessary to access the washer nozzle (2) plumbing connections.
2. From the underside of the hood, disconnect the washer plumbing (3) fitting from the barbed nipple of the washer nozzle.
3. From the underside of the hood, release the integral latch features of the washer nozzle and push the nozzle out through the mounting hole toward the top side of the hood.
4. Remove the washer nozzle from the top of the hood panel.

HEADLAMP

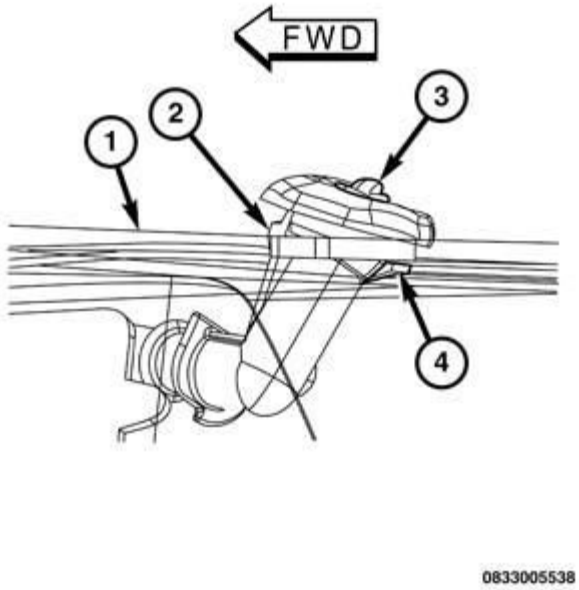

Fig. 42: Headlamp Washer Nozzle
Courtesy of CHRYSLER GROUP, LLC

CAUTION: Take proper precautions to ensure there is no cosmetic damage done to the paint finish of the headlamp washer nozzle cover or the front fascia during the following procedure.

NOTE: There are two headlamp washer nozzle configurations available for this vehicle: one for vehicles not equipped with an off-road package, and another for vehicles equipped with an off-road package (shown here). However, the removal and installation procedures for these two nozzle configurations is identical.

1. Remove the front fascia from the vehicle. Refer to **FASCIA, FRONT, REMOVAL** .
2. From the back side of the front fascia (1), disconnect the high pressure hose quick-connect fitting from the quick-connect nipple of the headlamp washer nozzle.

   Refer to **HOSES AND TUBES, WASHER, STANDARD PROCEDURE**.

3. From the back side of the front fascia, compress the movable mounting clip (2) of the headlamp washer nozzle (3) tightly against the body of the nozzle.
4. With the movable mounting clip fully compressed, tip the body of the nozzle forward far enough to raise the end of the movable clip through the mounting hole of the front fascia.
5. Disengage the fixed mounting clip (4) of the nozzle and pull it upward through the mounting hole of the front fascia.
6. Remove the headlamp washer nozzle from the front fascia.

REAR

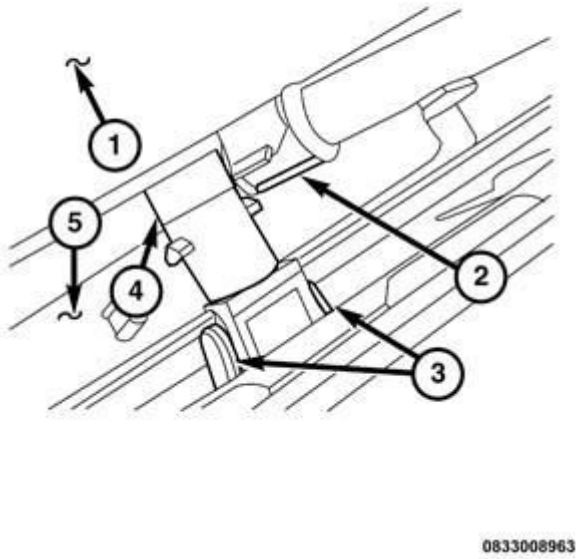

Fig. 43: Rear Washer Nozzle
Courtesy of CHRYSLER GROUP, LLC

1. Remove the liftgate spoiler from the top of the liftgate outer panel. Refer to **SPOILER, REMOVAL** .
2. From the interior of the spoiler (1), disengage the rear washer hose from the routing clips on the back of the Center High Mounted Stop Lamp (CHMSL) housing (5).
3. Disconnect the quick-connect fitting (2) of the washer hose from the quick-connect nipple of the rear washer nozzle (4). Refer to **HOSES AND TUBES, WASHER, STANDARD PROCEDURE**.
4. From the interior of the spoiler, release the latch features (3) of the rear washer nozzle and push the nozzle out through the mounting hole to the outside of the spoiler.
5. Remove the rear washer nozzle from the liftgate spoiler.

INSTALLATION

FRONT

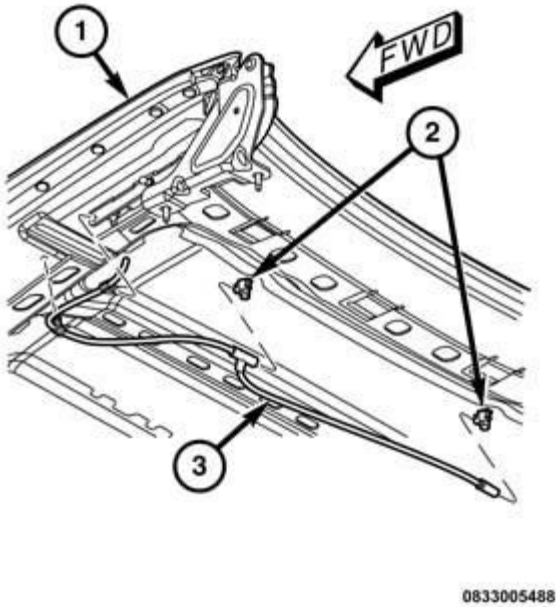

Fig. 44: Hood Plumbing, Hood Panel & Front Washer Nozzle
Courtesy of CHRYSLER GROUP, LLC

1. Position the washer nozzle (2) to the mounting hole on the outside of the hood panel (1).
2. Align the anti-rotation tabs of the nozzle with the anti-rotation notches in the mounting hole.
3. Using hand pressure, push firmly and evenly on the top of the washer nozzle until the integral latch features lock into place on the underside of the hood.
4. From the underside of the hood, reconnect the washer plumbing (3) fitting to the barbed nipple of the nozzle.
5. Reinstall the push-in retainers that secure the rear edge of the hood silencer pad to the inner hood reinforcement.

HEADLAMP

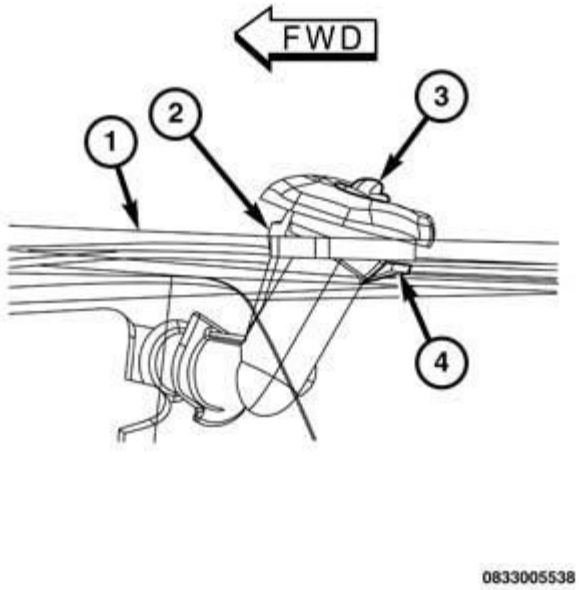

Fig. 45: Headlamp Washer Nozzle
Courtesy of CHRYSLER GROUP, LLC

CAUTION: Take proper precautions to ensure there is no cosmetic damage done to the paint finish of the headlamp washer nozzle cover or the front fascia during the following procedure.

1. Insert the quick-connect nipple and body of the headlamp washer nozzle (3) into the mounting hole of the front fascia (1).
2. Engage the fixed mounting clip (4) on the nozzle body through the mounting hole.

   Tilt the nozzle body rearward far enough to engage the movable mounting clip (2) through the mounting hole and until the nozzle bezel is flush with the surface of the front fascia.

3. From the back side of the front fascia (1), reconnect the high pressure hose quick-connect fitting to the quick-connect nipple of the headlamp washer nozzle.
4. Reinstall the front fascia onto the vehicle. Refer to **FASCIA, FRONT, INSTALLATION** .

REAR

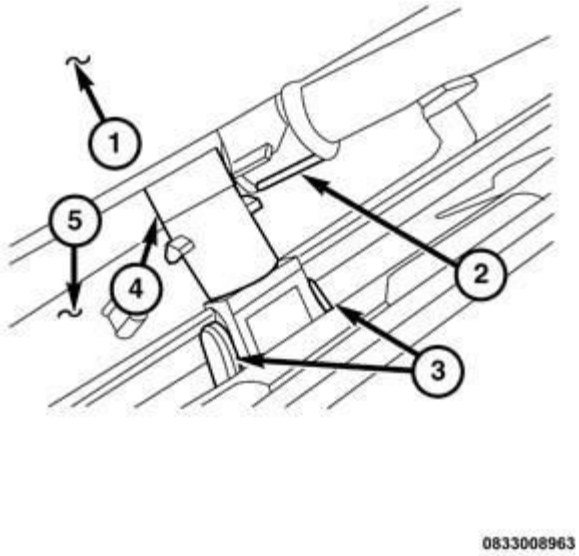

Fig. 46: Rear Washer Nozzle
Courtesy of CHRYSLER GROUP, LLC

1. Position the rear washer nozzle (4) to the mounting hole in the liftgate spoiler (1). Be certain that the rubber gasket is in position on the back of the nozzle bezel or flange.
2. Using hand pressure, push firmly and evenly on the nozzle bezel or flange until both integral latch features (3) are fully engaged on the inside of the spoiler mounting hole.
3. Reconnect the washer supply line quick-connect fitting (2) to the quick-connect barbed nipple on the back of the nozzle.
4. Engage the washer hose into the routing clips on the back of the Center High Mounted Stop Lamp (CHMSL) housing (5).
5. Reinstall the spoiler onto the liftgate outer panel. Refer to **SPOILER, INSTALLATION** .

MOTOR, WIPER

DESCRIPTION

FRONT

The front wiper motor is packaged with the wiper linkage module in this vehicle. Refer to **LINKAGE, WIPER ARM, DESCRIPTION**.

REAR

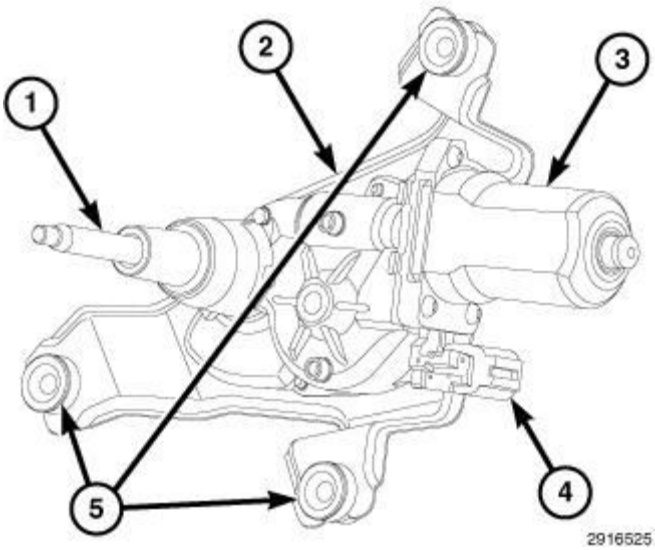

Fig. 47: Rear Wiper Motor, Motor Output Shaft, Integral Connector Receptacle & Rubber Isolators
Courtesy of CHRYSLER GROUP, LLC

The rear wiper motor is concealed behind the lower liftgate inside trim panel on the liftgate inner panel just below the liftgate glass near the center. The threaded and tapered end of the motor output shaft (1) that extends through the liftgate glass to drive the rear wiper arm and blade is the only visible component of the rear wiper motor. A rubber grommet is engaged within the output shaft clearance hole of the liftgate glass and seals the output shaft housing where it passes through the glass. An integral connector receptacle (4) connects the rear wiper motor to the vehicle electrical system through a dedicated take out and connector of the liftgate wire harness. The rear wiper motor consists of the following major components:

- **Bracket (2)** - The rear wiper motor bracket consists of a Stamped metal mounting plate for the wiper motor that is secured with screws to the wiper motor transmission housing. The bracket is secured with screws through three rubber isolators (5) to three mounting points that are integral to the liftgate inner panel.
- **Motor (3)** - The single-speed permanent magnet rear wiper motor is secured to the rear wiper motor bracket. The wiper motor includes an integral transmission, the motor output shaft, a park switch and an integral connector receptacle. An automatic resetting circuit breaker and an internal clutch mechanism protect the motor from overloads.

The rear wiper motor cannot be adjusted or repaired. If any component of the motor is ineffective or damaged, the entire rear wiper motor unit must be replaced. The motor output shaft grommet, the mounting hardware and the liftgate glass are available for individual service replacement.

OPERATION

FRONT

The front wiper motor is packaged with the wiper linkage module in this vehicle. Refer to **LINKAGE, WIPER ARM, OPERATION**.

REAR

The rear wiper motor operation is controlled by the Body Control Module (BCM), which uses relays soldered onto the BCM Printed Circuit Board (PCB) to control rear wiper system operation for energizing or de-energizing the rear wiper motor. The BCM uses internal programming, hard wired inputs received from the right (wiper) multifunction switch and the rear wiper motor park switch as well as electronic messages received over the Controller Area Network (CAN) data bus to provide the rear wiper and washer system operating modes.

The rear wiper motor park switch is a single pole, single throw, momentary switch within the wiper motor that is mechanically actuated by the wiper motor transmission components. The park switch alternately closes and opens a voltage signal for the rear wiper motor electronic control logic circuitry of the BCM. The park switch is normally an open circuit when the rear wiper blade is in the parked position, and is connected to fused ignition output when the rear wiper blade is anywhere except parked.

This park switch input allows the electronic logic circuits of the BCM to control all of the electronic features of rear wiper motor operation and to keep the motor energized long enough to complete its current wipe cycle and park the wiper blade at the base of the glass after the status of the rear wiper system or the ignition switch transitions to Off. The internal BCM circuitry pulls the park switch sense input to ground when the switch is open so that the microcontroller sees a ground when the wiper blade is parked.

The rear wiper motor is grounded at all times through a take out with an eyelet terminal connector in the body wire harness that is secured to a ground location in the passenger compartment. The automatic resetting circuit breaker protects the motor from overloads. The rear wiper motor transmission converts the rotary output of the wiper motor to the back and forth wiping motion of the rear wiper arm and blade on the liftgate glass.

The hard wired inputs and outputs of the rear wiper motor may be diagnosed using conventional diagnostic tools and procedures. Refer to the appropriate wiring information. However, conventional diagnostic methods will not prove conclusive in the diagnosis of the rear wiper motor or the electronic controls and communication between other modules and devices that provide some features of the rear wiper and washer system. The most reliable, efficient and accurate means to diagnose the rear wiper motor or the electronic controls and communication related to rear wiper motor operation requires the use of a diagnostic scan tool. Refer to the appropriate diagnostic information.

REMOVAL

FRONT

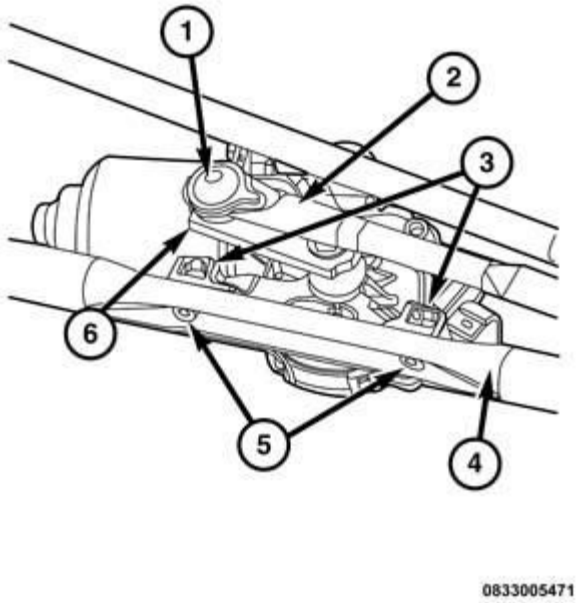

Fig. 48: Front Wiper Linkage Module
Courtesy of CHRYSLER GROUP, LLC

CAUTION: Do not apply pressure to, or pry on the plastic drive link bushings. When removing a drive link from, or installing a drive link onto the ball stud on the wiper motor crank arm apply pressure to, or pry on only the metal portions of the drive link around the bushing. If the bushing is damaged, the entire wiper linkage module MUST be replaced.

CAUTION: Do not remove the crank arm nut from the wiper motor output shaft. The crank arm is indexed to the output shaft with the motor in the park position during the manufacturing process, but there are no provisions made for correctly indexing this connection in the field. If the crank arm to output shaft indexing is incorrect, the entire wiper motor and crank arm unit MUST be replaced.

1. Disconnect and isolate the negative cable from the battery.
2. Remove the front wiper linkage module from the cowl plenum and place it on a suitable work surface. Refer to **LINKAGE, WIPER ARM, REMOVAL**.
3. Disengage the socket bushing (1) of the wiper drive link (2) from the ball stud on the wiper motor crank arm (6) using two large screwdrivers, one on each side of the ball stud. Pry firmly and evenly between the crank arm and the metal portion of the drive link until the socket unsnaps from the ball.
4. Remove the two screws (5) that secure the motor bracket (3) to the module bracket (4).
5. Remove the wiper motor and crank arm as a unit from the module bracket.

REAR

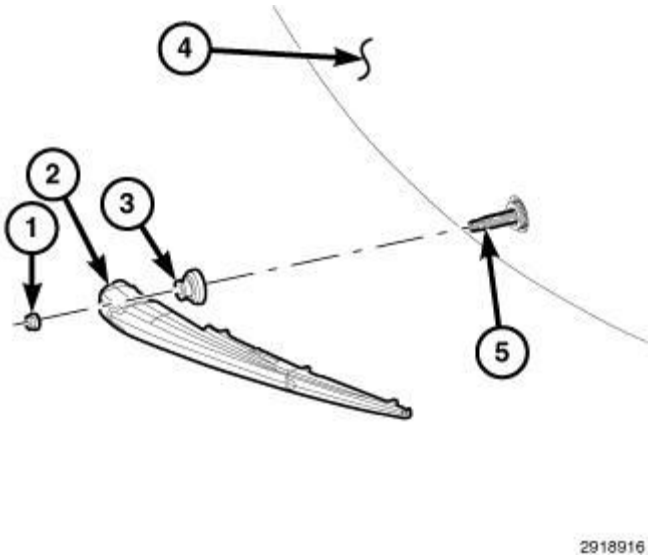

Fig. 49: Liftgate Glass, Rear Wiper Arm & Output Shaft
Courtesy of CHRYSLER GROUP, LLC

1. Disconnect and isolate the negative cable from the battery.
2. From the outside of the liftgate glass (4), remove the rear wiper arm (2) from the rear wiper motor output shaft (5). Refer to **ARM, WIPER, REMOVAL**.

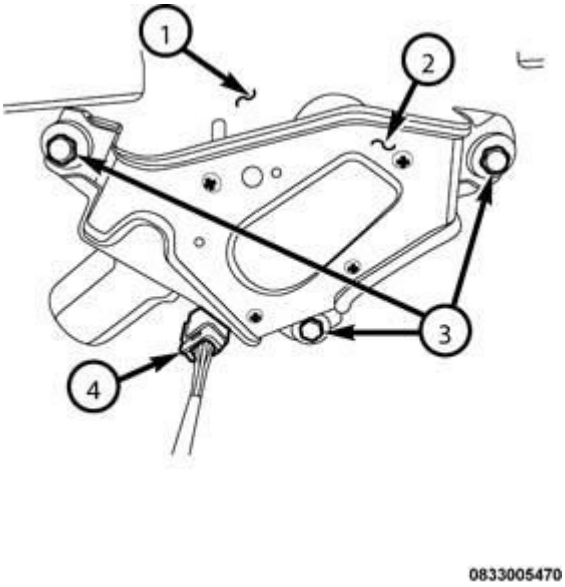

Fig. 50: Rear Wiper Motor
Courtesy of CHRYSLER GROUP, LLC

3. From the inside of the liftgate, remove the trim from the liftgate inner panel (1). Refer to **PANEL, TRIM, REMOVAL** .
4. Disconnect the liftgate wire harness connector (4) from the rear wiper motor (2) connector receptacle.
5. Remove the three screws (3) that secure the motor mounting bracket to the liftgate inner panel.

6. Carefully slide the rear wiper motor output shaft and housing out of the grommet installed in the clearance hole of the liftgate glass.
7. From the outside of the liftgate, remove the output shaft grommet from the clearance hole in the liftgate glass and discard.

INSTALLATION

FRONT

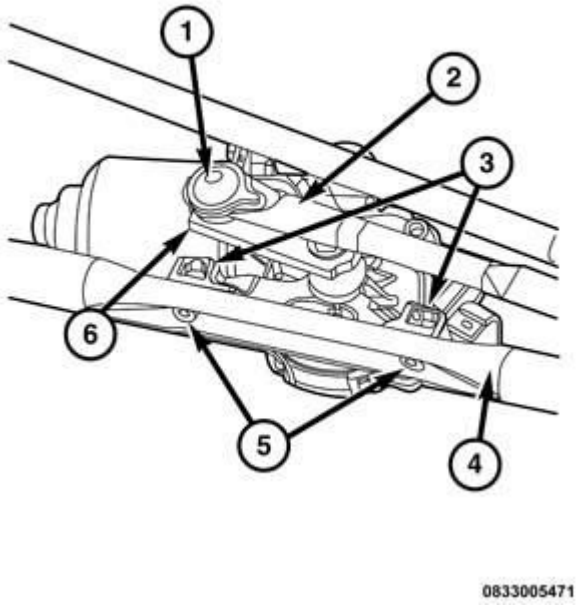

Fig. 51: Front Wiper Linkage Module
Courtesy of CHRYSLER GROUP, LLC

CAUTION: Do not apply pressure to, or pry on the plastic drive link bushings. When removing a drive link from, or installing a drive link onto the ball stud on the wiper motor crank arm apply pressure to, or pry on only the metal portions of the drive link around the bushing. If the bushing is damaged, the entire wiper linkage module MUST be replaced.

CAUTION: Do not remove the crank arm nut from the wiper motor output shaft. The crank arm is indexed to the output shaft with the motor in the park position during the manufacturing process, but there are no provisions made for correctly indexing this connection in the field. If the crank arm to output shaft indexing is incorrect, the entire wiper motor and crank arm unit MUST be replaced.

1. Position the front wiper motor unit to the front wiper module bracket (4).

2. Install and tighten the two screws (5) into the two nuts that secure the motor bracket (3) to the module bracket. Tighten the screws to 7.5 N.m (66 in. lbs.).
3. Position the socket bushing (1) of the wiper drive link (2) over the ball stud on the crank arm (6).
4. Place a short 19 millimeter or 3/4 inch socket over the domed cap side of the socket bushing as an installation tool. Use large channel-lock pliers to firmly and evenly apply enough pressure to the underside of the crank arm and the top of the socket installation tool to snap the bushing onto the ball stud. **Do not apply pressure directly to the plastic bushing.**

NOTE: Be certain to transition the ignition switch to the On status, then turn the front wiper switch On and Off again to cycle the wiper motor and linkage to their natural park position before reinstalling the front wiper arms onto the wiper pivots.

5. Reinstall the front wiper linkage module into the vehicle. Refer to **LINKAGE, WIPER ARM, INSTALLATION**.
6. Reconnect the negative cable to the battery.

REAR

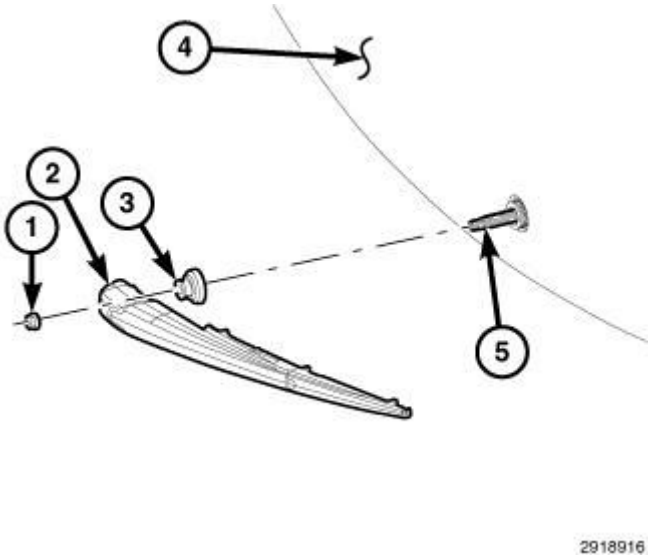

Fig. 52: Liftgate Glass, Rear Wiper Arm & Output Shaft
Courtesy of CHRYSLER GROUP, LLC

1. From the outside of the liftgate, install a new rubber grommet (3) into the rear wiper motor output shaft clearance hole of the liftgate glass (4). Always use a new grommet in the glass.

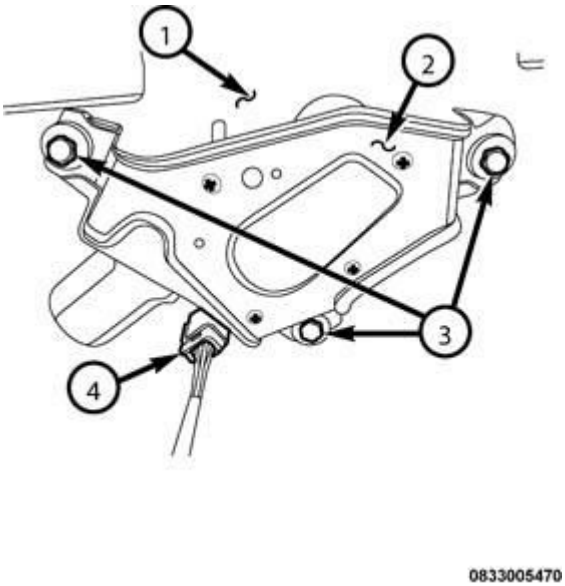

Fig. 53: Rear Wiper Motor
Courtesy of CHRYSLER GROUP, LLC

2. From the inside of the liftgate, position the rear wiper motor (2) output shaft and housing through the grommet in the liftgate glass clearance hole.
3. Position the rear wiper motor mounting bracket to the liftgate inner panel.
4. Install and tighten the three screws (3) that secure the motor mounting bracket to the liftgate inner panel. Tighten the screws securely.
5. Reconnect the liftgate wire harness connector (4) to the rear wiper motor connector receptacle.
6. Reinstall the trim onto the liftgate inner panel. Refer to **PANEL, TRIM, INSTALLATION** .
7. From the outside of the liftgate, reinstall the rear wiper arm onto the motor output shaft. Refer to **ARM, WIPER, INSTALLATION**.
8. Reconnect the negative cable to the battery.

PUMP, WINDSHIELD WASHER

DESCRIPTION

FRONT AND REAR

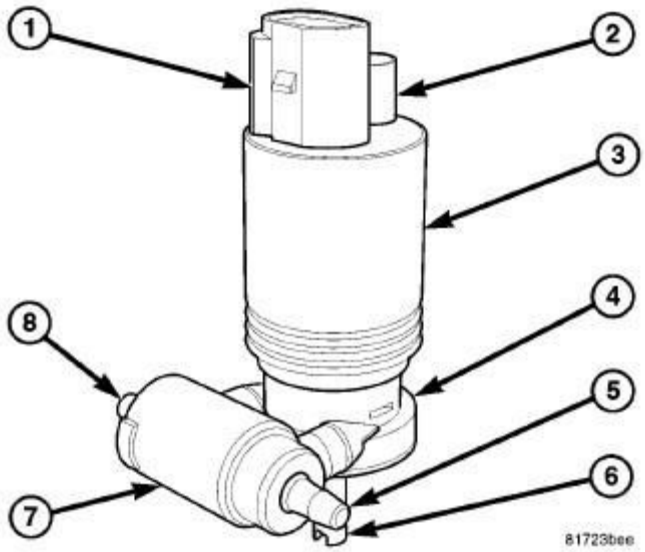

Fig. 54: Washer Pump/Motor
Courtesy of CHRYSLER GROUP, LLC

The washer pump/motor unit is located on the top of a sump area on the outboard side of the washer reservoir, which is located between the left front fender and the left front fender load beam ahead of the left front wheel house splash shield. A small permanently lubricated and sealed reversible electric motor (3) is coupled to the rotor-type washer pump (4). The use of an integral valve body (7) allows the washer pump/motor unit to provide washer fluid to either the front or the rear washer systems, depending upon the direction of the pump impeller rotation.

An inlet nipple (6) on the pump housing passes through a rubber grommet seal/filter screen installed in a dedicated mounting hole of the washer reservoir sump. The filter screen prevents most debris from entering the pump housing. When the pump is installed in the reservoir the front barbed outlet nipple (5) on the pump valve body housing connects the unit to the front washer plumbing, and the rear barbed outlet nipple (8) connects the unit to the rear washer plumbing. The letters **F** and **R** molded into the valve body housing adjacent to each nipple provide further clarification of the nipple assignments.

The washer pump/motor unit is retained on the reservoir by the interference fit between the pump inlet nipple and the grommet seal, which is a light press fit. The top of the washer pump is also secured to the washer reservoir by the use of a snap fit between the snap post (2) at the top of the pump motor housing and a receptacle molded into the reservoir that allows for mounting of the washer pump without the use of fasteners. An integral connector receptacle (1) on the top of the motor housing connects the unit to the vehicle electrical system through a dedicated take out and connector of the Front End Module (FEM) wire harness.

The washer pump/motor unit cannot be repaired. If ineffective or damaged, the entire washer pump/motor unit must be replaced. The rubber grommet seal/filter screen is available for separate service replacement.

HEADLAMP

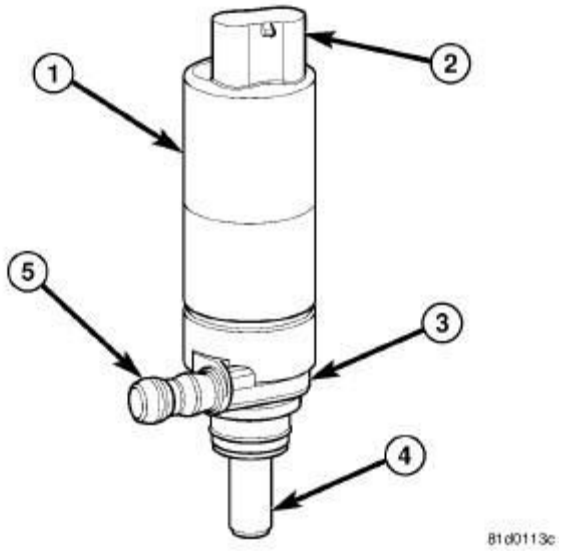

Fig. 55: Headlamp Washer Pump/Motor Unit
Courtesy of CHRYSLER GROUP, LLC

The headlamp washer pump/motor unit (1) of vehicles so equipped is located on the top of a sump area just above and rearward of the reversible front and rear washer pump on the outboard side of the washer reservoir, between the left front fender and left front fender load beam ahead of the left front wheel house splash shield. A small permanently lubricated and sealed electric motor is coupled to the rotor-type washer pump.

An inlet nipple (4) on the bottom of the pump housing (3) passes through a rubber grommet seal/filter screen installed in a dedicated mounting hole of the washer reservoir. When the pump is installed in the reservoir the quick connect outlet nipple (5) on the pump housing points toward the left side of the vehicle and connects the unit to the headlamp washer plumbing.

The headlamp washer pump/motor unit is retained on the reservoir by the interference fit between the pump inlet nipple and the grommet seal, which is a light press fit. The top of the washer pump is also secured to the washer reservoir by a light snap fit into a receptacle molded into the reservoir that allows for mounting of the washer pump without the use of fasteners. An integral connector receptacle (2) on the top of the motor housing connects the unit to the vehicle electrical system through a dedicated take out and connector of the Front End Module (FEM) wire harness.

The headlamp washer pump/motor unit cannot be repaired. If ineffective or damaged, the entire headlamp washer pump/motor unit must be replaced. The rubber grommet seal/filter screen is available for separate service replacement.

OPERATION

FRONT AND REAR

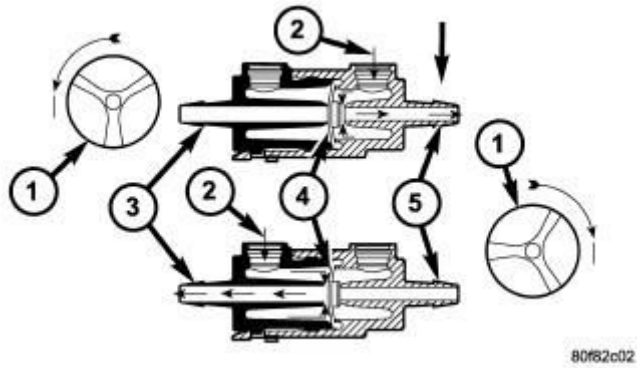

Fig. 56: Washer Pump/Motor Operation
Courtesy of CHRYSLER GROUP, LLC

The washer pump/motor unit features a small Direct Current (DC) reversible electric motor. The direction of the motor is controlled by hard wired outputs from the Body Control Module (BCM). When battery current and ground are applied to the two pump motor terminals, the motor rotates in one direction. When the polarity of these connections is reversed, the motor rotates in the opposite direction. When the pump motor is energized, the rotor-type pump pressurizes the washer fluid and forces it through one of the two pump outlet nipples, and into the front or rear washer plumbing.

The BCM controls the hard wired outputs to the pump motor based upon electronic **washer switch** status messages received over the Controller Area Network (CAN) data bus from the Steering Control Module (SCM). The SCM monitors analog and digital inputs from the front and rear washer switch circuitry contained within the right multifunction switch to determine the proper electronic messages to send. Whenever the low washer fluid indicator is illuminated, the BCM is programmed to suppress all rear washer requests in order to give priority to the need for forward visibility.

Washer fluid is drawn through the pump inlet nipple from the washer reservoir to the inlet port of the washer pump housing. An integral valve body is located in a housing on the outlet port side (2) of the pump housing. A diaphragm (4) in this valve body controls which washer system plumbing receives the washer fluid being pressurized by the pump.

When the pump impeller (1) rotates in the counterclockwise direction (viewed from the bottom), the biased diaphragm is sealing off the rear washer system outlet and nipple so the pressurized washer fluid is pushed out through the pump front outlet port and the front washer outlet nipple (5). When the pump impeller rotates in the clockwise direction (viewed from the bottom), pressurized washer fluid is pushed out through the pump rear outlet port and moves the diaphragm to open the rear washer outlet nipple and seal off the front washer outlet nipple, then the pressurized washer fluid is pushed out through the rear washer outlet nipple (3).

The washer pump/motor unit and the hard wired motor control circuits from the BCM may be diagnosed using conventional diagnostic tools and procedures. Refer to the appropriate wiring information. However, conventional diagnostic methods will not prove conclusive in the diagnosis of the washer pump/motor unit or the electronic controls and communication between other modules and devices that provide some features of the front and rear wiper and washer system. The most reliable, efficient and accurate means to diagnose the washer pump/motor unit or the electronic controls and communication related to washer pump/motor unit operation requires the use of a diagnostic scan tool. Refer to the appropriate diagnostic information.

HEADLAMP

Headlamp washer pump/motor unit operation is completely controlled by the Body Control Module (BCM) logic circuits based upon electronic **headlamp switch** and **washer switch** status messages received from the Steering Control Module (SCM) over the Controller Area Network (CAN) data bus. The SCM monitors hard wired analog and digital inputs from the headlamp switch circuitry of the left multifunction switch and from the front washer switch circuitry of the right multifunction switch to determine the proper status messages to send.

The headlamp washer relay control coil operates on ground received from the BCM, and the BCM will only allow the relay to function while the engine is running. In addition, the BCM will only allow the headlamp washers to operate when the headlamps are turned On. The BCM uses both a Low Side Driver (LSD) to energize or de-energize the headlamp washer relay in the Power Distribution Center (PDC) which, in turn, controls the operation of the headlamp washer pump/motor unit.

The hard wired circuits and components of the headlamp washer pump/motor unit may be diagnosed using conventional diagnostic tools and procedures. Refer to the appropriate wiring information. However, conventional diagnostic methods will not prove conclusive in the diagnosis of the headlamp washer pump/motor or the electronic controls and communication between other modules and devices that provide some features of the headlamp washer system. The most reliable, efficient and accurate means to diagnose the headlamp washer pump/motor unit or the electronic controls and communication related to headlamp washer pump/motor unit operation requires the use of a diagnostic scan tool. Refer to the appropriate diagnostic information.

REMOVAL

FRONT AND REAR

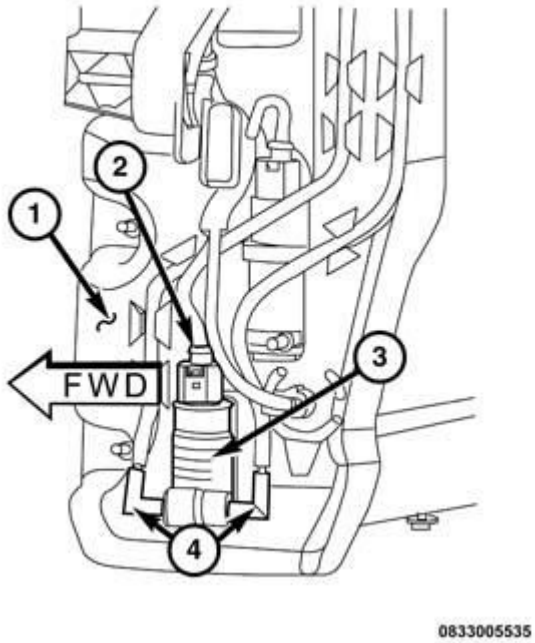

Fig. 57: Washer Pump/Motor Unit

Courtesy of CHRYSLER GROUP, LLC

NOTE: The washer pump/motor unit may be removed from the washer reservoir without removing the reservoir from the vehicle.

1. Disconnect and isolate the negative cable from the battery.
2. Turn the steering wheel to move the front wheels to the full left position.
3. Raise and support the vehicle.
4. Remove the plastic push-in fasteners that secure the forward end of the left front wheel house splash shield to the inner fender panel and the front fascia. Refer to **SHIELD, SPLASH, FRONT WHEELHOUSE, REMOVAL** .
5. Pull the forward end of the left front wheelhouse splash shield away from the inner fender panel and front fascia far enough to access the washer pump/motor unit (3) on the outboard side of the washer reservoir (1) on the outboard end of the Front End Module (FEM) hydroform.
6. Disconnect the FEM wire harness connector (2) for the washer pump motor from the motor connector receptacle.

NOTE: To aid in reinstallation, note the installed position of the front and rear washer plumbing fittings (4) prior to disconnecting them from the washer pump.

7. Disconnect the front and rear washer plumbing fittings from the barbed outlet nipples of the washer pump and allow the washer fluid to drain into a clean container for reuse.
8. Pull lightly outward on the top of the washer pump/motor housing away from the washer reservoir to disengage the snap post on the top of the motor from the receptacle in the reservoir.
9. Using hand pressure, firmly grasp and pull the washer pump upward far enough to disengage the pump inlet nipple from the rubber grommet seal/filter screen in the reservoir. Care must be taken not to damage the reservoir.
10. Remove the washer pump/motor unit from the washer reservoir.
11. Remove the rubber grommet seal from the washer pump mounting hole in the reservoir and discard.

HEADLAMP

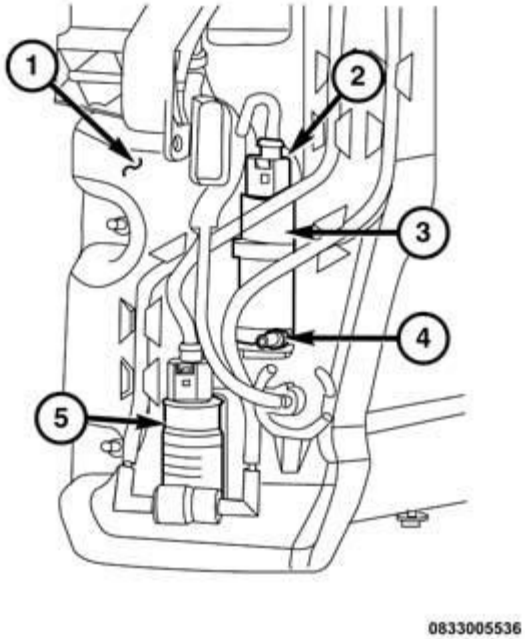

Fig. 58: Headlamp Washer Pump/Motor Unit
Courtesy of CHRYSLER GROUP, LLC

NOTE: The headlamp washer pump/motor unit may be removed from the washer reservoir without removing the reservoir from the vehicle.

1. Disconnect and isolate the negative cable from the battery.
2. Siphon the washer fluid from the washer reservoir into a clean container for reuse.
3. Turn the steering wheel to move the front wheels to the full left position.
4. Raise and support the vehicle.
5. Remove the plastic push-in fasteners that secure the forward end of the left front wheelhouse splash shield to the inner fender panel and the front fascia. Refer to **SHIELD, SPLASH, FRONT WHEELHOUSE, REMOVAL** .
6. Pull the forward end of the left front wheelhouse splash shield away from the inner fender panel and front fascia far enough to access the headlamp washer pump/motor unit (3) on the outboard side of the washer reservoir (1) on the outboard end of the Front End Module (FEM) hydroform. The headlamp washer pump is above and behind the reversible front and rear washer pump/motor unit (5).
7. Disconnect the FEM wire harness connector (2) for the headlamp washer pump motor from the motor connector receptacle.
8. Disconnect the high pressure headlamp washer supply line quick connect fitting from the headlamp washer pump outlet quick connect nipple. Refer to **HOSES AND TUBES, WASHER, STANDARD PROCEDURE**.
9. Pull lightly outward on the top of the headlamp washer pump/motor housing away from the washer reservoir to unsnap it from the molded receptacle in the reservoir.
10. Using hand pressure, firmly grasp and pull the headlamp washer pump upward far enough to disengage

the pump inlet nipple from the rubber grommet seal/filter screen in the reservoir. Care must be taken not to damage the reservoir.

11. Remove the rubber grommet seal/filter screen from the pump mounting hole in the washer reservoir and discard.

INSTALLATION

FRONT AND REAR

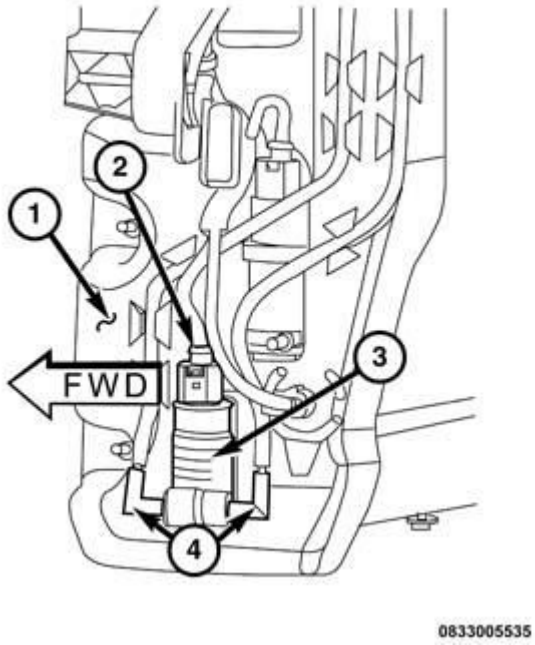

Fig. 59: Washer Pump/Motor Unit
Courtesy of CHRYSLER GROUP, LLC

1. Lubricate a new rubber grommet seal/filter screen with clean washer fluid and install it into the washer pump mounting hole in the washer reservoir (1). Always use a new rubber grommet seal/filter screen on the reservoir.
2. Position the inlet nipple on the base of the pump housing of the washer pump/motor unit (3) to the rubber grommet seal/filter screen in the reservoir.
3. Using hand pressure, press firmly and evenly downward on the top of washer pump/motor unit until the inlet nipple is fully seated in the rubber grommet seal/filter screen in the pump mounting hole of the reservoir.
4. Align the snap post on the top of the motor housing with the snap post receptacle in the washer reservoir.
5. Using hand pressure, press firmly and evenly on the top of motor housing until the post snaps into the receptacle.

NOTE: Be certain to reconnect the front and rear washer plumbing fitting to the proper outlet nipples of the washer pump. Failure to properly connect the

fittings will cause the front and rear washer systems to operate incorrectly.

6. Reconnect the front and rear washer plumbing fittings (4) to the barbed outlet nipples of the washer pump.
7. Reconnect the Front End Module (FEM) wire harness connector (2) for the washer pump/motor unit to the connector receptacle on the top of the motor.
8. Reinstall the plastic push-in fasteners that secure the left front wheelhouse splash shield to the inner fender panel and the front fascia. Refer to **SHIELD, SPLASH, FRONT WHEELHOUSE, INSTALLATION** .
9. Lower the vehicle.
10. Reconnect the negative cable to the battery.
11. Refill the washer reservoir with the washer fluid drained from the reservoir during the removal procedure.

HEADLAMP

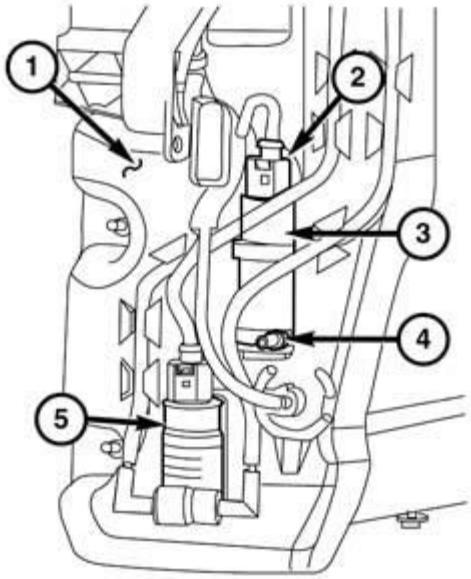

0833005536

Fig. 60: Headlamp Washer Pump/Motor Unit
Courtesy of CHRYSLER GROUP, LLC

1. Install a new rubber grommet seal/filter screen into the headlamp washer pump/motor unit mounting hole in the washer reservoir (1). Always use a new rubber grommet seal on the reservoir.
2. Position the inlet nipple of the headlamp washer pump/motor unit (3) to the rubber grommet seal/filter screen in the reservoir.
3. Using hand pressure, press firmly and evenly downward on the headlamp washer pump/motor unit until the inlet nipple is fully seated in the rubber grommet seal/filter screen in the pump mounting hole of the

reservoir.

4. Using hand pressure, press the top of the headlamp washer pump/motor housing firmly inward far enough to engage the snap fit between the motor housing and the molded motor receptacle in the reservoir.
5. Reconnect the Front End Module (FEM) wire harness connector (2) to the connector receptacle on the top of the pump motor.
6. Reconnect the headlamp washer high pressure supply line quick connect fitting to the headlamp washer pump outlet quick connect nipple. Refer to **HOSES AND TUBES, WASHER, STANDARD PROCEDURE**.
7. Reinstall the plastic push-in fasteners that secure the left front wheelhouse splash shield to the inner fender panel and the front fascia. Refer to **SHIELD, SPLASH, FRONT WHEELHOUSE, INSTALLATION** .
8. Lower the vehicle.
9. Refill the washer reservoir with the washer fluid drained during removal.
10. Reconnect the negative cable to the battery.

RESERVOIR, WINDSHIELD WASHER

DESCRIPTION

DESCRIPTION

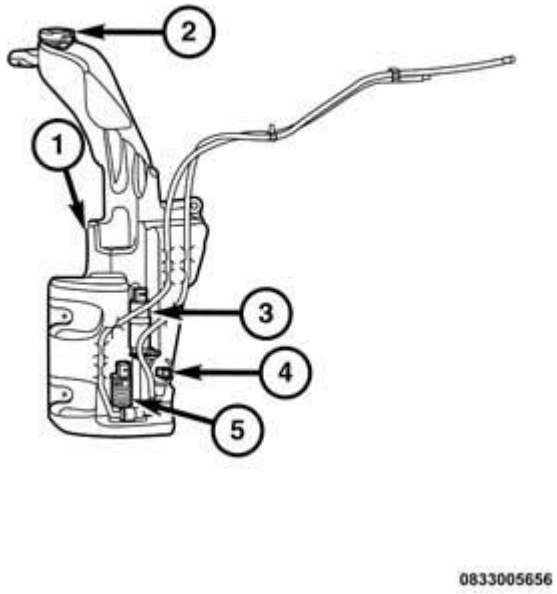

Fig. 61: Windshield Washer Reservoir
Courtesy of CHRYSLER GROUP, LLC

A single washer fluid reservoir (1) is used for both the front and rear washer systems. The molded plastic

washer fluid reservoir is mounted on the left outboard side of the Front End Module (FEM) hydroform between the left front fender and the left front fender load beam, ahead of the left front wheel, where it is concealed by the left front wheel house splash shield. The only visible component of the washer reservoir is the filler neck and cap unit (2), which extends upward into the engine compartment just behind the upper radiator cross member. A bright yellow plastic filler cap with a rubber seal and an International Control and Display Symbol icon for **Windshield Washer** molded into it snaps over the open end of the filler neck. The cap hinges on and is secured to the reservoir filler neck by an integral retainer ring and bail strap.

There are separate, dedicated holes on the outboard side of the reservoir provided for the reversible front and rear washer pump/motor unit (5) and the washer fluid level switch (4). The inboard side of the washer reservoir has integral mounting tabs that are secured to weld studs on the FEM hydroform by two nuts. A mounting tab near the top of the filler neck is secured by a screw to the upper radiator cross member. A mounting tab at the upper rear corner of the reservoir is secured to the battery tray after the FEM is secured to the vehicle. The left front fender wheel house splash shield must be removed to access the washer reservoir for service.

A unique reservoir is used for vehicles manufactured for export markets with the optional High Intensity Discharge (HID) headlamps and the headlamp washer system. This reservoir has a dedicated sump and mounting receptacle for the headlamp washer pump (3) on the outboard side of the reservoir, above and rearward of the reversible front and rear washer pump. The location and mounting provisions for this reservoir are the same as those for vehicles without the headlamp washer system.

The washer reservoir cannot be repaired and, if ineffective or damaged, it must be replaced. The washer reservoir, rubber grommet seals for the washer pump/motor units and the washer fluid level switch as well as the filler cap are each available for individual service replacement.

OPERATION

OPERATION

The washer fluid reservoir provides a secure, on-vehicle storage location for a large reserve of washer fluid for operation of the front and rear washer systems. The washer reservoir filler neck provides a clearly marked and readily accessible point from which to add washer fluid to the reservoir.

The reversible front and rear washer pump/motor unit is located in a sump area near the bottom on the outboard side of the reservoir to be certain that washer fluid will be available to the pump as the fluid level in the reservoir becomes depleted. The front and rear washer pump/motor unit is mounted in the lowest position in the sump. The washer fluid level switch is mounted just above the sump area of the reservoir so that there will be adequate warning to the vehicle operator that the washer fluid level is low, before the front and rear washer systems will no longer operate.

On vehicles equipped with the headlamp washer system the reservoir features a second sump located rearward of and above the front and rear washer pump sump. This allows the front and rear washer systems to remain operational after the washer fluid level falls below the pump inlet for the headlamp washer pump.

REMOVAL

REMOVAL

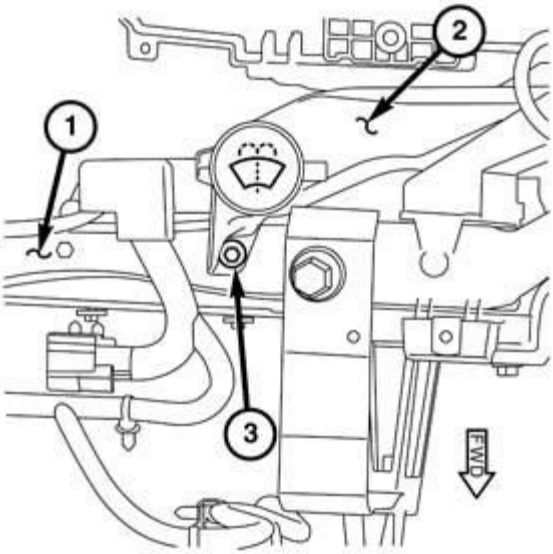

Fig. 62: Upper Radiator Support, Filler Neck & Screw
Courtesy of CHRYSLER GROUP, LLC

1. Disconnect and isolate the negative cable from the battery.
2. Turn the steering wheel to move the front wheels to the full left position.
3. Remove the screw (3) that secures the washer reservoir filler neck (2) to the upper radiator support (1).

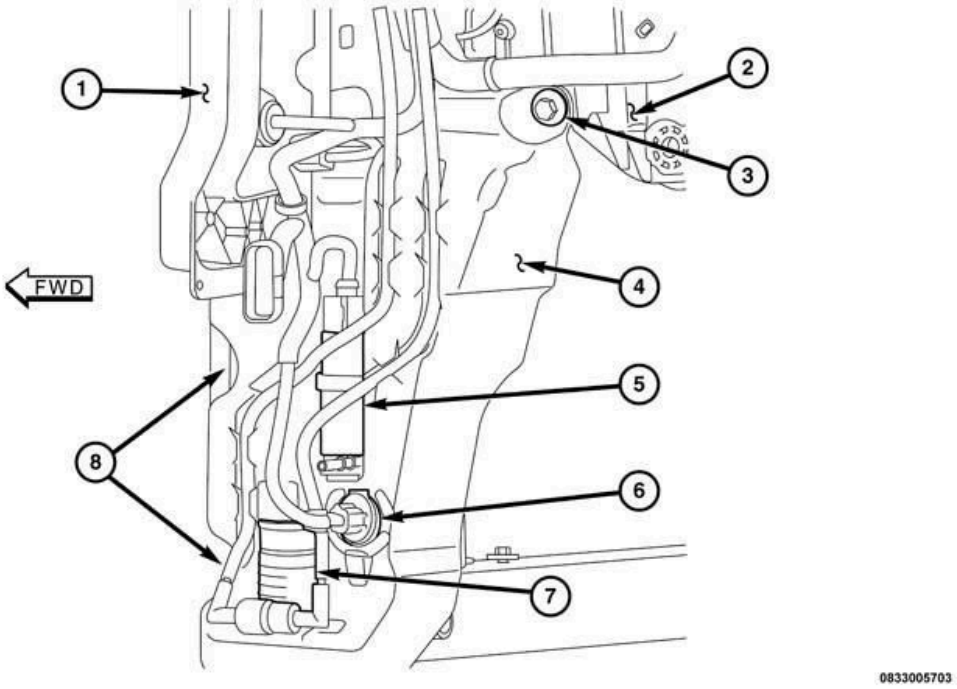

Fig. 63: Washer Fluid Level Switch, Pump/Motor & Headlamp Washer Pump/Motor
Courtesy of CHRYSLER GROUP, LLC

4. Raise and support the vehicle.
5. Remove the plastic push-in fasteners that secure the forward end of the left front wheelhouse splash shield to the inner fender panel and the front fascia. Refer to **SHIELD, SPLASH, FRONT WHEELHOUSE, REMOVAL** .
6. Pull the forward end of the front wheelhouse splash shield away from the inner fender panel and front fascia far enough to access the washer reservoir (4) for service.
7. Disconnect the Front End Module (FEM) wire harness connectors from the washer fluid level switch (6), the washer pump/motor (7) and, if equipped, the headlamp washer pump/motor (5).

NOTE: To aid in reinstallation, note the installed position of the washer hoses prior to disconnecting them from the washer pump.

8. Disconnect the front and rear washer hoses from the barbed outlet nipples of the washer pump and allow the washer fluid to drain into a clean container for reuse.
9. If the vehicle is so equipped, disconnect the headlamp washer supply hose quick-connect fitting from the headlamp washer pump/motor.
10. Remove the screw (3) that secures the mounting tab on the upper rear corner of the washer reservoir to the battery tray (2).
11. Remove the two nuts (8) that secure the forward mounting tabs of the washer reservoir to the weld studs on the outboard side of the FEM hydroform (1).
12. Lower the washer reservoir from the vehicle, rotating it as necessary for clearance.

INSTALLATION

INSTALLATION

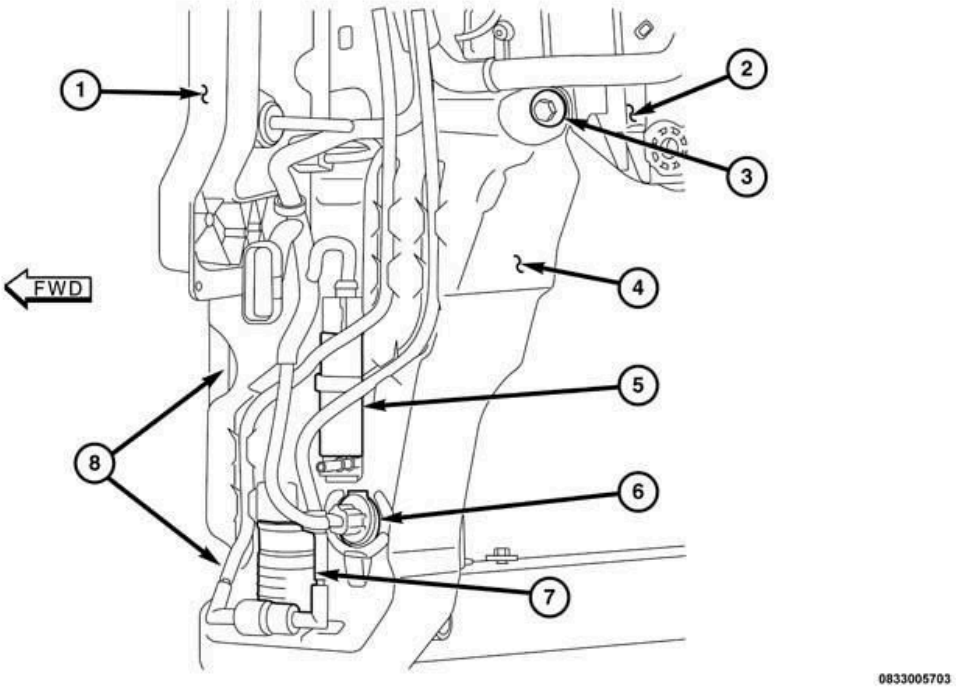

Fig. 64: Washer Fluid Level Switch, Pump/Motor & Headlamp Washer Pump/Motor
Courtesy of CHRYSLER GROUP, LLC

1. Position the washer reservoir (4) into the left front fender wheel house from underneath the vehicle.
2. Raise the washer reservoir into position, rotating it as necessary for clearance.
3. Engage the two mounting tabs at the front of the washer reservoir over the weld studs on the outboard side of the Front End Module (FEM) hydroform (1).
4. Install and tighten the two nuts (8) that secure the washer reservoir to the weld studs on the FEM hydroform. Tighten the nuts to 7 N.m (60 in. lbs.).
5. Install and tighten the screw (3) that secures the mounting tab on the upper rear corner of the washer reservoir to the battery tray (2). Tighten the screw to 7 N.m (60 in. lbs.).

NOTE: **Be certain to reconnect the front and rear washer hoses to the proper outlet nipples of the washer pump. Failure to properly connect the hoses will cause the front and rear washer systems to operate incorrectly.**

6. Reconnect the front and rear washer hoses to the barbed outlet nipples of the washer pump (7).
7. If the vehicle is so equipped, reconnect the headlamp washer supply hose quick-connect fitting to the outlet nipple of the headlamp washer pump (5).
8. Reconnect the FEM wire harness connectors to the washer fluid level switch (6), the washer pump/motor and, if equipped, the headlamp washer pump/motor.
9. Reinstall the plastic push-in fasteners that secure the left front wheelhouse splash shield to the inner fender panel and the front fascia. Refer to **SHIELD, SPLASH, FRONT WHEELHOUSE, INSTALLATION** .
10. Lower the vehicle.

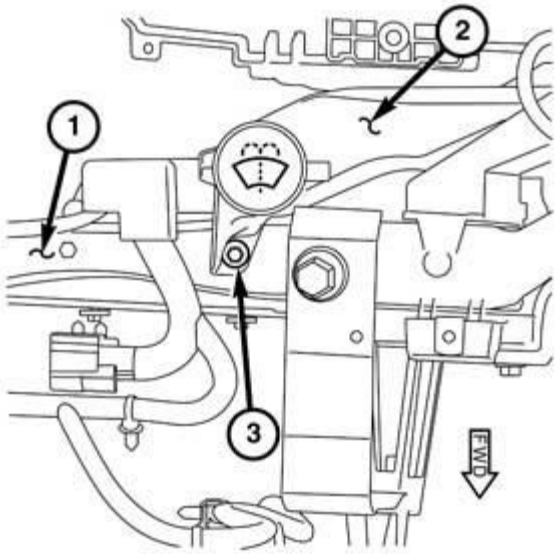

Fig. 65: Upper Radiator Support, Filler Neck & Screw
Courtesy of CHRYSLER GROUP, LLC

11. Install and tighten the screw (3) that secures the washer reservoir filler neck (2) mounting tab to the upper radiator cross member (1). Tighten the screw to 7 N.m (60 in. lbs.).
12. Refill the washer reservoir with the washer fluid drained during removal.
13. Reconnect the negative cable to the battery.

SWITCH, MULTIFUNCTION, RIGHT

DESCRIPTION

DESCRIPTION

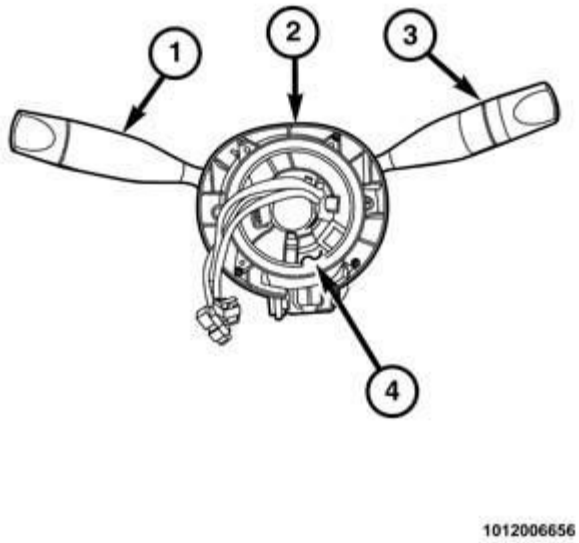

Fig. 66: Steering Column Control Module (SCCM) & Clockspring
Courtesy of CHRYSLER GROUP, LLC

The right (wiper) multifunction switch (3) is integral to the Steering Column Control Module (SCCM) (2), which includes both the left (1) and right multifunction switches, the microcontroller based Steering Control Module (SCM) and serves as the carrier for the clockspring (4). The right multifunction switch is located on the right side of the steering column, just below the steering wheel. This switch is the primary control for the front and rear wiper and washer systems.

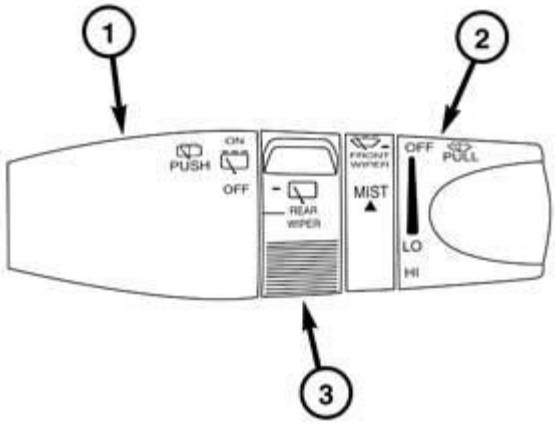

0833005928

Fig. 67: Control Knob, Control Stalk & Right Multifunction Switch
Courtesy of CHRYSLER GROUP, LLC

The only visible components of the switch are the control stalk (1), control knob (2) and control sleeve (3) that extend through the steering column shrouds on the right side of the column. The remainder of the switch including its mounting provisions and electrical connections are concealed within the SCCM beneath the steering column shrouds. The switch controls are constructed of molded black plastic. Each of the switch controls has white International Control and Display Symbol graphics applied to it, which clearly identify its many functions.

The right (wiper) multifunction switch provides the vehicle operator with a control interface for the following wiper and washer system functions:

- **Continuous Front Wipers** - The right multifunction switch control knob provides detent switching for two continuous front wipe modes, low speed or high speed.
- **Intermittent Front Wipers** - The right multifunction switch control knob provides detent switching for the intermittent front wipe mode with four minor detent delay interval positions. The four delay positions become four sensitivity positions for vehicles equipped with the optional automatic wiper system.
- **Front Wiper Mist Mode** - The right multifunction switch control stalk includes momentary switching of the front wiper motor low speed circuit to provide a mist mode features (sometimes referred to as pulse wipe), which allows the vehicle operator to momentarily operate the front wipers for one or more complete cycles.
- **Front Washer Mode** - The right multifunction switch control stalk provides momentary switching for control of the front washer system operation.
- **Intermittent Rear Wipe Mode** - The right multifunction switch control sleeve provides detent switching for a single fixed interval intermittent rear wiper mode.

- **Rear Washer Mode** - The right multifunction switch control stalk provides momentary switching for control of rear washer system operation.

The right multifunction switch cannot be adjusted or repaired. If any function of the switch is ineffective, or if the switch is damaged, the entire SCCM mounting housing, SCM and multifunction switches unit must be replaced. Refer to **MODULE, STEERING COLUMN, REMOVAL** . The clockspring is available for separate service replacement.

OPERATION

OPERATION

The right (wiper) multifunction switch uses resistor multiplexing to control the many functions and features it provides using a minimal number of hard wired circuits. The switch receives clean grounds from the Steering Control Module (SCM), then provides resistor multiplexed return outputs to the SCM to indicate the selected switch positions. The SCM then sends electronic **switch status** messages over the Controller Area Network (CAN) data bus to the Body Control Module (BCM) and other electronic modules in the vehicle.

If the SCM detects no inputs from the right multifunction switch, it transmits an electronic **Signal Not Available (SNA)** status message over the CAN data bus. The SNA status signals the other electronic modules to implement a fail-safe or default mode of operation for the front and rear wiper systems. The fail-safe mode will maintain the last selected front and rear wiper system operation for the remainder of the current ignition cycle, after which both wiper systems will default to Off.

The hard wired inputs and outputs of the SCM may be diagnosed using conventional diagnostic tools and procedures. Refer to the appropriate wiring information. However, conventional diagnostic methods will not prove conclusive in the diagnosis of the right multifunction switch or the electronic controls and communication between other modules and devices that provide some features of the wiper and washer system. The most reliable, efficient and accurate means to diagnose the right multifunction switch or the electronic controls and communication related to right multifunction switch operation requires the use of a diagnostic scan tool. Refer to the appropriate diagnostic information.

Following are descriptions of how the right multifunction switch is operated to control the many front and rear wiper and washer system functions and features it provides:

- **Front Washer Control** - The right multifunction switch control stalk is pulled rearward towards the steering wheel to a momentary WASH position to activate the washer pump/motor in the front washer mode. The washer pump/motor will continue to operate for as long as the control stalk is held in this position. The SCM reads the resistor multiplexed input from the right multifunction switch and sends an electronic **front washer switch status** message over the CAN data bus to the BCM and to other electronic modules in the vehicle.
- **Front Wiper Control** - The control knob on the end of the right multifunction switch control stalk is rotated to one of the two continuous wiper detent positions (LO or HI), to one of four intermittent delay or sensitivity wiper detent positions, or to the OFF position to select the front wiper mode. The SCM reads the resistor multiplexed input from the right multifunction switch and sends electronic **front wiper switch status** messages over the CAN data bus to the BCM and to other electronic modules in the vehicle.

- **Front Wiper Mist Mode** - The right multifunction switch control stalk is lifted upward to a momentary MIST position to activate the front wiper MIST mode. The front wiper motor will continue to operate, one complete cycle at a time, for as long as the control stalk is held in this position. The SCM reads the resistor multiplexed input from the right multifunction switch and sends an electronic **front wiper switch status** message over the CAN data bus to the BCM and to other electronic modules in the vehicle.
- **Rear Washer Control** - The right multifunction switch control pushed forward away from the steering wheel to the momentary WASH positions to activate the washer pump/motor in the rear washer mode. The washer pump/motor will continue to operate in the rear washer mode for as long as the control stalk is held in this position. The SCM reads the input from the right multifunction switch and sends an electronic **rear washer switch status** message over the CAN data bus to the BCM and to other electronic modules in the vehicle.
- **Rear Wiper Control** - The rear wiper mode is selected when the right multifunction switch control sleeve is rotated to the fixed interval intermittent rear wipe detent ON position detent position. The SCM reads the input from the right multifunction switch and sends an electronic **rear wiper switch status** message over the CAN data bus to the BCM and to other electronic modules in the vehicle.

DIAGNOSIS AND TESTING

DIAGNOSIS AND TESTING - RIGHT MULTIFUNCTION SWITCH

The hard wired inputs and outputs of the Steering Control Module (SCM) may be diagnosed using conventional diagnostic tools and procedures. Refer to the appropriate wiring information. However, conventional diagnostic methods will not prove conclusive in the diagnosis of the right multifunction switch or the electronic controls and communication between other modules and devices that provide some features of the wiper and washer system. The most reliable, efficient and accurate means to diagnose the right multifunction switch or the electronic controls and communication related to right multifunction switch operation requires the use of a diagnostic scan tool. Refer to the appropriate diagnostic information.

REMOVAL

REMOVAL

The right multifunction switch is serviced only as a unit with the Steering Column Control Module (SCCM) mounting housing, the Steering Control Module (SCM) and both multifunction switches. Refer to **MODULE, STEERING COLUMN, REMOVAL** . The clockspring is available for separate service replacement.

INSTALLATION

INSTALLATION

The right multifunction switch is serviced only as a unit with the Steering Column Control Module (SCCM) mounting housing, the Steering Control Module (SCM) and both multifunction switches. Refer to **MODULE, STEERING COLUMN, INSTALLATION** . The clockspring is available for separate service replacement.

SWITCH, WASHER FLUID LEVEL

DESCRIPTION

DESCRIPTION

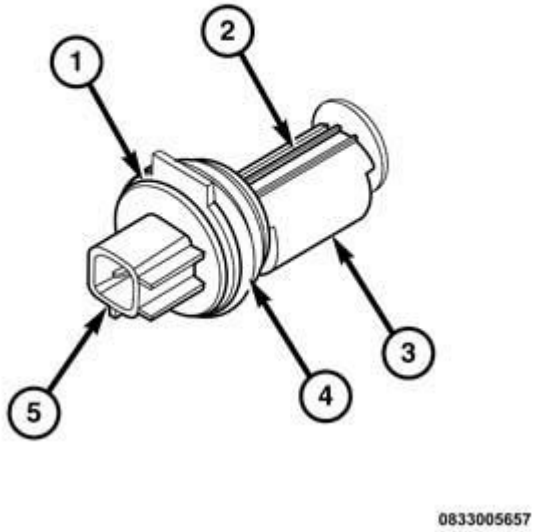

Fig. 68: Washer Fluid Level Switch
Courtesy of CHRYSLER GROUP, LLC

The washer fluid level switch is a single pole, single throw reed-type switch mounted just above the sump area near the bottom of the washer reservoir. Only the molded plastic switch mounting flange (1) and the integral connector receptacle (5) are visible when the switch is installed in the reservoir. A short barbed nipple formation extends from the inner surface of the switch mounting flange and is pressed through a rubber grommet seal (4) installed in the mounting hole of the reservoir.

A molded plastic float (3) hangs under a molded plastic beam (2) that extends axially from the switch mounting flange. A small permanent magnet is secured within a receptacle on the bottom of the float, and the reed switch is concealed within the beam.

The washer fluid level switch cannot be adjusted or repaired. If ineffective or damaged, it must be replaced. The grommet seal should be replaced with a new unit each time the switch is removed from the washer reservoir.

OPERATION

OPERATION

The washer fluid level switch uses a float to monitor the level of the washer fluid in the washer reservoir. The float contains a small magnet. When the float moves, the proximity of this magnet to a stationary reed switch within the beam formation of the switch changes. When the fluid level in the washer reservoir is at or above the

float level, the float rises and the influence of the float magnetic field is applied to the reed switch causing the normally open reed switch contacts to close. When the fluid level in the washer reservoir falls below the level of the float, the float falls and the influence of the float magnetic field is removed from the reed switch, causing the contacts of the normally open reed switch to open.

The washer fluid level switch is connected to the vehicle electrical system through a dedicated take out and connector of the Front End Module (FEM) wire harness. The switch is connected in series between the washer fluid switch sense and return circuits of the Body Control Module (BCM). When the switch opens, the BCM senses the input on the washer fluid switch return circuit. The BCM is programmed to respond to this input by sending an electronic message to the Instrument Cluster (IC) (also known as the Instrument Panel Cluster/IPC) over the Controller Area Network (CAN) data bus requesting illumination of the low washer fluid indicator and the sounding of an audible chime tone warning.

The washer fluid level switch and the hard wired circuits between the switch and the BCM may be diagnosed using conventional diagnostic tools and procedures. Refer to the appropriate wiring information. However, conventional diagnostic methods will not prove conclusive in the diagnosis of the washer fluid level switch or the electronic controls and communication between other modules and devices that provide some features of the wiper and washer systems. The most reliable, efficient and accurate means to diagnose the washer fluid level switch or the electronic controls and communication related to washer fluid level switch operation requires the use of a diagnostic scan tool. Refer to the appropriate diagnostic information.

REMOVAL

REMOVAL

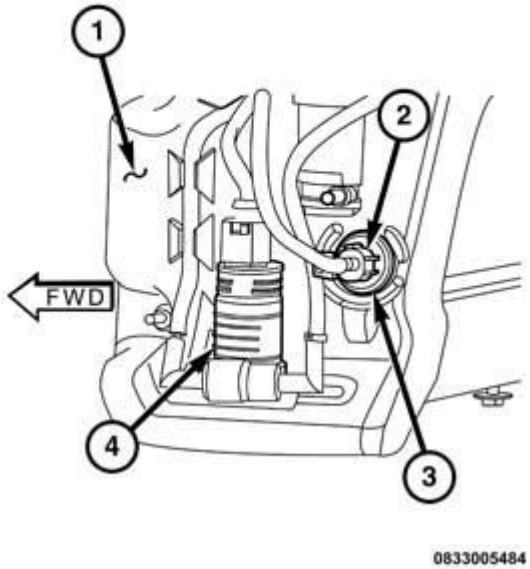

Fig. 69: Washer Fluid Level Sensor Unit & Connector
Courtesy of CHRYSLER GROUP, LLC

NOTE: The washer fluid level switch can be removed from the washer reservoir without removing the reservoir from the vehicle.

1. Disconnect and isolate the negative cable from the battery.
2. Turn the steering wheel to move the front wheels to the full left position.
3. Raise and support the vehicle.
4. Remove the plastic push-in fasteners that secure the forward end of the left front wheel house splash shield to the inner fender panel and the front fascia. Refer to **SHIELD, SPLASH, FRONT WHEELHOUSE, REMOVAL** .
5. Pull the forward end of the left front wheel house splash shield away from the inner fender panel and front fascia far enough to access the washer fluid level sensor unit (3) on the outboard side of the washer reservoir (1) on the outboard end of the Front End Module (FEM) hydroform.
6. Disconnect the FEM wire harness connector (2) for the washer fluid level sensor from the sensor connector receptacle.
7. Disconnect one of the reservoir washer plumbing fittings from the barbed outlet nipple of the washer pump (4) and allow the washer fluid to drain into a clean container for reuse.
8. Using a trim stick or another suitable wide flat-bladed tool, gently pry the barbed nipple of the washer fluid level sensor out of the rubber grommet seal on the reservoir just above the sump. Care must be taken not to damage the reservoir.
9. Remove the washer fluid level sensor from the washer reservoir.
10. Remove the rubber grommet seal from the washer fluid level sensor mounting hole in the washer reservoir and discard.

INSTALLATION

INSTALLATION

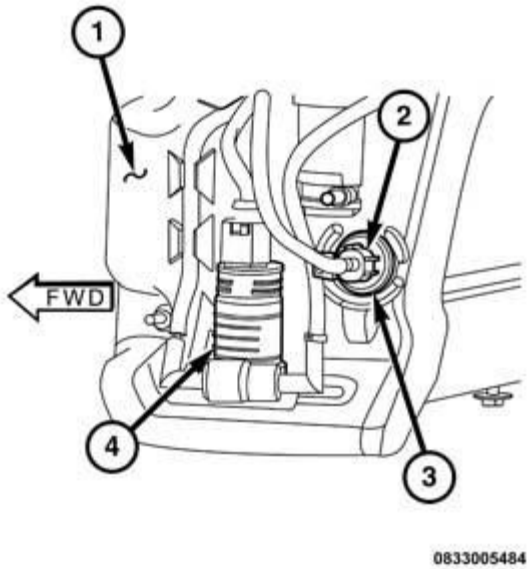

Fig. 70: Washer Fluid Level Sensor Unit & Connector
Courtesy of CHRYSLER GROUP, LLC

1. Lubricate a new rubber grommet seal with clean washer fluid and install it into the washer fluid level sensor mounting hole in the washer reservoir (1). Always use a new rubber grommet seal on the reservoir.
2. Insert the float of the washer fluid level sensor (3) through the rubber grommet seal and into the washer reservoir. The flat of the index tab on the washer fluid level switch mounting flange should be pointed downward.
3. Using hand pressure, press firmly and evenly on the washer fluid level sensor mounting flange until the barbed nipple is fully seated in the rubber grommet seal in the mounting hole of the washer reservoir.
4. Reconnect the Front End Module (FEM) wire harness connector (2) for the washer fluid level sensor to the sensor connector receptacle.
5. Reconnect the reservoir washer plumbing fitting to the barbed outlet nipple of the washer pump (4).
6. Reinstall the plastic push-in fasteners that secure the left front wheel house splash shield to the inner fender panel and the front fascia. Refer to **SHIELD, SPLASH, FRONT WHEELHOUSE, INSTALLATION** .
7. Lower the vehicle.
8. Reconnect the negative cable to the battery.
9. Refill the washer reservoir with the washer fluid siphoned from the reservoir during the removal procedure.

2014 AUTOMATIC TRANSMISSION

948TE - Service Information - Cherokee

DIAGNOSIS AND TESTING

DIAGNOSIS AND TESTING - AUTOMATIC TRANSMISSION - GENERAL CONDITIONS

CAUTION: Before attempting any repair on an automatic transmission, check for Diagnostic Trouble Codes with the appropriate scan tool.

CAUTION: A unique transmission fluid has been developed for the 8HP transmission. This fluid is NOT compatible with ATF+4 or any other current Chrysler transmission fluid. For specifics about this unique fluid, see FLUIDS, LUBRICANTS AND GENUINE PARTS in the owner's manual.

Transmission malfunctions may be caused by these general conditions:

- Poor engine performance.
- Improper adjustments.
- Hydraulic malfunctions.
- Mechanical malfunctions.
- Electronic malfunctions.
- Power Transfer Unit performance (if equipped).

Diagnosis of these problems should always begin by checking the easily accessible variables: fluid level, fluid condition, and transmission fault codes using the appropriate scan tool. Then perform a road test to determine if the problem has been corrected or if more diagnosis is necessary.

AIR TESTING

The 948TE transmission can be air tested to evaluate the condition of the seals and clutch apply circuits within the transmission. An adaptor plate in place of the valve body is required to perform this test. A rubber tipped air chuck connected to a 413 kPa (60 PSI) regulated shop air hose will provide adequate air pressure and volume to properly test the sealing components within the transmission.

1. Position the vehicle on a suitable hoist with the transmission in neutral. Refer to **HOISTING, STANDARD PROCEDURE** .
2. Remove the valve body. Refer to **VALVE BODY, REMOVAL**.

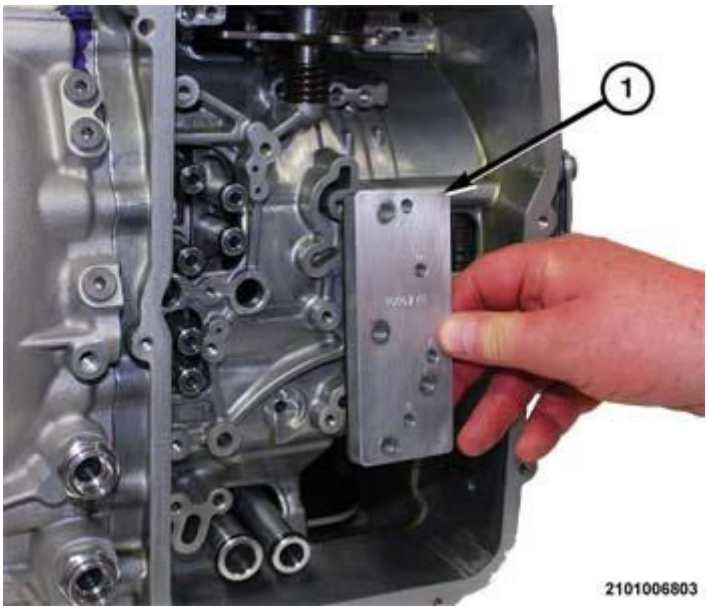

Fig. 1: Installing Air Test Adaptor Plate
Courtesy of CHRYSLER GROUP, LLC

3. Place the (special tool #10507, Plate, Air Pressure Test) (1) in position on the transmission housing.

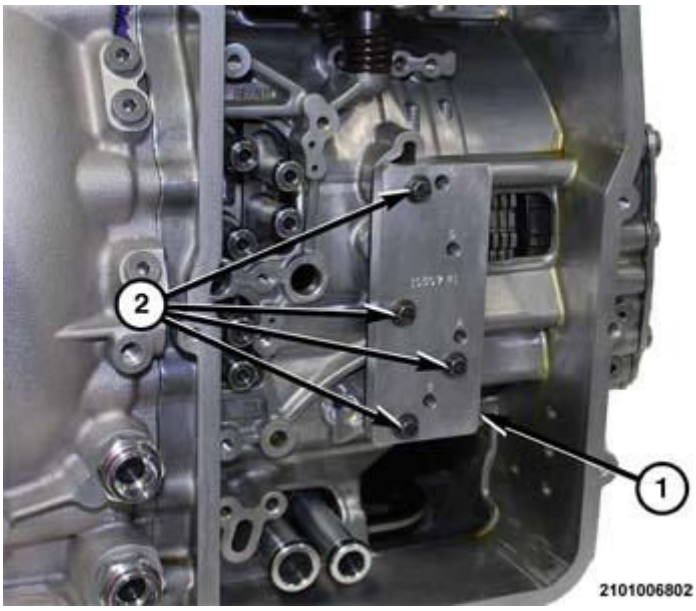

Fig. 2: Air Test Adaptor Plate Installed
Courtesy of CHRYSLER GROUP, LLC

4. Install the bolts (2) to hold the air test adaptor plate (1) to the transmission housing.

NOTE: **Do not exceed 60 psi air pressure. Air Pressure greater than 413 kPa (60 psi) may create a false positive result. Lip seals that are marginal may seal under higher pressure.**

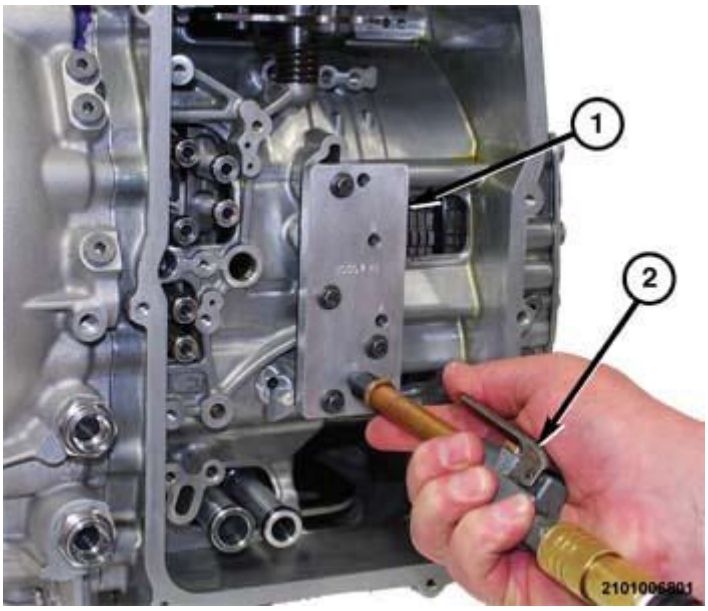

Fig. 3: Applying Air Pressure At Adaptor Plate
Courtesy of CHRYSLER GROUP, LLC

5. Using a rubber tip blow chuck (2) on a 413 kPa (60 psi) **regulated** shop air hose, pressurize each of the clutch apply circuits marked on the adaptor plate (1).
6. Each circuit should thump when the clutch or dog applies and hold until the air chuck is released.
   - If a clutch or dog does not apply and air escapes past a damaged seal, the transmission will need to be replaced or overhauled as necessary.
   - If the transmission passes the air test, the valve body or solenoid valve will be the likely cause of the transmission shifting problem. If the valve body or solenoid valves are defective, they will need to be replaced as necessary.
7. Install the valve body. Refer to **VALVE BODY, INSTALLATION**.
8. Road test the vehicle to verify the repair.

PRELIMINARY DIAGNOSIS

VEHICLE IS DRIVABLE

1. Check for transmission fault codes using the appropriate scan tool.
2. Road test and note how the transmission upshifts, downshifts, and engages.
3. Check fluid level and condition. Refer to **FLUID AND FILTER, STANDARD PROCEDURE**.

VEHICLE IS DISABLED

1. Check for transmission fault codes using the appropriate scan tool.
2. Position the vehicle on a hoist with the transmission in neutral. Refer to **HOISTING, STANDARD PROCEDURE** .
3. Check for cracked, leaking cooler lines.

4. Check the fluid level and condition. Refer to **FLUID AND FILTER, STANDARD PROCEDURE**.
5. With the transmission in the park position, attempt to rotate halfshafts to make sure the transmission output shaft is intact.
6. Check the power transfer unit (PTU) (if equipped).
7. Raise and support vehicle on safety stands, start engine with transmission in the Park position and allow to idle for several minutes, shift transmission into gear, and note following:
   a. On AWD vehicle, if propeller shaft turns but wheels do not, problem is with the differential or halfshafts.
   b. If the propeller shaft does not turn and the transmission is noisy, stop the engine. Remove the oil pan, and check for debris. If the pan is clear, remove the transmission and check for damaged driveplate, torque converter, oil pump, or input shaft.
8. Check the transmission control module (TCM), wiring, valve body, and solenoids (Utilize fault codes to diagnose if available).

ROAD TEST

Prior to performing a road test, verify that the fluid level, fluid condition, and linkage adjustment have been verified.

During the road test, the transmission should be operated in each position to check for slipping and any variation in shifting.

If the vehicle operates properly at highway speeds, but has poor acceleration, the converter stator overrunning clutch may be slipping. If acceleration is normal, but high throttle opening is needed to maintain highway speeds, the converter stator clutch may have seized. Both of these stator defects require replacement of the torque converter and thorough transmission cleaning.

Slipping clutches can be isolated by comparing the "Elements in Use" chart with clutch operation encountered on a road test. This chart identifies which clutches are applied at each position of the selector lever.

A slipping clutch may also set a DTC and can be determined by operating the transmission in all selector positions.

948TE 9 Speed FWD/AWD/4WD Planetary Automatic Transmission with 6 shift elements and 4 planetary gear sets.								
		CLUTCH-A	**CLUTCH-B**	**CLUTCH-C**	**CLUTCH-D**	**CLUTCH-E**	**CLUTCH-F**	**RATIO**
GEAR	**1st**	**X**			**X**		**X**	4.700
GEAR	**2nd**	**X**		**X**			**X**	2.842
GEAR	**3rd**	**X**	**X**				**X**	1.909
GEAR	**4th**	**X**				**X**	**X**	1.382
GEAR	**5th**	**X**	**X**			**X**		1.000
GEAR	**6th**	**X**		**X**		**X**		0.808
GEAR	**7th**	**X**			**X**	**X**		0.699

GEAR	**8th**			**X**	**X**	**X**		0.580
GEAR	**9th**		**X**		**X**	**X**		0.479
GEAR	**NEUTRAL/PARK**				**X**		**X**	
GEAR	**R**		**X**		**X**		**X**	3.805
Default Gear	**4th Gear**					**X**	**X**	

EMERGENCY RUNNING FUNCTION - LIMP IN MODE

In the event of a complete transmission electrical failure (loss of power to the transmission control module (TCM), the transmission enters default limp-in mode. When the TCM loses power, all solenoids are de-energized. Maximum pressure locks the transmission in fourth gear, and a diagnostic trouble code (DTC) is stored in memory. If the vehicle is in a forward gear range when the fault occurs, the transmission defaults to fourth gear.

The limp-in function remains active until the DTC is repaired or a stored DTC is erased with an appropriate scan tool.

FLUID LEAK DETECTION

The following procedure is for detecting transmission fluid leaks from the area between the transmission and the Power Transfer Unit (PTU). When transmission fluid is leaking form the weep hole in the area of the PTU, the seals around the differential output shaft and the differential side gear is most likely faulty. The large seals around the differential output shaft and side gear is serviceable without removing the transmission. The following procedure is recommended to determine which seal is leaking.

1. Disconnect the transmission vent tube from the adaptor nipple.
2. Adapt a compressed shop air coupling and a length neoprene hose onto the vent nipple.
3. Attach a 48 kPa (7 psi) regulated shop air source to the air coupling on the vent nipple.
4. Raise the vehicle on a suitable hoist.
5. Remove the PTU from the vehicle

   Refer to **REMOVAL** .

6. Apply a soapy solution to the seals inside and around the differential output shaft.
7. Observe over several minutes to see if air bubbles form in the leak area.

Test Results

- If bubbles are emanating from the inner differential side gear seal, remove the adapter sleeve and replace the inner seal.
- If bubbles are emanating from the outer output shaft seal, remove the adapter sleeve replace the seal.
- If bubbles are emanating from the transmission housing casting, replace the porous component.

STANDARD PROCEDURES

BEARING TURNING TORQUE MEASUREMENT

To determine proper select shim thickness for the differential and transfer gear bearings, the turning torque must be measured. If just the differential or transfer gear bearings are being replaced it is not necessary to measure the bearing turning torque. The original factory installed shims will be sufficient to properly preload the bearings when the transmission is assembled. If the differential, transfer gear, or transmission housing castings are replaced the differential and transfer gear bearing turning torque will need to be reestablished.

Verify that the bearings and races are **NEW** and properly installed on/in clean components with the factory installed select shims behind the bearing races. Lightly lubricate the bearings with transmission fluid.

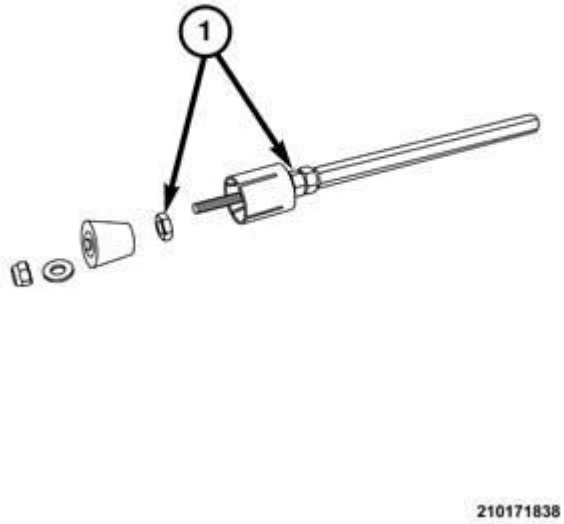

Fig. 4: Special Tool #C-4995A
Courtesy of CHRYSLER GROUP, LLC

Tool (special tool #C-4995A, Tool, Differential Bearing Torque) must be modified to be compatible with the following operation. Two 3/8-24 nuts (1) must be added to keep the center shaft from rotating in the cone and sleeve.

1. Remove the nylok™ nut and expander cone from the center shaft.
2. Remove the sleeve from the center shaft.
3. Install a nut on the center shaft and tighten it against the existing nut. Install the sleeve.
4. Install the 2nd nut inside the sleeve just far enough to install the cone and nut.
5. Install the cone and nut tight enough to keep the center shaft from rotating inside the cone and sleeve.

MEASUREMENT PROCEDURE

1. Position the differential on a clean work surface.

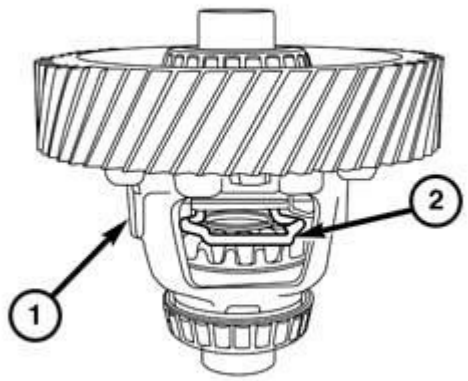

210171737

Fig. 5: Differential Pinion Gears & Lock Tool
Courtesy of CHRYSLER GROUP, LLC

2. On 4WD transmissions tool 10425 is not required, there is no differential. on FWD and AWD transmissions, install the lock tool (special tool #10425, Tool, Pinion and Side Gear Locking) (2) between the differential (1) pinion gears next to the link pin to prevent the differential from rotating.
3. Position the transmission and bell housing on a suitable clean work bench.
4. Install new bearing races with the original select shims.
5. Install the differential with new bearings lightly lubricated with transmission fluid in the transmission housing.
6. Install the bell housing.
7. Install the bolts to hold the bell housing to the transmission housing. Tighten bolts to 50% on the specified torque value

   Refer to **SPECIFICATIONS**.

8. Insert modified tool (special tool #C-4995A, Tool, Differential Bearing Torque) into the differential until the sleeve (C-4995-1) enters the halfshaft spline in the differential side gear.
9. Tighten the nut until the sleeve expands tightly in the side gear.
10. Tighten the jamb nut to prevent the center shaft from rotating in the sleeve.
11. Using a suitable wrench, rotate the differential 20 rotations clockwise and 20 rotations counterclockwise.

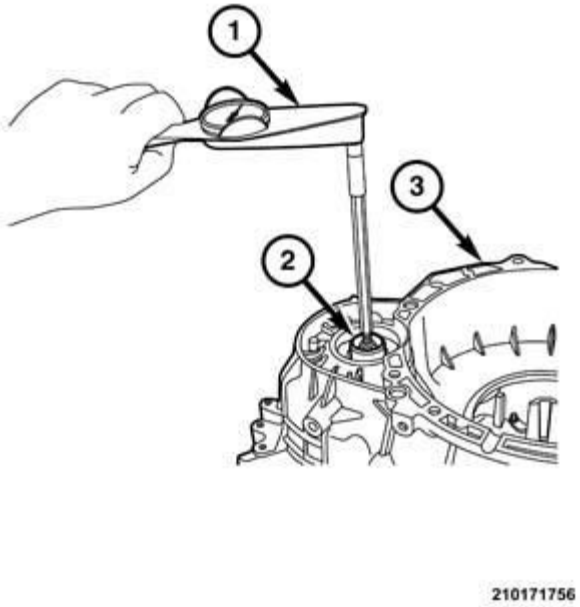

Fig. 6: Torque Wrench & Differential
Courtesy of CHRYSLER GROUP, LLC

12. Using a torque wrench (1), measure the turning resistance of the differential (2) after the initial break away. It should measure between 1.7 to 2.8 N.m (15 and 25 in lbs)
13. Adjust the turning torque by adding to or subtracting from the thickness of the select shims behind the differential bearing races.
14. After achieving proper differential turning torque, separate the bell housing from the transmission housing.
15. Install the transfer gear with new bearings into the transmission housing.
16. Install the bell housing.
17. Install the bolts to hold the bell housing to the transmission housing. Tighten bolts to 50% on the specified torque value

    Refer to **SPECIFICATIONS**.

    NOTE: The turning torque of the differential and the transfer gear will be higher than the differential alone. The ring gear is driving a smaller gear on the transfer shaft.

18. Using a suitable wrench, rotate the differential 20 rotations clockwise and 20 rotations counterclockwise.

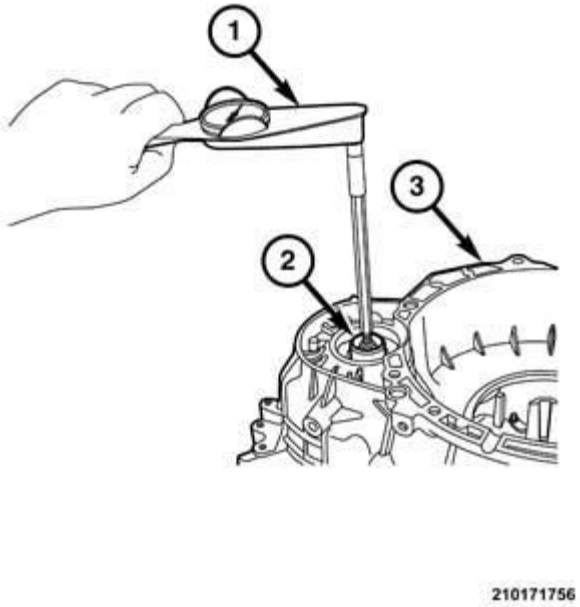

Fig. 7: Torque Wrench & Differential
Courtesy of CHRYSLER GROUP, LLC

19. Using a torque wrench (1), measure the turning resistance of the differential (2) after the initial break away. It should measure between 3.4 to 6.8 N.m (35 and 60 in lbs)
20. Adjust the turning torque by adding to or subtracting from the thickness of the select shims behind the transfer shaft bearing races.
21. Remove tool C-4995 from the differential.
22. Separate the bell housing from the transmission housing.
23. Remove the differential (1) and transfer gear (2).

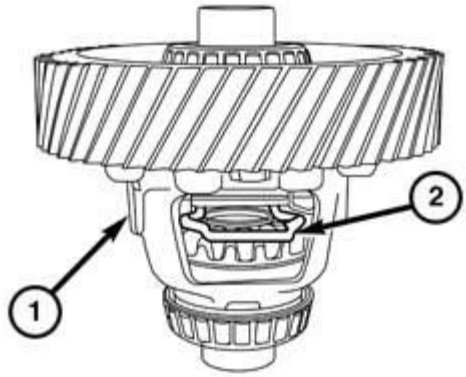

210171737

Fig. 8: Differential Pinion Gears & Lock Tool
Courtesy of CHRYSLER GROUP, LLC

24. On FWD and AWD transmissions, remove lock tool 10425 (2) from the differential (1).
25. Prepare transmission components for final assembly.

INPUT SHAFT END PLAY MEASUREMENT

Before disassembling the 948TE transmission measure the end play of the input shaft. This will aid in the assembly process when selecting a select shim.

1. Place the transaxle on a suitable clean work surface.
2. Remove the torque converter.
3. Use tools (special tool #8266B, End Play Socket Set) and (special tool #C-3339A, Set, Dial Indicator) attached to the input shaft, to measure the input shaft end play.

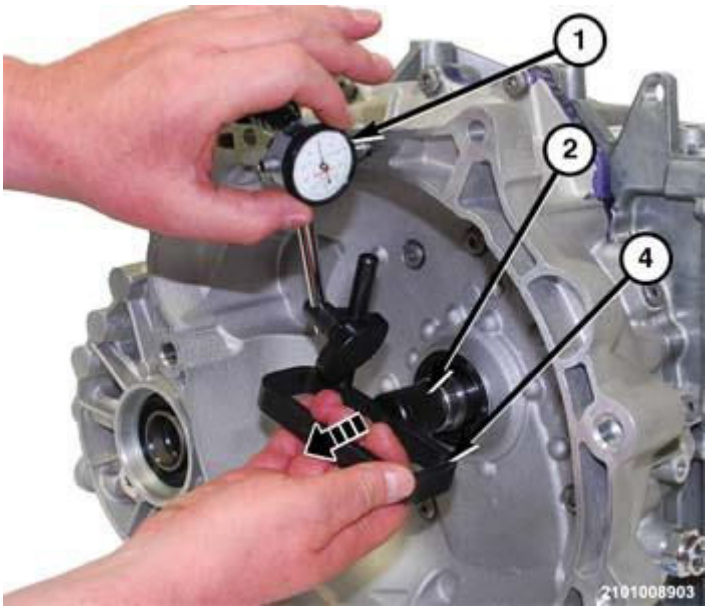

Fig. 9: Measuring Input Shaft End Play
Courtesy of CHRYSLER GROUP, LLC

4. Attach the dial indicator to the handle 8266-8.
5. Attach the handle to the spline adapter 8266-6.
6. Attach the spline adapter to the input shaft.
7. Position the dial indicator plunger on the bellhousing rim.
8. Pull outward on the handle and zero the dial indicator face.

Fig. 10: Input Shaft End Play Measurement
Courtesy of CHRYSLER GROUP, LLC

9. Push inward on the handle and read the dial indicator.
10. Record the measurement as a reference number for selecting the proper thickness select spacer when assembling the transmission.

SPECIFICATIONS

TORQUE SPECIFICATIONS

TIGHTENING SPECIFICATIONS 948TE TRANSAXLE

Component	N.m	In. Lb.	Ft. Lb.
Flexplate to Torque Converter (apply Mopar ® Lock & Seal Adhesive or replace the bolts)	40	-	30
Flexplate to Crankshaft-M12X1.25X14.00 (Do Not Reuse Original Bolts)	95	-	70
Access Plate to Trans-M6X1X16	9	80	-
Engine to Transaxle-M12X1.25X65.00	93	-	69
Engine to Transaxle-M10X1.50X45.00	50	-	37
Engine to Transaxle-M10X1.50X54.50	51	-	38
Engine to Transaxle-M10X1.25X55.00	50	-	37
Engine to Transaxle-M10X1.25X65	49	-	36
Trans to Engine-M12X1.25X50.0	115	-	85
Trans to Engine-M12X1.25X97.1	63	-	46
Trans to Engine-M10X1.50X54.50	51	-	38
Trans to Engine-M10X1.25X55.00	50	-	37
Trans to Engine- M10X1.25X65	49	-	36
Trans Bracket to Trans-M12X1.75X60.42	105	-	77
Trans Bracket to Trans-M6X1.0X16.00	10	88	-
Trans Mount to Shock Tower-M10X1.50X70.00	65	-	48
Trans Mount to Rail-M12X1.75X60.00	105	-	77
Trans Mount to Trans-M14X1.5X75.00	170	-	125
Torque Strut Bracket to Trans-M12X1.75X35.00	220	-	162
Pivot Bracket to Trans-M14X2.0X60.00	160	-	118
PTU to Trans Flange-M10X1.5X50.00	48	-	35
Battery Negative to Auto Trans-M8X1.25X20.00	24	-	17
EPS Ground to Transmission-M8X1.25X46.00	22	-	16
EPS Ground to Transmission-M6X1.0X16.00	10	88	-
Bracket to Transaxle-M6X1.0X20.0	8	71	-
Heat Shield to Cradle-M6X1.00X14.00	8	71	-
Heat Shield to PTU-M6X1.00X14.00	8	71	-
Lever to Transaxle Shaft-M8X1.00	19	-	14
ATX Cable Adjust-M5X0.8X14.00	8	71	-

Shift Cable Bracket to Trans-M6X1.00X14.00	12	106	-
Shift Cable Bracket to Trans-M6X1.0X20.0	8	71	-
Shifter Plate to Floor Pan-M6X1.0	9	80	-
Bracket to Front Crossmember-M12X1.75X95.00	90	-	66
Bracket to Front Crossmember-M12X1.75X40.00	70	-	52
FEM to Lower Load Path-M12X1.75X95.00	44	-	32
FEM to Inner Load Beam-M8X1.25X30.00	27	-	20
FEM to Upper Load Beam-M8X1.25X30.0	23	-	16
Vertical Link to Load Beam-M10X1.25X30.5	27	-	20
Tow Hook Bracket to Load Beam-M10X1.25X70.00	55	-	41
Engine Belly Pan to Engine X-Mbr-M6X1.00X25.50	10	88	-
Engine Belly Pan to Fascia C/Out-M6X1.00X25.50	10	88	-
Engine Belly Pan to Load Beam Rt/Lt-M6X1.00X25.50	10	88	-
Front Diff Bracket to Isolator Left-M12X1.5X65.0	120	-	88
Front Diff Bracket to Isolator Right-M12X1.5X65.0	120	-	88
Rear Diff Bracket to Isolator-M12X1.5X130.0	120	-	88

948TE INTERNAL TIGHTENING SPECIFICATIONS

Component	N.m	In. Lb.	Ft. Lb.
Plug - Screw TC Anti-Rotation	8	71	-
Screw - Oil Supply Tube M6x22	10.1	89	-
Plug - Screw M18 x 1.5 - 6e x 12	35	-	26
Screw - TORX M6x15 (Park guide) * = + angle 21°	4 *	35 *	-
Plug - Screw M18 x 1.5 - 6e x 12	35	-	26
Screw - TORX M6x15 (Gasket and cover)	10	88	-
Screw - TORX M6 x 42	12.5	111	-
Screw - TORX - Bell to Case M8x34	25	-	18
Screw - TORX M6x22	10	88	-
Plug - Screw M18 x 1.5 - 6e x 12	35	-	26
Plug - Screw - Bell Housing M10 x 1 - 6e x 8	12	106	-
Plug - Screw - Oil Fill M14 x 1.5 - 6e x 12	23	-	17
Fitting Assembly - Oil Cooler Line	30	-	22
Screw & Washer Assy - TORX - Pump Plate to Bell M8 x 69	25	-	18
Screw & Washer Assy - TORX - Pump Plate to Bell M8 x 25	25	-	18
Screw - TORX M6x22	10	88	-
Screw - TORX - Pump Plate to Bell M6x17	10	88	-
Screw - TORX w/patch M4 x 9	2.8	25	-
Screw - TORX Valve Body to Valve Body M5 x 40	6	53	-
Screw - TORX M5 x 12	6	53	-
Screw - Cover M5 x 50	6	53	-
Screw - TORX Wire Retention Plate M5x14	5.5	49	-

Screw - TORX M5x12	5.7	50	-
Screw - TORX Valve Body to Case M6x62	8	71	-
Screw - TORX M6x70	8	71	-
Pan Assy - Oil	9.5	84	-
Screw - TORX M8x21	21	-	15
Nut - Stake	60	-	49

CLUTCH SPECIFICATIONS

The B, C, D and E clutch clearance must be measured and properly set during the assembly process of the 948TE transmission. The recommended measurement procedures can be found in the appropriate CLUTCH - ADJUSTMENTS procedure.

CLUTCH COMPOSITION

A - Clutch	Dog Clutch
B - Clutch	5 Discs
C - Clutch	4 Discs
D - Clutch	4 Discs
E - Clutch	5 Discs
F - Clutch	Dog Clutch

CLUTCH CLEARANCE

B-clutch = 1.28 - 1.77 (0.050 - 0.070 in)	C-clutch = 0.76 - 1.15 (0.030 - 0.045 in)
D-clutch = 1.01 - 1.50 (0.040 - 0.059 in)	E-clutch = 1.28 - 1.77 (0.050 - 0.070 in)

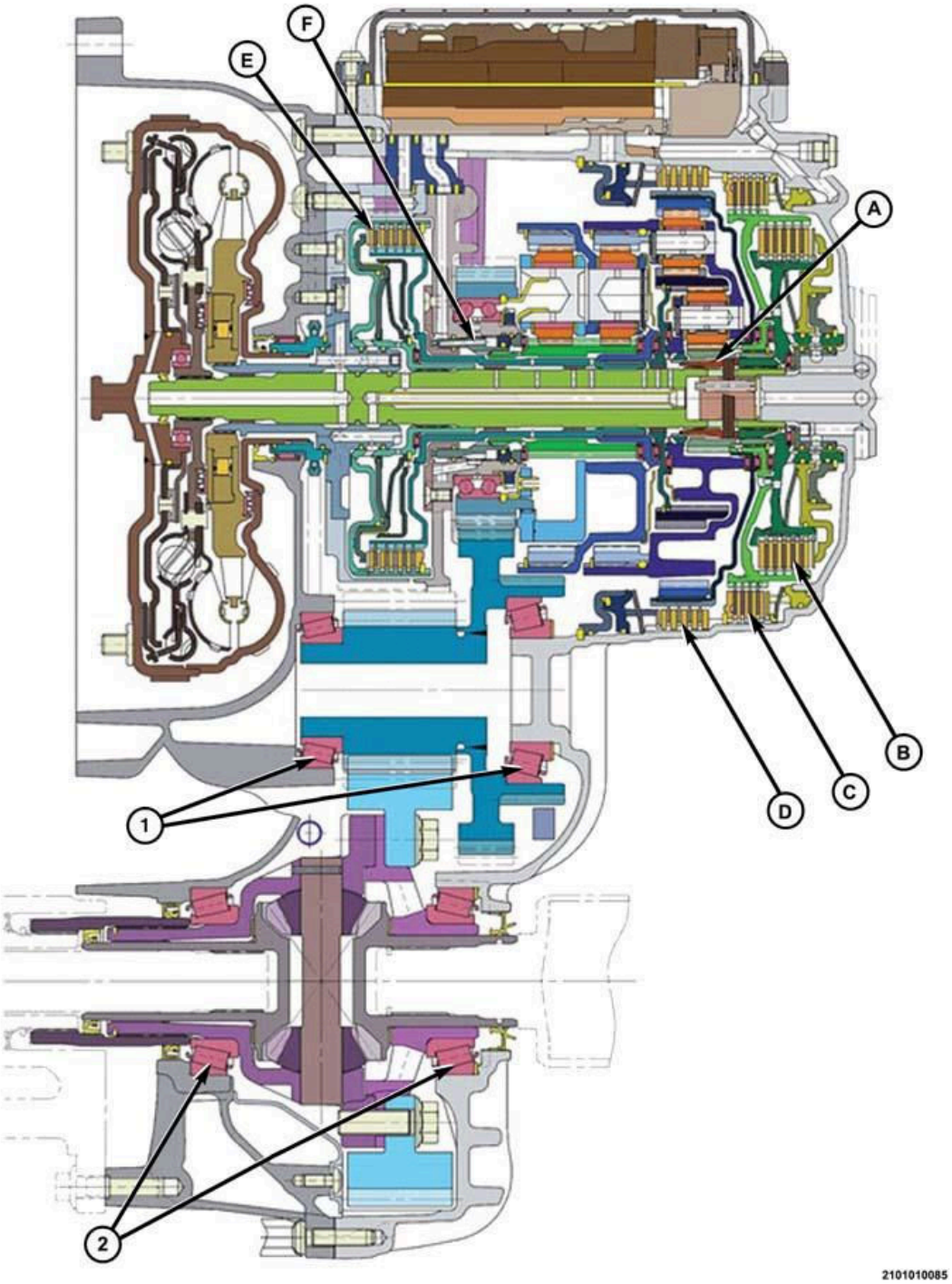

Fig. 11: Cutaway View Clutch Locations
Courtesy of CHRYSLER GROUP, LLC

TRANSMISSION GEAR RATIOS

Gear ratios for the 948TE automatic transmission are as follows:

GEAR	RATIO
1ST	4.70:1
2ND	2.824:1
3RD	1.909:1
4TH	1.382:1
5TH	1.00:1
6TH	0.808:1
7TH	0.699:1
8TH	0.58:1
9TH	0.479:1
REVERSE	3.805:1

SCHEMATICS AND DIAGRAMS

INTERNAL HYDRAULIC PASSAGES

Provided in the following illustrations are the locations of hydraulic passages that will aid in diagnosing leaks and clutch malfunctions.

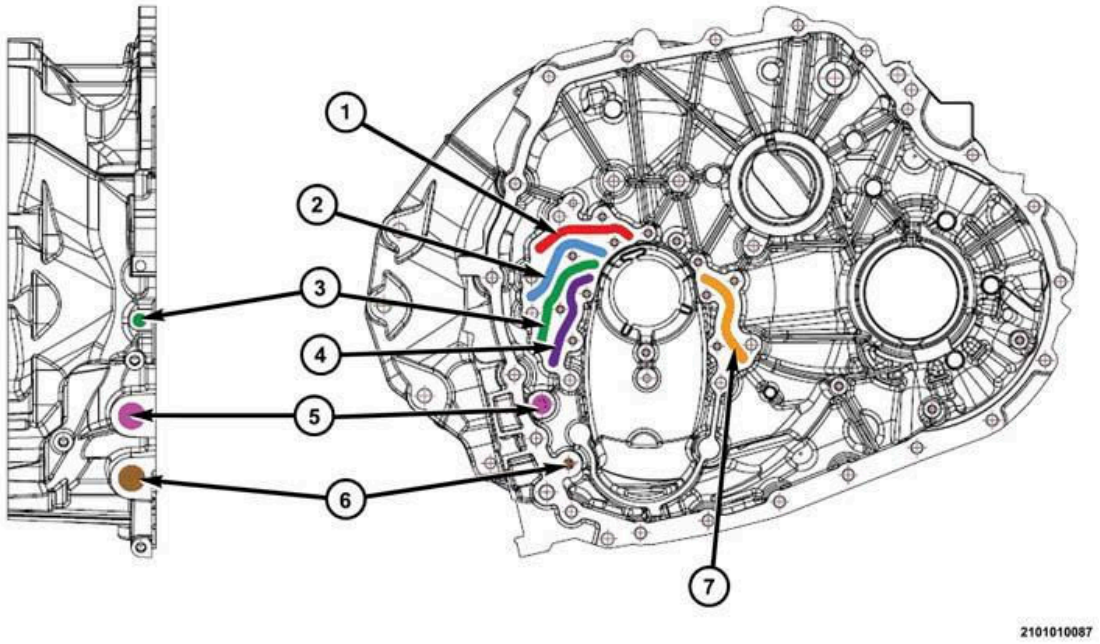

Fig. 12: Hydraulic Ports In Bellhousing
Courtesy of CHRYSLER GROUP, LLC

HYDRAULIC PORTS IN BELLHOUSING

1= Dog Clutch A - OFF	2= Clutch E
3= Torque Converter Open	4= Dog Clutch F - OFF

5= From Cooler	6= To Cooler
7= Dog Clutch F - ON	

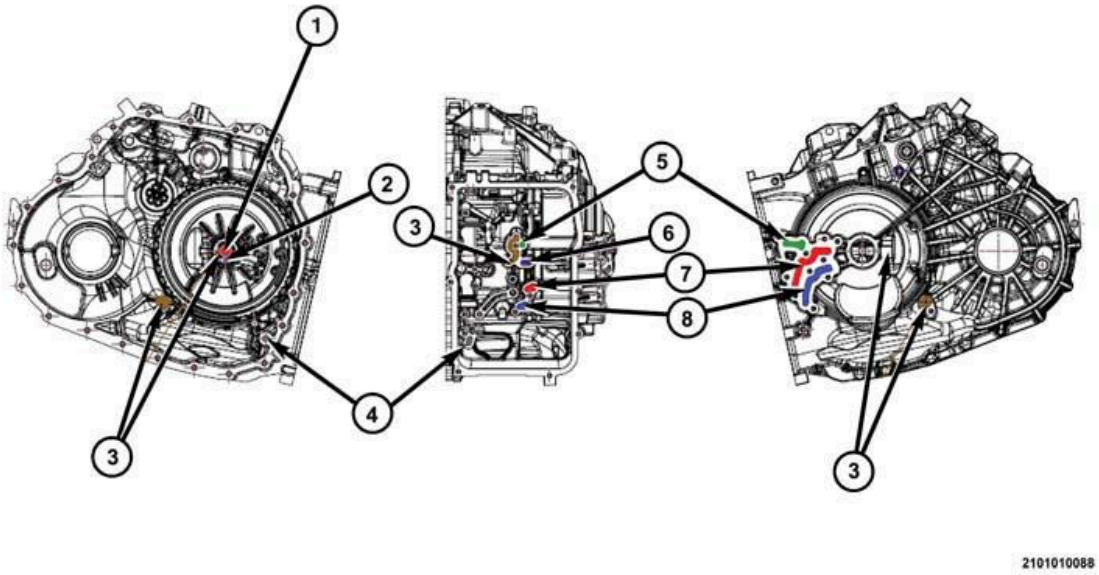

Fig. 13: Hydraulic Ports In Housing
Courtesy of CHRYSLER GROUP, LLC

HYDRAULIC PORTS IN HOUSING

1= Dog Clutch A - ON	2= Clutch B
3= Lubrication	4= To Cooler
5= Clutch C	6= Clutch D
7= Dog Clutch A - ON	8= Clutch B

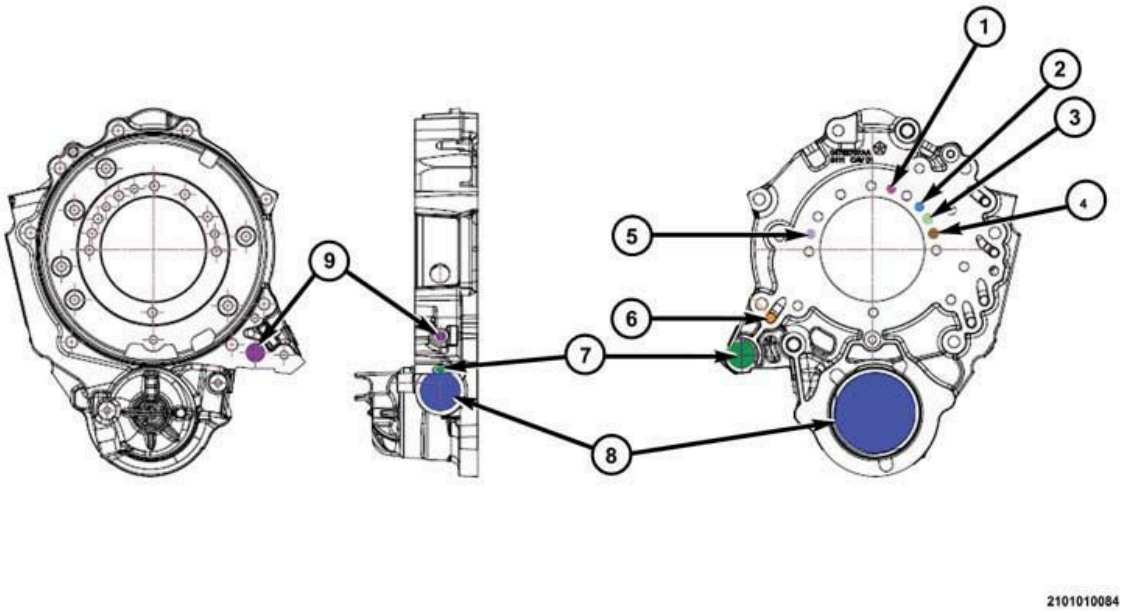

Fig. 14: Hydraulic Ports In Intermediate Support Plate
Courtesy of CHRYSLER GROUP, LLC

HYDRAULIC PORTS IN INTERMEDIATE SUPPORT PLATE

1= Dog Clutch A - OFF	2= Clutch E
3= Clutch J	4= Dog Clutch F - OFF
5= Dog Clutch F - ON	6= Front Lubrication
7= Rear Lubrication	8= Pump
9= From Cooler	

SHIFT SOLENOID HYDRAULIC SCHEMATIC

The following schematic illustrates the hydraulic function of the electronic shift solenoids.

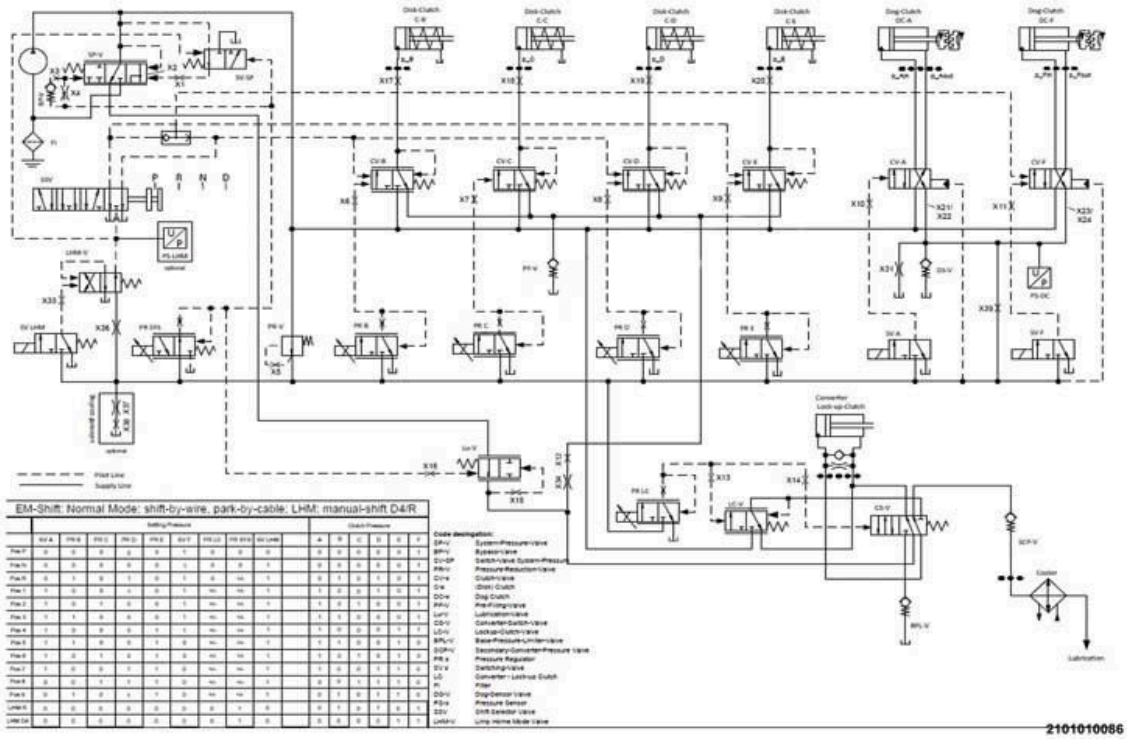

Fig. 15: Shift Solenoid Hydraulic Schematic
Courtesy of CHRYSLER GROUP, LLC

REMOVAL

FWD

WARNING: Hoisting and jack lift points provided in this service information are for a complete vehicle. When the transaxle is removed, the center of gravity will shift to the rear of the vehicle, possibly creating an unstable condition. Place safety stands under the rear frame rails behind the rear axle to stabilize the vehicle. Personal injury may result if safety stands are not used.

1. Position the vehicle on a suitable hoist with the transmission in neutral. Refer to **HOISTING, STANDARD PROCEDURE** .
2. Remove the battery. Refer to **BATTERY, REMOVAL** .
3. Remove Powertrain Control Module (PCM). Refer to **MODULE, POWERTRAIN CONTROL, REMOVAL** .
4. Remove the power distribution center. Refer to **CENTER, POWER DISTRIBUTION (PDC), REMOVAL** .
5. Hoist the vehicle.
6. Remove the front wheels. Refer to **REMOVAL** .

7. Remove the left and right half shafts. Refer to **REMOVAL** . If accessible, install suitable cap-plugs in the axle seals to prevent leakage.
8. Remove the left front fender splash shield. Refer to **SHIELD, SPLASH, FRONT WHEELHOUSE, REMOVAL** .
9. Remove the front fascia lower outboard rivets to the right front splash shield for lower load beam bolt access.
10. Remove the belly pan. Refer to **BELLY PAN, REMOVAL** .
11. Lower the vehicle until the brake rotors are 100 mm (4 in.) above the ground.
12. Release the lock lever on the wire connector on the front of the battery tray.
13. Separate the wire connector from the main engine harness.
14. Remove the battery tray. Refer to **TRAY, BATTERY, REMOVAL** .
15. Disconnect the vacuum line from the vacuum pump. Refer to **PUMP, VACUUM, REMOVAL** .
16. Disconnect the wire connector from the vacuum pump
17. Remove the nuts holding the vacuum pump to the mount bracket.
18. Separate the vacuum pump from the mount bracket.

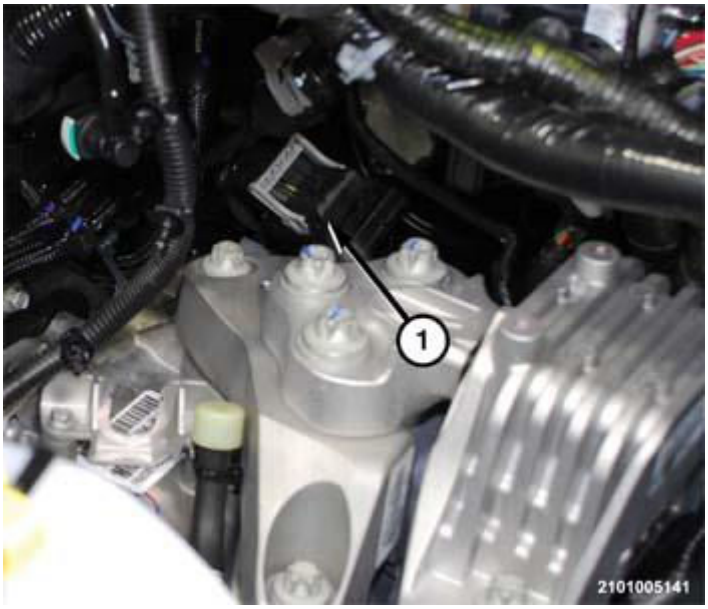

Fig. 16: Identifying Wire Connector Lock To TCM
Courtesy of CHRYSLER GROUP, LLC

19. Release the lock on the TCM connector (1).
20. Separate the wire connector (1) from the TCM.

Fig. 17: Ground Cable At Top Transmission
Courtesy of CHRYSLER GROUP, LLC

21. Remove the bolt (1) holding the ground cable to the top of the transmission.
22. Separate the ground cable (1) from the transmission.

Fig. 18: View Of Ground Cable & Shift Cable
Courtesy of CHRYSLER GROUP, LLC

23. Using a suitable prying tool (1), separate the shift cable end (2) from the manual lever on the transmission.

Fig. 19: View Of Shift Cable Housing & Mount Bracket
Courtesy of CHRYSLER GROUP, LLC

24. Release the locks holding the shift cable housing (2) to the mount bracket (1) on the transmission.
25. Separate the shift cable (2) from the mount bracket (2).

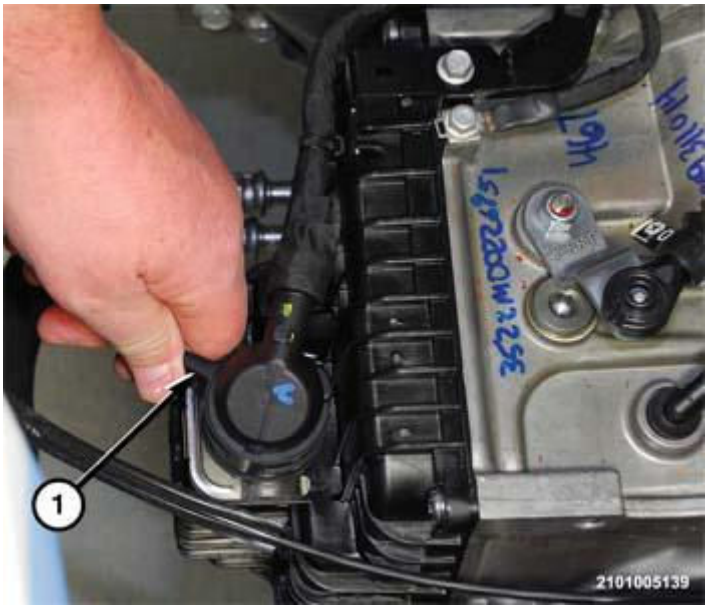

Fig. 20: Transmission Valve Body Solenoid Connector
Courtesy of CHRYSLER GROUP, LLC

26. Rotate the lock lever (2) counterclockwise on the transmission solenoid connector.
27. Separate the transmission solenoid connector (2) from the transmission.
28. Position a floor jack under the transmission.

29. Raise the jack enough to relieve tension on the upper transmission mount.

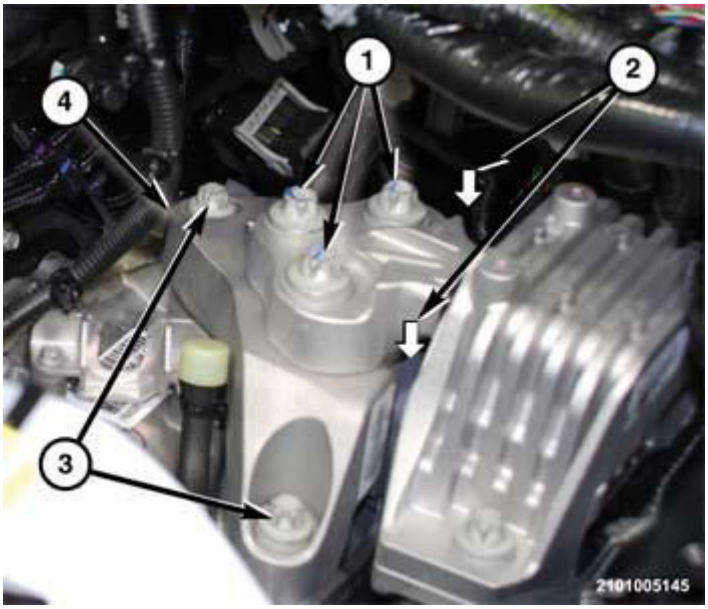

Fig. 21: Upper Transmission Mount Bolts
Courtesy of CHRYSLER GROUP, LLC

30. Remove the bolts (1) holding the upper transmission mount to the adaptor block (4).

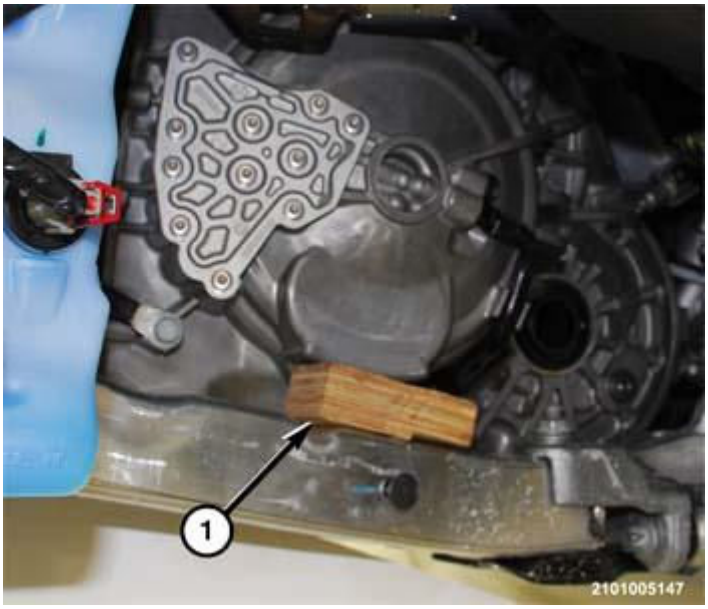

Fig. 22: Wooden Block Placed Between Transmission And Frame Rail
Courtesy of CHRYSLER GROUP, LLC

31. Place a wooden block (1) between the transmission end cover and the frame rail load beam.
32. Lower the floor jack until the wood block supports the transmission.

Fig. 23: Transmission End Cover Ground Cable
Courtesy of CHRYSLER GROUP, LLC

33. Remove the bolt (1) holding the ground cable to the transmission end cover.
34. Separate the ground cable (1) from the transmission.

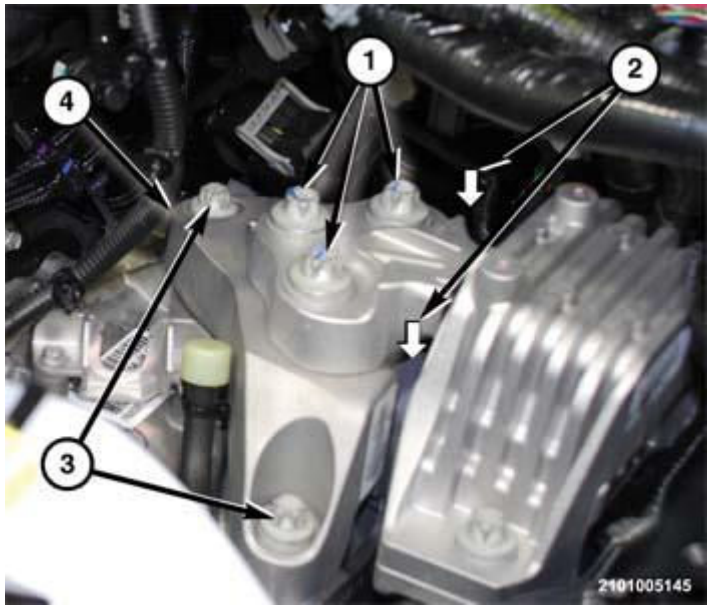

Fig. 24: Upper Transmission Mount Bolts
Courtesy of CHRYSLER GROUP, LLC

35. Remove the bolts (3) and hidden bolts (2) holding the transmission mount adaptor block (4) to the transmission.
36. Separate the transmission mount adaptor block (4) from the vehicle.

Fig. 25: Wire Harness Bracket & Bellhousing Bolt
Courtesy of CHRYSLER GROUP, LLC

37. Remove the upper bolt (1) holding the wire harness bracket and transmission bellhousing to the engine block

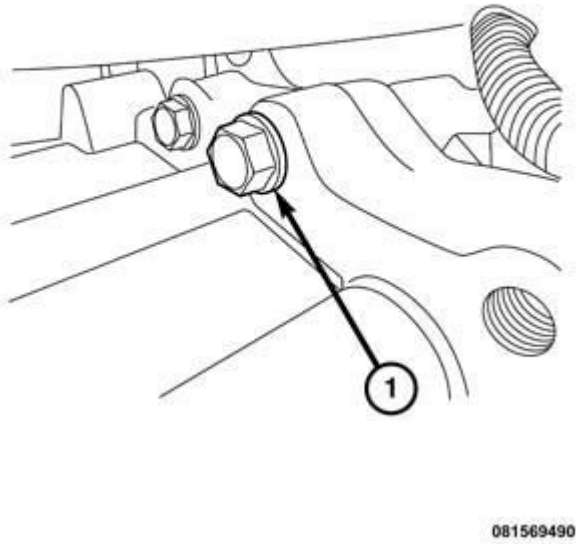

Fig. 26: Upper Starter Bolt
Courtesy of CHRYSLER GROUP, LLC

38. If equipped with a 2.4L engine, loosen and back out the upper starter bolt (1).

NOTE: The bolt will not be able to be removed due to lack of clearance.

Fig. 27: Upper Bellhousing Bolts
Courtesy of CHRYSLER GROUP, LLC

39. Remove upper bolts (1) holding the transmission bellhousing to the engine block located behind the main engine wire harness.
40. Raise the vehicle and place safety stands under the rear frame rails behind the rear axle to stabilize the vehicles center of gravity. Refer to the WARNING at beginning of this procedure (see **FWD**).
41. Place a suitable drain pan under the transmission to collect fluid that may leak from the differential seals and cooler lines.

Fig. 28: Transmission Cooler Lines
Courtesy of CHRYSLER GROUP, LLC

42. Disengage the quick couplings holding the cooler lines to the transmission.
43. Separate the cooler lines from the transmission. If accessible, install suitable cap-plugs in the male and female ends of the cooler lines to prevent leakage.

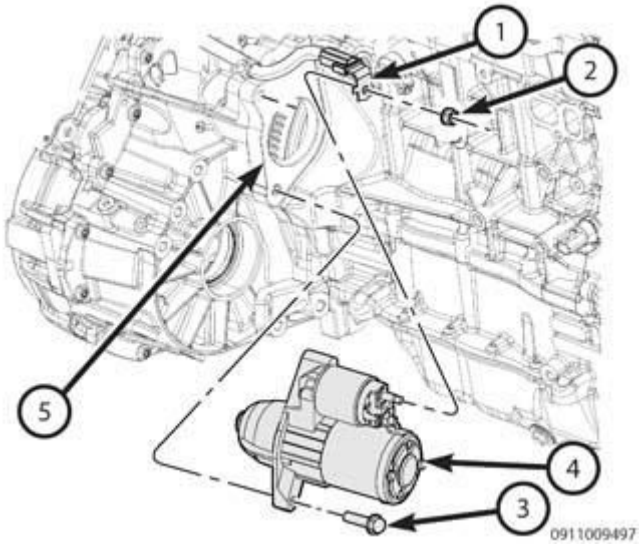

Fig. 29: Removing/Installing Starter
Courtesy of CHRYSLER GROUP, LLC

NOTE: After the bolts holding the starter motor to the bellhousing are removed the starter motor will remain the place.

44. If equipped with a 2.4L Remove the bolt (3) holding the starter (4) to the transmission bellhousing.

Fig. 30: Starter Bolts (3.2L)
Courtesy of CHRYSLER GROUP, LLC

45. If equipped with a 3.2L engine, remove the starter bolts (1).

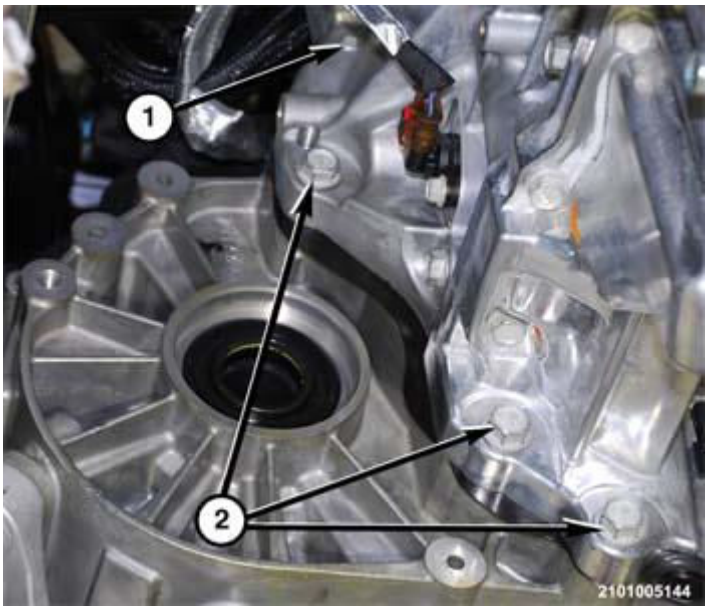

Fig. 31: Transmission Bellhousing Bolts Above The Differential Housing
Courtesy of CHRYSLER GROUP, LLC

46. Remove the bolt (1) holding the transmission bellhousing to the engine block from above the differential housing.
47. Remove the front exhaust pipe. Refer to **PIPE, EXHAUST CROSSUNDER, REMOVAL** .

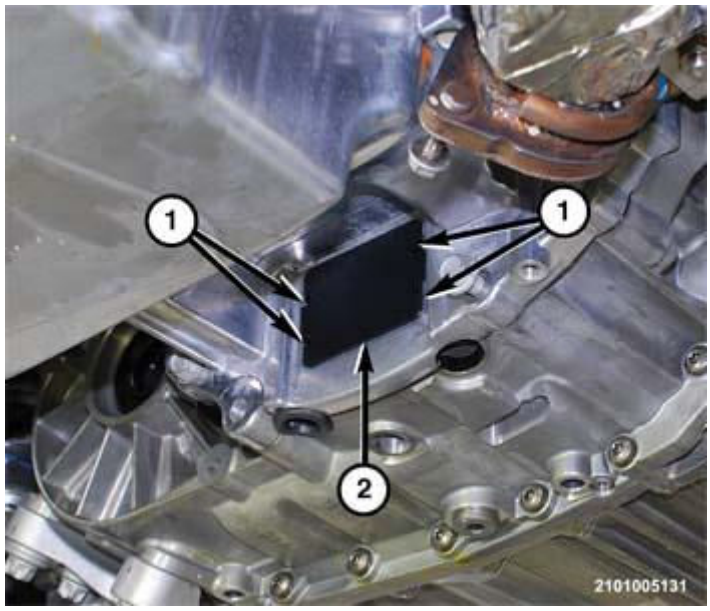

Fig. 32: Bellhousing Access Door
Courtesy of CHRYSLER GROUP, LLC

48. Remove the access door in the splash shield on the bellhousing.

NOTE: **The crankshaft can be rotated using a wrench to turn the balancer pulley end bolt.**

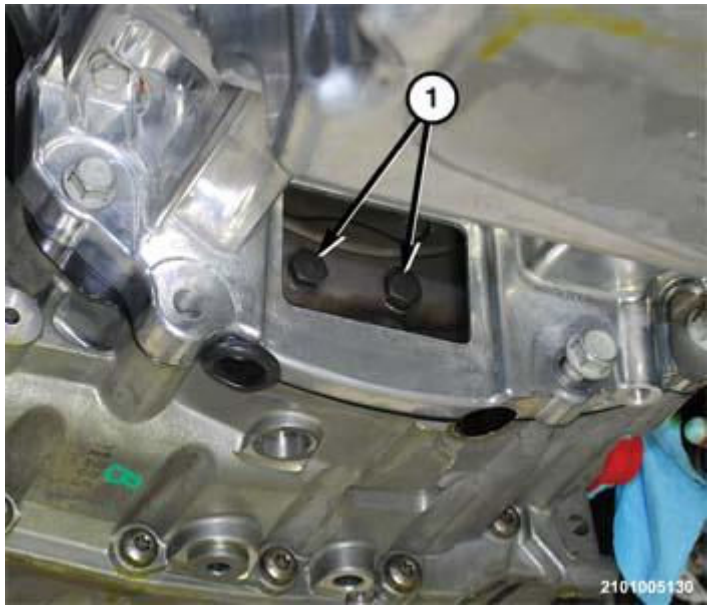

Fig. 33: Torque Converter Bolts
Courtesy of CHRYSLER GROUP, LLC

49. Through the access door opening, remove the bolts (1) holding the flexplate to the torque converter. Rotate the crankshaft to bring each set of bolts into view through the access door.

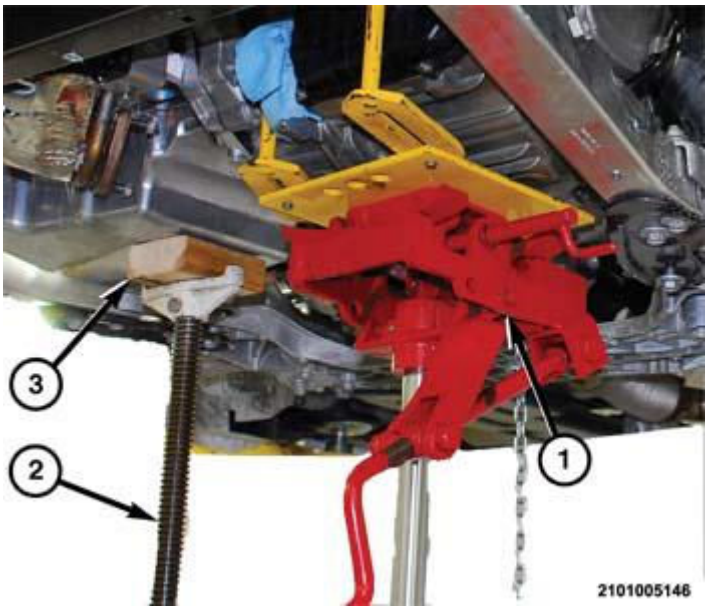

Fig. 34: Wooden Block Used To Protect Engine Oil Pan
Courtesy of CHRYSLER GROUP, LLC

50. Using a wooden block (3) to protect the engine oil pan, position a high stand (2) under the engine oil pan to support the engine.
51. Position a suitable transmission jack (1) under the transmission in a stable condition.
52. Secure the transmission to the lift plate of the transmission jack to avoid dropping the transmission during removal.

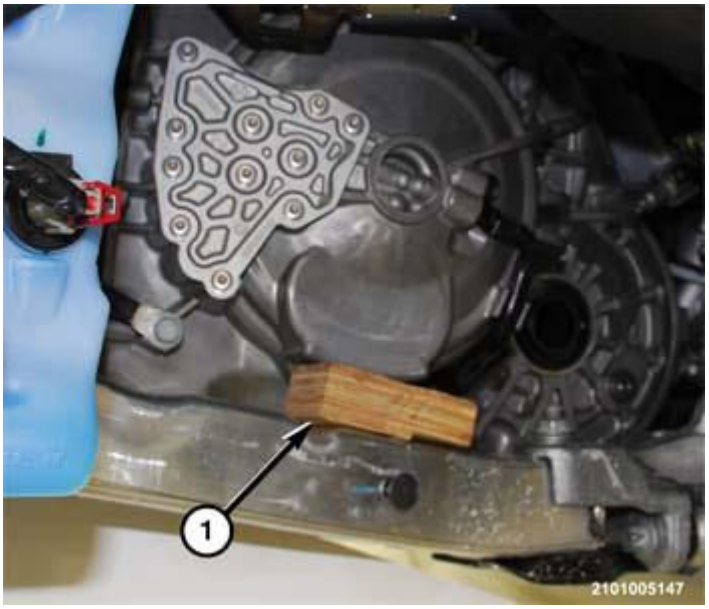

Fig. 35: Wooden Block Placed Between Transmission And Frame Rail
Courtesy of CHRYSLER GROUP, LLC

53. Lift the transmission jack and high stand until the wooden block (1) can be removed from between the

transmission end cover and the frame rail load beam.

Fig. 36: Rear Transmission Mount
Courtesy of CHRYSLER GROUP, LLC

54. Remove the through bolt (1) holding the rear transmission mount to the suspension cradle.
55. Remove the through bolt (2) holding the rear transmission mount to the adapter block on the transmission bellhousing.
56. Push the rear transmission mount rearward into the bracket on the suspension cradle and out of the way.

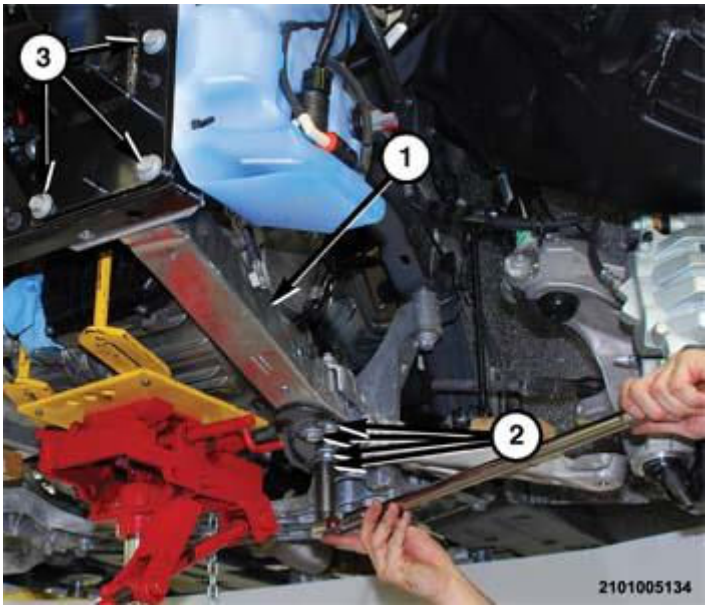

Fig. 37: Load Beam Bolts
Courtesy of CHRYSLER GROUP, LLC

57. Remove the bolts (2) holding the rear end of the load beam (1) to the suspension cradle.
58. Remove the bolts (3) holding the front of the load beam (1) to the radiator support panel.
59. Separate load beam (1) from the vehicle.

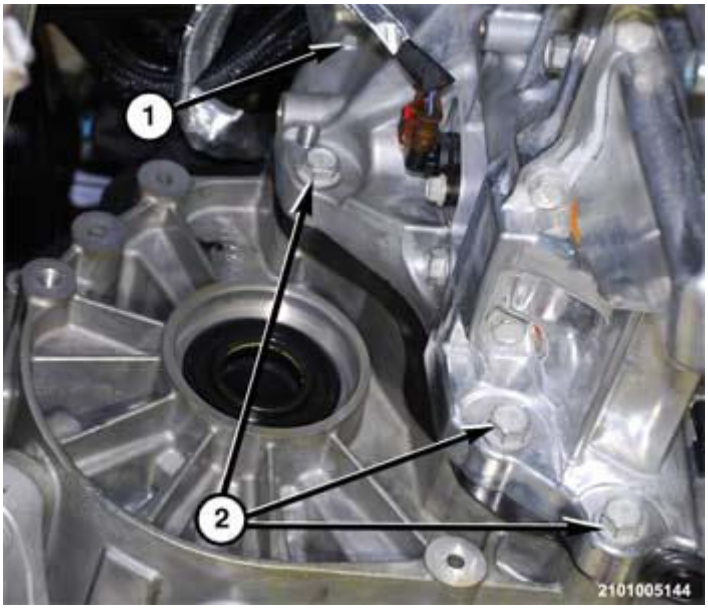

Fig. 38: Transmission Bellhousing Bolts Above The Differential Housing
Courtesy of CHRYSLER GROUP, LLC

60. Remove the bolts (2) holding the engine block and oil pan to the bellhousing next to the differential housing.

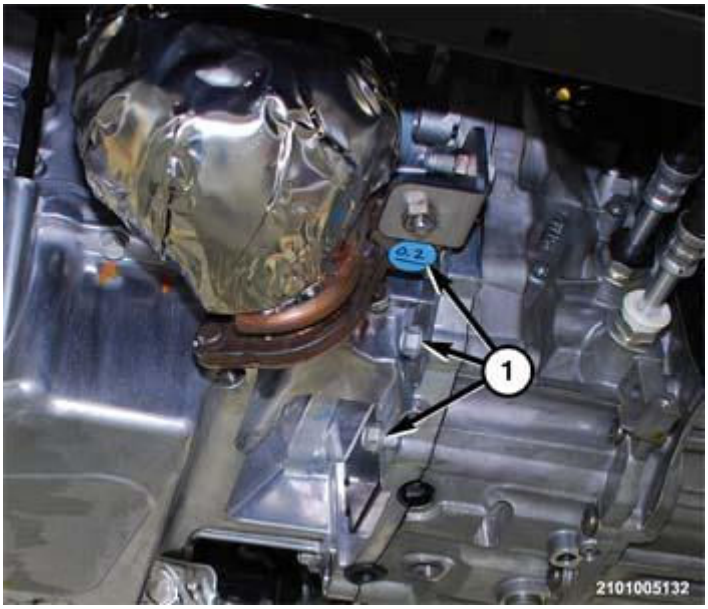

Fig. 39: Removing/Installing Transmission Bellhousing Bolts
Courtesy of CHRYSLER GROUP, LLC

61. Remove the bolts (1) holding the engine block and oil pan to the bellhousing from behind the exhaust maniverter.
62. Remove the bolt (1) holding the engine oil pan and exhaust bracket to the bellhousing.
63. Using a suitable prying tool, pry the bell housing away from the engine block
64. While guiding the transmission past obstacles, lower the transmission downward and away from the vehicle.

AWD/4WD

WARNING: **Hoisting and jack lift points provided in this service information are for a complete vehicle. When the transaxle is removed, the center of gravity will shift to the rear of the vehicle, possibly creating an unstable condition. Place safety stands under the rear frame rails behind the rear axle to stabilize the vehicle. Personal injury may result if safety stands are not used.**

1. Position the vehicle on a suitable hoist with the transmission in neutral. Refer to **HOISTING, STANDARD PROCEDURE** .
2. Remove the battery. Refer to **BATTERY, REMOVAL** .
3. Remove the Powertrain Control Module (PCM). Refer to **MODULE, POWERTRAIN CONTROL, REMOVAL** .
4. Remove the Power Distribution Center (PDC). Refer to **CENTER, POWER DISTRIBUTION (PDC), REMOVAL** .
5. Remove the battery tray. Refer to **TRAY, BATTERY, REMOVAL** .
6. If equipped with a 2.4L, remove the intake manifold. Refer to **MANIFOLD, INTAKE, REMOVAL** .
7. If equipped with a 3.2L, disconnect the vacuum line from the vacuum pump. Refer to **PUMP, VACUUM, REMOVAL** .
8. For 3.2L disconnect the wire connector from the vacuum pump.
9. For 3.2L remove the nuts holding the vacuum pump to the mount bracket.
10. For 3.2L separate the vacuum pump from the mount bracket.

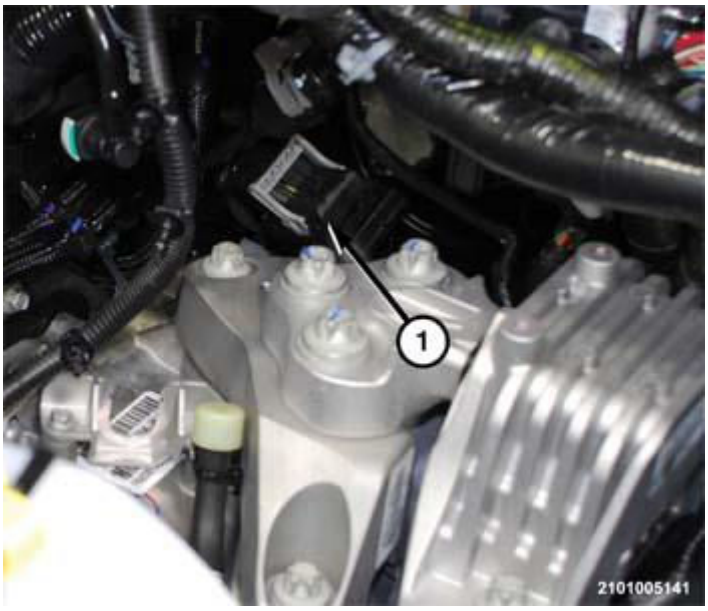

Fig. 40: Identifying Wire Connector Lock To TCM
Courtesy of CHRYSLER GROUP, LLC

11. Release the lock on the Transmission Control Module (TCM) connector (1).
12. Separate the wire connector (1) from the TCM.

Fig. 41: Ground Cable At Top Transmission
Courtesy of CHRYSLER GROUP, LLC

13. Remove the bolt (1) holding the ground cable to the top of the transmission.
14. Separate the ground cable (1) from the transmission.

Fig. 42: View Of Ground Cable & Shift Cable
Courtesy of CHRYSLER GROUP, LLC

15. Using a suitable prying tool (1), separate the shift cable end (2) from the manual lever on the transmission.

Fig. 43: View Of Shift Cable Housing & Mount Bracket
Courtesy of CHRYSLER GROUP, LLC

16. Release the locks holding the shift cable housing (2) to the mount bracket (1) on the transmission.
17. Separate the shift cable (2) from the mount bracket (2).

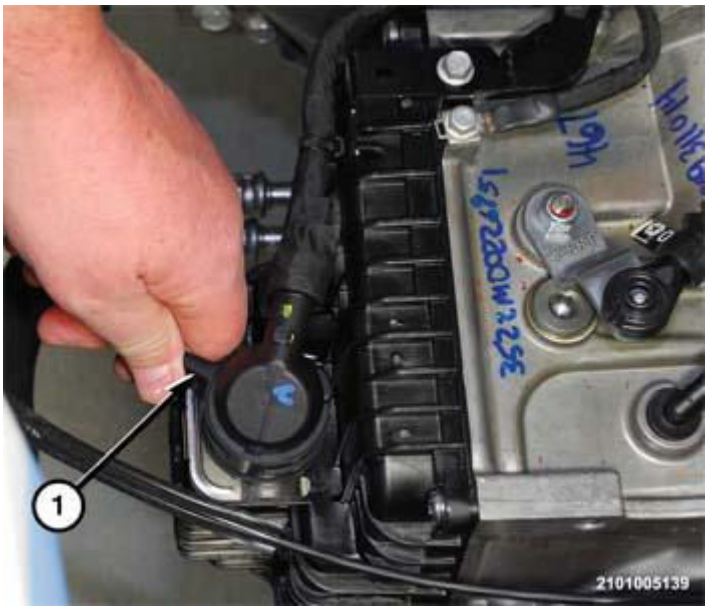

Fig. 44: Transmission Valve Body Solenoid Connector
Courtesy of CHRYSLER GROUP, LLC

18. Rotate the lock lever (2) counterclockwise on the transmission solenoid connector.
19. Separate the transmission solenoid connector (2) from the transmission.
20. Hoist the vehicle.
21. Remove the front wheels. Refer to **REMOVAL** .
22. Remove the belly pan. Refer to **BELLY PAN, REMOVAL** .
23. Remove the four rivets at the lower outboard edges of the front fascia to gain access to the lower load beam to core support bolts.
24. Remove the left and right half shafts. Refer to **REMOVAL** . If accessible, install suitable cap-plugs in the axle seals to prevent leakage.
25. Lower the vehicle until the brake rotors are 100 mm (4 in.) above the ground.
26. Position a floor jack under the transmission.
27. Raise the jack enough to relieve tension on the upper transmission mount.

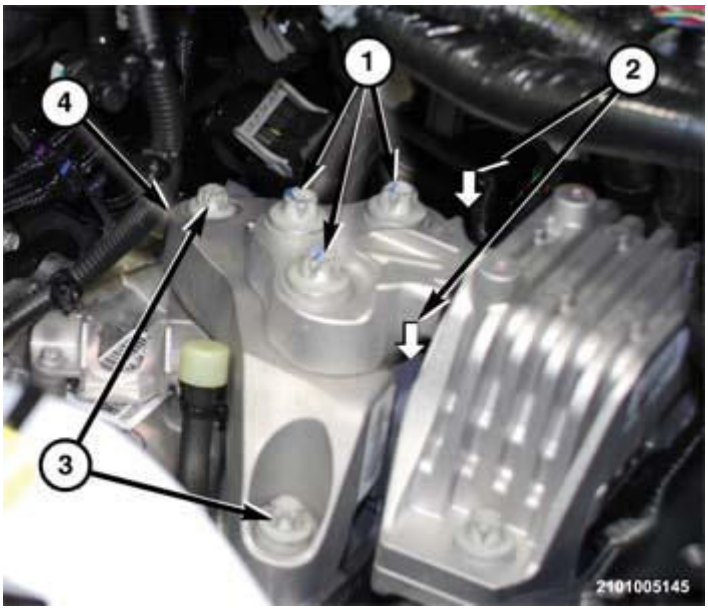

Fig. 45: Upper Transmission Mount Bolts
Courtesy of CHRYSLER GROUP, LLC

28. Remove the bolts (1) holding the upper transmission mount to the adaptor block (4).

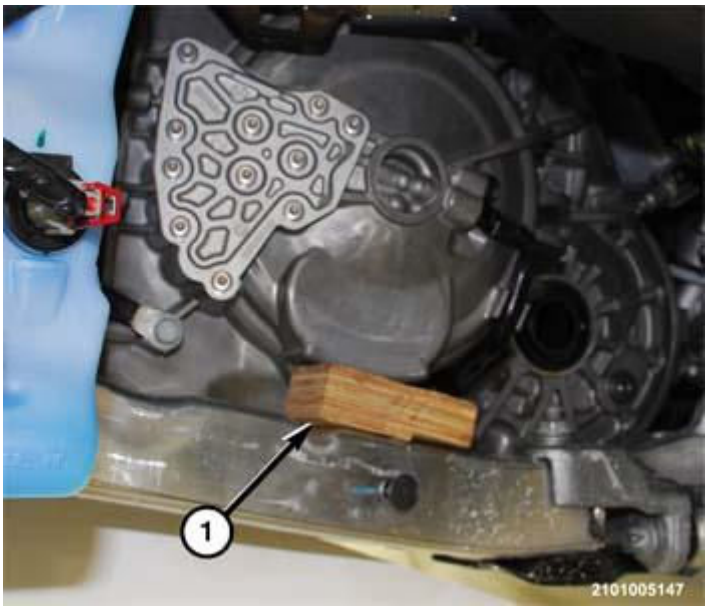

Fig. 46: Wooden Block Placed Between Transmission And Frame Rail
Courtesy of CHRYSLER GROUP, LLC

29. Place a wooden block (1) between the transmission end cover and the frame rail load beam.
30. Lower the floor jack until the wood block supports the transmission.

Fig. 47: Transmission End Cover Ground Cable
Courtesy of CHRYSLER GROUP, LLC

31. Remove the bolt (1) holding the ground cable to the transmission end cover.
32. Separate the ground cable (1) from the transmission.

Fig. 48: Wire Harness Bracket & Bellhousing Bolt
Courtesy of CHRYSLER GROUP, LLC

33. Remove the upper bolt (1) holding the wire harness bracket and transmission bellhousing to the engine block.

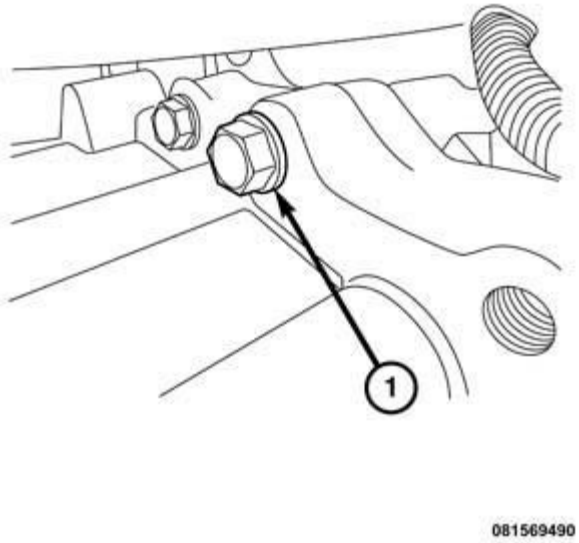

Fig. 49: Upper Starter Bolt
Courtesy of CHRYSLER GROUP, LLC

34. If equipped with a 2.4L, loosen and back out the starter bolt (1).

NOTE: The bolt will not be able to be removed due to lack of clearance.

Fig. 50: Upper Bellhousing Bolts
Courtesy of CHRYSLER GROUP, LLC

35. Remove upper bolts (1) holding the transmission bellhousing to the engine block located behind the main engine wire harness.
36. Raise the vehicle and place safety stands under the rear frame rails behind the rear axle to stabilize the vehicles center of gravity. Refer to the WARNING at beginning of this procedure (see **AWD/4WD**).
37. Place a suitable drain pan under the transmission to collect fluid that may leak from the differential seals and cooler lines.

Fig. 51: Transmission Cooler Lines
Courtesy of CHRYSLER GROUP, LLC

38. Disengage the quick couplings holding the cooler lines to the transmission.
39. Separate the cooler lines from the transmission. If accessible, install suitable cap-plugs in the male and female ends of the cooler lines to prevent leakage.

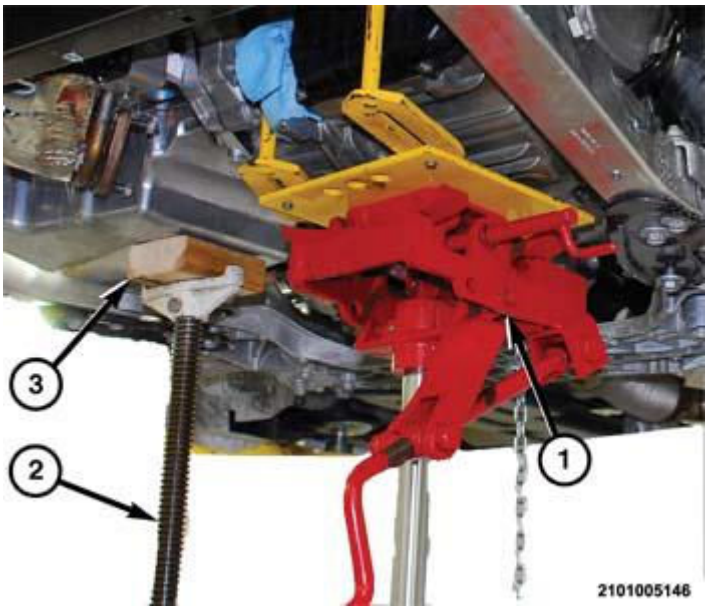

Fig. 52: Wooden Block Used To Protect Engine Oil Pan
Courtesy of CHRYSLER GROUP, LLC

40. Using a wooden block (3) to protect the engine oil pan, position a high stand (2) under the engine oil pan to support the engine.
41. Remove the power transfer unit (PTU). Refer to **REMOVAL** .

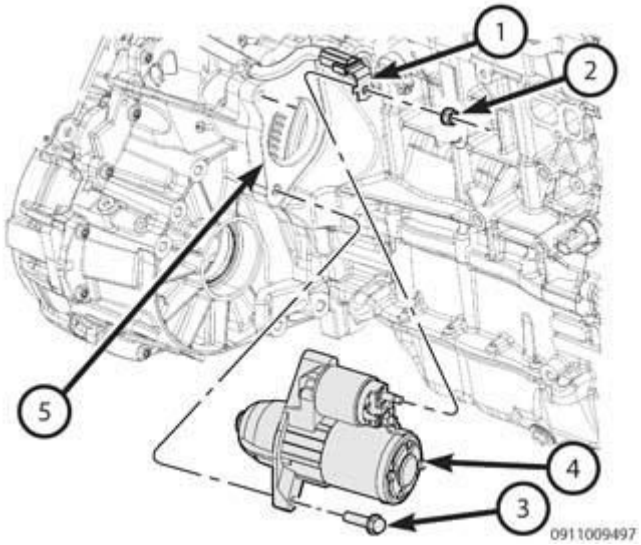

Fig. 53: Removing/Installing Starter
Courtesy of CHRYSLER GROUP, LLC

NOTE: After the bolts holding the starter motor to the bellhousing are removed the starter motor will remain the place.

42. If equipped with a 2.4L, remove the bolt (3) holding the starter (4) to the transmission bellhousing.

Fig. 54: Starter Bolts (3.2L)
Courtesy of CHRYSLER GROUP, LLC

43. If equipped with a 3.2L, remove the starter bolts (1).
44. Remove the bolt (1) holding the transmission bellhousing to the engine block from above the differential housing.

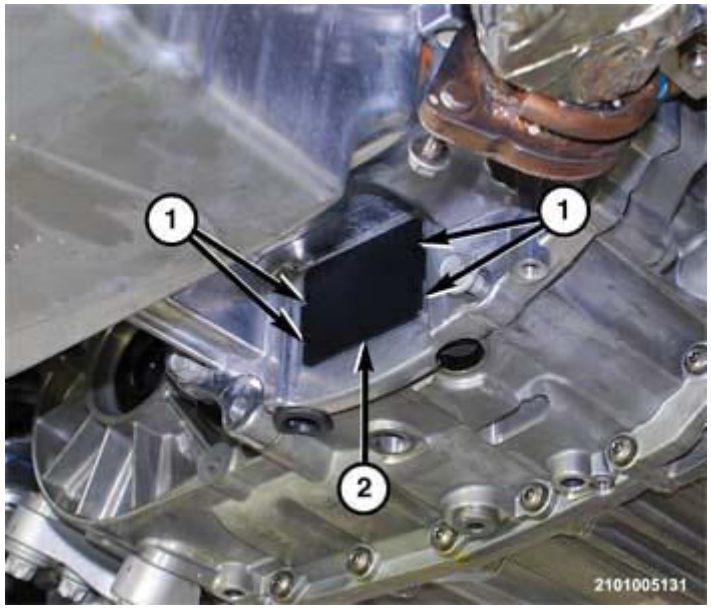

Fig. 55: Bellhousing Access Door
Courtesy of CHRYSLER GROUP, LLC

45. Remove the access door in the splash shield on the bellhousing.

NOTE: **The crankshaft can be rotated using a wrench to turn the balancer pulley end bolt.**

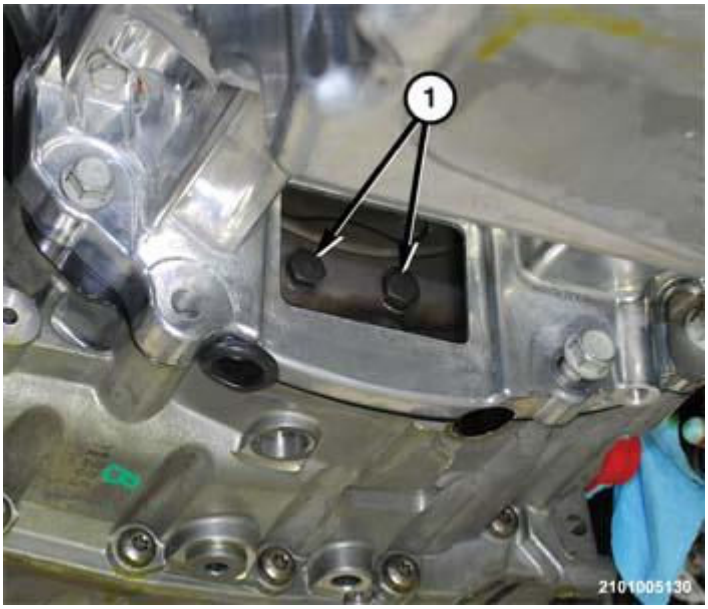

Fig. 56: Torque Converter Bolts
Courtesy of CHRYSLER GROUP, LLC

46. Through the access door opening, remove the bolts (1) holding the flexplate to the torque converter. Rotate the crankshaft to bring each set of bolts into view through the access door.

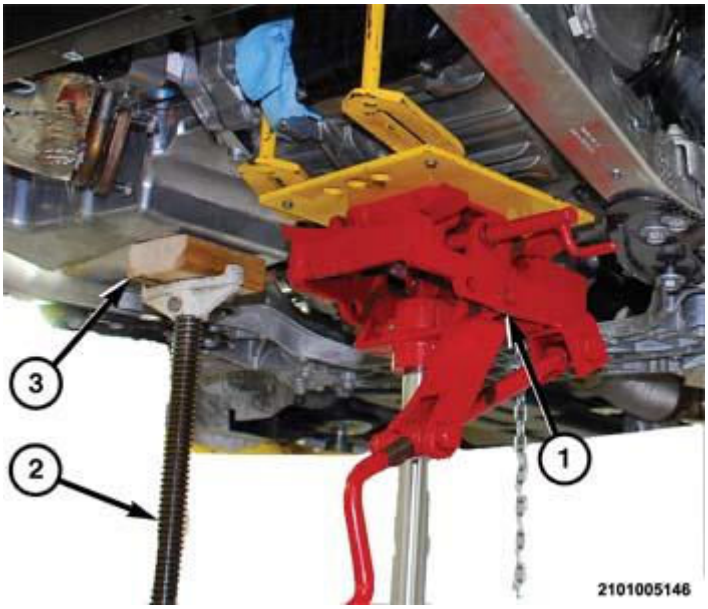

Fig. 57: Wooden Block Used To Protect Engine Oil Pan
Courtesy of CHRYSLER GROUP, LLC

47. Position a suitable transmission jack (1) under the transmission in a stable condition.

48. Secure the transmission to the lift plate of the transmission jack to avoid dropping the transmission during removal.
49. Remove the bolts (2) holding the engine block and oil pan to the bellhousing next to the differential housing.

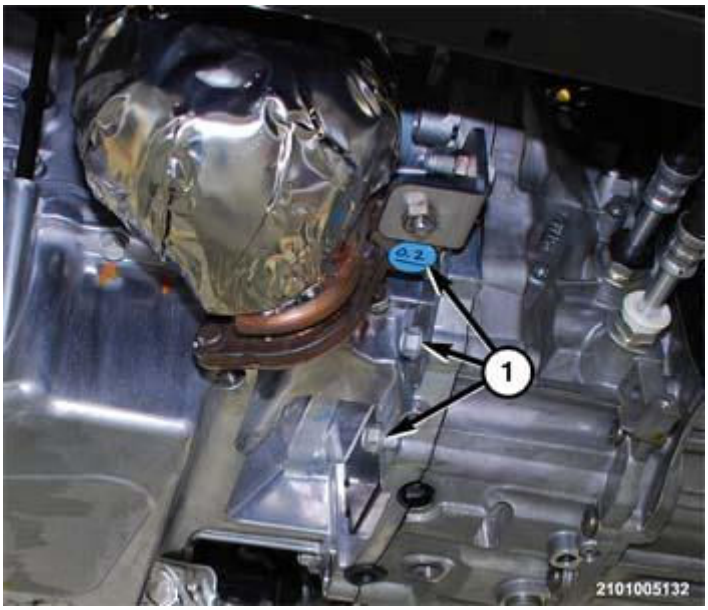

Fig. 58: Removing/Installing Transmission Bellhousing Bolts
Courtesy of CHRYSLER GROUP, LLC

50. Remove the bolts (1) holding the engine block and oil pan to the bellhousing from behind the catalytic converter.
51. Remove the bolt (1) holding the engine oil pan and exhaust bracket to the bellhousing.
52. Using a suitable prying tool, pry the bell housing away from the engine block.
53. While guiding the transmission past obstacles, lower the transmission downward and away from the vehicle.

DISASSEMBLY

DISASSEMBLY

The 948TE automatic transmission can be overhauled if the vehicle is beyond it's warranty coverage. Verify that the vehicle is no longer covered by warranty before proceeding with this procedure. A clean work area is necessary to assure a properly functioning transmission after the overhaul procedures are completed. Special tools have been developed and are required to disassemble this transmission. Acquire all of the special tools before starting this procedure.

WARNING: **Always wear safety glasses when cleaning, disassembling and assembling the transmission/transaxle. Contents of the transmission/transaxle can become projectiles (e.g., springs, snap-rings,**

as well as metal and other debris). Failure to wear safety glasses may result in severe personal injury.

Before disassembling the transmission, wash the transmission with a suitable solvent and a siphon pressure washer to remove oily grime and loose dirt. Place the transmission on a clean work surface with ample fluid drainage or absorbency.

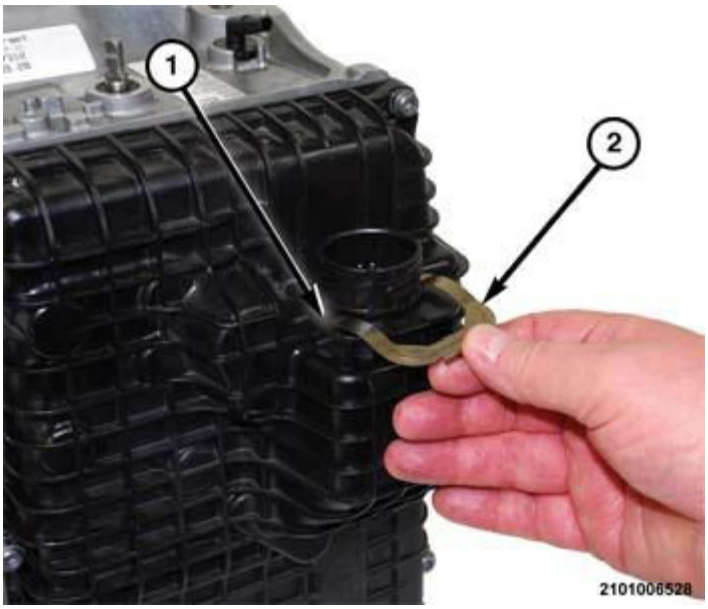

Fig. 59: Wire Connector Socket Clip
Courtesy of CHRYSLER GROUP, LLC

1. Remove the clip holding the wire connector socket in the valve body cover pan.

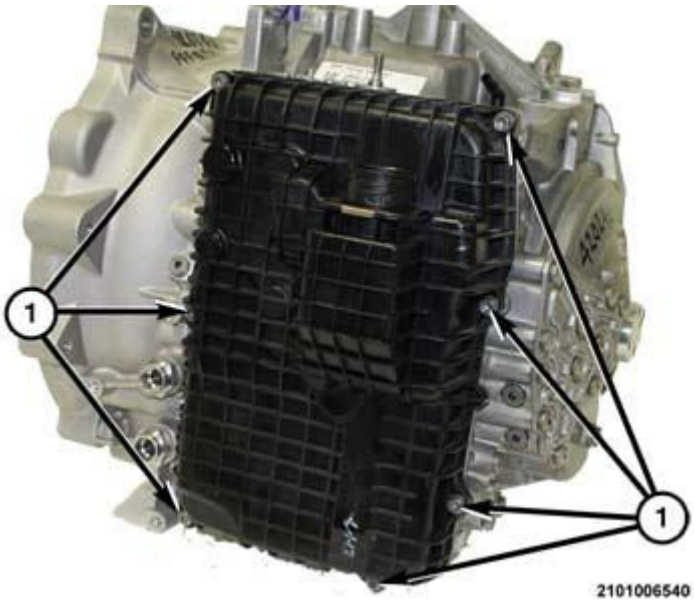

Fig. 60: Valve Body Cover Pan Bolts

Courtesy of CHRYSLER GROUP, LLC

2. Remove the valve body cover pan bolts (1).
3. Remove the valve body cover pan from the transmission.

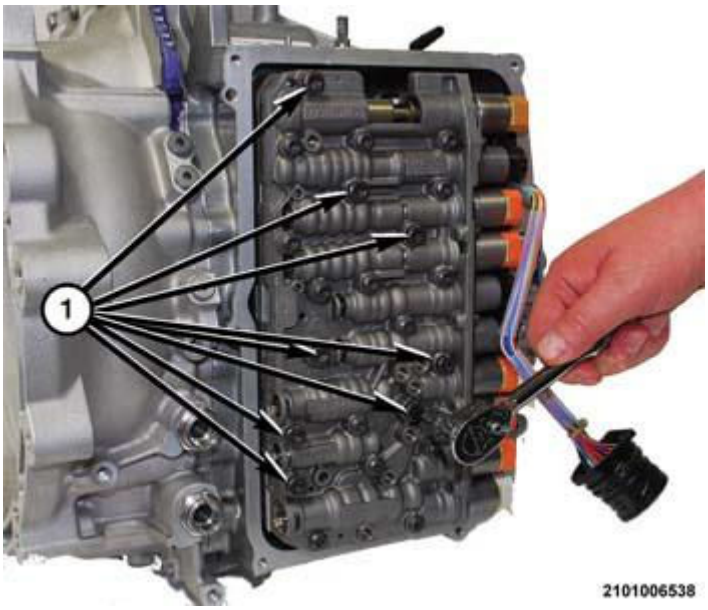

Fig. 61: Valve Body Bolts
Courtesy of CHRYSLER GROUP, LLC

4. Remove the valve body bolts (1).
5. Using a suitable prying tool, pry the valve body away from the adapter tubes.

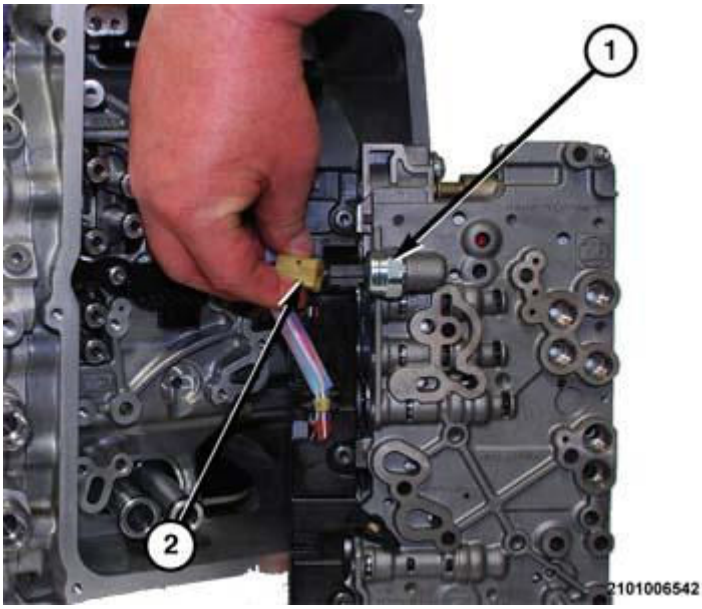

Fig. 62: Fluid Pressure Transducer Wire Harness Connector
Courtesy of CHRYSLER GROUP, LLC

6. Turn the valve body over to gain access to wire harness connectors.
7. Release the lock (2) on the fluid pressure transducer wire connector and separate the wire connector (2) from the fluid pressure transducer (1).

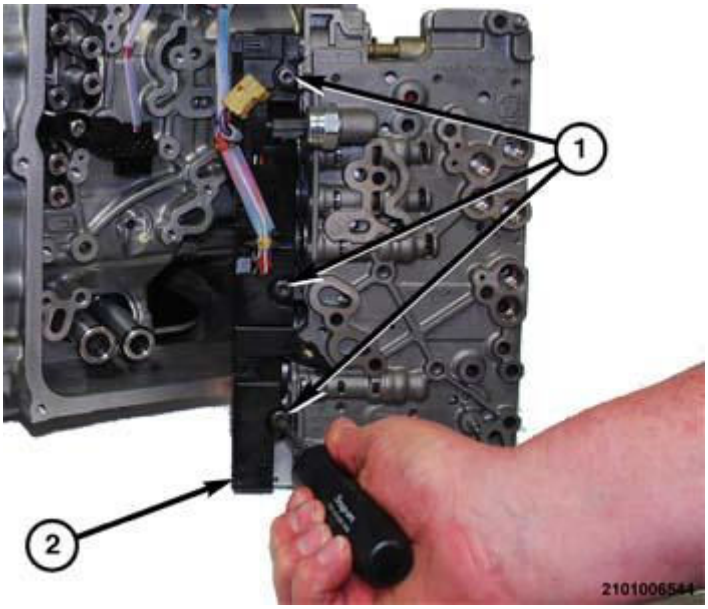

Fig. 63: Removing/Installing Wire Harness Connector At Valve Body Solenoids
Courtesy of CHRYSLER GROUP, LLC

8. Remove the bolts (1) holding the wire harness connector to the valve body and solenoids.
9. Using a suitable prying tool, Separate the wire harness connector (2) from the solenoids.
10. Separate the valve body from the transmission.

NOTE: **If the valve body is to be reused without disassembling it, store the valve body in a clean area until it is installed.**

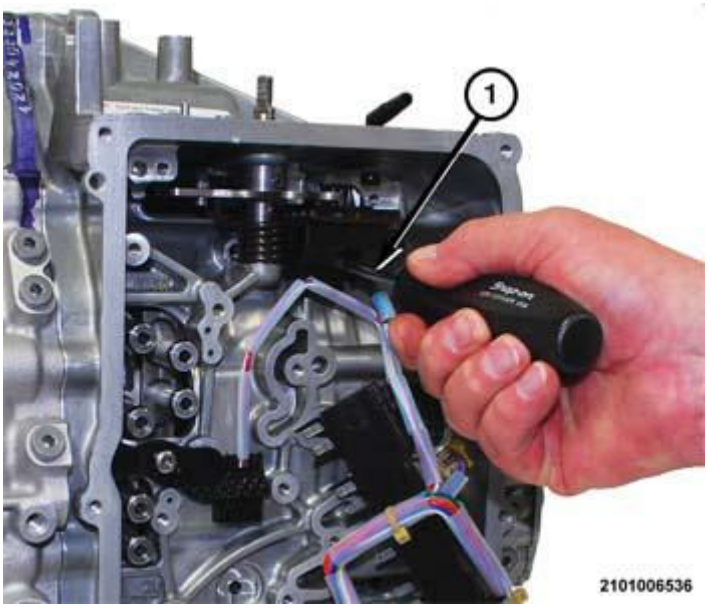

Fig. 64: Removing/Installing Transmission Range Sensor (TRS) Screw
Courtesy of CHRYSLER GROUP, LLC

11. Remove the Transmission Range Sensor (TRS) screw (1).

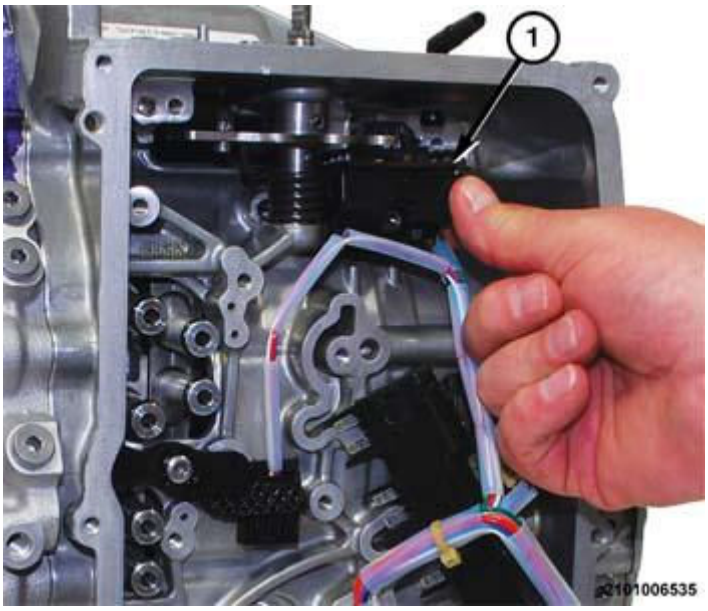

Fig. 65: Removing/Installing Transmission Range Sensor
Courtesy of CHRYSLER GROUP, LLC

12. Separate the TRS (1) from the transmission with the wire harness connected.

Fig. 66: Removing/Installing Speed Sensor Screw
Courtesy of CHRYSLER GROUP, LLC

13. Remove the speed sensor screw (1).

Fig. 67: Removing/Installing Speed Sensor
Courtesy of CHRYSLER GROUP, LLC

14. Separate the speed sensor (1) from the transmission with the wire harness connected.

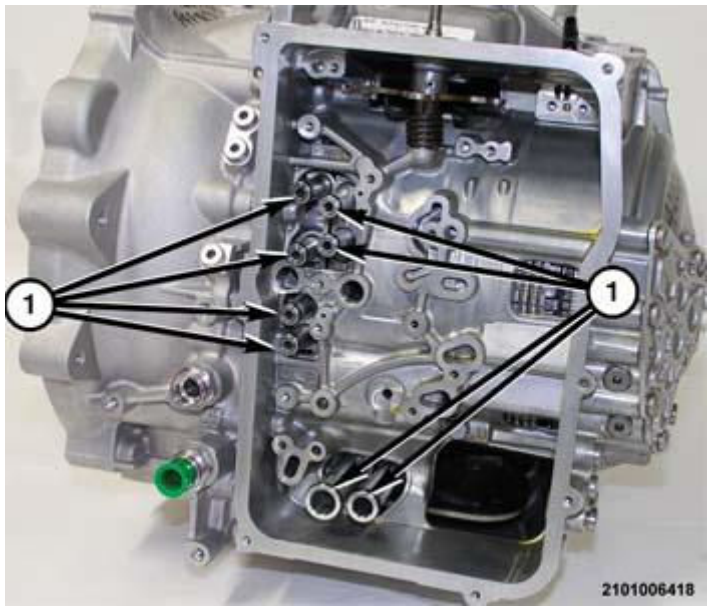

Fig. 68: Fluid Adapter Tubes & O-Ring Seals
Courtesy of CHRYSLER GROUP, LLC

15. Using suitable pliers, remove the fluid adapter tubes (1) from the transmission.

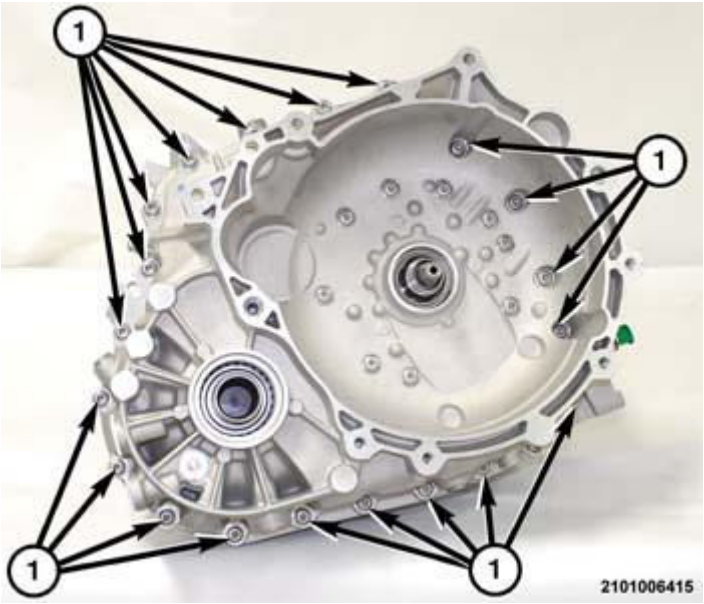

Fig. 69: Bellhousing To Transmission Housing Bolts
Courtesy of CHRYSLER GROUP, LLC

16. From around the perimeter of the transmission, remove the bellhousing bolts (1) holding the bellhousing to the transmission housing.

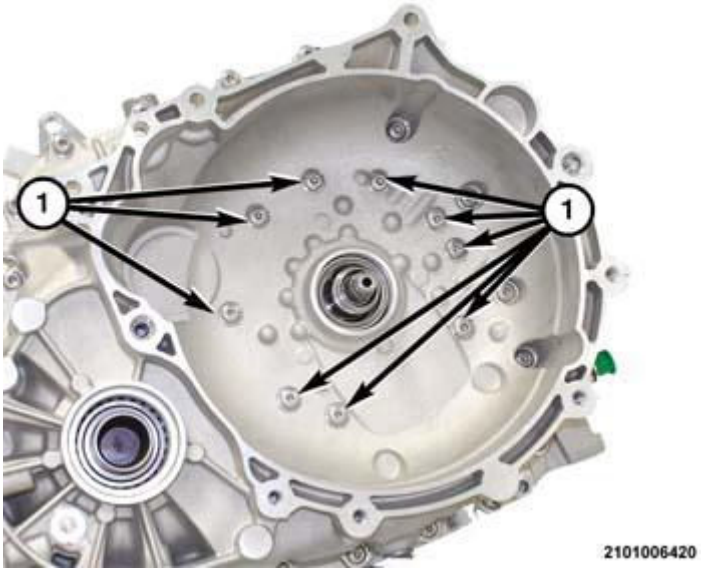

Fig. 70: Bellhousing To Output Gear Support Bolts
Courtesy of CHRYSLER GROUP, LLC

17. Remove the bellhousing bolts (1) holding the bellhousing to the output gear support.
18. Using wooden blocks to stabilize the transmission on the work surface, position the transmission on the bench with the bellhousing facing upward.
19. Using a suitable pry-bar in the pry point locations, pry upward to dislodge the bellhousing from the transmission housing.

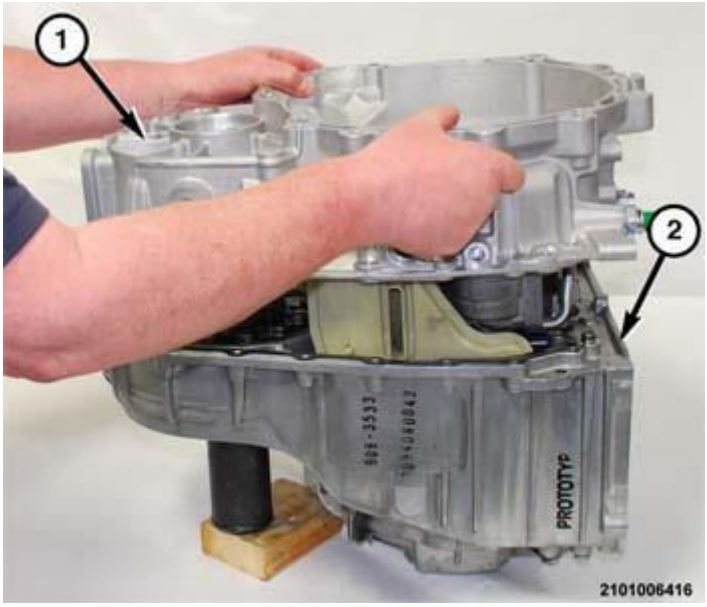

Fig. 71: Removing/Installing Bellhousing At Transmission Housing
Courtesy of CHRYSLER GROUP, LLC

20. Lift the bellhousing (1) upward and separate the assembly from the transmission housing (2).

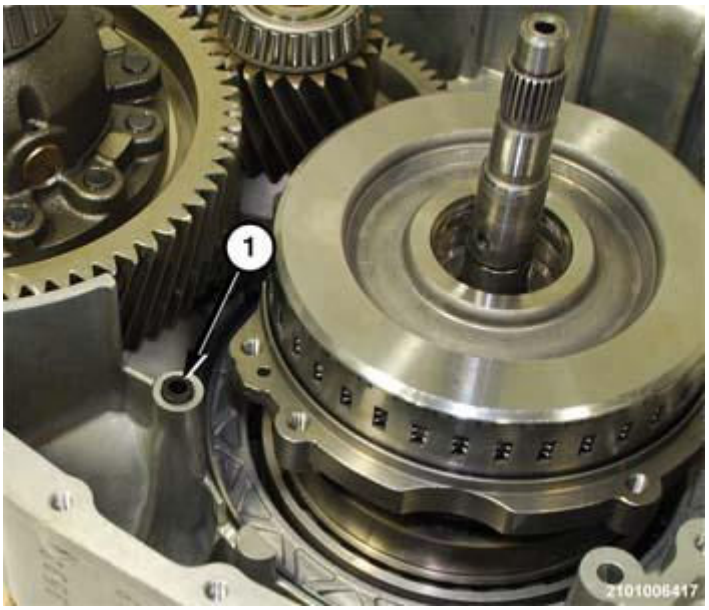

Fig. 72: Port Seal
Courtesy of CHRYSLER GROUP, LLC

21. Remove the seal (1) from the port in the transmission housing.

Fig. 73: Sealing Surface Of Transmission Housing
Courtesy of CHRYSLER GROUP, LLC

22. Separate the gasket (1) from the sealing surface of the transmission housing (2).

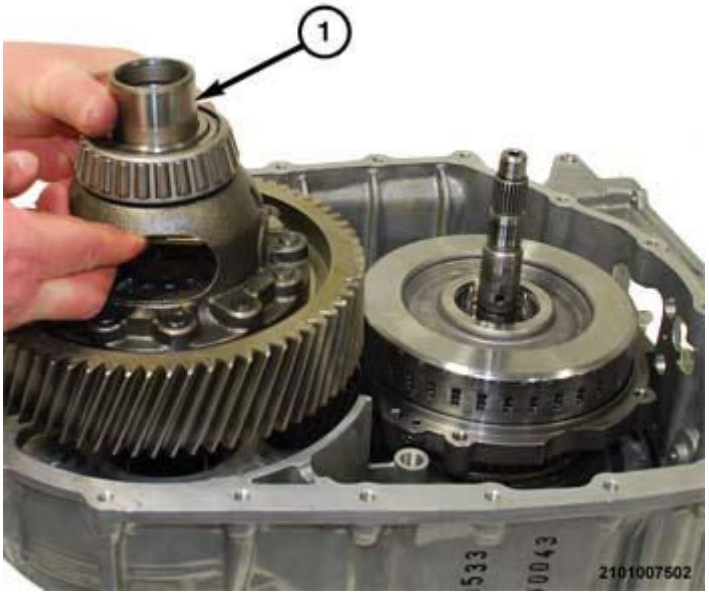

Fig. 74: Removing/Installing Differential Assembly
Courtesy of CHRYSLER GROUP, LLC

23. Remove the differential assembly (1) from the transmission housing.

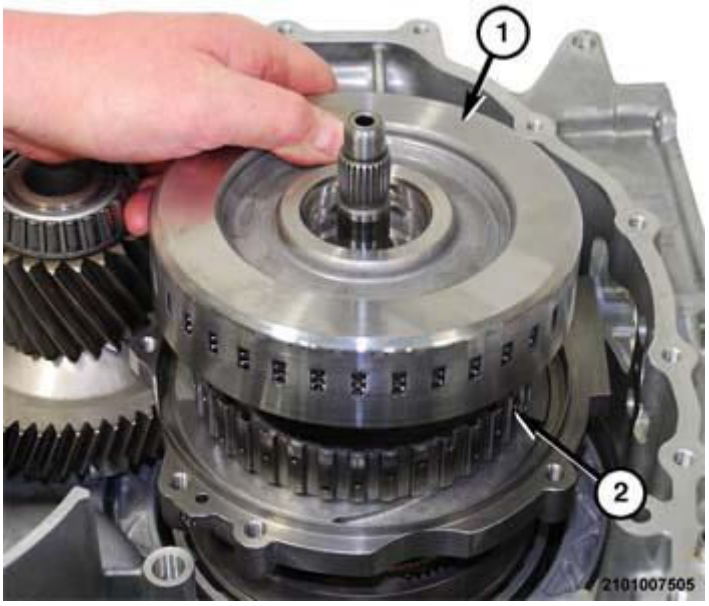

Fig. 75: Removing/Installing E-Clutch At E-Clutch Hub
Courtesy of CHRYSLER GROUP, LLC

24. Separate the E-clutch from the E-clutch hub and shaft (2).

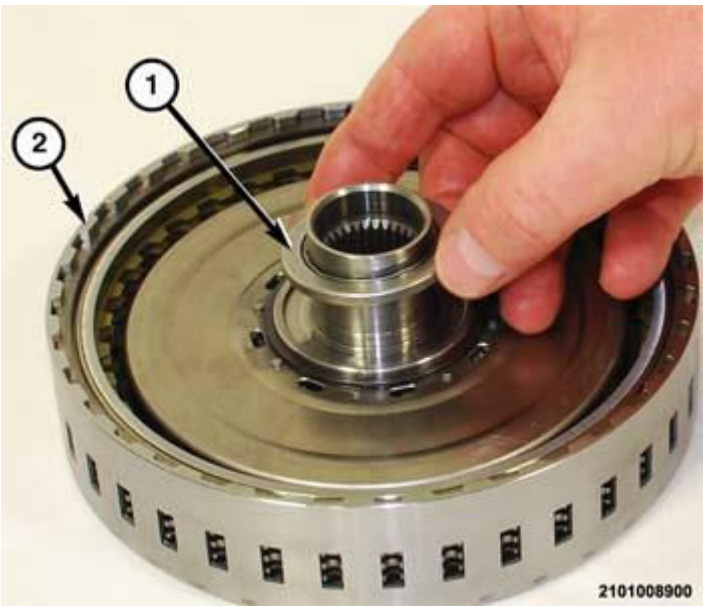

Fig. 76: Removing/Installing Thrust Bearing At E-Clutch Hub
Courtesy of CHRYSLER GROUP, LLC

25. Separate the thrust bearing (1) from the E-clutch (2) hub.

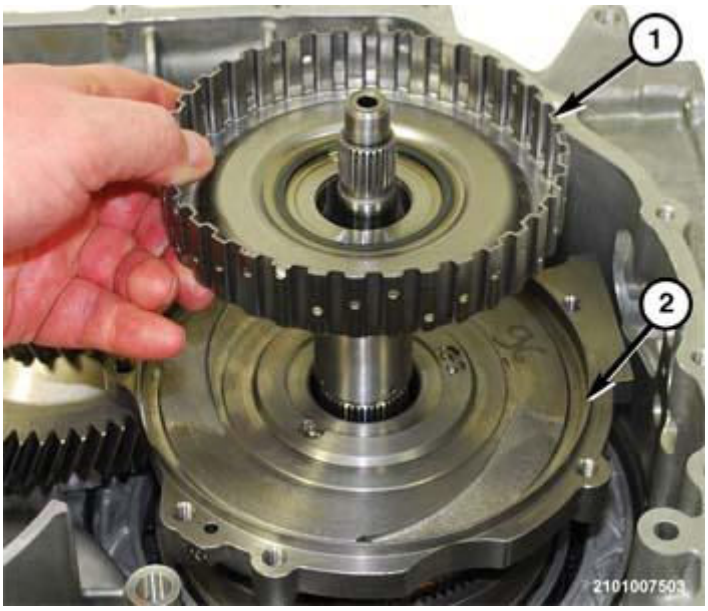

Fig. 77: E-Clutch Hub And Shaft
Courtesy of CHRYSLER GROUP, LLC

26. Separate the E-clutch hub and shaft (1) from the output gear support (2).

Fig. 78: Output Gear Support
Courtesy of CHRYSLER GROUP, LLC

27. Separate the output gear support (1) from the gear 4 planetary pinion carrier (2).

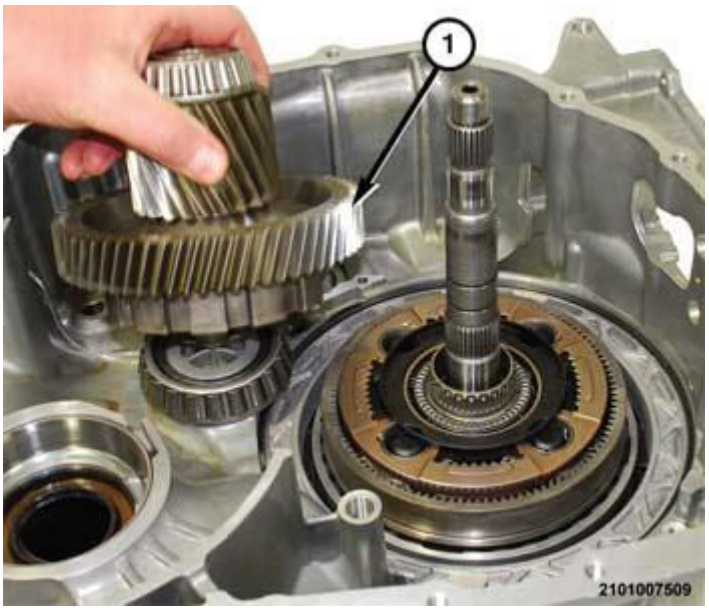

Fig. 79: Removing/Installing Transfer Gear
Courtesy of CHRYSLER GROUP, LLC

28. Remove the transfer gear from the transmission housing (1).

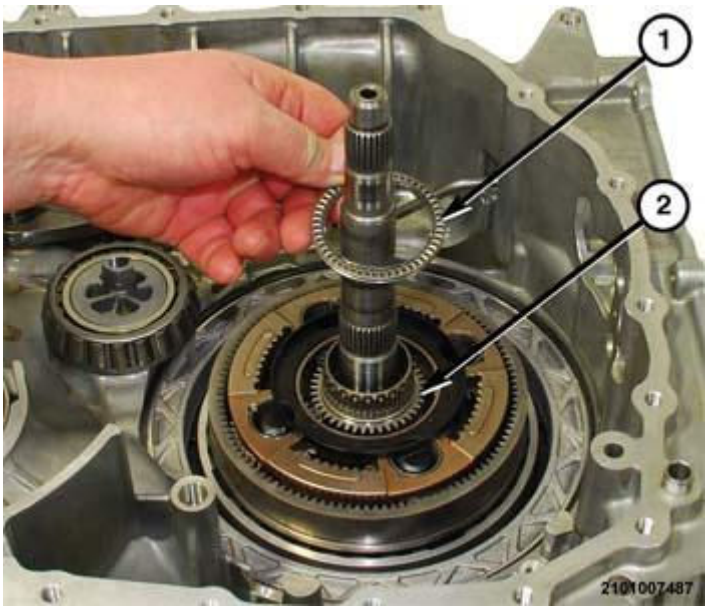

Fig. 80: Roller Type Thrust Bearing
Courtesy of CHRYSLER GROUP, LLC

29. Separate the roller type thrust bearing (1) from the sun gear 3 and 4 and Dog Clutch-F (2).

Fig. 81: Removing/Installing Sun Gear 3, 4 And Dog Clutch-F At Gear 4 Planetary Pinion Carrier
Courtesy of CHRYSLER GROUP, LLC

30. Separate the sun gear 3 and 4 and Dog Clutch-F (1) from the gear 4 planetary pinion carrier.

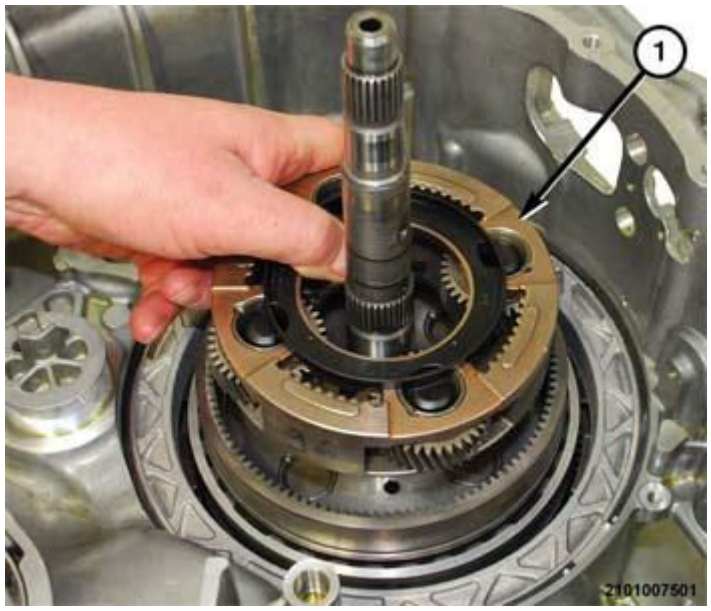

Fig. 82: Gear 4 Planetary Pinion Carrier
Courtesy of CHRYSLER GROUP, LLC

31. Separate the gear 4 planetary pinion carrier (1) from the annulus gear 4.

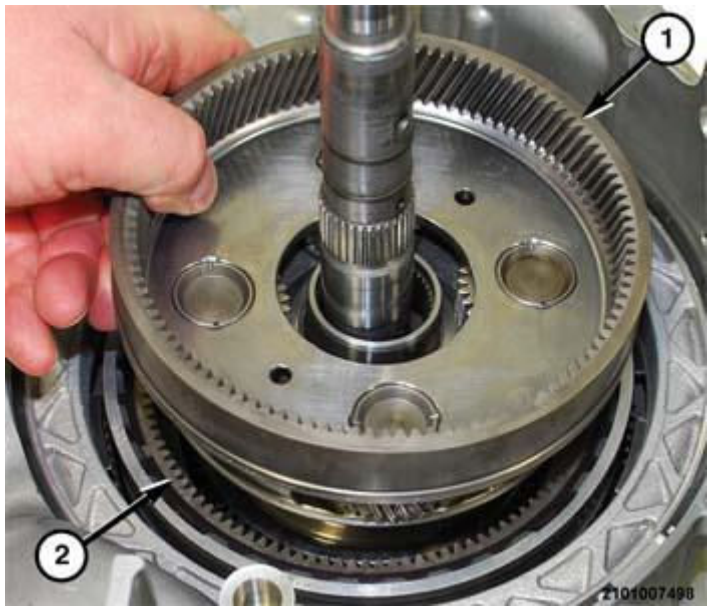

Fig. 83: Annulus Gear 4
Courtesy of CHRYSLER GROUP, LLC

32. Separate the annulus gear 4 from the annulus gear 3 (2).

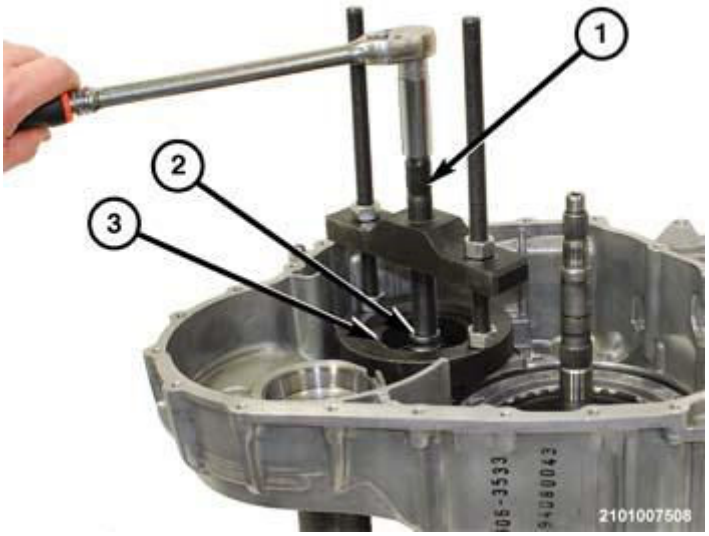

Fig. 84: Removing Transfer Gear Bearing Cone
Courtesy of CHRYSLER GROUP, LLC

33. Using Puller Press (special tool #C-293-PA, Puller, Press) (1), Adapter Blocks (special tool #9738, Blocks, Adapter) (3) and a suitable socket as a plug (2), remove the transfer gear bearing cone from the transmission housing.

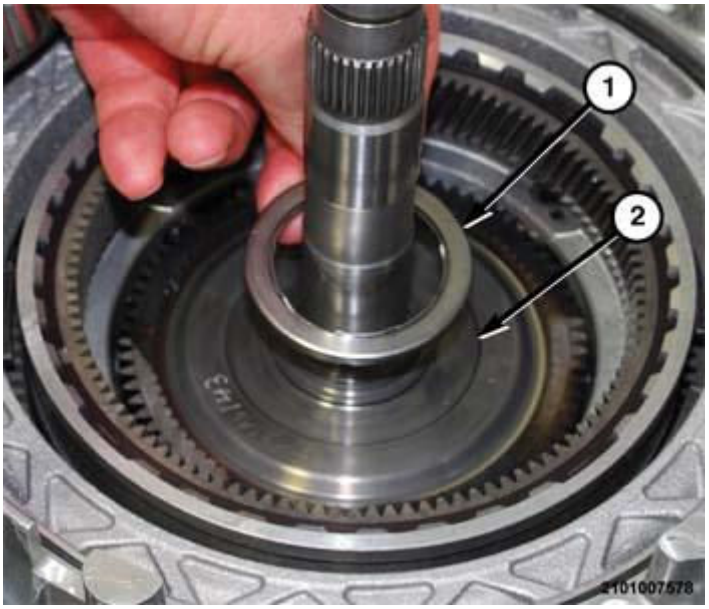

Fig. 85: Thrust Bearing & Annulus Gear 1 Planetary Hub
Courtesy of CHRYSLER GROUP, LLC

34. Separate the thrust bearing (1) from the annulus gear 1 planetary hub (2).

Fig. 86: Annulus Gear 1 Planetary Hub & Carrier Gear 1 And 2
Courtesy of CHRYSLER GROUP, LLC

35. Separate the annulus gear 1 planetary hub (1) from the carrier gear 1&2 (2).

Fig. 87: Thrust Bearing & Annulus Gear 1 Planetary Hub
Courtesy of CHRYSLER GROUP, LLC

36. Separate the thrust bearing (1) from under the annulus gear 1 planetary hub (2).

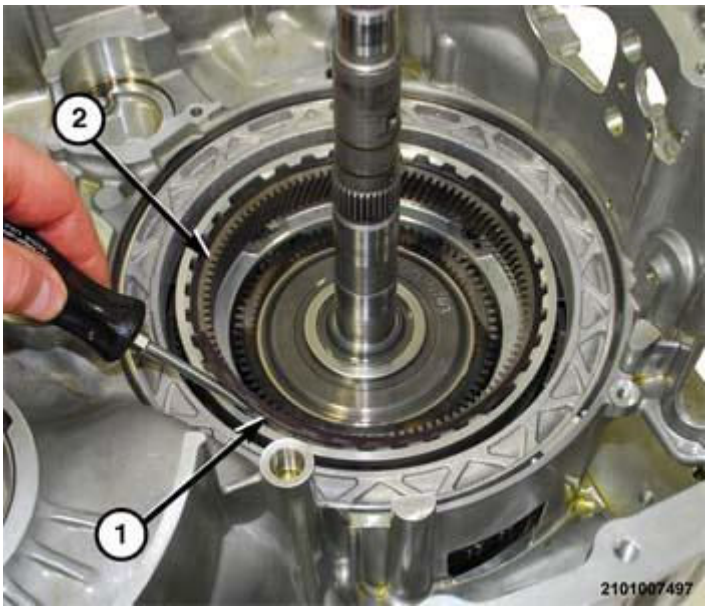

Fig. 88: Annulus Gear 3 & Snap-Ring
Courtesy of CHRYSLER GROUP, LLC

37. Using a suitable screw driver, remove the snap-ring (1) holding the annulus gear 3 (2).

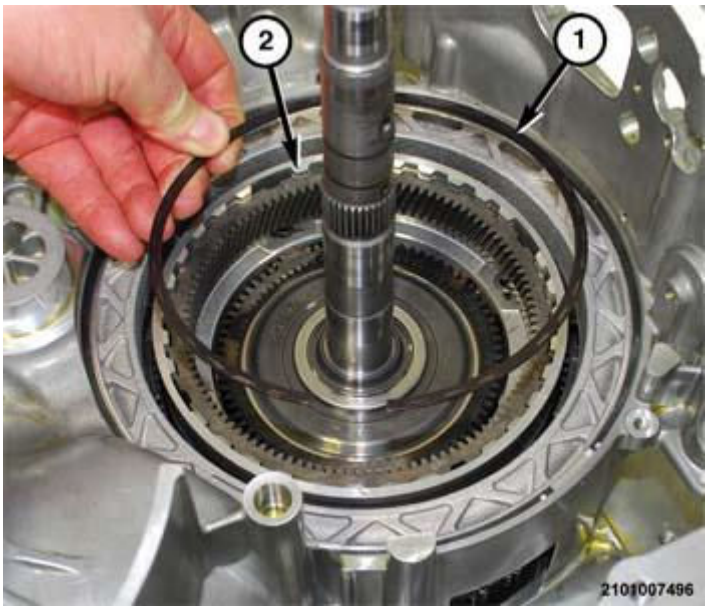

Fig. 89: Snap-Ring & Annulus Gear 3
Courtesy of CHRYSLER GROUP, LLC

38. Separate the snap-ring from the annulus gear 3 (2).

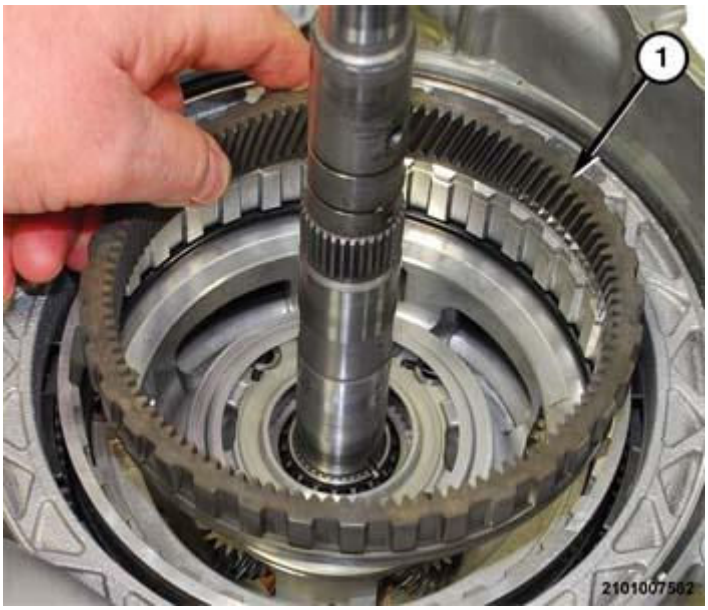

Fig. 90: Annulus Gear 3 & Carrier Gear 1&2
Courtesy of CHRYSLER GROUP, LLC

39. Separate the annulus gear 3 (1) from the carrier gear 1&2.

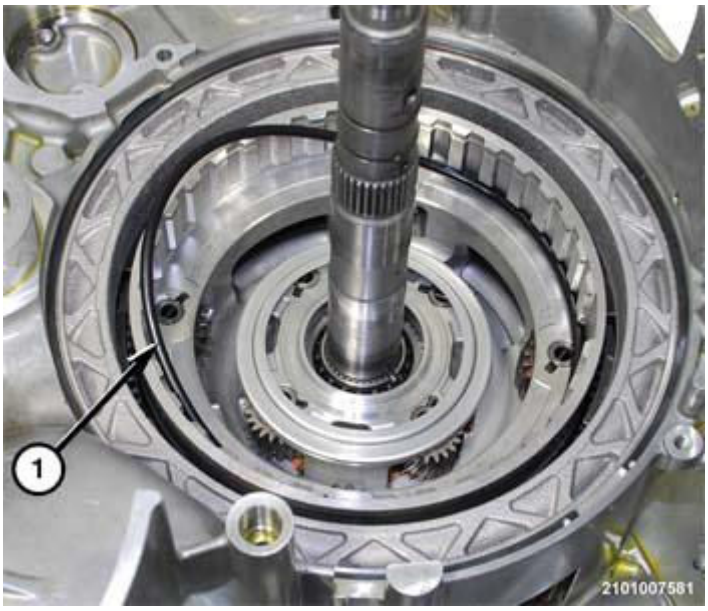

Fig. 91: Carrier Gear 1&2 & O-Ring Seal
Courtesy of CHRYSLER GROUP, LLC

40. Remove the O-ring seal (1) from the carrier gear 1&2.

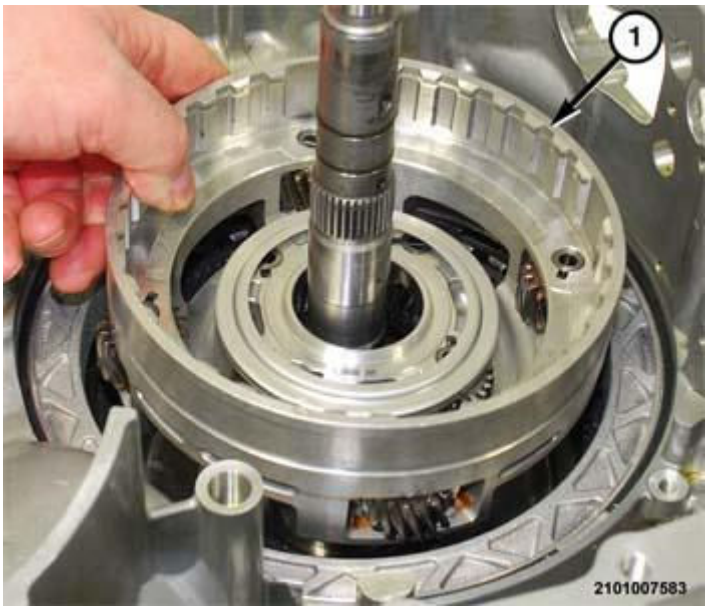

Fig. 92: Carrier Gear, Annulus Gear & D-Clutch Hub
Courtesy of CHRYSLER GROUP, LLC

41. Separate the carrier gear 1&2 (1) annulus gear 2, D-clutch hub and input shaft assembly.
42. Position the transmission housing on a suitable arbor pressure using wooden blocks for support.

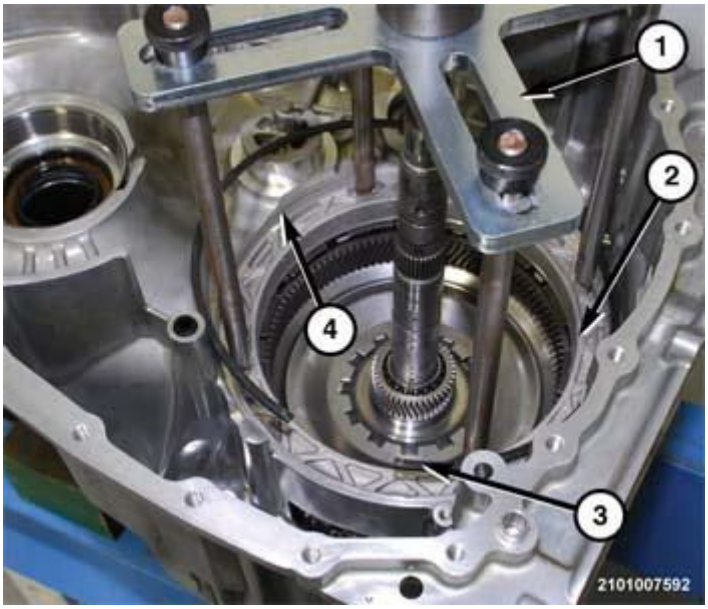

Fig. 93: Gaining Access To Snap Ring-Ring & Groove
Courtesy of CHRYSLER GROUP, LLC

43. Using Tool (special tool #8901A, Pressing Tool) (with pressure scale removed (1) and legs (special tool #10428, Adapter, Pressing Tool), Compress the bellville spring to gain access to the snap ring-ring (3) holding the D-clutch piston retainer (2) into the transmission housing (4).

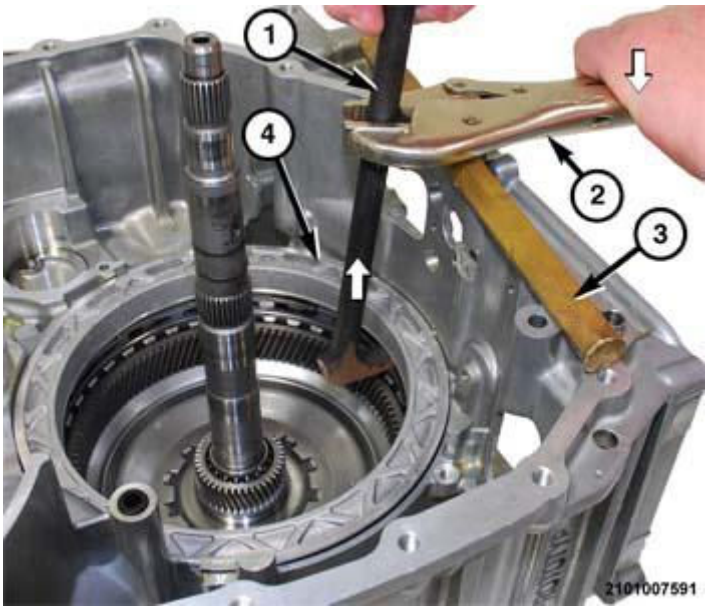

Fig. 94: Prying D-Clutch Piston Retainer Out Of Transmission Housing
Courtesy of CHRYSLER GROUP, LLC

NOTE: The O-ring seal on the D-clutch piston retainer will hang up in the snap-ring groove during removal and will need to be pried out of the transmission housing.

44. Using a suitable pry-bar (1) vise-grip pliers (2) and a brass drift (3) coupled together, pry the D-clutch piston retainer (4) upward and out of the transmission housing.

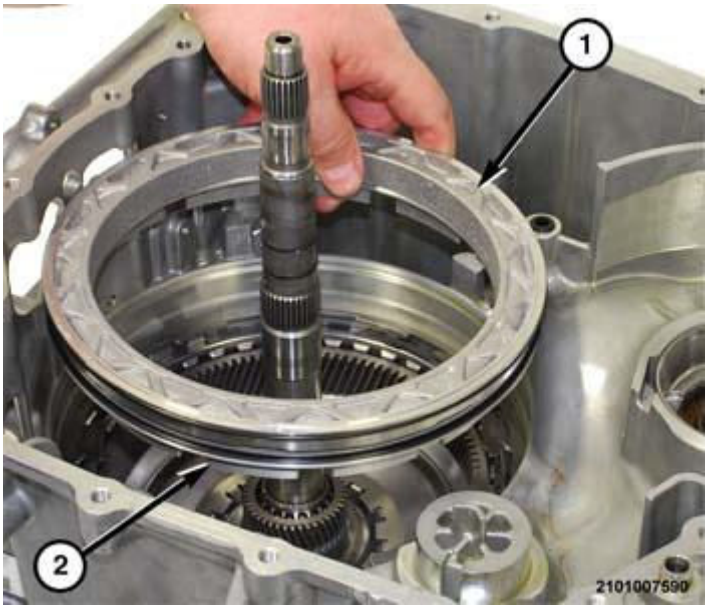

Fig. 95: D-Clutch Piston Retainer
Courtesy of CHRYSLER GROUP, LLC

45. Separate the D-clutch piston retainer (1) from the transmission housing.

Fig. 96: D-Clutch Piston & Retainer
Courtesy of CHRYSLER GROUP, LLC

46. Remove the D-clutch piston from the retainer.

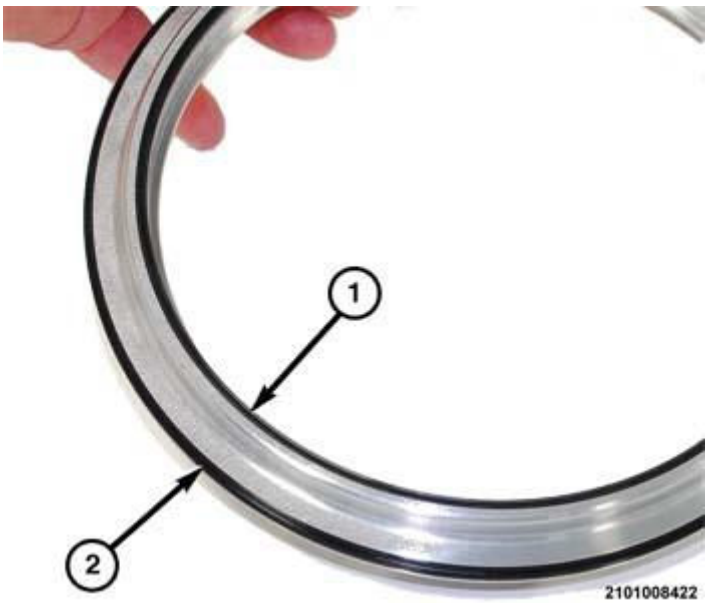

Fig. 97: D-Clutch Piston, Inner & Outer Seals
Courtesy of CHRYSLER GROUP, LLC

47. Remove the inner (1) and outer (2) lip seals from the D-clutch piston.

Fig. 98: D-Clutch Piston Retainer & O-Ring Seal
Courtesy of CHRYSLER GROUP, LLC

48. Remove the O-ring seal from the D-clutch piston retainer.

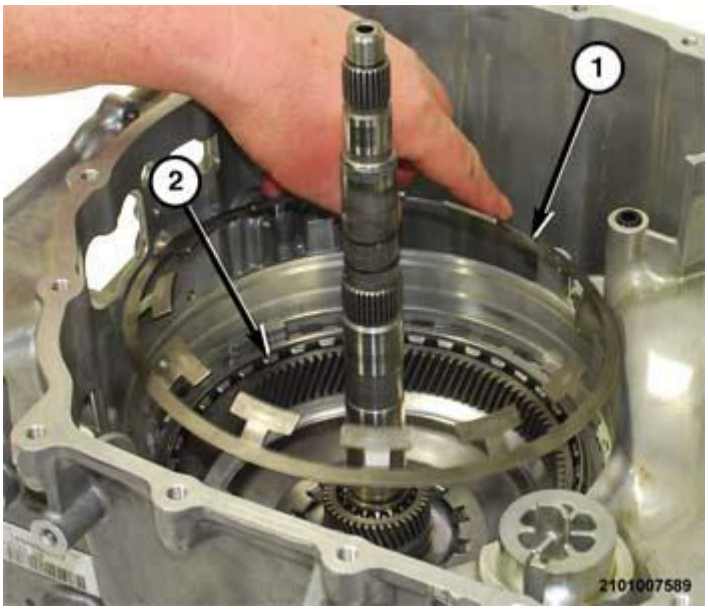

Fig. 99: Removing/Installing Bellville Spring
Courtesy of CHRYSLER GROUP, LLC

49. Separate the bellville spring from the transmission housing.

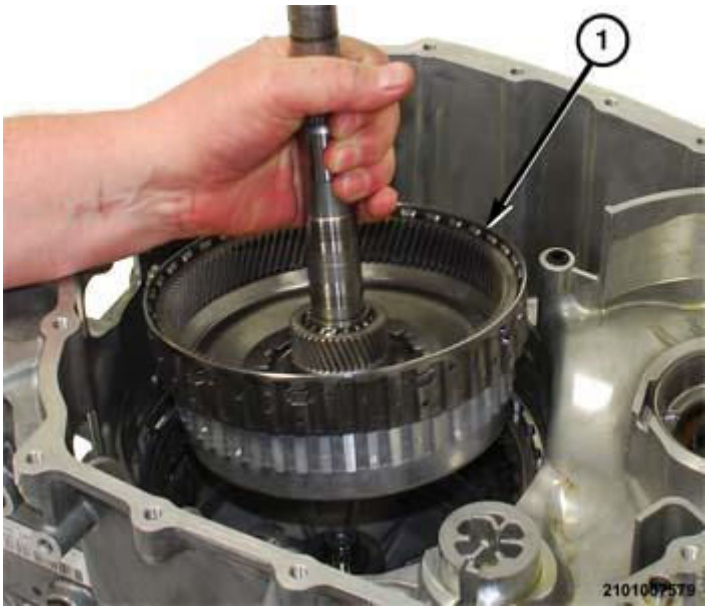

Fig. 100: Annulus Gear 2, D & C-Clutch Hub And Input Shaft Assembly
Courtesy of CHRYSLER GROUP, LLC

50. Separate the annulus gear 2, D and C-clutch hub and input shaft assembly (1) from the transmission housing.
51. Remove the annulus gear 2, D and C-clutch hub from the input shaft and B-clutch.

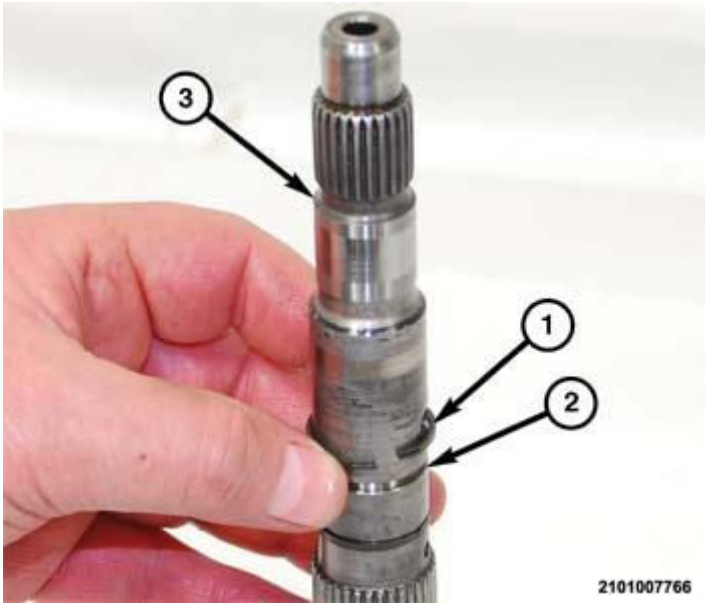

Fig. 101: Remove/Install Input Shaft Seal-Rings
Courtesy of CHRYSLER GROUP, LLC

52. Remove the seal-rings (1) from the lands (2) on the input shaft (3).

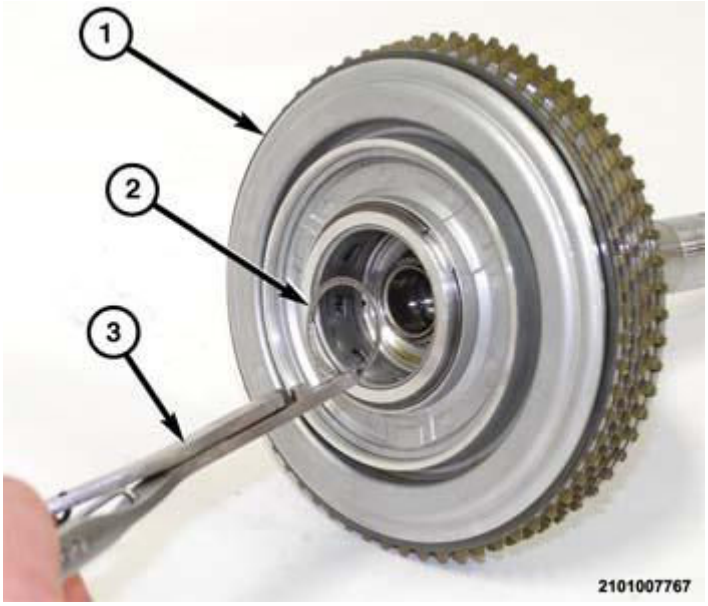

Fig. 102: Input Shaft/Dog Clutch A, B-Clutch Hub & Snap-Ring
Courtesy of CHRYSLER GROUP, LLC

NOTE: Dog clutch A is permanently attached to the input shaft and cannot be disassemble. If the dog clutch A fails an air test, replace the input shaft.

53. Using a suitable snap-ring pliers (3), remove the snap-ring (2) holding the input shaft to the B-clutch (1) hub.
54. Separate the input shaft/dog clutch A from the B-clutch (1) hub.

Fig. 103: Annulus Gear 2, D And C-Clutch Hub/B-Clutch Retainer
Courtesy of CHRYSLER GROUP, LLC

55. Place the annulus gear 2, D and C-clutch hub on tool (special tool #9611, Plug, Differential End) to hold the sun gear in position.

Fig. 104: Remove/Install Snap-Ring
Courtesy of CHRYSLER GROUP, LLC

56. Using a suitable snap-ring pliers (1), remove the snap-ring (2) holding the sun gear 1 to the annulus gear 2, D and C-clutch hub.

Fig. 105: Annulus Gear 2, D And C-Clutch Hub (3) & Sun Gear 1
Courtesy of CHRYSLER GROUP, LLC

57. Turn the annulus gear 2 (2), D and C-clutch hub (3) over and remove the sun gear 1 (1).

Fig. 106: Annulus Gear 2, D-Clutch Hub & C-Clutch Hub
Courtesy of CHRYSLER GROUP, LLC

58. Separate the Annulus gear 2, D-clutch hub (1) from the C-clutch hub.

Fig. 107: Thrust Bearing & C-Clutch Hub
Courtesy of CHRYSLER GROUP, LLC

59. Separate the thrust bearing (1) from the C-clutch hub (2).

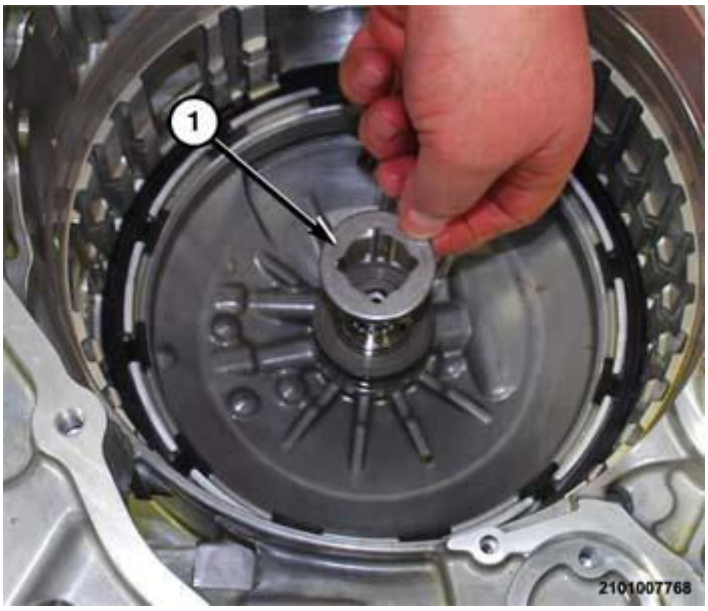

Fig. 108: Thrust Bearing & Input Shaft Rear Support
Courtesy of CHRYSLER GROUP, LLC

60. Remove the thrust bearing (1) from the input shaft rear support.

Fig. 109: Removing/Installing Input Shaft Rear Support Selective Thrust Washer
Courtesy of CHRYSLER GROUP, LLC

61. Remove the input shaft rear support selective thrust washer (1).

Fig. 110: Removing D-Clutch Friction Discs & Steel Plates From Transmission Housing
Courtesy of CHRYSLER GROUP, LLC

62. Separate the D-clutch friction discs and steel plates (1) from the transmission housing.

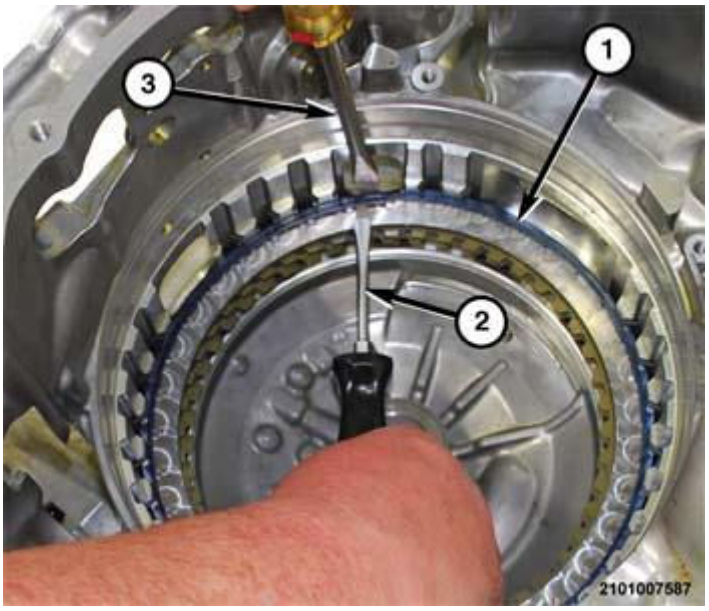

Fig. 111: Removing Snap-Ring
Courtesy of CHRYSLER GROUP, LLC

63. Using two suitable screw drivers, lift (2) the snap-ring (1) and pry it inward (3) and out of from the groove in the transmission housing.

Fig. 112: Removing C-Clutch Friction Discs & Steel Plates From Transmission Housing
Courtesy of CHRYSLER GROUP, LLC

64. Separate the C-clutch friction discs and steel plates (1) from the transmission housing.

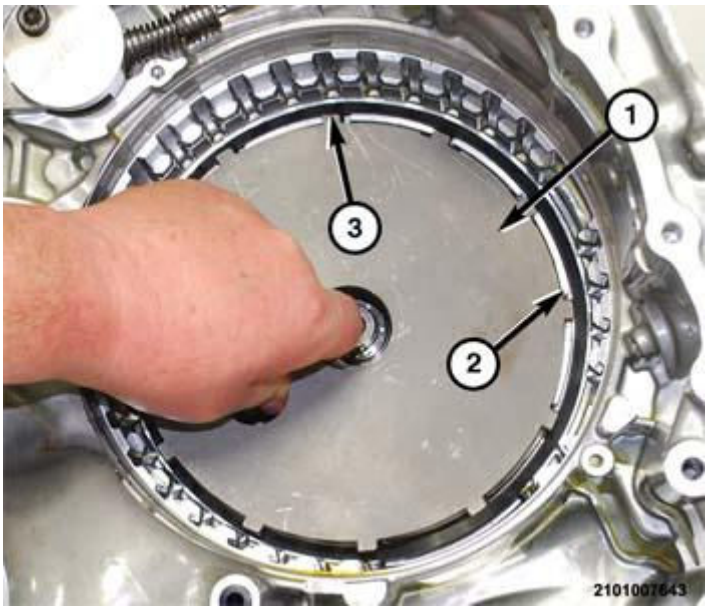

Fig. 113: C-Clutch Bellville Spring & Special Tool
Courtesy of CHRYSLER GROUP, LLC

65. Place the tool (special tool #10504, Compressor, Spring) (1) over the C-clutch bellville spring at the bottom of the transmission housing.

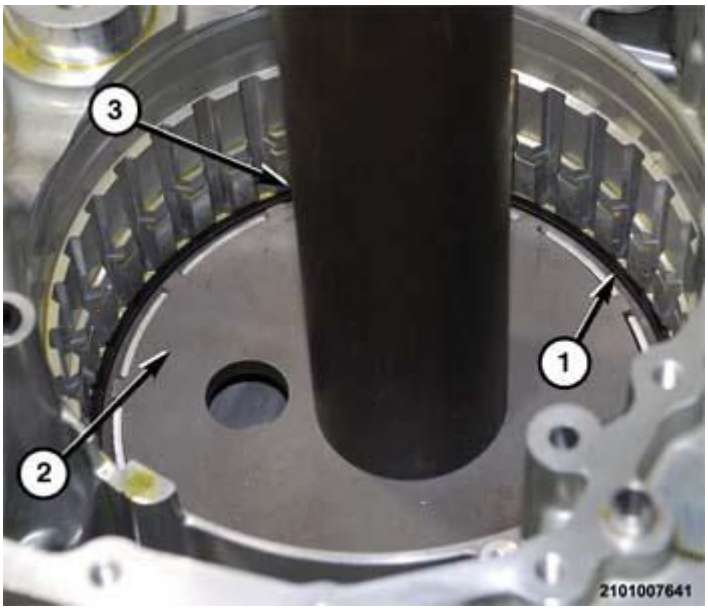

Fig. 114: C-Clutch Bellville Spring & Special Tools
Courtesy of CHRYSLER GROUP, LLC

66. Place tool (special tool #8228, Installer, Bearing) (3) over the input shaft support (tool 8901 with 10428 legs can also be used), compress the bellville spring to gain access to the stepped snap-ring (1).

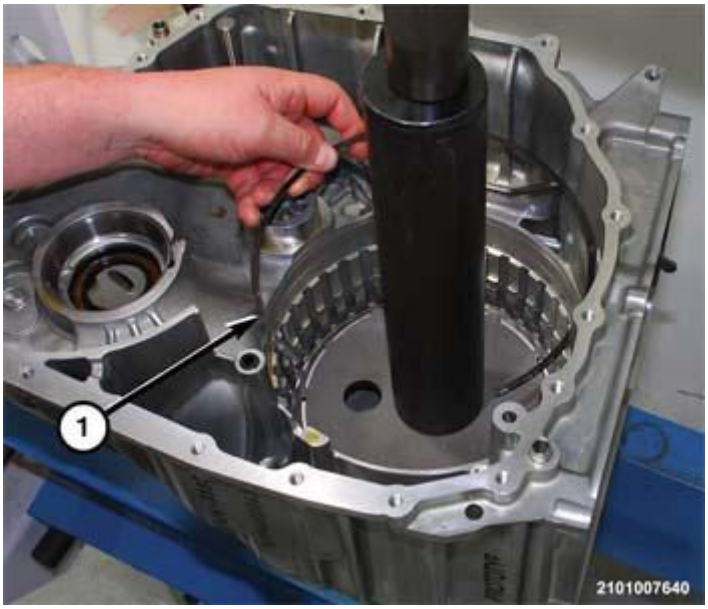

Fig. 115: Removing/Installing Snap-Ring
Courtesy of CHRYSLER GROUP, LLC

67. Using a suitable screw driver, remove the snap-ring (1) holding the C-clutch bellville spring in the transmission housing.

Fig. 116: C-Clutch Bellville Spring & C-Clutch Piston
Courtesy of CHRYSLER GROUP, LLC

68. Separate the C-clutch bellville spring (1) from the C-clutch piston (2).

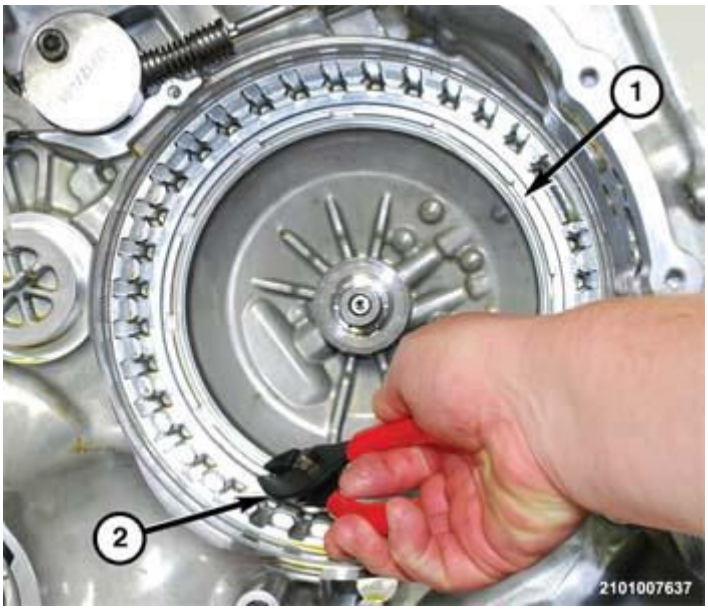

Fig. 117: Removing/Installing C-Clutch Piston
Courtesy of CHRYSLER GROUP, LLC

69. Using a suitable pliers (2), remove the C-clutch piston (1) from the transmission housing.

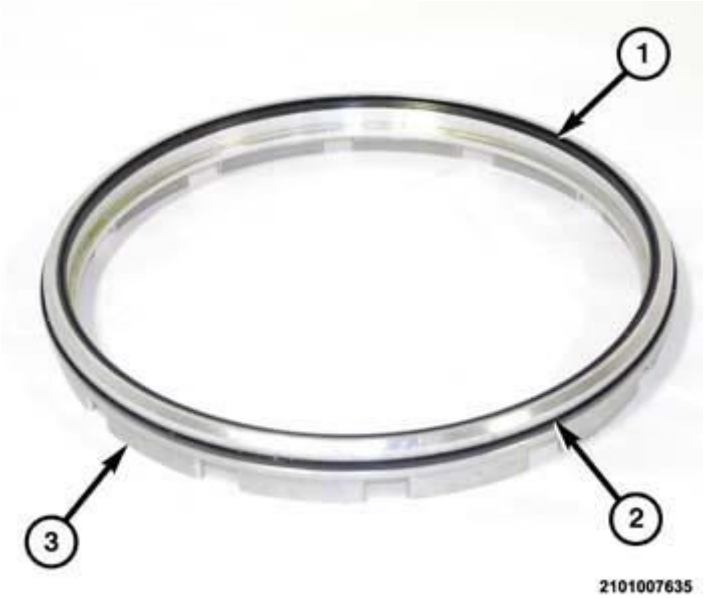

Fig. 118: C-Clutch Piston & Seals
Courtesy of CHRYSLER GROUP, LLC

70. If overhaul is being performed, remove inner (1) and outer (2) seals from the C-clutch piston.

Fig. 119: Removing/Installing Inner Seal-Rings
Courtesy of CHRYSLER GROUP, LLC

71. Using a suitable hook tool, remove the inner seal-rings (1) from the input shaft support.

Fig. 120: Removing/Installing Outer Seal-Rings
Courtesy of CHRYSLER GROUP, LLC

72. Using a suitable hook tool, remove the outer seal-rings (1) from the input shaft support.

Fig. 121: Removing/Installing Split Roller Bearing
Courtesy of CHRYSLER GROUP, LLC

73. Using a suitable hook tool, remove the split roller bearing (1) from the input shaft support.

ASSEMBLY

ASSEMBLY

The work area, counter surfaces and tools must be thoroughly cleaned before attempting to assemble the 948TE transmission. All of the sub assemblies should be disassembled, cleaned, and assembled with new sealing components where applicable. The transmission housing should be clean and oil free before beginning this procedure. The B, C, D, and E-clutches should be properly measured and adjusted prior to assembling the transmission. If the transmission was contaminated with metallic material, all of the thrust bearings and roller bearing should be replaced. The bearing in the output gear support assembly is not serviceable. The output gear support assembly should be replaced if metal debris is present.

WARNING: **Always wear safety glasses when cleaning, disassembling and assembling the transmission/transaxle. Contents of the transmission/transaxle can become projectiles (e.g., springs, snap-rings, as well as metal and other debris). Failure to wear safety glasses may result in severe personal injury.**

1. Place the transmission housing on a clean work surface with the open interior upward.
2. Place wooden blocks under the transmission to stabilize it for assembly.

Fig. 122: Removing/Installing Split Roller Bearing
Courtesy of CHRYSLER GROUP, LLC

3. Install the split roller bearing (1) in position on the input shaft support.

Fig. 123: Removing/Installing Outer Seal-Rings
Courtesy of CHRYSLER GROUP, LLC

4. Install the outer seal-rings (1) in the lands in the input shaft support.

Fig. 124: Removing/Installing Inner Seal-Rings
Courtesy of CHRYSLER GROUP, LLC

5. Install the inner seal-rings (1) in the lands in the input shaft support.

Fig. 125: Installing Inner Seal On C-Clutch Piston
Courtesy of CHRYSLER GROUP, LLC

6. Install the inner seal (2) on the C-clutch piston (1).

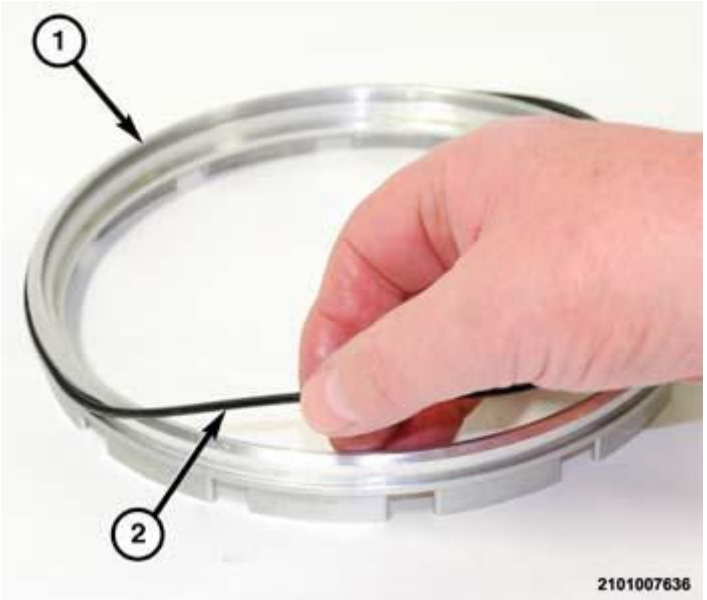

Fig. 126: Installing Outer Seal On C-Clutch Piston
Courtesy of CHRYSLER GROUP, LLC

7. Install the outer seal (2) on the C-clutch piston (1).

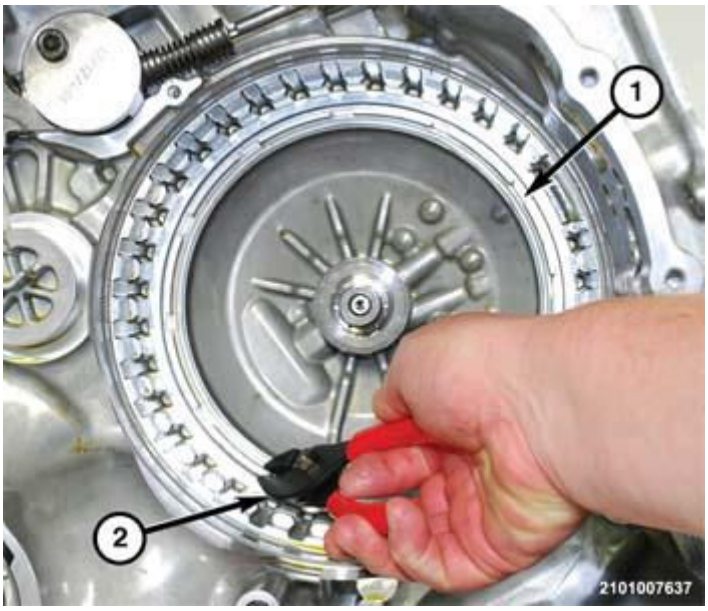

Fig. 127: Removing/Installing C-Clutch Piston
Courtesy of CHRYSLER GROUP, LLC

8. Install the C-clutch piston (1) in the transmission housing.

Fig. 128: Using Feeler Gauge To Turn Lip On Seal
Courtesy of CHRYSLER GROUP, LLC

9. If necessary, use a thin feeler gauge to turn the lip on the seal into the retainer as the piston is pushed downward.

Fig. 129: C-Clutch Bellville Spring & C-Clutch Piston
Courtesy of CHRYSLER GROUP, LLC

10. Place the C-clutch bellville spring (1) in position on the C-clutch piston (2).

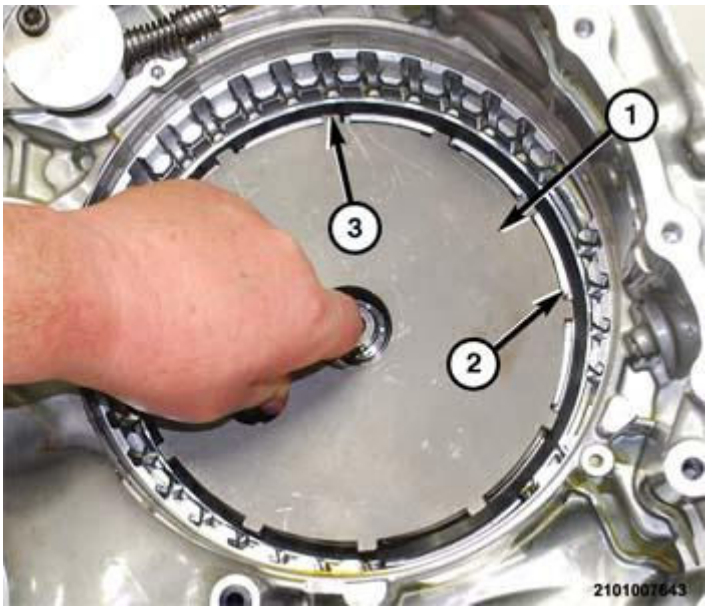

Fig. 130: C-Clutch Bellville Spring & Special Tool
Courtesy of CHRYSLER GROUP, LLC

11. Place the tool (special tool #10504, Compressor, Spring) (1) over the C-clutch bellville spring (3) at the bottom of the transmission housing.

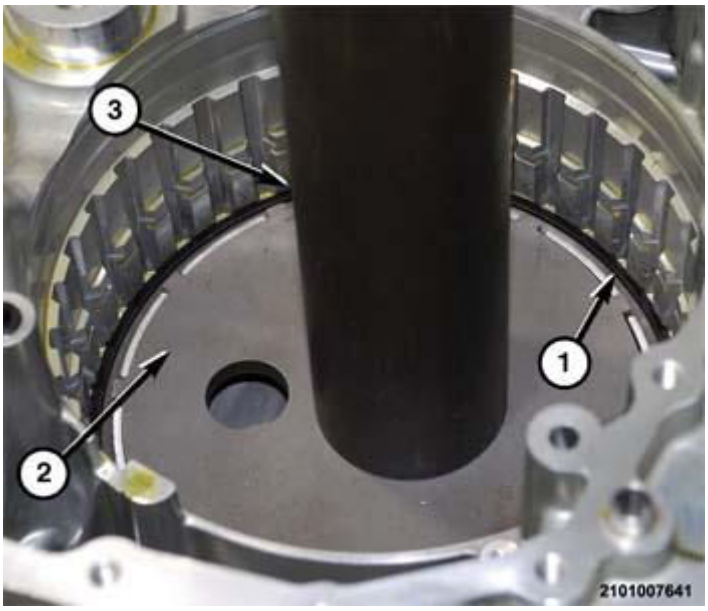

Fig. 131: C-Clutch Bellville Spring & Special Tools
Courtesy of CHRYSLER GROUP, LLC

12. Place tool (special tool #8228, Installer, Bearing) (3) over the input shaft support (tool 8901 with 10428 legs can also be used), compress the bellville spring to gain access to the snap-ring (1) groove.

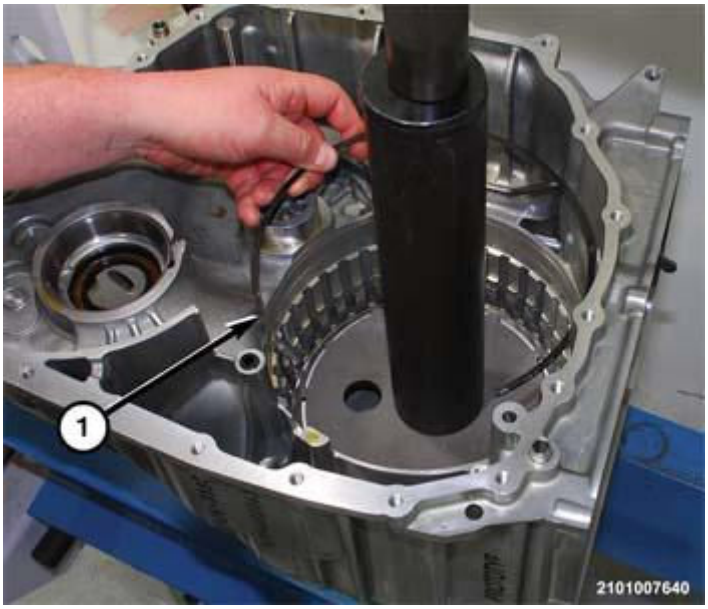

Fig. 132: Removing/Installing Snap-Ring
Courtesy of CHRYSLER GROUP, LLC

13. Install the snap-ring (1), stepped side down, to hold the C-clutch bellville spring in the transmission housing.
14. Remove the transmission housing from the arbor press and position it on a clean work bench. Position wood blocks under transmission to stabilize it for assembly.

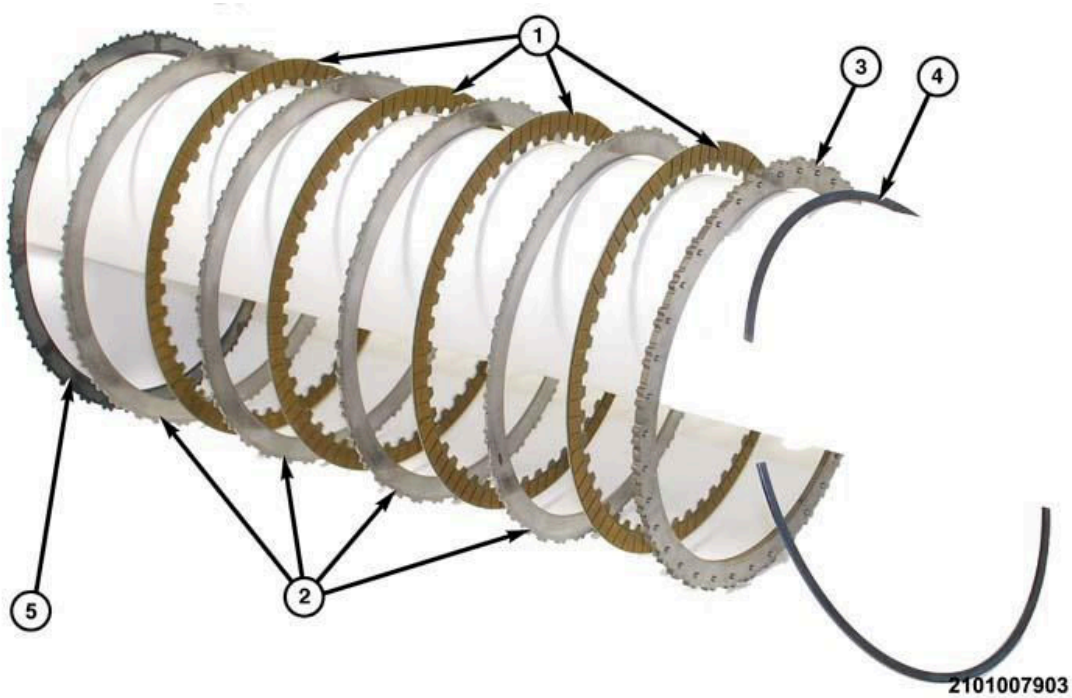

Fig. 133: Exploded View Of C-Clutch Wave Plate, Steel Plates, & Friction Discs
Courtesy of CHRYSLER GROUP, LLC

15. Install the C-clutch wave plate (5), one steel plate (2), then install the friction discs (1) alternately separated with steel plates (2) into the transmission housing on top of the C-clutch piston.

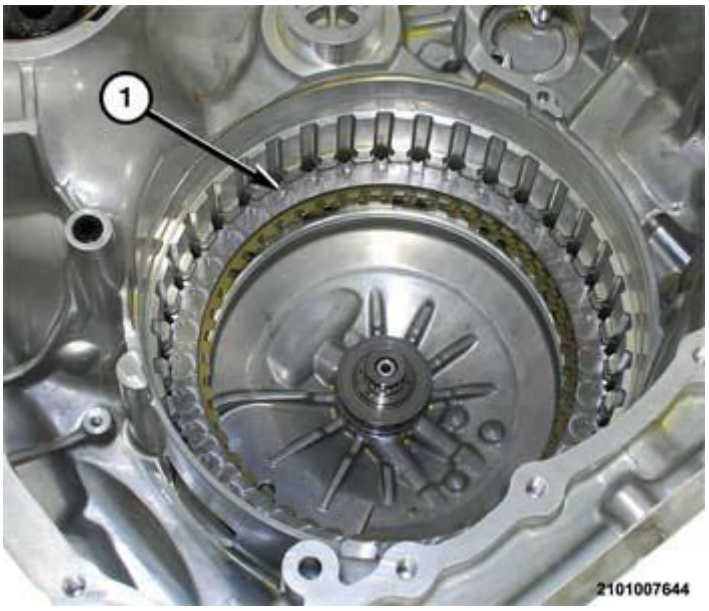

Fig. 134: C-Clutch Reaction Plate
Courtesy of CHRYSLER GROUP, LLC

16. Install the C-clutch reaction plate (1) with raised bosses upward on top of the C-clutch disc and plate

pack.

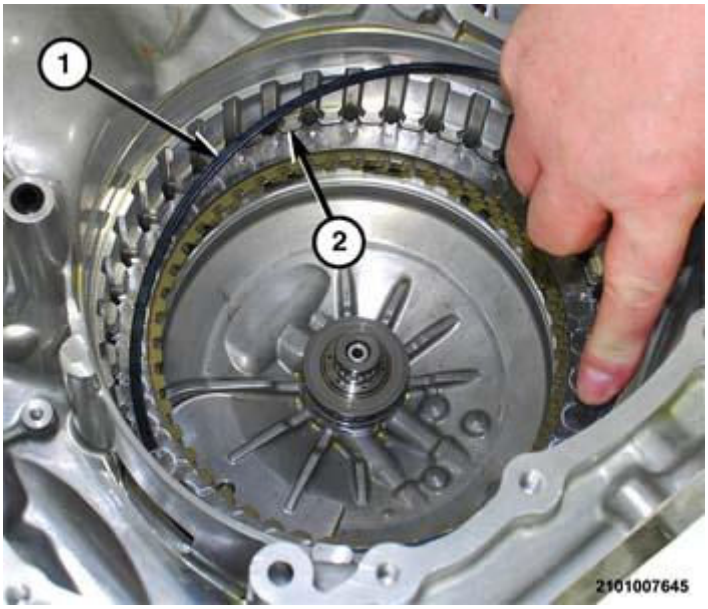

Fig. 135: Installing Snap-Ring
Courtesy of CHRYSLER GROUP, LLC

17. Install the snap-ring (1) in the groove (2) in the transmission housing.

NOTE: **Perform C-clutch measurements to verify that the correct selective plate is installed.**

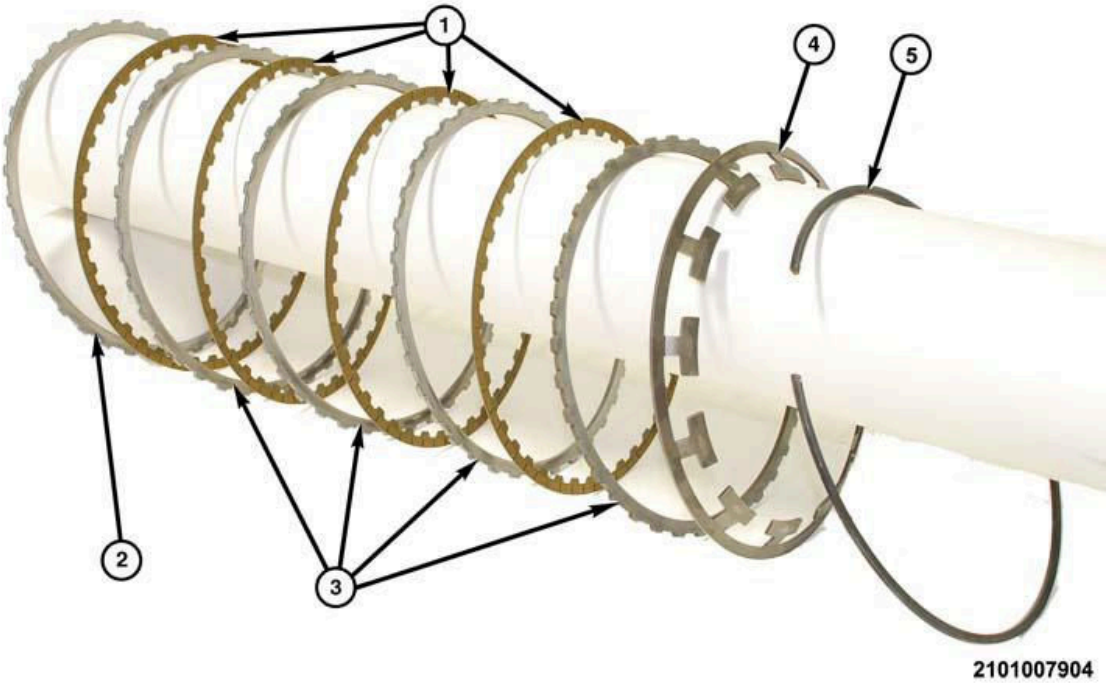

Fig. 136: Exploded View Of D-Clutch, Select Plate, Friction Plate & Steel Plates
Courtesy of CHRYSLER GROUP, LLC

NOTE: Perform D-clutch measurements to verify that the correct select plate (2) is installed.

18. Install the correct thickness selective plate (2).
19. Starting with a friction plate (1), alternately install the friction (1) and steel plates (3) in to the case.

Fig. 137: Removing/Installing Input Shaft Rear Support Selective Thrust Washer
Courtesy of CHRYSLER GROUP, LLC

20. Install the input shaft rear support selective thrust washer.

Fig. 138: Thrust Bearing & Input Shaft Rear Support
Courtesy of CHRYSLER GROUP, LLC

21. Install the thrust bearing (1) onto the input shaft rear support.

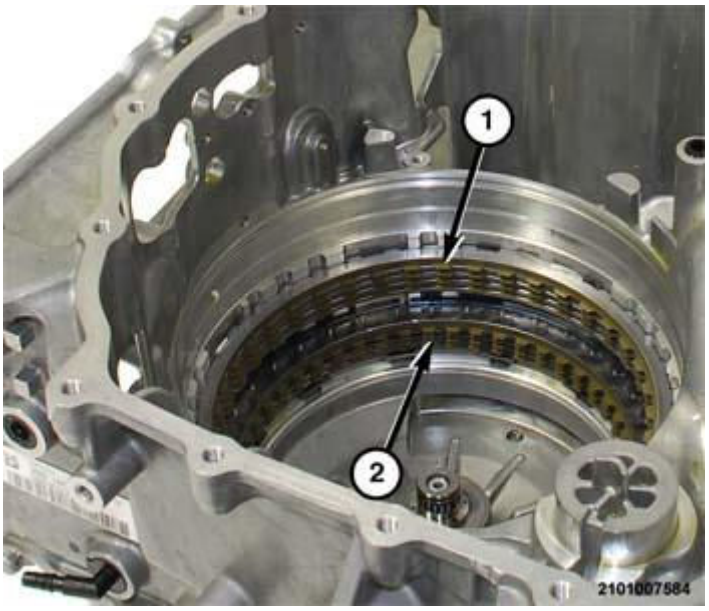

Fig. 139: D And C-Clutch Hubs & Input Shaft Assembly
Courtesy of CHRYSLER GROUP, LLC

22. Use a suitable screw driver to align the gaps in the friction discs in to D (1) and C (2) -clutch to prepare for installing the annulus gear 2, D and C-clutch hubs and input shaft assembly (1).

NOTE: **Before Final assembly of the annulus gear 2, D and C-clutch hub and input shaft, measure the B-clutch to verify that proper select plate was installed**

and air test the dog-A clutch and input shaft to verify proper sealing. The input shaft dog-A clutch hub are not serviceable and must be replaced if leaking.

Fig. 140: Thrust Bearing & C-Clutch Hub
Courtesy of CHRYSLER GROUP, LLC

23. Place the thrust bearing (1) in position on the C-clutch hub/B-clutch retainer (2).

Fig. 141: Annulus Gear 2, D-Clutch Hub & C-Clutch Hub/B-Clutch Retainer
Courtesy of CHRYSLER GROUP, LLC

24. Place the Annulus gear 2, D-clutch hub (1) in position on the C-clutch hub/B-clutch retainer (2).

Fig. 142: Annulus Gear 2, D And C-Clutch Hub (3) & Sun Gear 1
Courtesy of CHRYSLER GROUP, LLC

25. Insert the sun gear 1 (1) into annulus gear 2 (2), D and C-clutch hub/B-clutch retainer (3).

Fig. 143: Annulus Gear 2, D And C-Clutch Hub/B-Clutch Retainer
Courtesy of CHRYSLER GROUP, LLC

26. Turn the annulus gear 2, D and C-clutch hub/B-clutch retainer over and place it on tool (special tool #9611, Plug, Differential End) (2) to hold the sun gear in position.

Fig. 144: Remove/Install Snap-Ring
Courtesy of CHRYSLER GROUP, LLC

27. Using a suitable snap-ring pliers (1), install the snap-ring (2) to hold the sun gear 1 to the annulus gear 2, D and C-clutch hub/B-clutch retainer.

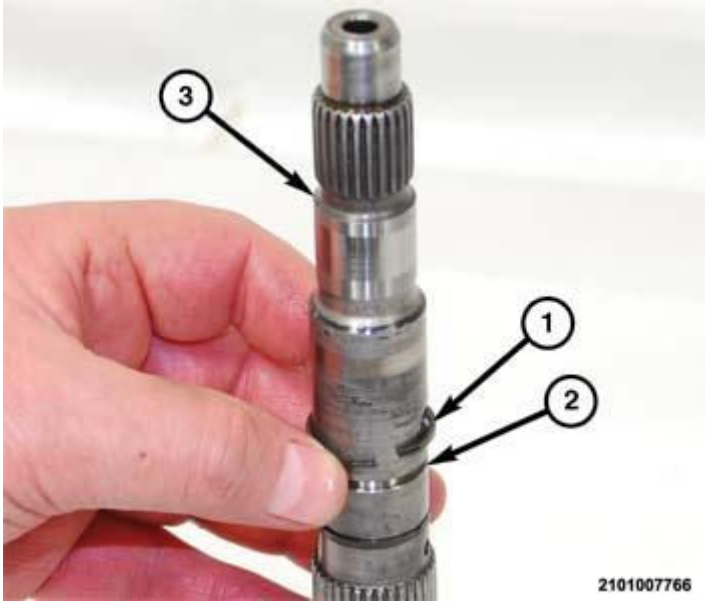

Fig. 145: Remove/Install Input Shaft Seal-Rings
Courtesy of CHRYSLER GROUP, LLC

28. Install NEW seal-rings (1) in the lands (2) on the input shaft (3).
29. Insert the input shaft into the B-clutch hub.

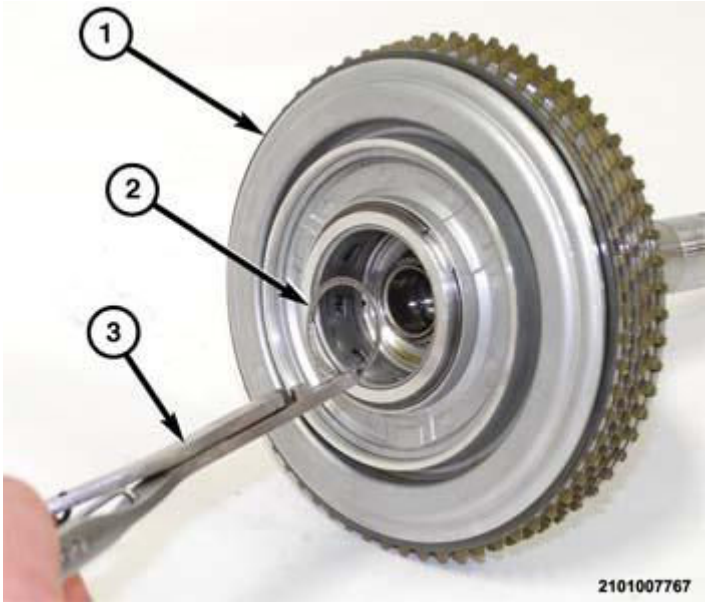

Fig. 146: Input Shaft/Dog Clutch A, B-Clutch Hub & Snap-Ring
Courtesy of CHRYSLER GROUP, LLC

30. Using a suitable snap-ring pliers (3), install the snap-ring (2) to hold the input shaft to the B-clutch (1) hub.

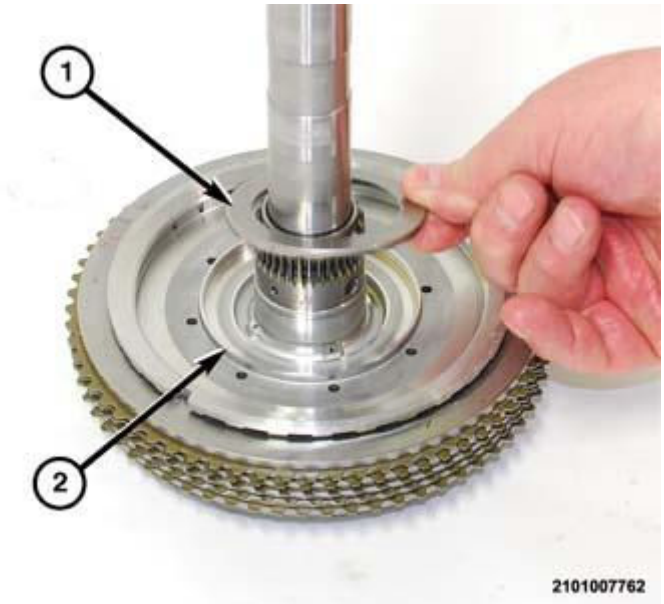

Fig. 147: Thrust Bearing & B-Clutch Hub
Courtesy of CHRYSLER GROUP, LLC

31. Place the thrust bearing on the B-clutch hub.
32. Install the annulus gear 2, D and C-clutch hub on the input shaft, B-clutch assembly.

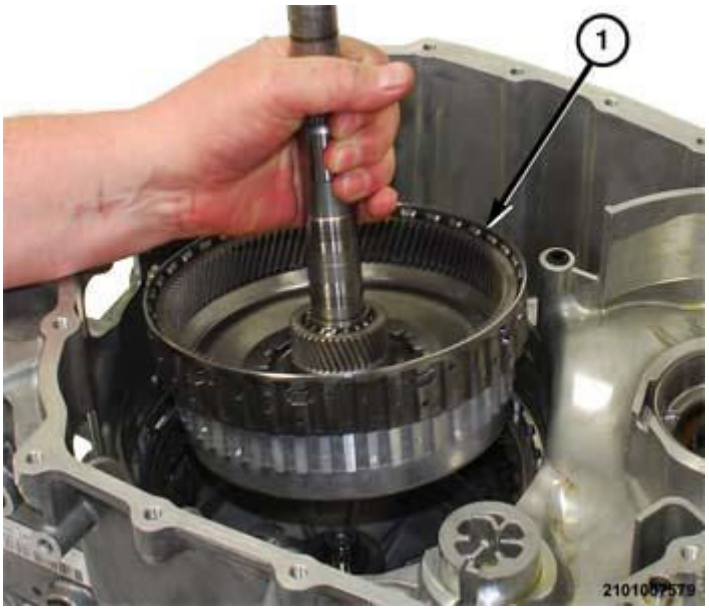

Fig. 148: Annulus Gear 2, D & C-Clutch Hub And Input Shaft Assembly
Courtesy of CHRYSLER GROUP, LLC

33. Install the annulus gear 2, D and C-clutch hub, input shaft and B-clutch assembly (1) into the transmission housing.

NOTE: **While not allowing the input shaft to slip inward, wriggle the annulus gear 2, D and C-clutch hubs and input shaft assembly (1) until they engage the D and C-clutch discs. A solid audible clunk will be heard if installed correctly. If the input shaft slips inward the B-clutch will come out of its retainer impeding proper installation.**

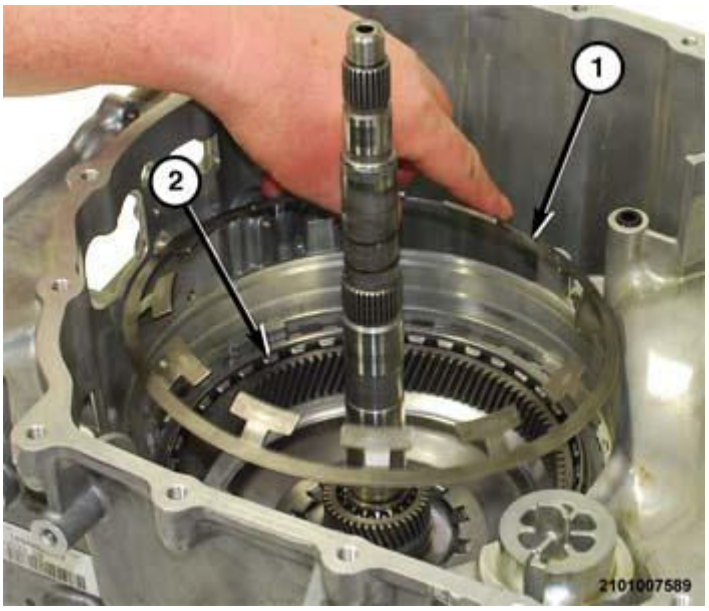

Fig. 149: Removing/Installing Bellville Spring

Courtesy of CHRYSLER GROUP, LLC

34. Place the D-clutch piston bellville spring (1) in position on the transmission housing (2).

Fig. 150: D-Clutch Piston Retainer & O-Ring Seal
Courtesy of CHRYSLER GROUP, LLC

35. Install NEW O-ring seal (2) in the D-clutch piston retainer (1).

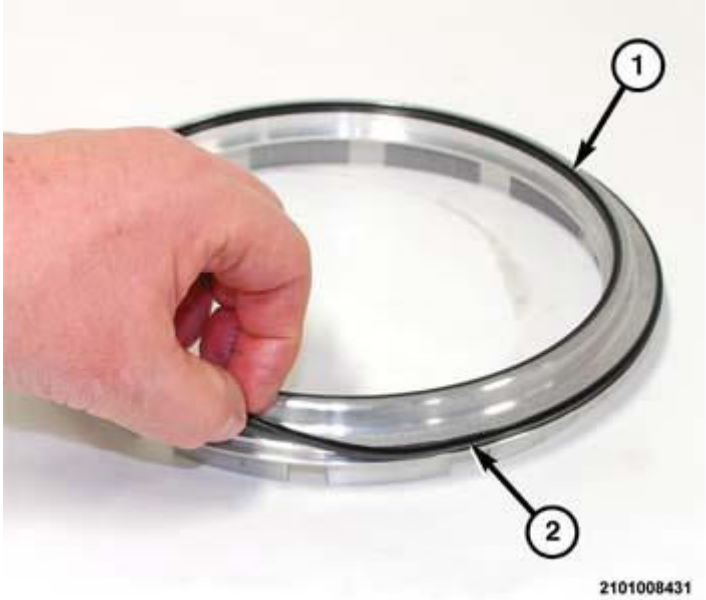

Fig. 151: D-Clutch Piston & Outer Lip Seal Ring
Courtesy of CHRYSLER GROUP, LLC

36. Install NEW outer lip seal ring (2) in the D-clutch piston (1).

Fig. 152: D-Clutch Piston & Inner Lip Seal Ring
Courtesy of CHRYSLER GROUP, LLC

37. Install NEW inner lip seal ring (1) in the D-clutch piston (2).

Fig. 153: D-Clutch Piston & Retainer
Courtesy of CHRYSLER GROUP, LLC

38. Install the D-clutch piston (2) in the retainer (1).

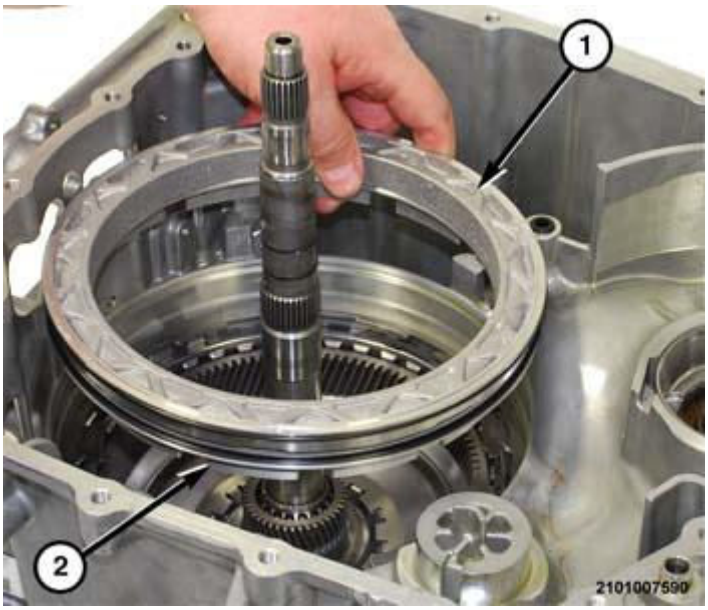

Fig. 154: D-Clutch Piston Retainer
Courtesy of CHRYSLER GROUP, LLC

39. Place the D-clutch piston (2) and retainer (1) assembly in the transmission housing over the D-clutch bellville spring. The fingers on the D-clutch piston (2) rest against the D-clutch select plate.
40. Position the transmission housing on a suitable arbor pressure using wooden blocks for support.

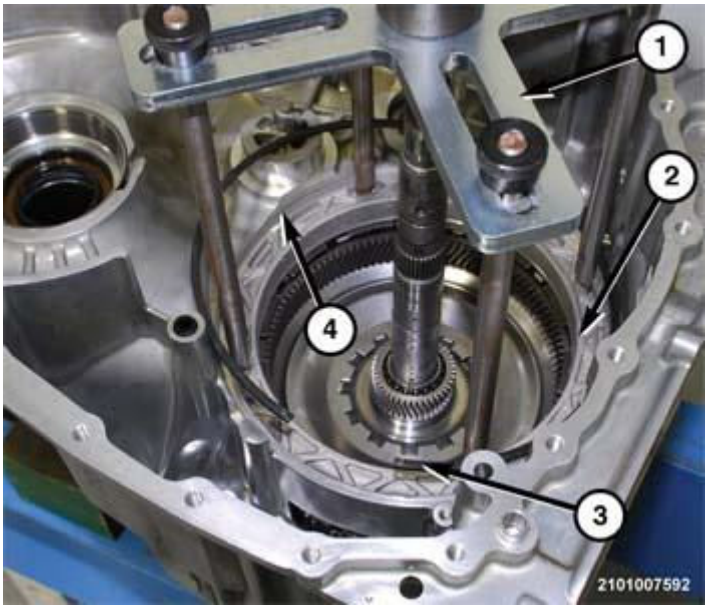

Fig. 155: Gaining Access To Snap Ring-Ring & Groove
Courtesy of CHRYSLER GROUP, LLC

41. Using Tool (special tool #8901A, Pressing Tool) (with the pressure scale removed) (1) and legs (special tool #10428, Adapter, Pressing Tool), Compress the bellville spring to gain access to the snap ring-ring groove (4) in the transmission housing.

42. Install the snap-ring to hold the D-clutch piston retainer (2) into the transmission housing (4).
43. Remove the transmission housing from the arbor press and place the transmission housing on the clean work surface. Use wood blocks to stabilize the transmission.

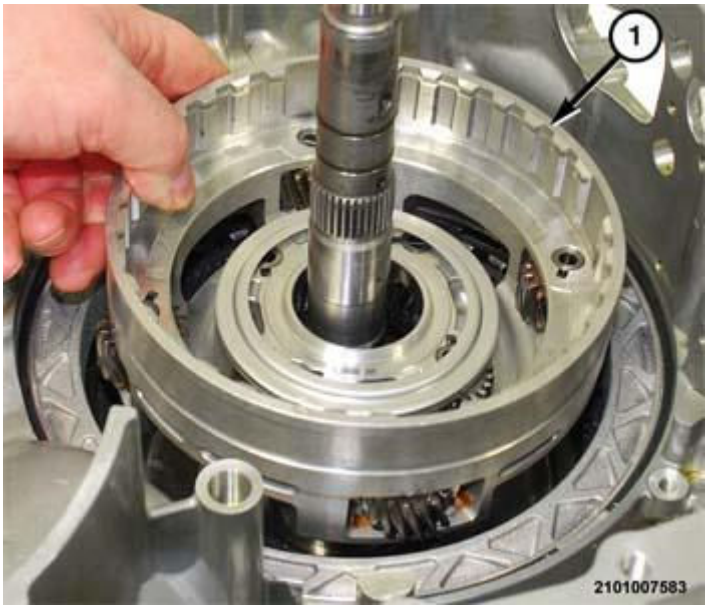

Fig. 156: Carrier Gear, Annulus Gear & D-Clutch Hub
Courtesy of CHRYSLER GROUP, LLC

44. Insert the carrier gear 1 and 2 (1) annulus gear 2, D-clutch hub and input shaft assembly onto the annulus gear 2, D and C-clutch hub and input shaft assembly.

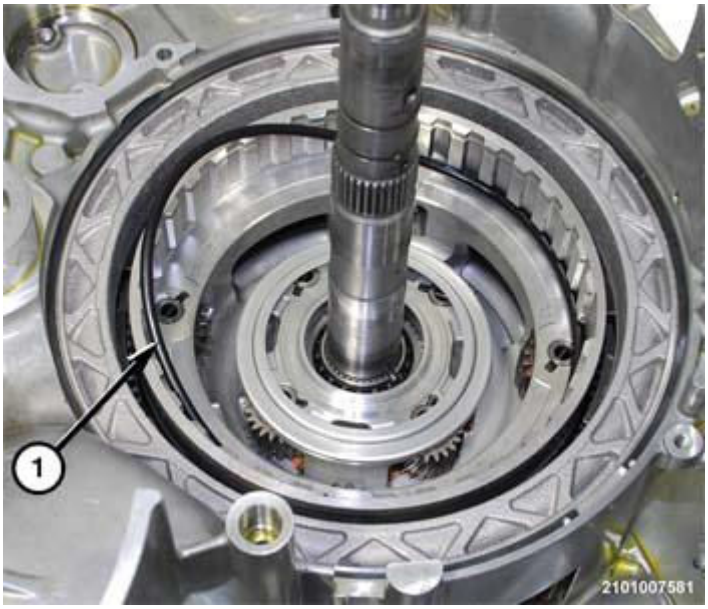

Fig. 157: Carrier Gear 1&2 & O-Ring Seal
Courtesy of CHRYSLER GROUP, LLC

45. Install the O-ring seal (1) into the carrier gear 1 and 2.

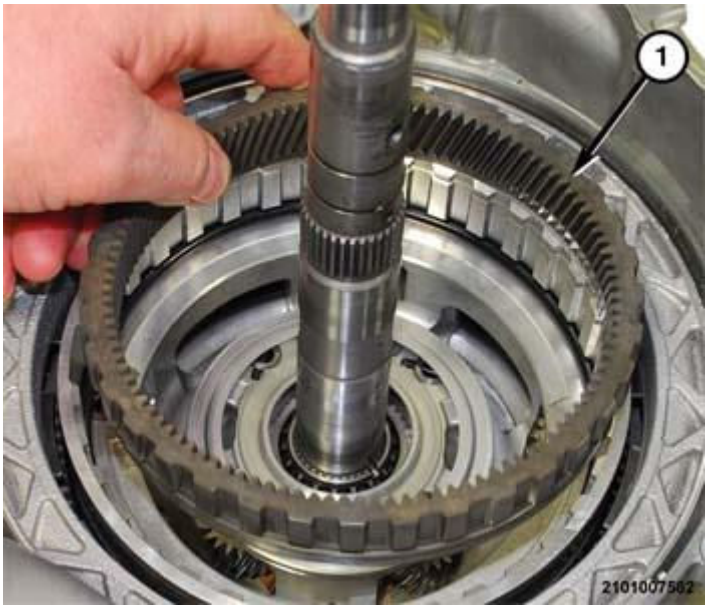

Fig. 158: Annulus Gear 3 & Carrier Gear 1&2
Courtesy of CHRYSLER GROUP, LLC

46. Install the annulus gear 3 (1) into the carrier gear 1 and 2.

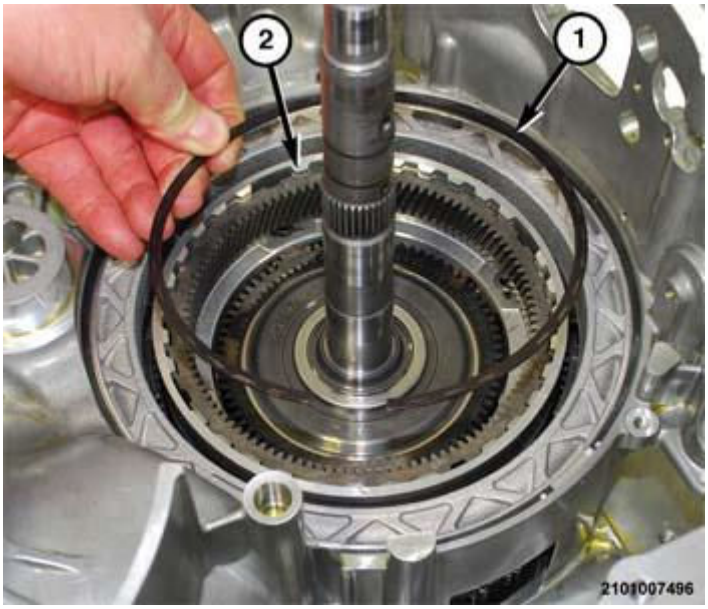

Fig. 159: Snap-Ring & Annulus Gear 3
Courtesy of CHRYSLER GROUP, LLC

47. Install the snap-ring to hold the annulus gear 3 (2) into the carrier gear 1 and 2.

Fig. 160: Thrust Bearing & Annulus Gear 1 Planetary Hub
Courtesy of CHRYSLER GROUP, LLC

48. Place the thrust bearing (1) in position under the annulus gear 1 planetary hub (2).

Fig. 161: Annulus Gear 1 Planetary Hub & Carrier Gear 1 And 2
Courtesy of CHRYSLER GROUP, LLC

49. Install the annulus gear 1 planetary hub (1) into the carrier gear 1 and 2 (2).

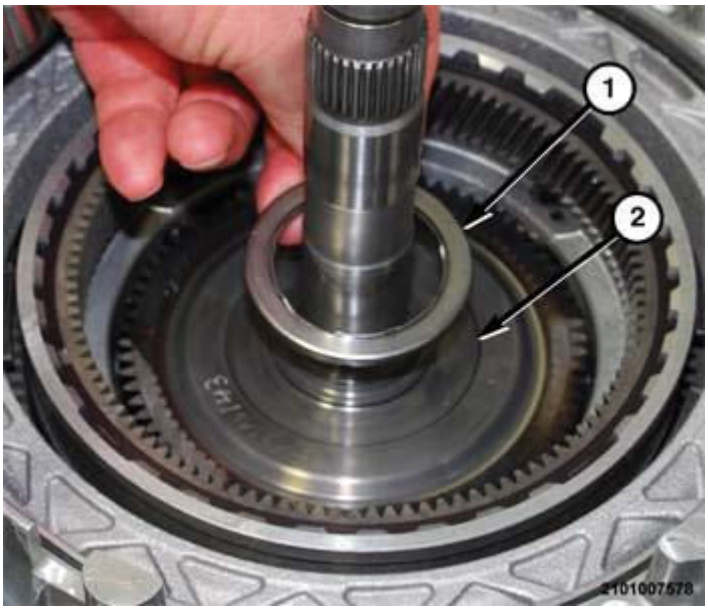

Fig. 162: Thrust Bearing & Annulus Gear 1 Planetary Hub
Courtesy of CHRYSLER GROUP, LLC

50. Place the thrust bearing (1) onto the annulus gear 1 planetary hub (2).

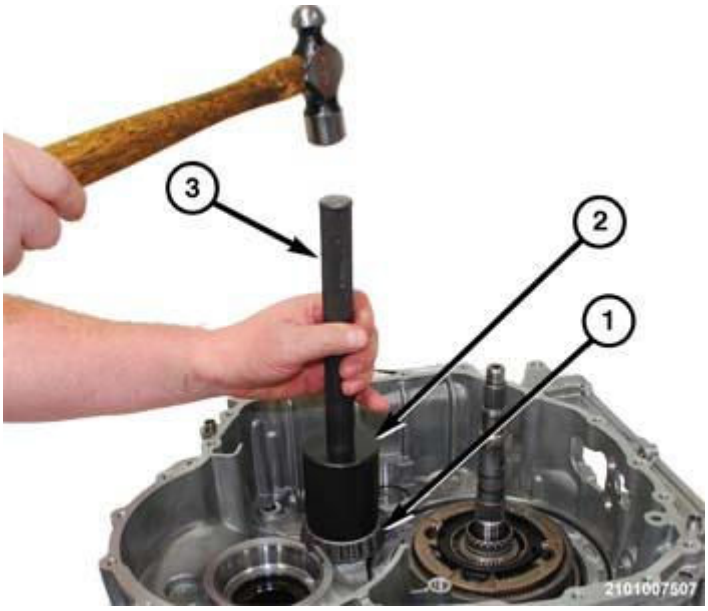

Fig. 163: Installing Transfer Gear Bearing Cone Onto Transmission Housing
Courtesy of CHRYSLER GROUP, LLC

51. Using Bearing Installer (special tool #6888, Installer, Seal) (2), and handle (special tool #C-4171, Driver Handle, Universal) (3) install the transfer gear bearing cone (1) onto the transmission housing.

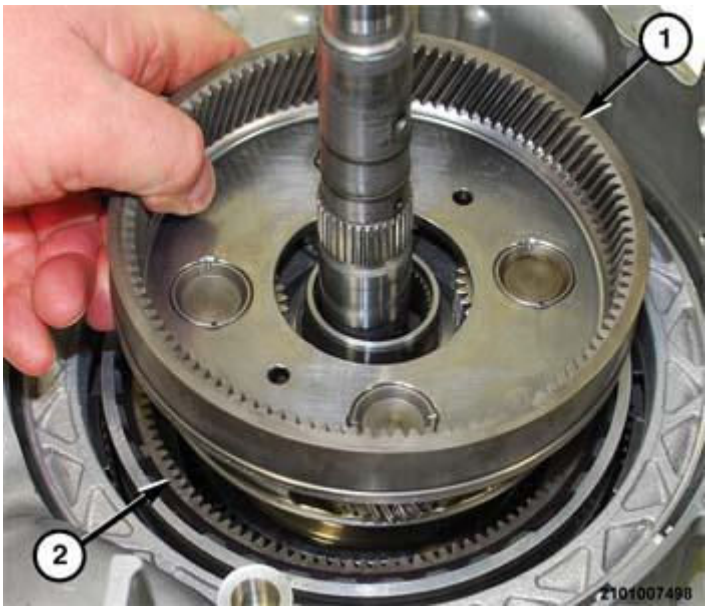

Fig. 164: Annulus Gear 4
Courtesy of CHRYSLER GROUP, LLC

52. Install the annulus gear 4 into the annulus gear 3 (2).

Fig. 165: Thrust Spacer & Underside Of Gear 4 Planetary Pinion Carrier
Courtesy of CHRYSLER GROUP, LLC

53. Install a NEW thrust spacer (1) on the underside of the gear 4 planetary pinion carrier (2).

Fig. 166: Thrust Spacer & Topside Of Gear 4 Planetary Pinion Carrier
Courtesy of CHRYSLER GROUP, LLC

54. Install a NEW thrust spacer (1) on the topside of the gear 4 planetary pinion carrier (2).

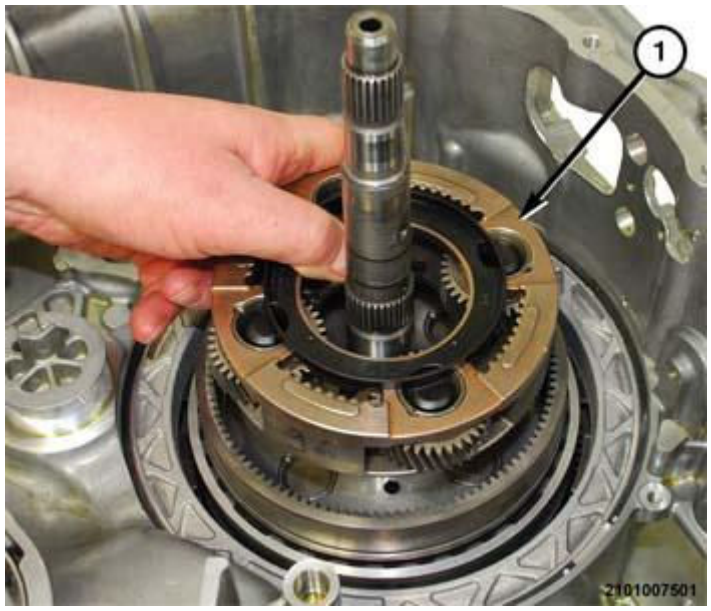

Fig. 167: Gear 4 Planetary Pinion Carrier
Courtesy of CHRYSLER GROUP, LLC

55. Install the gear 4 planetary pinion carrier (1) into the annulus gear 4.

Fig. 168: Removing/Installing Sun Gear 3, 4 And Dog Clutch-F At Gear 4 Planetary Pinion Carrier
Courtesy of CHRYSLER GROUP, LLC

56. Install the sun gear 3 and 4 and Dog Clutch-F (1) into the gear 4 planetary pinion carrier.

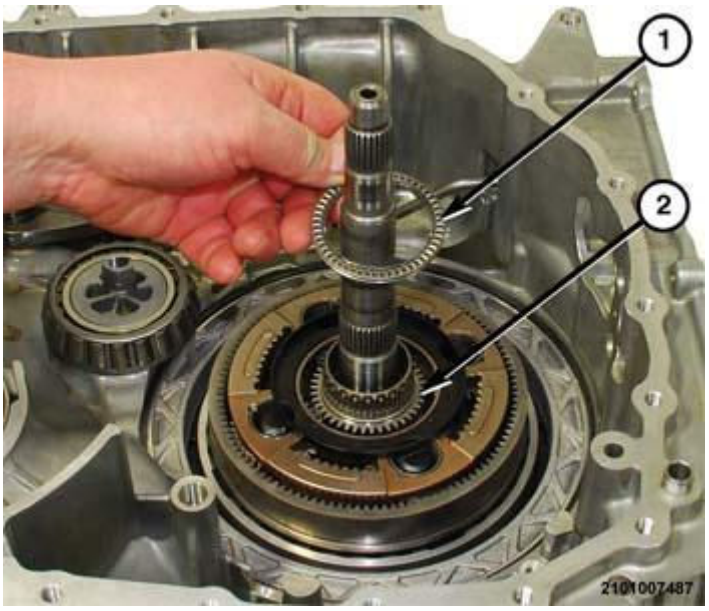

Fig. 169: Roller Type Thrust Bearing
Courtesy of CHRYSLER GROUP, LLC

57. Install the roller type thrust bearing (1) onto the sun gear 3 and 4 and Dog Clutch-F (2).

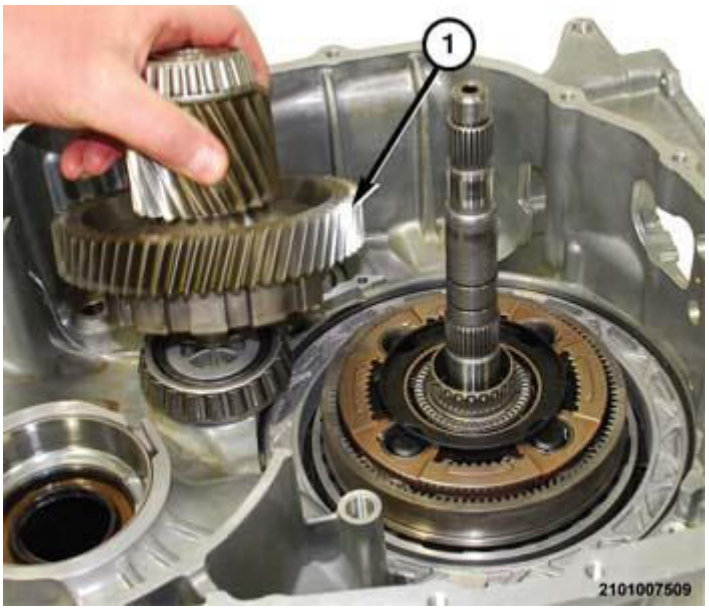

Fig. 170: Removing/Installing Transfer Gear
Courtesy of CHRYSLER GROUP, LLC

NOTE: **If new transfer gear (1) or transmission housing are being replaced measurements must be performed to determine correct thickness for the bearing preload shims. If the bearings and races are replaced the factory installed preload shims do not require replacement.**

58. If necessary, replace the bearings and races on the transfer gear (1).
59. Install the transfer gear (1) into the transmission housing.

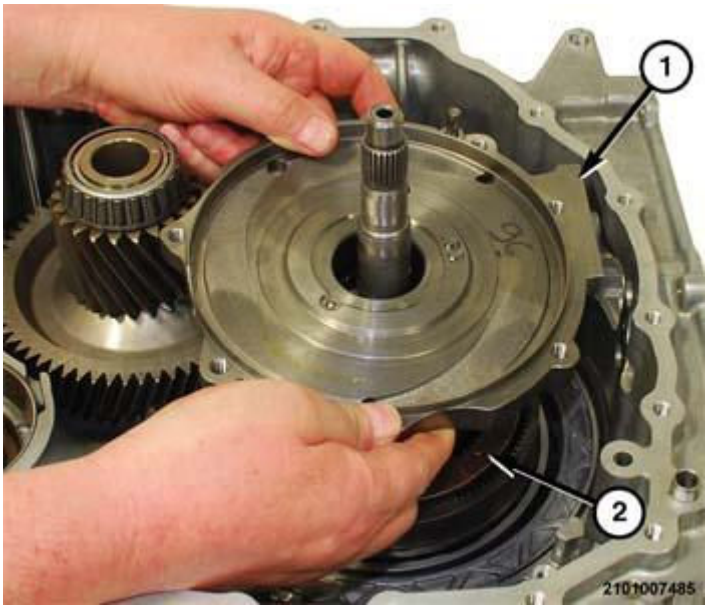

Fig. 171: Output Gear Support
Courtesy of CHRYSLER GROUP, LLC

60. Install the output gear support (1) into the gear 4 planetary pinion carrier (2).

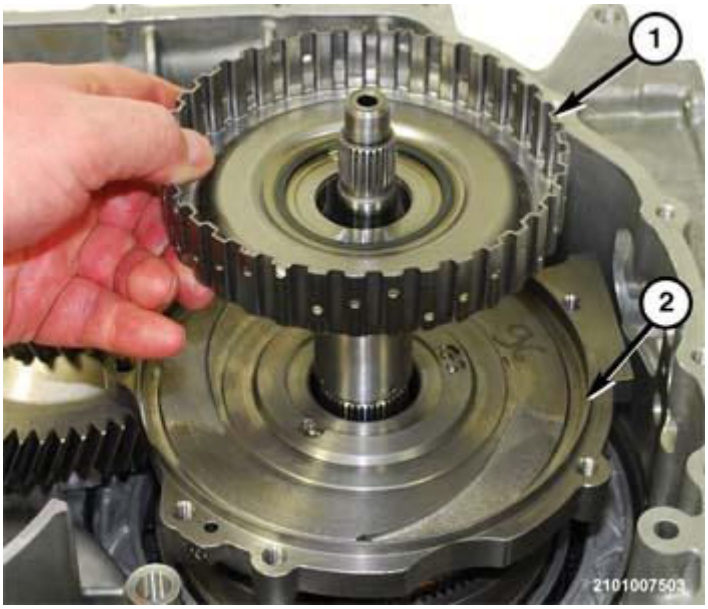

Fig. 172: E-Clutch Hub And Shaft
Courtesy of CHRYSLER GROUP, LLC

61. Install the E-clutch hub and shaft (1) into the output gear support (2).

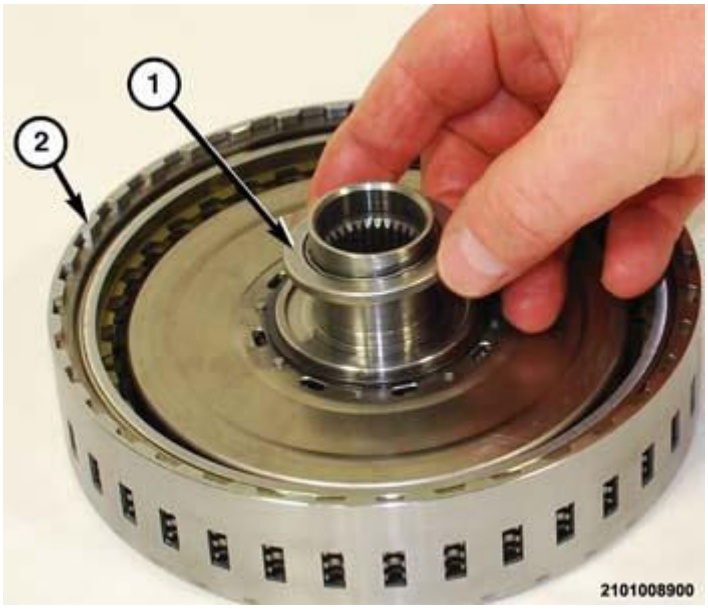

Fig. 173: Removing/Installing Thrust Bearing At E-Clutch Hub
Courtesy of CHRYSLER GROUP, LLC

62. Install the thrust bearing (1) on the E-clutch (2) hub.

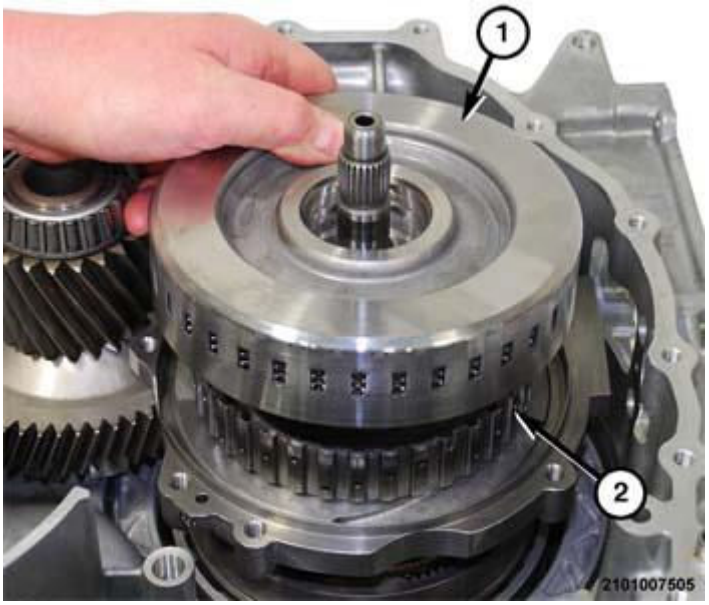

Fig. 174: Removing/Installing E-Clutch At E-Clutch Hub
Courtesy of CHRYSLER GROUP, LLC

NOTE: Before installing the E-clutch, use a suitable screwdriver to align the grooves in the friction.

63. Install the E-clutch onto the E-clutch hub and shaft (2).

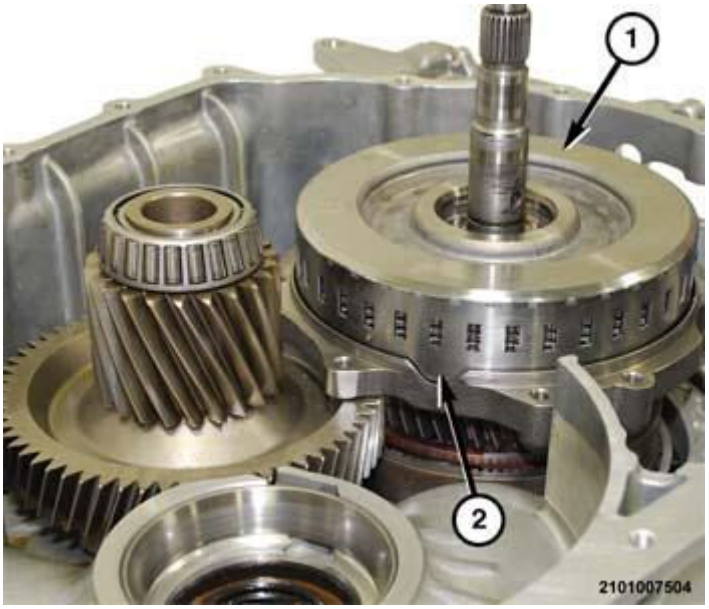

Fig. 175: E-Clutch Hub And Shaft
Courtesy of CHRYSLER GROUP, LLC

64. Wriggle the E-clutch (1) until all of the friction discs are fully engaged on the E-clutch hub and shaft.

NOTE: **When the E-clutch (1) is fully seated the gap (2) will be very small between the E-clutch retainer and the output gear support.**

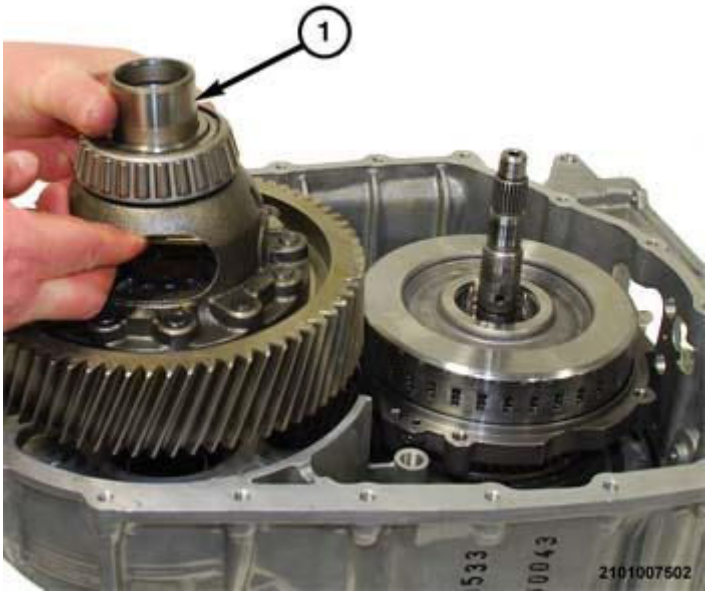

Fig. 176: Removing/Installing Differential Assembly
Courtesy of CHRYSLER GROUP, LLC

NOTE: **If new differential (1) or transmission housing are being replaced measurements must be performed to determine correct thickness for the bearing preload shims. If the bearings and races are replaced the factory installed preload shims do not require replacement.**

65. If necessary, replace the bearings and races on the differential (1).
66. Install the differential assembly (1) into the transmission housing.

Fig. 177: Sealing Surface Of Transmission Housing
Courtesy of CHRYSLER GROUP, LLC

67. Place a NEW gasket (1) in position on the sealing surface of the transmission housing (2).

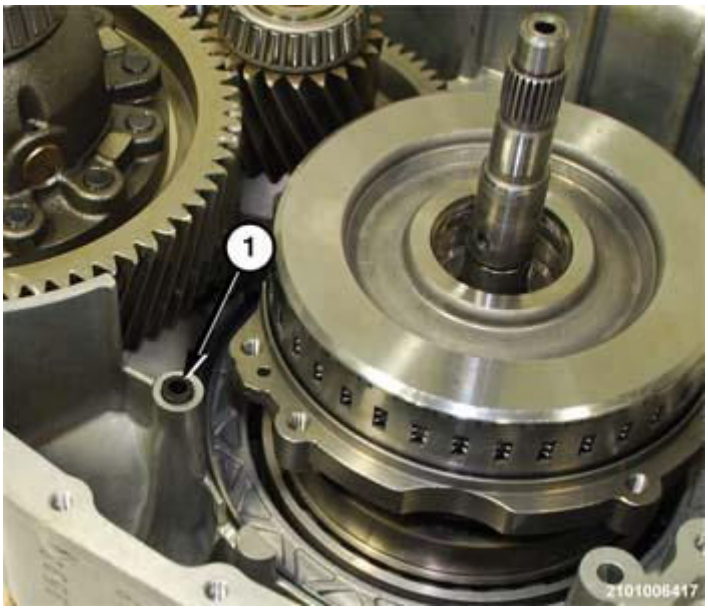

Fig. 178: Port Seal
Courtesy of CHRYSLER GROUP, LLC

68. Install a NEW seal (1) in the port in the transmission housing.

Fig. 179: Sealing Surface Of Transmission Housing
Courtesy of CHRYSLER GROUP, LLC

69. Install the gasket (1) on the sealing surface of the transmission housing (2).
70. If necessary, replace the output seal and the impeller hub seal.

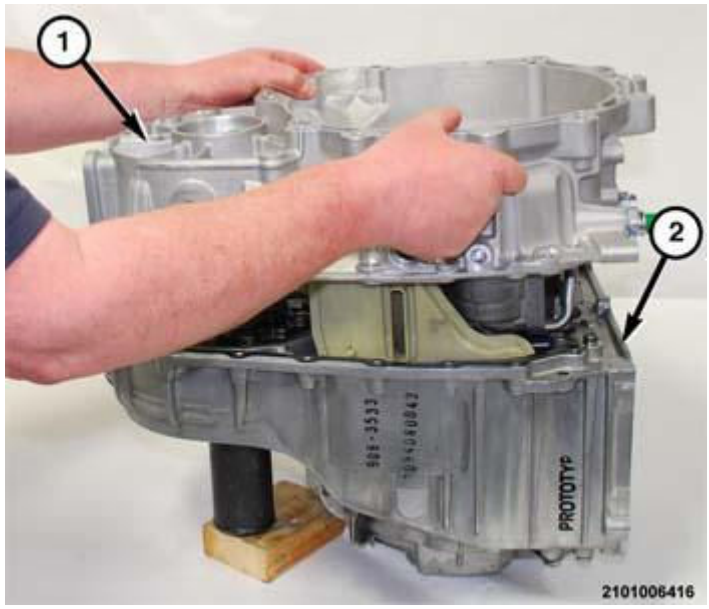

Fig. 180: Removing/Installing Bellhousing At Transmission Housing
Courtesy of CHRYSLER GROUP, LLC

71. While guiding the bellhousing (1) downward over the input and output shafts, place the bellhousing (1) in position on the transmission housing (2).

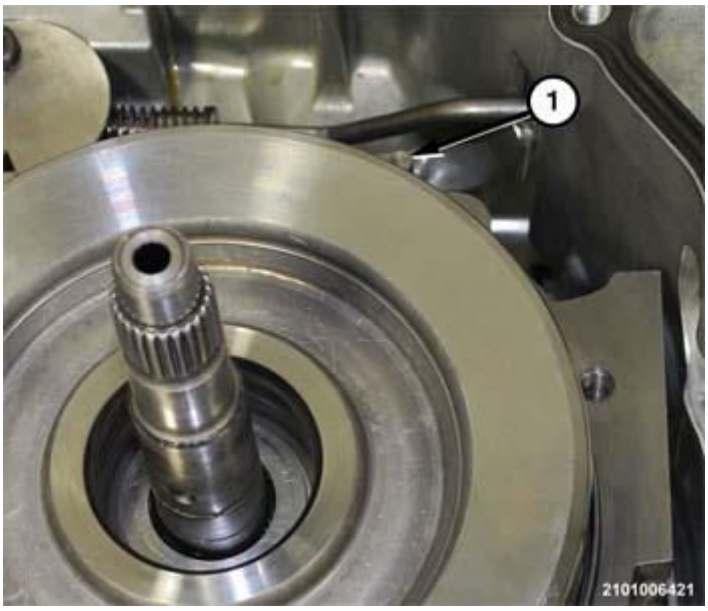

Fig. 181: Checking Guide Pin Alignment
Courtesy of CHRYSLER GROUP, LLC

72. Rotate the output gear clockwise to assure guide pin (1) alignment.

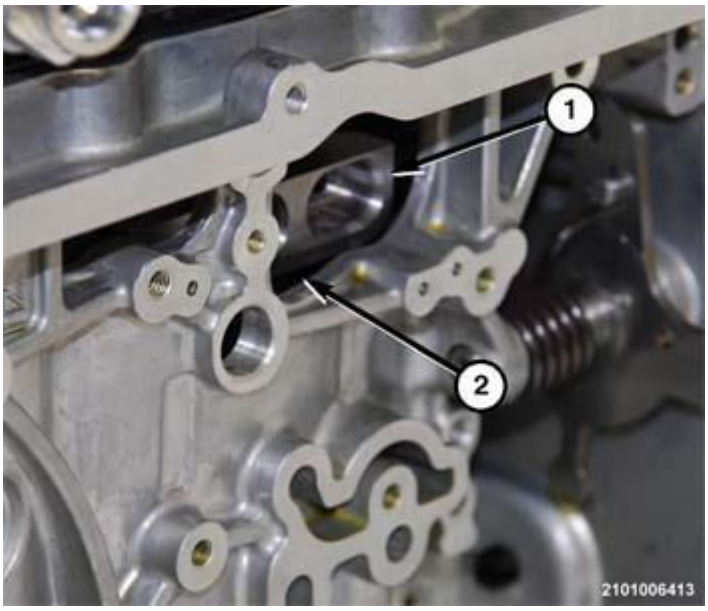

Fig. 182: Engaging Guide Pins In Transmission Housing Into Receptacle Holes
Courtesy of CHRYSLER GROUP, LLC

73. Rotate the output gear support (1) through the window (2) behind the valve body until the guide pin engages the receptacle hole in the bellhousing.
74. Engage the guide pins in the transmission housing into the receptacle holes bellhousing to assure proper alignment.
75. Install several bolts to hold the bell housing to the transmission housing. Tighten the bolts hand tight.

76. Position the transmission on the bench with the bellhousing facing outward.

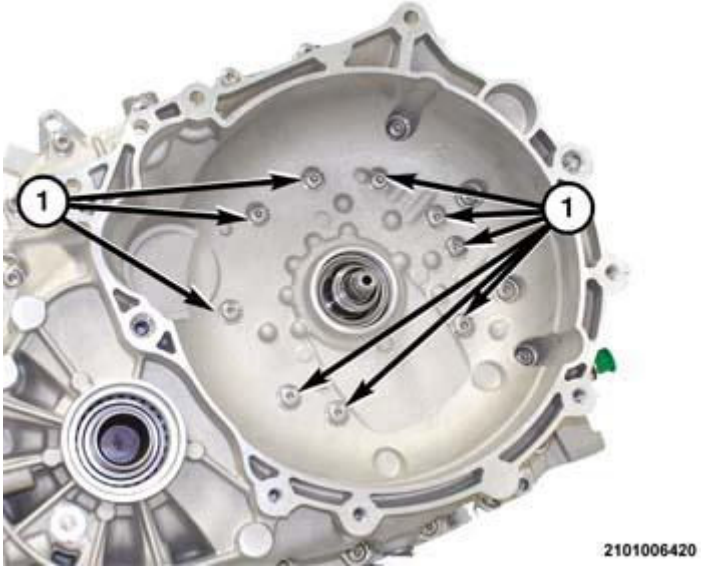

Fig. 183: Bellhousing To Output Gear Support Bolts
Courtesy of CHRYSLER GROUP, LLC

77. Install the bolts (1) with NEW seal washers to hold the bellhousing to the output gear support and tighten to the proper specifications. Refer to **SPECIFICATIONS**.

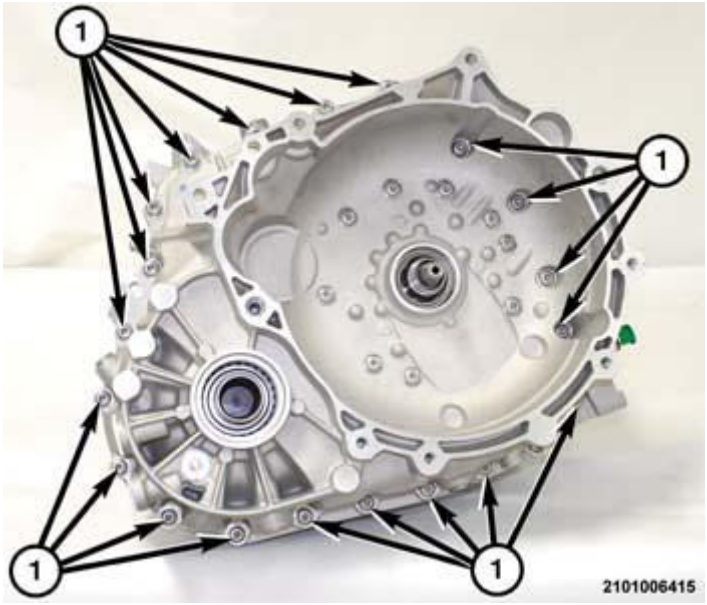

Fig. 184: Bellhousing To Transmission Housing Bolts
Courtesy of CHRYSLER GROUP, LLC

78. Install the bolts (1) to hold the bellhousing to the transmission housing and tighten to the proper specifications. Refer to **SPECIFICATIONS**.

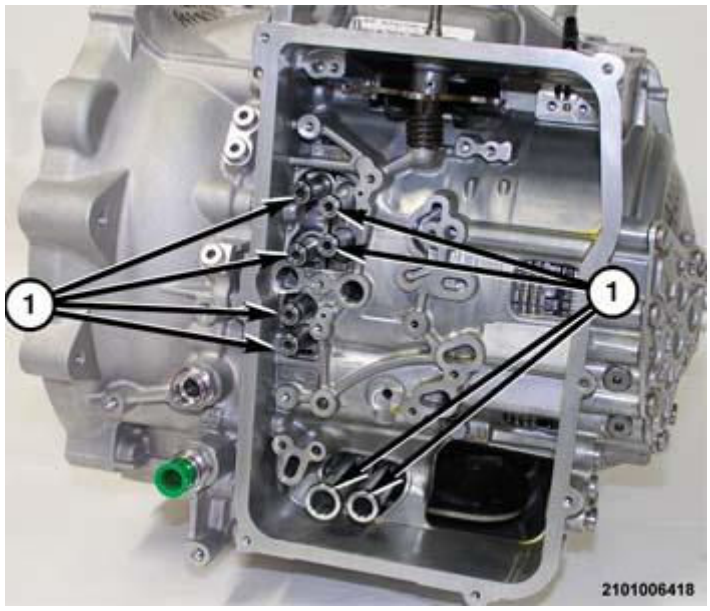

Fig. 185: Fluid Adapter Tubes & O-Ring Seals
Courtesy of CHRYSLER GROUP, LLC

79. Install NEW O-rings on both ends of the fluid transfer tubes.
80. Install the fluid adapter tubes (1) from the transmission.

Fig. 186: Removing/Installing Speed Sensor
Courtesy of CHRYSLER GROUP, LLC

81. Insert the speed sensor (1) into the transmission with the wire harness connected.

Fig. 187: Removing/Installing Speed Sensor Screw
Courtesy of CHRYSLER GROUP, LLC

82. Install the speed sensor screw (1) to hold the speed sensor to the transmission housing.

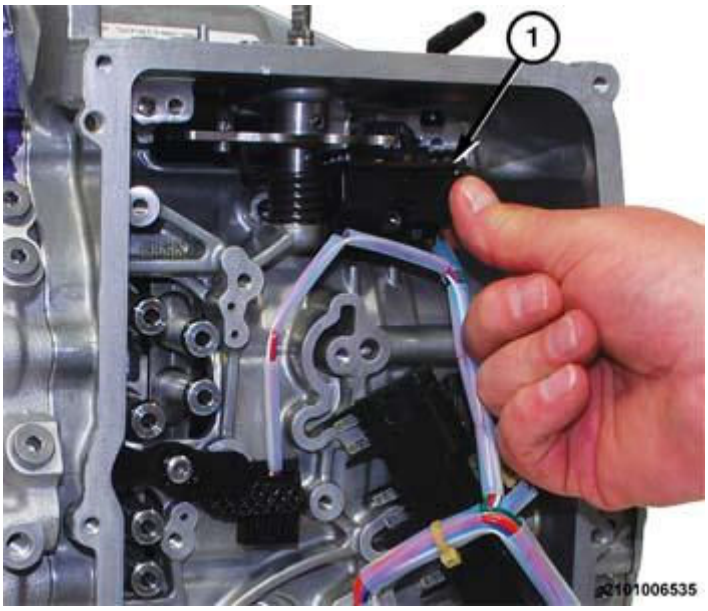

Fig. 188: Removing/Installing Transmission Range Sensor
Courtesy of CHRYSLER GROUP, LLC

83. Place the Transmission Range Sensor (TRS) (1) in position on the transmission with the wire harness connected.

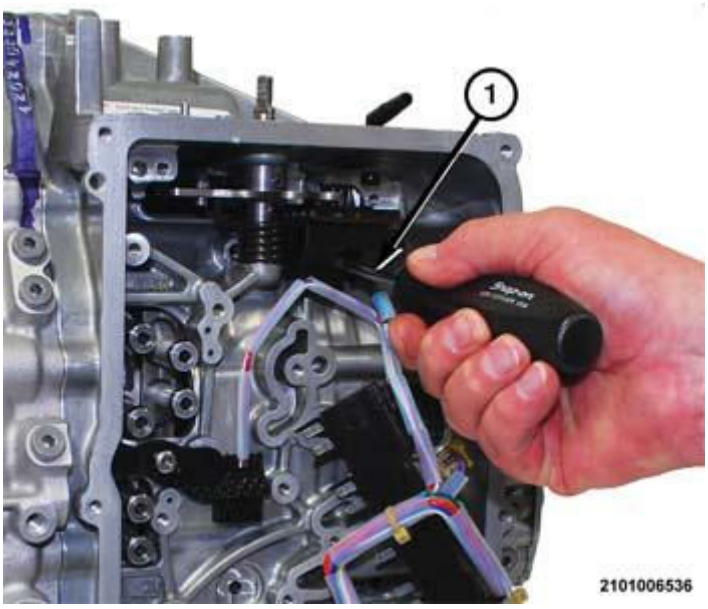

Fig. 189: Removing/Installing Transmission Range Sensor (TRS) Screw
Courtesy of CHRYSLER GROUP, LLC

84. Install the TRS screw (1) to hold the TRS to the transmission housing and tighten to the proper specifications. Refer to **SPECIFICATIONS**.

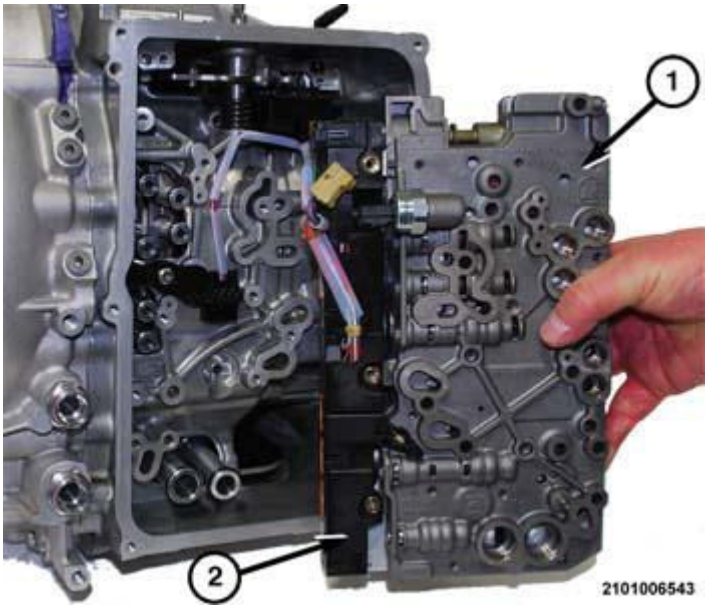

Fig. 190: Valve Body & Solenoids Wire Harness Connector
Courtesy of CHRYSLER GROUP, LLC

85. Place the valve body (1) in position on the transmission.
86. Place the wire harness connector (2) in position on the solenoids.
87. Press the connector (2) inward to engage the terminals on the solenoids.

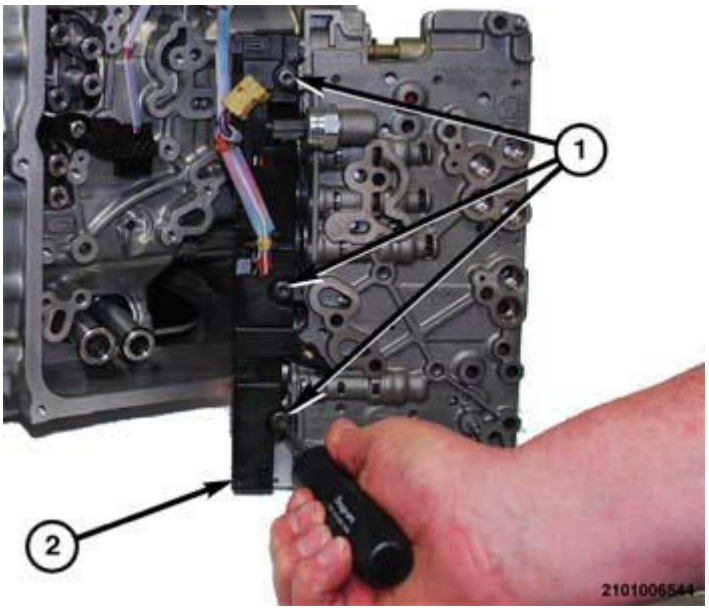

Fig. 191: Removing/Installing Wire Harness Connector At Valve Body Solenoids
Courtesy of CHRYSLER GROUP, LLC

88. Install the screws to hold the wire harness connector to the valve body and solenoids and tighten to the proper specifications. Refer to **SPECIFICATIONS**.

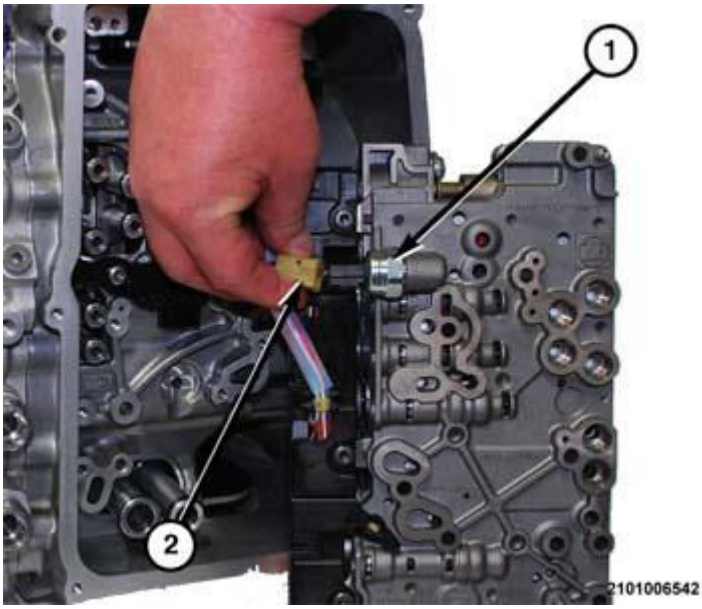

Fig. 192: Fluid Pressure Transducer Wire Harness Connector
Courtesy of CHRYSLER GROUP, LLC

89. Insert the wire harness connector into the fluid pressure transducer connector
90. Press connector together until the lock engages.

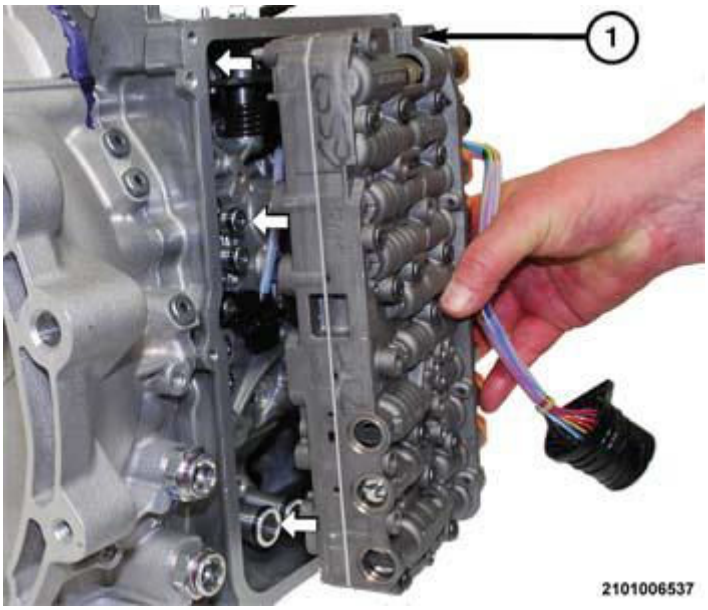

Fig. 193: Aligning Valve Body To Fluid Transfer Tubes
Courtesy of CHRYSLER GROUP, LLC

91. Turn the valve body (1) over and align the valve body (1) with the fluid transfer tubes.

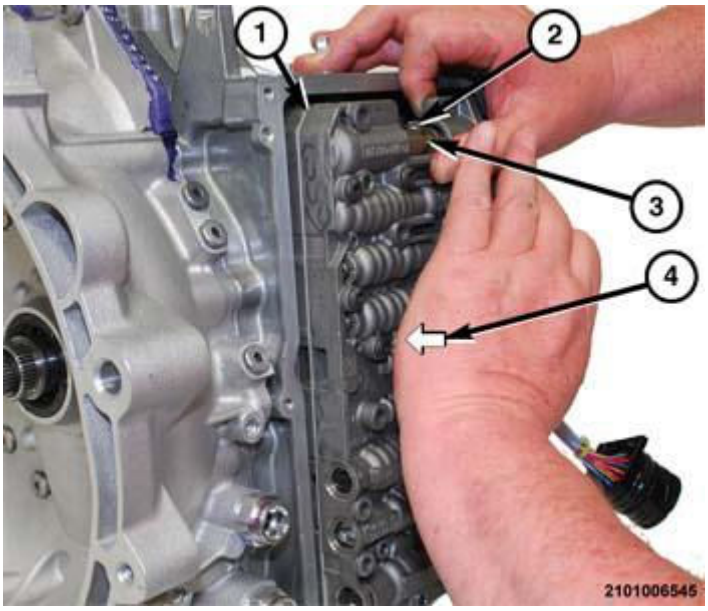

Fig. 194: Engaging Valve Body To Fluid Transfer Tubes
Courtesy of CHRYSLER GROUP, LLC

92. Guide the manual lever cam (2) into the slot (3) on the manual valve.
93. Firmly press (4) the valve body (1) inward until the O-rings on the fluid transfer adapters engage into receptacle holes on the valve body.

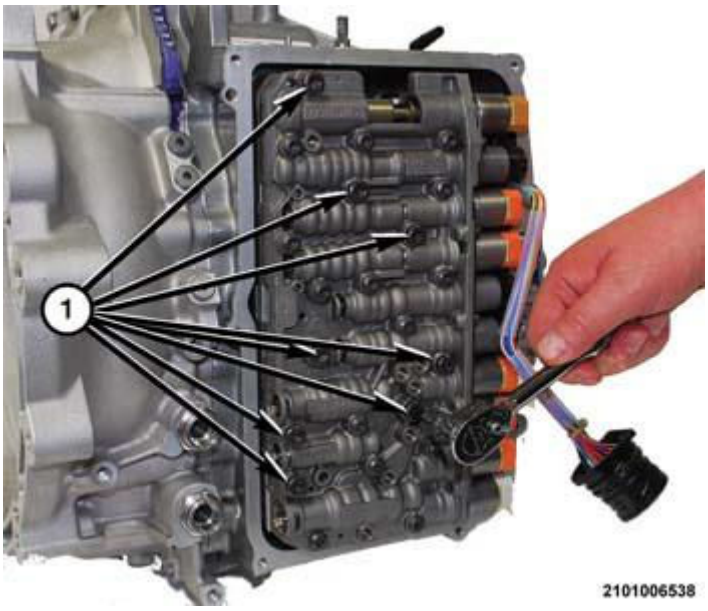

Fig. 195: Valve Body Bolts
Courtesy of CHRYSLER GROUP, LLC

94. Install the valve body bolts (1) to hold the valve body to the transmission housing and tighten to the proper specifications. Refer to **SPECIFICATIONS**.

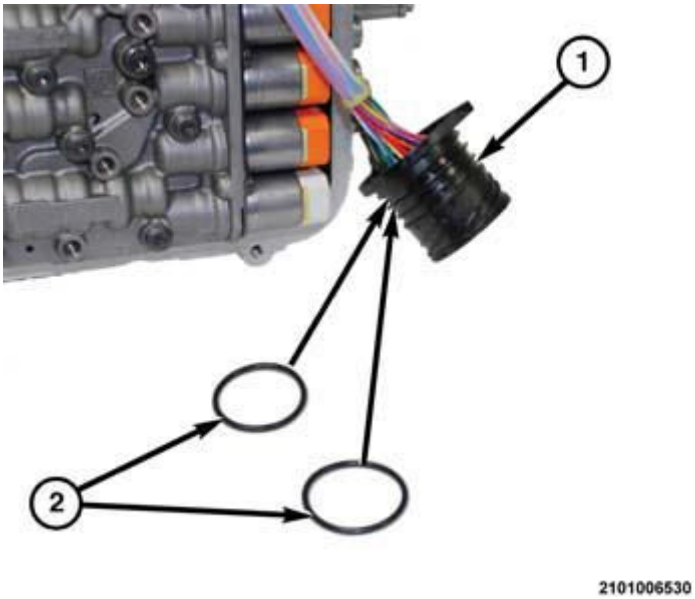

Fig. 196: Valve Body Solenoid Wire Harness Connector Socket O-Ring Seals
Courtesy of CHRYSLER GROUP, LLC

95. Install NEW O-ring seals (2) on the wire connector socket (1).

NOTE: **A light coating of assembly lube can be applied to the O-ring seals (2) to ease installation.**

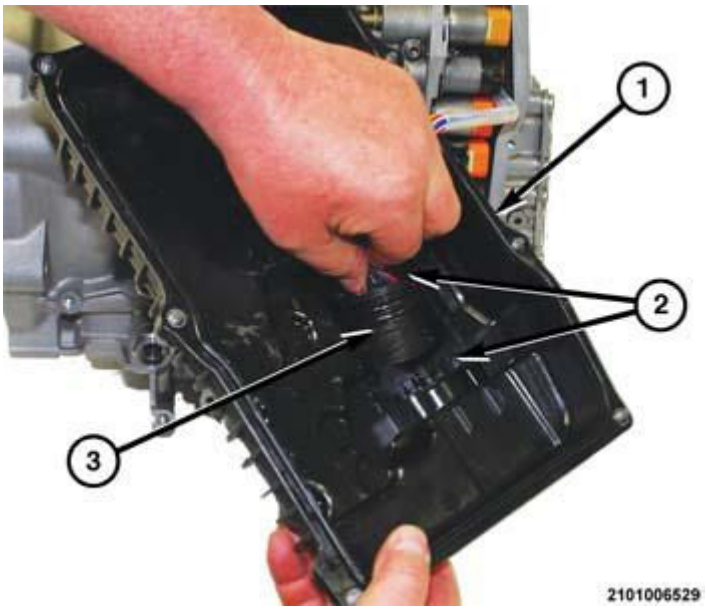

Fig. 197: Valve Body Cover Pan & Wire Connector Socket
Courtesy of CHRYSLER GROUP, LLC

96. Place the valve body cover pan (1) in position on the transmission.
97. Insert the wire connector socket (3) into the opening on the inside of valve body cover pan (1) with the flat side (2) of the socket on the left.

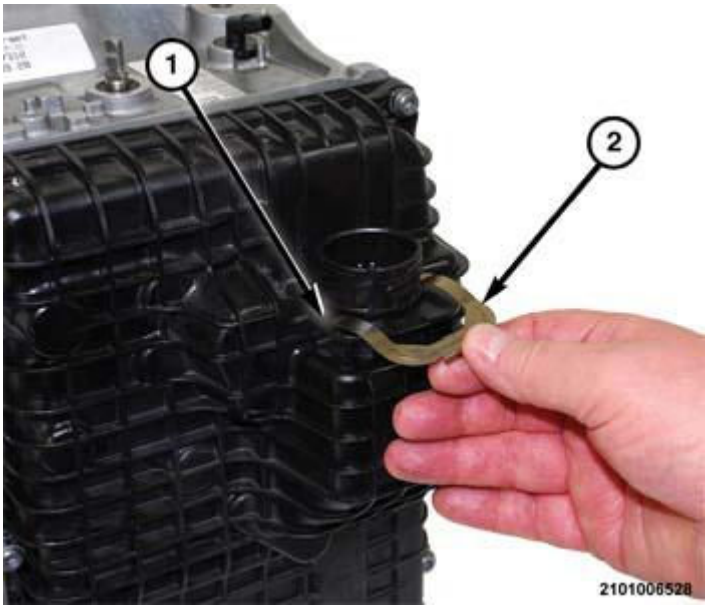

Fig. 198: Wire Connector Socket Clip
Courtesy of CHRYSLER GROUP, LLC

98. Press the wire connector socket inward until the retainer clip groove (1) is exposed on the outside of the valve body cover pan (1).
99. Install the clip (2) to hold the wire connector socket in the valve body cover pan.

Fig. 199: Valve Body Cover Pan Gasket Seal
Courtesy of CHRYSLER GROUP, LLC

100. Install a NEW gasket seal (1) in the groove around the sealing surface of the valve body cover pan (2).

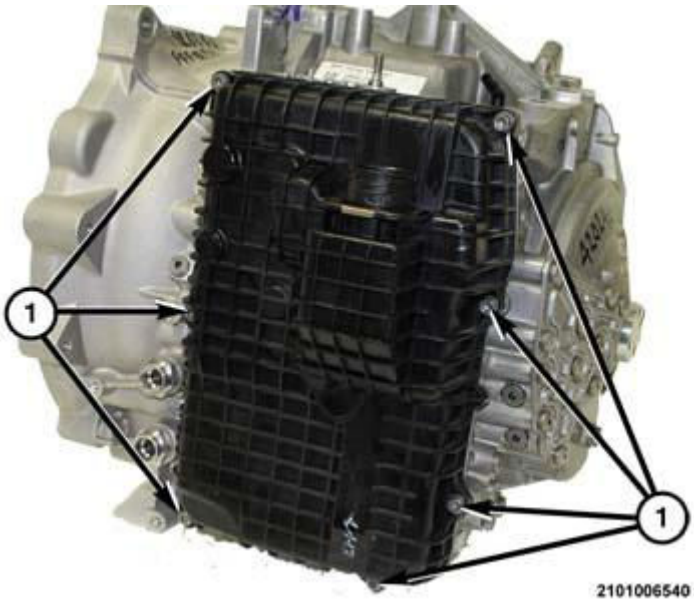

Fig. 200: Valve Body Cover Pan Bolts
Courtesy of CHRYSLER GROUP, LLC

101. Place the valve body cover pan gasket against the sealing surface of the transmission housing.
102. Install the valve body cover pan bolts (1) to hold the valve body cover pan to the transmission housing and tighten to the proper specifications. Refer to **SPECIFICATIONS**.
103. Install the transmission in the vehicle Refer to **INSTALLATION**.

.

104. Road test the vehicle to verify the repair.

INSTALLATION

FWD

WARNING: Hoisting and jack lift points provided in this service information are for a complete vehicle. When the transaxle is removed, the center of gravity will shift to the rear of the vehicle, possibly creating an unstable condition. Place safety stands under the rear frame rails behind the rear axle to stabilize the vehicle. Personal injury may result if safety stands are not used.

NOTE: If equipped with a 2.4L, be sure that the upper starter bolt is inserted into the proper hole in the transmission prior to mating transmission to block.

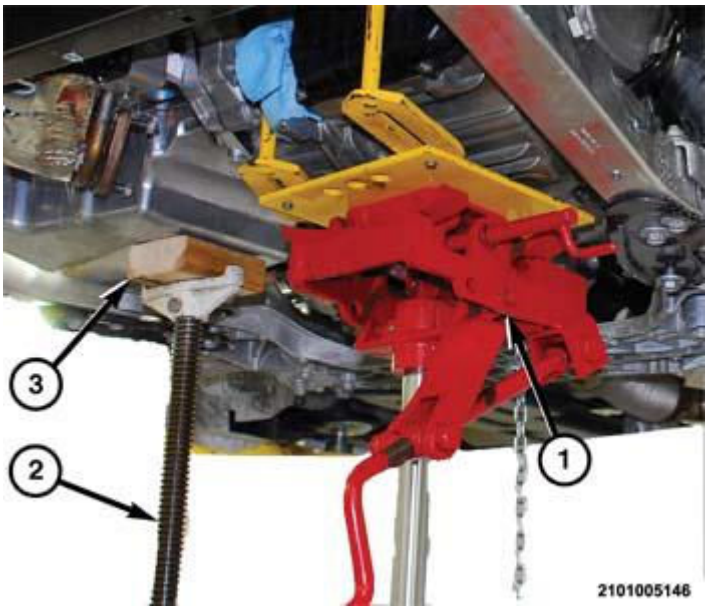

Fig. 201: Wooden Block Used To Protect Engine Oil Pan
Courtesy of CHRYSLER GROUP, LLC

1. While guiding the transmission past obstacles, jack (1) the transmission upward until the engine and the transmission are in line.
2. Push the bell housing against the engine block until the guide pins engage.

Fig. 202: Removing/Installing Transmission Bellhousing Bolts
Courtesy of CHRYSLER GROUP, LLC

3. Install the bolt (1) to hold the engine oil pan and exhaust bracket to the bellhousing. Refer to **SPECIFICATIONS**.
4. Install the bolts (1) to hold the engine block and oil pan to the bellhousing in position on behind the exhaust maniverter. Refer to **SPECIFICATIONS**.

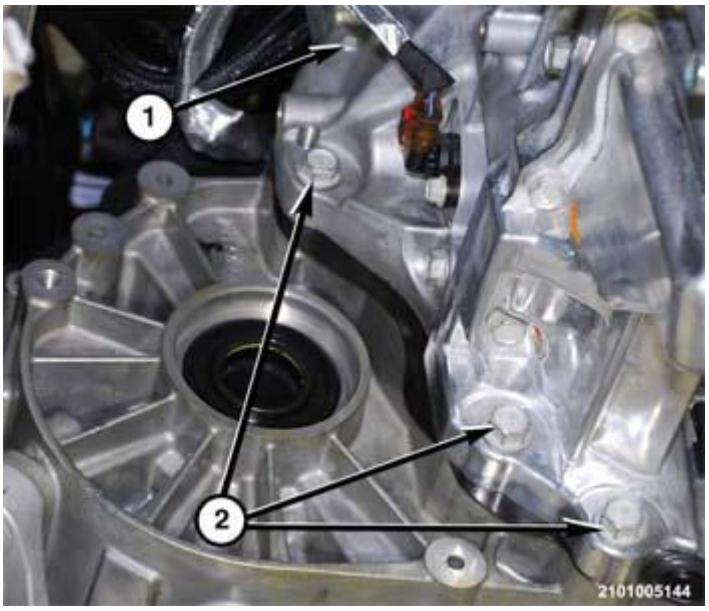

Fig. 203: Transmission Bellhousing Bolts Above The Differential Housing
Courtesy of CHRYSLER GROUP, LLC

5. Install the bolts (2) to hold the engine block and oil pan to the bellhousing next to the differential housing. Refer to **SPECIFICATIONS**.

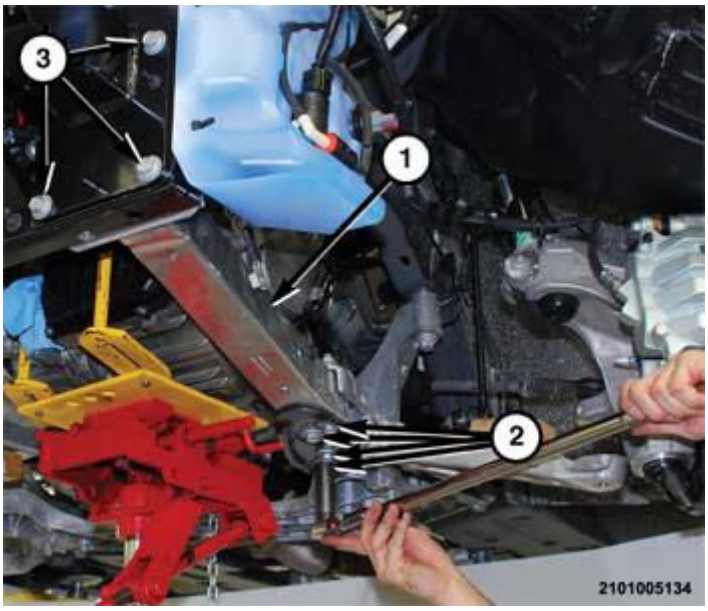

Fig. 204: Load Beam Bolts
Courtesy of CHRYSLER GROUP, LLC

NOTE: Shown in illustration with fascia removed for clarity.

6. Place the load beam (1) in position on the vehicle.
7. Install the bolts (3) to hold the front of the load beam (1) to the radiator support panel.
8. Install the bolts (2) to hold the rear end of the load beam (1) to the suspension cradle.

Fig. 205: Rear Transmission Mount
Courtesy of CHRYSLER GROUP, LLC

9. Push the rear transmission mount forward until the bolt holes line up.
10. Install the through bolt (2) to hold the rear transmission mount to the adapter block on the transmission bellhousing. Refer to **SPECIFICATIONS**.
11. Install the through bolt (1) to hold the rear transmission mount to the suspension cradle. Refer to **SPECIFICATIONS**.

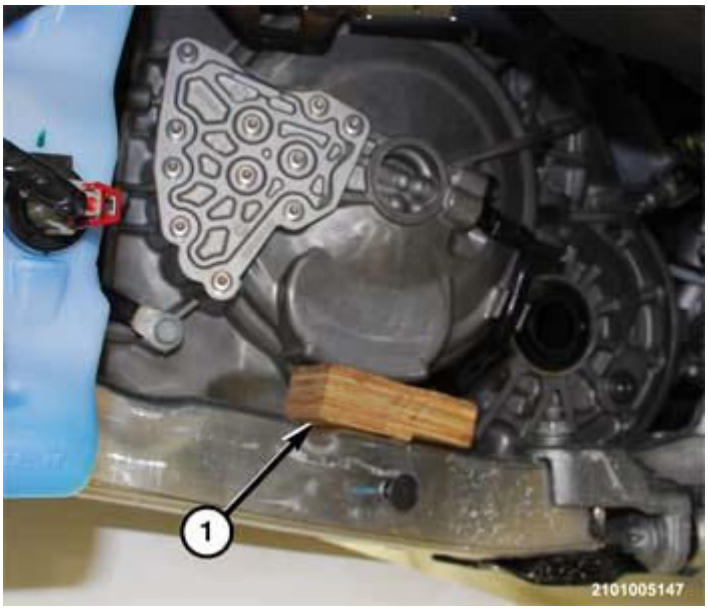

Fig. 206: Wooden Block Placed Between Transmission And Frame Rail
Courtesy of CHRYSLER GROUP, LLC

12. Place a wooden block (1) between the load beam and the transmission end cover.

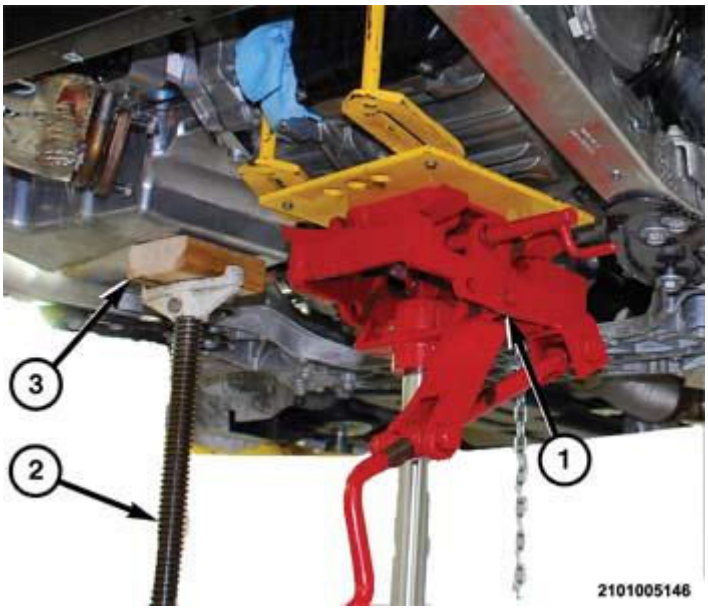

Fig. 207: Wooden Block Used To Protect Engine Oil Pan

Courtesy of CHRYSLER GROUP, LLC

13. Remove the safety chain holding the transmission to the transmission jack lift plate.
14. Lower the high stand (2) and the transmission jack (1) until the transmission rests on the wooden block.
15. Remove the high stand (2) and transmission jack (1) from under the vehicle.

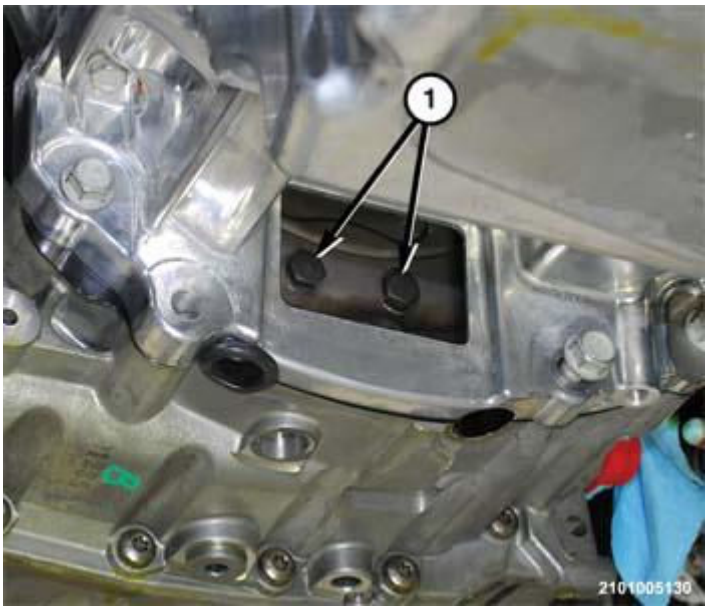

Fig. 208: Torque Converter Bolts
Courtesy of CHRYSLER GROUP, LLC

CAUTION: It is essential that correct length bolts be used to attach the converter to the driveplate. Failure to follow this caution may result in transmission damage.

16. Through the access door opening, Install **new** bolts (1) to hold the flexplate to the torque converter, Rotate the crankshaft to bring each set of bolts into view through the access door. Refer to **SPECIFICATIONS**.

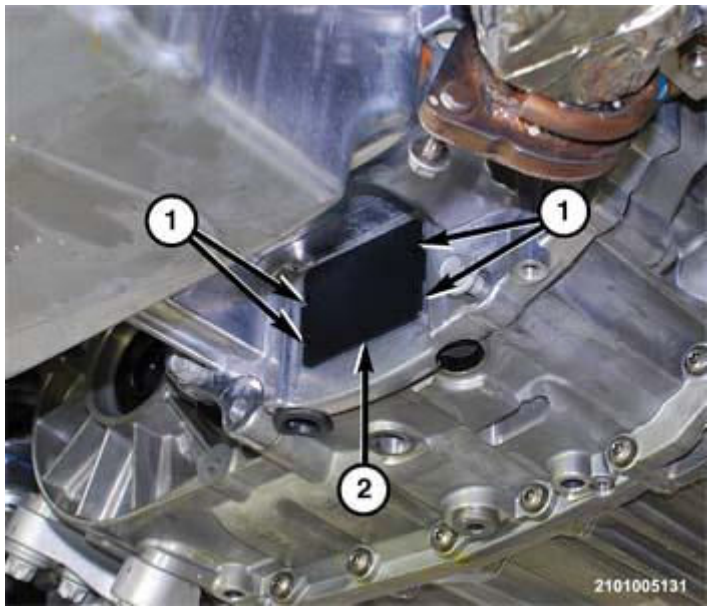

Fig. 209: Bellhousing Access Door
Courtesy of CHRYSLER GROUP, LLC

17. Install the access door in the splash shield on the bellhousing.
18. Install the front exhaust pipe. Refer to **PIPE, EXHAUST CROSSUNDER, INSTALLATION** .

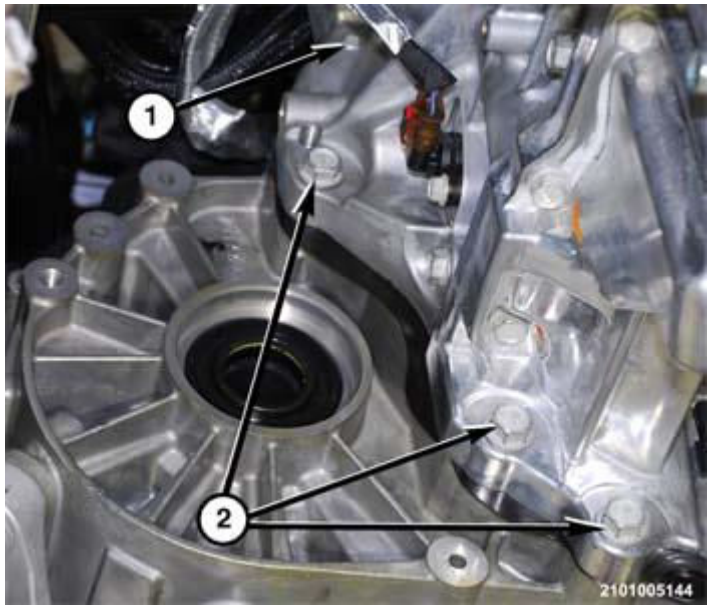

Fig. 210: Transmission Bellhousing Bolts Above The Differential Housing
Courtesy of CHRYSLER GROUP, LLC

19. Install the bolt (1) to hold the transmission bellhousing to the engine block above the differential housing. Refer to **SPECIFICATIONS**.

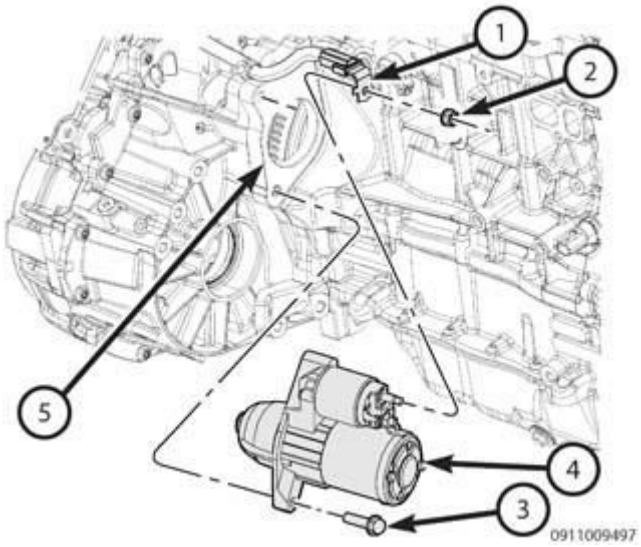

Fig. 211: Removing/Installing Starter
Courtesy of CHRYSLER GROUP, LLC

20. If equipped with a 2.4L, install the bolt (3) to hold the starter (4) to the transmission bellhousing. Refer to **SPECIFICATIONS** .

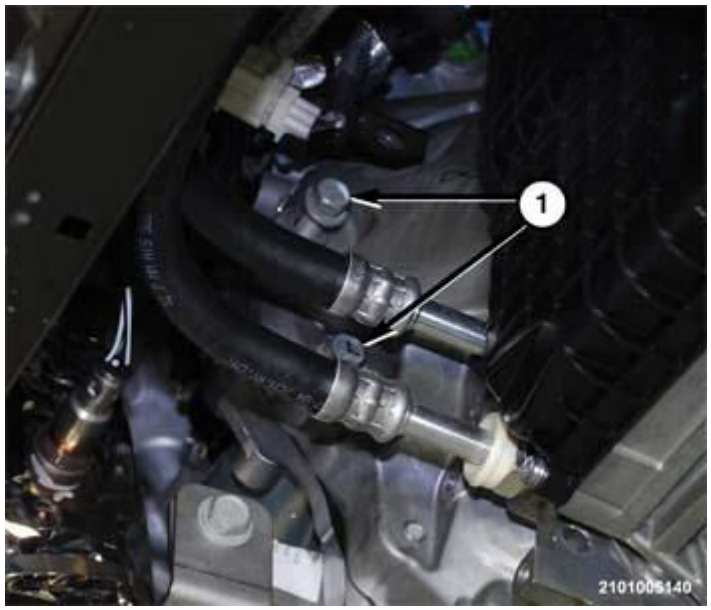

Fig. 212: Starter Bolts (3.2L)
Courtesy of CHRYSLER GROUP, LLC

21. If equipped with a 3.2L, install the starter bolts (1) and tighten to the proper specification. Refer to **SPECIFICATIONS** .

Fig. 213: Transmission Cooler Lines
Courtesy of CHRYSLER GROUP, LLC

22. Guide the cooler lines in position on the transmission.
23. Engage the quick couplings to hold the cooler lines to the transmission.
24. Install the left and right half shafts. Refer to **INSTALLATION** .
25. Remove the safety stands under the rear frame rails behind the rear axle and lower the vehicle.

Fig. 214: Upper Bellhousing Bolts
Courtesy of CHRYSLER GROUP, LLC

26. Install upper bolts (1) to hold the transmission bellhousing to the engine block located behind the main

engine wire harness. Refer to **SPECIFICATIONS**.

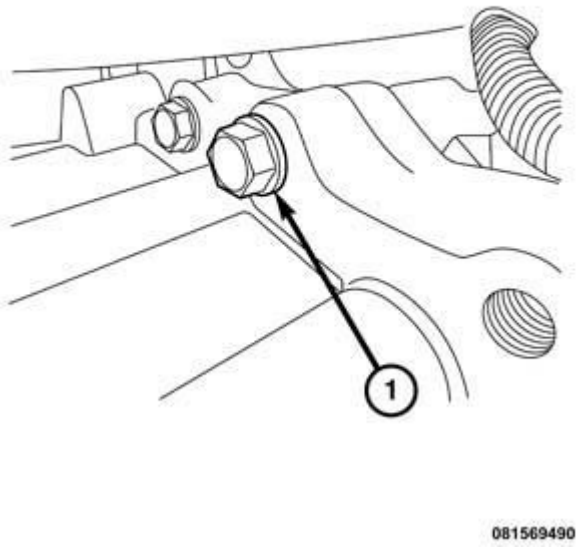

Fig. 215: Upper Starter Bolt
Courtesy of CHRYSLER GROUP, LLC

27. If equipped with a 2.4L, tighten the upper starter bolt (1). Refer to **SPECIFICATIONS** .

Fig. 216: Wire Harness Bracket & Bellhousing Bolt
Courtesy of CHRYSLER GROUP, LLC

28. Install the upper bolt (1) to hold the wire harness bracket and transmission bellhousing to the engine block. Refer to **SPECIFICATIONS**.

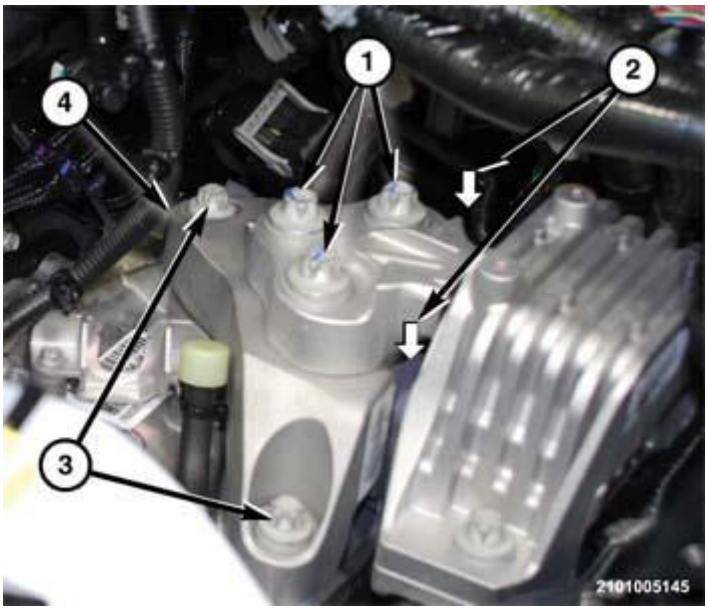

Fig. 217: Upper Transmission Mount Bolts
Courtesy of CHRYSLER GROUP, LLC

29. Place the transmission mount adaptor block (4) in position on the transmission.
30. Install the bolts (3) and hidden bolts (2) to hold the transmission mount adaptor block (4) to the transmission. Refer to **SPECIFICATIONS**.

Fig. 218: Transmission End Cover Ground Cable
Courtesy of CHRYSLER GROUP, LLC

31. Place the ground cable (1) in position on the transmission.
32. Install the bolt (1) to hold the ground cable to the transmission end cover. Refer to **SPECIFICATIONS**.
33. Position a floor jack under the transmission.
34. Raise the transmission until the wood block is free to be removed.

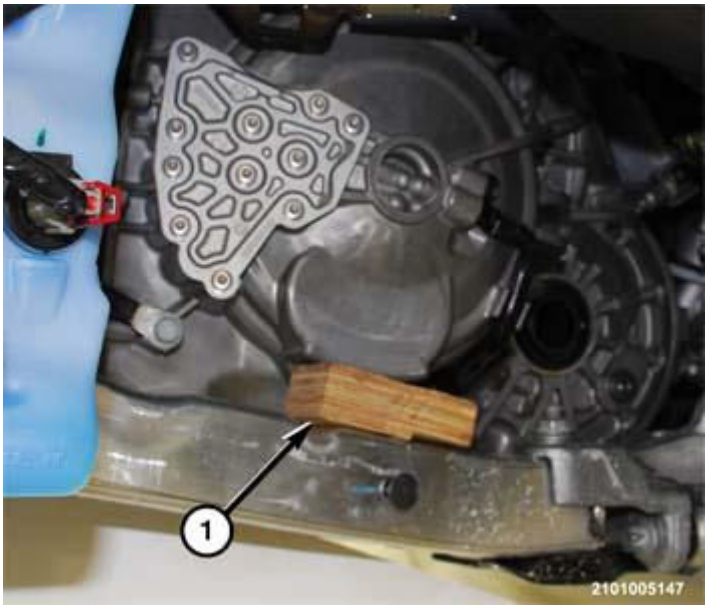

Fig. 219: Wooden Block Placed Between Transmission And Frame Rail
Courtesy of CHRYSLER GROUP, LLC

35. Remove the wooden block (1) from between the transmission end cover and the frame rail load beam.

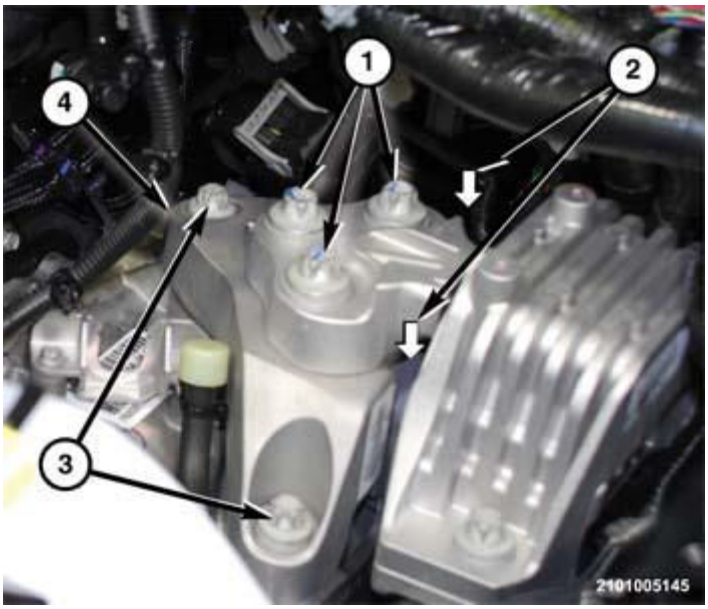

Fig. 220: Upper Transmission Mount Bolts
Courtesy of CHRYSLER GROUP, LLC

36. Install the bolts (1) to hold the upper transmission mount to the adaptor block (4). Refer to **SPECIFICATIONS**.
37. Lower and remove the floor jack.

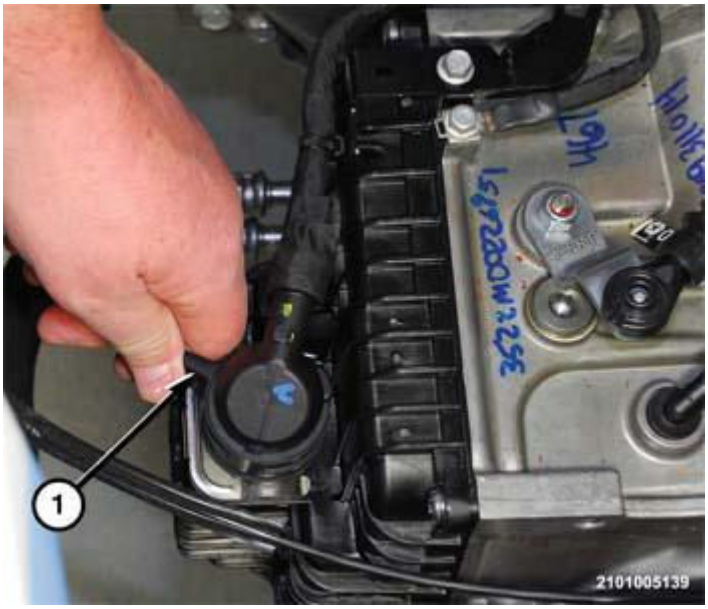

Fig. 221: Transmission Valve Body Solenoid Connector
Courtesy of CHRYSLER GROUP, LLC

38. Engage the transmission solenoid connector (2) into transmission connector.
39. Rotate the lock lever (2) clockwise on the transmission solenoid connector.

Fig. 222: View Of Shift Cable Housing & Mount Bracket
Courtesy of CHRYSLER GROUP, LLC

40. Place the shift cable (2) in position on the mount bracket (2).
41. Press the shift cable housing (2) into the mount bracket (1) on the transmission.

Fig. 223: View Of Ground Cable & Shift Cable
Courtesy of CHRYSLER GROUP, LLC

42. Snap the shift cable end (2) in position on the manual lever on the transmission.

Fig. 224: Ground Cable At Top Transmission
Courtesy of CHRYSLER GROUP, LLC

43. Place the ground cable (1) in position on the transmission.

44. Install the bolt (1) to hold the ground cable to the top of the transmission. Refer to **SPECIFICATIONS**.

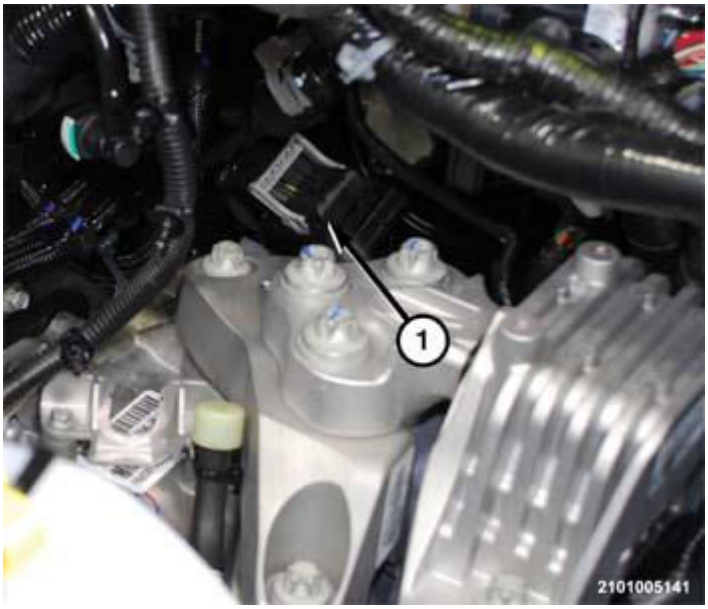

Fig. 225: Identifying Wire Connector Lock To TCM
Courtesy of CHRYSLER GROUP, LLC

45. Engage the wire connector (1) into the TCM connector.
46. Close the lock on the TCM connector (1).
47. Place the vacuum pump in position on the mount bracket. Refer to **PUMP, VACUUM, INSTALLATION** .
48. Install the nuts to hold the vacuum pump to the mount bracket.
49. Connect the wire connector onto the vacuum pump.
50. Connect the vacuum line onto the vacuum pump.
51. Install the battery tray. Refer to **TRAY, BATTERY, INSTALLATION** .
52. Install the power distribution center. Refer to **CENTER, POWER DISTRIBUTION (PDC), INSTALLATION** .
53. Engage the wire connector into the main engine harness on the front of the battery tray.
54. Engage the lock lever on the wire connector.
55. Install the PCM. Refer to **MODULE, POWERTRAIN CONTROL, INSTALLATION** .
56. Raise the vehicle.
57. Fill the transmission to the proper level with the specified fluid.
58. Install the belly pan. Refer to **BELLY PAN, INSTALLATION** .
59. Install new rivets at the lower outboard front fascia to right front splash shield.
60. Install the left front fender splash shield. Refer to **SHIELD, SPLASH, FRONT WHEELHOUSE, INSTALLATION** .
61. Install the front wheels. Refer to **INSTALLATION** .

62. Lower the vehicle.
63. Install the battery. Refer to **BATTERY, INSTALLATION** .
64. If transmission is replaced, program the Vehicle Identification Number (VIN) into the Transmission Control Module (TCM).

NOTE: **Note; only perform the Valve Body Solenoid Learn procedure if the valve body and/or the TCM was replaced during a repair. Do not perform this procedure if the repair did not require the valve body and/or TCM to be replaced. Do not perform this procedure if the transmission is being replaced.**

65. If valve body or the TCM was replaced, perform Valve Body Solenoid Learn procedure.
66. If transmission is replaced or internal repairs were made, perform Transmission Verification Test-948TE. Refer to **STANDARD PROCEDURE** .
67. Road test the vehicle to verify the repair.

AWD / 4WD

WARNING: **Hoisting and jack lift points provided in this service information are for a complete vehicle. When the transaxle is removed, the center of gravity will shift to the rear of the vehicle, possibly creating an unstable condition. Place safety stands under the rear frame rails behind the rear axle to stabilize the vehicle. Personal injury may result if safety stands are not used.**

NOTE: **If equipped with a 2.4L, be sure that the upper starter bolt is inserted into the proper hole in the transmission prior to mating transmission to block.**

1. While guiding the transmission past obstacles, jack (1) the transmission upward until the engine and the transmission are in line.
2. Push the bell housing against the engine block until the guide pins engage.

Fig. 226: Removing/Installing Transmission Bellhousing Bolts
Courtesy of CHRYSLER GROUP, LLC

3. Install the bolt (1) to hold the engine oil pan and exhaust bracket to the bellhousing. Refer to **SPECIFICATIONS**.
4. Install the bolts (1) to hold the engine block and oil pan to the bellhousing in position on behind the exhaust maniverter. Refer to **SPECIFICATIONS**.
5. Install the bolts to hold the engine block and oil pan to the bellhousing next to the differential housing. Refer to **SPECIFICATIONS**.

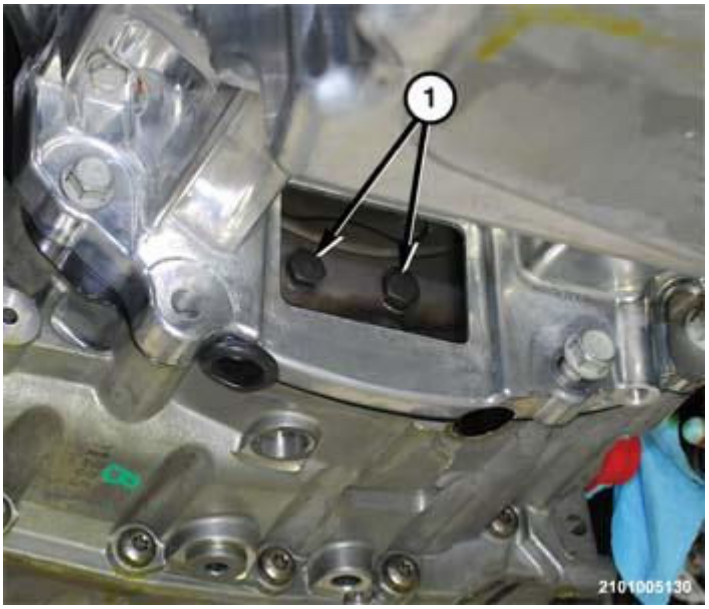

Fig. 227: Torque Converter Bolts
Courtesy of CHRYSLER GROUP, LLC

CAUTION: It is essential that correct length bolts be used to attach the converter to the driveplate. Failure to follow this caution may result in transmission damage.

6. Through the access door opening, Install **new** bolts (1) to hold the flexplate to the torque converter, Rotate the crankshaft to bring each set of bolts into view through the access door. Refer to **SPECIFICATIONS**.

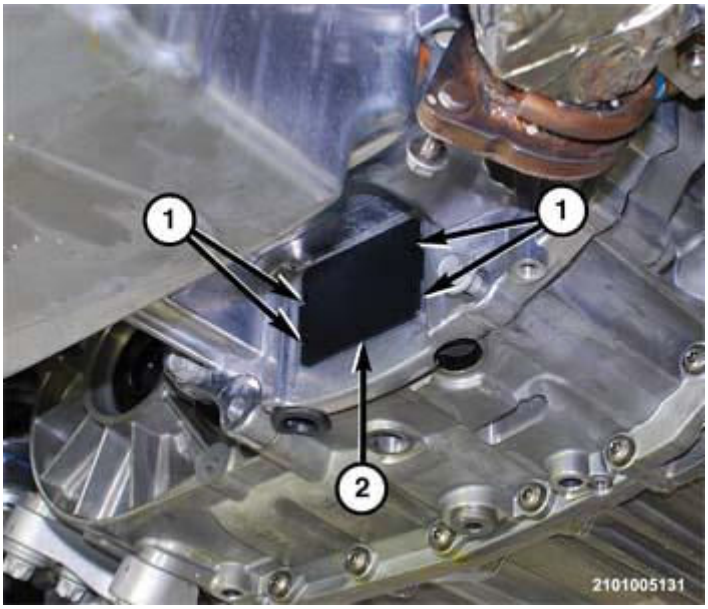

Fig. 228: Bellhousing Access Door
Courtesy of CHRYSLER GROUP, LLC

7. Install the access door in the splash shield on the bellhousing.

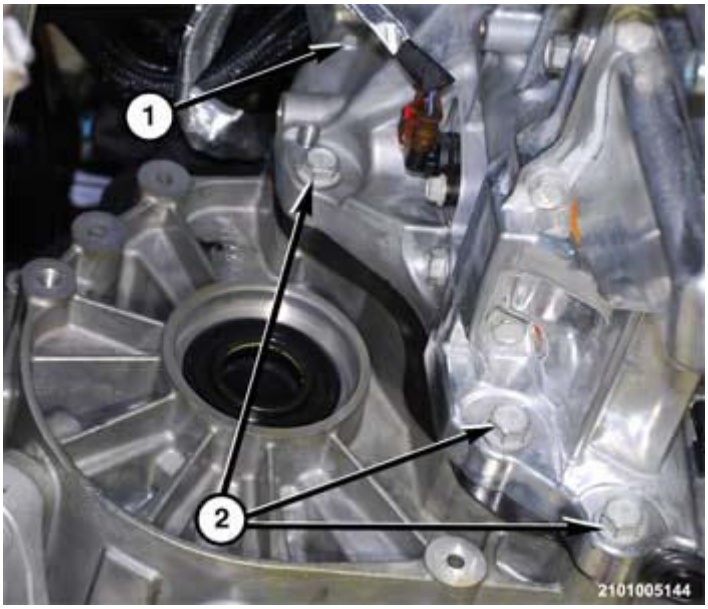

Fig. 229: Transmission Bellhousing Bolts Above The Differential Housing
Courtesy of CHRYSLER GROUP, LLC

8. Install the bolt (1) to hold the transmission bellhousing to the engine block above the differential housing. Refer to **SPECIFICATIONS**.

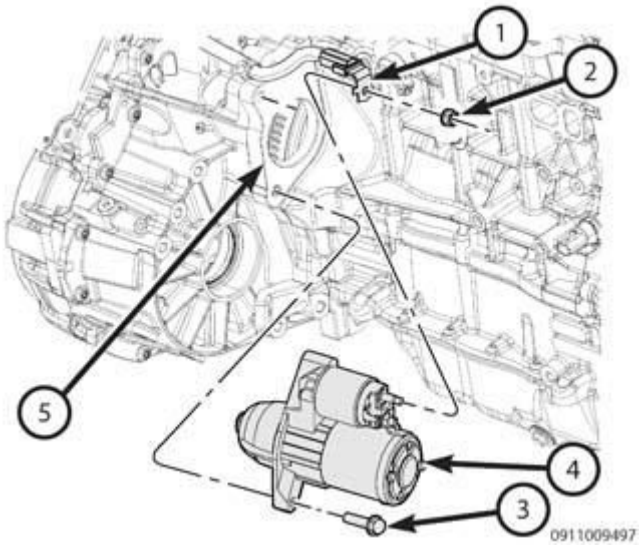

Fig. 230: Removing/Installing Starter
Courtesy of CHRYSLER GROUP, LLC

9. If equipped with a 2.4L, install the bolt (3) to hold the starter (4) to the transmission bellhousing. Refer to **SPECIFICATIONS** .

Fig. 231: Starter Bolts (3.2L)
Courtesy of CHRYSLER GROUP, LLC

10. If equipped with a 3.2L, install the starter bolts (1) and tighten to the proper specification. Refer to **SPECIFICATIONS** .
11. Install the power transfer unit (PTU). Refer to **INSTALLATION** .

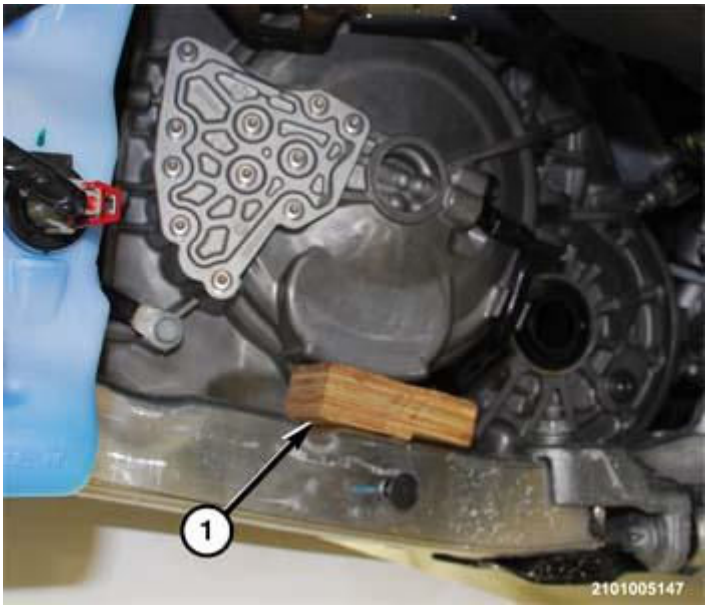

Fig. 232: Wooden Block Placed Between Transmission And Frame Rail
Courtesy of CHRYSLER GROUP, LLC

12. Insert a wood block (1) between the load beam and the transmission.

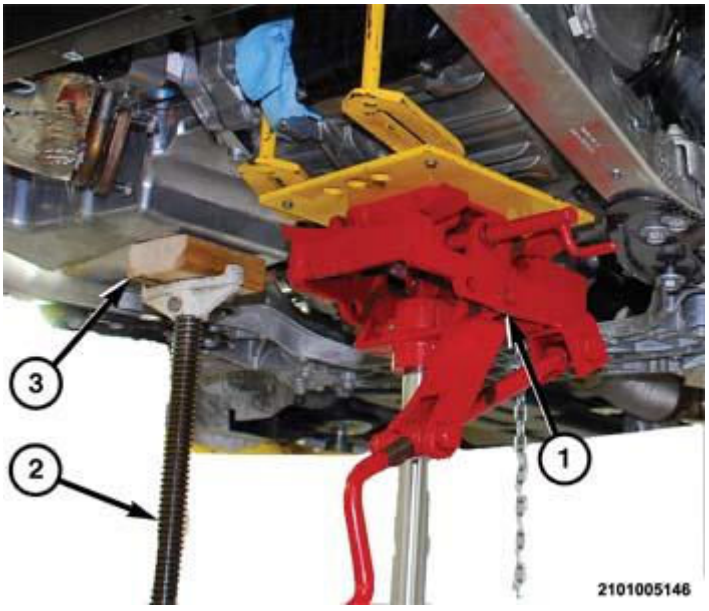

Fig. 233: Wooden Block Used To Protect Engine Oil Pan
Courtesy of CHRYSLER GROUP, LLC

13. Remove the safety chain holding the transmission to the transmission jack lift plate.

14. Lower the high stand (2) and the transmission jack (1) until the transmission rests on the wooden block.
15. Remove the high stand (2) and transmission jack (1) from under the vehicle.

Fig. 234: Transmission Cooler Lines
Courtesy of CHRYSLER GROUP, LLC

16. Guide the cooler lines in position on the transmission.
17. Engage the quick couplings to hold the cooler lines to the transmission.
18. Install the left and right half shafts. Refer to **INSTALLATION** .
19. Remove the safety stands under the rear frame rails behind the rear axle and lower the vehicle.

Fig. 235: Upper Bellhousing Bolts

Courtesy of CHRYSLER GROUP, LLC

20. Install upper bolts (1) to hold the transmission bellhousing to the engine block located behind the main engine wire harness. Refer to **SPECIFICATIONS**.

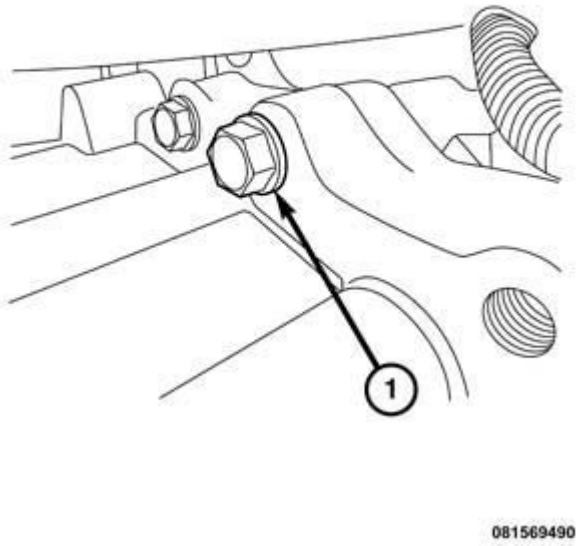

Fig. 236: Upper Starter Bolt
Courtesy of CHRYSLER GROUP, LLC

21. If equipped with a 2.4L, tighten the upper starter bolt. Refer to **SPECIFICATIONS** .

Fig. 237: Wire Harness Bracket & Bellhousing Bolt
Courtesy of CHRYSLER GROUP, LLC

22. Install the upper bolt (1) to hold the wire harness bracket and transmission bellhousing to the engine block. Refer to **SPECIFICATIONS**.

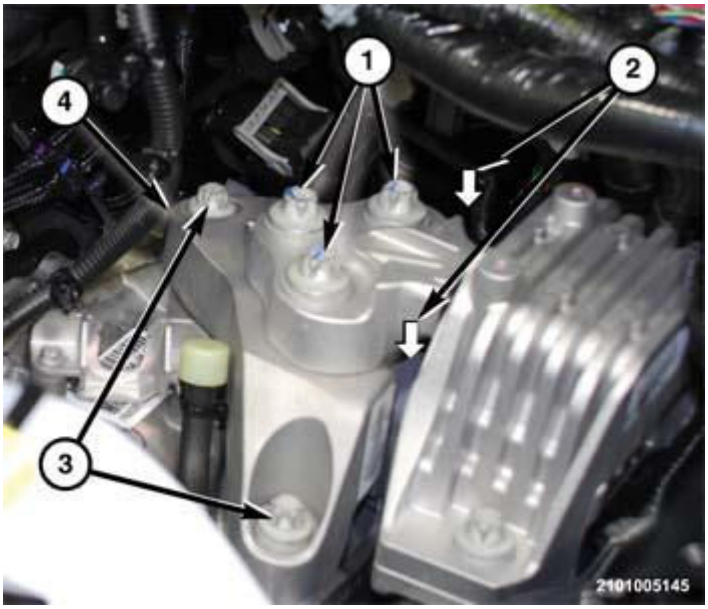

Fig. 238: Upper Transmission Mount Bolts
Courtesy of CHRYSLER GROUP, LLC

23. Place the transmission mount adaptor block (4) in position on the transmission.
24. Install the bolts (3) and hidden bolts (2) to hold the transmission mount adaptor block (4) to the transmission. Refer to **SPECIFICATIONS**.
25. Place the ground cable (1) in position on the transmission.
26. Install the bolt (1) to hold the ground cable to the transmission end cover. Refer to **SPECIFICATIONS**.
27. Position a floor jack under the transmission.
28. Raise the transmission until the wood block is free to be removed.

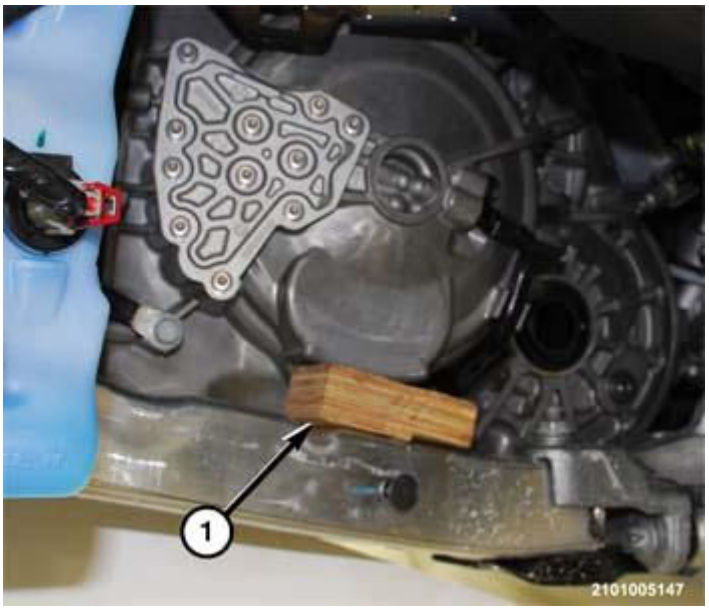

Fig. 239: Wooden Block Placed Between Transmission And Frame Rail
Courtesy of CHRYSLER GROUP, LLC

29. Remove the wooden block (1) from between the transmission end cover and the frame rail load beam.

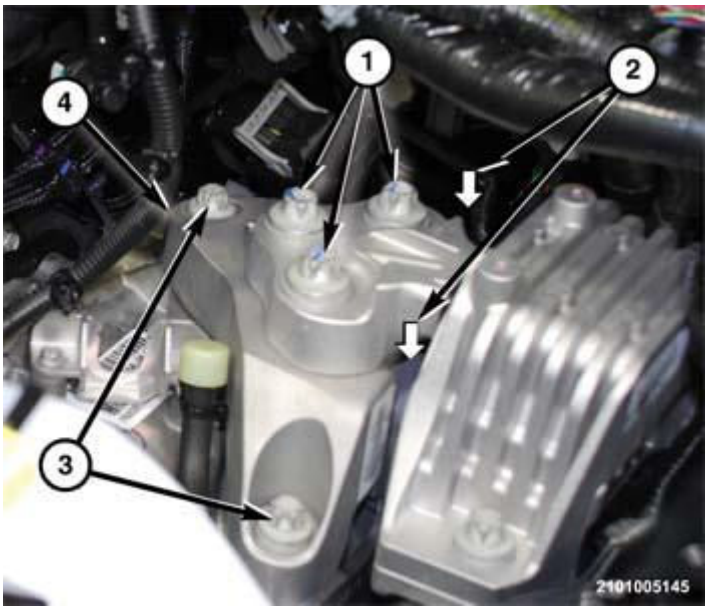

Fig. 240: Upper Transmission Mount Bolts
Courtesy of CHRYSLER GROUP, LLC

30. Install the bolts (1) to hold the upper transmission mount to the adaptor block (4). Refer to **SPECIFICATIONS**.
31. Lower and remove the floor jack.

Fig. 241: Transmission Valve Body Solenoid Connector
Courtesy of CHRYSLER GROUP, LLC

32. Engage the transmission solenoid connector (2) into transmission connector.
33. Rotate the lock lever (2) clockwise on the transmission solenoid connector.

Fig. 242: View Of Shift Cable Housing & Mount Bracket
Courtesy of CHRYSLER GROUP, LLC

34. Place the shift cable (2) in position on the mount bracket (2).
35. Press the shift cable housing (2) into the mount bracket (1) on the transmission.

Fig. 243: View Of Ground Cable & Shift Cable
Courtesy of CHRYSLER GROUP, LLC

36. Snap the shift cable end (2) in position on the manual lever on the transmission.

Fig. 244: Ground Cable At Top Transmission
Courtesy of CHRYSLER GROUP, LLC

37. Place the ground cable (1) in position on the transmission.
38. Install the bolt (1) to hold the ground cable to the top of the transmission. Refer to **SPECIFICATIONS**.

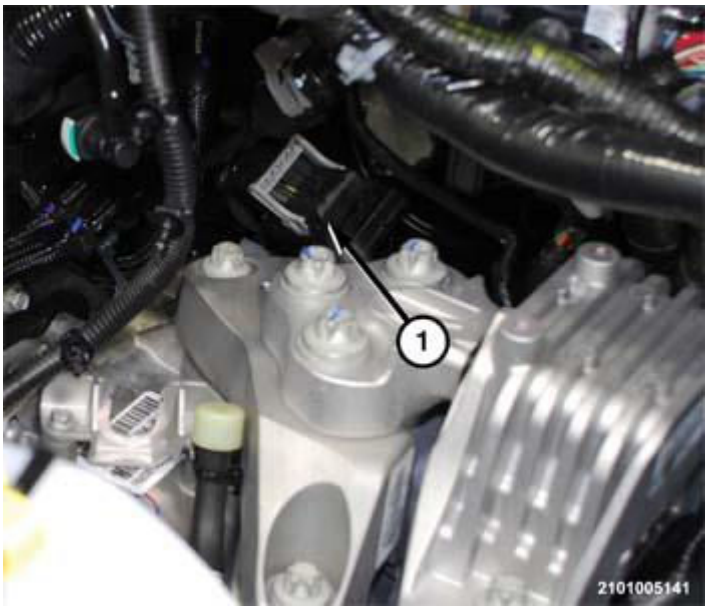

Fig. 245: Identifying Wire Connector Lock To TCM
Courtesy of CHRYSLER GROUP, LLC

39. Engage the wire connector (1) into the TCM connector.
40. Close the lock on the TCM connector (1).
41. If equipped with a 3.2L, place the vacuum pump in position on the mount bracket. Refer to **PUMP, VACUUM, INSTALLATION** .
42. For 3.2L install the nuts to hold the vacuum pump to the mount bracket.
43. For 3.2L connect the wire connector onto the vacuum pump.
44. For 3.2L connect the vacuum line onto the vacuum pump.
45. If equipped with a 2.4L, install the intake manifold. Refer to **MANIFOLD, INTAKE, INSTALLATION** .
46. Install the battery tray Refer to **TRAY, BATTERY, INSTALLATION** .
47. Install the power distribution center. Refer to **CENTER, POWER DISTRIBUTION (PDC), INSTALLATION** .
48. Install the PCM. Refer to **MODULE, POWERTRAIN CONTROL, INSTALLATION** .
49. Engage the connectors on the PCM.
50. Raise the vehicle.
51. Fill the transmission to the proper level with the specified fluid.
52. Install the belly pan. Refer to **BELLY PAN, INSTALLATION** .
53. Install new rivets at the lower outboard front fascia to wheel well liners.
54. Install the front wheels. Refer to **INSTALLATION** .
55. Lower the vehicle.
56. Install the battery. Refer to **BATTERY, INSTALLATION** .
57. If transmission is replaced, program the Vehicle Identification Number (VIN) into the Transmission

Control Module (TCM).

NOTE: **Note; only perform the Valve Body Solenoid Learn procedure if the valve body and/or the TCM was replaced during a repair. Do not perform this procedure if the repair did not require the valve body and/or TCM to be replaced. Do not perform this procedure if the transmission is being replaced.**

58. If valve body or the TCM was replaced, perform Valve Body Solenoid Learn procedure.
59. If transmission is replaced or internal repairs were made, perform Transmission Verification Test-948TE. Refer to **STANDARD PROCEDURE** .
60. Road test the vehicle to verify the repair.

SPECIAL TOOLS

SPECIAL TOOLS

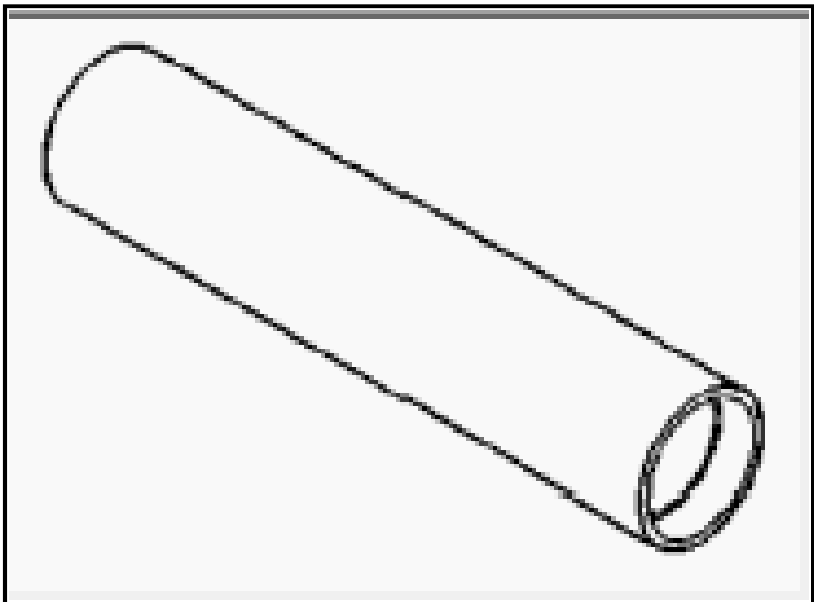	6052 - Installer, Bearing/Seal (Originally Shipped In Kit Number(s) 6303, 6672, 8853.)
	6888 - Installer, Seal (Originally Shipped In Kit Number(s) 6894, 6895, 6896, 6898, 9720-SUP.)

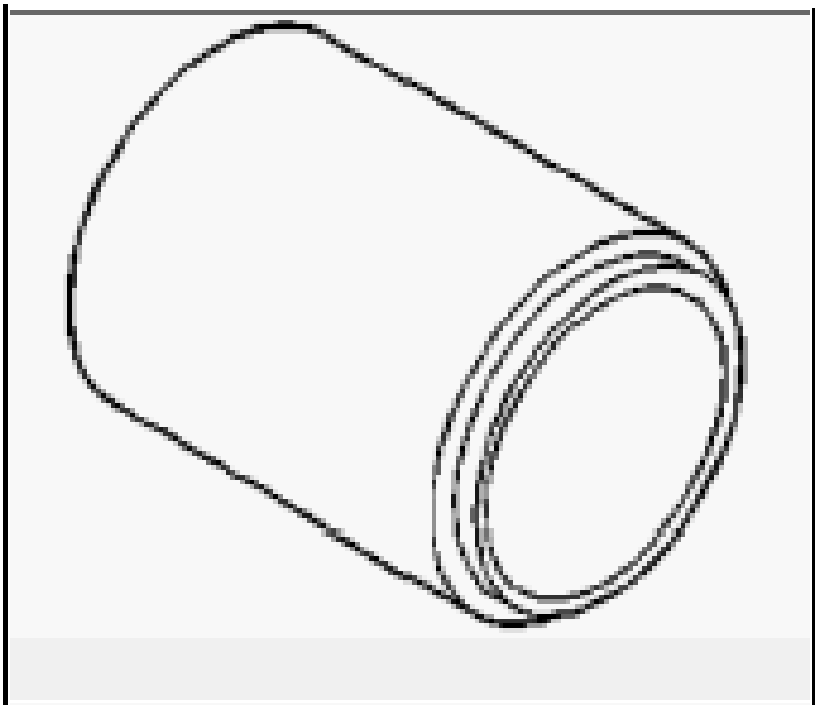

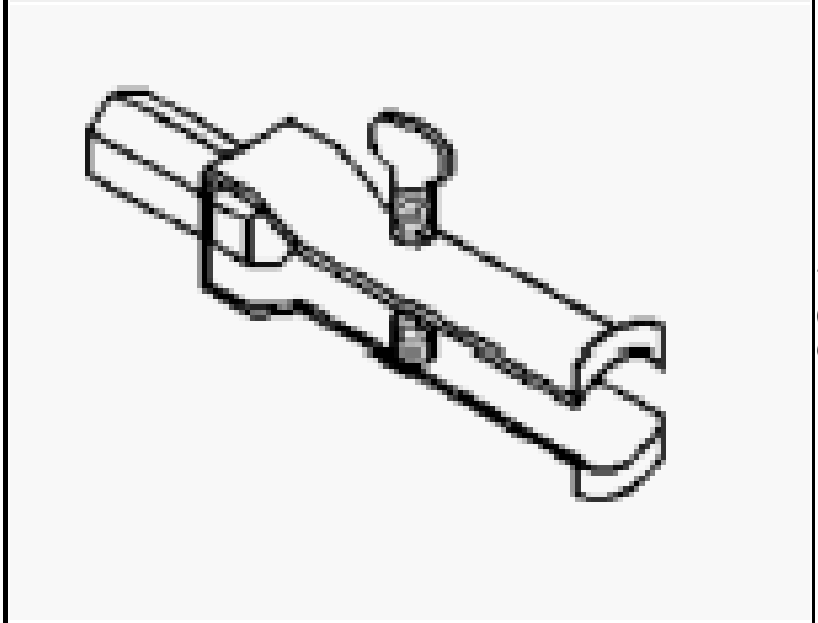

7794-A - Remover, Seal
(Originally Shipped In Kit Number(s) 6645.)

8148 - Cup
(Originally Shipped In Kit Number(s) 8104, 9975.)

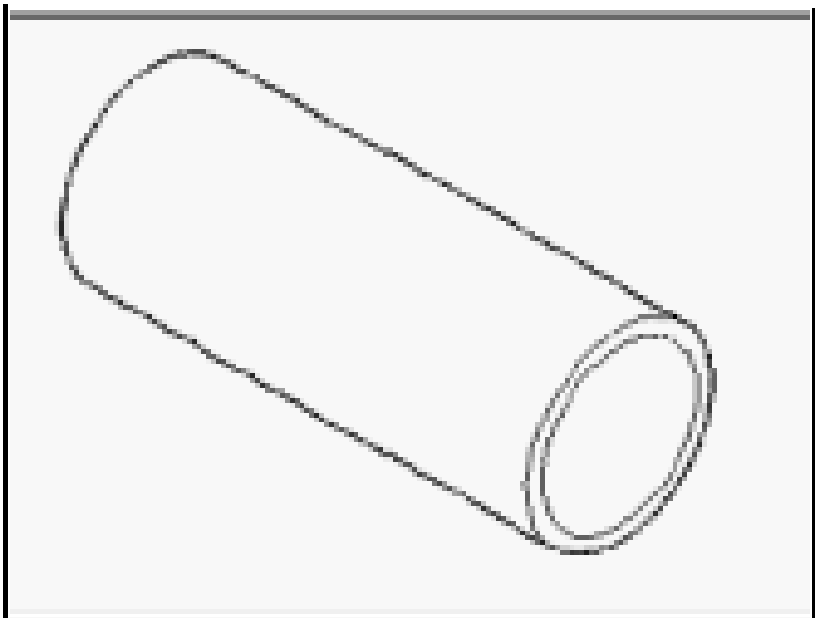

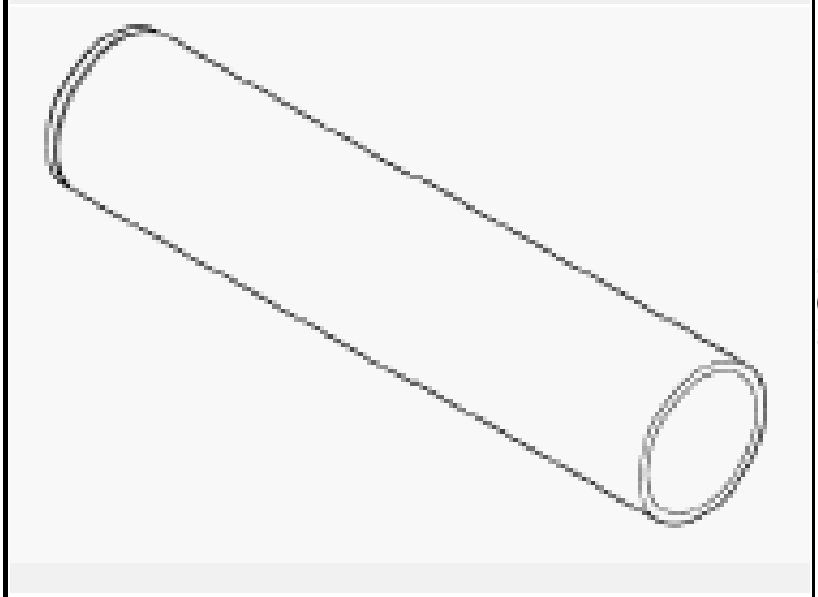

8228 - Installer, Bearing
(Originally Shipped In Kit Number(s) 8295, 8295CC, 8636.)

8266B - End Play Socket Set
(Originally Shipped In Kit Number(s) 8283, 8527, 8575, 8575CC.)

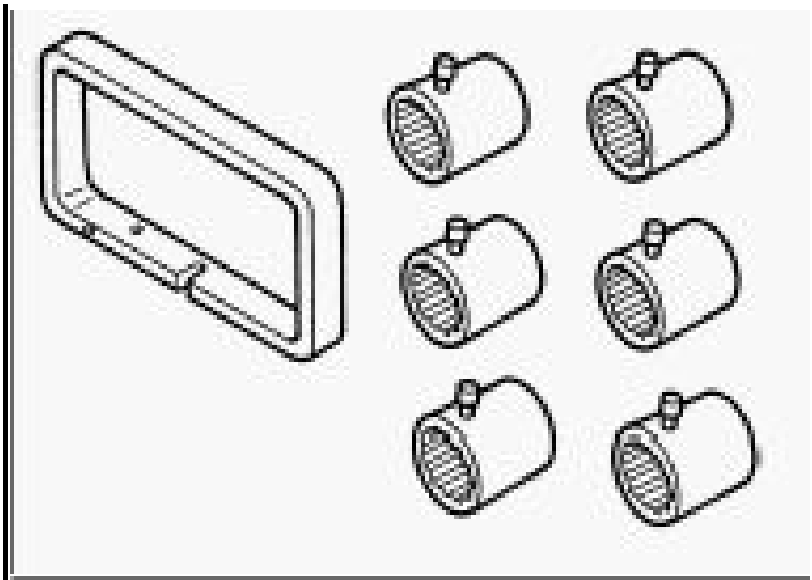

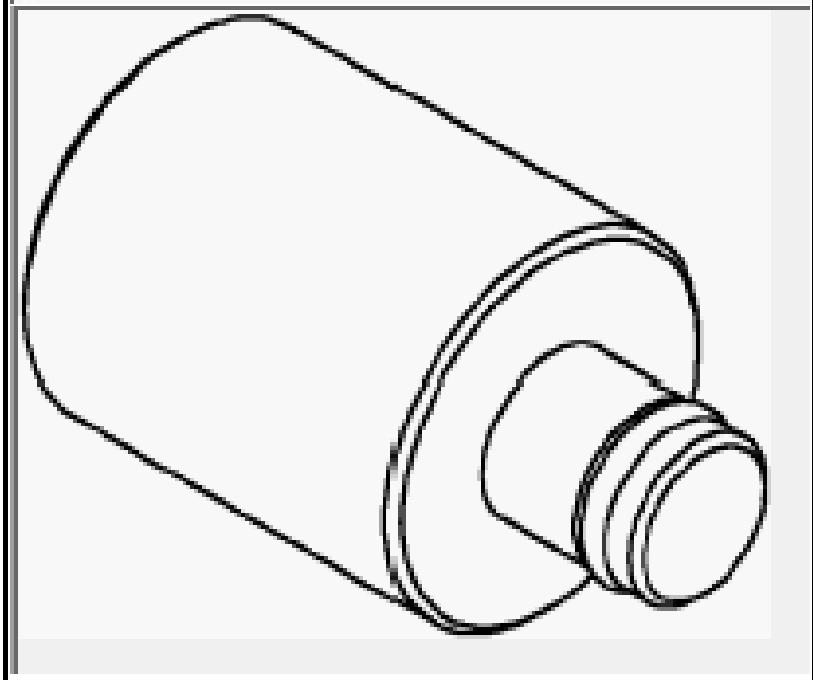

8513A - Insert, Crankshaft
(Originally Shipped In Kit Number(s) 8283, 8527, 8575, 8999, 8999CC.)

8594 - Installer, Bearing Cup

	(Originally Shipped In Kit Number(s) 8666, 8667, 8705, 8705CC.)
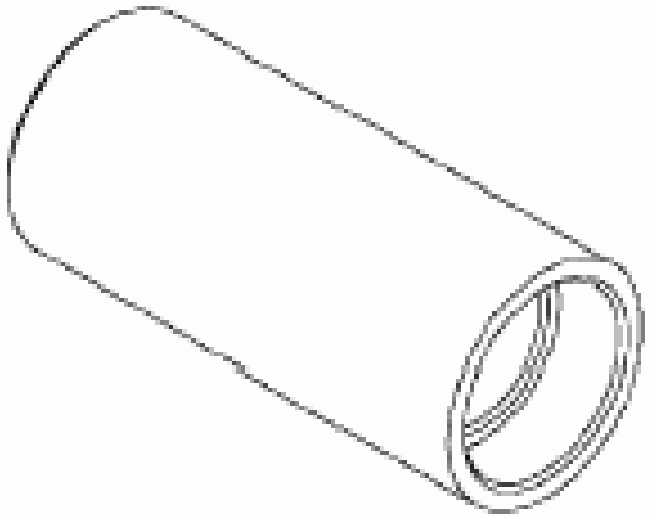	8840 - Installer, Oil Slinger (Originally Shipped In Kit Number(s) 8715, 8719, 8719CC, 9975, 9976.)

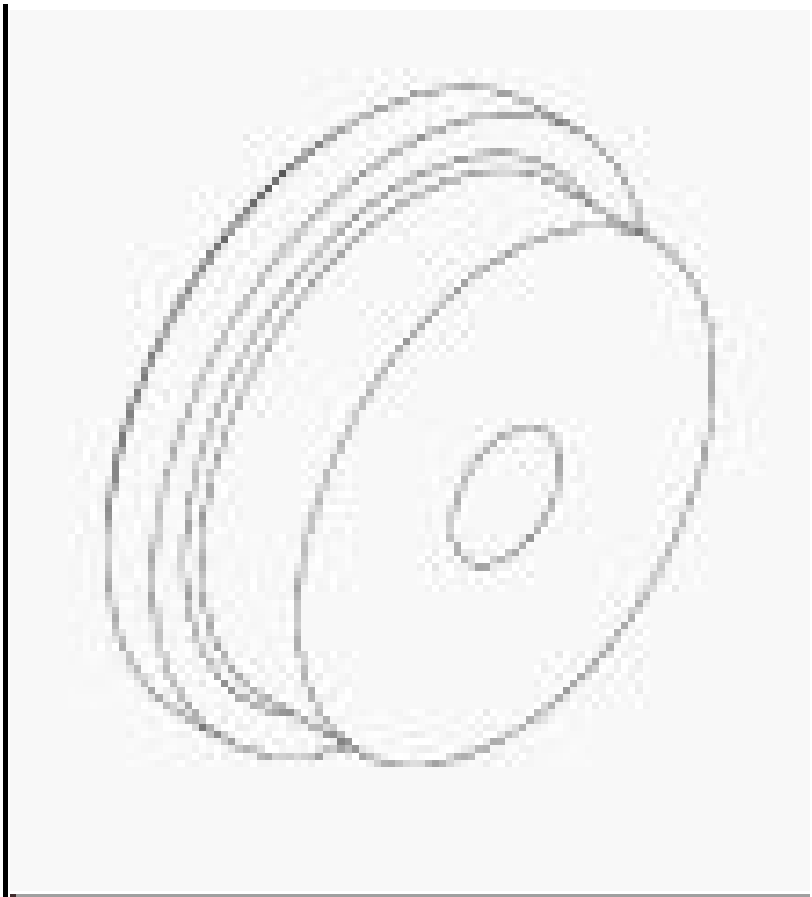

9588 - Installer, Bearing Cup
(Originally Shipped In Kit Number(s) 9692.)

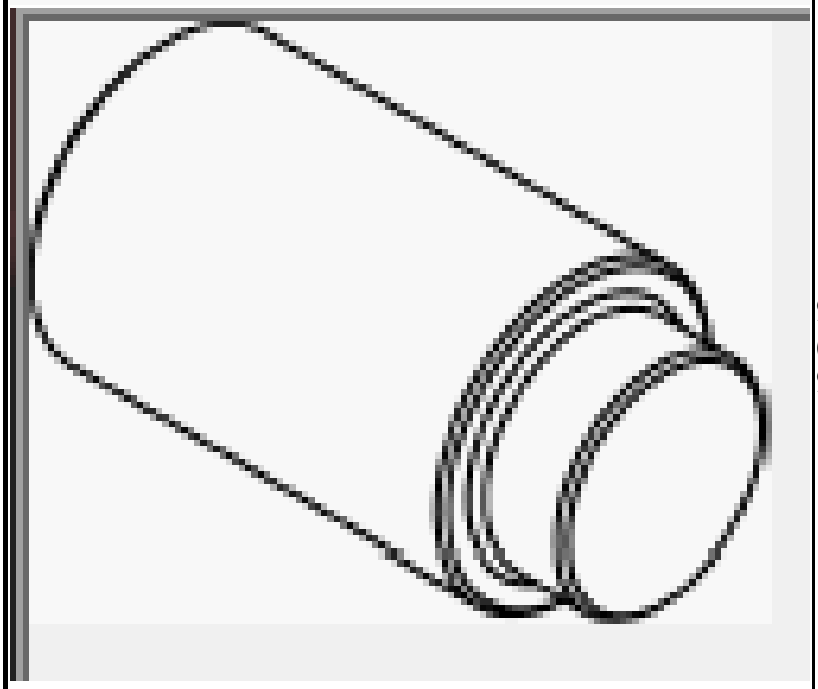

9611 - Plug, Differential End
(Originally Shipped In Kit Number(s) 9690.)

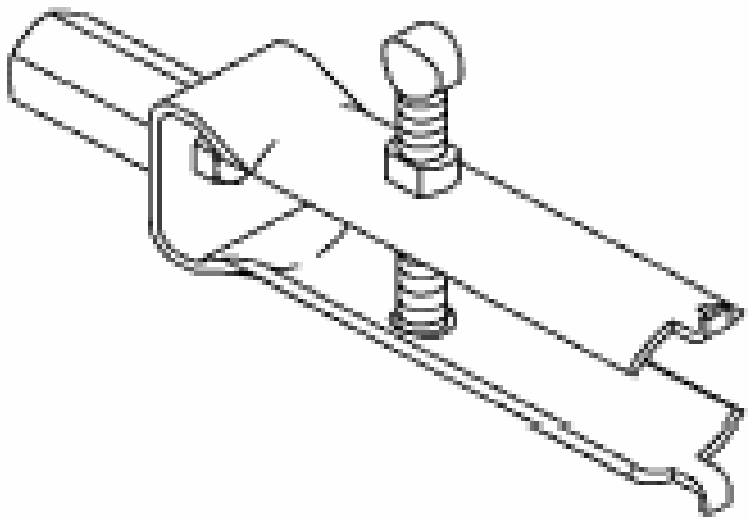	9664 - Remover, Bearing Cup (Originally Shipped In Kit Number(s) 9675, 9685, 9695.)
	9667 - Remover, Seal (Originally Shipped In Kit Number(s) 9691.)

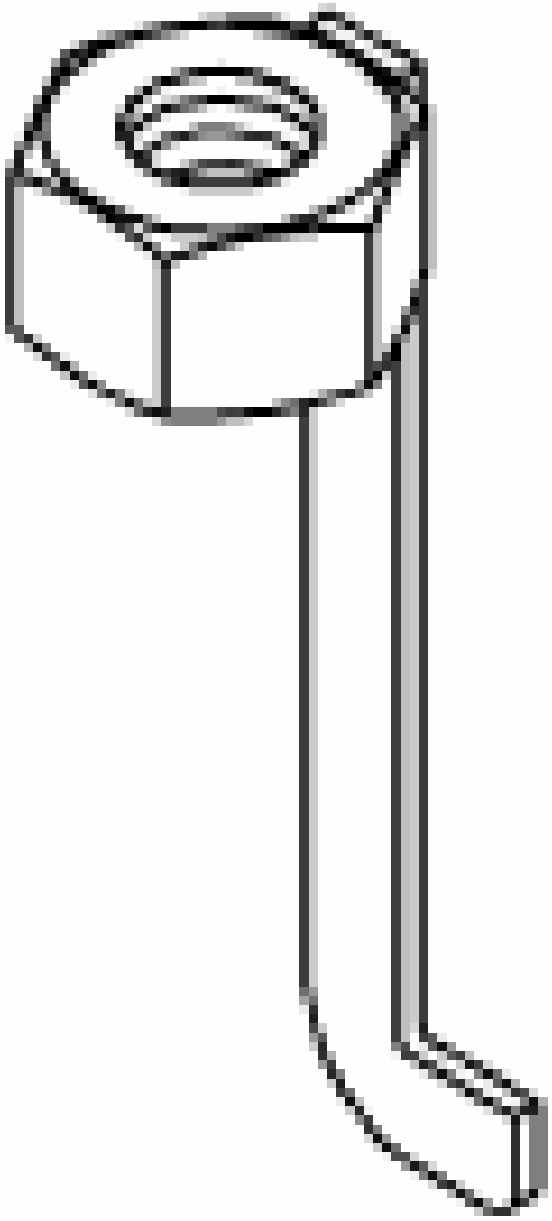

9676 - Adapter Plug
(Originally Shipped In Kit Number(s) 9675, 9685, 9695.)

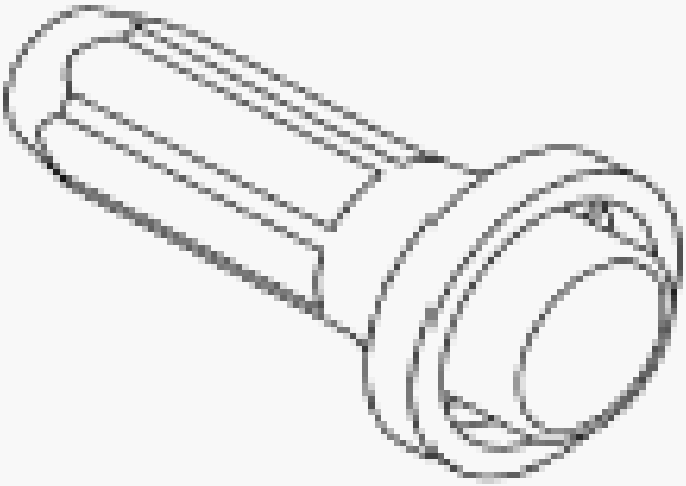

9677 - Installer, Seal
(Originally Shipped In Kit Number(s) 9675, 9685, 9695.)

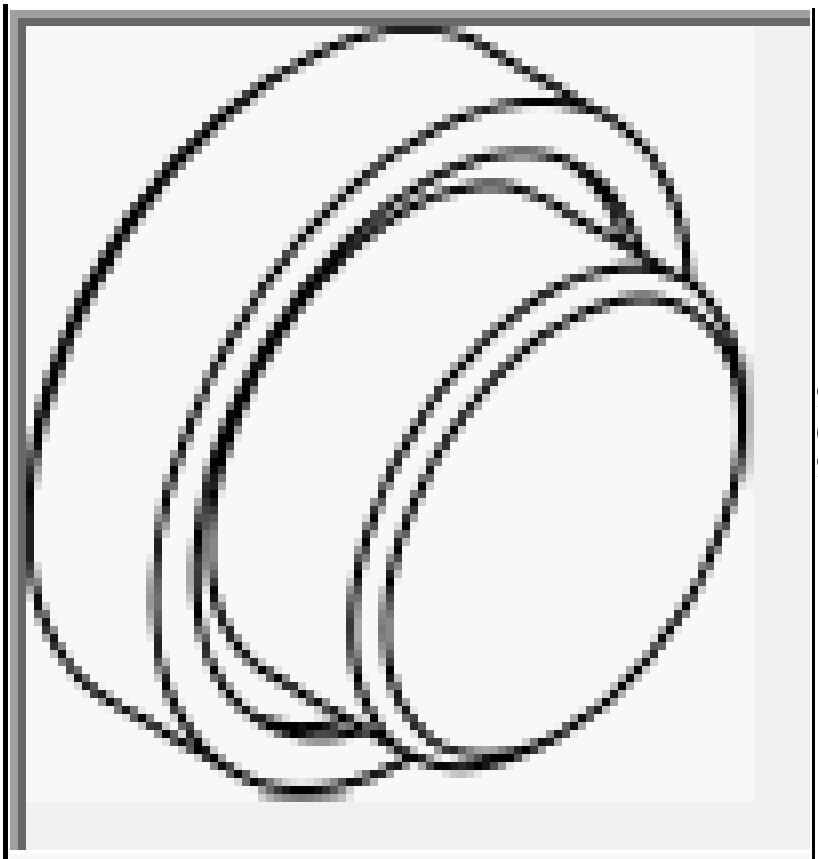

9678 - Press Plug
(Originally Shipped In Kit Number(s) 9675, 9685, 9695.)

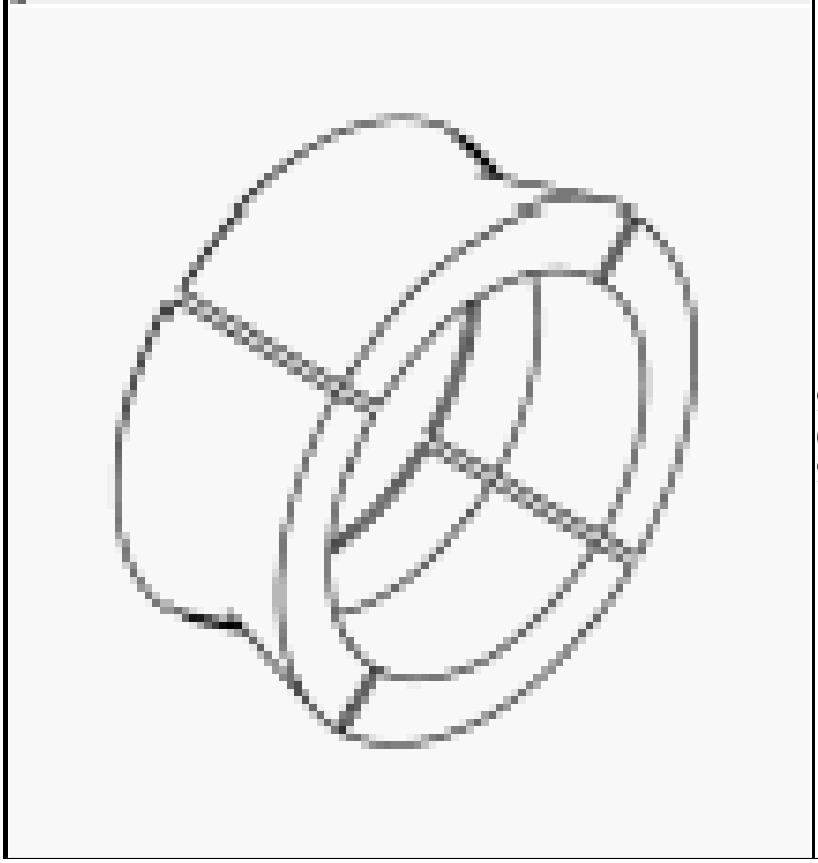

9738 - Blocks, Adapter
(Originally Shipped In Kit Number(s) 9720, 9967.)

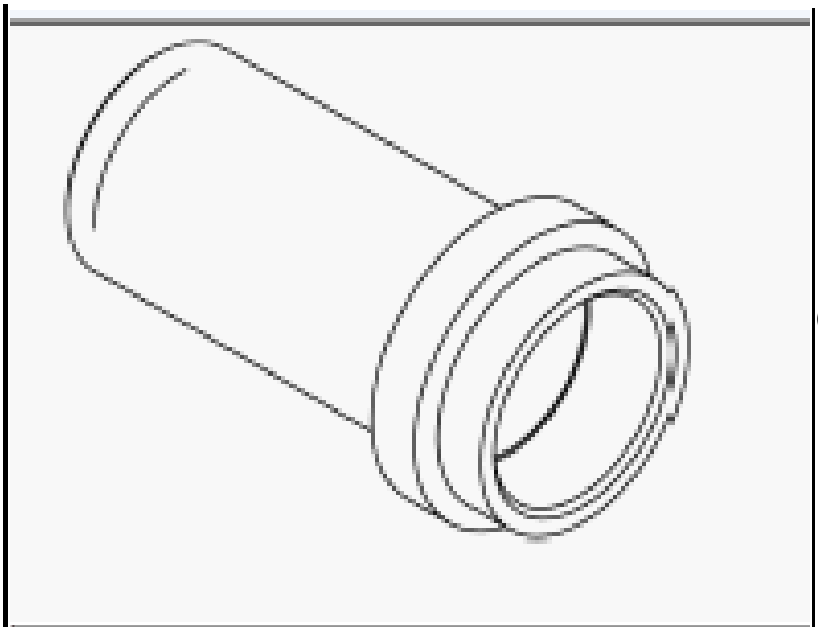

10036 - Installer, Bearing Cup
(Originally Shipped In Kit Number(s) 10035.)

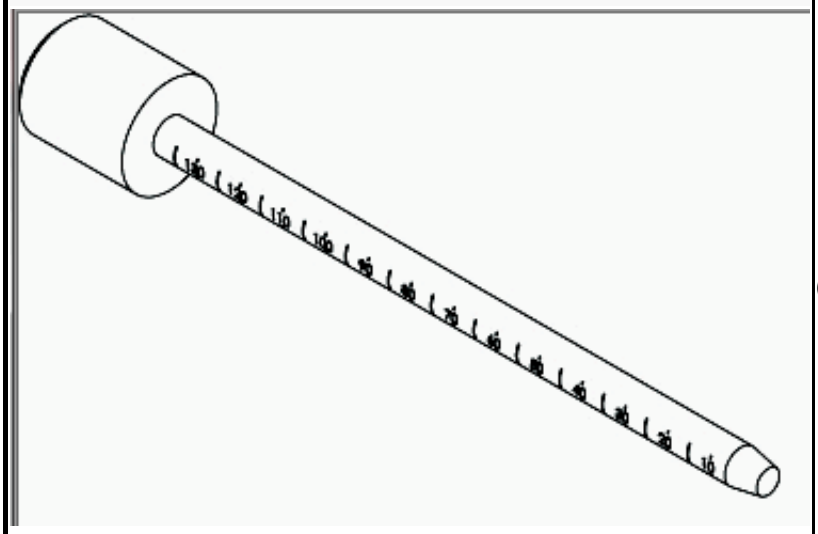

10323A - Dipstick
(Originally Shipped In Kit Number(s).)

10425 - Tool, Pinion and Side Gear Locking
(Originally Shipped In Kit Number(s) 10419.)

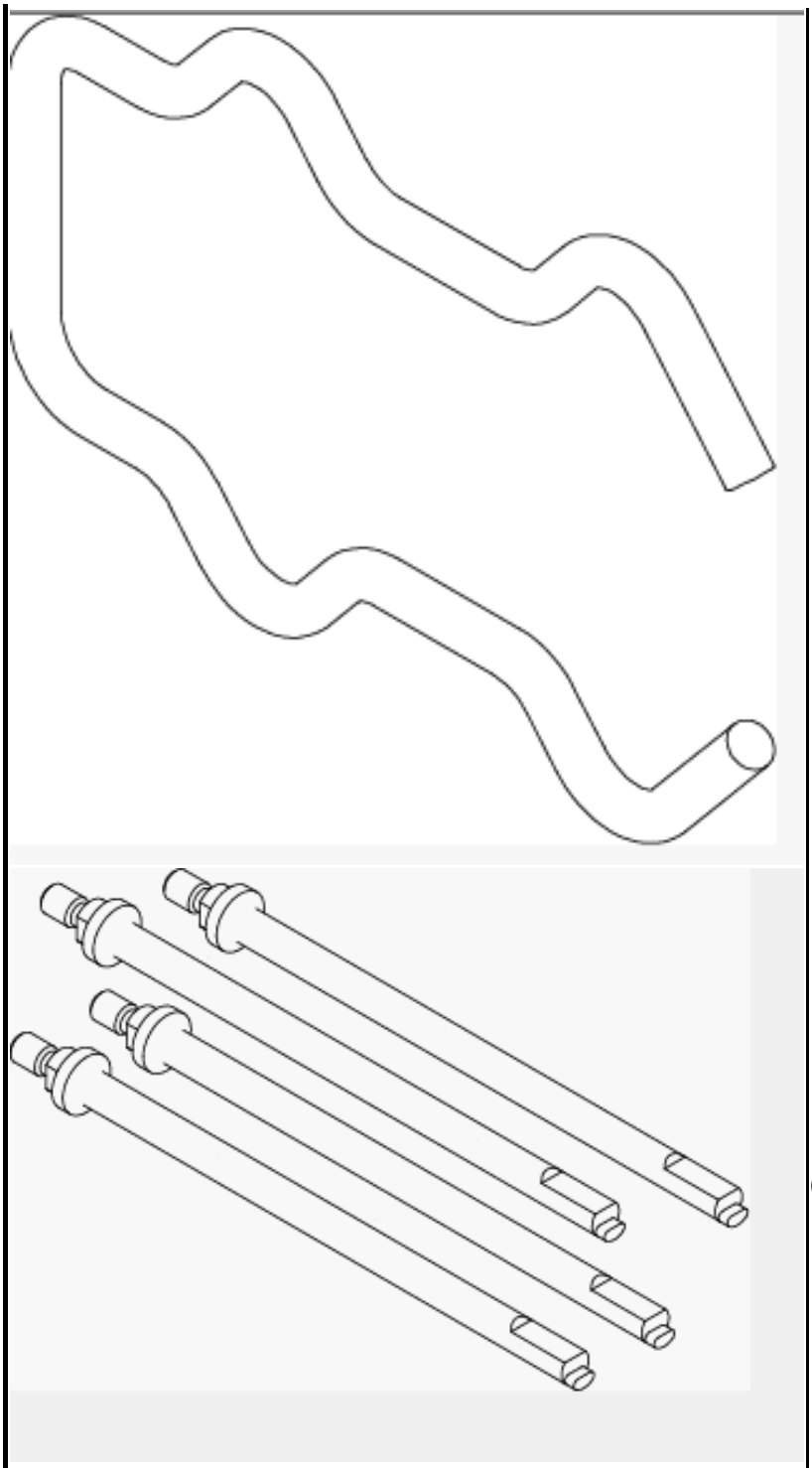

10428 - Adapter, Pressing Tool
(Originally Shipped In Kit Number(s).)

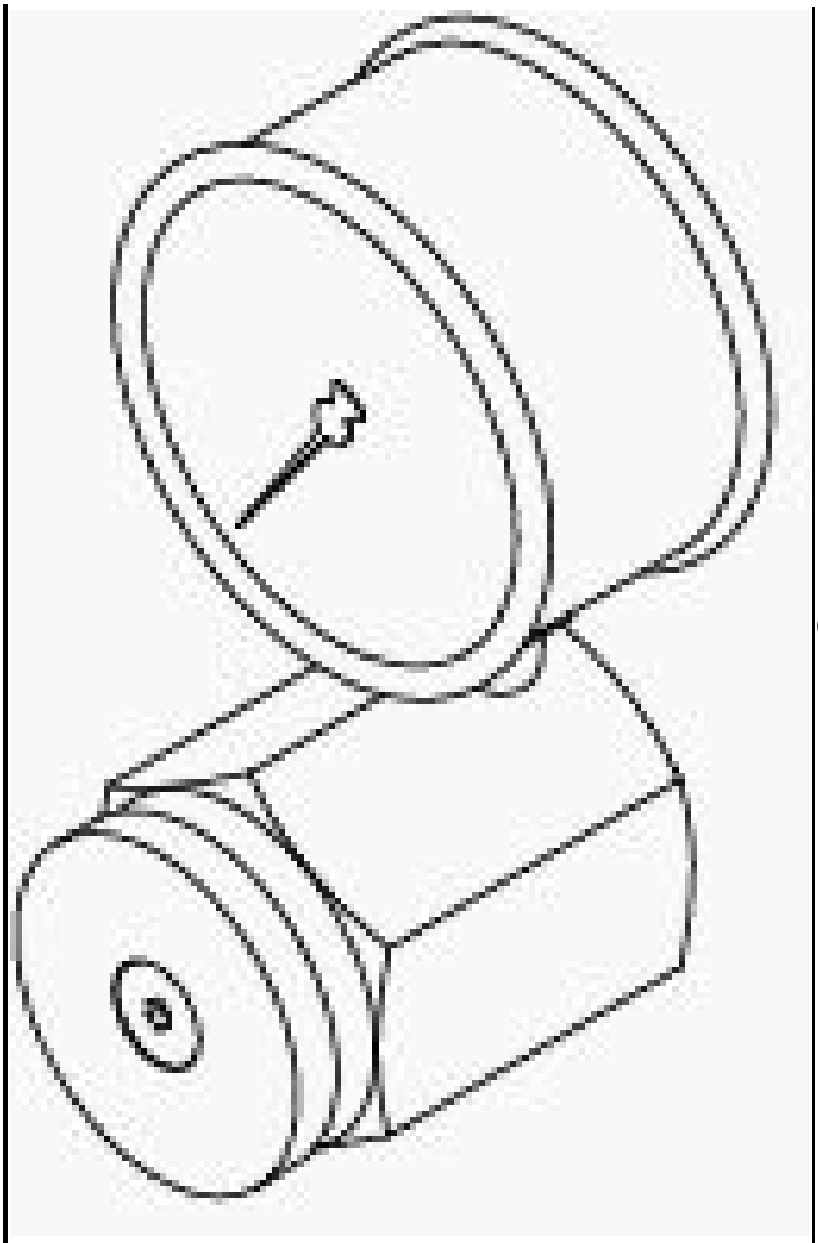

10429 - Gauge, Force
(Originally Shipped In Kit Number(s) 10419.)

10503 - Installer, Bearing
(Originally Shipped In Kit Number(s).)

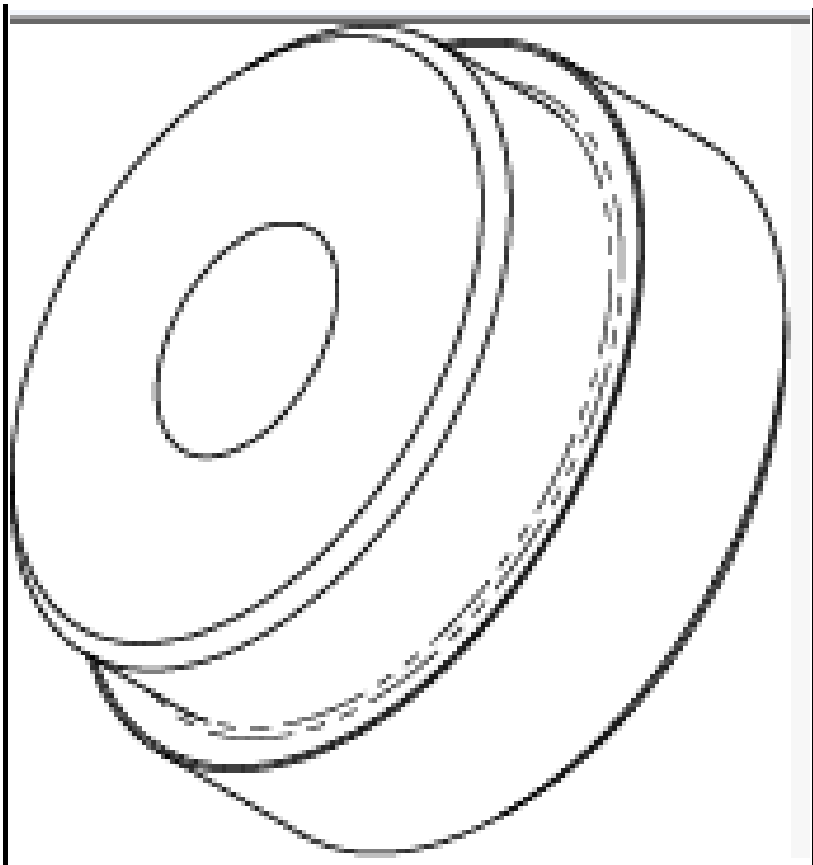

10504 - Compressor, Spring
(Originally Shipped In Kit Number(s).)

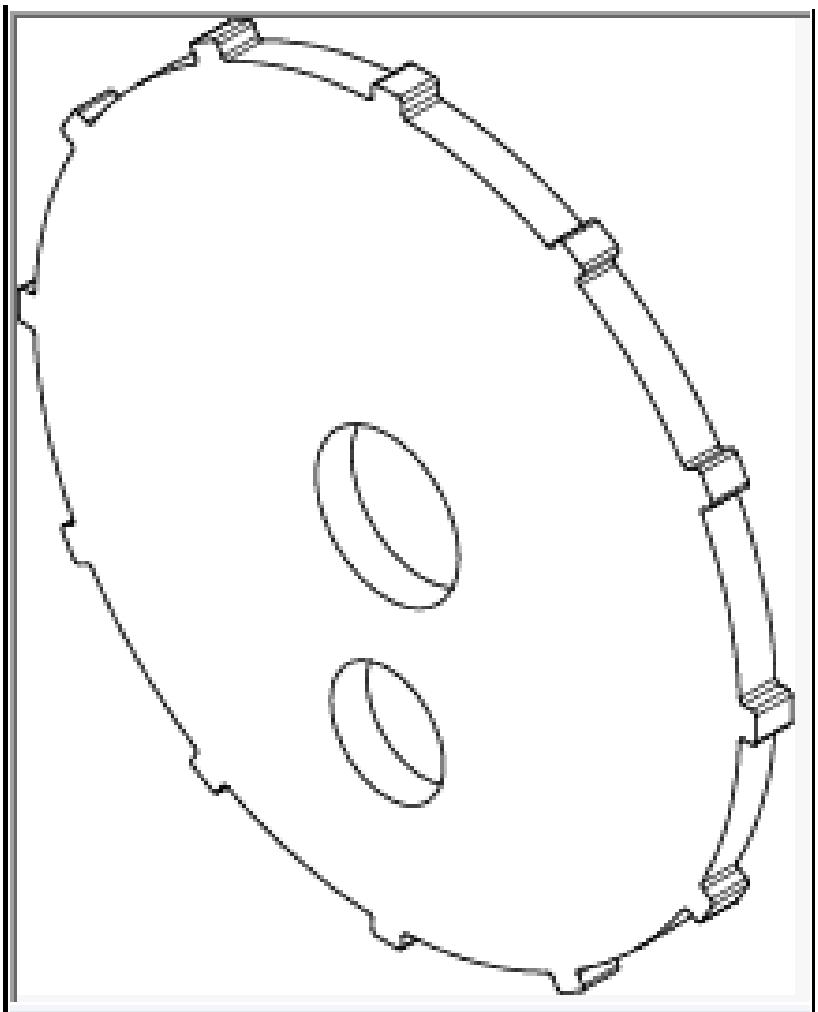

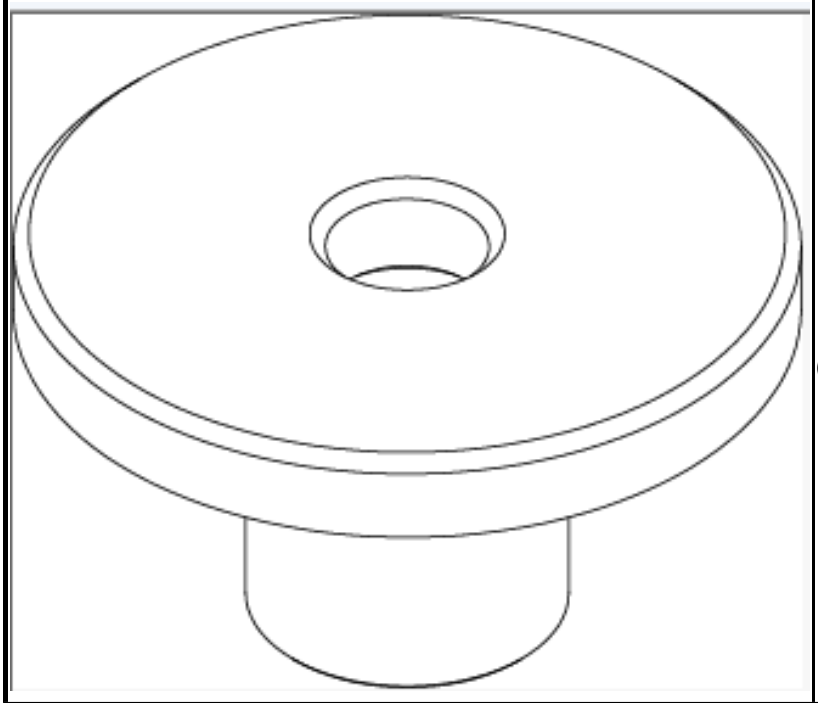

10506 - Installer, Oil Seal
(Originally Shipped In Kit Number(s).)

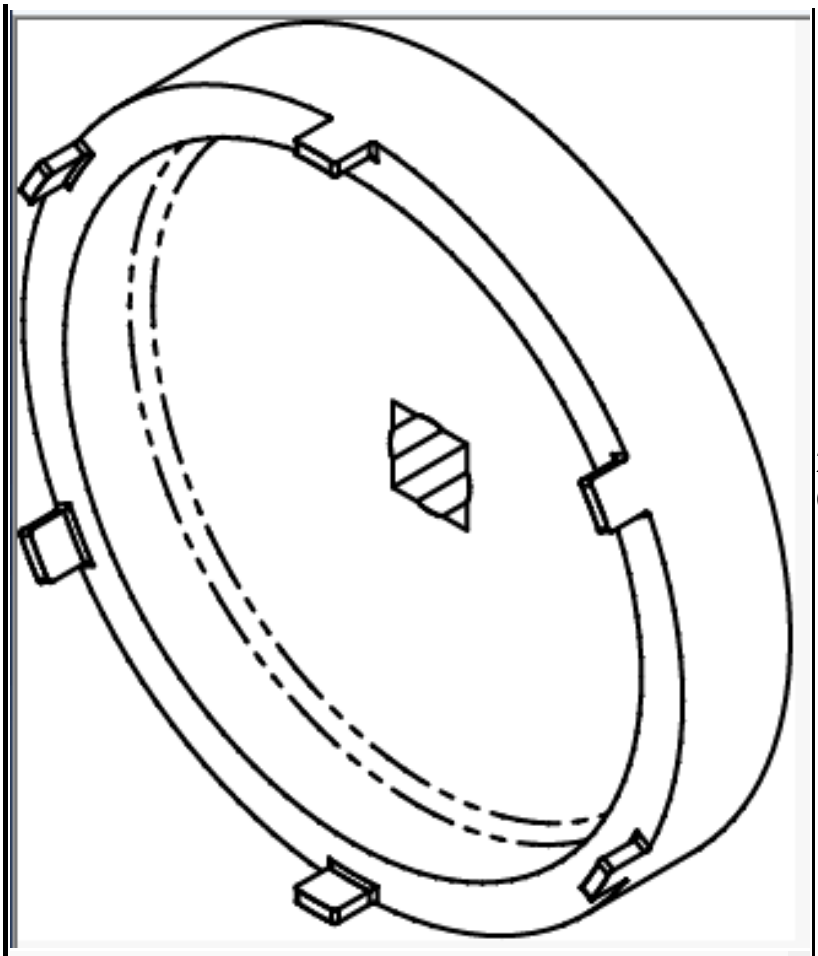

2012900210 - Wrench, Spanner
(Originally Shipped In Kit Number(s).)

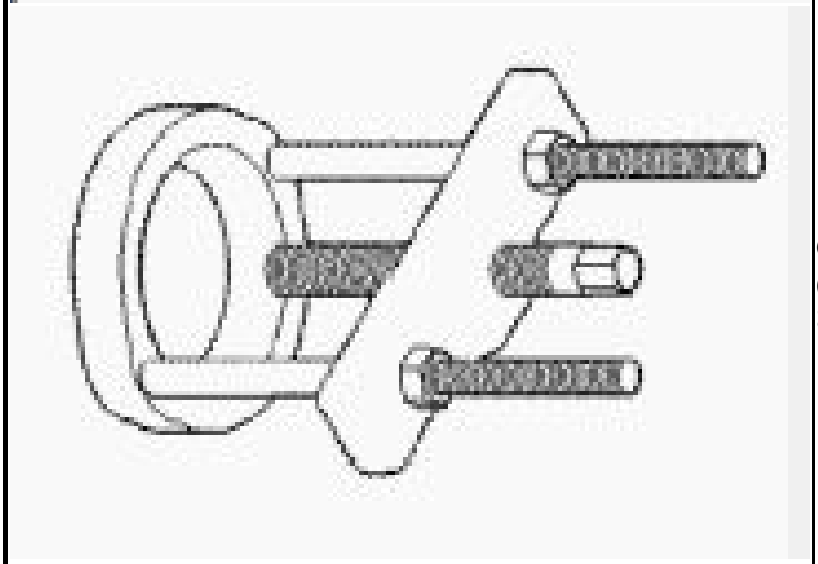

C-293-PA - Puller, Press
(Originally Shipped In Kit Number(s)
8418, 8837, C-293-M.)

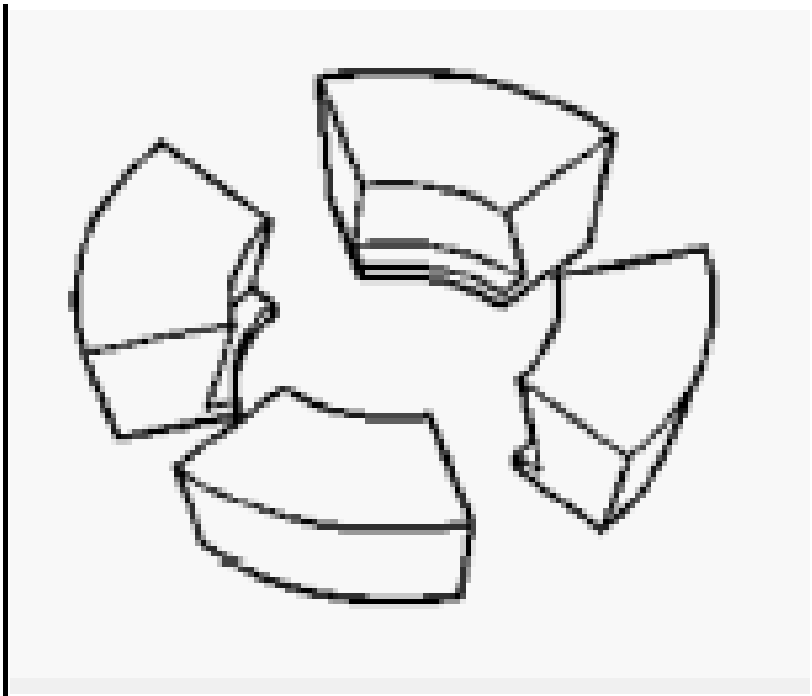	C-293-37 - Block Set, Puller (Originally Shipped In Kit Number(s) 8418, 8562, C-293-M, DD-914-CLT-L.)
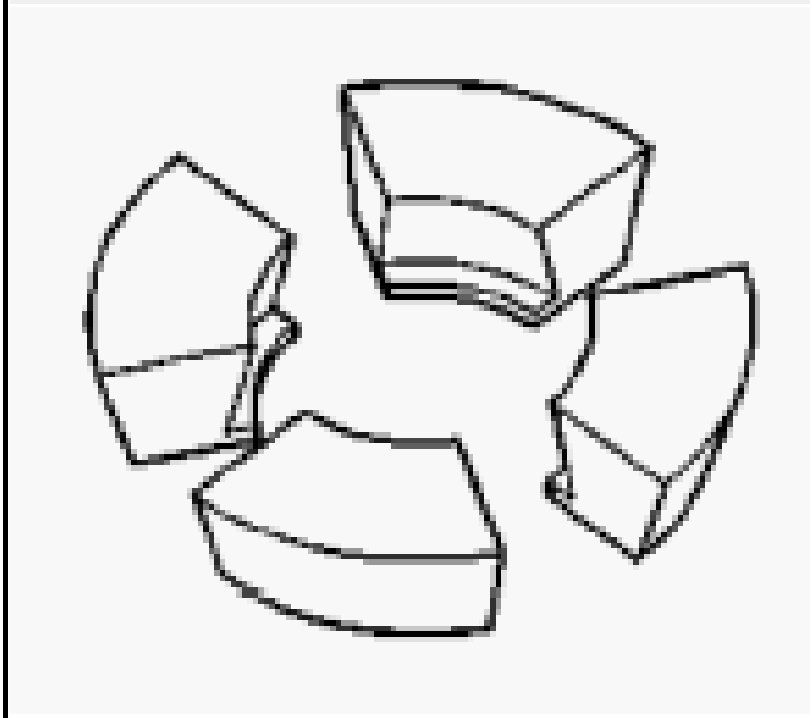	C-293-40 - Block Set, Puller (Originally Shipped In Kit Number(s) 9695, 9870, 9971.)
	C-637 - Slide Hammer, Universal (Originally Shipped In Kit Number(s)

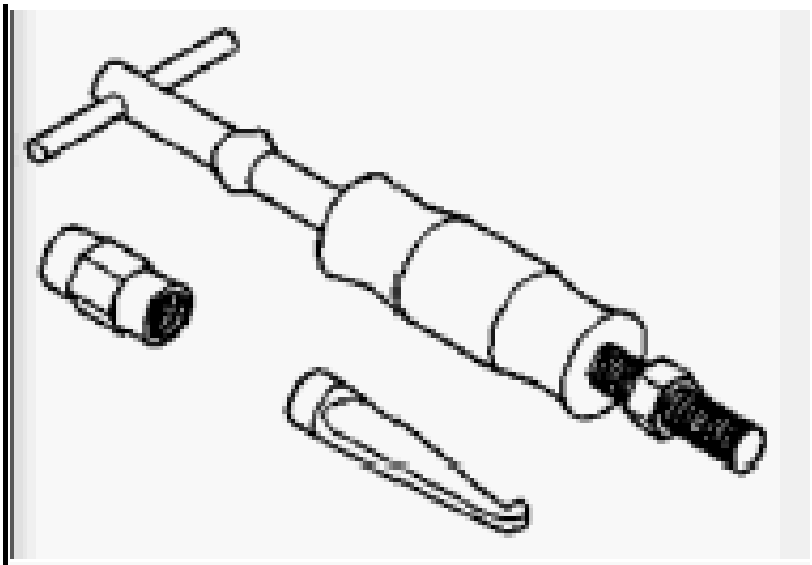	9202.)
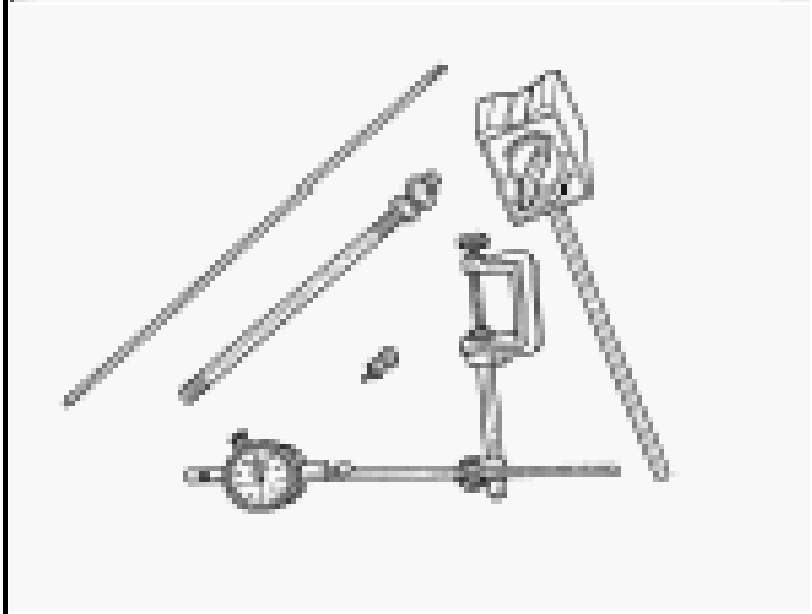	C-3339A - Set, Dial Indicator (Originally Shipped In Kit Number(s) 9202.)
	C-3752 - Slide Hammers (Originally Shipped In Kit Number(s) 9202, 9202A-CAN, 9202-CAN, 9202CC.)

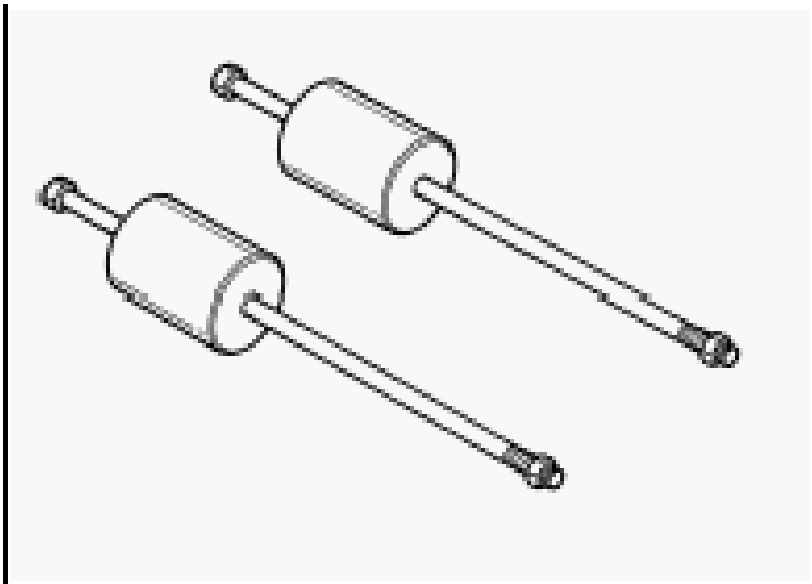

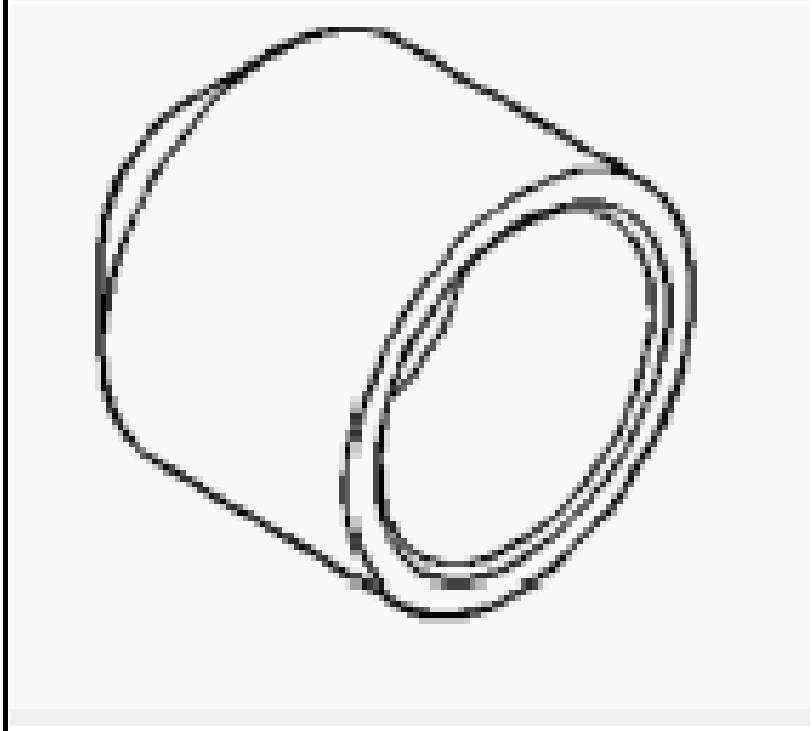

C-3972-A - Installer, Seal
(Originally Shipped In Kit Number(s) 9975.)

C-4171 - Driver Handle, Universal
(Originally Shipped In Kit Number(s) 9202, 9202A-CAN, 9202CC, 9299, 9299CC, 9299CC, 9300A-CAN.)

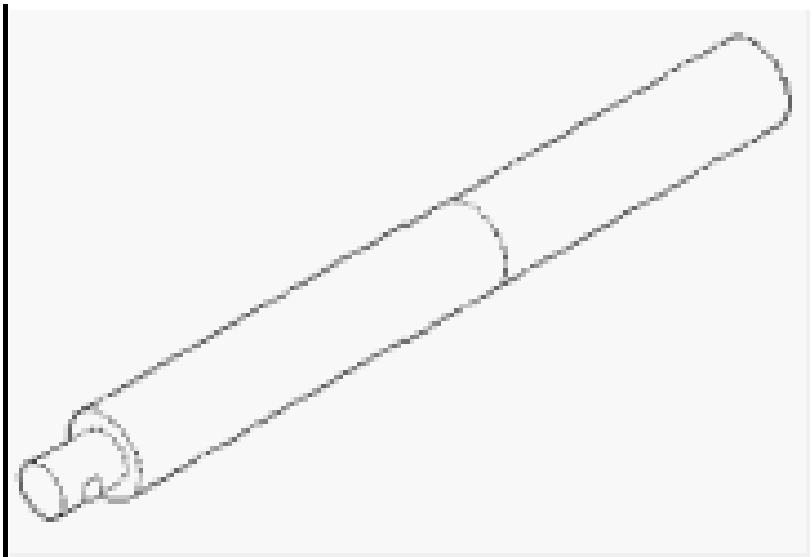	
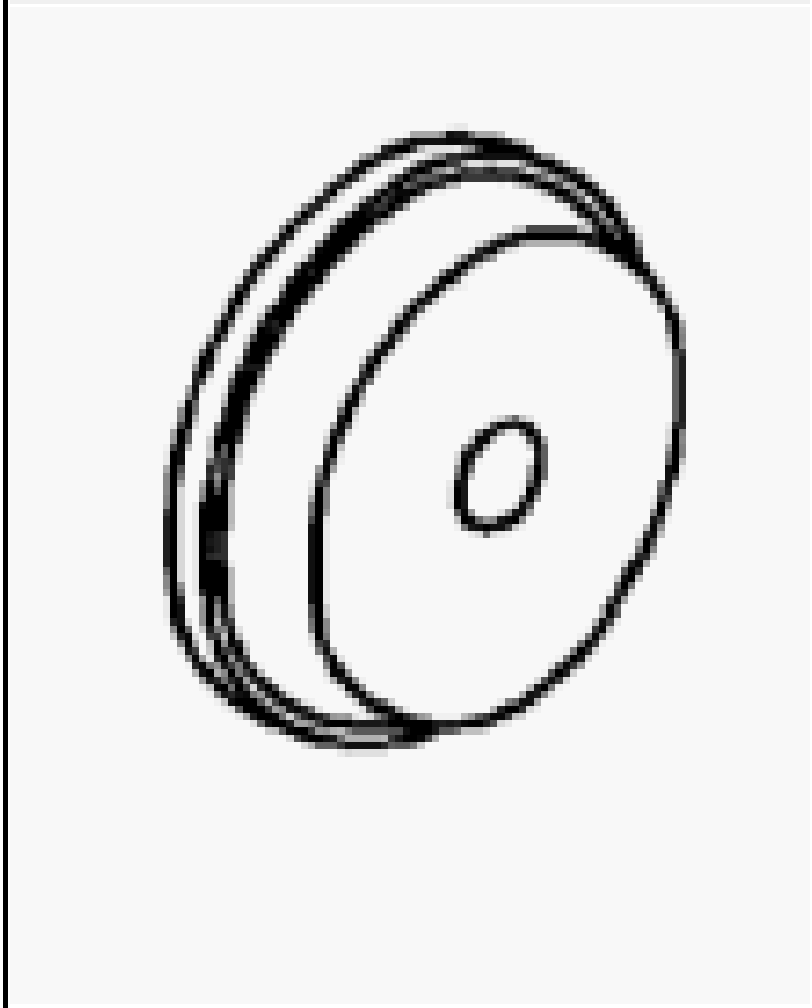	C-4310 - Installer, Bearing (Originally Shipped In Kit Number(s) C-4306.)

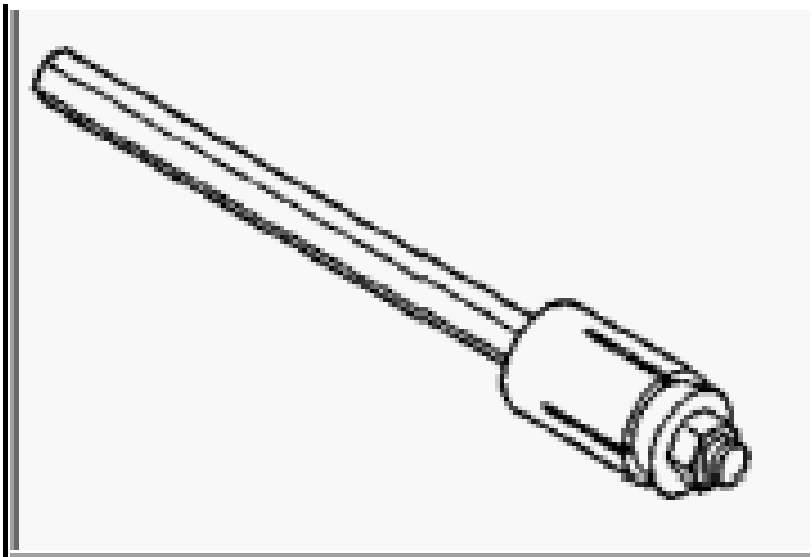	C-4995A - Tool, Differential Bearing Torque
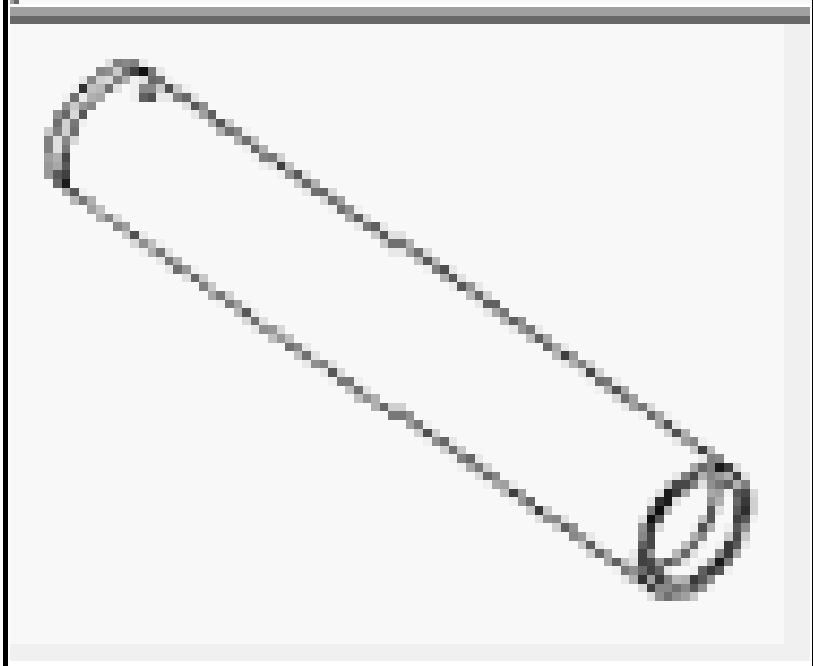	MD998805 - Installer, Seal (Originally Shipped In Kit Number(s) 9926.)
	8901A - Pressing Tool (Originally Shipped In Kit Number(s) 8901A.)

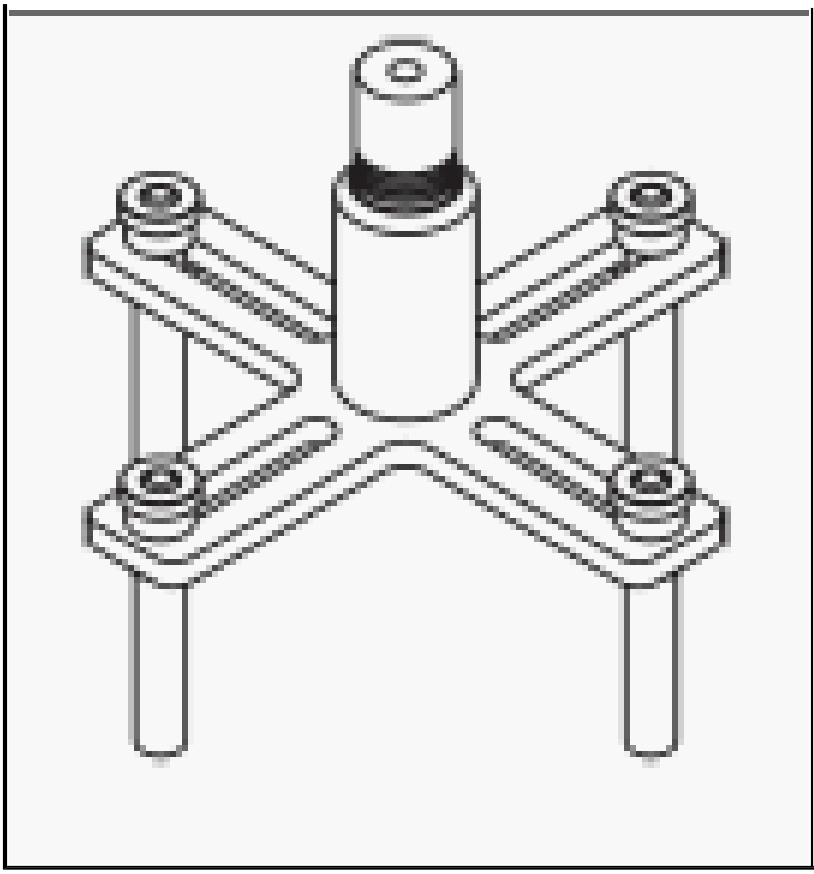

CABLE, SHIFT

ADJUSTMENTS

ADJUSTMENTS

ADJUSTMENT

1. Park the vehicle on level ground and set the parking brake.

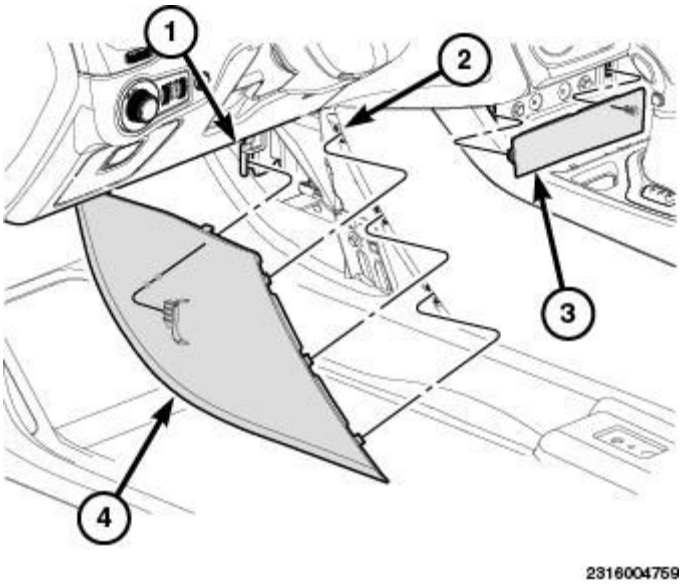

Fig. 246: Console Trim Pieces
Courtesy of CHRYSLER GROUP, LLC

2. Using (special tool #C-4755, Trim Stick) or equivalent, remove the front trim (3) covering the console fasteners.

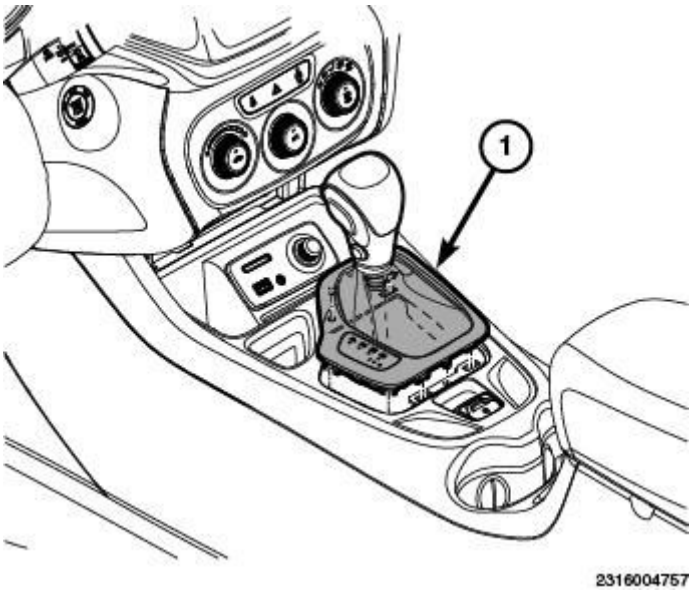

Fig. 247: Shifter Bezel & Console Bezel
Courtesy of CHRYSLER GROUP, LLC

3. Detach shifter bezel (1) from console bezel using (special tool #C-4755, Trim Stick) or equivalent, pry up on bezel (1).

NOTE: Do not remove the shifter bezel, as it will fit through the opening in the console bezel when it is removed.

4. Place the shifter in the Neutral position by manually releasing the Brake Ignition Transmission Shift Interlock (BITSI). Refer to **SHIFT, BRAKE INTERLOCK, STANDARD PROCEDURE**.

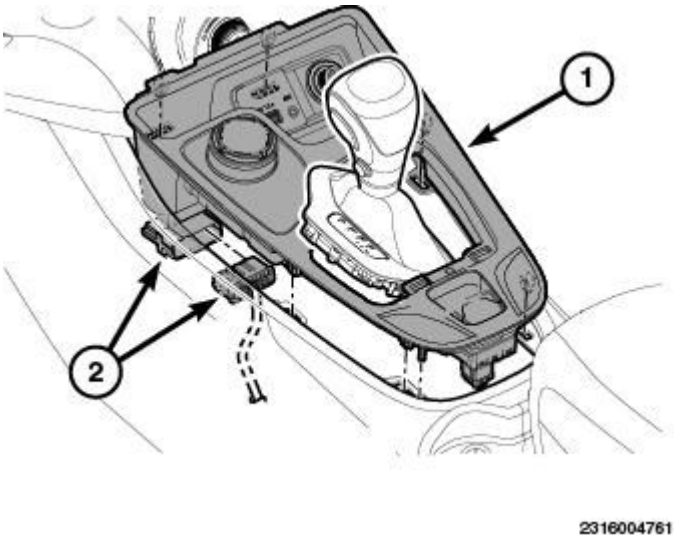

Fig. 248: Shifter Bezel, Console Bezel & Electrical Connectors
Courtesy of CHRYSLER GROUP, LLC

5. Using (special tool #C-4755, Trim Stick) or equivalent, separate the console bezel (1) and disconnect the electrical connectors (2).
6. Place the gearshift lever in Park (P) and remove ignition key.

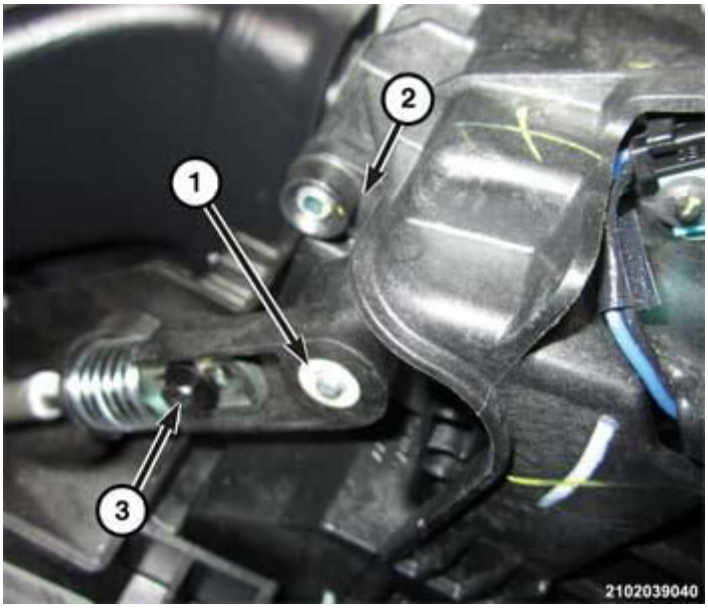

Fig. 249: Shifter Cable End & Adjustment Screw
Courtesy of CHRYSLER GROUP, LLC

7. Loosen the cable adjustment screw (3) at the shifter end of the cable.

8. Pull the gearshift lever fully forward to the park detent position.
9. Release the park brake, then rock the vehicle to assure it is in park. Reset the park brake.
10. Tighten the cable adjustment screw to proper specification, refer to **SPECIFICATIONS**.
11. Verify adjustment by using the verification procedure.
12. Place the shifter in the Neutral position by manually releasing the Brake Ignition Transmission Shifter Interlock (BITSI). Refer to **SHIFT, BRAKE INTERLOCK, STANDARD PROCEDURE**.

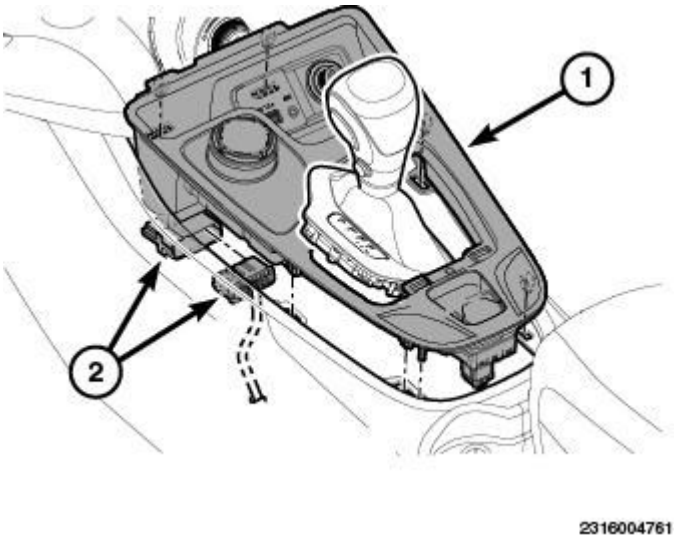

Fig. 250: Shifter Bezel, Console Bezel & Electrical Connectors
Courtesy of CHRYSLER GROUP, LLC

13. Insert the shifter bezel through the console bezel (1).
14. Connect the console bezel electrical connectors (2).
15. Install the console bezel (1) to the console.

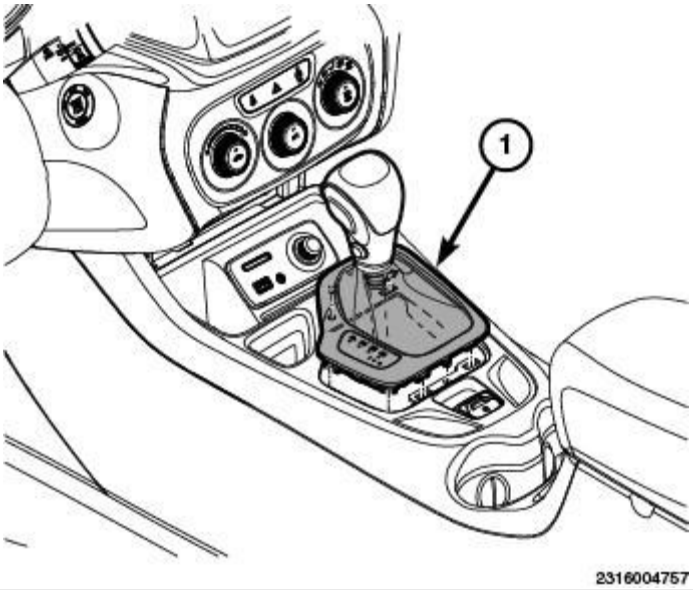

Fig. 251: Shifter Bezel & Console Bezel
Courtesy of CHRYSLER GROUP, LLC

16. Install the shifter bezel (1) to the console bezel.

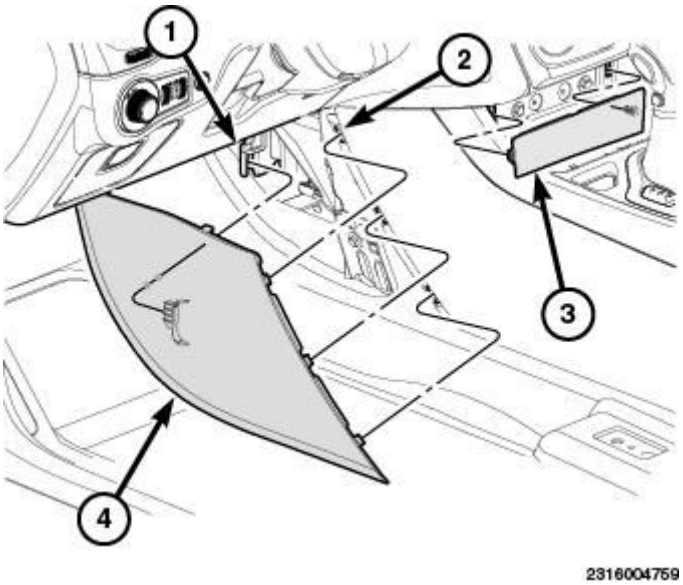

Fig. 252: Console Trim Pieces
Courtesy of CHRYSLER GROUP, LLC

17. Install the console front trim (3).

VERIFICATION

1. Place gearshift lever in Park (P).
2. Attempt to move vehicle by rocking back and forth on level ground. If vehicle does not move, attempt to start engine. If engine starts, the park position is correct.
3. Set parking brake.
4. Turn key to on/run and depress brake pedal. Place gearshift lever in Neutral (N).
5. Attempt to start engine. If engine starts in both Neutral (N) or Park (P), gearshift cable is adjusted properly. No adjustment is required.
6. If engine does not start in either Park (P) or Neutral (N), perform adjustment procedure.

REMOVAL

REMOVAL

1. Set the parking brake.
2. Disconnect and isolate the negative battery cable.

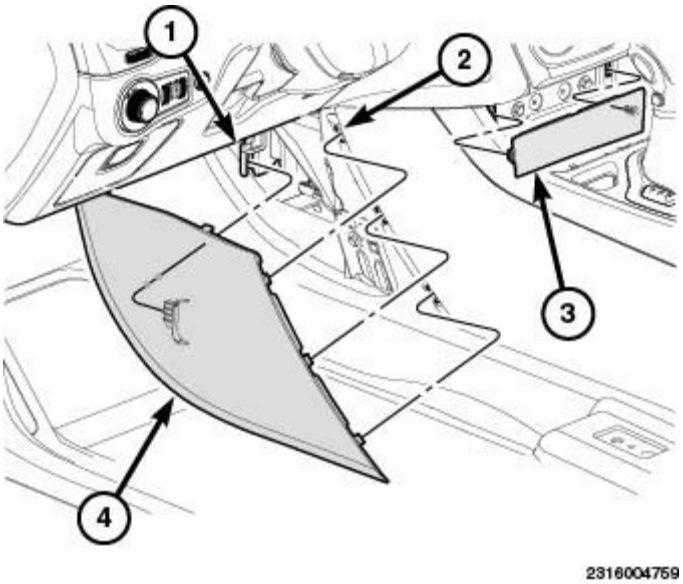

Fig. 253: Console Trim Pieces
Courtesy of CHRYSLER GROUP, LLC

3. Using (special tool #C-4755, Trim Stick) or equivalent, remove the front trim (3) covering the console fasteners.

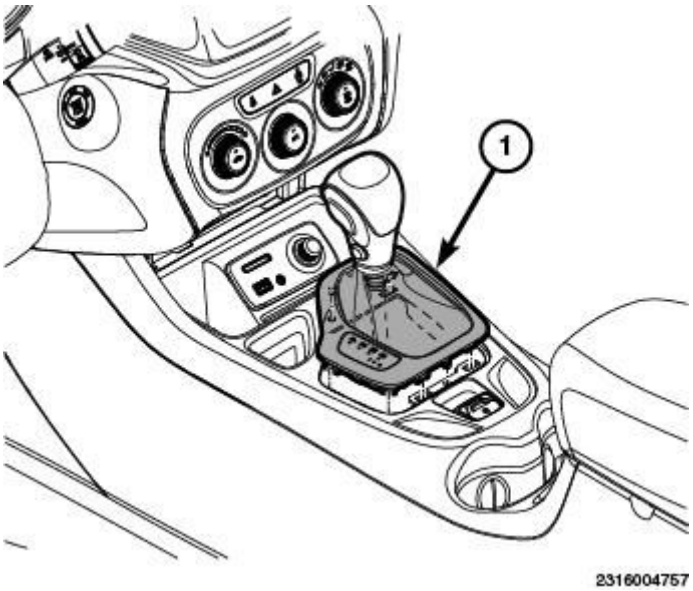

Fig. 254: Shifter Bezel & Console Bezel
Courtesy of CHRYSLER GROUP, LLC

4. Detach shifter bezel (1) from console bezel using (special tool #C-4755, Trim Stick) or equivalent, pry up on bezel (1).

NOTE: Do not remove the shifter bezel, as it will fit through the opening in the console bezel when it is removed.

5. Place the shifter in the Neutral position by manually releasing the Brake Ignition Transmission Shift Interlock (BITSI)

   Refer to **SHIFT, BRAKE INTERLOCK, STANDARD PROCEDURE**.

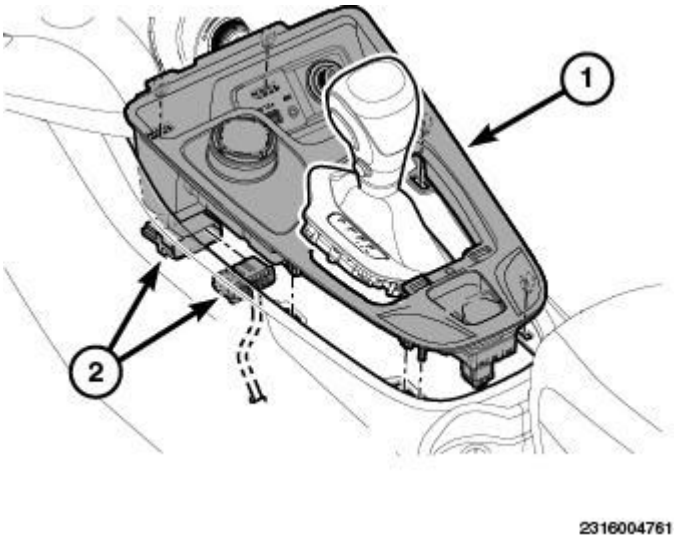

Fig. 255: Shifter Bezel, Console Bezel & Electrical Connectors
Courtesy of CHRYSLER GROUP, LLC

6. Using (special tool #C-4755, Trim Stick) or equivalent, separate the console bezel (1) and disconnect the electrical connectors (2).
7. Remove the console bezel.
8. Place shifter in Park position.

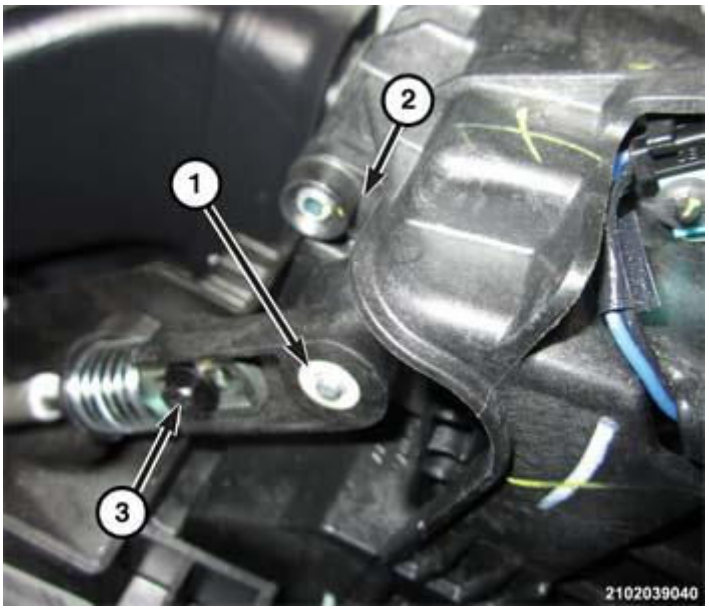

Fig. 256: Shifter Cable End & Adjustment Screw

Courtesy of CHRYSLER GROUP, LLC

9. Disconnect shifter cable (1) from the shifter (2).

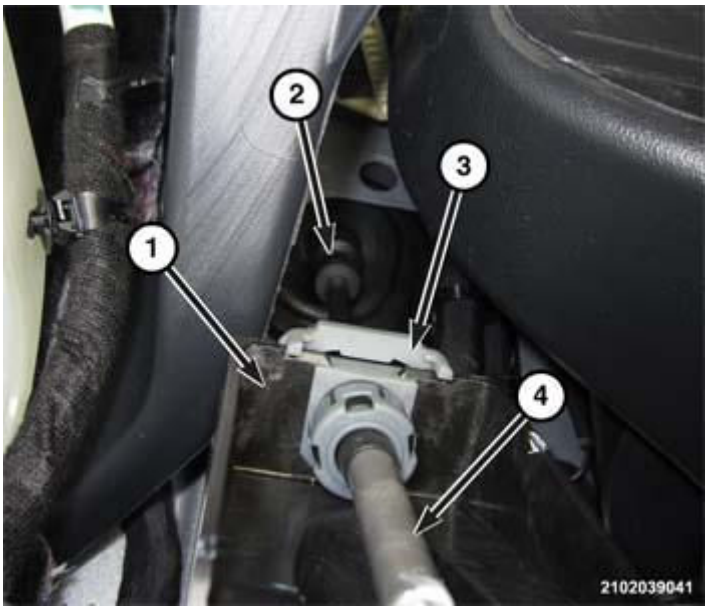

Fig. 257: Shifter Cable & Shifter Bracket
Courtesy of CHRYSLER GROUP, LLC

10. Release the lock (3) holding the shifter cable (4) to the shifter bracket (1).
11. Separate the shifter cable (4) from the shifter bracket (1).
12. Remove the Powertrain Control Module (PCM). Refer to **MODULE, POWERTRAIN CONTROL, REMOVAL** .
13. Remove the PCM bracket from the battery tray.

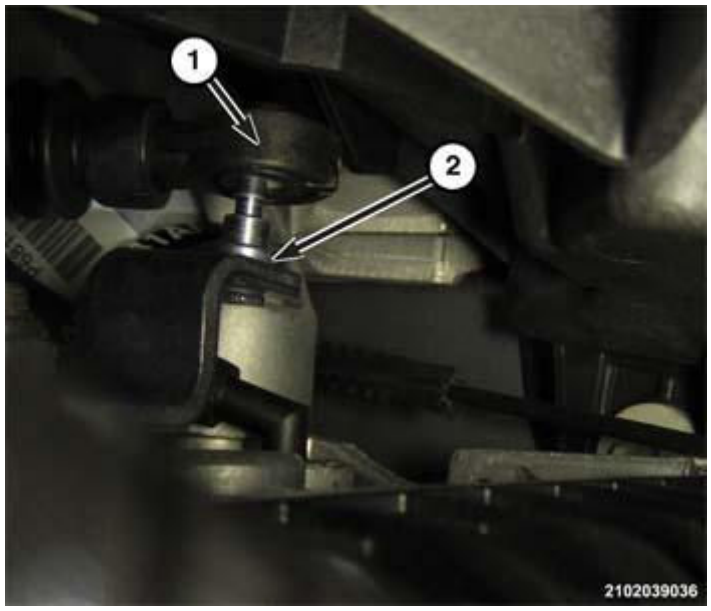

Fig. 258: Shifter Cable End & Manual Lever At Transmission
Courtesy of CHRYSLER GROUP, LLC

14. Separate the shifter cable end (1) from the manual lever (2) on the transmission.

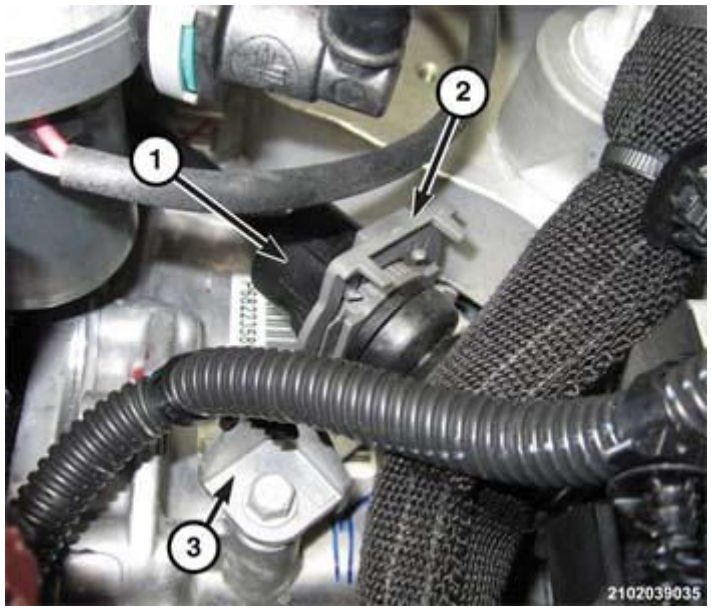

Fig. 259: Shifter Cable & Shift Cable Bracket On Transmission
Courtesy of CHRYSLER GROUP, LLC

15. Release the lock (2) holding the shifter cable (1) to the shift cable bracket (3) on the transmission.
16. Separate the shifter cable (1) from the shift cable bracket (3).
17. Raise and support the vehicle on a hoist. Refer to **HOISTING, STANDARD PROCEDURE** .

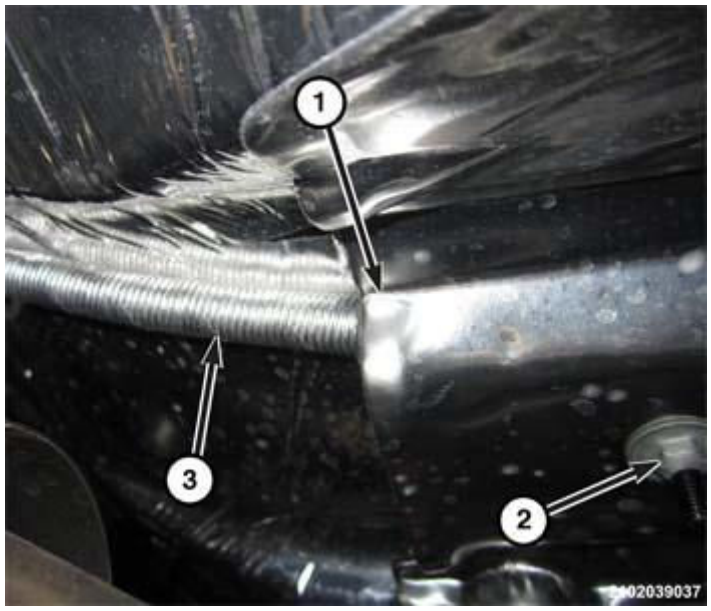

Fig. 260: Exhaust Heat Shield Nuts
Courtesy of CHRYSLER GROUP, LLC

18. Remove the exhaust heat shield (1) nuts (2) and lower heat shield to gain access to the shifter cable and grommet.

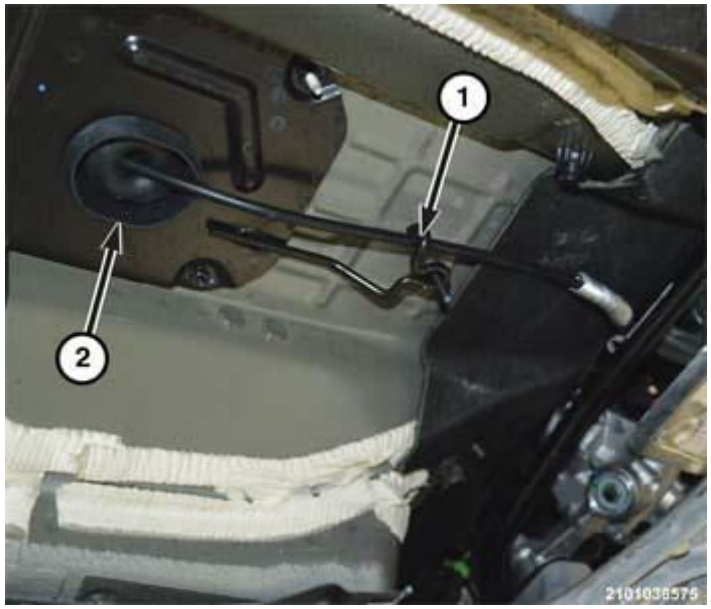

Fig. 261: Shifter Cable Support Bracket & Shifter Cable Grommet
Courtesy of CHRYSLER GROUP, LLC

NOTE: Exhaust and heat shield removed for clarity.

19. Detach the shifter cable from the support bracket (1).

20. Detach the shifter cable grommet (2) from the floor pan.

Fig. 262: Shifter Cable Clip
Courtesy of CHRYSLER GROUP, LLC

21. Detach the shifter cable from the clip (1) attached to the steering gear.

Fig. 263: Shifter Cable & Floor Pan Access Hole
Courtesy of CHRYSLER GROUP, LLC

22. Pull the shifter cable (1) through the floor pan.
23. Disconnect front sway bar links from the sway bar.

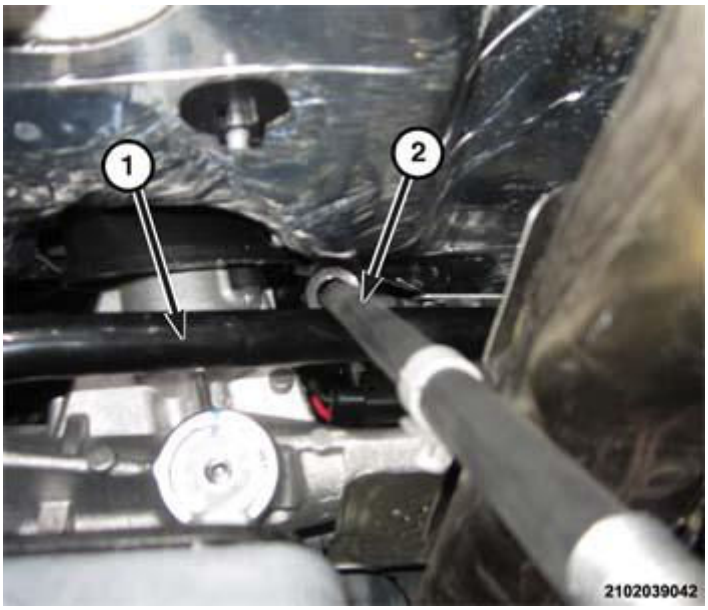

Fig. 264: Shifter Cable
Courtesy of CHRYSLER GROUP, LLC

24. Rotate the sway bar (1) for shifter cable (2) clearance.
25. Remove the shifter cable from the vehicle.

INSTALLATION

INSTALLATION

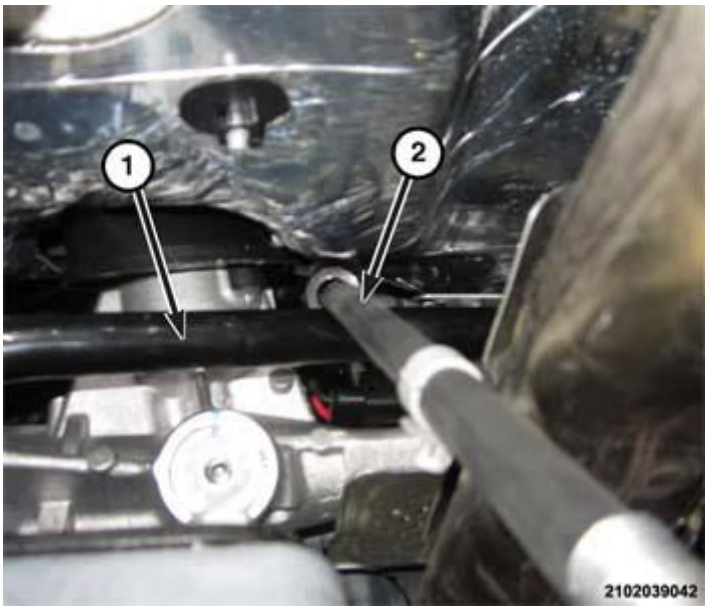

Fig. 265: Shifter Cable
Courtesy of CHRYSLER GROUP, LLC

NOTE: Exhaust and heat shield are removed for clarity.

Fig. 266: Shifter Cable & Floor Pan Access Hole
Courtesy of CHRYSLER GROUP, LLC

1. Position the shifter cable (2) into the vehicle.
2. Push the shifter cable (1) up through the floor pan.

Fig. 267: Shifter Cable Clip
Courtesy of CHRYSLER GROUP, LLC

3. Attach the shifter cable to the clip (1) attached to the steering gear.

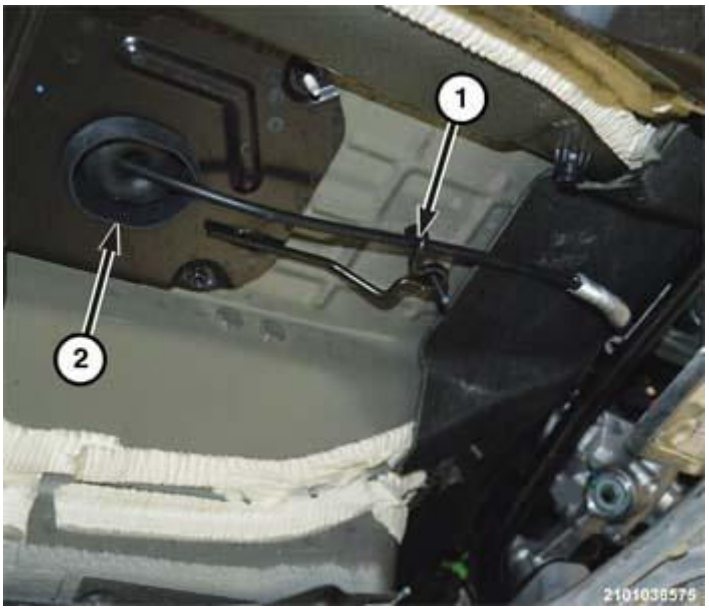

Fig. 268: Shifter Cable Support Bracket & Shifter Cable Grommet
Courtesy of CHRYSLER GROUP, LLC

4. Attach the shifter cable grommet (2) to the floor pan.
5. Attach the shifter cable to the support bracket (1).

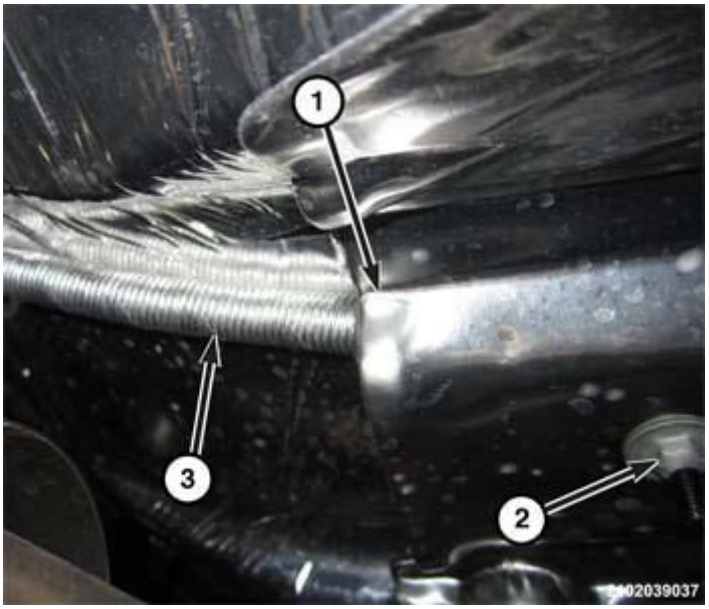

Fig. 269: Exhaust Heat Shield Nuts
Courtesy of CHRYSLER GROUP, LLC

6. Position the heat shield (1) in place and install the heat shield nuts (2).
7. Attach the front sway bar links to the sway bar and tighten to the proper specification. Refer to **FRONT, SPECIFICATIONS** .

8. Lower the vehicle.

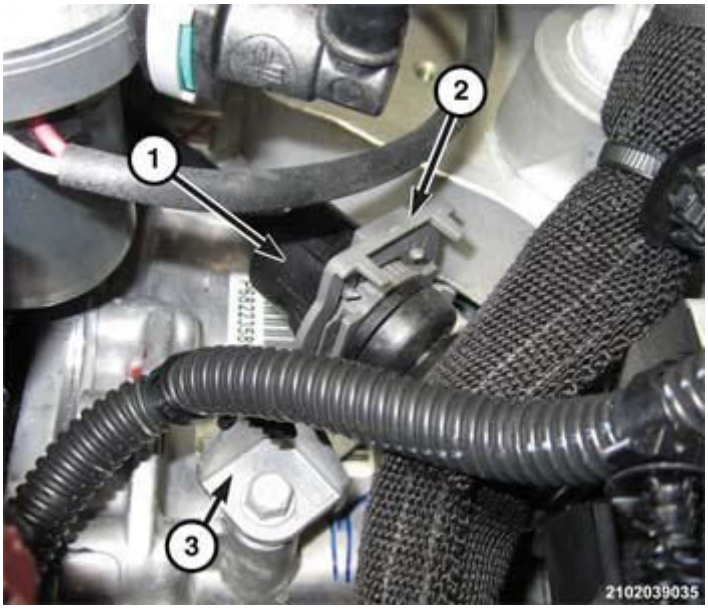

Fig. 270: Shifter Cable & Shift Cable Bracket On Transmission
Courtesy of CHRYSLER GROUP, LLC

9. Attach the shifter cable (1) in the shifter cable bracket (3) on the transmission.

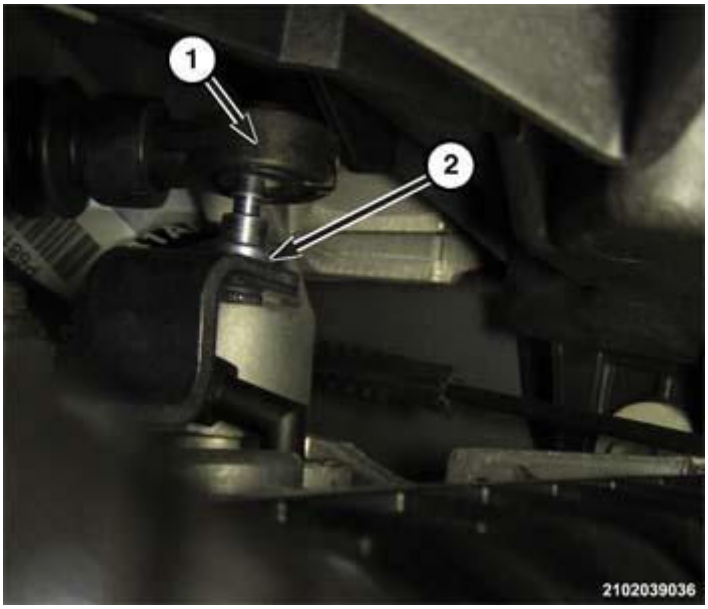

Fig. 271: Shifter Cable End & Manual Lever At Transmission
Courtesy of CHRYSLER GROUP, LLC

10. Attach the shifter cable end (1) to the manual lever (2).

NOTE: **Make sure the transmission is in Park by rotating the manual lever to its forward most position.**

11. Install the Powertrain Control Module (PCM) bracket to the battery tray.
12. Install the PCM. Refer to **MODULE, POWERTRAIN CONTROL, INSTALLATION** .

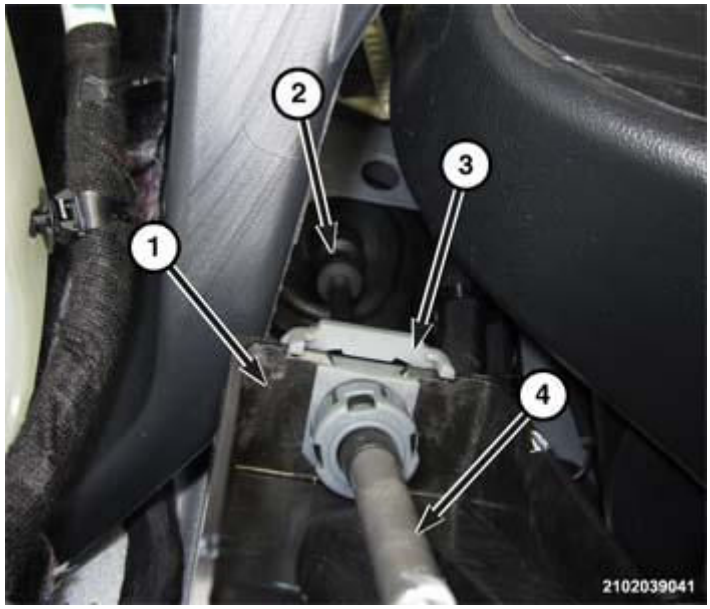

Fig. 272: Shifter Cable & Shifter Bracket
Courtesy of CHRYSLER GROUP, LLC

13. Attach the shifter cable (4) to the shifter bracket (1).

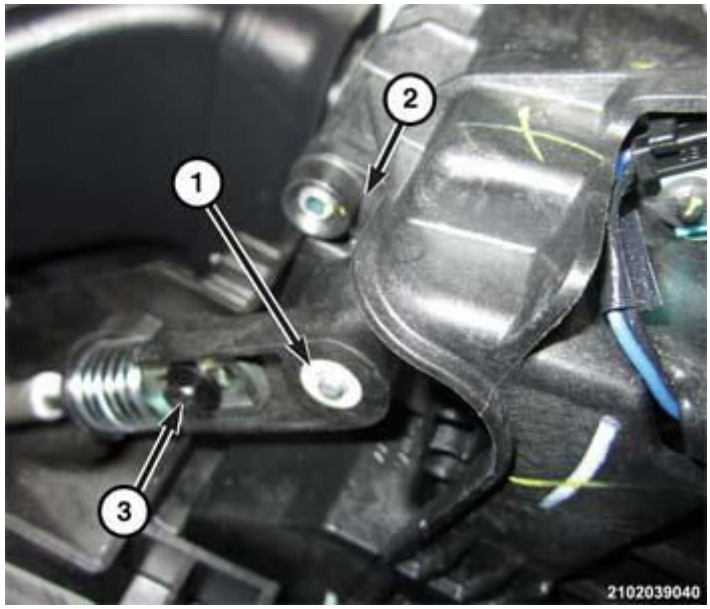

Fig. 273: Shifter Cable End & Adjustment Screw

Courtesy of CHRYSLER GROUP, LLC

14. With shifter in the Park position, attach the shifter cable end (1) to the shifter (2).
15. If necessary, adjust the shifter cable. Refer to **CABLE, SHIFT, ADJUSTMENTS**.
16. Place the shifter in the Neutral position by manually releasing the Brake Ignition Transmission Shifter Interlock (BITSI). Refer to **SHIFT, BRAKE INTERLOCK, STANDARD PROCEDURE**.

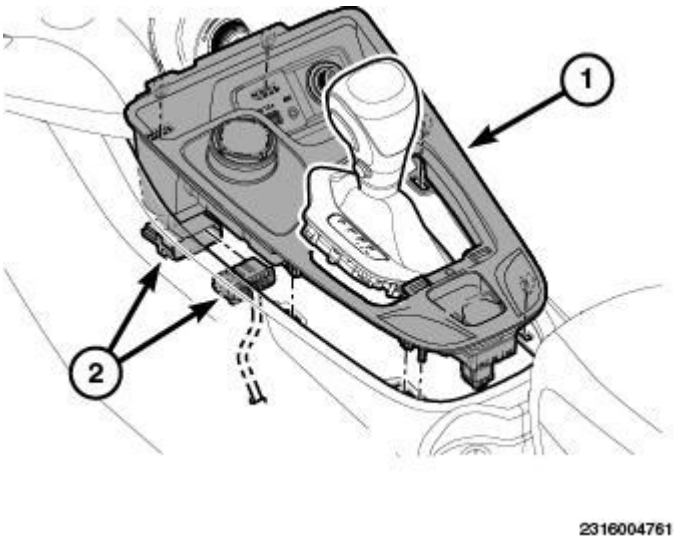

Fig. 274: Shifter Bezel, Console Bezel & Electrical Connectors
Courtesy of CHRYSLER GROUP, LLC

17. Insert the shifter bezel through the console bezel (1).
18. Connect the console bezel electrical connectors (2).
19. Install the console bezel (1) to the console.

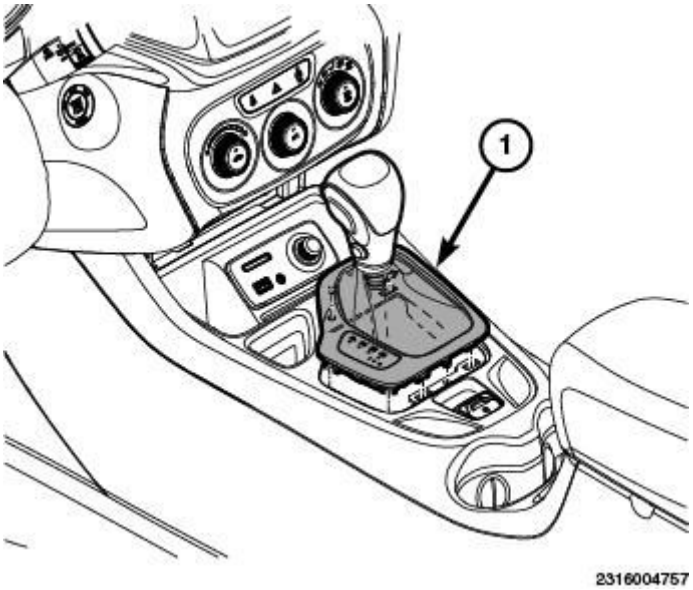

Fig. 275: Shifter Bezel & Console Bezel
Courtesy of CHRYSLER GROUP, LLC

20. Install the shifter bezel (1) to the console bezel.

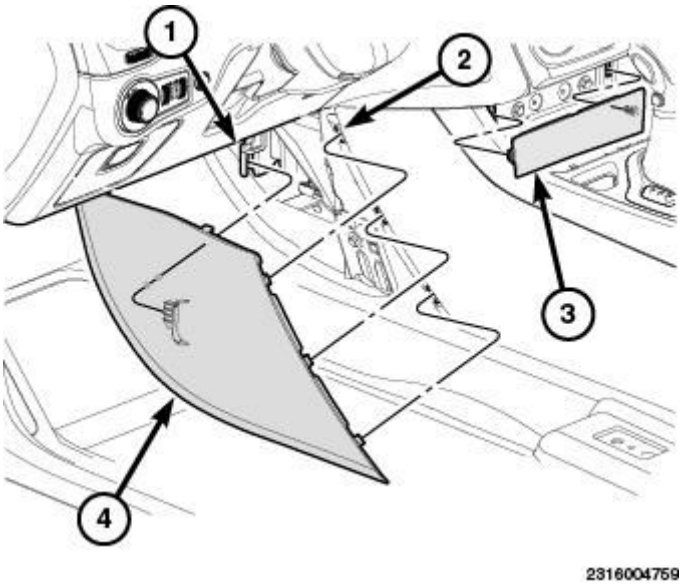

Fig. 276: Console Trim Pieces
Courtesy of CHRYSLER GROUP, LLC

21. Install the console front trim (3).
22. Connect the negative battery cable.

BEARINGS, DIFFERENTIAL

REMOVAL

DIFFERENTIAL BEARING

1. Remove the transmission from the vehicle. Refer to **INSTALLATION**.
2. Position the transmission on a suitable, clean work surface.
3. Drain the fluid from the transmission.

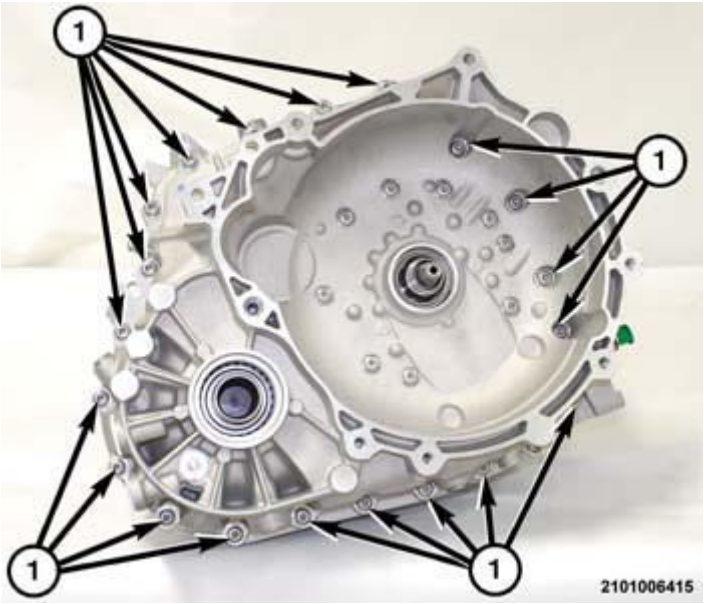

Fig. 277: Bellhousing To Transmission Housing Bolts
Courtesy of CHRYSLER GROUP, LLC

4. Remove the bolts (1) from around the perimeter of the transmission, (1) holding the bellhousing to the transmission housing.

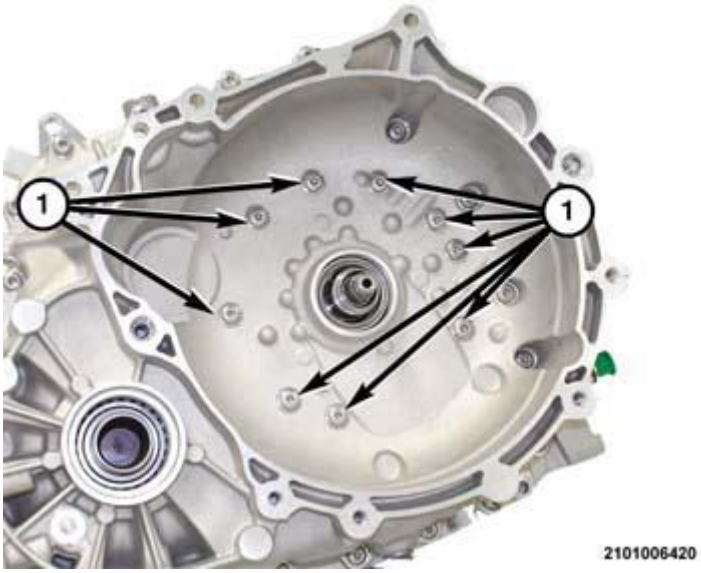

Fig. 278: Bellhousing To Output Gear Support Bolts
Courtesy of CHRYSLER GROUP, LLC

5. Remove the bolts (1) holding the bellhousing to the output gear support.
6. Using wooden blocks to stabilize the transmission on the work surface, position the transmission on the bench with the bellhousing facing upward.
7. Using a suitable pry-bar in the pry point locations, pry upward to dislodge the bellhousing from the

transmission housing.

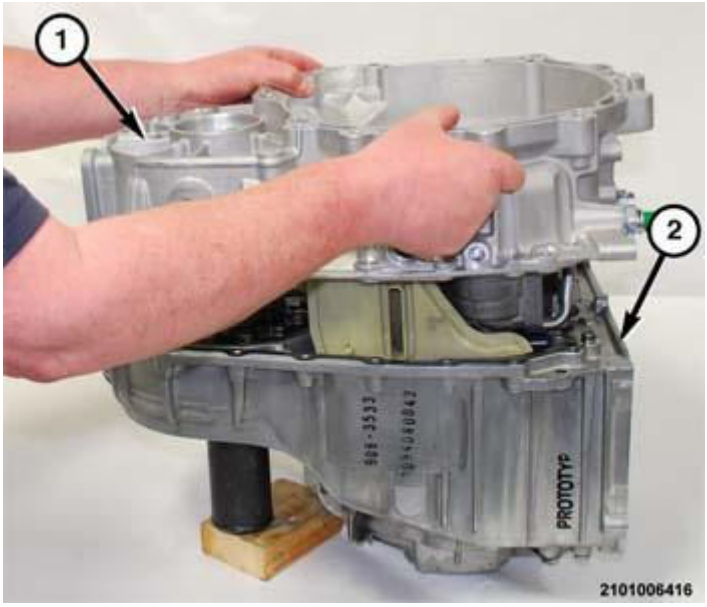

Fig. 279: Removing/Installing Bellhousing At Transmission Housing
Courtesy of CHRYSLER GROUP, LLC

8. Lift the bellhousing (1) upward and separate the assembly from the transmission housing (2).
9. Remove the bellhousing from the transmission.

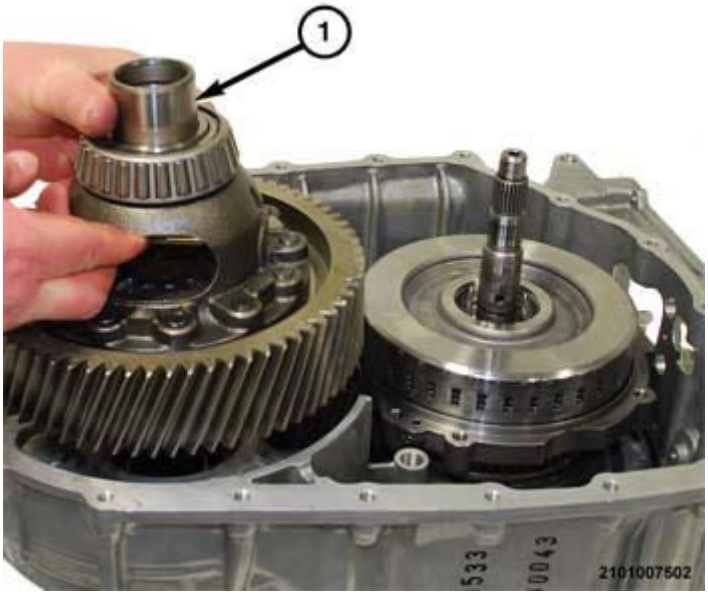

Fig. 280: Removing/Installing Differential Assembly
Courtesy of CHRYSLER GROUP, LLC

10. Remove the differential unit from the transmission

.

11. Clean the differential unit with solvent and blow it dry with regulated 344 kPa (50 psi) shop air.

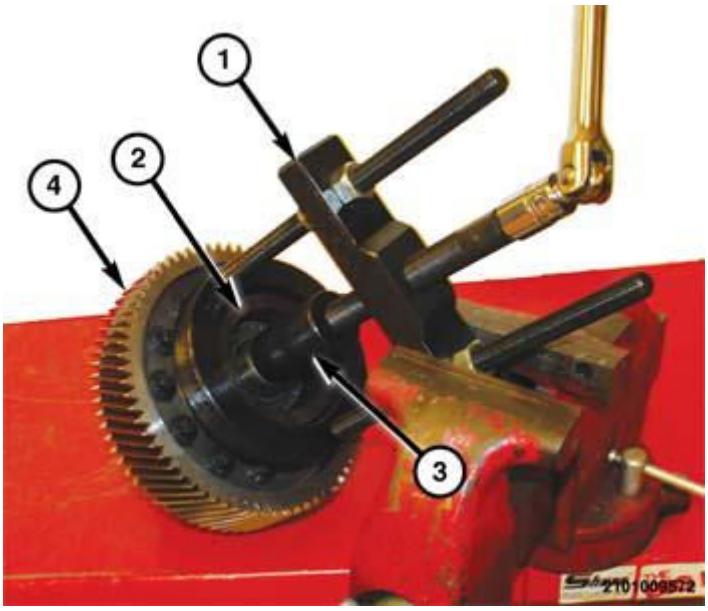

Fig. 281: Removing Differential Side Bearings (Differential is Assembled)
Courtesy of CHRYSLER GROUP, LLC

If the Differential is Assembled remove bearings using following tools and procedure.

1. Using tools (special tool #9738, Blocks, Adapter) (2), and (special tool #8513A, Insert, Crankshaft) (3), along with (special tool #C-293-PA, Puller, Press) (1) remove the side bearings.

If the Differential is Disassembled remove the bearings using following tools and procedure.

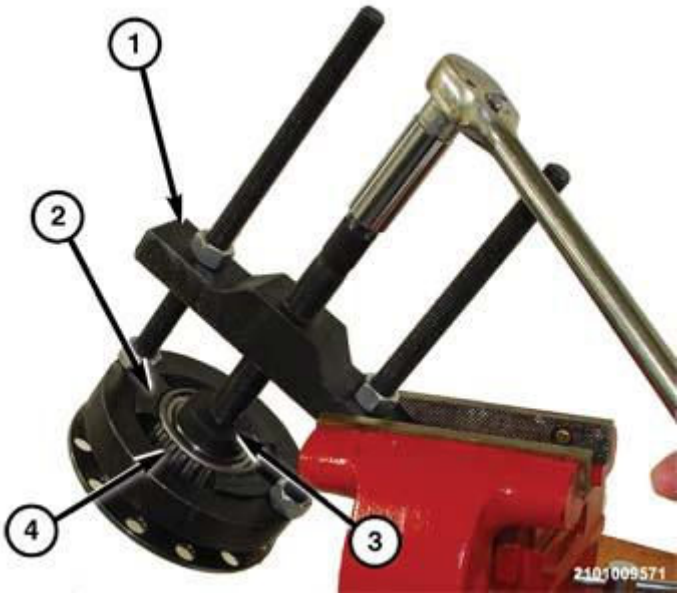

Fig. 282: Removing Differential Side Bearings (Differential is Disassembled)
Courtesy of CHRYSLER GROUP, LLC

1. Using tools (special tool #C-293-37, Block Set, Puller) (2), and (special tool #9678, Press Plug) (3), along with (special tool #C-293-PA, Puller, Press) (1) remove the side bearing (4).

BEARING RACE

1. Remove the transmission from the vehicle. Refer to **REMOVAL**.
2. Position the transmission on a suitable, clean work surface.
3. Drain the fluid from the transmission.

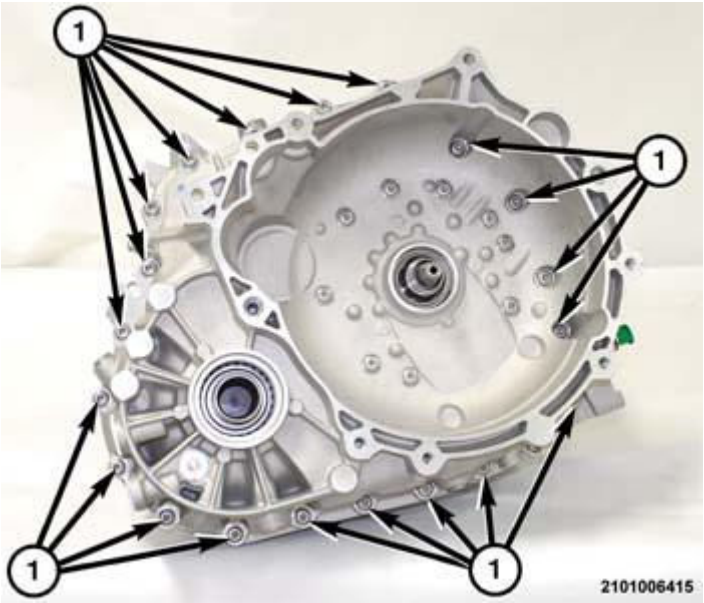

Fig. 283: Bellhousing To Transmission Housing Bolts

Courtesy of CHRYSLER GROUP, LLC

4. From around the perimeter of the transmission, remove the bolts (1) holding the bellhousing to the transmission housing.

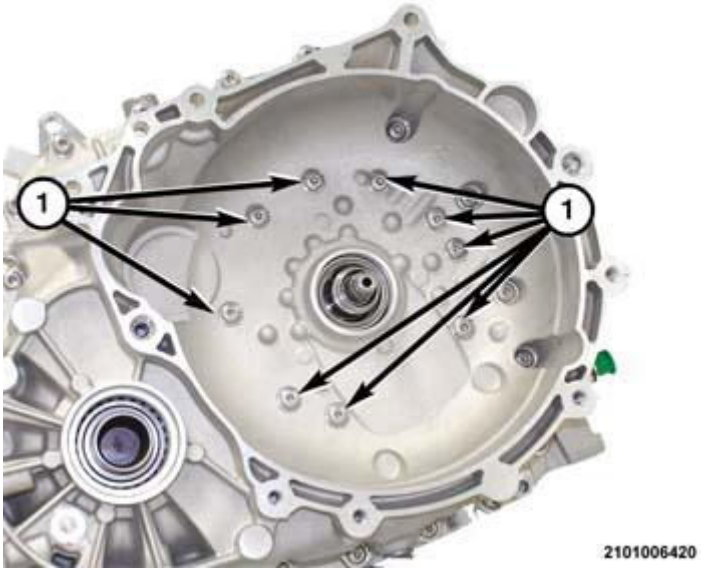

Fig. 284: Bellhousing To Output Gear Support Bolts
Courtesy of CHRYSLER GROUP, LLC

5. Remove the bolts (1) holding the bellhousing to the output gear support.
6. Using wooden blocks to stabilize the transmission on the work surface, position the transmission on the bench with the bellhousing facing upward.
7. Using a suitable pry-bar in the pry point locations, pry upward to dislodge the bellhousing from the transmission housing.

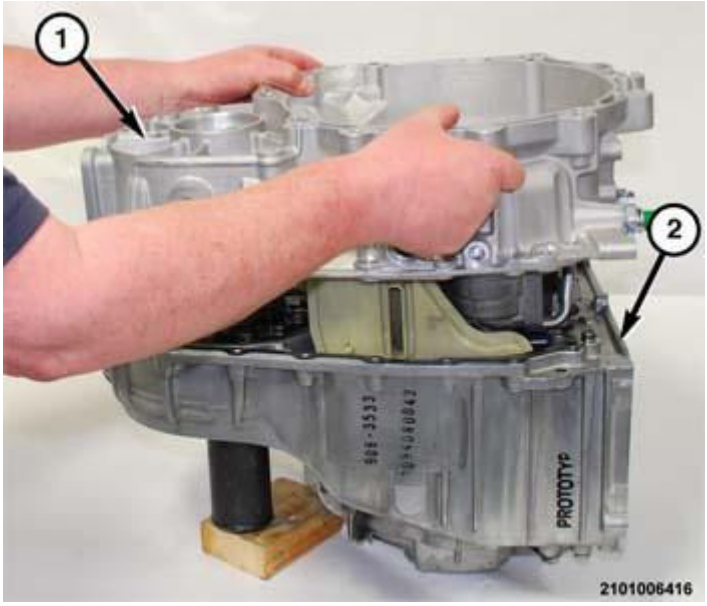

Fig. 285: Removing/Installing Bellhousing At Transmission Housing
Courtesy of CHRYSLER GROUP, LLC

8. Lift the bellhousing (1) upward and separate the assembly from the transmission housing (2).
9. Remove the bellhousing from the transmission.

Fig. 286: Remove Bearing Race From Bellhousing
Courtesy of CHRYSLER GROUP, LLC

10. Using tool (special tool #9664, Remover, Bearing Cup) (2), (special tool #C-637, Slide Hammer, Universal) (1) and a suitable vise-grip pliers (3) to hold the expansion screw in position, remove the bearing race (4) from the bellhousing.

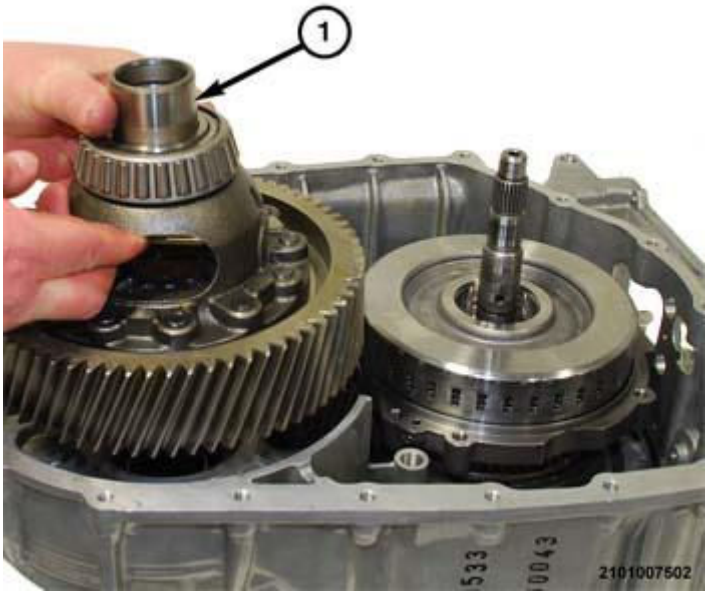

Fig. 287: Removing/Installing Differential Assembly
Courtesy of CHRYSLER GROUP, LLC

11. Remove the differential unit (1) from the transmission.

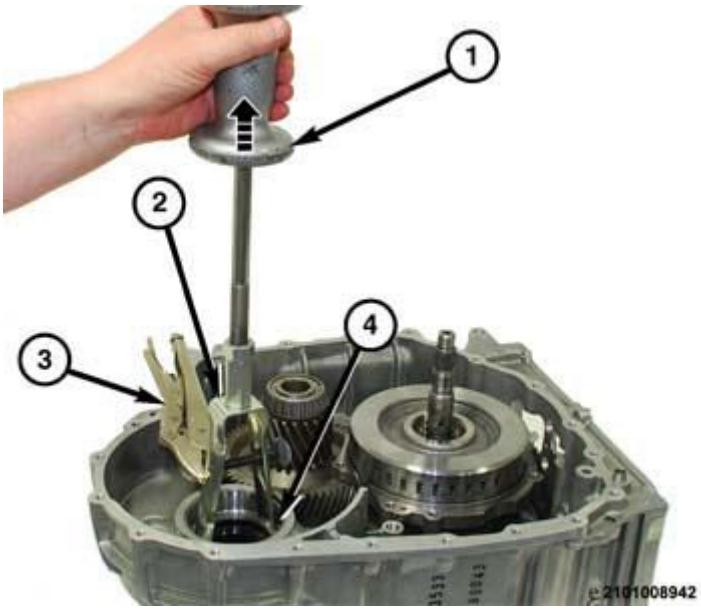

Fig. 288: Removing Bearing Race From The Transmission Housing
Courtesy of CHRYSLER GROUP, LLC

12. Using tool (special tool #9664, Remover, Bearing Cup) (2), (special tool #C-637, Slide Hammer, Universal) (1) and a suitable vise-grip pliers (3) to hold the expansion screw in position, remove the bearing race (4) from the transmission housing.

INSTALLATION

DIFFERENTIAL BEARING

1. Clean the differential unit with solvent and blow it dry with regulated 344 kPa (50 psi) shop air.

Fig. 289: Installiing Differential Side Bearing
Courtesy of CHRYSLER GROUP, LLC

2. Using a suitable hammer (1) tool (special tool #6888, Installer, Seal) (3) and (special tool #C-4171, Driver Handle, Universal)

   install the side bearings.

3. If necessary, assemble the differential unit.

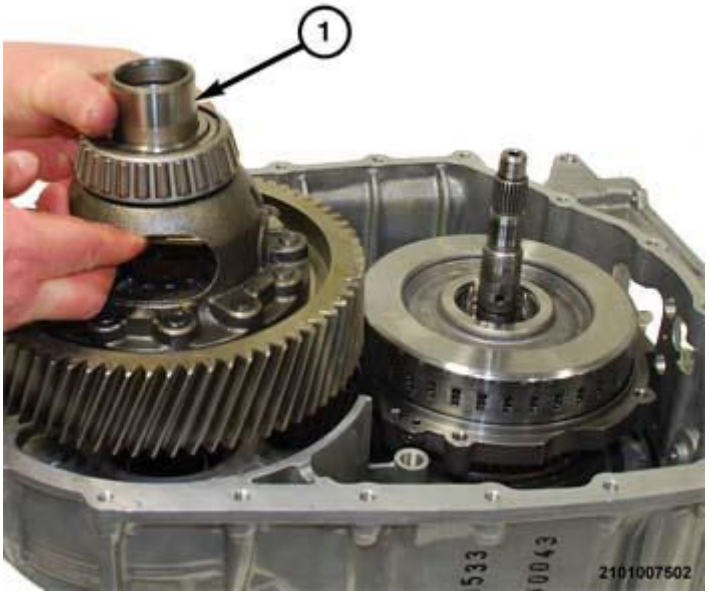

Fig. 290: Removing/Installing Differential Assembly
Courtesy of CHRYSLER GROUP, LLC

4. Install the differential unit (1) in the transmission.

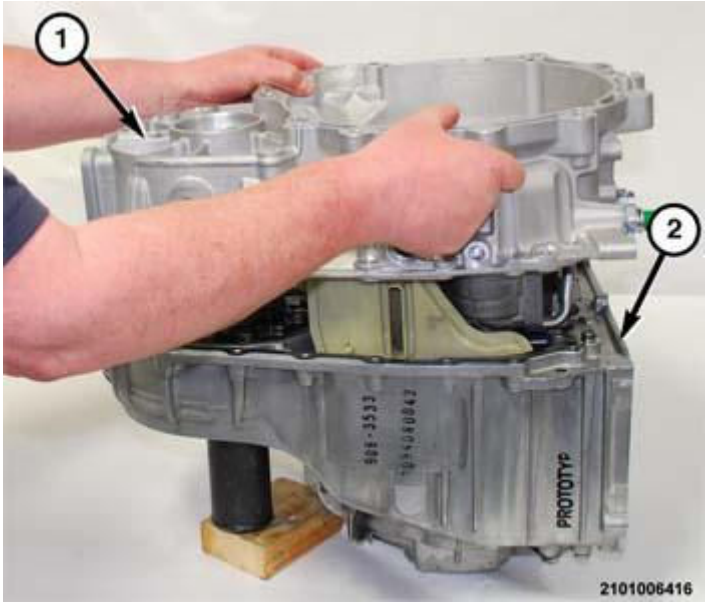

Fig. 291: Removing/Installing Bellhousing At Transmission Housing
Courtesy of CHRYSLER GROUP, LLC

5. While guiding the bellhousing (1) downward over the input and output shafts, place the bellhousing (1) in position on the transmission housing (2).
6. Engage the guide pins in the transmission housing into the receptacle holes bellhousing to assure proper alignment.

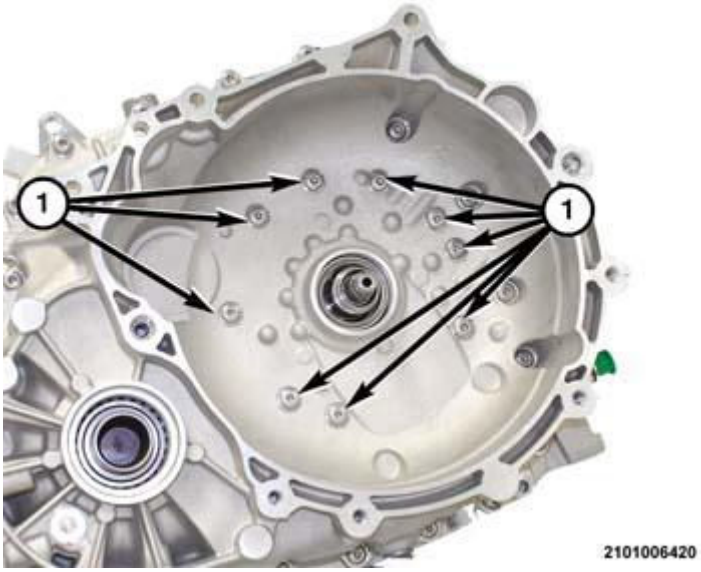

Fig. 292: Bellhousing To Output Gear Support Bolts
Courtesy of CHRYSLER GROUP, LLC

7. Install the bolts (1) with NEW seal washers to hold the bellhousing to the output gear support and tighten to the proper specifications. Refer to **SPECIFICATIONS**.

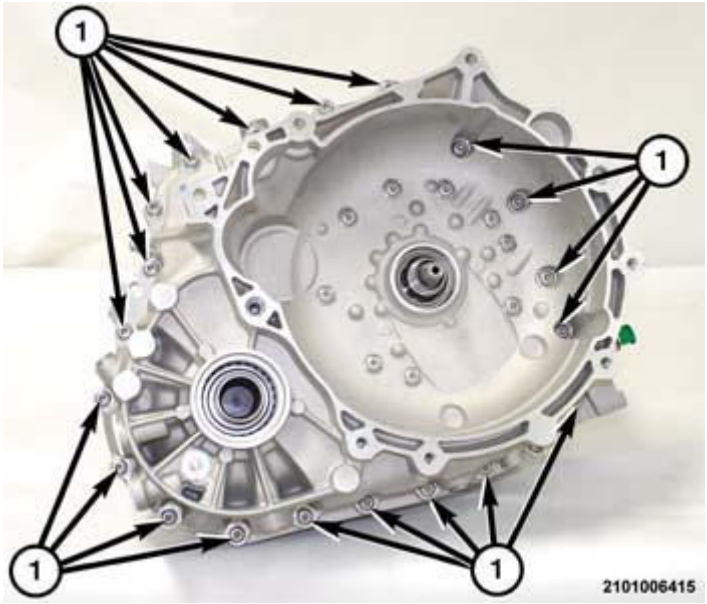

Fig. 293: Bellhousing To Transmission Housing Bolts
Courtesy of CHRYSLER GROUP, LLC

8. Install the bolts (1) to hold the bellhousing to the transmission housing and tighten to the proper specifications. Refer to **SPECIFICATIONS**.
9. Install the transmission in the vehicle. Refer to **INSTALLATION**.
10. Fill the transmission with the specified type and quantity fluid. Refer to **FLUID AND FILTER,**

STANDARD PROCEDURE.

11. Road test the vehicle to verify the repair.

BEARING RACE

If only the bearing are being replaced the bearing preload does not require selecting a new select shim. If the transmission housing, bellhousing or differential is replaced the proper thickness select shim will have to be determined. Refer to **STANDARD PROCEDURES**.

1. Wipe the bearing bores clean with a clean lint free cloth.
2. Inspect the bearing bores to damage or cracks in the casting.

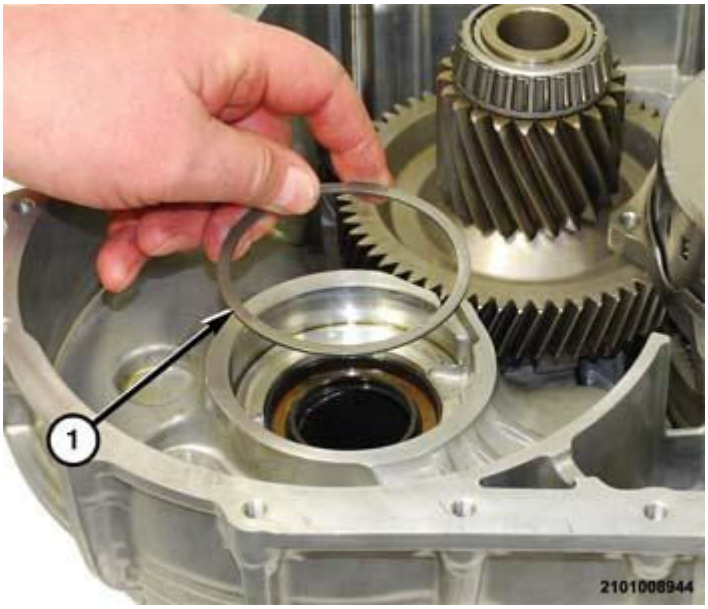

Fig. 294: Install Bearing Bore Shim
Courtesy of CHRYSLER GROUP, LLC

3. Install the original shim in the bearing bore of the transmission housing.

Fig. 295: Bearing Race
Courtesy of CHRYSLER GROUP, LLC

4. Place the NEW bearing race in the bearing bore of the transmission housing.

Fig. 296: Installing Bearing Race
Courtesy of CHRYSLER GROUP, LLC

5. Using tool (special tool #C-4310, Installer, Bearing) (2) and (special tool #C-4171, Driver Handle, Universal) (1) install the bearing race in the transmission housing.

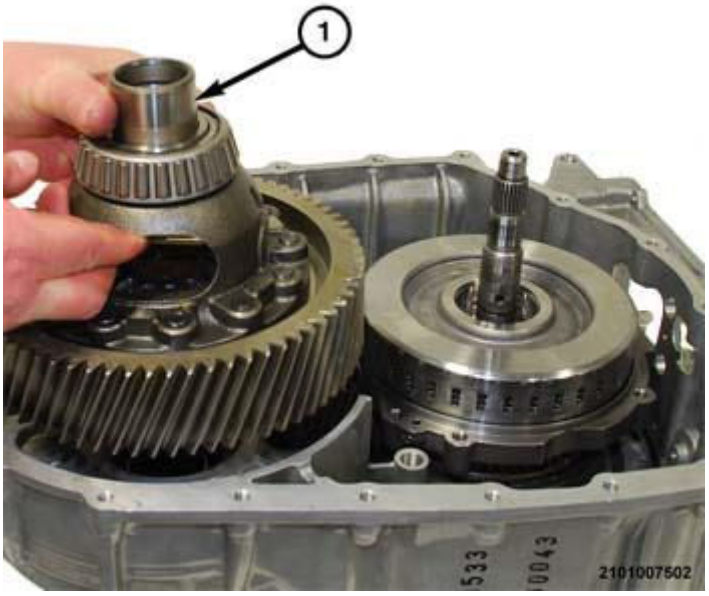

Fig. 297: Removing/Installing Differential Assembly
Courtesy of CHRYSLER GROUP, LLC

6. Install the differential unit in the transmission housing.
7. Place the NEW bearing race in the bearing bore of the bellhousing.
8. Using tool (special tool #C-4310, Installer, Bearing) and (special tool #C-4171, Driver Handle, Universal) install the bearing race in the bellhousing.

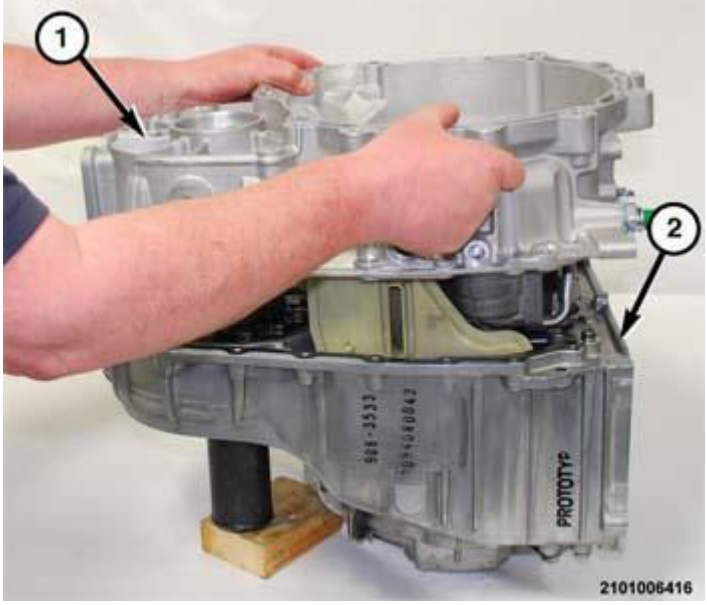

Fig. 298: Removing/Installing Bellhousing At Transmission Housing
Courtesy of CHRYSLER GROUP, LLC

9. While guiding the bellhousing (1) downward over the input and output shafts, place the bellhousing (1) in position on the transmission housing (2).

10. Engage the guide pins in the transmission housing into the receptacle holes bellhousing to assure proper alignment.

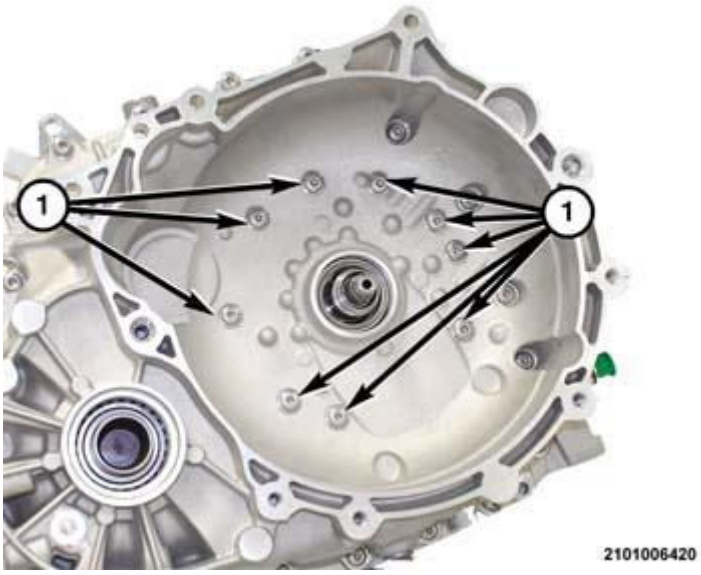

Fig. 299: Bellhousing To Output Gear Support Bolts
Courtesy of CHRYSLER GROUP, LLC

11. Install the bolts (1) with NEW seal washers to hold the bellhousing to the output gear support and tighten to the proper specifications. Refer to **SPECIFICATIONS**.

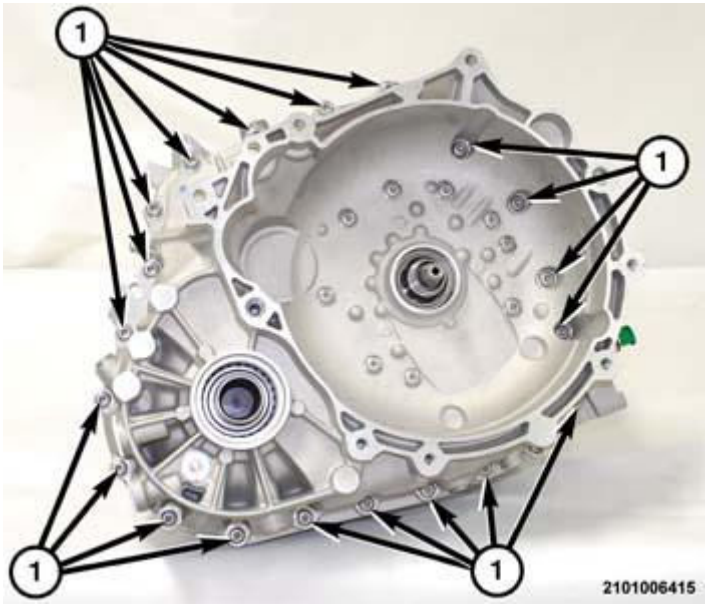

Fig. 300: Bellhousing To Transmission Housing Bolts
Courtesy of CHRYSLER GROUP, LLC

12. Install the bolts (1) to hold the bellhousing to the transmission housing and tighten to the proper

specifications. Refer to **SPECIFICATIONS**.

13. Install the transmission in the vehicle. Refer to **INSTALLATION**.
14. Fill the transmission with the specified type and quantity fluid. Refer to **FLUID AND FILTER, STANDARD PROCEDURE**.
15. Road test the vehicle to verify the repair.

BEARINGS, TRANSFER GEAR

REMOVAL

TRANSFER GEAR INNER BEARING

WARNING: Always wear safety glasses when cleaning, disassembling and assembling the transmission/transaxle. Contents of the transmission/transaxle can become projectiles (e.g., springs, snap-rings, as well as metal and other debris). Failure to wear safety glasses may result in severe personal injury.

Before disassembling the transmission, wash the transmission with a suitable solvent and a siphon pressure washer to remove oily grime and loose dirt. Place the transmission on a clean work surface with ample fluid drainage or absorbency.

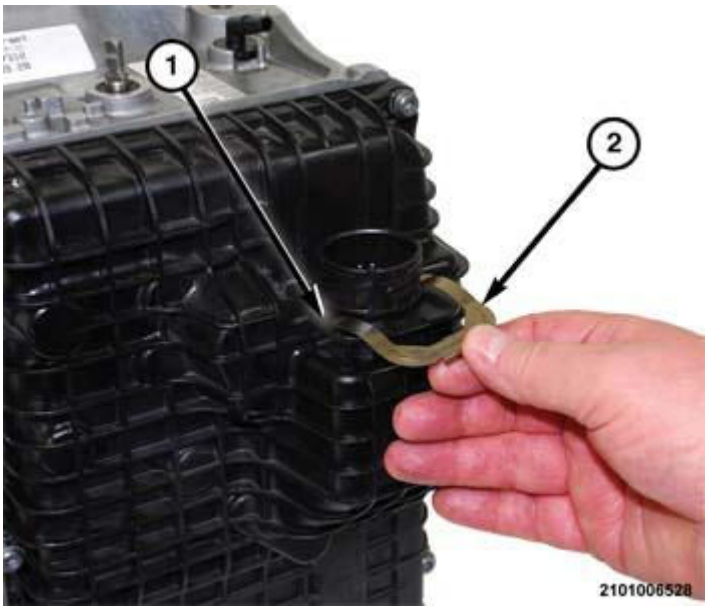

Fig. 301: Wire Connector Socket Clip
Courtesy of CHRYSLER GROUP, LLC

1. Remove the clip holding the wire connector socket in the valve body cover pan.

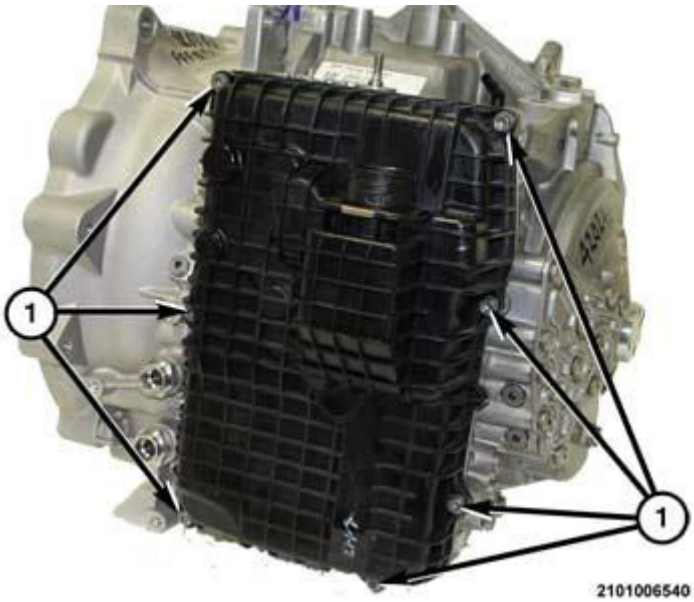

Fig. 302: Valve Body Cover Pan Bolts
Courtesy of CHRYSLER GROUP, LLC

2. Remove the bolts holding the valve body cover pan to the transmission housing.
3. Remove the valve body cover pan from the transmission.

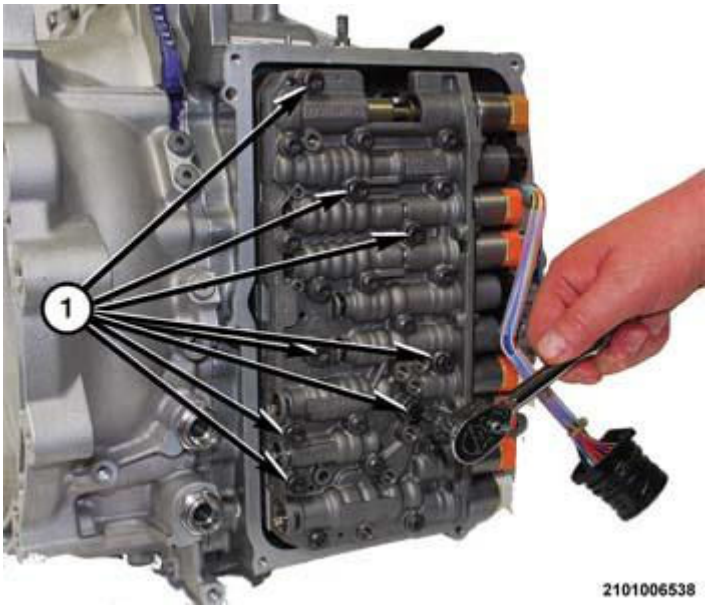

Fig. 303: Valve Body Bolts
Courtesy of CHRYSLER GROUP, LLC

4. Remove the bolts holding the valve body to the transmission housing.
5. Using a suitable prying tool, pry the valve body away from the adapter tubes.
6. Turn the valve body over to gain access to wire harness connectors.

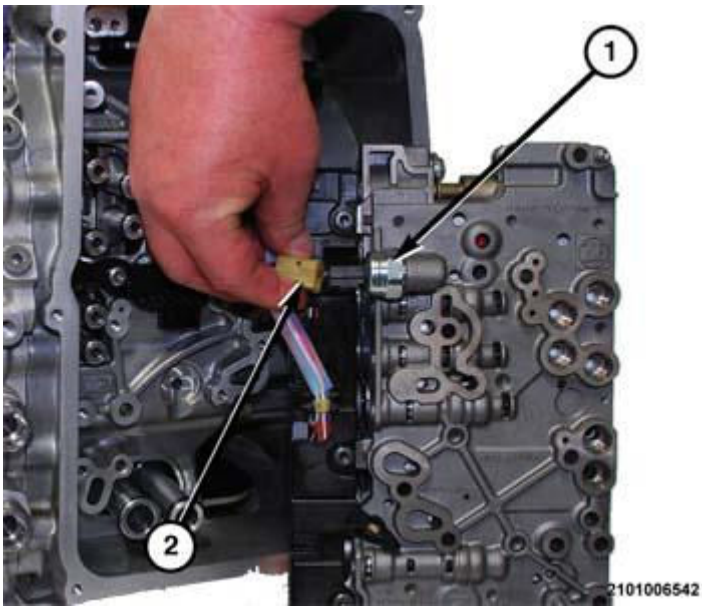

Fig. 304: Fluid Pressure Transducer Wire Harness Connector
Courtesy of CHRYSLER GROUP, LLC

7. Release the lock (2) on the fluid pressure transducer wire connector.
8. Separate the wire connector from the fluid pressure transducer (1).

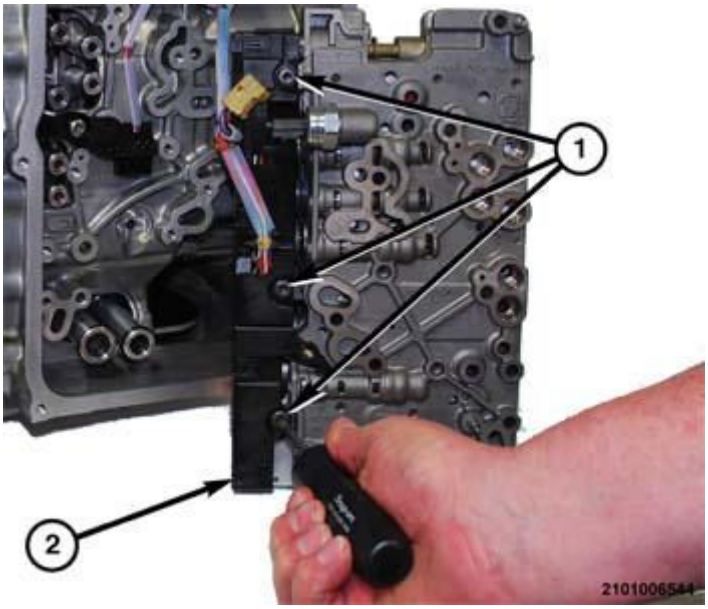

Fig. 305: Removing/Installing Wire Harness Connector At Valve Body Solenoids
Courtesy of CHRYSLER GROUP, LLC

9. Remove the bolts (1) holding the wire harness connector to the valve body and solenoids.
10. Using a suitable prying tool, Separate the wire harness connector (2) from the solenoids.
11. Separate the valve body from the transmission.

NOTE: **If the valve body is to be reused without disassembling it, store the valve body in a clean area until it is installed.**

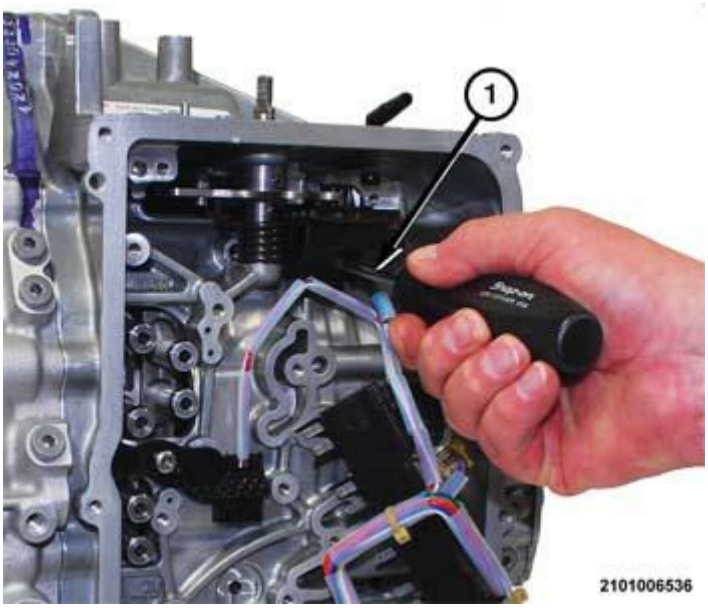

Fig. 306: Removing/Installing Transmission Range Sensor (TRS) Screw
Courtesy of CHRYSLER GROUP, LLC

12. Remove the screw (1) holding the TRS to the transmission housing.

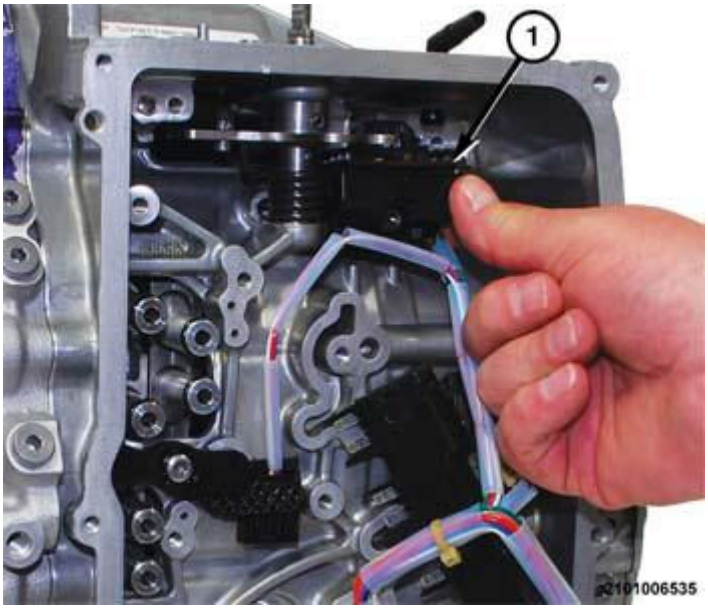

Fig. 307: Removing/Installing Transmission Range Sensor
Courtesy of CHRYSLER GROUP, LLC

13. Separate the TRS (1) from the transmission with the wire harness connected.

Fig. 308: Removing/Installing Speed Sensor Screw
Courtesy of CHRYSLER GROUP, LLC

14. Remove the screw (1) holding the speed sensors to the transmission housing.

Fig. 309: Removing/Installing Speed Sensor
Courtesy of CHRYSLER GROUP, LLC

15. Separate the speed sensor (1) from the transmission with the wire harness connected.

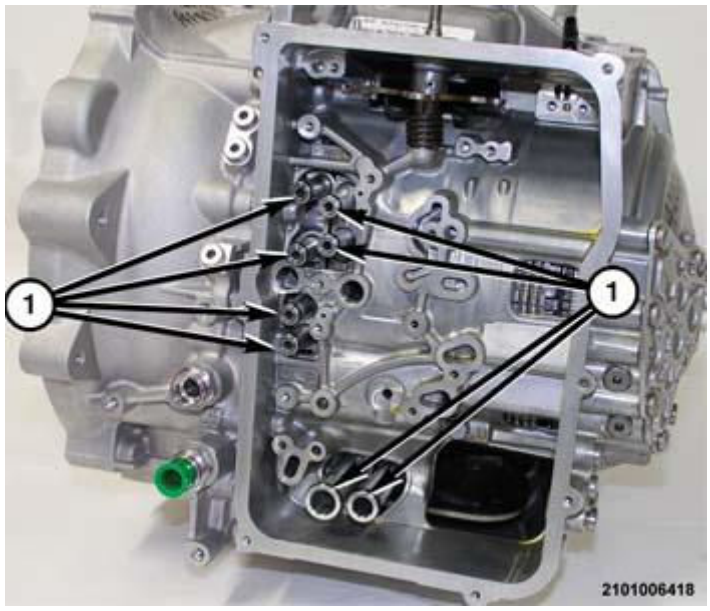

Fig. 310: Fluid Adapter Tubes & O-Ring Seals
Courtesy of CHRYSLER GROUP, LLC

16. Using suitable pliers, remove the fluid adapter tubes (1) from the transmission.

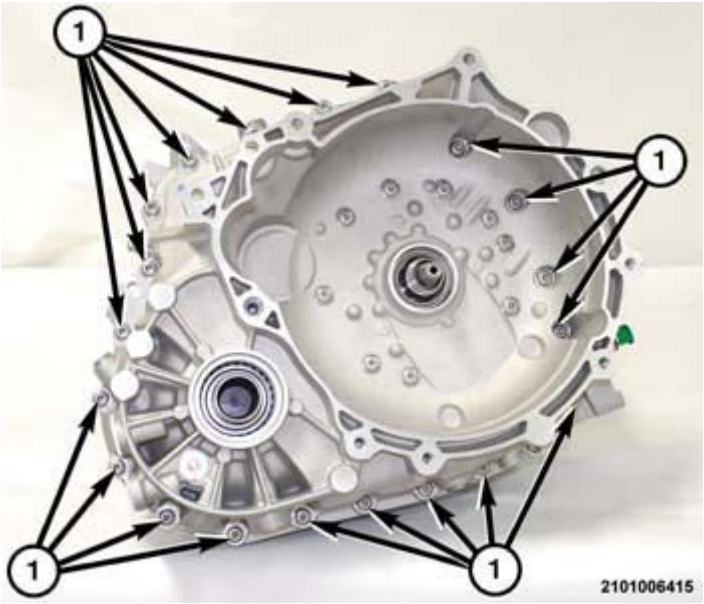

Fig. 311: Bellhousing To Transmission Housing Bolts
Courtesy of CHRYSLER GROUP, LLC

17. From around the perimeter of the transmission, remove the bolts (1) holding the bellhousing to the transmission housing.

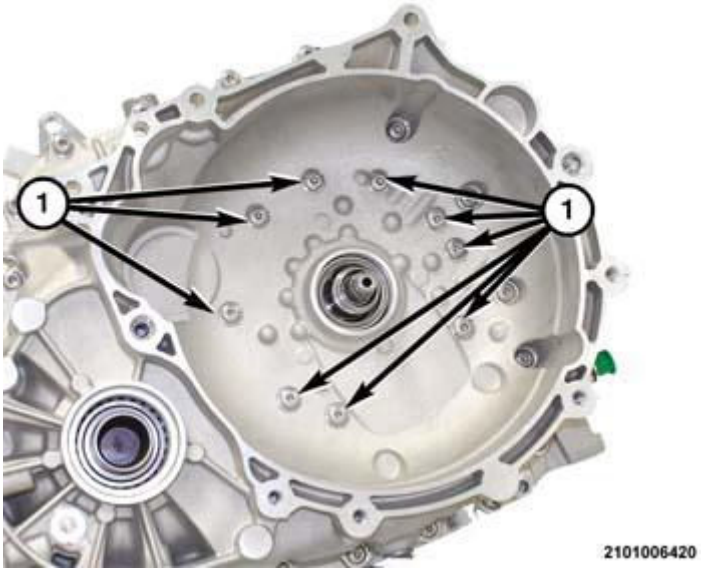

Fig. 312: Bellhousing To Output Gear Support Bolts
Courtesy of CHRYSLER GROUP, LLC

18. Remove the bolts (1) holding the bellhousing to the output gear support.
19. Using wooden blocks to stabilize the transmission on the work surface, position the transmission on the bench with the bellhousing facing upward.
20. Using a suitable pry-bar in the pry point locations, pry upward to dislodge the bellhousing from the transmission housing.

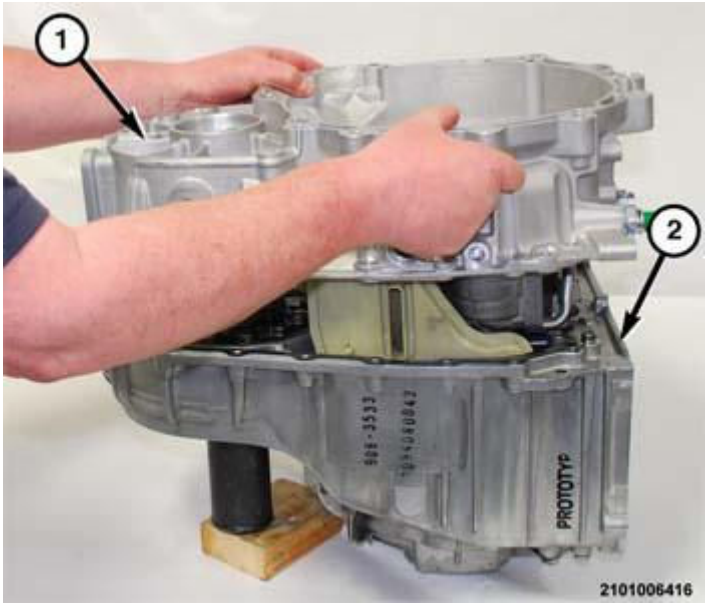

Fig. 313: Removing/Installing Bellhousing At Transmission Housing
Courtesy of CHRYSLER GROUP, LLC

21. Lift the bellhousing (1) upward and separate the assembly from the transmission housing (2).

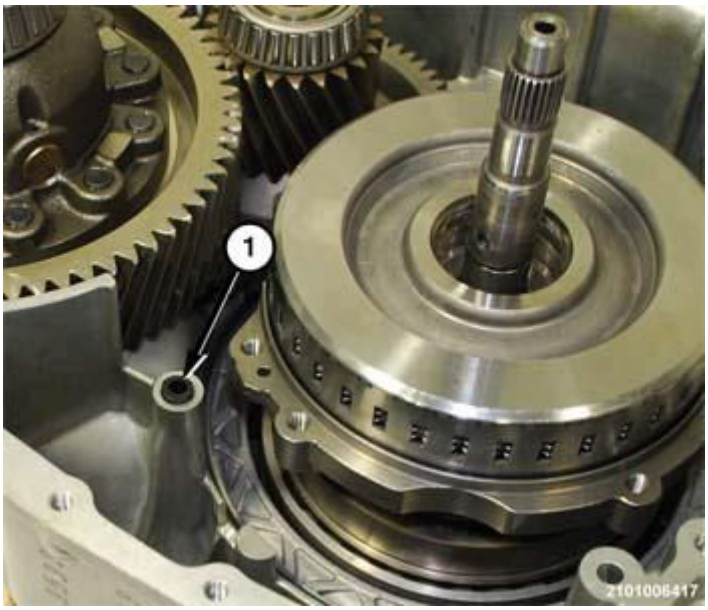

Fig. 314: Port Seal
Courtesy of CHRYSLER GROUP, LLC

22. Remove the seal (1) from the port in the transmission housing.

Fig. 315: Sealing Surface Of Transmission Housing
Courtesy of CHRYSLER GROUP, LLC

23. Separate the gasket (1) from the sealing surface of the transmission housing (2).

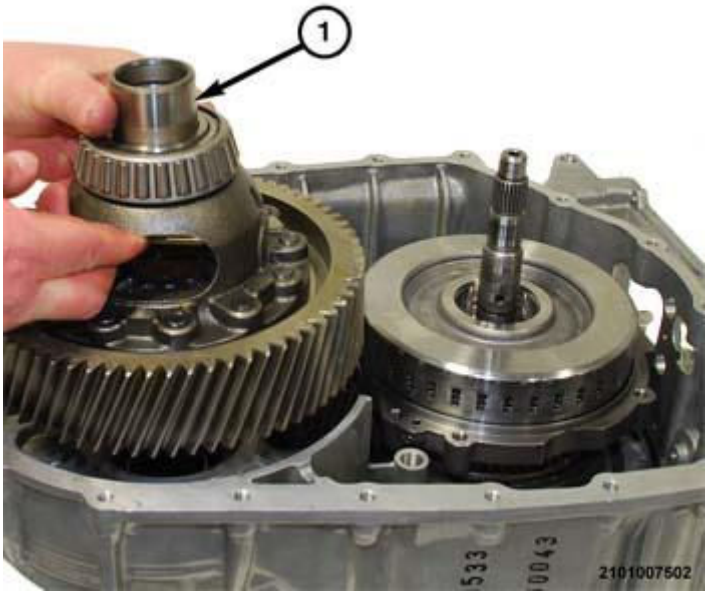

Fig. 316: Removing/Installing Differential Assembly
Courtesy of CHRYSLER GROUP, LLC

24. Remove the differential assembly (1) from the transmission housing.

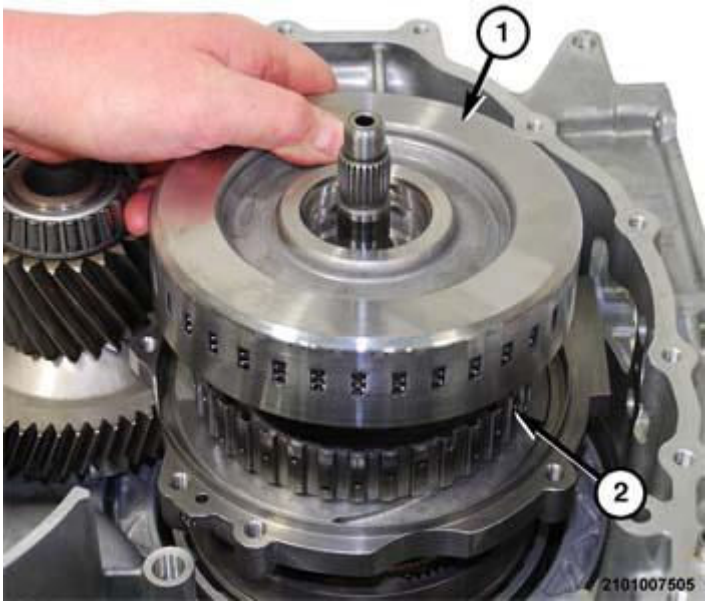

Fig. 317: Removing/Installing E-Clutch At E-Clutch Hub
Courtesy of CHRYSLER GROUP, LLC

25. Separate the E-clutch from the E-clutch hub and shaft (2).

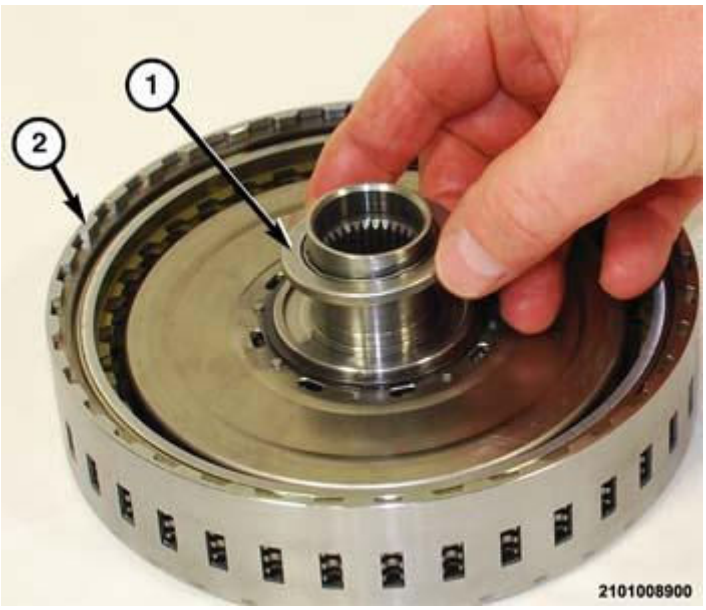

Fig. 318: Removing/Installing Thrust Bearing At E-Clutch Hub
Courtesy of CHRYSLER GROUP, LLC

26. Separate the thrust bearing (1) from the E-clutch (2) hub.

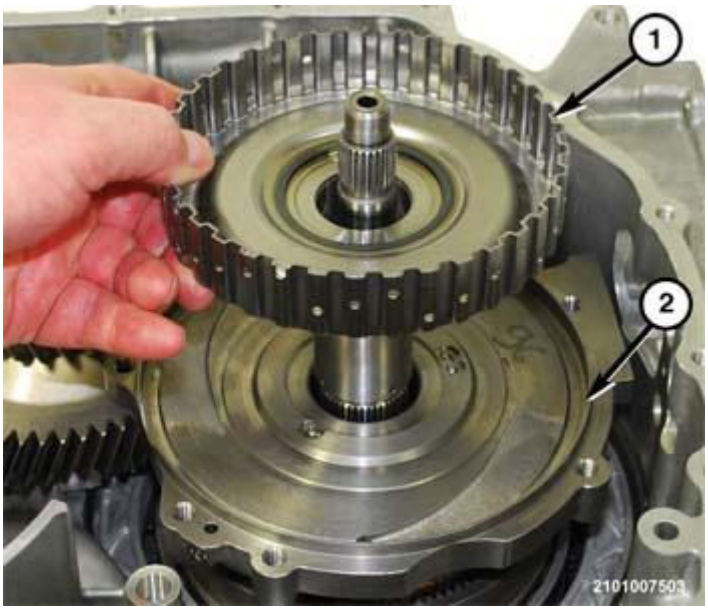

Fig. 319: E-Clutch Hub And Shaft
Courtesy of CHRYSLER GROUP, LLC

27. Separate the E-clutch hub and shaft (1) from the output gear support (2).

Fig. 320: Output Gear Support
Courtesy of CHRYSLER GROUP, LLC

28. Separate the output gear support (1) from the gear 4 planetary pinion carrier (2).

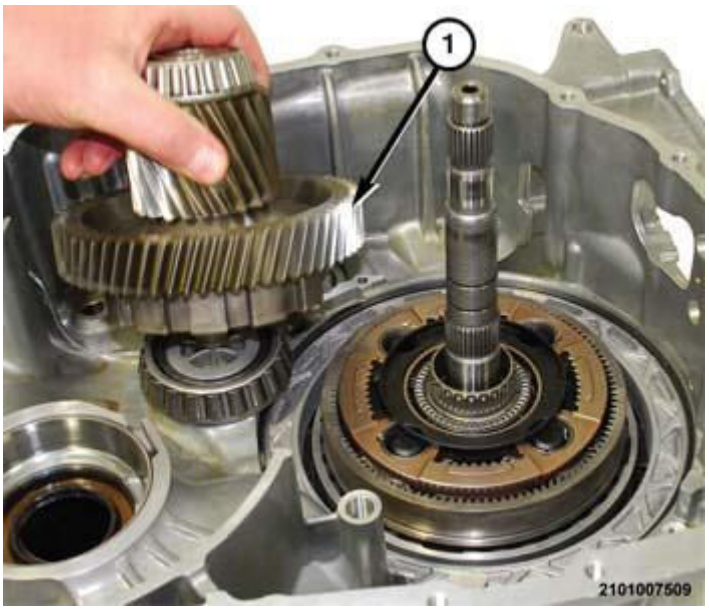

Fig. 321: Removing/Installing Transfer Gear
Courtesy of CHRYSLER GROUP, LLC

29. Remove the transfer gear from the transmission housing (1).

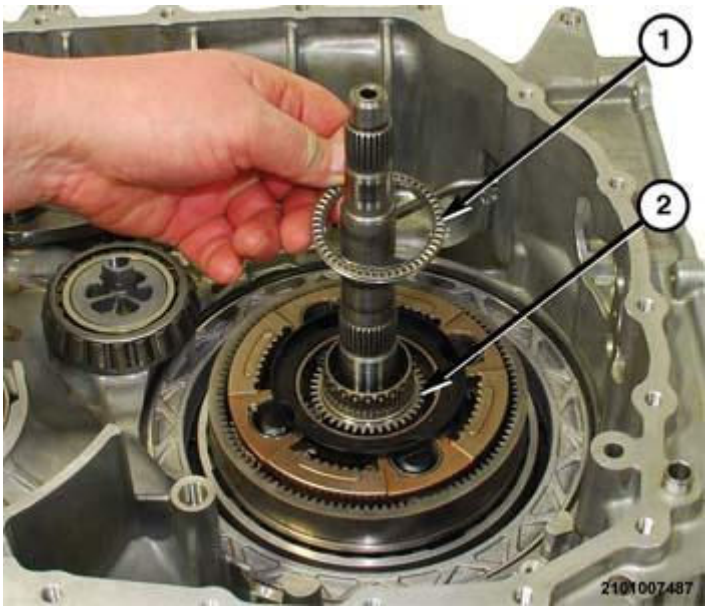

Fig. 322: Roller Type Thrust Bearing
Courtesy of CHRYSLER GROUP, LLC

30. Separate the roller type thrust bearing (1) from the sun gear 3 and 4 and Dog Clutch-F (2).

Fig. 323: Removing/Installing Sun Gear 3, 4 And Dog Clutch-F At Gear 4 Planetary Pinion Carrier
Courtesy of CHRYSLER GROUP, LLC

31. Separate the sun gear 3 and 4 and Dog Clutch-F (1) from the gear 4 planetary pinion carrier.

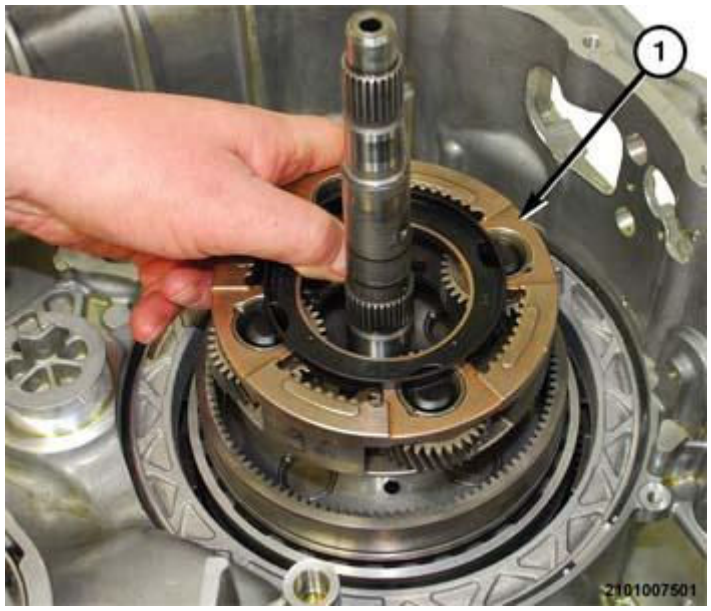

Fig. 324: Gear 4 Planetary Pinion Carrier
Courtesy of CHRYSLER GROUP, LLC

32. Separate the gear 4 planetary pinion carrier (1) from the annulus gear 4.

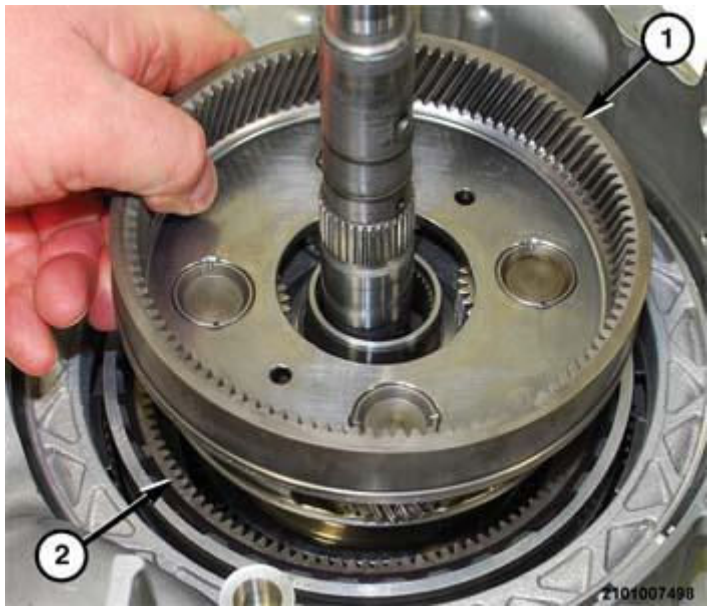

Fig. 325: Annulus Gear 4
Courtesy of CHRYSLER GROUP, LLC

33. Separate the annulus gear 4 from the annulus gear 3 (2).

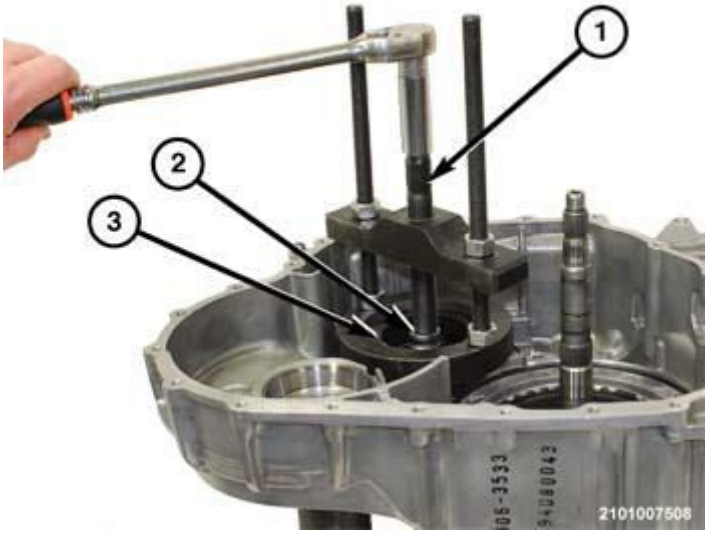

Fig. 326: Removing Transfer Gear Bearing Cone
Courtesy of CHRYSLER GROUP, LLC

34. Using Puller Press (special tool #C-293-PA, Puller, Press) (1), Adapter Blocks (special tool #9738, Blocks, Adapter) (3) and a suitable socket as a plug (2), remove the transfer gear bearing cone from the transmission housing.

TRANSFER GEAR INNER RACE

1. Clean the transfer gear with solvent and blow it dry with regulated 344 kPa (50 psi) shop air.

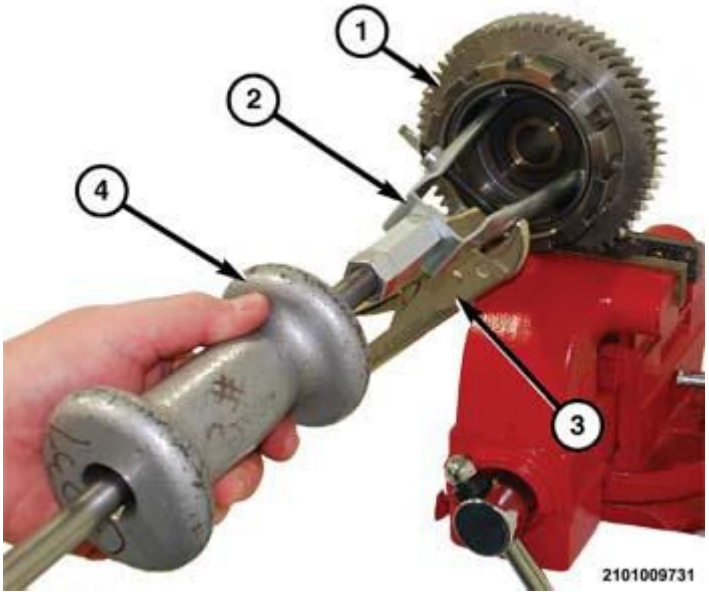

Fig. 327: Removing Bearing Race From Transfer Gear
Courtesy of CHRYSLER GROUP, LLC

2. Clamp the transfer gear (1) in a suitable bench vise with protective jaws.

NOTE: It may be necessary to clamp vise grips (3) on the seal remover to keep the expander screw in place.

3. Using tool (special tool #C-637, Slide Hammer, Universal) (4) and (special tool #7794-A, Remover, Seal) (2) with the jaws expanded out under the inner edge on the bearing race.
4. Knock outward with the slide hammer (4) until the bearing race comes out of the transfer gear (1).

TRANSFER GEAR OUTER BEARING

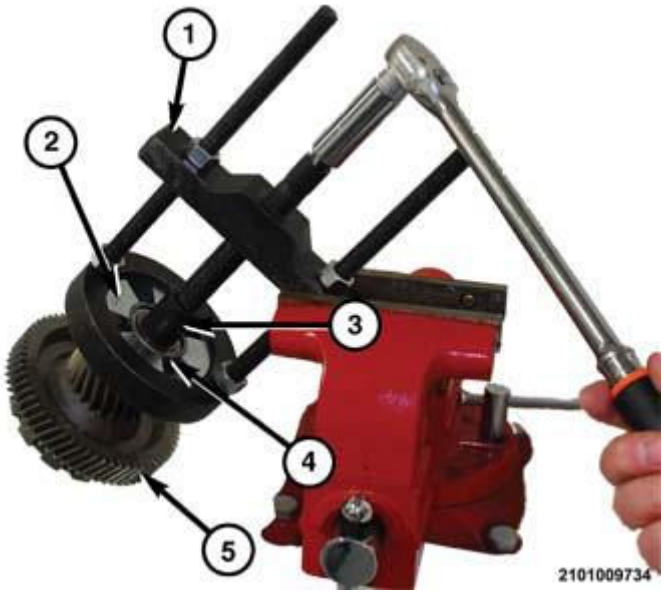

Fig. 328: Removing Transfer Gear Outer Bearing
Courtesy of CHRYSLER GROUP, LLC

1. Clamp tool (special tool #C-293-PA, Puller, Press) (1) in a suitable vise with the ram blot head upward.
2. Using tool (special tool #C-293-40, Block Set, Puller) (2) with the transfer gear bearing inserted under the puller press and engage the blocks evenly spaced around the bearing.
3. Insert tool (special tool #8513A, Insert, Crankshaft) (3) between the press ram and the transfer gear (5) and hand tighten the press (1) ram down to the Insert
4. While holding the transfer gear, use a suitable wrench to tighten the press (1) ram until the bearing (4) comes off the transfer gear.

TRANSFER GEAR OUTER RACE

1. Disassemble the transmission. Refer to **DISASSEMBLY**.
2. Position the bellhousing on a stable, clean work surface.

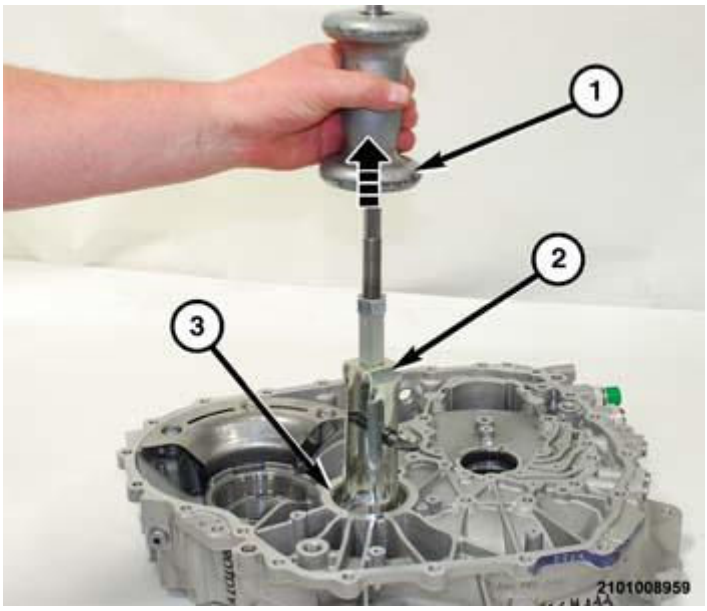

Fig. 329: Removing Transfer Gear Outer Bearing Race From Bellhousing
Courtesy of CHRYSLER GROUP, LLC

3. Using tool (special tool #C-637, Slide Hammer, Universal) (1) and (special tool #9664, Remover, Bearing Cup) (2) with the tool fingers inserted in the channels behind the transfer gear outer bearing race (3), remove the transfer gear outer bearing race (3) from the bellhousing bore.

INSTALLATION

TRANSFER GEAR INNER BEARING

The work area, counter surfaces and tools must be thoroughly cleaned before attempting to assemble the 948TE transmission. All of the sub assemblies should be disassembled, cleaned, and assembled with new sealing components where applicable. The transmission housing should be clean and oil free before beginning this procedure. If the transmission was contaminated with metallic material, all of the thrust bearings and roller bearings should be replaced. The bearing in the output gear support assembly is not serviceable. The output gear support assembly should be replaced if metal debris is present.

WARNING: **Always wear safety glasses when cleaning, disassembling and assembling the transmission/transaxle. Contents of the transmission/transaxle can become projectiles (e.g., springs, snap-rings, as well as metal and other debris). Failure to wear safety glasses may result in severe personal injury.**

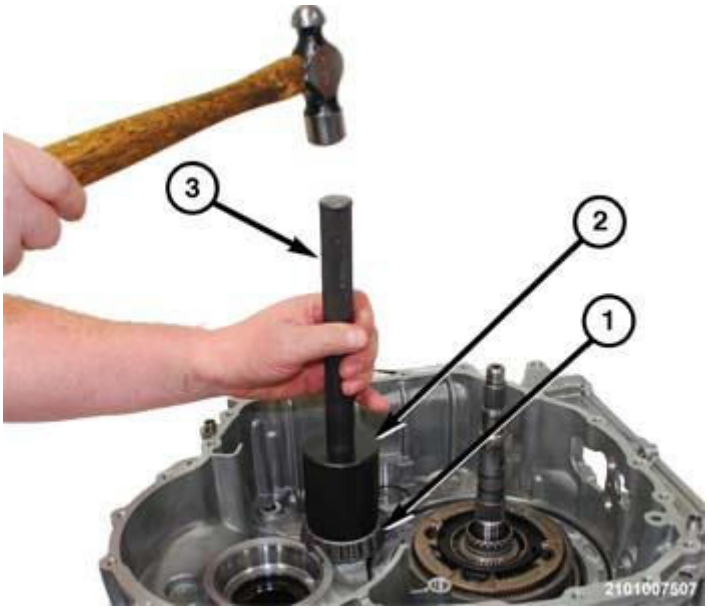

Fig. 330: Installing Transfer Gear Bearing Cone Onto Transmission Housing
Courtesy of CHRYSLER GROUP, LLC

1. Using Bearing Installer (special tool #6888, Installer, Seal) (2), and handle (special tool #C-4171, Driver Handle, Universal) (3) install the transfer gear bearing cone (1) onto the transmission housing.

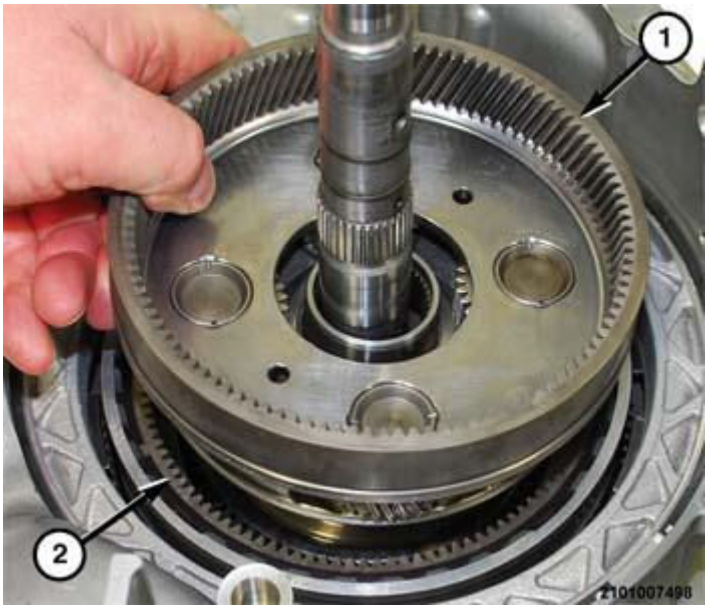

Fig. 331: Annulus Gear 4
Courtesy of CHRYSLER GROUP, LLC

2. Install the annulus gear 4 into the annulus gear 3 (2).

Fig. 332: Thrust Spacer & Underside Of Gear 4 Planetary Pinion Carrier
Courtesy of CHRYSLER GROUP, LLC

3. Install a NEW thrust spacer (1) on the underside of the gear 4 planetary pinion carrier (2).

Fig. 333: Thrust Spacer & Topside Of Gear 4 Planetary Pinion Carrier
Courtesy of CHRYSLER GROUP, LLC

4. Install a NEW thrust spacer (1) on the topside of the gear 4 planetary pinion carrier (2).

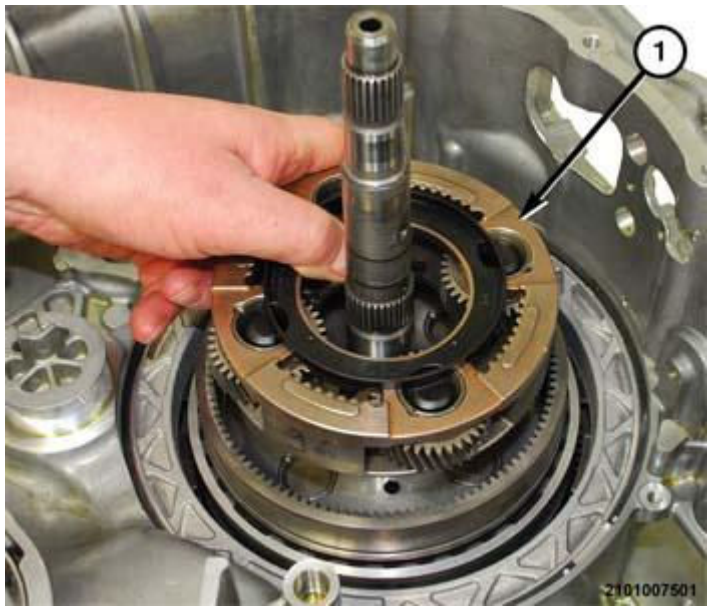

Fig. 334: Gear 4 Planetary Pinion Carrier
Courtesy of CHRYSLER GROUP, LLC

5. Install the gear 4 planetary pinion carrier (1) into the annulus gear 4.

Fig. 335: Removing/Installing Sun Gear 3, 4 And Dog Clutch-F At Gear 4 Planetary Pinion Carrier
Courtesy of CHRYSLER GROUP, LLC

6. Install the sun gear 3 and 4 and Dog Clutch-F (1) into the gear 4 planetary pinion carrier.

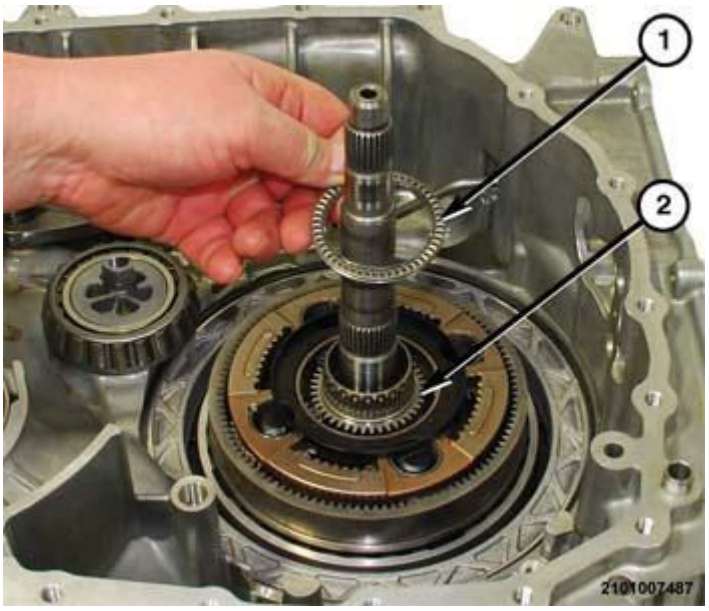

Fig. 336: Roller Type Thrust Bearing
Courtesy of CHRYSLER GROUP, LLC

7. Install the roller type thrust bearing (1) onto the sun gear 3 and 4 and Dog Clutch-F (2).

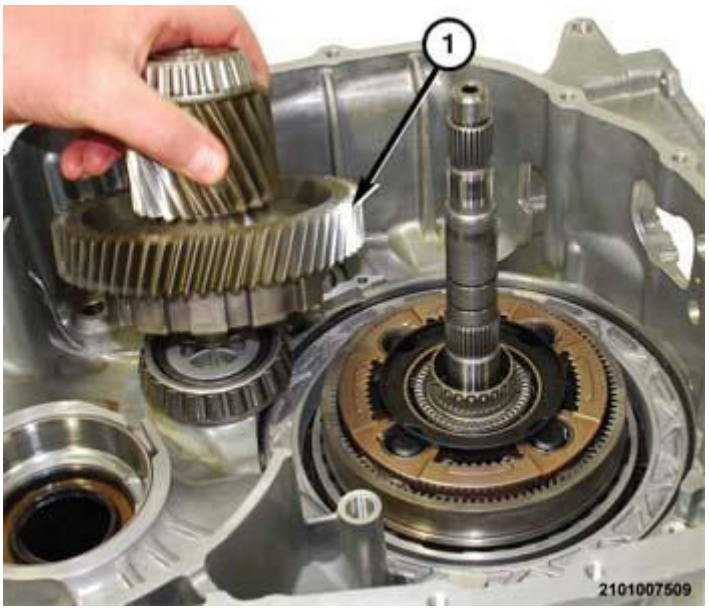

Fig. 337: Removing/Installing Transfer Gear
Courtesy of CHRYSLER GROUP, LLC

NOTE: **If new transfer gear (1) or transmission housing are being replaced measurements must be preformed to determine correct thickness for the bearing preload shims. If the bearings and races are replaced the factory installed preload shims do not require replacement.**

8. If necessary, replace the bearings and races on the transfer gear (1).
9. Install the transfer gear (1) into the transmission housing.

Fig. 338: Output Gear Support
Courtesy of CHRYSLER GROUP, LLC

10. Install the output gear support (1) into the gear 4 planetary pinion carrier (2).

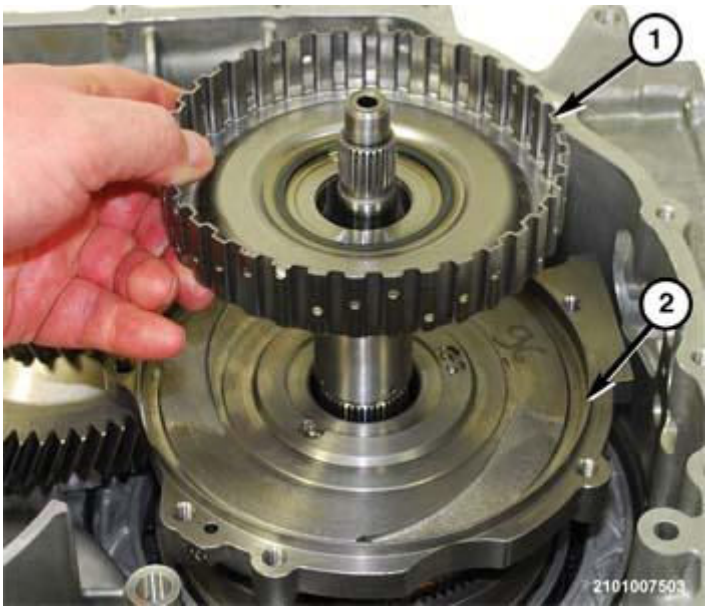

Fig. 339: E-Clutch Hub And Shaft
Courtesy of CHRYSLER GROUP, LLC

11. Install the E-clutch hub and shaft (1) into the output gear support (2)

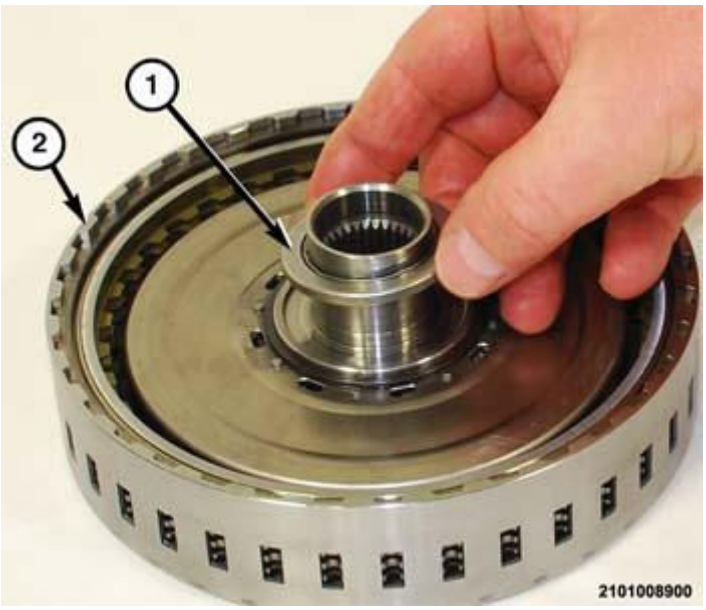

Fig. 340: Removing/Installing Thrust Bearing At E-Clutch Hub
Courtesy of CHRYSLER GROUP, LLC

12. Install the thrust bearing (1) on the E-clutch (2) hub.

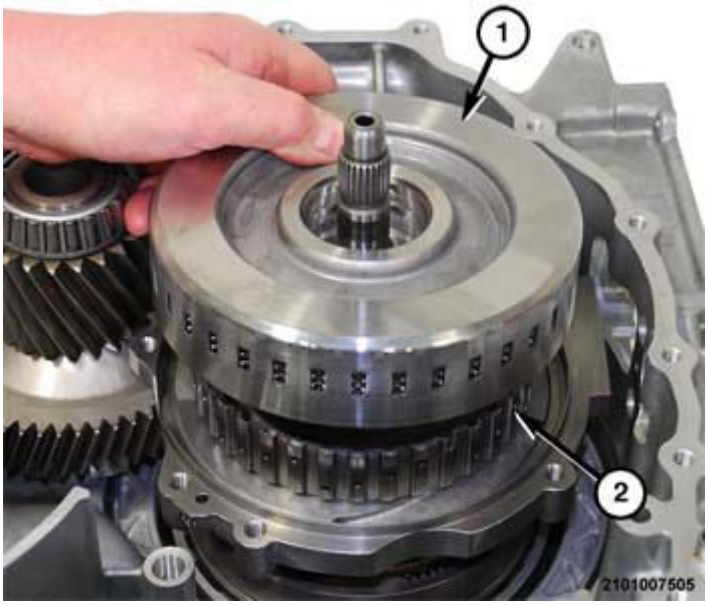

Fig. 341: Removing/Installing E-Clutch At E-Clutch Hub
Courtesy of CHRYSLER GROUP, LLC

NOTE: Before installing the E-clutch, use a suitable screwdriver to align the grooves in the friction.

13. Install the E-clutch onto the E-clutch hub and shaft (2).

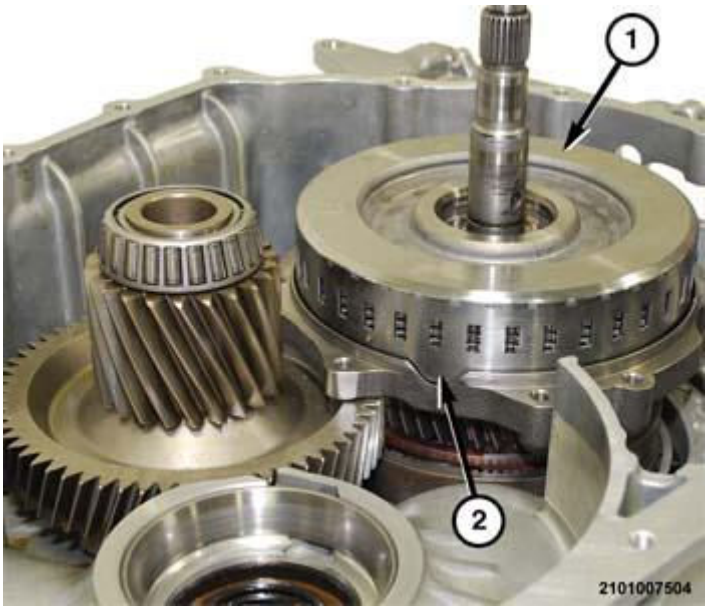

Fig. 342: E-Clutch Hub And Shaft
Courtesy of CHRYSLER GROUP, LLC

14. Wriggle the E-clutch (1) until all of the friction discs are fully engaged on the E-clutch hub and shaft.

NOTE: When the E-clutch (1) is fully seated the gap (2) will be very small between the E-clutch retainer and the output gear support.

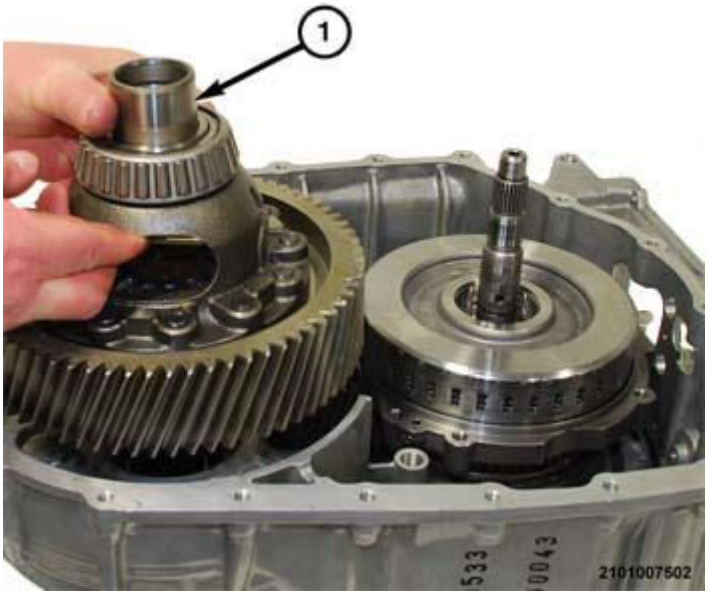

Fig. 343: Removing/Installing Differential Assembly
Courtesy of CHRYSLER GROUP, LLC

NOTE: If new differential (1) or transmission housing are being replaced

measurements must be preformed to determine correct thickness for the bearing preload shims. If the bearings and races are replaced the factory installed preload shims do not require replacement.

15. If necessary, replace the bearings and races on the differential (1).
16. Install the differential assembly (1) into the transmission housing.

Fig. 344: Sealing Surface Of Transmission Housing
Courtesy of CHRYSLER GROUP, LLC

17. Place a NEW gasket (1) in position on the sealing surface of the transmission housing (2).

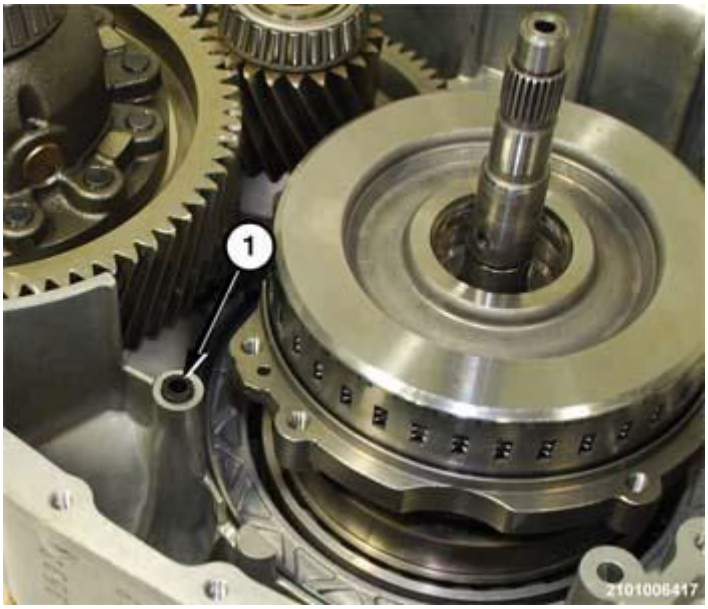

Fig. 345: Port Seal
Courtesy of CHRYSLER GROUP, LLC

18. Install a NEW seal (1) in the port in the transmission housing.
19. If necessary, replace the output seal and the impeller hub seal.

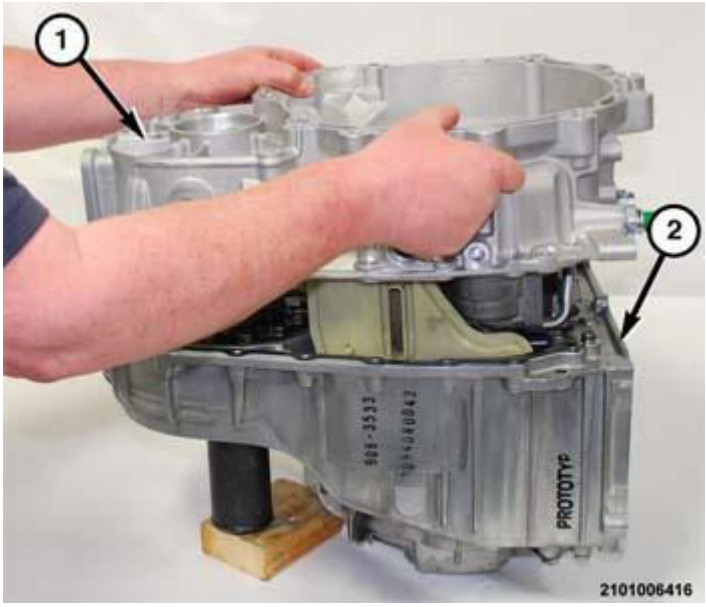

Fig. 346: Removing/Installing Bellhousing At Transmission Housing
Courtesy of CHRYSLER GROUP, LLC

20. While guiding the bellhousing (1) downward over the input and output shafts, place the bellhousing (1) in position on the transmission housing (2).

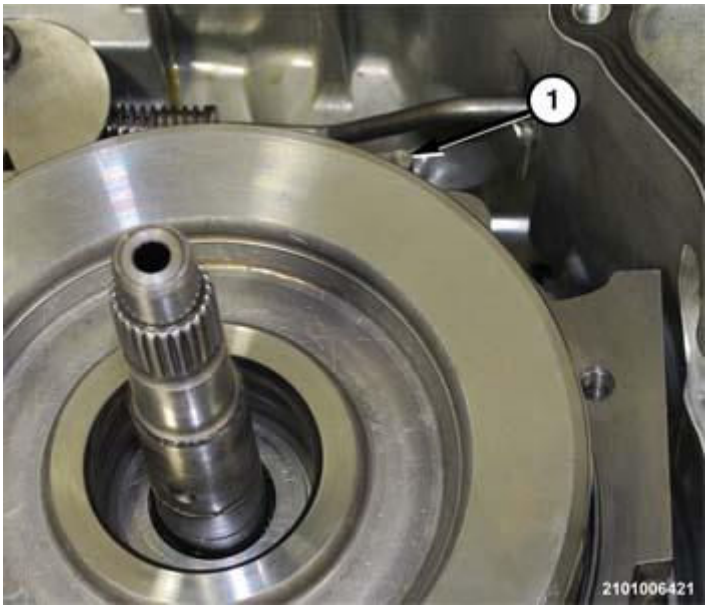

Fig. 347: Checking Guide Pin Alignment

Courtesy of CHRYSLER GROUP, LLC

21. Rotate the output gear clockwise to assure guide pin (1) alignment.

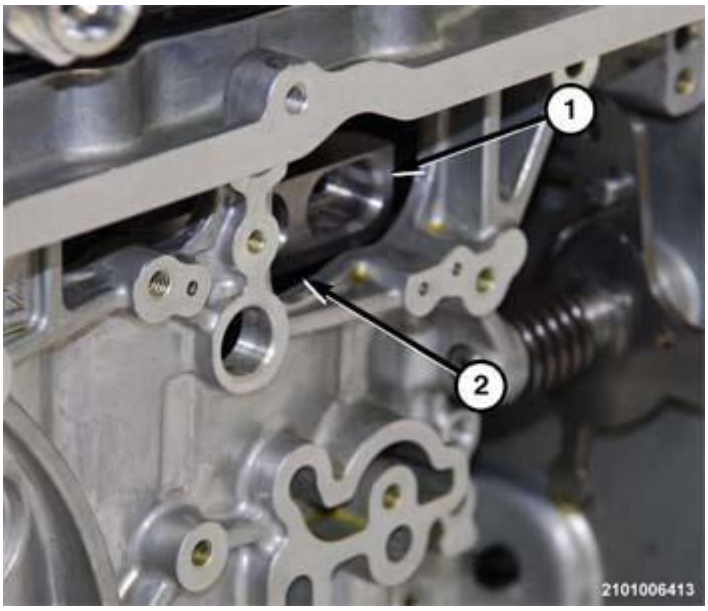

Fig. 348: Engaging Guide Pins In Transmission Housing Into Receptacle Holes
Courtesy of CHRYSLER GROUP, LLC

22. Rotate the output gear support (1) through the window (2) behind the valve body until the guide pin engages the receptacle hole in the bellhousing
23. Engage the guide pins in the transmission housing into the receptacle holes bellhousing to assure proper alignment.
24. Install several bolts to hold the bell housing to the transmission housing. Tighten the bolts hand tight.
25. Position the transmission on the bench with the bellhousing facing outward.

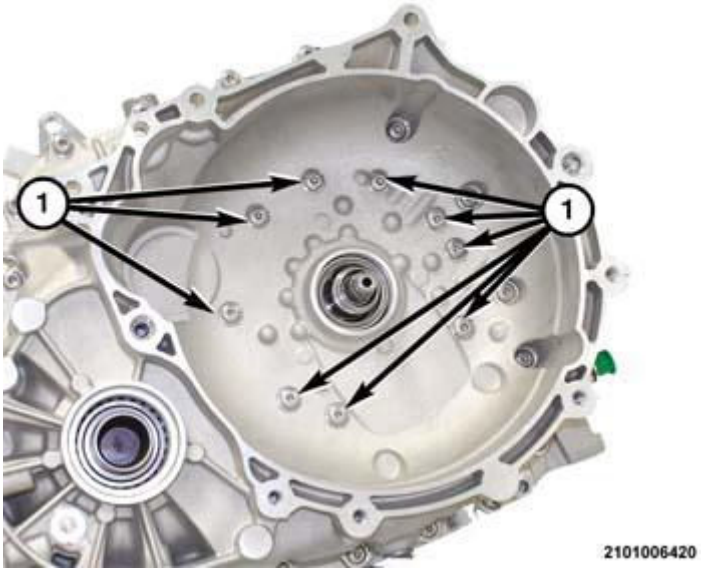

Fig. 349: Bellhousing To Output Gear Support Bolts
Courtesy of CHRYSLER GROUP, LLC

26. Install the bolts (1) with NEW seal washers to hold the bellhousing to the output gear support. Refer to **SPECIFICATIONS**.

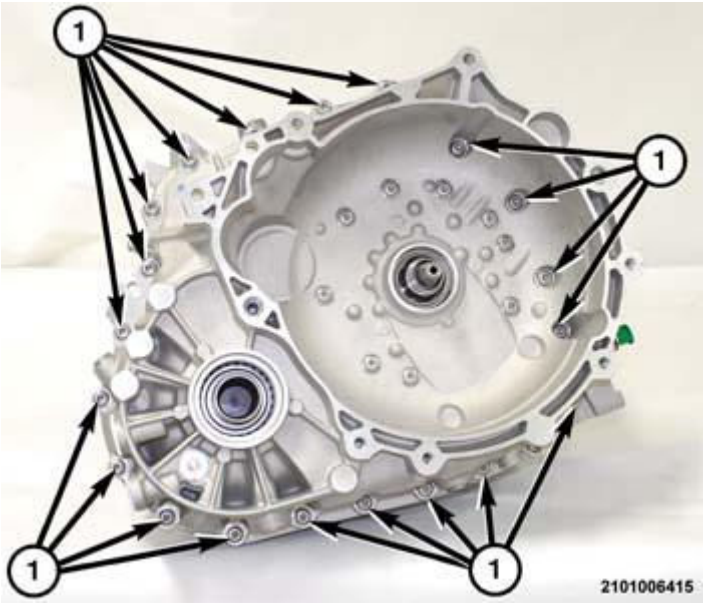

Fig. 350: Bellhousing To Transmission Housing Bolts
Courtesy of CHRYSLER GROUP, LLC

27. Install the bolts (1) to hold the bellhousing to the transmission housing. Refer to **SPECIFICATIONS**.

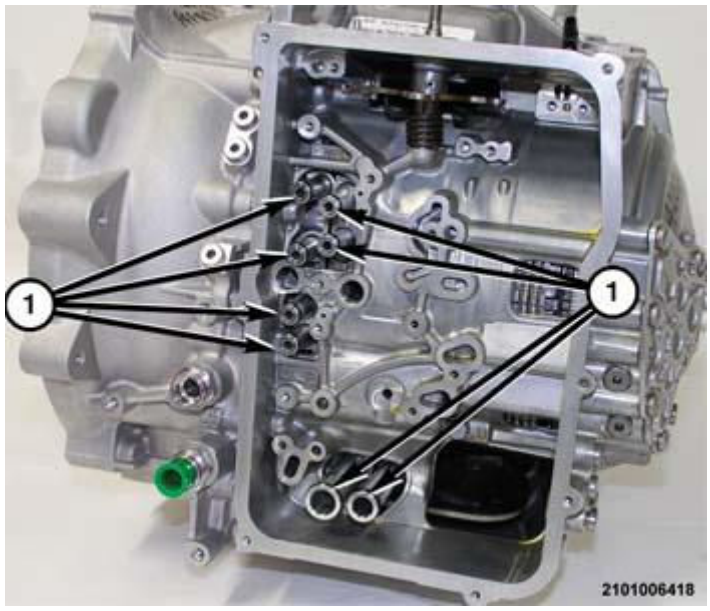

Fig. 351: Fluid Adapter Tubes & O-Ring Seals
Courtesy of CHRYSLER GROUP, LLC

28. Install NEW O-rings on both ends of the fluid transfer tubes.
29. Install the fluid adapter tubes (1) from the transmission.

Fig. 352: Removing/Installing Speed Sensor
Courtesy of CHRYSLER GROUP, LLC

30. Insert the speed sensor (1) into the transmission with the wire harness connected.

Fig. 353: Removing/Installing Speed Sensor Screw
Courtesy of CHRYSLER GROUP, LLC

31. Install the screw (1) to hold the speed sensors to the transmission housing.

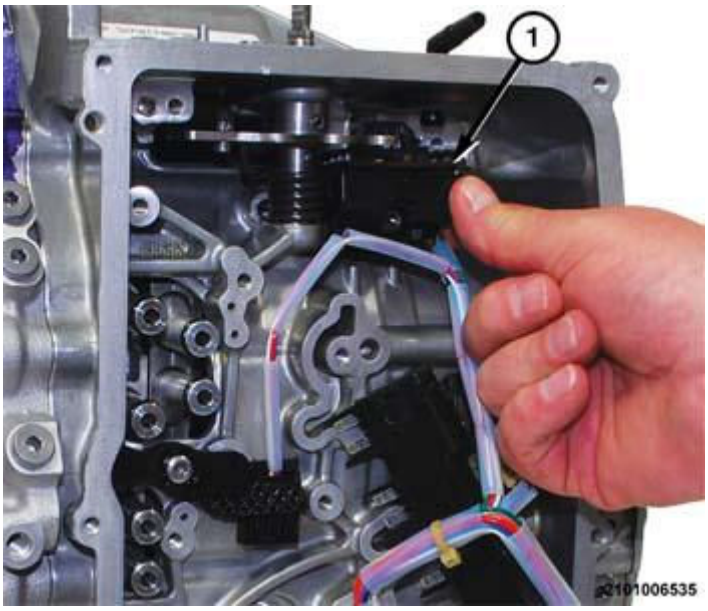

Fig. 354: Removing/Installing Transmission Range Sensor
Courtesy of CHRYSLER GROUP, LLC

32. Place the TRS (1) in position on the transmission with the wire harness connected.

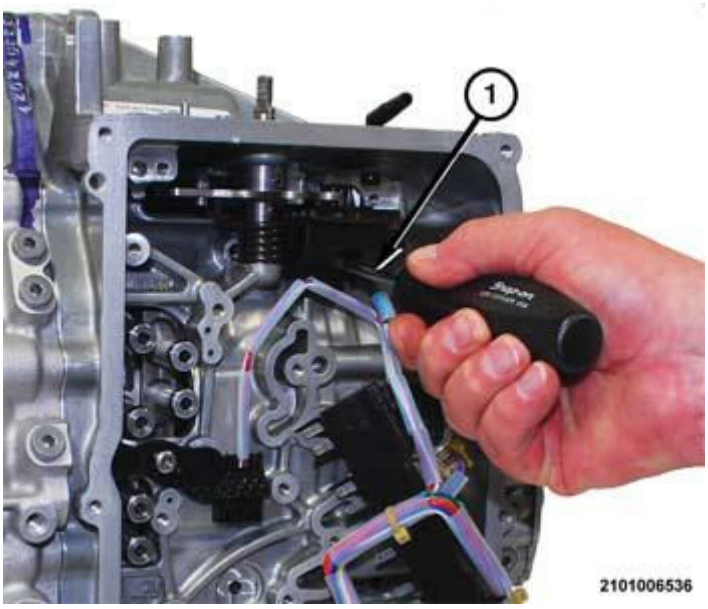

Fig. 355: Removing/Installing Transmission Range Sensor (TRS) Screw
Courtesy of CHRYSLER GROUP, LLC

33. Install the screw (1) to hold the TRS to the transmission housing. Refer to **SPECIFICATIONS**.

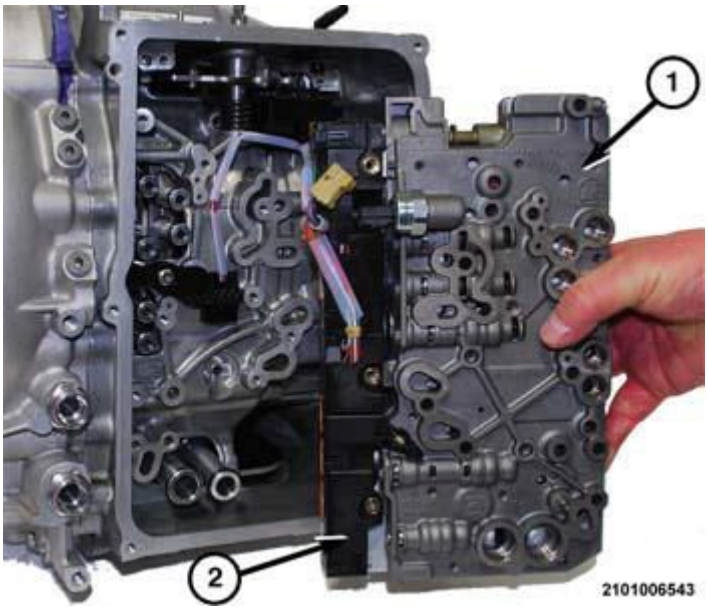

Fig. 356: Valve Body & Solenoids Wire Harness Connector
Courtesy of CHRYSLER GROUP, LLC

34. Place the valve body (1) in position on the transmission.
35. Place the wire harness connector (2) in position on the solenoids.
36. Press the connector (2) inward to engage the terminals on the solenoids.

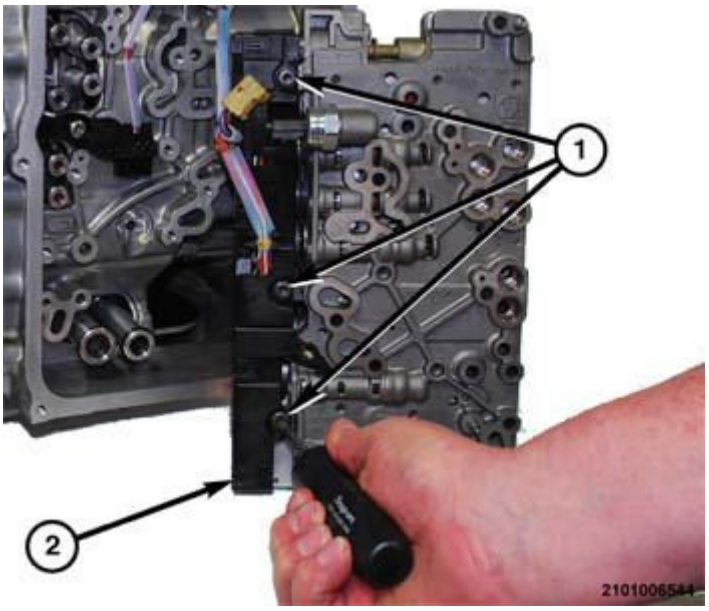

Fig. 357: Removing/Installing Wire Harness Connector At Valve Body Solenoids
Courtesy of CHRYSLER GROUP, LLC

37. Install the screws to hold the wire harness connector to the valve body and solenoids. Refer to **SPECIFICATIONS**.

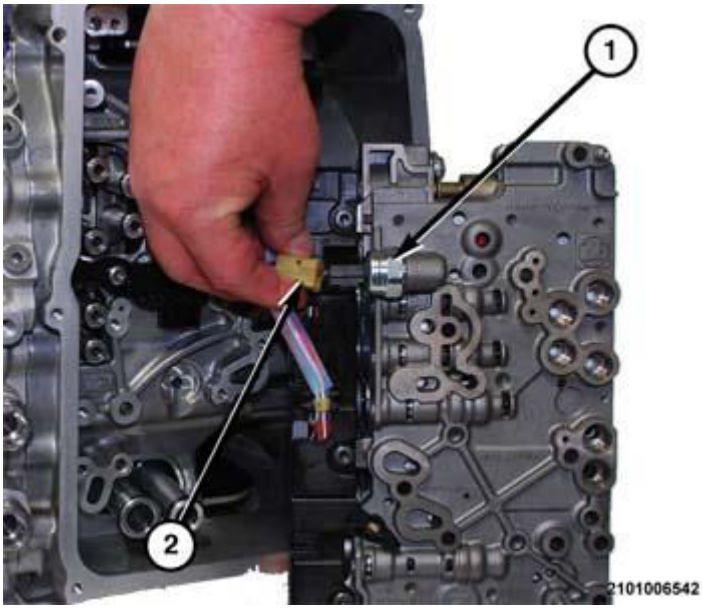

Fig. 358: Fluid Pressure Transducer Wire Harness Connector
Courtesy of CHRYSLER GROUP, LLC

38. Insert the wire harness connector into the fluid pressure transducer connector
39. Press connector together until the lock engages.

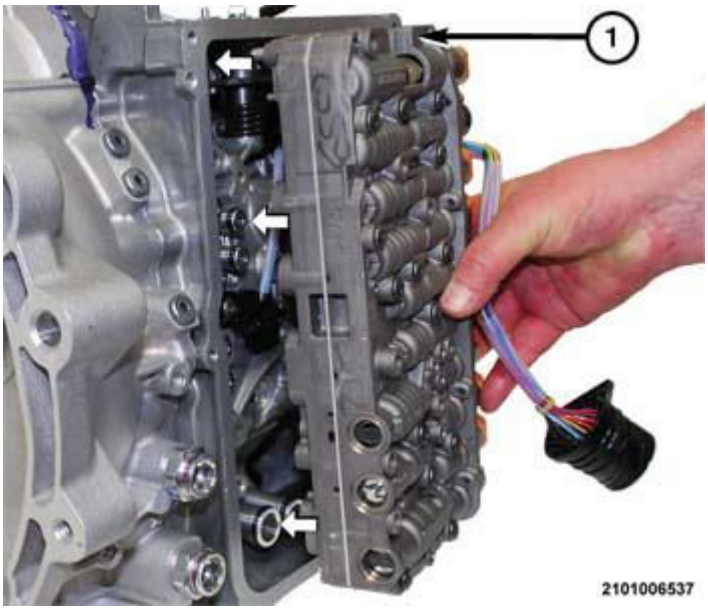

Fig. 359: Aligning Valve Body To Fluid Transfer Tubes
Courtesy of CHRYSLER GROUP, LLC

40. Turn the valve body (1) over and align the valve body (1) with the fluid transfer adapters.

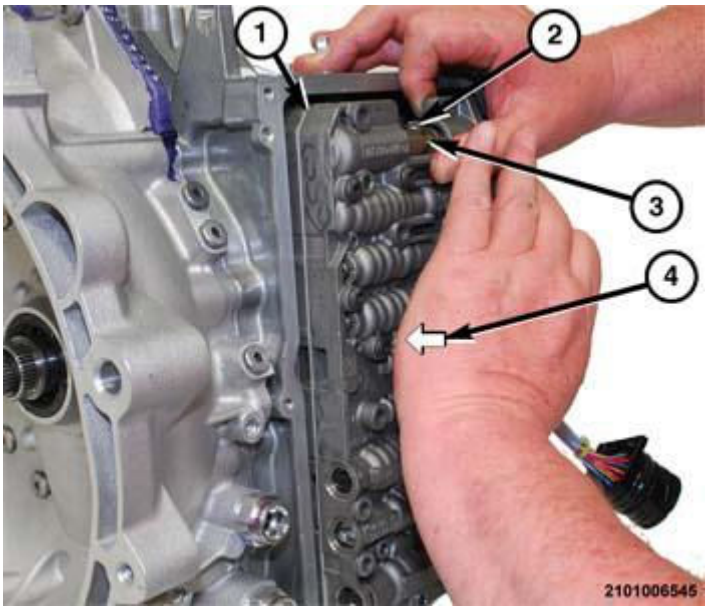

Fig. 360: Engaging Valve Body To Fluid Transfer Tubes
Courtesy of CHRYSLER GROUP, LLC

41. Guide the manual lever cam (2) into the slot (3) on the manual valve.
42. Firmly press (4) the valve body (1) inward until the O-rings on the fluid transfer adapters engage into receptacle holes on the valve body.

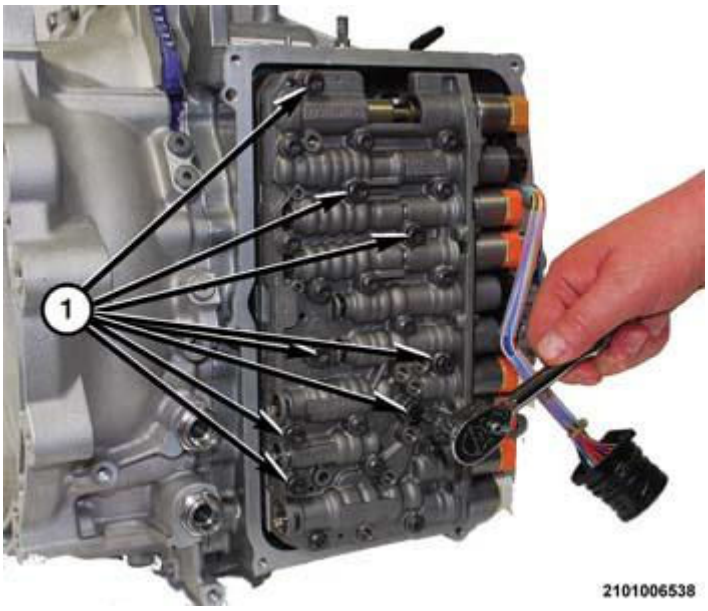

Fig. 361: Valve Body Bolts
Courtesy of CHRYSLER GROUP, LLC

43. Install the bolts (1) to hold the valve body to the transmission housing. Refer to **SPECIFICATIONS**.

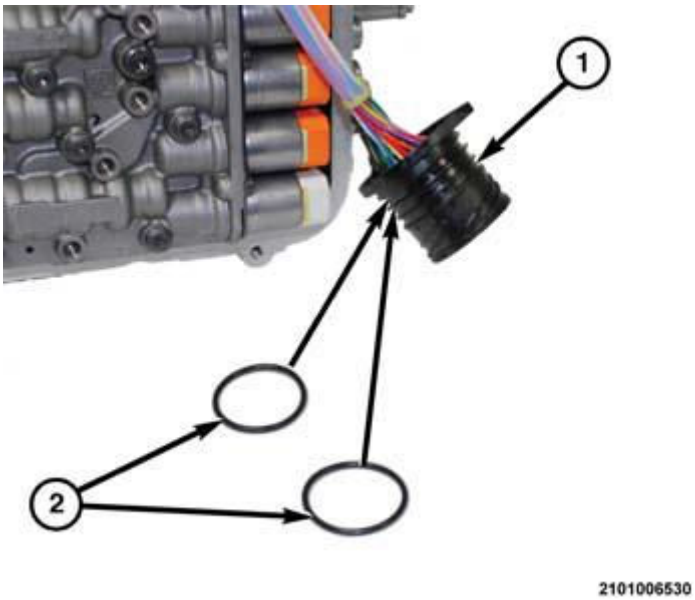

Fig. 362: Valve Body Solenoid Wire Harness Connector Socket O-Ring Seals
Courtesy of CHRYSLER GROUP, LLC

44. Install NEW O-ring seals (2) on the wire connector socket (1).

NOTE: **A light coating of assembly lube can be applied to the O-ring seals (2) to ease installation.**

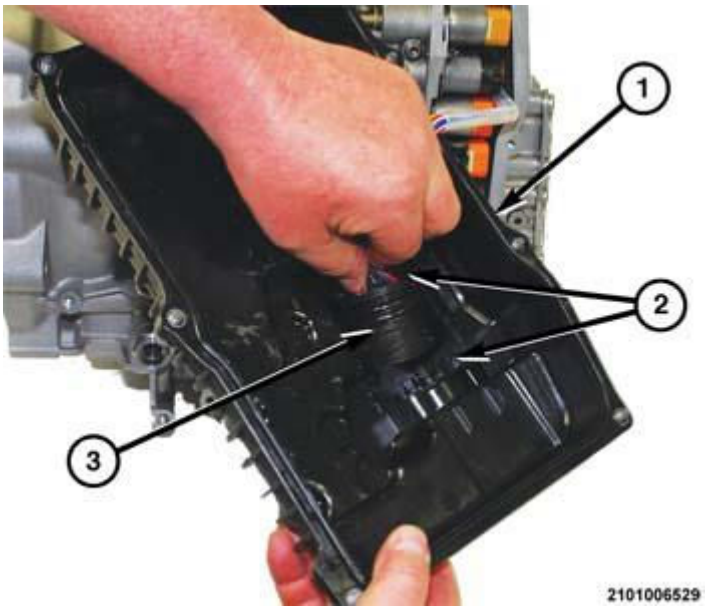

Fig. 363: Valve Body Cover Pan & Wire Connector Socket
Courtesy of CHRYSLER GROUP, LLC

45. Place the valve body cover pan (1) in position on the transmission.
46. Insert the wire connector socket (3) into the opening on the inside of valve body cover pan (1) with the flat side (2) of the socket on the left.

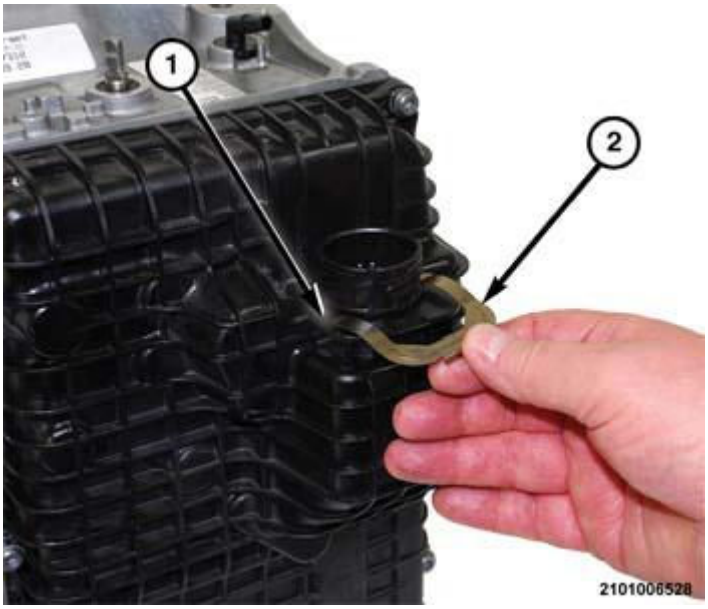

Fig. 364: Wire Connector Socket Clip
Courtesy of CHRYSLER GROUP, LLC

47. Press the wire connector socket inward until the retainer clip groove (1) is exposed on the outside of the valve body cover pan (1).
48. Install the clip (2) to hold the wire connector socket in the valve body cover pan.

Fig. 365: Valve Body Cover Pan Gasket Seal
Courtesy of CHRYSLER GROUP, LLC

49. Install a NEW gasket seal (1) in the groove around the sealing surface of the valve body cover pan (2).

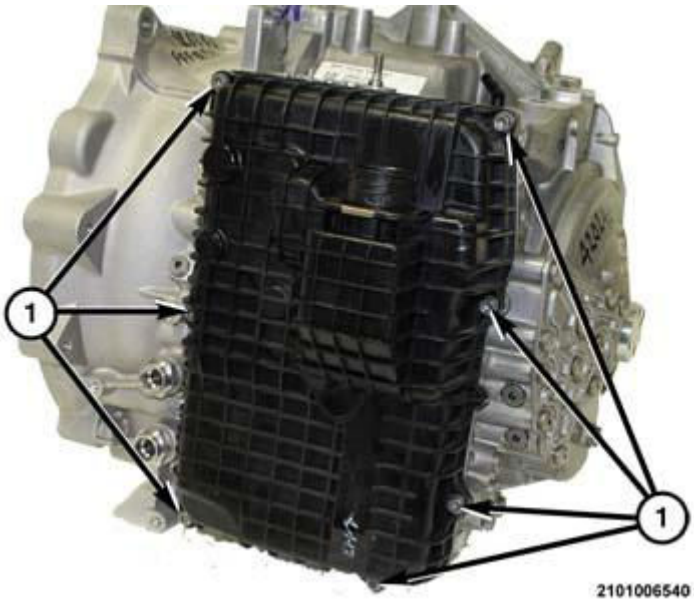

Fig. 366: Valve Body Cover Pan Bolts
Courtesy of CHRYSLER GROUP, LLC

50. Place the valve body cover pan gasket against the sealing surface of the transmission housing.
51. Install the bolts (1) to hold the valve body cover pan to the transmission housing. Refer to **SPECIFICATIONS**.
52. Install the transmission in the vehicle.

53. Road test the vehicle to verify the repair.

TRANSFER GEAR INNER RACE

1. Using a clean lint free cloth, wipe the transfer gear bore clean. Inspect the bore for burrs or other damage. Use crocus cloth the dress down burrs.
2. Place the transfer gear on the stable, clean work surface.

Fig. 367: Installing Bearing Race Into Transfer Gear Until
Courtesy of CHRYSLER GROUP, LLC

3. Place the NEW bearing race in the transfer gear bore.
4. Using a suitable hammer (1) and tool (special tool #9588, Installer, Bearing Cup)with (special tool #C-4171, Driver Handle, Universal), drive the bearing race into the transfer gear until it butts against the bottom surface.
5. Install the transfer gear in the transaxle.

TRANSFER GEAR OUTER BEARING

Clean the transfer gear with suitable solvent and blow it dry with 344 kPa (50psi) regulated shop air.

1. Place the transfer gear on a stable, clean work surface.

Fig. 368: Installing Transfer Gear Bearing Onto Transfer Gear
Courtesy of CHRYSLER GROUP, LLC

2. Place the NEW transfer gear bearing (3) on the transfer gear (4).
3. Using a suitable hammer (1) and tool (special tool #6052, Installer, Bearing/Seal) (2), drive the transfer gear bearing (3) onto the transfer gear (4).
4. Assemble the transaxle and install it in the vehicle. Refer to **ASSEMBLY**. Refer to **INSTALLATION**.
5. Properly fill the transaxle with specified type and quantity fluid. Refer to **CAPACITIES AND RECOMMENDED FLUIDS, SPECIFICATIONS** .
6. Road test the vehicle to verify the repair.

TRANSFER GEAR OUTER RACE

Clean the bearing bore with a lint free cloth and inspect for damage to the bellhousing casting. If the bellhousing is damaged the transmission will require replacement.

1. Place the NEW transfer gear outer bearing race in position in the bellhousing bore.

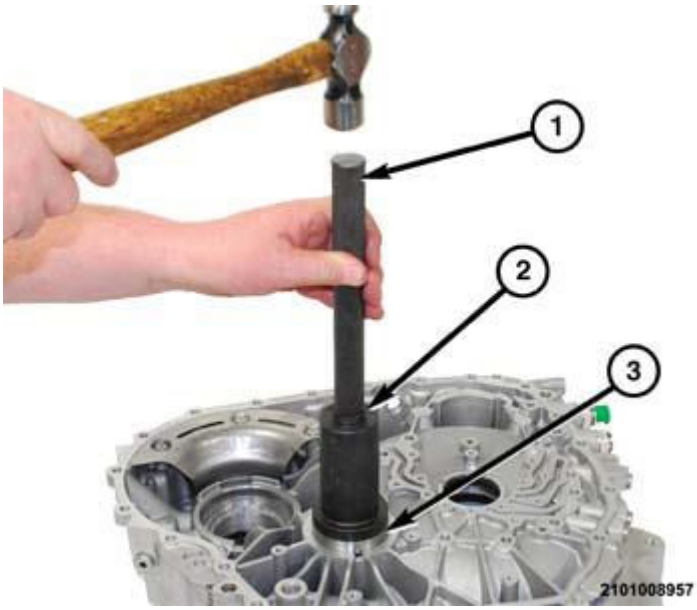

Fig. 369: Installing Transfer Gear Outer Bearing Race Into Bellhousing
Courtesy of CHRYSLER GROUP, LLC

2. Using and suitable hammer and tool (special tool #10036, Installer, Bearing Cup) (1) with (special tool #C-4171, Driver Handle, Universal) (2), drive the transfer gear outer bearing race (3) into the bellhousing bore until it seats down to the bottom stop.
3. Assemble the transmission and install the transmission in the vehicle. Refer to **ASSEMBLY**. Refer to **INSTALLATION**.
4. Fill the transmission with fluid. Refer to **FLUID AND FILTER, STANDARD PROCEDURE**.
5. Road test the vehicle to verify the repair.

BELLHOUSING

REMOVAL

REMOVAL

The following procedure is performed with the transmission drained and removed from the vehicle.

1. Place the transmission on a suitable, clean work surface.
2. Remove the torque converter.
3. Using a dial indicator, measure the input shaft end-play.

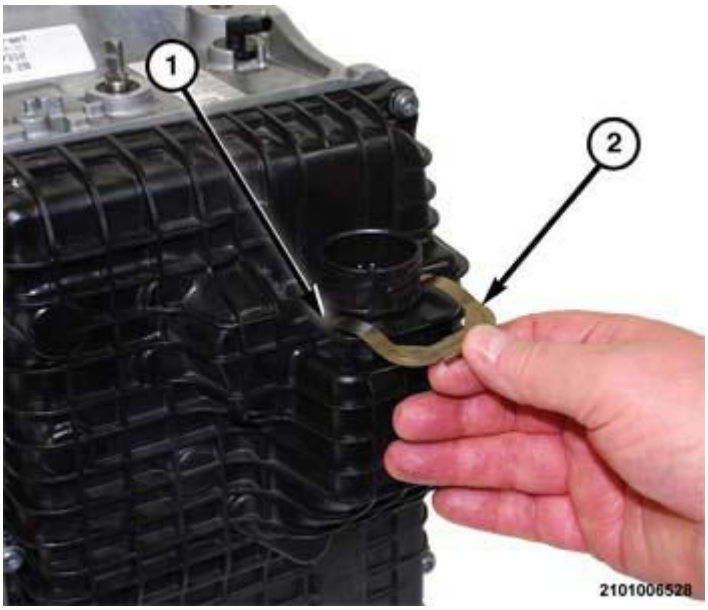

Fig. 370: Wire Connector Socket Clip
Courtesy of CHRYSLER GROUP, LLC

4. Remove the clip holding the wire connector socket in the valve body cover pan.

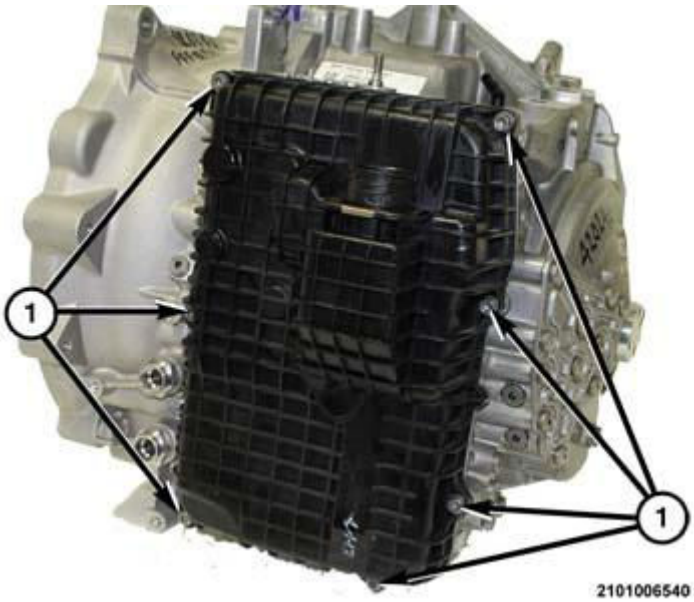

Fig. 371: Valve Body Cover Pan Bolts
Courtesy of CHRYSLER GROUP, LLC

5. Remove the valve body cover pan bolts (1).
6. Remove the valve body cover pan from the transmission.

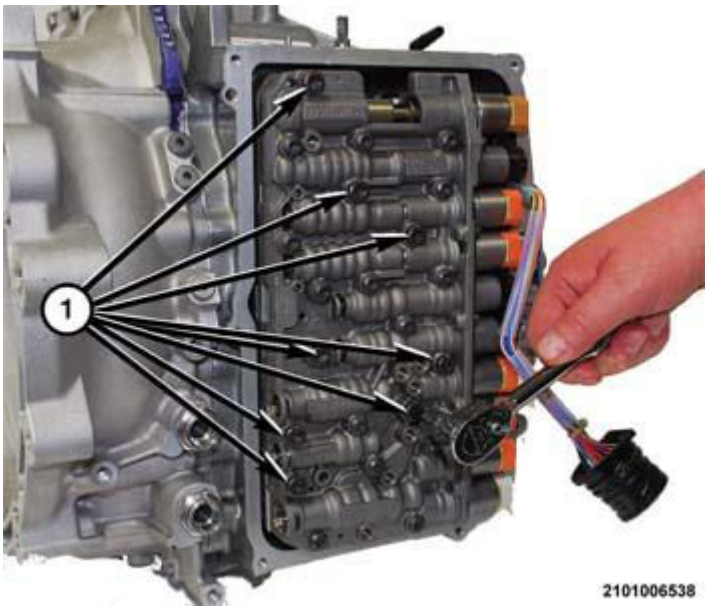

Fig. 372: Valve Body Bolts
Courtesy of CHRYSLER GROUP, LLC

7. Remove the valve body bolts (1).
8. Using a suitable prying tool, pry the valve body away from the adapter tubes.

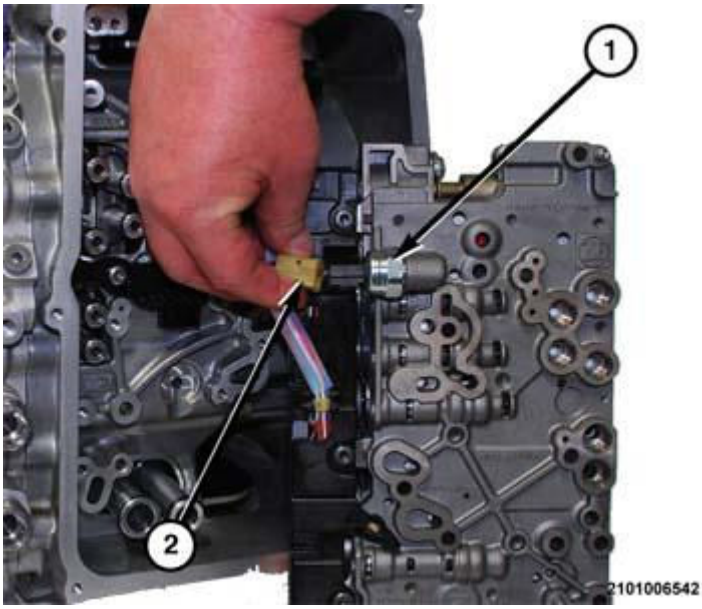

Fig. 373: Fluid Pressure Transducer Wire Harness Connector
Courtesy of CHRYSLER GROUP, LLC

9. Turn the valve body over to gain access to wire harness connectors.
10. Release the lock (2) on the fluid pressure transducer wire connector and separate the wire connector (2) from the fluid pressure transducer (1).

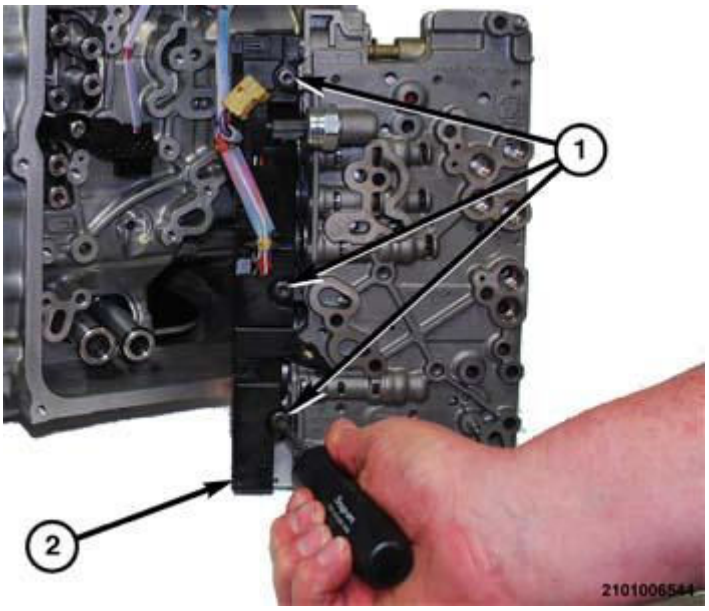

Fig. 374: Removing/Installing Wire Harness Connector At Valve Body Solenoids
Courtesy of CHRYSLER GROUP, LLC

11. Remove the bolts (1) holding the wire harness connector to the valve body and solenoids.
12. Using a suitable prying tool, Separate the wire harness connector (2) from the solenoids.
13. Separate the valve body from the transmission.

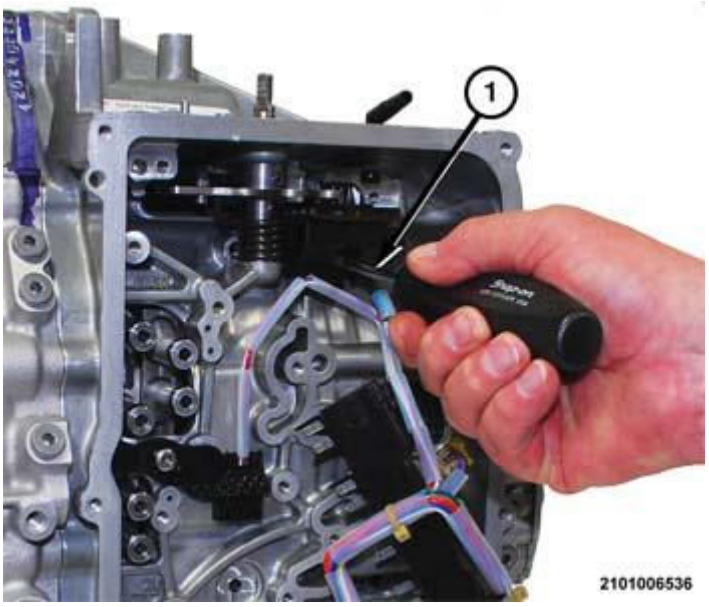

Fig. 375: Removing/Installing Transmission Range Sensor (TRS) Screw
Courtesy of CHRYSLER GROUP, LLC

14. Remove the Transmission Range Sensor (TRS) screw (1).

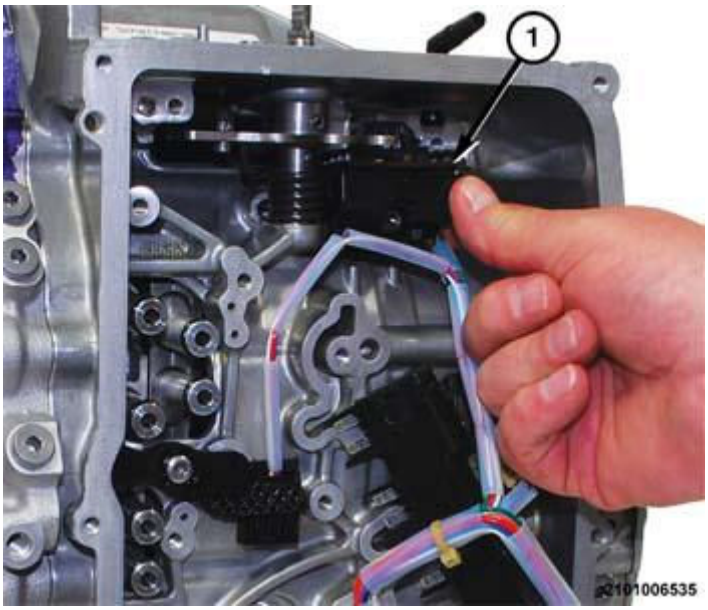

Fig. 376: Removing/Installing Transmission Range Sensor
Courtesy of CHRYSLER GROUP, LLC

15. Separate the TRS (1) from the transmission with the wire harness connected.

Fig. 377: Removing/Installing Speed Sensor Screw
Courtesy of CHRYSLER GROUP, LLC

16. Remove the speed sensor screw (1).

Fig. 378: Removing/Installing Speed Sensor
Courtesy of CHRYSLER GROUP, LLC

17. Separate the speed sensor (1) from the from the transmission with the wiring harness connected.

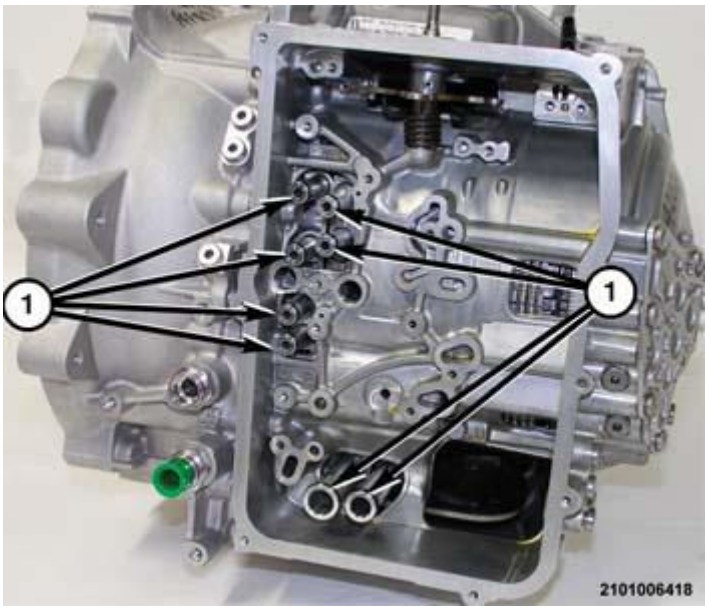

Fig. 379: Fluid Adapter Tubes & O-Ring Seals
Courtesy of CHRYSLER GROUP, LLC

18. Using suitable pliers, remove the fluid adapter tubes (1) from the transmission.

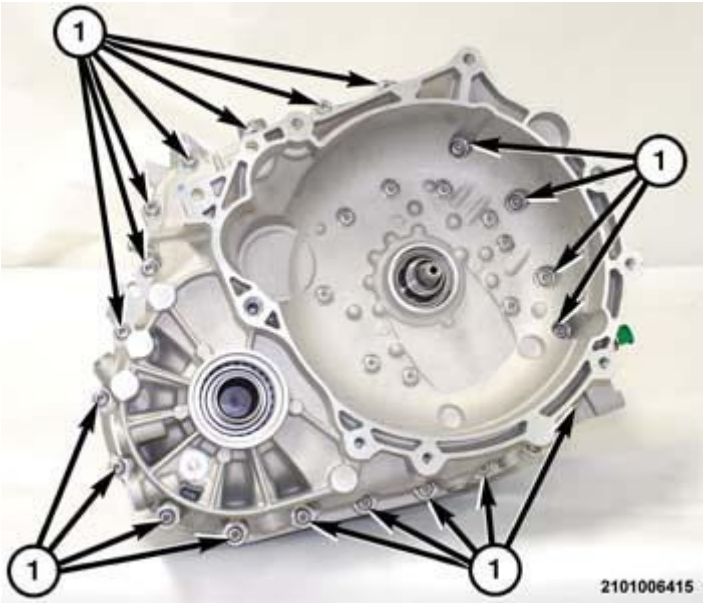

Fig. 380: Bellhousing To Transmission Housing Bolts
Courtesy of CHRYSLER GROUP, LLC

19. From around the perimeter of the transmission, remove the bellhousing bolts (1) holding the bellhousing to the transmission housing.

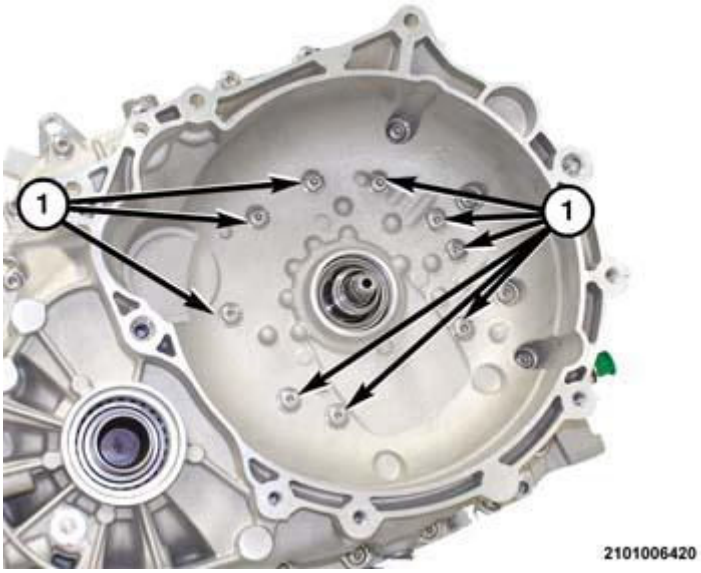

Fig. 381: Bellhousing To Output Gear Support Bolts
Courtesy of CHRYSLER GROUP, LLC

20. Remove the bellhousing bolts (1) holding the bellhousing to the output gear support.
21. Using wooden blocks to stabilize the transmission on the work surface, position the transmission on the bench with the bellhousing facing upward.
22. Using a suitable pry-bar in the pry point locations, pry upward to dislodge the bellhousing from the

transmission housing.

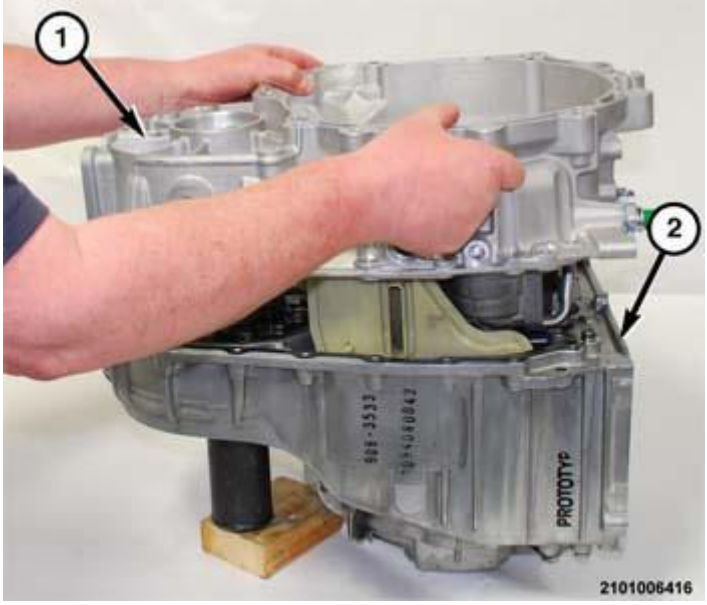

Fig. 382: Removing/Installing Bellhousing At Transmission Housing
Courtesy of CHRYSLER GROUP, LLC

23. Lift the bellhousing (1) upward and separate the bellhousing from the transmission housing (2).

INSTALLATION

INSTALLATION

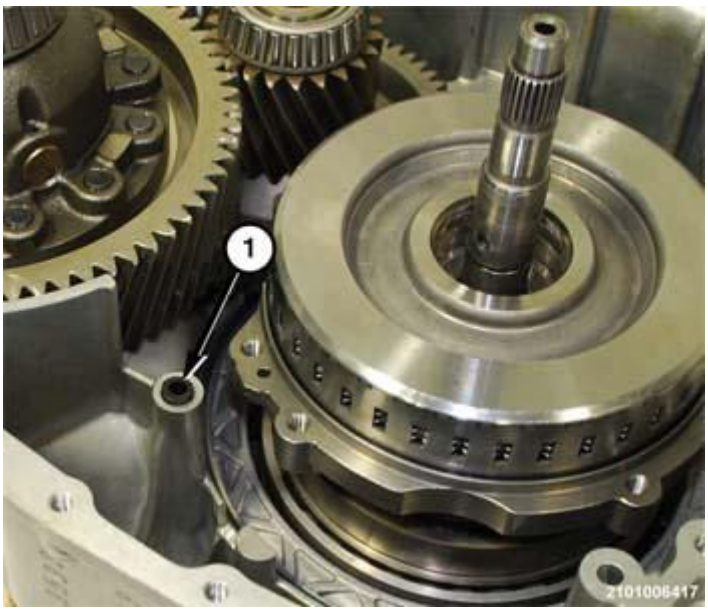

Fig. 383: Port Seal
Courtesy of CHRYSLER GROUP, LLC

1. Install a NEW crossover port seal (1) in the transmission housing.

Fig. 384: Sealing Surface Of Transmission Housing
Courtesy of CHRYSLER GROUP, LLC

2. Place a NEW gasket (1) on the clean sealing surface of the transmission housing (2).
3. If necessary, replace the output seal and the impeller hub seal.

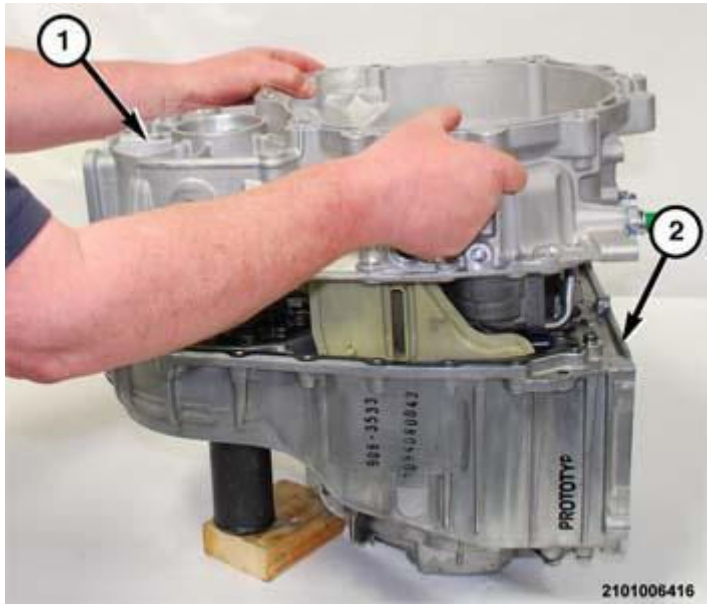

Fig. 385: Removing/Installing Bellhousing At Transmission Housing
Courtesy of CHRYSLER GROUP, LLC

4. While guiding the bellhousing (1) downward over the input and output shafts, place the bellhousing (1) in position on the transmission housing (2).

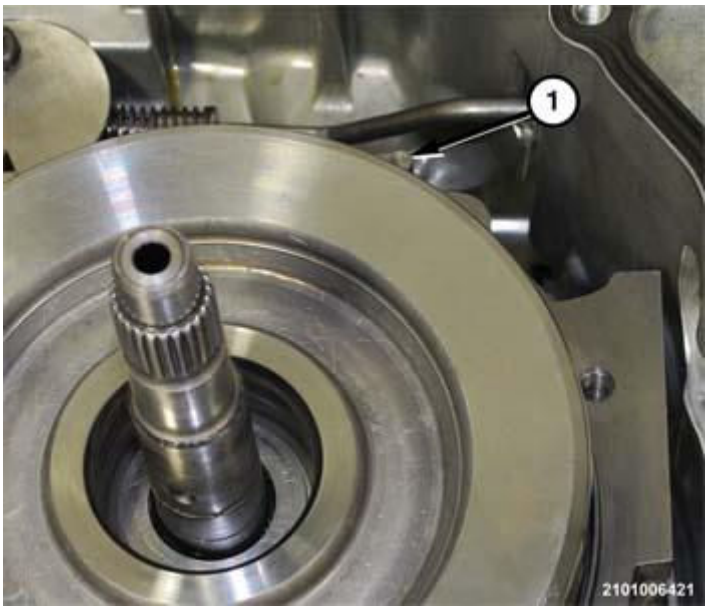

Fig. 386: Checking Guide Pin Alignment
Courtesy of CHRYSLER GROUP, LLC

5. Rotate the output gear clockwise to assure guide pin (1) alignment.

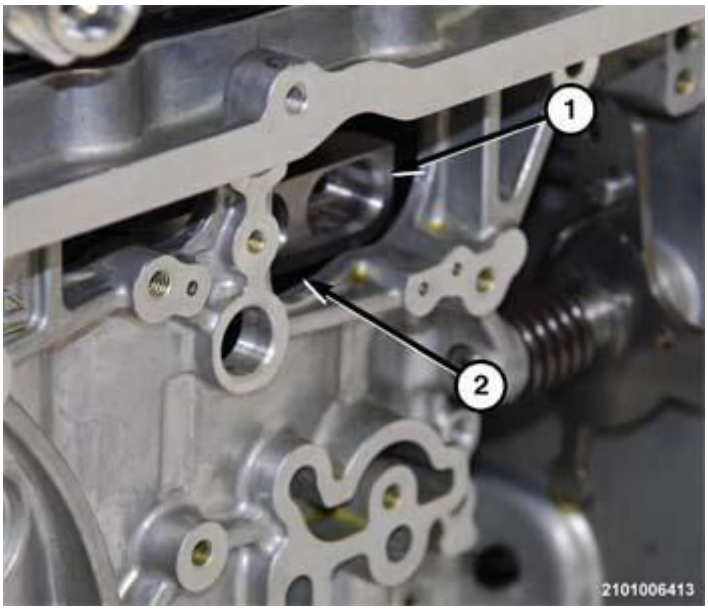

Fig. 387: Engaging Guide Pins In Transmission Housing Into Receptacle Holes
Courtesy of CHRYSLER GROUP, LLC

6. Rotate the output gear support (1) through the window (2) behind the valve body until the guide pin engages the receptacle hole in the bellhousing.
7. Engage the guide pins in the transmission housing into the receptacle holes bellhousing to assure proper alignment.
8. Install several bolts to hold the bellhousing to the transmission housing. Tighten hand tight.

9. Position the transmission on the bench with the bellhousing facing outward.

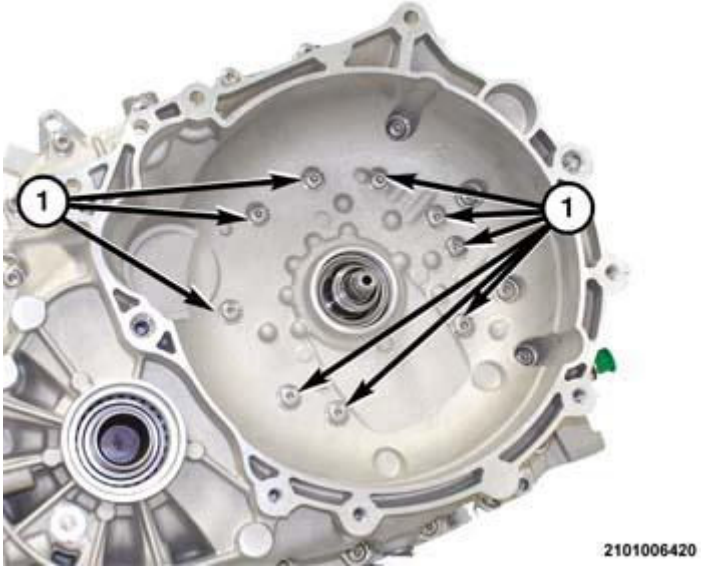

Fig. 388: Bellhousing To Output Gear Support Bolts
Courtesy of CHRYSLER GROUP, LLC

10. Install the output gear support bellhousing bolts (1) to hold the bellhousing and tighten to the proper specifications. Refer to **SPECIFICATIONS**.

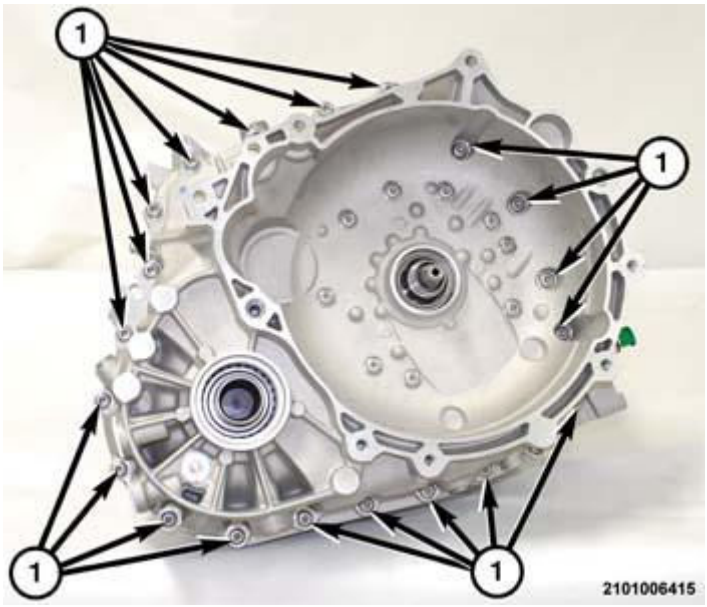

Fig. 389: Bellhousing To Transmission Housing Bolts
Courtesy of CHRYSLER GROUP, LLC

11. Install the bellhousing bolts (1) and tighten to the proper specifications. Refer to **SPECIFICATIONS**.

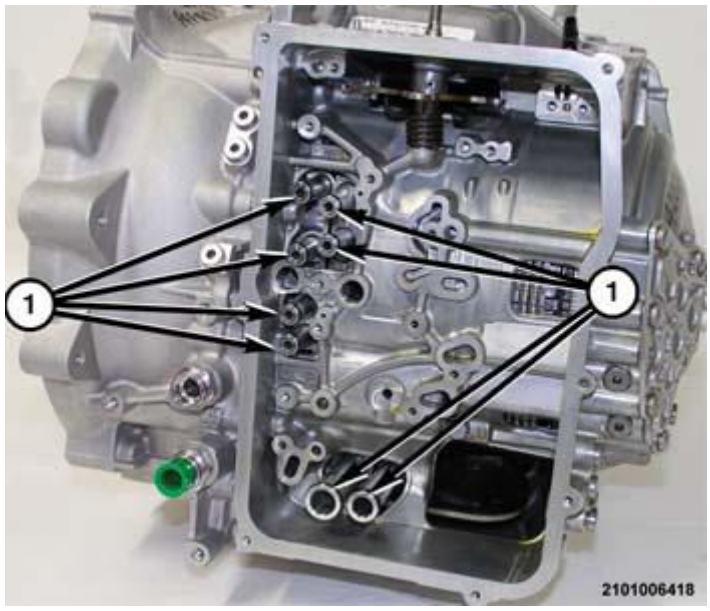

Fig. 390: Fluid Adapter Tubes & O-Ring Seals
Courtesy of CHRYSLER GROUP, LLC

12. Install NEW O-rings on both ends of the fluid transfer tubes.
13. Install the fluid adapter tubes (1) from the transmission.

Fig. 391: Removing/Installing Speed Sensor
Courtesy of CHRYSLER GROUP, LLC

14. Insert the speed sensor (1) into the transmission with the wire harness connected.

Fig. 392: Removing/Installing Speed Sensor Screw
Courtesy of CHRYSLER GROUP, LLC

15. Install the speed sensor screw (1) to hold the speed sensor to the transmission housing.

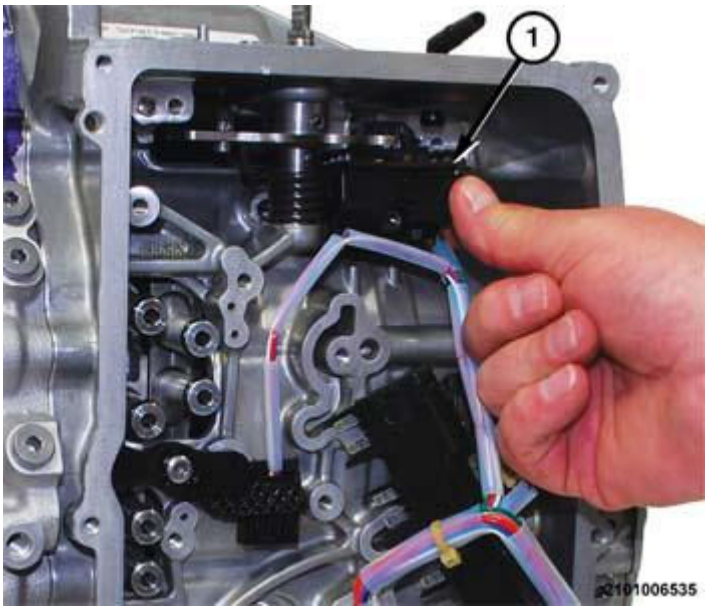

Fig. 393: Removing/Installing Transmission Range Sensor
Courtesy of CHRYSLER GROUP, LLC

16. Place the Transmission Range Sensor (TRS) (1) in position on the transmission with the wire harness connected.

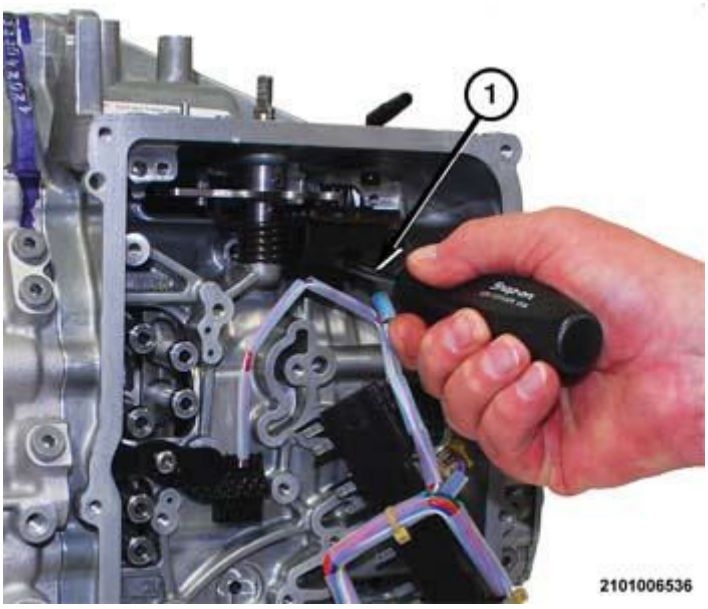

Fig. 394: Removing/Installing Transmission Range Sensor (TRS) Screw
Courtesy of CHRYSLER GROUP, LLC

17. Install the TRS screw (1) to hold the TRS to the transmission housing and tighten to the proper specifications. Refer to **SPECIFICATIONS**.

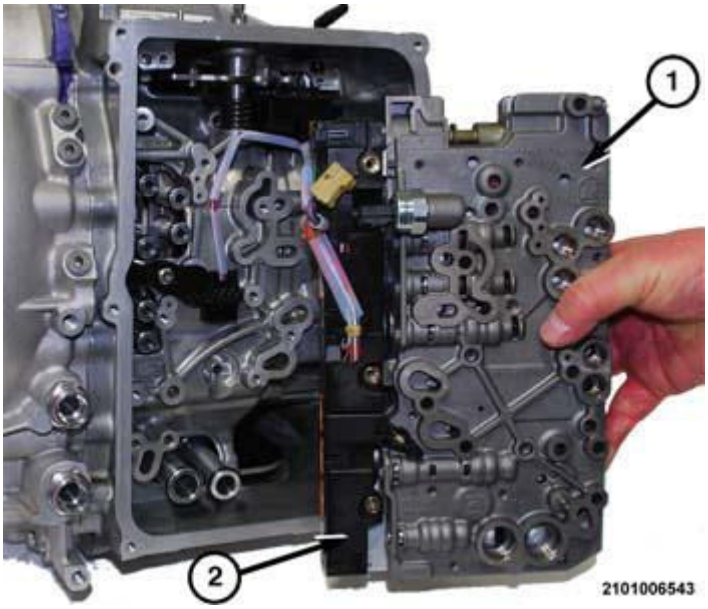

Fig. 395: Valve Body & Solenoids Wire Harness Connector
Courtesy of CHRYSLER GROUP, LLC

18. Place the valve body (1) in position on the transmission.
19. Place the wire harness connector (2) in position on the solenoids.
20. Press the connector (2) inward to engage the terminals on the solenoids.

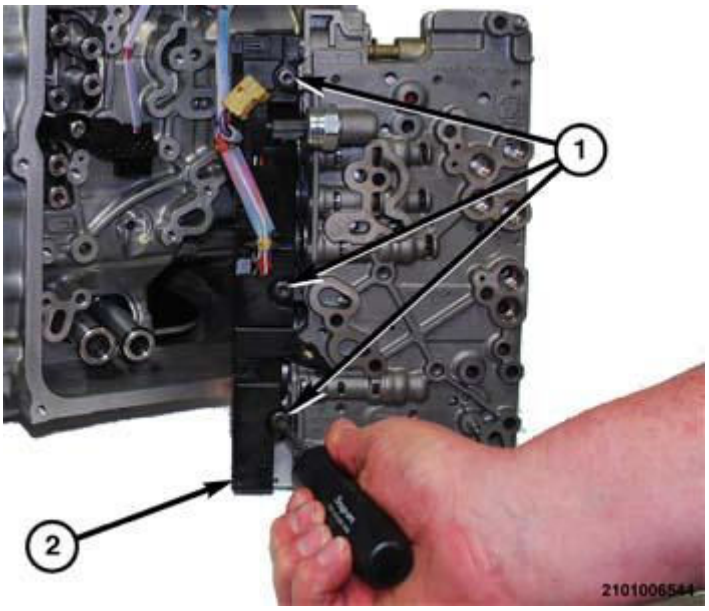

Fig. 396: Removing/Installing Wire Harness Connector At Valve Body Solenoids
Courtesy of CHRYSLER GROUP, LLC

21. Install the screws (1) to hold the wire harness connector to the valve body and solenoids and tighten to the proper specifications. Refer to **SPECIFICATIONS**.

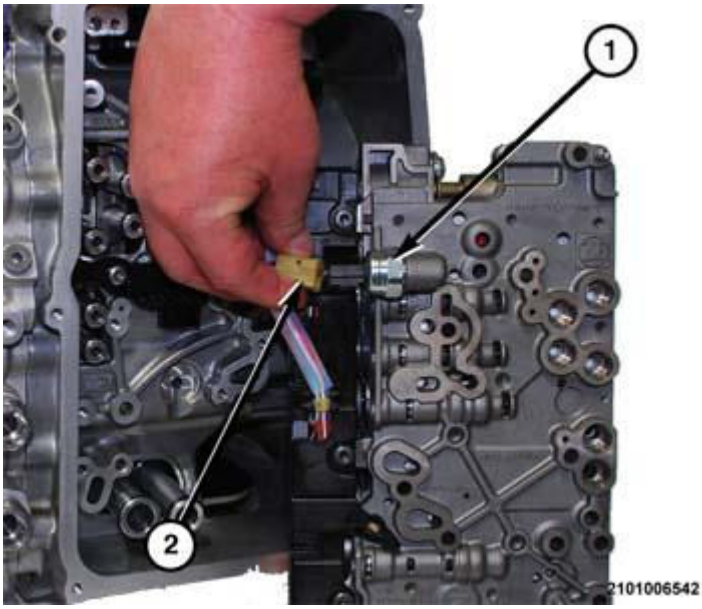

Fig. 397: Fluid Pressure Transducer Wire Harness Connector
Courtesy of CHRYSLER GROUP, LLC

22. Insert the fluid pressure transducer connector (2) into the fluid pressure transducer (1).
23. Press connector together until the lock engages.

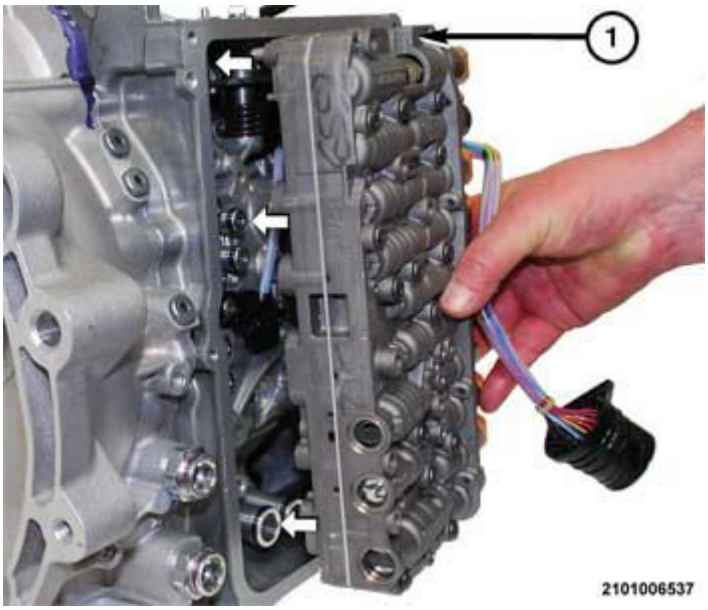

Fig. 398: Aligning Valve Body To Fluid Transfer Tubes
Courtesy of CHRYSLER GROUP, LLC

24. Turn the valve body (1) over and align the valve body (1) with the fluid transfer tubes.

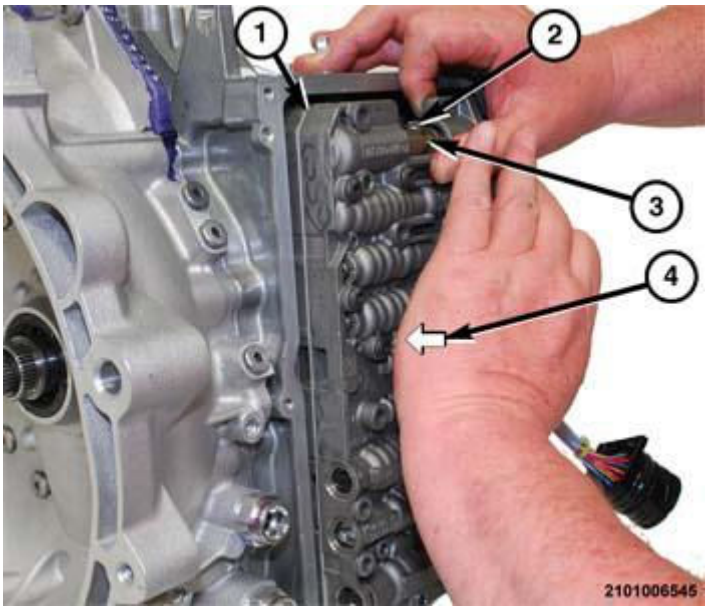

Fig. 399: Engaging Valve Body To Fluid Transfer Tubes
Courtesy of CHRYSLER GROUP, LLC

25. Guide the manual lever cam (2) into the slot (3) on the manual valve.
26. Firmly press (4) the valve body (1) inward until the O-rings on the fluid transfer adapters engage into receptacle holes on the valve body.

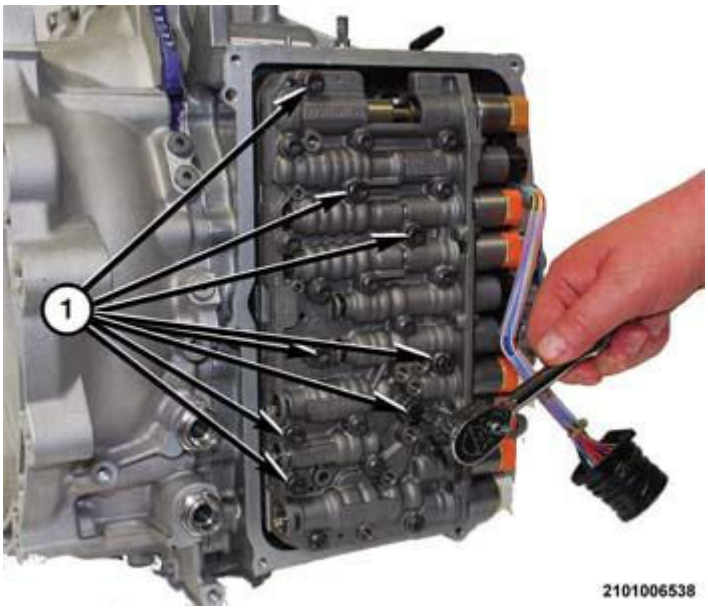

Fig. 400: Valve Body Bolts
Courtesy of CHRYSLER GROUP, LLC

27. Install the valve body bolts (1) and tighten to the proper specifications. Refer to **SPECIFICATIONS**.

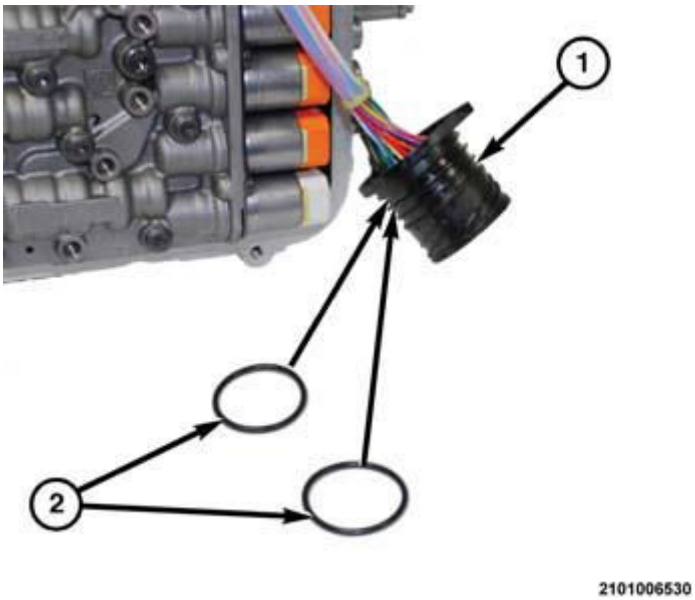

Fig. 401: Valve Body Solenoid Wire Harness Connector Socket O-Ring Seals
Courtesy of CHRYSLER GROUP, LLC

28. Install NEW O-ring seals (2) on the wire connector socket (1).

NOTE: **A light coating of assembly lube can be applied to the O-ring seals (2) to ease installation.**

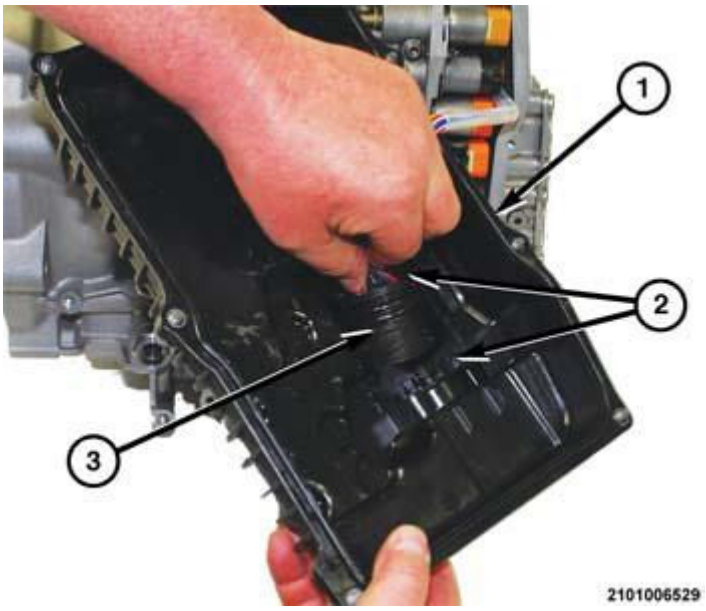

Fig. 402: Valve Body Cover Pan & Wire Connector Socket
Courtesy of CHRYSLER GROUP, LLC

29. Place the valve body cover pan (1) in position on the transmission.
30. Insert the wire connector socket (3) into the opening on the inside of valve body cover pan (1) with the flat side (2) of the socket on the left.

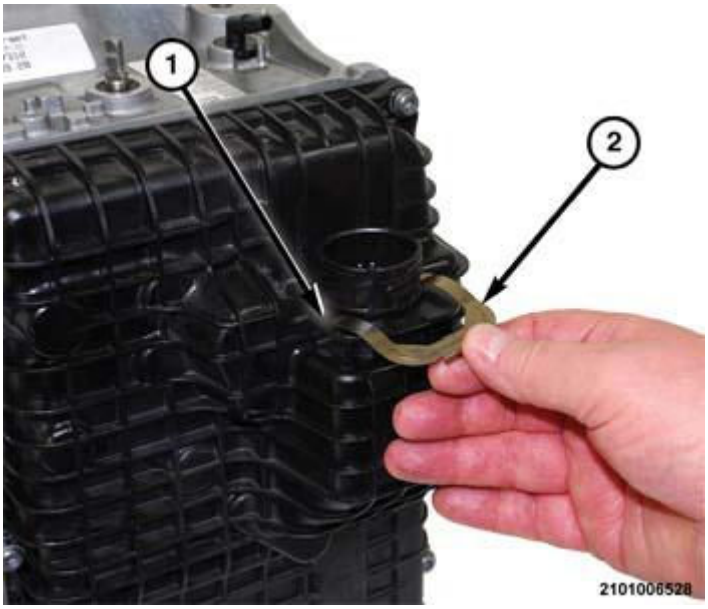

Fig. 403: Wire Connector Socket Clip
Courtesy of CHRYSLER GROUP, LLC

31. Press the wire connector socket inward until the retainer clip groove (1) is exposed on the outside of the valve body cover pan (1).
32. Install the clip (2) to hold the wire connector socket in the valve body cover pan.

Fig. 404: Valve Body Cover Pan Gasket Seal
Courtesy of CHRYSLER GROUP, LLC

33. Install a NEW gasket seal (1) in the groove around the sealing surface of the valve body cover pan (2).

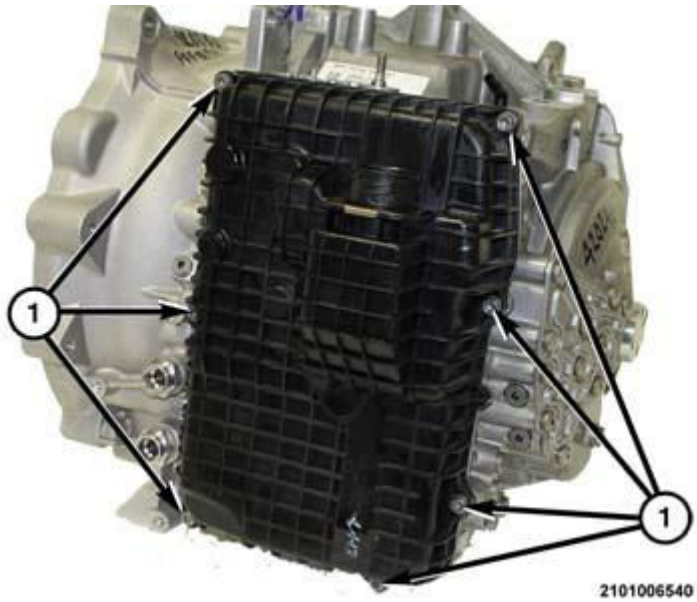

Fig. 405: Valve Body Cover Pan Bolts
Courtesy of CHRYSLER GROUP, LLC

34. Place the valve body cover pan gasket against the sealing surface of the transmission housing.
35. Install the valve body cover pan bolts (1) to hold the valve body cover pan to the transmission housing and tighten to the proper specifications. Refer to **SPECIFICATIONS**.
36. Install the torque converter.

37. Install the transmission in the vehicle. Refer to **INSTALLATION**.

CLUTCH, B

ADJUSTMENTS

B-CLUTCH MEASUREMENT

After the B-clutch is cleaned and assembled the end play must be measured to verify that the correct select reaction plate has been installed.

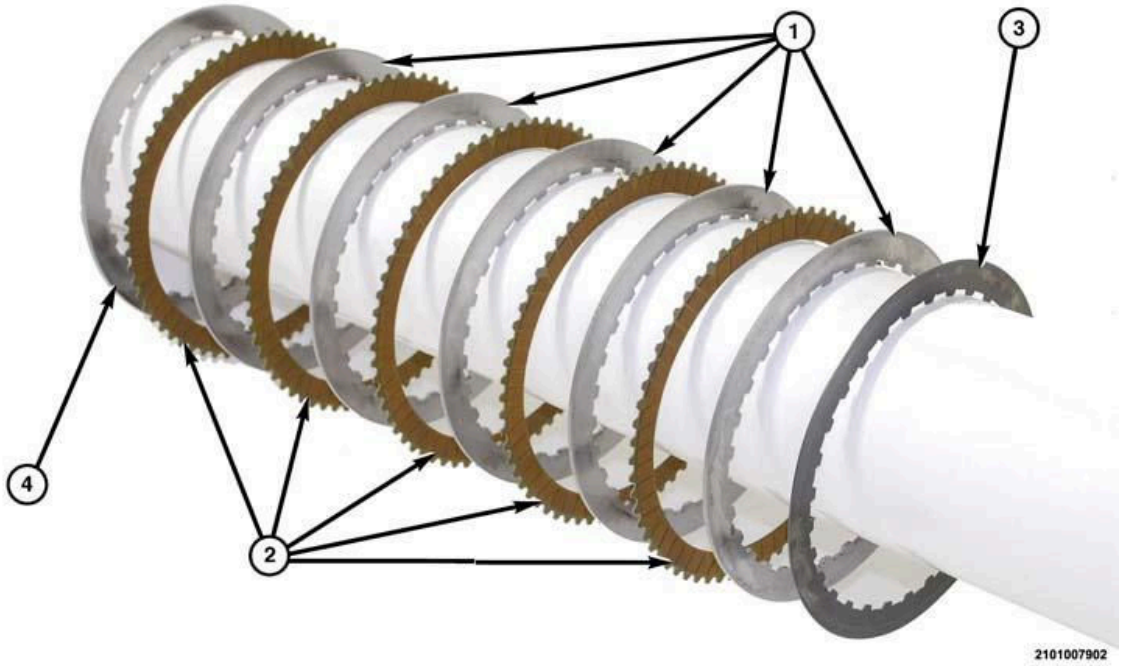

Fig. 406: Exploded View Of B-Clutch, Friction Discs & Steel Plates
Courtesy of CHRYSLER GROUP, LLC

1. Position the B-clutch on a arbor press with the reaction plate (4) facing upward.

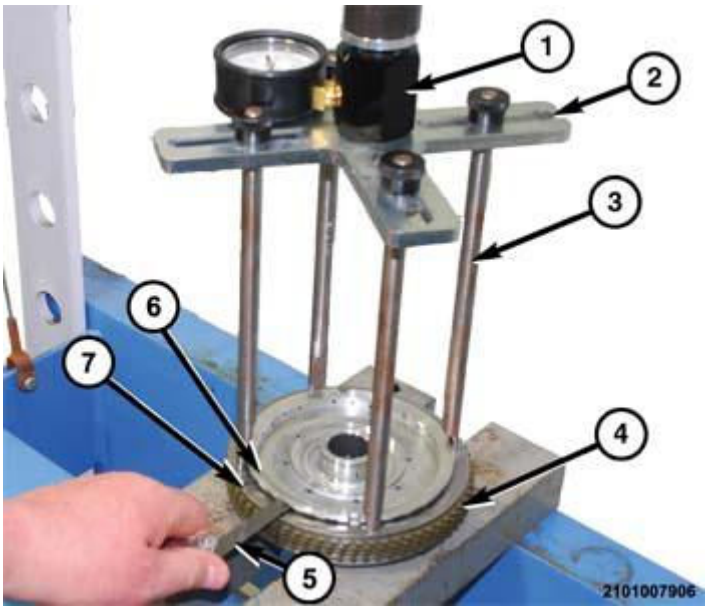

Fig. 407: Compressing B-Clutch
Courtesy of CHRYSLER GROUP, LLC

2. Using tool (special tool #10429, Gauge, Force) (special tool #8901A, Pressing Tool) (with pressure scale removed (1) and legs (special tool #10428, Adapter, Pressing Tool) (3), compress the B-clutch (4) to collapse wave plate to 68 kgf (150 lb. force) (1).
3. Using as suitable feeler gauge, measure the gap between the B-clutch hub and the reaction plate. Refer to **SPECIFICATIONS**.
4. If the measurement is not within specification, replace the reaction plate with the correct plate.

DISASSEMBLY

B-CLUTCH DISASSEMBLY

WARNING: **Always wear safety glasses when cleaning, disassembling and assembling the transmission/transaxle. Contents of the transmission/transaxle can become projectiles (e.g., springs, snap-rings, as well as metal and other debris). Failure to wear safety glasses may result in severe personal injury.**

NOTE: **Clean the B-clutch components with suitable solvent and blow them dry with regulated 344 kPa (50 psi) shop air. Position all of the B-clutch components on a clean work surface in preparation for assembly.**

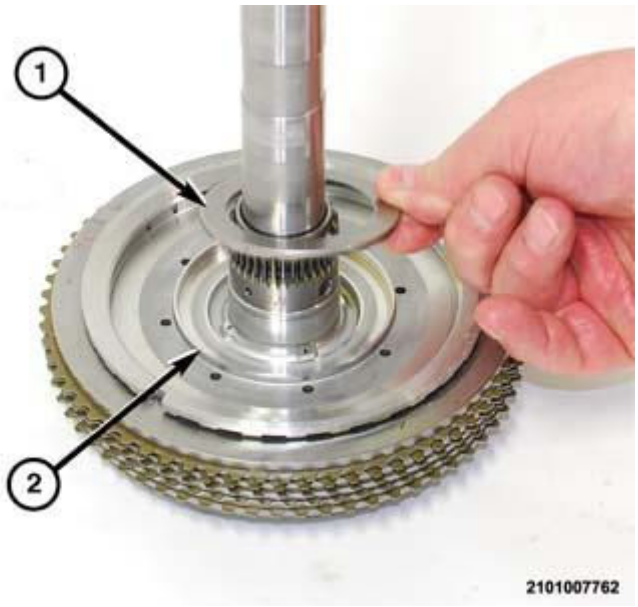

Fig. 408: Thrust Bearing & B-Clutch Hub
Courtesy of CHRYSLER GROUP, LLC

1. Remove the thrust bearing from B-clutch hub.

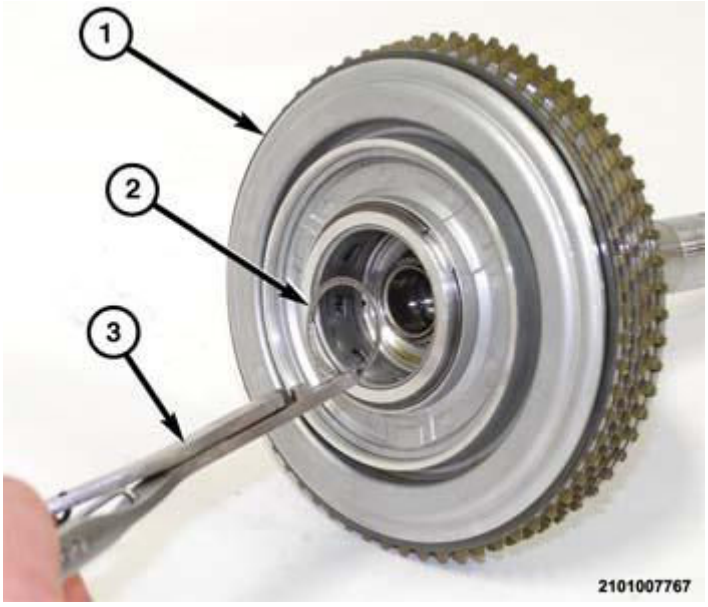

Fig. 409: Input Shaft/Dog Clutch A, B-Clutch Hub & Snap-Ring
Courtesy of CHRYSLER GROUP, LLC

2. Remove the snap-ring holding the B-clutch hub to the input shaft Dog A-clutch.
3. Remove the input shaft from the B-clutch (1).

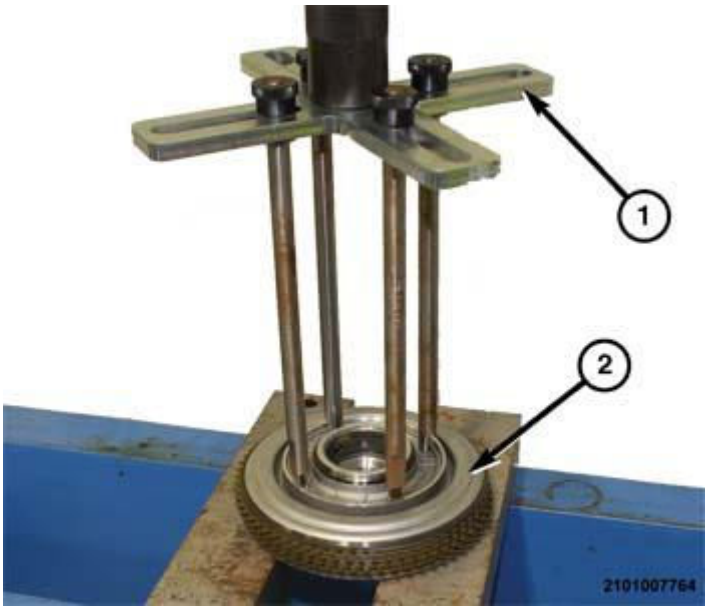

Fig. 410: Compressing B-Clutch Piston To Gain Access To Snap-Ring
Courtesy of CHRYSLER GROUP, LLC

4. Place the B-clutch with piston up on a suitable arbor press.
5. Using tool (special tool #8901A, Pressing Tool) (with pressure scale removed (1) and legs (special tool #10428, Adapter, Pressing Tool), compress the B-clutch (2) piston to gain access to the snap-ring.

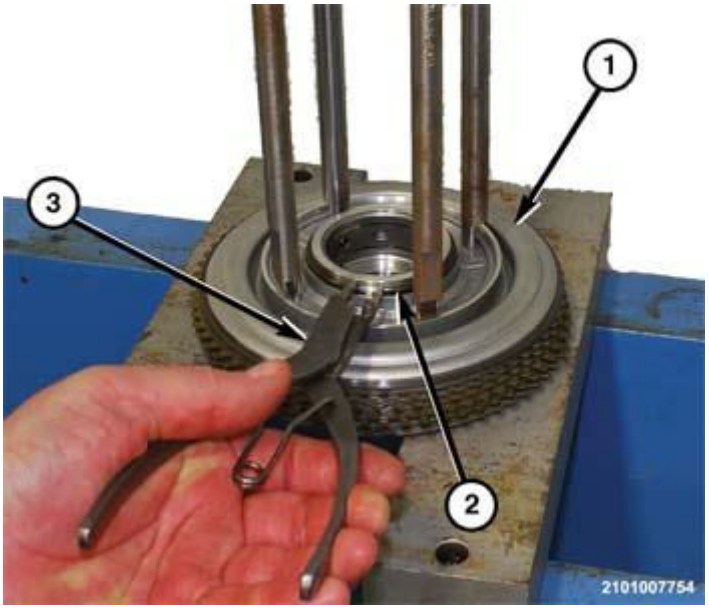

Fig. 411: Snap-Ring, B-Clutch Piston & B-Clutch Hub
Courtesy of CHRYSLER GROUP, LLC

6. Using a suitable snap-ring pliers (3), remove the snap-ring (2) holding the B-clutch piston in the B-clutch (1) hub.
7. Remove the B-clutch from the arbor press.

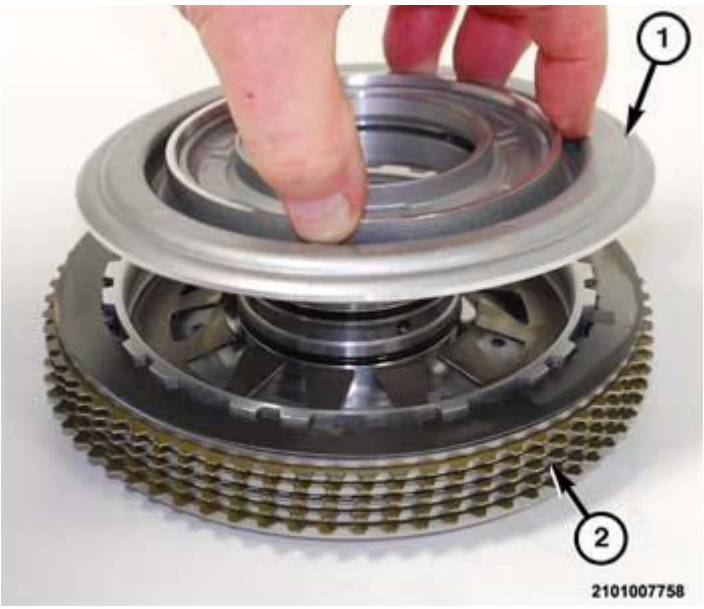

Fig. 412: B-Clutch Piston & B-Clutch
Courtesy of CHRYSLER GROUP, LLC

8. Remove the B-clutch piston (1) from the B-clutch (2).

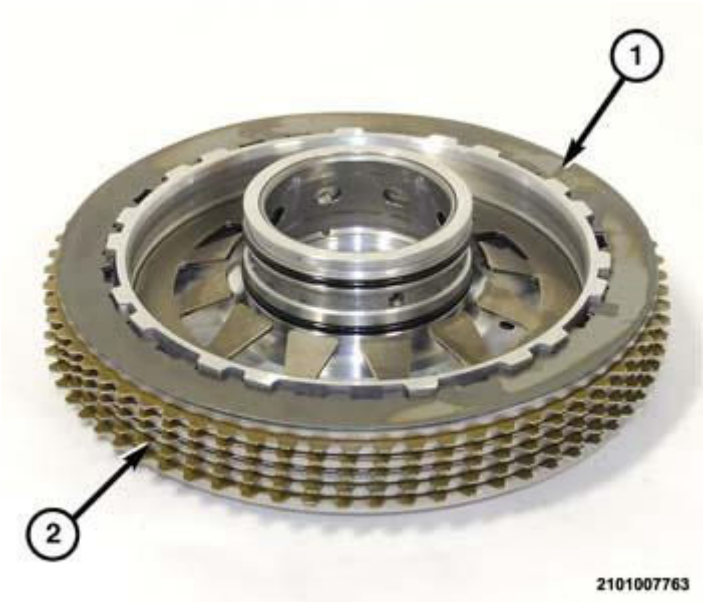

Fig. 413: B-Clutch & B-Clutch Hub
Courtesy of CHRYSLER GROUP, LLC

9. Remove the B-clutch (2) From the B-clutch hub (1).

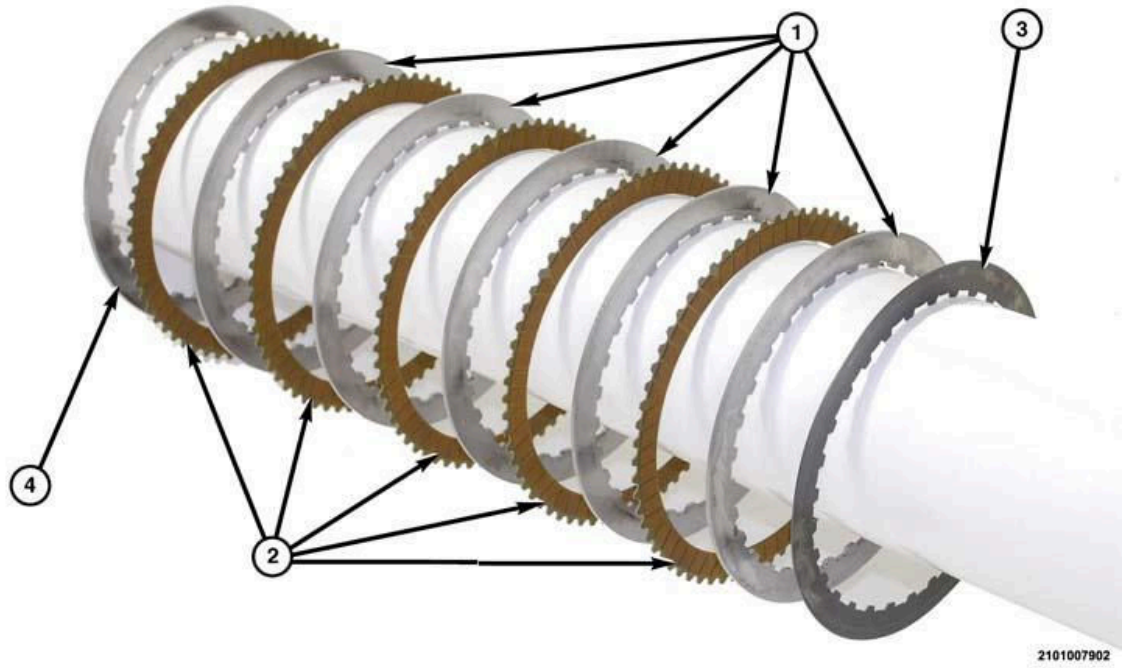

Fig. 414: Exploded View Of B-Clutch, Friction Discs & Steel Plates
Courtesy of CHRYSLER GROUP, LLC

10. Separate the friction discs (2) from the steel plates (1).

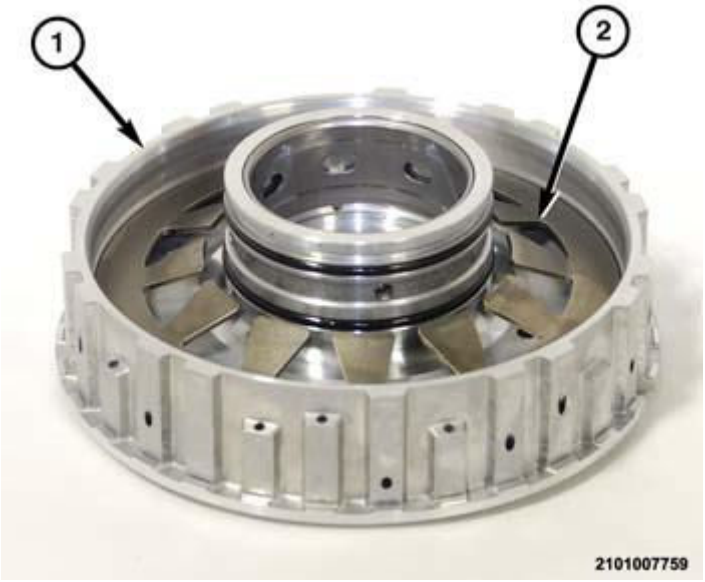

Fig. 415: Belleville Spring & B-Clutch Hub
Courtesy of CHRYSLER GROUP, LLC

11. Remove the belleville spring (2) from the B-clutch hub.

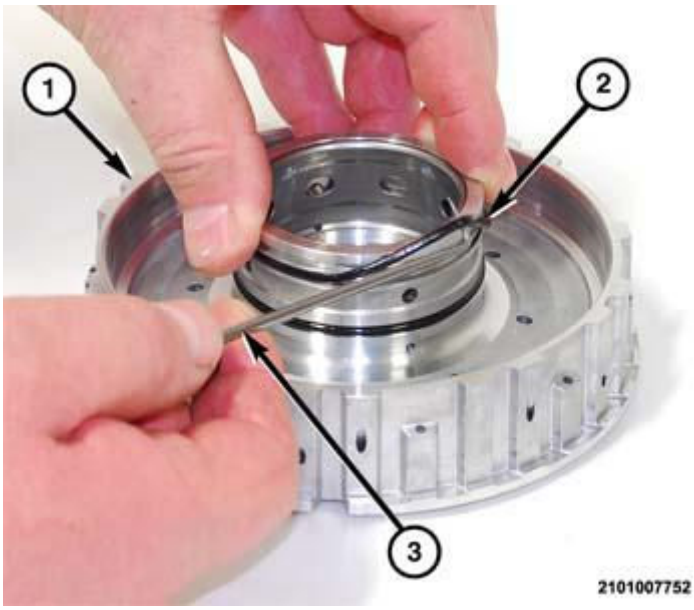

Fig. 416: Removing O-Ring Seals From B-Clutch Hub
Courtesy of CHRYSLER GROUP, LLC

12. Using a suitable hook tool (3) remove the O-ring seals (2) from the B-clutch hub (1).

Fig. 417: Remove/Install Balance Piston At B-Clutch Piston
Courtesy of CHRYSLER GROUP, LLC

13. Remove the balance piston (1) from the B-clutch piston (2).

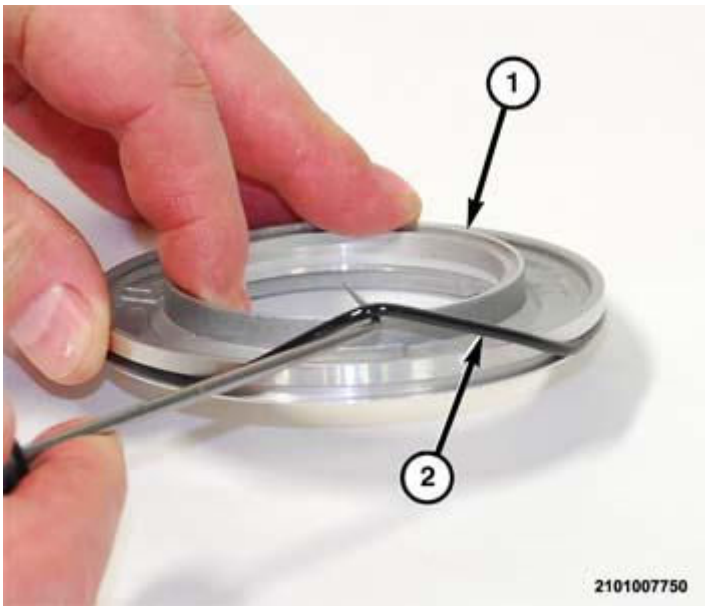

Fig. 418: Removing B-Clutch Balance Piston O-Ring
Courtesy of CHRYSLER GROUP, LLC

14. Using a suitable hook tool, remove the O-ring (2) from the balance piston (1).

Fig. 419: Removing B-Clutch Piston O-Ring
Courtesy of CHRYSLER GROUP, LLC

15. Using a suitable hook tool, remove the O-ring seal from the B-clutch piston.

ASSEMBLY

B-CLUTCH ASSEMBLY

WARNING: Always wear safety glasses when cleaning, disassembling and assembling the transmission/transaxle. Contents of the transmission/transaxle can become projectiles (e.g., springs, snap-rings, as well as metal and other debris). Failure to wear safety glasses may result in severe personal injury.

Clean the B-clutch components with suitable solvent and blow them dry with regulated 344 kPa (50 psi) shop air. Position all of the B-clutch components on a clean work surface in preparation for assembly.

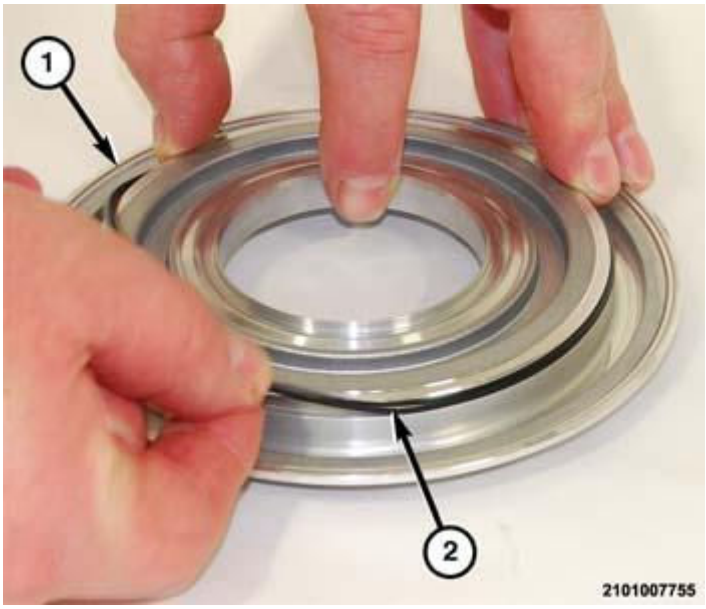

Fig. 420: Installing B-Clutch Piston O-Ring
Courtesy of CHRYSLER GROUP, LLC

1. Install the O-ring seal (2) on the B-clutch piston.

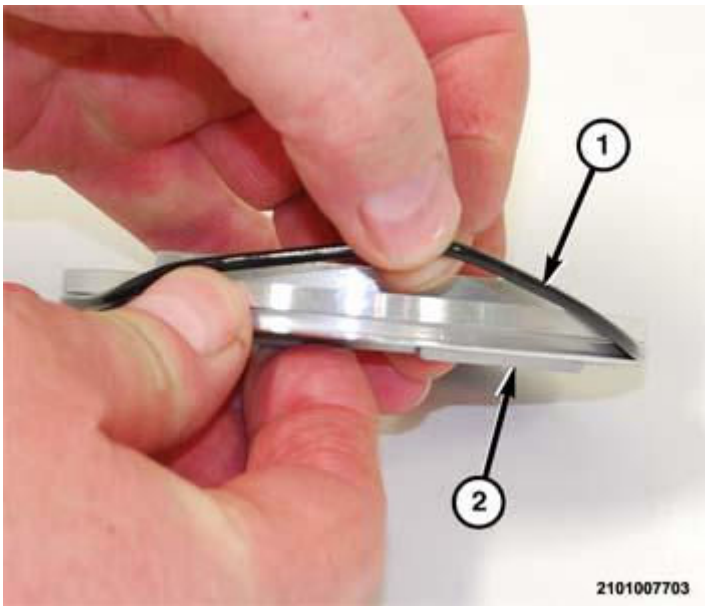

Fig. 421: Installing B-Clutch Balance Piston O-Ring
Courtesy of CHRYSLER GROUP, LLC

2. Install the O-ring seal (1) on the B-clutch balance piston (2).

Fig. 422: Remove/Install Balance Piston At B-Clutch Piston
Courtesy of CHRYSLER GROUP, LLC

3. Install the balance piston (1) in the B-clutch piston (2).

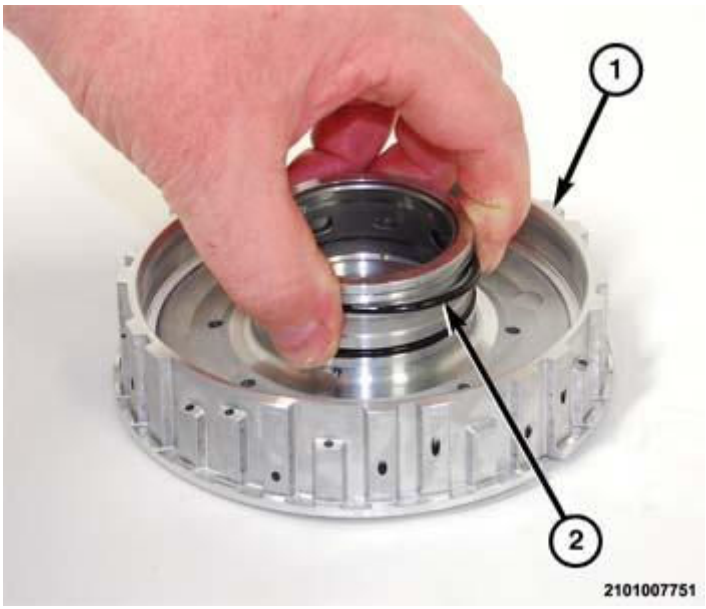

Fig. 423: B-Clutch Hub & O-Ring Seals
Courtesy of CHRYSLER GROUP, LLC

4. Install New O-ring seals (2) in the B-clutch hub (1).

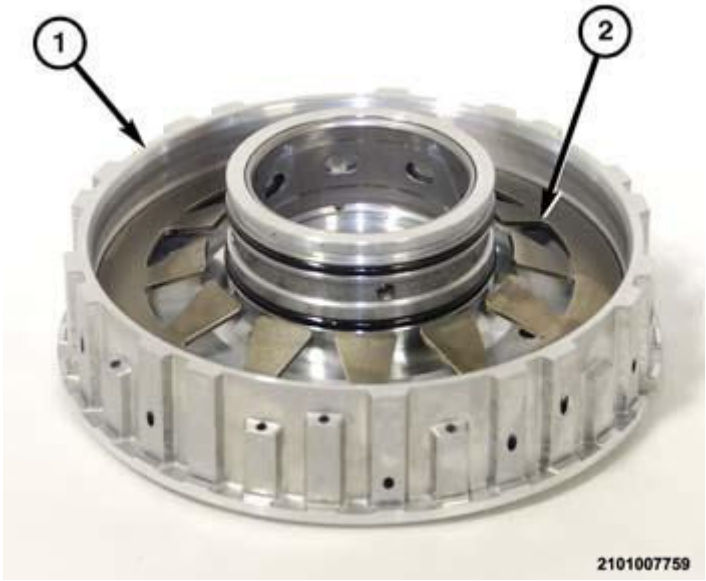

Fig. 424: Belleville Spring & B-Clutch Hub
Courtesy of CHRYSLER GROUP, LLC

5. Install the belleville spring (2) in the B-clutch hub (1).

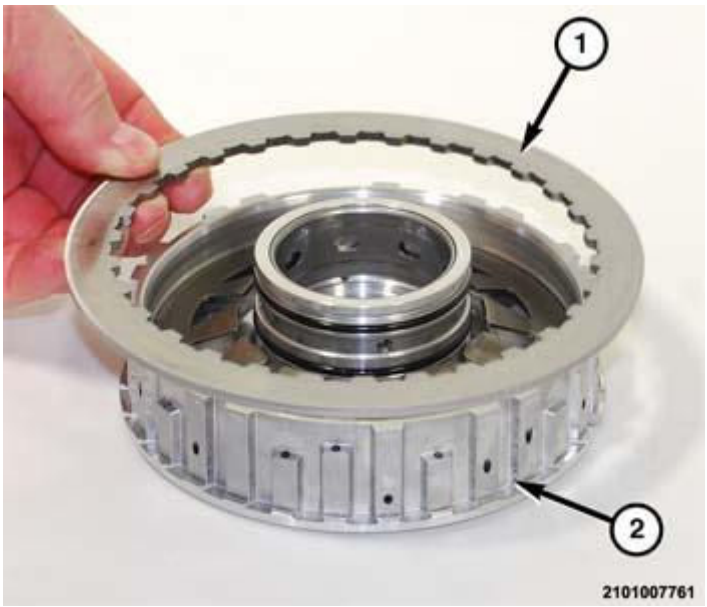

Fig. 425: Reaction Plate & B-Clutch Hub
Courtesy of CHRYSLER GROUP, LLC

6. Install the reaction plate (1) on the B-clutch hub (2).

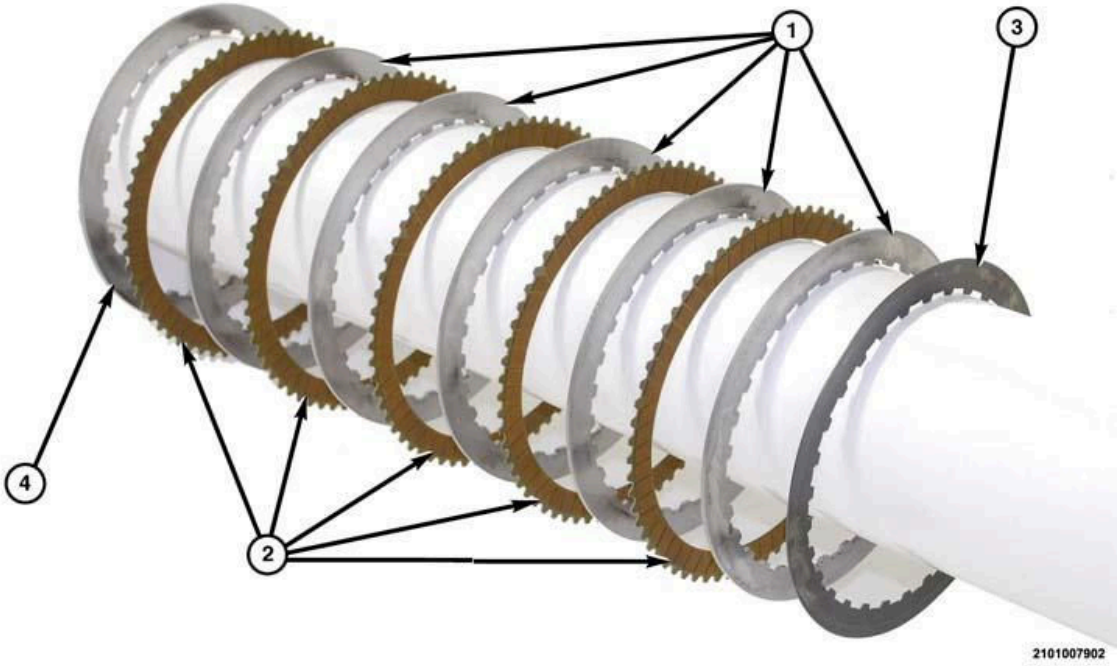

Fig. 426: Exploded View Of B-Clutch, Friction Discs & Steel Plates
Courtesy of CHRYSLER GROUP, LLC

7. In alternating sequence, Install the B-clutch friction plates (2) and steel plates (1) On the B-clutch hub.

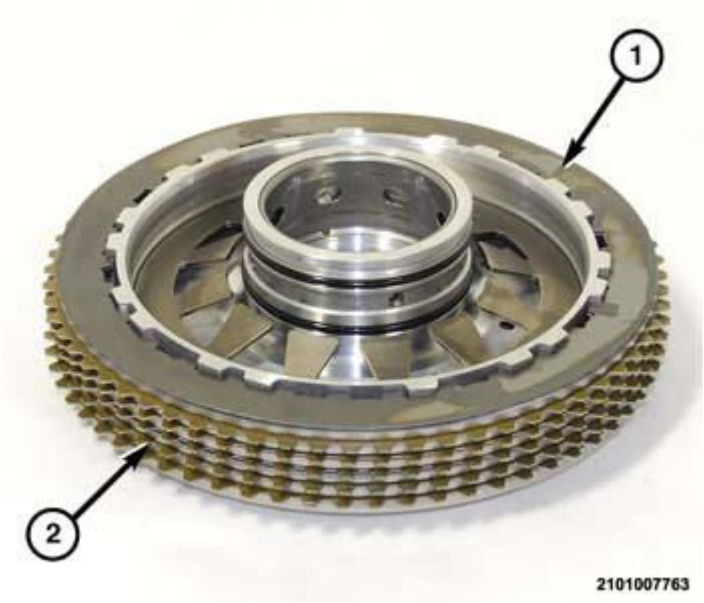

Fig. 427: B-Clutch & B-Clutch Hub
Courtesy of CHRYSLER GROUP, LLC

8. Install the wave spring plate (1) on the B-clutch hub.

Fig. 428: B-Clutch Piston & B-Clutch
Courtesy of CHRYSLER GROUP, LLC

9. Install the piston (1) the B-clutch (2).

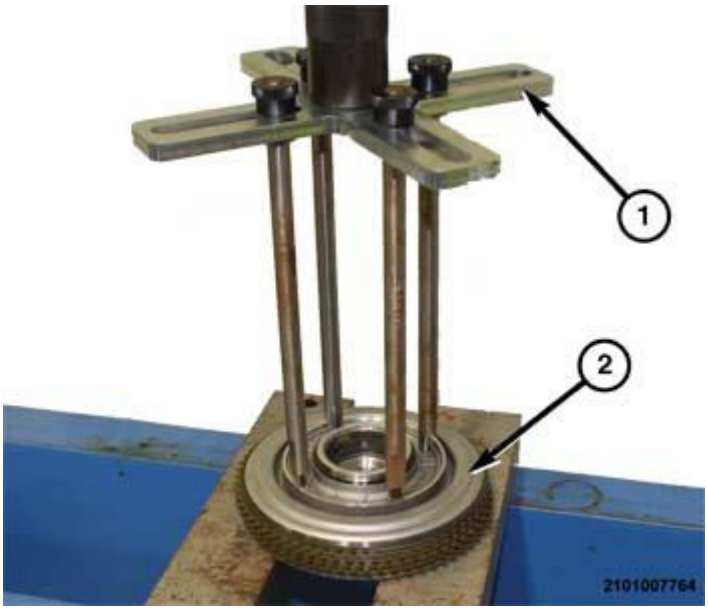

Fig. 429: Compressing B-Clutch Piston To Gain Access To Snap-Ring
Courtesy of CHRYSLER GROUP, LLC

10. Using tool (special tool #8901A, Pressing Tool) (with pressure scale removed (1) and legs (special tool #10428, Adapter, Pressing Tool), compress the B-clutch (2) piston to gain access to the snap-ring.

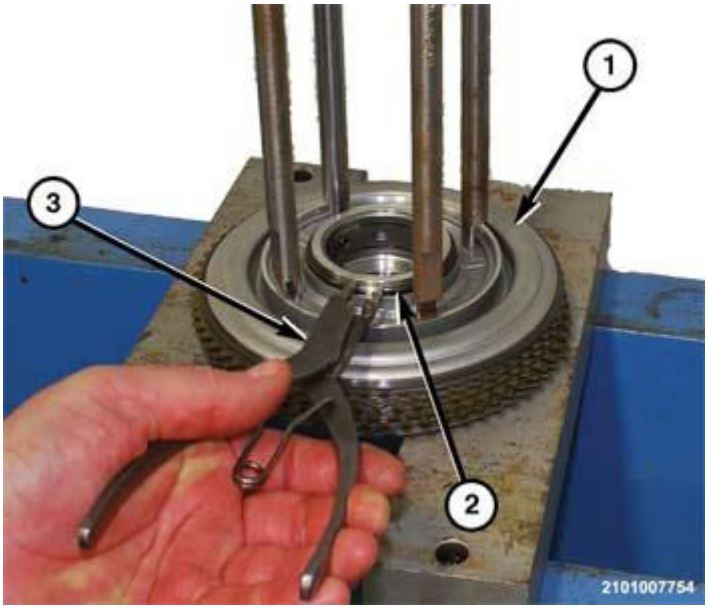

Fig. 430: Snap-Ring, B-Clutch Piston & B-Clutch Hub
Courtesy of CHRYSLER GROUP, LLC

11. Compress the B-clutch belleville spring and piston until the snap-ring groove is exposed.
12. Using a suitable snap-ring pliers (3), install the snap-ring (2) in the B-clutch (1) hub.

NOTE: **Before installing the input shaft/Dog A-clutch, measure the B-clutch to determine if the proper select reaction plate was installed. Air test the dog A-clutch with shop air regulated to 344 kPa (50 psi), it fails the air test replace the input shaft.**

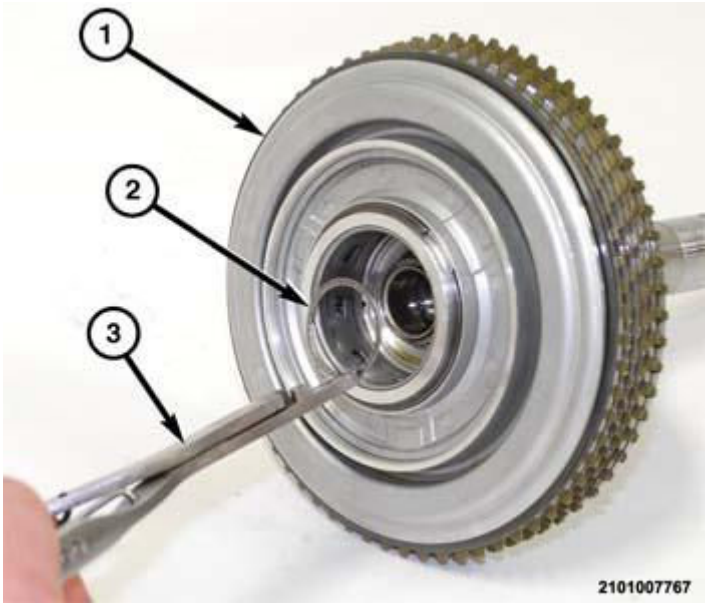

Fig. 431: Input Shaft/Dog Clutch A, B-Clutch Hub & Snap-Ring
Courtesy of CHRYSLER GROUP, LLC

13. Insert the input shaft/dog A-clutch into the B-clutch hub.
14. Using a suitable snap-ring pliers, install the snap-ring to hold the input shaft in the B-clutch hub.

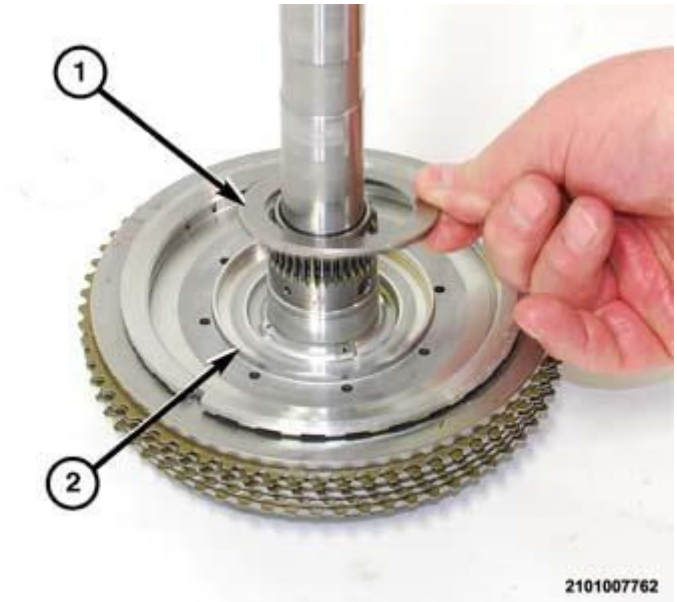

Fig. 432: Thrust Bearing & B-Clutch Hub
Courtesy of CHRYSLER GROUP, LLC

15. Install the thrust bearing on the B-clutch hub.

CLUTCH, C

ADJUSTMENTS

C-CLUTCH MEASUREMENT

After the C-clutch is cleaned and assembled the end play must be measured to verify that the correct select reaction plate (3) has been installed.

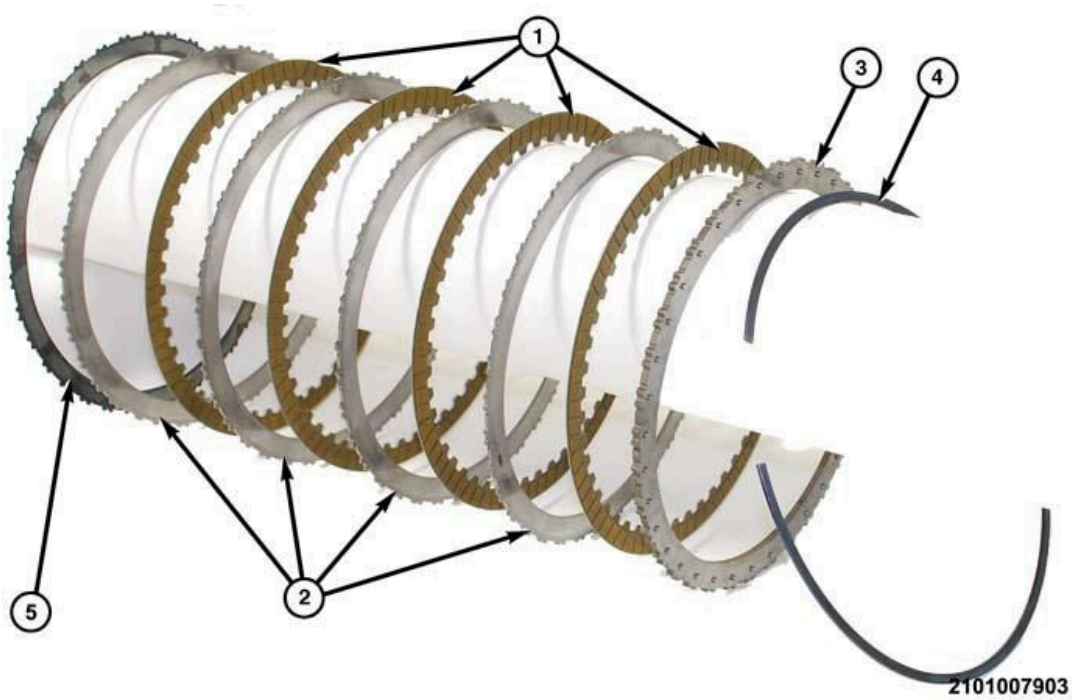

Fig. 433: Exploded View Of C-Clutch Wave Plate, Steel Plates, & Friction Discs
Courtesy of CHRYSLER GROUP, LLC

1. Position the transaxle housing on a suitable arbor press.

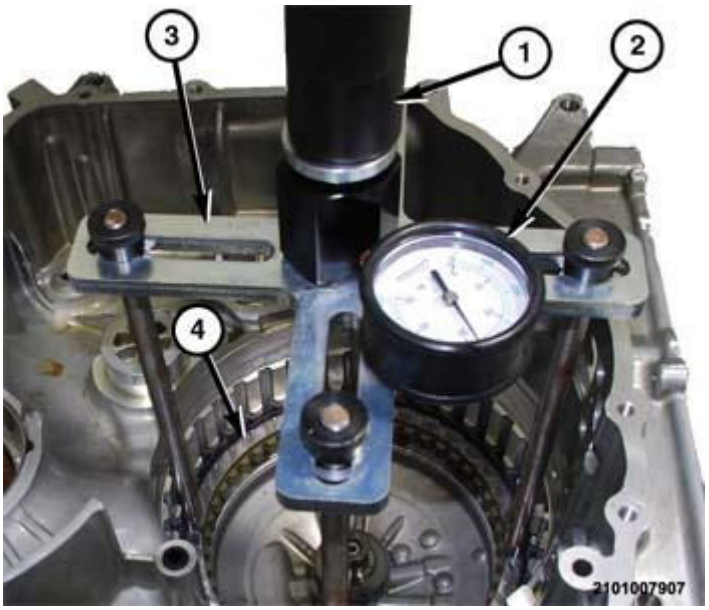

Fig. 434: Compressing C-Clutch To Collapse Wave Plate
Courtesy of CHRYSLER GROUP, LLC

2. Using tool (special tool #10429, Gauge, Force) (2), (special tool #8901A, Pressing Tool) (with pressure scale removed (3) and legs (special tool #10428, Adapter, Pressing Tool), compress the C-clutch (4) to collapse wave plate (5, See **Fig. 433**) to 68 kgf (150 lb. force).

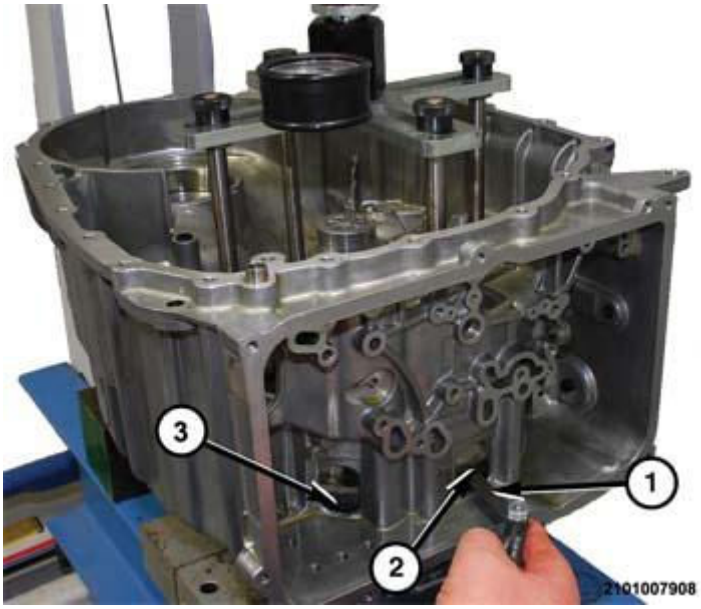

Fig. 435: Measuring Gap Between C-Clutch Snap-Ring & Reaction Plate
Courtesy of CHRYSLER GROUP, LLC

3. Using as suitable feeler gauge (1), measure the gap between the C-clutch snap-ring (2) and the reaction plate (2). Refer to **SPECIFICATIONS**.
4. If measurement does not match the specifications, replace the select reaction plate.

CLUTCH, D

ADJUSTMENTS

D-CLUTCH MEASUREMENT

After the D-clutch is cleaned and assembled the end play must be measured to verify that the correct select reaction plate has been installed.

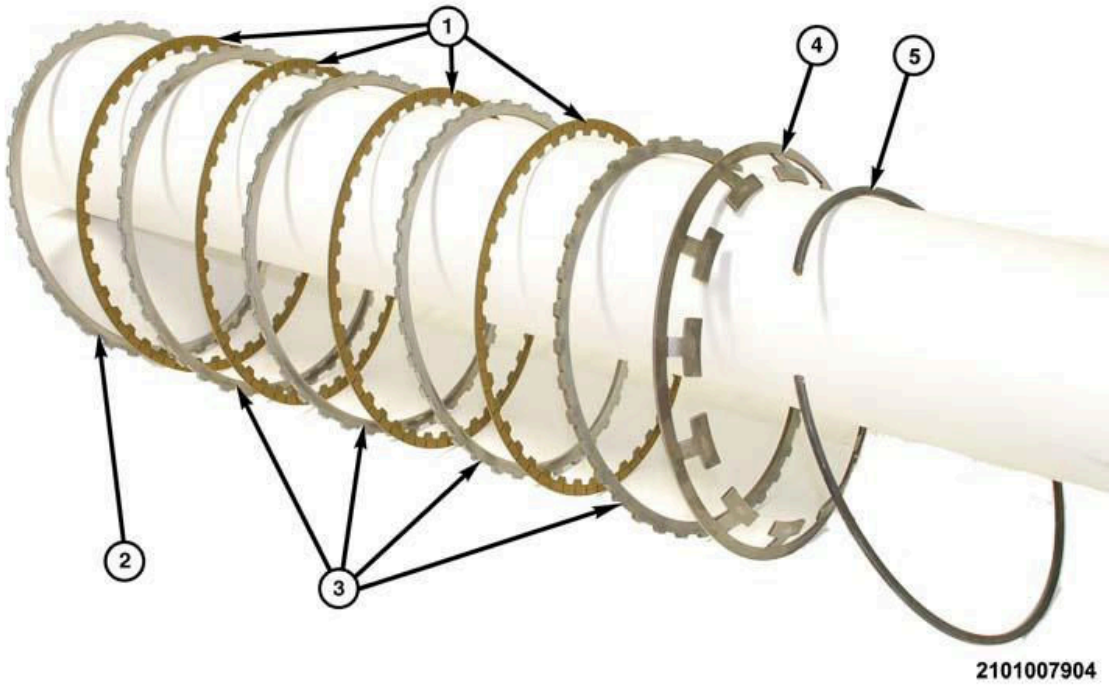

Fig. 436: Exploded View Of D-Clutch, Select Plate, Friction Plate & Steel Plates
Courtesy of CHRYSLER GROUP, LLC

1. Install the D-clutch snap-ring (5) in the groove in the transaxle housing.

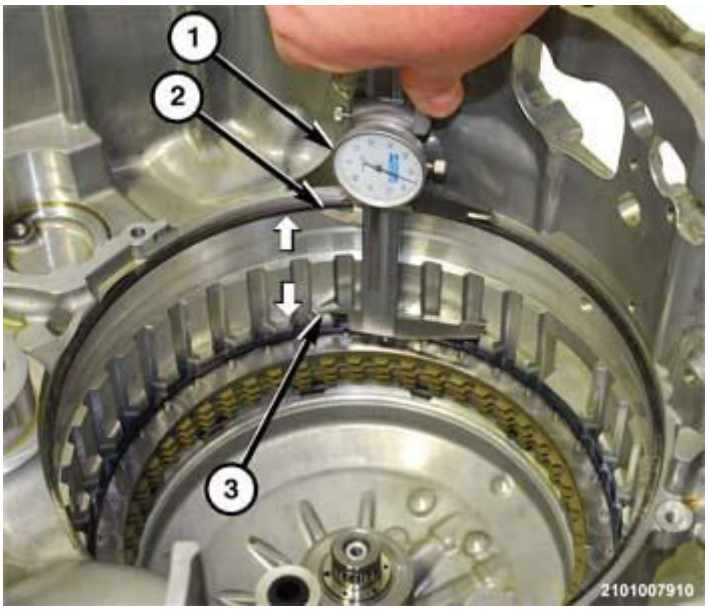

Fig. 437: Measuring Distance From The Bottom Of D-Clutch Snap-Ring To D-Clutch Shoulder
Courtesy of CHRYSLER GROUP, LLC

2. Using a suitable caliper (1), measure the distance from the bottom of the D-clutch snap-ring (2) to the D-clutch shoulder (3) in the transaxle housing. Record this number.

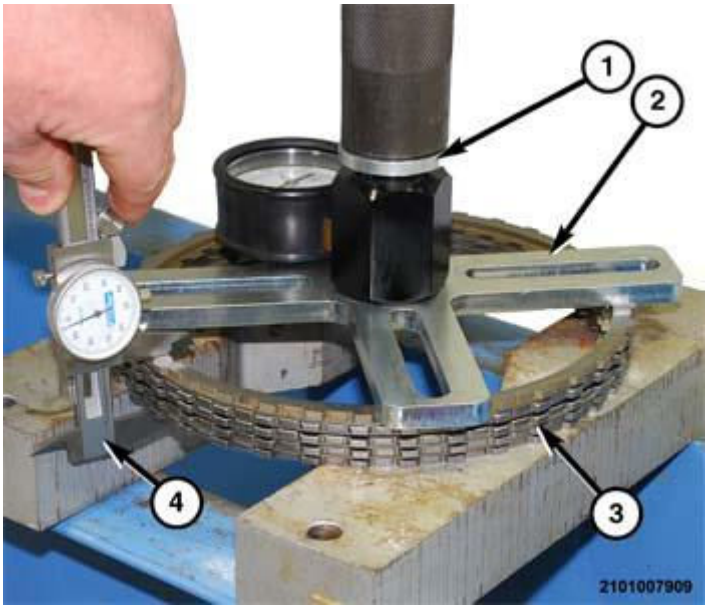

Fig. 438: Measuring Thickness Of D-Clutch
Courtesy of CHRYSLER GROUP, LLC

3. Place the D-clutch piston retainer/piston, belleville spring, and clutch stack on a suitable arbor press.
4. Using tool (special tool #10429, Gauge, Force) (1) and (special tool #8901A, Pressing Tool) (2) (with pressure scale and legs removed), compress the D-clutch (5) to 22.5 kgf (50 lb. force) (1).
5. Using a suitable caliper (1), measure the thickness from the snap-ring step in the D-clutch piston retainer

to the underside of the D-clutch reaction plate. Record this number.

6. Subtract the amount of step 5 from the amount of step 2. The difference is the amount of free-play in the D-clutch. Refer to **SPECIFICATIONS**.

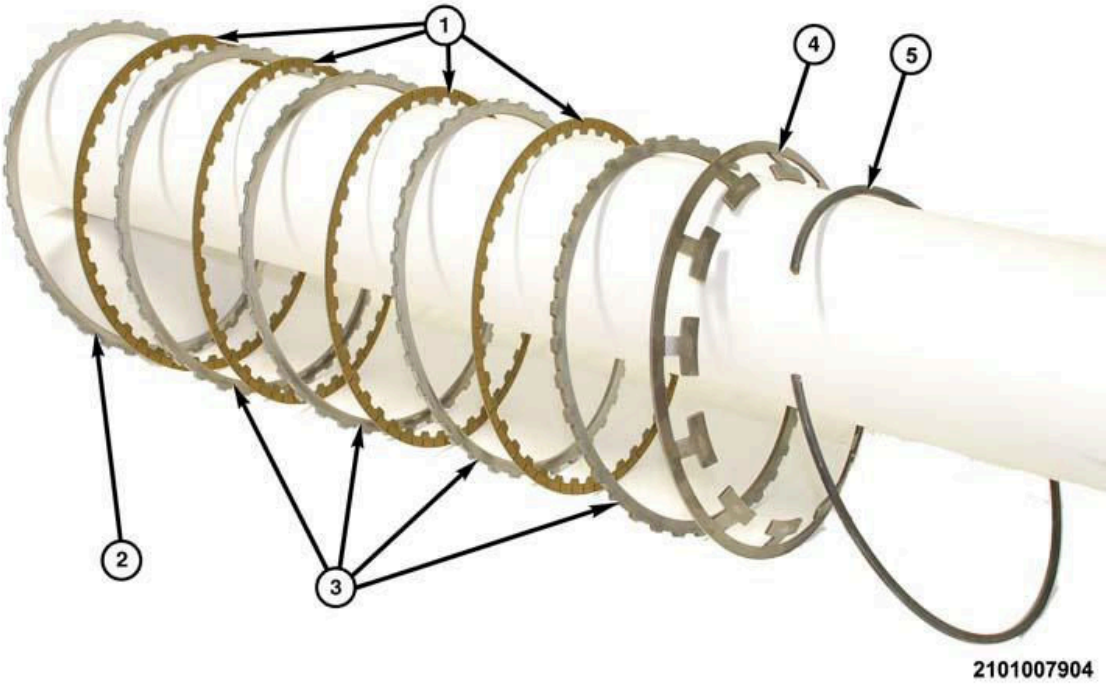

Fig. 439: Exploded View Of D-Clutch, Select Plate, Friction Plate & Steel Plates
Courtesy of CHRYSLER GROUP, LLC

7. If the remainder from step 6 does not match the specifications, replace the select reaction plate (2).

CLUTCH, E

ADJUSTMENTS

E-CLUTCH MEASUREMENT

After the E-clutch is cleaned and assembled the end play must be measured to verify that the correct select snap-ring has been installed.

1. Use a dial indicator and a magnetic base attached to the E-clutch retainer with the stylist tip resting on the reaction plate.

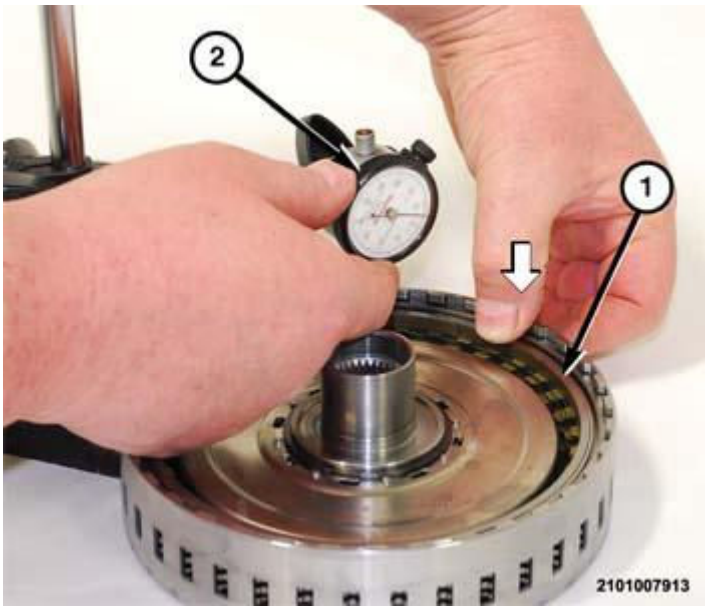

Fig. 440: Pressing Downward On Reaction Plate
Courtesy of CHRYSLER GROUP, LLC

2. Press downward on the reaction plate (1) and zero the dial indicator face (2).

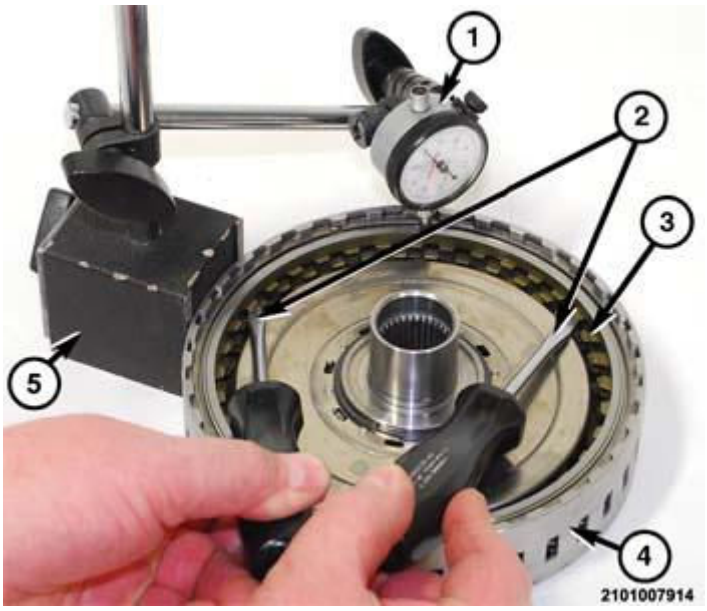

Fig. 441: Prying Center Friction Discs Upward
Courtesy of CHRYSLER GROUP, LLC

3. Using two suitable screw drivers (2), pry the center friction discs (3) upward while reading the dial indicator (1).

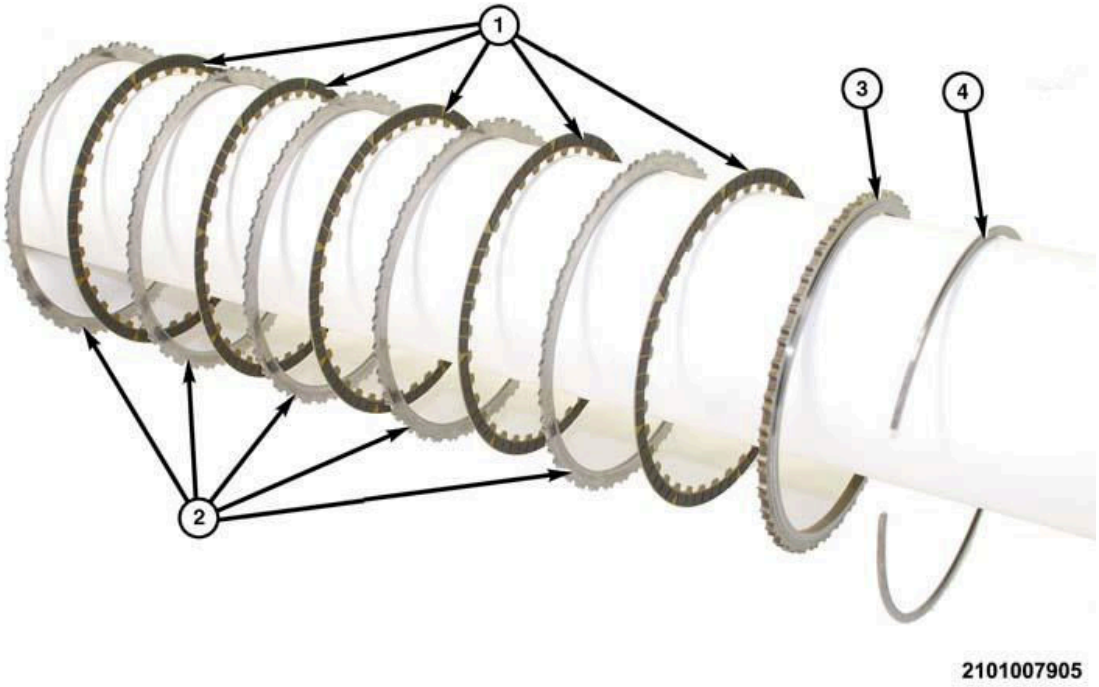

Fig. 442: Exploded View Of E-Clutch Components
Courtesy of CHRYSLER GROUP, LLC

4. The reading should be within specification. Refer to **SPECIFICATIONS**. If not, install the correct select snap-ring (4).

DISASSEMBLY

E-CLUTCH DISASSEMBLY

WARNING: **Always wear safety glasses when cleaning, disassembling and assembling the transmission/transaxle. Contents of the transmission/transaxle can become projectiles (e.g., springs, snap-rings, as well as metal and other debris). Failure to wear safety glasses may result in severe personal injury.**

NOTE: **Clean the E-clutch components with suitable solvent and blow them dry with regulated 344 kPa (50 psi) shop air. If the E-clutch failed an air test and air is bypassing the piston seals, the piston will require replacement. The seals are integral to the piston.**

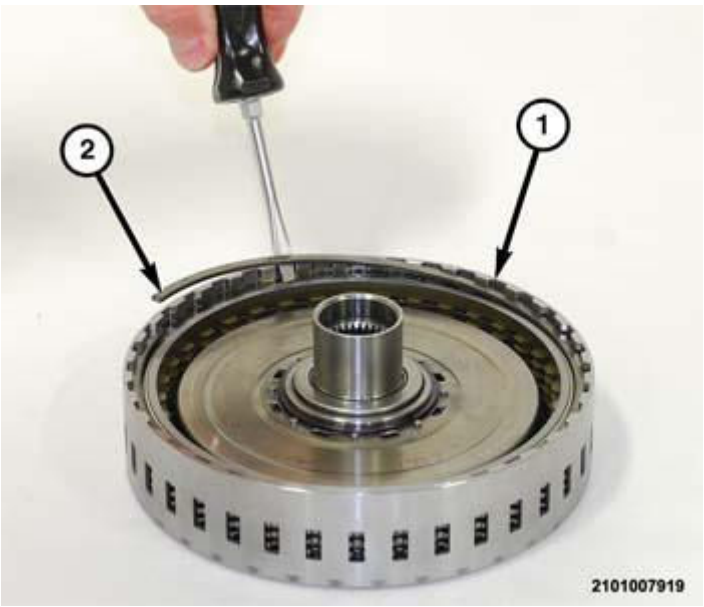

Fig. 443: Removing Snap-Ring
Courtesy of CHRYSLER GROUP, LLC

1. Using a suitable screw driver, remove the snap-ring (2) holding the E-clutch thrust place in the E-clutch retainer (1).

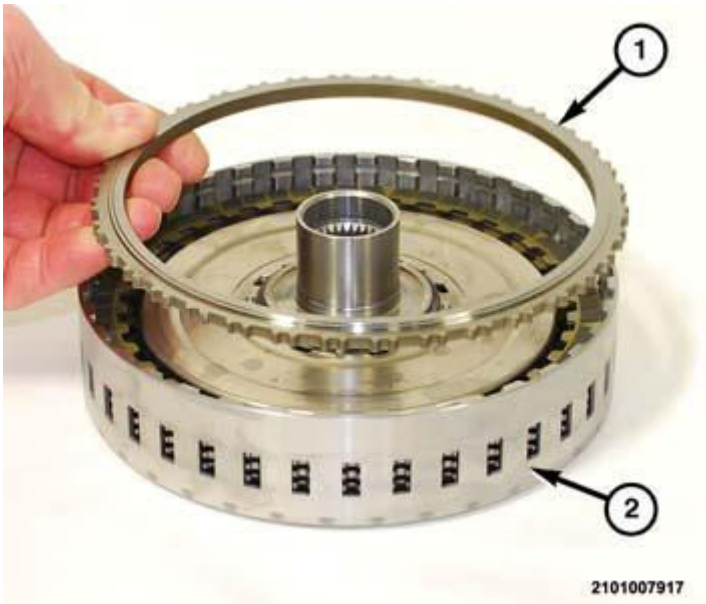

Fig. 444: Thrust Plate & E-Clutch Retainer
Courtesy of CHRYSLER GROUP, LLC

2. Remove the thrust plate (1) from the E-clutch retainer (2).

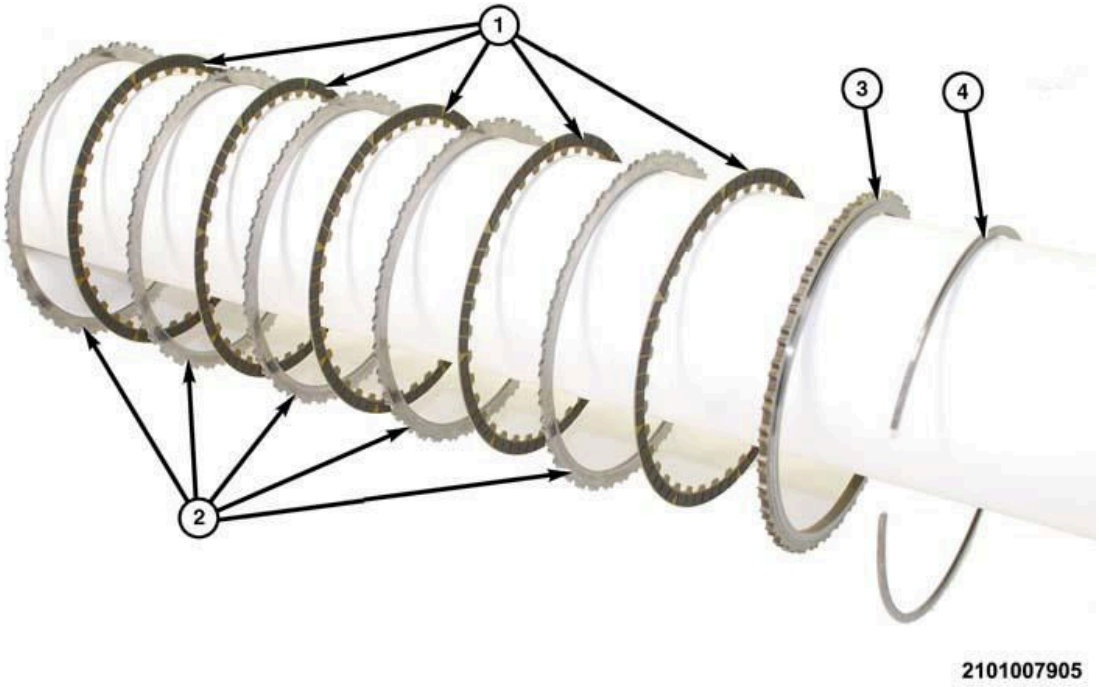

Fig. 445: Exploded View Of E-Clutch Components
Courtesy of CHRYSLER GROUP, LLC

3. Remove the E-clutch friction plates (1) and steel plates (2) from the E-clutch retainer.

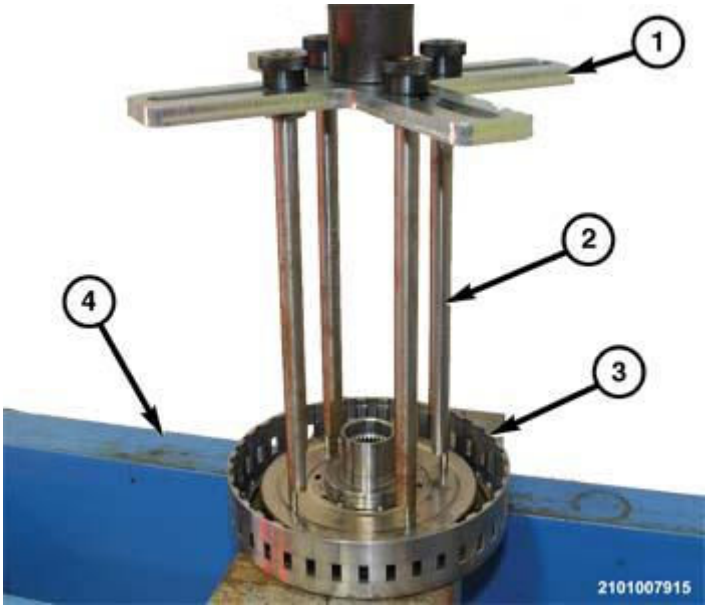

Fig. 446: E-Clutch Retainer & Arbor Press
Courtesy of CHRYSLER GROUP, LLC

4. Place the E-clutch retainer (3) on a suitable arbor press (4).
5. Using tool (special tool #8901A, Pressing Tool) (with pressure scale removed (1) and legs (special tool

#10428, Adapter, Pressing Tool) (2), compress the E-clutch spring retainer to gain access to the snap-ring.

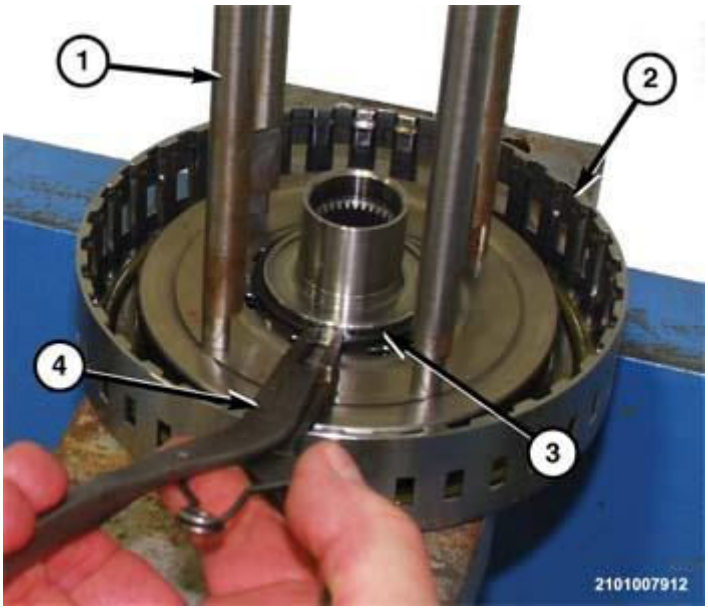

Fig. 447: Removing Snap-Ring
Courtesy of CHRYSLER GROUP, LLC

6. Using a suitable snap-ring pliers (4), remove the snap-ring (3) holding the spring retainer to the E-clutch (2).
7. Remove the tools 8904 and 10428 (1) from the arbor press.

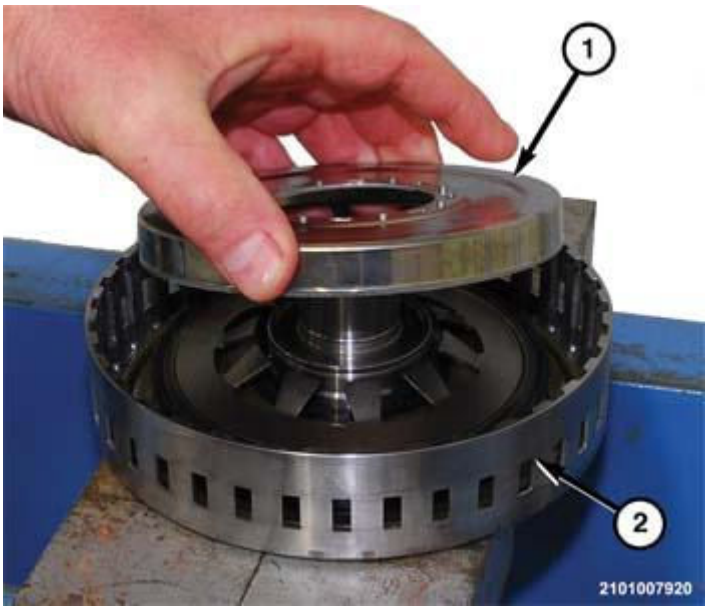

Fig. 448: Belleville Spring Retainer & E-Clutch
Courtesy of CHRYSLER GROUP, LLC

8. Remove the belleville spring retainer (1) from the E-clutch (2).

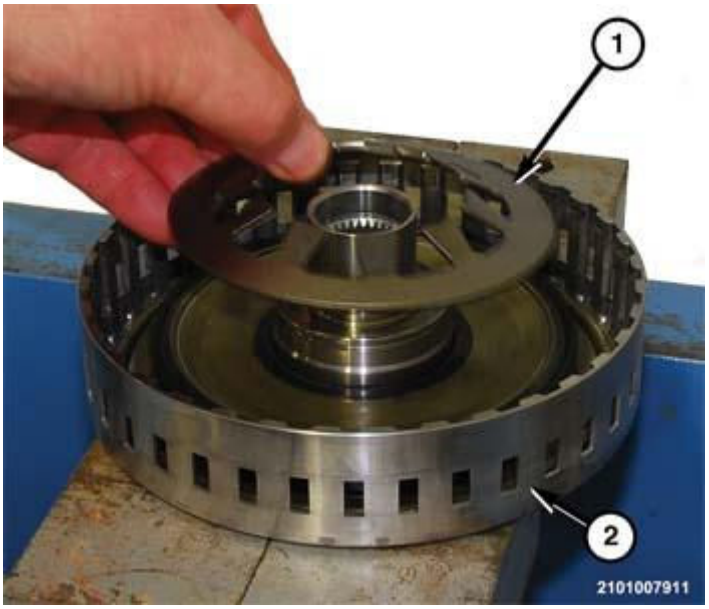

Fig. 449: Belleville Spring & E-Clutch
Courtesy of CHRYSLER GROUP, LLC

9. Remove the belleville spring (1) from the E-clutch (1).

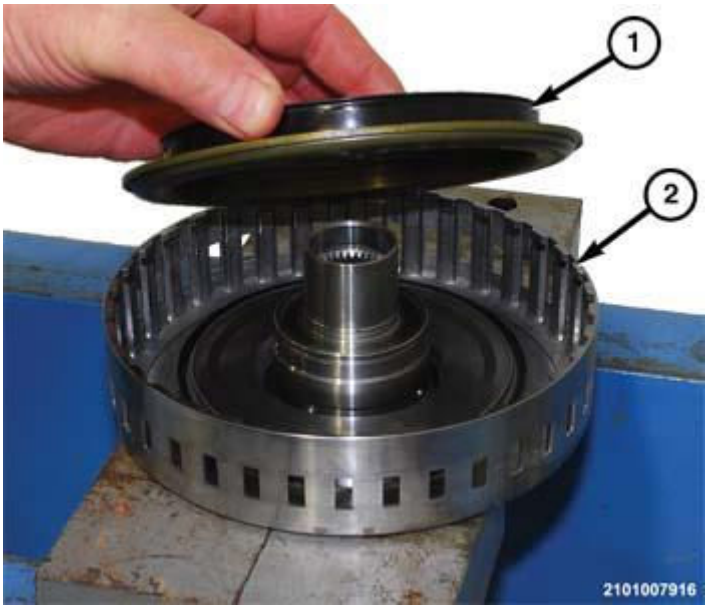

Fig. 450: E-Clutch Retainer & Piston
Courtesy of CHRYSLER GROUP, LLC

10. Remove the piston (1) from the E-clutch retainer (2).

ASSEMBLY

E-CLUTCH ASSEMBLY

WARNING: Always wear safety glasses when cleaning, disassembling and assembling the transmission/transaxle. Contents of the transmission/transaxle can become projectiles (e.g., springs, snap-rings, as well as metal and other debris). Failure to wear safety glasses may result in severe personal injury.

NOTE: Clean the E-clutch components with suitable solvent and blow them dry with regulated 344 kPa (50 psi) shop air. Position all of the E-clutch components on a clean work surface in preparation for assembly. If the seals are damaged in any way clutch piston, retainer and belleville spring retainer will require replacement.

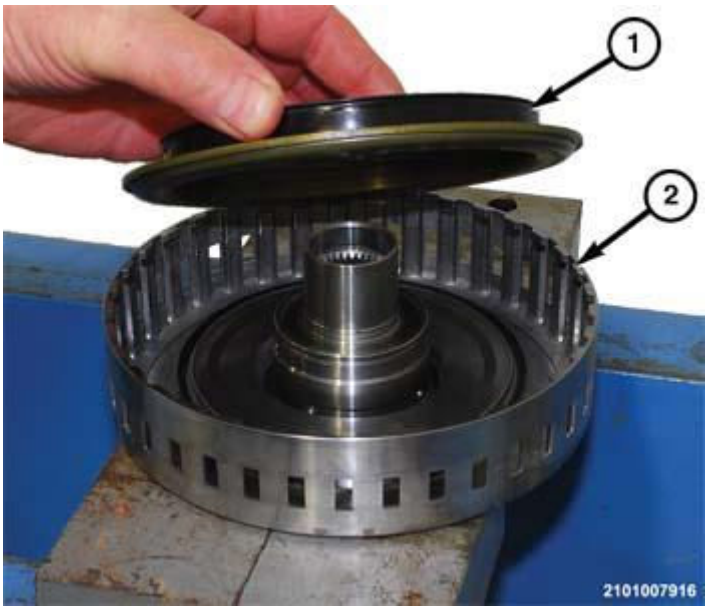

Fig. 451: E-Clutch Retainer & Piston
Courtesy of CHRYSLER GROUP, LLC

1. Install the piston (1) into the E-clutch retainer (2).

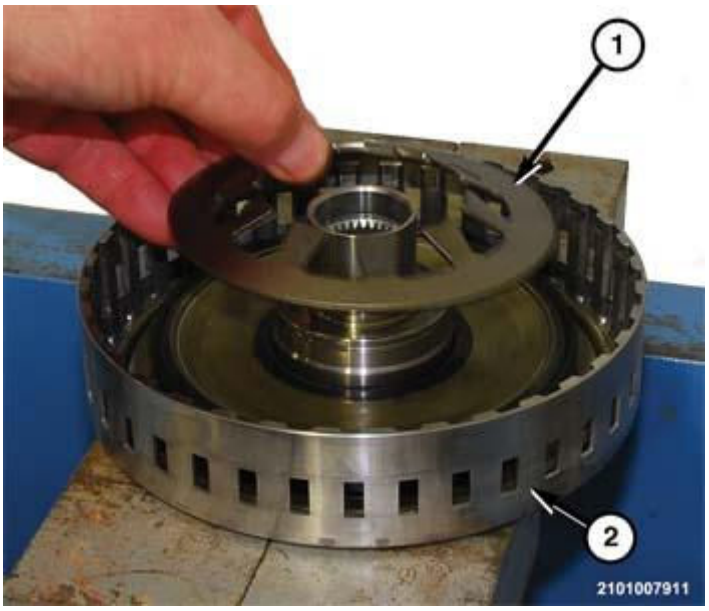

Fig. 452: Belleville Spring & E-Clutch
Courtesy of CHRYSLER GROUP, LLC

2. Install the belleville spring (1) into the E-clutch (1).

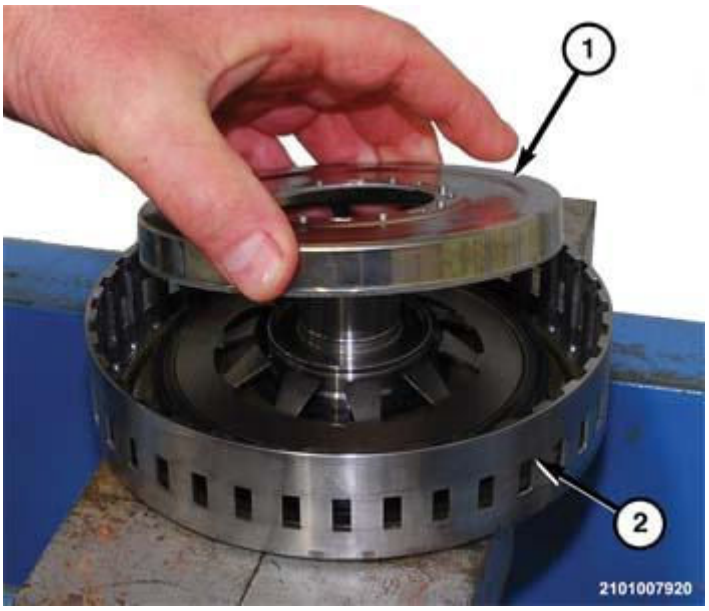

Fig. 453: Belleville Spring Retainer & E-Clutch
Courtesy of CHRYSLER GROUP, LLC

3. Install the belleville spring retainer (1) from the E-clutch (2).

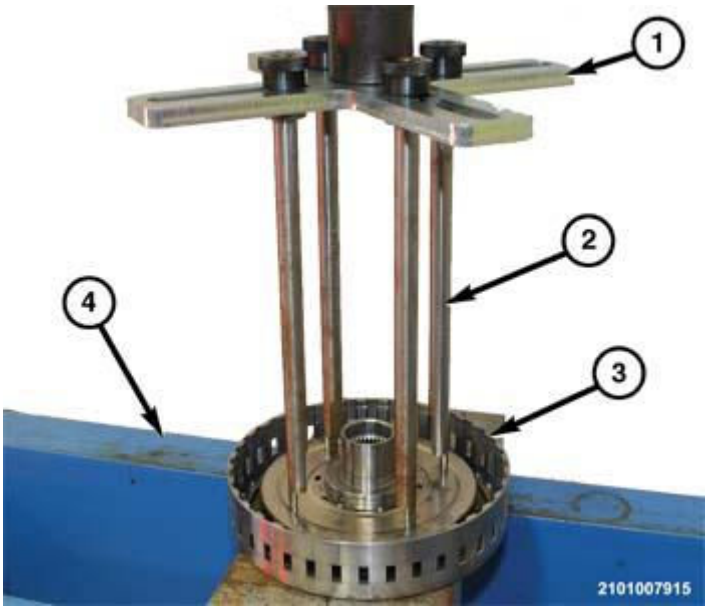

Fig. 454: E-Clutch Retainer & Arbor Press
Courtesy of CHRYSLER GROUP, LLC

4. Using tool (special tool #8901A, Pressing Tool) (with pressure scale removed (1) and legs (special tool #10428, Adapter, Pressing Tool) (2), compress the E-clutch spring retainer to until snap-ring groove is exposed.

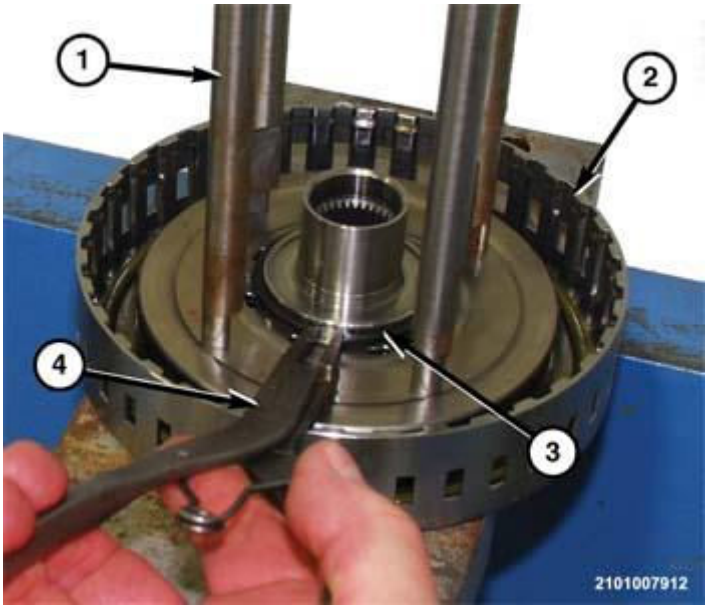

Fig. 455: Removing Snap-Ring
Courtesy of CHRYSLER GROUP, LLC

5. Using a suitable snap-ring pliers (4), remove the snap-ring (3) holding the spring retainer to the E-clutch (2).
6. Remove the tools 8904 and 10428 (1) from the arbor press.

7. Place the E-clutch retainer on a suitable clean work surface.

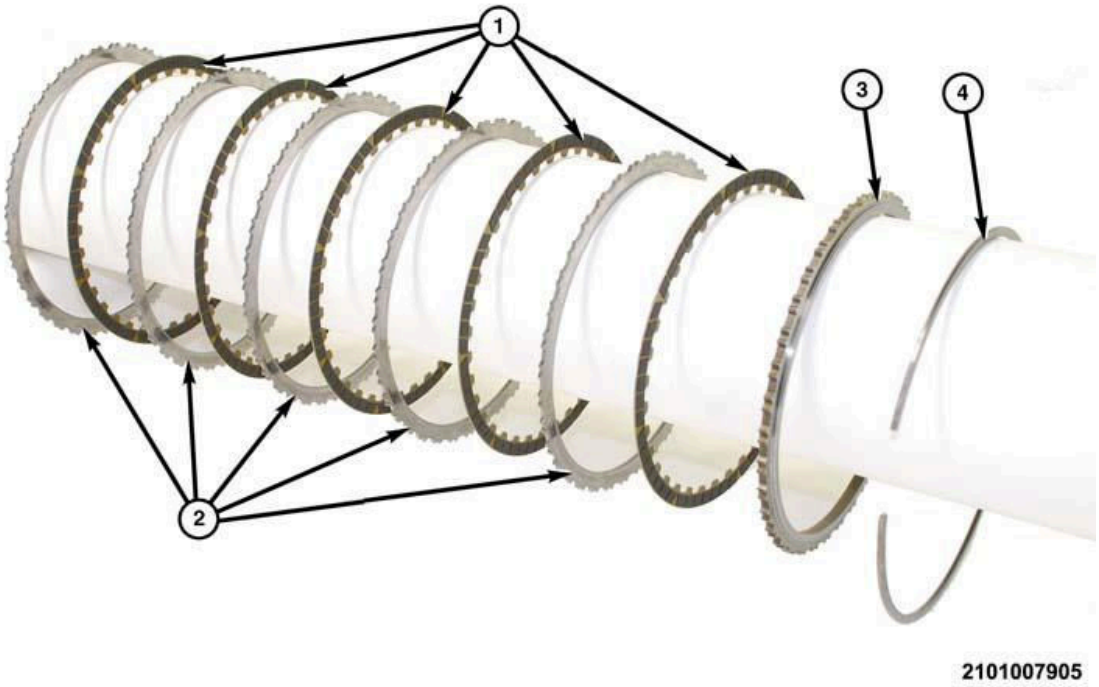

Fig. 456: Exploded View Of E-Clutch Components
Courtesy of CHRYSLER GROUP, LLC

8. In alternating sequence, Install the E-clutch friction plates (1) and steel plates (2) into the E-clutch retainer.

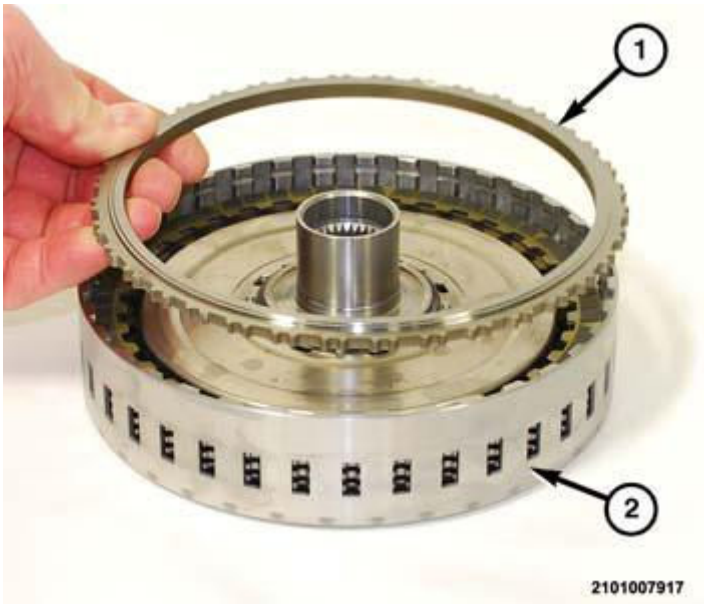

Fig. 457: Thrust Plate & E-Clutch Retainer
Courtesy of CHRYSLER GROUP, LLC

9. With stepped side up, install the thrust plate (1) into the E-clutch retainer (2).

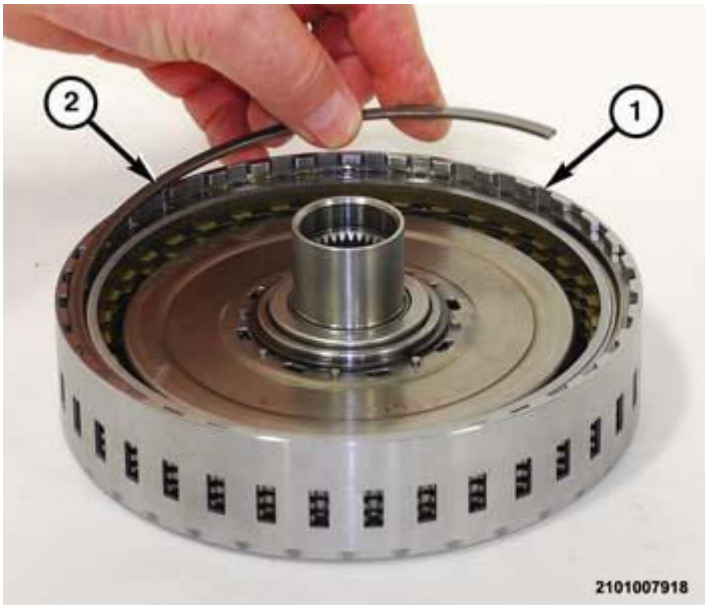

Fig. 458: Installing Snap-Ring
Courtesy of CHRYSLER GROUP, LLC

10. Install the snap-ring (2) to hold the E-clutch thrust place in the E-clutch retainer (1).

CLUTCH, F DOG

DISASSEMBLY

DOG F-CLUTCH DISASSEMBLY

The Dog F-clutch is located in the output gear support.

1. Clamp the output gear support assembly in a suitable bench vise.

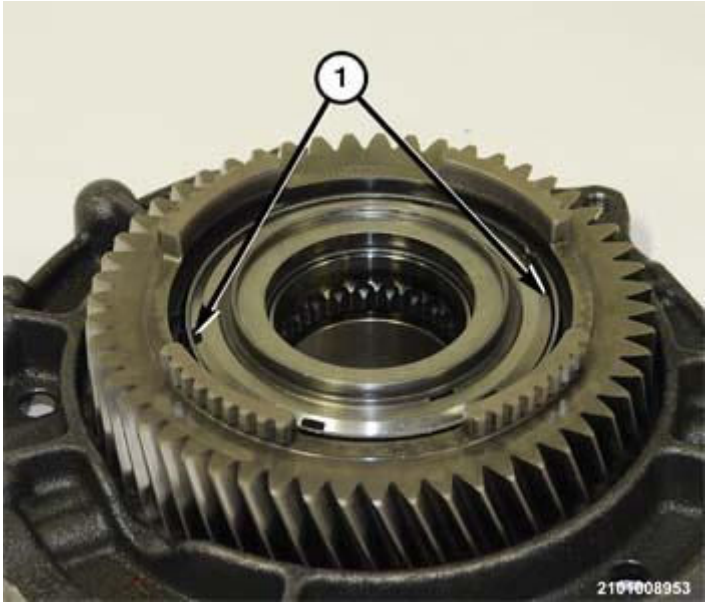

Fig. 459: Locking Plate
Courtesy of CHRYSLER GROUP, LLC

2. Using a suitable screw driver, pry the staking in the locking plate outward to allow to stake nut to rotate.

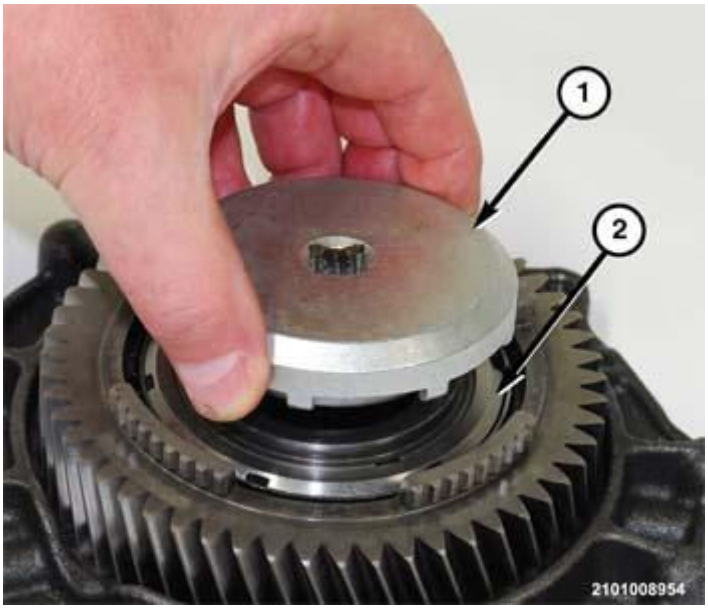

Fig. 460: Removing/Installing Stake Nut
Courtesy of CHRYSLER GROUP, LLC

3. Using tool (special tool #2012900210, Wrench, Spanner), remove the stake nut holding the output gear and bearing to the output gear support hub.

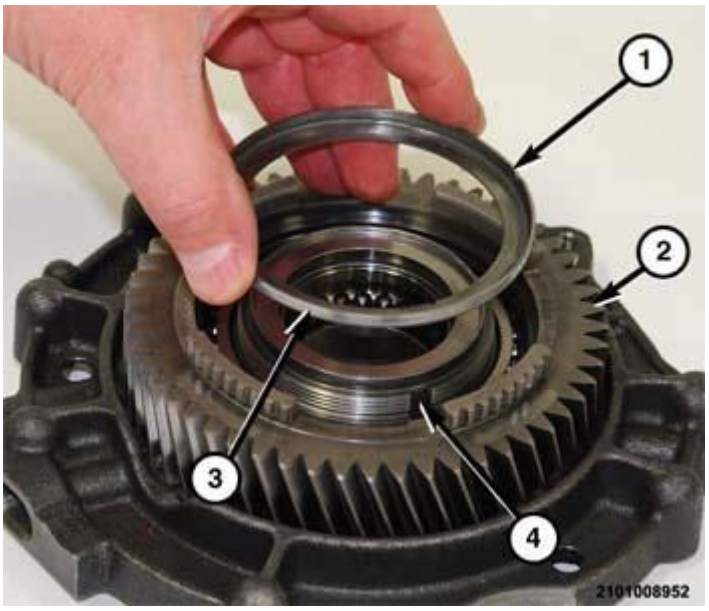

Fig. 461: Removing/Installing Lock Plate
Courtesy of CHRYSLER GROUP, LLC

4. Remove the lock plate from the output gear support.

Fig. 462: Removing/Installing Output Gear
Courtesy of CHRYSLER GROUP, LLC

5. Remove the output gear from the output gear support.

NOTE: **The double roller bearing in the output gear cannot be removed. If the bearing is damaged, replace the output gear as well.**

Fig. 463: Removing Dog F-Clutch Thrust Plate
Courtesy of CHRYSLER GROUP, LLC

6. Using tool (special tool #C-637, Slide Hammer, Universal) (1) and (special tool #7794-A, Remover, Seal) (1), remove the dog F-clutch thrust plate (3) from the output gear support hub.

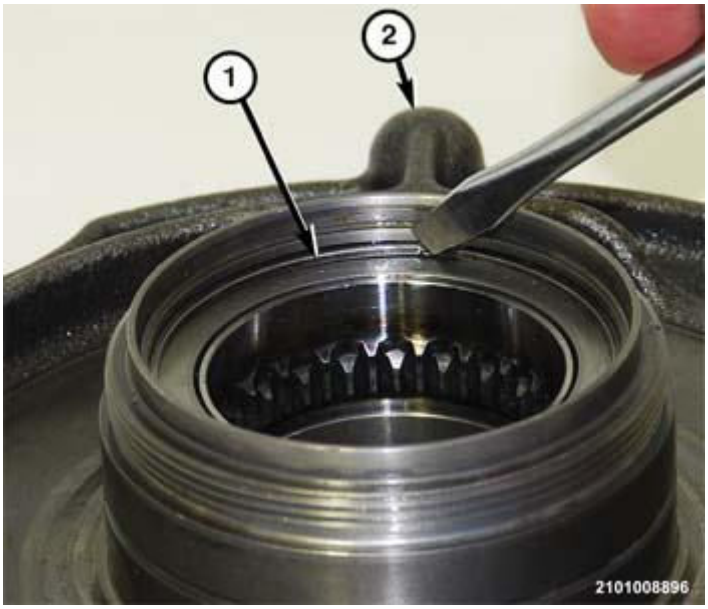

Fig. 464: Removing Snap-Ring
Courtesy of CHRYSLER GROUP, LLC

7. Using a suitable screw driver, remove the snap-ring holding the dog F-clutch plug and piston in the output gear support hub.

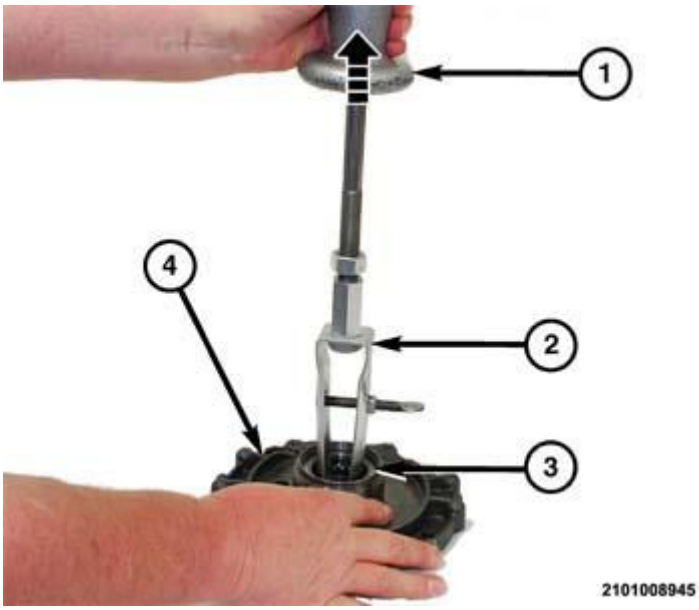

Fig. 465: Removing Dog F-Clutch From Output Gear Support Hub
Courtesy of CHRYSLER GROUP, LLC

8. Using tool (special tool #C-637, Slide Hammer, Universal) (1) and (special tool #7794-A, Remover, Seal) (2), remove the dog F-clutch (3) from the output gear support hub (4).
9. Remove the dog F-clutch plug from the dog F-clutch piston.

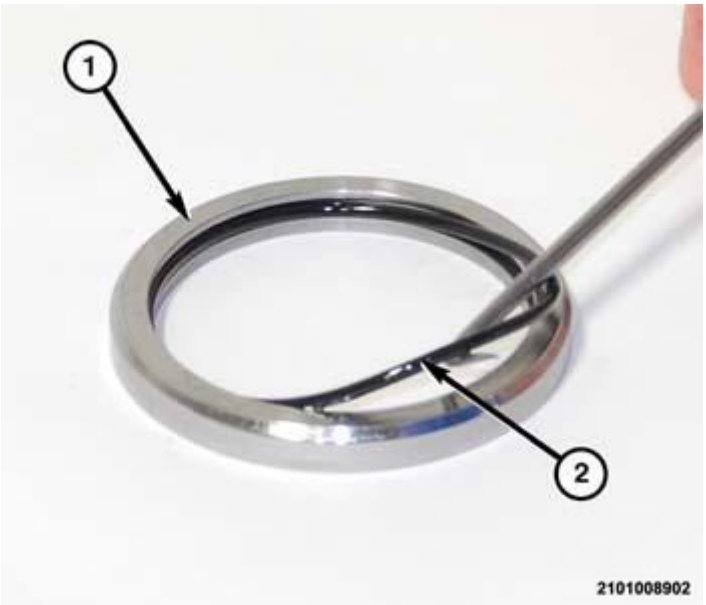

Fig. 466: Dog F-Clutch Plug & Inside O-Ring Seal
Courtesy of CHRYSLER GROUP, LLC

10. Remove the O-ring seal from the inside of the dog F-clutch plug.

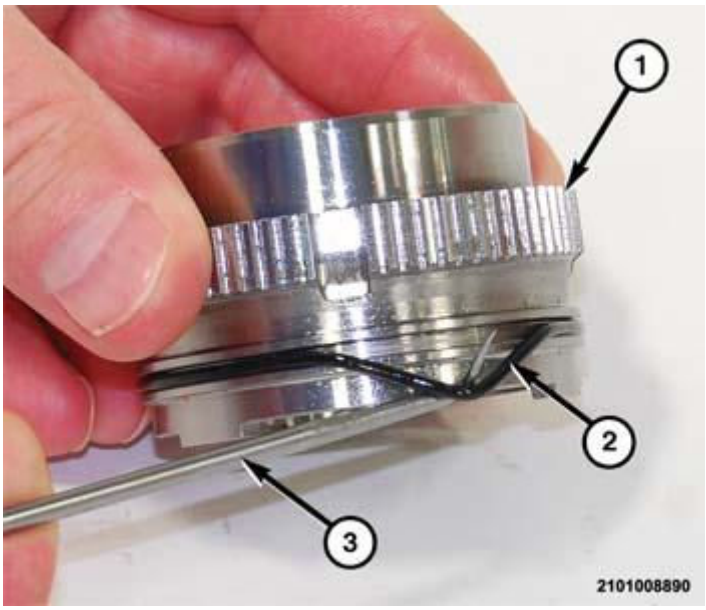

Fig. 467: Dog F-Clutch Piston & Inside O-Ring Seal
Courtesy of CHRYSLER GROUP, LLC

11. Remove the outer O-ring seal from the dog F-clutch piston.

Fig. 468: Dog F-Clutch Piston & Inner O-Ring Seal
Courtesy of CHRYSLER GROUP, LLC

12. Remove the inner O-ring seal from the dog F-clutch piston.

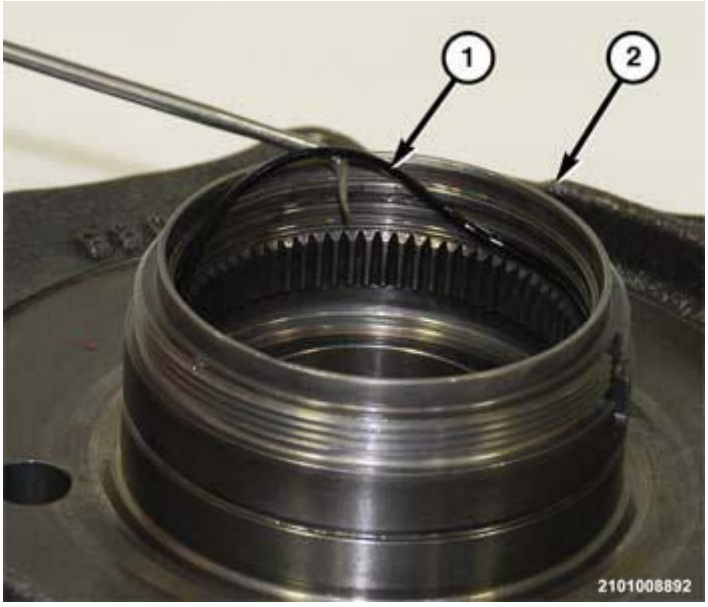

Fig. 469: Output Gear Support Hub & Upper O-Ring Seal
Courtesy of CHRYSLER GROUP, LLC

13. Remove the upper O-ring seal from the land inside the output gear support hub.

ASSEMBLY

DOG F-CLUTCH ASSEMBLY

Clean the dog F-clutch components with solvent and blow them dry with regulated 344 kPa (50 psi) shop air. Inspect the dog F-clutch components for damage or excessive wear. If dog F-clutch components a damaged the entire output gear support assembly will require replacement. Only the O-ring seals can be replaced. Apply assembly lubricant to the O-ring seals to aid installation.

Fig. 470: Installing A New Upper O-Ring Seal To Inside Land Of Output Gear Support Hub
Courtesy of CHRYSLER GROUP, LLC

1. Install a new upper O-ring seal (1) into the land inside the output gear support (2) hub.

Fig. 471: Installing New Inner O-Ring Seal Into The Dog F-Clutch Piston
Courtesy of CHRYSLER GROUP, LLC

2. Install a new inner O-ring seal (2) into the dog F-clutch piston (1).

Fig. 472: Installing New Outer O-Ring Seal Into The Dog F-Clutch Piston
Courtesy of CHRYSLER GROUP, LLC

3. Install a new outer O-ring seal (2) into the dog F-clutch piston (1).

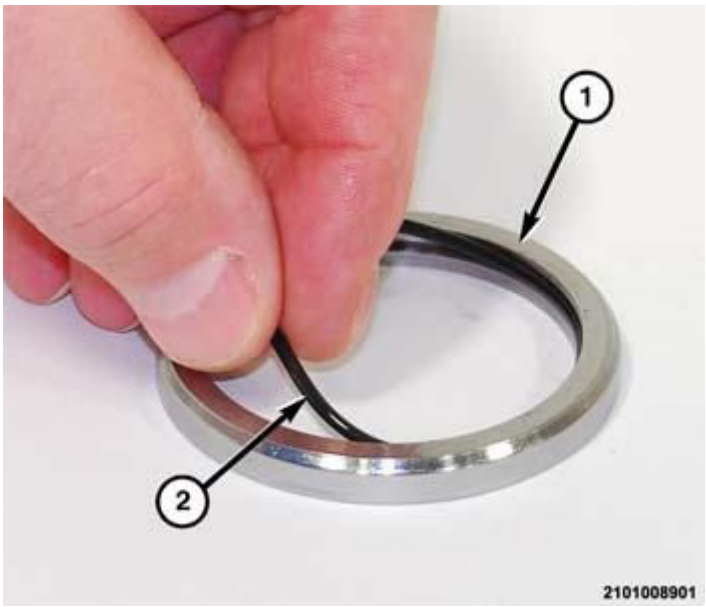

Fig. 473: Installing New O-Ring Seal Into The Inside Of Dog F-Clutch Plug
Courtesy of CHRYSLER GROUP, LLC

4. Install a new O-ring seal (2) into the inside of the dog F-clutch plug (1).

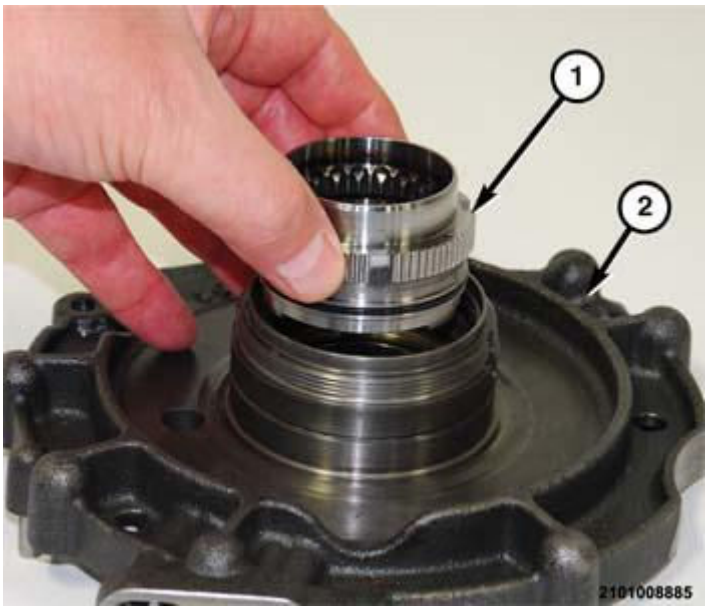

Fig. 474: Installing Dog F-Clutch Piston Into The Output Gear Support Hub
Courtesy of CHRYSLER GROUP, LLC

5. Install the dog F-clutch piston (1) into the output gear support hub (2).

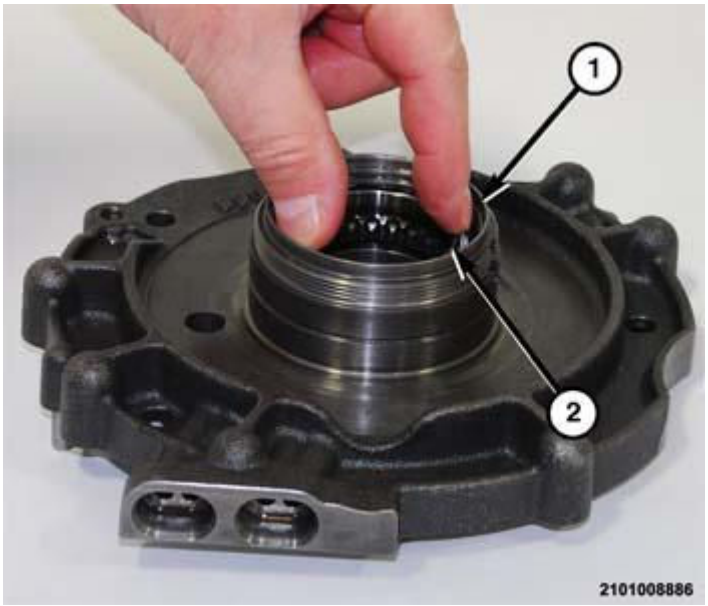

Fig. 475: Pushing Dog F-Clutch Piston To Bottom Of Bore In The Output Gear Support Hub
Courtesy of CHRYSLER GROUP, LLC

6. Push the dog F-clutch piston (2) to the bottom of the bore in the output gear support hub (1).

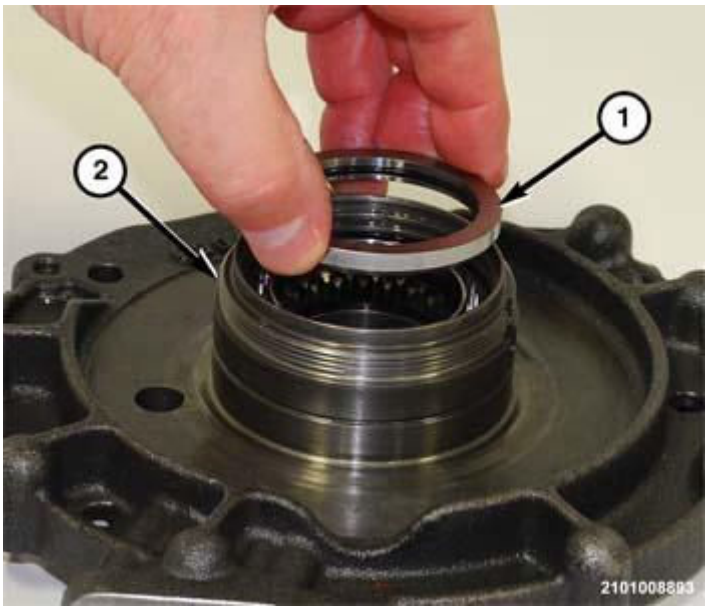

Fig. 476: Installing Dog F-Clutch Plug
Courtesy of CHRYSLER GROUP, LLC

7. Install the dog F-clutch plug (1) onto the dog F-clutch piston in the output gear support hub (2).

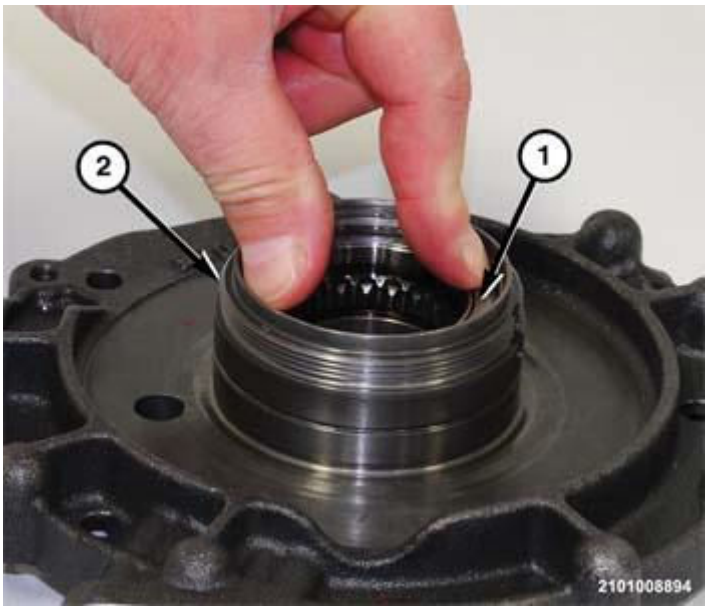

Fig. 477: Pushing Dog F-Clutch Plug To Bottom Of Bore
Courtesy of CHRYSLER GROUP, LLC

8. Push the dog F-clutch plug (1) to the bottom of the bore in the output gear support hub (2).

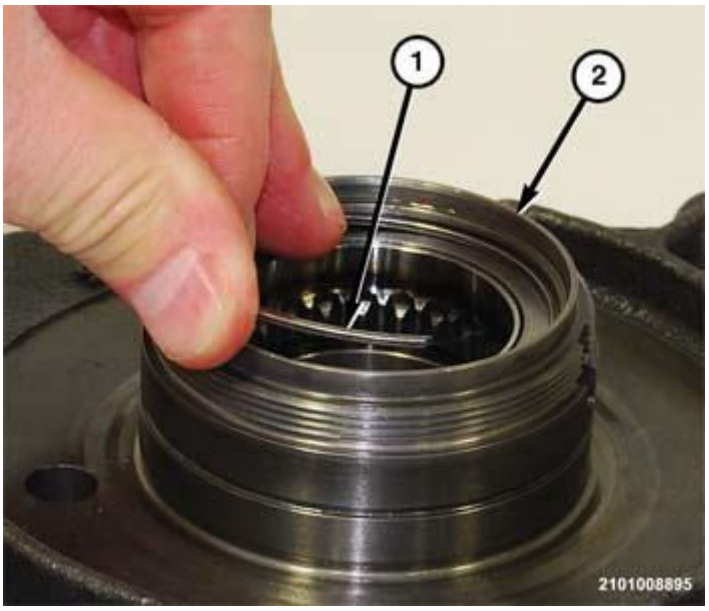

Fig. 478: Installing Snap-Ring
Courtesy of CHRYSLER GROUP, LLC

9. Install the snap-ring (1) to hold the dog F-clutch plug and piston in the output gear support hub (2).

Fig. 479: Placing Dog F-Clutch Thrust Plate In Position On Output Gear Support Hub
Courtesy of CHRYSLER GROUP, LLC

10. Place the dog F-clutch thrust plate (1) in position on the output gear support (2) hub.

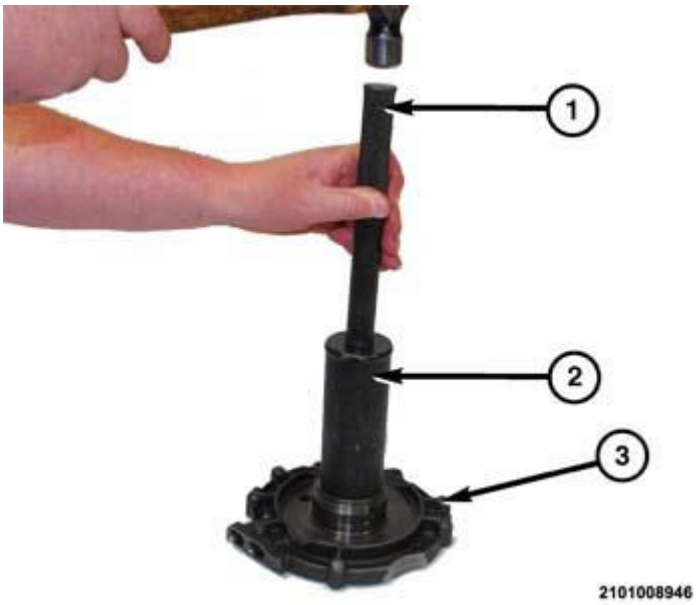

Fig. 480: Installing Dog F-Clutch Thrust Plate Into Output Gear Support Hub
Courtesy of CHRYSLER GROUP, LLC

11. Using tools (special tool #8148, Cup) (2) and (special tool #C-4171, Driver Handle, Universal) (1), install the dog F-clutch thrust plate into the output gear support (3) hub.

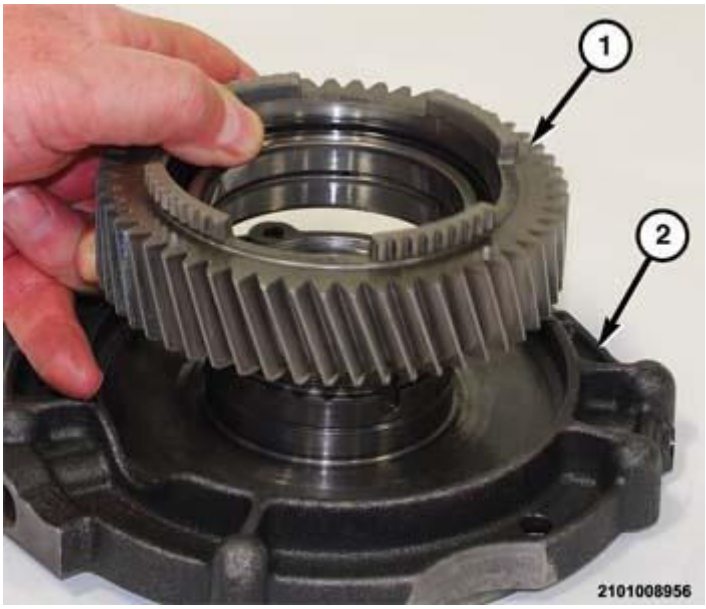

Fig. 481: Removing/Installing Output Gear
Courtesy of CHRYSLER GROUP, LLC

12. Install the output gear (1) onto the output gear support (2).

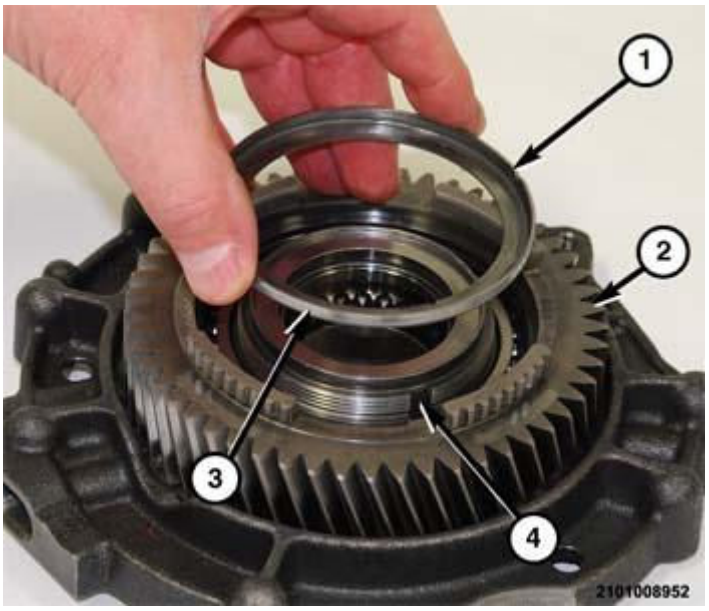

Fig. 482: Removing/Installing Lock Plate
Courtesy of CHRYSLER GROUP, LLC

13. Align the tab (3) on the lock plate (1) with the notch (4) on the output gear support hub and install the lock plate (3) onto the output gear (2) support.

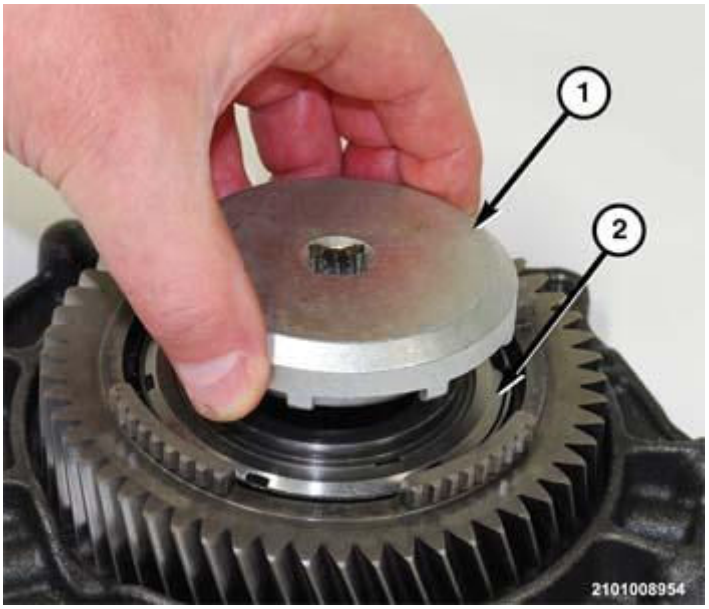

Fig. 483: Removing/Installing Stake Nut
Courtesy of CHRYSLER GROUP, LLC

14. Using tool (special tool #2012900210, Wrench, Spanner), install the stake nut (2) to hold the output gear and bearing to the output gear support hub. Refer to **SPECIFICATIONS**.

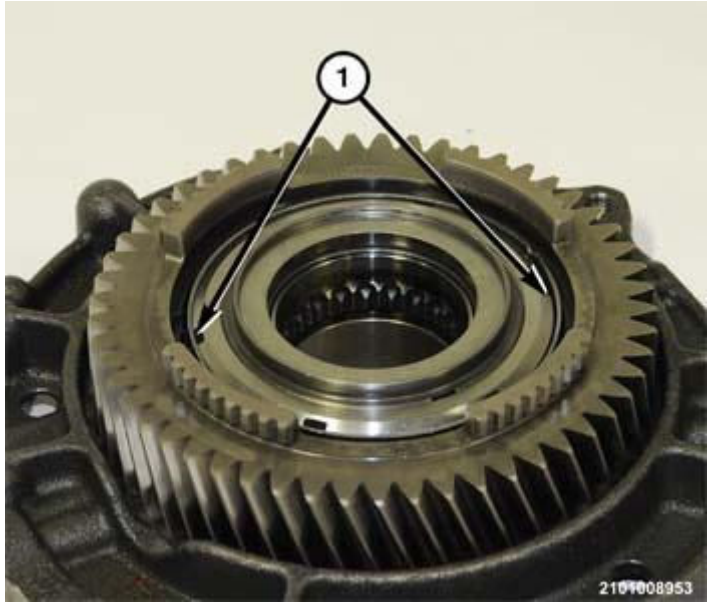

Fig. 484: Locking Plate
Courtesy of CHRYSLER GROUP, LLC

15. Using a suitable punch, stake (1) the locking plate inward to lock the stake nut in position.
16. Install the output gear support in the transaxle.

DIFFERENTIAL AND RING GEAR

DISASSEMBLY

2WD

NOTE: The differential unit can be placed on tool (special tool #6888, Installer, Seal) as a stable holding fixture.

1. Remove the transmission from the vehicle. Refer to **REMOVAL**.
2. Place the transmission on a suitable clean work surface.
3. Position a suitable drain pan under the transmission drain plug.
4. Remove the drain plug and allow the fluid to drain into the drain pan.
5. Remove the bellhousing from the transmission. Refer to **BELLHOUSING, REMOVAL**.

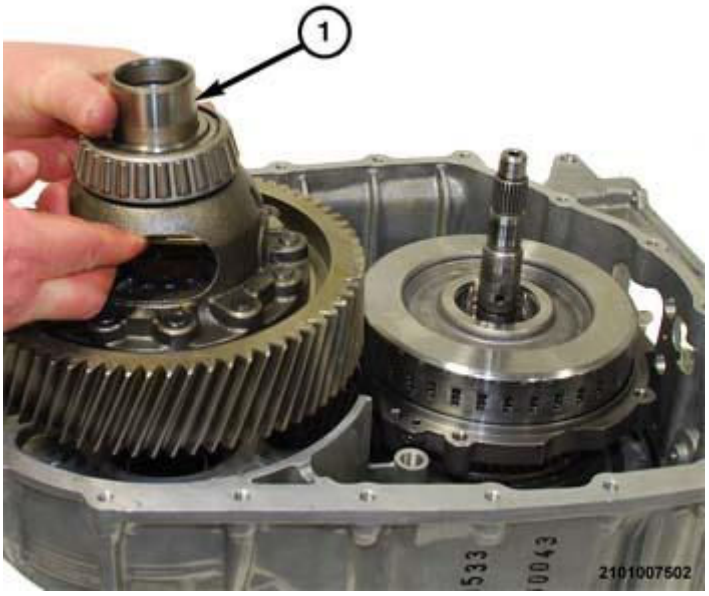

Fig. 485: Removing/Installing Differential Assembly
Courtesy of CHRYSLER GROUP, LLC

6. Separate the differential unit (1) from the transmission.

Fig. 486: View Of Ring Gear To Differential Unit & Bolts
Courtesy of CHRYSLER GROUP, LLC

7. Remove the bolts (2) holding the ring gear (1) to the differential unit.

Fig. 487: View Of Ring Gear & Differential Unit
Courtesy of CHRYSLER GROUP, LLC

8. Separate the ring gear (1) from the differential unit (2).

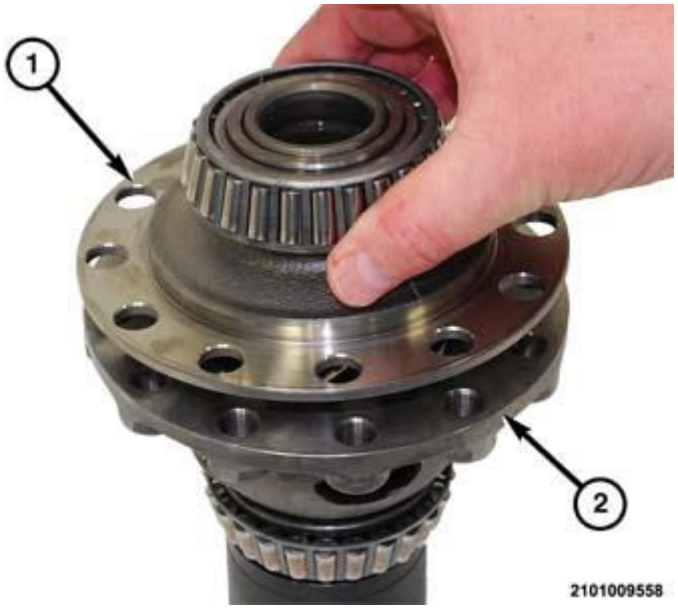

Fig. 488: View Of Upper Half Housing & Lower Differential Housing
Courtesy of CHRYSLER GROUP, LLC

9. Separate the two halves (1) of the differential housing (2) to gain access to the pinion shaft.

Fig. 489: Differential Side Gear & Thrust Washer
Courtesy of CHRYSLER GROUP, LLC

10. Remove the differential side gear (1) and thrust washer (2) from the differential housing (3).

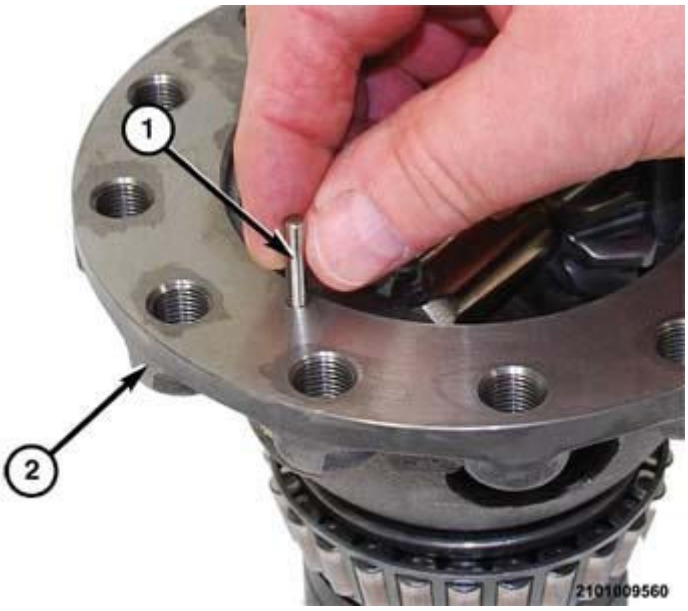

Fig. 490: Removing/Installing Pinion Shaft Lock-Pin
Courtesy of CHRYSLER GROUP, LLC

11. Using a suitable pencil magnet, remove the lock-pin (1) holding the pinion shaft in the differential housing (2).

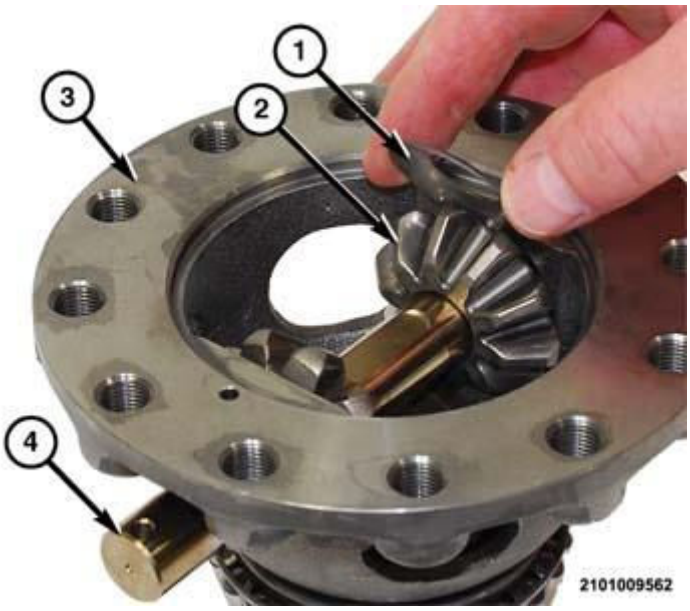

Fig. 491: Removing/Installing Conical Thrust Washer
Courtesy of CHRYSLER GROUP, LLC

12. Slide the pinion shaft (4) outward and remove the conical thrust washer (1) from behind the pinion gear (2).

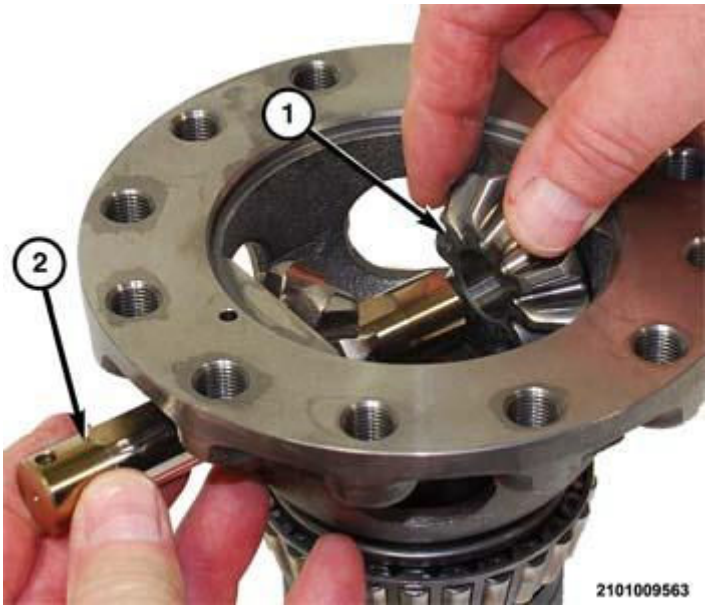

Fig. 492: Removing/Installing Pinion Gear 1
Courtesy of CHRYSLER GROUP, LLC

13. Slide the pinion shaft (2) outward and remove the pinion gear 1 (1).

Fig. 493: Removing/Installing Pinion Shaft & Pinion Gear 2
Courtesy of CHRYSLER GROUP, LLC

14. Slide the pinion shaft (2) outward and remove the pinion gear 2 (1).

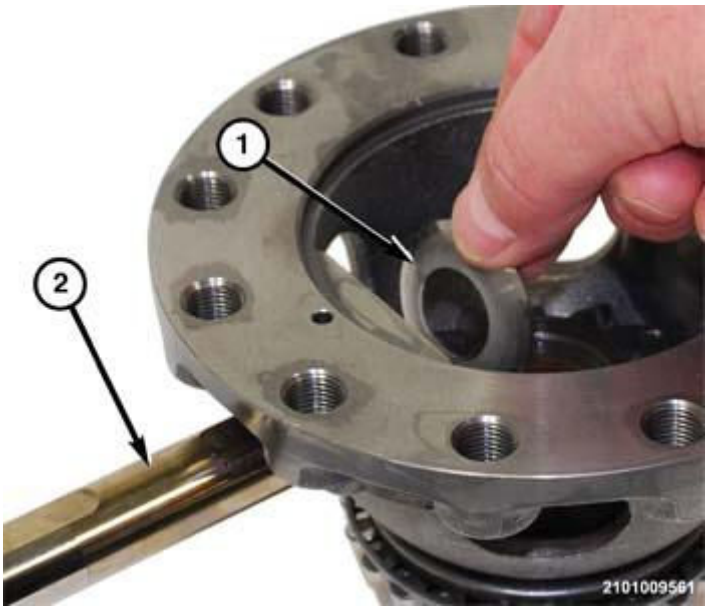

Fig. 494: Removing/Installing Pinion Shaft & Conical Thrust Washer
Courtesy of CHRYSLER GROUP, LLC

15. Slide the pinion shaft (2) outward and remove the conical thrust washer (1) from behind the pinion gear 2.
16. Remove the pinion shaft (2) from the differential housing.

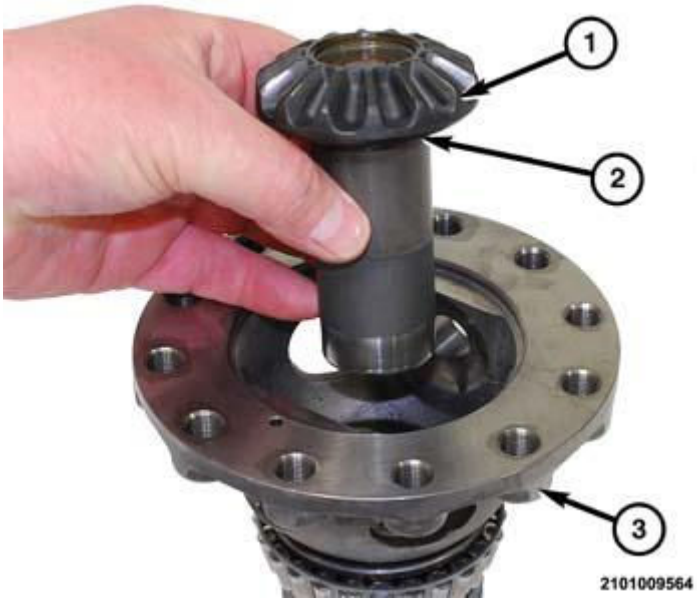

Fig. 495: Removing/Installing Differential Side Gear & Thrust Washer
Courtesy of CHRYSLER GROUP, LLC

17. Remove the differential side gear (1) and thrust washer (2) from the differential housing (3).

4WD

NOTE: There are no differential gears in the carrier housing of the 948TE Four Wheel Drive version transmission. The 2 speed PTU is equipped with a differential for the front wheels.

1. Remove the transmission from the vehicle. Refer to **REMOVAL**.
2. Place the transmission on a suitable clean work surface.
3. Position a suitable drain pan under the transmission drain plug.
4. Remove the drain plug and allow the fluid to drain into the drain pan.

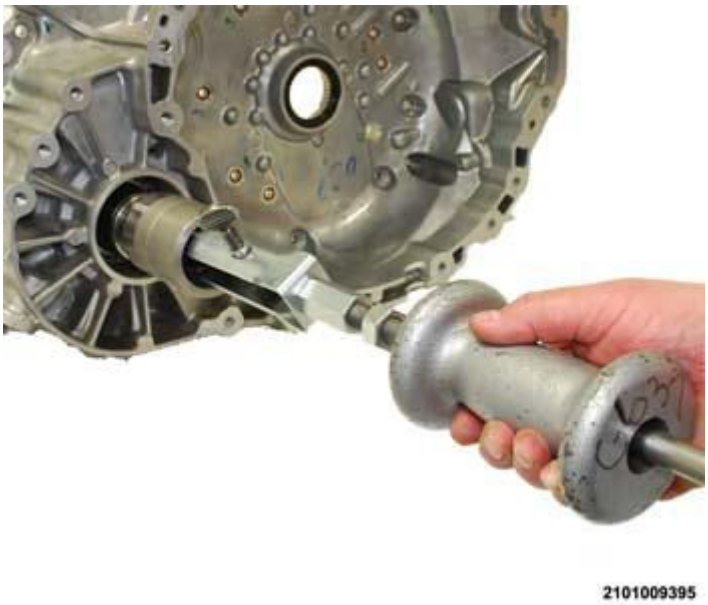

Fig. 496: Removing Differential Adapter Sleeve
Courtesy of CHRYSLER GROUP, LLC

5. Using tool (special tool #7794-A, Remover, Seal) and (special tool #C-637, Slide Hammer, Universal), remove the differential adapter sleeve.
6. Remove the bellhousing from the transmission. Refer to **BELLHOUSING, REMOVAL**.

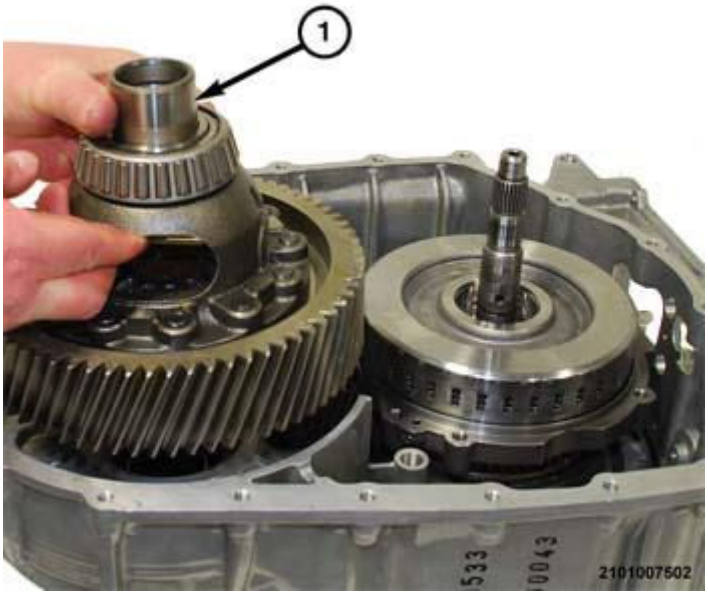

Fig. 497: Removing/Installing Differential Assembly
Courtesy of CHRYSLER GROUP, LLC

7. Separate the differential unit (1) from the transmission.

Fig. 498: View Of Ring Gear To Differential Unit & Bolts
Courtesy of CHRYSLER GROUP, LLC

8. Remove the bolts (2) holding the ring gear (1) to the differential unit.

Fig. 499: View Of Ring Gear & Differential Unit
Courtesy of CHRYSLER GROUP, LLC

9. Separate the ring gear (1) from the differential unit (2).

Fig. 500: View Of Upper Half Housing & Lower Differential Housing
Courtesy of CHRYSLER GROUP, LLC

10. Separate the two halves (1) of the differential housing (2) to gain access to the stub shaft that links the PTU to the left front wheel.

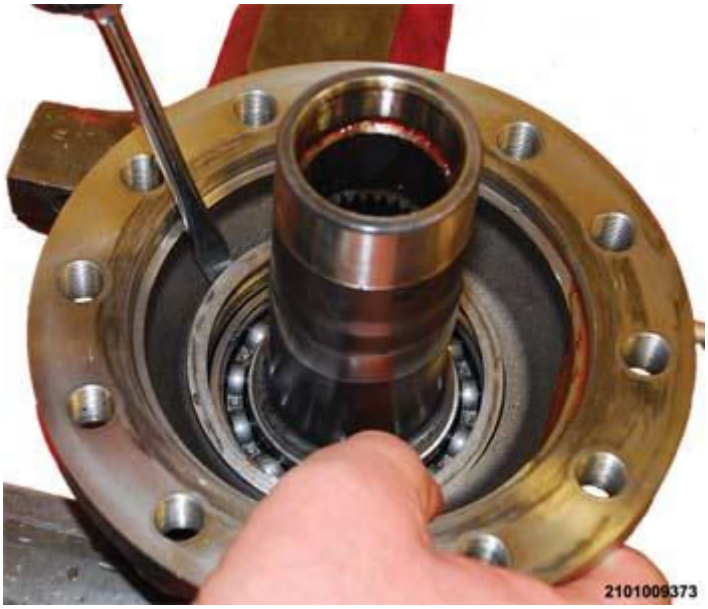

Fig. 501: Removing Snap-Ring
Courtesy of CHRYSLER GROUP, LLC

11. Using a suitable screw driver, remove the snap-ring holding the stub shaft bearing in the differential housing.

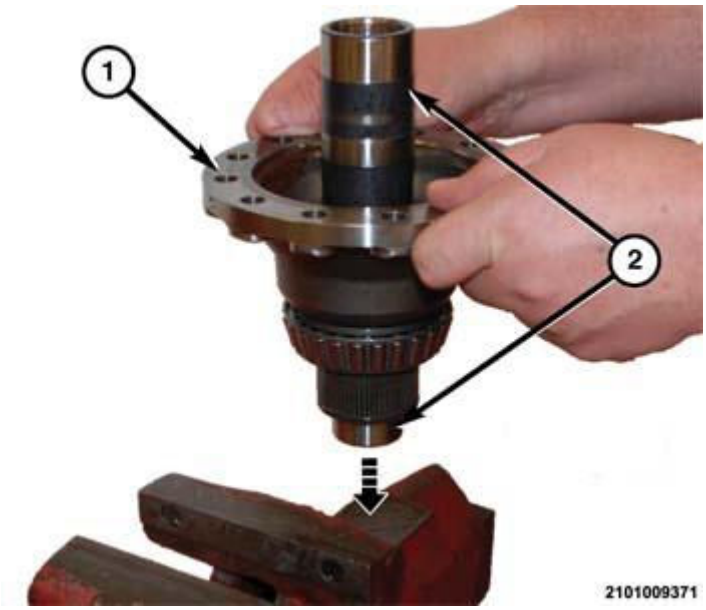

Fig. 502: Removing Stub Shaft & Bearing Out Of Differential Housing
Courtesy of CHRYSLER GROUP, LLC

12. Using a solid surface, drive the stub shaft (2) and bearing out of the differential housing (1).

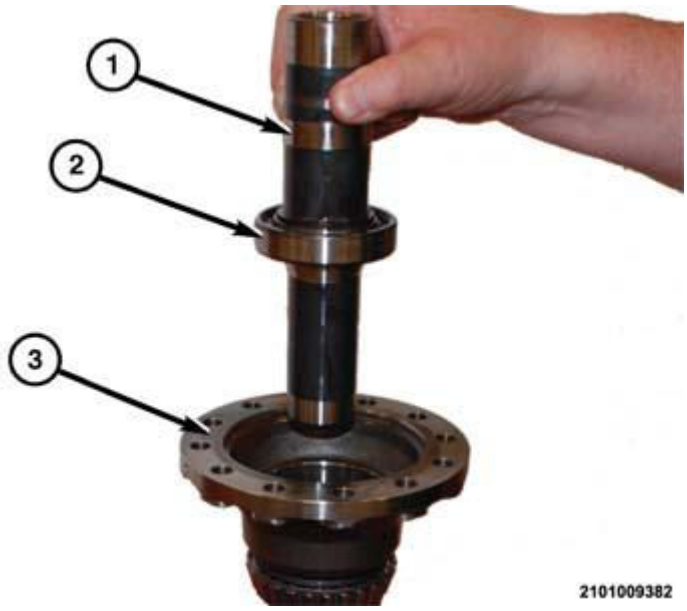

Fig. 503: Removing/Installing Stub Shaft
Courtesy of CHRYSLER GROUP, LLC

13. Separate the stub shaft from the differential housing.

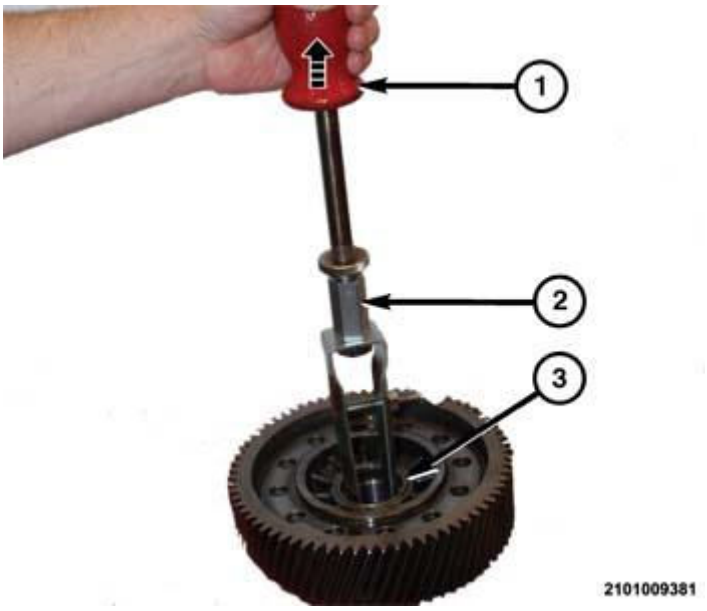

Fig. 504: Removing Stub Shaft Needle Roller Bearing
Courtesy of CHRYSLER GROUP, LLC

14. Using tool (special tool #7794-A, Remover, Seal)and (special tool #C-637, Slide Hammer, Universal), remove the stub shaft needle roller bearing from the differential housing.

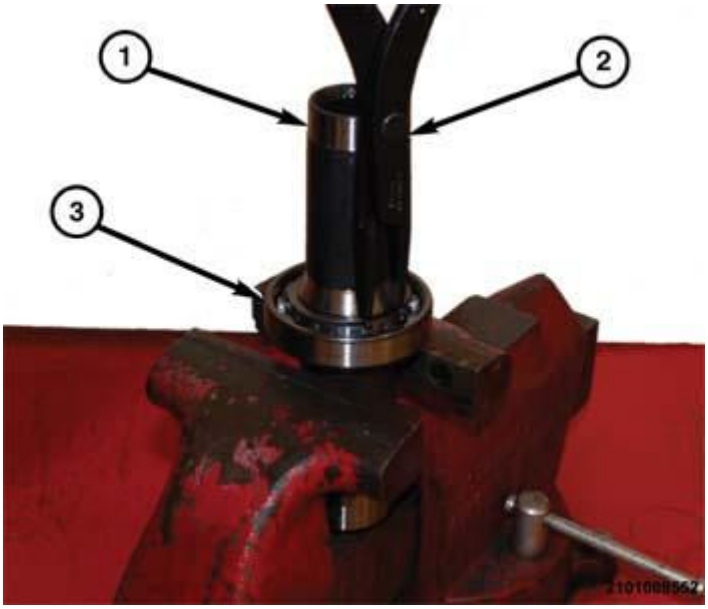

Fig. 505: Removing/Installing Snap-Ring At Ball Bearing On Stub Shaft
Courtesy of CHRYSLER GROUP, LLC

15. Using suitable snap-ring pliers (2), remove the snap-ring holding the ball bearing (3) on the stub shaft (1).

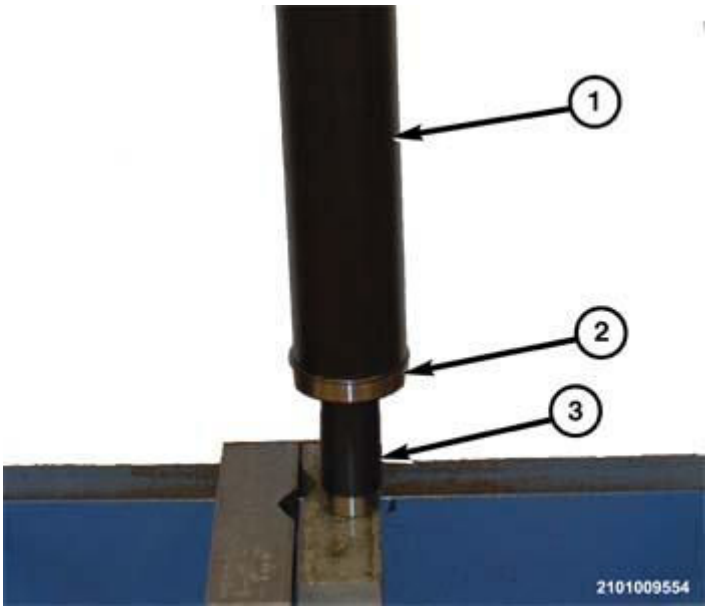

Fig. 506: Removing Ball Bearing From Stub Shaft
Courtesy of CHRYSLER GROUP, LLC

16. Using tool (special tool #8228, Installer, Bearing) (1) and an arbor press, remove the ball bearing (2) from the stub shaft (3).

AWD

NOTE: The differential unit can be placed on tool (special tool #6888, Installer, Seal) as a stable holding fixture.

1. Remove the transmission from the vehicle. Refer to **REMOVAL**.
2. Place the transmission on a suitable clean work surface.
3. Position a suitable drain pan under the transmission drain plug.
4. Remove the drain plug and allow the fluid to drain into the drain pan.

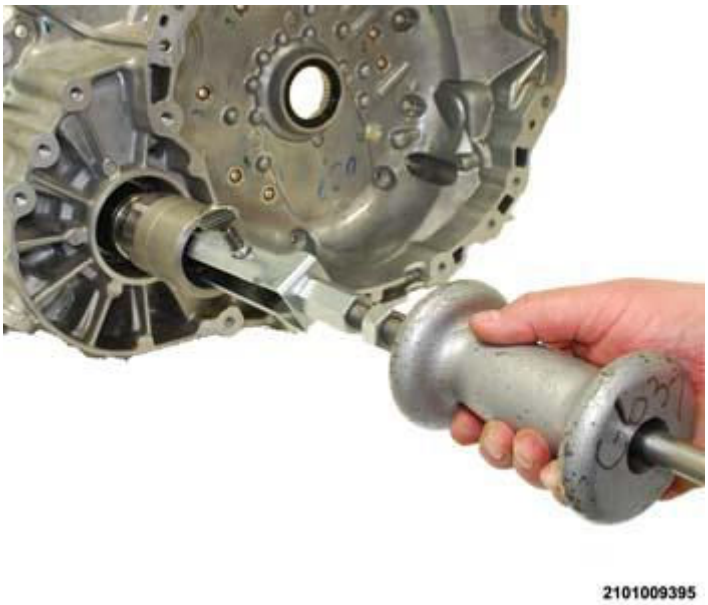

Fig. 507: Removing Differential Adapter Sleeve
Courtesy of CHRYSLER GROUP, LLC

5. Using tool (special tool #7794-A, Remover, Seal)and (special tool #C-637, Slide Hammer, Universal), remove the differential adapter sleeve.
6. Remove the bellhousing from the transmission. Refer to **BELLHOUSING, REMOVAL**.

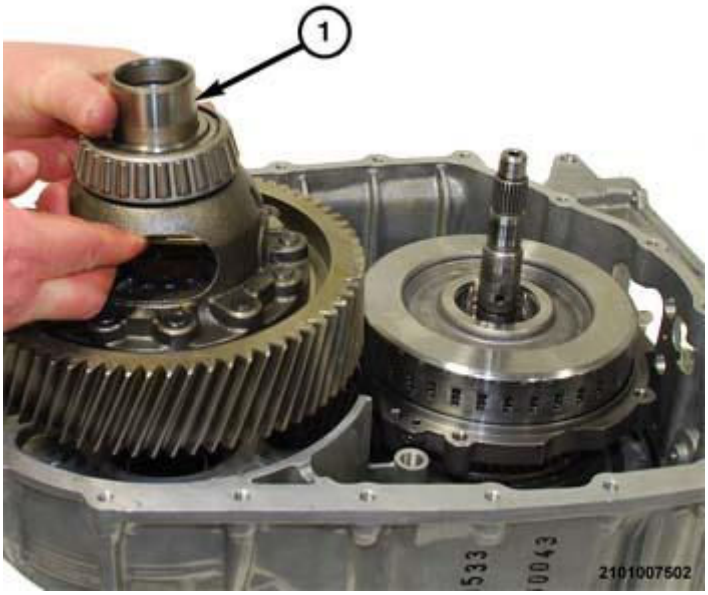

Fig. 508: Removing/Installing Differential Assembly
Courtesy of CHRYSLER GROUP, LLC

7. Separate the differential unit (1) from the transmission.

Fig. 509: View Of Ring Gear To Differential Unit & Bolts
Courtesy of CHRYSLER GROUP, LLC

8. Remove the bolts (2) holding the ring gear (1) to the differential unit.

Fig. 510: View Of Ring Gear & Differential Unit
Courtesy of CHRYSLER GROUP, LLC

9. Separate the ring gear (1) from the differential unit (2).

Fig. 511: View Of Upper Half Housing & Lower Differential Housing
Courtesy of CHRYSLER GROUP, LLC

10. Separate the two halves (1) of the differential housing (2) to gain access to the pinion shaft.

Fig. 512: Differential Side Gear & Thrust Washer
Courtesy of CHRYSLER GROUP, LLC

11. Remove the differential side gear (1) and thrust washer (2) from the differential housing (3).

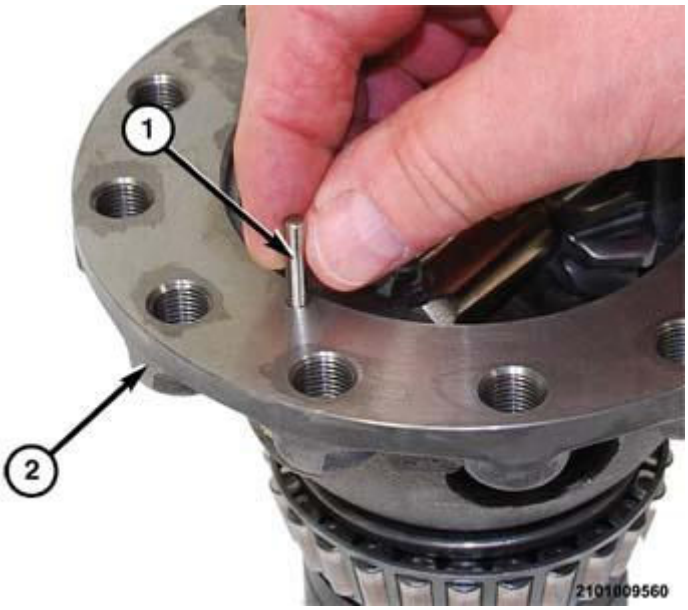

Fig. 513: Removing/Installing Pinion Shaft Lock-Pin
Courtesy of CHRYSLER GROUP, LLC

12. Using a suitable pencil magnet, remove the lock-pin (1) holding the pinion shaft in the differential housing (2).

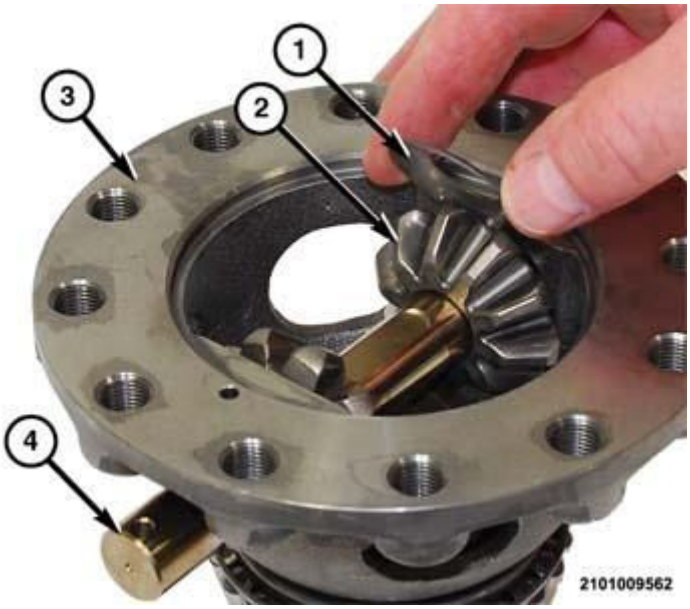

Fig. 514: Removing/Installing Conical Thrust Washer
Courtesy of CHRYSLER GROUP, LLC

13. Slide the pinion shaft (4) outward and remove the conical thrust washer (1) from behind the pinion gear (2).

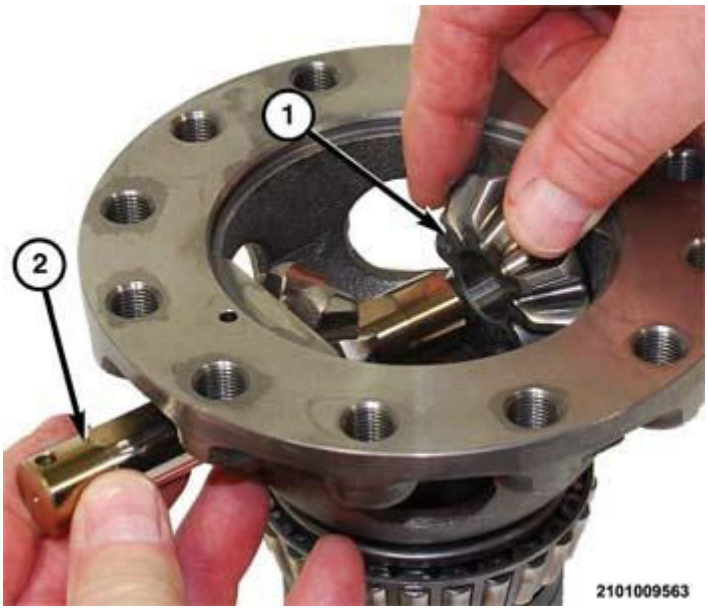

Fig. 515: Removing/Installing Pinion Gear 1
Courtesy of CHRYSLER GROUP, LLC

14. Slide the pinion shaft (2) outward and remove the pinion gear 1 (1).

Fig. 516: Removing/Installing Pinion Shaft & Pinion Gear 2
Courtesy of CHRYSLER GROUP, LLC

15. Slide the pinion shaft (2) outward and remove the pinion gear 2 (1).

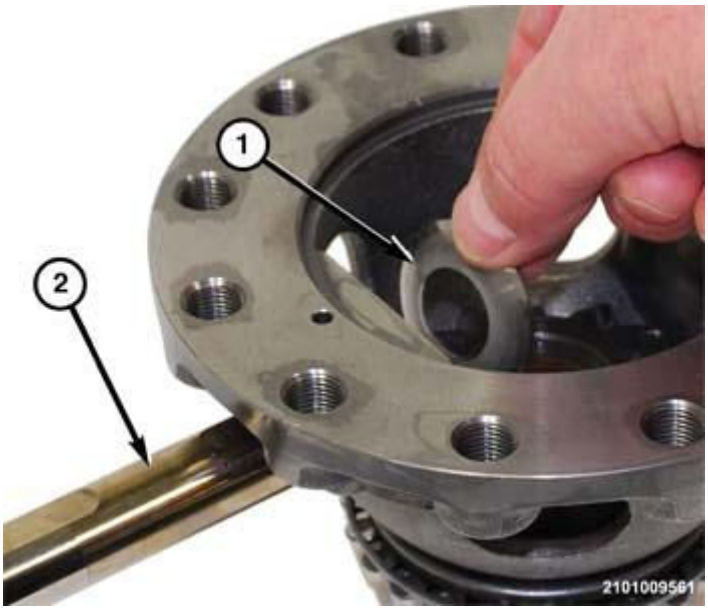

Fig. 517: Removing/Installing Pinion Shaft & Conical Thrust Washer
Courtesy of CHRYSLER GROUP, LLC

16. Slide the pinion shaft (2) outward and remove the conical thrust washer (1) from behind the pinion gear 2.
17. Remove the pinion shaft (2) from the differential housing.

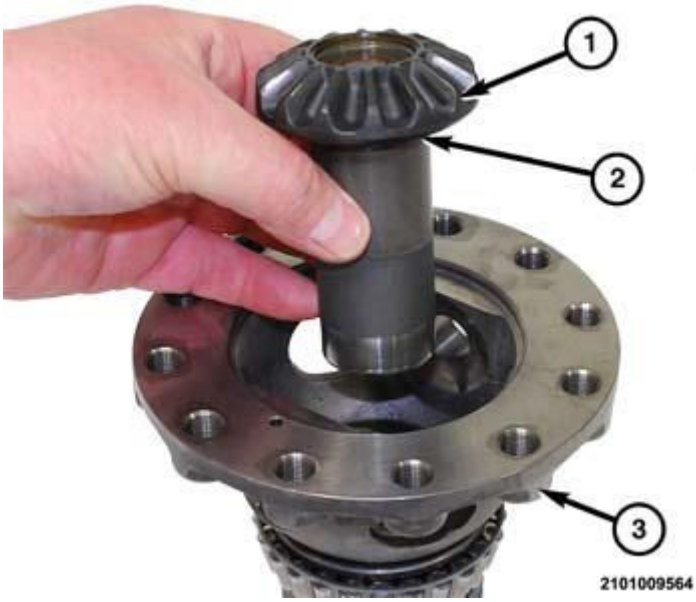

Fig. 518: Removing/Installing Differential Side Gear & Thrust Washer
Courtesy of CHRYSLER GROUP, LLC

18. Remove the differential side gear (1) and thrust washer (2) from the differential housing (3).
19. Separate the two halves (1) of the differential housing (2) to gain access to the pinion shaft.

Fig. 519: Differential Side Gear & Thrust Washer
Courtesy of CHRYSLER GROUP, LLC

20. Remove the differential side gear (1) and thrust washer (2) from the differential housing (3).

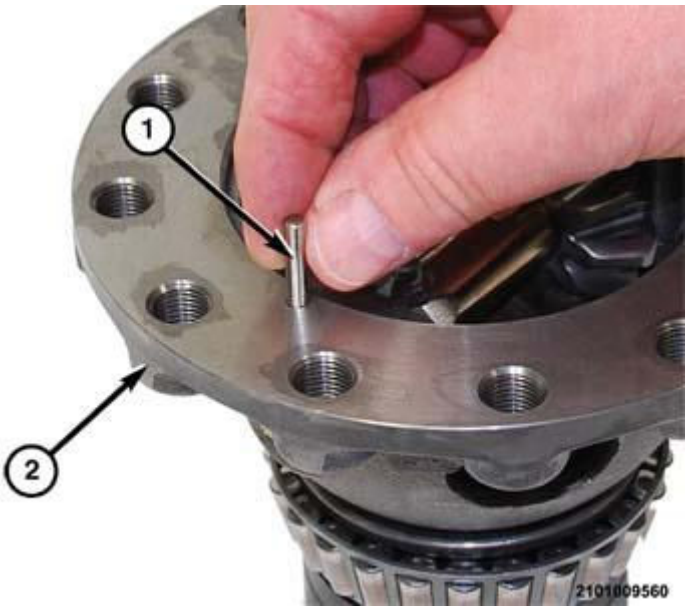

Fig. 520: Removing/Installing Pinion Shaft Lock-Pin
Courtesy of CHRYSLER GROUP, LLC

21. Using a suitable pencil magnet, remove the lock-pin (1) holding the pinion shaft in the differential housing (2).

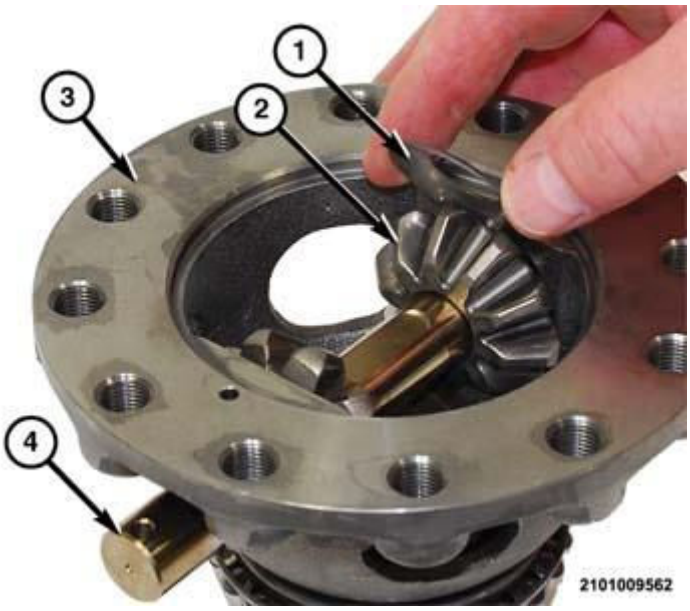

Fig. 521: Removing/Installing Conical Thrust Washer
Courtesy of CHRYSLER GROUP, LLC

22. Slide the pinion shaft (4) outward and remove the conical thrust washer (1) from behind the pinion gear (2).

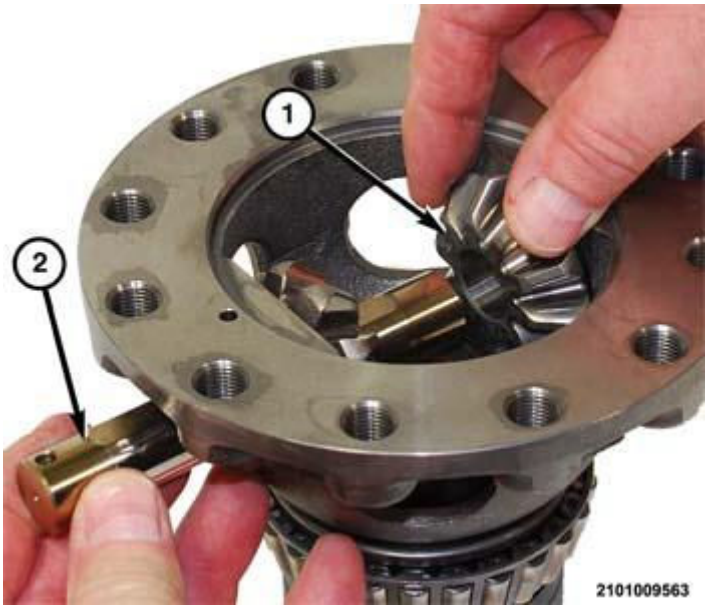

Fig. 522: Removing/Installing Pinion Gear 1
Courtesy of CHRYSLER GROUP, LLC

23. Slide the pinion shaft (2) outward and remove the pinion gear 1 (1).

Fig. 523: Removing/Installing Pinion Shaft & Pinion Gear 2
Courtesy of CHRYSLER GROUP, LLC

24. Slide the pinion shaft (2) outward and remove the pinion gear 2 (1).

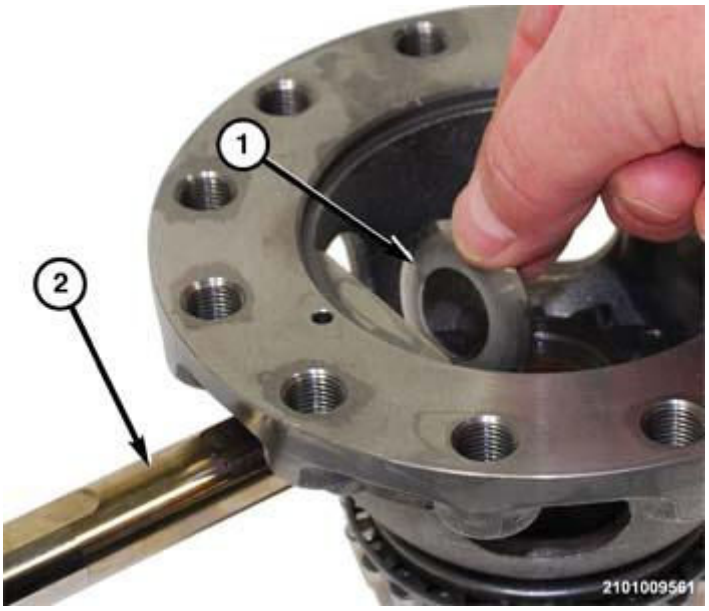

Fig. 524: Removing/Installing Pinion Shaft & Conical Thrust Washer
Courtesy of CHRYSLER GROUP, LLC

25. Slide the pinion shaft (2) outward and remove the conical thrust washer (1) from behind the pinion gear 2.
26. Remove the pinion shaft (2) from the differential housing.

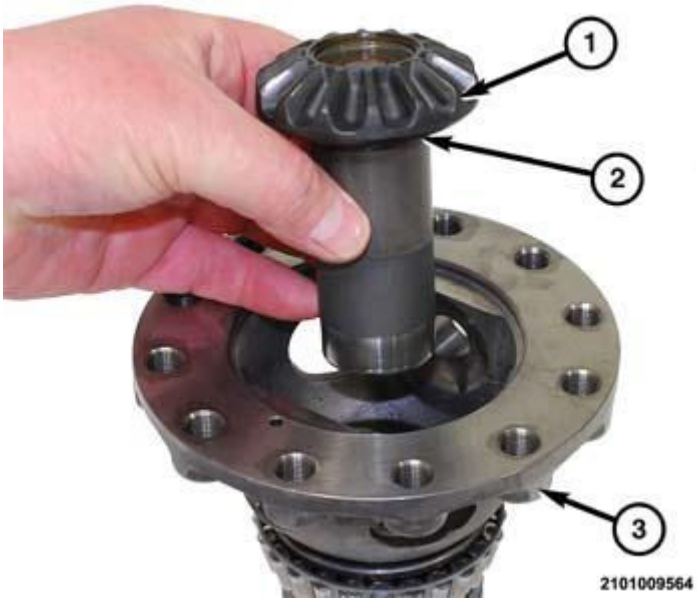

Fig. 525: Removing/Installing Differential Side Gear & Thrust Washer
Courtesy of CHRYSLER GROUP, LLC

27. Remove the differential side gear (1) and thrust washer (2) from the differential housing (3).

ASSEMBLY

2WD

The differential unit can be placed on tool (special tool #6888, Installer, Seal) as a stable holding fixture.

1. Clean the differential components with suitable solvent and blow then dry with 344 kPa (50 psi) shop air. Inspect the differential components for excess wear or damage. Replace the differential if damage is apparent.

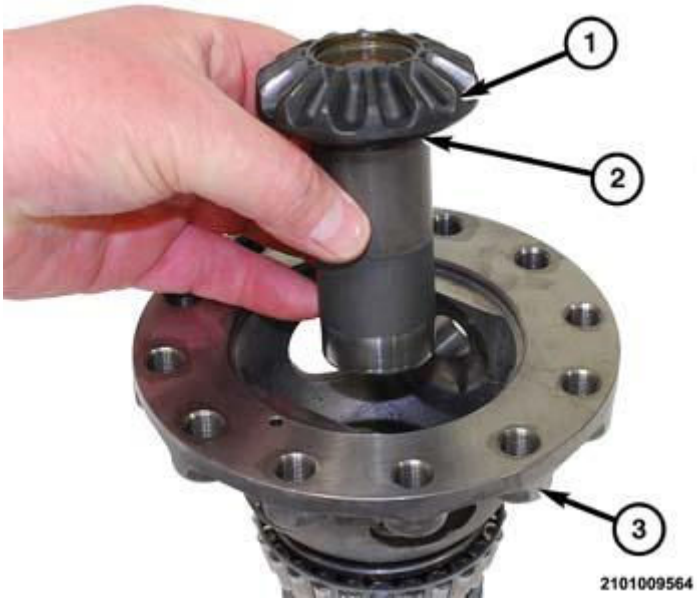

Fig. 526: Removing/Installing Differential Side Gear & Thrust Washer
Courtesy of CHRYSLER GROUP, LLC

2. Install the differential side gear (1) and thrust washer (2) into the differential housing (3).

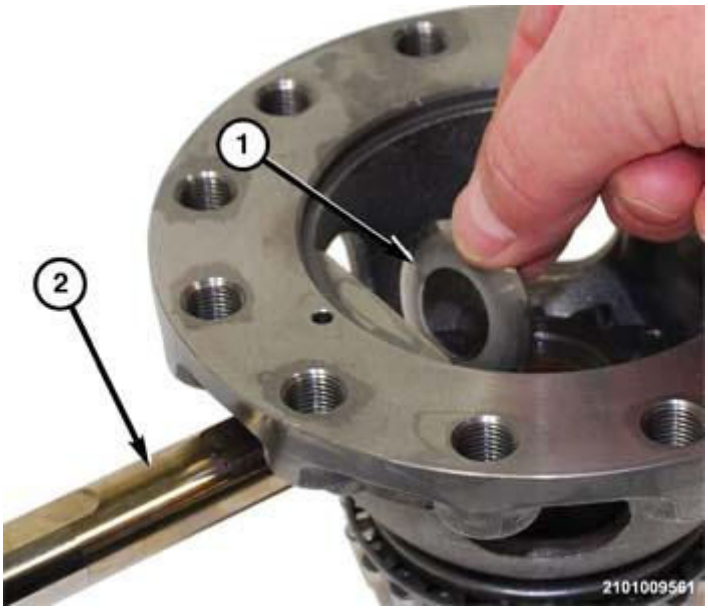

Fig. 527: Removing/Installing Pinion Shaft & Conical Thrust Washer
Courtesy of CHRYSLER GROUP, LLC

3. Install the pinion shaft (2) in the differential housing.
4. Slide the pinion shaft (2) inward and install the conical thrust washer (1).

Fig. 528: Removing/Installing Pinion Shaft & Pinion Gear 2
Courtesy of CHRYSLER GROUP, LLC

5. Slide the pinion shaft (2) inward and install the pinion gear 2 (1).

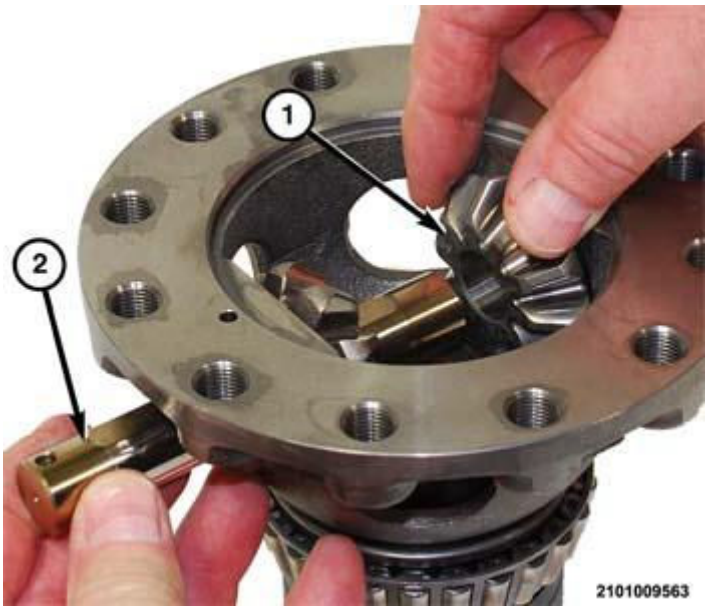

Fig. 529: Removing/Installing Pinion Gear 1
Courtesy of CHRYSLER GROUP, LLC

6. Slide the pinion shaft (2) inward and install the pinion gear 1 (1).

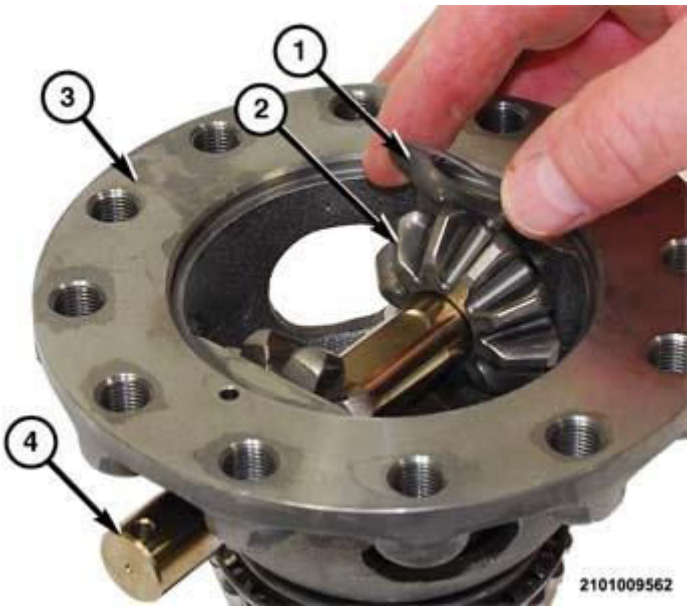

Fig. 530: Removing/Installing Conical Thrust Washer
Courtesy of CHRYSLER GROUP, LLC

7. Slide the pinion shaft (4) inward and install the conical thrust washer (1) behind the pinion gear (2).

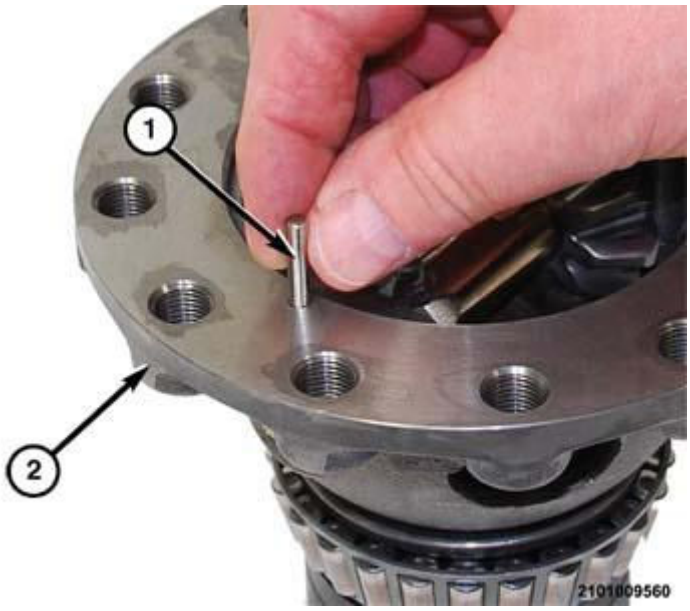

Fig. 531: Removing/Installing Pinion Shaft Lock-Pin
Courtesy of CHRYSLER GROUP, LLC

8. Align the hole in the pinion shaft with the hole in the differential housing (2) and install the lock-pin (1) to hold the pinion shaft in the differential housing (2).

Fig. 532: Differential Side Gear & Thrust Washer
Courtesy of CHRYSLER GROUP, LLC

9. Install the differential side gear (1) and thrust washer (2) into the differential housing (3).

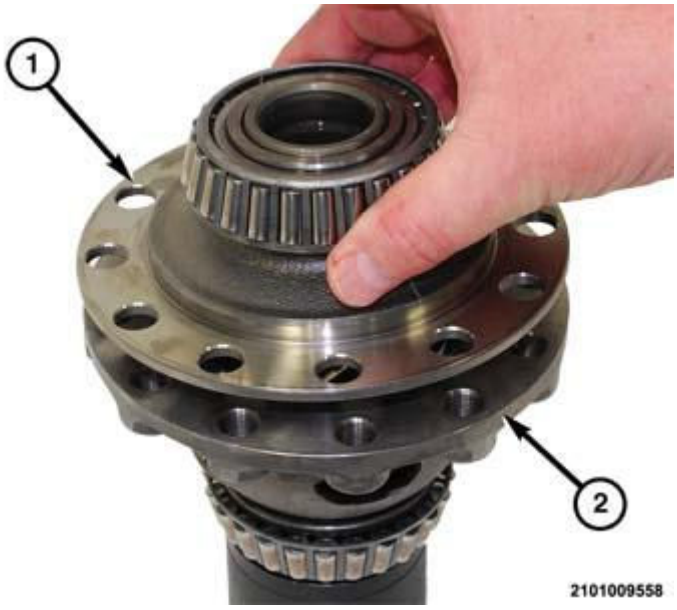

Fig. 533: View Of Upper Half Housing & Lower Differential Housing
Courtesy of CHRYSLER GROUP, LLC

10. Place the upper half (1) housing on the lower differential housing (2).

Fig. 534: View Of Ring Gear & Differential Unit
Courtesy of CHRYSLER GROUP, LLC

11. Place the ring gear (1) in position on the differential unit (2).

Fig. 535: View Of Ring Gear To Differential Unit & Bolts
Courtesy of CHRYSLER GROUP, LLC

12. Install the bolts (2) to hold the ring gear (1) to the differential unit.

Fig. 536: Tightening Ring Gear Bolts
Courtesy of CHRYSLER GROUP, LLC

13. Tighten the bolts to proper torque. Refer to **SPECIFICATIONS**.

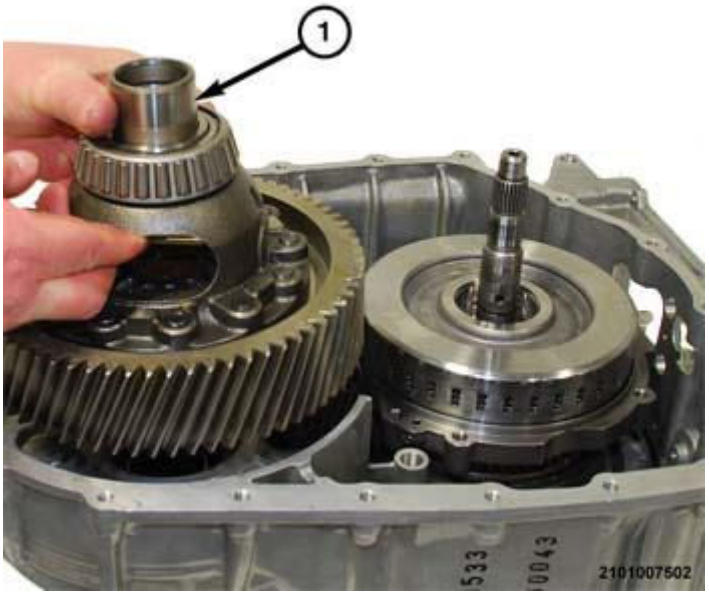

Fig. 537: Removing/Installing Differential Assembly
Courtesy of CHRYSLER GROUP, LLC

14. Place the differential unit (1) in position in the transmission.
15. Install the bellhousing. Refer to **BELLHOUSING, INSTALLATION**.
16. Road test the vehicle to verify the repair.

4WD

NOTE: **There are no differential gears in the carrier housing of the 948TE Four Wheel Drive version transmission. The 2 speed PTU is equipped with a differential for the front wheels.**

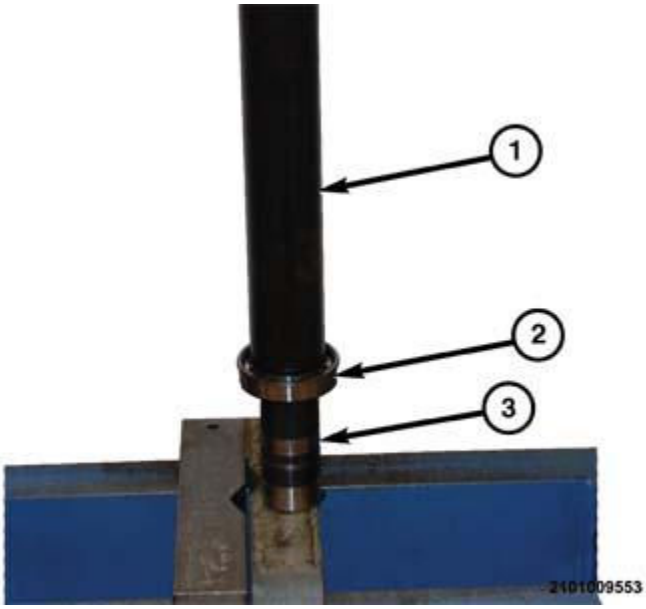

Fig. 538: Installing Ball Bearing To Stub Shaft
Courtesy of CHRYSLER GROUP, LLC

1. Using tool (special tool #MD998805, Installer, Seal) (1) and an arbor press, install the ball bearing (2) from the stub shaft (3).

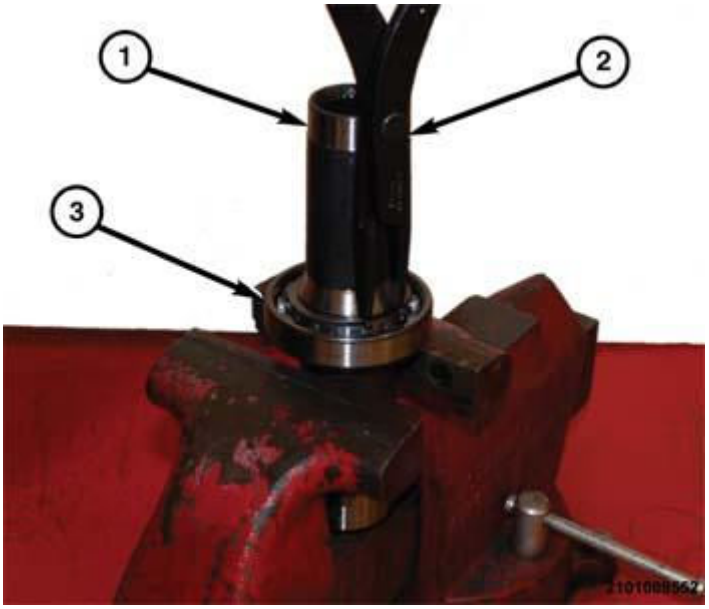

Fig. 539: Removing/Installing Snap-Ring At Ball Bearing On Stub Shaft
Courtesy of CHRYSLER GROUP, LLC

2. Using suitable snap-ring pliers (2), install the snap-ring to hold the ball bearing (3) on the stub shaft (1).

Fig. 540: Installing Stub Shaft Needle Roller Bearing
Courtesy of CHRYSLER GROUP, LLC

3. Using tool (special tool #8594, Installer, Bearing Cup) (3), (special tool #C-4171, Driver Handle, Universal) (2) and a suitable hammer (1), Install the stub shaft needle roller bearing (4) into the differential housing.

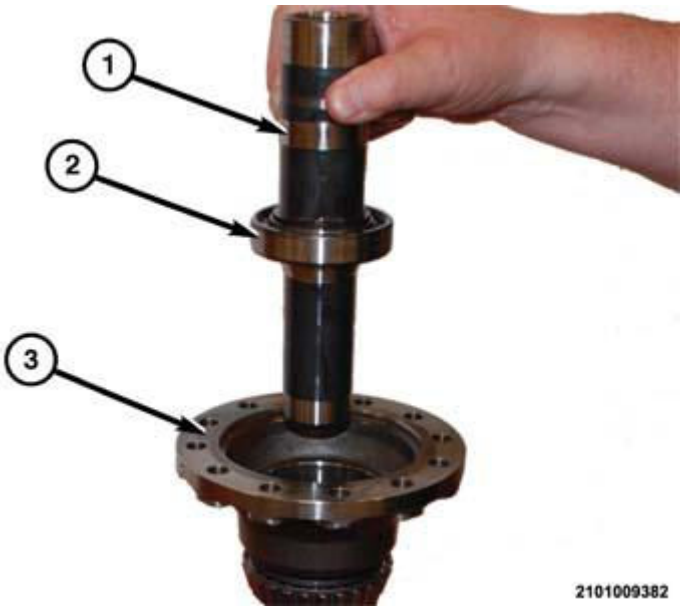

Fig. 541: Removing/Installing Stub Shaft
Courtesy of CHRYSLER GROUP, LLC

4. Insert the stub shaft into the differential housing.

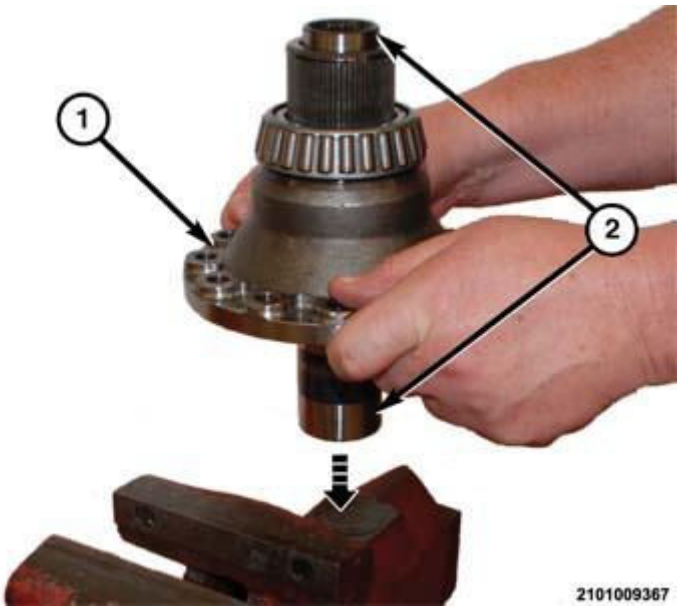

Fig. 542: Removing Stub Shaft & Bearing Into Of Differential Housing
Courtesy of CHRYSLER GROUP, LLC

5. Using a solid surface, drive the stub shaft (2) and bearing into of the differential housing (1).

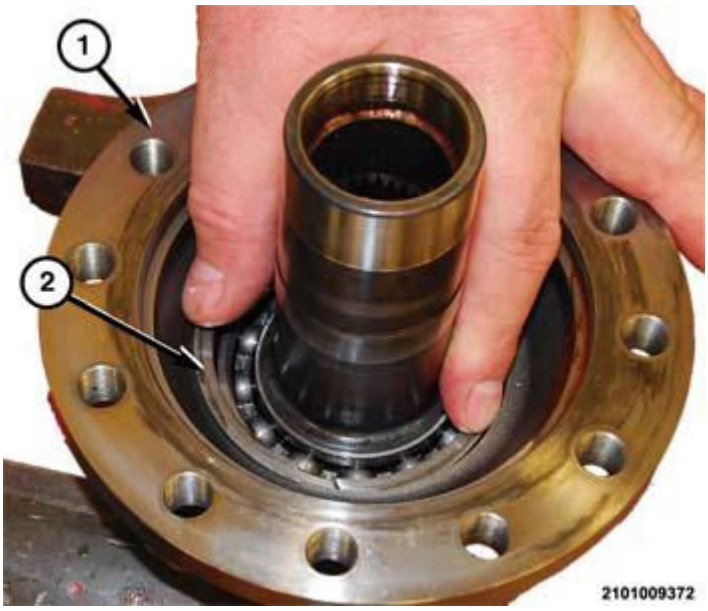

Fig. 543: Installing Snap-Ring
Courtesy of CHRYSLER GROUP, LLC

6. Install the snap-ring (2) to hold the stub shaft bearing in the differential housing (1).

Fig. 544: View Of Upper Half Housing & Lower Differential Housing
Courtesy of CHRYSLER GROUP, LLC

7. Place the two halves (1) of the differential housing (2) together.

Fig. 545: View Of Ring Gear & Differential Unit
Courtesy of CHRYSLER GROUP, LLC

8. Place the ring gear (1) in position on the differential unit (2).

Fig. 546: View Of Ring Gear To Differential Unit & Bolts
Courtesy of CHRYSLER GROUP, LLC

9. Install the bolts (2) to hold the ring gear (1) to the differential unit.

Fig. 547: Tightening Ring Gear Bolts
Courtesy of CHRYSLER GROUP, LLC

10. Using a suitable torque wrench (1) and a pry bar (2), tighten the bolts (4) to hold the ring gear (3) to the differential unit. Refer to **SPECIFICATIONS**.

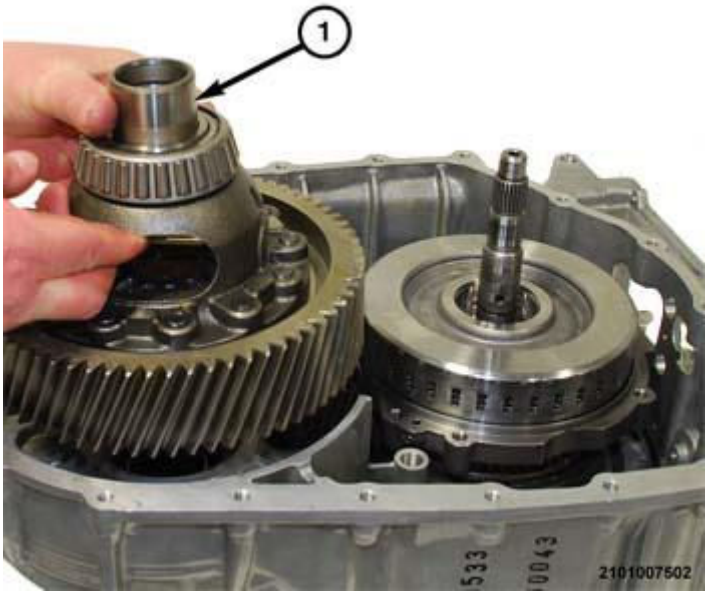

Fig. 548: Removing/Installing Differential Assembly
Courtesy of CHRYSLER GROUP, LLC

11. Place the differential unit in position in the transmission.
12. Install the bellhousing on the transmission. Refer to **BELLHOUSING, INSTALLATION**.

Fig. 549: All Wheel Drive (AWD) Adapter Sleeve
Courtesy of CHRYSLER GROUP, LLC

13. Install the differential adapter sleeve (1), AWD shown in illustration.
14. Install the transmission in the vehicle. Refer to **INSTALLATION**.
15. Road test the vehicle to verify the repair.

AWD

The differential unit can be placed on tool (special tool #6888, Installer, Seal) as a stable holding fixture.

1. Clean the differential components with suitable solvent and blow then dry with 344 kPa (50 psi) shop air. Inspect the differential components for excess wear or damage. Replace the differential if damage is apparent.

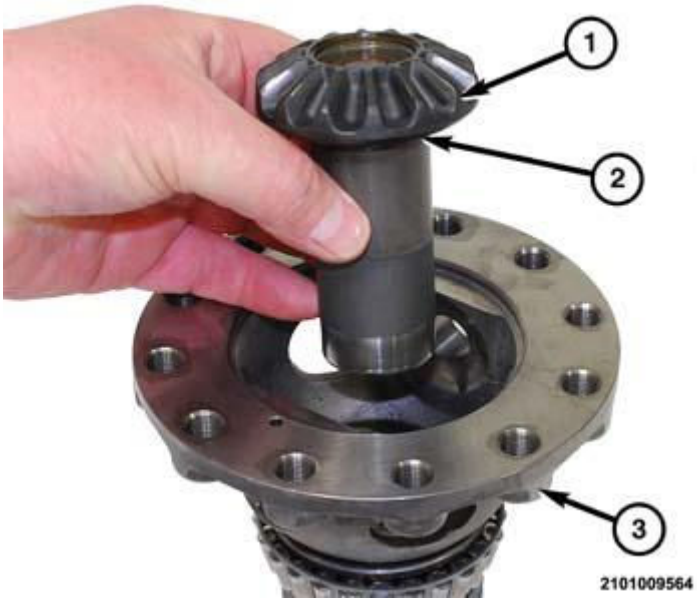

Fig. 550: Removing/Installing Differential Side Gear & Thrust Washer
Courtesy of CHRYSLER GROUP, LLC

2. Install the differential side gear (1) and thrust washer (2) into the differential housing (3).

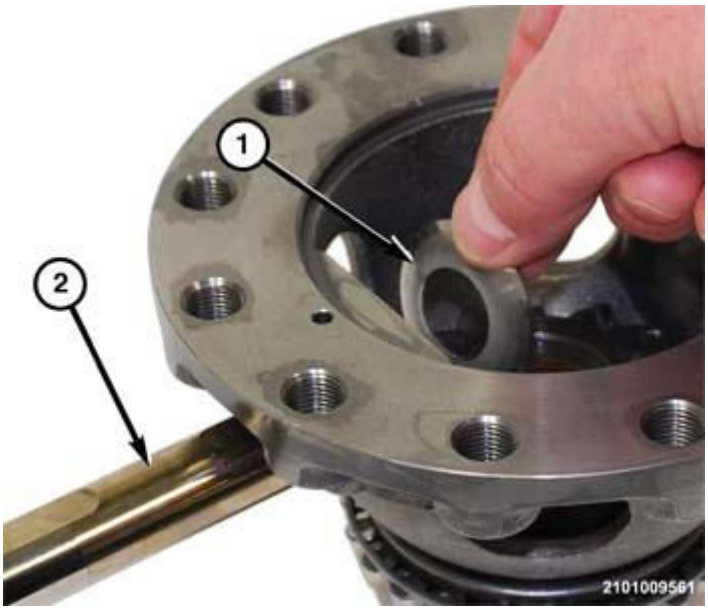

Fig. 551: Removing/Installing Pinion Shaft & Conical Thrust Washer
Courtesy of CHRYSLER GROUP, LLC

3. Install the pinion shaft (2) in the differential housing.
4. Slide the pinion shaft (2) inward and install the conical thrust washer (1).

Fig. 552: Removing/Installing Pinion Shaft & Pinion Gear 2
Courtesy of CHRYSLER GROUP, LLC

5. Slide the pinion shaft (2) inward and install the pinion gear 2 (1).

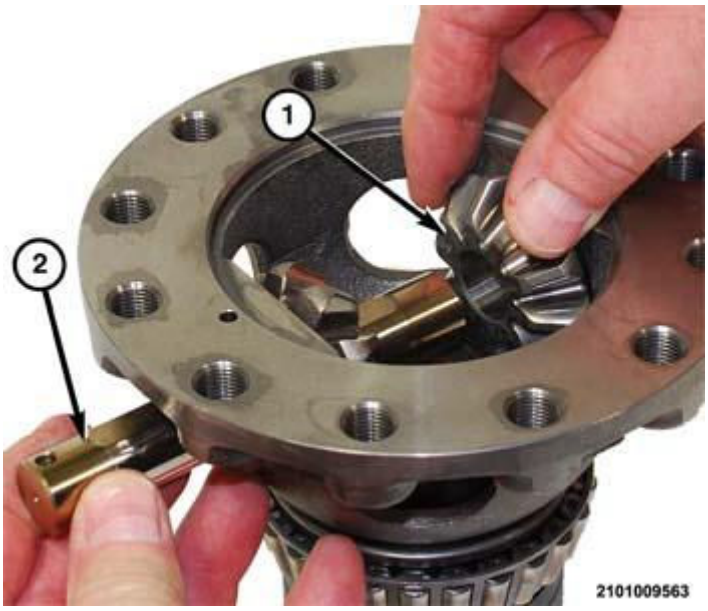

Fig. 553: Removing/Installing Pinion Gear 1
Courtesy of CHRYSLER GROUP, LLC

6. Slide the pinion shaft (2) inward and install the pinion gear 1 (1).

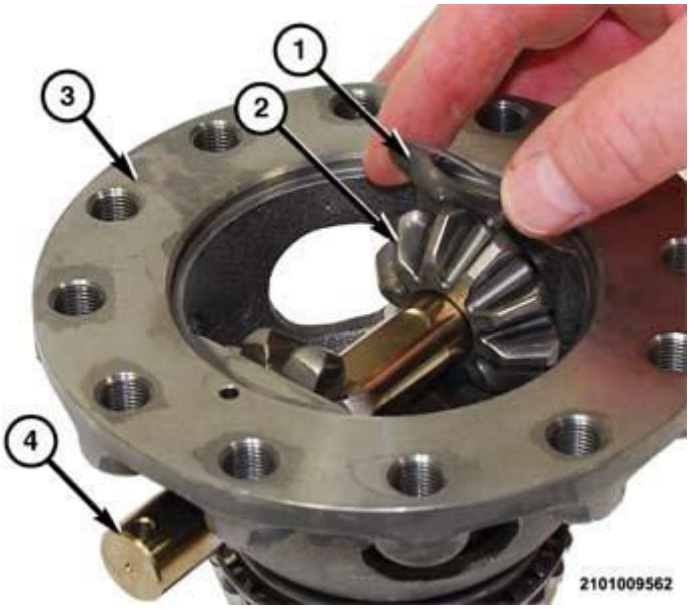

Fig. 554: Removing/Installing Conical Thrust Washer
Courtesy of CHRYSLER GROUP, LLC

7. Slide the pinion shaft (4) inward and install the conical thrust washer (1) behind the pinion gear (2).

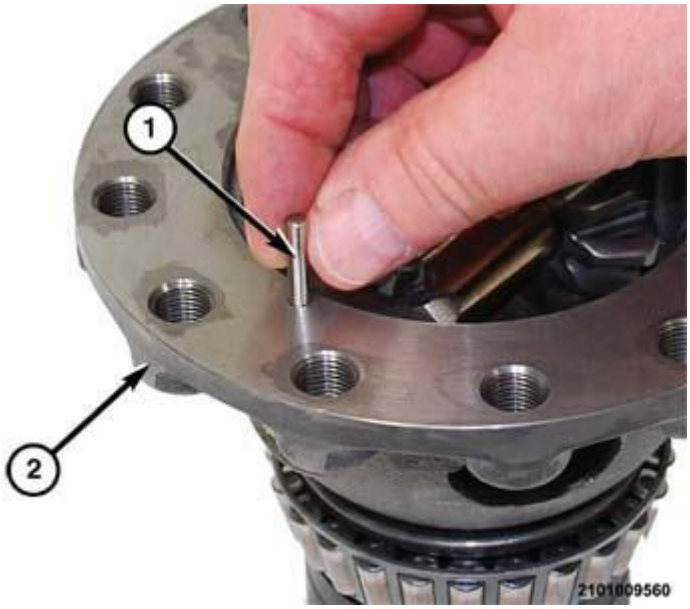

Fig. 555: Removing/Installing Pinion Shaft Lock-Pin
Courtesy of CHRYSLER GROUP, LLC

8. Align the hole in the pinion shaft with the hole in the differential housing (2) and install the lock-pin (1) to hold the pinion shaft in the differential housing (2).

Fig. 556: Differential Side Gear & Thrust Washer
Courtesy of CHRYSLER GROUP, LLC

9. Install the differential side gear (1) and thrust washer (2) into the differential housing (3).

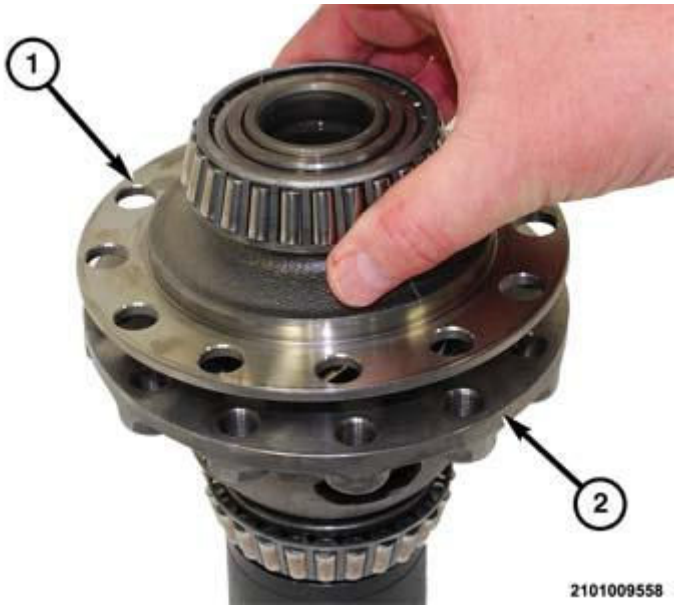

Fig. 557: View Of Upper Half Housing & Lower Differential Housing
Courtesy of CHRYSLER GROUP, LLC

10. Place the upper half (1) housing on the lower differential housing (2).

Fig. 558: View Of Ring Gear & Differential Unit
Courtesy of CHRYSLER GROUP, LLC

11. Place the ring gear (1) in position on the differential unit (2).

Fig. 559: View Of Ring Gear To Differential Unit & Bolts
Courtesy of CHRYSLER GROUP, LLC

12. Install the bolts (2) to hold the ring gear (1) to the differential unit.

Fig. 560: Tightening Ring Gear Bolts
Courtesy of CHRYSLER GROUP, LLC

13. Tighten the bolts to proper torque. Refer to **SPECIFICATIONS**.

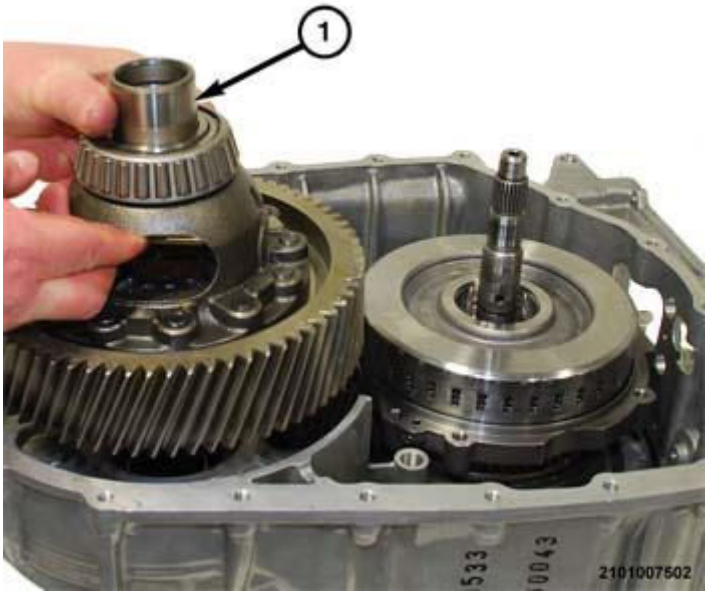

Fig. 561: Removing/Installing Differential Assembly
Courtesy of CHRYSLER GROUP, LLC

14. Place the differential unit (1) in position in the transmission.
15. Install the bell housing. Refer to **BELLHOUSING, INSTALLATION**.

Fig. 562: All Wheel Drive (AWD) Adapter Sleeve
Courtesy of CHRYSLER GROUP, LLC

16. Install the differential adapter sleeve (1).
17. Install the transmission in the vehicle. Refer to **INSTALLATION**.
18. Road test the vehicle to verify the repair.

FLUID AND FILTER

STANDARD PROCEDURE

FLUID LEVEL CHECK

2.4L

NOTE: It is not necessary to check the fluid level in the 948TE automatic transmission unless there are shifting issues and/or has evidence of a transmission fluid leak.

NOTE: Special Tool (special tool #10323A, Dipstick) Fluid level Indicator and a Scan-tool are required to accurately measure the fluid level (4) in the 948TE automatic transmission.

Checking the fluid level in the 948TE automatic transmission is to measure the distance from the upper lip of the fluid level check port, located on top of the transmission housing above the differential, down to the surface of the fluid. Tool 10323A fluid level indicator is marked in 5 mm increments with the base of the handle at 140 mm and the lower tip at "0". The engine must be running at idle with the transmission in park and the vehicle in a level position.

1. Connect a Scan Tool to the Diagnostic Connector under the instrument panel on the driver's side of the vehicle.
2. Navigate to a screen to display transmission fluid temperature.
3. Start the engine and allow it to run at idle with the transmission in Park.
4. Verify that the fluid temperature is above 50 °C.

NOTE: Vehicle must be level for accurate transmission fluid level readings.

5. Raise and support the vehicle. Refer to **HOISTING, STANDARD PROCEDURE** .
6. Remove the left front tire and wheel assembly.
7. Turn the steering wheel to the full left position.

Fig. 563: Fluid Level Check Port
Courtesy of CHRYSLER GROUP, LLC

8. Remove the plug from the fluid level check port.

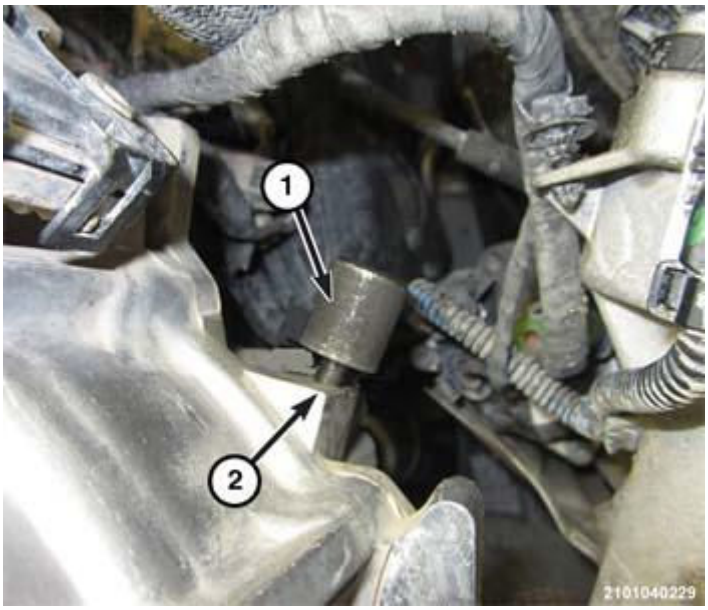

Fig. 564: Checking Trans Fluid Level Using Dipstick Special Tool
Courtesy of CHRYSLER GROUP, LLC

9. Insert tool (special tool #10323A, Dipstick) (1) into the fluid level check port and allow the handle of the tool to rest on the flat surface of the transmission housing (2) around the check port.
10. Remove the tool from the check port, keeping the handle above the tip so the level reading remains accurate.
11. Note the increment on the shaft of the tool where the fluid left a witness mark.

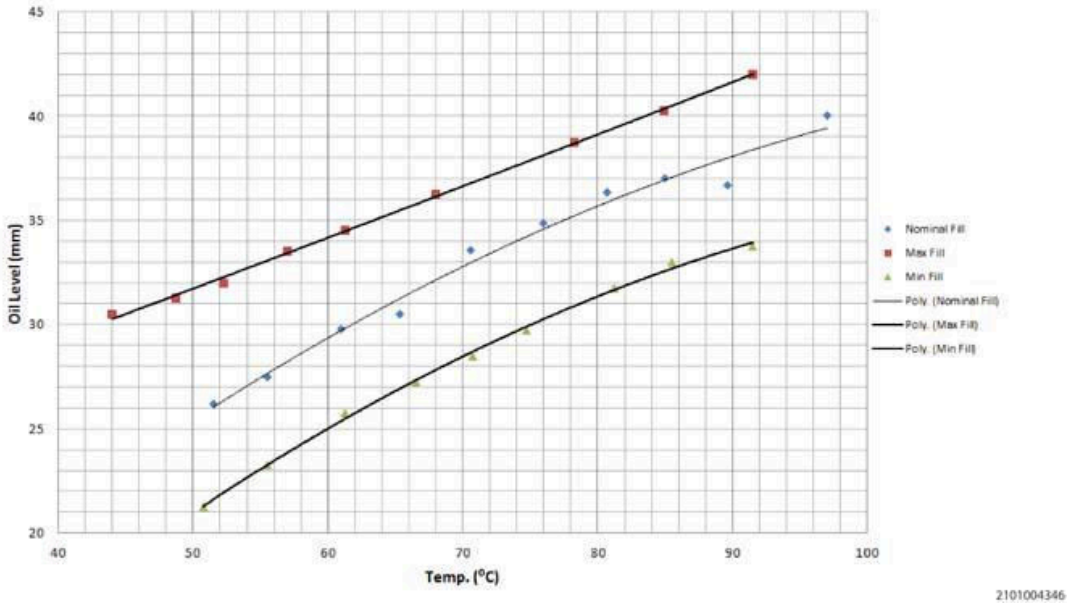

Fig. 565: Fluid Level & Temperature Chart
Courtesy of CHRYSLER GROUP, LLC

12. Based on the temperature of the fluid and the measurement on the tool, refer to the graph or the table to determine the proper level.
13. Install the plug into the fluid level check port. Tighten to specification.
14. Install the left front tire and wheel assembly. Refer to **INSTALLATION** .

FLUID LEVEL TABLE

TEMP in °C	MIN LEVEL (mm)	NOMINAL LEVEL (mm)	MAX LEVEL (mm)
50°	21 mm	26 mm	31.5 mm
55°	23 mm	27.5 mm	33 mm
60°	25 mm	30 mm	34 mm
65°	27 mm	31 mm	35.5 mm
70°	28.5 mm	33 mm	36.5 mm
75°	30 mm	35 mm	38 mm
80°	31.5 mm	36 mm	39 mm
85°	32.5 mm	37 mm	40 mm
90°	34 mm	38 mm	41.5 mm

FLUID LEVEL CHECK

YouTube	A multimedia supplement to the instructions contained in this article is available. To view the multimedia example of the condition described go to; **http://www.youtube.com/user/Mitchell1Tips** **then type "A00641450.vid1" into the "Search Channel" box.**

NOTE: **It is not necessary to check the fluid level in the 948TE automatic transmission unless there are shifting issues and/or has evidence of a transmission fluid leak.**

NOTE: **Special Tool (special tool #10323A, Dipstick) Fluid level Indicator and a Scan-tool are required to accurately measure the fluid level (4) in the 948TE automatic transmission.**

Checking the fluid level in the 948TE automatic transmission is to measure the distance from the upper lip of the fluid level check port, located on top of the transmission housing above the differential, down to the surface of the fluid. Tool 10323A fluid level indicator is marked in 5 mm increments with the base of the handle at 140 mm and the lower tip at "0". The engine must be running at idle with the transmission in park and the vehicle in a level position.

1. Connect a Scan Tool to the Diagnostic Connector under the instrument panel on the driver's side of the vehicle.
2. Navigate to a screen to display transmission fluid temperature.
3. Start the engine and allow it to run at idle with the transmission in Park.

4. Verify that the fluid temperature is above 50 °C.
5. Remove the engine cover.

Fig. 566: Fluid Level Check Port
Courtesy of CHRYSLER GROUP, LLC

6. Remove the plug from the fluid level check port.

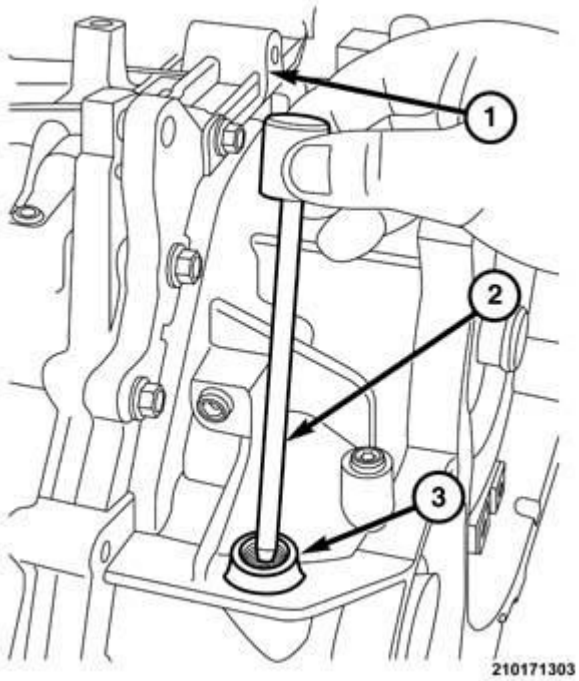

Fig. 567: Differential, Special Tool #10323A & Fluid Level Check Port
Courtesy of CHRYSLER GROUP, LLC

7. Insert tool (special tool #10323A, Dipstick) (2) into the fluid level check port (3) and allow the handle of the tool to rest on the flat surface of the transmission housing (1) around the check port.
8. Remove the tool from the check port, keeping the handle above the tip so the level reading remains accurate.
9. Note the increment on the shaft of the tool where the fluid left a witness mark.

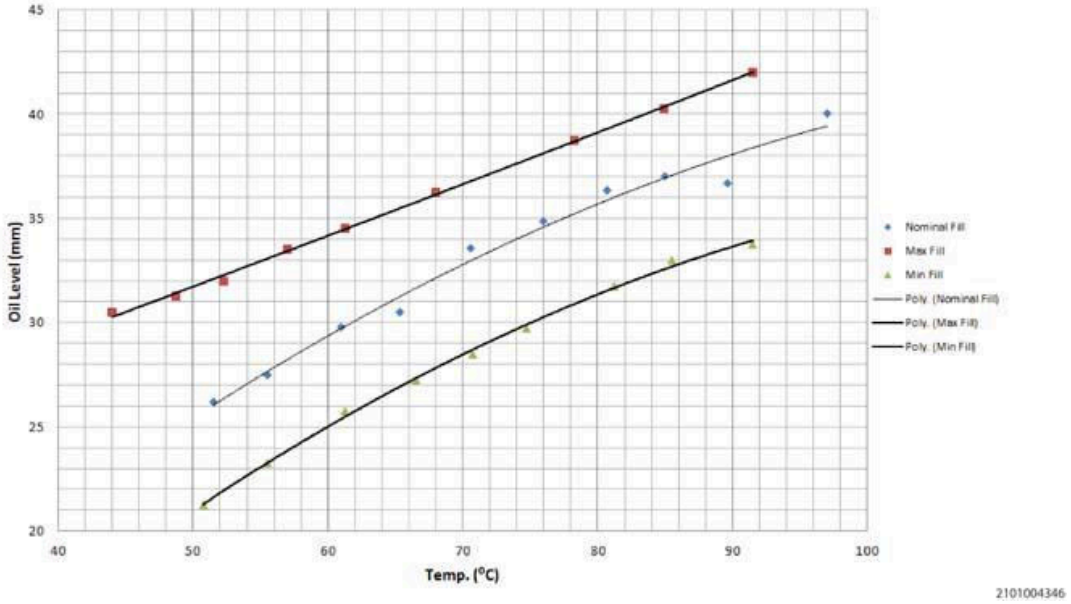

Fig. 568: Fluid Level & Temperature Chart
Courtesy of CHRYSLER GROUP, LLC

10. Based on the temperature of the fluid and the measurement on the tool, refer to the graph or the table to determine the proper level.
11. Install the plug into the fluid level check port. Tighten to specification.
12. Install the engine cover.

FLUID LEVEL TABLE

TEMP in °C	MIN LEVEL (mm)	NOMINAL LEVEL (mm)	MAX LEVEL (mm)
50°	21 mm	26 mm	31.5 mm
55°	23 mm	27.5 mm	33 mm
60°	25 mm	30 mm	34 mm
65°	27 mm	31 mm	35.5 mm
70°	28.5 mm	33 mm	36.5 mm
75°	30 mm	35 mm	38 mm
80°	31.5 mm	36 mm	39 mm
85°	32.5 mm	37 mm	40 mm
90°	34 mm	38 mm	41.5 mm

FLUID AND FILTER SERVICE

The 948TE automatic transmission is a sealed for life design and does not require periodic service. The only time the transmission fluid needs to be checked is when abnormal shifts frequently occur or evidence of a transmission fluid leak is present. The fluid filter is mounted internally and requires that the transmission be removed from the vehicle and disassembled to replace the filter. The fluid filter has a plastic body filled with polyester filter fleece.

NOTE: **The fluid used in the 948TE automatic transmission is not compatible with other types of transmission fluid, use only Shell® L12108 Automatic Transmission Fluid or Mopar® equivalent after repairs have been completed. Refer to Star Parts for the part number.**

Use of improper fluid will cause premature failure, poor shift quality and possible leaks.

REMOVAL

REMOVAL

NOTE: **The fluid filter does not require periodic replacement. It should only be replaced in conjunction with a major failure that caused excessive fluid contamination or during an overhaul.**

1. Remove the transmission from the vehicle. Refer to **REMOVAL**.
2. Drain the fluid from the transmission.
3. Remove the bellhousing from the transmission. Refer to **BELLHOUSING, REMOVAL**.

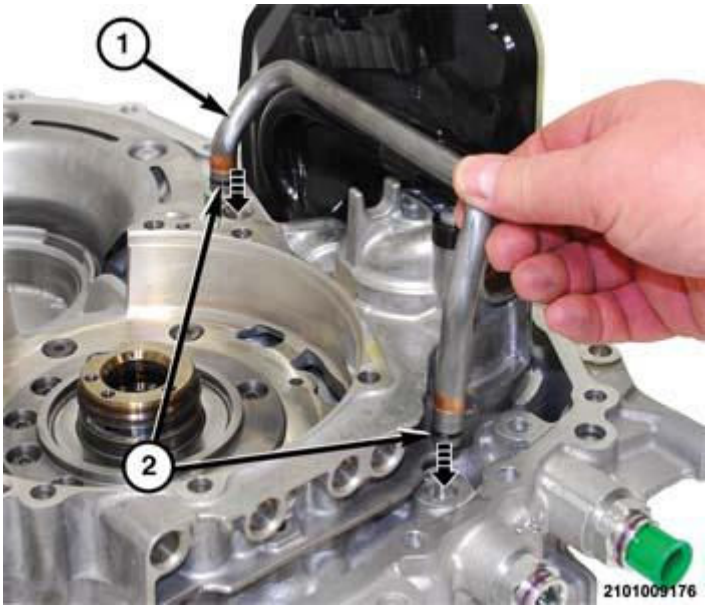

Fig. 569: Fluid Tube
Courtesy of CHRYSLER GROUP, LLC

4. Remove the fluid tube (1) from the intermediate support plate and bellhousing.

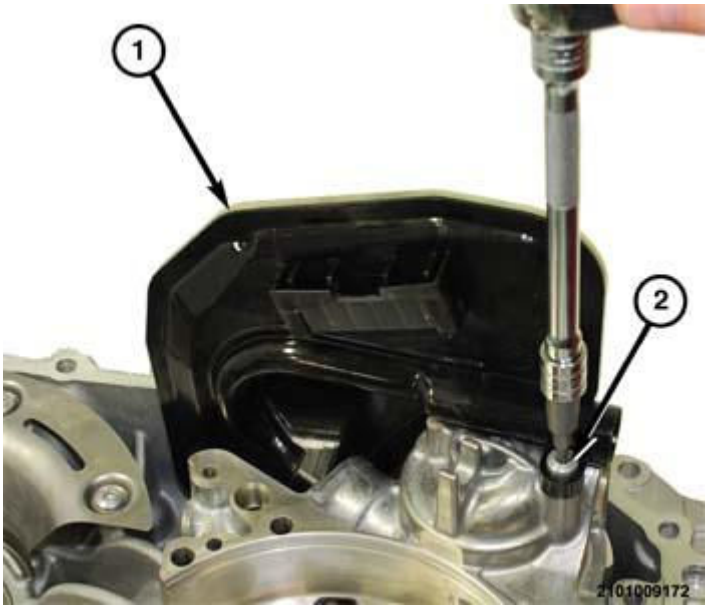

Fig. 570: Oil Filter, Intermediate Support Plate & Fastener
Courtesy of CHRYSLER GROUP, LLC

5. Remove the bolt (2) holding the oil filter (1) to the intermediate support plate.

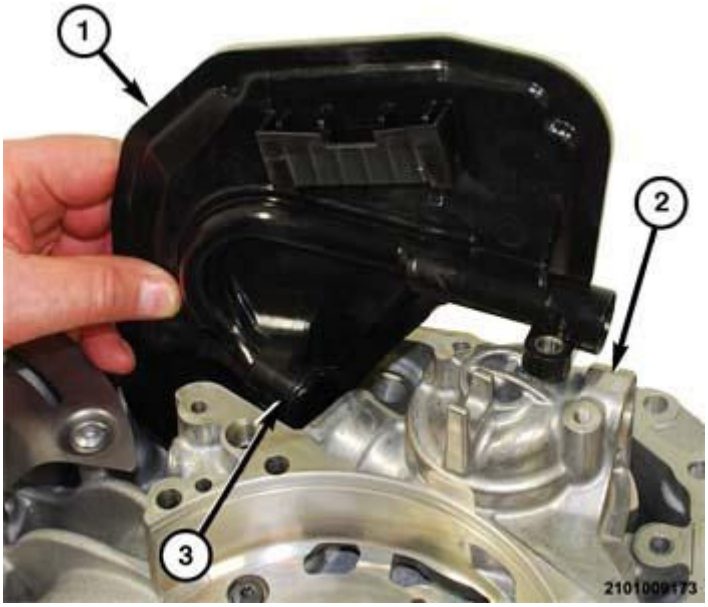

Fig. 571: Removing/Installing Transmission Oil Filter
Courtesy of CHRYSLER GROUP, LLC

6. Separate the oil filter (1) from the intermediate support plate (2).

INSTALLATION

INSTALLATION

1. Clean the intermediate support plate in preparation for the NEW filter.

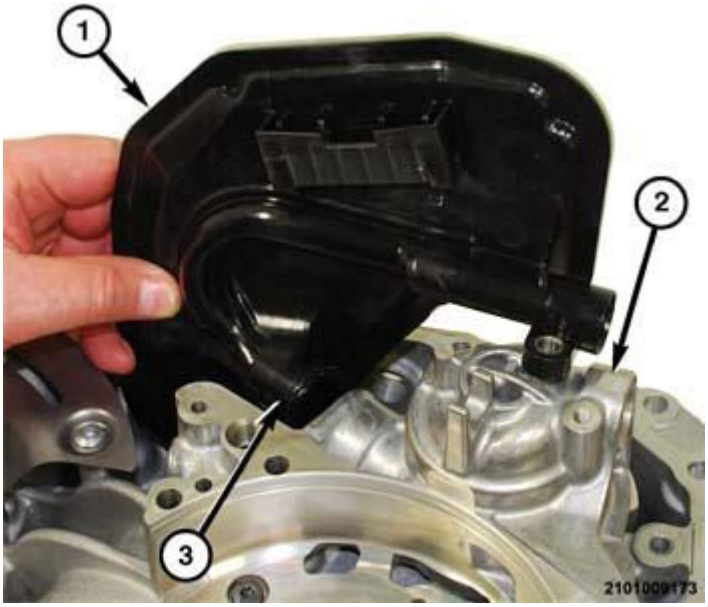

Fig. 572: Removing/Installing Transmission Oil Filter
Courtesy of CHRYSLER GROUP, LLC

2. Verify that the O-ring (3) is in good condition. Replace the O-ring (3) if damage is present.
3. Insert the oil filter neck (3) into the oil pump orifice and align the bolt hole with the bore in the intermediate support plate (2).

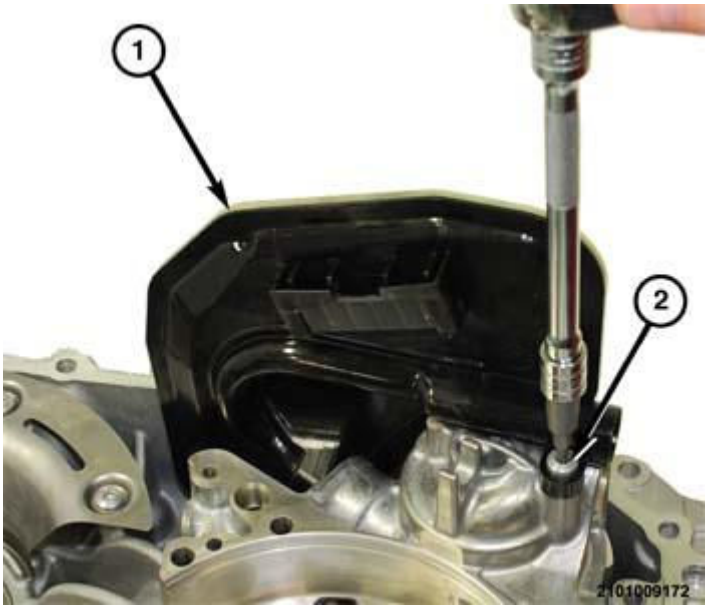

Fig. 573: Oil Filter, Intermediate Support Plate & Fastener
Courtesy of CHRYSLER GROUP, LLC

4. Install the bolt (2) to hold the oil filter (1) to the intermediate support plate and tighten to the proper specifications. Refer to **SPECIFICATIONS**.
5. Install the bellhousing on the transmission. Refer to **BELLHOUSING, INSTALLATION**.
6. Install the transmission in the vehicle. Refer to **INSTALLATION**.
7. Road test the vehicle to verify the repair.

MANUAL LEVER AND PARK ROD

REMOVAL

PARK DETENT AND MANUAL SHAFT

The transmission doe not require removal to complete the following procedure.

1. Remove the valve body from the transmission. Refer to **VALVE BODY, REMOVAL**.

Fig. 574: View Of Ground Cable & Shift Cable
Courtesy of CHRYSLER GROUP, LLC

2. Using a suitable prying tool (1), separate the shift cable end (2) from the manual lever on the transmission.
3. Remove the nut holding the manual shift lever to the manual shaft.
4. Pry the manual shift lever upward and off the manual shaft.

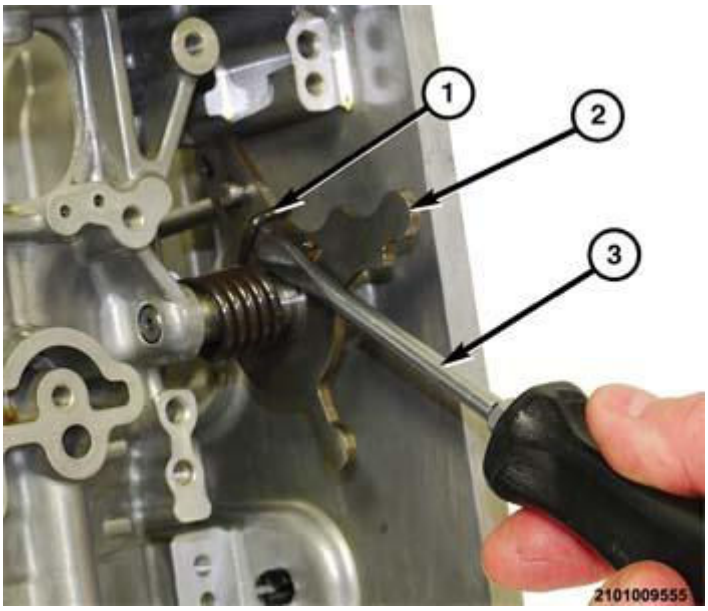

Fig. 575: Prying Spring Over Top Of Detent
Courtesy of CHRYSLER GROUP, LLC

5. Using a suitable screw driver (3), pry the spring (1) to the inside and off of the detent (2).

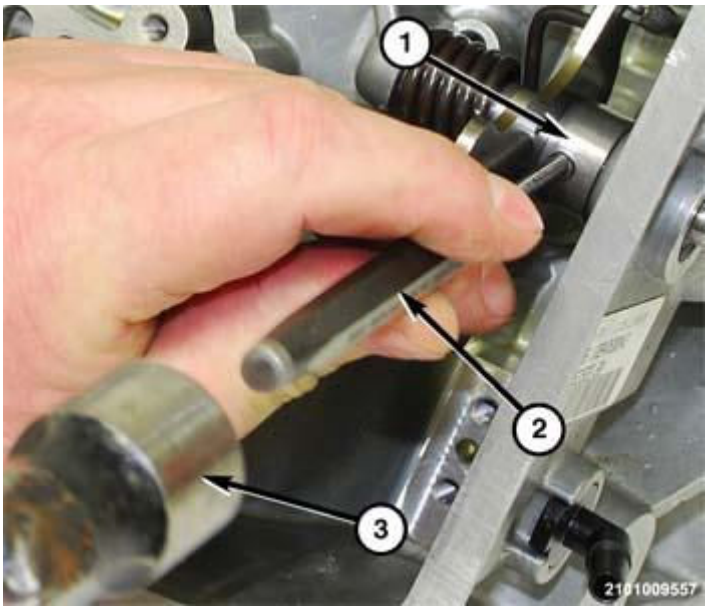

Fig. 576: Removing/Installing Detent Hub Roll Pin
Courtesy of CHRYSLER GROUP, LLC

6. Using a suitable hammer (3) and pin-punch (2), drive the roll-pin out of the detent hub (1).

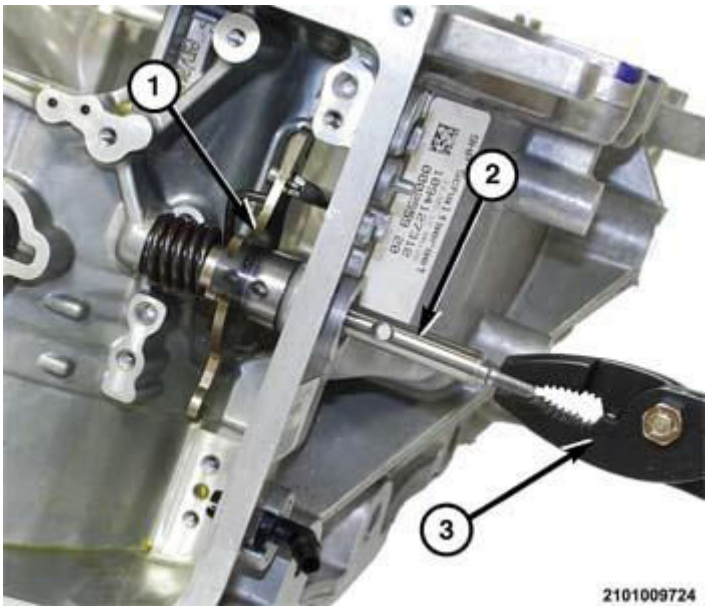

Fig. 577: Removing/Installing Manual Shaft
Courtesy of CHRYSLER GROUP, LLC

7. Using a suitable pliers (3), pull the manual shaft (2) out of the detent hub (1) and transmission housing.

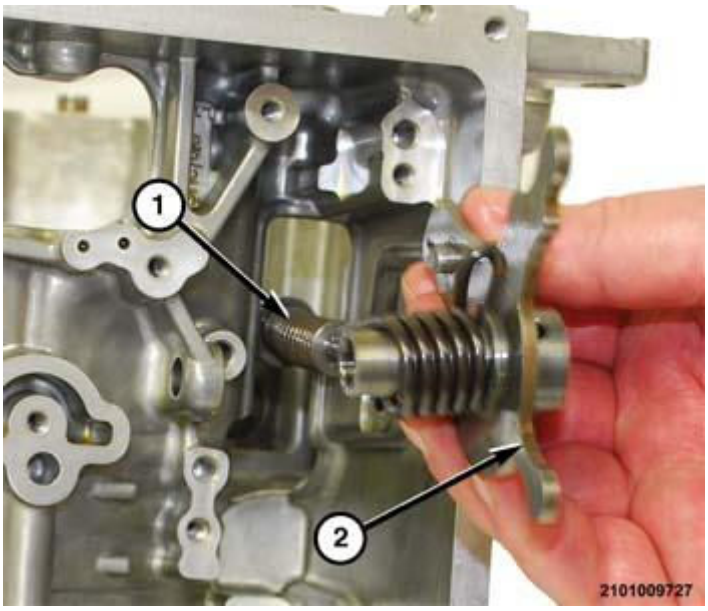

Fig. 578: Park Rod, Park Rod Guide And Detent
Courtesy of CHRYSLER GROUP, LLC

8. Separate the detent (2) and park rod (1) from the transmission.

INSTALLATION

PARK DETENT AND MANUAL SHAFT

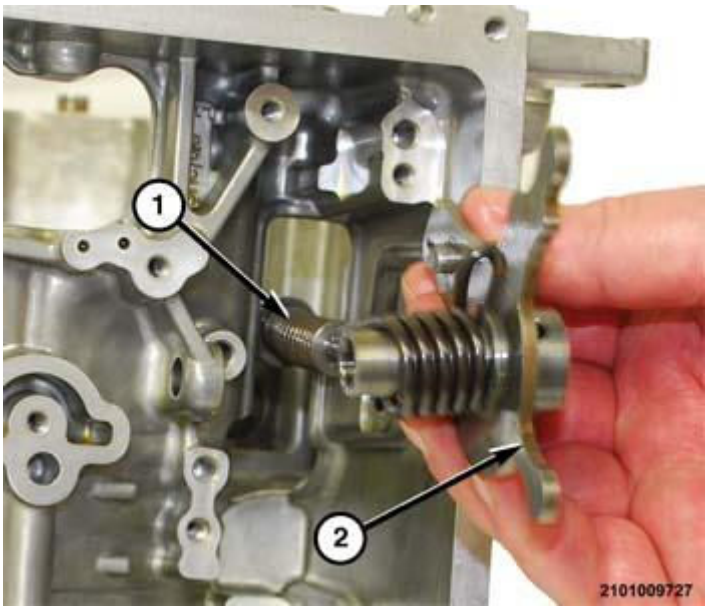

Fig. 579: Park Rod, Park Rod Guide And Detent
Courtesy of CHRYSLER GROUP, LLC

1. Insert the and park rod (1) into the Park rod guide and the detent (2) into the transmission.

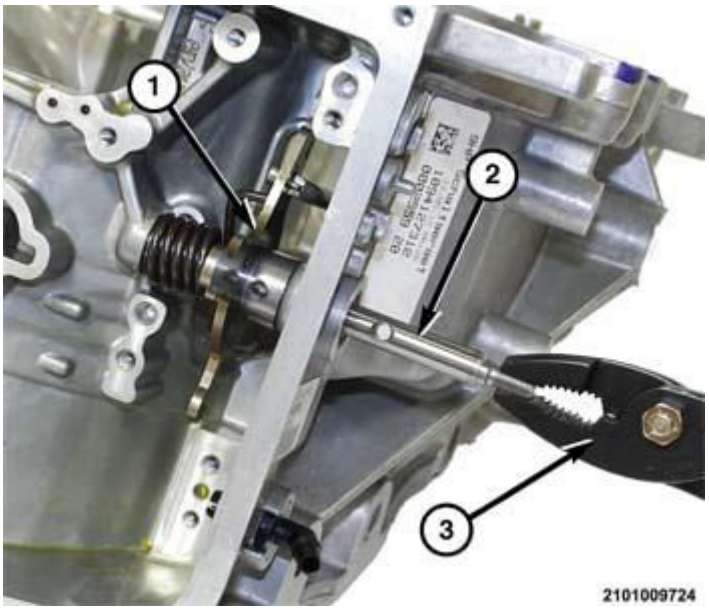

Fig. 580: Removing/Installing Manual Shaft
Courtesy of CHRYSLER GROUP, LLC

2. Insert the manual shaft (2) into the detent hub (1) and transmission housing and align the holes in the detent hub and the manual shaft.

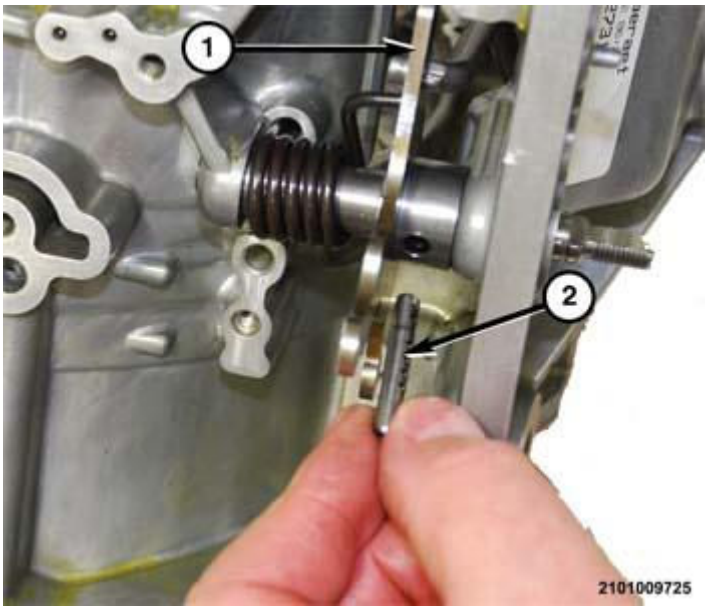

Fig. 581: Detent Hub Roll-Pin
Courtesy of CHRYSLER GROUP, LLC

3. Insert the tapered end of the roll-pin into the hole in the detent hub.

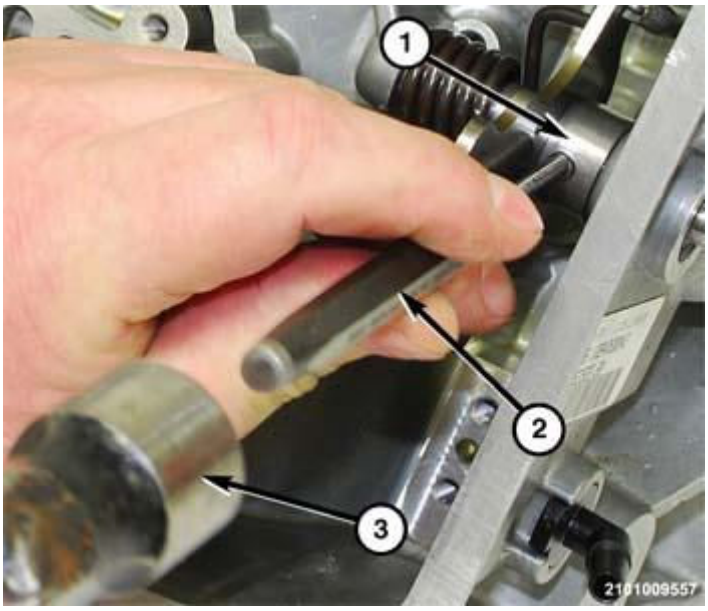

Fig. 582: Removing/Installing Detent Hub Roll Pin
Courtesy of CHRYSLER GROUP, LLC

4. Using a suitable hammer (3) and pin-punch (2), drive the roll-pin into of the detent hub (1) until the head is flush.

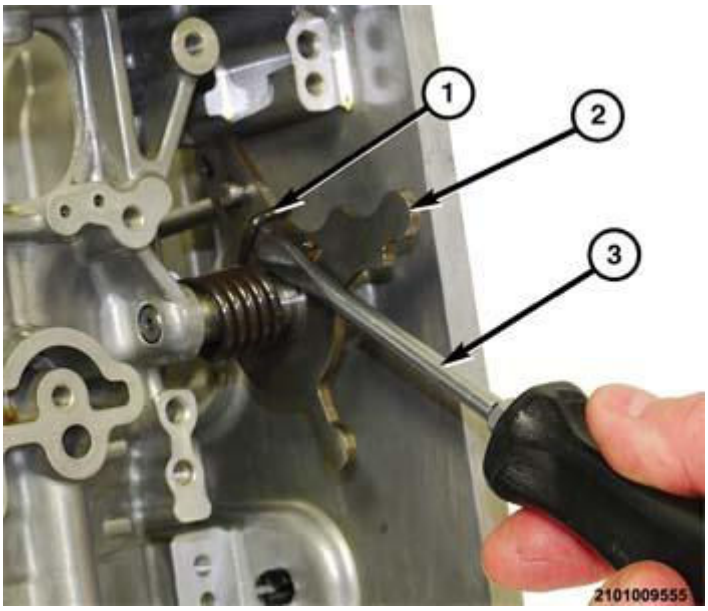

Fig. 583: Prying Spring Over Top Of Detent
Courtesy of CHRYSLER GROUP, LLC

5. Using a suitable screw driver (3), pry the spring (1) over the top of the detent (2).
6. Place the manual lever in position on the manual shift lever.
7. Install the nut to hold the manual shift lever to the manual shaft to the manual shaft. Refer to **SPECIFICATIONS**.
8. Snap the shift cable end onto the ball link on the manual shift lever.
9. Install the valve body into the transmission. Refer to **VALVE BODY, INSTALLATION**.

NEEDLE BEARING, OIL PUMP SPROCKET

REMOVAL

REMOVAL

1. Remove the transmission from the vehicle. Refer to **REMOVAL**.
2. Drain the fluid from the transmission.
3. Remove the bellhousing from the transmission. Refer to **BELLHOUSING, REMOVAL**.

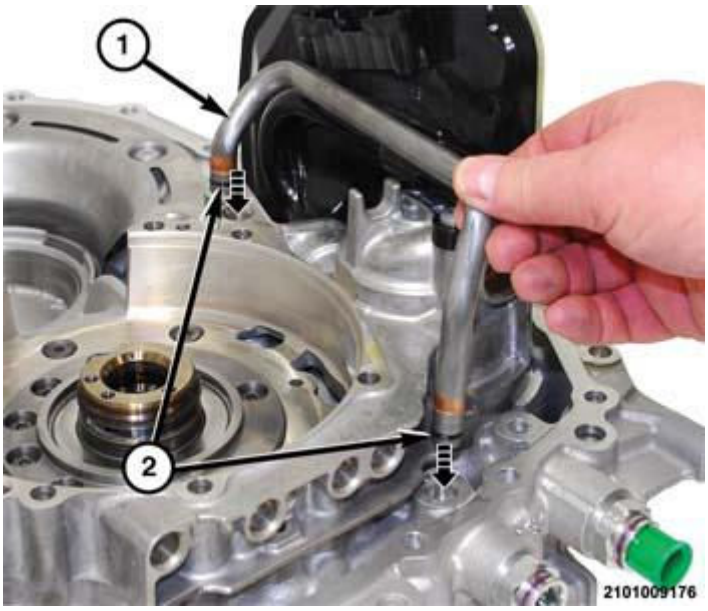

Fig. 584: Fluid Tube
Courtesy of CHRYSLER GROUP, LLC

4. Remove the fluid tube (1) from the bellhousing.

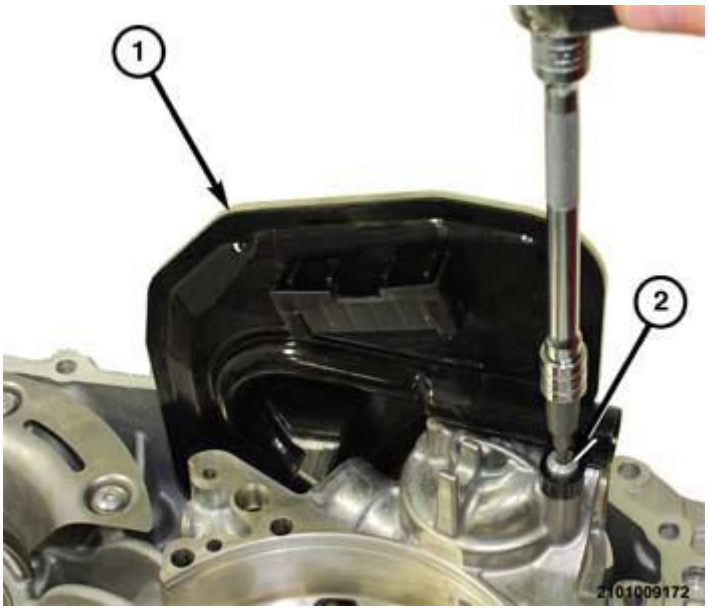

Fig. 585: Oil Filter, Intermediate Support Plate & Fastener
Courtesy of CHRYSLER GROUP, LLC

5. Remove the bolt (1) holding the oil filter (2) to the bellhousing.

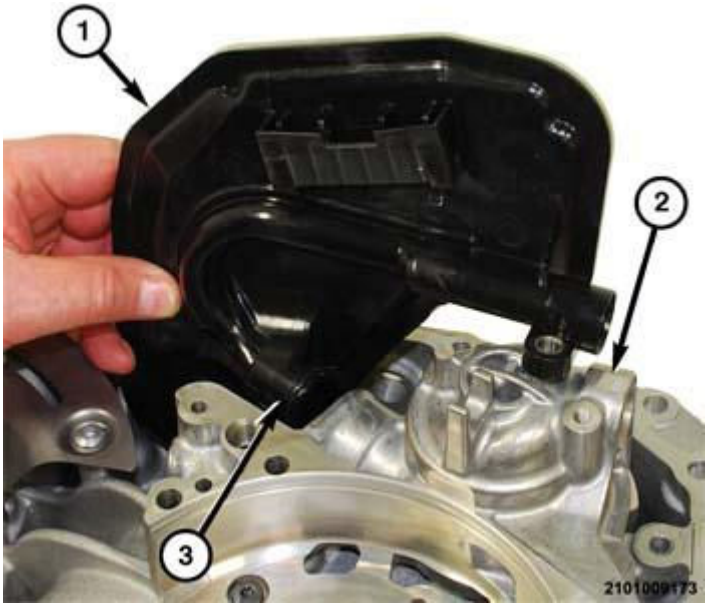

Fig. 586: Removing/Installing Transmission Oil Filter
Courtesy of CHRYSLER GROUP, LLC

6. Separate the oil filter (1) from the bellhousing (2).

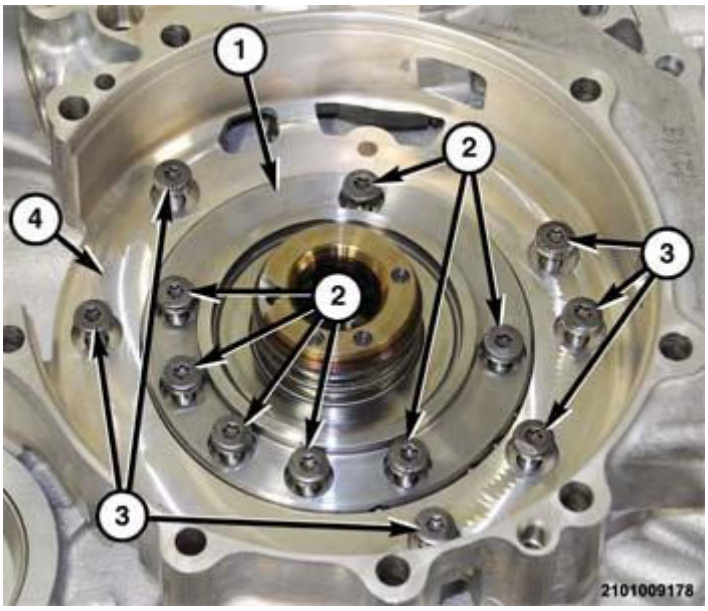

Fig. 587: Removing/Installing Bolts At Reaction Shaft To Intermediate Support Plate
Courtesy of CHRYSLER GROUP, LLC

7. Remove the bolts (2) holding the reaction shaft (1) to the intermediate support plate (4).

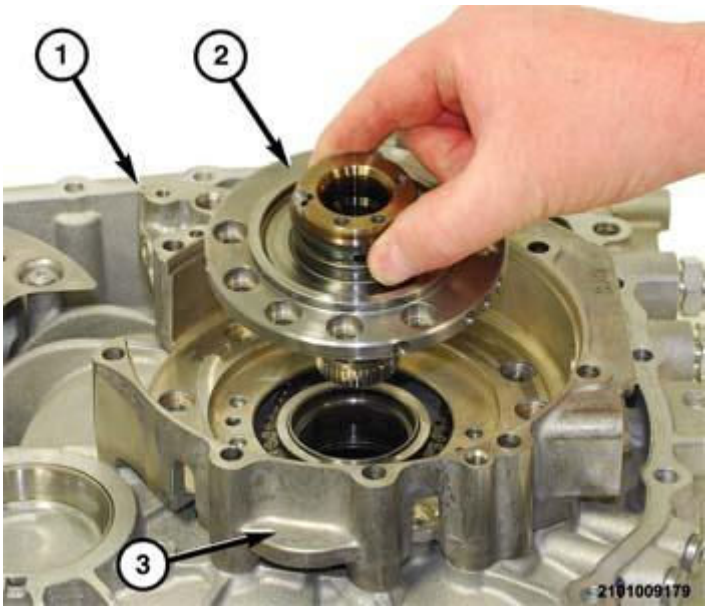

Fig. 588: Removing/Installing Reaction Shaft At Intermediate Support Plate
Courtesy of CHRYSLER GROUP, LLC

8. Separate the reaction shaft (2) from the intermediate support plate (1).

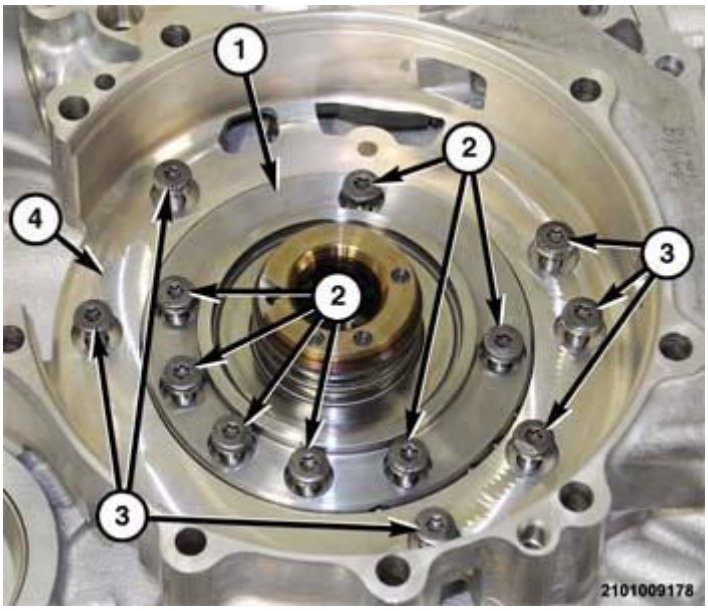

Fig. 589: Removing/Installing Bolts At Reaction Shaft To Intermediate Support Plate
Courtesy of CHRYSLER GROUP, LLC

9. Remove the bolts (3) holding the intermediate support plate and oil pump (1) to the bellhousing.

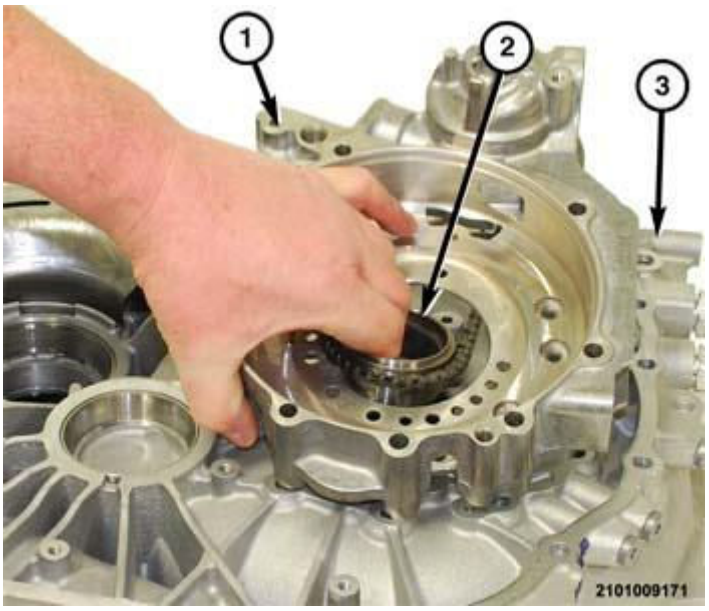

Fig. 590: Removing/Installing Intermediate Support Plate And Oil Pump
Courtesy of CHRYSLER GROUP, LLC

10. Separate the intermediate support plate and oil pump (1) from the bellhousing (3).
11. Using a suitable screw driver, remove the input shaft seal from the bellhousing.

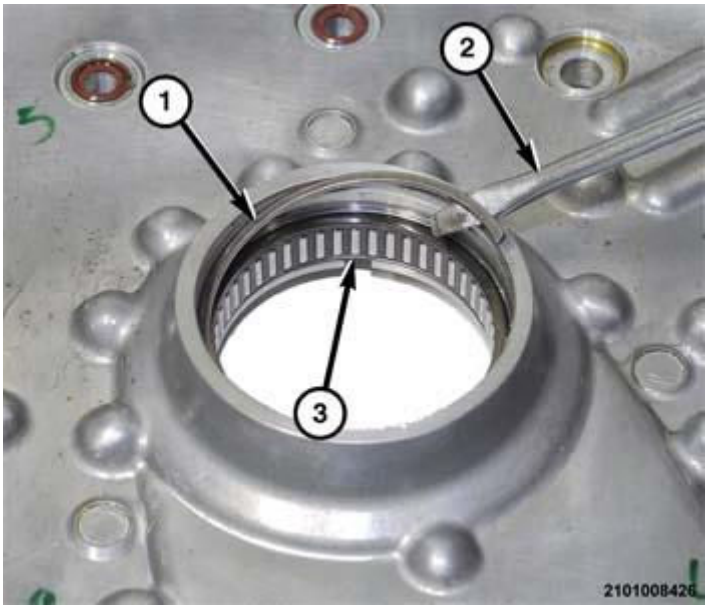

Fig. 591: View Of Snap-Ring Holding Oil Pump Sprocket Needle Bearing In Bellhousing
Courtesy of CHRYSLER GROUP, LLC

12. Using a suitable screw driver (2), remove the snap-ring (1) holding the oil pump sprocket needle bearing (3) in the bellhousing.

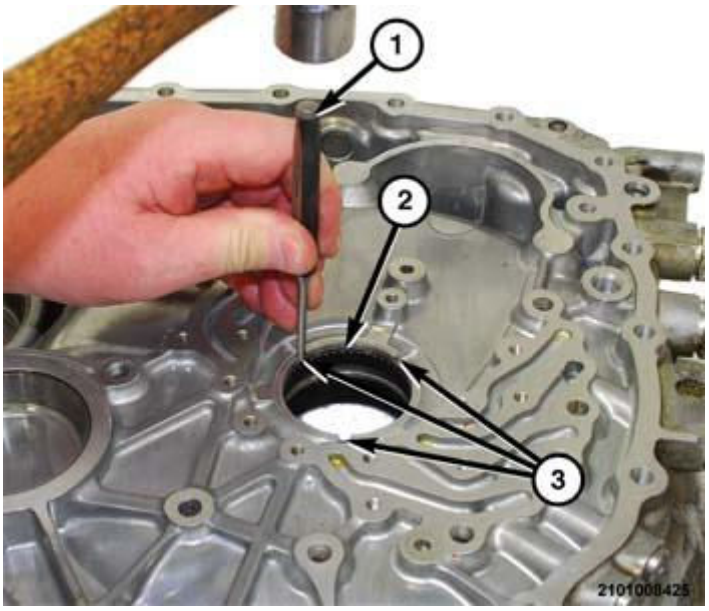

Fig. 592: Removing Oil Pump Sprocket Needle Bearing
Courtesy of CHRYSLER GROUP, LLC

13. Using a suitable punch tool, remove the oil pump sprocket needle bearing by tapping outward while alternating between the three notches in the bellhousing bore flange.

INSTALLATION

INSTALLATION

1. Clean the oil pump sprocket needle bearing and input shaft seal bore.

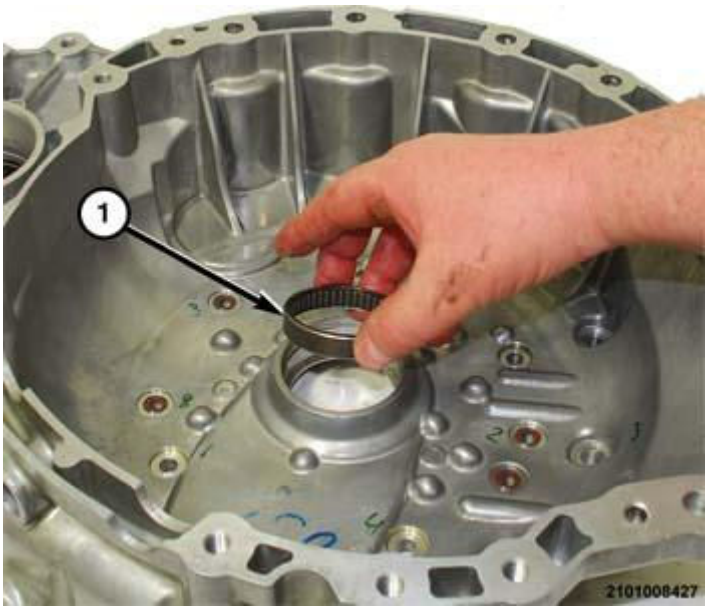

Fig. 593: Installing Oil Pump Sprocket Needle Bearing Into Bellhousing

Courtesy of CHRYSLER GROUP, LLC

2. Place the oil pump sprocket needle bearing (1) in position into the bore in the center of the bellhousing.

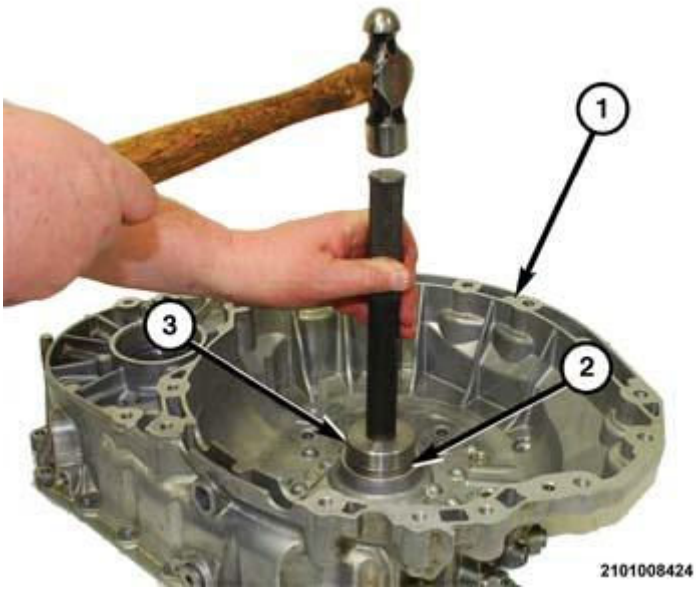

Fig. 594: Seating Oil Pump Sprocket Needle Bearing Against Flange
Courtesy of CHRYSLER GROUP, LLC

3. Using tool (special tool #10503, Installer, Bearing) (3) and (special tool #C-4171, Driver Handle, Universal), install the oil pump sprocket needle bearing (2) in the bellhousing (1) bore until the bearing butts against the flange.

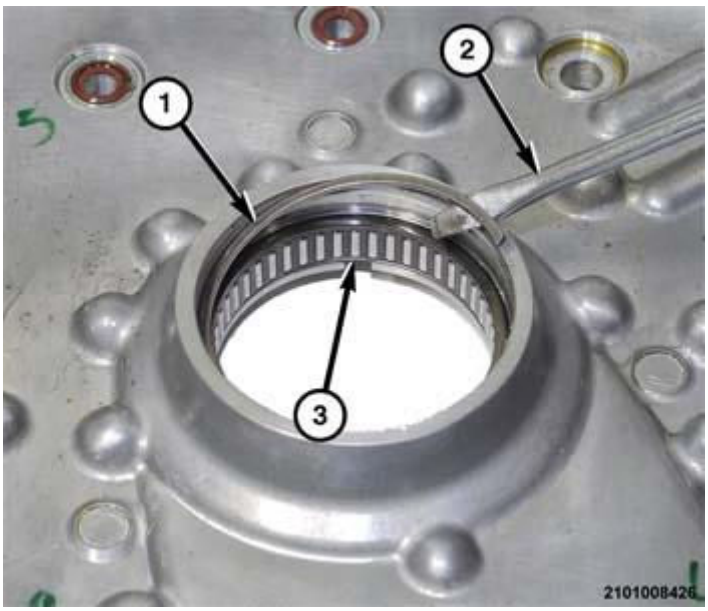

Fig. 595: View Of Snap-Ring Holding Oil Pump Sprocket Needle Bearing In Bellhousing
Courtesy of CHRYSLER GROUP, LLC

4. Install the snap-ring (1) to hold the oil pump sprocket needle bearing (3) in the bellhousing.
5. Apply assembly lube on the lip of the NEW seal.
6. Place the seal on tool (special tool #9677, Installer, Seal), with the tension spring away from the tool, and insert the seal into the bore in the bellhousing.

Fig. 596: Installing Seal Into Bellhousing
Courtesy of CHRYSLER GROUP, LLC

7. Using a suitable hammer, drive the seal into the bore in the center of the bellhousing until the tool seats against the bellhousing.

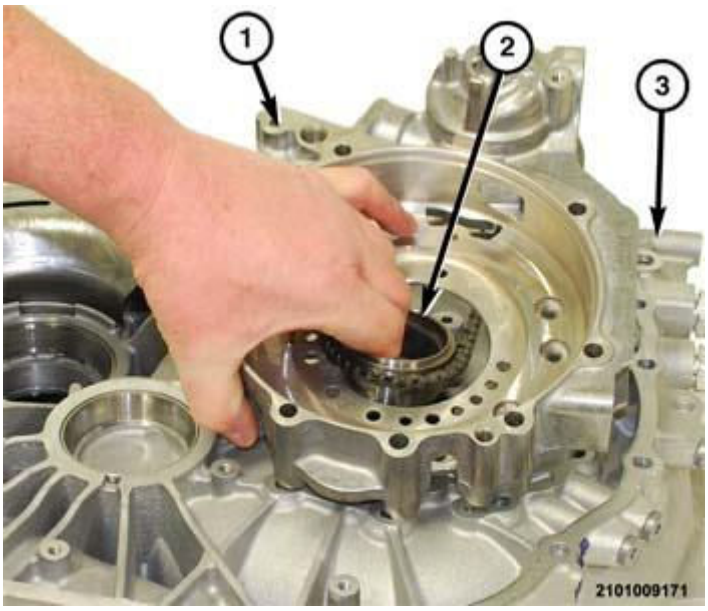

Fig. 597: Removing/Installing Intermediate Support Plate And Oil Pump

Courtesy of CHRYSLER GROUP, LLC

8. Place the intermediate support plate and oil pump (1) in position on the bellhousing (3) while guiding the oil pump sprocket into oil pump sprocket needle bearing.

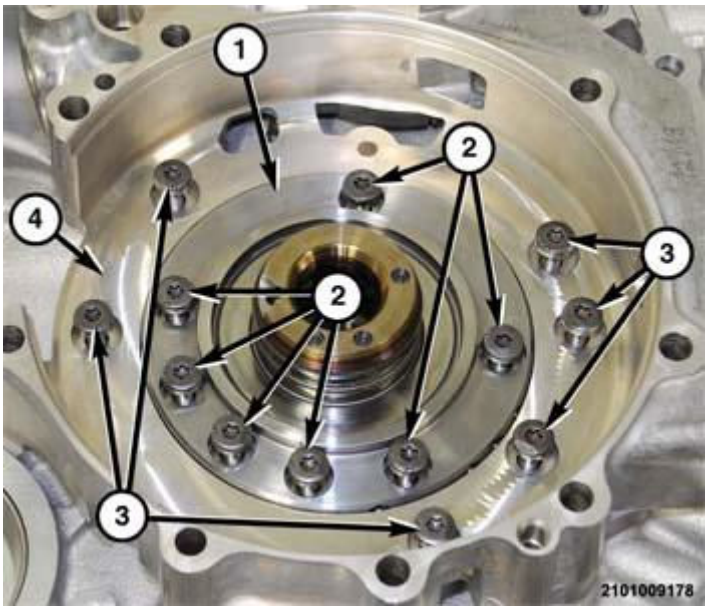

Fig. 598: Removing/Installing Bolts At Reaction Shaft To Intermediate Support Plate
Courtesy of CHRYSLER GROUP, LLC

9. Install the bolts (2) to hold the reaction shaft (1) to the intermediate support plate (4) and tighten to the proper specifications. Refer to **SPECIFICATIONS**.

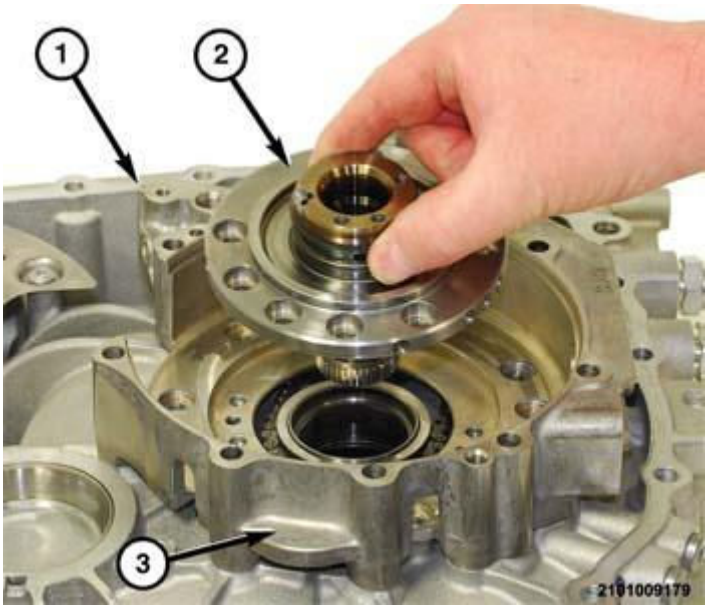

Fig. 599: Removing/Installing Reaction Shaft At Intermediate Support Plate
Courtesy of CHRYSLER GROUP, LLC

10. Place the reaction shaft (2) in position on the intermediate support plate (1).

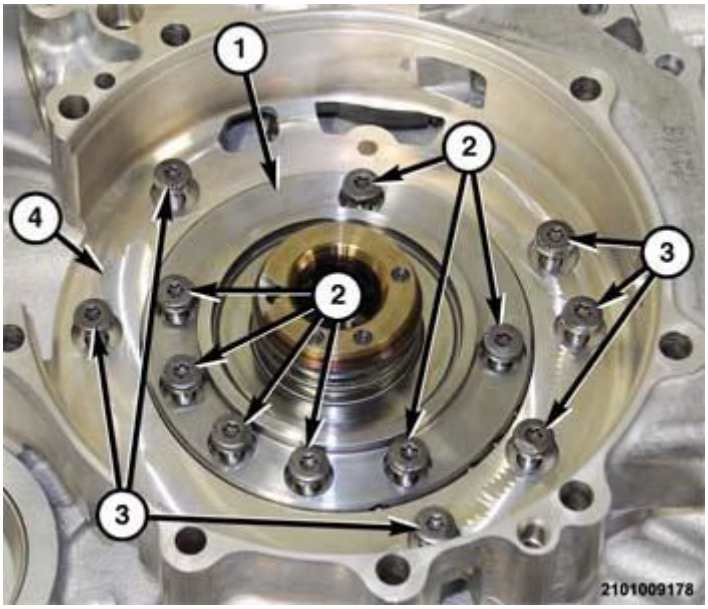

Fig. 600: Removing/Installing Bolts At Reaction Shaft To Intermediate Support Plate
Courtesy of CHRYSLER GROUP, LLC

11. Install the bolts (2) to hold the reaction shaft (1) to the intermediate support plate (4) and tighten to the proper specifications. Refer to **SPECIFICATIONS**.

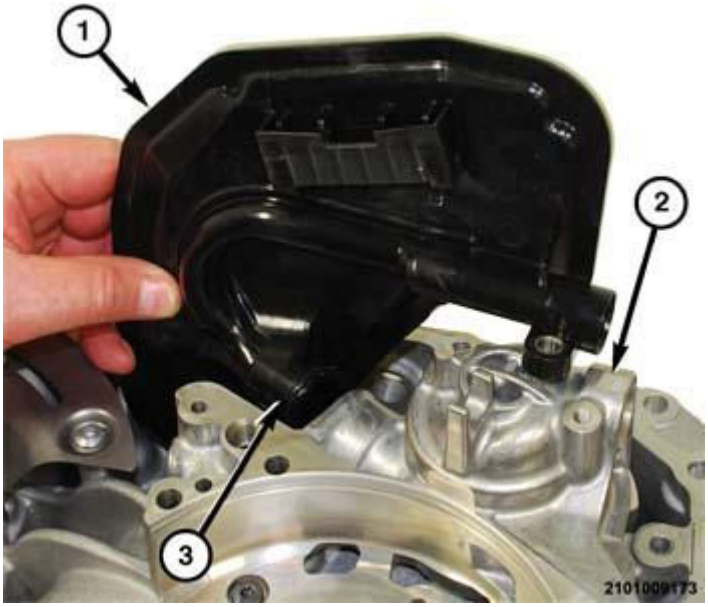

Fig. 601: Removing/Installing Transmission Oil Filter
Courtesy of CHRYSLER GROUP, LLC

12. Place the oil filter (1) in position on the bellhousing (2) and insert feed tube into the oil pump.

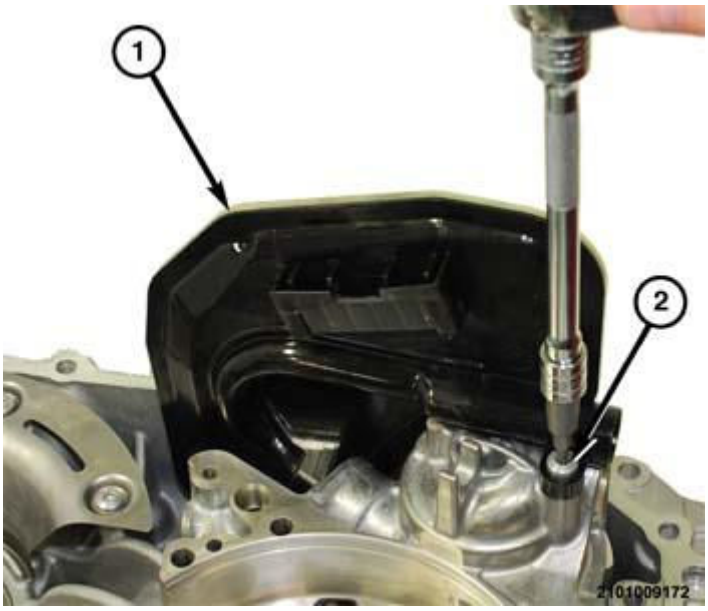

Fig. 602: Oil Filter, Intermediate Support Plate & Fastener
Courtesy of CHRYSLER GROUP, LLC

13. Install the bolt (1) to hold the oil filter (2) to the bellhousing and tighten to the proper specifications. Refer to **SPECIFICATIONS**.

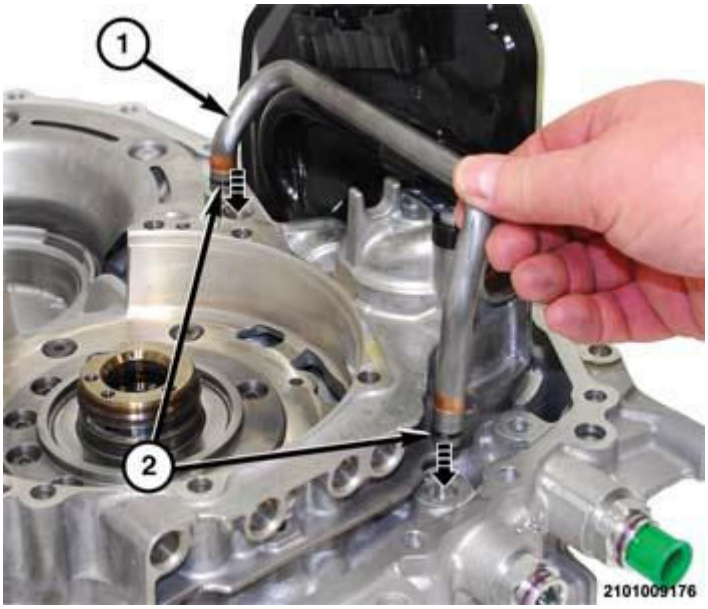

Fig. 603: Fluid Tube
Courtesy of CHRYSLER GROUP, LLC

14. Install the fluid tube (1) in the bellhousing.
15. Install the bellhousing on the transmission. Refer to **BELLHOUSING, INSTALLATION**.
16. Install the transmission in the vehicle. Refer to **INSTALLATION**.

17. Road test the vehicle to verify the repair.

PARKING SPRAG AND GUIDE

REMOVAL

REMOVAL

1. Remove the transmission from the vehicle. Refer to **REMOVAL**.
2. Position the transmission on the clean, stable work surface.
3. Remove the bellhousing from the transmission housing. Refer to **BELLHOUSING, REMOVAL**.

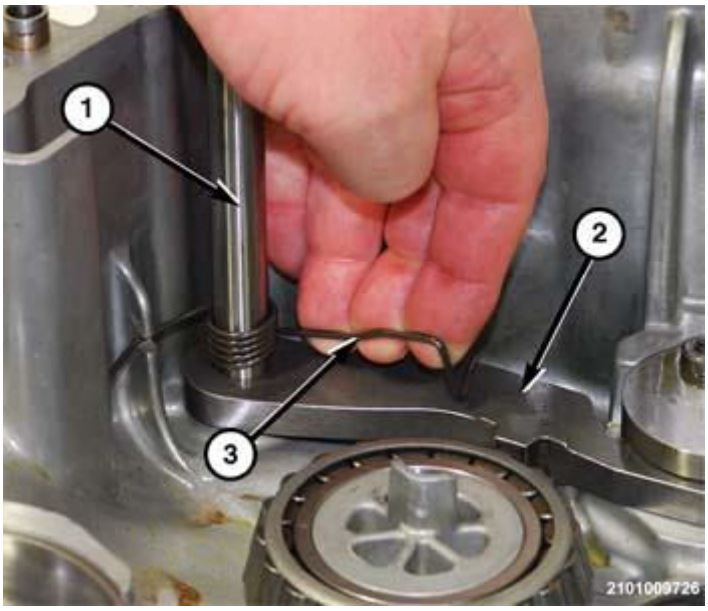

Fig. 604: Removing/Installing Park Pawl
Courtesy of CHRYSLER GROUP, LLC

4. Compress and release the park pawl (2) return spring (3).
5. Pull the reaction pin (1) outward and separate the reaction pin (1) from the park pawl (2).
6. Separate the park pawl (2) from the park rod guide.

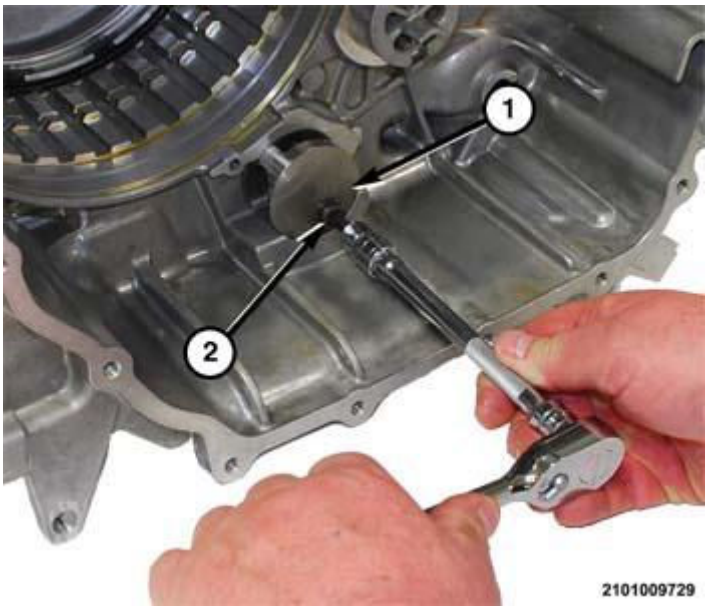

Fig. 605: Removing/Installing Park Rod Guide Bolt
Courtesy of CHRYSLER GROUP, LLC

7. Remove the bolt (2) holding the park rod guide (1) to the transmission housing.

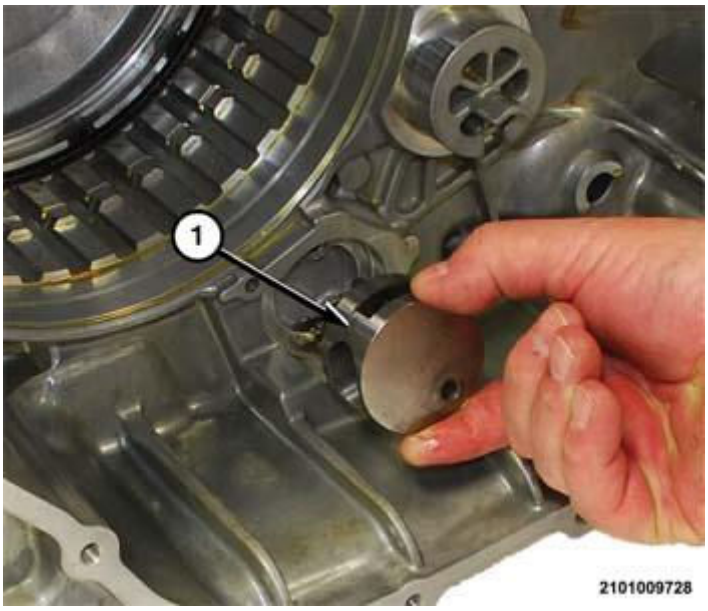

Fig. 606: Removing/Installing Park Rod Guide
Courtesy of CHRYSLER GROUP, LLC

8. Separate the park rod guide (1) from the transmission.

INSTALLATION

PARK ROD GUIDE AND PAWL

NOTE: **If the park pawl is damaged the transfer gear may also be damaged. Replace the transfer gear if damage if present. If the transfer gear is replaced the proper thickness bearing preload select shim will have to be established.**

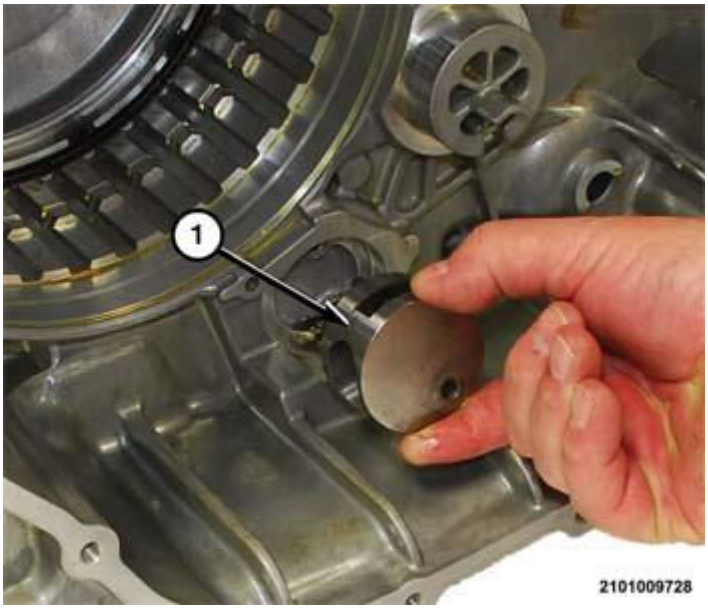

Fig. 607: Removing/Installing Park Rod Guide
Courtesy of CHRYSLER GROUP, LLC

1. Place the park rod guide (1) in position on the transmission.

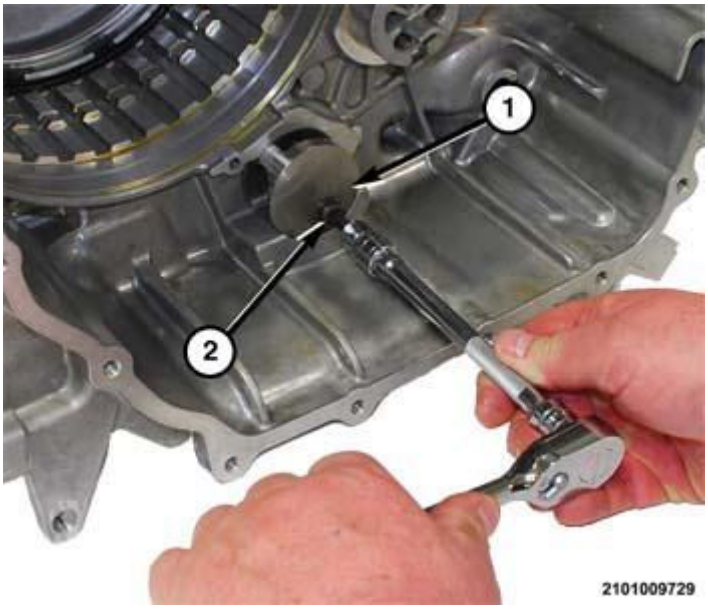

Fig. 608: Removing/Installing Park Rod Guide Bolt
Courtesy of CHRYSLER GROUP, LLC

2. Install the bolt (2) to hold the park rod guide (1) to the transmission housing and tighten to the proper

specifications. Refer to **SPECIFICATIONS**.

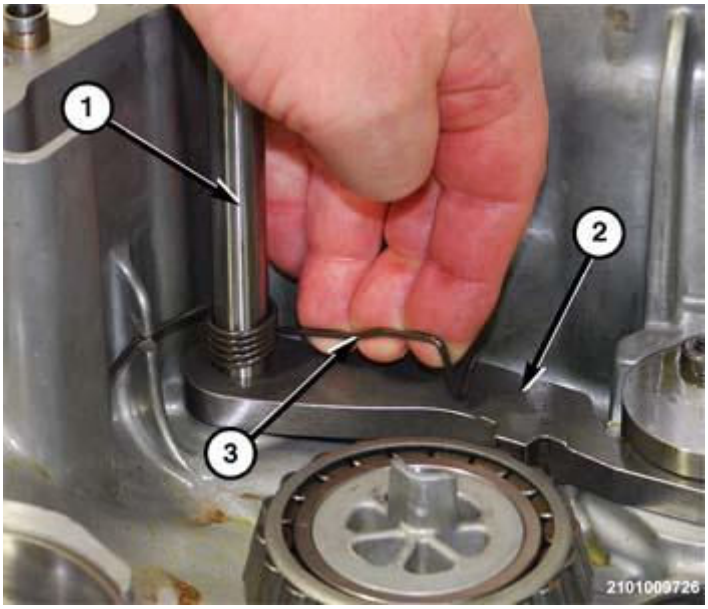

Fig. 609: Removing/Installing Park Pawl
Courtesy of CHRYSLER GROUP, LLC

3. Place the park pawl (2) in position in park rod guide.
4. Insert the reaction pin (1) through the park pawl (2) and into the transmission housing.
5. Slide the park pawl return spring (3) over the reaction pin (1) and insert the tail of the spring into the notch in the transmission housing.
6. Wind the park pawl return spring (3) counterclockwise and hook the bent end of the spring over the park pawl (2).
7. Install the bellhousing into the transmission housing. Refer to **BELLHOUSING, INSTALLATION**.
8. Install the torque converter.
9. Install the transmission into the vehicle. Refer to **INSTALLATION**.
10. Road test the vehicle to verify the repair.

PUMP, FLUID

REMOVAL

REMOVAL

1. Remove the transmission from the vehicle. Refer to **REMOVAL**.
2. Drain the fluid from the transmission.
3. Remove the bellhousing from the transmission. Refer to **BELLHOUSING, REMOVAL**.

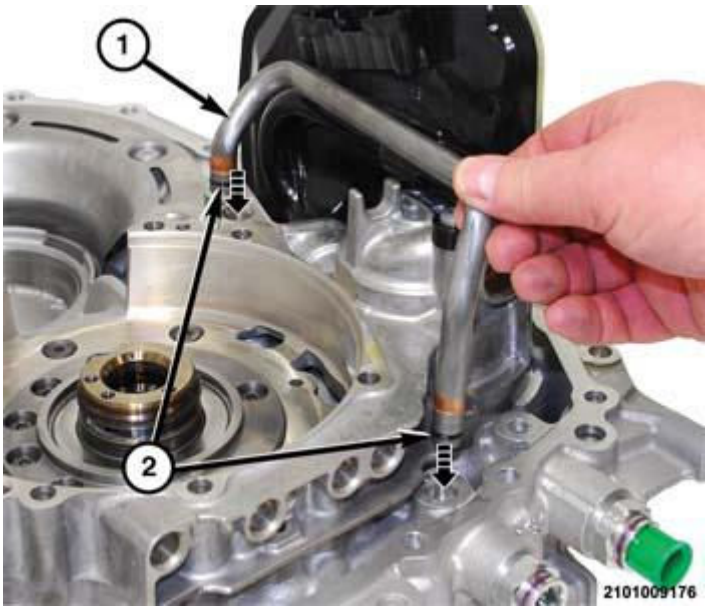

Fig. 610: Fluid Tube
Courtesy of CHRYSLER GROUP, LLC

4. Remove the fluid tube (1) from the intermediate support plate and bellhousing.

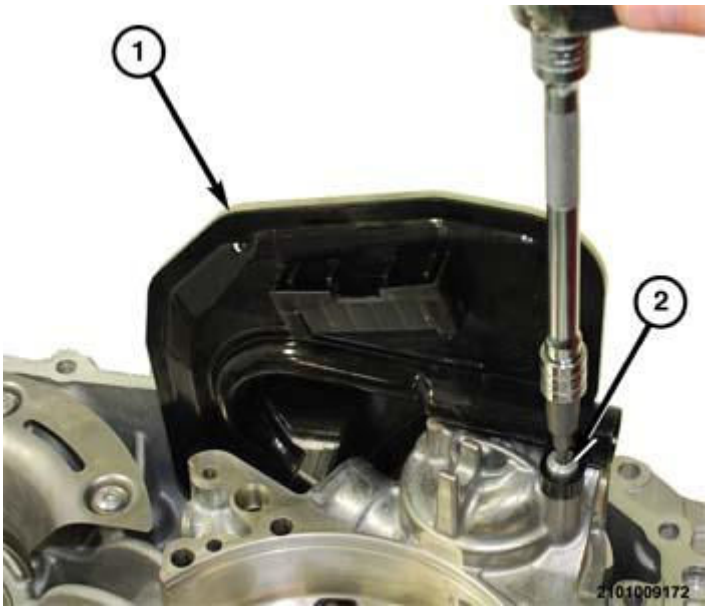

Fig. 611: Oil Filter, Intermediate Support Plate & Fastener
Courtesy of CHRYSLER GROUP, LLC

5. Remove the bolt (2) holding the oil filter (1) to the intermediate support plate.

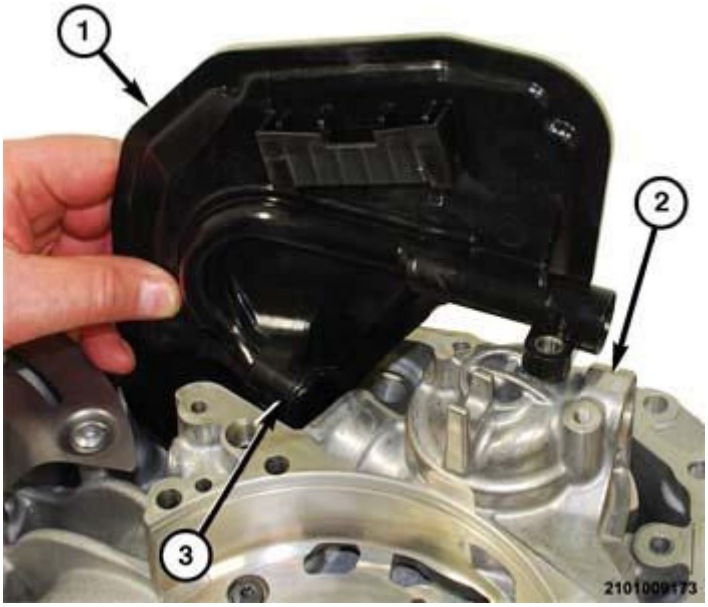

Fig. 612: Removing/Installing Transmission Oil Filter
Courtesy of CHRYSLER GROUP, LLC

6. Separate the oil filter (1) from the intermediate support plate (2).

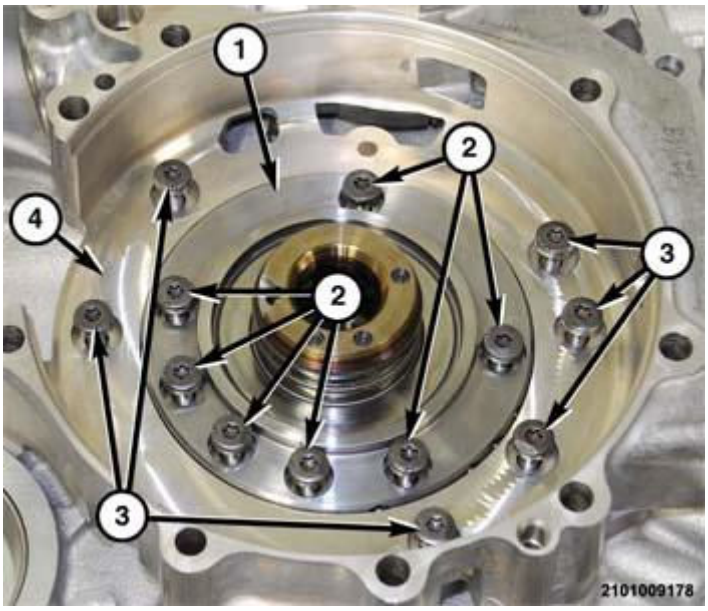

Fig. 613: Removing/Installing Bolts At Reaction Shaft To Intermediate Support Plate
Courtesy of CHRYSLER GROUP, LLC

7. Remove the bolts (2) holding the reaction shaft (1) to the intermediate support plate (4).

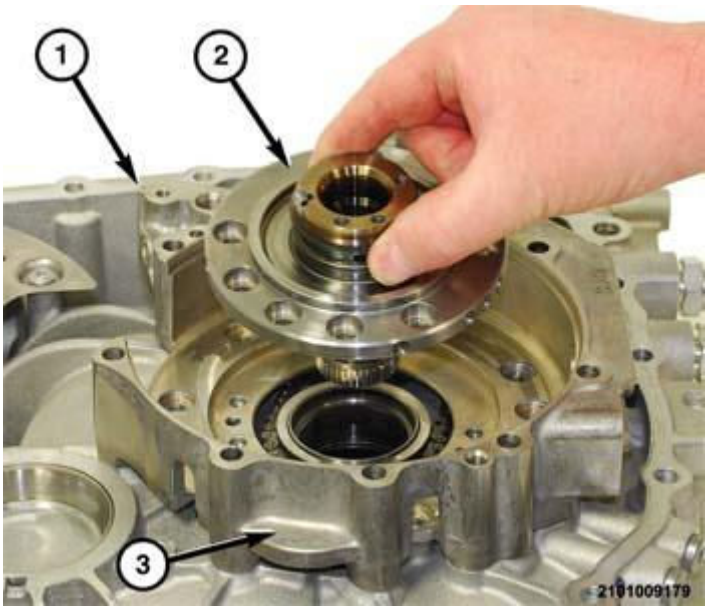

Fig. 614: Removing/Installing Reaction Shaft At Intermediate Support Plate
Courtesy of CHRYSLER GROUP, LLC

8. Separate the reaction shaft (2) from the intermediate support plate (1).

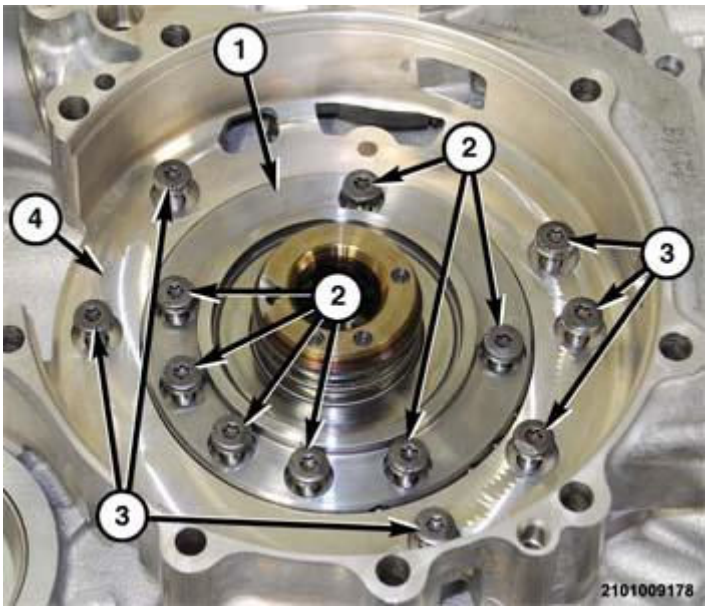

Fig. 615: Removing/Installing Bolts At Reaction Shaft To Intermediate Support Plate
Courtesy of CHRYSLER GROUP, LLC

9. Remove the bolts (3) holding the intermediate support plate and oil pump (1) to the bellhousing.

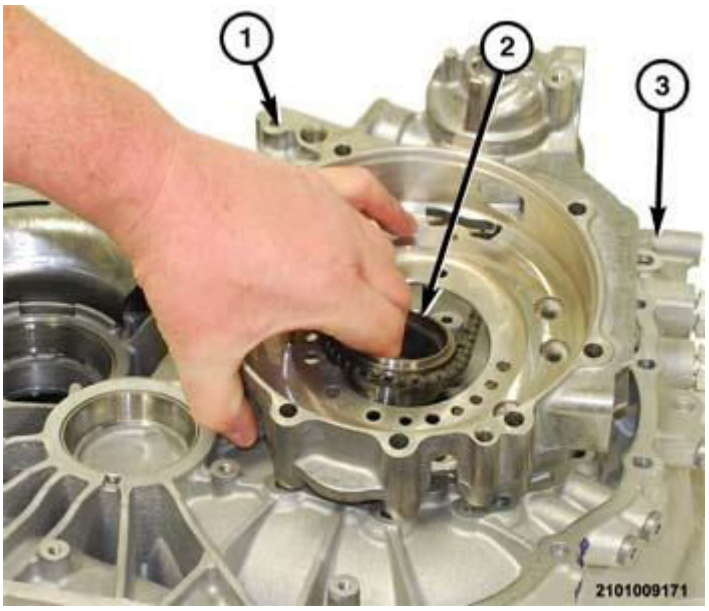

Fig. 616: Removing/Installing Intermediate Support Plate And Oil Pump
Courtesy of CHRYSLER GROUP, LLC

10. Separate the intermediate support plate and oil pump (1) from the bellhousing (3).
11. Turn the intermediate support plate and oil pump (1) outside up on the work surface.

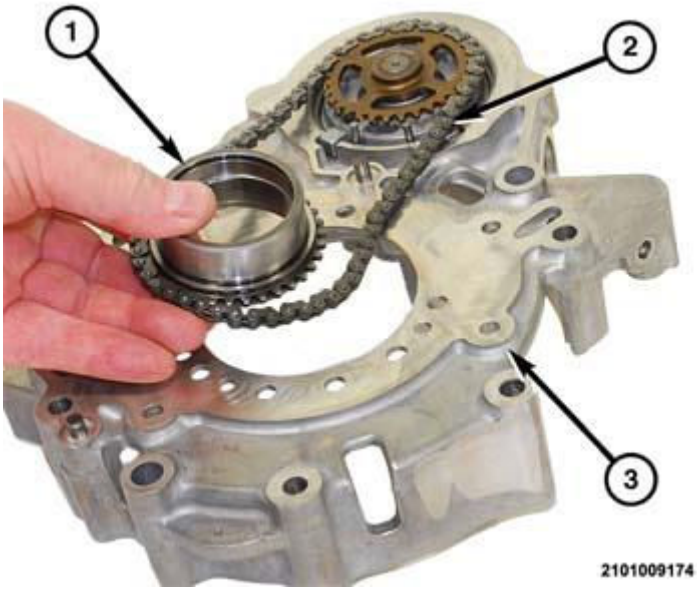

Fig. 617: View Of Oil Pump Drive Sprocket & Drive Chain
Courtesy of CHRYSLER GROUP, LLC

12. Separate the oil pump drive sprocket (1) from the drive chain (2).

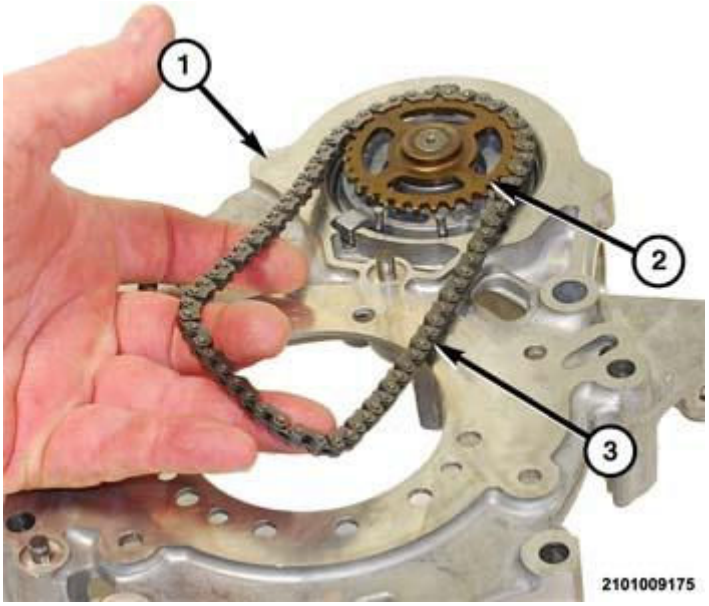

Fig. 618: View Of Oil Pump Drive Chain & Oil Pump Driven Sprocket
Courtesy of CHRYSLER GROUP, LLC

13. Separate the oil pump drive chain (3) from the oil pump driven sprocket (2).

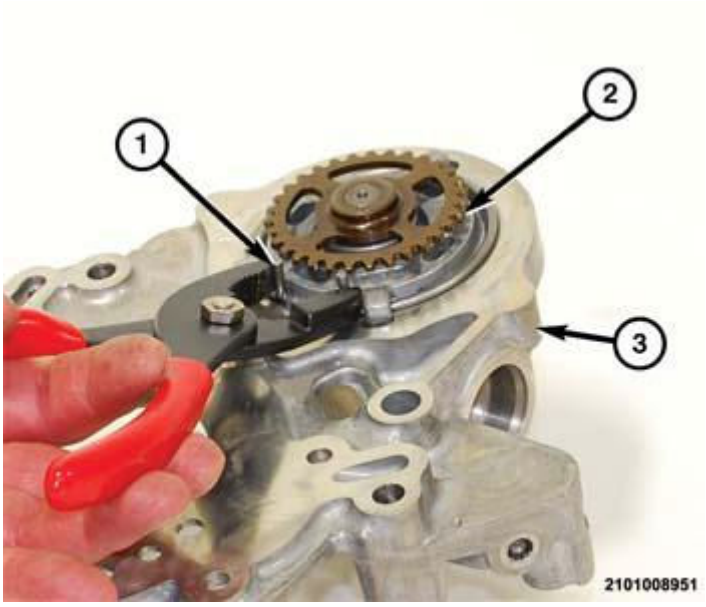

Fig. 619: Compressing Snap-Ring At Oil Pump
Courtesy of CHRYSLER GROUP, LLC

14. Using a suitable pliers (1), compress the snap-ring holding the oil pump (2) into the intermediate support plate (3).
15. While holding compression on the snap-ring (1), pry the oil pump out of the bore in the intermediate support plate (3).

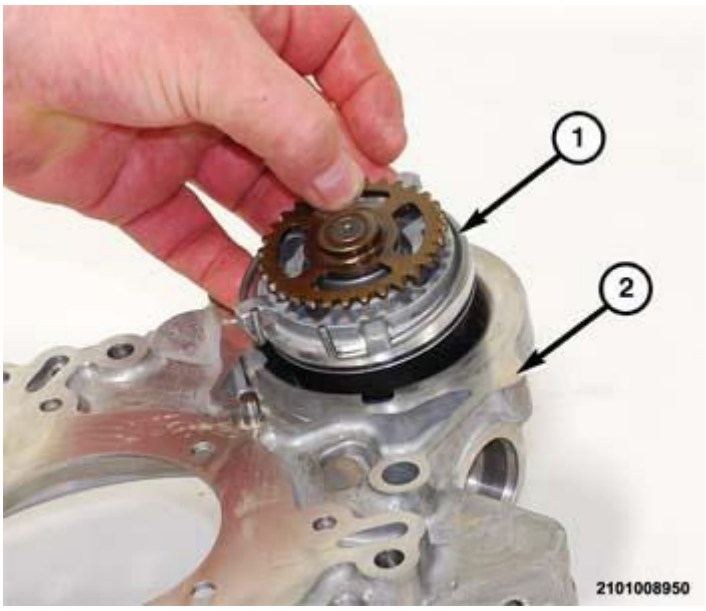

Fig. 620: Removing/Installing Oil Pump At Intermediate Support Plate
Courtesy of CHRYSLER GROUP, LLC

16. Separate the oil pump (1) from the intermediate support plate (2).

INSTALLATION

INSTALLATION

1. Clean the intermediate support plate and oil pump with suitable solvent and blow them dry with regulated 344 kPa (50 psi) shop air.
2. Inspect the intermediate support plate and oil pump for apparent damage or ware. If the intermediate support plate is damaged, the transmission will require replacement. If the oil pump is damaged, replace the oil pump.

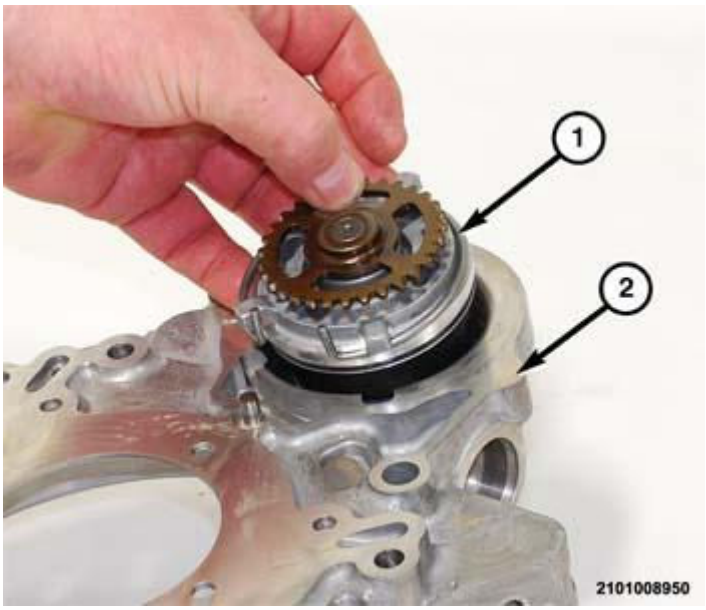

Fig. 621: Removing/Installing Oil Pump At Intermediate Support Plate
Courtesy of CHRYSLER GROUP, LLC

3. Insert the oil pump (1) into the intermediate support plate (2). Align the tabs on the pump with the notches on the intermediate support plate.

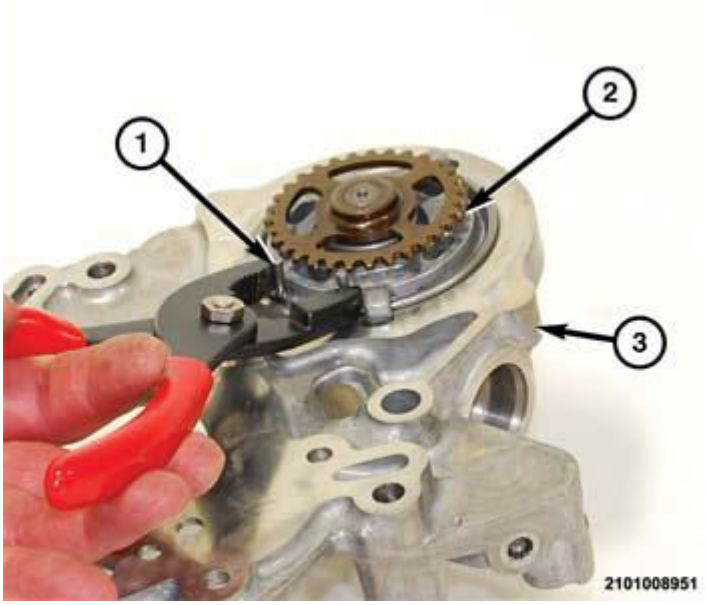

Fig. 622: Compressing Snap-Ring At Oil Pump
Courtesy of CHRYSLER GROUP, LLC

4. Using a suitable pliers (1), compress the snap-ring to hold the oil pump (2) into the intermediate support plate (3).
5. While holding compression on the snap-ring (1), tap the oil pump into the bore in the intermediate support plate (3) until it seats.

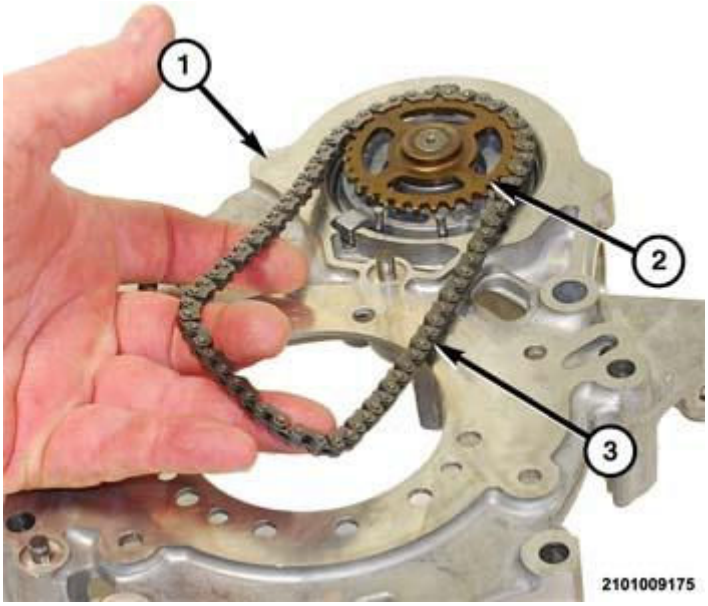

Fig. 623: View Of Oil Pump Drive Chain & Oil Pump Driven Sprocket
Courtesy of CHRYSLER GROUP, LLC

6. install the oil pump drive chain (3) onto the oil pump driven sprocket (2).

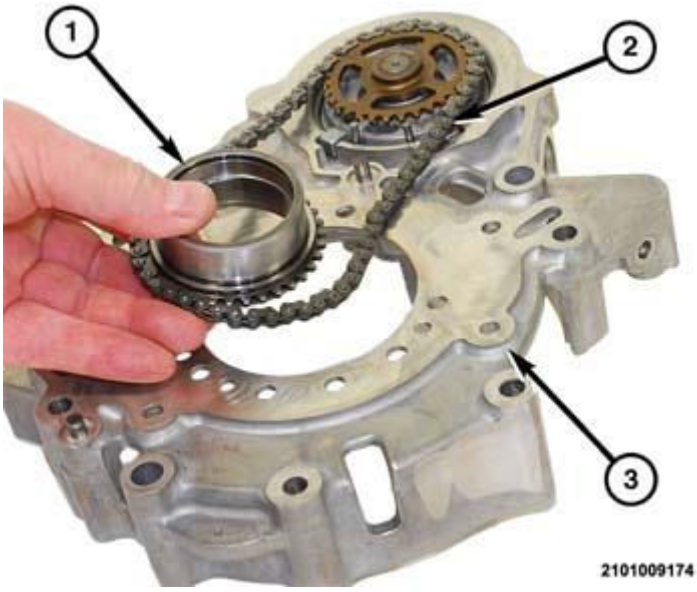

Fig. 624: View Of Oil Pump Drive Sprocket & Drive Chain
Courtesy of CHRYSLER GROUP, LLC

7. Install the oil pump drive sprocket (1) onto the drive chain (2).
8. While holding the chain on the drive sprocket, turn the intermediate support plate and oil pump (1) inside up on the work surface.

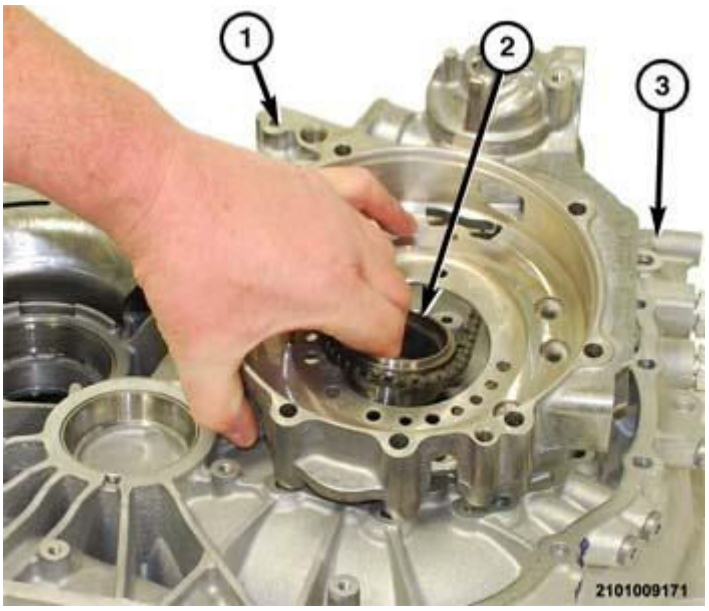

Fig. 625: Removing/Installing Intermediate Support Plate And Oil Pump
Courtesy of CHRYSLER GROUP, LLC

9. Place the intermediate support plate and oil pump (1) in position on the bellhousing (3).
10. Insert the oil pump drive sprocket into the oil pump sprocket needle bearing.

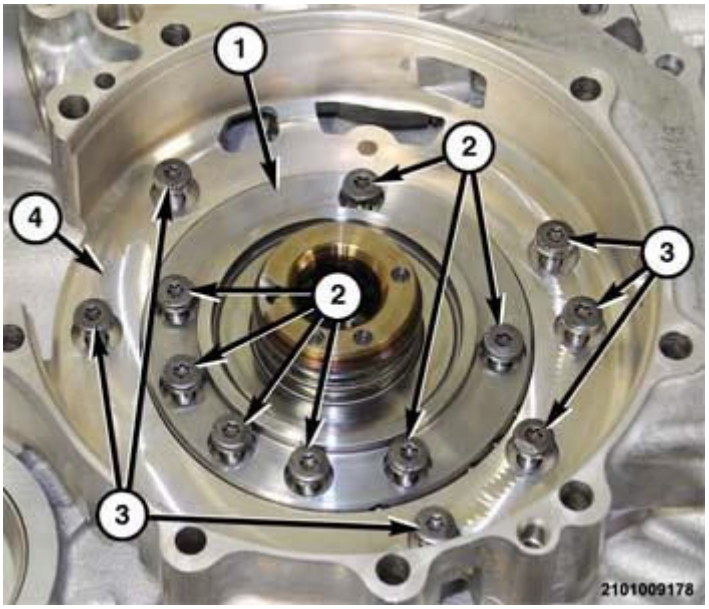

Fig. 626: Removing/Installing Bolts At Reaction Shaft To Intermediate Support Plate
Courtesy of CHRYSLER GROUP, LLC

11. Install the bolts (3) to hold the intermediate support plate and oil pump (1) to the bellhousing and tighten to the proper specifications. Refer to **SPECIFICATIONS**.

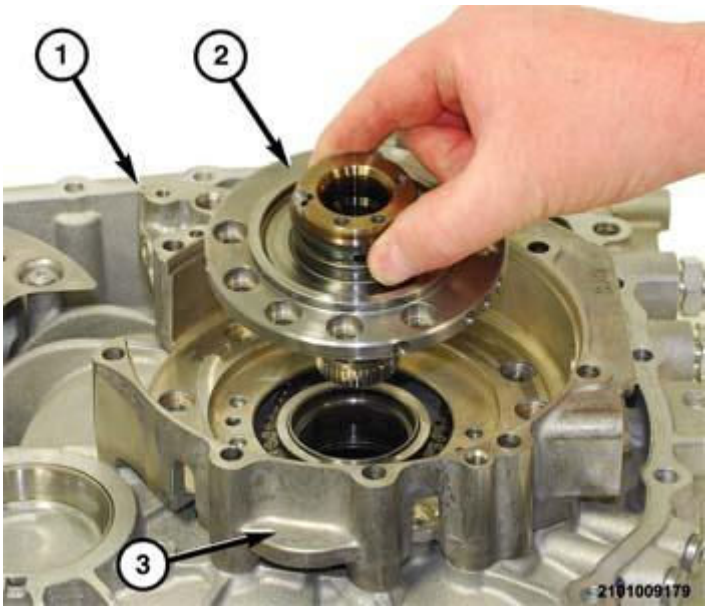

Fig. 627: Removing/Installing Reaction Shaft At Intermediate Support Plate
Courtesy of CHRYSLER GROUP, LLC

12. Place the reaction shaft (2) into the intermediate support plate (1).

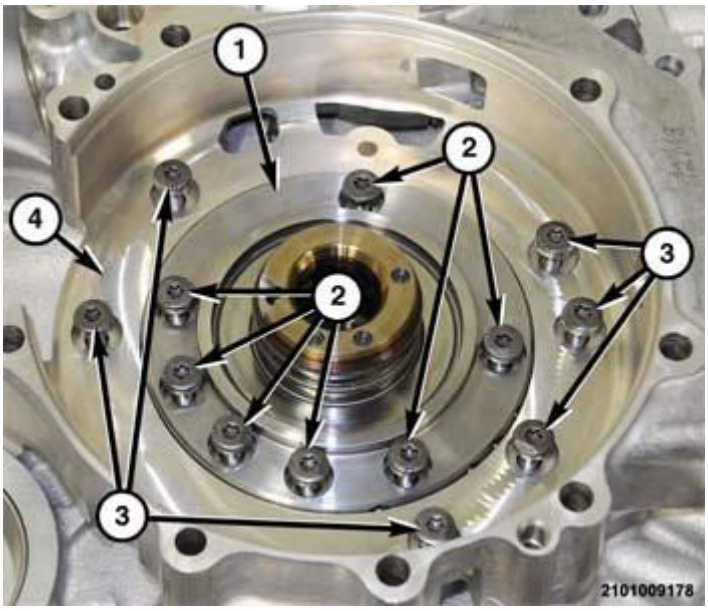

Fig. 628: Removing/Installing Bolts At Reaction Shaft To Intermediate Support Plate
Courtesy of CHRYSLER GROUP, LLC

13. Install the bolts (2) to hold the reaction shaft (1) to the intermediate support plate (4) and tighten to the proper specifications. Refer to **SPECIFICATIONS**.

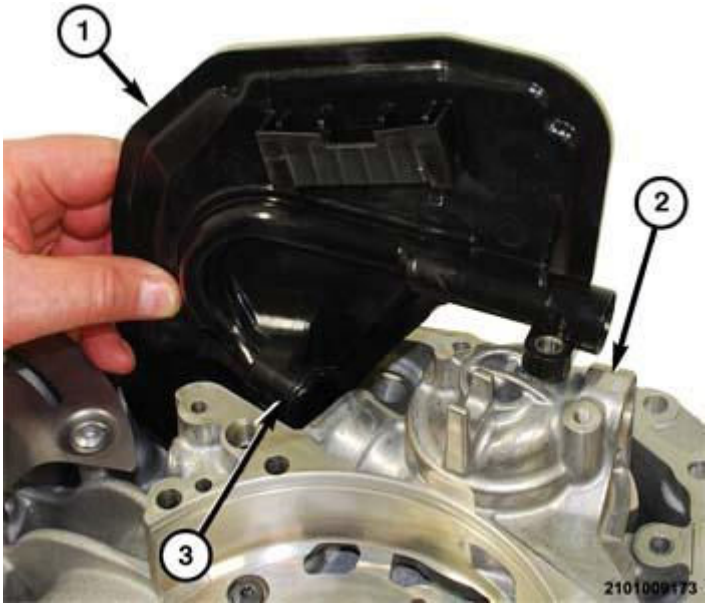

Fig. 629: Removing/Installing Transmission Oil Filter
Courtesy of CHRYSLER GROUP, LLC

14. Insert the oil filter neck (3) into the oil pump orifice and align the bolt hole with the bore in the intermediate support plate (2).

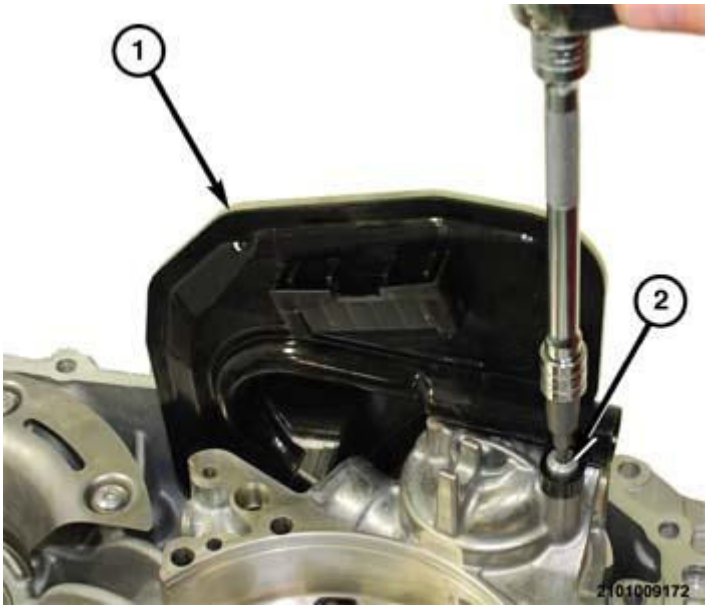

Fig. 630: Oil Filter, Intermediate Support Plate & Fastener
Courtesy of CHRYSLER GROUP, LLC

15. Install the bolt (2) to hold the oil filter (1) to the intermediate support plate and tighten to the proper specifications. Refer to **SPECIFICATIONS**.

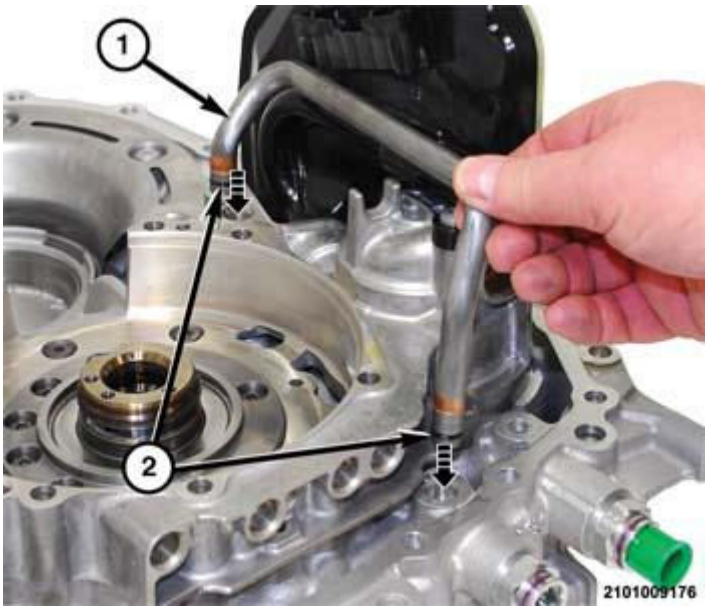

Fig. 631: Fluid Tube
Courtesy of CHRYSLER GROUP, LLC

16. Replace the O-ring seals (2) on the fluid tube (1).
17. Install the fluid tube (1) into the bellhousing and intermediate support plate.
18. Install the bellhousing on the transmission. Refer to **BELLHOUSING, INSTALLATION**.
19. Install the transmission in the vehicle. Refer to **INSTALLATION**.
20. Road test the vehicle to verify the repair.

SENSOR, FLUID PRESSURE

REMOVAL

REMOVAL

1. Position the vehicle on a suitable hoist with the transmission in neutral. Refer to **HOISTING, STANDARD PROCEDURE** .
2. Remove the valve body. Refer to **VALVE BODY, REMOVAL**.
3. Turn the valve body over to gain access to the pressure sensor.

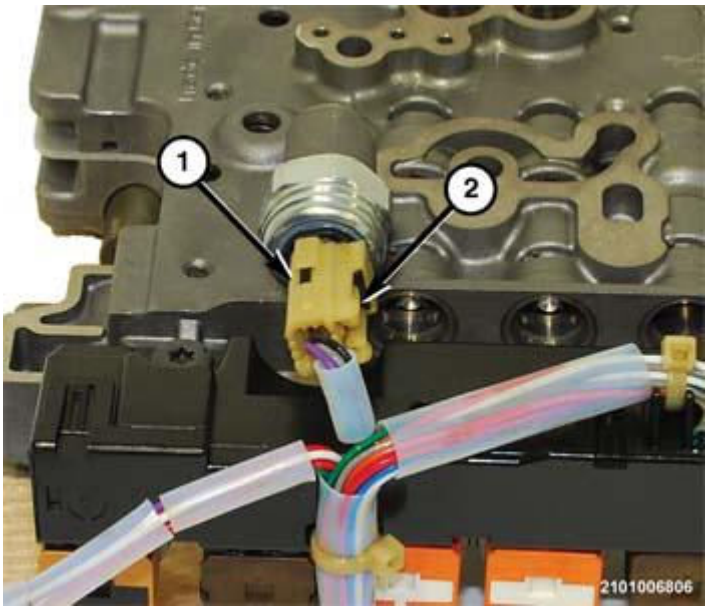

Fig. 632: Fluid Pressure Sensor Wire Connector
Courtesy of CHRYSLER GROUP, LLC

4. Release the lock on the pressure sensor wire connector.
5. Pull the wire connector from the pressure sensor.

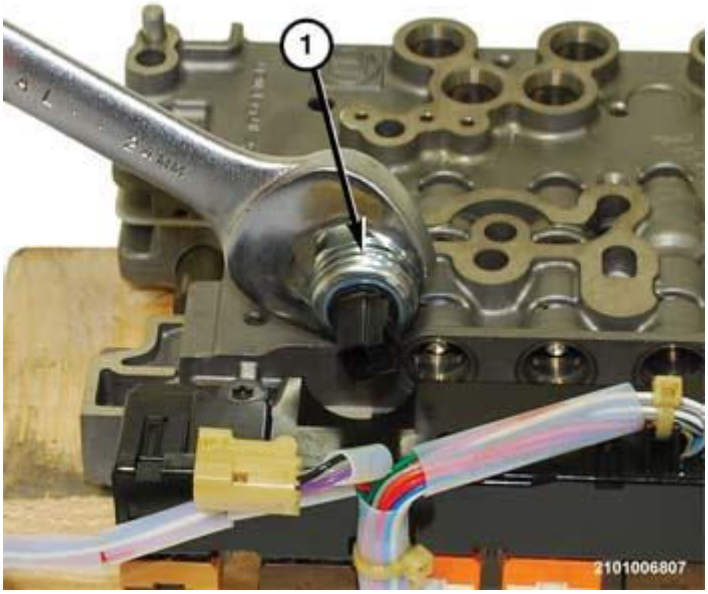

Fig. 633: Loosening/Tightening Fluid Pressure Sensor
Courtesy of CHRYSLER GROUP, LLC

6. Using a suitable wrench, loosen the pressure sensor.

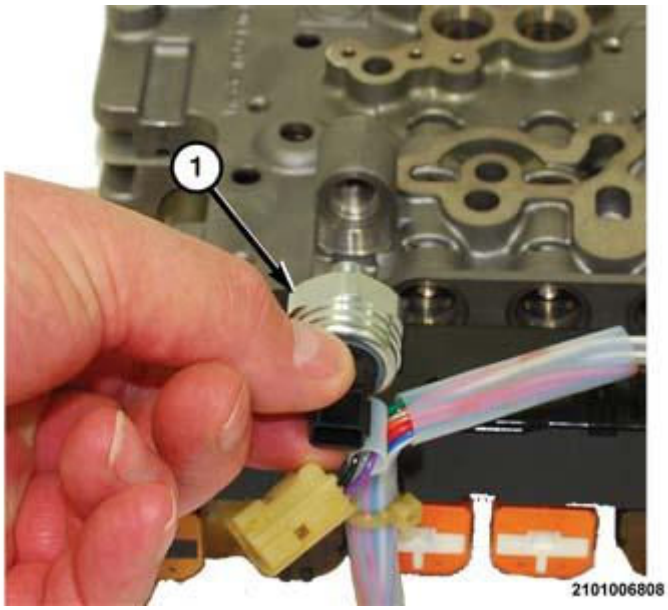

Fig. 634: Removing/Installing Fluid Pressure Sensor
Courtesy of CHRYSLER GROUP, LLC

7. Remove the pressure sensor from the valve body.

INSTALLATION

INSTALLATION

1. Remove the old O-ring from the pressure sensor if the old pressure sensor is reused.

Fig. 635: Fluid Pressure Sensor & O-Ring
Courtesy of CHRYSLER GROUP, LLC

2. Install a NEW O-ring (2) on the pressure sensor (1).

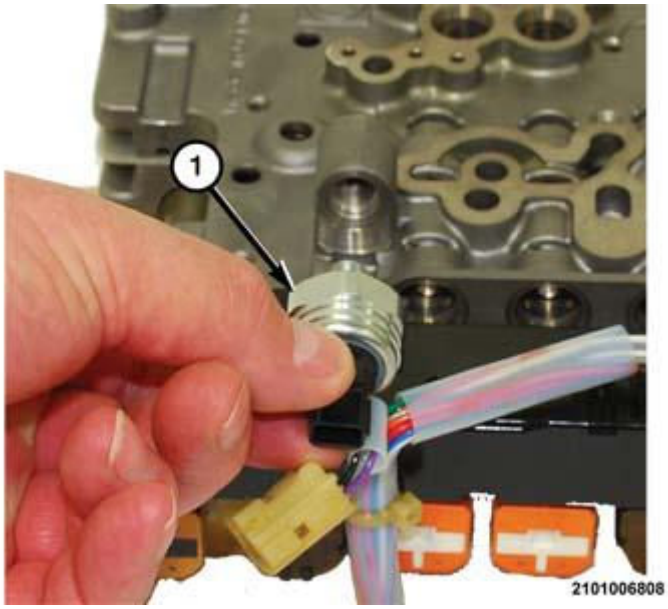

Fig. 636: Removing/Installing Fluid Pressure Sensor
Courtesy of CHRYSLER GROUP, LLC

3. Thread the pressure sensor (1) into the valve body.

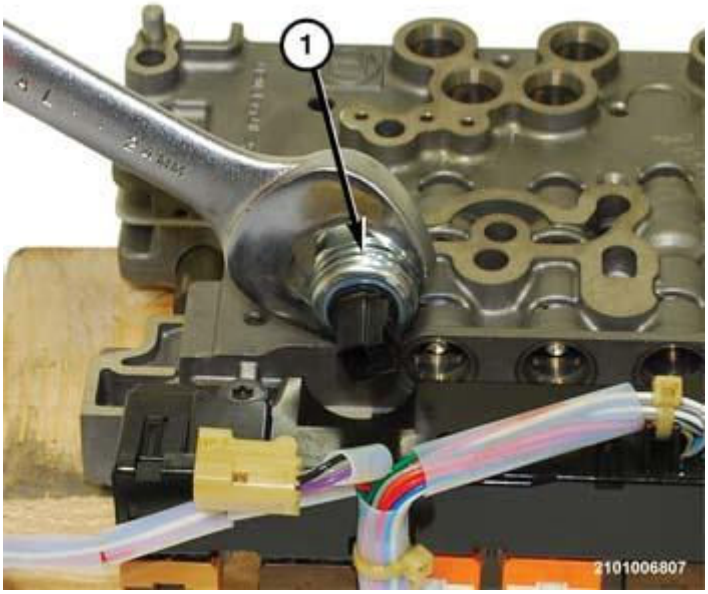

Fig. 637: Loosening/Tightening Fluid Pressure Sensor
Courtesy of CHRYSLER GROUP, LLC

4. Using a suitable wrench, tighten the pressure sensor (1).

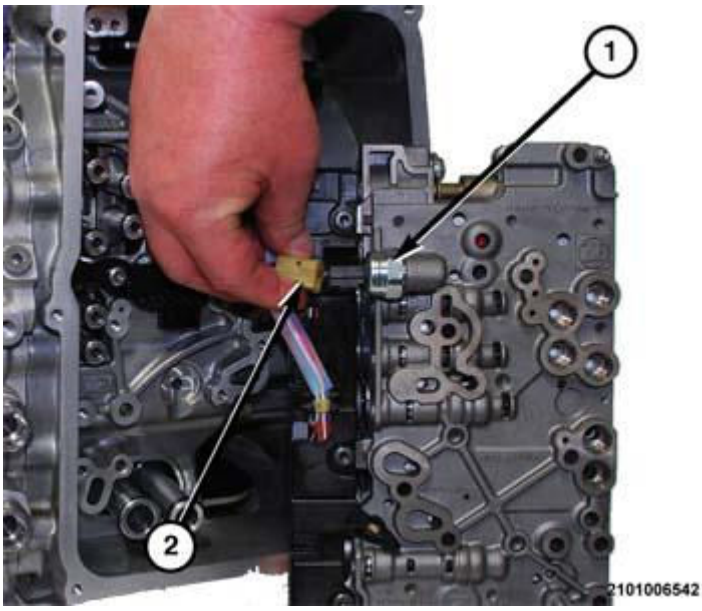

Fig. 638: Fluid Pressure Transducer Wire Harness Connector
Courtesy of CHRYSLER GROUP, LLC

5. Push the pressure sensor wire connector (2) into the pressure sensor (1).
6. The lock on the pressure sensor wire connector will click when fully engaged.
7. Turn the valve body over into position on transmission.
8. Install the valve body. Refer to **VALVE BODY, INSTALLATION**.
9. Road test the vehicle to verify the repair.

SEAL, AXLE

REMOVAL

FWD BOTH SIDES - AWD AND 4WD LEFT SIDE

1. Remove the halfshaft from the vehicle. Refer to **REMOVAL** .

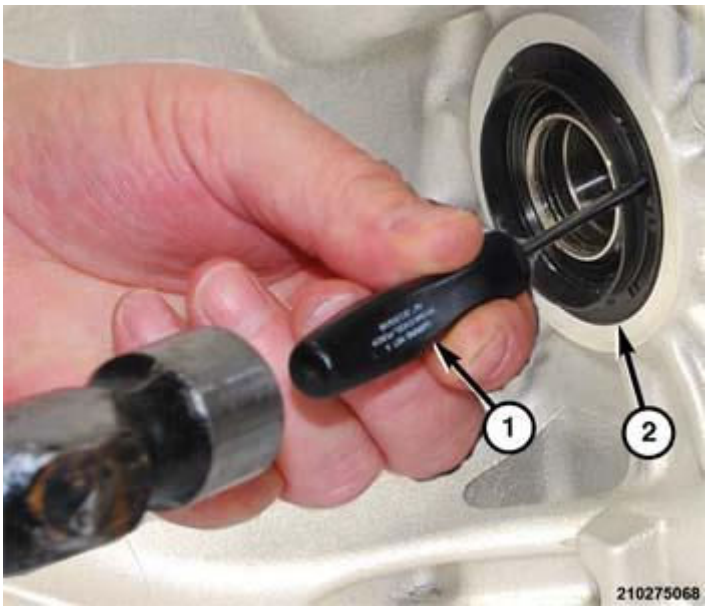

Fig. 639: Punching Hole In Differential Seal
Courtesy of CHRYSLER GROUP, LLC

NOTE: Keep the punch tool in the center of the seal to avoid damage to the transmission housing.

2. Using a suitable punch tool and hammer, punch a hole in the metal armature inside the seal.

Fig. 640: Slide Hammer & Differential Seal
Courtesy of CHRYSLER GROUP, LLC

3. Use a suitable Slide Hammer Dent Puller (2), to remove the seal (1).

4. Thread the sheet metal screw of the dent puller into the punched hole in the seal.
5. Tap outward on the slide hammer until the seal comes out of the seal bore.

RIGHT SIDE - 4WD

NOTE: The 948TE automatic transmission configured for Four Wheel Drive (4WD) utilizes an adapter sleeve to couple the Power Transfer Unit (PTU) to the differential. Lip seals are used to seal the inner and outer surfaces of the adapter sleeve.

1. Remove the Power Transfer Unit (PTU). Refer to **REMOVAL** .

2101009395

Fig. 641: Removing Differential Adapter Sleeve
Courtesy of CHRYSLER GROUP, LLC

2. Using tool (special tool #7794-A, Remover, Seal) and (special tool #C-637, Slide Hammer, Universal), Remove the adapter sleeve from the transmission.

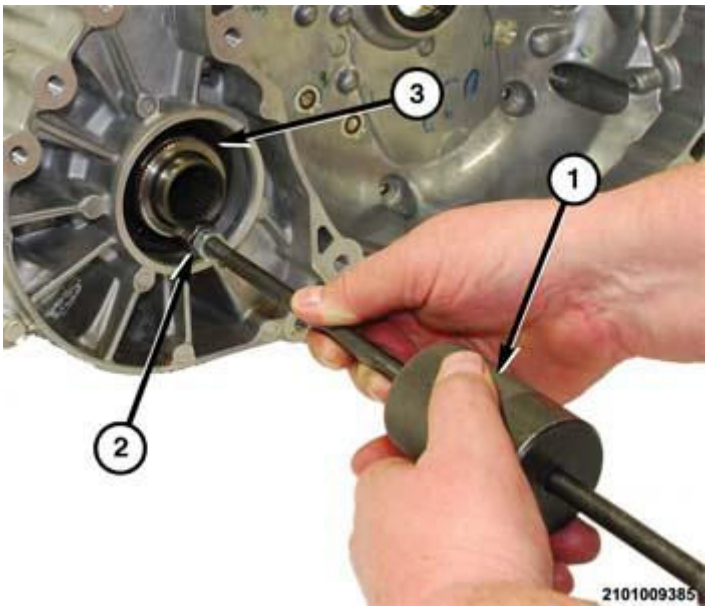

Fig. 642: Removing Seal From Transmission
Courtesy of CHRYSLER GROUP, LLC

3. Using tool (special tool #9667, Remover, Seal) (2) and (special tool #C-3752, Slide Hammers) (1), remove the seal from the transmission.

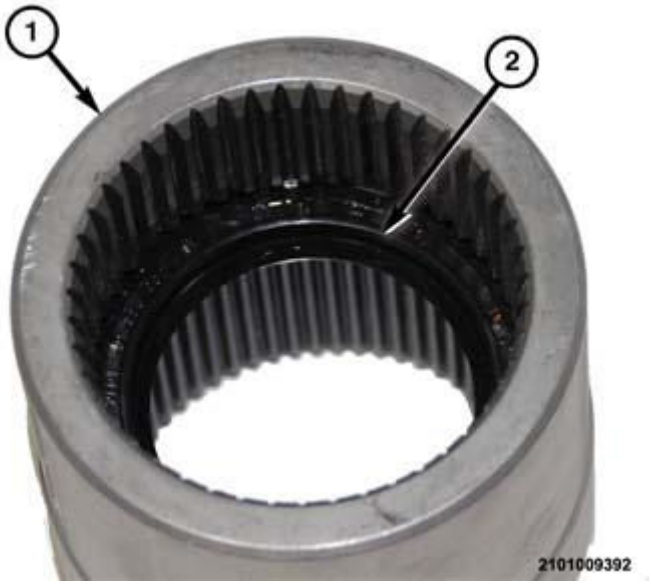

Fig. 643: View of Adapter Sleeve Seal Tension Spring
Courtesy of CHRYSLER GROUP, LLC

4. Position the adapter sleeve on the work surface with the seal tension spring down.

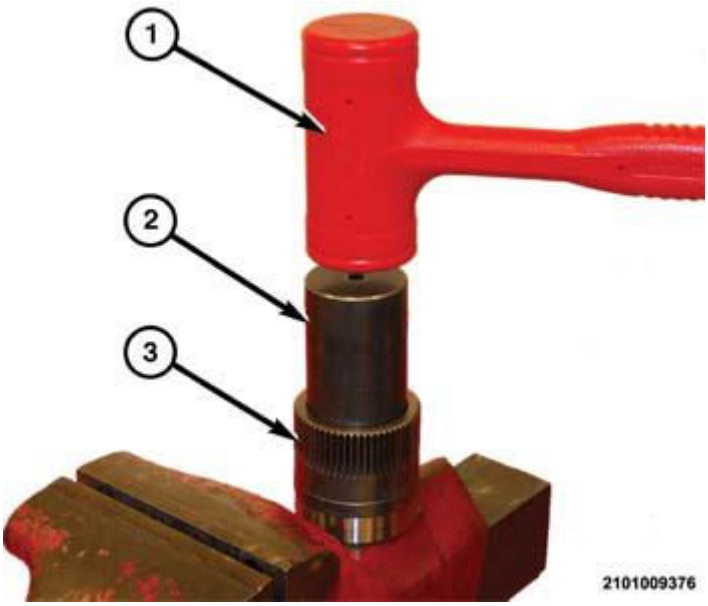

Fig. 644: Removing Seal From Inside Of Adapter Sleeve
Courtesy of CHRYSLER GROUP, LLC

5. Insert tool (special tool #9611, Plug, Differential End) (2) into the outer end of the adapter sleeve (3).
6. Using a suitable hammer (1), drive the seal from the inside of the adapter sleeve (3).

RIGHT SIDE - AWD

Fig. 645: All Wheel Drive (AWD) Adapter Sleeve
Courtesy of CHRYSLER GROUP, LLC

NOTE: **The 948TE automatic transmission configured for All Wheel Drive (AWD) utilizes an adapter sleeve (1) to couple the Power Transfer Unit (PTU) to the differential.**

Lip seals are used to seal the inner and outer surfaces of the adapter sleeve.

1. Remove the PTU from the vehicle. Refer to **REMOVAL** .

Fig. 646: Removing Differential Adapter Sleeve
Courtesy of CHRYSLER GROUP, LLC

2. Using tool (special tool #7794-A, Remover, Seal) and (special tool #C-637, Slide Hammer, Universal), Remove the adapter sleeve from the transmission.

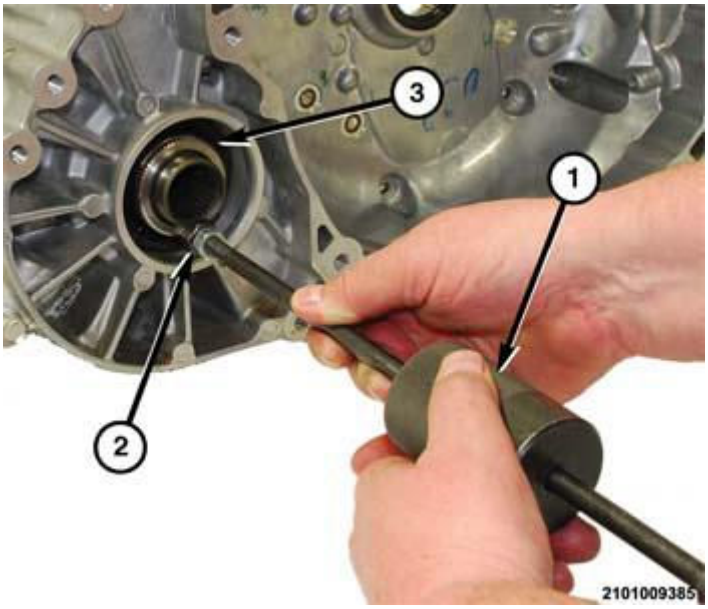

Fig. 647: Removing Seal From Transmission
Courtesy of CHRYSLER GROUP, LLC

3. Using tool (special tool #9667, Remover, Seal) (2) and (special tool #C-3752, Slide Hammers) (1), remove the seal from the transmission.

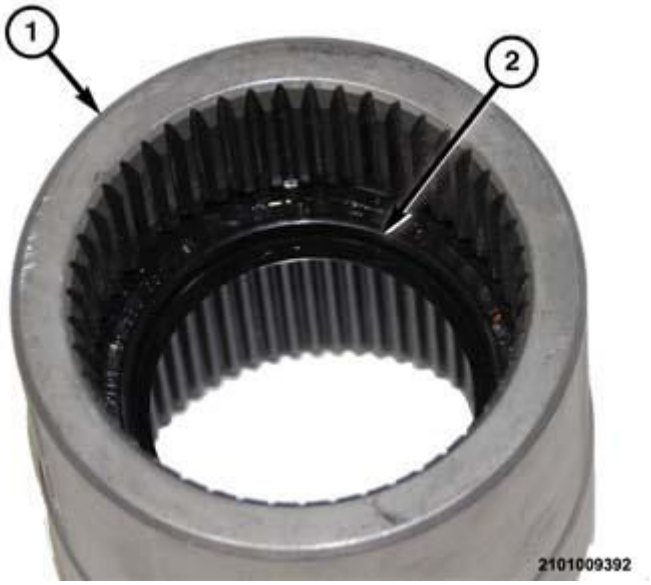

Fig. 648: View of Adapter Sleeve Seal Tension Spring
Courtesy of CHRYSLER GROUP, LLC

4. Position the adapter sleeve on the work surface with the seal tension spring down.

Fig. 649: PTU Side Of Adapter Sleeve And Special Tool
Courtesy of CHRYSLER GROUP, LLC

5. Insert tool (special tool #9676, Adapter Plug) (1) into the outer, PTU side of the adapter sleeve (2).

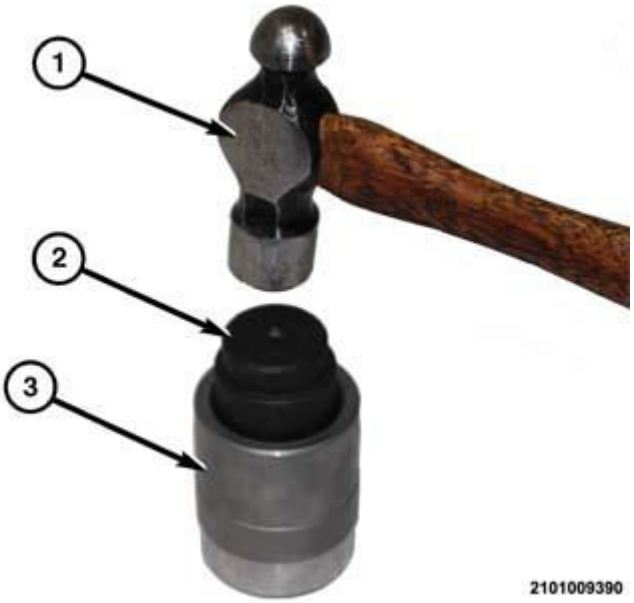

Fig. 650: Removing Seal From Inside Of Adapter Sleeve
Courtesy of CHRYSLER GROUP, LLC

6. Using a suitable hammer (1), drive the seal from the inside of the adapter sleeve (3).

INSTALLATION

FWD BOTH SIDES - AWD AND 4WD LEFT SIDE

NOTE: Clean the seal bore in the transmission housing with a clean lint-free cloth.

1. Apply assembly lube on the lip of the NEW seal to avoid damage after installation.

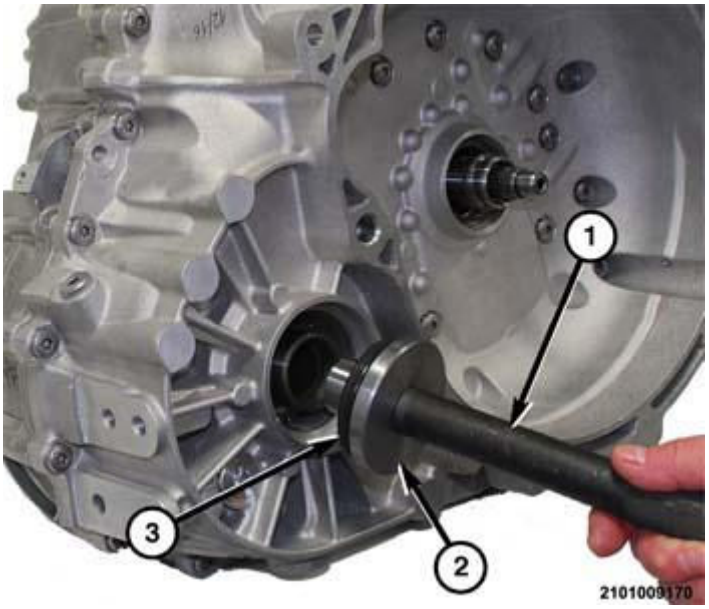

Fig. 651: Inserting Seal Into Transmission Bore
Courtesy of CHRYSLER GROUP, LLC

2. Using tool (special tool #10506, Installer, Oil Seal) (2) and (special tool #C-4171, Driver Handle, Universal) (1) with the seal (3) positioned on the installer, insert the seal in the transmission bore around the output shaft.

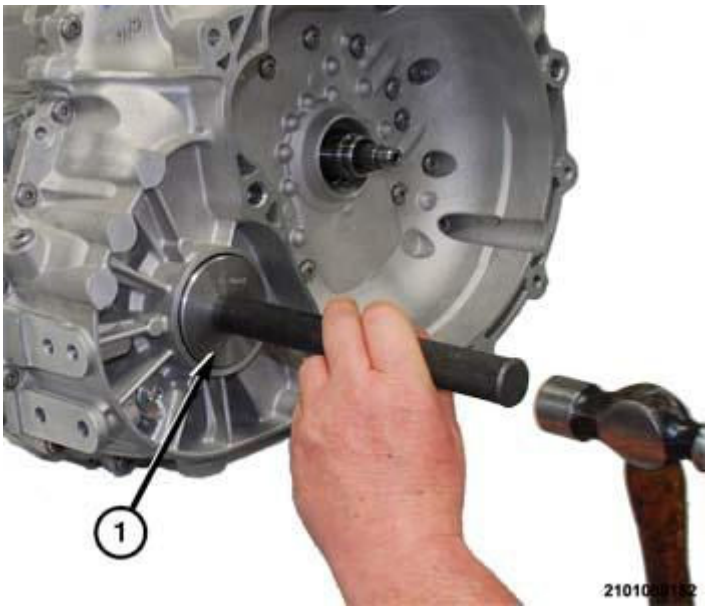

Fig. 652: Installing Seal Into Transmission
Courtesy of CHRYSLER GROUP, LLC

3. Using a suitable hammer, drive the seal into the transmission until it is seated.
4. Install the Left Hand (LH) halfshaft. Refer to **INSTALLATION** .
5. Verify that the transmission fluid is at the proper level. Refer to **FLUID AND FILTER, STANDARD PROCEDURE**.

RIGHT SIDE - 4WD

NOTE: Clean the adapter sleeve with suitable solvent and blow it dry with regulated 344 kPa (50 psi) shop air.

1. Apply assembly lube on the inner seal lip to avoid damaging the seal after installation.
2. Place the adapter sleeve on a suitable work surface with the transmission side up.

Fig. 653: Inserting Lip Seal Into Adapter Sleeve
Courtesy of CHRYSLER GROUP, LLC

3. Insert the **NEW** lip seal (1) into the adapter sleeve (2), (AWD Shown in illustration) with the tension spring up.

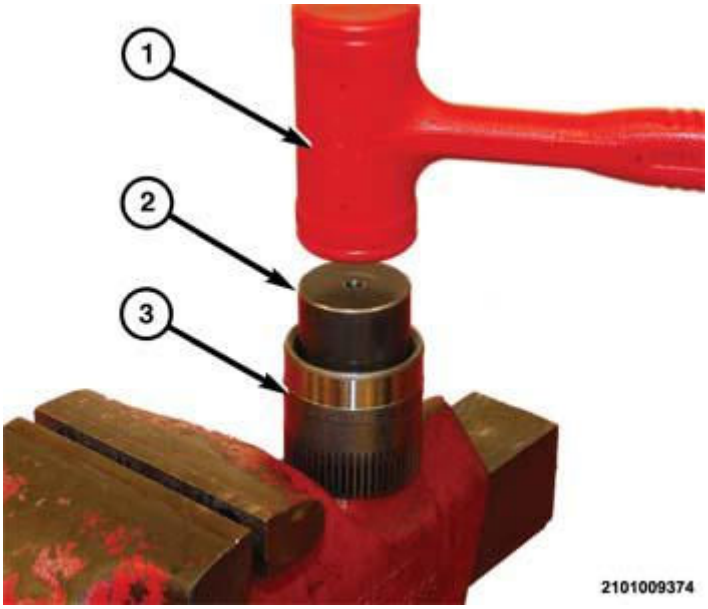

Fig. 654: Installing Seal Into Adapter Sleeve
Courtesy of CHRYSLER GROUP, LLC

4. Using tool (special tool #9611, Plug, Differential End) (2) and a hammer (1), install the seal in the adapter sleeve (3).

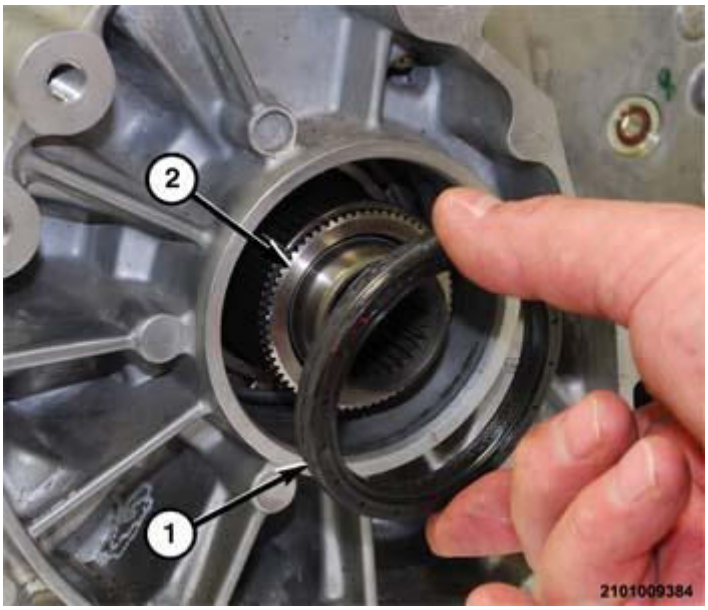

Fig. 655: Inserting Lip Seal Into Transmission
Courtesy of CHRYSLER GROUP, LLC

5. Apply assembly lube on the outer seal (1) lip to avoid damaging the seal after installation.
6. Insert the **NEW** lip seal (1) into the transmission (2).

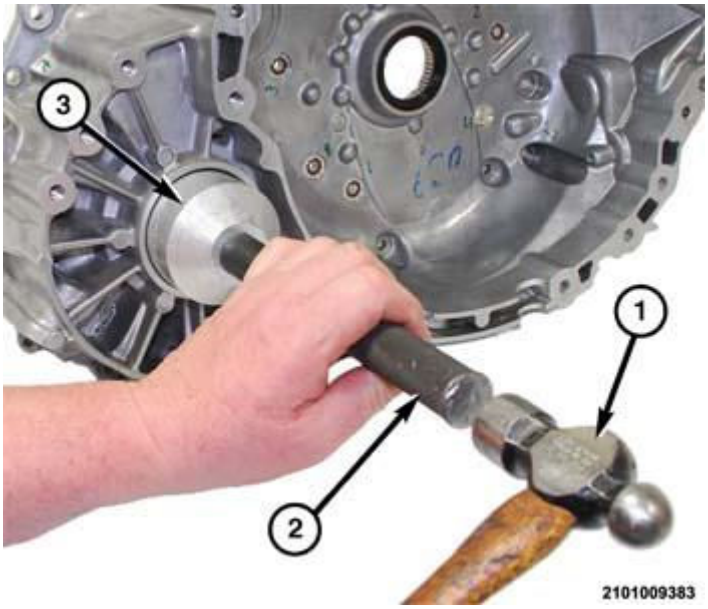

Fig. 656: Installing Outer Lip Seal Into Transmission
Courtesy of CHRYSLER GROUP, LLC

7. Using tool (special tool #C-3972-A, Installer, Seal) (3) and (special tool #C-4171, Driver Handle, Universal) (2) and a hammer (1), Install the outer lip seal in the transmission.
8. Install the Power Transfer Unit (PTU) into the vehicle. Refer to **INSTALLATION** .

9. Verify that the transmission fluid level is at the proper level. Refer to **FLUID AND FILTER, STANDARD PROCEDURE**.
10. Road test the vehicle to verify the repair.

RIGHT SIDE - AWD

NOTE: Clean the adapter sleeve with suitable solvent and blow it dry with regulated 344 kPa (50 psi) shop air.

1. Apply assembly lube on the inner seal lip to avoid damaging the seal after installation.
2. Place the adapter sleeve on a suitable work surface with the transmission side up.

Fig. 657: Inserting Lip Seal Into Adapter Sleeve
Courtesy of CHRYSLER GROUP, LLC

3. Insert the NEW lip seal (1) into the adapter sleeve (2) with the tension spring up.

Fig. 658: Installing Seal Into Adapter Sleeve
Courtesy of CHRYSLER GROUP, LLC

4. Using tool (special tool #8840, Installer, Oil Slinger) (2) and a hammer (1), install the seal in the adapter sleeve (3).

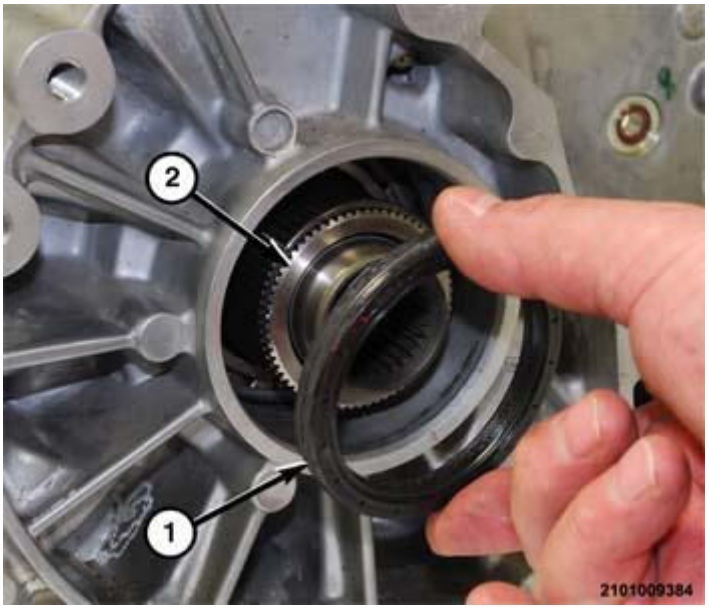

Fig. 659: Inserting Lip Seal Into Transmission
Courtesy of CHRYSLER GROUP, LLC

5. Apply assembly lube on the outer seal (1) lip to avoid damaging the seal after installation.
6. Insert the NEW lip seal (1) into the transmission (2).

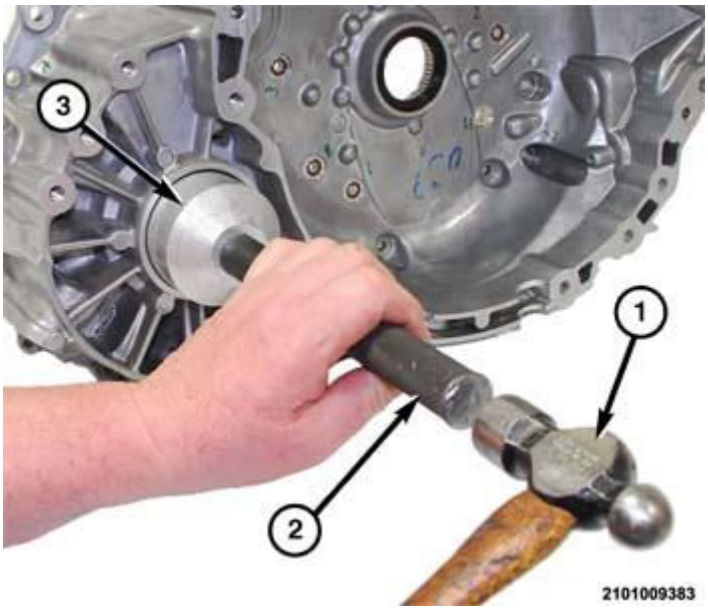

Fig. 660: Installing Outer Lip Seal Into Transmission
Courtesy of CHRYSLER GROUP, LLC

7. Using tool (special tool #C-3972-A, Installer, Seal) (3) and (special tool #C-4171, Driver Handle, Universal) (2) and a hammer (1), Install the outer lip seal in the transmission.
8. Install the Power Transfer Unit (PTU) into the vehicle. Refer to **INSTALLATION** .
9. Verify that the transmission fluid level is at the proper level. Refer to **FLUID AND FILTER, STANDARD PROCEDURE**.
10. Road test the vehicle to verify the repair.

SEAL, INPUT SHAFT

REMOVAL

REMOVAL

1. Remove the transmission from the vehicle, Refer to **REMOVAL**.
2. Drain the fluid from the transmission.
3. Remove the torque converter from the transmission.
4. Using a suitable punch tool, pierce a 3 mm (0.125 in.) hole in the center of the seals front surface through the metal armature.

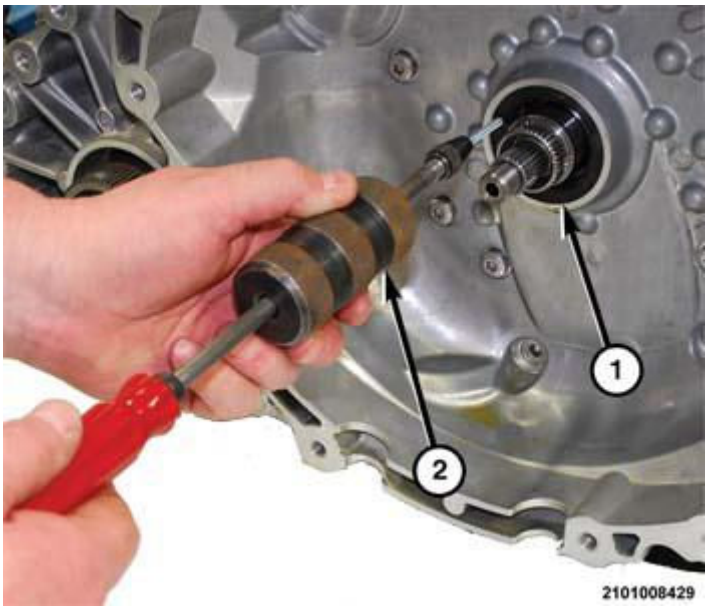

Fig. 661: Removing Seal From Center Of Bellhousing
Courtesy of CHRYSLER GROUP, LLC

5. Using a suitable dent puller (2) threaded into the hole in the seal (1), remove the seal (1) from the bore in the center of the bellhousing.

INSTALLATION

INSTALLATION

1. Clean the seal bore in the center of the bellhousing.
2. Apply assembly lube on the lip of the NEW seal.
3. Place the seal on tool (special tool #9677, Installer, Seal), with the tension spring away from the tool, and insert the seal into the bore in the bellhousing.

Fig. 662: Installing Seal Into Bellhousing
Courtesy of CHRYSLER GROUP, LLC

4. Using a suitable hammer, drive the seal into the bore in the center of the bellhousing until the tool seats against the bellhousing.
5. Install the torque converter.
6. Install the transmission in the vehicle. Refer to **INSTALLATION**.
7. Fill the transmission to the proper level. Refer to **STANDARD PROCEDURES**.
8. Road test the vehicle to verify the repair.

SENSORS, SPEED

REMOVAL

REMOVAL

The speed sensors can be replaced with the transmission in the vehicle.

1. Position the vehicle on a suitable hoist with the transmission in neutral.
2. Remove the valve body. Refer to **VALVE BODY, REMOVAL**.

Fig. 663: Removing/Installing Speed Sensor Screw
Courtesy of CHRYSLER GROUP, LLC

3. Remove the screw (1) holding the speed sensors to the transmission housing.

Fig. 664: Removing/Installing Speed Sensor
Courtesy of CHRYSLER GROUP, LLC

4. Separate the speed sensor (1) from the transmission.
5. Release the lock on the wire connector.
6. Separate the wire connector from the speed sensor.

INSTALLATION

INSTALLATION

1. Insert the wire connector into the speed sensor.
2. Engage the lock on the wire connector.

Fig. 665: Removing/Installing Speed Sensor
Courtesy of CHRYSLER GROUP, LLC

3. Insert the speed sensor (1) into the transmission housing.

Fig. 666: Removing/Installing Speed Sensor Screw
Courtesy of CHRYSLER GROUP, LLC

4. Install the screw (1) to hold the speed sensors to the transmission housing.
5. Install the valve body. Refer to **VALVE BODY, INSTALLATION**.
6. Road test the vehicle to verify repair.

SENSOR, TRANSAXLE RANGE

REMOVAL

REMOVAL

The Transmission Range Sensor (TRS) can be replaced with the transmission in the vehicle

1. Position the vehicle on a suitable hoist with the transmission in neutral.
2. Remove the valve body. Refer to **VALVE BODY, REMOVAL**.

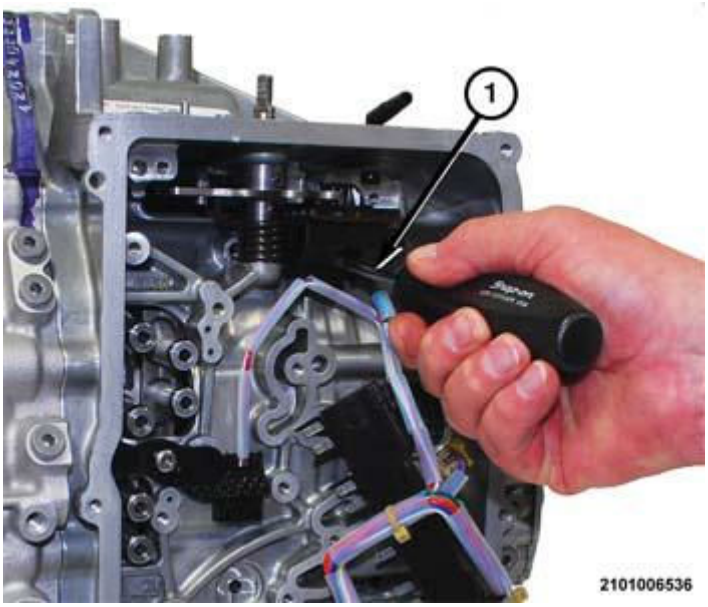

Fig. 667: Removing/Installing Transmission Range Sensor (TRS) Screw
Courtesy of CHRYSLER GROUP, LLC

3. Remove the screw (1) holding the TRS to the transmission housing.

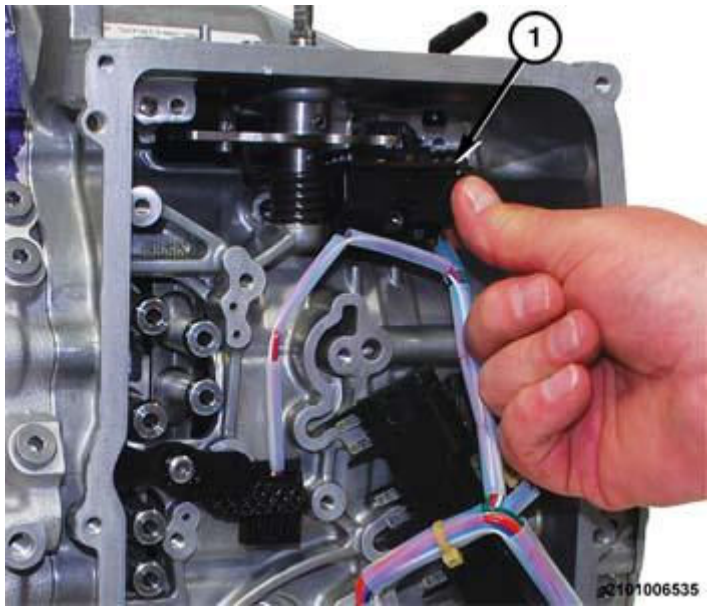

Fig. 668: Removing/Installing Transmission Range Sensor
Courtesy of CHRYSLER GROUP, LLC

4. Separate the TRS (1) from the transmission.
5. Release the lock on the wire connector.
6. Separate the wire connector from the TRS.

INSTALLATION

INSTALLATION

1. Insert the wire connector into the Transmission Range Sensor (TRS).
2. Engage the lock on the wire connector.

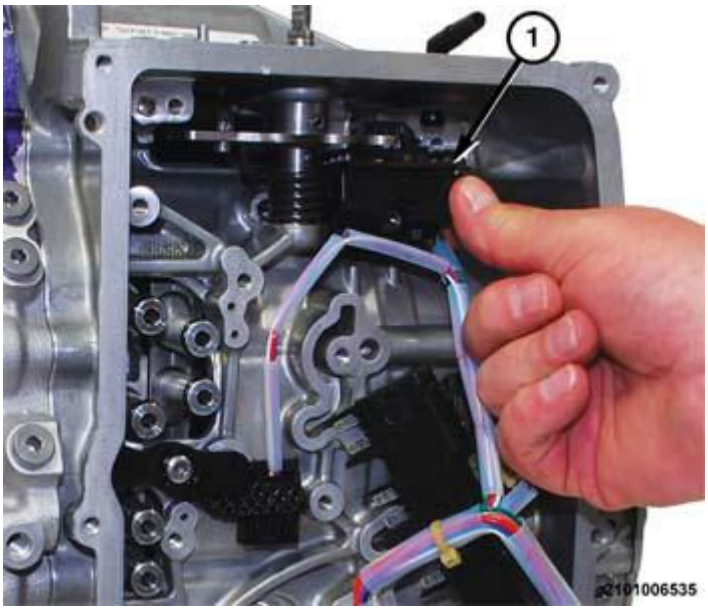

Fig. 669: Removing/Installing Transmission Range Sensor
Courtesy of CHRYSLER GROUP, LLC

3. Insert the TRS (1) into the transmission housing.

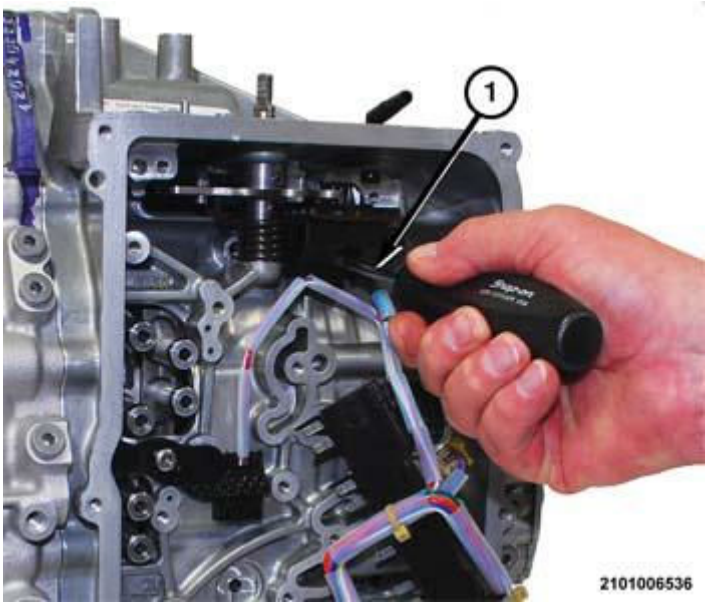

Fig. 670: Removing/Installing Transmission Range Sensor (TRS) Screw
Courtesy of CHRYSLER GROUP, LLC

4. Install the screw (1) to hold the TRS to the transmission housing.
5. Install the valve body. Refer to **VALVE BODY, INSTALLATION**.
6. Road test the vehicle to verify repair.

SHAFT, REACTION

REMOVAL

REMOVAL

1. Remove the transmission from the vehicle. Refer to **REMOVAL**.
2. Drain the fluid from the transmission.
3. Remove the bellhousing from the transmission. Refer to **BELLHOUSING, REMOVAL**.

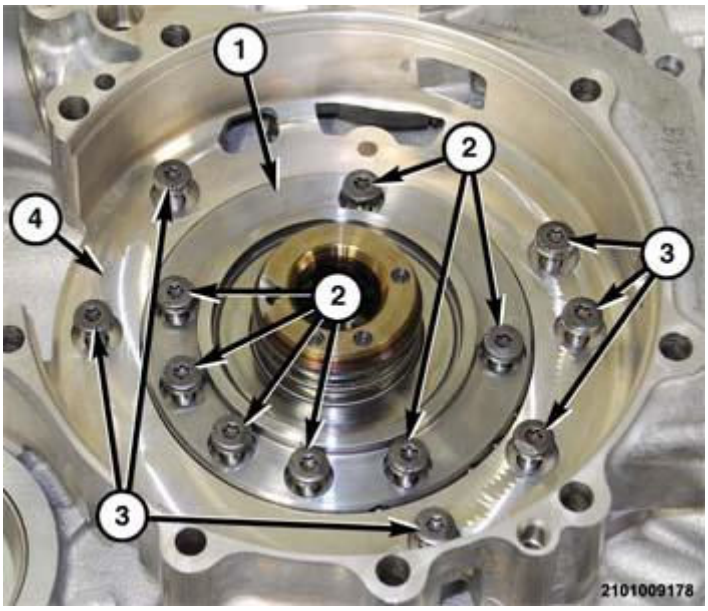

Fig. 671: Removing/Installing Bolts At Reaction Shaft To Intermediate Support Plate
Courtesy of CHRYSLER GROUP, LLC

4. Remove the bolts (2) holding the reaction shaft (1) to the intermediate support plate (4).

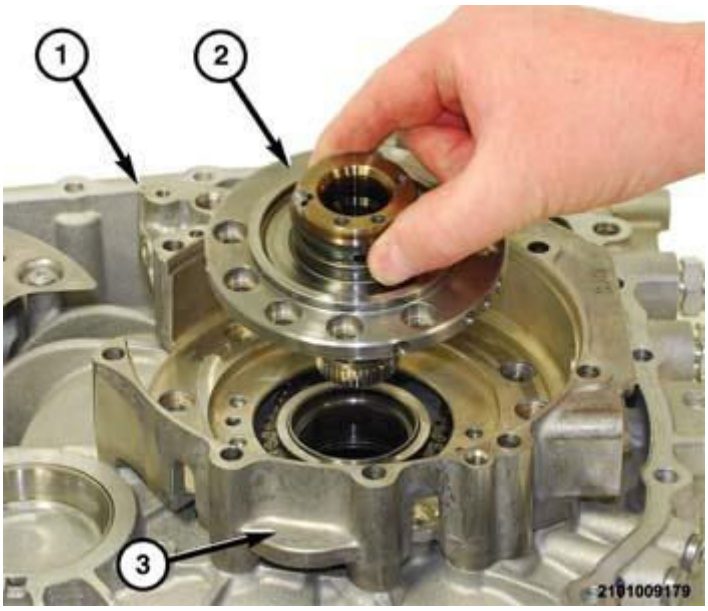

Fig. 672: Removing/Installing Reaction Shaft At Intermediate Support Plate
Courtesy of CHRYSLER GROUP, LLC

5. Separate the reaction shaft (2) from the intermediate support plate (1).

Fig. 673: Removing/Installing Seal Rings At Ring Land In Inner Reaction Shaft Hub
Courtesy of CHRYSLER GROUP, LLC

6. Remove the seal rings (1) from the ring lands in the inner reaction shaft hub (2).

Fig. 674: Removing/Installing Seal Ring At Ring Land In Outer Reaction Shaft Hub
Courtesy of CHRYSLER GROUP, LLC

7. Remove the seal ring (1) from the ring land in the outer reaction shaft hub (2).

INSTALLATION

INSTALLATION

1. Clean the reaction shaft with suitable solvent and blow it dry using regulated 344 kPa (50 psi) shop air.
2. Inspect the reaction shaft for excess damage or ware. Replace the reaction shaft if damage is present.

Fig. 675: Removing/Installing Seal Ring At Ring Land In Outer Reaction Shaft Hub

Courtesy of CHRYSLER GROUP, LLC

3. Install a New seal ring (1) in the land of the outer reaction shaft hub (2).

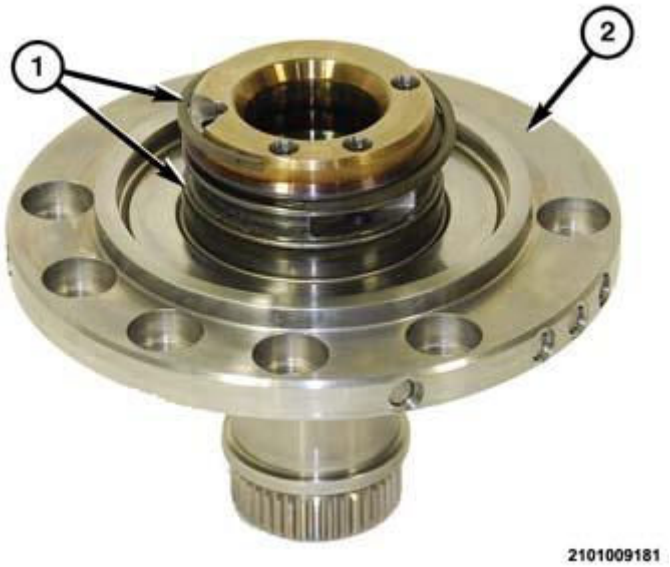

Fig. 676: Removing/Installing Seal Rings At Ring Land In Inner Reaction Shaft Hub
Courtesy of CHRYSLER GROUP, LLC

4. Install New seal rings (1) in the lands of the inner reaction shaft hub (2).

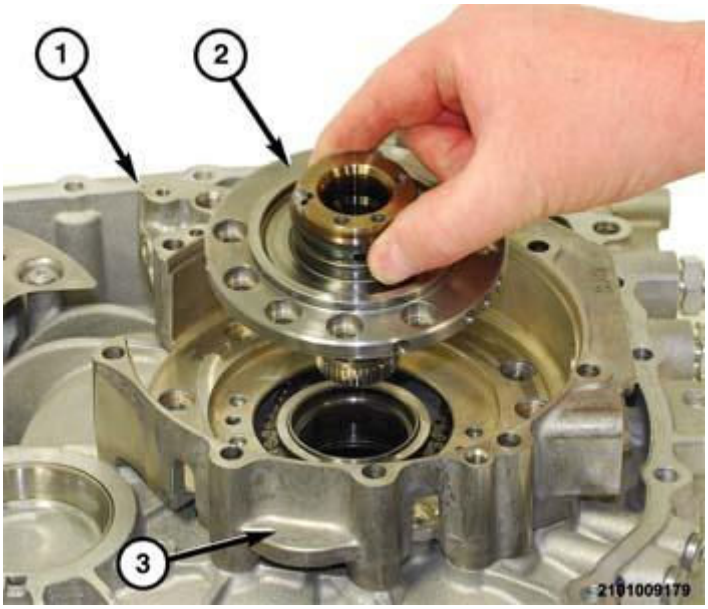

Fig. 677: Removing/Installing Reaction Shaft At Intermediate Support Plate
Courtesy of CHRYSLER GROUP, LLC

5. Place the reaction shaft (2) into the intermediate support plate (1).

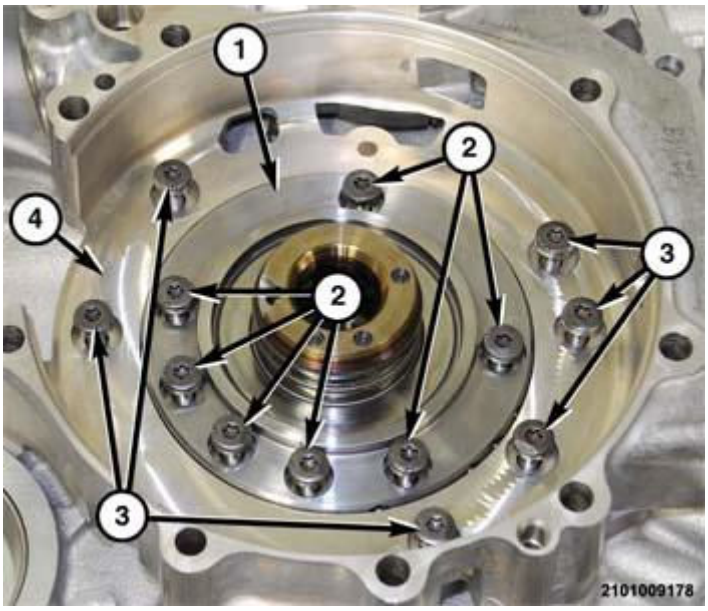

Fig. 678: Removing/Installing Bolts At Reaction Shaft To Intermediate Support Plate
Courtesy of CHRYSLER GROUP, LLC

6. Install the bolts (2) to hold the reaction shaft (1) to the intermediate support plate (4). Refer to **SPECIFICATIONS**.
7. Install the bellhousing on the transmission. Refer to **BELLHOUSING, INSTALLATION**.
8. Install the transmission in the vehicle. Refer to **INSTALLATION**.
9. Fill the transmission to the proper level. Refer to **FLUID AND FILTER, STANDARD PROCEDURE**.
10. Road test the vehicle to verify the repair.

SHIFTER, FLOOR CONSOLE

REMOVAL

REMOVAL

1. Disconnect the battery negative cable.
2. Remove the center floor console

   Refer to **CONSOLE, FLOOR, REMOVAL** .

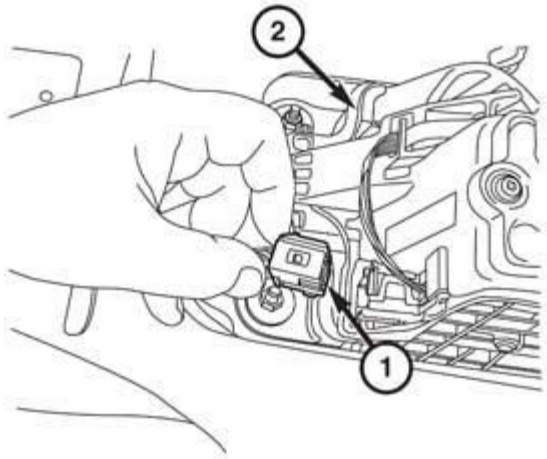

210171835

Fig. 679: PRND Wire Connector & Shifter Assembly
Courtesy of CHRYSLER GROUP, LLC

3. Release the wire connector lock and disconnect the PRND wire connector from the shifter assembly.

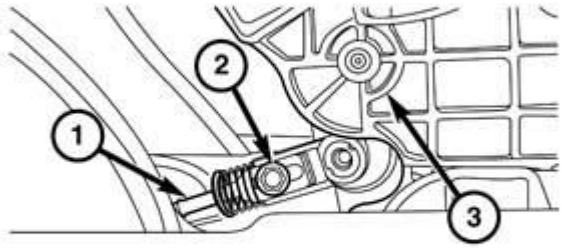

210171740

Fig. 680: Shifter Assembly & Gear Shift Cable End
Courtesy of CHRYSLER GROUP, LLC

4. Pry the gear shift cable end (2) from the pin under the shifter assembly (3).
5. Release the shift cable housing retainer and disengage the cable from the shifter assembly.

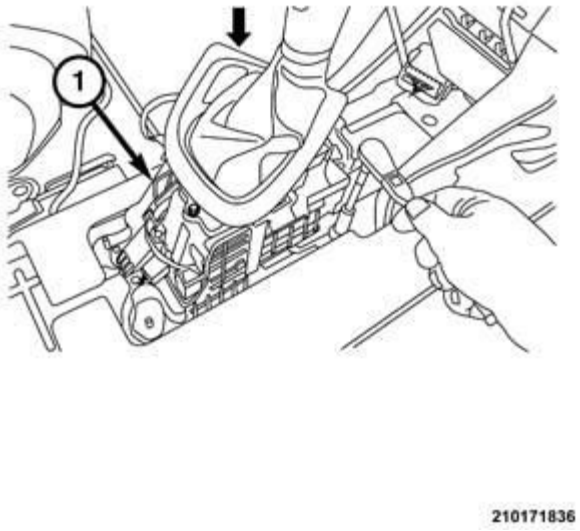

Fig. 681: Gear Shifter
Courtesy of CHRYSLER GROUP, LLC

6. Remove the nuts holding the gear shifter to the floor.
7. Separate the gear shifter from the vehicle.

INSTALLATION

INSTALLATION

1. Place the gear shifter in position on the floor pan.

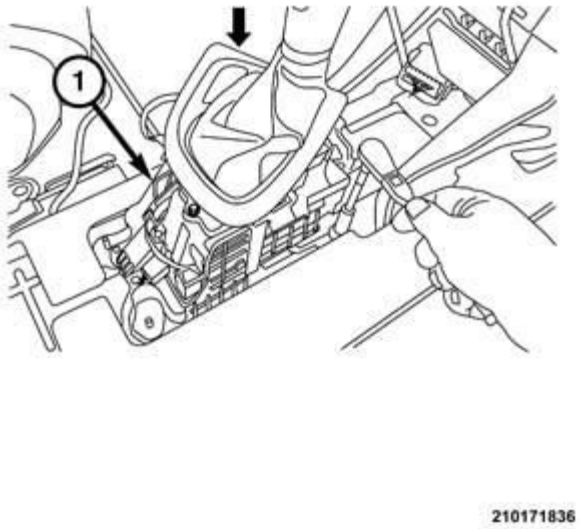

Fig. 682: Gear Shifter
Courtesy of CHRYSLER GROUP, LLC

2. Install nuts to hold the gear shifter assembly (1) to the floor pan.
3. Insert the shift cable into the access hole on the front of the shifter and lock the retainer into the shifter.

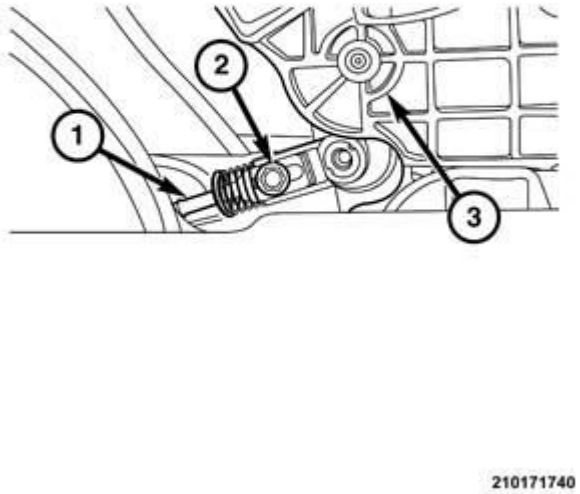

Fig. 683: Shifter Assembly & Gear Shift Cable End

Courtesy of CHRYSLER GROUP, LLC

4. Push the gear shift cable end (2) onto the pin under the shifter assembly (3).

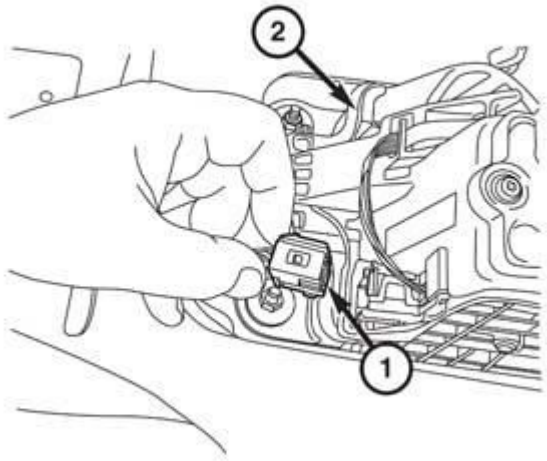

210171835

Fig. 684: PRND Wire Connector & Shifter Assembly
Courtesy of CHRYSLER GROUP, LLC

5. Connect the PRND wire connector into the shifter assembly connector.
6. Install the center floor console

   Refer to **CONSOLE, FLOOR, INSTALLATION** .

7. Connect the battery negative cable.

TUBE, OIL

REMOVAL

REMOVAL

1. Raise and support the vehicle. Refer to **HOISTING, STANDARD PROCEDURE** .
2. Remove the left front wheel and tire. Refer to **REMOVAL** .

Fig. 685: Oil Supply Tube
Courtesy of CHRYSLER GROUP, LLC

3. Remove the oil supply tube bolts (1, 3).
4. Remove the oil supply tube (1) from the transmission.

INSTALLATION

INSTALLATION

Fig. 686: O-Ring Seal Near Differential End For Oil Supply Tube
Courtesy of CHRYSLER GROUP, LLC

1. Replace the O-ring seal (1) near the differential end for the oil supply tube.

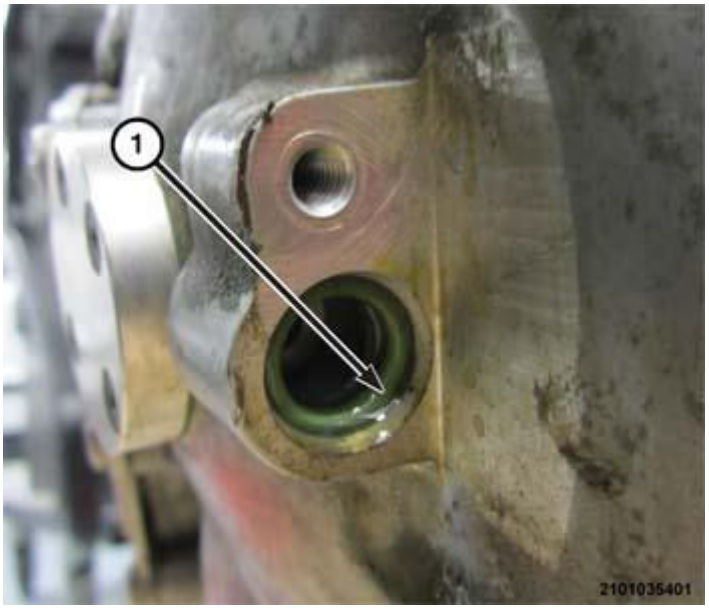

Fig. 687: O-Ring Seal Near Transmission For Oil Supply Tube
Courtesy of CHRYSLER GROUP, LLC

2. Replace the O-ring seal (1) near the end of the transmission for the oil supply tube.

Fig. 688: Oil Supply Tube
Courtesy of CHRYSLER GROUP, LLC

3. Install the oil supply tube (2) onto transmission.
4. Install the oil supply tube fasteners (3) and tighten to the proper specification. Refer to **SPECIFICATIONS**.

5. Install the left front wheel and tire. Refer to **INSTALLATION** .
6. Fill the transaxle to the proper level with the correct fluid. Refer to **FLUID AND FILTER, STANDARD PROCEDURE**.

VALVE BODY

REMOVAL

REMOVAL

1. Disconnect and isolate the negative battery cable.
2. Raise and support the vehicle. Refer to **HOISTING, STANDARD PROCEDURE** .
3. Remove the belly pan. Refer to **BELLY PAN, REMOVAL** .
4. Remove the drain plug and allow the fluid to drain from the transmission.
5. Install the drain plug.

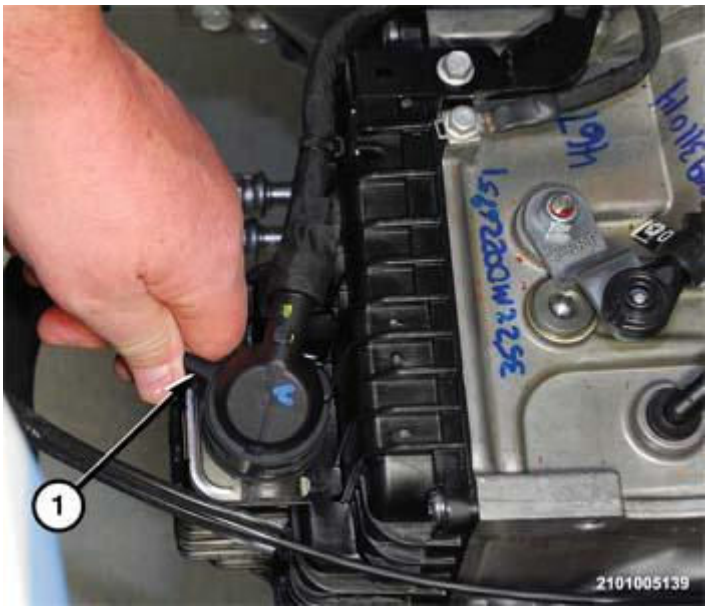

Fig. 689: Transmission Valve Body Solenoid Connector
Courtesy of CHRYSLER GROUP, LLC

6. Rotate the lock lever (2) counterclockwise on the transmission solenoid connector.
7. Disengage the wire connector from the socket on the transmission pan.

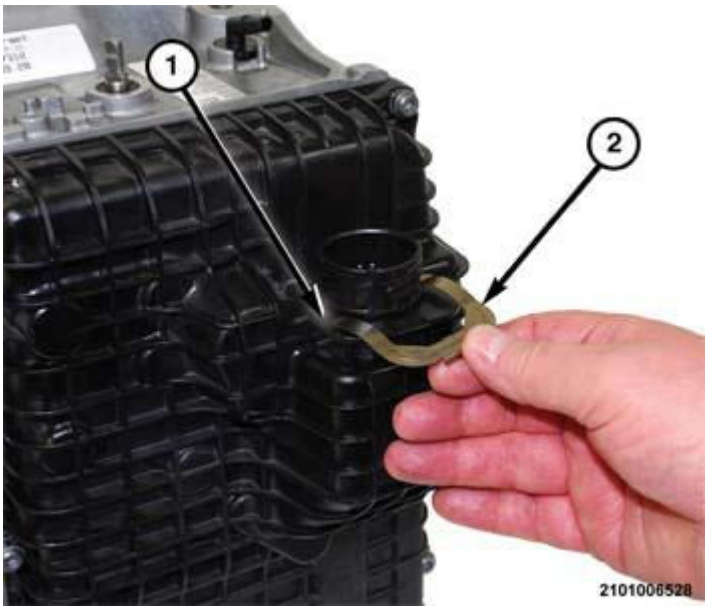

Fig. 690: Wire Connector Socket Clip
Courtesy of CHRYSLER GROUP, LLC

8. Using a suitable pry tool, remove the clip (2) holding the wire connector socket (1) in the valve body cover.
9. Press the wire connector socket inside the valve body cover.

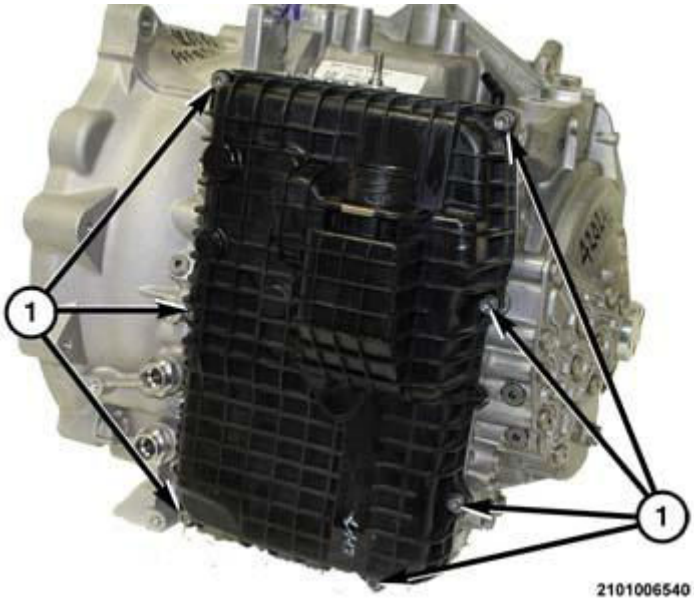

Fig. 691: Valve Body Cover Pan Bolts
Courtesy of CHRYSLER GROUP, LLC

10. Remove the bolts (1) holding the valve body cover to the transmission.
11. Remove the valve body cover from the transmission housing.

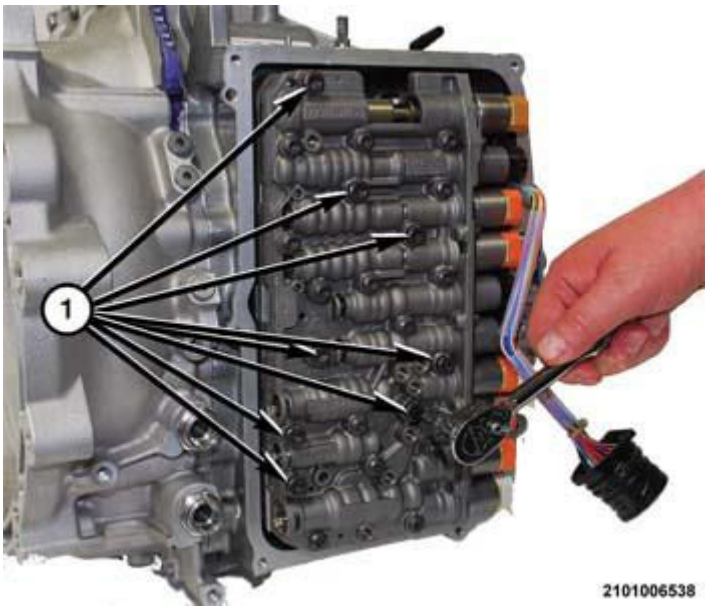

Fig. 692: Valve Body Bolts
Courtesy of CHRYSLER GROUP, LLC

12. Remove the larger (T45) bolts (1) holding the valve body to the transmission housing.
13. Using a suitable prying tool, separate the valve body from the fluid transfer adapter tubes.
14. Turn the valve body over to gain access to wire harness connectors.

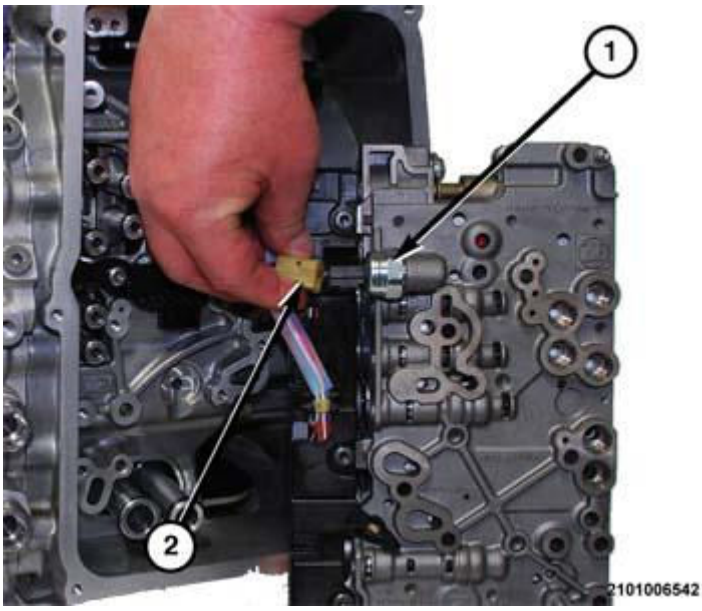

Fig. 693: Fluid Pressure Transducer Wire Harness Connector
Courtesy of CHRYSLER GROUP, LLC

15. Release the lock (2) on the fluid pressure transducer wire connector.
16. Separate the wire connector from the fluid pressure transducer (1).

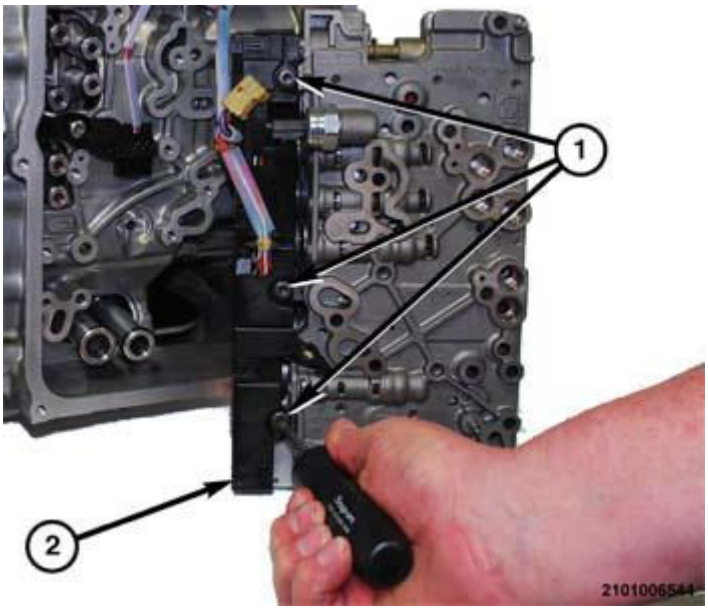

Fig. 694: Removing/Installing Wire Harness Connector At Valve Body Solenoids
Courtesy of CHRYSLER GROUP, LLC

17. Remove the bolts (1) holding the wire harness connector to the valve body and solenoids.
18. Using a suitable prying tool, Separate the wire harness connector (2) from the solenoids.
19. Separate the valve body from the vehicle.

NOTE: **If the valve body is to be reused without disassembling it, store the valve body in a clean area until it is installed.**

DISASSEMBLY

DISASSEMBLY

Remove the valve body from the transmission and place the valve body on a clean oil absorbent work surface. Position wood blocks at each end of the valve body to provide a stable work fixture.

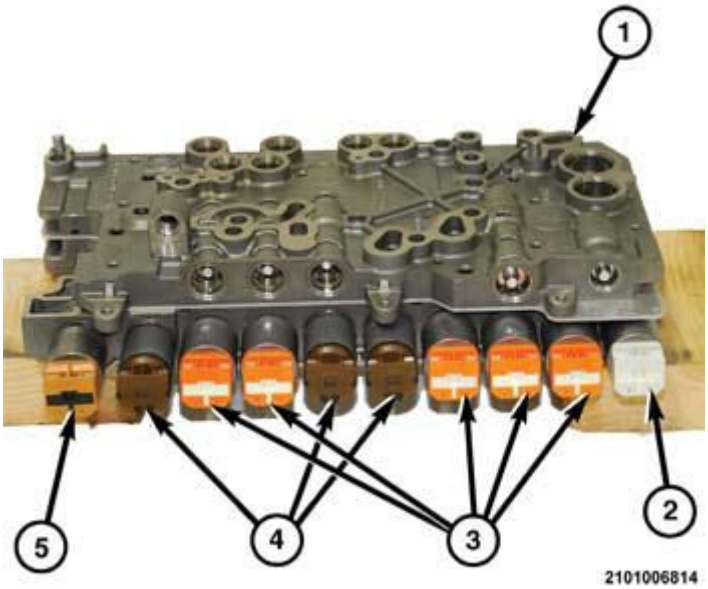

Fig. 695: View Of Valve Body & Solenoids
Courtesy of CHRYSLER GROUP, LLC

1. Remove the solenoids (2 - 5) from the valve body (1).

NOTE: Each type solenoid has a unique color end cover.

- 2 = System Pressure Regulator Solenoid
- 3 = Pressure Regulator Solenoids
- 4 = Dog Clutch Solenoids
- 5 = Parking Lock Solenoid

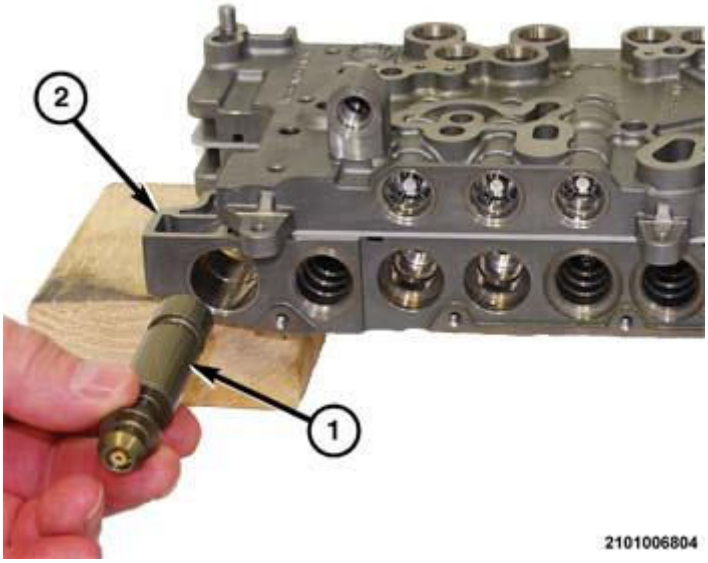

Fig. 696: Parking Lock Valve & Outer Valve Body
Courtesy of CHRYSLER GROUP, LLC

2. Remove the parking lock valve (1) from the park lock solenoid bore in the outer valve body (2).
3. Remove the pressure sensor from the valve body.
4. Position the valve body on the wooden blocks with outer side up.

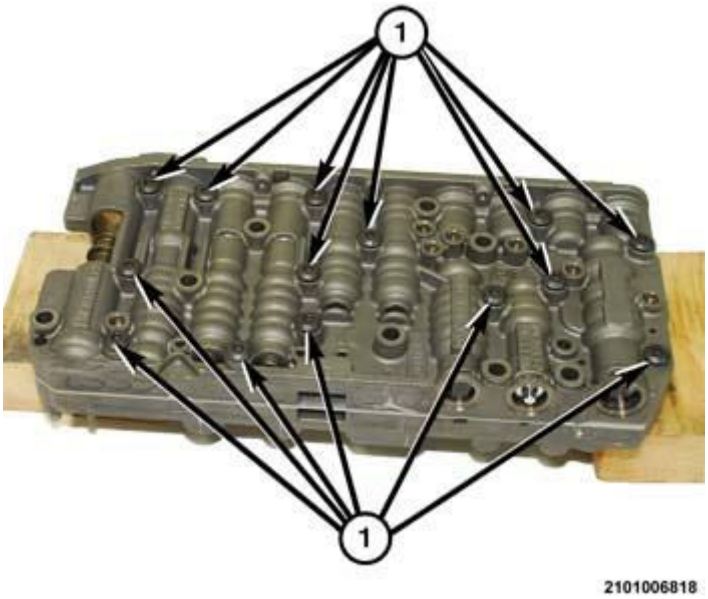

Fig. 697: Valve Body & 14 Screws
Courtesy of CHRYSLER GROUP, LLC

5. Remove the screws (1) holding the valve body halves together.

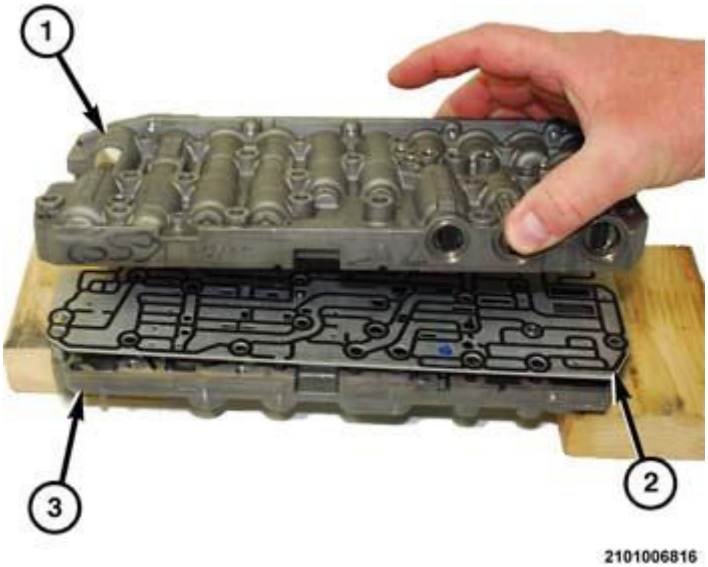

Fig. 698: Outer Valve Body & Separator Plate

Courtesy of CHRYSLER GROUP, LLC

6. Separate the outer valve body (1) from the separator plate (2).

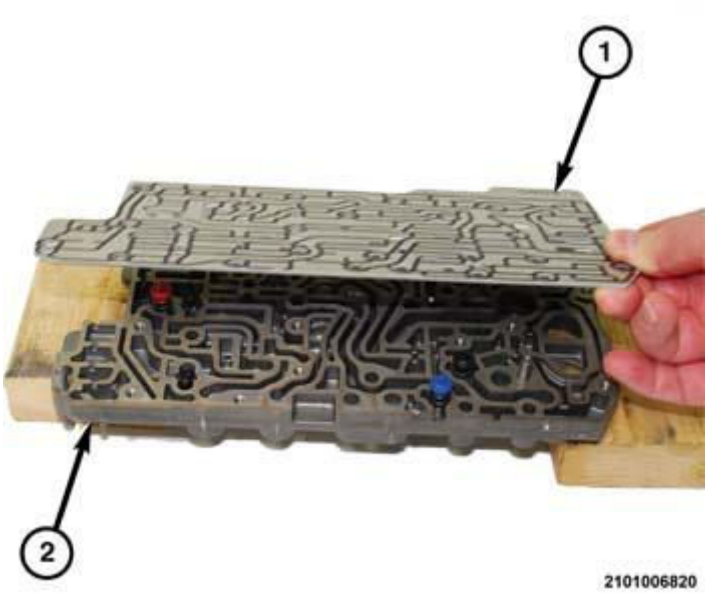

Fig. 699: Lifting Separator Plate Off Of Inner Valve Body
Courtesy of CHRYSLER GROUP, LLC

7. Lift the separator plate (1) upward and off of the inner valve body (2).

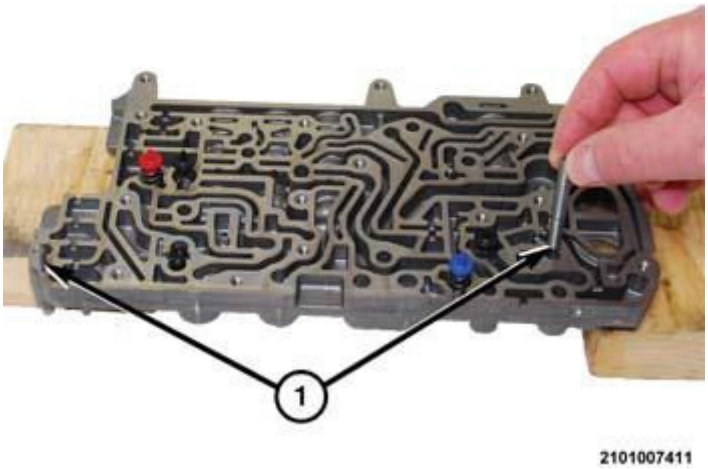

Fig. 700: Inner Valve Body & Guide Pins
Courtesy of CHRYSLER GROUP, LLC

8. Remove the guide pins (1) from the inner valve body.

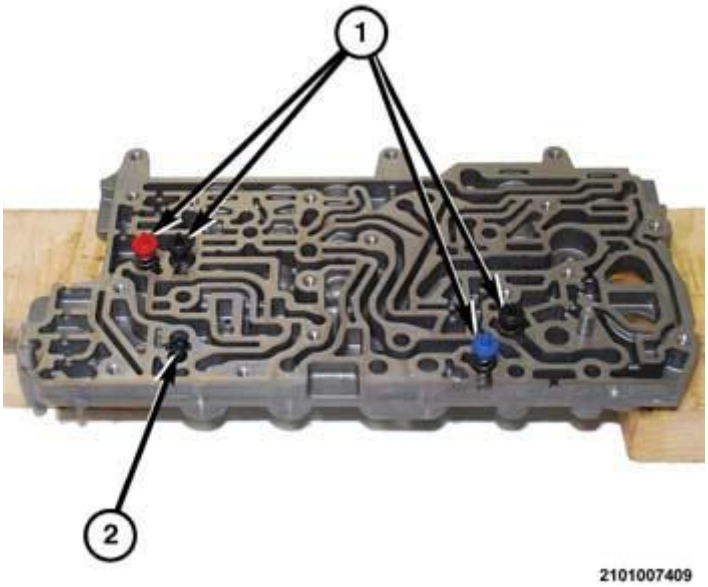

Fig. 701: Inner Valve Body, Color Coded Check Valves & Check-Balls
Courtesy of CHRYSLER GROUP, LLC

9. Remove the color coded check valves (1) from the inner valve body.
10. Remove the toggling, connected check-balls (2) from the inner valve body.
11. Position the outer valve body on the work surface inside up to gain access to the valve retaining spring clips.

NOTE: DO NOT damage the filter screen during removal.

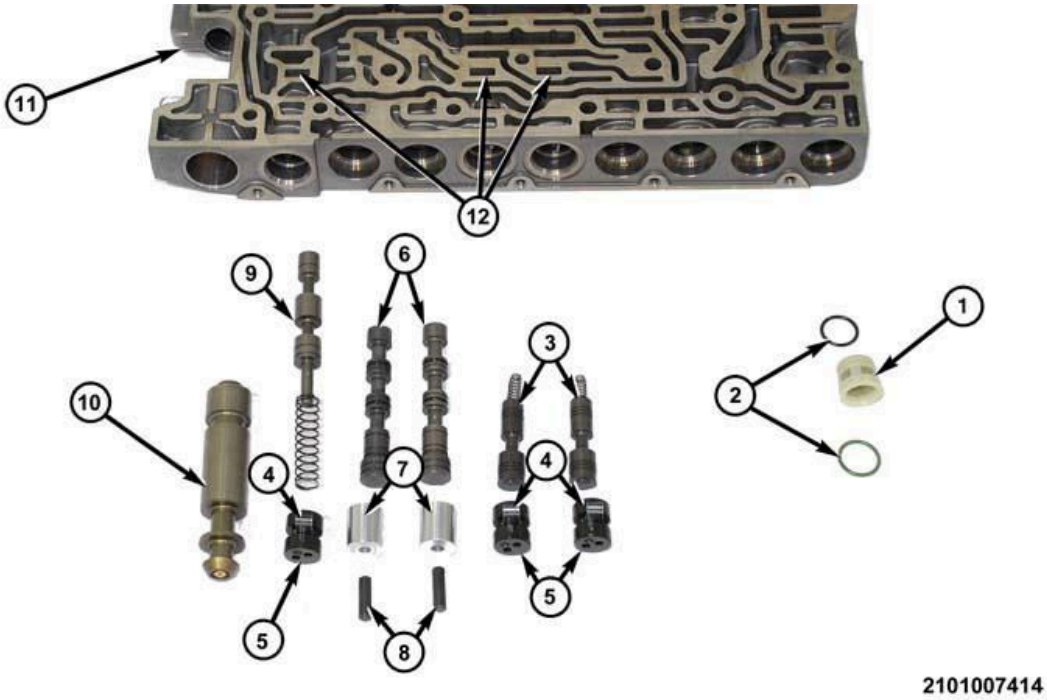

Fig. 702: Outer Valve Body Components
Courtesy of CHRYSLER GROUP, LLC

12. Using a suitable prying tool, remove the filter screen (1) from the bore in the outer valve body (11).
13. Remove the bullets (8), sleeves (7), and pressure regulator valves (6) from the bores in the outer valve body (11).
14. Remove the parking lock valve (10) from the bore in the outer valve body (11).
15. Using a suitable prying tool, remove the spring clips (12) holding the lubrication valve plugs in the bores in the outer valve body (11).
16. Remove the plugs (5), lubrication valves and springs (3) from the bores in the outer valve body (11).
17. Using a suitable prying tool, remove the spring clip (12) holding the MV park lock valve plug in the bore in the outer valve body (11).
18. Remove the spring and MV park lock valve (9) from the bore in the outer valve body (11).
19. Rotate the outer valve (11) body to gain access to the pressure and lubrication valves.

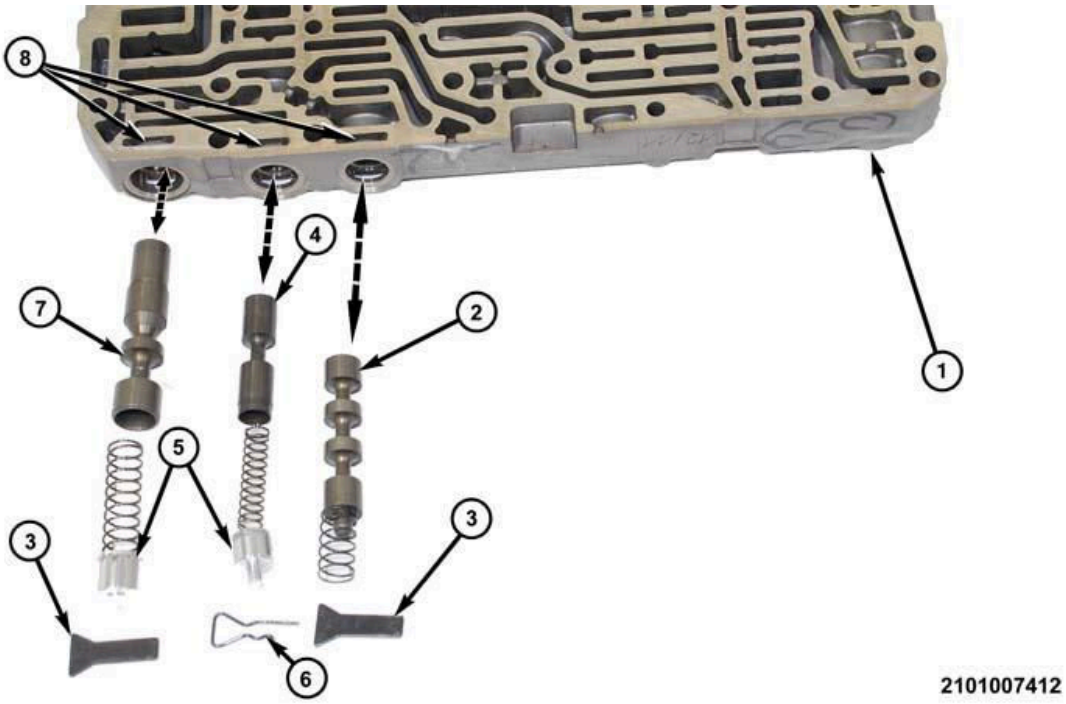

Fig. 703: Outer Valve Body & Pressure Valve
Courtesy of CHRYSLER GROUP, LLC

20. The support plates (3) and spring clip (6) are located in pockets (8) in the outer valve body (1).
21. Remove the support plate (3) holding the spring and converter pressure valve (2) in the bore in the outer valve body (1).
22. Remove the spring and converter pressure valve (2) from the bore in the outer valve body (1).
23. Remove the support plate (3) holding the plug (5), spring and system pressure valve (7) in the bore in the outer valve body (1).

24. Remove the plug (5), spring and system pressure valve (7) from the bore in the outer valve body (1).
25. Remove the spring clip (6) holding the plug (5), spring and lubrication valve (4) in the bore in the outer valve body (1).
26. Remove the plug (5), spring and lubrication valve (4) from the bore in the outer valve body (1).

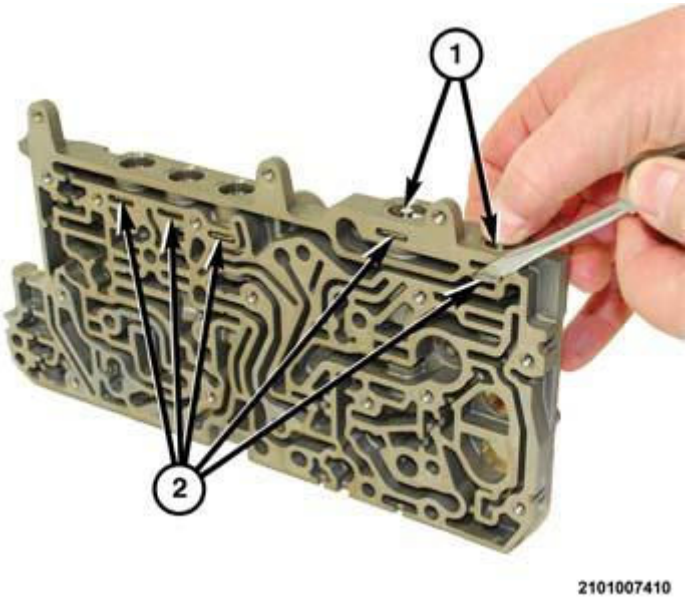

Fig. 704: Inner Valve Body With The Valves Bores Facing Up
Courtesy of CHRYSLER GROUP, LLC

27. Place the inner valve body on the clean work surface with the valves bores facing up.

NOTE: The spring clips holding (2) the plugs (1) in the inner valve are located in pockets (2) on the separator plate side of the inner valve body.

28. Press each of the valve plugs (1) downward and remove the spring clips (2) holding the valves in the bores in the inner valve body.

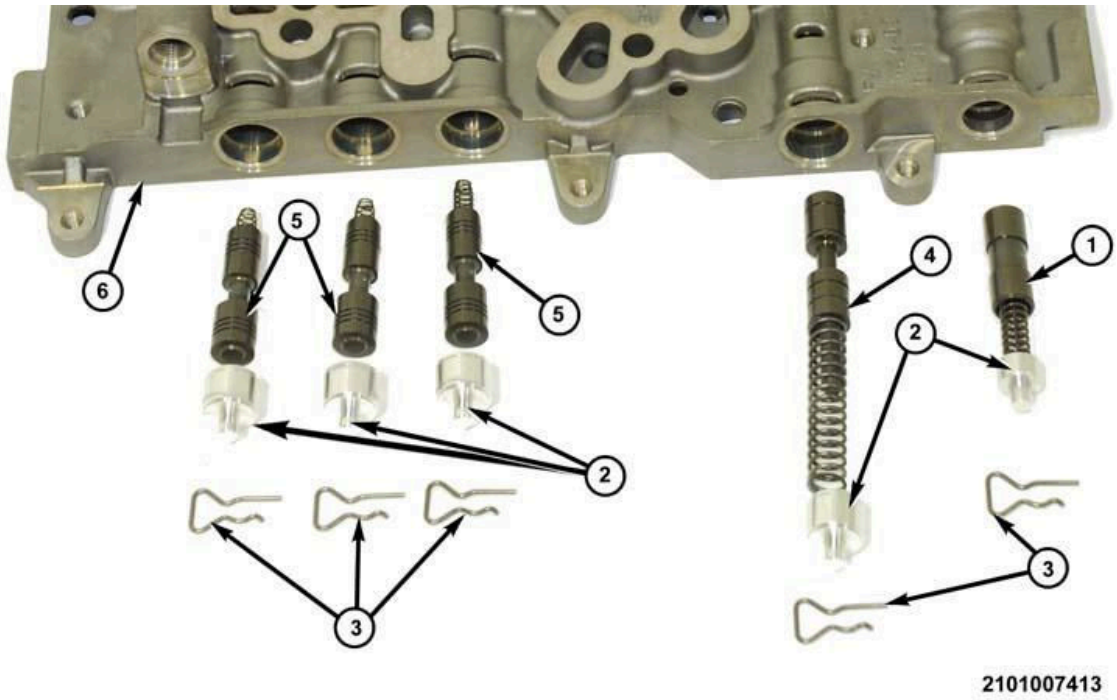

Fig. 705: Inner Valve Body Components
Courtesy of CHRYSLER GROUP, LLC

29. Remove the plug (2), spring and boost valve (1) from the bore in the inner valve body (6).
30. Remove the plug (2), spring and solenoid limit valve (4) from the bore in the inner valve body (6).
31. Remove the plugs (2), springs and PCV valves (5) from the bores in the inner valve body (6).
32. Perform the cleaning and inspection procedures.

INSPECTION

VALVE BODY CLEANING AND INSPECTION

Clean the valve body components with a suitable clean solvent. The valve body components can be blown dry with compressed regulated 344 kPa (50 psi) shop air.

Inspect the valve components and bores for excessive scoring, porosity, warping or other damage that may cause the valves to bind or leak excessively. If damage is evident the complete valve body must be replace.

ASSEMBLY

ASSEMBLY

Before assembling the valve body, thoroughly clean all of the components with a suitable solvent and blow them dry with 344 kPa (50 psi) **regulated** shop air. Clean the work surface and lay out a clean lint free cloth to avoid contaminating the clean valve body components. Lay the valve components out on the cloth in the order they will be installed in the valve body. The cloth will hold the valve components in place and keep them from rolling out of position. light lubricating oil can be applied the each component as the valve body is assembled.

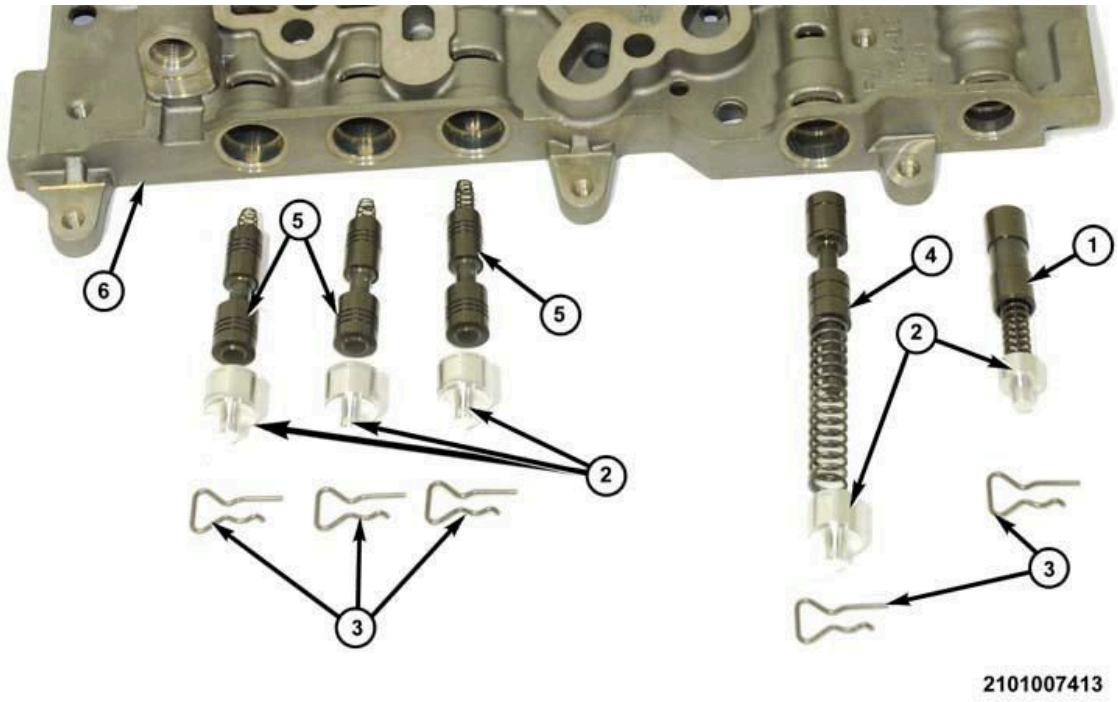

Fig. 706: Inner Valve Body Components
Courtesy of CHRYSLER GROUP, LLC

1. Install the springs, PCV valves, and (5) plugs (2), from the bores in the inner valve body (6).
2. Install the solenoid limit valve (4), spring, and plug (2) into the bore in the inner valve body (6).
3. Install the boost valve (1), spring, and plug (2) into the bore in the inner valve body (6).

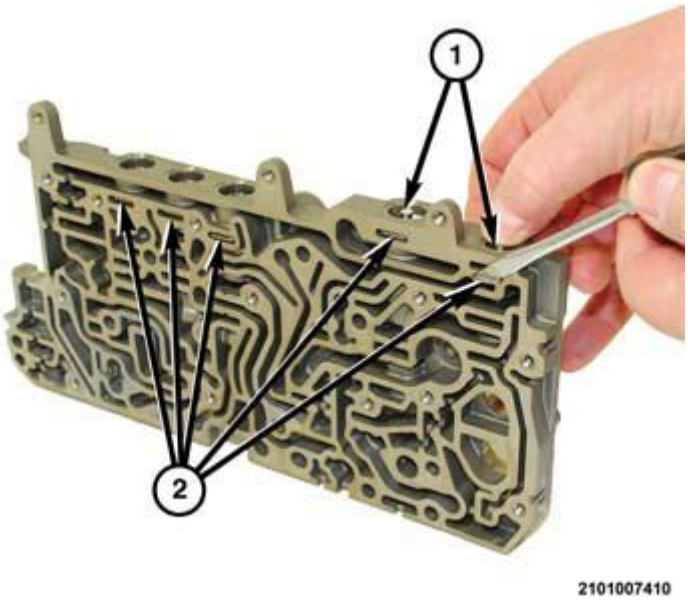

Fig. 707: Inner Valve Body With The Valves Bores Facing Up
Courtesy of CHRYSLER GROUP, LLC

4. Turn the inner valve body so the plugs (1) are facing upward
5. While pressing downward on the plugs (1), install the spring clips (2) to hold the plugs in the inner valve body.

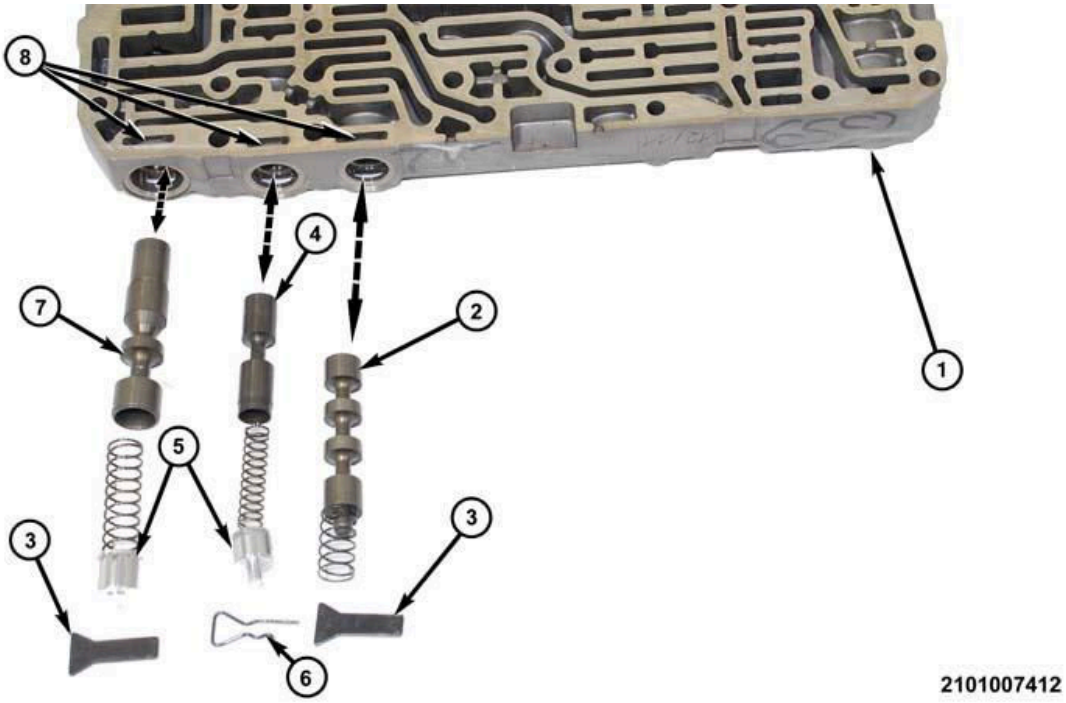

Fig. 708: Outer Valve Body & Pressure Valve
Courtesy of CHRYSLER GROUP, LLC

6. The support plates (3) and spring clip (6) are go into pockets (8) in the outer valve body (1).
7. Install the lubrication valve (4), spring, and plug (5) into the bore in the outer valve body (1).
8. Install the spring clip (6) to hold the plug (5), spring and lubrication valve (4) in the bore in the outer valve body (1).
9. Install the system pressure valve (7), spring, and plug (5) in the bore in the outer valve body (1).
10. Install the support plate (3) to hold the plug (5), spring and system pressure valve (7) into the bore in the outer valve body (1).
11. Install the converter pressure valve (2) and spring into the bore in the outer valve body (1).
12. Install the support plate (3) to hold the spring and converter pressure valve (2) in the bore in the outer valve body (1).

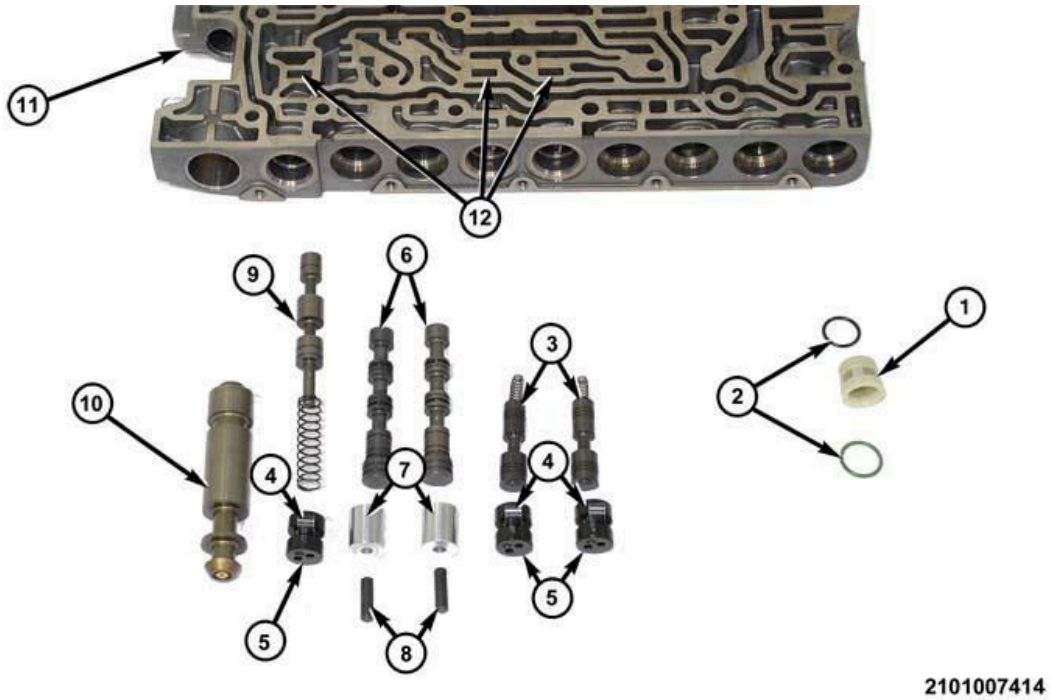

Fig. 709: Outer Valve Body Components
Courtesy of CHRYSLER GROUP, LLC

13. Position the outer valve body (11) on the work surface inside up to gain access to the valve retaining spring clips (13).
14. Install the MV park lock valve (9), spring, and plug into the bore in the outer valve body (11).
15. While pressing down on the plug to align the slot, install the spring clip (13) to hold the MV park lock valve and plug in the bore in the outer valve body (11).
16. Install the lubrication valves, springs (3), a plugs (5), into the bores in the outer valve body (11).
17. While pressing down on the plug to align the slot, install the spring clips (13) to hold the lubrication valve plugs in the bores in the outer valve body (11).
18. Install the parking lock valve (10) into the bore in the outer valve body (11).
19. Install the pressure regulator valves (6), sleeves (7), and bullets (8) into the bores in the outer valve body (11).
20. Install NEW O-rings (2) on the filter screen (1).
21. Install the filter screen (1) into the bore in the outer valve body (11).

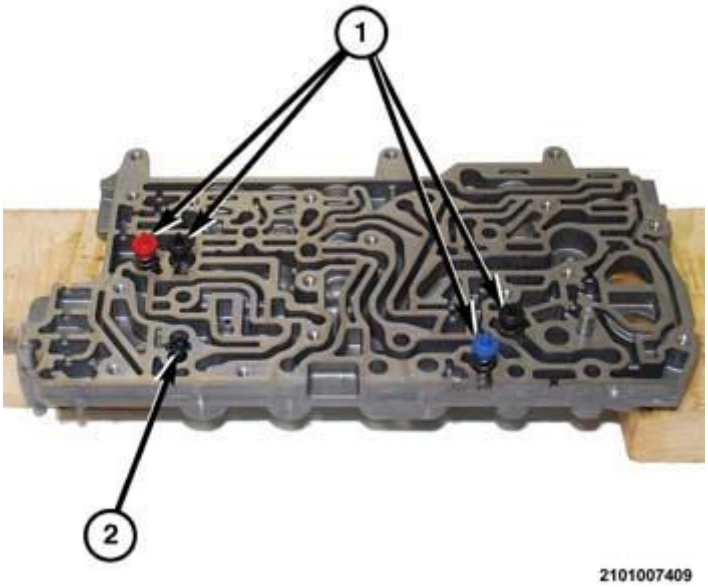

Fig. 710: Inner Valve Body, Color Coded Check Valves & Check-Balls
Courtesy of CHRYSLER GROUP, LLC

22. Place the inner valve body on the work surface resting on wood blocks to elevate the center for clearance underneath.
23. Install the toggling, connected check-balls (2) into the inner valve body.
24. Install the color coded check valves (1) into the inner valve body.

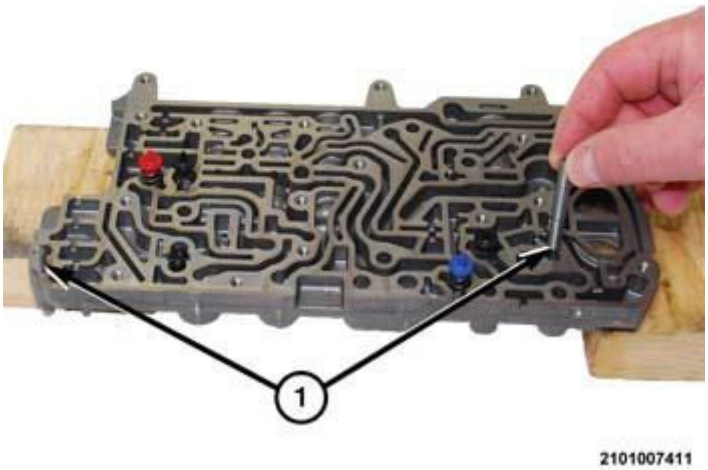

Fig. 711: Inner Valve Body & Guide Pins
Courtesy of CHRYSLER GROUP, LLC

25. With the smaller diameter end downward, install the guide pins (1) into the inner valve body.

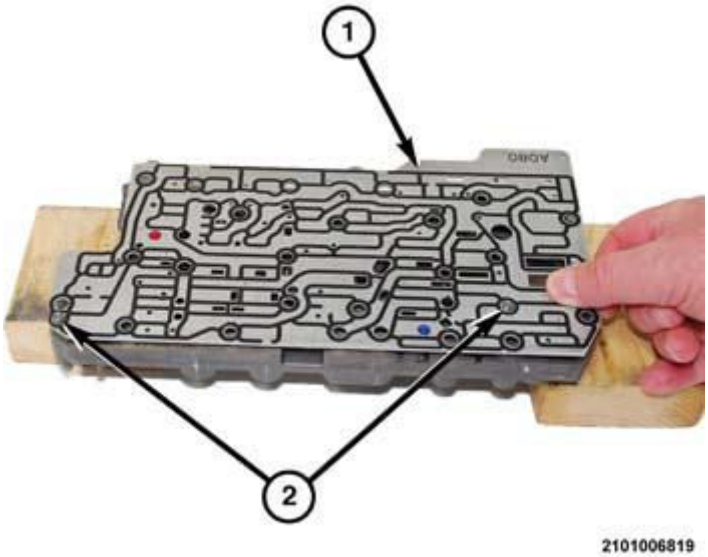

Fig. 712: Separator Plate & Inner Valve Body
Courtesy of CHRYSLER GROUP, LLC

26. Place the separator plate (1) in position on of the inner valve body over the guide pins (2).

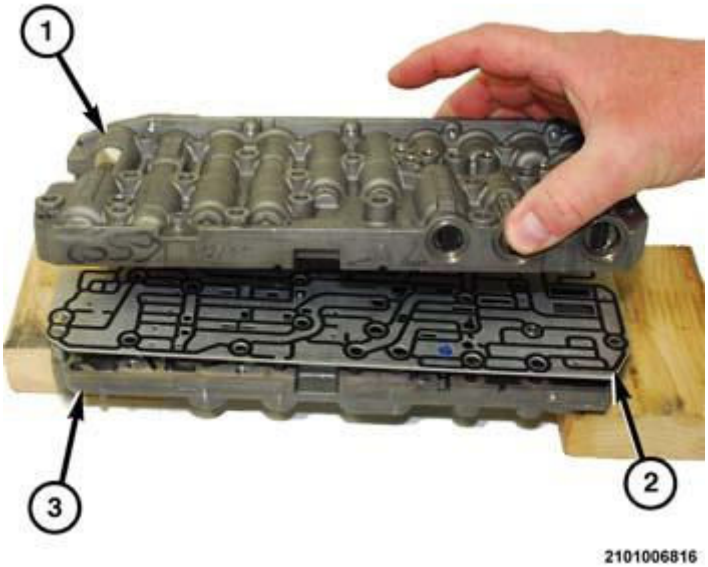

Fig. 713: Outer Valve Body & Separator Plate
Courtesy of CHRYSLER GROUP, LLC

27. Place the outer valve body (1) in position on the separator plate (2).

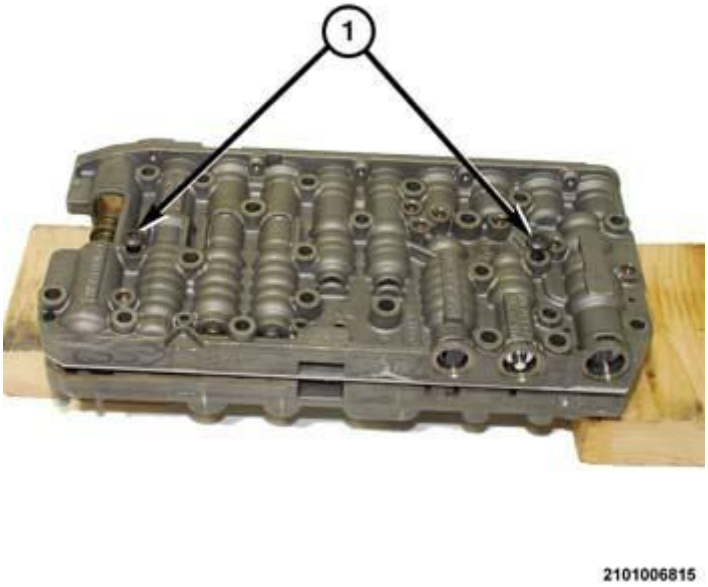

Fig. 714: Valve Body & 2 Screws
Courtesy of CHRYSLER GROUP, LLC

28. Install two screws (1) to hold the outer valve body to the inner valve body and separator plate. Tighten the screws snug with a suitable torx-drive screw driver.

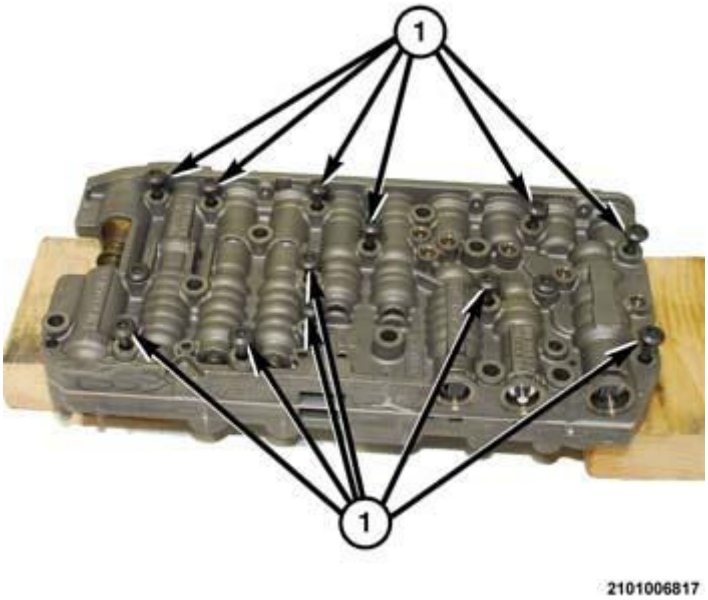

Fig. 715: Valve Body & 12 Screws
Courtesy of CHRYSLER GROUP, LLC

29. Install the remaining screws (1) to hold the inner valve body to the outer valve body.
30. Install the pressure sensor in the valve body.

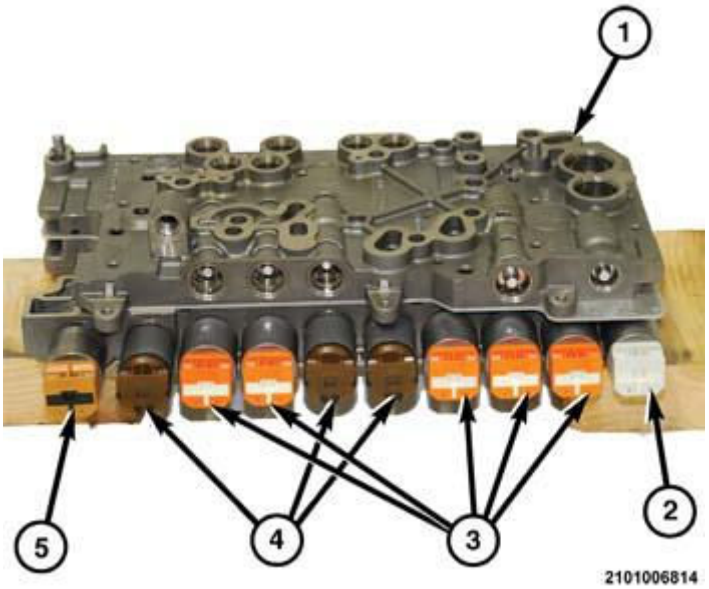

Fig. 716: View Of Valve Body & Solenoids
Courtesy of CHRYSLER GROUP, LLC

31. Install the solenoids (2 - 5) in the valve body (1).

NOTE: Each type solenoid has a unique color end cover.

- 2 = System Pressure Regulator Solenoid
- 3 = Pressure Regulator Solenoids
- 4 = Dog Clutch Solenoids
- 5 = Parking Lock Solenoid

32. Install the valve body in the transmission.
33. Finish assemble the vehicle.
34. Road test the vehicle to verify the repair.

INSTALLATION

INSTALLATION

NOTE: Before installing the valve body, replace the O-ring seals on the fluid transfer adapter tubes. Apply a light coating of assembly lube on the O-rings to ease valve body installation.

1. Clean the mating surfaces between the valve body and the transmission housing with a clean lint-free cloth.

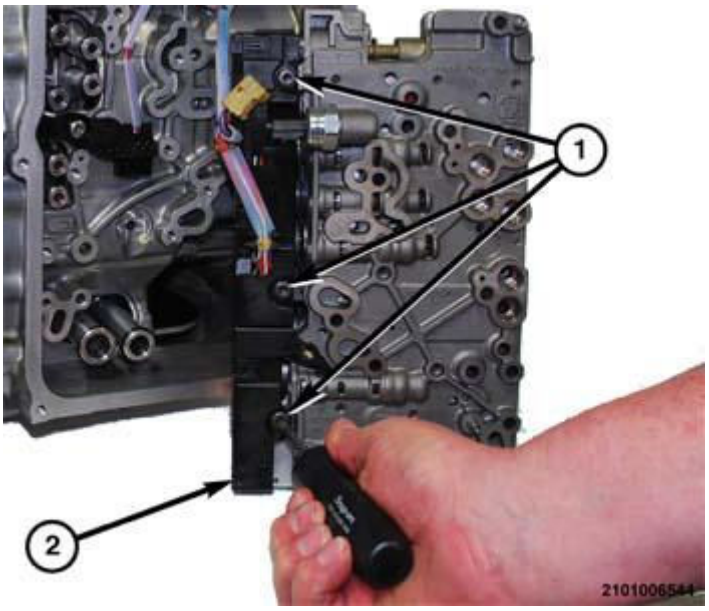

Fig. 717: Removing/Installing Wire Harness Connector At Valve Body Solenoids
Courtesy of CHRYSLER GROUP, LLC

2. Place the valve body in position on the transmission.
3. Place the wire harness connector in position on the solenoids.
4. Press the connector inward to engage the terminals on the solenoids.
5. Install the bolts to hold the wire harness connector to the valve body and solenoids and tighten to the proper specifications. Refer to **SPECIFICATIONS**.

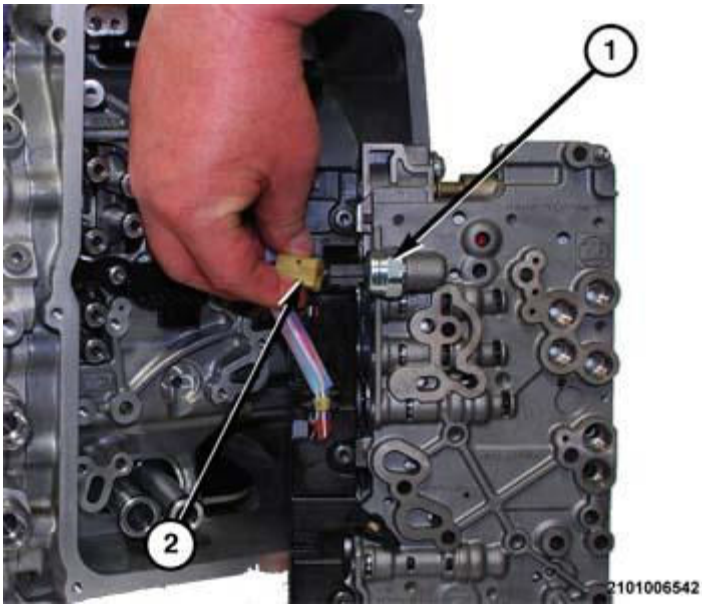

Fig. 718: Fluid Pressure Transducer Wire Harness Connector
Courtesy of CHRYSLER GROUP, LLC

6. Insert the wire harness connector (2) into the fluid pressure transducer connector (1).
7. Press connector together until the lock engages.

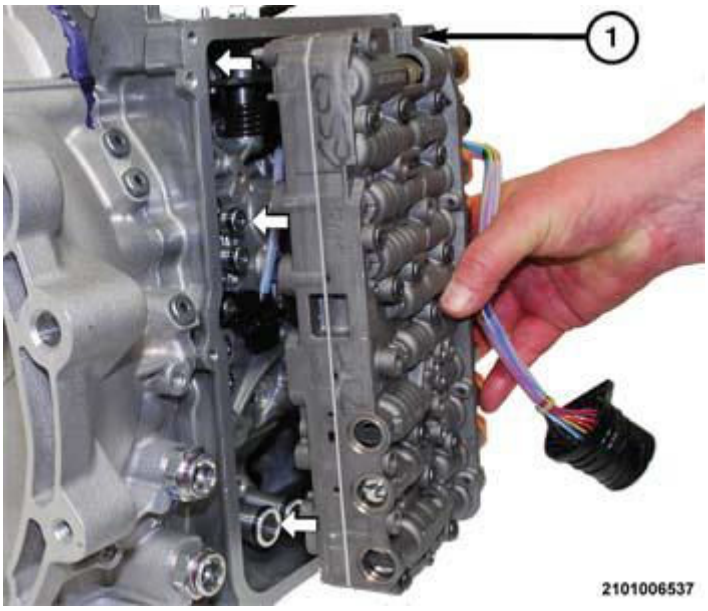

Fig. 719: Aligning Valve Body To Fluid Transfer Tubes
Courtesy of CHRYSLER GROUP, LLC

8. Turn the valve body (1) over and align the valve body (1) with the fluid transfer adapters.

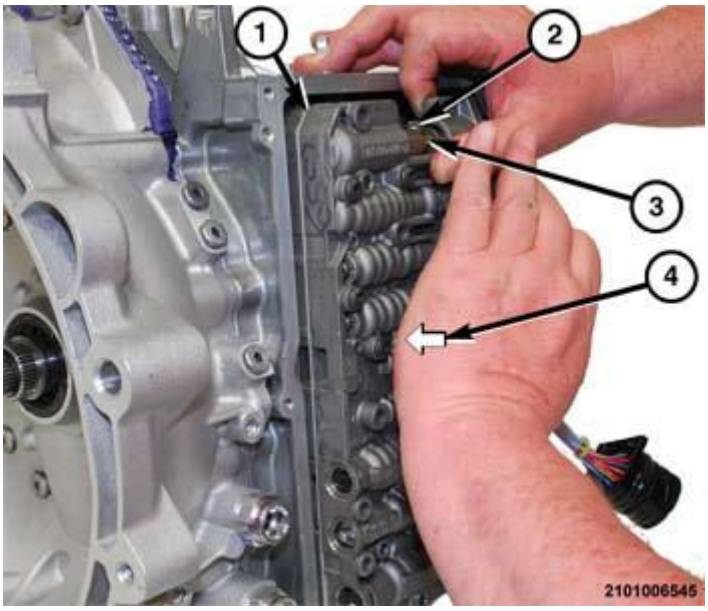

Fig. 720: Engaging Valve Body To Fluid Transfer Tubes
Courtesy of CHRYSLER GROUP, LLC

9. Guide the manual lever cam (2) into the slot (3) on the manual valve.

10. Firmly press (4) the valve body (1) inward until the O-rings on the fluid transfer adapters engage into receptacle holes on the valve body.

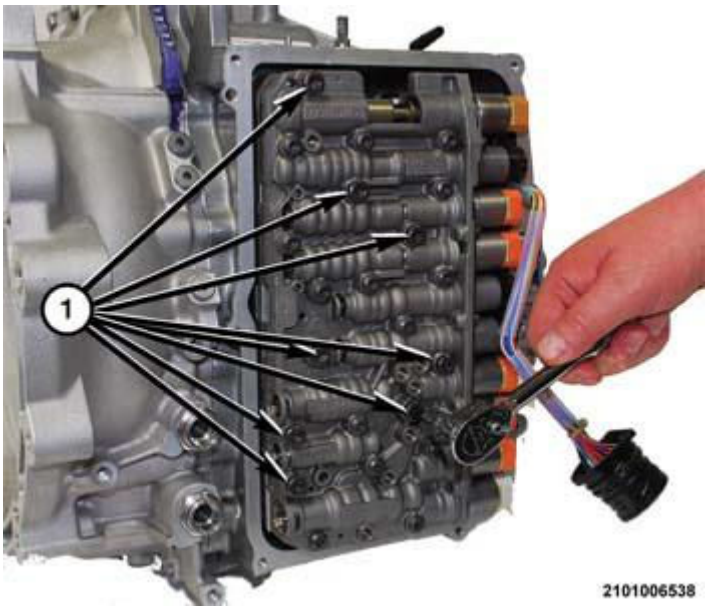

Fig. 721: Valve Body Bolts
Courtesy of CHRYSLER GROUP, LLC

11. Install the bolts (1) to hold the valve body to the transmission housing and tighten to the proper specifications. Refer to **SPECIFICATIONS**.

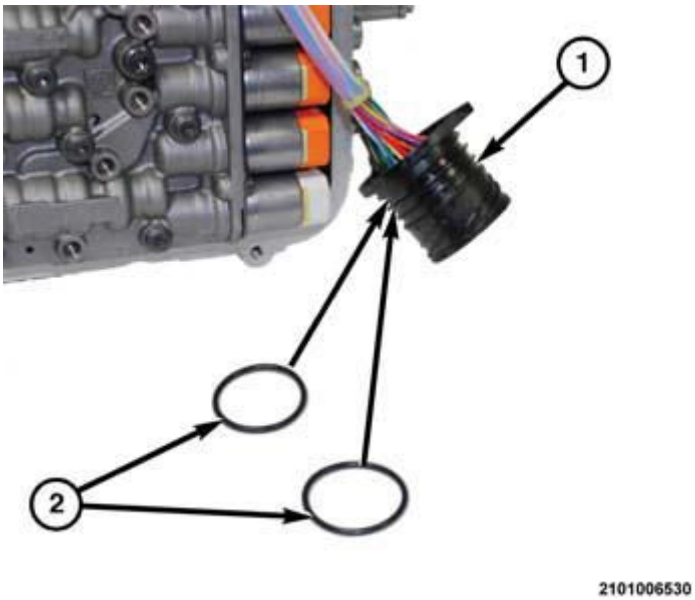

Fig. 722: Valve Body Solenoid Wire Harness Connector Socket O-Ring Seals
Courtesy of CHRYSLER GROUP, LLC

12. Install NEW O-ring seals (2) on the wire connector socket (1).

NOTE: **A light coating of assembly lube can be applied to the O-ring seals (2) to ease installation.**

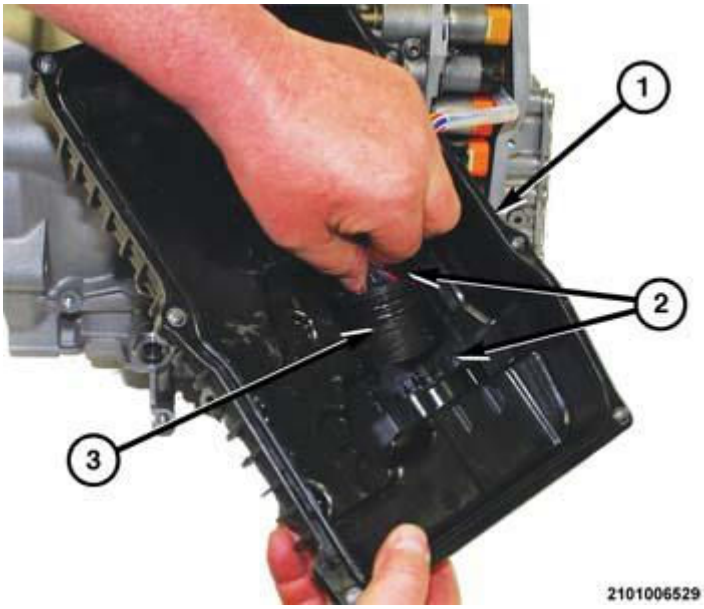

Fig. 723: Valve Body Cover Pan & Wire Connector Socket
Courtesy of CHRYSLER GROUP, LLC

13. Place the valve body cover (1) in position on the transmission.
14. Insert the wire connector socket (3) into the opening on the inside of valve body cover (1) with the flat side (2) of the socket on the left.

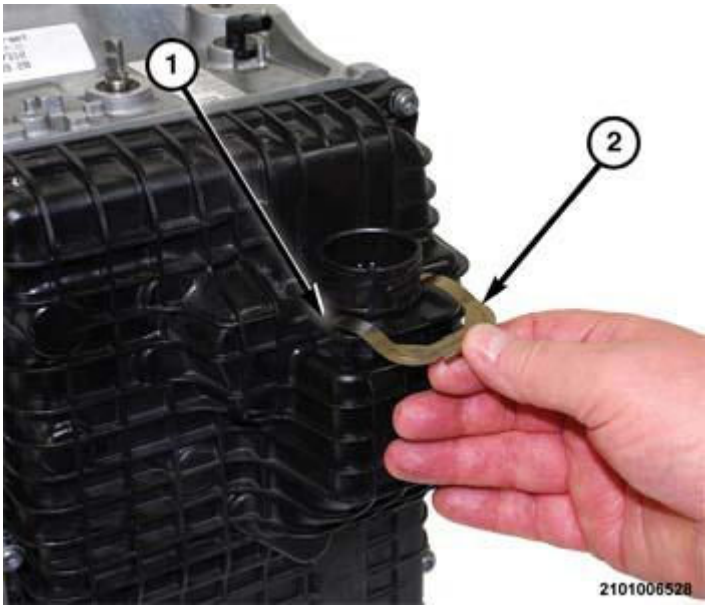

Fig. 724: Wire Connector Socket Clip
Courtesy of CHRYSLER GROUP, LLC

15. Press the wire connector socket inward until the retainer clip groove (1) is exposed on the outside of the valve body cover (1).
16. Install the clip (2) to hold the wire connector socket in the valve body cover.

Fig. 725: Valve Body Cover Pan Gasket Seal
Courtesy of CHRYSLER GROUP, LLC

17. Install a NEW gasket seal (1) in the groove around the sealing surface of the valve body cover (2).

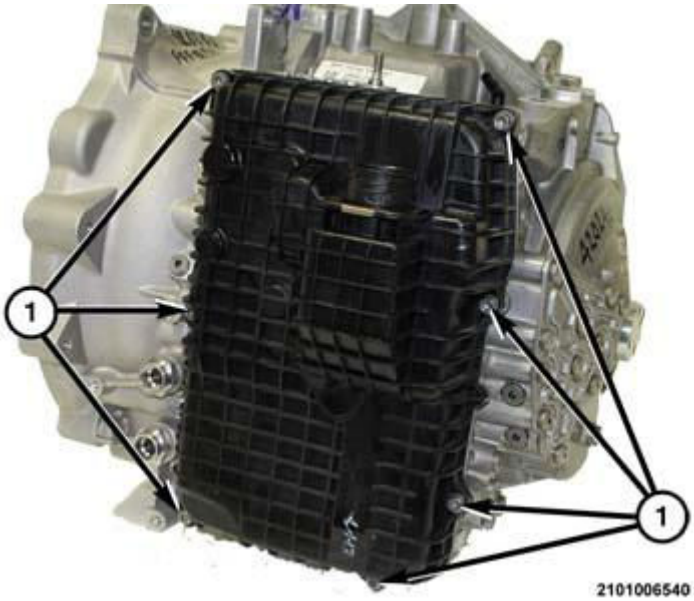

Fig. 726: Valve Body Cover Pan Bolts
Courtesy of CHRYSLER GROUP, LLC

18. Place the valve body cover pan gasket against the sealing surface of the transmission housing.

19. Install the bolts (1) to hold the valve body cover to the transmission housing and tighten to the proper specifications. Refer to **SPECIFICATIONS**.

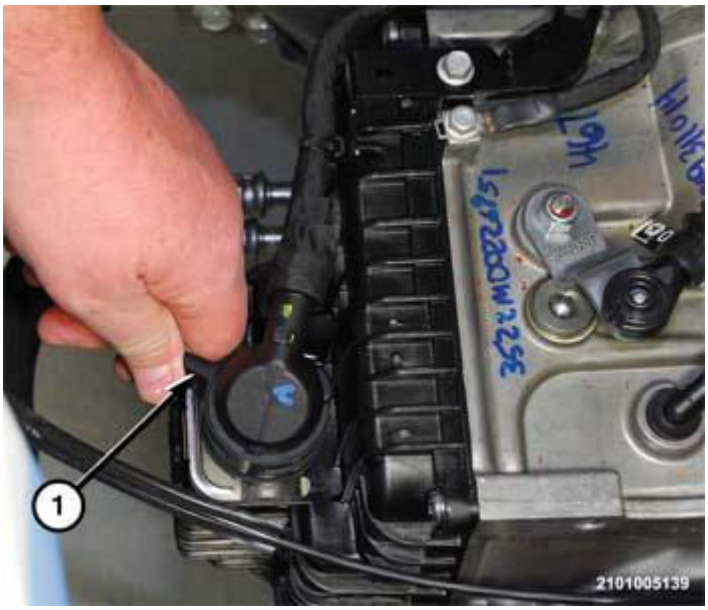

Fig. 727: Transmission Valve Body Solenoid Connector
Courtesy of CHRYSLER GROUP, LLC

20. Engage the wire connector into the socket on the valve body cover.
21. Rotate the lock lever (1) clockwise onto the transmission solenoid connector.
22. Fill the transmission. Refer to **FLUID AND FILTER, STANDARD PROCEDURE**.
23. Install the belly pan.
24. Connect the negative battery cable.
25. Perform the Valve Body Solenoid Learn procedure if the valve body and/or the TCM was replaced during a repair.
26. Perform Transmission Verification Test-948TE. Refer to **STANDARD PROCEDURE** .

VALVES, SOLENOID

REMOVAL

REMOVAL

1. Position the vehicle on a suitable hoist with the transmission in neutral. Refer to **HOISTING, STANDARD PROCEDURE** .
2. Remove the valve body from the transmission. Refer to **VALVE BODY, REMOVAL**.
3. Place the valve body on a clean work surface supported on each end by wooden blocks with the outer half facing upward.

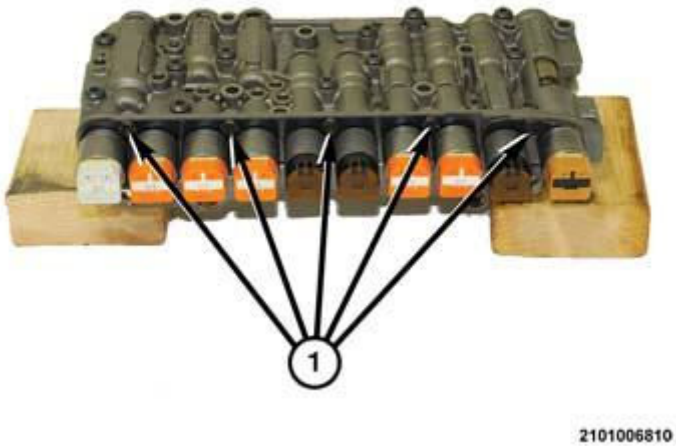

Fig. 728: View Of Solenoid Valve Retainer
Courtesy of CHRYSLER GROUP, LLC

4. Remove the screws (1) holding the solenoid retainers to the outer valve body.

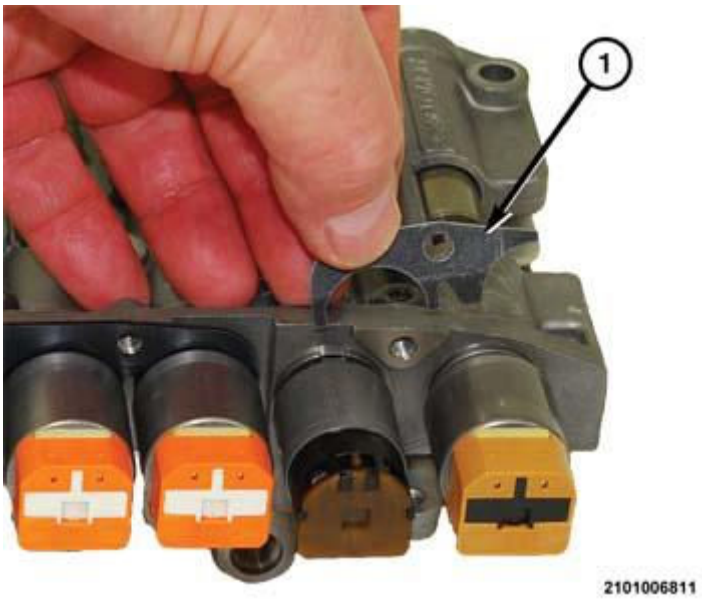

Fig. 729: View Of Solenoid Valve Small Retainer
Courtesy of CHRYSLER GROUP, LLC

5. Separate the small retainer (1) from the valve body.

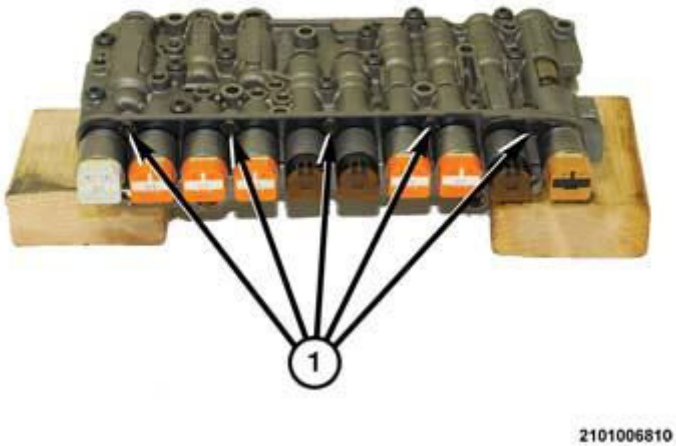

Fig. 730: View Of Solenoid Valve Retainer
Courtesy of CHRYSLER GROUP, LLC

6. Separate the large retainer (1) from the valve body.

Fig. 731: Solenoid Valves & Outer Valve Body
Courtesy of CHRYSLER GROUP, LLC

7. Turn the valve body over so the inner valve body (1) is on top.
8. Pull the solenoid valves (3) straight out of the outer valve body (2).

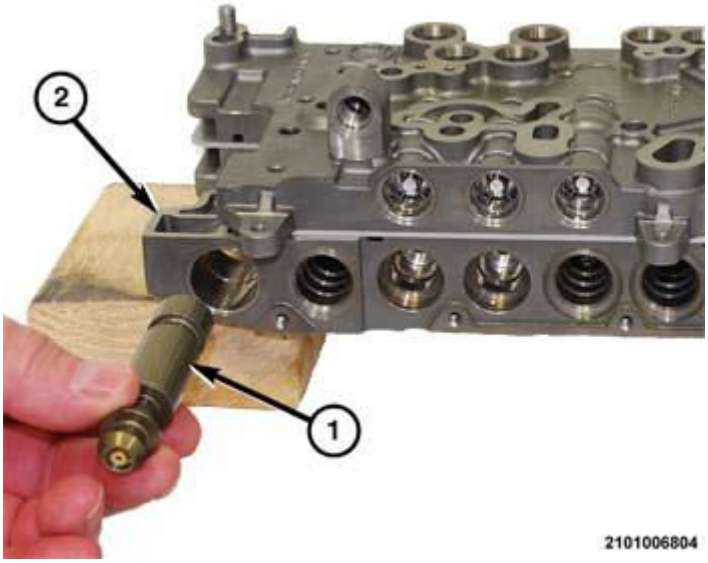

Fig. 732: Parking Lock Valve & Outer Valve Body
Courtesy of CHRYSLER GROUP, LLC

9. Remove the parking lock valve (1) from the outer valve body (2).

INSTALLATION

INSTALLATION

Place the valve body on a clean work surface supported on each end by wooden blocks with the upper half facing upward.

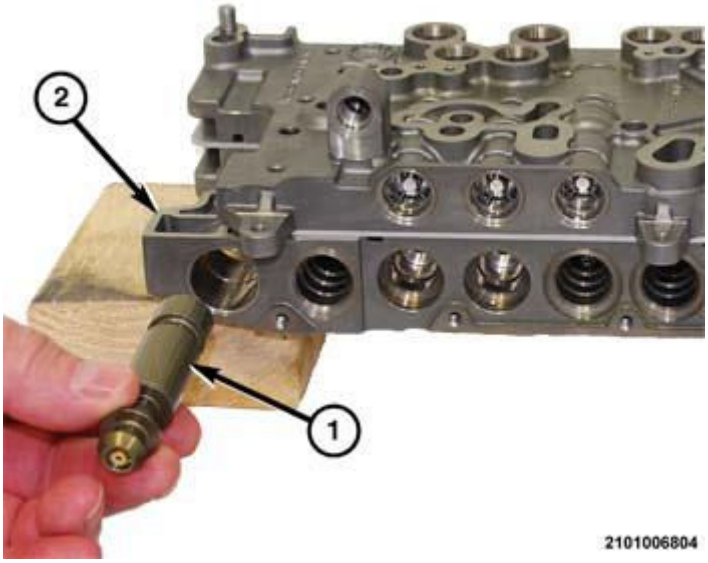

Fig. 733: Parking Lock Valve & Outer Valve Body

Courtesy of CHRYSLER GROUP, LLC

1. Insert the parking lock valve into the bore in the outer valve body.

Fig. 734: Solenoid Valves & Outer Valve Body
Courtesy of CHRYSLER GROUP, LLC

2. Insert the solenoids (3) straight into the outer valve body (2).

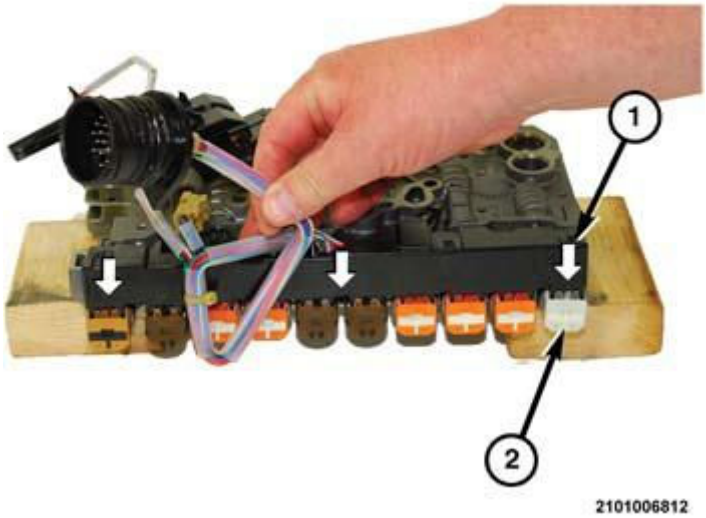

Fig. 735: Test Fitting Wire Connector
Courtesy of CHRYSLER GROUP, LLC

3. Test fit the wire connector (1) into the solenoid connectors (2) to assure alignment.

4. Remove the wire connector with care not to rotate the solenoids.

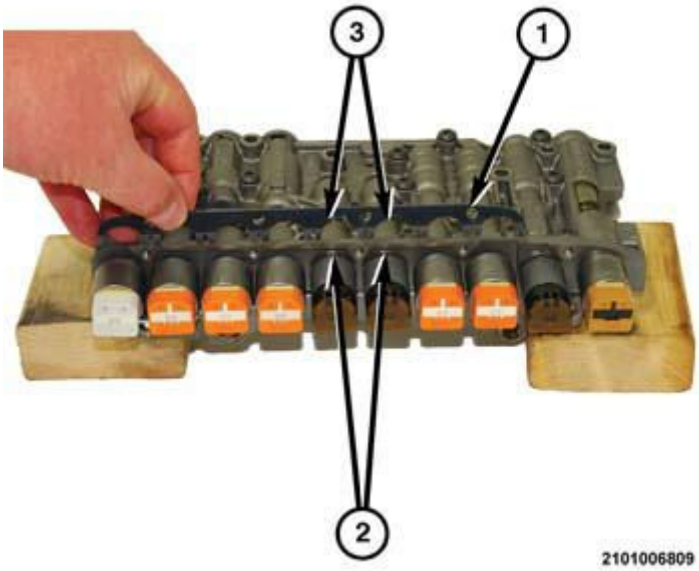

Fig. 736: Placing Large Retainer In Position On Valve Body
Courtesy of CHRYSLER GROUP, LLC

5. Turn the valve body over so the inner valve body (1) is on top.
6. Place the large retainer (1) in position on the valve body with the index tabs (3) on the retainer in the notches (2) on the center dog clutch solenoids.

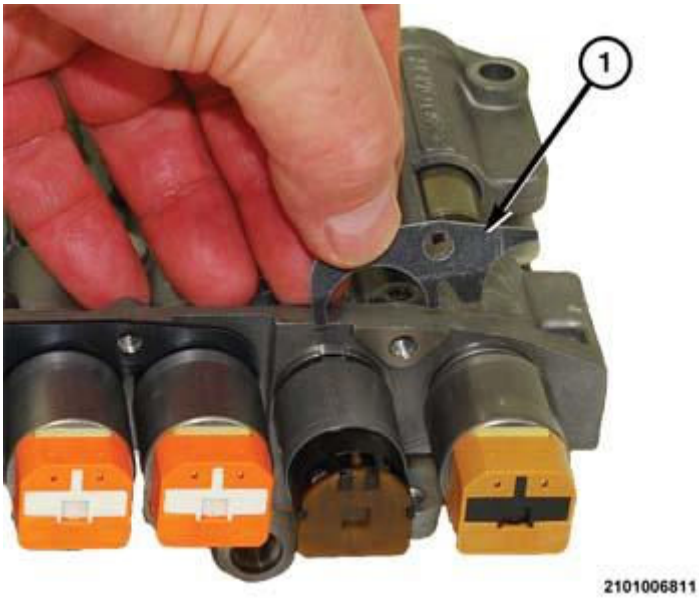

Fig. 737: View Of Solenoid Valve Small Retainer
Courtesy of CHRYSLER GROUP, LLC

7. Place the small retainer (1) in position on the valve body.

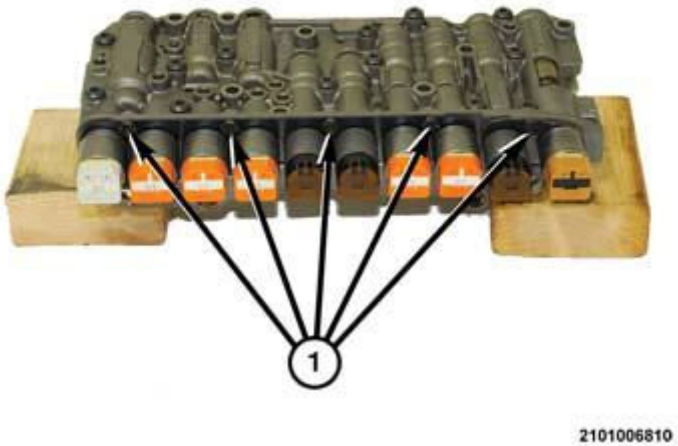

Fig. 738: View Of Solenoid Valve Retainer
Courtesy of CHRYSLER GROUP, LLC

8. Install the screws (1) to hold the solenoid retainers to the outer valve body.
9. Install the valve body in the transmission.
10. Perform the Valve Body Solenoid Learn procedure if the valve body and/or the TCM was replaced during a repair.
11. Perform Transmission Verification Test-948TE. Refer to **STANDARD PROCEDURE** .

SHIFT, BRAKE INTERLOCK

DESCRIPTION

DESCRIPTION

The Brake Transmission Shift Interlock (BTSI) system prevents the driver from shifting out of Park unless the service brake pedal is actuated. The BTSI system is a "Power to Release" shift mechanism. The system is mechanically locked in Park until power is applied to the solenoid contained within the shifter. No brake interlock adjustment is required. In the event of a solenoid problem or power loss, the shifter cannot be moved from Park unless a manual override is actuated. A BTSI override mechanism is provided with this shifter to allow the vehicle to be shifted out of PARK in the event of an electrical failure.

OPERATION

OPERATION

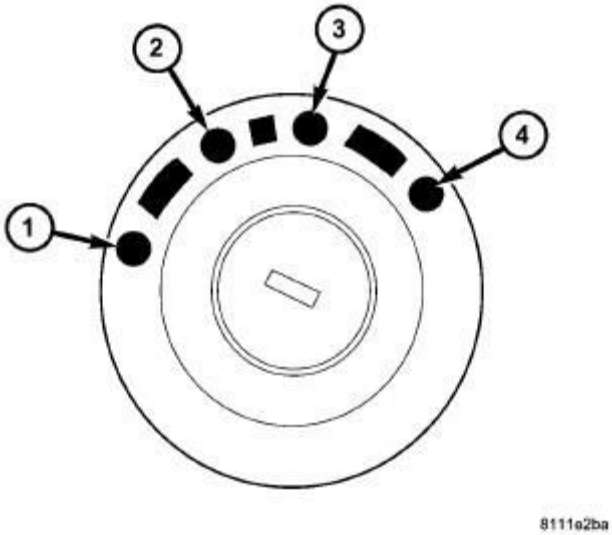

Fig. 739: Ignition Key/Switch Positions
Courtesy of CHRYSLER GROUP, LLC

1 - LOCK 2 - ACC 3 - ON 4 - START

The Brake Transmission Shifter/Ignition Interlock (BTSI) is engaged whenever the ignition switch is in the LOCK (1) position. An additional electrically activated feature will prevent shifting out of the PARK position unless the brake pedal is depressed at least one-half inch. A solenoid in the shifter assembly is energized when the ignition is in the ON position and the brake pedal is depressed. When the key is in the ON position and the brake pedal is depressed, the shifter is unlocked and will move into any position. The interlock system also prevents the ignition switch from being turned to the LOCK position, unless the shifter is in the gated PARK position.

The following chart describes the normal operation of the Brake Transmission Shift Interlock (BTSI) system. If the "expected response" differs from the vehicle's response, then system repair and/or adjustment is necessary.

ACTION	EXPECTED RESPONSE
1. Turn key to the "ACC" position and depress brake pedal.	1. Shifter CAN be shifted out of park.
2. Turn key to the "ON" position, with foot off of brake pedal.	2. Shifter CANNOT be shifted out of park.
3. Turn key to the "ON" position and depress the brake pedal.	3. Shifter CAN be shifted out of park.
4. Leave shifter in any gear, except "PARK", and try to return key to the "LOCK" position.	4. Key cannot be returned to the "LOCK" position.

5. Return shifter to "PARK" and try to remove the key.	5. Key can be removed (after returning to "LOCK" position).
6. With the key removed, and the brake depressed, try to shift out of "PARK".	6. Shifter cannot be shifted out of "PARK".
NOTE: Any failure to meet these expected responses requires system adjustment or repair.	

STANDARD PROCEDURE

BTSI OVERRIDE

If a malfunction occurs and the shift lever cannot be moved out of the PARK position, you can use the following procedure to temporarily move the shift lever.

1. Turn the engine OFF.
2. Apply the parking brake.

Fig. 740: Removing Shifter Bezel And Boot Assembly
Courtesy of CHRYSLER GROUP, LLC

3. Using a screwdriver (2) or similar tool, carefully separate the shifter bezel and boot assembly (1) from the center console bezel.
4. Press and maintain firm pressure on the brake pedal.

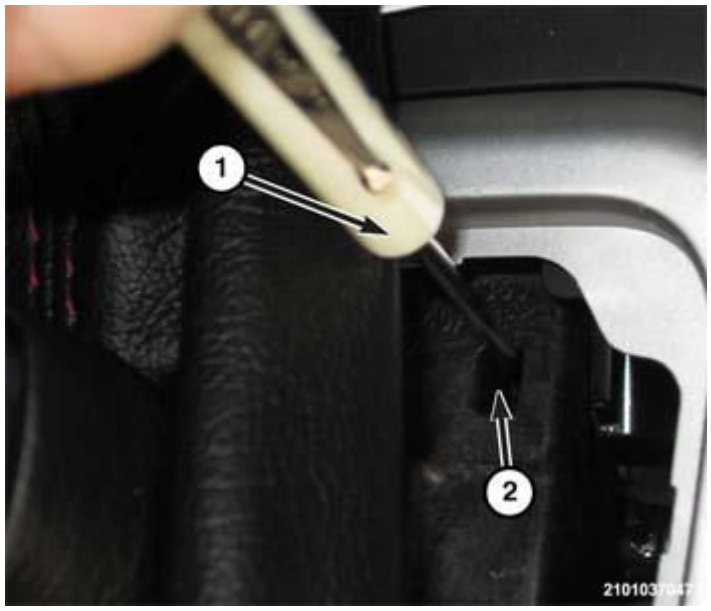

Fig. 741: Holding The Override Release Lever Down
Courtesy of CHRYSLER GROUP, LLC

5. Insert a small screwdriver (1) or similar tool down into the shift lever override access hole (2) (at the right front corner of the shift lever assembly), and push and hold the override release lever down.
6. Move the shift lever to the NEUTRAL position
7. The vehicle may then be started in NEUTRAL.
8. Reinstall the shift lever boot.

2014 AUTOMATIC TRANSMISSION

Electronic Shift Module (ESM) - Electrical Diagnostics, 948TE - Cherokee

DIAGNOSTIC CODE INDEX

DIAGNOSTIC CODE INDEX

DTC	Description
P0606-49	INTERNAL CONTROL PROCESSOR - INTERNAL ELECTRONIC FAILURE
P0929-1D	GEAR SHIFT LOCK SOLENOID/ACTUATOR CONTROL CIRCUIT 1 PERFORMANCE - CIRCUIT CURRENT OUT OF RANGE
P1C81-49	SHIFT LEVER POSITION INDETERMINATE - INTERNAL ELECTRONIC FAILURE
P1C81-54	SHIFT LEVER POSITION INDETERMINATE-MISSING CALIBRATION
P1C81-62	SHIFT LEVER POSITION INDETERMINATE - SIGNAL COMPARE FAILURE
P1C81-78	SHIFT LEVER POSITION INDETERMINATE - ALIGNMENT OR ADJUSTMENT INCORRECT
P1C84-63	AUTOSTICK DISENGAGE FAILURE - CIRCUIT / COMPONENT PROTECTION TIME-OUT
P1C86-1D	PRNDL DISPLAY - CIRCUIT CURRENT OUT OF RANGE
P1C8B-16	BATTERY VOLTAGE - CIRCUIT VOLTAGE BELOW THRESHOLD
P1C8B-17	BATTERY VOLTAGE - CIRCUIT VOLTAGE ABOVE THRESHOLD
U0001-00	CAN C BUS
U0100-87	LOST COMMUNICATION WITH ECM/PCM - MISSING MESSAGE
U0101-87	LOST COMMUNICATION WITH TCM-MISSING MESSAGE
U0140-87	LOST COMMUNICATION WITH BODY CONTROL MODULE-MISSING MESSAGE
U0401-86	IMPLAUSIBLE DATA RECEIVED FROM ECM/PCM-SIGNAL INVALID
U0402-86	IMPLAUSIBLE DATA RECEIVED FROM TCM - SIGNAL INVALID
U0422-86	IMPLAUSIBLE DATA RECEIVED FROM BODY CONTROL MODULE - SIGNAL INVALID

DIAGNOSIS AND TESTING

P0606-49-INTERNAL CONTROL PROCESSOR - INTERNAL ELECTRONIC FAILURE

For a complete wiring diagram, **refer to appropriate SYSTEM WIRING DIAGRAMS article** .

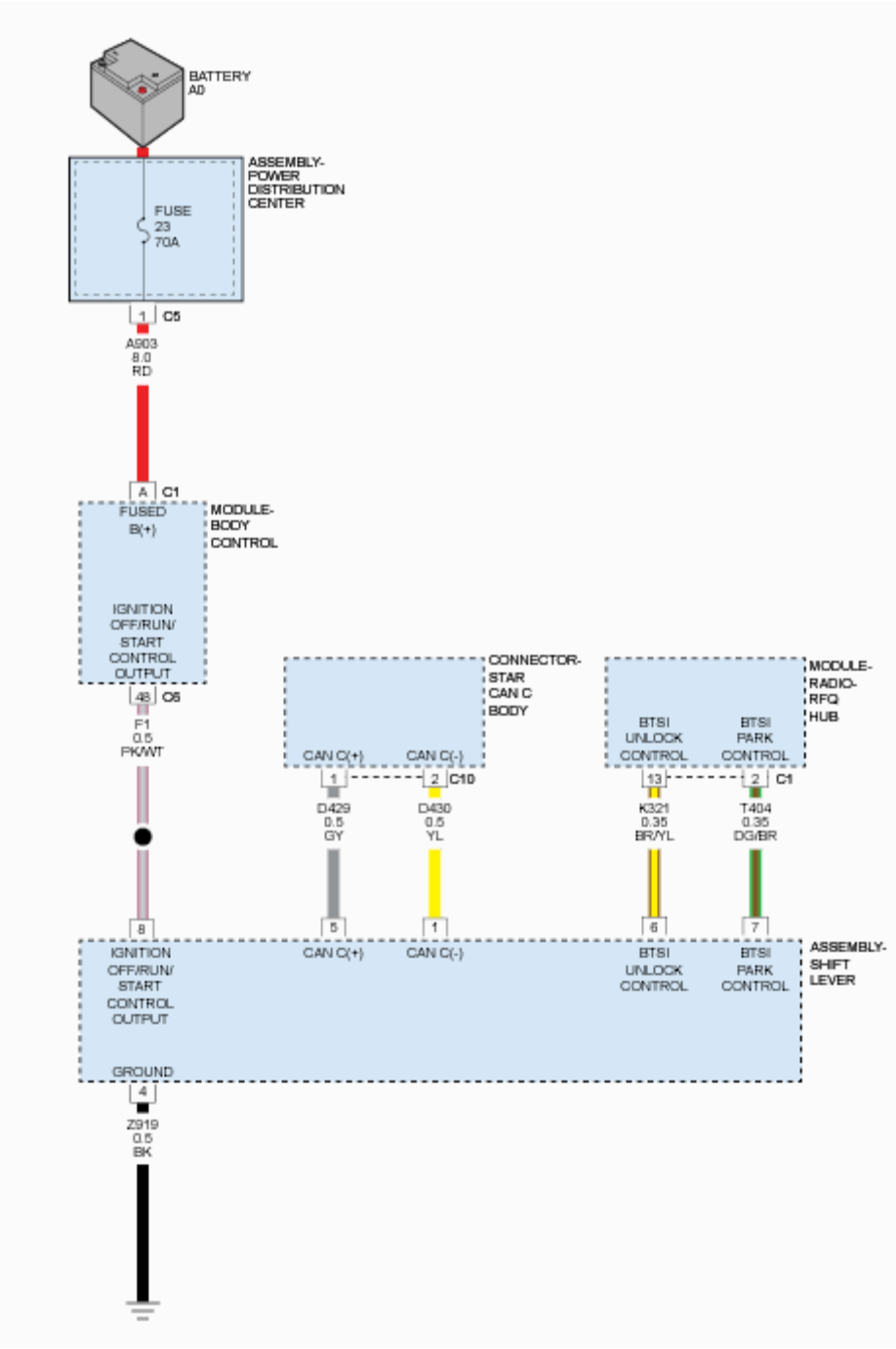

Fig. 1: Gear Shift Module (GSM) / Electronic Shift Module (ESM) Circuit Diagram
Courtesy of CHRYSLER GROUP, LLC

THEORY OF OPERATION

The Gear Shift Module (GSM) / Electronic Shift Module (ESM) performs various internal tests to verify proper controller operation. This DTC indicates that there is an error with the Shifter's internal processor.

WHEN MONITORED

Continuously with the ignition in the run position.

SET CONDITION

If the Shift Lever Assembly controller detects an internal fault.

POSSIBLE CAUSES

Possible Causes
SHIFTER LEVER ASSEMBLY

Always perform the Pre-Diagnostic Troubleshooting procedure before proceeding. Refer to STANDARD PROCEDURE.

DIAGNOSTIC TEST

SHIFTER LEVER ASSEMBLY

Repair

- Using the schematics as a guide, check the Gear Shift / Electronic Shifter Control Module terminals for corrosion, damage, or terminal push out. Pay particular attention to all power and ground circuits. If no problems are found, replace the Shift Lever Assembly. Refer to **SHIFTER, FLOOR CONSOLE, REMOVAL** .
- Perform the ESM VERIFICATION TEST. Refer to **ESM VERIFICATION TEST**.

P0929-1D-GEAR SHIFT LOCK SOLENOID/ACTUATOR CONTROL CIRCUIT 1 PERFORMANCE - CIRCUIT CURRENT OUT OF RANGE

For a complete wiring diagram, **refer to appropriate SYSTEM WIRING DIAGRAMS article** .

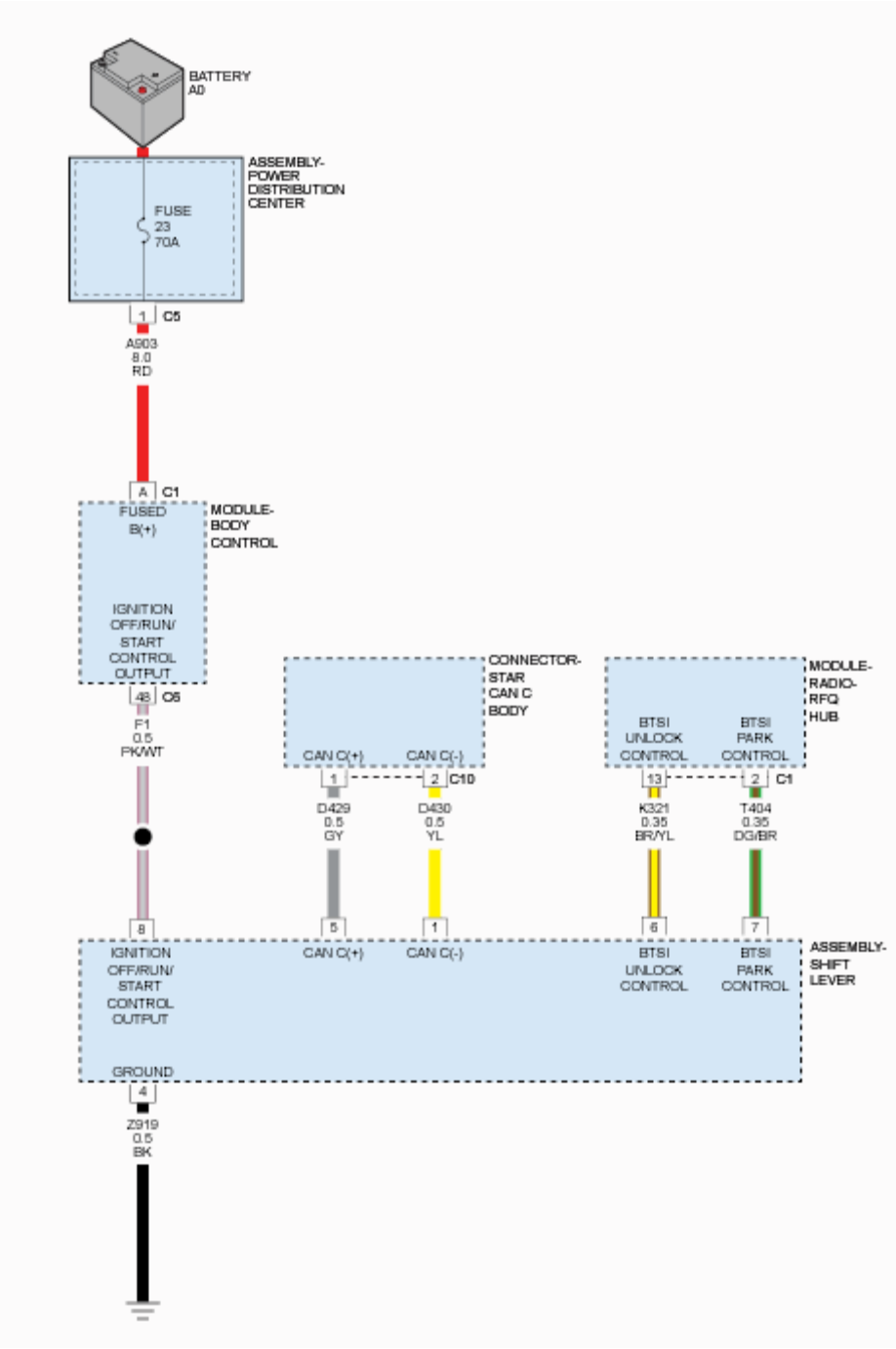

Fig. 2: Gear Shift Module (GSM) / Electronic Shift Module (ESM) Circuit Diagram
Courtesy of CHRYSLER GROUP, LLC

THEORY OF OPERATION

The Gear Shift Module (GSM) / Electronic Shift Module (ESM) performs various internal tests to verify proper controller operation. This DTC indicates that there is a fault with the ESM circuitry or the ESM internal processor.

WHEN MONITORED

Continuously with the ignition in the run position.

SET CONDITION

The ESM controller detects an over or under current condition with Gear Shift Lock Solenoid.

POSSIBLE CAUSES

Possible Causes
ELECTRONIC SHIFT MODULE (ESM) HARNESS CONNECTORS
ELECTRONIC SHIFT MODULE (ESM) INTERNAL ERROR

Always perform the Pre-Diagnostic Troubleshooting procedure before proceeding. Refer to STANDARD PROCEDURE.

DIAGNOSTIC TEST

1. **CHECK IF THE DTC IS CURRENT**
    1. Turn ignition ON, engine NOT running.
    2. Record the Environmental Data for this DTC.
    3. With the scan tool, clear the DTC.
    4. Remove the Shift Lever Assembly bezel and inspect the ESM connectors for proper installation.
    5. Using the Environmental Data recorded earlier, try to duplicate the conditions in which the DTC set. It may be necessary to test drive the vehicle.
    6. With the scan tool, read ESM DTC's.

    Did the DTC reset?

    Yes

    - Using the schematics as a guide, check the ESM terminals for corrosion, damage or terminal push out. Pay particular attention to power and ground circuits. Check Service Information Tune-ups or Service Bulletins for possible causes that may apply. If no trouble is found, replace the Shift Lever Assembly. Refer to **SHIFTER, FLOOR CONSOLE, REMOVAL** .
    - Perform the ESM VERIFICATION TEST. Refer to **ESM VERIFICATION TEST**.

    No

    - Go To 2
2. **INTERMITTENT WIRING AND CONNECTORS**
    1. The conditions necessary to set this DTC are not present at this time.
    2. Using the schematics as a guide, inspect the wiring and connectors specific to this circuit.

3. Wiggle the wiring and connectors while checking for any possible open or shorted circuits.
4. Check for any Service Information Tune-ups or Technical Service Bulletins that may apply.

   Were any problems found?

   Yes

   - Repair as necessary.
   - Perform the ESM VERIFICATION TEST. Refer to **ESM VERIFICATION TEST**.

   No

   - Test Complete.

P1C81-49-SHIFT LEVER POSITION INDETERMINATE - INTERNAL ELECTRONIC FAILURE

For a complete wiring diagram, **refer to appropriate SYSTEM WIRING DIAGRAMS article** .

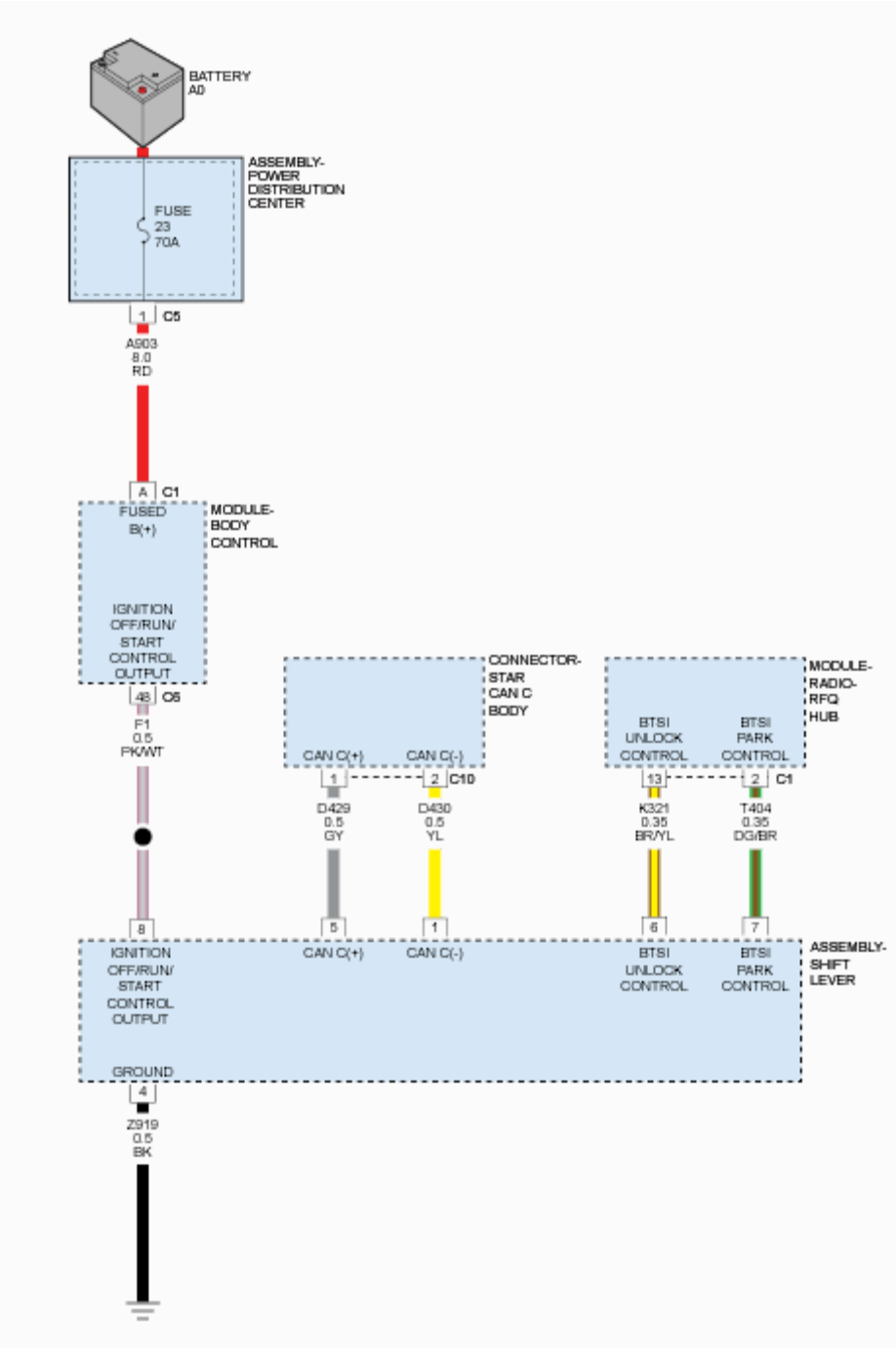

Fig. 3: Gear Shift Module (GSM) / Electronic Shift Module (ESM) Circuit Diagram
Courtesy of CHRYSLER GROUP, LLC

THEORY OF OPERATION

The Gear Shift Module (GSM) / Electronic Shift Module (ESM) performs various internal tests to verify proper controller operation. This DTC indicates that there is a fault with the ESM circuitry or the ESM internal processor.

WHEN MONITORED

Continuously with the ignition in the run position.

SET CONDITION

The ESM controller detects an internal sensor electrical error.

POSSIBLE CAUSES

Possible Causes
ELECTRONIC SHIFT MODULE (ESM) INTERNAL ERROR

Always perform the Pre-Diagnostic Troubleshooting procedure before proceeding. Refer to STANDARD PROCEDURE.

DIAGNOSTIC TEST

1. **CHECK IF THE DTC IS CURRENT**
    1. Turn the Ignition ON, Engine not running.
    2. Record the Environmental Data for this DTC.
    3. With the scan tool, clear the DTC.
    4. Using the Environmental Data recorded earlier, try to duplicate the conditions in which the DTC set. It may be necessary to test drive the vehicle.
    5. With the scan tool, read ESM DTC's.

    Did the DTC reset?

    Yes

    - Using the schematics as a guide, check the ESM terminals for corrosion, damage or terminal push out. Pay particular attention to power and ground circuits. Check Service Information Tune-ups or Service Bulletins for possible causes that may apply. If no trouble is found, replace the Shift Lever Assembly. Refer to **SHIFTER, FLOOR CONSOLE, REMOVAL** .
    - Perform the ESM VERIFICATION TEST. Refer to **ESM VERIFICATION TEST**.

    No

    - Go To 2
2. **INTERMITTENT WIRING AND CONNECTORS**
    1. The conditions necessary to set this DTC are not present at this time.
    2. Using the schematics as a guide, inspect the wiring and connectors specific to this circuit.
    3. Wiggle the wiring and connectors while checking for any possible open or shorted circuits.
    4. Check for any Service Information Tune-ups or Technical Service Bulletins that may apply.

Were any problems found?

Yes

- Repair as necessary.
- Perform the ESM VERIFICATION TEST. Refer to **ESM VERIFICATION TEST**.

No

- Test Complete.

P1C81-54-SHIFT LEVER POSITION INDETERMINATE-MISSING CALIBRATION

For a complete wiring diagram, **refer to appropriate SYSTEM WIRING DIAGRAMS article** .

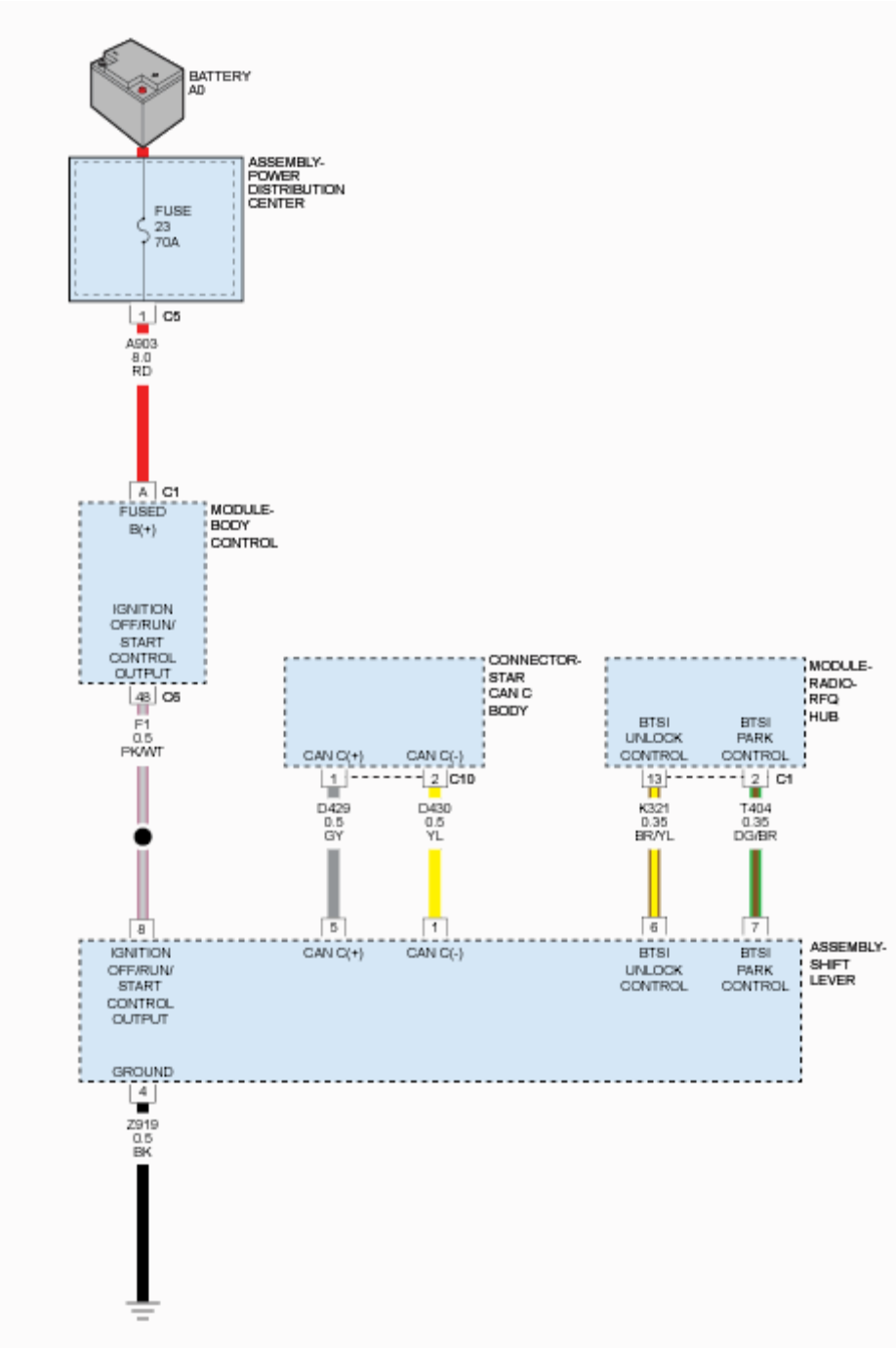

Fig. 4: Gear Shift Module (GSM) / Electronic Shift Module (ESM) Circuit Diagram
Courtesy of CHRYSLER GROUP, LLC

THEORY OF OPERATION

The Gear Shift Module (GSM) / Electronic Shift Module (ESM) performs various internal tests to verify proper controller operation. This DTC indicates that there is a fault with the ESM circuitry or the ESM internal processor.

WHEN MONITORED

Continuously with the ignition in the run position.

SET CONDITION

The ESM controller detects an internal sensor missing calibration data error.

POSSIBLE CAUSES

Possible Causes
ELECTRONIC SHIFT MODULE (ESM) INTERNAL ERROR

Always perform the Pre-Diagnostic Troubleshooting procedure before proceeding. Refer to STANDARD PROCEDURE.

DIAGNOSTIC TEST

1. **CHECK IF THE DTC IS CURRENT**
    1. Turn the Ignition ON, Engine not running.
    2. Record the Environmental Data for this DTC.
    3. With the scan tool, clear the DTC.
    4. Using the Environmental Data recorded earlier, try to duplicate the conditions in which the DTC set. It may be necessary to test drive the vehicle.
    5. With the scan tool, read ESM DTC's.

    Did the DTC reset?

    Yes

    - Using the schematics as a guide, check the ESM terminals for corrosion, damage or terminal push out. Pay particular attention to power and ground circuits. Check Service Information Tune-ups or Service Bulletins for possible causes that may apply. If no trouble is found, replace the Shift Lever Assembly. Refer to **SHIFTER, FLOOR CONSOLE, REMOVAL** .
    - Perform the ESM VERIFICATION TEST. Refer to **ESM VERIFICATION TEST**.

    No

    - Go To 2
2. **INTERMITTENT WIRING AND CONNECTORS**
    1. The conditions necessary to set this DTC are not present at this time.
    2. Using the schematics as a guide, inspect the wiring and connectors specific to this circuit.
    3. Wiggle the wiring and connectors while checking for any possible open or shorted circuits.
    4. Check for any Service Information Tune-ups or Technical Service Bulletins that may apply.

Were any problems found?

Yes

- Repair as necessary.
- Perform the ESM VERIFICATION TEST. Refer to **ESM VERIFICATION TEST**.

No

- Test Complete.

P1C81-62-SHIFT LEVER POSITION INDETERMINATE - SIGNAL COMPARE FAILURE

For a complete wiring diagram, **refer to appropriate SYSTEM WIRING DIAGRAMS article** .

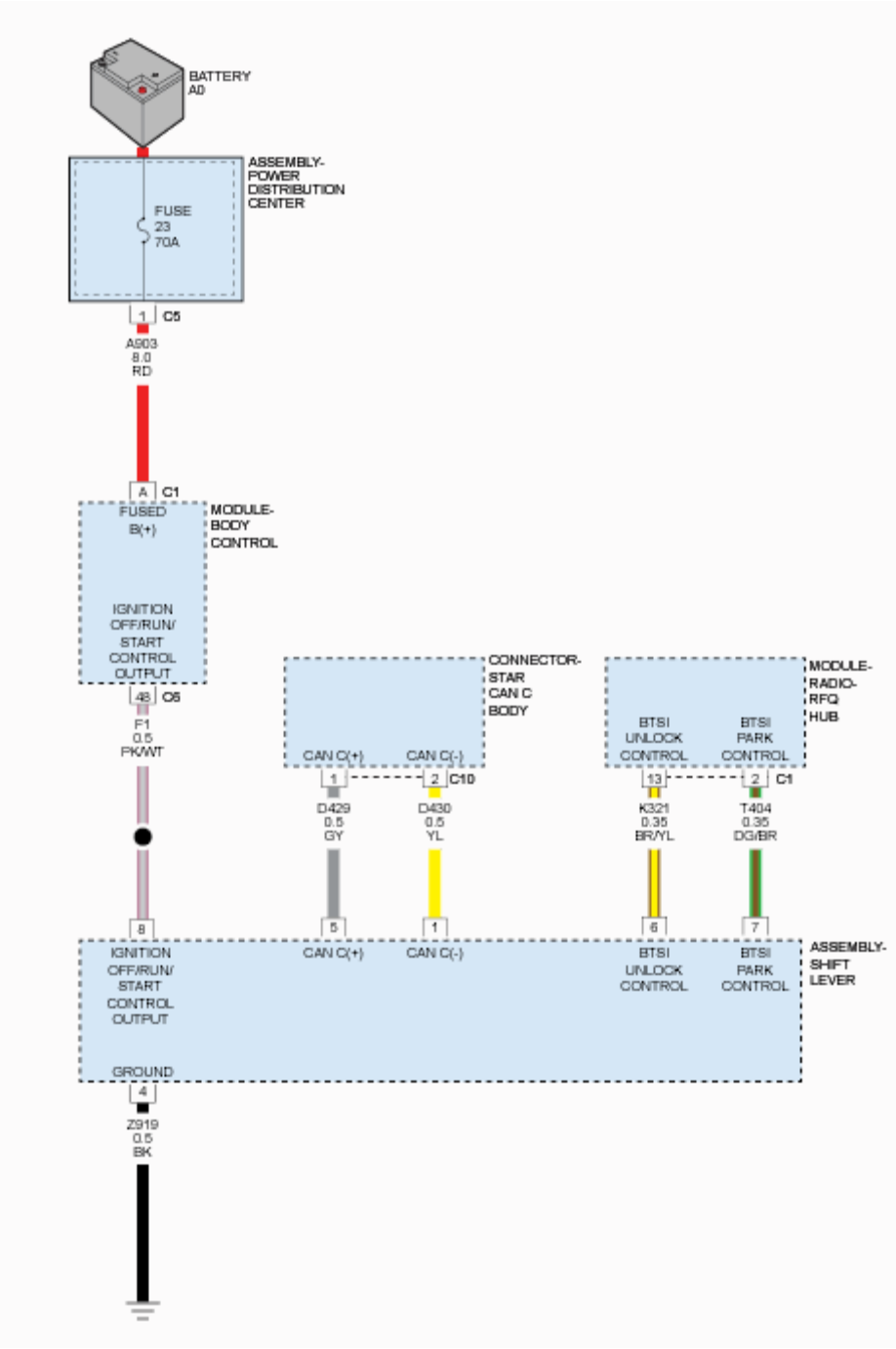

Fig. 5: Gear Shift Module (GSM) / Electronic Shift Module (ESM) Circuit Diagram
Courtesy of CHRYSLER GROUP, LLC

THEORY OF OPERATION

The Gear Shift Module (GSM) / Electronic Shift Module (ESM) performs various internal tests to verify proper controller operation. This DTC indicates that there is a fault with the ESM circuitry or the ESM internal processor.

WHEN MONITORED

Continuously with the ignition in the run position.

SET CONDITION

The ESM controller detects a sensor mismatch error.

POSSIBLE CAUSES

Possible Causes
ELECTRONIC SHIFT MODULE (ESM) INTERNAL ERROR

Always perform the Pre-Diagnostic Troubleshooting procedure before proceeding. Refer to STANDARD PROCEDURE.

DIAGNOSTIC TEST

1. **CHECK IF THE DTC IS CURRENT**
    1. Turn the Ignition ON, Engine not running.
    2. Record the Environmental Data for this DTC.
    3. With the scan tool, clear the DTC.
    4. Using the Environmental Data recorded earlier, try to duplicate the conditions in which the DTC set. It may be necessary to test drive the vehicle.
    5. With the scan tool, read ESM DTC's.

    Did the DTC reset?

    Yes

    - Using the schematics as a guide, check the ESM terminals for corrosion, damage or terminal push out. Pay particular attention to power and ground circuits. Check Service Information Tune-ups or Service Bulletins for possible causes that may apply. If no trouble is found, replace the Shift Lever Assembly. Refer to **SHIFTER, FLOOR CONSOLE, REMOVAL** .
    - Perform the ESM VERIFICATION TEST. Refer to **ESM VERIFICATION TEST**.

    No

    - Go To 2
2. **INTERMITTENT WIRING AND CONNECTORS**
    1. The conditions necessary to set this DTC are not present at this time.
    2. Using the schematics as a guide, inspect the wiring and connectors specific to this circuit.
    3. Wiggle the wiring and connectors while checking for any possible open or shorted circuits.
    4. Check for any Service Information Tune-ups or Technical Service Bulletins that may apply.

Were any problems found?

Yes

- Repair as necessary.
- Perform the ESM VERIFICATION TEST. Refer to **ESM VERIFICATION TEST**.

No

- Test Complete.

P1C81-78-SHIFT LEVER POSITION INDETERMINATE - ALIGNMENT OR ADJUSTMENT INCORRECT

For a complete wiring diagram, **refer to appropriate SYSTEM WIRING DIAGRAMS article** .

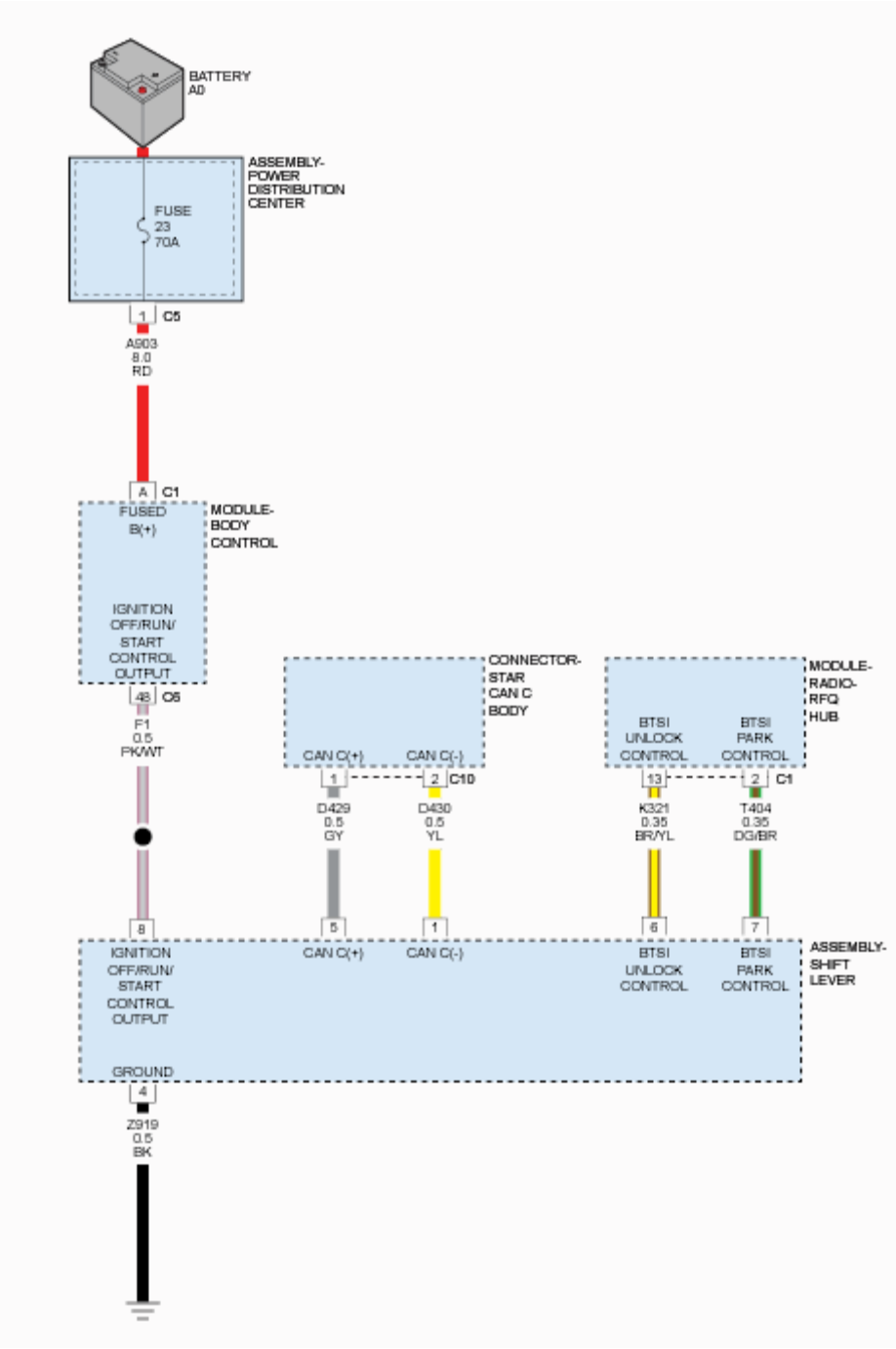

Fig. 6: Gear Shift Module (GSM) / Electronic Shift Module (ESM) Circuit Diagram
Courtesy of CHRYSLER GROUP, LLC

THEORY OF OPERATION

The Gear Shift Module (GSM) / Electronic Shift Module (ESM) performs various internal tests to verify proper controller operation. This DTC indicates that there is a fault with the ESM circuitry or the ESM internal processor.

WHEN MONITORED

Continuously with the ignition in the run position.

SET CONDITION

The ESM controller detects the Shift Lever in an invalid position.

POSSIBLE CAUSES

Possible Causes
BINDING SHIFT LEVER
ELECTRONIC SHIFT MODULE (ESM) INTERNAL ERROR

Always perform the Pre-Diagnostic Troubleshooting procedure before proceeding. Refer to STANDARD PROCEDURE.

DIAGNOSTIC TEST

1. **CHECK IF THE DTC IS CURRENT**
    1. Turn the Ignition ON, Engine not running.
    2. Record the Environmental Data for this DTC.
    3. With the scan tool, clear the DTC.
    4. Using the Environmental Data recorded earlier, try to duplicate the conditions in which the DTC set. It may be necessary to test drive the vehicle.
    5. Attempt to move the shift lever out of the normal gate path several times.
    6. With the scan tool, read ESM DTC's.

    Did the DTC reset?

    Yes

    - Using the schematics as a guide, check the ESM terminals for corrosion, damage or terminal push out. Pay particular attention to power and ground circuits. Check Service Information Tune-ups or Service Bulletins for possible causes that may apply. If no trouble is found, replace the Shift Lever Assembly. Refer to **SHIFTER, FLOOR CONSOLE, REMOVAL** .
    - Perform the ESM VERIFICATION TEST. Refer to **ESM VERIFICATION TEST**.

    No

    - Go To 2
2. **INTERMITTENT WIRING AND CONNECTORS**
    1. The conditions necessary to set this DTC are not present at this time.
    2. Using the schematics as a guide, inspect the wiring and connectors specific to this circuit.

3. Wiggle the wiring and connectors while checking for any possible open or shorted circuits.
4. Check for any Service Information Tune-ups or Technical Service Bulletins that may apply.

   Were any problems found?

   Yes

   - Repair as necessary.
   - Perform the ESM VERIFICATION TEST. Refer to **ESM VERIFICATION TEST**.

   No

   - Test Complete.

P1C84-63-AUTOSTICK DISENGAGE FAILURE - CIRCUIT / COMPONENT PROTECTION TIME-OUT

For a complete wiring diagram, **refer to appropriate SYSTEM WIRING DIAGRAMS article** .

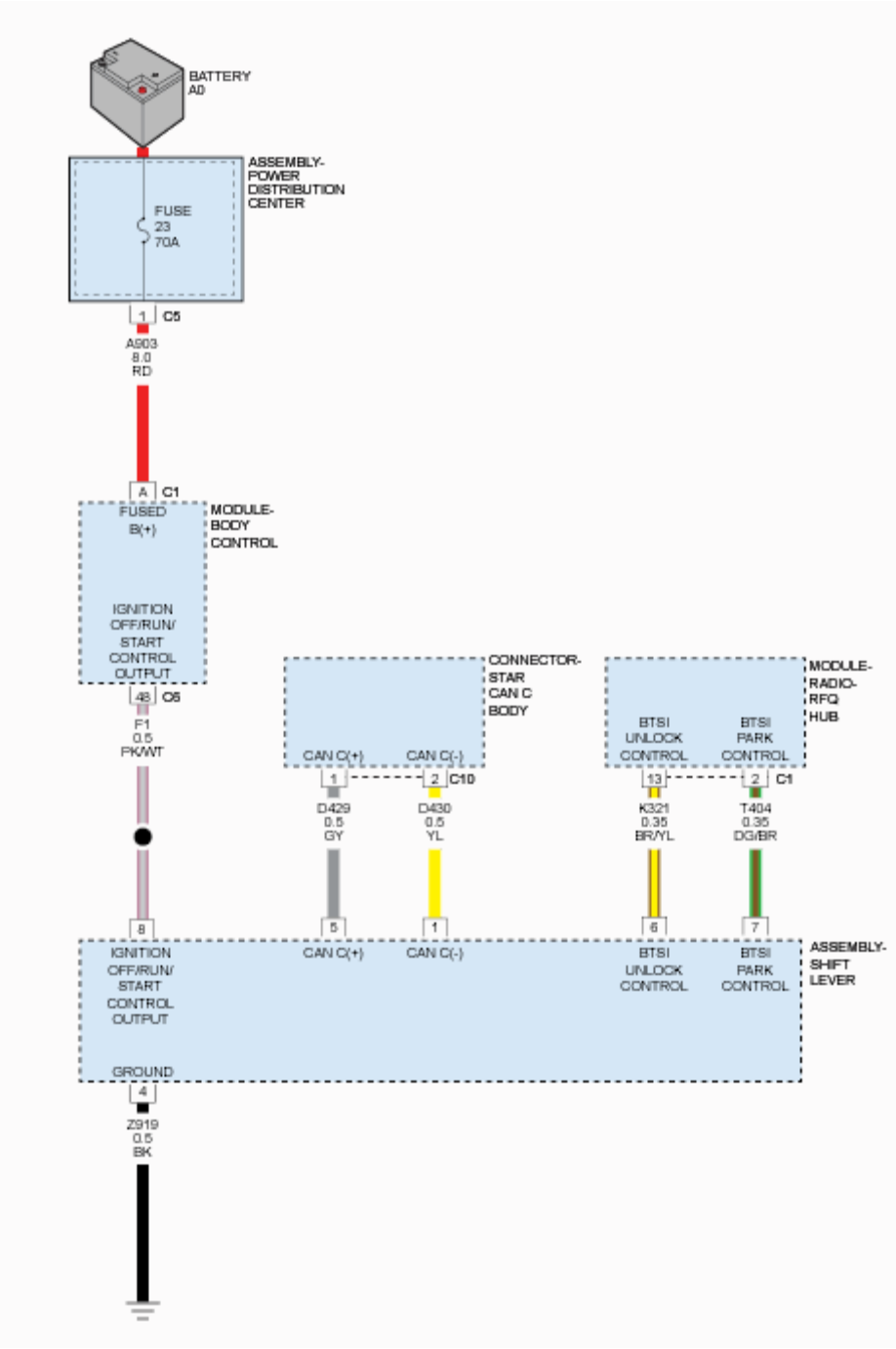

Fig. 7: Gear Shift Module (GSM) / Electronic Shift Module (ESM) Circuit Diagram
Courtesy of CHRYSLER GROUP, LLC

THEORY OF OPERATION

The Gear Shift Module (GSM) / Electronic Shift Module (ESM) performs various internal tests to verify proper controller operation. This DTC indicates that there is a fault with the ESM circuitry or the ESM internal processor.

WHEN MONITORED

Continuously with the ignition in the run position.

SET CONDITION

The ESM controller detects the Autostick Upshift or Downshift switch stuck for more than 60 seconds.

POSSIBLE CAUSES

Possible Causes
AUTOSTICK UPSHIFT OR DOWNSHIFT SWITCH STUCK
ELECTRONIC SHIFT MODULE (ESM) INTERNAL ERROR

Always perform the Pre-Diagnostic Troubleshooting procedure before proceeding. Refer to STANDARD PROCEDURE.

DIAGNOSTIC TEST

1. **CHECK IF THE DTC IS CURRENT**

NOTE: A vehicle operator leaning or pushing on the shift lever for more than 60 seconds could set this DTC.

1. Turn the Ignition ON, Engine not running.
2. Record the Environmental Data for this DTC.
3. With the scan tool, erase DTCs.
4. Using the Environmental Data recorded earlier, try to duplicate the conditions in which the DTC set. It may be necessary to test drive the vehicle.
5. Operate the Autostick in the upshift and downshift positions. Shift lever should return to normal position when released.
6. With the scan tool, read ESM DTC's.

Did the Shift Lever stick in either of the Autostick positions or did the DTC reset?

Yes

- Using the schematics as a guide, check the ESM terminals for corrosion, damage or terminal push out. Pay particular attention to power and ground circuits. Check Service Information Tune-ups or Service Bulletins for possible causes that may apply. If no trouble is found, replace the Shift Lever Assembly. Refer to **SHIFTER, FLOOR CONSOLE, REMOVAL** .
- Perform the ESM VERIFICATION TEST. Refer to **ESM VERIFICATION TEST**.

No

- Go To 2

2. **INTERMITTENT WIRING AND CONNECTORS**
    1. The conditions necessary to set this DTC are not present at this time.
    2. Using the schematics as a guide, inspect the wiring and connectors specific to this circuit.
    3. Wiggle the wiring and connectors while checking for any possible open or shorted circuits.
    4. Check for any Service Information Tune-ups or Technical Service Bulletins that may apply.

    Were any problems found?

    Yes

    - Repair as necessary.
    - Perform the ESM VERIFICATION TEST. Refer to **ESM VERIFICATION TEST**.

    No

    - Test Complete.

P1C86-1D-PRNDL DISPLAY - CIRCUIT CURRENT OUT OF RANGE

For a complete wiring diagram, **refer to appropriate SYSTEM WIRING DIAGRAMS article** .

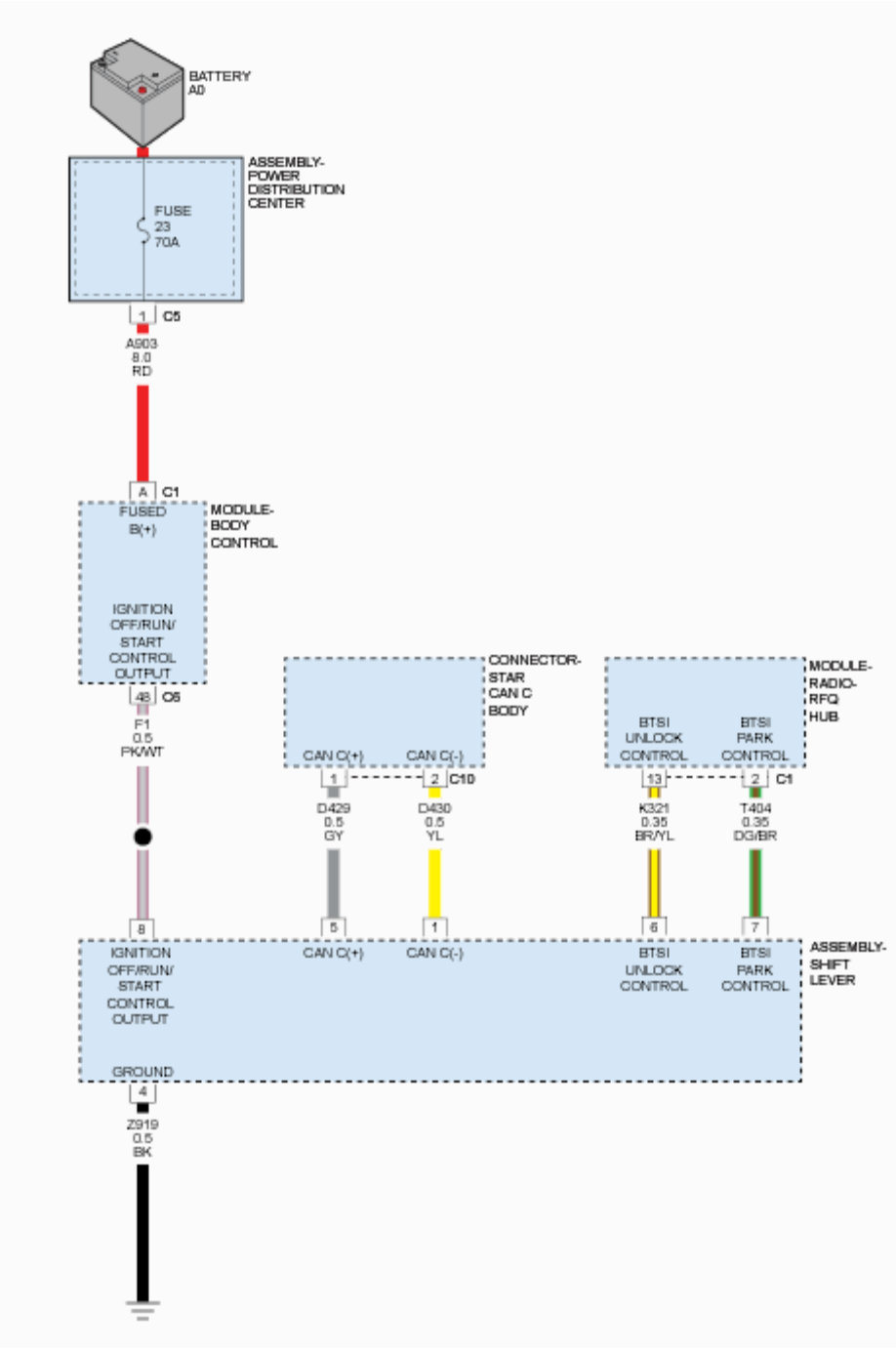

Fig. 8: Gear Shift Module (GSM) / Electronic Shift Module (ESM) Circuit Diagram
Courtesy of CHRYSLER GROUP, LLC

THEORY OF OPERATION

The Gear Shift Module (GSM) / Electronic Shift Module (ESM) performs various internal tests to verify proper controller operation. This DTC indicates that there is a fault with the ESM circuitry or the ESM internal processor.

WHEN MONITORED

Continuously with the ignition in the run position.

SET CONDITION

The ESM controller detects an error with the PRNDL LED display.

POSSIBLE CAUSES

Possible Causes
ELECTRONIC SHIFT MODULE (ESM) HARNESS CONNECTORS
SHIFT LEVER ASSEMBLY BEZEL
ELECTRONIC SHIFT MODULE (ESM) INTERNAL ERROR

Always perform the Pre-Diagnostic Troubleshooting procedure before proceeding. Refer to STANDARD PROCEDURE.

DIAGNOSTIC TEST

1. **CHECK IF THE DTC IS CURRENT**
    1. Turn the Ignition ON, Engine not running.
    2. Record the Environmental Data for this DTC.
    3. With the scan tool, erase DTCs.
    4. Remove the Shift Lever Assembly bezel and inspect the ESM connectors for proper installation.
    5. Using the Environmental Data recorded earlier, try to duplicate the conditions in which the DTC set. It may be necessary to test drive the vehicle.
    6. With the scan tool, read ESM DTC's.

    Did the DTC reset?

    Yes

    - Using the schematics as a guide, check the ESM terminals for corrosion, damage or terminal push out. Pay particular attention to power and ground circuits. Check Service Information Tune-ups or Service Bulletins for possible causes that may apply. If no trouble is found, replace the Shift Lever Bezel. Refer to **BEZEL, SHIFTER, REMOVAL** .
    - Clear DTCs and recheck for the DTC. If the DTC resets, replace the Shift Lever Assembly. Refer to **SHIFTER, FLOOR CONSOLE, REMOVAL** .
    - Perform the ESM VERIFICATION TEST. Refer to **ESM VERIFICATION TEST**.

    No

    - Go To 2

2. **INTERMITTENT WIRING AND CONNECTORS**
    1. The conditions necessary to set this DTC are not present at this time.
    2. Using the schematics as a guide, inspect the wiring and connectors specific to this circuit.
    3. Wiggle the wiring and connectors while checking for any possible open or shorted circuits.
    4. Check for any Service Information Tune-ups or Technical Service Bulletins that may apply.

    Were any problems found?

    Yes

    - Repair as necessary.
    - Perform the ESM VERIFICATION TEST. Refer to **ESM VERIFICATION TEST**.

    No

    - Test Complete.

P1C8B-16-BATTERY VOLTAGE - CIRCUIT VOLTAGE BELOW THRESHOLD

For a complete wiring diagram, **refer to appropriate SYSTEM WIRING DIAGRAMS article** .

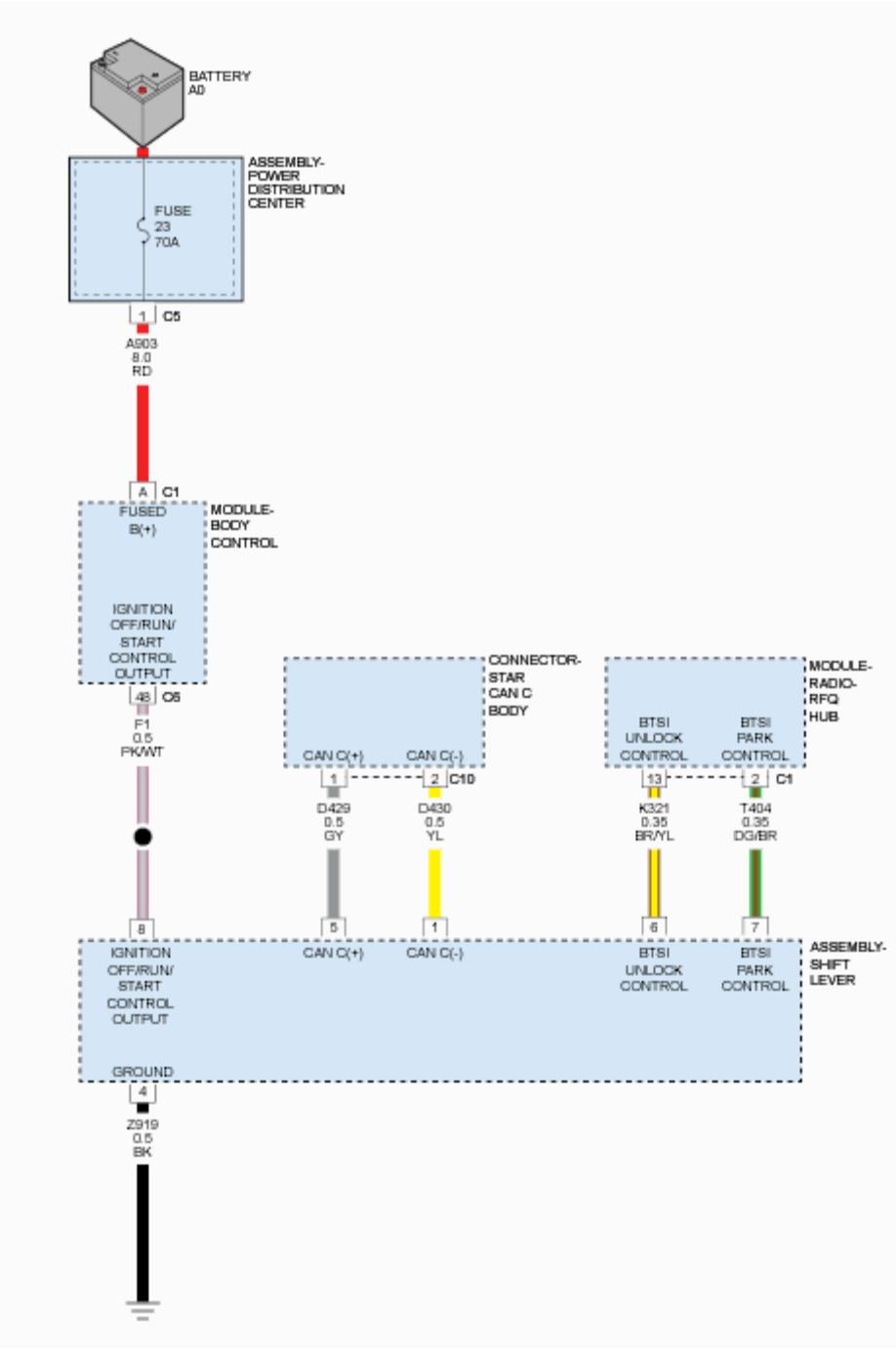

Fig. 9: Gear Shift Module (GSM) / Electronic Shift Module (ESM) Circuit Diagram
Courtesy of CHRYSLER GROUP, LLC

THEORY OF OPERATION

The Electronic Shift Module (ESM) monitors battery voltage. The DTC sets if the monitored battery voltage drops below 8.0 volts and a temporary limp in will be activated. If the voltage rises above 8.0 volts, normal operations is resumed.

WHEN MONITORED

Continuously with the ignition in the run position.

SET CONDITION

When monitored battery voltage drops below 8.0 volts.

POSSIBLE CAUSES

Possible Causes
ELECTRONIC SHIFT MODULE (ESM)
VEHICLE CHARGING SYSTEM
ESM BATTERY CIRCUIT

Always perform the Pre-Diagnostic Troubleshooting procedure before proceeding. Refer to STANDARD PROCEDURE.

DIAGNOSTIC TEST

1. **CHECK FOR ENGINE CHARGING SYSTEM DTCS**
   1. With the scan tool, read Engine DTCs.

      Are any Engine Charging System DTCs present?

      Yes

      - Refer to the **DTC INDEX** article and perform the appropriate diagnostic procedure.
      - Perform the ESM VERIFICATION TEST. Refer to **ESM VERIFICATION TEST**.

      No

      - Go To 2
2. **CHECK ESM POWER CIRCUIT**
   1. Turn the Ignition OFF.
   2. Disconnect the ESM harness connector.
   3. Turn the Ignition ON, Engine not running.
   4. Using a 12-volt test light connected to ground, check the ESM battery power circuit in the Shift Lever Assembly harness connector.

      NOTE: The test light must illuminate brightly. Compare the brightness to that of a direct connection to the battery.

      Does the test light illuminate brightly?

Yes

- Go To 3

No

- Repair the ESM power circuit for high resistance.
- Perform the ESM VERIFICATION TEST. Refer to **ESM VERIFICATION TEST**.

3. **CHECK GROUND CIRCUIT**
   1. Turn the Ignition OFF.
   2. Using a 12-volt test light connected to 12-volts, check the ESM ground circuit in the Shift Lever Assembly harness connector.

NOTE: The test light must illuminate brightly. Compare the brightness to that of a direct connection to the battery.

Does the test light illuminate brightly?

Yes

- Go To 4

No

- Repair the ground circuit for high resistance.
- Perform the ESM VERIFICATION TEST. Refer to **ESM VERIFICATION TEST**.

4. **ELECTRONIC SHIFT MODULE**
   1. Reconnect all disconnected harness connectors.
   2. With the scan tool, erase ESM DTCs.
   3. Start the engine and raise the engine speed to 2, 000 rpm for 10 seconds.
   4. With the scan tool, read ESM DTCs.

Did the DTC reset?

Yes

- Using the schematics as a guide, check the Electronic Shift Module (ESM) terminals for corrosion, damage or terminal push out. Pay particular attention to all power and ground circuits. If no problems are found, replace the ESM in accordance to the Service Information. Refer to **SHIFTER, FLOOR CONSOLE, REMOVAL** .
- Perform the ESM VERIFICATION TEST. Refer to **ESM VERIFICATION TEST**.

No

- Test Complete.

P1C8B-17-BATTERY VOLTAGE - CIRCUIT VOLTAGE ABOVE THRESHOLD

For a complete wiring diagram, **refer to appropriate SYSTEM WIRING DIAGRAMS article** .

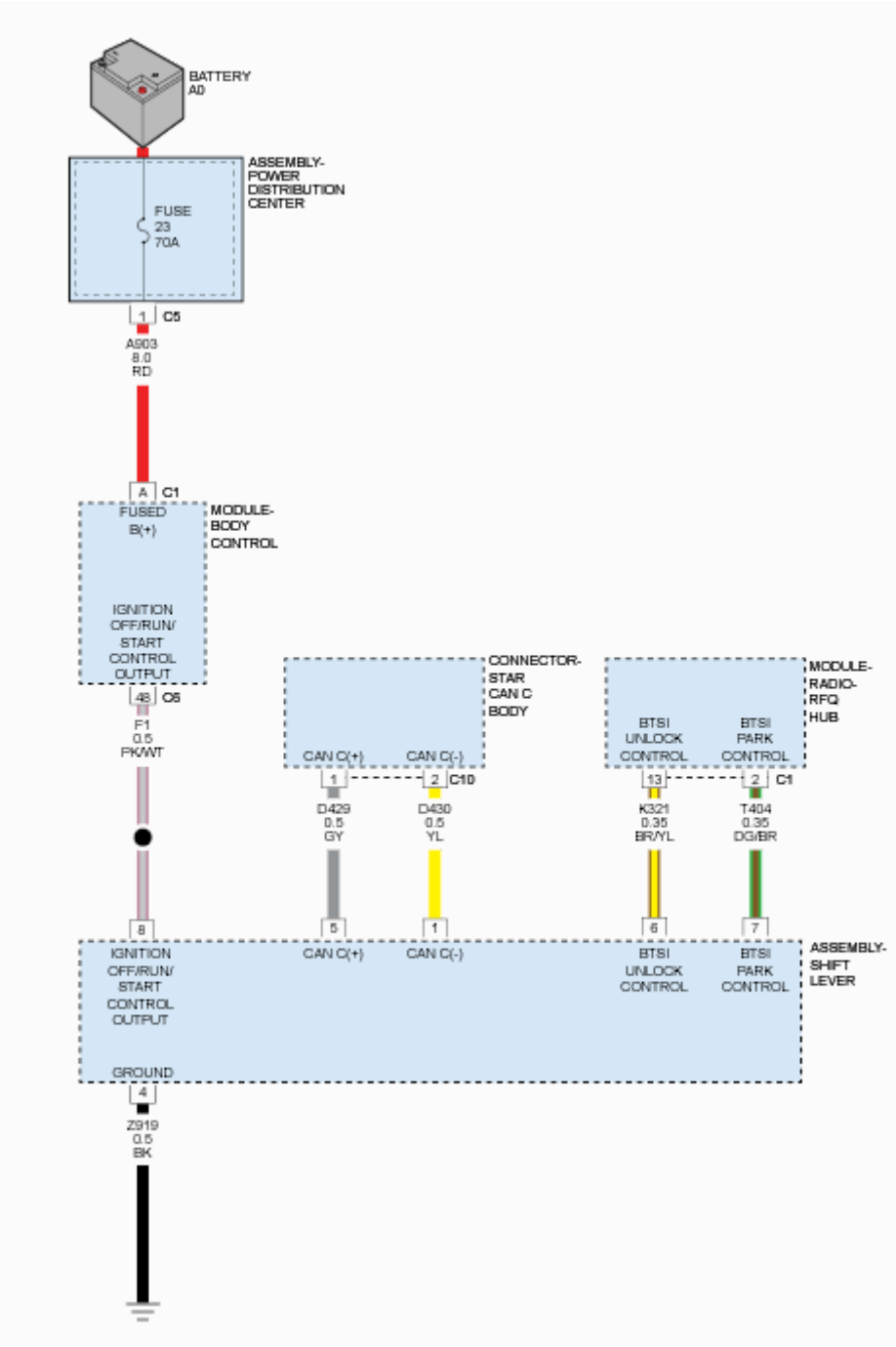

Fig. 10: Gear Shift Module (GSM) / Electronic Shift Module (ESM) Circuit Diagram
Courtesy of CHRYSLER GROUP, LLC

THEORY OF OPERATION

The Electronic Shift Module (ESM) monitors ignition voltage. The DTC will set, if the monitored voltage is above 16.0 volts.

WHEN MONITORED

Continuously with the ignition in the run position.

SET CONDITION

When the monitored battery voltage rises above 16.0 volts.

POSSIBLE CAUSES

Possible Causes
CHARGING SYSTEM DTCS
VEHICLE WAS JUMP STARTED INCORRECTLY
SYSTEM VOLTAGE HIGH
ESM - INTERNAL ERROR

Always perform the Pre-Diagnostic Troubleshooting procedure before proceeding. Refer to STANDARD PROCEDURE.

DIAGNOSTIC TEST

1. **CHECK FOR CHARGING SYSTEM DTCS**
   1. With the scan tool, read Engine DTCs.

      NOTE: This includes one trip faults.

      Are any Engine Charging System DTCs present?

      Yes

      - Refer to the **DTC INDEX** article and perform the appropriate diagnosis.
      - Perform the ESM VERIFICATION TEST. Refer to **ESM VERIFICATION TEST**.

      No

      - Go To 2
2. **VEHICLE WAS JUMP STARTED INCORRECTLY**
   1. Verify if the vehicle was jump started by another vehicle using a 24-volt charging system or incorrectly jump started with the 12 volt battery in series.

Was the vehicle jump started by another vehicle?

Yes

- This is the cause of the DTC. Clear the DTC and return the vehicle to the customer.
- Perform the ESM VERIFICATION TEST. Refer to **ESM VERIFICATION TEST**.

No

- Go To 3

3. **CHECK SYSTEM VOLTAGE**
   1. Start the engine and let idle for at least 10 seconds.
   2. With the scan tool, monitor system voltage.

   Is the system voltage above 16V for more than 5 seconds?

   Yes

   - **Refer to DIAGNOSIS AND TESTING** and perform the appropriate diagnosis.
   - Perform the ESM VERIFICATION TEST. Refer to **ESM VERIFICATION TEST**.

   No

   - Go To 4

4. **SHIFT LEVER ASSEMBLY**
   1. Reconnect all disconnected harness connectors.
   2. With the scan tool, erase ESM DTC's.
   3. Start the engine and raise the engine speed to 2, 000 rpm.
   4. With the scan tool, read ESM DTC's.

   Did the DTC reset?

   Yes

   - Replace the Shift Lever Assembly in accordance to the Service Information. Refer to **SHIFTER, FLOOR CONSOLE, REMOVAL** .
   - Perform the ESM VERIFICATION TEST. Refer to **ESM VERIFICATION TEST**.

   No

   - Test Complete.

U0001-00-CAN C BUS

Perform the COMMUNICATION PRE-DIAGNOSTIC PROCEDURE. Refer to **STANDARD PROCEDURE** .

U0100-87-LOST COMMUNICATION WITH ECM/PCM - MISSING MESSAGE

Perform the COMMUNICATION PRE-DIAGNOSTIC PROCEDURE. Refer to **STANDARD PROCEDURE** .

U0101-87-LOST COMMUNICATION WITH TCM-MISSING MESSAGE

Perform the COMMUNICATION PRE-DIAGNOSTIC PROCEDURE. Refer to **STANDARD PROCEDURE** .

U0140-87-LOST COMMUNICATION WITH BODY CONTROL MODULE-MISSING MESSAGE

Perform the COMMUNICATION PRE-DIAGNOSTIC PROCEDURE. Refer to **STANDARD PROCEDURE** .

U0401-86-IMPLAUSIBLE DATA RECEIVED FROM ECM/PCM-SIGNAL INVALID

For a complete wiring diagram, **refer to appropriate SYSTEM WIRING DIAGRAMS article** .

WHEN MONITORED

Continuously with the ignition on.

One valid CAN message received at least once.

U0002-00-CAN C Bus Off Performance DTC is not present

SET CONDITION

Electronic Shift Module (ESM) detects an incorrect CAN message from the Powertrain Control Module (PCM).

POSSIBLE CAUSES

Possible Causes
ELECTRONIC SHIFT MODULE (ESM) CAN BUS DTCS
POWERTRAIN CONTROL MODULE (PCM) DTCS
ELECTRONIC SHIFT MODULE (ESM)

Always perform the Pre-Diagnostic Troubleshooting procedure before proceeding. Refer to STANDARD PROCEDURE.

DIAGNOSTIC TEST

1. **VERIFY THE DTC IS ACTIVE**
    1. Turn the Ignition ON, Engine not running.
    2. With the scan tool, record and erase the DTCs.
    3. Cycle the Ignition from OFF to ON.
    4. With the scan tool, read the DTCs.

    Is the DTC active at this time?

    Yes

    - Go To 2

    No

    - Go To 4
2. **CHECK IF BODY CONTROL MODULE (BCM) CAN BUS DTCS ARE PRESENT**
    1. With the scan tool, read the BCM DTCs.

    Are there any BCM CAN BUS DTCs present?

    Yes

    - Perform the appropriate diagnostic procedure. Refer to **DIAGNOSTIC CODE INDEX** .

    No

    - Go To 3
3. **CHECK IF POWERTRAIN CONTROL MODULE (PCM) DTCS ARE PRESENT**
    1. With the scan tool, read PCM DTCs.

    Are there any PCM DTCs present?

    Yes

    - Perform the appropriate diagnostic procedure. Refer to the **DTC INDEX** article .

    No

    - Using the schematics as a guide, check the Electronic Shift Module (ESM) terminals and connectors for corrosion, damage or pushed out terminals. Pay particular attention to the power and ground circuits. If no problems are found, replace the ESM. Refer to **SHIFTER, FLOOR CONSOLE, REMOVAL** .
    - Perform the ESM VERIFICATION TEST. Refer to **ESM VERIFICATION TEST**.

4. **INTERMITTENT WIRING AND CONNECTORS**
    1. Using the wiring diagram/schematic as a guide, inspect the wiring harness and connectors.
    2. Wiggle test the wiring harness and connectors while monitoring the scan tool data relative to this circuit.
    3. Look for the data to change or for the DTC to reset during the wiggle test.
    4. While monitoring the scan tool data relative to this circuit, move the selector switch to each position several times.
    5. Look for the data to change other than as expected or for the DTC to reset.

    Were any problems found?

    Yes

    - Repair as necessary.
    - Perform the ESM VERIFICATION TEST. Refer to **ESM VERIFICATION TEST**.

    No

    - Test complete, the condition or conditions that originally set this DTC are not present at this time.

U0402-86-IMPLAUSIBLE DATA RECEIVED FROM TCM - SIGNAL INVALID

For a complete wiring diagram, **refer to appropriate SYSTEM WIRING DIAGRAMS article** .

WHEN MONITORED

Continuously with the ignition on.

One valid CAN message received at least once

U0002-00-CAN C Bus Off Performance DTC not present.

SET CONDITION

Electronic Shift Module (ESM) detects an incorrect CAN message from the Transmission Control Module (TCM).

POSSIBLE CAUSES

Possible Causes
ELECTRONIC SHIFT MODULE (ESM) CAN BUS DTCS
TRANSMISSION CONTROL MODULE (TCM) DTCS
ELECTRONIC SHIFT MODULE (ESM)

Always perform the Pre-Diagnostic Troubleshooting procedure before proceeding. Refer to STANDARD PROCEDURE.

DIAGNOSTIC TEST

1. **VERIFY THE DTC IS ACTIVE**
    1. Turn the Ignition ON, Engine not running.
    2. With the scan tool, record and erase the DTCs.
    3. Cycle the Ignition from OFF to ON.
    4. With the scan tool, read the DTCs.

    Is the DTC active at this time?

    Yes

    - Go To 2

    No

    - Go To 4
2. **CHECK IF BODY CONTROL MODULE (BCM) CAN BUS DTCS ARE PRESENT**
    1. With the scan tool, read the BCM DTCs.

    Are there any BCM CAN BUS DTCs present?

    Yes

    - Perform the appropriate diagnostic procedure. Refer to **DIAGNOSTIC CODE INDEX** .

    No

    - Go To 3
3. **CHECK IF TRANSMISSION CONTROL MODULE (TCM) DTCS ARE PRESENT**
    1. With the scan tool, read TCM DTCs.

    Are there any TCM DTCs present?

    Yes

    - Perform the appropriate diagnostic procedure. Refer to **DIAGNOSTIC CODE INDEX** .

    No

    - Using the schematics as a guide, check the Electronic Shift Module (ESM) terminals and

connectors for corrosion, damage or pushed out terminals. Pay particular attention to the power and ground circuits. If no problems are found, replace the ESM. Refer to **SHIFTER, FLOOR CONSOLE, REMOVAL** .

- Perform the ESM VERIFICATION TEST. Refer to **ESM VERIFICATION TEST**.

4. **INTERMITTENT WIRING AND CONNECTORS**
   1. Using the wiring diagram/schematic as a guide, inspect the wiring harness and connectors.
   2. Wiggle test the wiring harness and connectors while monitoring the scan tool data relative to this circuit.
   3. Look for the data to change or for the DTC to reset during the wiggle test.
   4. While monitoring the scan tool data relative to this circuit, move the selector switch to each position several times.
   5. Look for the data to change other than as expected or for the DTC to reset.

   Were any problems found?

   Yes

   - Repair as necessary.
   - Perform the ESM VERIFICATION TEST. Refer to **ESM VERIFICATION TEST**.

   No

   - Test complete, the condition or conditions that originally set this DTC are not present at this time.

U0422-86-IMPLAUSIBLE DATA RECEIVED FROM BODY CONTROL MODULE - SIGNAL INVALID

For a complete wiring diagram, **refer to appropriate SYSTEM WIRING DIAGRAMS article** .

WHEN MONITORED

Continuously with the ignition on.

One valid CAN message received at least once

U0002-00-CAN C Bus Off Performance DTC not present.

SET CONDITION

Electronic Shift Module (ESM) detects an incorrect CAN message from the Body Control Module (BCM).

POSSIBLE CAUSES

Possible Causes
ELECTRONIC SHIFT MODULE (ESM) CAN BUS DTCS
BODY CONTROL MODULE (BCM) DTCS
ELECTRONIC SHIFT MODULE (ESM)

Always perform the Pre-Diagnostic Troubleshooting procedure before proceeding. Refer to STANDARD PROCEDURE.

DIAGNOSTIC TEST

1. **VERIFY THE DTC IS ACTIVE**
    1. Turn the Ignition ON, Engine not running.
    2. With the scan tool, record and erase the DTCs.
    3. Cycle the Ignition from OFF to ON.
    4. With the scan tool, read the DTCs.

    Is the DTC active at this time?

    Yes

    - Go To 2

    No

    - Go To 3
2. **CHECK IF BODY CONTROL MODULE (BCM) DTCS ARE PRESENT**
    1. With the scan tool, read the BCM DTCs.

    Are there any BCM DTCs present?

    Yes

    - Perform the appropriate diagnostic procedure. Refer to **DIAGNOSTIC CODE INDEX** .

    No

    - Using the schematics as a guide, check the Electronic Shift Module (ESM) terminals and connectors for corrosion, damage or pushed out terminals. Pay particular attention to the power and ground circuits. If no problems are found, replace the ESM. Refer to **SHIFTER, FLOOR CONSOLE, REMOVAL** .
    - Perform the ESM VERIFICATION TEST. Refer to **ESM VERIFICATION TEST**.
3. **INTERMITTENT WIRING AND CONNECTORS**
    1. Using the wiring diagram/schematic as a guide, inspect the wiring harness and connectors.

2. Wiggle test the wiring harness and connectors while monitoring the scan tool data relative to this circuit.
3. Look for the data to change or for the DTC to reset during the wiggle test.
4. While monitoring the scan tool data relative to this circuit, move the selector switch to each position several times.
5. Look for the data to change other than as expected or for the DTC to reset.

Were any problems found?

Yes

- Repair as necessary.
- Perform the ESM VERIFICATION TEST. Refer to **ESM VERIFICATION TEST**.

No

- Test complete, the condition or conditions that originally set this DTC are not present at this time.

STANDARD PROCEDURE

PRE-DIAGNOSTIC TROUBLESHOOTING PROCEDURE

For a complete wiring diagram, **refer to appropriate SYSTEM WIRING DIAGRAMS article** .

Perform the following pre-diagnostic troubleshooting procedures prior to performing any diagnostic test.

NOTE: Due to different power control configurations, the Transmission Control Relay (if equipped) may be referred to as a PCM relay.

NOTE: Incorrect fluid level, and/or poor fluid condition can be the cause of many transmission problems. Visually inspect the transmission and cooler lines for leakage and repair as necessary. Adjust the transmission fluid level according to Service Information.

Always perform diagnostics with a fully charged battery to avoid false symptoms.

1. With the scan tool, read the engine DTCs. Check and repair all engine DTCs prior to performing transmission symptom diagnostic procedures.
2. With the scan tool, read and record all transmission DTCs. Record the controller software version and variant ID (configuration or level).

NOTE: Check for Service Information Tune-ups or Technical Service Bulletins (TSB) that may apply.

NOTE: If the TCM detects and stores a DTC, the TCM also stores the vehicles operating conditions under which the DTC originally set. Using a scan tool this information is located under Environmental Data. Before erasing any stored DTCs, it is recommended to record all available data to assist in troubleshooting and duplicating the conditions and in which the DTC set.

3. Verify the current software level of transmission controller. Various problems are corrected by software upgrades (flash) to the transmission controller.

NOTE: If TCM software updates are performed, all DTC information (Environmental Data) will be lost.

4. Using the wiring diagram/schematic as a guide, inspect the wiring and connectors to all components related to the transmission and shift lever assembly. Clean and repair as necessary.
5. Most DTCs set on start up but some may only set by driving the vehicle. Note the when monitored and set conditions of the reported DTC. If variant DTCs are present, perform their respective test first.
6. Verify the axle ratio and transfer case ratio.

Did any of the above procedures repair the vehicle?

Yes

- Testing is complete.
- Perform the TRANSMISSION VERIFICATION TEST. Refer to **TRANSMISSION VERIFICATION TEST-948TE** .

No

- Refer to **DIAGNOSTIC CODE INDEX** and perform the appropriate diagnostic procedure.

ESM VERIFICATION TEST

To validate the repair(s) that fixed the vehicle, perform the following steps.

1. Reconnect any disconnected components.
2. Connect the scan tool to the Data Link Connector.
3. With the scan tool, erase ABS DTCs.
4. With the scan tool, erase PCM DTCs.
5. With the scan tool, erase ESM DTCs.
6. With the scan tool, erase TCM DTCs.

CAUTION: Apply the parking brake.

7. With the scan tool, display the Transmission Temperature. Start and run the engine until the transmission temperature is above 43° C (110° F).
8. If internal transmission components were repaired or replaced check the transmission fluid and adjust if necessary. Refer to the CHECK OIL LEVEL procedure. Refer to **FLUID AND FILTER, STANDARD PROCEDURE** .
9. If internal transmission repairs are performed or the Transmission Control Module (TCM) is replaced, perform a TCM ADAPTATION procedure. Refer to **TCM ADAPTATION-948TE AND 9HP48** .
10. After performing the above procedures, perform the "**Road Test Procedure** " below.

ROAD TEST PROCEDURE

1. Road test the vehicle. Make fifteen to twenty upshifts so all gear ranges are complete.
2. Perform these shifts from a standing start to 72 Km/h (45 mph) with a constant throttle opening of 20 to 25 degrees.
3. With speeds below 40 Km/h (25 mph), make five to eight wide open throttle kickdowns to 1st gear. Allow at least 5 seconds each in 2nd and 3rd gear between each kickdown.
4. With the scan tool, read DTCs.

Did any DTCs set?

Yes

- Refer to the **DTC INDEX** article and perform the appropriate diagnostic procedure.

No

- Testing is complete.

2014 AUTOMATIC TRANSMISSION

Transmission Control Module (TCM) - Electrical Diagnostics, 948TE - Cherokee

DIAGNOSIS AND TESTING

P0219-00-ENGINE OVERSPEED

For a complete wiring diagram, **refer to appropriate SYSTEM WIRING DIAGRAMS article** .

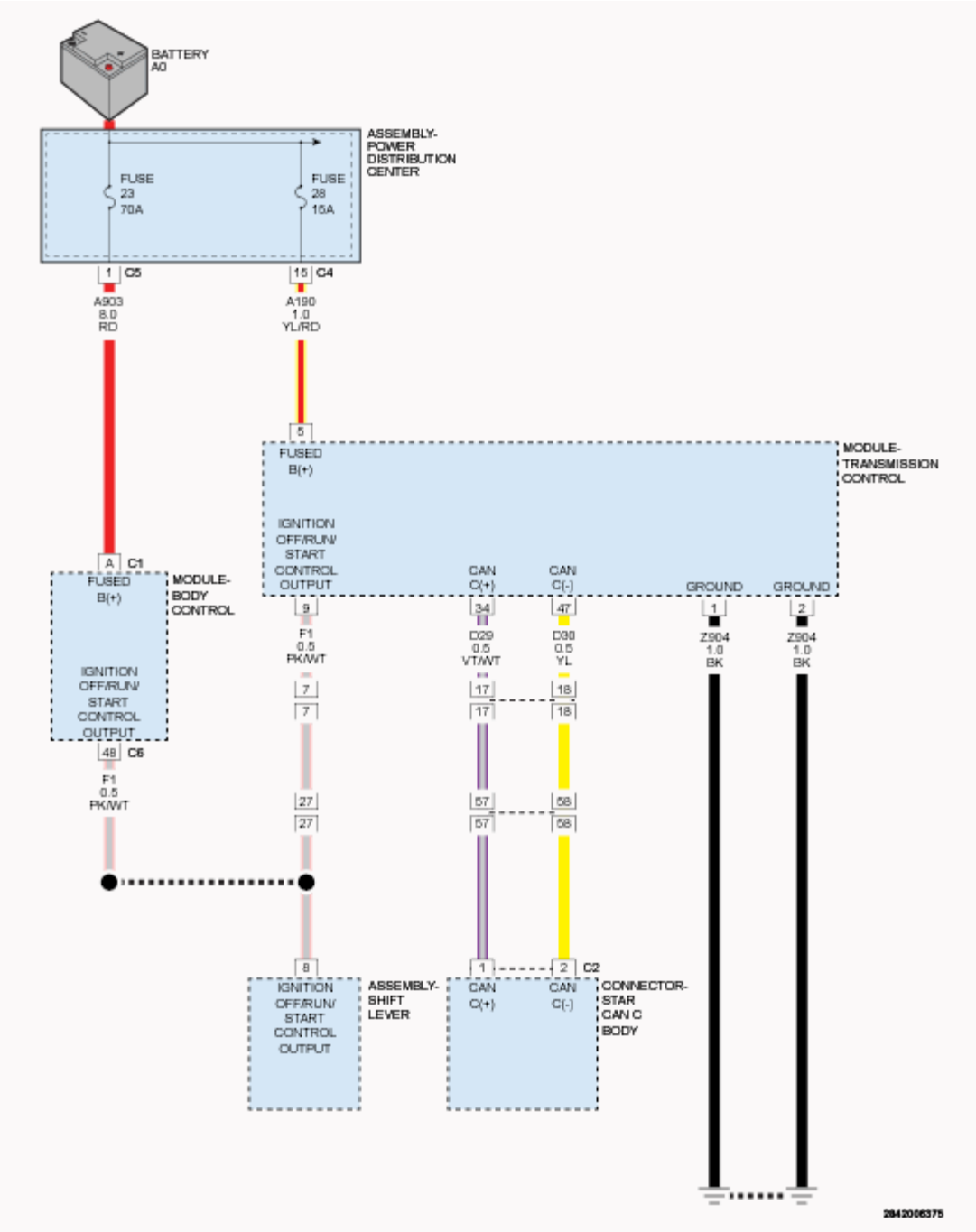

Fig. 1: TCM System Voltage Circuit Diagram
Courtesy of CHRYSLER GROUP, LLC

THEORY OF OPERATION

This diagnostic monitors the Input (Turbine) Speed Sensor signal and engine speed signal via CAN in order to detect conditions that could indicate a transmission that is slipping or does not engage a gear properly. This diagnostic monitors for these conditions while the transmission is in a fixed gear and during shift events. Under certain conditions, an Engine mechanical problem can cause this DTC to set.

WHEN MONITORED

In Fixed Gear

Gear position must be in Drive or Reverse.

At a Gear Shift Request

Gear position must be in Drive or Reverse.

SET CONDITION

In Fixed Gear

The failure is detected if the engine speed is greater than a threshold for a calibrated amount of time.

At a Gear Shift Request

The failure is detected if the calculated input speed of the target gear, i.e. the actual output speed, target gear ratio, is greater than a calibrated threshold for a calibrated amount of time.

POSSIBLE CAUSES

Possible Causes
MECHANICAL ENGINE PROBLEM
MECHANICAL TRANSMISSION PROBLEM
TCM - INTERNAL ERROR

Always perform the Pre-Diagnostic Troubleshooting procedure before proceeding. Refer to STANDARD PROCEDURE .

DIAGNOSTIC TEST

1. **CHECK FOR OTHER TRANSMISSION DTCS**
    1. With the scan tool, check for other transmission DTCs.

       Are any gear ratio and/or speed sensor DTCs present in addition to DTC P0219?

       Yes

       - Refer to **DIAGNOSTIC CODE INDEX** .

       No

       - Go To 2
2. **CHECK FOR ENGINE DTCS**

1. With the scan tool, check for engine DTCs.

   Are any engine DTCs present?

   Yes

   - Refer to the **DTC INDEX** article .

   No

   - Go To3

3. **CHECK IF ENGINE MECHANICAL PROBLEMS ARE PRESENT**
   1. Determine if any Engine mechanical problems are present.

      Are any Engine mechanical problems present?

      Yes

      - Repair engine as necessary. Refer to the applicable ENGINE-SERVICE INFORMATION for the appropriate repair procedures.
      - Perform TRANSMISSION VERIFICATION TEST. Refer to **STANDARD PROCEDURE** .

      No

      - Go To 4

4. **CHECK IF TRANSMISSION MECHANICAL PROBLEMS ARE PRESENT**
   1. Check transmission fluid level and check for leaks if necessary.
   2. Determine if any Transmission mechanical problems are present.
   3. Turn the ignition OFF.
   4. Remove the Transmission Oil Pan and inspect for excessive debris or a plugged Transmission Oil Filter.

      Is there any fluid leaks, debris, plugged Transmission Oil Filter, or signs of an internal transmission problem?

      Yes

      - Repair Transmission as necessary.
      - Perform TRANSMISSION VERIFICATION TEST. Refer to **STANDARD PROCEDURE** .

      No

      - Go To5

5. **TEST DRIVE THE VEHICLE**

NOTE: The Engine and Transmission must not have mechanical problems and be operating normally before proceeding with this test.

1. With the scan tool, erase Transmission DTCs.
2. Road test the vehicle.
3. With the scan tool, read Transmission DTCs.

Did DTC P0219-ENGINE OVERSPEED reset?

Yes

NOTE: If this Electronic Control Unit (ECU) is being replaced with a new unit, a diagnostic scan tool MUST be used to align the PROXI configuration data into the new ECU. Follow the routine outlined in the diagnostic scan tool for PROXI Configuration Alignment under Body Control Module (BCM) Miscellaneous Functions menu.

- Using the schematics as a guide, check the Transmission Control Module (TCM) terminals and connectors for corrosion, damage or pushed out terminals. Pay particular attention to the power and ground circuits. If no problems are found, replace the TCM and perform programming and PROXI Configuration Alignment procedures. Refer to **MODULE, TRANSMISSION CONTROL, REMOVAL** .
- Perform the TRANSMISSION VERIFICATION TEST. Refer to **STANDARD PROCEDURE** .

No

- Test Complete.
- Perform TRANSMISSION VERIFICATION TEST. Refer to **STANDARD PROCEDURE** .

P0562-00-SYSTEM VOLTAGE LOW

For a complete wiring diagram, **refer to appropriate SYSTEM WIRING DIAGRAMS article** .

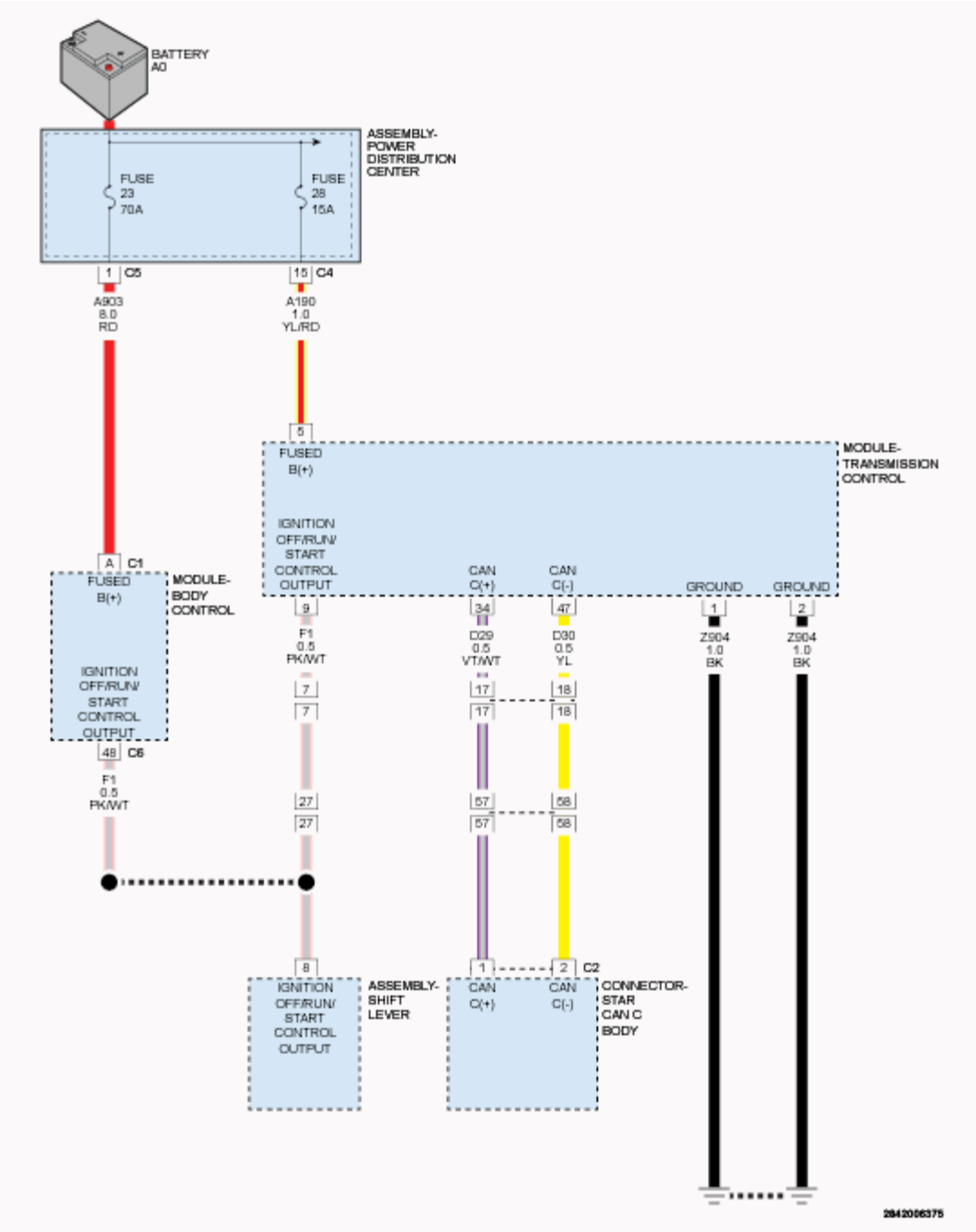

Fig. 2: TCM System Voltage Circuit Diagram
Courtesy of CHRYSLER GROUP, LLC

THEORY OF OPERATION

The Transmission Control Module (TCM) monitors the system voltage level at the TCM supply voltage pin for the following failure conditions:

- System Voltage Excessively Low

- System Voltage Low
- System Voltage High

If the TCM supply voltage is below a threshold that is lower than the system voltage excessively low threshold, then the solenoid valves and pressure regulators are not powered.

WHEN MONITORED

Transmission solenoid valves and pressure regulators are powered on.

Engine speed via CAN message from PCM is greater than a calibrated value.

SET CONDITION

The failure is detected if the system voltage is less than a calibrated threshold for a calibrated amount of time.

POSSIBLE CAUSES

Possible Causes
FUSE
LOW BATTERY VOLTAGE
ENGINE CHARGING SYSTEM
BATTERY VOLTAGE CIRCUIT HIGH RESISTANCE
TCM - INTERNAL ERROR

Always perform the Pre-Diagnostic Troubleshooting procedure before proceeding. Refer to STANDARD PROCEDURE .

DIAGNOSTIC TEST

1. **CHECK FOR RELATED CHARGING SYSTEM DTCS**
    1. With the scan tool, read the Engine DTCs.

       Are there any Charging System related DTCs present?

       Yes

       - Refer to the **DTC INDEX** article and repair any Charging System DTCs before proceeding. After repairing the Charging System DTCs, perform the Transmission Verification test to verify the transmission and or controller was not damaged.
       - Perform the TRANSMISSION VERIFICATION TEST. Refer to **STANDARD PROCEDURE** .

       No

- Go To 2

2. **CHECK IF DTC IS CURRENT**
   1. With the scan tool, read TCM DTCs.
   2. Record the Environmental Data and any DTCs.
   3. With the scan tool, erase DTCs.
   4. Using the recorded Environmental Data, along with the When Monitored and Set Conditions above, operate the vehicle in the conditions that set the DTC.
   5. With the scan tool, read TCM DTCs.

   Did the DTC reset?

   Yes

   - Go To 3.

   No

   - Go To 4.

3. **CHECK POWER SUPPLY CIRCUIT**
   1. Turn the Ignition OFF.
   2. Disconnect the TCM C1 harness connector.
   3. Turn the Ignition ON, Engine not running.
   4. Measure the voltage of the (A190) battery circuit.

   Is the voltage above 9 volts?

   Yes

   NOTE: **If this Electronic Control Unit (ECU) is being replaced with a new unit, a diagnostic scan tool MUST be used to align the PROXI configuration data into the new ECU. Follow the routine outlined in the diagnostic scan tool for PROXI Configuration Alignment under Body Control Module (BCM) Miscellaneous Functions menu.**

   - Using the schematics as a guide, check the Transmission Control Module (TCM) terminals and connectors for corrosion, damage or pushed out terminals. Pay particular attention to the power and ground circuits. If no problems are found, replace the TCM and perform programming and PROXI Configuration Alignment procedures. Refer to **MODULE, TRANSMISSION CONTROL, REMOVAL** .
   - Perform the TRANSMISSION VERIFICATION TEST. Refer to **STANDARD PROCEDURE** .

   No

- Repair the (A190) battery circuit for an open or high resistance.
- Perform the TRANSMISSION VERIFICATION TEST.

  Refer to **STANDARD PROCEDURE** .

4. **CHECK WIRING AND CONNECTORS**
   1. The conditions necessary to set the DTC are not present at this time.
   2. Using the schematics as a guide, inspect the wiring and connectors specific to this circuit.
   3. Wiggle the wires while checking for shorted and open circuits.
   4. Check for any Service Bulletins that may apply.

   Were there any problems found?

   Yes

   - Repair as necessary.
   - Perform the TRANSMISSION VERIFICATION TEST. Refer to **STANDARD PROCEDURE** .

   No

   - Test complete.

P0563-00-SYSTEM VOLTAGE HIGH

For a complete wiring diagram, **refer to appropriate SYSTEM WIRING DIAGRAMS article** .

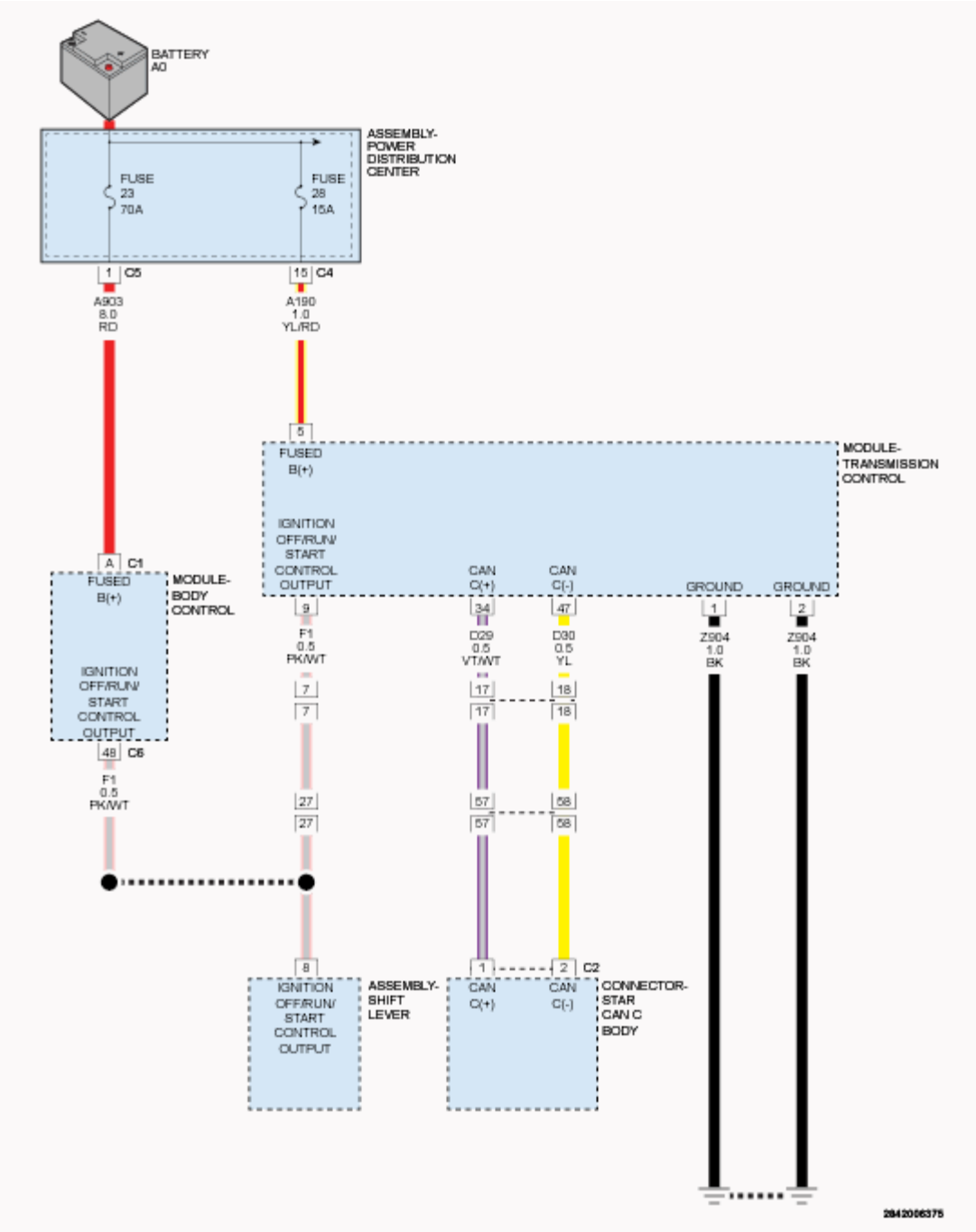

Fig. 3: TCM System Voltage Circuit Diagram
Courtesy of CHRYSLER GROUP, LLC

THEORY OF OPERATION

The Transmission Control Module (TCM) monitors the system voltage level at the TCM supply voltage pin for the following failure conditions:

- System Voltage Excessively Low

- System Voltage Low
- System Voltage High

If the TCM supply voltage is below a threshold that is lower than the system voltage excessively low threshold, then the solenoid valves and pressure regulators are not powered.

WHEN MONITORED

Transmission solenoid valves and pressure regulators are powered on.

No jump start detected.

TCM supply voltage is greater than a calibrated value after TCM power up for a calibrated amount of time.

Transmission range switch is in Drive or Reverse position.

SET CONDITION

The failure is detected if the system voltage is greater than a calibrated threshold for a calibrated amount of time.

POSSIBLE CAUSES

Possible Causes
CHARGING SYSTEM OVERCHARGE CONDITION JUMP START OFF A 24 VOLT SYSTEM TCM - INTERNAL ERROR

Always perform the Pre-Diagnostic Troubleshooting procedure before proceeding. Refer to STANDARD PROCEDURE .

DIAGNOSTIC TEST

1. **CHECK FOR CHARGING SYSTEM DTCS**
    1. With the scan tool, read engine DTCs.

        NOTE: This includes any one trip faults.

        Are any engine charging system DTCs present?

        Yes

        - Repair any charging system DTCs before proceeding. After repairing the Charging System, perform the transmission verification test to verify the Transmission and or TCM was not damaged. Refer to **STANDARD PROCEDURE** .

No

- Go To 2

2. **CHECK IF VOLTAGE IS GREATER THAN 16 VOLTS**
   1. Start the Engine and raise the engine speed to 2, 000 rpm.
   2. With the scan tool, monitor the transmission system voltage for 60 seconds.

   Does the transmission system voltage read greater than 16 volts?

   Yes

   - Go To 4

   No

   - Go To 3

3. **VERIFY IF THE VEHICLE WAS JUMP STARTED WITH 24-VOLT SYSTEM**
   1. Verify the vehicle was jump started by another vehicle using a 24-Volt Charging System.

   Was the vehicle jump started by another vehicle using a 24-Volt Charging System?

   Yes

   - This is the cause of the DTC. Erase the DTC and return the vehicle to the customer.
   - Perform the TRANSMISSION VERIFICATION TEST. Refer to **STANDARD PROCEDURE** .

   No

   - Go To 4

4. **CHECK BATTERY VOLTAGE**
   1. Start the Engine and raise the engine speed to 2, 000 rpm.
   2. With the Scan Tool, read the transmission system voltage.
   3. With a voltmeter, measure the battery voltage at the Battery.
   4. Compare the readings.

   Does the voltmeter reading match the scan tool reading?

   Yes

   - Repair the Charging System for an over charging condition. After repairing the Charging System, perform the TRANSMISSION VERIFICATION TEST to verify the Transmission and or TCM was not damaged.

- Perform the TRANSMISSION VERIFICATION TEST. Refer to **STANDARD PROCEDURE** .

No

NOTE: If this Electronic Control Unit (ECU) is being replaced with a new unit, a diagnostic scan tool MUST be used to align the PROXI configuration data into the new ECU. Follow the routine outlined in the diagnostic scan tool for PROXI Configuration Alignment under Body Control Module (BCM) Miscellaneous Functions menu.

- Using the schematics as a guide, check the TCM Connector Terminals for corrosion, damage or terminal push out. Pay particular attention to all power and ground circuits. If no problems are found, replace the TCM and perform programming and PROXI Configuration Alignment procedures. Refer to **MODULE, TRANSMISSION CONTROL, REMOVAL** .
- Perform the TRANSMISSION VERIFICATION TEST. Refer to **STANDARD PROCEDURE** .

P0601-00-INTERNAL CONTROL MODULE MEMORY CHECKSUM ERROR

For a complete wiring diagram, **refer to appropriate SYSTEM WIRING DIAGRAMS article** .

THEORY OF OPERATION

The purpose of the diagnostic is to monitor the validity of the Read Only Memory (ROM) flash memory. A Cyclic Redundancy Check (CRC) checksum is calculated for each memory block of the flash memory and compared with the stored reference checksum. There is a different stored reference checksum for each memory block. If the checksum rationality check of the last memory block has finished, the calculation starts all over again beginning with the first memory block.

WHEN MONITORED

Ignition On.

TCM initialization has completed.

SET CONDITION

The failure is detected if the calculated checksum does not match the stored reference checksum for any of the memory blocks.

POSSIBLE CAUSES

POSSIBLE CAUSES
TRANSMISSION CONTROL MODULE (TCM)

Always perform the Pre-Diagnostic Troubleshooting procedure before proceeding. Refer to STANDARD PROCEDURE .

DIAGNOSTIC TEST

CHECK IF TCM IS FLASHABLE

1. With the scan tool, record the vehicles controller part number.
2. Select Use Controller Part Number under the Flash Tab.
3. Flash the controller with the correct software.

Were you able to update (flash) the controller successfully?

Yes

- Test Complete.
- Perform the TRANSMISSION VERIFICATION TEST. Refer to **STANDARD PROCEDURE** .

No

NOTE: **If this Electronic Control Unit (ECU) is being replaced with a new unit, a diagnostic scan tool MUST be used to align the PROXI configuration data into the new ECU. Follow the routine outlined in the diagnostic scan tool for PROXI Configuration Alignment under Body Control Module (BCM) Miscellaneous Functions menu.**

- Using the schematics as a guide, check the Transmission Control Module (TCM) terminals and connectors for corrosion, damage or pushed out terminals. Pay particular attention to the power and ground circuits. If no problems are found, replace the TCM and perform programming and PROXI Configuration Alignment procedures. Refer to **MODULE, TRANSMISSION CONTROL, REMOVAL** .
- Perform the TRANSMISSION VERIFICATION TEST. Refer to **STANDARD PROCEDURE** .

P0610-00-ECU VEHICLE OPTIONS MISMATCH

For a complete wiring diagram, **refer to appropriate SYSTEM WIRING DIAGRAMS article** .

THEORY OF OPERATION

The purpose of the diagnostic is to detect an incorrect Vehicle Identification Number (VIN) stored in the TCM. This diagnostic compares the VIN stored in the TCM to the VIN received via CAN.

WHEN MONITORED

Ignition switch is on.

SET CONDITION

The VIN stored in the TCM is not equal to the VIN received via CAN.

POSSIBLE CAUSES

Possible Causes
USED CONTROLLER INSTALLED WITH WRONG CONFIGURATION
BODY CONTROL MODULE (BCM) NOT PROPERLY PROGRAMED OR WAS REPLACED AND NOT PROGRAMED
TCM NOT PROPERLY PROGRAMED OR WAS REPLACED AND NOT PROGRAMED
TCM - INTERNAL ERROR

Always perform the Pre-Diagnostic Troubleshooting procedure before proceeding. Refer to STANDARD PROCEDURE .

DIAGNOSTIC TEST

1. **CHECK IF THE DTC IS ACTIVE**
   1. With the scan tool, read transmission DTCs.

      Is the status Active for this DTC?

      Yes

      - Go To 2

      No

      - Go To 4
2. **CHECK THE BCM**

   Has the BCM been reprogrammed or replaced without being programed?

   Yes

   - Program the BCM if not programed. With the scan tool perform the proxi update procedure.
   - Perform the TRANSMISSION VERIFICATION TEST. Refer to **STANDARD PROCEDURE** .

   No

   - Go To 3
3. **CHECK THE TCM**

   Has the TCM been recently replaced with a new or used controller?

Yes

- With the scan tool perform a TCM proxi relearn.
- Perform the TRANSMISSION VERIFICATION TEST. Refer to **STANDARD PROCEDURE** .

No

NOTE: If this Electronic Control Unit (ECU) is being replaced with a new unit, a diagnostic scan tool MUST be used to align the PROXI configuration data into the new ECU. Follow the routine outlined in the diagnostic scan tool for PROXI Configuration Alignment under Body Control Module (BCM) Miscellaneous Functions menu.

- With the scan tool perform a TCM proxi relearn and recheck for DTC. If DTC reset and using the schematics as a guide, check the TCM terminals for corrosion, damage, or terminal push out. Pay particular attention to all power and ground circuits. Check for any Service Bulletins for possible causes that may apply. If no problems are found, replace the TCM and perform programming and PROXI Configuration Alignment procedures. Refer to **MODULE, TRANSMISSION CONTROL, REMOVAL** .
- Perform the TRANSMISSION VERIFICATION TEST. Refer to **STANDARD PROCEDURE** .

4. **CHECK THE WIRING AND CONNECTORS**
   1. The conditions necessary to set this DTC are not present at this time.
   2. Using the schematics as a guide, inspect the wiring and connectors specific to this circuit.
   3. Wiggle the wires while checking for shorted and open circuits.

   Were there any problems found?

   Yes

   - Repair as necessary.
   - Perform the TRANSMISSION VERIFICATION TEST. Refer to **STANDARD PROCEDURE** .

   No

   - Test Complete.

P0613-00-INTERNAL TRANSMISSION PROCESSOR

For a complete wiring diagram, **refer to appropriate SYSTEM WIRING DIAGRAMS article** .

THEORY OF OPERATION

The purpose of the diagnostic is to check if the Analog to Digital Converter (ADC), which is included as part of the microcontroller in the TCM, is functioning properly. The monitoring consists of the following three separate

checks:

1. **Sampling check:**

   The RAM area used by the ADC is checked to determine if samples have been stored, overwriting the known data stored during TCM initialization.

2. **Out of range check:**

   The sampled voltages in the ADC are checked to be within a valid operating range.

3. **Rationality check:**

   The microcontroller generates multiple control voltages, which are sampled by the ADC. The sampled voltages are compared to the control voltages.

.

WHEN MONITORED

TCM is powered.

TCM initialization has completed.

SET CONDITION

The failure is detected if one of the following occurs:

- No samples have been stored overwriting the known data stored during TCM initialization.
- The sampled voltages are not within a valid operating range.
- The sampled voltages do not equal the control voltages generated by the microcontroller.

POSSIBLE CAUSES

Possible Causes
TCM - INTERNAL ERROR

Always perform the Pre-Diagnostic Troubleshooting procedure before proceeding. Refer to STANDARD PROCEDURE .

DIAGNOSTIC TEST

TRANSMISSION CONTROL MODULE

View repair

Repair

NOTE: If this Electronic Control Unit (ECU) is being replaced with a new unit, a diagnostic scan tool MUST be used to align the PROXI configuration data into the new ECU. Follow the routine outlined in the diagnostic scan tool for PROXI Configuration Alignment under Body Control Module (BCM) Miscellaneous Functions menu.

- Using the schematics as a guide, check the Transmission Control Module (TCM) terminals and Transmission Assembly connectors for corrosion, damage or terminal push out. Pay particular attention to all power and ground circuits. If no problems are found, Replace the TCM and perform programming and PROXI Configuration Alignment procedures. Refer to **MODULE, TRANSMISSION CONTROL, REMOVAL** .
- Perform the TRANSMISSION VERIFICATION TEST. Refer to **STANDARD PROCEDURE** .

P061B-00-INTERNAL CONTROL MODULE TORQUE CALCULATION PERFORMANCE

For a complete wiring diagram, **refer to appropriate SYSTEM WIRING DIAGRAMS article** .

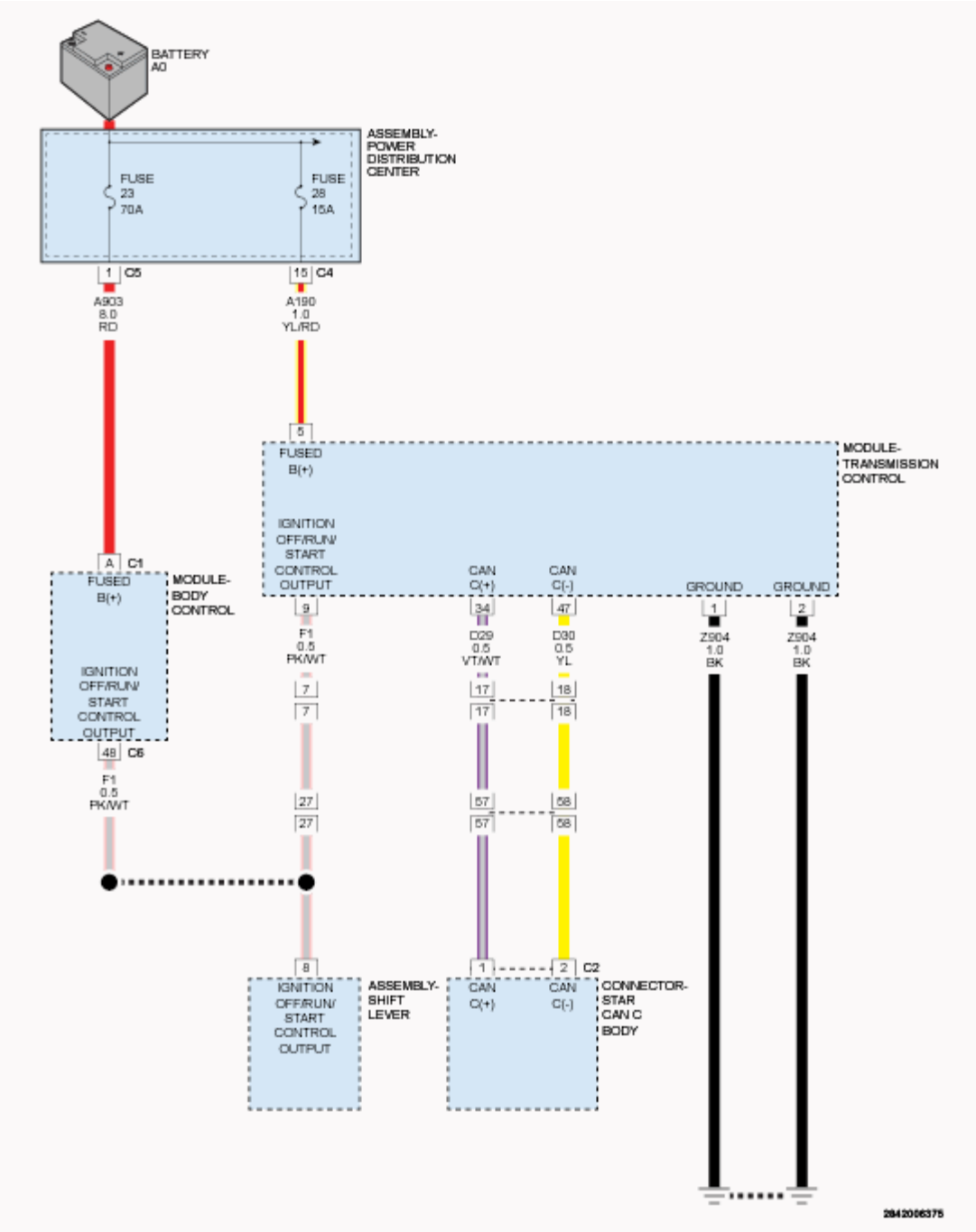

Fig. 4: TCM System Voltage Circuit Diagram
Courtesy of CHRYSLER GROUP, LLC

THEORY OF OPERATION

The purpose of the diagnostic is to monitor the positive engine torque request calculation in the TCM and the engine response resulting from the positive engine torque request. This diagnostic includes the following checks:

- Rationality check of the engine torque request
- Rationality check of the engine torque request magnitude
- Rationality check of speed gradients during gearshifts

WHEN MONITORED

Rationality check of the positive engine torque request:

- Ignition On

Rationality check of the positive engine torque request magnitude:

- Ignition On
- No gearshift in progress
- Driver request is not in PARK or NEUTRAL

Rationality check of speed gradients during gearshifts:

- Ignition On
- No gearshift in progress
- Driver request is not in PARK or NEUTRAL
- Positive engine request active

SET CONDITION

Rationality check of the positive engine torque request: A fault is detected if a positive or negative engine torque request is sent via CAN and no positive or negative torque request was calculated by the shift control software.

Rationality check of the positive engine torque request magnitude: A fault is detected if the actual calculated engine torque request and the delivered engine torque request sent via CAN are both greater than a first threshold for a calibrated amount of time or if the actual calculated engine torque and the delivered engine torque request sent via CAN are both greater than a second threshold for a calibrated amount of time. Depending on the torque request magnitude, two different torque thresholds and two different filtering times are used. For example, if the torque request is high, a short filtering time is used or if the torque request is low, a long filtering time is used.

Rationality check of speed gradients during gearshifts: A fault is detected if the difference between the actual input speed gradient and the actual output speed gradient multiplied by the actual gear ratio is lower than a calibrated threshold.

POSSIBLE CAUSES

Possible Causes

ENGINE DTCS
ENGINE MECHANICAL
TRANSMISSION CONTROL MODULE (TCM - INTERNAL ERROR

Always perform the Pre-Diagnostic Troubleshooting procedure before proceeding. Refer to STANDARD PROCEDURES .

DIAGNOSTIC TEST

1. **CHECK IF DTC IS CURRENT**
    1. With the scan tool, read TCM DTCs.
    2. Record the Environmental Data and any DTCs.
    3. With the scan tool, erase DTCs.
    4. Using the recorded Environmental Data, along with the When Monitored and Set Conditions above, operate the vehicle in the conditions that set the DTC.
    5. With the scan tool, read TCM DTCs.

    Did the DTC reset?

    Yes

    - Go To 2.

    No

    - Go To 5.
2. **CHECK FOR ENGINE DTCS**
    1. With the scan tool, check for engine DTCs.

    Are any engine DTCs present?

    Yes

    - Refer to the **DTC INDEX** article .

    No

    - Go To3
3. **CHECK IF ENGINE MECHANICAL PROBLEMS ARE PRESENT**
    1. Determine if any Engine mechanical problems are present.

    Are any Engine mechanical problems present?

    Yes

- Repair engine as necessary. Refer to the applicable ENGINE-SERVICE INFORMATION for the appropriate repair procedures.
- Perform TRANSMISSION VERIFICATION TEST. Refer to **STANDARD PROCEDURE** .

No

- Go To 4

4. **PROGRAM PCM AND TCM**
   1. With the scan tool, record the vehicles controller part number.
   2. Select Use Controller Part Number under the Flash Tab.
   3. Flash the TCM and PCM with the latest software

   Were you able to program (flash) the PCM and TCM successfully?

   Yes

   - Perform the TRANSMISSION VERIFICATION TEST. Refer to **STANDARD PROCEDURE** .

   No

   NOTE: **If this Electronic Control Unit (ECU) is being replaced with a new unit, a diagnostic scan tool MUST be used to align the PROXI configuration data into the new ECU. Follow the routine outlined in the diagnostic scan tool for PROXI Configuration Alignment under Body Control Module (BCM) Miscellaneous Functions menu.**

   - Using the schematics as a guide, check the Transmission Control Module (TCM) terminals and connectors for corrosion, damage or pushed out terminals. Pay particular attention to the power and ground circuits. If no problems are found, replace the TCM and perform programming and PROXI Configuration Alignment procedures. Refer to **MODULE, TRANSMISSION CONTROL, REMOVAL** .
   - Perform the TRANSMISSION VERIFICATION TEST. Refer to **STANDARD PROCEDURE** .

5. **CHECK WIRING AND CONNECTORS**
   1. The conditions necessary to set the DTC are not present at this time.
   2. Using the schematics as a guide, inspect the wiring and connectors specific to this circuit.
   3. Wiggle the wires while checking for shorted and open circuits.
   4. Check for any Service Bulletins that may apply.

   Were there any problems found?

   Yes

- Repair as necessary.
- Perform the TRANSMISSION VERIFICATION TEST. Refer to **STANDARD PROCEDURE** .

No

- Test complete.

P062F-00-INTERNAL CONTROL MODULE EEPROM ERROR

For a complete wiring diagram, **refer to appropriate SYSTEM WIRING DIAGRAMS article** .

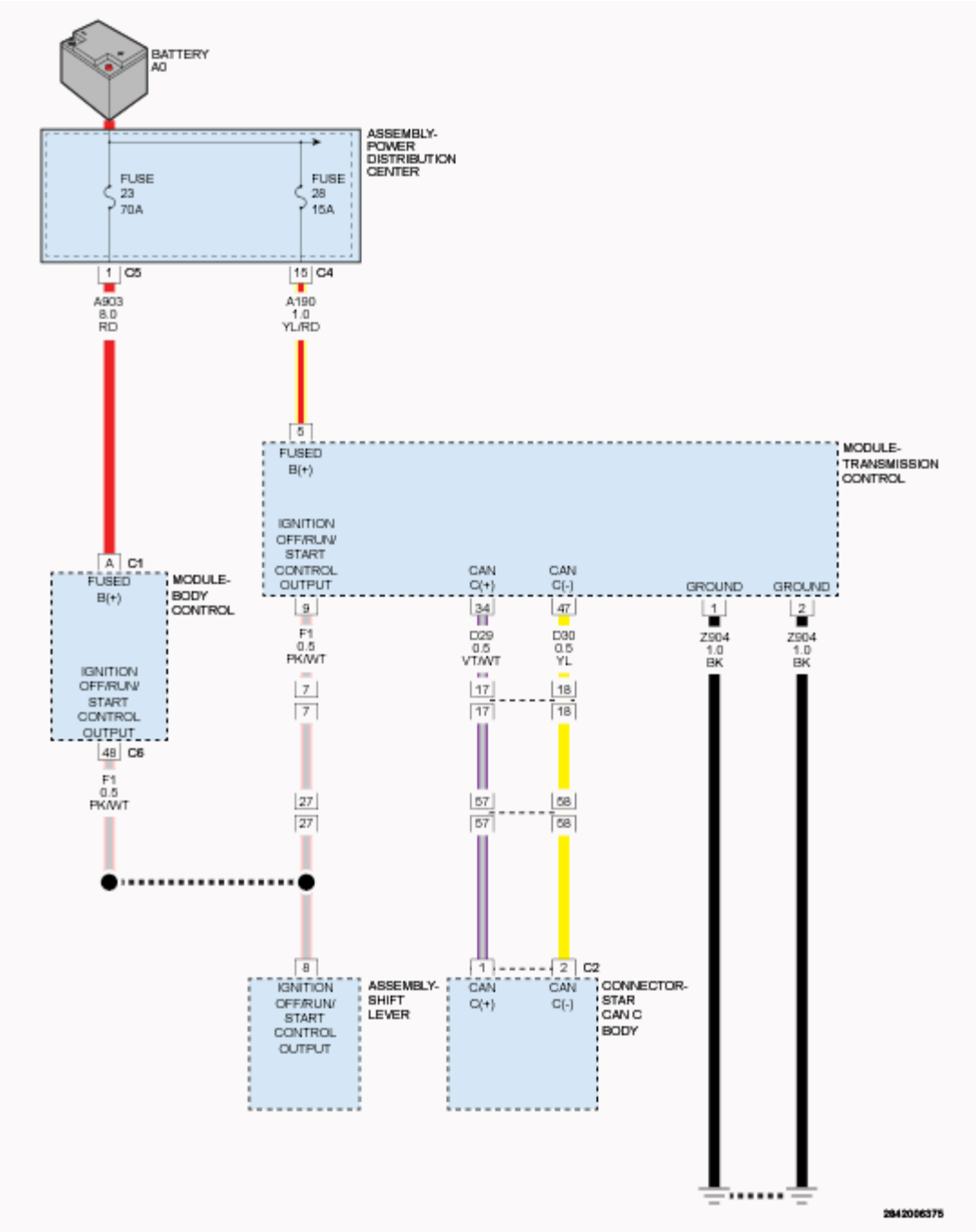

Fig. 5: TCM System Voltage Circuit Diagram
Courtesy of CHRYSLER GROUP, LLC

THEORY OF OPERATION

The purpose of the diagnostic is to detect data failures in the EEPROM address space following read and write operations. The EEPROM is sub divided into two sector groups (SG). Each SG is divided into separate channels. The channels are controlled by the corresponding software component (e.g. diagnostic event handler). Each software component has a mechanism using either a Cyclic Redundancy Check (CRC) or a redundant

complement to recognize the validity of the data stored.

WHEN MONITORED

An EEPROM read or write operation has occurred.

SET CONDITION

The failure is detected if one of the following conditions occur:

- The read data or write data does not correspond to the associated CRC checksum.
- The read data or write data does not correspond to the associated complement.

POSSIBLE CAUSES

Possible Causes
TCM - INTERNAL ERROR

Always perform the Pre-Diagnostic Troubleshooting procedure before proceeding. Refer to STANDARD PROCEDURE .

DIAGNOSTIC TEST

TRANSMISSION CONTROL MODULE

View repair

Repair

NOTE: If this Electronic Control Unit (ECU) is being replaced with a new unit, a diagnostic scan tool MUST be used to align the PROXI configuration data into the new ECU. Follow the routine outlined in the diagnostic scan tool for PROXI Configuration Alignment under Body Control Module (BCM) Miscellaneous Functions menu.

- Using the schematics as a guide, check the Transmission Control Module (TCM) terminals and Transmission Assembly connectors for corrosion, damage or terminal push out. Pay particular attention to all power and ground circuits. If no problems are found, Replace the TCM and perform programming and PROXI Configuration Alignment procedures. Refer to **MODULE, TRANSMISSION CONTROL, REMOVAL** .
- Perform the TRANSMISSION VERIFICATION TEST. Refer to **STANDARD PROCEDURE** .

P0631-00-VIN NOT PROGRAMMED OR INCOMPATIBLE TCM

For a complete wiring diagram, **refer to appropriate SYSTEM WIRING DIAGRAMS article** .

THEORY OF OPERATION

The purpose of the diagnostic is to detect incorrect TCM configuration (calibration data) stored in the TCM. This diagnostic compares the Vehicle Identification Number (VIN) stored in the TCM to the VIN received via CAN. It is assumed that the correct transmission has been installed in the vehicle.

WHEN MONITORED

Ignition on.

SET CONDITION

The VIN received via CAN message does not match the VIN stored in the TCM.

POSSIBLE CAUSES

Possible Causes
TRANSMISSION CONTROL MODULE (TCM) IS NOT PROGRAMMED PROPERLY
TRANSMISSION CONTROL MODULE (TCM) INSTALLED FROM ANOTHER VEHICLE

Always perform the Pre-Diagnostic Troubleshooting procedure before proceeding. Refer to STANDARD PROCEDURE .

DIAGNOSTIC TEST

CHECK TCM PROGRAMMING

NOTE: This DTC is set when a TCM from another vehicle is installed or a new TCM is installed into the current vehicle.

1. Perform programming and PROXI Configuration Alignment procedures. Refer to **MODULE, TRANSMISSION CONTROL, REMOVAL** .
2. Perform the TRANSMISSION VERIFICATION TEST. Refer to **STANDARD PROCEDURE** .

   Did the TCM pass the TRANSMISSION VERIFICATION TEST?

   Yes

   - Test complete.

   No

   NOTE: If this Electronic Control Unit (ECU) is being replaced with a new unit, a diagnostic scan tool MUST be used to align the PROXI configuration data into the new ECU. Follow the routine outlined in the diagnostic scan tool

for PROXI Configuration Alignment under Body Control Module (BCM) Miscellaneous Functions menu.

- Using the schematics as a guide, check the Transmission Control Module (TCM) terminals and connectors for corrosion, damage or pushed out terminals. Pay particular attention to the power and ground circuits. If no problems are found, replace the TCM and perform programming and PROXI Configuration Alignment procedures. Refer to **MODULE, TRANSMISSION CONTROL, REMOVAL** .
- Perform the TRANSMISSION VERIFICATION TEST. Refer to **STANDARD PROCEDURE** .

P0634-00-PCM-ECM-TCM INTERNAL TEMPERATURE TOO HIGH

For a complete wiring diagram, **refer to appropriate SYSTEM WIRING DIAGRAMS article** .

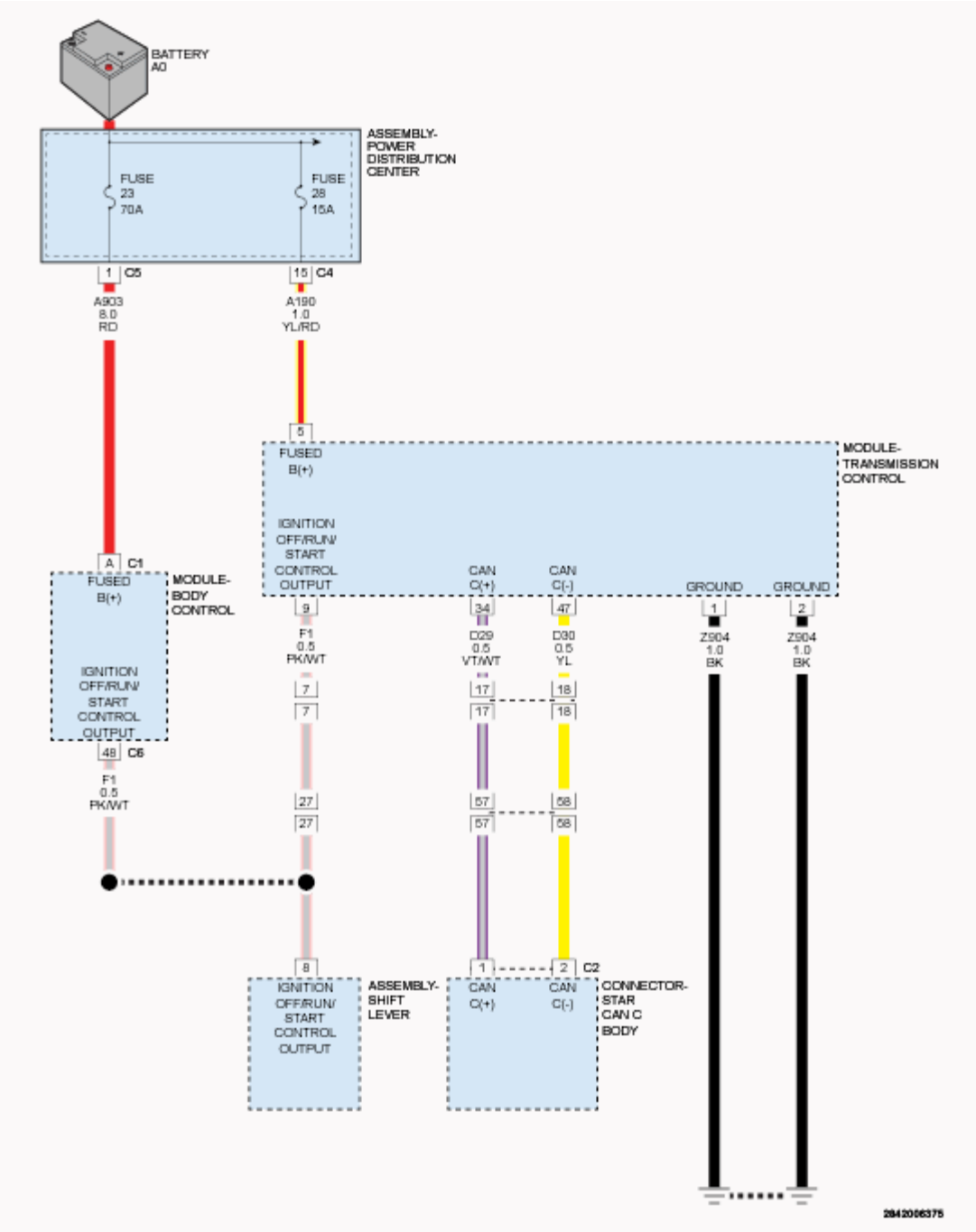

Fig. 6: TCM System Voltage Circuit Diagram
Courtesy of CHRYSLER GROUP, LLC

THEORY OF OPERATION

The purpose of the diagnostic is to detect an over temperature of the TCM to protect the TCM hardware.

WHEN MONITORED

TCM is powered ON.

TCM initialization is completed.

SET CONDITION

Temperature measured on the printed circuit board of the TCM is greater than a calibrated threshold.

POSSIBLE CAUSES

Possible Causes
TCM INTERNAL ERROR

Always perform the Pre-Diagnostic Troubleshooting procedure before proceeding. Refer to STANDARD PROCEDURE .

DIAGNOSTIC TEST

TRANSMISSION CONTROL MODULE

View repair

Repair

NOTE: If this Electronic Control Unit (ECU) is being replaced with a new unit, a diagnostic scan tool MUST be used to align the PROXI configuration data into the new ECU. Follow the routine outlined in the diagnostic scan tool for PROXI Configuration Alignment under Body Control Module (BCM) Miscellaneous Functions menu.

- Using the schematics as a guide, check the Transmission Control Module (TCM) terminals and Transmission Assembly connectors for corrosion, damage or terminal push out. Pay particular attention to all power and ground circuits. If no problems are found, Replace the TCM and perform programming and PROXI Configuration Alignment procedures. Refer to **MODULE, TRANSMISSION CONTROL, REMOVAL** .
- Perform the TRANSMISSION VERIFICATION TEST. Refer to **STANDARD PROCEDURE** .

P0643-00-SENSOR REFERENCE VOLTAGE 1 CIRCUIT HIGH

For a complete wiring diagram, **refer to appropriate SYSTEM WIRING DIAGRAMS article** .

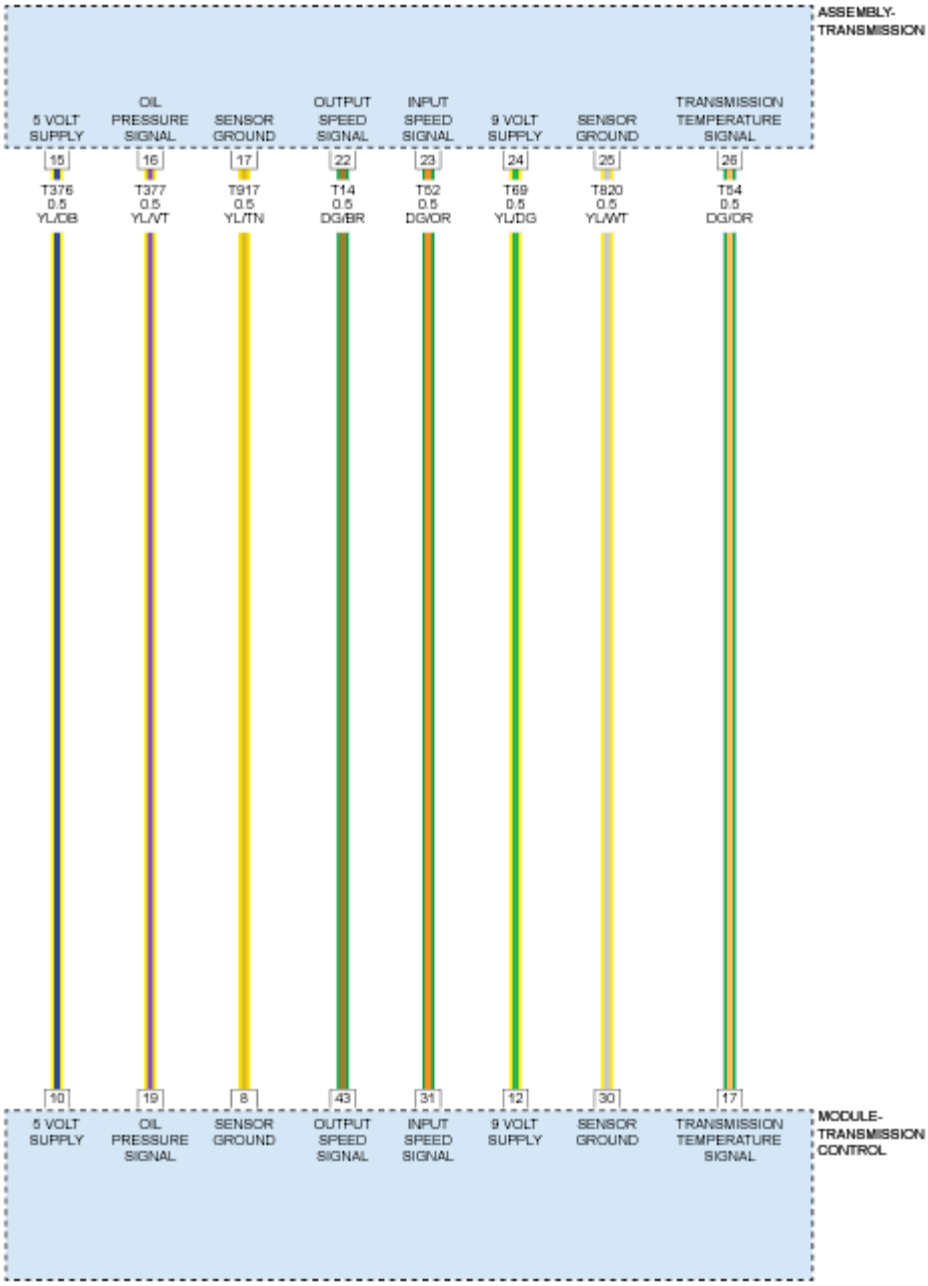

Fig. 7: Power & Ground, Temperature, Oil Pressure And Speed Sensors Circuit Diagram
Courtesy of CHRYSLER GROUP, LLC

THEORY OF OPERATION

The purpose of the diagnostic is to detect circuit failures on the sensor supply voltage. The 9 volt sensor supply voltage is used by the Input and Output Speed Sensors and the Transmission Range Switch (TRS) in the Transmission. The monitoring is performed internal to the TCM by evaluating the sensor supply voltage output level to detect short to battery, short to ground or open circuit failures.

WHEN MONITORED

Battery voltage is greater than a calibrated threshold.

SET CONDITION

The failure is detected if one of the following conditions occur:

- A short to battery voltage failure is detected if the sensor supply voltage is greater than 9.6 volts for a calibrated amount of time.
- A short to ground or open circuit failure is detected if the sensor supply voltage is less than 3.4 volts for a calibrated amount of time.
- A failure is detected if both the input and output speed sensors are reporting an electrical failure within a fixed amount of time.

POSSIBLE CAUSES

Possible Causes
(T69) 9-VOLT SUPPLY CIRCUIT OPEN
(T69) 9-VOLT SUPPLY CIRCUIT SHORTED TO VOLTAGE
(T69) 9-VOLT SUPPLY CIRCUIT SHORTED TO GROUND
TRANSMISSION RANGE SENSOR (TRS) - INTERNAL ERROR
OUTPUT SHAFT SPEED SENSOR
INPUT (TURBINE) SPEED SENSOR
TCM - INTERNAL ERROR

Always perform the Pre-Diagnostic Troubleshooting procedure before proceeding. Refer to STANDARD PROCEDURE .

DIAGNOSTIC TEST

1. **CHECK IF DTC IS CURRENT**
    1. With the scan tool, read TCM DTCs.
    2. Record the Environmental Data and any DTCs.
    3. With the scan tool, erase DTCs.
    4. Using the recorded Environmental Data, along with the When Monitored and Set Conditions above, operate the vehicle in the conditions that set the DTC.
    5. With the scan tool, read TCM DTCs.

    Did the DTC reset?

    Yes

    - Go To 2.

No

- Go To 5.

2. **CHECK 9-VOLT SUPPLY CIRCUIT OPERATION**
   1. Turn the Ignition OFF.
   2. Disconnect the Transmission Assembly harness connector.
   3. Turn the Ignition ON, Engine not running.
   4. Measure the voltage between the (T69) 9-Volt Supply circuit and ground.

   Is the voltage between 3.4 and 9.6 volts?

   Yes

   - Replace the Lead Frame assembly in accordance with the Service Information.
   - Perform the TRANSMISSION VERIFICATION TEST. Refer to **STANDARD PROCEDURE** .

   No

   - Go To 3.

3. **CHECK 9-VOLT SUPPLY CIRCUIT FOR A SHORT TO GROUND OR A SHORT TO ANOTHER CIRCUIT**
   1. Turn the Ignition OFF.
   2. Disconnect the TCM harness connector.
   3. Measure the resistance between (T69) 9-Volt Supply circuit and ground.
   4. Measure the resistance between (T69) 9-Volt Supply circuit and all other circuits in the TCM harness connector.

   Is there continuity between the (T69) 9-Volt Supply circuit and ground or another circuit in the TCM harness connector?

   Yes

   - Repair the (T69) 9-Volt Supply circuit for a short to ground or a short to another circuit in the TCM harness.
   - Perform the TRANSMISSION VERIFICATION TEST. Refer to **STANDARD PROCEDURE** .

   No

   - Go To 4

4. **CHECK 9-VOLT SUPPLY CIRCUIT FOR AN OPEN**
   1. Measure the resistance of (T69) 9-Volt Supply circuit between the TCM harness connector and the

Transmission Assembly harness connector.

Is the resistance below 5.0 ohms?

Yes

NOTE: If this Electronic Control Unit (ECU) is being replaced with a new unit, a diagnostic scan tool MUST be used to align the PROXI configuration data into the new ECU. Follow the routine outlined in the diagnostic scan tool for PROXI Configuration Alignment under Body Control Module (BCM) Miscellaneous Functions menu.

- Using the schematics as a guide, check the Transmission Control Module (TCM) terminals and connectors for corrosion, damage or pushed out terminals. Pay particular attention to the power and ground circuits. If no problems are found, replace the TCM and perform programming and PROXI Configuration Alignment procedures. Refer to **MODULE, TRANSMISSION CONTROL, REMOVAL** .
- Perform the TRANSMISSION VERIFICATION TEST. Refer to **STANDARD PROCEDURE** .

No

- Repair the (T69) 9-Volt Supply circuit for an open.
- Perform the TRANSMISSION VERIFICATION TEST. Refer to **STANDARD PROCEDURE** .

5. **CHECK WIRING AND CONNECTORS**
   1. The conditions necessary to set the DTC are not present at this time.
   2. Using the schematics as a guide, inspect the wiring and connectors specific to this circuit.
   3. Wiggle the wires while checking for shorted and open circuits.
   4. Check for any Service Bulletins that may apply.

   Were there any problems found?

   Yes

   - Repair as necessary.
   - Perform the TRANSMISSION VERIFICATION TEST. Refer to **STANDARD PROCEDURE** .

   No

   - Test complete.

P064F-00-UNAUTHORIZED SOFTWARE-CALIBRATION DETECTED

For a complete wiring diagram, **refer to appropriate SYSTEM WIRING DIAGRAMS article** .

THEORY OF OPERATION

The purpose of the diagnostic is to detect if the internal part numbers of the TCM software, calibration, and hardware do not correlate.

WHEN MONITORED

TCM is powered ON.

TCM is initializing.

SET CONDITION

Internal part numbers of the software, calibration, and hardware do not correlate.

POSSIBLE CAUSES

Possible Causes
WRONG TCM SOFTWARE/CALIBRATION INSTALLED

Always perform the Pre-Diagnostic Troubleshooting procedure before proceeding. Refer to STANDARD PROCEDURE .

DIAGNOSTIC TEST

1. **CHECK IF DTC IS CURRENT**
    1. With the scan tool, read TCM DTCs.
    2. Record the Environmental Data and any DTCs.
    3. With the scan tool, erase DTCs.
    4. Using the recorded Environmental Data, along with the When Monitored and Set Conditions above, operate the vehicle in the conditions that set the DTC.
    5. With the scan tool, read TCM DTCs.

    Did the DTC reset?

    Yes

    - Using the schematics as a guide, check the Transmission Control Module (TCM) terminals and connectors for corrosion, damage or pushed out terminals. Pay particular attention to the power and ground circuits. If no problems are found, reprogram the TCM and perform the PROXI Configuration Alignment procedures. Refer to **MODULE, TRANSMISSION CONTROL, REMOVAL** .
    - Perform the TRANSMISSION VERIFICATION TEST. Refer to **STANDARD**

PROCEDURE .

No

- Go To 2

2. **CHECK WIRING AND CONNECTORS**
   1. The conditions necessary to set the DTC are not present at this time.
   2. Using the schematics as a guide, inspect the wiring and connectors specific to this circuit.
   3. Wiggle the wires while checking for shorted and open circuits.
   4. Check for any Service Bulletins that may apply.

   Were there any problems found?

   Yes

   - Repair as necessary.
   - Perform the TRANSMISSION VERIFICATION TEST. Refer to **STANDARD PROCEDURE** .

   No

   - Test complete.

P0653-00-SENSOR REFERENCE VOLTAGE 2 CIRCUIT HIGH

For a complete wiring diagram, **refer to appropriate SYSTEM WIRING DIAGRAMS article** .

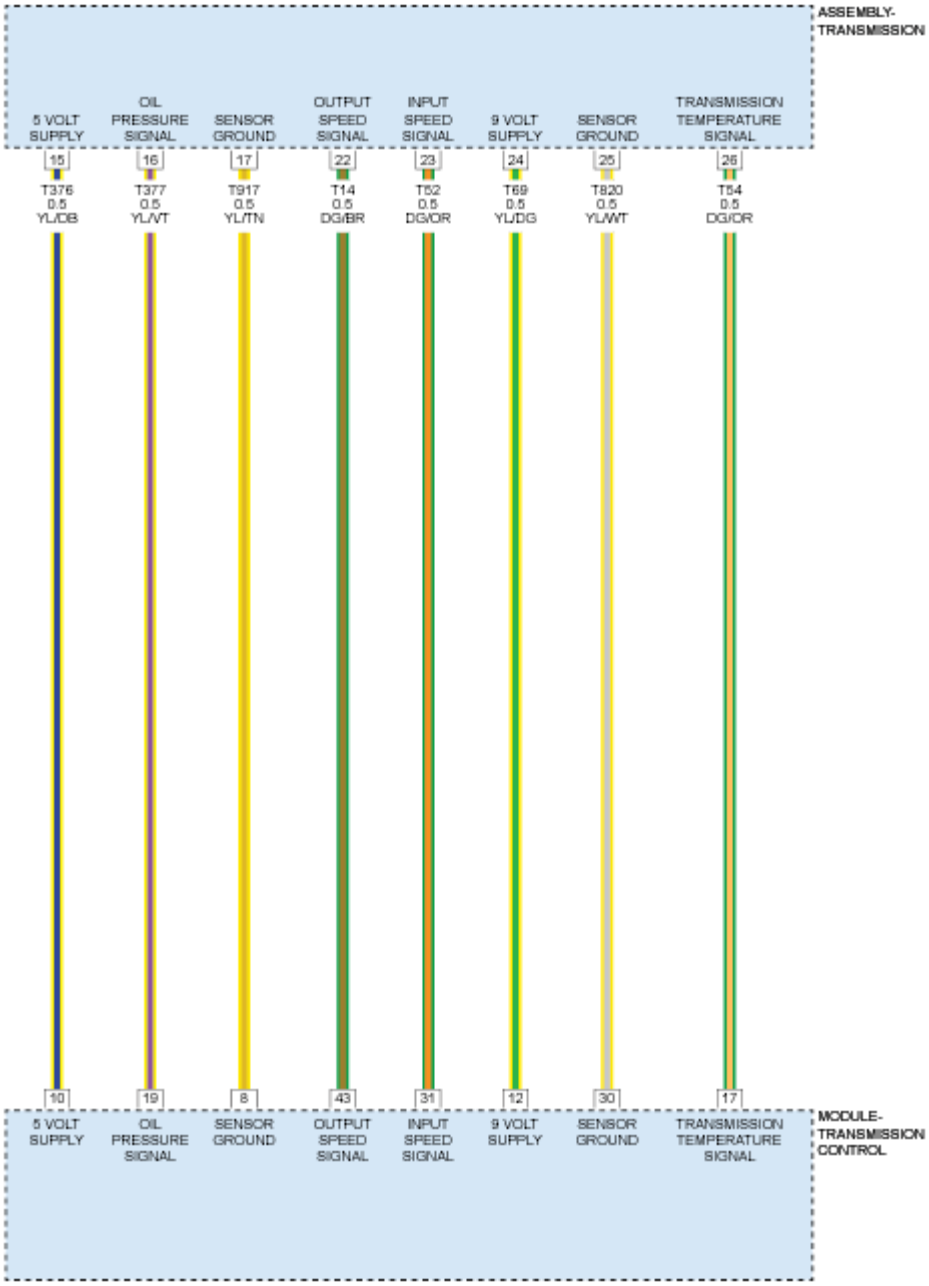

Fig. 8: Power & Ground, Temperature, Oil Pressure And Speed Sensors Circuit Diagram
Courtesy of CHRYSLER GROUP, LLC

THEORY OF OPERATION

The purpose of the diagnostic is to detect circuit failures on the sensor supply voltage. The 5 volt sensor supply voltage is used by the oil pressure sensor in the transmission. The monitoring is performed internal to the TCM by evaluating the sensor supply voltage output level to detect short to battery, short to ground, or open circuit failures.

WHEN MONITORED

Battery voltage is above a calibrated value.

SET CONDITION

The failure is detected if one of the following conditions occur:

- A short to battery voltage failure is detected if the sensor supply voltage is greater than a calibrated threshold for a calibrated amount of time.
- A short to ground or open circuit failure is detected if the sensor supply voltage is lower than a calibrated threshold for a calibrated amount of time.

POSSIBLE CAUSES

Possible Causes
(T376) 5-VOLT SUPPLY CIRCUIT OPEN
(T376) 5-VOLT SUPPLY CIRCUIT SHORT TO GROUND
(T376) 5-VOLT SUPPLY CIRCUIT SHORT TO VOLTAGE
TRANSMISSION OIL PRESSURE SENSOR
TCM - INTERNAL ERROR

Always perform the Pre-Diagnostic Troubleshooting procedure before proceeding. Refer to STANDARD PROCEDURE .

DIAGNOSTIC TEST

1. **CHECK IF DTC IS CURRENT**
    1. With the scan tool, read TCM DTCs.
    2. Record the Environmental Data and any DTCs.
    3. With the scan tool, erase DTCs.
    4. Using the recorded Environmental Data, along with the When Monitored and Set Conditions above, operate the vehicle in the conditions that set the DTC.
    5. With the scan tool, read TCM DTCs.

    Did the DTC reset?

    Yes

    - Go To 2

    No

    - Go To 8

2. **CHECK 5-VOLT SUPPLY CIRCUIT OPERATION**
    1. Turn the Ignition OFF.
    2. Disconnect the Transmission Assembly harness connector.
    3. Turn the Ignition ON, Engine not running.
    4. Measure the voltage between the (T376) 5-Volt Supply circuit and ground.

    Is the voltage between 4.7 and 5.3 volts?

    Yes

    - Go To 5

    No

    - Go To 3
3. **CHECK 5-VOLT SUPPLY CIRCUIT FOR A SHORT TO GROUND OR A SHORT TO ANOTHER CIRCUIT**
    1. Turn the Ignition OFF.
    2. Disconnect the TCM harness connector.
    3. Measure the resistance between (T376) 5-Volt Supply circuit and ground.
    4. Measure the resistance between (T376) 5-Volt Supply circuit and all other circuits in the TCM harness connector.

    Is there continuity between the (T376) 5-Volt Supply circuit and ground or another circuit in the TCM harness connector?

    Yes

    - Repair the (T376) 5-Volt Supply circuit for a short to ground or a short to another circuit in the TCM harness.
    - Perform the TRANSMISSION VERIFICATION TEST. Refer to **STANDARD PROCEDURE** .

    No

    - Go To 4
4. **CHECK 5-VOLT SUPPLY CIRCUIT FOR AN OPEN**
    1. Measure the resistance of (T376) 5-Volt Supply circuit between the TCM harness connector and the Transmission Assembly harness connector.

    Is the resistance below 5.0 ohms?

    Yes

NOTE: **If this Electronic Control Unit (ECU) is being replaced with a new unit, a diagnostic scan tool MUST be used to align the PROXI configuration data into the new ECU. Follow the routine outlined in the diagnostic scan tool for PROXI Configuration Alignment under Body Control Module (BCM) Miscellaneous Functions menu.**

- Using the schematics as a guide, check the Transmission Control Module (TCM) terminals and connectors for corrosion, damage or pushed out terminals. Pay particular attention to the power and ground circuits. If no problems are found, replace the TCM and perform programming and PROXI Configuration Alignment procedures. Refer to **MODULE, TRANSMISSION CONTROL, REMOVAL** .
- Perform the TRANSMISSION VERIFICATION TEST. Refer to **STANDARD PROCEDURE** .

No

- Repair the (T376) 5-Volt Supply circuit for an open.
- Perform the TRANSMISSION VERIFICATION TEST. Refer to **STANDARD PROCEDURE** .

5. **CHECK THE LEAD FRAME HARNESS (T376) 5-VOLT SUPPLY CIRCUIT FOR A SHORT TO GROUND**
   1. Turn the Ignition OFF.
   2. Measure the resistance between the (T376) 5-Volt Supply circuit in the Lead Frame harness connector and ground.

      Is there continuity between the (T376) 5-Volt Supply circuit and ground?

      Yes

      - Replace the Lead Frame assembly in accordance with the Service Information.
      - Perform the TRANSMISSION VERIFICATION TEST. Refer to **STANDARD PROCEDURE** .

      No

      - Go To6

6. **CHECK THE LEAD FRAME HARNESS (T376) 5-VOLT SUPPLY CIRCUIT FOR A SHORT TO ANOTHER CIRCUIT**
   1. Remove the Transmission Side Cover and disconnect the Transmission Oil Pressure Sensor harness connector.
   2. Measure the resistance between the (T376) 5-Volt Supply circuit and all other circuits on the Lead Frame harness connector.

      Is there continuity between the (T376) 5-Volt Supply circuit and another circuit in the Lead Frame

harness?

Yes

- Replace the Lead Frame assembly in accordance with the Service Information.
- Perform the TRANSMISSION VERIFICATION TEST. Refer to **STANDARD PROCEDURE** .

No

- Go To 7

7. **CHECK THE LEAD FRAME HARNESS (T376) 5-VOLT SUPPLY CIRCUIT FOR AN OPEN CIRCUIT**
   1. Measure the resistance of the (T376) 5-Volt Supply circuit between the Lead Frame harness connector and the Transmission Oil Pressure Sensor harness connector.

      Is the resistance less than 5.0 ohms?

      Yes

      - Replace the Transmission Oil Pressure Sensor in accordance with the Service Information.
      - Perform the TRANSMISSION VERIFICATION TEST. Refer to **STANDARD PROCEDURE** .

      No

      - Replace the Lead Frame assembly in accordance with the Service Information.
      - Perform the TRANSMISSION VERIFICATION TEST. Refer to **STANDARD PROCEDURE** .
8. **CHECK WIRING AND CONNECTORS**
   1. The conditions necessary to set the DTC are not present at this time.
   2. Using the schematics as a guide, inspect the wiring and connectors specific to this circuit.
   3. Wiggle the wires while checking for shorted and open circuits.
   4. Check for any Service Bulletins that may apply.

      Were there any problems found?

      Yes

      - Repair as necessary.
      - Perform the TRANSMISSION VERIFICATION TEST. Refer to **STANDARD PROCEDURE** .

      No

- Test complete.

P0701-00-TRANSMISSION CONTROL SYSTEM PERFORMANCE

For a complete wiring diagram, **refer to appropriate SYSTEM WIRING DIAGRAMS article** .

THEORY OF OPERATION

The purpose of the diagnostic is to monitor the solenoid valve actuation of the dog clutch A, dog clutch F and the parking lock (if equipped). A solenoid valve is actuated by an on/off output stage that is controlled by the low level software. Solenoid actuation is commanded by the high level application software in the TCM. After this command has occurred, the diagnostic checks the functionality of the low level software, microcontroller output pin and on/off output stage.

The monitoring is performed by measuring the voltage drop at the drain of the on/off output stage. This voltage is compared with the actual battery voltage to detect whether the on/off output stage is actuated

WHEN MONITORED

Ignition On.

No actuation of solenoid valve commanded by the high level application software.

SET CONDITION

The failure is detected if the voltage at any of the three solenoid valve output stages is greater than a calibrated threshold

POSSIBLE CAUSES

Possible Causes
TRANSMISSION CONTROL MODULE (TCM) - INTERNAL ERROR

Always perform the Pre-Diagnostic Troubleshooting procedure before proceeding. Refer to STANDARD PROCEDURES .

DIAGNOSTIC TEST

TRANSMISSION CONTROL MODULE

View repair

Repair

NOTE: If this Electronic Control Unit (ECU) is being replaced with a new unit, a diagnostic scan tool MUST be used to align the PROXI configuration data into

the new ECU. Follow the routine outlined in the diagnostic scan tool for PROXI Configuration Alignment under Body Control Module (BCM) Miscellaneous Functions menu.

- Using the schematics as a guide, check the Transmission Control Module (TCM) terminals and Transmission Assembly connectors for corrosion, damage or terminal push out. Pay particular attention to all power and ground circuits. If no problems are found, Replace the TCM and perform programming and PROXI Configuration Alignment procedures. Refer to **MODULE, TRANSMISSION CONTROL, REMOVAL** .
- Perform the TRANSMISSION VERIFICATION TEST. Refer to **STANDARD PROCEDURE** .

P0703-00-BRAKE SWITCH 2 PERFORMANCE

For a complete wiring diagram, **refer to appropriate SYSTEM WIRING DIAGRAMS article** .

THEORY OF OPERATION

The purpose of the diagnostic is to monitor the CAN bus, the transmitted messages on the CAN bus and the validity of the CAN signals. Several control units are connected to the CAN bus which send their messages cyclically in a defined time window. The messages contain multiple signals representing vehicle information.

CAN Bus Monitoring: To distinguish general problems with the CAN bus (e.g. electrical problems) from problems with certain messages or signals, the general state of the CAN bus is monitored.

CAN Message Monitoring: All messages received and used by the TCU are monitored for timeout and validity of the DLC (Data Length Code) information in the message header. If available, the message is also monitored for the validity of a checksum and for the correct behavior of an alive-counter that the sending control unit is expected to increment on each transmittal.

CAN Signal Monitoring: If the sending control unit does not have valid information to send, it may send a defined failure value indicating an invalid signal. Incoming signals with a defined failure value are monitored for signal validity.

WHEN MONITORED

TCM supply voltage is greater than a calibrated threshold.

Ignition Switch is ON.

No failure in CAN bus or CAN massage monitoring.

SET CONDITION

The ABS reports via CAN message that the Brake signal is not available or a Brake signal failure has been detected.

POSSIBLE CAUSES

Possible Causes
ANTILOCK BRAKE SYSTEM (ABS) DTCS TCM - INTERNAL ERROR

Always perform the Pre-Diagnostic Troubleshooting procedure before proceeding. Refer to STANDARD PROCEDURE .

DIAGNOSTIC TEST

1. **VERIFY THE DTC IS ACTIVE**
    1. Turn the Ignition ON.
    2. With the scan tool, record and erase the DTCs.
    3. Cycle the ignition switch from off to on.
    4. With the scan tool, read the DTCs.

    Is the DTC active at this time?

    Yes

    - Go To 2

    No

    - Go To 3
2. **CHECK IF Antilock Brake System (ABS) DTCS ARE PRESENT**
    1. With the scan tool, read the ABS DTCs.

    Are there any ABS DTCs present?

    Yes

    - Perform the appropriate diagnostic procedure. Refer to **DIAGNOSTIC CODE INDEX** .

    No

    NOTE: **If this Electronic Control Unit (ECU) is being replaced with a new unit, a diagnostic scan tool MUST be used to align the PROXI configuration data into the new ECU. Follow the routine outlined in the diagnostic scan tool for PROXI Configuration Alignment under Body Control Module (BCM) Miscellaneous Functions menu.**

    - Using the schematics as a guide, check the Transmission Control Module (TCM) terminals

and connectors for corrosion, damage or pushed out terminals. Pay particular attention to the power and ground circuits. If no problems are found, replace the TCM and perform programming and PROXI Configuration Alignment procedures. Refer to **MODULE, TRANSMISSION CONTROL, REMOVAL** .

- Perform the TRANSMISSION VERIFICATION TEST. Refer to **STANDARD PROCEDURE** .

3. **INTERMITTENT WIRING AND CONNECTORS**
   1. Using the wiring diagram/schematic as a guide, inspect the wiring harness and connectors.
   2. Wiggle test the wiring harness and connectors while monitoring the scan tool data relative to this circuit.
   3. Look for the data to change or for the DTC to reset during the wiggle test.
   4. While monitoring the scan tool data relative to this circuit, move the selector switch to each position several times.
   5. Look for the data to change other than as expected or for the DTC to reset.

   Were any problems found?

   Yes

   - Repair as necessary.
   - Perform the TRANSMISSION VERIFICATION TEST. Refer to **STANDARD PROCEDURE** .

   No

   - Test complete, the condition or conditions that originally set this DTC are not present at this time.

P0711-00-TRANSMISSION FLUID TEMPERATURE SENSOR A CIRCUIT RANGE-PERFORMANCE

For a complete wiring diagram, **refer to appropriate SYSTEM WIRING DIAGRAMS article** .

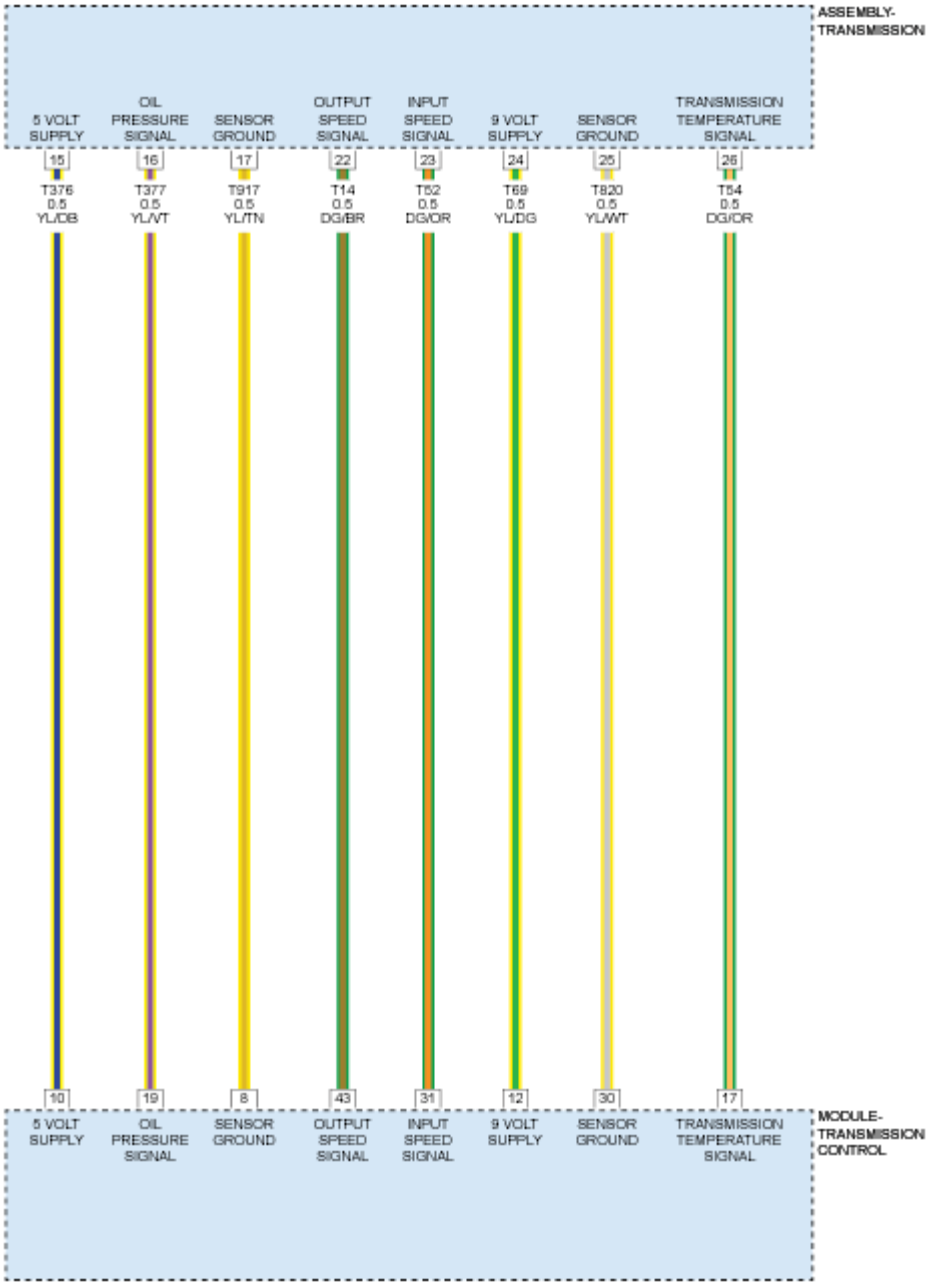

Fig. 9: Power & Ground, Temperature, Oil Pressure And Speed Sensors Circuit Diagram
Courtesy of CHRYSLER GROUP, LLC

THEORY OF OPERATION

The purpose of the diagnostic is to detect rationality failures of the transmission oil temperature sensor by evaluating the following conditions:

Comparison to a Temperature Model

- The measured transmission oil temperature is compared to a calculated model temperature. The calculation of the modeled temperature is based on the fact that the resistance of the pressure regulator coil is correlated with the oil temperature. The calculation is based on the actual duty cycle of pressure regulator for a given commanded current and the value of the pressure regulator power supply.

Low Temperature Detection

- The measured transmission oil temperature is monitored for a low value after having first reached a fixed temperature value.

Stuck in Low Temperature Detection

- The measured transmission oil temperature is monitored for a minimum amount of temperature change at low temperatures.

Temperature Jump Detection

- The measured transmission oil temperature is monitored for a maximum amount of temperature change between two consecutive data samples.

WHEN MONITORED

Temperature Jump Detection:

Ignition on.

No failure detected in oil temperature sensor circuit high or low fault monitoring.

Comparison to Temperature Model:

Ignition on.

No failure detected in oil temperature sensor circuit high or low fault monitoring.

No failure detected in oil temperature jump detection monitoring.

The engine speed is greater than a calibrated value or the input speed is greater than a calibrated value.

The output speed is greater than a calibrated value.

Pressure regulator power supply is switched on.

No failure detected in supply voltage of pressure regulator monitoring.

No failure detected in pressure regulator circuit monitoring.

Calibrated time has expired after engine start.

Low Temperature Detection:

Ignition on.

No failure detected in oil temperature sensor circuit high or low fault monitoring.

No failure detected in oil temperature jump detection monitoring.

The engine speed is greater than a calibrated value or the input speed is greater than a calibrated value.

The output speed is greater than a calibrated value.

Stuck in Low Temperature Detection:

Ignition on.

No failure detected in oil temperature sensor circuit high or low fault monitoring.

No failure detected in oil temperature jump detection monitoring.

The engine speed is greater than a calibrated value or the input speed is greater than a calibrated value.

The output speed is greater than a calibrated value.

Transmission oil temperature is less than a calibrated value.

SET CONDITION

Temperature Jump Detection:

The TCM detects that there has been a transmission fluid temperature change greater than 10°C (50°F) in less than 1 second.

Comparison to a Temperature Model:

The failure is detected if the absolute value of the difference between the oil temperature sensor signal measured by the TCM and the calculated oil temperature is greater than a calibrated threshold for a calibrated amount of time.

Low Temperature Detection:

The failure is detected if the oil temperature sensor signal is less than a calibrated threshold after having first reached another higher calibrated threshold in the same driving cycle.

Stuck in Low Temperature Detection:

The failure is detected if the absolute value of the difference between the current transmission oil temperature and a previous oil temperature stored a calibrated time before is less than a calibrated threshold.

POSSIBLE CAUSES

Possible Causes
INCORRECT TRANSMISSION FLUID LEVEL
RESTRICTION IN TRANSMISSION COOLING SYSTEM
VEHICLE AIRFLOW RESTRICTED
TORQUE CONVERTER
CASE VENT PLUGGED OR DAMAGED
TRANSMISSION FLUID TEMPERATURE SENSOR CIRCUIT FAULT
TRANSMISSION FLUID TEMPERATURE SENSOR
TCM - INTERNAL FAULT

Always perform the Pre-Diagnostic Troubleshooting procedure before proceeding. Perform the TRANSMISSION VERIFICATION TEST. Refer to STANDARD PROCEDURE .

DIAGNOSTIC TEST

Before performing this Diagnostic Test, be certain that there are no problems that could cause the Transmission to overheat. Check for restricted transmission oil cooler and lines, air flow restrictions, and low transmission fluid. Towing loads weighing more than the recommended towing capacity could cause excessively high transmission temperatures.

1. **CHECK FOR ENGINE COOLING DTCS**
    1. With the scan tool, read Engine DTCs.

       Are any engine cooling or Active Grille Shutter (AGS) DTCs present?

       Yes

       - Refer to the **DTC INDEX** article and perform the appropriate diagnostic procedure.

       No

       - Go To 2
2. **CHECK FOR OTHER TRANSMISSION DTCS**
    1. With the scan tool, read Transmission DTCs.
    2. Record any Transmission Freeze Frame data.

       Are there any other transmission DTCs?

Yes

- Perform the appropriate diagnostic procedure in the Service Information.

No

- Go To 3

3. **CHECK IF DTC IS CURRENT**
   1. Using the scan tool, read TCM DTCs.
   2. Record the Environmental Data and any DTCs.
   3. Clear DTCs.
   4. Using the recorded Environmental Data, along with the When Monitored and Set Conditions above, operate the vehicle in the conditions that set the DTC.
   5. Read TCM DTCs.

   Did the DTC reset?

   Yes

   - Go To 4

   No

   - Go To 9

4. **CHECK TRANSMISSION TEMPERATURE SENSOR CIRCUITS FOR HIGH RESISTANCE**
   1. Turn the Ignition OFF.
   2. Disconnect the TCM harness connector.
   3. Remove the transmission side cover and disconnect the transmission temperature sensor harness connector.
   4. Connect a jumper between the (T54) Transmission Temperature Signal circuit and the (T820) Sensor Ground circuit at the transmission temperature sensor harness connector.
   5. Measure resistance between (T54) Transmission Temperature Signal circuit and the (T820) Sensor Ground circuit at the TCM harness connector.

   Is the resistance below 5.0 ohms?

   Yes

   - Go To 5

   No

   - Repair the (T54) Transmission Temperature Signal circuit or the (T820) Sensor Ground

circuit for an open or high resistance.

- Perform the TRANSMISSION VERIFICATION TEST. Refer to **STANDARD PROCEDURE** .

5. **CHECK TRANSMISSION TEMPERATURE SENSOR CIRCUITS FOR A SHORT TO GROUND**
   1. With the jumper still connected, measure resistance between (T54) Transmission Temperature Signal circuit at the TCM harness connector and ground.

      Is there continuity between (T54) Transmission Temperature Signal circuit and ground?

      Yes

      - Repair the (T54) Transmission Temperature Signal circuit or (T820) Sensor Ground circuit for a short to ground.
      - Perform the TRANSMISSION VERIFICATION TEST. Refer to **STANDARD PROCEDURE** .

      No

      - Go To 6
6. **CHECK THE (T54) TRANSMISSION TEMPERATURE SIGNAL CIRCUIT FOR A SHORT TO ANOTHER CIRCUIT**
   1. Remove the jumper from the transmission temperature sensor harness connector.
   2. Measure resistance between (T54) Transmission Temperature Signal circuit and all other circuits in the TCM harness connector.

      Is there continuity between (T54) transmission temperature signal circuit and any other TCM circuit?

      Yes

      - Repair the (T54) Transmission Temperature Signal circuit for a short to another circuit.
      - Perform the TRANSMISSION VERIFICATION TEST. Refer to **STANDARD PROCEDURE** .

      No

      - Go To 7
7. **CHECK THE (T820) SENSOR GROUND CIRCUIT FOR A SHORT TO ANOTHER CIRCUIT**
   1. Measure resistance between (T820) Sensor Ground circuit and all other circuits in the TCM harness connector.

      Is there continuity between (T820) Sensor Ground circuit and any other TCM circuit?

Yes

- Repair the (T820) Sensor Ground circuit for a short to another circuit.
- Perform the TRANSMISSION VERIFICATION TEST. Refer to **STANDARD PROCEDURE** .

No

- Go To 8

8. **VERIFY TRANSMISSION TEMPERATURE SENSOR RESISTANCE / TEMPERATURE CORRELATION**
   1. Measure the resistance between (T54) Transmission Temperature Signal terminal and (T820) Sensor Ground terminal at the transmission temperature sensor.

TYPICAL VALUES FOR TRANSMISSION TEMPERATURE SENSOR	
TEMPERATURE	**APPROXIMATE RESISTANCE**
-30°C (-22°F)	44000 Ohms ± 6600
10°C (50°F)	6455 Ohms ± 645
110°C (230°F)	247 Ohms ± 16
145°C (293°F)	111 Ohms ± 6

Using the chart above, compare the Temperature Sensor temperature to the correlating resistance value.

Is the resistance within the specified range when the sensor is at the given temperature?

Yes

NOTE: **If this Electronic Control Unit (ECU) is being replaced with a new unit, a diagnostic scan tool MUST be used to align the PROXI configuration data into the new ECU. Follow the routine outlined in the diagnostic scan tool for PROXI Configuration Alignment under Body Control Module (BCM) Miscellaneous Functions menu.**

- Using the schematics as a guide, check the Transmission Control Module (TCM) terminals and connectors for corrosion, damage or pushed out terminals. Pay particular attention to the power and ground circuits. If no problems are found, replace the TCM and perform programming and PROXI Configuration Alignment procedures. Refer to **MODULE, TRANSMISSION CONTROL, REMOVAL** .
- Perform the TRANSMISSION VERIFICATION TEST. Refer to **STANDARD PROCEDURE** .

No

- Replace the Transmission Temperature Sensor in accordance with the Service Information.
- Perform the TRANSMISSION VERIFICATION TEST. Refer to **STANDARD PROCEDURE** .

9. **CHECK WIRING AND CONNECTORS**
    1. The conditions necessary to set the DTC are not present at this time.
    2. Using the schematics as a guide, inspect the wiring and connectors specific to this circuit.
    3. Wiggle the wires while checking for shorted and open circuits.
    4. Check for any Service Bulletins that may apply.

    Were there any problems found?

    Yes

    - Repair as necessary.
    - Perform the TRANSMISSION VERIFICATION TEST. Refer to **STANDARD PROCEDURE** .

    No

    - Test complete.

P0712-00-TRANSMISSION FLUID TEMPERATURE SENSOR A CIRCUIT LOW

For a complete wiring diagram, **refer to appropriate SYSTEM WIRING DIAGRAMS article** .

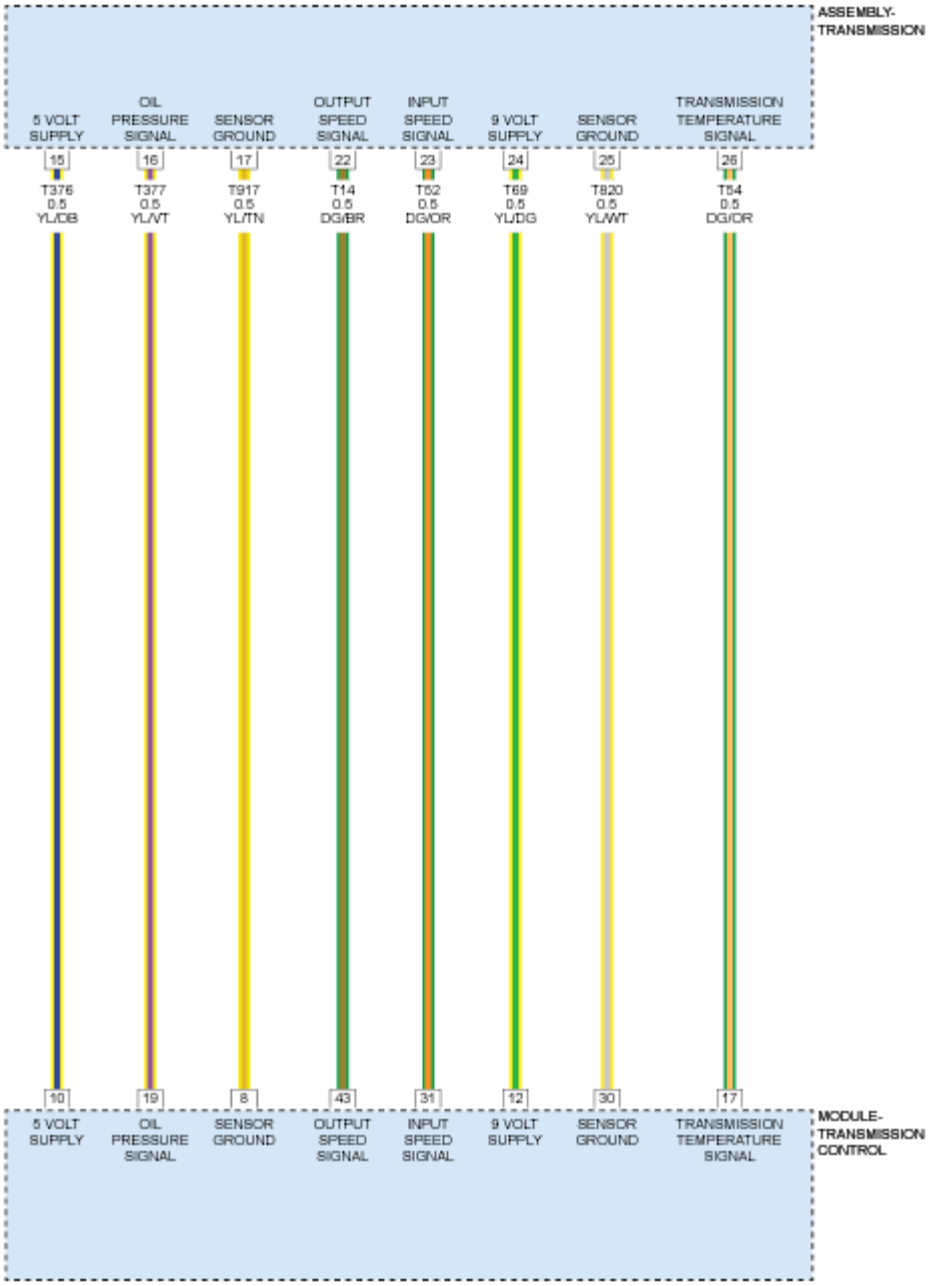

Fig. 10: Power & Ground, Temperature, Oil Pressure And Speed Sensors Circuit Diagram
Courtesy of CHRYSLER GROUP, LLC

THEORY OF OPERATION

The purpose of the diagnostic is to detect electrical failures of the transmission temperature sensor circuits. The transmission temperature sensor is a discrete analog resistor with a positive temperature coefficient. The monitoring is performed by comparing the sensor output voltage to minimum and maximum thresholds.

WHEN MONITORED

Ignition switch is on.

No failures detected by the analog to digital converter monitoring.

SET CONDITION

The failure is detected if one of the following conditions occur:

- Short to battery or open circuit (can not be distinguished) is detected if the sensor output voltage is greater than a fixed threshold.
- Short to ground is detected if the sensor output voltage is less than a fixed threshold.

POSSIBLE CAUSES

Possible Causes
(T54) TRANSMISSION TEMPERATURE SIGNAL CIRCUIT SHORTED TO GROUND TRANSMISSION TEMPERATURE SENSOR TCM - INTERNAL ERROR

Always perform the Pre-Diagnostic Troubleshooting procedure before proceeding. Refer to STANDARD PROCEDURE .

DIAGNOSTIC TEST

1. **CHECK IF DTC IS CURRENT**
    1. With the scan tool, read TCM DTCs.
    2. Record the Environmental Data and any DTCs.
    3. With the scan tool, erase DTCs.
    4. Using the recorded Environmental Data, along with the When Monitored and Set Conditions above, operate the vehicle in the conditions that set the DTC.
    5. With the scan tool, read TCM DTCs.

    Did the DTC reset?

    Yes

    - Go To 2

    No

    - Go To 5
2. **CHECK (T54) TRANSMISSION TEMPERATURE SIGNAL CIRCUIT OPERATION**
    1. Turn the Ignition OFF.
    2. Remove the Transmission Side Cover and disconnect the Transmission Temperature Sensor

harness connector.

3. Turn the Ignition ON, Engine not running.
4. Measure the voltage between (T54) Transmission Temperature Signal circuit and ground.

Is the voltage greater than 4.8 volts?

Yes

- Go To 4

No

- Go To 3

3. **CHECK (T54) TRANSMISSION TEMPERATURE SENSOR CIRCUIT FOR A SHORT TO GROUND**
   1. Turn the Ignition OFF.
   2. Disconnect the TCM harness connector.
   3. Measure the resistance of the (T54) Transmission Temperature Signal circuit between the TCM harness connector and ground.

   Is there continuity between (T54) transmission temperature signal circuit and ground?

   Yes

   - Repair (T54) Transmission Temperature Signal circuit for a short to ground.
   - Perform the TRANSMISSION VERIFICATION TEST. Refer to **STANDARD PROCEDURE** .

   No

   NOTE: If this Electronic Control Unit (ECU) is being replaced with a new unit, a diagnostic scan tool MUST be used to align the PROXI configuration data into the new ECU. Follow the routine outlined in the diagnostic scan tool for PROXI Configuration Alignment under Body Control Module (BCM) Miscellaneous Functions menu.

   - Using the schematics as a guide, check the Transmission Control Module (TCM) terminals and connectors for corrosion, damage or pushed out terminals. Pay particular attention to the power and ground circuits. If no problems are found, replace the TCM and perform programming and PROXI Configuration Alignment procedures. Refer to **MODULE, TRANSMISSION CONTROL, REMOVAL** .
   - Perform TRANSMISSION VERIFICATION TEST. Refer to **STANDARD PROCEDURE** .
4. **VERIFY TRANSMISSION TEMPERATURE SENSOR RESISTANCE / TEMPERATURE CORRELATION**

1. Measure the resistance of the Transmission Temperature Sensor between the (T54) Transmission Temperature Signal terminal and the (T820) Sensor Ground terminal.

TYPICAL VALUES FOR TRANSMISSION TEMPERATURE SENSOR	
TEMPERATURE	**APPROXIMATE RESISTANCE**
-30°C (-22°F)	44000 Ohms ± 6600
10°C (50°F)	6455 Ohms ± 645
110°C (230°F)	247 Ohms ± 16
145°C (293°F)	111 Ohms ± 6

Using the chart above, compare the Temperature Sensor temperature to the correlating resistance value.

Is the resistance within the specified range when the sensor is at the given temperature?

Yes

NOTE: If this Electronic Control Unit (ECU) is being replaced with a new unit, a diagnostic scan tool MUST be used to align the PROXI configuration data into the new ECU. Follow the routine outlined in the diagnostic scan tool for PROXI Configuration Alignment under Body Control Module (BCM) Miscellaneous Functions menu.

- Using the schematics as a guide, check the Transmission Control Module (TCM) terminals and connectors for corrosion, damage or pushed out terminals. Pay particular attention to the power and ground circuits. If no problems are found, replace the TCM and perform programming and PROXI Configuration Alignment procedures. Refer to **MODULE, TRANSMISSION CONTROL, REMOVAL** .
- Perform the TRANSMISSION VERIFICATION TEST. Refer to **STANDARD PROCEDURE** .

No

- Replace the Transmission Temperature Sensor in accordance with the Service Information.
- Perform the TRANSMISSION VERIFICATION TEST. Refer to **STANDARD PROCEDURE** .

5. **CHECK WIRING AND CONNECTORS**
   1. The conditions necessary to set the DTC are not present at this time.
   2. Using the schematics as a guide, inspect the wiring and connectors specific to this circuit.
   3. Wiggle the wires while checking for shorted and open circuits.
   4. Check for any Service Bulletins that may apply.

   Were there any problems found?

Yes

- Repair as necessary.
- Perform the TRANSMISSION VERIFICATION TEST. Refer to **STANDARD PROCEDURE** .

No

- Test complete.

P0713-00-TRANSMISSION FLUID TEMPERATURE SENSOR A CIRCUIT HIGH

For a complete wiring diagram, **refer to appropriate SYSTEM WIRING DIAGRAMS article** .

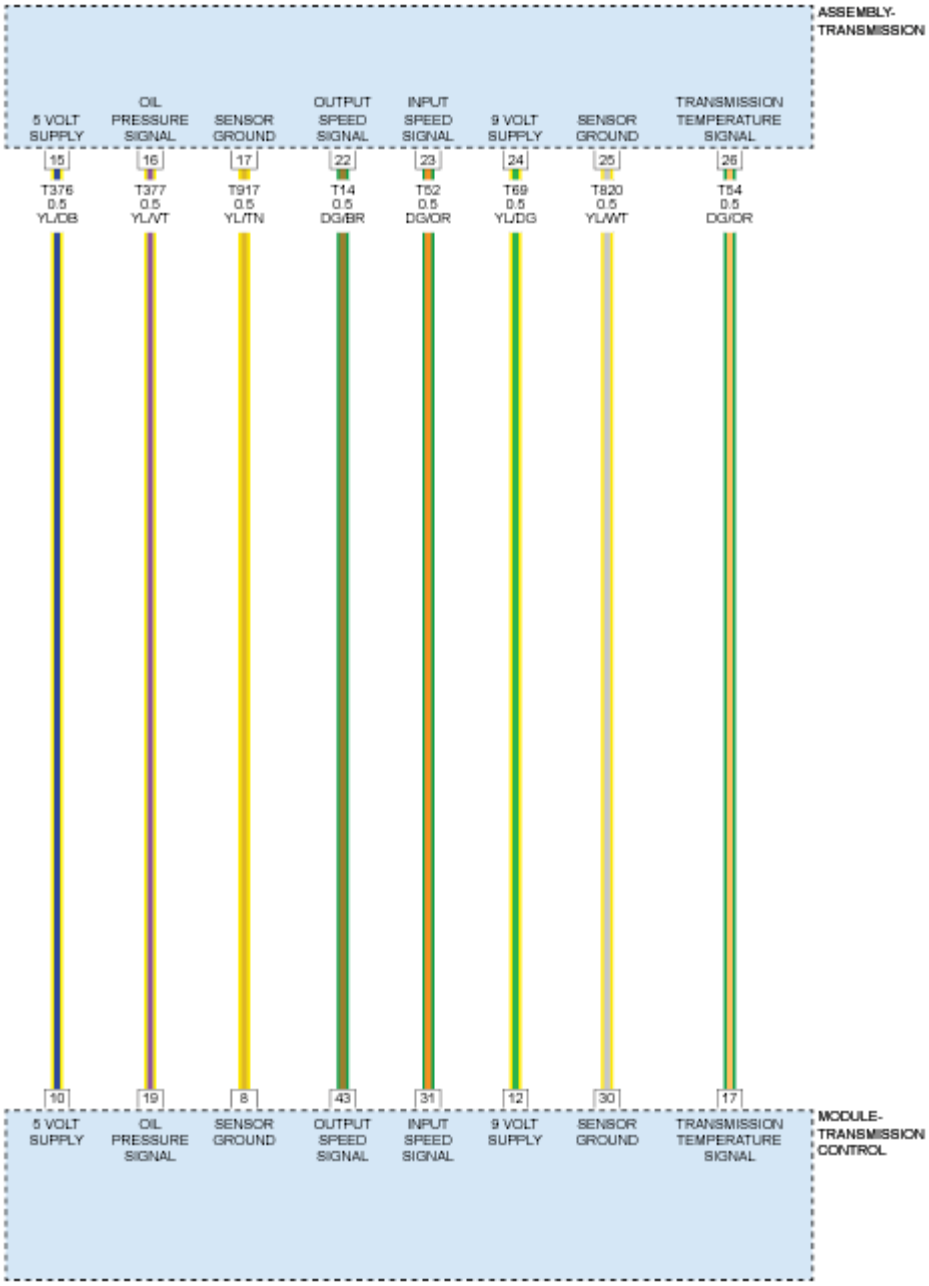

Fig. 11: Power & Ground, Temperature, Oil Pressure And Speed Sensors Circuit Diagram
Courtesy of CHRYSLER GROUP, LLC

THEORY OF OPERATION

The purpose of the diagnostic is to detect electrical failures of the transmission temperature sensor circuits. The transmission temperature sensor is a discrete analog resistor with a positive temperature coefficient. The monitoring is performed by comparing the sensor output voltage to minimum and maximum thresholds.

WHEN MONITORED

Ignition switch is on.

No failures detected by the analog to digital converter monitoring.

SET CONDITION

The failure is detected if one of the following conditions occur:

- Short to battery or open circuit (can not be distinguished) is detected if the sensor output voltage is greater than a fixed threshold.
- Short to ground is detected if the sensor output voltage is less than a fixed threshold.

POSSIBLE CAUSES

Possible Causes
(T54) TRANSMISSION TEMPERATURE SIGNAL CIRCUIT OPEN
(T54) TRANSMISSION TEMPERATURE SIGNAL CIRCUIT SHORTED TO VOLTAGE
(T820) SENSOR GROUND CIRCUIT OPEN
TRANSMISSION TEMPERATURE SENSOR
TCM - INTERNAL ERROR

Always perform the Pre-Diagnostic Troubleshooting procedure before proceeding. Refer to STANDARD PROCEDURE .

DIAGNOSTIC TEST

1. **CHECK IF DTC IS CURRENT**
    1. With the scan tool, read TCM DTCs.
    2. Record the Environmental Data and any DTCs.
    3. With the scan tool, erase DTCs.
    4. Using the recorded Environmental Data, along with the When Monitored and Set Conditions above, operate the vehicle in the conditions that set the DTC.
    5. With the scan tool, read TCM DTCs.

    Did the DTC reset?

    Yes

    - Go To 2

    No

    - Go To 7
2. **CHECK (T54) TRANSMISSION TEMPERATURE SIGNAL AND (T820) SENSOR GROUND**

CIRCUIT OPERATION

1. Turn the Ignition OFF.
2. Remove the Transmission Side Cover and disconnect the Transmission Temperature Sensor harness connector.
3. Turn the Ignition ON.
4. Measure the voltage between (T54) Transmission Temperature Signal circuit and (T820) Sensor Ground.

   Is the voltage greater than 4.8 volts?

   Yes

   - Go To 5

   No

   - Go To 3

3. **CHECK (T54) TRANSMISSION TEMPERATURE SENSOR CIRCUIT FOR AN OPEN**
   1. Turn the Ignition OFF.
   2. Disconnect the TCM harness connector.
   3. Measure the resistance of the (T54) Transmission Temperature Signal circuit between the TCM harness connector and the Transmission Temperature Sensor harness connector.

      Is the resistance below 5 ohms?

      Yes

      - Go To 4

      No

      - Repair (T54) Transmission Temperature Signal circuit for an open.
      - Perform the TRANSMISSION VERIFICATION TEST. Refer to **STANDARD PROCEDURE** .

4. **PUT TITLE HERE**
   1. Measure the resistance of the (T820) Sensor Ground circuit between the TCM harness connector and the Transmission Temperature Sensor harness connector.

      Is the resistance below 5 ohms?

      Yes

      NOTE: If this Electronic Control Unit (ECU) is being replaced with a new unit,

a diagnostic scan tool MUST be used to align the PROXI configuration data into the new ECU. Follow the routine outlined in the diagnostic scan tool for PROXI Configuration Alignment under Body Control Module (BCM) Miscellaneous Functions menu.

- Using the schematics as a guide, check the Transmission Control Module (TCM) terminals and connectors for corrosion, damage or pushed out terminals. Pay particular attention to the power and ground circuits. If no problems are found, replace the TCM and perform programming and PROXI Configuration Alignment procedures. Refer to **MODULE, TRANSMISSION CONTROL, REMOVAL** .
- Perform the TRANSMISSION VERIFICATION TEST. Refer to **STANDARD PROCEDURE** .

No

- Repair (T820) Sensor Ground circuit for an open.
- Perform the TRANSMISSION VERIFICATION TEST. Refer to **STANDARD PROCEDURE** .

5. **CHECK THE (T54) TRANSMISSION TEMPERATURE SIGNAL CIRCUIT FOR A SHORT TO ANOTHER CIRCUIT**
   1. Disconnect the TCM harness connector.
   2. Measure resistance between (T54) Transmission Temperature Signal circuit and all other circuits in the TCM harness connector.

      Is there continuity between (T54) transmission temperature signal circuit and any other TCM circuit?

      Yes

      - Repair the (T54) Transmission Temperature Signal circuit for a short to another circuit.
      - Perform the TRANSMISSION VERIFICATION TEST. Refer to **STANDARD PROCEDURE** .

      No

      - Go To 6
6. **VERIFY TRANSMISSION TEMPERATURE SENSOR RESISTANCE / TEMPERATURE CORRELATION**
   1. Measure the resistance of the Transmission Temperature Sensor between the (T54) Transmission Temperature Signal terminal and the (T820) Sensor Ground terminal.

TYPICAL VALUES FOR TRANSMISSION TEMPERATURE SENSOR	
TEMPERATURE	**APPROXIMATE RESISTANCE**
-30°C (-22°F)	44000 Ohms ± 6600

10°C (50°F)	6455 Ohms ± 645
110°C (230°F)	247 Ohms ± 16
145°C (293°F)	111 Ohms ± 6

Using the chart above, compare the Temperature Sensor temperature to the correlating resistance value.

Is the resistance within the specified range when the sensor is at the given temperature?

Yes

NOTE: **If this Electronic Control Unit (ECU) is being replaced with a new unit, a diagnostic scan tool MUST be used to align the PROXI configuration data into the new ECU. Follow the routine outlined in the diagnostic scan tool for PROXI Configuration Alignment under Body Control Module (BCM) Miscellaneous Functions menu.**

- Using the schematics as a guide, check the Transmission Control Module (TCM) terminals and connectors for corrosion, damage or pushed out terminals. Pay particular attention to the power and ground circuits. If no problems are found, replace the TCM and perform programming and PROXI Configuration Alignment procedures. Refer to **MODULE, TRANSMISSION CONTROL, REMOVAL** .
- Perform the TRANSMISSION VERIFICATION TEST. Refer to **STANDARD PROCEDURE** .

No

- Replace the Transmission Temperature Sensor in accordance with the Service Information.
- Perform the TRANSMISSION VERIFICATION TEST. Refer to **STANDARD PROCEDURE** .

7. **CHECK WIRING AND CONNECTORS**
   1. The conditions necessary to set the DTC are not present at this time.
   2. Using the schematics as a guide, inspect the wiring and connectors specific to this circuit.
   3. Wiggle the wires while checking for shorted and open circuits.
   4. Check for any Service Bulletins that may apply.

   Were there any problems found?

   Yes

   - Repair as necessary.
   - Perform the TRANSMISSION VERIFICATION TEST. Refer to **STANDARD PROCEDURE** .

No

- Test complete.

P0716-00-INPUT SHAFT SPEED SENSOR 1 PERFORMANCE

For a complete wiring diagram, **refer to appropriate SYSTEM WIRING DIAGRAMS article** .

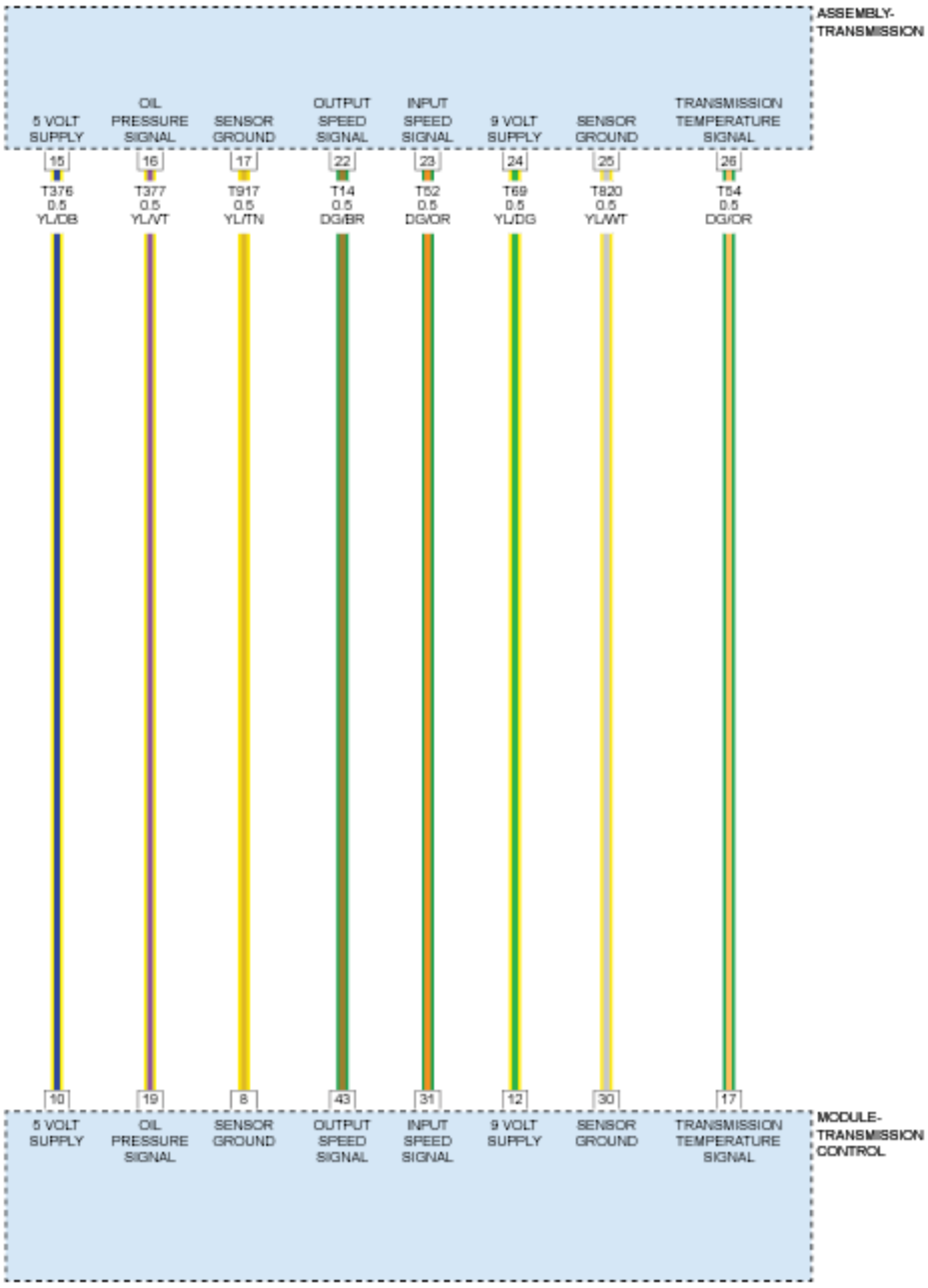

Fig. 12: Power & Ground, Temperature, Oil Pressure And Speed Sensors Circuit Diagram

Courtesy of CHRYSLER GROUP, LLC

THEORY OF OPERATION

The purpose of the diagnostic is to detect rationality failures of the input speed sensor signal. This diagnostic checks if the input speed sensor signal is within the calculated tolerance bands.

The upper threshold of the first tolerance band is the greater value of either the engine speed or calculated input speed, plus a calibrated offset. The calculated input speed is based upon the output speed signal multiplied by the gear ratio factor. This factor corresponds to either the target gear or current gear depending on which gear provides the greater ratio.

The lower threshold of the first tolerance band is the lesser value of either the engine speed or calculated input speed, minus a calibrated offset. The calculated input speed is based upon the output speed signal multiplied by the gear ratio factor. This factor corresponds to either the target gear or current gear depending on which gear provides the lesser ratio.

The thresholds of the second tolerance bands are calculated using the same method described above. In place of the output speed signal, the wheel speed signal via CAN is used for the calculation.

WHEN MONITORED

No failure detected in the sensor supply voltage monitoring.

No failure detected in the input speed sensor circuit monitoring.

No failure detected in the output speed sensor monitoring.

No CAN failure of the wheel speed signal received via CAN used for the rationality monitoring.

No CAN failure of the engine speed signal received via CAN used for the rationality monitoring.

SET CONDITION

The failure is detected if the input speed sensor signal is not within the calculated tolerance bands for the input speed sensor signal for a calibrated amount of time.

POSSIBLE CAUSES

Possible Causes
INPUT SHAFT SPEED SENSOR OR WIRING
OUTPUT SHAFT SPEED SENSOR OR WIRING
TRANSMISSION INTERNAL FAILURE
TCM - INTERNAL ERROR

Always perform the Pre-Diagnostic Troubleshooting procedure before proceeding. Refer to STANDARD

PROCEDURE .

DIAGNOSTIC TEST

1. **CHECK IF CONDITION IS CURRENT**
    1. Turn the Ignition ON, Engine not running.
    2. With the scan tool, erase TCM DTCs.
    3. Raise the vehicle on the hoist.
    4. Start the Engine.
    5. Select 4th gear to keep the transmission from shifting into 5th or higher gear.
    6. With the scan tool, view the Data Display, read the Input Speed Sensor RPM.
    7. Firmly apply the Brake Pedal and place the Gear Selector in DRIVE.

    WARNING: To avoid personal injury or death, keep hands and feet clear of rotating wheels.

    8. Release the Brakes and raise the Engine RPM to allow the Transmission to perform a 2-3 and 3-4 upshift while observing the Input Speed Sensor RPM.

    Did the Input Speed Sensor display an RPM above 7, 700 at any time during the test?

    Yes

    - Go To 2

    No

    NOTE: If this Electronic Control Unit (ECU) is being replaced with a new unit, a diagnostic scan tool MUST be used to align the PROXI configuration data into the new ECU. Follow the routine outlined in the diagnostic scan tool for PROXI Configuration Alignment under Body Control Module (BCM) Miscellaneous Functions menu.

    - Using the schematics as a guide, check the Transmission Control Module (TCM) terminals and connectors for corrosion, damage or pushed out terminals. Pay particular attention to the power and ground circuits. If no problems are found, replace the TCM and perform programming and PROXI Configuration Alignment procedures. Refer to **MODULE, TRANSMISSION CONTROL, REMOVAL** .
    - Perform the TRANSMISSION VERIFICATION TEST. Refer to **STANDARD PROCEDURE** .
2. **INSPECT FOR INTERNAL TRANSMISSION FAILURE**
    1. This DTC is an indication of an internal transmission failure.
    2. Remove the Transmission Oil Pan and inspect for excessive debris such as clutch friction material

or metal contamination.

Is there any indication of an internal transmission failure?

Yes

- Repair internal transmission as necessary in accordance with the Service Information.
- Perform the TRANSMISSION VERIFICATION TEST. Refer to **STANDARD PROCEDURE** .

No

Go To 3

3. **CHECK SPEED SENSORS AND WIRING**
   1. Check the Output and Input Speed Sensors wiring for high resistance and high resistance short to ground. Also check connections for corrosion and pushed out terminals.

      Were any problems found?

      Yes

      - Repair in accordance with the Service Information.
      - Perform the TRANSMISSION VERIFICATION TEST. Refer to **STANDARD PROCEDURE** .

      No

      NOTE: If this Electronic Control Unit (ECU) is being replaced with a new unit, a diagnostic scan tool MUST be used to align the PROXI configuration data into the new ECU. Follow the routine outlined in the diagnostic scan tool for PROXI Configuration Alignment under Body Control Module (BCM) Miscellaneous Functions menu.

      - Using the schematics as a guide, check the Transmission Control Module (TCM) terminals and connectors for corrosion, damage or pushed out terminals. Pay particular attention to the power and ground circuits. If no problems are found, replace the TCM and perform programming and PROXI Configuration Alignment procedures. Refer to **MODULE, TRANSMISSION CONTROL, REMOVAL** .
      - Perform the TRANSMISSION VERIFICATION TEST. Refer to **STANDARD PROCEDURE** .

P0721-00-OUTPUT SHAFT SPEED SENSOR CIRCUIT PERFORMANCE

For a complete wiring diagram, **refer to appropriate SYSTEM WIRING DIAGRAMS article** .

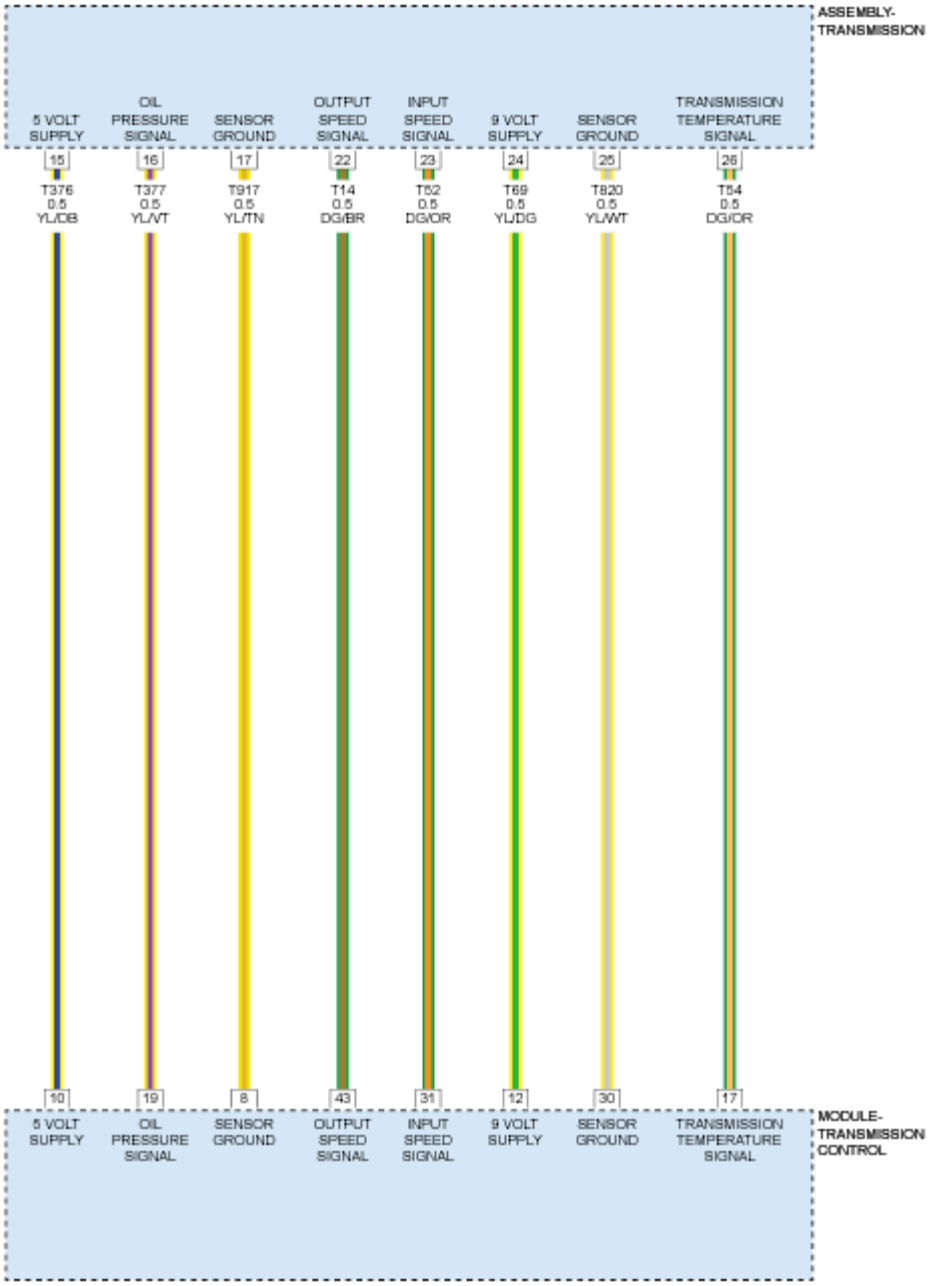

Fig. 13: Power & Ground, Temperature, Oil Pressure And Speed Sensors Circuit Diagram
Courtesy of CHRYSLER GROUP, LLC

THEORY OF OPERATION

The purpose of the diagnostic is to detect rationality failures of the output speed sensor signal. This diagnostic checks if the output speed sensor signal is within the calculated tolerance bands.

The upper threshold of the first tolerance band is the calculated output speed plus a calibrated offset. The calculated output speed is based upon the input speed signal multiplied by the gear ratio factor. This factor

corresponds to either the target gear or current gear depending on which gear provides the greater ratio.

The lower threshold of the first tolerance band is the calculated output speed, minus a calibrated offset. The calculated output speed is based upon the input speed signal multiplied by the gear ratio factor. This factor corresponds to either the target gear or current gear depending on which gear provides the lesser ratio.

The thresholds of the second tolerance bands are calculated using the same method described above. In place of the input speed signal, the wheel speed signal via CAN is used for the calculation.

In addition, this diagnostic checks if the rotating direction of the output speed sensor signal corresponds to the actual gear position.

WHEN MONITORED

No failure detected in the sensor supply voltage monitoring.

No failure detected in the output speed sensor circuit monitoring.

No failure detected in the input speed sensor monitoring.

No CAN failure of the wheel speed signal received via CAN used for the rationality monitoring.

SET CONDITION

The failure is detected if one of the following conditions occur:

The rotating direction of the output speed sensor signal does not correspond to the actual gear position.

The output speed sensor signal is not within the calculated tolerance bands for the output speed sensor signal for a calibrated amount of time.

POSSIBLE CAUSES

Possible Causes
TRANSMISSION INTERNAL FAILURE TCM - INTERNAL ERROR

Always perform the Pre-Diagnostic Troubleshooting procedure before proceeding. Refer to STANDARD PROCEDURE .

DIAGNOSTIC TEST

1. **CHECK IF CONDITION IS CURRENT**
    1. Turn the Ignition ON, Engine not running.
    2. With the scan tool, erase TCM DTCs.

3. Raise the vehicle on the hoist.
4. Start the Engine.
5. With the scan tool, view the Data Display, read the Output Speed Sensor RPM.
6. Firmly apply the Brake Pedal and place the Gear Selector in DRIVE.

WARNING: To avoid personal injury or death, keep hands and feet clear of rotating wheels.

7. Release the Brakes and raise the Engine RPM to allow the Transmission to perform a 2-3 and 3-4 upshift while observing the Output Speed Sensor RPM.

   Did the Output Speed Sensor display an RPM above 1, 000?

   Yes

   - Go To 2

   No

   NOTE: If this Electronic Control Unit (ECU) is being replaced with a new unit, a diagnostic scan tool MUST be used to align the PROXI configuration data into the new ECU. Follow the routine outlined in the diagnostic scan tool for PROXI Configuration Alignment under Body Control Module (BCM) Miscellaneous Functions menu.

   - Using the schematics as a guide, check the Transmission Control Module (TCM) terminals and connectors for corrosion, damage or pushed out terminals. Pay particular attention to the power and ground circuits. If no problems are found, replace the TCM and perform programming and PROXI Configuration Alignment procedures. Refer to **MODULE, TRANSMISSION CONTROL, REMOVAL** .
   - Perform the TRANSMISSION VERIFICATION TEST. Refer to **STANDARD PROCEDURE** .

2. **INSPECT FOR INTERNAL TRANSMISSION FAILURE**
   1. This DTC is an indication of a internal transmission failure.
   2. Remove the Transmission Oil Pan and inspect for excessive debris such as clutch friction material or metal contamination.

      Is there any indication of an internal transmission failure?

      Yes

      - Repair internal transmission as necessary in accordance to the Service Information.
      - Perform the TRANSMISSION VERIFICATION TEST. Refer to **STANDARD**

PROCEDURE .

No

Go To 3

3. **CHECK SPEED SENSORS AND WIRING**
   1. Check the Output and Input Speed Sensors wiring for high resistance and high resistance short to ground. Also check connections for corrosion and pushed out terminals.

      Were any problems found?

      Yes

      - Repair in accordance with the Service Information.
      - Perform the TRANSMISSION VERIFICATION TEST. Refer to **STANDARD PROCEDURE** .

      No

      NOTE: If this Electronic Control Unit (ECU) is being replaced with a new unit, a diagnostic scan tool MUST be used to align the PROXI configuration data into the new ECU. Follow the routine outlined in the diagnostic scan tool for PROXI Configuration Alignment under Body Control Module (BCM) Miscellaneous Functions menu.

      - Using the schematics as a guide, check the Transmission Control Module (TCM) terminals and connectors for corrosion, damage or pushed out terminals. Pay particular attention to the power and ground circuits. If no problems are found, replace the TCM and perform programming and PROXI Configuration Alignment procedures. Refer to **MODULE, TRANSMISSION CONTROL, REMOVAL** .
      - Perform the TRANSMISSION VERIFICATION TEST. Refer to **STANDARD PROCEDURE** .

P0729-00-GEAR 6 SHIFT INCORRECT RATIO

For a complete wiring diagram, **refer to appropriate SYSTEM WIRING DIAGRAMS article** .

THEORY OF OPERATION

The Transmission Control Module (TCM) monitors for conditions which lead to an unexpected transmission gear ratio (e.g. slipping clutches, hydraulic or mechanical defects, etc.). The TCM compares the actual gear ratio (i.e. the ratio of input speed to output speed) to a minimum and maximum calibrated gear ratio value. The TCM performs this comparison while driving in a fix gear, during gear engagement, and during shifting from one gear to another.

WHEN MONITORED

Gear Selector position is in Drive or Reverse.

Transmission Fluid temperature is above a calibrated threshold.

No clutch slip control functions commanded.

No failure in input speed signal.

Input speed above a calibrated threshold.

Valid output speed signal from the output speed sensor or calculated from the wheel speed signal if output speed sensor is not available.

Valid engine speed signal from the PCM.

During Gearshifts:

The output speed and the output speed gradient must be higher than a calibrated threshold.

SET CONDITION

During Gearshifts:

A symptom is detected if the measured gear ratio exceeds the gear ratio range.

If a symptom is detected during downshifts requiring the engagement of a dog clutch or during upshifts, the diagnostic system aborts the gear shifting and the gear from which the shifting has been started is engaged. After a calibrated number of symptoms have been detected a failure is stored and the diagnostic system engages a calibrated gear.

If a symptom is detected during a downshift requiring the engagement of a dog clutch, a fault code is stored indicating the associated dog clutch.

In Fixed Gears:

If the output speed is greater than a threshold then a symptom is detected if the measured gear ratio exceeds the gear ratio range for calibrated amount of time.

If the output speed is lower than this threshold, then a symptom is detected if the absolute difference between output speed multiplied by the fix gear ratio of the actual gear and input speed exceeds a threshold for a calibrated amount of time

If a symptom is detected while driving in a fixed gear, the diagnostic system commands an up shift to the next gear. After a calibrated number of symptoms have been detected a failure is stored and the diagnostic system engages a calibrated gear. This gear is monitored as well and if a failure is detected for this gear, an alternative

gear is engaged and so on. The selection of alternative gears follows a calibrated logic. The aim of this logic is to detect a damaged clutch and to finally select an alternative gear that consists of a combination of clutches in which the damaged clutch is not involved. If a further failure symptom occurs in this final alternative gear, a failure for general transmission ratio malfunction is stored.

POSSIBLE CAUSES

Possible Causes
A DOG CLUTCH
CLUTCH C
CLUTCH E
TRANSMISSION CONTROL MODULE (TCM)

Always perform the Pre-Diagnostic Troubleshooting procedure before proceeding. Refer to STANDARD PROCEDURE .

DIAGNOSTIC TEST

1. **CHECK IF DTC IS CURRENT**
    1. With the scan tool, read TCM DTCs.
    2. Record the Environmental Data and any DTCs.
    3. With the scan tool, erase DTCs.
    4. Using the recorded Environmental Data, along with the When Monitored and Set Conditions above, operate the vehicle in the conditions that set the DTC.
    5. With the scan tool, read TCM DTCs.

    Did the DTC reset?

    Yes

    - Go To 2

    No

    - Go To 3
2. **TRANSMISSION**

    If the DTC returns, view repair.

    Repair

    - Verify proper fluid level. Refer to **FLUID AND FILTER, STANDARD PROCEDURE** .
    - Verify proper operation of the input and output speed sensors.
    - Refer to **DIAGNOSIS AND TESTING** and using the clutch application chart, inspect the

clutches, valve body solenoids, and valves associated with this gear ratio error.
- Repair or replace the Transmission in accordance with the Service Information.
- Perform the TRANSMISSION VERIFICATION TEST. Refer to **STANDARD PROCEDURE** .

3. **CHECK WIRING AND CONNECTORS**
   1. The conditions necessary to set the DTC are not present at this time.
   2. Using the schematics as a guide, inspect the wiring and connectors specific to this circuit.
   3. Wiggle the wires while checking for shorted and open circuits.
   4. Check for any Service Bulletins that may apply.

   Were there any problems found?

   Yes

   - Repair as necessary.
   - Perform the TRANSMISSION VERIFICATION TEST. Refer to **STANDARD PROCEDURE** .

   No

   - Test complete.

P072F-00-STUCK IN GEAR 4

For a complete wiring diagram, **refer to appropriate SYSTEM WIRING DIAGRAMS article** .

THEORY OF OPERATION

The purpose of the diagnostic is to detect if the dog clutch F is stuck in the engaged position while shifting from the extended neutral position (all clutches should be disengaged) to the drive position. To be able to detect if dog clutch F is stuck, the friction clutch E is engaged after the extended neutral position has occurred. If the input speed is equal to the output speed multilplied by the gear ratio of the fourth gear, the dog clutch F is stuck in the engaged position

A dog clutch is a type of clutch that couples two rotating shifting elements not by friction but by interference. The two parts of the clutch are designed such that one will push the other, causing both to rotate at the same speed and will never slip. The speeds of the shifting elements must match before the dog clutch can be engaged. If the rotational speed difference of the shifting elements is too high during the engagement, the dog clutch is damaged. If torque is transmitted via the shifting elements of the dog clutch, the dog clutch cannot be disengaged.

WHEN MONITORED

Dog clutch F has been commanded in the engaged position.

The extended neutral position is active (maximum time = 1s).

Friction clutch E is commanded in the engaged position.

No failure in input speed signal monitoring.

No failure in output speed signal monitoring.

SET CONDITION

The failure is detected if the measured input speed is within a calibrated range of the output speed multiplied by the gear ratio of the fourth gear for a calibrated amount of time.

POSSIBLE CAUSES

Possible Causes
INTERNAL TRANSMISSION PROBLEM TRANSMISSION CONTROL MODULE (TCM)

Always perform the Pre-Diagnostic Troubleshooting procedure before proceeding. Refer to STANDARD PROCEDURE .

DIAGNOSTIC TEST

CHECK FOR INTERNAL TRANSMISSION PROBLEM

Repair

- Inspect Dog Clutch F and related O-ring for damage and repair in accordance with the Service Information.
- Perform the TRANSMISSION VERIFICATION TEST.

  Refer to **STANDARD PROCEDURE** .

P0731-00-GEAR 1 SHIFT INCORRECT RATIO

For a complete wiring diagram, **refer to appropriate SYSTEM WIRING DIAGRAMS article** .

THEORY OF OPERATION

The Transmission Control Module (TCM) monitors for conditions which lead to an unexpected transmission gear ratio (e.g. slipping clutches, hydraulic or mechanical defects, etc.). The TCM compares the actual gear ratio (i.e. the ratio of input speed to output speed) to a minimum and maximum calibrated gear ratio value. The TCM performs this comparison while driving in a fix gear, during gear engagement, and during shifting from one gear to another.

WHEN MONITORED

Gear Selector position is in DRIVE or REVERSE.

Transmission Fluid temperature is above a calibrated threshold.

No clutch slip control functions commanded.

No failure in input speed signal.

Input speed above a calibrated threshold.

Valid output speed signal from the output speed sensor or calculated from the wheel speed signal if output speed sensor is not available.

Valid engine speed signal from the PCM.

During Gearshifts:

The output speed and the output speed gradient must be higher than a calibrated threshold.

SET CONDITION

During Gearshifts:

A symptom is detected if the measured gear ratio exceeds the gear ratio range.

If a symptom is detected during downshifts requiring the engagement of a dog clutch or during upshifts, the diagnostic system aborts the gear shifting and the gear from which the shifting has been started is engaged. After a calibrated number of symptoms have been detected a failure is stored and the diagnostic system engages a calibrated gear.

If a symptom is detected during a downshift requiring the engagement of a dog clutch, a fault code is stored indicating the associated dog clutch.

In Fixed Gears:

If the output speed is greater than a threshold then a symptom is detected if the measured gear ratio exceeds the gear ratio range for calibrated amount of time.

If the output speed is lower than this threshold, then a symptom is detected if the absolute difference between output speed multiplied by the fix gear ratio of the actual gear and input speed exceeds a threshold for a calibrated amount of time

If a symptom is detected while driving in a fixed gear, the diagnostic system commands an up shift to the next gear. After a calibrated number of symptoms have been detected a failure is stored and the diagnostic system engages a calibrated gear. This gear is monitored as well and if a failure is detected for this gear, an alternative gear is engaged and so on. The selection of alternative gears follows a calibrated logic. The aim of this logic is to detect a damaged clutch and to finally select an alternative gear that consists of a combination of clutches in

which the damaged clutch is not involved. If a further failure symptom occurs in this final alternative gear, a failure for general transmission ratio malfunction is stored.

POSSIBLE CAUSES

Possible Causes
CLUTCH C VALVE BODY TRANSMISSION CONTROL MODULE (TCM)

Always perform the Pre-Diagnostic Troubleshooting procedure before proceeding. Refer to STANDARD PROCEDURE .

DIAGNOSTIC TEST

1. **CHECK IF DTC IS CURRENT**
   1. With the scan tool, read TCM DTCs.
   2. Record the Environmental Data and any DTCs.
   3. With the scan tool, erase DTCs.
   4. Using the recorded Environmental Data, along with the When Monitored and Set Conditions above, operate the vehicle in the conditions that set the DTC.
   5. With the scan tool, read TCM DTCs.

      Did the DTC reset?

      Yes

      - Go To 2

      No

      - Go To 3
2. **TRANSMISSION**

   If the DTC returns, view repair.

   Repair

   - Verify proper fluid level. Refer to **FLUID AND FILTER, STANDARD PROCEDURE** .
   - Verify proper operation of the input and output speed sensors.
   - Refer to **DIAGNOSIS AND TESTING** and using the clutch application chart, inspect the clutches, valve body solenoids, and valves associated with this gear ratio error.
   - Repair or replace the Transmission in accordance with the Service Information.

- Perform the TRANSMISSION VERIFICATION TEST. Refer to **STANDARD PROCEDURE** .

3. **CHECK WIRING AND CONNECTORS**
   1. The conditions necessary to set the DTC are not present at this time.
   2. Using the schematics as a guide, inspect the wiring and connectors specific to this circuit.
   3. Wiggle the wires while checking for shorted and open circuits.
   4. Check for any Service Bulletins that may apply.

   Were there any problems found?

   Yes

   - Repair as necessary.
   - Perform the TRANSMISSION VERIFICATION TEST. Refer to **STANDARD PROCEDURE** .

   No

   - Test complete.

P0732-00-GEAR 2 SHIFT INCORRECT RATIO

For a complete wiring diagram, **refer to appropriate SYSTEM WIRING DIAGRAMS article** .

THEORY OF OPERATION

The Transmission Control Module (TCM) monitors for conditions which lead to an unexpected transmission gear ratio (e.g. slipping clutches, hydraulic or mechanical defects, etc.). The TCM compares the actual gear ratio (i.e. the ratio of input speed to output speed) to a minimum and maximum calibrated gear ratio value. The TCM performs this comparison while driving in a fix gear, during gear engagement, and during shifting from one gear to another.

WHEN MONITORED

Gear Selector position is in DRIVE or REVERSE.

Transmission Fluid temperature is above a calibrated threshold.

No clutch slip control functions commanded.

No failure in input speed signal.

Input speed above a calibrated threshold.

Valid output speed signal from the output speed sensor or calculated from the wheel speed signal if output speed sensor is not available.

Valid engine speed signal from the PCM.

During Gearshifts:

The output speed and the output speed gradient must be higher than a calibrated threshold.

SET CONDITION

During Gearshifts:

A symptom is detected if the measured gear ratio exceeds the gear ratio range.

If a symptom is detected during downshifts requiring the engagement of a dog clutch or during upshifts, the diagnostic system aborts the gear shifting and the gear from which the shifting has been started is engaged. After a calibrated number of symptoms have been detected a failure is stored and the diagnostic system engages a calibrated gear.

If a symptom is detected during a downshift requiring the engagement of a dog clutch, a fault code is stored indicating the associated dog clutch.

In Fixed Gears:

If the output speed is greater than a threshold then a symptom is detected if the measured gear ratio exceeds the gear ratio range for calibrated amount of time.

If the output speed is lower than this threshold, then a symptom is detected if the absolute difference between output speed multiplied by the fix gear ratio of the actual gear and input speed exceeds a threshold for a calibrated amount of time

If a symptom is detected while driving in a fixed gear, the diagnostic system commands an up shift to the next gear. After a calibrated number of symptoms have been detected a failure is stored and the diagnostic system engages a calibrated gear. This gear is monitored as well and if a failure is detected for this gear, an alternative gear is engaged and so on. The selection of alternative gears follows a calibrated logic. The aim of this logic is to detect a damaged clutch and to finally select an alternative gear that consists of a combination of clutches in which the damaged clutch is not involved. If a further failure symptom occurs in this final alternative gear, a failure for general transmission ratio malfunction is stored.

POSSIBLE CAUSES

Possible Causes
CLUTCH B
CLUTCH D
VALVE BODY
TRANSMISSION CONTROL MODULE (TCM)

Always perform the Pre-Diagnostic Troubleshooting procedure before proceeding. Refer to STANDARD

PROCEDURE .

DIAGNOSTIC TEST

1. **CHECK IF DTC IS CURRENT**
    1. With the scan tool, read TCM DTCs.
    2. Record the Environmental Data and any DTCs.
    3. With the scan tool, erase DTCs.
    4. Using the recorded Environmental Data, along with the When Monitored and Set Conditions above, operate the vehicle in the conditions that set the DTC.
    5. With the scan tool, read TCM DTCs.

    Did the DTC reset?

    Yes

    - Go To 2

    No

    - Go To 3
2. **TRANSMISSION**

    If the DTC returns, view repair.

    Repair

    - Verify proper fluid level. Refer to **FLUID AND FILTER, STANDARD PROCEDURE** .
    - Verify proper operation of the input and output speed sensors.
    - Refer to **DIAGNOSIS AND TESTING** and using the clutch application chart, inspect the clutches, valve body solenoids, and valves associated with this gear ratio error.
    - Repair or replace the Transmission in accordance with the Service Information.
    - Perform the TRANSMISSION VERIFICATION TEST. Refer to **STANDARD PROCEDURE** .
3. **CHECK WIRING AND CONNECTORS**
    1. The conditions necessary to set the DTC are not present at this time.
    2. Using the schematics as a guide, inspect the wiring and connectors specific to this circuit.
    3. Wiggle the wires while checking for shorted and open circuits.
    4. Check for any Service Bulletins that may apply.

    Were there any problems found?

    Yes

- Repair as necessary.
- Perform the TRANSMISSION VERIFICATION TEST. Refer to **STANDARD PROCEDURE** .

No

- Test complete.

P0733-00-GEAR 3 SHIFT INCORRECT RATIO

For a complete wiring diagram, **refer to appropriate SYSTEM WIRING DIAGRAMS article** .

THEORY OF OPERATION

The Transmission Control Module (TCM) monitors for conditions which lead to an unexpected transmission gear ratio (e.g. slipping clutches, hydraulic or mechanical defects, etc.). The TCM compares the actual gear ratio (i.e. the ratio of input speed to output speed) to a minimum and maximum calibrated gear ratio value. The TCM performs this comparison while driving in a fix gear, during gear engagement, and during shifting from one gear to another.

WHEN MONITORED

Gear Selector position is in DRIVE or REVERSE.

Transmission Fluid temperature is above a calibrated threshold.

No clutch slip control functions commanded.

No failure in input speed signal.

Input speed above a calibrated threshold.

Valid output speed signal from the output speed sensor or calculated from the wheel speed signal if output speed sensor is not available.

Valid engine speed signal from the PCM.

During Gearshifts:

The output speed and the output speed gradient must be higher than a calibrated threshold.

SET CONDITION

During Gearshifts:

A symptom is detected if the measured gear ratio exceeds the gear ratio range.

If a symptom is detected during downshifts requiring the engagement of a dog clutch or during upshifts, the diagnostic system aborts the gear shifting and the gear from which the shifting has been started is engaged. After a calibrated number of symptoms have been detected a failure is stored and the diagnostic system engages a calibrated gear.

If a symptom is detected during a downshift requiring the engagement of a dog clutch, a fault code is stored indicating the associated dog clutch.

In Fixed Gears:

If the output speed is greater than a threshold then a symptom is detected if the measured gear ratio exceeds the gear ratio range for calibrated amount of time.

If the output speed is lower than this threshold, then a symptom is detected if the absolute difference between output speed multiplied by the fix gear ratio of the actual gear and input speed exceeds a threshold for a calibrated amount of time

If a symptom is detected while driving in a fixed gear, the diagnostic system commands an up shift to the next gear. After a calibrated number of symptoms have been detected a failure is stored and the diagnostic system engages a calibrated gear. This gear is monitored as well and if a failure is detected for this gear, an alternative gear is engaged and so on. The selection of alternative gears follows a calibrated logic. The aim of this logic is to detect a damaged clutch and to finally select an alternative gear that consists of a combination of clutches in which the damaged clutch is not involved. If a further failure symptom occurs in this final alternative gear, a failure for general transmission ratio malfunction is stored.

POSSIBLE CAUSES

Possible Causes
CLUTCH C
CLUTCH E
VALVE BODY
TRANSMISSION CONTROL MODULE (TCM)

Always perform the Pre-Diagnostic Troubleshooting procedure before proceeding. Refer to STANDARD PROCEDURE .

DIAGNOSTIC TEST

1. **CHECK IF DTC IS CURRENT**
    1. With the scan tool, read TCM DTCs.
    2. Record the Environmental Data and any DTCs.
    3. With the scan tool, erase DTCs.
    4. Using the recorded Environmental Data, along with the When Monitored and Set Conditions above, operate the vehicle in the conditions that set the DTC.
    5. With the scan tool, read TCM DTCs.

Did the DTC reset?

Yes

- Go To 2

No

- Go To 3

2. **TRANSMISSION**

   If the DTC returns, view repair.

   Repair

   - Verify proper fluid level. Refer to **FLUID AND FILTER, STANDARD PROCEDURE** .
   - Verify proper operation of the input and output speed sensors.
   - Refer to **DIAGNOSIS AND TESTING** and using the clutch application chart, inspect the clutches, valve body solenoids, and valves associated with this gear ratio error.
   - Repair or replace the Transmission in accordance with the Service Information.
   - Perform the TRANSMISSION VERIFICATION TEST. Refer to **STANDARD PROCEDURE** .

3. **CHECK WIRING AND CONNECTORS**
   1. The conditions necessary to set the DTC are not present at this time.
   2. Using the schematics as a guide, inspect the wiring and connectors specific to this circuit.
   3. Wiggle the wires while checking for shorted and open circuits.
   4. Check for any Service Bulletins that may apply.

   Were there any problems found?

   Yes

   - Repair as necessary.
   - Perform the TRANSMISSION VERIFICATION TEST. Refer to **STANDARD PROCEDURE** .

   No

   - Test complete.

P0734-00-GEAR 4 SHIFT INCORRECT RATIO

For a complete wiring diagram, **refer to appropriate SYSTEM WIRING DIAGRAMS article** .

THEORY OF OPERATION

The Transmission Control Module (TCM) monitors for conditions which lead to an unexpected transmission gear ratio (e.g. slipping clutches, hydraulic or mechanical defects, etc.). The TCM compares the actual gear ratio (i.e. the ratio of input speed to output speed) to a minimum and maximum calibrated gear ratio value. The TCM performs this comparison while driving in a fix gear, during gear engagement, and during shifting from one gear to another.

WHEN MONITORED

Gear Selector position is in DRIVE or REVERSE.

Transmission Fluid temperature is above a calibrated threshold.

No clutch slip control functions commanded.

No failure in input speed signal.

Input speed above a calibrated threshold.

Valid output speed signal from the output speed sensor or calculated from the wheel speed signal if output speed sensor is not available.

Valid engine speed signal from the PCM.

During Gearshifts:

The output speed and the output speed gradient must be higher than a calibrated threshold.

SET CONDITION

During Gearshifts:

A symptom is detected if the measured gear ratio exceeds the gear ratio range.

If a symptom is detected during downshifts requiring the engagement of a dog clutch or during upshifts, the diagnostic system aborts the gear shifting and the gear from which the shifting has been started is engaged. After a calibrated number of symptoms have been detected a failure is stored and the diagnostic system engages a calibrated gear.

If a symptom is detected during a downshift requiring the engagement of a dog clutch, a fault code is stored indicating the associated dog clutch.

In Fixed Gears:

If the output speed is greater than a threshold then a symptom is detected if the measured gear ratio exceeds the gear ratio range for calibrated amount of time.

If the output speed is lower than this threshold, then a symptom is detected if the absolute difference between

output speed multiplied by the fix gear ratio of the actual gear and input speed exceeds a threshold for a calibrated amount of time

If a symptom is detected while driving in a fixed gear, the diagnostic system commands an up shift to the next gear. After a calibrated number of symptoms have been detected a failure is stored and the diagnostic system engages a calibrated gear. This gear is monitored as well and if a failure is detected for this gear, an alternative gear is engaged and so on. The selection of alternative gears follows a calibrated logic. The aim of this logic is to detect a damaged clutch and to finally select an alternative gear that consists of a combination of clutches in which the damaged clutch is not involved. If a further failure symptom occurs in this final alternative gear, a failure for general transmission ratio malfunction is stored.

POSSIBLE CAUSES

Possible Causes
CLUTCH B
CLUTCH F
VALVE BODY
TRANSMISSION CONTROL MODULE (TCM)

Always perform the Pre-Diagnostic Troubleshooting procedure before proceeding. Refer to STANDARD PROCEDURE .

DIAGNOSTIC TEST

1. **CHECK IF DTC IS CURRENT**
    1. With the scan tool, read TCM DTCs.
    2. Record the Environmental Data and any DTCs.
    3. With the scan tool, erase DTCs.
    4. Using the recorded Environmental Data, along with the When Monitored and Set Conditions above, operate the vehicle in the conditions that set the DTC.
    5. With the scan tool, read TCM DTCs.

    Did the DTC reset?

    Yes

    - Go To 2

    No

    - Go To 3
2. **TRANSMISSION**

    If the DTC returns, view repair.

Repair

- Verify proper fluid level. Refer to **FLUID AND FILTER, STANDARD PROCEDURE** .
- Verify proper operation of the input and output speed sensors.
- Refer to **DIAGNOSIS AND TESTING** and using the clutch application chart, inspect the clutches, valve body solenoids, and valves associated with this gear ratio error.
- Repair or replace the Transmission in accordance with the Service Information.
- Perform the TRANSMISSION VERIFICATION TEST. Refer to **STANDARD PROCEDURE** .

3. **CHECK WIRING AND CONNECTORS**
   1. The conditions necessary to set the DTC are not present at this time.
   2. Using the schematics as a guide, inspect the wiring and connectors specific to this circuit.
   3. Wiggle the wires while checking for shorted and open circuits.
   4. Check for any Service Bulletins that may apply.

   Were there any problems found?

   Yes

   - Repair as necessary.
   - Perform the TRANSMISSION VERIFICATION TEST. Refer to **STANDARD PROCEDURE** .

   No

   - Test complete.

P0735-00-GEAR 5 SHIFT INCORRECT RATIO

For a complete wiring diagram, **refer to appropriate SYSTEM WIRING DIAGRAMS article** .

THEORY OF OPERATION

The Transmission Control Module (TCM) monitors for conditions which lead to an unexpected transmission gear ratio (e.g. slipping clutches, hydraulic or mechanical defects, etc.). The TCM compares the actual gear ratio (i.e. the ratio of input speed to output speed) to a minimum and maximum calibrated gear ratio value. The TCM performs this comparison while driving in a fix gear, during gear engagement, and during shifting from one gear to another.

WHEN MONITORED

Gear Selector position is in DRIVE or REVERSE.

Transmission Fluid temperature is above a calibrated threshold.

No clutch slip control functions commanded.

No failure in input speed signal.

Input speed above a calibrated threshold.

Valid output speed signal from the output speed sensor or calculated from the wheel speed signal if output speed sensor is not available.

Valid engine speed signal from the PCM.

During Gearshifts:

The output speed and the output speed gradient must be higher than a calibrated threshold.

SET CONDITION

During Gearshifts:

A symptom is detected if the measured gear ratio exceeds the gear ratio range.

If a symptom is detected during downshifts requiring the engagement of a dog clutch or during upshifts, the diagnostic system aborts the gear shifting and the gear from which the shifting has been started is engaged. After a calibrated number of symptoms have been detected a failure is stored and the diagnostic system engages a calibrated gear.

If a symptom is detected during a downshift requiring the engagement of a dog clutch, a fault code is stored indicating the associated dog clutch.

In Fixed Gears:

If the output speed is greater than a threshold then a symptom is detected if the measured gear ratio exceeds the gear ratio range for calibrated amount of time.

If the output speed is lower than this threshold, then a symptom is detected if the absolute difference between output speed multiplied by the fix gear ratio of the actual gear and input speed exceeds a threshold for a calibrated amount of time

If a symptom is detected while driving in a fixed gear, the diagnostic system commands an up shift to the next gear. After a calibrated number of symptoms have been detected a failure is stored and the diagnostic system engages a calibrated gear. This gear is monitored as well and if a failure is detected for this gear, an alternative gear is engaged and so on. The selection of alternative gears follows a calibrated logic. The aim of this logic is to detect a damaged clutch and to finally select an alternative gear that consists of a combination of clutches in which the damaged clutch is not involved. If a further failure symptom occurs in this final alternative gear, a failure for general transmission ratio malfunction is stored.

POSSIBLE CAUSES

Possible Causes
CLUTCH C CLUTCH E CLUTCH F VALVE BODY TRANSMISSION CONTROL MODULE (TCM)

Always perform the Pre-Diagnostic Troubleshooting procedure before proceeding. Refer to STANDARD PROCEDURE .

DIAGNOSTIC TEST

1. **CHECK IF DTC IS CURRENT**
    1. With the scan tool, read TCM DTCs.
    2. Record the Environmental Data and any DTCs.
    3. With the scan tool, erase DTCs.
    4. Using the recorded Environmental Data, along with the When Monitored and Set Conditions above, operate the vehicle in the conditions that set the DTC.
    5. With the scan tool, read TCM DTCs.

    Did the DTC reset?

    Yes

    - Go To 2

    No

    - Go To 3
2. **TRANSMISSION**

    If the DTC returns, view repair.

    Repair

    - Verify proper fluid level. Refer to **FLUID AND FILTER, STANDARD PROCEDURE** .
    - Verify proper operation of the input and output speed sensors.
    - Refer to **DIAGNOSIS AND TESTING** and using the clutch application chart, inspect the clutches, valve body solenoids, and valves associated with this gear ratio error.
    - Repair or replace the Transmission in accordance with the Service Information.
    - Perform the TRANSMISSION VERIFICATION TEST. Refer to **STANDARD PROCEDURE** .
3. **CHECK WIRING AND CONNECTORS**
    1. The conditions necessary to set the DTC are not present at this time.

2. Using the schematics as a guide, inspect the wiring and connectors specific to this circuit.
3. Wiggle the wires while checking for shorted and open circuits.
4. Check for any Service Bulletins that may apply.

Were there any problems found?

Yes

- Repair as necessary.
- Perform the TRANSMISSION VERIFICATION TEST. Refer to **STANDARD PROCEDURE** .

No

- Test complete.

P073E-00-UNABLE TO ENGAGE REVERSE

For a complete wiring diagram, **refer to appropriate SYSTEM WIRING DIAGRAMS article** .

THEORY OF OPERATION

This diagnostic detects a sticking Dog Clutch A when the shifter is shifted into the REVERSE position. If the error is detected, all clutches will be disengaged and the Malfunction Indicator Lamp (MIL) will not be illuminated. The diagnostic monitors the Input and Output Speed sensor signals and compares them to calibrated values to determine if the failure is present.

WHEN MONITORED

When Monitored: This diagnostic runs continuously when the following conditions are met:

- Engine running.
- Gear Selector is shifted into the REVERSE position.

SET CONDITION

Input speed and Output speed sensor signals indicate a sticking Dog Clutch A.

DEFAULT ACTIONS

- MIL is illuminated on the first trip that the diagnostic fails.
- Reverse will be disabled.

POSSIBLE CAUSES

Possible Causes
DOG CLUTCH A VALVE BODY

Always perform the Pre-Diagnostic Troubleshooting procedure before proceeding. Refer to STANDARD PROCEDURE .

DIAGNOSTIC TEST

1. **CHECK FOR AN ACTIVE DTC**
    1. With the scan tool, read TCM DTCs and record on the repair order.
    2. Record the Event Data and Environmental Data.
    3. With the scan tool, erase DTCs.
    4. Using the recorded Event and Environmental Data, along with the When Monitored and Set Conditions above, operate the vehicle in the conditions that set the DTC.
    5. With the scan tool, read TCM DTCs

    Did the DTC return?

    Yes

    - Go To 2.

    No

    - Go To 3.
2. **CHECK DOG CLUTCH A**
    1. Remove the Transmission and inspect Dog Clutch A and related components for sticking. Refer to **REMOVAL** and **DISASSEMBLY** .

    Did you find and repair the condition?

    Yes

    - Perform the TRANSMISSION VERIFICATION TEST. Refer to **STANDARD PROCEDURE** .

    No

    - Replace the Valve Body. Refer to **VALVE BODY** .
    - Perform the TRANSMISSION VERIFICATION TEST. Refer to **STANDARD PROCEDURE** .
3. **CHECK WIRING AND CONNECTORS**
    1. The conditions necessary to set the DTC are not present at this time.
    2. Using the schematics as a guide, inspect the wiring and connectors specific to this circuit.

3. Wiggle the wires while checking for shorted and open circuits.
4. Check for any Service Bulletins that may apply.

Were any problems found?

Yes

- Repair as necessary.
- Perform the TRANSMISSION VERIFICATION TEST. Refer to **STANDARD PROCEDURE** .

No

- Test complete.

P076F-00-GEAR 7 SHIFT INCORRECT RATIO

For a complete wiring diagram, **refer to appropriate SYSTEM WIRING DIAGRAMS article** .

THEORY OF OPERATION

The Transmission Control Module (TCM) monitors for conditions which lead to an unexpected transmission gear ratio (e.g. slipping clutches, hydraulic or mechanical defects, etc.). The TCM compares the actual gear ratio (i.e. the ratio of input speed to output speed) to a minimum and maximum calibrated gear ratio value. The TCM performs this comparison while driving in a fix gear, during gear engagement, and during shifting from one gear to another.

WHEN MONITORED

Gear Selector position is in DRIVE or REVERSE.

Transmission Fluid temperature is above a calibrated threshold.

No clutch slip control functions commanded.

No failure in input speed signal.

Input speed above a calibrated threshold.

Valid output speed signal from the output speed sensor or calculated from the wheel speed signal if output speed sensor is not available.

Valid engine speed signal from the PCM.

During Gearshifts:

The output speed and the output speed gradient must be higher than a calibrated threshold.

SET CONDITION

During Gearshifts:

A symptom is detected if the measured gear ratio exceeds the gear ratio range.

If a symptom is detected during downshifts requiring the engagement of a dog clutch or during upshifts, the diagnostic system aborts the gear shifting and the gear from which the shifting has been started is engaged. After a calibrated number of symptoms have been detected a failure is stored and the diagnostic system engages a calibrated gear.

If a symptom is detected during a downshift requiring the engagement of a dog clutch, a fault code is stored indicating the associated dog clutch.

In Fixed Gears:

If the output speed is greater than a threshold then a symptom is detected if the measured gear ratio exceeds the gear ratio range for calibrated amount of time.

If the output speed is lower than this threshold, then a symptom is detected if the absolute difference between output speed multiplied by the fix gear ratio of the actual gear and input speed exceeds a threshold for a calibrated amount of time

If a symptom is detected while driving in a fixed gear, the diagnostic system commands an up shift to the next gear. After a calibrated number of symptoms have been detected a failure is stored and the diagnostic system engages a calibrated gear. This gear is monitored as well and if a failure is detected for this gear, an alternative gear is engaged and so on. The selection of alternative gears follows a calibrated logic. The aim of this logic is to detect a damaged clutch and to finally select an alternative gear that consists of a combination of clutches in which the damaged clutch is not involved. If a further failure symptom occurs in this final alternative gear, a failure for general transmission ratio malfunction is stored.

POSSIBLE CAUSES

Possible Causes
CLUTCH A
CLUTCH C
VALVE BODY
TRANSMISSION CONTROL MODULE (TCM)

Always perform the Pre-Diagnostic Troubleshooting procedure before proceeding. Refer to STANDARD PROCEDURE .

DIAGNOSTIC TEST

1. **CHECK IF DTC IS CURRENT**
    1. With the scan tool, read TCM DTCs.

2. Record the Environmental Data and any DTCs.
3. With the scan tool, erase DTCs.
4. Using the recorded Environmental Data, along with the When Monitored and Set Conditions above, operate the vehicle in the conditions that set the DTC.
5. With the scan tool, read TCM DTCs.

   Did the DTC reset?

   Yes

   - Go To 2

   No

   - Go To 3

2. **TRANSMISSION**

   If the DTC returns, view repair.

   Repair

   - Verify proper fluid level. Refer to **FLUID AND FILTER, STANDARD PROCEDURE** .
   - Verify proper operation of the input and output speed sensors.
   - Refer to **DIAGNOSIS AND TESTING** and using the clutch application chart, inspect the clutches, valve body solenoids, and valves associated with this gear ratio error.
   - Repair or replace the Transmission in accordance with the Service Information.
   - Perform the TRANSMISSION VERIFICATION TEST. Refer to **STANDARD PROCEDURE** .

3. **CHECK WIRING AND CONNECTORS**
   1. The conditions necessary to set the DTC are not present at this time.
   2. Using the schematics as a guide, inspect the wiring and connectors specific to this circuit.
   3. Wiggle the wires while checking for shorted and open circuits.
   4. Check for any Service Bulletins that may apply.

      Were there any problems found?

      Yes

      - Repair as necessary.
      - Perform the TRANSMISSION VERIFICATION TEST. Refer to **STANDARD PROCEDURE** .

      No

- Test complete.

P077C-00-OUTPUT SHAFT SPEED SENSOR CIRCUIT LOW

For a complete wiring diagram, **refer to appropriate SYSTEM WIRING DIAGRAMS article** .

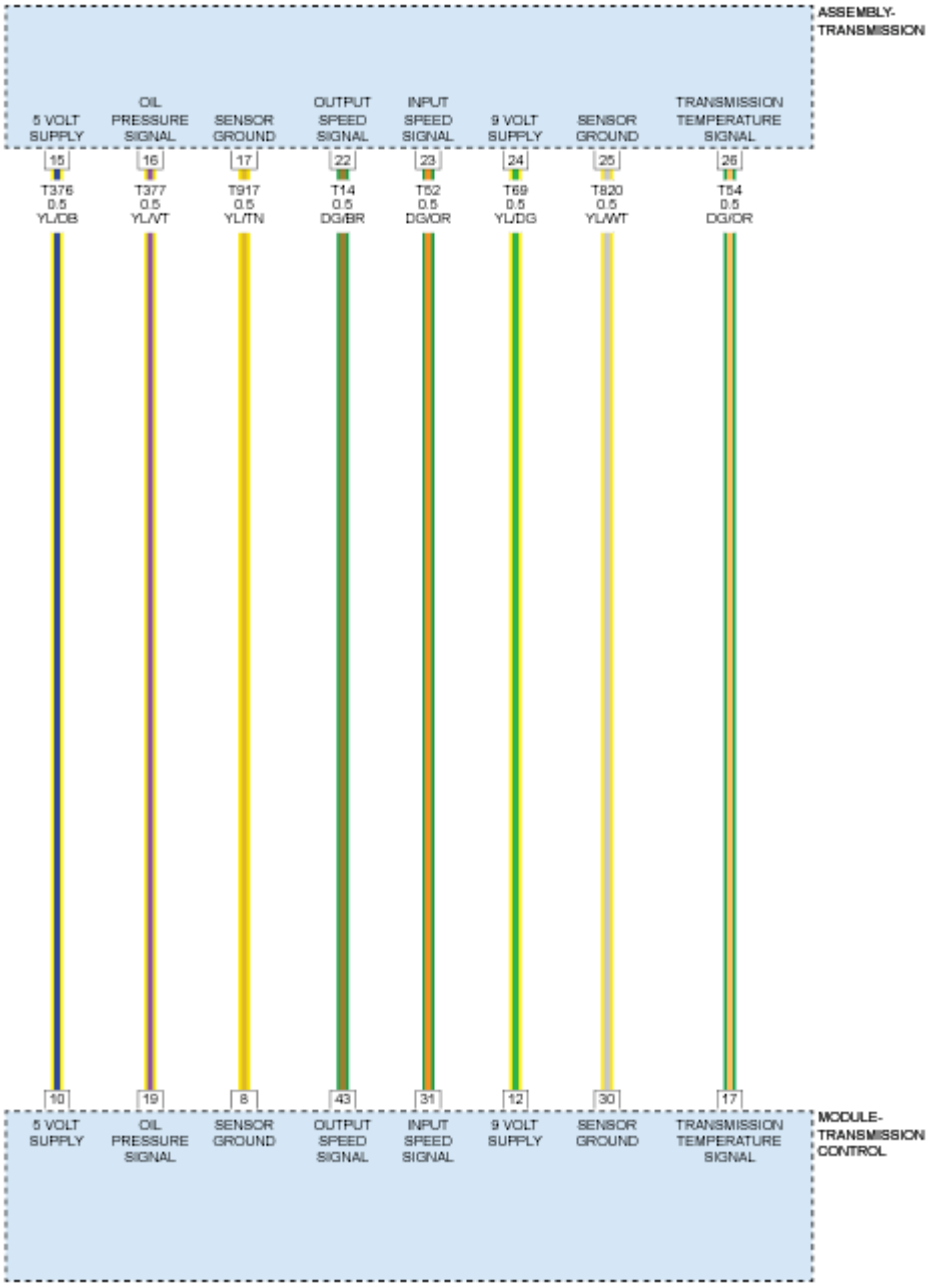

Fig. 14: Power & Ground, Temperature, Oil Pressure And Speed Sensors Circuit Diagram
Courtesy of CHRYSLER GROUP, LLC

THEORY OF OPERATION

The TCM monitors the Input Speed and Output Speed Sensors for electrical malfunctions. This monitoring is done by comparing the sensor voltage (measured across a shunt resistor) to a high and low signal voltage threshold. If the high or low voltage threshold is exceeded, a DTC is set for the specific sensor.

WHEN MONITORED

No failure detected in sensor supply voltage monitoring.

No failure detected in analog to digital converter monitoring.

SET CONDITION

Short to ground or open circuit is detected if the Output Speed Signal voltage is less than 0.35 volt for a calibrated amount of time.

POSSIBLE CAUSES

Possible Causes
(T14) OUTPUT SPEED SIGNAL CIRCUIT OPEN
(T14) OUTPUT SPEED SIGNAL CIRCUIT SHORTED TO GROUND
OUTPUT SPEED SENSOR
TCM - INTERNAL ERROR

Always perform the Pre-Diagnostic Troubleshooting procedure before proceeding. Refer to STANDARD PROCEDURE .

DIAGNOSTIC TEST

1. **CHECK IF DTC IS CURRENT**
    1. With the scan tool, read TCM DTCs.
    2. Record the Environmental Data and any DTCs.
    3. With the scan tool, erase DTCs.
    4. Using the recorded Environmental Data, along with the When Monitored and Set Conditions above, operate the vehicle in the conditions that set the DTC.
    5. With the scan tool, read TCM DTCs.

    Did the DTC reset?

    Yes

    - Go To 2

    No

- Go To 5

2. **CHECK (T14) OUTPUT SPEED SIGNAL CIRCUIT FOR AN OPEN**
   1. Turn the Ignition OFF.
   2. Disconnect the Transmission Assembly harness connector.
   3. Disconnect the TCM harness connector.
   4. Measure the resistance of the (T14) Output Speed Signal circuit between the TCM harness connector and the Transmission Assembly harness connector.

      Is the resistance below 5.0 ohms?

      Yes

      - Go To 3

      No

      - Repair the (T14) Output Speed Signal circuit for an open.
      - Perform the TRANSMISSION VERIFICATION TEST. Refer to **STANDARD PROCEDURE** .

3. **CHECK (T14) OUTPUT SPEED SIGNAL CIRCUIT FOR A SHORT TO GROUND OR ANOTHER CIRCUIT**
   1. Measure the resistance between ground and the (T14) Output Speed Signal circuit.
   2. Measure the resistance between the (T14) Output Speed Signal circuit and all other circuits in the TCM harness connector.

      Is there continuity between the (T14) Output Speed Signal circuit and ground or another circuit?

      Yes

      - Repair the (T14) Output Speed Signal circuit for a short to ground or another circuit.
      - Perform the TRANSMISSION VERIFICATION TEST. Refer to **STANDARD PROCEDURE** .

      No

      Go To 4

4. **CHECK OUTPUT SPEED SENSOR FOR AN OPEN**

   NOTE: The Output Speed Sensor must be at room temperature to perform the next test.

   1. With the RED lead on terminal 24 and the BLACK lead on terminal 22, measure the resistance of

the Output Speed Sensor at the Transmission side of the Transmission Assembly harness connector.

Is the resistance between 5.5 and 7.0 ohms?

Yes

NOTE: If this Electronic Control Unit (ECU) is being replaced with a new unit, a diagnostic scan tool MUST be used to align the PROXI configuration data into the new ECU. Follow the routine outlined in the diagnostic scan tool for PROXI Configuration Alignment under Body Control Module (BCM) Miscellaneous Functions menu.

- Using the schematics as a guide, check the Transmission Control Module (TCM) terminals and connectors for corrosion, damage or pushed out terminals. Pay particular attention to the power and ground circuits. If no problems are found, replace the TCM and perform programming and PROXI Configuration Alignment procedures. Refer to **MODULE, TRANSMISSION CONTROL, REMOVAL** .
- Perform the TRANSMISSION VERIFICATION TEST. Refer to **STANDARD PROCEDURE** .

No

- Replace the Output Speed Sensor in accordance with the Service Information.
- Perform the TRANSMISSION VERIFICATION TEST. Refer to **STANDARD PROCEDURE** .

5. **CHECK WIRING AND CONNECTORS**
   1. The conditions necessary to set the DTC are not present at this time.
   2. Using the schematics as a guide, inspect the wiring and connectors specific to this circuit.
   3. Wiggle the wires while checking for shorted and open circuits.
   4. Check for any Service Bulletins that may apply.

   Were there any problems found?

   Yes

   - Repair as necessary.
   - Perform the TRANSMISSION VERIFICATION TEST. Refer to **STANDARD PROCEDURE** .

   No

   - Test complete.

P077D-00-OUTPUT SHAFT SPEED SENSOR CIRCUIT HIGH

For a complete wiring diagram, **refer to appropriate SYSTEM WIRING DIAGRAMS article** .

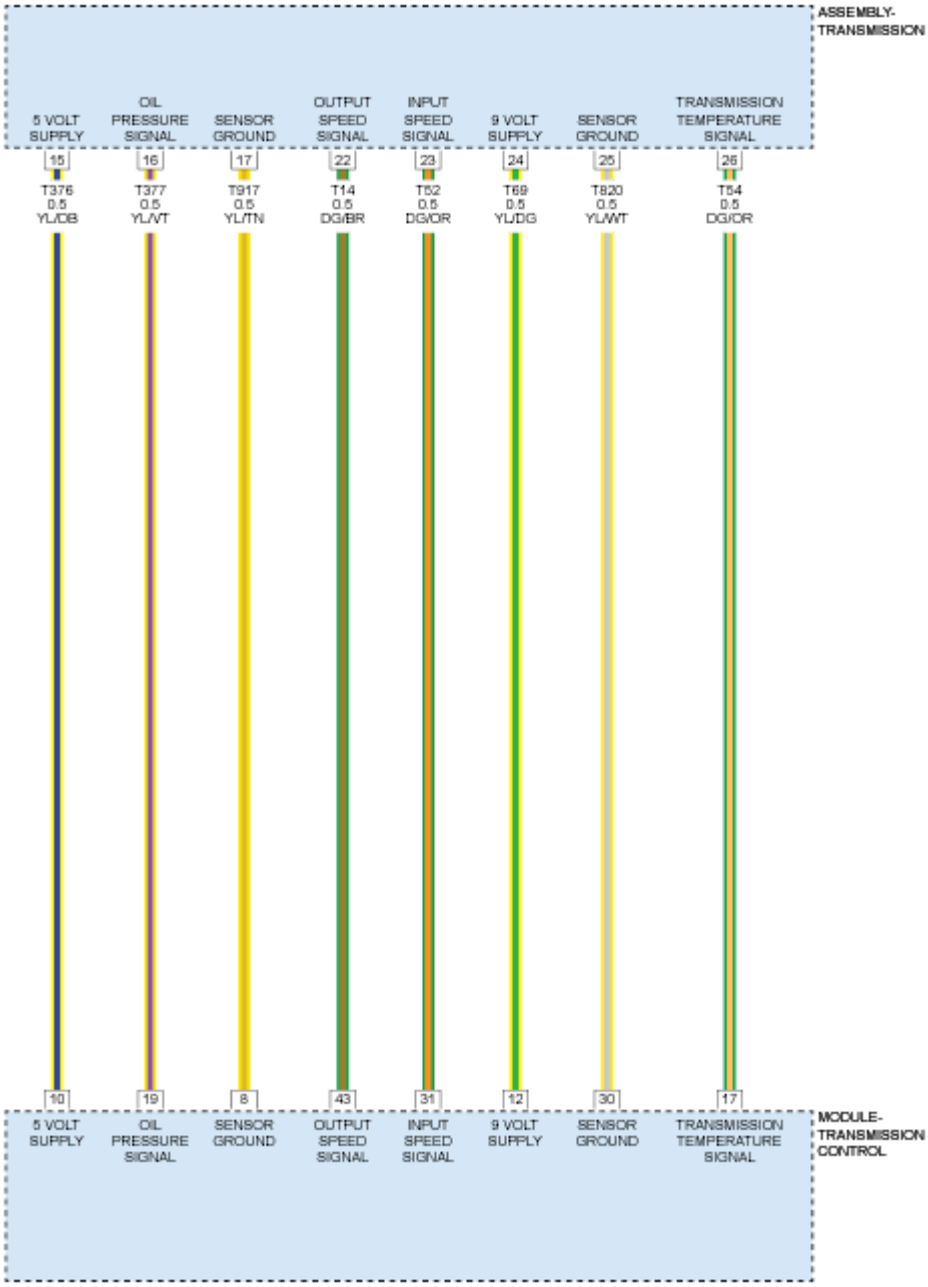

Fig. 15: Power & Ground, Temperature, Oil Pressure And Speed Sensors Circuit Diagram
Courtesy of CHRYSLER GROUP, LLC

THEORY OF OPERATION

The TCM monitors the Input Speed and Output Speed Sensors for electrical malfunctions. This monitoring is done by comparing the sensor voltage (measured across a shunt resistor) to a high and low signal voltage threshold. If the high or low voltage threshold is exceeded, a DTC is set for the specific sensor.

WHEN MONITORED

No failure detected in sensor supply voltage monitoring.

No failure detected in analog to digital converter monitoring.

SET CONDITION

Short to voltage is detected if the Output Speed Signal voltage is greater than 1.95 volts for a calibrated amount of time.

POSSIBLE CAUSES

Possible Causes
(T14) OUTPUT SPEED SIGNAL CIRCUIT SHORTED TO VOLTAGE
OUTPUT SPEED SENSOR
TCM - INTERNAL ERROR

Always perform the Pre-Diagnostic Troubleshooting procedure before proceeding. Refer to STANDARD PROCEDURE .

DIAGNOSTIC TEST

1. **CHECK IF DTC IS CURRENT**
    1. With the scan tool, read TCM DTCs.
    2. Record the Environmental Data and any DTCs.
    3. With the scan tool, erase DTCs.
    4. Using the recorded Environmental Data, along with the When Monitored and Set Conditions above, operate the vehicle in the conditions that set the DTC.
    5. With the scan tool, read TCM DTCs.

    Did the DTC reset?

    Yes

    - Go To 2

    No

    - Go To 4
2. **CHECK (T14) OUTPUT SPEED SIGNAL CIRCUIT FOR A SHORT TO VOLTAGE**
    1. Turn the Ignition OFF.
    2. Disconnect the Transmission Assembly harness connector.
    3. Turn the Ignition ON, Engine not running.

4. Measure the voltage of the (T14) Output Speed Signal circuit in the Transmission Assembly harness connector.

   Is the voltage above 1.95 volts?

   Yes

   - Go To 3

   No

   - Replace the Output Speed Sensor in accordance with the Service Information.
   - Perform the TRANSMISSION VERIFICATION TEST. Refer to **STANDARD PROCEDURE** .

3. **CHECK (T14) OUTPUT SPEED SIGNAL CIRCUIT FOR A SHORT TO ANOTHER CIRCUIT**
   1. Turn the Ignition OFF.
   2. Disconnect the TCM harness connector.
   3. Measure the resistance between the (T14) Output Speed Signal circuit and all other circuits in the TCM harness connector.

      Is there continuity between the (T14) Output Speed Signal circuit and any other circuit in the TCM harness connector?

      Yes

      - Repair the (T14) Output Speed Signal circuit for a short to another circuit
      - Perform the TRANSMISSION VERIFICATION TEST. Refer to **STANDARD PROCEDURE** .

      No

      NOTE: If this Electronic Control Unit (ECU) is being replaced with a new unit, a diagnostic scan tool MUST be used to align the PROXI configuration data into the new ECU. Follow the routine outlined in the diagnostic scan tool for PROXI Configuration Alignment under Body Control Module (BCM) Miscellaneous Functions menu.

      - Using the schematics as a guide, check the Transmission Control Module (TCM) terminals and connectors for corrosion, damage or pushed out terminals. Pay particular attention to the power and ground circuits. If no problems are found, replace the TCM and perform programming and PROXI Configuration Alignment procedures. Refer to **MODULE, TRANSMISSION CONTROL, REMOVAL** .
      - Perform the TRANSMISSION VERIFICATION TEST. Refer to **STANDARD PROCEDURE** .

4. **CHECK WIRING AND CONNECTORS**
    1. The conditions necessary to set the DTC are not present at this time.
    2. Using the schematics as a guide, inspect the wiring and connectors specific to this circuit.
    3. Wiggle the wires while checking for shorted and open circuits.
    4. Check for any Service Bulletins that may apply.

    Were there any problems found?

    Yes

    - Repair as necessary.
    - Perform the TRANSMISSION VERIFICATION TEST. Refer to **STANDARD PROCEDURE** .

    No

    - Test complete.

P077E-00-TRANSMISSION FLUID TEMPERATURE MULTIPLE SENSOR CORRELATION

For a complete wiring diagram, **refer to appropriate SYSTEM WIRING DIAGRAMS article** .

THEORY OF OPERATION

The purpose of the diagnostic is to detect failures in the analog to digital conversion of the temperature sensor signal. The temperature sensor signal is converted using two independent Analog to Digital Converter (ADC) channels. The diagnostic is performed by comparing the result of each ADC channel to determine if the signals are equivalent.

WHEN MONITORED

Battery voltage is greater than a calibrated value.

SET CONDITION

The failure is detected if the difference in the two analog to digital channels of the temperature sensor signal is not equal to zero.

POSSIBLE CAUSES

Possible Causes
OTHER TRANSMISSION FLUID TEMPERATURE SENSOR DTCS SET TRANSMISSION CONTROL MODULE (TCM)

Always perform the Pre-Diagnostic Troubleshooting procedure before proceeding. Refer to STANDARD

PROCEDURE .

DIAGNOSTIC TEST

1. **CHECK FOR RELATED TRANSMISSION TEMPERATURE DTCS**
   1. With the scan tool, read transmission DTCs.

      Are any other Transmission Fluid Temperature DTCs present?

      Yes

      - Refer to **DIAGNOSTIC CODE INDEX** and perform the appropriate repair for those DTCs first.
      - Perform the TRANSMISSION VERIFICATION TEST. Refer to **STANDARD PROCEDURE** .

      No

      - Go To 2
2. **TRANSMISSION CONTROL MODULE (TCM)**

   If there are no possible causes remaining, view repair.

   Repair

   NOTE: If this Electronic Control Unit (ECU) is being replaced with a new unit, a diagnostic scan tool MUST be used to align the PROXI configuration data into the new ECU. Follow the routine outlined in the diagnostic scan tool for PROXI Configuration Alignment under Body Control Module (BCM) Miscellaneous Functions menu.

   - Using the schematics as a guide, check the Transmission Control Module (TCM) terminals and connectors for corrosion, damage or pushed out terminals. Pay particular attention to the power and ground circuits. If no problems are found, replace the TCM and perform programming and PROXI Configuration Alignment procedures. Refer to **MODULE, TRANSMISSION CONTROL, REMOVAL** .
   - Perform the TRANSMISSION VERIFICATION TEST. Refer to **STANDARD PROCEDURE** .

P07BF-00-INPUT-TURBINE SHAFT SPEED SENSOR 1 CIRCUIT LOW

For a complete wiring diagram, **refer to appropriate SYSTEM WIRING DIAGRAMS article** .

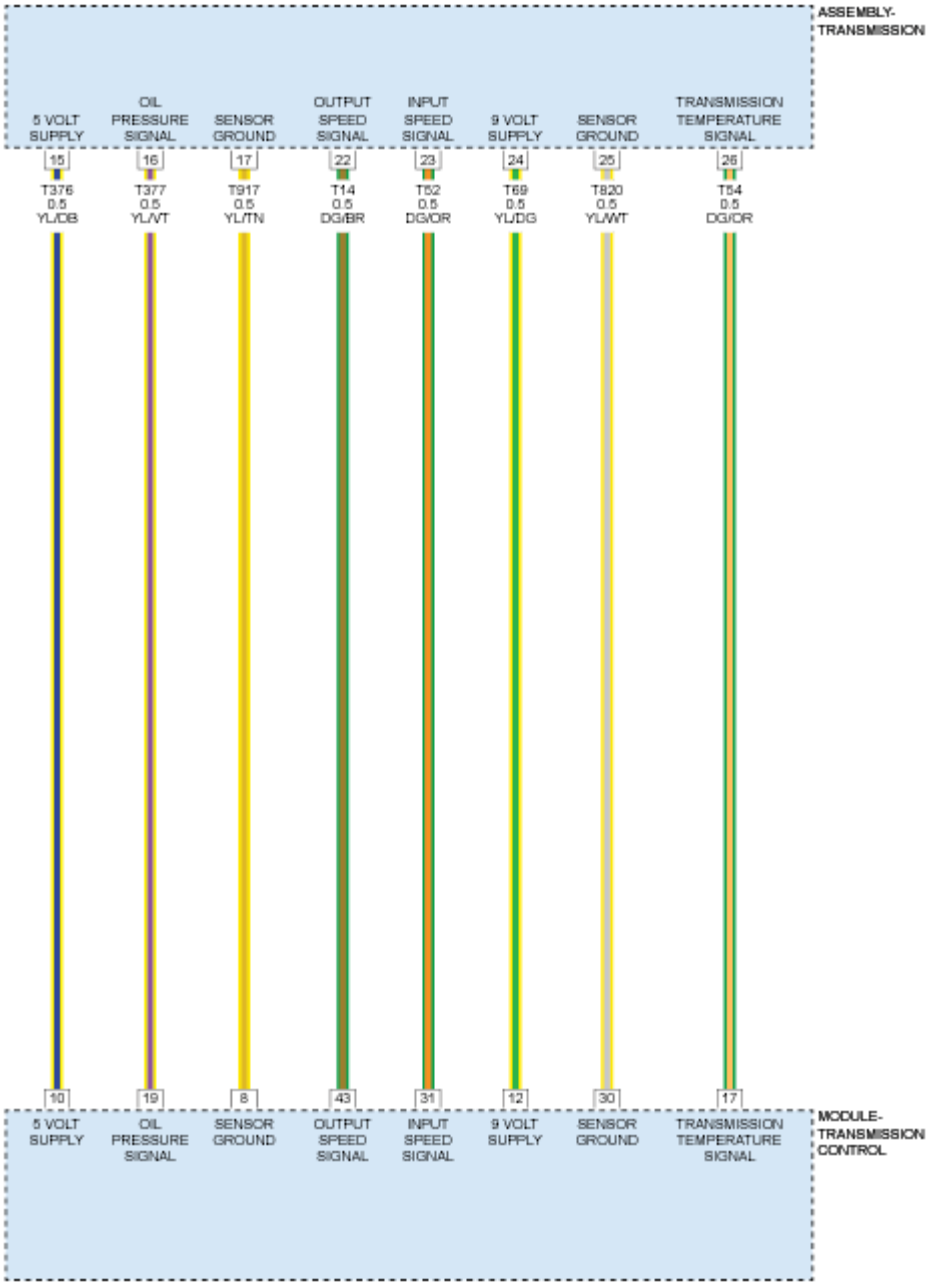

Fig. 16: Power & Ground, Temperature, Oil Pressure And Speed Sensors Circuit Diagram
Courtesy of CHRYSLER GROUP, LLC

THEORY OF OPERATION

The TCM monitors the Input Speed and Output Speed Sensors for electrical malfunctions. This monitoring is done by comparing the sensor voltage (measured across a shunt resistor) to a high and low signal voltage threshold. If the high or low voltage threshold is exceeded, a DTC is set for the specific sensor.

WHEN MONITORED

No failure detected in sensor supply voltage monitoring.

No failure detected in analog to digital converter monitoring.

SET CONDITION

Short to ground or open circuit is detected if the Input Speed Signal voltage is less than 0.35 volt for a calibrated amount of time.

POSSIBLE CAUSES

Possible Causes
(T14) INPUT SPEED SIGNAL CIRCUIT OPEN
(T14) INPUT SPEED SIGNAL CIRCUIT SHORTED TO GROUND
INPUT SPEED SENSOR
TCM - INTERNAL ERROR

Always perform the Pre-Diagnostic Troubleshooting procedure before proceeding. Refer to STANDARD PROCEDURE .

DIAGNOSTIC TEST

1. **CHECK IF DTC IS CURRENT**
    1. With the scan tool, read TCM DTCs.
    2. Record the Environmental Data and any DTCs.
    3. With the scan tool, erase DTCs.
    4. Using the recorded Environmental Data, along with the When Monitored and Set Conditions above, operate the vehicle in the conditions that set the DTC.
    5. With the scan tool, read TCM DTCs.

    Did the DTC reset?

    Yes

    - Go To 2

    No

    - Go To 5
2. **CHECK (T52) INPUT SPEED SIGNAL CIRCUIT FOR AN OPEN**
    1. Turn the Ignition OFF.
    2. Disconnect the Transmission Assembly harness connector.
    3. Disconnect the TCM harness connector.

4. Measure the resistance of the (T52) Input Speed Signal circuit between the TCM harness connector and the Transmission Assembly harness connector.

   Is the resistance below 5.0 ohms?

   Yes

   - Go To 3

   No

   - Repair the (T52) Input Speed Signal circuit for an open.
   - Perform the TRANSMISSION VERIFICATION TEST. Refer to **STANDARD PROCEDURE** .

3. **CHECK (T52) INPUT SPEED SIGNAL CIRCUIT FOR A SHORT TO GROUND OR ANOTHER CIRCUIT**
   1. Measure the resistance between ground and the (T52) Input Speed Signal circuit.
   2. Measure the resistance between the (T52) Input Speed Signal circuit and all other circuits in the TCM harness connector.

      Is there continuity between the (T52) Input Speed Signal circuit and ground or another circuit?

      Yes

      - Repair the (T52) Input Speed Signal circuit for a short to ground or another circuit.
      - Perform the TRANSMISSION VERIFICATION TEST. Refer to **STANDARD PROCEDURE** .

      No

      Go To 4

4. **CHECK INPUT SPEED SENSOR FOR AN OPEN**
   1. **NOTE: The Input Speed Sensor must be at room temperature to perform the next test.**

   2. With the RED lead on terminal 24 and the BLACK lead on terminal 23, measure the resistance of the Input Speed Sensor at the Transmission side of the Transmission Assembly harness connector.

      Is the resistance between 5.5 and 7.0 ohms?

      Yes

      NOTE: If this Electronic Control Unit (ECU) is being replaced with a new unit,

a diagnostic scan tool MUST be used to align the PROXI configuration data into the new ECU. Follow the routine outlined in the diagnostic scan tool for PROXI Configuration Alignment under Body Control Module (BCM) Miscellaneous Functions menu.

- Using the schematics as a guide, check the Transmission Control Module (TCM) terminals and connectors for corrosion, damage or pushed out terminals. Pay particular attention to the power and ground circuits. If no problems are found, replace the TCM and perform programming and PROXI Configuration Alignment procedures. Refer to **MODULE, TRANSMISSION CONTROL, REMOVAL** .
- Perform the TRANSMISSION VERIFICATION TEST. Refer to **STANDARD PROCEDURE** .

No

- Replace the Input Speed Sensor in accordance with the Service Information.
- Perform the TRANSMISSION VERIFICATION TEST. Refer to **STANDARD PROCEDURE** .

5. **CHECK WIRING AND CONNECTORS**
   1. The conditions necessary to set the DTC are not present at this time.
   2. Using the schematics as a guide, inspect the wiring and connectors specific to this circuit.
   3. Wiggle the wires while checking for shorted and open circuits.
   4. Check for any Service Bulletins that may apply.

   Were there any problems found?

   Yes

   - Repair as necessary.
   - Perform the TRANSMISSION VERIFICATION TEST. Refer to **STANDARD PROCEDURE** .

   No

   - Test complete.

P07C0-00-INPUT-TURBINE SHAFT SPEED SENSOR 1 CIRCUIT HIGH

For a complete wiring diagram, **refer to appropriate SYSTEM WIRING DIAGRAMS article** .

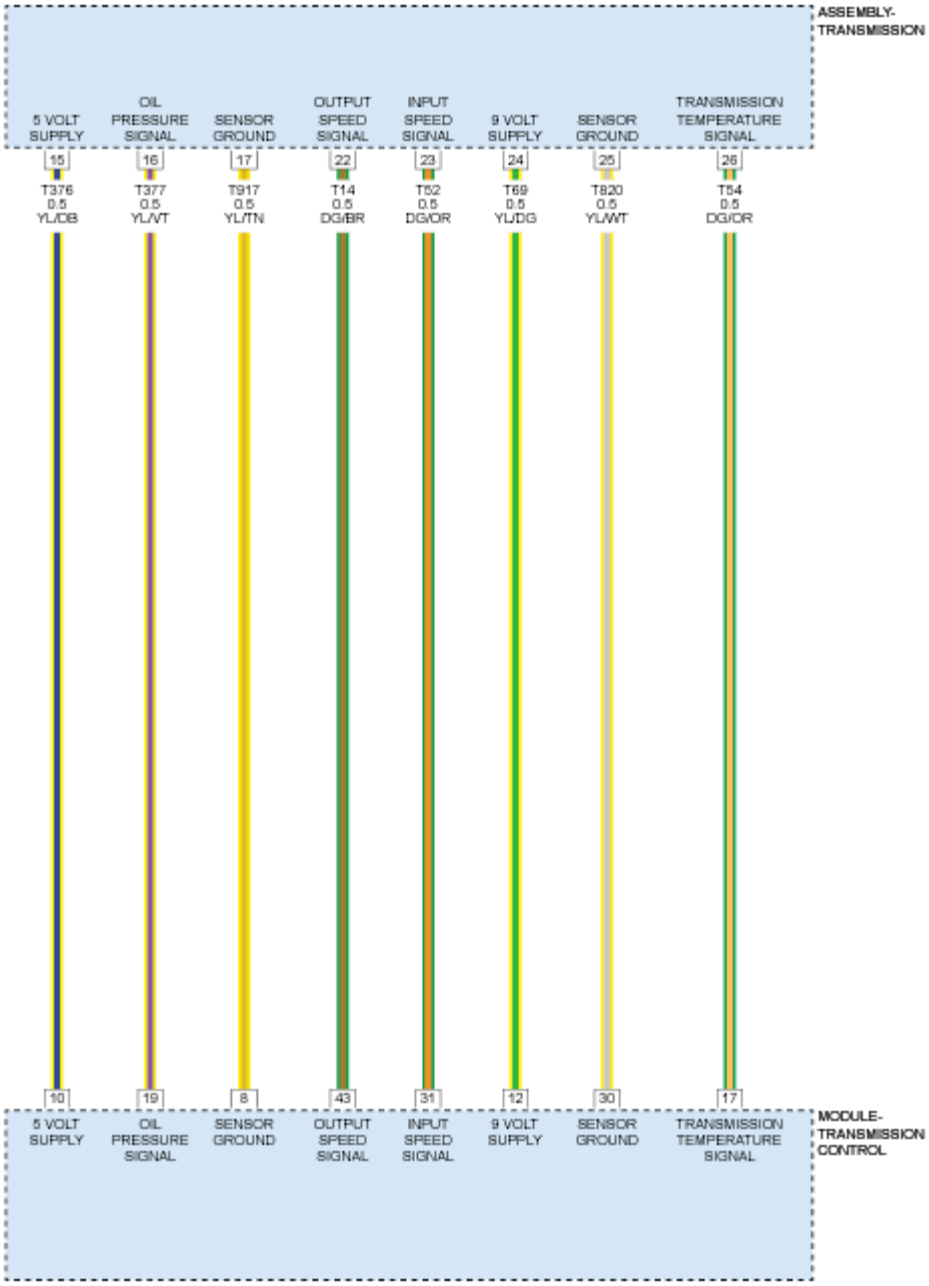

Fig. 17: Power & Ground, Temperature, Oil Pressure And Speed Sensors Circuit Diagram
Courtesy of CHRYSLER GROUP, LLC

THEORY OF OPERATION

The TCM monitors the Input Speed and Output Speed Sensors for electrical malfunctions. This monitoring is done by comparing the sensor voltage (measured across a shunt resistor) to a high and low signal voltage threshold. If the high or low voltage threshold is exceeded, a DTC is set for the specific sensor.

WHEN MONITORED

No failure detected in sensor supply voltage monitoring.

No failure detected in analog to digital converter monitoring.

SET CONDITION

Short to voltage is detected if the Input Speed Signal voltage is greater than 1.95 volts for a calibrated amount of time.

POSSIBLE CAUSES

Possible Causes
(T14) INPUT SPEED SIGNAL CIRCUIT SHORTED TO VOLTAGE INPUT SPEED SENSOR TCM - INTERNAL ERROR

Always perform the Pre-Diagnostic Troubleshooting procedure before proceeding. Refer to STANDARD PROCEDURE .

DIAGNOSTIC TEST

1. **CHECK IF DTC IS CURRENT**
    1. With the scan tool, read TCM DTCs.
    2. Record the Environmental Data and any DTCs.
    3. With the scan tool, erase DTCs.
    4. Using the recorded Environmental Data, along with the When Monitored and Set Conditions above, operate the vehicle in the conditions that set the DTC.
    5. With the scan tool, read TCM DTCs.

    Did the DTC reset?

    Yes

    - Go To 2

    No

    - Go To 4
2. **CHECK (T52) INPUT SPEED SIGNAL CIRCUIT FOR A SHORT TO VOLTAGE**
    1. Turn the Ignition OFF.
    2. Disconnect the Transmission Assembly harness connector.
    3. Turn the Ignition ON, Engine not running.
    4. Measure the voltage of the (T52) Input Speed Signal circuit in the Transmission Assembly harness connector.

Is the voltage above 1.95 volts?

Yes

- Go To 3

No

- Replace the Input Speed Sensor in accordance with the Service Information.
- Perform the TRANSMISSION VERIFICATION TEST. Refer to **STANDARD PROCEDURE** .

3. **CHECK (T52) INPUT SPEED SIGNAL CIRCUIT FOR A SHORT TO ANOTHER CIRCUIT**
   1. Turn the Ignition OFF.
   2. Disconnect the TCM harness connector.
   3. Measure the resistance between the (T52) Input Speed Signal circuit and all other circuits in the TCM harness connector.

   Is there continuity between the (T52) Input Speed Signal circuit and any other circuit in the TCM harness connector?

   Yes

   - Repair the (T52) Input Speed Signal circuit for a short to another circuit.
   - Perform the TRANSMISSION VERIFICATION TEST. Refer to **STANDARD PROCEDURE** .

   No

   NOTE: If this Electronic Control Unit (ECU) is being replaced with a new unit, a diagnostic scan tool MUST be used to align the PROXI configuration data into the new ECU. Follow the routine outlined in the diagnostic scan tool for PROXI Configuration Alignment under Body Control Module (BCM) Miscellaneous Functions menu.

   - Using the schematics as a guide, check the Transmission Control Module (TCM) terminals and connectors for corrosion, damage or pushed out terminals. Pay particular attention to the power and ground circuits. If no problems are found, replace the TCM and perform programming and PROXI Configuration Alignment procedures. Refer to **MODULE, TRANSMISSION CONTROL, REMOVAL** .
   - Perform the TRANSMISSION VERIFICATION TEST. Refer to **STANDARD PROCEDURE** .

4. **CHECK WIRING AND CONNECTORS**
   1. The conditions necessary to set the DTC are not present at this time.
   2. Using the schematics as a guide, inspect the wiring and connectors specific to this circuit.

3. Wiggle the wires while checking for shorted and open circuits.
4. Check for any Service Bulletins that may apply.

   Were there any problems found?

   Yes

   - Repair as necessary.
   - Perform the TRANSMISSION VERIFICATION TEST. Refer to **STANDARD PROCEDURE** .

   No

   - Test complete.

P07D9-00-GEAR 8 SHIFT INCORRECT RATIO

For a complete wiring diagram, **refer to appropriate SYSTEM WIRING DIAGRAMS article** .

THEORY OF OPERATION

The Transmission Control Module (TCM) monitors for conditions which lead to an unexpected transmission gear ratio (e.g. slipping clutches, hydraulic or mechanical defects, etc.). The TCM compares the actual gear ratio (i.e. the ratio of input speed to output speed) to a minimum and maximum calibrated gear ratio value. The TCM performs this comparison while driving in a fix gear, during gear engagement, and during shifting from one gear to another.

WHEN MONITORED

Gear Selector position is in DRIVE or REVERSE.

Transmission Fluid temperature is above a calibrated threshold.

No clutch slip control functions commanded.

No failure in input speed signal.

Input speed above a calibrated threshold.

Valid output speed signal from the output speed sensor or calculated from the wheel speed signal if output speed sensor is not available.

Valid engine speed signal from the PCM.

During Gearshifts:

The output speed and the output speed gradient must be higher than a calibrated threshold.

SET CONDITION

During Gearshifts:

A symptom is detected if the measured gear ratio exceeds the gear ratio range.

If a symptom is detected during downshifts requiring the engagement of a dog clutch or during upshifts, the diagnostic system aborts the gear shifting and the gear from which the shifting has been started is engaged. After a calibrated number of symptoms have been detected a failure is stored and the diagnostic system engages a calibrated gear.

If a symptom is detected during a downshift requiring the engagement of a dog clutch, a fault code is stored indicating the associated dog clutch.

In Fixed Gears:

If the output speed is greater than a threshold then a symptom is detected if the measured gear ratio exceeds the gear ratio range for calibrated amount of time.

If the output speed is lower than this threshold, then a symptom is detected if the absolute difference between output speed multiplied by the fix gear ratio of the actual gear and input speed exceeds a threshold for a calibrated amount of time

If a symptom is detected while driving in a fixed gear, the diagnostic system commands an up shift to the next gear. After a calibrated number of symptoms have been detected a failure is stored and the diagnostic system engages a calibrated gear. This gear is monitored as well and if a failure is detected for this gear, an alternative gear is engaged and so on. The selection of alternative gears follows a calibrated logic. The aim of this logic is to detect a damaged clutch and to finally select an alternative gear that consists of a combination of clutches in which the damaged clutch is not involved. If a further failure symptom occurs in this final alternative gear, a failure for general transmission ratio malfunction is stored.

POSSIBLE CAUSES

Possible Causes
CLUTCH A
CLUTCH B
CLUTCH D
VALVE BODY
TRANSMISSION CONTROL MODULE (TCM)

Always perform the Pre-Diagnostic Troubleshooting procedure before proceeding. Refer to STANDARD PROCEDURE .

DIAGNOSTIC TEST

1. **CHECK IF DTC IS CURRENT**
    1. With the scan tool, read TCM DTCs.
    2. Record the Environmental Data and any DTCs.
    3. With the scan tool, erase DTCs.
    4. Using the recorded Environmental Data, along with the When Monitored and Set Conditions above, operate the vehicle in the conditions that set the DTC.
    5. With the scan tool, read TCM DTCs.

    Did the DTC reset?

    Yes

    - Go To 2

    No

    - Go To 3
2. **TRANSMISSION**

    If the DTC returns, view repair.

    Repair

    - Verify proper fluid level. Refer to **FLUID AND FILTER, STANDARD PROCEDURE** .
    - Verify proper operation of the input and output speed sensors.
    - Refer to **DIAGNOSIS AND TESTING** and using the clutch application chart, inspect the clutches, valve body solenoids, and valves associated with this gear ratio error.
    - Repair or replace the Transmission in accordance with the Service Information.
    - Perform the TRANSMISSION VERIFICATION TEST. Refer to **STANDARD PROCEDURE** .
3. **CHECK WIRING AND CONNECTORS**
    1. The conditions necessary to set the DTC are not present at this time.
    2. Using the schematics as a guide, inspect the wiring and connectors specific to this circuit.
    3. Wiggle the wires while checking for shorted and open circuits.
    4. Check for any Service Bulletins that may apply.

    Were there any problems found?

    Yes

    - Repair as necessary.
    - Perform the TRANSMISSION VERIFICATION TEST. Refer to **STANDARD PROCEDURE** .

No

- Test complete.

P07F6-00-GEAR 9 INCORRECT RATIO

For a complete wiring diagram, **refer to appropriate SYSTEM WIRING DIAGRAMS article** .

THEORY OF OPERATION

The Transmission Control Module (TCM) monitors for conditions which lead to an unexpected transmission gear ratio (e.g. slipping clutches, hydraulic or mechanical defects, etc.). The TCM compares the actual gear ratio (i.e. the ratio of input speed to output speed) to a minimum and maximum calibrated gear ratio value. The TCM performs this comparison while driving in a fix gear, during gear engagement, and during shifting from one gear to another.

WHEN MONITORED

Gear Selector position is in DRIVE or REVERSE.

Transmission Fluid temperature is above a calibrated threshold.

No clutch slip control functions commanded.

No failure in input speed signal.

Input speed above a calibrated threshold.

Valid output speed signal from the output speed sensor or calculated from the wheel speed signal if output speed sensor is not available.

Valid engine speed signal from the PCM.

During Gearshifts:

The output speed and the output speed gradient must be higher than a calibrated threshold.

SET CONDITION

During Gearshifts:

A symptom is detected if the measured gear ratio exceeds the gear ratio range.

If a symptom is detected during downshifts requiring the engagement of a dog clutch or during upshifts, the diagnostic system aborts the gear shifting and the gear from which the shifting has been started is engaged. After a calibrated number of symptoms have been detected a failure is stored and the diagnostic system engages a calibrated gear.

If a symptom is detected during a downshift requiring the engagement of a dog clutch, a fault code is stored indicating the associated dog clutch.

In Fixed Gears:

If the output speed is greater than a threshold then a symptom is detected if the measured gear ratio exceeds the gear ratio range for calibrated amount of time.

If the output speed is lower than this threshold, then a symptom is detected if the absolute difference between output speed multiplied by the fix gear ratio of the actual gear and input speed exceeds a threshold for a calibrated amount of time

If a symptom is detected while driving in a fixed gear, the diagnostic system commands an up shift to the next gear. After a calibrated number of symptoms have been detected a failure is stored and the diagnostic system engages a calibrated gear. This gear is monitored as well and if a failure is detected for this gear, an alternative gear is engaged and so on. The selection of alternative gears follows a calibrated logic. The aim of this logic is to detect a damaged clutch and to finally select an alternative gear that consists of a combination of clutches in which the damaged clutch is not involved. If a further failure symptom occurs in this final alternative gear, a failure for general transmission ratio malfunction is stored.

POSSIBLE CAUSES

Possible Causes
CLUTCH A
CLUTCH C
VALVE BODY
TRANSMISSION CONTROL MODULE (TCM)

Always perform the Pre-Diagnostic Troubleshooting procedure before proceeding. Refer to STANDARD PROCEDURE .

DIAGNOSTIC TEST

1. **CHECK IF DTC IS CURRENT**
    1. With the scan tool, read TCM DTCs.
    2. Record the Environmental Data and any DTCs.
    3. With the scan tool, erase DTCs.
    4. Using the recorded Environmental Data, along with the When Monitored and Set Conditions above, operate the vehicle in the conditions that set the DTC.
    5. With the scan tool, read TCM DTCs.

    Did the DTC reset?

    Yes

- Go To 2

No

- Go To 3

2. **TRANSMISSION**

   If the DTC returns, view repair.

   Repair

   - Verify proper fluid level. Refer to **FLUID AND FILTER, STANDARD PROCEDURE** .
   - Verify proper operation of the input and output speed sensors.
   - Refer to **DIAGNOSIS AND TESTING** and using the clutch application chart, inspect the clutches, valve body solenoids, and valves associated with this gear ratio error.
   - Repair or replace the Transmission in accordance with the Service Information.
   - Perform the TRANSMISSION VERIFICATION TEST. Refer to **STANDARD PROCEDURE** .

3. **CHECK WIRING AND CONNECTORS**
   1. The conditions necessary to set the DTC are not present at this time.
   2. Using the schematics as a guide, inspect the wiring and connectors specific to this circuit.
   3. Wiggle the wires while checking for shorted and open circuits.
   4. Check for any Service Bulletins that may apply.

   Were there any problems found?

   Yes

   - Repair as necessary.
   - Perform the TRANSMISSION VERIFICATION TEST. Refer to **STANDARD PROCEDURE** .

   No

   - Test complete.

P0810-00-CLUTCH POSITION CONTROL ERROR

For a complete wiring diagram, **refer to appropriate SYSTEM WIRING DIAGRAMS article** .

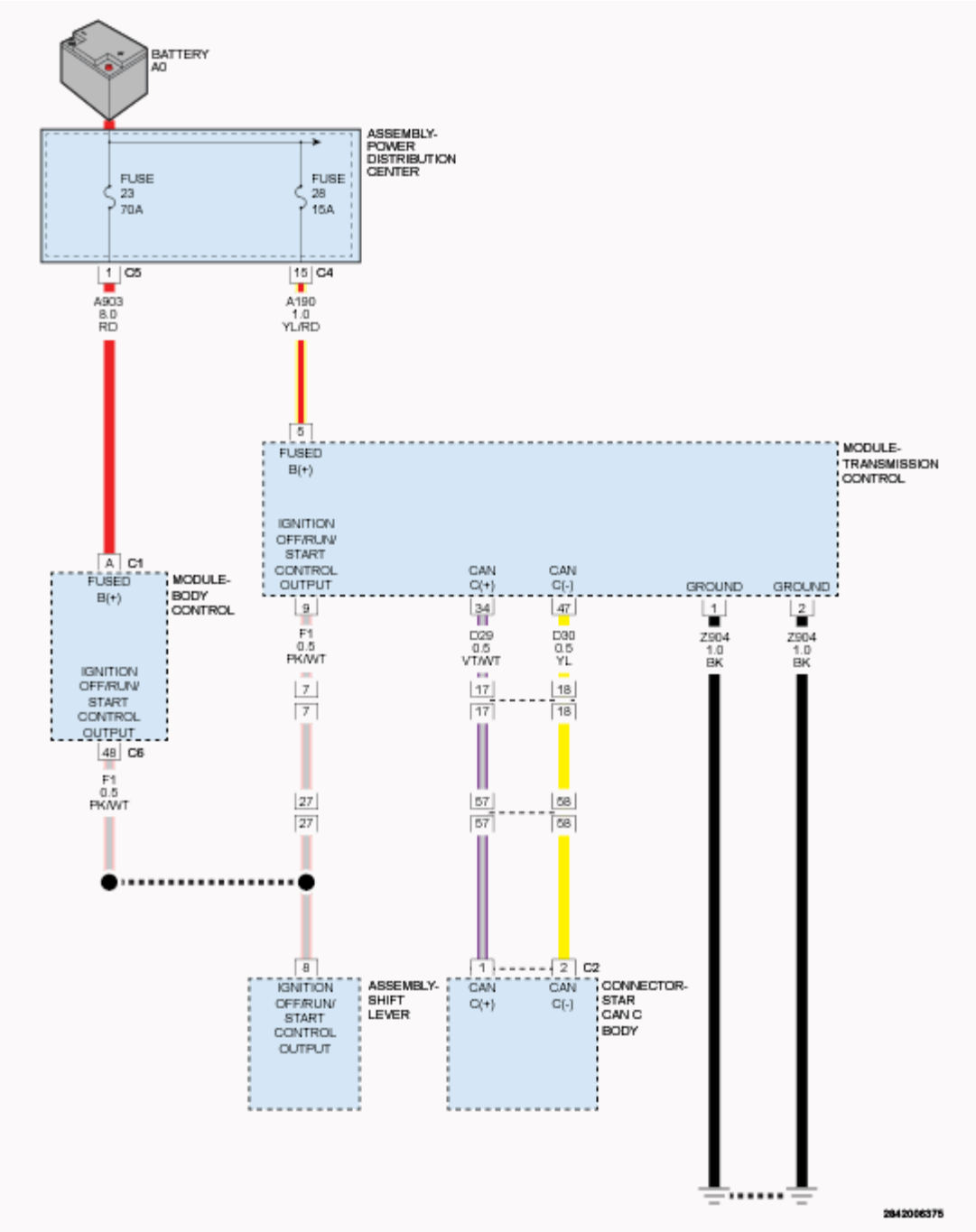

Fig. 18: TCM System Voltage Circuit Diagram
Courtesy of CHRYSLER GROUP, LLC

THEORY OF OPERATION

The purpose of the diagnostic is to detect an incorrect dog clutch position due to either hydraulic, electrical or mechanical failures. The actual position of either dog clutch A or F is calculated based upon the pressure variation resulting from the dog clutch actuation. The pressure is measured by a pressure sensor. A symptom of an incorrect dog clutch position is detected if the actual position does not correspond to the commanded

position for greater than a calibrated amount of time. A fault is set, when the number of symptoms is greater than a calibrated threshold.

An additional diagnostic is performed immediately after engine restart. The time between the states "initialization" and either "engaged" or "disengaged" is monitored. If the time required between the "initialization" state and the recognition of the "engaged" or "disengaged" state is greater than a calibrated threshold, a fault is stored

WHEN MONITORED

State Monitoring

Engine speed is greater than a calibrated value.

No electrical or rationality failures in the oil pressure sensor.

Initialization Monitoring

Dog clutches A and F are in the "initialization" state.

Engine speed is greater than a calibrated value.

No electrical or rationality failures in the oil pressure sensor.

SET CONDITION

State Monitoring

The failure is detected if the actual dog clutch position does not correspond to the commanded "engaged", "initialization / intermediate" or "disengaged" state for greater than a calibrated amount of time.

A fault is set after a calibrated number of failures has occurred.

Initialization Monitoring

The failure is detected if the actual dog clutch position does not transition to either the commanded "engaged" or "disengaged" state within a calibrated amount of time

POSSIBLE CAUSES

Possible Causes
TRANSMISSION

Always perform the Pre-Diagnostic Troubleshooting procedure before proceeding. Refer to STANDARD PROCEDURE .

DIAGNOSTIC TEST

1. **CHECK IF DTC IS CURRENT**
    1. With the scan tool, read TCM DTCs.
    2. Record the Environmental Data and any DTCs.
    3. With the scan tool, erase DTCs.
    4. Using the recorded Environmental Data, along with the When Monitored and Set Conditions above, operate the vehicle in the conditions that set the DTC.
    5. With the scan tool, read TCM DTCs.

    Did the DTC reset?

    Yes

    - Go To 2.

    No

    - Go To 3.
2. **TRANSMISSION**

    If there are no possible causes remaining, view repair.

    Repair

    - If the DTC returns, replace the Transmission and perform the appropriate repair for this DTC in accordance to the Service Information.
    - Perform the TRANSMISSION VERIFICATION TEST. Refer to **STANDARD PROCEDURE** .
3. **INTERMITTENT WIRING AND CONNECTORS**
    1. The conditions necessary to set this DTC are not present at this time.
    2. Using the schematics as a guide, inspect the wiring and connectors specific to this circuit.
    3. Wiggle the wiring and connectors while checking for any possible open or shorted circuits.
    4. Check for any Service Information Tune-ups or Technical Service Bulletins that may apply.

    Were any problems found?

    Yes

    - Repair as necessary.
    - Perform the TRANSMISSION VERIFICATION TEST. Refer to **STANDARD PROCEDURE** .

    No

- Test Complete.

P0885-00-TCM POWER CONTROL CIRCUIT

For a complete wiring diagram, **refer to appropriate SYSTEM WIRING DIAGRAMS article** .

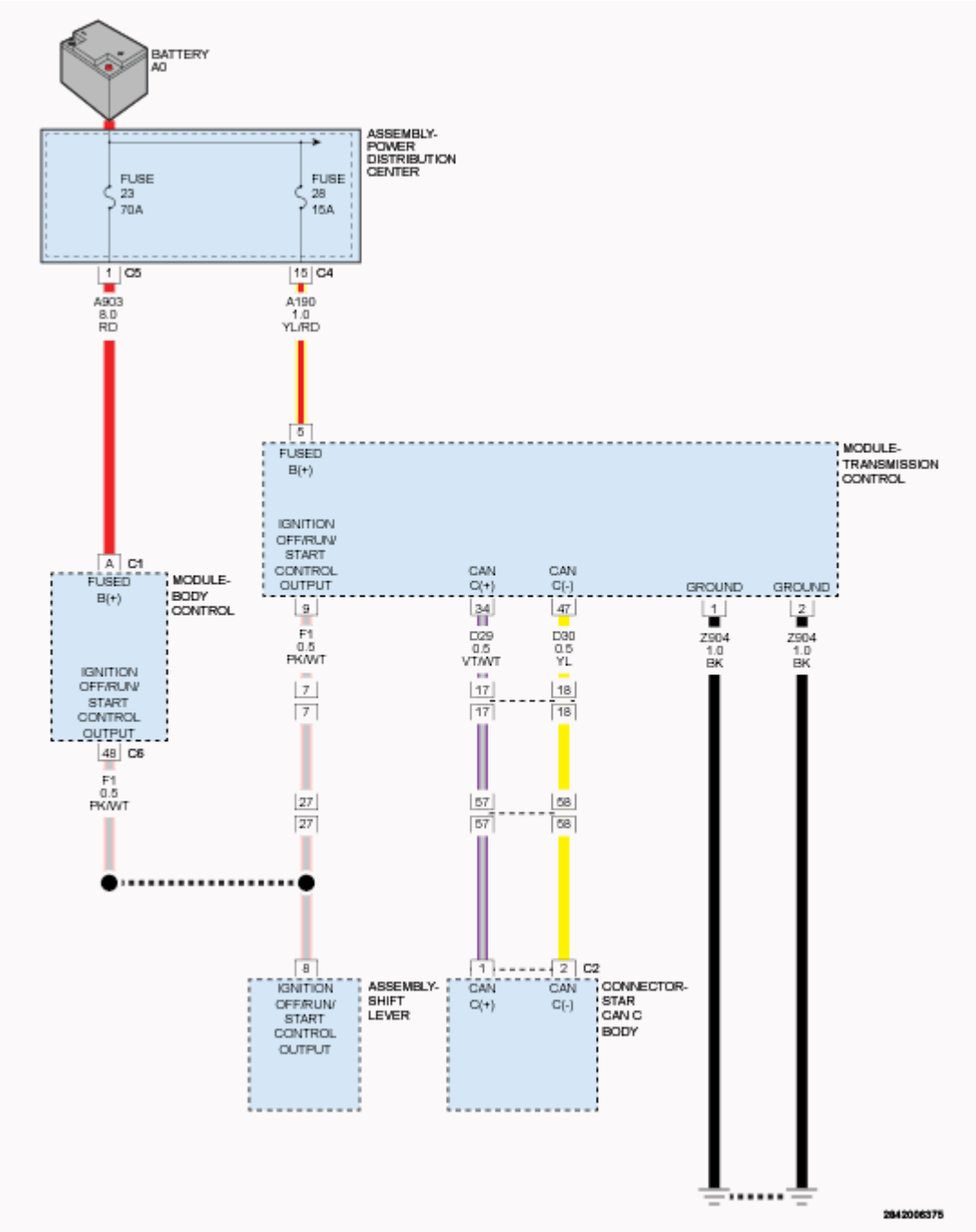

Fig. 19: TCM System Voltage Circuit Diagram
Courtesy of CHRYSLER GROUP, LLC

THEORY OF OPERATION

The purpose of the diagnostic is to detect electrical failures in the power supply of the solenoid and pressure regulator output stages. Diagnostics are performed in the microcontroller as well as the output stage ASICs. The open circuit diagnostics are performed in the output stage ASICs and the other electrical diagnostics are performed in the microcontroller.

WHEN MONITORED

Short to Battery Failure: Power supply is switched OFF.

Open Circuit Failure: Power supply is switched ON and battery voltage is above a calibrated threshold.

Short to Ground / Overcurrent Failure: Power supply is switched ON.

SET CONDITION

Short to Battery Failure: A failure is detected if the output stage power supply voltage level is greater than a predefined voltage threshold.

Open Circuit Failure: A failure is detected if two or more output stage ASICs are reporting to the microcontroller an open circuit failure within a predefined period of time.

Short to Ground / Overcurrent Failure: A failure is detected if the measured current through the output stage power supply is greater than a predefined maximum allowed current threshold.

POSSIBLE CAUSES

Possible Causes
CHARGING SYSTEM DTCS
SOLENOID CIRCUIT DTCS
TCM POWER SUPPLY CIRCUIT FAILURES
TCM GROUND CIRCUIT FAILURES
TRANSMISSION CONTROL MODULE (TCM)

Always perform the Pre-Diagnostic Troubleshooting procedure before proceeding. Refer to STANDARD PROCEDURES .

DIAGNOSTIC TEST

1. **CHECK IF DTC IS CURRENT**
    1. Using the scan tool, read TCM DTCs.
    2. Record the Environmental Data and any DTCs.
    3. Clear DTCs.
    4. Using the recorded Environmental Data, along with the When Monitored and Set Conditions

above, operate the vehicle in the conditions that set the DTC.

5. Read TCM DTCs.

   Did the DTC reset?

   Yes

   - Go To 2

   No

   - Go To 9

2. **CHECK FOR ENGINE CHARGING SYSTEM DTCS**
   1. With the scan tool, read Engine DTCs.

      Are any Engine Charging System DTCs present?

      Yes

      - Repair any Charging System DTCs before proceeding. After repairing the Charging System, perform the TRANSMISSION VERIFICATION TEST to verify the transmission and or controller was not damaged. Refer to **STANDARD PROCEDURE** .

      No

      - Go To 3

3. **CHECK FOR SOLENOID SUPPLY CIRCUIT DTCS**
   1. Refer to recorded Transmission DTCs.

      Were any solenoid supply circuit DTCs set?

      Yes

      - Perform the appropriate diagnostic procedure. Refer to **DIAGNOSTIC CODE INDEX** .
      - Perform the TRANSMISSION VERIFICATION TEST. Refer to **STANDARD PROCEDURE** .

      No

      - Go To 4.

4. **CHECK SYSTEM VOLTAGE**
   1. Start the engine.
   2. With the scan tool, under transmission, check system voltage.

Is the transmission system voltage above 9.0 volts?

Yes

- Go To 5

No

- Go To 7

5. **CHECK IF VOLTAGE IS GREATER THAN 16.9 VOLTS**
   1. Start the engine and raise the engine speed to 2000 rpm.
   2. With the scan tool, monitor the Transmission system voltage for at least 60 seconds.

   Does the Transmission system voltage read above 16.9 volts for any period of time?

   Yes

   - Repair the charging system for an over charging condition. and repair any Charging System symptoms before proceeding. Refer to **DIAGNOSIS AND TESTING** . After repairing the Charging System, perform the TRANSMISSION VERIFICATION TEST to verify the transmission and or controller was not damaged.
   - Perform the TRANSMISSION VERIFICATION TEST. Refer to **STANDARD PROCEDURE** .

   No

   - Go To 6

6. **VERIFY IF VEHICLE WAS JUMP STARTED WITH 24-VOLT SYSTEM**
   1. Verify if the vehicle was jump started by another vehicle using a 24-volt charging system.

   Was the vehicle jump started by another vehicle using a 24-volt charging system?

   Yes

   - This is the cause of the DTC. Erase the DTC and return the vehicle to the customer.
   - Perform the TRANSMISSION VERIFICATION TEST. Refer to **STANDARD PROCEDURE** .

   No

   - Go To 9

7. **CHECK THE TCM POWER INPUT CIRCUITS**
   1. Turn the ignition OFF.
   2. Disconnect the TCM C1 harness connector.

3. Ignition ON, Engine not running.
4. Using a 12-volt test light connected to ground, check the TCM power input circuits at the TCM C1 harness connector.

NOTE: The test light must illuminate brightly. Compare the brightness to that of a direct connection to the battery.

Does the test light illuminate brightly?

Yes

- Go To 8

No

- Repair the TCM power input circuits for an open or high resistance.
- Perform the TRANSMISSION VERIFICATION TEST. Refer to **STANDARD PROCEDURE** .

8. **CHECK THE TCM GROUND CIRCUITS**
   1. Ignition ON, Engine not running.
   2. Using a 12-volt test light connected to B(+), check the ground circuits at the TCM C1 harness connector.

NOTE: The test light must illuminate brightly. Compare the brightness to that of a direct connection to the battery.

Does the test light illuminate brightly?

Yes

NOTE: If this Electronic Control Unit (ECU) is being replaced with a new unit, a diagnostic scan tool MUST be used to align the PROXI configuration data into the new ECU. Follow the routine outlined in the diagnostic scan tool for PROXI Configuration Alignment under Body Control Module (BCM) Miscellaneous Functions menu.

- Using the schematics as a guide, check the Transmission Control Module (TCM) terminals and connectors for corrosion, damage or pushed out terminals. Pay particular attention to the power and ground circuits. If no problems are found, replace the TCM and perform programming and PROXI Configuration Alignment procedures. Refer to **MODULE, TRANSMISSION CONTROL, REMOVAL** .
- Perform the TRANSMISSION VERIFICATION TEST. Refer to **STANDARD PROCEDURE** .

No

- Repair the TCM grounds circuits for an open or high resistance.
- Perform the TRANSMISSION VERIFICATION TEST. Refer to **STANDARD PROCEDURE** .

9. **INTERMITTENT WIRING AND CONNECTORS**
    1. The conditions necessary to set this DTC are not present at this time.
    2. Using the schematics as a guide, inspect the wiring and connectors specific to this circuit.
    3. Wiggle the wires while checking for shorted and open circuits.

    Were there any problems found?

    Yes

    - Repair as necessary.
    - Perform the TRANSMISSION VERIFICATION TEST. Refer to **STANDARD PROCEDURE** .

    No

    - Test Complete.

P0887-00-TCM POWER CONTROL CIRCUIT HIGH

For a complete wiring diagram, **refer to appropriate SYSTEM WIRING DIAGRAMS article** .

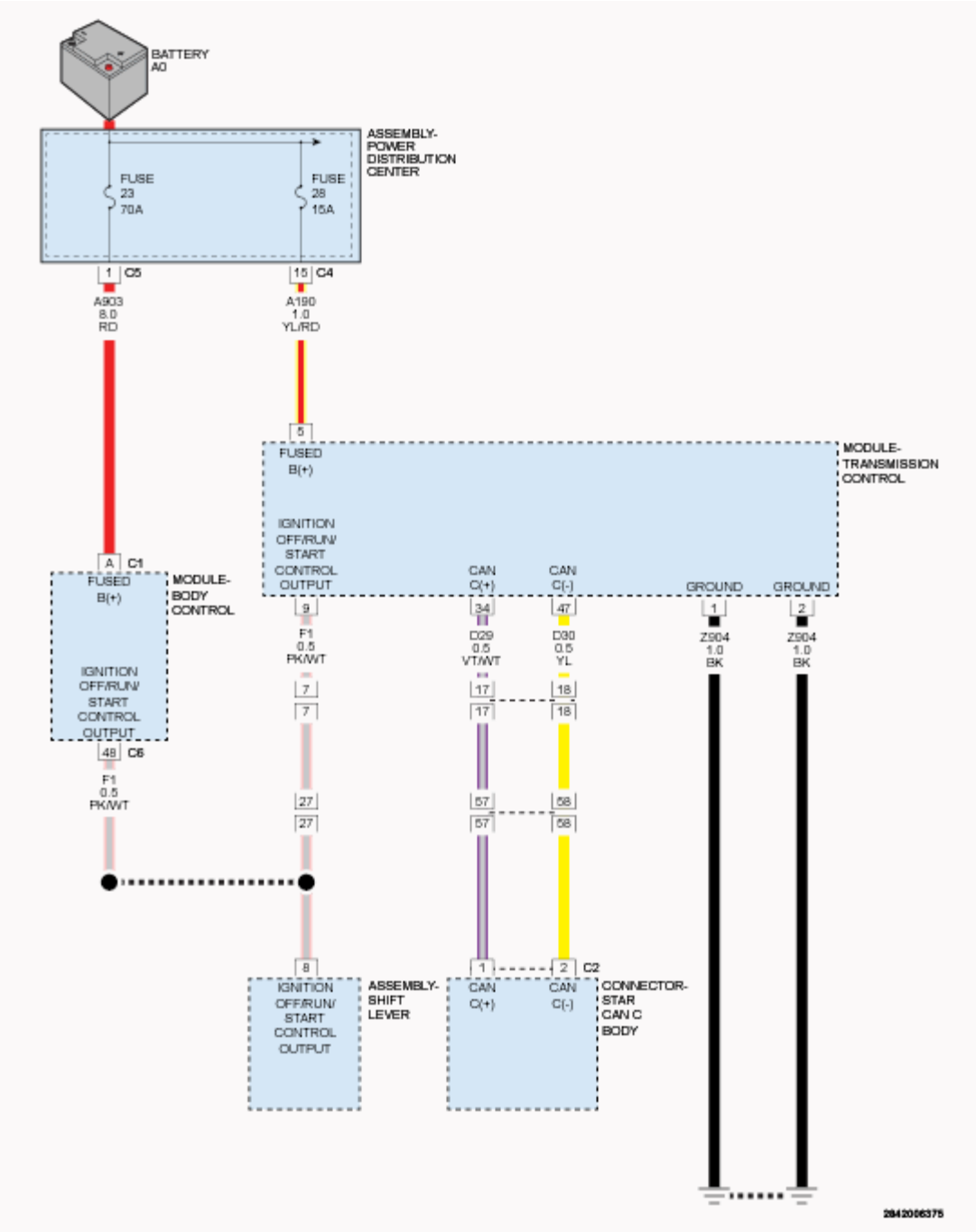

Fig. 20: TCM System Voltage Circuit Diagram
Courtesy of CHRYSLER GROUP, LLC

THEORY OF OPERATION

The purpose of the diagnostic is to detect a functional failure of the pressure control solenoid output stages in the TCM. The diagnostic monitors for an incorrect current feed to the pressure control solenoids which control the friction clutches. The monitoring is performed using two independent methods of comparing the commanded current to the measured current:

Current Summation Check: The sum current (total current of pressure control solenoids B, C, D, E) is measured using a shunt resistor. The measured value is compared to the summed commanded currents of pressure control solenoids B, C, D, E (Sum Current Calculation).

PWM Feedback Signal Check: The pulse width modulation (PWM) feedback signal generated by the current regulator in the output stage ASIC identifies a deviating output current for each current regulator. To perform a functional check of the output stage current, the TCM calculates the actual current based upon the PWM feedback signal, the output stage power supply voltage and the resistance of the corresponding pressure control solenoid. This calculated current is compared to the commanded current from the current regulator.

WHEN MONITORED

Battery voltage is greater than a calibrated threshold.

All commanded currents are greater than zero.

SET CONDITION

Current Summation Check: The failure is detected if the calculated current summation deviates from the commanded current summation by a calibrated amount. The difference is compared to positive and negative calibrated thresholds.

PWM Feedback Signal Check: The failure is detected if the calculated pressure control solenoid current deviates from the commanded current by a calibrated amount. The difference is compared to positive and negative calibrated thresholds.

POSSIBLE CAUSES

Possible Causes
PRESSURE CONTROL SOLENOID DTCS SET TRANSMISSION CONTROL MODULE (TCM)

Always perform the Pre-Diagnostic Troubleshooting procedure before proceeding. Refer to STANDARD PROCEDURE .

DIAGNOSTIC TEST

CHECK FOR PRESSURE CONTROL SOLENOID DTCS

1. With the scan tool, read TCM DTCs.

   Are other Pressure Control Solenoid DTCs set?

   Yes

   - Repair the Pressure Control Solenoid DTCs in accordance with the Service Information. Refer to

the appropriate DTC procedure. See the **DIAGNOSTIC CODE INDEX** .

- Perform the TRANSMISSION VERIFICATION TEST. Refer to **STANDARD PROCEDURE** .

No

NOTE: If this Electronic Control Unit (ECU) is being replaced with a new unit, a diagnostic scan tool MUST be used to align the PROXI configuration data into the new ECU. Follow the routine outlined in the diagnostic scan tool for PROXI Configuration Alignment under Body Control Module (BCM) Miscellaneous Functions menu.

- Using the schematics as a guide, check the Transmission Control Module (TCM) terminals and connectors for corrosion, damage or pushed out terminals. Pay particular attention to the power and ground circuits. If no problems are found, replace the TCM and perform programming and PROXI Configuration Alignment procedures. Refer to **MODULE, TRANSMISSION CONTROL, REMOVAL** .
- Perform the TRANSMISSION VERIFICATION TEST. Refer to **STANDARD PROCEDURE** .

P0933-00-HYDRAULIC PRESSURE SENSOR RANGE-PERFORMANCE

For a complete wiring diagram, **refer to appropriate SYSTEM WIRING DIAGRAMS article** .

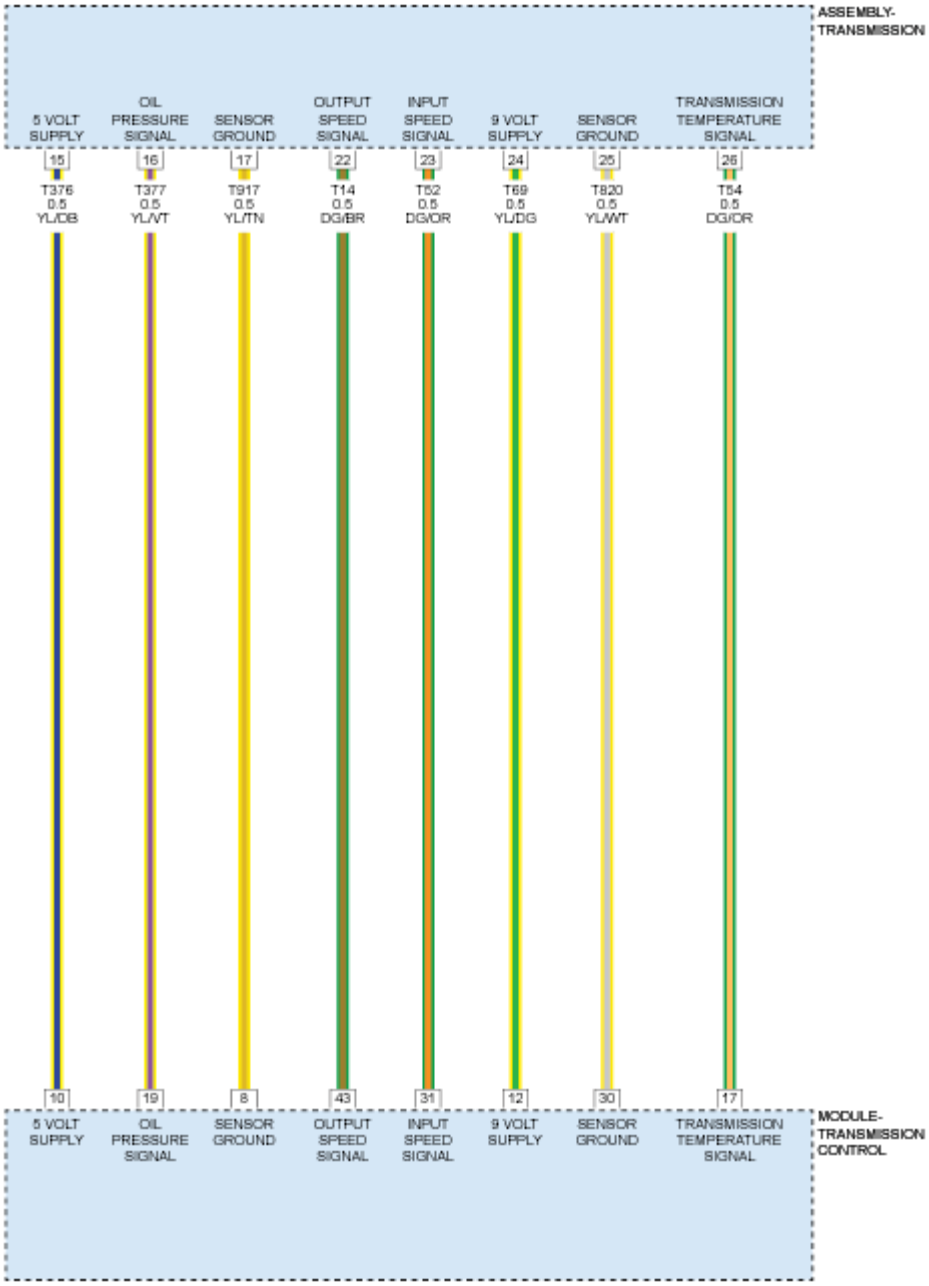

Fig. 21: Power & Ground, Temperature, Oil Pressure And Speed Sensors Circuit Diagram
Courtesy of CHRYSLER GROUP, LLC

THEORY OF OPERATION

The purpose of the diagnostic is to detect range and rationality failures of the Transmission Oil Pressure Sensor. The Transmission Oil Pressure Sensor detects actuation of the dog clutches A and F. When both dog clutches A and F are in a stable end position, the diagnostic performs the following checks:

Range Check

- The Transmission Oil Pressure Sensor output is compared to a minimum and maximum threshold at the boundary of the normal operating range.

Gradient Check

- The rate of change of the Transmission Oil Pressure Sensor output is compared to a maximum value within the normal operating range.

WHEN MONITORED

Engine speed is greater than 430 rpm.

No failure detected in the electrical monitoring of dog clutch solenoids A and F.

No failure detected in the electrical monitoring of the dog clutch pressure sensor.

No failure detected in the dog clutch position monitoring.

Dog clutch actuation pressure variation is less than a calibrated value (Both dog clutches are in end position).

SET CONDITION

Range Check

The failure is detected if the dog clutch pressure sensor value is not within the calibrated range.

Gradient check

The failure is detected if the absolute value of the gradient of the dog clutch pressure sensor value is greater than a calibrated threshold for a calibrated amount of time.

POSSIBLE CAUSES

Possible Causes
(T376) 5-VOLT SUPPLY CIRCUIT OPEN CIRCUIT OR HIGH RESISTANCE
(T377) OIL PRESSURE SIGNAL CIRCUIT OPEN CIRCUIT OR HIGH RESISTANCE
(T917) SENSOR GROUND CIRCUIT OPEN CIRCUIT OR HIGH RESISTANCE
TRANSMISSION OIL PRESSURE SENSOR
TRANSMISSION MECHANICAL PROBLEM
TCM - INTERNAL ERROR

Always perform the Pre-Diagnostic Troubleshooting procedure before proceeding. Refer to STANDARD PROCEDURE .

DIAGNOSTIC TEST

1. **CHECK IF DTC IS CURRENT**
    1. With the scan tool, read TCM DTCs.
    2. Record the Environmental Data and any DTCs.
    3. With the scan tool, erase DTCs.
    4. Using the recorded Environmental Data, along with the When Monitored and Set Conditions above, operate the vehicle in the conditions that set the DTC.
    5. With the scan tool, read TCM DTCs.

    Did the DTC reset?

    Yes

    - Go To 2

    No

    - Go To 10
2. **CHECK FOR OTHER TCM DTCS**
    1. Refer to the recorded DTCs.

    Are any other TCM DTCs set?

    Yes

    - Perform the appropriate diagnostic procedure. Refer to the **DIAGNOSTIC CODE INDEX** .
    - Perform the TRANSMISSION VERIFICATION TEST. Refer to **STANDARD PROCEDURE** .

    No

    - Go To 3
3. **CHECK OIL PRESSURE SENSOR (T376) 5-VOLT SUPPLY AND (T377) OIL PRESSURE SIGNAL CIRCUIT OPERATION**
    1. Turn the Ignition OFF.
    2. Disconnect the Transmission Assembly harness connector.
    3. Connect a jumper between the (T376) 5-Volt Supply circuit and the (T377) Oil Pressure Signal circuit at the TCM harness side of the Transmission Assembly harness connector.
    4. Turn the Ignition ON, Engine not running.
    5. With the scan tool, view Data Display, read the Oil Pressure Sensor voltage.

    Does the Oil Pressure Sensor voltage display 5 volts?

    Yes

- Go To 4

No

- Go To 7

4. **CHECK (T917) SENSOR GROUND CIRCUIT OPERATION**
   1. Connect another jumper between the (T377) Oil Pressure Signal circuit and the (T917) Sensor Ground circuit at the TCM harness side of the Transmission Assembly harness connector.
   2. With the scan tool, view Data Display, read the Oil Pressure Sensor voltage.

      Does the Oil Pressure Sensor voltage display 0 volts?

      Yes

      - Go To 5

      No

      - Go To 9

5. **CHECK OIL PRESSURE SENSOR RESISTANCE**
   1. Turn the Ignition OFF.
   2. Remove both jumpers from the Transmission Assembly harness connector.
   3. **NOTE: The Oil Pressure Sensor must be at room temperature to perform the next test.**
   4. Measure the resistance of the Oil Pressure Sensor between terminal 15 and terminal 16 at the Transmission side of the Transmission Assembly harness connector.

      Is the resistance between 4.6 and 5.0 ohms?

      Yes

      - Go To 6

      No

      - Replace the Transmission Oil Pressure sensor in accordance with the Service Information.
      - Perform the TRANSMISSION VERIFICATION TEST. Refer to **STANDARD PROCEDURE** .

6. **CHECK THE TRANSMISSION FOR MECHANICAL PROBLEMS**
   1. Check the Transmission for mechanical problems. Refer to **DIAGNOSIS AND TESTING** .

      Did the Transmission have any mechanical problems?

Yes

- Repair as needed in accordance with the Service Information.
- Perform the TRANSMISSION VERIFICATION TEST. Refer to **STANDARD PROCEDURE** .

No

NOTE: **If this Electronic Control Unit (ECU) is being replaced with a new unit, a diagnostic scan tool MUST be used to align the PROXI configuration data into the new ECU. Follow the routine outlined in the diagnostic scan tool for PROXI Configuration Alignment under Body Control Module (BCM) Miscellaneous Functions menu.**

- Using the schematics as a guide, check the Transmission Control Module (TCM) terminals and connectors for corrosion, damage or pushed out terminals. Pay particular attention to the power and ground circuits. If no problems are found, replace the TCM and perform programming and PROXI Configuration Alignment procedures. Refer to **MODULE, TRANSMISSION CONTROL, REMOVAL** .
- Perform the TRANSMISSION VERIFICATION TEST. Refer to **STANDARD PROCEDURE** .

7. **CHECK THE (T376) 5-VOLT CIRCUIT FOR OPEN/HIGH RESISTANCE**
   1. Turn the Ignition OFF.
   2. Disconnect the TCM harness connector.
   3. Measure the resistance of (T376) 5-Volt Supply circuit between the TCM harness connector and the Transmission Assembly harness connector.

      Is the resistance below 5 ohms?

      Yes

      - Go To 8

      No

      - Repair the (T376) 5-Volt Supply circuit for an open circuit or high resistance.
      - Perform the TRANSMISSION VERIFICATION TEST. Refer to **STANDARD PROCEDURE** .
8. **CHECK THE (T377) OIL PRESSURE SIGNAL CIRCUIT FOR OPEN/HIGH RESISTANCE**
   1. Measure the resistance of the (T377) Oil Pressure Signal circuit between the TCM harness connector and the Transmission Assembly harness connector.

      Is the resistance below 5 ohms?

Yes

NOTE: **If this Electronic Control Unit (ECU) is being replaced with a new unit, a diagnostic scan tool MUST be used to align the PROXI configuration data into the new ECU. Follow the routine outlined in the diagnostic scan tool for PROXI Configuration Alignment under Body Control Module (BCM) Miscellaneous Functions menu.**

- Using the schematics as a guide, check the Transmission Control Module (TCM) terminals and connectors for corrosion, damage or pushed out terminals. Pay particular attention to the power and ground circuits. If no problems are found, replace the TCM and perform programming and PROXI Configuration Alignment procedures. Refer to **MODULE, TRANSMISSION CONTROL, REMOVAL** .
- Perform the TRANSMISSION VERIFICATION TEST. Refer to **STANDARD PROCEDURE** .

No

- Repair the (T377) Oil Pressure Signal circuit for an open circuit or high resistance.
- Perform the TRANSMISSION VERIFICATION TEST. Refer to **STANDARD PROCEDURE** .

9. **CHECK THE (T917) SENSOR GROUND CIRCUIT FOR OPEN/HIGH RESISTANCE**
   1. Turn the Ignition OFF.
   2. Disconnect the TCM harness connector.
   3. Measure the resistance of the (T917) Sensor Ground circuit between the TCM harness connector and the Transmission Assembly harness connector.

      Is the resistance below 5 ohms?

      Yes

      NOTE: **If this Electronic Control Unit (ECU) is being replaced with a new unit, a diagnostic scan tool MUST be used to align the PROXI configuration data into the new ECU. Follow the routine outlined in the diagnostic scan tool for PROXI Configuration Alignment under Body Control Module (BCM) Miscellaneous Functions menu.**

      - Using the schematics as a guide, check the Transmission Control Module (TCM) terminals and connectors for corrosion, damage or pushed out terminals. Pay particular attention to the power and ground circuits. If no problems are found, replace the TCM and perform programming and PROXI Configuration Alignment procedures. Refer to **MODULE, TRANSMISSION CONTROL, REMOVAL** .
      - Perform the TRANSMISSION VERIFICATION TEST. Refer to **STANDARD PROCEDURE** .

No

- Repair the (T917) Sensor Ground circuit for an open circuit or high resistance.
- Perform the TRANSMISSION VERIFICATION TEST. Refer to **STANDARD PROCEDURE** .

10. **CHECK WIRING AND CONNECTORS**
    1. The conditions necessary to set the DTC are not present at this time.
    2. Using the schematics as a guide, inspect the wiring and connectors specific to this circuit.
    3. Wiggle the wires while checking for shorted and open circuits.
    4. Check for any Service Bulletins that may apply.

    Were there any problems found?

    Yes

    - Repair as necessary.
    - Perform the TRANSMISSION VERIFICATION TEST. Refer to **STANDARD PROCEDURE** .

    No

    - Test complete.

P0934-00-HYDRAULIC PRESSURE SENSOR CIRCUIT LOW

For a complete wiring diagram, **refer to appropriate SYSTEM WIRING DIAGRAMS article** .

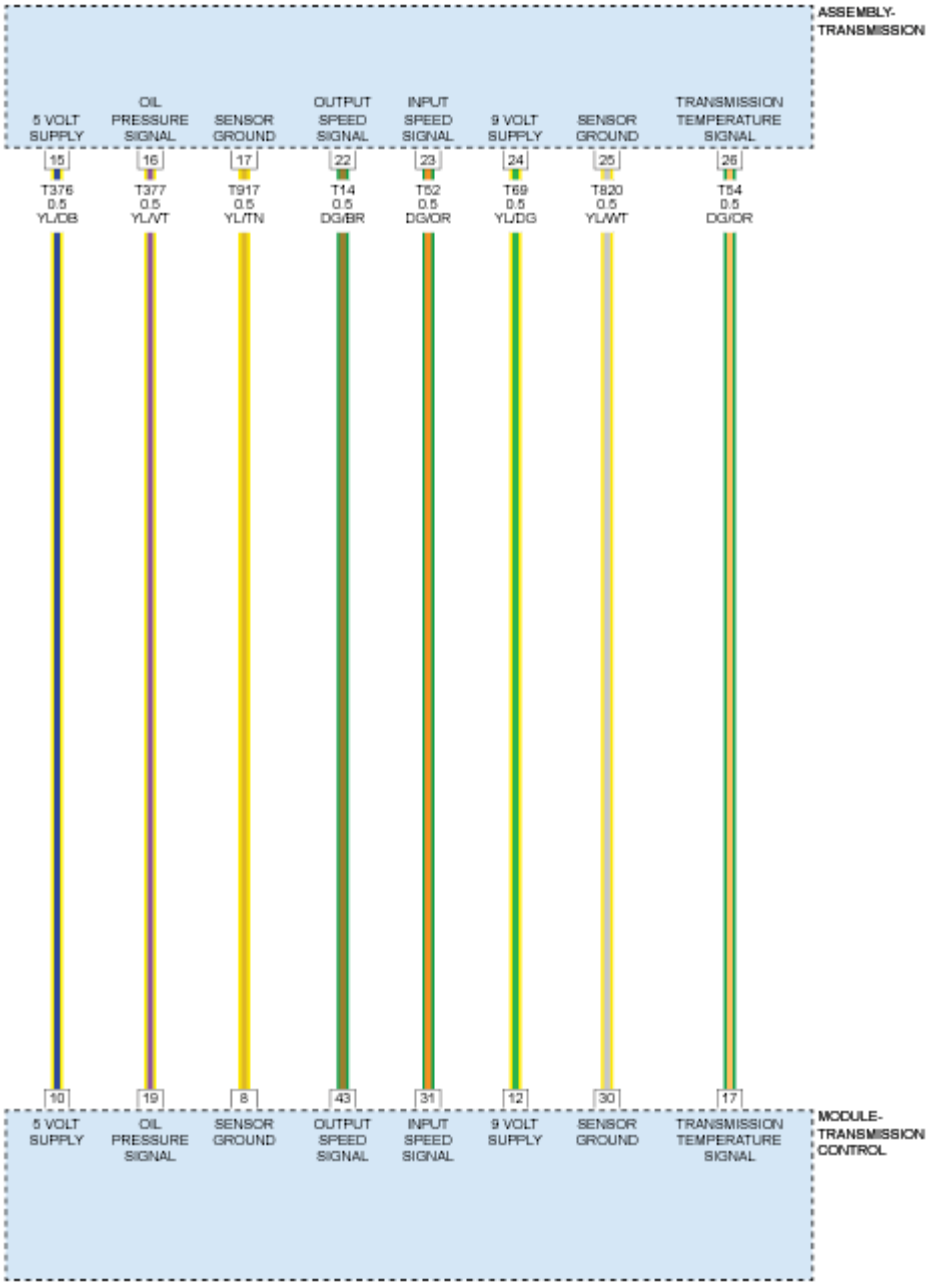

Fig. 22: Power & Ground, Temperature, Oil Pressure And Speed Sensors Circuit Diagram
Courtesy of CHRYSLER GROUP, LLC

THEORY OF OPERATION

The purpose of this diagnostic is to detect electrical failures of the oil pressure sensor circuit. The pressure sensor measures the oil pressure which actuates both dog clutches. The monitoring is performed by comparing the sensor voltage to calibrated thresholds.

WHEN MONITORED

No failure detected in sensor supply voltage monitoring.

No failure detected in analog to digital converter monitoring.

SET CONDITION

Short to ground or open circuit is detected if the sensor voltage is less than a fixed threshold.

POSSIBLE CAUSES

Possible Causes
(T377) OIL PRESSURE SIGNAL CIRCUIT OPEN
(T377) OIL PRESSURE SIGNAL CIRCUIT SHORT TO GROUND
TRANSMISSION OIL PRESSURE SENSOR
TCM - INTERNAL ERROR

Always perform the Pre-Diagnostic Troubleshooting procedure before proceeding. Refer to STANDARD PROCEDURE .

DIAGNOSTIC TEST

1. **CHECK IF DTC IS CURRENT**
    1. With the scan tool, read TCM DTCs.
    2. Record the Environmental Data and any DTCs.
    3. With the scan tool, erase DTCs.
    4. Using the recorded Environmental Data, along with the When Monitored and Set Conditions above, operate the vehicle in the conditions that set the DTC.
    5. With the scan tool, read TCM DTCs.

    Did the DTC reset?

    Yes

    - Go To 2

    No

    - Go To 6
2. **CHECK (T377) OIL PRESSURE SIGNAL CIRCUIT AND (T376) 5-VOLT SUPPLY CIRCUIT OPERATION**
    1. Turn the Ignition OFF.
    2. Disconnect the Transmission Assembly harness connector.
    3. Connect a jumper between the (T377) Oil Pressure Signal Circuit and the (T376) 5-Volt Supply Circuit at the TCM harness side of the Transmission Assembly harness connector.

4. Turn the Ignition ON, Engine not running.
5. With the scan tool, view Data Display, read the Oil Pressure Sensor voltage.

   Does the Oil Pressure Sensor voltage read 5 volts?

   Yes

   - Replace the Transmission Oil Pressure sensor in accordance with the Service Information.
   - Perform the TRANSMISSION VERIFICATION TEST. Refer to **STANDARD PROCEDURE** .

   No

   - Go To 3

3. **CHECK THE (T376) 5-VOLT CIRCUIT FOR OPEN/HIGH RESISTANCE**
   1. Turn the Ignition OFF.
   2. Disconnect the TCM harness connector.
   3. Measure the resistance of the (T376) 5-Volt Supply circuit between the TCM harness connector and the Transmission Assembly harness connector.

      Is the resistance below 5 ohms?

      Yes

      - Go To 4

      No

      - Repair the (T376) 5-Volt Supply circuit for an open circuit or high resistance.
      - Perform the TRANSMISSION VERIFICATION TEST. Refer to **STANDARD PROCEDURE** .

4. **CHECK THE (T377) OIL PRESSURE SIGNAL CIRCUIT FOR OPEN/HIGH RESISTANCE**
   1. Measure the resistance of (T377) Oil Pressure Signal circuit between the TCM harness connector and the Transmission Assembly harness connector.

      Is the resistance below 5 ohms?

      Yes

      Go To 5

      No

      - Repair the (T377) Oil Pressure Signal circuit for an open circuit or high resistance.

- Perform the TRANSMISSION VERIFICATION TEST. Refer to **STANDARD PROCEDURE** .

5. **CHECK (T377) OIL PRESSURE SIGNAL CIRCUIT FOR A SHORT TO GROUND OR ANOTHER CIRCUIT**
   1. Measure the resistance between the (T377) Oil Pressure Signal circuit and ground at the TCM harness connector.
   2. Measure the resistance between the (T377) Oil Pressure Signal circuit and all other circuits in the TCM harness connector.

   Is there continuity between the (T377) Oil Pressure Signal circuit and ground or any other circuit?

   Yes

   - Repair the (T377) Oil Pressure Signal circuit for a short to ground or another circuit.

   No

   NOTE: If this Electronic Control Unit (ECU) is being replaced with a new unit, a diagnostic scan tool MUST be used to align the PROXI configuration data into the new ECU. Follow the routine outlined in the diagnostic scan tool for PROXI Configuration Alignment under Body Control Module (BCM) Miscellaneous Functions menu.

   - Using the schematics as a guide, check the Transmission Control Module (TCM) terminals and connectors for corrosion, damage or pushed out terminals. Pay particular attention to the power and ground circuits. If no problems are found, replace the TCM and perform programming and PROXI Configuration Alignment procedures. Refer to **MODULE, TRANSMISSION CONTROL, REMOVAL** .
   - Perform the TRANSMISSION VERIFICATION TEST. Refer to **STANDARD PROCEDURE** .

6. **CHECK WIRING AND CONNECTORS**
   1. The conditions necessary to set the DTC are not present at this time.
   2. Using the schematics as a guide, inspect the wiring and connectors specific to this circuit.
   3. Wiggle the wires while checking for shorted and open circuits.
   4. Check for any Service Bulletins that may apply.

   Were there any problems found?

   Yes

   - Repair as necessary.
   - Perform the TRANSMISSION VERIFICATION TEST. Refer to **STANDARD PROCEDURE** .

No

- Test complete.

P0935-00-HYDRAULIC PRESSURE SENSOR CIRCUIT HIGH

For a complete wiring diagram, **refer to appropriate SYSTEM WIRING DIAGRAMS article** .

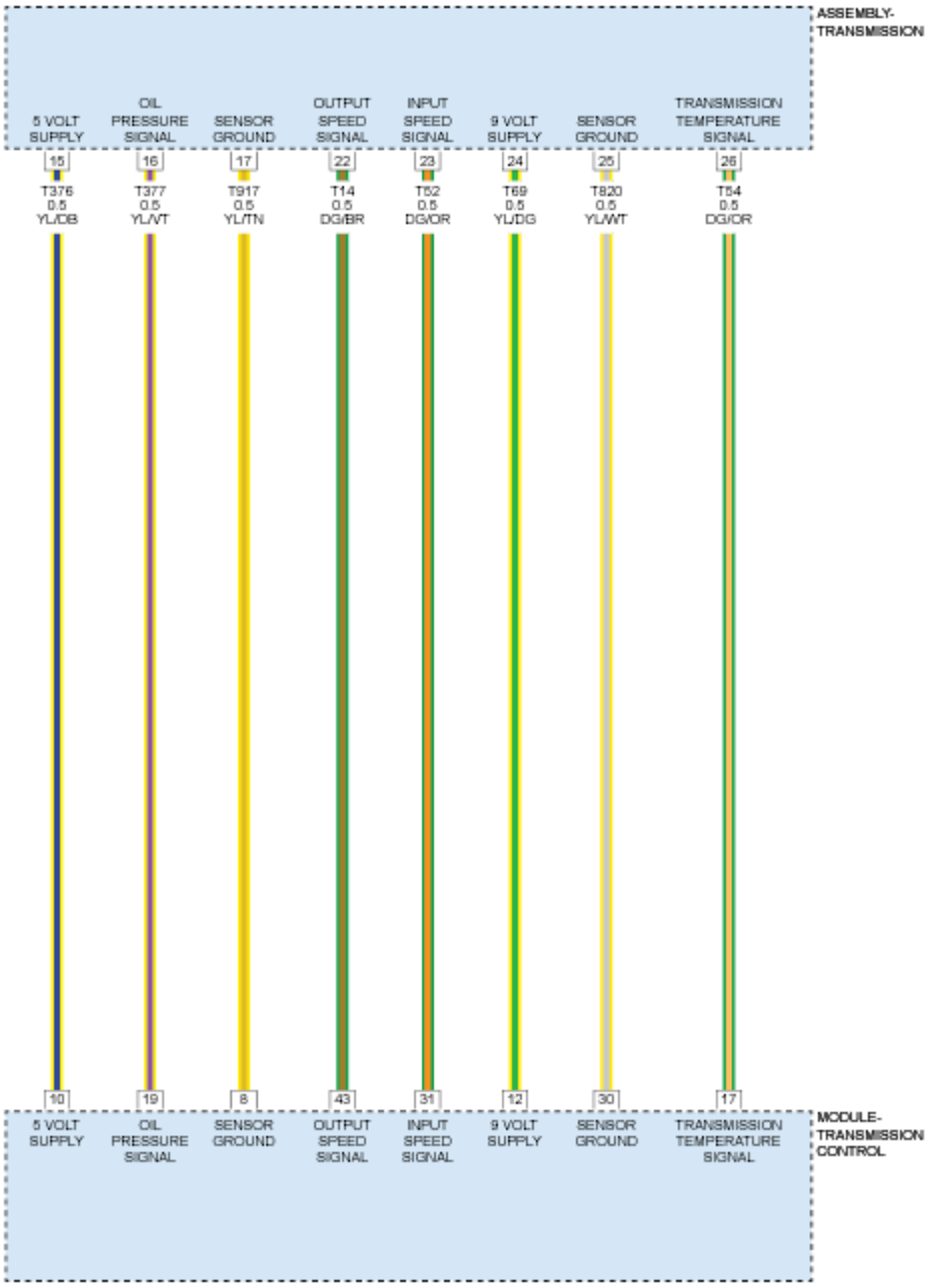

Fig. 23: Power & Ground, Temperature, Oil Pressure And Speed Sensors Circuit Diagram

Courtesy of CHRYSLER GROUP, LLC

THEORY OF OPERATION

The purpose of this diagnostic is to detect electrical failures of the oil pressure sensor circuit. The pressure sensor measures the oil pressure which actuates both dog clutches. The monitoring is performed by comparing the sensor voltage to calibrated thresholds.

WHEN MONITORED

No failure detected in sensor supply voltage monitoring.

No failure detected in analog to digital converter monitoring.

SET CONDITION

Short to battery is detected if the sensor voltage is greater than a fixed threshold.

POSSIBLE CAUSES

Possible Causes
(T377) OIL PRESSURE SIGNAL CIRCUIT SHORTED TO VOLTAGE
(T917) SENSOR GROUND CIRCUIT OPEN
TRANSMISSION OIL PRESSURE SENSOR
TCM - INTERNAL ERROR

Always perform the Pre-Diagnostic Troubleshooting procedure before proceeding. Refer to STANDARD PROCEDURE .

DIAGNOSTIC TEST

1. **CHECK IF DTC IS CURRENT**
    1. With the scan tool, read TCM DTCs.
    2. Record the Environmental Data and any DTCs.
    3. With the scan tool, erase DTCs.
    4. Using the recorded Environmental Data, along with the When Monitored and Set Conditions above, operate the vehicle in the conditions that set the DTC.
    5. With the scan tool, read TCM DTCs.

    Did the DTC reset?

    Yes

    - Go To 2

No

- Go To 5

2. **CHECK (T377) OIL PRESSURE SIGNAL CIRCUIT FOR SHORT TO ANOTHER CIRCUIT**
   1. Turn the Ignition OFF.
   2. Disconnect the Transmission Assembly harness connector.
   3. Disconnect the TCM harness connector.
   4. Measure the resistance between the (T377) Oil Pressure Signal circuit and all other circuits in the TCM harness connector.

   Is there continuity between (T377) Oil Pressure Signal circuit and any other circuit?

   Yes

   - Repair the (T377) Oil Pressure Signal circuit for a short to another circuit.
   - Perform the TRANSMISSION VERIFICATION TEST. Refer to **STANDARD PROCEDURE** .

   No

   - Go To 3

3. **CHECK THE (T917) SENSOR GROUND CIRCUIT FOR AN OPEN**
   1. Measure the resistance of (T917) Sensor Ground circuit between the TCM harness connector and the Transmission Assembly harness connector.

   Is the resistance less than 5 ohms?

   Yes

   - Go To 4

   No

   - Repair the (T917) Sensor Ground circuit for an open circuit.
   - Perform the TRANSMISSION VERIFICATION TEST. Refer to **STANDARD PROCEDURE** .

4. **CHECK THE TCM FOR A SHORT TO VOLTAGE**
   1. Connect the TCM harness connector.
   2. Turn the Ignition ON, Engine not running.
   3. Measure the voltage of the (T377) Oil Pressure Signal circuit at the Transmission Assembly harness connector.

   Is the voltage above 1 volt?

Yes

NOTE: If this Electronic Control Unit (ECU) is being replaced with a new unit, a diagnostic scan tool MUST be used to align the PROXI configuration data into the new ECU. Follow the routine outlined in the diagnostic scan tool for PROXI Configuration Alignment under Body Control Module (BCM) Miscellaneous Functions menu.

- Using the schematics as a guide, check the Transmission Control Module (TCM) terminals and connectors for corrosion, damage or pushed out terminals. Pay particular attention to the power and ground circuits. If no problems are found, replace the TCM and perform programming and PROXI Configuration Alignment procedures. Refer to **MODULE, TRANSMISSION CONTROL, REMOVAL** .
- Perform the TRANSMISSION VERIFICATION TEST. Refer to **STANDARD PROCEDURE** .

No

- Replace the Transmission Oil Pressure Sensor in accordance with the Service Information.
- Perform the TRANSMISSION VERIFICATION TEST. Refer to **STANDARD PROCEDURE** .

5. **CHECK WIRING AND CONNECTORS**
   1. The conditions necessary to set the DTC are not present at this time.
   2. Using the schematics as a guide, inspect the wiring and connectors specific to this circuit.
   3. Wiggle the wires while checking for shorted and open circuits.
   4. Check for any Service Bulletins that may apply.

   Were there any problems found?

   Yes

   - Repair as necessary.
   - Perform the TRANSMISSION VERIFICATION TEST. Refer to **STANDARD PROCEDURE** .

   No

   - Test complete.

P0960-00-PRESSURE CONTROL SOLENOID 1 CONTROL CIRCUIT OPEN

For a complete wiring diagram, **refer to appropriate SYSTEM WIRING DIAGRAMS article** .

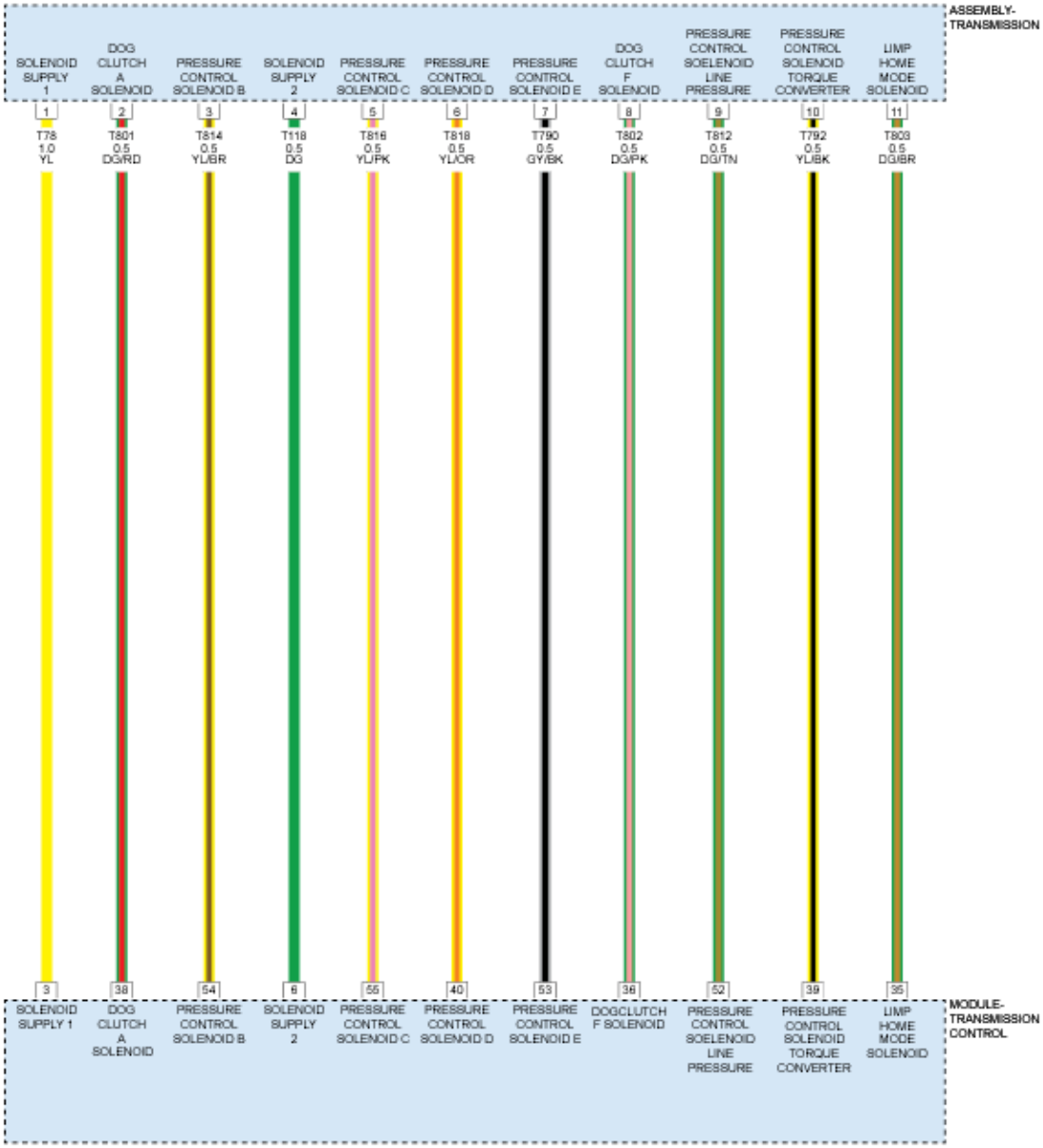

Fig. 24: Pressure Regulators & Solenoids Control Circuit Diagram
Courtesy of CHRYSLER GROUP, LLC

THEORY OF OPERATION

The purpose of the diagnostic is to detect circuit failures on any of the output stages. All output stages are controlled by a current controller that can operate an output stage in two different modes:

- Current controlled mode (pressure regulators)
- Switched mode or PWM controlled (solenoids)

Pressure Regulator Monitoring: The current regulator ASIC in the TCM indicates the following circuit failures via SPI bus to the CPU:

- Short to ground
- Short to battery or open circuit

Solenoid Monitoring: The TCM measures the actual solenoid voltages and compares them to calibrated thresholds to identify the following electrical failures:

- Short to ground or open circuit
- Short to battery

WHEN MONITORED

Output stages power supply switched on.

Power supply voltage is greater than a calibrated value.

SET CONDITION

Pressure Regulator Monitoring: A failure is detected if one of the following conditions occur:

An short to ground failure is detected if the ASIC indicates a short to ground failure.

A short to battery or open circuit failure is detected if the ASIC indicates a short to battery or open circuit failure.

Solenoid Monitoring: A failure is detected if one of the following conditions occur:

An short to ground or open circuit failure is detected if the ratio between the voltage at the solenoid valve and the output stages power supply is above a calibrated threshold.

A short to battery failure is detected if the ratio between the voltage at the solenoid valve and the output stages power supply is below a calibrated threshold.

POSSIBLE CAUSES

Possible Causes
(T78) SOLENOID SUPPLY 1 CIRCUIT OPEN
(T78) SOLENOID SUPPLY 1 CIRCUIT SHORTED TO GROUND
(T812) PRESSURE CONTROL SOLENOID - LINE PRESSURE CIRCUIT OPEN
(T812) PRESSURE CONTROL SOLENOID - LINE PRESSURE CIRCUIT SHORTED TO GROUND
(T812) PRESSURE CONTROL SOLENOID - LINE PRESSURE CIRCUIT SHORTED TO VOLTAGE
PRESSURE CONTROL SOLENOID - LINE PRESSURE
TRANSMISSION CONTROL MODULE (TCM)

Always perform the Pre-Diagnostic Troubleshooting procedure before proceeding. Refer to STANDARD PROCEDURE .

DIAGNOSTIC TEST

1. **CHECK IF THE DTC IS CURRENT**
    1. Using the scan tool, read TCM DTCs.
    2. Record the Environmental Data and any DTCs.
    3. Clear DTCs.
    4. Using the recorded Environmental Data, along with the When Monitored and Set Conditions above, operate the vehicle in the conditions that set the DTC.
    5. Read TCM DTCs.

    Did the DTC reset?

    Yes

    - Go To 2

    No

    - Go To 9
2. **CHECK THE PRESSURE CONTROL SOLENOID - LINE PRESSURE**
    1. Turn the Ignition OFF.
    2. Disconnect the Transmission Assembly harness connector.
    3. Measure the resistance of the Pressure Control Solenoid - Line Pressure at the appropriate terminals in the Transmission Assembly interface connector.

    Is the resistance of the Pressure Control Solenoid - Line Pressure 11.0 Ohms ± 1.0 Ohms?

    Yes

    - Go To 3

    No

    - Replace the Pressure Control Solenoid - Line Pressure in accordance with the Service Information.
    - Perform the TRANSMISSION VERIFICATION TEST. Refer to **STANDARD PROCEDURE** .
3. **CHECK THE (T78) SOLENOID SUPPLY 1 CIRCUIT FOR AN OPEN**
    1. Disconnect the TCM harness connector.
    2. Measure the resistance of the (T78) Solenoid Supply 1 circuit between the Transmission Assembly

harness connector and the TCM harness connector.

Is the resistance below 5.0 Ohms?

Yes

- Go To 4

No

- Repair the (T78) Solenoid Supply 1 circuit for an open or high resistance.
- Perform the TRANSMISSION VERIFICATION TEST. Refer to **STANDARD PROCEDURE** .

4. **CHECK THE (T78) SOLENOID SUPPLY 1 CIRCUIT FOR A SHORT TO GROUND**
   1. Measure the resistance between ground and the (T78) Solenoid Supply 1 circuit.

   Is there continuity between ground and the (T78) Solenoid Supply 1 circuit?

   Yes

   - Repair the (T78) Solenoid Supply 1 circuit for a short to ground.
   - Perform the TRANSMISSION VERIFICATION TEST. Refer to **STANDARD PROCEDURE** .

   No

   - Go To 5

5. **CHECK THE (T78) SOLENOID SUPPLY 1 CIRCUIT FOR A SHORT TO ANOTHER CIRCUIT**
   1. Measure the resistance between the (T78) Solenoid Supply 1 circuit and all other circuits in the TCM harness connector.

   Is there continuity between the (T78) Solenoid Supply 1 circuit and any other circuits in the TCM harness connector?

   Yes

   - Repair the (T78) Solenoid Supply 1 circuit for a short to another circuit.
   - Perform the TRANSMISSION VERIFICATION TEST. Refer to **STANDARD PROCEDURE** .

   No

   - Go To 6.

6. **CHECK THE (T812) PRESSURE CONTROL SOLENOID - LINE PRESSURE CIRCUIT FOR**

AN OPEN

1. Measure the resistance of the (T812) Pressure Control Solenoid - Line Pressure circuit between the Transmission Assembly harness connector and the TCM harness connector.

   Is the resistance below 5.0 Ohms?

   Yes

   - Go To 7

   No

   - Repair the (T812) Pressure Control Solenoid - Line Pressure circuit for an open or high resistance.
   - Perform the TRANSMISSION VERIFICATION TEST. Refer to **STANDARD PROCEDURE** .

7. **CHECK THE (T812) PRESSURE CONTROL SOLENOID - LINE PRESSURE CIRCUIT FOR A SHORT TO GROUND**
   1. Measure the resistance between ground and the (T812) Pressure Control Solenoid - Line Pressure circuit.

      Is there continuity between ground and the (T812) Pressure Control Solenoid - Line Pressure circuit?

      Yes

      - Repair the (T812) Pressure Control Solenoid - Line Pressure circuit for a short to ground.
      - Perform the TRANSMISSION VERIFICATION TEST. Refer to **STANDARD PROCEDURE** .

      No

      - Go To 8.

8. **CHECK THE (T812) PRESSURE CONTROL SOLENOID - LINE PRESSURE CIRCUIT FOR A SHORT TO ANOTHER CIRCUIT**
   1. Measure the resistance between the (T812) Pressure Control Solenoid - Line Pressure circuit and all other circuits in the TCM harness connector.

      Is there continuity between the (T812) Pressure Control Solenoid - Line Pressure circuit and any other circuits in the TCM harness connector?

      Yes

      - Repair the (T812) Pressure Control Solenoid - Line Pressure circuit for a short to another circuit.

- Perform the TRANSMISSION VERIFICATION TEST. Refer to **STANDARD PROCEDURE** .

No

NOTE: If this Electronic Control Unit (ECU) is being replaced with a new unit, a diagnostic scan tool MUST be used to align the PROXI configuration data into the new ECU. Follow the routine outlined in the diagnostic scan tool for PROXI Configuration Alignment under Body Control Module (BCM) Miscellaneous Functions menu.

- Using the schematics as a guide, check the Transmission Control Module (TCM) terminals and connectors for corrosion, damage or pushed out terminals. Pay particular attention to the power and ground circuits. If no problems are found, replace the TCM and perform programming and PROXI Configuration Alignment procedures. Refer to **MODULE, TRANSMISSION CONTROL, REMOVAL** .
- Perform the TRANSMISSION VERIFICATION TEST. Refer to **STANDARD PROCEDURE** .

9. **CHECK THE WIRING AND CONNECTORS**
   1. The conditions necessary to set this DTC are not present at this time.
   2. Use the Freeze Frame Data to help duplicate the conditions in which the DTC originally set. Pay particular attention to the DTC set conditions, such as, VSS, MAP, ECT, and Load.
   3. Using the schematics as a guide, visually inspect the related wiring harness. Look for any chafed, pierced, pinched, or partially broken wires.
   4. Visually inspect the related wiring harness connectors. Look for broken, bent, pushed out, or corroded terminals.
   5. Wiggle the wiring and connectors while checking for any possible open or shorted circuits.
   6. Check for any Service Information Tune-ups or Technical Service Bulletins that may apply.

   Were there any problems found?

   Yes

   - Repair as necessary.
   - Perform the TRANSMISSION VERIFICATION TEST. Refer to **STANDARD PROCEDURE** .

   No

   - Test Complete.

P0962-00-PRESSURE CONTROL SOLENOID 1 CONTROL CIRCUIT LOW

For a complete wiring diagram, **refer to appropriate SYSTEM WIRING DIAGRAMS article** .

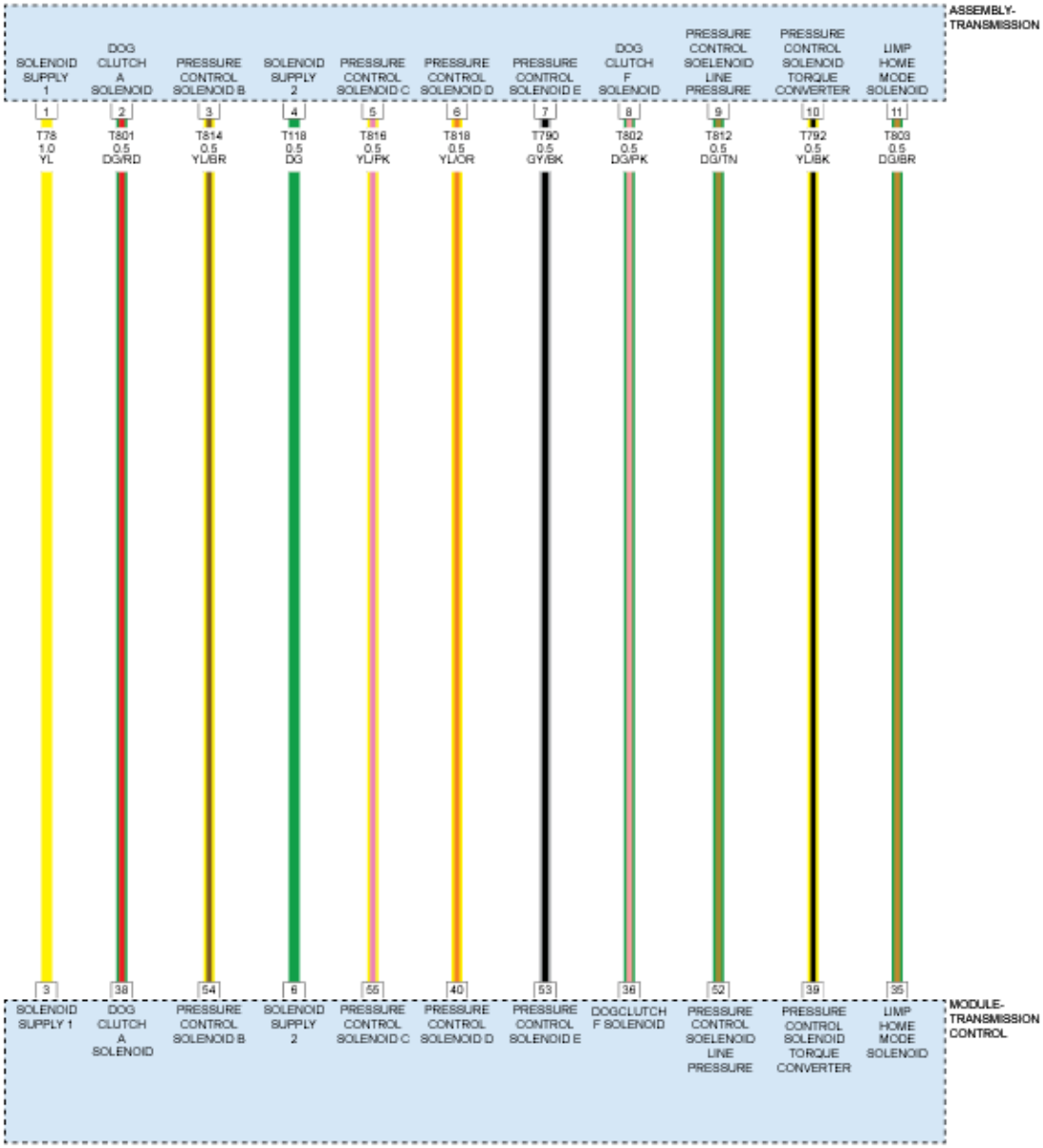

Fig. 25: Pressure Regulators & Solenoids Control Circuit Diagram
Courtesy of CHRYSLER GROUP, LLC

THEORY OF OPERATION

The purpose of the diagnostic is to detect circuit failures on any of the output stages. All output stages are controlled by a current controller that can operate an output stage in two different modes:

- Current controlled mode (pressure regulators)
- Switched mode or PWM controlled (solenoids)

Pressure Regulator Monitoring: The current regulator ASIC in the TCM indicates the following circuit failures via SPI bus to the CPU:

- Short to ground
- Short to battery or open circuit

Solenoid Monitoring: The TCM measures the actual solenoid voltages and compares them to calibrated thresholds to identify the following electrical failures:

- Short to ground or open circuit
- Short to battery

WHEN MONITORED

Output stages power supply switched on.

Power supply voltage is greater than a calibrated value.

SET CONDITION

Pressure Regulator Monitoring: A failure is detected if one of the following conditions occur:

An short to ground failure is detected if the ASIC indicates a short to ground failure.

A short to battery or open circuit failure is detected if the ASIC indicates a short to battery or open circuit failure.

Solenoid Monitoring: A failure is detected if one of the following conditions occur:

An short to ground or open circuit failure is detected if the ratio between the voltage at the solenoid valve and the output stages power supply is above a calibrated threshold.

A short to battery failure is detected if the ratio between the voltage at the solenoid valve and the output stages power supply is below a calibrated threshold.

POSSIBLE CAUSES

Possible Causes
(T78) SOLENOID SUPPLY 1 CIRCUIT OPEN
(T78) SOLENOID SUPPLY 1 CIRCUIT SHORTED TO GROUND
(T812) PRESSURE CONTROL SOLENOID - LINE PRESSURE CIRCUIT OPEN
(T812) PRESSURE CONTROL SOLENOID - LINE PRESSURE CIRCUIT SHORTED TO GROUND
(T812) PRESSURE CONTROL SOLENOID - LINE PRESSURE CIRCUIT SHORTED TO VOLTAGE
PRESSURE CONTROL SOLENOID - LINE PRESSURE
TRANSMISSION CONTROL MODULE (TCM)

Always perform the Pre-Diagnostic Troubleshooting procedure before proceeding. Refer to STANDARD PROCEDURE .

DIAGNOSTIC TEST

1. **CHECK IF THE DTC IS CURRENT**
    1. Using the scan tool, read TCM DTCs.
    2. Record the Environmental Data and any DTCs.
    3. Clear DTCs.
    4. Using the recorded Environmental Data, along with the When Monitored and Set Conditions above, operate the vehicle in the conditions that set the DTC.
    5. Read TCM DTCs.

    Did the DTC reset?

    Yes

    - Go To 2

    No

    - Go To 9
2. **CHECK THE PRESSURE CONTROL SOLENOID - LINE PRESSURE**
    1. Turn the Ignition OFF.
    2. Disconnect the Transmission Assembly harness connector.
    3. Measure the resistance of the Pressure Control Solenoid - Line Pressure at the appropriate terminals in the Transmission Assembly interface connector.

    Is the resistance of the Pressure Control Solenoid - Line Pressure 11.0 Ohms ± 1.0 Ohms?

    Yes

    - Go To 3

    No

    - Replace the Pressure Control Solenoid - Line Pressure in accordance with the Service Information.
    - Perform the TRANSMISSION VERIFICATION TEST. Refer to **STANDARD PROCEDURE** .
3. **CHECK THE (T78) SOLENOID SUPPLY 1 CIRCUIT FOR AN OPEN**
    1. Disconnect the TCM harness connector.
    2. Measure the resistance of the (T78) Solenoid Supply 1 circuit between the Transmission Assembly

harness connector and the TCM harness connector.

Is the resistance below 5.0 Ohms?

Yes

- Go To 4

No

- Repair the (T78) Solenoid Supply 1 circuit for an open or high resistance.
- Perform the TRANSMISSION VERIFICATION TEST. Refer to **STANDARD PROCEDURE** .

4. **CHECK THE (T78) SOLENOID SUPPLY 1 CIRCUIT FOR A SHORT TO GROUND**
   1. Measure the resistance between ground and the (T78) Solenoid Supply 1 circuit.

   Is there continuity between ground and the (T78) Solenoid Supply 1 circuit?

   Yes

   - Repair the (T78) Solenoid Supply 1 circuit for a short to ground.
   - Perform the TRANSMISSION VERIFICATION TEST. Refer to **STANDARD PROCEDURE** .

   No

   - Go To 5

5. **CHECK THE (T78) SOLENOID SUPPLY 1 CIRCUIT FOR A SHORT TO ANOTHER CIRCUIT**
   1. Measure the resistance between the (T78) Solenoid Supply 1 circuit and all other circuits in the TCM harness connector.

   Is there continuity between the (T78) Solenoid Supply 1 circuit and any other circuits in the TCM harness connector?

   Yes

   - Repair the (T78) Solenoid Supply 1 circuit for a short to another circuit.
   - Perform the TRANSMISSION VERIFICATION TEST. Refer to **STANDARD PROCEDURE** .

   No

   - Go To 6.

6. **CHECK THE (T812) PRESSURE CONTROL SOLENOID - LINE PRESSURE CIRCUIT FOR**

AN OPEN

1. Measure the resistance of the (T812) Pressure Control Solenoid - Line Pressure circuit between the Transmission Assembly harness connector and the TCM harness connector.

   Is the resistance below 5.0 Ohms?

   Yes

   - Go To 7

   No

   - Repair the (T812) Pressure Control Solenoid - Line Pressure circuit for an open or high resistance.
   - Perform the TRANSMISSION VERIFICATION TEST. Refer to **STANDARD PROCEDURE** .

7. **CHECK THE (T812) PRESSURE CONTROL SOLENOID - LINE PRESSURE CIRCUIT FOR A SHORT TO GROUND**
   1. Measure the resistance between ground and the (T812) Pressure Control Solenoid - Line Pressure circuit.

      Is there continuity between ground and the (T812) Pressure Control Solenoid - Line Pressure circuit?

      Yes

      - Repair the (T812) Pressure Control Solenoid - Line Pressure circuit for a short to ground.
      - Perform the TRANSMISSION VERIFICATION TEST. Refer to **STANDARD PROCEDURE** .

      No

      - Go To 8.

8. **CHECK THE (T812) PRESSURE CONTROL SOLENOID - LINE PRESSURE CIRCUIT FOR A SHORT TO ANOTHER CIRCUIT**
   1. Measure the resistance between the (T812) Pressure Control Solenoid - Line Pressure circuit and all other circuits in the TCM harness connector.

      Is there continuity between the (T812) Pressure Control Solenoid - Line Pressure circuit and any other circuits in the TCM harness connector?

      Yes

      - Repair the (T812) Pressure Control Solenoid - Line Pressure circuit for a short to another circuit.

- Perform the TRANSMISSION VERIFICATION TEST. Refer to **STANDARD PROCEDURE** .

No

NOTE: If this Electronic Control Unit (ECU) is being replaced with a new unit, a diagnostic scan tool MUST be used to align the PROXI configuration data into the new ECU. Follow the routine outlined in the diagnostic scan tool for PROXI Configuration Alignment under Body Control Module (BCM) Miscellaneous Functions menu.

- Using the schematics as a guide, check the Transmission Control Module (TCM) terminals and connectors for corrosion, damage or pushed out terminals. Pay particular attention to the power and ground circuits. If no problems are found, replace the TCM and perform programming and PROXI Configuration Alignment procedures. Refer to **MODULE, TRANSMISSION CONTROL, REMOVAL** .
- Perform the TRANSMISSION VERIFICATION TEST. Refer to **STANDARD PROCEDURE** .

9. **CHECK THE WIRING AND CONNECTORS**
   1. The conditions necessary to set this DTC are not present at this time.
   2. Use the Freeze Frame Data to help duplicate the conditions in which the DTC originally set. Pay particular attention to the DTC set conditions, such as, VSS, MAP, ECT, and Load.
   3. Using the schematics as a guide, visually inspect the related wiring harness. Look for any chafed, pierced, pinched, or partially broken wires.
   4. Visually inspect the related wiring harness connectors. Look for broken, bent, pushed out, or corroded terminals.
   5. Wiggle the wiring and connectors while checking for any possible open or shorted circuits.
   6. Check for any Service Information Tune-ups or Technical Service Bulletins that may apply.

   Were there any problems found?

   Yes

   - Repair as necessary.
   - Perform the TRANSMISSION VERIFICATION TEST. Refer to **STANDARD PROCEDURE** .

   No

   - Test Complete.

P0973-00-SHIFT SOLENOID 1 CONTROL CIRCUIT LOW

For a complete wiring diagram, **refer to appropriate SYSTEM WIRING DIAGRAMS article** .

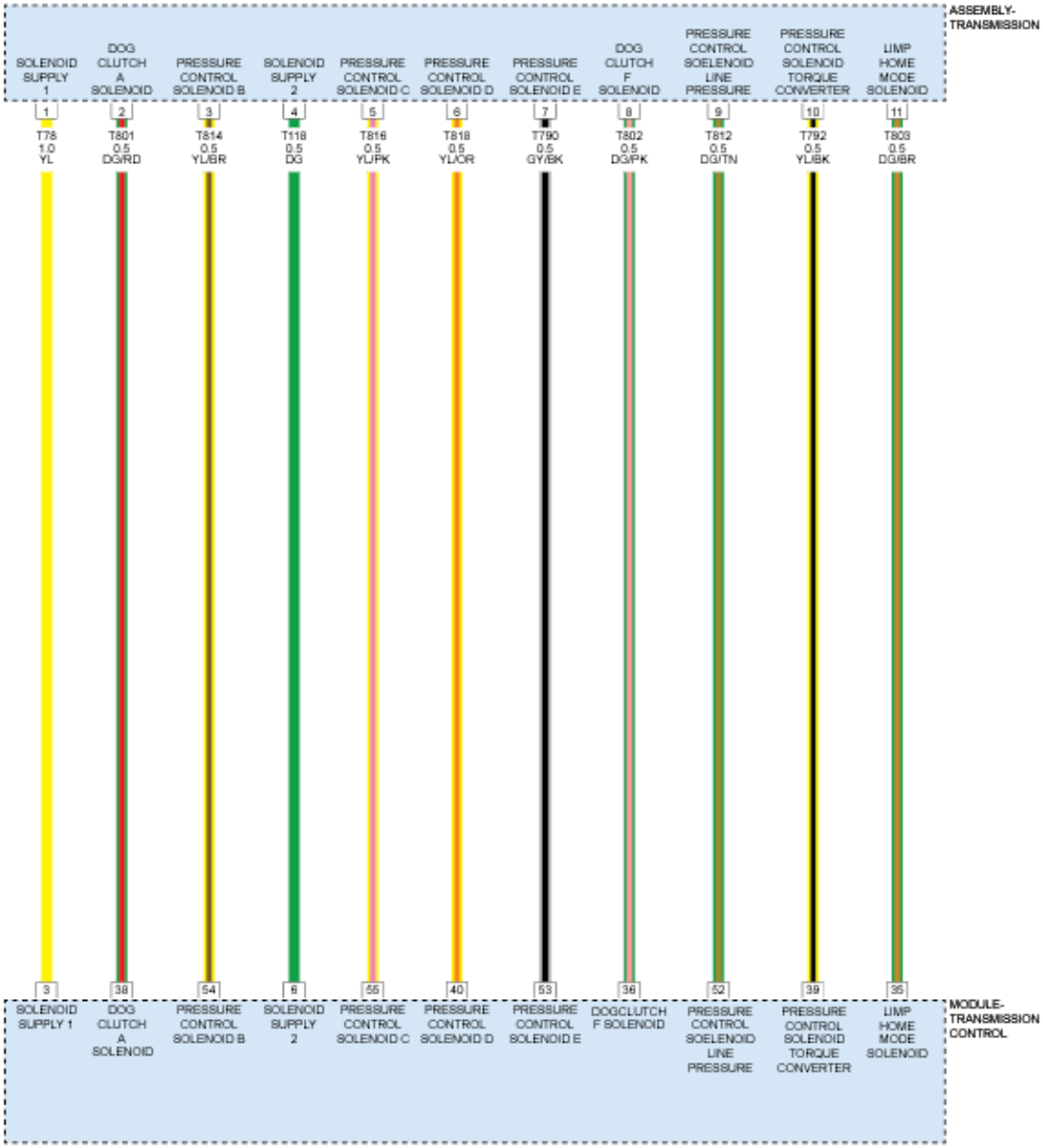

Fig. 26: Pressure Regulators & Solenoids Control Circuit Diagram
Courtesy of CHRYSLER GROUP, LLC

THEORY OF OPERATION

The purpose of the diagnostic is to detect circuit failures on any of the output stages. All output stages are controlled by a current controller that can operate an output stage in two different modes:

- Current controlled mode (pressure regulators)
- Switched mode or PWM controlled (solenoids)

Pressure Regulator Monitoring: The current regulator ASIC in the TCM indicates the following circuit failures via SPI bus to the CPU:

- Short to ground
- Short to battery or open circuit

Solenoid Monitoring: The TCM measures the actual solenoid voltages and compares them to calibrated thresholds to identify the following electrical failures:

- Short to ground or open circuit
- Short to battery

WHEN MONITORED

Output stages power supply switched on.

Power supply voltage is greater than a calibrated value.

SET CONDITION

Pressure Regulator Monitoring: A failure is detected if one of the following conditions occur:

An short to ground failure is detected if the ASIC indicates a short to ground failure.

A short to battery or open circuit failure is detected if the ASIC indicates a short to battery or open circuit failure.

Solenoid Monitoring: A failure is detected if one of the following conditions occur:

An short to ground or open circuit failure is detected if the ratio between the voltage at the solenoid valve and the output stages power supply is above a calibrated threshold.

A short to battery failure is detected if the ratio between the voltage at the solenoid valve and the output stages power supply is below a calibrated threshold.

POSSIBLE CAUSES

Possible Causes
(T78) SOLENOID POWER SUPPLY 1 CIRCUIT OPEN
(T78) SOLENOID POWER SUPPLY 1 CIRCUIT SHORTED TO GROUND
(T801) DOG CLUTCH A SOLENOID CIRCUIT OPEN
(T801) DOG CLUTCH A SOLENOID CIRCUIT SHORTED TO GROUND
(T801) DOG CLUTCH A SOLENOID CIRCUIT SHORTED TO VOLTAGE
DOG CLUTCH A SOLENOID
TRANSMISSION CONTROL MODULE (TCM)

Always perform the Pre-Diagnostic Troubleshooting procedure before proceeding. Refer to STANDARD PROCEDURES .

DIAGNOSTIC TEST

1. **CHECK IF THE DTC IS CURRENT**
    1. Using the scan tool, read TCM DTCs.
    2. Record the Environmental Data and any DTCs.
    3. Clear DTCs.
    4. Using the recorded Environmental Data, along with the When Monitored and Set Conditions above, operate the vehicle in the conditions that set the DTC.
    5. Read TCM DTCs.

    Did the DTC reset?

    Yes

    - Go To 2

    No

    - Go To 9
2. **CHECK THE DOG CLUTCH A SOLENOID**
    1. Turn the Ignition OFF.
    2. Disconnect the Transmission Assembly harness connector.
    3. Measure the resistance of the Dog Clutch A Solenoid at the appropriate terminals in the Transmission Assembly interface connector.

    Is the resistance of the Dog Clutch A Solenoid 11.0 Ohms ± 1.0 Ohms?

    Yes

    - Go To 3

    No

    - Replace the Dog Clutch A Solenoid in accordance with the Service Information.
    - Perform the TRANSMISSION VERIFICATION TEST. Refer to **STANDARD PROCEDURE** .
3. **CHECK THE (T78) SOLENOID SUPPLY 1 CIRCUIT FOR AN OPEN**
    1. Disconnect the TCM harness connector.
    2. Measure the resistance of the (T78) Solenoid Supply 1 circuit between the Transmission Assembly harness connector and the TCM harness connector.

Is the resistance below 5.0 Ohms?

Yes

- Go To 4

No

- Repair the (T78) Solenoid Supply 1 circuit for an open or high resistance.
- Perform the TRANSMISSION VERIFICATION TEST. Refer to **STANDARD PROCEDURE** .

4. **CHECK THE (T78) SOLENOID SUPPLY 1 CIRCUIT FOR A SHORT TO GROUND**
   1. Measure the resistance between ground and the (T78) Solenoid Supply 1 circuit.

      Is there continuity between ground and the (T78) Solenoid Supply 1 circuit?

      Yes

      - Repair the (T78) Solenoid Supply 1 circuit for a short to ground.
      - Perform the TRANSMISSION VERIFICATION TEST. Refer to **STANDARD PROCEDURE** .

      No

      - Go To 5

5. **CHECK THE (T78) SOLENOID SUPPLY 1 CIRCUIT FOR A SHORT TO ANOTHER CIRCUIT**
   1. Measure the resistance between the (T78) Solenoid Supply 1 circuit and all other circuits in the TCM harness connector.

      Is there continuity between the (T78) Solenoid Supply 1 circuit and any other circuits in the TCM harness connector?

      Yes

      - Repair the (T78) Solenoid Supply 1 circuit for a short to another circuit.
      - Perform the TRANSMISSION VERIFICATION TEST. Refer to **STANDARD PROCEDURE** .

      No

      - Go To 6.

6. **CHECK THE (T801) DOG CLUTCH A SOLENOID CIRCUIT FOR AN OPEN**
   1. Measure the resistance of the (T801) Dog Clutch A Solenoid circuit between the Transmission Assembly harness connector and the TCM harness connector.

Is the resistance below 5.0 Ohms?

Yes

- Go To 7

No

- Repair the (T801) Dog Clutch A Solenoid circuit for an open or high resistance.
- Perform the TRANSMISSION VERIFICATION TEST. Refer to **STANDARD PROCEDURE** .

7. **CHECK THE (T801) DOG CLUTCH A SOLENOID CIRCUIT FOR A SHORT TO GROUND**
   1. Measure the resistance between ground and the (T801) Dog Clutch A Solenoid circuit.

      Is there continuity between ground and the (T801) Dog Clutch A Solenoid circuit?

      Yes

      - Repair the (T801) Dog Clutch A Solenoid circuit for a short to ground.
      - Perform the TRANSMISSION VERIFICATION TEST. Refer to **STANDARD PROCEDURE** .

      No

      - Go To 8.

8. **CHECK THE (T801) DOG CLUTCH A SOLENOID CIRCUIT FOR A SHORT TO ANOTHER CIRCUIT**
   1. Measure the resistance between the (T801) Dog Clutch A Solenoid circuit and all other circuits in the TCM harness connector.

      Is there continuity between the (T801) Dog Clutch A Solenoid circuit and any other circuits in the TCM harness connector?

      Yes

      - Repair the (T801) Dog Clutch A Solenoid circuit for a short to another circuit.
      - Perform the TRANSMISSION VERIFICATION TEST. Refer to **STANDARD PROCEDURE** .

      No

      NOTE: **If this Electronic Control Unit (ECU) is being replaced with a new unit, a diagnostic scan tool MUST be used to align the PROXI configuration data into the new ECU. Follow the routine outlined in**

the diagnostic scan tool for PROXI Configuration Alignment under Body Control Module (BCM) Miscellaneous Functions menu.

- Using the schematics as a guide, check the Transmission Control Module (TCM) terminals and connectors for corrosion, damage or pushed out terminals. Pay particular attention to the power and ground circuits. If no problems are found, replace the TCM and perform programming and PROXI Configuration Alignment procedures. Refer to **MODULE, TRANSMISSION CONTROL, REMOVAL** .
- Perform the TRANSMISSION VERIFICATION TEST. Refer to **STANDARD PROCEDURE** .

9. **CHECK THE WIRING AND CONNECTORS**
   1. The conditions necessary to set this DTC are not present at this time.
   2. Use the Freeze Frame Data to help duplicate the conditions in which the DTC originally set. Pay particular attention to the DTC set conditions, such as, VSS, MAP, ECT, and Load.
   3. Using the schematics as a guide, visually inspect the related wiring harness. Look for any chafed, pierced, pinched, or partially broken wires.
   4. Visually inspect the related wiring harness connectors. Look for broken, bent, pushed out, or corroded terminals.
   5. Wiggle the wiring and connectors while checking for any possible open or shorted circuits.
   6. Check for any Service Information Tune-ups or Technical Service Bulletins that may apply.

   Were there any problems found?

   Yes

   - Repair as necessary.
   - Perform the TRANSMISSION VERIFICATION TEST. Refer to **STANDARD PROCEDURE** .

   No

   - Test Complete.

P0974-00-SHIFT SOLENOID 1 CONTROL CIRCUIT HIGH

For a complete wiring diagram, **refer to appropriate SYSTEM WIRING DIAGRAMS article** .

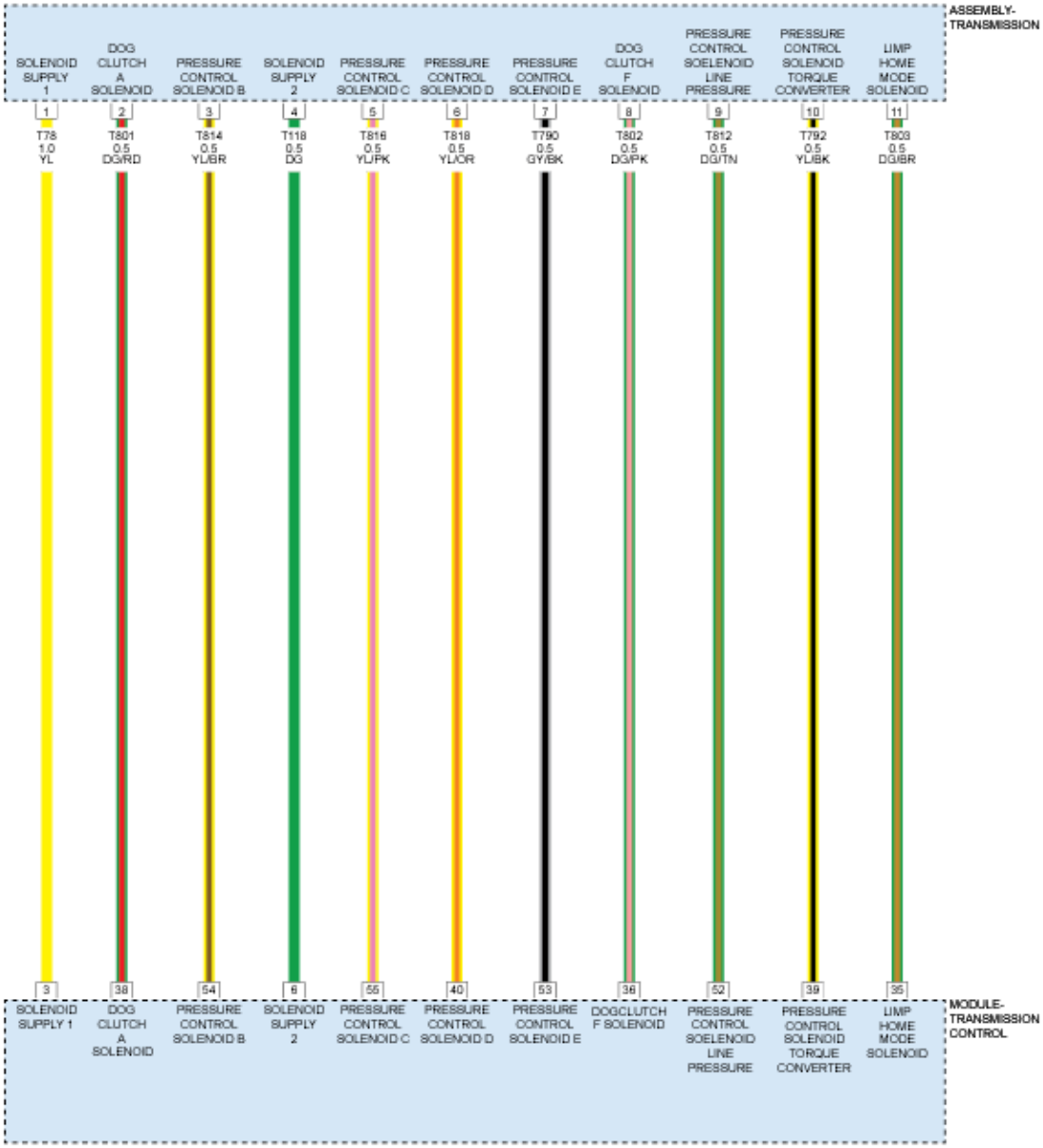

Fig. 27: Pressure Regulators & Solenoids Control Circuit Diagram
Courtesy of CHRYSLER GROUP, LLC

THEORY OF OPERATION

The purpose of the diagnostic is to detect circuit failures on any of the output stages. All output stages are controlled by a current controller that can operate an output stage in two different modes:

- Current controlled mode (pressure regulators)
- Switched mode or PWM controlled (solenoids)

Pressure Regulator Monitoring: The current regulator ASIC in the TCM indicates the following circuit failures via SPI bus to the CPU:

- Short to ground
- Short to battery or open circuit

Solenoid Monitoring: The TCM measures the actual solenoid voltages and compares them to calibrated thresholds to identify the following electrical failures:

- Short to ground or open circuit
- Short to battery

WHEN MONITORED

Output stages power supply switched on.

Power supply voltage is greater than a calibrated value.

SET CONDITION

Pressure Regulator Monitoring: A failure is detected if one of the following conditions occur:

An short to ground failure is detected if the ASIC indicates a short to ground failure.

A short to battery or open circuit failure is detected if the ASIC indicates a short to battery or open circuit failure.

Solenoid Monitoring: A failure is detected if one of the following conditions occur:

An short to ground or open circuit failure is detected if the ratio between the voltage at the solenoid valve and the output stages power supply is above a calibrated threshold.

A short to battery failure is detected if the ratio between the voltage at the solenoid valve and the output stages power supply is below a calibrated threshold.

POSSIBLE CAUSES

Possible Causes
(T78) SOLENOID POWER SUPPLY 1 CIRCUIT OPEN
(T78) SOLENOID POWER SUPPLY 1 CIRCUIT SHORTED TO GROUND
(T801) DOG CLUTCH A SOLENOID CIRCUIT OPEN
(T801) DOG CLUTCH A SOLENOID CIRCUIT SHORTED TO GROUND
(T801) DOG CLUTCH A SOLENOID CIRCUIT SHORTED TO VOLTAGE
DOG CLUTCH A SOLENOID
TRANSMISSION CONTROL MODULE (TCM)

Always perform the Pre-Diagnostic Troubleshooting procedure before proceeding. Refer to STANDARD PROCEDURES .

DIAGNOSTIC TEST

1. **CHECK IF THE DTC IS CURRENT**
    1. Using the scan tool, read TCM DTCs.
    2. Record the Environmental Data and any DTCs.
    3. Clear DTCs.
    4. Using the recorded Environmental Data, along with the When Monitored and Set Conditions above, operate the vehicle in the conditions that set the DTC.
    5. Read TCM DTCs.

    Did the DTC reset?

    Yes

    - Go To 2

    No

    - Go To 9
2. **CHECK THE DOG CLUTCH A SOLENOID**
    1. Turn the Ignition OFF.
    2. Disconnect the Transmission Assembly harness connector.
    3. Measure the resistance of the Dog Clutch A Solenoid at the appropriate terminals in the Transmission Assembly interface connector.

    Is the resistance of the Dog Clutch A Solenoid 11.0 Ohms ± 1.0 Ohms?

    Yes

    - Go To 3

    No

    - Replace the Dog Clutch A Solenoid in accordance with the Service Information.
    - Perform the TRANSMISSION VERIFICATION TEST. Refer to **STANDARD PROCEDURE** .
3. **CHECK THE (T78) SOLENOID SUPPLY 1 CIRCUIT FOR AN OPEN**
    1. Disconnect the TCM harness connector.
    2. Measure the resistance of the (T78) Solenoid Supply 1 circuit between the Transmission Assembly harness connector and the TCM harness connector.

Is the resistance below 5.0 Ohms?

Yes

- Go To 4

No

- Repair the (T78) Solenoid Supply 1 circuit for an open or high resistance.
- Perform the TRANSMISSION VERIFICATION TEST. Refer to **STANDARD PROCEDURE** .

4. **CHECK THE (T78) SOLENOID SUPPLY 1 CIRCUIT FOR A SHORT TO GROUND**
   1. Measure the resistance between ground and the (T78) Solenoid Supply 1 circuit.

      Is there continuity between ground and the (T78) Solenoid Supply 1 circuit?

      Yes

      - Repair the (T78) Solenoid Supply 1 circuit for a short to ground.
      - Perform the TRANSMISSION VERIFICATION TEST. Refer to **STANDARD PROCEDURE** .

      No

      - Go To 5

5. **CHECK THE (T78) SOLENOID SUPPLY 1 CIRCUIT FOR A SHORT TO ANOTHER CIRCUIT**
   1. Measure the resistance between the (T78) Solenoid Supply 1 circuit and all other circuits in the TCM harness connector.

      Is there continuity between the (T78) Solenoid Supply 1 circuit and any other circuits in the TCM harness connector?

      Yes

      - Repair the (T78) Solenoid Supply 1 circuit for a short to another circuit.
      - Perform the TRANSMISSION VERIFICATION TEST. Refer to **STANDARD PROCEDURE** .

      No

      - Go To 6.

6. **CHECK THE (T801) DOG CLUTCH A SOLENOID CIRCUIT FOR AN OPEN**
   1. Measure the resistance of the (T801) Dog Clutch A Solenoid circuit between the Transmission Assembly harness connector and the TCM harness connector.

Is the resistance below 5.0 Ohms?

Yes

- Go To 7

No

- Repair the (T801) Dog Clutch A Solenoid circuit for an open or high resistance.
- Perform the TRANSMISSION VERIFICATION TEST. Refer to **STANDARD PROCEDURE** .

7. **CHECK THE (T801) DOG CLUTCH A SOLENOID CIRCUIT FOR A SHORT TO GROUND**
   1. Measure the resistance between ground and the (T801) Dog Clutch A Solenoid circuit.

      Is there continuity between ground and the (T801) Dog Clutch A Solenoid circuit?

      Yes

      - Repair the (T801) Dog Clutch A Solenoid circuit for a short to ground.
      - Perform the TRANSMISSION VERIFICATION TEST. Refer to **STANDARD PROCEDURE** .

      No

      - Go To 8.

8. **CHECK THE (T801) DOG CLUTCH A SOLENOID CIRCUIT FOR A SHORT TO ANOTHER CIRCUIT**
   1. Measure the resistance between the (T801) Dog Clutch A Solenoid circuit and all other circuits in the TCM harness connector.

      Is there continuity between the (T801) Dog Clutch A Solenoid circuit and any other circuits in the TCM harness connector?

      Yes

      - Repair the (T801) Dog Clutch A Solenoid circuit for a short to another circuit.
      - Perform the TRANSMISSION VERIFICATION TEST. Refer to **STANDARD PROCEDURE** .

      No

      NOTE: **If this Electronic Control Unit (ECU) is being replaced with a new unit, a diagnostic scan tool MUST be used to align the PROXI configuration data into the new ECU. Follow the routine outlined in**

the diagnostic scan tool for PROXI Configuration Alignment under Body Control Module (BCM) Miscellaneous Functions menu.

- Using the schematics as a guide, check the Transmission Control Module (TCM) terminals and connectors for corrosion, damage or pushed out terminals. Pay particular attention to the power and ground circuits. If no problems are found, replace the TCM and perform programming and PROXI Configuration Alignment procedures. Refer to **MODULE, TRANSMISSION CONTROL, REMOVAL** .
- Perform the TRANSMISSION VERIFICATION TEST. Refer to **STANDARD PROCEDURE** .

9. **CHECK THE WIRING AND CONNECTORS**
   1. The conditions necessary to set this DTC are not present at this time.
   2. Use the Freeze Frame Data to help duplicate the conditions in which the DTC originally set. Pay particular attention to the DTC set conditions, such as, VSS, MAP, ECT, and Load.
   3. Using the schematics as a guide, visually inspect the related wiring harness. Look for any chafed, pierced, pinched, or partially broken wires.
   4. Visually inspect the related wiring harness connectors. Look for broken, bent, pushed out, or corroded terminals.
   5. Wiggle the wiring and connectors while checking for any possible open or shorted circuits.
   6. Check for any Service Information Tune-ups or Technical Service Bulletins that may apply.

   Were there any problems found?

   Yes

   - Repair as necessary.
   - Perform the TRANSMISSION VERIFICATION TEST. Refer to **STANDARD PROCEDURE** .

   No

   - Test Complete.

P0975-00-SHIFT SOLENOID B CONTROL CIRCUIT PERFORMANCE

For a complete wiring diagram, **refer to appropriate SYSTEM WIRING DIAGRAMS article** .

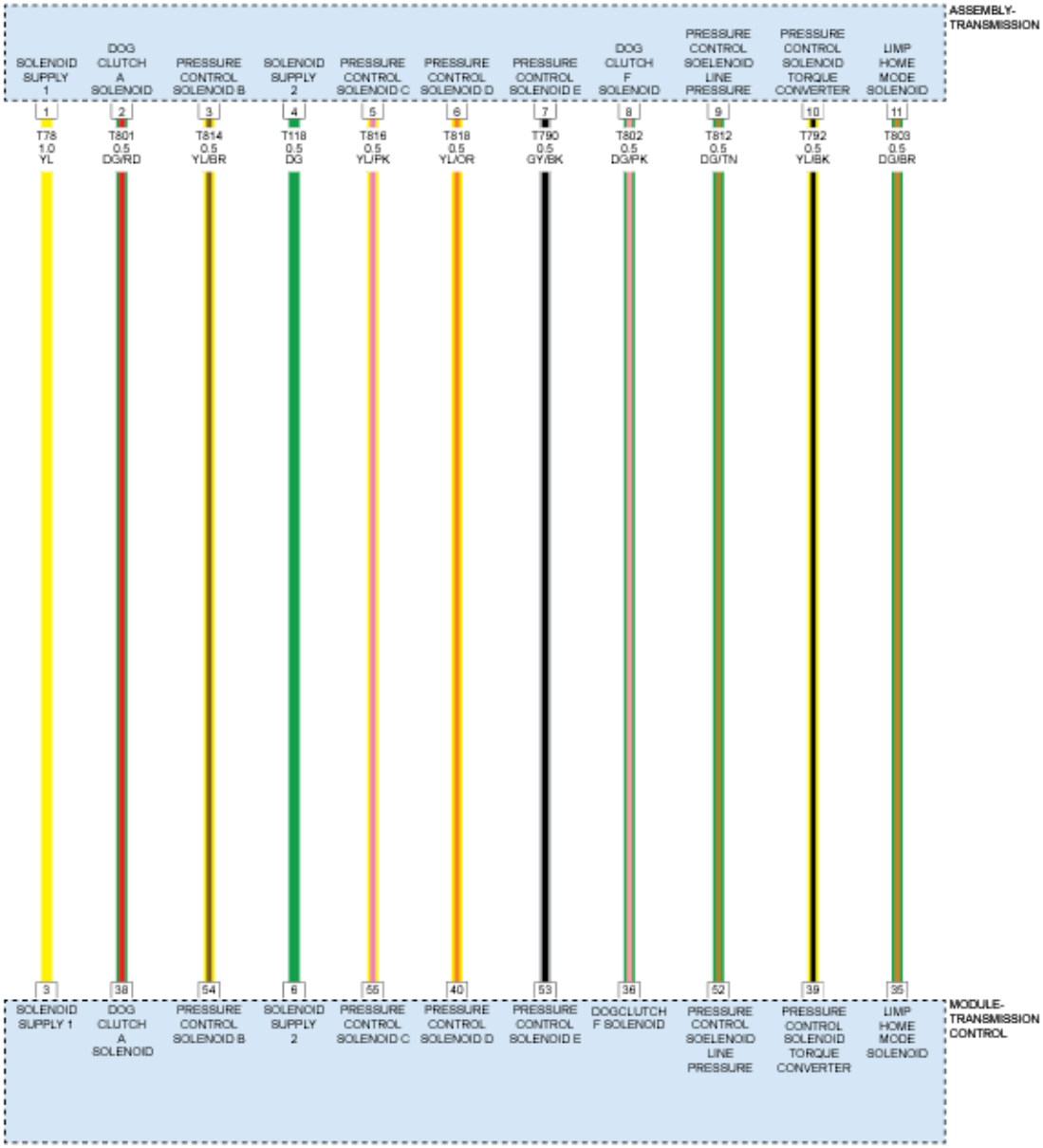

Fig. 28: Pressure Regulators & Solenoids Control Circuit Diagram
Courtesy of CHRYSLER GROUP, LLC

THEORY OF OPERATION

The purpose of the diagnostic is to detect a functional failure of the pressure regulator output stages in the TCM. The diagnostic monitors for an incorrect current feed to the pressure regulators which control the friction clutches. The monitoring is performed using two independent methods of comparing the commanded current to the measured current.

Current Summation Check: The sum current (total current of pressure regulators B, C, D, E) is measured using a shunt resistor. The measured value is compared to the summed commanded currents of pressure

regulators B, C, D, E (Sum Current Calculation).

PWM Feedback Signal Check: The pulse width modulation (PWM) feedback signal generated by the current regulator in the output stage identifies a deviating output current for each current regulator. To perform a functional check of the output stage current, the TCM calculates the actual current based upon the PWM feedback signal, the output stage power supply voltage and the resistance of the corresponding pressure regulator. This calculated current is compared to the commanded current from the current regulator.

WHEN MONITORED

Continuously after the ignition switch is turned to the run position.

All commanded solenoid currents are greater than zero.

SET CONDITION

Current Summation Check: The failure is detected if the calculated current summation deviates from the commanded current summation by a calibrated amount. The difference is compared to positive and negative calibrated thresholds.

PWM Feedback Signal Check: The failure is detected if the calculated pressure regulator current deviates from the commanded current by a calibrated amount. The difference is compared to positive and negative calibrated thresholds.

POSSIBLE CAUSES

Possible Causes
(T118) SOLENOID SUPPLY 2 CIRCUIT OPEN
(T118) SOLENOID SUPPLY 2 CIRCUIT SHORTED TO GROUND
(T814) PRESSURE CONTROL SOLENOID B CIRCUIT OPEN
(T814) PRESSURE CONTROL SOLENOID B CIRCUIT SHORTED TO GROUND
PRESSURE CONTROL SOLENOID B
TRANSMISSION CONTROL MODULE (TCM)

Always perform the Pre-Diagnostic Troubleshooting procedure before proceeding. Refer to STANDARD PROCEDURE .

DIAGNOSTIC TEST

1. **CHECK IF THE DTC IS CURRENT**
    1. Using the scan tool, read TCM DTCs.
    2. Record the Environmental Data and any DTCs.
    3. Clear DTCs.
    4. Using the recorded Environmental Data, along with the When Monitored and Set Conditions above, operate the vehicle in the conditions that set the DTC.

5. Read TCM DTCs.

   Did the DTC reset?

   Yes

   - Go To 2

   No

   - Go To 9

2. **CHECK THE PRESSURE CONTROL SOLENOID B**
   1. Turn the Ignition OFF.
   2. Disconnect the Transmission Assembly harness connector.
   3. Measure the resistance of the Pressure Control Solenoid B at the appropriate terminals in the Transmission Assembly interface connector.

      Is the resistance of the Pressure Control Solenoid B 5.4 Ohms ± 0.5 Ohms?

      Yes

      - Go To 3

      No

      - Replace the Pressure Control Solenoid B in accordance with the service information.
      - Perform the TRANSMISSION VERIFICATION TEST. Refer to **STANDARD PROCEDURE** .

3. **CHECK THE (T118) SOLENOID SUPPLY 2 CIRCUIT FOR AN OPEN**
   1. Disconnect the TCM harness connector.
   2. Measure the resistance of the (T118) Solenoid Supply 2 circuit between the Transmission Assembly harness connector and the TCM harness connector.

      Is the resistance below 5.0 Ohms?

      Yes

      - Go To 4

      No

      - Repair the (T118) Solenoid Supply 2 circuit for an open or high resistance.
      - Perform the TRANSMISSION VERIFICATION TEST. Refer to **STANDARD PROCEDURE** .

4. **CHECK THE (T118) SOLENOID SUPPLY 2 CIRCUIT FOR A SHORT TO GROUND**
   1. Measure the resistance between ground and the (T118) Solenoid Supply 2 circuit.

      Is there continuity between ground and the (T118) Solenoid Supply 2 circuit?

      Yes

      - Repair the (T118) Solenoid Supply 2 circuit for a short to ground.
      - Perform the TRANSMISSION VERIFICATION TEST. Refer to **STANDARD PROCEDURE** .

      No

      - Go To 5
5. **CHECK THE (T118) SOLENOID SUPPLY 2 CIRCUIT FOR A SHORT TO ANOTHER CIRCUIT**
   1. Measure the resistance between the (T118) Solenoid Supply 2 circuit and all other circuits in the TCM harness connector.

      Is there continuity between the (T118) Solenoid Supply 2 circuit and any other circuits in the TCM harness connector?

      Yes

      - Repair the (T118) Solenoid Supply 2 circuit for a short to another circuit.
      - Perform the TRANSMISSION VERIFICATION TEST. Refer to **STANDARD PROCEDURE** .

      No

      - Go To 6.
6. **CHECK THE (T814) PRESSURE CONTROL SOLENOID B CIRCUIT FOR AN OPEN**
   1. Measure the resistance of the (T814) Pressure Control Solenoid B circuit between the Transmission Assembly harness connector and the TCM harness connector.

      Is the resistance below 5.0 Ohms?

      Yes

      - Go To 7

      No

      - Repair the (T814) Pressure Control Solenoid B circuit for an open or high resistance.

- Perform the TRANSMISSION VERIFICATION TEST. Refer to **STANDARD PROCEDURE** .

7. **CHECK THE (T814) PRESSURE CONTROL SOLENOID B CIRCUIT FOR A SHORT TO GROUND**
   1. Measure the resistance between ground and the (T814) Pressure Control Solenoid B circuit.

      Is there continuity between ground and the (T814) Pressure Control Solenoid B circuit?

      Yes

      - Repair the (T814) Pressure Control Solenoid B circuit for a short to ground.
      - Perform the TRANSMISSION VERIFICATION TEST. Refer to **STANDARD PROCEDURE** .

      No

      - Go To 8.

8. **CHECK THE (T814) PRESSURE CONTROL SOLENOID B CIRCUIT FOR A SHORT TO ANOTHER CIRCUIT**
   1. Measure the resistance between the (T814) Pressure Control Solenoid B circuit and all other circuits in the TCM harness connector.

      Is there continuity between the (T814) Pressure Control Solenoid B circuit and any other circuits in the TCM harness connector?

      Yes

      - Repair the (T814) Pressure Control Solenoid B circuit for a short to another circuit.
      - Perform the TRANSMISSION VERIFICATION TEST. Refer to **STANDARD PROCEDURE** .

      No

      NOTE: If this Electronic Control Unit (ECU) is being replaced with a new unit, a diagnostic scan tool MUST be used to align the PROXI configuration data into the new ECU. Follow the routine outlined in the diagnostic scan tool for PROXI Configuration Alignment under Body Control Module (BCM) Miscellaneous Functions menu.

      - Using the schematics as a guide, check the Transmission Control Module (TCM) terminals and connectors for corrosion, damage or pushed out terminals. Pay particular attention to the power and ground circuits. If no problems are found, replace the TCM and perform programming and PROXI Configuration Alignment procedures. Refer to **MODULE, TRANSMISSION CONTROL, REMOVAL** .

- Perform the TRANSMISSION VERIFICATION TEST. Refer to **STANDARD PROCEDURE** .

9. **CHECK THE WIRING AND CONNECTORS**
    1. The conditions necessary to set this DTC are not present at this time.
    2. Use the Freeze Frame Data to help duplicate the conditions in which the DTC originally set. Pay particular attention to the DTC set conditions, such as, VSS, MAP, ECT, and Load.
    3. Using the schematics as a guide, visually inspect the related wiring harness. Look for any chafed, pierced, pinched, or partially broken wires.
    4. Visually inspect the related wiring harness connectors. Look for broken, bent, pushed out, or corroded terminals.
    5. Wiggle the wiring and connectors while checking for any possible open or shorted circuits.
    6. Check for any Service Information Tune-ups or Technical Service Bulletins that may apply.

    Were there any problems found?

    Yes

    - Repair as necessary.
    - Perform the TRANSMISSION VERIFICATION TEST. Refer to **STANDARD PROCEDURE** .

    No

    - Test Complete.

P0976-00-SHIFT SOLENOID 2 CONTROL CIRCUIT LOW

For a complete wiring diagram, **refer to appropriate SYSTEM WIRING DIAGRAMS article** .

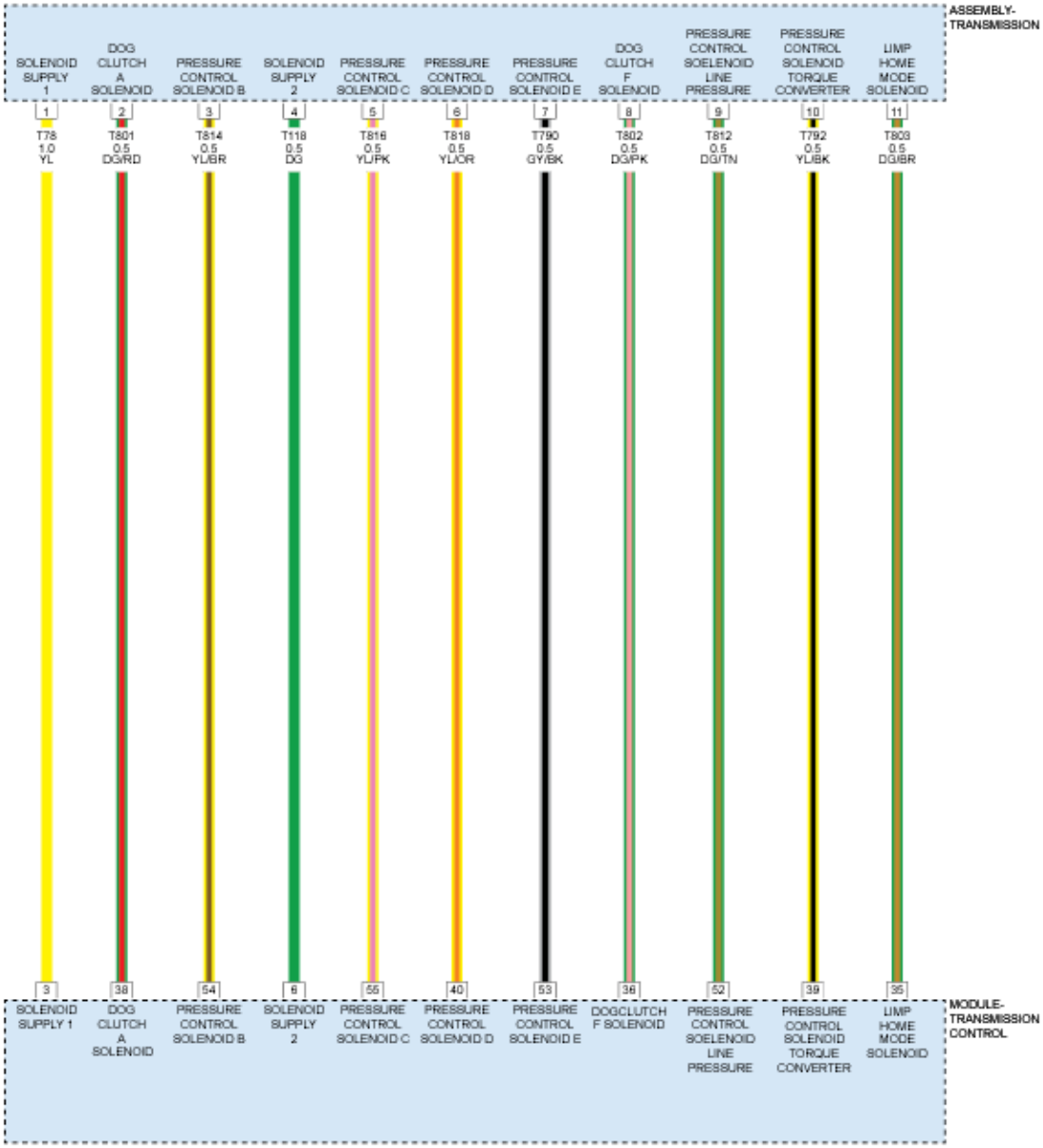

Fig. 29: Pressure Regulators & Solenoids Control Circuit Diagram
Courtesy of CHRYSLER GROUP, LLC

THEORY OF OPERATION

The purpose of the diagnostic is to detect circuit failures on any of the output stages. All output stages are controlled by a current controller that can operate an output stage in two different modes:

- Current controlled mode (pressure regulators)
- Switched mode or PWM controlled (solenoids)

Pressure Regulator Monitoring: The current regulator ASIC in the TCM indicates the following circuit failures via SPI bus to the CPU:

- Short to ground
- Short to battery or open circuit

Solenoid Monitoring: The TCM measures the actual solenoid voltages and compares them to calibrated thresholds to identify the following electrical failures:

- Short to ground or open circuit
- Short to battery

WHEN MONITORED

Output stages power supply switched on.

Power supply voltage is greater than a calibrated value.

SET CONDITION

Pressure Regulator Monitoring: A failure is detected if one of the following conditions occur:

An short to ground failure is detected if the ASIC indicates a short to ground failure.

A short to battery or open circuit failure is detected if the ASIC indicates a short to battery or open circuit failure.

Solenoid Monitoring: A failure is detected if one of the following conditions occur:

An short to ground or open circuit failure is detected if the ratio between the voltage at the solenoid valve and the output stages power supply is above a calibrated threshold.

A short to battery failure is detected if the ratio between the voltage at the solenoid valve and the output stages power supply is below a calibrated threshold.

POSSIBLE CAUSES

Possible Causes
(T118) SOLENOID SUPPLY 2 CIRCUIT OPEN
(T118) SOLENOID SUPPLY 2 CIRCUIT SHORTED TO GROUND
(T814) PRESSURE CONTROL SOLENOID B CIRCUIT OPEN
(T814) PRESSURE CONTROL SOLENOID B CIRCUIT SHORTED TO GROUND
(T814) PRESSURE CONTROL SOLENOID B CIRCUIT SHORTED TO VOLTAGE
PRESSURE CONTROL SOLENOID B
TRANSMISSION CONTROL MODULE (TCM)

Always perform the Pre-Diagnostic Troubleshooting procedure before proceeding. Refer to STANDARD PROCEDURE .

DIAGNOSTIC TEST

1. **CHECK IF THE DTC IS CURRENT**
    1. Using the scan tool, read TCM DTCs.
    2. Record the Environmental Data and any DTCs.
    3. Clear DTCs.
    4. Using the recorded Environmental Data, along with the When Monitored and Set Conditions above, operate the vehicle in the conditions that set the DTC.
    5. Read TCM DTCs.

    Did the DTC reset?

    Yes

    - Go To 2

    No

    - Go To 9
2. **CHECK THE PRESSURE CONTROL SOLENOID B**
    1. Turn the Ignition OFF.
    2. Disconnect the Transmission Assembly harness connector.
    3. Measure the resistance of the Pressure Control Solenoid B at the appropriate terminals in the Transmission Assembly interface connector.

    Is the resistance of the Pressure Control Solenoid B 5.4 Ohms ± 0.5 Ohms?

    Yes

    - Go To 3

    No

    - Replace the Pressure Control Solenoid B in accordance with the service information.
    - Perform the TRANSMISSION VERIFICATION TEST. Refer to **STANDARD PROCEDURE** .
3. **CHECK THE (T118) SOLENOID SUPPLY 2 CIRCUIT FOR AN OPEN**
    1. Disconnect the TCM harness connector.
    2. Measure the resistance of the (T118) Solenoid Supply 2 circuit between the Transmission Assembly harness connector and the TCM harness connector.

Is the resistance below 5.0 Ohms?

Yes

- Go To 4

No

- Repair the (T118) Solenoid Supply 2 circuit for an open or high resistance.
- Perform the TRANSMISSION VERIFICATION TEST. Refer to **STANDARD PROCEDURE** .

4. **CHECK THE (T118) SOLENOID SUPPLY 2 CIRCUIT FOR A SHORT TO GROUND**
   1. Measure the resistance between ground and the (T118) Solenoid Supply 2 circuit.

      Is there continuity between ground and the (T118) Solenoid Supply 2 circuit?

      Yes

      - Repair the (T118) Solenoid Supply 2 circuit for a short to ground.
      - Perform the TRANSMISSION VERIFICATION TEST. Refer to **STANDARD PROCEDURE** .

      No

      - Go To 5

5. **CHECK THE (T118) SOLENOID SUPPLY 2 CIRCUIT FOR A SHORT TO ANOTHER CIRCUIT**
   1. Measure the resistance between the (T118) Solenoid Supply 2 circuit and all other circuits in the TCM harness connector.

      Is there continuity between the (T118) Solenoid Supply 2 circuit and any other circuits in the TCM harness connector?

      Yes

      - Repair the (T118) Solenoid Supply 2 circuit for a short to another circuit.
      - Perform the TRANSMISSION VERIFICATION TEST. Refer to **STANDARD PROCEDURE** .

      No

      - Go To 6.

6. **CHECK THE (T814) PRESSURE CONTROL SOLENOID B CIRCUIT FOR AN OPEN**
   1. Measure the resistance of the (T814) Pressure Control Solenoid B circuit between the Transmission

Assembly harness connector and the TCM harness connector.

Is the resistance below 5.0 Ohms?

Yes

- Go To 7

No

- Repair the (T814) Pressure Control Solenoid B circuit for an open or high resistance.
- Perform the TRANSMISSION VERIFICATION TEST. Refer to **STANDARD PROCEDURE** .

7. **CHECK THE (T814) PRESSURE CONTROL SOLENOID B CIRCUIT FOR A SHORT TO GROUND**
   1. Measure the resistance between ground and the (T814) Pressure Control Solenoid B circuit.

      Is there continuity between ground and the (T814) Pressure Control Solenoid B circuit?

      Yes

      - Repair the (T814) Pressure Control Solenoid B circuit for a short to ground.
      - Perform the TRANSMISSION VERIFICATION TEST. Refer to **STANDARD PROCEDURE** .

      No

      - Go To 8.
8. **CHECK THE (T814) PRESSURE CONTROL SOLENOID B CIRCUIT FOR A SHORT TO ANOTHER CIRCUIT**
   1. Measure the resistance between the (T814) Pressure Control Solenoid B circuit and all other circuits in the TCM harness connector.

      Is there continuity between the (T814) Pressure Control Solenoid B circuit and any other circuits in the TCM harness connector?

      Yes

      - Repair the (T814) Pressure Control Solenoid B circuit for a short to another circuit.
      - Perform the TRANSMISSION VERIFICATION TEST. Refer to **STANDARD PROCEDURE** .

      No

NOTE: **If this Electronic Control Unit (ECU) is being replaced with a new unit, a diagnostic scan tool MUST be used to align the PROXI configuration data into the new ECU. Follow the routine outlined in the diagnostic scan tool for PROXI Configuration Alignment under Body Control Module (BCM) Miscellaneous Functions menu.**

- Using the schematics as a guide, check the Transmission Control Module (TCM) terminals and connectors for corrosion, damage or pushed out terminals. Pay particular attention to the power and ground circuits. If no problems are found, replace the TCM and perform programming and PROXI Configuration Alignment procedures. Refer to **MODULE, TRANSMISSION CONTROL, REMOVAL** .
- Perform the TRANSMISSION VERIFICATION TEST. Refer to **STANDARD PROCEDURE** .

9. **CHECK THE WIRING AND CONNECTORS**
   1. The conditions necessary to set this DTC are not present at this time.
   2. Use the Freeze Frame Data to help duplicate the conditions in which the DTC originally set. Pay particular attention to the DTC set conditions, such as, VSS, MAP, ECT, and Load.
   3. Using the schematics as a guide, visually inspect the related wiring harness. Look for any chafed, pierced, pinched, or partially broken wires.
   4. Visually inspect the related wiring harness connectors. Look for broken, bent, pushed out, or corroded terminals.
   5. Wiggle the wiring and connectors while checking for any possible open or shorted circuits.
   6. Check for any Service Information Tune-ups or Technical Service Bulletins that may apply.

   Were there any problems found?

   Yes

   - Repair as necessary.
   - Perform the TRANSMISSION VERIFICATION TEST. Refer to **STANDARD PROCEDURE** .

   No

   - Test Complete.

P0978-00-SHIFT SOLENOID 3 CONTROL CIRCUIT RANGE-PERFORMANCE

For a complete wiring diagram, **refer to appropriate SYSTEM WIRING DIAGRAMS article** .

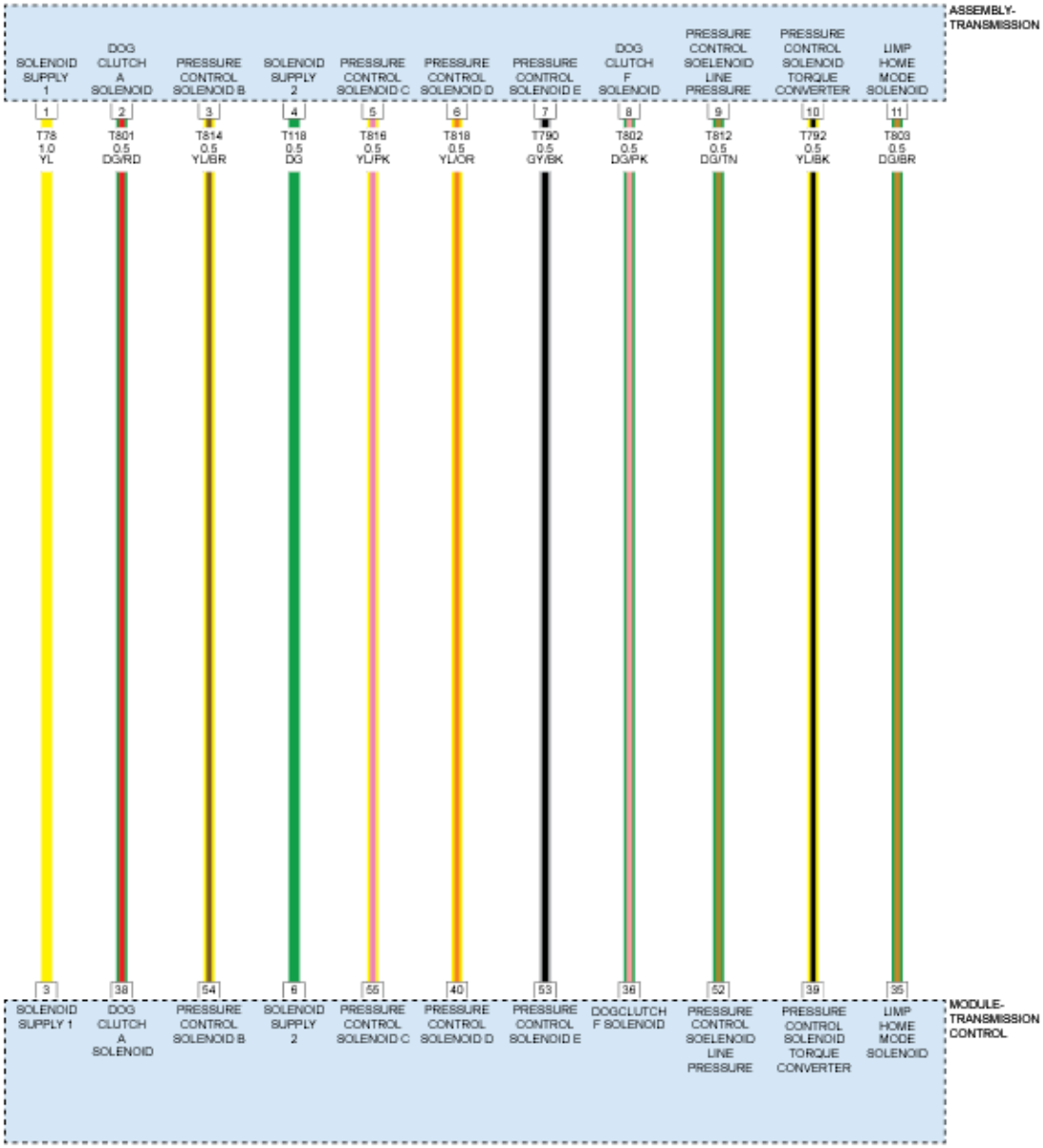

Fig. 30: Pressure Regulators & Solenoids Control Circuit Diagram
Courtesy of CHRYSLER GROUP, LLC

THEORY OF OPERATION

The purpose of the diagnostic is to detect a functional failure of the pressure regulator output stages in the TCM. The diagnostic monitors for an incorrect current feed to the pressure regulators which control the friction clutches. The monitoring is performed using two independent methods of comparing the commanded current to the measured current.

Current Summation Check: The sum current (total current of pressure regulators B, C, D, E) is measured using a shunt resistor. The measured value is compared to the summed commanded currents of pressure

regulators B, C, D, E (Sum Current Calculation).

PWM Feedback Signal Check: The pulse width modulation (PWM) feedback signal generated by the current regulator in the output stage identifies a deviating output current for each current regulator. To perform a functional check of the output stage current, the TCM calculates the actual current based upon the PWM feedback signal, the output stage power supply voltage and the resistance of the corresponding pressure regulator. This calculated current is compared to the commanded current from the current regulator.

WHEN MONITORED

Continuously after the ignition switch is turned to the run position.

All commanded solenoid currents are greater than zero.

SET CONDITION

Current Summation Check: The failure is detected if the calculated current summation deviates from the commanded current summation by a calibrated amount. The difference is compared to positive and negative calibrated thresholds.

PWM Feedback Signal Check : The failure is detected if the calculated pressure regulator current deviates from the commanded current by a calibrated amount. The difference is compared to positive and negative calibrated thresholds.

POSSIBLE CAUSES

Possible Causes
(T118) SOLENOID SUPPLY 2 CIRCUIT OPEN
(T118) SOLENOID SUPPLY 2 CIRCUIT SHORTED TO GROUND
(T816) PRESSURE CONTROL SOLENOID C CIRCUIT OPEN
(T816) PRESSURE CONTROL SOLENOID C CIRCUIT SHORTED TO GROUND
(T816) PRESSURE CONTROL SOLENOID C CIRCUIT SHORTED TO VOLTAGE
PRESSURE CONTROL SOLENOID C
TRANSMISSION CONTROL MODULE (TCM)

Always perform the Pre-Diagnostic Troubleshooting procedure before proceeding. Refer to STANDARD PROCEDURE .

DIAGNOSTIC TEST

1. **CHECK IF THE DTC IS CURRENT**
    1. Using the scan tool, read TCM DTCs.
    2. Record the Environmental Data and any DTCs.
    3. Clear DTCs.
    4. Using the recorded Environmental Data, along with the When Monitored and Set Conditions

above, operate the vehicle in the conditions that set the DTC.

5. Read TCM DTCs.

   Did the DTC reset?

   Yes

   - Go To 9

   No

   - Go To 2

2. **CHECK THE PRESSURE CONTROL SOLENOID C**
   1. Turn the Ignition OFF.
   2. Disconnect the Transmission Assembly harness connector.
   3. Measure the resistance of the Pressure Control Solenoid C at the appropriate terminals in the Transmission Assembly interface connector.

      Is the resistance of the Pressure Control Solenoid C 5.4 Ohms ± 0.5 Ohms?

      Yes

      - Go To 3

      No

      - Replace the Pressure Control Solenoid C in accordance with the service information.
      - Perform the TRANSMISSION VERIFICATION TEST. Refer to **STANDARD PROCEDURE** .

3. **CHECK THE (T118) SOLENOID SUPPLY 2 CIRCUIT FOR AN OPEN**
   1. Disconnect the TCM harness connector.
   2. Measure the resistance of the (T118) Solenoid Supply 2 circuit between the Transmission Assembly harness connector and the TCM harness connector.

      Is the resistance below 5.0 Ohms?

      Yes

      - Go To 4

      No

      - Repair the (T118) Solenoid Supply 2 circuit for an open or high resistance.
      - Perform the TRANSMISSION VERIFICATION TEST. Refer to **STANDARD**

PROCEDURE .

4. **CHECK THE (T118) SOLENOID SUPPLY 2 CIRCUIT FOR A SHORT TO GROUND**
   1. Measure the resistance between ground and the (T118) Solenoid Supply 2 circuit.

      Is there continuity between ground and the (T118) Solenoid Supply 2 circuit?

      Yes

      - Repair the (T118) Solenoid Supply 2 circuit for a short to ground.
      - Perform the TRANSMISSION VERIFICATION TEST. Refer to **STANDARD PROCEDURE** .

      No

      - Go To 5
5. **CHECK THE (T118) SOLENOID SUPPLY 2 CIRCUIT FOR A SHORT TO ANOTHER CIRCUIT**
   1. Measure the resistance between the (T118) Solenoid Supply 2 circuit and all other circuits in the TCM harness connector.

      Is there continuity between the (T118) Solenoid Supply 2 circuit and any other circuits in the TCM harness connector?

      Yes

      - Repair the (T118) Solenoid Supply 2 circuit for a short to another circuit.
      - Perform the TRANSMISSION VERIFICATION TEST. Refer to **STANDARD PROCEDURE** .

      No

      - Go To 6.
6. **CHECK THE (T816) PRESSURE CONTROL SOLENOID C CIRCUIT FOR AN OPEN**
   1. Measure the resistance of the (T816) Pressure Control Solenoid C circuit between the Transmission Assembly harness connector and the TCM harness connector.

      Is the resistance below 5.0 Ohms?

      Yes

      - Go To 7

      No

- Repair the (T816) Pressure Control Solenoid C circuit for an open or high resistance.
- Perform the TRANSMISSION VERIFICATION TEST. Refer to **STANDARD PROCEDURE** .

7. **CHECK THE (T816) PRESSURE CONTROL SOLENOID C CIRCUIT FOR A SHORT TO GROUND**
   1. Measure the resistance between ground and the (T816) Pressure Control Solenoid C circuit.

      Is there continuity between ground and the (T816) Pressure Control Solenoid C circuit?

      Yes

      - Repair the (T816) Pressure Control Solenoid C circuit for a short to ground.
      - Perform the TRANSMISSION VERIFICATION TEST. Refer to **STANDARD PROCEDURE** .

      No

      - Go To 8.

8. **CHECK THE (T816) PRESSURE CONTROL SOLENOID C CIRCUIT FOR A SHORT TO ANOTHER CIRCUIT**
   1. Measure the resistance between the (T816) Pressure Control Solenoid C circuit and all other circuits in the TCM harness connector.

      Is there continuity between the (T816) Pressure Control Solenoid C circuit and any other circuits in the TCM harness connector?

      Yes

      - Repair the (T816) Pressure Control Solenoid C circuit for a short to another circuit.
      - Perform the TRANSMISSION VERIFICATION TEST. Refer to **STANDARD PROCEDURE** .

      No

      NOTE: **If this Electronic Control Unit (ECU) is being replaced with a new unit, a diagnostic scan tool MUST be used to align the PROXI configuration data into the new ECU. Follow the routine outlined in the diagnostic scan tool for PROXI Configuration Alignment under Body Control Module (BCM) Miscellaneous Functions menu.**

      - Using the schematics as a guide, check the Transmission Control Module (TCM) terminals and connectors for corrosion, damage or pushed out terminals. Pay particular attention to the power and ground circuits. If no problems are found, replace the TCM and perform programming and PROXI Configuration Alignment procedures. Refer to **MODULE,**

TRANSMISSION CONTROL, REMOVAL .

- Perform the TRANSMISSION VERIFICATION TEST. Refer to **STANDARD PROCEDURE** .

9. **CHECK THE WIRING AND CONNECTORS**
    1. The conditions necessary to set this DTC are not present at this time.
    2. Use the Freeze Frame Data to help duplicate the conditions in which the DTC originally set. Pay particular attention to the DTC set conditions, such as, VSS, MAP, ECT, and Load.
    3. Using the schematics as a guide, visually inspect the related wiring harness. Look for any chafed, pierced, pinched, or partially broken wires.
    4. Visually inspect the related wiring harness connectors. Look for broken, bent, pushed out, or corroded terminals.
    5. Wiggle the wiring and connectors while checking for any possible open or shorted circuits.
    6. Check for any Service Information Tune-ups or Technical Service Bulletins that may apply.

    Were there any problems found?

    Yes

    - Repair as necessary.
    - Perform the TRANSMISSION VERIFICATION TEST. Refer to **STANDARD PROCEDURE** .

    No

    - Test Complete.

P0979-00-SHIFT SOLENOID 3 CONTROL CIRCUIT LOW

For a complete wiring diagram, **refer to appropriate SYSTEM WIRING DIAGRAMS article** .

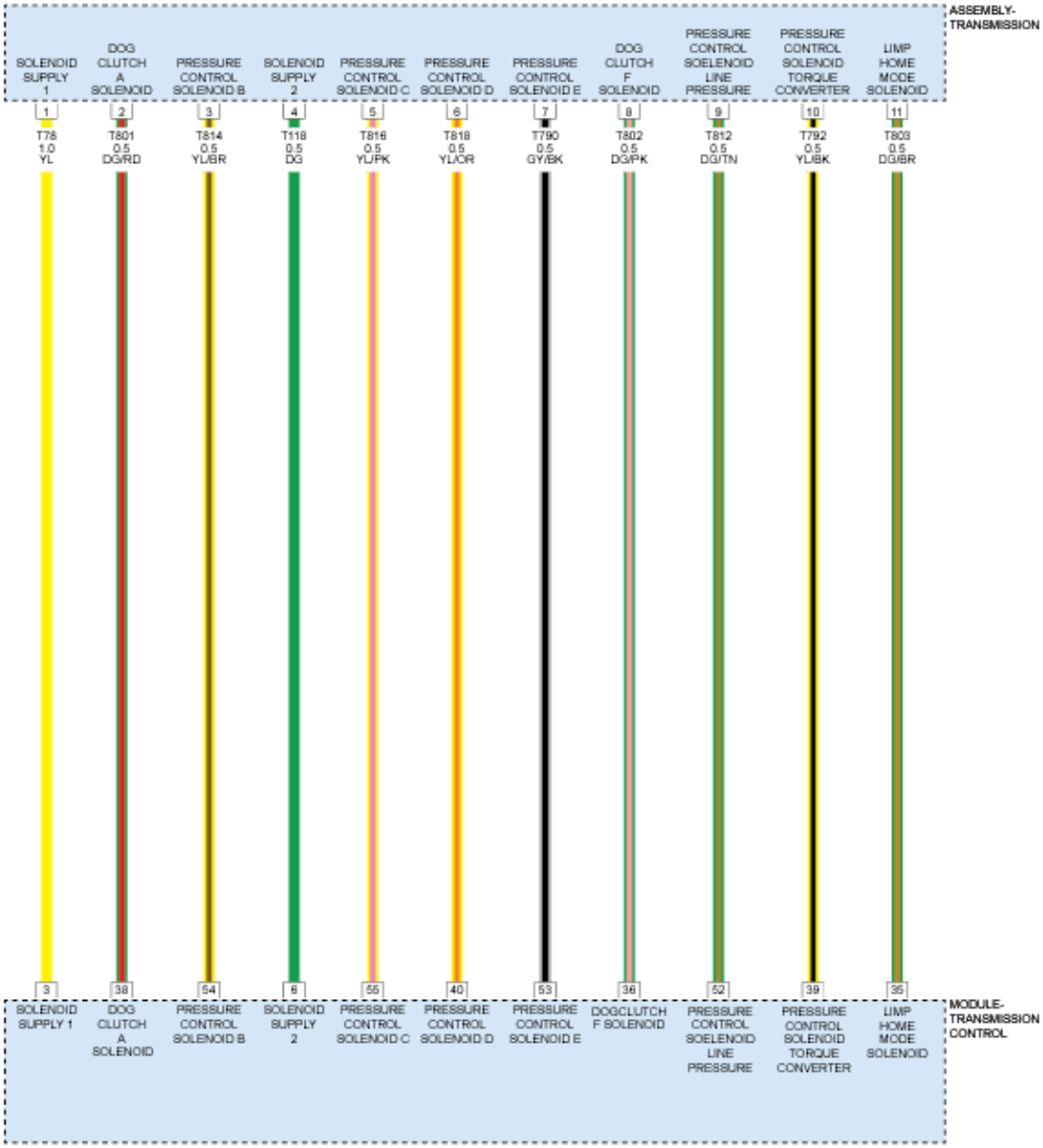

Fig. 31: Pressure Regulators & Solenoids Control Circuit Diagram
Courtesy of CHRYSLER GROUP, LLC

THEORY OF OPERATION

The purpose of the diagnostic is to detect circuit failures on any of the output stages. All output stages are controlled by a current controller that can operate an output stage in two different modes:

- Current controlled mode (pressure regulators)
- Switched mode or PWM controlled (solenoids)

Pressure Regulator Monitoring: The current regulator ASIC in the TCM indicates the following circuit failures via SPI bus to the CPU:

- Short to ground
- Short to battery or open circuit

Solenoid Monitoring: The TCM measures the actual solenoid voltages and compares them to calibrated thresholds to identify the following electrical failures:

- Short to ground or open circuit
- Short to battery

WHEN MONITORED

Output stages power supply switched on.

Power supply voltage is greater than a calibrated value.

SET CONDITION

Pressure Regulator Monitoring: A failure is detected if one of the following conditions occur:

An short to ground failure is detected if the ASIC indicates a short to ground failure.

A short to battery or open circuit failure is detected if the ASIC indicates a short to battery or open circuit failure.

Solenoid Monitoring: A failure is detected if one of the following conditions occur:

An short to ground or open circuit failure is detected if the ratio between the voltage at the solenoid valve and the output stages power supply is above a calibrated threshold.

A short to battery failure is detected if the ratio between the voltage at the solenoid valve and the output stages power supply is below a calibrated threshold.

POSSIBLE CAUSES

Possible Causes
(T118) SOLENOID SUPPLY 2 CIRCUIT OPEN
(T118) SOLENOID SUPPLY 2 CIRCUIT SHORTED TO GROUND
(T816) PRESSURE CONTROL SOLENOID C CIRCUIT OPEN
(T816) PRESSURE CONTROL SOLENOID C CIRCUIT SHORTED TO GROUND
(T816) PRESSURE CONTROL SOLENOID C CIRCUIT SHORTED TO VOLTAGE
PRESSURE CONTROL SOLENOID C
TRANSMISSION CONTROL MODULE (TCM)

Always perform the Pre-Diagnostic Troubleshooting procedure before proceeding. Refer to STANDARD PROCEDURES .

DIAGNOSTIC TEST

1. **CHECK IF THE DTC IS CURRENT**
    1. Using the scan tool, read TCM DTCs.
    2. Record the Environmental Data and any DTCs.
    3. Clear DTCs.
    4. Using the recorded Environmental Data, along with the When Monitored and Set Conditions above, operate the vehicle in the conditions that set the DTC.
    5. Read TCM DTCs.

    Did the DTC reset?

    Yes

    - Go To 9

    No

    - Go To 2
2. **CHECK THE PRESSURE CONTROL SOLENOID C**
    1. Turn the Ignition OFF.
    2. Disconnect the Transmission Assembly harness connector.
    3. Measure the resistance of the Pressure Control Solenoid C at the appropriate terminals in the Transmission Assembly interface connector.

    Is the resistance of the Pressure Control Solenoid C 5.4 Ohms ± 0.5 Ohms?

    Yes

    - Go To 3

    No

    - Replace the Pressure Control Solenoid C in accordance with the service information.
    - Perform the TRANSMISSION VERIFICATION TEST. Refer to **STANDARD PROCEDURE** .
3. **CHECK THE (T118) SOLENOID SUPPLY 2 CIRCUIT FOR AN OPEN**
    1. Disconnect the TCM harness connector.
    2. Measure the resistance of the (T118) Solenoid Supply 2 circuit between the Transmission Assembly harness connector and the TCM harness connector.

Is the resistance below 5.0 Ohms?

Yes

- Go To 4

No

- Repair the (T118) Solenoid Supply 2 circuit for an open or high resistance.
- Perform the TRANSMISSION VERIFICATION TEST. Refer to **STANDARD PROCEDURE** .

4. **CHECK THE (T118) SOLENOID SUPPLY 2 CIRCUIT FOR A SHORT TO GROUND**
   1. Measure the resistance between ground and the (T118) Solenoid Supply 2 circuit.

      Is there continuity between ground and the (T118) Solenoid Supply 2 circuit?

      Yes

      - Repair the (T118) Solenoid Supply 2 circuit for a short to ground.
      - Perform the TRANSMISSION VERIFICATION TEST. Refer to **STANDARD PROCEDURE** .

      No

      - Go To 5

5. **CHECK THE (T118) SOLENOID SUPPLY 2 CIRCUIT FOR A SHORT TO ANOTHER CIRCUIT**
   1. Measure the resistance between the (T118) Solenoid Supply 2 circuit and all other circuits in the TCM harness connector.

      Is there continuity between the (T118) Solenoid Supply 2 circuit and any other circuits in the TCM harness connector?

      Yes

      - Repair the (T118) Solenoid Supply 2 circuit for a short to another circuit.
      - Perform the TRANSMISSION VERIFICATION TEST. Refer to **STANDARD PROCEDURE** .

      No

      - Go To 6.

6. **CHECK THE (T816) PRESSURE CONTROL SOLENOID C CIRCUIT FOR AN OPEN**
   1. Measure the resistance of the (T816) Pressure Control Solenoid C circuit between the Transmission

Assembly harness connector and the TCM harness connector.

Is the resistance below 5.0 Ohms?

Yes

- Go To 7

No

- Repair the (T816) Pressure Control Solenoid C circuit for an open or high resistance.
- Perform the TRANSMISSION VERIFICATION TEST. Refer to **STANDARD PROCEDURE** .

7. **CHECK THE (T816) PRESSURE CONTROL SOLENOID C CIRCUIT FOR A SHORT TO GROUND**
   1. Measure the resistance between ground and the (T816) Pressure Control Solenoid C circuit.

      Is there continuity between ground and the (T816) Pressure Control Solenoid C circuit?

      Yes

      - Repair the (T816) Pressure Control Solenoid C circuit for a short to ground.
      - Perform the TRANSMISSION VERIFICATION TEST. Refer to **STANDARD PROCEDURE** .

      No

      - Go To 8.

8. **CHECK THE (T816) PRESSURE CONTROL SOLENOID C CIRCUIT FOR A SHORT TO ANOTHER CIRCUIT**
   1. Measure the resistance between the (T816) Pressure Control Solenoid C circuit and all other circuits in the TCM harness connector.

      Is there continuity between the (T816) Pressure Control Solenoid C circuit and any other circuits in the TCM harness connector?

      Yes

      - Repair the (T816) Pressure Control Solenoid C circuit for a short to another circuit.
      - Perform the TRANSMISSION VERIFICATION TEST. Refer to **STANDARD PROCEDURE** .

      No

NOTE: **If this Electronic Control Unit (ECU) is being replaced with a new unit, a diagnostic scan tool MUST be used to align the PROXI configuration data into the new ECU. Follow the routine outlined in the diagnostic scan tool for PROXI Configuration Alignment under Body Control Module (BCM) Miscellaneous Functions menu.**

- Using the schematics as a guide, check the Transmission Control Module (TCM) terminals and connectors for corrosion, damage or pushed out terminals. Pay particular attention to the power and ground circuits. If no problems are found, replace the TCM and perform programming and PROXI Configuration Alignment procedures. Refer to **MODULE, TRANSMISSION CONTROL, REMOVAL** .
- Perform the TRANSMISSION VERIFICATION TEST. Refer to **STANDARD PROCEDURE** .

9. **CHECK THE WIRING AND CONNECTORS**
   1. The conditions necessary to set this DTC are not present at this time.
   2. Use the Freeze Frame Data to help duplicate the conditions in which the DTC originally set. Pay particular attention to the DTC set conditions, such as, VSS, MAP, ECT, and Load.
   3. Using the schematics as a guide, visually inspect the related wiring harness. Look for any chafed, pierced, pinched, or partially broken wires.
   4. Visually inspect the related wiring harness connectors. Look for broken, bent, pushed out, or corroded terminals.
   5. Wiggle the wiring and connectors while checking for any possible open or shorted circuits.
   6. Check for any Service Information Tune-ups or Technical Service Bulletins that may apply.

   Were there any problems found?

   Yes

   - Repair as necessary.
   - Perform the TRANSMISSION VERIFICATION TEST. Refer to **STANDARD PROCEDURE** .

   No

   - Test Complete.

P097B-00-SHIFT SOLENOID 2 CONTROL CIRCUIT OPEN

For a complete wiring diagram, **refer to appropriate SYSTEM WIRING DIAGRAMS article** .

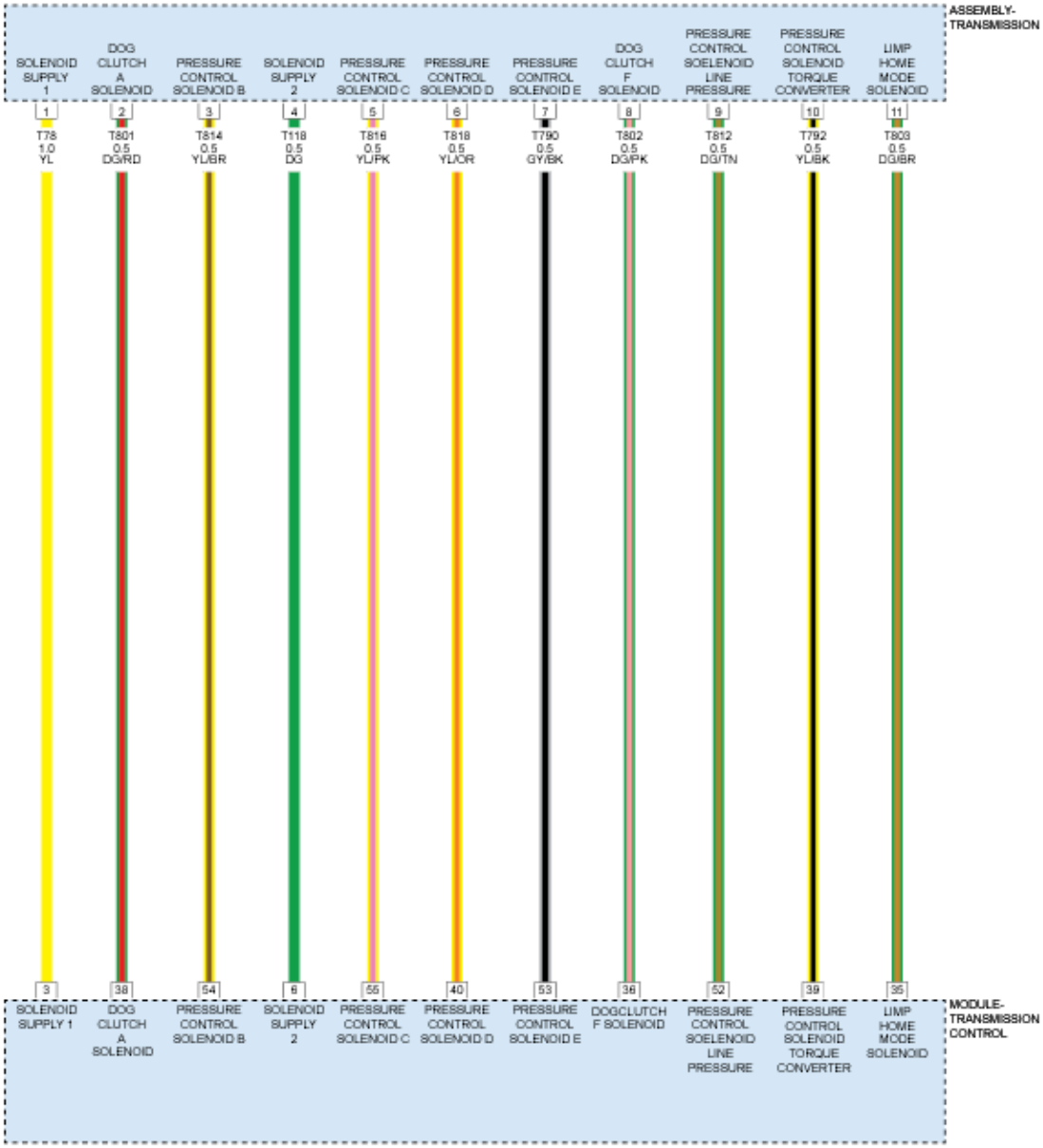

Fig. 32: Pressure Regulators & Solenoids Control Circuit Diagram
Courtesy of CHRYSLER GROUP, LLC

THEORY OF OPERATION

The purpose of the diagnostic is to detect circuit failures on any of the output stages. All output stages are controlled by a current controller that can operate an output stage in two different modes:

- Current controlled mode (pressure regulators)
- Switched mode or PWM controlled (solenoids)

Pressure Regulator Monitoring: The current regulator ASIC in the TCM indicates the following circuit failures via SPI bus to the CPU:

- Short to ground
- Short to battery or open circuit

Solenoid Monitoring: The TCM measures the actual solenoid voltages and compares them to calibrated thresholds to identify the following electrical failures:

- Short to ground or open circuit
- Short to battery

WHEN MONITORED

Output stages power supply switched on.

Power supply voltage is greater than a calibrated value.

SET CONDITION

Pressure Regulator Monitoring: A failure is detected if one of the following conditions occur:

An short to ground failure is detected if the ASIC indicates a short to ground failure.

A short to battery or open circuit failure is detected if the ASIC indicates a short to battery or open circuit failure.

Solenoid Monitoring: A failure is detected if one of the following conditions occur:

An short to ground or open circuit failure is detected if the ratio between the voltage at the solenoid valve and the output stages power supply is above a calibrated threshold.

A short to battery failure is detected if the ratio between the voltage at the solenoid valve and the output stages power supply is below a calibrated threshold.

POSSIBLE CAUSES

Possible Causes
(T118) SOLENOID SUPPLY 2 CIRCUIT OPEN
(T118) SOLENOID SUPPLY 2 CIRCUIT SHORTED TO GROUND
(T814) PRESSURE CONTROL SOLENOID B CIRCUIT OPEN
(T814) PRESSURE CONTROL SOLENOID B CIRCUIT SHORTED TO GROUND
(T814) PRESSURE CONTROL SOLENOID B CIRCUIT SHORTED TO VOLTAGE
PRESSURE CONTROL SOLENOID B
TRANSMISSION CONTROL MODULE (TCM)

Always perform the Pre-Diagnostic Troubleshooting procedure before proceeding. Refer to STANDARD PROCEDURE .

DIAGNOSTIC TEST

1. **CHECK IF THE DTC IS CURRENT**
    1. Using the scan tool, read TCM DTCs.
    2. Record the Environmental Data and any DTCs.
    3. Clear DTCs.
    4. Using the recorded Environmental Data, along with the When Monitored and Set Conditions above, operate the vehicle in the conditions that set the DTC.
    5. Read TCM DTCs.

    Did the DTC reset?

    Yes

    - Go To 2

    No

    - Go To 9
2. **CHECK THE PRESSURE CONTROL SOLENOID B**
    1. Turn the Ignition OFF.
    2. Disconnect the Transmission Assembly harness connector.
    3. Measure the resistance of the Pressure Control Solenoid B at the appropriate terminals in the Transmission Assembly interface connector.

    Is the resistance of the Pressure Control Solenoid B 5.4 Ohms ± 0.5 Ohms?

    Yes

    - Go To 3

    No

    - Replace the Pressure Control Solenoid B in accordance with the service information.
    - Perform the TRANSMISSION VERIFICATION TEST. Refer to **STANDARD PROCEDURE** .
3. **CHECK THE (T118) SOLENOID SUPPLY 2 CIRCUIT FOR AN OPEN**
    1. Disconnect the TCM harness connector.
    2. Measure the resistance of the (T118) Solenoid Supply 2 circuit between the Transmission Assembly harness connector and the TCM harness connector.

Is the resistance below 5.0 Ohms?

Yes

- Go To 4

No

- Repair the (T118) Solenoid Supply 2 circuit for an open or high resistance.
- Perform the TRANSMISSION VERIFICATION TEST. Refer to **STANDARD PROCEDURE** .

4. **CHECK THE (T118) SOLENOID SUPPLY 2 CIRCUIT FOR A SHORT TO GROUND**
   1. Measure the resistance between ground and the (T118) Solenoid Supply 2 circuit.

      Is there continuity between ground and the (T118) Solenoid Supply 2 circuit?

      Yes

      - Repair the (T118) Solenoid Supply 2 circuit for a short to ground.
      - Perform the TRANSMISSION VERIFICATION TEST. Refer to **STANDARD PROCEDURE** .

      No

      - Go To 5

5. **CHECK THE (T118) SOLENOID SUPPLY 2 CIRCUIT FOR A SHORT TO ANOTHER CIRCUIT**
   1. Measure the resistance between the (T118) Solenoid Supply 2 circuit and all other circuits in the TCM harness connector.

      Is there continuity between the (T118) Solenoid Supply 2 circuit and any other circuits in the TCM harness connector?

      Yes

      - Repair the (T118) Solenoid Supply 2 circuit for a short to another circuit.
      - Perform the TRANSMISSION VERIFICATION TEST. Refer to **STANDARD PROCEDURE** .

      No

      - Go To 6.

6. **CHECK THE (T814) PRESSURE CONTROL SOLENOID B CIRCUIT FOR AN OPEN**
   1. Measure the resistance of the (T814) Pressure Control Solenoid B circuit between the Transmission

Assembly harness connector and the TCM harness connector.

Is the resistance below 5.0 Ohms?

Yes

- Go To 7

No

- Repair the (T814) Pressure Control Solenoid B circuit for an open or high resistance.
- Perform the TRANSMISSION VERIFICATION TEST. Refer to **STANDARD PROCEDURE** .

7. **CHECK THE (T814) PRESSURE CONTROL SOLENOID B CIRCUIT FOR A SHORT TO GROUND**
   1. Measure the resistance between ground and the (T814) Pressure Control Solenoid B circuit.

      Is there continuity between ground and the (T814) Pressure Control Solenoid B circuit?

      Yes

      - Repair the (T814) Pressure Control Solenoid B circuit for a short to ground.
      - Perform the TRANSMISSION VERIFICATION TEST. Refer to **STANDARD PROCEDURE** .

      No

      - Go To 8.
8. **CHECK THE (T814) PRESSURE CONTROL SOLENOID B CIRCUIT FOR A SHORT TO ANOTHER CIRCUIT**
   1. Measure the resistance between the (T814) Pressure Control Solenoid B circuit and all other circuits in the TCM harness connector.

      Is there continuity between the (T814) Pressure Control Solenoid B circuit and any other circuits in the TCM harness connector?

      Yes

      - Repair the (T814) Pressure Control Solenoid B circuit for a short to another circuit.
      - Perform the TRANSMISSION VERIFICATION TEST. Refer to **STANDARD PROCEDURE** .

      No

NOTE: **If this Electronic Control Unit (ECU) is being replaced with a new unit, a diagnostic scan tool MUST be used to align the PROXI configuration data into the new ECU. Follow the routine outlined in the diagnostic scan tool for PROXI Configuration Alignment under Body Control Module (BCM) Miscellaneous Functions menu.**

- Using the schematics as a guide, check the Transmission Control Module (TCM) terminals and connectors for corrosion, damage or pushed out terminals. Pay particular attention to the power and ground circuits. If no problems are found, replace the TCM and perform programming and PROXI Configuration Alignment procedures. Refer to **MODULE, TRANSMISSION CONTROL, REMOVAL** .
- Perform the TRANSMISSION VERIFICATION TEST. Refer to **STANDARD PROCEDURE** .

9. **CHECK THE WIRING AND CONNECTORS**
   1. The conditions necessary to set this DTC are not present at this time.
   2. Use the Freeze Frame Data to help duplicate the conditions in which the DTC originally set. Pay particular attention to the DTC set conditions, such as, VSS, MAP, ECT, and Load.
   3. Using the schematics as a guide, visually inspect the related wiring harness. Look for any chafed, pierced, pinched, or partially broken wires.
   4. Visually inspect the related wiring harness connectors. Look for broken, bent, pushed out, or corroded terminals.
   5. Wiggle the wiring and connectors while checking for any possible open or shorted circuits.
   6. Check for any Service Information Tune-ups or Technical Service Bulletins that may apply.

   Were there any problems found?

   Yes

   - Repair as necessary.
   - Perform the TRANSMISSION VERIFICATION TEST. Refer to **STANDARD PROCEDURE** .

   No

   - Test Complete.

P097C-00-SHIFT SOLENOID 3 CONTROL CIRCUIT OPEN

For a complete wiring diagram, **refer to appropriate SYSTEM WIRING DIAGRAMS article** .

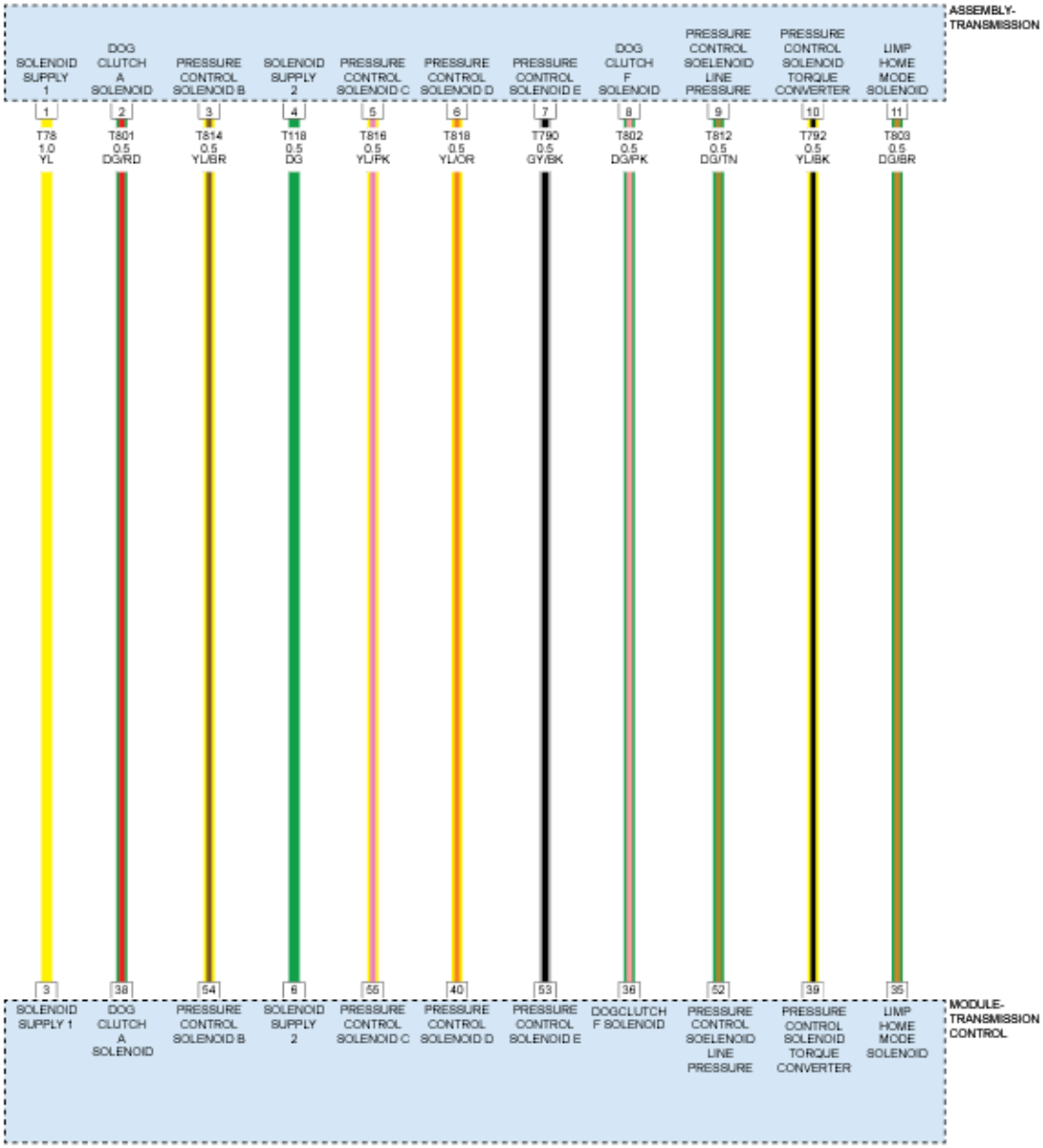

Fig. 33: Pressure Regulators & Solenoids Control Circuit Diagram
Courtesy of CHRYSLER GROUP, LLC

THEORY OF OPERATION

The purpose of the diagnostic is to detect circuit failures on any of the output stages. All output stages are controlled by a current controller that can operate an output stage in two different modes:

- Current controlled mode (pressure regulators)
- Switched mode or PWM controlled (solenoids)

Pressure Regulator Monitoring: The current regulator ASIC in the TCM indicates the following circuit failures via SPI bus to the CPU:

- Short to ground
- Short to battery or open circuit

Solenoid Monitoring: The TCM measures the actual solenoid voltages and compares them to calibrated thresholds to identify the following electrical failures:

- Short to ground or open circuit
- Short to battery

WHEN MONITORED

Output stages power supply switched on.

Power supply voltage is greater than a calibrated value.

SET CONDITION

Pressure Regulator Monitoring: A failure is detected if one of the following conditions occur:

An short to ground failure is detected if the ASIC indicates a short to ground failure.

A short to battery or open circuit failure is detected if the ASIC indicates a short to battery or open circuit failure.

Solenoid Monitoring: A failure is detected if one of the following conditions occur:

An short to ground or open circuit failure is detected if the ratio between the voltage at the solenoid valve and the output stages power supply is above a calibrated threshold.

A short to battery failure is detected if the ratio between the voltage at the solenoid valve and the output stages power supply is below a calibrated threshold.

POSSIBLE CAUSES

Possible Causes
(T118) SOLENOID SUPPLY 2 CIRCUIT OPEN
(T118) SOLENOID SUPPLY 2 CIRCUIT SHORTED TO GROUND
(T816) PRESSURE CONTROL SOLENOID C CIRCUIT OPEN
(T816) PRESSURE CONTROL SOLENOID C CIRCUIT SHORTED TO GROUND
(T816) PRESSURE CONTROL SOLENOID C CIRCUIT SHORTED TO VOLTAGE
PRESSURE CONTROL SOLENOID C
TRANSMISSION CONTROL MODULE (TCM)

Always perform the Pre-Diagnostic Troubleshooting procedure before proceeding. Refer to STANDARD PROCEDURES .

DIAGNOSTIC TEST

1. **CHECK IF THE DTC IS CURRENT**
    1. Using the scan tool, read TCM DTCs.
    2. Record the Environmental Data and any DTCs.
    3. Clear DTCs.
    4. Using the recorded Environmental Data, along with the When Monitored and Set Conditions above, operate the vehicle in the conditions that set the DTC.
    5. Read TCM DTCs.

    Did the DTC reset?

    Yes

    - Go To 9

    No

    - Go To 2
2. **CHECK THE PRESSURE CONTROL SOLENOID C**
    1. Turn the Ignition OFF.
    2. Disconnect the Transmission Assembly harness connector.
    3. Measure the resistance of the Pressure Control Solenoid C at the appropriate terminals in the Transmission Assembly interface connector.

    Is the resistance of the Pressure Control Solenoid C 5.4 Ohms ± 0.5 Ohms?

    Yes

    - Go To 3

    No

    - Replace the Pressure Control Solenoid C in accordance with the service information.
    - Perform the TRANSMISSION VERIFICATION TEST. Refer to **STANDARD PROCEDURE** .
3. **CHECK THE (T118) SOLENOID SUPPLY 2 CIRCUIT FOR AN OPEN**
    1. Disconnect the TCM harness connector.
    2. Measure the resistance of the (T118) Solenoid Supply 2 circuit between the Transmission Assembly harness connector and the TCM harness connector.

Is the resistance below 5.0 Ohms?

Yes

- Go To 4

No

- Repair the (T118) Solenoid Supply 2 circuit for an open or high resistance.
- Perform the TRANSMISSION VERIFICATION TEST. Refer to **STANDARD PROCEDURE** .

4. **CHECK THE (T118) SOLENOID SUPPLY 2 CIRCUIT FOR A SHORT TO GROUND**
   1. Measure the resistance between ground and the (T118) Solenoid Supply 2 circuit.

      Is there continuity between ground and the (T118) Solenoid Supply 2 circuit?

      Yes

      - Repair the (T118) Solenoid Supply 2 circuit for a short to ground.
      - Perform the TRANSMISSION VERIFICATION TEST. Refer to **STANDARD PROCEDURE** .

      No

      - Go To 5

5. **CHECK THE (T118) SOLENOID SUPPLY 2 CIRCUIT FOR A SHORT TO ANOTHER CIRCUIT**
   1. Measure the resistance between the (T118) Solenoid Supply 2 circuit and all other circuits in the TCM harness connector.

      Is there continuity between the (T118) Solenoid Supply 2 circuit and any other circuits in the TCM harness connector?

      Yes

      - Repair the (T118) Solenoid Supply 2 circuit for a short to another circuit.
      - Perform the TRANSMISSION VERIFICATION TEST. Refer to **STANDARD PROCEDURE** .

      No

      - Go To 6.

6. **CHECK THE (T816) PRESSURE CONTROL SOLENOID C CIRCUIT FOR AN OPEN**
   1. Measure the resistance of the (T816) Pressure Control Solenoid C circuit between the Transmission

Assembly harness connector and the TCM harness connector.

Is the resistance below 5.0 Ohms?

Yes

- Go To 7

No

- Repair the (T816) Pressure Control Solenoid C circuit for an open or high resistance.
- Perform the TRANSMISSION VERIFICATION TEST. Refer to **STANDARD PROCEDURE** .

7. **CHECK THE (T816) PRESSURE CONTROL SOLENOID C CIRCUIT FOR A SHORT TO GROUND**
   1. Measure the resistance between ground and the (T816) Pressure Control Solenoid C circuit.

      Is there continuity between ground and the (T816) Pressure Control Solenoid C circuit?

      Yes

      - Repair the (T816) Pressure Control Solenoid C circuit for a short to ground.
      - Perform the TRANSMISSION VERIFICATION TEST. Refer to **STANDARD PROCEDURE** .

      No

      - Go To 8.

8. **CHECK THE (T816) PRESSURE CONTROL SOLENOID C CIRCUIT FOR A SHORT TO ANOTHER CIRCUIT**
   1. Measure the resistance between the (T816) Pressure Control Solenoid C circuit and all other circuits in the TCM harness connector.

      Is there continuity between the (T816) Pressure Control Solenoid C circuit and any other circuits in the TCM harness connector?

      Yes

      - Repair the (T816) Pressure Control Solenoid C circuit for a short to another circuit.
      - Perform the TRANSMISSION VERIFICATION TEST. Refer to **STANDARD PROCEDURE** .

      No

NOTE: **If this Electronic Control Unit (ECU) is being replaced with a new unit, a diagnostic scan tool MUST be used to align the PROXI configuration data into the new ECU. Follow the routine outlined in the diagnostic scan tool for PROXI Configuration Alignment under Body Control Module (BCM) Miscellaneous Functions menu.**

- Using the schematics as a guide, check the Transmission Control Module (TCM) terminals and connectors for corrosion, damage or pushed out terminals. Pay particular attention to the power and ground circuits. If no problems are found, replace the TCM and perform programming and PROXI Configuration Alignment procedures. Refer to **MODULE, TRANSMISSION CONTROL, REMOVAL** .
- Perform the TRANSMISSION VERIFICATION TEST. Refer to **STANDARD PROCEDURE** .

9. **CHECK THE WIRING AND CONNECTORS**
   1. The conditions necessary to set this DTC are not present at this time.
   2. Use the Freeze Frame Data to help duplicate the conditions in which the DTC originally set. Pay particular attention to the DTC set conditions, such as, VSS, MAP, ECT, and Load.
   3. Using the schematics as a guide, visually inspect the related wiring harness. Look for any chafed, pierced, pinched, or partially broken wires.
   4. Visually inspect the related wiring harness connectors. Look for broken, bent, pushed out, or corroded terminals.
   5. Wiggle the wiring and connectors while checking for any possible open or shorted circuits.
   6. Check for any Service Information Tune-ups or Technical Service Bulletins that may apply.

   Were there any problems found?

   Yes

   - Repair as necessary.
   - Perform the TRANSMISSION VERIFICATION TEST. Refer to **STANDARD PROCEDURE** .

   No

   - Test Complete.

P097D-00-SHIFT SOLENOID 4 CONTROL CIRCUIT OPEN

For a complete wiring diagram, **refer to appropriate SYSTEM WIRING DIAGRAMS article** .

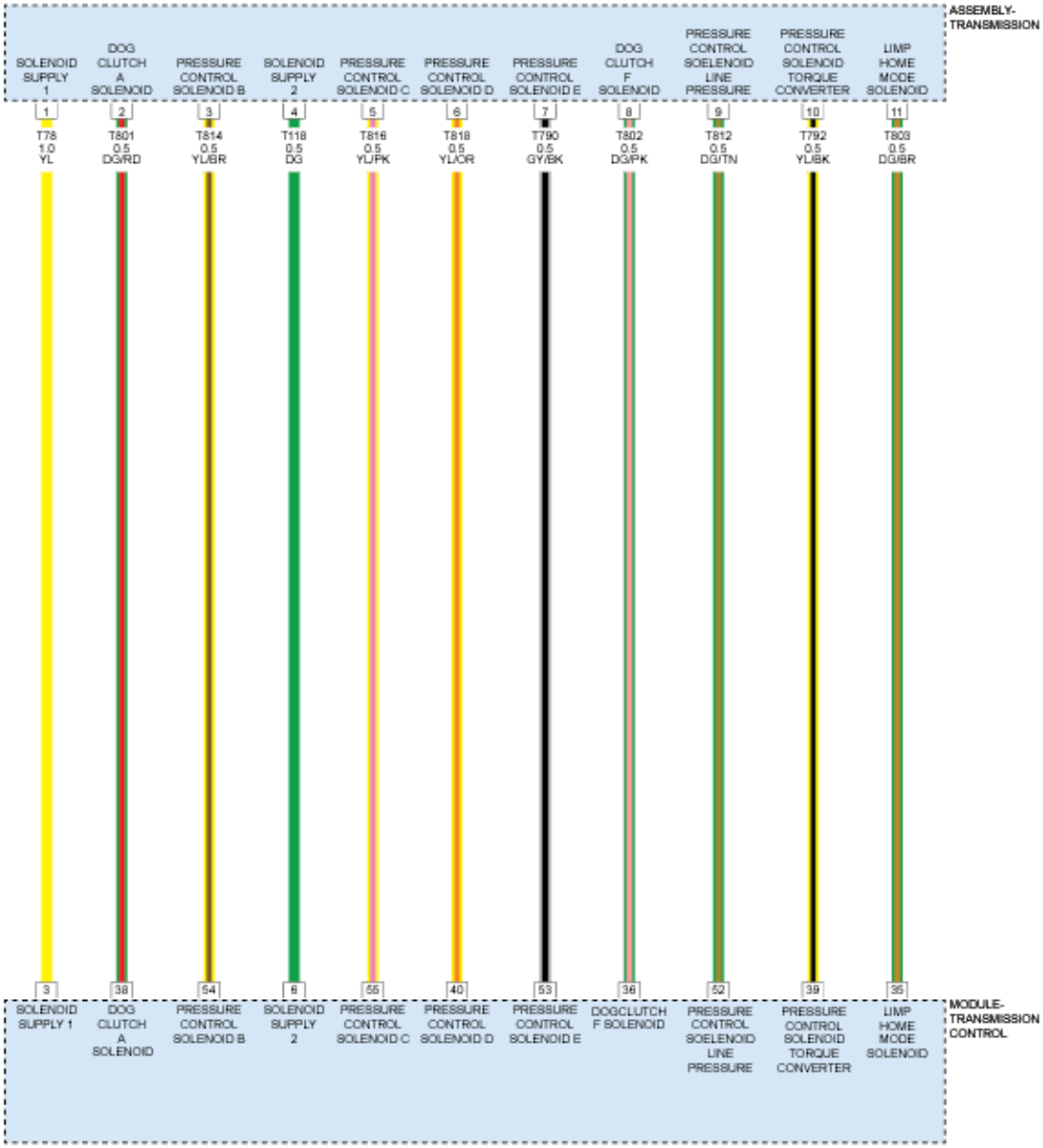

Fig. 34: Pressure Regulators & Solenoids Control Circuit Diagram
Courtesy of CHRYSLER GROUP, LLC

THEORY OF OPERATION

The purpose of the diagnostic is to detect circuit failures on any of the output stages. All output stages are controlled by a current controller that can operate an output stage in two different modes:

- Current controlled mode (pressure regulators)
- Switched mode or PWM controlled (solenoids)

Pressure Regulator Monitoring: The current regulator ASIC in the TCM indicates the following circuit failures via SPI bus to the CPU:

- Short to ground
- Short to battery or open circuit

Solenoid Monitoring: The TCM measures the actual solenoid voltages and compares them to calibrated thresholds to identify the following electrical failures:

- Short to ground or open circuit
- Short to battery

WHEN MONITORED

Output stages power supply switched on.

Power supply voltage is greater than a calibrated value.

SET CONDITION

Pressure Regulator Monitoring: A failure is detected if one of the following conditions occur:

An short to ground failure is detected if the ASIC indicates a short to ground failure.

A short to battery or open circuit failure is detected if the ASIC indicates a short to battery or open circuit failure.

Solenoid Monitoring: A failure is detected if one of the following conditions occur:

An short to ground or open circuit failure is detected if the ratio between the voltage at the solenoid valve and the output stages power supply is above a calibrated threshold.

A short to battery failure is detected if the ratio between the voltage at the solenoid valve and the output stages power supply is below a calibrated threshold.

POSSIBLE CAUSES

Possible Causes
(T118) SOLENOID SUPPLY 2 CIRCUIT OPEN
(T118) SOLENOID SUPPLY 2 CIRCUIT SHORTED TO GROUND
(T818) PRESSURE CONTROL SOLENOID D CIRCUIT OPEN
(T818) PRESSURE CONTROL SOLENOID D CIRCUIT SHORTED TO GROUND
(T818) PRESSURE CONTROL SOLENOID D CIRCUIT SHORTED TO VOLTAGE
PRESSURE CONTROL SOLENOID D
TRANSMISSION CONTROL MODULE (TCM)

Always perform the Pre-Diagnostic Troubleshooting procedure before proceeding. Refer to STANDARD PROCEDURE .

DIAGNOSTIC TEST

1. **CHECK IF THE DTC IS CURRENT**
    1. Using the scan tool, read TCM DTCs.
    2. Record the Environmental Data and any DTCs.
    3. Clear DTCs.
    4. Using the recorded Environmental Data, along with the When Monitored and Set Conditions above, operate the vehicle in the conditions that set the DTC.
    5. Read TCM DTCs.

    Did the DTC reset?

    Yes

    - Go To 2

    No

    - Go To 9
2. **CHECK THE PRESSURE CONTROL SOLENOID D**
    1. Turn the Ignition OFF.
    2. Disconnect the Transmission Assembly harness connector.
    3. Measure the resistance of the Pressure Control Solenoid D at the appropriate terminals in the Transmission Assembly interface connector.

    Is the resistance of the Pressure Control Solenoid D 5.4 Ohms ± 0.5 Ohms?

    Yes

    - Go To 3

    No

    - Replace the Pressure Control Solenoid D in accordance with the service information.
    - Perform the TRANSMISSION VERIFICATION TEST. Refer to **STANDARD PROCEDURE** .
3. **CHECK THE (T118) SOLENOID SUPPLY 2 CIRCUIT FOR AN OPEN**
    1. Disconnect the TCM harness connector.
    2. Measure the resistance of the (T118) Solenoid Supply 2 circuit between the Transmission Assembly harness connector and the TCM harness connector.

Is the resistance below 5.0 Ohms?

Yes

- Go To 4

No

- Repair the (T118) Solenoid Supply 2 circuit for an open or high resistance.
- Perform the TRANSMISSION VERIFICATION TEST. Refer to **STANDARD PROCEDURE** .

4. **CHECK THE (T118) SOLENOID SUPPLY 2 CIRCUIT FOR A SHORT TO GROUND**
   1. Measure the resistance between ground and the (T118) Solenoid Supply 2 circuit.

      Is there continuity between ground and the (T118) Solenoid Supply 2 circuit?

      Yes

      - Repair the (T118) Solenoid Supply 2 circuit for a short to ground.
      - Perform the TRANSMISSION VERIFICATION TEST. Refer to **STANDARD PROCEDURE** .

      No

      - Go To 5

5. **CHECK THE (T118) SOLENOID SUPPLY 2 CIRCUIT FOR A SHORT TO ANOTHER CIRCUIT**
   1. Measure the resistance between the (T118) Solenoid Supply 2 circuit and all other circuits in the TCM harness connector.

      Is there continuity between the (T118) Solenoid Supply 2 circuit and any other circuits in the TCM harness connector?

      Yes

      - Repair the (T118) Solenoid Supply 2 circuit for a short to another circuit.
      - Perform the TRANSMISSION VERIFICATION TEST. Refer to **STANDARD PROCEDURE** .

      No

      - Go To 6.

6. **CHECK THE (T818) PRESSURE CONTROL SOLENOID D CIRCUIT FOR AN OPEN**
   1. Measure the resistance of the (T818) Pressure Control Solenoid D circuit between the Transmission

Assembly harness connector and the TCM harness connector.

Is the resistance below 5.0 Ohms?

Yes

- Go To 7

No

- Repair the (T818) Pressure Control Solenoid D circuit for an open or high resistance.
- Perform the TRANSMISSION VERIFICATION TEST. Refer to **STANDARD PROCEDURE** .

7. **CHECK THE (T818) PRESSURE CONTROL SOLENOID D CIRCUIT FOR A SHORT TO GROUND**
   1. Measure the resistance between ground and the (T818) Pressure Control Solenoid D circuit.

      Is there continuity between ground and the (T818) Pressure Control Solenoid D circuit?

      Yes

      - Repair the (T818) Pressure Control Solenoid D circuit for a short to ground.
      - Perform the TRANSMISSION VERIFICATION TEST. Refer to **STANDARD PROCEDURE** .

      No

      - Go To 8.

8. **CHECK THE (T818) PRESSURE CONTROL SOLENOID D CIRCUIT FOR A SHORT TO ANOTHER CIRCUIT**
   1. Measure the resistance between the (T818) Pressure Control Solenoid D circuit and all other circuits in the TCM harness connector.

      Is there continuity between the (T818) Pressure Control Solenoid D circuit and any other circuits in the TCM harness connector?

      Yes

      - Repair the (T818) Pressure Control Solenoid D circuit for a short to another circuit.
      - Perform the TRANSMISSION VERIFICATION TEST. Refer to **STANDARD PROCEDURE** .

      No

NOTE: **If this Electronic Control Unit (ECU) is being replaced with a new unit, a diagnostic scan tool MUST be used to align the PROXI configuration data into the new ECU. Follow the routine outlined in the diagnostic scan tool for PROXI Configuration Alignment under Body Control Module (BCM) Miscellaneous Functions menu.**

- Using the schematics as a guide, check the Transmission Control Module (TCM) terminals and connectors for corrosion, damage or pushed out terminals. Pay particular attention to the power and ground circuits. If no problems are found, replace the TCM and perform programming and PROXI Configuration Alignment procedures. Refer to **MODULE, TRANSMISSION CONTROL, REMOVAL** .
- Perform the TRANSMISSION VERIFICATION TEST. Refer to **STANDARD PROCEDURE** .

9. **CHECK THE WIRING AND CONNECTORS**
   1. The conditions necessary to set this DTC are not present at this time.
   2. Use the Freeze Frame Data to help duplicate the conditions in which the DTC originally set. Pay particular attention to the DTC set conditions, such as, VSS, MAP, ECT, and Load.
   3. Using the schematics as a guide, visually inspect the related wiring harness. Look for any chafed, pierced, pinched, or partially broken wires.
   4. Visually inspect the related wiring harness connectors. Look for broken, bent, pushed out, or corroded terminals.
   5. Wiggle the wiring and connectors while checking for any possible open or shorted circuits.
   6. Check for any Service Information Tune-ups or Technical Service Bulletins that may apply.

   Were there any problems found?

   Yes

   - Repair as necessary.
   - Perform the TRANSMISSION VERIFICATION TEST. Refer to **STANDARD PROCEDURE** .

   No

   - Test Complete.

P097E-00-SHIFT SOLENOID 5 CONTROL CIRCUIT OPEN

For a complete wiring diagram, **refer to appropriate SYSTEM WIRING DIAGRAMS article** .

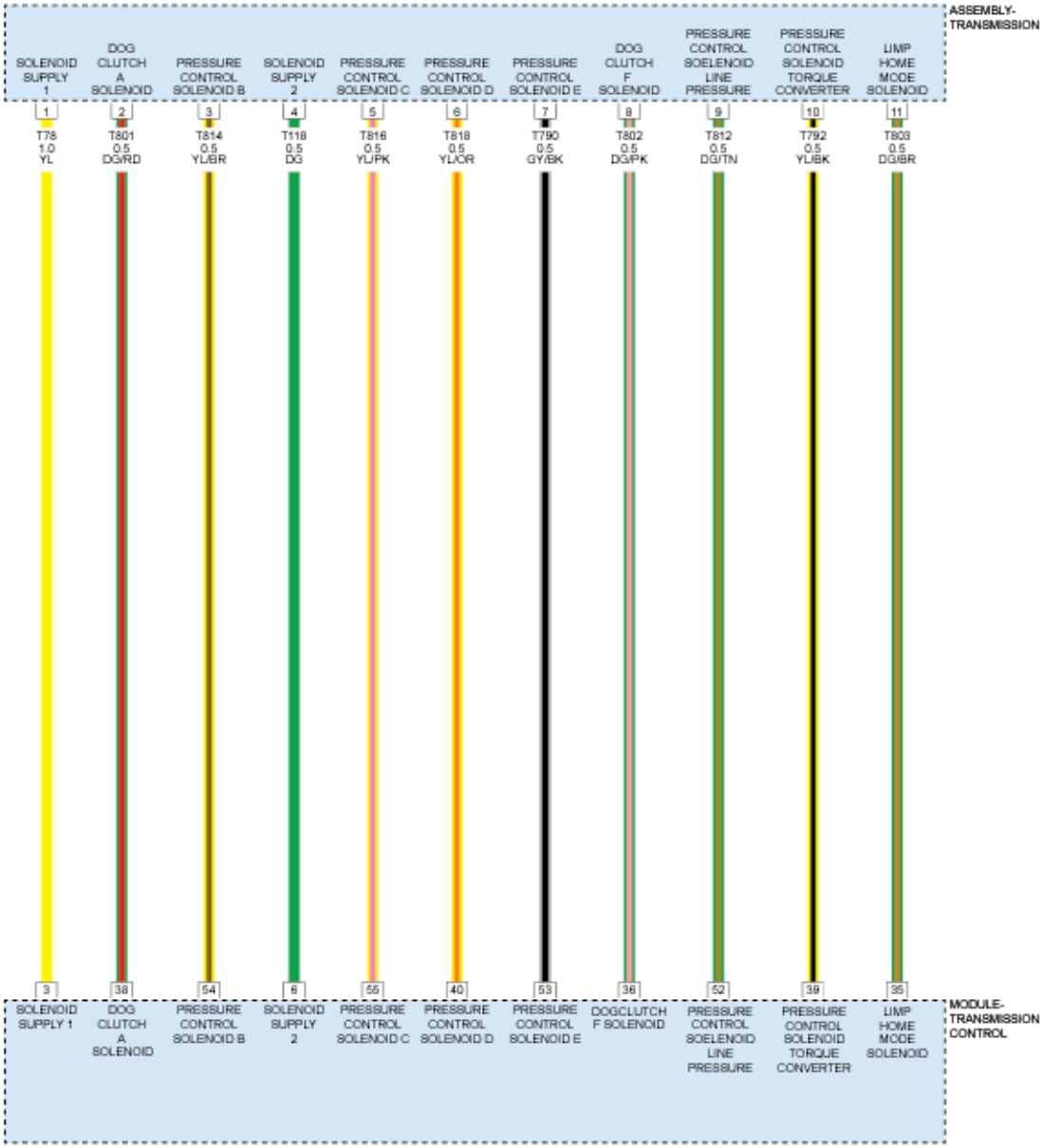

Fig. 35: Pressure Regulators & Solenoids Control Circuit Diagram
Courtesy of CHRYSLER GROUP, LLC

THEORY OF OPERATION

The purpose of the diagnostic is to detect circuit failures on any of the output stages. All output stages are controlled by a current controller that can operate an output stage in two different modes:

- Current controlled mode (pressure regulators)
- Switched mode or PWM controlled (solenoids)

Pressure Regulator Monitoring: The current regulator ASIC in the TCM indicates the following circuit failures via SPI bus to the CPU:

- Short to ground
- Short to battery or open circuit

Solenoid Monitoring: The TCM measures the actual solenoid voltages and compares them to calibrated thresholds to identify the following electrical failures:

- Short to ground or open circuit
- Short to battery

WHEN MONITORED

Output stages power supply switched on.

Power supply voltage is greater than a calibrated value.

SET CONDITION

Pressure Regulator Monitoring: A failure is detected if one of the following conditions occur:

An short to ground failure is detected if the ASIC indicates a short to ground failure.

A short to battery or open circuit failure is detected if the ASIC indicates a short to battery or open circuit failure.

Solenoid Monitoring: A failure is detected if one of the following conditions occur:

An short to ground or open circuit failure is detected if the ratio between the voltage at the solenoid valve and the output stages power supply is above a calibrated threshold.

A short to battery failure is detected if the ratio between the voltage at the solenoid valve and the output stages power supply is below a calibrated threshold.

POSSIBLE CAUSES

Possible Causes
(T118) SOLENOID SUPPLY 2 CIRCUIT OPEN
(T118) SOLENOID SUPPLY 2 CIRCUIT SHORTED TO GROUND
(T790) PRESSURE CONTROL SOLENOID E CIRCUIT OPEN
(T790) PRESSURE CONTROL SOLENOID E CIRCUIT SHORTED TO GROUND
(T790) PRESSURE CONTROL SOLENOID E CIRCUIT SHORTED TO VOLTAGE
PRESSURE CONTROL SOLENOID E
TRANSMISSION CONTROL MODULE (TCM)

Always perform the Pre-Diagnostic Troubleshooting procedure before proceeding. Refer to STANDARD PROCEDURE .

DIAGNOSTIC TEST

1. **CHECK IF THE DTC IS CURRENT**
    1. Using the scan tool, read TCM DTCs.
    2. Record the Environmental Data and any DTCs.
    3. Clear DTCs.
    4. Using the recorded Environmental Data, along with the When Monitored and Set Conditions above, operate the vehicle in the conditions that set the DTC.
    5. Read TCM DTCs.

    Did the DTC reset?

    Yes

    - Go To 2

    No

    - Go To 9
2. **CHECK THE PRESSURE CONTROL SOLENOID E**
    1. Turn the Ignition OFF.
    2. Disconnect the Transmission Assembly harness connector.
    3. Measure the resistance of the Pressure Control Solenoid E at the appropriate terminals in the Transmission Assembly interface connector.

    Is the resistance of the Pressure Control Solenoid E 5.4 Ohms ± 0.5 Ohms?

    Yes

    - Go To 3

    No

    - Replace the Pressure Control Solenoid E in accordance with the service information.
    - Perform the TRANSMISSION VERIFICATION TEST. Refer to **STANDARD PROCEDURE** .
3. **CHECK THE (T118) SOLENOID SUPPLY 2 CIRCUIT FOR AN OPEN**
    1. Disconnect the TCM harness connector.
    2. Measure the resistance of the (T118) Solenoid Supply 2 circuit between the Transmission Assembly harness connector and the TCM harness connector.

Is the resistance below 5.0 Ohms?

Yes

- Go To 4

No

- Repair the (T118) Solenoid Supply 2 circuit for an open or high resistance.
- Perform the TRANSMISSION VERIFICATION TEST. Refer to **STANDARD PROCEDURE** .

4. **CHECK THE (T118) SOLENOID SUPPLY 2 CIRCUIT FOR A SHORT TO GROUND**
   1. Measure the resistance between ground and the (T118) Solenoid Supply 2 circuit.

      Is there continuity between ground and the (T118) Solenoid Supply 2 circuit?

      Yes

      - Repair the (T118) Solenoid Supply 2 circuit for a short to ground.
      - Perform the TRANSMISSION VERIFICATION TEST. Refer to **STANDARD PROCEDURE** .

      No

      - Go To 5

5. **CHECK THE (T118) SOLENOID SUPPLY 2 CIRCUIT FOR A SHORT TO ANOTHER CIRCUIT**
   1. Measure the resistance between the (T118) Solenoid Supply 2 circuit and all other circuits in the TCM harness connector.

      Is there continuity between the (T118) Solenoid Supply 2 circuit and any other circuits in the TCM harness connector?

      Yes

      - Repair the (T118) Solenoid Supply 2 circuit for a short to another circuit.
      - Perform the TRANSMISSION VERIFICATION TEST. Refer to **STANDARD PROCEDURE** .

      No

      - Go To 6.

6. **CHECK THE (T790) PRESSURE CONTROL SOLENOID E CIRCUIT FOR AN OPEN**
   1. Measure the resistance of the (T790) Pressure Control Solenoid E circuit between the Transmission

Assembly harness connector and the TCM harness connector.

Is the resistance below 5.0 Ohms?

Yes

- Go To 7

No

- Repair the (T790) Pressure Control Solenoid E circuit for an open or high resistance.
- Perform the TRANSMISSION VERIFICATION TEST. Refer to **STANDARD PROCEDURE** .

7. **CHECK THE (T790) PRESSURE CONTROL SOLENOID E CIRCUIT FOR A SHORT TO GROUND**
   1. Measure the resistance between ground and the (T790) Pressure Control Solenoid E circuit.

      Is there continuity between ground and the (T790) Pressure Control Solenoid E circuit?

      Yes

      - Repair the (T790) Pressure Control Solenoid E circuit for a short to ground.
      - Perform the TRANSMISSION VERIFICATION TEST. Refer to **STANDARD PROCEDURE** .

      No

      - Go To 8.

8. **CHECK THE (T790) PRESSURE CONTROL SOLENOID E CIRCUIT FOR A SHORT TO ANOTHER CIRCUIT**
   1. Measure the resistance between the (T790) Pressure Control Solenoid E circuit and all other circuits in the TCM harness connector.

      Is there continuity between the (T790) Pressure Control Solenoid E circuit and any other circuits in the TCM harness connector?

      Yes

      - Repair the (T790) Pressure Control Solenoid E circuit for a short to another circuit.
      - Perform the TRANSMISSION VERIFICATION TEST. Refer to **STANDARD PROCEDURE** .

      No

NOTE: **If this Electronic Control Unit (ECU) is being replaced with a new unit, a diagnostic scan tool MUST be used to align the PROXI configuration data into the new ECU. Follow the routine outlined in the diagnostic scan tool for PROXI Configuration Alignment under Body Control Module (BCM) Miscellaneous Functions menu.**

- Using the schematics as a guide, check the Transmission Control Module (TCM) terminals and connectors for corrosion, damage or pushed out terminals. Pay particular attention to the power and ground circuits. If no problems are found, replace the TCM and perform programming and PROXI Configuration Alignment procedures. Refer to **MODULE, TRANSMISSION CONTROL, REMOVAL** .
- Perform the TRANSMISSION VERIFICATION TEST. Refer to **STANDARD PROCEDURE** .

9. **CHECK THE WIRING AND CONNECTORS**
   1. The conditions necessary to set this DTC are not present at this time.
   2. Use the Freeze Frame Data to help duplicate the conditions in which the DTC originally set. Pay particular attention to the DTC set conditions, such as, VSS, MAP, ECT, and Load.
   3. Using the schematics as a guide, visually inspect the related wiring harness. Look for any chafed, pierced, pinched, or partially broken wires.
   4. Visually inspect the related wiring harness connectors. Look for broken, bent, pushed out, or corroded terminals.
   5. Wiggle the wiring and connectors while checking for any possible open or shorted circuits.
   6. Check for any Service Information Tune-ups or Technical Service Bulletins that may apply.

   Were there any problems found?

   Yes

   - Repair as necessary.
   - Perform the TRANSMISSION VERIFICATION TEST. Refer to **STANDARD PROCEDURE** .

   No

   - Test Complete.

P0981-00-SHIFT SOLENOID 4 CONTROL CIRCUIT RANGE-PERFORMANCE

For a complete wiring diagram, **refer to appropriate SYSTEM WIRING DIAGRAMS article** .

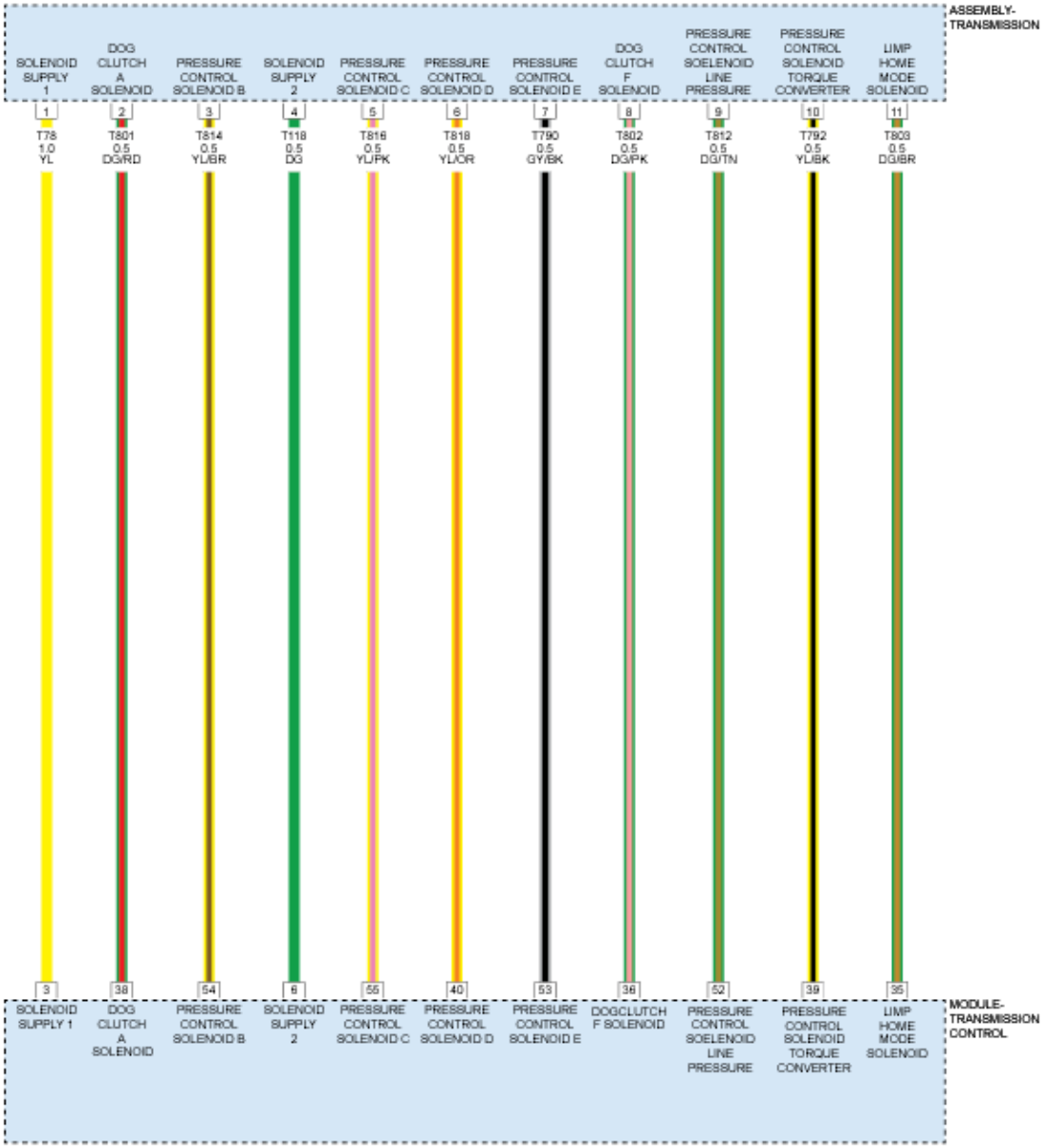

Fig. 36: Pressure Regulators & Solenoids Control Circuit Diagram
Courtesy of CHRYSLER GROUP, LLC

THEORY OF OPERATION

The purpose of the diagnostic is to detect a functional failure of the pressure regulator output stages in the TCM. The diagnostic monitors for an incorrect current feed to the pressure regulators which control the friction clutches. The monitoring is performed using two independent methods of comparing the commanded current to the measured current.

Current Summation Check: The sum current (total current of pressure regulators B, C, D, E) is measured using a shunt resistor. The measured value is compared to the summed commanded currents of pressure

regulators B, C, D, E (Sum Current Calculation).

PWM Feedback Signal Check: The pulse width modulation (PWM) feedback signal generated by the current regulator in the output stage identifies a deviating output current for each current regulator. To perform a functional check of the output stage current, the TCM calculates the actual current based upon the PWM feedback signal, the output stage power supply voltage and the resistance of the corresponding pressure regulator. This calculated current is compared to the commanded current from the current regulator.

WHEN MONITORED

Continuously after the ignition switch is turned to the run position.

All commanded solenoid currents are greater than zero.

SET CONDITION

Current Summation Check: The failure is detected if the calculated current summation deviates from the commanded current summation by a calibrated amount. The difference is compared to positive and negative calibrated thresholds.

PWM Feedback Signal Check: The failure is detected if the calculated pressure regulator current deviates from the commanded current by a calibrated amount. The difference is compared to positive and negative calibrated thresholds.

POSSIBLE CAUSES

Possible Causes
(T118) SOLENOID SUPPLY 2 CIRCUIT OPEN
(T118) SOLENOID SUPPLY 2 CIRCUIT SHORTED TO GROUND
(T818) PRESSURE CONTROL SOLENOID D CIRCUIT OPEN
(T818) PRESSURE CONTROL SOLENOID D CIRCUIT SHORTED TO GROUND
(T818) PRESSURE CONTROL SOLENOID D CIRCUIT SHORTED TO VOLTAGE
PRESSURE CONTROL SOLENOID D
TRANSMISSION CONTROL MODULE (TCM)

Always perform the Pre-Diagnostic Troubleshooting procedure before proceeding. Refer to STANDARD PROCEDURE .

DIAGNOSTIC TEST

1. **CHECK IF THE DTC IS CURRENT**
    1. Using the scan tool, read TCM DTCs.
    2. Record the Environmental Data and any DTCs.
    3. Clear DTCs.
    4. Using the recorded Environmental Data, along with the When Monitored and Set Conditions

above, operate the vehicle in the conditions that set the DTC.

5. Read TCM DTCs.

   Did the DTC reset?

   Yes

   - Go To 2

   No

   - Go To 9

2. **CHECK THE PRESSURE CONTROL SOLENOID D**
   1. Turn the Ignition OFF.
   2. Disconnect the Transmission Assembly harness connector.
   3. Measure the resistance of the Pressure Control Solenoid D at the appropriate terminals in the Transmission Assembly interface connector.

      Is the resistance of the Pressure Control Solenoid D 5.4 Ohms ± 0.5 Ohms?

      Yes

      - Go To 3

      No

      - Replace the Pressure Control Solenoid D in accordance with the service information.
      - Perform the TRANSMISSION VERIFICATION TEST. Refer to **STANDARD PROCEDURE** .

3. **CHECK THE (T118) SOLENOID SUPPLY 2 CIRCUIT FOR AN OPEN**
   1. Disconnect the TCM harness connector.
   2. Measure the resistance of the (T118) Solenoid Supply 2 circuit between the Transmission Assembly harness connector and the TCM harness connector.

      Is the resistance below 5.0 Ohms?

      Yes

      - Go To 4

      No

      - Repair the (T118) Solenoid Supply 2 circuit for an open or high resistance.
      - Perform the TRANSMISSION VERIFICATION TEST. Refer to **STANDARD**

PROCEDURE .

4. **CHECK THE (T118) SOLENOID SUPPLY 2 CIRCUIT FOR A SHORT TO GROUND**
   1. Measure the resistance between ground and the (T118) Solenoid Supply 2 circuit.

      Is there continuity between ground and the (T118) Solenoid Supply 2 circuit?

      Yes

      - Repair the (T118) Solenoid Supply 2 circuit for a short to ground.
      - Perform the TRANSMISSION VERIFICATION TEST. Refer to **STANDARD PROCEDURE** .

      No

      - Go To 5
5. **CHECK THE (T118) SOLENOID SUPPLY 2 CIRCUIT FOR A SHORT TO ANOTHER CIRCUIT**
   1. Measure the resistance between the (T118) Solenoid Supply 2 circuit and all other circuits in the TCM harness connector.

      Is there continuity between the (T118) Solenoid Supply 2 circuit and any other circuits in the TCM harness connector?

      Yes

      - Repair the (T118) Solenoid Supply 2 circuit for a short to another circuit.
      - Perform the TRANSMISSION VERIFICATION TEST. Refer to **STANDARD PROCEDURE** .

      No

      - Go To 6.
6. **CHECK THE (T818) PRESSURE CONTROL SOLENOID D CIRCUIT FOR AN OPEN**
   1. Measure the resistance of the (T818) Pressure Control Solenoid D circuit between the Transmission Assembly harness connector and the TCM harness connector.

      Is the resistance below 5.0 Ohms?

      Yes

      - Go To 7

      No

- Repair the (T818) Pressure Control Solenoid D circuit for an open or high resistance.
- Perform the TRANSMISSION VERIFICATION TEST. Refer to **STANDARD PROCEDURE** .

7. **CHECK THE (T818) PRESSURE CONTROL SOLENOID D CIRCUIT FOR A SHORT TO GROUND**
   1. Measure the resistance between ground and the (T818) Pressure Control Solenoid D circuit.

      Is there continuity between ground and the (T818) Pressure Control Solenoid D circuit?

      Yes

      - Repair the (T818) Pressure Control Solenoid D circuit for a short to ground.
      - Perform the TRANSMISSION VERIFICATION TEST. Refer to **STANDARD PROCEDURE** .

      No

      - Go To 8.

8. **CHECK THE (T818) PRESSURE CONTROL SOLENOID D CIRCUIT FOR A SHORT TO ANOTHER CIRCUIT**
   1. Measure the resistance between the (T818) Pressure Control Solenoid D circuit and all other circuits in the TCM harness connector.

      Is there continuity between the (T818) Pressure Control Solenoid D circuit and any other circuits in the TCM harness connector?

      Yes

      - Repair the (T818) Pressure Control Solenoid D circuit for a short to another circuit.
      - Perform the TRANSMISSION VERIFICATION TEST. Refer to **STANDARD PROCEDURE** .

      No

      NOTE: **If this Electronic Control Unit (ECU) is being replaced with a new unit, a diagnostic scan tool MUST be used to align the PROXI configuration data into the new ECU. Follow the routine outlined in the diagnostic scan tool for PROXI Configuration Alignment under Body Control Module (BCM) Miscellaneous Functions menu.**

      - Using the schematics as a guide, check the Transmission Control Module (TCM) terminals and connectors for corrosion, damage or pushed out terminals. Pay particular attention to the power and ground circuits. If no problems are found, replace the TCM and perform programming and PROXI Configuration Alignment procedures. Refer to **MODULE,**

TRANSMISSION CONTROL, REMOVAL .

- Perform the TRANSMISSION VERIFICATION TEST. Refer to **STANDARD PROCEDURE** .

9. **CHECK THE WIRING AND CONNECTORS**
    1. The conditions necessary to set this DTC are not present at this time.
    2. Use the Freeze Frame Data to help duplicate the conditions in which the DTC originally set. Pay particular attention to the DTC set conditions, such as, VSS, MAP, ECT, and Load.
    3. Using the schematics as a guide, visually inspect the related wiring harness. Look for any chafed, pierced, pinched, or partially broken wires.
    4. Visually inspect the related wiring harness connectors. Look for broken, bent, pushed out, or corroded terminals.
    5. Wiggle the wiring and connectors while checking for any possible open or shorted circuits.
    6. Check for any Service Information Tune-ups or Technical Service Bulletins that may apply.

    Were there any problems found?

    Yes

    - Repair as necessary.
    - Perform the TRANSMISSION VERIFICATION TEST. Refer to **STANDARD PROCEDURE** .

    No

    - Test Complete.

P0982-00-SHIFT SOLENOID 4 CONTROL CIRCUIT LOW

For a complete wiring diagram, **refer to appropriate SYSTEM WIRING DIAGRAMS article** .

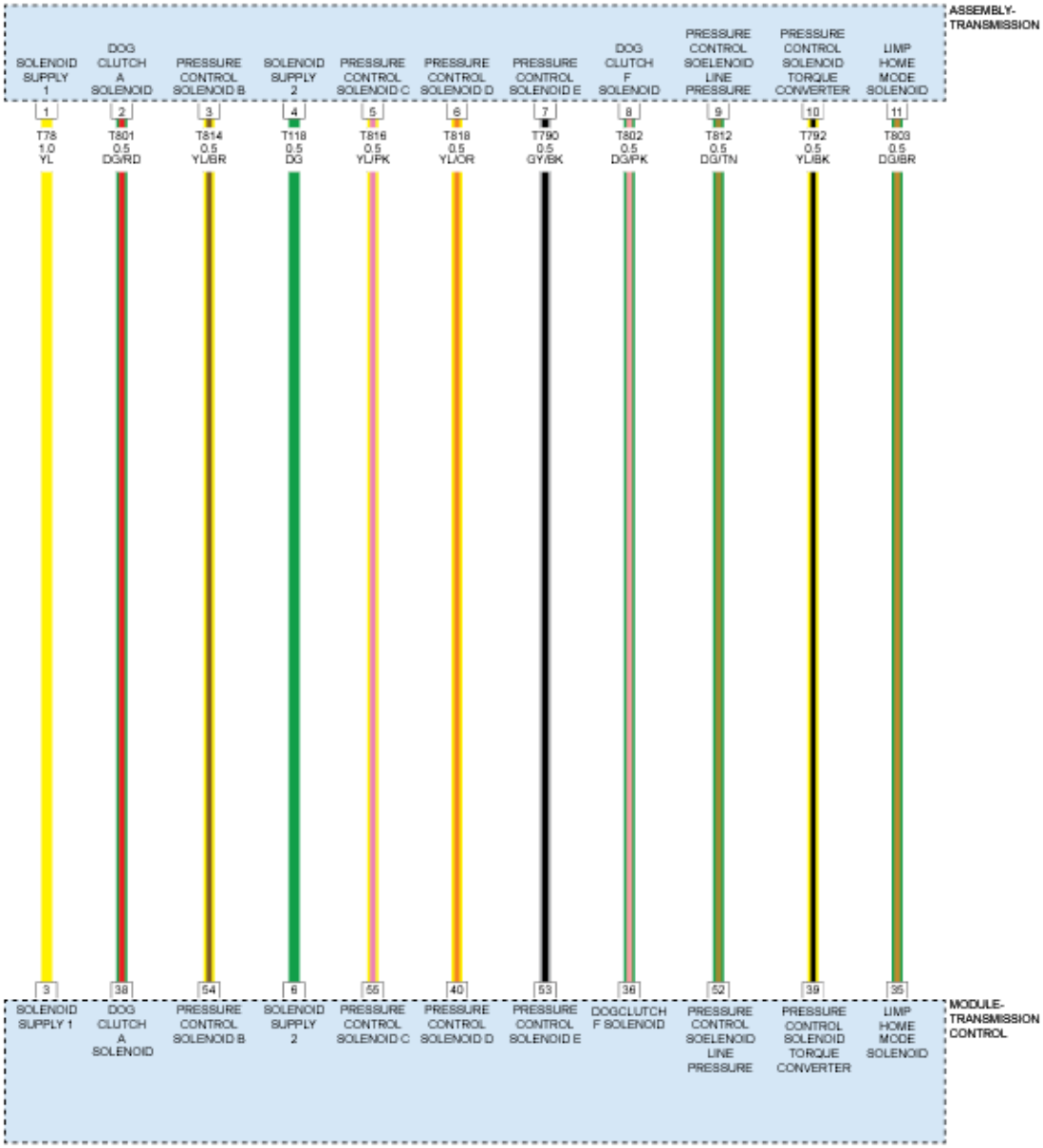

Fig. 37: Pressure Regulators & Solenoids Control Circuit Diagram
Courtesy of CHRYSLER GROUP, LLC

THEORY OF OPERATION

The purpose of the diagnostic is to detect circuit failures on any of the output stages. All output stages are controlled by a current controller that can operate an output stage in two different modes:

- Current controlled mode (pressure regulators)
- Switched mode or PWM controlled (solenoids)

Pressure Regulator Monitoring: The current regulator ASIC in the TCM indicates the following circuit failures via SPI bus to the CPU:

- Short to ground
- Short to battery or open circuit

Solenoid Monitoring: The TCM measures the actual solenoid voltages and compares them to calibrated thresholds to identify the following electrical failures:

- Short to ground or open circuit
- Short to battery

WHEN MONITORED

Output stages power supply switched on.

Power supply voltage is greater than a calibrated value.

SET CONDITION

Pressure Regulator Monitoring: A failure is detected if one of the following conditions occur:

An short to ground failure is detected if the ASIC indicates a short to ground failure.

A short to battery or open circuit failure is detected if the ASIC indicates a short to battery or open circuit failure.

Solenoid Monitoring: A failure is detected if one of the following conditions occur:

An short to ground or open circuit failure is detected if the ratio between the voltage at the solenoid valve and the output stages power supply is above a calibrated threshold.

A short to battery failure is detected if the ratio between the voltage at the solenoid valve and the output stages power supply is below a calibrated threshold.

POSSIBLE CAUSES

Possible Causes
(T118) SOLENOID SUPPLY 2 CIRCUIT OPEN
(T118) SOLENOID SUPPLY 2 CIRCUIT SHORTED TO GROUND
(T818) PRESSURE CONTROL SOLENOID D CIRCUIT OPEN
(T818) PRESSURE CONTROL SOLENOID D CIRCUIT SHORTED TO GROUND
(T818) PRESSURE CONTROL SOLENOID D CIRCUIT SHORTED TO VOLTAGE
PRESSURE CONTROL SOLENOID D
TRANSMISSION CONTROL MODULE (TCM)

Always perform the Pre-Diagnostic Troubleshooting procedure before proceeding. Refer to STANDARD PROCEDURE .

DIAGNOSTIC TEST

1. **CHECK IF THE DTC IS CURRENT**
    1. Using the scan tool, read TCM DTCs.
    2. Record the Environmental Data and any DTCs.
    3. Clear DTCs.
    4. Using the recorded Environmental Data, along with the When Monitored and Set Conditions above, operate the vehicle in the conditions that set the DTC.
    5. Read TCM DTCs.

    Did the DTC reset?

    Yes

    - Go To 2

    No

    - Go To 9
2. **CHECK THE PRESSURE CONTROL SOLENOID D**
    1. Turn the Ignition OFF.
    2. Disconnect the Transmission Assembly harness connector.
    3. Measure the resistance of the Pressure Control Solenoid D at the appropriate terminals in the Transmission Assembly interface connector.

    Is the resistance of the Pressure Control Solenoid D 5.4 Ohms ± 0.5 Ohms?

    Yes

    - Go To 3

    No

    - Replace the Pressure Control Solenoid D in accordance with the service information.
    - Perform the TRANSMISSION VERIFICATION TEST. Refer to **STANDARD PROCEDURE** .
3. **CHECK THE (T118) SOLENOID SUPPLY 2 CIRCUIT FOR AN OPEN**
    1. Disconnect the TCM harness connector.
    2. Measure the resistance of the (T118) Solenoid Supply 2 circuit between the Transmission Assembly harness connector and the TCM harness connector.

Is the resistance below 5.0 Ohms?

Yes

- Go To 4

No

- Repair the (T118) Solenoid Supply 2 circuit for an open or high resistance.
- Perform the TRANSMISSION VERIFICATION TEST. Refer to **STANDARD PROCEDURE** .

4. **CHECK THE (T118) SOLENOID SUPPLY 2 CIRCUIT FOR A SHORT TO GROUND**
   1. Measure the resistance between ground and the (T118) Solenoid Supply 2 circuit.

      Is there continuity between ground and the (T118) Solenoid Supply 2 circuit?

      Yes

      - Repair the (T118) Solenoid Supply 2 circuit for a short to ground.
      - Perform the TRANSMISSION VERIFICATION TEST. Refer to **STANDARD PROCEDURE** .

      No

      - Go To 5

5. **CHECK THE (T118) SOLENOID SUPPLY 2 CIRCUIT FOR A SHORT TO ANOTHER CIRCUIT**
   1. Measure the resistance between the (T118) Solenoid Supply 2 circuit and all other circuits in the TCM harness connector.

      Is there continuity between the (T118) Solenoid Supply 2 circuit and any other circuits in the TCM harness connector?

      Yes

      - Repair the (T118) Solenoid Supply 2 circuit for a short to another circuit.
      - Perform the TRANSMISSION VERIFICATION TEST. Refer to **STANDARD PROCEDURE** .

      No

      - Go To 6.

6. **CHECK THE (T818) PRESSURE CONTROL SOLENOID D CIRCUIT FOR AN OPEN**
   1. Measure the resistance of the (T818) Pressure Control Solenoid D circuit between the Transmission

Assembly harness connector and the TCM harness connector.

Is the resistance below 5.0 Ohms?

Yes

- Go To 7

No

- Repair the (T818) Pressure Control Solenoid D circuit for an open or high resistance.
- Perform the TRANSMISSION VERIFICATION TEST. Refer to **STANDARD PROCEDURE** .

7. **CHECK THE (T818) PRESSURE CONTROL SOLENOID D CIRCUIT FOR A SHORT TO GROUND**
   1. Measure the resistance between ground and the (T818) Pressure Control Solenoid D circuit.

      Is there continuity between ground and the (T818) Pressure Control Solenoid D circuit?

      Yes

      - Repair the (T818) Pressure Control Solenoid D circuit for a short to ground.
      - Perform the TRANSMISSION VERIFICATION TEST. Refer to **STANDARD PROCEDURE** .

      No

      - Go To 8.

8. **CHECK THE (T818) PRESSURE CONTROL SOLENOID D CIRCUIT FOR A SHORT TO ANOTHER CIRCUIT**
   1. Measure the resistance between the (T818) Pressure Control Solenoid D circuit and all other circuits in the TCM harness connector.

      Is there continuity between the (T818) Pressure Control Solenoid D circuit and any other circuits in the TCM harness connector?

      Yes

      - Repair the (T818) Pressure Control Solenoid D circuit for a short to another circuit.
      - Perform the TRANSMISSION VERIFICATION TEST. Refer to **STANDARD PROCEDURE** .

      No

NOTE: **If this Electronic Control Unit (ECU) is being replaced with a new unit, a diagnostic scan tool MUST be used to align the PROXI configuration data into the new ECU. Follow the routine outlined in the diagnostic scan tool for PROXI Configuration Alignment under Body Control Module (BCM) Miscellaneous Functions menu.**

- Using the schematics as a guide, check the Transmission Control Module (TCM) terminals and connectors for corrosion, damage or pushed out terminals. Pay particular attention to the power and ground circuits. If no problems are found, replace the TCM and perform programming and PROXI Configuration Alignment procedures. Refer to **MODULE, TRANSMISSION CONTROL, REMOVAL** .
- Perform the TRANSMISSION VERIFICATION TEST. Refer to **STANDARD PROCEDURE** .

9. **CHECK THE WIRING AND CONNECTORS**
   1. The conditions necessary to set this DTC are not present at this time.
   2. Use the Freeze Frame Data to help duplicate the conditions in which the DTC originally set. Pay particular attention to the DTC set conditions, such as, VSS, MAP, ECT, and Load.
   3. Using the schematics as a guide, visually inspect the related wiring harness. Look for any chafed, pierced, pinched, or partially broken wires.
   4. Visually inspect the related wiring harness connectors. Look for broken, bent, pushed out, or corroded terminals.
   5. Wiggle the wiring and connectors while checking for any possible open or shorted circuits.
   6. Check for any Service Information Tune-ups or Technical Service Bulletins that may apply.

   Were there any problems found?

   Yes

   - Repair as necessary.
   - Perform the TRANSMISSION VERIFICATION TEST. Refer to **STANDARD PROCEDURE** .

   No

   - Test Complete.

P0984-00-SHIFT SOLENOID 5 CONTROL CIRCUIT RANGE-PERFORMANCE

For a complete wiring diagram, **refer to appropriate SYSTEM WIRING DIAGRAMS article** .

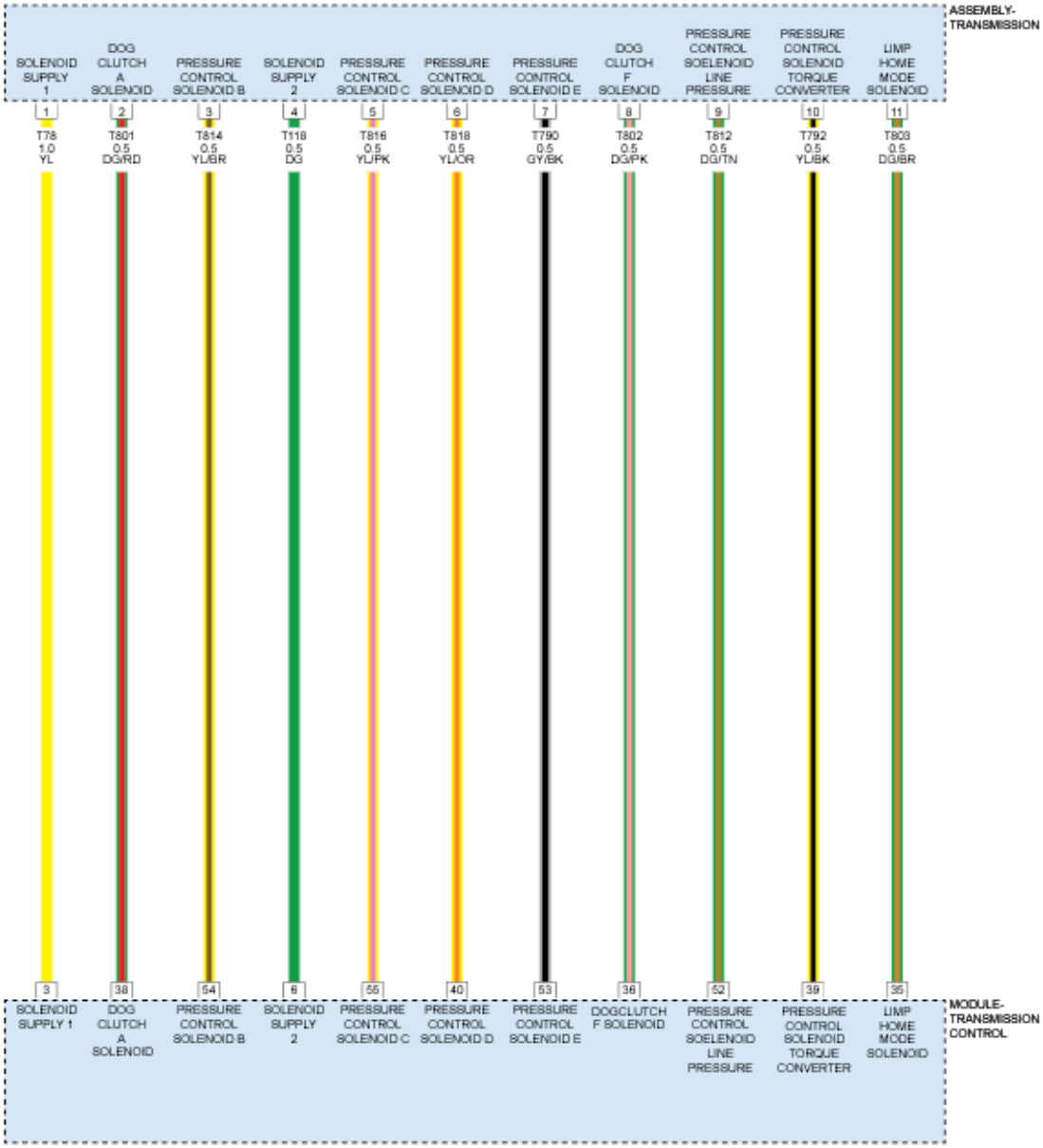

Fig. 38: Pressure Regulators & Solenoids Control Circuit Diagram
Courtesy of CHRYSLER GROUP, LLC

THEORY OF OPERATION

The purpose of the diagnostic is to detect a functional failure of the pressure regulator output stages in the TCM. The diagnostic monitors for an incorrect current feed to the pressure regulators which control the friction clutches. The monitoring is performed using two independent methods of comparing the commanded current to the measured current.

Current Summation Check: The sum current (total current of pressure regulators B, C, D, E) is measured using a shunt resistor. The measured value is compared to the summed commanded currents of pressure

regulators B, C, D, E (Sum Current Calculation).

PWM Feedback Signal Check: The pulse width modulation (PWM) feedback signal generated by the current regulator in the output stage identifies a deviating output current for each current regulator. To perform a functional check of the output stage current, the TCM calculates the actual current based upon the PWM feedback signal, the output stage power supply voltage and the resistance of the corresponding pressure regulator. This calculated current is compared to the commanded current from the current regulator.

WHEN MONITORED

Continuously after the ignition switch is turned to the run position.

All commanded solenoid currents are greater than zero.

SET CONDITION

Current Summation Check: The failure is detected if the calculated current summation deviates from the commanded current summation by a calibrated amount. The difference is compared to positive and negative calibrated thresholds.

PWM Feedback Signal Check: The failure is detected if the calculated pressure regulator current deviates from the commanded current by a calibrated amount. The difference is compared to positive and negative calibrated thresholds.

POSSIBLE CAUSES

Possible Causes
(T118) SOLENOID SUPPLY 2 CIRCUIT OPEN
(T118) SOLENOID SUPPLY 2 CIRCUIT SHORTED TO GROUND
(T790) PRESSURE CONTROL SOLENOID E CIRCUIT OPEN
(T790) PRESSURE CONTROL SOLENOID E CIRCUIT SHORTED TO GROUND
(T790) PRESSURE CONTROL SOLENOID E CIRCUIT SHORTED TO VOLTAGE
PRESSURE CONTROL SOLENOID E
TRANSMISSION CONTROL MODULE (TCM)

Always perform the Pre-Diagnostic Troubleshooting procedure before proceeding. Refer to STANDARD PROCEDURE .

DIAGNOSTIC TEST

1. **CHECK IF THE DTC IS CURRENT**
    1. Using the scan tool, read TCM DTCs.
    2. Record the Environmental Data and any DTCs.
    3. Clear DTCs.
    4. Using the recorded Environmental Data, along with the When Monitored and Set Conditions

above, operate the vehicle in the conditions that set the DTC.

5. Read TCM DTCs.

   Did the DTC reset?

   Yes

   - Go To 2

   No

   - Go To 9

2. **CHECK THE PRESSURE CONTROL SOLENOID E**
   1. Turn the Ignition OFF.
   2. Disconnect the Transmission Assembly harness connector.
   3. Measure the resistance of the Pressure Control Solenoid E at the appropriate terminals in the Transmission Assembly interface connector.

      Is the resistance of the Pressure Control Solenoid E 5.4 Ohms ± 0.5 Ohms?

      Yes

      - Go To 3

      No

      - Replace the Pressure Control Solenoid E in accordance with the service information.
      - Perform the TRANSMISSION VERIFICATION TEST. Refer to **STANDARD PROCEDURE** .

3. **CHECK THE (T118) SOLENOID SUPPLY 2 CIRCUIT FOR AN OPEN**
   1. Disconnect the TCM harness connector.
   2. Measure the resistance of the (T118) Solenoid Supply 2 circuit between the Transmission Assembly harness connector and the TCM harness connector.

      Is the resistance below 5.0 Ohms?

      Yes

      - Go To 4

      No

      - Repair the (T118) Solenoid Supply 2 circuit for an open or high resistance.
      - Perform the TRANSMISSION VERIFICATION TEST. Refer to **STANDARD**

PROCEDURE .

4. **CHECK THE (T118) SOLENOID SUPPLY 2 CIRCUIT FOR A SHORT TO GROUND**
   1. Measure the resistance between ground and the (T118) Solenoid Supply 2 circuit.

      Is there continuity between ground and the (T118) Solenoid Supply 2 circuit?

      Yes

      - Repair the (T118) Solenoid Supply 2 circuit for a short to ground.
      - Perform the TRANSMISSION VERIFICATION TEST. Refer to **STANDARD PROCEDURE** .

      No

      - Go To 5
5. **CHECK THE (T118) SOLENOID SUPPLY 2 CIRCUIT FOR A SHORT TO ANOTHER CIRCUIT**
   1. Measure the resistance between the (T118) Solenoid Supply 2 circuit and all other circuits in the TCM harness connector.

      Is there continuity between the (T118) Solenoid Supply 2 circuit and any other circuits in the TCM harness connector?

      Yes

      - Repair the (T118) Solenoid Supply 2 circuit for a short to another circuit.
      - Perform the TRANSMISSION VERIFICATION TEST. Refer to **STANDARD PROCEDURE** .

      No

      - Go To 6.
6. **CHECK THE (T790) PRESSURE CONTROL SOLENOID E CIRCUIT FOR AN OPEN**
   1. Measure the resistance of the (T790) Pressure Control Solenoid E circuit between the Transmission Assembly harness connector and the TCM harness connector.

      Is the resistance below 5.0 Ohms?

      Yes

      - Go To 7

      No

- Repair the (T790) Pressure Control Solenoid E circuit for an open or high resistance.
- Perform the TRANSMISSION VERIFICATION TEST. Refer to **STANDARD PROCEDURE** .

7. **CHECK THE (T790) PRESSURE CONTROL SOLENOID E CIRCUIT FOR A SHORT TO GROUND**
   1. Measure the resistance between ground and the (T790) Pressure Control Solenoid E circuit.

      Is there continuity between ground and the (T790) Pressure Control Solenoid E circuit?

      Yes

      - Repair the (T790) Pressure Control Solenoid E circuit for a short to ground.
      - Perform the TRANSMISSION VERIFICATION TEST. Refer to **STANDARD PROCEDURE** .

      No

      - Go To 8.

8. **CHECK THE (T790) PRESSURE CONTROL SOLENOID E CIRCUIT FOR A SHORT TO ANOTHER CIRCUIT**
   1. Measure the resistance between the (T790) Pressure Control Solenoid E circuit and all other circuits in the TCM harness connector.

      Is there continuity between the (T790) Pressure Control Solenoid E circuit and any other circuits in the TCM harness connector?

      Yes

      - Repair the (T790) Pressure Control Solenoid E circuit for a short to another circuit.
      - Perform the TRANSMISSION VERIFICATION TEST. Refer to **STANDARD PROCEDURE** .

      No

      NOTE: **If this Electronic Control Unit (ECU) is being replaced with a new unit, a diagnostic scan tool MUST be used to align the PROXI configuration data into the new ECU. Follow the routine outlined in the diagnostic scan tool for PROXI Configuration Alignment under Body Control Module (BCM) Miscellaneous Functions menu.**

      - Using the schematics as a guide, check the Transmission Control Module (TCM) terminals and connectors for corrosion, damage or pushed out terminals. Pay particular attention to the power and ground circuits. If no problems are found, replace the TCM and perform programming and PROXI Configuration Alignment procedures. Refer to **MODULE,**

TRANSMISSION CONTROL, REMOVAL .

- Perform the TRANSMISSION VERIFICATION TEST. Refer to **STANDARD PROCEDURE** .

9. **CHECK THE WIRING AND CONNECTORS**
    1. The conditions necessary to set this DTC are not present at this time.
    2. Use the Freeze Frame Data to help duplicate the conditions in which the DTC originally set. Pay particular attention to the DTC set conditions, such as, VSS, MAP, ECT, and Load.
    3. Using the schematics as a guide, visually inspect the related wiring harness. Look for any chafed, pierced, pinched, or partially broken wires.
    4. Visually inspect the related wiring harness connectors. Look for broken, bent, pushed out, or corroded terminals.
    5. Wiggle the wiring and connectors while checking for any possible open or shorted circuits.
    6. Check for any Service Information Tune-ups or Technical Service Bulletins that may apply.

    Were there any problems found?

    Yes

    - Repair as necessary.
    - Perform the TRANSMISSION VERIFICATION TEST. Refer to **STANDARD PROCEDURE** .

    No

    - Test Complete.

P0985-00-SHIFT SOLENOID 5 CONTROL CIRCUIT LOW

For a complete wiring diagram, **refer to appropriate SYSTEM WIRING DIAGRAMS article** .

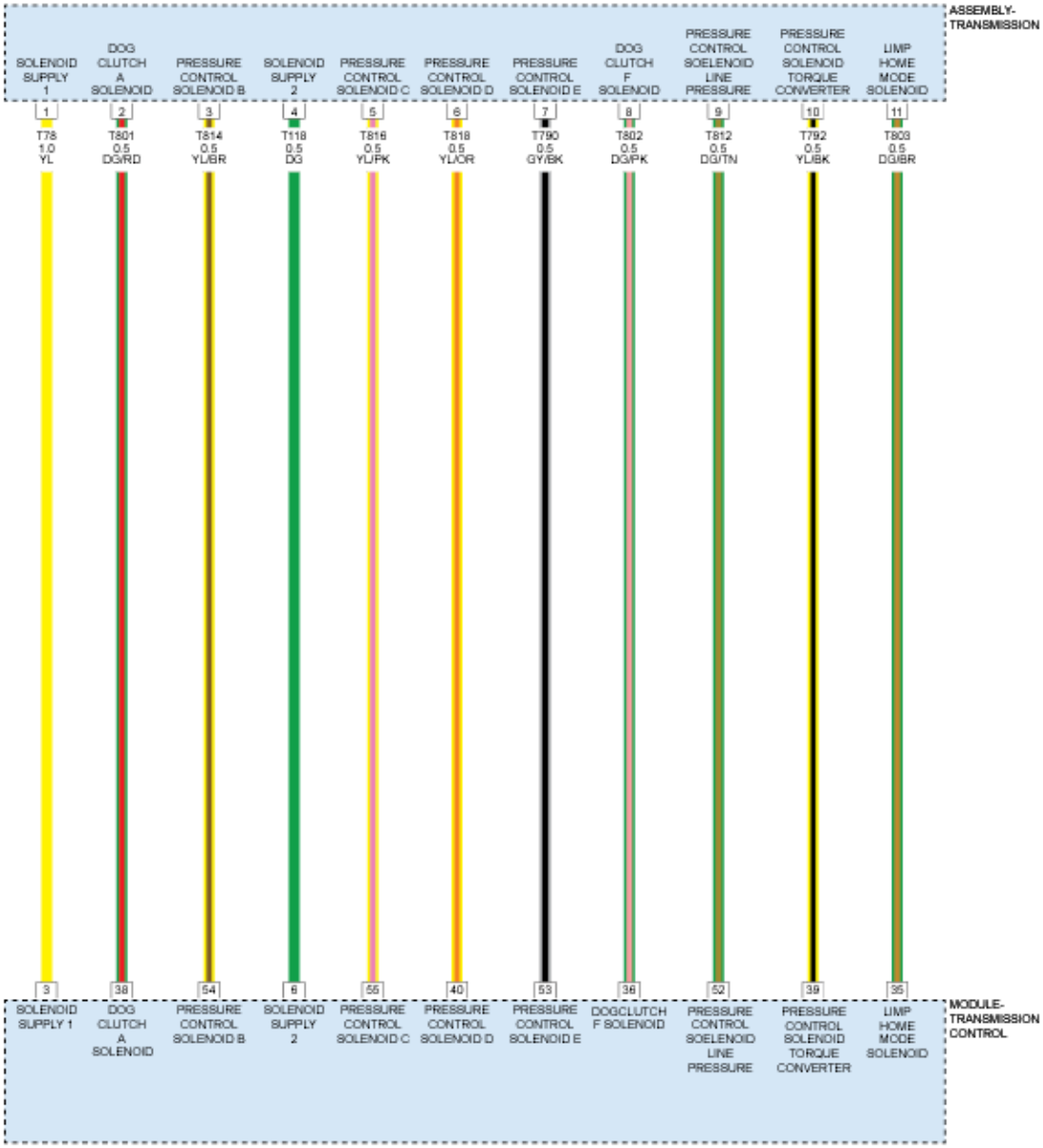

Fig. 39: Pressure Regulators & Solenoids Control Circuit Diagram
Courtesy of CHRYSLER GROUP, LLC

THEORY OF OPERATION

The purpose of the diagnostic is to detect circuit failures on any of the output stages. All output stages are controlled by a current controller that can operate an output stage in two different modes:

- Current controlled mode (pressure regulators)
- Switched mode or PWM controlled (solenoids)

Pressure Regulator Monitoring: The current regulator ASIC in the TCM indicates the following circuit failures via SPI bus to the CPU:

- Short to ground
- Short to battery or open circuit

Solenoid Monitoring: The TCM measures the actual solenoid voltages and compares them to calibrated thresholds to identify the following electrical failures:

- Short to ground or open circuit
- Short to battery

WHEN MONITORED

Output stages power supply switched on.

Power supply voltage is greater than a calibrated value.

SET CONDITION

Pressure Regulator Monitoring: A failure is detected if one of the following conditions occur:

An short to ground failure is detected if the ASIC indicates a short to ground failure.

A short to battery or open circuit failure is detected if the ASIC indicates a short to battery or open circuit failure.

Solenoid Monitoring: A failure is detected if one of the following conditions occur:

An short to ground or open circuit failure is detected if the ratio between the voltage at the solenoid valve and the output stages power supply is above a calibrated threshold.

A short to battery failure is detected if the ratio between the voltage at the solenoid valve and the output stages power supply is below a calibrated threshold.

POSSIBLE CAUSES

Possible Causes
(T118) SOLENOID SUPPLY 2 CIRCUIT OPEN
(T118) SOLENOID SUPPLY 2 CIRCUIT SHORTED TO GROUND
(T790) PRESSURE CONTROL SOLENOID E CIRCUIT OPEN
(T790) PRESSURE CONTROL SOLENOID E CIRCUIT SHORTED TO GROUND
(T790) PRESSURE CONTROL SOLENOID E CIRCUIT SHORTED TO VOLTAGE
PRESSURE CONTROL SOLENOID E
TRANSMISSION CONTROL MODULE (TCM)

Always perform the Pre-Diagnostic Troubleshooting procedure before proceeding. Refer to STANDARD PROCEDURE .

DIAGNOSTIC TEST

1. **CHECK IF THE DTC IS CURRENT**
    1. Using the scan tool, read TCM DTCs.
    2. Record the Environmental Data and any DTCs.
    3. Clear DTCs.
    4. Using the recorded Environmental Data, along with the When Monitored and Set Conditions above, operate the vehicle in the conditions that set the DTC.
    5. Read TCM DTCs.

    Did the DTC reset?

    Yes

    - Go To 2

    No

    - Go To 9
2. **CHECK THE PRESSURE CONTROL SOLENOID E**
    1. Turn the Ignition OFF.
    2. Disconnect the Transmission Assembly harness connector.
    3. Measure the resistance of the Pressure Control Solenoid E at the appropriate terminals in the Transmission Assembly interface connector.

    Is the resistance of the Pressure Control Solenoid E 5.4 Ohms ± 0.5 Ohms?

    Yes

    - Go To 3

    No

    - Replace the Pressure Control Solenoid E in accordance with the service information.
    - Perform the TRANSMISSION VERIFICATION TEST. Refer to **STANDARD PROCEDURE** .
3. **CHECK THE (T118) SOLENOID SUPPLY 2 CIRCUIT FOR AN OPEN**
    1. Disconnect the TCM harness connector.
    2. Measure the resistance of the (T118) Solenoid Supply 2 circuit between the Transmission Assembly harness connector and the TCM harness connector.

Is the resistance below 5.0 Ohms?

Yes

- Go To 4

No

- Repair the (T118) Solenoid Supply 2 circuit for an open or high resistance.
- Perform the TRANSMISSION VERIFICATION TEST. Refer to **STANDARD PROCEDURE** .

4. **CHECK THE (T118) SOLENOID SUPPLY 2 CIRCUIT FOR A SHORT TO GROUND**
   1. Measure the resistance between ground and the (T118) Solenoid Supply 2 circuit.

      Is there continuity between ground and the (T118) Solenoid Supply 2 circuit?

      Yes

      - Repair the (T118) Solenoid Supply 2 circuit for a short to ground.
      - Perform the TRANSMISSION VERIFICATION TEST. Refer to **STANDARD PROCEDURE** .

      No

      - Go To 5

5. **CHECK THE (T118) SOLENOID SUPPLY 2 CIRCUIT FOR A SHORT TO ANOTHER CIRCUIT**
   1. Measure the resistance between the (T118) Solenoid Supply 2 circuit and all other circuits in the TCM harness connector.

      Is there continuity between the (T118) Solenoid Supply 2 circuit and any other circuits in the TCM harness connector?

      Yes

      - Repair the (T118) Solenoid Supply 2 circuit for a short to another circuit.
      - Perform the TRANSMISSION VERIFICATION TEST. Refer to **STANDARD PROCEDURE** .

      No

      - Go To 6.

6. **CHECK THE (T790) PRESSURE CONTROL SOLENOID E CIRCUIT FOR AN OPEN**
   1. Measure the resistance of the (T790) Pressure Control Solenoid E circuit between the Transmission

Assembly harness connector and the TCM harness connector.

Is the resistance below 5.0 Ohms?

Yes

- Go To 7

No

- Repair the (T790) Pressure Control Solenoid E circuit for an open or high resistance.
- Perform the TRANSMISSION VERIFICATION TEST. Refer to **STANDARD PROCEDURE** .

7. **CHECK THE (T790) PRESSURE CONTROL SOLENOID E CIRCUIT FOR A SHORT TO GROUND**
   1. Measure the resistance between ground and the (T790) Pressure Control Solenoid E circuit.

      Is there continuity between ground and the (T790) Pressure Control Solenoid E circuit?

      Yes

      - Repair the (T790) Pressure Control Solenoid E circuit for a short to ground.
      - Perform the TRANSMISSION VERIFICATION TEST. Refer to **STANDARD PROCEDURE** .

      No

      - Go To 8.

8. **CHECK THE (T790) PRESSURE CONTROL SOLENOID E CIRCUIT FOR A SHORT TO ANOTHER CIRCUIT**
   1. Measure the resistance between the (T790) Pressure Control Solenoid E circuit and all other circuits in the TCM harness connector.

      Is there continuity between the (T790) Pressure Control Solenoid E circuit and any other circuits in the TCM harness connector?

      Yes

      - Repair the (T790) Pressure Control Solenoid E circuit for a short to another circuit.
      - Perform the TRANSMISSION VERIFICATION TEST. Refer to **STANDARD PROCEDURE** .

      No

NOTE: **If this Electronic Control Unit (ECU) is being replaced with a new unit, a diagnostic scan tool MUST be used to align the PROXI configuration data into the new ECU. Follow the routine outlined in the diagnostic scan tool for PROXI Configuration Alignment under Body Control Module (BCM) Miscellaneous Functions menu.**

- Using the schematics as a guide, check the Transmission Control Module (TCM) terminals and connectors for corrosion, damage or pushed out terminals. Pay particular attention to the power and ground circuits. If no problems are found, replace the TCM and perform programming and PROXI Configuration Alignment procedures. Refer to **MODULE, TRANSMISSION CONTROL, REMOVAL** .
- Perform the TRANSMISSION VERIFICATION TEST. Refer to **STANDARD PROCEDURE** .

9. **CHECK THE WIRING AND CONNECTORS**
   1. The conditions necessary to set this DTC are not present at this time.
   2. Use the Freeze Frame Data to help duplicate the conditions in which the DTC originally set. Pay particular attention to the DTC set conditions, such as, VSS, MAP, ECT, and Load.
   3. Using the schematics as a guide, visually inspect the related wiring harness. Look for any chafed, pierced, pinched, or partially broken wires.
   4. Visually inspect the related wiring harness connectors. Look for broken, bent, pushed out, or corroded terminals.
   5. Wiggle the wiring and connectors while checking for any possible open or shorted circuits.
   6. Check for any Service Information Tune-ups or Technical Service Bulletins that may apply.

   Were there any problems found?

   Yes

   - Repair as necessary.
   - Perform the TRANSMISSION VERIFICATION TEST. Refer to **STANDARD PROCEDURE** .

   No

   - Test Complete.

P0998-00-SHIFT SOLENOID 6 CONTROL CIRCUIT LOW

For a complete wiring diagram, **refer to appropriate SYSTEM WIRING DIAGRAMS article** .

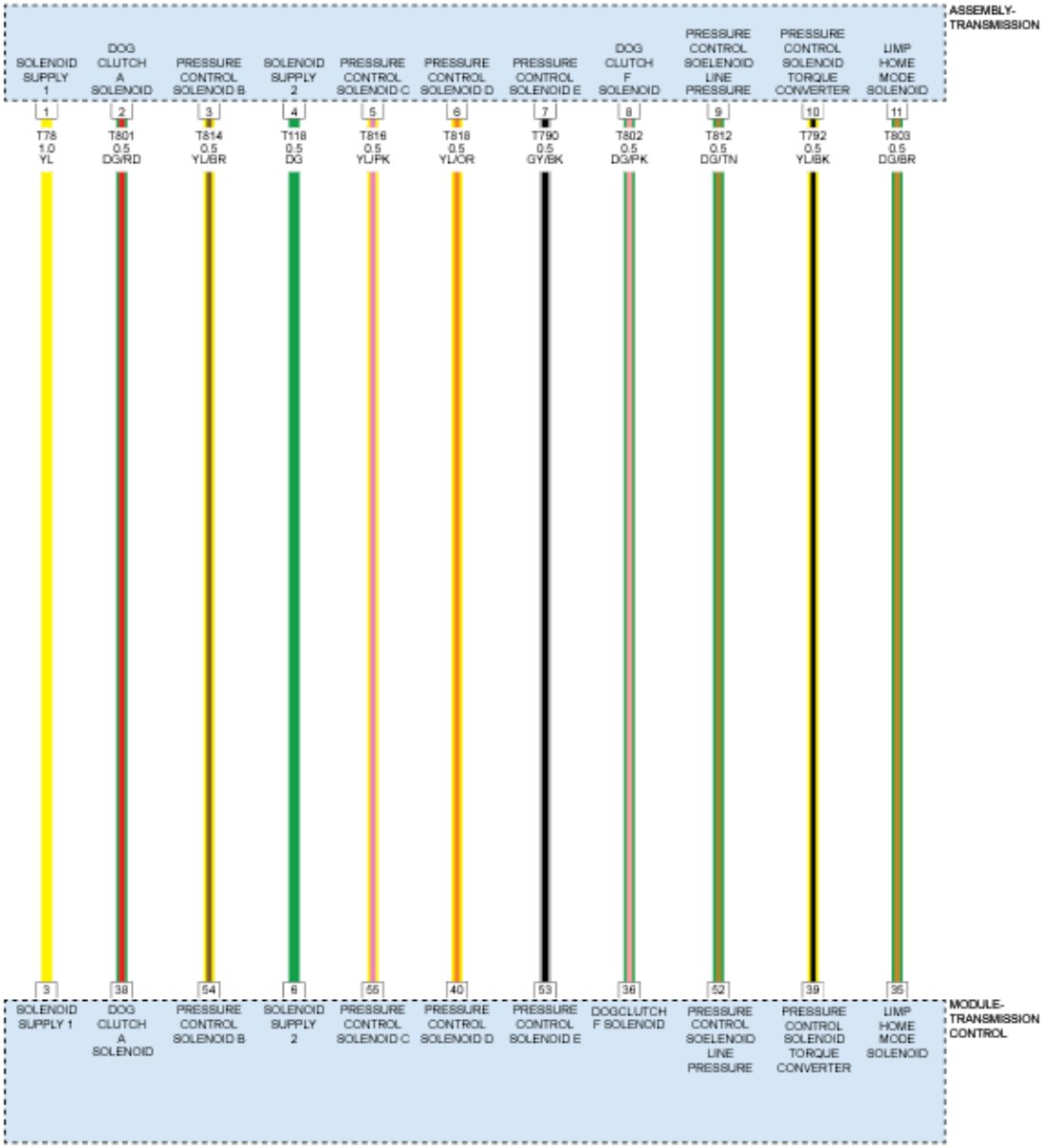

Fig. 40: Pressure Regulators & Solenoids Control Circuit Diagram
Courtesy of CHRYSLER GROUP, LLC

THEORY OF OPERATION

The purpose of the diagnostic is to detect circuit failures on any of the output stages. All output stages are controlled by a current controller that can operate an output stage in two different modes:

- Current controlled mode (pressure regulators)
- Switched mode or PWM controlled (solenoids)

Pressure Regulator Monitoring: The current regulator ASIC in the TCM indicates the following circuit failures via SPI bus to the CPU:

- Short to ground
- Short to battery or open circuit

Solenoid Monitoring: The TCM measures the actual solenoid voltages and compares them to calibrated thresholds to identify the following electrical failures:

- Short to ground or open circuit
- Short to battery

WHEN MONITORED

Output stages power supply switched on.

Power supply voltage is greater than a calibrated value.

SET CONDITION

Pressure Regulator Monitoring: A failure is detected if one of the following conditions occur:

An short to ground failure is detected if the ASIC indicates a short to ground failure.

A short to battery or open circuit failure is detected if the ASIC indicates a short to battery or open circuit failure.

Solenoid Monitoring: A failure is detected if one of the following conditions occur:

An short to ground or open circuit failure is detected if the ratio between the voltage at the solenoid valve and the output stages power supply is above a calibrated threshold.

A short to battery failure is detected if the ratio between the voltage at the solenoid valve and the output stages power supply is below a calibrated threshold.

POSSIBLE CAUSES

Possible Causes
(T78) SOLENOID SUPPLY 1 CIRCUIT OPEN
(T78) SOLENOID SUPPLY 1 CIRCUIT SHORTED TO GROUND
(T802) DOG CLUTCH F SOLENOID CIRCUIT OPEN
(T802) DOG CLUTCH F SOLENOID CIRCUIT SHORTED TO GROUND
(T802) DOG CLUTCH F SOLENOID CIRCUIT SHORTED TO VOLTAGE
DOG CLUTCH F SOLENOID
TRANSMISSION CONTROL MODULE (TCM)

Always perform the Pre-Diagnostic Troubleshooting procedure before proceeding. Refer to STANDARD PROCEDURE .

DIAGNOSTIC TEST

1. **CHECK IF THE DTC IS CURRENT**
    1. Using the scan tool, read TCM DTCs.
    2. Record the Environmental Data and any DTCs.
    3. Clear DTCs.
    4. Using the recorded Environmental Data, along with the When Monitored and Set Conditions above, operate the vehicle in the conditions that set the DTC.
    5. Read TCM DTCs.

    Did the DTC reset?

    Yes

    - Go To 2

    No

    - Go To 9
2. **CHECK THE DOG CLUTCH F SOLENOID**
    1. Turn the Ignition OFF.
    2. Disconnect the Transmission Assembly harness connector.
    3. Measure the resistance of the Dog Clutch F Solenoid at the appropriate terminals in the Transmission Assembly interface connector.

    Is the resistance of the Dog Clutch F Solenoid 11.0 Ohms ± 1.0 Ohms?

    Yes

    - Go To 3

    No

    - Replace the Dog Clutch F Solenoid in accordance with the Service Information.
    - Perform the TRANSMISSION VERIFICATION TEST. Refer to **STANDARD PROCEDURE** .
3. **CHECK THE (T78) SOLENOID SUPPLY 1 CIRCUIT FOR AN OPEN**
    1. Disconnect the TCM harness connector.
    2. Measure the resistance of the (T78) Solenoid Supply 1 circuit between the Transmission Assembly harness connector and the TCM harness connector.

Is the resistance below 5.0 Ohms?

Yes

- Go To 4

No

- Repair the (T78) Solenoid Supply 1 circuit for an open or high resistance.
- Perform the TRANSMISSION VERIFICATION TEST. Refer to **STANDARD PROCEDURE** .

4. **CHECK THE (T78) SOLENOID SUPPLY 1 CIRCUIT FOR A SHORT TO GROUND**
   1. Measure the resistance between ground and the (T78) Solenoid Supply 1 circuit.

      Is there continuity between ground and the (T78) Solenoid Supply 1 circuit?

      Yes

      - Repair the (T78) Solenoid Supply 1 circuit for a short to ground.
      - Perform the TRANSMISSION VERIFICATION TEST. Refer to **STANDARD PROCEDURE** .

      No

      - Go To 5

5. **CHECK THE (T78) SOLENOID SUPPLY 1 CIRCUIT FOR A SHORT TO ANOTHER CIRCUIT**
   1. Measure the resistance between the (T78) Solenoid Supply 1 circuit and all other circuits in the TCM harness connector.

      Is there continuity between the (T78) Solenoid Supply 1 circuit and any other circuits in the TCM harness connector?

      Yes

      - Repair the (T78) Solenoid Supply 1 circuit for a short to another circuit.
      - Perform the TRANSMISSION VERIFICATION TEST. Refer to **STANDARD PROCEDURE** .

      No

      - Go To 6.

6. **CHECK THE (T802) DOG CLUTCH F SOLENOID CIRCUIT FOR AN OPEN**
   1. Measure the resistance of the (T802) Dog Clutch F Solenoid circuit between the Transmission Assembly harness connector and the TCM harness connector.

Is the resistance below 5.0 Ohms?

Yes

- Go To 7

No

- Repair the (T802) Dog Clutch F Solenoid circuit for an open or high resistance.
- Perform the TRANSMISSION VERIFICATION TEST. Refer to **STANDARD PROCEDURE** .

7. **CHECK THE (T802) DOG CLUTCH F SOLENOID CIRCUIT FOR A SHORT TO GROUND**
   1. Measure the resistance between ground and the (T802) Dog Clutch F Solenoid circuit.

      Is there continuity between ground and the (T802) Dog Clutch F Solenoid circuit?

      Yes

      - Repair the (T802) Dog Clutch F Solenoid circuit for a short to ground.
      - Perform the TRANSMISSION VERIFICATION TEST. Refer to **STANDARD PROCEDURE** .

      No

      - Go To 8.

8. **CHECK THE (T802) DOG CLUTCH F SOLENOID CIRCUIT FOR A SHORT TO ANOTHER CIRCUIT**
   1. Measure the resistance between the (T802) Dog Clutch F Solenoid circuit and all other circuits in the TCM harness connector.

      Is there continuity between the (T802) Dog Clutch F Solenoid circuit and any other circuits in the TCM harness connector?

      Yes

      - Repair the (T802) Dog Clutch F Solenoid circuit for a short to another circuit.
      - Perform the TRANSMISSION VERIFICATION TEST. Refer to **STANDARD PROCEDURE** .

      No

      NOTE: **If this Electronic Control Unit (ECU) is being replaced with a new unit, a diagnostic scan tool MUST be used to align the PROXI configuration data into the new ECU. Follow the routine outlined in**

the diagnostic scan tool for PROXI Configuration Alignment under Body Control Module (BCM) Miscellaneous Functions menu.

- Using the schematics as a guide, check the Transmission Control Module (TCM) terminals and connectors for corrosion, damage or pushed out terminals. Pay particular attention to the power and ground circuits. If no problems are found, replace the TCM and perform programming and PROXI Configuration Alignment procedures. Refer to **MODULE, TRANSMISSION CONTROL, REMOVAL** .
- Perform the TRANSMISSION VERIFICATION TEST. Refer to **STANDARD PROCEDURE** .

9. **CHECK THE WIRING AND CONNECTORS**
   1. The conditions necessary to set this DTC are not present at this time.
   2. Use the Freeze Frame Data to help duplicate the conditions in which the DTC originally set. Pay particular attention to the DTC set conditions, such as, VSS, MAP, ECT, and Load.
   3. Using the schematics as a guide, visually inspect the related wiring harness. Look for any chafed, pierced, pinched, or partially broken wires.
   4. Visually inspect the related wiring harness connectors. Look for broken, bent, pushed out, or corroded terminals.
   5. Wiggle the wiring and connectors while checking for any possible open or shorted circuits.
   6. Check for any Service Information Tune-ups or Technical Service Bulletins that may apply.

   Were there any problems found?

   Yes

   - Repair as necessary.
   - Perform the TRANSMISSION VERIFICATION TEST. Refer to **STANDARD PROCEDURE** .

   No

   - Test Complete.

P0999-00-SHIFT SOLENOID 6 CONTROL CIRCUIT HIGH

For a complete wiring diagram, **refer to appropriate SYSTEM WIRING DIAGRAMS article** .

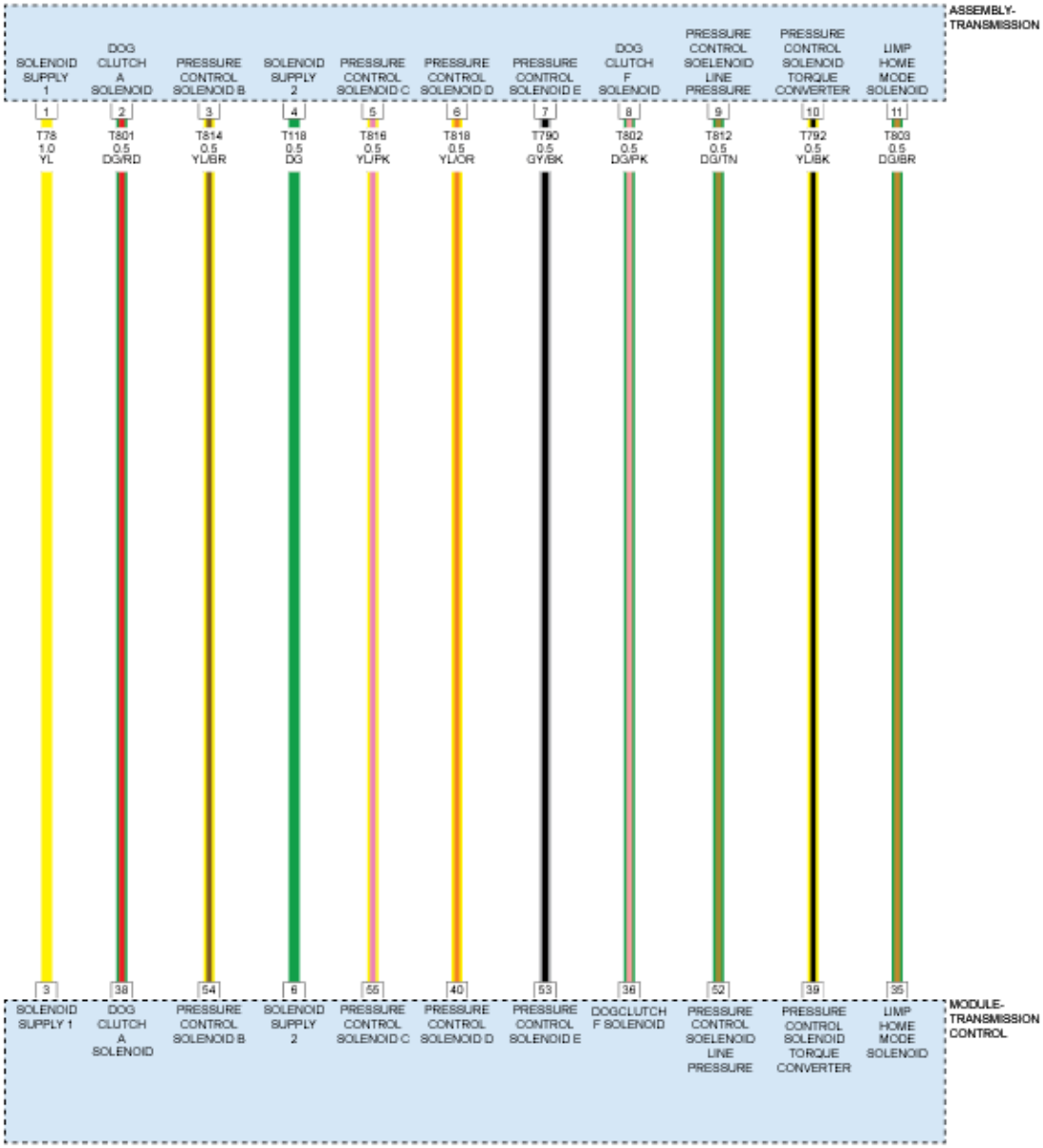

Fig. 41: Pressure Regulators & Solenoids Control Circuit Diagram
Courtesy of CHRYSLER GROUP, LLC

THEORY OF OPERATION

The purpose of the diagnostic is to detect circuit failures on any of the output stages. All output stages are controlled by a current controller that can operate an output stage in two different modes:

- Current controlled mode (pressure regulators)
- Switched mode or PWM controlled (solenoids)

Pressure Regulator Monitoring: The current regulator ASIC in the TCM indicates the following circuit failures via SPI bus to the CPU:

- Short to ground
- Short to battery or open circuit

Solenoid Monitoring: The TCM measures the actual solenoid voltages and compares them to calibrated thresholds to identify the following electrical failures:

- Short to ground or open circuit
- Short to battery

WHEN MONITORED

Output stages power supply switched on.

Power supply voltage is greater than a calibrated value.

SET CONDITION

Pressure Regulator Monitoring: A failure is detected if one of the following conditions occur:

An short to ground failure is detected if the ASIC indicates a short to ground failure.

A short to battery or open circuit failure is detected if the ASIC indicates a short to battery or open circuit failure.

Solenoid Monitoring: A failure is detected if one of the following conditions occur:

An short to ground or open circuit failure is detected if the ratio between the voltage at the solenoid valve and the output stages power supply is above a calibrated threshold.

A short to battery failure is detected if the ratio between the voltage at the solenoid valve and the output stages power supply is below a calibrated threshold.

POSSIBLE CAUSES

Possible Causes
(T78) SOLENOID SUPPLY 1 CIRCUIT OPEN
(T78) SOLENOID SUPPLY 1 CIRCUIT SHORTED TO GROUND
(T802) DOG CLUTCH F SOLENOID CIRCUIT OPEN
(T802) DOG CLUTCH F SOLENOID CIRCUIT SHORTED TO GROUND
(T802) DOG CLUTCH F SOLENOID CIRCUIT SHORTED TO VOLTAGE
DOG CLUTCH F SOLENOID
TRANSMISSION CONTROL MODULE (TCM)

Always perform the Pre-Diagnostic Troubleshooting procedure before proceeding. Refer to STANDARD PROCEDURE .

DIAGNOSTIC TEST

1. **CHECK IF THE DTC IS CURRENT**
    1. Using the scan tool, read TCM DTCs.
    2. Record the Environmental Data and any DTCs.
    3. Clear DTCs.
    4. Using the recorded Environmental Data, along with the When Monitored and Set Conditions above, operate the vehicle in the conditions that set the DTC.
    5. Read TCM DTCs.

    Did the DTC reset?

    Yes

    - Go To 2

    No

    - Go To 9
2. **CHECK THE DOG CLUTCH F SOLENOID**
    1. Turn the Ignition OFF.
    2. Disconnect the Transmission Assembly harness connector.
    3. Measure the resistance of the Dog Clutch F Solenoid at the appropriate terminals in the Transmission Assembly interface connector.

    Is the resistance of the Dog Clutch F Solenoid 11.0 Ohms ± 1.0 Ohms?

    Yes

    - Go To 3

    No

    - Replace the Dog Clutch F Solenoid in accordance with the Service Information.
    - Perform the TRANSMISSION VERIFICATION TEST. Refer to **STANDARD PROCEDURE** .
3. **CHECK THE (T78) SOLENOID SUPPLY 1 CIRCUIT FOR AN OPEN**
    1. Disconnect the TCM harness connector.
    2. Measure the resistance of the (T78) Solenoid Supply 1 circuit between the Transmission Assembly harness connector and the TCM harness connector.

Is the resistance below 5.0 Ohms?

Yes

- Go To 4

No

- Repair the (T78) Solenoid Supply 1 circuit for an open or high resistance.
- Perform the TRANSMISSION VERIFICATION TEST. Refer to **STANDARD PROCEDURE** .

4. **CHECK THE (T78) SOLENOID SUPPLY 1 CIRCUIT FOR A SHORT TO GROUND**
   1. Measure the resistance between ground and the (T78) Solenoid Supply 1 circuit.

      Is there continuity between ground and the (T78) Solenoid Supply 1 circuit?

      Yes

      - Repair the (T78) Solenoid Supply 1 circuit for a short to ground.
      - Perform the TRANSMISSION VERIFICATION TEST. Refer to **STANDARD PROCEDURE** .

      No

      - Go To 5

5. **CHECK THE (T78) SOLENOID SUPPLY 1 CIRCUIT FOR A SHORT TO ANOTHER CIRCUIT**
   1. Measure the resistance between the (T78) Solenoid Supply 1 circuit and all other circuits in the TCM harness connector.

      Is there continuity between the (T78) Solenoid Supply 1 circuit and any other circuits in the TCM harness connector?

      Yes

      - Repair the (T78) Solenoid Supply 1 circuit for a short to another circuit.
      - Perform the TRANSMISSION VERIFICATION TEST. Refer to **STANDARD PROCEDURE** .

      No

      - Go To 6.

6. **CHECK THE (T802) DOG CLUTCH F SOLENOID CIRCUIT FOR AN OPEN**
   1. Measure the resistance of the (T802) Dog Clutch F Solenoid circuit between the Transmission Assembly harness connector and the TCM harness connector.

Is the resistance below 5.0 Ohms?

Yes

- Go To 7

No

- Repair the (T802) Dog Clutch F Solenoid circuit for an open or high resistance.
- Perform the TRANSMISSION VERIFICATION TEST. Refer to **STANDARD PROCEDURE** .

7. **CHECK THE (T802) DOG CLUTCH F SOLENOID CIRCUIT FOR A SHORT TO GROUND**
   1. Measure the resistance between ground and the (T802) Dog Clutch F Solenoid circuit.

      Is there continuity between ground and the (T802) Dog Clutch F Solenoid circuit?

      Yes

      - Repair the (T802) Dog Clutch F Solenoid circuit for a short to ground.
      - Perform the TRANSMISSION VERIFICATION TEST. Refer to **STANDARD PROCEDURE** .

      No

      - Go To 8.

8. **CHECK THE (T802) DOG CLUTCH F SOLENOID CIRCUIT FOR A SHORT TO ANOTHER CIRCUIT**
   1. Measure the resistance between the (T802) Dog Clutch F Solenoid circuit and all other circuits in the TCM harness connector.

      Is there continuity between the (T802) Dog Clutch F Solenoid circuit and any other circuits in the TCM harness connector?

      Yes

      - Repair the (T802) Dog Clutch F Solenoid circuit for a short to another circuit.
      - Perform the TRANSMISSION VERIFICATION TEST. Refer to **STANDARD PROCEDURE** .

      No

      NOTE: **If this Electronic Control Unit (ECU) is being replaced with a new unit, a diagnostic scan tool MUST be used to align the PROXI configuration data into the new ECU. Follow the routine outlined in**

the diagnostic scan tool for PROXI Configuration Alignment under Body Control Module (BCM) Miscellaneous Functions menu.

- Using the schematics as a guide, check the Transmission Control Module (TCM) terminals and connectors for corrosion, damage or pushed out terminals. Pay particular attention to the power and ground circuits. If no problems are found, replace the TCM and perform programming and PROXI Configuration Alignment procedures. Refer to **MODULE, TRANSMISSION CONTROL, REMOVAL** .
- Perform the TRANSMISSION VERIFICATION TEST. Refer to **STANDARD PROCEDURE** .

9. **CHECK THE WIRING AND CONNECTORS**
   1. The conditions necessary to set this DTC are not present at this time.
   2. Use the Freeze Frame Data to help duplicate the conditions in which the DTC originally set. Pay particular attention to the DTC set conditions, such as, VSS, MAP, ECT, and Load.
   3. Using the schematics as a guide, visually inspect the related wiring harness. Look for any chafed, pierced, pinched, or partially broken wires.
   4. Visually inspect the related wiring harness connectors. Look for broken, bent, pushed out, or corroded terminals.
   5. Wiggle the wiring and connectors while checking for any possible open or shorted circuits.
   6. Check for any Service Information Tune-ups or Technical Service Bulletins that may apply.

   Were there any problems found?

   Yes

   - Repair as necessary.
   - Perform the TRANSMISSION VERIFICATION TEST. Refer to **STANDARD PROCEDURE** .

   No

   - Test Complete.

P1500-00-ECU CONFIGURATION MISMATCH

For a complete wiring diagram, **refer to appropriate SYSTEM WIRING DIAGRAMS article** .

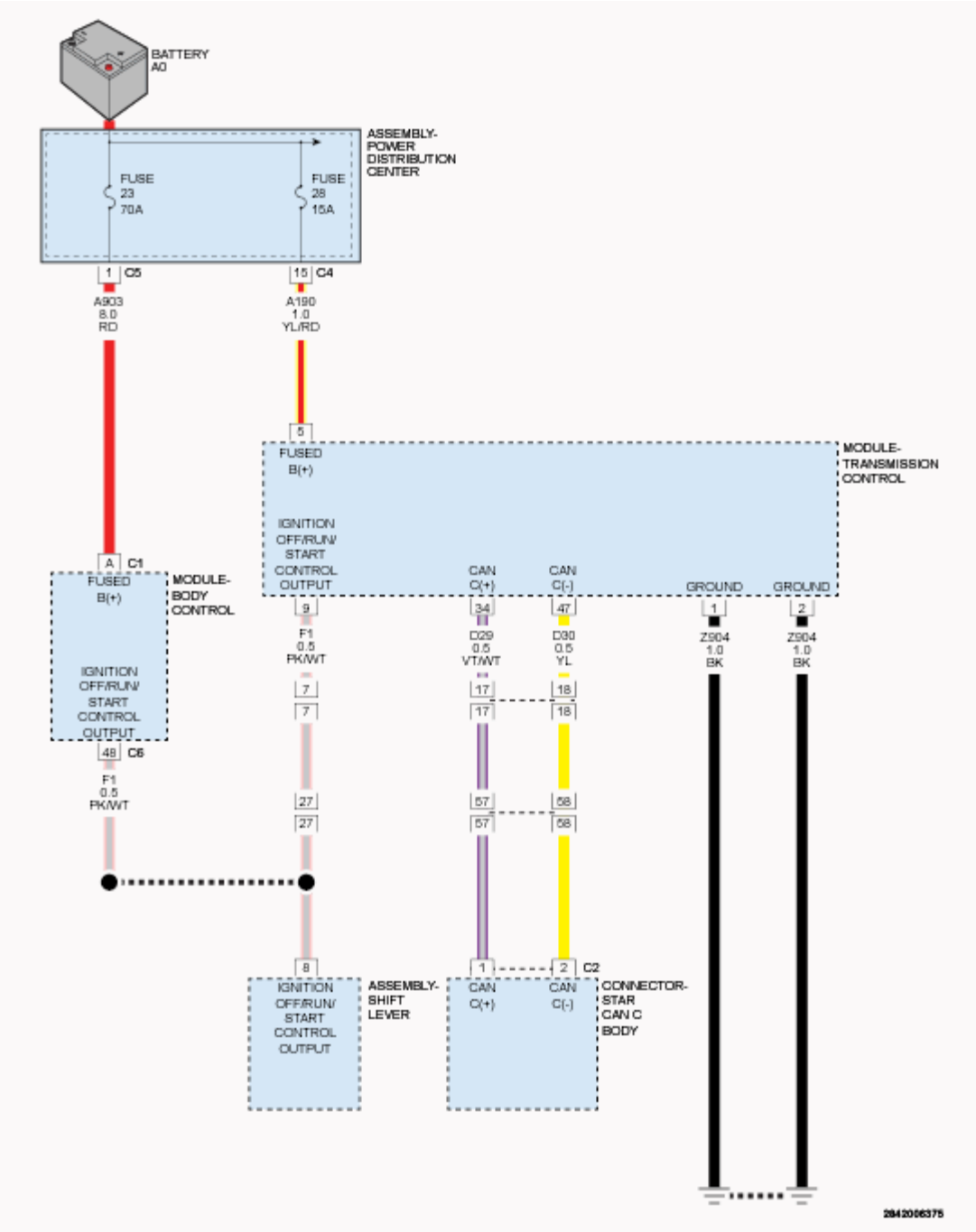

Fig. 42: TCM System Voltage Circuit Diagram
Courtesy of CHRYSLER GROUP, LLC

THEORY OF OPERATION

The purpose of the diagnostic is to detect an incorrect vehicle configuration stored in the TCM. This diagnostic compares the vehicle configuration codes stored in the TCM to the vehicle configuration codes received via CAN from the Body Control Module (BCM).

WHEN MONITORED

Ignition is ON.

SET CONDITION

The failure is detected if the vehicle configuration codes stored in the TCM are not equal to the vehicle configuration codes received via CAN from the Body Control Module (BCM).

POSSIBLE CAUSES

Possible Causes
USED CONTROLLER INSTALLED WITH WRONG CONFIGURATION
BCM NOT PROPERLY PROGRAMED OR WAS REPLACED AND NOT PROGRAMED
TCM NOT PROPERLY PROGRAMED OR WAS REPLACED AND NOT PROGRAMED
TCM - INTERNAL ERROR

Always perform the Pre-Diagnostic Troubleshooting procedure before proceeding. Refer to STANDARD PROCEDURE .

DIAGNOSTIC TEST

1. **CHECK IF DTC IS CURRENT**
    1. With the scan tool, read TCM DTCs.
    2. Record the Environmental Data and any DTCs.
    3. With the scan tool, erase DTCs.
    4. Using the recorded Environmental Data, along with the When Monitored and Set Conditions above, operate the vehicle in the conditions that set the DTC.
    5. With the scan tool, read TCM DTCs.

    Did the DTC reset?

    Yes

    - Go To 2

    No

    - Go To 4
2. **CHECK THE BCM**

    Has the BCM been reprogrammed or replaced without being programed?

    Yes

- Program the BCM if not programed. With the scan tool perform the proxi update procedure.
- Perform the TRANSMISSION VERIFICATION TEST. Refer to **STANDARD PROCEDURE** .

No

- Go To 3

3. **CHECK THE TCM**

Has the TCM been recently replaced with a new or used controller?

Yes

- With the scan tool perform a TCM proxi relearn.
- Perform the TRANSMISSION VERIFICATION TEST. Refer to **STANDARD PROCEDURE** .

No

NOTE: **If this Electronic Control Unit (ECU) is being replaced with a new unit, a diagnostic scan tool MUST be used to align the PROXI configuration data into the new ECU. Follow the routine outlined in the diagnostic scan tool for PROXI Configuration Alignment under Body Control Module (BCM) Miscellaneous Functions menu.**

- Using the schematics as a guide, check the Transmission Control Module (TCM) terminals and connectors for corrosion, damage or pushed out terminals. Pay particular attention to the power and ground circuits. If no problems are found, replace the TCM and perform programming and PROXI Configuration Alignment procedures. Refer to **MODULE, TRANSMISSION CONTROL, REMOVAL** .
- Perform the TRANSMISSION VERIFICATION TEST. Refer to **STANDARD PROCEDURE** .

4. **CHECK WIRING AND CONNECTORS**
   1. The conditions necessary to set the DTC are not present at this time.
   2. Using the schematics as a guide, inspect the wiring and connectors specific to this circuit.
   3. Wiggle the wires while checking for shorted and open circuits.
   4. Check for any Service Bulletins that may apply.

   Were there any problems found?

   Yes

   - Repair as necessary.
   - Perform the TRANSMISSION VERIFICATION TEST. Refer to **STANDARD PROCEDURE** .

No

- Test complete.

P1614-00-ECU RESET-RECOVERY OCCURRED

For a complete wiring diagram, **refer to appropriate SYSTEM WIRING DIAGRAMS article** .

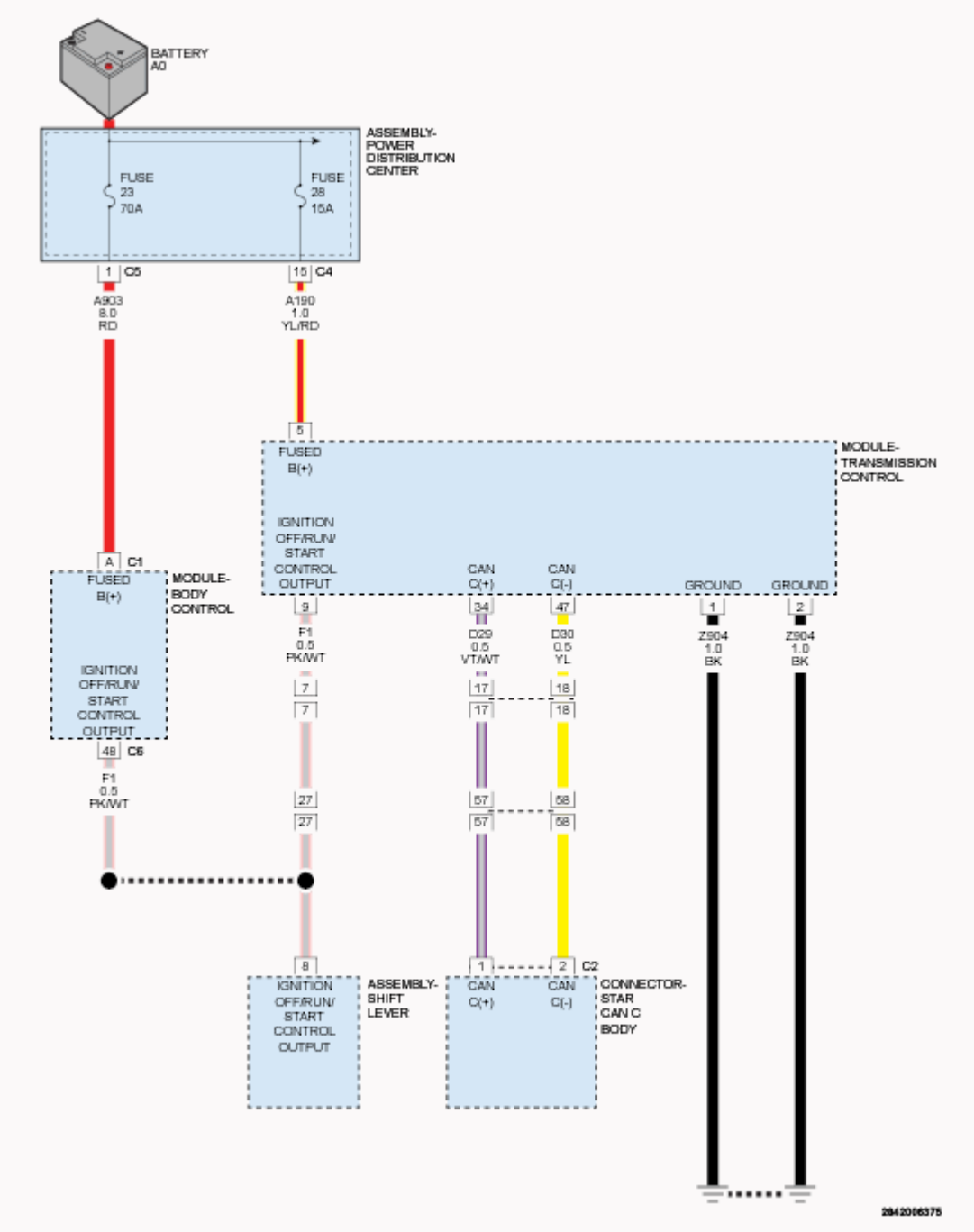

Fig. 43: TCM System Voltage Circuit Diagram

Courtesy of CHRYSLER GROUP, LLC

THEORY OF OPERATION

The purpose of the diagnostic is to detect the reason of a TCM reset. The reason is determined after a reset following TCM re-initialization. There are several situations where a reset of the TCM can occur. Some of these are initiated by the TCM software itself and others may be caused by an under voltage condition. There are three reset categories which include low level software, high level / application software and under voltage conditions. The following failures are examples of each of these categories that can cause resets of the TCM:

- A function call is out of sequence in the high level / application software
- A division by zero has occurred in the low level software
- An under voltage condition has occurred in the TCM supply voltage

If the software detects a condition for initiating a reset, the reason of the reset is stored in an area of the RAM that is not initialized (non volatile) during TCM re-initialization. Upon TCM initialization, this information is read and the appropriate fault code indicating the reason of the reset is stored.

WHEN MONITORED

TCM is powered on.

The output speed is greater than a calibrated value or the engine speed is greater than a calibrated value.

SET CONDITION

Reset in Low Level Software or Under Voltage Condition:

The failure is detected during re-initialization of the TCM if a reset code for low level software or under voltage condition has been stored in the non volatile RAM.

Reset in High Level / Application Software:

The failure is detected during re-initialization of the TCM if a reset code for high level / application software has been stored in the non volatile RAM.

POSSIBLE CAUSES

Possible Causes
TCM - INTERNAL ERROR

Always perform the Pre-Diagnostic Troubleshooting procedure before proceeding. Refer to STANDARD PROCEDURE .

DIAGNOSTIC TEST

1. **CHECK FOR OTHER DTCS**
   1. With the scan tool, read TCM DTCs.
   2. Record the Environmental Data and any DTCs.

      Are any other TCM DTCs set?

      Yes

      - Repair the other DTCs before proceeding. After the repair is complete, perform the TRANSMISSION VERIFICATION TEST. Refer to **STANDARD PROCEDURE** .

      No

      - Go To 2
2. **CHECK IF DTC IS CURRENT**
   1. With the scan tool, erase DTCs.
   2. Using the recorded Environmental Data, along with the When Monitored and Set Conditions above, operate the vehicle in the conditions that set the DTC.
   3. With the scan tool, read TCM DTCs.

      Did the DTC reset?

      Yes

      NOTE: If this Electronic Control Unit (ECU) is being replaced with a new unit, a diagnostic scan tool MUST be used to align the PROXI configuration data into the new ECU. Follow the routine outlined in the diagnostic scan tool for PROXI Configuration Alignment under Body Control Module (BCM) Miscellaneous Functions menu.

      - Using the schematics as a guide, check the Transmission Control Module (TCM) terminals and connectors for corrosion, damage or pushed out terminals. Pay particular attention to the power and ground circuits. If no problems are found, replace the TCM and perform programming and PROXI Configuration Alignment procedures. Refer to **MODULE, TRANSMISSION CONTROL, REMOVAL** .
      - Perform the TRANSMISSION VERIFICATION TEST. Refer to **STANDARD PROCEDURE** .

      No

      - Go To 3
3. **CHECK WIRING AND CONNECTORS**
   1. The conditions necessary to set the DTC are not present at this time.

2. Using the schematics as a guide, inspect the wiring and connectors specific to this circuit.
3. Wiggle the wires while checking for shorted and open circuits.
4. Check for any Service Bulletins that may apply.

Were there any problems found?

Yes

- Repair as necessary.
- Perform the TRANSMISSION VERIFICATION TEST. Refer to **STANDARD PROCEDURE** .

No

- Test complete.

P1634-00-TCM INTERNAL INTERNAL WATCHDOG PERFORMANCE

For a complete wiring diagram, **refer to appropriate SYSTEM WIRING DIAGRAMS article** .

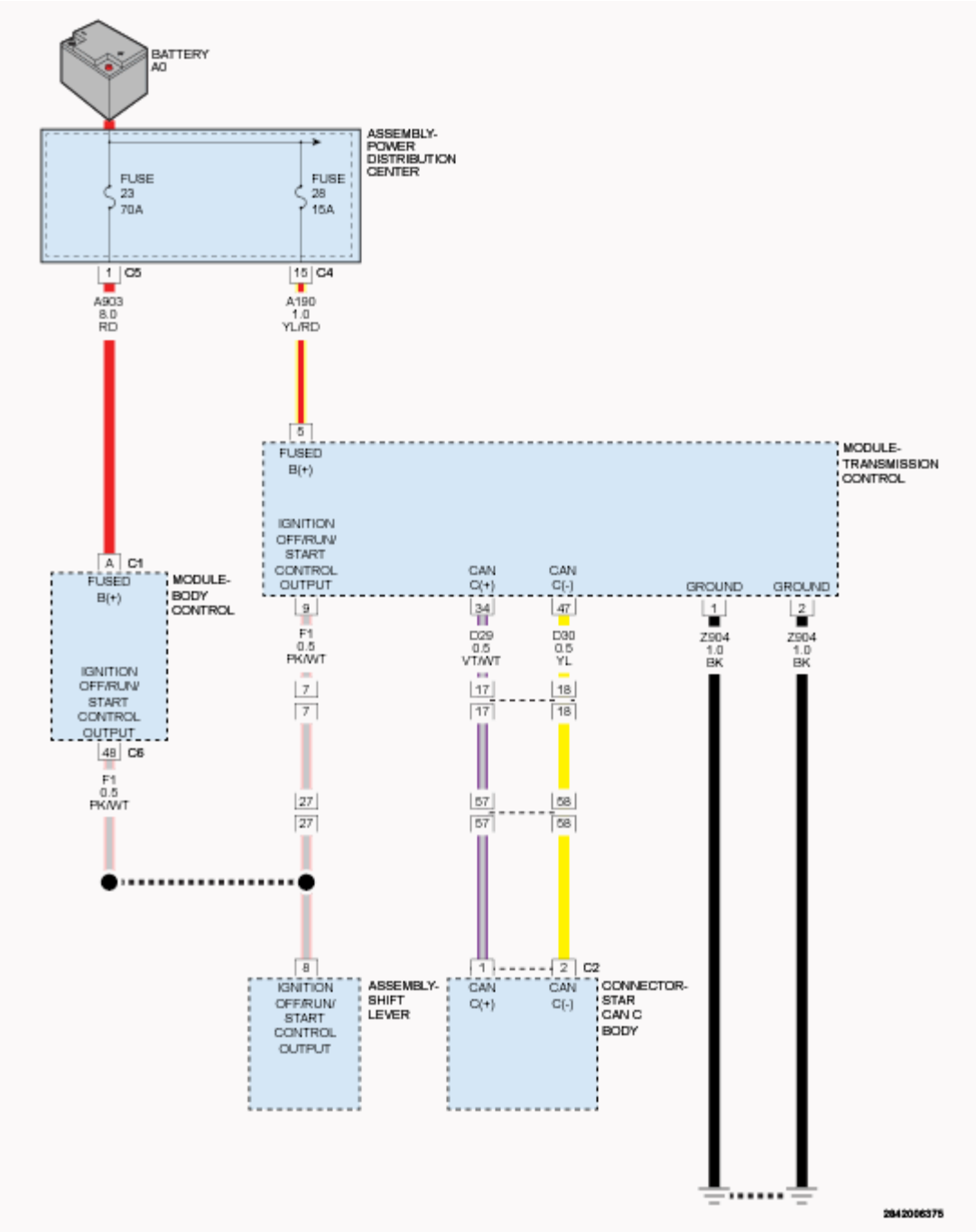

Fig. 44: TCM System Voltage Circuit Diagram
Courtesy of CHRYSLER GROUP, LLC

THEORY OF OPERATION

The TCM monitors for internal hardware and software failures. If a failure is detected, a DTC will set that indicates the exact nature of the failure.

WHEN MONITORED

Continuously with the ignition switch in the run position.

The Inhibit Path Test that is done during initialization has successfully completed.

SET CONDITION

A failure is detected if one of the following conditions occurs:

- A failure in the SPI communication between the CPU and the watchdog ASIC (e.g. timeout of SPI message) is detected.
- The status value of the watchdog ASIC, which includes the watchdog error counter, is unequal to the expected value in the CPU software.
- The watchdog error counter is above the threshold to switch off the output stages.
- The number of safety relevant software modules monitored by the Program Flow Control is not as expected.
- A safety relevant software module monitored by the Program Flow Control has calculated an invalid checksum.
- The actual sequence of safety relevant software modules monitored by the Program Flow Control is not equal to the expected sequence.

POSSIBLE CAUSES

Possible Causes
TCM - INTERNAL ERROR

Always perform the Pre-Diagnostic Troubleshooting procedure before proceeding. Refer to STANDARD PROCEDURE .

DIAGNOSTIC TEST

1. **CHECK IF DTC IS CURRENT**
    1. With the scan tool, read TCM DTCs.
    2. Record the Environmental Data and any DTCs.
    3. With the scan tool, erase DTCs.
    4. Using the recorded Environmental Data, along with the When Monitored and Set Conditions above, operate the vehicle in the conditions that set the DTC.
    5. With the scan tool, read TCM DTCs.

    Did the DTC reset?

    Yes

    NOTE: If this Electronic Control Unit (ECU) is being replaced with a new unit, a diagnostic scan tool MUST be used to align the PROXI

configuration data into the new ECU. Follow the routine outlined in the diagnostic scan tool for PROXI Configuration Alignment under Body Control Module (BCM) Miscellaneous Functions menu.

- Using the schematics as a guide, check the Transmission Control Module (TCM) terminals and connectors for corrosion, damage or pushed out terminals. Pay particular attention to the power and ground circuits. If no problems are found, replace the TCM and perform programming and PROXI Configuration Alignment procedures. Refer to **MODULE, TRANSMISSION CONTROL, REMOVAL** .
- Perform the TRANSMISSION VERIFICATION TEST. Refer to **STANDARD PROCEDURE** .

No

- Go To 2

2. **CHECK WIRING AND CONNECTORS**
   1. The conditions necessary to set the DTC are not present at this time.
   2. Using the schematics as a guide, inspect the wiring and connectors specific to this circuit.
   3. Wiggle the wires while checking for shorted and open circuits.
   4. Check for any Service Bulletins that may apply.

   Were there any problems found?

   Yes

   - Repair as necessary.
   - Perform the TRANSMISSION VERIFICATION TEST. Refer to **STANDARD PROCEDURE** .

   No

   - Test complete.

P167A-00-CALIBRATION MISMATCH

For a complete wiring diagram, **refer to appropriate SYSTEM WIRING DIAGRAMS article** .

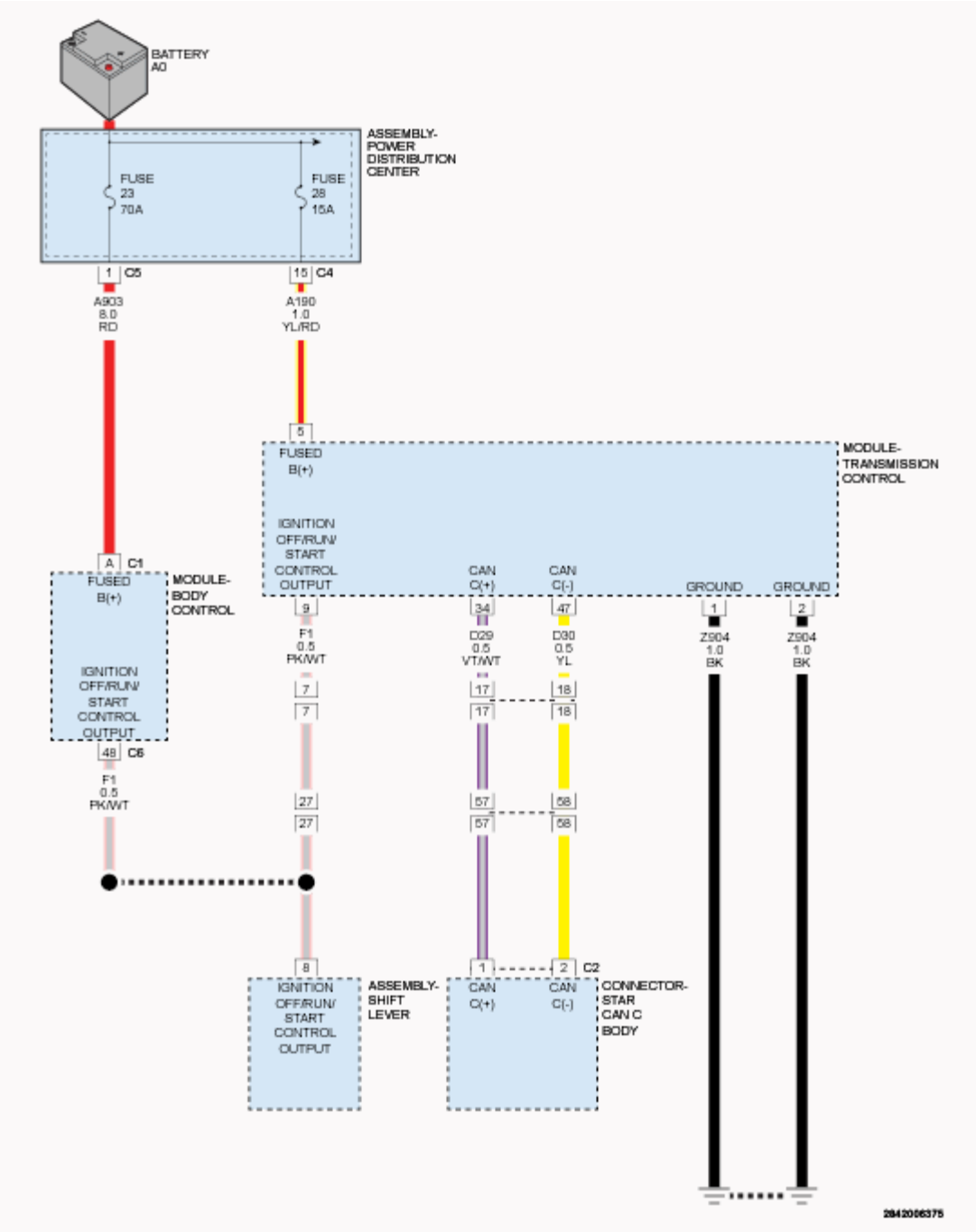

Fig. 45: TCM System Voltage Circuit Diagram
Courtesy of CHRYSLER GROUP, LLC

THEORY OF OPERATION

The purpose of the diagnostic is to detect if the programmed TCM software does not match the hydraulic identification number stored in the EEPROM of the TCM which indicates the type of hydraulic hardware in the transmission. This hydraulic identification number is stored during manufacturing of the hydraulic by the transmission supplier.

WHEN MONITORED

Ignition is ON.

SET CONDITION

A failure is detected if the hydraulic identification number stored during the manufacturing of the hydraulic does not match the expected value in the TCM software.

POSSIBLE CAUSES

Possible Causes
TRANSMISSION CONTROL MODULE (TCM) IS NOT PROGRAMMED TCM INTERNAL ERROR

Always perform the Pre-Diagnostic Troubleshooting procedure before proceeding. Refer to STANDARD PROCEDURE .

DIAGNOSTIC TEST

PERFORM TCM PROGRAM PROCEDURE

1. With the scan tool, attempt to program the TCM with the latest calibrations and perform the PROXI Configuration Alignment procedure.

   Were you able to program the TCM successfully?

   Yes

   - Test complete.
   - Perform the TRANSMISSION VERIFICATION TEST. Refer to **STANDARD PROCEDURE** .

   No

   NOTE: If this Electronic Control Unit (ECU) is being replaced with a new unit, a diagnostic scan tool MUST be used to align the PROXI configuration data into the new ECU. Follow the routine outlined in the diagnostic scan tool for PROXI Configuration Alignment under Body Control Module (BCM) Miscellaneous Functions menu.

   - Using the schematics as a guide, check the Transmission Control Module (TCM) terminals and connectors for corrosion, damage or pushed out terminals. Pay particular attention to the power and ground circuits. If no problems are found, replace the TCM and perform programming and PROXI Configuration Alignment procedures. Refer to **MODULE, TRANSMISSION CONTROL, REMOVAL** .
   - Perform the TRANSMISSION VERIFICATION TEST. Refer to **STANDARD PROCEDURE** .

P1725-00-TRANSMISSION RANGE SENSOR C CIRCUIT LOW

For a complete wiring diagram, **refer to appropriate SYSTEM WIRING DIAGRAMS article** .

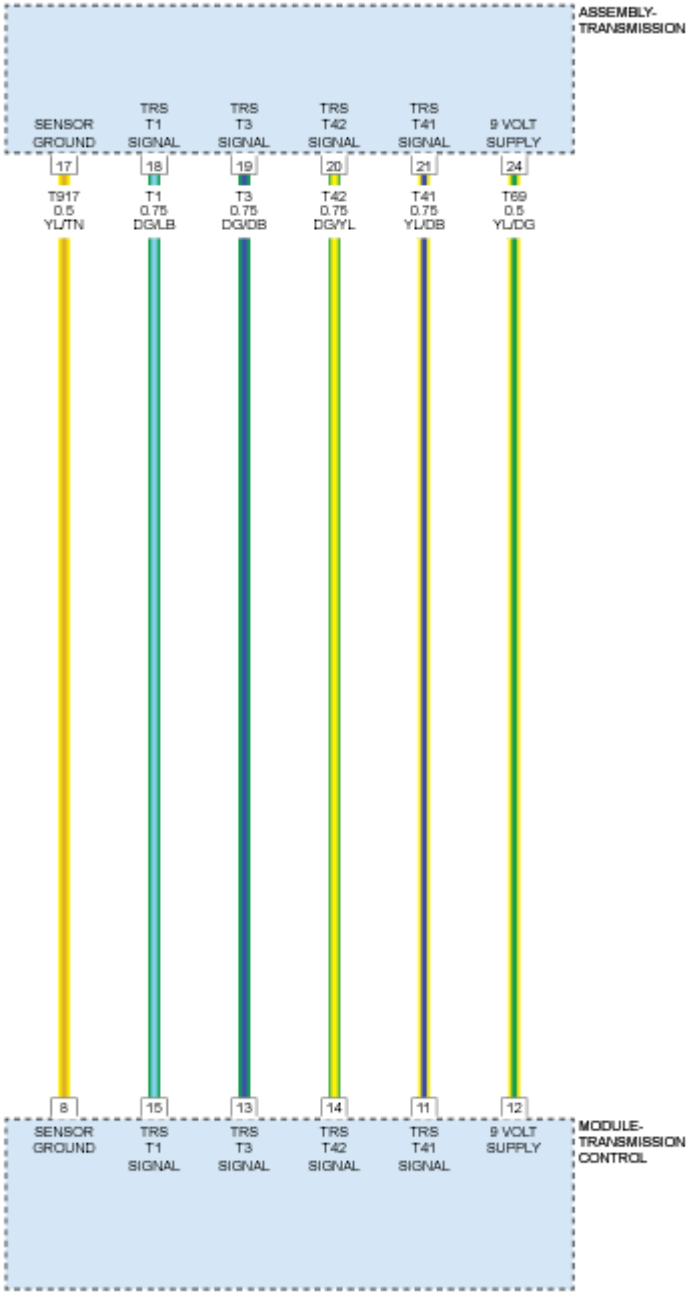

Fig. 46: Transmission Range Sensor (TRS) Circuit Diagram
Courtesy of CHRYSLER GROUP, LLC

THEORY OF OPERATION

The purpose of this DTC is to monitor the TRS signal circuits for electrical faults. Each of the four TRS signal circuits are monitored for open, short to ground, and short to voltage electrical faults. A DTC will set depending on the nature of the electrical fault, and on which circuit the fault occurs. The TRS signal circuits are connected to the TCM by four independent circuits which distinguish between the possible gear selector positions (park, reverse, neutral, and drive). The monitoring is performed by comparing the sensor voltage measured across a small shunt resistor to a threshold value for each sensor pin.

WHEN MONITORED

Ignition is ON.

No failure detected in Transmission Range Sensor (TRS) supply voltage monitoring.

No failure detected in the analog to digital converter monitoring.

Battery voltage is more than a calibrated value.

SET CONDITION

TRS circuit (T3) signal voltage is less than 0.245 volt for a calibrated amount of time.

POSSIBLE CAUSES

Possible Causes
TRANSMISSION RANGE SENSOR (TRS) SIGNAL CIRCUIT (T3) SHORTED TO GROUND
TRS - INTERNAL FAULT
TCM - INTERNAL FAULT

Always perform the Pre-Diagnostic Troubleshooting procedure before proceeding. Refer to STANDARD PROCEDURE .

DIAGNOSTIC TEST

1. **CHECK IF DTC IS CURRENT**
    1. With the scan tool, read TCM DTCs.
    2. Record the Environmental Data and any DTCs.
    3. With the scan tool, erase DTCs.
    4. Using the recorded Environmental Data, along with the When Monitored and Set Conditions above, operate the vehicle in the conditions that set the DTC.
    5. With the scan tool, read TCM DTCs.

    Did the DTC reset?

    Yes

- Go To 2.

No

- Go To 4.

2. **CHECK (T3) TRS SIGNAL CIRCUIT FOR AN OPEN**
   1. Turn the Ignition OFF.
   2. Disconnect the TCM harness connector.
   3. Disconnect the transmission assembly harness connector.
   4. Measure the resistance of the (T3) TRS signal circuit between the TCM harness connector and the transmission assembly harness connector.

   Is the resistance below 5.0 ohms?

   Yes

   - Go To 3.

   No

   - Repair the (T3) TRS signal circuit for an open.
   - Perform the TRANSMISSION VERIFICATION TEST. Refer to **STANDARD PROCEDURE** .

3. **CHECK (T3) TRS SIGNAL CIRCUIT FOR A SHORT TO GROUND OR A SHORT ANOTHER CIRCUIT**
   1. Measure the resistance between the (T3) TRS signal circuit at the TCM harness connector and ground.
   2. Measure the resistance between the (T3) TRS signal circuit and all other circuits in the TCM harness connector.

   Is the resistance more than 100K ohms for both measurements?

   Yes

   NOTE: **If this Electronic Control Unit (ECU) is being replaced with a new unit, a diagnostic scan tool MUST be used to align the PROXI configuration data into the new ECU. Follow the routine outlined in the diagnostic scan tool for PROXI Configuration Alignment under Body Control Module (BCM) Miscellaneous Functions menu.**

   - Using the schematics as a guide, check the Transmission Control Module (TCM) terminals and connectors for corrosion, damage or pushed out terminals. Pay particular attention to the power and ground circuits. If no problems are found, replace the TCM and perform programming and PROXI Configuration Alignment procedures. Refer to **MODULE,**

TRANSMISSION CONTROL, REMOVAL .

- Perform the TRANSMISSION VERIFICATION TEST. Refer to **STANDARD PROCEDURE** .
- If vehicle does not pass the TRANSMISSION VERIFICATION TEST, replace the TRS in accordance with the Service Information.
- Perform the TRANSMISSION VERIFICATION TEST. Refer to **STANDARD PROCEDURE** .

No

- Repair the (T3) TRS signal circuit for a short to ground or short to another circuit.
- Perform the TRANSMISSION VERIFICATION TEST. Refer to **STANDARD PROCEDURE** .

4. **CHECK WIRING AND CONNECTORS**
   1. The conditions necessary to set the DTC are not present at this time.
   2. Using the schematics as a guide, inspect the wiring and connectors specific to this circuit.
   3. Wiggle the wires while checking for shorted and open circuits.
   4. Check for any Service Bulletins that may apply.

   Were there any problems found?

   Yes

   - Repair as necessary.
   - Perform the TRANSMISSION VERIFICATION TEST. Refer to **STANDARD PROCEDURE** .

   No

   - Test complete.

P1726-00-TRANSMISSION RANGE SENSOR C CIRCUIT HIGH

For a complete wiring diagram, **refer to appropriate SYSTEM WIRING DIAGRAMS article** .

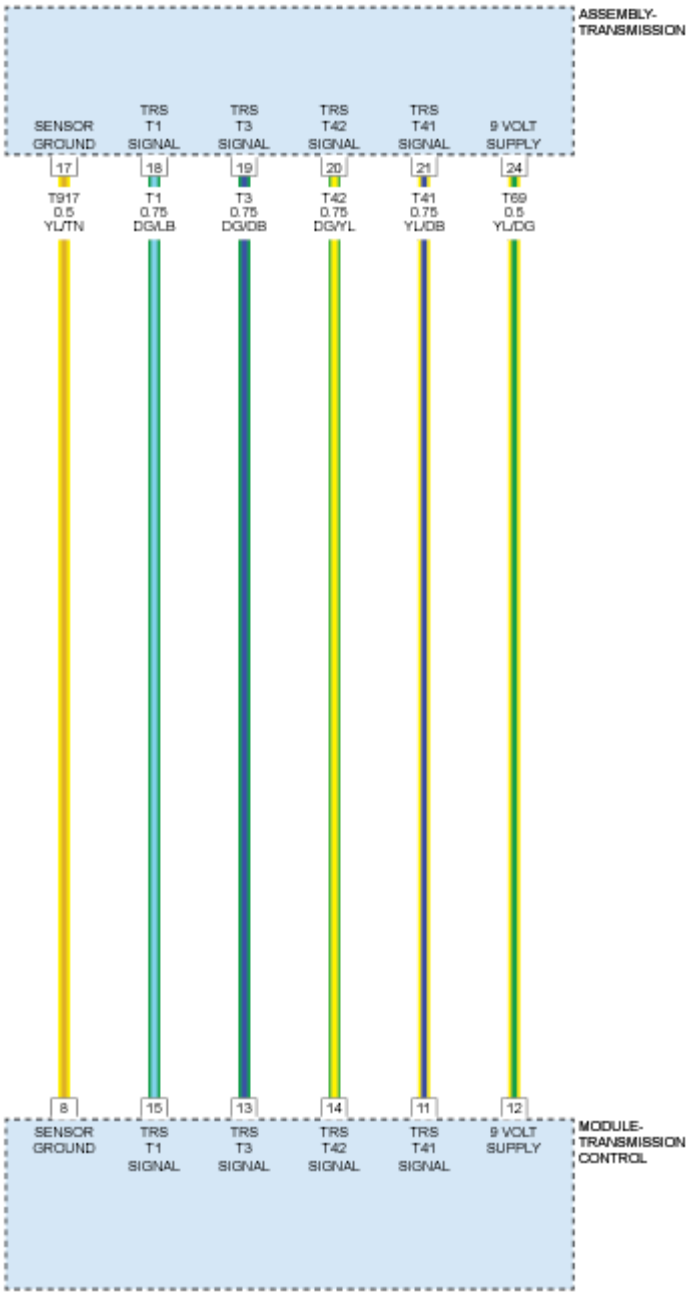

Fig. 47: Transmission Range Sensor (TRS) Circuit Diagram
Courtesy of CHRYSLER GROUP, LLC

THEORY OF OPERATION

The purpose of this DTC is to monitor the TRS signal circuits for electrical faults. Each of the four TRS signal circuits are monitored for open, short to ground, and short to voltage electrical faults. A DTC will set depending on the nature of the electrical fault, and on which circuit the fault occurs. The TRS signal circuits are connected to the TCM by four independent circuits which distinguish between the possible gear selector positions (park, reverse, neutral, and drive). The monitoring is performed by comparing the sensor voltage measured across a

small shunt resistor to a threshold value for each sensor pin.

WHEN MONITORED

Ignition is ON.

No failure detected in Transmission Range Sensor (TRS) supply voltage monitoring.

No failure detected in the analog to digital converter monitoring.

Battery voltage is more than a calibrated value.

SET CONDITION

TRS circuit (T3) signal voltage is greater than 6.2 volts for a calibrated amount of time.

POSSIBLE CAUSES

Possible Causes
TRANSMISSION RANGE SENSOR (TRS) SIGNAL CIRCUIT (T3) OPEN CIRCUIT
TRS SIGNAL CIRCUIT (T3) SHORTED TO VOLTAGE
TRS - INTERNAL FAULT
TCM - INTERNAL FAULT

Always perform the Pre-Diagnostic Troubleshooting procedure before proceeding. Refer to STANDARD PROCEDURE .

DIAGNOSTIC TEST

1. **CHECK IF DTC IS CURRENT**
    1. With the scan tool, read TCM DTCs.
    2. Record the Environmental Data and any DTCs.
    3. With the scan tool, erase DTCs.
    4. Using the recorded Environmental Data, along with the When Monitored and Set Conditions above, operate the vehicle in the conditions that set the DTC.
    5. With the scan tool, read TCM DTCs.

    Did the DTC reset?

    Yes

    - Go To 2.

    No

- Go To 4.

2. **CHECK (T3) TRS SIGNAL CIRCUIT FOR AN OPEN**
   1. Turn the Ignition OFF.
   2. Disconnect the TCM harness connector.
   3. Disconnect the transmission assembly harness connector.
   4. Measure the resistance of the (T3) TRS signal circuit between the TCM harness connector and the transmission assembly harness connector.

      Is the resistance below 5.0 ohms?

      Yes

      - Go To 3.

      No

      - Repair the (T3) TRS signal circuit for an open.
      - Perform the TRANSMISSION VERIFICATION TEST. Refer to **STANDARD PROCEDURE** .

3. **CHECK (T3) TRS SIGNAL CIRCUIT FOR A SHORT ANOTHER CIRCUIT**
   1. Measure the resistance between the (T3) TRS signal circuit and all other circuits in the TCM harness connector.

      Is the resistance more than 100K ohms for both measurements?

      Yes

      NOTE: If this Electronic Control Unit (ECU) is being replaced with a new unit, a diagnostic scan tool MUST be used to align the PROXI configuration data into the new ECU. Follow the routine outlined in the diagnostic scan tool for PROXI Configuration Alignment under Body Control Module (BCM) Miscellaneous Functions menu.

      - Using the schematics as a guide, check the Transmission Control Module (TCM) terminals and connectors for corrosion, damage or pushed out terminals. Pay particular attention to the power and ground circuits. If no problems are found, replace the TCM and perform programming and PROXI Configuration Alignment procedures. Refer to **MODULE, TRANSMISSION CONTROL, REMOVAL** .
      - Perform the TRANSMISSION VERIFICATION TEST. Refer to **STANDARD PROCEDURE** .
      - If vehicle does not pass the TRANSMISSION VERIFICATION TEST, replace the TRS in accordance with the Service Information.
      - Perform the TRANSMISSION VERIFICATION TEST. Refer to **STANDARD**

PROCEDURE .

No

- Repair the (T3) TRS signal circuit for a short to another circuit.
- Perform the TRANSMISSION VERIFICATION TEST. Refer to **STANDARD PROCEDURE** .

4. **CHECK WIRING AND CONNECTORS**
   1. The conditions necessary to set the DTC are not present at this time.
   2. Using the schematics as a guide, inspect the wiring and connectors specific to this circuit.
   3. Wiggle the wires while checking for shorted and open circuits.
   4. Check for any Service Bulletins that may apply.

   Were there any problems found?

   Yes

   - Repair as necessary.
   - Perform the TRANSMISSION VERIFICATION TEST. Refer to **STANDARD PROCEDURE** .

   No

   - Test complete.

P1727-00-TRANSMISSION RANGE SENSOR D CIRCUIT LOW

For a complete wiring diagram, **refer to appropriate SYSTEM WIRING DIAGRAMS article** .

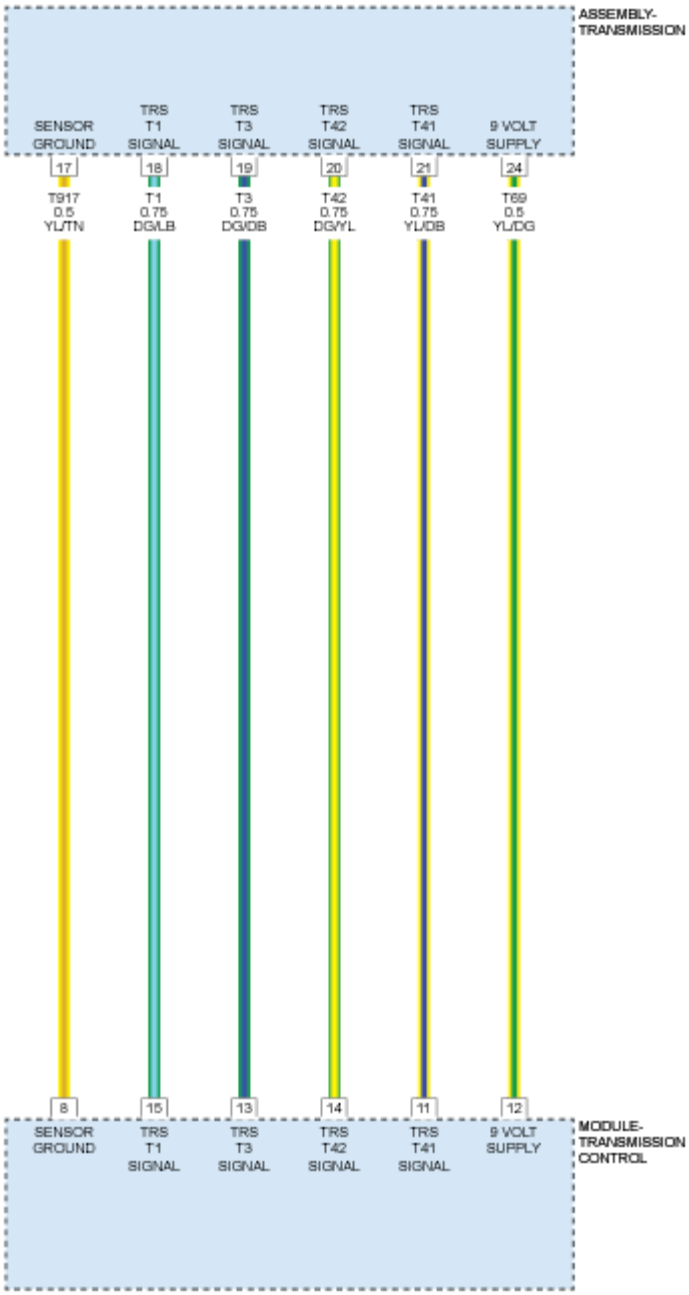

Fig. 48: Transmission Range Sensor (TRS) Circuit Diagram
Courtesy of CHRYSLER GROUP, LLC

THEORY OF OPERATION

The purpose of this DTC is to monitor the TRS signal circuits for electrical faults. Each of the four TRS signal circuits are monitored for open, short to ground, and short to voltage electrical faults. A DTC will set depending on the nature of the electrical fault, and on which circuit the fault occurs. The TRS signal circuits are connected to the TCM by four independent circuits which distinguish between the possible gear selector positions (park, reverse, neutral, and drive). The monitoring is performed by comparing the sensor voltage measured across a

small shunt resistor to a threshold value for each sensor pin.

WHEN MONITORED

Ignition is ON.

No failure detected in Transmission Range Sensor (TRS) supply voltage monitoring.

No failure detected in the analog to digital converter monitoring.

Battery voltage is more than a calibrated value.

SET CONDITION

TRS circuit (T1) signal voltage is less than 0.245 volt for a calibrated amount of time.

POSSIBLE CAUSES

Possible Causes
TRANSMISSION RANGE SENSOR (TRS) SIGNAL CIRCUIT (T1) SHORTED TO GROUND TRS - INTERNAL FAULT TCM - INTERNAL FAULT

Always perform the Pre-Diagnostic Troubleshooting procedure before proceeding. Refer to STANDARD PROCEDURE .

DIAGNOSTIC TEST

1. **CHECK IF DTC IS CURRENT**
    1. With the scan tool, read TCM DTCs.
    2. Record the Environmental Data and any DTCs.
    3. With the scan tool, erase DTCs.
    4. Using the recorded Environmental Data, along with the When Monitored and Set Conditions above, operate the vehicle in the conditions that set the DTC.
    5. With the scan tool, read TCM DTCs.

    Did the DTC reset?

    Yes

    - Go To 2.

    No

    - Go To 4.

2. **CHECK (T1) TRS SIGNAL CIRCUIT FOR AN OPEN**
   1. Turn the Ignition OFF.
   2. Disconnect the TCM harness connector.
   3. Disconnect the transmission assembly harness connector.
   4. Measure the resistance of the (T1) TRS signal circuit between the TCM harness connector and the transmission assembly harness connector.

      Is the resistance below 5.0 ohms?

      Yes

      - Go To 3.

      No

      - Repair the (T1) TRS signal circuit for an open.
      - Perform the TRANSMISSION VERIFICATION TEST. Refer to **STANDARD PROCEDURE** .
3. **CHECK (T1) TRS SIGNAL CIRCUIT FOR A SHORT TO GROUND OR A SHORT ANOTHER CIRCUIT**
   1. Measure the resistance between the (T1) TRS signal circuit at the TCM harness connector and ground.
   2. Measure the resistance between the (T1) TRS signal circuit and all other circuits in the TCM harness connector.

      Is the resistance more than 100K ohms for both measurements?

      Yes

      NOTE: If this Electronic Control Unit (ECU) is being replaced with a new unit, a diagnostic scan tool MUST be used to align the PROXI configuration data into the new ECU. Follow the routine outlined in the diagnostic scan tool for PROXI Configuration Alignment under Body Control Module (BCM) Miscellaneous Functions menu.

      - Using the schematics as a guide, check the Transmission Control Module (TCM) terminals and connectors for corrosion, damage or pushed out terminals. Pay particular attention to the power and ground circuits. If no problems are found, replace the TCM and perform programming and PROXI Configuration Alignment procedures. Refer to **MODULE, TRANSMISSION CONTROL, REMOVAL** .
      - Perform the TRANSMISSION VERIFICATION TEST. Refer to **STANDARD PROCEDURE** .
      - If vehicle does not pass the TRANSMISSION VERIFICATION TEST, replace the TRS in accordance with the Service Information.

- Perform the TRANSMISSION VERIFICATION TEST. Refer to **STANDARD PROCEDURE** .

No

- Repair the (T1) TRS signal circuit for a short to ground or short to another circuit.
- Perform the TRANSMISSION VERIFICATION TEST. Refer to **STANDARD PROCEDURE** .

4. **CHECK WIRING AND CONNECTORS**
   1. The conditions necessary to set the DTC are not present at this time.
   2. Using the schematics as a guide, inspect the wiring and connectors specific to this circuit.
   3. Wiggle the wires while checking for shorted and open circuits.
   4. Check for any Service Bulletins that may apply.

   Were there any problems found?

   Yes

   - Repair as necessary.
   - Perform the TRANSMISSION VERIFICATION TEST. Refer to **STANDARD PROCEDURE** .

   No

   - Test complete.

P1728-00-TRANSMISSION RANGE SENSOR D CIRCUIT HIGH

For a complete wiring diagram, **refer to appropriate SYSTEM WIRING DIAGRAMS article** .

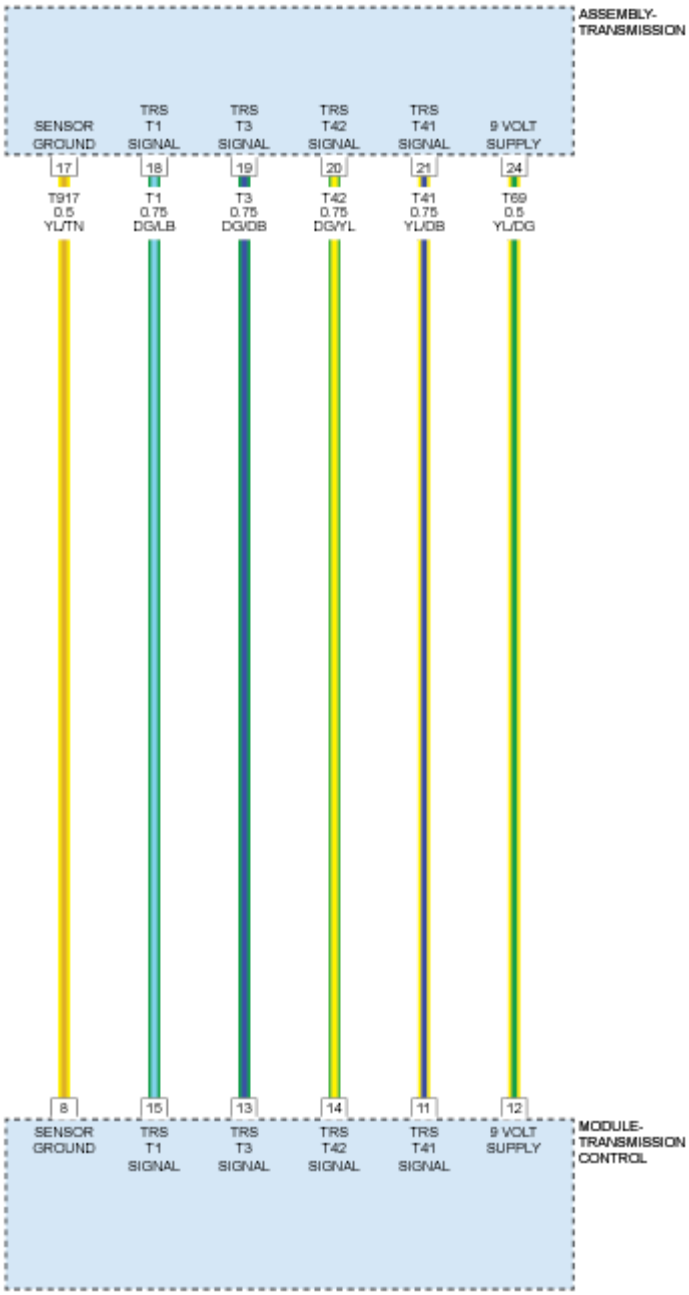

Fig. 49: Transmission Range Sensor (TRS) Circuit Diagram
Courtesy of CHRYSLER GROUP, LLC

THEORY OF OPERATION

The purpose of this DTC is to monitor the TRS signal circuits for electrical faults. Each of the four TRS signal circuits are monitored for open, short to ground, and short to voltage electrical faults. A DTC will set depending on the nature of the electrical fault, and on which circuit the fault occurs. The TRS signal circuits are connected to the TCM by four independent circuits which distinguish between the possible gear selector positions (park, reverse, neutral, and drive). The monitoring is performed by comparing the sensor voltage measured across a

small shunt resistor to a threshold value for each sensor pin.

WHEN MONITORED

Ignition is ON.

No failure detected in Transmission Range Sensor (TRS) supply voltage monitoring.

No failure detected in the analog to digital converter monitoring.

Battery voltage is more than a calibrated value.

SET CONDITION

TRS circuit (T1) signal voltage is greater than 6.2 volts for a calibrated amount of time.

POSSIBLE CAUSES

Possible Causes
TRANSMISSION RANGE SENSOR (TRS) SIGNAL CIRCUIT (T1) OPEN CIRCUIT
TRS SIGNAL CIRCUIT (T1) SHORTED TO VOLTAGE
TRS - INTERNAL FAULT
TCM - INTERNAL FAULT

Always perform the Pre-Diagnostic Troubleshooting procedure before proceeding. Refer to STANDARD PROCEDURE .

DIAGNOSTIC TEST

1. **CHECK IF DTC IS CURRENT**
    1. With the scan tool, read TCM DTCs.
    2. Record the Environmental Data and any DTCs.
    3. With the scan tool, erase DTCs.
    4. Using the recorded Environmental Data, along with the When Monitored and Set Conditions above, operate the vehicle in the conditions that set the DTC.
    5. With the scan tool, read TCM DTCs.

    Did the DTC reset?

    Yes

    - Go To 2.

    No

- Go To 4.

2. **CHECK (T1) TRS SIGNAL CIRCUIT FOR AN OPEN**
   1. Turn the Ignition OFF.
   2. Disconnect the TCM harness connector.
   3. Disconnect the transmission assembly harness connector.
   4. Measure the resistance of the (T1) TRS signal circuit between the TCM harness connector and the transmission assembly harness connector.

      Is the resistance below 5.0 ohms?

      Yes

      - Go To 3.

      No

      - Repair the (T1) TRS signal circuit for an open.
      - Perform the TRANSMISSION VERIFICATION TEST. Refer to **STANDARD PROCEDURE** .

3. **CHECK (T1) TRS SIGNAL CIRCUIT FOR A SHORT ANOTHER CIRCUIT**
   1. Measure the resistance between the (T1) TRS signal circuit and all other circuits in the TCM harness connector.

      Is the resistance more than 100K ohms for both measurements?

      Yes

      NOTE: If this Electronic Control Unit (ECU) is being replaced with a new unit, a diagnostic scan tool MUST be used to align the PROXI configuration data into the new ECU. Follow the routine outlined in the diagnostic scan tool for PROXI Configuration Alignment under Body Control Module (BCM) Miscellaneous Functions menu.

      - Using the schematics as a guide, check the Transmission Control Module (TCM) terminals and connectors for corrosion, damage or pushed out terminals. Pay particular attention to the power and ground circuits. If no problems are found, replace the TCM and perform programming and PROXI Configuration Alignment procedures. Refer to **MODULE, TRANSMISSION CONTROL, REMOVAL** .
      - Perform the TRANSMISSION VERIFICATION TEST. Refer to **STANDARD PROCEDURE** .
      - If vehicle does not pass the TRANSMISSION VERIFICATION TEST, replace the TRS in accordance with the Service Information.
      - Perform the TRANSMISSION VERIFICATION TEST. Refer to **STANDARD**

PROCEDURE .

No

- Repair the (T1) TRS signal circuit for a short to another circuit.
- Perform the TRANSMISSION VERIFICATION TEST. Refer to **STANDARD PROCEDURE** .

4. **CHECK WIRING AND CONNECTORS**
   1. The conditions necessary to set the DTC are not present at this time.
   2. Using the schematics as a guide, inspect the wiring and connectors specific to this circuit.
   3. Wiggle the wires while checking for shorted and open circuits.
   4. Check for any Service Bulletins that may apply.

   Were there any problems found?

   Yes

   - Repair as necessary.
   - Perform the TRANSMISSION VERIFICATION TEST. Refer to **STANDARD PROCEDURE** .

   No

   - Test complete.

P1731-00-INCORRECT GEAR ENGAGED

For a complete wiring diagram, **refer to appropriate SYSTEM WIRING DIAGRAMS article** .

THEORY OF OPERATION

The purpose of this diagnostic is to detect if a change in transmission gear position has occurred that was not requested.

WHEN MONITORED

TCM powered.

TCM initialization has completed.

SET CONDITION

The failure is detected if one of the following occurs:

The shift by wire software output did change from P, N or D to R although R should not have been determined

based on the input signals.

POSSIBLE CAUSES

Possible Causes
LOW FLUID LEVEL
TRANSMISSION SOLENOID, SPEED SENSOR, OR OTHER ELECTRICAL RELATED DTCS PRESENT
INTERMITTENT STICKING VALVE IN VALVE BODY
TRANSMISSION INTERNAL PROBLEM
TCM - INTERNAL ERROR

Always perform the Pre-Diagnostic Troubleshooting procedure before proceeding. Refer to STANDARD PROCEDURE .

DIAGNOSTIC TEST

1. **CHECK IF TRANSMISSION SOLENOID DTCS ARE PRESENT**
   1. With the scan tool, check for other transmission DTCs.

      Are any transmission solenoid, speed sensor and/or any other transmission electrical related DTCs present?

      Yes

      - Refer to **DIAGNOSTIC CODE INDEX** and perform the appropriate repair.

      No

      - Go To 2
2. **CHECK TRANSMISSION FLUID LEVEL**
   1. Turn the Ignition OFF.

      NOTE: Low fluid level can be the cause of many transmission problems. Visually inspect the transmission and cooler lines for leakage and repair as necessary and adjust the fluid level in accordance to the Service Information. If no visual leaks are observed and the vehicle has obtained over 1610 km (1000 miles) from new or transmission service, a fluid level check is unnecessary.

   2. Check the transmission fluid level and condition in accordance to the Service Information.

      Is the fluid level correct?

      Yes

- Go To 3

No

- Correct the fluid level in accordance to the Service Information. Refer to **FLUID AND FILTER, STANDARD PROCEDURE** .
- Perform the TRANSMISSION VERIFICATION TEST. Refer to **STANDARD PROCEDURE** .

3. **CHECK FOR INTERNAL TRANSMISSION PROBLEM**
   1. Check for an internal transmission mechanical problems.
   2. Remove the transmission oil pan and inspect for excessive debris or a plugged transmission oil filter in accordance to the Service Information.
   3. Inspect the valve body for foreign material.
   4. This DTC is usually set due to an internal transmission problem such as, but not limited to: stuck solenoid valve and/or contamination in the valve body, broken springs, leaking clutch seals, dislodged or broken snap ring etc.
   5. Check Service Information for the appropriate service procedure and any other possible causes.

   Were any problems found?

   Yes

   - Repair as necessary.
   - Perform the TRANSMISSION VERIFICATION TEST. Refer to **STANDARD PROCEDURE** .

   No

   NOTE: If this Electronic Control Unit (ECU) is being replaced with a new unit, a diagnostic scan tool MUST be used to align the PROXI configuration data into the new ECU. Follow the routine outlined in the diagnostic scan tool for PROXI Configuration Alignment under Body Control Module (BCM) Miscellaneous Functions menu.

   - Using the schematics as a guide, check the Transmission Control Module (TCM) terminals and connectors for corrosion, damage or pushed out terminals. Pay particular attention to the power and ground circuits. If no problems are found, replace the TCM and perform programming and PROXI Configuration Alignment procedures. Refer to **MODULE, TRANSMISSION CONTROL, REMOVAL** .
   - Perform the TRANSMISSION VERIFICATION TEST. Refer to **STANDARD PROCEDURE** .

P176D-00-TRANSMISSION FLUID TEMPERATURE TOO HIGH

For a complete wiring diagram, **refer to appropriate SYSTEM WIRING DIAGRAMS article** .

THEORY OF OPERATION

The purpose of the diagnostic is to detect rationality failures of the transmission oil temperature sensor by evaluating the following conditions:

Comparison to a Temperature Model

- The measured transmission oil temperature is compared to a calculated model temperature. The calculation of the modeled temperature is based on the fact that the resistance of the pressure regulator coil is correlated with the oil temperature. The calculation is based on the actual duty cycle of pressure regulator for a given commanded current and the value of the pressure regulator power supply.

Low Temperature Detection

- The measured transmission oil temperature is monitored for a low value after having first reached a fixed temperature value.

Stuck in Low Temperature Detection

- The measured transmission oil temperature is monitored for a minimum amount of temperature change at low temperatures.

Temperature Jump Detection

- The measured transmission oil temperature is monitored for a maximum amount of temperature change between two consecutive data samples.

WHEN MONITORED

Temperature Jump Detection:

Ignition on.

No failure detected in oil temperature sensor circuit high or low fault monitoring.

Comparison to Temperature Model:

Ignition on.

No failure detected in oil temperature sensor circuit high or low fault monitoring.

No failure detected in oil temperature jump detection monitoring.

The engine speed is greater than a calibrated value or the input speed is greater than a calibrated value.

The output speed is greater than a calibrated value.

Pressure regulator power supply is switched on.

No failure detected in supply voltage of pressure regulator monitoring.

No failure detected in pressure regulator circuit monitoring.

Calibrated time has expired after engine start.

Low Temperature Detection:

Ignition on.

No failure detected in oil temperature sensor circuit high or low fault monitoring.

No failure detected in oil temperature jump detection monitoring.

The engine speed is greater than a calibrated value or the input speed is greater than a calibrated value.

The output speed is greater than a calibrated value.

Stuck in Low Temperature Detection:

Ignition on.

No failure detected in oil temperature sensor circuit high or low fault monitoring.

No failure detected in oil temperature jump detection monitoring.

The engine speed is greater than a calibrated value or the input speed is greater than a calibrated value.

The output speed is greater than a calibrated value.

Transmission oil temperature is less than a calibrated value.

SET CONDITION

Temperature Jump Detection:

The TCM detects that there has been a transmission fluid temperature change greater than 10°C (50°F) in less than 1 second.

Comparison to a Temperature Model:

The failure is detected if the absolute value of the difference between the oil temperature sensor signal

measured by the TCM and the calculated oil temperature is greater than a calibrated threshold for a calibrated amount of time.

Low Temperature Detection:

The failure is detected if the oil temperature sensor signal is less than a calibrated threshold after having first reached another higher calibrated threshold in the same driving cycle.

Stuck in Low Temperature Detection:

The failure is detected if the absolute value of the difference between the current transmission oil temperature and a previous oil temperature stored a calibrated time before is less than a calibrated threshold.

POSSIBLE CAUSES

Possible Causes
INCORRECT TRANSMISSION FLUID LEVEL
RESTRICTION IN TRANSMISSION COOLING SYSTEM
VEHICLE AIRFLOW RESTRICTED
TORQUE CONVERTER
CASE VENT PLUGGED OR DAMAGED
TRANSMISSION FLUID TEMPERATURE SENSOR CIRCUIT FAULT
TRANSMISSION FLUID TEMPERATURE SENSOR
TCM - INTERNAL FAULT

Always perform the Pre-Diagnostic Troubleshooting procedure before proceeding. Perform the TRANSMISSION VERIFICATION TEST. Refer to STANDARD PROCEDURE .

DIAGNOSTIC TEST

1. **VISUAL INSPECTION**

NOTE: Make certain that the vehicle is not towing loads weighing more than the recommended towing capacity

1. Check Transmission Cooler for airflow restrictions and internal fluid restrictions.
2. Check Transmission fluid level and if low, check for leaks.
3. Check Transmission Cooler lines for restrictions.
4. Check Transmission case vent for restrictions.

Were any problems found?

Yes

- Repair in accordance with the Service Information.
- Perform the TRANSMISSION VERIFICATION TEST. Refer to **STANDARD PROCEDURE** .

No

- Go To 2

2. **CHECK FOR OTHER TRANSMISSION DTCS**
   1. With the scan tool, read Transmission DTCs.
   2. Record any Transmission Freeze Frame data.

   Are there any other transmission DTCs?

   Yes

   - Perform the appropriate diagnostic procedure(s) in accordance with the Service Information.

   No

   - Go To 3

3. **CHECK TRANSMISSION TEMPERATURE SENSOR CIRCUITS FOR HIGH RESISTANCE**
   1. Turn the Ignition OFF.
   2. Disconnect the TCM harness connector.
   3. Remove the transmission side cover and disconnect the transmission temperature sensor harness connector.
   4. Connect a jumper between the (T54) Transmission Temperature Signal circuit and the (T820) Sensor Ground circuit at the transmission temperature sensor harness connector.
   5. Measure resistance between (T54) Transmission Temperature Signal circuit and the (T820) Sensor Ground circuit at the TCM harness connector.

   Is the resistance below 5.0 ohms?

   Yes

   - Go To 4

   No

   - Repair the (T54) Transmission Temperature Signal circuit or the (T820) Sensor Ground circuit for an open or high resistance.
   - Perform the TRANSMISSION VERIFICATION TEST. Refer to **STANDARD PROCEDURE** .

4. **CHECK TRANSMISSION TEMPERATURE SENSOR CIRCUITS FOR A SHORT TO**

GROUND

1. With the jumper still connected, measure resistance between (T54) Transmission Temperature Signal circuit at the TCM harness connector and ground.

   Is there continuity between (T54) Transmission Temperature Signal circuit and ground?

   Yes

   - Repair the (T54) Transmission Temperature Signal circuit or (T820) Sensor Ground circuit for a short to ground.
   - Perform the TRANSMISSION VERIFICATION TEST. Refer to **STANDARD PROCEDURE** .

   No

   - Go To 5

5. **CHECK THE (T54) TRANSMISSION TEMPERATURE SIGNAL CIRCUIT FOR A SHORT TO ANOTHER CIRCUIT**
   1. Remove the jumper from the transmission temperature sensor harness connector.
   2. Measure resistance between (T54) Transmission Temperature Signal circuit and all other circuits in the TCM harness connector.

      Is there continuity between (T54) transmission temperature signal circuit and any other TCM circuit?

      Yes

      - Repair the (T54) Transmission Temperature Signal circuit for a short to another circuit.
      - Perform the TRANSMISSION VERIFICATION TEST. Refer to **STANDARD PROCEDURE** .

      No

      - Go To 6

6. **CHECK THE (T820) SENSOR GROUND CIRCUIT FOR A SHORT TO ANOTHER CIRCUIT**
   1. Measure resistance between (T820) Sensor Ground circuit and all other circuits in the TCM harness connector.

      Is there continuity between (T820) Sensor Ground circuit and any other TCM circuit?

      Yes

      - Repair the (T820) Sensor Ground circuit for a short to another circuit.
      - Perform the TRANSMISSION VERIFICATION TEST. Refer to **STANDARD**

PROCEDURE .

No

- Go To 7

7. **VERIFY TRANSMISSION TEMPERATURE SENSOR RESISTANCE / TEMPERATURE CORRELATION**
   1. Measure the resistance between (T54) Transmission Temperature Signal terminal and (T820) Sensor Ground terminal at the transmission temperature sensor.

TYPICAL VALUES FOR TRANSMISSION TEMPERATURE SENSOR	
TEMPERATURE	**APPROXIMATE RESISTANCE**
-30°C (-22°F)	44000 Ohms ± 6600
10°C (50°F)	6455 Ohms ± 645
110°C (230°F)	247 Ohms ± 16
145°C (293°F)	111 Ohms ± 6

Using the chart above, compare the Temperature Sensor temperature to the correlating resistance value.

Is the resistance within the specified range when the sensor is at the given temperature?

Yes

NOTE: **If this Electronic Control Unit (ECU) is being replaced with a new unit, a diagnostic scan tool MUST be used to align the PROXI configuration data into the new ECU. Follow the routine outlined in the diagnostic scan tool for PROXI Configuration Alignment under Body Control Module (BCM) Miscellaneous Functions menu.**

- Using the schematics as a guide, check the Transmission Control Module (TCM) terminals and connectors for corrosion, damage or pushed out terminals. Pay particular attention to the power and ground circuits. If no problems are found, replace the TCM and perform programming and PROXI Configuration Alignment procedures. Refer to **MODULE, TRANSMISSION CONTROL, REMOVAL** .
- Perform the TRANSMISSION VERIFICATION TEST. Refer to **STANDARD PROCEDURE** .

No

- Replace the Transmission Fluid Temperature Sensor in accordance with the Service Information.
- Perform the TRANSMISSION VERIFICATION TEST. Refer to **STANDARD PROCEDURE** .

2014 AUTOMATIC TRANSMISSION

Transmission Control Module (TCM) - Electrical Diagnostics, 948TE - Cherokee

DIAGNOSIS AND TESTING

P1C4E-00-ABS DTC PRESENT

For a complete wiring diagram, **refer to appropriate SYSTEM WIRING DIAGRAMS article** .

THEORY OF OPERATION

The purpose of the diagnostic is to prevent a down shift or engaging the park pawl during a lock up of the driven wheels which is caused by a failure or disablement of the Anti-lock Brake System (ABS).

WHEN MONITORED

When the ignition switch is turned to the run position.

Failure of ABS functionality or disablement of ABS functionality as indicated by the ABS module.

Engaged brake switch or failure in brake signal is indicated.

SET CONDITION

The failure is detected if the delta output speed (difference between previous and current measurement) is greater than a calibrated threshold for an amount of time.

POSSIBLE CAUSES

Possible Causes
ABS MODULE DTCS

Always perform the Pre-Diagnostic Troubleshooting procedure before proceeding. Refer to STANDARD PROCEDURE .

DIAGNOSTIC TEST

1. **CHECK FOR TCM CAN BUS DTCS**
    1. With the scan tool, read TCM DTCs.

       Are any TCM CAN BUS DTCs present?

       Yes

       - Refer to **DIAGNOSTIC CODE INDEX** and perform the appropriate diagnostic procedure.

Perform the diagnostic procedure for DTC U0001-CAN C BUS first. Refer to **U0001-00-CAN C BUS**.

- Perform the Transmission Verification Test. Refer to **STANDARD PROCEDURE** .

No

- Go To 2

2. **CHECK IF ABS DTCS ARE PRESENT**
   1. With the scan tool, read ABS DTCs.

   Are any ABS DTCs present?

   Yes

   - Refer to **DIAGNOSTIC CODE INDEX** and perform the appropriate diagnostic procedure.
   - Perform the Transmission Verification Test. Refer to **STANDARD PROCEDURE** .

   No

   NOTE: **If this Electronic Control Unit (ECU) is being replaced with a new unit, a diagnostic scan tool MUST be used to align the PROXI configuration data into the new ECU. Follow the routine outlined in the diagnostic scan tool for PROXI Configuration Alignment under Body Control Module (BCM) Miscellaneous Functions menu.**

   - Using the schematics as a guide, check the Transmission Control Module (TCM) terminals and connectors for corrosion, damage or pushed out terminals. Pay particular attention to the power and ground circuits. If no problems are found, replace the TCM and perform programming and PROXI Configuration Alignment procedures. Refer to **MODULE, TRANSMISSION CONTROL, REMOVAL** .
   - Perform the Transmission Verification Test. Refer to **STANDARD PROCEDURE** .

P1C8C-00-SYSTEM VOLTAGE

For a complete wiring diagram, **refer to appropriate SYSTEM WIRING DIAGRAMS article** .

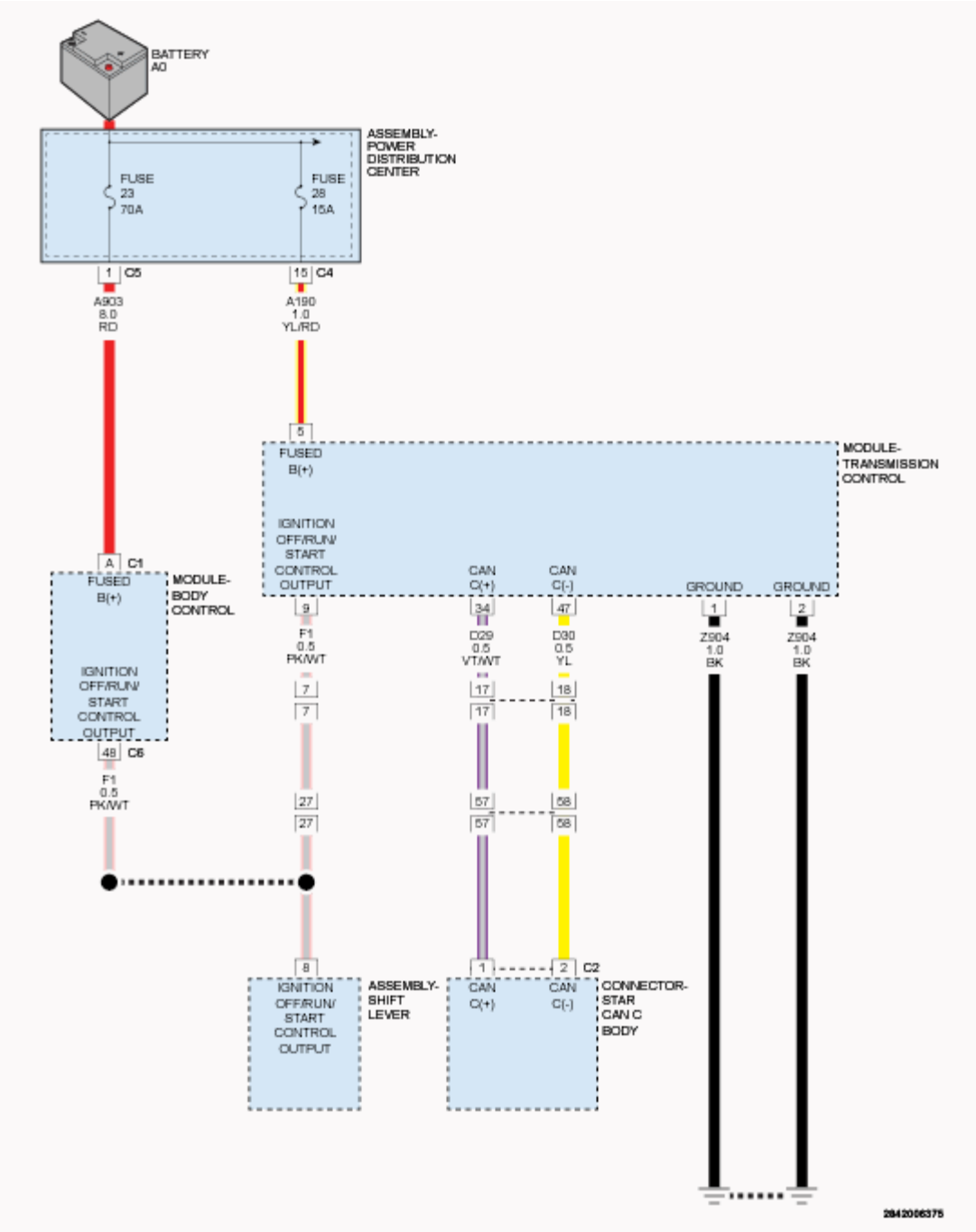

Fig. 1: TCM System Voltage Circuit Diagram
Courtesy of CHRYSLER GROUP, LLC

THEORY OF OPERATION

The purpose of the diagnostic is to detect failures of the internal TCM voltage supply circuit. The internal TCM voltage is converted independently into two digital values using two separate Analog-to-Digital Converter (ADC) channels. The diagnostic is performed by comparing the two digital values of the system voltage.

WHEN MONITORED

TCM powered.

SET CONDITION

The failure is detected if the absolute difference between the independent voltage conversions of the internal TCM voltage is greater than a calibrated threshold.

POSSIBLE CAUSES

Possible Causes
TCM - INTERNAL ERROR

Always perform the Pre-Diagnostic Troubleshooting procedure before proceeding. Refer to STANDARD PROCEDURE .

DIAGNOSTIC TEST

1. **CHECK IF DTC IS CURRENT**
    1. With the scan tool, read TCM DTCs.
    2. Record the Environmental Data and any DTCs.
    3. With the scan tool, erase DTCs.
    4. Using the recorded Environmental Data, along with the When Monitored and Set Conditions above, operate the vehicle in the conditions that set the DTC.
    5. With the scan tool, read TCM DTCs.

    Did the DTC reset?

    Yes

    NOTE: If this Electronic Control Unit (ECU) is being replaced with a new unit, a diagnostic scan tool MUST be used to align the PROXI configuration data into the new ECU. Follow the routine outlined in the diagnostic scan tool for PROXI Configuration Alignment under Body Control Module (BCM) Miscellaneous Functions menu.

    - Using the schematics as a guide, check the Transmission Control Module (TCM) terminals and connectors for corrosion, damage or pushed out terminals. Pay particular attention to the power and ground circuits. If no problems are found, replace the TCM and perform programming and PROXI Configuration Alignment procedures. Refer to **MODULE, TRANSMISSION CONTROL, REMOVAL** .
    - Perform the Transmission Verification Test. Refer to **STANDARD PROCEDURE** .

    No

- Go to 2

2. **CHECK WIRING AND CONNECTORS**
   1. The conditions necessary to set the DTC are not present at this time.
   2. Using the schematics as a guide, inspect the wiring and connectors specific to this circuit.
   3. Wiggle the wires while checking for shorted and open circuits.
   4. Check for any Service Bulletins that may apply.

   Were there any problems found?

   Yes

   - Repair as necessary.
   - Perform the Transmission Verification Test. Refer to **STANDARD PROCEDURE** .

   No

   - Test complete.

P1CC9-00-UNABLE TO ENGAGE GEAR

For a complete wiring diagram, **refer to appropriate SYSTEM WIRING DIAGRAMS article** .

THEORY OF OPERATION

The purpose of this diagnostic is to detect that a dog clutch is not able to engage within a calibrated amount of time. During normal operating conditions, a dog clutch shift in progress may be temporarily interrupted by disengaging the drive-line ("extended neutral") if a successful dog clutch engagement has not occurred. If this "extended neutral" state of dog clutch disengagement is active for greater than a calibrated amount of time without a successful re-engagement, a failure is detected.

WHEN MONITORED

Gear shift requiring a dog clutch is in progress.

SET CONDITION

The failure is detected if the time of a temporary disengaged drive-line condition ("extended neutral") is greater than a calibrated amount of time.

POSSIBLE CAUSES

Possible Causes
INTERNAL TRANSMISSION PROBLEM

Always perform the Pre-Diagnostic Troubleshooting procedure before proceeding. Refer to STANDARD

PROCEDURE .

DIAGNOSTIC TEST

1. **CHECK IF DTC IS CURRENT**

   NOTE: The Transmission Control Module stores under Environmental Data the transmission operating conditions when the DTC was set. Before clearing any DTCs, record all information pertaining to the DTC.

   1. With the scan tool, erase transmission DTCs.
   2. Using the Environmental Data previously recorded, drive the vehicle and try to duplicate the condition in which the DTC set.

      Does the DTC reset?

      Yes

      - Go To 2

      No

      - Go To 3
2. **TRANSMISSION**

   If the DTC returns, view repair.

   Repair

   - Verify proper fluid level. Refer to **FLUID AND FILTER, STANDARD PROCEDURE** .
   - Verify proper operation of the input and output speed sensors.
   - Refer to **DIAGNOSIS AND TESTING** and using the clutch application chart, inspect the clutches, valve body solenoids, and valves associated with this error.
   - Repair or replace the Transmission in accordance with the Service Information.
   - Perform the TRANSMISSION VERIFICATION TEST. Refer to **STANDARD PROCEDURE** .
3. **INTERMITTENT WIRING AND CONNECTORS**
   1. The conditions necessary to set this DTC are not present at this time.
   2. Using the schematics as a guide, inspect the wiring and connectors specific to this circuit.
   3. Wiggle the wiring and connectors while checking for any possible open or shorted circuits.
   4. Check for any Service Information Tune-ups or Technical Service Bulletins that may apply.

      Were any problems found?

Yes

- Repair as necessary.
- Perform the TRANSMISSION VERIFICATION TEST. Refer to **STANDARD PROCEDURE** .

No

- Test Complete.

P1D25-00-SHIFT CONTROL RATIONALITY

For a complete wiring diagram, **refer to appropriate SYSTEM WIRING DIAGRAMS article** .

THEORY OF OPERATION

The TCM monitors for internal hardware and software failures. If a failure is detected, a DTC will set that indicates the exact nature of the failure.

WHEN MONITORED

TCM powered up.

TCM initialization has completed.

SET CONDITION

Faulty calculated position:

The failure is detected if one of the following occurs:

The calibration data stored at two different locations of the RAM has changed at only one location.

The initially determined gearbox position (P, R, N or D) after power up which is determined with two different methods has unequal results.

The calculated gearbox position stored in the buffer does not match the current gearbox position.

Faulty position on interface:

The failure is detected if the comparison of the commanded position sent on the interface between the shift by wire software and the shift control software to the actual position from the interface is not equal.

POSSIBLE CAUSES

Possible Causes

TCM - INTERNAL FAULT

Always perform the Pre-Diagnostic Troubleshooting procedure before proceeding. Refer to STANDARD PROCEDURE .

DIAGNOSTIC TEST

1. **CHECK IF DTC IS CURRENT**
   1. With the scan tool, read TCM DTCs.
   2. Record the Environmental Data and any DTCs.
   3. With the scan tool, erase DTCs.
   4. Using the recorded Environmental Data, along with the When Monitored and Set Conditions above, operate the vehicle in the conditions that set the DTC.
   5. With the scan tool, read TCM DTCs.

   Did the DTC reset?

   Yes

   NOTE: If this Electronic Control Unit (ECU) is being replaced with a new unit, a diagnostic scan tool MUST be used to align the PROXI configuration data into the new ECU. Follow the routine outlined in the diagnostic scan tool for PROXI Configuration Alignment under Body Control Module (BCM) Miscellaneous Functions menu.

   - Using the schematics as a guide, check the Transmission Control Module (TCM) terminals and connectors for corrosion, damage or pushed out terminals. Pay particular attention to the power and ground circuits. If no problems are found, replace the TCM and perform programming and PROXI Configuration Alignment procedures. Refer to **MODULE, TRANSMISSION CONTROL, REMOVAL** .
   - Perform the Transmission Verification Test. Refer to **STANDARD PROCEDURE** .

   No

   - Go to 2
2. **CHECK WIRING AND CONNECTORS**
   1. The conditions necessary to set the DTC are not present at this time.
   2. Using the schematics as a guide, inspect the wiring and connectors specific to this circuit.
   3. Wiggle the wires while checking for shorted and open circuits.
   4. Check for any Service Bulletins that may apply.

   Were there any problems found?

Yes

- Repair as necessary.
- Perform the Transmission Verification Test. Refer to **STANDARD PROCEDURE** .

No

- Test complete.

P1D78-00-LIMP HOME MODE SOLENOID CIRCUIT LOW

For a complete wiring diagram, **refer to appropriate SYSTEM WIRING DIAGRAMS article** .

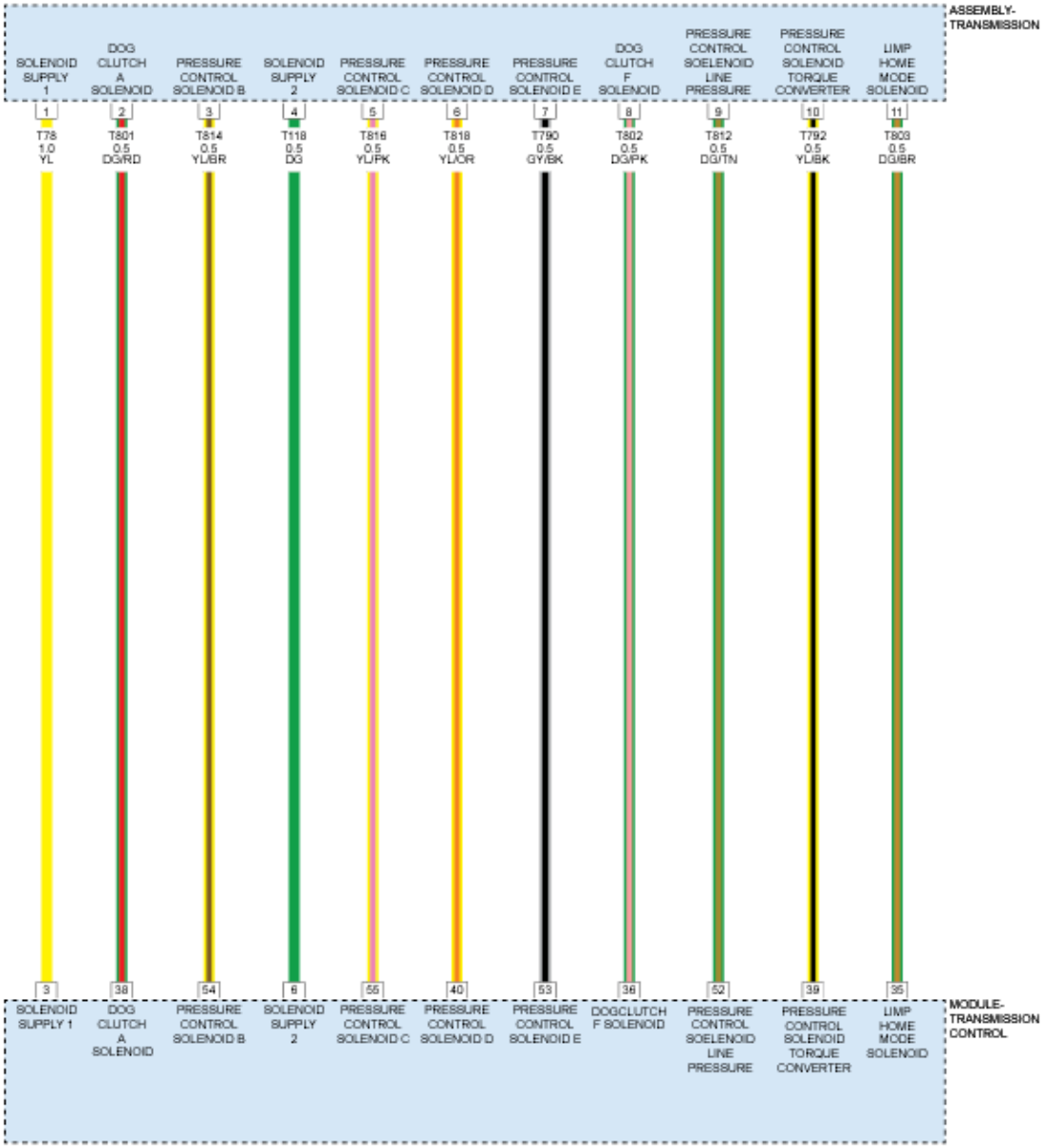

Fig. 2: Pressure Regulators & Solenoids Control Circuit Diagram
Courtesy of CHRYSLER GROUP, LLC

THEORY OF OPERATION

The purpose of the diagnostic is to detect circuit failures on any of the output stages. All output stages are controlled by a current controller that can operate an output stage in two different modes:

- Current controlled mode (pressure regulators)
- Switched mode or PWM controlled (solenoids)

Pressure Regulator Monitoring: The current regulator ASIC in the TCM indicates the following circuit failures via SPI bus to the CPU:

- Short to ground
- Short to battery or open circuit

Solenoid Monitoring: The TCM measures the actual solenoid voltages and compares them to calibrated thresholds to identify the following electrical failures:

- Short to ground or open circuit
- Short to battery

WHEN MONITORED

Output stages power supply switched on.

Power supply voltage is greater than a calibrated value.

SET CONDITION

Pressure Regulator Monitoring: A failure is detected if one of the following conditions occur:

An short to ground failure is detected if the ASIC indicates a short to ground failure.

A short to battery or open circuit failure is detected if the ASIC indicates a short to battery or open circuit failure.

Solenoid Monitoring: A failure is detected if one of the following conditions occur:

An short to ground or open circuit failure is detected if the ratio between the voltage at the solenoid valve and the output stages power supply is above a calibrated threshold.

A short to battery failure is detected if the ratio between the voltage at the solenoid valve and the output stages power supply is below a calibrated threshold.

POSSIBLE CAUSES

Possible Causes
(T78) SOLENOID SUPPLY 1 CIRCUIT OPEN
(T78) SOLENOID SUPPLY 1 CIRCUIT SHORTED TO GROUND
(T803) LIMP HOME MODE SOLENOID CIRCUIT OPEN
(T803) LIMP HOME MODE SOLENOID CIRCUIT SHORTED TO GROUND
(T803) LIMP HOME MODE SOLENOID CIRCUIT SHORTED TO VOLTAGE
LIMP HOME MODE SOLENOID
TRANSMISSION CONTROL MODULE (TCM)

Always perform the Pre-Diagnostic Troubleshooting procedure before proceeding. Refer to STANDARD PROCEDURE .

DIAGNOSTIC TEST

1. **CHECK IF THE DTC IS CURRENT**
    1. Using the scan tool, read TCM DTCs.
    2. Record the Environmental Data and any DTCs.
    3. Clear DTCs.
    4. Using the recorded Environmental Data, along with the When Monitored and Set Conditions above, operate the vehicle in the conditions that set the DTC.
    5. Read TCM DTCs.

    Did the DTC reset?

    Yes

    - Go To 2

    No

    - Go To 9
2. **CHECK THE LIMP HOME MODE SOLENOID**
    1. Turn the Ignition OFF.
    2. Disconnect the Transmission Assembly harness connector.
    3. Measure the resistance of the Limp Home Mode Solenoid at the appropriate terminals in the Transmission Assembly interface connector.

    Is the resistance of the Limp Home Mode Solenoid 11.0 Ohms ± 1.0 Ohms?

    Yes

    - Go To 3

    No

    - Replace the Limp Home Mode Solenoid in accordance with the Service Information.
    - Perform the TRANSMISSION VERIFICATION TEST. Refer to **STANDARD PROCEDURE** .
3. **CHECK THE (T78) SOLENOID SUPPLY 1 CIRCUIT FOR AN OPEN**
    1. Disconnect the TCM harness connector.
    2. Measure the resistance of the (T78) Solenoid Supply 1 circuit between the Transmission Assembly harness connector and the TCM harness connector.

Is the resistance below 5.0 Ohms?

Yes

- Go To 4

No

- Repair the (T78) Solenoid Supply 1 circuit for an open or high resistance.
- Perform the TRANSMISSION VERIFICATION TEST. Refer to **STANDARD PROCEDURE** .

4. **CHECK THE (T78) SOLENOID SUPPLY 1 CIRCUIT FOR A SHORT TO GROUND**
   1. Measure the resistance between ground and the (T78) Solenoid Supply 1 circuit.

      Is there continuity between ground and the (T78) Solenoid Supply 1 circuit?

      Yes

      - Repair the (T78) Solenoid Supply 1 circuit for a short to ground.
      - Perform the TRANSMISSION VERIFICATION TEST. Refer to **STANDARD PROCEDURE** .

      No

      - Go To 5

5. **CHECK THE (T78) SOLENOID SUPPLY 1 CIRCUIT FOR A SHORT TO ANOTHER CIRCUIT**
   1. Measure the resistance between the (T78) Solenoid Supply 1 circuit and all other circuits in the TCM harness connector.

      Is there continuity between the (T78) Solenoid Supply 1 circuit and any other circuits in the TCM harness connector?

      Yes

      - Repair the (T78) Solenoid Supply 1 circuit for a short to another circuit.
      - Perform the TRANSMISSION VERIFICATION TEST. Refer to **STANDARD PROCEDURE** .

      No

      - Go To 6.

6. **CHECK THE (T803) LIMP HOME MODE SOLENOID CIRCUIT FOR AN OPEN**
   1. Measure the resistance of the (T803) Limp Home Mode Solenoid circuit between the Transmission Assembly harness connector and the TCM harness connector.

Is the resistance below 5.0 Ohms?

Yes

- Go To 7

No

- Repair the (T803) Limp Home Mode Solenoid circuit for an open or high resistance.
- Perform the TRANSMISSION VERIFICATION TEST. Refer to **STANDARD PROCEDURE** .

7. **CHECK THE (T803) LIMP HOME MODE SOLENOID CIRCUIT FOR A SHORT TO GROUND**
   1. Measure the resistance between ground and the (T803) Limp Home Mode Solenoid circuit.

      Is there continuity between ground and the (T803) Limp Home Mode Solenoid circuit?

      Yes

      - Repair the (T803) Limp Home Mode Solenoid circuit for a short to ground.
      - Perform the TRANSMISSION VERIFICATION TEST. Refer to **STANDARD PROCEDURE** .

      No

      - Go To 8.

8. **CHECK THE (T803) LIMP HOME MODE SOLENOID CIRCUIT FOR A SHORT TO ANOTHER CIRCUIT**
   1. Measure the resistance between the (T803) Limp Home Mode Solenoid circuit and all other circuits in the TCM harness connector.

      Is there continuity between the (T803) Limp Home Mode Solenoid circuit and any other circuits in the TCM harness connector?

      Yes

      - Repair the (T803) Limp Home Mode Solenoid circuit for a short to another circuit.
      - Perform the TRANSMISSION VERIFICATION TEST. Refer to **STANDARD PROCEDURE** .

      No

      NOTE: **If this Electronic Control Unit (ECU) is being replaced with a new unit, a diagnostic scan tool MUST be used to align the PROXI configuration data into the new ECU. Follow the routine outlined in**

the diagnostic scan tool for PROXI Configuration Alignment under Body Control Module (BCM) Miscellaneous Functions menu.

- Using the schematics as a guide, check the Transmission Control Module (TCM) terminals and connectors for corrosion, damage or pushed out terminals. Pay particular attention to the power and ground circuits. If no problems are found, replace the TCM and perform programming and PROXI Configuration Alignment procedures. Refer to **MODULE, TRANSMISSION CONTROL, REMOVAL** .
- Perform the TRANSMISSION VERIFICATION TEST. Refer to **STANDARD PROCEDURE** .

9. **CHECK THE WIRING AND CONNECTORS**
   1. The conditions necessary to set this DTC are not present at this time.
   2. Use the Freeze Frame Data to help duplicate the conditions in which the DTC originally set. Pay particular attention to the DTC set conditions, such as, VSS, MAP, ECT, and Load.
   3. Using the schematics as a guide, visually inspect the related wiring harness. Look for any chafed, pierced, pinched, or partially broken wires.
   4. Visually inspect the related wiring harness connectors. Look for broken, bent, pushed out, or corroded terminals.
   5. Wiggle the wiring and connectors while checking for any possible open or shorted circuits.
   6. Check for any Service Information Tune-ups or Technical Service Bulletins that may apply.

   Were there any problems found?

   Yes

   - Repair as necessary.
   - Perform the TRANSMISSION VERIFICATION TEST. Refer to **STANDARD PROCEDURE** .

   No

   - Test Complete.

P1D79-00-LIMP HOME MODE SOLENOID CIRCUIT HIGH

For a complete wiring diagram, **refer to appropriate SYSTEM WIRING DIAGRAMS article** .

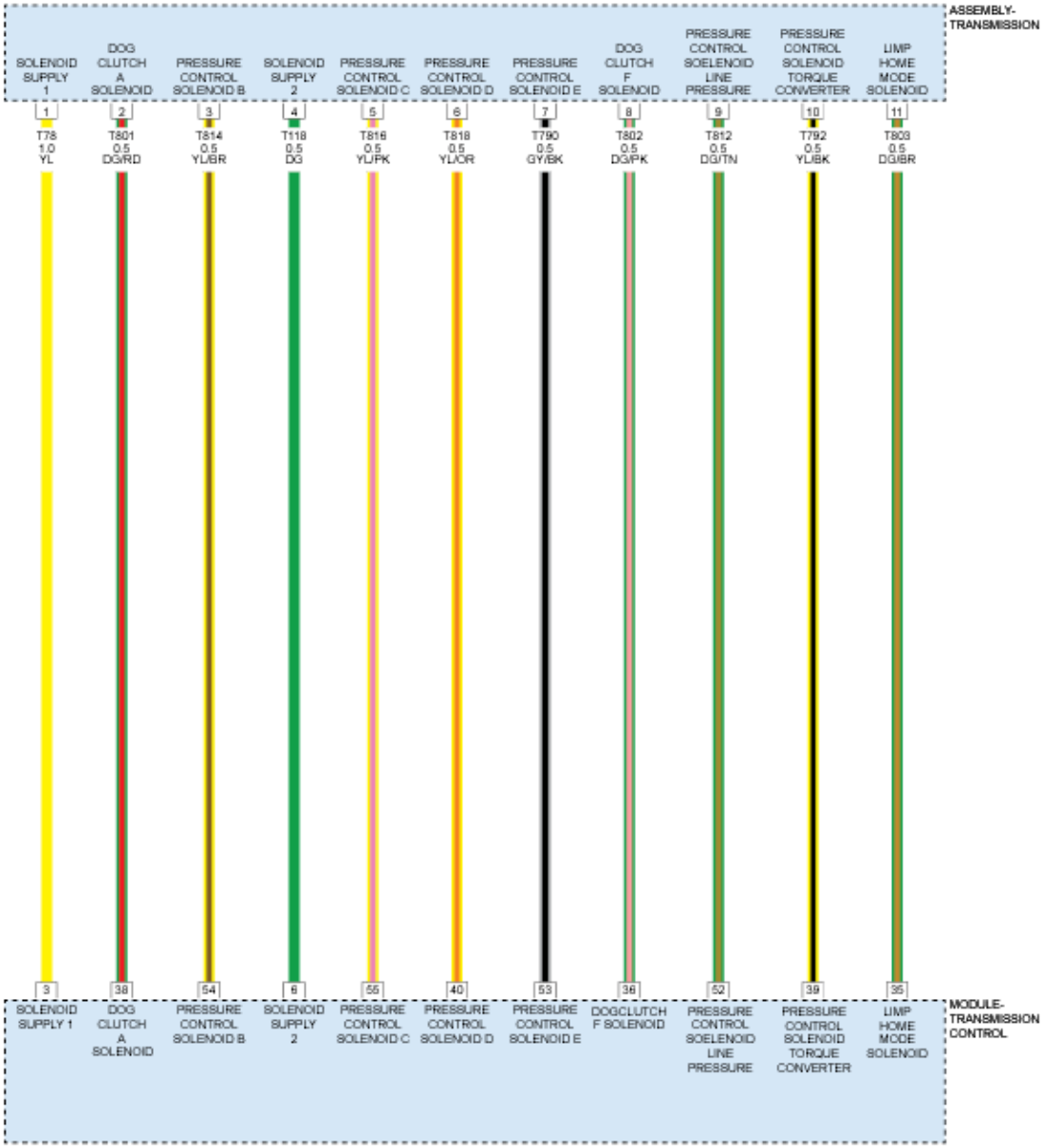

Fig. 3: Pressure Regulators & Solenoids Control Circuit Diagram
Courtesy of CHRYSLER GROUP, LLC

THEORY OF OPERATION

The purpose of the diagnostic is to detect circuit failures on any of the output stages. All output stages are controlled by a current controller that can operate an output stage in two different modes:

- Current controlled mode (pressure regulators)
- Switched mode or PWM controlled (solenoids)

Pressure Regulator Monitoring: The current regulator ASIC in the TCM indicates the following circuit failures via SPI bus to the CPU:

- Short to ground
- Short to battery or open circuit

Solenoid Monitoring: The TCM measures the actual solenoid voltages and compares them to calibrated thresholds to identify the following electrical failures:

- Short to ground or open circuit
- Short to battery

WHEN MONITORED

Output stages power supply switched on.

Power supply voltage is greater than a calibrated value.

SET CONDITION

Pressure Regulator Monitoring: A failure is detected if one of the following conditions occur:

An short to ground failure is detected if the ASIC indicates a short to ground failure.

A short to battery or open circuit failure is detected if the ASIC indicates a short to battery or open circuit failure.

Solenoid Monitoring: A failure is detected if one of the following conditions occur:

An short to ground or open circuit failure is detected if the ratio between the voltage at the solenoid valve and the output stages power supply is above a calibrated threshold.

A short to battery failure is detected if the ratio between the voltage at the solenoid valve and the output stages power supply is below a calibrated threshold.

POSSIBLE CAUSES

Possible Causes
(T78) SOLENOID SUPPLY 1 CIRCUIT OPEN
(T78) SOLENOID SUPPLY 1 CIRCUIT SHORTED TO GROUND
(T803) LIMP HOME MODE SOLENOID CIRCUIT OPEN
(T803) LIMP HOME MODE SOLENOID CIRCUIT SHORTED TO GROUND
(T803) LIMP HOME MODE SOLENOID CIRCUIT SHORTED TO VOLTAGE
LIMP HOME MODE SOLENOID
TRANSMISSION CONTROL MODULE (TCM)

Always perform the Pre-Diagnostic Troubleshooting procedure before proceeding. Refer to STANDARD PROCEDURE .

DIAGNOSTIC TEST

1. **CHECK IF THE DTC IS CURRENT**
    1. Using the scan tool, read TCM DTCs.
    2. Record the Environmental Data and any DTCs.
    3. Clear DTCs.
    4. Using the recorded Environmental Data, along with the When Monitored and Set Conditions above, operate the vehicle in the conditions that set the DTC.
    5. Read TCM DTCs.

    Did the DTC reset?

    Yes

    - Go To 2

    No

    - Go To 9
2. **CHECK THE LIMP HOME MODE SOLENOID**
    1. Turn the Ignition OFF.
    2. Disconnect the Transmission Assembly harness connector.
    3. Measure the resistance of the Limp Home Mode Solenoid at the appropriate terminals in the Transmission Assembly interface connector.

    Is the resistance of the Limp Home Mode Solenoid 11.0 Ohms ± 1.0 Ohms?

    Yes

    - Go To 3

    No

    - Replace the Limp Home Mode Solenoid in accordance with the Service Information.
    - Perform the TRANSMISSION VERIFICATION TEST. Refer to **STANDARD PROCEDURE** .
3. **CHECK THE (T78) SOLENOID SUPPLY 1 CIRCUIT FOR AN OPEN**
    1. Disconnect the TCM harness connector.
    2. Measure the resistance of the (T78) Solenoid Supply 1 circuit between the Transmission Assembly harness connector and the TCM harness connector.

Is the resistance below 5.0 Ohms?

Yes

- Go To 4

No

- Repair the (T78) Solenoid Supply 1 circuit for an open or high resistance.
- Perform the TRANSMISSION VERIFICATION TEST. Refer to **STANDARD PROCEDURE** .

4. **CHECK THE (T78) SOLENOID SUPPLY 1 CIRCUIT FOR A SHORT TO GROUND**
   1. Measure the resistance between ground and the (T78) Solenoid Supply 1 circuit.

      Is there continuity between ground and the (T78) Solenoid Supply 1 circuit?

      Yes

      - Repair the (T78) Solenoid Supply 1 circuit for a short to ground.
      - Perform the TRANSMISSION VERIFICATION TEST. Refer to **STANDARD PROCEDURE** .

      No

      - Go To 5

5. **CHECK THE (T78) SOLENOID SUPPLY 1 CIRCUIT FOR A SHORT TO ANOTHER CIRCUIT**
   1. Measure the resistance between the (T78) Solenoid Supply 1 circuit and all other circuits in the TCM harness connector.

      Is there continuity between the (T78) Solenoid Supply 1 circuit and any other circuits in the TCM harness connector?

      Yes

      - Repair the (T78) Solenoid Supply 1 circuit for a short to another circuit.
      - Perform the TRANSMISSION VERIFICATION TEST. Refer to **STANDARD PROCEDURE** .

      No

      - Go To 6.

6. **CHECK THE (T803) LIMP HOME MODE SOLENOID CIRCUIT FOR AN OPEN**
   1. Measure the resistance of the (T803) Limp Home Mode Solenoid circuit between the Transmission Assembly harness connector and the TCM harness connector.

Is the resistance below 5.0 Ohms?

Yes

- Go To 7

No

- Repair the (T803) Limp Home Mode Solenoid circuit for an open or high resistance.
- Perform the TRANSMISSION VERIFICATION TEST. Refer to **STANDARD PROCEDURE** .

7. **CHECK THE (T803) LIMP HOME MODE SOLENOID CIRCUIT FOR A SHORT TO GROUND**
   1. Measure the resistance between ground and the (T803) Limp Home Mode Solenoid circuit.

      Is there continuity between ground and the (T803) Limp Home Mode Solenoid circuit?

      Yes

      - Repair the (T803) Limp Home Mode Solenoid circuit for a short to ground.
      - Perform the TRANSMISSION VERIFICATION TEST. Refer to **STANDARD PROCEDURE** .

      No

      - Go To 8.

8. **CHECK THE (T803) LIMP HOME MODE SOLENOID CIRCUIT FOR A SHORT TO ANOTHER CIRCUIT**
   1. Measure the resistance between the (T803) Limp Home Mode Solenoid circuit and all other circuits in the TCM harness connector.

      Is there continuity between the (T803) Limp Home Mode Solenoid circuit and any other circuits in the TCM harness connector?

      Yes

      - Repair the (T803) Limp Home Mode Solenoid circuit for a short to another circuit.
      - Perform the TRANSMISSION VERIFICATION TEST. Refer to **STANDARD PROCEDURE** .

      No

      NOTE: **If this Electronic Control Unit (ECU) is being replaced with a new unit, a diagnostic scan tool MUST be used to align the PROXI configuration data into the new ECU. Follow the routine outlined in**

the diagnostic scan tool for PROXI Configuration Alignment under Body Control Module (BCM) Miscellaneous Functions menu.

- Using the schematics as a guide, check the Transmission Control Module (TCM) terminals and connectors for corrosion, damage or pushed out terminals. Pay particular attention to the power and ground circuits. If no problems are found, replace the TCM and perform programming and PROXI Configuration Alignment procedures. Refer to **MODULE, TRANSMISSION CONTROL, REMOVAL** .
- Perform the TRANSMISSION VERIFICATION TEST. Refer to **STANDARD PROCEDURE** .

9. **CHECK THE WIRING AND CONNECTORS**
   1. The conditions necessary to set this DTC are not present at this time.
   2. Use the Freeze Frame Data to help duplicate the conditions in which the DTC originally set. Pay particular attention to the DTC set conditions, such as, VSS, MAP, ECT, and Load.
   3. Using the schematics as a guide, visually inspect the related wiring harness. Look for any chafed, pierced, pinched, or partially broken wires.
   4. Visually inspect the related wiring harness connectors. Look for broken, bent, pushed out, or corroded terminals.
   5. Wiggle the wiring and connectors while checking for any possible open or shorted circuits.
   6. Check for any Service Information Tune-ups or Technical Service Bulletins that may apply.

   Were there any problems found?

   Yes

   - Repair as necessary.
   - Perform the TRANSMISSION VERIFICATION TEST. Refer to **STANDARD PROCEDURE** .

   No

   - Test Complete.

P1D8F-00-INCORRECT GEAR RATIO CLUTCH 1 DEFECTIVE

For a complete wiring diagram, **refer to appropriate SYSTEM WIRING DIAGRAMS article** .

THEORY OF OPERATION

The Transmission Control Module (TCM) monitors for conditions which lead to an unexpected transmission gear ratio (e.g. slipping clutches, hydraulic or mechanical defects, etc.). The TCM compares the actual gear ratio (i.e. the ratio of input speed to output speed) to a minimum and maximum calibrated gear ratio value. The TCM performs this comparison while driving in a fix gear, during gear engagement, and during shifting from one gear to another.

WHEN MONITORED

General Enable Conditions:

Driving position is in Drive or Reverse.

Oil temperature above a calibrated threshold.

No clutch slip control functions commanded.

No failure in input speed signal.

Input speed above a calibrated threshold.

Valid output speed signal from the output speed sensor or calculated from the wheel speed signal if output speed sensor is not available.

Valid engine speed signal from the PCM.

During Gear Shifts:

The output speed and the output speed gradient must be greater than a calibrated value.

SET CONDITION

During Gear Shifts:

A symptom is detected if the measured gear ratio exceeds the gear ratio range.

If a symptom is detected during downshifts requiring the engagement of a dog clutch or during upshifts, the diagnostic system aborts the gear shifting and the gear from which the shifting has been started is engaged. After a calibrated number of symptoms have been detected a failure is stored and the diagnostic system engages a calibrated gear

If a symptom is detected during a downshift requiring the engagement of a dog clutch, a fault code is stored indicating the associated dog clutch.

In Fixed Gears:

If the output speed is greater than a threshold then a symptom is detected if the measured gear ratio exceeds the gear ratio range for calibrated amount of time.

If the output speed is lower than this threshold, then a symptom is detected if the absolute difference between output speed multiplied by the fix gear ratio of the actual gear and input speed exceeds a threshold for a calibrated amount of time.

If a symptom is detected while driving in a fixed gear, the diagnostic system commands an up shift to the next

gear. After a calibrated number of symptoms have been detected a failure is stored and the diagnostic system engages a calibrated gear. This gear is monitored as well and if a failure is detected for this gear, an alternative gear is engaged and so on. The selection of alternative gears follows a calibrated logic. The aim of this logic is to detect a damaged clutch and to finally select an alternative gear that consists of a combination of clutches in which the damaged clutch is not involved. If a further failure symptom occurs in this final alternative gear, a failure for general transmission ratio malfunction is stored.

POSSIBLE CAUSES

Possible Causes
TRANSMISSION - INTERNAL COMPONENTS

Always perform the Pre-Diagnostic Troubleshooting procedure before proceeding. Refer to STANDARD PROCEDURE .

DIAGNOSTIC TEST

1. **CHECK IF DTC IS CURRENT**
    1. With the scan tool, read TCM DTCs.
    2. Record the Environmental Data and any DTCs.
    3. With the scan tool, erase DTCs.
    4. Using the recorded Environmental Data, along with the When Monitored and Set Conditions above, operate the vehicle in the conditions that set the DTC.
    5. With the scan tool, read TCM DTCs.

    Did the DTC reset?

    Yes

    - Go to 2

    No

    - Go to 3
2. **TRANSMISSION**

    If the DTC returns, view repair.

    Repair

    - Verify proper fluid level. Refer to **FLUID AND FILTER, STANDARD PROCEDURE** .
    - Verify proper operation of the input and output speed sensors.
    - Refer to **DIAGNOSIS AND TESTING** and using the clutch application chart, inspect the clutches, valve body solenoids, and valves associated with this gear ratio error.

- Repair or replace the Transmission in accordance with the Service Information.
- Perform the TRANSMISSION VERIFICATION TEST. Refer to **STANDARD PROCEDURE** .

3. **CHECK WIRING AND CONNECTORS**
   1. The conditions necessary to set the DTC are not present at this time.
   2. Using the schematics as a guide, inspect the wiring and connectors specific to this circuit.
   3. Wiggle the wires while checking for shorted and open circuits.
   4. Check for any Service Bulletins that may apply.

   Were there any problems found?

   Yes

   - Repair as necessary.
   - Perform the TRANSMISSION VERIFICATION TEST. Refer to **STANDARD PROCEDURE** .

   No

   - Test complete.

P1D90-00-INCORRECT GEAR RATIO CLUTCH 2 DEFECTIVE

For a complete wiring diagram, **refer to appropriate SYSTEM WIRING DIAGRAMS article** .

THEORY OF OPERATION

The Transmission Control Module (TCM) monitors for conditions which lead to an unexpected transmission gear ratio (e.g. slipping clutches, hydraulic or mechanical defects, etc.). The TCM compares the actual gear ratio (i.e. the ratio of input speed to output speed) to a minimum and maximum calibrated gear ratio value. The TCM performs this comparison while driving in a fix gear, during gear engagement, and during shifting from one gear to another.

WHEN MONITORED

General Enable Conditions:

Driving position is in Drive or Reverse.

Oil temperature above a calibrated threshold.

No clutch slip control functions commanded.

No failure in input speed signal.

Input speed above a calibrated threshold.

Valid output speed signal from the output speed sensor or calculated from the wheel speed signal if output speed sensor is not available.

Valid engine speed signal from the PCM.

During Gear Shifts:

The output speed and the output speed gradient must be greater than a calibrated value.

SET CONDITION

During Gear Shifts:

A symptom is detected if the measured gear ratio exceeds the gear ratio range.

If a symptom is detected during downshifts requiring the engagement of a dog clutch or during upshifts, the diagnostic system aborts the gear shifting and the gear from which the shifting has been started is engaged. After a calibrated number of symptoms have been detected a failure is stored and the diagnostic system engages a calibrated gear

If a symptom is detected during a downshift requiring the engagement of a dog clutch, a fault code is stored indicating the associated dog clutch.

In Fixed Gears:

If the output speed is greater than a threshold then a symptom is detected if the measured gear ratio exceeds the gear ratio range for calibrated amount of time.

If the output speed is lower than this threshold, then a symptom is detected if the absolute difference between output speed multiplied by the fix gear ratio of the actual gear and input speed exceeds a threshold for a calibrated amount of time.

If a symptom is detected while driving in a fixed gear, the diagnostic system commands an up shift to the next gear. After a calibrated number of symptoms have been detected a failure is stored and the diagnostic system engages a calibrated gear. This gear is monitored as well and if a failure is detected for this gear, an alternative gear is engaged and so on. The selection of alternative gears follows a calibrated logic. The aim of this logic is to detect a damaged clutch and to finally select an alternative gear that consists of a combination of clutches in which the damaged clutch is not involved. If a further failure symptom occurs in this final alternative gear, a failure for general transmission ratio malfunction is stored.

POSSIBLE CAUSES

Possible Causes
TRANSMISSION - INTERNAL COMPONENTS

Always perform the Pre-Diagnostic Troubleshooting procedure before proceeding. Refer to STANDARD

PROCEDURE .

DIAGNOSTIC TEST

1. **CHECK IF DTC IS CURRENT**
    1. With the scan tool, read TCM DTCs.
    2. Record the Environmental Data and any DTCs.
    3. With the scan tool, erase DTCs.
    4. Using the recorded Environmental Data, along with the When Monitored and Set Conditions above, operate the vehicle in the conditions that set the DTC.
    5. With the scan tool, read TCM DTCs.

    Did the DTC reset?

    Yes

    - Go to 2

    No

    - Go to 3
2. **TRANSMISSION**

    If the DTC returns, view repair.

    Repair

    - Verify proper fluid level. Refer to **FLUID AND FILTER, STANDARD PROCEDURE** .
    - Verify proper operation of the input and output speed sensors.
    - Refer to **DIAGNOSIS AND TESTING** and using the clutch application chart, inspect the clutches, valve body solenoids, and valves associated with this gear ratio error.
    - Repair or replace the Transmission in accordance with the Service Information.
    - Perform the TRANSMISSION VERIFICATION TEST. Refer to **STANDARD PROCEDURE** .
3. **CHECK WIRING AND CONNECTORS**
    1. The conditions necessary to set the DTC are not present at this time.
    2. Using the schematics as a guide, inspect the wiring and connectors specific to this circuit.
    3. Wiggle the wires while checking for shorted and open circuits.
    4. Check for any Service Bulletins that may apply.

    Were there any problems found?

    Yes

- Repair as necessary.
- Perform the TRANSMISSION VERIFICATION TEST. Refer to **STANDARD PROCEDURE** .

No

- Test complete.

P1D91-00-INCORRECT GEAR RATIO CLUTCH 3 DEFECTIVE

For a complete wiring diagram, **refer to appropriate SYSTEM WIRING DIAGRAMS article** .

THEORY OF OPERATION

The Transmission Control Module (TCM) monitors for conditions which lead to an unexpected transmission gear ratio (e.g. slipping clutches, hydraulic or mechanical defects, etc.). The TCM compares the actual gear ratio (i.e. the ratio of input speed to output speed) to a minimum and maximum calibrated gear ratio value. The TCM performs this comparison while driving in a fix gear, during gear engagement, and during shifting from one gear to another.

WHEN MONITORED

General Enable Conditions:

Driving position is in Drive or Reverse.

Oil temperature above a calibrated threshold.

No clutch slip control functions commanded.

No failure in input speed signal.

Input speed above a calibrated threshold.

Valid output speed signal from the output speed sensor or calculated from the wheel speed signal if output speed sensor is not available.

Valid engine speed signal from the PCM.

During Gear Shifts:

The output speed and the output speed gradient must be greater than a calibrated value.

SET CONDITION

During Gear Shifts:

A symptom is detected if the measured gear ratio exceeds the gear ratio range.

If a symptom is detected during downshifts requiring the engagement of a dog clutch or during upshifts, the diagnostic system aborts the gear shifting and the gear from which the shifting has been started is engaged. After a calibrated number of symptoms have been detected a failure is stored and the diagnostic system engages a calibrated gear

If a symptom is detected during a downshift requiring the engagement of a dog clutch, a fault code is stored indicating the associated dog clutch.

In Fixed Gears:

If the output speed is greater than a threshold then a symptom is detected if the measured gear ratio exceeds the gear ratio range for calibrated amount of time.

If the output speed is lower than this threshold, then a symptom is detected if the absolute difference between output speed multiplied by the fix gear ratio of the actual gear and input speed exceeds a threshold for a calibrated amount of time.

If a symptom is detected while driving in a fixed gear, the diagnostic system commands an up shift to the next gear. After a calibrated number of symptoms have been detected a failure is stored and the diagnostic system engages a calibrated gear. This gear is monitored as well and if a failure is detected for this gear, an alternative gear is engaged and so on. The selection of alternative gears follows a calibrated logic. The aim of this logic is to detect a damaged clutch and to finally select an alternative gear that consists of a combination of clutches in which the damaged clutch is not involved. If a further failure symptom occurs in this final alternative gear, a failure for general transmission ratio malfunction is stored.

POSSIBLE CAUSES

Possible Causes
TRANSMISSION - INTERNAL COMPONENTS

Always perform the Pre-Diagnostic Troubleshooting procedure before proceeding. Refer to STANDARD PROCEDURE .

DIAGNOSTIC TEST

1. **CHECK IF DTC IS CURRENT**
    1. With the scan tool, read TCM DTCs.
    2. Record the Environmental Data and any DTCs.
    3. With the scan tool, erase DTCs.
    4. Using the recorded Environmental Data, along with the When Monitored and Set Conditions above, operate the vehicle in the conditions that set the DTC.
    5. With the scan tool, read TCM DTCs.

Did the DTC reset?

Yes

- Go to 2

No

- Go to 3

2. **TRANSMISSION**

   If the DTC returns, view repair.

   Repair

   - Verify proper fluid level. Refer to **FLUID AND FILTER, STANDARD PROCEDURE** .
   - Verify proper operation of the input and output speed sensors.
   - Refer to **DIAGNOSIS AND TESTING** and using the clutch application chart, inspect the clutches, valve body solenoids, and valves associated with this gear ratio error.
   - Repair or replace the Transmission in accordance with the Service Information.
   - Perform the TRANSMISSION VERIFICATION TEST. Refer to **STANDARD PROCEDURE** .

3. **CHECK WIRING AND CONNECTORS**
   1. The conditions necessary to set the DTC are not present at this time.
   2. Using the schematics as a guide, inspect the wiring and connectors specific to this circuit.
   3. Wiggle the wires while checking for shorted and open circuits.
   4. Check for any Service Bulletins that may apply.

   Were there any problems found?

   Yes

   - Repair as necessary.
   - Perform the TRANSMISSION VERIFICATION TEST. Refer to **STANDARD PROCEDURE** .

   No

   - Test complete.

P1D92-00-INCORRECT GEAR RATIO CLUTCH 4 DEFECTIVE

For a complete wiring diagram, **refer to appropriate SYSTEM WIRING DIAGRAMS article** .

THEORY OF OPERATION

The Transmission Control Module (TCM) monitors for conditions which lead to an unexpected transmission gear ratio (e.g. slipping clutches, hydraulic or mechanical defects, etc.). The TCM compares the actual gear ratio (i.e. the ratio of input speed to output speed) to a minimum and maximum calibrated gear ratio value. The TCM performs this comparison while driving in a fix gear, during gear engagement, and during shifting from one gear to another.

WHEN MONITORED

General Enable Conditions:

Driving position is in Drive or Reverse.

Oil temperature above a calibrated threshold.

No clutch slip control functions commanded.

No failure in input speed signal.

Input speed above a calibrated threshold.

Valid output speed signal from the output speed sensor or calculated from the wheel speed signal if output speed sensor is not available.

Valid engine speed signal from the PCM.

During Gear Shifts:

The output speed and the output speed gradient must be greater than a calibrated value.

SET CONDITION

During Gear Shifts:

A symptom is detected if the measured gear ratio exceeds the gear ratio range.

If a symptom is detected during downshifts requiring the engagement of a dog clutch or during upshifts, the diagnostic system aborts the gear shifting and the gear from which the shifting has been started is engaged. After a calibrated number of symptoms have been detected a failure is stored and the diagnostic system engages a calibrated gear

If a symptom is detected during a downshift requiring the engagement of a dog clutch, a fault code is stored indicating the associated dog clutch.

In Fixed Gears:

If the output speed is greater than a threshold then a symptom is detected if the measured gear ratio exceeds the gear ratio range for calibrated amount of time.

If the output speed is lower than this threshold, then a symptom is detected if the absolute difference between output speed multiplied by the fix gear ratio of the actual gear and input speed exceeds a threshold for a calibrated amount of time.

If a symptom is detected while driving in a fixed gear, the diagnostic system commands an up shift to the next gear. After a calibrated number of symptoms have been detected a failure is stored and the diagnostic system engages a calibrated gear. This gear is monitored as well and if a failure is detected for this gear, an alternative gear is engaged and so on. The selection of alternative gears follows a calibrated logic. The aim of this logic is to detect a damaged clutch and to finally select an alternative gear that consists of a combination of clutches in which the damaged clutch is not involved. If a further failure symptom occurs in this final alternative gear, a failure for general transmission ratio malfunction is stored.

POSSIBLE CAUSES

Possible Causes
TRANSMISSION - INTERNAL COMPONENTS

Always perform the Pre-Diagnostic Troubleshooting procedure before proceeding. Refer to STANDARD PROCEDURE .

DIAGNOSTIC TEST

1. **CHECK IF DTC IS CURRENT**
    1. With the scan tool, read TCM DTCs.
    2. Record the Environmental Data and any DTCs.
    3. With the scan tool, erase DTCs.
    4. Using the recorded Environmental Data, along with the When Monitored and Set Conditions above, operate the vehicle in the conditions that set the DTC.
    5. With the scan tool, read TCM DTCs.

    Did the DTC reset?

    Yes

    - Go to 2

    No

    - Go to 3
2. **TRANSMISSION**

    If the DTC returns, view repair.

    Repair

- Verify proper fluid level. Refer to **FLUID AND FILTER, STANDARD PROCEDURE** .
- Verify proper operation of the input and output speed sensors.
- Refer to **DIAGNOSIS AND TESTING** and using the clutch application chart, inspect the clutches, valve body solenoids, and valves associated with this gear ratio error.
- Repair or replace the Transmission in accordance with the Service Information.
- Perform the TRANSMISSION VERIFICATION TEST. Refer to **STANDARD PROCEDURE** .

3. **CHECK WIRING AND CONNECTORS**
   1. The conditions necessary to set the DTC are not present at this time.
   2. Using the schematics as a guide, inspect the wiring and connectors specific to this circuit.
   3. Wiggle the wires while checking for shorted and open circuits.
   4. Check for any Service Bulletins that may apply.

   Were there any problems found?

   Yes

   - Repair as necessary.
   - Perform the TRANSMISSION VERIFICATION TEST. Refer to **STANDARD PROCEDURE** .

   No

   - Test complete.

P1D93-00-INCORRECT GEAR RATIO CLUTCH 5 DEFECTIVE

For a complete wiring diagram, **refer to appropriate SYSTEM WIRING DIAGRAMS article** .

THEORY OF OPERATION

The Transmission Control Module (TCM) monitors for conditions which lead to an unexpected transmission gear ratio (e.g. slipping clutches, hydraulic or mechanical defects, etc.). The TCM compares the actual gear ratio (i.e. the ratio of input speed to output speed) to a minimum and maximum calibrated gear ratio value. The TCM performs this comparison while driving in a fix gear, during gear engagement, and during shifting from one gear to another.

WHEN MONITORED

General Enable Conditions:

Driving position is in Drive or Reverse.

Oil temperature above a calibrated threshold.

No clutch slip control functions commanded.

No failure in input speed signal.

Input speed above a calibrated threshold.

Valid output speed signal from the output speed sensor or calculated from the wheel speed signal if output speed sensor is not available.

Valid engine speed signal from the PCM.

During Gear Shifts:

The output speed and the output speed gradient must be greater than a calibrated value.

SET CONDITION

During Gear Shifts:

A symptom is detected if the measured gear ratio exceeds the gear ratio range.

If a symptom is detected during downshifts requiring the engagement of a dog clutch or during upshifts, the diagnostic system aborts the gear shifting and the gear from which the shifting has been started is engaged. After a calibrated number of symptoms have been detected a failure is stored and the diagnostic system engages a calibrated gear

If a symptom is detected during a downshift requiring the engagement of a dog clutch, a fault code is stored indicating the associated dog clutch.

In Fixed Gears:

If the output speed is greater than a threshold then a symptom is detected if the measured gear ratio exceeds the gear ratio range for calibrated amount of time.

If the output speed is lower than this threshold, then a symptom is detected if the absolute difference between output speed multiplied by the fix gear ratio of the actual gear and input speed exceeds a threshold for a calibrated amount of time.

If a symptom is detected while driving in a fixed gear, the diagnostic system commands an up shift to the next gear. After a calibrated number of symptoms have been detected a failure is stored and the diagnostic system engages a calibrated gear. This gear is monitored as well and if a failure is detected for this gear, an alternative gear is engaged and so on. The selection of alternative gears follows a calibrated logic. The aim of this logic is to detect a damaged clutch and to finally select an alternative gear that consists of a combination of clutches in which the damaged clutch is not involved. If a further failure symptom occurs in this final alternative gear, a failure for general transmission ratio malfunction is stored.

POSSIBLE CAUSES

Possible Causes
TRANSMISSION - INTERNAL COMPONENTS

Always perform the Pre-Diagnostic Troubleshooting procedure before proceeding. Refer to STANDARD PROCEDURE .

DIAGNOSTIC TEST

1. **CHECK IF DTC IS CURRENT**
   1. With the scan tool, read TCM DTCs.
   2. Record the Environmental Data and any DTCs.
   3. With the scan tool, erase DTCs.
   4. Using the recorded Environmental Data, along with the When Monitored and Set Conditions above, operate the vehicle in the conditions that set the DTC.
   5. With the scan tool, read TCM DTCs.

      Did the DTC reset?

      Yes

      - Go to 2

      No

      - Go to 3
2. **TRANSMISSION**

   If the DTC returns, view repair.

   Repair

   - Verify proper fluid level. Refer to **FLUID AND FILTER, STANDARD PROCEDURE** .
   - Verify proper operation of the input and output speed sensors.
   - Refer to **DIAGNOSIS AND TESTING** and using the clutch application chart, inspect the clutches, valve body solenoids, and valves associated with this gear ratio error.
   - Repair or replace the Transmission in accordance with the Service Information.
   - Perform the TRANSMISSION VERIFICATION TEST. Refer to **STANDARD PROCEDURE** .
3. **CHECK WIRING AND CONNECTORS**
   1. The conditions necessary to set the DTC are not present at this time.
   2. Using the schematics as a guide, inspect the wiring and connectors specific to this circuit.
   3. Wiggle the wires while checking for shorted and open circuits.
   4. Check for any Service Bulletins that may apply.

Were there any problems found?

Yes

- Repair as necessary.
- Perform the TRANSMISSION VERIFICATION TEST. Refer to **STANDARD PROCEDURE** .

No

- Test complete.

P1D94-00-TCM INTERNAL SBW CALIBRATION MISMATCH

For a complete wiring diagram, **refer to appropriate SYSTEM WIRING DIAGRAMS article** .

THEORY OF OPERATION

The shift by wire software output did not change from R, N or D to P although P should have been determined based on the input signals.

WHEN MONITORED

TCM powered.

TCM initialization has completed.

SET CONDITION

The failure is detected if one of the following occurs:

The shift by wire software output did change from P, N or D to R although R should not have been determined based on the input signals.

POSSIBLE CAUSES

Possible Causes
LOW FLUID LEVEL
TRANSMISSION SOLENOID, SPEED SENSOR, OR OTHER ELECTRICAL RELATED DTCS PRESENT
INTERMITTENT STICKING VALVE IN VALVE BODY
TRANSMISSION INTERNAL PROBLEM
TCM - INTERNAL ERROR

Always perform the Pre-Diagnostic Troubleshooting procedure before proceeding. Refer to STANDARD PROCEDURE .

DIAGNOSTIC TEST

1. **CHECK IF TRANSMISSION SOLENOID DTCS ARE PRESENT**
   1. With the scan tool, check for other transmission DTCs.

      Are any transmission solenoid, speed sensor and/or any other transmission electrical related DTCs present?

      Yes

      - Refer to **DIAGNOSTIC CODE INDEX** and perform the appropriate repair.

      No

      - Go to 2
2. **CHECK TRANSMISSION FLUID LEVEL**
   1. Turn the Ignition OFF.

      NOTE: Low fluid level can be the cause of many transmission problems. Visually inspect the transmission and cooler lines for leakage and repair as necessary and adjust the fluid level in accordance to the Service Information. If no visual leaks are observed and the vehicle has obtained over 1610 km (1000 miles) from new or transmission service, a fluid level check is unnecessary.

   2. Check the transmission fluid level and condition in accordance to the Service Information.

      Is the fluid level correct?

      Yes

      - Go to 3

      No

      - Correct the fluid level in accordance to the Service Information. Refer to **FLUID AND FILTER, STANDARD PROCEDURE** .
      - Perform the TRANSMISSION VERIFICATION TEST. Refer to **STANDARD PROCEDURE** .
3. **CHECK FOR INTERNAL TRANSMISSION PROBLEM**
   1. Check for an internal transmission mechanical problems.
   2. Remove the transmission oil pan and inspect for excessive debris or a plugged transmission oil filter in accordance to the Service Information.
   3. Inspect the valve body for foreign material.

4. This DTC is usually set due to an internal transmission problem such as, but not limited to: stuck solenoid valve and/or contamination in the valve body, broken springs, leaking clutch seals, dislodged or broken snap ring etc.
5. Check Service Information for the appropriate service procedure and any other possible causes.

   Were any problems found?

   Yes

   - Repair as necessary.
   - Perform the Transmission Verification Test. Refer to **STANDARD PROCEDURE** .

   No

   NOTE: If this Electronic Control Unit (ECU) is being replaced with a new unit, a diagnostic scan tool MUST be used to align the PROXI configuration data into the new ECU. Follow the routine outlined in the diagnostic scan tool for PROXI Configuration Alignment under Body Control Module (BCM) Miscellaneous Functions menu.

   - Using the schematics as a guide, check the Transmission Control Module (TCM) terminals and connectors for corrosion, damage or pushed out terminals. Pay particular attention to the power and ground circuits. If no problems are found, replace the TCM and perform programming and PROXI Configuration Alignment procedures. Refer to **MODULE, TRANSMISSION CONTROL, REMOVAL** .
   - Perform the Transmission Verification Test. Refer to **STANDARD PROCEDURE** .

P1D95-00-TCM CLUTCH FAILURE UNDETERMINED

For a complete wiring diagram, **refer to appropriate SYSTEM WIRING DIAGRAMS article** .

THEORY OF OPERATION

The Transmission Control Module (TCM) monitors for conditions which lead to an unexpected transmission gear ratio (e.g. slipping clutches, hydraulic or mechanical defects, etc.). The TCM compares the actual gear ratio (i.e. the ratio of input speed to output speed) to a minimum and maximum calibrated gear ratio value. The TCM performs this comparison while driving in a fix gear, during gear engagement, and during shifting from one gear to another.

WHEN MONITORED

General Enable Conditions:

Driving position is in Drive or Reverse.

Oil temperature above a calibrated threshold.

No clutch slip control functions commanded.

No failure in input speed signal.

Input speed above a calibrated threshold.

Valid output speed signal from the output speed sensor or calculated from the wheel speed signal if output speed sensor is not available.

Valid engine speed signal from the PCM.

During Gear Shifts:

The output speed and the output speed gradient must be greater than a calibrated value.

SET CONDITION

During Gear Shifts:

A symptom is detected if the measured gear ratio exceeds the gear ratio range.

If a symptom is detected during downshifts requiring the engagement of a dog clutch or during upshifts, the diagnostic system aborts the gear shifting and the gear from which the shifting has been started is engaged. After a calibrated number of symptoms have been detected a failure is stored and the diagnostic system engages a calibrated gear

If a symptom is detected during a downshift requiring the engagement of a dog clutch, a fault code is stored indicating the associated dog clutch.

In Fixed Gears:

If the output speed is greater than a threshold then a symptom is detected if the measured gear ratio exceeds the gear ratio range for calibrated amount of time.

If the output speed is lower than this threshold, then a symptom is detected if the absolute difference between output speed multiplied by the fix gear ratio of the actual gear and input speed exceeds a threshold for a calibrated amount of time.

If a symptom is detected while driving in a fixed gear, the diagnostic system commands an up shift to the next gear. After a calibrated number of symptoms have been detected a failure is stored and the diagnostic system engages a calibrated gear. This gear is monitored as well and if a failure is detected for this gear, an alternative gear is engaged and so on. The selection of alternative gears follows a calibrated logic. The aim of this logic is to detect a damaged clutch and to finally select an alternative gear that consists of a combination of clutches in which the damaged clutch is not involved. If a further failure symptom occurs in this final alternative gear, a failure for general transmission ratio malfunction is stored.

POSSIBLE CAUSES

Possible Causes
TRANSMISSION - INTERNAL COMPONENTS

Always perform the Pre-Diagnostic Troubleshooting procedure before proceeding. Refer to STANDARD PROCEDURE .

DIAGNOSTIC TEST

1. **CHECK IF DTC IS CURRENT**
    1. With the scan tool, read TCM DTCs.
    2. Record the Environmental Data and any DTCs.
    3. With the scan tool, erase DTCs.
    4. Using the recorded Environmental Data, along with the When Monitored and Set Conditions above, operate the vehicle in the conditions that set the DTC.
    5. With the scan tool, read TCM DTCs.

    Did the DTC reset?

    Yes

    - Go to 2

    No

    - Go to 3
2. **TRANSMISSION**

    If the DTC returns, view repair.

    Repair

    - Verify proper fluid level. Refer to **FLUID AND FILTER, STANDARD PROCEDURE** .
    - Verify proper operation of the input and output speed sensors.
    - Refer to **DIAGNOSIS AND TESTING** and using the clutch application chart, inspect the clutches, valve body solenoids, and valves associated with this gear ratio error.
    - Repair or replace the Transmission in accordance with the Service Information.
    - Perform the TRANSMISSION VERIFICATION TEST. Refer to **STANDARD PROCEDURE** .
3. **CHECK WIRING AND CONNECTORS**
    1. The conditions necessary to set the DTC are not present at this time.
    2. Using the schematics as a guide, inspect the wiring and connectors specific to this circuit.
    3. Wiggle the wires while checking for shorted and open circuits.

4. Check for any Service Bulletins that may apply.

   Were there any problems found?

   Yes

   - Repair as necessary.
   - Perform the TRANSMISSION VERIFICATION TEST. Refer to **STANDARD PROCEDURE** .

   No

   - Test complete.

P1D98-00-INCORRECT GEAR RATIO CLUTCH B OR D DEFECTIVE

For a complete wiring diagram, **refer to appropriate SYSTEM WIRING DIAGRAMS article** .

THEORY OF OPERATION

The Transmission Control Module (TCM) monitors for conditions which lead to an unexpected transmission gear ratio (e.g. slipping clutches, hydraulic or mechanical defects, etc.). The TCM compares the actual gear ratio (i.e. the ratio of input speed to output speed) to a minimum and maximum calibrated gear ratio value. The TCM performs this comparison while driving in a fix gear, during gear engagement, and during shifting from one gear to another.

WHEN MONITORED

General Enable Conditions:

Driving position is in Drive or Reverse.

Oil temperature above a calibrated threshold.

No clutch slip control functions commanded.

No failure in input speed signal.

Input speed above a calibrated threshold.

Valid output speed signal from the output speed sensor or calculated from the wheel speed signal if output speed sensor is not available.

Valid engine speed signal from the PCM.

During Gear Shifts:

The output speed and the output speed gradient must be greater than a calibrated value.

SET CONDITION

During Gear Shifts:

A symptom is detected if the measured gear ratio exceeds the gear ratio range.

If a symptom is detected during downshifts requiring the engagement of a dog clutch or during upshifts, the diagnostic system aborts the gear shifting and the gear from which the shifting has been started is engaged. After a calibrated number of symptoms have been detected a failure is stored and the diagnostic system engages a calibrated gear

If a symptom is detected during a downshift requiring the engagement of a dog clutch, a fault code is stored indicating the associated dog clutch.

In Fixed Gears:

If the output speed is greater than a threshold then a symptom is detected if the measured gear ratio exceeds the gear ratio range for calibrated amount of time.

If the output speed is lower than this threshold, then a symptom is detected if the absolute difference between output speed multiplied by the fix gear ratio of the actual gear and input speed exceeds a threshold for a calibrated amount of time.

If a symptom is detected while driving in a fixed gear, the diagnostic system commands an up shift to the next gear. After a calibrated number of symptoms have been detected a failure is stored and the diagnostic system engages a calibrated gear. This gear is monitored as well and if a failure is detected for this gear, an alternative gear is engaged and so on. The selection of alternative gears follows a calibrated logic. The aim of this logic is to detect a damaged clutch and to finally select an alternative gear that consists of a combination of clutches in which the damaged clutch is not involved. If a further failure symptom occurs in this final alternative gear, a failure for general transmission ratio malfunction is stored.

POSSIBLE CAUSES

Possible Causes
TRANSMISSION - INTERNAL COMPONENTS

Always perform the Pre-Diagnostic Troubleshooting procedure before proceeding. Refer to STANDARD PROCEDURE .

DIAGNOSTIC TEST

1. **CHECK IF DTC IS CURRENT**
    1. With the scan tool, read TCM DTCs.
    2. Record the Environmental Data and any DTCs.

3. With the scan tool, erase DTCs.
4. Using the recorded Environmental Data, along with the When Monitored and Set Conditions above, operate the vehicle in the conditions that set the DTC.
5. With the scan tool, read TCM DTCs.

   Did the DTC reset?

   Yes

   - Go to 2

   No

   - Go to 3

2. **TRANSMISSION**

   If the DTC returns, view repair.

   Repair

   - Verify proper fluid level. Refer to **FLUID AND FILTER, STANDARD PROCEDURE** .
   - Verify proper operation of the input and output speed sensors.
   - Refer to **DIAGNOSIS AND TESTING** and using the clutch application chart, inspect the clutches, valve body solenoids, and valves associated with this gear ratio error.
   - Repair or replace the Transmission in accordance with the Service Information.
   - Perform the TRANSMISSION VERIFICATION TEST. Refer to **STANDARD PROCEDURE** .

3. **CHECK WIRING AND CONNECTORS**
   1. The conditions necessary to set the DTC are not present at this time.
   2. Using the schematics as a guide, inspect the wiring and connectors specific to this circuit.
   3. Wiggle the wires while checking for shorted and open circuits.
   4. Check for any Service Bulletins that may apply.

      Were there any problems found?

      Yes

      - Repair as necessary.
      - Perform the TRANSMISSION VERIFICATION TEST. Refer to **STANDARD PROCEDURE** .

      No

      - Test complete.

P1D99-00-INCORRECT GEAR RATIO CLUTCH B OR E DEFECTIVE

For a complete wiring diagram, **refer to appropriate SYSTEM WIRING DIAGRAMS article** .

THEORY OF OPERATION

The Transmission Control Module (TCM) monitors for conditions which lead to an unexpected transmission gear ratio (e.g. slipping clutches, hydraulic or mechanical defects, etc.). The TCM compares the actual gear ratio (i.e. the ratio of input speed to output speed) to a minimum and maximum calibrated gear ratio value. The TCM performs this comparison while driving in a fix gear, during gear engagement, and during shifting from one gear to another.

WHEN MONITORED

General Enable Conditions:

Driving position is in Drive or Reverse.

Oil temperature above a calibrated threshold.

No clutch slip control functions commanded.

No failure in input speed signal.

Input speed above a calibrated threshold.

Valid output speed signal from the output speed sensor or calculated from the wheel speed signal if output speed sensor is not available.

Valid engine speed signal from the PCM.

During Gear Shifts:

The output speed and the output speed gradient must be greater than a calibrated value.

SET CONDITION

During Gear Shifts:

A symptom is detected if the measured gear ratio exceeds the gear ratio range.

If a symptom is detected during downshifts requiring the engagement of a dog clutch or during upshifts, the diagnostic system aborts the gear shifting and the gear from which the shifting has been started is engaged. After a calibrated number of symptoms have been detected a failure is stored and the diagnostic system engages a calibrated gear

If a symptom is detected during a downshift requiring the engagement of a dog clutch, a fault code is stored

indicating the associated dog clutch.

In Fixed Gears:

If the output speed is greater than a threshold then a symptom is detected if the measured gear ratio exceeds the gear ratio range for calibrated amount of time.

If the output speed is lower than this threshold, then a symptom is detected if the absolute difference between output speed multiplied by the fix gear ratio of the actual gear and input speed exceeds a threshold for a calibrated amount of time.

If a symptom is detected while driving in a fixed gear, the diagnostic system commands an up shift to the next gear. After a calibrated number of symptoms have been detected a failure is stored and the diagnostic system engages a calibrated gear. This gear is monitored as well and if a failure is detected for this gear, an alternative gear is engaged and so on. The selection of alternative gears follows a calibrated logic. The aim of this logic is to detect a damaged clutch and to finally select an alternative gear that consists of a combination of clutches in which the damaged clutch is not involved. If a further failure symptom occurs in this final alternative gear, a failure for general transmission ratio malfunction is stored.

POSSIBLE CAUSES

Possible Causes
TRANSMISSION - INTERNAL COMPONENTS

Always perform the Pre-Diagnostic Troubleshooting procedure before proceeding. Refer to STANDARD PROCEDURE .

DIAGNOSTIC TEST

1. **CHECK IF DTC IS CURRENT**
    1. With the scan tool, read TCM DTCs.
    2. Record the Environmental Data and any DTCs.
    3. With the scan tool, erase DTCs.
    4. Using the recorded Environmental Data, along with the When Monitored and Set Conditions above, operate the vehicle in the conditions that set the DTC.
    5. With the scan tool, read TCM DTCs.

    Did the DTC reset?

    Yes

    - Go to 2

    No

- Go to 3

2. **TRANSMISSION**

   If the DTC returns, view repair.

   Repair

   - Verify proper fluid level. Refer to **FLUID AND FILTER, STANDARD PROCEDURE** .
   - Verify proper operation of the input and output speed sensors.
   - Refer to **DIAGNOSIS AND TESTING** and using the clutch application chart, inspect the clutches, valve body solenoids, and valves associated with this gear ratio error.
   - Repair or replace the Transmission in accordance with the Service Information.
   - Perform the TRANSMISSION VERIFICATION TEST. Refer to **STANDARD PROCEDURE** .

3. **CHECK WIRING AND CONNECTORS**
   1. The conditions necessary to set the DTC are not present at this time.
   2. Using the schematics as a guide, inspect the wiring and connectors specific to this circuit.
   3. Wiggle the wires while checking for shorted and open circuits.
   4. Check for any Service Bulletins that may apply.

   Were there any problems found?

   Yes

   - Repair as necessary.
   - Perform the TRANSMISSION VERIFICATION TEST. Refer to **STANDARD PROCEDURE** .

   No

   - Test complete.

P1D9E-00-INCORRECT GEAR RATIO CLUTCH C OR E DEFECTIVE

For a complete wiring diagram, **refer to appropriate SYSTEM WIRING DIAGRAMS article** .

THEORY OF OPERATION

The Transmission Control Module (TCM) monitors for conditions which lead to an unexpected transmission gear ratio (e.g. slipping clutches, hydraulic or mechanical defects, etc.). The TCM compares the actual gear ratio (i.e. the ratio of input speed to output speed) to a minimum and maximum calibrated gear ratio value. The TCM performs this comparison while driving in a fix gear, during gear engagement, and during shifting from one gear to another.

WHEN MONITORED

General Enable Conditions:

Driving position is in Drive or Reverse.

Oil temperature above a calibrated threshold.

No clutch slip control functions commanded.

No failure in input speed signal.

Input speed above a calibrated threshold.

Valid output speed signal from the output speed sensor or calculated from the wheel speed signal if output speed sensor is not available.

Valid engine speed signal from the PCM.

During Gear Shifts:

The output speed and the output speed gradient must be greater than a calibrated value.

SET CONDITION

During Gear Shifts:

A symptom is detected if the measured gear ratio exceeds the gear ratio range.

If a symptom is detected during downshifts requiring the engagement of a dog clutch or during upshifts, the diagnostic system aborts the gear shifting and the gear from which the shifting has been started is engaged. After a calibrated number of symptoms have been detected a failure is stored and the diagnostic system engages a calibrated gear

If a symptom is detected during a downshift requiring the engagement of a dog clutch, a fault code is stored indicating the associated dog clutch.

In Fixed Gears:

If the output speed is greater than a threshold then a symptom is detected if the measured gear ratio exceeds the gear ratio range for calibrated amount of time.

If the output speed is lower than this threshold, then a symptom is detected if the absolute difference between output speed multiplied by the fix gear ratio of the actual gear and input speed exceeds a threshold for a calibrated amount of time.

If a symptom is detected while driving in a fixed gear, the diagnostic system commands an up shift to the next gear. After a calibrated number of symptoms have been detected a failure is stored and the diagnostic system engages a calibrated gear. This gear is monitored as well and if a failure is detected for this gear, an alternative

gear is engaged and so on. The selection of alternative gears follows a calibrated logic. The aim of this logic is to detect a damaged clutch and to finally select an alternative gear that consists of a combination of clutches in which the damaged clutch is not involved. If a further failure symptom occurs in this final alternative gear, a failure for general transmission ratio malfunction is stored.

POSSIBLE CAUSES

Possible Causes
TRANSMISSION - INTERNAL COMPONENTS

Always perform the Pre-Diagnostic Troubleshooting procedure before proceeding. Refer to STANDARD PROCEDURE .

DIAGNOSTIC TEST

1. **CHECK IF DTC IS CURRENT**
    1. With the scan tool, read TCM DTCs.
    2. Record the Environmental Data and any DTCs.
    3. With the scan tool, erase DTCs.
    4. Using the recorded Environmental Data, along with the When Monitored and Set Conditions above, operate the vehicle in the conditions that set the DTC.
    5. With the scan tool, read TCM DTCs.

    Did the DTC reset?

    Yes

    - Go to 2

    No

    - Go to 3
2. **TRANSMISSION**

    If the DTC returns, view repair.

    Repair

    - Verify proper fluid level. Refer to **FLUID AND FILTER, STANDARD PROCEDURE** .
    - Verify proper operation of the input and output speed sensors.
    - Refer to **DIAGNOSIS AND TESTING** and using the clutch application chart, inspect the clutches, valve body solenoids, and valves associated with this gear ratio error.
    - Repair or replace the Transmission in accordance with the Service Information.
    - Perform the TRANSMISSION VERIFICATION TEST. Refer to **STANDARD PROCEDURE** .

3. **CHECK WIRING AND CONNECTORS**
    1. The conditions necessary to set the DTC are not present at this time.
    2. Using the schematics as a guide, inspect the wiring and connectors specific to this circuit.
    3. Wiggle the wires while checking for shorted and open circuits.
    4. Check for any Service Bulletins that may apply.

    Were there any problems found?

    Yes

    - Repair as necessary.
    - Perform the TRANSMISSION VERIFICATION TEST. Refer to **STANDARD PROCEDURE** .

    No

    - Test complete.

P1D9F-00-INCORRECT GEAR RATIO CLUTCH D OR E DEFECTIVE

For a complete wiring diagram, **refer to appropriate SYSTEM WIRING DIAGRAMS article** .

THEORY OF OPERATION

The Transmission Control Module (TCM) monitors for conditions which lead to an unexpected transmission gear ratio (e.g. slipping clutches, hydraulic or mechanical defects, etc.). The TCM compares the actual gear ratio (i.e. the ratio of input speed to output speed) to a minimum and maximum calibrated gear ratio value. The TCM performs this comparison while driving in a fix gear, during gear engagement, and during shifting from one gear to another.

WHEN MONITORED

General Enable Conditions:

Driving position is in Drive or Reverse.

Oil temperature above a calibrated threshold.

No clutch slip control functions commanded.

No failure in input speed signal.

Input speed above a calibrated threshold.

Valid output speed signal from the output speed sensor or calculated from the wheel speed signal if output

speed sensor is not available.

Valid engine speed signal from the PCM.

During Gear Shifts:

The output speed and the output speed gradient must be greater than a calibrated value.

SET CONDITION

During Gear Shifts:

A symptom is detected if the measured gear ratio exceeds the gear ratio range.

If a symptom is detected during downshifts requiring the engagement of a dog clutch or during upshifts, the diagnostic system aborts the gear shifting and the gear from which the shifting has been started is engaged. After a calibrated number of symptoms have been detected a failure is stored and the diagnostic system engages a calibrated gear

If a symptom is detected during a downshift requiring the engagement of a dog clutch, a fault code is stored indicating the associated dog clutch.

In Fixed Gears:

If the output speed is greater than a threshold then a symptom is detected if the measured gear ratio exceeds the gear ratio range for calibrated amount of time.

If the output speed is lower than this threshold, then a symptom is detected if the absolute difference between output speed multiplied by the fix gear ratio of the actual gear and input speed exceeds a threshold for a calibrated amount of time.

If a symptom is detected while driving in a fixed gear, the diagnostic system commands an up shift to the next gear. After a calibrated number of symptoms have been detected a failure is stored and the diagnostic system engages a calibrated gear. This gear is monitored as well and if a failure is detected for this gear, an alternative gear is engaged and so on. The selection of alternative gears follows a calibrated logic. The aim of this logic is to detect a damaged clutch and to finally select an alternative gear that consists of a combination of clutches in which the damaged clutch is not involved. If a further failure symptom occurs in this final alternative gear, a failure for general transmission ratio malfunction is stored.

POSSIBLE CAUSES

Possible Causes
TRANSMISSION - INTERNAL COMPONENTS

Always perform the Pre-Diagnostic Troubleshooting procedure before proceeding. Refer to STANDARD PROCEDURE .

DIAGNOSTIC TEST

1. **CHECK IF DTC IS CURRENT**
    1. With the scan tool, read TCM DTCs.
    2. Record the Environmental Data and any DTCs.
    3. With the scan tool, erase DTCs.
    4. Using the recorded Environmental Data, along with the When Monitored and Set Conditions above, operate the vehicle in the conditions that set the DTC.
    5. With the scan tool, read TCM DTCs.

    Did the DTC reset?

    Yes

    - Go to 2

    No

    - Go to 3
2. **TRANSMISSION**

    If the DTC returns, view repair.

    Repair

    - Verify proper fluid level. Refer to **FLUID AND FILTER, STANDARD PROCEDURE** .
    - Verify proper operation of the input and output speed sensors.
    - Refer to **DIAGNOSIS AND TESTING** and using the clutch application chart, inspect the clutches, valve body solenoids, and valves associated with this gear ratio error.
    - Repair or replace the Transmission in accordance with the Service Information.
    - Perform the TRANSMISSION VERIFICATION TEST. Refer to **STANDARD PROCEDURE** .
3. **CHECK WIRING AND CONNECTORS**
    1. The conditions necessary to set the DTC are not present at this time.
    2. Using the schematics as a guide, inspect the wiring and connectors specific to this circuit.
    3. Wiggle the wires while checking for shorted and open circuits.
    4. Check for any Service Bulletins that may apply.

    Were there any problems found?

    Yes

    - Repair as necessary.

- Perform the TRANSMISSION VERIFICATION TEST. Refer to **STANDARD PROCEDURE** .

No

- Test complete.

P1DA3-00-INCORRECT GEAR RATIO CLUTCH B D OR E DEFECTIVE

For a complete wiring diagram, **refer to appropriate SYSTEM WIRING DIAGRAMS article** .

THEORY OF OPERATION

The Transmission Control Module (TCM) monitors for conditions which lead to an unexpected transmission gear ratio (e.g. slipping clutches, hydraulic or mechanical defects, etc.). The TCM compares the actual gear ratio (i.e. the ratio of input speed to output speed) to a minimum and maximum calibrated gear ratio value. The TCM performs this comparison while driving in a fix gear, during gear engagement, and during shifting from one gear to another.

WHEN MONITORED

General Enable Conditions:

Driving position is in Drive or Reverse.

Oil temperature above a calibrated threshold.

No clutch slip control functions commanded.

No failure in input speed signal.

Input speed above a calibrated threshold.

Valid output speed signal from the output speed sensor or calculated from the wheel speed signal if output speed sensor is not available.

Valid engine speed signal from the PCM.

During Gear Shifts:

The output speed and the output speed gradient must be greater than a calibrated value.

SET CONDITION

During Gear Shifts:

A symptom is detected if the measured gear ratio exceeds the gear ratio range.

If a symptom is detected during downshifts requiring the engagement of a dog clutch or during upshifts, the diagnostic system aborts the gear shifting and the gear from which the shifting has been started is engaged. After a calibrated number of symptoms have been detected a failure is stored and the diagnostic system engages a calibrated gear

If a symptom is detected during a downshift requiring the engagement of a dog clutch, a fault code is stored indicating the associated dog clutch.

In Fixed Gears:

If the output speed is greater than a threshold then a symptom is detected if the measured gear ratio exceeds the gear ratio range for calibrated amount of time.

If the output speed is lower than this threshold, then a symptom is detected if the absolute difference between output speed multiplied by the fix gear ratio of the actual gear and input speed exceeds a threshold for a calibrated amount of time.

If a symptom is detected while driving in a fixed gear, the diagnostic system commands an up shift to the next gear. After a calibrated number of symptoms have been detected a failure is stored and the diagnostic system engages a calibrated gear. This gear is monitored as well and if a failure is detected for this gear, an alternative gear is engaged and so on. The selection of alternative gears follows a calibrated logic. The aim of this logic is to detect a damaged clutch and to finally select an alternative gear that consists of a combination of clutches in which the damaged clutch is not involved. If a further failure symptom occurs in this final alternative gear, a failure for general transmission ratio malfunction is stored.

POSSIBLE CAUSES

Possible Causes
TRANSMISSION - INTERNAL COMPONENTS

Always perform the Pre-Diagnostic Troubleshooting procedure before proceeding. Refer to STANDARD PROCEDURE .

DIAGNOSTIC TEST

1. **CHECK IF DTC IS CURRENT**
    1. With the scan tool, read TCM DTCs.
    2. Record the Environmental Data and any DTCs.
    3. With the scan tool, erase DTCs.
    4. Using the recorded Environmental Data, along with the When Monitored and Set Conditions above, operate the vehicle in the conditions that set the DTC.
    5. With the scan tool, read TCM DTCs.

Did the DTC reset?

Yes

- Go to 2

No

- Go to 3

2. **TRANSMISSION**

   If the DTC returns, view repair.

   Repair

   - Verify proper fluid level. Refer to **FLUID AND FILTER, STANDARD PROCEDURE** .
   - Verify proper operation of the input and output speed sensors.
   - Refer to **DIAGNOSIS AND TESTING** and using the clutch application chart, inspect the clutches, valve body solenoids, and valves associated with this gear ratio error.
   - Repair or replace the Transmission in accordance with the Service Information.
   - Perform the TRANSMISSION VERIFICATION TEST. Refer to **STANDARD PROCEDURE** .

3. **CHECK WIRING AND CONNECTORS**
   1. The conditions necessary to set the DTC are not present at this time.
   2. Using the schematics as a guide, inspect the wiring and connectors specific to this circuit.
   3. Wiggle the wires while checking for shorted and open circuits.
   4. Check for any Service Bulletins that may apply.

   Were there any problems found?

   Yes

   - Repair as necessary.
   - Perform the TRANSMISSION VERIFICATION TEST. Refer to **STANDARD PROCEDURE** .

   No

   - Test complete.

P1DA5-00-INCORRECT GEAR RATIO CLUTCH C D OR E DEFECTIVE

For a complete wiring diagram, **refer to appropriate SYSTEM WIRING DIAGRAMS article** .

THEORY OF OPERATION

The Transmission Control Module (TCM) monitors for conditions which lead to an unexpected transmission gear ratio (e.g. slipping clutches, hydraulic or mechanical defects, etc.). The TCM compares the actual gear ratio (i.e. the ratio of input speed to output speed) to a minimum and maximum calibrated gear ratio value. The TCM performs this comparison while driving in a fix gear, during gear engagement, and during shifting from one gear to another.

WHEN MONITORED

General Enable Conditions:

Driving position is in Drive or Reverse.

Oil temperature above a calibrated threshold.

No clutch slip control functions commanded.

No failure in input speed signal.

Input speed above a calibrated threshold.

Valid output speed signal from the output speed sensor or calculated from the wheel speed signal if output speed sensor is not available.

Valid engine speed signal from the PCM.

During Gear Shifts:

The output speed and the output speed gradient must be greater than a calibrated value.

SET CONDITION

During Gear Shifts:

A symptom is detected if the measured gear ratio exceeds the gear ratio range.

If a symptom is detected during downshifts requiring the engagement of a dog clutch or during upshifts, the diagnostic system aborts the gear shifting and the gear from which the shifting has been started is engaged. After a calibrated number of symptoms have been detected a failure is stored and the diagnostic system engages a calibrated gear

If a symptom is detected during a downshift requiring the engagement of a dog clutch, a fault code is stored indicating the associated dog clutch.

In Fixed Gears:

If the output speed is greater than a threshold then a symptom is detected if the measured gear ratio exceeds the gear ratio range for calibrated amount of time.

If the output speed is lower than this threshold, then a symptom is detected if the absolute difference between output speed multiplied by the fix gear ratio of the actual gear and input speed exceeds a threshold for a calibrated amount of time.

If a symptom is detected while driving in a fixed gear, the diagnostic system commands an up shift to the next gear. After a calibrated number of symptoms have been detected a failure is stored and the diagnostic system engages a calibrated gear. This gear is monitored as well and if a failure is detected for this gear, an alternative gear is engaged and so on. The selection of alternative gears follows a calibrated logic. The aim of this logic is to detect a damaged clutch and to finally select an alternative gear that consists of a combination of clutches in which the damaged clutch is not involved. If a further failure symptom occurs in this final alternative gear, a failure for general transmission ratio malfunction is stored.

POSSIBLE CAUSES

Possible Causes
TRANSMISSION - INTERNAL COMPONENTS

Always perform the Pre-Diagnostic Troubleshooting procedure before proceeding. Refer to STANDARD PROCEDURE .

DIAGNOSTIC TEST

1. **CHECK IF DTC IS CURRENT**
    1. With the scan tool, read TCM DTCs.
    2. Record the Environmental Data and any DTCs.
    3. With the scan tool, erase DTCs.
    4. Using the recorded Environmental Data, along with the When Monitored and Set Conditions above, operate the vehicle in the conditions that set the DTC.
    5. With the scan tool, read TCM DTCs.

    Did the DTC reset?

    Yes

    - Go to 2

    No

    - Go to 3
2. **TRANSMISSION**

    If the DTC returns, view repair.

    Repair

- Verify proper fluid level. Refer to **FLUID AND FILTER, STANDARD PROCEDURE** .
- Verify proper operation of the input and output speed sensors.
- Refer to **DIAGNOSIS AND TESTING** and using the clutch application chart, inspect the clutches, valve body solenoids, and valves associated with this gear ratio error.
- Repair or replace the Transmission in accordance with the Service Information.
- Perform the TRANSMISSION VERIFICATION TEST. Refer to **STANDARD PROCEDURE** .

3. **CHECK WIRING AND CONNECTORS**
   1. The conditions necessary to set the DTC are not present at this time.
   2. Using the schematics as a guide, inspect the wiring and connectors specific to this circuit.
   3. Wiggle the wires while checking for shorted and open circuits.
   4. Check for any Service Bulletins that may apply.

   Were there any problems found?

   Yes

   - Repair as necessary.
   - Perform the TRANSMISSION VERIFICATION TEST. Refer to **STANDARD PROCEDURE** .

   No

   - Test complete.

P1DA9-00-TRANSMISSION FLUID TEMPERATURE RATIONALITY

For a complete wiring diagram, **refer to appropriate SYSTEM WIRING DIAGRAMS article** .

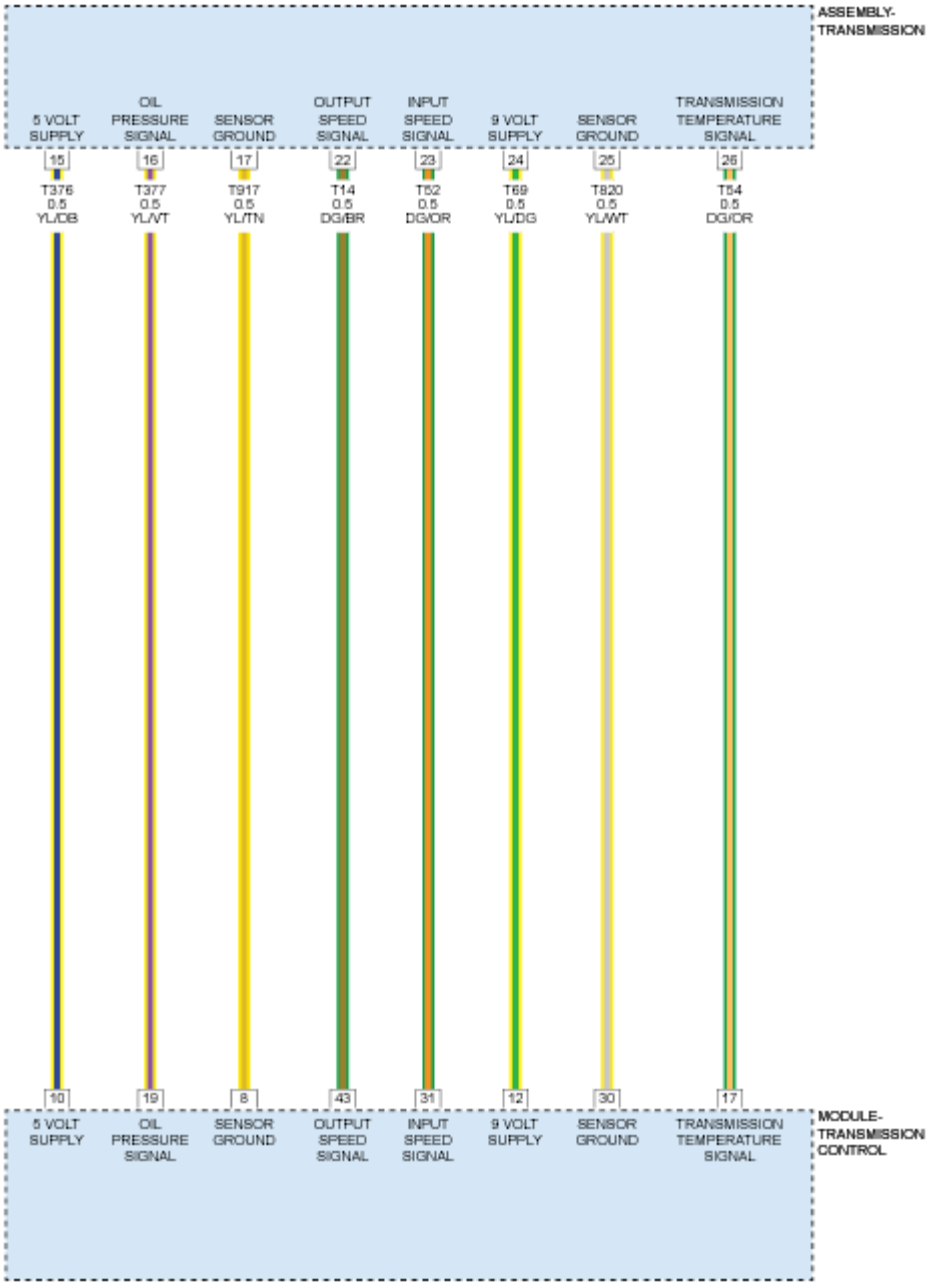

Fig. 4: Power & Ground, Temperature, Oil Pressure And Speed Sensors Circuit Diagram
Courtesy of CHRYSLER GROUP, LLC

THEORY OF OPERATION

The purpose of the diagnostic is to detect rationality failures of the transmission oil temperature sensor by evaluating the following conditions:

Comparison to a Temperature Model

- The measured transmission oil temperature is compared to a calculated model temperature. The calculation of the modeled temperature is based on the fact that the resistance of the pressure regulator coil is correlated with the oil temperature. The calculation is based on the actual duty cycle of pressure regulator for a given commanded current and the value of the pressure regulator power supply.

Low Temperature Detection

- The measured transmission oil temperature is monitored for a low value after having first reached a fixed temperature value.

Stuck in Low Temperature Detection

- The measured transmission oil temperature is monitored for a minimum amount of temperature change at low temperatures.

Temperature Jump Detection

- The measured transmission oil temperature is monitored for a maximum amount of temperature change between two consecutive data samples.

WHEN MONITORED

Temperature Jump Detection:

Ignition on.

No failure detected in oil temperature sensor circuit high or low fault monitoring.

Comparison to Temperature Model:

Ignition on.

No failure detected in oil temperature sensor circuit high or low fault monitoring.

No failure detected in oil temperature jump detection monitoring.

The engine speed is greater than a calibrated value or the input speed is greater than a calibrated value.

The output speed is greater than a calibrated value.

Pressure regulator power supply is switched on.

No failure detected in supply voltage of pressure regulator monitoring.

No failure detected in pressure regulator circuit monitoring.

Calibrated time has expired after engine start.

Low Temperature Detection:

Ignition on.

No failure detected in oil temperature sensor circuit high or low fault monitoring.

No failure detected in oil temperature jump detection monitoring.

The engine speed is greater than a calibrated value or the input speed is greater than a calibrated value.

The output speed is greater than a calibrated value.

Stuck in Low Temperature Detection:

Ignition on.

No failure detected in oil temperature sensor circuit high or low fault monitoring.

No failure detected in oil temperature jump detection monitoring.

The engine speed is greater than a calibrated value or the input speed is greater than a calibrated value.

The output speed is greater than a calibrated value.

Transmission oil temperature is less than a calibrated value.

SET CONDITION

Temperature Jump Detection:

The TCM detects that there has been a transmission fluid temperature change greater than 10°C (50°F) in less than 1 second.

Comparison to a Temperature Model:

The failure is detected if the absolute value of the difference between the oil temperature sensor signal measured by the TCM and the calculated oil temperature is greater than a calibrated threshold for a calibrated amount of time.

Low Temperature Detection:

The failure is detected if the oil temperature sensor signal is less than a calibrated threshold after having first reached another higher calibrated threshold in the same driving cycle.

Stuck in Low Temperature Detection:

The failure is detected if the absolute value of the difference between the current transmission oil temperature and a previous oil temperature stored a calibrated time before is less than a calibrated threshold.

POSSIBLE CAUSES

Possible Causes
INCORRECT TRANSMISSION FLUID LEVEL
RESTRICTION IN TRANSMISSION COOLING SYSTEM
VEHICLE AIRFLOW RESTRICTED
TORQUE CONVERTER
CASE VENT PLUGGED OR DAMAGED
TRANSMISSION FLUID TEMPERATURE SENSOR CIRCUIT FAULT
TRANSMISSION FLUID TEMPERATURE SENSOR
TCM - INTERNAL FAULT

Always perform the Pre-Diagnostic Troubleshooting procedure before proceeding. Perform the Transmission Verification Test. Refer to STANDARD PROCEDURE .

DIAGNOSTIC TEST

Before performing this Diagnostic Test, be certain that there are no problems that could cause the Transmission to overheat. Check for restricted transmission oil cooler and lines, air flow restrictions, and low transmission fluid. Towing loads weighing more than the recommended towing capacity could cause excessively high transmission temperatures.

1. **CHECK FOR ENGINE COOLING DTCS**
    1. With the scan tool, read Engine DTCs.

       Are any engine cooling or Active Grille Shutter (AGS) DTCs present?

       Yes

       - Refer to the **DTC INDEX** article and perform the appropriate diagnostic procedure.

       No

       - Go to 2
2. **CHECK FOR OTHER TRANSMISSION DTCS**
    1. With the scan tool, read Transmission DTCs.
    2. Record any Transmission Freeze Frame data.

       Are there any other transmission DTCs?

Yes

- Perform the appropriate diagnostic procedure in the Service Information.

No

- Go to 3

3. **CHECK IF DTC IS CURRENT**
   1. Using the scan tool, read TCM DTCs.
   2. Record the Environmental Data and any DTCs.
   3. Clear DTCs.
   4. Using the recorded Environmental Data, along with the When Monitored and Set Conditions above, operate the vehicle in the conditions that set the DTC.
   5. Read TCM DTCs.

   Did the DTC reset?

   Yes

   - Go to 4

   No

   - Go to 9

4. **CHECK TRANSMISSION TEMPERATURE SENSOR CIRCUITS FOR HIGH RESISTANCE**
   1. Turn the Ignition OFF.
   2. Disconnect the TCM harness connector.
   3. Remove the transmission side cover and disconnect the transmission temperature sensor harness connector.
   4. Connect a jumper between the (T54) Transmission Temperature Signal circuit and the (T820) Sensor Ground circuit at the transmission temperature sensor harness connector.
   5. Measure resistance between (T54) Transmission Temperature Signal circuit and the (T820) Sensor Ground circuit at the TCM harness connector.

   Is the resistance below 5.0 ohms?

   Yes

   - Go to 5

   No

   - Repair the (T54) Transmission Temperature Signal circuit or the (T820) Sensor Ground

circuit for an open or high resistance.

- Perform the TRANSMISSION VERIFICATION TEST. Refer to **STANDARD PROCEDURE** .

5. **CHECK TRANSMISSION TEMPERATURE SENSOR CIRCUITS FOR A SHORT TO GROUND**
   1. With the jumper still connected, measure resistance between (T54) Transmission Temperature Signal circuit at the TCM harness connector and ground.

      Is there continuity between (T54) Transmission Temperature Signal circuit and ground?

      Yes

      - Repair the (T54) Transmission Temperature Signal circuit or (T820) Sensor Ground circuit for a short to ground.
      - Perform the TRANSMISSION VERIFICATION TEST. Refer to **STANDARD PROCEDURE** .

      No

      - Go to 6
6. **CHECK THE (T54) TRANSMISSION TEMPERATURE SIGNAL CIRCUIT FOR A SHORT TO ANOTHER CIRCUIT**
   1. Remove the jumper from the transmission temperature sensor harness connector.
   2. Measure resistance between (T54) Transmission Temperature Signal circuit and all other circuits in the TCM harness connector.

      Is there continuity between (T54) transmission temperature signal circuit and any other TCM circuit?

      Yes

      - Repair the (T54) Transmission Temperature Signal circuit for a short to another circuit.
      - Perform the TRANSMISSION VERIFICATION TEST. Refer to **STANDARD PROCEDURE** .

      No

      - Go to 7
7. **CHECK THE (T820) SENSOR GROUND CIRCUIT FOR A SHORT TO ANOTHER CIRCUIT**
   1. Measure resistance between (T820) Sensor Ground circuit and all other circuits in the TCM harness connector.

      Is there continuity between (T820) Sensor Ground circuit and any other TCM circuit?

Yes

- Repair the (T820) Sensor Ground circuit for a short to another circuit.
- Perform the TRANSMISSION VERIFICATION TEST. Refer to **STANDARD PROCEDURE** .

No

- Go to 8

8. **VERIFY TRANSMISSION TEMPERATURE SENSOR RESISTANCE / TEMPERATURE CORRELATION**
   1. Measure the resistance between (T54) Transmission Temperature Signal terminal and (T820) Sensor Ground terminal at the transmission temperature sensor.

TYPICAL VALUES FOR TRANSMISSION TEMPERATURE SENSOR	
TEMPERATURE	**APPROXIMATE RESISTANCE**
-30°C (-22°F)	44000 Ohms ± 6600
10°C (50°F)	6455 Ohms ± 645
110°C (230°F)	247 Ohms ± 16
145°C (293°F)	111 Ohms ± 6

Using the chart above, compare the Temperature Sensor temperature to the correlating resistance value.

Is the resistance within the specified range when the sensor is at the given temperature?

Yes

NOTE: **If this Electronic Control Unit (ECU) is being replaced with a new unit, a diagnostic scan tool MUST be used to align the PROXI configuration data into the new ECU. Follow the routine outlined in the diagnostic scan tool for PROXI Configuration Alignment under Body Control Module (BCM) Miscellaneous Functions menu.**

- Using the schematics as a guide, check the Transmission Control Module (TCM) terminals and connectors for corrosion, damage or pushed out terminals. Pay particular attention to the power and ground circuits. If no problems are found, replace the TCM and perform programming and PROXI Configuration Alignment procedures. Refer to **MODULE, TRANSMISSION CONTROL, REMOVAL** .
- Perform the TRANSMISSION VERIFICATION TEST. Refer to **STANDARD PROCEDURE** .

No

- Replace the Transmission Temperature Sensor in accordance with the Service Information.
- Perform the TRANSMISSION VERIFICATION TEST. Refer to **STANDARD PROCEDURE** .

9. **CHECK WIRING AND CONNECTORS**
    1. The conditions necessary to set the DTC are not present at this time.
    2. Using the schematics as a guide, inspect the wiring and connectors specific to this circuit.
    3. Wiggle the wires while checking for shorted and open circuits.
    4. Check for any Service Bulletins that may apply.

    Were there any problems found?

    Yes

    - Repair as necessary.
    - Perform the TRANSMISSION VERIFICATION TEST. Refer to **STANDARD PROCEDURE** .

    No

    - Test complete.

P1DAB-00-VEHICLE SPEED UNDETERMINED

For a complete wiring diagram, **refer to appropriate SYSTEM WIRING DIAGRAMS article** .

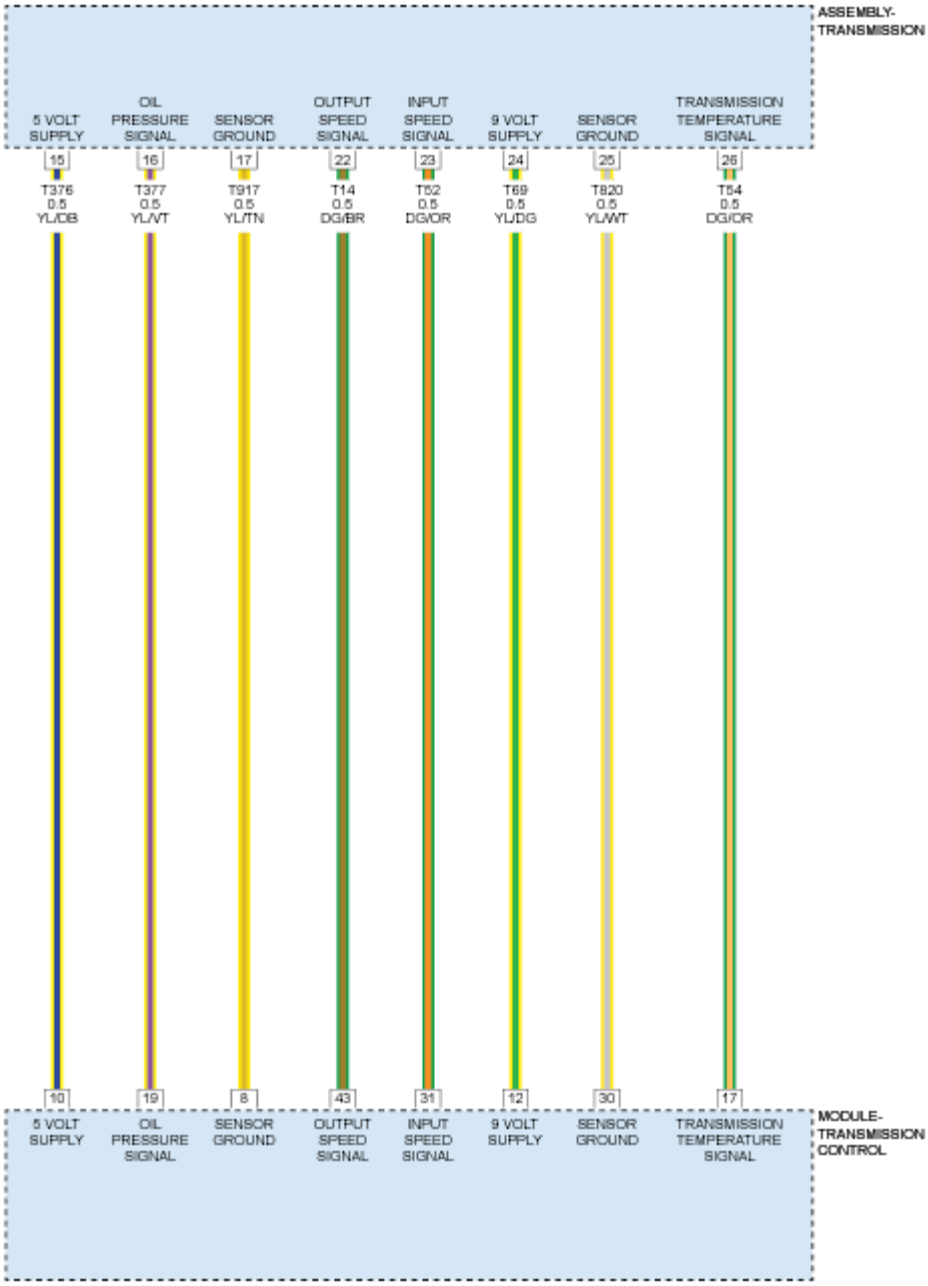

Fig. 5: Power & Ground, Temperature, Oil Pressure And Speed Sensors Circuit Diagram
Courtesy of CHRYSLER GROUP, LLC

THEORY OF OPERATION

The purpose of the diagnostic is to detect rationality failures of the output speed sensor signal. This diagnostic checks if the output speed sensor signal is within the calculated tolerance bands.

The upper threshold of the first tolerance band is the calculated output speed plus a calibrated offset. The calculated output speed is based upon the input speed signal multiplied by the gear ratio factor. This factor

corresponds to either the target gear or current gear depending on which gear provides the greater ratio.

The lower threshold of the first tolerance band is the calculated output speed, minus a calibrated offset. The calculated output speed is based upon the input speed signal multiplied by the gear ratio factor. This factor corresponds to either the target gear or current gear depending on which gear provides the lesser ratio.

The thresholds of the second tolerance bands are calculated using the same method described above. In place of the input speed signal, the wheel speed signal via CAN is used for the calculation.

In addition, this diagnostic checks if the rotating direction of the output speed sensor signal corresponds to the actual gear position.

WHEN MONITORED

No failure detected in the speed sensor supply voltage monitoring.

SET CONDITION

The failure is detected if more than one of the speed sensor signals is not rational.

POSSIBLE CAUSES

Possible Causes
MISMATCHED TIRE CIRCUMFERENCES
FRONT OR REAR WHEELS BEING ON A SLIPPERY SURFACE WHILE THE OPPOSITE TIRES ARE NOT
POWERTRAIN CONTROL MODULE (PCM) - INTERNAL ERROR

Always perform the Pre-Diagnostic Troubleshooting procedure before proceeding. Refer to STANDARD PROCEDURE .

DIAGNOSTIC TEST

1. **CHECK FOR ACTIVE DTCs**
    1. Turn the Ignition ON, Engine not running.
    2. With the scan tool, read TCM DTCs.

    NOTE: Check for Bus Communication DTCs. If no Bus or Communication DTCs are set, check for active DTCs stored in the Anti-Lock Brake Module. Any bus or communication DTCs or VSS DTCs in the Anti-Lock Brake Module must be properly diagnosed before continuing.

    3. Record the Environmental Data and any DTCs.
    4. With the scan tool, erase DTCs.
    5. Using the recorded Environmental Data, along with the When Monitored and Set Conditions

above, operate the vehicle in the conditions that set the DTC.

6. With the scan tool, read TCM DTCs.

NOTE: It may be necessary to drive the vehicle to meet the conditions to set this DTC, try to repeat the conditions in which the fault set by reviewing the Freeze Frame data.

Is the DTC Active or Pending at this time?

Yes

- Go to 2

No

- Go to 4

2. **VISUAL INSPECTION**

NOTE: This code can set due to tire circumference differences and from the front or rear wheels being on a slippery surface while the opposite tires are not.

1. This code may also set on a hard acceleration on loose gravel or during other off road driving conditions.
2. Check tire pressure of all the tires.
3. Check for correct tire sizes.
4. Check tire wear on all the tires.
5. Ask the customer what the road and driving conditions were like when the fault set.

Were any problems found?

Yes

- Repair as necessary. If the code set during a front or rear wheel spin condition, no repair is necessary.
- Perform the Transmission Verification Test. Refer to **STANDARD PROCEDURE** .

No

- Go to 3

3. **CHECK PCM WIRING AND CONNECTIONS**
   1. Using the wiring diagram/schematic as a guide, inspect the wiring and connectors between the Vehicle Speed Sensors, ABS Module, and the Powertrain Control Module (PCM).
   2. Look for any chafed, pierced, pinched, or partially broken wires.

3. Look for broken, bent, pushed out or corroded terminals. Verify that there is good pin to terminal contact in the Vehicle Speed Sensors, ABS Module, and PCM connectors.
4. Perform any Technical Service Bulletins that may apply.

   Were any problems found?

   Yes

   - Repair as necessary.
   - Perform the Transmission Verification Test. Refer to **STANDARD PROCEDURE** .

   No

   NOTE: If this Electronic Control Unit (ECU) is being replaced with a new unit, a diagnostic scan tool MUST be used to align the PROXI configuration data into the new ECU. Follow the routine outlined in the diagnostic scan tool for PROXI Configuration Alignment under Body Control Module (BCM) Miscellaneous Functions menu.

   - Replace the TCM and perform programming and PROXI Configuration Alignment procedures. Refer to **MODULE, TRANSMISSION CONTROL, REMOVAL** .
   - Perform the Transmission Verification Test. Refer to **STANDARD PROCEDURE** .

4. **CHECK WIRING AND CONNECTORS**
   1. The conditions necessary to set the DTC are not present at this time.
   2. Using the schematics as a guide, inspect the wiring and connectors specific to this circuit.
   3. Wiggle the wires while checking for shorted and open circuits.
   4. Check for any Service Bulletins that may apply.

      Were there any problems found?

      Yes

      - Repair as necessary.
      - Perform the Transmission Verification Test. Refer to **STANDARD PROCEDURE** .

      No

      - Test complete.

P1DAD-00-INPUT SHAFT-OUTPUT SHAFT DIRECTION CORRELATION

For a complete wiring diagram, **refer to appropriate SYSTEM WIRING DIAGRAMS article** .

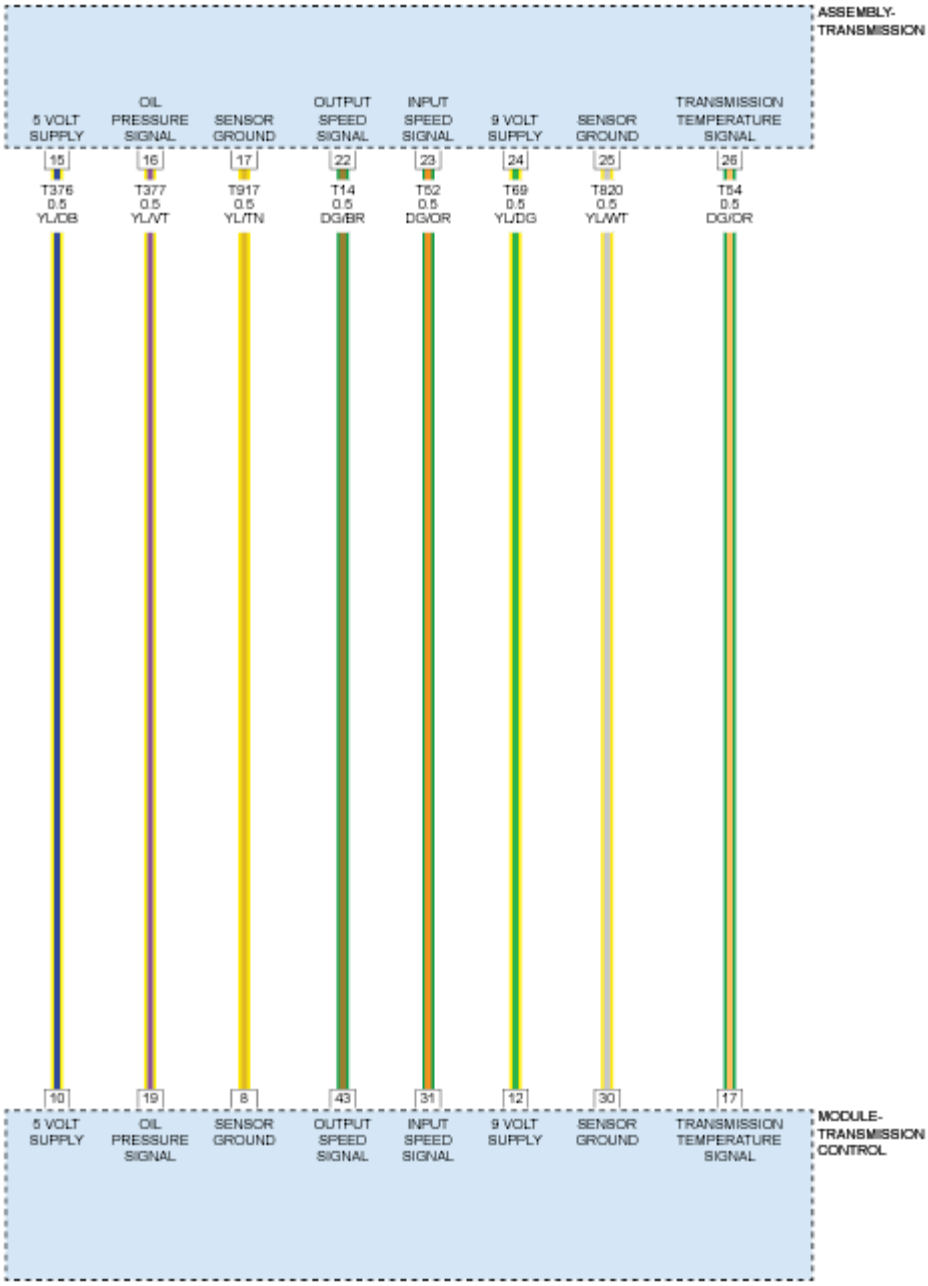

Fig. 6: Power & Ground, Temperature, Oil Pressure And Speed Sensors Circuit Diagram
Courtesy of CHRYSLER GROUP, LLC

THEORY OF OPERATION

The purpose of the diagnostic is to detect an unwanted driving direction. A rationality check is performed between the measured directions of input speed and output speed signal and the calculated driving direction. The calculated driving direction is based on the commanded currents of the pressure regulators.

WHEN MONITORED

No input speed or output speed sensor DTCs set.

Input speed and output speed greater than a calibrated threshold.

Shift not in progress.

No clutch slip control function active.

SET CONDITION

The failure is detected if the measured directions of input speed and output speed signal do not correspond to the calculated driving direction for a calibrated amount of time.

Calculated Driving Direction is Forward:

A failure is detected if the input speed and output speed direction are different.

Calculated Driving Direction is Reverse:

A failure is detected if the input speed and output speed direction are the same.

POSSIBLE CAUSES

Possible Causes
TRANSMISSION - INTERNAL

Always perform the Pre-Diagnostic Troubleshooting procedure before proceeding. Refer to STANDARD PROCEDURE .

DIAGNOSTIC TEST

1. **CHECK IF DTC IS CURRENT**
    1. Turn the Ignition ON.
    2. With the scan tool, CLEAR transmission DTCs.
    3. Raise the vehicle on the hoist.
    4. Start the engine.
    5. With the scan tool, monitor the Output Speed Sensor RPM.
    6. Firmly apply the brakes and place the gear selector in Drive.

    WARNING: To avoid personal injury or death, keep hands and feet clear of rotating wheels.

    7. Release the brakes and raise the engine rpm to allow the transmission to upshift to the 1-2 and 2-3 shift schedule.

Did the Output Speed Sensor display an rpm below 1, 000?

Yes

- Go To 2

No

- Perform the Transmission Verification Test. Refer to **STANDARD PROCEDURE** .

2. **INTERNAL TRANSMISSION**

NOTE: This DTC is an indication of a internal transmission failure.

1. Turn the Ignition OFF.
2. Remove the Transmission Oil Pan and inspect for excessive debris such as clutch friction material or metal contamination.

Is there any indication of an internal transmission failure?

Yes

- Repair internal transmission as necessary in accordance with the Service Information. Refer to **REMOVAL** .
- Perform the Transmission Verification Test. Refer to **STANDARD PROCEDURE** .

No

NOTE: If this Electronic Control Unit (ECU) is being replaced with a new unit, a diagnostic scan tool MUST be used to align the PROXI configuration data into the new ECU. Follow the routine outlined in the diagnostic scan tool for PROXI Configuration Alignment under Body Control Module (BCM) Miscellaneous Functions menu.

- Using the schematics as a guide, check the Transmission Control Module (TCM) terminals and connectors for corrosion, damage or pushed out terminals. Pay particular attention to the power and ground circuits. If no problems are found, replace the TCM and perform programming and PROXI Configuration Alignment procedures. Refer to **MODULE, TRANSMISSION CONTROL, REMOVAL** .
- Perform the Transmission Verification Test. Refer to **STANDARD PROCEDURE** .

P1DAF-00-INCOMPATIBLE LIMP IN ACTION REQUESTED

For a complete wiring diagram, **refer to appropriate SYSTEM WIRING DIAGRAMS article** .

THEORY OF OPERATION

The purpose of the diagnostic is to determine unique failure situations when multiple failures requiring conflicting limp-in actions occur. If conflicting limp-in actions are commanded, the mechanical limp-home mode is activated as the final limp-in action.

WHEN MONITORED

Ignition On.

SET CONDITION

Multiple failures requiring conflicting limp-in actions occur.

POSSIBLE CAUSES

Possible Causes
OTHER TRANSMISSION CONTROL MODULE (TCM) DIAGNOSTIC TROUBLE CODES (DTS) ARE SET POWERTRIAN CONTROL MODULE (PCM) DTCS ARE SET

Always perform the Pre-Diagnostic Troubleshooting procedure before proceeding. Refer to STANDARD PROCEDURE .

DIAGNOSTIC TEST

1. **CHECK FOR TCM DTCS**
    1. With the scan tool, read TCM DTCs.

       Are any other TCM DTCs present?

       Yes

       - Refer to **DIAGNOSTIC CODE INDEX** and perform the appropriate diagnostic procedure.
       - Perform the Transmission Verification Test. Refer to **STANDARD PROCEDURE** .

       No

       - Go to 2
2. **CHECK IF PCM DTCS ARE PRESENT**
    1. With the scan tool, read PCM DTCs.

       Are any PCM DTCs present?

       Yes

       - **Refer to** and perform the appropriate diagnostic procedure.

- Perform the Transmission Verification Test. Refer to **STANDARD PROCEDURE** .

No

NOTE: If this Electronic Control Unit (ECU) is being replaced with a new unit, a diagnostic scan tool MUST be used to align the PROXI configuration data into the new ECU. Follow the routine outlined in the diagnostic scan tool for PROXI Configuration Alignment under Body Control Module (BCM) Miscellaneous Functions menu.

- Using the schematics as a guide, check the Transmission Control Module (TCM) terminals and connectors for corrosion, damage or pushed out terminals. Pay particular attention to the power and ground circuits. If no problems are found, replace the TCM and perform programming and PROXI Configuration Alignment procedures. Refer to **MODULE, TRANSMISSION CONTROL, REMOVAL** .
- Perform the Transmission Verification Test. Refer to **STANDARD PROCEDURE** .

P1DB1-00-TCM SYSTEM VOLTAGE EXCESSIVELY LOW

For a complete wiring diagram, **refer to appropriate SYSTEM WIRING DIAGRAMS article** .

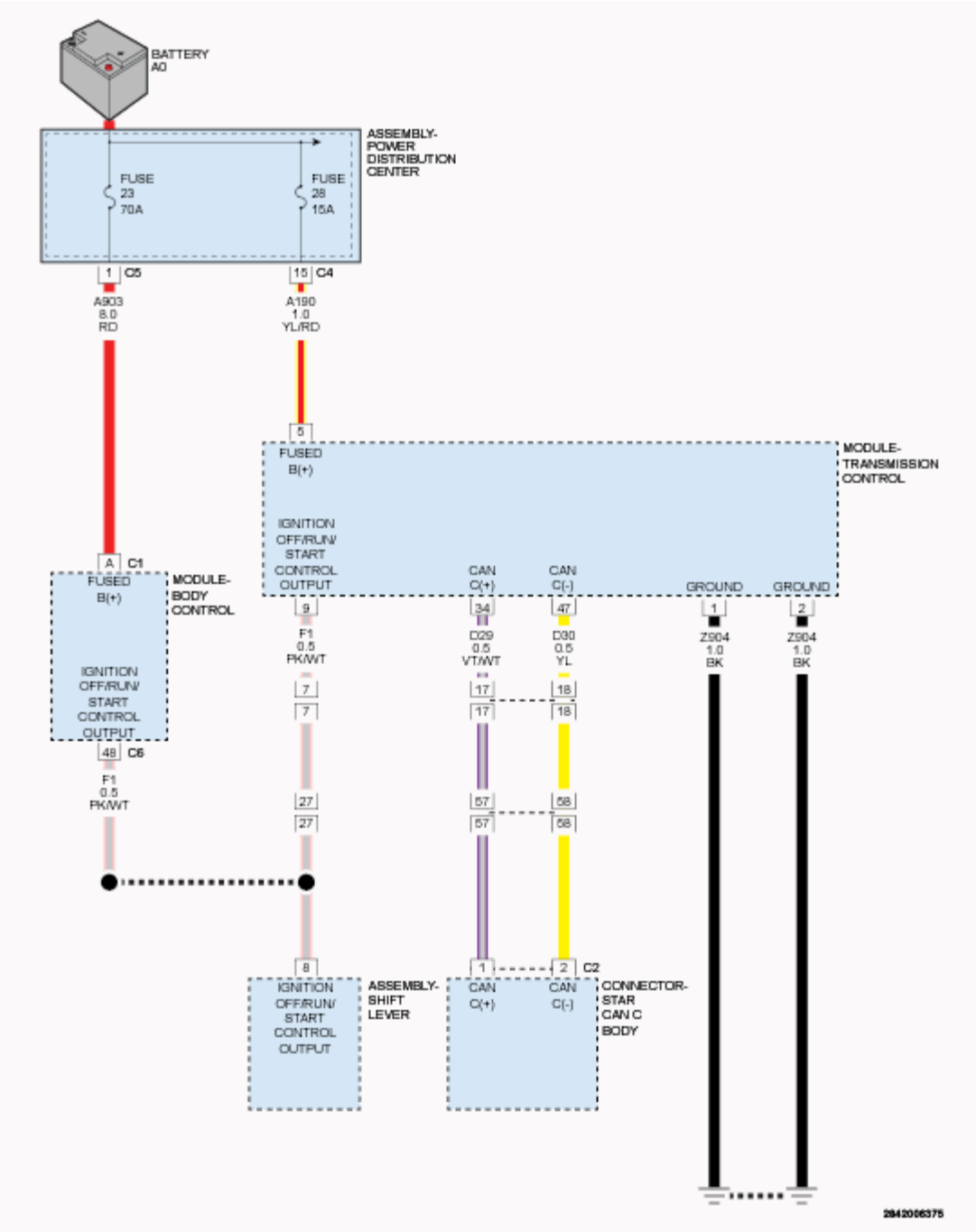

Fig. 7: TCM System Voltage Circuit Diagram
Courtesy of CHRYSLER GROUP, LLC

THEORY OF OPERATION

The Transmission Control Module (TCM) monitors the system voltage level at the TCM supply voltage pin for the following failure conditions:

- System Voltage Excessively Low

- System Voltage Low
- System Voltage High

If the TCM supply voltage is below a threshold that is lower than the system voltage excessively low threshold, then the solenoid valves and pressure regulators are not powered.

WHEN MONITORED

Transmission solenoid valves and pressure regulators are powered on.

SET CONDITION

The failure is detected if the system voltage is less than a calibrated threshold.

POSSIBLE CAUSES

Possible Causes
FUSE
LOW BATTERY VOLTAGE
ENGINE CHARGING SYSTEM
BATTERY VOLTAGE CIRCUIT HIGH RESISTANCE
TCM - INTERNAL ERROR

Always perform the Pre-Diagnostic Troubleshooting procedure before proceeding. Refer to STANDARD PROCEDURE .

DIAGNOSTIC TEST

1. **CHECK FOR ENGINE CHARGING SYSTEM DTCS**
    1. With the scan tool, read Engine DTCs.

       Are any Engine Charging System DTCs present?

       Yes

       - Repair any Charging System DTCs before proceeding. After repairing the Charging System, perform the Transmission Verification test to verify the transmission and or controller was not damaged. Refer to **STANDARD PROCEDURE** .

       No

       - Go to 2
2. **CHECK SYSTEM VOLTAGE**
    1. Start the engine.

2. With the scan tool, under transmission, check system voltage.

   Is the transmission system voltage above 7.0 volts?

   Yes

   - Go to 3

   No

   - Go to 4

3. **INTERMITTENT WIRING AND CONNECTORS**
   1. The conditions necessary to set this DTC are not present at this time.
   2. Using the schematics as a guide, inspect the wiring and connectors specific to this circuit.
   3. Wiggle the wires while checking for shorted and open circuits.

   Where any problems found?

   Yes

   - Repair as necessary.
   - Perform the Transmission Verification Test. Refer to **STANDARD PROCEDURE** .

   No

   - Go to 4

4. **CHECK THE BATT CIRCUIT**
   1. Ignition ON, Engine Not Running.
   2. Using a 12-volt test light connected to ground, check the (A190) BATT circuit at the TCM connector.

   NOTE: The test light must illuminate brightly. Compare the brightness to that of a direct connection to the battery.

   Does the test light illuminate brightly?

   Yes

   NOTE: If this Electronic Control Unit (ECU) is being replaced with a new unit, a diagnostic scan tool MUST be used to align the PROXI configuration data into the new ECU. Follow the routine outlined in the diagnostic scan tool for PROXI Configuration Alignment under Body Control Module (BCM) Miscellaneous Functions menu.

- Replace the TCM and perform programming and PROXI Configuration Alignment procedures. Refer to **MODULE, TRANSMISSION CONTROL, REMOVAL** .
- Perform the Transmission Verification Test. Refer to **STANDARD PROCEDURE** .

No

- Repair the (A190) BATT circuit for an open or high resistance.
- Perform the Transmission Verification Test. Refer to **STANDARD PROCEDURE** .

P1DB2-00-ACTUATOR SUPPLY VOLTAGE A CIRCUIT

For a complete wiring diagram, **refer to appropriate SYSTEM WIRING DIAGRAMS article** .

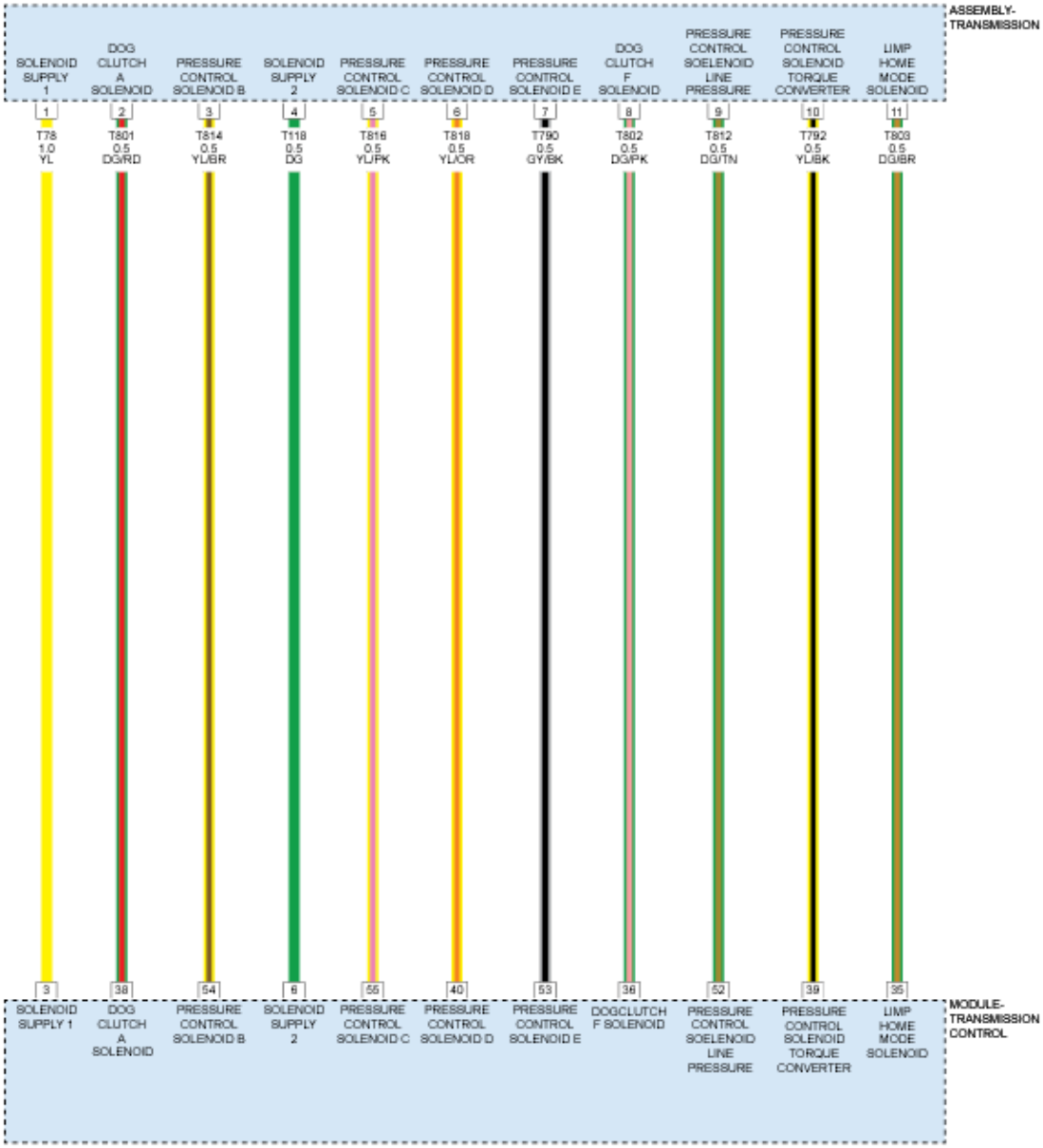

Fig. 8: Pressure Regulators & Solenoids Control Circuit Diagram
Courtesy of CHRYSLER GROUP, LLC

THEORY OF OPERATION

The voltage supply circuit(s) for the solenoids and pressure regulators are monitored for open circuits, shorts to ground, and shorts to voltage. If a failure is detected, the TCMA will deactivate the affected power supply circuit and set a corresponding DTC relevant to the fault that was detected.

WHEN MONITORED

Ignition is OFF.

SET CONDITION

A failure is detected if the output stage power supply voltage level is greater than 4 volts.

POSSIBLE CAUSES

Possible Causes
TCM - INTERNAL ERROR

Always perform the Pre-Diagnostic Troubleshooting procedure before proceeding. Refer to STANDARD PROCEDURE .

DIAGNOSTIC TEST

1. **CHECK IF DTC IS CURRENT**
    1. With the scan tool, read TCM DTCs.
    2. Record the Environmental Data and any DTCs.
    3. With the scan tool, erase DTCs.
    4. Using the recorded Environmental Data, along with the When Monitored and Set Conditions above, operate the vehicle in the conditions that set the DTC.
    5. With the scan tool, read TCM DTCs.

    Did the DTC reset?

    Yes

    NOTE: If this Electronic Control Unit (ECU) is being replaced with a new unit, a diagnostic scan tool MUST be used to align the PROXI configuration data into the new ECU. Follow the routine outlined in the diagnostic scan tool for PROXI Configuration Alignment under Body Control Module (BCM) Miscellaneous Functions menu.

    - Using the schematics as a guide, check the Transmission Control Module (TCM) terminals and connectors for corrosion, damage or pushed out terminals. Pay particular attention to the power and ground circuits. If no problems are found, replace the TCM and perform programming and PROXI Configuration Alignment procedures. Refer to **MODULE, TRANSMISSION CONTROL, REMOVAL** .
    - Perform the Transmission Verification Test. Refer to **STANDARD PROCEDURE** .

    No

    - Go to 2
2. **CHECK WIRING AND CONNECTORS**
    1. The conditions necessary to set the DTC are not present at this time.

2. Using the schematics as a guide, inspect the wiring and connectors specific to this circuit.
3. Wiggle the wires while checking for shorted and open circuits.
4. Check for any Service Bulletins that may apply.

   Were there any problems found?

   Yes

   - Repair as necessary.
   - Perform the Transmission Verification Test. Refer to **STANDARD PROCEDURE** .

   No

   - Test complete.

P1DB3-00-TCM ECU RESET-RECOVERY OCCURRED

For a complete wiring diagram, **refer to appropriate SYSTEM WIRING DIAGRAMS article** .

THEORY OF OPERATION

The purpose of the diagnostic is to detect the reason of a TCM reset. The reason is determined after a reset following TCM re-initialization. There are several situations where a reset of the TCM can occur. Some of these are initiated by the TCM software itself and others may be caused by an under voltage condition. There are three reset categories which include low level software, high level / application software and under voltage conditions. The following failures are examples of each of these categories that can cause resets of the TCM:

- A function call is out of sequence in the high level / application software
- A division by zero has occurred in the low level software
- An under voltage condition has occurred in the TCM supply voltage

If the software detects a condition for initiating a reset, the reason of the reset is stored in an area of the RAM that is not initialized (non volatile) during TCM re-initialization. Upon TCM initialization, this information is read and the appropriate fault code indicating the reason of the reset is stored.

WHEN MONITORED

TCM is powered on.

The output speed is greater than a calibrated value or the engine speed is greater than a calibrated value.

SET CONDITION

Reset in Low Level Software or Under Voltage Condition:

The failure is detected during re-initialization of the TCM if a reset code for low level software or under voltage condition has been stored in the non volatile RAM.

Reset in High Level / Application Software:

The failure is detected during re-initialization of the TCM if a reset code for high level / application software has been stored in the non volatile RAM.

POSSIBLE CAUSES

Possible Causes
TCM - INTERNAL ERROR

Always perform the Pre-Diagnostic Troubleshooting procedure before proceeding. Refer to STANDARD PROCEDURE .

DIAGNOSTIC TEST

1. **CHECK FOR OTHER DTCS**
   1. With the scan tool, read TCM DTCs.
   2. Record the Environmental Data and any DTCs.

      Are any other TCM DTCs set?

      Yes

      - Repair the other DTCs before proceeding. After the repair is complete, perform the Transmission Verification Test. Refer to **STANDARD PROCEDURE** .

      No

      - Go to 2
2. **CHECK IF DTC IS CURRENT**
   1. With the scan tool, erase DTCs.
   2. Using the recorded Environmental Data, along with the When Monitored and Set Conditions above, operate the vehicle in the conditions that set the DTC.
   3. With the scan tool, read TCM DTCs.

      Did the DTC reset?

      Yes

      NOTE: If this Electronic Control Unit (ECU) is being replaced with a new unit, a diagnostic scan tool MUST be used to align the PROXI

configuration data into the new ECU. Follow the routine outlined in the diagnostic scan tool for PROXI Configuration Alignment under Body Control Module (BCM) Miscellaneous Functions menu.

- Using the schematics as a guide, check the Transmission Control Module (TCM) terminals and connectors for corrosion, damage or pushed out terminals. Pay particular attention to the power and ground circuits. If no problems are found, replace the TCM and perform programming and PROXI Configuration Alignment procedures. Refer to **MODULE, TRANSMISSION CONTROL, REMOVAL** .
- Perform the Transmission Verification Test. Refer to **STANDARD PROCEDURE** .

No

- Go to 3

3. **CHECK WIRING AND CONNECTORS**
   1. The conditions necessary to set the DTC are not present at this time.
   2. Using the schematics as a guide, inspect the wiring and connectors specific to this circuit.
   3. Wiggle the wires while checking for shorted and open circuits.
   4. Check for any Service Bulletins that may apply.

   Were there any problems found?

   Yes

   - Repair as necessary.
   - Perform the Transmission Verification Test. Refer to **STANDARD PROCEDURE** .

   No

   - Test complete.

P1DB7-00-TORQUE CONVERTER CLUTCH PERFORMANCE

For a complete wiring diagram, **refer to appropriate SYSTEM WIRING DIAGRAMS article** .

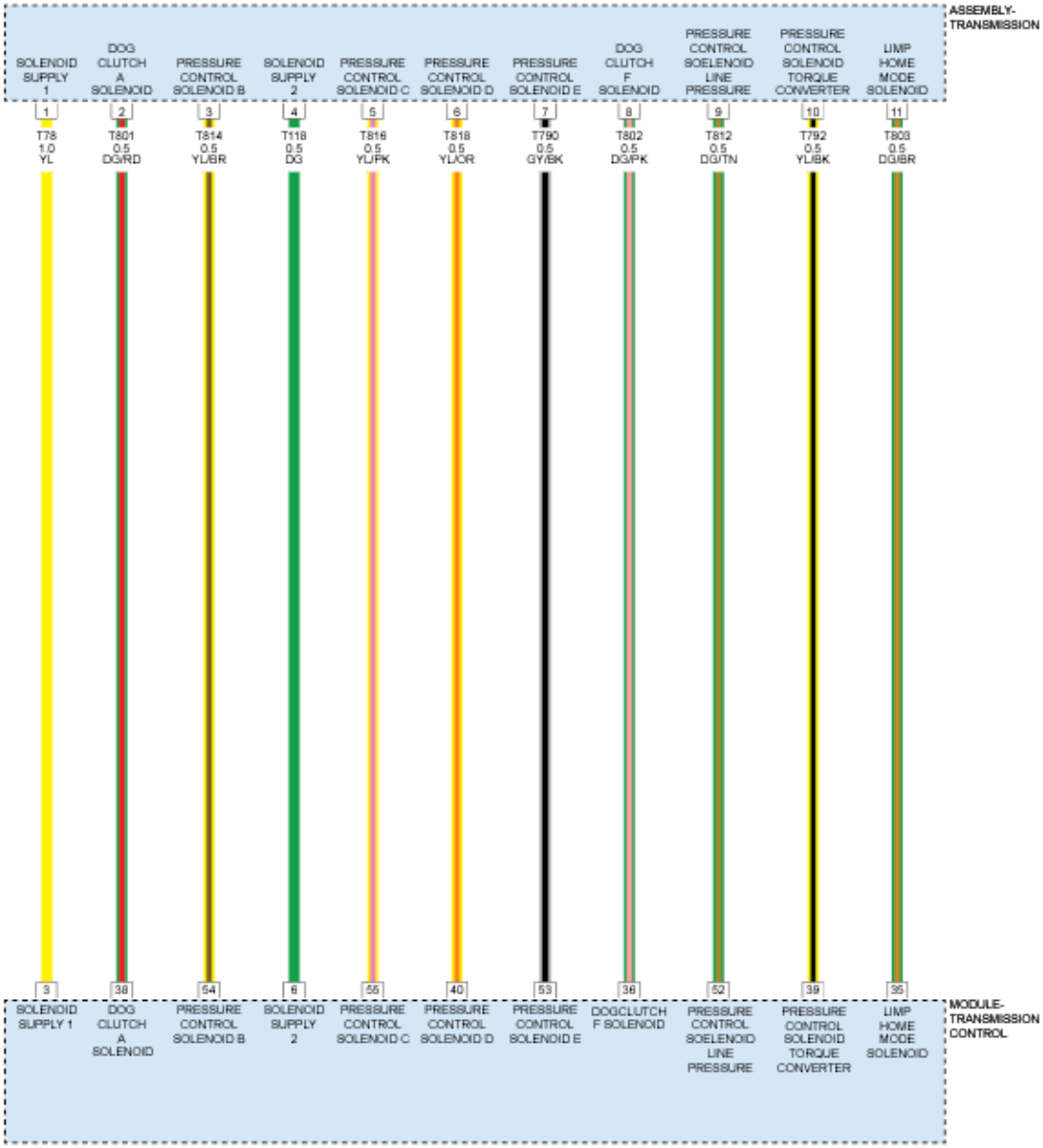

Fig. 9: Pressure Regulators & Solenoids Control Circuit Diagram
Courtesy of CHRYSLER GROUP, LLC

THEORY OF OPERATION

The purpose of the monitoring is to detect a failure in the Torque Converter Clutch (TCC) system. The TCC is used to bypass the torque converter. The TCC can be open, closed or in closed loop control mode where a specific clutch slip is controlled. The actual slip and the target slip are compared to detect a failure.

WHEN MONITORED

TCC closed or in closed loop control mode.

Pressure inside the TCC (calculated by a software model) must be greater than a calibrated threshold.

Engine torque must be lower than a calibrated threshold.

SET CONDITION

A failure is detected if the difference between the actual slip and target slip of the TCC is greater than a calibrated threshold for an amount of time.

A fault is set if a failure has occurred twice.

POSSIBLE CAUSES

Possible Causes
TORQUE CONVERTER CIRCUIT DTCs
INPUT SPEED SENSOR CIRCUIT OR PERFORMANCE DTCS
TORQUE CONVERTER
TRANSMISSION CONTROL MODULE (TCM)

Always perform the Pre-Diagnostic Troubleshooting procedure before proceeding. Refer to STANDARD PROCEDURE .

DIAGNOSTIC TEST

1. **CHECK IF DTC IS CURRENT**
    1. With the scan tool, read TCM DTCs.
    2. Record the Environmental Data and any DTCs.
    3. With the scan tool, erase DTCs.
    4. Using the recorded Environmental Data, along with the When Monitored and Set Conditions above, operate the vehicle in the conditions that set the DTC.
    5. With the scan tool, read TCM DTCs.

    Did the DTC reset?

    Yes

    Go To 2

    No

    - Go to 4
2. **CHECK FOR OTHER TCM DTCS**
    1. With the scan tool, read TCM DTCs.

Are Input Speed Sensor, CAN, or Torque Converter Clutch Circuit DTCs set?

Yes

- Repair DTCs in accordance with the Service Information. Refer to **DIAGNOSTIC CODE INDEX** .
- Perform the TRANSMISSION VERIFICATION TEST. Refer to **STANDARD PROCEDURE** .

No

- Go To 3

3. **CHECK VALVE BODY AND SOLENOID FOR CONTAMINATION AND DAMAGE**
   1. Check the Valve Body and related Pressure Control Solenoid for contamination or damage that could cause this condition.

   Was a problem found?

   Yes

   - Repair in accordance with the Service Information.
   - Perform the TRANSMISSION VERIFICATION TEST. Refer to **STANDARD PROCEDURE** .

   No

   - Replace the Torque Converter in accordance with the Service Information.
   - Perform the TRANSMISSION VERIFICATION TEST. Refer to **STANDARD PROCEDURE** .

4. **INTERMITTENT WIRING AND CONNECTORS**
   1. The conditions necessary to set this DTC are not present at this time.
   2. Using the schematics as a guide, inspect the wiring and connectors specific to this circuit.
   3. Wiggle the wiring and connectors while checking for any possible open or shorted circuits.
   4. Check for any Service Information Tune-ups or Technical Service Bulletins that may apply.

   Were any problems found?

   Yes

   - Repair as necessary.
   - Perform the TRANSMISSION VERIFICATION TEST. Refer to **STANDARD PROCEDURE** .

   No

- Test Complete.

P1DB8-00-UNINTENDED TORQUE APPLIED WHILE IN NEUTRAL

For a complete wiring diagram, **refer to appropriate SYSTEM WIRING DIAGRAMS article** .

THEORY OF OPERATION

The purpose of the diagnostic is to detect an unwanted power flow in the transmission. A rationality check of the ratio of input speed to engine speed is done while no power flow is requested.

WHEN MONITORED

No failure in input speed signal.

No failure in engine speed signal.

Engine speed greater than a calibrated threshold.

No mechanical limp home mode active.

No power flow requested.

SET CONDITION

The failure is detected if the ratio of input speed to engine speed is less than a calibrated threshold for an amount of time.

POSSIBLE CAUSES

Possible Causes
TCM - INTERNAL ERROR

Always perform the Pre-Diagnostic Troubleshooting procedure before proceeding. Refer to STANDARD PROCEDURE .

DIAGNOSTIC TEST

1. **CHECK IF DTC IS CURRENT**
    1. With the scan tool, read TCM DTCs.
    2. Record the Environmental Data and any DTCs.
    3. With the scan tool, erase DTCs.
    4. Using the recorded Environmental Data, along with the When Monitored and Set Conditions above, operate the vehicle in the conditions that set the DTC.
    5. With the scan tool, read TCM DTCs.

Did the DTC reset?

Yes

NOTE: If this Electronic Control Unit (ECU) is being replaced with a new unit, a diagnostic scan tool MUST be used to align the PROXI configuration data into the new ECU. Follow the routine outlined in the diagnostic scan tool for PROXI Configuration Alignment under Body Control Module (BCM) Miscellaneous Functions menu.

- Using the schematics as a guide, check the Transmission Control Module (TCM) terminals and connectors for corrosion, damage or pushed out terminals. Pay particular attention to the power and ground circuits. If no problems are found, replace the TCM and perform programming and PROXI Configuration Alignment procedures. Refer to **MODULE, TRANSMISSION CONTROL, REMOVAL** .
- Perform the Transmission Verification Test. Refer to **STANDARD PROCEDURE** .

No

- Go to 2

2. **CHECK WIRING AND CONNECTORS**
   1. The conditions necessary to set the DTC are not present at this time.
   2. Using the schematics as a guide, inspect the wiring and connectors specific to this circuit.
   3. Wiggle the wires while checking for shorted and open circuits.
   4. Check for any Service Bulletins that may apply.

   Were there any problems found?

   Yes

   - Repair as necessary.
   - Perform the Transmission Verification Test. Refer to **STANDARD PROCEDURE** .

   No

   - Test complete.

P1DB9-00-TCM ECU RESET EXTENDED LOW VOLTAGE

For a complete wiring diagram, **refer to appropriate SYSTEM WIRING DIAGRAMS article** .

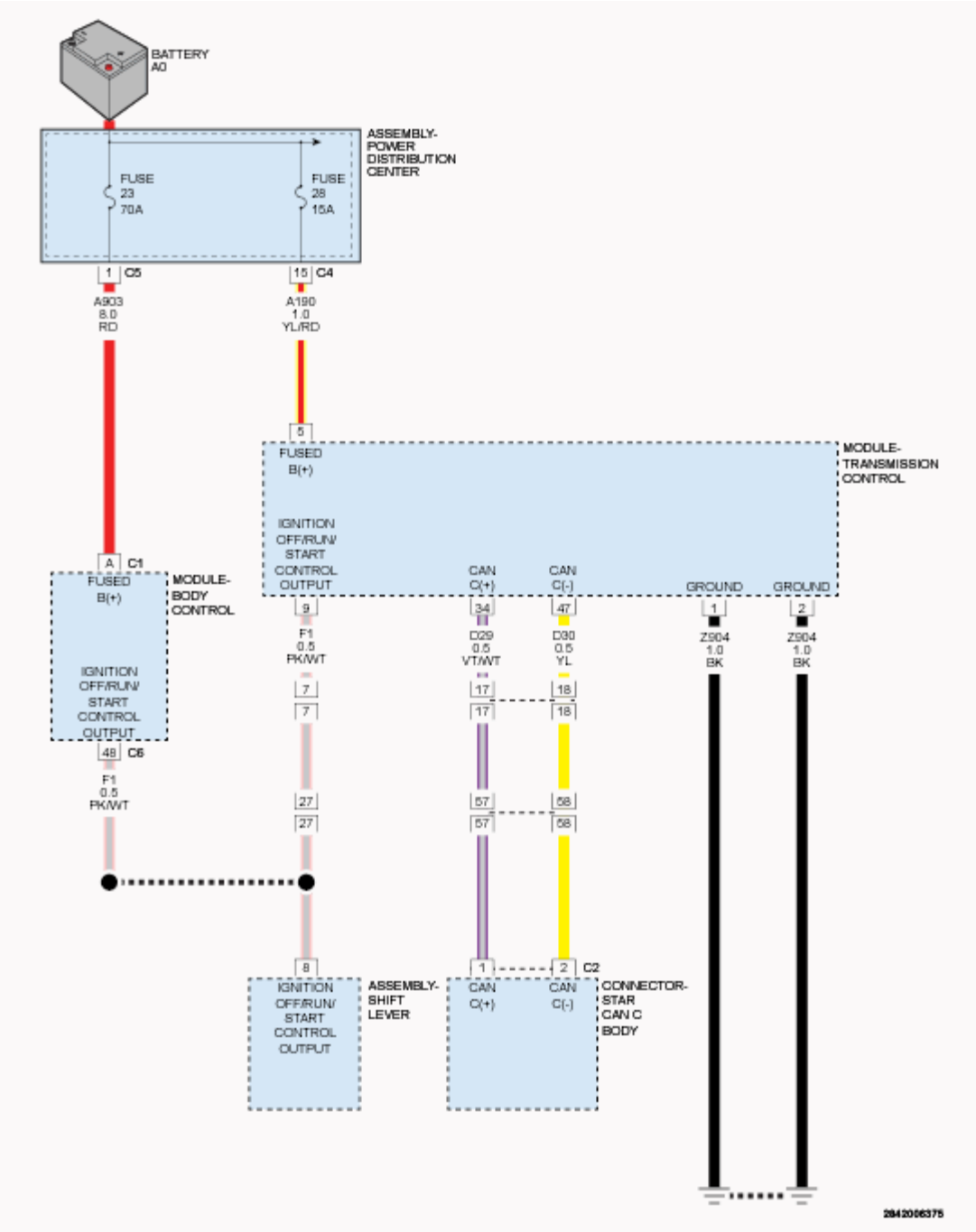

Fig. 10: TCM System Voltage Circuit Diagram
Courtesy of CHRYSLER GROUP, LLC

THEORY OF OPERATION

The purpose of the diagnostic is to ensure power flow after a Transmission Control Module (TCM) reset during a mechanical limp-in action or after an under voltage reset due to a low voltage condition of the TCM source voltage. The diagnostic is performed once during the reset initialization.

WHEN MONITORED

TCM reset has occurred.

Output speed is above a calibrated value.

SET CONDITION

Reset has occurred with Mechanical Limp-In Action Active.

Reset has occurred during an under voltage condition and the shifter position and driving direction information stored in RAM has been cleared.

POSSIBLE CAUSES

Possible Causes
TCM - INTERNAL ERROR

Always perform the Pre-Diagnostic Troubleshooting procedure before proceeding. Refer to STANDARD PROCEDURE .

DIAGNOSTIC TEST

1. **CHECK FOR ENGINE CHARGING SYSTEM DTCS**
    1. With the scan tool, read Engine DTCs.

       Are any Engine Charging System DTCs present?

       Yes

       - Repair Charging System DTCs before proceeding. Refer to **DIAGNOSIS AND TESTING** .
       - Perform the Transmission Verification Test. Refer to **STANDARD PROCEDURE** .

       No

       - Go To 2
2. **CHECK IF DTC IS CURRENT**
    1. With the scan tool, read TCM DTCs.
    2. Record the Environmental Data and any DTCs.
    3. With the scan tool, erase DTCs.
    4. Using the recorded Environmental Data, along with the When Monitored and Set Conditions above, operate the vehicle in the conditions that set the DTC.
    5. With the scan tool, read TCM DTCs.

Did the DTC reset?

Yes

NOTE: If this Electronic Control Unit (ECU) is being replaced with a new unit, a diagnostic scan tool MUST be used to align the PROXI configuration data into the new ECU. Follow the routine outlined in the diagnostic scan tool for PROXI Configuration Alignment under Body Control Module (BCM) Miscellaneous Functions menu.

- Using the schematics as a guide, check the Transmission Control Module (TCM) terminals and connectors for corrosion, damage or pushed out terminals. Pay particular attention to the power and ground circuits. If no problems are found, replace the TCM and perform programming and PROXI Configuration Alignment procedures. Refer to **MODULE, TRANSMISSION CONTROL, REMOVAL** .
- Perform the Transmission Verification Test. Refer to **STANDARD PROCEDURE** .

No

- Go to 3

3. **CHECK WIRING AND CONNECTORS**
   1. The conditions necessary to set the DTC are not present at this time.
   2. Using the schematics as a guide, inspect the wiring and connectors specific to this circuit.
   3. Wiggle the wires while checking for shorted and open circuits.
   4. Check for any Service Bulletins that may apply.

   Were there any problems found?

   Yes

   - Repair as necessary.
   - Perform the Transmission Verification Test. Refer to **STANDARD PROCEDURE** .

   No

   - Test complete.

P1DC8-00-CLUTCH TEMP THRESHOLD ACHIEVED AUTOSTICK INHIBIT

For a complete wiring diagram, **refer to appropriate SYSTEM WIRING DIAGRAMS article** .

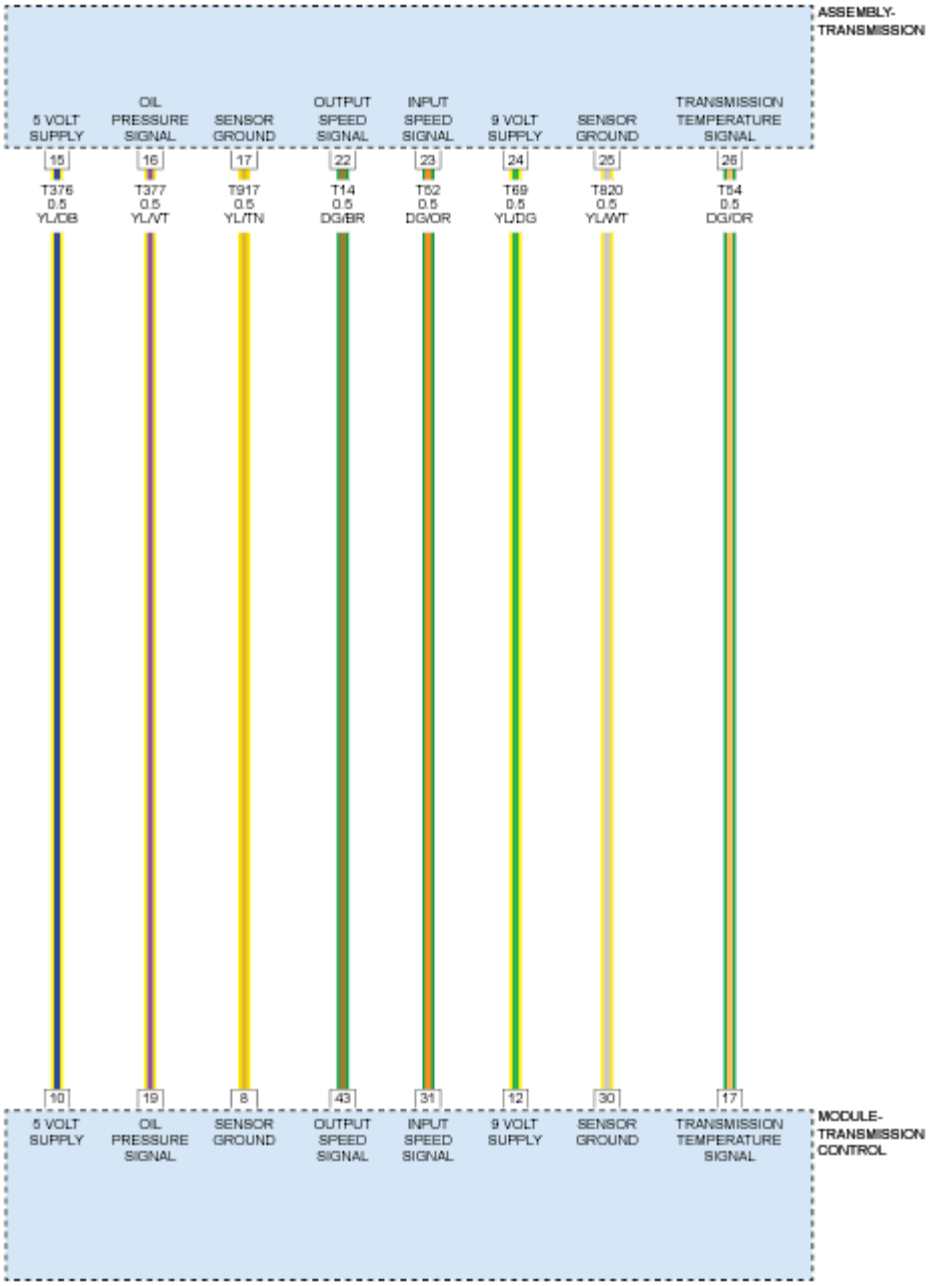

Fig. 11: Power & Ground, Temperature, Oil Pressure And Speed Sensors Circuit Diagram
Courtesy of CHRYSLER GROUP, LLC

THEORY OF OPERATION

The Transmission Control Module (TCM) performs several diagnostic checks to determine whether the temperature of a clutch is above a calibrated temperature value. These diagnostic checks use temperature models which are based upon input speed and output speed, current gear, target gear, calculated effective pressure on engaging clutch and on the disengaging clutch. The DTCs set by these diagnostics are used to protect the durability of the clutches by controlling the shift operation. No repair action is required. This fault is

only used to initiate a calibration strategy and for diagnostic information in case other faults are set.

WHEN MONITORED

A gear shift or gear engagement is active.

SET CONDITION

The calculated clutch temperature is above a calibrated value.

Default Action When DTC Sets:

Auto Stick function will be deactivated.

POSSIBLE CAUSES

Possible Causes
EXCESSIVE AMOUNT OF WIDE OPEN THROTTLE DRIVING
EXCESSIVE AMOUNT PADDLE SHIFT USAGE IN LOW GEARS

Always perform the Pre-Diagnostic Troubleshooting procedure before proceeding. Refer to STANDARD PROCEDURE .

DIAGNOSTIC TEST

CHECK FOR OTHER DTCS

NOTE: No repair action is required. This fault is only used to initiate a calibration strategy and for diagnostic information in case other faults are set.

1. With the scan tool, read TCM DTCs.

   View Repair

   - Refer to **DIAGNOSIS AND TESTING** and perform the appropriate diagnostic procedure.
   - Perform the TRANSMISSION VERIFICATION TEST. Refer to **STANDARD PROCEDURE** .

P1DCD-00-TCM MONITORING PROCESSOR PERFORMANCE MULTIPLE CLUTCHES LOCKED UP

For a complete wiring diagram, **refer to appropriate SYSTEM WIRING DIAGRAMS article** .

THEORY OF OPERATION

The monitoring of the pressure regulator and solenoid logic is used to detect a failure in the activation of the pressure regulators and solenoids. The pressure regulators are used to control the pressure to the clutches and

the solenoids are used to activate the pressure to the park lock and to the position valve. The commanded currents of all regulators and solenoids are monitored. The monitoring consists of several monitoring strategies, transmission blocking, wrong driving direction, gear engagement of reverse gear while driving forward, unwanted engaging or disengaging of the park lock.

This diagnostic monitors for conditions that could cause a combination of clutches, that do not correlate to a desired gear engagement, to be applied at the same time.

WHEN MONITORED

No limp home mode active.

No position valve monitoring active.

Transmission oil temperature must be greater than a calibrated threshold.

SET CONDITION

A failure is detected if more than 3 clutches or the combination of clutches C, D, and F is activated at the same time.

POSSIBLE CAUSES

Possible Causes
CLUTCH A
CLUTCH B
CLUTCH C
CLUTCH D
CLUTCH E
TCM - INTERNAL ERROR

Always perform the Pre-Diagnostic Troubleshooting procedure before proceeding. Refer to STANDARD PROCEDURE .

DIAGNOSTIC TEST

1. **CHECK IF DTC IS CURRENT**
    1. With the scan tool, read TCM DTCs.
    2. Record the Environmental Data and any DTCs.
    3. With the scan tool, erase DTCs.
    4. Using the recorded Environmental Data, along with the When Monitored and Set Conditions above, operate the vehicle in the conditions that set the DTC.
    5. With the scan tool, read TCM DTCs.

    Did the DTC reset?

Yes

NOTE: If this Electronic Control Unit (ECU) is being replaced with a new unit, a diagnostic scan tool MUST be used to align the PROXI configuration data into the new ECU. Follow the routine outlined in the diagnostic scan tool for PROXI Configuration Alignment under Body Control Module (BCM) Miscellaneous Functions menu.

- Using the schematics as a guide, check the Transmission Control Module (TCM) terminals and connectors for corrosion, damage or pushed out terminals. Pay particular attention to the power and ground circuits. If no problems are found, replace the TCM and perform programming and PROXI Configuration Alignment procedures. Refer to **MODULE, TRANSMISSION CONTROL, REMOVAL** .
- Perform the Transmission Verification Test. Refer to **STANDARD PROCEDURE** .

No

- Go to 2

2. **CHECK WIRING AND CONNECTORS**
   1. The conditions necessary to set the DTC are not present at this time.
   2. Using the schematics as a guide, inspect the wiring and connectors specific to this circuit.
   3. Wiggle the wires while checking for shorted and open circuits.
   4. Check for any Service Bulletins that may apply.

   Were there any problems found?

   Yes

   - Repair as necessary.
   - Perform the Transmission Verification Test. Refer to **STANDARD PROCEDURE** .

   No

   - Test complete.

P1DCE-00-TCM MONITORING PROCESSOR PERFORMANCE INCORRECT DRIVING DIRECTION

For a complete wiring diagram, **refer to appropriate SYSTEM WIRING DIAGRAMS article** .

THEORY OF OPERATION

The monitoring of the pressure regulator and solenoid logic is used to detect a failure in the activation of the pressure regulators and solenoids. The pressure regulators are used to control the pressure to the clutches and the solenoids are used to activate the pressure to the park lock and to the position valve. The commanded

currents of all regulators and solenoids are monitored. The monitoring consists of several monitoring strategies, transmission blocking, wrong driving direction, gear engagement of reverse gear while driving forward, unwanted engaging or disengaging of the park lock.

WHEN MONITORED

No limp home mode active.

No position valve monitoring active.

Driving position must be in Drive or Reverse.

SET CONDITION

In the Drive position, a failure is detected if a pressure regulator combination for reverse gear is detected (clutches B, D, and F activated). In the Reverse position, a failure is detected if a pressure regulator combination different from reverse gear is detected (clutches B, D, and F activated).

POSSIBLE CAUSES

Possible Causes
CLUTCH A
CLUTCH B
CLUTCH C
CLUTCH D
CLUTCH E
TCM - INTERNAL ERROR

Always perform the Pre-Diagnostic Troubleshooting procedure before proceeding. Refer to STANDARD PROCEDURE .

DIAGNOSTIC TEST

1. **CHECK IF DTC IS CURRENT**
    1. With the scan tool, read TCM DTCs.
    2. Record the Environmental Data and any DTCs.
    3. With the scan tool, erase DTCs.
    4. Using the recorded Environmental Data, along with the When Monitored and Set Conditions above, operate the vehicle in the conditions that set the DTC.
    5. With the scan tool, read TCM DTCs.

    Did the DTC reset?

    Yes

NOTE: **If this Electronic Control Unit (ECU) is being replaced with a new unit, a diagnostic scan tool MUST be used to align the PROXI configuration data into the new ECU. Follow the routine outlined in the diagnostic scan tool for PROXI Configuration Alignment under Body Control Module (BCM) Miscellaneous Functions menu.**

- Using the schematics as a guide, check the Transmission Control Module (TCM) terminals and connectors for corrosion, damage or pushed out terminals. Pay particular attention to the power and ground circuits. If no problems are found, replace the TCM and perform programming and PROXI Configuration Alignment procedures. Refer to **MODULE, TRANSMISSION CONTROL, REMOVAL** .
- Perform the Transmission Verification Test. Refer to **STANDARD PROCEDURE** .

No

- Go to 2

2. **CHECK WIRING AND CONNECTORS**
   1. The conditions necessary to set the DTC are not present at this time.
   2. Using the schematics as a guide, inspect the wiring and connectors specific to this circuit.
   3. Wiggle the wires while checking for shorted and open circuits.
   4. Check for any Service Bulletins that may apply.

   Were there any problems found?

   Yes

   - Repair as necessary.
   - Perform the Transmission Verification Test. Refer to **STANDARD PROCEDURE** .

   No

   - Test complete.

P1DCF-00-TCM MONITORING PROCESSOR PERFORMANCE UNALLOWED PARK ENGAGEMENT DO TO ABS FAILURE

For a complete wiring diagram, **refer to appropriate SYSTEM WIRING DIAGRAMS article** .

THEORY OF OPERATION

The monitoring of the pressure regulator and solenoid logic is used to detect a failure in the activation of the pressure regulators and solenoids. The pressure regulators are used to control the pressure to the clutches and the solenoids are used to activate the pressure to the park lock and to the position valve. The commanded currents of all regulators and solenoids are monitored. The monitoring consists of several monitoring strategies, transmission blocking, wrong driving direction, gear engagement of reverse gear while driving forward,

unwanted engaging or disengaging of the park lock.

WHEN MONITORED

No limp home mode active.

No position valve monitoring active.

Vehicle speed signal is not valid.

SET CONDITION

A failure is detected if the solenoid valve for the park lock is deactivated for greater than a calibrated amount of time.

POSSIBLE CAUSES

Possible Causes
ANTI-LOCK BRAKE SYSTEM (ABS) ERROR TCM - INTERNAL ERROR

Always perform the Pre-Diagnostic Troubleshooting procedure before proceeding. Refer to STANDARD PROCEDURE .

DIAGNOSTIC TEST

1. **CHECK IF ABS DTCS ARE PRESENT**
    1.
    2. With the scan tool, read ABS DTCs.

       Are any ABS DTCs set?

       Yes

       - Perform the appropriate diagnostic procedure. Refer to **DIAGNOSTIC CODE INDEX** .
       - Perform the Transmission Verification Test. Refer to **STANDARD PROCEDURE** .

       No

       - Go to 2
2. **CHECK IF DTC IS CURRENT**
    1. With the scan tool, read TCM DTCs.
    2. Record the Environmental Data and any DTCs.
    3. With the scan tool, erase DTCs.

4. Using the recorded Environmental Data, along with the When Monitored and Set Conditions above, operate the vehicle in the conditions that set the DTC.
5. With the scan tool, read TCM DTCs.

   Did the DTC reset?

   Yes

   NOTE: If this Electronic Control Unit (ECU) is being replaced with a new unit, a diagnostic scan tool MUST be used to align the PROXI configuration data into the new ECU. Follow the routine outlined in the diagnostic scan tool for PROXI Configuration Alignment under Body Control Module (BCM) Miscellaneous Functions menu.

   - Using the schematics as a guide, check the Transmission Control Module (TCM) terminals and connectors for corrosion, damage or pushed out terminals. Pay particular attention to the power and ground circuits. If no problems are found, replace the TCM and perform programming and PROXI Configuration Alignment procedures. Refer to **MODULE, TRANSMISSION CONTROL, REMOVAL** .
   - Perform the Transmission Verification Test. Refer to **STANDARD PROCEDURE** .

   No

   - Go to 3

3. **CHECK WIRING AND CONNECTORS**
   1. The conditions necessary to set the DTC are not present at this time.
   2. Using the schematics as a guide, inspect the wiring and connectors specific to this circuit.
   3. Wiggle the wires while checking for shorted and open circuits.
   4. Check for any Service Bulletins that may apply.

   Were there any problems found?

   Yes

   - Repair as necessary.
   - Perform the Transmission Verification Test. Refer to **STANDARD PROCEDURE** .

   No

   - Test complete.

P1DD0-00-TCM MONITORING PROCESSOR PERFORMANCE UNALLOWED PARK ENGAGEMENT

For a complete wiring diagram, **refer to appropriate SYSTEM WIRING DIAGRAMS article** .

THEORY OF OPERATION

The monitoring of the pressure regulator and solenoid logic is used to detect a failure in the activation of the pressure regulators and solenoids. The pressure regulators are used to control the pressure to the clutches and the solenoids are used to activate the pressure to the park lock and to the position valve. The commanded currents of all regulators and solenoids are monitored. The monitoring consists of several monitoring strategies, transmission blocking, wrong driving direction, gear engagement of reverse gear while driving forward, unwanted engaging or disengaging of the park lock.

WHEN MONITORED

No limp home mode active.

No position valve monitoring active.

Driving position must be in PARK.

SET CONDITION

A failure is detected if the solenoid for the parking cylinder valve is activated and the commanded current of the pressure regulator for the system pressure is greater than a calibrated threshold for longer than a calibrated amount of time.

POSSIBLE CAUSES

Possible Causes
TCM - INTERNAL ERROR

Always perform the Pre-Diagnostic Troubleshooting procedure before proceeding. Refer to STANDARD PROCEDURE .

DIAGNOSTIC TEST

1. **CHECK IF DTC IS CURRENT**
    1. With the scan tool, read TCM DTCs.
    2. Record the Environmental Data and any DTCs.
    3. With the scan tool, erase DTCs.
    4. Using the recorded Environmental Data, along with the When Monitored and Set Conditions above, operate the vehicle in the conditions that set the DTC.
    5. With the scan tool, read TCM DTCs.

    Did the DTC reset?

Yes

NOTE: If this Electronic Control Unit (ECU) is being replaced with a new unit, a diagnostic scan tool MUST be used to align the PROXI configuration data into the new ECU. Follow the routine outlined in the diagnostic scan tool for PROXI Configuration Alignment under Body Control Module (BCM) Miscellaneous Functions menu.

- Using the schematics as a guide, check the Transmission Control Module (TCM) terminals and connectors for corrosion, damage or pushed out terminals. Pay particular attention to the power and ground circuits. If no problems are found, replace the TCM and perform programming and PROXI Configuration Alignment procedures. Refer to **MODULE, TRANSMISSION CONTROL, REMOVAL** .
- Perform the Transmission Verification Test. Refer to **STANDARD PROCEDURE** .

No

- Go to 2

2. **CHECK WIRING AND CONNECTORS**
   1. The conditions necessary to set the DTC are not present at this time.
   2. Using the schematics as a guide, inspect the wiring and connectors specific to this circuit.
   3. Wiggle the wires while checking for shorted and open circuits.
   4. Check for any Service Bulletins that may apply.

   Were there any problems found?

   Yes

   - Repair as necessary.
   - Perform the Transmission Verification Test. Refer to **STANDARD PROCEDURE** .

   No

   - Test complete.

P1DDC-00-TCM MONITORING PROCESSOR PERFORMANCE UNALLOWED REVERSE ENGAGEMENT

For a complete wiring diagram, **refer to appropriate SYSTEM WIRING DIAGRAMS article** .

THEORY OF OPERATION

The monitoring of the pressure regulator and solenoid logic is used to detect a failure in the activation of the pressure regulators and solenoids. The pressure regulators are used to control the pressure to the clutches and the solenoids are used to activate the pressure to the park lock and to the position valve. The commanded

currents of all regulators and solenoids are monitored. The monitoring consists of several monitoring strategies, transmission blocking, wrong driving direction, gear engagement of reverse gear while driving forward, unwanted engaging or disengaging of the park lock.

WHEN MONITORED

No limp home mode active.

No position valve monitoring active.

No failure in vehicle speed signal.

Vehicle speed above calibrated threshold.

Power flow in forward direction.

SET CONDITION

A failure is detected if a pressure regulator combination for reverse gear is detected (clutches B, D and F activated).

POSSIBLE CAUSES

Possible Causes
SPEED SENSOR DTCS SET OPERATOR ERROR - SHIFT TO PARK WHILE VEHICLE IS MOVING FORWARD

Always perform the Pre-Diagnostic Troubleshooting procedure before proceeding. Refer to STANDARD PROCEDURE .

DIAGNOSTIC TEST

CHECK FOR SPEED SENSOR DTCS

1. With the scan tool, read TCM DTCs.

   Are Speed Sensor DTCs set?

   Yes

   - Repair DTCs in accordance with the Service Information. Refer to **DIAGNOSTIC CODE INDEX** .
   - Perform the TRANSMISSION VERIFICATION TEST. Refer to **STANDARD PROCEDURE** .

   No

- Verify the customer did not shift into REVERSE while vehicle was moving forward at high speed.

P1DDD-00-TCM MONITORING PERFORMANCE UNABLE TO DISENGAGE DRIVE OR REVERSE

For a complete wiring diagram, **refer to appropriate SYSTEM WIRING DIAGRAMS article** .

THEORY OF OPERATION

The purpose of the diagnostic is to detect a failure in the activation of the pressure regulators and solenoids during gear disengagement or while position N or P is engaged. The pressure regulators are used to control the pressure to the clutches (B, C, D, and E). The solenoids are used to activate the pressure to the dog-clutches (A and F). The commanded currents calculated by the TCM to control the pressure regulators for the clutches and to activate the solenoids for the dog clutches are compared to the requested driving position from the shift-by-wire system.

WHEN MONITORED

Gear disengagement:

NEUTRAL or PARK requested.

Engaged position NEUTRAL or PARK:

NEUTRAL or PARK requested.

NEUTRAL or PARK engaged for greater than a calibrated amount of time.

Clutch-combination E and F is not activated for greater than a calibrated amount of time.

SET CONDITION

A failure is detected if three or more clutches including dog-clutches are activated at the same time, or clutch combination E and F is activated (based upon the calculated commanded currents) for a calibrated amount of time.

POSSIBLE CAUSES

Possible Causes
TCM - INTERNAL ERROR

Always perform the Pre-Diagnostic Troubleshooting procedure before proceeding. Refer to STANDARD PROCEDURE .

DIAGNOSTIC TEST

1. **CHECK IF DTC IS CURRENT**
   1. With the scan tool, read TCM DTCs.
   2. Record the Environmental Data and any DTCs.
   3. With the scan tool, erase DTCs.
   4. Using the recorded Environmental Data, along with the When Monitored and Set Conditions above, operate the vehicle in the conditions that set the DTC.
   5. With the scan tool, read TCM DTCs.

   Did the DTC reset?

   Yes

   NOTE: If this Electronic Control Unit (ECU) is being replaced with a new unit, a diagnostic scan tool MUST be used to align the PROXI configuration data into the new ECU. Follow the routine outlined in the diagnostic scan tool for PROXI Configuration Alignment under Body Control Module (BCM) Miscellaneous Functions menu.

   - Using the schematics as a guide, check the Transmission Control Module (TCM) terminals and connectors for corrosion, damage or pushed out terminals. Pay particular attention to the power and ground circuits. If no problems are found, replace the TCM and perform programming and PROXI Configuration Alignment procedures. Refer to **MODULE, TRANSMISSION CONTROL, REMOVAL** .
   - Perform the Transmission Verification Test. Refer to **STANDARD PROCEDURE** .

   No

   - Go to 2
2. **CHECK WIRING AND CONNECTORS**
   1. The conditions necessary to set the DTC are not present at this time.
   2. Using the schematics as a guide, inspect the wiring and connectors specific to this circuit.
   3. Wiggle the wires while checking for shorted and open circuits.
   4. Check for any Service Bulletins that may apply.

   Were there any problems found?

   Yes

   - Repair as necessary.
   - Perform the Transmission Verification Test. Refer to **STANDARD PROCEDURE** .

   No

- Test complete.

P1DEB-00-INCORRECT GEAR DISPLAYED DUE TO INCORRECT GEAR RATIO

For a complete wiring diagram, **refer to appropriate SYSTEM WIRING DIAGRAMS article** .

THEORY OF OPERATION

The purpose of the diagnostic is to ensure that the output of the TCM shift by wire software corresponds to the input of the TCM shift by wire software. The input to the TCM shift by wire software is the driver request, vehicle and transmission conditions.

WHEN MONITORED

Ignition on.

TCM initialization has completed.

SET CONDITION

The failure is detected if one of the following occurs:

The displayed position is not equal to the transmitted position (N or P instead of D or R).

The displayed position is not equal to the transmitted position (R instead of D or D instead of R).

The displayed position is not equal to the transmitted position (P instead of N).

POSSIBLE CAUSES

Possible Causes
INCORRECT GEAR RATIO DTCS TCM - INTERNAL ERROR

Always perform the Pre-Diagnostic Troubleshooting procedure before proceeding. Refer to STANDARD PROCEDURE .

DIAGNOSTIC TEST

1. **CHECK FOR INCORRECT GEAR RATIO DTCS**
    1. With the scan tool, read TCM DTCs.

       Are any Incorrect Gear Ratio DTCs present?

       Yes

- Repair any Incorrect Gear Ratio DTCs before proceeding.
- Perform the Transmission Verification Test. Refer to **STANDARD PROCEDURE** .

No

- Go To 2

2. **CHECK IF DTC IS CURRENT**
   1. With the scan tool, read TCM DTCs.
   2. Record the Environmental Data and any DTCs.
   3. With the scan tool, erase DTCs.
   4. Using the recorded Environmental Data, along with the When Monitored and Set Conditions above, operate the vehicle in the conditions that set the DTC.
   5. With the scan tool, read TCM DTCs.

   Did the DTC reset?

   Yes

   NOTE: If this Electronic Control Unit (ECU) is being replaced with a new unit, a diagnostic scan tool MUST be used to align the PROXI configuration data into the new ECU. Follow the routine outlined in the diagnostic scan tool for PROXI Configuration Alignment under Body Control Module (BCM) Miscellaneous Functions menu.

   - Using the schematics as a guide, check the Transmission Control Module (TCM) terminals and connectors for corrosion, damage or pushed out terminals. Pay particular attention to the power and ground circuits. If no problems are found, replace the TCM and perform programming and PROXI Configuration Alignment procedures. Refer to **MODULE, TRANSMISSION CONTROL, REMOVAL** .
   - Perform the Transmission Verification Test. Refer to **STANDARD PROCEDURE** .

   No

   - Go to 3

3. **CHECK WIRING AND CONNECTORS**
   1. The conditions necessary to set the DTC are not present at this time.
   2. Using the schematics as a guide, inspect the wiring and connectors specific to this circuit.
   3. Wiggle the wires while checking for shorted and open circuits.
   4. Check for any Service Bulletins that may apply.

   Were there any problems found?

   Yes

- Repair as necessary.
- Perform the Transmission Verification Test. Refer to **STANDARD PROCEDURE** .

No

- Test complete.

P1DF3-00-ECU NOT INITIALIZED

For a complete wiring diagram, **refer to appropriate SYSTEM WIRING DIAGRAMS article** .

THEORY OF OPERATION

The purpose of the diagnostic is to detect a failure in the signal from the requested shift selector position (PRND position).

WHEN MONITORED

Ignition on.

SET CONDITION

The failure is detected if one of the following occurs:

A failure in the comparison check is detected.

A driver position massage failure from the on-board network is detected.

A driver position signal failure from the on-board network is detected.

POSSIBLE CAUSES

Possible Causes
(F1) IGNITION/OFF/RUN/START CONTROL OUTPUT CIRCUIT OPEN
(F1) IGNITION/OFF/RUN/START CONTROL OUTPUT CIRCUIT SHORT TO GROUND
BODY CONTROL MODULE (BCM) DTCS SET
CAN DTCS SET
TCM - INTERNAL FAILURE

Always perform the Pre-Diagnostic Troubleshooting procedure before proceeding. Refer to STANDARD PROCEDURE .

DIAGNOSTIC TEST

1. **CHECK IF CAN DTCS ARE SET IN OTHER CONTROLLERS**

1. With the scan tool, read DTCs.

   Are any CAN DTCs set?

   Yes

   - Perform the appropriate diagnostic procedure.
   - Perform the TRANSMISSION VERIFICATION TEST. Refer to **STANDARD PROCEDURE** .

   No

   - Go to 2

2. **CHECK WIRING AND CONNECTORS**
   1. The conditions necessary to set the DTC are not present at this time.
   2. Using the schematics as a guide, inspect the wiring and connectors specific to this circuit.
   3. Wiggle the wires while checking for shorted and open circuits.
   4. Check for any Service Bulletins that may apply.

   Were there any problems found?

   Yes

   - Repair as necessary.
   - Perform the Transmission Verification Test. Refer to **STANDARD PROCEDURE** .

   No

   - Test complete.

P1DF8-00-ACTUAL DECREASE OF ENGINE TORQUE HIGH

For a complete wiring diagram, **refer to appropriate SYSTEM WIRING DIAGRAMS article** .

THEORY OF OPERATION

The purpose of the diagnostic is to monitor if the PCM executed the torque requested by the TCM. This is determined by comparing the PCM's executed torque to the original torque requested by the TCM via CAN. These torque requests only occur during shift operations.

WHEN MONITORED

Ignition on.

No failure detected in the CAN Bus monitoring.

No failure detected in the CAN torque message monitoring.

No limp in action active, that suppresses the torque requests.

SET CONDITION

The failure is detected if the absolute value of the difference between the torque requested by the TCM and the PCM's executed torque is not within a calibrated range.

POSSIBLE CAUSES

Possible Causes
POWERTRIAN CONTROL MODULE (PCM) DTCS TCM CAN BUS DTCS

Always perform the Pre-Diagnostic Troubleshooting procedure before proceeding. Refer to STANDARD PROCEDURE .

DIAGNOSTIC TEST

1. **CHECK FOR TCM CAN BUS DTCS**
    1. With the scan tool, read TCM DTCs.

       Are any TCM CAN BUS DTCs present?

       Yes

       - Refer to **DIAGNOSTIC CODE INDEX** and perform the appropriate diagnostic procedure. Perform the diagnostic procedure for DTC U0001-CAN C BUS first if the fault is present. Refer to **U0001-00-CAN C BUS**.
       - Perform the TRANSMISSION VERIFICATION TEST. Refer to **STANDARD PROCEDURE** .

       No

       - Go to 2
2. **CHECK FOR PCM DTCS**
    1. With the scan tool, read PCM DTCs.

       Are any PCM DTCs present?

       Yes

- Refer to and perform the appropriate diagnostic procedure.
- Perform the Transmission Verification Test. Refer to **STANDARD PROCEDURE** .

No

- Go to 3

3. **CHECK IF DTC IS CURRENT**
   1. With the scan tool, read TCM DTCs.
   2. Record the Environmental Data and any DTCs.
   3. With the scan tool, erase DTCs.
   4. Using the recorded Environmental Data, along with the When Monitored and Set Conditions above, operate the vehicle in the conditions that set the DTC.
   5. With the scan tool, read TCM DTCs.

   Did the DTC reset?

   Yes

   NOTE: If this Electronic Control Unit (ECU) is being replaced with a new unit, a diagnostic scan tool MUST be used to align the PROXI configuration data into the new ECU. Follow the routine outlined in the diagnostic scan tool for PROXI Configuration Alignment under Body Control Module (BCM) Miscellaneous Functions menu.

   - Using the schematics as a guide, check the Transmission Control Module (TCM) terminals and connectors for corrosion, damage or pushed out terminals. Pay particular attention to the power and ground circuits. If no problems are found, replace the TCM and perform programming and PROXI Configuration Alignment procedures. Refer to **MODULE, TRANSMISSION CONTROL, REMOVAL** .
   - Perform the Transmission Verification Test. Refer to **STANDARD PROCEDURE** .

   No

   - Go to 4

4. **CHECK WIRING AND CONNECTORS**
   1. The conditions necessary to set the DTC are not present at this time.
   2. Using the schematics as a guide, inspect the wiring and connectors specific to this circuit.
   3. Wiggle the wires while checking for shorted and open circuits.
   4. Check for any Service Bulletins that may apply.

   Were there any problems found?

   Yes

- Repair as necessary.
- Perform the Transmission Verification Test. Refer to **STANDARD PROCEDURE** .

No

- Test complete.

P1E23-00-INCORRECT GEAR RATIO CLUTCH 6 DEFECTIVE

For a complete wiring diagram, **refer to appropriate SYSTEM WIRING DIAGRAMS article** .

THEORY OF OPERATION

The Transmission Control Module (TCM) monitors for conditions which lead to an unexpected transmission gear ratio (e.g. slipping clutches, hydraulic or mechanical defects, etc.). The TCM compares the actual gear ratio (i.e. the ratio of input speed to output speed) to a minimum and maximum calibrated gear ratio value. The TCM performs this comparison while driving in a fix gear, during gear engagement, and during shifting from one gear to another.

WHEN MONITORED

General Enable Conditions:

Driving position is in Drive or Reverse.

Oil temperature above a calibrated threshold.

No clutch slip control functions commanded.

No failure in input speed signal.

Input speed above a calibrated threshold.

Valid output speed signal from the output speed sensor or calculated from the wheel speed signal if output speed sensor is not available.

Valid engine speed signal from the PCM.

During Gear Shifts:

The output speed and the output speed gradient must be greater than a calibrated value.

SET CONDITION

During Gear Shifts:

A symptom is detected if the measured gear ratio exceeds the gear ratio range.

If a symptom is detected during downshifts requiring the engagement of a dog clutch or during upshifts, the diagnostic system aborts the gear shifting and the gear from which the shifting has been started is engaged. After a calibrated number of symptoms have been detected a failure is stored and the diagnostic system engages a calibrated gear

If a symptom is detected during a downshift requiring the engagement of a dog clutch, a fault code is stored indicating the associated dog clutch.

In Fixed Gears:

If the output speed is greater than a threshold then a symptom is detected if the measured gear ratio exceeds the gear ratio range for calibrated amount of time.

If the output speed is lower than this threshold, then a symptom is detected if the absolute difference between output speed multiplied by the fix gear ratio of the actual gear and input speed exceeds a threshold for a calibrated amount of time.

If a symptom is detected while driving in a fixed gear, the diagnostic system commands an up shift to the next gear. After a calibrated number of symptoms have been detected a failure is stored and the diagnostic system engages a calibrated gear. This gear is monitored as well and if a failure is detected for this gear, an alternative gear is engaged and so on. The selection of alternative gears follows a calibrated logic. The aim of this logic is to detect a damaged clutch and to finally select an alternative gear that consists of a combination of clutches in which the damaged clutch is not involved. If a further failure symptom occurs in this final alternative gear, a failure for general transmission ratio malfunction is stored.

POSSIBLE CAUSES

Possible Causes
TRANSMISSION - INTERNAL COMPONENTS

Always perform the Pre-Diagnostic Troubleshooting procedure before proceeding. Refer to STANDARD PROCEDURE .

DIAGNOSTIC TEST

1. **CHECK IF DTC IS CURRENT**
    1. With the scan tool, read TCM DTCs.
    2. Record the Environmental Data and any DTCs.
    3. With the scan tool, erase DTCs.
    4. Using the recorded Environmental Data, along with the When Monitored and Set Conditions above, operate the vehicle in the conditions that set the DTC.
    5. With the scan tool, read TCM DTCs.

Did the DTC reset?

Yes

- Go to 2

No

- Go to 3

2. **TRANSMISSION**

   If the DTC returns, view repair.

   Repair

   - Verify proper fluid level. Refer to **FLUID AND FILTER, STANDARD PROCEDURE** .
   - Verify proper operation of the input and output speed sensors.
   - Refer to **DIAGNOSIS AND TESTING** and using the clutch application chart, inspect the clutches, valve body solenoids, and valves associated with this gear ratio error.
   - Repair or replace the Transmission in accordance with the Service Information.
   - Perform the TRANSMISSION VERIFICATION TEST. Refer to **STANDARD PROCEDURE** .

3. **CHECK WIRING AND CONNECTORS**
   1. The conditions necessary to set the DTC are not present at this time.
   2. Using the schematics as a guide, inspect the wiring and connectors specific to this circuit.
   3. Wiggle the wires while checking for shorted and open circuits.
   4. Check for any Service Bulletins that may apply.

   Were there any problems found?

   Yes

   - Repair as necessary.
   - Perform the TRANSMISSION VERIFICATION TEST. Refer to **STANDARD PROCEDURE** .

   No

   - Test complete.

P215C-00-OUTPUT SHAFT SPEED WHEEL SPEED CORRELATION

For a complete wiring diagram, **refer to appropriate SYSTEM WIRING DIAGRAMS article** .

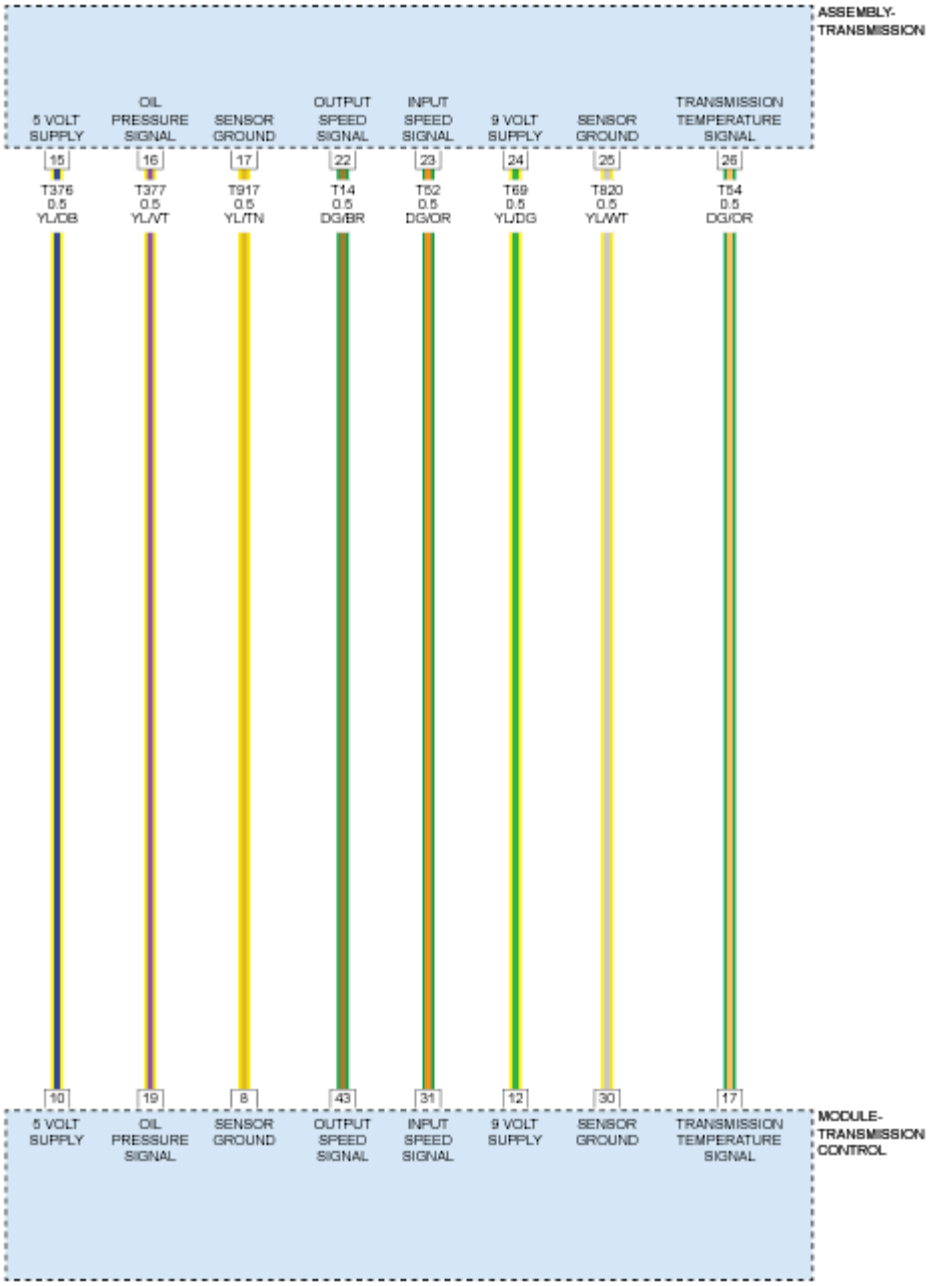

Fig. 12: Power & Ground, Temperature, Oil Pressure And Speed Sensors Circuit Diagram
Courtesy of CHRYSLER GROUP, LLC

THEORY OF OPERATION

The purpose of the diagnostic is to detect rationality failures of the wheel speed signal via CAN. This diagnostic checks if the wheel speed signal is within the calculated tolerance bands.

The upper threshold of the first tolerance band is the calculated wheel speed plus a calibrated offset. The calculated wheel speed is based upon the input speed signal multiplied by the gear ratio factor. This factor

corresponds to either the target gear or current gear depending on which gear provides the greater ratio.

The lower threshold of the first tolerance band is the calculated wheel speed, minus a calibrated offset. The calculated wheel speed is based upon the input speed signal multiplied by the gear ratio factor. This factor corresponds to either the target gear or current gear depending on which gear provides the lesser ratio.

The thresholds of the second tolerance bands are calculated using the same method described above. In place of the input speed signal, the output speed signal is used for the calculation.

WHEN MONITORED

No failure detected in the input speed sensor monitoring.

No failure detected in the output speed sensor monitoring.

No CAN failure of the wheel speed signal received via CAN used for the rationality monitoring.

SET CONDITION

The failure is detected if the wheel speed signal via CAN is not within the calculated tolerance bands for the wheel speed signal for a calibrated amount of time.

POSSIBLE CAUSES

Possible Causes
CAN BUS DTC IS SET ANTI-LOCK BRAKE SYSTEM (ABS) MODULE - INTERNAL ERROR

Always perform the Pre-Diagnostic Troubleshooting procedure before proceeding. Refer to STANDARD PROCEDURE .

DIAGNOSTIC TEST

1. **CHECK DTC IS CURRENT**
    1. Ignition ON, engine NOT running.
    2. With the scan tool, select View TCM DTCs.

    Is the DTC Active?

    Yes

    - Go to 2

    No

    - Go to 3

2. **U0121-LOST COMMUNICATION WITH ABS MODULE ALSO SET**
   1. With the scan tool continue reading DTCs.

      Is U0121-LOST COMMUNICATION WITH ABS MODULE set?

      Yes

      - Follow the diagnostics for U0121-Lost Communication With ABS Module. Refer to **DIAGNOSIS AND TESTING** .
      - Perform the Transmission Verification Test. Refer to **STANDARD PROCEDURE** .

      No

      NOTE: If this Electronic Control Unit (ECU) is being replaced with a new unit, a diagnostic scan tool MUST be used to align the PROXI configuration data into the new ECU. Follow the routine outlined in the diagnostic scan tool for PROXI Configuration Alignment under Body Control Module (BCM) Miscellaneous Functions menu.

      - Using the schematics as a guide, check the Transmission Control Module (TCM) terminals and connectors for corrosion, damage or pushed out terminals. Pay particular attention to the power and ground circuits. If no problems are found, replace the TCM and perform programming and PROXI Configuration Alignment procedures. Refer to **MODULE, TRANSMISSION CONTROL, REMOVAL** .
      - Perform the Transmission Verification Test. Refer to **STANDARD PROCEDURE** .
3. **CHECK WIRING AND CONNECTORS**
   1. The conditions necessary to set the DTC are not present at this time.
   2. Using the schematics as a guide, inspect the wiring and connectors specific to this circuit.
   3. Wiggle the wires while checking for shorted and open circuits.
   4. Check for any Service Bulletins that may apply.

      Were there any problems found?

      Yes

      - Repair as necessary.
      - Perform the Transmission Verification Test. Refer to **STANDARD PROCEDURE** .

      No

      - Test complete.

P2761-00-TORQUE CONVERTER CLUTCH PRESSURE CONTROL SOLENOID CONTROL CIRCUIT-OPEN

For a complete wiring diagram, **refer to appropriate SYSTEM WIRING DIAGRAMS article** .

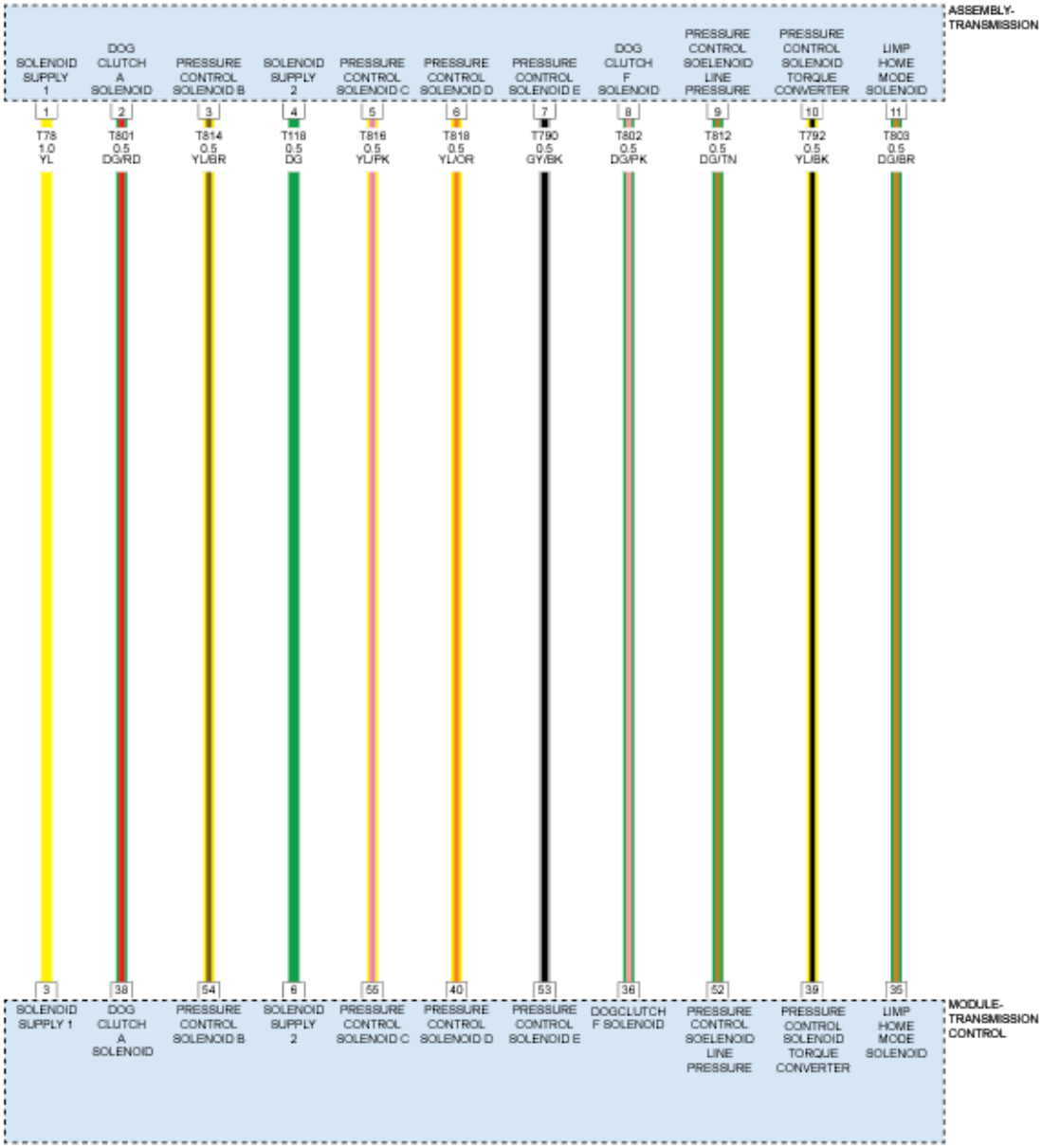

Fig. 13: Pressure Regulators & Solenoids Control Circuit Diagram
Courtesy of CHRYSLER GROUP, LLC

THEORY OF OPERATION

The purpose of the diagnostic is to detect circuit failures on any of the output stages. All output stages are controlled by a current controller that can operate an output stage in two different modes:

- Current controlled mode (pressure regulators)

- Switched mode or PWM controlled (solenoids)

Pressure Regulator Monitoring: The current regulator ASIC in the TCM indicates the following circuit failures via SPI bus to the CPU:

- Short to ground
- Short to battery or open circuit

Solenoid Monitoring: The TCM measures the actual solenoid voltages and compares them to calibrated thresholds to identify the following electrical failures:

- Short to ground or open circuit
- Short to battery

WHEN MONITORED

Output stages power supply switched on.

Power supply voltage is greater than a calibrated value.

SET CONDITION

Pressure Regulator Monitoring: A failure is detected if one of the following conditions occur:

An short to ground failure is detected if the ASIC indicates a short to ground failure.

A short to battery or open circuit failure is detected if the ASIC indicates a short to battery or open circuit failure.

Solenoid Monitoring: A failure is detected if one of the following conditions occur:

An short to ground or open circuit failure is detected if the ratio between the voltage at the solenoid valve and the output stages power supply is above a calibrated threshold.

A short to battery failure is detected if the ratio between the voltage at the solenoid valve and the output stages power supply is below a calibrated threshold.

POSSIBLE CAUSES

Possible Causes
(T78) SOLENOID SUPPLY 1 CIRCUIT OPEN
(T78) SOLENOID SUPPLY 1 CIRCUIT SHORTED TO GROUND
(T792) TORQUE CONVERTER PRESSURE CONTROL SOLENOID CIRCUIT OPEN
(T792) TORQUE CONVERTER PRESSURE CONTROL SOLENOID CIRCUIT SHORTED TO GROUND

(T792) TORQUE CONVERTER PRESSURE CONTROL SOLENOID CIRCUIT SHORTED TO VOLTAGE
TORQUE CONVERTER PRESSURE CONTROL SOLENOID
TRANSMISSION CONTROL MODULE (TCM)

Always perform the Pre-Diagnostic Troubleshooting procedure before proceeding. Refer to STANDARD PROCEDURE .

DIAGNOSTIC TEST

1. **CHECK IF THE DTC IS CURRENT**
    1. Using the scan tool, read TCM DTCs.
    2. Record the Environmental Data and any DTCs.
    3. Clear DTCs.
    4. Using the recorded Environmental Data, along with the When Monitored and Set Conditions above, operate the vehicle in the conditions that set the DTC.
    5. Read TCM DTCs.

    Did the DTC reset?

    Yes

    - Go To 2

    No

    - Go To 9
2. **CHECK THE TORQUE CONVERTER PRESSURE CONTROL SOLENOID (7)**
    1. Turn the Ignition OFF.
    2. Disconnect the Transmission Assembly harness connector.
    3. Measure the resistance of the Torque Converter Pressure Control Solenoid (7) at the appropriate terminals in the Transmission Assembly interface connector.

    Is the resistance of the Torque Converter Pressure Control Solenoid (7) 11.0 Ohms ± 1.0 Ohms?

    Yes

    - Go To 3

    No

    - Replace the Torque Converter Pressure Control Solenoid (7) in accordance with the Service Information.

- Perform the TRANSMISSION VERIFICATION TEST. Refer to **STANDARD PROCEDURE** .

3. **CHECK THE (T78) SOLENOID SUPPLY 1 CIRCUIT FOR AN OPEN**
   1. Disconnect the TCM harness connector.
   2. Measure the resistance of the (T78) Solenoid Supply 1 circuit between the Transmission Assembly harness connector and the TCM harness connector.

      Is the resistance below 5.0 Ohms?

      Yes

      - Go To 4

      No

      - Repair the (T78) Solenoid Supply 1 circuit for an open or high resistance.
      - Perform the TRANSMISSION VERIFICATION TEST. Refer to **STANDARD PROCEDURE** .
4. **CHECK THE (T78) SOLENOID SUPPLY 1 CIRCUIT FOR A SHORT TO GROUND**
   1. Measure the resistance between ground and the (T78) Solenoid Supply 1 circuit.

      Is there continuity between ground and the (T78) Solenoid Supply 1 circuit?

      Yes

      - Repair the (T78) Solenoid Supply 1 circuit for a short to ground.
      - Perform the TRANSMISSION VERIFICATION TEST. Refer to **STANDARD PROCEDURE** .

      No

      - Go To 5
5. **CHECK THE (T78) SOLENOID SUPPLY 1 CIRCUIT FOR A SHORT TO ANOTHER CIRCUIT**
   1. Measure the resistance between the (T78) Solenoid Supply 1 circuit and all other circuits in the TCM harness connector.

      Is there continuity between the (T78) Solenoid Supply 1 circuit and any other circuits in the TCM harness connector?

      Yes

      - Repair the (T78) Solenoid Supply 1 circuit for a short to another circuit.
      - Perform the TRANSMISSION VERIFICATION TEST. Refer to **STANDARD PROCEDURE** .

No

- Go To 6.

6. **CHECK THE (T792) TORQUE CONVERTER PRESSURE CONTROL SOLENOID (7) CIRCUIT FOR AN OPEN**
   1. Measure the resistance of the (T792) Torque Converter Pressure Control Solenoid (7) circuit between the Transmission Assembly harness connector and the TCM harness connector.

      Is the resistance below 5.0 Ohms?

      Yes

      - Go To 7

      No

      - Repair the (T792) Torque Converter Pressure Control Solenoid (7) circuit for an open or high resistance.
      - Perform the TRANSMISSION VERIFICATION TEST. Refer to **STANDARD PROCEDURE** .

7. **CHECK THE (T792) TORQUE CONVERTER PRESSURE CONTROL SOLENOID (7) CIRCUIT FOR A SHORT TO GROUND**
   1. Measure the resistance between ground and the (T792) Torque Converter Pressure Control Solenoid (7) circuit.

      Is there continuity between ground and the (T792) Torque Converter Pressure Control Solenoid (7) circuit?

      Yes

      - Repair the (T792) Torque Converter Pressure Control Solenoid (7) circuit for a short to ground.
      - Perform the TRANSMISSION VERIFICATION TEST. Refer to **STANDARD PROCEDURE** .

      No

      - Go To 8.

8. **CHECK THE (T792) TORQUE CONVERTER PRESSURE CONTROL SOLENOID (7) CIRCUIT FOR A SHORT TO ANOTHER CIRCUIT**
   1. Measure the resistance between the (T792) Torque Converter Pressure Control Solenoid (7) circuit and all other circuits in the TCM harness connector.

      Is there continuity between the (T792) Torque Converter Pressure Control Solenoid (7) circuit and any other circuits in the TCM harness connector?

Yes

- Repair the (T792) Torque Converter Pressure Control Solenoid (7) circuit for a short to another circuit.
- Perform the TRANSMISSION VERIFICATION TEST. Refer to **STANDARD PROCEDURE** .

No

NOTE: **If this Electronic Control Unit (ECU) is being replaced with a new unit, a diagnostic scan tool MUST be used to align the PROXI configuration data into the new ECU. Follow the routine outlined in the diagnostic scan tool for PROXI Configuration Alignment under Body Control Module (BCM) Miscellaneous Functions menu.**

- Using the schematics as a guide, check the Transmission Control Module (TCM) terminals and connectors for corrosion, damage or pushed out terminals. Pay particular attention to the power and ground circuits. If no problems are found, replace the TCM and perform programming and PROXI Configuration Alignment procedures. Refer to **MODULE, TRANSMISSION CONTROL, REMOVAL** .
- Perform the TRANSMISSION VERIFICATION TEST. Refer to **STANDARD PROCEDURE** .

9. **CHECK THE WIRING AND CONNECTORS**
   1. The conditions necessary to set this DTC are not present at this time.
   2. Use the Freeze Frame Data to help duplicate the conditions in which the DTC originally set. Pay particular attention to the DTC set conditions, such as, VSS, MAP, ECT, and Load.
   3. Using the schematics as a guide, visually inspect the related wiring harness. Look for any chafed, pierced, pinched, or partially broken wires.
   4. Visually inspect the related wiring harness connectors. Look for broken, bent, pushed out, or corroded terminals.
   5. Wiggle the wiring and connectors while checking for any possible open or shorted circuits.
   6. Check for any Service Information Tune-ups or Technical Service Bulletins that may apply.

   Were there any problems found?

   Yes

   - Repair as necessary.
   - Perform the TRANSMISSION VERIFICATION TEST. Refer to **STANDARD PROCEDURE** .

   No

   - Test Complete.

P2764-00-TORQUE CONVERTER CLUTCH PRESSURE CONTROL SOLENOID CONTROL CIRCUIT LOW

For a complete wiring diagram, **refer to appropriate SYSTEM WIRING DIAGRAMS article** .

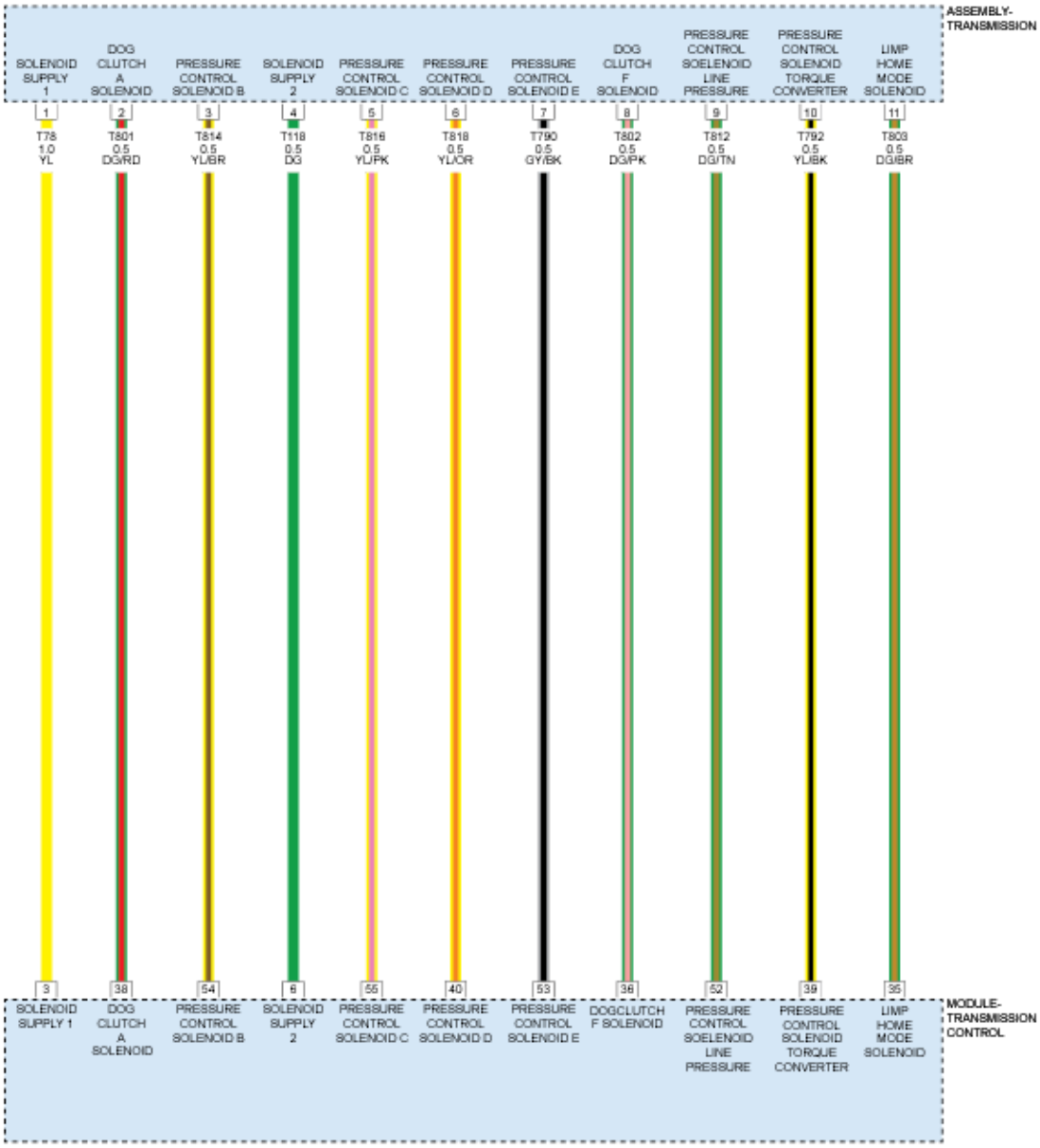

Fig. 14: Pressure Regulators & Solenoids Control Circuit Diagram
Courtesy of CHRYSLER GROUP, LLC

THEORY OF OPERATION

The purpose of the diagnostic is to detect circuit failures on any of the output stages. All output stages are controlled by a current controller that can operate an output stage in two different modes:

- Current controlled mode (pressure regulators)
- Switched mode or PWM controlled (solenoids)

Pressure Regulator Monitoring: The current regulator ASIC in the TCM indicates the following circuit failures via SPI bus to the CPU:

- Short to ground
- Short to battery or open circuit

Solenoid Monitoring: The TCM measures the actual solenoid voltages and compares them to calibrated thresholds to identify the following electrical failures:

- Short to ground or open circuit
- Short to battery

WHEN MONITORED

Output stages power supply switched on.

Power supply voltage is greater than a calibrated value.

SET CONDITION

Pressure Regulator Monitoring: A failure is detected if one of the following conditions occur:

An short to ground failure is detected if the ASIC indicates a short to ground failure.

A short to battery or open circuit failure is detected if the ASIC indicates a short to battery or open circuit failure.

Solenoid Monitoring: A failure is detected if one of the following conditions occur:

An short to ground or open circuit failure is detected if the ratio between the voltage at the solenoid valve and the output stages power supply is above a calibrated threshold.

A short to battery failure is detected if the ratio between the voltage at the solenoid valve and the output stages power supply is below a calibrated threshold.

POSSIBLE CAUSES

Possible Causes
(T78) SOLENOID SUPPLY 1 CIRCUIT OPEN (T78) SOLENOID SUPPLY 1 CIRCUIT SHORTED TO GROUND (T792) TORQUE CONVERTER PRESSURE CONTROL SOLENOID CIRCUIT OPEN (T792) TORQUE CONVERTER PRESSURE CONTROL SOLENOID CIRCUIT SHORTED TO

GROUND
(T792) TORQUE CONVERTER PRESSURE CONTROL SOLENOID CIRCUIT SHORTED TO VOLTAGE
TORQUE CONVERTER PRESSURE CONTROL SOLENOID
TRANSMISSION CONTROL MODULE (TCM)

Always perform the Pre-Diagnostic Troubleshooting procedure before proceeding. Refer to STANDARD PROCEDURE .

DIAGNOSTIC TEST

1. **CHECK IF THE DTC IS CURRENT**
    1. Using the scan tool, read TCM DTCs.
    2. Record the Environmental Data and any DTCs.
    3. Clear DTCs.
    4. Using the recorded Environmental Data, along with the When Monitored and Set Conditions above, operate the vehicle in the conditions that set the DTC.
    5. Read TCM DTCs.

    Did the DTC reset?

    Yes

    - Go To 2

    No

    - Go To 9
2. **CHECK THE TORQUE CONVERTER PRESSURE CONTROL SOLENOID (7)**
    1. Turn the Ignition OFF.
    2. Disconnect the Transmission Assembly harness connector.
    3. Measure the resistance of the Torque Converter Pressure Control Solenoid (7) at the appropriate terminals in the Transmission Assembly interface connector.

    Is the resistance of the Torque Converter Pressure Control Solenoid (7) 11.0 Ohms ± 1.0 Ohms?

    Yes

    - Go To 3

    No

    - Replace the Torque Converter Pressure Control Solenoid (7) in accordance with the Service Information.

- Perform the TRANSMISSION VERIFICATION TEST. Refer to **STANDARD PROCEDURE** .

3. **CHECK THE (T78) SOLENOID SUPPLY 1 CIRCUIT FOR AN OPEN**
   1. Disconnect the TCM harness connector.
   2. Measure the resistance of the (T78) Solenoid Supply 1 circuit between the Transmission Assembly harness connector and the TCM harness connector.

      Is the resistance below 5.0 Ohms?

      Yes

      - Go To 4

      No

      - Repair the (T78) Solenoid Supply 1 circuit for an open or high resistance.
      - Perform the TRANSMISSION VERIFICATION TEST. Refer to **STANDARD PROCEDURE** .
4. **CHECK THE (T78) SOLENOID SUPPLY 1 CIRCUIT FOR A SHORT TO GROUND**
   1. Measure the resistance between ground and the (T78) Solenoid Supply 1 circuit.

      Is there continuity between ground and the (T78) Solenoid Supply 1 circuit?

      Yes

      - Repair the (T78) Solenoid Supply 1 circuit for a short to ground.
      - Perform the TRANSMISSION VERIFICATION TEST. Refer to **STANDARD PROCEDURE** .

      No

      - Go To 5
5. **CHECK THE (T78) SOLENOID SUPPLY 1 CIRCUIT FOR A SHORT TO ANOTHER CIRCUIT**
   1. Measure the resistance between the (T78) Solenoid Supply 1 circuit and all other circuits in the TCM harness connector.

      Is there continuity between the (T78) Solenoid Supply 1 circuit and any other circuits in the TCM harness connector?

      Yes

      - Repair the (T78) Solenoid Supply 1 circuit for a short to another circuit.
      - Perform the TRANSMISSION VERIFICATION TEST. Refer to **STANDARD PROCEDURE** .

No

- Go To 6.

6. **CHECK THE (T792) TORQUE CONVERTER PRESSURE CONTROL SOLENOID (7) CIRCUIT FOR AN OPEN**
   1. Measure the resistance of the (T792) Torque Converter Pressure Control Solenoid (7) circuit between the Transmission Assembly harness connector and the TCM harness connector.

      Is the resistance below 5.0 Ohms?

      Yes

      - Go To 7

      No

      - Repair the (T792) Torque Converter Pressure Control Solenoid (7) circuit for an open or high resistance.
      - Perform the TRANSMISSION VERIFICATION TEST. Refer to **STANDARD PROCEDURE** .

7. **CHECK THE (T792) TORQUE CONVERTER PRESSURE CONTROL SOLENOID (7) CIRCUIT FOR A SHORT TO GROUND**
   1. Measure the resistance between ground and the (T792) Torque Converter Pressure Control Solenoid (7) circuit.

      Is there continuity between ground and the (T792) Torque Converter Pressure Control Solenoid (7) circuit?

      Yes

      - Repair the (T792) Torque Converter Pressure Control Solenoid (7) circuit for a short to ground.
      - Perform the TRANSMISSION VERIFICATION TEST. Refer to **STANDARD PROCEDURE** .

      No

      - Go To 8.

8. **CHECK THE (T792) TORQUE CONVERTER PRESSURE CONTROL SOLENOID (7) CIRCUIT FOR A SHORT TO ANOTHER CIRCUIT**
   1. Measure the resistance between the (T792) Torque Converter Pressure Control Solenoid (7) circuit and all other circuits in the TCM harness connector.

      Is there continuity between the (T792) Torque Converter Pressure Control Solenoid (7) circuit and any other circuits in the TCM harness connector?

Yes

- Repair the (T792) Torque Converter Pressure Control Solenoid (7) circuit for a short to another circuit.
- Perform the TRANSMISSION VERIFICATION TEST. Refer to **STANDARD PROCEDURE** .

No

NOTE: **If this Electronic Control Unit (ECU) is being replaced with a new unit, a diagnostic scan tool MUST be used to align the PROXI configuration data into the new ECU. Follow the routine outlined in the diagnostic scan tool for PROXI Configuration Alignment under Body Control Module (BCM) Miscellaneous Functions menu.**

- Using the schematics as a guide, check the Transmission Control Module (TCM) terminals and connectors for corrosion, damage or pushed out terminals. Pay particular attention to the power and ground circuits. If no problems are found, replace the TCM and perform programming and PROXI Configuration Alignment procedures. Refer to **MODULE, TRANSMISSION CONTROL, REMOVAL** .
- Perform the TRANSMISSION VERIFICATION TEST. Refer to **STANDARD PROCEDURE** .

9. **CHECK THE WIRING AND CONNECTORS**
   1. The conditions necessary to set this DTC are not present at this time.
   2. Use the Freeze Frame Data to help duplicate the conditions in which the DTC originally set. Pay particular attention to the DTC set conditions, such as, VSS, MAP, ECT, and Load.
   3. Using the schematics as a guide, visually inspect the related wiring harness. Look for any chafed, pierced, pinched, or partially broken wires.
   4. Visually inspect the related wiring harness connectors. Look for broken, bent, pushed out, or corroded terminals.
   5. Wiggle the wiring and connectors while checking for any possible open or shorted circuits.
   6. Check for any Service Information Tune-ups or Technical Service Bulletins that may apply.

   Were there any problems found?

   Yes

   - Repair as necessary.
   - Perform the TRANSMISSION VERIFICATION TEST. Refer to **STANDARD PROCEDURE** .

   No

   - Test Complete.

P2784-00-INPUT SPEED SENSOR 1-2 CORRELATION

For a complete wiring diagram, **refer to appropriate SYSTEM WIRING DIAGRAMS article** .

THEORY OF OPERATION

The purpose of the diagnostic is to detect computational failures of the TCM which are related to the speed signal monitoring.

WHEN MONITORED

Ignition is ON.

SET CONDITION

The failure is detected if the speed sensor computations in the TCM are not valid

POSSIBLE CAUSES

Possible Causes
INTERNAL TRANSMISSION TRANSMISSION CONTROL MODULE (TCM)

Always perform the Pre-Diagnostic Troubleshooting procedure before proceeding. Refer to STANDARD PROCEDURE .

DIAGNOSTIC TEST

1. **CHECK FOR SPEED SENSOR OR SENSOR SUPPLY VOLTAGE DTCS**
    1. With the scan tool, check for other transmission DTCs.

       Are any Speed Sensor or Sensor Supply Voltage DTCs present?

       Yes

       - Refer to **DIAGNOSIS AND TESTING** and perform the appropriate diagnostic procedure.

       No

       - Go To 2
2. **CHECK IF DTC IS CURRENT**
    1. With the scan tool, read TCM DTCs.
    2. Record the Environmental Data and any DTCs.
    3. With the scan tool, erase DTCs.
    4. Using the recorded Environmental Data, along with the When Monitored and Set Conditions

above, operate the vehicle in the conditions that set the DTC.

5. With the scan tool, read TCM DTCs.

   Did the DTC reset?

   Yes

   - Go to 3.

   No

   - Go to 4.

3. **INTERNAL TRANSMISSION**
   1. Turn the Ignition OFF.
   2. Remove the Transmission Oil Pan and inspect for debris, a plugged Transmission Oil Filter, or any sign of an internal transmission problem.

      Is there any debris, plugged Transmission Oil Filter, or any sign of an internal transmission problem?

      Yes

      - Repair as necessary. Refer to **REMOVAL** .
      - Perform the TRANSMISSION VERIFICATION TEST. Refer to **STANDARD PROCEDURE** .

      No

      NOTE: If this Electronic Control Unit (ECU) is being replaced with a new unit, a diagnostic scan tool MUST be used to align the PROXI configuration data into the new ECU. Follow the routine outlined in the diagnostic scan tool for PROXI Configuration Alignment under Body Control Module (BCM) Miscellaneous Functions menu.

      - Using the schematics as a guide, check the Transmission Control Module (TCM) terminals and connectors for corrosion, damage or pushed out terminals. Pay particular attention to the power and ground circuits. If no problems are found, replace the TCM and perform programming and PROXI Configuration Alignment procedures. Refer to **MODULE, TRANSMISSION CONTROL, REMOVAL** .
      - Perform the Transmission Verification Test. Refer to **STANDARD PROCEDURE** .

4. **CHECK THE WIRING AND CONNECTORS**
   1. The conditions necessary to set this DTC are not present at this time.
   2. Using the schematics as a guide, inspect the wiring and connectors specific to this circuit.
   3. Wiggle the wiring and connectors while checking for any possible open or shorted circuits.

4. Check for any Service Information Tune-ups or Technical Service Bulletins that may apply.

   Were there any problems found?

   Yes

   - Repair as necessary.
   - Perform the TRANSMISSION VERIFICATION TEST. Refer to **STANDARD PROCEDURE** .

   No

   - Test Complete.

U0001-00-CAN C BUS

Perform the COMMUNICATION PRE-DIAGNOSTIC PROCEDURE. Refer to **COMMUNICATION PRE-DIAGNOSTIC PROCEDURE** **STANDARD PROCEDURE** .

U0100-00-LOST COMMUNICATION WITH ECM/PCM

Perform the COMMUNICATION PRE-DIAGNOSTIC PROCEDURE. Refer to **COMMUNICATION PRE-DIAGNOSTIC PROCEDURE** .

U0102-00-LOST COMMUNICATION WITH TRANSFER CASE CONTROL MODULE / AWD

Perform the COMMUNICATION PRE-DIAGNOSTIC PROCEDURE. Refer to **COMMUNICATION PRE-DIAGNOSTIC PROCEDURE** .

U0103-00-LOST COMMUNICATION WITH ELECTRIC GEAR SHIFT MODULE

Perform the COMMUNICATION PRE-DIAGNOSTIC PROCEDURE. Refer to **COMMUNICATION PRE-DIAGNOSTIC PROCEDURE** .

U0121-00-LOST COMMUNICATION WITH ANTI-LOCK BRAKE SYSTEM (ABS) CONTROL MODULE

Perform the COMMUNICATION PRE-DIAGNOSTIC PROCEDURE. Refer to **COMMUNICATION PRE-DIAGNOSTIC PROCEDURE** .

U0131-00-LOST COMMUNICATION WITH ELECTRIC POWER STEERING CONTROL MODULE

Perform the COMMUNICATION PRE-DIAGNOSTIC PROCEDURE. Refer to **COMMUNICATION PRE-DIAGNOSTIC PROCEDURE** .

U0140-00-LOST COMMUNICATION WITH BODY CONTROL MODULE

Perform the COMMUNICATION PRE-DIAGNOSTIC PROCEDURE. Refer to **COMMUNICATION PRE-DIAGNOSTIC PROCEDURE** .

U0212-00-LOST COMMUNICATION WITH SCM

Perform the COMMUNICATION PRE-DIAGNOSTIC PROCEDURE. Refer to **COMMUNICATION PRE-DIAGNOSTIC PROCEDURE** .

U0401-IMPLAUSIBLE DATA RECEIVED FROM ECM/PCM

For a complete wiring diagram **refer to appropriate SYSTEM WIRING DIAGRAMS article** .

THEORY OF OPERATION

The purpose of the diagnostic is to monitor the CAN bus, the transmitted messages on the CAN bus and the validity of the CAN signals. Several control units are connected to the CAN bus which send their messages cyclically in a defined time window. The messages contain multiple signals representing vehicle information.

CAN Bus Monitoring: To distinguish general problems with the CAN bus (e.g. electrical problems) from problems with certain messages or signals, the general state of the CAN bus is monitored.

CAN Message Monitoring: All messages received and used by the TCU are monitored for timeout and validity of the DLC (Data Length Code) information in the message header. If available, the message is also monitored for the validity of a checksum and for the correct behavior of an alive-counter that the sending control unit is expected to increment on each transmittal.

CAN Signal Monitoring: If the sending control unit does not have valid information to send, it may send a defined failure value indicating an invalid signal. Incoming signals with a defined failure value are monitored for signal validity.

WHEN MONITORED

Continuously with the ignition on and voltage within a valid range.

No failure in CAN BUS monitoring.

No failure in CAN BUS or message monitoring.

SET CONDITION

When the TCM detects an incorrect CAN ID from the Powertrain Control Module (PCM).

POSSIBLE CAUSES

Possible Causes
BODY CONTROL MODULE (BCM) CAN BUS DTCS PRESENT

POWERTRAIN CONTROL MODULE (PCM) DTCS PRESENT
TCM - INTERNAL ERROR

Always perform the Pre-Diagnostic Troubleshooting procedure before proceeding. Refer to STANDARD PROCEDURE .

DIAGNOSTIC TEST

1. **VERIFY THE DTC IS ACTIVE**
    1. Turn the Ignition ON.
    2. With the scan tool, record and erase the DTCs.
    3. Cycle the ignition switch from OFF to ON.
    4. With the scan tool, read the DTCs.

    Is the DTC active at this time?

    Yes

    - Go To 2

    No

    - Go To 4
2. **CHECK IF BODY CONTROL MODULE (BCM) CAN BUS DTCS ARE PRESENT**
    1. With the scan tool, read the BCM DTCs.

    Are there any BCM CAN BUS DTCs present?

    Yes

    - Perform the appropriate diagnostic procedure. Refer to **DIAGNOSIS AND TESTING** .

    No

    - Go To 3
3. **CHECK IF POWERTRAIN CONTROL MODULE (PCM) DTCS ARE PRESENT**
    1. With the scan tool, read PCM DTCs.

    Are there any PCM DTCs present?

    Yes

    - Perform the appropriate diagnostic procedure. Refer to .

No

NOTE: If this Electronic Control Unit (ECU) is being replaced with a new unit, a diagnostic scan tool MUST be used to align the PROXI configuration data into the new ECU. Follow the routine outlined in the diagnostic scan tool for PROXI Configuration Alignment under Body Control Module (BCM) Miscellaneous Functions menu.

- Using the schematics as a guide, check the Transmission Control Module (TCM) terminals and connectors for corrosion, damage or pushed out terminals. Pay particular attention to the power and ground circuits. If no problems are found, replace the TCM and perform programming and PROXI Configuration Alignment procedures. Refer to **MODULE, TRANSMISSION CONTROL, REMOVAL** .
- Perform the Transmission Verification Test. Refer to **STANDARD PROCEDURE** .

4. **INTERMITTENT WIRING AND CONNECTORS**
   1. Using the wiring diagram/schematic as a guide, inspect the wiring harness and connectors.
   2. Wiggle test the wiring harness and connectors while monitoring the scan tool data relative to this circuit.
   3. Look for the data to change or for the DTC to reset during the wiggle test.
   4. While monitoring the scan tool data relative to this circuit, move the selector switch to each position several times.
   5. Look for the data to change other than as expected or for the DTC to reset.

   Were any problems found?

   Yes

   - Repair as necessary.
   - Perform the Transmission Verification Test. Refer to **STANDARD PROCEDURE** .

   No

   - Test complete, the condition or conditions that originally set this DTC are not present at this time.

U0403-IMPLAUSIBLE DATA RECEIVED FROM T-CASE

For a complete wiring diagram **refer to appropriate SYSTEM WIRING DIAGRAMS article** .

THEORY OF OPERATION

The purpose of the diagnostic is to monitor the CAN bus, the transmitted messages on the CAN bus and the validity of the CAN signals. Several control units are connected to the CAN bus which send their messages cyclically in a defined time window. The messages contain multiple signals representing vehicle information.

CAN Bus Monitoring: To distinguish general problems with the CAN bus (e.g. electrical problems) from problems with certain messages or signals, the general state of the CAN bus is monitored.

CAN Message Monitoring: All messages received and used by the TCU are monitored for timeout and validity of the DLC (Data Length Code) information in the message header. If available, the message is also monitored for the validity of a checksum and for the correct behavior of an alive-counter that the sending control unit is expected to increment on each transmittal.

CAN Signal Monitoring: If the sending control unit does not have valid information to send, it may send a defined failure value indicating an invalid signal. Incoming signals with a defined failure value are monitored for signal validity.

WHEN MONITORED

Continuously with the ignition on, one valid CAN ID received at least once, and no U0002-CAN BUS Off Performance DTC present.

SET CONDITION

When the TCM detects an incorrect CAN ID from the Drivetrain Control Module (DTCM).

POSSIBLE CAUSES

Possible Causes
BODY CONTROL MODULE (BCM) CAN BUS DTCS PRESENT
DRIVETRAIN CONTROL MODULE (DTCM) DTCS PRESENT
POWERTRAIN CONTROL MODULE (PCM) - INTERNAL ERROR
TCM - INTERNAL ERROR

Always perform the Pre-Diagnostic Troubleshooting procedure before proceeding. Refer to STANDARD PROCEDURE .

DIAGNOSTIC TEST

1. **CHECK FOR BCM CAN BUS DTCS**
    1. With the scan tool, read BCM DTCs.

       Are any BCM CAN BUS DTCs present?

       Yes

       - Refer to **DIAGNOSTIC CODE INDEX** and perform the appropriate diagnostic procedure. Perform the diagnostic procedure for DTC U0001-CAN C BUS first if the fault is present. Refer to **U0001-00-CAN C BUS**.
       - Perform the Transmission Verification Test. Refer to **STANDARD PROCEDURE** .

No

- Go To 2

2. **DRIVETRAIN CONTROL MODULE (DTCM) DTCS PRESENT**
   1. With the scan tool, read Drivetrain Control Module (DTCM) DTCs.

      Are any DTCM DTCs present?

      Yes

      - Refer to **DIAGNOSTIC CODE INDEX** and perform the appropriate diagnostic procedure.

      No

      NOTE: If this Electronic Control Unit (ECU) is being replaced with a new unit, a diagnostic scan tool MUST be used to align the PROXI configuration data into the new ECU. Follow the routine outlined in the diagnostic scan tool for PROXI Configuration Alignment under Body Control Module (BCM) Miscellaneous Functions menu.

      - Using the schematics as a guide, check the Transmission Control Module (TCM) terminals and connectors for corrosion, damage or pushed out terminals. Pay particular attention to the power and ground circuits. If no problems are found, replace the TCM and perform programming and PROXI Configuration Alignment procedures. Refer to **MODULE, TRANSMISSION CONTROL, REMOVAL** .
      - Perform the Transmission Verification Test. Refer to **STANDARD PROCEDURE** .

U0404-IMPLAUSIBLE DATA RECEIVED FROM ESM

For a complete wiring diagram **refer to appropriate SYSTEM WIRING DIAGRAMS article** .

THEORY OF OPERATION

The messages sent on a dedicated CAN BUS and are distinguished by an identifier (ID). Each CAN ID is defined to contain a certain number of bytes. The Transmission Control Module (TCM) verifies that it has received the proper number of bytes for each ID.

WHEN MONITORED

Continuously with the ignition on and one valid CAN ID received.

SET CONDITION

When the TCM detects an incorrect CAN ID from the Electronic Shift Module (ESM).

POSSIBLE CAUSES

Possible Causes
ELECTRONIC SHIFT MODULE (ESM) DTCS PRESENT TCM - INTERNAL ERROR

Always perform the Pre-Diagnostic Troubleshooting procedure before proceeding. Refer to STANDARD PROCEDURE .

DIAGNOSTIC TEST

CHECK FOR ESM CAN BUS DTCS

1. With the scan tool, read ESM DTCs.

   Are any ESM CAN BUS DTCs present?

   Yes

   - Refer to **DIAGNOSTIC CODE INDEX** and perform the appropriate diagnostic procedure.
   - Perform the Transmission Verification Test. Refer to **STANDARD PROCEDURE** .

   No

   NOTE: If this Electronic Control Unit (ECU) is being replaced with a new unit, a diagnostic scan tool MUST be used to align the PROXI configuration data into the new ECU. Follow the routine outlined in the diagnostic scan tool for PROXI Configuration Alignment under Body Control Module (BCM) Miscellaneous Functions menu.

   - Using the schematics as a guide, check the Transmission Control Module (TCM) terminals and connectors for corrosion, damage or pushed out terminals. Pay particular attention to the power and ground circuits. If no problems are found, replace the TCM and perform programming and PROXI Configuration Alignment procedures. Refer to **MODULE, TRANSMISSION CONTROL, REMOVAL** .
   - Perform the Transmission Verification Test. Refer to **STANDARD PROCEDURE** .

U0415-IMPLAUSIBLE DATA RECEIVED FROM ABS

For a complete wiring diagram, **refer to appropriate SYSTEM WIRING DIAGRAMS article** .

THEORY OF OPERATION

The purpose of the diagnostic is to monitor the CAN bus, the transmitted messages on the CAN bus and the validity of the CAN signals. Several control units are connected to the CAN bus which send their messages cyclically in a defined time window. The messages contain multiple signals representing vehicle information.

CAN Bus Monitoring: To distinguish general problems with the CAN bus (e.g. electrical problems) from problems with certain messages or signals, the general state of the CAN bus is monitored.

CAN Message Monitoring: All messages received and used by the TCU are monitored for timeout and validity of the DLC (Data Length Code) information in the message header. If available, the message is also monitored for the validity of a checksum and for the correct behavior of an alive-counter that the sending control unit is expected to increment on each transmittal.

CAN Signal Monitoring: If the sending control unit does not have valid information to send, it may send a defined failure value indicating an invalid signal. Incoming signals with a defined failure value are monitored for signal validity.

WHEN MONITORED

Continuously with the ignition on, one valid CAN ID received at least once, and no U0002-CAN BUS Off Performance DTC present.

SET CONDITION

When the TCM detects an incorrect CAN ID from the Anti-Lock Brake Module (ABS).

POSSIBLE CAUSES

Possible Causes
BCM CAN BUS DTCS PRESENT
ABS DTCS PRESENT
TCM - INTERNAL ERROR

Always perform the Pre-Diagnostic Troubleshooting procedure before proceeding. Refer to STANDARD PROCEDURE .

DIAGNOSTIC TEST

1. **CHECK FOR BCM CAN BUS DTCS**
    1. With the scan tool, read BCM DTCs.

       Are any BCM CAN BUS DTCs present?

       Yes

       - Refer to **DIAGNOSTIC CODE INDEX** and perform the appropriate diagnostic procedure. Perform the diagnostic procedure for DTC U0001-CAN C BUS first if the fault is present. Refer to **U0001-00-CAN C BUS**.
       - Perform the Transmission Verification Test. Refer to **STANDARD PROCEDURE** .

       No

- Go To 2

2. **ANTI-LOCK BRAKE MODULE (ABS) DTCS PRESENT**
   1. With the scan tool, read ABS DTCs.

      Are any ABS DTCs present?

      Yes

      - Refer to **DIAGNOSTIC CODE INDEX** and perform the appropriate diagnostic procedure.

      No

      NOTE: If this Electronic Control Unit (ECU) is being replaced with a new unit, a diagnostic scan tool MUST be used to align the PROXI configuration data into the new ECU. Follow the routine outlined in the diagnostic scan tool for PROXI Configuration Alignment under Body Control Module (BCM) Miscellaneous Functions menu.

      - Using the schematics as a guide, check the Transmission Control Module (TCM) terminals and connectors for corrosion, damage or pushed out terminals. Pay particular attention to the power and ground circuits. If no problems are found, replace the TCM and perform programming and PROXI Configuration Alignment procedures. Refer to **MODULE, TRANSMISSION CONTROL, REMOVAL** .
      - Perform the Transmission Verification Test. Refer to **STANDARD PROCEDURE** .

U0420-INVALID DATA RECEIVED FROM POWER STEERING CONTROL MODULE

For a complete wiring diagram, **refer to appropriate SYSTEM WIRING DIAGRAMS article** .

THEORY OF OPERATION

The purpose of the diagnostic is to monitor the CAN bus, the transmitted messages on the CAN bus and the validity of the CAN signals. Several control units are connected to the CAN bus which send their messages cyclically in a defined time window. The messages contain multiple signals representing vehicle information.

CAN Bus Monitoring: To distinguish general problems with the CAN bus (e.g. electrical problems) from problems with certain messages or signals, the general state of the CAN bus is monitored.

CAN Message Monitoring: All messages received and used by the TCU are monitored for timeout and validity of the DLC (Data Length Code) information in the message header. If available, the message is also monitored for the validity of a checksum and for the correct behavior of an alive-counter that the sending control unit is expected to increment on each transmittal.

CAN Signal Monitoring: If the sending control unit does not have valid information to send, it may send a defined failure value indicating an invalid signal. Incoming signals with a defined failure value are monitored

for signal validity.

WHEN MONITORED

Ignition Switch is ON.

SET CONDITION

Module did not receive a valid CAN message from the Electronic Power Steering (EPS) Module.

POSSIBLE CAUSES

Possible Causes
OTHER RELATED BODY CONTROL MODULE (BCM) DTCS ARE SET
BATTERY HAS BEEN DISCONNECTED OR BATTERY VOLTAGE IS TOO LOW
ELECTRONIC POWER STEERING (EPS) MODULE
MODULE THAT SET THIS DTC

DIAGNOSTIC TEST

1. **ACTIVE ABS OR EPS DTCS**

   NOTE: If this fault was present along with ABS or EPS DTC C0054-54, a battery disconnect may have caused this fault to set. Perform the EPS Sensor learn routine.

   NOTE: Diagnose all CAN B and C communication DTCs before continuing.

   1. Ignition on, engine not running.
   2. With a scan tool, view DTCs.

      Was the DTC C0054-54 present along with this fault?

      Yes

      - Go To 2

      No

      - Go To 3
2. **INITIALIZE EPS MODULE**
   1. With the scan tool, under "Miscellaneous Functions" run the EPS Learn routine.
   2. Cycle the ignition off to on.
   3. With the scan tool, erase the DTCs.

4. Cycle the ignition off to on.
5. Wait ten seconds.
6. With the scan tool, read the DTCs.

   Did the DTC return as active or pending?

   Yes

   - Go To 3

   No

   - Test complete.

3. **SAS COMMUNICATION RELATED DTCs IN OTHER MODULES**
   1. With the scan tool, select Network Diagnostics.

      Is there more than one module with active DTCs "Logged Against" the SAS at this time?

      Yes

      - Refer to **DIAGNOSTIC CODE INDEX** and perform the U110A-87-Lost Communication with SCM - CAN C - Missing Message diagnostic procedure.

      No

      - Using the schematics as a guide, check the Transmission Control Module (TCM) terminals and connectors for corrosion, damage or pushed out terminals. Pay particular attention to the power and ground circuits. If no problems are found, replace the TCM and perform programming procedures. Refer to **MODULE, TRANSMISSION CONTROL, REMOVAL** .
      - Perform the Transmission Verification Test. Refer to **STANDARD PROCEDURE** .

U0422-IMPLAUSIBLE DATA RECEIVED FROM BODY CONTROL MODULE

For a complete wiring diagram **refer to appropriate SYSTEM WIRING DIAGRAMS article** .

THEORY OF OPERATION

The purpose of the diagnostic is to monitor the CAN bus, the transmitted messages on the CAN bus and the validity of the CAN signals. Several control units are connected to the CAN bus which send their messages cyclically in a defined time window. The messages contain multiple signals representing vehicle information.

CAN Bus Monitoring: To distinguish general problems with the CAN bus (e.g. electrical problems) from problems with certain messages or signals, the general state of the CAN bus is monitored.

CAN Message Monitoring: All messages received and used by the TCU are monitored for timeout and validity of the DLC (Data Length Code) information in the message header. If available, the message is also monitored for the validity of a checksum and for the correct behavior of an alive-counter that the sending control unit is expected to increment on each transmittal.

CAN Signal Monitoring: If the sending control unit does not have valid information to send, it may send a defined failure value indicating an invalid signal. Incoming signals with a defined failure value are monitored for signal validity.

WHEN MONITORED

Continuously with the ignition on, one valid CAN ID received at least once, and no U0002-CAN BUS Off Performance DTC present.

SET CONDITION

When the TCM detects an incorrect CAN ID from the Body Control Module (BCM).

POSSIBLE CAUSES

Possible Causes
BODY CONTROL MODULE (BCM) CAN BUS DTCS PRESENT
POWERTRAIN CONTROL MODULE (PCM) - INTERNAL ERROR
TCM - INTERNAL ERROR

Always perform the Pre-Diagnostic Troubleshooting procedure before proceeding. Refer to STANDARD PROCEDURE .

DIAGNOSTIC TEST

CHECK FOR BCM CAN BUS DTCS

1. With the scan tool, read BCM DTCs.

   Are any BCM CAN BUS DTCs present?

   Yes

   - Refer to **DIAGNOSTIC CODE INDEX** and perform the appropriate diagnostic procedure. Perform the diagnostic procedure for DTC U0001-CAN C BUS first if the fault is present. Refer to **U0001-00-CAN C BUS**.
   - Perform the TRANSMISSION VERIFICATION TEST. Refer to **STANDARD PROCEDURE** .

   No

NOTE: If this Electronic Control Unit (ECU) is being replaced with a new unit, a

diagnostic scan tool MUST be used to align the PROXI configuration data into the new ECU. Follow the routine outlined in the diagnostic scan tool for PROXI Configuration Alignment under Body Control Module (BCM) Miscellaneous Functions menu.

- Using the schematics as a guide, check the Transmission Control Module (TCM) terminals and connectors for corrosion, damage or pushed out terminals. Pay particular attention to the power and ground circuits. If no problems are found, replace the TCM and perform programming and PROXI Configuration Alignment procedures. Refer to **MODULE, TRANSMISSION CONTROL, REMOVAL** .
- Perform the Transmission Verification Test. Refer to **STANDARD PROCEDURE** .

U0429-IMPLAUSIBLE DATA RECEIVED FROM SCM

For a complete wiring diagram **refer to appropriate SYSTEM WIRING DIAGRAMS article** .

THEORY OF OPERATION

The purpose of the diagnostic is to monitor the CAN bus, the transmitted messages on the CAN bus and the validity of the CAN signals. Several control units are connected to the CAN bus which send their messages cyclically in a defined time window. The messages contain multiple signals representing vehicle information.

CAN Bus Monitoring: To distinguish general problems with the CAN bus (e.g. electrical problems) from problems with certain messages or signals, the general state of the CAN bus is monitored.

CAN Message Monitoring: All messages received and used by the TCU are monitored for timeout and validity of the DLC (Data Length Code) information in the message header. If available, the message is also monitored for the validity of a checksum and for the correct behavior of an alive-counter that the sending control unit is expected to increment on each transmittal.

CAN Signal Monitoring: If the sending control unit does not have valid information to send, it may send a defined failure value indicating an invalid signal. Incoming signals with a defined failure value are monitored for signal validity.

WHEN MONITORED

Continuously with the ignition on, one valid CAN ID received at least once, and no U0002-CAN BUS Off Performance DTC present.

SET CONDITION

When the TCM detects an incorrect CAN ID from the Steering Control Module (SCM).

POSSIBLE CAUSES

Possible Causes

STEERING CONTROL MODULE (SCM) DTCS
BODY CONTROL MODULE (BCM) CAN BUS DTCS
ANTI-LOCK BRAKE SYSTEM (ABS) MODULE CAN BUS DTCS
ANTI-LOCK BRAKE SYSTEM (ABS) MODULE
TCM - INTERNAL ERROR

Always perform the Pre-Diagnostic Troubleshooting procedure before proceeding. Refer to STANDARD PROCEDURE .

DIAGNOSTIC TEST

1. **CHECK FOR BCM CAN BUS DTCS**
   1. With the scan tool, read BCM DTCs.

      Are any BCM CAN BUS DTCs present?

      Yes

      - Refer to **DIAGNOSTIC CODE INDEX** and perform the appropriate diagnostic procedure. Perform the diagnostic procedure for DTC U0001-CAN C BUS first if the fault is present. Refer to **U0001-00-CAN C BUS**.
      - Perform the Transmission Verification Test. Refer to **STANDARD PROCEDURE** .

      No

      - Go To 2
2. **CHECK IF STEERING CONTROL MODULE (SCM) DTCS ARE PRESENT**
   1. With the scan tool, read SCM DTCs.

      Are any SCM DTCs present?

      Yes

      - Refer to **DIAGNOSTIC CODE INDEX** and perform the appropriate diagnostic procedure.
      - Perform the TRANSMISSION VERIFICATION TEST. Refer to **STANDARD PROCEDURE** .

      No

      NOTE: **If this Electronic Control Unit (ECU) is being replaced with a new unit, a diagnostic scan tool MUST be used to align the PROXI configuration data into the new ECU. Follow the routine outlined in the diagnostic scan tool for PROXI Configuration Alignment under Body Control Module (BCM) Miscellaneous Functions menu.**

- Using the schematics as a guide, check the Transmission Control Module (TCM) terminals and connectors for corrosion, damage or pushed out terminals. Pay particular attention to the power and ground circuits. If no problems are found, replace the TCM and perform programming and PROXI Configuration Alignment procedures. Refer to **MODULE, TRANSMISSION CONTROL, REMOVAL** .
- Perform the Transmission Verification Test. Refer to **STANDARD PROCEDURE** .

U11E3-00-TCM LOST COMMUNICATION WITH ESM ON DPT CAN

For a complete wiring diagram, **refer to appropriate SYSTEM WIRING DIAGRAMS article** .

THEORY OF OPERATION

The purpose of the diagnostic is to monitor the CAN bus, the transmitted messages on the CAN bus and the validity of the CAN signals. Several control units are connected to the CAN bus which send their messages cyclically in a defined time window. The messages contain multiple signals representing vehicle information.

CAN Bus Monitoring: To distinguish general problems with the CAN bus (e.g. electrical problems) from problems with certain messages or signals, the general state of the CAN bus is monitored.

CAN Message Monitoring: All messages received and used by the TCU are monitored for timeout and validity of the DLC (Data Length Code) information in the message header. If available, the message is also monitored for the validity of a checksum and for the correct behavior of an alive-counter that the sending control unit is expected to increment on each transmittal.

CAN Signal Monitoring: If the sending control unit does not have valid information to send, it may send a defined failure value indicating an invalid signal. Incoming signals with a defined failure value are monitored for signal validity.

WHEN MONITORED

With the ignition on for at least five seconds.

SET CONDITION

Bus messages not received from the Electronic Shift Module (ESM) for approximately two to five seconds.

POSSIBLE CAUSES

Possible Causes
ELECTRONIC SHIFT MODULE (ESM) POWERS AND GROUNDS
BOTH CAN C BUS CIRCUITS OPEN
ELECTRONIC SHIFT MODULE (ESM)
TRANSMISSION CONTROL MODULE (TCM)

DIAGNOSTIC TEST

VERIFY DTC IS ACTIVE

1. Turn the Ignition on.
2. With the scan tool, read active DTCs.

   Does the scan tool display this DTC as active?

   Yes

   - Refer to **DIAGNOSIS AND TESTING** and perform the NO RESPONSE FROM ESM (ELECTRONIC SHIFT MODULE) diagnostic procedure.

   No

   - Refer to **DIAGNOSIS AND TESTING** and perform the STORED LOST COMMUNICATION DTCS diagnostic procedure.

U1400-IMPLAUSIBLE TPS SIGNAL RECEIVED

For a complete wiring diagram **refer to appropriate SYSTEM WIRING DIAGRAMS article** .

THEORY OF OPERATION

The purpose of the diagnostic is to monitor the CAN bus, the transmitted messages on the CAN bus and the validity of the CAN signals. Several control units are connected to the CAN bus which send their messages cyclically in a defined time window. The messages contain multiple signals representing vehicle information.

CAN Bus Monitoring: To distinguish general problems with the CAN bus (e.g. electrical problems) from problems with certain messages or signals, the general state of the CAN bus is monitored.

CAN Message Monitoring: All messages received and used by the TCU are monitored for timeout and validity of the DLC (Data Length Code) information in the message header. If available, the message is also monitored for the validity of a checksum and for the correct behavior of an alive-counter that the sending control unit is expected to increment on each transmittal.

CAN Signal Monitoring: If the sending control unit does not have valid information to send, it may send a defined failure value indicating an invalid signal. Incoming signals with a defined failure value are monitored for signal validity.

WHEN MONITORED

TCM supply voltage is greater than a calibrated threshold.

Ignition Switch is ON.

No failure in CAN bus or CAN massage monitoring.

SET CONDITION

The PCM reports via CAN message that the Throttle Position Sensor (TPS) signal is not available or a TPS signal failure has been detected.

POSSIBLE CAUSES

Possible Causes
BODY CONTROL MODULE (BCM) CAN BUS DTCS
POWERTRAIN CONTROL MODULE (PCM) DTCS
TCM - INTERNAL ERROR

Always perform the Pre-Diagnostic Troubleshooting procedure before proceeding. Refer to STANDARD PROCEDURE .

DIAGNOSTIC TEST

1. **VERIFY THE DTC IS ACTIVE**
    1. Turn the Ignition ON.
    2. With the scan tool, record and erase the DTCs.
    3. Cycle the ignition switch from OFF to ON.
    4. With the scan tool, read the DTCs.

    Is the DTC active at this time?

    Yes

    - Go To 2

    No

    - Go To 4
2. **CHECK IF BODY CONTROL MODULE (BCM) CAN BUS DTCS ARE PRESENT**
    1. With the scan tool, read the BCM DTCs.

    Are there any BCM CAN BUS DTCs present?

    Yes

    - Perform the appropriate diagnostic procedure. Refer to **DIAGNOSTIC CODE INDEX** .

    No

    - Go To 3

3. **CHECK IF POWERTRAIN CONTROL MODULE (PCM) DTCS ARE PRESENT**
   1. With the scan tool, read PCM DTCs.

      Are there any PCM DTCs present?

      Yes

      - Perform the appropriate diagnostic procedure. Refer to the **DTC INDEX** article .

      No

      NOTE: If this Electronic Control Unit (ECU) is being replaced with a new unit, a diagnostic scan tool MUST be used to align the PROXI configuration data into the new ECU. Follow the routine outlined in the diagnostic scan tool for PROXI Configuration Alignment under Body Control Module (BCM) Miscellaneous Functions menu.

      - Using the schematics as a guide, check the Transmission Control Module (TCM) terminals and connectors for corrosion, damage or pushed out terminals. Pay particular attention to the power and ground circuits. If no problems are found, replace the TCM and perform programming and PROXI Configuration Alignment procedures. Refer to **MODULE, TRANSMISSION CONTROL, REMOVAL** .
      - Perform the Transmission Verification Test. Refer to **STANDARD PROCEDURE** .
4. **INTERMITTENT WIRING AND CONNECTORS**
   1. Using the wiring diagram/schematic as a guide, inspect the wiring harness and connectors.
   2. Wiggle test the wiring harness and connectors while monitoring the scan tool data relative to this circuit.
   3. Look for the data to change or for the DTC to reset during the wiggle test.
   4. While monitoring the scan tool data relative to this circuit, move the selector switch to each position several times.
   5. Look for the data to change other than as expected or for the DTC to reset.

      Were any problems found?

      Yes

      - Repair as necessary.
      - Perform the Transmission Verification Test. Refer to **STANDARD PROCEDURE** .

      No

      - Test complete, the condition or conditions that originally set this DTC are not present at this time.

THEORY OF OPERATION

The purpose of the diagnostic is to monitor the CAN bus, the transmitted messages on the CAN bus and the validity of the CAN signals. Several control units are connected to the CAN bus which send their messages cyclically in a defined time window. The messages contain multiple signals representing vehicle information.

CAN Bus Monitoring: To distinguish general problems with the CAN bus (e.g. electrical problems) from problems with certain messages or signals, the general state of the CAN bus is monitored.

CAN Message Monitoring: All messages received and used by the TCU are monitored for timeout and validity of the DLC (Data Length Code) information in the message header. If available, the message is also monitored for the validity of a checksum and for the correct behavior of an alive-counter that the sending control unit is expected to increment on each transmittal.

CAN Signal Monitoring: If the sending control unit does not have valid information to send, it may send a defined failure value indicating an invalid signal. Incoming signals with a defined failure value are monitored for signal validity.

U1401-IMPLAUSIBLE ENGINE SPEED SIGNAL RECEIVED

For a complete wiring diagram **refer to appropriate SYSTEM WIRING DIAGRAMS article** .

THEORY OF OPERATION

The purpose of the diagnostic is to monitor the CAN bus, the transmitted messages on the CAN bus and the validity of the CAN signals. Several control units are connected to the CAN bus which send their messages cyclically in a defined time window. The messages contain multiple signals representing vehicle information.

CAN Bus Monitoring: To distinguish general problems with the CAN bus (e.g. electrical problems) from problems with certain messages or signals, the general state of the CAN bus is monitored.

CAN Message Monitoring: All messages received and used by the TCU are monitored for timeout and validity of the DLC (Data Length Code) information in the message header. If available, the message is also monitored for the validity of a checksum and for the correct behavior of an alive-counter that the sending control unit is expected to increment on each transmittal.

CAN Signal Monitoring: If the sending control unit does not have valid information to send, it may send a defined failure value indicating an invalid signal. Incoming signals with a defined failure value are monitored for signal validity.

WHEN MONITORED

TCM supply voltage is greater than a calibrated threshold.

Ignition Switch is ON.

No failure in CAN bus or CAN massage monitoring.

SET CONDITION

The PCM reports via CAN message that the Engine Speed signal is not available or an Engine Speed signal failure has been detected.

POSSIBLE CAUSES

Possible Causes
BODY CONTROL MODULE (BCM) CAN BUS DTCS
POWERTRAIN CONTROL MODULE (PCM) DTCS
TCM - INTERNAL ERROR

Always perform the Pre-Diagnostic Troubleshooting procedure before proceeding. Refer to STANDARD PROCEDURE .

DIAGNOSTIC TEST

1. **VERIFY THE DTC IS ACTIVE**
    1. Turn the Ignition ON.
    2. With the scan tool, record and erase the DTCs.
    3. Cycle the ignition switch from OFF to ON.
    4. With the scan tool, read the DTCs.

    Is the DTC active at this time?

    Yes

    - Go To 2

    No

    - Go To 4
2. **CHECK IF BODY CONTROL MODULE (BCM) CAN BUS DTCS ARE PRESENT**
    1. With the scan tool, read the BCM DTCs.

    Are there any BCM CAN BUS DTCs present?

    Yes

    - Perform the appropriate diagnostic procedure. Refer to **DIAGNOSTIC CODE INDEX** .

    No

    - Go To 3

3. **CHECK IF POWERTRAIN CONTROL MODULE (PCM) DTCS ARE PRESENT**
   1. With the scan tool, read PCM DTCs.

      Are there any PCM DTCs present?

      Yes

      - Perform the appropriate diagnostic procedure. Refer to .

      No

      NOTE: If this Electronic Control Unit (ECU) is being replaced with a new unit, a diagnostic scan tool MUST be used to align the PROXI configuration data into the new ECU. Follow the routine outlined in the diagnostic scan tool for PROXI Configuration Alignment under Body Control Module (BCM) Miscellaneous Functions menu.

      - Using the schematics as a guide, check the Transmission Control Module (TCM) terminals and connectors for corrosion, damage or pushed out terminals. Pay particular attention to the power and ground circuits. If no problems are found, replace the TCM and perform programming and PROXI Configuration Alignment procedures. Refer to **MODULE, TRANSMISSION CONTROL, REMOVAL** .
      - Perform the Transmission Verification Test. Refer to **STANDARD PROCEDURE** .
4. **INTERMITTENT WIRING AND CONNECTORS**
   1. Using the wiring diagram/schematic as a guide, inspect the wiring harness and connectors.
   2. Wiggle test the wiring harness and connectors while monitoring the scan tool data relative to this circuit.
   3. Look for the data to change or for the DTC to reset during the wiggle test.
   4. While monitoring the scan tool data relative to this circuit, move the selector switch to each position several times.
   5. Look for the data to change other than as expected or for the DTC to reset.

      Were any problems found?

      Yes

      - Repair as necessary.
      - Perform the Transmission Verification Test. Refer to **STANDARD PROCEDURE** .

      No

      - Test complete, the condition or conditions that originally set this DTC are not present at this time.

U1408-IMPLAUSIBLE BRAKE SIGNAL RECEIVED

For a complete wiring diagram, **refer to appropriate SYSTEM WIRING DIAGRAMS article** .

THEORY OF OPERATION

The purpose of the diagnostic is to monitor the CAN bus, the transmitted messages on the CAN bus and the validity of the CAN signals. Several control units are connected to the CAN bus which send their messages cyclically in a defined time window. The messages contain multiple signals representing vehicle information.

CAN Bus Monitoring: To distinguish general problems with the CAN bus (e.g. electrical problems) from problems with certain messages or signals, the general state of the CAN bus is monitored.

CAN Message Monitoring: All messages received and used by the TCU are monitored for timeout and validity of the DLC (Data Length Code) information in the message header. If available, the message is also monitored for the validity of a checksum and for the correct behavior of an alive-counter that the sending control unit is expected to increment on each transmittal.

CAN Signal Monitoring: If the sending control unit does not have valid information to send, it may send a defined failure value indicating an invalid signal. Incoming signals with a defined failure value are monitored for signal validity.

WHEN MONITORED

TCM supply voltage is greater than a calibrated threshold.

Ignition Switch is ON.

No failure in CAN bus or CAN massage monitoring.

SET CONDITION

The ABS reports via CAN message that the Brake signal is not available or a Brake signal failure has been detected.

POSSIBLE CAUSES

Possible Causes
ANTILOCK BRAKE SYSTEM (ABS) DTCS
TCM - INTERNAL ERROR

Always perform the Pre-Diagnostic Troubleshooting procedure before proceeding. Refer to STANDARD PROCEDURE .

DIAGNOSTIC TEST

1. **VERIFY THE DTC IS ACTIVE**
    1. Turn the Ignition ON.
    2. With the scan tool, record and erase the DTCs.
    3. Cycle the ignition switch from off to on.
    4. With the scan tool, read the DTCs.

    Is the DTC active at this time?

    Yes

    - Go To 2

    No

    - Go To 3
2. **CHECK IF Antilock Brake System (ABS) DTCS ARE PRESENT**
    1. With the scan tool, read the ABS DTCs.

    Are there any ABS DTCs present?

    Yes

    - Perform the appropriate diagnostic procedure. Refer to **DIAGNOSTIC CODE INDEX** .

    No

    NOTE: **If this Electronic Control Unit (ECU) is being replaced with a new unit, a diagnostic scan tool MUST be used to align the PROXI configuration data into the new ECU. Follow the routine outlined in the diagnostic scan tool for PROXI Configuration Alignment under Body Control Module (BCM) Miscellaneous Functions menu.**

    - Using the schematics as a guide, check the Transmission Control Module (TCM) terminals and connectors for corrosion, damage or pushed out terminals. Pay particular attention to the power and ground circuits. If no problems are found, replace the TCM and perform programming and PROXI Configuration Alignment procedures. Refer to **MODULE, TRANSMISSION CONTROL, REMOVAL** .
    - Perform the Transmission Verification Test. Refer to **STANDARD PROCEDURE** .
3. **INTERMITTENT WIRING AND CONNECTORS**
    1. Using the wiring diagram/schematic as a guide, inspect the wiring harness and connectors.
    2. Wiggle test the wiring harness and connectors while monitoring the scan tool data relative to this circuit.
    3. Look for the data to change or for the DTC to reset during the wiggle test.

4. While monitoring the scan tool data relative to this circuit, move the selector switch to each position several times.
5. Look for the data to change other than as expected or for the DTC to reset.

   Were any problems found?

   Yes

   - Repair as necessary.
   - Perform the Transmission Verification Test. Refer to **STANDARD PROCEDURE** .

   No

   - Test complete, the condition or conditions that originally set this DTC are not present at this time.

U1412-IMPLAUSIBLE VEHICLE SPEED SIGNAL RECEIVED

For a complete wiring diagram **refer to appropriate SYSTEM WIRING DIAGRAMS article** .

THEORY OF OPERATION

The purpose of the diagnostic is to monitor the CAN bus, the transmitted messages on the CAN bus and the validity of the CAN signals. Several control units are connected to the CAN bus which send their messages cyclically in a defined time window. The messages contain multiple signals representing vehicle information.

CAN Bus Monitoring: To distinguish general problems with the CAN bus (e.g. electrical problems) from problems with certain messages or signals, the general state of the CAN bus is monitored.

CAN Message Monitoring: All messages received and used by the TCU are monitored for timeout and validity of the DLC (Data Length Code) information in the message header. If available, the message is also monitored for the validity of a checksum and for the correct behavior of an alive-counter that the sending control unit is expected to increment on each transmittal.

CAN Signal Monitoring: If the sending control unit does not have valid information to send, it may send a defined failure value indicating an invalid signal. Incoming signals with a defined failure value are monitored for signal validity.

WHEN MONITORED

Battery voltage is greater than a calibrated threshold.

Ignition is on.

No failure in CAN bus or message monitoring.

SET CONDITION

The Anti-Lock Brake System (ABS) Module reports via CAN message that the Vehicle Speed signal is not available or a Vehicle Speed signal failure has been detected.

POSSIBLE CAUSES

Possible Causes
ANTI-LOCK BRAKE SYSTEM (ABS) MODULE DTCS
BODY CONTROL MODULE (BCM) DTCS
TCM - INTERNAL ERROR

Always perform the Pre-Diagnostic Troubleshooting procedure before proceeding. Refer to STANDARD PROCEDURE .

DIAGNOSTIC TEST

1. **VERIFY THE DTC IS ACTIVE**
    1. Turn the Ignition ON.
    2. With the scan tool, record and erase the DTCs.
    3. Cycle the ignition switch from OFF to ON.
    4. With the scan tool, read the DTCs.

    Is the DTC active at this time?

    Yes

    - Go to 2

    No

    - Go to 4
2. **CHECK IF BODY CONTROL MODULE (BCM) CAN BUS DTCS ARE PRESENT**
    1. With the scan tool, read the BCM DTCs.

    Are there any BCM CAN BUS DTCs present?

    Yes

    - Perform the appropriate diagnostic procedure. Refer to **DIAGNOSTIC CODE INDEX** .

    No

    - Go To 3

3. **CHECK IF ANTILOCK BRAKE SYSTEM (ABS) MODULE DTCS ARE PRESENT**
   1. With the scan tool, read ABS DTCs.

      Are there any ABS DTCs present?

      Yes

      - Perform the appropriate diagnostic procedure. Refer to **DIAGNOSTIC CODE INDEX** .

      No

      NOTE: If this Electronic Control Unit (ECU) is being replaced with a new unit, a diagnostic scan tool MUST be used to align the PROXI configuration data into the new ECU. Follow the routine outlined in the diagnostic scan tool for PROXI Configuration Alignment under Body Control Module (BCM) Miscellaneous Functions menu.

      - Using the schematics as a guide, check the Transmission Control Module (TCM) terminals and connectors for corrosion, damage or pushed out terminals. Pay particular attention to the power and ground circuits. If no problems are found, replace the TCM and perform programming and PROXI Configuration Alignment procedures. Refer to **MODULE, TRANSMISSION CONTROL, REMOVAL** .
      - Perform the Transmission Verification Test. Refer to **STANDARD PROCEDURE** .
4. **INTERMITTENT WIRING AND CONNECTORS**
   1. Using the wiring diagram/schematic as a guide, inspect the wiring harness and connectors.
   2. Wiggle test the wiring harness and connectors while monitoring the scan tool data relative to this circuit.
   3. Look for the data to change or for the DTC to reset during the wiggle test.
   4. While monitoring the scan tool data relative to this circuit, move the selector switch to each position several times.
   5. Look for the data to change other than as expected or for the DTC to reset.

      Were any problems found?

      Yes

      - Repair as necessary.
      - Perform the Transmission Verification Test. Refer to **STANDARD PROCEDURE** .

      No

      - Test complete, the condition or conditions that originally set this DTC are not present at this time.

U1424-IMPLAUSIBLE ENGINE TORQUE SIGNAL RECEIVED

For a complete wiring diagram **refer to appropriate SYSTEM WIRING DIAGRAMS article** .

THEORY OF OPERATION

The purpose of the diagnostic is to monitor the CAN bus, the transmitted messages on the CAN bus and the validity of the CAN signals. Several control units are connected to the CAN bus which send their messages cyclically in a defined time window. The messages contain multiple signals representing vehicle information.

CAN Bus Monitoring: To distinguish general problems with the CAN bus (e.g. electrical problems) from problems with certain messages or signals, the general state of the CAN bus is monitored.

CAN Message Monitoring: All messages received and used by the TCU are monitored for timeout and validity of the DLC (Data Length Code) information in the message header. If available, the message is also monitored for the validity of a checksum and for the correct behavior of an alive-counter that the sending control unit is expected to increment on each transmittal.

CAN Signal Monitoring: If the sending control unit does not have valid information to send, it may send a defined failure value indicating an invalid signal. Incoming signals with a defined failure value are monitored for signal validity.

WHEN MONITORED

TCM supply voltage is greater than a calibrated threshold.

Ignition Switch is ON.

No failure in CAN bus or CAN massage monitoring.

SET CONDITION

The PCM reports via CAN message that the Engine Torque signal is not available or an Engine Torque signal failure has been detected.

POSSIBLE CAUSES

Possible Causes
BODY CONTROL MODULE (BCM) CAN BUS DTCS
POWERTRAIN CONTROL MODULE (PCM) DTCS
TCM - INTERNAL ERROR

Always perform the Pre-Diagnostic Troubleshooting procedure before proceeding. Refer to STANDARD PROCEDURE .

DIAGNOSTIC TEST

1. **VERIFY THE DTC IS ACTIVE**
    1. Turn the Ignition ON.
    2. With the scan tool, record and erase the DTCs.
    3. Cycle the ignition switch from OFF to ON.
    4. With the scan tool, read the DTCs.

    Is the DTC active at this time?

    Yes

    - Go To 2

    No

    - Go To 4
2. **CHECK IF BODY CONTROL MODULE (BCM) CAN BUS DTCS ARE PRESENT**
    1. With the scan tool, read the BCM DTCs.

    Are there any BCM CAN BUS DTCs present?

    Yes

    - Perform the appropriate diagnostic procedure. Refer to **DIAGNOSTIC CODE INDEX** .

    No

    - Go To 3
3. **CHECK IF POWERTRAIN CONTROL MODULE (PCM) DTCS ARE PRESENT**
    1. With the scan tool, read PCM DTCs.

    Are there any PCM DTCs present?

    Yes

    - Perform the appropriate diagnostic procedure. Refer to .

    No

    NOTE: **If this Electronic Control Unit (ECU) is being replaced with a new unit, a diagnostic scan tool MUST be used to align the PROXI configuration data into the new ECU. Follow the routine outlined in the diagnostic scan tool for PROXI Configuration Alignment under Body Control Module (BCM) Miscellaneous Functions menu.**

- Using the schematics as a guide, check the Transmission Control Module (TCM) terminals and connectors for corrosion, damage or pushed out terminals. Pay particular attention to the power and ground circuits. If no problems are found, replace the TCM and perform programming and PROXI Configuration Alignment procedures. Refer to **MODULE, TRANSMISSION CONTROL, REMOVAL** .
- Perform the Transmission Verification Test. Refer to **STANDARD PROCEDURE** .

4. **INTERMITTENT WIRING AND CONNECTORS**
   1. Using the wiring diagram/schematic as a guide, inspect the wiring harness and connectors.
   2. Wiggle test the wiring harness and connectors while monitoring the scan tool data relative to this circuit.
   3. Look for the data to change or for the DTC to reset during the wiggle test.
   4. While monitoring the scan tool data relative to this circuit, move the selector switch to each position several times.
   5. Look for the data to change other than as expected or for the DTC to reset.

   Were any problems found?

   Yes

   - Repair as necessary.
   - Perform the Transmission Verification Test. Refer to **STANDARD PROCEDURE** .

   No

   - Test complete, the condition or conditions that originally set this DTC are not present at this time.

U1461-IMPLAUSIBLE DATA RECEIVED FROM ESM ON D-PT

For a complete wiring diagram **refer to appropriate SYSTEM WIRING DIAGRAMS article** .

THEORY OF OPERATION

The purpose of the diagnostic is to monitor the CAN bus, the transmitted messages on the CAN bus and the validity of the CAN signals. Several control units are connected to the CAN bus which send their messages cyclically in a defined time window. The messages contain multiple signals representing vehicle information.

CAN Bus Monitoring: To distinguish general problems with the CAN bus (e.g. electrical problems) from problems with certain messages or signals, the general state of the CAN bus is monitored.

CAN Message Monitoring: All messages received and used by the TCU are monitored for timeout and validity of the DLC (Data Length Code) information in the message header. If available, the message is also monitored for the validity of a checksum and for the correct behavior of an alive-counter that the sending control unit is expected to increment on each transmittal.

CAN Signal Monitoring: If the sending control unit does not have valid information to send, it may send a defined failure value indicating an invalid signal. Incoming signals with a defined failure value are monitored for signal validity.

WHEN MONITORED

TCM supply voltage is greater than a calibrated threshold.

Ignition Switch is ON.

No failure in CAN bus or CAN massage monitoring.

SET CONDITION

The Electronic Shift Module (ESM) reports via CAN message that an ESM signal is not available or an ESM signal failure has been detected.

POSSIBLE CAUSES

Possible Causes
BODY CONTROL MODULE (BCM) CAN BUS DTCS
ELECTRONIC SHIFT MODULE (ESM) DTCS
TCM - INTERNAL ERROR

Always perform the Pre-Diagnostic Troubleshooting procedure before proceeding. Refer to STANDARD PROCEDURE .

DIAGNOSTIC TEST

1. **VERIFY THE DTC IS ACTIVE**
    1. Turn the Ignition ON.
    2. With the scan tool, record and erase the DTCs.
    3. Cycle the ignition switch from OFF to ON.
    4. With the scan tool, read the DTCs.

    Is the DTC active at this time?

    Yes

    - Go To 2

    No

    - Go To 4
2. **CHECK IF BODY CONTROL MODULE (BCM) CAN BUS DTCS ARE PRESENT**

1. With the scan tool, read the BCM DTCs.

   Are there any BCM CAN BUS DTCs present?

   Yes

   - Perform the appropriate diagnostic procedure. Refer to **DIAGNOSTIC CODE INDEX** .

   No

   - Go To 3

3. **CHECK IF ELECTRONIC SHIFT MODULE (ESM) DTCS ARE PRESENT**
   1. With the scan tool, read ESM DTCs.

      Are there any ESM DTCs present?

      Yes

      - Perform the appropriate diagnostic procedure. Refer to **DIAGNOSIS AND TESTING** .

      No

      NOTE: If this Electronic Control Unit (ECU) is being replaced with a new unit, a diagnostic scan tool MUST be used to align the PROXI configuration data into the new ECU. Follow the routine outlined in the diagnostic scan tool for PROXI Configuration Alignment under Body Control Module (BCM) Miscellaneous Functions menu.

      - Using the schematics as a guide, check the Transmission Control Module (TCM) terminals and connectors for corrosion, damage or pushed out terminals. Pay particular attention to the power and ground circuits. If no problems are found, replace the TCM and perform programming and PROXI Configuration Alignment procedures. Refer to **MODULE, TRANSMISSION CONTROL, REMOVAL** .
      - Perform the Transmission Verification Test. Refer to **STANDARD PROCEDURE** .

4. **INTERMITTENT WIRING AND CONNECTORS**
   1. Using the wiring diagram/schematic as a guide, inspect the wiring harness and connectors.
   2. Wiggle test the wiring harness and connectors while monitoring the scan tool data relative to this circuit.
   3. Look for the data to change or for the DTC to reset during the wiggle test.
   4. While monitoring the scan tool data relative to this circuit, move the selector switch to each position several times.
   5. Look for the data to change other than as expected or for the DTC to reset.

      Were any problems found?

Yes

- Repair as necessary.
- Perform the Transmission Verification Test. Refer to **STANDARD PROCEDURE** .

No

- Test complete, the condition or conditions that originally set this DTC are not present at this time.

THEORY OF OPERATION

The purpose of the diagnostic is to monitor the CAN bus, the transmitted messages on the CAN bus and the validity of the CAN signals. Several control units are connected to the CAN bus which send their messages cyclically in a defined time window. The messages contain multiple signals representing vehicle information.

CAN Bus Monitoring: To distinguish general problems with the CAN bus (e.g. electrical problems) from problems with certain messages or signals, the general state of the CAN bus is monitored.

CAN Message Monitoring: All messages received and used by the TCU are monitored for timeout and validity of the DLC (Data Length Code) information in the message header. If available, the message is also monitored for the validity of a checksum and for the correct behavior of an alive-counter that the sending control unit is expected to increment on each transmittal.

CAN Signal Monitoring: If the sending control unit does not have valid information to send, it may send a defined failure value indicating an invalid signal. Incoming signals with a defined failure value are monitored for signal validity.

U1465-IMPLAUSIBLE DRIVER SHIFT REQUEST SIGNAL RECEIVED

For a complete wiring diagram **refer to appropriate SYSTEM WIRING DIAGRAMS article** .

THEORY OF OPERATION

The purpose of the diagnostic is to monitor the CAN bus, the transmitted messages on the CAN bus and the validity of the CAN signals. Several control units are connected to the CAN bus which send their messages cyclically in a defined time window. The messages contain multiple signals representing vehicle information.

CAN Bus Monitoring: To distinguish general problems with the CAN bus (e.g. electrical problems) from problems with certain messages or signals, the general state of the CAN bus is monitored.

CAN Message Monitoring: All messages received and used by the TCU are monitored for timeout and validity of the DLC (Data Length Code) information in the message header. If available, the message is also monitored for the validity of a checksum and for the correct behavior of an alive-counter that the sending control unit is expected to increment on each transmittal.

CAN Signal Monitoring: If the sending control unit does not have valid information to send, it may send a

defined failure value indicating an invalid signal. Incoming signals with a defined failure value are monitored for signal validity.

WHEN MONITORED

TCM supply voltage is greater than a calibrated threshold.

Ignition Switch is ON.

No failure in CAN bus or CAN massage monitoring.

SET CONDITION

The Electronic Shift Module (ESM) reports via CAN message that an ESM signal is not available or an ESM signal failure has been detected.

POSSIBLE CAUSES

Possible Causes
BODY CONTROL MODULE (BCM) CAN BUS DTCS
ELECTRONIC SHIFT MODULE (ESM) DTCS
TCM - INTERNAL ERROR

Always perform the Pre-Diagnostic Troubleshooting procedure before proceeding. Refer to STANDARD PROCEDURE .

DIAGNOSTIC TEST

1. **VERIFY THE DTC IS ACTIVE**
    1. Turn the Ignition ON.
    2. With the scan tool, record and erase the DTCs.
    3. Cycle the ignition switch from OFF to ON.
    4. With the scan tool, read the DTCs.

    Is the DTC active at this time?

    Yes

    - Go To 2

    No

    - Go To 4
2. **CHECK IF BODY CONTROL MODULE (BCM) CAN BUS DTCS ARE PRESENT**
    1. With the scan tool, read the BCM DTCs.

Are there any BCM CAN BUS DTCs present?

Yes

- Perform the appropriate diagnostic procedure. Refer to **DIAGNOSTIC CODE INDEX** .

No

- Go To 3

3. **CHECK IF ELECTRONIC SHIFT MODULE (ESM) DTCS ARE PRESENT**
   1. With the scan tool, read ESM DTCs.

      Are there any ESM DTCs present?

      Yes

      - Perform the appropriate diagnostic procedure. Refer to **DIAGNOSIS AND TESTING** .

      No

      NOTE: If this Electronic Control Unit (ECU) is being replaced with a new unit, a diagnostic scan tool MUST be used to align the PROXI configuration data into the new ECU. Follow the routine outlined in the diagnostic scan tool for PROXI Configuration Alignment under Body Control Module (BCM) Miscellaneous Functions menu.

      - Using the schematics as a guide, check the Transmission Control Module (TCM) terminals and connectors for corrosion, damage or pushed out terminals. Pay particular attention to the power and ground circuits. If no problems are found, replace the TCM and perform programming and PROXI Configuration Alignment procedures. Refer to **MODULE, TRANSMISSION CONTROL, REMOVAL** .
      - Perform the Transmission Verification Test. Refer to **STANDARD PROCEDURE** .

4. **INTERMITTENT WIRING AND CONNECTORS**
   1. Using the wiring diagram/schematic as a guide, inspect the wiring harness and connectors.
   2. Wiggle test the wiring harness and connectors while monitoring the scan tool data relative to this circuit.
   3. Look for the data to change or for the DTC to reset during the wiggle test.
   4. While monitoring the scan tool data relative to this circuit, move the selector switch to each position several times.
   5. Look for the data to change other than as expected or for the DTC to reset.

      Were any problems found?

      Yes

- Repair as necessary.
- Perform the Transmission Verification Test. Refer to **STANDARD PROCEDURE** .

No

- Test complete, the condition or conditions that originally set this DTC are not present at this time.

U1467-IMPLAUSIBLE DRIVER SHIFT REQUEST SIGNAL RECEIVED ON CAN AND D-PT CAN

For a complete wiring diagram **refer to appropriate SYSTEM WIRING DIAGRAMS article** .

THEORY OF OPERATION

The purpose of the diagnostic is to monitor the CAN bus, the transmitted messages on the CAN bus and the validity of the CAN signals. Several control units are connected to the CAN bus which send their messages cyclically in a defined time window. The messages contain multiple signals representing vehicle information.

CAN Bus Monitoring: To distinguish general problems with the CAN bus (e.g. electrical problems) from problems with certain messages or signals, the general state of the CAN bus is monitored.

CAN Message Monitoring: All messages received and used by the TCU are monitored for timeout and validity of the DLC (Data Length Code) information in the message header. If available, the message is also monitored for the validity of a checksum and for the correct behavior of an alive-counter that the sending control unit is expected to increment on each transmittal.

CAN Signal Monitoring: If the sending control unit does not have valid information to send, it may send a defined failure value indicating an invalid signal. Incoming signals with a defined failure value are monitored for signal validity.

WHEN MONITORED

TCM supply voltage is greater than a calibrated threshold.

Ignition Switch is ON.

No failure in CAN bus or CAN massage monitoring.

SET CONDITION

The Electronic Shift Module (ESM) reports via CAN message that an ESM signal is not available or an ESM signal failure has been detected.

POSSIBLE CAUSES

Possible Causes

BODY CONTROL MODULE (BCM) CAN BUS DTCS
ELECTRONIC SHIFT MODULE (ESM) DTCS
TCM - INTERNAL ERROR

Always perform the Pre-Diagnostic Troubleshooting procedure before proceeding. Refer to STANDARD PROCEDURE .

DIAGNOSTIC TEST

1. **VERIFY THE DTC IS ACTIVE**
    1. Turn the Ignition ON.
    2. With the scan tool, record and erase the DTCs.
    3. Cycle the ignition switch from OFF to ON.
    4. With the scan tool, read the DTCs.

    Is the DTC active at this time?

    Yes

    - Go To 2

    No

    - Go To 4
2. **CHECK IF BODY CONTROL MODULE (BCM) CAN BUS DTCS ARE PRESENT**
    1. With the scan tool, read the BCM DTCs.

    Are there any BCM CAN BUS DTCs present?

    Yes

    - Perform the appropriate diagnostic procedure. Refer to **DIAGNOSTIC CODE INDEX** .

    No

    - Go To 3
3. **CHECK IF ELECTRONIC SHIFT MODULE (ESM) DTCS ARE PRESENT**
    1. With the scan tool, read ESM DTCs.

    Are there any ESM DTCs present?

    Yes

    - Perform the appropriate diagnostic procedure. Refer to **DIAGNOSIS AND TESTING** .

No

NOTE: If this Electronic Control Unit (ECU) is being replaced with a new unit, a diagnostic scan tool MUST be used to align the PROXI configuration data into the new ECU. Follow the routine outlined in the diagnostic scan tool for PROXI Configuration Alignment under Body Control Module (BCM) Miscellaneous Functions menu.

- Using the schematics as a guide, check the Transmission Control Module (TCM) terminals and connectors for corrosion, damage or pushed out terminals. Pay particular attention to the power and ground circuits. If no problems are found, replace the TCM and perform programming and PROXI Configuration Alignment procedures. Refer to **MODULE, TRANSMISSION CONTROL, REMOVAL** .
- Perform the Transmission Verification Test. Refer to **STANDARD PROCEDURE** .

4. **INTERMITTENT WIRING AND CONNECTORS**
   1. Using the wiring diagram/schematic as a guide, inspect the wiring harness and connectors.
   2. Wiggle test the wiring harness and connectors while monitoring the scan tool data relative to this circuit.
   3. Look for the data to change or for the DTC to reset during the wiggle test.
   4. While monitoring the scan tool data relative to this circuit, move the selector switch to each position several times.
   5. Look for the data to change other than as expected or for the DTC to reset.

   Were any problems found?

   Yes

   - Repair as necessary.
   - Perform the Transmission Verification Test. Refer to **STANDARD PROCEDURE** .

   No

   - Test complete, the condition or conditions that originally set this DTC are not present at this time.

2014 AUTOMATIC TRANSMISSION

Transmission Control Module (TCM) - Electrical Diagnostics, 948TE - Cherokee

DIAGNOSTIC CODE INDEX

DIAGNOSTIC CODE INDEX

DTC	Description
P0219-00	ENGINE OVERSPEED
P0562-00	SYSTEM VOLTAGE LOW
P0563-00	SYSTEM VOLTAGE HIGH
P0601-00	INTERNAL CONTROL MODULE MEMORY CHECKSUM ERROR
P0610-00	ECU VEHICLE OPTIONS MISMATCH
P0613-00	INTERNAL TRANSMISSION PROCESSOR
P061B-00	INTERNAL CONTROL MODULE TORQUE CALCULATION PERFORMANCE
P062F-00	INTERNAL CONTROL MODULE EEPROM ERROR
P0631-00	VIN NOT PROGRAMMED OR INCOMPATIBLE TCM
P0634-00	PCM-ECM-TCM INTERNAL TEMPERATURE TOO HIGH
P0643-00	SENSOR REFERENCE VOLTAGE 1 CIRCUIT HIGH
P064F-00	UNAUTHORIZED SOFTWARE-CALIBRATION DETECTED
P0653-00	SENSOR REFERENCE VOLTAGE 2 CIRCUIT HIGH
P0701-00	TRANSMISSION CONTROL SYSTEM PERFORMANCE
P0703-00	BRAKE SWITCH 2 PERFORMANCE
P0711-00	TRANSMISSION FLUID TEMPERATURE SENSOR A CIRCUIT RANGE-PERFORMANCE
P0712-00	TRANSMISSION FLUID TEMPERATURE SENSOR A CIRCUIT LOW
P0713-00	TRANSMISSION FLUID TEMPERATURE SENSOR A CIRCUIT HIGH
P0716-00	INPUT SHAFT SPEED SENSOR 1 PERFORMANCE
P0721-00	OUTPUT SHAFT SPEED SENSOR CIRCUIT PERFORMANCE
P0729-00	GEAR 6 SHIFT INCORRECT RATIO
P072F-00	STUCK IN GEAR 4
P0731-00	GEAR 1 SHIFT INCORRECT RATIO
P0732-00	GEAR 2 SHIFT INCORRECT RATIO
P0733-00	GEAR 3 SHIFT INCORRECT RATIO
P0734-00	GEAR 4 SHIFT INCORRECT RATIO
P0735-00	GEAR 5 SHIFT INCORRECT RATIO
P073E-00	UNABLE TO ENGAGE REVERSE
P076F-00	GEAR 7 SHIFT INCORRECT RATIO
P077C-00	OUTPUT SHAFT SPEED SENSOR CIRCUIT LOW
P077D-00	OUTPUT SHAFT SPEED SENSOR CIRCUIT HIGH

P077E-00	TRANSMISSION FLUID TEMPERATURE MULTIPLE SENSOR CORRELATION
P07BF-00	INPUT-TURBINE SHAFT SPEED SENSOR 1 CIRCUIT LOW
P07C0-00	INPUT-TURBINE SHAFT SPEED SENSOR 1 CIRCUIT HIGH
P07D9-00	GEAR 8 SHIFT INCORRECT RATIO
P07F6-00	GEAR 9 INCORRECT RATIO
P0810-00	CLUTCH POSITION CONTROL ERROR
P0885-00	TCM POWER CONTROL CIRCUIT
P0887-00	TCM POWER CONTROL CIRCUIT HIGH
P0933-00	HYDRAULIC PRESSURE SENSOR RANGE-PERFORMANCE
P0934-00	HYDRAULIC PRESSURE SENSOR CIRCUIT LOW
P0935-00	HYDRAULIC PRESSURE SENSOR CIRCUIT HIGH
P0960-00	PRESSURE CONTROL SOLENOID 1 CONTROL CIRCUIT OPEN
P0962-00	PRESSURE CONTROL SOLENOID 1 CONTROL CIRCUIT LOW
P0973-00	SHIFT SOLENOID 1 CONTROL CIRCUIT LOW
P0974-00	SHIFT SOLENOID 1 CONTROL CIRCUIT HIGH
P0975-00	SHIFT SOLENOID B CONTROL CIRCUIT PERFORMANCE
P0976-00	SHIFT SOLENOID 2 CONTROL CIRCUIT LOW
P0978-00	SHIFT SOLENOID 3 CONTROL CIRCUIT RANGE-PERFORMANCE
P0979-00	SHIFT SOLENOID 3 CONTROL CIRCUIT LOW
P097B-00	SHIFT SOLENOID 2 CONTROL CIRCUIT OPEN
P097C-00	SHIFT SOLENOID 3 CONTROL CIRCUIT OPEN
P097D-00	SHIFT SOLENOID 4 CONTROL CIRCUIT OPEN
P097E-00	SHIFT SOLENOID 5 CONTROL CIRCUIT OPEN
P0981-00	SHIFT SOLENOID 4 CONTROL CIRCUIT RANGE-PERFORMANCE
P0982-00	SHIFT SOLENOID 4 CONTROL CIRCUIT LOW
P0984-00	SHIFT SOLENOID 5 CONTROL CIRCUIT RANGE-PERFORMANCE
P0985-00	SHIFT SOLENOID 5 CONTROL CIRCUIT LOW
P0998-00	SHIFT SOLENOID 6 CONTROL CIRCUIT LOW
P0999-00	SHIFT SOLENOID 6 CONTROL CIRCUIT HIGH
P1500-00	ECU CONFIGURATION MISMATCH
P1614-00	ECU RESET-RECOVERY OCCURRED
P1634-00	TCM INTERNAL INTERNAL WATCHDOG PERFORMANCE
P167A-00	CALIBRATION MISMATCH
P1725-00	TRANSMISSION RANGE SENSOR C CIRCUIT LOW
P1726-00	TRANSMISSION RANGE SENSOR C CIRCUIT HIGH
P1727-00	TRANSMISSION RANGE SENSOR D CIRCUIT LOW
P1728-00	TRANSMISSION RANGE SENSOR D CIRCUIT HIGH
P1731-00	INCORRECT GEAR ENGAGED
P176D-00	TRANSMISSION FLUID TEMPERATURE TOO HIGH
P1C4E-00	ABS DTC PRESENT

P1C8C-00	SYSTEM VOLTAGE
P1CC9-00	UNABLE TO ENGAGE GEAR
P1D25-00	SHIFT CONTROL RATIONALITY
P1D78-00	LIMP HOME MODE SOLENOID CIRCUIT LOW
P1D79-00	LIMP HOME MODE SOLENOID CIRCUIT HIGH
P1D8F-00	INCORRECT GEAR RATIO CLUTCH 1 DEFECTIVE
P1D90-00	INCORRECT GEAR RATIO CLUTCH 2 DEFECTIVE
P1D91-00	INCORRECT GEAR RATIO CLUTCH 3 DEFECTIVE
P1D92-00	INCORRECT GEAR RATIO CLUTCH 4 DEFECTIVE
P1D93-00	INCORRECT GEAR RATIO CLUTCH 5 DEFECTIVE
P1D94-00	TCM INTERNAL SBW CALIBRATION MISMATCH
P1D95-00	TCM CLUTCH FAILURE UNDETERMINED
P1D98-00	INCORRECT GEAR RATIO CLUTCH B OR D DEFECTIVE
P1D99-00	INCORRECT GEAR RATIO CLUTCH B OR E DEFECTIVE
P1D9E-00	INCORRECT GEAR RATIO CLUTCH C OR E DEFECTIVE
P1D9F-00	INCORRECT GEAR RATIO CLUTCH D OR E DEFECTIVE
P1DA3-00	INCORRECT GEAR RATIO CLUTCH B D OR E DEFECTIVE
P1DA5-00	INCORRECT GEAR RATIO CLUTCH C D OR E DEFECTIVE
P1DA9-00	TRANSMISSION FLUID TEMPERATURE RATIONALITY
P1DAB-00	VEHICLE SPEED UNDETERMINED
P1DAD-00	INPUT SHAFT-OUTPUT SHAFT DIRECTION CORRELATION
P1DAF-00	INCOMPATIBLE LIMP IN ACTION REQUESTED
P1DB1-00	TCM SYSTEM VOLTAGE EXCESSIVELY LOW
P1DB2-00	ACTUATOR SUPPLY VOLTAGE A CIRCUIT
P1DB3-00	TCM ECU RESET-RECOVERY OCCURRED
P1DB7-00	TORQUE CONVERTER CLUTCH PERFORMANCE
P1DB8-00	UNINTENDED TORQUE APPLIED WHILE IN NEUTRAL
P1DB9-00	TCM ECU RESET EXTENDED LOW VOLTAGE
P1DC8-00	CLUTCH TEMP THRESHOLD ACHIEVED AUTOSTICK INHIBIT
P1DCD-00	TCM MONITORING PROCESSOR PERFORMANCE MULTIPLE CLUTCHES LOCKED UP
P1DCE-00	TCM MONITORING PROCESSOR PERFORMANCE INCORRECT DRIVING DIRECTION
P1DCF-00	TCM MONITORING PROCESSOR PERFORMANCE UNALLOWED PARK ENGAGEMENT DO TO ABS FAILURE
P1DD0-00	TCM MONITORING PROCESSOR PERFORMANCE UNALLOWED PARK ENGAGEMENT
P1DDC-00	TCM MONITORING PROCESSOR PERFORMANCE UNALLOWED REVERSE ENGAGEMENT
P1DDD-00	TCM MONITORING PERFORMANCE UNABLE TO DISENGAGE DRIVE OR REVERSE

P1DEB-00	INCORRECT GEAR DISPLAYED DUE TO INCORRECT GEAR RATIO
P1DF3-00	ECU NOT INITIALIZED
P1DF8-00	ACTUAL DECREASE OF ENGINE TORQUE HIGH
P1E23-00	INCORRECT GEAR RATIO CLUTCH 6 DEFECTIVE
P215C-00	OUTPUT SHAFT SPEED WHEEL SPEED CORRELATION
P2761-00	TORQUE CONVERTER CLUTCH PRESSURE CONTROL SOLENOID CONTROL CIRCUIT-OPEN
P2764-00	TORQUE CONVERTER CLUTCH PRESSURE CONTROL SOLENOID CONTROL CIRCUIT LOW
P2784-00	INPUT SPEED SENSOR 1-2 CORRELATION
U0001-00	CAN C BUS
U0100-00	LOST COMMUNICATION WITH ECM/PCM
U0102-00	LOST COMMUNICATION WITH TRANSFER CASE CONTROL MODULE / AWD
U0103-00	LOST COMMUNICATION WITH ELECTRIC GEAR SHIFT MODULE
U0121-00	LOST COMMUNICATION WITH ANTI-LOCK BRAKE SYSTEM (ABS) CONTROL MODULE
U0131-00	LOST COMMUNICATION WITH ELECTRIC POWER STEERING CONTROL MODULE
U0140-00	LOST COMMUNICATION WITH BODY CONTROL MODULE
U0212-00	LOST COMMUNICATION WITH SCM
U0401	IMPLAUSIBLE DATA RECEIVED FROM ECM/PCM
U0403	IMPLAUSIBLE DATA RECEIVED FROM T-CASE
U0404	IMPLAUSIBLE DATA RECEIVED FROM ESM
U0415	IMPLAUSIBLE DATA RECEIVED FROM ABS
U0420	INVALID DATA RECEIVED FROM POWER STEERING CONTROL MODULE
U0422	IMPLAUSIBLE DATA RECEIVED FROM BODY CONTROL MODULE
U0429	IMPLAUSIBLE DATA RECEIVED FROM SCM
U11E3-00	TCM LOST COMMUNICATION WITH ESM ON DPT CAN
U1400	IMPLAUSIBLE TPS SIGNAL RECEIVED
U1401	IMPLAUSIBLE ENGINE SPEED SIGNAL RECEIVED
U1408	IMPLAUSIBLE BRAKE SIGNAL RECEIVED
U1412	IMPLAUSIBLE VEHICLE SPEED SIGNAL RECEIVED
U1424	IMPLAUSIBLE ENGINE TORQUE SIGNAL RECEIVED
U1461	IMPLAUSIBLE DATA RECEIVED FROM ESM ON D-PT
U1465	IMPLAUSIBLE DRIVER SHIFT REQUEST SIGNAL RECEIVED
U1467	IMPLAUSIBLE DRIVER SHIFT REQUEST SIGNAL RECEIVED ON CAN AND D-PT CAN

2014 AUTOMATIC TRANSMISSION

Transmission Control Module (TCM) - Electrical Diagnostics, 948TE - Cherokee

STANDARD PROCEDURE

PRE-DIAGNOSTIC TROUBLESHOOTING PROCEDURE

For a complete wiring diagram, **refer to the appropriate Wiring Information** .

Perform the following pre-diagnostic troubleshooting procedures prior to performing any diagnostic test.

NOTE: Due to different power control configurations, the Transmission Control Relay (if equipped) may be referred to as a PCM relay.

NOTE: Incorrect fluid level, and/or poor fluid condition can be the cause of many transmission problems. Visually inspect the transmission and cooler lines for leakage and repair as necessary. Adjust the transmission fluid level according to Service Information.

Always perform diagnostics with a fully charged battery to avoid false symptoms.

1. With the scan tool, read the engine DTCs. Check and repair all engine DTCs prior to performing transmission symptom diagnostic procedures.
2. With the scan tool, read and record all transmission DTCs. Record the controller software version and variant ID (configuration or level).

   NOTE: Check for Service Information Tune-ups or Technical Service Bulletins (TSB) that may apply.

   NOTE: If the TCM detects and stores a DTC, the TCM also stores the vehicles operating conditions under which the DTC originally set. Using a scan tool this information is located under Environmental Data. Before erasing any stored DTCs, it is recommended to record all available data to assist in troubleshooting and duplicating the conditions and in which the DTC set.

3. Verify the current software level of transmission controller. Various problems are corrected by software upgrades (flash) to the transmission controller.

   NOTE: If TCM software updates are performed, all DTC information (Environmental Data) will be lost.

4. Using the wiring diagram/schematic as a guide, inspect the wiring and connectors to all components related to the transmission and shift lever assembly. Clean and repair as necessary.

5. Most DTCs set on start up but some may only set by driving the vehicle. Note the when monitored and set conditions of the reported DTC. If variant DTCs are present, perform their respective test first.
6. Verify the axle ratio and transfer case ratio.

Did any of the above procedures repair the vehicle?

Yes

- Testing is complete.
- Perform the TRANSMISSION VERIFICATION TEST. Refer to **TRANSMISSION VERIFICATION TEST-948TE**.

No

- Refer to the **DIAGNOSTIC CODE INDEX** and perform the appropriate diagnostic procedure.

TRANSMISSION VERIFICATION TEST-948TE

To validate the repair(s) that fixed the vehicle, perform the following steps.

1. Reconnect any disconnected components.
2. Connect the scan tool to the Data Link Connector.
3. With the scan tool, erase ABS DTCs.
4. With the scan tool, erase PCM DTCs.
5. With the scan tool, erase TCM DTCs.

CAUTION: Apply the parking brake.

6. With the scan tool, display the Transmission Temperature. Start and run the engine until the transmission temperature is above 43° C (110° F).
7. If internal transmission components were repaired or replaced check the transmission fluid and adjust if necessary. Refer to the Check Oil Level procedure. Refer to **FLUID AND FILTER, STANDARD PROCEDURE** .
8. If the Transmission Control Module (TCM), Valve Body, or Transmission without TCM was replaced, perform the Valve Body Solenoid Learn Procedure with a scan tool.
9. If internal transmission repairs were performed or the Transmission Control Module (TCM) was replaced, perform the TCM ADAPTATION procedure. Refer to **TCM ADAPTATION-948TE AND 9HP48**.
10. After performing the above procedures, perform the "ROAD TEST PROCEDURE" below.

ROAD TEST PROCEDURE

1. Road test the vehicle. Make fifteen to twenty upshifts so all gear ranges are complete.

2. Perform these shifts from a standing start to 72 Km/h (45 mph) with a constant throttle opening of 20 to 25 degrees.
3. With speeds below 40 Km/h (25 mph), make five to eight wide open throttle kick downs to 1st gear. Allow at least 5 seconds each in 2nd and 3rd gear between each kickdown.
4. With the scan tool, read DTCs.

Did any DTCs set?

Yes

- Refer to the **DTC INDEX** article and perform the appropriate diagnostic procedure.

No

- Testing is complete.

TCM PROGRAMMING PROCEDURE-948TE

TCM PROGRAMMING-948TE

PROGRAMMING THE TRANSMISSION CONTROL MODULE (TCM)

NOTE: When replacing a Transmission Control Module (TCM), the TCM must be programmed.

NOTE: Failure to properly program the TCM may result in the illumination of the Malfunction Indicator Lamp (MIL) and setting DTC(s).

NOTE: While performing the TCM programming procedure, the vehicle battery must be maintained between 10 and 16 volts. Ambient temperature must be between 0° C (32° F) 60° C (140° F). Vehicle must be in Park with brake pedal depressed.

1. Using the scan tool and Dealer Connect, download the appropriate TCM flash file to the scan tool.
2. Turn the Ignition ON, Engine not running.
3. Make sure the gear selector is in the PARK position.
4. Apply and hold the brake pedal for the duration of the programming procedure.
5. Following the menu on the scan tool, program the TCM.

NOTE: If this Electronic Control Unit (ECU) is being replaced with a new unit, a diagnostic scan tool MUST be used to align the PROXI configuration data into the new ECU.

Follow the routine outlined in the diagnostic scan tool for PROXI Configuration Alignment under Body

Control Module (BCM) Miscellaneous Functions menu.

NOTE: **If this Electronic Control Unit (ECU) is being replaced with a new unit, a diagnostic scan tool MUST be used to perform the Valve Body Solenoid Learn procedure. Failure to perform the Valve Body Solenoid Learn procedure will result in reduced shift quality.**

Using a scan tool, follow the on-screen instructions to perform the Valve Body Solenoid Learn procedure.

NOTE: **If this Electronic Control Unit (ECU) is being replaced with a new unit, a diagnostic scan tool MUST be used to perform the TCM Adaptation procedure. Failure to perform the TCM Adaptation procedure will result in reduced shift quality.**

Perform the TCM ADAPTATION procedure. Refer to **TCM ADAPTATION-948TE AND 9HP48**.

6. With the scan tool, erase DTCs.
7. With the scan tool, read TCM DTCs.

Does the scan tool display any DTCs?

Yes

- Perform the appropriate diagnostic procedure(s).

No

- Test Complete
- Perform the TRANSMISSION VERIFICATION TEST. Refer to **STANDARD PROCEDURE**.

TCM ADAPTATION-948TE AND 9HP48

YouTube	A multimedia supplement to the instructions contained in this article is available. To view the multimedia example of the condition described go to; **http://www.youtube.com/user/Mitchell1Tips** **then type "A00641451.vid1" into the "Search Channel" box.**

The 948TE and 9HP48 Automatic Transmissions use a sophisticated shift algorithm that includes learned information so that the shift quality remains excellent even as the Transmission wears. This learned information is recorded in memory cells referred to "Adaptation Memory Cells". Each applied clutch records the amount of time it takes to fill the clutch (Fast Filling Counter/Filling Time) and the amount of pressure (Filling Counter/Filling Pressure) required to apply the clutches. The adaptation memory cells should be set to zero (0) on every new Transmission (in a new vehicle and/or when the Transmission is replaced for service) and when the Transmission Control Module (TCM) is replaced for service. In addition, the adaptation memory cells are

set to zero (0) anytime the TCM is flashed, and when the TCM adaptation memory cells are cleared using the scan tool diagnostic scan tool (Via Quick Learn/Valve Body Solenoid Learn). Until the adaptation has been learned/relearned, the Transmission shift quality may not meet the customers expectations.

NOTE: **Anytime the Valve Body assembly is replaced and/or the Transmission has been overhauled, the adaptation memory cells must be cleared using the scan tool.**

NOTE: **THE ADAPTATION LEARN PROCEDURE SHOULD NOT BE CONFUSED WITH "QUICK LEARN" SOON TO BE CALLED "VALVE BODY SOLENOID LEARN". THE VALVE BODY SOLENOID LEARN PROCEDURE WILL MATCH THE TRANSMISSION CONTROL MODULE WITH THE SOLENOIDS IN THE VALVE BODY. THIS PROCEDURE SHOULD ONLY BE PERFORMED WHEN THE VALVE BODY AND/OR THE TRANSMISSION CONTROL MODULE HAS BEEN REPLACED. DO NOT PERFORM A QUICK LEARN/VALVE BODY SOLENOID LEARN WHEN THE TRANSMISSION ASSEMBLY HAS BEEN REPLACED. QUICK LEARN/VALVE BODY SOLENOID LEARN WILL ERASE ALL FACTORY SETTINGS WHEN PERFORMED. IT ALSO WILL ERASE ALL ADAPTATION MEMORY CELLS AS WELL. DO NOT PERFORM THE QUICK LEARN/VALVE BODY SOLENOID LEARN WHEN THE ADAPTATION LEARN PROCEDURE IS ALL THAT IS REQUIRED.**

The following 948TE/9HP48 Clutch Application Chart will help in identifying the clutches that are applied in each gear. Keep in mind that shift quality is greatly affected by the timing of disengaging one clutch and applying another smoothly. If a clutch remains on too long, then harsh shifts can occur or if the clutch disengages too quickly, then poor shift quality can occur.

948TE/9HP48 Clutch Application Chart

Gear	Clutch - A (Dog Clutch)	Clutch - B	Clutch - C	Clutch - D	Clutch - E	Clutch - F (Dog Clutch)	Ratio
First	X			X		X	4.700
Second	X		X			X	2.842
Third	X	X				X	1.909
Fourth	X				X	X	1.382
Fifth	X	X			X		1.000
Sixth	X		X		X		0.808
Seventh	X			X	X		0.699
Eighth			X	X	X		0.580
Ninth		X		X	X		0.479
P/N				X		X	
Reverse		X		X		X	3.805
Default Fourth Gear					X	X	

The adaptation memory cells appear on the scan tool for every clutch except the dog clutches. Each clutch will include:

- Fast Filling Counter = the number of filling time events that has taken place
- Filling Time = +/- number of ms (milli seconds) from zero (standard set value)
- Filling Counter = the number of filling pressure events that has taken place
- Filling Pressure = +/- mb (millibar)/PSI (Pounds Per Square Inch) from zero (standard set value)

If the adaptation memory cell "counter" is zero (0), then the adaptation memory cell has not been updated. It will take a minimum of two counts to improve shift quality and with each subsequent count, shift quality will improve even more. Shift quality with continue to improve until the count reaches five, at which time improvements will be negligible.

The Adaptation Drive Learn procedure is very sensitive to transmission temperature, transmission input shaft torque, and transmission turbine RPM. The Adaptation Drive Learn procedure must be performed at the following:

- Transmission Oil Temperature between 50°C (122°F) - 110°C (230°F).
- Transmission input Shaft Torque between 24 Nm (18 ft. lbs.) - 150 Nm (110 ft. lbs.) (will be monitored on the scan tool as Engine Crankshaft Torque).
- Transmission input shaft RPM 1100 - 2500 RPM (can be monitored by monitoring Engine RPM using the tachometer on the cluster).

NOTE: The longer the above criteria are held constant, the quicker the procedure can be accomplished.

NOTE: Perform this procedure on a smooth road surface. The TCM or TCMA will abort the adaptation process if it senses rough road conditions. The road should be clear of traffic due to the start, stop, and slow vehicle speeds required during this procedure.

NOTE: The learn process may produce small, regular torque pulsations. This is normal, and indicates the learn process is working.

NOTE: The Adaptation Drive Learn procedure must be performed with an assistant so that the scan tool can be properly monitored while maintaining safe driving practices.

The B AND C CLUTCHES ADAPTATION LEARN PROCEDURE affects the following primary shifts:

- Reverse Engagement
- 1-2 Up-Shift
- 2-1 Coast Down-Shift

- 2-3 Up-Shift
- 3-2 Down-Shift
- 4-5 Up-Shift
- 5-6 Up-Shift
- 6-5 Down-Shift
- 5-4 Power on Down-Shift
- 3-2 Down-Shift
- 4-3 Coast Down-Shift

B AND C CLUTCHES ADAPTATION LEARN PROCEDURE

1. With the Scan Tool, erase DTCs.
2. Setup the scan tool to display the Transmission Oil Temperature, Engine Crankshaft Torque, Turbine (Input) Speed Sensor RPM, and Clutch 'X' - Filling Counter for each clutch.
3. Drive the vehicle until the Transmission Oil Temperature is above 50° C (122° F).
4. Accelerate the vehicle moderately to seventh (7th) gear. It will be necessary to maintain seventh gear during this process by utilizing the Electronic Range Selector (ERS).
5. Drive vehicle at constant vehicle speed between 80 - 96 kph (50 - 60 mph).
6. Maintain seventh gear, steady pedal, and constant speed continuously for approximately 10 minutes while staying within the following conditions:
    - Transmission input Shaft Torque should be between 24 Nm (18 ft. lbs.) - 150 Nm (110 ft. lbs.) (will be monitored on the scan tool as Engine Crankshaft Torque)
    - Transmission input shaft RPM should be between 1100 - 2500 RPM (can be monitored by monitoring Engine RPM using the tachometer on the cluster)
7. Using the scan tool, inspect the Clutch - B and Clutch - C Filling Counter/Fast Filling Counter status.
8. Continue the drive adaptation procedure until Clutch - B and Clutch - C Filling and Fast Filling Counters are at least 2 or greater.
9. Proceed to the "D CLUTCH ADAPTATION LEARN PROCEDURE" below.

The D CLUTCH ADAPTATION LEARN PROCEDURE affects the following primary shifts:

- 1-2 Up-Shift
- 2-1 Down-Shift
- 6-7 Up-Shift
- 7-6 Down-Shift
- Drive engagement when rolling backwards (or in cases of spline locked dog clutch A)

D CLUTCH ADAPTATION LEARN PROCEDURE

1. With the Scan Tool, erase DTCs.
2. Setup the scan tool to display the Transmission Oil Temperature, Engine Crankshaft Torque, Turbine

(Input) Speed Sensor RPM, and Clutch 'D' - Filling Counter.

3. Drive the vehicle until the Transmission Oil Temperature is above 50° C (122° F).
4. Accelerate the vehicle moderately to sixth (6th) gear. It will be necessary to maintain sixth gear during this process by utilizing Electronic Range Shifter (ERS).
5. Drive vehicle at constant vehicle speed between 64 - 80 kph (40 - 50 mph).
6. Maintain sixth gear, steady pedal, and constant speed continuously for approximately 10 minutes while staying within the following conditions:
   - Transmission input Shaft Torque should be between 24 Nm (18 ft. lbs.) - 150 Nm (110 ft. lbs.) (will be monitored on the scan tool as Engine Crankshaft Torque).
   - Transmission input shaft RPM should be between 1100 - 2500 RPM (can be monitored by monitoring Engine RPM using the tachometer on the cluster).
7. Using the scan tool, inspect the Clutch - D Filling Counter/Fast Filling Counter status.
8. Continue the drive adaptation procedure until Clutch - D Filling and Fast Filling Counter is at least 2 or greater.
9. If necessary, proceed to the "E Clutch Adaptation Learn Procedure" below.

NOTE: If the 3-4 upshift and/or the 4-3 downshift requires improvement, perform the E CLUTCH ADAPTATION LEARN PROCEDURE.

The E CLUTCH ADAPTATION LEARN PROCEDURE affects the following primary shifts:

- 3-4 Up-Shift
- 4-3 Down-Shift
- PRNDL in DRIVE Position

NOTE: This procedure will require the vehicle to be driven on a smooth road that is mostly flat that can be driven safely while maintaining a constant speed of 24-kph (15 mph) for approximately 10 miles.

NOTE: During the E CLUTCH ADAPTATION LEARN PROCEDURE, the vehicle must come to a complete stop in between each adaptation in order to learn the next adaptation. In some cases, it may be necessary to shift the transmission into Park, then into Reverse, then back to Park before proceeding to the next adaptation learn cycle.

E CLUTCH ADAPTATION LEARN PROCEDURE

1. With the Scan Tool, erase DTCs.
2. Drive the vehicle until the Transmission Oil Temperature is above 50° C (122° F).
3. Accelerate the vehicle moderately to third (3rd) gear. It will be necessary to maintain 3rd gear during this process by utilizing Electronic Range Shifter (ERS).
4. Drive vehicle at constant vehicle speed at 24 kph (15 mph).

5. Maintain 3rd gear, steady pedal, and constant vehicle speed continuously for a minimum of 1 minute, making sure engine speed is less than 2, 000 RPM while driving 24 kph (15 mph). This will require adjusting the gas pedal position to keep the engine speed below 2, 000 RPM.
6. After 1 minute of driving at 15 mph, bring vehicle to a stop, then proceed to 24 kph (15 mph) as described above and repeat 5 times.
7. Stop the vehicle and shift to PARK. Using the scan tool, inspect Clutch E Filling Counter/Fast Filling Counter status.
8. Continue this procedure until Clutch - E Filling and Fast Filling Counters are at least 2 or greater.

2014 BRAKES

Antilock Brake System (ABS) - Electrical Diagnostics - Cherokee

DIAGNOSTIC CODE INDEX

DIAGNOSTIC CODE INDEX

DTC	Description
C0020-01	ABS PUMP MOTOR CONTROL - GENERAL ELECTRICAL FAILURE
C0020-16	ABS PUMP MOTOR CONTROL - CIRCUIT VOLTAGE BELOW THRESHOLD
C0020-35	ABS PUMP MOTOR CONTROL - SIGNAL HIGH TIME>MAXIMUM
C0021-02	BRAKE BOOSTER - GENERAL SIGNAL FAILURE
C0031-1D	LEFT FRONT WHEEL SPEED SENSOR - CIRCUIT CURRENT OUT OF RANGE
C0031-2F	LEFT FRONT WHEEL SPEED SENSOR - SIGNAL ERRATIC
C0031-4A	LEFT FRONT WHEEL SPEED SENSOR - INCORRECT COMPONENT INSTALLED
C0031-62	LEFT FRONT WHEEL SPEED SENSOR - SIGNAL COMPARE FAILURE
C0034-1D	RIGHT FRONT WHEEL SPEED SENSOR - CIRCUIT CURRENT OUT OF RANGE
C0034-2F	RIGHT FRONT WHEEL SPEED SENSOR - SIGNAL ERRATIC
C0034-4A	RIGHT FRONT WHEEL SPEED SENSOR - INCORRECT COMPONENT INSTALLED
C0034-62	RIGHT FRONT WHEEL SPEED SENSOR - SIGNAL COMPARE FAILURE
C0036-02	LEFT REAR TONE WHEEL - GENERAL SIGNAL FAILURE
C0037-1D	LEFT REAR WHEEL SPEED SENSOR - CIRCUIT CURRENT OUT OF RANGE
C0037-2F	LEFT REAR WHEEL SPEED SENSOR - SIGNAL ERRATIC
C0037-4A	LEFT REAR WHEEL SPEED SENSOR - INCORRECT COMPONENT INSTALLED
C0037-62	LEFT REAR WHEEL SPEED SENSOR - SIGNAL COMPARE FAILURE
C0039-02	RIGHT REAR TONE WHEEL - GENERAL SIGNAL FAILURE
C003A-1D	RIGHT REAR WHEEL SPEED SENSOR - CIRCUIT CURRENT OUT OF RANGE
C003A-2F	RIGHT REAR WHEEL SPEED SENSOR - SIGNAL ERRATIC
C003A-4A	RIGHT REAR WHEEL SPEED SENSOR - INCORRECT COMPONENT INSTALLED
C003A-62	RIGHT REAR WHEEL SPEED SENSOR - SIGNAL COMPARE FAILURE
C0040-29	BRAKE PEDAL SWITCH - SIGNAL INVALID
C0040-2A	BRAKE PEDAL SWITCH - STUCK
C0040-62	BRAKE PEDAL SWITCH - SIGNAL COMPARE FAILURE
C0044-01	BRAKE PRESSURE SENSOR 1 - GENERAL ELECTRICAL FAILURE
C0044-28	BRAKE PRESSURE SENSOR 1 - SIGNAL BIAS LEVEL OUT OF RANGE / ZERO ADJUSTMENT FAILURE
C0044-64	BRAKE PRESSURE SENSOR 1 - SIGNAL PLAUSIBILITY FAILURE

C0051-22	STEERING WHEEL POSITION SENSOR - SIGNAL AMPLITUDE > MAXIMUM
C0051-28	STEERING WHEEL POSITION SENSOR - SIGNAL BIAS LEVEL OUT OF RANGE / ZERO ADJUSTMENT FAILURE
C0051-2F	STEERING WHEEL POSITION SENSOR - SIGNAL ERRATIC
C0051-49	STEERING WHEEL POSITION SENSOR - INTERNAL ELECTRONIC FAILURE
C0051-54	STEERING WHEEL POSITION SENSOR - MISSING CALIBRATION
C0051-62	STEERING WHEEL POSITION SENSOR - SIGNAL COMPARE FAILURE
C006A-28	MULTI-AXIS ACCELERATION SENSOR - SIGNAL BIAS LEVEL OUT OF RANGE / ZERO ADJUSTMENT FAILURE
C006A-49	MULTI-AXIS ACCELERATION SENSOR - INTERNAL ELECTRONIC FAILURE
C006A-54	MULTI-AXIS ACCELERATION SENSOR - MISSING CALIBRATION
C006A-62	MULTI-AXIS ACCELERATION SENSOR - SIGNAL COMPARE FAILURE
C0078-86	TIRE DIAMETER - SIGNAL INVALID
C008B-12	WHEEL SPEED SENSOR SUPPLY - CIRCUIT SHORT TO BATTERY
C107B-62	WHEEL SPEED COMPARATIVE PERFORMANCE-SIGNAL COMPARE FAILURE
C1082-01	VACUUM PRESSURE SENSOR - GENERAL ELECTRICAL FAILURE
C1082-02	VACUUM PRESSURE SENSOR - GENERAL SIGNAL FAILURE
C1082-2F	VACUUM PRESSURE SENSOR - SIGNAL ERRATIC
C1086-4B	ABS SYSTEM CONTROL TOO LONG - OVER TEMPERATURE
C1086-9A	ABS SYSTEM CONTROL TOO LONG - COMPONENT OR SYSTEM OPERATING CONDITIONS
C121A-09	STEERING ANGLE SENSOR NOT INITIALIZED - COMPONENT FAILURES
C121C-00	TORQUE REQUEST SIGNAL DENIED
C1239-00	EMISSION ROLLS TEST ACTIVE
C123B-4B	ESP SYSTEM CONTROL TOO LONG - OVER TEMPERATURE
C1246-1C	VACUUM PRESSURE SENSOR SUPPLY - CIRCUIT VOLTAGE OUT OF RANGE
C124A-00	ACC TORQUE REQUEST SIGNAL DENIED
C124E-00	HILL START ASSIST DISABLED - CONDITIONS NOT CORRECT
C124F-00	ESP REQUEST DENIED FROM ACC
C1252-92	VACUUM PUMP CONTROL CIRCUIT - PERFORMANCE OR INCORRECT OPERATION
C2100-16	BATTERY VOLTAGE LOW - CIRCUIT VOLTAGE BELOW THRESHOLD
C2101-17	BATTERY VOLTAGE HIGH - CIRCUIT VOLTAGE ABOVE THRESHOLD
C2104-13	ABS/ESC VALVE SUPPLY VOLTAGE - CIRCUIT OPEN
C211B-92	IGNITION RUN/START INPUT CIRCUIT - PERFORMANCE OR INCORRECT OPERATION
C212A-16	SYSTEM VOLTAGE LOW - CIRCUIT VOLTAGE BELOW THRESHOLD
C212A-17	SYSTEM VOLTAGE HIGH - CIRCUIT VOLTAGE ABOVE THRESHOLD
C2200-41	ANTI-LOCK BRAKE MODULE INTERNAL - GENERAL CHECKSUM

	FAILURE
C2200-44	ANTI-LOCK BRAKE MODULE INTERNAL - DATA MEMORY FAILURE
C2200-46	ANTI-LOCK BRAKE MODULE INTERNAL - CALIBRATION / PARAMETER MEMORY FAILURE
C2200-47	ANTI-LOCK BRAKE MODULE INTERNAL - WATCHDOG / SAFETY AuC FAILURE
C2200-48	ANTI-LOCK BRAKE MODULE INTERNAL - SUPERVISION SOFTWARE FAILURE
C2200-49	ANTI-LOCK BRAKE MODULE INTERNAL - INTERNAL ELECTRONIC FAILURE
C2202-00	ORIGINAL VIN MISMATCH / MISSING
C2206-00	VEHICLE CONFIGURATION MISMATCH
P1DCB-72	REVERSE GEAR SWITCH - ACTUATOR STUCK OPEN
U0002-88	CAN C BUS OFF PERFORMANCE - BUS OFF
U0100-00	LOST COMMUNICATION WITH ECM/PCM
U0101-00	LOST COMMUNICATION WITH TCM
U0102-00	LOST COMMUNICATION WITH TRANSFER CASE CONTROL MODULE / AWD
U0104-00	LOST COMMUNICATION WITH CRUISE CONTROL MODULE
U0125-00	LOST COMMUNICATION WITH DYNAMICS SENSOR
U0126-00	LOST COMMUNICATION WITH STEERING ANGLE SENSOR
U0128-00	LOST COMMUNICATION WITH PARK BRAKE CONTROL MODULE
U0131-00	LOST COMMUNICATION WITH ELECTRIC POWER STEERING CONTROL MODULE
U0140-00	LOST COMMUNICATION WITH BODY CONTROL MODULE
U0159-00	LOST COMMUNICATION WITH PARKING ASSIST CONTROL MODULE
U0401-00	IMPLAUSIBLE DATA RECEIVED FROM ECM/PCM
U0402-00	IMPLAUSIBLE DATA RECEIVED FROM TCM
U0403-00	IMPLAUSIBLE DATA RECEIVED FROM T-CASE
U0405-00	INVALID DATA RECEIVED FROM CRUISE CONTROL MODULE
U0417-00	IMPLAUSIBLE DATA RECEIVED FROM PARK BRAKE CONTROL MODULE
U0420-00	INVALID DATA RECEIVED FROM POWER STEERING CONTROL MODULE
U0422-00	IMPLAUSIBLE DATA RECEIVED FROM BODY CONTROL MODULE
U0432-00	INVALID DATA RECEIVED FROM MULTI - AXIS ACCELERATION SENSOR MODULE
U045A-00	IMPLAUSIBLE DATA RECEIVED FROM PARKING ASSIST MODULE
U140E-00	IMPLAUSIBLE VEHICLE CONFIGURATION DATA RECEIVED

DIAGNOSIS AND TESTING

C0020-01-ABS PUMP MOTOR CONTROL - GENERAL ELECTRICAL FAILURE

For a complete wiring diagram, **refer to appropriate SYSTEM WIRING DIAGRAMS article** .

NOTE: If DTC C0020-16 or C0020-35 are present, refer to the appropriate diagnostics for these DTCs before continuing with this procedure.

WHEN MONITORED

With the ignition on and no system under voltage condition present.

SET CONDITION

OPEN CIRCUIT: The Anti-lock Brake System (ABS) Module has detected improper voltage level when the motor is not running.

LOCKED MOTOR: The Anti-lock Brake System (ABS) Module is not seeing the proper response when motor is running.

POSSIBLE CAUSES

Possible Causes
ANTI-LOCK BRAKE SYSTEM (ABS) MODULE/INTEGRATED CONTROL UNIT (ICU)

DIAGNOSTIC TEST

ANTI-LOCK BRAKE SYSTEM (ABS) MODULE

1. Perform any Technical Service Bulletins (TSBs) that may apply.
2. Turn the ignition off to the lock position.
3. Inspect the related wiring harness. Look for any chafed, pierced, pinched, or partially broken wires.
4. Inspect the related wire harness connectors. Look for broken, bent, pushed out, or corroded terminals.

   Were any problems found?

   Yes

   - Repair as necessary.
   - Perform the ABS VERIFICATION TEST. Refer to **STANDARD PROCEDURE**.

   No

   - Replace the Integrated Control Unit (ICU) in accordance with the Service Information. Refer to **INTEGRATED CONTROL UNIT (ICU), REMOVAL** .
   - Perform the ABS VERIFICATION TEST. Refer to **STANDARD PROCEDURE**.

C0020-16-ABS PUMP MOTOR CONTROL - CIRCUIT VOLTAGE BELOW THRESHOLD

For a complete wiring diagram, **refer to appropriate SYSTEM WIRING DIAGRAMS article** .

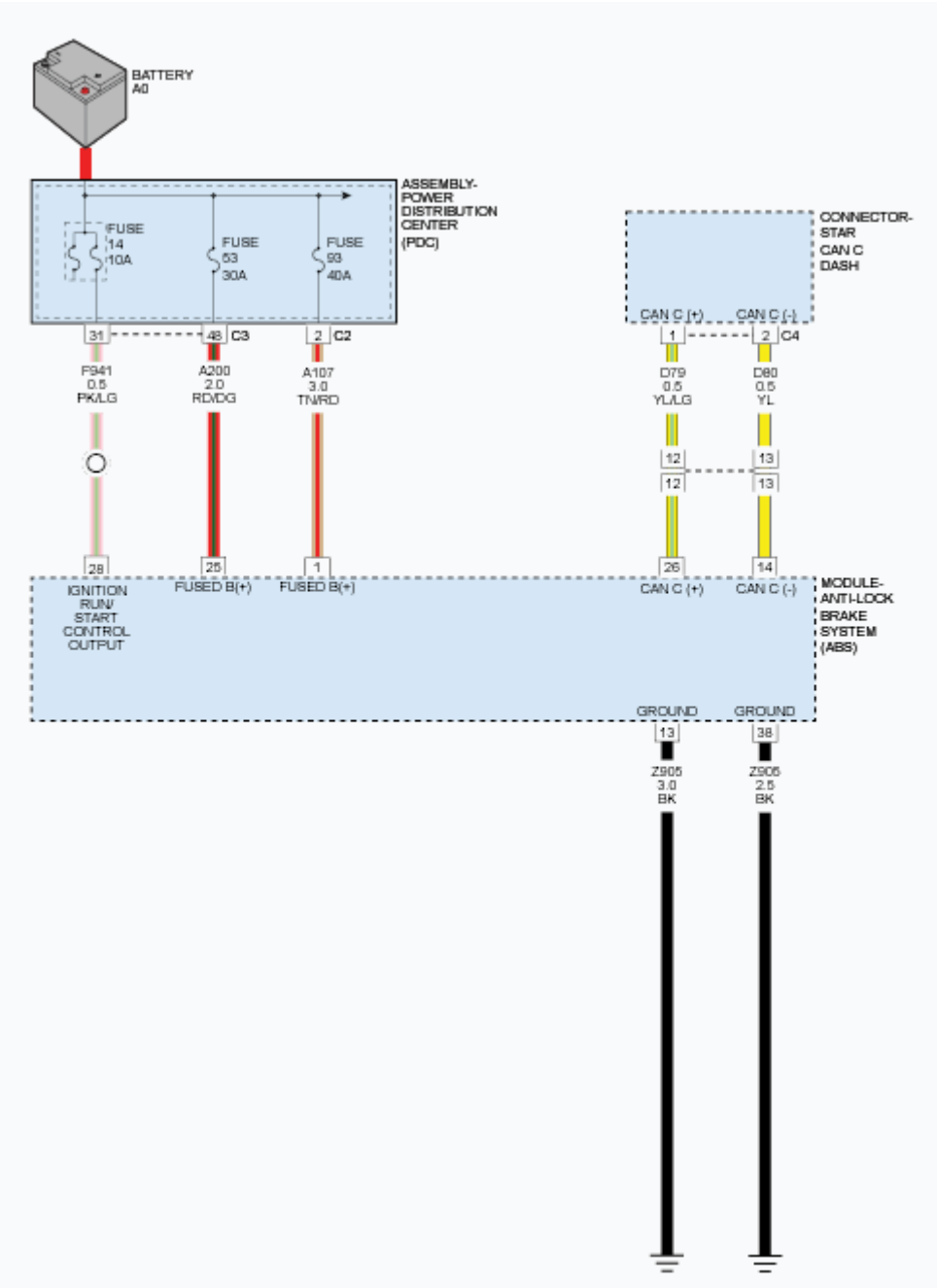

Fig. 1: Identifying Anti-lock Brake Module Circuit Schematic
Courtesy of CHRYSLER GROUP, LLC

WHEN MONITORED

With the ignition on and no system under voltage condition present.

SET CONDITION

The motor voltage supplied to the Anti-lock Brake System (ABS) Module is 50 percent of ignition voltage.

POSSIBLE CAUSES

Possible Causes
FUSE F93 (40A)
(A107) FUSED B+ CIRCUIT SHORTED TO GROUND
(A107) FUSED B+ CIRCUIT OPEN OR HIGH RESISTANCE
(Z905) GROUND CIRCUITS OPEN OR HIGH RESISTANCE
INTEGRATED CONTROL UNIT (ICU)

DIAGNOSTIC TEST

1. **CHECK THE FUSE**
    1. Ignition on, engine not running.
    2. Using a 12-volt test light connected to ground, check the fuse for power.

    Is the fuse good?

    Yes

    - Go To 3

    No

    - Go To 2
2. **(A107) FUSED B+ CIRCUIT SHORTED TO GROUND**
    1.
    2. Turn the ignition off to the lock position.
    3. Remove the F04 40A Fuse.
    4. Disconnect the ABS Module harness connector.
    5. Measure the resistance between Ground and the (A107) Fused B+ Circuit in the ABS Module harness connector.

    Is the resistance above 5.0 Ohms?

    Yes

    - Go To 3

    No

    - Repair the (A107) Fused B+ circuit for a short to ground.

- Perform the ABS VERIFICATION TEST. Refer to **STANDARD PROCEDURE**.

3. **ABS PUMP MOTOR**
   1. Connect the ABS Module harness connector.
   2. Install the F93 40A Fuse.
   3. Ignition on, engine not running.
   4. With the scan tool, read and record the DTCs.
   5. With the scan tool, actuate the ABS pump motor.

   Did the Pump Motor operate correctly when actuated with out blowing the fuse?

   Yes

   - Go To 4

   No

   - Go To 6

4. **(A107) FUSED B+ CIRCUIT OPEN OR HIGH RESISTANCE**
   1. Turn the ignition off to the lock position.
   2. Disconnect the ABS Module harness connector.
   3. Using a 12-volt test light connected to ground, check the (A107) Fused B+ circuit.

   NOTE: The test light should be illuminated and bright. Compare the brightness to that of a direct connection to the battery.

   Is the test light illuminated and bright?

   Yes

   - Go To 5

   No

   - Repair the (A107) Fused B+ circuit for an open circuit or high resistance.
   - Perform the ABS VERIFICATION TEST. Refer to **STANDARD PROCEDURE**.

5. **(Z905) GROUND CIRCUITS OPEN OR HIGH RESISTANCE**
   1. Using a 12-volt test light connected to 12-volts, check the (Z905) Ground circuits.

   NOTE: The test light should be illuminated and bright. Compare the brightness to that of a direct connection to the battery.

   Is the test light illuminated and bright?

Yes

- Go To 6

No

- Repair the (Z905) Ground circuit(s) for an open circuit or high resistance.
- Perform the ABS VERIFICATION TEST. Refer to **STANDARD PROCEDURE**.

6. **INTEGRATED CONTROL UNIT (ICU)**
   1. Turn the ignition off to the lock position.
   2. Inspect the related wiring harness. Look for any chafed, pierced, pinched, or partially broken wires.
   3. Inspect the related wire harness connectors. Look for broken, bent, pushed out, or corroded terminals.
   4. Perform any Technical Service Bulletins that may apply.

   Were any problems found?

   Yes

   - Repair as necessary.
   - Perform the ABS VERIFICATION TEST. Refer to **STANDARD PROCEDURE**.

   No

   - Replace the Integrated Control Unit (ICU) in accordance with the Service Information. Refer to **INTEGRATED CONTROL UNIT (ICU), REMOVAL** .
   - Perform the ABS VERIFICATION TEST. Refer to **STANDARD PROCEDURE**.

C0020-35-ABS PUMP MOTOR CONTROL - SIGNAL HIGH TIME>MAXIMUM

For a complete wiring diagram, **refer to appropriate SYSTEM WIRING DIAGRAMS article** .

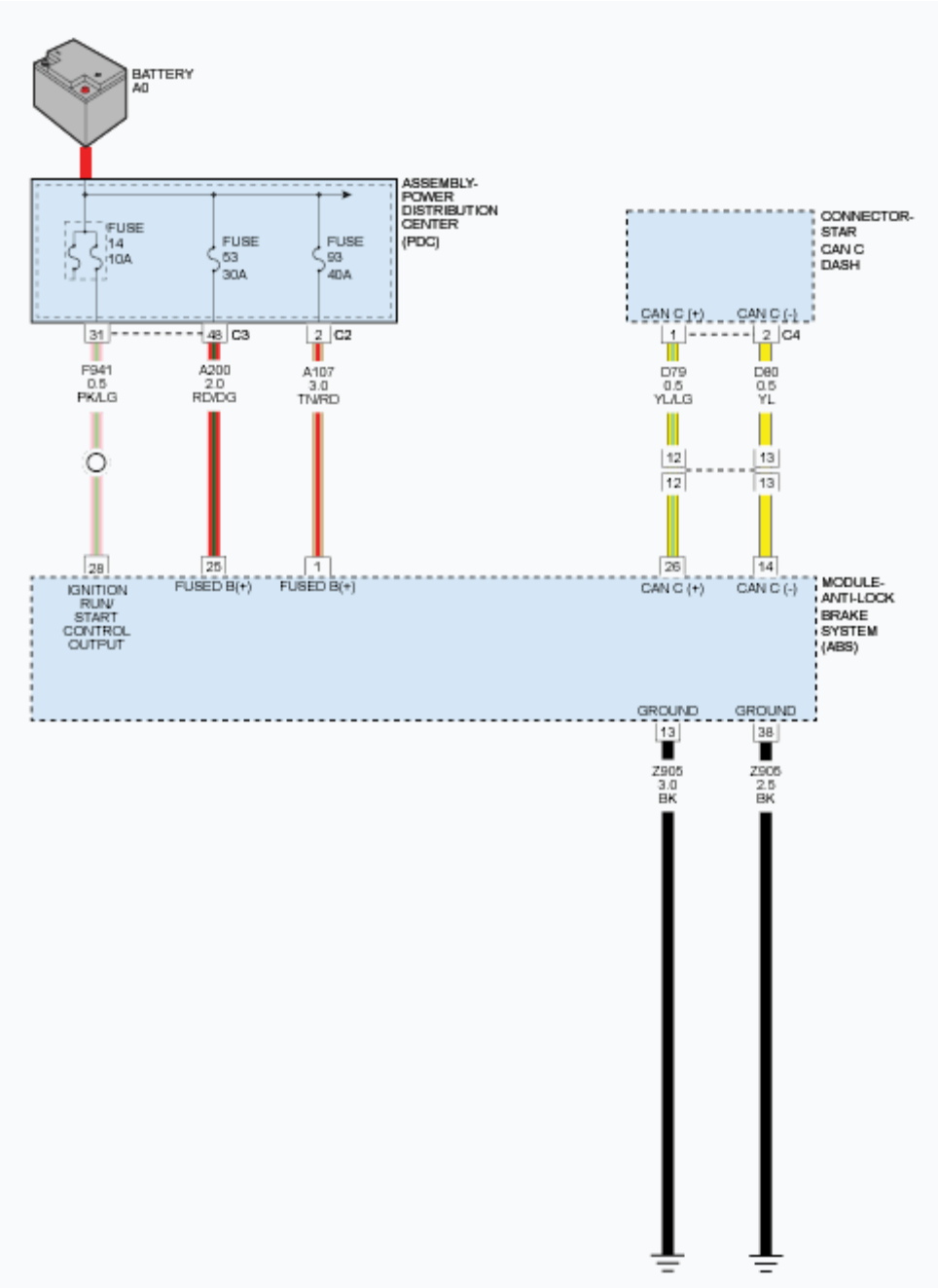

Fig. 2: Identifying Anti-lock Brake Module Circuit Schematic
Courtesy of CHRYSLER GROUP, LLC

WHEN MONITORED

With the ignition on and no system under voltage condition present.

SET CONDITION

If the Anti-lock Brake System (ABS) Module detects that the pump motor has a poor ground or the ABS has

internal pump motor driver shorted, this DTC will be active.

POSSIBLE CAUSES

Possible Causes
(A107) FUSED B+ CIRCUIT OPEN OR HIGH RESISTANCE (Z905) GROUND CIRCUITS OPEN OR HIGH RESISTANCE INTEGRATED CONTROL UNIT (ICU)

DIAGNOSTIC TEST

1. **VERIFY THE DTC IS ACTIVE**

   NOTE: After erasing ACTIVE DTCs it may be necessary for the Anti-lock Brake System (ABS) Module to go to sleep before the DTCs are cleared. IF the DTC is still ACTIVE after the clear command then Turn the ignition off, disconnect the Scan Tool, close the doors and wait until all indicators on the Cluster have gone out, typically about 30 seconds.

   1. Turn the ignition on.
   2. With the scan tool, read and record the DTCs.
   3. With the scan tool, read and record the Environmental Data to help identify the conditions in which the DTC was set.
   4. With the scan tool, erase the DTCs.

   CAUTION: Make sure brake capability is available before road testing.

   5. Road test the vehicle above 16 km/h (10 mph).
   6. With the scan tool, read and record the DTCs.

   Is the DTC active at this time?

   Yes

   - Go To 2

   No

   - Perform the ABS-INTERMITTENT CONDITION TEST. Refer to **STANDARD PROCEDURE**.

2. **(A107) FUSED B+ CIRCUIT OPEN OR HIGH RESISTANCE**
   1. Turn the ignition off to the lock position.

2. Disconnect the ABS Module harness connector.
3. Using a 12-volt test light connected to ground, check the (A107) Fused B+ circuit.

NOTE: The test light should be illuminated and bright. Compare the brightness to that of a direct connection to the battery.

Is the test light illuminated and bright?

Yes

- Go To 3

No

- Repair the (A107) Fused B+ circuit for an open circuit or high resistance.
- Perform the ABS VERIFICATION TEST. Refer to **STANDARD PROCEDURE**.

3. **(Z905) GROUND CIRCUITS OPEN OR HIGH RESISTANCE**
   1. Using a 12-volt test light connected to 12-volts, check the (Z905) Ground circuits.

NOTE: The test light should be illuminated and bright. Compare the brightness to that of a direct connection to the battery.

Is the test light illuminated and bright?

Yes

- Go To 4

No

- Repair the (Z905) Ground circuit(s) for an open circuit or high resistance.
- Perform the ABS VERIFICATION TEST. Refer to **STANDARD PROCEDURE**.

4. **INTEGRATED CONTROL UNIT (ICU)**
   1. Turn the ignition off to the lock position.
   2. Inspect the related wiring harness. Look for any chafed, pierced, pinched, or partially broken wires.
   3. Inspect the related wire harness connectors. Look for broken, bent, pushed out, or corroded terminals.
   4. Perform any Technical Service Bulletins that may apply.

Were any problems found?

Yes

- Repair as necessary.
- Perform the ABS VERIFICATION TEST. Refer to **STANDARD PROCEDURE**.

No

- Replace the Integrated Control Unit (ICU) in accordance with the Service Information. Refer to **INTEGRATED CONTROL UNIT (ICU), REMOVAL** .
- Perform the ABS VERIFICATION TEST. Refer to **STANDARD PROCEDURE**.

C0021-02-BRAKE BOOSTER - GENERAL SIGNAL FAILURE

For a complete wiring diagram, **refer to appropriate SYSTEM WIRING DIAGRAMS article** .

WHEN MONITORED

With the ignition on.

SET CONDITION

When the Vacuum Pressure Sensor indicates a failure in the Vacuum Booster. After the cold start phase (i.e. 3 min after engine is running) and if the engine is running above 600 RPM there should be at least -135 mbar (-1.96 psi) of differential pressure in the vacuum-chamber for boosting the pedal force. If the pressure remains below this value for more than two minutes. Timer resets if the pressure remains above 220 mbar (3.19 psi) for 10 seconds or engine off vehicle speed present and low booster vacuum present.

POSSIBLE CAUSES

Possible Causes
ENGINE STALLED WHILE ROLLING IN NEUTRAL
PINCHED, CUT OR OPEN VACUUM SUPPLY LINE
BRAKE BOOSTER
VACUUM PRESSURE SENSOR

DIAGNOSTIC TEST

1. **VERIFY THE DTC IS ACTIVE**

NOTE: **After erasing ACTIVE DTCs it may be necessary for the Anti-lock Brake System (ABS) Module to go to sleep before the DTCs are cleared. IF the DTC is still ACTIVE after the clear command then Turn the ignition off, disconnect the Scan Tool, close the doors and wait until all indicators on the Cluster have gone out, typically about 30 seconds.**

1. Turn the ignition on.
2. With the scan tool, read and record the DTCs.

3. With the scan tool, read and record Environmental Data to help identify the conditions in which the DTC was set.
4. With the scan tool, erase the DTCs.
5. Start the engine.
6. Press and release the brake pedal.
7. Wait five minutes or until red brake lamp illuminates.

WARNING: To avoid possible serious or fatal injury, check brake capability is available before road testing.

8. Test drive the vehicle at speeds above 10 km/h (6 mph).
9. With the scan tool, read and record the DTCs.

Is the DTC Active at this time?

Yes

- Go To 2.

No

- Check the vacuum supply line to brake booster for a pinched, cut, loose or cracked vacuum hose which could cause an intermittent condition.
- Perform the ABS-INTERMITTENT CONDITION TEST. Refer to **STANDARD PROCEDURE**.

2. **CHECK VACUUM SUPPLY LINE**
   1. Turn the ignition off.
   2. Check the vacuum supply line to brake booster for a pinched, cut, loose or open vacuum hose.
   3. Disconnect the booster vacuum supply line and attach a vacuum pressure gauge.
   4. Start the engine.

   Does the vacuum fluctuate with RPM change?

   Yes

   - Repair as necessary.
   - Perform the ABS VERIFICATION TEST. Refer to **STANDARD PROCEDURE**.

   No

   - Go To 3
3. **CHECK FOR VACUUM PRESSURE SIGNAL CHANGE**

1. Turn the ignition on.
2. Remove the Vacuum Pressure Sensor from the Booster.
3. Block off the vacuum feed port.
4. Connect a vacuum pump to the Vacuum Pressure Sensor.
5. Apply vacuum to the Vacuum Pressure Sensor.
6. Using the scan tool, and a pressure gauge watch for the signal change.
7. Using the scan tool, watch for signal change.

   Is the signal changing and does it compare to the pressure gauge reading?

   Yes

   - Go To 4

   No

   - Replace the Vacuum Pressure Sensor in accordance with the Service Information. Refer to **BOOSTER, POWER BRAKE, REMOVAL** .
   - Perform the ABS VERIFICATION TEST. Refer to **STANDARD PROCEDURE**.

4. **CHECK BRAKE BOOSTER CHECK VALVE**
   1. Remove the Brake Booster Check Valve.
   2. Apply vacuum to the booster side of the check valve.

      Is the Brake Booster Check Valve holding vacuum?

      Yes

      - Replace the Brake Booster in accordance with the Service Information. Refer to **BOOSTER, POWER BRAKE, REMOVAL** .
      - Perform the ABS VERIFICATION TEST. Refer to **STANDARD PROCEDURE**.

      No

      - Replace Brake Booster Check Valve in accordance with the Service Information. Refer to **BOOSTER, POWER BRAKE, REMOVAL** .
      - Perform the ABS VERIFICATION TEST. Refer to **STANDARD PROCEDURE**.

C0031-1D-LEFT FRONT WHEEL SPEED SENSOR - CIRCUIT CURRENT OUT OF RANGE

For a complete wiring diagram, **refer to appropriate SYSTEM WIRING DIAGRAMS article** .

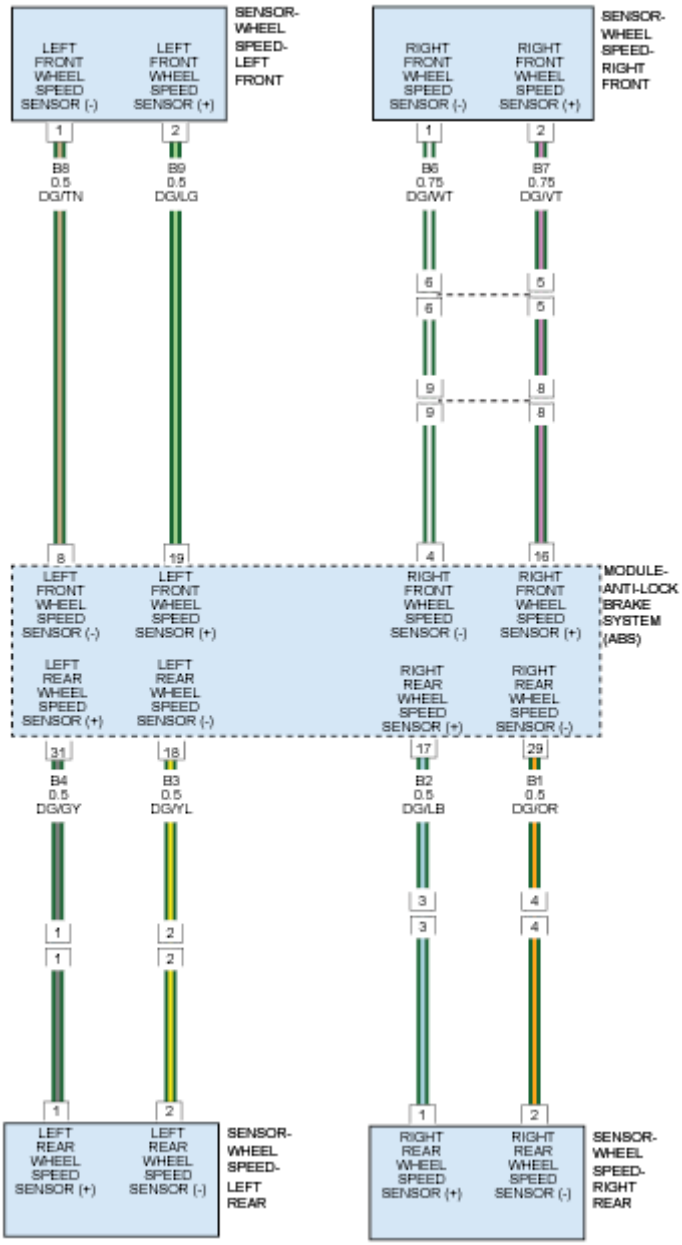

Fig. 3: Wheel Speed Sensor Circuit Schematic
Courtesy of CHRYSLER GROUP, LLC

WHEN MONITORED

With the ignition on and no system under voltage or over voltage condition present.

SET CONDITION

When the Left Front Wheel Speed Sensor circuit fails the diagnostic test.

POSSIBLE CAUSES

Possible Causes
CONNECTOR/TERMINAL DAMAGE
(B8) LEFT FRONT WHEEL SPEED SENSOR SIGNAL CIRCUIT SHORTED TO VOLTAGE
(B9) LEFT FRONT WHEEL SPEED SENSOR SUPPLY CIRCUIT SHORTED TO VOLTAGE
(B8) LEFT FRONT WHEEL SPEED SENSOR SIGNAL CIRCUIT SHORTED TO GROUND
(B9) LEFT FRONT WHEEL SPEED SENSOR SUPPLY CIRCUIT SHORTED TO GROUND
(B8) LEFT FRONT WHEEL SPEED SENSOR SIGNAL CIRCUIT OPEN
(B9) LEFT FRONT WHEEL SPEED SENSOR SUPPLY CIRCUIT OPEN
(B9) LEFT FRONT WHEEL SPEED SENSOR SUPPLY CIRCUIT SHORTED TO THE (B8) LEFT FRONT WHEEL SPEED SENSOR SIGNAL CIRCUIT
LEFT FRONT WHEEL SPEED SENSOR
ANTI-LOCK BRAKE SYSTEM (ABS) MODULE

DIAGNOSTIC TEST

1. **VERIFY THE DTC IS ACTIVE**

NOTE: **After erasing ACTIVE DTCs it may be necessary for the Anti-lock Brake System (ABS) Module to go to sleep before the DTCs are cleared. IF the DTC is still ACTIVE after the clear command then Turn the ignition off, disconnect the Scan Tool, close the doors and wait until all indicators on the Cluster have gone out, typically about 30 seconds.**

1. Ignition on, engine not running.
2. With the scan tool, erase DTCs.
3. Cycle the ignition switch from off to on.
4. With the scan tool, select View DTCs.

Is the DTC active at this time?

Yes

- Go To 2

No

- The condition that caused the symptom is currently not present. Inspect the related wiring for a possible intermittent condition. Look for any chafed, pierced, pinched, or partially broken wires.
- Perform the ABS INTERMITTENT CONDITION TEST. Refer to **STANDARD PROCEDURE**.

2. **CHECK CONNECTOR/TERMINAL FOR DAMAGE**

NOTE: Check all terminals for broken, bent, pushed out, or corroded terminals.

1. Turn the ignition off to the lock position.
2. Inspect the Wheel Speed Sensor for proper mounting.
3. Inspect the Wheel Speed Sensor harness and connector.
4. Inspect the Wheel Speed Sensor for excessive debris on the sensor.

Were any problems found?

Yes

- Repair as necessary in accordance with the Service Information.
- Perform the ABS VERIFICATION TEST. Refer to **STANDARD PROCEDURE**.

No

- Go To 3

3. **CHECK (B9) LEFT FRONT WHEEL SPEED SENSOR SUPPLY CIRCUIT VOLTAGE**
   1. Disconnect the Left Front Wheel Speed Sensor harness connector.
   2. Turn the ignition on.
   3. Measure the voltage between the (B9) Left Front Wheel Speed Sensor Supply circuit and ground.

   Is the voltage above 10 volts?

   Yes

   - Go To 6

   No

   - Go To 4

4. **(B9) LEFT FRONT WHEEL SPEED SENSOR SUPPLY CIRCUIT SHORTED TO GROUND**
   1. Turn the ignition off.
   2. Disconnect the ABS Module harness connector.
   3. Measure the resistance between the (B9) Left Front Wheel Speed Sensor Supply circuit and ground.

   Is the resistance below 5.0 Ohms?

   Yes

   - Repair the (B9) Left Front Wheel Speed Sensor Supply circuit for a short to ground.
   - Perform the ABS VERIFICATION TEST. Refer to **STANDARD PROCEDURE**.

No

- Go To 5

5. **(B9) LEFT FRONT WHEEL SPEED SENSOR SUPPLY CIRCUIT OPEN**
   1. Measure the resistance of the (B9) Left Front Wheel Speed Sensor Supply circuit between the Left Front Wheel Speed Sensor harness connector and the ABS harness connector.

      Is the resistance below 5 Ohms?

      Yes

      - Go To 6

      No

      - Repair the open (B9) Left Front Wheel Speed Sensor Supply circuit.
      - Perform the ABS VERIFICATION TEST. Refer to **STANDARD PROCEDURE**.
6. **(B8) LEFT FRONT WHEEL SPEED SENSOR SIGNAL CIRCUIT SHORTED TO VOLTAGE**
   1. Turn the ignition on.
   2. Measure the voltage of the (B8) Left Front Wheel Speed Sensor Signal circuit at the Left Front Wheel Speed Sensor harness connector.

      Is there any voltage present?

      Yes

      - Repair the (B8) Left Front Wheel Speed Sensor Signal circuit for a short to voltage.
      - Perform the ABS VERIFICATION TEST. Refer to **STANDARD PROCEDURE**.

      No

      - Go To 7
7. **(B8) LEFT FRONT WHEEL SPEED SENSOR SIGNAL CIRCUIT SHORTED TO GROUND**
   1. Turn the ignition off.
   2. Measure the resistance between the (B8) Left Front Wheel Speed Sensor Signal circuit and ground.

      Is the resistance below 5.0 Ohms?

      Yes

      - Repair the (B8) Left Front Wheel Speed Sensor Signal circuit for a short to ground.
      - Perform the ABS VERIFICATION TEST. Refer to **STANDARD PROCEDURE**.

No

- Go To 8

8. **(B8) LEFT FRONT WHEEL SPEED SENSOR SIGNAL CIRCUIT OPEN**
   1. Measure the resistance of the (B8) Left Front Wheel Speed Sensor Signal circuit between the Left Front Wheel Speed Sensor harness connector and the ABS harness connector.

      Is the resistance below 5 Ohms?

      Yes

      - Go To 9

      No

      - Repair the open (B8) Left Front Wheel Speed Sensor Signal circuit.
      - Perform the ABS VERIFICATION TEST. Refer to **STANDARD PROCEDURE**.
9. **(B9) LEFT FRONT WHEEL SPEED SENSOR SUPPLY CIRCUIT SHORTED TO THE (B8) LEFT FRONT WHEEL SPEED SENSOR SIGNAL CIRCUIT**
   1. Turn the ignition off to the lock position.
   2. Measure the resistance between the (B9) Left Front Wheel Speed Sensor Supply circuit and the (B8) Left Front Wheel Speed Sensor Signal circuit at the Wheel Speed Sensor harness connector.

      Is the resistance below 5.0 Ohms?

      Yes

      - Repair (B9) Left Front Wheel Speed Sensor Supply circuit for a short to the (B8) Left Front Wheel Speed Sensor Signal circuit.
      - Perform the ABS VERIFICATION TEST. Refer to **STANDARD PROCEDURE**.

      No

      - Go To 10
10. **LEFT FRONT WHEEL SPEED SENSOR**
    1. Replace the Left Front Wheel Speed Sensor in accordance with the Service Information. Refer to **SENSOR, WHEEL SPEED, FRONT, REMOVAL** .
    2. Perform the ABS VERIFICATION TEST. Refer to **STANDARD PROCEDURE**.

       CAUTION: Make sure brake capability is available before road testing.

    3. Road test the vehicle over 40 km/h (25 mph).

NOTE: Vehicle must be driven above 40 km/h (25 mph) for set conditions to be meet.

4. With the scan tool, read ABS DTCs.

   Is the status Active for this DTC?

   Yes

   - Replace the Anti-lock Brake System (ABS) Module in accordance with the Service Information. Refer to **MODULE, ANTI-LOCK BRAKE SYSTEM, REMOVAL** .
   - Perform the ABS VERIFICATION TEST. Refer to **STANDARD PROCEDURE**.

   No

   - Test complete.

C0031-2F-LEFT FRONT WHEEL SPEED SENSOR - SIGNAL ERRATIC

For a complete wiring diagram, **refer to appropriate SYSTEM WIRING DIAGRAMS article** .

WHEN MONITORED

With the ignition on and no system under voltage or over voltage condition present.

SET CONDITION

When the Anti-lock Brake System (ABS) Module detects multiple drastic changes in Left Front wheel speed.

POSSIBLE CAUSES

Possible Causes
CHECK LEFT FRONT WHEEL SPEED SENSOR FOR LOOSENESS
INSPECT CIRCUITS/CONNECTOR/TERMINALS FOR DAMAGE
LEFT FRONT WHEEL BEARING AND HUB OR ENCODER FOR DAMAGE
LEFT FRONT WHEEL SPEED SENSOR
ANTI-LOCK BRAKE SYSTEM (ABS) MODULE

DIAGNOSTIC TEST

1. **VERIFY THE DTC IS ACTIVE**

   NOTE: If DTC C0031-1D is present, perform the diagnostics for this DTC before continuing with this diagnostic procedure.

NOTE: After erasing ACTIVE DTCs it may be necessary for the Anti-lock Brake System (ABS) Module to go to sleep before the DTCs are cleared. IF the DTC is still ACTIVE after the clear command then Turn the ignition off, disconnect the Scan Tool, close the doors and wait until all indicators on the Cluster have gone out, typically about 30 seconds.

1. Turn the ignition on.
2. With the scan tool, record and erase DTCs.

CAUTION: Make sure brake capability is available before road testing.

3. Road test the vehicle over 40 km/h (25 mph).

NOTE: Vehicle must be driven above 40 km/h (25 mph) for set conditions to be met.

4. With the scan tool, read DTCs.

Is the DTC active at this time?

Yes

- Go To 3

No

- Go To 2

2. **CHECK WHEEL SPEED SENSOR SIGNALS**
   1. Turn the ignition on.
   2. With the scan tool, monitor and graph ALL the WSS speeds and compare graph while an assistant drives the vehicle.

NOTE: If graph shows periodic dropouts pay close attention to the tone wheel.

   3. Slowly accelerate as straight as possible from a stop to 40 km/h (25 mph).

Is the Left Front WSS speed showing 0 km/h (0 mph), not matching other wheels, or showing erratic behavior?

Yes

- Go To 3

No

- Perform the ABS INTERMITTENT CONDITION diagnostic procedure. Refer to **STANDARD PROCEDURE**.

3. **CHECK LEFT FRONT WSS FOR LOOSENESS, INSPECT CIRCUITS/CONNECTORS/TERMINALS FOR DAMAGE**

NOTE: Check all terminals for broken, bent, pushed out, or corroded terminals.

1. Turn the ignition off to the lock position.
2. Inspect the ABS Module harness connector and the Left Front WSS harness connector.
3. Check the Left Front WSS for looseness, excessive corrosion and not properly fastened.
4. Inspect the (B8) Left Front WSS Signal and (B9) Left Front WSS Supply circuits between the Left Front WSS and Anti-Lock Brake Module for damage.

Is the Left Front WSS loose or any of the wiring/connectors/terminals damaged?

Yes

- Repair as necessary.
- Perform the ABS VERIFICATION TEST. Refer to **STANDARD PROCEDURE**.

No

- Go To 4

4. **CHECK LEFT FRONT WHEEL SPEED SENSOR FOR DAMAGE**

1. Remove the Left Front Wheel Speed Sensor.
2. Inspect the Wheel Speed Sensor for proper mounting.
3. Inspect the Wheel Speed Sensor harness and connector.
4. Inspect the Wheel Speed Sensor for excessive debris on the sensor.

Is the Left Front Wheel Speed Sensor damaged?

Yes

- Replace the Left Front Wheel Speed Sensor in accordance with the Service Information. Refer to **SENSOR, WHEEL SPEED, FRONT, REMOVAL** .
- Perform the ABS VERIFICATION TEST. Refer to **STANDARD PROCEDURE**.

No

- Go To 5

5. **CHECK LEFT FRONT WHEEL BEARING AND HUB OR ENCODER FOR DAMAGE**

1. Inspect the Left Front wheel bearing, hub and Encoder for excessive runout, clearance or damage.

   NOTE: Refer to the appropriate service information, if necessary, for procedures or specifications.

   Is the Left Front Wheel Bearing, Hub or Encoder Damaged?

   Yes

   - Replace the Hub and Wheel Bearing in accordance with the Service Information. Refer to **HUB AND BEARING, REMOVAL** .
   - Perform the ABS VERIFICATION TEST. Refer to **STANDARD PROCEDURE**.

   No

   - Go To 6

6. **LEFT FRONT WHEEL SPEED SENSOR**
   1. Replace the Left Front Wheel Speed Sensor in accordance with the Service Information. Refer to **SENSOR, WHEEL SPEED, FRONT, REMOVAL** .
   2. Perform the ABS VERIFICATION TEST. Refer to **STANDARD PROCEDURE**.
   3. Road test the vehicle over 40 km/h (25 mph).

      NOTE: Vehicle must be driven above 40 km/h (25 mph) for set conditions to be met.

   4. With the scan tool, read ABS DTCs.

      Does the DTC remain active?

      Yes

      - Replace the Anti-Lock Brakes Module in accordance with the Service Information. Refer to **MODULE, ANTI-LOCK BRAKE SYSTEM, REMOVAL** .
      - Perform the ABS VERIFICATION TEST. Refer to **STANDARD PROCEDURE**.

      No

      - Test Complete.

C0031-4A-LEFT FRONT WHEEL SPEED SENSOR - INCORRECT COMPONENT INSTALLED

For a complete wiring diagram, **refer to appropriate SYSTEM WIRING DIAGRAMS article** .

WHEN MONITORED

With the ignition on and no system under voltage or over voltage condition present.

SET CONDITION

When the Anti-lock Brake System (ABS) Module detects that the wrong component is installed.

POSSIBLE CAUSES

Possible Causes
LEFT FRONT WHEEL SPEED SENSOR ANTI-LOCK BRAKE SYSTEM (ABS) MODULE

DIAGNOSTIC TEST

1. **VERIFY THE DTC IS ACTIVE**

   NOTE: If DTC C0031-1D is present, perform the diagnostics for this DTC before continuing with this diagnostic procedure.

   NOTE: This vehicle uses non-directional front wheel speed sensors and directional rear wheel speed sensors.

   NOTE: After erasing ACTIVE DTCs it may be necessary for the Anti-lock Brake System (ABS) Module to go to sleep before the DTCs are cleared. IF the DTC is still ACTIVE after the clear command then Turn the ignition off, disconnect the Scan Tool, close the doors and wait until all indicators on the Cluster have gone out, typically about 30 seconds.

   1. Ignition on.
   2. With the scan tool, record and erase DTCs.
   3. With the scan tool, read DTCs.

   Is the DTC active at this time?

   Yes

   - Go To 2

   No

   - Test Complete.

2. **LEFT FRONT WHEEL SPEED SENSOR**

   NOTE: This vehicle uses a non-directional front wheel speed sensor, make sure

the correct wheel speed sensor is installed on the vehicle.

1. Replace the Left Front Wheel Speed Sensor in accordance with the Service Information. Refer to **SENSOR, WHEEL SPEED, FRONT, REMOVAL** . Perform the ABS VERIFICATION TEST. Refer to **STANDARD PROCEDURE**.

   CAUTION: Make sure brake capability is available before road testing.

2. Road test the vehicle over 40 km/h (25 mph).
3. With the scan tool, read DTCs.

   Does the DTC remain active?

   Yes

   - Replace the Anti-lock Brake System (ABS) Module in accordance with the Service Information. Refer to **MODULE, ANTI-LOCK BRAKE SYSTEM, REMOVAL** .
   - Perform the ABS VERIFICATION TEST. Refer to **STANDARD PROCEDURE**.

   No

   - Test complete.

C0031-62-LEFT FRONT WHEEL SPEED SENSOR - SIGNAL COMPARE FAILURE

For a complete wiring diagram, **refer to appropriate SYSTEM WIRING DIAGRAMS article** .

WHEN MONITORED

With the ignition on, no system under voltage or over voltage condition present, no open or shorted wheel speed sensor DTCs set, vehicle not under high acceleration, and vehicle speed greater than 0.

SET CONDITION

This DTC will be set if the wheel speed signal is 0 km/h (0 mph) or very low when compared to the other wheel speed signals.

POSSIBLE CAUSES

Possible Causes
IMPROPER LEFT FRONT TIRE PRESSURE/MISMATCHED TIRES CHECK LEFT FRONT WHEEL SPEED SENSOR FOR LOOSENESS INSPECT CIRCUITS/CONNECTOR/TERMINALS FOR DAMAGE

LEFT FRONT HUB AND WHEEL BEARING
LEFT FRONT WHEEL SPEED SENSOR
ANTI-LOCK BRAKE SYSTEM (ABS) MODULE

DIAGNOSTIC TEST

1. **VERIFY THE DTC IS ACTIVE**

NOTE: **If DTC C0031-1D is present, perform the diagnostics for this DTC before continuing with this diagnostic procedure.**

NOTE: **After erasing ACTIVE DTCs it may be necessary for the Anti-lock Brake System (ABS) Module to go to sleep before the DTCs are cleared. IF the DTC is still ACTIVE after the clear command then Turn the ignition off, disconnect the Scan Tool, close the doors and wait until all indicators on the Cluster have gone out, typically about 30 seconds.**

1. Turn the ignition on.
2. With the scan tool, record and erase DTCs.

CAUTION: Make sure brake capability is available before road testing.

3. Road test the vehicle over 40 km/h (25 mph).

NOTE: **Vehicle must be driven above 40 km/h (25 mph) for set conditions to be met.**

4. With the scan tool, read DTCs.

   Is the DTC active at this time?

   Yes

   - Go To 3

   No

   - Go To 2

2. **CHECK WHEEL SPEED SENSOR SIGNALS**
   1. Turn the ignition on.
   2. With the scan tool, monitor and graph ALL the WSS speeds and compare graph while an assistant drives the vehicle.

NOTE: If graph shows periodic dropouts pay close attention to the tone wheel.

3. Slowly accelerate as straight as possible from a stop to 40 km/h (25 mph).

   Is the Left Front WSS speed showing 0 km/h (0 mph), not matching other wheels, or showing erratic behavior?

   Yes

   - Go To 3

   No

   - Perform the ABS INTERMITTENT CONDITION diagnostic procedure. Refer to **STANDARD PROCEDURE**.

3. **CHECK FOR IMPROPER LEFT FRONT TIRE PRESSURE/MISMATCHED TIRES**
   1. Turn the ignition off.
   2. Check and adjust the Left Front Tire pressure.
   3. Check and adjust all other tire pressures.
   4. Inspect for mismatched tires on vehicle.

   Is the Left Front Tire improperly inflated or mismatched tires on vehicle?

   Yes

   - Repair as necessary
   - Perform the ABS VERIFICATION TEST. Refer to **STANDARD PROCEDURE**.

   No

   - Go To 4

4. **CHECK LEFT FRONT WSS FOR LOOSENESS, INSPECT CIRCUITS/CONNECTORS/TERMINALS FOR DAMAGE**

   NOTE: Check all terminals for broken, bent, pushed out, or corroded terminals.

   1. Turn the ignition off to the lock position.
   2. Inspect the ABS Module harness connector and the Left Front WSS harness connector.
   3. Check the Left Front WSS for looseness, excessive corrosion and not properly fastened.
   4. Inspect the (B8) Left Front WSS Signal and (B9) Left Front WSS Supply circuits between the Left Front WSS and Anti-Lock Brake Module for damage.

Is the Left Front WSS loose or any of the wiring/connectors/terminals damaged?

Yes

- Repair as necessary.
- Perform the ABS VERIFICATION TEST. Refer to **STANDARD PROCEDURE**.

No

- Go To 5

5. **CHECK LEFT FRONT WHEEL SPEED SENSOR FOR DAMAGE**
   1. Remove the Left Front Wheel Speed Sensor.
   2. Inspect the Wheel Speed Sensor for proper mounting.
   3. Inspect the Wheel Speed Sensor harness and connector.
   4. Inspect the Wheel Speed Sensor for excessive debris on the sensor.

   Is the Left Front Wheel Speed Sensor damaged?

   Yes

   - Replace the Left Front Wheel Speed Sensor in accordance with the Service Information. Refer to **SENSOR, WHEEL SPEED, FRONT, REMOVAL** .
   - Perform the ABS VERIFICATION TEST. Refer to **STANDARD PROCEDURE**.

   No

   - Go To 6

6. **CHECK LEFT FRONT WHEEL BEARING AND HUB OR ENCODER FOR DAMAGE**
   1. Inspect the Left Front wheel bearing, hub and Encoder for excessive runout, clearance or damage.

   NOTE: Refer to the appropriate service information, if necessary, for procedures or specifications.

   Is the Left Front Wheel Bearing, Hub or Encoder Damaged?

   Yes

   - Replace the Hub and Wheel Bearing in accordance with the Service Information. Refer to **HUB AND BEARING, REMOVAL** .
   - Perform the ABS VERIFICATION TEST. Refer to **STANDARD PROCEDURE**.

   No

- Go To 7

7. **LEFT FRONT WHEEL SPEED SENSOR**
   1. Replace the Left Front Wheel Speed Sensor in accordance with the Service Information. Refer to **SENSOR, WHEEL SPEED, FRONT, REMOVAL** .
   2. Perform the ABS VERIFICATION TEST. Refer to **STANDARD PROCEDURE**.
   3. Road test the vehicle over 40 km/h (25 mph).

      NOTE: Vehicle must be driven above 40 km/h (25 mph) for set conditions to be met.

   4. With the scan tool, read ABS DTCs.

      Does the DTC remain active?

      Yes

      - Replace the Anti-Lock Brakes Module in accordance with the Service Information. Refer to **MODULE, ANTI-LOCK BRAKE SYSTEM, REMOVAL** .
      - Perform the ABS VERIFICATION TEST. Refer to **STANDARD PROCEDURE**.

      No

      - Test Complete.

C0034-1D-RIGHT FRONT WHEEL SPEED SENSOR - CIRCUIT CURRENT OUT OF RANGE

For a complete wiring diagram, **refer to appropriate SYSTEM WIRING DIAGRAMS article** .

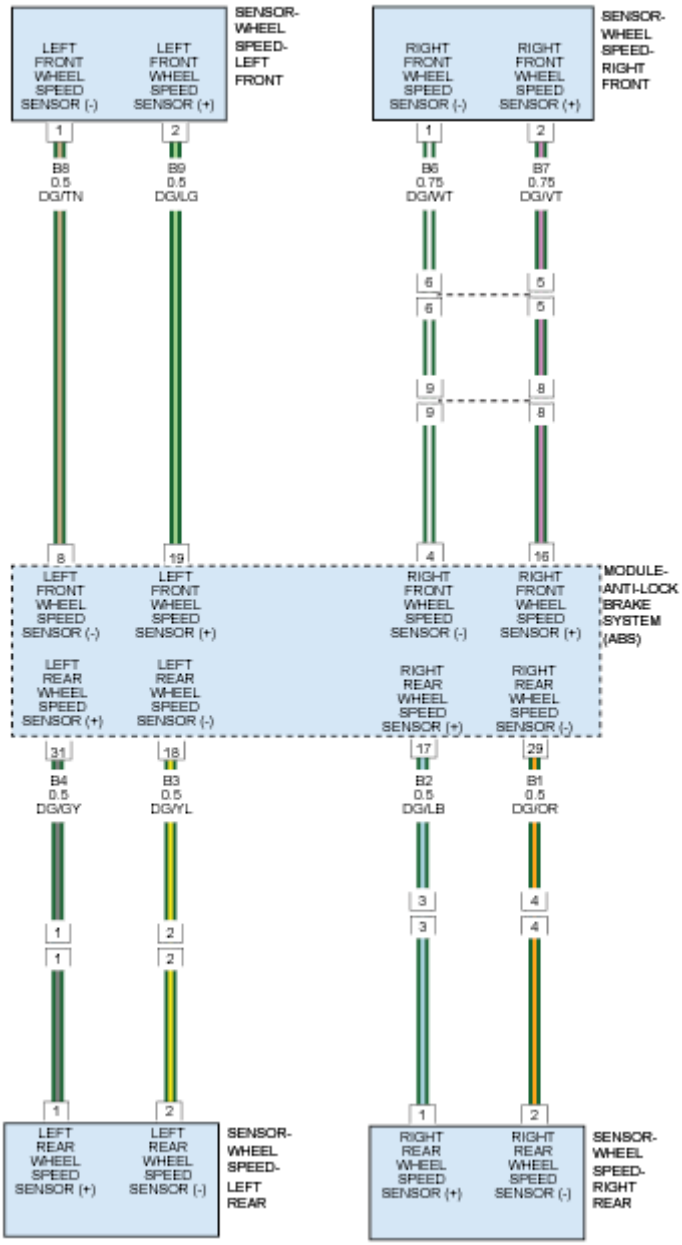

Fig. 4: Wheel Speed Sensor Circuit Schematic
Courtesy of CHRYSLER GROUP, LLC

WHEN MONITORED

With the ignition on and no system under voltage or over voltage condition present.

SET CONDITION

When the Right Front Wheel Speed Sensor circuit fails the diagnostic test.

POSSIBLE CAUSES

Possible Causes
CONNECTOR/TERMINAL DAMAGE
(B6) RIGHT FRONT WHEEL SPEED SENSOR SIGNAL CIRCUIT SHORTED TO VOLTAGE
(B7) RIGHT FRONT WHEEL SPEED SENSOR SUPPLY CIRCUIT SHORTED TO VOLTAGE
(B6) RIGHT FRONT WHEEL SPEED SENSOR SIGNAL CIRCUIT SHORTED TO GROUND
(B7) RIGHT FRONT WHEEL SPEED SENSOR SUPPLY CIRCUIT SHORTED TO GROUND
(B6) RIGHT FRONT WHEEL SPEED SENSOR SIGNAL CIRCUIT OPEN
(B7) RIGHT FRONT WHEEL SPEED SENSOR SUPPLY CIRCUIT OPEN
(B7) RIGHT FRONT WHEEL SPEED SENSOR SUPPLY CIRCUIT SHORTED TO THE (B6) RIGHT FRONT WHEEL SPEED SENSOR SIGNAL CIRCUIT
RIGHT FRONT WHEEL SPEED SENSOR
ANTI-LOCK BRAKE SYSTEM (ABS) MODULE

DIAGNOSTIC TEST

1. **VERIFY THE DTC IS ACTIVE**

NOTE: **After erasing ACTIVE DTCs it may be necessary for the Anti-lock Brake System (ABS) Module to go to sleep before the DTCs are cleared. IF the DTC is still ACTIVE after the clear command then Turn the ignition off, disconnect the Scan Tool, close the doors and wait until all indicators on the Cluster have gone out, typically about 30 seconds.**

1. Ignition on, engine not running.
2. With the scan tool, erase DTCs.
3. Cycle the ignition switch from off to on.
4. With the scan tool, select View DTCs.

Is the DTC active at this time?

Yes

- Go To 2

No

- The condition that caused the symptom is currently not present. Inspect the related wiring for a possible intermittent condition. Look for any chafed, pierced, pinched, or partially broken wires.
- Perform the ABS-INTERMITTENT CONDITION TEST. Refer to **STANDARD PROCEDURE**.

2. **CHECK CONNECTOR/TERMINAL FOR DAMAGE**

NOTE: Check all terminals for broken, bent, pushed out, or corroded terminals.

1. Turn the ignition off to the lock position.
2. Inspect the Wheel Speed Sensor for proper mounting.
3. Inspect the Wheel Speed Sensor harness and connector.
4. Inspect the Wheel Speed Sensor for excessive debris on the sensor.

Were any problems found?

Yes

- Repair as necessary in accordance with the Service Information.
- Perform the ABS VERIFICATION TEST. Refer to **STANDARD PROCEDURE**.

No

- Go To 3

3. **CHECK (B7) RIGHT FRONT WHEEL SPEED SENSOR SUPPLY CIRCUIT VOLTAGE**
   1. Disconnect the Right Front Wheel Speed Sensor harness connector.
   2. Turn the ignition on.
   3. Measure the voltage between the (B7) Right Front Wheel Speed Sensor Supply circuit and ground.

   Is the voltage above 10 volts?

   Yes

   - Go To 6

   No

   - Go To 4

4. **(B7) RIGHT FRONT WHEEL SPEED SENSOR SUPPLY CIRCUIT SHORTED TO GROUND**
   1. Turn the ignition off.
   2. Disconnect the ABS Module harness connector.
   3. Measure the resistance between the (B7) Right Front Wheel Speed Sensor Supply circuit and ground.

   Is the resistance below 5.0 Ohms?

   Yes

   - Repair the (B7) Right Front Wheel Speed Sensor Supply circuit for a short to ground.
   - Perform the ABS VERIFICATION TEST. Refer to **STANDARD PROCEDURE**.

No

- Go To 5

5. **(B7) RIGHT FRONT WHEEL SPEED SENSOR SUPPLY CIRCUIT OPEN**
   1. Measure the resistance of the (B7) Right Front Wheel Speed Sensor Supply circuit between the Right Front Wheel Speed Sensor harness connector and the ABS harness connector.

      Is the resistance below 5 Ohms?

      Yes

      - Go To 6

      No

      - Repair the open (B7) Right Front Wheel Speed Sensor Supply circuit.
      - Perform the ABS VERIFICATION TEST. Refer to **STANDARD PROCEDURE**.
6. **(B6) RIGHT FRONT WHEEL SPEED SENSOR SIGNAL CIRCUIT SHORTED TO VOLTAGE**
   1. Turn the ignition on.
   2. Measure the voltage of the (B6) Right Front Wheel Speed Sensor Signal circuit at the Right Front Wheel Speed Sensor harness connector.

      Is there any voltage present?

      Yes

      - Repair the (B6) Right Front Wheel Speed Sensor Signal circuit for a short to voltage.
      - Perform the ABS VERIFICATION TEST. Refer to **STANDARD PROCEDURE**.

      No

      - Go To 7
7. **(B6) RIGHT FRONT WHEEL SPEED SENSOR SIGNAL CIRCUIT SHORTED TO GROUND**
   1. Turn the ignition off.
   2. Measure the resistance between the (B6) Right Front Wheel Speed Sensor Signal circuit and ground.

      Is the resistance below 5.0 Ohms?

      Yes

      - Repair the (B6) Right Front Wheel Speed Sensor Signal circuit for a short to ground.
      - Perform the ABS VERIFICATION TEST. Refer to **STANDARD PROCEDURE**.

No

- Refer to 8.

8. **(B6) RIGHT FRONT WHEEL SPEED SENSOR SIGNAL CIRCUIT OPEN**
   1. Measure the resistance of the (B6) Right Front Wheel Speed Sensor Signal circuit between the Right Front Wheel Speed Sensor harness connector and the ABS harness connector.

      Is the resistance below 5 Ohms?

      Yes

      - Go To 9

      No

      - Repair the open (B6) Right Front Wheel Speed Sensor Signal circuit.
      - Perform the ABS VERIFICATION TEST. Refer to **STANDARD PROCEDURE**.
9. **(B7) RIGHT FRONT WHEEL SPEED SENSOR SUPPLY CIRCUIT SHORTED TO THE (B6) RIGHT FRONT WHEEL SPEED SENSOR SIGNAL CIRCUIT**
   1. Turn the ignition off to the lock position.
   2. Measure the resistance between the (B7) Right Front Wheel Speed Sensor Supply circuit and the (B6) Right Front Wheel Speed Sensor Signal circuit at the Wheel Speed Sensor harness connector.

      Is the resistance below 5.0 Ohms?

      Yes

      - Repair (B7) Right Front Wheel Speed Sensor Supply circuit for a short to the (B6) Right Front Wheel Speed Sensor Signal circuit.
      - Perform the ABS VERIFICATION TEST. Refer to **STANDARD PROCEDURE**.

      No

      - Go To 10
10. **RIGHT FRONT WHEEL SPEED SENSOR**
    1. Replace the Right Front Wheel Speed Sensor in accordance with the Service Information. Refer to **SENSOR, WHEEL SPEED, FRONT, REMOVAL** .
    2. Perform the ABS VERIFICATION TEST. Refer to **STANDARD PROCEDURE**.

       CAUTION: Make sure brake capability is available before road testing.

    3. Road test the vehicle over 40 km/h (25 mph).

NOTE: Vehicle must be driven above 40 km/h (25 mph) for set conditions to be meet.

4. With the scan tool, read ABS DTCs.

   Is the status Active for this DTC?

   Yes

   - Replace the Anti-lock Brake System (ABS) Module in accordance with the Service Information. Refer to **MODULE, ANTI-LOCK BRAKE SYSTEM, REMOVAL** .
   - Perform the ABS VERIFICATION TEST. Refer to **STANDARD PROCEDURE**.

   No

   - Test complete.

C0034-2F-RIGHT FRONT WHEEL SPEED SENSOR - SIGNAL ERRATIC

For a complete wiring diagram, **refer to appropriate SYSTEM WIRING DIAGRAMS article** .

WHEN MONITORED

With the ignition on and no system under voltage or over voltage condition present.

SET CONDITION

When the Anti-lock Brake System (ABS) Module detects multiple drastic changes in Right Front wheel speed.

POSSIBLE CAUSES

Possible Causes
CHECK RIGHT FRONT WHEEL SPEED SENSOR FOR LOOSENESS
INSPECT CIRCUITS/CONNECTOR/TERMINALS FOR DAMAGE
RIGHT FRONT WHEEL BEARING AND HUB OR ENCODER FOR DAMAGE
RIGHT FRONT WHEEL SPEED SENSOR
ANTI-LOCK BRAKE SYSTEM (ABS) MODULE

DIAGNOSTIC TEST

1. **VERIFY THE DTC IS ACTIVE**

   NOTE: If DTC C0034-1D is present, perform the diagnostics for this DTC before continuing with this diagnostic procedure.

NOTE: After erasing ACTIVE DTCs it may be necessary for the Anti-lock Brake System (ABS) Module to go to sleep before the DTCs are cleared. IF the DTC is still ACTIVE after the clear command then Turn the ignition off, disconnect the Scan Tool, close the doors and wait until all indicators on the Cluster have gone out, typically about 30 seconds.

1. Turn the ignition on.
2. With the scan tool, record and erase DTCs.

CAUTION: Make sure brake capability is available before road testing.

3. Road test the vehicle over 40 km/h (25 mph).

NOTE: Vehicle must be driven above 40 km/h (25 mph) for set conditions to be met.

4. With the scan tool, read DTCs.

   Is the DTC active at this time?

   Yes

   - Go To 3

   No

   - Go To 2

2. **CHECK WHEEL SPEED SENSOR SIGNALS**
   1. Turn the ignition on.
   2. With the scan tool, monitor and graph ALL the WSS speeds and compare graph while an assistant drives the vehicle.

   NOTE: If graph shows periodic dropouts pay close attention to the tone wheel.

   3. Slowly accelerate as straight as possible from a stop to 40 km/h (25 mph).

      Is the Right Front WSS speed showing 0 km/h (0 mph), not matching other wheels, or showing erratic behavior?

      Yes

      - Go To 3

No

- Perform ABS INTERMITTENT CONDITION diagnostic procedure. Refer to **STANDARD PROCEDURE**.

3. **CHECK RIGHT FRONT WSS FOR LOOSENESS, INSPECT CIRCUITS/CONNECTORS/TERMINALS FOR DAMAGE**

NOTE: Check all terminals for broken, bent, pushed out, or corroded terminals.

1. Turn the ignition off to the lock position.
2. Inspect the ABS Module harness connector and the Right Front WSS harness connector.
3. Check the Right Front WSS for looseness, excessive corrosion and not properly fastened.
4. Inspect the (B6) Right Front WSS Signal and (B7) Right Front WSS Supply circuits between the Right Front WSS and Anti-Lock Brake Module for damage.

Is the Right Front WSS loose or any of the wiring/connectors/terminals damaged?

Yes

- Repair as necessary.
- Perform the ABS VERIFICATION TEST. Refer to **STANDARD PROCEDURE**.

No

- Go To 4

4. **CHECK RIGHT FRONT WHEEL SPEED SENSOR FOR DAMAGE**

1. Remove the Right Front Wheel Speed Sensor.
2. Inspect the Wheel Speed Sensor for proper mounting.
3. Inspect the Wheel Speed Sensor harness and connector.
4. Inspect the Wheel Speed Sensor for excessive debris on the sensor.

Is the Right Front Wheel Speed Sensor damaged?

Yes

- Replace the Right Front Wheel Speed Sensor in accordance with the Service Information. Refer to **SENSOR, WHEEL SPEED, FRONT, REMOVAL** .
- Perform the ABS VERIFICATION TEST. Refer to **STANDARD PROCEDURE**.

No

- Go To 5

5. **CHECK RIGHT FRONT WHEEL BEARING AND HUB OR ENCODER FOR DAMAGE**

1. Inspect the Right Front wheel bearing, hub and Encoder for excessive runout, clearance or damage.

   NOTE: Refer to the appropriate service information, if necessary, for procedures or specifications.

   Is the Right Front Wheel Bearing, Hub or Encoder Damaged?

   Yes

   - Replace the Hub and Wheel Bearing in accordance with the Service Information. Refer to **HUB AND BEARING, REMOVAL** .
   - Perform the ABS VERIFICATION TEST. Refer to **STANDARD PROCEDURE**.

   No

   - Go To 6

6. **RIGHT FRONT WHEEL SPEED SENSOR**
   1. Replace the Right Front Wheel Speed Sensor in accordance with the Service Information. Refer to **SENSOR, WHEEL SPEED, FRONT, REMOVAL** .
   2. Perform the ABS VERIFICATION TEST. Refer to **STANDARD PROCEDURE**.
   3. Road test the vehicle over 40 km/h (25 mph).

      NOTE: Vehicle must be driven above 40 km/h (25 mph) for set conditions to be met.

   4. With the scan tool, read ABS DTCs.

      Does the DTC remain active?

      Yes

      - Replace the Anti-Lock Brakes Module in accordance with the Service Information. Refer to **MODULE, ANTI-LOCK BRAKE SYSTEM, REMOVAL** .
      - Perform the ABS VERIFICATION TEST. Refer to **STANDARD PROCEDURE**.

      No

      - Test Complete.

C0034-4A-RIGHT FRONT WHEEL SPEED SENSOR - INCORRECT COMPONENT INSTALLED

For a complete wiring diagram, **refer to appropriate SYSTEM WIRING DIAGRAMS article** .

WHEN MONITORED

With the ignition on and no system under voltage or over voltage condition present.

SET CONDITION

When the Anti-lock Brake System (ABS) Module detects that the wrong component is installed.

POSSIBLE CAUSES

Possible Causes
RIGHT FRONT WHEEL SPEED SENSOR ANTI-LOCK BRAKE SYSTEM (ABS) MODULE

DIAGNOSTIC TEST

1. **VERIFY THE DTC IS ACTIVE**

   NOTE: If DTC C0034-1D is present, perform the diagnostics for this DTC before continuing with this diagnostic procedure.

   NOTE: This vehicle uses non-directional front wheel speed sensors and directional rear wheel speed sensors.

   NOTE: After erasing ACTIVE DTCs it may be necessary for the Anti-lock Brake System (ABS) Module to go to sleep before the DTCs are cleared. IF the DTC is still ACTIVE after the clear command then Turn the ignition off, disconnect the Scan Tool, close the doors and wait until all indicators on the Cluster have gone out, typically about 30 seconds.

   1. Ignition on.
   2. With the scan tool, record and erase DTCs.
   3. With the scan tool, read DTCs.

   Is the DTC active at this time?

   Yes

   - Go To 2

   No

   - Test Complete.

2. **RIGHT FRONT WHEEL SPEED SENSOR**

   NOTE: This vehicle uses a non-directional front wheel speed sensor, make sure

the correct wheel speed sensor is installed on the vehicle.

1. Replace the Right Front Wheel Speed Sensor in accordance with the Service Information. Refer to **SENSOR, WHEEL SPEED, FRONT, REMOVAL** . Perform the ABS VERIFICATION TEST. Refer to **STANDARD PROCEDURE**.

   CAUTION: Make sure brake capability is available before road testing.

2. Road test the vehicle over 40 km/h (25 mph).
3. With the scan tool, read DTCs.

   Does the DTC remain active?

   Yes

   - Replace the Anti-lock Brake System (ABS) Module in accordance with the Service Information. Refer to **MODULE, ANTI-LOCK BRAKE SYSTEM, REMOVAL** .
   - Perform the ABS VERIFICATION TEST. Refer to **STANDARD PROCEDURE**.

   No

   - Test complete.

C0034-62-RIGHT FRONT WHEEL SPEED SENSOR - SIGNAL COMPARE FAILURE

For a complete wiring diagram, **refer to appropriate SYSTEM WIRING DIAGRAMS article** .

WHEN MONITORED

With the ignition on, no system under voltage or over voltage condition present, no open or shorted wheel speed sensor DTCs set, vehicle not under high acceleration, and vehicle speed greater than 0.

SET CONDITION

This DTC will be set if the wheel speed signal is 0 km/h (0 mph) or very low when compared to the other wheel speed signals.

POSSIBLE CAUSES

Possible Causes
IMPROPER RIGHT FRONT TIRE PRESSURE/MISMATCHED TIRES CHECK RIGHT FRONT WHEEL SPEED SENSOR FOR LOOSENESS INSPECT CIRCUITS/CONNECTOR/TERMINALS FOR DAMAGE

RIGHT FRONT WHEEL BEARING AND HUB OR ENCODER FOR DAMAGE
RIGHT FRONT WHEEL SPEED SENSOR
ANTI-LOCK BRAKE SYSTEM (ABS) MODULE

DIAGNOSTIC TEST

1. **VERIFY THE DTC IS ACTIVE**

NOTE: **If DTC C0034-1D is present, perform the diagnostics for this DTC before continuing with this diagnostic procedure.**

NOTE: **After erasing ACTIVE DTCs it may be necessary for the Anti-lock Brake System (ABS) Module to go to sleep before the DTCs are cleared. IF the DTC is still ACTIVE after the clear command then Turn the ignition off, disconnect the Scan Tool, close the doors and wait until all indicators on the Cluster have gone out, typically about 30 seconds.**

1. Turn the ignition on.
2. With the scan tool, record and erase DTCs.

CAUTION: Make sure brake capability is available before road testing.

3. Road test the vehicle over 40 km/h (25 mph).

NOTE: **Vehicle must be driven above 40 km/h (25 mph) for set conditions to be met.**

4. With the scan tool, read DTCs.

   Is the DTC active at this time?

   Yes

   - Go To 3

   No

   - Go To 2

2. **CHECK WHEEL SPEED SENSOR SIGNALS**
   1. Turn the ignition on.
   2. With the scan tool, monitor and graph ALL the WSS speeds and compare graph while an assistant drives the vehicle.

NOTE: If graph shows periodic dropouts pay close attention to the tone wheel.

3. Slowly accelerate as straight as possible from a stop to 40 km/h (25 mph).

   Is the Right Front WSS speed showing 0 km/h (0 mph), not matching other wheels, or showing erratic behavior?

   Yes

   - Go To 3

   No

   - Perform ABS INTERMITTENT CONDITION diagnostic procedure. Refer to **STANDARD PROCEDURE**.

3. **CHECK FOR IMPROPER RIGHT FRONT TIRE PRESSURE/MISMATCHED TIRES**
   1. Turn the ignition off.
   2. Check and adjust the Right Front Tire pressure.
   3. Check and adjust all other tire pressures.
   4. Inspect for mismatched tires on vehicle.

   Is the Right Front Tire improperly inflated or mismatched tires on vehicle?

   Yes

   - Repair as necessary
   - Perform the ABS VERIFICATION TEST. Refer to **STANDARD PROCEDURE**.

   No

   - Go To 4

4. **CHECK RIGHT FRONT WSS FOR LOOSENESS, INSPECT CIRCUITS/CONNECTORS/TERMINALS FOR DAMAGE**

   NOTE: Check all terminals for broken, bent, pushed out, or corroded terminals.

   1. Turn the ignition off to the lock position.
   2. Inspect the ABS Module harness connector and the Right Front WSS harness connector.
   3. Check the Right Front WSS for looseness, excessive corrosion and not properly fastened.
   4. Inspect the (B6) Right Front WSS Signal and (B7) Right Front WSS Supply circuits between the Right Front WSS and Anti-Lock Brake Module for damage.

Is the Right Front WSS loose or any of the wiring/connectors/terminals damaged?

Yes

- Repair as necessary.
- Perform the ABS VERIFICATION TEST. Refer to **STANDARD PROCEDURE**.

No

- Go To 5

5. **CHECK RIGHT FRONT WHEEL SPEED SENSOR FOR DAMAGE**
   1. Remove the Right Front Wheel Speed Sensor.
   2. Inspect the Wheel Speed Sensor for proper mounting.
   3. Inspect the Wheel Speed Sensor harness and connector.
   4. Inspect the Wheel Speed Sensor for excessive debris on the sensor.

   Is the Right Front Wheel Speed Sensor damaged?

   Yes

   - Replace the Right Front Wheel Speed Sensor in accordance with the Service Information. Refer to **SENSOR, WHEEL SPEED, FRONT, REMOVAL** .
   - Perform the ABS VERIFICATION TEST. Refer to **STANDARD PROCEDURE**.

   No

   - Go To 6

6. **CHECK RIGHT FRONT WHEEL BEARING AND HUB OR ENCODER FOR DAMAGE**
   1. Inspect the Right Front wheel bearing, hub and Encoder for excessive runout, clearance or damage.

   NOTE: Refer to the appropriate service information, if necessary, for procedures or specifications.

   Is the Right Front Wheel Bearing, Hub or Encoder Damaged?

   Yes

   - Replace the Hub and Wheel Bearing in accordance with the Service Information. Refer to **HUB AND BEARING, REMOVAL** .
   - Perform the ABS VERIFICATION TEST. Refer to **STANDARD PROCEDURE**.

   No

- Go To 7

7. **RIGHT FRONT WHEEL SPEED SENSOR**
   1. Replace the Right Front Wheel Speed Sensor in accordance with the Service Information. Refer to **SENSOR, WHEEL SPEED, FRONT, REMOVAL** .
   2. Perform the ABS VERIFICATION TEST. Refer to **STANDARD PROCEDURE**.
   3. Road test the vehicle over 40 km/h (25 mph).

      NOTE: Vehicle must be driven above 40 km/h (25 mph) for set conditions to be met.

   4. With the scan tool, read ABS DTCs.

      Does the DTC remain active?

      Yes

      - Replace the Anti-Lock Brakes Module in accordance with the Service Information. Refer to **MODULE, ANTI-LOCK BRAKE SYSTEM, REMOVAL** .
      - Perform the ABS VERIFICATION TEST. Refer to **STANDARD PROCEDURE**.

      No

      - Test Complete.

C0036-02-LEFT REAR TONE WHEEL - GENERAL SIGNAL FAILURE

For a complete wiring diagram **refer to appropriate SYSTEM WIRING DIAGRAMS article** .

WHEN MONITORED

With the ignition on.

SET CONDITION

When the Anti-lock Brake System (ABS) Module detects changes in Left Rear wheel speed.

POSSIBLE CAUSES

Possible Causes
CHECK LEFT REAR WHEEL SPEED SENSOR FOR LOOSENESS
INSPECT CIRCUITS/CONNECTOR/TERMINALS FOR DAMAGE
LEFT REAR WHEEL BEARING AND HUB OR ENCODER FOR DAMAGE
LEFT REAR WHEEL SPEED SENSOR
ANTI-LOCK BRAKE SYSTEM (ABS) MODULE

DIAGNOSTIC TEST

1. **VERIFY THE DTC IS ACTIVE**

NOTE: This DTC must be active for the results of this test to be valid. If DTC C0037-1D is present it must be repaired before continuing.

NOTE: After erasing ACTIVE DTCs it may be necessary for the Anti-lock Brake System (ABS) Module to go to sleep before the DTCs are cleared. IF the DTC is still ACTIVE after the clear command then Turn the ignition off, disconnect the Scan Tool, close the doors and wait until all indicators on the Cluster have gone out, typically about 30 seconds.

1. Turn the ignition on.
2. With the scan tool, read DTCs.
3. With the scan tool, read and record Environmental Data to help identify the conditions in which the DTC was set.
4. With the scan tool, erase DTCs.
5. Cycle the ignition switch off then on.

CAUTION: Ensure brake capability is available before road testing.

6. Test drive the vehicle in a straight line to 40 km/h (25 mph).

NOTE: Vehicle must be driven above 40 km/h (25 mph) for set conditions to be met.

7. With the scan tool, read DTCs.

Is the DTC active at this time?

Yes

- Go To 2

No

- The condition that caused the symptom is currently not present. Inspect the related wiring for a possible intermittent condition. Look for any chafed, pierced, pinched, or partially broken wires.
- Perform the ABS-INTERMITTENT CONDITION TEST. Refer to **STANDARD PROCEDURE**.

2. **CHECK LEFT REAR WSS FOR LOOSENESS, INSPECT CIRCUITS/CONNECTORS/TERMINALS FOR DAMAGE**

   NOTE: Check all terminals for broken, bent, pushed out, or corroded terminals.

   1. Turn the ignition off to the lock position.
   2. Inspect the ABS Module harness connector and the Left Rear WSS harness connector.
   3. Check the Left Rear WSS for looseness, excessive corrosion and not properly fastened.
   4. Inspect the (B3) Left Rear WSS Signal and (B4) Left Rear WSS Supply circuits between the Left Rear WSS and Anti-Lock Brake Module for damage.

   Is the Left Rear WSS loose or any of the wiring/connectors/terminals damaged?

   Yes

   - Repair as necessary.
   - Perform the ABS VERIFICATION TEST. Refer to **STANDARD PROCEDURE**.

   No

   - Go To 3

3. **CHECK LEFT REAR WHEEL SPEED SENSOR FOR DAMAGE**
   1. Remove the Left Rear Wheel Speed Sensor.
   2. Inspect the Wheel Speed Sensor for proper mounting.
   3. Inspect the Wheel Speed Sensor harness and connector.
   4. Inspect the Wheel Speed Sensor for excessive debris on the sensor.

   Is the Left Rear Wheel Speed Sensor damaged?

   Yes

   - Replace the Left Rear Wheel Speed Sensor in accordance with the Service Information. Refer to **SENSOR, WHEEL SPEED, REAR, REMOVAL** .
   - Perform the ABS VERIFICATION TEST. Refer to **STANDARD PROCEDURE**.

   No

   - Go To 4

4. **CHECK LEFT REAR WHEEL BEARING AND HUB OR ENCODER FOR DAMAGE**
   1. Inspect the Left Rear wheel bearing, hub and Encoder for excessive runout, clearance or damage.

   NOTE: Refer to the appropriate service information, if necessary, for

procedures or specifications.

Is the Left Rear Wheel Bearing, Hub or Encoder Damaged?

Yes

- Replace the Hub and Wheel Bearing in accordance with the Service Information. Refer to **HUB AND BEARING, REMOVAL** .
- Perform the ABS VERIFICATION TEST. Refer to **STANDARD PROCEDURE**.

No

- Go To 5

5. **LEFT REAR WHEEL SPEED SENSOR**
   1. Replace the Left Rear Wheel Speed Sensor in accordance with the Service Information. Refer to **SENSOR, WHEEL SPEED, REAR, REMOVAL** .
   2. Perform the ABS VERIFICATION TEST. Refer to **STANDARD PROCEDURE**.
   3. Road test the vehicle over 40 km/h (25 mph).

      NOTE: Vehicle must be driven above 40 km/h (25 mph) for set conditions to be met.

   4. With the scan tool, read ABS DTCs.

      Does the DTC remain active?

      Yes

      - Replace the Anti-lock Brake System (ABS) Module in accordance with the Service Information. Refer to **MODULE, ANTI-LOCK BRAKE SYSTEM, REMOVAL** .
      - Perform the ABS VERIFICATION TEST. Refer to **STANDARD PROCEDURE**.

      No

      - Test Complete.

C0037-1D-LEFT REAR WHEEL SPEED SENSOR - CIRCUIT CURRENT OUT OF RANGE

For a complete wiring diagram, **refer to appropriate SYSTEM WIRING DIAGRAMS article** .

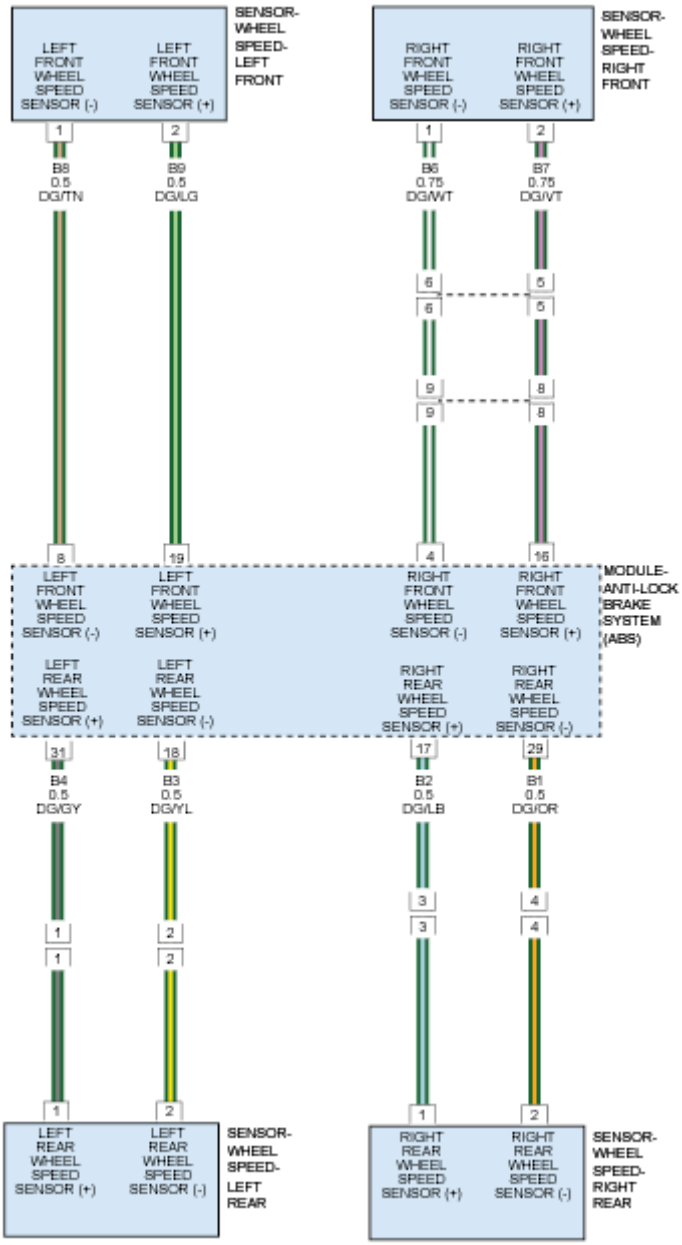

Fig. 5: Wheel Speed Sensor Circuit Schematic
Courtesy of CHRYSLER GROUP, LLC

WHEN MONITORED

With the ignition on and no system under voltage or over voltage condition present.

SET CONDITION

When the Left Rear Wheel Speed Sensor circuit fails the diagnostic test.

POSSIBLE CAUSES

Possible Causes
CONNECTOR/TERMINAL DAMAGE
(B3) LEFT REAR WHEEL SPEED SENSOR SIGNAL CIRCUIT SHORTED TO VOLTAGE
(B4) LEFT REAR WHEEL SPEED SENSOR SUPPLY CIRCUIT SHORTED TO VOLTAGE
(B3) LEFT REAR WHEEL SPEED SENSOR SIGNAL CIRCUIT SHORTED TO GROUND
(B4) LEFT REAR WHEEL SPEED SENSOR SUPPLY CIRCUIT SHORTED TO GROUND
(B3) LEFT REAR WHEEL SPEED SENSOR SIGNAL CIRCUIT OPEN
(B4) LEFT REAR WHEEL SPEED SENSOR SUPPLY CIRCUIT OPEN
(B4) LEFT REAR WHEEL SPEED SENSOR SUPPLY CIRCUIT SHORTED TO THE (B3) LEFT REAR WHEEL SPEED SENSOR SIGNAL CIRCUIT
LEFT REAR WHEEL SPEED SENSOR
ANTI-LOCK BRAKE SYSTEM (ABS) MODULE

DIAGNOSTIC TEST

1. **VERIFY THE DTC IS ACTIVE**

NOTE: **After erasing ACTIVE DTCs it may be necessary for the Anti-lock Brake System (ABS) Module to go to sleep before the DTCs are cleared. IF the DTC is still ACTIVE after the clear command then Turn the ignition off, disconnect the Scan Tool, close the doors and wait until all indicators on the Cluster have gone out, typically about 30 seconds.**

1. Ignition on, engine not running.
2. With the scan tool, erase DTCs.
3. Cycle the ignition switch from off to on.
4. With the scan tool, select View DTCs.

Is the DTC active at this time?

Yes

- Go To 2

No

- The condition that caused the symptom is currently not present. Inspect the related wiring for a possible intermittent condition. Look for any chafed, pierced, pinched, or partially broken wires.
- Perform the ABS-INTERMITTENT CONDITION TEST. Refer to **STANDARD PROCEDURE**.

2. **CHECK CONNECTOR/TERMINAL FOR DAMAGE**

NOTE: Check all terminals for broken, bent, pushed out, or corroded terminals.

1. Turn the ignition off to the lock position.
2. Inspect the Wheel Speed Sensor for proper mounting.
3. Inspect the Wheel Speed Sensor harness and connector.
4. Inspect the Wheel Speed Sensor for excessive debris on the sensor.

Were any problems found?

Yes

- Repair as necessary in accordance with the Service Information.
- Perform the ABS VERIFICATION TEST. Refer to **STANDARD PROCEDURE**.

No

- Go To 3

3. **CHECK (B4) LEFT REAR WHEEL SPEED SENSOR SUPPLY CIRCUIT VOLTAGE**
   1. Disconnect the Left Rear Wheel Speed Sensor harness connector.
   2. Turn the ignition on.
   3. Measure the voltage between the (B4) Left Rear Wheel Speed Sensor Supply circuit and ground.

   Is the voltage above 10 volts?

   Yes

   - Go To 6

   No

   - Go To 4

4. **(B4) LEFT REAR WHEEL SPEED SENSOR SUPPLY CIRCUIT SHORTED TO GROUND**
   1. Turn the ignition off.
   2. Disconnect the ABS Module harness connector.
   3. Measure the resistance between the (B4) Left Rear Wheel Speed Sensor Supply circuit and ground.

   Is the resistance below 5.0 Ohms?

   Yes

   - Repair the (B4) Left Rear Wheel Speed Sensor Supply circuit for a short to ground.
   - Perform the ABS VERIFICATION TEST. Refer to **STANDARD PROCEDURE**.

No

- Go To 5

5. **(B4) LEFT REAR WHEEL SPEED SENSOR SUPPLY CIRCUIT OPEN**
   1. Measure the resistance of the (B4) Left Rear Wheel Speed Sensor Supply circuit between the Left Rear Wheel Speed Sensor harness connector and the ABS harness connector.

      Is the resistance below 5 Ohms?

      Yes

      - Go To 6

      No

      - Repair the open (B4) Left Rear Wheel Speed Sensor Supply circuit.
      - Perform the ABS VERIFICATION TEST. Refer to **STANDARD PROCEDURE**.
6. **(B3) LEFT REAR WHEEL SPEED SENSOR SIGNAL CIRCUIT SHORTED TO VOLTAGE**
   1. Turn the ignition on.
   2. Measure the voltage of the (B3) Left Rear Wheel Speed Sensor Signal circuit at the Left Rear Wheel Speed Sensor harness connector.

      Is there any voltage present?

      Yes

      - Repair the (B3) Left Rear Wheel Speed Sensor Signal circuit for a short to voltage.
      - Perform the ABS VERIFICATION TEST. Refer to **STANDARD PROCEDURE**.

      No

      - Go To 7
7. **(B3) LEFT REAR WHEEL SPEED SENSOR SIGNAL CIRCUIT SHORTED TO GROUND**
   1. Turn the ignition off.
   2. Measure the resistance between the (B3) Left Rear Wheel Speed Sensor Signal circuit and ground.

      Is the resistance below 5.0 Ohms?

      Yes

      - Repair the (B3) Left Rear Wheel Speed Sensor Signal circuit for a short to ground.
      - Perform the ABS VERIFICATION TEST. Refer to **STANDARD PROCEDURE**.

No

- Go To 8

8. **(B3) LEFT REAR WHEEL SPEED SENSOR SIGNAL CIRCUIT OPEN**
   1. Measure the resistance of the (B3) Left Rear Wheel Speed Sensor Signal circuit between the Left Rear Wheel Speed Sensor harness connector and the ABS harness connector.

      Is the resistance below 5 Ohms?

      Yes

      - Go To 9

      No

      - Repair the open (B3) Left Rear Wheel Speed Sensor Signal circuit.
      - Perform the ABS VERIFICATION TEST. Refer to **STANDARD PROCEDURE**.
9. **(B4) LEFT REAR WHEEL SPEED SENSOR SUPPLY CIRCUIT SHORTED TO THE (B3) LEFT REAR WHEEL SPEED SENSOR SIGNAL CIRCUIT**
   1. Turn the ignition off to the lock position.
   2. Measure the resistance between the (B4) Left Rear Wheel Speed Sensor Supply circuit and the (B3) Left Rear Wheel Speed Sensor Signal circuit at the Wheel Speed Sensor harness connector.

      Is the resistance below 5.0 Ohms?

      Yes

      - Repair (B4) Left Rear Wheel Speed Sensor Supply circuit for a short to the (B3) Left Rear Wheel Speed Sensor Signal circuit.
      - Perform the ABS VERIFICATION TEST. Refer to **STANDARD PROCEDURE**.

      No

      - Go To 10
10. **LEFT REAR WHEEL SPEED SENSOR**
    1. Replace the Left Rear Wheel Speed Sensor in accordance with the Service Information. Refer to **SENSOR, WHEEL SPEED, REAR, REMOVAL** .
    2. Perform the ABS VERIFICATION TEST. Refer to **STANDARD PROCEDURE**.

       CAUTION: Make sure brake capability is available before road testing.

    3. Road test the vehicle over 40 km/h (25 mph).

NOTE: Vehicle must be driven above 40 km/h (25 mph) for set conditions to be meet.

4. With the scan tool, read ABS DTCs.

   Is the status Active for this DTC?

   Yes

   - Replace the Anti-lock Brake System (ABS) Module in accordance with the Service Information. Refer to **MODULE, ANTI-LOCK BRAKE SYSTEM, REMOVAL** .
   - Perform the ABS VERIFICATION TEST. Refer to **STANDARD PROCEDURE**.

   No

   - Test complete.

C0037-2F-LEFT REAR WHEEL SPEED SENSOR - SIGNAL ERRATIC

For a complete wiring diagram, **refer to appropriate SYSTEM WIRING DIAGRAMS article** .

WHEN MONITORED

With the ignition on.

SET CONDITION

When the Anti-lock Brake System (ABS) Module detects multiple drastic changes in Left Rear wheel speed.

POSSIBLE CAUSES

Possible Causes
CHECK LEFT REAR WHEEL SPEED SENSOR FOR LOOSENESS
INSPECT CIRCUITS/CONNECTOR/TERMINALS FOR DAMAGE
LEFT REAR WHEEL BEARING AND HUB OR ENCODER FOR DAMAGE
LEFT REAR WHEEL SPEED SENSOR
ANTI-LOCK BRAKE SYSTEM (ABS) MODULE

DIAGNOSTIC TEST

1. **VERIFY THE DTC IS ACTIVE**

NOTE: If DTC C0037-1D is present, perform the diagnostics for this DTC before continuing with this diagnostic procedure.

NOTE: After erasing ACTIVE DTCs it may be necessary for the Anti-lock Brake System (ABS) Module to go to sleep before the DTCs are cleared. IF the DTC is still ACTIVE after the clear command then Turn the ignition off, disconnect the Scan Tool, close the doors and wait until all indicators on the Cluster have gone out, typically about 30 seconds.

1. Turn the ignition on.
2. With the scan tool, record and erase DTCs.

CAUTION: Make sure brake capability is available before road testing.

3. Road test the vehicle over 40 km/h (25 mph).

NOTE: Vehicle must be driven above 40 km/h (25 mph) for set conditions to be met.

4. With the scan tool, read DTCs.

   Is the DTC active at this time?

   Yes

   - Go To 3

   No

   - Go To 2

2. **CHECK WHEEL SPEED SENSOR SIGNALS**
   1. Turn the ignition on.
   2. With the scan tool, monitor and graph ALL the WSS speeds and compare graph while an assistant drives the vehicle.

   NOTE: If graph shows periodic dropouts pay close attention to the tone wheel.

   3. Slowly accelerate as straight as possible from a stop to 40 km/h (25 mph).

      Is the Left Rear WSS speed showing 0 km/h (0 mph), not matching other wheels, or showing erratic behavior?

      Yes

      - Go To 3

No

- Perform ABS INTERMITTENT CONDITION diagnostic procedure. Refer to **STANDARD PROCEDURE**.

3. **CHECK LEFT REAR WSS FOR LOOSENESS, INSPECT CIRCUITS/CONNECTORS/TERMINALS FOR DAMAGE**

NOTE: Check all terminals for broken, bent, pushed out, or corroded terminals.

1. Turn the ignition off to the lock position.
2. Inspect the ABS Module harness connector and the Left Rear WSS harness connector.
3. Check the Left Rear WSS for looseness, excessive corrosion and not properly fastened.
4. Inspect the (B3) Left Rear WSS Signal and (B4) Left Rear WSS Supply circuits between the Left Rear WSS and Anti-Lock Brake Module for damage.

Is the Left Rear WSS loose or any of the wiring/connectors/terminals damaged?

Yes

- Repair as necessary.
- Perform the ABS VERIFICATION TEST. Refer to **STANDARD PROCEDURE**.

No

- Go To 4

4. **CHECK LEFT REAR WHEEL SPEED SENSOR FOR DAMAGE**

1. Remove the Left Rear Wheel Speed Sensor.
2. Inspect the Wheel Speed Sensor for proper mounting.
3. Inspect the Wheel Speed Sensor harness and connector.
4. Inspect the Wheel Speed Sensor for excessive debris on the sensor.

Is the Left Rear Wheel Speed Sensor damaged?

Yes

- Replace the Left Rear Wheel Speed Sensor in accordance with the Service Information. Refer to **SENSOR, WHEEL SPEED, REAR, REMOVAL** .
- Perform the ABS VERIFICATION TEST. Refer to **STANDARD PROCEDURE**.

No

- Go To 5

5. **CHECK LEFT REAR WHEEL BEARING AND HUB OR ENCODER FOR DAMAGE**

1. Inspect the Left Rear wheel bearing, hub and Encoder for excessive runout, clearance or damage.

   NOTE: Refer to the appropriate service information, if necessary, for procedures or specifications.

   Is the Left Rear Wheel Bearing, Hub or Encoder Damaged?

   Yes

   - Replace the Hub and Wheel Bearing in accordance with the Service Information. Refer to **HUB AND BEARING, REMOVAL** .
   - Perform the ABS VERIFICATION TEST. Refer to **STANDARD PROCEDURE**.

   No

   - Go To 6

6. **LEFT REAR WHEEL SPEED SENSOR**
   1. Replace the Left Rear Wheel Speed Sensor in accordance with the Service Information. Refer to **SENSOR, WHEEL SPEED, REAR, REMOVAL** .
   2. Perform the ABS VERIFICATION TEST. Refer to **STANDARD PROCEDURE**.
   3. Road test the vehicle over 40 km/h (25 mph).

      NOTE: Vehicle must be driven above 40 km/h (25 mph) for set conditions to be met.

   4. With the scan tool, read ABS DTCs.

      Does the DTC remain active?

      Yes

      - Replace the Anti-lock Brake System (ABS) Module in accordance with the Service Information. Refer to **MODULE, ANTI-LOCK BRAKE SYSTEM, REMOVAL** .
      - Perform the ABS VERIFICATION TEST. Refer to **STANDARD PROCEDURE**.

      No

      - Test Complete.

C0037-4A-LEFT REAR WHEEL SPEED SENSOR - INCORRECT COMPONENT INSTALLED

For a complete wiring diagram, **refer to appropriate SYSTEM WIRING DIAGRAMS article** .

WHEN MONITORED

With the ignition on and no system under voltage or over voltage condition present.

SET CONDITION

When the Anti-lock Brake System (ABS) Module detects that the wrong component is installed.

POSSIBLE CAUSES

Possible Causes
LEFT REAR WHEEL SPEED SENSOR ANTI-LOCK BRAKE SYSTEM (ABS) MODULE

DIAGNOSTIC TEST

1. **VERIFY THE DTC IS ACTIVE**

   NOTE: If DTC C0037-1D is present, perform the diagnostics for this DTC before continuing with this diagnostic procedure.

   NOTE: This vehicle uses non-directional front wheel speed sensors and directional rear wheel speed sensors.

   NOTE: After erasing ACTIVE DTCs it may be necessary for the Anti-lock Brake System (ABS) Module to go to sleep before the DTCs are cleared. IF the DTC is still ACTIVE after the clear command then Turn the ignition off, disconnect the Scan Tool, close the doors and wait until all indicators on the Cluster have gone out, typically about 30 seconds.

   1. Ignition on.
   2. With the scan tool, record and erase DTCs.
   3. With the scan tool, read DTCs.

   Is the DTC active at this time?

   Yes

   - Go To 2

   No

   - Test Complete.

2. **LEFT REAR WHEEL SPEED SENSOR**

   NOTE: This vehicle uses a directional rear wheel speed sensor, make sure the

correct wheel speed sensor is installed on the vehicle.

1. Replace the Left Rear Wheel Speed Sensor in accordance with the Service Information. Refer to **SENSOR, WHEEL SPEED, REAR, REMOVAL** . Perform the ABS VERIFICATION TEST. Refer to **STANDARD PROCEDURE**.

   CAUTION: Make sure brake capability is available before road testing.

2. Road test the vehicle over 40 km/h (25 mph).
3. With the scan tool, read DTCs.

   Does the DTC remain active?

   Yes

   - Replace the Anti-lock Brake System (ABS) Module in accordance with the Service Information. Refer to **MODULE, ANTI-LOCK BRAKE SYSTEM, REMOVAL** .
   - Perform the ABS VERIFICATION TEST. Refer to **STANDARD PROCEDURE**.

   No

   - Test complete.

C0037-62-LEFT REAR WHEEL SPEED SENSOR - SIGNAL COMPARE FAILURE

For a complete wiring diagram, **refer to appropriate SYSTEM WIRING DIAGRAMS article** .

WHEN MONITORED

With the ignition on, no system under voltage or over voltage condition present, no open or shorted wheel speed sensor DTCs set, vehicle not under high acceleration, and vehicle speed greater than 0.

SET CONDITION

This DTC will be set if the wheel speed signal is 0 km/h (0 mph) or very low when compared to the other wheel speed signals.

POSSIBLE CAUSES

Possible Causes
IMPROPER LEFT REAR TIRE PRESSURE/MISMATCHED TIRES CHECK LEFT REAR WHEEL SPEED SENSOR FOR LOOSENESS INSPECT CIRCUITS/CONNECTOR/TERMINALS FOR DAMAGE

LEFT REAR WHEEL BEARING AND HUB OR ENCODER FOR DAMAGE
LEFT REAR WHEEL SPEED SENSOR
ANTI-LOCK BRAKE SYSTEM (ABS) MODULE

DIAGNOSTIC TEST

1. **VERIFY THE DTC IS ACTIVE**

NOTE: **If DTC C0037-1D is present, perform the diagnostics for this DTC before continuing with this diagnostic procedure.**

NOTE: **After erasing ACTIVE DTCs it may be necessary for the Anti-lock Brake System (ABS) Module to go to sleep before the DTCs are cleared. IF the DTC is still ACTIVE after the clear command then Turn the ignition off, disconnect the Scan Tool, close the doors and wait until all indicators on the Cluster have gone out, typically about 30 seconds.**

1. Turn the ignition on.
2. With the scan tool, record and erase DTCs.

CAUTION: Make sure brake capability is available before road testing.

3. Road test the vehicle over 40 km/h (25 mph).

NOTE: **Vehicle must be driven above 40 km/h (25 mph) for set conditions to be met.**

4. With the scan tool, read DTCs.

   Is the DTC active at this time?

   Yes

   - Go To 3

   No

   - Go To 2

2. **CHECK WHEEL SPEED SENSOR SIGNALS**
   1. Turn the ignition on.
   2. With the scan tool, monitor and graph ALL the WSS speeds and compare graph while an assistant drives the vehicle.

NOTE: If graph shows periodic dropouts pay close attention to the tone wheel.

3. Slowly accelerate as straight as possible from a stop to 40 km/h (25 mph).

   Is the Left Rear WSS speed showing 0 km/h (0 mph), not matching other wheels, or showing erratic behavior?

   Yes

   - Go To 3

   No

   - Perform ABS-INTERMITTENT CONDITION diagnostic procedure. Refer to **STANDARD PROCEDURE**.

3. **CHECK FOR IMPROPER LEFT REAR TIRE PRESSURE/MISMATCHED TIRES**
   1. Turn the ignition off.
   2. Check and adjust the Left Rear Tire pressure.
   3. Check and adjust all other tire pressures.
   4. Inspect for mismatched tires on vehicle.

   Is the Left Rear Tire improperly inflated or mismatched tires on vehicle?

   Yes

   - Repair as necessary
   - Perform the ABS VERIFICATION TEST. Refer to **STANDARD PROCEDURE**.

   No

   - Go To 4

4. **CHECK LEFT REAR WSS FOR LOOSENESS, INSPECT CIRCUITS/CONNECTORS/TERMINALS FOR DAMAGE**

   NOTE: Check all terminals for broken, bent, pushed out, or corroded terminals.

   1. Turn the ignition off to the lock position.
   2. Inspect the ABS Module harness connector and the Left Rear WSS harness connector.
   3. Check the Left Rear WSS for looseness, excessive corrosion and not properly fastened.
   4. Inspect the (B3) Left Rear WSS Signal and (B4) Left Rear WSS Supply circuits between the Left Rear WSS and Anti-Lock Brake Module for damage.

Is the Left Rear WSS loose or any of the wiring/connectors/terminals damaged?

Yes

- Repair as necessary.
- Perform the ABS VERIFICATION TEST. Refer to **STANDARD PROCEDURE**.

No

- Go To 5

5. **CHECK LEFT REAR WHEEL SPEED SENSOR FOR DAMAGE**
   1. Remove the Left Rear Wheel Speed Sensor.
   2. Inspect the Wheel Speed Sensor for proper mounting.
   3. Inspect the Wheel Speed Sensor harness and connector.
   4. Inspect the Wheel Speed Sensor for excessive debris on the sensor.

   Is the Left Rear Wheel Speed Sensor damaged?

   Yes

   - Replace the Left Rear Wheel Speed Sensor in accordance with the Service Information. Refer to **SENSOR, WHEEL SPEED, REAR, REMOVAL** .
   - Perform the ABS VERIFICATION TEST. Refer to **STANDARD PROCEDURE**.

   No

   - Go To 6

6. **CHECK LEFT REAR WHEEL BEARING AND HUB OR ENCODER FOR DAMAGE**
   1. Inspect the Left Rear wheel bearing, hub and Encoder for excessive runout, clearance or damage.

   NOTE: Refer to the appropriate service information, if necessary, for procedures or specifications.

   Is the Left Rear Wheel Bearing, Hub or Encoder Damaged?

   Yes

   - Replace the Hub and Wheel Bearing in accordance with the Service Information. Refer to **HUB AND BEARING, REMOVAL** .
   - Perform the ABS VERIFICATION TEST. Refer to **STANDARD PROCEDURE**.

   No

- Go To 7

7. **LEFT REAR WHEEL SPEED SENSOR**
   1. Replace the Left Rear Wheel Speed Sensor in accordance with the Service Information. Refer to **SENSOR, WHEEL SPEED, REAR, REMOVAL** .
   2. Perform the ABS VERIFICATION TEST. Refer to **STANDARD PROCEDURE**.
   3. Road test the vehicle over 40 km/h (25 mph).

      NOTE: Vehicle must be driven above 40 km/h (25 mph) for set conditions to be met.

   4. With the scan tool, read ABS DTCs.

      Does the DTC remain active?

      Yes

      - Replace the Anti-Lock Brakes Module in accordance with the Service Information. Refer to **MODULE, ANTI-LOCK BRAKE SYSTEM, REMOVAL** .
      - Perform the ABS VERIFICATION TEST. Refer to **STANDARD PROCEDURE**.

      No

      - Test Complete.

C0039-02-RIGHT REAR TONE WHEEL - GENERAL SIGNAL FAILURE

For a complete wiring diagram **refer to appropriate SYSTEM WIRING DIAGRAMS article** .

WHEN MONITORED

With the ignition on and no system under voltage or over voltage condition present.

SET CONDITION

When the Anti-lock Brake System (ABS) Module detects changes in Right Rear wheel speed.

POSSIBLE CAUSES

Possible Causes
CHECK RIGHT REAR WHEEL SPEED SENSOR FOR LOOSENESS
INSPECT CIRCUITS/CONNECTOR/TERMINALS FOR DAMAGE
RIGHT REAR WHEEL BEARING AND HUB OR ENCODER FOR DAMAGE
RIGHT REAR WHEEL SPEED SENSOR
ANTI-LOCK BRAKE SYSTEM (ABS) MODULE

DIAGNOSTIC TEST

1. **VERIFY THE DTC IS ACTIVE**

NOTE: **If DTC C003A-1D is present, perform the diagnostics for this DTC before continuing with this diagnostic procedure.**

NOTE: **After erasing ACTIVE DTCs it may be necessary for the Anti-lock Brake System (ABS) Module to go to sleep before the DTCs are cleared. IF the DTC is still ACTIVE after the clear command then Turn the ignition off, disconnect the Scan Tool, close the doors and wait until all indicators on the Cluster have gone out, typically about 30 seconds.**

1. Turn the ignition on.
2. With the scan tool, record and erase DTCs.

CAUTION: Make sure brake capability is available before road testing.

3. Road test the vehicle over 40 km/h (25 mph).

NOTE: **Vehicle must be driven above 40 km/h (25 mph) for set conditions to be met.**

4. With the scan tool, read DTCs.

Is the DTC active at this time?

Yes

- Go To 2

No

- The condition that caused the symptom is currently not present. Inspect the related wiring for a possible intermittent condition. Look for any chafed, pierced, pinched, or partially broken wires.
- Perform the ABS-INTERMITTENT CONDITION TEST. Refer to **STANDARD PROCEDURE**.

2. **CHECK RIGHT REAR WSS FOR LOOSENESS, INSPECT CIRCUITS/CONNECTORS/TERMINALS FOR DAMAGE**

NOTE: **Check all terminals for broken, bent, pushed out, or corroded terminals.**

1. Turn the ignition off to the lock position.
2. Inspect the ABS Module harness connector and the Right Rear WSS harness connector.
3. Check the Right Rear WSS for looseness, excessive corrosion and not properly fastened.
4. Inspect the (B1) Right Rear WSS Signal and (B2) Right Rear WSS Supply circuits between the Right Rear WSS and Anti-Lock Brake Module for damage.

   Is the Right Rear WSS loose or any of the wiring/connectors/terminals damaged?

   Yes

   - Repair as necessary.
   - Perform the ABS VERIFICATION TEST. Refer to **STANDARD PROCEDURE**.

   No

   - Go To 3

3. **CHECK RIGHT REAR WHEEL SPEED SENSOR FOR DAMAGE**
   1. Remove the Right Rear Wheel Speed Sensor.
   2. Inspect the Wheel Speed Sensor for proper mounting.
   3. Inspect the Wheel Speed Sensor harness and connector.
   4. Inspect the Wheel Speed Sensor for excessive debris on the sensor.

   Is the Right Rear Wheel Speed Sensor damaged?

   Yes

   - Replace the Right Rear Wheel Speed Sensor in accordance with the Service Information. Refer to **SENSOR, WHEEL SPEED, REAR, REMOVAL** .
   - Perform the ABS VERIFICATION TEST. Refer to **STANDARD PROCEDURE**.

   No

   - Go To 4

4. **CHECK RIGHT REAR WHEEL BEARING AND HUB OR ENCODER FOR DAMAGE**
   1. Inspect the Right Rear wheel bearing, hub and Encoder for excessive runout, clearance or damage.

   NOTE: Refer to the appropriate service information, if necessary, for procedures or specifications.

   Is the Right Rear Wheel Bearing, Hub or Encoder Damaged?

   Yes

- Replace the Hub and Wheel Bearing in accordance with the Service Information. Refer to **HUB AND BEARING, REMOVAL** .
- Perform the ABS VERIFICATION TEST. Refer to **STANDARD PROCEDURE**.

No

- Go To 5

5. **RIGHT REAR WHEEL SPEED SENSOR**
   1. Replace the Right Rear Wheel Speed Sensor in accordance with the Service Information. Refer to **SENSOR, WHEEL SPEED, FRONT, REMOVAL** .
   2. Perform the ABS VERIFICATION TEST. Refer to **STANDARD PROCEDURE**.
   3. Road test the vehicle over 40 km/h (25 mph).

      NOTE: Vehicle must be driven above 40 km/h (25 mph) for set conditions to be met.

   4. With the scan tool, read ABS DTCs.

      Does the DTC remain active?

      Yes

      - Replace the Anti-Lock Brakes Module in accordance with the Service Information. Refer to **MODULE, ANTI-LOCK BRAKE SYSTEM, REMOVAL** .
      - Perform the ABS VERIFICATION TEST. Refer to **STANDARD PROCEDURE**.

      No

      - Test Complete.

C003A-1D-RIGHT REAR WHEEL SPEED SENSOR - CIRCUIT CURRENT OUT OF RANGE

For a complete wiring diagram **refer to appropriate SYSTEM WIRING DIAGRAMS article** .

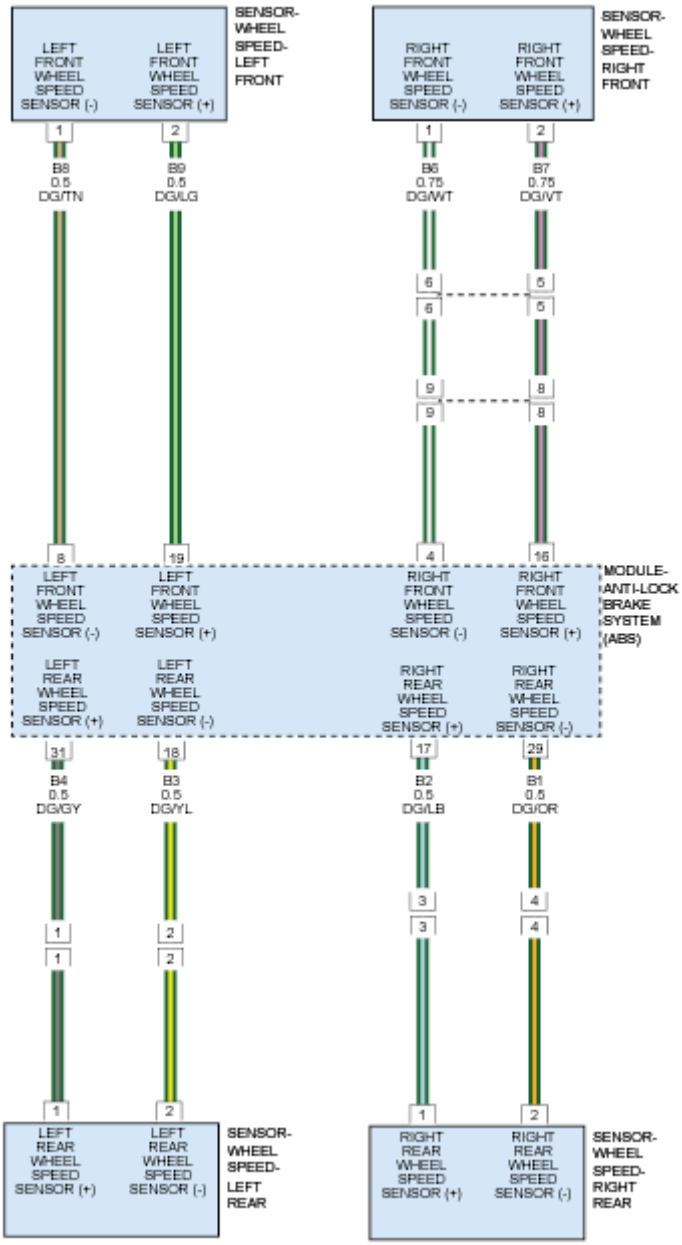

Fig. 6: Wheel Speed Sensor Circuit Schematic
Courtesy of CHRYSLER GROUP, LLC

WHEN MONITORED

With the ignition on and no system under voltage or over voltage condition present.

SET CONDITION

When the Right Rear Wheel Speed Sensor circuit fails the diagnostic test.

POSSIBLE CAUSES

Possible Causes
CONNECTOR/TERMINAL DAMAGE
(B1) RIGHT REAR WHEEL SPEED SENSOR SIGNAL CIRCUIT SHORTED TO VOLTAGE
(B2) RIGHT REAR WHEEL SPEED SENSOR SUPPLY CIRCUIT SHORTED TO VOLTAGE
(B1) RIGHT REAR WHEEL SPEED SENSOR SIGNAL CIRCUIT SHORTED TO GROUND
(B2) RIGHT REAR WHEEL SPEED SENSOR SUPPLY CIRCUIT SHORTED TO GROUND
(B1) RIGHT REAR WHEEL SPEED SENSOR SIGNAL CIRCUIT OPEN
(B2) RIGHT REAR WHEEL SPEED SENSOR SUPPLY CIRCUIT OPEN
(B2) RIGHT REAR WHEEL SPEED SENSOR SUPPLY CIRCUIT SHORTED TO THE (B1) RIGHT REAR WHEEL SPEED SENSOR SIGNAL CIRCUIT
RIGHT REAR WHEEL SPEED SENSOR
ANTI-LOCK BRAKE SYSTEM (ABS) MODULE

DIAGNOSTIC TEST

1. **VERIFY THE DTC IS ACTIVE**

NOTE: **After erasing ACTIVE DTCs it may be necessary for the Anti-lock Brake System (ABS) Module to go to sleep before the DTCs are cleared. IF the DTC is still ACTIVE after the clear command then Turn the ignition off, disconnect the Scan Tool, close the doors and wait until all indicators on the Cluster have gone out, typically about 30 seconds.**

1. Ignition on, engine not running.
2. With the scan tool, erase DTCs.
3. Cycle the ignition switch from off to on.
4. With the scan tool, select View DTCs.

Is the DTC active at this time?

Yes

- Go To 2

No

- The condition that caused the symptom is currently not present. Inspect the related wiring for a possible intermittent condition. Look for any chafed, pierced, pinched, or partially broken wires.
- Perform the ABS-INTERMITTENT CONDITION TEST. Refer to **STANDARD PROCEDURE**.

2. **CHECK CONNECTOR/TERMINAL FOR DAMAGE**

NOTE: Check all terminals for broken, bent, pushed out, or corroded terminals.

1. Turn the ignition off to the lock position.
2. Inspect the Wheel Speed Sensor for proper mounting.
3. Inspect the Wheel Speed Sensor harness and connector.
4. Inspect the Wheel Speed Sensor for excessive debris on the sensor.

Were any problems found?

Yes

- Repair as necessary in accordance with the Service Information.
- Perform the ABS VERIFICATION TEST. Refer to **STANDARD PROCEDURE**.

No

- Go To 3

3. **CHECK (B2) RIGHT REAR WHEEL SPEED SENSOR SUPPLY CIRCUIT VOLTAGE**
   1. Disconnect the Right Rear Wheel Speed Sensor harness connector.
   2. Turn the ignition on.
   3. Measure the voltage between the (B2) Right Rear Wheel Speed Sensor Supply circuit and ground.

   Is the voltage above 10 volts?

   Yes

   - Go To 6

   No

   - Go To 4

4. **(B2) RIGHT REAR WHEEL SPEED SENSOR SUPPLY CIRCUIT SHORTED TO GROUND**
   1. Turn the ignition off.
   2. Disconnect the ABS Module harness connector.
   3. Measure the resistance between the (B2) Right Rear Wheel Speed Sensor Supply circuit and ground.

   Is the resistance below 5.0 Ohms?

   Yes

   - Repair the (B2) Right Rear Wheel Speed Sensor Supply circuit for a short to ground.
   - Perform the ABS VERIFICATION TEST. Refer to **STANDARD PROCEDURE**.

No

- Go To 5

5. **(B2) RIGHT REAR WHEEL SPEED SENSOR SUPPLY CIRCUIT OPEN**
   1. Measure the resistance of the (B2) Right Rear Wheel Speed Sensor Supply circuit between the Right Rear Wheel Speed Sensor harness connector and the ABS harness connector.

      Is the resistance below 5 Ohms?

      Yes

      - Go To 6

      No

      - Repair the open (B2) Right Rear Wheel Speed Sensor Supply circuit.
      - Perform the ABS VERIFICATION TEST. Refer to **STANDARD PROCEDURE**.

6. **(B1) RIGHT REAR WHEEL SPEED SENSOR SIGNAL CIRCUIT SHORTED TO VOLTAGE**
   1. Turn the ignition on.
   2. Measure the voltage of the (B1) Right Rear Wheel Speed Sensor Signal circuit at the Right Rear Wheel Speed Sensor harness connector.

      Is there any voltage present?

      Yes

      - Repair the (B1) Right Rear Wheel Speed Sensor Signal circuit for a short to voltage.
      - Perform the ABS VERIFICATION TEST. Refer to **STANDARD PROCEDURE**.

      No

      - Go To 7

7. **(B1) RIGHT REAR WHEEL SPEED SENSOR SIGNAL CIRCUIT SHORTED TO GROUND**
   1. Turn the ignition off.
   2. Measure the resistance between the (B1) Right Rear Wheel Speed Sensor Signal circuit and ground.

      Is the resistance below 5.0 Ohms?

      Yes

      - Repair the (B1) Right Rear Wheel Speed Sensor Signal circuit for a short to ground.
      - Perform the ABS VERIFICATION TEST. Refer to **STANDARD PROCEDURE**.

No

- Go To 8

8. **(B1) RIGHT REAR WHEEL SPEED SENSOR SIGNAL CIRCUIT OPEN**
   1. Measure the resistance of the (B1) Right Rear Wheel Speed Sensor Signal circuit between the Right Rear Wheel Speed Sensor harness connector and the ABS harness connector.

      Is the resistance below 5 Ohms?

      Yes

      - Go To 9

      No

      - Repair the open (B1) Right Rear Wheel Speed Sensor Signal circuit.
      - Perform the ABS VERIFICATION TEST. Refer to **STANDARD PROCEDURE**.

9. **(B2) RIGHT REAR WHEEL SPEED SENSOR SUPPLY CIRCUIT SHORTED TO THE (B1) RIGHT REAR WHEEL SPEED SENSOR SIGNAL CIRCUIT**
   1. Turn the ignition off to the lock position.
   2. Measure the resistance between the (B2) Right Rear Wheel Speed Sensor Supply circuit and the (B1) Right Rear Wheel Speed Sensor Signal circuit at the Wheel Speed Sensor harness connector.

      Is the resistance below 5.0 Ohms?

      Yes

      - Repair (B2) Right Rear Wheel Speed Sensor Supply circuit for a short to the (B1) Right Rear Wheel Speed Sensor Signal circuit.
      - Perform the ABS VERIFICATION TEST. Refer to **STANDARD PROCEDURE**.

      No

      - Go To 10

10. **RIGHT REAR WHEEL SPEED SENSOR**
    1. Replace the Right Rear Wheel Speed Sensor in accordance with the Service Information. Refer to **SENSOR, WHEEL SPEED, REAR, REMOVAL** .
    2. Perform the ABS VERIFICATION TEST. Refer to **STANDARD PROCEDURE**.

       CAUTION: Make sure brake capability is available before road testing.

    3. Road test the vehicle over 40 km/h (25 mph).

NOTE: Vehicle must be driven above 40 km/h (25 mph) for set conditions to be meet.

4. With the scan tool, read ABS DTCs.

   Is the status Active for this DTC?

   Yes

   - Replace the Anti-lock Brake System (ABS) Module in accordance with the Service Information. Refer to **MODULE, ANTI-LOCK BRAKE SYSTEM, REMOVAL** .
   - Perform the ABS VERIFICATION TEST. Refer to **STANDARD PROCEDURE**.

   No

   - Test complete.

C003A-2F-RIGHT REAR WHEEL SPEED SENSOR - SIGNAL ERRATIC

For a complete wiring diagram, **refer to appropriate SYSTEM WIRING DIAGRAMS article** .

WHEN MONITORED

With the ignition on and no system under voltage or over voltage condition present.

SET CONDITION

When the Anti-lock Brake System (ABS) Module detects multiple drastic changes in Right Rear wheel speed.

POSSIBLE CAUSES

Possible Causes
CHECK RIGHT REAR WHEEL SPEED SENSOR FOR LOOSENESS
INSPECT CIRCUITS/CONNECTOR/TERMINALS FOR DAMAGE
RIGHT REAR WHEEL BEARING AND HUB OR ENCODER FOR DAMAGE
RIGHT REAR WHEEL SPEED SENSOR
ANTI-LOCK BRAKE SYSTEM (ABS) MODULE

DIAGNOSTIC TEST

1. **VERIFY THE DTC IS ACTIVE**

NOTE: If DTC C003A-1D is present, perform the diagnostics for this DTC before continuing with this diagnostic procedure.

NOTE: After erasing ACTIVE DTCs it may be necessary for the Anti-lock Brake System (ABS) Module to go to sleep before the DTCs are cleared. IF the DTC is still ACTIVE after the clear command then Turn the ignition off, disconnect the Scan Tool, close the doors and wait until all indicators on the Cluster have gone out, typically about 30 seconds.

1. Turn the ignition on.
2. With the scan tool, record and erase DTCs.

CAUTION: Make sure brake capability is available before road testing.

3. Road test the vehicle over 40 km/h (25 mph).

NOTE: Vehicle must be driven above 40 km/h (25 mph) for set conditions to be met.

4. With the scan tool, read DTCs.

   Is the DTC active at this time?

   Yes

   - Go To 3

   No

   - Go To 2

2. **CHECK WHEEL SPEED SENSOR SIGNALS**
   1. Turn the ignition on.
   2. With the scan tool, monitor and graph ALL the WSS speeds and compare graph while an assistant drives the vehicle.

   NOTE: If graph shows periodic dropouts pay close attention to the tone wheel.

   3. Slowly accelerate as straight as possible from a stop to 40 km/h (25 mph).

      Is the Right Rear WSS speed showing 0 km/h (0 mph), not matching other wheels, or showing erratic behavior?

      Yes

      - Go To 3

No

- Perform the ABS INTERMITTENT CONDITION diagnostic procedure. Refer to **STANDARD PROCEDURE**.

3. **CHECK RIGHT REAR WSS FOR LOOSENESS, INSPECT CIRCUITS/CONNECTORS/TERMINALS FOR DAMAGE**

NOTE: Check all terminals for broken, bent, pushed out, or corroded terminals.

1. Turn the ignition off to the lock position.
2. Inspect the ABS Module harness connector and the Right Rear WSS harness connector.
3. Check the Right Rear WSS for looseness, excessive corrosion and not properly fastened.
4. Inspect the (B1) Right Rear WSS Signal and (B2) Right Rear WSS Supply circuits between the Right Rear WSS and Anti-Lock Brake Module for damage.

Is the Right Rear WSS loose or any of the wiring/connectors/terminals damaged?

Yes

- Repair as necessary.
- Perform the ABS VERIFICATION TEST. Refer to **STANDARD PROCEDURE**.

No

- Go To 4

4. **CHECK RIGHT REAR WHEEL SPEED SENSOR FOR DAMAGE**

1. Remove the Right Rear Wheel Speed Sensor.
2. Inspect the Wheel Speed Sensor for proper mounting.
3. Inspect the Wheel Speed Sensor harness and connector.
4. Inspect the Wheel Speed Sensor for excessive debris on the sensor.

Is the Right Rear Wheel Speed Sensor damaged?

Yes

- Replace the Right Rear Wheel Speed Sensor in accordance with the Service Information. Refer to **SENSOR, WHEEL SPEED, REAR, REMOVAL** .
- Perform the ABS VERIFICATION TEST. Refer to **STANDARD PROCEDURE**.

No

- Go To 5

5. **CHECK RIGHT REAR WHEEL BEARING AND HUB OR ENCODER FOR DAMAGE**

1. Inspect the Right Rear wheel bearing, hub and Encoder for excessive runout, clearance or damage.

   NOTE: Refer to the appropriate service information, if necessary, for procedures or specifications.

   Is the Right Rear Wheel Bearing, Hub or Encoder Damaged?

   Yes

   - Replace the Hub and Wheel Bearing in accordance with the Service Information. Refer to **HUB AND BEARING, REMOVAL** .
   - Perform the ABS VERIFICATION TEST. Refer to **STANDARD PROCEDURE**.

   No

   - Go To 6

6. **RIGHT REAR WHEEL SPEED SENSOR**
   1. Replace the Right Rear Wheel Speed Sensor in accordance with the Service Information. Refer to **SENSOR, WHEEL SPEED, REAR, REMOVAL** .
   2. Perform the ABS VERIFICATION TEST. Refer to **STANDARD PROCEDURE**.
   3. Road test the vehicle over 40 km/h (25 mph).

      NOTE: Vehicle must be driven above 40 km/h (25 mph) for set conditions to be met.

   4. With the scan tool, read ABS DTCs.

      Does the DTC remain active?

      Yes

      - Replace the Anti-Lock Brakes Module in accordance with the Service Information. Refer to **MODULE, ANTI-LOCK BRAKE SYSTEM, REMOVAL** .
      - Perform the ABS VERIFICATION TEST. Refer to **STANDARD PROCEDURE**.

      No

      - Test Complete.

C003A-4A-RIGHT REAR WHEEL SPEED SENSOR - INCORRECT COMPONENT INSTALLED

For a complete wiring diagram, **refer to appropriate SYSTEM WIRING DIAGRAMS article** .

WHEN MONITORED

With the ignition on and no system under voltage or over voltage condition present.

SET CONDITION

When the Anti-lock Brake System (ABS) Module detects that the wrong component is installed.

POSSIBLE CAUSES

Possible Causes
RIGHT REAR WHEEL SPEED SENSOR ANTI-LOCK BRAKE SYSTEM (ABS) MODULE

DIAGNOSTIC TEST

1. **VERIFY THE DTC IS ACTIVE**

   NOTE: If DTC C003A-1D is present, perform the diagnostics for this DTC before continuing with this diagnostic procedure.

   NOTE: This vehicle uses non-directional front wheel speed sensors and directional rear wheel speed sensors.

   NOTE: After erasing ACTIVE DTCs it may be necessary for the Anti-lock Brake System (ABS) Module to go to sleep before the DTCs are cleared. IF the DTC is still ACTIVE after the clear command then Turn the ignition off, disconnect the Scan Tool, close the doors and wait until all indicators on the Cluster have gone out, typically about 30 seconds.

   1. Ignition on.
   2. With the scan tool, record and erase DTCs.
   3. With the scan tool, read DTCs.

   Is the DTC active at this time?

   Yes

   - Go To 2

   No

   - Test Complete.

2. **RIGHT REAR WHEEL SPEED SENSOR**

   NOTE: This vehicle uses a directional rear wheel speed sensor, make sure the

correct wheel speed sensor is installed on the vehicle.

1. Replace the Right Rear Wheel Speed Sensor in accordance with the Service Information. Refer to **SENSOR, WHEEL SPEED, REAR, REMOVAL** . Perform the ABS VERIFICATION TEST. Refer to **STANDARD PROCEDURE**.

   CAUTION: Make sure brake capability is available before road testing.

2. Road test the vehicle over 40 km/h (25 mph).
3. With the scan tool, read DTCs.

   Does the DTC remain active?

   Yes

   - Replace the Anti-lock Brake System (ABS) Module in accordance with the Service Information. Refer to **MODULE, ANTI-LOCK BRAKE SYSTEM, REMOVAL** .
   - Perform the ABS VERIFICATION TEST. Refer to **STANDARD PROCEDURE**.

   No

   - Test complete.

C003A-62-RIGHT REAR WHEEL SPEED SENSOR - SIGNAL COMPARE FAILURE

For a complete wiring diagram, **refer to appropriate SYSTEM WIRING DIAGRAMS article** .

WHEN MONITORED

With the ignition on, no system under voltage or over voltage condition present, no open or shorted wheel speed sensor DTCs set, vehicle not under high acceleration, and vehicle speed greater than 0.

SET CONDITION

This DTC will be set if the wheel speed signal is 0 km/h (0 mph) or very low when compared to the other wheel speed signals.

POSSIBLE CAUSES

Possible Causes
IMPROPER RIGHT REAR TIRE PRESSURE/MISMATCHED TIRES CHECK RIGHT REAR WHEEL SPEED SENSOR FOR LOOSENESS INSPECT CIRCUITS/CONNECTOR/TERMINALS FOR DAMAGE

RIGHT REAR WHEEL BEARING AND HUB OR ENCODER FOR DAMAGE
RIGHT REAR WHEEL SPEED SENSOR
ANTI-LOCK BRAKE SYSTEM (ABS) MODULE

DIAGNOSTIC TEST

1. **VERIFY THE DTC IS ACTIVE**

NOTE: **If DTC C003A-1D is present, perform the diagnostics for this DTC before continuing with this diagnostic procedure.**

NOTE: **After erasing ACTIVE DTCs it may be necessary for the Anti-lock Brake System (ABS) Module to go to sleep before the DTCs are cleared. IF the DTC is still ACTIVE after the clear command then Turn the ignition off, disconnect the Scan Tool, close the doors and wait until all indicators on the Cluster have gone out, typically about 30 seconds.**

1. Turn the ignition on.
2. With the scan tool, record and erase DTCs.

CAUTION: Make sure brake capability is available before road testing.

3. Road test the vehicle over 40 km/h (25 mph).

NOTE: **Vehicle must be driven above 40 km/h (25 mph) for set conditions to be met.**

4. With the scan tool, read DTCs.

Is the DTC active at this time?

Yes

- Go To 3

No

- Go To 2

2. **CHECK WHEEL SPEED SENSOR SIGNALS**
   1. Turn the ignition on.
   2. With the scan tool, monitor and graph ALL the WSS speeds and compare graph while an assistant drives the vehicle.

NOTE: If graph shows periodic dropouts pay close attention to the tone wheel.

3. Slowly accelerate as straight as possible from a stop to 40 km/h (25 mph).

   Is the Right Rear WSS speed showing 0 km/h (0 mph), not matching other wheels, or showing erratic behavior?

   Yes

   - Go To 3

   No

   - Perform ABS-INTERMITTENT CONDITION diagnostic procedure. Refer to **STANDARD PROCEDURE**.

3. **CHECK FOR IMPROPER RIGHT REAR TIRE PRESSURE/MISMATCHED TIRES**
   1. Turn the ignition off.
   2. Check and adjust the Right Rear Tire pressure.
   3. Check and adjust all other tire pressures.
   4. Inspect for mismatched tires on vehicle.

   Is the Right Rear Tire improperly inflated or mismatched tires on vehicle?

   Yes

   - Repair as necessary
   - Perform the ABS VERIFICATION TEST. Refer to **STANDARD PROCEDURE**.

   No

   - Go To 4

4. **CHECK RIGHT REAR WSS FOR LOOSENESS, INSPECT CIRCUITS/CONNECTORS/TERMINALS FOR DAMAGE**

   NOTE: Check all terminals for broken, bent, pushed out, or corroded terminals.

   1. Turn the ignition off to the lock position.
   2. Inspect the ABS Module harness connector and the Right Rear WSS harness connector.
   3. Check the Right Rear WSS for looseness, excessive corrosion and not properly fastened.
   4. Inspect the (B1) Right Rear WSS Signal and (B2) Right Rear WSS Supply circuits between the Right Rear WSS and Anti-Lock Brake Module for damage.

Is the Right Rear WSS loose or any of the wiring/connectors/terminals damaged?

Yes

- Repair as necessary.
- Perform the ABS VERIFICATION TEST. Refer to **STANDARD PROCEDURE**.

No

- Go To 5

5. **CHECK RIGHT REAR WHEEL SPEED SENSOR FOR DAMAGE**
   1. Remove the Right Rear Wheel Speed Sensor.
   2. Inspect the Wheel Speed Sensor for proper mounting.
   3. Inspect the Wheel Speed Sensor harness and connector.
   4. Inspect the Wheel Speed Sensor for excessive debris on the sensor.

   Is the Right Rear Wheel Speed Sensor damaged?

   Yes

   - Replace the Right Rear Wheel Speed Sensor in accordance with the Service Information. Refer to **SENSOR, WHEEL SPEED, REAR, REMOVAL** .
   - Perform the ABS VERIFICATION TEST. Refer to **STANDARD PROCEDURE**.

   No

   - Go To 6

6. **CHECK RIGHT REAR WHEEL BEARING AND HUB OR ENCODER FOR DAMAGE**
   1. Inspect the Right Rear wheel bearing, hub and Encoder for excessive runout, clearance or damage.

   NOTE: Refer to the appropriate service information, if necessary, for procedures or specifications.

   Is the Right Rear Wheel Bearing, Hub or Encoder Damaged?

   Yes

   - Replace the Hub and Wheel Bearing in accordance with the Service Information. Refer to **HUB AND BEARING, REMOVAL** .
   - Perform the ABS VERIFICATION TEST. Refer to **STANDARD PROCEDURE**.

   No

- Go To 7

7. **RIGHT REAR WHEEL SPEED SENSOR**
   1. Replace the Right Rear Wheel Speed Sensor in accordance with the Service Information. Refer to **SENSOR, WHEEL SPEED, REAR, REMOVAL** .
   2. Perform the ABS VERIFICATION TEST. Refer to **STANDARD PROCEDURE**.
   3. Road test the vehicle over 40 km/h (25 mph).

      NOTE: Vehicle must be driven above 40 km/h (25 mph) for set conditions to be met.

   4. With the scan tool, read ABS DTCs.

      Does the DTC remain active?

      Yes

      - Replace the Anti-Lock Brakes Module in accordance with the Service Information. Refer to **MODULE, ANTI-LOCK BRAKE SYSTEM, REMOVAL** .
      - Perform the ABS VERIFICATION TEST. Refer to **STANDARD PROCEDURE**.

      No

      - Test Complete.

C0040-29-BRAKE PEDAL SWITCH - SIGNAL INVALID

For a complete wiring diagram, **refer to appropriate SYSTEM WIRING DIAGRAMS article** .

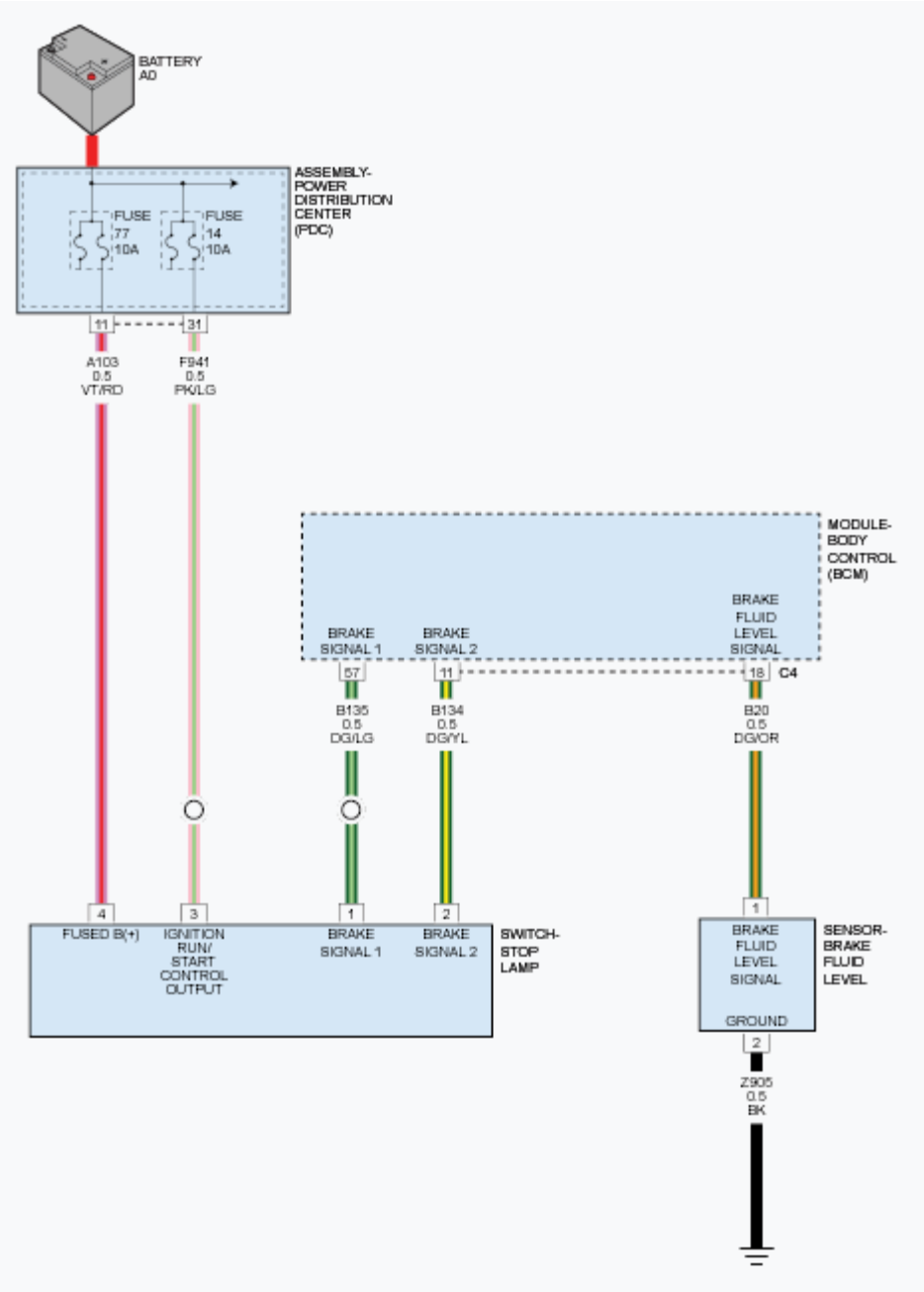

Fig. 7: Identifying Stop Lamp Switch Wiring Diagram
Courtesy of CHRYSLER GROUP, LLC

THEORY OF OPERATION

The Anti-lock Brake System (ABS) Module monitors the Normally Open and Normally Closed Brake Switch status from the Body Control Module (BCM) over the CAN BUS. The Normally Open switch should always activate before the Normally Closed switch.

WHEN MONITORED

With the ignition on and no system under voltage condition present.

SET CONDITION

When the Body Control Module (BCM) indicates that the Normally Closed brake switch signal indicates brake applied and the Normally Open Brake Switch signal Indicates Brake Not applied for 500 msec.

POSSIBLE CAUSES

Possible Causes
BRAKE SIGNAL 1 CIRCUIT OPEN OR SHORTED TO GROUND
BRAKE SIGNAL 2 CIRCUIT OPEN OR SHORTED TO GROUND
STOPLAMP SWITCH
BODY CONTROL MODULE (BCM)

DIAGNOSTIC TEST

1. **VERIFY THE DTC IS ACTIVE**

NOTE: **After erasing ACTIVE DTCs it may be necessary for the Anti-lock Brake System (ABS) Module to go to sleep before the DTCs are cleared. IF the DTC is still ACTIVE after the clear command then Turn the ignition off, disconnect the Scan Tool, close the doors and wait until all indicators on the Cluster have gone out, typically about 30 seconds.**

NOTE: **Check for loose terminals at Fuse 26 in the PDC. Repair as necessary.**

NOTE: **Verify that the Brake Switch is installed correctly on the vehicle before proceeding.**

1. Turn the ignition on.
2. With the scan tool, read DTCs.

   Does the scan tool display this DTC as active?

   Yes

   - Go To 2

   No

   - Test complete. The condition or conditions that originally set this DTC are not present at this time. Using the wiring diagrams as a guide, check all related splices and connectors for signs of water intrusion, corrosion, pushed out or bent terminals and correct pin tension.

- Perform the BODY VERIFICATION TEST. Refer to **STANDARD PROCEDURE** .

2. **CHECK THE (B135) BRAKE SIGNAL 1 CIRCUIT FOR A SHORT TO GROUND OR OPEN**

NOTE: The (B135) Brake Signal 1 circuit is normally OPEN when the brake pedal is NOT PRESSED.

1. Turn the ignition off.
2. Disconnect the BCM C4 harness connector.
3. With the Brake Pedal PRESSED, measure the voltage of the (B135) Brake Signal 1 circuit at the BCM C4 harness connector.

   Is the voltage above 10 volts?

   Yes

   - Go To 3

   No

   - Using the wiring diagrams as a guide, repair the (B135) Brake Signal 1 circuit for an open or short to ground.

     NOTE: Check for loose terminals at Fuse 26 in the PDC. Repair as necessary.

   - Perform the BODY VERIFICATION TEST. Refer to **STANDARD PROCEDURE** .

3. **CHECK THE (B134) BRAKE SIGNAL 2 CIRCUIT FOR A SHORT TO GROUND OR OPEN**

NOTE: The (B134) Brake Signal 2 circuit is normally CLOSED when the brake pedal is NOT PRESSED.

1. Turn the ignition on.
2. With the Brake Pedal NOT PRESSED, measure the voltage of the (B135) Brake Signal 1 circuit at the BCM C4 harness connector.

   Is the voltage above 10 volts?

   Yes

   - Replace the Body Control Module (BCM) in accordance with the Service Information.
   - Perform the BODY VERIFICATION TEST. Refer to **STANDARD PROCEDURE** .

   No

- Using the wiring diagrams as a guide, repair the (B134) Brake Signal 2 circuit for an open or short to ground.
- Perform the BODY VERIFICATION TEST. Refer to **STANDARD PROCEDURE** .

C0040-2A-BRAKE PEDAL SWITCH - STUCK

For a complete wiring diagram, **refer to appropriate SYSTEM WIRING DIAGRAMS article** .

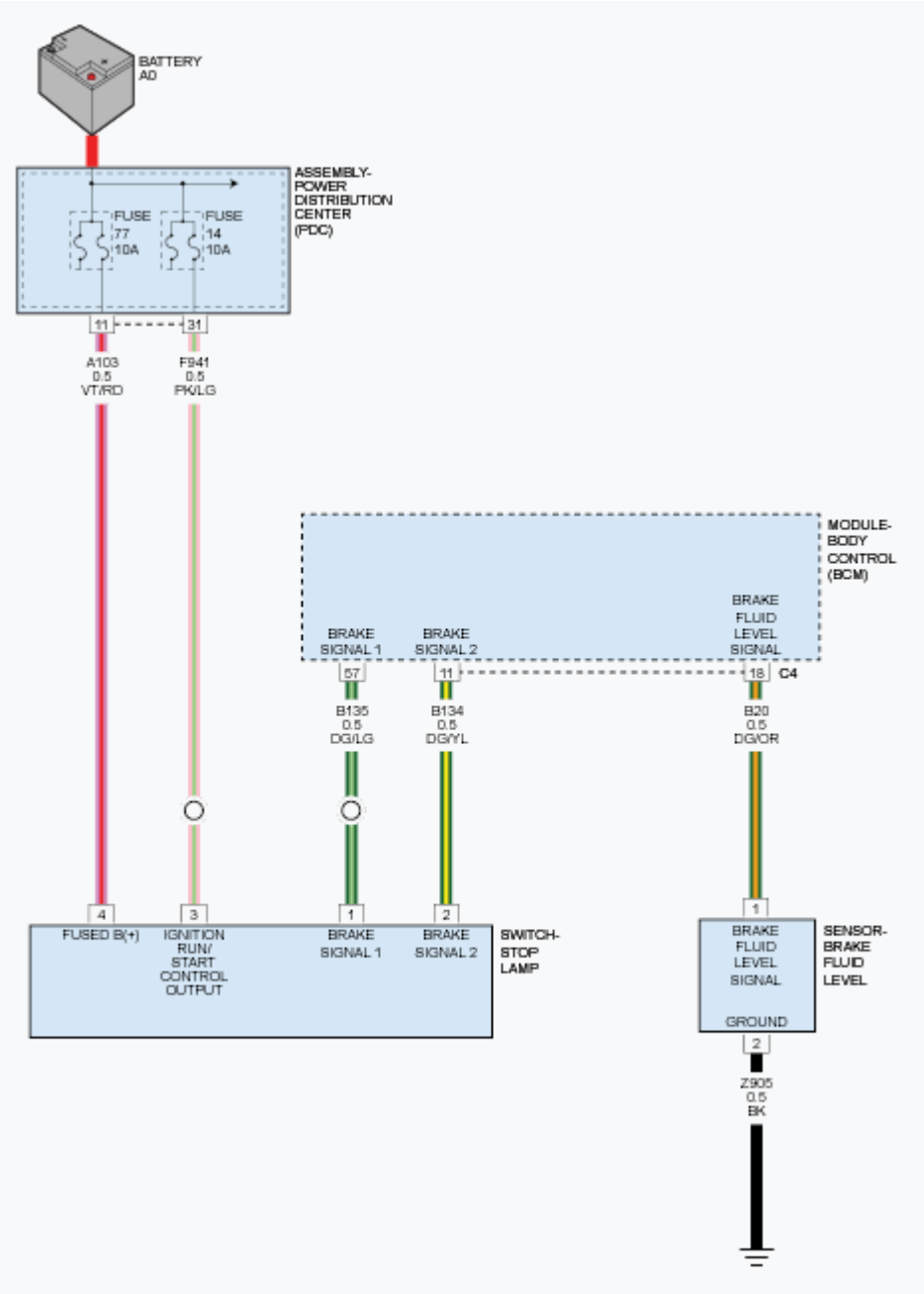

Fig. 8: Identifying Stop Lamp Switch Wiring Diagram
Courtesy of CHRYSLER GROUP, LLC

THEORY OF OPERATION

The brake switch stuck on test checks for a high vehicle speed condition where the brake switch is continually pressed.

WHEN MONITORED

Monitoring conditions

SET CONDITION

The brake switch rationality checks both failure modes of the brake switch. The brake switch stuck on test checks for a high vehicle speed condition where the brake switch is continually depressed. The brake switch stuck off test checks for brake pressure present with the brake switch saying not pressed.

POSSIBLE CAUSES

Possible Causes
STOPLAMP SWITCH INSTALLATION/ADJUSTMENT
BODY CONTROL MODULE (BCM) DTCs
POWERTRAIN CONTROL MODULE (PCM) DTCS
(B134) BRAKE SWITCH 2 SIGNAL CIRCUIT SHORTED TO GROUND
(B134) BRAKE SWITCH 2 SIGNAL CIRCUIT OPEN OR HIGH RESISTANCE
(B135) BRAKE SWITCH 1 SIGNAL CIRCUIT SHORTED TO VOLTAGE
STOPLAMP SWITCH
ANTI-LOCK BRAKE SYSTEM (ABS) MODULE

DIAGNOSTIC TEST

1. **CHECK BODY CONTROL MODULE (BCM) DTCs**
    1. Turn the ignition on.
    2. With the scan tool, read DTCs in the BCM.

       Are there any BCM Stop Lamp Switch related DTCs present?

       Yes

       - Perform the appropriate diagnostic procedure. Refer to the **BODY CONTROL MODULE (BCM) - DIAGNOSTIC CODE INDEX** article .

       No

       - Go To 2
2. **CHECK POWERTRAIN CONTROL MODULE (PCM) DTCs**
    1. Turn the ignition on.

2. With the scan tool, read DTCs in the PCM.

   Are there any PCM Stop Lamp Switch related DTCs present?

   Yes

   - Perform the appropriate diagnostic procedure. Refer to the **DTC INDEX** article .

   No

   - Go To 3

3. **STOP LAMP SWITCH OPERATION**
   1. Start the engine.
   2. Using the scan tool, monitor the brake pedal switch status while pressing the brake pedal and releasing.

      Is the Stop Lamp Switch operating correctly?

      Yes

      - Go To 4

      No

      - Go To 5

4. **BRAKE PEDAL PRESSURE**
   1. Using the scan tool, monitor the brake pedal pressure and the status of the brake pedal switch while slowly pressing the brake pedal.

      Was there Brake Pressure before the Brake Pedal Switch status changed?

      Yes

      - Check for correct Stop Lamp Switch Installation. Refer to **SWITCH, STOP LAMP, INSTALLATION** .

      No

      - Perform the INTERMITTENT CONDITION diagnostic procedure. Refer to **STANDARD PROCEDURE** for 2.0L diesel engine, **STANDARD PROCEDURE** for 2.4L gasoline engine or **STANDARD PROCEDURE** for 3.2L gasoline engine. .

5. **(B134) BRAKE SIGNAL 2 CIRCUIT**
   1. Turn the ignition off.
   2. Disconnect the Stop Lamp Switch harness connector.

3. Using a 12-volt test light connected to 12 volts, check the (B134) Brake Signal 2 circuit at the Stop Lamp Switch harness connector while pressing and releasing the brake pedal several times.

   Does the test light change from illuminated to not illuminated as the brake pedal is pressed and released?

   Yes

   - Go To 6

   No

   - Go To 7

6. **(B135) BRAKE SIGNAL 1 CIRCUIT**
   1. Turn the ignition on.
   2. Using a 12-volt test light connected to ground, check the (B135) Brake Signal 1 circuit at the Stop Lamp Switch harness connector while pressing and releasing the brake pedal several times.

      Does the test light change from illuminated to not illuminated as the brake pedal is pressed and released?

      Yes

      - Go To 11

      No

      - Go To 9

7. **(B134) BRAKE SIGNAL 2 CIRCUIT SHORTED TO GROUND**
   1. Disconnect the PCM C1 harness connector.
   2. Measure the resistance between ground and the (B134) Brake Signal 2 circuit in the Stop Lamp Switch harness connector.

      Is the resistance below 100 Ohms?

      Yes

      - Repair the (B134) Brake Signal 2 circuit for a short to ground.
      - Perform the POWERTRAIN VERIFICATION TEST. Refer to **STANDARD PROCEDURE** for 2.0L diesel engine, **STANDARD PROCEDURE** for 2.4L gasoline engine or **STANDARD PROCEDURE** for 3.2L gasoline engine.

      No

- Go To 8

8. **(B134) BRAKE SIGNAL 2 CIRCUIT OPEN OR HIGH RESISTANCE**
   1. Measure the resistance of the (B134) Brake Signal 2 circuit between the Stop Lamp Switch harness connector and the PCM C1 harness connector.

      Is the resistance below 5.0 ohms?

      Yes

      - Go To 10

      No

      - Repair the (B134) Brake Signal 2 circuit for an open or high resistance.
      - Perform the PCM VERIFICATION Test. Refer to **STANDARD PROCEDURE** for 2.0L diesel engine, **STANDARD PROCEDURE** for 2.4L gasoline engine or **STANDARD PROCEDURE** for 3.2L gasoline engine.
9. **(B135) BRAKE SIGNAL 1 CIRCUIT SHORTED TO VOLTAGE**
   1. Measure the voltage of the (B135) Brake Signal 1 circuit in the Stop Lamp Switch harness connector.

      Is there any voltage present?

      Yes

      - Repair the (B135) Brake Signal 1 circuit for a short to voltage.
      - Perform the PCM VERIFICATION Test. Refer to **STANDARD PROCEDURE** for 2.0L diesel engine, **STANDARD PROCEDURE** for 2.4L gasoline engine or **STANDARD PROCEDURE** for 3.2L gasoline engine.

      No

      - Go To 10
10. **STOPLAMP SWITCH**
    1. Using the wiring diagram/schematic as a guide, inspect the wiring and connectors between the Stop Lamp Switch and the Powertrain Control Module (PCM).
    2. Look for any chafed, pierced, pinched, or partially broken wires.
    3. Look for broken, bent, pushed out or corroded terminals.
    4. Refer to any Technical Service Bulletins that may apply.
    5. Replace the Stop Lamp Switch in accordance with the Service Information. Perform the PCM VERIFICATION TEST. Refer to **STANDARD PROCEDURE** for 2.0L diesel engine, **STANDARD PROCEDURE** for 2.4L gasoline engine or **STANDARD PROCEDURE** for 3.2L gasoline engine.

6. With the scan tool, read DTCs in the ABS Module.

   Does the DTC remain active?

   Yes

   - Go To 11

   No

   - Replace the Stop Lamp Switch in accordance with the Service Information.
   - Perform the ABS VERIFICATION TEST. Refer to **STANDARD PROCEDURE**.

11. **ANTI-LOCK BRAKE SYSTEM (ABS) MODULE**
    1. With the scan tool, erase DTCs in the ABS Module.
    2. Press and release the brake pedal.
    3. With the scan tool, read DTCs in the ABS Module.

       Does the DTC remain active?

       Yes

       - Replace the Anti-lock Brake System (ABS) Module in accordance with the Service Information. Refer to **MODULE, ANTI-LOCK BRAKE SYSTEM, REMOVAL** .
       - Perform the ABS VERIFICATION TEST. Refer to **STANDARD PROCEDURE**.

       No

       - Test Complete.
       - Perform the ABS VERIFICATION TEST. Refer to **STANDARD PROCEDURE**.

C0040-62-BRAKE PEDAL SWITCH - SIGNAL COMPARE FAILURE

For a complete wiring diagram, **refer to appropriate SYSTEM WIRING DIAGRAMS article** .

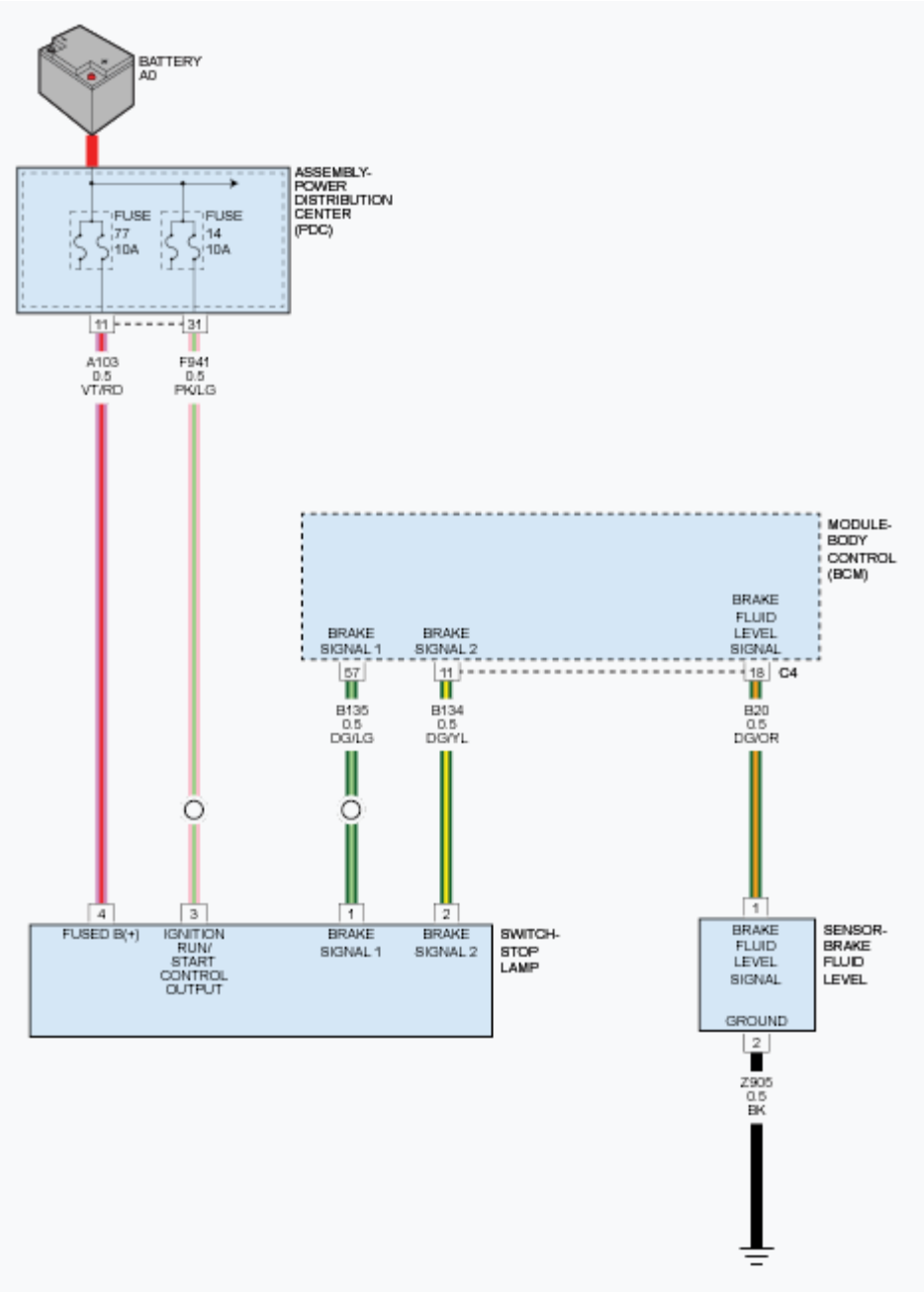

Fig. 9: Identifying Stop Lamp Switch Wiring Diagram
Courtesy of CHRYSLER GROUP, LLC

THEORY OF OPERATION

The brake switch stuck on test checks for a high vehicle speed condition where the brake switch is continually pressed.

WHEN MONITORED

Monitoring conditions

SET CONDITION

The brake switch rationality checks both failure modes of the brake switch. The brake switch stuck on test checks for a high vehicle speed condition where the brake switch is continually depressed. The brake switch stuck off test checks for brake pressure present with the brake switch saying not pressed.

POSSIBLE CAUSES

Possible Causes
STOPLAMP SWITCH INSTALLATION/ADJUSTMENT
BODY CONTROL MODULE (BCM) DTCs
POWERTRAIN CONTROL MODULE (PCM) DTCS
(B135) BRAKE SWITCH 1 SIGNAL CIRCUIT OPEN OR HIGH RESISTANCE
STOPLAMP SWITCH
ANTI-LOCK BRAKE SYSTEM (ABS) MODULE

DIAGNOSTIC TEST

1. **CHECK BODY CONTROL MODULE (BCM) DTCs**
    1. Turn the ignition on.
    2. With the scan tool, read DTCs in the BCM.

    Are there any BCM Stop Lamp Switch related DTCs present?

    Yes

    - Perform the appropriate diagnostic procedure. Refer to the **BODY CONTROL MODULE (BCM) - DIAGNOSTIC CODE INDEX** article .

    No

    - Go To 2
2. **CHECK POWERTRAIN CONTROL MODULE (PCM) DTCs**
    1. Turn the ignition on.
    2. With the scan tool, read DTCs in the PCM.

    Are there any PCM Stop Lamp Switch related DTCs present?

    Yes

    - Perform the appropriate diagnostic procedure. Refer to the **DTC INDEX** article .

    No

- Go To 3

3. **STOP LAMP SWITCH OPERATION**
   1. Start the engine.
   2. Using the scan tool, monitor the brake pedal switch status while pressing the brake pedal and releasing.

      Is the Stop Lamp Switch operating correctly?

      Yes

      - Go To 4

      No

      - Go To 5
4. **BRAKE PEDAL PRESSURE**
   1. Using the scan tool, monitor the brake pedal pressure and the status of the brake pedal switch while slowly pressing the brake pedal.

      Was there Brake Pressure before the Brake Pedal Switch status changed?

      Yes

      - Check for correct Stop Lamp Switch Installation. Refer to **SWITCH, STOP LAMP, INSTALLATION** .

      No

      - Perform the INTERMITTENT CONDITION diagnostic procedure. Refer to **STANDARD PROCEDURE** for 2.0L diesel engine, **STANDARD PROCEDURE** for 2.4L gasoline engine or **STANDARD PROCEDURE** for 3.2L gasoline engine.
5. **(B134) BRAKE SIGNAL 2 CIRCUIT**
   1. Turn the ignition off.
   2. Disconnect the Stop Lamp Switch harness connector.
   3. Using a 12-volt test light connected to 12 volts, check the (B134) Brake Signal 2 circuit at the Stop Lamp Switch harness connector while pressing and releasing the brake pedal several times.

      Does the test light change from illuminated to not illuminated as the brake pedal is pressed and released?

      Yes

      - Go To 6

No

- Go To 7

6. **(B135) BRAKE SIGNAL 1 CIRCUIT**
   1. Turn the ignition on.
   2. Using a 12-volt test light connected to ground, check the (B135) Brake Signal 1 circuit at the Stop Lamp Switch harness connector while pressing and releasing the brake pedal several times.

      Does the test light change from illuminated to not illuminated as the brake pedal is pressed and released?

      Yes

      - Go To 8

      No

      - Go To 7
7. **(B135) BRAKE SIGNAL 1 CIRCUIT OPEN OR HIGH RESISTANCE**
   1. Measure the resistance of the (B135) Brake Signal 1 circuit between the Stop Lamp Switch harness connector and the PCM C1 harness connector.

      Is the resistance below 5.0 Ohms?

      Yes

      - Go To 8

      No

      - Repair the (B135) Brake Signal 1 circuit for an open or high resistance.
      - Perform the POWERTRAIN VERIFICATION TEST. Refer to **STANDARD PROCEDURE** for 2.0L diesel engine, **STANDARD PROCEDURE** for 2.4L gasoline engine or **STANDARD PROCEDURE** for 3.2L gasoline engine.
8. **STOPLAMP SWITCH**
   1. Using the wiring diagram/schematic as a guide, inspect the wiring and connectors between the Stop Lamp Switch and the Powertrain Control Module (PCM).
   2. Look for any chafed, pierced, pinched, or partially broken wires.
   3. Look for broken, bent, pushed out or corroded terminals.
   4. Refer to any Technical Service Bulletins that may apply.
   5. Replace the Stop Lamp Switch in accordance with the Service Information. Perform the PCM VERIFICATION TEST. Refer to **STANDARD PROCEDURE** for 2.0L diesel engine, **STANDARD PROCEDURE** for 2.4L gasoline engine or **STANDARD PROCEDURE** for 3.2L gasoline engine.

6. With the scan tool, read DTCs in the ABS Module.

   Does the DTC remain active?

   Yes

   - Go To 9

   No

   - Replace the Stop Lamp Switch in accordance with the Service Information.
   - Perform the ABS VERIFICATION TEST. Refer to **STANDARD PROCEDURE**.

9. **ANTI-LOCK BRAKE SYSTEM (ABS) MODULE**
   1. With the scan tool, erase DTCs in the ABS Module.
   2. Press and release the brake pedal.
   3. With the scan tool, read DTCs in the ABS Module.

      Does the DTC remain active?

      Yes

      - Replace the Integrated Control Unit (ICU) in accordance with the Service Information. Refer to **INTEGRATED CONTROL UNIT (ICU), REMOVAL** .
      - Perform the ABS VERIFICATION TEST. Refer to **STANDARD PROCEDURE**.

      No

      - Test Complete.
      - Perform the ABS VERIFICATION TEST. Refer to **STANDARD PROCEDURE**.

C0044-01-BRAKE PRESSURE SENSOR 1 - GENERAL ELECTRICAL FAILURE

For a complete wiring diagram, **refer to appropriate SYSTEM WIRING DIAGRAMS article** .

WHEN MONITORED

With the ignition on.

SET CONDITION

When the Anti-Lock Brake Module indicates that the Brake Pressure Sensor Signal is out of range.

POSSIBLE CAUSES

Possible Causes
ANTI-LOCK BRAKE SYSTEM (ABS) MODULE HYDRAULIC CONTROL UNIT (HCU)

DIAGNOSTIC TEST

1. **VERIFY THE DTC IS ACTIVE**

NOTE: **After erasing ACTIVE DTCs it may be necessary for the Anti-lock Brake System (ABS) Module to go to sleep before the DTCs are cleared. IF the DTC is still ACTIVE after the clear command then Turn the ignition off, disconnect the Scan Tool, close the doors and wait until all indicators on the Cluster have gone out, typically about 30 seconds.**

NOTE: **This DTC must be active for the results of this test to be valid.**

1. Turn the ignition on.
2. With the scan tool, read and record DTCs.
3. With the scan tool, read and record Freeze Fame information.
4. With the scan tool, erase DTCs.
5. Start the engine.
6. Press the brake pedal firmly and release.
7. With the scan tool, read and record DTCs.

Is the DTC active at this time?

Yes

- Go To 2

No

- Perform the ABS-INTERMITTENT CONDITION TEST. Refer to **STANDARD PROCEDURE**.

2. **ANTI-LOCK BRAKE SYSTEM (ABS) MODULE**
   1. Replace the Anti-Lock Brake System (ABS) Module in accordance with the Service Information. Refer to **MODULE, ANTI-LOCK BRAKE SYSTEM, REMOVAL** .
   2. Ignition on, engine not running.
   3. With the scan tool, erase DTCs.
   4. Start the engine.
   5. Press the brake pedal firmly and release.
   6. With the scan tool, read and record DTCs.

Does the DTC remain active?

Yes

- Replace the Hydraulic Control Unit (HCU) in accordance with the Service Information.
- Perform the ABS VERIFICATION TEST. Refer to **STANDARD PROCEDURE**.

No

- Test complete.

C0044-28-BRAKE PRESSURE SENSOR 1 - SIGNAL BIAS LEVEL OUT OF RANGE / ZERO ADJUSTMENT FAILURE

For a complete wiring diagram, **refer to appropriate SYSTEM WIRING DIAGRAMS article** .

NOTE: Repair all other DTC's before continuing with this diagnostic procedure.

WHEN MONITORED

Ignition on.

SET CONDITION

The Anti-lock Brake System (ABS) Module has detected brake pressure when the brake pedal has not been applied.

POSSIBLE CAUSES

Possible Causes
BRAKE FLUID CONTAMINATION
STOP LAMP SWITCH INSTALLATION/ADJUSTMENT
PINCHED OR BENT BRAKE LINES
STOP LAMP SWITCH
POWER BRAKE BOOSTER
INTEGRATED CONTROL UNIT (ICU)

DIAGNOSTIC TEST

1. **VERIFY THE DTC IS ACTIVE**

NOTE: After erasing ACTIVE DTCs it may be necessary for the Anti-lock Brake System (ABS) Module to go to sleep before the DTCs are cleared. IF the DTC is still ACTIVE after the clear command then Turn the ignition off, disconnect the Scan Tool, close the doors and wait until all indicators on

the Cluster have gone out, typically about 30 seconds.

NOTE: This DTC must be active for the results of this test to be valid.

1. Turn the ignition on.
2. With the scan tool, read and record DTCs.
3. With the scan tool, read and record Freeze Fame information.
4. With the scan tool, erase DTCs.
5. Start the engine.
6. Press the brake pedal firmly and release.
7. With the scan tool, read and record DTCs.

   Is the DTC active at this time?

   Yes

   - Go To 2

   No

   - Perform the ABS INTERMITTENT CONDITION TEST. Refer to **STANDARD PROCEDURE**.

2. **MECHANICAL BRAKE SYSTEM INSPECTION**
   1. Turn the ignition off.
   2. Check the brake fluid for contaminants.
   3. Visually inspect the brake lines between the Brake Master Cylinder and the Integrated Control Unit (ICU) for bent, damaged, or pinched restrictions.

      Where any problems found?

      Yes

      - Repair as necessary.
      - Perform the ABS VERIFICATION TEST. Refer to **STANDARD PROCEDURE**.

      No

      - Go To 3

3. **BRAKE FLUID PRESSURE**
   1. Start the engine.
   2. The brake pedal released.
   3. With the scan tool, under "Data Display" read the Brake Fluid Pressure.

Is the Brake Fluid Pressure below 10 bar (145 psi)?

Yes

- Go To 4

No

- Go To 5

4. **BRAKE PEDAL INSPECTION**
   1. Turn the ignition off.
   2. Check the brake pedal for damage or restrictions not allowing it to fully return.

   Where any problems found?

   Yes

   - Repair as necessary.
   - Perform the ABS VERIFICATION TEST. Refer to **STANDARD PROCEDURE**.

   No

   - Replace the Integrated Control Unit (ICU) in accordance with the Service Information.
   - Perform the ABS VERIFICATION TEST. Refer to **STANDARD PROCEDURE**.
5. **BRAKE PEDAL STOP LAMP SWITCH**
   1. Start the engine.
   2. With the scan tool, under "Data Display" monitor the BL Switch and the Brake Fluid Pressure.
   3. Press the brake pedal slowly.

   Did the BL Switch indicate pressed before their was Brake Fluid Pressure?

   Yes

   - Go To 6

   No

   - Repair or replace the Stop Lamp Switch in accordance with the Service Information. Refer to **SWITCH, STOP LAMP, REMOVAL** .
   - Perform the ABS VERIFICATION TEST. Refer to **STANDARD PROCEDURE**.
6. **INTEGRATED CONTROL UNIT (ICU)**
   1. Disconnect the Primary brake line between the master cylinder and the Integrated Control Unit (ICU).

2. With the scan tool, under "Data Display" read the Brake Oil Pressure.

   Is the Brake Oil Pressure below 10 bar (145 psi)?

   Yes

   - Replace the Brake Master Cylinder in accordance with the Service Information. Refer to **MASTER CYLINDER, BRAKE, REMOVAL** .
   - Perform the ABS VERIFICATION TEST. Refer to **STANDARD PROCEDURE**.

   No

   - Replace the Integrated Control Unit (ICU) in accordance with the Service Information. Refer to **INTEGRATED CONTROL UNIT (ICU), REMOVAL** .
   - Perform the ABS VERIFICATION TEST. Refer to **STANDARD PROCEDURE**.

C0044-64-BRAKE PRESSURE SENSOR 1 - SIGNAL PLAUSIBILITY FAILURE

For a complete wiring diagram, **refer to appropriate SYSTEM WIRING DIAGRAMS article** .

WHEN MONITORED

Ignition on.

SET CONDITION

The Anti-lock Brake System (ABS) Module has detected a moderate deceleration without a change in brake pressure.

POSSIBLE CAUSES

Possible Causes
BRAKE FLUID LEVEL LOW OR CONTAMINATED
AIR IN BRAKE SYSTEM
INTEGRATED CONTROL UNIT (ICU)

DIAGNOSTIC TEST

1. **VERIFY THE DTC IS ACTIVE**

   NOTE: After erasing ACTIVE DTCs it may be necessary for the Anti-lock Brake System (ABS) Module to go to sleep before the DTCs are cleared. IF the DTC is still ACTIVE after the clear command then Turn the ignition off, disconnect the Scan Tool, close the doors and wait until all indicators on the Cluster have gone out, typically about 30 seconds.

NOTE: This DTC must be active for the results of this test to be valid.

1. Turn the ignition on.
2. With the scan tool, read and record DTCs.
3. With the scan tool, read and record Freeze Fame information.
4. With the scan tool, erase DTCs.
5. Start the engine.
6. Press the brake pedal firmly and release.
7. With the scan tool, read and record DTCs.

   Is the DTC active at this time?

   Yes

   - Go To 2

   No

   - Perform the ABS INTERMITTENT CONDITION TEST. Refer to **STANDARD PROCEDURE**.

2. **MECHANICAL BRAKE SYSTEM INSPECTION**
   1. Turn the ignition off.
   2. Check the brake fluid level.
   3. Visually inspect the brake fluid for contaminants.
   4. Check base brake issues.
   5. Visually inspect all the brake lines for bent, damaged, or pinched restrictions.

      Where any problems found?

      Yes

      - Repair as necessary.
      - Perform the ABS VERIFICATION TEST. Refer to **STANDARD PROCEDURE**.

      No

      - Replace the Integrated Control Unit (ICU) in accordance with the Service Information. Refer to **INTEGRATED CONTROL UNIT (ICU), REMOVAL** .
      - Perform the ABS VERIFICATION TEST. Refer to **STANDARD PROCEDURE**.

C0051-22-STEERING WHEEL POSITION SENSOR - SIGNAL AMPLITUDE > MAXIMUM

For a complete wiring diagram, **refer to appropriate SYSTEM WIRING DIAGRAMS article** .

WHEN MONITORED

With ignition on, but not if a CAN time out failure is detected.

SET CONDITION

If the Anti-Lock Brakes System (ABS) Module detects sensor overtravel over 720 degrees.

NOTE: The Steering Angle Sensor (SAS) is internal to the Steering Gear.

POSSIBLE CAUSES

Possible Causes
STEERING WHEEL ALIGNMENT
STEERING COLUMN OR INTERMEDIATE SHAFT IMPROPERLY INSTALLED OR DAMAGED
ELECTRIC POWER STEERING (EPS) MODULE
ANTI-LOCK BRAKE SYSTEM (ABS) MODULE/INTEGRATED CONTROL UNIT (ICU)

NOTE: Diagnose and repair any Electric Power Steering (EPS) Module DTCs before continuing with this diagnostic procedure.

DIAGNOSTIC TEST

1. **VERIFY THE DTC IS ACTIVE**

NOTE: After erasing ACTIVE DTCs it may be necessary for the Anti-lock Brake System (ABS) Module to go to sleep before the DTCs are cleared. IF the DTC is still ACTIVE after the clear command then Turn the ignition off, disconnect the Scan Tool, close the doors and wait until all indicators on the Cluster have gone out, typically about 30 seconds.

NOTE: This DTC must be active for the results of this test to be valid.

1. Perform any Technical Service Bulletins (TSBs) that may apply.
2. Ignition on, engine not running.
3. Using the scan tool, read and record DTCs.
4. Using the scan tool, read and record Environmental Data.
5. Using the scan tool, erase DTCs.
6. Start the engine.
7. Slowly turn the steering wheel from lock to lock.
8. Using the scan tool, read and record DTCs.

Is the DTC active at this time?

Yes

- Go To 2

No

- Perform the ABS-INTERMITTENT CONDITION TEST. Refer to **STANDARD PROCEDURE**.

2. **INSPECT THE WHEEL ALIGNMENT, STEERING COLUMN AND INTERMEDIATE SHAFT FOR INCORRECT INSTALLATION OR DAMAGE**

NOTE: If available, check the vehicle repair history for collision damage.

1. Turn the ignition off.
2. Inspect the vehicle for proper wheel alignment.
3. Inspect the vehicle for damage causing tracking problems or steering wheel misalignment.
4. Inspect the steering column and intermediate shaft for damage.

Were any problems found?

Yes

- Repair as necessary.
- Perform the ABS VERIFICATION TEST. Refer to **STANDARD PROCEDURE**.

No

- Go To 3

3. **CHECK THE STEERING ANGLE**
   1. Turn steering wheel so wheels point in a straight ahead position.
   2. With scan tool, read the steering angle.

Is the Steering Angle reading within ±15°?

Yes

- Go To 4

No

- Replace the Electric Power Steering (EPS) Module in accordance with the Service Information. Refer to **GEAR, REMOVAL** .

4. **CHECK STEERING ANGLE CHANGE**
    1. Turn steering wheel so wheels point in a straight ahead position.
    2. With scan tool, graph the steering angle to see if reading never travels above 720° whiling rotating wheel from lock to lock.
    3. Rotate steering wheel to the right and the degrees will decrease and rotating steering wheel to the left the degrees will increase.

    Did the steering angle change accordingly with no irregularities and display lower than ±720° from lock to lock?

    Yes

    - Replace the Anti-lock Brake System (ABS) Module in accordance with the Service Information. Refer to **INTEGRATED CONTROL UNIT (ICU), REMOVAL** .
    - Perform the ABS VERIFICATION TEST. Refer to **STANDARD PROCEDURE**.

    No

    - Replace the Electric Power Steering (EPS) Module in accordance with the Service Information. Refer to **GEAR, REMOVAL** .

C0051-28-STEERING WHEEL POSITION SENSOR - SIGNAL BIAS LEVEL OUT OF RANGE / ZERO ADJUSTMENT FAILURE

For a complete wiring diagram, **refer to appropriate SYSTEM WIRING DIAGRAMS article** .

WHEN MONITORED

Driving straight with speeds above 15 km/h (9 mph).

SET CONDITION

If the Anti-lock Brakes System (ABS) Module detects that the sensor signal is showing to great of a value while driving straight.

NOTE: The Steering Angle Sensor (SAS) is internal to the Steering Gear.

POSSIBLE CAUSES

Possible Causes
STEERING WHEEL ALIGNMENT
STEERING COLUMN OR INTERMEDIATE SHAFT IMPROPERLY INSTALLED OR DAMAGED
ELECTRIC POWER STEERING (EPS) MODULE
ANTI-LOCK BRAKE SYSTEM (ABS) MODULE

NOTE: Diagnose and repair any Electric Power Steering (EPS) Module DTCs before continuing with this diagnostic procedure.

DIAGNOSTIC TEST

1. **VERIFY THE DTC IS ACTIVE**

NOTE: After erasing ACTIVE DTCs it may be necessary for the Anti-lock Brake System (ABS) Module to go to sleep before the DTCs are cleared. IF the DTC is still ACTIVE after the clear command then Turn the ignition off, disconnect the Scan Tool, close the doors and wait until all indicators on the Cluster have gone out, typically about 30 seconds.

NOTE: This DTC must be active for the results of this test to be valid.

1. Perform any Technical Service Bulletins (TSBs) that may apply.
2. Ignition on, engine not running.
3. Using the scan tool, read and record DTCs.
4. Using the scan tool, read and record Environmental Data.
5. Using the scan tool, erase DTCs.
6. Test drive the vehicle straight with speeds above 15 km/h (9 mph).
7. Stop the vehicle.
8. Slowly turn the steering wheel from lock to lock.
9. Using the scan tool, read DTCs.

Is the DTC active at this time?

Yes

- Go To 2

No

- Perform the ABS-INTERMITTENT CONDITION TEST. Refer to **STANDARD PROCEDURE**.

2. **INSPECT THE WHEEL ALIGNMENT, STEERING COLUMN AND INTERMEDIATE SHAFT FOR INCORRECT INSTALLATION OR DAMAGE**

NOTE: If available, check the vehicle repair history for collision damage.

1. Turn the ignition off.
2. Inspect the vehicle for proper wheel alignment.

3. Inspect the vehicle for damage causing tracking problems or steering wheel misalignment.
4. Inspect the steering column and intermediate shaft for damage.

   Were any problems found?

   Yes

   - Repair as necessary.
   - Perform the ABS VERIFICATION TEST. Refer to **STANDARD PROCEDURE**.

   No

   - Go To 3

3. **CHECK THE STEERING ANGLE**
   1. Test drive the vehicle straight with speeds above 15 km/h (9 mph).
   2. With scan tool, read the steering angle.

   Is the Steering Angle reading within ±15°?

   Yes

   - Replace the Anti-lock Brake System (ABS) Module in accordance with the Service Information. Refer to **MODULE, ANTI-LOCK BRAKE SYSTEM, REMOVAL** .
   - Perform the ABS VERIFICATION TEST. Refer to **STANDARD PROCEDURE**.

   No

   - Replace the Electric Power Steering (EPS) Module in accordance with the Service Information. Refer to **GEAR, REMOVAL** .

C0051-2F-STEERING WHEEL POSITION SENSOR - SIGNAL ERRATIC

For a complete wiring diagram, **refer to appropriate SYSTEM WIRING DIAGRAMS article**

WHEN MONITORED

Continuously.

SET CONDITION

When the Anti-lock Brake System (ABS) Module detects an erratic signal from the Steering Angle Sensor (SAS).

NOTE: The Steering Angle Sensor (SAS) is internal to the Steering Gear.

POSSIBLE CAUSES

Possible Causes
STEERING ANGLE SENSOR (SAS) NOT CALIBRATED
ELECTRONIC POWER STEERING (EPS) MODULE
ANTI-LOCK BRAKE SYSTEM (ABS) MODULE

NOTE: Diagnose and repair any Electric Power Steering (EPS) Module DTCs before continuing with this diagnostic procedure.)

DIAGNOSTIC TEST

1. **VERIFY THE DTC IS ACTIVE**

   NOTE: After erasing ACTIVE DTCs it may be necessary for the Anti-lock Brake System (ABS) Module to go to sleep before the DTCs are cleared. IF the DTC is still ACTIVE after the clear command then Turn the ignition off, disconnect the Scan Tool, close the doors and wait until all indicators on the Cluster have gone out, typically about 30 seconds.

   NOTE: This DTC must be active for the results of this test to be valid.

   1. Perform any Technical Service Bulletins (TSBs) that may apply.
   2. Ignition on, engine not running.
   3. Using the scan tool, read and record DTCs.
   4. Using the scan tool, read and record Environmental Data.
   5. Using the scan tool, erase DTCs.
   6. Start the engine.
   7. Slowly turn the steering wheel from lock to lock.
   8. Using the scan tool, read and record DTCs.

   Is the DTC active at this time?

   Yes

   - Go To 2

   No

   - Perform the ABS-INTERMITTENT CONDITION TEST. Refer to **STANDARD PROCEDURE**.

2. **INSPECT THE WHEEL ALIGNMENT, STEERING COLUMN AND INTERMEDIATE SHAFT FOR INCORRECT INSTALLATION OR DAMAGE**

NOTE: If available, check the vehicle repair history for collision damage.

1. Turn the ignition off.
2. Inspect the vehicle for proper wheel alignment.
3. Inspect the vehicle for damage causing tracking problems or steering wheel misalignment.
4. Inspect the steering column and intermediate shaft for damage.

Were any problems found?

Yes

- Repair as necessary.
- Perform the ABS VERIFICATION TEST. Refer to **STANDARD PROCEDURE**.

No

- Go To 3

3. **CHECK THE STEERING ANGLE**
   1. Turn steering wheel so wheels point in a straight ahead position.
   2. With scan tool, read the steering angle.

   Is the Steering Angle reading within ±15°?

   Yes

   - Go To 4

   No

   - Replace the Electric Power Steering (EPS) Module in accordance with the Service Information. Refer to **GEAR, REMOVAL** .

4. **CHECK STEERING ANGLE CHANGE**
   1. Turn steering wheel so wheels point in a straight ahead position.
   2. With scan tool, graph the steering angle to see if reading never travels above 720° whiling rotating wheel from lock to lock.
   3. Rotate steering wheel to the right and the degrees will decrease and rotating steering wheel to the left the degrees will increase.

   Did the steering angle change accordingly with no irregularities and display lower than ±720° from lock to lock?

   Yes

- Replace the Anti-lock Brake System (ABS) Module in accordance with the Service Information. Refer to **MODULE, ANTI-LOCK BRAKE SYSTEM, REMOVAL** .
- Perform the ABS VERIFICATION TEST. Refer to **STANDARD PROCEDURE**.

No

- Replace the Electric Power Steering (EPS) Module in accordance with the Service Information. Refer to **GEAR, REMOVAL** .

C0051-49-STEERING WHEEL POSITION SENSOR - INTERNAL ELECTRONIC FAILURE

For a complete wiring diagram, **refer to appropriate SYSTEM WIRING DIAGRAMS article** .

WHEN MONITORED

When vehicle speed is above 15 km/h (9 mph) and the Yaw rate, lateral acceleration, steering angle and vehicle-speed are all valid.

SET CONDITION

When the Anti-Lock Brake System (ABS) Module detects that the Steering angle Sensor (SAS) has sent an internal failure status.

NOTE: The Steering Angle Sensor (SAS) is internal to the Steering Gear.

POSSIBLE CAUSES

Possible Causes
WIRING HARNESS, TERMINAL, CONNECTOR DAMAGE
ELECTRIC POWER STEERING (EPS) MODULE

NOTE: Diagnose and repair any Electric Power Steering (EPS) Module DTCs before continuing with this diagnostic procedure.

DIAGNOSTIC TEST

STEERING WHEEL POSITION SENSOR-INTERNAL ELECTRONIC FAILURE

1. Perform any Technical Service Bulletins (TSBs) that may apply.
2. The ABS Module is reporting internal errors from the SAS.

NOTE: Before continuing, check the Electric Power Steering (EPS) Module harness connector terminals for corrosion, damage, or terminal push out. Repair as necessary.

3. Using the schematics as a guide, inspect the wire harness and connectors. Pay particular attention to all Power and Ground circuits.
4. Perform any Technical Service Bulletins that may apply.

   Were there any problems found?

   Yes

   - Repair as necessary.
   - Perform the ABS VERIFICATION TEST. Refer to **STANDARD PROCEDURE**.

   No

   - Replace the Electric Power Steering (EPS) Module in accordance with the Service Information. Refer to **GEAR, REMOVAL** .
   - Perform the ABS VERIFICATION TEST. Refer to **STANDARD PROCEDURE**.

C0051-54-STEERING WHEEL POSITION SENSOR - MISSING CALIBRATION

For a complete wiring diagram, **refer to appropriate SYSTEM WIRING DIAGRAMS article** .

WHEN MONITORED

Ignition on.

SET CONDITION

When the Steering Angle Sensor (SAS) indicates that the EPS battery power was disconnected or low and the correct driving conditions have occurred.

NOTE: The Steering Angle Sensor (SAS) is internal to the Steering Gear.

POSSIBLE CAUSES

Possible Causes
TERMINAL/CONNECTOR/WIRING HARNESS DAMAGE
STEERING ANGLE SENSOR (SAS)
ANTI-LOCK BRAKE SYSTEM (ABS) MODULE/INTEGRATED CONTROL UNIT (ICU)

NOTE: The Electrical Power Steering (EPS) will erase their DTC when the low battery condition is corrected so it may not be present. Refer to DIAGNOSIS AND TESTING .

DIAGNOSTIC TEST

1. **VERIFY THE DTC IS ACTIVE**

NOTE: After erasing ACTIVE DTCs it may be necessary for the Anti-lock Brake System (ABS) Module to go to sleep before the DTCs are cleared. IF the DTC is still ACTIVE after the clear command then Turn the ignition off, disconnect the Scan Tool, close the doors and wait until all indicators on the Cluster have gone out, typically about 30 seconds.

NOTE: This DTC must be active for the results of this test to be valid.

1. Turn the ignition on.
2. With the scan tool, erase the DTCs.

WARNING: To avoid possible serious or fatal injury, check brake capability is available before road testing.

3. Test drive the vehicle by turning the vehicle left and right in a curving manner at a velocity between 15 and 35 km/h (9 and 22 mph).
4. Park the vehicle.
5. With the scan tool, read ABS DTCs.

Is the DTC active at this time?

Yes

- Go To 2

No

- Test complete.

2. **STEERING ANGLE SENSOR**
   1. Turn the ignition off to the lock position.

NOTE: The Steering Angle Sensor (SAS) is internal to the Steering Gear.

Replace the Steering Angle Sensor (SAS) in accordance with the Service Information. Refer to **GEAR, REMOVAL** .

2. Perform the ABS VERIFICATION TEST. Refer to **STANDARD PROCEDURE**.

WARNING: To avoid possible serious or fatal injury, check brake capability is available before road testing.

3. Test drive the vehicle by turning the vehicle left and right in a curving manner at a velocity between 15 and 35 km/h (9 and 22 mph).
4. With the scan tool, read the DTCs.

   Does the DTC remain active?

   Yes

   - Replace the Anti-lock Brake System (ABS) Module in accordance with the Service Information. Refer to **MODULE, ANTI-LOCK BRAKE SYSTEM, REMOVAL** .
   - Perform the ABS VERIFICATION TEST. Refer to **STANDARD PROCEDURE**.

   No

   - Test complete.

C0051-62-STEERING WHEEL POSITION SENSOR - SIGNAL COMPARE FAILURE

For a complete wiring diagram, **refer to appropriate SYSTEM WIRING DIAGRAMS article** .

WHEN MONITORED

When vehicle speed is above 15 km/h (9 mph) and the Yaw rate, lateral acceleration, steering angle and vehicle-speed are all valid.

SET CONDITION

When the Anti-lock Brake System (ABS) Module detects that the Electronic Stability Control (ESC) calculated Steering Angle does not match the sensor signal from the Electric Power Steering (EPS) Module.

NOTE: The Steering Angle Sensor (SAS) is internal to the Steering Gear.

POSSIBLE CAUSES

Possible Causes
STEERING WHEEL ALIGNMENT
STEERING COLUMN OR INTERMEDIATE SHAFT IMPROPERLY INSTALLED OR DAMAGED
ELECTRIC POWER STEERING (EPS) MODULE
ANTI-LOCK BRAKE SYSTEM (ABS) MODULE

NOTE: Diagnose and repair any Electric Power Steering (EPS) Module DTCs before continuing with this diagnostic procedure.)

DIAGNOSTIC TEST

1. **VERIFY THE DTC IS ACTIVE**

NOTE: After erasing ACTIVE DTCs it may be necessary for the Anti-lock Brake System (ABS) Module to go to sleep before the DTCs are cleared. IF the DTC is still ACTIVE after the clear command then Turn the ignition off, disconnect the Scan Tool, close the doors and wait until all indicators on the Cluster have gone out, typically about 30 seconds.

NOTE: This DTC must be active for the results of this test to be valid.

1. Perform any Technical Service Bulletins (TSBs) that may apply.
2. Ignition on, engine not running.
3. Using the scan tool, read and record DTCs.
4. Using the scan tool, read and record Environmental Data.
5. Using the scan tool, erase DTCs.
6. Start the engine.
7. Slowly turn the steering wheel from lock to lock.
8. Using the scan tool, read and record DTCs.

Is the DTC active at this time?

Yes

- Go To 2

No

- Perform the ABS-INTERMITTENT CONDITION TEST. Refer to **STANDARD PROCEDURE**.

2. **INSPECT THE WHEEL ALIGNMENT, STEERING COLUMN AND INTERMEDIATE SHAFT FOR INCORRECT INSTALLATION OR DAMAGE**

NOTE: If available, check the vehicle repair history for collision damage.

1. Perform any Technical Service Bulletins (TSBs) that may apply
2. Inspect the vehicle for proper wheel alignment.
3. Inspect the vehicle for damage causing tracking problems or steering wheel misalignment.
4. Inspect the steering column and intermediate shaft for damage.

Were any problems found?

Yes

- Repair as necessary.
- Perform the ABS VERIFICATION TEST. Refer to **STANDARD PROCEDURE**.

No

- Go To 3

3. **CHECK THE STEERING ANGLE**
   1. Turn steering wheel so wheels point in a straight ahead position.
   2. With scan tool, graph the steering angle while slowly rotating steering wheel from lock to lock.

      Is the Steering Angle reading within ±15°?

      Yes

      - Go To 4

      No

      - Replace the Electric Power Steering (EPS) module in accordance with the Service Information. Refer to **GEAR, REMOVAL** .
      - Perform the ABS VERIFICATION TEST. Refer to **STANDARD PROCEDURE**.
4. **CHECK STEERING ANGLE CHANGE**
   1. Turn steering wheel so wheels point in a straight ahead position.
   2. With scan tool, graph the steering angle to see while rotating wheel from lock to lock.

      NOTE: Sensor damage can occur if wheel is turned over 720°.

   3. Rotate steering wheel to the right and the degrees will decrease and rotating steering wheel to the left the degrees will increase.

      Did the steering angle change accordingly and display lower then 720° from lock to lock with no erratic signal behavior?

      Yes

      - Replace the Anti-lock Brake System (ABS) Module in accordance with the Service Information. Refer to **MODULE, ANTI-LOCK BRAKE SYSTEM, REMOVAL** .
      - Perform the ABS VERIFICATION TEST. Refer to **STANDARD PROCEDURE**.

      No

      - Replace the Electric Power Steering (EPS) module in accordance with the Service Information. Refer to **GEAR, REMOVAL** .

- Perform the ABS VERIFICATION TEST. Refer to **STANDARD PROCEDURE**.

C006A-28-MULTI-AXIS ACCELERATION SENSOR - SIGNAL BIAS LEVEL OUT OF RANGE / ZERO ADJUSTMENT FAILURE

For a complete wiring diagram, **refer to appropriate SYSTEM WIRING DIAGRAMS article** .

WHEN MONITORED

Ignition on.

SET CONDITION

When the Anti-lock Brake System (ABS) Module detects that one of the Dynamics Sensors offset levels are above reasonable levels.

NOTE: The Dynamics Sensor is internal to the Occupant Restraint Controller (ORC).

POSSIBLE CAUSES

Possible Causes
LONGITUDINAL G-SENSOR ROUTINE PERFORMED INCORRECTLY
OCCUPANT RESTRAINT CONTROLLER (ORC) INSTALLATION
OCCUPANT RESTRAINT CONTROLLER (ORC)
ANTI-LOCK BRAKE SYSTEM (ABS) MODULE/INTEGRATED CONTROL UNIT (ICU)

DIAGNOSTIC TEST

1. **VERIFY THE DTC IS ACTIVE**

NOTE: After erasing ACTIVE DTCs it may be necessary for the Anti-lock Brake System (ABS) Module to go to sleep before the DTCs are cleared. IF the DTC is still ACTIVE after the clear command then Turn the ignition off, disconnect the Scan Tool, close the doors and wait until all indicators on the Cluster have gone out, typically about 30 seconds.

NOTE: This DTC must be active for the results of this test to be valid.

1. Perform any Technical Service Bulletins (TSBs) that may apply.
2. Ignition on, engine not running.
3. Using the scan tool, read and record DTCs.
4. Using the scan tool, read and record Environmental Data.
5. Using the scan tool, erase DTCs.
6. Start the engine.

7. Slowly turn the steering wheel from lock to lock.
8. Using the scan tool, read and record DTCs.

   Is the DTC active at this time?

   Yes

   - Go To 2

   No

   - Perform the ABS-INTERMITTENT CONDITION TEST. Refer to **STANDARD PROCEDURE**.

2. **CHECK FOR OCCUPANT RESTRAINT CONTROLLER (ORC) DTCs**
   1. Perform any Technical Service Bulletins (TSBs) that may apply.
   2. Turn the ignition on.
   3. With the scan tool, read DTCs in the ORC.

      Are there any ORC related DTCs present?

      Yes

      - Perform the appropriate diagnostic procedure. Refer to the **OCCUPANT RESTRAINT CONTROLLER (ORC) - DIAGNOSTIC CODE INDEX** article .

      No

      - Go To 3

3. **LONGITUDINAL G-SENSOR ROUTINE**

   NOTE: The Longitudinal G-Sensor Calibration routine must be performed on a level surface.

   With the scan tool, under "Miscellaneous Functions" run the Longitudinal G-Sensor Calibration routine.

   1. Cycle the ignition from off to on.
   2. With the scan tool, read the DTCs.

      Does the DTC remain active?

      Yes

      - Go To 4

No

- Test complete.
- Perform the ABS VERIFICATION TEST. Refer to **STANDARD PROCEDURE**.

4. **YAW RATE**
   1. On a flat surface with the scan tool, under "Data" monitor the Yaw Rate, Longitudinal and Lateral Acceleration.

      Is the Yaw Rate outside of ±6°/sec or the Longitudinal and Lateral Acceleration outside of ±1.7meters/sec^2 ?

      Yes

      - Go To 5

      No

      - Replace the Anti-lock Brake System (ABS) Module in accordance with the Service Information. Refer to **MODULE, ANTI-LOCK BRAKE SYSTEM, REMOVAL** .
      - Perform the ABS VERIFICATION TEST. Refer to **STANDARD PROCEDURE**.
5. **CHECK THE ORC INSTALLATION**

   NOTE: The Occupant Restraint Controller (ORC) installation and mounting bolt torque is crucial for proper operation.

   1. Check the ORC for damaged, modified, and bent mounting brackets.
   2. Check the ORC mounting bolts for a loose or over tightened condition.

      Were any problems found?

      Yes

      - Repair as necessary.
      - Perform the ABS VERIFICATION TEST. Refer to **STANDARD PROCEDURE**.

      No

      - Replace the Occupant Restraint Controller (ORC) in accordance with the Service Information. Refer to **MODULE, OCCUPANT RESTRAINT CONTROLLER, REMOVAL** .
      - Perform the ABS VERIFICATION TEST. Refer to **STANDARD PROCEDURE**.

C006A-49-MULTI-AXIS ACCELERATION SENSOR - INTERNAL ELECTRONIC FAILURE

For a complete wiring diagram, **refer to appropriate SYSTEM WIRING DIAGRAMS article** .

WHEN MONITORED

Ignition on.

SET CONDITION

The Dynamics Sensor has indicated that it has detected an internal failure.

NOTE: The Dynamics Sensor is internal to the Occupant Restraint Controller (ORC).

POSSIBLE CAUSES

Possible Causes
OCCUPANT RESTRAINT CONTROLLER (ORC) ANTI-LOCK BRAKE SYSTEM (ABS) MODULE/INTEGRATED CONTROL UNIT (ICU)

NOTE: If DTC U0002-88 is present, perform the diagnostics for this DTC before continuing with this test.

DIAGNOSTIC TEST

1. **VERIFY THE IS ACTIVE**

NOTE: After erasing ACTIVE DTCs it may be necessary for the Anti-lock Brake System (ABS) Module to go to sleep before the DTCs are cleared. IF the DTC is still ACTIVE after the clear command then Turn the ignition off, disconnect the Scan Tool, close the doors and wait until all indicators on the Cluster have gone out, typically about 30 seconds.

NOTE: This DTC must be active for the results of this test to be valid.

1. Perform any Technical Service Bulletins (TSBs) that may apply.
2. Ignition on, engine not running.
3. With the scan tool, read and record the ABS DTCs.
4. With the scan tool, read and record Environmental Data (EV Data).
5. With the scan tool, erase ABS DTCs.

WARNING: To avoid possible serious or fatal injury, check brake capability is available before road testing.

6. Test drive the vehicle by turning the vehicle left or right in a curving manner at a velocity between

15 and 35 km/h (9 and 22 mph).

7. Park the vehicle on level ground.
8. With the scan tool, read the ABS DTCs.

   Is the DTC active at this time?

   Yes

   - Go To 2

   No

   - Perform the ABS-INTERMITTENT CONDITION TEST. Refer to **STANDARD PROCEDURE**.

2. **ANTI-LOCK BRAKE SYSTEM (ABS) MODULE**
   1. Turn the ignition off to the lock position.
   2. Replace the Occupant Restraint Controller (ORC) in accordance with the Service Information. Refer to **MODULE, OCCUPANT RESTRAINT CONTROLLER, REMOVAL** .
   3. Perform the ABS VERIFICATION TEST. Refer to **STANDARD PROCEDURE**.
   4. Test drive the vehicle on mainly straight road conditions at a velocity between 15 and 35 km/h (9 and 22 mph).
   5. With the scan tool, read the DTCs.

      Does the DTC remain active?

      Yes

      - Replace the Anti-lock Brake System (ABS) Module in accordance with the Service Information. Refer to **MODULE, ANTI-LOCK BRAKE SYSTEM, REMOVAL** .
      - Perform the ABS VERIFICATION TEST. Refer to **STANDARD PROCEDURE**.

      No

      - Test complete.

C006A-54-MULTI-AXIS ACCELERATION SENSOR - MISSING CALIBRATION

For a complete wiring diagram, **refer to appropriate SYSTEM WIRING DIAGRAMS article** .

WHEN MONITORED

Ignition on.

SET CONDITION

When the Anti-lock Brake System (ABS) Module detects that a new Dynamics Sensor has been placed on the vehicle.

NOTE: The Dynamics Sensor is internal to the Occupant Restraint Controller (ORC).

POSSIBLE CAUSES

Possible Causes
DYNAMIC SENSOR NOT CALIBRATED
OCCUPANT RESTRAINT CONTROLLER (ORC)
ANTI-LOCK BRAKE SYSTEM (ABS) MODULE/INTEGRATED CONTROL UNIT (ICU)

DIAGNOSTIC TEST

1. **PERFORM THE LONGITUDINAL G SENSOR CALIBRATION ROUTINE**
   1. Turn the ignition on.
   2. With the scan tool, read and record the ABS DTCs.

      NOTE: The Longitudinal G-Sensor Calibration routine must be performed on a level surface.

      With the scan tool, perform the "Longitudinal G-Sensor Calibration" routine and perform and the ABS VERIFICATION TEST. Refer to **STANDARD PROCEDURE**.

   3. Park the vehicle.

      Was the Longitudinal G-Sensor Calibration routine successful?

      Yes

      - Go To 2

      No

      - Perform the Longitudinal G-Sensor routine again, if still unsuccessful.
      - Go To 4
2. **VERIFY THE DTC IS ACTIVE**

   NOTE: After erasing ACTIVE DTCs it may be necessary for the Anti-lock Brake System (ABS) Module to go to sleep before the DTCs are cleared. IF the DTC is still ACTIVE after the clear command then Turn the ignition off, disconnect the Scan Tool, close the doors and wait until all indicators on the Cluster have gone out, typically about 30 seconds.

NOTE: This DTC must be active for the results of this test to be valid.

1. Turn the ignition on.
2. With the scan tool, erase the DTCs.
3. Cycle the ignition from off to on.
4. With the scan tool, read ABS DTCs.

   Does the DTC remain active?

   Yes

   - Go To 4

   No

   - Test complete.

3. **CHECK THE ORC INSTALLATION**

NOTE: The Occupant Restraint Controller (ORC) installation and mounting bolt torque is crucial for proper operation.

1. Check the ORC for damaged, modified, and bent mounting brackets.
2. Check the ORC mounting bolts for a loose or over tightened condition.

   Were any problems found?

   Yes

   - Repair as necessary.
   - Perform the ABS VERIFICATION TEST. Refer to **STANDARD PROCEDURE**.

   No

   - Go To 4

4. **ANTI-LOCK BRAKE SYSTEM (ABS) MODULE**
   1. Turn the ignition off to the lock position.
   2. Replace the Occupant Restraint Controller (ORC) in accordance with the Service Information. Refer to **MODULE, OCCUPANT RESTRAINT CONTROLLER, REMOVAL** .
   3. Perform the ABS VERIFICATION TEST. Refer to **STANDARD PROCEDURE**.
   4. Test drive the vehicle by turning the vehicle left and right in a curving manner at a velocity between 15 and 35 km/h (9 and 22 mph).
   5. With the scan tool, read the DTCs.

Does the DTC remain active?

Yes

- Replace the Anti-lock Brake System (ABS) Module in accordance with the Service Information. Refer to **MODULE, ANTI-LOCK BRAKE SYSTEM, REMOVAL** .
- Perform the ABS VERIFICATION TEST. Refer to **STANDARD PROCEDURE**.

No

- Test complete.

C006A-62-MULTI-AXIS ACCELERATION SENSOR - SIGNAL COMPARE FAILURE

For a complete wiring diagram, **refer to appropriate SYSTEM WIRING DIAGRAMS article** .

WHEN MONITORED

When ignition is on and vehicle speed is above 15 km/h (9 mph).

SET CONDITION

When the Anti-lock Brake System (ABS) Module detects that one of the three Dynamics Sensor signals does not agree with the calculated value.

NOTE: The Dynamics Sensor is internal to the Occupant Restraint Controller (ORC).

POSSIBLE CAUSES

Possible Causes
OCCUPANT RESTRAINT CONTROLLER (ORC)
ANTI-LOCK BRAKE SYSTEM (ABS) MODULE/INTEGRATED CONTROL UNIT (ICU)

DIAGNOSTIC TEST

1. **VERIFY THE DTC IS ACTIVE**
    1. Perform any Technical Service Bulletins (TSBs) that may apply.
    2. Ignition on, engine not running.
    3. With the scan tool, read and record the ABS DTCs.
    4. With the scan tool, erase ABS DTCs.

WARNING: To avoid possible serious or fatal injury, check brake capability is available before road testing.

5. Test drive the vehicle by turning left or right in a curving manner at a velocity between 15 and 35 km/h (9 and 22 mph).
6. Park the vehicle on level ground.
7. With the scan tool, read the ABS DTCs.

   Is the DTC active at this time?

   Yes

   - Go To 2

   No

   - Perform the ABS-INTERMITTENT CONDITION TEST. Refer to **STANDARD PROCEDURE**.

2. **CHECK THE ORC INSTALLATION**

   NOTE: The Occupant Restraint Controller (ORC) installation and mounting bolt torque is crucial for proper operation.

   1. Check the ORC for damaged, modified, and bent mounting brackets.
   2. Check the ORC mounting bolts for a loose or over tightened condition.

      Were any problems found?

      Yes

      - Repair as necessary.
      - Perform the ABS VERIFICATION TEST. Refer to **STANDARD PROCEDURE**.

      No

      - Go To 3

3. **ANTI-LOCK BRAKE SYSTEM (ABS) MODULE**
   1. Turn the ignition off to the lock position.
   2. Replace the Occupant Restraint Controller (ORC) in accordance with the Service Information. Refer to **MODULE, OCCUPANT RESTRAINT CONTROLLER, REMOVAL** .
   3. Perform the ABS VERIFICATION TEST. Refer to **STANDARD PROCEDURE**.

      WARNING: To avoid possible serious or fatal injury, check brake capability is available before road testing.

   4. Test drive the vehicle by turning left or right in a curving manner at a velocity between 15 and 35

km/h (9 and 22 mph).

5. With the scan tool, read the DTCs.

   Does the DTC remain active?

   Yes

   - Replace the Anti-lock Brake System (ABS) Module in accordance with the Service Information. Refer to **MODULE, ANTI-LOCK BRAKE SYSTEM, REMOVAL** .
   - Perform the ABS VERIFICATION TEST. Refer to **STANDARD PROCEDURE**.

   No

   - Test complete.

C0078-86-TIRE DIAMETER - SIGNAL INVALID

For a complete wiring diagram, **refer to appropriate SYSTEM WIRING DIAGRAMS article** .

WHEN MONITORED

With the ignition on.

SET CONDITION

The DTC will set if the stored tire size is out of range or has changed from the previous initialization.

POSSIBLE CAUSES

Possible Causes
INCORRECT TIRE SIZE PROGRAMMED INTO BODY CONTROL MODULE (BCM)

DIAGNOSTIC TEST

1. **INCORRECT TIRES PROGRAMMED INTO BCM**
   1. Inspect all four tires on the vehicle and note the size of each tire.

      NOTE: A non-production size tire cannot be programmed into the BCM. The production Powertrain, with the production size tires, is the only emissions certified configuration that is available for reprogramming.

   2. Verify the correct Tire/wheel information is programmed in the BCM.

      Is the correct value programmed in the BCM?

Yes

- Go To 2

No

- Program the correct Tire/Wheel information in the BCM.
- Perform the ABS VERIFICATION TEST. Refer to **STANDARD PROCEDURE**.

2. **PERFORM ABS MODULE INITIALIZATION**
   1. Turn the ignition on.
   2. With the scan tool, read and record the ABS DTCs.
   3. With the scan tool, under "Miscellaneous Functions" perform the ABS Initialization routine. Perform the ABS VERIFICATION TEST. Refer to **STANDARD PROCEDURE**.
   4. With the scan tool, read the DTCs.

   Does the DTC remain active?

   Yes

   - Perform the ABS Module Initialization routine again, if still unsuccessful.
   - Replace the Anti-Lock Brake System (ABS) Module in accordance with the Service Information. Refer to **MODULE, ANTI-LOCK BRAKE SYSTEM, REMOVAL** .
   - Perform the ABS VERIFICATION TEST. Refer to **STANDARD PROCEDURE**.

   No

   - Test complete.

C008B-12-WHEEL SPEED SENSOR SUPPLY - CIRCUIT SHORT TO BATTERY

For a complete wiring diagram, **refer to appropriate SYSTEM WIRING DIAGRAMS article** .

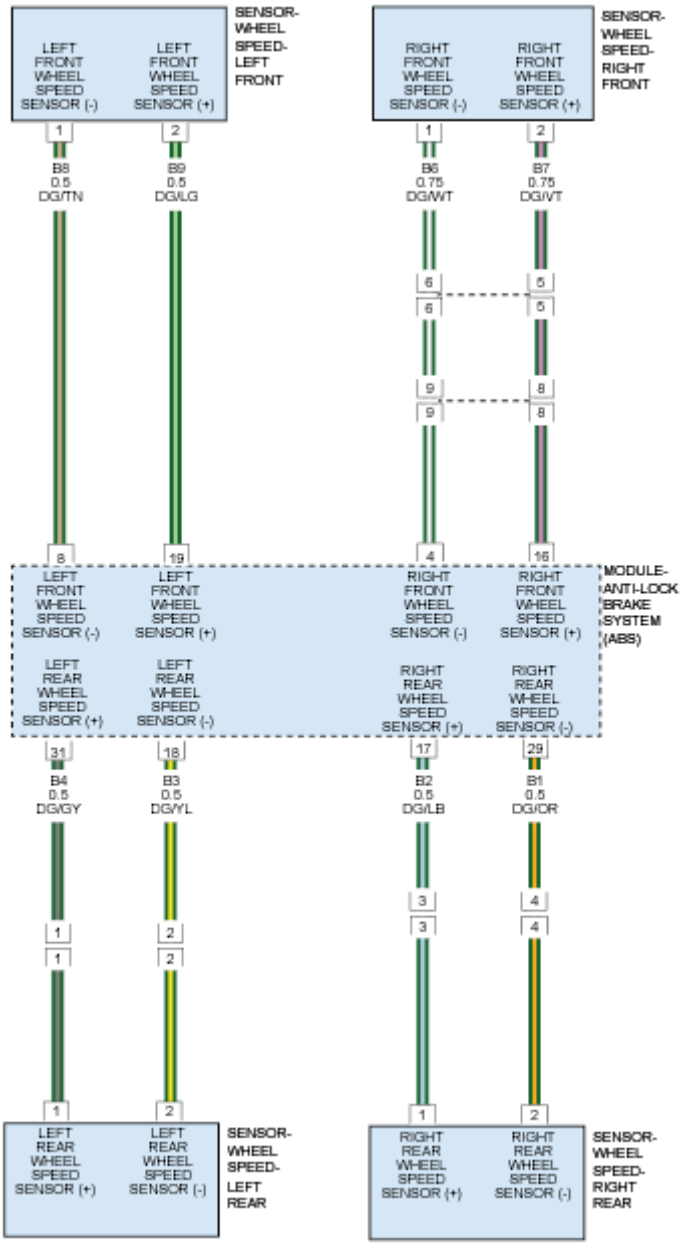

Fig. 10: Wheel Speed Sensor Circuit Schematic
Courtesy of CHRYSLER GROUP, LLC

WHEN MONITORED

With the ignition on and no system under voltage or over voltage condition present.

SET CONDITION

When Wheel Speed Sensor Supply circuit detects a short to battery voltage.

POSSIBLE CAUSES

Possible Causes
CONNECTOR/TERMINAL DAMAGE
(B9) LEFT FRONT WHEEL SPEED SENSOR SUPPLY CIRCUIT SHORTED TO VOLTAGE
(B7) RIGHT FRONT WHEEL SPEED SENSOR SUPPLY CIRCUIT SHORTED TO VOLTAGE
(B4) LEFT REAR WHEEL SPEED SENSOR SUPPLY CIRCUIT SHORTED TO VOLTAGE
(B2) RIGHT REAR WHEEL SPEED SENSOR SUPPLY CIRCUIT SHORTED TO VOLTAGE
ANTI-LOCK BRAKE SYSTEM (ABS) MODULE

DIAGNOSTIC TEST

1. **VERIFY THE DTC IS ACTIVE**

NOTE: **After erasing ACTIVE DTCs it may be necessary for the Anti-lock Brake System (ABS) Module to go to sleep before the DTCs are cleared. IF the DTC is still ACTIVE after the clear command then Turn the ignition off, disconnect the Scan Tool, close the doors and wait until all indicators on the Cluster have gone out, typically about 30 seconds.**

NOTE: **This DTC must be active for the results of this test to be valid.**

1. Ignition on, engine not running.
2. With the scan tool, erase DTCs.
3. Cycle the ignition switch from off to on.
4. With the scan tool, select View DTCs.

Is the DTC active at this time?

Yes

- Go To 2

No

- The condition that caused the symptom is currently not present. Inspect the related wiring for a possible intermittent condition. Look for any chafed, pierced, pinched, or partially broken wires.
- Perform the ABS INTERMITTENT CONDITION TEST. Refer to **STANDARD PROCEDURE**.

2. **CHECK CONNECTOR/TERMINAL FOR DAMAGE**

NOTE: **Check all terminals for broken, bent, pushed out, or corroded terminals.**

1. Turn the ignition off.
2. Inspect the Wheel Speed Sensor for proper mounting.
3. Inspect the Wheel Speed Sensor harness and connector.
4. Inspect the Wheel Speed Sensor for excessive debris on the sensor.

   Were any problems found?

   Yes

   - Repair as necessary in accordance with the Service Information.
   - Perform the ABS VERIFICATION TEST. Refer to **STANDARD PROCEDURE**.

   No

   - Go To 3

3. **CHECK (B9) LEFT FRONT WHEEL SPEED SENSOR SUPPLY CIRCUIT VOLTAGE**
   1. Turn the ignition off.
   2. Disconnect the ABS Module harness connector.
   3. Turn the ignition on.
   4. Measure the voltage between the (B9) Left Front Wheel Speed Sensor Supply circuit and ground.

      Is the voltage above 10 volts?

      Yes

      - Repair the (B9) Left Front Wheel Speed Sensor Supply circuit for short to voltage.
      - Perform the ABS VERIFICATION TEST. Refer to **STANDARD PROCEDURE**.

      No

      - Go To 4

4. **(B7) RIGHT FRONT WHEEL SPEED SENSOR SUPPLY CIRCUIT SHORTED TO VOLTAGE**
   1. Turn the ignition off.
   2. Turn the ignition on.
   3. Measure the voltage between the (B7) Right Front Wheel Speed Sensor Supply circuit and ground.

      Is the resistance below 5 Ohms?

      Yes

      - Go To 5

No

- Repair the (B7) Right Front Wheel Speed Sensor Supply circuit for short to voltage.
- Perform the ABS VERIFICATION TEST. Refer to **STANDARD PROCEDURE**.

5. **CHECK (B4) LEFT REAR WHEEL SPEED SENSOR SUPPLY CIRCUIT VOLTAGE**
   1. Turn the ignition off.
   2. Turn the ignition on.
   3. Measure the voltage between the (B4) Left Rear Wheel Speed Sensor Supply circuit and ground.

   Is the voltage above 10 volts?

   Yes

   - Repair the (B4) Left Rear Wheel Speed Sensor Supply circuit for short to voltage.
   - Perform the ABS VERIFICATION TEST. Refer to **STANDARD PROCEDURE**.

   No

   - Go To 6

6. **(B2) RIGHT REAR WHEEL SPEED SENSOR SUPPLY CIRCUIT SHORTED TO VOLTAGE**
   1. Turn the ignition off.
   2. Turn the ignition on.
   3. Measure the voltage between the (B2) Right Rear Wheel Speed Sensor Supply circuit and ground.

   Is the resistance below 5 Ohms?

   Yes

   - Replace the Anti-lock Brake System (ABS) Module in accordance with the Service Information. Refer to **MODULE, ANTI-LOCK BRAKE SYSTEM, REMOVAL** .
   - Perform the ABS VERIFICATION TEST. Refer to **STANDARD PROCEDURE**.

   No

   - Repair the (B2) Right Rear Wheel Speed Sensor Supply circuit for short to voltage.
   - Perform the ABS VERIFICATION TEST. Refer to **STANDARD PROCEDURE**.

C107B-62-WHEEL SPEED COMPARATIVE PERFORMANCE-SIGNAL COMPARE FAILURE

For a complete wiring diagram, **refer to appropriate SYSTEM WIRING DIAGRAMS article** .

NOTE: Repair all other Wheel Speed Sensor DTCs first before continuing with this diagnostic procedure.

WHEN MONITORED

With the ignition on and no under voltage, vehicle speed above 15 km/h (9 mph) driving straight with no braking.

SET CONDITION

This DTC will set when multiple Wheel Speed Sensor signals are questionable, sensors are swapped, or directional sensors do not match.

POSSIBLE CAUSES

Possible Causes
IMPROPER TIRE PRESSURE/MISMATCHED TIRES
WHEEL SPEED SENSORS (WSS) SWAPPED
WHEEL SPEED SENSOR (WSS)
HUB AND WHEEL BEARING DAMAGED OR INSTALLED INCORRECTLY
ANTI-LOCK BRAKE SYSTEM (ABS) MODULE

DIAGNOSTIC TEST

1. **VERIFY THE DTC IS ACTIVE**

NOTE: Inspect the tires for improper air pressure and or mismatched tires before continuing, repair as necessary.

1. Turn the ignition on.
2. With the scan tool, record and erase DTCs.

CAUTION: Make sure brake capability is available before road testing.

3. Road test the vehicle over 40 km/h (25 mph).
4. With the scan tool, read DTCs.

Is the DTC active at this time?

Yes

- Go To 2

No

- Perform the ABS-INTERMITTENT CONDITION TEST. Refer to **STANDARD**

PROCEDURE.

2. **CHECK WHEEL SPEED SENSOR SIGNALS**
   1. Turn the ignition on.
   2. With the scan tool, monitor and graph ALL the Wheel Speed Sensors speeds and compare.
   3. Slowly accelerate as straight as possible from a stop to 40 km/h (25 mph).

   Is one or more of the WSS speeds showing 0 km/h (0 mph) or not matching the other WSS speeds?

   Yes

   - Go To 3

   No

   - Perform the ABS-INTERMITTENT CONDITION TEST. Refer to **STANDARD PROCEDURE**.

3. **INSPECT WHEEL SPEED SENSORS FOR DAMAGE**

   NOTE: Check all terminals for broken, bent, pushed out, or corroded terminals.

   1. Turn the ignition off.
   2. Verify the correct WSS are installed and not swapped.
   3. Inspect each WSS for looseness and or not properly fastened.

   Are any WSS swapped, loose or any of the wiring/connectors/terminals damaged?

   Yes

   - Repair as necessary.
   - Perform the ABS VERIFICATION TEST. Refer to **STANDARD PROCEDURE**.

   No

   - Go To 4

4. **CHECK EACH HUB AND WHEEL BEARING FOR DAMAGE**
   1. Inspect each Hub and Wheel Bearing for damage, corrosion, cracks, looseness, or improper installation.

   Are any of the Hub and or Wheel Bearings damaged?

   Yes

   - Replace the Hub and Wheel Bearing in accordance with the Service Information. Refer to

HUB AND BEARING, REMOVAL or **HUB AND BEARING, REMOVAL** .
- Perform the ABS VERIFICATION TEST. Refer to **STANDARD PROCEDURE**.

No

- Go To 5

5. **WHEEL SPEED SENSORS**
   1. Replace the Wheel Speed Sensor(s) in accordance with the Service Information. Refer to **SENSOR, WHEEL SPEED, FRONT, REMOVAL** or **SENSOR, WHEEL SPEED, REAR, REMOVAL**
   2. Perform the ABS VERIFICATION TEST. Refer to **STANDARD PROCEDURE**.
   3. With the scan tool, monitor and graph ALL the Wheel Speed Sensors speeds and compare.
   4. Slowly accelerate as straight as possible from a stop to 40 km/h (25 mph).
   5. With the scan tool, read the DTCs.

   Does this DTC remain active?

   Yes

   - Replace the Anti-lock Brake System (ABS) Module in accordance with the Service Information. Refer to **MODULE, ANTI-LOCK BRAKE SYSTEM, REMOVAL** .
   - Perform the ABS VERIFICATION TEST. Refer to **STANDARD PROCEDURE**.

   No

   - Test complete.

C1082-01-VACUUM PRESSURE SENSOR - GENERAL ELECTRICAL FAILURE

For a complete wiring diagram, **refer to appropriate SYSTEM WIRING DIAGRAMS article** .

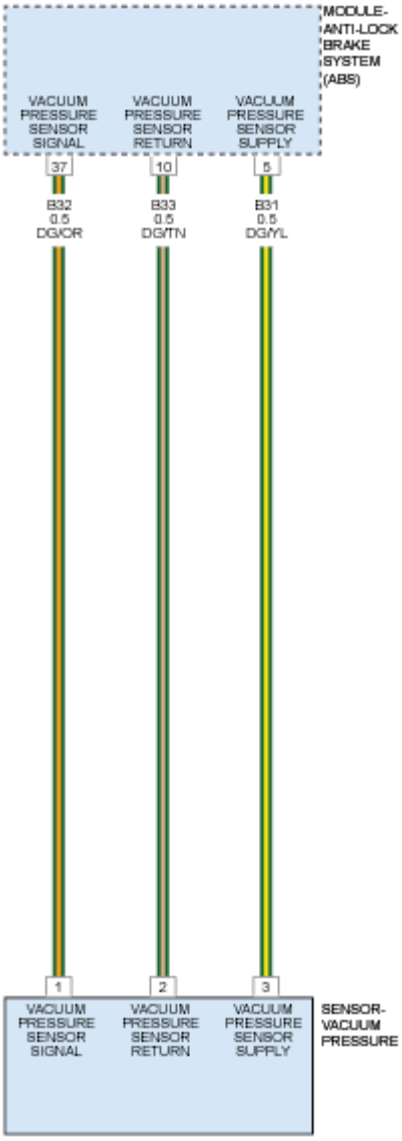

Fig. 11: Vacuum Pressure Sensor Circuit Schematic
Courtesy of CHRYSLER GROUP, LLC

WHEN MONITORED

Continuous

SET CONDITION

The Vacuum Sensor Signal indicates that the voltage level is below 0.1 volt or greater than 3.5 volts for 100 msec.

POSSIBLE CAUSES

Possible Causes
(B31) VACUUM PRESSURE SENSOR SUPPLY CIRCUIT OPEN OR HIGH RESISTANCE
(B32) VACUUM PRESSURE SENSOR SIGNAL CIRCUIT SHORTED TO VOLTAGE
(B32) VACUUM PRESSURE SENSOR SIGNAL CIRCUIT SHORTED TO GROUND
(B32) VACUUM PRESSURE SENSOR SIGNAL CIRCUIT OPEN OR HIGH RESISTANCE
(B33) VACUUM PRESSURE SENSOR RETURN CIRCUIT OPEN OR HIGH RESISTANCE
VACUUM PRESSURE SENSOR
ANTI-LOCK BRAKE SYSTEM (ABS) MODULE

DIAGNOSTIC TEST

1. **VERIFY THE DTC IS ACTIVE**
    1. Perform any Technical Service Bulletins (TSBs) that may apply.
    2. Ignition on, engine not running.
    3. With the scan tool, record and erase the DTCs.
    4. Cycle the ignition switch from off to on.
    5. With the scan tool, read the DTCs.

    Is the DTC active at this time?

    Yes

    - Go To 2

    No

    - The condition that caused the symptom is currently not present. Inspect the related wiring for a possible intermittent condition. Look for any chafed, pierced, pinched, or partially broken wires.
    - Perform the ABS-INTERMITTENT CONDITION TEST. Refer to **STANDARD PROCEDURE**.
2. **(B31) VACUUM PRESSURE SENSOR SUPPLY CIRCUIT OPEN OR HIGH RESISTANCE**
    1. Turn ignition off to the lock position.
    2. Disconnect the ABS Module harness connector.
    3. Measure the resistance of the (B31) Vacuum Pressure Sensor Supply circuit between the Vacuum Pressure Sensor harness connector and the ABS Module harness connector.

    Is the resistance below 5.0 Ohms?

    Yes

    - Go To 3

No

- Repair the (B31) Vacuum Pressure Sensor Supply circuit for an open or high resistance.
- Perform the ABS VERIFICATION TEST. Refer to **STANDARD PROCEDURE**.

3. **(B32) VACUUM PRESSURE SENSOR SIGNAL CIRCUIT SHORTED TO VOLTAGE**
   1. Turn ignition off to the lock position.
   2. Disconnect the ABS Module harness connector.
   3. Disconnect the Vacuum Pressure Sensor harness connector.
   4. Ignition on, engine not running.
   5. Measure the voltage between ground and the (B32) Vacuum Pressure Sensor Signal circuit at the Vacuum Pressure Sensor harness connector.

   Is there any voltage present?

   Yes

   - Repair the (B32) Vacuum Pressure Sensor Signal circuit for a short to ground.
   - Perform the ABS VERIFICATION TEST. Refer to **STANDARD PROCEDURE**.

   No

   - Go To 4
4. **(B32) VACUUM PRESSURE SENSOR SIGNAL CIRCUIT SHORTED TO GROUND**
   1. Turn ignition off to the lock position.
   2. Disconnect the ABS Module harness connector.
   3. Measure the resistance between ground and the (B32) Vacuum Pressure Sensor Signal circuit at the Vacuum Pressure Sensor harness connector.

   Is the resistance below 5.0 Ohms?

   Yes

   - Repair the (B32) Vacuum Pressure Sensor Signal circuit for a short to ground.
   - Perform ABS VERIFICATION TEST. Refer to **STANDARD PROCEDURE**.

   No

   - Go To 5
5. **(B32) VACUUM PRESSURE SENSOR SIGNAL CIRCUIT OPEN OR HIGH RESISTANCE**
   1. Turn ignition off to the lock position.
   2. Disconnect the ABS Module harness connector.
   3. Measure the resistance of the (B32) Vacuum Pressure Sensor Signal circuit between the Vacuum

Pressure Sensor harness connector and the ABS Module harness connector.

Is the resistance below 5.0 Ohms?

Yes

- Go To 6

No

- Repair the (B32) Vacuum Pressure Sensor Signal circuit for an open or high resistance.
- Perform the ABS VERIFICATION TEST. Refer to **STANDARD PROCEDURE**.

6. **(B33) VACUUM PRESSURE SENSOR RETURN CIRCUIT OPEN OR HIGH RESISTANCE**
   1. Turn ignition off to the lock position.
   2. Measure the resistance of the (B33) Vacuum Pressure Sensor Return circuit between the Vacuum Pressure Sensor harness connector and the ABS Module harness connector.

   Is the resistance below 5.0 Ohms?

   Yes

   - Go To 7

   No

   - Repair the (B33) Vacuum Pressure Sensor Return circuit for an open or high resistance.
   - Perform the ABS VERIFICATION TEST. Refer to **STANDARD PROCEDURE**.

7. **ANTI-LOCK BRAKE SYSTEM (ABS) MODULE**
   1. Turn the ignition off to the lock position.
   2. Replace the Vacuum Pressure Sensor.
   3. Perform the ABS VERIFICATION TEST. Refer to **STANDARD PROCEDURE**.
   4. With the scan tool, read the DTCs.

   Is the DTC still active?

   Yes

   - Replace the Anti-Lock Brake System (ABS) Module in accordance with the Service Information. Refer to **MODULE, ANTI-LOCK BRAKE SYSTEM, REMOVAL** .
   - Perform the ABS VERIFICATION TEST. Refer to **STANDARD PROCEDURE**.

   No

- Test complete.

C1082-02-VACUUM PRESSURE SENSOR - GENERAL SIGNAL FAILURE

For a complete wiring diagram, **refer to appropriate SYSTEM WIRING DIAGRAMS article** .

WHEN MONITORED

With the ignition on and engine running for five minutes.

SET CONDITION

When the Anti-Lock Brake Module detects that the vacuum sensor signal does not make sense based on other vehicle conditions. No signal change, signal rapid change, unexpected change.

POSSIBLE CAUSES

Possible Causes
VACUUM PRESSURE SENSOR BRAKE VACUUM BOOSTER ANTI-LOCK BRAKE SYSTEM (ABS) MODULE

DIAGNOSTIC TEST

1. **VACUUM PRESSURE SIGNAL**
    1. Start the engine.
    2. With the scan tool, view and record the vacuum pressure signal with no brake applied.
    3. Turn the engine off.
    4. Ignition on.
    5. With the scan tool, view and record the vacuum pressure with no brake applied.

    Is the vacuum pressure signal staying consistent?

    Yes

    - Go To 2

    No

    - Go To 4
2. **MEASURE THE VACUUM PRESSURE SIGNAL**
    1. Start the engine.
    2. Measure the vacuum pressure while pressing the brake pedal several times.
    3. Turn the engine off.

4. Ignition on.

   Does the vacuum drop below 14 mbar (2 psi)?

   Yes

   - Go To 3

   No

   - Perform the ABS-INTERMITTENT CONDITION TEST. Refer to **STANDARD PROCEDURE**.

3. **CHECK FOR VACUUM PRESSURE SIGNAL CHANGE**
   1. Turn the ignition on.
   2. Remove the Vacuum Pressure Sensor from the Booster.
   3. Connect a vacuum pump to the Vacuum Pressure Sensor.
   4. Apply vacuum to the Vacuum Pressure Sensor and watch for signal change.

      Is the vacuum pressure signal changing on the scan tool as vacuum is being applied?

      Yes

      - Go To 4

      No

      - Replace the Vacuum Pressure Sensor.
      - Perform the ABS VERIFICATION TEST. Refer to **STANDARD PROCEDURE**.

4. **CHECK BRAKE BOOSTER CHECK VALVE**
   1. Remove the Brake Booster Check Valve.
   2. Apply vacuum to the booster side of the check valve.

      Is the Brake Booster Check Valve holding vacuum?

      Yes

      - Go To 5

      No

      - Replace the Brake Booster Check Valve.
      - Perform the ABS VERIFICATION TEST. Refer to **STANDARD PROCEDURE**.

5. **CHECK BRAKE BOOSTER**

1. Reinstall the Brake Booster Check Valve.
2. Using a vacuum pump apply vacuum to the Brake Booster.

   Is the Brake Booster holding vacuum?

   Yes

   - Go To 6

   No

   - Replace the Power Brake Booster in accordance with the Service Information. Refer to **BOOSTER, POWER BRAKE, REMOVAL** .
   - Perform the ABS VERIFICATION TEST. Refer to **STANDARD PROCEDURE**.

6. **EXTERNAL VACUUM PUMP**
   1. Verify the vehicle is equipped with a external vacuum pump.

      Is the vehicle equipped with a external vacuum pump?

      Yes

      - Repair or replace the External Vacuum Pump in accordance with the Service Information.
      - Perform the ABS VERIFICATION TEST. Refer to **STANDARD PROCEDURE**.

      No

      - Go To 7

7. **ANTI-LOCK BRAKE SYSTEM (ABS) MODULE**
   1. Turn the ignition off to the lock position.
   2. Replace the Vacuum Pressure Sensor.
   3. Perform the ABS VERIFICATION TEST. Refer to **STANDARD PROCEDURE**.
   4. With the scan tool, read the DTCs.

      Does the DTC remain active?

      Yes

      - Replace the Anti-Lock Brake System (ABS) Module in accordance with the Service Information. Refer to **MODULE, ANTI-LOCK BRAKE SYSTEM, REMOVAL** .
      - Perform the ABS VERIFICATION TEST. Refer to **STANDARD PROCEDURE**.

      No

- Test complete, the condition or conditions that originally set this DTC are not present at this time.

C1082-2F-VACUUM PRESSURE SENSOR - SIGNAL ERRATIC

For a complete wiring diagram, **refer to appropriate SYSTEM WIRING DIAGRAMS article** .

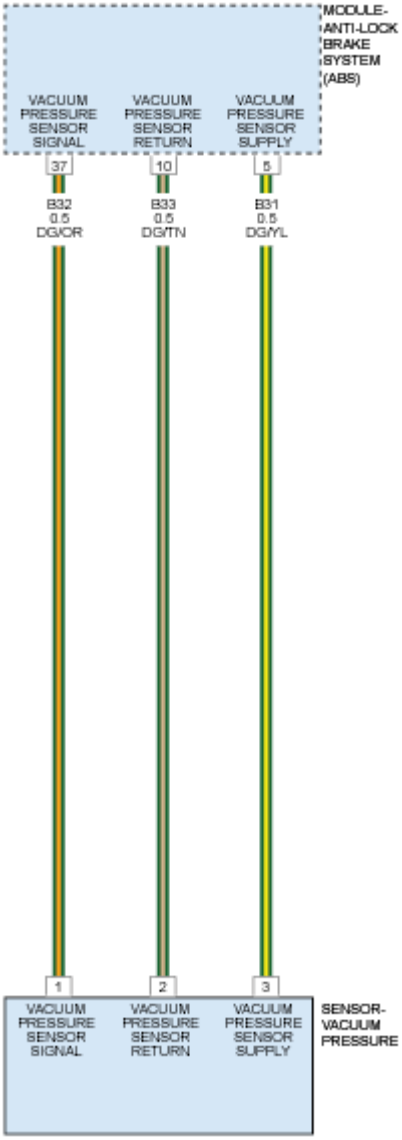

Fig. 12: Vacuum Pressure Sensor Circuit Schematic
Courtesy of CHRYSLER GROUP, LLC

WHEN MONITORED

Ignition On, Continuous

SET CONDITION

The erratic vacuum pressure sensor fault is set when the ABS module detects multiple quick voltage transitions to faulted levels.

NOTE: If any other DTCs are present, repair them first before continuing with this diagnostic procedure.

POSSIBLE CAUSES

Possible Causes
WIRING HARNESS, TERMINAL, CONNECTOR DAMAGE
VACUUM PRESSURE SENSOR
POWER BRAKE BOOSTER
ANTI-LOCK BRAKE SYSTEM (ABS) MODULE

DIAGNOSTIC TEST

1. **INSPECT RELATED WIRING HARNESS, TERMINALS, AND CONNECTORS**
    1. Perform any Technical Service Bulletins (TSBs) that may apply.
    2. Review the scan tool Environmental Data (EV Data). If possible, try to duplicate the conditions under which the DTC set.
    3. Turn the ignition off.
    4. Visually inspect the related wire harness. Disconnect all the related harness connectors. Look for any chafed, pierced, pinched, partially broken wires and broken, bent, pushed out, or corroded terminals.
    5. Wiggle the wires while checking for shorts and open circuits.
    6. Inspect and clean all ABS, engine, and chassis grounds that are related to the most current DTC.

    Were any problems found?

    Yes

    - Repair as necessary.
    - Perform the ABS VERIFICATION TEST. Refer to **STANDARD PROCEDURE**.

    No

    - Go To 2
2. **ANTI-LOCK BRAKE SYSTEM (ABS) MODULE**
    1. Turn the ignition off to the lock position.
    2. Replace the Vacuum Pressure Sensor.
    3. Perform the ABS VERIFICATION TEST. Refer to **STANDARD PROCEDURE**.

4. With the scan tool, read the DTCs.

   Is the DTC still active?

   Yes

   - Replace the Anti-Lock Brake System (ABS) Module in accordance with the Service Information. Refer to **MODULE, ANTI-LOCK BRAKE SYSTEM, REMOVAL** .
   - Perform the ABS VERIFICATION TEST. Refer to **STANDARD PROCEDURE**.

   No

   - Test complete, the condition or conditions that originally set this DTC are not present at this time.

C1086-4B-ABS SYSTEM CONTROL TOO LONG - OVER TEMPERATURE

For a complete wiring diagram, **refer to appropriate SYSTEM WIRING DIAGRAMS article** .

NOTE: If any other DTCs are present, repair them first before continuing with this diagnostic procedure.

WHEN MONITORED

With the ignition on.

SET CONDITION

When the Anti-lock Brake System (ABS) Module calculated thermal model has determined that there has been excessive system activation.

POSSIBLE CAUSES

Possible Causes
ABS, TCS, ESP CONTROL TOO LONG OR TO FREQUENT
ANTI-LOCK BRAKE SYSTEM (ABS) MODULE

DIAGNOSTIC TEST

1. **VERIFY THE DTC IS ACTIVE**

   NOTE: This DTC must be active for the results of this test to be valid.

   1. Perform any related Technical Service Bulletins (TSBs) for this DTC.
   2. Allow vehicle to sit for 10 minutes before continuing with test.

3. Turn the ignition on.
4. With the scan tool, read and record the DTCs.
5. With the scan tool, read and record the Environmental Data to help identify the conditions in which the DTC was set.
6. With the scan tool, erase the DTCs.
7. Start the engine.
8. With the scan tool, read and record the DTCs.

   Is the DTC active at this time?

   Yes

   - Go To 2

   No

   - Perform the ABS-INTERMITTENT CONDITION TEST. Refer to **STANDARD PROCEDURE**.

2. **ANTI-LOCK BRAKE SYSTEM (ABS) MODULE**

   NOTE: Check with customer on driving terrain (e.g. mud, snow, ice) for set condition.

   1. Visually inspect the ABS Module wiring.
   2. Visually inspect the braking system.

      Were any problems found?

      Yes

      - Repair as necessary.
      - Perform the ABS VERIFICATION TEST. Refer to **STANDARD PROCEDURE**.

      No

      - Replace the Anti-lock Brake System (ABS) Module in accordance with the Service Information. Refer to **MODULE, ANTI-LOCK BRAKE SYSTEM, REMOVAL** .
      - Perform the ABS VERIFICATION TEST. Refer to **STANDARD PROCEDURE**.

C1086-9A-ABS SYSTEM CONTROL TOO LONG - COMPONENT OR SYSTEM OPERATING CONDITIONS

For a complete wiring diagram, **refer to appropriate SYSTEM WIRING DIAGRAMS article** .

WHEN MONITORED

With the ignition on.

SET CONDITION

When the Anti-lock Brake System (ABS) Module calculated thermal model has determined that there has been excessive system activation.

POSSIBLE CAUSES

Possible Causes
ABS, TCS, ESP CONTROL TOO LONG OR TOO FREQUENT ANTI-LOCK BRAKE SYSTEM (ABS) MODULE

NOTE: If any other DTCs are present, repair them first before continuing with this diagnostic procedure.

DIAGNOSTIC TEST

1. **VERIFY THE DTC IS ACTIVE**

NOTE: After erasing ACTIVE DTCs it may be necessary for the Anti-lock Brake System (ABS) Module to go to sleep before the DTCs are cleared. IF the DTC is still ACTIVE after the clear command then Turn the ignition off, disconnect the Scan Tool, close the doors and wait until all indicators on the Cluster have gone out, typically about 30 seconds.

NOTE: This DTC must be active for the results of this test to be valid.

NOTE: Check with customer on driving terrain (e.g. mud, snow, ice) for set condition.

Perform any related Technical Service Bulletins (TSBs) for this DTC.

1. Allow vehicle to sit for 10 minutes before continuing with test.
2. Turn the ignition on.
3. With the scan tool, read and record the DTCs.
4. With the scan tool, erase the DTCs.
5. Start the engine.
6. With the scan tool, read and record the DTCs.

Is the DTC active at this time?

Yes

- Go To 2

No

- Perform the ABS-INTERMITTENT CONDITION TEST. Refer to **STANDARD PROCEDURE**.

2. **ANTI-LOCK BRAKE SYSTEM (ABS) MODULE**
   1. Visually inspect the ABS Module wiring.
   2. Visually inspect the braking system.

   Were any problems found?

   Yes

   - Repair as necessary.
   - Perform the ABS VERIFICATION TEST. Refer to **STANDARD PROCEDURE**.

   No

   - Replace the Anti-lock Brake System (ABS) Module in accordance with the Service Information. Refer to **MODULE, ANTI-LOCK BRAKE SYSTEM, REMOVAL** .
   - Perform the ABS VERIFICATION TEST. Refer to **STANDARD PROCEDURE**.

C121A-09-STEERING ANGLE SENSOR NOT INITIALIZED - COMPONENT FAILURES

For a complete wiring diagram, **refer to appropriate SYSTEM WIRING DIAGRAMS article** .

NOTE: If any Electrical Power Steering (EPS) DTCs are present, perform the appropriate diagnostic procedure. Refer to DIAGNOSIS AND TESTING .

WHEN MONITORED

Ignition on.

SET CONDITION

When the Anti-lock Brake System (ABS) Module detects that a new Steering Angle Sensor has been placed on the vehicle, but it has not been calibrated.

NOTE: The Steering Angle Sensor (SAS) is internal to the Steering Gear.

POSSIBLE CAUSES

Possible Causes
STEERING ANGLE SENSOR (SAS) LOOSE OR WIRING HARNESS DAMAGE ANTI-LOCK BRAKE SYSTEM (ABS) MODULE

DIAGNOSTIC TEST

1. **PERFORM THE EPS LEARN ROUTINE**
   1. Turn the ignition on.
   2. With the scan tool, read and record the ABS DTCs.
   3. With the scan tool, under "Miscellaneous Functions" perform the EPS Learn routine in the EPS Module. Refer to **STANDARD PROCEDURE** .
   4. Perform and the ABS VERIFICATION TEST. Refer to **STANDARD PROCEDURE**.

   Was the routine successful?

   Yes

   - Go To 2

   No

   - Perform the " EPS Learn" routine again, if still unsuccessful.
   - Go To 3
2. **VERIFY IF THE DTC IS STILL ACTIVE**

   NOTE: After erasing ACTIVE DTCs it may be necessary for the Anti-lock Brake System (ABS) Module to go to sleep before the DTCs are cleared. IF the DTC is still ACTIVE after the clear command then Turn the ignition off, disconnect the Scan Tool, close the doors and wait until all indicators on the Cluster have gone out, typically about 30 seconds.

   NOTE: This DTC must be active for the results of this test to be valid.

   1. Turn the ignition on.
   2. With the scan tool, erase the DTCs.
   3. Cycle the ignition from off to on.
   4. With the scan tool, read ABS DTCs.

   Does the DTC remain active?

   Yes

   - Go To 3

No

- Test complete.

3. **ANTI-LOCK BRAKE SYSTEM (ABS) MODULE**
   1. Turn the ignition off to the lock position.
   2. Using the schematics as a guide, check the EPS pins, terminals, and connectors for corrosion, damage, or terminal push out. Pay particular attention to all power and ground circuits. If no problems are found, replace the Electric Power Steering (EPS) Module in accordance with the Service Information. Refer to **GEAR, REMOVAL** .
   3. Perform the ABS VERIFICATION TEST. Refer to **STANDARD PROCEDURE**.
   4. Start the vehicle.
   5. Turn the steering wheel from lock to lock several times.
   6. With the scan tool, read the DTCs.

   Does the DTC remain active?

   Yes

   - Using the schematics as a guide, check the ABS Module pins, terminals, and connectors for corrosion, damage, or terminal push out. Pay particular attention to all power and ground circuits. If no problems are found, replace thee Anti-lock Brake System (ABS) Module in accordance with the Service Information. Refer to **MODULE, ANTI-LOCK BRAKE SYSTEM, REMOVAL** .
   - Perform the ABS VERIFICATION TEST. Refer to **STANDARD PROCEDURE**.

   No

   - Test complete.

C121C-00-TORQUE REQUEST SIGNAL DENIED

For a complete wiring diagram, **refer to appropriate SYSTEM WIRING DIAGRAMS article** .

WHEN MONITORED

With the ignition on, engine running.

SET CONDITION

When the Powertrain Control Module (PCM) has informed the Anti-lock Brake System (ABS) Module that it can no longer allow the engine torque reduction requests when engine is above 360 rpm.

POSSIBLE CAUSES

Possible Causes
EXCESSIVE LOAD ON ENGINE ANTI-LOCK BRAKE SYSTEM (ABS) MODULE POWERTRAIN CONTROL MODULE (PCM)

NOTE: If any PCM DTCs are present, perform the appropriate diagnostic procedure. Refer to the DTC INDEX article .

DIAGNOSTIC TEST

1. **VERIFY THE DTC IS ACTIVE**

NOTE: After erasing ACTIVE DTCs it may be necessary for the Anti-lock Brake System (ABS) Module to go to sleep before the DTCs are cleared. IF the DTC is still ACTIVE after the clear command then Turn the ignition off, disconnect the Scan Tool, close the doors and wait until all indicators on the Cluster have gone out, typically about 30 seconds.

NOTE: This DTC must be active for the results of this test to be valid and this DTC may set while driving under severe load conditions.

1. Turn the ignition on.
2. With the scan tool, read and record DTCs.
3. With the scan tool, read and record Freeze Frame information.
4. With the scan tool, erase DTCs.
5. Cycle the ignition switch from off to on.
6. Start the engine and raise the engine RPM to 2500.
7. With the scan tool, read and record DTCs.

Is the DTC active at this time?

Yes

- Go To 2

No

- Perform the ABS-INTERMITTENT CONDITION TEST. Refer to **STANDARD PROCEDURE**.

2. **CHECK ENGINE IDLE**
   1. Allow the engine to idle.

Does the engine run rough at idle?

Yes

- Replace the Powertrain Control Module (PCM) in accordance with the Service Information. Refer to **MODULE, POWERTRAIN CONTROL, REMOVAL** .
- Perform the POWERTRAIN VERIFICATION TEST. Refer to **STANDARD PROCEDURE** for 2.0L diesel engine, **STANDARD PROCEDURE** for 2.4L gasoline engine or **STANDARD PROCEDURE** for 3.2L gasoline engine.

No

- Replace the Anti-Lock Brake System (ABS) Module in accordance with the Service Information. Refer to **MODULE, ANTI-LOCK BRAKE SYSTEM, REMOVAL** .
- Perform the ABS VERIFICATION TEST. Refer to **STANDARD PROCEDURE**.

C1239-00-EMISSION ROLLS TEST ACTIVE

For a complete wiring diagram, **refer to appropriate SYSTEM WIRING DIAGRAMS article** .

WHEN MONITORED

Continuously with the ignition on and the Body Control Module (BCM) has the Emissions Test Mode bit set.

SET CONDITION

If the Anti-lock Brake System (ABS) Module receives two messages in a row indicating that the Body Control Module (BCM) has been requested to activate the Emission Rolls Test.

POSSIBLE CAUSES

Possible Causes
EMISSION ROLLS TEST ENABLED
ANTI-LOCK BRAKE SYSTEM (ABS) MODULE
BODY CONTROL MODULE (BCM)

DIAGNOSTIC TEST

1. **VERIFY DTC IS ACTIVE**
    1. Turn the ignition on.
    2. With the scan tool record and erase the DTCs.
    3. Turn the ignition off.
    4. Turn the ignition on.
    5. Using the scan tool, read the DTCs.

    Is this DTC active?

Yes

- Go To 2

No

- Perform the ABS-INTERMITTENT CONDITION TEST. Refer to **STANDARD PROCEDURE**.

2. **EMISSION ROLLS TEST ENABLED**
   1. Turn the ignition on.
   2. Using the scan tool, under "Miscellaneous Functions" DISABLE the Emission Rolls Test in the BCM.
   3. With the scan tool, erase the DTCs.
   4. Turn the ignition off and wait ten seconds.
   5. Turn the ignition on.
   6. Using the scan tool, the read DTCs in ABS.

   Is the DTC active at this time?

   Yes

   - Go To 3

   No

   - Test complete, the condition or conditions that originally set this DTC are not present at this time.

3. **ANTI-LOCK BRAKE SYSTEM (ABS) MODULE**
   1. Turn the ignition off.
   2. Replace the Anti-Lock Brake System (ABS) Module in accordance with the Service Information. Refer to **MODULE, ANTI-LOCK BRAKE SYSTEM, REMOVAL** .
   3. Turn the ignition on.
   4. Using the scan tool, read DTCs in the ABS.

   Is the DTC still remain active?

   Yes

   - Replace the Body Control Module (BCM) in accordance with the Service Information. Refer to **MODULE, BODY CONTROL, REMOVAL** .

   No

- Test complete.

C123B-4B-ESP SYSTEM CONTROL TOO LONG - OVER TEMPERATURE

For a complete wiring diagram, **refer to appropriate SYSTEM WIRING DIAGRAMS article** .

NOTE: If any other DTCs are present, repair them first before continuing with this diagnostic procedure.

WHEN MONITORED

With the ignition on.

SET CONDITION

When the Anti-Lock Brake System (ABS) Module indicates excessive valve control.

POSSIBLE CAUSES

Possible Causes
AGGRESSIVE DRIVING MANEUVERS, MISMATCHED TIRES, FRONT END ALIGNMENT
TCS, ESP CONTROL TOO LONG OR TO FREQUENT
ANTI-LOCK BRAKE SYSTEM (ABS) MODULE

DIAGNOSTIC TEST

ANTI-LOCK BRAKE SYSTEM (ABS)

NOTE: Check with customer for unusual driving terrain (e.g. mud, snow, ice) or aggressive driving maneuvers at the time of set condition.

1. Perform any related Technical Service Bulletins (TSBs) for this DTC.
2. Check for mismatched tires.
3. Visually inspect the ABS Module wiring.
4. Visually inspect the braking system.
5. Check the alignment.

   Were any problems found?

   Yes

   - Repair as necessary.
   - Perform the ABS VERIFICATION TEST. Refer to **STANDARD PROCEDURE**.

No

- Perform the ABS-INTERMITTENT CONDITION TEST. Refer to **STANDARD PROCEDURE**.

C1246-1C-VACUUM PRESSURE SENSOR SUPPLY - CIRCUIT VOLTAGE OUT OF RANGE

For a complete wiring diagram, **refer to appropriate SYSTEM WIRING DIAGRAMS article** .

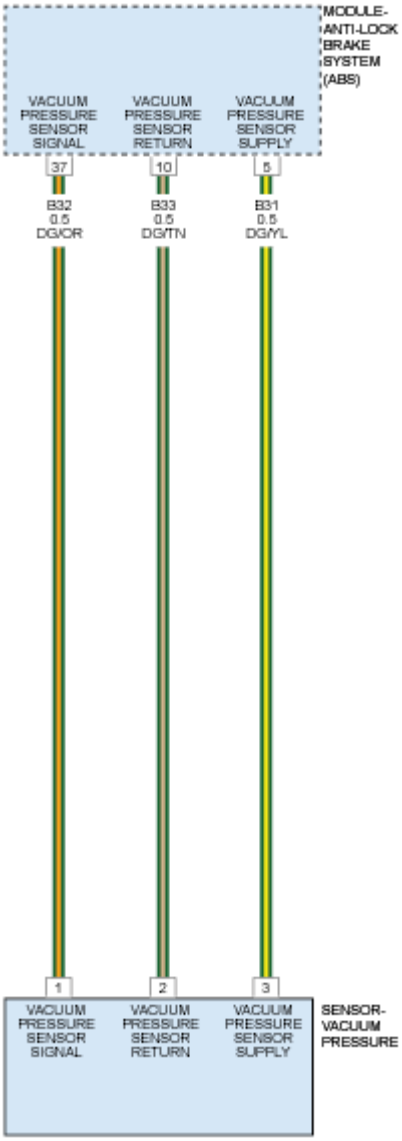

Fig. 13: Vacuum Pressure Sensor Circuit Schematic
Courtesy of CHRYSLER GROUP, LLC

WHEN MONITORED

Continuous.

SET CONDITION

The Vacuum Sensor five volt supply voltage feedback indicates that the voltage level is less than 4.75 volts or greater than 5.25 volts for more than 50 msec.

POSSIBLE CAUSES

Possible Causes
(B31) VACUUM PRESSURE SENSOR SUPPLY CIRCUIT SHORTED TO VOLTAGE
(B31) VACUUM PRESSURE SENSOR SUPPLY CIRCUIT SHORTED TO GROUND
VACUUM PRESSURE SENSOR
ANTI-LOCK BRAKE SYSTEM (ABS) MODULE

DIAGNOSTIC TEST

1. **VERIFY THE DTC IS ACTIVE**
    1. Ignition on, engine not running.
    2. With the scan tool, record and erase the DTCs.
    3. Cycle the ignition switch from off to on.
    4. With the scan tool, read the DTCs.

    Is the DTC active at this time?

    Yes

    - Go To 2

    No

    - The condition that caused this DTC to set is currently not present. Inspect the related wiring for a possible intermittent condition. Look for any chafed, pierced, pinched, or partially broken wires.
    - Perform the ABS INTERMITTENT CONDITION TEST. Refer to **STANDARD PROCEDURE**.
2. **(B31) VACUUM PRESSURE SENSOR SUPPLY CIRCUIT SHORTED TO VOLTAGE**
    1. Turn ignition off to the lock position.
    2. Disconnect the ABS Module harness connector.
    3. Disconnect the Vacuum Pressure Sensor harness connector.
    4. Ignition on, engine not running.
    5. Measure the voltage of the (B31) Vacuum Pressure Sensor Supply circuit in the Vacuum Pressure Sensor harness connector.

Is the voltage above 5.25 volts?

Yes

- Repair the (B31) Vacuum Pressure Sensor Supply circuit for a short to voltage.
- Perform the ABS VERIFICATION TEST. Refer to **STANDARD PROCEDURE**.

No

- Go To 3

3. **(B31) VACUUM PRESSURE SENSOR SUPPLY CIRCUIT SHORTED TO GROUND**
   1. Turn ignition off to the lock position.
   2. Measure the resistance between ground and the (B31) Vacuum Pressure Sensor Supply circuit at the Vacuum Pressure Sensor harness connector.

   Is the resistance below 5.0 Ohms?

   Yes

   - Repair the (B31) Vacuum Pressure Sensor Supply circuit for a short to ground.
   - Perform the ABS VERIFICATION TEST. Refer to **STANDARD PROCEDURE**.

   No

   - Go To 4

4. **ANTI-LOCK BRAKE SYSTEM (ABS) MODULE**
   1. Turn the ignition off to the lock position.
   2. Replace the Vacuum Pressure Sensor.
   3. Perform the ABS VERIFICATION TEST. Refer to **STANDARD PROCEDURE**.
   4. With the scan tool, read the DTCs.

   Does the DTC remain active?

   Yes

   - Replace the Anti-lock Brake System (ABS) Module in accordance with the Service Information. Refer to **MODULE, ANTI-LOCK BRAKE SYSTEM, REMOVAL** .
   - Perform the ABS VERIFICATION TEST. Refer to **STANDARD PROCEDURE**.

   No

   - Test complete.

C124A-00-ACC TORQUE REQUEST SIGNAL DENIED

For a complete wiring diagram, **refer to appropriate SYSTEM WIRING DIAGRAMS article** .

WHEN MONITORED

Continuously with the ignition on.

SET CONDITION

When the Anti-lock Brake System (ABS) Module detects an actual deceleration message from the Adaptive Cruise Control (ACC) Module.

POSSIBLE CAUSES

Possible Causes
ADAPTIVE CRUISE CONTROL (ACC) MODULE ANTI-LOCK BRAKE SYSTEM (ABS) MODULE

DIAGNOSTIC TEST

ADAPTIVE CRUISE CONTROL (ACC) MODULE

1. Replace the Adaptive Cruise Control (ACC) Module in accordance with the Service Information. Refer to **MODULE, ADAPTIVE CRUISE CONTROL, REMOVAL** .

   NOTE: After erasing ACTIVE DTCs it may be necessary for the Anti-lock Brake System (ABS) Module to go to sleep before the DTCs are cleared. IF the DTC is still ACTIVE after the clear command then Turn the ignition off, disconnect the Scan Tool, close the doors and wait until all indicators on the Cluster have gone out, typically about 30 seconds.

   NOTE: This DTC must be active for the results of this test to be valid.

2. Turn the ignition on.
3. With the scan tool, record and erase DTCs.
4. Cycle the ignition switch from off to on.
5. With the scan tool, read DTCs.

   Does the DTC remain active?

   Yes

   - Using the schematics as a guide, check the Anti-lock Brake System (ABS) Module pins, terminals, and connectors for corrosion, damage, or terminal push out. Pay particular attention to all power

and ground circuits. If no problems are found, replace Anti-lock Brake System (ABS) Module in accordance with the Service Information. Refer to **MODULE, ANTI-LOCK BRAKE SYSTEM, REMOVAL** .

No

- Test complete.

C124E-00-HILL START ASSIST DISABLED - CONDITIONS NOT CORRECT

For a complete wiring diagram, **refer to appropriate SYSTEM WIRING DIAGRAMS article** .

WHEN MONITORED

Continuously with the ignition on.

SET CONDITION

When the Anti-Lock Brake System (ABS) Module detects an incorrect clutch interlock switch message from the Powertrain Control Module (PCM).

POSSIBLE CAUSES

Possible Causes
POWERTRAIN CONTROL (PCM) DTCS
RADIO FREQUENCY (RF) HUB DTCS
ANTI-LOCK BRAKE SYSTEM (ABS) MODULE

DIAGNOSTIC TEST

1. **VERIFY THE DTC IS ACTIVE**

NOTE: After erasing ACTIVE DTCs it may be necessary for the Anti-lock Brake System (ABS) Module to go to sleep before the DTCs are cleared. IF the DTC is still ACTIVE after the clear command then Turn the ignition off, disconnect the Scan Tool, close the doors and wait until all indicators on the Cluster have gone out, typically about 30 seconds.

NOTE: This DTC must be active for the results of this test to be valid.

1. Perform any Technical Service Bulletins (TSBs) that may apply.
2. Turn the ignition on.
3. With the scan tool, record and erase the DTCs.
4. Cycle the ignition switch from off to on.
5. With the scan tool, read the DTCs.

Is the DTC active at this time?

Yes

- Go To 2

No

- Perform the ABS-INTERMITTENT CONDITION TEST. Refer to **STANDARD PROCEDURE**.

2. **CHECK FOR POWERTRAIN CONTROL MODULE (PCM) DTCS ARE PRESENT**
   1. With the scan tool, read the PCM DTCs.

   Are there any PCM DTCs present?

   Yes

   - Perform the appropriate diagnostic procedures. Refer to the **DTC INDEX** article .

   No

   - Go To 3

3. **CHECK FOR RADIO FREQUENCY (RF) HUB DTCS ARE PRESENT**
   1. With the scan tool, read the RF Hub DTCs.

   Are there any RF Hub DTCs present?

   Yes

   - Perform the appropriate diagnostic procedures. Refer to **DIAGNOSIS AND TESTING** .

   No

   - Go To 4

4. **CHECK THE REVERSE GEAR SWITCH**
   1. With the scan tool, in the PCM under "Data Display" check the Reverse Gear Switch functionality.

   NOTE: If equipped.

   With the scan tool, in the PCM under "Data Display" check the Clutch Switch functionality.

   Are the switches operating correctly?

   Yes

- Using the schematics as a guide, check the Anti-Lock Brake System (ABS) Module pins, terminals, and connectors for corrosion, damage, or terminal push out. Pay particular attention to all power and ground circuits. If no problems are found, replace the Anti-lock Brake System (ABS) Module in accordance with the Service Information. Refer to **MODULE, ANTI-LOCK BRAKE SYSTEM, REMOVAL** .
- Perform the ABS VERIFICATION TEST. Refer to **STANDARD PROCEDURE**.

No

- Repair as necessary.
- Perform the ABS VERIFICATION TEST. Refer to **STANDARD PROCEDURE**.

C124F-00-ESP REQUEST DENIED FROM ACC

For a complete wiring diagram, **refer to appropriate SYSTEM WIRING DIAGRAMS article** .

NOTE: If any ACC DTCs are present, repair them first before continuing with this diagnostic procedure.

WHEN MONITORED

Ignition On.

SET CONDITION

When the Anti-Lock Brake System (ABS) Module has determined that there is a disagreement between what ACC is requesting and what ESP thinks it should be requesting.

POSSIBLE CAUSES

Possible Causes
ADAPTIVE CRUISE CONTROL (ACC) MODULE
ANTI-LOCK BRAKE SYSTEM (ABS) MODULE

DIAGNOSTIC TEST

ADAPTIVE CRUISE CONTROL (ACC) MODULE

1. Replace the Adaptive Cruise Control (ACC) Module in accordance with the Service Information. Refer to **MODULE, ADAPTIVE CRUISE CONTROL, REMOVAL** .
2. Perform the ABS VERIFICATION TEST. Refer to **STANDARD PROCEDURE**.

NOTE: After erasing ACTIVE DTCs it may be necessary for the Anti-lock Brake System (ABS) Module to go to sleep before the DTCs are cleared. IF the DTC is still ACTIVE after the clear command then Turn the ignition off,

disconnect the Scan Tool, close the doors and wait until all indicators on the Cluster have gone out, typically about 30 seconds.

3. Turn the ignition on.
4. With the scan tool, record and erase DTCs.
5. Cycle the ignition switch from off to on.
6. With the scan tool, read DTCs.

Does the DTC remain active?

Yes

- Using the schematics as a guide, check the Anti-Lock Brake System (ABS) Module pins, terminals, and connectors for corrosion, damage, or terminal push out. Pay particular attention to all power and ground circuits. If no problems are found, replace the Anti-lock Brake System (ABS) Module in accordance with the Service Information. Refer to **MODULE, ANTI-LOCK BRAKE SYSTEM, REMOVAL** .
- Perform the ABS VERIFICATION TEST. Refer to **STANDARD PROCEDURE**.

No

- Test complete.

C1252-92-VACUUM PUMP CONTROL CIRCUIT - PERFORMANCE OR INCORRECT OPERATION

For a complete wiring diagram, **refer to appropriate SYSTEM WIRING DIAGRAMS article** .

NOTE: If any PCM DTCs are present, repair them first before continuing with this diagnostic procedure.

WHEN MONITORED

Continuously with the ignition on.

SET CONDITION

The Powertrain Control (PCM) has indicated that there is a Vacuum Pump failure.

POSSIBLE CAUSES

Possible Causes
ELECTRIC VACUUM PUMP (3.6L) ANTI-LOCK BRAKE SYSTEM (ABS) MODULE

POWERTRAIN CONTROL MODULE (PCM)

DIAGNOSTIC TEST

1. **VERIFY THE DTC IS ACTIVE**

NOTE: **After erasing ACTIVE DTCs it may be necessary for the Anti-lock Brake System (ABS) Module to go to sleep before the DTCs are cleared. IF the DTC is still ACTIVE after the clear command then Turn the ignition off, disconnect the Scan Tool, close the doors and wait until all indicators on the Cluster have gone out, typically about 30 seconds.**

NOTE: **This DTC must be active for the results of this test to be valid.**

1. Perform any Technical Service Bulletins (TSBs) that may apply.
2. Ignition on, engine not running.
3. Using the scan tool, read and record DTCs.
4. Using the scan tool, read and record Environmental Data.
5. Using the scan tool, erase DTCs.
6. Start the engine.
7. Slowly turn the steering wheel from lock to lock.
8. Using the scan tool, read and record DTCs.

Is the DTC active at this time?

Yes

- Go To 2

No

- Perform the ABS-INTERMITTENT CONDITION TEST. Refer to **STANDARD PROCEDURE**.

2. **CHECK FOR ANY ENGINE DTCs**
   1. Turn the ignition on.
   2. With the scan tool, record and erase DTCs in the PCM.
   3. Cycle the ignition switch from off to on.
   4. With the scan tool, read DTCs in the PCM.

   Are there any PCM DTCs?

   Yes

- Perform the appropriate diagnostic procedure. Refer to the **DTC INDEX** article .

No

- Using the schematics as a guide, check the Anti-lock Brake System (ABS) Module pins, terminals, and connectors for corrosion, damage, or terminal push out. Pay particular attention to all power and ground circuits. If no problems are found, replace the Anti-lock Brake Module in accordance with the Service Information. Refer to **MODULE, ANTI-LOCK BRAKE SYSTEM, REMOVAL** .
- Perform the ABS VERIFICATION TEST. Refer to **STANDARD PROCEDURE**.

C2100-16-BATTERY VOLTAGE LOW - CIRCUIT VOLTAGE BELOW THRESHOLD

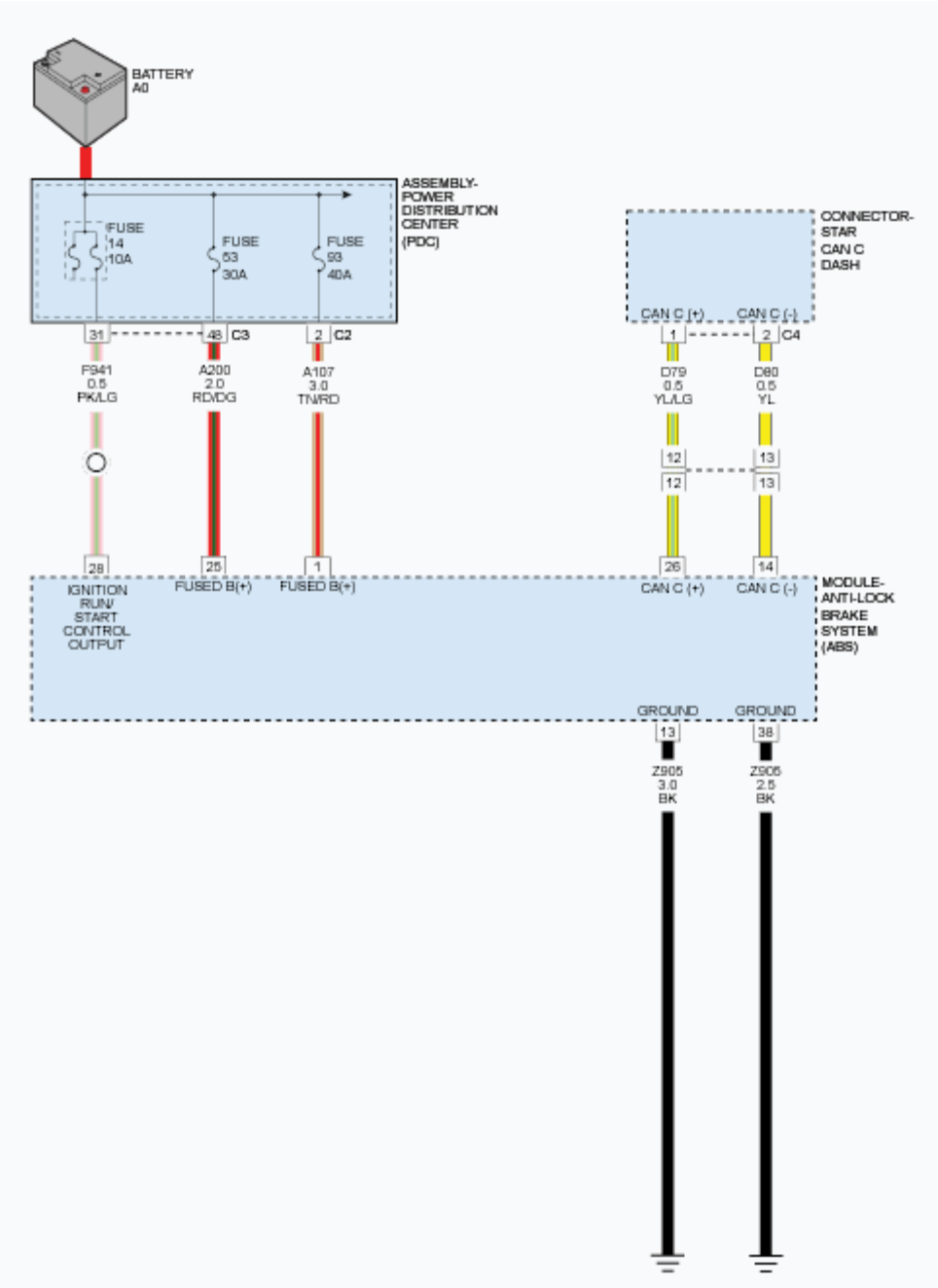

Fig. 14: Identifying Anti-lock Brake Module Circuit Schematic
Courtesy of CHRYSLER GROUP, LLC

WHEN MONITORED

Ignition on.

SET CONDITION

If the sensed ignition voltage drops below 9 volts with engine running or vehicle speed present for 100 msec or

if voltage is below 7 volts the maturation time changes to 15 ms.

POSSIBLE CAUSES

Possible Causes
CHARGING SYSTEM
POWER CIRCUITS OPEN OR HIGH RESISTANCE
GROUND CIRCUITS OPEN OR HIGH RESISTANCE
ANTI-LOCK BRAKE SYSTEM (ABS) MODULE

DIAGNOSTIC TEST

1. **VERIFY THE DTC IS ACTIVE**

NOTE: **After erasing ACTIVE DTCs it may be necessary for the Anti-lock Brake System (ABS) Module to go to sleep before the DTCs are cleared. IF the DTC is still ACTIVE after the clear command then Turn the ignition off, disconnect the Scan Tool, close the doors and wait until all indicators on the Cluster have gone out, typically about 30 seconds.**

NOTE: **This DTC must be active for the results of this test to be valid.**

NOTE: **Diagnose and repair any Powertrain Charging system DTCs before continuing with this procedure.**

NOTE: **Make sure the battery is fully charged.**

NOTE: **This DTC must be active for the results of this test to be valid.**

1. Ignition on, engine not running.
2. With the scan tool, record and erase DTCs.
3. Turn ignition off to the lock position.
4. Start the engine.
5. With the scan tool, read DTCs.

Is the DTC active at this time?

Yes

- Go To 2

No

- Perform the ABS-INTERMITTENT CONDITION TEST. Refer to **STANDARD PROCEDURE**.

2. **POWER CIRCUITS FOR AN OPEN OR HIGH RESISTANCE**
   1. Turn ignition off to the lock position.
   2. Disconnect the ABS Module harness connector.
   3. Ignition on, engine not running.
   4. With a 12-volt test light connected to ground, check the (A107) Fused B+, (A200) Fused B+ and (F941) Fused Ignition Switch Output circuits at the ABS harness connector.

      Does the test light illuminate brightly?

      Yes

      - Go To 3

      No

      - Repair the Power circuits for an open or high resistance.
      - Perform the ABS VERIFICATION TEST. Refer to **STANDARD PROCEDURE**.
3. **GROUND CIRCUITS OPEN OR HIGH RESISTANCE**
   1. Turn ignition off to the lock position.
   2. With a test light connected to B+ check the (Z905) Ground circuits at the ABS harness connector.

      Does the test light illuminate brightly?

      Yes

      - Replace the Anti-lock Brake System (ABS) Module in accordance with the service information. Refer to **MODULE, ANTI-LOCK BRAKE SYSTEM, REMOVAL** .
      - Perform the ABS VERIFICATION TEST. Refer to **STANDARD PROCEDURE**.

      No

      - Repair the Ground circuits for an open or high resistance.
      - Perform the ABS VERIFICATION TEST. Refer to **STANDARD PROCEDURE**.

C2101-17-BATTERY VOLTAGE HIGH - CIRCUIT VOLTAGE ABOVE THRESHOLD

For a complete wiring diagram, **refer to appropriate SYSTEM WIRING DIAGRAMS article** .

WHEN MONITORED

Ignition on.

SET CONDITION

If the sensed ignition voltage is above 18V or if the ignition voltage is above 16.5V with vehicle speed greater than 6 kph (4 mph).

POSSIBLE CAUSES

Possible Causes
POWERTRAIN CONTROL MODULE (PCM) CHARGING SYSTEM DTCS PRESENT ANTI-LOCK BRAKE SYSTEM (ABS) MODULE

DIAGNOSTIC TEST

1. **CHARGING SYSTEM DTCS PRESENT**

   NOTE: Disconnect battery charger before continuing.

   1. Start the engine.
   2. With the scan tool, read DTCs in the PCM.

      Are there any Charging System or related voltage DTCs present?

      Yes

      - Perform the appropriate Charging System DTC diagnostic procedures before continuing with this test. Refer to the **DTC INDEX** article .

      No

      - Go To 2

2. **VERIFY THE DTC IS ACTIVE**

   NOTE: After erasing ACTIVE DTCs it may be necessary for the Anti-lock Brake System (ABS) Module to go to sleep before the DTCs are cleared. IF the DTC is still ACTIVE after the clear command then Turn the ignition off, disconnect the Scan Tool, close the doors and wait until all indicators on the Cluster have gone out, typically about 30 seconds.

   NOTE: This DTC must be active for the results of this test to be valid.

   1. Ignition on, engine not running.
   2. With the scan tool, record and erase DTCs.
   3. Turn ignition off to the lock position.
   4. Start the engine.

5. With the scan tool, read DTCs.

   Is the DTC active at this time?

   Yes

   - Replace the Anit-lock Brake System (ABS) Module in accordance with the Service Information. Refer to **MODULE, ANTI-LOCK BRAKE SYSTEM, REMOVAL** .
   - Perform the ABS VERIFICATION TEST. Refer to **STANDARD PROCEDURE**.

   No

   - Perform the ABS-INTERMITTENT TEST. Refer to **STANDARD PROCEDURE**.

C2104-13-ABS/ESC VALVE SUPPLY VOLTAGE - CIRCUIT OPEN

For a complete wiring diagram, **refer to appropriate SYSTEM WIRING DIAGRAMS article** .

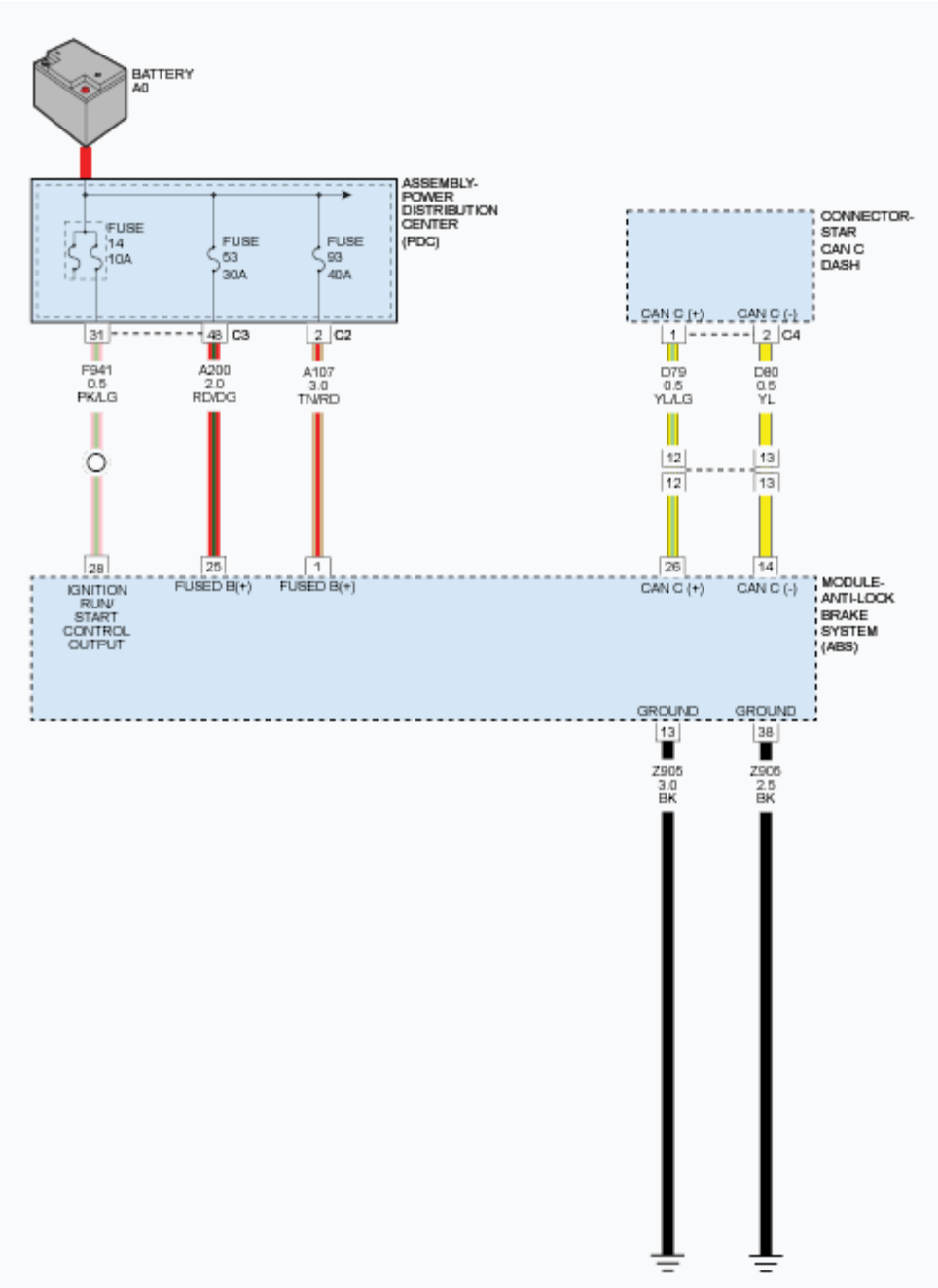

Fig. 15: Identifying Anti-lock Brake Module Circuit Schematic
Courtesy of CHRYSLER GROUP, LLC

WHEN MONITORED

Continuous.

SET CONDITION

The Anti-lock Brake System (ABS) Module has detected a low voltage on the Valve supply battery feed.

POSSIBLE CAUSES

Possible Causes
FUSE 53 30A
POWER CIRCUITS OPEN OR HIGH RESISTANCE
GROUND CIRCUITS OPEN OR HIGH RESISTANCE
ANTI-LOCK BRAKE SYSTEM (ABS) MODULE

DIAGNOSTIC TEST

1. **VERIFY THE DTC IS ACTIVE**

   NOTE: After erasing ACTIVE DTCs it may be necessary for the Anti-lock Brake System (ABS) Module to go to sleep before the DTCs are cleared. IF the DTC is still ACTIVE after the clear command then Turn the ignition off, disconnect the Scan Tool, close the doors and wait until all indicators on the Cluster have gone out, typically about 30 seconds.

   NOTE: This DTC must be active for the results of this test to be valid.

   1. Turn the ignition on.
   2. With the scan tool, read and record the ABS DTCs.
   3. With the scan tool, read and record the Environmental Data to help identify the conditions in which the DTC was set.
   4. With the scan tool, erase the ABS DTCs.
   5. Cycle the ignition switch.
   6. With the scan tool, read the ABS DTCs.

   Is the DTC active at this time?

   Yes

   - Go To 2

   No

   - Perform the ABS-INTERMITTENT CONDITION TEST. Refer to **STANDARD PROCEDURE**.

2. **CHECK THE FUSE**
   1. Ignition on, engine not running.
   2. Using a 12-volt test light connected to ground, check the fuse for power.

   Is the fuse good?

Yes

- Go To 4

No

- Go To 3

3. **(A200) FUSED B+ CIRCUIT SHORTED TO GROUND**
   1. Turn the ignition off to the lock position.
   2. Remove the F53 (30A) Fuse.
   3. Disconnect the ABS Module harness connector.
   4. Measure the resistance between Ground and the (A200) Fused B+ Circuit in the ABS Module harness connector.

      Is the resistance above 5.0 Ohms?

      Yes

      - Go To 4

      No

      - Repair the (A107) Fused B+ circuit for a short to ground.
      - Perform the ABS VERIFICATION TEST. Refer to **STANDARD PROCEDURE**.
4. **(A200) FUSED B+ CIRCUIT OPEN OR HIGH RESISTANCE**
   1. Turn the ignition off to the lock position.
   2. Using a 12-volt test light connected to ground, check the (A200) Fused B+ circuit.

      NOTE: The test light should be illuminated and bright. Compare the brightness to that of a direct connection to the battery.

      Is the test light illuminated and bright?

      Yes

      - Go To 5

      No

      - Repair the (A107) Fused B+ circuit for an open circuit or high resistance.
      - Perform the ABS VERIFICATION TEST. Refer to **STANDARD PROCEDURE**.
5. **(Z905) GROUND CIRCUITS OPEN OR HIGH RESISTANCE**
   1. Using a 12-volt test light connected to 12-volts, check the (Z905) Ground circuits.

NOTE: The test light should be illuminated and bright. Compare the brightness to that of a direct connection to the battery.

Is the test light illuminated and bright?

Yes

- Replace the Anti-lock Brake System (ABS) Module in accordance with the Service Information. Refer to **MODULE, ANTI-LOCK BRAKE SYSTEM, REMOVAL** .
- Perform the ABS VERIFICATION TEST. Refer to **STANDARD PROCEDURE**.

No

- Repair the (Z905) Ground circuit(s) for an open circuit or high resistance.
- Perform the ABS VERIFICATION TEST. Refer to **STANDARD PROCEDURE**.

C211B-92-IGNITION RUN/START INPUT CIRCUIT - PERFORMANCE OR INCORRECT OPERATION

For a complete wiring diagram, **refer to appropriate SYSTEM WIRING DIAGRAMS article** .

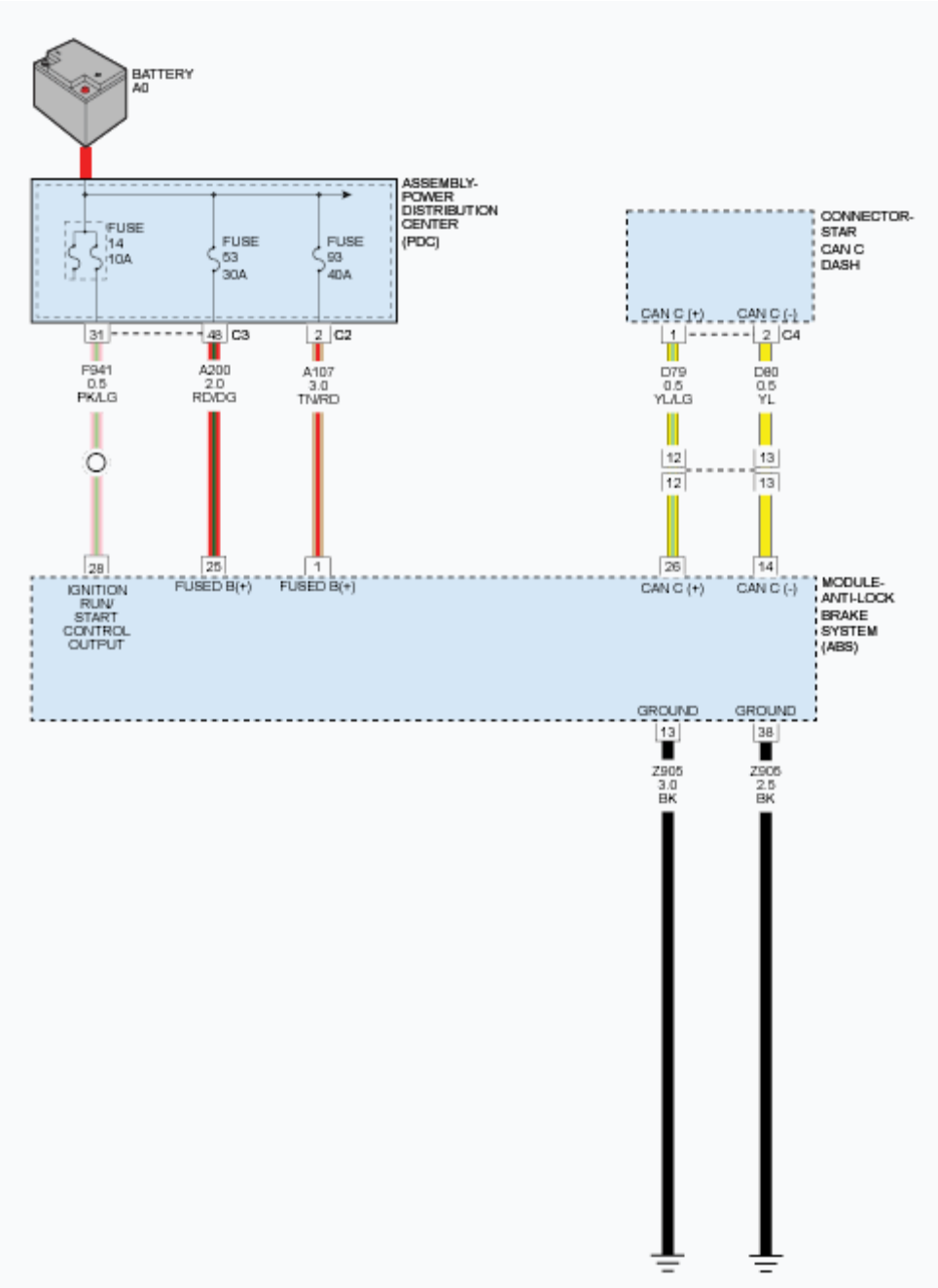

Fig. 16: Identifying Anti-lock Brake Module Circuit Schematic
Courtesy of CHRYSLER GROUP, LLC

WHEN MONITORED

Continuous.

SET CONDITION

The Ignition Status reported on the CAN Bus does not match the state of the Ignition Input.

POSSIBLE CAUSES

Possible Causes
FUSE (10A)
(F941) FUSED IGNITION SWITCH OUTPUT (RUN-START) CIRCUIT SHORT TO VOLTAGE
POWER CIRCUITS OPEN OR HIGH RESISTANCE
ANTI-LOCK BRAKE SYSTEM (ABS) MODULE

NOTE: If any other DTCs are present, repair them first before continuing with this diagnostic procedure.

DIAGNOSTIC TEST

1. **VERIFY THE DTC IS ACTIVE**

   NOTE: After erasing ACTIVE DTCs it may be necessary for the Anti-lock Brake System (ABS) Module to go to sleep before the DTCs are cleared. IF the DTC is still ACTIVE after the clear command then Turn the ignition off, disconnect the Scan Tool, close the doors and wait until all indicators on the Cluster have gone out, typically about 30 seconds.

   NOTE: This DTC must be active for the results of this test to be valid.

   1. Turn the ignition on.
   2. With the scan tool, read and record the DTCs.
   3. With the scan tool, erase the DTCs.
   4. Start the engine.
   5. With the scan tool, read and record the DTCs.

   Is the DTC active at this time?

   Yes

   - Go To 2

   No

   - Perform the ABS-INTERMITTENT CONDITION TEST. Refer to **STANDARD PROCEDURE**.

2. **CHECK THE FUSE**
   1. Ignition on, engine not running.
   2. Using a 12-volt test light connected to ground, check the fuse for power.

Is the fuse good?

Yes

- Go To 3

No

- If the related fuse is open, check the (F941) Fused Ignition Switch Output (RUN/START) circuit for a short to ground.
- Perform the ABS VERIFICATION TEST. Refer to **STANDARD PROCEDURE**.

3. **(F941) FUSED IGNITION SWITCH OUTPUT (RUN-START) CIRCUIT SHORT TO VOLTAGE**
   1. Turn ignition off to the lock position.
   2. Disconnect the ABS Module harness connector.
   3. With a test light connected to ground check the (F941) Fused Ignition Switch Output (RUN/START) circuit at the ABS harness connector.

NOTE: The test light must illuminate brightly. Compare the brightness to that of a direct connection to the battery.

Does the test light illuminate brightly?

Yes

- Go To 4

No

- Repair the Power circuits for an open or high resistance.
- Perform the ABS VERIFICATION TEST. Refer to **STANDARD PROCEDURE**.

4. **POWER CIRCUITS FOR AN OPEN OR HIGH RESISTANCE**
   1. Ignition on, engine not running.
   2. With a test light connected to ground check (A107) Fused B+, (A200) Fused B+ and (F941) Fused Ignition Switch Output (RUN/START) circuits at the ABS harness connector.

NOTE: The test light must illuminate brightly. Compare the brightness to that of a direct connection to the battery.

Does the test light illuminate brightly?

Yes

- Replace the Anti-lock System Brake (ABS) Module in accordance with the service

information. Refer to **MODULE, ANTI-LOCK BRAKE SYSTEM, REMOVAL** .
- Perform the ABS VERIFICATION TEST. Refer to **STANDARD PROCEDURE**.

No

- Repair the Power circuits for an open or high resistance.
- Perform the ABS VERIFICATION TEST. Refer to **STANDARD PROCEDURE**.

C212A-16-SYSTEM VOLTAGE LOW - CIRCUIT VOLTAGE BELOW THRESHOLD

For a complete wiring diagram, **refer to appropriate SYSTEM WIRING DIAGRAMS article** .

WHEN MONITORED

Continuous.

SET CONDITION

The Anti-lock Brake System (ABS) Module has detected a low voltage system error and the Body Control Module (BCM) battery voltage CAN message also indicates a low voltage condition.

POSSIBLE CAUSES

Possible Causes
CHARGING SYSTEM DTCS PRESENT BATTERY ANTI-LOCK BRAKE SYSTEM (ABS) MODULE

DIAGNOSTIC TEST

1. **CHARGING SYSTEM DTCS PRESENT**
    1. Ignition on, engine not running.
    2. With the scan tool, read DTCs in the Powertrain Control Module.

    Are there any Charging System or related voltage DTCs present?

    Yes

    - Perform the appropriate Charging System DTC diagnostic procedures before continuing with this test. Refer to the **DTC INDEX** article .

    No

    - Go To 2
2. **BATTERY**

NOTE: Make sure the Battery is in good condition. Using the Midtronics Battery Tester or an equivalent Battery tester, test the Battery before continuing.

Does the Battery pass the load test for this specific application?

Yes

- Go To 3

No

- Replace the Battery in accordance with the Service Information. Refer to **BATTERY, REMOVAL** .

3. **VERIFY THE DTC IS ACTIVE**

NOTE: After erasing ACTIVE DTCs it may be necessary for the Anti-lock Brake System (ABS) Module to go to sleep before the DTCs are cleared. IF the DTC is still ACTIVE after the clear command then Turn the ignition off, disconnect the Scan Tool, close the doors and wait until all indicators on the Cluster have gone out, typically about 30 seconds.

NOTE: This DTC must be active for the results of this test to be valid.

1. Turn the ignition on.
2. With the scan tool, read and record the DTCs.
3. With the scan tool, erase the DTCs.
4. Start the engine.
5. With the scan tool, read and record the DTCs.

Is the DTC active at this time?

Yes

- Replace the Anti-lock Brake System (ABS) Module in accordance with the service information. Refer to **MODULE, ANTI-LOCK BRAKE SYSTEM, REMOVAL** .
- Perform the ABS VERIFICATION TEST. Refer to **STANDARD PROCEDURE**.

No

- Perform the ABS-INTERMITTENT CONDITION TEST. Refer to **STANDARD PROCEDURE**.

C212A-17-SYSTEM VOLTAGE HIGH - CIRCUIT VOLTAGE ABOVE THRESHOLD

For a complete wiring diagram, **refer to appropriate SYSTEM WIRING DIAGRAMS article** .

WHEN MONITORED

Continuous.

SET CONDITION

The Anti-lock Brake System (ABS) Module has detected a high voltage system error and the Body Control Module (BCM) battery voltage CAN message also indicates a high voltage condition.

POSSIBLE CAUSES

Possible Causes
CHARGING SYSTEM DTCS PRESENT BATTERY ANTI-LOCK BRAKE SYSTEM (ABS) MODULE

DIAGNOSTIC TEST

1. **CHARGING SYSTEM DTCS PRESENT**
    1. Ignition on, engine not running.
    2. With the scan tool, read DTCs in the Powertrain Control Module.

    Are there any Charging System or related voltage DTCs present?

    Yes

    - Perform the appropriate Charging System DTC diagnostic procedures before continuing with this test. Refer to the **DTC INDEX** article .

    No

    - Go To 2
2. **BATTERY**

    NOTE: Make sure the Battery is in good condition. Using the Midtronics Battery Tester or an equivalent Battery tester, test the Battery before continuing.

    Does the Battery pass the load test for this specific application?

    Yes

    - Go To 3

No

- Replace the Battery in accordance with the Service Information. Refer to **BATTERY, REMOVAL** .

3. **VERIFY THE DTC IS ACTIVE**

NOTE: After erasing ACTIVE DTCs it may be necessary for the Anti-lock Brake System (ABS) Module to go to sleep before the DTCs are cleared. IF the DTC is still ACTIVE after the clear command then Turn the ignition off, disconnect the Scan Tool, close the doors and wait until all indicators on the Cluster have gone out, typically about 30 seconds.

NOTE: This DTC must be active for the results of this test to be valid.

1. Turn the ignition on.
2. With the scan tool, read and record the DTCs.
3. With the scan tool, erase the DTCs.
4. Start the engine.
5. With the scan tool, read and record the DTCs.

Is the DTC active at this time?

Yes

- Replace the Anti-lock Brake System (ABS) Module in accordance with the service information. Refer to **MODULE, ANTI-LOCK BRAKE SYSTEM, REMOVAL** .
- Perform the ABS VERIFICATION TEST. Refer to **STANDARD PROCEDURE**.

No

- Perform the ABS-INTERMITTENT CONDITION TEST. Refer to **STANDARD PROCEDURE**.

C2200-41-ANTI-LOCK BRAKE MODULE INTERNAL - GENERAL CHECKSUM FAILURE

For a complete wiring diagram, **refer to appropriate SYSTEM WIRING DIAGRAMS article** .

WHEN MONITORED

Ignition on.

SET CONDITION

The Anti-lock Brake System (ABS) Module has detected an internal error.

POSSIBLE CAUSES

Possible Causes
ANTI-LOCK BRAKE SYSTEM (ABS) MODULE

DIAGNOSTIC TEST

ANTI-LOCK BRAKE SYSTEM (ABS) MODULE

1. The Anti-lock Brake System (ABS) Module is reporting internal errors.

   NOTE: Before continuing, check the Anti-lock Brake System (ABS) Module harness connector terminals for corrosion, damage, or terminal push out. Repair as necessary.

2. Using the schematics as a guide, inspect the wire harness and connectors. Pay particular attention to all Power and Ground circuits.
3. Perform any Technical Service Bulletins that may apply.

   Were there any problems found?

   Yes

   - Repair as necessary.
   - Perform the ABS VERIFICATION TEST. Refer to **STANDARD PROCEDURE**.

   No

   - Replace the Anti-lock Brake System (ABS) Module in accordance with the Service Information. Refer to **MODULE, ANTI-LOCK BRAKE SYSTEM, REMOVAL** .
   - Perform the ABS VERIFICATION TEST. Refer to **STANDARD PROCEDURE**.

C2200-44-ANTI-LOCK BRAKE MODULE INTERNAL - DATA MEMORY FAILURE

For a complete wiring diagram, **refer to appropriate SYSTEM WIRING DIAGRAMS article** .

WHEN MONITORED

Ignition on.

SET CONDITION

The Anti-lock Brake System (ABS) Module has detected an internal error.

POSSIBLE CAUSES

Possible Causes
ANTI-LOCK BRAKE SYSTEM (ABS) MODULE

DIAGNOSTIC TEST

ANTI-LOCK BRAKE SYSTEM (ABS) MODULE INTERNAL CONDITION

1. The ABS Module is reporting internal errors.

   NOTE: Before continuing, check the Anti-lock Brake System (ABS) Module harness connector terminals for corrosion, damage, or terminal push out. Repair as necessary.

2. Using the schematics as a guide, inspect the wire harness and connectors. Pay particular attention to all Power and Ground circuits.
3. Perform any Technical Service Bulletins that may apply.

   Were there any problems found?

   Yes

   - Repair as necessary.
   - Perform the ABS VERIFICATION TEST. Refer to **STANDARD PROCEDURE**.

   No

   - Replace the Anti-lock Brake System (ABS) Module in accordance with the Service Information. Refer to **MODULE, ANTI-LOCK BRAKE SYSTEM, REMOVAL** .
   - Perform the ABS VERIFICATION TEST. Refer to **STANDARD PROCEDURE**.

C2200-46-ANTI-LOCK BRAKE MODULE INTERNAL - CALIBRATION / PARAMETER MEMORY FAILURE

For a complete wiring diagram, **refer to appropriate SYSTEM WIRING DIAGRAMS article** .

WHEN MONITORED

Ignition on.

SET CONDITION

The Anti-lock Brake System (ABS) Module has detected an internal error.

POSSIBLE CAUSES

Possible Causes
ANTI-LOCK BRAKE SYSTEM (ABS) MODULE

DIAGNOSTIC TEST

ANTI-LOCK BRAKE SYSTEM (ABS) MODULE INTERNAL CONDITION

1. The ABS Module is reporting internal errors.

   NOTE: Before continuing, check the Anti-lock Brake System (ABS) Module harness connector terminals for corrosion, damage, or terminal push out. Repair as necessary.

2. Using the schematics as a guide, inspect the wire harness and connectors. Pay particular attention to all Power and Ground circuits.
3. Perform any Technical Service Bulletins that may apply.

   Were there any problems found?

   Yes

   - Repair as necessary.
   - Perform the ABS VERIFICATION TEST. Refer to **STANDARD PROCEDURE**.

   No

   - Replace the Anti-lock Brake System (ABS) Module in accordance with the Service Information. Refer to **MODULE, ANTI-LOCK BRAKE SYSTEM, REMOVAL** .
   - Perform the ABS VERIFICATION TEST. Refer to **STANDARD PROCEDURE**.

C2200-47-ANTI-LOCK BRAKE MODULE INTERNAL - WATCHDOG / SAFETY AUC FAILURE

For a complete wiring diagram, **refer to appropriate SYSTEM WIRING DIAGRAMS article** .

WHEN MONITORED

Ignition on.

SET CONDITION

The Anti-lock Brake System (ABS) Module has detected an internal error.

POSSIBLE CAUSES

Possible Causes

ANTI-LOCK BRAKE SYSTEM (ABS) MODULE

DIAGNOSTIC TEST

ANTI-LOCK BRAKE SYSTEM (ABS) MODULE INTERNAL CONDITION

1. The ABS Module is reporting internal errors.

   NOTE: Before continuing, check the Anti-lock Brake System (ABS) Module harness connector terminals for corrosion, damage, or terminal push out. Repair as necessary.

2. Using the schematics as a guide, inspect the wire harness and connectors. Pay particular attention to all Power and Ground circuits.
3. Perform any Technical Service Bulletins that may apply.

   Were there any problems found?

   Yes

   - Repair as necessary.
   - Perform the ABS VERIFICATION TEST. Refer to **STANDARD PROCEDURE**.

   No

   - Replace the Anti-lock Brake System (ABS) Module in accordance with the Service Information. Refer to **MODULE, ANTI-LOCK BRAKE SYSTEM, REMOVAL** .
   - Perform the ABS VERIFICATION TEST. Refer to **STANDARD PROCEDURE**.

C2200-48-ANTI-LOCK BRAKE MODULE INTERNAL - SUPERVISION SOFTWARE FAILURE

For a complete wiring diagram, **refer to appropriate SYSTEM WIRING DIAGRAMS article** .

WHEN MONITORED

Ignition on.

SET CONDITION

The Anti-lock Brake System (ABS) Module has detected an internal error.

POSSIBLE CAUSES

Possible Causes
ANTI-LOCK BRAKE SYSTEM (ABS) MODULE

DIAGNOSTIC TEST

ANTI-LOCK BRAKE SYSTEM (ABS) MODULE INTERNAL CONDITION

1. The ABS Module is reporting internal errors.

   NOTE: Before continuing, check the Anti-lock Brake System (ABS) Module harness connector terminals for corrosion, damage, or terminal push out. Repair as necessary.

2. Using the schematics as a guide, inspect the wire harness and connectors. Pay particular attention to all Power and Ground circuits.
3. Perform any Technical Service Bulletins that may apply.

   Were there any problems found?

   Yes

   - Repair as necessary.
   - Perform the ABS VERIFICATION TEST. Refer to **STANDARD PROCEDURE**.

   No

   - Replace the Anti-lock Brake System (ABS) Module in accordance with the Service Information. Refer to **MODULE, ANTI-LOCK BRAKE SYSTEM, REMOVAL** .
   - Perform the ABS VERIFICATION TEST. Refer to **STANDARD PROCEDURE**.

C2200-49-ANTI-LOCK BRAKE MODULE INTERNAL - INTERNAL ELECTRONIC FAILURE

For a complete wiring diagram, **refer to appropriate SYSTEM WIRING DIAGRAMS article** .

WHEN MONITORED

Ignition on.

SET CONDITION

The Anti-lock Brake System (ABS) Module has detected an internal error.

POSSIBLE CAUSES

Possible Causes
ANTI-LOCK BRAKE SYSTEM (ABS) MODULE/HYDRAULIC CONTROL UNIT DO NOT MATCH ANTI-LOCK BRAKE SYSTEM (ABS) MODULE

DIAGNOSTIC TEST

ANTI-LOCK BRAKE SYSTEM (ABS) MODULE INTERNAL CONDITION

1. The ABS Module is reporting internal errors.
2. Verify that the Anti-lock Brake System (ABS) Module or the Hydraulic Control Unit (HCU) were not replaced individually from another vehicle.

NOTE: Before continuing, check the Anti-lock Brake System (ABS) Module harness connector terminals for corrosion, damage, or terminal push out. Repair as necessary.

3. Using the schematics as a guide, inspect the wire harness and connectors. Pay particular attention to all Power and Ground circuits.
4. Perform any Technical Service Bulletins that may apply.

Were there any problems found?

Yes

- Repair as necessary.
- Perform the ABS VERIFICATION TEST. Refer to **STANDARD PROCEDURE**.

No

- Replace the Anti-lock Brake System (ABS) Module in accordance with the Service Information. Refer to **MODULE, ANTI-LOCK BRAKE SYSTEM, REMOVAL** .
- Perform the ABS VERIFICATION TEST. Refer to **STANDARD PROCEDURE**.

C2202-00-ORIGINAL VIN MISMATCH / MISSING

For a complete wiring diagram, **refer to appropriate SYSTEM WIRING DIAGRAMS article** .

NOTE: Diagnose and repair any Powertrain Control Module (PCM), VIN or Communication DTCs before continuing with this diagnostic procedure.

WHEN MONITORED

Ignition on.

SET CONDITION

This DTC will set if the current VIN does not match the broadcast VIN.

POSSIBLE CAUSES

Possible Causes
BODY CONTROL MODULE (BCM) PROXI CONFIGURATION ALIGNMENT NOT PERFORMED POWERTRAIN CONTROL MODULE (PCM) VIN NOT PROGRAMMED ANTI-LOCK BRAKE SYSTEM (ABS) MODULE/INTEGRATED CONTROL UNIT (ICU) POWERTRAIN CONTROL MODULE (PCM)

DIAGNOSTIC TEST

1. **VERIFY THE DTC IS ACTIVE**

   NOTE: After erasing ACTIVE DTCs it may be necessary for the Anti-lock Brake System (ABS) Module to go to sleep before the DTCs are cleared. IF the DTC is still ACTIVE after the clear command then Turn the ignition off, disconnect the Scan Tool, close the doors and wait until all indicators on the Cluster have gone out, typically about 30 seconds.

   NOTE: This DTC must be active for the results of this test to be valid.

   1. Ignition on, engine not running.
   2. With the scan tool, erase DTCs.
   3. Turn ignition off to the lock position.
   4. Ignition on, engine not running.
   5. Wait ten seconds.
   6. With the scan tool, read DTCs.

   Is the DTC active at this time?

   Yes

   - Go To 2

   No

   - Test complete, the condition or conditions that originally set this DTC are not present at this time.

2. **WRONG VIN PROGRAMMED IN PCM**
   1. Ignition on, engine not running.
   2. With the scan tool, read the VIN in the PCM.
   3. Compare VIN in the PCM to the vehicle VIN.

   Is the correct VIN programmed in the PCM?

   Yes

- Go To 3

No

- Program the correct VIN into the PCM. Follow the VIN programing procedure in the PCM/ECM reprogramming procedure. Refer to **STANDARD PROCEDURE** for 2.0L diesel engine, **STANDARD PROCEDURE** for 2.4L gasoline engine or **STANDARD PROCEDURE** for 3.2L gasoline engine. .
- Perform the ABS VERIFICATION TEST. Refer to **STANDARD PROCEDURE**.

3. **VERIFY THE BCM PROXI CONFIGURATION ALIGNMENT ROUTINE WAS PERFORMED**
   1. In the Body Control Module (BCM) with the scan tool, under "Miscellaneous Functions" run the "PROXI Configuration Alignment" routine.
   2. With the scan tool, erase the ABS DTCs.
   3. Cycle the ignition switch from off to on, leaving the ignition on for a minimum of ten seconds.
   4. With the scan tool, read the ABS DTCs.

   Does the DTC remain active?

   Yes

   - Using the schematics as a guide, check the Anti-Lock Brake System (ABS) Module pins, terminals, and connectors for corrosion, damage, or terminal push out. Pay particular attention to all power and ground circuits. If no problems are found, replace the Anti-Lock Brake Module accordance with Service Information. Refer to **MODULE, ANTI-LOCK BRAKE SYSTEM, REMOVAL** .
   - Perform the ABS VERIFICATION TEST. Refer to **STANDARD PROCEDURE**.

   No

   - Test complete, the condition or conditions that originally set this DTC are not present at this time.

C2206-00-VEHICLE CONFIGURATION MISMATCH

For a complete wiring diagram, **refer to appropriate SYSTEM WIRING DIAGRAMS article** .

NOTE: **If the BCM has been serviced make sure that the PROXI Configuration Alignment routine is performed before continuing with this diagnostic procedure.**

WHEN MONITORED

Ignition on.

SET CONDITION

This DTC will set if the Body Control Module (BCM) and the Anti-lock Brake System (ABS) configuration codes do not match on power up.

POSSIBLE CAUSES

Possible Causes
BODY CONTROL MODULE (BCM) PROXI CONFIGURATION ALIGNMENT NOT PERFORMED
BODY CONTROL MODULE (BCM) AND ANTI-LOCK BRAKE SYSTEM (ABS) MODULE PROXI CONFIGURATION DO NOT MATCH
ANTI-LOCK BRAKE SYSTEM (ABS) MODULE/INTEGRATED CONTROL UNIT (ICU)

DIAGNOSTIC TEST

1. **VERIFY THE DTC IS ACTIVE**

NOTE: **After erasing ACTIVE DTCs it may be necessary for the Anti-lock Brake System (ABS) Module to go to sleep before the DTCs are cleared. IF the DTC is still ACTIVE after the clear command then Turn the ignition off, disconnect the Scan Tool, close the doors and wait until all indicators on the Cluster have gone out, typically about 30 seconds.**

NOTE: **This DTC must be active for the results of this test to be valid.**

1. Perform any Technical Service Bulletins that may apply.
2. Ignition on, engine not running.
3. With the scan tool, erase DTCs.
4. Turn ignition off to the lock position.
5. Ignition on, engine not running.
6. Wait ten seconds.
7. With the scan tool, read DTCs.

Is the DTC active at this time?

Yes

- Go To 2

No

- Perform the ABS-INTERMITTENT CONDITION TEST. Refer to **STANDARD PROCEDURE**.

2. **INITIALIZE THE ABS MODULE**

1. In the Body Control Module (BCM) with the scan tool, under "Miscellaneous Functions" run the "PROXI Configuration Alignment" routine.
2. Turn ignition off to the lock position.
3. Cycle the ignition from off to on.
4. Wait ten seconds.
5. With the scan tool, read DTCs.

   Does the DTC remain active?

   Yes

   - Replace the Anti-lock Brake System (ABS) Module in accordance with the service information. Refer to **MODULE, ANTI-LOCK BRAKE SYSTEM, REMOVAL** .
   - Perform the ABS VERIFICATION TEST. Refer to **STANDARD PROCEDURE**.

   No

   - Test complete, the condition or conditions that originally set this DTC are not present at this time.

P1DCB-72-REVERSE GEAR SWITCH - ACTUATOR STUCK OPEN

For a complete wiring diagram, **refer to appropriate SYSTEM WIRING DIAGRAMS article**

WHEN MONITORED

Ignition on.

SET CONDITION

The Anti-lock Brake System (ABS) Module is receiving a signal that the reverse gear switch is indicating reverse for longer than 3 seconds while vehicle is moving forward at over 11 km/h (7 mph).

POSSIBLE CAUSES

Possible Causes
POWERTRAIN CONTROL MODULE (PCM) DTCs (T22) REVERSE SWITCH SIGNAL SHORTED TO VOLTAGE BACKUP LAMP SWITCH ANTI-LOCK BRAKE SYSTEM (ABS) MODULE/INTEGRATED CONTROL UNIT (ICU)

DIAGNOSTIC TEST

1. **VERIFY THE DTC IS ACTIVE**

NOTE: Diagnose and repair any Powertrain Control Module (PCM), VIN or Communication DTCs before continuing with this diagnostic procedure.

NOTE: After erasing ACTIVE DTCs it may be necessary for the Anti-lock Brake System (ABS) Module to go to sleep before the DTCs are cleared. IF the DTC is still ACTIVE after the clear command then Turn the ignition off, disconnect the Scan Tool, close the doors and wait until all indicators on the Cluster have gone out, typically about 30 seconds.

NOTE: This DTC must be active for the results of this test to be valid.

1. Perform any Technical Service Bulletins (TSBs) that may apply.
2. Turn the ignition on.
3. With the scan tool, record and erase the DTCs.
4. Cycle the ignition switch from off to on.
5. With the scan tool, read the DTCs.

   Is the DTC active at this time?

   Yes

   - Go To 2

   No

   - Perform the ABS-INTERMITTENT CONDITION TEST. Refer to **STANDARD PROCEDURE**.

2. **CHECK IF POWERTRAIN CONTROL MODULE DTCS ARE PRESENT**
   1. With the scan tool, read the PCM DTCs.

      Are there any PCM DTCs present?

      Yes

      - Perform the appropriate diagnostic procedures. Refer to the **DTC INDEX** article .

      No

      - Go To 3

3. **(T22) REVERSE SWITCH SIGNAL CIRCUIT SHORTED TO VOLTAGE**
   1. Turn ignition off to the lock position.
   2. Disconnect the PCM C3 harness connector.
   3. Disconnect the Back-up Lamp Switch harness connector.

4. Ignition on, engine not running.
5. Measure the voltage of the (T22) Reverse Switch Signal circuit in the Back-up Lamp Switch harness connector harness connector.

   Is the voltage above 5.25 volts?

   Yes

   - Repair the (T22) Reverse Switch Signal circuit for a short to voltage.
   - Perform the ABS VERIFICATION TEST. Refer to **STANDARD PROCEDURE**.

   No

   - Go To 4

4. **ANTI-LOCK BRAKE SYSTEM (ABS) MODULE**
   1. Turn the ignition off to the lock position.
   2. Replace the Backup Lamp Switch.
   3. Perform the PCM VERIFICATION TEST. Refer to **STANDARD PROCEDURE** for 2.0L diesel engine, **STANDARD PROCEDURE** for 2.4L gasoline engine or **STANDARD PROCEDURE** for 3.2L gasoline engine.
   4. With the scan tool, read the DTCs.

      Does the DTC remain active?

      Yes

      - Replace the Anti-Lock Brake System (ABS) Module in accordance with the Service Information. Refer to **MODULE, ANTI-LOCK BRAKE SYSTEM, REMOVAL** .
      - Perform the ABS VERIFICATION TEST. Refer to **STANDARD PROCEDURE**.

      No

      - Test complete.

U0002-88-CAN C BUS OFF PERFORMANCE - BUS OFF

For a complete wiring diagram, **refer to appropriate SYSTEM WIRING DIAGRAMS article** .

WHEN MONITORED

Ignition on, battery voltage between 9 and 16 volts.

SET CONDITION

The Anti-lock Brake Module (ABS) Module has detected catastrophic failure on the CAN bus.

POSSIBLE CAUSES

Possible Causes
CAN BUS CIRCUITS OPEN OR SHORTED
DTCS RELATED TO BATTERY VOLTAGE, IGNITION, OR VIN MESSAGES
BODY CONTROL MODULE (BCM) POWER AND GROUND
BCM NOT CONFIGURED CORRECTLY
BODY CONTROL MODULE (BCM)
MODULE THAT SET THIS DTC

DIAGNOSTIC TEST

VERIFY THE DTC IS ACTIVE

1. Ignition on, engine not running.
2. With the scan tool, read DTCs and record on vehicle work order.

   Is the DTC Active at this time?

   Yes

   NOTE: Diagnose the U0002-88 CAN C BUS OFF PERFORMANCE-BUSS OFF as the U0010-00 CAN C BUS CIRCUIT test.

   - Perform the U0010-00-CAN C BUS diagnostic procedure. Refer to the **BODY CONTROL MODULE (BCM) - DIAGNOSTIC CODE INDEX** article .

   No

   - Perform the STORED LOST COMMUNICATION DTCs diagnostic procedure. Refer to **DIAGNOSIS AND TESTING** .

U0100-00-LOST COMMUNICATION WITH ECM/PCM

Perform the COMMUNICATION PRE-DIAGNOSTIC PROCEDURE. Refer to **STANDARD PROCEDURE** .

U0101-00-LOST COMMUNICATION WITH TCM

Perform the COMMUNICATION PRE-DIAGNOSTIC PROCEDURE. Refer to **STANDARD PROCEDURE** .

U0102-00-LOST COMMUNICATION WITH TRANSFER CASE CONTROL MODULE / AWD

Perform the COMMUNICATION PRE-DIAGNOSTIC PROCEDURE. Refer to **STANDARD PROCEDURE** .

U0104-00-LOST COMMUNICATION WITH CRUISE CONTROL MODULE

Perform the COMMUNICATION PRE-DIAGNOSTIC PROCEDURE. Refer to **STANDARD PROCEDURE** .

U0125-00-LOST COMMUNICATION WITH DYNAMICS SENSOR

For a complete wiring diagram, **refer to appropriate SYSTEM WIRING DIAGRAMS article** .

WHEN MONITORED

Ignition on, battery voltage between 9 and 16 volts.

SET CONDITION

If the Anti-lock Brake System (ABS) Module fails to receive bus messages from the Dynamic Sensor for approximately 150 ms.

NOTE: The Dynamics Sensor is internal to the Occupant Restraints Controller (ORC)

POSSIBLE CAUSES

Possible Causes
CAN B OR CAN C BUS CIRCUITS OPEN OR SHORTED DTCS RELATED TO BATTERY VOLTAGE, IGNITION, OR VIN MESSAGES MODULE THAT SET THIS DTC

DIAGNOSTIC TEST

1. **VERIFY THE DTC IS ACTIVE**
    1. Using the scan tool, read the DTCs.

       Is the DTC active at this time?

       Yes

       - Go To 2

       No

       - Refer to **DIAGNOSIS AND TESTING** and perform the NO RESPONSE FROM ORC diagnostic procedure.

2. **VERIFY THAT THE OCCUPANT RESTRAINT CONTROLLER (ORC) IS ACTIVE ON THE BUS**
   1. Turn the ignition on.
   2. Using the scan tool, select Network Diagnostics.
   3. Verify that the ORC is active on the bus.

      Is the ORC active on the bus?

      Yes

      - Go To 3

      No

      - Perform the U0151-87 LOST COMMUNICATION WITH ORC diagnostic procedure. Refer to the **BODY CONTROL MODULE (BCM) - DIAGNOSTIC CODE INDEX** .
3. **ANTI-LOCK BRAKE SYSTEM (ABS) MODULE**

   WARNING: **To avoid serious or fatal injury on vehicles equipped with airbags, disable the Supplemental Restraint System (SRS). Refer to RESTRAINTS - SERVICE INFORMATION before attempting any steering wheel, steering column, airbag, seat belt tensioner, impact sensor, or instrument panel component diagnosis or service. Disconnect and isolate the battery negative (ground) cable, then wait two minutes for the system capacitor to discharge before performing further diagnosis or service. This is the only sure way to disable the SRS. Failure to take the proper precautions could result in accidental airbag deployment.**

   1. Replace the Anti-Lock Brakes System (ABS) Module in accordance with the Service Information. Refer to **MODULE, ANTI-LOCK BRAKE SYSTEM, REMOVAL** .
   2. Perform the ABS VERIFICATION TEST. Refer to **STANDARD PROCEDURE**.
   3. Using the scan tool, read ABS DTCs.

      Does the DTC remain active?

      Yes

      - Replace the Occupant Restraint Controller (ORC) in accordance with the Service Information.
      - Perform the ABS VERIFICATION TEST. Refer to **STANDARD PROCEDURE**.

      No

- Test complete.

U0126-00-LOST COMMUNICATION WITH STEERING ANGLE SENSOR

Perform the COMMUNICATION PRE-DIAGNOSTIC PROCEDURE. Refer to **STANDARD PROCEDURE** .

U0128-00-LOST COMMUNICATION WITH PARK BRAKE CONTROL MODULE

Perform the COMMUNICATION PRE-DIAGNOSTIC PROCEDURE. Refer to **STANDARD PROCEDURE** .

U0131-00-LOST COMMUNICATION WITH ELECTRIC POWER STEERING CONTROL MODULE

Perform the COMMUNICATION PRE-DIAGNOSTIC PROCEDURE. Refer to **STANDARD PROCEDURE** .

U0140-00-LOST COMMUNICATION WITH BODY CONTROL MODULE

Perform the COMMUNICATION PRE-DIAGNOSTIC PROCEDURE. Refer to **STANDARD PROCEDURE** .

U0159-00-LOST COMMUNICATION WITH PARKING ASSIST CONTROL MODULE

Perform the COMMUNICATION PRE-DIAGNOSTIC PROCEDURE. Refer to **STANDARD PROCEDURE** .

U0401-00-IMPLAUSIBLE DATA RECEIVED FROM ECM/PCM

For a complete wiring diagram, **refer to appropriate SYSTEM WIRING DIAGRAMS article** .

NOTE: Check for DTCs in the associated module before continuing with this diagnostic procedure.

WHEN MONITORED

Continuously with the ignition on, one valid CAN message received at least once, and no U0002-88-CAN C Bus Off Performance DTC present.

SET CONDITION

When the Anti-Lock Brake System (ABS) Module detects an incorrect CAN message from the Powertrain Control Module (PCM).

POSSIBLE CAUSES

Possible Causes
ANTI-LOCK BRAKE SYSTEM (ABS) MODULE CAN BUS DTCS ENGINE DTCS POWERTRAIN CONTROL (PCM) CAN BUS DTCS ANTI-LOCK BRAKE SYSTEM (ABS) MODULE POWERTRAIN CONTROL (PCM)

DIAGNOSTIC TEST

1. **VERIFY THE DTC IS ACTIVE**

   NOTE: This DTC must be active for the results of this test to be valid.

   1. Perform any Technical Service Bulletins (TSBs) that may apply.
   2. Turn the ignition on.
   3. With the scan tool, record and erase the DTCs.
   4. Cycle the ignition switch from off to on.
   5. With the scan tool, read the DTCs.

   Is the DTC active at this time?

   Yes

   - Go To 2

   No

   - Perform the ABS-INTERMITTENT CONDITION TEST. Refer to **STANDARD PROCEDURE**.

2. **CHECK IF POWERTRAIN CONTROL MODULE DTCS ARE PRESENT**
   1. With the scan tool, read the PCM DTCs.

   Are there any PCM DTCs present?

   Yes

   - Perform the appropriate diagnostic procedures. Refer to the **DTC INDEX** article .

   No

   - Go To 3

3. **CHECK OTHER MODULES FOR CAN BUS DTCS**
   1. With the scan tool, read the DTCs.

Are there any CAN BUS DTCs present?

Yes

- Using the schematics as a guide, check the Powertrain Control Module (PCM) pins, terminals, and connectors for corrosion, damage, or terminal push out. Pay particular attention to all power and ground circuits. If no problems are found, replace the Powertrain Control Module (PCM) in accordance with the Service Information. Refer to **MODULE, POWERTRAIN CONTROL, REMOVAL** .

No

- Using the schematics as a guide, check the Anti-Lock Brake System (ABS) Module pins, terminals, and connectors for corrosion, damage, or terminal push out. Pay particular attention to all power and ground circuits. If no problems are found, replace the Anti-Lock Brake Module in accordance with the Service Information. Refer to **MODULE, ANTI-LOCK BRAKE SYSTEM, REMOVAL** .
- Perform the ABS VERIFICATION TEST. Refer to **STANDARD PROCEDURE**.

U0402-00-IMPLAUSIBLE DATA RECEIVED FROM TCM

For a complete wiring diagram, **refer to appropriate SYSTEM WIRING DIAGRAMS article** .

NOTE: Check for DTCs in the associated module before continuing with this diagnostic procedure.

WHEN MONITORED

Continuously with the ignition on, one valid CAN message received at least once, and no U0002-88-CAN C Bus Off Performance DTC present.

SET CONDITION

When the Anti-Lock Brake Module detects an incorrect CAN message from the Powertrain Control Module (PCM).

POSSIBLE CAUSES

Possible Causes
ANTI-LOCK BRAKE SYSTEM (ABS) MODULE CAN BUS DTCS
POWERTRAIN CONTROL MODULE (PCM) DTCS
ANTI-LOCK BRAKE SYSTEM (ABS) MODULE
POWERTRAIN CONTROL MODULE (PCM)

DIAGNOSTIC TEST

1. **VERIFY DTC IS ACTIVE**

   NOTE: This DTC must be active for the results of this test to be valid.

   1. Perform any Technical Service Bulletins (TSBs) that may apply.
   2. Turn the ignition on.
   3. With the scan tool, record and erase the DTCs.
   4. Cycle the ignition switch from off to on.
   5. With the scan tool, read the DTCs.

   Is the DTC active at this time?

   Yes

   - Go To 2

   No

   - Perform the ABS-INTERMITTENT CONDITION TEST. Refer to **STANDARD PROCEDURE**.

2. **CHECK IF POWERTRAIN CONTROL MODULE DTCS ARE PRESENT**
   1. With the scan tool, read PCM DTCs.

   Are there any PCM DTCs present?

   Yes

   - Perform the appropriate diagnostic procedures. Refer to the **DTC INDEX** article .

   No

   - Go To 3

3. **CHECK OTHER MODULES FOR CAN BUS DTCS**
   1. With the scan tool, read the DTCs.

   Are there any CAN BUS DTCs present?

   Yes

   - Using the schematics as a guide, check the Powertrain Control Module (PCM) pins, terminals, and connectors for corrosion, damage, or terminal push out. Pay particular attention to all power and ground circuits. If no problems are found, replace the Powertrain Control Module (PCM) in accordance with the Service Information. Refer to **MODULE, POWERTRAIN CONTROL, REMOVAL** .

No

- Using the schematics as a guide, check the Anti-Lock Brake System (ABS) Module pins, terminals, and connectors for corrosion, damage, or terminal push out. Pay particular attention to all power and ground circuits. If no problems are found, replace the Anti-Lock Brake Module in accordance with the Service Information. Refer to **MODULE, ANTI-LOCK BRAKE SYSTEM, REMOVAL** .
- Perform the ABS VERIFICATION TEST. Refer to **STANDARD PROCEDURE**.

U0403-00-IMPLAUSIBLE DATA RECEIVED FROM T-CASE

For a complete wiring diagram, **refer to appropriate SYSTEM WIRING DIAGRAMS article** .

WHEN MONITORED

Continuously with the ignition on, one valid CAN message received at least once, and no CAN C Bus Off Performance DTC present.

SET CONDITION

When the Anti-Lock Brake System (ABS) Module detects an incorrect CAN message from the Drive Train Control Module (DTCM).

POSSIBLE CAUSES

Possible Causes
ANTI-LOCK BRAKE SYSTEM (ABS) MODULE CAN BUS DTCS
DRIVE TRAIN CONTROL MODULE (DTCM) DTCS
ANTI-LOCK BRAKE SYSTEM (ABS) MODULE

DIAGNOSTIC TEST

1. **VERIFY THE DTC IS ACTIVE**
    1. If any CAN Communication DTCs are present, perform the diagnostics for them first before continuing with this diagnostic procedure.

    NOTE: This DTC must be active for the results of this test to be valid.

    2. Perform any Technical Service Bulletins (TSBs) that may apply.
    3. Turn the ignition on.
    4. With the scan tool, record and erase the DTCs.
    5. Cycle the ignition switch from off to on.
    6. With the scan tool, read the DTCs.

Is the DTC active at this time?

Yes

- Go To 2

No

- Perform the ABS-INTERMITTENT CONDITION TEST. Refer to **STANDARD PROCEDURE**.

2. **CHECK IF DTCM DTCS ARE PRESENT**
   1. With the scan tool, read the DTCM DTCs.

   Are there any DTCM DTCs present?

   Yes

   - Perform the appropriate diagnostic procedures. Refer to **DIAGNOSIS AND TESTING** .

   No

   - Using the schematics as a guide, check the Anti-lock Brake System (ABS) Module pins, terminals, and connectors for corrosion, damage, or terminal push out. Pay particular attention to all power and ground circuits. If no problems are found, replace the Anti-Lock Brake System (ABS) Module in accordance with the Service Information. Refer to **MODULE, ANTI-LOCK BRAKE SYSTEM, REMOVAL** .
   - Perform the ABS VERIFICATION TEST. Refer to **STANDARD PROCEDURE**.

U0405-00-INVALID DATA RECEIVED FROM CRUISE CONTROL MODULE

For a complete wiring diagram, **refer to appropriate SYSTEM WIRING DIAGRAMS article** .

WHEN MONITORED

Continuously with the ignition on, one valid CAN message received at least once, and no U0002-88-CAN C Bus Off Performance DTC present.

SET CONDITION

When the Anti-lock Brake System (ABS) Module detects an incorrect CAN message from the Adaptive Cruise Control (ACC) Module.

POSSIBLE CAUSES

Possible Causes
ANTI-LOCK BRAKE SYSTEM (ABS) MODULE CAN BUS DTCS

ADAPTIVE CRUISE CONTROL (ACC) MODULE DTCS
ANTI-LOCK BRAKE SYSTEM (ABS) MODULE
ADAPTIVE CRUISE CONTROL (ACC) MODULE

DIAGNOSTIC TEST

1. **VERIFY DTC IS ACTIVE**

   NOTE: This DTC must be active for the results of this test to be valid.

   1. Perform any Technical Service Bulletins (TSBs) that may apply.
   2. Turn the ignition on.
   3. With the scan tool, record and erase the DTCs.
   4. Cycle the ignition switch from off to on.
   5. With the scan tool, read the DTCs.

   Is the DTC active at this time?

   Yes

   - Go To 2

   No

   - Perform the ABS-INTERMITTENT CONDITION TEST. Refer to **STANDARD PROCEDURE**.

2. **CHECK IF ADAPTIVE CRUISE CONTROL (ACC) MODULE DTCS ARE PRESENT**
   1. With the scan tool, read ACC DTCs.

   Are there any ACC DTCs present?

   Yes

   - Perform the appropriate diagnostic procedures. Refer to **DIAGNOSIS AND TESTING** .

   No

   - Go To 3

3. **CHECK OTHER MODULES FOR CAN BUS DTCS**
   1. With the scan tool, read the DTCs.

   Are there any CAN BUS DTCs present?

Yes

- Using the schematics as a guide, check the Adaptive Cruise Control (ACC) Module pins, terminals, and connectors for corrosion, damage, or terminal push out. Pay particular attention to all power and ground circuits. If no problems are found, replace the Adaptive Cruise Control (ACC) Module.

No

- Using the schematics as a guide, check the Anti-lock Brake System (ABS) Module pins, terminals, and connectors for corrosion, damage, or terminal push out. Pay particular attention to all power and ground circuits. If no problems are found, replace the Anti-lock Brake System (ABS) Module in accordance with the Service Information. Refer to **MODULE, ANTI-LOCK BRAKE SYSTEM, REMOVAL** .
- Perform the ABS VERIFICATION TEST. Refer to **STANDARD PROCEDURE**.

U0417-00-IMPLAUSIBLE DATA RECEIVED FROM PARK BRAKE CONTROL MODULE

For a complete wiring diagram, **refer to appropriate SYSTEM WIRING DIAGRAMS article** .

WHEN MONITORED

Continuously with the ignition on, one valid CAN message received at least once, and no CAN C Bus Off Performance DTC present.

SET CONDITION

When the Anti-lock Brake System (ABS) Module detects an incorrect CAN message from the Electric Park Brake (EPB) Module.

POSSIBLE CAUSES

Possible Causes
ANTI-LOCK BRAKE SYSTEM (ABS) MODULE CAN BUS DTCS
BODY CONTROL MODULE (BCM) DTCS
ELECTRIC PARK BRAKE (EPB) MODULE DTCS
ANTI-LOCK BRAKE SYSTEM (ABS) MODULE

DIAGNOSTIC TEST

1. **VERIFY THE DTC IS ACTIVE**
    1. Turn the ignition on.
    2. With the scan tool, record and erase DTCs.
    3. Cycle the ignition from off to on.
    4. With the scan tool, read DTCs.

Is the DTC active at this time?

Yes

- Go To 2

No

- Perform the ABS-INTERMITTENT CONDITION TEST. Refer to **STANDARD PROCEDURE**.

2. **CHECK FOR BODY CONTROL MODULE (BCM) DTCS**
   1. With the scan tool, read BCM DTCs.

      Are there any BCM CAN Bus DTCs present?

      Yes

      - Perform the appropriate diagnostic procedure. Refer to the **BODY CONTROL MODULE (BCM) - DIAGNOSTIC CODE INDEX** article .

      No

      - Go To 3

3. **CHECK FOR ELECTRIC PARKING BRAKE (EPB) MODULE**
   1. With the scan tool, read EPB DTCs.

      Are there any EPB DTCs present?

      Yes

      - Perform the appropriate diagnostic procedure. Refer to **DIAGNOSIS AND TESTING** .

      No

      - Go To 4

4. **CHECK OTHER MODULES FOR DTCS**
   1. With the scan tool, read DTCs.

      Are there any other modules reporting implausible communication DTCs against the EPB?

      Yes

      - Using the schematics as a guide, check the EPB Module pins, terminals, and connectors for corrosion, damage, or terminal push out. Pay particular attention to all power and ground circuits. If no problems are found, replace the Electric Parking Brake (EPB) Module in

accordance with the Service Information. Refer to **MODULE, ELECTRIC PARK BRAKE, REMOVAL** .

- Perform the ABS VERIFICATION TEST. Refer to **STANDARD PROCEDURE**.

No

- Using the schematics as a guide, check the ABS Module pins, terminals, and connectors for corrosion, damage, or terminal push out. Pay particular attention to all power and ground circuits. If no problems are found, replace the Anti-Lock Brake System (ABS) Module in accordance with the Service Information. Refer to **MODULE, ANTI-LOCK BRAKE SYSTEM, REMOVAL** .
- Perform the ABS VERIFICATION TEST. Refer to **STANDARD PROCEDURE**.

U0420-00-INVALID DATA RECEIVED FROM POWER STEERING CONTROL MODULE

For a complete wiring diagram, **refer to appropriate SYSTEM WIRING DIAGRAMS article** .

WHEN MONITORED

Ignition in Run/Start.

SET CONDITION

Incorrect data received from Electric Power Steering Control Module (EPS).

POSSIBLE CAUSES

Possible Causes
DTCS STORED OR ACTIVE IN THE EPS ANTI-LOCK BRAKE SYSTEM (ABS) MODULE

NOTE: Repair all other ABS or EPS DTCs before continuing with this diagnostic procedure.

DIAGNOSTIC TEST

1. **VERIFY THE DTC IS ACTIVE**
    1. Turn the ignition on.
    2. With the scan tool, read the DTCs.

    Is the DTC active at this time?

    Yes

    - Go To 2

No

- The condition that caused this code to set is not present at this time. Check for an intermittent condition by inspecting the related wiring harness for chafed, pierced, pinched, and partially broken wires. Also inspect the related connectors for broken, bent, pushed out, spread, corroded, or contaminated terminals.
- Perform the BODY VERIFICATION TEST. Refer to **STANDARD PROCEDURE** .

2. **DTCS STORED OR ACTIVE IN THE EPS**
   1. With the scan tool, read EPS DTCs.

      Are any DTCs active or stored in the EPS?

      Yes

      - Perform the appropriate diagnostic procedure. Refer to **DIAGNOSIS AND TESTING** .

      No

      - Go To 3

3. **INITIALIZE EPS MODULE**
   1. With the scan tool, under "Miscellaneous Functions" run the EPS Learn routine.
   2. Cycle the ignition off to on.
   3. With the scan tool, erase the DTCs.
   4. Cycle the ignition off to on.
   5. Wait ten seconds.
   6. With the scan tool, read the DTCs.

      Does the DTC remain active?

      Yes

      - Using the schematics as a guide, check the Anti-lock Brake System (ABS) Module pins, terminals, and connectors for corrosion, damage, or terminal push out. Pay particular attention to all power and ground circuits. If no problems are found, replace the Anti-lock Brake Module in accordance with the Service Information. Refer to **MODULE, ANTI-LOCK BRAKE SYSTEM, REMOVAL** .
      - Perform the ABS VERIFICATION TEST. Refer to **STANDARD PROCEDURE**.

      No

      - Test complete.

U0422-00-IMPLAUSIBLE DATA RECEIVED FROM BODY CONTROL MODULE

For a complete wiring diagram, **refer to appropriate SYSTEM WIRING DIAGRAMS article** .

NOTE: Check for DTCs in the associated module before continuing with this diagnostic procedure.

WHEN MONITORED

Continuously with the ignition on, one valid CAN message received at least once, and no U0002-88-CAN C Bus Off Performance DTC present.

SET CONDITION

When the Anti-Lock Brake System (ABS) Module detects an incorrect CAN message from the Body Control Module (BCM).

POSSIBLE CAUSES

Possible Causes
ANTI-LOCK BRAKE SYSTEM (ABS) MODULE CAN BUS DTCS
BODY CONTROL MODULE (BCM) DTCS
ANTI-LOCK BRAKE SYSTEM (ABS) MODULE

DIAGNOSTIC TEST

1. **VERIFY THE DTC IS ACTIVE**

   NOTE: This DTC must be active for the results of this test to be valid.

   1. Perform any Technical Service Bulletins (TSBs) that may apply.
   2. Turn the ignition on.
   3. With the scan tool, record and erase the DTCs.
   4. Cycle the ignition switch from off to on.
   5. With the scan tool, read the DTCs.

   Is the DTC active at this time?

   Yes

   - Go To 2

   No

   - Perform the ABS-INTERMITTENT CONDITION TEST. Refer to **STANDARD PROCEDURE**.

2. **CHECK BODY CONTROL MODULE (BCM) CAN BUS DTCS ARE PRESENT**
   1. With the scan tool, read the BCM DTCs.

      Are there any BCM CAN BUS DTCs present?

      Yes

      - Perform the appropriate diagnostic procedures. Refer to the **BODY CONTROL MODULE (BCM) - DIAGNOSTIC CODE INDEX** article .
      - Perform the ABS VERIFICATION TEST. Refer to **STANDARD PROCEDURE**.

      No

      - Using the schematics as a guide, check the Anti-Lock Brake System (ABS) Module pins, terminals, and connectors for corrosion, damage, or terminal push out. Pay particular attention to all power and ground circuits. If no problems are found, replace the Anti-Lock Brake Module accordance with Service Information. Refer to **MODULE, ANTI-LOCK BRAKE SYSTEM, REMOVAL** .
      - Perform the ABS VERIFICATION TEST. Refer to **STANDARD PROCEDURE**.

U0432-00-INVALID DATA RECEIVED FROM MULTI - AXIS ACCELERATION SENSOR MODULE

For a complete wiring diagram, **refer to appropriate SYSTEM WIRING DIAGRAMS article** .

WHEN MONITORED

Continuously with the ignition on, one valid CAN message received at least once.

SET CONDITION

When the Anti-Lock Brake system (ABS) Module detects an incorrect CAN message from the Dynamics Sensor.

NOTE: The Dynamics Sensor is internal to the Occupant Restraints Controller (ORC)

POSSIBLE CAUSES

Possible Causes
OCCUPANT RESTRAINT CONTROLLER (ORC)
ANTI-LOCK BRAKE SYSTEM (ABS) MODULE/INTERNAL CONTROL UNIT (ICU)

DIAGNOSTIC TEST

1. **VERIFY THE DTC IS ACTIVE**

NOTE: This DTC must be active for the results of this test to be valid.

1. Perform any Technical Service Bulletins (TSBs) that may apply.
2. Turn the ignition on.
3. With the scan tool, read and record the DTCs.
4. With the scan tool, read and record the Environmental Data to help identify the conditions in which the DTC was set.
5. With the scan tool, erase the DTCs.
6. Start the engine.
7. With the scan tool, read the DTCs.

   Is the DTC active at this time?

   Yes

   - Go To 2

   No

   - Perform the ABS-INTERMITTENT CONDITION TEST. Refer to **STANDARD PROCEDURE**.

2. **CHECK FOR OCCUPANT RESTRAINT CONTROLLER (ORC) DTCS PRESENT**
   1. With the scan tool, read the DTCs.

      Are there any ORC DTCs present?

      Yes

      - Perform the appropriate diagnostic procedures. Refer to the **OCCUPANT RESTRAINT CONTROLLER (ORC) - DIAGNOSTIC CODE INDEX** article .

      No

      - Go To 3

3. **CHECK OTHER MODULES FOR CAN BUS DTCS**
   1. With the scan tool, read the DTCs.

      Are there any CAN BUS DTCs present?

      Yes

      - Using the schematics as a guide, check the Occupant Restraint Controller (ORC) pins, terminals, and connectors for corrosion, damage, or terminal push out. Pay particular attention to all power and ground circuits. If no problems are found, replace the Occupant

Restraint Controller (ORC) in accordance with the Service Information. Refer to **MODULE, OCCUPANT RESTRAINT CONTROLLER, REMOVAL** .

No

- Using the schematics as a guide, check the Anti-lock Brake System (ABS) Module pins, terminals, and connectors for corrosion, damage, or terminal push out. Pay particular attention to all power and ground circuits. If no problems are found, replace the Anti-lock Brake System (ABS) Module in accordance with the Service Information. Refer to **MODULE, ANTI-LOCK BRAKE SYSTEM, REMOVAL** .
- Perform the ABS VERIFICATION TEST. Refer to **STANDARD PROCEDURE**.

U045A-00-IMPLAUSIBLE DATA RECEIVED FROM PARKING ASSIST MODULE

For a complete wiring diagram, **refer to appropriate SYSTEM WIRING DIAGRAMS article** .

WHEN MONITORED

Continuously with the ignition on, one valid CAN message received at least once, and no CAN C Bus Off Performance DTC present.

SET CONDITION

When the Anti-lock Brake System (ABS) Module detects an incorrect CAN message from the Park Assist Module (PAM).

POSSIBLE CAUSES

Possible Causes
ANTI-LOCK BRAKE SYSTEM (ABS) MODULE CAN BUS DTCS
BODY CONTROL MODULE (BCM) DTCS
PARK ASSIST MODULE (PAM) DTCS
ANTI-LOCK BRAKE SYSTEM (ABS) MODULE

DIAGNOSTIC TEST

1. **VERIFY THE DTC IS ACTIVE**
    1. Turn the ignition on.
    2. With the scan tool, record and erase DTCs.
    3. Cycle the ignition from off to on.
    4. With the scan tool, read DTCs.

    Is the DTC active at this time?

    Yes

- Go To 2

No

- Perform the ABS-INTERMITTENT CONDITION TEST. Refer to **STANDARD PROCEDURE**.

2. **CHECK FOR BODY CONTROL MODULE (BCM) DTCS**
   1. With the scan tool, read BCM DTCs.

      Are there any BCM CAN Bus DTCs present?

      Yes

      - Perform the appropriate diagnostic procedure. Refer to the **BODY CONTROL MODULE (BCM) - DIAGNOSTIC CODE INDEX** article .

      No

      - Go To 3
3. **CHECK FOR PARK ASSIST MODULE (PAM) DTCS**
   1. With the scan tool, read PAM DTCs.

      Are there any PAM DTCs present?

      Yes

      - Perform the appropriate diagnostic procedure. Refer to **DIAGNOSIS AND TESTING** .

      No

      - Go To 4
4. **CHECK OTHER MODULES FOR DTCS**
   1. With the scan tool, read DTCs.

      Are there any other modules reporting implausible communication DTCs against the PAM?

      Yes

      - Replace the Park Assist Module (PAM) in accordance with the Service Information. Refer to **MODULE, PARK ASSIST, REMOVAL** .
      - Perform the ABS VERIFICATION TEST. Refer to **STANDARD PROCEDURE**.

      No

- Using the schematics as a guide, check the ABS Module pins, terminals, and connectors for corrosion, damage, or terminal push out. Pay particular attention to all power and ground circuits. If no problems are found, replace the Anti-Lock Brake System (ABS) Module in accordance with the Service Information. Refer to **MODULE, ANTI-LOCK BRAKE SYSTEM, REMOVAL** .
- Perform the ABS VERIFICATION TEST. Refer to **STANDARD PROCEDURE**.

U140E-00-IMPLAUSIBLE VEHICLE CONFIGURATION DATA RECEIVED

For a complete wiring diagram, **refer to appropriate SYSTEM WIRING DIAGRAMS article** .

NOTE: If any other DTCs are present, repair them first before continuing with this diagnostic procedure.

NOTE: If the BCM has been replaced and or the PROXI Configuration Alignment has not been performed, address this issue first before continuing with this diagnostic procedure.

WHEN MONITORED

Continuously.

SET CONDITION

The Body Control Module (BCM) Indicates that the PROXI Configuration Alignment has not been performed.

POSSIBLE CAUSES

Possible Causes
BODY CONTROL MODULE (BCM) PROXI CONFIGURATION ALIGNMENT NOT PERFORMED
ANTI-LOCK BRAKE SYSTEM (ABS) MODULE/INTEGRATED CONTROL UNIT (ICU)

DIAGNOSTIC TEST

1. **VERIFY THE DTC IS ACTIVE**

NOTE: This DTC must be active for the results of this test to be valid.

1. Turn the ignition on.
2. With the scan tool, read and record the DTCs.
3. With the scan tool, read and record the Environmental Data to help identify the conditions in which the DTC was set.
4. With the scan tool, erase the DTCs.
5. Cycle the ignition from off to on.

6. With the scan tool, read and record the DTCs.

   Is the DTC active at this time?

   Yes

   - Go To 2

   No

   - Perform the ABS-INTERMITTENT CONDITION TEST. Refer to **STANDARD PROCEDURE**.

2. **VERIFY THE BCM PROXI CONFIGURATION ALIGNMENT ROUTINE WAS PERFORMED**
   1. In the Body Control Module (BCM) with the scan tool, under "Miscellaneous Functions" run the "PROXI Configuration Alignment" routine.
   2. With the scan tool, erase the ABS DTCs.
   3. Cycle the ignition switch from off to on, leaving the ignition on for a minimum of ten seconds.
   4. With the scan tool, read the ABS DTCs.

      Does the DTC remain active?

      Yes

      - Using the schematics as a guide, check the Anti-Lock Brake System (ABS) Module pins, terminals, and connectors for corrosion, damage, or terminal push out. Pay particular attention to all power and ground circuits. If no problems are found, replace the Anti-Lock Brake Module accordance with Service Information. Refer to **MODULE, ANTI-LOCK BRAKE SYSTEM, REMOVAL** .
      - Perform the ABS VERIFICATION TEST. Refer to **STANDARD PROCEDURE**.

      No

      - Test complete.

STANDARD PROCEDURE

ABS VERIFICATION TEST

DIAGNOSTIC TEST

ABS VERIFICATION TEST

WARNING: To avoid possible serious or fatal injury, check brake capability is available before road testing.

1. Turn the ignition off.
2. Connect all previously disconnected components and connectors.
3. Verify all accessories are turned off and the battery is fully charged.
4. The Body Control Module (BCM) PROXI Configuration Alignment routine must be performed first if any of the following components were replaced listed in the table below.

NOTE: If the BCM PROXI is not performed, the ABS indicator will illuminate continuously.

- Turn the ignition on and using the scan tool, go into the Body Control Module (BCM) under "Miscellaneous Functions" and perform the "PROXI Configuration Alignment" routine.

5. Perform the correct routines using the scan tool under "Miscellaneous Functions" with the wheels pointing straight ahead on level ground:

NOTE: If the ABS is not initialized, the ABS indicator will flash continuously.

Component	Routines
Anti-lock Brake System (ABS) Module	ABS Initialization
Hydraulic Control Unit (HCU)	ABS Initialization/ABS Bleed Brakes
Integrated Control Unit (ICU)	ABS Initialization/ABS Bleed Brakes
Dynamics Sensor/Occupant Restraints Controller (ORC)	ABS Initialization
Steering Column Control Module (SCCM)/Steering Angle Sensor (SAS)	ABS Initialization

NOTE: If any of the Wheel Speed Sensors were replaced, test drive the vehicle at a speed above 25 km/h (15 mph) for several minutes.

NOTE: After erasing ACTIVE DTCs it may be necessary for the Anti-lock Brake System (ABS) Module to go to sleep before the DTCs are cleared. IF the DTC is still ACTIVE after the clear command then Turn the ignition off, disconnect the Scan Tool, close the doors and wait until all indicators on the Cluster have gone out, typically about 30 seconds.

6. Verify that the ignition is on, with the scan tool, erase all Diagnostic Trouble Codes (DTCs) from All modules. Start the engine and allow it to run for two minutes and fully operate the system that was indicating the failure.
7. Turn the ignition off and wait five seconds. Turn the ignition on and using the scan tool, read DTCs from all modules.
8. If any Diagnostic Trouble Codes are present, and perform the diagnostic procedure. Refer to **DIAGNOSIS AND TESTING**.
9. **NOTE: For Sensor Signal Plausibility and Pump Motor faults, the ABS Module must verify that**

the failure conditions are no longer present in the current ignition cycle before it can turn off the failure lamp(s). This may require the vehicle to be driven for several minutes above 15 km/h (9 mph). Once it has been determined that the failure condition is no longer present the lamp(s) will be turned off.

10. If there are no DTCs present after turning ignition on, road test the vehicle for at least five minutes.
    - Slowly turn the steering wheel from lock to lock.
    - Test drive the vehicle by turning the vehicle left or right in a curving manner at a speeds between 10 and 25 km/h (6 and 15 mph).
    - Perform several anti-lock braking stops.
11. Again, with the scan tool read DTCs. If any DTCs are present, for the diagnostic procedure and troubleshoot the new or recurring DTC. Refer to **DIAGNOSIS AND TESTING**.
12. If there are no Diagnostic Trouble Codes (DTCs) present, and the customer's concern can no longer be duplicated, the repair is complete.

    Are any DTCs present or is the original concern still present?

    Yes

    - Repair is not complete, perform the appropriate diagnostic procedure. Refer to **DIAGNOSIS AND TESTING**.

    No

    - Repair is complete.

ABS INTERMITTENT CONDITION

For a complete wiring diagram, **refer to appropriate SYSTEM WIRING DIAGRAMS article** .

DIAGNOSTIC TEST

PERFORM ABS INTERMITTENT CONDITION TEST

NOTE: The conditions that set the DTC are not present at this time. The following list may help in identifying the intermittent condition.

WARNING: When the engine is operating, do not stand in direct line with the fan. Do not put your hands near the pulleys, belts or fan. Do not wear loose clothing. Failure to follow these instructions may result in possible serious or fatal injury.

1. Perform any Technical Service Bulletins (TSBs) that may apply.
2. Review the scan tool Environmental Data (EV Data). If possible, try to duplicate the conditions under which the DTC set.

3. Turn the ignition off.
4. Visually inspect the related wire harness. Disconnect all the related harness connectors. Look for any chafed, pierced, pinched, partially broken wires and broken, bent, pushed out, or corroded terminals.
5. Wiggle the wires while checking for shorts and open circuits.
6. Perform a voltage drop test on the related circuits between the suspected inoperative component and the Anti-Lock Brake System (ABS) Module.
7. Inspect and clean all PCM, ABS, engine, and chassis grounds that are related to the most current DTC.
8. If numerous trouble codes were set, use a wire schematic and look for any common ground or supply circuits.
9. For any Relay DTCs, actuate the Relay with the scan tool and wiggle the related wire harness to try to interrupt the actuation.
10. Use the scan tool to perform a System Test if one applies to failing component.
11. A co-pilot, data recorder, or lab scope should be used to help diagnose intermittent conditions.
12. Test drive the vehicle over 15 km/h (9 mph).

Were any problems found during the above inspections?

Yes

- Perform the necessary repairs.
- Perform the ABS VERIFICATION TEST. Refer to **STANDARD PROCEDURE**.

No

- Test complete, the condition or conditions that originally set this DTC are not present at this time.

2014 BRAKES

Antilock Brake System (ABS) - Service Information - Cherokee

CAUTION

CAUTION

The antilock brake system uses an electronic control module known as the Antilock Brake Module (ABM). This module is designed to withstand normal current draws associated with vehicle operation. Care must be taken to avoid overloading the circuits.

CAUTION: In testing for open or short circuits, do not ground or apply voltage to any of the circuits unless instructed to do so for a diagnostic procedure.

CAUTION: These circuits should only be tested using a high impedance multi-meter or the designated scan tool as described in this service information . Power should never be removed or applied to any control module with the ignition in the ON position. Before removing or connecting battery cables, fuses, or connectors, always turn the ignition to the OFF position.

CAUTION: The ABM 47-way connector should never be connected or disconnected with the ignition switch in the ON position.

CAUTION: This vehicle utilizes active wheel speed sensors. Do not apply voltage to wheel speed sensors at any time.

CAUTION: Use only factory wiring harnesses. Do not cut or splice wiring to the brake circuits. The addition of aftermarket electrical equipment (car phone, radar detector, citizen band radio, trailer lighting, trailer brakes, etc.) on a vehicle equipped with antilock brakes may affect the function of the antilock brake system.

CAUTION: When performing any service procedure on a vehicle equipped with ABS, do not apply a 12-volt power source to the ground circuit of the pump motor in the HCU. Doing this will damage the pump motor and will require replacement of the entire HCU.

CAUTION: An attempt to remove or disconnect certain system components may result in improper system operation. Only those components with approved removal and installation procedures in this service information should be serviced.

CAUTION: If welding work is to be performed on the vehicle using an electric arc welder, the ABM connector should be disconnected during the welding operation.

CAUTION: Many components of the ABS are not serviceable and must be replaced as an assembly. Do not disassemble any component which is not designed to be serviced.

CAUTION: Brake fluid will damage painted surfaces. If brake fluid is spilled on any painted surface, wash off with water immediately.

CAUTION: Only the recommended jacking or hoisting positions for this vehicle are to be used whenever it is necessary to lift a vehicle.

DESCRIPTION

ANTILOCK BRAKE SYSTEM

This vehicle uses an antilock brake system standard with Electronic Stability Control (ESC) and All-Speed Traction Control.

This antilock brake system uses components of the base brake system, but also features the following components:

- Integrated Control Unit (ICU) - Hydraulic Control Unit (HCU) and Antilock Brake Module (ABM)
- Wheel Speed Sensors (WSS) - Four sensors (one at each wheel)
- Steering Angle Sensor - Part of the Electronic Power Steering (EPS) Module, located in the EPS steering gear
- Dynamics Sensor Module - Includes Yaw rate, longitudinal, and lateral acceleration sensors. Located in the Occupant Restraint Controller (ORC) Module.

The ABS system is made up of the Hydraulic Control Unit (HCU) and the Antilock Brake Module (ABM). For additional information on these components, refer to **HYDRAULIC CONTROL UNIT (HCU), DESCRIPTION** and **MODULE, ANTI-LOCK BRAKE SYSTEM, DESCRIPTION** .

ABS

The purpose of the antilock brake system (ABS) is to prevent wheel lockup under braking conditions on virtually any type of road surface. Antilock braking is desirable because a vehicle that is stopped without locking the wheels retains directional stability and some steering capability. This allows the driver to retain greater control of the vehicle during braking.

All vehicles use Electronic Variable Brake Proportioning (EVBP) to balance front-to-rear braking when the brakes are applied in the partial braking range. For more information on electronic brake distribution, refer to

DESCRIPTION.

ELECTRONIC STABILITY CONTROL

For information on the Electronic Stability Control, refer to **DESCRIPTION**.

TRACTION CONTROL

For information on the All-Speed Traction Control, refer to **DESCRIPTION**.

ELECTRONIC STABILITY CONTROL

Electronic Stability Control (ESC), which includes Hydraulic Brake Assist, Traction Control, and Electronic Roll Mitigation, is standard on all vehicles. ESC aids the driver in maintaining vehicle directional stability. ESC will do whatever can be done, within the limits of available traction, to keep the car on course.

ESC uses the ABS with Traction Control along with the following components to operate:

- Dynamics (ESC) Sensor
- Steering Angle Sensor (SAS)

The Dynamics Sensor is incorporated with the Occupant Restraint Controller (ORC) Module. The ORC is mounted under the center console, which is near the center of gravity of the car for effective sensing. Refer to **MODULE, OCCUPANT RESTRAINT CONTROLLER, DESCRIPTION** . The Steering Angle Sensor is located in the Electric Power Steering (EPS) gear. Refer to **SENSOR, STEERING WHEEL ANGLE, DESCRIPTION**.

HYDRAULIC BRAKE ASSIST

Brake Assist is programmed into the ESC system. Brake assist helps the driver overcome the tendency to not apply the brakes hard enough or quick enough to achieve the minimum stopping distance during a panic stop. During this situation, the ESC system instantly applies the maximum available pressure to the brakes and the vehicle stops as quickly as available traction will allow.

TRACTION CONTROL

The traction control system that is part of the Electronic Stability Control (ESC), is an all-speed traction control. All-Speed Traction Control enhances mobility and prevents wheel slip when accelerating on slippery surfaces. It also provides a measure of directional stability control. Using the wheel-speed sensors, it can detect excessive yaw and help keep the car on the intended course, as for instance, when accelerating around a curve.

All-Speed Traction Control is effective up to 85 mph (137 km/h).

The traction control system may be turned off or on by depressing the ESC Off switch button, located near the middle of the dash.

ELECTRONIC VARIABLE BRAKE PROPORTIONING

Vehicles equipped with ABS use Electronic Variable Brake Proportioning (EVBP) to balance front-to-rear braking. The EVBP is used in place of a rear proportioning valve. The EVBP system uses the ABS system to control the slip of the rear wheels in partial braking range. The braking force of the rear wheels is controlled electronically by using the inlet and outlet valves located in the Integrated Control Unit (ICU).

OPERATION

ANTILOCK BRAKE SYSTEM

ABS

There are a few performance characteristics of the Antilock Brake System (ABS) that may at first seem abnormal, but in fact are normal. These characteristics are described below.

NORMAL BRAKING

Under normal braking conditions, the ABS functions the same as a standard base brake system with a diagonally split master cylinder and conventional vacuum assist.

ABS BRAKING

ABS operation is available at all vehicle speeds above 5-8 km/h (3-5 mph) If a wheel locking tendency is detected during a brake application, the brake system enters the ABS mode. During ABS braking, hydraulic pressure in the four wheel circuits is modulated to prevent any wheel from locking. Each wheel circuit is designed with a set of electric solenoids to allow modulation, although for vehicle stability, both rear wheel solenoids receive the same electrical signal. Wheel lockup may be perceived at the very end of an ABS stop and is considered normal.

During an ABS event, the Integrated Control Unit (ICU) regulates hydraulic pressure at all four of the vehicle's wheels.

The hydraulic pressure at each front wheel is controlled independently (relative to the amount of slip at each wheel) in order to maximize the braking force generated by the front brakes. The rear wheels are controlled such that the hydraulic pressure at either rear wheel does not exceed that of the highest slip rear wheel in order to maintain vehicle stability.

The system can build and release pressure at each wheel, depending on signals generated by the Wheel Speed Sensors (WSS) at each wheel and received at the Antilock Brake Module (ABM).

NOISE AND BRAKE PEDAL FEEL

During ABS braking, some brake pedal movement may be felt. In addition, ABS braking will create ticking, popping, or groaning noises heard by the driver. This is normal and is due to pressurized fluid being transferred between the master cylinder and the brakes. If ABS operation occurs during hard braking, some pulsation may be felt in the vehicle body due to fore and aft movement of the suspension as brake pressures are modulated.

At the end of an ABS stop, ABS is turned off when the vehicle is slowed to a speed of 5-6 km/h (3-4 mph).

There may be a slight brake pedal drop anytime that the ABS is deactivated, such as at the end of the stop when the vehicle speed is less than 3 mph (5 km/h) or during an ABS stop where ABS is no longer required. These conditions exist when a vehicle is being stopped on a road surface with patches of ice, loose gravel, or sand on it. Also, stopping a vehicle on a bumpy road surface activates ABS because of the wheel hop caused by the bumps.

TIRE NOISE AND MARKS

Although the ABS system prevents complete wheel lockup, some wheel slip is desired in order to achieve optimum braking performance. Wheel slip is defined as follows: 0 percent slip means the wheel is rolling freely and 100 percent slip means the wheel is fully locked. During brake pressure modulation, wheel slip is allowed to reach up to 25-30 percent. This means that the wheel rolling velocity is 25-30 percent less than that of a free rolling wheel at a given vehicle speed. This slip may result in some tire chirping, depending on the road surface. This sound should not be interpreted as total wheel lockup.

Complete wheel lockup normally leaves black tire marks on dry pavement. The ABS will not leave dark black tire marks since the wheel never reaches a fully locked condition. However, tire marks may be noticeable as light patched marks.

START-UP AND DRIVE-OFF CYCLES

When the ignition is turned on, a popping sound and a slight brake pedal movement may be noticed. The ABS warning lamp will also be on for up to 5 seconds after the ignition is turned on.

When the vehicle is first driven off, a humming may be heard or felt by the driver at approximately 12-25 mph (20-40 km/h). All of these conditions are a normal function of ABS as the system is performing a diagnosis check.

PREMATURE ABS CYCLING

Symptoms of premature ABS cycling include: clicking sounds from the solenoid valves; pump/motor running; and pulsations in the brake pedal. Premature ABS cycling can occur at any braking rate of the vehicle and on any type of road surface. Neither the red BRAKE indicator lamp, nor the amber ABS indicator lamp, illuminate and no faults are stored in the ABM.

Premature ABS cycling is a condition that needs to be correctly assessed when diagnosing problems with the antilock brake system. It may be necessary to use a scan tool to detect and verify premature ABS cycling.

Check the following common causes when diagnosing premature ABS cycling: damaged wheel bearings (causing tone wheel issues); damaged wheel speed sensor mounting bosses; and loose wheel speed sensor mounting screws.

After diagnosing the defective component, repair or replace it as required. When the component repair or replacement is completed, test drive the vehicle to verify that premature ABS cycling has been corrected.

ELECTRONIC STABILITY CONTROL

For information on the Electronic Stability Control, refer to **OPERATION**.

TRACTION CONTROL

For information on the All-Speed Traction Control, refer to **OPERATION**.

ELECTRONIC STABILITY CONTROL

To determine whether the car is responding properly to cornering commands, ESC uses steering wheel angle, yaw (turning) rate and lateral acceleration sensors (combined into Dynamics Sensor). Using signals from these sensors, in addition to individual wheel speed sensor signals, the system determines appropriate brake and throttle actions. Once initiated, ESC operates much like All-Speed Traction Control, except that the goal is directional stability. If the vehicle yaw response, or rate of turning, is inconsistent with the steering angle and vehicle speed indications, the ESC system applies the brakes and, if necessary closes the throttle, to restore control. This occurs whether the vehicle is turning too rapidly (oversteering) or not rapidly enough (understeering).

HYDRAULIC BRAKE ASSIST

Brake Assist is programmed into the ESC system. During a panic stop, a pressure sensor determines when the driver is doing so by measuring the brake pedal pressure application rate. A high rate of pedal pressure application causes the ESC system to apply maximum available pressure to the brakes and the vehicle stops as quickly as available traction will allow.

TRACTION CONTROL

For information on the All-Speed Traction Control, refer to **OPERATION**.

TRACTION CONTROL

Traction control systems sense impending wheel spin based on a model of the rate of change of wheel speed under normal traction conditions. The All-Speed Traction Control uses signals from the same wheel speed sensors as ABS to determine when to apply the brakes to one or more wheels and when to reduce engine torque output using the electronic throttle control (ETC) to prevent wheel slip during acceleration. Throttle control makes the vehicle less reliant on brake application alone to maintain traction, increasing the operating speed range and more closely modulates speed, resulting in smoother operation. With All-Speed Traction Control reducing engine torque as well as applying the brakes, it is possible to achieve almost seamless torque application at the wheels.

If the wheel slip is severe enough to require throttle intervention, All-Speed Traction Control will reduce engine torque and sometimes upshift the transmission to avoid the condition. In milliseconds, All-Speed Traction Control interrogates the engine control system to determine the current torque output, determines how much the torque output the current conditions will allow, and signals this requirement to the engine control system, which reduces the torque by partially closing the throttle. With execution of the torque reduction, the brake system reduces brake pressure to make the transition smooth, while maintaining forward progress. By reducing engine power, braking effectiveness is maintained and the system can operate throughout the normal vehicle speed range. That is why the system is identified as providing "all-speed" traction control.

The traction control system is enabled at each ignition cycle. It may be turned off by depressing the ESC OFF switch button. The ESC OFF lamp illuminates immediately upon depressing the button. Pressing this button again or turning off and restarting the vehicle will enable the traction control system.

ELECTRONIC VARIABLE BRAKE PROPORTIONING

Upon entry into EVBP, the inlet valve for the rear brake circuit is switched on so that the fluid supply from the master cylinder is shut off. In order to decrease the rear brake pressure, the outlet valve for the rear brake circuit is pulsed. This allows fluid to enter the Low Pressure Accumulator (LPA) in the Hydraulic Control Unit (HCU) resulting in a drop in fluid pressure to the rear brakes. In order to increase the rear brake pressure, the outlet valve is switched off and the inlet valve is pulsed. This increases the pressure to the rear brakes. This back-and-forth process will continue until the required slip difference is obtained. At the end of EVBP braking (brakes released) the fluid in the LPA is pumped back to the master cylinder by switching on the motor for ABS systems or by opening the ESVs for ESC systems. At the same time the inlet valve is switched on in case of another brake application.

The EVBP will remain functional during many ABS fault modes. If both the red BRAKE and amber ABS warning indicators are illuminated, the EVBP may not be functioning.

DIAGNOSIS AND TESTING

DIAGNOSIS AND TESTING - INSPECTION AND ROAD TEST

1. Visually inspect the ABS for damaged or disconnected components and connectors.
2. Verify the brake lamps are operational. If they are not, repair them prior to continuing.
3. Connect a scan tool to the Data Link Connector located under the instrument panel to the left of the steering column. If the scan tool does not power-up, check the power and ground supplies to the connector.
4. Turn the ignition key to the ON position.
5. Using the scan tool, read and record any Diagnostic Trouble Codes (DTCs). If any DTCs are present, refer to the appropriate diagnostic information.

   If no problems are observed, it will be necessary to road test the vehicle.

   Many ABS conditions judged to be a problem by the driver may be normal operating conditions. To become familiarized with the normal operating characteristics of this antilock brake system, refer to **OPERATION**.

   WARNING: **Conditions that result in turning on the red brake warning indicator lamp may indicate reduced braking ability.**

   Before road testing a brake complaint vehicle, note whether the red BRAKE warning indicator lamp, amber ABS warning indicator lamp, or both are turned on. If it is the red BRAKE warning indicator, there is a brake hydraulic problem that must be corrected before driving the vehicle

Refer to **DIAGNOSIS AND TESTING** or **DIAGNOSIS AND TESTING** .

The following conditions will cause the red BRAKE lamp to illuminate:

- Low fluid in the brake reservoir
- Park Brake engaged
- Brake hydraulic problem
- ABS issue that will not allow the Brake Proportioning function

If the amber ABS warning indicator is on, road test the vehicle as described below. While only the amber ABS warning indicator is on, the ABS is not functional. The ability to stop the car using the base brake system should not be affected.

6. Turn the key to the OFF position and then back to the ON position. Note whether the amber ABS warning indicator lamp continues to stay on.
7. If the amber ABS warning indicator lamp stays on, shift into gear and drive the car to a speed of approximately 25 km/h (15 mph) to complete the ABS Start-Up and Drive-Off Cycles. Refer to **OPERATION**. If at this time the amber ABS warning indicator lamp stays on, refer to the appropriate diagnostic information.
8. If the amber ABS warning indicator lamp goes out at any time, drive the vehicle a short distance. Accelerate the vehicle to a speed of at least 64 km/h (40 mph). Bring the vehicle to a complete stop, braking hard enough to cause the ABS to cycle. Repeat this action several times. Using the scan tool, read and record any Diagnostic Trouble Codes (DTCs). If any DTCs are present, refer to the appropriate diagnostic information.

STANDARD PROCEDURE

BLEEDING

PRESSURE BLEEDING

NOTE: Pressure bleeding is the preferred method after ICU replacement.

NOTE: Follow pressure bleeder manufacturer instructions for use of pressure bleeding equipment.

NOTE: ABS pressure bleeding is done with the use of power pressure brake bleed equipment

NOTE: To bleed the brakes with a pressure bleeder, the aid of a helper will be required.

ABS system bleeding requires conventional bleeding methods plus use of a scan tool. The procedure involves performing a base brake bleeding, followed by use of the scan tool to cycle and bleed the HCU pump and solenoids.

1. Perform base brake bleeding. Refer to **STANDARD PROCEDURE** .
2. Install pressure bleeding equipment by following the pressure bleeder manufacturer instructions.
3. Connect scan tool to the Data Link Connector and navigate to the ABS menu to begin bleed process.
4. Starting at the LF wheel, following the scan tool on screen instructions, open the bleed screw and continue following scan tool process until cycle completes. Repeat this process for each remaining wheel going to RF, RR, LR.
5. Top off master cylinder fluid level and verify proper brake operation before moving vehicle.
6. Test drive the vehicle to be sure the brakes are operating correctly and that the brake pedal does not feel spongy.

MANUAL BLEEDING

NOTE: ABS manual bleeding is done without the use of power pressure brake bleed equipment.

NOTE: To bleed the brakes manually, the aid of a helper will be required.It is critical that during this process that the master cylinder brake fluid remains within operating range.

ABS system bleeding requires conventional bleeding methods plus use of a scan tool. The procedure involves performing a base brake bleeding, followed by use of the scan tool to cycle and bleed the HCU pump and solenoids.

1. Perform base brake bleeding. Refer to **STANDARD PROCEDURE** .
2. Connect scan tool to the Data Link Connector and navigate to the ABS menu to begin bleed process.
3. Starting at the LF wheel, following the scan tool prompts, open the bleed screw and begin stroking the brake pedal every two seconds while continuing to follow scan tool process until cycle is completed. Repeat this process for each remaining wheel going to RF, RR, LR.
4. Top off master cylinder fluid level and verify proper brake operation before moving vehicle.
5. Test drive the vehicle to be sure the brakes are operating correctly and that the brake pedal does not feel spongy.

SPECIFICATIONS

TORQUE

For ABS fastener torque specifications, see Brake Fastener Torque. Refer to **SPECIFICATIONS** .

ELECTRICAL

SENSOR, DYNAMICS

DESCRIPTION

DESCRIPTION

Fig. 1: Identifying Occupant Restraint Controller
Courtesy of CHRYSLER GROUP, LLC

The Yaw Rate and Lateral Acceleration Sensors are referred to as the Dynamics Sensor and are housed within the Occupant Restraint Controller (ORC) (1). The sensors are used to measure side-to-side (Lateral) motion and vehicle rotational sensing (how fast the vehicle is turning - Yaw).

Yaw and Lateral Acceleration Sensors cannot be serviced separately. The Occupant Restraint Controller (ORC) must be replaced when necessary. Refer to **MODULE, OCCUPANT RESTRAINT CONTROLLER, REMOVAL** .

SENSOR, STEERING WHEEL ANGLE

DESCRIPTION

DESCRIPTION

The steering angle sensor is an integral part of the Electric Power Steering (EPS) rack. If the steering angle sensor requires service, the EPS rack must be replaced. Refer to **GEAR, REMOVAL** .

SENSOR, WHEEL SPEED, FRONT

DESCRIPTION

DESCRIPTION

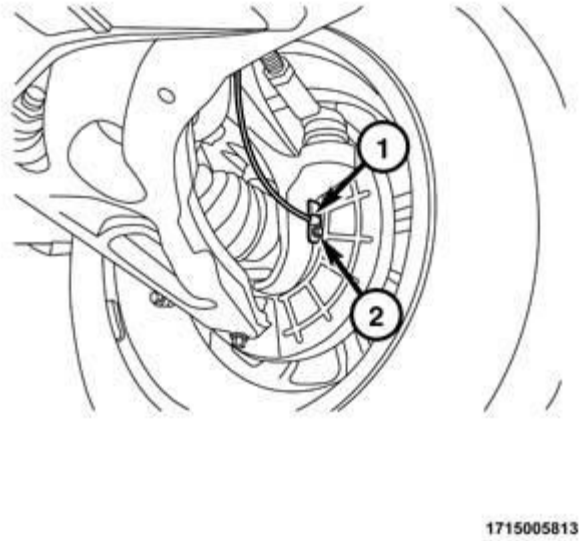

Fig. 2: Identifying Front Wheel Speed Sensor
Courtesy of CHRYSLER GROUP, LLC

The antilock brake system uses two-wire wheel speed sensors, known as active wheel speed sensors. The sensors use an electronic principle known as magneto-resistive to help increase performance and durability. The sensors convert wheel speed into a small digital signal. A Wheel Speed Sensor (WSS) is used at each wheel. A magnetic pole encoder serves as the trigger mechanism for each sensor. At each wheel of the vehicle there is one wheel speed sensor and one encoder.

WSS air gaps are not adjustable.

REMOVAL

REMOVAL

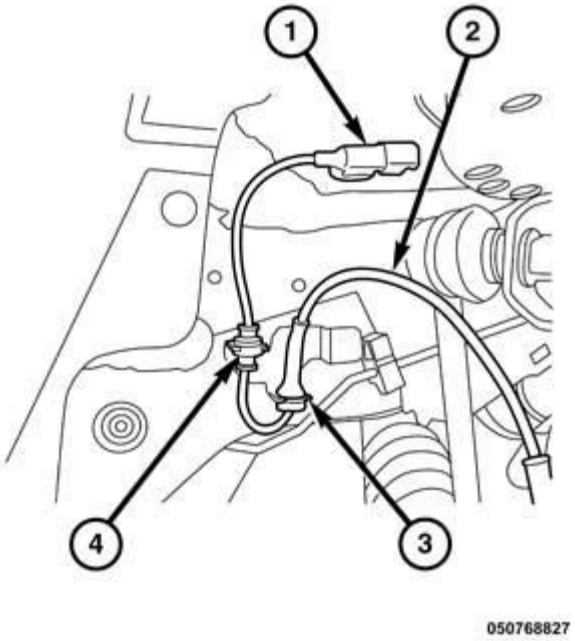

Fig. 3: Wheel Speed Sensor Cable, Connector & Retainers
Courtesy of CHRYSLER GROUP, LLC

NOTE: Before proceeding, refer to CAUTION and WARNING .

1. Raise and support the vehicle. refer to **HOISTING, STANDARD PROCEDURE** .
2. Disconnect the wheel speed sensor harness (2) connector from the wiring harness connector (1) on the inner fender.
3. Separate sensor harness clips from retainers (3, 4).
4. Separate the wheel speed sensor harness from the strut bracket.

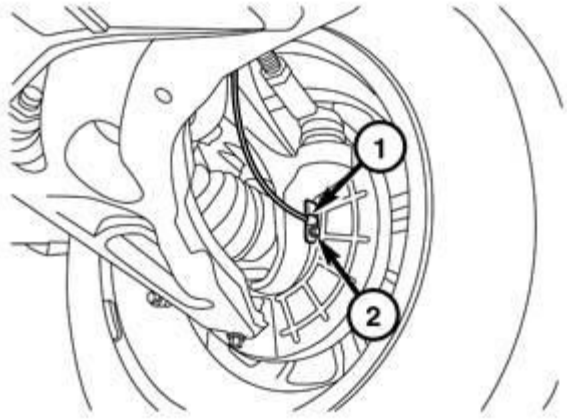

1715005813

Fig. 4: Removing/Installing Screw Fastening The Wheel Speed Sensor Head
Courtesy of CHRYSLER GROUP, LLC

5. Remove the mounting screw (2) fastening the wheel speed sensor head (1) to the knuckle. Pull the sensor head out of the knuckle and remove the wheel speed cable from the vehicle.

INSTALLATION

INSTALLATION

NOTE: Before proceeding, refer to CAUTION and WARNING .

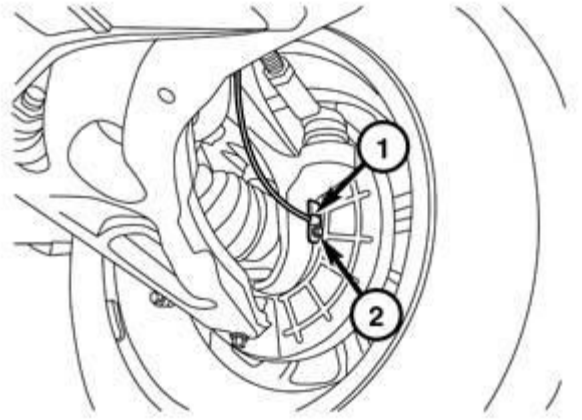

1715005813

Fig. 5: Removing/Installing Screw Fastening The Wheel Speed Sensor Head
Courtesy of CHRYSLER GROUP, LLC

1. Install the wheel speed sensor head (1) into the knuckle. Install the mounting screw (2) and tighten it to 12 N.m (106 in. lbs.).

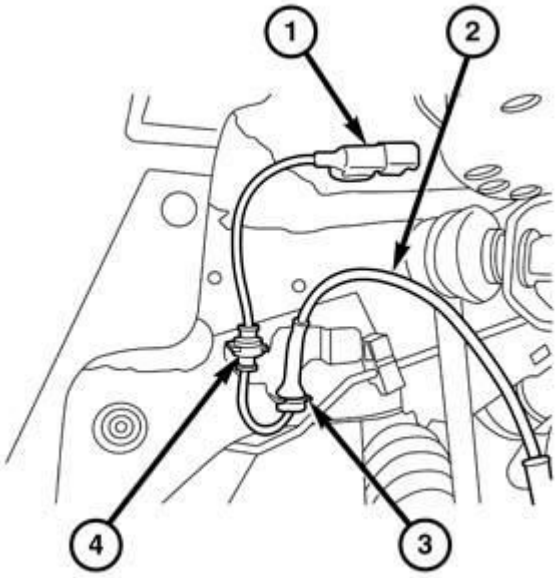

050768827

Fig. 6: Wheel Speed Sensor Cable, Connector & Retainers
Courtesy of CHRYSLER GROUP, LLC

CAUTION: Failure to install speed sensor cables properly may result in contact with moving parts or an over extension of cables causing an open circuit. Be sure that cables are installed, routed, and clipped properly.

2. Connect the wheel speed sensor to the harness connector (1) on the inner fender well.
3. Connect the harness routing clips (3, 4) on the inner fender well.
4. Connect the sensor harness to the strut bracket.
5. Lower the vehicle.
6. Perform the Diagnostic Verification Test and clear any faults. Refer to **STANDARD PROCEDURE** .

SENSOR, WHEEL SPEED, REAR

DESCRIPTION

DESCRIPTION

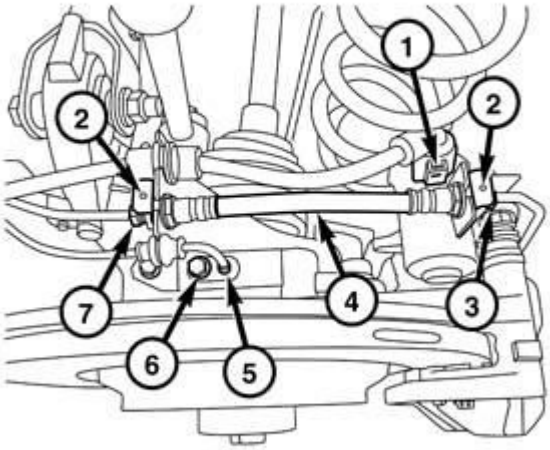

1715005817

Fig. 7: Removing/Installing Rear Wheel Speed Sensor
Courtesy of CHRYSLER GROUP, LLC

The antilock brake system uses two-wire wheel speed sensors, known as active wheel speed sensors. The sensors use an electronic principle known as magneto-resistive to help increase performance and durability. The sensors convert wheel speed into a small digital signal. A Wheel Speed Sensor (WSS) is used at each wheel. A magnetic pole encoder serves as the trigger mechanism for each sensor. At each wheel of the vehicle there is one wheel speed sensor and one encoder.

The rear wheel speed sensor head is secured to the knuckle assembly by a bolt (1). The encoder is integral to the hub and bearing assembly. The encoder is serviced as part of the rear hub and bearing.

The WSS air gaps are not adjustable.

REMOVAL

REMOVAL

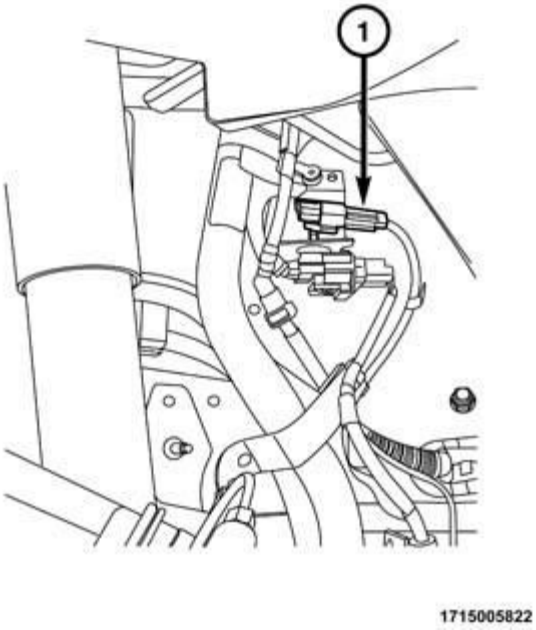

Fig. 8: Wheel Speed Sensor Cable Connector
Courtesy of CHRYSLER GROUP, LLC

NOTE: Before proceeding, refer to CAUTION and WARNING .

1. Raise and support the vehicle Refer to **HOISTING, STANDARD PROCEDURE** .
2. Disconnect the wheel speed sensor cable connector (1) at the body wiring harness connector.

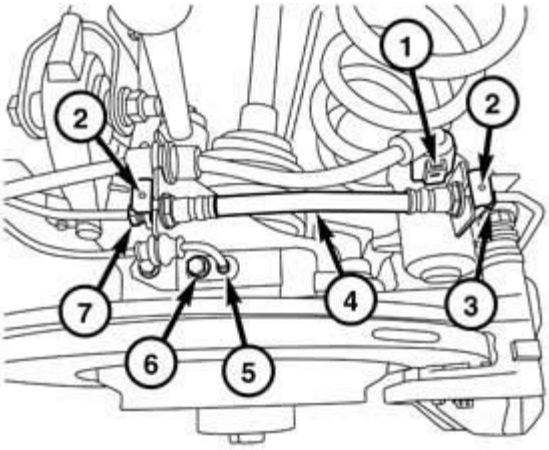

1715005817

Fig. 9: Removing/Installing Rear Wheel Speed Sensor
Courtesy of CHRYSLER GROUP, LLC

3. Separate the wheel speed sensor cable from all retainers and clips.
4. Remove retaining bolt (6) and wheel speed sensor (5) from knuckle assembly.

INSTALLATION

INSTALLATION

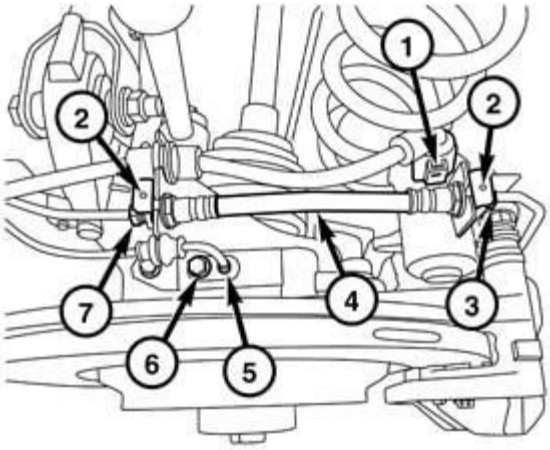

1715005817

Fig. 10: Removing/Installing Rear Wheel Speed Sensor
Courtesy of CHRYSLER GROUP, LLC

1. Install the wheel speed sensor (5) into the knuckle.
2. Install the wheel speed sensor retaining bolt (6) and tighten to 12 N.m (106 in. lbs.).

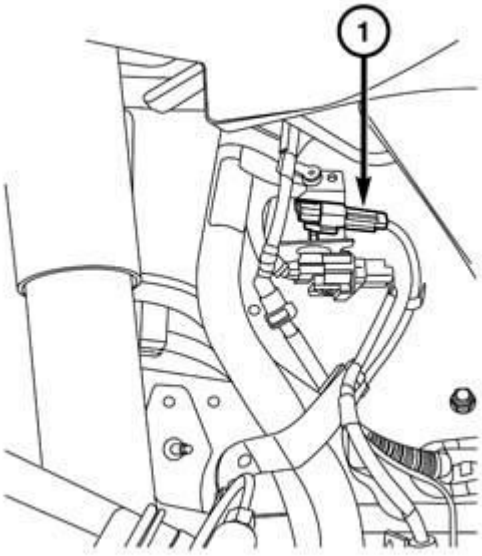

1715005822

Fig. 11: Wheel Speed Sensor Cable Connector

Courtesy of CHRYSLER GROUP, LLC

3. Route wheel speed sensor cable and snap into clips and retainers.
4. Connect wheel speed sensor cable connector (1) to body wiring harness connector.
5. Lower the vehicle.

SWITCH, ELECTRONIC STABILITY PROGRAM (ESP)

DESCRIPTION

DESCRIPTION

The Electronic Stability Control (ESC) switch is mounted in the switch bank assembly of the instrument panel.

The ESC Off switch turns the Electronic Stability Control off and back on. The system resets to ESC-on each time the ignition is cycled.

When the ESC Off switch is depressed and released, turning ESC off, it does not completely turn the system off. The ESC system reduces torque management to a lesser amount, but ESC function can still occur if the system perceives the need.

HYDRAULIC/MECHANICAL

HYDRAULIC CONTROL UNIT (HCU)

DESCRIPTION

DESCRIPTION

The Hydraulic Control Unit (HCU) is mounted to the Antilock Brake Module (ABM) as part of the Integrated Control Unit (ICU). The HCU controls the flow of brake fluid to the brakes using a series of valves and accumulators. A pump/motor is mounted on the HCU to empty the accumulators during an ABS stop and supply build pressure to the brakes during a traction control or ESC event. If the HCU needs replacement it is removed as an assembly with the ABM and then disassembled. Refer to **INTEGRATED CONTROL UNIT (ICU), REMOVAL**.

VALVES AND SOLENOIDS

The valve block contains four inlet valves and four outlet solenoid valves. The inlet valves are spring-loaded in the open position and the outlet valves are spring-loaded in the closed position during normal braking. The fluid is allowed to flow from the master cylinder to the wheel brakes.

During an ABS stop, these valves cycle to maintain the proper slip ratio for each wheel. The inlet valve closes preventing further pressure increase and the outlet valve opens to provide a path from the wheel brake to the HCU accumulators and pump/motor. This releases (decays) pressure from the wheel brake, thus releasing the wheel from excessive slippage. Once the wheel is no longer slipping, the outlet valve is closed and the inlet valve is opened to reapply (build) pressure.

If the ABS includes the traction control feature, there are four other valves in the HCU. Two Traction Control (TC) (or ESC) valves, mounted in the HCU valve block, are normally in the open position and close only when the traction control is applied. There are also two normally closed shuttle valves which open during traction control and ESC events to provide a direct fluid path from the brake fluid reservoir to the inlet of the HCU pump.

These TC valves are used to isolate the rear (non-driving) wheels of the vehicle from the hydraulic pressure that the HCU pump/motor is sending to the front (driving) wheels when traction control is being applied. The rear brakes need to be isolated from the master cylinder when traction control is being applied so the rear wheels do not drag.

BRAKE FLUID ACCUMULATORS

There are two fluid accumulators in the HCU: one for the primary hydraulic circuit, and one for the secondary hydraulic circuit. Each hydraulic circuit uses a 3 cc accumulator.

The fluid accumulators temporarily store brake fluid that is removed from the wheel brakes during an ABS cycle. This stored fluid is used by the pump/motor to provide build pressure for the brake hydraulic system. When the antilock stop is complete, the accumulators are drained by the pump/motor.

There are two noise dampening chambers in the HCU on this vehicle equipped with traction control.

PUMP/MOTOR

There are two pump assemblies in the HCU: one for the primary hydraulic circuit, and one for the secondary hydraulic circuit. Both pumps are driven by a common electric motor. This DC-type motor is integral to the HCU and is controlled by the ABM.

Brake fluid is released to the accumulators when the outlet valve is opened during an antilock stop. The pump mechanism consists of two opposing pistons operated by an eccentric camshaft. In operation, these pistons are used to purge fluid from the accumulators back into the master cylinder circuits. When the antilock stop is complete, the pump/motor drains the accumulators.

The pump motor is also used to build pressure when the system goes into Electronic Stability Control (ESC) and traction control mode.

The ABM may turn on the pump/motor when an antilock stop is detected. The pump/motor continues to run during the antilock stop and is turned off after the stop is complete. Under some conditions, the pump/motor runs to drain the accumulators during the next drive-off.

The pump/motor is not a serviceable item; if it requires replacement, the HCU must be replaced.

INTEGRATED CONTROL UNIT (ICU)

DESCRIPTION

DESCRIPTION

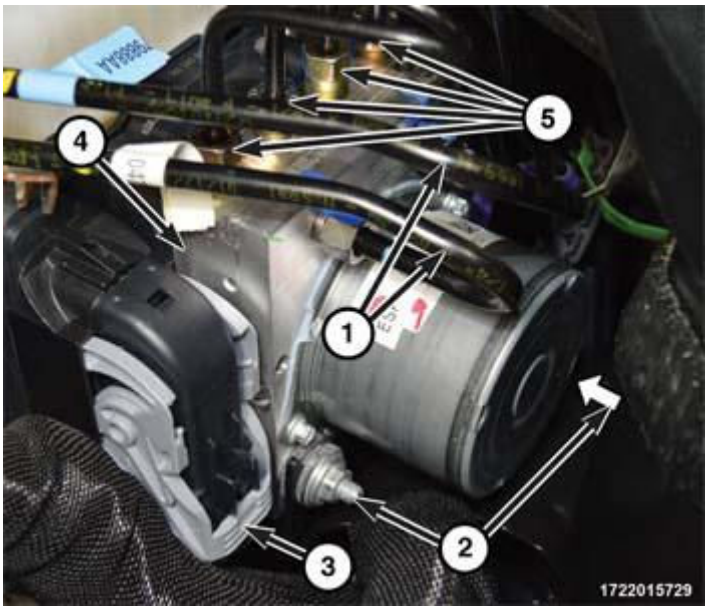

Fig. 12: Identifying Integrated Control Unit (ICU)
Courtesy of CHRYSLER GROUP, LLC

The Hydraulic Control Unit (HCU) and the Antilock Brake Module (ABM) used with this antilock brake system are combined (integrated) into one unit, which is called the Integrated Control Unit (ICU) (4).

The ICU (4) is located in the engine compartment, mounted to the left side body frame rail near the brake master cylinder.

The ABS with ESC and All-Speed Traction Control ICU consists of the following components: the ABM, solenoid valves, traction control solenoid valves, hydraulic shuttle valves, valve block, fluid accumulators, a pump, and an electric pump/motor.

The ICU can be disassembled to service either the HCU or the ABM. The HCU and ABM (ICU) should be removed from the vehicle as an assembly . Refer to **INTEGRATED CONTROL UNIT (ICU), REMOVAL**.

For additional information on the ABS, refer to **MODULE, ANTI-LOCK BRAKE SYSTEM, DESCRIPTION** .

OPERATION

OPERATION

For information of the ICU, refer to these individual components of the ICU:

- ANTILOCK BRAKE MODULE (ABM). Refer to **MODULE, ANTI-LOCK BRAKE SYSTEM, DESCRIPTION** .
- HYDRAULIC CONTROL UNIT (HCU). Refer to **HYDRAULIC CONTROL UNIT (HCU), DESCRIPTION**.

REMOVAL

REMOVAL

NOTE: Before proceeding, refer to CAUTION and WARNING .

CAUTION: Before disassembling the ICU, the ICU must be thoroughly cleaned. This must be done to prevent dirt particles and debris from entering into vital areas of the ICU.

1. Install the brake pedal holding tool.
2. Disconnect and isolate battery negative cable from battery post.

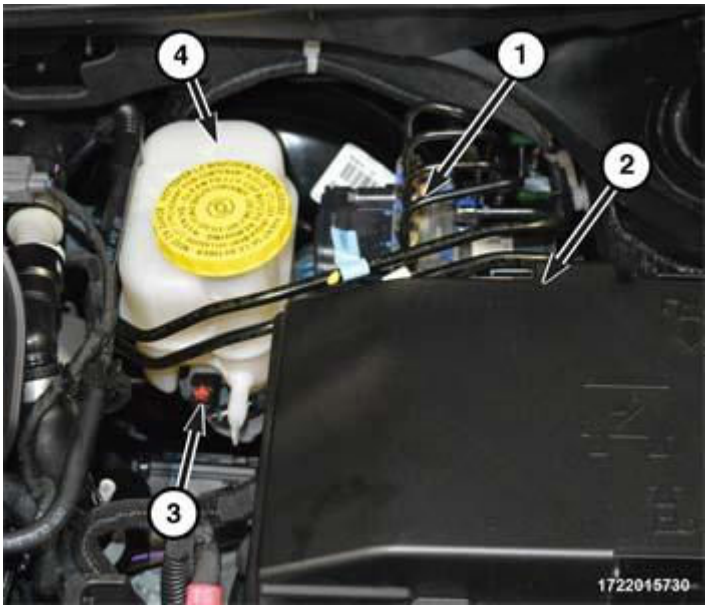

Fig. 13: Power Distribution Center (PDC)
Courtesy of CHRYSLER GROUP, LLC

3. Remove the Power Distribution Center (PDC) (2). Refer to **CENTER, POWER DISTRIBUTION (PDC), REMOVAL** .

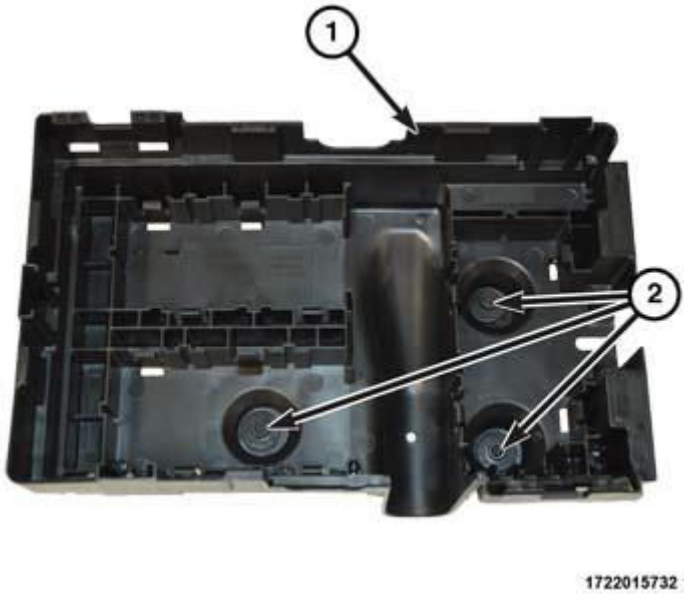

Fig. 14: Power Distribution Center (PDC) Mount
Courtesy of CHRYSLER GROUP, LLC

4. Remove the bolts (2) from the PDC mount (1), lift up and disconnect the wire harness retaining clips from the underside of the PDC mount and set the mount aside.

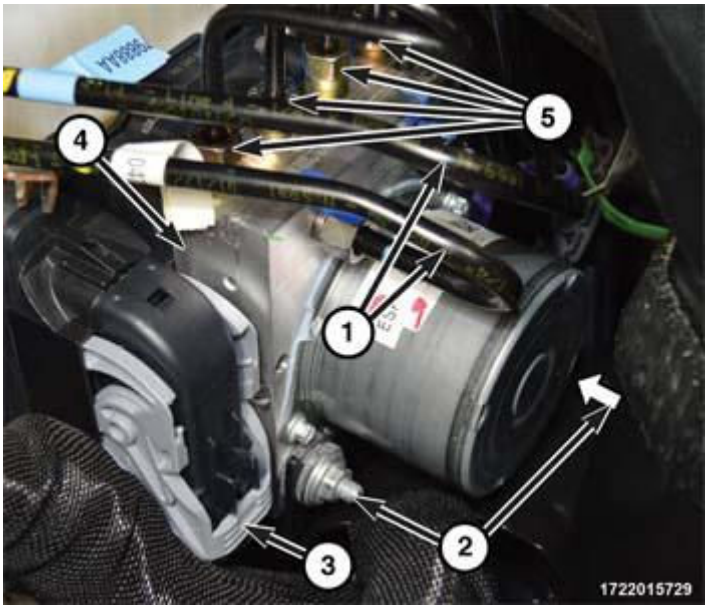

Fig. 15: Identifying Integrated Control Unit (ICU)
Courtesy of CHRYSLER GROUP, LLC

5. Disconnect the ABM connector (3) from the ICU (4).
6. Remove the brake lines (1, 5) at the ICU.
7. Loosen the two nuts (2) securing the ICU (4) to the bracket and remove the ICU.

8. If removing the brake booster, remove the ICU bracket mounting bolts and remove the bracket from the vehicle.

INSTALLATION

INSTALLATION

1. If removed, place ICU bracket into position on body, then install mounting bolts and tighten to 25 N.m (18 ft. lbs.).

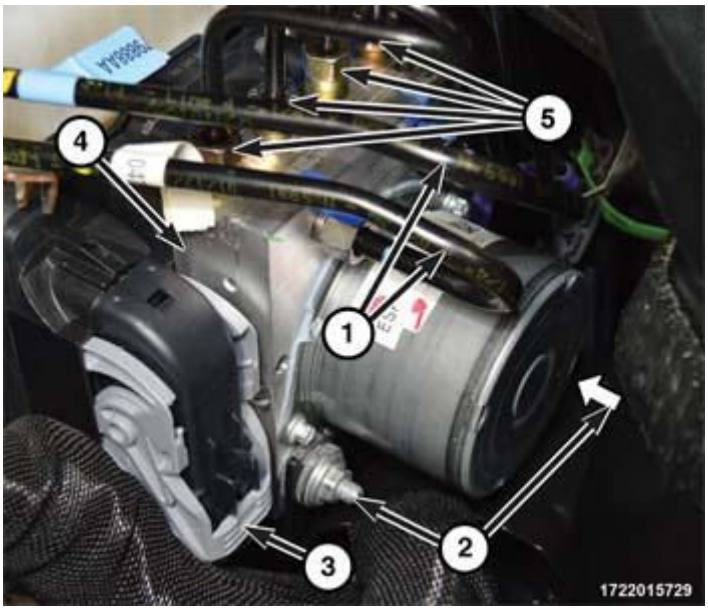

Fig. 16: Identifying Integrated Control Unit (ICU)
Courtesy of CHRYSLER GROUP, LLC

2. Install ICU (4) to mounting bracket, then install retaining nuts (2) and tighten to 8 N.m (71 in. lbs.).
3. Install the brake lines (1, 5) to the ICU. Torque to specifications. Refer to **SPECIFICATIONS** .
4. Install the ABM connector (3) to the ICU (4).

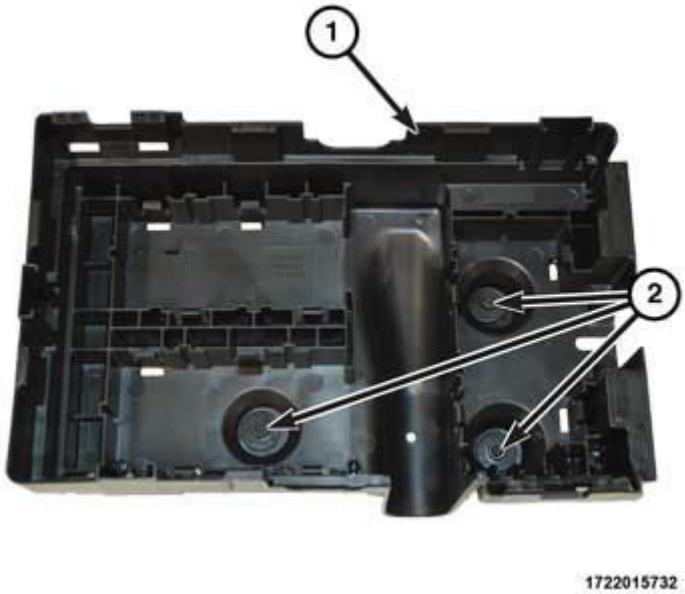

Fig. 17: Power Distribution Center (PDC) Mount
Courtesy of CHRYSLER GROUP, LLC

5. Install the PDC mount, route the wire harness retaining clips under the mount and install and tighten the bolts (2).

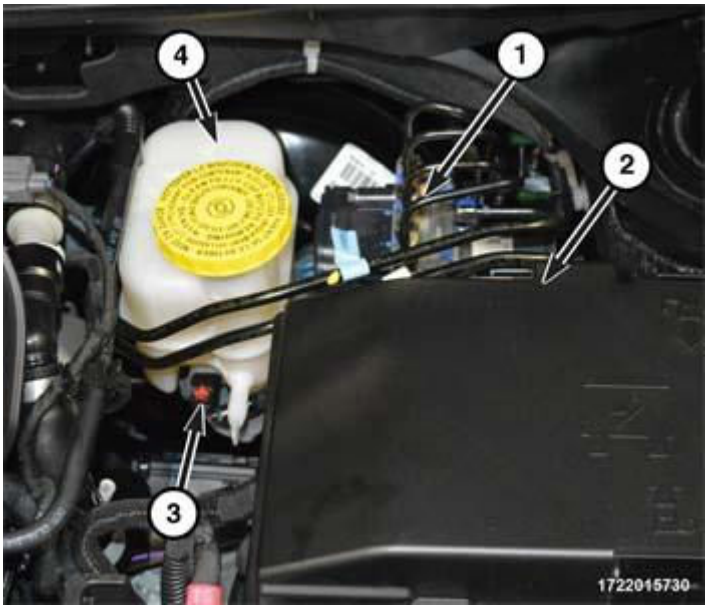

Fig. 18: Identifying Power Distribution Center (PDC)
Courtesy of CHRYSLER GROUP, LLC

6. Install the PDC (2). Refer to **CENTER, POWER DISTRIBUTION (PDC), INSTALLATION** .
7. Reconnect the negative battery cable.
8. Remove the brake pedal holding tool.

9. Install a scan tool to initialize the ABS module and perform the following:
   a. Clear any faults.
   b. Fill the master cylinder to the proper fill level and bleed the base and hydraulic system. Refer to **STANDARD PROCEDURE** .
10. Perform the Verification Test and clear any faults. Refer to **STANDARD PROCEDURE** .

NOTE: **If this Electronic Control Unit (ECU) is being replaced with a new unit, a diagnostic scan tool MUST be used to align the PROXI configuration data into the new ECU. Follow the routine outlined in the diagnostic scan tool for PROXI Configuration Alignment under Body Control Module (BCM) Miscellaneous Functions menu.**

2014 BRAKES

Base - Service Information - Cherokee

WARNING

WARNING

WARNING: Chrysler LLC does not manufacture any vehicles or replacement parts that contain asbestos. Aftermarket products may or may not contain asbestos. Refer to aftermarket product packaging for product information.

Whether the product contains asbestos or not, dust and dirt can accumulate on brake parts during normal use. Follow practices prescribed by appropriate regulations for the handling, processing and disposing of dust and debris.

CAUTION

CAUTION

CAUTION: If the electric park brake (EPB) switch is actuated with the caliper removed from the caliper bracket and still connected electrically, the EPB motor will fully extend causing damage to the caliper piston. Disconnect and isolate the negative battery cable before servicing any EPB component.

CAUTION: Use only Mopar® Brake Fluid DOT 3 Motor Vehicle or equivalent from a tightly sealed container. Do not use petroleum-based fluid because seal damage in the brake system will result.

CAUTION: Brake fluid will damage painted surfaces. If brake fluid is spilled on any painted surfaces, wash it off immediately with water.

CAUTION: Never use gasoline, kerosene, alcohol, motor oil, transmission fluid, or any fluid containing mineral oil to clean system components. These fluids damage rubber cups and seals.

CAUTION: During service procedures, grease or any other foreign material must be kept off the caliper assembly, brake linings, brake rotor and external surfaces of the hub.

CAUTION: When handling the brake rotor and caliper, be careful to avoid damaging

the brake rotor and caliper, and scratching or nicking the brake shoe lining.

DIAGNOSIS AND TESTING

DIAGNOSIS AND TESTING - BASE BRAKE SYSTEM DIAGNOSIS CHARTS

NOTE: There are three diagnosis charts following that cover the RED BRAKE WARNING INDICATOR, BRAKE NOISE and OTHER BRAKE CONDITIONS.

RED BRAKE WARNING INDICATOR

CONDITION	POSSIBLE CAUSES	CORRECTION
RED BRAKE WARNING INDICATOR ON	1. Electric park brake is not released.	Refer to **DIAGNOSIS AND TESTING**
	2. Park brake warning switch.	Refer to **DIAGNOSIS AND TESTING**
	3. Brake fluid level low in reservoir.	3. Fill reservoir. Check entire system for leaks. Repair or replace as required.
	4. Brake fluid level switch.	4. Disconnect switch wiring connector. If lamp goes out, replace switch.
	5. Mechanical instrument cluster (MIC) problem.	5. Refer to appropriate diagnostic information.
	6. ABS EVBP malfunction.	6. Refer to the appropriate ABS diagnostic service information.

BRAKE NOISE

CONDITION	POSSIBLE CAUSES	CORRECTION
DISC BRAKE CHIRP	1. Excessive brake rotor runout.	1. Diagnose and correct as necessary. Refer to **ROTOR, BRAKE, DIAGNOSIS AND TESTING**.
DISC BRAKE MOAN OR HOWL WHILE BRAKING IN REVERSE	1. Rear disc brake caliper guide pin bolts installed in incorrect locations.	1. Remove lower guide pin bolt and inspect for special sleeve on tip. If sleeve is present, remove upper and lower guide pin bolts and install special sleeved bolt in upper location and standard guide pin bolt in lower location. Refer to **CALIPER, DISC BRAKE, FRONT, REMOVAL** or **CALIPER, DISC BRAKE, REAR, REMOVAL**. Perform on both sides of vehicle as necessary.
DISC BRAKE RATTLE OR CLUNK	1. Broken or missing spring clips. 2. Caliper guide pin bolts loose. 3. Missing	1. Replace brake pads. 2. Tighten guide pin bolts. 3. Replace missing abutment shims.

	abutment shims.	
DISC BRAKE SQUEAK AT LOW SPEED (WHILE APPLYING LIGHT BRAKE PEDAL EFFORT)	1. Brake pad linings.	1. Replace brake pads.
SCRAPING (METAL-TO-METAL).	1. Foreign object interference with brakes.	1. Inspect brakes and remove foreign object.
	2. Brake pads worn out.	2. Replace brake pads. Inspect rotors. Reface or replace as necessary.
SCRAPING OR WHIRRING	1. ABS wheel speed sensor hitting tone wheel.	1. Inspect, correct or replace faulty component(s).

OTHER BRAKE CONDITIONS

CONDITION	POSSIBLE CAUSES	CORRECTION
BRAKES CHATTER	1. Disc brake rotor has excessive thickness variation.	1. Isolate condition as rear or front. Reface or replace brake rotors as necessary.
BRAKES DRAG (FRONT OR ALL)	1. Contaminated brake fluid.	1. Check for swollen seals. Replace all system components containing rubber.
	2. Binding caliper pins or bushings.	2. Replace pins and bushings
	3. Misadjusted brake lamp switch.	3. Replace brake lamp switch. Refer to **SWITCH, STOP LAMP, REMOVAL** .
	4. Master cylinder not fully returning.	4. Inspect master cylinder and replace as necessary.
	5. Binding brake pedal.	5. Replace brake pedal/bushings.
BRAKES DRAG (REAR ONLY)	1. Operator error.	1. Describe operation of electric park brake.
2. Electric park brake does not release.		2. Refer to **DIAGNOSIS AND TESTING**
BRAKES GRAB	1. Contaminated brake pad.	1. Inspect and clean, or replace pads. Repair source of contamination.
	2. Improper power brake booster assist.	2. Refer to POWER BRAKE BOOSTER in this service information .
EXCESSIVE PEDAL EFFORT	1. Obstruction of brake pedal.	1. Inspect, remove or move

		obstruction.
	2. Low power brake booster assist.	2. Refer to POWER BRAKE BOOSTER in this service information .
	3. Glazed brake linings.	3. Reface or replace brake rotors as necessary.
	4. Brake pad lining transfer to brake rotor.	4. Reface or replace brake rotors as necessary. Replace brake pads.
EXCESSIVE PEDAL EFFORT (HARD PEDAL - CAN'T SKID WHEELS)	1. Power brake booster runout (vacuum assist).	1. Check booster vacuum hose and engine tune for adequate vacuum supply. Refer to POWER BRAKE BOOSTER.
EXCESSIVE PEDAL TRAVEL (VEHICLE STOPS OK)	1. Air in brake lines.	1. Bleed brakes.
	2. Brake fluid low in reservoir	2. Fill reservoir. Check entire system for leaks; repair or replace as required.
EXCESSIVE PEDAL TRAVEL (ONE FRONT WHEEL LOCKS UP DURING HARD BRAKING)	1. One of the two hydraulic circuits is malfunctioning.	1. Inspect system for leaks. Check master cylinder for internal malfunction.
PEDAL PULSATES/SURGES DURING BRAKING	1. Disc brake rotor has excessive thickness variation.	1. Isolate condition as rear or front. Reface or replace brake rotors as necessary.
PEDAL IS SPONGY	1. Air in brake lines.	1. Bleed brakes.
	2. ABS EVBP not functioning.	2. Refer to the appropriate ABS diagnostic service information.
STOP LAMPS STAY ON	1. Brake lamp switch out of adjustment.	1. Replace brake lamp switch. Refer to **SWITCH, STOP LAMP, REMOVAL** .
	2. Brake pedal binding.	2. Inspect and replace as necessary.
	3. Power brake booster not allowing pedal to return completely.	3. Replace power brake booster.
VEHICLE PULLS TO RIGHT OR LEFT ON BRAKING	1. Frozen brake caliper piston.	1. Replace frozen piston or caliper. Bleed brakes.
	2. Contaminated brake pad lining (most likely front lining).	2. Inspect and clean, or replace pads. Repair source of contamination.
	3. Pinched brake lines.	3. Replace pinched line.
	4. Leaking piston seal.	4. Replace piston seal or brake caliper.
	5. Suspension problem.	5. Refer to the appropriate Suspension service information .

STANDARD PROCEDURE

STANDARD PROCEDURE - BASE BRAKE BLEEDING

CAUTION: Before removing the master cylinder cap, wipe it clean to prevent dirt and other foreign matter from dropping into the master cylinder reservoir.

CAUTION: Use only Mopar® brake fluid or an equivalent from a fresh, tightly sealed container. Brake fluid must conform to DOT 3 specifications.

Do not pump the brake pedal at any time while having a bleeder screw open during the bleeding process. This will only increase the amount of air in the system and make additional bleeding necessary.

Do not allow the master cylinder reservoir to run out of brake fluid while bleeding the system. An empty reservoir will allow additional air into the brake system. Check the fluid level frequently and add fluid as needed.

The following wheel circuit sequence for bleeding the brake hydraulic system should be used to ensure adequate removal of all trapped air from the hydraulic system.

- Left rear wheel
- Right front wheel
- Right rear wheel
- Left front wheel

MANUAL BLEEDING

NOTE: To bleed the brakes manually, the aid of a helper will be required.

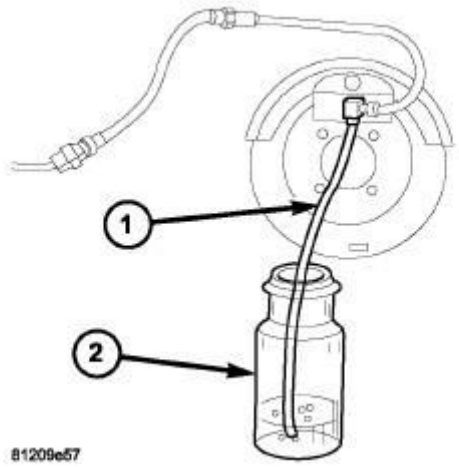

Fig. 1: Bleeding Brakes

Courtesy of CHRYSLER GROUP, LLC

1. Attach, (special tool #8358-1, Bleed Tube) (1) to the bleeder screw and feed the hose into a clear jar (2) containing enough fresh brake fluid to submerge the end of the hose.
2. Have a helper pump the brake pedal three or four times and hold it in the down position.
3. With the pedal in the down position, open the bleeder screw at least one full turn.
4. Once the brake pedal has dropped, close the bleeder screw. After the bleeder screw is closed, release the brake pedal.
5. Repeat the above steps until all trapped air is removed from that wheel circuit (usually four or five times).
6. Bleed the remaining wheel circuits in the same manner until all air is removed from the brake system. Monitor the fluid level in the master cylinder reservoir to make sure it does not go dry.
7. Check and adjust brake fluid level to the FULL mark.
8. Check the brake pedal travel. If pedal travel is excessive or has not been improved, some air may still be trapped in the system. Re-bleed the brakes as necessary.
9. Test drive the vehicle to verify the brakes are operating properly and pedal feel is correct.

PRESSURE BLEEDING

NOTE: Follow pressure bleeder manufacturer's instructions for use of pressure bleeding equipment.

1. Attach the pressure bleeding equipment to the Master Cylinder.

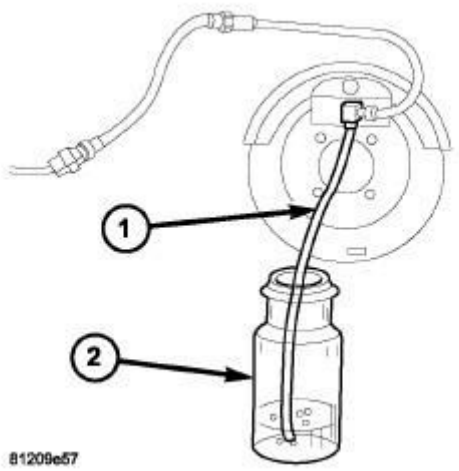

Fig. 2: Bleeding Brakes
Courtesy of CHRYSLER GROUP, LLC

2. Attach, (special tool #8358-1, Bleed Tube) (1) to the bleeder screw and feed the hose into a clear jar (2) containing enough fresh brake fluid to submerge the end of the hose.
3. Open the bleeder screw at least one full turn or more to obtain a steady stream of brake fluid.
4. After approximately 120-240 ml (4-8 ounces) of fluid have been bled through the brake circuit and an air-

free flow is maintained in the clear plastic hose and jar, close the bleeder screw.

5. Repeat this procedure at all the remaining bleeder screws.
6. Check and adjust brake fluid level to the FULL mark on the reservoir.
7. Check the brake pedal travel. If pedal travel is excessive or has not been improved, some air may still be trapped in the system. Re-bleed the brakes as necessary.
8. Test drive the vehicle to verify the brakes are operating properly and pedal feel is correct.

SPECIFICATIONS

SPECIFICATIONS

DESCRIPTION	SPECIFICATIONS
Front	
Front Disc Brake Caliper Type	Single Piston Sliding
Front Disc Brake Caliper	1 x 60 mm (2.362 in.)
Front Disc Brake Rotor Diameter	305 mm (12.01 in.)
Front Disc Brake Rotor Thickness	28 mm (1.102 in.)
Front Disc Brake Rotor Maximum Runout	0.020 mm (0.0008 in.)
Front Disc Brake Rotor Maximum Thickness Variation	0.008 mm (0.0003 in.)
Front Disc Brake Rotor Minimum Thickness	26 mm (1.024 in.)
Rear	
Rear Disc Brake Caliper Type	Single Piston Sliding
Rear Disc Brake Caliper	1 x 38 mm (1.496 in.)
Rear Disc Brake Rotor Diameter	264 mm (10.39 in.)
Rear Disc Brake Rotor Thickness	10 mm (0.3937 in.)
Rear Disc Brake Rotor Maximum Runout	0.020 mm (0.0008 in.)
Rear Disc Brake Rotor Maximum Thickness Variation	0.009 mm (0.0004 in.)
Rear Disc Brake Rotor Minimum Thickness	8 mm (0.3150 in.)

TORQUE

TORQUE SPECIFICATIONS

DESCRIPTION	N.m	Ft. Lbs.	In. Lbs.
ABS ICU Mounting Bolt (To Bracket)	8	-	71
ABS ICU Mounting Bracket Screws (To Frame)	25	18	221
ABS Wheel Speed Sensor Head Mounting Screw - Front	12	-	106
ABS Wheel Speed Sensor Head Mounting Screw - Rear	12	-	106
ABS Wheel Speed Sensor Routing Bracket Mounting Screw	12	-	106
Brake Flex Hose Fitting - Front Caliper	18	-	159

Brake Flex Hose Fitting- Rear Caliper	18	-	159
Brake Pedal/Booster Mounting Nuts	20	15	-
Brake Tube Nuts	25	18	-
Disc Brake Caliper Adapter Bracket - Front	175	129	-
Disc Brake Caliper Adapter Bracket - Rear	120	89	-
Disc Brake Caliper Guide Pin Bolts - Front	43	32	-
Disc Brake Caliper Guide Pin Bolts - Rear	43	32	-
Front Rotor Retaining Bolt	20	15	-
Rear Rotor Retaining Bolt	20	15	-
Master Cylinder Mounting Nuts	25	-	216
Parking Brake Lever Mounting Nuts	35	26	-

SPECIAL TOOLS

SPECIAL TOOLS

	25-W - Roller Contact Point
	8358-1 - Bleed Tube (Originally Shipped In Kit Number(s) 8646, 8647, 8648.)

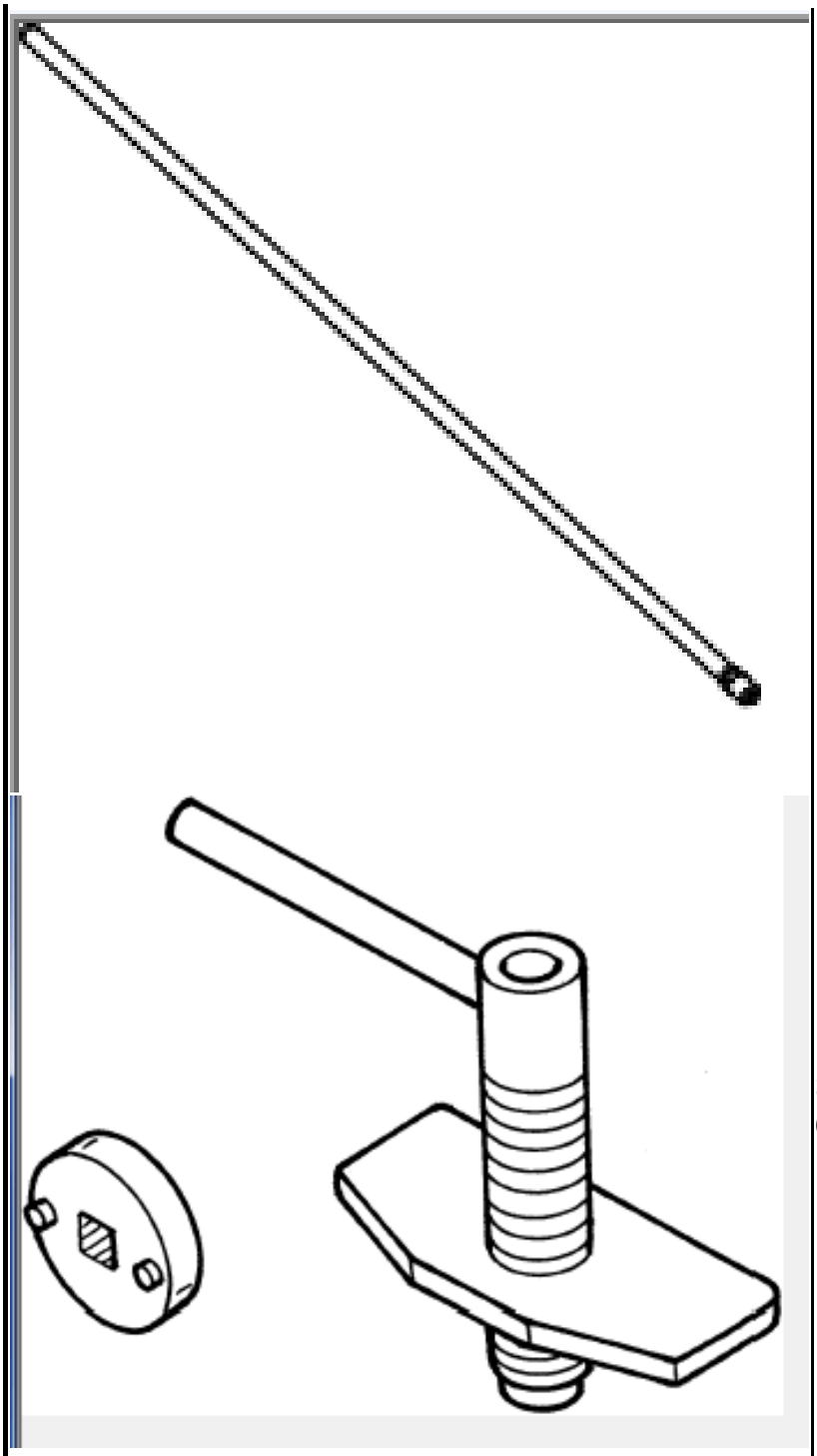

8807 - Retractor, Rear Caliper Piston (Originally Shipped In Kit Number(s) 10105, 8632.)

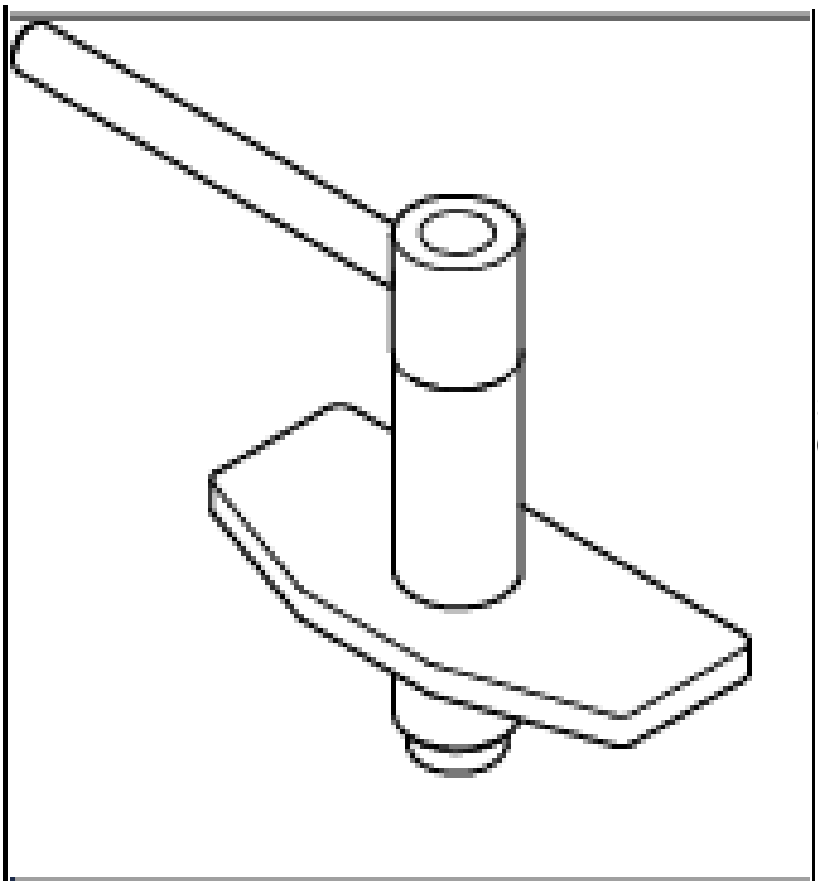

8807-1 - Assembly, Forcing Screw
(Originally Shipped In Kit Number(s) 10105, 8632.)

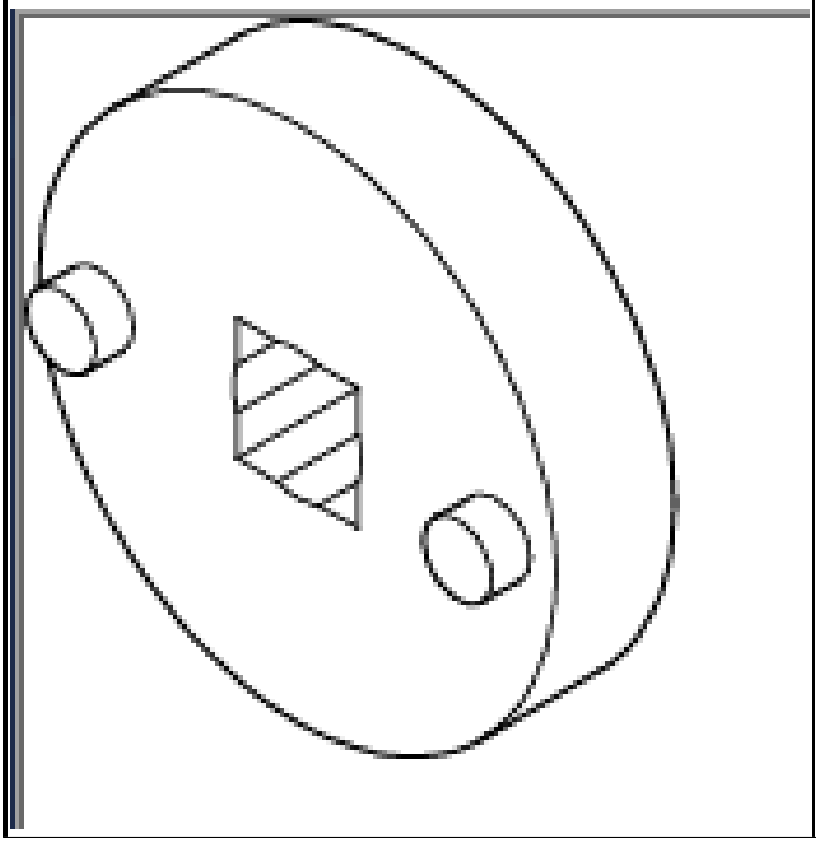

8807-2 - Adapter
(Originally Shipped In Kit Number(s) 10105, 8632.)

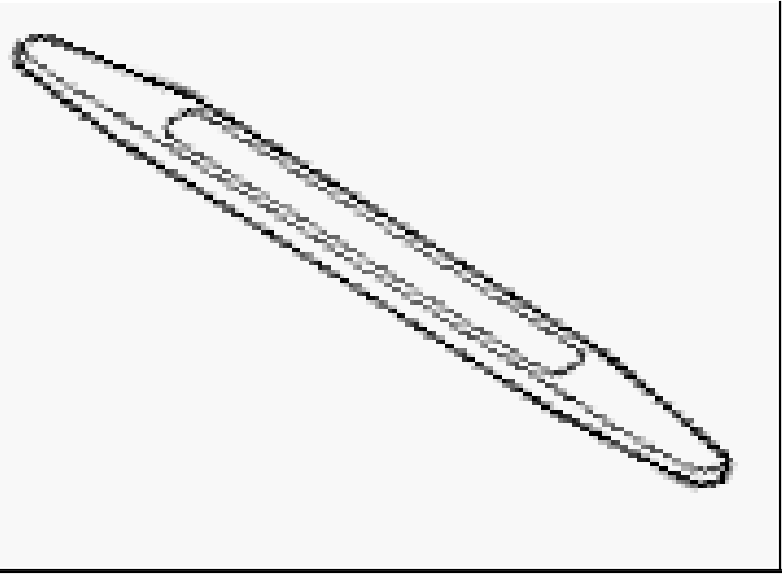	C-3339A - Set, Dial Indicator (Originally Shipped In Kit Number(s) 9202.)

ELECTRICAL

PUMP, ELECTRIC VACUUM

DESCRIPTION

DESCRIPTION

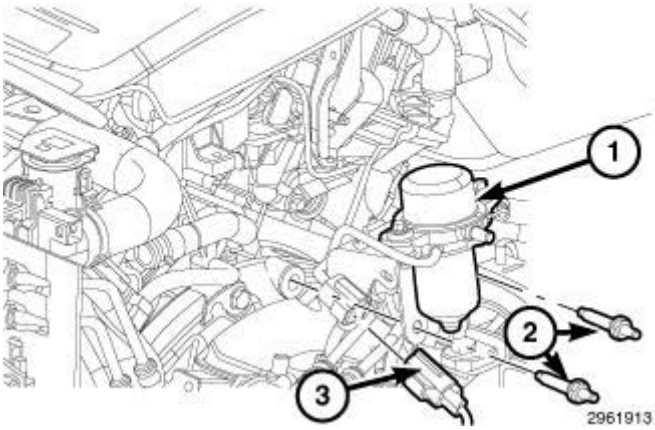

Fig. 3: Electric Vacuum Pump, Connector & Two Bolts
Courtesy of CHRYSLER GROUP, LLC

NOTE: Only the 3.6L engine has an electric vacuum pump.

On the 3.6L engine there is an electric vacuum pump (1) located on the left side of the engine. The vacuum

pump (1) has one electrical connector (3) on a pigtail connected to the mounting bracket. The mounting bracket is secured to the engine with two bolts (2).

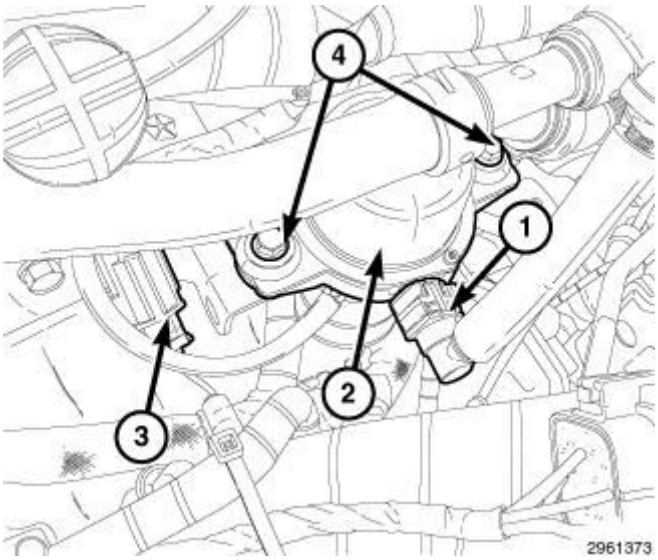

Fig. 4: Vacuum Pump, Two Rubber Insulated Studs, Quick-Connect Type End & Vacuum Pump
Courtesy of CHRYSLER GROUP, LLC

The vacuum pump (2) mounts to the bracket with two rubber insulated studs (4) to reduce vibration. The vacuum hose has a quick-connect type end (1) with a locking tab at the vacuum pump (2).

OPERATION

OPERATION

The Electric Vacuum Pump (EVP) system is installed to provide supplemental vacuum to the brake booster when the engine vacuum supply is low. The vacuum pump is connected to the engine and the brake booster through a series of hoses and one-way flow check valves. A pressure sensor, mounted in the brake booster, provides information to the Antilock Brake System (ABS) module, then the vacuum level is sent over CAN to the Powertrain Control Module (PCM). The PCM modulates the EVP operation to maintain the brake booster vacuum within a given range. This system ensures that the customer experiences a consistent brake pedal feel under all driving conditions.

A two wire electrical connector is used to supply power and ground for the vacuum pump. Operating voltage is between 9V - 16V. Control of the vacuum pump is provided by the Powertrain Control Module (PCM) using a low side driver to a normally open relay (coil side). The relay coil side power is from a fuse in the under hood PDC. The switched power circuit to the vacuum pump relay is wired directly from the battery through an inline fuse holder located below the remote battery post connection on the RH side in the engine compartment. The relay is located on the LH shock tower in the engine compartment.

The PCM monitors the Manifold Absolute Pressure (MAP) sensor and when the signal indicates low engine vacuum the PCM will cycle the vacuum pump as necessary to add vacuum to the power brake booster. The vacuum hoses are connected between the vacuum pump, the engine manifold (for MAP sensor signal), and the power brake booster vacuum sensor (on the brake booster). When the PCM cycles the vacuum pump on, the

PCM monitors the MAP sensor and if the vacuum signal does not indicate a rising vacuum then DTCs will be set. Additionally, the Antilock Brake System (ABS) module monitors the vacuum at the brake booster vacuum sensor and DTCs will also set in the ABS module.

REMOVAL

REMOVAL

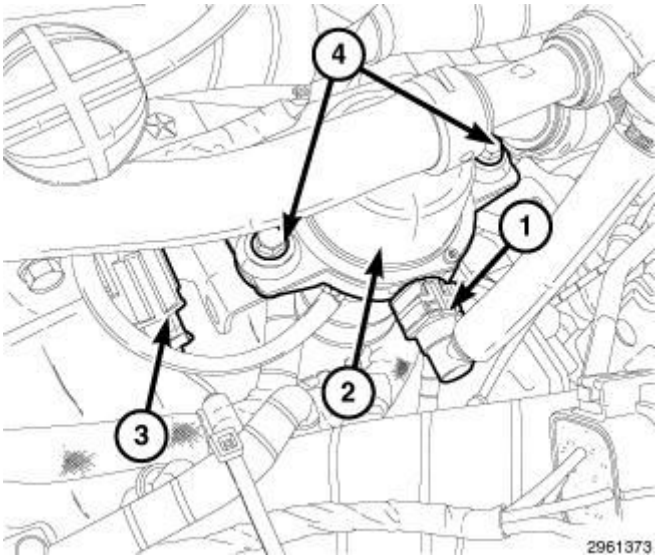

Fig. 5: Vacuum Pump, Two Rubber Insulated Studs, Quick-Connect Type End & Vacuum Pump
Courtesy of CHRYSLER GROUP, LLC

1. Remove the engine appearance cover.
2. Disconnect the electrical connector (3) and remove the harness connector from the back side of the mounting bracket.
3. Release the locking tab and disconnect the quick connect vacuum hose (1) from the vacuum pump (2).

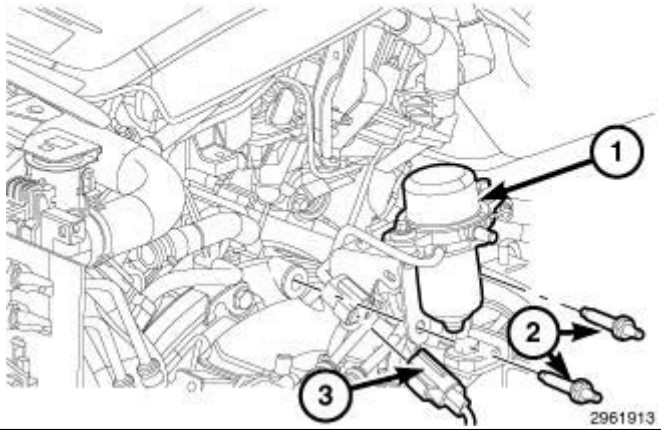

Fig. 6: Electric Vacuum Pump, Connector & Two Bolts
Courtesy of CHRYSLER GROUP, LLC

4. Remove the vacuum pump bracket bolts (2) and remove the vacuum pump assembly (1) from the vehicle.

INSTALLATION

INSTALLATION

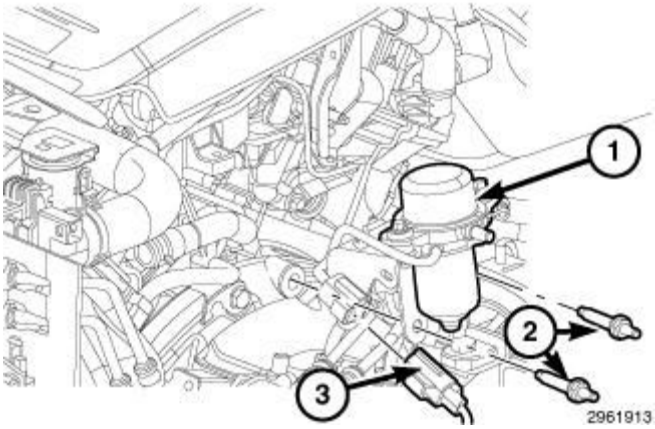

Fig. 7: Electric Vacuum Pump, Connector & Two Bolts
Courtesy of CHRYSLER GROUP, LLC

1. Position the vacuum pump assembly (1), ensuring that the two ground leads are in place while installing bracket mounting bolts (2). .
2. Attach the harness connector to the bracket and connect the electrical connector (3).

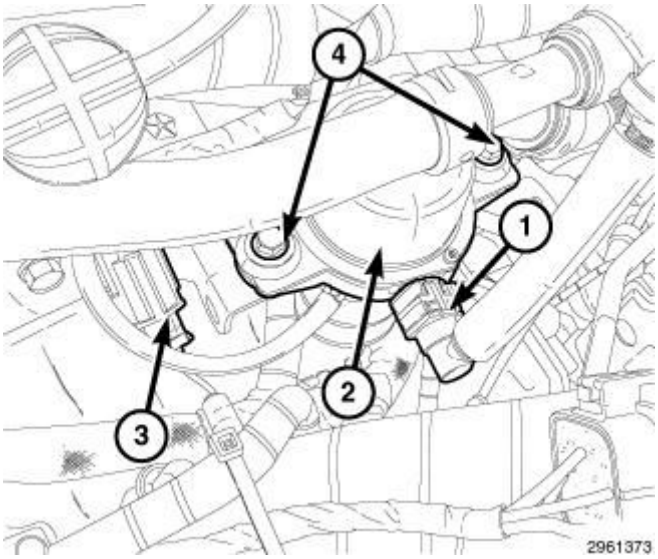

Fig. 8: Vacuum Pump, Two Rubber Insulated Studs, Quick-Connect Type End & Vacuum Pump
Courtesy of CHRYSLER GROUP, LLC

3. Connect the quick-connect vacuum hose (1) to the vacuum pump (2) and seat the locking tab.
4. Install the engine appearance cover.

SWITCH, BRAKE FLUID LEVEL

DESCRIPTION

DESCRIPTION

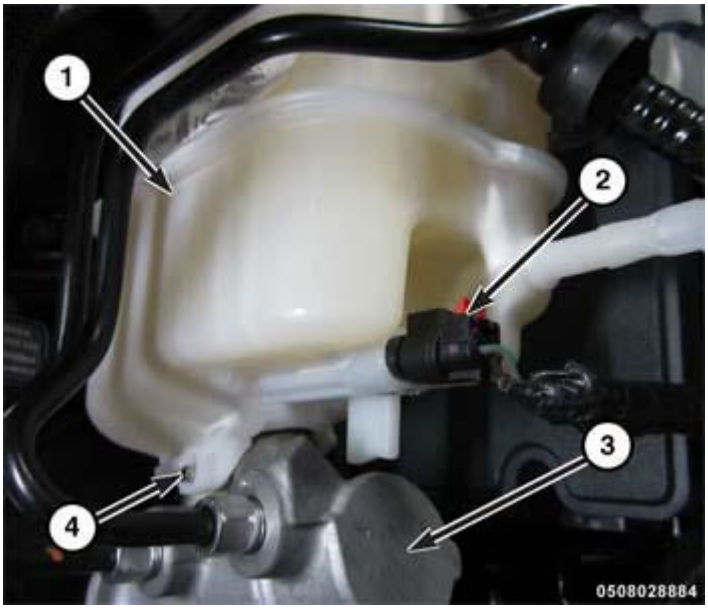

Fig. 9: Identifying Brake Master Cylinder Fluid Reservoir Components
Courtesy of CHRYSLER GROUP, LLC

The brake fluid level switch (2) is an internal part of the master cylinder brake fluid reservoir (1). The switch **cannot** be serviced separately from the brake master cylinder fluid reservoir (1). Refer to **RESERVOIR, BRAKE MASTER CYLINDER, REMOVAL**.

HYDRAULIC/MECHANICAL

DESCRIPTION

DESCRIPTION

Each disc brake assembly consists of the following major components:

- Caliper
- Caliper adapter bracket

- Pads
- Rotor
- Electric Park Brake (rear calipers)

REAR DISC CALIPER The rear brake caliper features an Electric Park Brake (EPB) which combines a electromechanical motor and gear unit (EPB actuator) with a conventional rear caliper. Refer to **PARKING BRAKE, DESCRIPTION**. The EPB actuator can be removed and serviced separately from the caliper.

CAUTION: If the electric park brake (EPB) switch is actuated with the caliper removed from the caliper bracket and still connected electrically, the EPB motor will fully extend causing damage to the caliper piston. Disconnect and isolate the negative battery cable before servicing any EPB component.

BOOSTER, POWER BRAKE

DESCRIPTION

DESCRIPTION

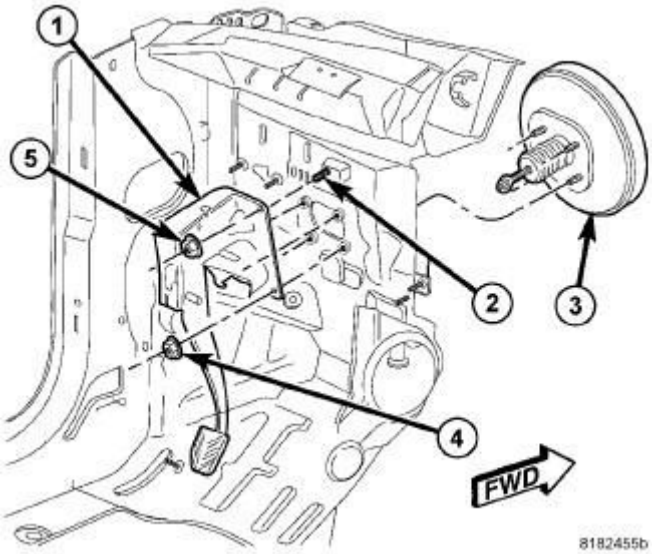

Fig. 10: Pedal And Booster Mounting - LHD
Courtesy of CHRYSLER GROUP, LLC

The power brake booster (3) is mounted to the engine side of the dash panel. The master cylinder is bolted to the front of the booster. A vacuum check valve is also mounted on the front of the booster. A vacuum line connects the check valve to engine source vacuum. The booster input rod extends through the dash panel and connects to the brake pedal.

This vehicle uses a single diaphragm, single rate vacuum power brake booster with 279 mm (11 in.) diaphragm.

The power brake booster can be identified by the tag attached to the body of the booster. This tag contains the following information:

- The production part number
- The date it was built, and
- The booster manufacturer.

DIAGNOSIS AND TESTING

DIAGNOSIS AND TESTING - MASTER CYLINDER/POWER BOOSTER

1. Start the engine and check the booster vacuum hose connections. A hissing noise indicates a vacuum leak. Correct any vacuum leaks before proceeding.
2. Stop the engine and pump the brake pedal until all vacuum reserve in the booster is depleted.
3. Press and hold the brake pedal under light foot pressure. The pedal should hold firm. If the pedal falls away, there may be an external leak or the master cylinder is faulty (internal leakage).
4. Start the engine and note pedal action. It should fall away slightly under light foot pressure, then hold firm. If no pedal action is discernible, the power booster, vacuum supply or vacuum check valve is faulty, proceed to the POWER BOOSTER VACUUM TEST.
5. If the POWER BOOSTER VACUUM TEST passes, rebuild the booster vacuum reserve as follows: Release the brake pedal. Increase engine speed to 1500 RPM, close the throttle and immediately turn off the ignition to stop the engine.
6. Wait a minimum of 90 seconds and try brake action again. The booster should provide two or more vacuum assisted pedal applications. If the vacuum assist is not provided, the booster is faulty.

POWER BOOSTER VACUUM TEST

1. Connect a vacuum gauge to the booster check valve with a short length of hose and T-fitting.
2. Start and run the engine at curb idle for one minute.
3. Observe the vacuum supply. If the vacuum supply is less that 12 inches HG (406 millibars), repair the vacuum supply.
4. Clamp the hose shut between the intake vacuum source and the check valve.
5. Stop the engine and observe the vacuum gauge.
6. If the vacuum drops more than one inch HG (33 millibars) within 15 seconds, the booster diaphragm or check valve is faulty.

POWER BOOSTER CHECK VALVE TEST

1. Remove the power booster check valve from the power booster.
2. Using a hand operated vacuum pump, apply 15-20 inches HG (508-677 millibars) vacuum at the booster side of the check valve.
3. The vacuum should hold steady. If the gauge on the pump indicates vacuum loss, the check valve is faulty and should be replaced.

REMOVAL

REMOVAL

NOTE: Before proceeding, refer to CAUTION and WARNING.

1. Disconnect and isolate the battery negative cable from its post on the battery.
2. Remove the Power Distribution Center (PDC) from the mounting location and position aside. Refer to **CENTER, POWER DISTRIBUTION (PDC), REMOVAL** .
3. Remove the ICU. Refer to **INTEGRATED CONTROL UNIT (ICU), REMOVAL** .
4. Remove the ICU mounting bracket.
5. Remove the master cylinder and reservoir assembly. Refer to **MASTER CYLINDER, BRAKE, REMOVAL**.
6. Disconnect the vacuum sensor and remove the vacuum hose from the booster.

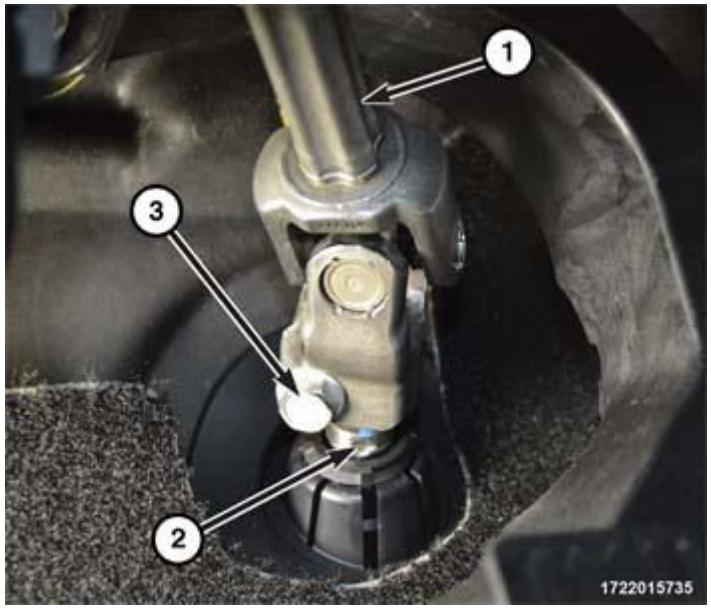

Fig. 11: Identifying Intermediate Shaft, Pinch Bolt And Steering Gear Pinion Shaft
Courtesy of CHRYSLER GROUP, LLC

7. Remove intermediate shaft pinch bolt (3) and separate the intermediate shaft (1) at the base of the column from the steering gear pinion shaft (2). Discard the pinch bolt (3); it is not to be reused.
8. Position the intermediate shaft (1) so that the pedal assembly can be accessed.
9. Remove the stop lamp switch. Refer to **SWITCH, STOP LAMP, REMOVAL** .

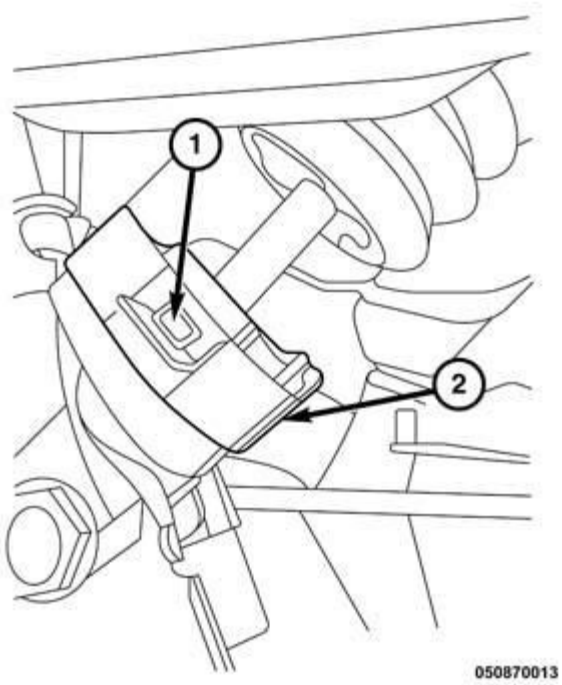

Fig. 12: Retainer & Clips
Courtesy of CHRYSLER GROUP, LLC

10. Disengage clips (1) on booster rod keeper assembly retainer (2). Position retainer (2) up to remove booster rod from pedal assembly.

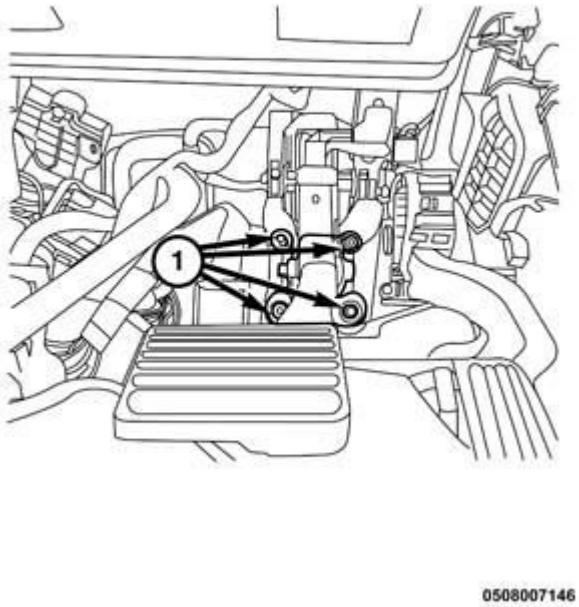

Fig. 13: Remove/Install Power Brake Booster Nuts
Courtesy of CHRYSLER GROUP, LLC

11. Remove the four nuts (1) attaching the power brake booster to the dash panel.
12. Slide the power brake booster forward until its mounting studs clear the dash panel, then remove it through the engine compartment.

INSTALLATION

INSTALLATION

1. Install the power brake booster by sliding the push rod and studs through the dash panel and into mounting position. Insure vacuum check valve opening on front shell of booster is at approximately 9 o'clock.

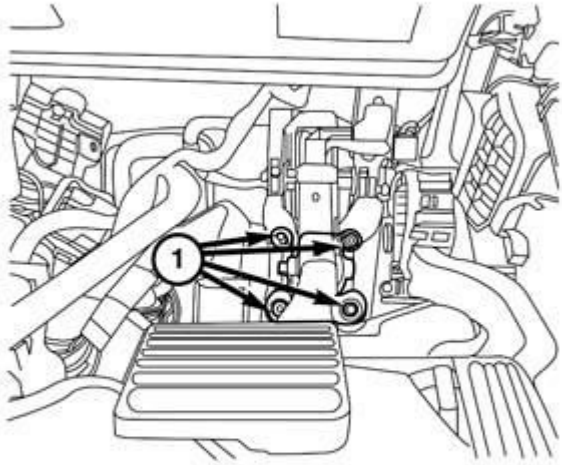

0508007146

Fig. 14: Remove/Install Power Brake Booster Nuts
Courtesy of CHRYSLER GROUP, LLC

2. Install the four power brake booster mounting nuts (1) in following sequence: Top inboard, bottom outboard, top outboard, bottom inboard. Failure to do so may result in damage to the booster. Tighten to the proper specification

   Refer to **TORQUE SPECIFICATIONS** .

   NOTE: Make sure the cup that the booster push rod reacts against is still in place in the pedal before installing the new booster rod keeper.

   NOTE: The brake pedal booster rod keeper (2) cannot be reused. Always install a new keeper if the brake pedal push rod was separated from the keeper.

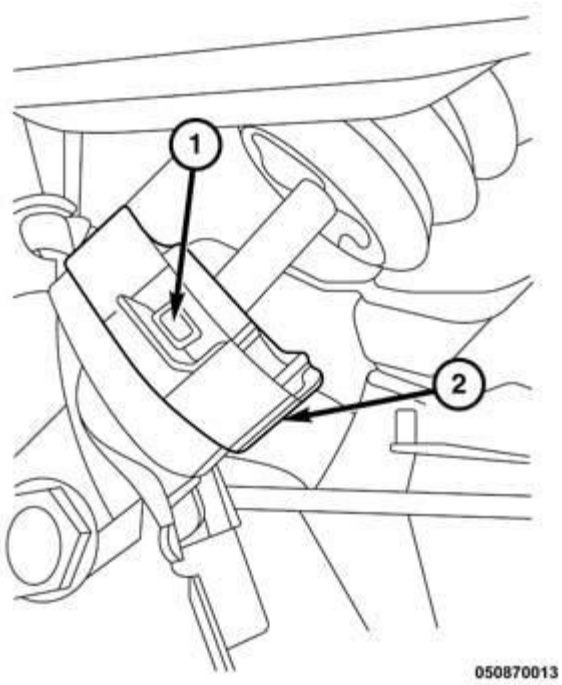

Fig. 15: Retainer & Clips
Courtesy of CHRYSLER GROUP, LLC

3. Install the power brake booster push rod and retainer (2) into NEW booster rod keeper, ensuring that the clips (1) are engaged.
4. Install and adjust the stop lamp switch in the brake pedal bracket. Refer to **SWITCH, STOP LAMP, INSTALLATION** .

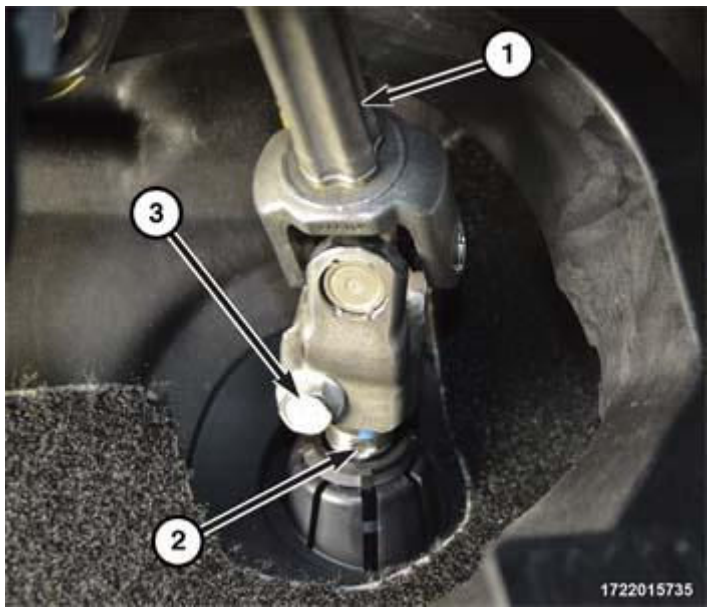

Fig. 16: Identifying Intermediate Shaft, Pinch Bolt And Steering Gear Pinion Shaft
Courtesy of CHRYSLER GROUP, LLC

5. Verify the front wheels of vehicle are in the STRAIGHT-AHEAD position.
6. Install the intermediate shaft (1) onto the steering gear input shaft (2).

NOTE: A new pinch bolt (3) must be installed every time the pinch bolt is removed.

7. Install a **NEW** pinch bolt (3) and tighten to the proper specification. Refer to **COLUMN, SPECIFICATIONS** .
8. Connect the vacuum sensor and install the vacuum hose in the booster.
9. Install the master cylinder and reservoir assembly. Refer to **MASTER CYLINDER, BRAKE, INSTALLATION**.
10. Install the ICU mounting bracket and tighten to the proper specification. Refer to **TORQUE SPECIFICATIONS** .
11. Install the ICU. Refer to **INTEGRATED CONTROL UNIT (ICU), INSTALLATION** .
12. Install the PDC. Refer to **CENTER, POWER DISTRIBUTION (PDC), INSTALLATION** .
13. Connect the battery negative cable to its post on the battery.
14. Bleed the base brake system. Refer to **STANDARD PROCEDURE** .
15. Road test the vehicle to ensure proper operation of the brakes.

CALIPER, DISC BRAKE, FRONT

REMOVAL

REMOVAL

NOTE: Before proceeding, Refer to CAUTION and WARNING.

1. Using a brake pedal holding tool, depress the brake pedal past its first 25 mm (1 inch) of travel and hold it in this position. This will isolate the master cylinder from the brake hydraulic system and will not allow the brake fluid to drain out of the master cylinder reservoir when the lines are opened.
2. Raise and support the vehicle. Refer to **HOISTING, STANDARD PROCEDURE** .
3. Remove the wheel mounting bolts, then the tire and wheel assembly.

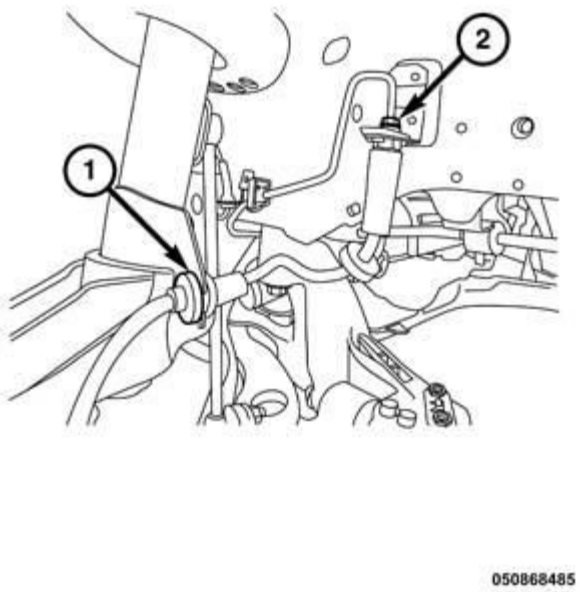

Fig. 17: Brake Line Connector & Clip
Courtesy of CHRYSLER GROUP, LLC

4. Remove the brake line connector (2) from the junction on the inner fender.
5. Separate the clip (1) from the strut and remove the brake hose from the strut.

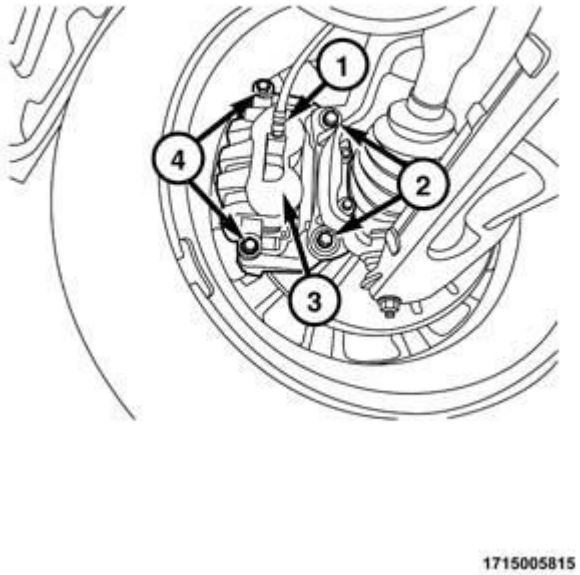

Fig. 18: Identifying Brake Hose Connector And Pin Bolts

Courtesy of CHRYSLER GROUP, LLC

6. Remove the brake hose connector (1) from the brake caliper.
7. Remove the two brake caliper guide pin bolts (4).
8. Slide the disc brake caliper from the disc brake adapter bracket and remove.

DISASSEMBLY

DISASSEMBLY

NOTE: Before disassembling the brake caliper, remove it from the vehicle. Refer to CALIPER, DISC BRAKE, FRONT, REMOVAL or CALIPER, DISC BRAKE, REAR, REMOVAL.

NOTE: Before disassembling the brake caliper, clean and inspect it. Refer to CALIPER, DISC BRAKE, FRONT, INSPECTION and CALIPER, DISC BRAKE, FRONT, CLEANING.

WARNING: Under no condition should high pressure air ever be used to remove a piston from a caliper bore. Personal injury could result from such a practice.

CAUTION: Do not use excessive force when clamping caliper in vise. Excessive vise pressure will cause bore distortion.

1. Mount the caliper in a vise equipped with protective jaws.

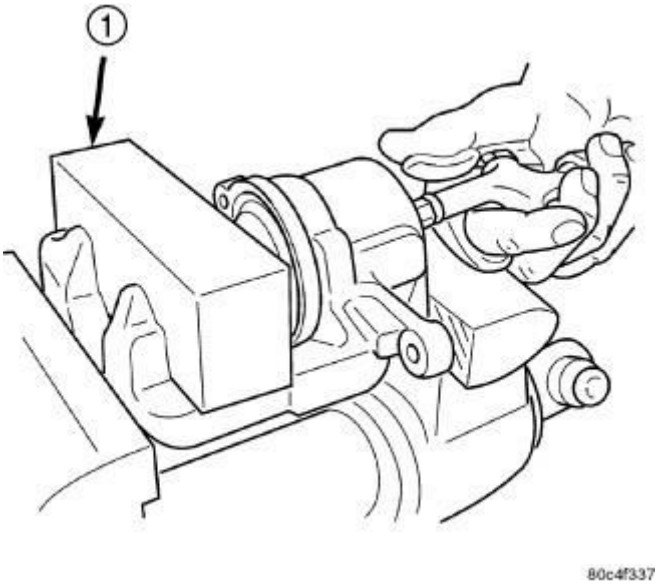

Fig. 19: Identifying Wooden Block Placed In Brake Caliper

Courtesy of CHRYSLER GROUP, LLC

1 - WOOD BLOCK

WARNING: Do not place face or hands near caliper and piston if using compressed air pressure to remove piston. Do not use high pressure.

2. Place a wooden block (1) in the caliper as shown in the illustration.
3. If necessary, apply low pressure compressed air to the caliper fluid inlet in short spurts to force the piston out.
4. Remove the piston from the caliper.
5. Remove the dust boot from the piston and discard it.

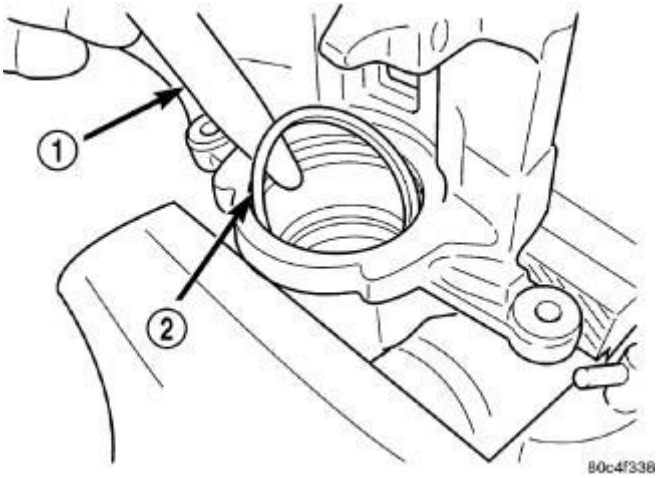

Fig. 20: Piston Seal Removal
Courtesy of CHRYSLER GROUP, LLC

1 - TRIM STICK 2 - SEAL

CAUTION: Do not use a screw driver or other metal tool for seal removal. Using such tools can scratch the bore or leave burrs on the seal groove edges.

6. Using a soft tool such as a plastic trim stick (1), work the piston seal (2) out of its groove in caliper piston bore. Discard the used seal.
7. Clean the piston bore and drilled passage ways with alcohol or a suitable solvent. Wipe it dry using only a lint-free cloth.
8. Inspect both the piston and bore for scoring or pitting. Bores that show light scratches or corrosion can usually be cleared of the light scratches or corrosion using crocus cloth.

CLEANING

CLEANING

WARNING: Chrysler LLC does not manufacture any vehicles or replacement parts that contain asbestos. Aftermarket products may or may not contain asbestos. Refer to aftermarket product packaging for product information.

Whether the product contains asbestos or not, dust and dirt can accumulate on brake parts during normal use. Follow practices prescribed by appropriate regulations for the handling, processing and disposing of dust and debris.

To clean or flush the internal passages of the brake caliper, use fresh brake fluid or Mopar® Non-Chlorinated Brake Parts Cleaner. Never use gasoline, kerosene, alcohol, oil, transmission fluid or any fluid containing mineral oil to clean the caliper. These fluids will damage rubber cups and seals.

INSPECTION

INSPECTION

Inspect the disc brake caliper for the following:

- Brake fluid leaks in and around piston boot area
- Ruptures, brittleness or damage to the piston dust boot

If caliper fails inspection, disassemble and recondition caliper, replacing the seals and dust boots.

ASSEMBLY

ASSEMBLY

NOTE: Always have clean hands when assembling a brake caliper.

NOTE: Always use fresh, clean brake fluid when assembling a brake caliper.

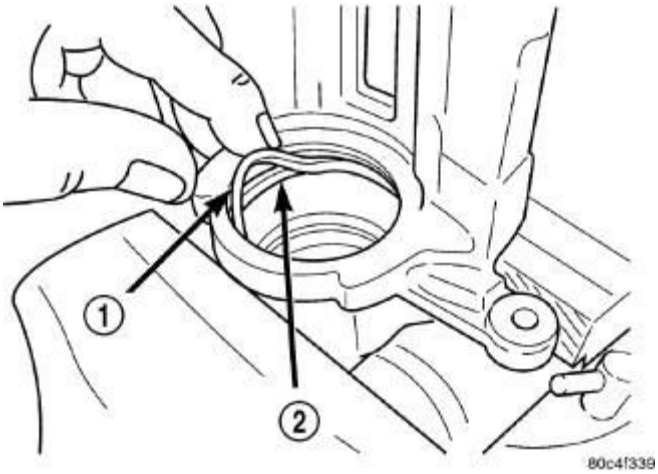

Fig. 21: New Piston Seal Installation
Courtesy of CHRYSLER GROUP, LLC

1 - SEAL 2 - GROOVE

NOTE: Never use an old piston seal.

1. Dip the NEW piston seal in clean brake fluid and install it in the groove (2) of the caliper bore. The seal (1) should be started at one area of the groove and gently worked around into the groove using only your clean fingers to seat it.

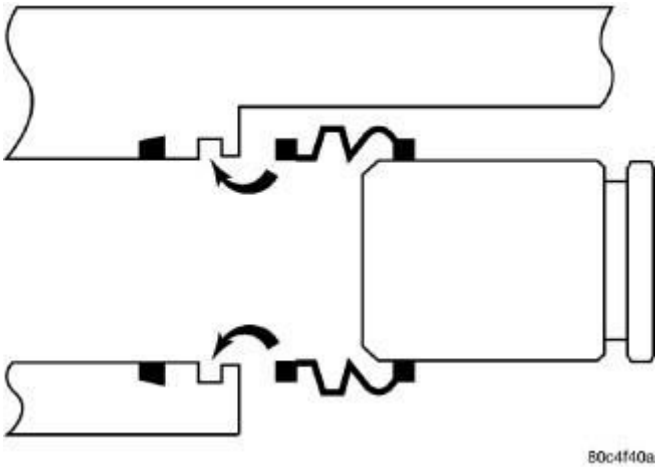

Fig. 22: Boot Installation
Courtesy of CHRYSLER GROUP, LLC

2. Coat the NEW piston with clean brake fluid.
3. Coat the NEW piston boot with clean brake fluid leaving a generous amount inside the boot.
4. Position the dust boot over the lower section of the piston.
5. Extend the dust boot below the bottom of the piston and guide the lip seal into the groove in the caliper

piston bore.

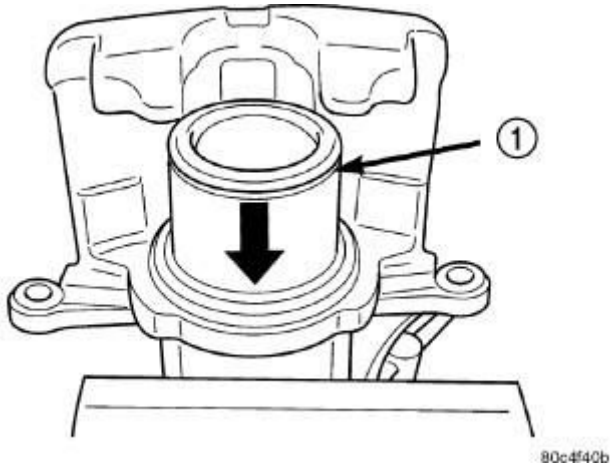

Fig. 23: Piston Installation
Courtesy of CHRYSLER GROUP, LLC

1 - PISTON GROOVE

CAUTION: Force applied to the piston (1) to seat it in the bore must be applied uniformly to avoid cocking and binding of the piston.

6. Install the piston (1) into the bore, carefully pushing it past the piston seal using **hand pressure** . Push the piston in until it bottoms in the caliper bore and the dust boot lip seal falls into the groove near the top of the piston.
7. Install the caliper on the vehicle and bleed the brakes as necessary. Refer to **CALIPER, DISC BRAKE, FRONT, INSTALLATION** or **CALIPER, DISC BRAKE, REAR, INSTALLATION**.

INSTALLATION

INSTALLATION

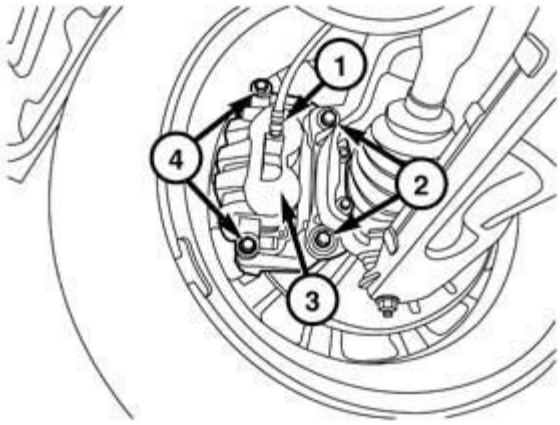

1715005815

Fig. 24: Identifying Brake Hose Connector And Pin Bolts
Courtesy of CHRYSLER GROUP, LLC

CAUTION: Use care when installing the caliper onto the adapter bracket to avoid damaging the guide pin boots.

1. Completely retract the caliper piston back into the bore of the caliper. Use a C-clamp to retract the piston. Place a wood block over the piston before installing the C-clamp to avoid damaging the piston.
2. Install the disc brake caliper over the brake pads on the brake caliper adapter bracket.
3. Align the caliper guide pin bolt holes with the adapter bracket. Install the caliper guide pin bolts (4) and tighten to 43 N.m (32 ft. lbs.).
4. Install the brake hose (1) connector to the brake caliper and tighten to 18 N.m (159 in. lbs.).

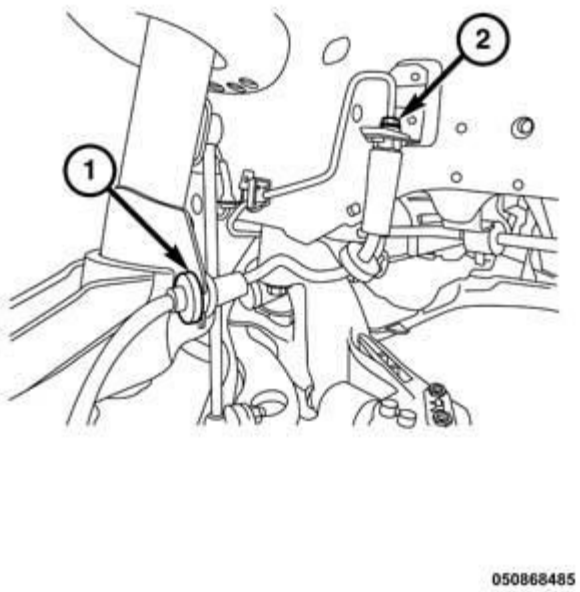

Fig. 25: Brake Line Connector & Clip
Courtesy of CHRYSLER GROUP, LLC

5. Install brake hose fitting to brake line connector (2) and tighten to 18 N.m (159 in. lbs.).
6. Install brake hose to mounting location on strut (1) and secure with the clip.
7. Install the tire and wheel assembly. Refer to **INSTALLATION** .
8. Lower the vehicle.

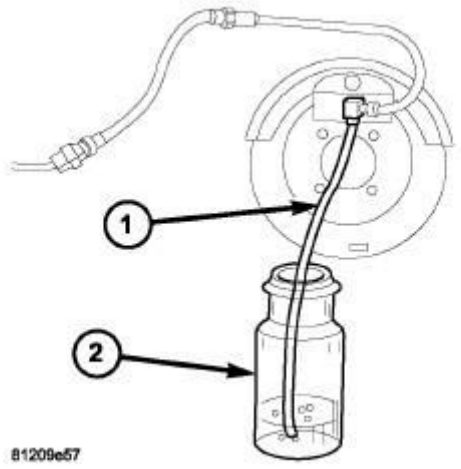

Fig. 26: Bleeding Brakes
Courtesy of CHRYSLER GROUP, LLC

9. Remove the brake pedal holding tool.

10. Bleed the caliper as necessary. Refer to **STANDARD PROCEDURE** .
11. Road test the vehicle and make several stops to wear off any foreign material on the brakes and to seat the brake pads.

CALIPER, DISC BRAKE, REAR

REMOVAL

REMOVAL

NOTE: Before proceeding, refer to CAUTION and WARNING.

The electronic park brake (EPB) actuator must be retracted prior to removing the brake caliper assembly. This can be done in two ways:

- A diagnostic scan tool (Service Mode position).
- Through Uconnect

CAUTION: If the electric park brake (EPB) switch is actuated with the caliper removed from the caliper bracket and still connected electrically, the EPB motor will fully extend causing damage to the caliper piston. Disconnect and isolate the negative battery cable before servicing any EPB component.

1. Using a brake pedal holding tool, depress the brake pedal past its first one inch of travel and hold it in this position. This will isolate the master cylinder from the brake hydraulic system and will not allow the brake fluid to drain out of the master cylinder reservoir while the lines are disconnected.
2. Disconnect and isolate the negative battery cable.
3. Raise and support the vehicle. Refer to **HOISTING, STANDARD PROCEDURE** .
4. Remove the wheel mounting bolts, then the rear tire and wheel assembly.

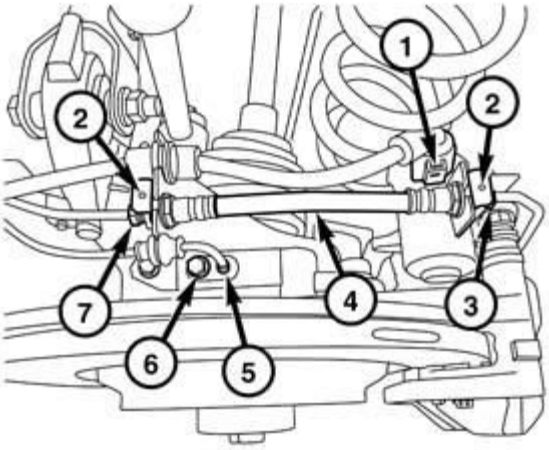

1715005817

Fig. 27: Identifying Brake Line Bracket, Brake Line, Flex Hose And Wheel Speed Sensor
Courtesy of CHRYSLER GROUP, LLC

5. Remove the nut and brake line bracket (2) from the brake caliper.
6. Remove the brake line (3) from the flex hose (4).

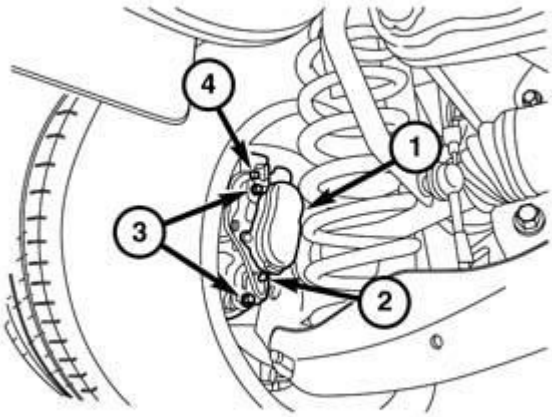

1715005819

Fig. 28: Caliper Guide Pin Bolts

Courtesy of CHRYSLER GROUP, LLC

7. While holding guide pins from turning, remove caliper guide pin bolts (3).
8. Slide and remove the disc brake caliper from the disc brake adapter bracket.

INSTALLATION

INSTALLATION

CAUTION: Use care when installing the caliper onto the disc brake adapter to avoid damaging the guide pin boots.

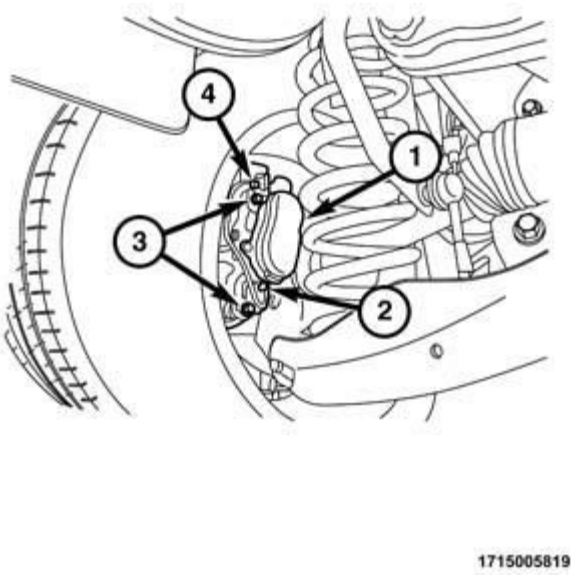

Fig. 29: Caliper Guide Pin Bolts
Courtesy of CHRYSLER GROUP, LLC

1. Install the disc brake caliper with outboard brake pad attached over the inboard brake pad and rotor, onto the brake caliper adapter bracket.
2. Align the caliper guide pin bolt holes with the adapter bracket. Install the caliper guide pin bolts (3) and tighten the guide pin bolts to 43N.m (32 ft. lbs.).

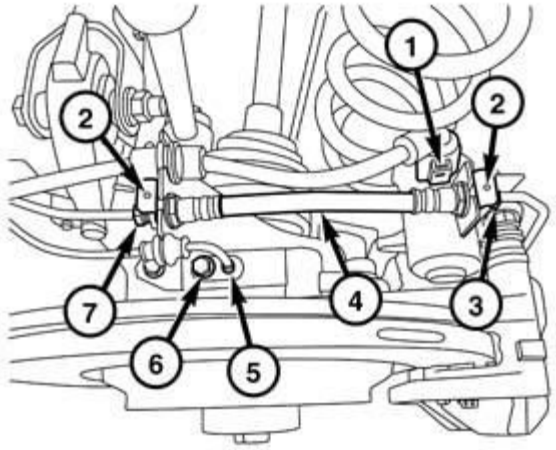

1715005817

Fig. 30: Identifying Brake Line Bracket, Brake Line, Flex Hose And Wheel Speed Sensor
Courtesy of CHRYSLER GROUP, LLC

3. Install brake line fitting (3) to the flex hose (4) and tighten to 18 N.m (159 in. lbs.).
4. Install the brake line bracket and nut (2) to the brake caliper.
5. Install the tire and wheel assembly. Refer to **INSTALLATION** .
6. Lower the vehicle.
7. Remove the brake pedal holding tool.

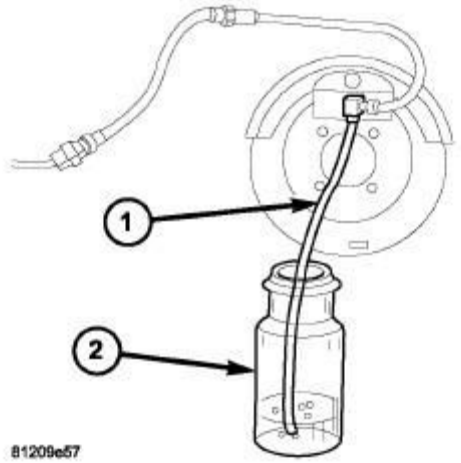

Fig. 31: Bleeding Brakes
Courtesy of CHRYSLER GROUP, LLC

8. Bleed the caliper as necessary. Refer to **STANDARD PROCEDURE** .
9. Pump the brake pedal several times to ensure the vehicle has a firm brake pedal before moving the vehicle.
10. Exit the Service Mode prior to road testing the vehicle. This can be done in two ways:
    - Exit the Service Mode with diagnostic scan tool.
    - While depressing the brake pedal, press the EPB switch.
11. Road test the vehicle and make several stops to wear off any foreign material on the brakes and to seat the brake pads.

FLUID

DIAGNOSIS AND TESTING

DIAGNOSIS AND TESTING - BRAKE FLUID CONTAMINATION

Indications of fluid contamination are swollen or deteriorated rubber parts. Swelling indicates the presence of petroleum in the brake fluid.

To test for contamination, put a small amount of drained brake fluid in clear glass jar. If the fluid separates into layers, there is mineral oil or other fluid contamination of the brake fluid.

If the brake fluid is contaminated, drain and thoroughly flush the brake system. Replace all the rubber parts or components containing rubber coming into contact with the brake fluid including: the master cylinder and reservoir; caliper seals; ABS hydraulic control unit; and all hydraulic fluid hoses.

SPECIFICATIONS

SPECIFICATIONS

The brake fluid used in this vehicle must conform to DOT 3 specifications and SAE J1703 standards. No other type of brake fluid is recommended or approved for usage in the vehicle brake system. Use only Mopar® Brake Fluid DOT 3 Motor Vehicle or equivalent from a tightly sealed container.

CAUTION: Never use reclaimed brake fluid or fluid from a container which has been left open. An open container will absorb moisture from the air and contaminate the fluid.

CAUTION: Never use any type of a petroleum-based fluid in the brake hydraulic system. Use of such type fluids will result in seal damage of the vehicle brake hydraulic system causing a failure of the vehicle brake system. Petroleum based fluids would be items such as engine oil, transmission fluid, power steering fluid, etc.

MASTER CYLINDER, BRAKE

DESCRIPTION

DESCRIPTION

All master cylinders are a two-outlet design and the brake tubes from these primary and secondary outlet ports lead directly to the Integrated Control Unit (ICU) before going to each wheel brake.

The master cylinder body is an anodized aluminum casting. It has a machined bore to accept the master cylinder pistons and also has threaded ports with seats for hydraulic brake tube connections.

The master cylinder has the brake fluid reservoir mounted on top of it which gravity feeds brake fluid to the master cylinder when it is required. On manual transmission model vehicles the brake fluid reservoir also feeds the clutch hydraulic circuit. The reservoir is made of see-through plastic and it houses the brake fluid level switch.

DIAGNOSIS AND TESTING

DIAGNOSIS AND TESTING - MASTER CYLINDER/POWER BOOSTER

1. Start the engine and check the booster vacuum hose connections. A hissing noise indicates a vacuum leak. Correct any vacuum leaks before proceeding.
2. Stop the engine and pump the brake pedal until all vacuum reserve in the booster is depleted.
3. Press and hold the brake pedal under light foot pressure. The pedal should hold firm. If the pedal falls away, there may be an external leak or the master cylinder is faulty (internal leakage).
4. Start the engine and note pedal action. It should fall away slightly under light foot pressure, then hold firm. If no pedal action is discernible, the power booster, vacuum supply or vacuum check valve is faulty, proceed to the POWER BOOSTER VACUUM TEST.
5. If the POWER BOOSTER VACUUM TEST passes, rebuild the booster vacuum reserve as follows: Release the brake pedal. Increase engine speed to 1500 RPM, close the throttle and immediately turn off the ignition to stop the engine.
6. Wait a minimum of 90 seconds and try brake action again. The booster should provide two or more vacuum assisted pedal applications. If the vacuum assist is not provided, the booster is faulty.

POWER BOOSTER VACUUM TEST

1. Connect a vacuum gauge to the booster check valve with a short length of hose and T-fitting.
2. Start and run the engine at curb idle for one minute.
3. Observe the vacuum supply. If the vacuum supply is less that 12 inches HG (406 millibars), repair the vacuum supply.
4. Clamp the hose shut between the intake vacuum source and the check valve.
5. Stop the engine and observe the vacuum gauge.
6. If the vacuum drops more than one inch HG (33 millibars) within 15 seconds, the booster diaphragm or check valve is faulty.

POWER BOOSTER CHECK VALVE TEST

1. Remove the power booster check valve from the power booster.
2. Using a hand operated vacuum pump, apply 15-20 inches HG (508-677 millibars) vacuum at the booster side of the check valve.
3. The vacuum should hold steady. If the gauge on the pump indicates vacuum loss, the check valve is faulty and should be replaced.

STANDARD PROCEDURE

STANDARD PROCEDURE - MASTER CYLINDER BLEEDING

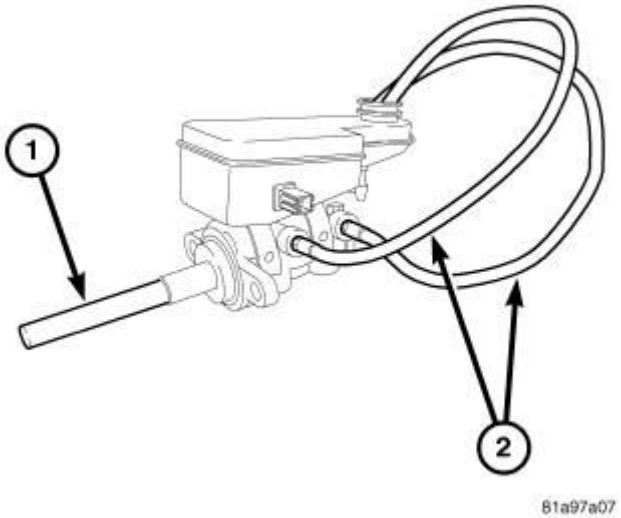

Fig. 32: Bleeding Master Cylinder With ABS
Courtesy of CHRYSLER GROUP, LLC

1. Clamp the master cylinder in a vise with soft-jaw caps.
2. Attach the special tools for bleeding the master cylinder in the following fashion:
   a. Thread a Bleeder Tube (2) (special tool #8358-1, Bleed Tube), into the primary and secondary ports. Tighten bleeder tube nuts to 20 N.m (177 in. lbs.).
   b. Flex each Bleeder Tube and place the open ends into the neck of the master cylinder reservoir. Position the open ends of the tubes into the reservoir so their outlets are below the surface of the brake fluid in the reservoir when filled.

NOTE: Make sure the ends of the Bleeder Tubes stay below the surface of the brake fluid in the reservoir at all times during the bleeding procedure.

3. Fill the brake fluid reservoir with fresh Mopar® Brake Fluid DOT 3 Motor Vehicle, or equivalent. Refer to **FLUID, SPECIFICATIONS**.
4. Using an appropriately sized wooden dowel as a pushrod, slowly press the pistons inward discharging brake fluid through the Bleeder Tubes, then release the pressure, allowing the pistons to return to the released position. Repeat this several times until all air bubbles are expelled from the master cylinder bore

and Bleeder Tubes.

5. Remove the Bleeder Tubes from the master cylinder and plug the master cylinder outlet ports.
6. Install the fill cap on the reservoir.
7. Remove the master cylinder from the vise.
8. Install the master cylinder on the vehicle. Refer to **MASTER CYLINDER, BRAKE, INSTALLATION**.

REMOVAL

REMOVAL

CAUTION: The vacuum in the power brake booster must be pumped down before removing the master cylinder to prevent the booster from sucking in any contamination. This can be done by pumping the brake pedal while the engine is not running until a firm brake pedal is achieved.

NOTE: Before proceeding, refer to CAUTION and WARNING.

1. With the engine not running, pump the brake pedal 4-5 strokes until the pedal feel is firm.
2. Remove the engine cover, if equipped.
3. Disconnect and isolate the battery negative cable from its post on the battery.

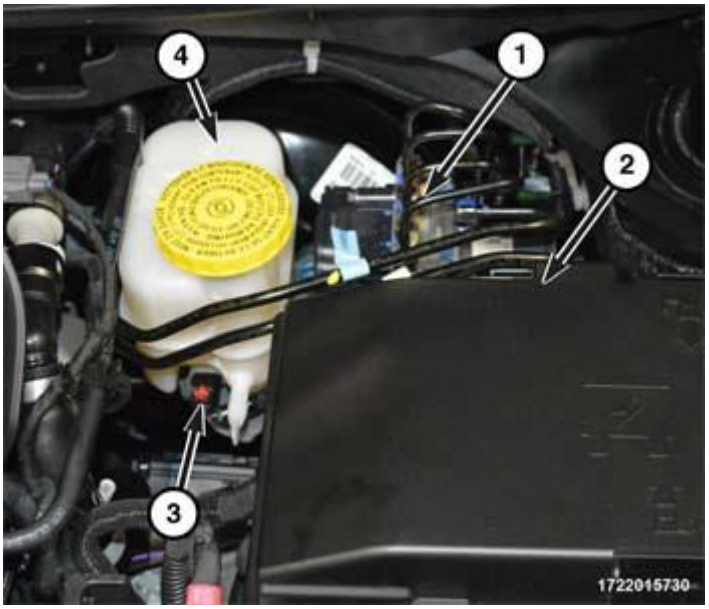

Fig. 33: Identifying Power Distribution Center (PDC)
Courtesy of CHRYSLER GROUP, LLC

4. Remove the PDC (2) from the vehicle. Refer to **CENTER, POWER DISTRIBUTION (PDC), REMOVAL** .

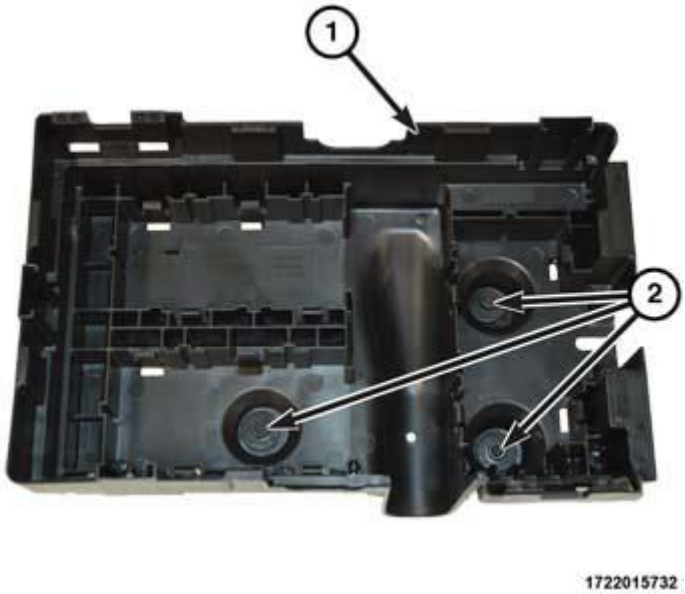

Fig. 34: Power Distribution Center (PDC) Mount
Courtesy of CHRYSLER GROUP, LLC

5. Remove the bolts (2) from the PDC mounting bracket (1) and remove from the vehicle.
6. Siphon as much fluid as possible from master cylinder reservoir.

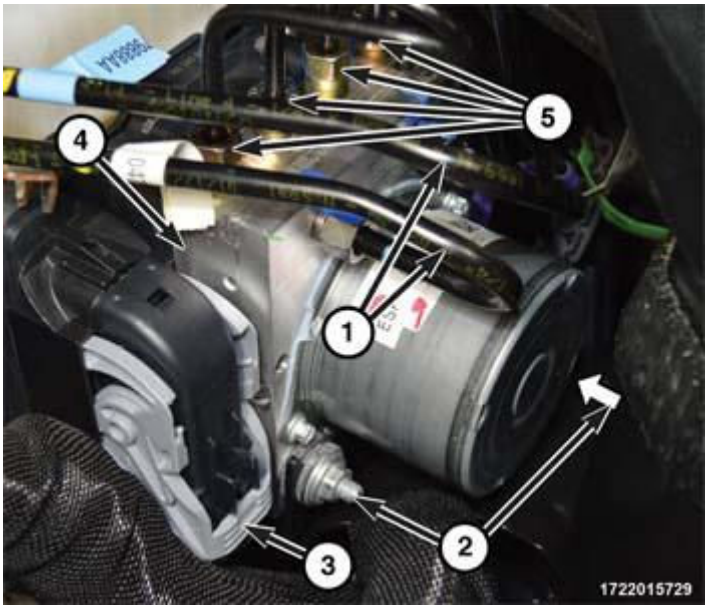

Fig. 35: Identifying Integrated Control Unit (ICU)
Courtesy of CHRYSLER GROUP, LLC

7. Remove the primary and secondary brake tubes (1) from the Integrated Control Unit (ICU) to the master cylinder.

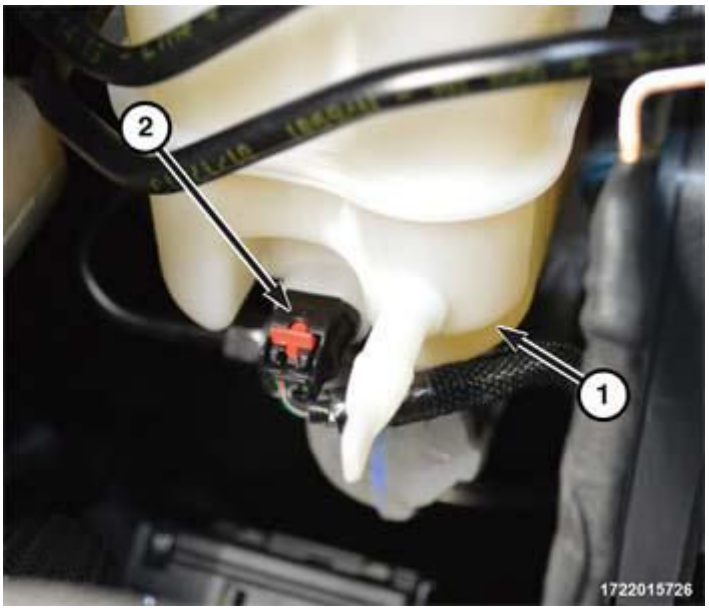

Fig. 36: Removing/Installing Wire Harness From Brake Fluid Level Switch
Courtesy of CHRYSLER GROUP, LLC

8. Disconnect wire harness (2) from brake fluid level switch on master cylinder reservoir.
9. Disconnect wire harness from brake vacuum check valve. Remove vacuum tube from power brake booster.
10. Remove master cylinder retaining nuts. Taking care not to lose o-ring seal between power brake booster and master cylinder, remove master cylinder from vehicle.

INSTALLATION

INSTALLATION

NOTE: The master cylinder must be bled before installing it on the vehicle.

1. Bench bleed the master cylinder. Refer to **MASTER CYLINDER, BRAKE, STANDARD PROCEDURE**.
2. Wipe the face of the power brake booster clean where the vacuum seal on the rear of the master cylinder comes in contact when it's installed. Do not get any cleaner or debris inside the booster.
3. Line up the master cylinder mounting holes with the mounting studs on the power brake booster. Ensure o-ring seal is located on rear of master cylinder before installing into the booster. Ensure the master cylinder piston push rod lines up with the booster push rod, then carefully slide the master cylinder into the power brake booster until it contacts the face of the booster.
4. Install two **NEW** master cylinder mounting nuts (1). Tighten each nut to 25 N.m (18 ft. lbs.).

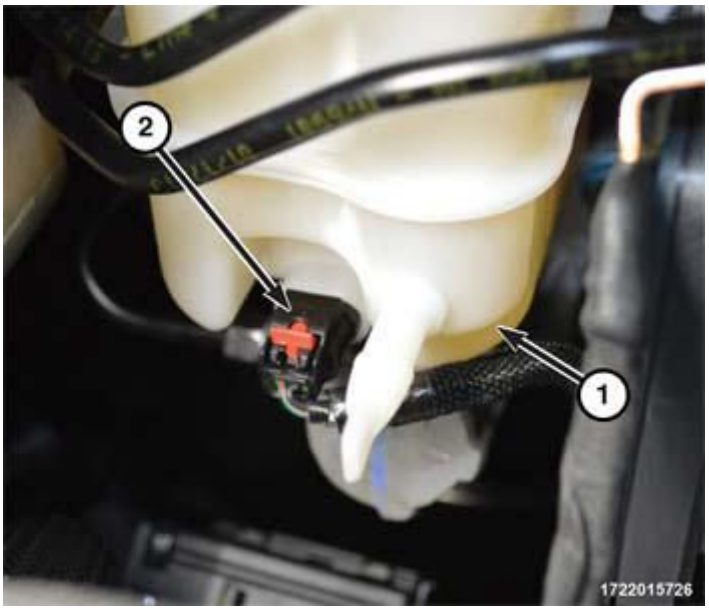

Fig. 37: Removing/Installing Wire Harness From Brake Fluid Level Switch
Courtesy of CHRYSLER GROUP, LLC

5. Connect the wiring harness connector (2) to the brake fluid level switch.

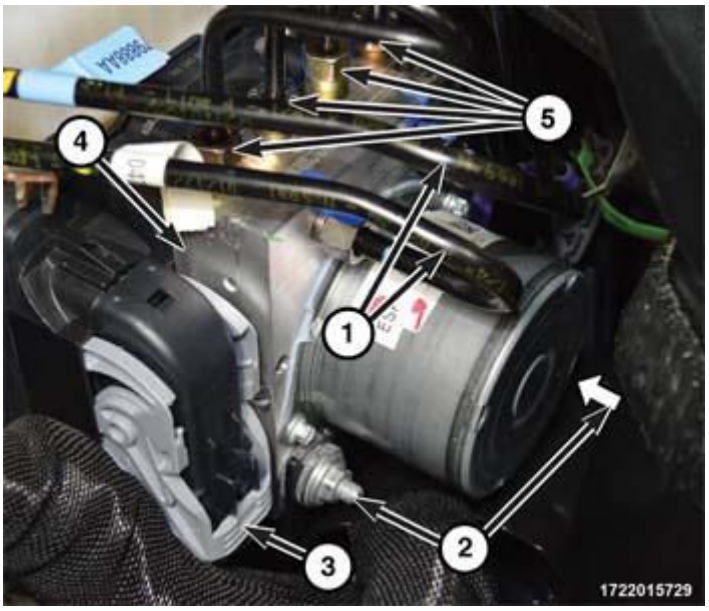

Fig. 38: Identifying Integrated Control Unit (ICU)
Courtesy of CHRYSLER GROUP, LLC

6. Connect the primary and secondary brake tubes (1) from the ICU to the master cylinder. Tighten the tube nuts to 25 N.m (18 ft. lbs.).
7. Connect the wiring harnesses to the brake vacuum sensor and connect the vacuum tube to the brake booster.

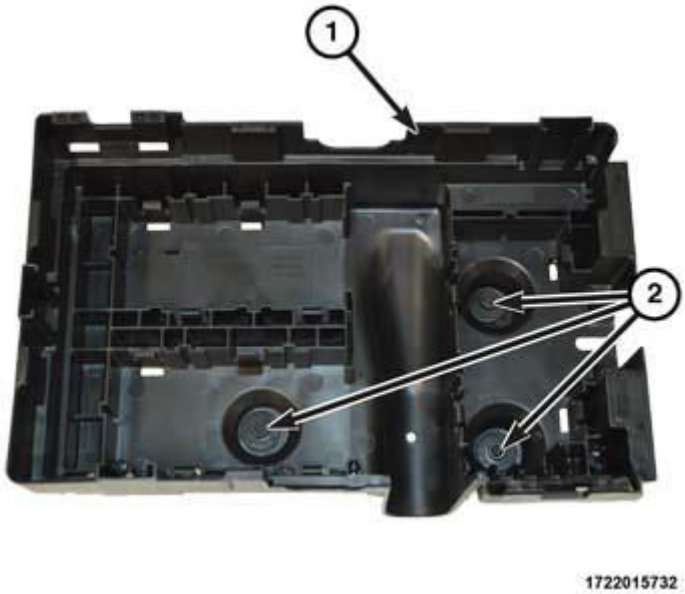

Fig. 39: Power Distribution Center (PDC) Mount
Courtesy of CHRYSLER GROUP, LLC

8. Install the PDC mount (1) and tighten the bolts (2).

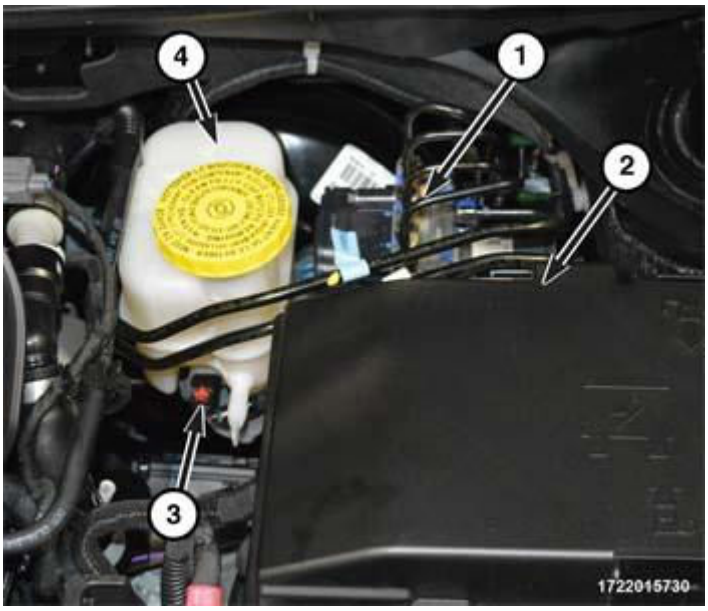

Fig. 40: Identifying Power Distribution Center (PDC)
Courtesy of CHRYSLER GROUP, LLC

9. Install the PDC (2). Refer to **CENTER, POWER DISTRIBUTION (PDC), INSTALLATION** .
10. Connect the negative (ground) cable on the battery.
11. Fill the master cylinder reservoir to the proper level.
12. Install the engine cover, if equipped.

13. Install a scan tool to initialize the ABS and perform the following:
    a. Clear any faults.
    b. Fill the master cylinder to the proper fill level and bleed the base hydraulic system. Refer to **STANDARD PROCEDURE** .
    c. Check for leaks.
    d. Perform the ABS Verification Test. Refer to **STANDARD PROCEDURE**
14. Road test the vehicle to ensure proper operation of the brakes.

PADS, BRAKE, FRONT

REMOVAL

REMOVAL

NOTE: Before proceeding, refer to CAUTION and WARNING.

1. Raise and support the vehicle. Refer to **HOISTING, STANDARD PROCEDURE** .
2. Remove the wheel mounting bolts, then the tire and wheel assembly.

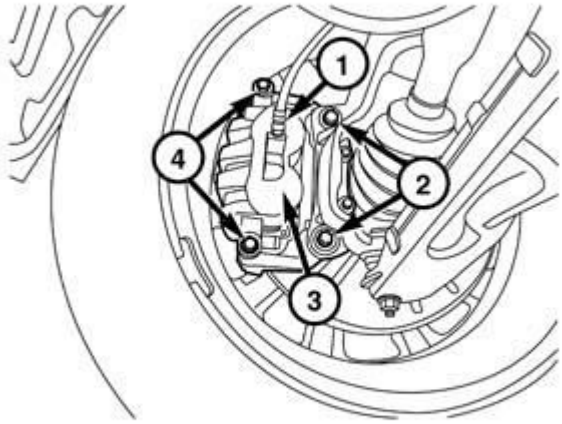

1715005815

Fig. 41: Identifying Brake Hose Connector And Pin Bolts
Courtesy of CHRYSLER GROUP, LLC

3. Remove the two brake caliper guide pin bolts (4).
4. Remove the disc brake caliper from the disc brake adapter bracket and hang it out of the way using wire or a bungee cord. Use care not to overextend the brake hose when doing this.

5. Remove the brake pads from the caliper adapter bracket.

CLEANING

CLEANING

WARNING: Chrysler LLC does not manufacture any vehicles or replacement parts that contain asbestos. Aftermarket products may or may not contain asbestos. Refer to aftermarket product packaging for product information.

Whether the product contains asbestos or not, dust and dirt can accumulate on brake parts during normal use. Follow practices prescribed by appropriate regulations for the handling, processing and disposing of dust and debris.

INSPECTION

INSPECTION

Visually inspect brake pads for uneven lining wear. Also inspect for excessive lining deterioration. Check the clearance between the tips of the wear indicators (if equipped) on the pads and the brake rotors.

If a visual inspection does not adequately determine the condition of the lining, a physical check will be necessary. To check the amount of lining wear, remove the disc brake pads from the vehicle.

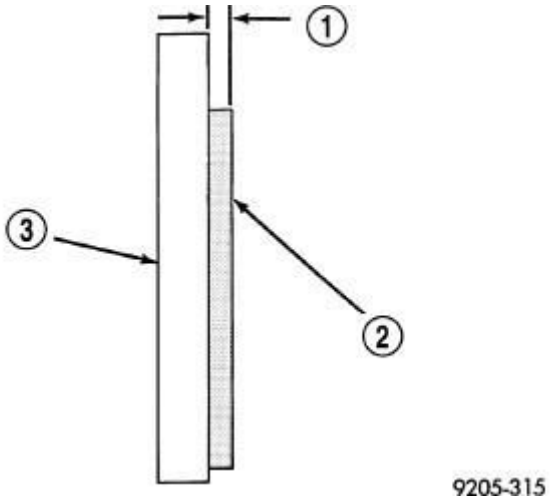

Fig. 42: Brake Pad Friction Material Thickness Measurement
Courtesy of CHRYSLER GROUP, LLC

1 - BRAKE SHOE ASSEMBLY FRICTION MATERIAL THICKNESS IS TO BE MEASURED AT THE THINNEST POINT. 2 - BRAKE SHOE ASSEMBLY FRICTION MATERIAL

3 - BRAKE SHOE ASSEMBLY BACKING PLATE

Measure brake pad minimum thickness (1). Brake pads must be replaced when usable material on a brake pad lining (2) measured at its **thinnest point** measures 1.5 mm (0.06 inches) or less.

If a brake pad fails inspection, replace **both** disc brake pads (inboard and outboard) at each caliper. It is also necessary to replace the pads on the opposite side of the vehicle as well as the pads failing inspection to maintain proper braking characteristics.

If the brake pad assemblies do not require replacement, be sure to reinstall the brake pads in the original position they were removed from.

NOTE: It is important to inspect both front and rear brake pads during the same inspection.

INSTALLATION

INSTALLATION

NOTE: Make sure that the audible wear indicators (if equipped) are placed toward the top side nearest the bleeder screw when the inboard brake pads are installed on each side of the vehicle.

1. Place the brake pads in the abutment shims clipped into the disc brake caliper adapter bracket. Place the pad with the wear indicator attached on the inboard side.
2. Completely retract the caliper piston back into the bore of the caliper.

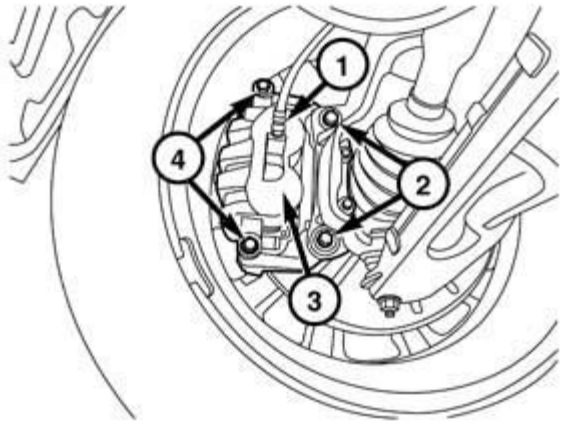

1715005815

Fig. 43: Identifying Brake Hose Connector And Pin Bolts
Courtesy of CHRYSLER GROUP, LLC

CAUTION: Use care when installing the caliper onto the adapter bracket to avoid damaging the guide pin boots.

3. Install the disc brake caliper over the brake pads on the brake caliper adapter bracket.
4. Align the caliper guide pin bolt holes with the adapter bracket. Install the caliper guide pin bolts (4) and tighten to 43 N.m (32 ft. lbs.).
5. Install the tire and wheel assembly. Refer to **INSTALLATION** .
6. Lower the vehicle.
7. Pump the brake pedal several times before moving the vehicle to set the pads to the brake rotor.
8. Check and adjust the brake fluid level in the reservoir as necessary.
9. Road test the vehicle and make several stops to wear off any foreign material on the brakes and to seat the brake pads.

PADS, BRAKE, REAR

REMOVAL

REMOVAL

NOTE: Before proceeding, refer to CAUTION and WARNING.

The electronic parking brake actuator (EPB) must be retracted prior to removing the brake caliper assembly.

This can be done in two ways:

- A diagnostic scan tool (Service Mode position)
- Through Uconnect

CAUTION: If the electric park brake (EPB) switch is actuated with the caliper removed from the caliper bracket and still connected electrically, the EPB motor will fully extend causing damage to the caliper piston. Disconnect and isolate the negative battery cable before servicing any EPB component.

1. Disconnect and isolate the negative battery cable.
2. Raise and support the vehicle. Refer to **HOISTING, STANDARD PROCEDURE** .
3. Remove the wheel mounting bolts, then the rear tire and wheel assembly.

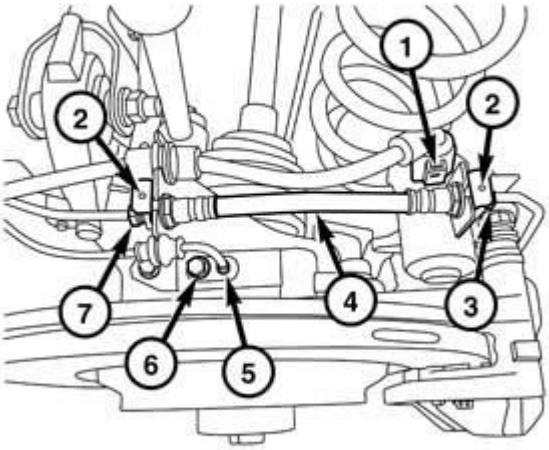

1715005817

Fig. 44: Identifying Brake Line Bracket, Brake Line, Flex Hose And Wheel Speed Sensor
Courtesy of CHRYSLER GROUP, LLC

4. Remove the nut and brake line bracket (2).

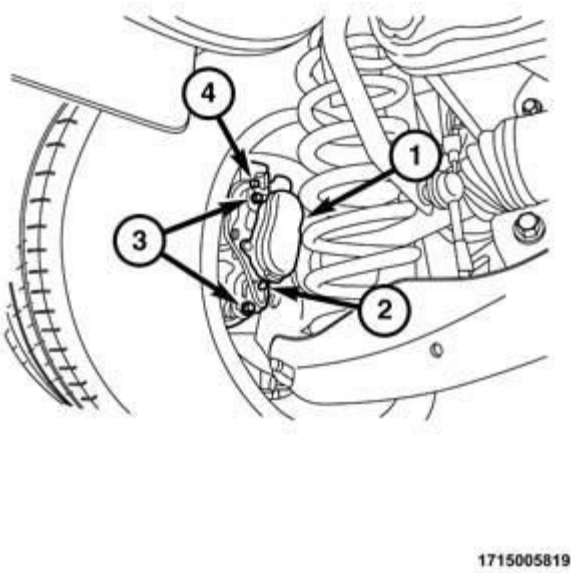

Fig. 45: Caliper Guide Pin Bolts
Courtesy of CHRYSLER GROUP, LLC

5. While holding guide pins from turning, remove caliper guide pin bolts (3).
6. Slide and remove the disc brake caliper from the disc brake adapter bracket.

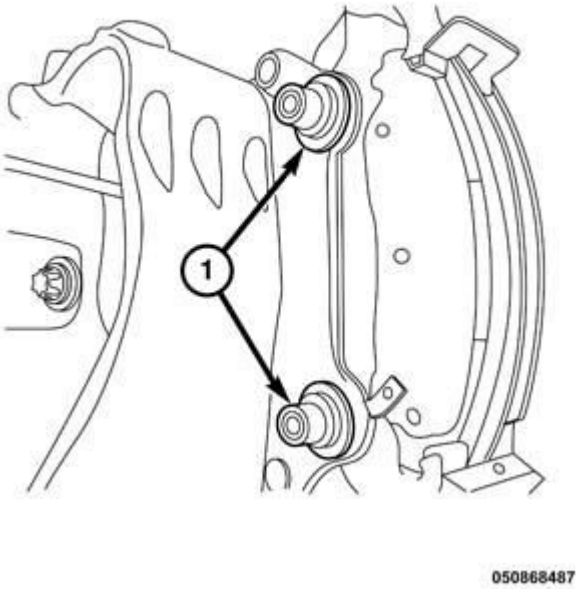

Fig. 46: Removing Brake Pads From The Caliper Adapter Bracket

Courtesy of CHRYSLER GROUP, LLC

7. Remove the brake pads from the caliper adapter bracket.

CLEANING

CLEANING

WARNING: Chrysler LLC does not manufacture any vehicles or replacement parts that contain asbestos. Aftermarket products may or may not contain asbestos. Refer to aftermarket product packaging for product information.

Whether the product contains asbestos or not, dust and dirt can accumulate on brake parts during normal use. Follow practices prescribed by appropriate regulations for the handling, processing and disposing of dust and debris.

INSPECTION

INSPECTION

Visually inspect brake pads for uneven lining wear. Also inspect for excessive lining deterioration. Check the clearance between the tips of the wear indicators (if equipped) on the pads and the brake rotors.

If a visual inspection does not adequately determine the condition of the lining, a physical check will be necessary. To check the amount of lining wear, remove the disc brake pads from the vehicle.

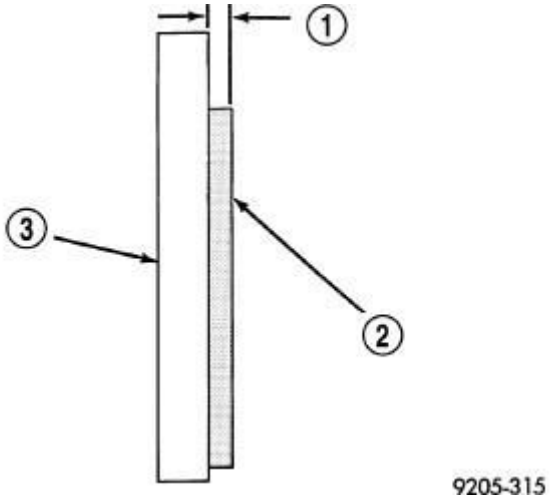

Fig. 47: Brake Pad Friction Material Thickness Measurement
Courtesy of CHRYSLER GROUP, LLC

1 - BRAKE SHOE ASSEMBLY FRICTION MATERIAL THICKNESS IS TO BE MEASURED AT THE THINNEST POINT.

2 - BRAKE SHOE ASSEMBLY FRICTION MATERIAL
3 - BRAKE SHOE ASSEMBLY BACKING PLATE

Measure brake pad minimum thickness (1). Brake pads must be replaced when usable material on a brake pad lining (2) measured at its **thinnest point** measures 1.5 mm (0.06 inches) or less.

If a brake pad fails inspection, replace **both** disc brake pads (inboard and outboard) at each caliper. It is also necessary to replace the pads on the opposite side of the vehicle as well as the pads failing inspection to maintain proper braking characteristics.

If the brake pad assemblies do not require replacement, be sure to reinstall the brake pads in the original position they were removed from.

NOTE: It is important to inspect both front and rear brake pads during the same inspection.

INSTALLATION

INSTALLATION

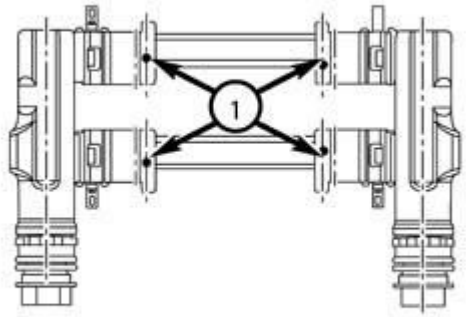

0508012591

Fig. 48: Identifying Lubricant Application Areas
Courtesy of CHRYSLER GROUP, LLC

1. Before installing the brake pads, apply WOLFRACOAT® C (1) or equivalent lubricant to the abutment clips as shown in the illustration.

NOTE: WOLFRACOAT® C or equivalent lubricant must be applied to prevent noise.

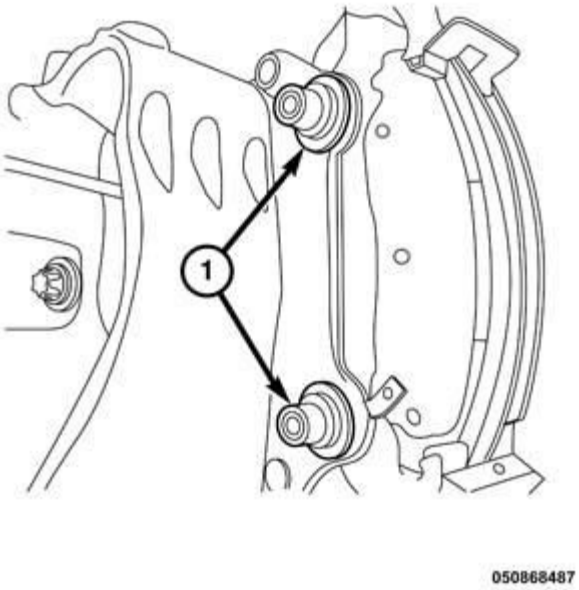

Fig. 49: Caliper Bracket Mounting Bolts
Courtesy of CHRYSLER GROUP, LLC

2. Install the pads to the caliper adapter bracket making sure the wear indicators are on the bottom side opposite of the bleeder screw.

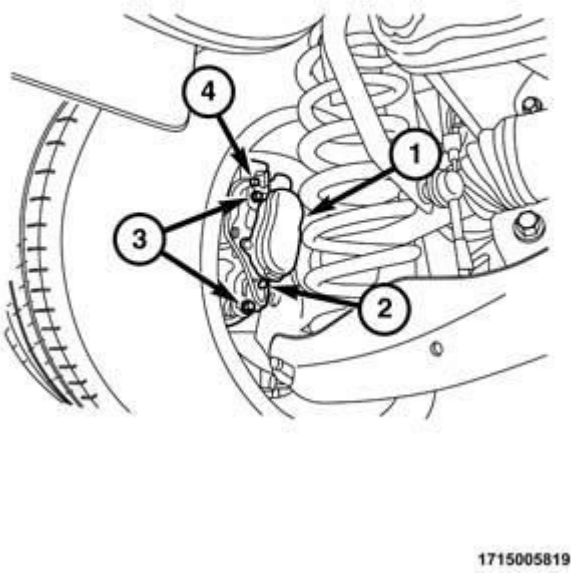

Fig. 50: Caliper Guide Pin Bolts
Courtesy of CHRYSLER GROUP, LLC

CAUTION: Use care when installing the caliper onto the disc brake adapter to avoid damaging the guide pin boots.

3. Align the caliper guide pin bolt holes with the adapter bracket. Install the caliper guide pin bolts (3) and tighten the guide pin bolts to 43 N.m (32 ft. lbs.).

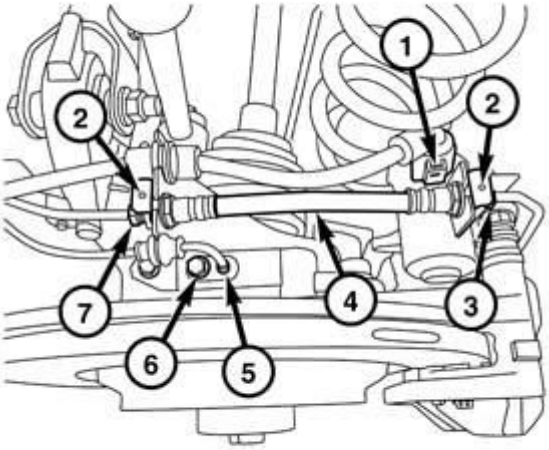

1715005817

Fig. 51: Identifying Brake Line Bracket, Brake Line, Flex Hose And Wheel Speed Sensor
Courtesy of CHRYSLER GROUP, LLC

4. Install the brake line bracket and nut (2).
5. Install the tire and wheel assembly Refer to **INSTALLATION** .
6. Lower the vehicle.
7. Pump the brake pedal several times to ensure the vehicle has a firm brake pedal before moving the vehicle.
8. Exit the Service Mode prior to road testing the vehicle. This can be done in two ways:
   - Exit the Service Mode with diagnostic scan tool.
   - While depressing the brake pedal, press the EPB switch.
9. Road test the vehicle and make several stops to wear off any foreign material on the brakes and to seat the brake pads.

PEDAL(S), BRAKE AND/OR ACCELERATOR

REMOVAL

REMOVAL

NOTE: Before proceeding, refer to CAUTION and WARNING.

1. Disconnect and isolate the battery negative cable from its post on the battery.

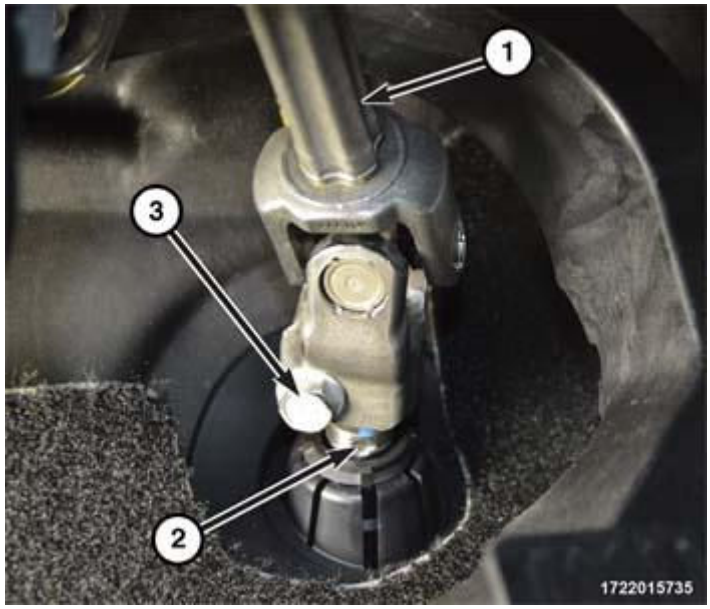

Fig. 52: Identifying Intermediate Shaft, Pinch Bolt And Steering Gear Pinion Shaft
Courtesy of CHRYSLER GROUP, LLC

2. Remove intermediate shaft pinch bolt (3) and separate the intermediate shaft (1) at the base of the column from the steering gear pinion shaft (2). Discard the pinch bolt (3); it is not to be reused.
3. Position the intermediate shaft (1) so that the pedal assembly can be accessed.

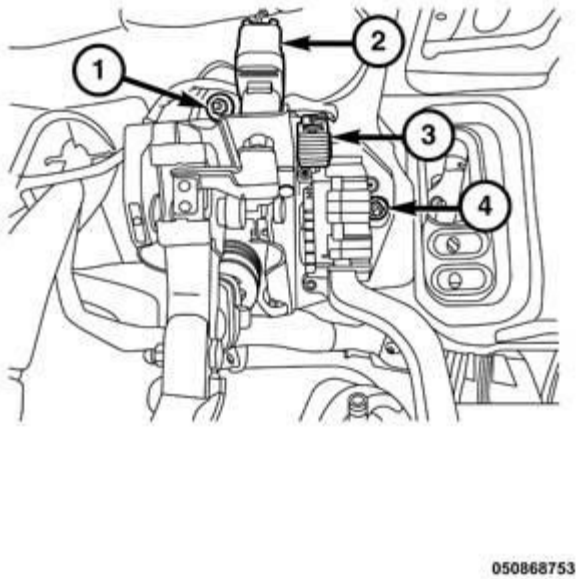

Fig. 53: Stop Lamp Switch, Connector & Nuts
Courtesy of CHRYSLER GROUP, LLC

4. Remove the stop lamp switch (2). Refer to **SWITCH, STOP LAMP, REMOVAL** .
5. Disconnect accelerator pedal electrical connector (3).

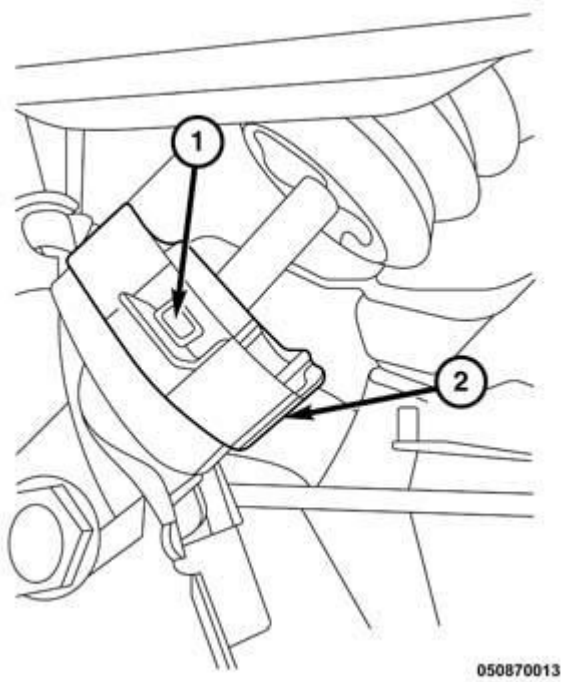

Fig. 54: Retainer & Clips

Courtesy of CHRYSLER GROUP, LLC

6. Disengage clips (1) on booster rod keeper assembly retainer (2). Position retainer (2) up to remove booster rod from pedal assembly.
7. Disconnect the clutch safety switch electrical connector and disengage clutch rod from clutch pedal, if equipped. Refer to **PEDAL AND PAD, CLUTCH, REMOVAL** .

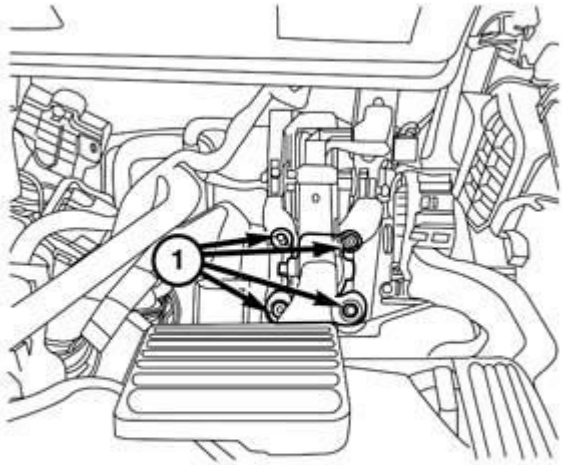

0508007146

Fig. 55: Remove/Install Power Brake Booster Nuts
Courtesy of CHRYSLER GROUP, LLC

8. Remove the four nuts (1) attaching the brake pedal sled (and power brake booster) to the dash panel.

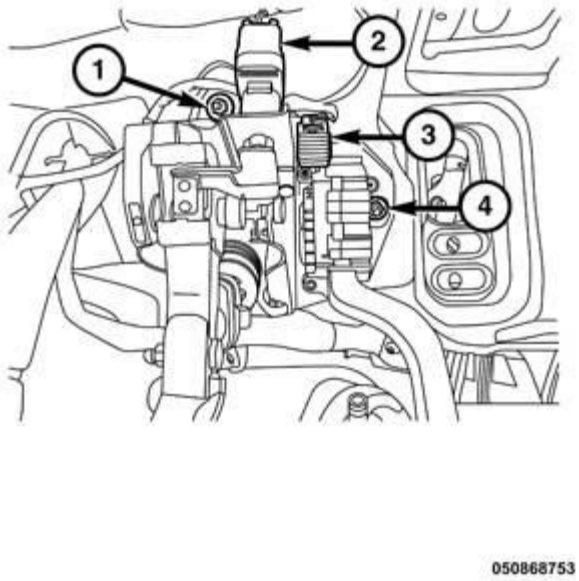

Fig. 56: Stop Lamp Switch, Connector & Nuts
Courtesy of CHRYSLER GROUP, LLC

9. Remove the remaining two nuts (1, 4) attaching the brake pedal sled to the dash panel.
10. Remove the brake pedal and bracket assembly from vehicle.

INSTALLATION

INSTALLATION

1. Carefully install the brake pedal and bracket assembly in the vehicle lining up the bracket with the power brake booster mounting studs and the studs on the dash panel.

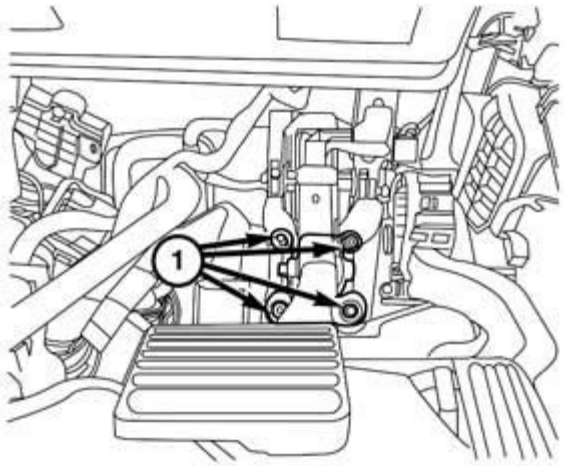

0508007146

Fig. 57: Remove/Install Power Brake Booster Nuts
Courtesy of CHRYSLER GROUP, LLC

2. Install the four nuts (1) attaching the brake pedal (and power brake booster) to the dash panel. **Do not tighten the nuts at this time.**
3. Tighten the nuts in the following sequence: Top inboard, bottom outboard, top outboard, bottom inboard to the proper specifications. Refer to **SPECIFICATIONS** . Failure to do so may result in damage to the booster.

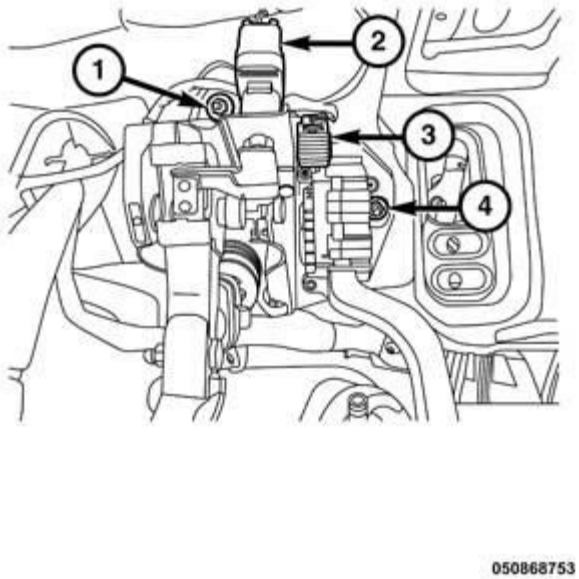

Fig. 58: Stop Lamp Switch, Connector & Nuts
Courtesy of CHRYSLER GROUP, LLC

4. Install the two remaining nuts (1, 4) attaching the brake pedal sled to the dash panel and tighten to the proper specifications. Refer to **SPECIFICATIONS** .

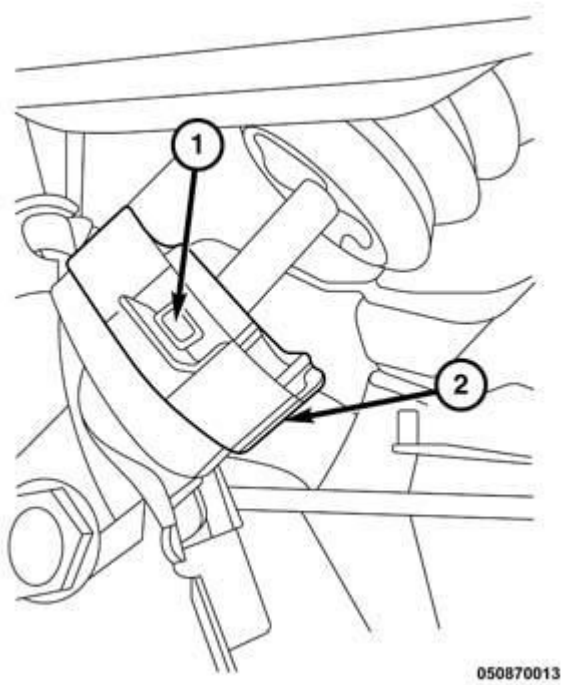

Fig. 59: Retainer & Clips
Courtesy of CHRYSLER GROUP, LLC

NOTE: The brake pedal booster rod keeper (2) cannot be reused. Always install a new keeper if the brake pedal push rod was separated from the keeper.

5. Install the power brake booster push rod and retainer (2) into a NEW booster rod keeper, ensuring that the clips (1) are engaged.

NOTE: Make sure the cup that the booster push rod reacts against is still in place in the pedal before installing the new booster rod keeper.

Connect the clutch safety switch electrical connector and engage clutch rod to clutch pedal, if equipped. Refer to **PEDAL AND PAD, CLUTCH, INSTALLATION** .

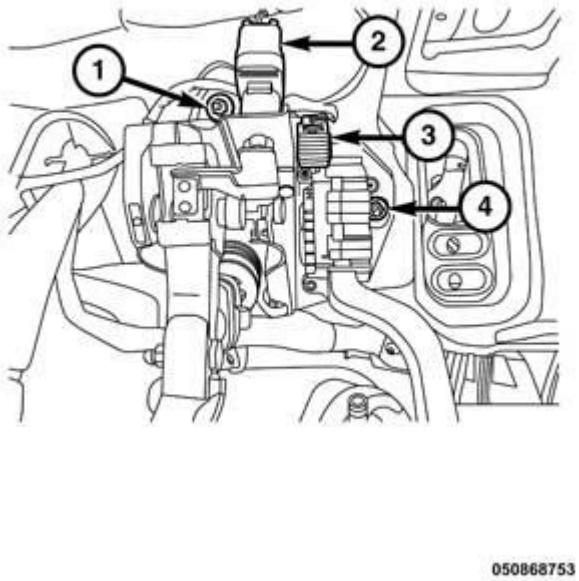

Fig. 60: Stop Lamp Switch, Connector & Nuts
Courtesy of CHRYSLER GROUP, LLC

6. Install and adjust the stop lamp switch (2) in the brake pedal bracket. Refer to **SWITCH, STOP LAMP, INSTALLATION** .
7. Connect accelerator pedal electrical connector (3).

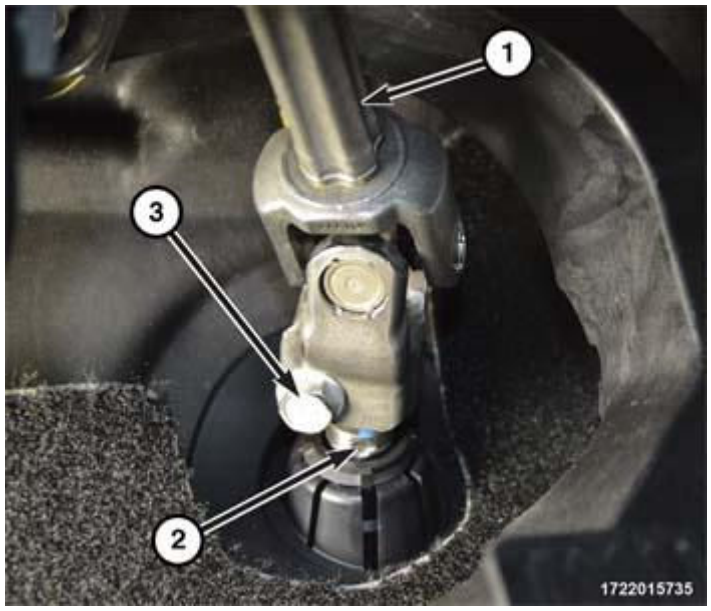

Fig. 61: Identifying Intermediate Shaft, Pinch Bolt And Steering Gear Pinion Shaft
Courtesy of CHRYSLER GROUP, LLC

NOTE: A new pinch bolt (3) must be installed every time the pinch bolt is removed.

8. Verify the front wheels of vehicle are in the STRAIGHT-AHEAD position.
9. Install the intermediate shaft (1) onto the steering gear pinion shaft (2).
10. Install a **NEW** pinch bolt (3) and tighten to specifications. Refer to **COLUMN, SPECIFICATIONS** .
11. If equipped, install the silencer pad below the instrument panel.
12. Connect the battery negative cable to its post on the battery.
13. Check the stop lamps to verify they are operating properly and not staying on when the pedal is in the released position.
14. Road test the vehicle to ensure proper operation of the brakes.

RESERVOIR, BRAKE MASTER CYLINDER

REMOVAL

REMOVAL

1. Remove the brake master cylinder and brake master cylinder reservoir assembly. Refer to **MASTER CYLINDER, BRAKE, REMOVAL**.

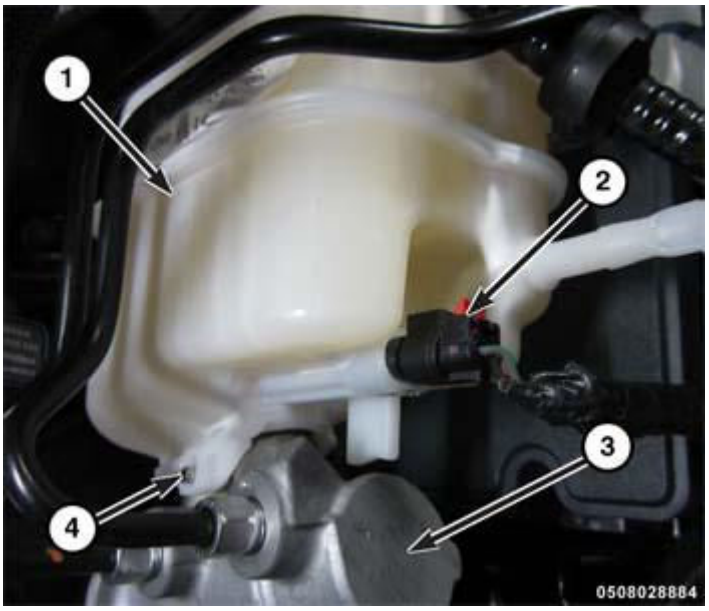

Fig. 62: Identifying Brake Master Cylinder Fluid Reservoir Components
Courtesy of CHRYSLER GROUP, LLC

2. Thoroughly clean all surfaces of brake fluid reservoir (1) and master cylinder (3). Use only Mopar® Brake Parts Cleaner or equivalent.

CAUTION: When removing fluid reservoir from the master cylinder, do not pry off using any type of tool. This can damage the fluid reservoir or master cylinder housing.

3. Using the appropriate tool, remove the roll pin (4) retaining the brake master cylinder reservoir (1) to the brake master cylinder (3).
4. Rock the brake fluid reservoir (1) side-to-side while pulling up to remove it from the seal grommets in master cylinder housing (3).

INSTALLATION

INSTALLATION

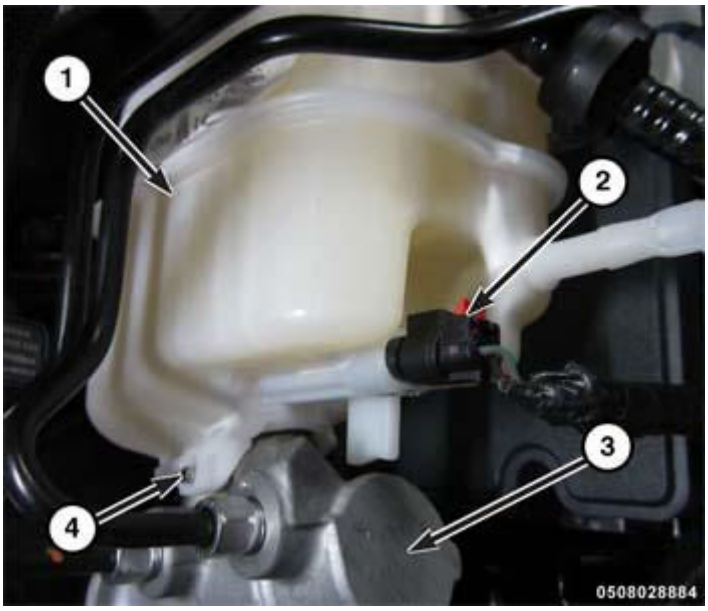

Fig. 63: Identifying Brake Master Cylinder Fluid Reservoir Components
Courtesy of CHRYSLER GROUP, LLC

1. Install **NEW** brake master cylinder reservoir (1) sealing grommets in brake master cylinder housing (3).
2. Lubricate reservoir mounting area with fresh clean brake fluid. Place reservoir (1) in position over sealing grommets. Seat reservoir into sealing grommets using a rocking motion while firmly pressing down on fluid reservoir. Once installed, make sure fluid reservoir is touching the top of both sealing grommets or reservoir is not properly installed.
3. Using the appropriate tool, install the roll pin (4) retaining the brake master cylinder reservoir (1) to the brake master cylinder (3).
4. Install the brake master cylinder and brake master cylinder reservoir assembly. Refer to **MASTER CYLINDER, BRAKE, INSTALLATION**.

ROTOR, BRAKE

DIAGNOSIS AND TESTING

DIAGNOSIS AND TESTING - BRAKE ROTOR

Any servicing of the rotor requires extreme care to maintain the rotor within service tolerances to ensure proper brake action.

Excessive runout or wobble in a rotor can increase pedal travel due to piston knock-back. This increases guide pin sleeve wear due to the tendency of the caliper to follow the rotor wobble.

When diagnosing a brake noise or pulsation, the machined disc braking surface should be inspected.

BRAKING SURFACE INSPECTION

Light braking surface scoring and wear is acceptable. If heavy scoring or warping is evident, the rotor must be

refaced or replaced.

Excessive wear and scoring of the rotor can cause improper lining contact on the rotor's braking surface. If the ridges on the rotor are not removed before new brake shoes are installed, improper wear of the shoes will result.

If a vehicle has not been driven for a period of time, the rotor's braking surface will rust in the areas not covered by the brake shoes at that time. Once the vehicle is driven, noise and chatter from the disc brakes can result when the brakes are applied.

Some discoloration or wear of the rotor surface is normal and does not require resurfacing when linings are replaced. If cracks or burned spots are evident, the rotor must be replaced.

ROTOR MINIMUM THICKNESS

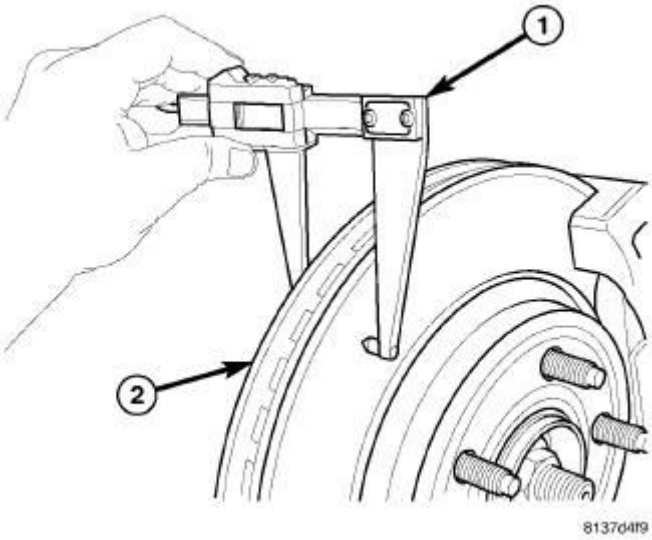

Fig. 64: Measuring Rotor Thickness
Courtesy of CHRYSLER GROUP, LLC

Measure rotor thickness (1) at the center of the brake pad contact surface. Replace the rotor if it is worn below minimum thickness or if machining the rotor will cause its thickness to fall below specifications.

CAUTION: Do not machine the rotor if it will cause the rotor to fall below minimum thickness.

On front rotors, Minimum thickness specifications are cast on the rotor's unmachined surface on the OD of the brake plate.

On rear rotors, Minimum thickness specifications are cast into the rotor's unmachined surface on the side of the hub mounting face. This area also shows the maximum thickness specifications for the hat section of the rotor.

ROTOR THICKNESS VARIATION

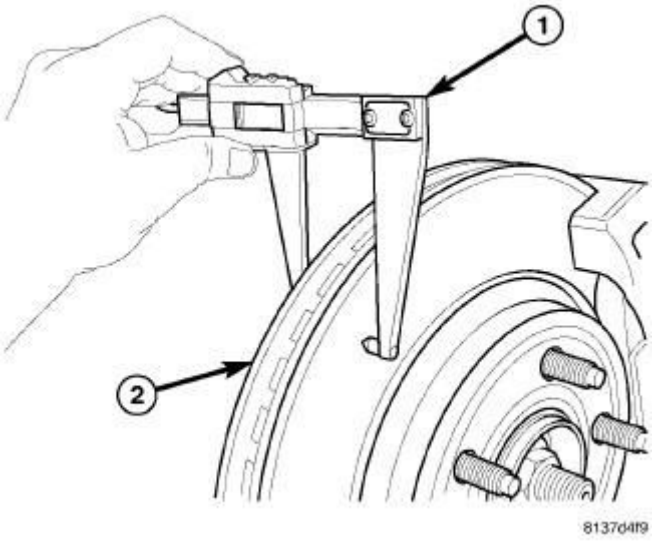

Fig. 65: Measuring Rotor Thickness
Courtesy of CHRYSLER GROUP, LLC

Thickness variation in a rotor's braking surface can result in pedal pulsation, chatter and surge. This can also be caused by excessive runout in the rotor or the hub.

Rotor thickness variation measurements should be made in conjunction with measuring runout. Measure thickness of the brake rotor (2) at 12 equal points around the rotor braking surface with a micrometer (1) at a radius approximately 25 mm (1 inch) from edge of rotor.

1. If excessive rotor thickness variation is found, reface or replace brake rotor. Refer to **ROTOR, BRAKE, STANDARD PROCEDURE**.

ROTOR RUNOUT

On-vehicle rotor runout is the combination of the individual runout of the hub face and the runout of the brake rotor (hub runout can be measured separately). To measure rotor runout on the vehicle:

1. Raise and support the vehicle.
2. Remove the tire and wheel assembly. Refer to **REMOVAL** .
3. Install wheel mounting (lug) bolts and spacers (washers) to secure rotor onto the hub assembly. Progressively tighten the (lug) bolts to specifications.
4. Mount Dial Indicator (special tool #C-3339A, Set, Dial Indicator) with Wheel (special tool #25-W, Roller Contact Point), or equivalent, to the knuckle. Position the dial indicator wheel to contact the rotor braking surface approximately 10 mm (0.39 in.) from the outer edge of the rotor.
5. Slowly rotate the brake rotor checking lateral runout, marking the low and high spots. Record these measurements.

6. Check and record the runout on the opposite side of the rotor in the same fashion, marking the low and high spots.
7. Compare runout measurement to specifications. Refer to **SPECIFICATIONS** .
8. If runout is in excess of specifications, check the lateral runout of the hub face. Before removing the rotor from the hub, place a chalk mark across both the rotor and the one wheel stud closest to where the high runout measurement was taken. This way, the original mounting spot of the rotor on the hub is indexed.
9. Remove the rotor from the hub. Refer to **ROTOR, BRAKE, REMOVAL**.

NOTE: Before measuring hub runout, clean the hub face surface with an appropriate cleaner. This provides a clean surface to get an accurate indicator reading.

10. Mount Dial Indicator (special tool #C-3339A, Set, Dial Indicator) to the knuckle. Position the dial indicator stem so it contacts the hub face near the outer diameter. Care must be taken to position the stem outside of the stud circle, but inside of the chamfer on the hub rim.
11. Slowly rotate the hub measuring runout. Hub runout should not exceed 0.040 mm (0.0016 inch). If runout exceeds this specification, the hub must be replaced. Refer to **HUB AND BEARING, REMOVAL** and **KNUCKLE, STEERING, REMOVAL** .
12. If hub runout does not exceed this specification, install the original rotor back on the hub, aligning the chalk mark on the rotor with a wheel mounting stud, two studs apart from the original stud.
13. Install wheel mounting (lug) bolts and spacers (washers) to secure rotor onto the hub assembly. Progressively tighten the (lug) bolts to specifications.
14. Mount the Dial Indicator (special tool #C-3339A, Set, Dial Indicator) (1) and remeasure runout on both sides of the brake rotor as explained in earlier steps to see if runout is now within specifications.
15. If runout is still not within specifications, reface or replace brake rotor. Refer to **ROTOR, BRAKE, STANDARD PROCEDURE**.

STANDARD PROCEDURE

STANDARD PROCEDURE - BRAKE ROTOR MACHINING

NOTE: Refacing the rotor is not required each time the brake pads are replaced, only when the need is foreseen.

Any servicing of the rotor requires extreme care to maintain the rotor within service tolerances to ensure proper brake action.

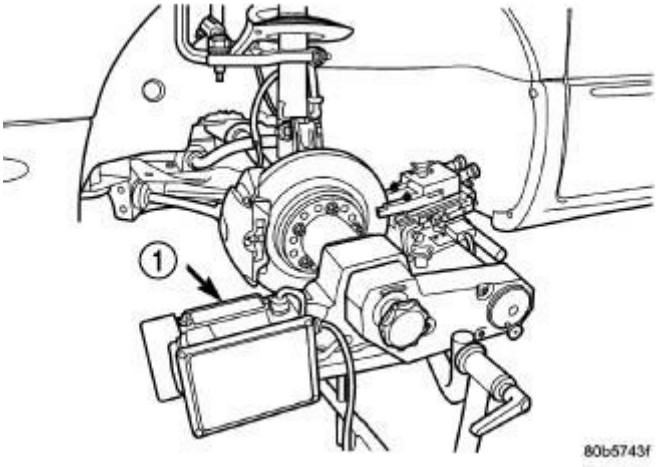

Fig. 66: On-Car Brake Lathe
Courtesy of CHRYSLER GROUP, LLC

1 - ON-CAR BRAKE LATHE

If the rotor surface is deeply scored or warped, or there is a complaint of brake roughness or brake pedal pulsation, the rotor should be refaced using a hub-mounted on-car brake lathe (1), or replaced.

The use of a hub-mounted on-car brake lathe (1) is highly recommended to eliminate the possibility of excessive runout. It trues the brake rotor to the vehicle's hub and bearing.

NOTE: All brake rotors have markings for minimum allowable thickness cast on an unmachined surface of the rotor or stamped into the hat section. On this vehicle, the minimum thickness specification for the front brake rotor is located on the OD of the brake plate. The minimum thickness specification for the rear brake rotor is located on the side of the hub mounting face.

Minimum allowable thickness is the minimum thickness which the brake rotor machined surface may be cut to.

CAUTION: Do not machine the rotor if it will cause the rotor to fall below minimum thickness.

Before lathe installation, verify the brake rotor face and the hub adapters are free of any chips, rust, or contamination.

When mounting and using the brake lathe, strict attention to the brake lathe manufacturer's operating instructions is required.

Machine both sides of the brake rotor at the same time. Cutting both sides at the same time minimizes the possibility of a tapered or uneven cut.

When refacing a rotor, the required TIR (Total Indicator Reading) and thickness variation limits MUST BE

MAINTAINED. Extreme care in the operation of rotor turning equipment is required.

REMOVAL

FRONT BRAKE ROTOR

NOTE: Before proceeding, refer to CAUTION and WARNING.

1. Raise and support the vehicle, refer to **HOISTING, STANDARD PROCEDURE** .
2. Remove the wheel mounting bolts, then the tire and wheel assembly.

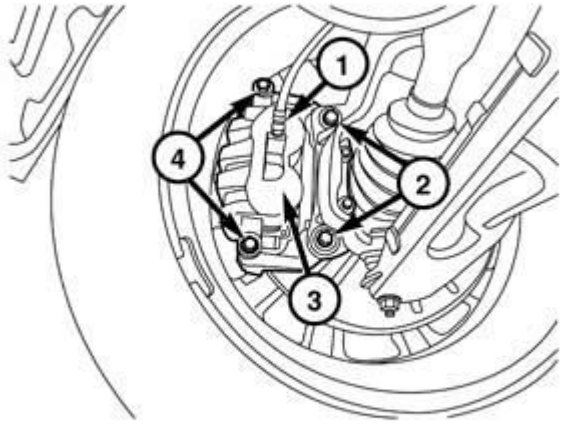

1715005815

Fig. 67: Identifying Brake Hose Connector And Pin Bolts
Courtesy of CHRYSLER GROUP, LLC

3. Remove the two brake caliper adapter bolts (2).

NOTE: The bolts are one time use and need to be discarded.

4. Remove the disc brake caliper and adapter as an assembly and hang it out of the way using wire or a bungee cord. Use care not to overextend the brake hose when doing this.
5. Remove the rotor retaining bolt and remove the rotor from the hub and bearing.

REAR BRAKE ROTOR

NOTE: Before proceeding, refer to CAUTION and WARNING.

The electronic parking brake actuator (EPB) must be retracted prior to removing the brake caliper assembly. This can be done in two ways:

- A diagnostic scan tool (Service Mode position)
- Through Uconnect

CAUTION: If the electric park brake (EPB) switch is actuated with the caliper removed from the caliper bracket and still connected electrically, the EPB motor will fully extend causing damage to the caliper piston. Disconnect and isolate the negative battery cable before servicing any EPB component.

1. Disconnect and isolate the negative battery cable.
2. Raise and support the vehicle. Refer to **HOISTING, STANDARD PROCEDURE** .
3. Remove the wheel mounting bolts, then the tire and wheel assembly.

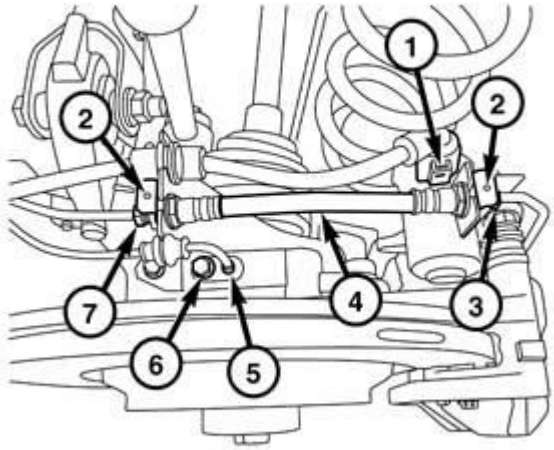

1715005817

Fig. 68: Identifying Brake Line Bracket, Brake Line, Flex Hose And Wheel Speed Sensor
Courtesy of CHRYSLER GROUP, LLC

4. Remove the nut and brake line bracket (2).

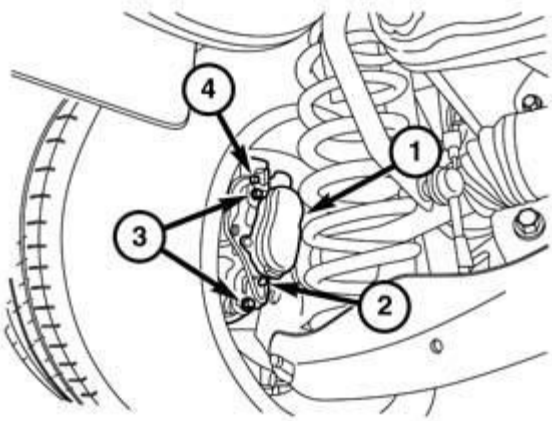

1715005819

Fig. 69: Removing/Installing Guide Pin Bolts
Courtesy of CHRYSLER GROUP, LLC

5. While holding the hex fitting on the caliper slides, remove caliper guide pin bolts (3).

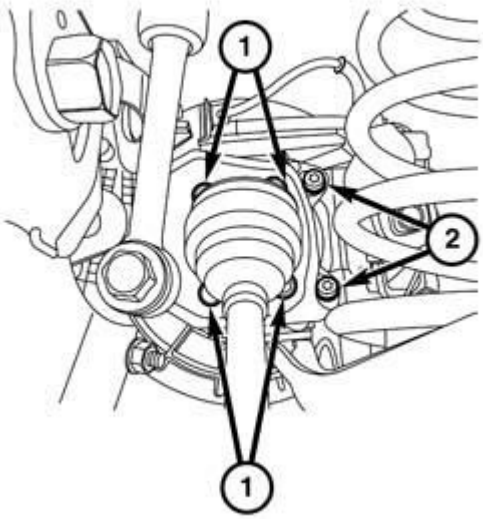

1715005821

Fig. 70: Removing Caliper Bracket Mounting Bolts And Mounting Bracket
Courtesy of CHRYSLER GROUP, LLC

6. Remove caliper from mounting bracket and support with a bungee cord or wire. Do not let it hang from the brake hose.
7. Remove caliper bracket mounting bolts (2) and remove caliper mounting bracket.

NOTE: The bolts are one time use and need to be discarded.

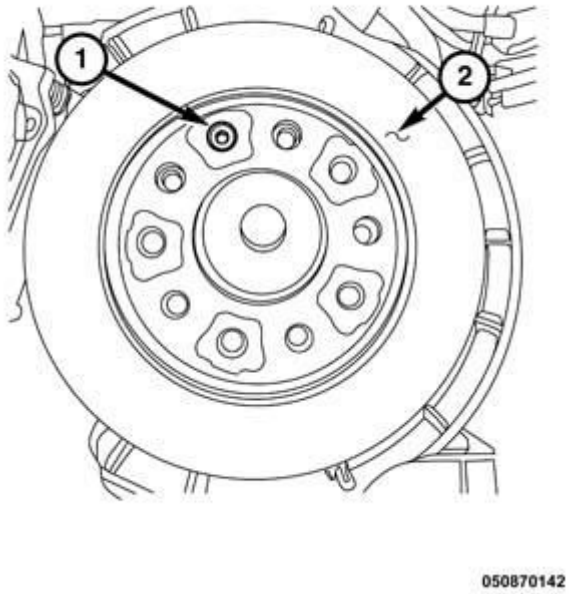

Fig. 71: Rotor & Retaining Bolt
Courtesy of CHRYSLER GROUP, LLC

8. Remove retaining bolt (1) and slide brake rotor (2) off the hub and bearing.

INSTALLATION

FRONT BRAKE ROTOR

NOTE: Inspect disc brake pads before installation. Refer to INSPECTION .

1. Clean the hub face to remove any dirt or corrosion where the rotor mounts.
2. Install the brake rotor on the hub and bearing.
3. Install the brake rotor retaining bolt and tighten to 20 N.m (177 in. lbs.).

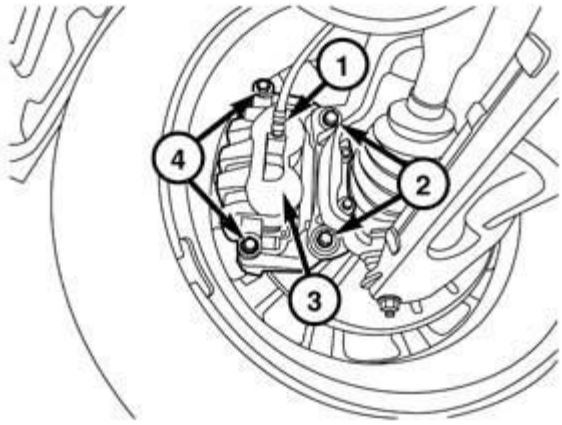

1715005815

Fig. 72: Identifying Brake Hose Connector And Pin Bolts
Courtesy of CHRYSLER GROUP, LLC

4. Install the disc brake caliper and adapter bracket assembly over the brake rotor and knuckle.
5. Install **NEW** mounting bolts (2) securing the caliper adapter bracket to the knuckle and tighten to 175 N.m (129 ft. lbs.).
6. Install the tire and wheel assembly. Refer to **INSTALLATION** .
7. Lower the vehicle.
8. Pump the brake pedal several times before moving the vehicle to set the pads to the brake rotor.
9. Check and adjust the brake fluid level in the reservoir as necessary.
10. Road test the vehicle and make several stops to seat the brake pads to the rotor.

REAR BRAKE ROTOR

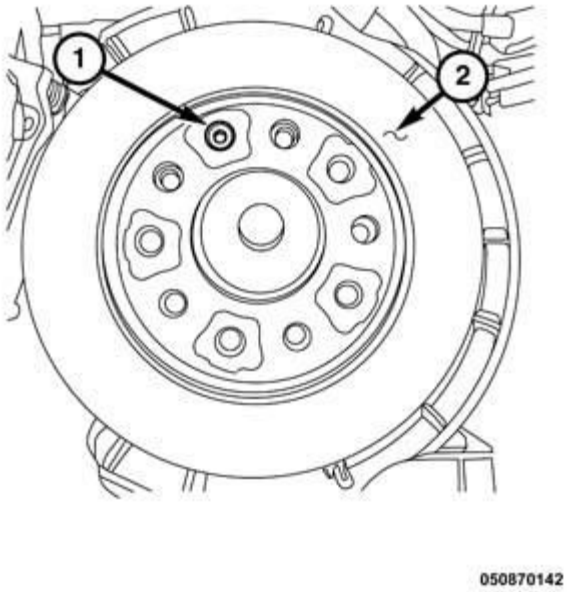

Fig. 73: Rotor & Retaining Bolt
Courtesy of CHRYSLER GROUP, LLC

NOTE: Inspect disc brake pads before installation. Refer to INSPECTION .

1. Clean the hub face to remove any dirt or corrosion where the rotor mounts.
2. Install the brake rotor (2) on the hub and bearing.
3. Install rotor retaining bolt (1) and tighten to 20 N.m (177 in. lbs.).

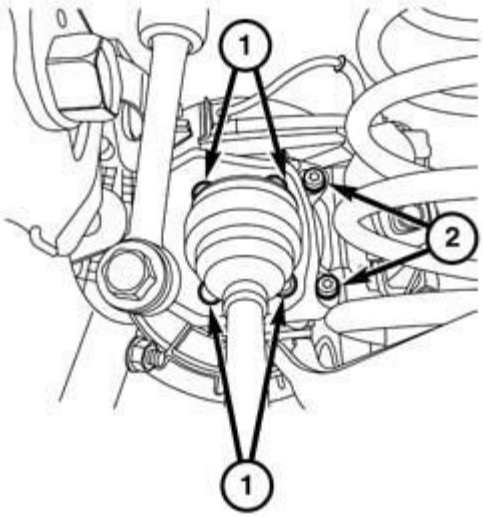

1715005821

Fig. 74: Installing Caliper Mounting Bracket And Two New Mounting Bolts
Courtesy of CHRYSLER GROUP, LLC

4. Install caliper mounting bracket and install two **NEW** mounting bolts (2) and tighten to 120 N.m (89 ft. lbs.).

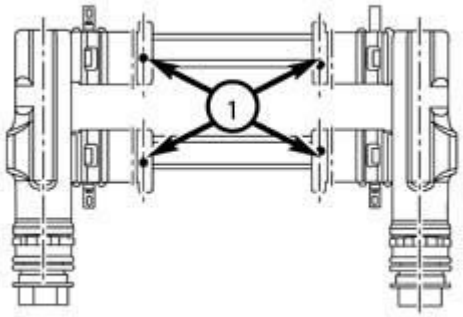

0508012591

Fig. 75: Identifying Lubricant Application Areas
Courtesy of CHRYSLER GROUP, LLC

5. Before installing the brake pads, apply WOLFRACOAT® C (1) or equivalent lubricant to the abutment clips as shown in the illustration.

NOTE: WOLFRACOAT® C or equivalent lubricant must be applied to prevent

noise.

6. There is a small post on the lower backside of the inboard pad. Make sure that this post lines up with one of the slots on the piston to ensure the pad interfaces with the piston correctly.

CAUTION: Use care when installing the caliper onto the adapter bracket to avoid damaging the guide pin boot.

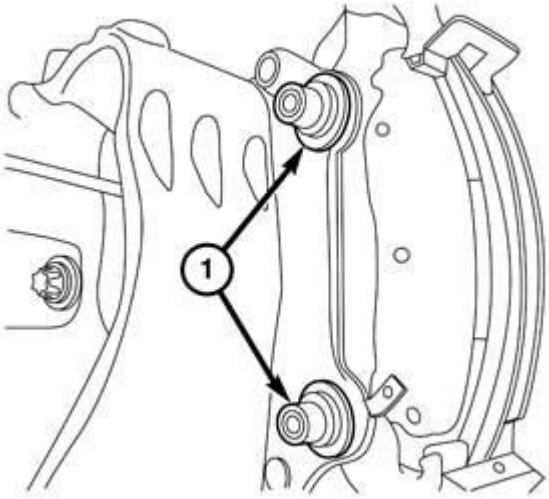

050868487

Fig. 76: Installing The Brake Pads To The Adapter Bracket
Courtesy of CHRYSLER GROUP, LLC

7. Install the brake pads to the adapter bracket and install the caliper to the adapter bracket.
8. Install the disc brake caliper guide pin bolts (3). While holding the hex fitting on the caliper slides, tighten the guide pin bolts (1) to 43 N.m (32 ft. lbs.).

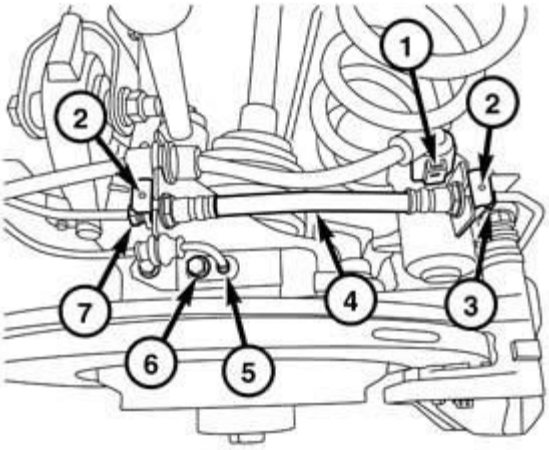

1715005817

Fig. 77: Identifying Brake Line Bracket, Brake Line, Flex Hose And Wheel Speed Sensor
Courtesy of CHRYSLER GROUP, LLC

9. Install the brake line bracket and nut (2).
10. Install tire and wheel assembly. Refer to **INSTALLATION** .
11. Lower the vehicle.
12. Pump the brake pedal several times before moving the vehicle to set the pads to the brake rotor.
13. Check and adjust the brake fluid level in the reservoir as necessary.
14. Exit the Service Mode prior to road testing the vehicle. This can be done in two ways:
    - Exit the Service Mode with diagnostic scan tool.
    - While depressing the brake pedal, press the EPB switch.
15. Road test the vehicle and make several stops to seat the brake pads to the rotor.

PARKING BRAKE

DESCRIPTION

DESCRIPTION

The electric park brakes consist of the following components:

- Electric park brake switch and indicator
- Electric park brake control module
- Two electromechanical motor gear units attached to conventional sliding calipers

- Communication to other modules allowing seamless operation of the electric parking brake

The electromechanical motor gear units attach directly to the rear brake calipers and provide clamp load through the caliper transferred to the brake rotor.

The motors are controlled by a bi-directional 12-volt feed and ground through the electric brake control module.

The module does not maintain voltage to the motors to keep the parking brake applied. Once engaged, the parking brake remains engaged even if the motors are disconnected.

For information on Service Mode and normal operating conditions. Refer to **MODULE, ELECTRIC PARK BRAKE, OPERATION** .

CAUTION: If the electric park brake (EPB) switch is actuated with the caliper removed from the caliper bracket and still connected electrically, the EPB motor will fully extend causing damage to the caliper piston. Disconnect and isolate the negative battery cable before servicing any EPB component.

SWITCH, ELECTRIC PARK BRAKE

DESCRIPTION

DESCRIPTION

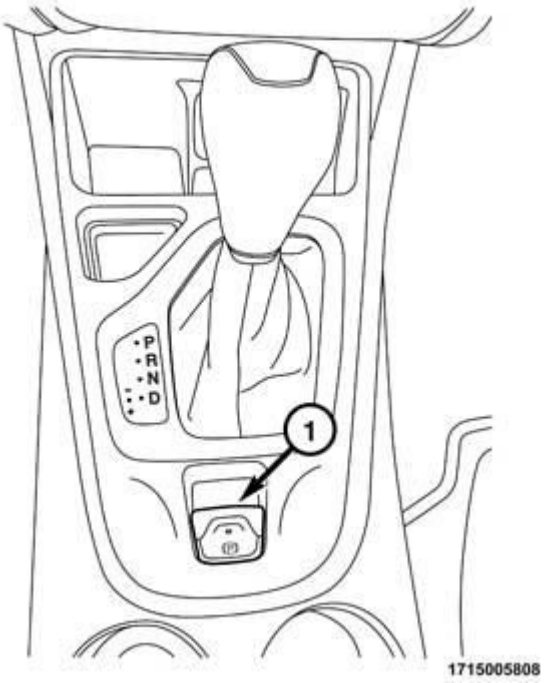

Fig. 78: Identifying Electric Park Brake (EPB) Switch
Courtesy of CHRYSLER GROUP, LLC

All vehicles are equipped with a center-mounted, electric park brake (EPB) switch mounted between the front seats.

The EPB switch is a three-position switch that can be pulled up to apply or pressed down to release. The switch communicates with the EPB module through hard-wired circuits. The switch housing also includes an indicator to let the driver know when the parking brake is applied. If the vehicle is turned off, the indicator will extinguish after ten seconds.

CAUTION: If the electric park brake (EPB) switch is actuated with the caliper removed from the caliper bracket and still connected electrically, the EPB motor will fully extend causing damage to the caliper piston. Disconnect and isolate the negative battery cable before servicing any EPB component.

OPERATION

OPERATION

The EPB switch sends an on/off request signal to the EPB module to apply or release the EPB.

At any time, the EPB switch can be actuated. Depending on the speed of the vehicle when the EPB switch is actuated, the EPB module will output different commands to request the EPB to apply under the following conditions:

Static Apply (under 5 kph) - Retracts the EPB motors attached to the rear calipers to release the rear brakes.

Dynamic Apply (over 5 kph) - Actuates the hydraulic braking system.

Fig. 79: Identifying Brake Warning And EPB Fault Lamp
Courtesy of CHRYSLER GROUP, LLC

There are two indicators in the instrument cluster to give feedback for the electric parking brake system. The

traditional red BRAKE warning lamp is illuminated when the EPB is applied. If there is a fault in the EPB system, an amber EPB fault lamp is illuminated.

NOTE: **To remove the vehicle from Service Mode, press the EPB switch while also depressing the brake pedal.**

For information on Service Mode and normal operating conditions. Refer to MODULE, ELECTRIC PARK BRAKE, OPERATION .

CAUTION: If the electric park brake (EPB) switch is actuated with the caliper removed from the caliper bracket and still connected electrically, the EPB motor will fully extend causing damage to the caliper piston. Disconnect and isolate the negative battery cable before servicing any EPB component.

REMOVAL

REMOVAL

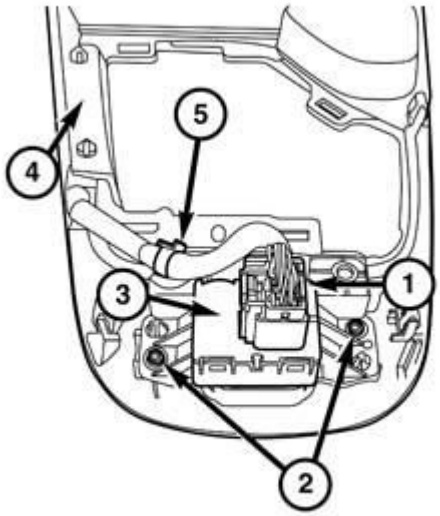

0508007143

Fig. 80: Identifying Electric Park Brake (EPB) Switch, Shift Bezel And Screws
Courtesy of CHRYSLER GROUP, LLC

CAUTION: If the electric park brake (EPB) switch is actuated with the caliper removed from the caliper bracket and still connected electrically, the EPB motor will fully extend causing damage to the caliper piston. Disconnect and isolate the negative battery cable before servicing any EPB component.

NOTE: **If the EPB switch is removed while power is still applied to the vehicle, it will set a General Switch Fault (DTC) in the EPB module. The EPB switch is monitored by the EPB module to confirm it's availability at all times.**

1. Disconnect negative (ground) cable from the battery and isolate it.
2. Remove the shift bezel (4). Refer to **BEZEL, SHIFTER, REMOVAL** .
3. Disconnect the electrical connector (1) from the EPB switch (3).
4. Remove the screws (2) from the EPB switch.

INSTALLATION

INSTALLATION

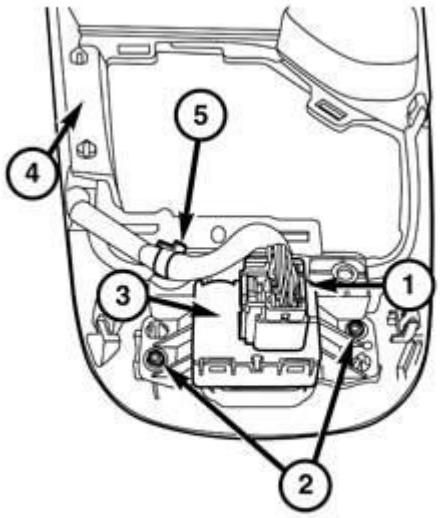

0508007143

Fig. 81: Identifying Electric Park Brake (EPB) Switch, Shift Bezel And Screws
Courtesy of CHRYSLER GROUP, LLC

1. Install the EPB switch (3) to the shift bezel (4).
2. Install the screws (2) securing the EPB switch (3) to the shift bezel (4).
3. Connect the electrical connector (1).
4. Install the shift bezel. Refer to **BEZEL, SHIFTER, INSTALLATION** .
5. Connect negative (ground) cable to the battery.

ACTUATOR, ELECTRIC PARK BRAKE

DESCRIPTION

DESCRIPTION

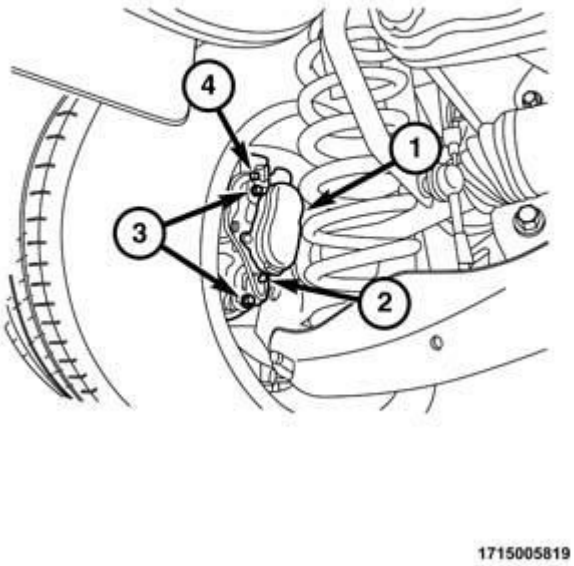

Fig. 82: Identifying Guide Pin Bolts
Courtesy of CHRYSLER GROUP, LLC

CAUTION: If the electric park brake (EPB) switch is actuated with the caliper removed from the caliper bracket and still connected electrically, the EPB motor will fully extend causing damage to the caliper piston. Disconnect and isolate the negative battery cable before servicing any EPB component.

The electromechanical motor gear units (1) attach directly to the conventional hydraulic rear brake calipers with two fasteners and provide clamp load through the caliper transferred to the brake rotor.

NOTE: If the electric park brake actuator is found to be defective or needs to be replaced, it can only be replaced as an assembly. There are no serviceable parts inside and is non-repairable.

OPERATION

OPERATION

CAUTION: If the electric park brake (EPB) switch is actuated with the caliper removed from the caliper bracket and still connected electrically, the EPB motor will fully extend causing damage to the caliper piston. Disconnect and isolate the negative battery cable before servicing any EPB component.

The electric park brake (EPB) actuator is driven by the EPB module. It is a bi-directional motor that receives 12

volt power and ground through the EPB module to apply or release clamp load to the brake rotor. Once applied, it does not need voltage to maintain clamp load.

For information on Service Mode and normal operating conditions. Refer to **MODULE, ELECTRIC PARK BRAKE, OPERATION** .

REMOVAL

REMOVAL

NOTE: Release the electric park brake (EPB) before proceeding.

CAUTION: If the electric park brake (EPB) switch is actuated with the caliper removed from the caliper bracket and still connected electrically, the EPB motor will fully extend causing damage to the caliper piston. Disconnect and isolate the negative battery cable before servicing any EPB component.

1. Disconnect and isolate battery negative cable from battery post.
2. Raise and support the vehicle. Refer to **HOISTING, STANDARD PROCEDURE** .

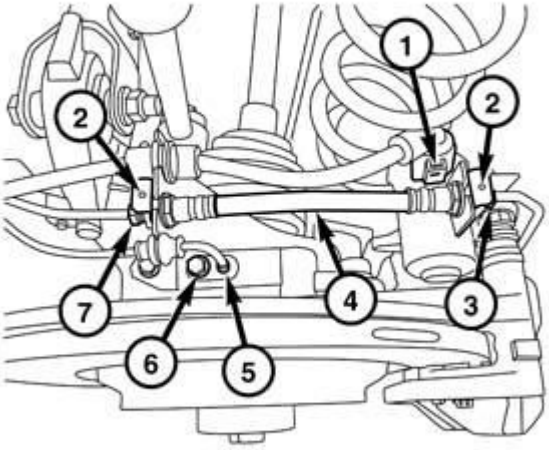

1715005817

Fig. 83: Identifying Brake Line Bracket, Brake Line, Flex Hose And Wheel Speed Sensor
Courtesy of CHRYSLER GROUP, LLC

3. Disconnect electrical connector (1) at the electric park brake actuator (EPB).

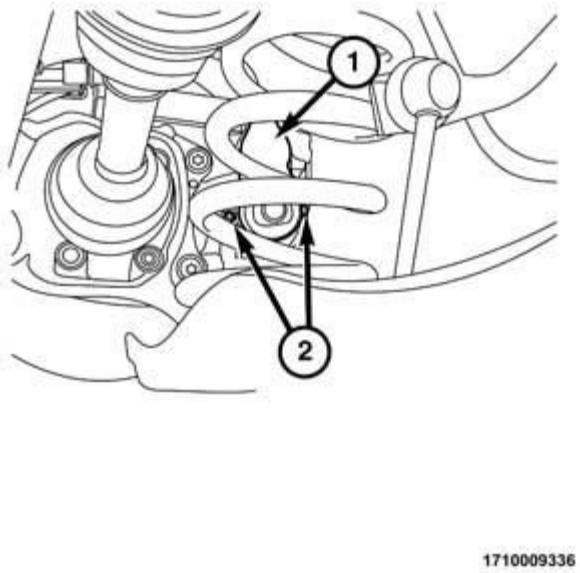

Fig. 84: Identifying EPB Actuator
Courtesy of CHRYSLER GROUP, LLC

4. Remove the two bolts (2) attaching the EPB actuator (1) from the brake caliper.

INSTALLATION

INSTALLATION

NOTE: Using an appropriate lubricant, lightly lubricate the O-ring on the body of the new EPB actuator before installing it.

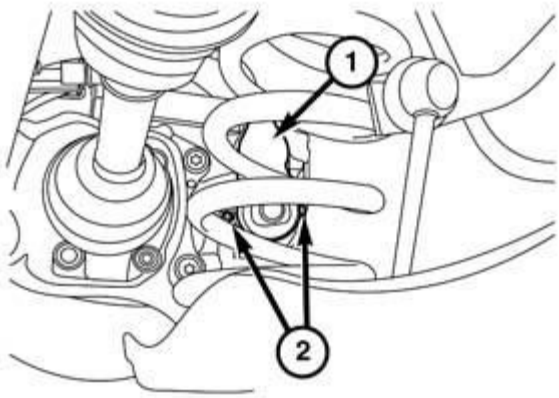

1710009336

Fig. 85: Identifying EPB Actuator
Courtesy of CHRYSLER GROUP, LLC

1. Position the electric park brake (EPB) actuator (1) to the brake caliper and install the two bolts (2). Tighten the bolts to 12 N.m (106 in. lbs.).

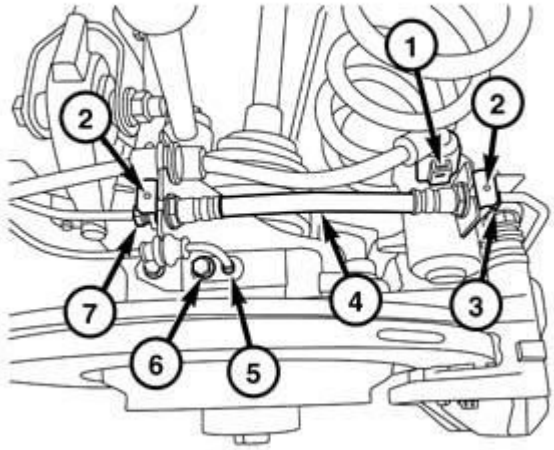

1715005817

Fig. 86: Identifying Brake Line Bracket, Brake Line, Flex Hose And Wheel Speed Sensor
Courtesy of CHRYSLER GROUP, LLC

2. Connect the electrical connector (1) to the EPB actuator.
3. Lower the vehicle.
4. Connect negative (ground) cable to the battery.
5. Using the EPB switch, release the EPB, followed by an EPB apply and then another EPB release. Only in that order, even if the EPB is already in the released state. This will make sure the new actuator is working, recognized by the EPB module and there is correlation between the left and right sides.

2014 BRAKES

Electric Parking Brake (EPB) Module - Electrical Diagnostics - Cherokee

DIAGNOSTIC CODE INDEX

DIAGNOSTIC CODE INDEX

DTC	Description
C0062-54	LONGITUDINAL ACCELERATION SENSOR - MISSING CALIBRATION
C008E-00	ECU INTERNAL PERFORMANCE
C10CD-01	ELECTRONIC PARK BRAKE SWITCH - GENERAL ELECTRICAL FAILURE
C10D0-52	ELECTRONIC PARK BRAKE MODULE - NOT ACTIVATED
C10D0-53	ELECTRONIC PARK BRAKE MODULE - DEACTIVATED
C10EA-00	LEFT PARK BRAKE ACTUATOR
C10EA-04	LEFT PARK BRAKE ACTUATOR - SYSTEM INTERNAL FAILURE
C10EB-00	RIGHT PARK BRAKE ACTUATOR
C10EB-04	RIGHT PARK BRAKE ACTUATOR - SYSTEM INTERNAL FAILURE
C10EC-00	PARK BRAKE ACTUATOR CORRELATION
C10ED-00	ELECTRONIC PARK BRAKE SWITCH LED
C2100-00	BATTERY VOLTAGE LOW
C2101-00	BATTERY VOLTAGE HIGH
C2203-00	CURRENT VIN MISSING/MISMATCH
C2212-00	ECU IN PLANT MODE
C2219-00	ECU UNABLE TO CONFIGURE/CONFIGURATION NOT LEARNED
C2222-68	IMPROPER POWERDOWN - EVENT INFORMATION
C2223-00	ECU CONFIGURATION MISMATCH
U0001-00	CAN C BUS
U0100-00	LOST COMMUNICATION WITH ECM/PCM
U0101-00	LOST COMMUNICATION WITH TCM
U0102-00	LOST COMMUNICATION WITH TRANSFER CASE CONTROL MODULE / AWD
U0129-00	LOST COMMUNICATION WITH BRAKE SYSTEM CONTROL MODULE
U0140-00	LOST COMMUNICATION WITH BODY CONTROL MODULE
U0151-00	LOST COMMUNICATION WITH OCCUPANT RESTRAINT CONTROLLER (ORC)
U0401-00	IMPLAUSIBLE DATA RECEIVED FROM ECM/PCM
U0402-00	IMPLAUSIBLE DATA RECEIVED FROM TCM
U0403-00	IMPLAUSIBLE DATA RECEIVED FROM T-CASE
U0415-00	IMPLAUSIBLE DATA RECEIVED FROM ABS
U0415-92	IMPLAUSIBLE DATA RECEIVED FROM ABS - PERFORMANCE OR INCORRECT OPERATION
U0422-00	IMPLAUSIBLE DATA RECEIVED FROM BODY CONTROL MODULE

U0423-00	IMPLAUSIBLE DATA RECEIVED FROM THE CLUSTER/CCN
U0452-00	IMPLAUSIBLE DATA RECEIVED FROM RESTRAINTS CONTROL MODULE
U300A-00	IGNITION SWITCH

DIAGNOSIS AND TESTING

C0062-54-LONGITUDINAL ACCELERATION SENSOR - MISSING CALIBRATION

For a complete wiring diagram, **refer to appropriate SYSTEM WIRING DIAGRAMS article** .

WHEN MONITORED

Ignition on.

SET CONDITION

When the Electric Parking Brake (EPB) Module has not been calibrated and a new Dynamics Sensor has been installed on the vehicle.

NOTE: The Dynamics Sensor is internal to the Occupant Restraint Controller (ORC).

POSSIBLE CAUSES

Possible Causes
OCCUPANT RESTRAINT CONTROLLER (ORC) DTCS
G-SENSOR ALIGNMENT ROUTINE CALIBRATION NOT PERFORMED
ELECTRIC PARKING BRAKE (EPB) MODULE

DIAGNOSTIC TEST

1. **CHECK FOR OCCUPANT RESTRAINT CONTROLLER (ORC) DTCs**
    1. Perform any Technical Service Bulletins (TSBs) that may apply.
    2. Turn the ignition on.
    3. With the scan tool, read DTCs in the ORC.

    Are there any ORC related DTCs present?

    Yes

    - Perform the appropriate diagnostic procedure. Refer to the **OCCUPANT RESTRAINT CONTROLLER (ORC) - DIAGNOSTIC CODE INDEX** article.

    No

- Go To 2

2. **PERFORM THE G-SENSOR ALIGNMENT ROUTINE**
   1. With the scan tool, under "Miscellaneous Functions" perform the G-Sensor Alignment routine.

      Was the routine successful?

      Yes

      - The conditions that caused this code to set are not present at this time. Using the wiring diagram/schematic as a guide, inspect the wiring harness and electrical connectors.
      - Perform the EPB VERIFICATION TEST. Refer to **STANDARD PROCEDURE**.

      No

      - Perform the " G-Sensor Alignment" routine again, if still unsuccessful.
      - Go To 3

3. **VERIFY THE DTC IS ACTIVE**
   1. Turn the ignition on.
   2. With the scan tool, record and erase the DTCs.
   3. Cycle the ignition from off to on.
   4. Push the EPB Switch down to release the Electric Parking Brakes.
   5. Pull the EPB Switch up to set the Electric Parking Brakes.
   6. Push the EPB Switch down to release the Electric Parking Brakes.
   7. Cycle the ignition from off to on.
   8. With the scan tool, read EPB DTCs.

      Does the DTC remain active?

      Yes

      - Replace the Electric Parking Brake (EPB) Module in accordance with service information. Refer to **MODULE, ELECTRIC PARK BRAKE, REMOVAL** .
      - Perform the EPB VERIFICATION TEST. Refer to **STANDARD PROCEDURE**.

      No

      - Test complete.

C008E-00-ECU INTERNAL PERFORMANCE

For a complete wiring diagram, **refer to appropriate SYSTEM WIRING DIAGRAMS article** .

WHEN MONITORED

Ignition on.

SET CONDITION

The Electric Parking Brake (EPB) Module runs a self diagnostic test to validate proper controller operation. This DTC will set if the controller has failed one or more internal test.

POSSIBLE CAUSES

Possible Causes
ELECTRIC PARKING BRAKE (EPB) MODULE

DIAGNOSTIC TEST

1. **VERIFY THE DTC IS ACTIVE**
    1. Turn the ignition on.
    2. With the scan tool, record and erase the DTCs.
    3. Cycle the ignition from off to on.
    4. Push the EPB Switch down to release the Electric Parking Brakes.
    5. Pull the EPB Switch up to set the Electric Parking Brakes.
    6. Push the EPB Switch down to release the Electric Parking Brakes.
    7. Cycle the ignition from off to on.
    8. With the scan tool, read EPB DTCs.

    Is the DTC active at this time?

    Yes

    - Replace the Electric Parking Brake (EPB) Module in accordance with service information. Refer to **MODULE, ELECTRIC PARK BRAKE, REMOVAL** .
    - Perform the EPB VERIFICATION TEST. Refer to **STANDARD PROCEDURE**.

    No

    - Go To 2
2. **CHECK THE WIRING AND CONNECTORS**
    1. The conditions necessary to set the DTC are not present at this time.
    2. Using the schematics as a guide, inspect the wiring and connectors specific to this module. Wiggle the wiring and connectors while checking for shorted and open circuits.
    3. Check all related splices and connectors for signs of water intrusion, corrosion, pushed out or bent terminals, and correct pin tension.
    4. Check Service Bulletins for any possible causes that may apply.

Were there any problems found?

Yes

- Repair as necessary.
- Perform the EPB VERIFICATION TEST. Refer to **STANDARD PROCEDURE**.

No

- Test complete.

C10CD-01-ELECTRONIC PARK BRAKE SWITCH - GENERAL ELECTRICAL FAILURE

For a complete wiring diagram, **refer to appropriate SYSTEM WIRING DIAGRAMS article** .

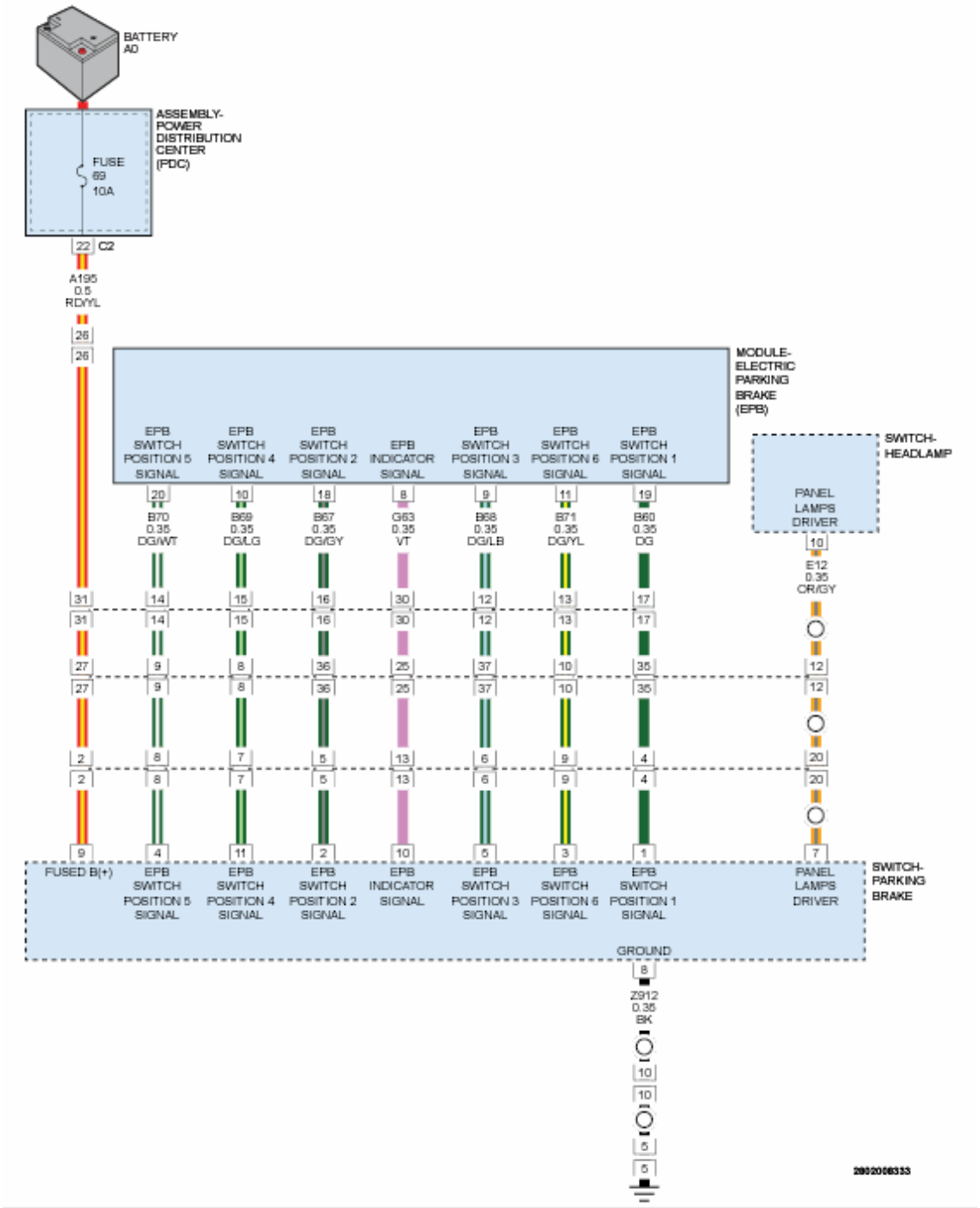

Fig. 1: Identifying Parking Brake Switch Circuit Diagram
Courtesy of CHRYSLER GROUP, LLC

WHEN MONITORED

With the ignition on and no system under voltage or over voltage condition present.

SET CONDITION

When the Electric Parking Brake (EPB) Module detects improper EPB Switch inputs.

POSSIBLE CAUSES

Possible Causes
PARKING BRAKE (EPB) SWITCH/CONNECTOR/TERMINAL DAMAGE
(B60) EPB SWITCH POSITION 1 SIGNAL CIRCUIT SHORTED TO VOLTAGE
(B67) EPB SWITCH POSITION 2 SIGNAL CIRCUIT SHORTED TO VOLTAGE
(B68) EPB SWITCH POSITION 3 SIGNAL CIRCUIT SHORTED TO VOLTAGE
(B69) EPB SWITCH POSITION 4 SIGNAL CIRCUIT SHORTED TO VOLTAGE
(B70) EPB SWITCH POSITION 5 SIGNAL CIRCUIT SHORTED TO VOLTAGE
(B71) EPB SWITCH POSITION 6 SIGNAL CIRCUIT SHORTED TO VOLTAGE
(B60) EPB SWITCH POSITION 1 SIGNAL CIRCUIT SHORTED TO GROUND
(B67) EPB SWITCH POSITION 2 SIGNAL CIRCUIT SHORTED TO GROUND
(B68) EPB SWITCH POSITION 3 SIGNAL CIRCUIT SHORTED TO GROUND
(B69) EPB SWITCH POSITION 4 SIGNAL CIRCUIT SHORTED TO GROUND
(B70) EPB SWITCH POSITION 5 SIGNAL CIRCUIT SHORTED TO GROUND
(B71) EPB SWITCH POSITION 6 SIGNAL CIRCUIT SHORTED TO GROUND
(B60) EPB SWITCH POSITION 1 SIGNAL CIRCUIT OPEN OR HIGH RESISTANCE
(B67) EPB SWITCH POSITION 2 SIGNAL CIRCUIT OPEN OR HIGH RESISTANCE
(B68) EPB SWITCH POSITION 3 SIGNAL CIRCUIT OPEN OR HIGH RESISTANCE
(B69) EPB SWITCH POSITION 4 SIGNAL CIRCUIT OPEN OR HIGH RESISTANCE
(B70) EPB SWITCH POSITION 5 SIGNAL CIRCUIT OPEN OR HIGH RESISTANCE
(B71) EPB SWITCH POSITION 6 SIGNAL CIRCUIT OPEN OR HIGH RESISTANCE
PARKING BRAKE SWITCH
ELECTRIC PARKING BRAKE (EPB) MODULE

DIAGNOSTIC TEST

1. **VERIFY THE DTC IS ACTIVE**
    1. Turn the ignition on.
    2. With the scan tool, record and erase the DTCs.
    3. Cycle the ignition from off to on.
    4. Push the EPB Switch down to release the Electric Parking Brakes.
    5. Pull the EPB Switch up to set the Electric Parking Brakes.
    6. Push the EPB Switch down to release the Electric Parking Brakes.
    7. Cycle the ignition from off to on.
    8. With the scan tool, read EPB DTCs.

    Is the DTC active at this time?

Yes

- Go To 2

No

- The conditions that caused this code to set are not present at this time. Using the wiring diagram/schematic as a guide, inspect the wiring harness and electrical connectors.
- Perform the EPB VERIFICATION TEST. Refer to **STANDARD PROCEDURE**.

2. **CHECK PARKING BRAKE SWITCH CONNECTOR/TERMINAL FOR DAMAGE**

NOTE: Check all terminals for broken, bent, pushed out, or corroded terminals.

1. Turn the ignition off.
2. Inspect the Parking Brake Switch for proper mounting.
3. Inspect the Parking Brake Switch for correct mechanical operation.
4. Inspect the Parking Brake Switch harness and connector.

Were any problems found?

Yes

- Repair as necessary.
- Perform the EPB VERIFICATION TEST. Refer to **STANDARD PROCEDURE**.

No

- Go To 3

3. **(B60) EPB SWITCH POSITION 1 SIGNAL CIRCUIT SHORTED TO VOLTAGE**
   1. Disconnect the EPB Module harness connector.
   2. Disconnect the Parking Brake Switch harness connector.
   3. Turn the ignition on.
   4. Measure the voltage of the (B60) EPB Switch Position 1 Signal circuit at the Parking Brake Switch harness connector.

   Is there any voltage present?

   Yes

   - Repair the (B60) EPB Switch Position 1 Signal circuit for a short to voltage.
   - Perform the EPB VERIFICATION TEST. Refer to **STANDARD PROCEDURE**.

   No

- Go To 4

4. **(B67) EPB SWITCH POSITION 2 SIGNAL CIRCUIT SHORTED TO VOLTAGE**
   1. Measure the voltage of the (B67) EPB Switch Position 2 Signal circuit at the Parking Brake Switch harness connector harness connector.

      Is there any voltage present?

      Yes

      - Repair the (B67) EPB Switch Position 2 Signal circuit for a short to voltage.
      - Perform the EPB VERIFICATION TEST. Refer to **STANDARD PROCEDURE**.

      No

      - Go To 5

5. **(B68) EPB SWITCH POSITION 3 SIGNAL CIRCUIT SHORTED TO VOLTAGE**
   1. Measure the voltage of the (B68) EPB Switch Position 3 Signal circuit at the Parking Brake Switch harness connector harness connector.

      Is there any voltage present?

      Yes

      - Repair the (B68) EPB Switch Position 3 Signal circuit for a short to voltage.
      - Perform the EPB VERIFICATION TEST. Refer to **STANDARD PROCEDURE**.

      No

      - Go To 6

6. **(B69) EPB SWITCH POSITION 4 SIGNAL CIRCUIT SHORTED TO VOLTAGE**
   1. Measure the voltage of the (B69) EPB Switch Position 4 Signal circuit at the Parking Brake Switch harness connector harness connector.

      Is there any voltage present?

      Yes

      - Repair the (B69) EPB Switch Position 4 Signal circuit for a short to voltage.
      - Perform the EPB VERIFICATION TEST. Refer to **STANDARD PROCEDURE**.

      No

      - Go To 7

7. **(B70) EPB SWITCH POSITION 5 SIGNAL CIRCUIT SHORTED TO VOLTAGE**
   1. Measure the voltage of the (B70) EPB Switch Position 5 Signal circuit at the Parking Brake Switch harness connector harness connector.

      Is there any voltage present?

      Yes

      - Repair the (B70) EPB Switch Position 5 Signal circuit for a short to voltage.
      - Perform the EPB VERIFICATION TEST. Refer to **STANDARD PROCEDURE**.

      No

      - Go To 8
8. **(B71) EPB SWITCH POSITION 6 SIGNAL CIRCUIT SHORTED TO VOLTAGE**
   1. Measure the voltage of the (B71) EPB Switch Position 6 Signal circuit at the Parking Brake Switch harness connector harness connector.

      Is there any voltage present?

      Yes

      - Repair the (B71) EPB Switch Position 6 Signal circuit for a short to voltage.
      - Perform the EPB VERIFICATION TEST. Refer to **STANDARD PROCEDURE**.

      No

      - Go To 9
9. **(B60) EPB SWITCH POSITION 1 SIGNAL CIRCUIT SHORTED TO GROUND**
   1. Turn the ignition off.
   2. Measure the resistance between the (B60) EPB Switch Position 1 Signal circuit and ground.

      Is the resistance below 5.0 Ohms?

      Yes

      - Repair the (B60) EPB Switch Position 1 Signal circuit for a short to ground.
      - Perform the EPB VERIFICATION TEST. Refer to **STANDARD PROCEDURE**.

      No

      - Go To 10
10. **(B67) EPB SWITCH POSITION 2 SIGNAL CIRCUIT SHORTED TO GROUND**

1. Measure the resistance between the (B67) EPB Switch Position 2 Signal circuit and ground.

   Is the resistance below 5.0 Ohms?

   Yes

   - Repair the (B67) EPB Switch Position 2 Signal circuit for a short to ground.
   - Perform the EPB VERIFICATION TEST. Refer to **STANDARD PROCEDURE**.

   No

   - Go To 11

11. **(B68) EPB SWITCH POSITION 3 SIGNAL CIRCUIT SHORTED TO GROUND**
    1. Measure the resistance between the (B68) EPB Switch Position 3 Signal circuit and ground.

       Is the resistance below 5.0 Ohms?

       Yes

       - Repair the (B68) EPB Switch Position 3 Signal circuit for a short to ground.
       - Perform the EPB VERIFICATION TEST. Refer to **STANDARD PROCEDURE**.

       No

       - Go To 12

12. **(B69) EPB SWITCH POSITION 4 SIGNAL CIRCUIT SHORTED TO GROUND**
    1. Measure the resistance between the (B69) EPB Switch Position 4 Signal circuit and ground.

       Is the resistance below 5.0 Ohms?

       Yes

       - Repair the (B69) EPB Switch Position 4 Signal circuit for a short to ground.
       - Perform the EPB VERIFICATION TEST. Refer to **STANDARD PROCEDURE**.

       No

       - Go To 13

13. **(B70) EPB SWITCH POSITION 5 SIGNAL CIRCUIT SHORTED TO GROUND**
    1. Measure the resistance between the (B70) EPB Switch Position 5 Signal circuit and ground.

       Is the resistance below 5.0 Ohms?

       Yes

- Repair the (B70) EPB Switch Position 5 Signal circuit for a short to ground.
- Perform the EPB VERIFICATION TEST. Refer to **STANDARD PROCEDURE**.

No

- Go To 14

14. **(B71) EPB SWITCH POSITION 6 SIGNAL CIRCUIT SHORTED TO GROUND**
    1. Measure the resistance between the (B71) EPB Switch Position 6 Signal circuit and ground.

    Is the resistance below 5.0 Ohms?

    Yes

    - Repair the (B71) EPB Switch Position 6 Signal circuit for a short to ground.
    - Perform the EPB VERIFICATION TEST. Refer to **STANDARD PROCEDURE**.

    No

    - Go To 15

15. **(B60) EPB SWITCH POSITION 1 SIGNAL CIRCUIT OPEN OR HIGH RESISTANCE**
    1. Measure the resistance of the (B60) EPB Switch Position 1 Signal circuit between the Parking Brake Switch harness connector and the EPB Module harness connector.

    Is the resistance below 5 Ohms?

    Yes

    - Go To 16

    No

    - Repair the (B60) EPB Switch Position 1 Signal circuit for an open or high resistance.
    - Perform the EPB VERIFICATION TEST. Refer to **STANDARD PROCEDURE**.

16. **(B67) EPB SWITCH POSITION 2 SIGNAL CIRCUIT OPEN OR HIGH RESISTANCE**
    1. Measure the resistance of the (B67) EPB Switch Position 2 Signal circuit between the Parking Brake Switch harness connector and the EPB Module harness connector.

    Is the resistance below 5 Ohms?

    Yes

    - Go To 17

    No

- Repair the (B67) EPB Switch Position 2 Signal circuit for an open or high resistance.
- Perform the EPB VERIFICATION TEST. Refer to **STANDARD PROCEDURE**.

17. **(B68) EPB SWITCH POSITION 3 SIGNAL CIRCUIT OPEN OR HIGH RESISTANCE**
    1. Measure the resistance of the (B68) EPB Switch Position 3 Signal circuit between the Parking Brake Switch harness connector and the EPB Module harness connector.

       Is the resistance below 5 Ohms?

       Yes

       - Go To 18

       No

       - Repair the (B68) EPB Switch Position 3 Signal circuit for an open or high resistance.
       - Perform the EPB VERIFICATION TEST. Refer to **STANDARD PROCEDURE**.
18. **(B69) EPB SWITCH POSITION 4 SIGNAL CIRCUIT OPEN OR HIGH RESISTANCE**
    1. Measure the resistance of the (B69) EPB Switch Position 4 Signal circuit between the Parking Brake Switch harness connector and the EPB Module harness connector.

       Is the resistance below 5 Ohms?

       Yes

       - Go To 19

       No

       - Repair the (B69) EPB Switch Position 4 Signal circuit for an open or high resistance.
       - Perform the EPB VERIFICATION TEST. Refer to **STANDARD PROCEDURE**.
19. **(B70) EPB SWITCH POSITION 5 SIGNAL CIRCUIT OPEN OR HIGH RESISTANCE**
    1. Measure the resistance of the (B70) EPB Switch Position 5 Signal circuit between the Parking Brake Switch harness connector and the EPB Module harness connector.

       Is the resistance below 5 Ohms?

       Yes

       - Go To 20

       No

       - Repair the (B70) EPB Switch Position 5 Signal circuit for an open or high resistance.

- Perform the EPB VERIFICATION TEST. Refer to **STANDARD PROCEDURE**.

20. **(B71) EPB SWITCH POSITION 6 SIGNAL CIRCUIT OPEN OR HIGH RESISTANCE**
    1. Measure the resistance of the (B71) EPB Switch Position 6 Signal circuit between the Parking Brake Switch harness connector and the EPB Module harness connector.

       Is the resistance below 5 Ohms?

       Yes

       - Go To 21

       No

       - Repair the (B71) EPB Switch Position 6 Signal circuit for an open or high resistance.
       - Perform the EPB VERIFICATION TEST. Refer to **STANDARD PROCEDURE**.
21. **PARKING BRAKE SWITCH**
    1. Replace the Parking Brake Switch in accordance with the Service Information. Refer to **SWITCH, ELECTRIC PARK BRAKE, REMOVAL** .
    2. Perform the EPB VERIFICATION TEST. Refer to **STANDARD PROCEDURE**.
    3. Turn the ignition to on.
    4. With the scan tool, erase EPB DTCs.
    5. Cycle the ignition from off to on.
    6. Push the Parking Brake Switch to release the parking brake.
    7. Pull the Parking Brake Switch to set the parking brake.
    8. Push the Parking Brake Switch to release the parking brake.
    9. Cycle the ignition from off to on.
    10. With the scan tool, read EPB DTCs.

        Does the DTC remain active?

        Yes

        - Replace the Electric Parking Brake (EPB) Module in accordance with service information. Refer to **MODULE, ELECTRIC PARK BRAKE, REMOVAL** .
        - Perform the EPB VERIFICATION TEST. Refer to **STANDARD PROCEDURE**.

        No

        - Test complete.

C10D0-52-ELECTRONIC PARK BRAKE MODULE - NOT ACTIVATED

For a complete wiring diagram, **refer to appropriate SYSTEM WIRING DIAGRAMS article** .

WHEN MONITORED

Ignition on.

SET CONDITION

A new Electric Parking Brake (EPB) Module has been installed and the Assembly Check routine has not been performed.

POSSIBLE CAUSES

Possible Causes
ASSEMBLY CHECK ROUTINE NOT PERFORMED ELECTRIC PARKING BRAKE (EPB) MODULE

DIAGNOSTIC TEST

1. **VERIFY THE DTC IS ACTIVE**
    1. Turn the ignition on.
    2. With the scan tool, record and erase the DTCs.
    3. Cycle the ignition from off to on.
    4. Push the EPB Switch down to release the Electric Parking Brakes.
    5. Pull the EPB Switch up to set the Electric Parking Brakes.
    6. Push the EPB Switch down to release the Electric Parking Brakes.
    7. Cycle the ignition from off to on.
    8. With the scan tool, read EPB DTCs.

    Is the DTC active at this time?

    Yes

    - Go To 2

    No

    - Test complete, the condition or conditions that originally set this DTC are not present at this time.
2. **PERFORM THE ASSEMBLY CHECK ROUTINE**
    1. Ignition on, engine not running.
    2. With the scan tool, under "Miscellaneous Functions" perform the Assembly Check routine.
    3. With the scan tool, erase the DTCs.

4. Cycle the ignition from off to on.
5. With the scan tool, read the DTCs.

   Does the DTC remain active?

   Yes

   - Replace the Electric Parking Brake (EPB) Module in accordance with service information. Refer to **MODULE, ELECTRIC PARK BRAKE, REMOVAL** .
   - Perform the EPB VERIFICATION TEST. Refer to **STANDARD PROCEDURE**.

   No

   - Test complete, the condition or conditions that originally set this DTC are not present at this time.
   - Perform the EPB VERIFICATION TEST. Refer to **STANDARD PROCEDURE**.

C10D0-53-ELECTRONIC PARK BRAKE MODULE - DEACTIVATED

For a complete wiring diagram, **refer to appropriate SYSTEM WIRING DIAGRAMS article** .

WHEN MONITORED

Ignition on.

SET CONDITION

The Electric Parking Brake (EPB) Module has been deactivated and is in Service/Maintenance mode.

POSSIBLE CAUSES

Possible Causes
ELECTRIC PARKING BRAKE (EPB) MODULE IN SERVICE/MAINTENANCE MODE
ASSEMBLY CHECK ROUTINE NOT PERFORMED
ELECTRIC PARKING BRAKE (EPB) MODULE

DIAGNOSTIC TEST

1. **VERIFY THE DTC IS ACTIVE**
   1. Turn the ignition on.
   2. With the scan tool, record and erase the DTCs.
   3. Cycle the ignition from off to on.
   4. Push the EPB Switch down to release the Electric Parking Brakes.
   5. Pull the EPB Switch up to set the Electric Parking Brakes.

6. Push the EPB Switch down to release the Electric Parking Brakes.
7. Cycle the ignition from off to on.
8. With the scan tool, read EPB DTCs.

   Is the DTC active at this time?

   Yes

   - Go To 2

   No

   - Test complete, the condition or conditions that originally set this DTC are not present at this time.

2. **PERFORM THE MAINTENANCE CLOSED ROUTINE**
   1. Ignition on, engine not running.
   2. With the scan tool, under "Miscellaneous Functions" in the "Service Procedure Menu" perform the Maintenance Closed routine.
   3. With the scan tool, erase the DTCs.
   4. Cycle the ignition from off to on.
   5. With the scan tool, read the DTCs.

      Does the DTC remain active?

      Yes

      - Replace the Electric Parking Brake (EPB) Module in accordance with service information. Refer to **MODULE, ELECTRIC PARK BRAKE, REMOVAL** .
      - Perform the EPB VERIFICATION TEST. Refer to **STANDARD PROCEDURE**.

      No

      - Test complete, the condition or conditions that originally set this DTC are not present at this time.
      - Perform the EPB VERIFICATION TEST. Refer to **STANDARD PROCEDURE**.

C10EA-00-LEFT PARK BRAKE ACTUATOR

For a complete wiring diagram, **refer to appropriate SYSTEM WIRING DIAGRAMS article** .

WHEN MONITORED

With the ignition on and no system under voltage or over voltage condition present.

SET CONDITION

When the Electric Parking Brake (EPB) Module detects high current draw from the Left Rear Electric Parking Brake Actuator.

POSSIBLE CAUSES

Possible Causes
LEFT REAR ELECTRIC PARKING BRAKE ACTUATOR CONNECTOR/TERMINAL DAMAGE
LEFT REAR BRAKE ASSEMBLY INCORRECT OPERATION OR MECHANICAL DAMAGE
LEFT REAR ELECTRIC PARKING BRAKE ACTUATOR
ELECTRIC PARKING BRAKE (EPB) MODULE

DIAGNOSTIC TEST

1. **VERIFY THE DTC IS ACTIVE**

   NOTE: If any other DTCs are present, repair them first before continuing with this diagnostic procedure.

   Ignition on, engine not running.

   1. With the scan tool, record and erase DTCs.
   2. With the scan tool, under "Miscellaneous Functions" perform the Apply Left Actuator routine.
   3. Cycle the ignition switch from off to on.
   4. With the scan tool, read DTCs.

      Is the DTC active at this time?

      Yes

      - Go To 2

      No

      - The conditions that caused this code to set are not present at this time. Using the wiring diagram/schematic as a guide, inspect the wiring harness and electrical connectors.
      - Perform the EPB VERIFICATION TEST. Refer to **STANDARD PROCEDURE**.

2. **CHECK LEFT REAR ELECTRIC PARKING BRAKE ACTUATOR CONNECTOR/TERMINAL FOR DAMAGE**

   NOTE: Check all terminals for broken, bent, pushed out, or corroded terminals.

   1. Turn the ignition off.

2. Inspect the Left Rear Electric Parking Brake Actuator harness and connector.
3. Inspect the Left Rear Brake Assembly for incorrect mounting or damage.
4. Inspect the Left Rear Brake Assembly for correct operation.

   Were any problems found?

   Yes

   - Repair as necessary.
   - Perform the EPB VERIFICATION TEST. Refer to **STANDARD PROCEDURE**.

   No

   - Go To 3

3. **LEFT REAR ELECTRIC PARKING BRAKE ACTUATOR**
   1. Replace the Left Rear Electric Parking Brake Actuator in accordance with the Service Information. Refer to **ACTUATOR, ELECTRIC PARK BRAKE, REMOVAL** .
   2. Perform the EPB VERIFICATION TEST. Refer to **STANDARD PROCEDURE**.
   3. Turn the ignition to on.
   4. With the scan tool, erase EPB DTCs.
   5. With the scan tool, under "Miscellaneous Functions" perform the Apply Left Actuator routine.
   6. Cycle the ignition switch from off to on.
   7. With the scan tool, read EPB DTCs.

      Does the DTC remain active?

      Yes

      - Replace the Electric Parking Brake (EPB) Module in accordance with service information. Refer to **MODULE, ELECTRIC PARK BRAKE, REMOVAL** .
      - Perform the EPB VERIFICATION TEST. Refer to **STANDARD PROCEDURE**.

      No

      - Test complete.

C10EA-04-LEFT PARK BRAKE ACTUATOR - SYSTEM INTERNAL FAILURE

For a complete wiring diagram, **refer to appropriate SYSTEM WIRING DIAGRAMS article** .

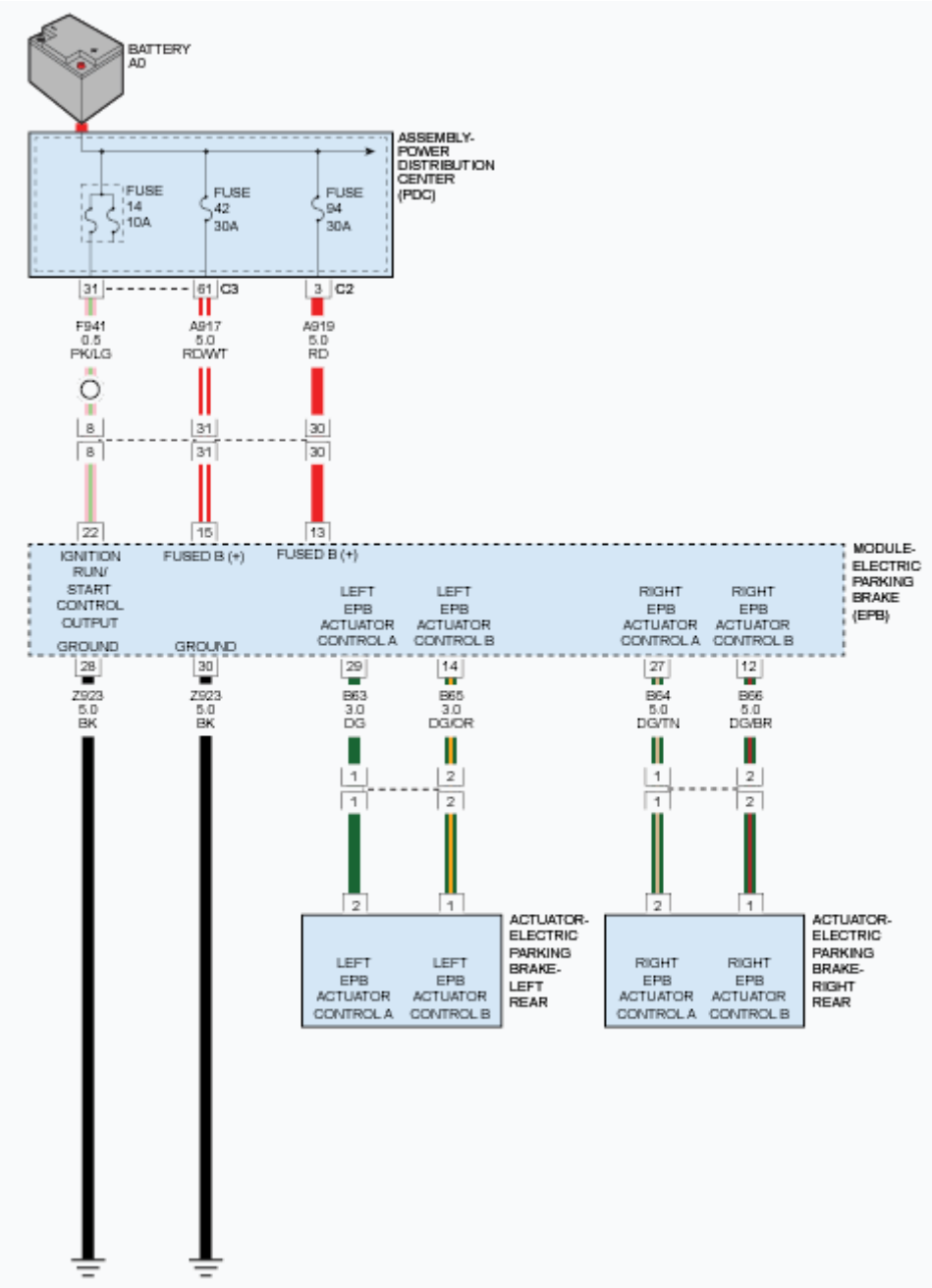

Fig. 2: Identifying Electric Parking Brake Actuator Circuit Diagram
Courtesy of CHRYSLER GROUP, LLC

WHEN MONITORED

With the ignition on and no system under voltage or over voltage condition present.

SET CONDITION

When the Left Rear Electric Parking Brake Actuator is not responding to the Electric Parking Brake (EPB)

Module.

POSSIBLE CAUSES

Possible Causes
LEFT REAR ELECTRIC PARKING BRAKE ACTUATOR CONNECTOR/TERMINAL DAMAGE
LEFT REAR BRAKE ASSEMBLY INCORRECT OPERATION OR MECHANICAL DAMAGE
(B63) LEFT EPB ACTUATOR CONTROL A CIRCUIT SHORTED TO GROUND
(B65) LEFT EPB ACTUATOR CONTROL B CIRCUIT SHORTED TO GROUND
(B63) LEFT EPB ACTUATOR CONTROL A CIRCUIT OPEN OR HIGH RESISTANCE
(B65) LEFT EPB ACTUATOR CONTROL B CIRCUIT OPEN OR HIGH RESISTANCE
(B63) LEFT EPB ACTUATOR CONTROL A CIRCUIT SHORTED TO (B65) LEFT EPB ACTUATOR CONTROL B CIRCUIT
LEFT REAR ELECTRIC PARKING BRAKE ACTUATOR
ELECTRIC PARKING BRAKE (EPB) MODULE

DIAGNOSTIC TEST

1. **VERIFY THE DTC IS ACTIVE**

   NOTE: If any system supply voltage DTCs are present, repair them first before continuing with this diagnostic procedure.

   Ignition on, engine not running.

   1. With the scan tool, record and erase DTCs.
   2. With the scan tool, under "Miscellaneous Functions" perform the Apply Left Actuator routine.
   3. Cycle the ignition switch from off to on.
   4. With the scan tool, read DTCs.

   Is the DTC active at this time?

   Yes

   - Go To 2

   No

   - The conditions that caused this code to set are not present at this time. Using the wiring diagram/schematic as a guide, inspect the wiring harness and electrical connectors.
   - Perform the EPB VERIFICATION TEST. Refer to **STANDARD PROCEDURE**.

2. **CHECK LEFT REAR ELECTRIC PARKING BRAKE ACTUATOR CONNECTOR/TERMINAL FOR DAMAGE**

NOTE: Check all terminals for broken, bent, pushed out, or corroded terminals.

1. Turn the ignition off.
2. Inspect the Left Rear Electric Parking Brake Actuator harness and connector.
3. Inspect the Left Rear Brake Assembly for incorrect mounting or damage.
4. Inspect the Left Rear Brake Assembly for correct operation.

Were any problems found?

Yes

- Repair as necessary.
- Perform the EPB VERIFICATION TEST. Refer to **STANDARD PROCEDURE**.

No

- Go To 3

3. **(B63) LEFT EPB ACTUATOR CONTROL A CIRCUIT SHORTED TO GROUND**
   1. Disconnect the EPB Module harness connector.
   2. Disconnect the Left Rear Electric Parking Brake Actuator harness connector.
   3. Measure the resistance between the (B63) Left EPB Actuator Control A circuit and ground.

   Is the resistance below 5.0 Ohms?

   Yes

   - Repair the (B63) Left EPB Actuator Control A circuit for a short to ground.
   - Perform the EPB VERIFICATION TEST. Refer to **STANDARD PROCEDURE**.

   No

   - Go To 4

4. **(B65) LEFT EPB ACTUATOR CONTROL B CIRCUIT SHORTED TO GROUND**
   1. Measure the resistance between the (B65) Left EPB Actuator Control B circuit and ground.

   Is the resistance below 5.0 Ohms?

   Yes

   - Repair the (B65) Left EPB Actuator Control B circuit for a short to ground.
   - Perform the EPB VERIFICATION TEST. Refer to **STANDARD PROCEDURE**.

   No

- Go To 5

5. **(B63) LEFT EPB ACTUATOR CONTROL A CIRCUIT OPEN OR HIGH RESISTANCE**
   1. Measure the resistance of the (B63) Left EPB Actuator Control A circuit between the Left Rear Electric Parking Brake Actuator harness connector and the EPB Module harness connector.

      Is the resistance below 5 Ohms?

      Yes

      - Go To 6

      No

      - Repair the (B63) Left EPB Actuator Control A circuit for an open or high resistance.
      - Perform the EPB VERIFICATION TEST. Refer to **STANDARD PROCEDURE**.
6. **(B65) LEFT EPB ACTUATOR CONTROL B CIRCUIT OPEN OR HIGH RESISTANCE**
   1. Measure the resistance of the (B65) Left EPB Actuator Control B circuit between the Left Rear Electric Parking Brake Actuator harness connector and the EPB Module harness connector.

      Is the resistance below 5 Ohms?

      Yes

      - Go To 7

      No

      - Repair the (B65) Left EPB Actuator Control B circuit for an open or high resistance.
      - Perform the EPB VERIFICATION TEST. Refer to **STANDARD PROCEDURE**.
7. **(B63) LEFT EPB ACTUATOR CONTROL A CIRCUIT SHORTED TO (B65) LEFT EPB ACTUATOR CONTROL B CIRCUIT**
   1. Measure the resistance of the (B63) Left EPB Actuator Control A and the (B65) Left EPB Actuator Control B circuit at the Left Rear Electric Parking Brake Actuator harness connector.

      Is the resistance above 5 Ohms?

      Yes

      - Go To 8

      No

      - Repair the (B63) Right EPB Actuator Control A for a short to the (B65) Right EPB Actuator Control B circuit.

- Perform the EPB VERIFICATION TEST. Refer to **STANDARD PROCEDURE**.

8. **LEFT REAR ELECTRIC PARKING BRAKE ACTUATOR**
   1. Replace the Left Rear Electric Parking Brake Actuator in accordance with the Service Information. Refer to **ACTUATOR, ELECTRIC PARK BRAKE, REMOVAL** .
   2. Perform the EPB VERIFICATION TEST. Refer to **STANDARD PROCEDURE**.
   3. Turn the ignition to on.
   4. With the scan tool, erase EPB DTCs.
   5. With the scan tool, under "Miscellaneous Functions" perform the Apply Left Actuator routine.
   6. Cycle the ignition switch from off to on.
   7. With the scan tool, read EPB DTCs.

      Does the DTC remain active?

      Yes

      - Replace the Electric Parking Brake (EPB) Module in accordance with service information. Refer to **MODULE, ELECTRIC PARK BRAKE, REMOVAL** .
      - Perform the EPB VERIFICATION TEST. Refer to **STANDARD PROCEDURE**.

      No

      - Test complete.

C10EB-00-RIGHT PARK BRAKE ACTUATOR

For a complete wiring diagram, **refer to appropriate SYSTEM WIRING DIAGRAMS article** .

WHEN MONITORED

With the ignition on and no system under voltage or over voltage condition present.

SET CONDITION

When the Electric Parking Brake (EPB) Module detects high current draw from the Right Rear Electric Parking Brake Actuator.

POSSIBLE CAUSES

Possible Causes
RIGHT REAR ELECTRIC PARKING BRAKE ACTUATOR CONNECTOR/TERMINAL DAMAGE
RIGHT REAR BRAKE ASSEMBLY INCORRECT OR MECHANICAL DAMAGE
RIGHT REAR ELECTRIC PARKING BRAKE ACTUATOR
ELECTRIC PARKING BRAKE (EPB) MODULE

DIAGNOSTIC TEST

1. **VERIFY THE DTC IS ACTIVE**

   NOTE: If any other DTCs are present, repair them first before continuing with this diagnostic procedure.

   Ignition on, engine not running.

   1. With the scan tool, record and erase DTCs.
   2. With the scan tool, under "Miscellaneous Functions" perform the Apply Right Actuator routine.
   3. Cycle the ignition switch from off to on.
   4. With the scan tool, read DTCs.

   Is the DTC active at this time?

   Yes

   - Go To 2

   No

   - The conditions that caused this code to set are not present at this time. Using the wiring diagram/schematic as a guide, inspect the wiring harness and electrical connectors.
   - Perform the EPB VERIFICATION TEST. Refer to **STANDARD PROCEDURE**.

2. **CHECK RIGHT REAR ELECTRIC PARKING BRAKE ACTUATOR CONNECTOR/TERMINAL FOR DAMAGE**

   NOTE: Check all terminals for broken, bent, pushed out, or corroded terminals.

   1. Turn the ignition off.
   2. Inspect the Right Rear Electric Parking Brake Actuator harness and connector.
   3. Inspect the Right Rear Brake Assembly for incorrect mounting or damage.
   4. Inspect the Right Rear Brake Assembly for correct operation.

   Were any problems found?

   Yes

   - Repair as necessary.
   - Perform the EPB VERIFICATION TEST. Refer to **STANDARD PROCEDURE**.

   No

- Go To 3

3. **RIGHT REAR ELECTRIC PARKING BRAKE ACTUATOR**
    1. Replace the Right Rear Electric Parking Brake Actuator in accordance with the Service Information. Refer to **ACTUATOR, ELECTRIC PARK BRAKE, REMOVAL** .
    2. Perform the EPB VERIFICATION TEST. Refer to **STANDARD PROCEDURE**.
    3. Turn the ignition to on.
    4. With the scan tool, erase EPB DTCs.
    5. With the scan tool, under "Miscellaneous Functions" perform the Apply Right Actuator routine.
    6. Cycle the ignition switch from off to on.
    7. With the scan tool, read EPB DTCs.

    Does the DTC remain active?

    Yes

    - Replace the Electric Parking Brake (EPB) Module in accordance with service information. Refer to **MODULE, ELECTRIC PARK BRAKE, REMOVAL** .
    - Perform the EPB VERIFICATION TEST. Refer to **STANDARD PROCEDURE**.

    No

    - Test complete.

C10EB-04-RIGHT PARK BRAKE ACTUATOR - SYSTEM INTERNAL FAILURE

For a complete wiring diagram, **refer to appropriate SYSTEM WIRING DIAGRAMS article** .

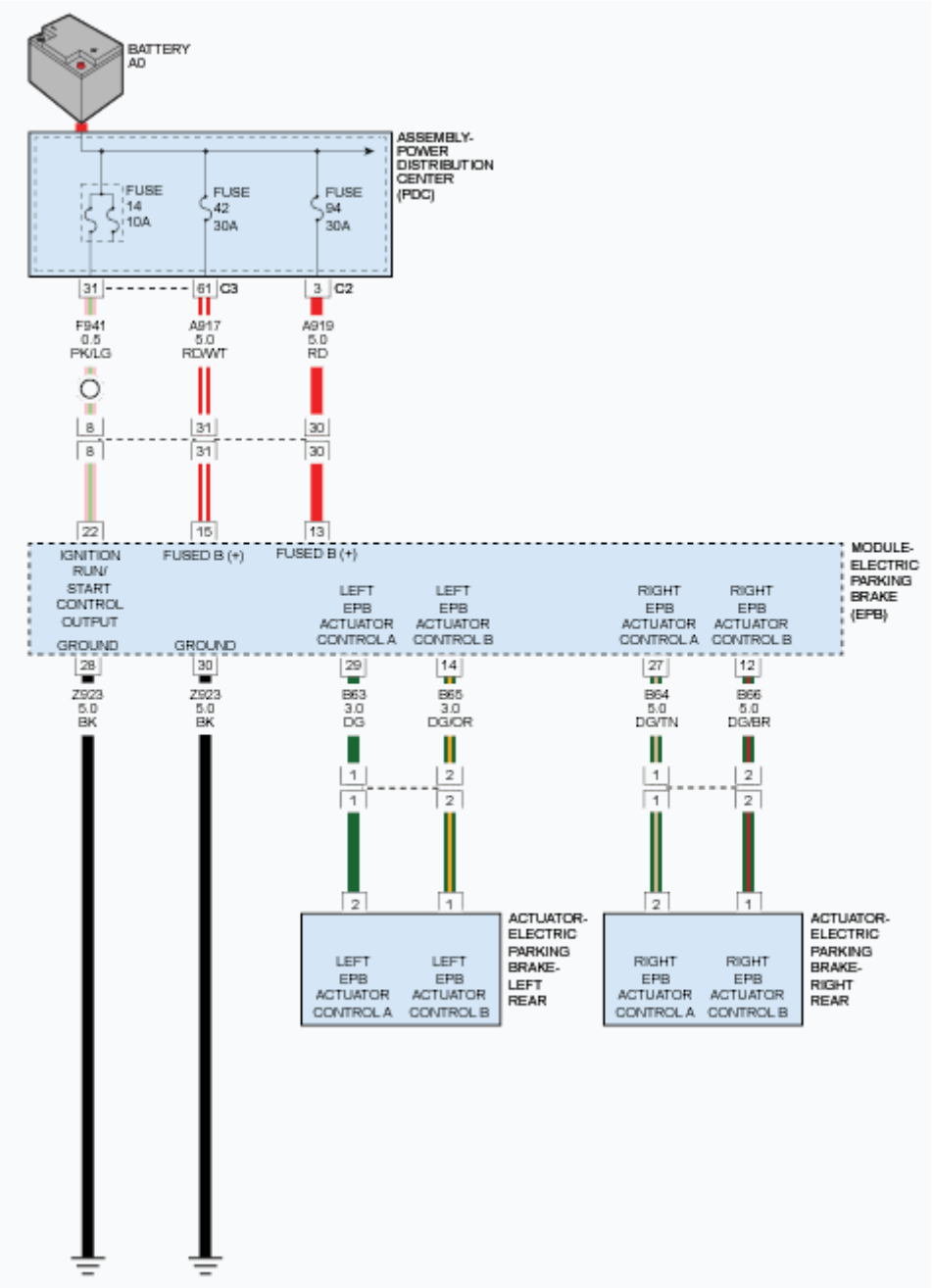

Fig. 3: Identifying Electric Parking Brake Actuator Circuit Diagram
Courtesy of CHRYSLER GROUP, LLC

WHEN MONITORED

With the ignition on and no system under voltage or over voltage condition present.

SET CONDITION

When the Right Rear Electric Parking Brake Actuator is not responding to the Electric Parking Brake (EPB)

Module.

POSSIBLE CAUSES

Possible Causes
RIGHT REAR ELECTRIC PARKING BRAKE ACTUATOR CONNECTOR/TERMINAL DAMAGE
RIGHT REAR BRAKE ASSEMBLY INCORRECT OR MECHANICAL DAMAGE
(B64) RIGHT EPB ACTUATOR CONTROL A CIRCUIT SHORTED TO GROUND
(B66) RIGHT EPB ACTUATOR CONTROL B CIRCUIT SHORTED TO GROUND
(B64) RIGHT EPB ACTUATOR CONTROL A CIRCUIT OPEN OR HIGH RESISTANCE
(B66) RIGHT EPB ACTUATOR CONTROL B CIRCUIT OPEN OR HIGH RESISTANCE
(B64) RIGHT EPB ACTUATOR CONTROL A CIRCUIT SHORTED TO (B66) RIGHT EPB ACTUATOR CONTROL B CIRCUIT
RIGHT REAR ELECTRIC PARKING BRAKE ACTUATOR
ELECTRIC PARKING BRAKE (EPB) MODULE

DIAGNOSTIC TEST

1. **VERIFY THE DTC IS ACTIVE**

   NOTE: If any system supply voltage DTCs are present, repair them first before continuing with this diagnostic procedure.

   Ignition on, engine not running.

   1. With the scan tool, record and erase DTCs.
   2. With the scan tool, under "Miscellaneous Functions" perform the Apply Right Actuator routine.
   3. Cycle the ignition switch from off to on.
   4. With the scan tool, read DTCs.

   Is the DTC active at this time?

   Yes

   - Go To 2

   No

   - The conditions that caused this code to set are not present at this time. Using the wiring diagram/schematic as a guide, inspect the wiring harness and electrical connectors.
   - Perform the EPB VERIFICATION TEST. Refer to **STANDARD PROCEDURE**.

2. **CHECK RIGHT REAR ELECTRIC PARKING BRAKE ACTUATOR CONNECTOR/TERMINAL FOR DAMAGE**

NOTE: Check all terminals for broken, bent, pushed out, or corroded terminals.

1. Turn the ignition off.
2. Inspect the Right Rear Electric Parking Brake Actuator harness and connector.
3. Inspect the Right Rear Brake Assembly for incorrect mounting or damage.
4. Inspect the Right Rear Brake Assembly for correct operation.

Were any problems found?

Yes

- Repair as necessary.
- Perform the EPB VERIFICATION TEST. Refer to **STANDARD PROCEDURE**.

No

- Go To 3

3. **(B64) RIGHT EPB ACTUATOR CONTROL A CIRCUIT SHORTED TO GROUND**
   1. Disconnect the EPB Module harness connector.
   2. Disconnect the Right Rear Electric Parking Brake Actuator harness connector.
   3. Measure the resistance between the (B64) Right EPB Actuator Control A circuit and ground.

   Is the resistance below 5.0 Ohms?

   Yes

   - Repair the (B64) Right EPB Actuator Control A circuit for a short to ground.
   - Perform the EPB VERIFICATION TEST. Refer to **STANDARD PROCEDURE**.

   No

   - Go To 4

4. **(B66) RIGHT EPB ACTUATOR CONTROL B CIRCUIT SHORTED TO GROUND**
   1. Measure the resistance between the (B66) Right EPB Actuator Control B circuit and ground.

   Is the resistance below 5.0 Ohms?

   Yes

   - Repair the (B66) Right EPB Actuator Control B circuit for a short to ground.
   - Perform the EPB VERIFICATION TEST. Refer to **STANDARD PROCEDURE**.

   No

- Go To 5

5. **(B64) RIGHT EPB ACTUATOR CONTROL A CIRCUIT OPEN OR HIGH RESISTANCE**
   1. Measure the resistance of the (B64) Right EPB Actuator Control A circuit between the Right Rear Electric Parking Brake Actuator harness connector and the EPB Module harness connector.

      Is the resistance below 5 Ohms?

      Yes

      - Go To 6

      No

      - Repair the (B64) Right EPB Actuator Control A circuit for an open or high resistance.
      - Perform the EPB VERIFICATION TEST. Refer to **STANDARD PROCEDURE**.
6. **(B66) RIGHT EPB ACTUATOR CONTROL B CIRCUIT OPEN OR HIGH RESISTANCE**
   1. Measure the resistance of the (B66) Right EPB Actuator Control B circuit between the Right Rear Electric Parking Brake Actuator harness connector and the EPB Module harness connector.

      Is the resistance below 5 Ohms?

      Yes

      - Go To 7

      No

      - Repair the (B66) Right EPB Actuator Control B circuit for an open or high resistance.
      - Perform the EPB VERIFICATION TEST. Refer to **STANDARD PROCEDURE**.
7. **(B64) RIGHT EPB ACTUATOR CONTROL A CIRCUIT SHORTED TO (B66) RIGHT EPB ACTUATOR CONTROL B CIRCUIT**
   1. Measure the resistance of the (B64) Right EPB Actuator Control A and the (B66) Right EPB Actuator Control B circuit at the Right Rear Electric Parking Brake Actuator harness connector.

      Is the resistance above 5 Ohms?

      Yes

      - Go To 8

      No

      - Repair the (B64) Right EPB Actuator Control A for a short to the (B66) Right EPB Actuator Control B circuit.

- Perform the EPB VERIFICATION TEST. Refer to **STANDARD PROCEDURE**.

8. **RIGHT REAR ELECTRIC PARKING BRAKE ACTUATOR**
   1. Replace the Right Rear Electric Parking Brake Actuator in accordance with the Service Information. Refer to **ACTUATOR, ELECTRIC PARK BRAKE, REMOVAL** .
   2. Perform the EPB VERIFICATION TEST. Refer to **STANDARD PROCEDURE**.
   3. Turn the ignition to on.
   4. With the scan tool, erase EPB DTCs.
   5. With the scan tool, under "Miscellaneous Functions" perform the Apply Right Actuator routine.
   6. Cycle the ignition switch from off to on.
   7. With the scan tool, read EPB DTCs.

      Does the DTC remain active?

      Yes

      - Replace the Electric Parking Brake (EPB) Module in accordance with service information. Refer to **MODULE, ELECTRIC PARK BRAKE, REMOVAL** .
      - Perform the EPB VERIFICATION TEST. Refer to **STANDARD PROCEDURE**.

      No

      - Test complete.

C10EC-00-PARK BRAKE ACTUATOR CORRELATION

For a complete wiring diagram, **refer to appropriate SYSTEM WIRING DIAGRAMS article** .

WHEN MONITORED

With the ignition on and no system under voltage or over voltage condition present.

SET CONDITION

When the Electric Parking Brake (EPB) Module detects that the parking brake state differs or is unknown from the Left Rear Electric Parking Brake Actuator to the Right Rear Electric Parking Brake Actuator.

POSSIBLE CAUSES

Possible Causes
ELECTRIC PARKING BRAKE ACTUATORS CONNECTOR/TERMINAL DAMAGE
LEFT REAR ELECTRIC PARKING BRAKE ACTUATOR
RIGHT REAR ELECTRIC PARKING BRAKE ACTUATOR
ELECTRIC PARKING BRAKE (EPB) MODULE

DIAGNOSTIC TEST

1. **VERIFY THE DTC IS ACTIVE**

   NOTE: If any other DTCs are present, repair them first before continuing with this diagnostic procedure.

   Turn the ignition on.

   1. With the scan tool, record and erase the DTCs.
   2. Cycle the ignition from off to on.
   3. Push the EPB Switch down to release the Electric Parking Brakes.
   4. Pull the EPB Switch up to set the Electric Parking Brakes.
   5. Push the EPB Switch down to release the Electric Parking Brakes.
   6. Cycle the ignition from off to on.
   7. With the scan tool, read EPB DTCs.

   Is the DTC active at this time?

   Yes

   - Go To 2

   No

   - The conditions that caused this code to set are not present at this time. Using the wiring diagram/schematic as a guide, inspect the wiring harness and electrical connectors.
   - Perform the EPB VERIFICATION TEST. Refer to **STANDARD PROCEDURE**.

2. **CHECK ELECTRIC PARKING BRAKE ACTUATORS CONNECTOR/TERMINAL FOR DAMAGE**

   NOTE: Check all terminals for broken, bent, pushed out, or corroded terminals.

   1. Turn the ignition off.
   2. Inspect the harness and connectors for both Electric Parking Brake Actuators.

   Were any problems found?

   Yes

   - Repair as necessary.
   - Perform the EPB VERIFICATION TEST. Refer to **STANDARD PROCEDURE**.

No

- Go To 3

3. **CHECK THE ELECTRIC PARKING BRAKE ACTUATORS**
   1. Ignition on, engine not running.
   2. With the scan tool, under "Miscellaneous Functions" perform the Apply Both Actuators routine.
   3. With the scan tool, under "Data Display" monitor the Status Parking Brake Left and the Status Parking Brake Right.

   Are both Parking Brake Actuators displaying the same result?

   Yes

   - Replace the Electric Parking Brake (EPB) Module in accordance with service information. Refer to **MODULE, ELECTRIC PARK BRAKE, REMOVAL** .
   - Perform the EPB VERIFICATION TEST. Refer to **STANDARD PROCEDURE**.

   No

   - Replace the Rear Electric Parking Brake Actuator at fault in accordance with the Service Information. Refer to **ACTUATOR, ELECTRIC PARK BRAKE, REMOVAL** .
   - Perform the EPB VERIFICATION TEST. Refer to **STANDARD PROCEDURE**.

C10ED-00-ELECTRONIC PARK BRAKE SWITCH LED

For a complete wiring diagram, **refer to appropriate SYSTEM WIRING DIAGRAMS article** .

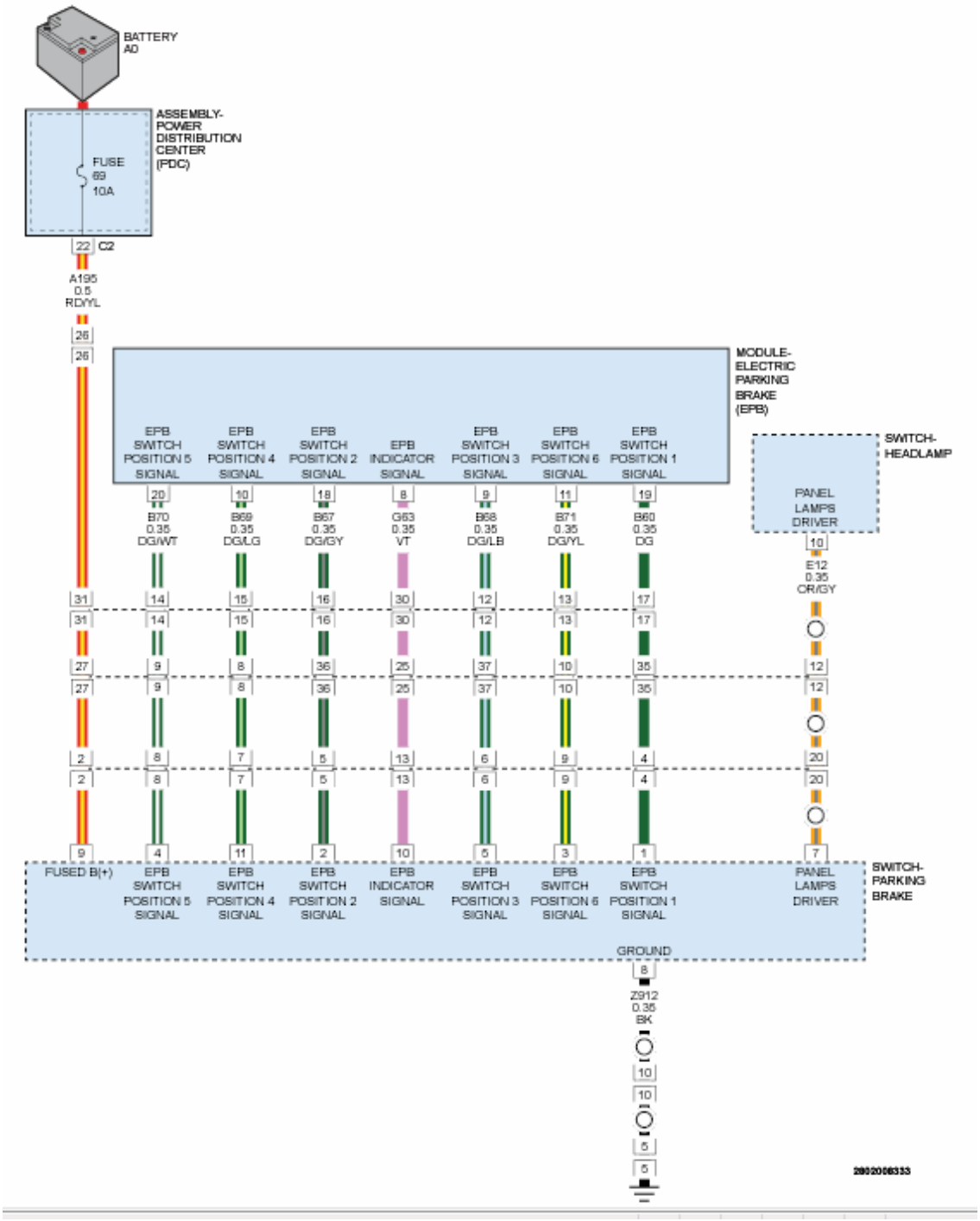

Fig. 4: Identifying Parking Brake Switch Circuit Diagram
Courtesy of CHRYSLER GROUP, LLC

WHEN MONITORED

With the ignition on and no system under voltage or over voltage condition present.

SET CONDITION

When the Electric Parking Brake (EPB) Module detects improper EPB Switch led demand input.

POSSIBLE CAUSES

Possible Causes
PARKING BRAKE (EPB) SWITCH/CONNECTOR/TERMINAL DAMAGE
(G63) EPB INDICATOR SIGNAL CIRCUIT SHORTED TO VOLTAGE
(G63) EPB INDICATOR SIGNAL CIRCUIT SHORTED TO GROUND
(G63) EPB INDICATOR SIGNAL CIRCUIT OPEN OR HIGH RESISTANCE
PARKING BRAKE SWITCH
ELECTRIC PARKING BRAKE (EPB) MODULE

DIAGNOSTIC TEST

1. **VERIFY THE DTC IS ACTIVE**

   NOTE: If any other DTCs are present, repair them first before continuing with this diagnostic procedure.

   Turn the ignition on.

   1. With the scan tool, record and erase the DTCs.
   2. Cycle the ignition from off to on.
   3. Push the EPB Switch down to release the Electric Parking Brakes.
   4. Pull the EPB Switch up to set the Electric Parking Brakes.
   5. Push the EPB Switch down to release the Electric Parking Brakes.
   6. Cycle the ignition from off to on.
   7. With the scan tool, read EPB DTCs.

   Is the DTC active at this time?

   Yes

   - Go To 2

   No

   - The conditions that caused this code to set are not present at this time. Using the wiring diagram/schematic as a guide, inspect the wiring harness and electrical connectors.
   - Perform the EPB VERIFICATION TEST. Refer to **STANDARD PROCEDURE**.

2. **CHECK PARKING BRAKE SWITCH CONNECTOR/TERMINAL FOR DAMAGE**

NOTE: Check all terminals for broken, bent, pushed out, or corroded terminals.

1. Turn the ignition off.
2. Inspect the Parking Brake Switch for proper mounting.
3. Inspect the Parking Brake Switch harness and connector.

   Were any problems found?

   Yes

   - Repair as necessary.
   - Perform the EPB VERIFICATION TEST. Refer to **STANDARD PROCEDURE**.

   No

   - Go To 3

3. **(G63) EPB INDICATOR SIGNAL CIRCUIT SHORTED TO VOLTAGE**
   1. Disconnect the EPB Module harness connector.
   2. Disconnect the Parking Brake Switch harness connector.
   3. Turn the ignition on.
   4. Measure the voltage of the (G63) EPB Indicator Signal circuit at the Left Front Wheel Speed Sensor harness connector.

      Is there any voltage present?

      Yes

      - Repair the (G63) EPB Indicator Signal circuit for a short to voltage.
      - Perform the EPB VERIFICATION TEST. Refer to **STANDARD PROCEDURE**.

      No

      - Go To 4

4. **(G63) EPB INDICATOR SIGNAL CIRCUIT SHORTED TO GROUND**
   1. Turn the ignition off.
   2. Measure the resistance between the (G63) EPB Indicator Signal circuit and ground.

      Is the resistance below 5.0 Ohms?

      Yes

      - Repair the (G63) EPB Indicator Signal circuit for a short to ground.
      - Perform the EPB VERIFICATION TEST. Refer to **STANDARD PROCEDURE**.

No

- Go To 5

5. **(G63) EPB INDICATOR SIGNAL CIRCUIT OPEN OR HIGH RESISTANCE**
   1. Measure the resistance of the (G63) EPB Indicator Signal circuit between the Parking Brake Switch harness connector and the EPB Module harness connector.

      Is the resistance below 5 Ohms?

      Yes

      - Go To 6

      No

      - Repair the (G63) EPB Indicator Signal circuit for an open or high resistance.
      - Perform the EPB VERIFICATION TEST. Refer to **STANDARD PROCEDURE**.
6. **PARKING BRAKE SWITCH**
   1. Replace the Parking Brake Switch in accordance with the Service Information. Refer to **SWITCH, ELECTRIC PARK BRAKE, REMOVAL** .
   2. Perform the EPB VERIFICATION TEST. Refer to **STANDARD PROCEDURE**.
   3. Turn the ignition to on.
   4. With the scan tool, erase EPB DTCs.
   5. Pull the Parking Brake Switch to set the parking brake.
   6. Cycle the ignition from off to on.
   7. Push the Parking Brake Switch to release the parking brake.
   8. Cycle the ignition from off to on.
   9. With the scan tool, read EPB DTCs.

      Does the DTC remain active?

      Yes

      - Replace the Electric Parking Brake (EPB) Module in accordance with service information. Refer to **MODULE, ELECTRIC PARK BRAKE, REMOVAL** .
      - Perform the EPB VERIFICATION TEST. Refer to **STANDARD PROCEDURE**.

      No

      - Test complete.

C2100-00-BATTERY VOLTAGE LOW

For a complete wiring diagram, **refer to appropriate SYSTEM WIRING DIAGRAMS article** .

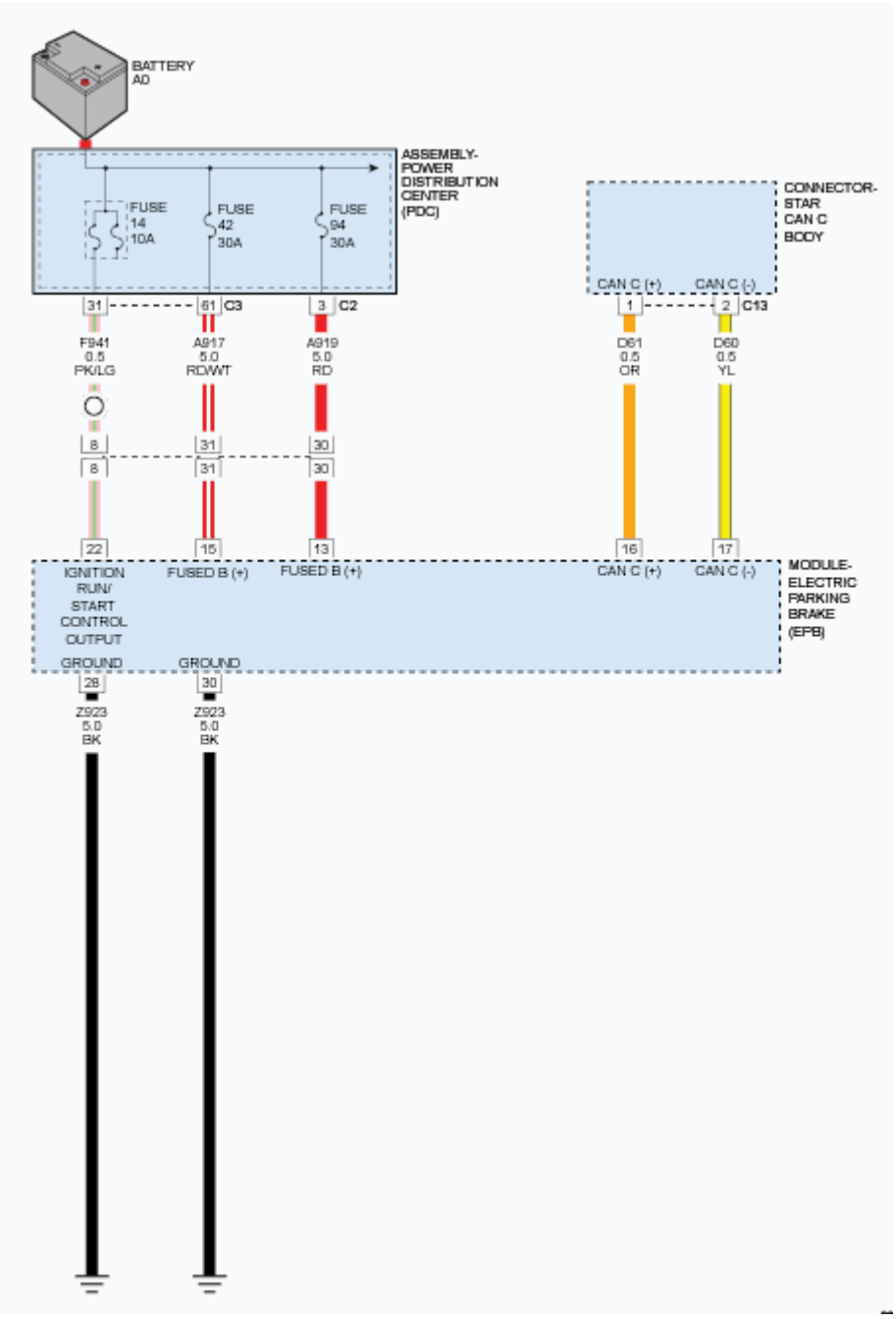

Fig. 5: Identifying Electric Parking Brake Module Circuit Diagram
Courtesy of CHRYSLER GROUP, LLC

WHEN MONITORED

Ignition on.

SET CONDITION

If the sensed battery voltage is below 10.7 volts and engine speeds are above 750 rpm for three seconds, undervoltage detection is activated.

POSSIBLE CAUSES

Possible Causes
CHARGING SYSTEM
(A917) FUSED B(+) CIRCUIT OPEN OR HIGH RESISTANCE
(A919) FUSED B(+) CIRCUIT OPEN OR HIGH RESISTANCE
(F941) FUSED IGNITION SWITCH OUTPUT (RUN-START) CIRCUIT OPEN OR HIGH RESISTANCE
(Z923) GROUND CIRCUITS OPEN OR HIGH RESISTANCE
ELECTRIC PARKING BRAKE (EPB) MODULE

DIAGNOSTIC TEST

1. **VERIFY THE DTC IS ACTIVE**

NOTE: Diagnose and repair any Powertrain Charging system DTCs before continuing with this procedure.

NOTE: Make sure the battery is fully charged.

1. Turn the ignition on.
2. With the scan tool, record and erase the DTCs.
3. Cycle the ignition from off to on.
4. Push the EPB Switch down to release the Electric Parking Brakes.
5. Pull the EPB Switch up to set the Electric Parking Brakes.
6. Push the EPB Switch down to release the Electric Parking Brakes.
7. Cycle the ignition from off to on.
8. With the scan tool, read EPB DTCs.

Is the DTC active at this time?

Yes

- Go To 2

No

- The conditions that caused this code to set are not present at this time. Using the wiring diagram/schematic as a guide, inspect the wiring harness and electrical connectors.
- Perform the EPB VERIFICATION TEST. Refer to **STANDARD PROCEDURE**.

2. **CHARGING SYSTEM DTCS PRESENT**
    1. Start the engine.
    2. With the scan tool, read DTCs in the PCM.

    Are there any Charging System or related voltage DTCs present?

    Yes

    - Perform the appropriate Charging System DTC diagnostic procedures before continuing with this test. Refer to the **DTC INDEX** article .

    No

    - Go To 3
3. **(A917) FUSED B(+) CIRCUIT OPEN OR HIGH RESISTANCE**
    1. Turn the ignition off.
    2. Disconnect the EPB Module harness connector.
    3. Turn the ignition on.
    4. With a 12-volt test light connected to ground, check the (A917) Fused B+ circuit at the EPB Module harness connector.

    Does the test light illuminate brightly?

    Yes

    - Go To 4

    No

    - Repair the (A917) Fused B(+) circuit for an open or high resistance.
    - Perform the EPB VERIFICATION TEST. Refer to **STANDARD PROCEDURE**.
4. **(A919) FUSED B(+) CIRCUIT OPEN OR HIGH RESISTANCE**
    1. Turn the ignition off.
    2. Disconnect the EPB Module harness connector.
    3. Turn the ignition on.
    4. With a 12-volt test light connected to ground, check the (A919) Fused B+ circuit at the EPB Module harness connector.

    Does the test light illuminate brightly?

    Yes

    - Go To 5

No

- Repair the (A919) Fused B(+) circuit for an open or high resistance.
- Perform the EPB VERIFICATION TEST. Refer to **STANDARD PROCEDURE**.

5. **(F941) FUSED IGNITION SWITCH OUTPUT (RUN-START) CIRCUIT OPEN OR HIGH RESISTANCE**
   1. With a 12-volt test light connected to ground, check the (F941) Fused Ignition Switch Output circuit at the EPB Module harness connector.

      Does the test light illuminate brightly?

      Yes

      - Go To 6

      No

      - Repair the (F941) Fused Ignition Switch Output circuit for an open or high resistance.
      - Perform the EPB VERIFICATION TEST. Refer to **STANDARD PROCEDURE**.
6. **(Z923) GROUND CIRCUITS OPEN OR HIGH RESISTANCE**
   1. Turn the ignition off.
   2. With a test light connected to B+ check the (Z923) Ground circuit at the EPS Module C1 harness connector.

      Does the test light illuminate brightly?

      Yes

      - Replace the Electric Parking Brake (EPB) Module in accordance with service information. Refer to **MODULE, ELECTRIC PARK BRAKE, REMOVAL** .
      - Perform the EPB VERIFICATION TEST. Refer to **STANDARD PROCEDURE**.

      No

      - Repair the (Z923) Ground circuits for an open or high resistance.
      - Perform the EPB VERIFICATION TEST. Refer to **STANDARD PROCEDURE**.

C2101-00-BATTERY VOLTAGE HIGH

For a complete wiring diagram, **refer to appropriate SYSTEM WIRING DIAGRAMS article** .

WHEN MONITORED

Ignition on.

SET CONDITION

If the sensed ignition voltage is greater than 16.5 volts for 100 msec.

POSSIBLE CAUSES

Possible Causes
POWERTRAIN CONTROL MODULE (PCM) CHARGING SYSTEM DTCS PRESENT ELECTRIC PARKING BRAKE (EPB) MODULE

DIAGNOSTIC TEST

1. **CHARGING SYSTEM DTCS PRESENT**

   NOTE: Disconnect battery charger before continuing.

   1. Start the engine.
   2. With the scan tool, read DTCs in the PCM.

      Are there any Charging System or related voltage DTCs present?

      Yes

      - Perform the appropriate Charging System DTC diagnostic procedures before continuing with this test. Refer to the **DTC INDEX** article .

      No

      - Go To 2
2. **VERIFY THE DTC IS ACTIVE**
   1. Turn the ignition on.
   2. With the scan tool, record and erase the DTCs.
   3. Cycle the ignition from off to on.
   4. Push the EPB Switch down to release the Electric Parking Brakes.
   5. Pull the EPB Switch up to set the Electric Parking Brakes.
   6. Push the EPB Switch down to release the Electric Parking Brakes.
   7. Cycle the ignition from off to on.
   8. With the scan tool, read EPB DTCs.

      Is the DTC active at this time?

      Yes

- Replace the Electric Parking Brake (EPB) Module in accordance with service information. Refer to **MODULE, ELECTRIC PARK BRAKE, REMOVAL** .
- Perform the EPB VERIFICATION TEST. Refer to **STANDARD PROCEDURE**.

No

- The conditions that caused this code to set are not present at this time. Using the wiring diagram/schematic as a guide, inspect the wiring harness and electrical connectors.
- Perform the EPB VERIFICATION TEST. Refer to **STANDARD PROCEDURE**.

C2203-00-CURRENT VIN MISSING/MISMATCH

For a complete wiring diagram, **refer to appropriate SYSTEM WIRING DIAGRAMS article** .

WHEN MONITORED

Ignition on.

SET CONDITION

This DTC will set if the current VIN does not match the broadcast VIN.

POSSIBLE CAUSES

Possible Causes
POWERTRAIN CONTROL MODULE (PCM) VIN MISSING OR NOT PROGRAMMED CORRECTLY ELECTRIC PARKING BRAKE (EPB) MODULE

NOTE: Diagnose and repair any Powertrain Control Module (PCM), VIN or Communication DTCs before continuing with this diagnostic procedure.

DIAGNOSTIC TEST

1. **VERIFY THE DTC IS ACTIVE**

NOTE: This DTC must be active for the results of this test to be valid.

1. Turn the ignition on.
2. With the scan tool, record and erase the DTCs.
3. Cycle the ignition from off to on.
4. Push the EPB Switch down to release the Electric Parking Brakes.
5. Pull the EPB Switch up to set the Electric Parking Brakes.
6. Push the EPB Switch down to release the Electric Parking Brakes.

7. Cycle the ignition from off to on.
8. With the scan tool, read EPB DTCs.

   Is the DTC active at this time?

   Yes

   - Go To 2

   No

   - The conditions that caused this code to set are not present at this time. Using the wiring diagram/schematic as a guide, inspect the wiring harness and electrical connectors.
   - Perform the EPB VERIFICATION TEST. Refer to **STANDARD PROCEDURE**.

2. **WRONG OR INCORRECT VIN PROGRAMMED IN PCM**
   1. Ignition on, engine not running.
   2. With the scan tool, read the VIN in the PCM.
   3. Compare VIN in the PCM to the vehicle VIN.

      Is the correct VIN programmed in the PCM?

      Yes

      - Replace the Electric Parking Brake (EPB) Module in accordance with service information. Refer to **MODULE, ELECTRIC PARK BRAKE, REMOVAL** .
      - Perform the EPB VERIFICATION TEST. Refer to **STANDARD PROCEDURE**.

      No

      - Program the correct VIN into the PCM. Follow the VIN programing procedure in the PCM/ECM reprogramming procedure. Refer to **STANDARD PROCEDURE** for 2.0L diesel engine, **STANDARD PROCEDURE** for 2.4L gasoline engine or **STANDARD PROCEDURE** for 3.2L gasoline engine. .

C2212-00-ECU IN PLANT MODE

For a complete wiring diagram, **refer to appropriate SYSTEM WIRING DIAGRAMS article** .

WHEN MONITORED

Continuously.

SET CONDITION

Run the Electric Parking Brake (EPB) Module diagnostic routine.

POSSIBLE CAUSES

Possible Causes
TAKE OUT OF PLANT MODE ROUTINE ELECTRIC PARKING BRAKE (EPB) MODULE

DIAGNOSTIC TEST

1. **VERIFY THE DTC IS ACTIVE**
    1. Turn the ignition on.
    2. With the scan tool, record and erase the DTCs.
    3. Cycle the ignition from off to on.
    4. Push the EPB Switch down to release the Electric Parking Brakes.
    5. Pull the EPB Switch up to set the Electric Parking Brakes.
    6. Push the EPB Switch down to release the Electric Parking Brakes.
    7. Cycle the ignition from off to on.
    8. With the scan tool, read EPB DTCs.

    Is the DTC active at this time?

    Yes

    - Go To 2

    No

    - Test complete, the condition or conditions that originally set this DTC are not present at this time.
2. **ELECTRIC PARKING BRAKE (EPB) MODULE ROUTINE**
    1. Ignition on, engine not running.
    2. With the scan tool, under "Miscellaneous Functions" perform the "Take Out of Plant Mode" routine.
    3. With the scan tool, erase the DTCs.
    4. Cycle the ignition from off to on.
    5. With the scan tool, read the DTCs.

    Does the DTC remain active?

    Yes

    - Replace the Electric Parking Brake (EPB) Module in accordance with service information. Refer to **MODULE, ELECTRIC PARK BRAKE, REMOVAL** .

- Perform the EPB VERIFICATION TEST. Refer to **STANDARD PROCEDURE**.

No

- Test complete, the condition or conditions that originally set this DTC are not present at this time.
- Perform the EPB VERIFICATION TEST. Refer to **STANDARD PROCEDURE**.

C2219-00-ECU UNABLE TO CONFIGURE/CONFIGURATION NOT LEARNED

For a complete wiring diagram, **refer to appropriate SYSTEM WIRING DIAGRAMS article** .

WHEN MONITORED

Ignition on.

SET CONDITION

This DTC will set if any of the learned Vehicle Configuration data from the CAN Bus has changed.

POSSIBLE CAUSES

Possible Causes
LOST COMMUNICATION DTCS
BODY CONTROL MODULE (BCM) PROXI ALIGNMENT NOT PERFORMED
BODY CONTROL MODULE (BCM)
ELECTRIC PARKING BRAKE (EPB) MODULE

DIAGNOSTIC TEST

1. **VERIFY THE DTC IS ACTIVE**

NOTE: If multiple DTCs are present, inspect the wiring and harness connector at the EPB Module.

NOTE: If the Electric Parking Brake (EPB) Module was replaced, verify that the correct EPB Module was installed on the vehicle.

1. Turn the ignition on.
2. With the scan tool, record and erase the DTCs.
3. Cycle the ignition from off to on.
4. Push the EPB Switch down to release the Electric Parking Brakes.
5. Pull the EPB Switch up to set the Electric Parking Brakes.
6. Push the EPB Switch down to release the Electric Parking Brakes.

7. Cycle the ignition from off to on.
8. With the scan tool, read EPB DTCs.

   Is the DTC active at this time?

   Yes

   - Go To 2

   No

   - Test complete. The condition or conditions that originally set this DTC are not present at this time. Using the wiring diagrams as a guide, check all related splices and connectors for signs of water intrusion, corrosion, pushed out or bent terminals, and correct pin tension.

2. **LOST COMMUNICATION DTCS**
   1. With the scan tool, read the DTCs.

      Are there any Lost Communication DTCs present?

      Yes

      - Perform the STORED LOST COMMUNICATION DTCs diagnostic procedure. Refer to **DIAGNOSIS AND TESTING** .

      No

      - Go To 3

3. **BODY CONTROL MODULE (BCM) PROXI ALIGNMENT**
   1. Using the scan tool, under "Miscellaneous Functions" perform the PROXI Alignment routine in the BCM.

      Was the BCM PROXI Alignment routine successful?

      Yes

      - Replace the Electric Parking Brake (EPB) Module in accordance with service information. Refer to **MODULE, ELECTRIC PARK BRAKE, REMOVAL** .
      - Perform the EPB VERIFICATION TEST. Refer to **STANDARD PROCEDURE**.

      No

      - Replace the BCM in accordance with the Service Information. Refer to **MODULE, BODY CONTROL, REMOVAL** .
      - Perform the BODY VERIFICATION TEST. Refer to **STANDARD PROCEDURE** .

C2222-68-IMPROPER POWERDOWN - EVENT INFORMATION

For a complete wiring diagram, **refer to appropriate SYSTEM WIRING DIAGRAMS article** .

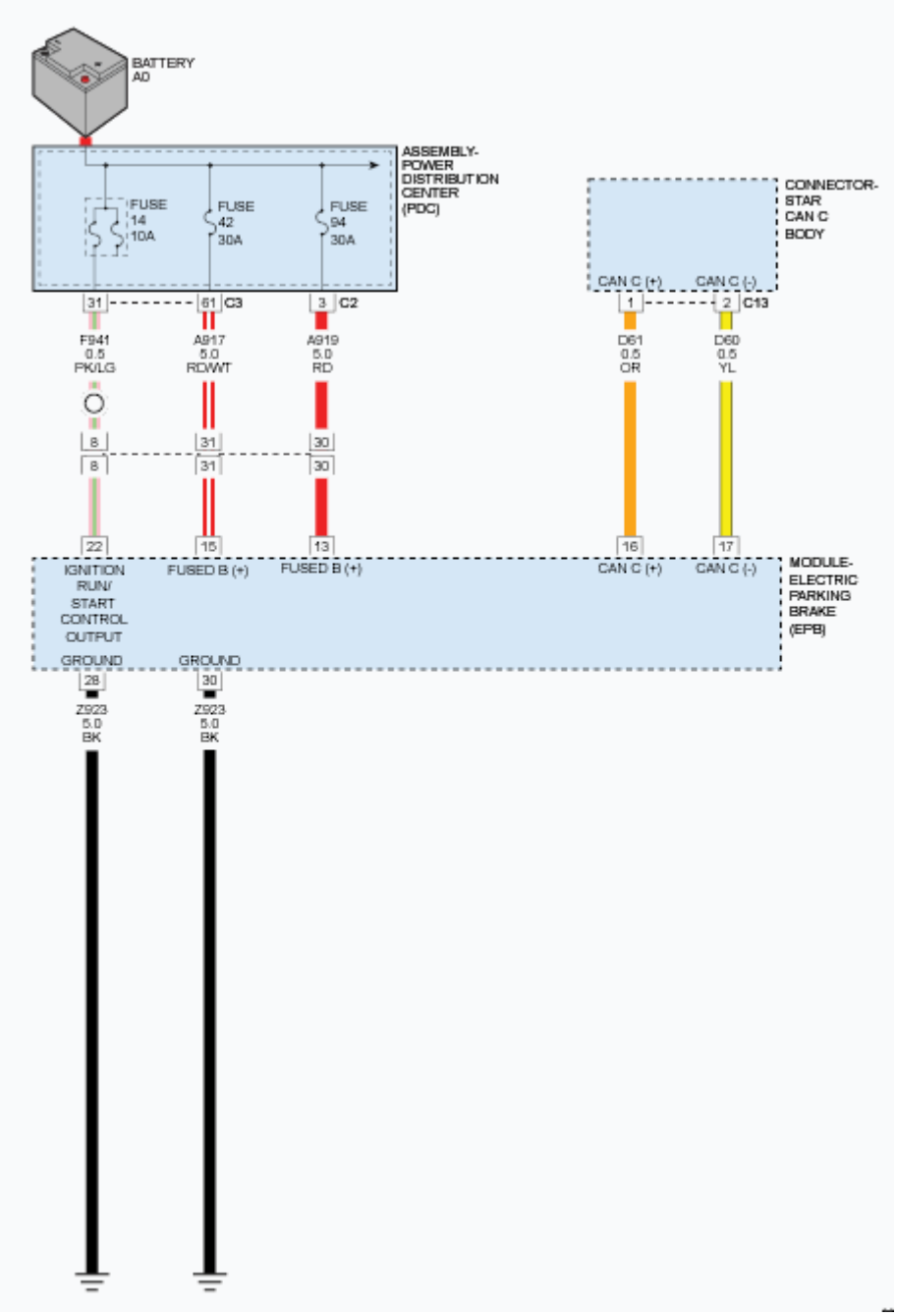

Fig. 6: Identifying Electric Parking Brake Module Circuit Diagram
Courtesy of CHRYSLER GROUP, LLC

WHEN MONITORED

Ignition on and no system under voltage or over voltage condition present.

SET CONDITION

The Electric Parking Brake (EPB) Module has supply voltage interrupted during EPB actuation.

POSSIBLE CAUSES

Possible Causes
(F941) FUSED RUN/START CONTROL OUTPUT CIRCUIT FOR AN OPEN OR SHORT CIRCUIT ELECTRIC PARKING BRAKE (EPB) MODULE

DIAGNOSTIC TEST

1. **VERIFY THE DTC IS ACTIVE**

   NOTE: If any other DTCs are present, repair them first before continuing with this diagnostic procedure.

   Turn the ignition on.

   1. With the scan tool, record and erase the DTCs.
   2. Cycle the ignition from off to on.
   3. Push the EPB Switch down to release the Electric Parking Brakes.
   4. Pull the EPB Switch up to set the Electric Parking Brakes.
   5. Push the EPB Switch down to release the Electric Parking Brakes.
   6. Cycle the ignition from off to on.
   7. With the scan tool, read EPB DTCs.

      Is the DTC active at this time?

      Yes

      - Go To 2

      No

      - The conditions that caused this code to set are not present at this time. Using the wiring diagram/schematic as a guide, inspect the wiring harness and electrical connectors.
      - Perform the EPB VERIFICATION TEST. Refer to **STANDARD PROCEDURE**.

2. **CHECK THE (F941) FUSED RUN/START CONTROL OUTPUT CIRCUIT FOR AN OPEN OR SHORT CIRCUIT**
   1. Turn the ignition on.
   2. Using a 12-volt test light connected to ground, check the (F941) Fused Run/Start Control Output circuit.

Does the test light illuminate brightly?

Yes

- Replace the Electric Parking Brake (EPB) Module in accordance with service information. Refer to **MODULE, ELECTRIC PARK BRAKE, REMOVAL** .
- Perform the EPB VERIFICATION TEST. Refer to **STANDARD PROCEDURE**.

No

- Repair the (F941) Fused Run/Start Control Output circuit for an open or short.
- Perform the EPB VERIFICATION TEST. Refer to **STANDARD PROCEDURE**.

C2223-00-ECU CONFIGURATION MISMATCH

For a complete wiring diagram, **refer to appropriate SYSTEM WIRING DIAGRAMS article** .

WHEN MONITORED

Continuously with system voltage between 10.0 and 16.0 volts Electric Parking Brake (EPB) Module is not in Plant-Mode.

SET CONDITION

Body Control Module (BCM) does not expect the Electric Parking Brake (EPB) Module to be present.

POSSIBLE CAUSES

Possible Causes
BODY CONTROL MODULE (BCM) DOES NOT DETECT THE ELECTRIC PARKING BRAKE (EPB)
ELECTRIC PARKING BRAKE (EPB) MODULE NOT PROGRAMED

DIAGNOSTIC TEST

ELECTRIC PARKING BRAKE (EPB) MODULE NOT PROGRAMED

This Diagnostic Trouble Code will set if the Body Control Module (BCM) is not configured for Electric Parking Brake (EPB) Module.

- Program the BCM with the correct sales code. Refer to **STANDARD PROCEDURE** .
- Perform the EPB VERIFICATION TEST. Refer to **STANDARD PROCEDURE**.

U0001-00-CAN C BUS

Perform the COMMUNICATION PRE-DIAGNOSTIC PROCEDURE. Refer to **STANDARD PROCEDURE** .

U0100-00-LOST COMMUNICATION WITH ECM/PCM

Perform the COMMUNICATION PRE-DIAGNOSTIC PROCEDURE. Refer to **STANDARD PROCEDURE** .

U0101-00-LOST COMMUNICATION WITH TCM

Perform the COMMUNICATION PRE-DIAGNOSTIC PROCEDURE. Refer to **STANDARD PROCEDURE** .

U0102-00-LOST COMMUNICATION WITH TRANSFER CASE CONTROL MODULE / AWD

Perform the COMMUNICATION PRE-DIAGNOSTIC PROCEDURE. Refer to **STANDARD PROCEDURE** .

U0129-00-LOST COMMUNICATION WITH BRAKE SYSTEM CONTROL MODULE

Perform the COMMUNICATION PRE-DIAGNOSTIC PROCEDURE. Refer to **STANDARD PROCEDURE** .

U0140-00-LOST COMMUNICATION WITH BODY CONTROL MODULE

Perform the COMMUNICATION PRE-DIAGNOSTIC PROCEDURE. Refer to **STANDARD PROCEDURE** .

U0151-00-LOST COMMUNICATION WITH OCCUPANT RESTRAINT CONTROLLER (ORC)

Perform the COMMUNICATION PRE-DIAGNOSTIC PROCEDURE. Refer to **STANDARD PROCEDURE** .

U0401-00-IMPLAUSABLE DATA RECEIVED FROM ECM/PCM

For a complete wiring diagram, **refer to appropriate SYSTEM WIRING DIAGRAMS article** .

WHEN MONITORED

Continuously with the ignition on, one valid CAN message received at least once, and no CAN C Bus Off Performance DTC present.

SET CONDITION

When the Electric Parking Brake (EPB) Module detects an incorrect CAN message from the Powertrain Control Module (PCM).

POSSIBLE CAUSES

Possible Causes
ELECTRIC PARKING BRAKE (EPB) MODULE CAN BUS DTCS
BODY CONTROL MODULE (BCM) DTCS
POWERTRAIN CONTROL MODULE (PCM) DTCS
ELECTRIC PARKING BRAKE (EPB) MODULE

DIAGNOSTIC TEST

1. **VERIFY THE DTC IS ACTIVE**
    1. Turn the ignition on.
    2. With the scan tool, record and erase DTCs.
    3. Cycle the ignition from off to on.
    4. With the scan tool, read DTCs.

    Is the DTC active at this time?

    Yes

    - Go To 2

    No

    - Go To 5
2. **CHECK FOR BODY CONTROL MODULE (BCM) DTCS**
    1. With the scan tool, read BCM DTCs.

    Are there any BCM CAN Bus DTCs present?

    Yes

    - Perform the appropriate diagnostic procedure. Refer to the **BODY CONTROL MODULE (BCM) - DIAGNOSTIC CODE INDEX** article .

    No

    - Go To 3
3. **CHECK FOR POWERTRAIN CONTROL MODULE (PCM) DTCS**
    1. With the scan tool, read PCM DTCs.

    Are there any PCM DTCs present?

    Yes

- Perform the appropriate diagnostic procedure. Refer to the **DTC INDEX** article .

No

- Go To 4

4. **CHECK OTHER MODULES FOR DTCS**
   1. With the scan tool, read DTCs.

      Are there any other modules reporting implausible communication DTCs against the PCM?

      Yes

      - Replace the Powertrain Control Module (PCM) in accordance with the Service Information. Refer to **MODULE, POWERTRAIN CONTROL, REMOVAL** .
      - Perform the EPB VERIFICATION TEST. Refer to **STANDARD PROCEDURE**.

      No

      - Using the schematics as a guide, check the EPB module pins, terminals, and connectors for corrosion, damage, or terminal push out. Pay particular attention to all power and ground circuits. If no problems are found, replace the Electric Parking Brake (EPB) Module in accordance with the Service Information. Refer to **MODULE, ELECTRIC PARK BRAKE, REMOVAL** .
      - Perform the EPB VERIFICATION TEST. Refer to **STANDARD PROCEDURE**.
5. **CHECK THE WIRING AND CONNECTORS**
   1. The conditions necessary to set the DTC are not present at this time.
   2. Using the schematics as a guide, inspect the wiring and connectors specific to this module. Wiggle the wiring and connectors while checking for shorted and open circuits.
   3. Check all related splices and connectors for signs of water intrusion, corrosion, pushed out or bent terminals, and correct pin tension.
   4. Check Service Bulletins for any possible causes that may apply.

      Were there any problems found?

      Yes

      - Repair as necessary.
      - Perform the EPB VERIFICATION TEST. Refer to **STANDARD PROCEDURE**.

      No

      - Test complete.

U0402-00-IMPLAUSIBLE DATA RECEIVED FROM TCM

For a complete wiring diagram, **refer to appropriate SYSTEM WIRING DIAGRAMS article** .

WHEN MONITORED

Continuously with the ignition on, one valid CAN message received at least once, and no CAN C Bus Off Performance DTC present.

SET CONDITION

When the Electric Parking Brake (EPB) Module detects an incorrect CAN message from the Transmission Control Module (TCM).

POSSIBLE CAUSES

Possible Causes
ELECTRIC PARKING BRAKE (EPB) MODULE CAN BUS DTCS
BODY CONTROL MODULE (BCM) DTCS
TRANSMISSION CONTROL MODULE (TCM) DTCS
ELECTRIC PARKING BRAKE (EPB) MODULE

DIAGNOSTIC TEST

1. **VERIFY THE DTC IS ACTIVE**
    1. Turn the ignition on.
    2. With the scan tool, record and erase DTCs.
    3. Cycle the ignition from off to on.
    4. With the scan tool, read DTCs.

    Is the DTC active at this time?

    Yes

    - Go To 2

    No

    - Go To 5
2. **CHECK FOR BODY CONTROL MODULE (BCM) DTCS**
    1. With the scan tool, read BCM DTCs.

    Are there any BCM CAN Bus DTCs present?

    Yes

- Perform the appropriate diagnostic procedure. Refer to the **BODY CONTROL MODULE (BCM) - DIAGNOSTIC CODE INDEX** article .

No

- Go To 3

3. **CHECK FOR TRANSMISSION CONTROL MODULE (TCM) DTCS**
   1. With the scan tool, read TCM DTCs.

      Are there any TCM DTCs present?

      Yes

      - Perform the appropriate diagnostic procedure. Refer to the **TRANSMISSION CONTROL MODULE (TCM) - DIAGNOSTIC CODE INDEX** article .

      No

      - Go To 4

4. **CHECK OTHER MODULES FOR DTCS**
   1. With the scan tool, read DTCs.

      Are there any other modules reporting implausible communication DTCs against the TCM?

      Yes

      - Replace the Transmission Control Module (TCM) in accordance with the Service Information. Refer to **MODULE, TRANSMISSION CONTROL, REMOVAL** .
      - Perform the EPB VERIFICATION TEST. Refer to **STANDARD PROCEDURE**.

      No

      - Using the schematics as a guide, check the EPB module pins, terminals, and connectors for corrosion, damage, or terminal push out. Pay particular attention to all power and ground circuits. If no problems are found, replace the Electric Parking Brake (EPB) Module in accordance with the Service Information. Refer to **MODULE, ELECTRIC PARK BRAKE, REMOVAL** .
      - Perform the EPB VERIFICATION TEST. Refer to **STANDARD PROCEDURE**.

5. **CHECK THE WIRING AND CONNECTORS**
   1. The conditions necessary to set the DTC are not present at this time.
   2. Using the schematics as a guide, inspect the wiring and connectors specific to this module. Wiggle the wiring and connectors while checking for shorted and open circuits.
   3. Check all related splices and connectors for signs of water intrusion, corrosion, pushed out or bent terminals, and correct pin tension.

4. Check Service Bulletins for any possible causes that may apply.

   Were there any problems found?

   Yes

   - Repair as necessary.
   - Perform the EPB VERIFICATION TEST. Refer to **STANDARD PROCEDURE**.

   No

   - Test complete.

U0403-00-IMPLAUSIBLE DATA RECEIVED FROM T-CASE

For a complete wiring diagram, **refer to appropriate SYSTEM WIRING DIAGRAMS article** .

WHEN MONITORED

Continuously with the ignition on, one valid CAN message received at least once, and no CAN C Bus Off Performance DTC present.

SET CONDITION

When the Electric Parking Brake (EPB) Module detects an incorrect CAN message from the Drive Train Control Module (DTCM).

POSSIBLE CAUSES

Possible Causes
ELECTRIC PARKING BRAKE (EPB) MODULE CAN BUS DTCS
BODY CONTROL MODULE (BCM) DTCS
DRIVE TRAIN CONTROL MODULE (DTCM) DTCS
ELECTRIC PARKING BRAKE (EPB) MODULE

DIAGNOSTIC TEST

1. **VERIFY THE DTC IS ACTIVE**
   1. Turn the ignition on.
   2. With the scan tool, record and erase DTCs.
   3. Cycle the ignition from off to on.
   4. With the scan tool, read DTCs.

      Is the DTC active at this time?

Yes

- Go To 2

No

- Go To 5

2. **CHECK FOR BODY CONTROL MODULE (BCM) DTCS**
   1. With the scan tool, read BCM DTCs.

      Are there any BCM CAN Bus DTCs present?

      Yes

      - Perform the appropriate diagnostic procedure. Refer to the **BODY CONTROL MODULE (BCM) - DIAGNOSTIC CODE INDEX** article .

      No

      - Go To 3

3. **CHECK FOR DRIVE TRAIN CONTROL MODULE (DTCM) DTCS**
   1. With the scan tool, read DTCM DTCs.

      Are there any DTCM DTCs present?

      Yes

      - Perform the appropriate diagnostic procedure. Refer to **DIAGNOSIS AND TESTING** .

      No

      - Go To 4

4. **CHECK OTHER MODULES FOR DTCS**
   1. With the scan tool, read DTCs.

      Are there any other modules reporting implausible communication DTCs against the DTCM?

      Yes

      - Replace the Drive Train Control Module (DTCM) in accordance with the Service Information. Refer to **MODULE, DRIVETRAIN CONTROL, REMOVAL** .
      - Perform the EPB VERIFICATION TEST. Refer to **STANDARD PROCEDURE**.

      No

- Using the schematics as a guide, check the EPB module pins, terminals, and connectors for corrosion, damage, or terminal push out. Pay particular attention to all power and ground circuits. If no problems are found, replace the Electric Parking Brake (EPB) Module in accordance with the Service Information. Refer to **MODULE, ELECTRIC PARK BRAKE, REMOVAL** .
- Perform the EPB VERIFICATION TEST. Refer to **STANDARD PROCEDURE**.

5. **CHECK THE WIRING AND CONNECTORS**
   1. The conditions necessary to set the DTC are not present at this time.
   2. Using the schematics as a guide, inspect the wiring and connectors specific to this module. Wiggle the wiring and connectors while checking for shorted and open circuits.
   3. Check all related splices and connectors for signs of water intrusion, corrosion, pushed out or bent terminals, and correct pin tension.
   4. Check Service Bulletins for any possible causes that may apply.

   Were there any problems found?

   Yes

   - Repair as necessary.
   - Perform the EPB VERIFICATION TEST. Refer to **STANDARD PROCEDURE**.

   No

   - Test complete.

U0415-00-IMPLAUSIBLE DATA RECEIVED FROM ABS

For a complete wiring diagram, **refer to appropriate SYSTEM WIRING DIAGRAMS article** .

WHEN MONITORED

Continuously with the ignition on, one valid CAN message received at least once, and no CAN C Bus Off Performance DTC present.

SET CONDITION

When the Electric Parking Brake (EPB) Module detects an incorrect CAN message from the Anti-lock Brake System (ABS) Module.

POSSIBLE CAUSES

Possible Causes
ELECTRIC PARKING BRAKE (EPB) MODULE CAN BUS DTCS BODY CONTROL MODULE (BCM) DTCS

ANTI-LOCK BRAKE SYSTEM (ABS) MODULE
ELECTRIC PARKING BRAKE (EPB) MODULE

DIAGNOSTIC TEST

1. **VERIFY THE DTC IS ACTIVE**
    1. Turn the ignition on.
    2. With the scan tool, record and erase DTCs.
    3. Cycle the ignition from off to on.
    4. With the scan tool, read DTCs.

    Is the DTC active at this time?

    Yes

    - Go To 2

    No

    - Go To 5
2. **CHECK FOR BODY CONTROL MODULE (BCM) DTCS**
    1. With the scan tool, read BCM DTCs.

    Are there any BCM CAN Bus DTCs present?

    Yes

    - Perform the appropriate diagnostic procedure. Refer to the **BODY CONTROL MODULE (BCM) - DIAGNOSTIC CODE INDEX** article .

    No

    - Go To 3
3. **CHECK FOR ANTI-LOCK BRAKE SYSTEM (ABS) MODULE DTCS**
    1. With the scan tool, read ABS DTCs.

    Are there any ABS DTCs present?

    Yes

    - Perform the appropriate diagnostic procedure. Refer to **DIAGNOSIS AND TESTING** .

    No

- Go To 4

4. **CHECK OTHER MODULES FOR DTCS**
   1. With the scan tool, read DTCs.

      Are there any other modules reporting implausible communication DTCs against the ABS Module?

      Yes

      - Replace the Anti-lock Brake System (ABS) Module in accordance with the Service Information. Refer to **MODULE, ANTI-LOCK BRAKE SYSTEM, REMOVAL** .
      - Perform the EPB VERIFICATION TEST. Refer to **STANDARD PROCEDURE**.

      No

      - Using the schematics as a guide, check the EPB module pins, terminals, and connectors for corrosion, damage, or terminal push out. Pay particular attention to all power and ground circuits. If no problems are found, replace the Electric Parking Brake (EPB) Module in accordance with the Service Information. Refer to **MODULE, ELECTRIC PARK BRAKE, REMOVAL** .
      - Perform the EPB VERIFICATION TEST. Refer to **STANDARD PROCEDURE**.
5. **CHECK THE WIRING AND CONNECTORS**
   1. The conditions necessary to set the DTC are not present at this time.
   2. Using the schematics as a guide, inspect the wiring and connectors specific to this module. Wiggle the wiring and connectors while checking for shorted and open circuits.
   3. Check all related splices and connectors for signs of water intrusion, corrosion, pushed out or bent terminals, and correct pin tension.
   4. Check Service Bulletins for any possible causes that may apply.

      Were there any problems found?

      Yes

      - Repair as necessary.
      - Perform the EPB VERIFICATION TEST. Refer to **STANDARD PROCEDURE**.

      No

      - Test complete.

U0415-92-IMPLAUSIBLE DATA RECEIVED FROM ABS - PERFORMANCE OR INCORRECT OPERATION

For a complete wiring diagram, **refer to appropriate SYSTEM WIRING DIAGRAMS article** .

WHEN MONITORED

Continuously with the ignition on, one valid CAN message received at least once, and no CAN C Bus Off Performance DTC present.

SET CONDITION

When the Electric Parking Brake (EPB) Module detects an incorrect CAN message from the Anti-lock Brake System (ABS) Module.

POSSIBLE CAUSES

Possible Causes
ELECTRIC PARKING BRAKE (EPB) MODULE CAN BUS DTCS
BODY CONTROL MODULE (BCM) DTCS
ANTI-LOCK BRAKE SYSTEM (ABS) MODULE
ELECTRIC PARKING BRAKE (EPB) MODULE

DIAGNOSTIC TEST

1. **VERIFY THE DTC IS ACTIVE**
    1. Turn the ignition on.
    2. With the scan tool, record and erase DTCs.
    3. Cycle the ignition from off to on.
    4. With the scan tool, read DTCs.

    Is the DTC active at this time?

    Yes

    - Go To 2

    No

    - Go To 5
2. **CHECK FOR BODY CONTROL MODULE (BCM) DTCS**
    1. With the scan tool, read BCM DTCs.

    Are there any BCM CAN Bus DTCs present?

    Yes

    - Perform the appropriate diagnostic procedure. Refer to the **BODY CONTROL MODULE (BCM) - DIAGNOSTIC CODE INDEX** article .

No

- Go To 3

3. **CHECK FOR ANTI-LOCK BRAKE SYSTEM (ABS) MODULE DTCS**
   1. With the scan tool, read ABS DTCs.

      Are there any ABS DTCs present?

      Yes

      - Perform the appropriate diagnostic procedure. Refer to **DIAGNOSIS AND TESTING** .

      No

      - Go To 4

4. **CHECK OTHER MODULES FOR DTCS**
   1. With the scan tool, read DTCs.

      Are there any other modules reporting implausible communication DTCs against the ABS Module?

      Yes

      - Replace the Anti-lock Brake System (ABS) Module in accordance with the Service Information. Refer to **MODULE, ANTI-LOCK BRAKE SYSTEM, REMOVAL** .
      - Perform the EPB VERIFICATION TEST. Refer to **STANDARD PROCEDURE**.

      No

      - Using the schematics as a guide, check the EPB module pins, terminals, and connectors for corrosion, damage, or terminal push out. Pay particular attention to all power and ground circuits. If no problems are found, replace the Electric Parking Brake (EPB) Module in accordance with the Service Information. Refer to **MODULE, ELECTRIC PARK BRAKE, REMOVAL** .
      - Perform the EPB VERIFICATION TEST. Refer to **STANDARD PROCEDURE**.

5. **CHECK THE WIRING AND CONNECTORS**
   1. The conditions necessary to set the DTC are not present at this time.
   2. Using the schematics as a guide, inspect the wiring and connectors specific to this module. Wiggle the wiring and connectors while checking for shorted and open circuits.
   3. Check all related splices and connectors for signs of water intrusion, corrosion, pushed out or bent terminals, and correct pin tension.
   4. Check Service Bulletins for any possible causes that may apply.

      Were there any problems found?

Yes

- Repair as necessary.
- Perform the EPB VERIFICATION TEST. Refer to **STANDARD PROCEDURE**.

No

- Test complete.

U0422-00-IMPLAUSIBLE DATA RECEIVED FROM BODY CONTROL MODULE

For a complete wiring diagram, **refer to appropriate SYSTEM WIRING DIAGRAMS article** .

WHEN MONITORED

Continuously with the ignition on, one valid CAN message received at least once, and no CAN C Bus Off Performance DTC present.

SET CONDITION

When the Electric Parking Brake (EPB) Module detects an incorrect CAN message from the Body Control Module (BCM).

POSSIBLE CAUSES

Possible Causes
ELECTRIC PARKING BRAKE (EPB) MODULE CAN BUS DTCS
BODY CONTROL MODULE (BCM) DTCS
ELECTRIC PARKING BRAKE (EPB) MODULE

DIAGNOSTIC TEST

1. **VERIFY THE DTC IS ACTIVE**
    1. Turn the ignition on.
    2. With the scan tool, record and erase DTCs.
    3. Cycle the ignition from off to on.
    4. With the scan tool, read DTCs.

    Is the DTC active at this time?

    Yes

    - Go To 2

    No

- Go To 4

2. **CHECK FOR BODY CONTROL MODULE (BCM) DTCS**
   1. With the scan tool, read BCM DTCs.

      Are there any BCM CAN Bus DTCs present?

      Yes

      - Perform the appropriate diagnostic procedure. Refer to the **BODY CONTROL MODULE (BCM) - DIAGNOSTIC CODE INDEX** article .

      No

      - Go To 3

3. **CHECK OTHER MODULES FOR DTCS**
   1. With the scan tool, read DTCs.

      Are there any other modules reporting implausible communication DTCs against the BCM?

      Yes

      - Replace the Body Control Module (BCM) in accordance with the Service Information. Refer to **MODULE, BODY CONTROL, REMOVAL** .
      - Perform the EPB VERIFICATION TEST. Refer to **STANDARD PROCEDURE**.

      No

      - Using the schematics as a guide, check the EPB module pins, terminals, and connectors for corrosion, damage, or terminal push out. Pay particular attention to all power and ground circuits. If no problems are found, replace the Electric Parking Brake (EPB) Module in accordance with the Service Information. Refer to **MODULE, ELECTRIC PARK BRAKE, REMOVAL** .
      - Perform the EPB VERIFICATION TEST. Refer to **STANDARD PROCEDURE**.

4. **CHECK THE WIRING AND CONNECTORS**
   1. The conditions necessary to set the DTC are not present at this time.
   2. Using the schematics as a guide, inspect the wiring and connectors specific to this module. Wiggle the wiring and connectors while checking for shorted and open circuits.
   3. Check all related splices and connectors for signs of water intrusion, corrosion, pushed out or bent terminals, and correct pin tension.
   4. Check Service Bulletins for any possible causes that may apply.

      Were there any problems found?

Yes

- Repair as necessary.
- Perform the EPB VERIFICATION TEST. Refer to **STANDARD PROCEDURE**.

No

- Test complete.

U0423-00-IMPLAUSABLE DATA RECEIVED FROM THE CLUSTER/CCN

For a complete wiring diagram, **refer to appropriate SYSTEM WIRING DIAGRAMS article** .

WHEN MONITORED

Continuously with the ignition on, one valid CAN message received at least once, and no CAN C Bus Off Performance DTC present.

SET CONDITION

When the Electric Parking Brake (EPB) Module detects an incorrect CAN message from the Instrument Cluster (IPC).

POSSIBLE CAUSES

Possible Causes
ELECTRIC PARKING BRAKE (EPB) MODULE CAN BUS DTCS
BODY CONTROL MODULE (BCM) DTCS
INSTRUMENT CLUSTER (IPC) DTCS
ELECTRIC PARKING BRAKE (EPB) MODULE

DIAGNOSTIC TEST

1. **VERIFY THE DTC IS ACTIVE**
    1. Turn the ignition on.
    2. With the scan tool, record and erase DTCs.
    3. Cycle the ignition from off to on.
    4. With the scan tool, read DTCs.

    Is the DTC active at this time?

    Yes

    - Go To 2

No

- Go To 5

2. **CHECK FOR BODY CONTROL MODULE (BCM) DTCS**
   1. With the scan tool, read BCM DTCs.

      Are there any BCM CAN Bus DTCs present?

      Yes

      - Perform the appropriate diagnostic procedure. Refer to the **BODY CONTROL MODULE (BCM) - DIAGNOSTIC CODE INDEX** article .

      No

      - Go To 3

3. **CHECK FOR INSTRUMENT CLUSTER (IPC) DTCS**
   1. With the scan tool, read IPC DTCs.

      Are there any IPC DTCs present?

      Yes

      - Perform the appropriate diagnostic procedure. Refer to **DIAGNOSIS AND TESTING** .

      No

      - Go To 4

4. **CHECK OTHER MODULES FOR DTCS**
   1. With the scan tool, read DTCs.

      Are there any other modules reporting implausible communication DTCs against the IPC?

      Yes

      - Replace the Instrument Cluster (IPC) in accordance with the Service Information. Refer to **REMOVAL** .
      - Perform the EPB VERIFICATION TEST. Refer to **STANDARD PROCEDURE**.

      No

      - Using the schematics as a guide, check the EPB module pins, terminals, and connectors for corrosion, damage, or terminal push out. Pay particular attention to all power and ground circuits. If no problems are found, replace the Electric Parking Brake (EPB) Module in accordance with the Service Information. Refer to **MODULE, ELECTRIC PARK**

BRAKE, REMOVAL .
- Perform the EPB VERIFICATION TEST. Refer to **STANDARD PROCEDURE**.

5. **CHECK THE WIRING AND CONNECTORS**
   1. The conditions necessary to set the DTC are not present at this time.
   2. Using the schematics as a guide, inspect the wiring and connectors specific to this module. Wiggle the wiring and connectors while checking for shorted and open circuits.
   3. Check all related splices and connectors for signs of water intrusion, corrosion, pushed out or bent terminals, and correct pin tension.
   4. Check Service Bulletins for any possible causes that may apply.

   Were there any problems found?

   Yes

   - Repair as necessary.
   - Perform the EPB VERIFICATION TEST. Refer to **STANDARD PROCEDURE**.

   No

   - Test complete.

U0452-00-IMPLAUSIBLE DATA RECEIVED FROM RESTRAINTS CONTROL MODULE

For a complete wiring diagram, **refer to appropriate SYSTEM WIRING DIAGRAMS article** .

WHEN MONITORED

Continuously with the ignition on, one valid CAN message received at least once, and no CAN C Bus Off Performance DTC present.

SET CONDITION

When the Electric Parking Brake (EPB) Module detects an incorrect CAN message from the Occupant Restraint Controller (ORC).

POSSIBLE CAUSES

Possible Causes
ELECTRIC PARKING BRAKE (EPB) MODULE CAN BUS DTCS
BODY CONTROL MODULE (BCM) DTCS
OCCUPANT RESTRAINT CONTROLLER (ORC) DTCS
ELECTRIC PARKING BRAKE (EPB) MODULE

DIAGNOSTIC TEST

1. **VERIFY THE DTC IS ACTIVE**
    1. Turn the ignition on.
    2. With the scan tool, record and erase DTCs.
    3. Cycle the ignition from off to on.
    4. With the scan tool, read DTCs.

    Is the DTC active at this time?

    Yes

    - Go To 2

    No

    - Go To 5
2. **CHECK FOR BODY CONTROL MODULE (BCM) DTCS**
    1. With the scan tool, read BCM DTCs.

    Are there any BCM CAN Bus DTCs present?

    Yes

    - Perform the appropriate diagnostic procedure. Refer to the **BODY CONTROL MODULE (BCM) - DIAGNOSTIC CODE INDEX** article .

    No

    - Go To 3
3. **CHECK FOR OCCUPANT RESTRAINT CONTROLLER (ORC) DTCS**
    1. With the scan tool, read ORC DTCs.

    Are there any ORC DTCs present?

    Yes

    - Perform the appropriate diagnostic procedure. Refer to the **OCCUPANT RESTRAINT CONTROLLER (ORC) - DIAGNOSTIC CODE INDEX** article .

    No

    - Go To 4
4. **CHECK OTHER MODULES FOR DTCS**
    1. With the scan tool, read DTCs.

Are there any other modules reporting implausible communication DTCs against the ORC?

Yes

- Replace the Occupant Restraint Controller (ORC) in accordance with the Service Information. Refer to **REMOVAL** .
- Perform the EPB VERIFICATION TEST. Refer to **STANDARD PROCEDURE**.

No

- Using the schematics as a guide, check the EPB module pins, terminals, and connectors for corrosion, damage, or terminal push out. Pay particular attention to all power and ground circuits. If no problems are found, replace the Electric Parking Brake (EPB) Module in accordance with the Service Information. Refer to **MODULE, ELECTRIC PARK BRAKE, REMOVAL** .
- Perform the EPB VERIFICATION TEST. Refer to **STANDARD PROCEDURE**.

5. **CHECK THE WIRING AND CONNECTORS**
   1. The conditions necessary to set the DTC are not present at this time.
   2. Using the schematics as a guide, inspect the wiring and connectors specific to this module. Wiggle the wiring and connectors while checking for shorted and open circuits.
   3. Check all related splices and connectors for signs of water intrusion, corrosion, pushed out or bent terminals, and correct pin tension.
   4. Check Service Bulletins for any possible causes that may apply.

   Were there any problems found?

   Yes

   - Repair as necessary.
   - Perform the EPB VERIFICATION TEST. Refer to **STANDARD PROCEDURE**.

   No

   - Test complete.

U300A-00-IGNITION SWITCH

For a complete wiring diagram, **refer to appropriate SYSTEM WIRING DIAGRAMS article** .

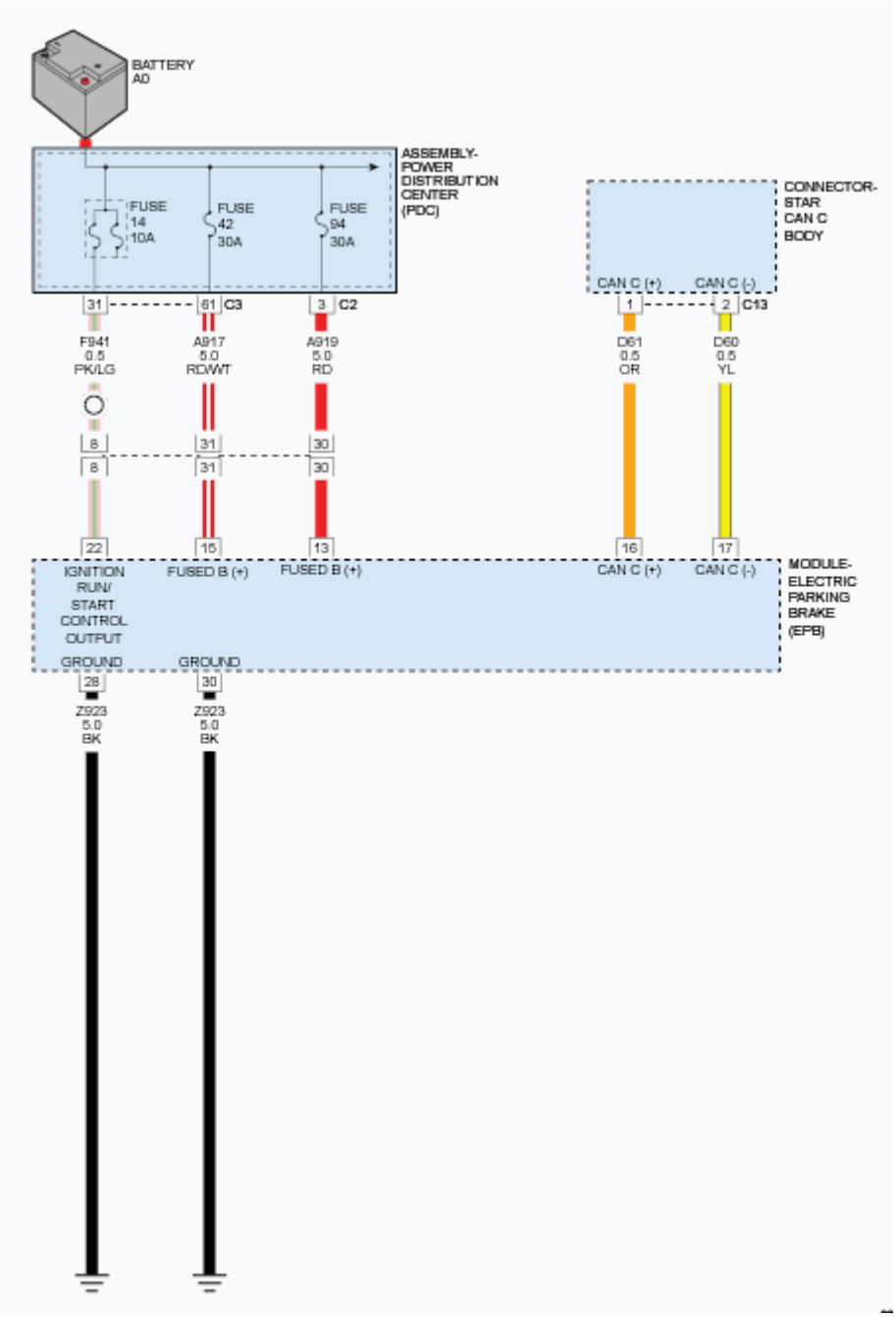

Fig. 7: Identifying Electric Parking Brake Module Circuit Diagram
Courtesy of CHRYSLER GROUP, LLC

WHEN MONITORED

Ignition on for 5 seconds and no system under voltage or over voltage condition present.

SET CONDITION

The Electric Parking Brake (EPB) Module indicates that the ignition switch input from CAN does not match the

ignition switch hard wired input.

POSSIBLE CAUSES

Possible Causes
RADIO FREQUENCY (RF) HUB DTCS (F941) FUSED RUN/START CONTROL OUTPUT CIRCUIT FOR AN OPEN OR SHORT CIRCUIT (D60) CAN C BUS (-) CIRCUIT OPEN OR HIGH RESISTANCE (D61) CAN C BUS (+) CIRCUIT OPEN OR HIGH RESISTANCE ELECTRIC PARKING BRAKE (EPB) MODULE

DIAGNOSTIC TEST

1. **VERIFY THE DTC IS ACTIVE**

   NOTE: If any other DTCs are present, repair them first before continuing with this diagnostic procedure.

   Ignition on, engine not running.

   1. With the scan tool, record and erase DTCs.
   2. Cycle the ignition switch from off to on.
   3. With the scan tool, read DTCs.

      Is the DTC active at this time?

      Yes

      - Go To 2

      No

      - The conditions that caused this code to set are not present at this time. Using the wiring diagram/schematic as a guide, inspect the wiring harness and electrical connectors.
      - Perform the EPB VERIFICATION TEST. Refer to **STANDARD PROCEDURE**.

2. **CHECK FOR RADIO FREQUENCY (RF) HUB DTCS**
   1. With the scan tool, read RF HUB DTCs.

      Are there any RF HUB DTCs present?

      Yes

      - Perform the appropriate diagnostic procedure. Refer to **DIAGNOSIS AND TESTING** .

No

- Go To 3

3. **CHECK THE (F941) FUSED RUN/START CONTROL OUTPUT CIRCUIT FOR AN OPEN OR SHORT CIRCUIT**
   1. Turn the ignition on.
   2. Using a 12-volt test light connected to ground, check the (F941) Fused Run/Start Control Output circuit.

      Does the test light illuminate brightly?

      Yes

      - Go To 4

      No

      - Repair the (F941) Fused Run/Start Control Output circuit for an open or short.
      - Perform the EPB VERIFICATION TEST. Refer to **STANDARD PROCEDURE**.
4. **(D61) CAN C BUS (+) CIRCUIT OPEN OR HIGH RESISTANCE**
   1. Turn the ignition off.
   2. Disconnect the CAN C Body C13 Star harness connector.
   3. Measure the resistance of the (D61) CAN C Bus (+) circuit between the CAN C Body C13 Star harness connector and the ABS Module harness connector.

      Is resistance below 5.0 Ohms?

      Yes

      - Go To 5

      No

      - Repair the (D61) CAN C Bus (+) circuit for an open or high resistance.
      - Perform the EPB VERIFICATION TEST. Refer to **STANDARD PROCEDURE**.
5. **(D60) CAN C BUS (-) CIRCUIT OPEN OR HIGH RESISTANCE**
   1. Measure the resistance of the (D60) CAN C Bus (-) circuit between the CAN C Body C13 Star harness connector and the ABS Module harness connector.

      Is resistance below 5.0 Ohms?

      Yes

      - Replace the Electric Parking Brake (EPB) Module in accordance with service information.

Refer to **MODULE, ELECTRIC PARK BRAKE, REMOVAL** .

- Perform the EPB VERIFICATION TEST. Refer to **STANDARD PROCEDURE**.

No

- Repair the (D60) CAN C Bus (-) circuit for an open or high resistance.
- Perform the EPB VERIFICATION TEST. Refer to **STANDARD PROCEDURE**.

STANDARD PROCEDURE

EPB VERIFICATION TEST

EPB VERIFICATION TEST

NOTE: **If this Electronic Control Unit (ECU) is being replaced with a new unit, a diagnostic scan tool MUST be used to align the PROXI configuration data into the new ECU. Follow the routine outlined in the diagnostic scan tool for PROXI Configuration Alignment under Body Control Module (BCM) "Miscellaneous Functions" menu.**

1. Turn the ignition off to the lock position.
2. Remove all test equipment.
3. Connect all previously disconnected components and connectors.
4. Verify all accessories are turned off, the battery is fully charged and the charging system has a status of "recharging".
5. Verify that the ignition is on. With the scan tool, record and erase all DTCs from all modules. Start the engine and allow it to run for two minutes.
6. Cycle the ignition from off to on.
7. Push the EPB Switch down to release the Electric Parking Brakes.
8. Pull the EPB Switch up to set the Electric Parking Brakes.
9. Push the EPB Switch down to release the Electric Parking Brakes.
10. Cycle the ignition from off to on.
11. While pressing the brake pedal push the EPB Switch down to release the Electric Parking Brakes.
12. Turn the ignition off and wait ten seconds. Turn the ignition on and using the scan tool, read the DTCs from all modules.
13. If there are no DTCs present after turning ignition on, road test the vehicle for at least five minutes.
14. Again, with the scan tool read DTCs. If any DTCs are present, refer to the **DTC INDEX** for the appropriate Diagnostic procedure and troubleshoot the new or recurring symptom.
15. If there are no DTCs present and the customer's concern can no longer be duplicated, the repair is complete.

    Are any DTCs present or is the original concern still present?

Yes

- Perform the appropriate diagnostic procedure. Refer to **DIAGNOSIS AND TESTING**.

No

- Repair is complete.

2014 CLUTCH

Clutch System - Cherokee

DESCRIPTION

DESCRIPTION

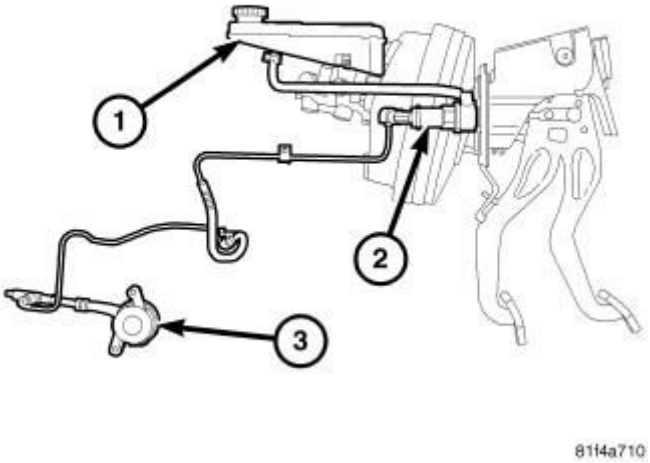

Fig. 1: Clutch Hydraulic System - Typical
Courtesy of CHRYSLER GROUP, LLC

The typical clutch hydraulic system consists of a clutch master cylinder (2), slave cylinder (3), and an interconnecting hydraulic line. Clutch hydraulic fluid is supplied by the brake system via the brake master cylinder reservoir (1).

FLUID

CAUTION: Never use any type of petroleum-based fluid (engine oil, transmission oil, power steering fluid, etc.) in the clutch hydraulic system. Use of such fluids will result in master/slave cylinder seal damage, and cause a failure of the hydraulic clutch release system.

NOTE: Under normal operating conditions, the clutch hydraulic system does not require additional fluid for the life of the vehicle. Since the clutch shares the brake reservoir, the fluid level will be maintained whenever the brake system is checked.

The fluid required for use in the clutch hydraulic system is brake fluid conforming to DOT 3 specifications and J1703 standards. No other type of fluid is recommended or approved for use in the clutch hydraulic system. Use only MOPAR® brake fluid or equivalent from a tightly sealed container.

OPERATION

OPERATION

The clutch hydraulic system is responsible for engaging and disengaging the clutch. Depressing the clutch pedal develops hydraulic pressure in the clutch master cylinder. Hydraulic pressure is transmitted to the release bearing that is in contact with the pressure plate diaphragm spring. As hydraulic force is applied the bearing depresses the diaphragm spring inward on the fulcrums that pushes the pressure plate rearward releasing clamping force on the clutch disc.

DIAGNOSIS AND TESTING

DIAGNOSIS AND TESTING - CLUTCH SYSTEM

Clutch problem diagnosis will generally require a road test to determine the type of fault. Component inspection will then determine the problem after road testing.

Drive the vehicle at normal speeds during road test. Shift the transaxle through all gear ranges and observe clutch action. If chatter, grab, slip, or improper release is experienced, remove and inspect the clutch components. If the problem is noise or hard shifting, further diagnosis may be needed. The transaxle or other driveline components may actually be at fault.

CLUTCH GRAB/CHATTER

CONDITION	POSSIBLE CAUSES	CORRECTION
CLUTCH DISC FACING COVERED WITH OIL OR GREASE	Oil leak at engine rear main or transaxle input shaft seal.	Correct leak and replace modular clutch assembly. -
	Too much grease applied to splines of disc and input shaft.	Apply lighter coating of grease to splines.
NO FAULT FOUND WITH CLUTCH COMPONENTS	Problem actually related to suspension or driveline component.	Further diagnosis required. Check engine/transmission mounts, suspension attaching parts and other driveline components as needed.
	Engine	Check EFI and

	related problems.	ignition systems.
PARTIAL ENGAGEMENT OF CLUTCH DISC	Clutch cover, spring, or release fingers bent, distorted (rough handling, improper assembly).	Replace clutch assembly.
	Clutch disc damaged or distorted.	Replace clutch assembly.
	Clutch Misalignment	Check clutch housing to engine dowels and dowel holes for damage. Correct as necessary.

CLUTCH SLIPS

CONDITION	POSSIBLE CAUSES	CORRECTION
DISC FACING WORN OUT	Normal wear.	Replace clutch assembly.
	Driver frequently rides (slips) clutch, results in rapid wear, overheating.	Replace clutch assembly.
	Insufficient clutch cover diaphragm spring tension	Replace clutch assembly.
CLUTCH DISC FACING CONTAMINATED WITH OIL OR GREASE	Leak at rear main oil seal or transaxle input shaft seal	Replace leaking seals. Replace clutch assembly. -
	Excessive amount of	Apply less grease to input

	grease applied to input shaft splines	shaft. Replace clutch assembly. -
	Road splash, water entering housing	Seal housing. Inspect clutch assembly.
	Concentric Slave Cylinder leaking hydraulic fluid	Replace Concentric Slave Cylinder (CSC)
CLUTCH IS RUNNING PARTIALLY DISENGAGED	Release bearing sticking or binding, does not return to normal running position.	Verify that bearing is actually binding. Then, replace bearing and transmission front bearing retainer if sleeve surface is damaged.
	Concentric Slave cylinder (CSC) binding	Replace Concentric Slave cylinder (CSC)
CLUTCH DISC FACINGS HAVE FRACTURED INTO SMALL PIECES	Driver performs a 5-1 downshift at vehicle speed in excess of 60 miles per hour	Alert driver to problem cause. Replace clutch assembly. Inspect slave cylinder and bearing for damage.
	Leak at rear main or transaxle input shaft seal	Replace seal. Replace clutch assembly. -
	Excessive heat from	Replace Clutch Assembly

	slippage	

IMPROPER CLUTCH RELEASE

CONDITION	POSSIBLE CAUSES	CORRECTION
CLUTCH DISC BINDS ON INPUT SHAFT SPLINES	Clutch disc hub splines damaged during installation	Clean, smooth, and lubricate disc and shaft splines. Replace modular clutch assembly, or clutch disc, and/or input shaft if splines are severely damaged.
	Input shaft splines rough, damaged.	Clean input shaft splines. Then lube.
	Corrosion or rust formations on splines of input shaft and disc	Clean input shaft splines and disc splines, then lube
CLUTCH DISC RUSTED TO FLYWHEEL AND/OR PRESSURE PLATE	Occurs in vehicles stored or not driven for extended period of time. Also occurs after steam cleaning if vehicle is not used for extended period.	Replace clutch assembly.
CLUTCH WILL NOT DISENGAGE PROPERLY	Disc bent, distorted during transaxle	Replace clutch assembly.

	installation	
	Clutch cover diaphragm spring damaged during transaxle installation	Replace clutch assembly.
	Air in clutch hydraulic system.	Bleed clutch hydraulic system to purge air.
	Clutch master cylinder or slave cylinder leaking	Check and replace master and/or slave cylinder

CLUTCH PEDAL NOISE

CONDITION	POSSIBLE CAUSES	CORRECTION
CLUTCH PEDAL SQUEAKS WHEN DEPRESSED TO FLOOR	Pedal bushings worn out or inadequate lubrication	Replace the Pedal assembly
	Push rod ball joint worn out	Lubricate or replace the push rod
	Clutch pedal return spring worn out	Replace the Pedal assembly

DIAGNOSIS AND TESTING - CLUTCH CHATTER COMPLAINTS

For all clutch chatter complaints, perform the following:

1. Check for loose, misaligned, or broken engine and transmission mounts. If present, they should be corrected at this time. Test vehicle for chatter. If chatter is gone, there is no need to go any further.
2. If chatter persists, check hydraulic clutch release system is functioning properly.
3. Check for loose connections in drivetrain. Correct any problems and determine if clutch chatter complaints have been satisfied. If not:

a. Remove transaxle.
b. Check to see if the release bearing is sticky or binding. Replace bearing, if needed.
c. Check clutch assembly for contamination (dirt, oil). Replace clutch assembly, if required.
d. Check to see if the clutch disc hub splines are damaged. Replace with new clutch assembly, if necessary.
e. Check input shaft splines for damage. Replace, if necessary.
f. Check for uneven wear on clutch fingers.
g. Check for broken clutch cover diaphragm spring fingers. Replace with new clutch assembly, if necessary.

DIAGNOSIS AND TESTING - CLASH-INTO-REVERSE

Manual transaxles are equipped with a reverse synchronizer that reduces gear train spin down time after the clutch pedal is depressed. It prevents gear clash while shifting into reverse, when the vehicle is not moving.

1. Depress clutch pedal to floor and hold. After three seconds, shift to reverse. If clash is present, clutch has excessive spin time, and the reverse brake may not be functioning.
2. Remove transaxle.
3. Check the input shaft spline, clutch disc splines, and release bearing for dry rust. If present, clean rust off and apply a light coat of bearing grease to the input shaft splines. Apply grease on the input shaft splines only where the clutch disc slides. Verify that the clutch disc slides freely along the input shaft spline.
4. Check to see if the clutch disc hub splines are damaged, and replace with new clutch assembly if required.
5. Check the input shaft for damaged splines. Replace as necessary.
6. Check for broken clutch cover diaphragm spring fingers.
7. Install clutch assembly and transaxle.

STANDARD PROCEDURE

STANDARD PROCEDURE - BLEEDING CLUTCH HYDRAULIC CIRCUIT

MANUAL BLEEDING

NOTE: A helper is required to perform this procedure.

1. Verify fluid level in clutch/brake cylinder. Top off with DOT 3 brake fluid as necessary. Leave cap off.
2. Raise vehicle on a suitable hoist.
3. Remove the belly pan, if equipped.

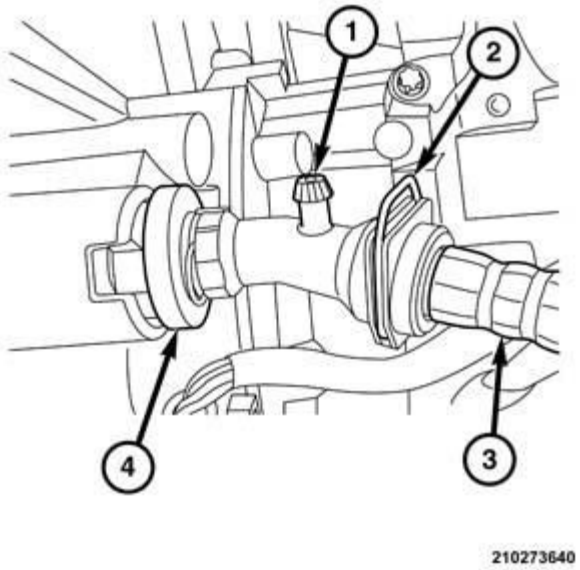

Fig. 2: Clutch Slave Cylinder Union & Nipple
Courtesy of CHRYSLER GROUP, LLC

4. Remove the cap from the nipple (1) on top of the clutch slave cylinder union (4).

NOTE: **Do not allow clutch/brake fluid reservoir to run dry while bleeding the clutch. If the reservoir runs dry during this procedure,**

It must be refilled and the process must be repeated .

5. Have a helper depress and hold the clutch pedal to the floor.

NOTE: **Verify the helper understands not release the clutch pedal from the floor until the technician closes the bleed port and signals the helper to cycle the clutch pedal to avoid inadvertently drawing air back into the system.**

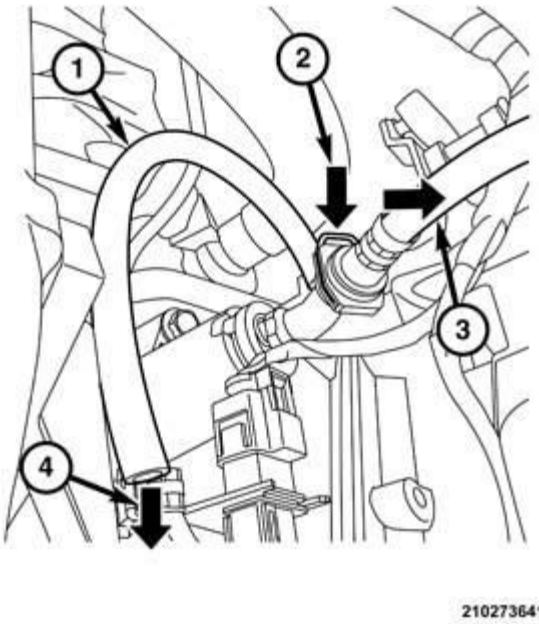

Fig. 3: Hydraulic Hose, Retainer Clip & Transparent Tubing
Courtesy of CHRYSLER GROUP, LLC

6. Connect a length of transparent tubing (1) to the bleeder nipple on the slave cylinder union. Insert the lower end of the transparent tube (1) into a clean container to catch the flow (4).
7. Press downward on the retainer clip (2) holding the hydraulic line to the slave cylinder union while pulling outward on the hydraulic hose (3) to open the bleeder flow (4). This allows the line to pop out about 1/8 in (3 mm) which opens the bleeder. Any air in the system will escape at this time.
8. Push the line (3) inward until the clip (2) snaps in place to stop the bleeder flow.
9. Repeat steps 5 through 8 at least fifteen times or until air bubbles are no longer visible in the transparent tube (1).
10. Slowly actuate the clutch pedal ten up/down cycles.
11. **Apply the brakes**

    Start engine and verify clutch operation and pedal feel. If the clutch pedal feels fine and the transaxle can be easily shifted from neutral to any gear, the clutch is operating correctly. If pedal still feels spongy or clutch does not fully disengage, excessive air is still trapped within the system, most likely at the master cylinder.

12. Remove the transparent tube (1) from the nipple on the slave cylinder union.
13. Install the belly pan, if removed.
14. Lower the vehicle.
15. Top off brake master cylinder fluid level with DOT 3 brake fluid as necessary.

POWER BLEEDING CLUTCH HYDRAULIC CIRCUIT

1. Remove reservoir cap and connect bleeder cap to clutch/brake fluid reservoir.

NOTE: Use Bleeder Cap/Modified reservoir cap adapter Snap-on #901-059 or equivalent.

2. Connect power bleeding machine to bleeder cap.

NOTE: Use Service Filling Machine/Brake power bleeder or equivalent.

3. Service filling machine should be pressurized between 2.0 and 2.5 bar (29 - 36 PSI).
4. Raise vehicle on a suitable hoist.
5. Remove the belly pan, if equipped.

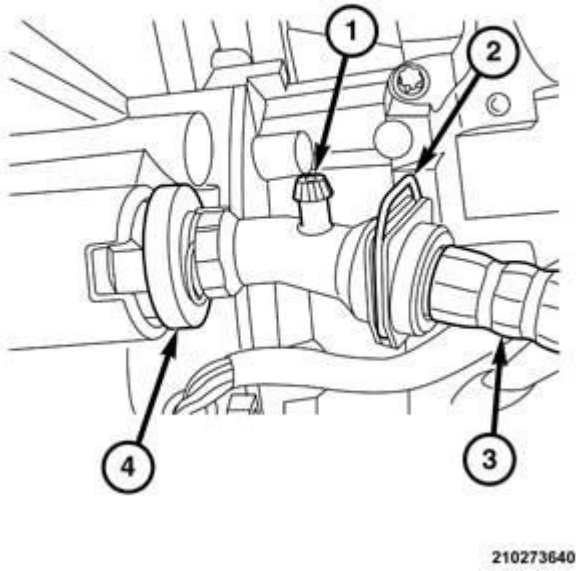

Fig. 4: Clutch Slave Cylinder Union & Nipple
Courtesy of CHRYSLER GROUP, LLC

6. Remove the dust cover from the nipple (1) on the hydraulic slave cylinder union (4).

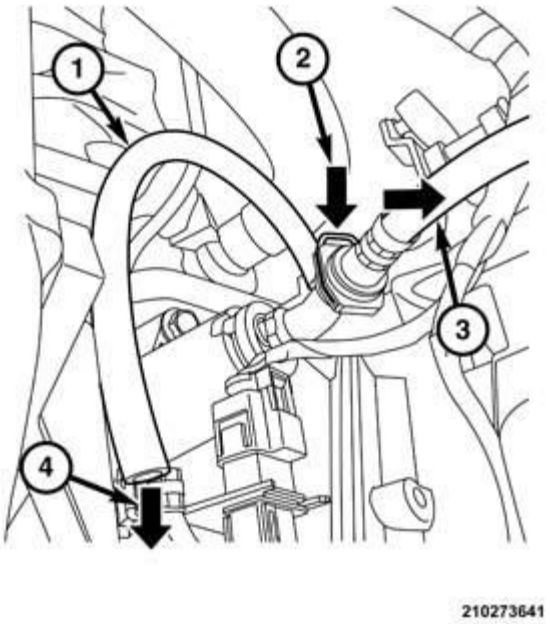

Fig. 5: Hydraulic Hose, Retainer Clip & Transparent Tubing
Courtesy of CHRYSLER GROUP, LLC

7. Connect a length of transparent tubing (1) to the bleeder nipple. Insert the open end of the transparent tube (1) into a clean container to catch the fluid flow (4) during bleeding procedure.
8. Turn ON the power bleeding machine.

NOTE: **While bleeding the system, do not allow the clutch fluid reservoir to completely to run dry. If this happens, refill the clutch fluid reservoir, and repeat the procedure.**

9. Press downward on the retainer clip (2) holding the hydraulic line to the slave cylinder union while pulling outward on the hydraulic hose (3) to open the bleeder flow (4). This allows the line to pop out about 1/8 in (3 mm) which opens the bleeder. Any air in the system will escape at this time.
10. Allow fluid to flow (4) out of bleed port until no air bubbles are visible in the transparent tube (1).
11. Push the line (3) inward until the clip (2) snaps in place to stop the bleeder flow.
12. If necessary, lower the vehicle.
13. Slowly actuate the clutch pedal fifteen up/down cycles.
14. If necessary, hoist the vehicle.
15. Repeat steps 9 through 11 to verify air is NOT trapped in the system.
16. Turn OFF power bleeder machine.
17. If necessary, lower the vehicle.
18. **Apply brakes**

Start engine and verify clutch operation and pedal feel. If the clutch pedal feels fine and the transaxle can be easily shifted from neutral to any gear, the clutch is operating correctly. If pedal still feels spongy or clutch does not fully disengage, excessive air is still trapped in the system.

19. If clutch function is normal, disconnect bleeder machine and install reservoir cap.
20. If necessary, hoist the vehicle.
21. Remove the transparent tube (1) from the nipple on the slave cylinder union and install the dust cover.
22. Install the belly pan, if removed.
23. Lower the vehicle.

SPECIFICATIONS

TORQUE SPECIFICATIONS

TORQUE SPECIFICATIONS

DESCRIPTION	N.m	Ft. Lbs.	In. Lbs.
Pressure Plate to Flywheel Bolts	20	15	177
Flywheel to Crankshaft Bolts	110	81	-
Slave Cylinder to Transmission	10	-	88
Clutch pipe to Transmission Mounting Bolts	18	-	159

CYLINDER, CLUTCH SLAVE

REMOVAL

MANUAL

WARNING: Chrysler LLC does not manufacture any vehicles or replacement parts that contain asbestos. Aftermarket products may or may not contain asbestos. Refer to aftermarket product packaging for product information. Whether the product contains asbestos or not, dust and dirt can accumulate on manual clutch parts during normal use. Follow practices prescribed by appropriate regulations for the handling, processing and disposing of dust and debris.

NOTE: To prevent drainage of clutch master cylinder assembly upon slave cylinder removal, it is necessary to make sure brake master cylinder fluid level is full and reservoir cap is installed tight.

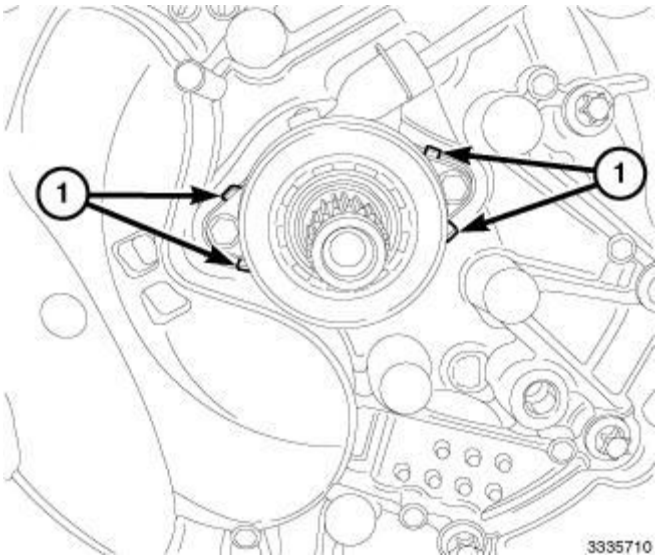

Fig. 6: Concentric Slave Cylinder Retention Tabs
Courtesy of CHRYSLER GROUP, LLC

1. Remove transmission from vehicle. Refer to **REMOVAL** .
2. Release the retention tabs from the Concentric Slave Cylinder (CSC) (1).

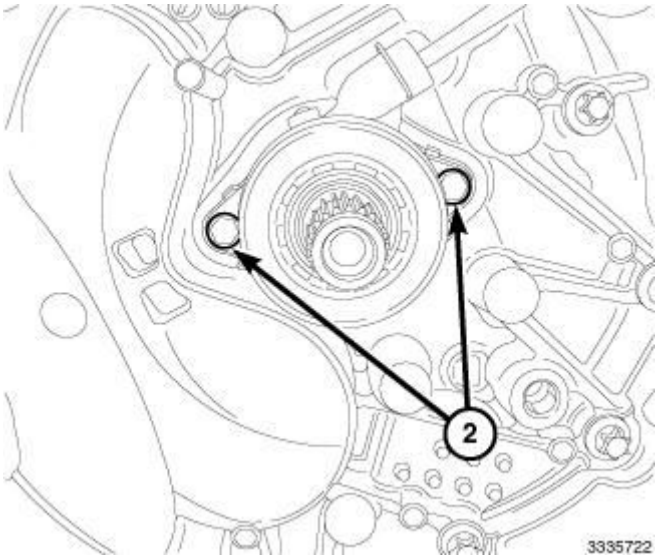

Fig. 7: CSC Bolts
Courtesy of CHRYSLER GROUP, LLC

3. Remove the CSC bolts (2).

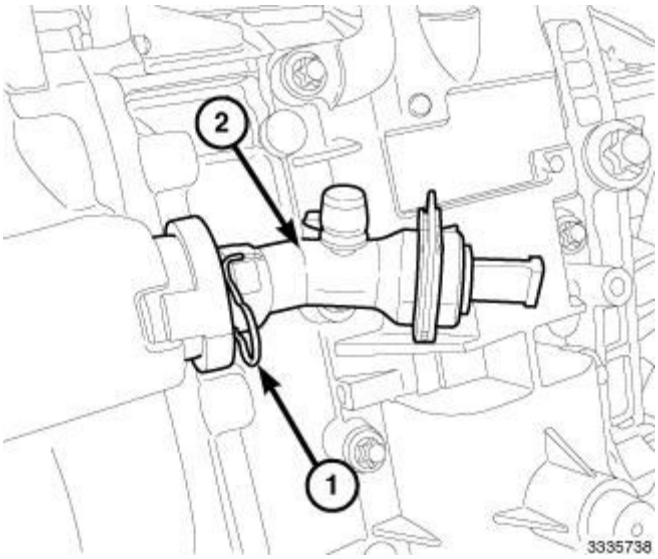

Fig. 8: Retention Clip & Connection
Courtesy of CHRYSLER GROUP, LLC

4. Disconnect the hydraulic connection at the case. Release the retention clip (1), then separate the connection (2).

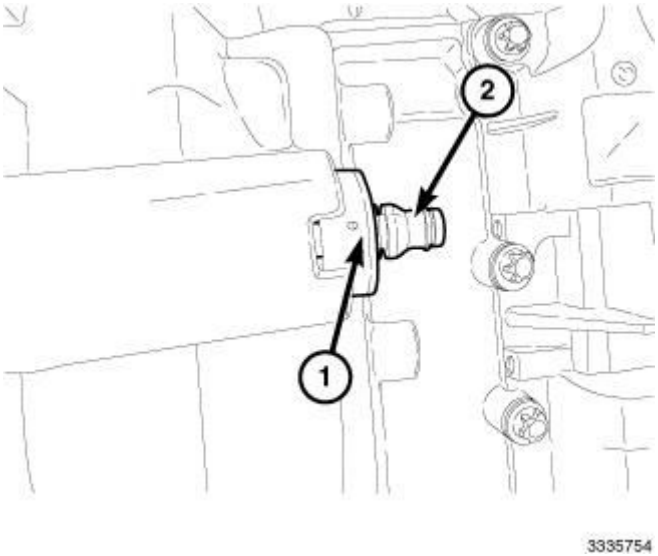

Fig. 9: Hydraulic Fitting & Plastic Retainer
Courtesy of CHRYSLER GROUP, LLC

5. Disconnect the hydraulic fitting (2) from the plastic retainer (1).
6. Remove the CSC.

INSTALLATION

MANUAL

WARNING: Chrysler LLC does not manufacture any vehicles or replacement parts that contain asbestos. Aftermarket products may or may not contain asbestos. Refer to aftermarket product packaging for product information. Whether the product contains asbestos or not, dust and dirt can accumulate on manual clutch parts during normal use. Follow practices prescribed by appropriate regulations for the handling, processing and disposing of dust and debris.

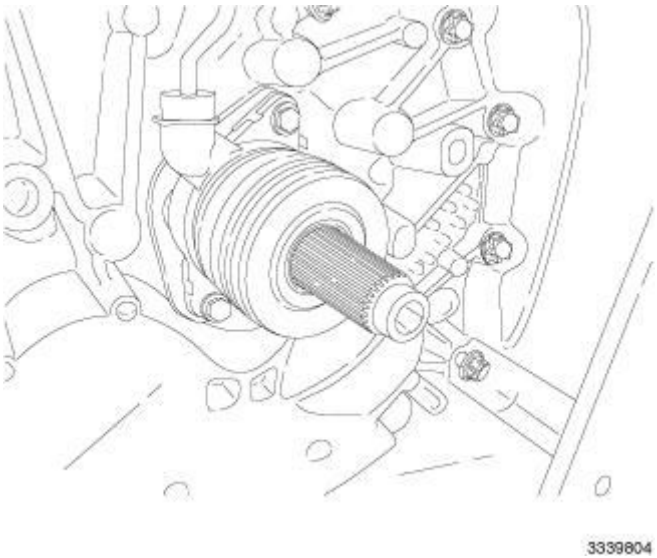

Fig. 10: Concentric Slave Cylinder (CSC) and Bolts
Courtesy of CHRYSLER GROUP, LLC

1. Install the Concentric Slave Cylinder (CSC) and bolts to the transmission. Tighten the bolts to 10 N.m (89 in. lb.).

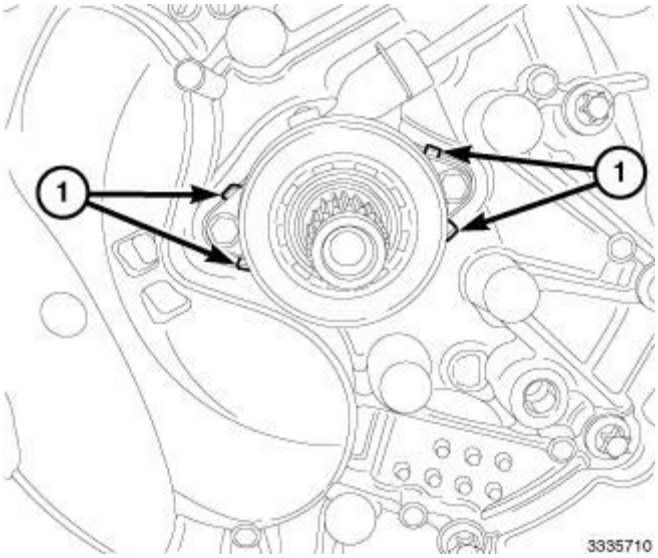

Fig. 11: Concentric Slave Cylinder Retention Tabs
Courtesy of CHRYSLER GROUP, LLC

2. Engage the retention tabs to the CSC (1).

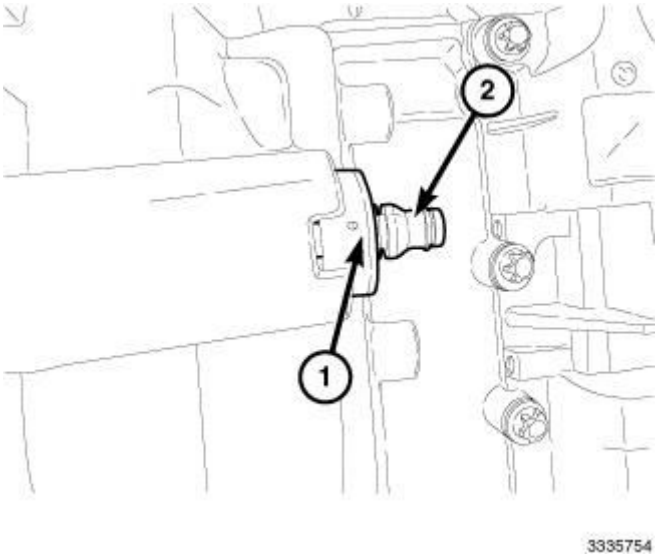

Fig. 12: Hydraulic Fitting & Plastic Retainer
Courtesy of CHRYSLER GROUP, LLC

3. Connect the hydraulic fitting (2) to the plastic retainer (1).

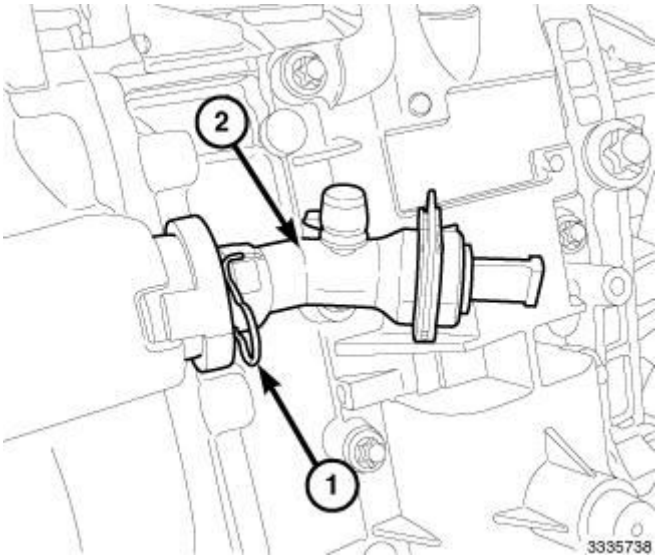

Fig. 13: Retention Clip & Connection
Courtesy of CHRYSLER GROUP, LLC

4. Connect the hydraulic connection at the case.
5. Install the transmission. Refer to **INSTALLATION** .
6. Bleed the hydraulic clutch system.

   Refer to **STANDARD PROCEDURE**.

DISC, CLUTCH

REMOVAL

MANUAL

WARNING: Chrysler LLC does not manufacture any vehicles or replacement parts that contain asbestos. Aftermarket products may or may not contain asbestos. Refer to aftermarket product packaging for product information. Whether the product contains asbestos or not, dust and dirt can accumulate on manual clutch parts during normal use. Follow practices prescribed by appropriate regulations for the handling, processing and disposing of dust and debris.

1. Remove the transaxle. Refer to **REMOVAL** .

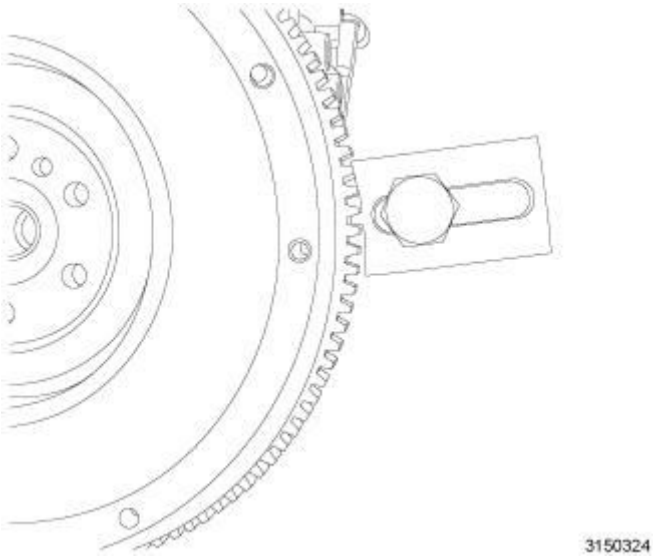

Fig. 14: Flywheel Locking Tool
Courtesy of CHRYSLER GROUP, LLC

NOTE: Typical installation of 10272 shown in illustration.

NOTE: It may be necessary to install an appropriate length 10 MM bolt, washer and nut in place of the supplied 12 MM fastener.

2. Install the (special tool #10272, Tool, Flywheel Locking).
3. Prior to removal, mark the position of the pressure plate to the flywheel with paint or scribe line for assembly reference.

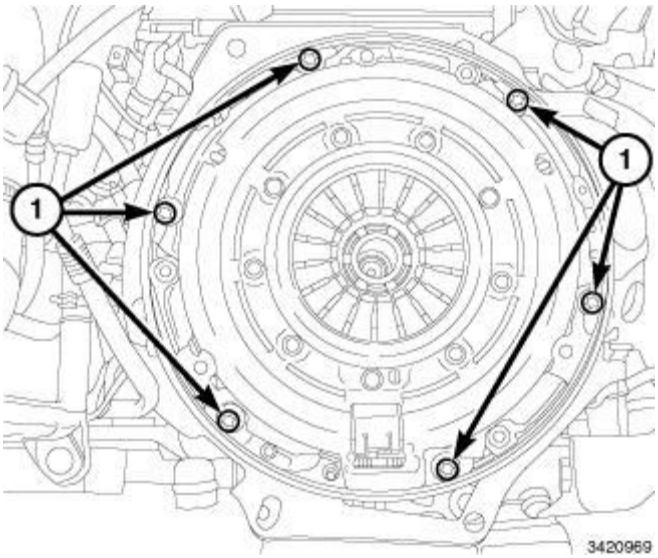

Fig. 15: Pressure Plate-To-Flywheel Bolts
Courtesy of CHRYSLER GROUP, LLC

4. Loosen pressure plate bolts (1) evenly, a few threads at a time and in a diagonal pattern to prevent warping the plate.
5. While holding the clutch and disc against the flywheel, remove the bolts (1) holding the pressure plate to the flywheel.
6. While securely holding the disc to the clutch plate, separate the clutch from the flywheel.

INSTALLATION

MANUAL

WARNING: Chrysler LLC does not manufacture any vehicles or replacement parts that contain asbestos. Aftermarket products may or may not contain asbestos. Refer to aftermarket product packaging for product information. Whether the product contains asbestos or not, dust and dirt can accumulate on manual clutch parts during normal use. Follow practices prescribed by appropriate regulations for the handling, processing and disposing of dust and debris.

1. Inspect clutch release bearing and the Concentric Slave Cylinder (CSC) for excessive wear and replace if necessary.
2. Clean the surfaces of the flywheel and pressure plate to make certain that all oil, grease, and rust have been removed.

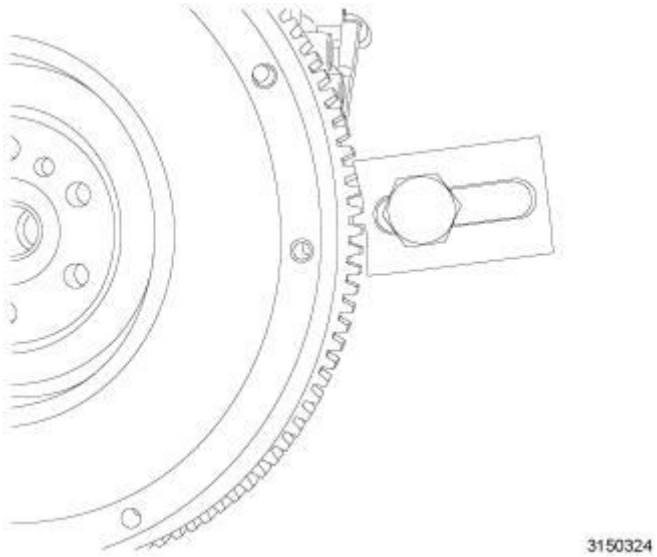

Fig. 16: Flywheel Locking Tool
Courtesy of CHRYSLER GROUP, LLC

NOTE: Typical installation of 10272 shown in illustration.

3. Install the (special tool #10272, Tool, Flywheel Locking).

NOTE: It may be necessary to install an appropriate length 10 MM bolt, washer and nut in place of the supplied 12 MM fastener.

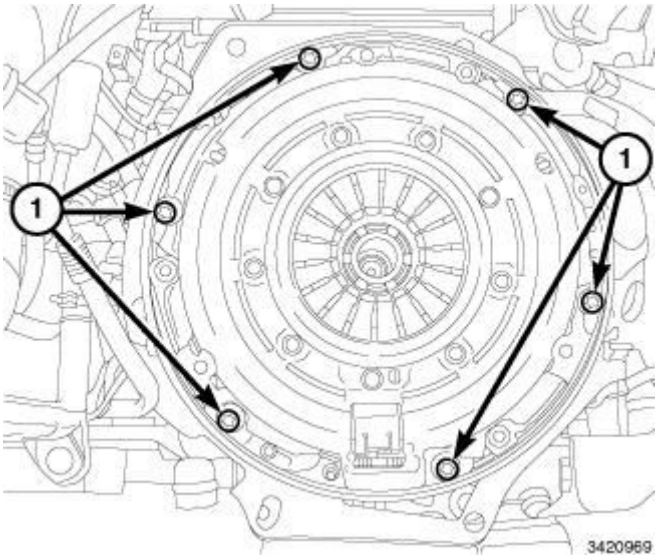

Fig. 17: Pressure Plate-To-Flywheel Bolts
Courtesy of CHRYSLER GROUP, LLC

4. Install the clutch pressure plate to the flywheel and clutch disc. Finger tighten the pressure plate-to-flywheel bolts.

5. Use a suitable clutch alignment tool to position the clutch disc to the center of the flywheel.
6. Tighten pressure plate bolts (1) evenly and in rotation a few threads at a time. **The bolts must be tightened evenly and to specified torque to avoid distorting the pressure plate.**
7. Using a "star" torque pattern, tighten the pressure plate bolts (1). Refer to **SPECIFICATIONS**.
8. Remove the clutch alignment tool.
9. Apply light coat of Mopar® High Temperature Bearing Grease or equivalent to clutch disc hub and splines of transmission input shaft.

CAUTION: Do not over lubricate shaft splines. This will result in grease contamination of disc.

10. Install the transaxle.

FLYWHEEL

OPERATION

OPERATION

The flywheel serves to dampen the engine firing pulses. The heavy weight of the flywheel relative to the rotating mass of the engine components serves to stabilize the flow of power to the remainder of the drivetrain. The crankshaft has the tendency to attempt to speed up and slow down in response to the cylinder firing pulses. The flywheel dampens these impulses by absorbing energy when the crankshaft speeds and releasing the energy back into the system when the crankshaft slows down.

REMOVAL

MANUAL

WARNING: Chrysler LLC does not manufacture any vehicles or replacement parts that contain asbestos. Aftermarket products may or may not contain asbestos. Refer to aftermarket product packaging for product information. Whether the product contains asbestos or not, dust and dirt can accumulate on manual clutch parts during normal use. Follow practices prescribed by appropriate regulations for the handling, processing and disposing of dust and debris.

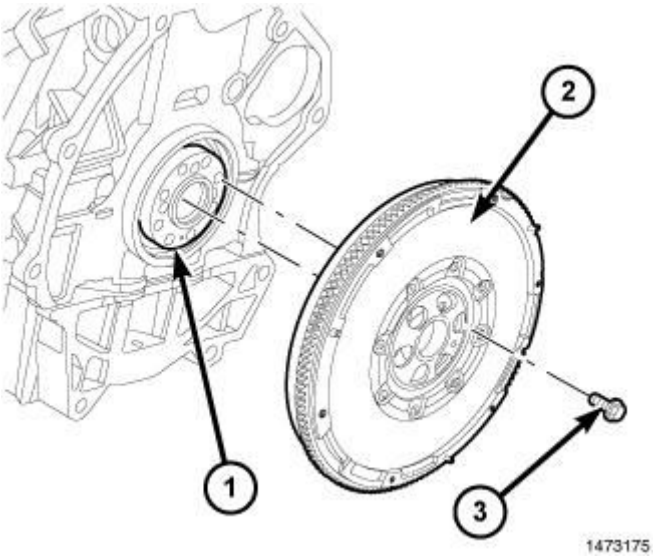

Fig. 18: Removing/Installing Flywheel-To-Crankshaft Bolts And Flywheel Assembly
Courtesy of CHRYSLER GROUP, LLC

1. Remove transmission.
2. Remove clutch pressure plate and disc.

   Refer to **DISC, CLUTCH, REMOVAL**.

3. While holding the flywheel against the engine, remove the bolts (3) holding the flywheel to the crankshaft flange (1).
4. Separate the flywheel (2) from the engine.

INSTALLATION

MANUAL

WARNING: Chrysler LLC does not manufacture any vehicles or replacement parts that contain asbestos. Aftermarket products may or may not contain asbestos. Refer to aftermarket product packaging for product information. Whether the product contains asbestos or not, dust and dirt can accumulate on manual clutch parts during normal use. Follow practices prescribed by appropriate regulations for the handling, processing and disposing of dust and debris.

1. Place the flywheel (2) in position on the engine.
2. While holding the flywheel against the engine, install the bolts (3) to hold the flywheel to the crankshaft flange (1).

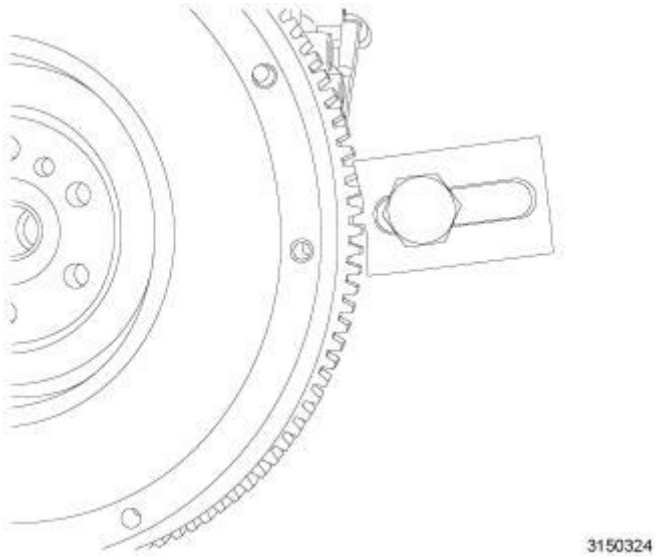

Fig. 19: Flywheel Locking Tool
Courtesy of CHRYSLER GROUP, LLC

NOTE: Typical installation of 10272 shown in illustration.

3. Install (special tool #10272, Tool, Flywheel Locking).

NOTE: It may be necessary to install an appropriate length 10 MM bolt, washer and nut in place of the supplied 12 MM fastener.

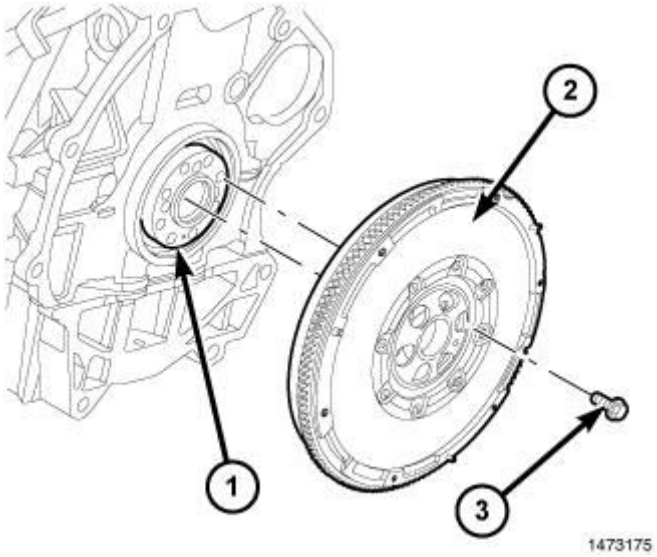

Fig. 20: Removing/Installing Flywheel-To-Crankshaft Bolts And Flywheel Assembly
Courtesy of CHRYSLER GROUP, LLC

4. Tighten the flywheel bolts to specification. Refer to **SPECIFICATIONS**.
5. Install clutch pressure plate and disc. Refer to **DISC, CLUTCH, REMOVAL**.

6. Install transmission.
7. Road test vehicle to verify repair.

PEDAL AND PAD, CLUTCH

REMOVAL

REMOVAL

CAUTION: Brake fluid will damage painted surfaces. If brake fluid is spilled on any painted surfaces, wash it off immediately with water.

NOTE: Before proceeding, refer to WARNING .

Refer to CAUTION .

NOTE: To remove brake/clutch/throttle pedal armature assembly from the vehicle, refer to PEDAL(S), BRAKE AND/OR ACCELERATOR, REMOVAL .

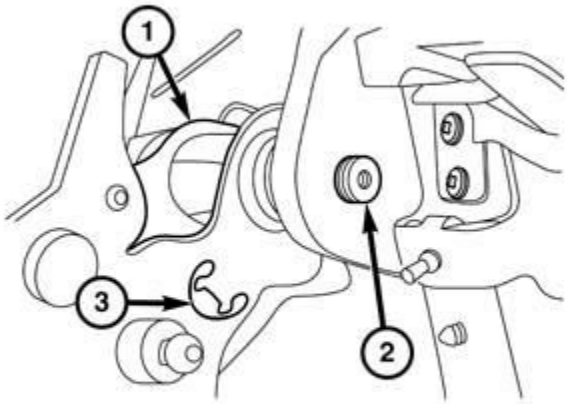

060868951

Fig. 21: Clevis Pin & E-Clip
Courtesy of CHRYSLER GROUP, LLC

1. Remove E-clip (3) holding the clevis pin (2) in the pedal armature.

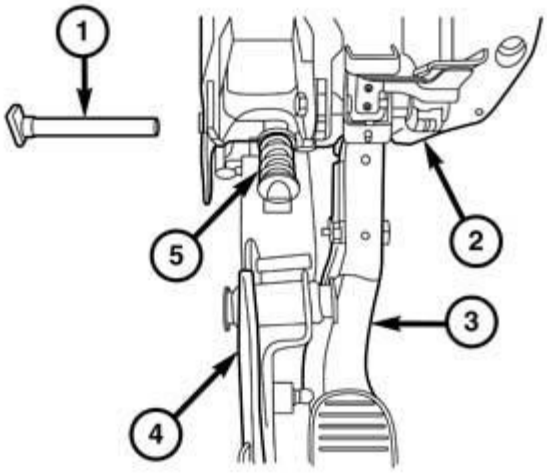

Fig. 22: Clevis Pin, Armature, Clutch Pedal & Return Spring
Courtesy of CHRYSLER GROUP, LLC

2. Using a suitable pry bar, pry the clevis pin (1) from the left side of the armature (2) while holding the clutch pedal (4) in place.
3. As clevis (1) is pulled free of the armature (2) apply pressure to force the pedal inward to keep the return spring (5) from falling out of the assembly.
4. With one hand positioned under the return spring (5) to catch it, withdraw the clutch pedal (4) from the armature.

INSTALLATION

INSTALLATION

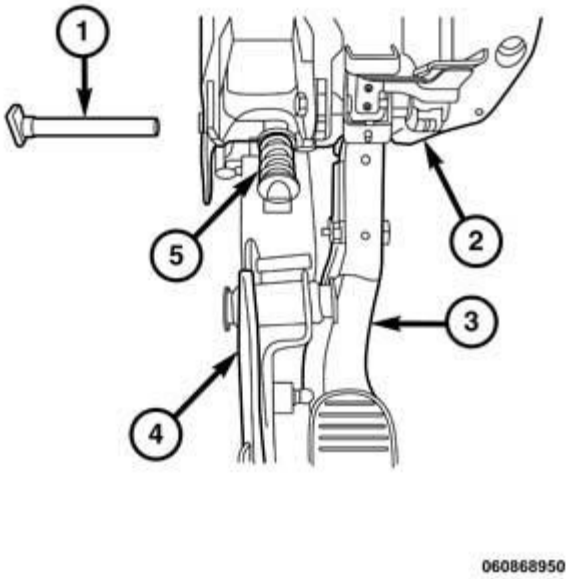

Fig. 23: Clevis Pin, Armature, Clutch Pedal & Return Spring
Courtesy of CHRYSLER GROUP, LLC

1. Position the return spring (5) over the pivot pin on the clutch pedal and into the notch on the plastic armature (2) while holding clutch pedal inward.
2. Align the clutch pedal (3) pivot bushings with the pass through holes in the armature (2).
3. Insert the clevis pin (1) into the left side of the armature (2) while holding the clutch pedal (3) in place. Align the head of the clevis with the inset on the armature and push the clevis all-the-way into the armature.

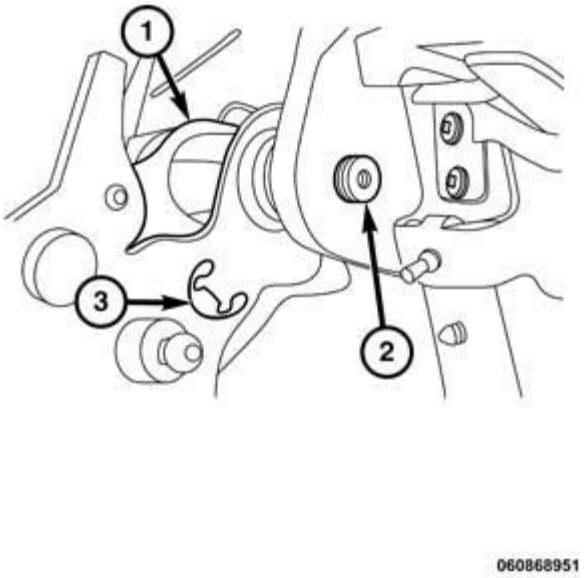

Fig. 24: Clevis Pin & E-Clip
Courtesy of CHRYSLER GROUP, LLC

4. Install the E-clip (3) to hold the clevis pin (2) in the pedal armature.

NOTE: **To install brake/clutch/throttle pedal armature assembly in the vehicle, refer to PEDAL(S), BRAKE AND/OR ACCELERATOR, INSTALLATION .**

SWITCH, CLUTCH STARTER INTERLOCK

DESCRIPTION

DESCRIPTION

The clutch pedal position switch is attached to the side of the brake/throttle/clutch pedal armature assembly. It is secured with an integral locking lever. A pin on the clutch pedal lever cycles the switch. A three pin electrical connector plugs into the switch.

OPERATION

OPERATION

The clutch pedal position switch is used to prevent starter motor engagement until the clutch pedal is fully depressed. An input from this switch is also used to either shut down or prevent operation of the speed control system when the clutch pedal is depressed. When the clutch pedal is depressed the switch contacts are closed and creates a complete circuit to allow the starter relay to energize the starter motor. When the clutch pedal is released, the switch contacts open and will not allow the starter relay to energize the starter motor.

DIAGNOSIS AND TESTING

DIAGNOSIS AND TESTING - CLUTCH PEDAL POSITION SWITCH

The Clutch Pedal Position Switch consists of two open or closed style switches.

When the switch lever is at the rearward end of its swing (pedal released) the downstop or interlock switch is open and should not have continuity through the connector pins 1 and 2. The upstop switch is closed and should have continuity between pins 1 and 3.

When the switch lever is at the forward end of its swing (pedal depressed) the downstop or interlock switch is closed and should have continuity through the connector pins 1 and 2. The upstop switch is open and should not have continuity between pins 1 and 3.

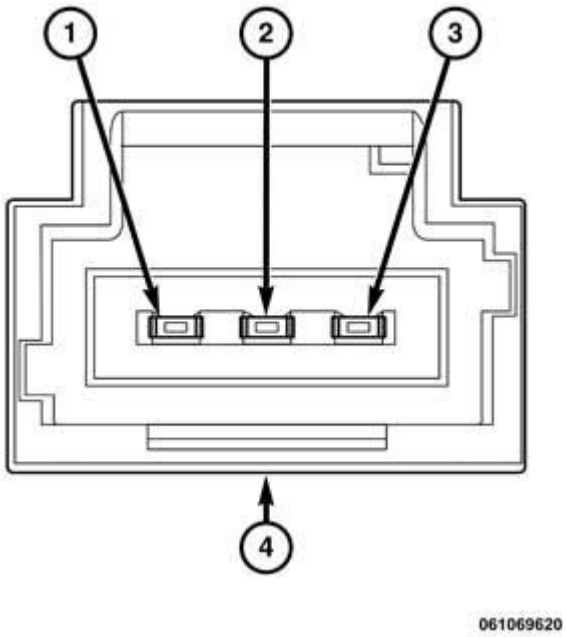

Fig. 25: Clutch Pedal Position Switch Connector Terminal Identification
Courtesy of CHRYSLER GROUP, LLC

To test the switch, unplug the wire harness connector and connect a continuity tester or OHM meter to the pins in the switch connector (1).

CLUTCH PEDAL POSITION SWITCH TEST

SYMPTOM	TEST RESULT	REPAIR
Engine will not crank with clutch depressed.	1. No continuity is detected from pin 1 to pin 2 or continuity is detected from pin 1 to pin 3 with clutch pedal depressed.	1. Switch needs to be replaced. 2. Repair electrical fault in

	2. If switch tests OK with the clutch pedal depressed.	system.
Engine cranks with clutch released.	1. Continuity is detected from pin 1 to pin 2 or no continuity is detected from pin 1 to pin 2 with clutch pedal depressed. 2. If switch tests OK with the clutch pedal depressed.	1. Switch needs to be replaced. 2. Repair electrical fault in system.

REMOVAL

REMOVAL

1. Disconnect and isolate the battery negative cable from its post on the battery.
2. If equipped, remove the knee blocker air bag to gain access to the brake/clutch/throttle pedal assembly.

   Refer to **AIR BAG, KNEE BLOCKER, REMOVAL** .

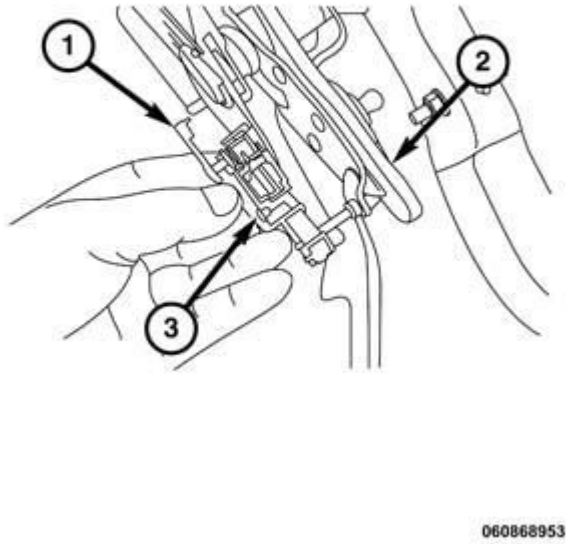

Fig. 26: Pedal Arm Bracket & Lock-Levers
Courtesy of CHRYSLER GROUP, LLC

3. Disconnect wire harness connector from clutch pedal position switch.
4. Disengage and rotate lock-lever (1) counterclockwise and pull the base of the lock-lever (3) outward.

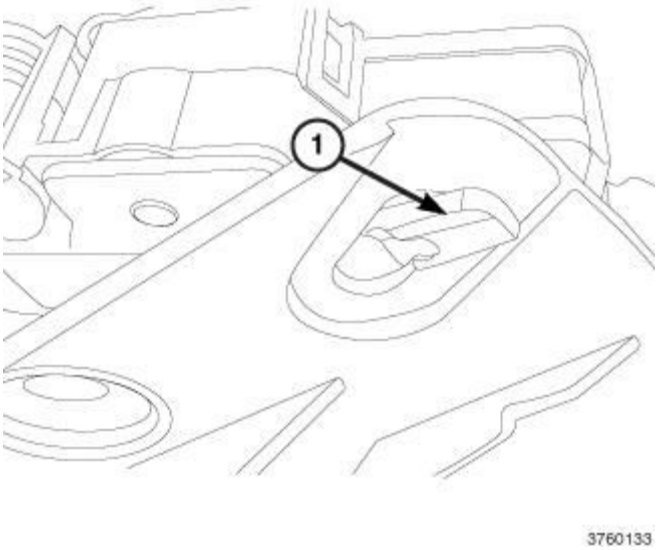

Fig. 27: Locating Tab
Courtesy of CHRYSLER GROUP, LLC

5. Unhook retainer from slotted hole in pedal armature and separate the clutch pedal position switch form the clutch pedal arm.

INSTALLATION

INSTALLATION

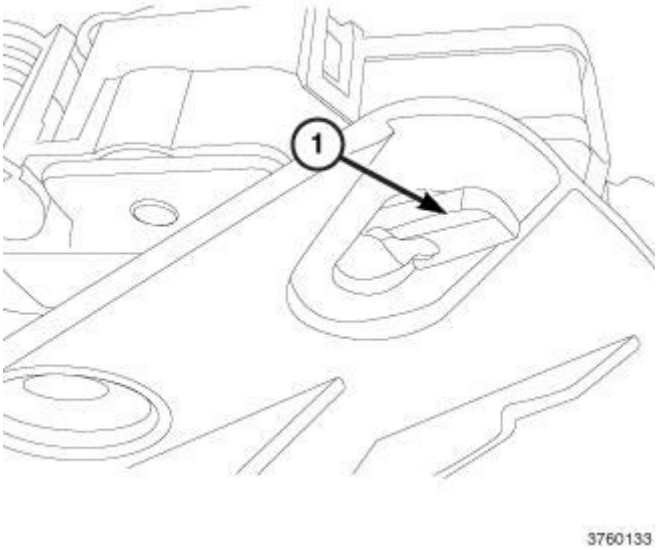

Fig. 28: Locating Tab
Courtesy of CHRYSLER GROUP, LLC

1. Place the clutch pedal position switch onto the pin on the clutch pedal arm.
2. Hook (1) retainer on back of switch into the slotted hole in the clutch pedal armature.

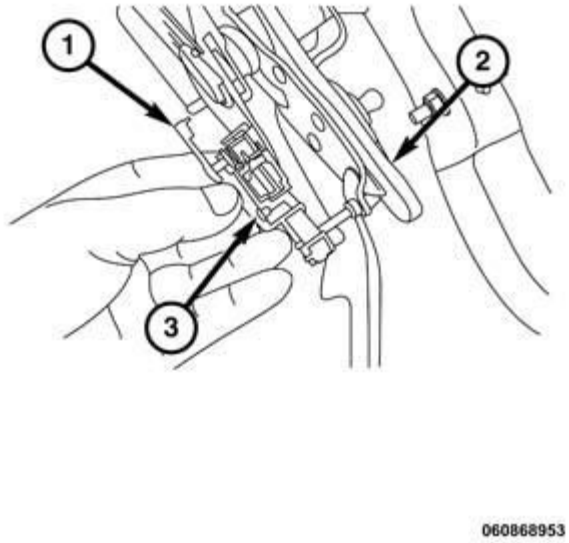

Fig. 29: Pedal Arm Bracket & Lock-Levers
Courtesy of CHRYSLER GROUP, LLC

3. Insert the pin on the clutch pedal arm (2) into the switch lever and push the base of the lock-lever inward to engage the bracket (2).

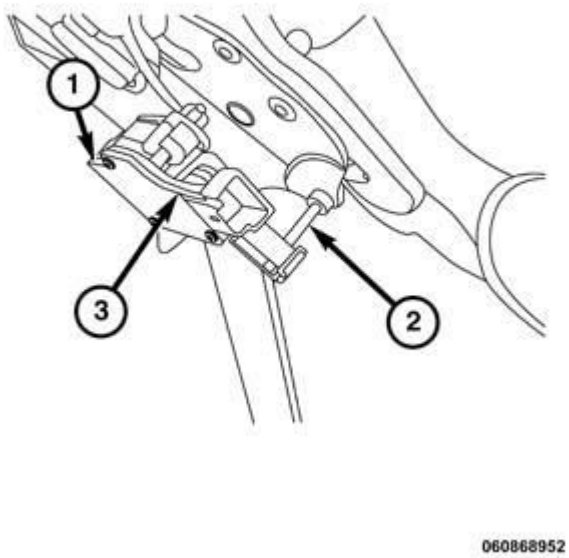

Fig. 30: Clutch Pedal Position Switch & Lock-Lever
Courtesy of CHRYSLER GROUP, LLC

4. Rotate lock-lever (3) clockwise until lever is seated.
5. Connect wire harness connector into clutch pedal position switch (1).
6. If equipped, install the knee blocker air bag.

   Refer to **AIR BAG, KNEE BLOCKER, INSTALLATION** .

7. Connect the battery cable onto the negative post of the battery.

2014 DRIVELINE/AXLES

Front Half Shaft - Cherokee

DESCRIPTION

DESCRIPTION

This vehicle is equipped with an unequal length halfshaft system consisting of short left and long right halfshafts. The halfshafts consist of a fixed constant velocity (CV) joint at the outboard end connected by a solid shaft to a plunging CV joint on the inboard end. The inner (CV) joint has a splined connection into the transmission. The outer joint has a spline connection to the wheel hub and is retained with a steel lock nut.

All the halfshaft assemblies use the same type of inner and outer joints. The inner joint is a tripod joint that allows for the changes in halfshaft length through the jounce and rebound travel of the front suspension. The outer joint is a Rzeppa joint that allows articulation during front suspension travel and steering. Both tripod joints and Rzeppa joints are true constant velocity (CV) joint assemblies.

The inner tripod joints are designed with a retention feature that prevents the tripod rollers from coming out of the inner joint housing up to a specific load. If this feature is overcome and any of the rollers are pulled past the retention feature the joint will lock up and no longer function properly. The entire halfshaft assembly must be replaced if it locks up.

DIAGNOSIS AND TESTING

DIAGNOSIS AND TESTING - HALFSHAFT

VEHICLE INSPECTION

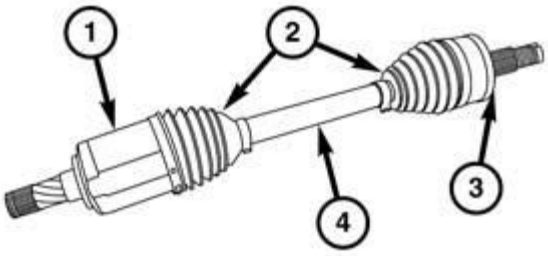

030369459

Fig. 1: C/V Joint, Tripod Joint, Halfshaft & Inner/Outer Boots
Courtesy of CHRYSLER GROUP, LLC

The general appearance of the Halfshafts should be clean and oil free around the CV (3) and tripod (1) boots (2). Grease on or around the boots is a sign of leakage and the boots or halfshaft should be replaced.

NOISE OR VIBRATION IN TURNS

Vibration associated with the CV joints in the halfshafts occur in the 3rd and 8th order. Use a vibration analyzer to determine the frequency of the vibration.

SYMPTOM	POSSIBLE CAUSE	REPAIR
Clicking noise while turning.	Lack of lube in CV joint boots.	Replace halfshaft
Chuckling or snap noise while turning.	Loose wheel or hub nut.	Tighten wheel or hub nut. Replace damaged components.
Loud knocking noise centering on inner CV tripod joints.	Damaged Differential side/pinion gears.	Remove halfshaft and rotate side gears by hand. Replaced damaged transaxle components.

Noise may also be caused by another component of the vehicle coming in contact with the half shaft, brake or wheel assemblies.

CLUNKING NOISE DURING ACCELERATION

SYMPTOM	POSSIBLE CAUSE	REPAIR
		1. Replace hub nut and

Clunk/snap noise during launch or shifting into drive or reverse.	1. Loose hub nut. 2. Damaged hub splines.	properly tighten. 2. Replace hub bearing and halfshaft.
Clunking noise at low speed.	Severely worn or damaged tripod or CV joint.	Replace halfshaft.
Rattle/clunk over bumps. Grease slung around undercarriage.	Loss of lube in CV joint boots.	Replace halfshaft.

SHUDDER OR VIBRATION DURING ACCELERATION

SYMPTOM	POSSIBLE CAUSE	REPAIR
Shudder or vibration on acceleration.	1. Engine rotating beyond limits. 2. Worn or damaged half shaft inner tripod joint 3. Severely worn or damaged suspension or steering component. 4. Front end severely out of alignment.	1. Replaced damaged or worn engine/transaxle mounts. 2. Replace halfshaft. 3. Replace worn or damaged suspension or steering component. 4. Align front end. Refer to **WHEEL ALIGNMENT, STANDARD PROCEDURE** .

VIBRATION AT HIGHWAY SPEEDS

Vibration associated with the CV joints in the halfshafts occur in the 3rd and 8th order (3 or 8 events for each rotation). The inner tripod joint with three pivot axis has three events in each rotation of the halfshaft. This will produce a 3rd order vibration of the wheel rotation speed. The outer CV joint with 8 pivot axis balls has eight events in each rotation of the halfshaft. This will produce a 8th order vibration of the wheel rotation speed. An 8th order vibration will create a high pitch sound, like gear noise. Use a vibration analyzer to determine the frequency of the vibration before replacing components.

SYMPTOM	POSSIBLE CAUSE	REPAIR
Low frequency vibration, matching wheel speed. Wheel balance and runout is OK.	Foreign material (plastic bags, organic sinew and road debris) fouling the halfshaft.	Clean debris from around halfshaft.
High frequency vibration matching 3rd order wheel speed.	1. Faulty inner tripod joint. 2. Vehicle ride height is modified.	1. Replace halfshaft. 2. Return vehicle to proper ride height.
High pitch whine sound with possible high frequency vibration in the floor matching 8th order wheel speed.	1. Faulty outer CV joint. 2. Vehicle ride height is modified.	1. Replace halfshaft. 2. Return vehicle to proper ride height.

SPECIFICATIONS

SPECIFICATIONS

TORQUE SPECIFICATIONS

DESCRIPTION	N.m	Ft. Lbs.
Bolts, Bearing Plate to Intermediate Bracket	24	17
Bolts, Intermediate Bracket to Engine Block and Oil Pan	65	48

REMOVAL

WITHOUT INTERMEDIATE SHAFT

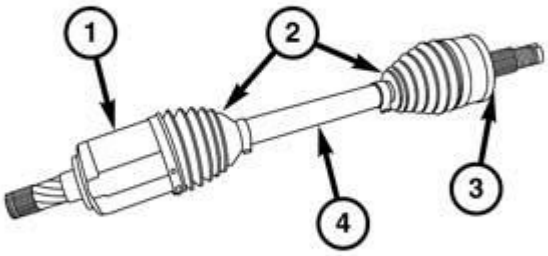

030369459

Fig. 2: C/V Joint, Tripod Joint, Halfshaft & Inner/Outer Boots
Courtesy of CHRYSLER GROUP, LLC

NOTE: **Never handle the halfshaft assembly by the inner or outer boots (2). This can cause damage to the boot, which will allow contaminants to enter the C/V joint.**

NOTE: **The inner tripod joint (1) is designed with a retention feature that prevents the tripod rollers from coming out of the inner joint housing up to a specific load. If this feature is overcome and the rollers are pulled past the retention feature the joint will lock up and no longer function properly. The entire halfshaft assembly (4) must be replaced if this occurs.**

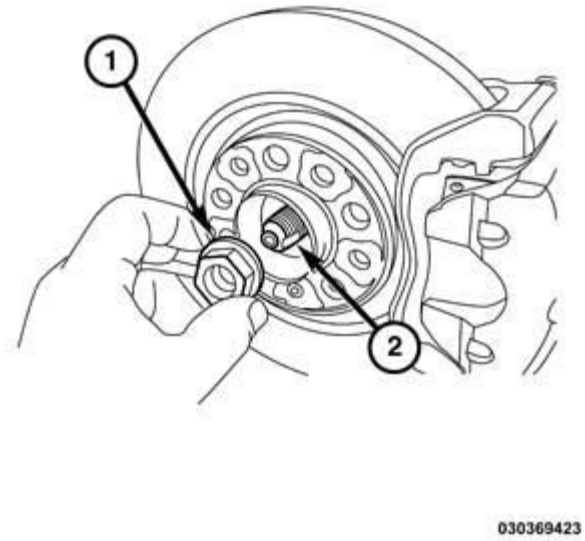

Fig. 3: Hub Nut & Halfshaft
Courtesy of CHRYSLER GROUP, LLC

1. Raise vehicle on a suitable hoist.
2. Remove the wheel and tire assembly from the vehicle. Refer to **REMOVAL** .
3. Using a suitable punch, lift the two staked areas in the hub nut to avoid damaging the halfshaft.
4. While a helper applies the brakes to keep the hub from rotating, remove the hub nut (1) from the halfshaft (2) and discard it.

   The used hub nut is not reusable.

5. If equipped, remove the engine belly pan. Refer to **BELLY PAN, REMOVAL**

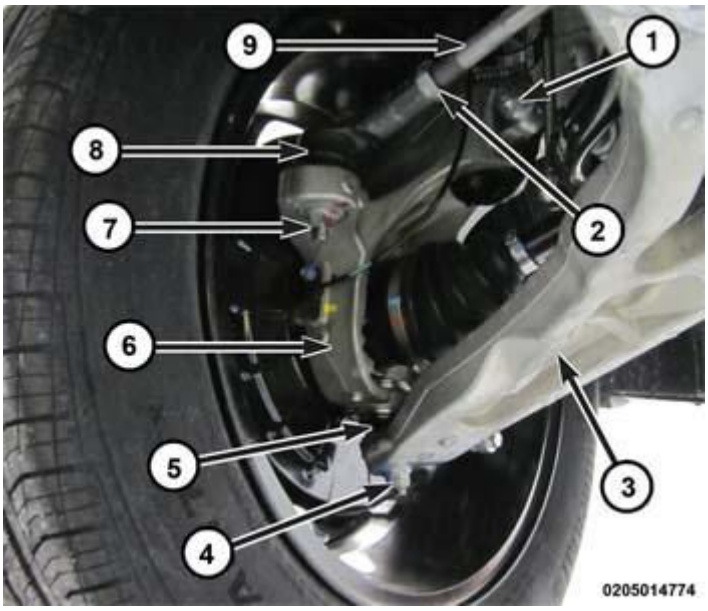

Fig. 4: Removing/Installing The Lower Ball Joint Nut To Control Arm
Courtesy of CHRYSLER GROUP, LLC

6. Remove the lower ball joint nut (4) to control arm.

NOTE: **Use care when separating the ball joint stud from the knuckle so the ball joint boot does not get cut.**

NOTE: **After separating the control arm from the knuckle, do not let it swing rapidly back up, this can tear the ball joint dust boot.**

7. Pry the lower control arm (3) downward until ball joint stud clears the knuckle.

NOTE: **The halfshaft may stick in the hub bearing during removal. A dead-blow or plastic hammer can be used to tap the halfshaft inward and out of the hub bearing.**

8. Swing the steering knuckle (1) outward and off the halfshaft end.
9. Place a drain pan under the transaxle to catch fluid that may spill from differential seal when the halfshaft is removed.
10. Hold the halfshaft up and remove support stand.
11. Slip the halfshaft shaft from the differential seal.
12. Separate the halfshaft from the vehicle.

WITH INTERMEDIATE SHAFT

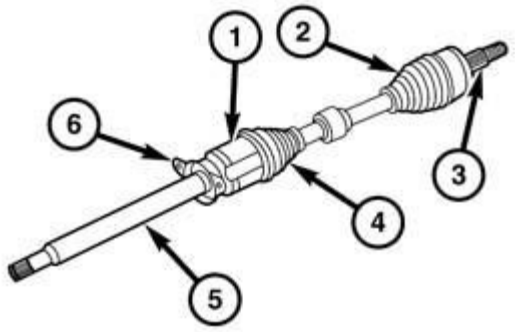

030369426

Fig. 5: C/V Joint, Tripod Joint, Halfshaft, Intermediate Shaft & Inner/Outer Boots
Courtesy of CHRYSLER GROUP, LLC

NOTE: **Never handle the halfshaft assembly by the inner or outer boots (2 and 4). This can cause damage to the boot, which will allow contaminants to enter the C/V joint.**

NOTE: **The inner tripod joint (1) is designed with a retention feature that prevents the tripod rollers from coming out of the inner joint housing up to a specific load. If this feature is overcome and the rollers are pulled past the retention feature the joint will lock up and no longer function properly. The entire halfshaft assembly (3) must be replaced if this occurs.**

1. Raise vehicle on a suitable hoist.
2. Remove the wheel and tire assembly from the vehicle. Refer to **REMOVAL** .

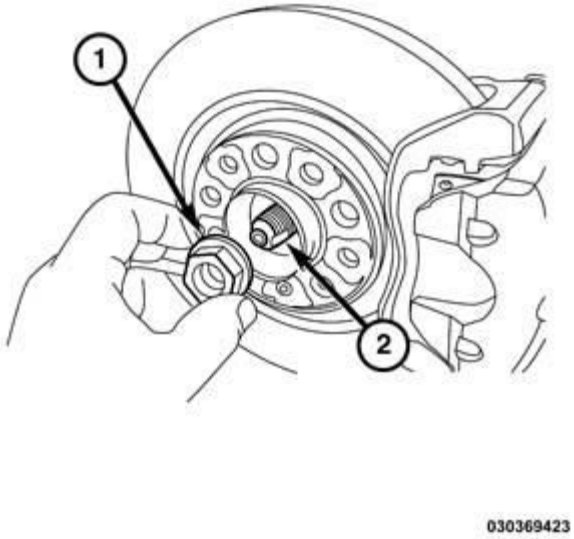

Fig. 6: Hub Nut & Halfshaft
Courtesy of CHRYSLER GROUP, LLC

3. Using a suitable punch, lift the two staked areas in the hub nut to avoid damaging the halfshaft.
4. While a helper applies the brakes to keep the hub from rotating, remove the hub nut (1) from the halfshaft (2) and discard it.

   The used hub nut is not reusable.

5. If equipped, remove the engine belly pan. Refer to **BELLY PAN, REMOVAL** .

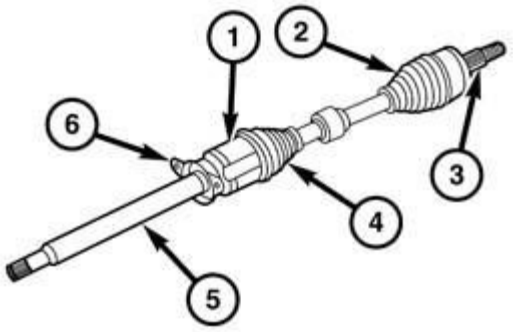

030369426

Fig. 7: C/V Joint, Tripod Joint, Halfshaft, Intermediate Shaft & Inner/Outer Boots
Courtesy of CHRYSLER GROUP, LLC

6. Remove bolts holding intermediate support bearing (6) to the engine bracket.
7. Separate the bearing bracket (6) from the engine support bracket and support the halfshaft on a suitable stand.

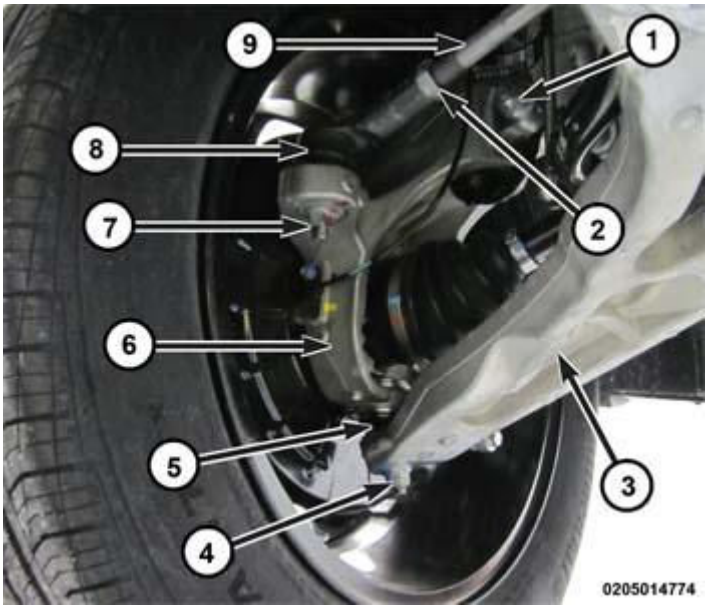

Fig. 8: Removing/Installing The Lower Ball Joint Nut To Control Arm
Courtesy of CHRYSLER GROUP, LLC

8. Remove the lower ball joint nut (4) to control arm.

NOTE: **Use care when separating the ball joint stud from the knuckle so the ball joint boot does not get cut.**

NOTE: **After separating the control arm from the knuckle, do not let it swing rapidly back up, this can tear the ball joint dust boot.**

9. Pry the lower control arm (3) downward until ball joint stud clears the knuckle.

NOTE: **The halfshaft may stick in the hub bearing during removal. A dead-blow or plastic hammer can be used to tap the halfshaft inward and out of the hub bearing.**

10. Swing the steering knuckle (1) outward and off the halfshaft end.
11. Place a drain pan under the transaxle to catch fluid that may spill from differential seal when the halfshaft is removed.
12. Hold the halfshaft up and remove support stand.
13. Slip the halfshaft shaft from the differential seal.
14. Separate the halfshaft from the vehicle.

INSTALLATION

WITHOUT INTERMEDIATE SHAFT

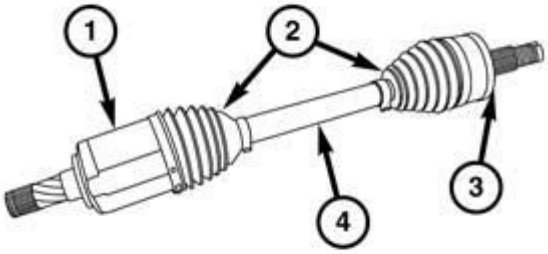

030369459

Fig. 9: C/V Joint, Tripod Joint, Halfshaft & Inner/Outer Boots
Courtesy of CHRYSLER GROUP, LLC

NOTE: Never handle the halfshaft (4) assembly by the inner or outer boots (2). This can cause damage to the boot, which will allow contaminants to enter the C/V joint (3).

NOTE: The inner tripod joint (1) is designed with a retention feature that prevents the tripod rollers from coming out of the inner joint housing up to a specific load. If this feature is overcome and the rollers are pulled past the retention feature the joint will lock up and no longer function properly. The entire halfshaft assembly (3) must be replaced if this occurs.

1. Raise vehicle on a suitable hoist.
2. Position the halfshaft under the vehicle and over the lower control arm.

NOTE: Lightly apply a light grease to the splines prior to installation.

NOTE: When installing the right halfshaft on All Wheel Drive vehicles with a single speed Power Transfer Unit and manual transmission, use care when installing the halfshaft as the shaft must pass through multiple oil seals.

3. Slip the halfshaft shaft into the differential seal and lightly twist until intermediate shaft slides all the way into the differential.

NOTE: Attempt to remove tripod joint by hand to verify that the snap ring is fully engaged. If snap ring is fully engaged, tripod joint will not be removable from transmission by hand.

4. Swing the steering knuckle outward and engage the halfshaft end into the hub bearing spline.
5. Push the lower control arm downward until ball joint stud can enter the bottom of the knuckle.
6. Insert the ball joint stud into the control arm.

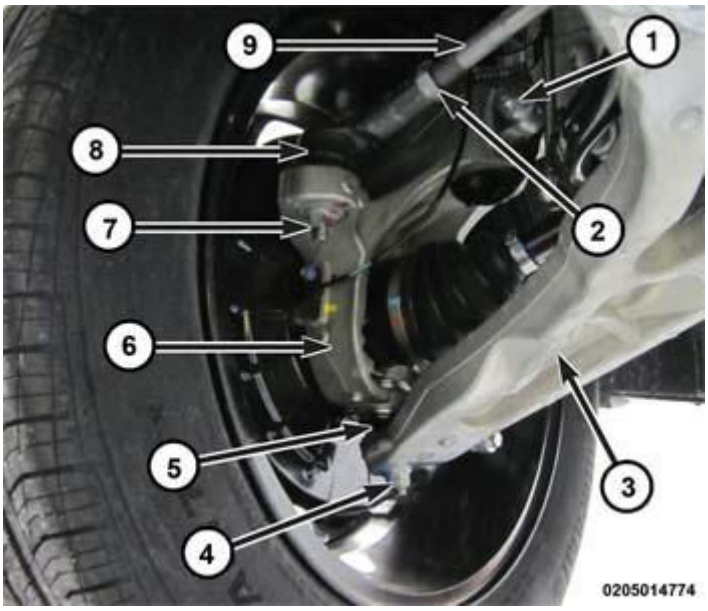

Fig. 10: Removing/Installing The Lower Ball Joint Nut To Control Arm
Courtesy of CHRYSLER GROUP, LLC

7. Install a **NEW** lower ball joint to control arm nut (4) and tighten to 25 Nm Plus 175° (18 ft. lbs. Plus 175°). Refer to **FRONT, SPECIFICATIONS** .
8. Remove support stand from under the halfshaft.
9. If equipped, install the engine belly pan. Refer to **BELLY PAN, INSTALLATION**

.

NOTE: Always install a new hub nut. The original hub nut is one-time use only and must be discarded when removed.

10. Install a **NEW** hub nut and while a helper applies the brakes, tighten the nut to 200 N.m (148 ft. lbs.)

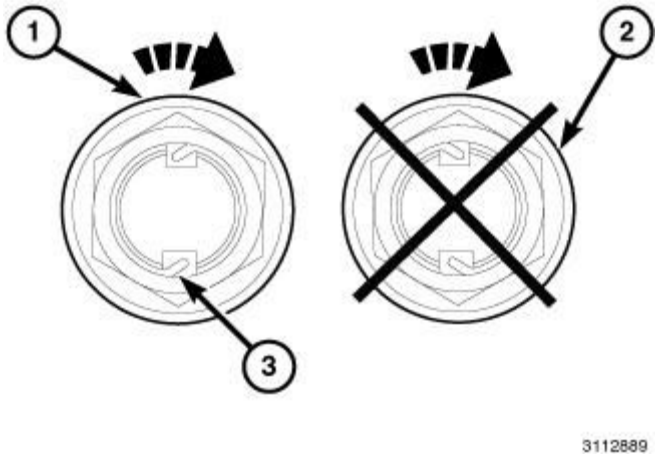

Fig. 11: Correct Hub Nut Staking
Courtesy of CHRYSLER GROUP, LLC

NOTE: Do not use air tools on staking tool while staking hub nut.

11. Using the staking tool (special tool #10287, Tool, Front Hub Staking), align the leading cutting edge of tool with the top left side channel on axle as shown in the illustration (1). Tighten fastener on staking tool with hand tools until the threads bottom out completely.

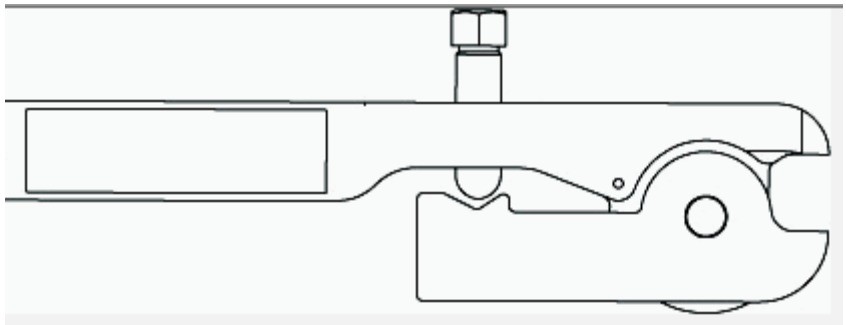

Fig. 12: Special Tool #10287
Courtesy of CHRYSLER GROUP, LLC

NOTE: The hub nut must be staked so that it looks similar to Fig. 11. Both edges must be split and bent into the shape shown in the illustration (3). The staking must be in the opposite direction from the forward rotation of the wheel.

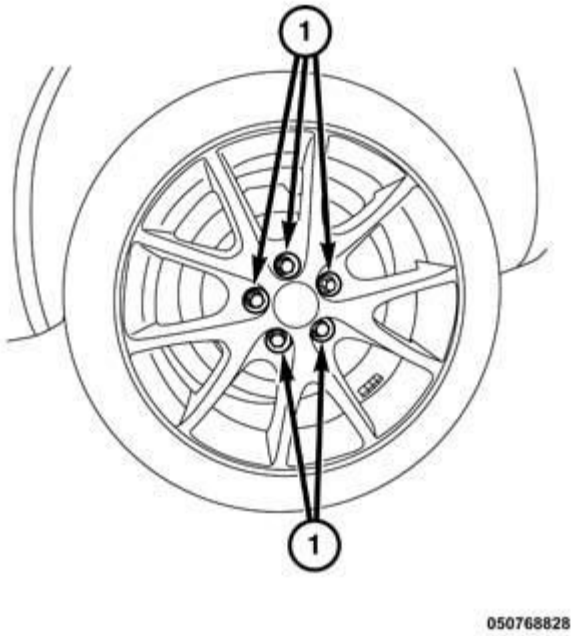

Fig. 13: Wheel Mounting Bolts
Courtesy of CHRYSLER GROUP, LLC

12. Install the wheel and tire assembly on the vehicle. Refer to **INSTALLATION** .
13. Lower the vehicle and road test to verify the repair.

WITH INTERMEDIATE SHAFT

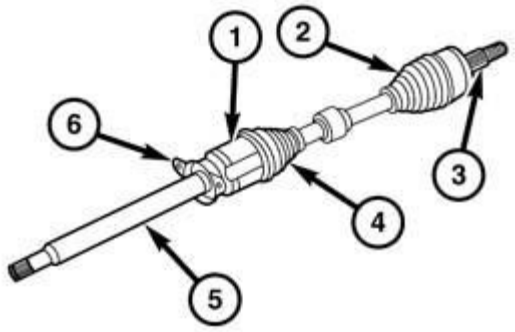

030369426

Fig. 14: C/V Joint, Tripod Joint, Halfshaft, Intermediate Shaft & Inner/Outer Boots
Courtesy of CHRYSLER GROUP, LLC

NOTE: **Never handle the halfshaft assembly by the inner or outer boots (2 and 4). This can cause damage to the boot, which will allow contaminants to enter the C/V joint.**

NOTE: **The inner tripod joint (1) is designed with a retention feature that prevents the tripod rollers from coming out of the inner joint housing up to a specific load. If this feature is overcome and the rollers are pulled past the retention feature the joint will lock up and no longer function properly. The entire halfshaft assembly (3) must be replaced if this occurs.**

1. Raise vehicle on a suitable hoist.
2. Position the halfshaft under the vehicle and over the lower control arm.

NOTE: **Lightly apply a light grease to the splines prior to installation.**

3. Slip the halfshaft shaft into the differential seal and lightly twist until intermediate shaft slides all the way into the differential.
4. Hold the halfshaft up and place a support stand under the halfshaft to avoid damaging the halfshaft.
5. Swing the steering knuckle outward and engage the halfshaft end into the hub bearing spline.
6. Insert the ball joint stud into the control arm.

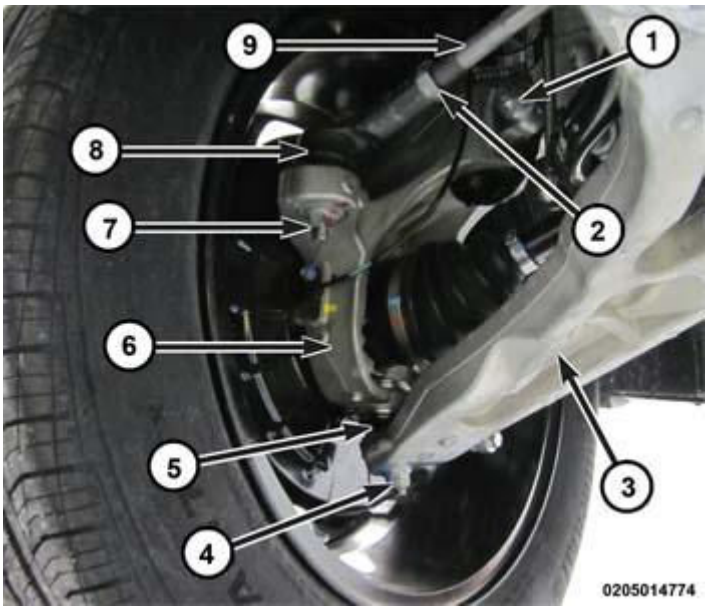

Fig. 15: Removing/Installing The Lower Ball Joint Nut To Control Arm
Courtesy of CHRYSLER GROUP, LLC

7. Install a **NEW** nut (4) to lower ball joint stud to control arm and tighten to 25 Nm Plus 175° (18 ft. lbs. Plus 175°). Refer to **FRONT, SPECIFICATIONS** .

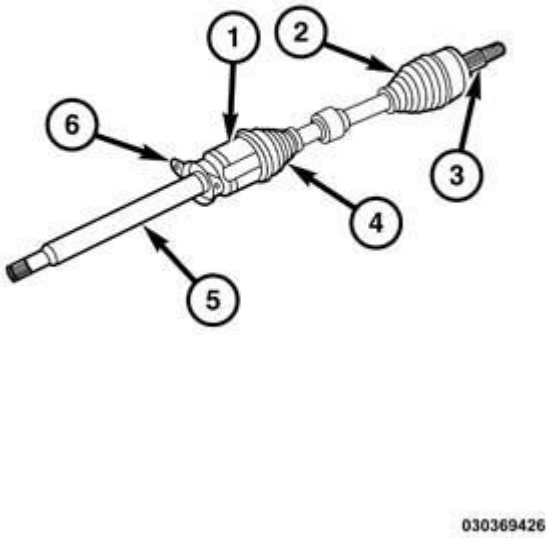

Fig. 16: C/V Joint, Tripod Joint, Halfshaft, Intermediate Shaft & Inner/Outer Boots
Courtesy of CHRYSLER GROUP, LLC

8. Position the intermediate bearing bracket (6) onto the engine support bracket and align the bolt holes.

9. Install bolts to hold intermediate support bearing (6) to the engine bracket. Refer to **SPECIFICATIONS**
10. Remove support stand from under the halfshaft.
11. If equipped, install the engine belly pan. Refer to **BELLY PAN, INSTALLATION** .

NOTE: Always install a new hub nut. The original hub nut is one-time use only and must be discarded when removed.

12. Install a **NEW** hub nut and while a helper applies the brakes, tighten the nut to 200 N.m (148 ft. lbs.)

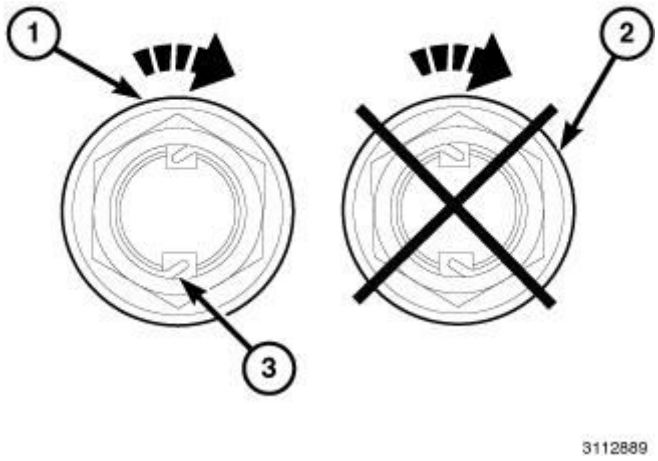

Fig. 17: Correct Hub Nut Staking
Courtesy of CHRYSLER GROUP, LLC

NOTE: Do not use air tools on staking tool while staking hub nut.

13. Using the staking tool (special tool #10287, Tool, Front Hub Staking), align the leading cutting edge of tool with the top left side channel on axle as shown in the illustration (1). Tighten fastener on staking tool with hand tools until the threads bottom out completely.

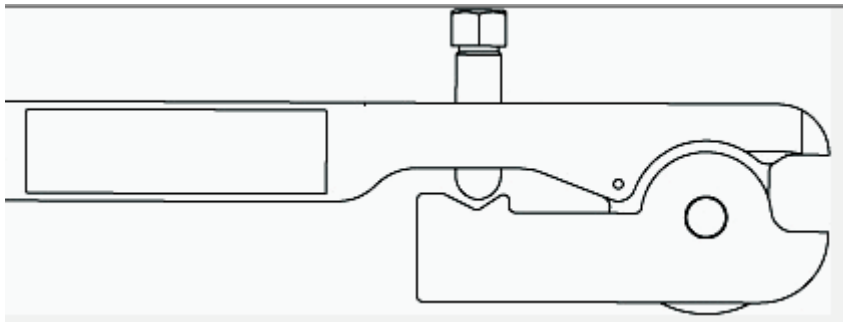

Fig. 18: Special Tool #10287
Courtesy of CHRYSLER GROUP, LLC

NOTE: **The hub nut must be staked so that it looks similar to Fig. 17. Both edges must be split and bent into the shape shown in the illustration (3). The staking must be in the opposite direction from the forward rotation of the wheel.**

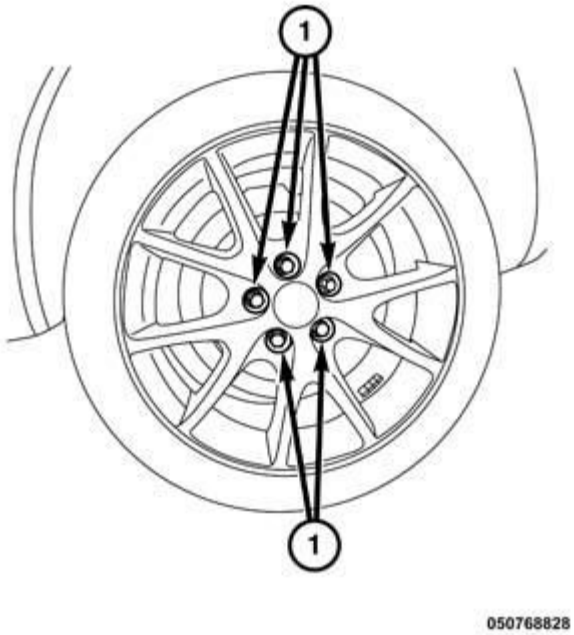

Fig. 19: Wheel Mounting Bolts
Courtesy of CHRYSLER GROUP, LLC

14. Install the wheel and tire assembly on the vehicle. Refer to **INSTALLATION** .
15. Lower the vehicle and road test to verify the repair.

SPECIAL TOOLS

SPECIAL TOOLS

	C-4975A - Installer, Axle Clamp

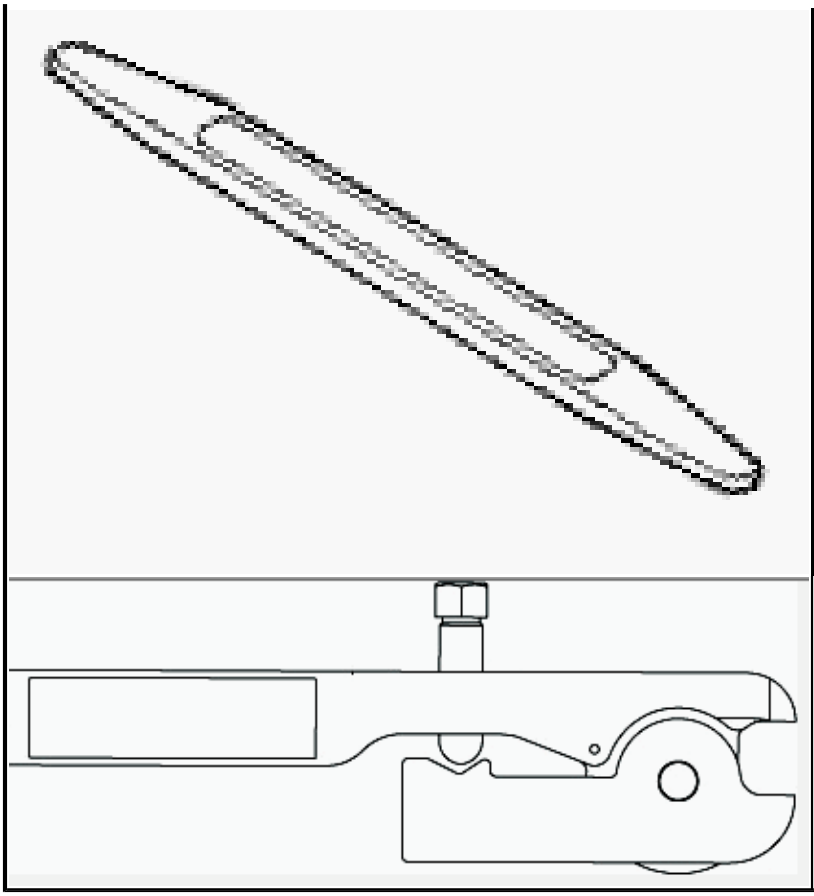	10287 - Tool, Front Hub Staking (Originally Shipped In Kit Number(s) 10324-UPD2, 10409-UPD3.)

BOOT, DRIVE SHAFT, OUTER

REMOVAL

REMOVAL

1. Remove halfshaft assembly from vehicle. Refer to **REMOVAL**.

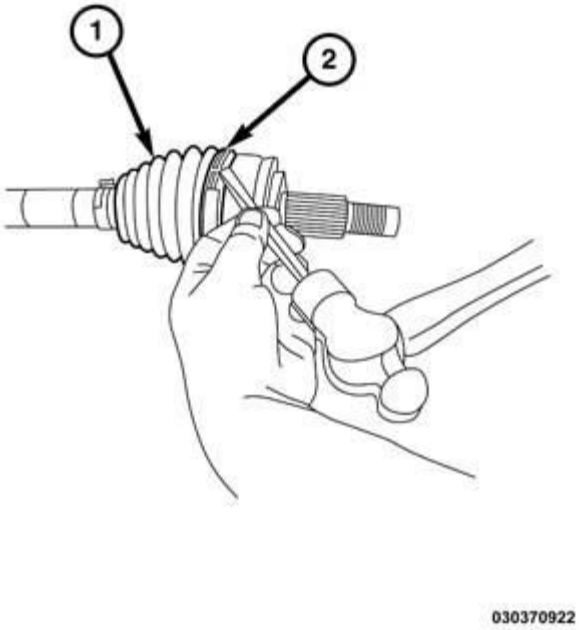

Fig. 20: Removing Large Clamp
Courtesy of CHRYSLER GROUP, LLC

2. Remove the large clamp (2) retaining CV joint sealing boot (1) to CV joint housing and discard clamp.

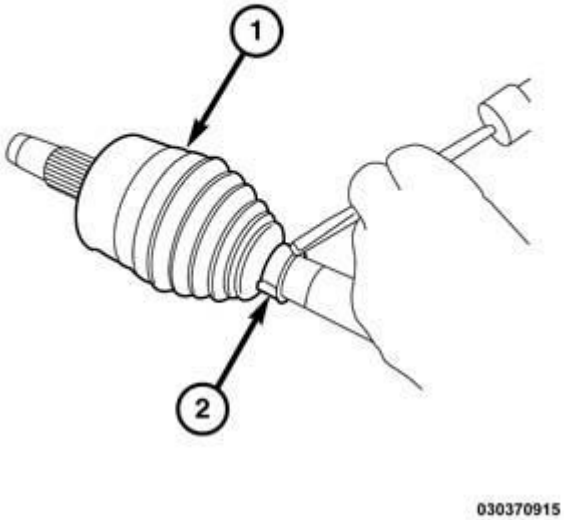

Fig. 21: Removing Small Clamp
Courtesy of CHRYSLER GROUP, LLC

3. Remove small clamp (2) holding CV joint boot (1) to interconnecting shaft and discard clamp.
4. Remove boot from CV joint housing and slide it down interconnecting shaft to expose the CV joint.
5. Wipe away grease to expose outer CV joint and interconnecting shaft.
6. Using a suitable vise with brass jaw insulators, secure the interconnecting shaft to prepare to remove the CV joint from the interconnecting shaft.

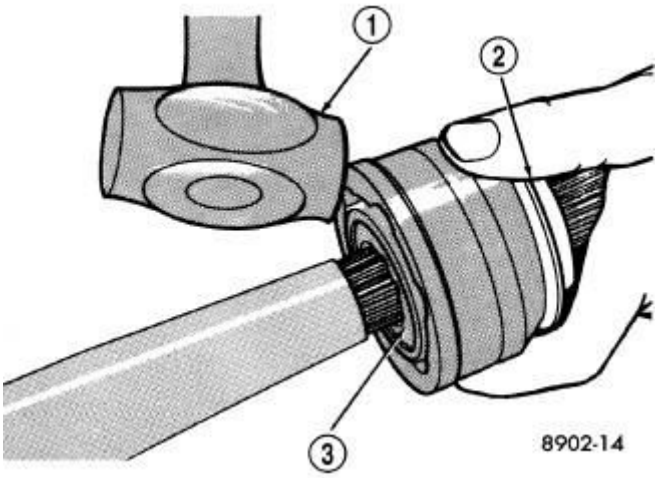

Fig. 22: Outer C/V Joint Removal From Interconnecting Shaft
Courtesy of CHRYSLER GROUP, LLC

7. Using a dead-blow hammer (1), sharply strike the outer edge of the CV joint (2) to disengage the spider (3) from the circlip on interconnecting shaft.
8. Slide outer CV joint (2) off end of interconnecting shaft.
9. Remove the circlip from the end of the interconnecting shaft.
10. Slide the boot off interconnecting shaft.
11. Wipe excess lubricant from CV joint and inspect CV joint and interconnecting shaft for damage or excessive wear.

If the CV joint shows signs of excessive wear, the halfshaft assembly must be replaced.

INSTALLATION

INSTALLATION

1. Install a NEW circlip into the groove on the interconnecting shaft.

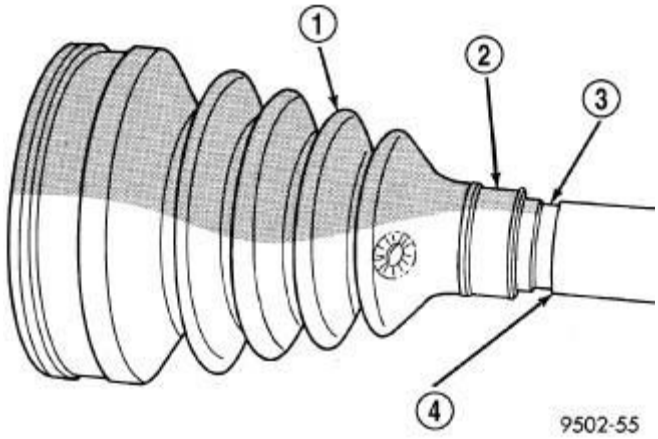

Fig. 23: Sealing Boot Installation On Interconnecting Shaft
Courtesy of CHRYSLER GROUP, LLC

2. Position clamps in the grooves on the new CV joint boot (1).
3. Slide the new CV boot (1) onto the interconnecting shaft (4) until the boot seats is in the groove (3) on interconnecting shaft.

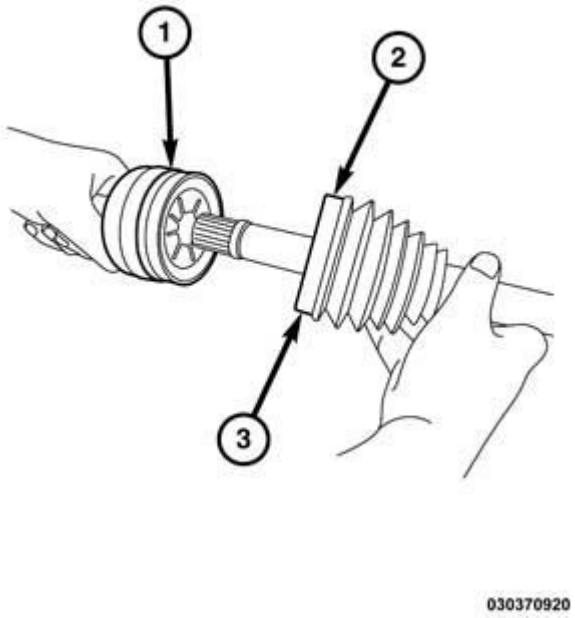

Fig. 24: Aligning CV Joint Hub
Courtesy of CHRYSLER GROUP, LLC

4. Align splines on interconnecting shaft with splines on CV joint hub (1) and push the CV joint onto interconnecting shaft.

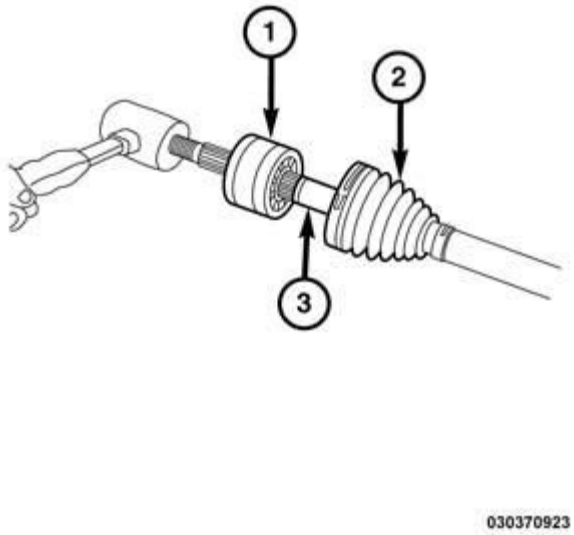

Fig. 25: Installing CV Joint Hub
Courtesy of CHRYSLER GROUP, LLC

NOTE: Verify that the circlip compresses into the groove in the interconnecting shaft as the CV joint is installed on to the interconnecting shaft.

5. Using a brass hammer, drive the CV joint (1) onto the interconnecting shaft (3) until CV joint (1) is fully seated on the interconnecting shaft (3).

NOTE: Use ONLY the lubricant provided with the NEW boot during the assembly of the CV joint boot.

6. Apply 1/2 of the tube of lubricant, provided with the new boot, into the CV joint while articulating the joint in the housing. Apply the remaining amount inside the CV joint boot.
7. Position the small clamp (3) into CV joint boot recess (4).

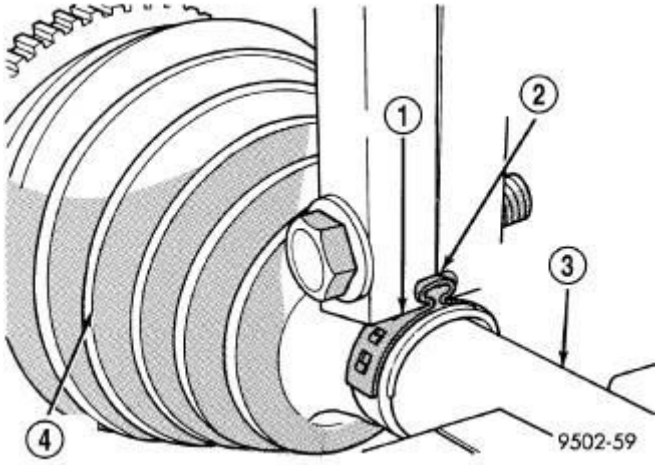

Fig. 26: Sealing Boot Retaining Clamp Installed
Courtesy of CHRYSLER GROUP, LLC

8. Using Special Tool (special tool #C-4975A, Installer, Axle Clamp), crimp (2) the small clamp (1) to hold the small end of the tripod boot (4) onto the interconnecting shaft (3).

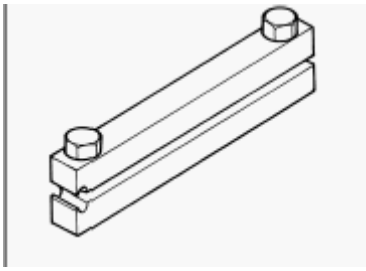

Fig. 27: C-4975A - Installer, Axle Clamp
Courtesy of CHRYSLER GROUP, LLC

NOTE: Tighten tool until the jaws are closed and the clamp is fully crimped (2).

9. Seat the large end of the CV joint Boot onto the CV joint housing.
10. Inspect the CV joint boot to verify that it is not distorted or wrinkled in any way.

NOTE: It may be necessary to equalize the air inside boot to gain the proper shape.

11. An awl or trim stick can be inserted under the boot lip to equalize the air inside the boot.
12. Wrap new large "latching type boot clamp" around the CV joint boot large end and snap the ends of the clamp together in preparation for compressing the clamp.

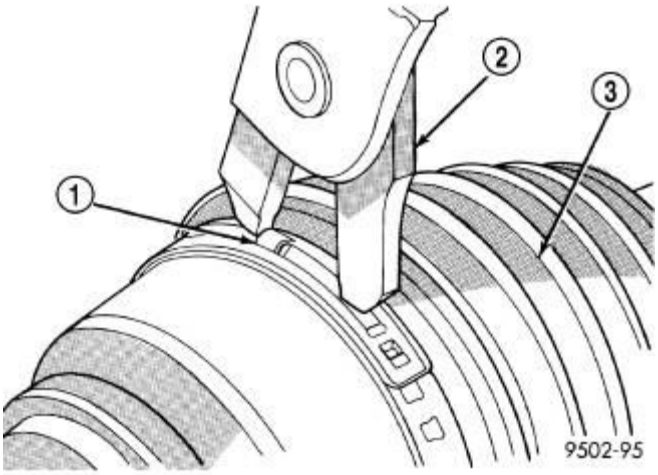

Fig. 28: Clamping Tool Installed On Sealing Boot Clamp
Courtesy of CHRYSLER GROUP, LLC

13. Insert the prongs of Clamp Locking Tool (2) in the raised holes (1) on the clamp.

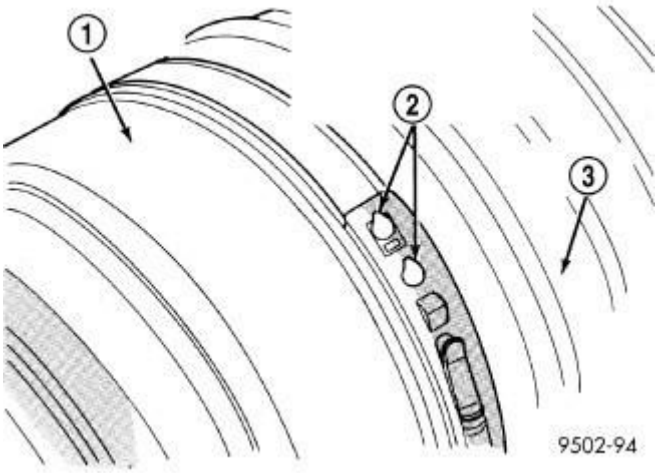

Fig. 29: Sealing Boot Clamp Correctly Installed
Courtesy of CHRYSLER GROUP, LLC

14. Squeeze tool together until the barbs (2) on underside of the clamp, lock into the windows in the topside of the clamp.
15. Install the halfshaft in the vehicle. Refer to **INSTALLATION** .

BOOT, DRIVE SHAFT, INNER

REMOVAL

REMOVAL

1. Remove the halfshaft from the vehicle. Refer to **REMOVAL**.

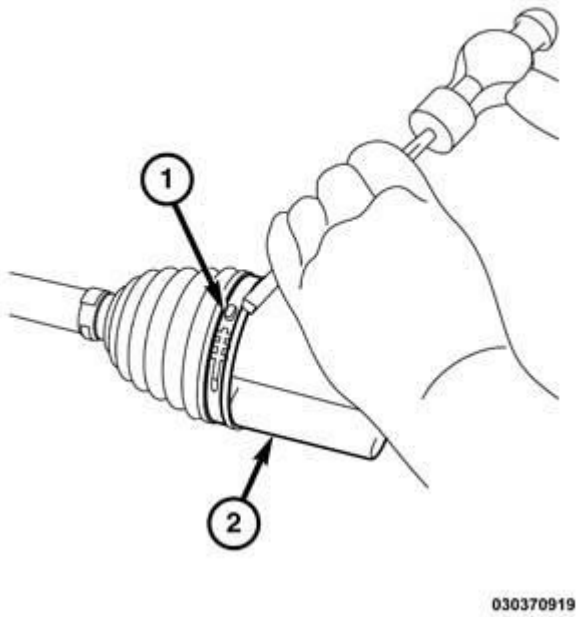

Fig. 30: Removing Large Boot Clamp
Courtesy of CHRYSLER GROUP, LLC

2. Remove large boot clamp (1) holding the inner tripod joint sealing boot (1) to tripod joint housing (2) and discard.

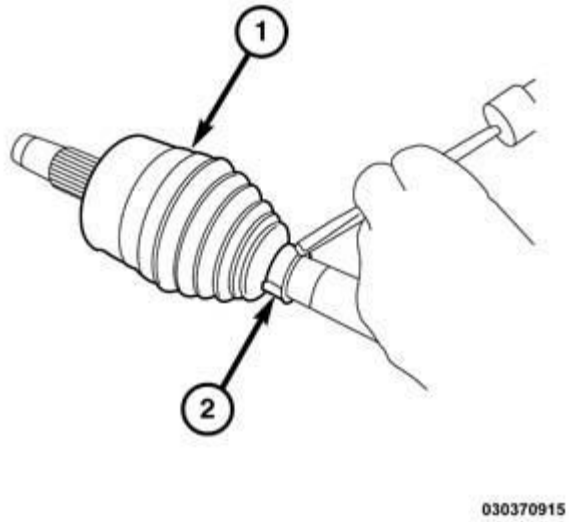

Fig. 31: Removing Small Clamp
Courtesy of CHRYSLER GROUP, LLC

3. Remove small clamp (2) holding the inner tripod joint boot to interconnecting shaft and discard.
4. Push the boot down the interconnecting shaft to expose the tripod housing and tripod joint.
5. Slide the tripod joint housing off the spider assembly (2) and the interconnecting shaft.

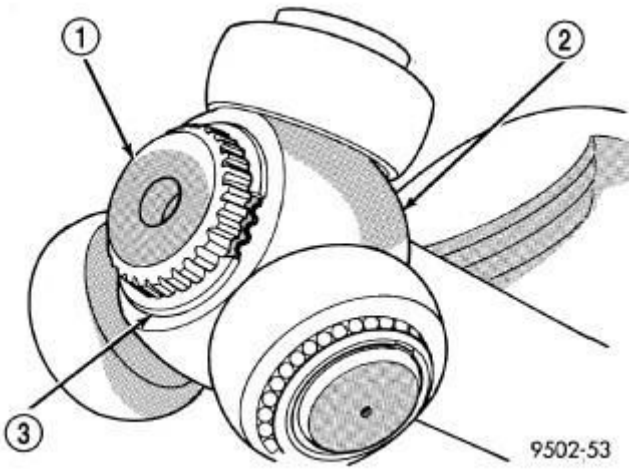

Fig. 32: Spider Assembly Retaining Snap-Ring
Courtesy of CHRYSLER GROUP, LLC

6. Remove snap-ring (3) holding the spider assembly to the interconnecting shaft.

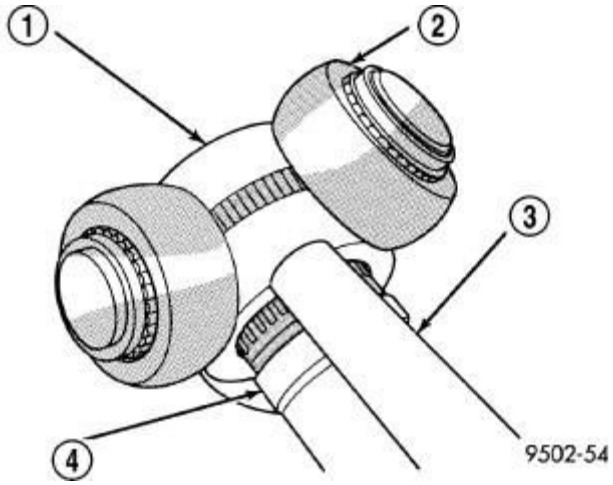

Fig. 33: Spider Assembly Removal From Interconnecting Shaft
Courtesy of CHRYSLER GROUP, LLC

CAUTION: Do not hit spider assembly bearings when removing spider assembly.

7. Slide the spider assembly (1) from interconnecting shaft (4). If spider assembly (1) will not come off interconnecting shaft by hand, it can be removed by tapping spider assembly with a brass drift (3).
8. Slide sealing boot off interconnecting shaft.
9. Thoroughly clean and inspect spider assembly, tripod joint housing, and interconnecting shaft for any signs of excessive wear.

   If any parts show signs of excessive wear, the halfshaft assembly will require replacement. Component parts of these halfshaft assemblies are not serviceable.

INSTALLATION

INSTALLATION

NOTE: I f the tripod joint bearings or housing is damaged due to loss of lubricant

1. Place new small clamp on Tripod boot.

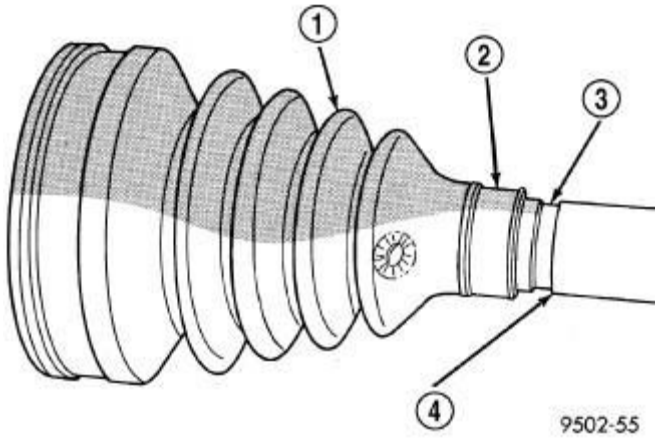

Fig. 34: Sealing Boot Installation On Interconnecting Shaft
Courtesy of CHRYSLER GROUP, LLC

2. Insert end of interconnecting shaft (4) into small end (2) of tripod boot (1).
3. Slide tripod boot up the interconnecting shaft (4) to gain access to the splined end of the interconnecting shaft.

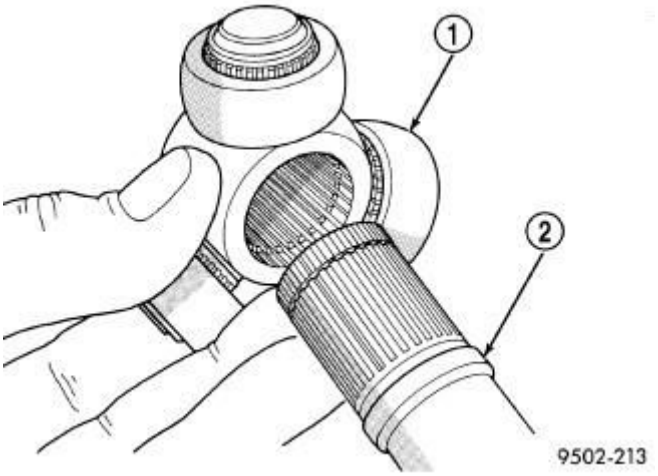

Fig. 35: Spider Assembly Installation On Interconnecting Shaft
Courtesy of CHRYSLER GROUP, LLC

4. Engage spline of interconnecting shaft (2) into the center on the tripod spider (1).

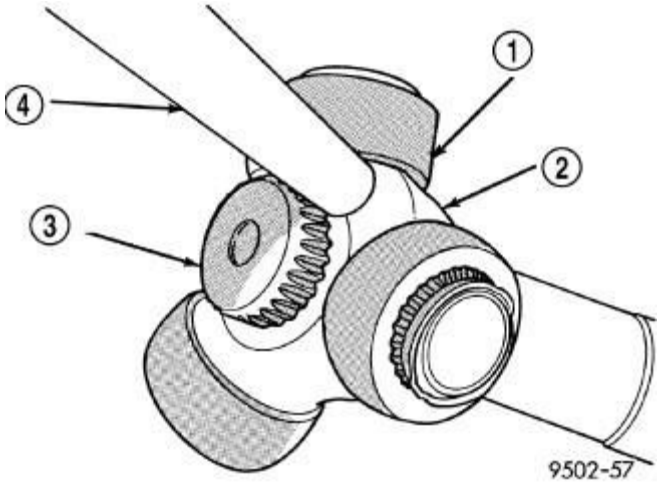

Fig. 36: Installing Spider Assembly On Interconnecting Shaft
Courtesy of CHRYSLER GROUP, LLC

5. Using a brass drift (4), tap tripod spider (2) onto the interconnecting shaft (3) until it seats and the snap-ring groove is exposed.

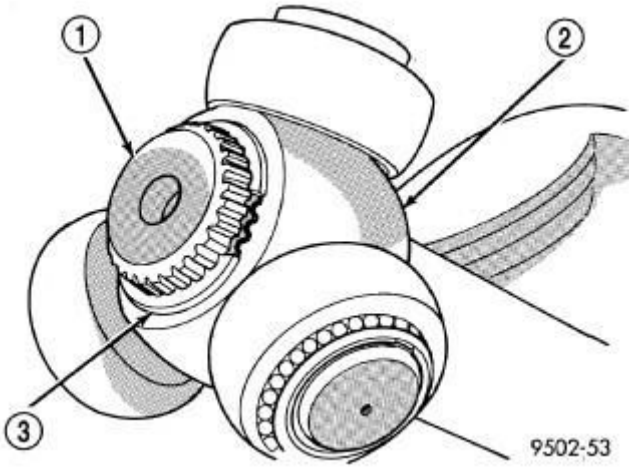

Fig. 37: Spider Assembly Retaining Snap-Ring
Courtesy of CHRYSLER GROUP, LLC

6. Install the snap-ring (3) to hold the spider assembly to the interconnecting shaft.

NOTE: Use ONLY the lubricant provided with the NEW boot during the assembly of the tripod boot.

7. Apply 1/2 of the tube of lubricant, provided with the new boot, into tripod housing. Apply the remaining amount inside the tripod boot.

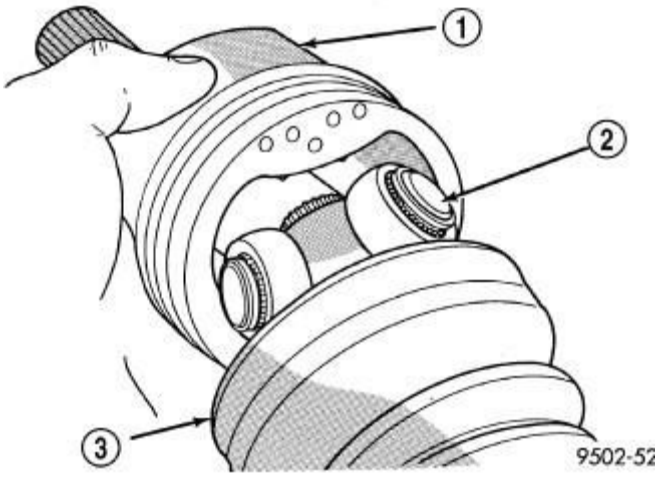

Fig. 38: Installing Tripod Housing On Spider Assembly
Courtesy of CHRYSLER GROUP, LLC

8. Engage the spider bearings (2) into the tripod housing (1).
9. Slide the spider into the tripod housing (1) until it seats.

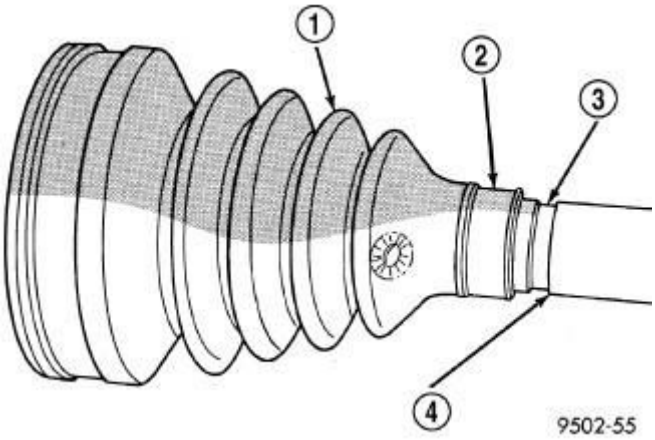

Fig. 39: Sealing Boot Installation On Interconnecting Shaft
Courtesy of CHRYSLER GROUP, LLC

10. Slide boot (1) toward the tripod joint until the small end (2) seats in the recess (3) in the interconnecting shaft (4).
11. Insert tripod housing into the large end of the tripod boot.

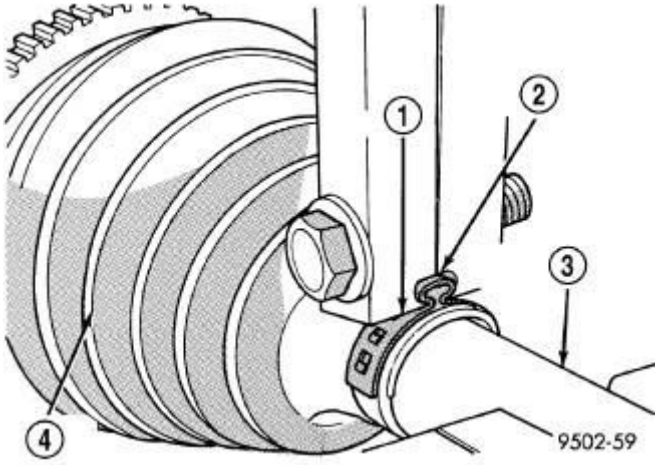

Fig. 40: Sealing Boot Retaining Clamp Installed
Courtesy of CHRYSLER GROUP, LLC

12. Using Special Tool (special tool #C-4975A, Installer, Axle Clamp), crimp (2) the small clamp (1) to hold the small end of the tripod boot (4) onto the interconnecting shaft (3).

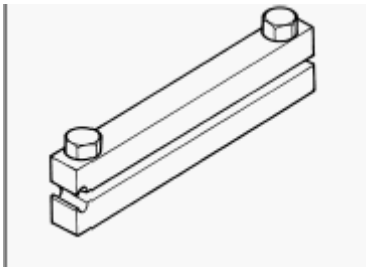

Fig. 41: C-4975A - Installer, Axle Clamp
Courtesy of CHRYSLER GROUP, LLC

NOTE: Tighten tool until the jaws are closed and the clamp is fully crimped (2).

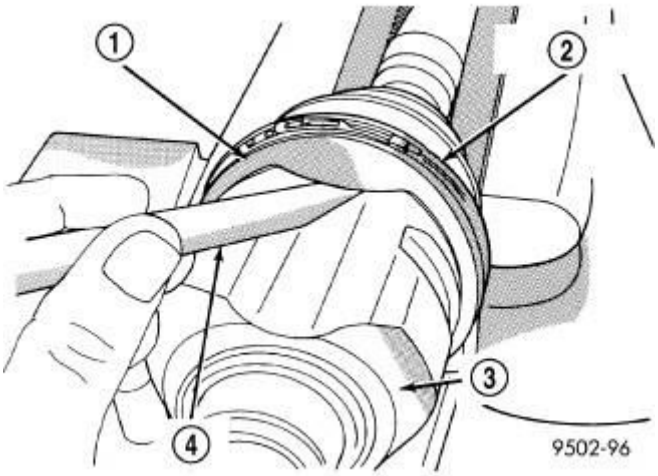

Fig. 42: Trim Stick Inserted For Venting Tripod Joint
Courtesy of CHRYSLER GROUP, LLC

13. Inspect the tripod boot to verify that it is not distorted or wrinkled in any way.

NOTE: **It may be necessary to equalize the air inside boot to gain the proper shape.**

14. An awl or trim stick (4) can be inserted under the boot lip to equalize the air inside the boot (1).
15. Center the clamp in the groove in the tripod joint boot.

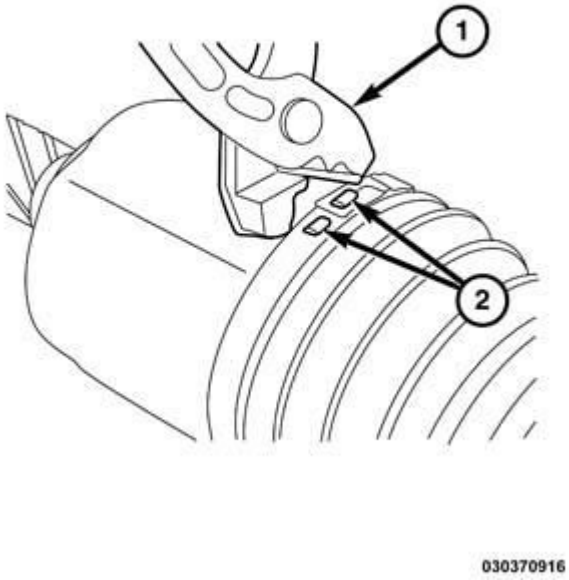

Fig. 43: Locking Pliers & Lock Tabs
Courtesy of CHRYSLER GROUP, LLC

16. Engage the clamp locking pliers (1) into the lock tabs (2) on the tripod joint boot clamp.

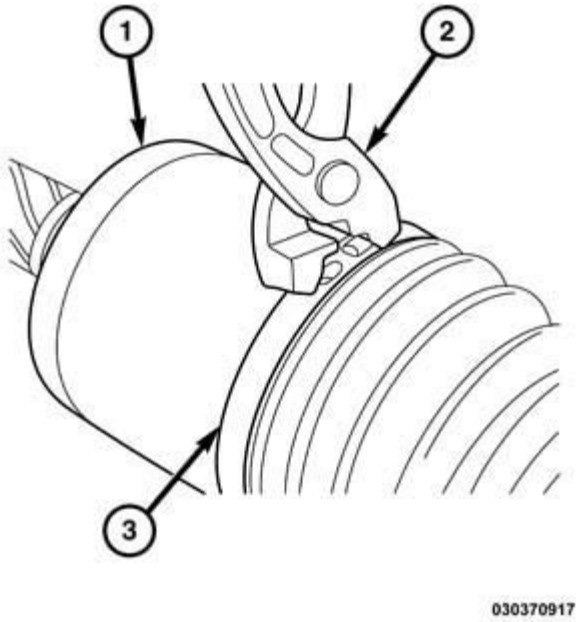

Fig. 44: Squeezing Clamp
Courtesy of CHRYSLER GROUP, LLC

17. Squeeze the clamp (3) to engage the lock tabs to hold the tripod joint boot in position on the tripod joint housing (1).

2014 DRIVELINE/AXLES

Propeller Shaft - Cherokee

REMOVAL

REMOVAL

CAUTION: Propeller shaft removal is a two-person operation. Never allow propeller shaft to hang from the center bearing, or while only connected to power transfer unit (PTU) or rear driveline module flanges. A helper is required. If a propeller shaft section is hung unsupported, damage may occur to the joint, boot, and/or center bearing from over-angulation. This may result in driveline vibrations.

1. Place transmission in neutral.
2. Raise and support the vehicle. Refer to **HOISTING, STANDARD PROCEDURE** .

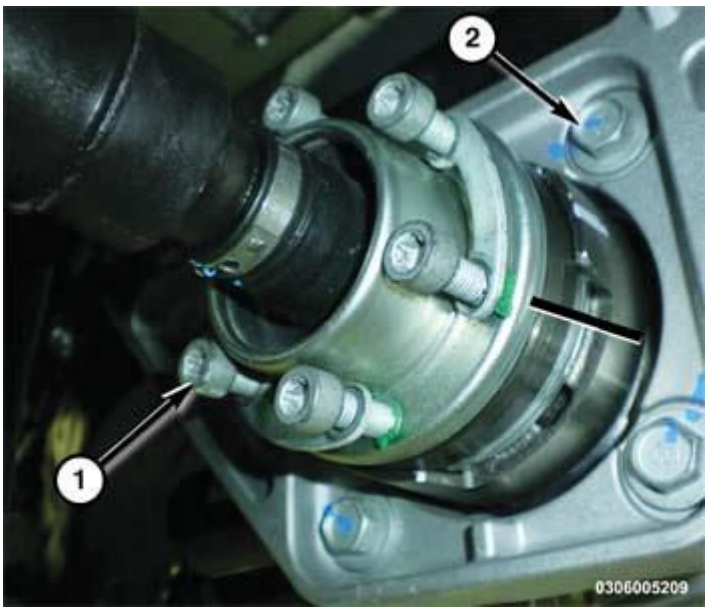

Fig. 1: Removing Bolts Holding Rear Propeller Shaft To Rear Pinion Flange
Courtesy of CHRYSLER GROUP, LLC

3. Apply index marks on the rear pinion flange and the rear prop shaft.

NOTE: Be sure a helper is holding the propeller shaft in place.

4. Remove the bolts holding the rear propeller shaft to the rear pinion flange.

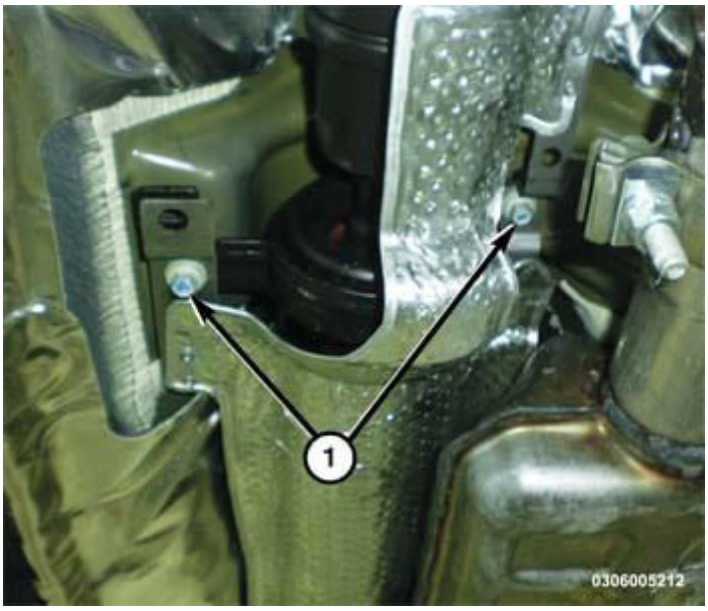

Fig. 2: Front Center Bearing Mounting Bolts
Courtesy of CHRYSLER GROUP, LLC

5. Remove the front center bearing mounting bolts (1).

Fig. 3: Rear Center Bearing Mounting Bolts
Courtesy of CHRYSLER GROUP, LLC

6. Remove the rear center bearing mounting bolts (1).

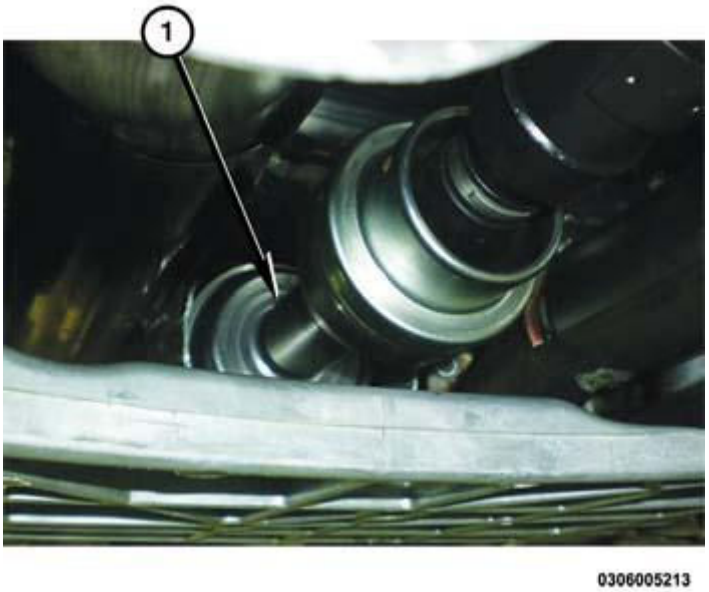

Fig. 4: Sliding Propeller Shaft Off Power Transfer Unit
Courtesy of CHRYSLER GROUP, LLC

7. Slide the propeller shaft (1) off the Power Transfer Unit (PTU).

INSTALLATION

INSTALLATION

CAUTION: Propeller shaft removal is a two-person operation. Never allow propeller shaft to hang from the center bearing, or while only connected to power transfer unit (PTU) or rear driveline module flanges. A helper is required. If a propeller shaft section is hung unsupported, damage may occur to the joint, boot, and/or center bearing from over-angulation. This may result in driveline vibrations.

NOTE: Lightly apply a light grease to the splines prior to installation.

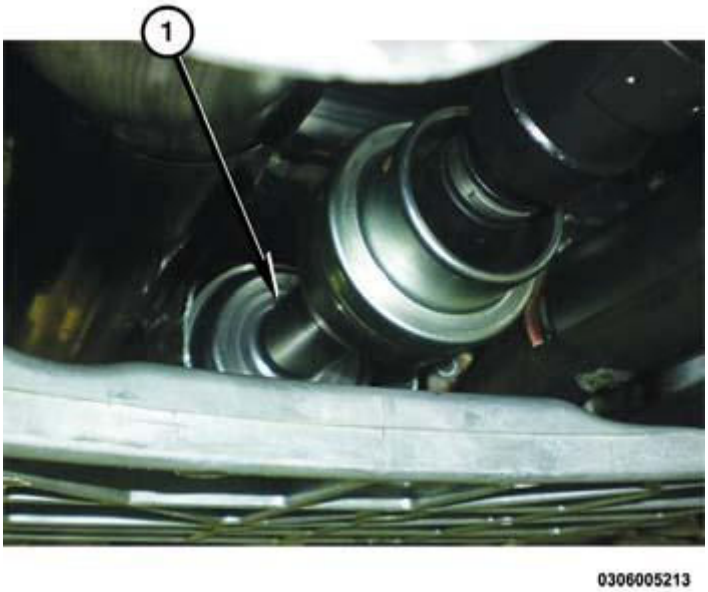

Fig. 5: Installing Propeller Shaft Into Power Transfer Unit
Courtesy of CHRYSLER GROUP, LLC

1. With the aid of a helper, install the propeller shaft (1) into the Power Transfer Unit (PTU).

NOTE: **Attempt to remove propeller shaft joint by hand to verify that the snap ring is fully engaged. If snap ring is fully engaged, propeller shaft joint will not be removable from PTU by hand.**

Fig. 6: Rear Center Bearing Bolts
Courtesy of CHRYSLER GROUP, LLC

2. Align the center bearing mounts in place.

3. Install the rear center bearing bolts (1) and torque to 23 N.m (17 ft. lbs.).

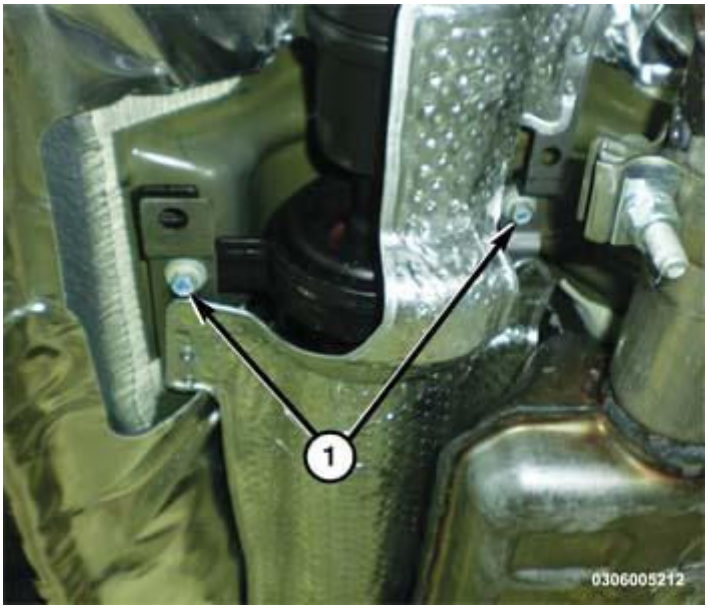

Fig. 7: Front Center Bearing Bolts
Courtesy of CHRYSLER GROUP, LLC

4. Install the front center bearing bolts (1) and torque to 23 N.m (17 ft. lbs.).

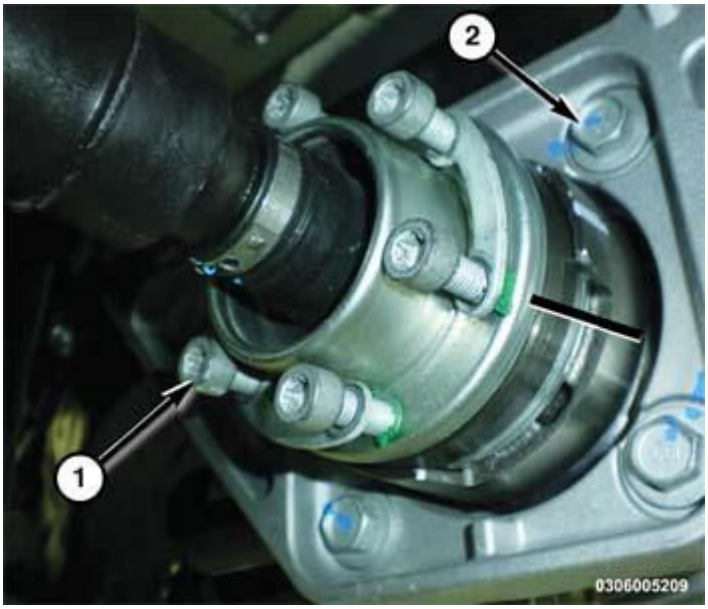

Fig. 8: Aligning Index Marks On Propeller Shaft To Pinion Flange
Courtesy of CHRYSLER GROUP, LLC

5. Align index marks on the propeller shaft to the pinion flange.
6. Replace propeller shaft bolts (1) and torque to 21 N.m (15 ft. lbs.).

2014 DRIVELINE/AXLES

Rear Driveline Module - Cherokee

OPERATION

OPERATION

The primary benefits of All Wheel Drive are:

- Superior straight line acceleration, and cornering on all surfaces
- Better traction and handling under adverse conditions, resulting in improved hill climbing ability and safer driving.

ECU (Inside vehicle) uses throttle position, wheel speeds and steering angle (if equipped) to control clutch.

DIAGNOSIS AND TESTING

REAR DRIVELINE MODULE OPERATION

Driveline module operation requires relatively straight-forward diagnosis. Refer to the following chart:

CONDITION	POSSIBLE CAUSES	CORRECTION
No AWD in forward or reverse directions, propeller shaft turning	1. Check Drivetrain Control Module for DTC's.	1. Review Drivetrain Control Module diagnostic service information
	2. Power Transfer Unit (PTU) failure	2. Replace the PTU assembly
No AWD in forward or reverse directions, propeller shaft not turning	1. Check Drivetrain Control Module for DTC's.	1. Review Drivetrain Control Module diagnostic service information
	2. Differential, Rear Axle component failure.	2. Diagnose and repair or replace as necessary.
Vibration at all speeds, continuous torque transfer	1. Mis-matched tires, worn tires on front axle.	1. Replace worn or incorrect (mis-matched) tires with same make and size

REAR DRIVELINE MODULE NOISE

Different sources can be the cause of noise that the rear driveline module assembly is suspected of making. Refer to the following causes for noise diagnosis.

DRIVELINE MODULE ASSEMBLY NOISE

The most important part of driveline module service is properly identifying the cause of failures and noise

complaints. The cause of most driveline module failures is relatively easy to identify. The cause of driveline module noise is more difficult to identify.

If vehicle noise becomes intolerable, an effort should be made to isolate the noise. Many noises that are reported as coming from the driveline module may actually originate at other sources. For example:

- Tires
- Road surfaces
- Wheel bearings
- Engine
- Transmission
- Exhaust
- Propeller shaft (vibration)
- Vehicle body (drumming)

Driveline module noises are normally divided into two categories: gear noise or bearing noise. A thorough and careful inspection should be completed to determine the actual source of the noise before replacing the driveline module. Other sources of noise from the rear driveline module are the pump, actuator, and low hydraulic fluid level.

The rubber mounting bushings help to dampen-out driveline module noise when properly installed. Inspect to confirm that no metal contact exists between the driveline module case and the body or suspension cradle. The complete isolation of noise to one area requires expertise and experience. Identifying certain types of vehicle noise baffles even the most capable technicians. Often such practices as:

- Increase tire inflation pressure to eliminate tire noise.
- Listen for noise at varying speeds with different driveline load conditions
- Swerving the vehicle from left to right to detect wheel bearing noise.

All driveline module assemblies produce noise to a certain extent. Slight carrier noise that is noticeable only at certain speeds or isolated situations should be considered normal. Carrier noise tends to peak at a variety of vehicle speeds. The pump and actuator may be audible in certain situations that may be normal. Noise is **NOT ALWAYS** an indication of a problem within the carrier or rear driveline module components.

TIRE NOISE

Tire noise is often mistaken for driveline module noise. Tires that are unbalanced, worn unevenly or are worn in a saw-tooth manner are usually noisy. They often produce a noise that appears to originate in the driveline module.

Tire noise changes with different road surfaces, but driveline module noise does not. Inflate all four tires with approximately 20 psi (138 kPa) more than the recommended inflation pressure (for test purposes only). This will alter noise caused by tires, but will not affect noise caused by the differential. Rear axle noise usually ceases when coasting at speeds less than 30 mph (48 km/h); however, tire noise continues, but at a lower frequency, as the speed is reduced.

After test has been completed lower tire pressure back to recommended pressure.

GEAR NOISE (DRIVE PINION AND RING GEAR)

Abnormal gear noise is rare and is usually caused by scoring on the ring gear and drive pinion. Scoring is the result of insufficient or incorrect lubricant in the carrier housing.

Abnormal gear noise can be easily recognized. It produces a cycling tone that will be very pronounced within a given speed range. The noise can occur during one or more of the following drive conditions:

- Drive
- Road load
- Float
- Coast

Abnormal gear noise usually tends to peak within a narrow vehicle speed range or ranges. It is usually more pronounced between 30 to 40 mph (48 to 64 km/h) and 50 to 60 mph (80 to 96 km/h). When objectionable gear noise occurs, note the driving conditions and the speed range.

BEARING NOISE (DRIVE PINION AND DIFFERENTIAL)

Defective bearings produce a rough growl that is constant in pitch and varies with the speed of vehicle. Being aware of this will enable a technician to separate bearing noise from gear noise.

Drive pinion bearing noise that results from defective or damaged bearings can usually be identified by its constant, rough sound. Drive pinion front bearing is usually more pronounced during a coast condition. Drive pinion rear bearing noise is more pronounced during a drive condition. The drive pinion bearings are rotating at a higher rate of speed than either the differential side bearings or the axle shaft bearing.

Differential side bearing noise will usually produce a constant, rough sound. The sound is much lower in frequency than the noise caused by drive pinion bearings.

Bearing noise can best be detected by road testing the vehicle on a smooth road (black top). However, it is easy to mistake tire noise for bearing noise. If a doubt exists, the tire treads should be examined for irregularities that often causes a noise that resembles bearing noise.

ENGINE AND TRANSMISSION NOISE

Sometimes noise that appears to be in the driveline module assembly is actually caused by the engine or the transmission. To identify the true source of the noise, note the approximate vehicle speed and/or RPM when the noise is most noticeable. Stop the vehicle next to a flat brick or cement wall (this will help reflect the sound). Place the transaxle in **NEUTRAL** . Accelerate the engine slowly up through the engine speed that matches the vehicle speed noted when the noise occurred. If the same noise is produced, it usually indicates that the noise is being caused by the engine or transaxle.

SPECIFICATIONS

TORQUE SPECIFICATIONS

TORQUE SPECIFICATIONS

DESCRIPTION	N.m	Ft. Lbs.	In. Lbs.
Bolts, Rear Drive Module Mounting	130	96	-
Bracket, Differential to RDM	60	44	-
Bolt, Rear Propeller Shaft	21	15	-
Bolt, Pump	12	-	106
Sensor, Pressure	21	15	-
Bolt, Hydraulic Fluid Cover	6	-	53
Nut, Hub	175	129	-

1-SPEED RDM SPECIFICATIONS

DESCRIPTION	SPECIFICATION
GEAR RATIO	2.73:1
RING GEAR DIAMETER	165 mm (6.5 in.)
DIFFERENTIAL FLUID FILL CAPACITY	0.89 Liters
HYDRAULIC FLUID FILL CAPACITY	0.439 Liters

2-SPEED RDM SPECIFICATIONS

DESCRIPTION	SPECIFICATION
GEAR RATIO	2.73:1
LOW RANGE PLANETARY GEAR RATIO	2.91:1
RING GEAR DIAMETER	165 mm (6.5 in.)
DIFFERENTIAL FLUID FILL CAPACITY STANDARD	1.15 Liters
DIFFERENTIAL FLUID FILL CAPACITY WITH LOCKER	1.23 Liters
HYDRAULIC FLUID FILL CAPACITY	0.439 Liters

REMOVAL

REMOVAL

CAUTION: Never grasp half shaft assembly by the boots. This may cause the boot to pucker or crease and reduce the service life of the boot.

Avoid over angulating or stroking the C/V joints when handling the half shaft.

Half shafts exposed to battery acid, transmission fluid, brake fluid, differential fluid or gasoline may cause the boots to deteriorate. Failure to

follow these instructions will result in damage.

CAUTION: Propeller shaft installation is a two-person operation. Never allow propeller shaft to hang from the center bearing, or while only connected to the transmission or rear axle flanges. A helper is required. If a propeller shaft section is hung unsupported, damage may occur to the shaft, coupler, and/or center bearing from over-angulation. This may result in driveline vibrations and/or component failure.

1. Disconnect the battery negative cable.
2. Lift and support the vehicle. Refer to **HOISTING, STANDARD PROCEDURE** .
3. Remove the muffler. Refer to **MUFFLER, EXHAUST, REMOVAL** .

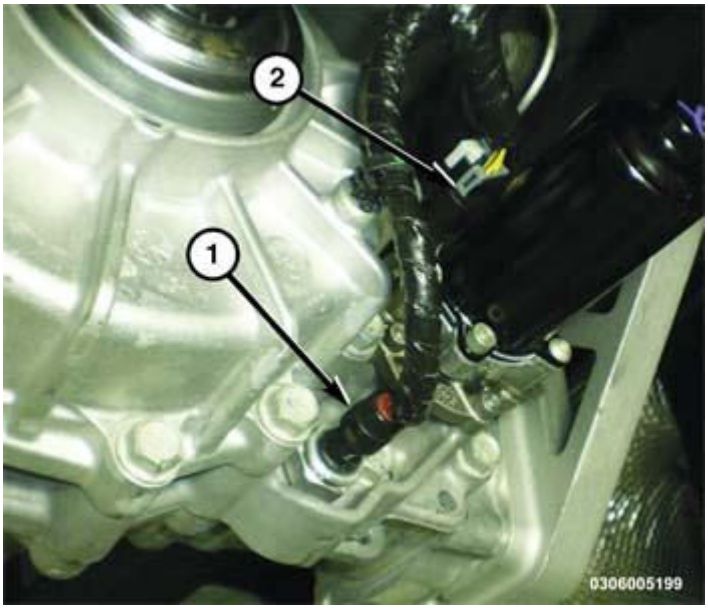

Fig. 1: Identifying Pressure Sensor And Pump Motor Electrical Connectors
Courtesy of CHRYSLER GROUP, LLC

4. Disconnect the pressure sensor electrical connector (1).
5. Disconnect the pump motor electrical connector (2).
6. Disconnect the vent hose.

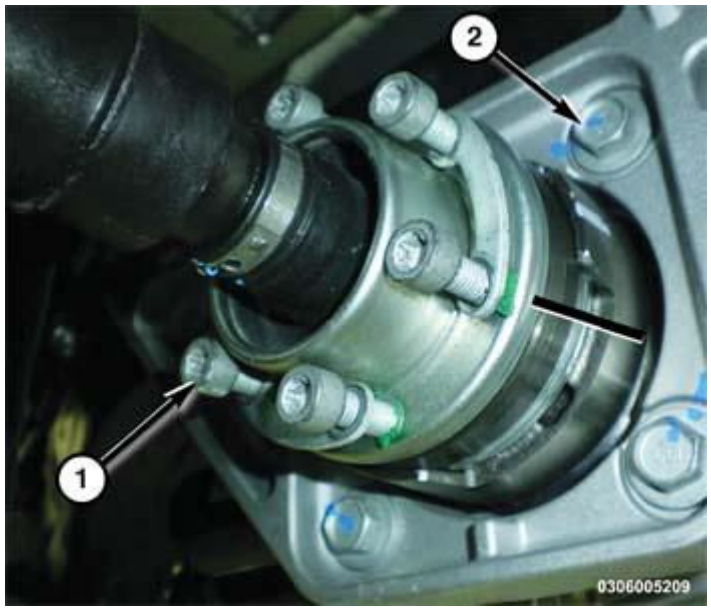

Fig. 2: Aligning Index Marks On Propeller Shaft To Pinion Flange
Courtesy of CHRYSLER GROUP, LLC

7. Apply alignment index marks to the rear propeller shaft and rear pinion flange.
8. Remove the bolts (1) holding the rear propeller shaft to the rear pinion flange.
9. Separate the rear propeller shaft from the rear pinion flange and secure the shaft to the side.

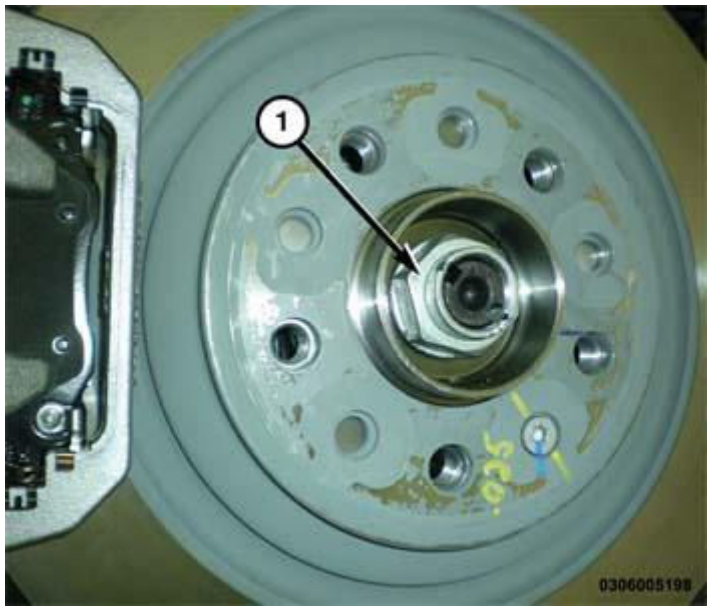

Fig. 3: Axle Shaft Nut
Courtesy of CHRYSLER GROUP, LLC

10. Using a suitable punch, remove the staking from the right side axle shaft nut (1).
11. Remove the right side axle shaft nut (1).

12. Remove the left rear knuckle. Refer to **KNUCKLE, REAR, REMOVAL**

.

NOTE: Mark the axle shaft for location.

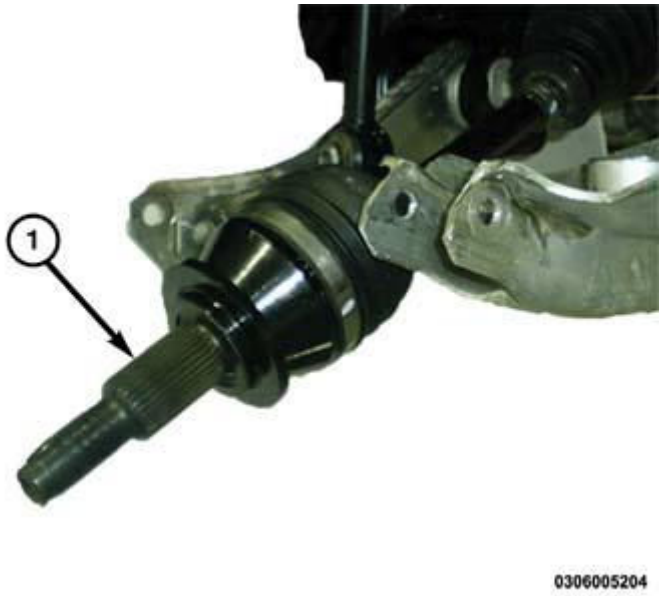

Fig. 4: Identifying Rear Half Shaft
Courtesy of CHRYSLER GROUP, LLC

13. Remove the left axle shaft (1) from the Rear drive Module.

NOTE: It may be necessary to hold the stub shafts in place when removing the axle shaft.

NOTE: Tag the axle shaft shims for location.

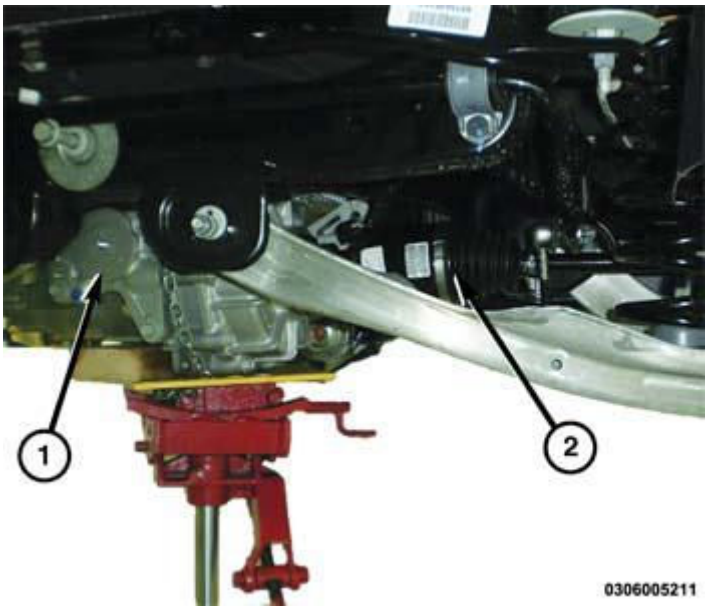

Fig. 5: Identifying Axle Shaft And Rear Drive Module
Courtesy of CHRYSLER GROUP, LLC

14. Support the Rear Drive Module (1) with a suitable jack and secure it with chains.

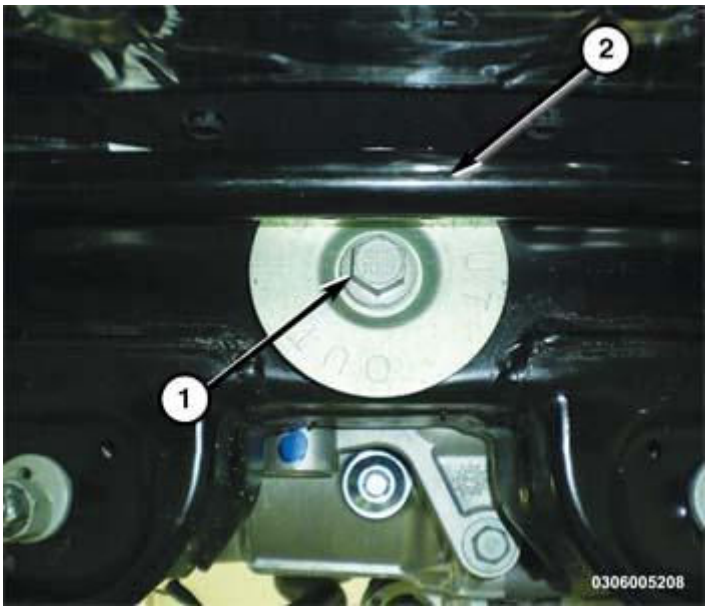

Fig. 6: Rear Mount Bolt
Courtesy of CHRYSLER GROUP, LLC

15. Remove the rear mount bolt (1) from the Rear Drive Module.

NOTE: **The rear sway bar (2) may need to be repositioned out of the way to remove RDM bolt (1).**

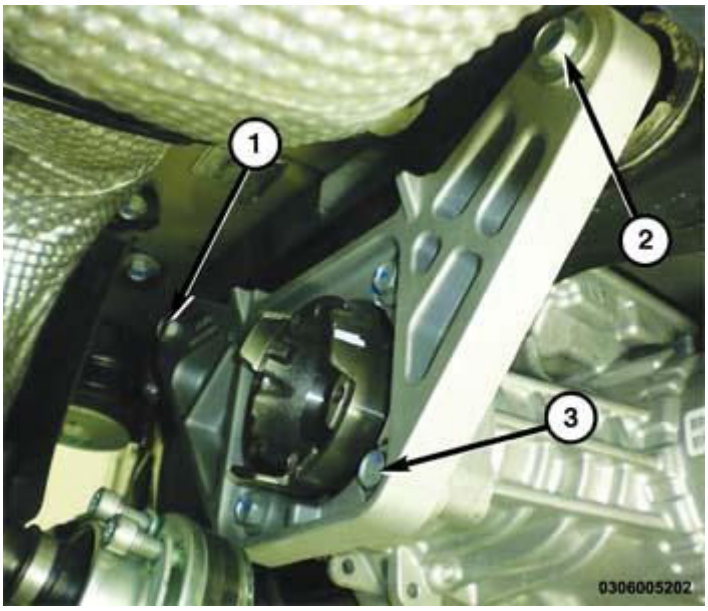

Fig. 7: Front Mount Bolts
Courtesy of CHRYSLER GROUP, LLC

16. Remove the front mount bolts (1 and 2) from the Rear Drive Module.
17. Lower the Rear Drive Module with the right axle shaft (1) attached to the Rear Drive Module.

NOTE: The right side axle shaft may need to be tapped out with a suitable tool from the right hub.

18. If necessary remove the right axle shaft.

INSTALLATION

INSTALLATION

CAUTION: Never grasp half shaft assembly by the boots. This may cause the boot to pucker or crease and reduce the service life of the boot.

Avoid over angulating or stroking the C/V joints when handling the half shaft.

Half shafts exposed to battery acid, transmission fluid, brake fluid, differential fluid or gasoline may cause the boots to deteriorate. Failure to follow these instructions will result in damage.

CAUTION: Propeller shaft installation is a two-person operation. Never allow propeller shaft to hang from the center bearing, or while only connected to the transmission or rear axle flanges. A helper is required. If a propeller

shaft section is hung unsupported, damage may occur to the shaft, coupler, and/or center bearing from over-angulation. This may result in driveline vibrations and/or component failure.

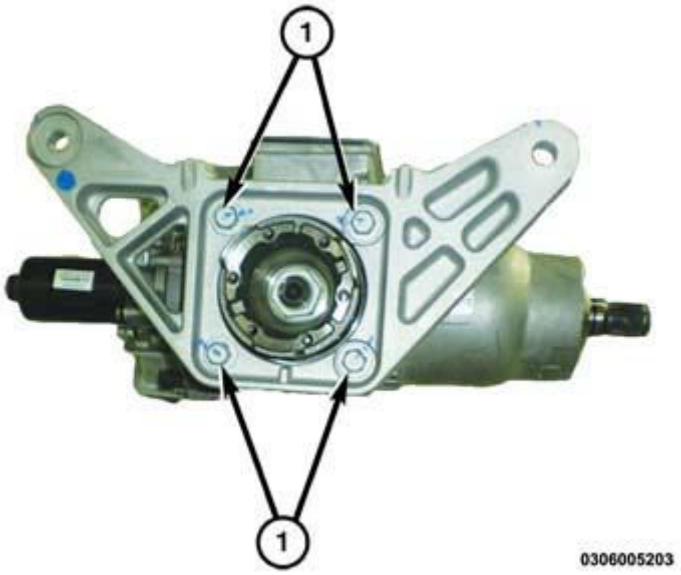

Fig. 8: Installing The Rear Drive Module (RDM) Mount Bracket And Torque Bolts
Courtesy of CHRYSLER GROUP, LLC

1. If removed, install the Rear Drive Module (RDM) mount bracket and torque bolts (1) to 60 N.m (44 ft. lbs.).

NOTE: **Clean the splined mating surfaces and apply a light grease to the internal splines prior to installing halfshaft.**

2. If removed, install the right axle shaft onto the RDM. Clean any residual excess grease from RDM output shaft.
3. Install the right axle shaft shim onto hub end of shaft.
4. Secure the RDM on a suitable jack and secure it with chains.
5. If service was performed to the RDM and hydraulic fluid needs to be added, refer to **FLUID, HYDRAULIC, STANDARD PROCEDURE**.
6. Raise the Rear Drive Module with the right axle shaft into position.

NOTE: **There are locating pins on the RDM mount bracket. Make sure the RDM mount bracket is in the correct location.**

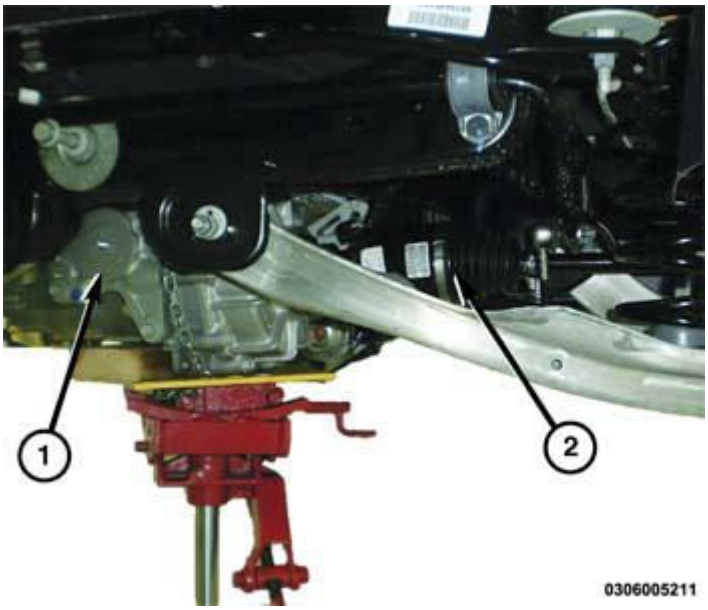

Fig. 9: Identifying Axle Shaft And Rear Drive Module
Courtesy of CHRYSLER GROUP, LLC

7. Guide the right axle shaft (2) into the right side hub.
8. Connect the vent hose.

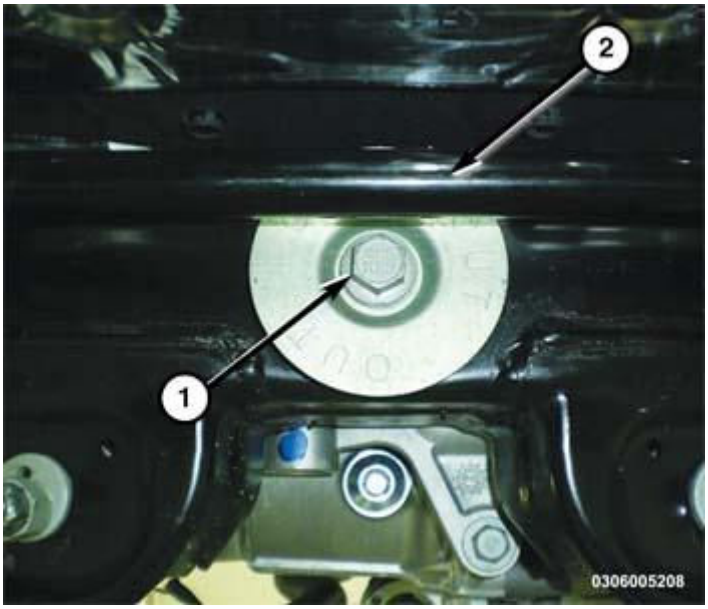

Fig. 10: Rear Mount Bolt
Courtesy of CHRYSLER GROUP, LLC

9. Install rear mount bolt into RDM.

NOTE: Do not tighten at this time.

NOTE: **The rear sway bar (2) may need to be repositioned to install the RDM bolt (1).**

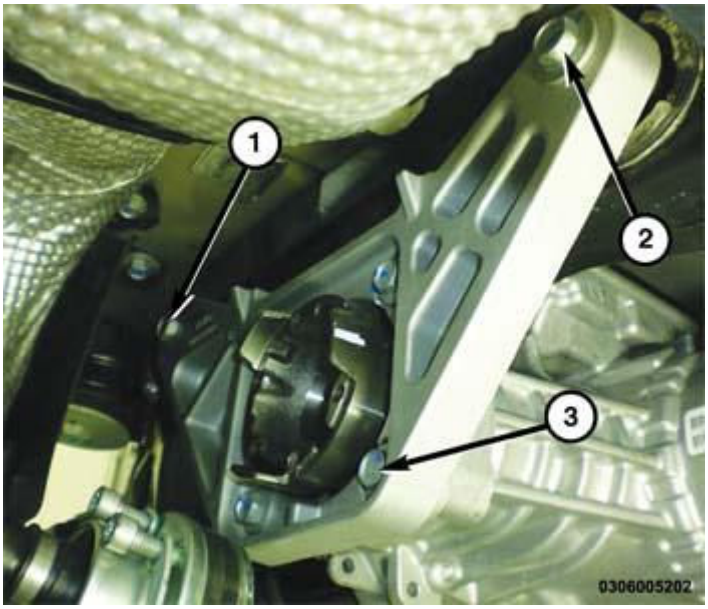

Fig. 11: Front Mount Bolts
Courtesy of CHRYSLER GROUP, LLC

10. Install the front mount bolts into the RDM.
11. Torque all RDM mount bolts to 130 N.m (96 ft.lbs.).

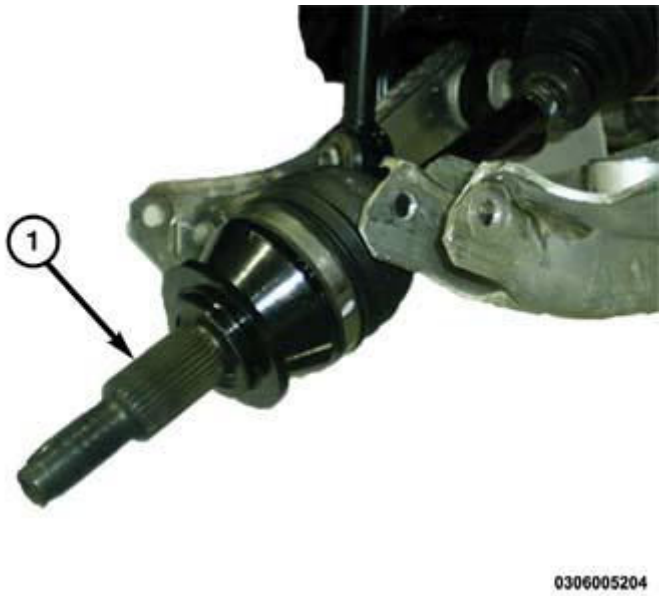

Fig. 12: Identifying Rear Axle Shaft
Courtesy of CHRYSLER GROUP, LLC

12. If service was performed the RDM and differential fluid needs to be added, refer to **FLUID, DIFFERENTIAL, STANDARD PROCEDURE**.

NOTE: Clean the splined mating surfaces and apply a light grease to the internal splines prior to installing halfshaft.

13. Install the left axle shaft onto the RDM. Clean any residual excess grease from RDM output shaft.
14. Install the axle shaft shim onto hub end of the shaft.
15. Install the left rear knuckle. Refer to **KNUCKLE, REAR, INSTALLATION** .

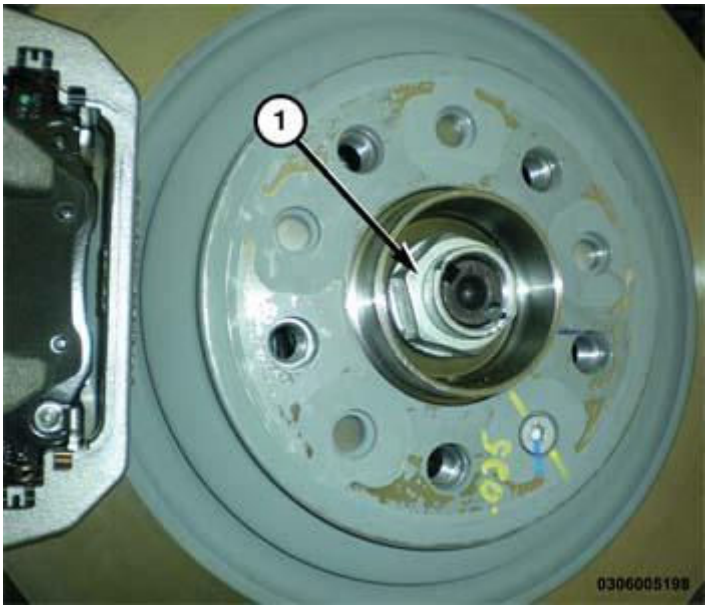

Fig. 13: Axle Shaft Nut
Courtesy of CHRYSLER GROUP, LLC

NOTE: Always install a new hub nut. The original hub nut is one-time use only and must be discarded when removed.

16. Install a **new** right axle shaft nut (1) and torque to 200 N.m (148 ft. lbs.).

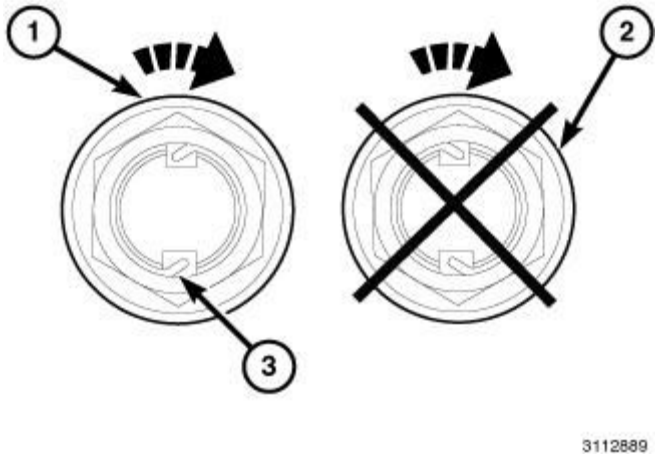

Fig. 14: Correct Hub Nut Staking
Courtesy of CHRYSLER GROUP, LLC

NOTE: Do not use air tools while staking hub nut.

17. Using the staking tool (special tool #10287, Tool, Front Hub Staking), align the leading cutting edge of tool with the top left side channel on axle as shown in the illustration (1). Tighten fastener on staking tool with hand tools until the threads bottom out completely.

NOTE: The hub nut must be staked so that it looks similar to Fig. 14. Both edges must be split and bent into the shape shown in the illustration (3). The staking must be in the opposite direction from the forward rotation of the wheel.

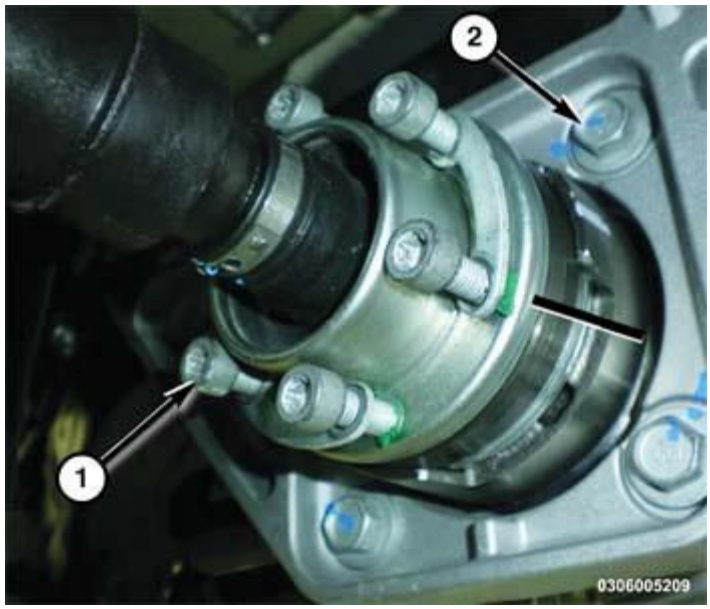

Fig. 15: Aligning Index Marks On Propeller Shaft To Pinion Flange
Courtesy of CHRYSLER GROUP, LLC

18. Connect the rear prop shaft to the alignment mark and torque bolts (1) to 21 N.m (15 ft. lbs.).

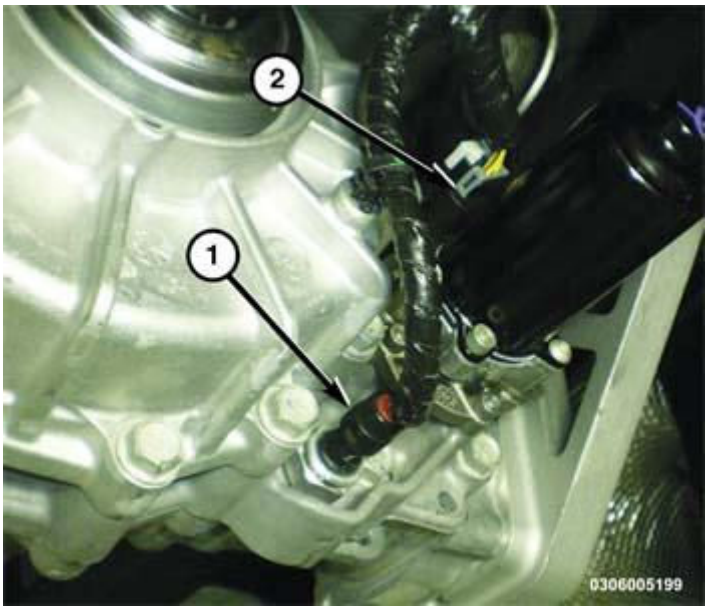

Fig. 16: Identifying Pressure Sensor And Pump Motor Electrical Connectors
Courtesy of CHRYSLER GROUP, LLC

19. Connect the pump motor electrical connector (2).
20. Connect the pressure sensor electrical connector (1).
21. Install the muffler. Refer to **MUFFLER, EXHAUST, INSTALLATION** .

SPECIAL TOOLS

SPECIAL TOOLS

	8420B - Remover, Shaft (Originally Shipped In Kit Number(s) 8660CC, 8662CC, 8660, 8662, 8664, 8668, 8710, 8710CC.)

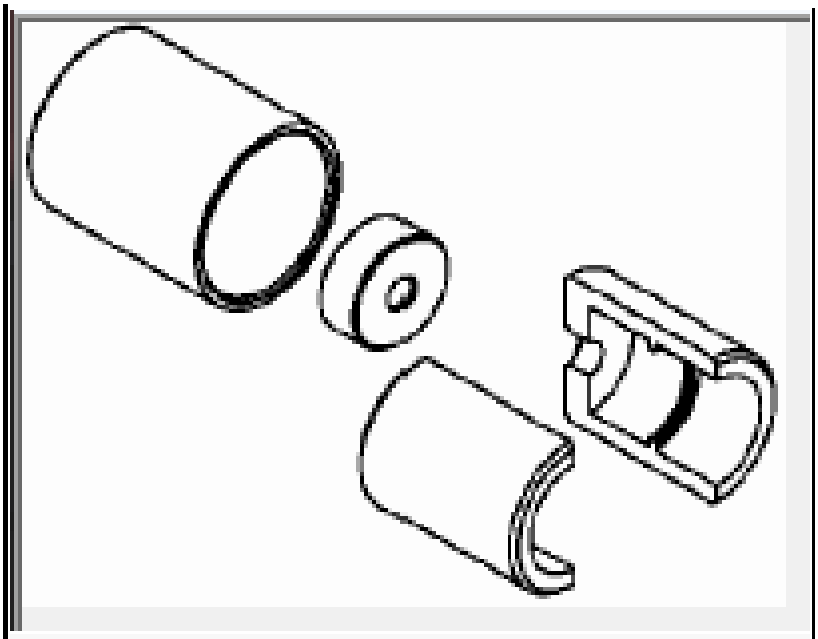

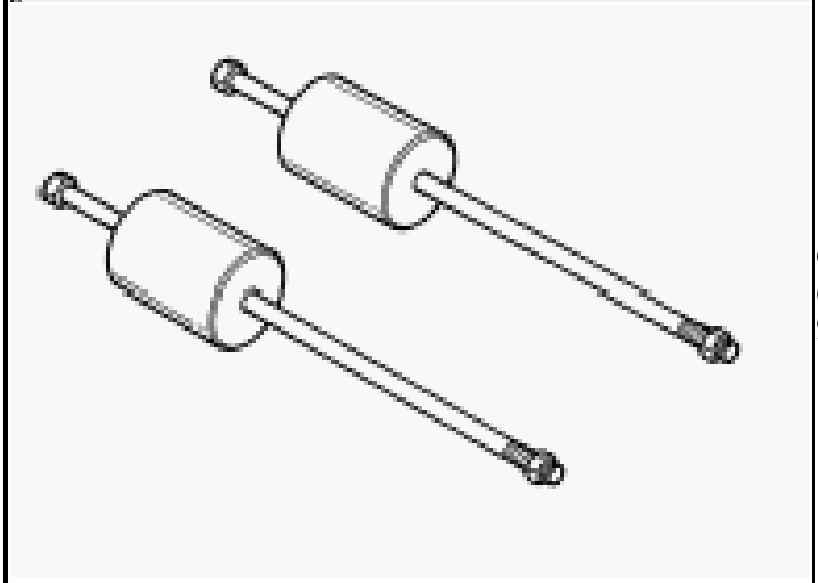

C-3752 - Slide Hammers
(Originally Shipped In Kit Number(s)
9202, 9202A-CAN, 9202-CAN, 9202CC.)

9585 - Remover, Bearing Cup
(Originally Shipped In Kit Number(s)
9691.)

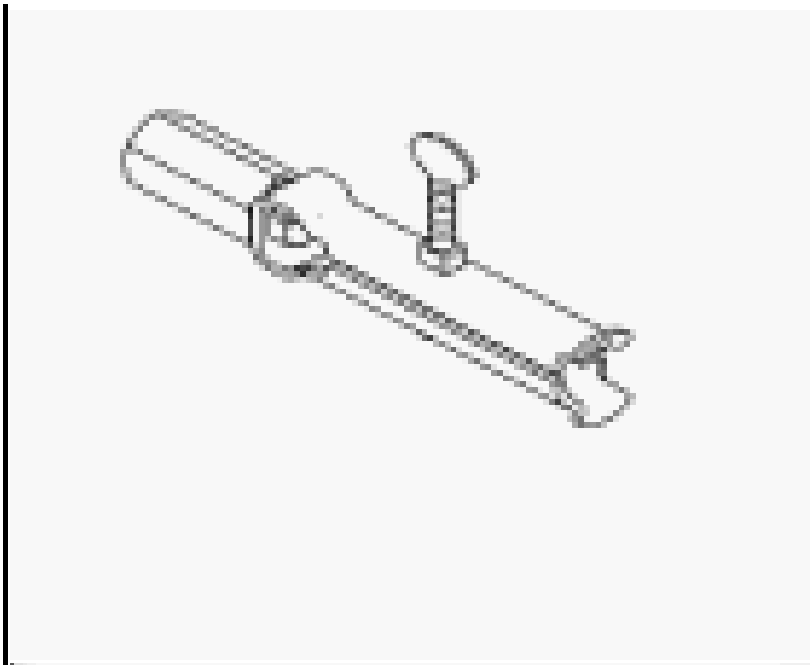

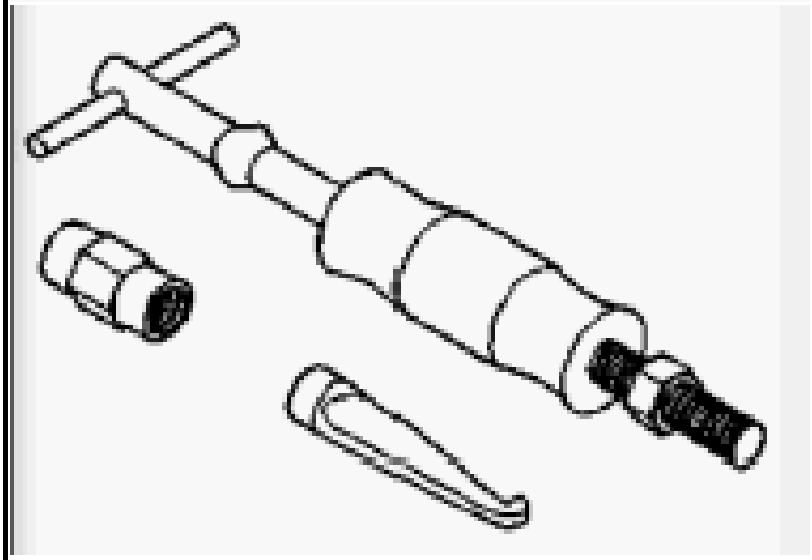

C-637 - Slide Hammer, Universal
(Originally Shipped In Kit Number(s) 9202.)

7794-A - Remover, Seal
(Originally Shipped In Kit Number(s) 6645.)

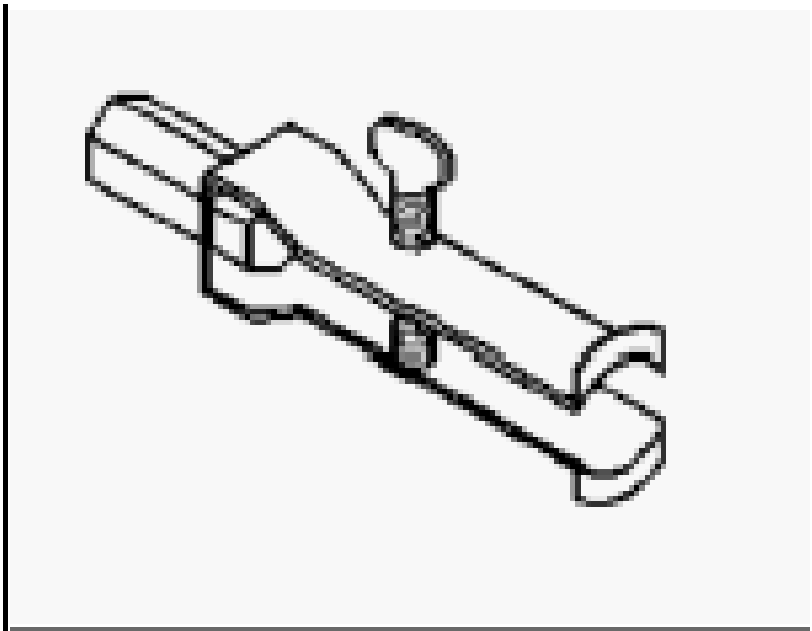

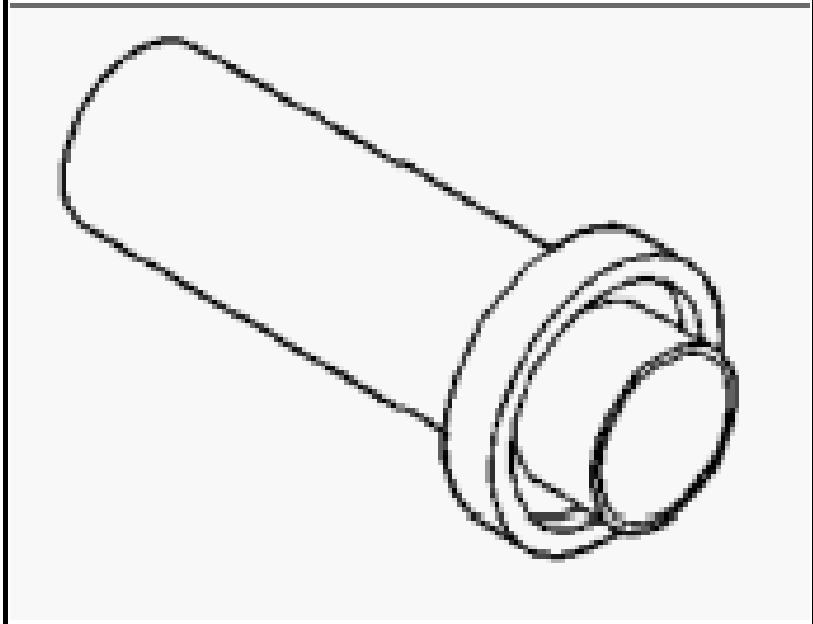

6952A - Installer, Seal
(Originally Shipped In Kit Number(s) 6945, 6947, 6949.)

P-334 - Splitter, Bearing

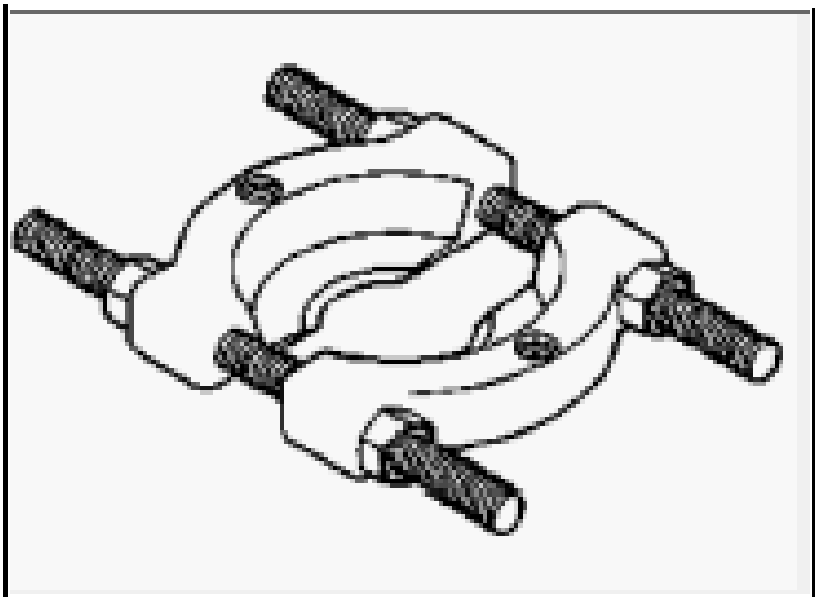

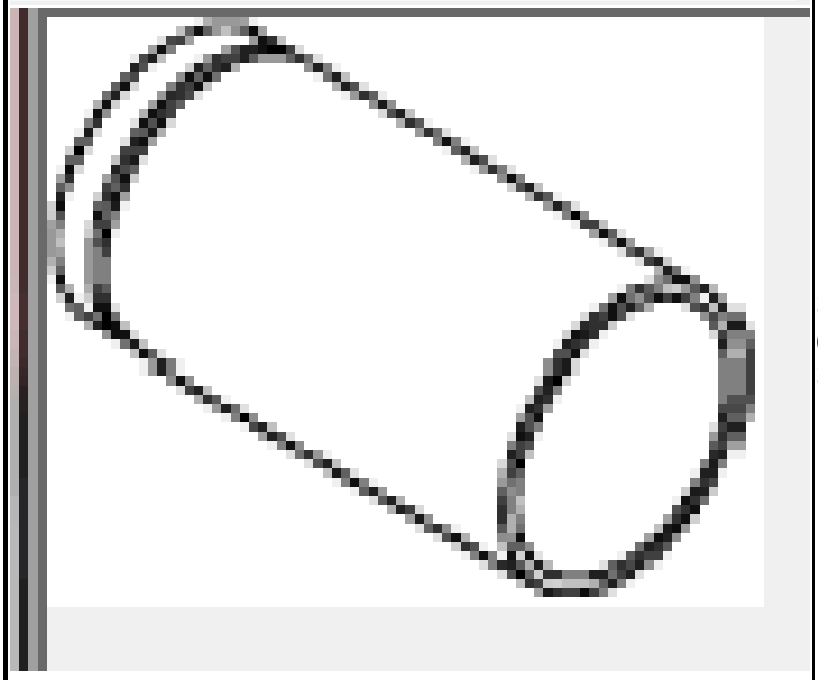

8975-2 - Cup, Remover
(Originally Shipped In Kit Number(s) 8887, 8887CC.)

C-452 - Puller, Companion Flange

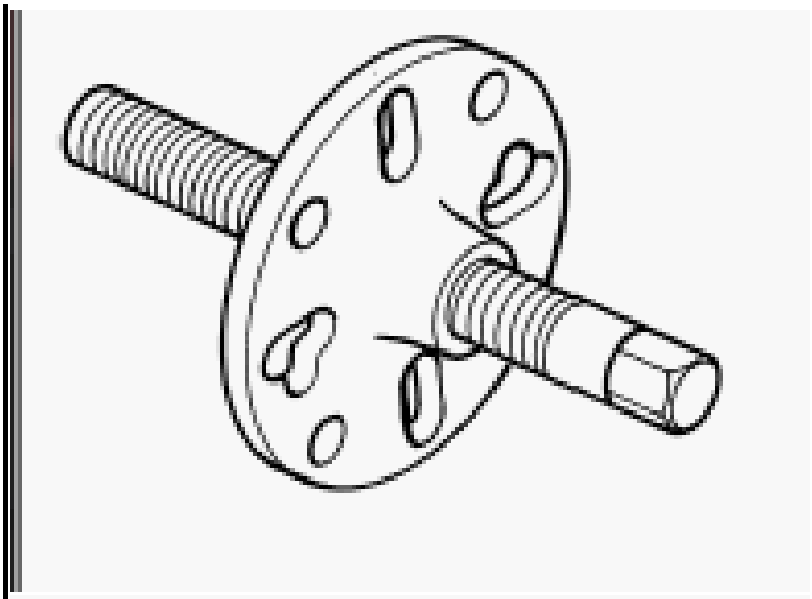

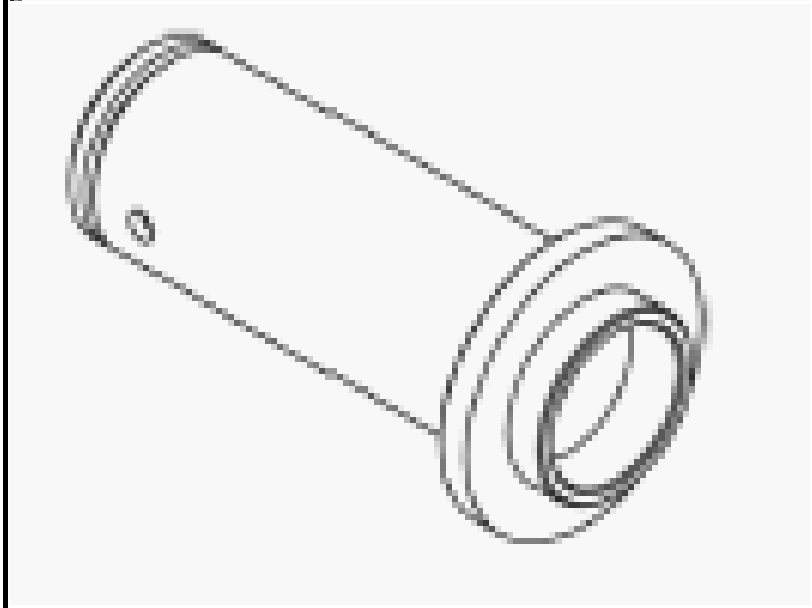

9987 - Installer, Seal
(Originally Shipped In Kit Number(s) 10006, 9978.)

9776-2 - Cup, Receiver
(Originally Shipped In Kit Number(s).)

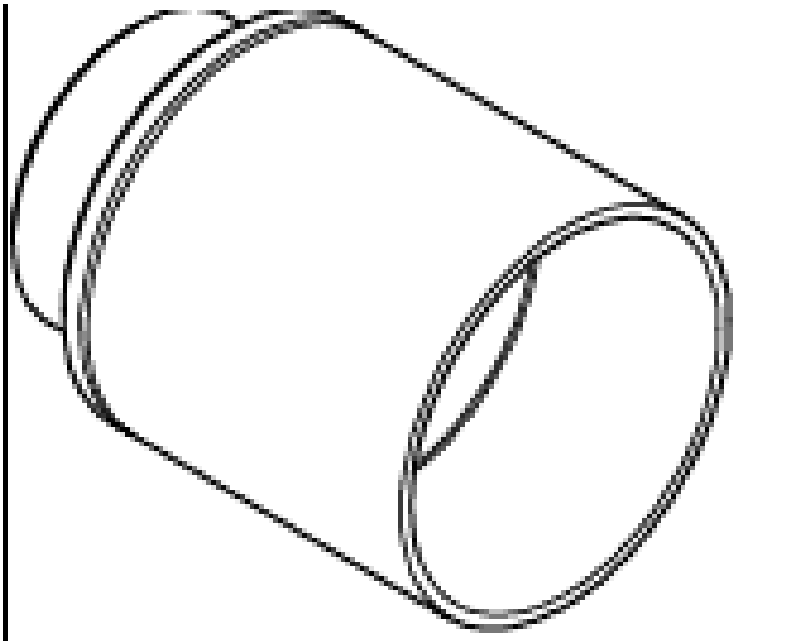

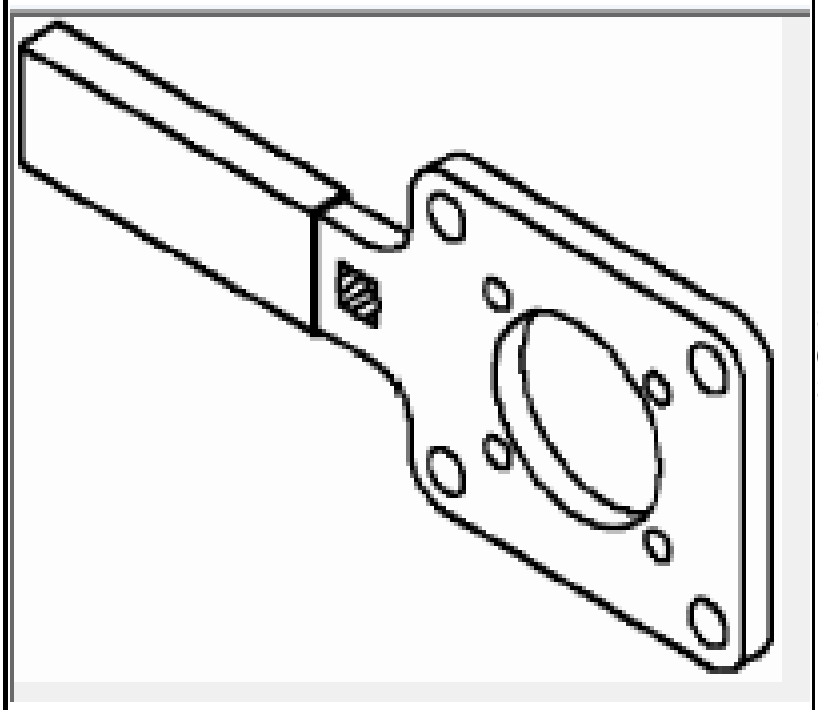

8979 - Wrench, Pinion Flange
(Originally Shipped In Kit Number(s) 8999.)

10287-1 - Tool, Staking
(Originally Shipped In Kit Number(s).)

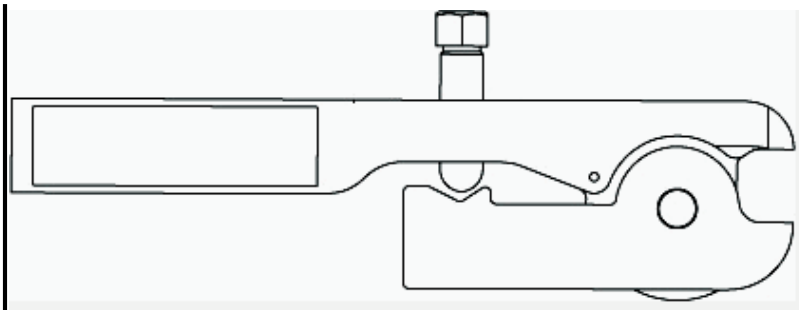

CASE ASSEMBLY, DIFFERENTIAL

DESCRIPTION

DESCRIPTION

The differential gear system divides the torque between the axle shafts. It allows the axle shafts to rotate at different speeds when turning corners.

Each differential side gear is splined to an axle shaft. The pinion gears are mounted on a pinion mate shaft and are free to rotate on the shaft. The pinion gear is fitted in a bore in the differential case and is positioned at a right angle to the axle shafts.

OPERATION

OPERATION

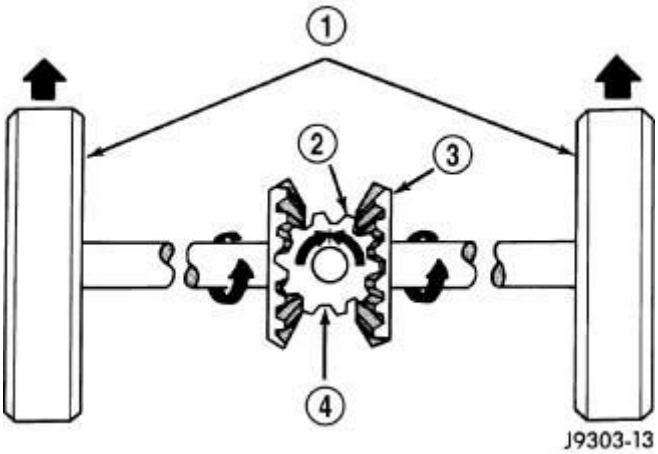

Fig. 17: Differential Operation-Straight Ahead Driving
Courtesy of CHRYSLER GROUP, LLC

1 - IN STRAIGHT AHEAD DRIVING EACH WHEEL ROTATES AT 100% OF CASE SPEED
2 - PINION GEAR
3 - SIDE GEAR

4 - PINION GEARS ROTATE WITH CASE

In operation, power flow occurs as follows:

- The pinion gear (2) rotates the ring gear
- The ring gear (bolted to the differential case) rotates the case
- The differential pinion gears (mounted on the pinion mate shaft in the case) rotate the side gears
- The side gears (splined to the axle shafts) rotate the shafts

During straight-ahead driving, the differential pinion gears do not rotate on the pinion mate shaft. This occurs because input torque applied to the gears is divided and distributed equally between the two side gears. As a result, the pinion gears revolve with the pinion mate shaft but do not rotate around it.

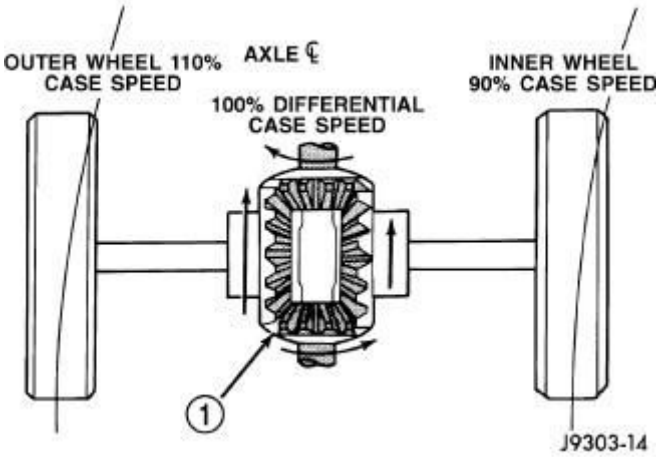

Fig. 18: Differential Operation-On Turns
Courtesy of CHRYSLER GROUP, LLC

1 - PINION GEARS ROTATE ON PINION SHAFT

When turning corners, the outside wheel must travel a greater distance than the inside wheel to complete a turn. The difference must be compensated for to prevent the tires from scuffing and skidding through turns. To accomplish this, the differential allows the axle shafts to turn at unequal speeds. In this instance, the input torque applied to the pinion gears is not divided equally. The pinion gears now rotate around the pinion mate shaft in opposite directions. This allows the side gear and axle shaft attached to the outside wheel to rotate at a faster speed.

FLUID, DIFFERENTIAL

STANDARD PROCEDURE

STANDARD PROCEDURE-DIFFERENTIAL FLUID FILL

The differential is fluid is fill for life.

The fill plug (1) for the differential assembly is located on rear of the Rear Drive Module (RDM).

The correct fill level is to the bottom of the fill plug hole. Be sure the vehicle is on a level surface, or is hoisted in a level manner, in order to obtain the correct fill level.

Differential fluid must be equalized though out differential. It may take a couple of minutes for the fluid to equalize.

1. Raise and support the vehicle on a hoist. Refer to **HOISTING, STANDARD PROCEDURE** .

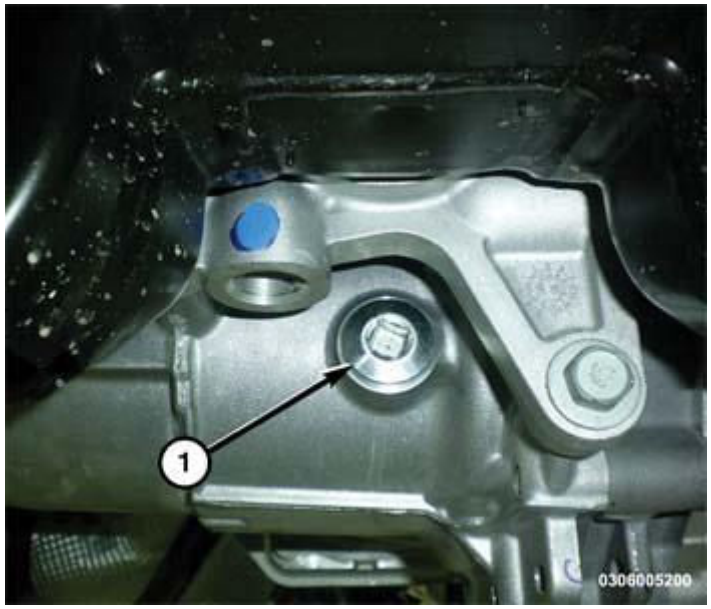

Fig. 19: Differential Fill Plug
Courtesy of CHRYSLER GROUP, LLC

2. Position a drain pan under the differential fill plug (1).
3. Remove the differential fill plug (1).

NOTE: When filling the differential, it may take several minutes for the fluid to equalize, it is necessary to allow for fluid equalization to determine if the fluid level is correct when filling.

4. Using a suction gun or equivalent, fill the differential assembly to the bottom of the fill plug. If removed for service the fluid capacities are 89L (.94 Quarts) if single speed, 1.15 L (1.2 Quarts) if two speed standard, 1.23 L (1.3 Quarts) if two speed with locker of Mopar® specified MS-2395 fluid (70W-80). Refer to **CAPACITIES AND RECOMMENDED FLUIDS, SPECIFICATIONS** .

CAUTION: RDM fluid contains a special modifier package for the wet clutch. Use of any other fluid not meeting the manufacturer specifications will cause damage to the RDM.

5. Install the fill plug (1) and torque to 35 N.m (26 ft. lbs.).

SEAL, INPUT FLANGE

REMOVAL

REMOVAL

NOTE: The pinion turning torque must be measured before the pinion flange is removed, for correct installation.

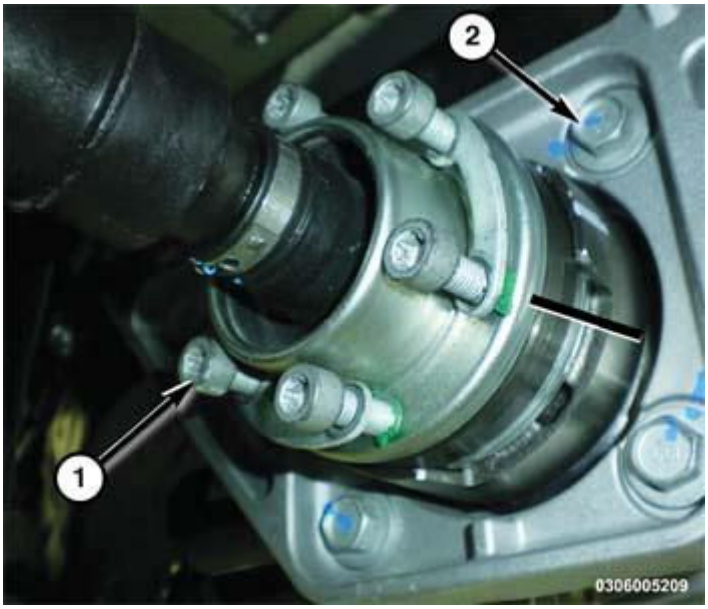

Fig. 20: Aligning Index Marks On Propeller Shaft To Pinion Flange
Courtesy of CHRYSLER GROUP, LLC

1. Apply alignment index marks to the rear propeller shaft and rear pinion flange.
2. Remove the bolts (1) holding the rear propeller shaft to the rear pinion flange.
3. Separate the rear propeller shaft from the rear pinion flange and secure the shaft to the side.
4. Measure and record pinion turning torque.
5. Using suitable chisel, remove the staking from the pinion nut.
6. Remove the pinion nut.

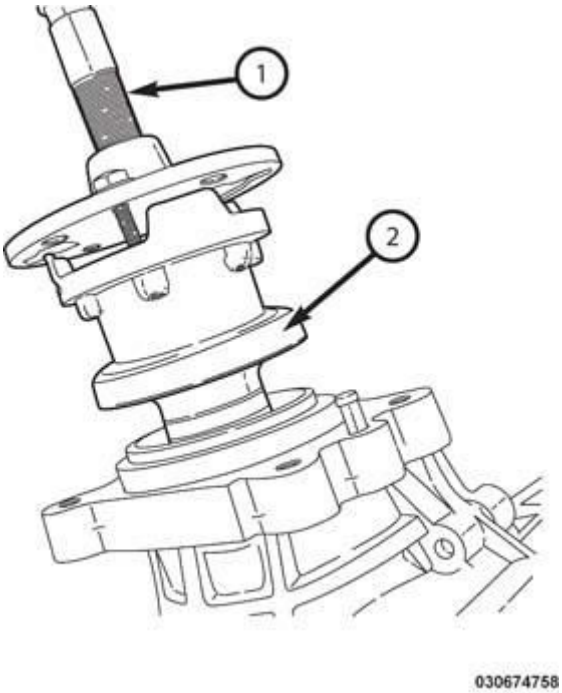

Fig. 21: Removing The Pinion Flange
Courtesy of CHRYSLER GROUP, LLC

7. Using (special tool #C-452, Puller, Companion Flange) (1), remove the pinion flange (2).

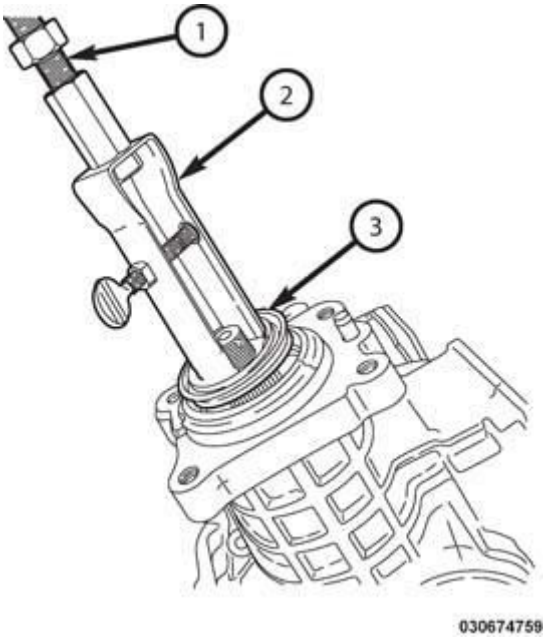

Fig. 22: Removing The Pinion Seal Using Special Tool
Courtesy of CHRYSLER GROUP, LLC

8. Remove the pinion seal (3) using (special tool #7794-A, Remover, Seal) (2) and (special tool #C-637, Slide Hammer, Universal) (1).

9. Clean and inspect the sealing surface on the pinion flange, if damaged install a **NEW** pinion flange. If the pinion seal bore is damaged it will be necessary to replace the Differential, Rear Axle assembly.

INSTALLATION

INSTALLATION

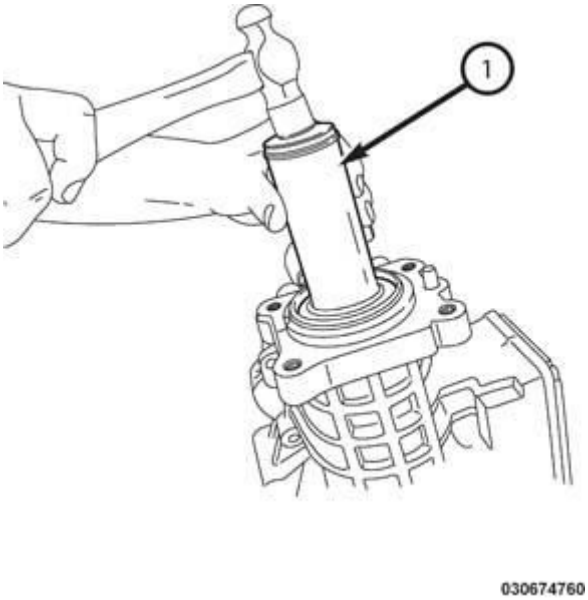

Fig. 23: Installing Pinion Seal Using Special Tool
Courtesy of CHRYSLER GROUP, LLC

1. Install the pinion seal using (special tool #9987, Installer, Seal) (1).
2. Clean splines, apply Mopar® thread sealant meeting MS-CD95A or equivalent to the splines in the flange.

NOTE: **For pinion flange installation 3-5 (in. lbs.) must be added to the original measured pinion turning torque.**

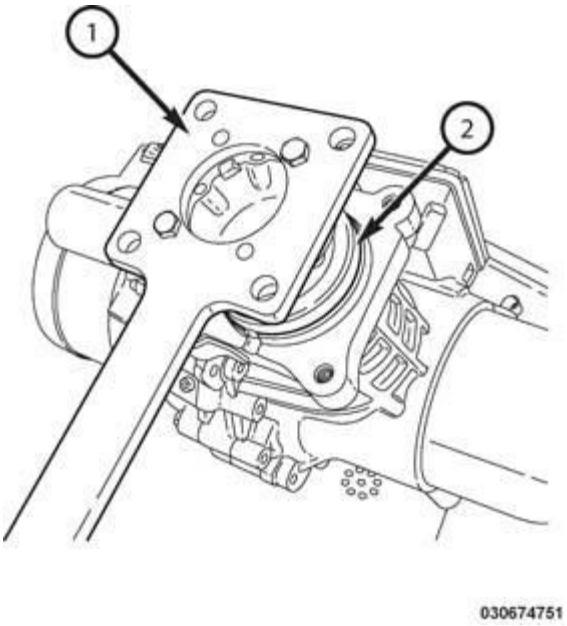

Fig. 24: Installing Pinion Nut Using Special Tool
Courtesy of CHRYSLER GROUP, LLC

3. Place the pinion flange on the splines of the pinion.
4. Install a **NEW** pinion nut and tighten using (special tool #8979, Wrench, Pinion Flange) (1).

NOTE: Do not over tighten pinion nut. The turning torque must be 3-5 (in lbs.) more than the turning torque before removal.

5. Measure the pinion turning torque, adding 3-5 (in. lbs.) to pinion nut measurement that was measured before pinion flange removal.
6. Using a suitable chisel, stake the pinion nut on both sides of the nut.

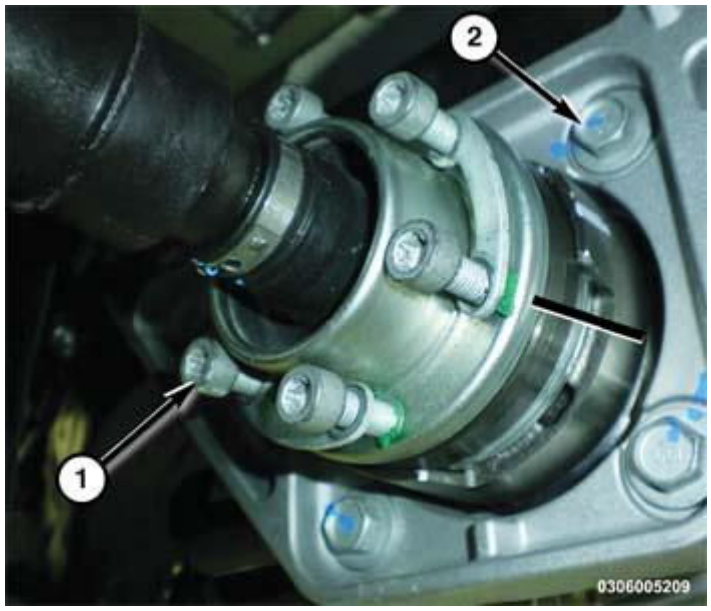

Fig. 25: Aligning Index Marks On Propeller Shaft To Pinion Flange
Courtesy of CHRYSLER GROUP, LLC

7. Connect the rear prop shaft with the alignment marks lined up.
8. Torque rear prop shaft bolts (1) to 21 N.m 15 (ft. lbs.).
9. Fill the differential, rear axle. Refer to **FLUID, DIFFERENTIAL, STANDARD PROCEDURE**.

SEAL, OUTPUT FLANGE

REMOVAL

ONE SPEED

1. Disconnect battery negative cable.
2. Raise and support vehicle. Refer to **HOISTING, STANDARD PROCEDURE** .
3. Remove rear knuckle. Refer to **KNUCKLE, REAR, REMOVAL** .

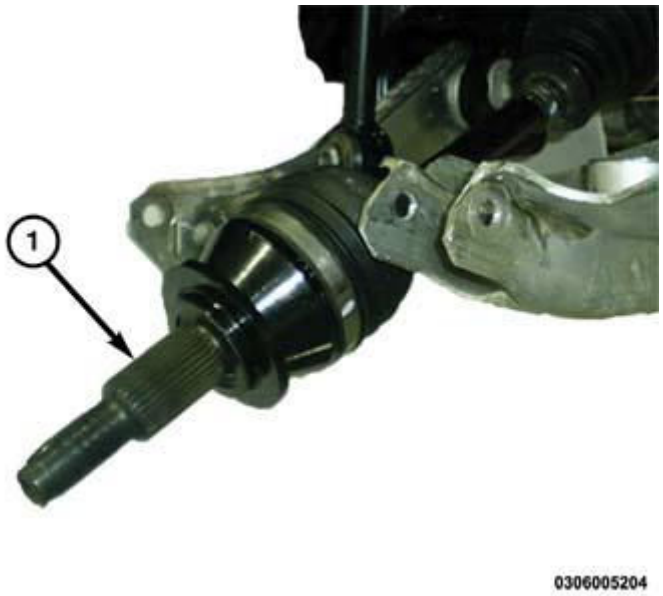

Fig. 26: Identifying Rear Axle Shaft
Courtesy of CHRYSLER GROUP, LLC

4. Remove the axle shaft (1) from the Differential, Rear Axle.

NOTE: **The output shaft may need to be held in place when removing the axle shaft.**

NOTE: **Tag the axle shaft shim for location.**

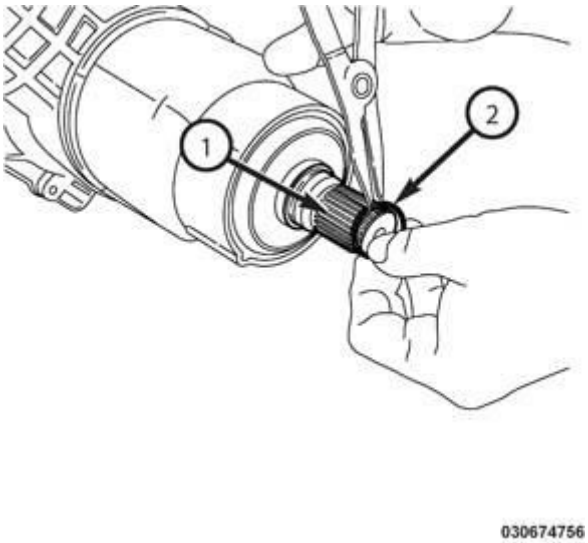

Fig. 27: Removing Clip From Output Shaft
Courtesy of CHRYSLER GROUP, LLC

5. Remove clip (2) from output shaft (1).

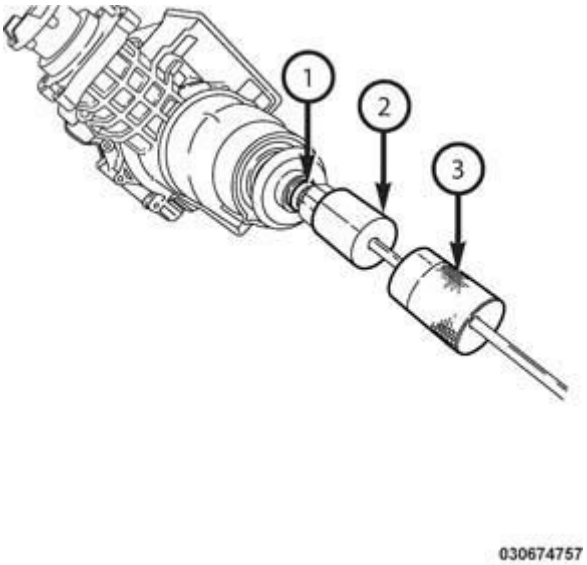

Fig. 28: Removing Output Shaft Using Special Tools
Courtesy of CHRYSLER GROUP, LLC

6. Using (special tool #8420B, Remover, Shaft) (2) and (special tool #C-637, Slide Hammer, Universal) (3) remove the output shaft (1).

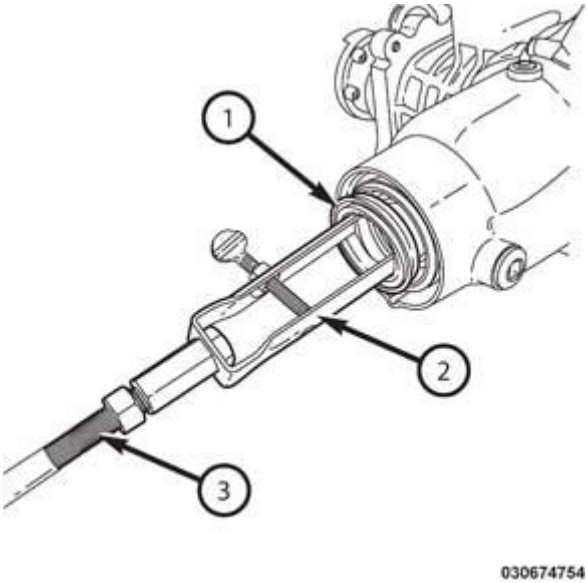

Fig. 29: Removing The Output Shaft Seal
Courtesy of CHRYSLER GROUP, LLC

7. Remove the output shaft seal (1) using (special tool #7794-A, Remover, Seal) (2) and (special tool #C-637, Slide Hammer, Universal) (3).
8. Clean and inspect the sealing surface on the output shaft, if damaged install a **NEW** output shaft. If the pinion seal bore is damaged it will be necessary to replace the Differential, Rear Axle assembly.

TWO SPEED - LEFT

1. Disconnect battery negative cable.
2. Raise and support vehicle. Refer to **HOISTING, STANDARD PROCEDURE** .
3. Remove rear knuckle. Refer to **KNUCKLE, REAR, REMOVAL** .

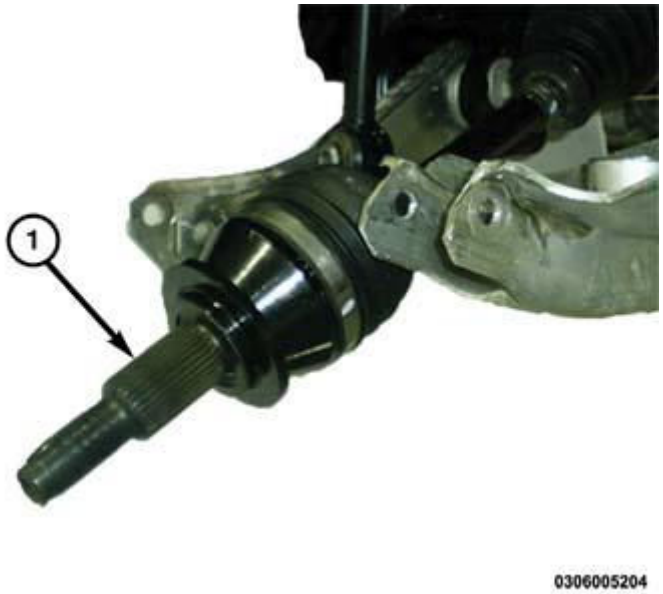

Fig. 30: Identifying Axle Half Shaft
Courtesy of CHRYSLER GROUP, LLC

4. Remove the axle shaft (1) from Rear Axle Differential.

NOTE: **The output shaft may need to be held in place when removing the axle shaft.**

NOTE: **Tag the axle shaft shim for location.**

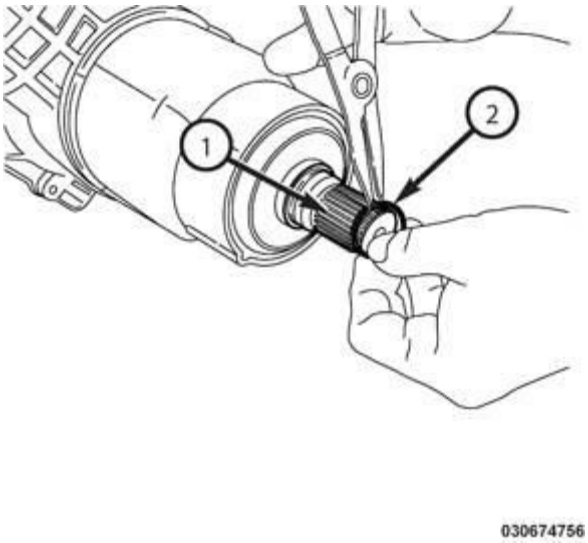

Fig. 31: Removing Clip From Output Shaft
Courtesy of CHRYSLER GROUP, LLC

5. Remove clip (2) from output shaft (1).

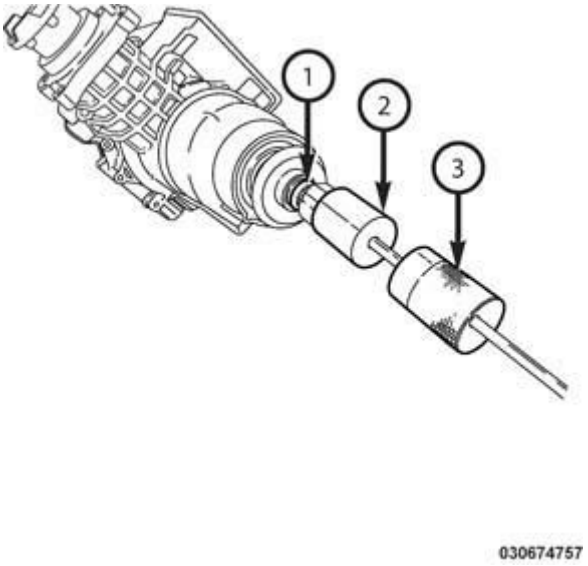

Fig. 32: Removing Output Shaft Using Special Tools
Courtesy of CHRYSLER GROUP, LLC

6. Using (special tool #8420B, Remover, Shaft) (2) and (special tool #C-637, Slide Hammer, Universal) (3) remove the output shaft (1).

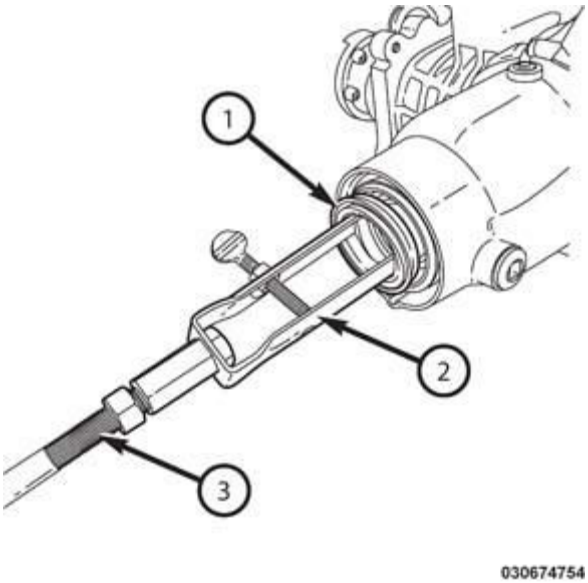

Fig. 33: Removing The Output Shaft Seal
Courtesy of CHRYSLER GROUP, LLC

7. Remove the output shaft seal (1) using (special tool #7794-A, Remover, Seal) (2) and (special tool #C-637, Slide Hammer, Universal) (3).
8. Clean and inspect the sealing surface on the output shaft, if damaged install a **NEW** output shaft. If the pinion seal bore is damaged it will be necessary to replace the Differential, Rear Axle assembly.

TWO SPEED - RIGHT

1. Disconnect battery negative cable.
2. Raise and support vehicle. Refer to **HOISTING, STANDARD PROCEDURE** .
3. Remove rear knuckle. Refer to **KNUCKLE, REAR, REMOVAL** .

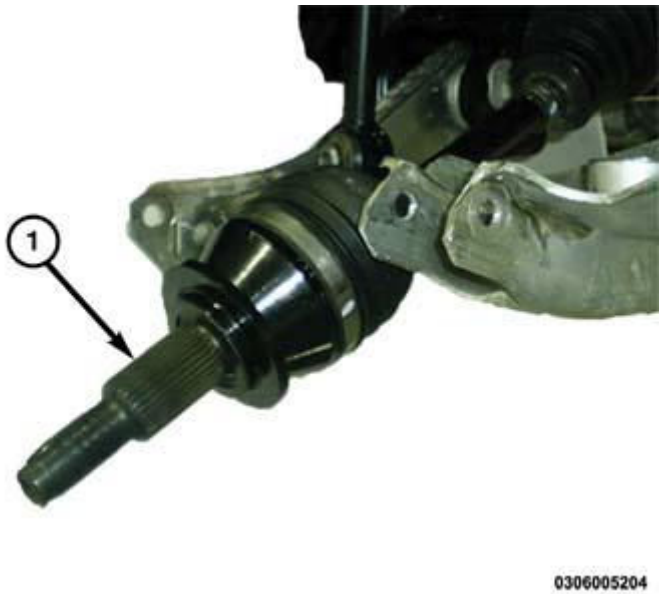

Fig. 34: Removing The Axle Shaft From Rear Axle Differential
Courtesy of CHRYSLER GROUP, LLC

4. Remove the axle shaft (1) from Rear Axle Differential.

NOTE: Tag the axle shaft shim for location.

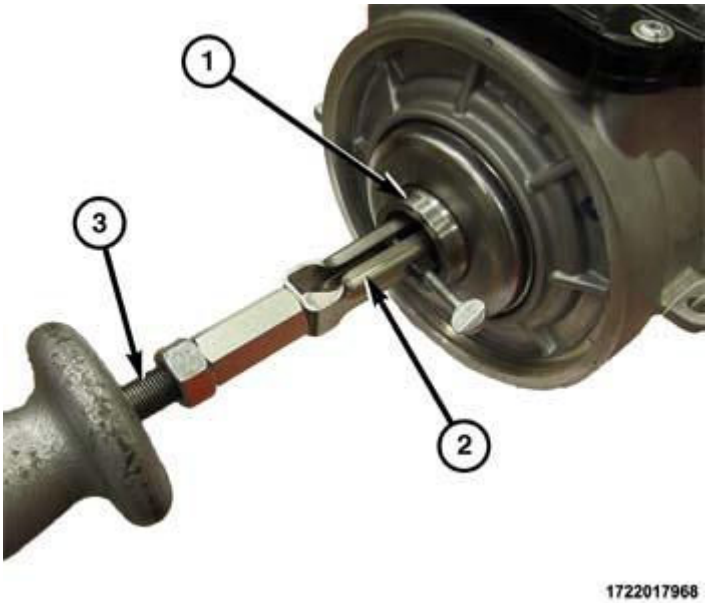

Fig. 35: Removing The Output Shaft
Courtesy of CHRYSLER GROUP, LLC

5. If equipped with two speed with locker, carefully remove the dust deflector using a slide hammer. If equipped with a two speed non locking differential, using (special tool #9585, Remover, Bearing Cup) (2) and (special tool #C-637, Slide Hammer, Universal) (3) remove the output shaft (1).

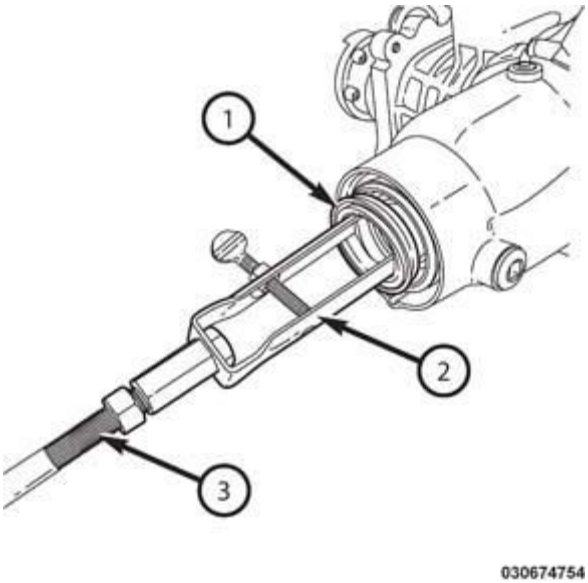

Fig. 36: Removing The Output Shaft Seal
Courtesy of CHRYSLER GROUP, LLC

6. If equipped with a two speed locking differential, pry the seal out with an appropriate screwdriver being careful not to damage the seal bore. If equipped with a two speed non locking differential, remove the output shaft seal (1) using (special tool #7794-A, Remover, Seal) (2) and (special tool #C-637, Slide Hammer, Universal) (3).

NOTE: Left side shown in the illustration, right side similar.

7. Clean and inspect the sealing surface on the output shaft, if damaged install a **NEW** output shaft. If the pinion seal bore is damaged it will be necessary to replace the Differential, Rear Axle assembly.

INSTALLATION

ONE SPEED

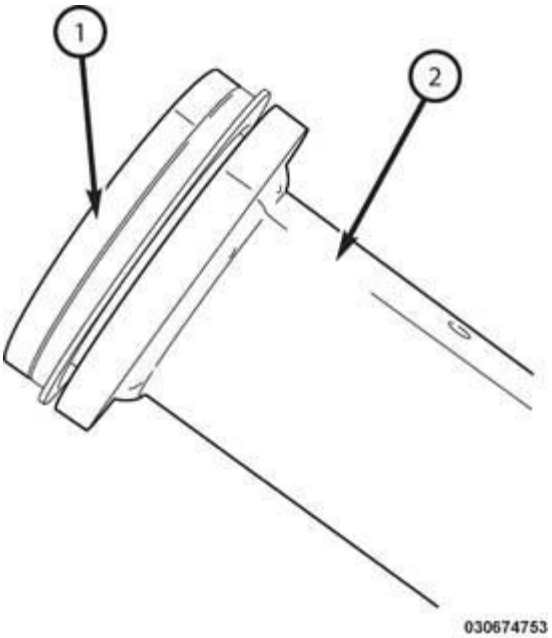

Fig. 37: Installing The Output Seal Onto Special Tool
Courtesy of CHRYSLER GROUP, LLC

1. Install the output seal (1) onto (special tool #6952A, Installer, Seal) (2).

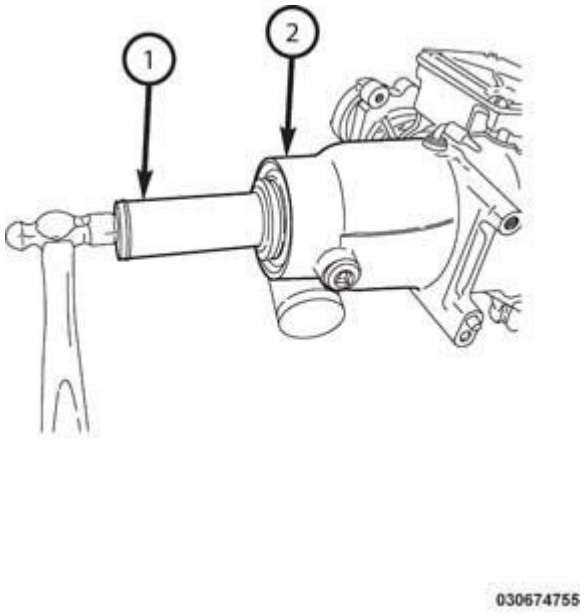

Fig. 38: Installing The Output Seal Using Special Tool
Courtesy of CHRYSLER GROUP, LLC

2. Install the output seal using (special tool #6952A, Installer, Seal) (1).
3. Install the output shaft into the Rear Axle Differential.

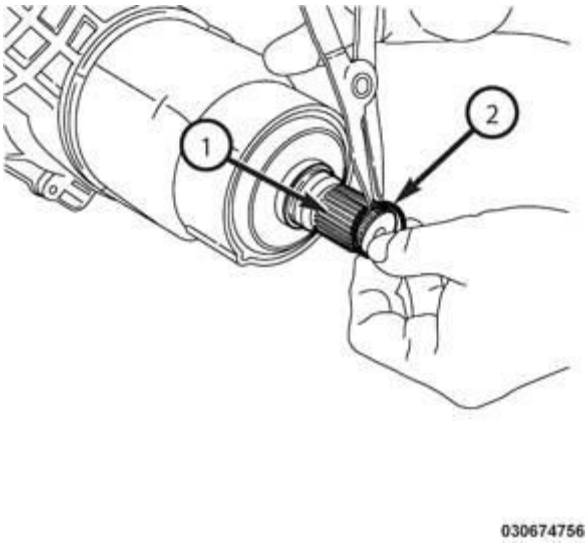

Fig. 39: Installing Clip Onto Output Shaft
Courtesy of CHRYSLER GROUP, LLC

4. Install a new circlip (2) onto output shaft (1).
5. Install the axle shaft shim on the hub end of the shaft.

NOTE: **Use care when installing halfshaft to axle assembly. The halfshaft installation angle should be minimized to avoid damage to the seal upon installation.**

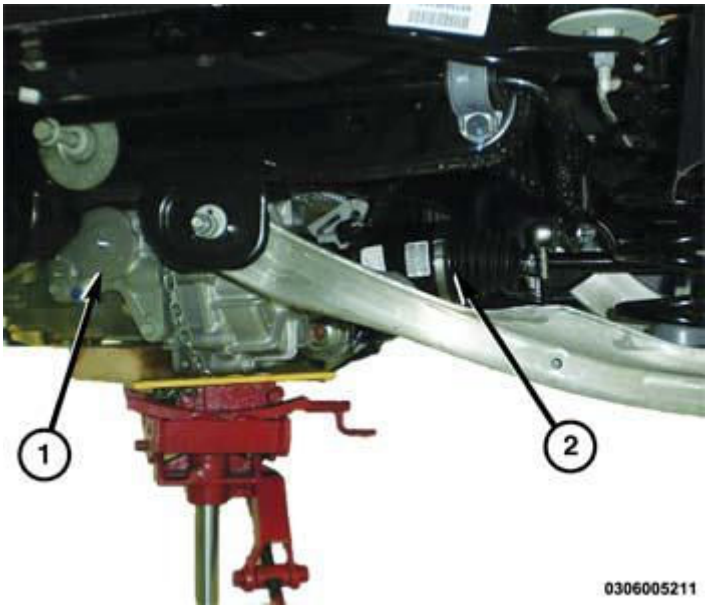

Fig. 40: Installing The Half Shaft Onto The Rear Drive Module
Courtesy of CHRYSLER GROUP, LLC

NOTE: **Lightly apply a light grease to the splines prior to installing halfshaft.**

6. Install the axle shaft (2) onto the Rear Axle Differential (1).

NOTE: Be sure the axle shaft is installed fully into circlip.

7. Install the rear knuckle. Refer to **KNUCKLE, REAR, INSTALLATION** .
8. Fill the differential fluid. Refer to **FLUID, DIFFERENTIAL, STANDARD PROCEDURE**.

TWO SPEED - LEFT

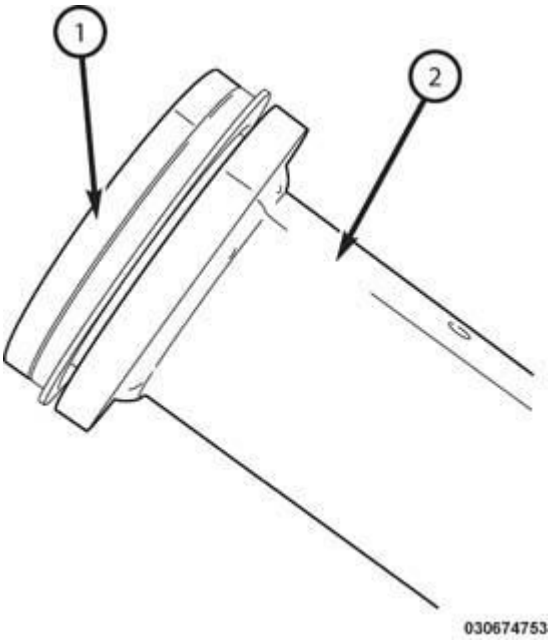

Fig. 41: Installing The Output Seal Onto Special Tool
Courtesy of CHRYSLER GROUP, LLC

1. Install the output seal (1) onto (special tool #10117, Installer, Seal) (2).

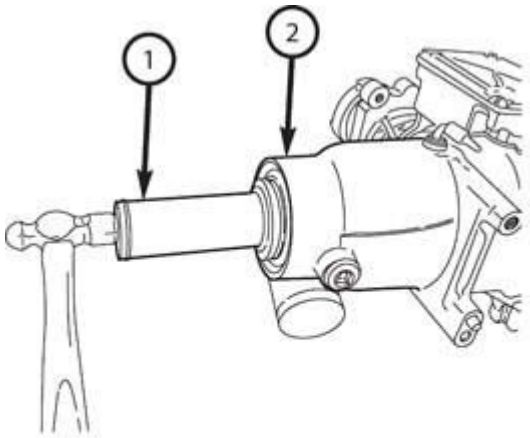

030674755

Fig. 42: Installing The Output Seal Using Special Tool
Courtesy of CHRYSLER GROUP, LLC

2. Install the output seal using (special tool #10117, Installer, Seal) (1).
3. Install the output shaft into the Differential, Rear Axle.

NOTE: Always use (special tool #9099, Seal Protector, Differential Output) when installing shaft into Rear Axle Differential. If Seal Protector is new, split at the seam before using.

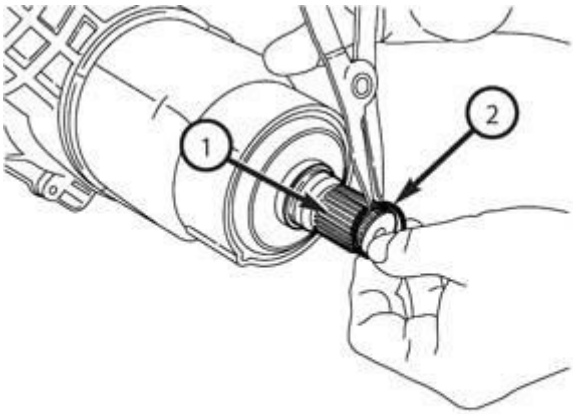

030674756

Fig. 43: Installing A New Circlip Onto Output Shaft
Courtesy of CHRYSLER GROUP, LLC

4. Install a new circlip (2) onto output shaft (1).

5. Install the axle shaft shim on the hub end of the shaft.

NOTE: Use care when installing halfshaft to axle assembly. The halfshaft installation angle should be minimized to avoid damage to the seal upon installation.

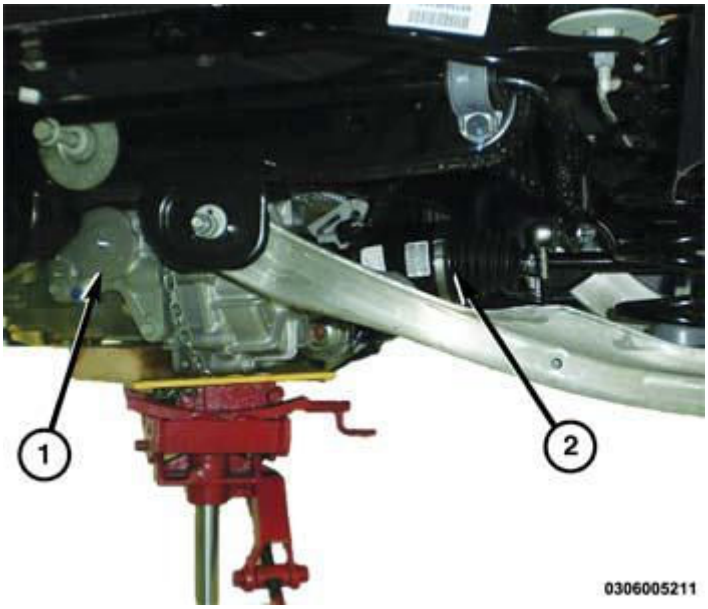

Fig. 44: Installing The Half Shaft Onto The Rear Drive Module
Courtesy of CHRYSLER GROUP, LLC

NOTE: Lightly apply a light grease to the splines prior to installing halfshaft.

6. Install the axle shaft (2) onto the output shaft.

NOTE: Be sure the axle shaft is installed fully into circlip.

7. Install the rear knuckle. Refer to **KNUCKLE, REAR, INSTALLATION** .
8. Fill the differential fluid. Refer to **FLUID, DIFFERENTIAL, STANDARD PROCEDURE**.

TWO SPEED - RIGHT

Fig. 45: Installing The Output Seal Using Special Tool
Courtesy of CHRYSLER GROUP, LLC

1. Install the output seal using (special tool #D-163, Installer, Seal) and (special tool #C-4171-2, Extension, Drive Handle).
2. If equipped with a two speed with locker, install dust deflector onto shaft. If equipped with a two speed non locking differential install the output shaft into the Rear Axle Differential.

NOTE: **Always use (special tool #9099, Seal Protector, Differential Output) when installing shaft into the Differential, Rear Axle. If seal protector is new, split at the seam before using.**

3. Install a new circlip to the output shaft.
4. Install the axle shaft shim on the hub end of the shaft.

NOTE: **Use care when installing halfshaft to axle assembly. The halfshaft installation angle should be minimized to avoid damage to the seal upon installation.**

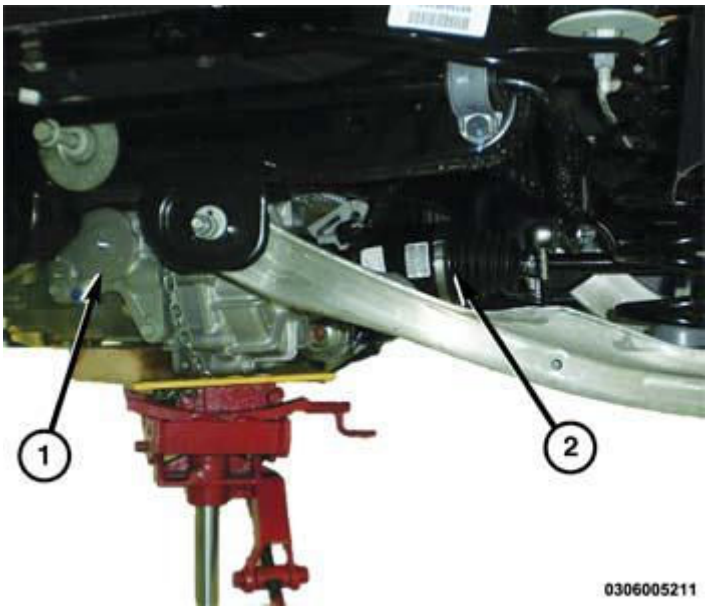

Fig. 46: Installing The Half Shaft Onto The Rear Drive Module
Courtesy of CHRYSLER GROUP, LLC

NOTE: Lightly apply a light grease to the splines prior to installing halfshaft.

5. Install the axle shaft (2) onto the Rear Axle Differential, Rear Axle (1).

NOTE: Be sure the axle shaft is installed fully and circlip is seated onto output shaft.

6. Install the rear knuckle. Refer to **KNUCKLE, REAR, INSTALLATION** .
7. Fill the differential fluid. Refer to **FLUID, DIFFERENTIAL, STANDARD PROCEDURE**.

SENSOR, PRESSURE

REMOVAL

REMOVAL

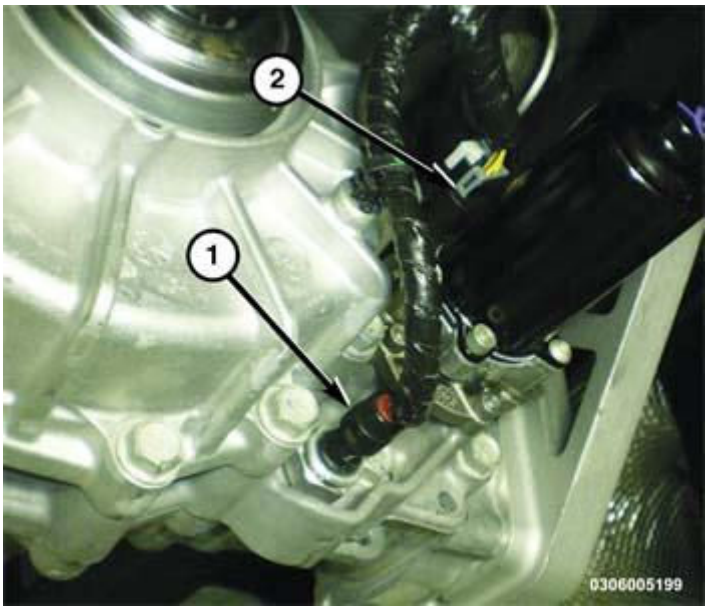

Fig. 47: Removing The Pressure Sensor From The Rear Drive Module Housing
Courtesy of CHRYSLER GROUP, LLC

1. Place a drain pan under the (RDM) Rear Drive Module.
2. Disconnect the electrical connector from the pressure sensor.
3. Remove the pressure sensor (1) from the Rear Drive Module housing.
4. Allow fluid to drain from the housing.

INSTALLATION

INSTALLATION

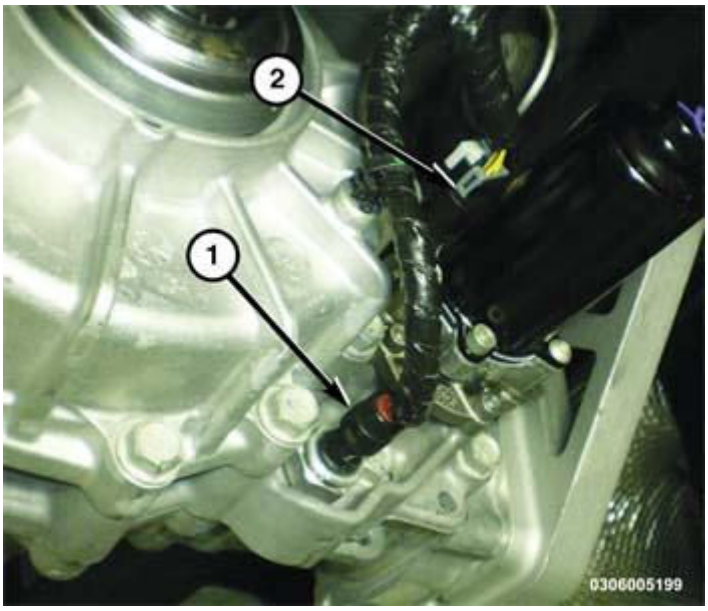

Fig. 48: Replacing The Pressure Sensor With Pre-Applied Sealant To The Threads
Courtesy of CHRYSLER GROUP, LLC

1. Replace the pressure sensor (1) with pre-applied sealant to the threads.
2. Torque the pressure sensor (1) to 21 Nm (15 ft. lbs.).
3. Check and adjust the Rear Drive Module (RDM) hydraulic fluid level and bleed hydraulic system. Refer to **FLUID, HYDRAULIC, STANDARD PROCEDURE**.

CAUTION: Do not mix hydraulic fluid and the RDM lubricant. Use only recommended fluid to prevent damage to Rear Driveline Module components. Fluid must meet material specification MS-2155.

MOTOR, PUMP

REMOVAL

REMOVAL

NOTE: Some hydraulic fluid will be lost when removing the motor and pump assembly.

NOTE: The Rear Drive Module (RDM) must be topped off with proper hydraulic fluid if motor and pump assembly is being serviced. The hydraulic system then must be bled.

CAUTION: Do not mix hydraulic fluid and the RDM lubricant. Use only recommended fluid to prevent damage to Rear Driveline Module components. Fluid must meet material specification MS-2155.

1. With the scan tool park the RDM.
2. Position a drain under the RDM.

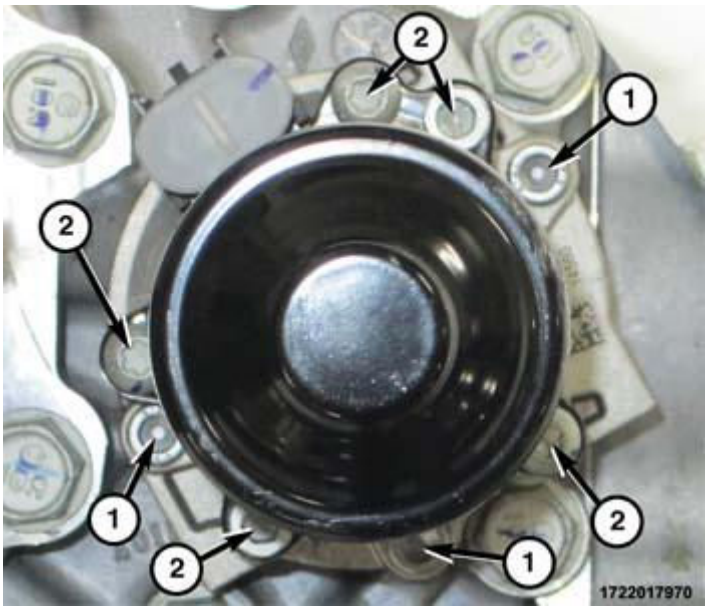

Fig. 49: Removing Three Fasteners From The RDM Motor And Pump Assembly
Courtesy of CHRYSLER GROUP, LLC

3. Remove the three fasteners (1) from the RDM motor and pump assembly. **Do not remove the fasteners securing the motor to the pump (2)** .

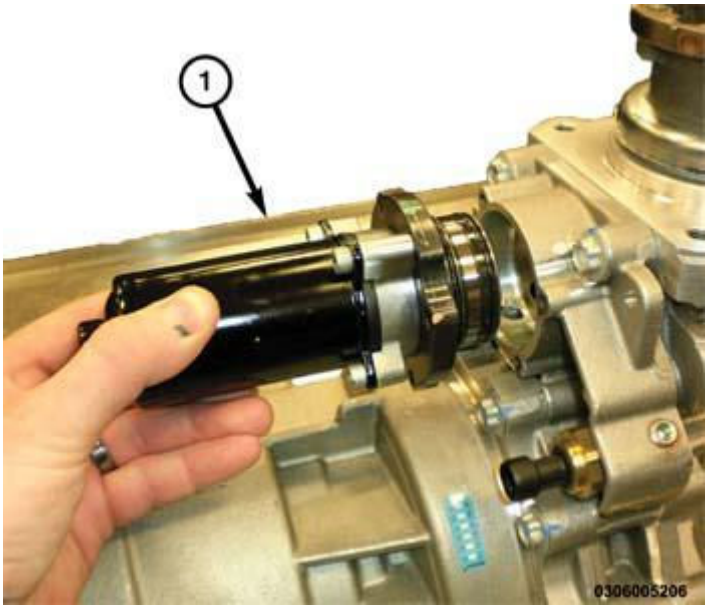

Fig. 50: Removing The Motor And Pump Assembly From The RDM
Courtesy of CHRYSLER GROUP, LLC

4. Remove the motor and pump assembly (1) from the RDM.

CAUTION: Do not use motor housing as a lever or handle when removing pump and motor assembly, damage to the pump or motor may result.

INSTALLATION

INSTALLATION

Fig. 51: Identifying Motor And Pump Assembly O-Rings
Courtesy of CHRYSLER GROUP, LLC

1. Park the Rear Drive Module motor and pump assembly using a scan tool.

NOTE: **The motor and pump assembly O-rings must be replaced. The O-rings are of different size and must not be interchanged. the red O-ring (3) goes on first and is nearest the pump flange, followed by the blue O-ring (4) that sits nearest the outboard edge.**

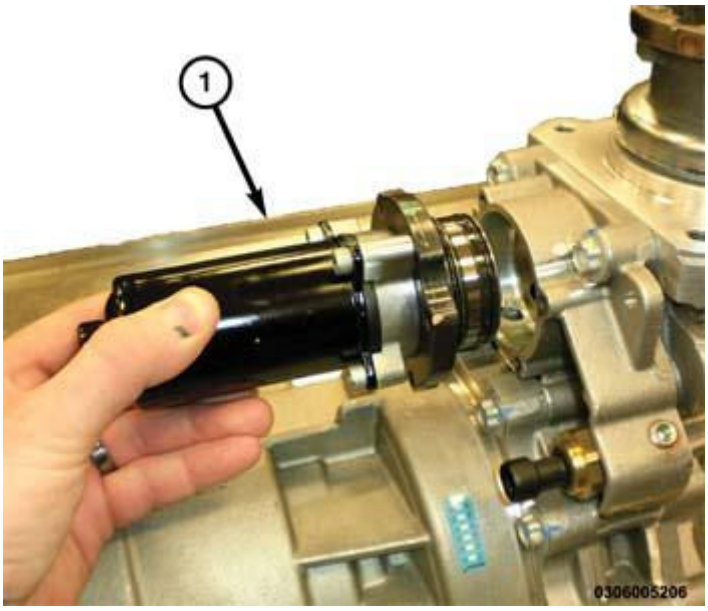

Fig. 52: Installing The Motor And Pump Assembly From The RDM
Courtesy of CHRYSLER GROUP, LLC

2. Install the motor and pump assembly (1) onto the Rear Drive Module.

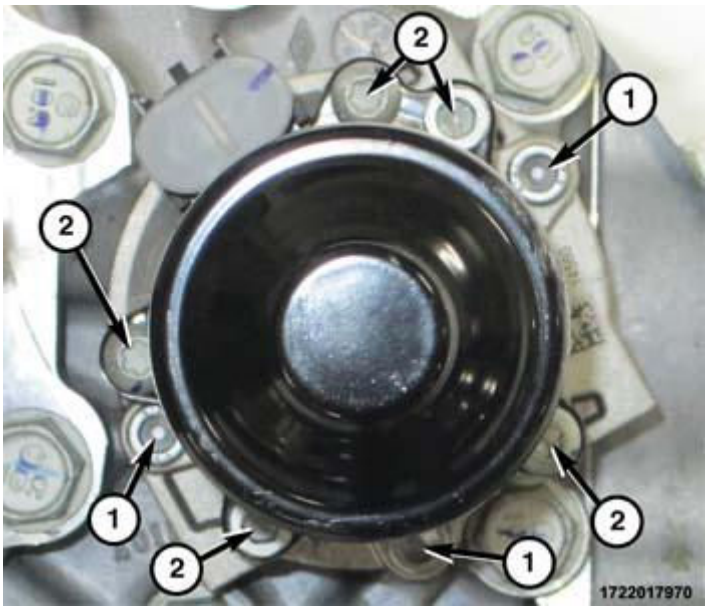

Fig. 53: Installing Three Fasteners From The RDM Motor And Pump Assembly
Courtesy of CHRYSLER GROUP, LLC

3. Install the three motor and pump assembly fasteners (1) and uniformly finger tighten until the motor and pump assembly are fully seated to housing. Torque to 12 N.m (106 in. lbs.).

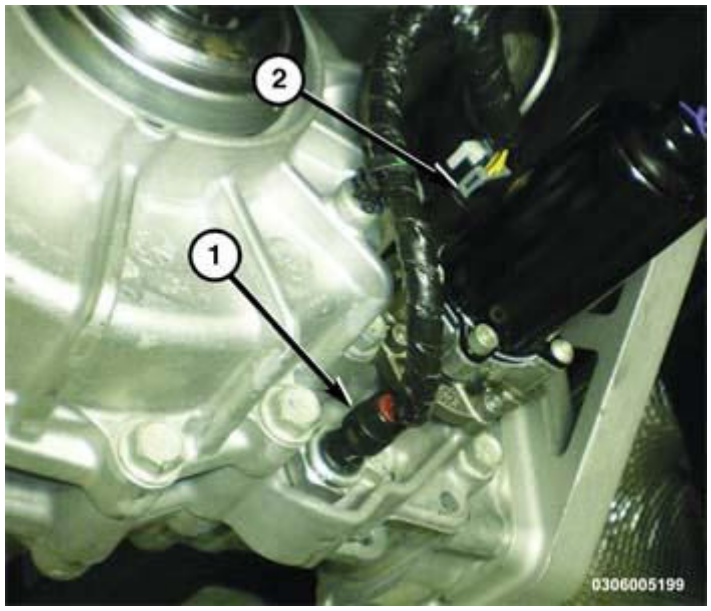

Fig. 54: Identifying Pressure Sensor And Pump Motor Electrical Connectors
Courtesy of CHRYSLER GROUP, LLC

4. Connect the electrical connector (2).
5. Top off hydraulic fluid and bleed the hydraulic system. Refer to **FLUID, HYDRAULIC, STANDARD PROCEDURE**.

CAUTION: Do not mix hydraulic fluid and the RDM lubricant. Use only recommended fluid to prevent damage to Rear Driveline Module components. Fluid must meet material specification MS-2155.

FLUID, HYDRAULIC

STANDARD PROCEDURE

STANDARD PROCEDURE-HYDRAULIC FLUID FILL

YouTube	A multimedia supplement to the instructions contained in this article is available. To view the multimedia example of the condition described go to; **http://www.youtube.com/user/Mitchell1Tips** **then type "A00641401.vid1" into the "Search Channel" box.**

1. Raise and support the vehicle. Refer to **HOISTING, STANDARD PROCEDURE** .
2. Remove the muffler. Refer to **MUFFLER, EXHAUST, REMOVAL** .
3. Disengage the wire harness clips from the rear cross-member to gain length in the wire harness.

NOTE: The wire harness connectors must be left plugged in to the Rear Drive

Module (RDM), they will be needed in the filling process.

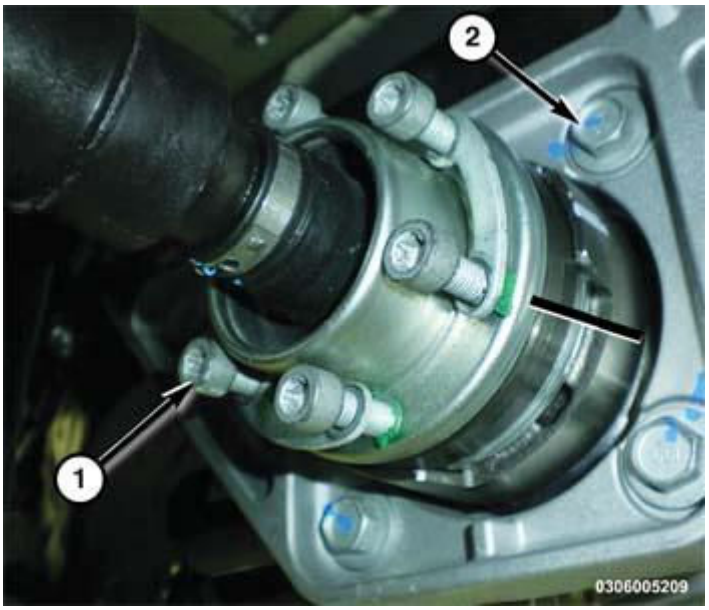

Fig. 55: Aligning Index Marks On Propeller Shaft To Pinion Flange
Courtesy of CHRYSLER GROUP, LLC

4. Apply alignment index marks to the rear propeller shaft and the rear pinion flange.
5. Remove the bolts (1) holding the rear propeller shaft to the rear pinion flange.
6. Separate the rear propeller shaft from the rear pinion flange and secure the shaft to the side.

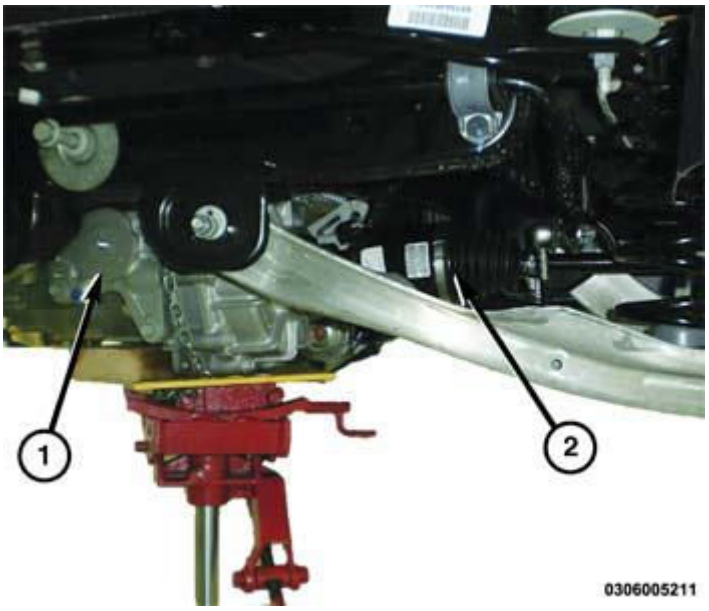

Fig. 56: Identifying Axle Shaft And Rear Drive Module
Courtesy of CHRYSLER GROUP, LLC

7. Using a suitable jack, support and secure the Rear Drive Module (RDM) (1).

NOTE: The RDM must be level on the jack.

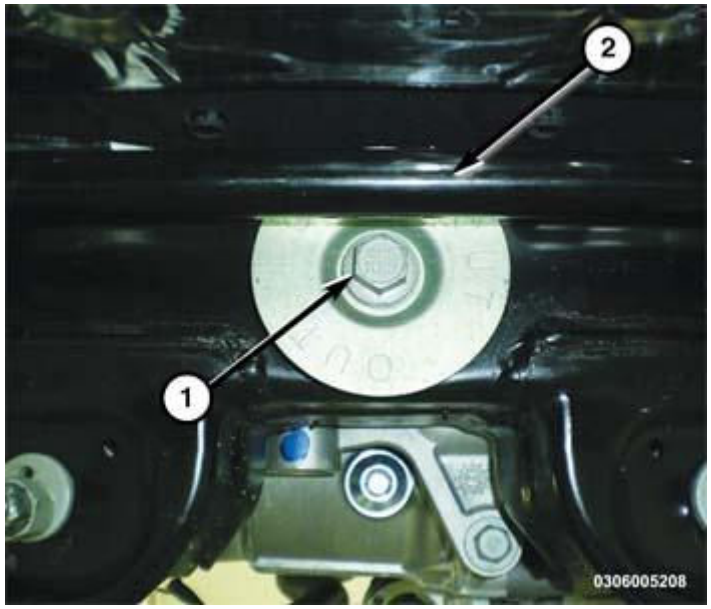

Fig. 57: Rear Mount Bolt
Courtesy of CHRYSLER GROUP, LLC

8. Remove the rear RDM mount bolt (1).

NOTE: It may be necessary to position the rear sway bar (2) of the way to gain clearance for rear mount bolt (1).

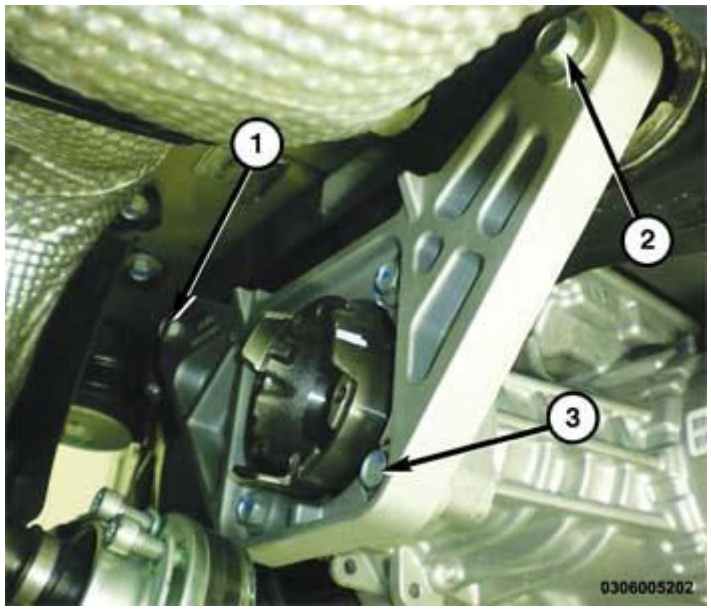

Fig. 58: Front Mount Bolts
Courtesy of CHRYSLER GROUP, LLC

9. Remove the front RDM mount bolts (1 and 2).

NOTE: RDM must be level on jack when filling with fluid.

10. Lower the RDM evenly until there is approximately 4 in. of clearance between the body and the RDM hydraulic fluid cover.

NOTE: Make sure the wire harness and vent hose is not damaged.

11. Place a drain pan under the RDM.

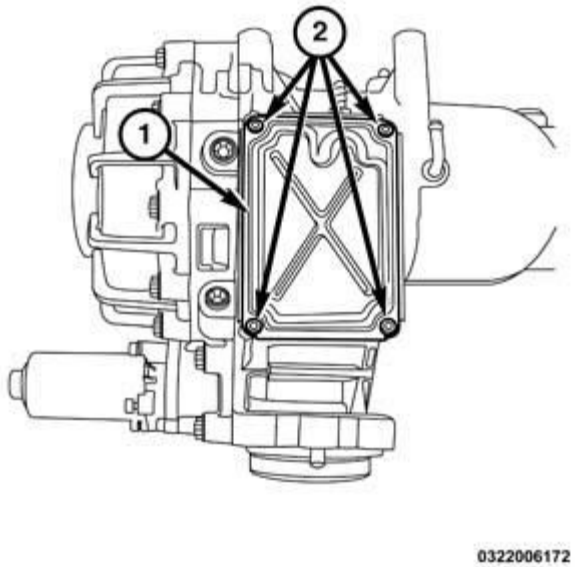

Fig. 59: Identifying Hydraulic Fluid Cover Bolts And Gaskets
Courtesy of CHRYSLER GROUP, LLC

12. Remove the hydraulic fluid cover (1) bolts (2).
13. Remove the hydraulic fluid cover (1) and gasket.

NOTE: Do not allow any debris to fall into hydraulic reservoir.

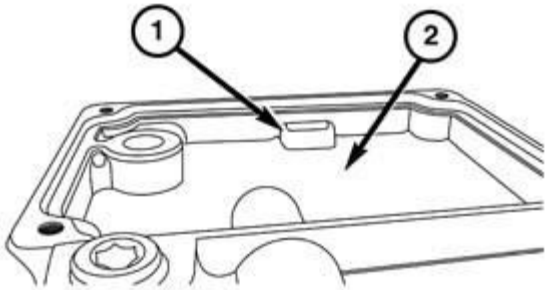

0322006171

Fig. 60: Identifying Reservoir And Fill Level Indicator
Courtesy of CHRYSLER GROUP, LLC

14. Fill the reservoir (2) with hydraulic fluid so that the fluid is level with the cast Fill Level Indicator (1). Refer to **CAPACITIES AND RECOMMENDED FLUIDS, SPECIFICATIONS**

NOTE: **Do not mix hydraulic fluid and the RDM lubricant. Use only recommended fluid to prevent damage to Rear Driveline Module components. Fluid must meet material specification MS-2155.**

NOTE: **A mirror may be required to see the fluid level.**

15. Using the scan tool actuate the Rear Differential Bleed procedure in the Misc. Functions menu and follow the prompts.

Fig. 61: Identifying Diaphragm Gasket And Hydraulic Fluid Cover
Courtesy of CHRYSLER GROUP, LLC

16. Install a new diaphragm gasket (1) and install hydraulic fluid cover (2). Torque bolts to 6 N.m (53 in. lbs.).

NOTE: **Be sure that the diaphragm gasket is properly orientated By ensuring the vent holes (3) align.**

17. Raise the RDM in place and install the mounting bolts.
18. Torque the mounting bolts to 130 N.m (96 ft. lbs.).
19. Clip the wiring harness into the rear cross-member.

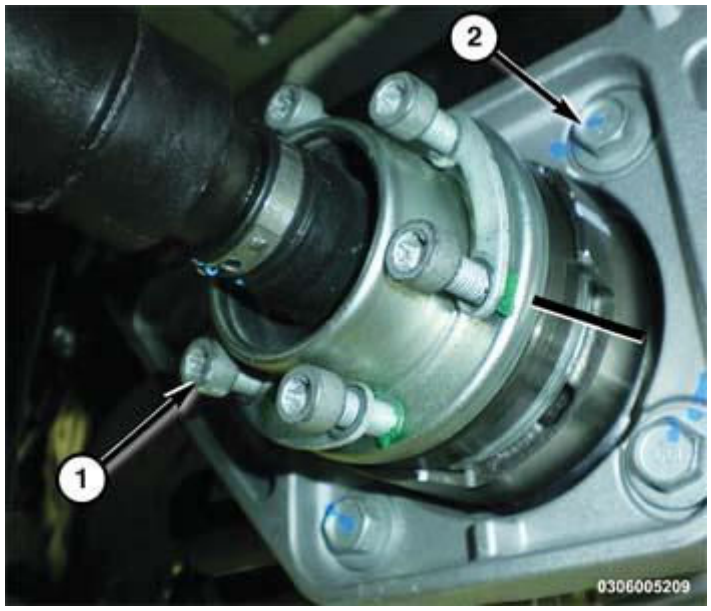

Fig. 62: Aligning Index Marks On Propeller Shaft To Pinion Flange
Courtesy of CHRYSLER GROUP, LLC

20. Align reference marks on propeller shaft and pinion flange. Tighten bolts to 21 N.m (15 ft. lbs.)
21. Install the muffler. Refer to **MUFFLER, EXHAUST, INSTALLATION** .

ACTUATOR, AXLE SHAFT

REMOVAL

REMOVAL

1. Using diagnostic scan tool, place Rear Axle Differential in the 4-HI position.
2. Remove the Rear Axle Differential assembly from the vehicle. Refer to **REMOVAL**.
3. Clean area around the actuator to prevent debris from entering housing.

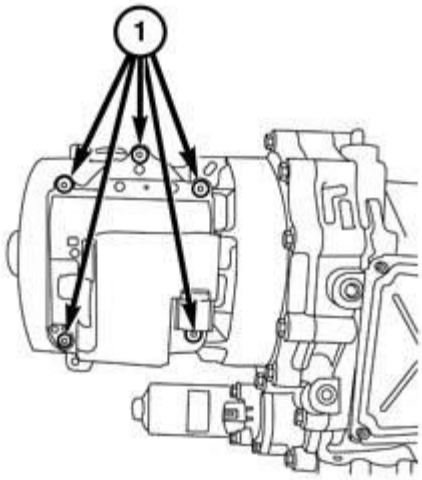

0322008595

Fig. 63: Removing Actuator Retaining Fasteners
Courtesy of CHRYSLER GROUP, LLC

4. Remove the actuator retaining fasteners and discard (1).

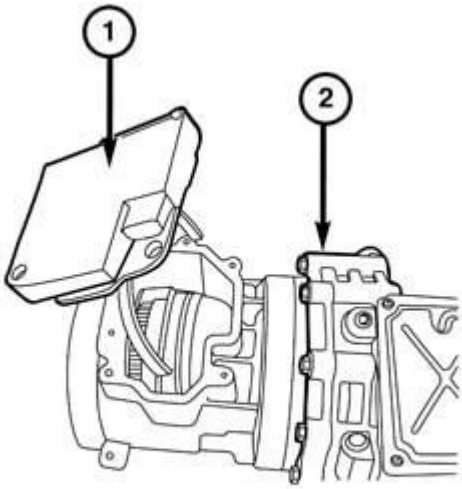

0322008596

Fig. 64: Removing The Actuator Assembly
Courtesy of CHRYSLER GROUP, LLC

5. Remove the actuator assembly (1) up and off the housing (2).

INSTALLATION

INSTALLATION

1. Clean mating surfaces.
2. Install new gasket if necessary.

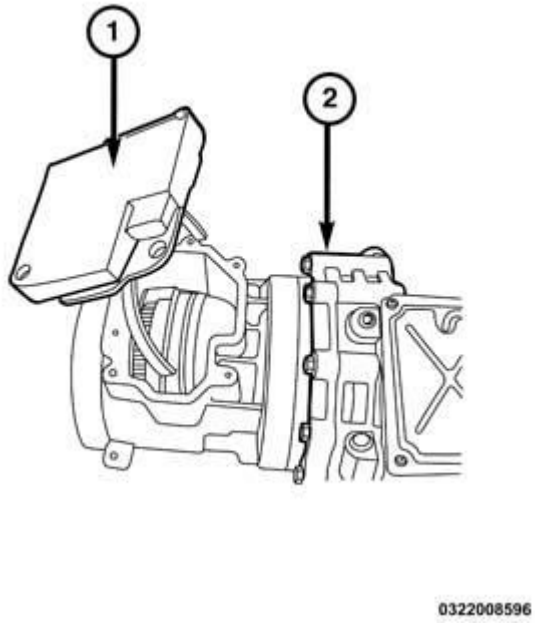

Fig. 65: Positioning Actuator Onto Housing
Courtesy of CHRYSLER GROUP, LLC

3. Position actuator (1) onto housing (2), ensure the shift fork engages the sliding collar grooves.

NOTE: **If replacing the actuator, check to make sure the two locating dowel pins are removed from the rear Axle Differential housing, the locating dowels come pre-installed in the actuator.**

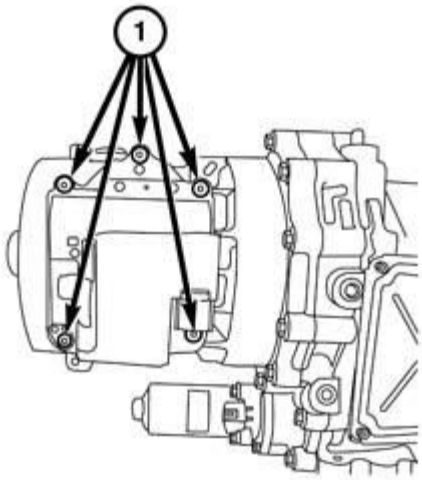

0322008595

Fig. 66: Installing New Actuator Retaining Fasteners
Courtesy of CHRYSLER GROUP, LLC

NOTE: Do not reuse the actuator mounting screws.

4. Install new actuator retaining fasteners (1) and tighten. Refer to **SPECIFICATIONS**.
5. Install the Rear Axle Differential into vehicle. Refer to **INSTALLATION**.
6. Check and add fluid as necessary. Refer to **FLUID, DIFFERENTIAL, STANDARD PROCEDURE**.

2014 DRIVELINE/AXLES

Rear Half Shaft - Cherokee

REMOVAL

REMOVAL

CAUTION: Never grasp half shaft assembly by the boots. This may cause the boot to pucker or crease and reduce the service life of the boot.

Avoid over angulating or stroking the C/V joints when handling the half shaft.

Half shafts exposed to battery acid, transmission fluid, brake fluid, differential fluid or gasoline may cause the boots to deteriorate. Failure to follow these instructions will result in damage.

1. Disconnect battery negative cable.
2. Raise and support vehicle. Refer to **HOISTING, STANDARD PROCEDURE** .
3. Remove rear knuckle. Refer to **KNUCKLE, REAR, REMOVAL** .

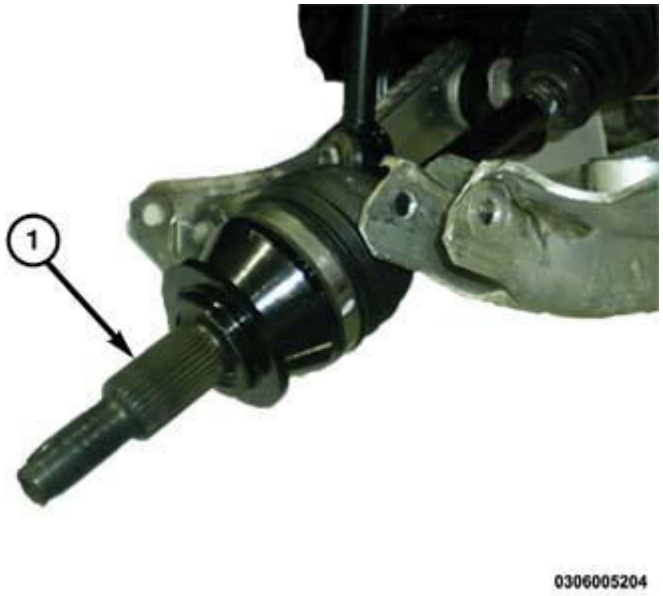

Fig. 1: Identifying Rear Half Shaft
Courtesy of CHRYSLER GROUP, LLC

4. Using appropriate tool, partially dislodge the half shaft from the differential. Install (special tool #9099, Seal Protector, Differential Output) to protect seal upon removal.

NOTE: **The stub shaft may need to be held in place when removing the half shaft.**

NOTE: **Tag the half shaft shim for location.**

5. Completely remove the half shaft from the differential. Make sure the seal protector engages seal.

INSTALLATION

INSTALLATION

CAUTION: **Never grasp half shaft assembly by the boots. This may cause the boot to pucker or crease and reduce the service life of the boot.**

Avoid over angulating or stroking the C/V joints when handling the half shaft.

Half shafts exposed to battery acid, transmission fluid, brake fluid, differential fluid or gasoline may cause the boots to deteriorate. Failure to follow these instructions will result in damage.

1. Install the half shaft shim on the hub end of the shaft.

NOTE: **Lightly apply a light grease to the splines prior to installation.**

NOTE: **Use care when installing half shaft to axle assembly. The half shaft installation angle should be minimized to avoid damage to the seal upon installation.**

2. Install new circlip(s) on half shaft(s).

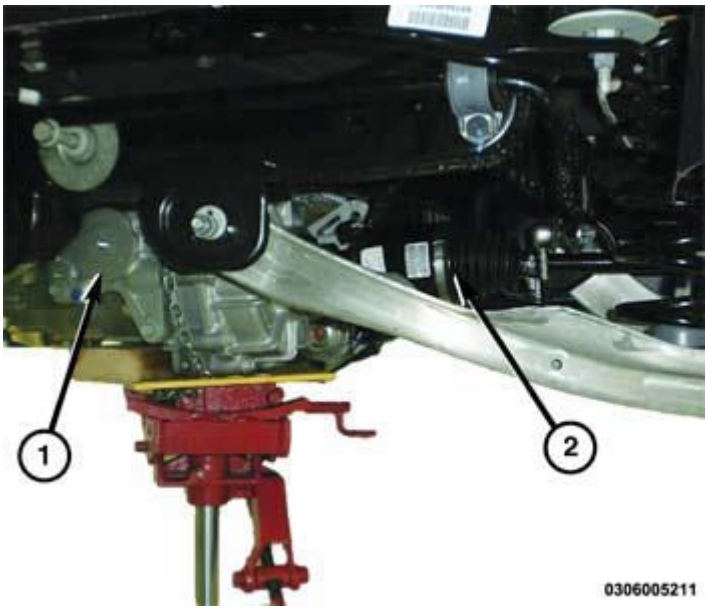

Fig. 2: Installing The Half Shaft Onto The Rear Drive Module
Courtesy of CHRYSLER GROUP, LLC

3. Install the half shaft (2) onto the Rear Drive Module (1).

NOTE: **Attempt to remove tripod joint by hand to verify that the snap ring is fully engaged. If snap ring is fully engaged, tripod joint will not be removable from rear drive module by hand.**

4. Install the rear knuckle. Refer to **KNUCKLE, REAR, INSTALLATION** .
5. If necessary, fill the differential fluid.

2014 ELECTRICAL

Battery System - Service Information - Cherokee

DESCRIPTION

DESCRIPTION

This vehicle is equipped with a single 12-volt battery. All of the components of the battery system are located within the engine compartment of the vehicle. The battery system for this vehicle contains the following components:

- **Battery** - The storage battery provides a reliable means of storing a renewable source of electrical energy within the vehicle.
- **Battery Cables** - The battery cables connect the positive and negative charged battery terminal posts to the vehicle electrical system.
- **Battery, Intelligent Sensor** - The Intelligent Battery Sensor (IBS) serves to record and process measured battery variable values (current, voltage, temperature) for the vehicle power net management system.
- **Battery Hold-down** - The battery hold-down hardware secures the battery in the battery tray.
- **Battery Thermal Guard** - The battery thermal guard insulates the battery to protect it from engine compartment temperature extremes.
- **Battery Tray** - The battery tray provides a secure mounting location in the vehicle for the battery and an anchor point for the battery hold-down hardware.

For battery system maintenance schedules, refer to **MAINTENANCE SCHEDULES, DESCRIPTION** .

DIAGNOSIS AND TESTING

DIAGNOSIS AND TESTING - BATTERY SYSTEM

The battery, starting, and charging systems in the vehicle operate with one another and must be tested as a complete system. In order for the engine to start and the battery to maintain its charge properly, all of the components that are used in these systems must perform within specifications. It is important that the battery, starting, and charging systems be thoroughly tested and inspected any time a battery needs to be charged or replaced. The cause of abnormal battery discharge, overcharging or early battery failure must be diagnosed and corrected before a battery is replaced and before a vehicle is returned to service. The service information for these systems has been separated within this Service Information to make it easier to locate the specific information you are seeking. However, when attempting to diagnose any of these systems, it is important that you keep their interdependency in mind.

The diagnostic procedures used for the battery, starting, and charging systems include the most basic conventional diagnostic methods, to the more sophisticated On-Board Diagnostics (OBD) built into the Powertrain Control Module (PCM). Use of an induction-type milliampere ammeter, a volt/ohmmeter, a battery charger, a carbon pile rheostat (load tester) and a 12-volt test lamp may be required. All OBD-sensed systems are monitored by the PCM. Each monitored circuit is assigned a Diagnostic Trouble Code (DTC). The PCM

will store a DTC in electronic memory for any failure it detects. Refer to **DIAGNOSIS AND TESTING** for the proper charging system on-board diagnostic test procedures.

BATTERY SYSTEM DIAGNOSIS		
CONDITION	**POSSIBLE CAUSES**	**CORRECTION**
THE BATTERY SEEMS WEAK OR DEAD WHEN ATTEMPTING TO START THE ENGINE.	1. The electrical system ignition-off draw is excessive.	1. Refer to **BATTERY, STANDARD PROCEDURE** for the proper test procedures. Repair the excessive ignition-off draw, as required.
	2. The charging system is inoperative.	2. Determine if the charging system is performing to specifications. Refer to **DIAGNOSIS AND TESTING** . Repair the inoperative charging system, as required.
	3. The battery is discharged.	3. Determine the battery state-of-charge using the Midtronics GR8 battery tester. Refer to **BATTERY, STANDARD PROCEDURE**. Charge the battery as required.
	4. The battery terminal connections are loose or corroded.	4. Refer to **CABLES, BATTERY, DIAGNOSIS AND TESTING**. Clean and tighten the battery terminal connections, as required.
	5. The battery has an incorrect size or rating for this vehicle.	5. Refer to **SPECIFICATIONS** for the proper size and rating. Replace an incorrect battery, as required.
	6. The battery is inoperative.	6. Determine the battery cranking capacity using the Midtronics GR8 battery tester. Refer to **BATTERY, STANDARD PROCEDURE**. Replace the inoperative battery, as required.
	7. The starting system is inoperative.	7. Determine if the starting system is performing to specifications. Refer to **DIAGNOSIS AND TESTING** . Repair the inoperative starting system, as required.
	8. The battery is physically damaged.	8. Inspect the battery for loose terminal posts or a cracked and leaking case. Replace the damaged battery, as required.
THE BATTERY STATE OF CHARGE CANNOT BE MAINTAINED.	1. The battery has an incorrect size or rating for this vehicle.	1. Refer to **SPECIFICATIONS** for the proper size and rating. Replace an incorrect battery, as required.
	2. The battery terminal connections are loose or corroded.	2. Refer to **CABLES, BATTERY, DIAGNOSIS AND TESTING**. Clean and tighten the battery terminal connections, as required.
	3. The electrical system ignition-off draw is	3. Refer to **BATTERY, STANDARD PROCEDURE** for the proper test

	excessive.	procedures. Repair the inoperative electrical system, as required.
	4. The battery is inoperative.	4. Test the battery using the Midtronics GR8 battery tester. Refer to **BATTERY, STANDARD PROCEDURE**. Replace the inoperative battery, as required.
	5. The starting system is inoperative.	5. Determine if the starting system is performing to specifications. Refer to **DIAGNOSIS AND TESTING** . Repair the inoperative starting system, as required.
	6. The charging system is inoperative.	6. Determine if the charging system is performing to specifications. Refer to **DIAGNOSIS AND TESTING** . Repair the inoperative charging system, as required.
	7. Electrical loads exceed the output of the charging system.	7. Inspect the vehicle for aftermarket electrical equipment which might cause excessive electrical loads.
	8. Slow driving or prolonged idling with high-amperage draw systems in use.	8. Advise the vehicle operator, as required.
THE BATTERY WILL NOT ACCEPT A CHARGE.	1. The battery is inoperative.	1. Test the battery using the Midtronics GR8 battery tester. Refer to **BATTERY, STANDARD PROCEDURE**. Replace the inoperative battery, as required.

GR8 ELECTRICAL SYSTEM TESTER

The Midtronics GR8 battery system tester is designed to help diagnose the cause of a defective battery. Refer to **BATTERY, STANDARD PROCEDURE** for directions on using the Midtronics GR8 battery tester.

STANDARD PROCEDURE

STANDARD PROCEDURE - SHIPPING MODE

When a new vehicle is delivered, the Body Control Module (BCM) is set to shipping mode. The BCM has a mode that takes the place of pulling the IOD fuse called "Shipping Mode". Shipping mode deactivates several vehicle accessories to prevent normal ignition OFF draw from depleting the battery over time. Removing the vehicle from shipping mode activates all vehicle systems.

You can enable/disable the vehicle from "Shipping Mode" by using the scan tool, go to BCM >> Misc. function >> Exit Shipping Mode.

SPECIFICATIONS

BATTERY

The battery Group Size number, the Cold Cranking Amperage (CCA) rating, and the Reserve Capacity (RC) rating or Ampere-Hours (AH) rating can be found on the original equipment battery label. Be certain that a replacement battery has the correct Group Size number, as well as CCA, and RC or AH ratings that equal or exceed the original equipment specification for the vehicle being serviced. Battery sizes and ratings are discussed in more detail below.

NOTE: Vehicles equipped with a diesel engine utilize a unique battery. The specifications for this battery may differ from the standards shown here. Refer to the battery manufacturer for detailed specifications.

- **Group Size** - The outside dimensions and terminal placement of the battery conform to standards established by the Battery Council International (BCI). Each battery is assigned a BCI Group Size number to help identify a correctly-sized replacement.
- **Cold Cranking Amperage** - The Cold Cranking Amperage (CCA) rating specifies how much current (in amperes) the battery can deliver for thirty seconds at -18° C (0° F). Terminal voltage must not fall below 7.2 volts during or after the thirty second discharge period. The CCA required is generally higher as engine displacement increases, depending also upon the starter current draw requirements.
- **Reserve Capacity** - The Reserve Capacity (RC) rating specifies the time (in minutes) it takes for battery terminal voltage to fall below 10.5 volts, at a discharge rate of 25 amperes. RC is determined with the battery fully-charged at 26.7° C (80° F). This rating estimates how long the battery might last after a charging system failure, under minimum electrical load.
- **Ampere-Hours** - The Ampere-Hours (AH) rating specifies the current (in amperes) that a battery can deliver steadily for twenty hours, with the voltage in the battery not falling below 10.5 volts. This rating is also sometimes identified as the twenty-hour discharge rating.
- **Load Test Amperage** - The Load Test Amperage rating specifies the current (in amperes) that a battery should be tested at with the battery load test equipment. This value should always be 50 percent of the CCA. For example: if the CCA for this battery is 700 amps, the Load Test Amperage is 50 percent of that or 350 amps.

BATTERY CLASSIFICATIONS AND RATINGS TABLE

BATTERY CLASSIFICATIONS AND RATINGS				
BCI Group Size Classification	**Cold Cranking Amperage**	**Reserve Capacity**	**Ampere - Hours**	**Load Test Amperage**
34	700	90 Minutes	50	350
86	525	100 Minutes	60	265

TORQUE

TORQUE SPECIFICATIONS

DESCRIPTION	N.m	Ft. Lbs.	In. Lbs.
Battery Terminal Clamp Pinch-Bolt Hex Nut	5	-	45

Negative Battery Cable Remote Terminal Nut	16.5	-	145
Positive Battery Cable Remote Terminal Nut	16.5	-	145
Battery Hold Down Bolt	16	-	142
Starter Solenoid B(+) Terminal Stud Nut	13	-	115
Battery Negative Cable Ground Eyelet Terminal To Engine Block Bolt	16.5	-	145
PDC B(+) Terminal Stud Nut	10	-	90
Battery Tray Support Bolt	16	-	142
Battery Tray Bolt	16	-	142

CLEANING

CLEANING

The following information details the recommended cleaning procedures for the battery and related components. In addition to the maintenance schedules found in this Service Information and the owners manual, it is recommended that these procedures be performed any time the battery or related components must be removed for vehicle service.

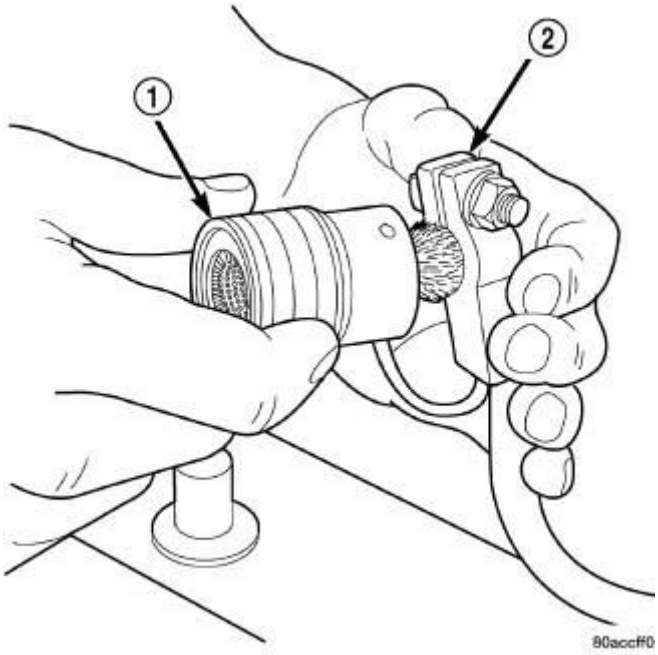

Fig. 1: Cleaning Battery Cable Terminal Clamps Using Terminal Cleaning Tool
Courtesy of CHRYSLER GROUP, LLC

1. Clean the battery cable terminal clamps (2) of all corrosion. Remove any corrosion using a wire brush (1) or a post and terminal cleaning tool, and a sodium bicarbonate (baking soda) and warm water cleaning solution.
2. Clean the battery tray and battery hold-down hardware of all corrosion. Remove any corrosion using a wire brush and a sodium bicarbonate (baking soda) and warm water cleaning solution. Paint any exposed bare metal.

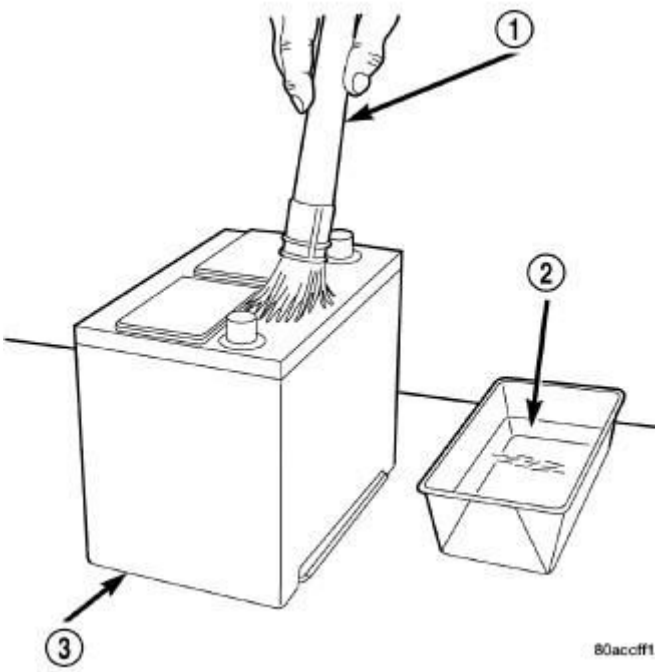

Fig. 2: Cleaning Outside Of Battery Case
Courtesy of CHRYSLER GROUP, LLC

3. If the removed battery is to be reinstalled, clean the outside of the battery case (3) and the top cover with a sodium bicarbonate (baking soda) and warm water cleaning solution using a stiff bristle parts cleaning brush (1) to remove any acid film. Rinse the battery with clean water. Ensure that the cleaning solution does not enter the battery cells through the vent holes. If the battery is being replaced, refer to **SPECIFICATIONS** for the factory-installed battery specifications. Confirm that the replacement battery is the correct size and has the correct ratings for the vehicle.
4. Clean the battery thermal guard with a sodium bicarbonate (baking soda) and warm water cleaning solution using a stiff bristle parts cleaning brush to remove any acid film.

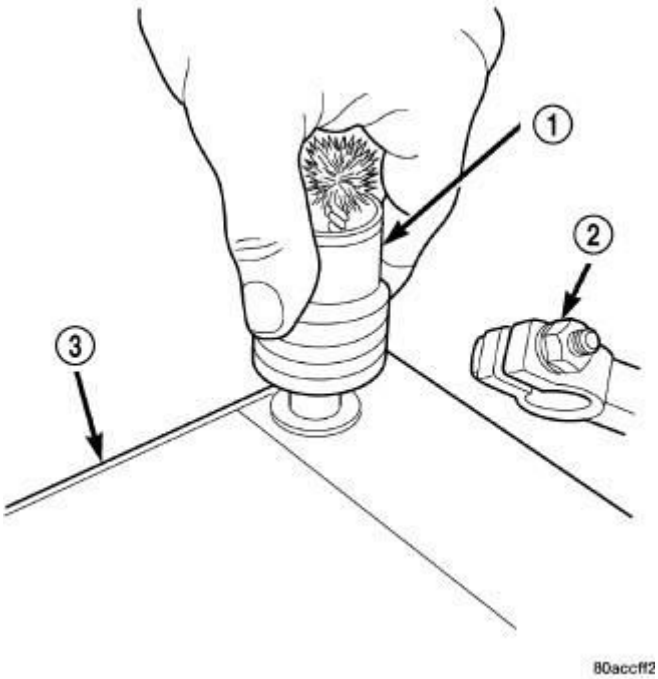

Fig. 3: Cleaning Battery Terminal Post Using Terminal Cleaner
Courtesy of CHRYSLER GROUP, LLC

5. Clean any corrosion from the battery terminal posts with a wire brush or a post and terminal cleaner, and a sodium bicarbonate (baking soda) and warm water cleaning solution.

INSPECTION

INSPECTION

The following information details the recommended inspection procedures for the battery and related components. In addition to the maintenance schedules found in this Service Information and the owner's manual, it is recommended that these procedures be performed any time the battery or related components must be removed for vehicle service.

1. Inspect the battery cable terminal clamps for damage. Replace any battery cable that has a damaged or deformed terminal clamp.
2. Inspect the battery tray and battery hold-down hardware for damage. Replace any damaged parts.
3. Slide the thermal guard off of the battery case (if equipped). Inspect the battery case for cracks or other damage that could result in electrolyte leaks. Also, check the battery terminal posts for looseness. Batteries with damaged cases or loose terminal posts must be replaced.
4. Inspect the battery thermal guard for tears, cracks, deformation or other damage (if equipped). Replace any battery thermal guard that has been damaged.
5. Inspect the battery built-in test indicator sight glass (if equipped) for an indication of the battery condition. If the battery is discharged, charge as required. Refer to **STANDARD PROCEDURE** for detailed instructions.

BATTERY

DESCRIPTION

DESCRIPTION

Low-maintenance conventional batteries are used on this vehicle. These batteries have non-removable battery cell caps. Under normal service, the composition of this battery reduces gassing and water loss at normal charge rates.

Conventional batteries are made up of six individual cells that are connected in series. Each cell contains positive charged cell groups made of lead oxide, and negatively charged cell groups made of sponge lead. The cells are submerged in a sulfuric acid and water solution called electrolyte.

The battery performs the function of a chemical storage device for electrical energy generated by the alternator. It must be capable of supplying high current for starting and powering other electrical loads. The battery function is also to serve as a stabilizing component in the charging system by providing energy when the system demands exceed the output of the alternator.

OPERATION

OPERATION

The battery is designed to store electrical energy in a chemical form. When an electrical load is applied to the terminals of the battery, an electrochemical reaction occurs. This reaction causes the battery to discharge electrical current from its terminals. As the battery discharges, a gradual chemical change takes place within each cell. The sulfuric acid in the electrolyte combines with the plate materials, causing both plates to slowly change to lead sulfate. At the same time, oxygen from the positive plate material combines with hydrogen from the sulfuric acid, causing the electrolyte to become mainly water. The chemical changes within the battery are caused by the movement of excess or free electrons between the positive and negative plate groups. This movement of electrons produces a flow of electrical current through the load device attached to the battery terminals.

As the plate materials become more similar chemically, and the electrolyte becomes less acid, the voltage potential of each cell is reduced. However, by charging the battery with a voltage higher than that of the battery itself, the battery discharging process is reversed. Charging the battery gradually changes the sulfated lead plates back into sponge lead and lead dioxide, and the water back into sulfuric acid. This action restores the difference in the electron charges deposited on the plates, and the voltage potential of the battery cells. For a battery to remain useful, it must be able to produce high-amperage current over an extended period. A battery must also be able to accept a charge, so that its voltage potential may be restored.

The battery is vented to release excess hydrogen gas that is created when the battery is being charged or discharged. However, even with these vents, hydrogen gas can collect in or around the battery. If hydrogen gas is exposed to flame or sparks, it may ignite. If the electrolyte level is low, the battery may arc internally and explode. If the battery is equipped with removable cell caps, add distilled water whenever the electrolyte level is below the top of the plates. If the battery cell caps cannot be removed, the battery must be replaced if the electrolyte level becomes low.

DIAGNOSIS AND TESTING

DIAGNOSIS AND TESTING - BATTERY

WARNING: IF THE BATTERY SHOWS SIGNS OF FREEZING, LEAKING OR LOOSE POSTS, DO NOT TEST, ASSIST-BOOST, OR CHARGE. THE BATTERY MAY ARC INTERNALLY AND EXPLODE. PERSONAL INJURY AND/OR VEHICLE DAMAGE MAY RESULT.

WARNING: EXPLOSIVE HYDROGEN GAS FORMS IN AND AROUND THE BATTERY. DO NOT SMOKE, USE FLAME, OR CREATE SPARKS NEAR THE BATTERY. PERSONAL INJURY AND/OR VEHICLE DAMAGE MAY RESULT.

WARNING: THE BATTERY CONTAINS SULFURIC ACID, WHICH IS POISONOUS AND CAUSTIC. AVOID CONTACT WITH THE SKIN, EYES, OR CLOTHING. IN THE EVENT OF CONTACT, FLUSH WITH WATER AND CALL A PHYSICIAN IMMEDIATELY. KEEP OUT OF THE REACH OF CHILDREN.

A battery that will not accept a charge is inoperative, and must be replaced. Further testing is not required. A fully-charged battery must be load tested to determine its cranking capacity. A battery that is fully-charged, but does not pass the load test, is inoperative and must be replaced.

NOTE: Completely discharged batteries may take several hours to accept a charge. Refer to STANDARD PROCEDURE for the proper battery charging procedures.

MIDTRONICS GR8 BATTERY TESTER

The Midtronics GR8 battery tester is designed to help diagnose the cause of an inoperative battery. Refer to **BATTERY, STANDARD PROCEDURE** for instructions on the use of the Midtronics GR8 battery tester.

STANDARD PROCEDURE

CONVENTIONAL BATTERY CHARGING

CAUTION: Vehicles equipped with a diesel engine utilize a unique spiral cell battery. This battery has a maximum charging voltage that must be used in order to restore the battery to its full potential, failure to use the spiral cell battery charging procedure could result in damage to the battery or personal injury. for the appropriate procedure.

Battery charging is the means by which the battery can be restored to its full voltage potential. A battery is fully-charged when:

- Midtronics (special tool #GR8-1220KIT-CHRY, AGM Battery Tester/Charger Station) tester indicates

battery is OK.

- Open-circuit voltage of the battery is 12.65 volts or above.
- Battery passes Load Test multiple times.

WARNING: If the battery shows signs of freezing, leaking, loose posts, do not test, assist-boost, or charge. The battery may arc internally and explode. Personal injury and/or vehicle damage may result.

WARNING: EXPLOSIVE HYDROGEN GAS FORMS IN AND AROUND THE BATTERY. DO NOT SMOKE, USE FLAME, OR CREATE SPARKS NEAR THE BATTERY. PERSONAL INJURY AND/OR VEHICLE DAMAGE MAY RESULT.

WARNING: THE BATTERY CONTAINS SULFURIC ACID, WHICH IS POISONOUS AND CAUSTIC. AVOID CONTACT WITH THE SKIN, EYES, OR CLOTHING. IN THE EVENT OF CONTACT, FLUSH WITH WATER AND CALL A PHYSICIAN IMMEDIATELY. KEEP OUT OF THE REACH OF CHILDREN.

WARNING: If the battery is equipped with removable cell caps, be certain that each of the cell caps is in place and tight before the battery is returned to service. Personal injury and/or vehicle damage may result from loose or missing cell caps.

CAUTION: Always disconnect and isolate the battery negative cable before charging a battery. Do not exceed sixteen volts while charging a battery. Damage to the vehicle electrical system components may result.

CAUTION: Battery electrolyte will bubble inside the battery case during normal battery charging. Electrolyte boiling or being discharged from the battery vents indicates a battery overcharging condition. Immediately reduce the charging rate or turn off the charger to evaluate the battery condition. Damage to the battery may result from overcharging.

CAUTION: The battery should not be hot to the touch. If the battery feels hot to the touch, turn off the charger and let the battery cool before continuing the charging operation. Damage to the battery may result.

After the battery has been charged to an open-circuit voltage reading of 12.4 volts or greater, retest the battery with the Midtronics (special tool #GR8-1220KIT-CHRY, AGM Battery Tester/Charger Station) tester indicates battery is OK or perform a load test to determine the battery cranking capacity.

Refer to **BATTERY, STANDARD PROCEDURE**.

Clean and inspect the battery hold downs, tray, terminals, posts, and top before completing battery service.

Refer to **CLEANING** for the proper battery system cleaning procedures. Refer to **INSPECTION** for the proper battery system inspection procedures.

CHARGING A COMPLETELY DISCHARGED CONVENTIONAL BATTERY

The following procedure should be used to recharge a completely discharged battery. Unless this procedure is properly followed, a good battery may be needlessly replaced.

1. Measure the voltage at the battery posts with a voltmeter, accurate to 1/10 (0.10) volt. If the reading is below ten volts, the battery charging current will be low. It could take some time before the battery accepts a current greater than a few milliamperes. Such low current may not be detectable on the ammeters built into many battery chargers.
2. Disconnect and isolate the battery negative cable. Connect the Midtronics (special tool #GR8-1220KIT-CHRY, AGM Battery Tester/Charger Station).

NOTE: **Some battery chargers are equipped with polarity-sensing circuitry. This circuitry protects the battery charger and the battery from being damaged if they are improperly connected. If the battery state-of-charge is too low for the polarity-sensing circuitry to detect, the battery charger will not operate. This makes it appear that the battery will not accept charging current. See the instructions provided by the manufacturer of the battery charger for details on how to bypass the polarity-sensing circuitry.**

3. Battery chargers vary in the amount of voltage and current they provide. The amount of time required for a battery to accept measurable charging current at various voltages is shown in the Charge Rate Table. If the charging current is still not measurable at the end of the charging time, the battery is faulty and must be replaced. If the charging current is measurable during the charging time, the battery may be good and the charging should be completed in the normal manner.

CONVENTIONAL BATTERY CHARGE RATE TABLE

Voltage	Minutes
16.0 volts maximum	up to 10 min.
14.0 to 15.9 volts	up to 20 min.
13.9 volts or less	up to 30 min.

CHARGING TIME REQUIRED

The time required to charge a battery will vary, depending upon the following factors:

- **Battery Capacity** - A completely discharged heavy-duty battery requires twice the charging time of a small capacity battery.
- **Temperature** - A longer time will be needed to charge a battery at -18° C (0° F) than at 27° C (80° F). When a fast battery charger is connected to a cold battery, the current accepted by the battery will be very low at first. As the battery warms, it will accept a higher charging current rate (amperage).
- **Charger Capacity** - A battery charger that supplies only five amperes will require a longer charging

time. A battery charger that supplies twenty amperes or more will require a shorter charging time.

- **State-Of-Charge** - A completely discharged battery requires more charging time than a partially discharged battery. Electrolyte is nearly pure water in a completely discharged battery. At first, the charging current (amperage) will be low. As the battery charges, the specific gravity of the electrolyte will gradually rise.

The Conventional Battery Charging Time Table gives an indication of the time required to charge a typical battery at room temperature based upon the battery state-of-charge and the charger capacity.

CONVENTIONAL BATTERY CHARGING TIME TABLE

Charging Amperage	5 Amps	10 Amps	20 Amps
Open Circuit Voltage	**Hours Charging @ 21° C (70° F)**		
12.25 to 12.49	6 hours	3 hours	1.5 hours
12.00 to 12.24	10 hours	5 hours	2.5 hours
10.00 to 11.99	14 hours	7 hours	3.5 hours
Below 10.00	18 hours	9 hours	4.5 hours

GR8 BATTERY TESTER / CHARGER

Always use the Midtronics GR8 Instruction Manual that was supplied with the tester as a reference. If the Instruction Manual is not available the following procedure can be used:

WARNING: **Always wear appropriate eye protection and use extreme caution when working with batteries.**

BATTERY TESTING

CAUTION: Never connect the GR8 to the remote battery posts. Connecting the GR8 to the remote battery posts will give a false test reading indicating that the battery is bad.

1. If testing the battery OUT-OF-VEHICLE, clean the battery terminals with a wire brush before testing. Refer to **CLEANING**. If the battery is equipped with side post terminals, install and tighten the supplied lead terminal stud adapters. Do not use steel bolts. Failure to properly install the stud adapters, or using stud adapters that are dirty or worn-out may result in false test readings.
2. If testing the battery IN-THE-VEHICLE, make certain all of the vehicle accessory loads are OFF, including the ignition. Connect the GR8 to directly to the battery posts.

NOTE: Multiple batteries connected in parallel must have the ground cable disconnected to perform a battery test. Failure to disconnect may result in false battery test readings.

3. Using the ARROW key select **in** or **out** of vehicle testing and press ENTER to make a selection.
4. If not selected, choose the Cold Cranking Amp (CCA) battery rating. Or select the appropriate battery

rating for your area (see menu). The tester will then run its self programmed test of the battery and display the results. Refer to the test result table noted below.

5. While viewing the battery test result, press the CODE button and the tester will prompt you for the last 4 digits of the VIN. Use the UP/DOWN arrow buttons to scroll to the correct character; then press ENTER to select and move to the next digit. Then press the ENTER button to view the SERVICE CODE. Pressing the CODE button a second time will return you to the test results.

NOTE: The SERVICE CODE is required on every warranty claim submitted for battery replacement.

QUICK REFERENCE GUIDE

Inspect the battery for damages and check the electrolyte level. Always use the necessary safety precautions when working with batteries to prevent severe injury or death. Follow all manufacturers' instructions and BCI (Battery Council International) safety recommendations, which include the following precautions:

MAIN MENU

The Main Menu is the starting point for all tools and utilities, which are depicted as icons. Some icons lead directly to the function they represent, while others are menu icons that lead to two or more options.

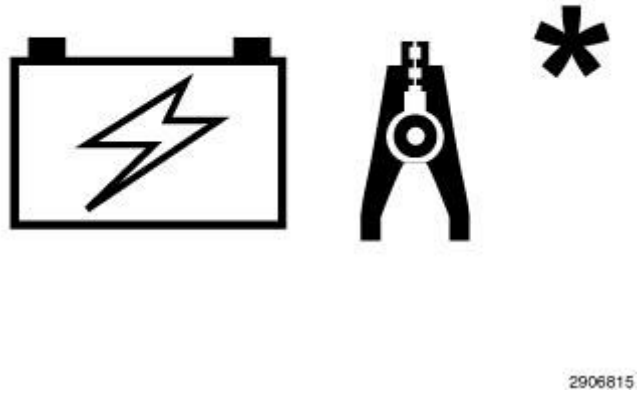

Fig. 4: Battery Tester Main Menu Icon 1
Courtesy of CHRYSLER GROUP, LLC

Automatically tests, charges, and provides battery decision using the information you select in a series of screens. Start here to generate warranty codes.

2907015

Fig. 5: Battery Tester Main Menu Icon 2
Courtesy of CHRYSLER GROUP, LLC

Tests the starting and charging systems.

2906976

Fig. 6: Battery Tester Main Menu Icon 3
Courtesy of CHRYSLER GROUP, LLC

Maintains battery voltage at 13.5 volts to provide uninterrupted reprogramming of ECUs and retain vehicle system settings.

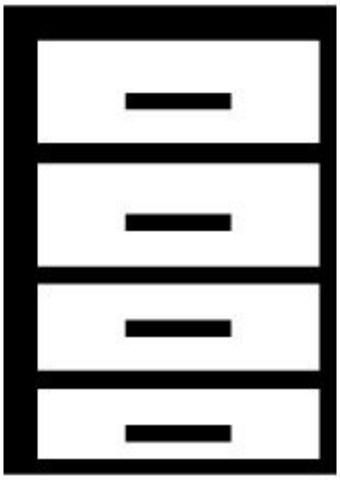

2906894

Fig. 7: Battery Tester Main Menu Icon 4
Courtesy of CHRYSLER GROUP, LLC

Includes a utility to view and print a test counter, a data transfer utility, the software version and date, the GR8 serial number for the control module, and current wireless channel.

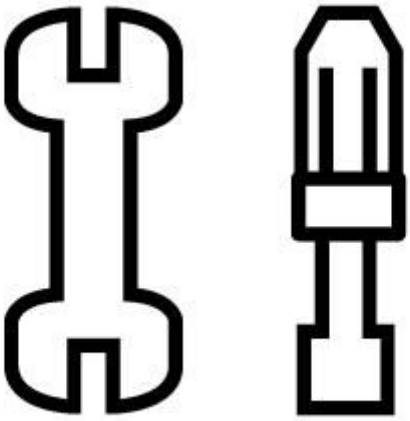

2907001

Fig. 8: Battery Tester Main Menu Icon 5
Courtesy of CHRYSLER GROUP, LLC

The Setup Menu lets you customize options in the GR8 to suit your needs.

2906883

Fig. 9: Battery Tester Main Menu Icon 6
Courtesy of CHRYSLER GROUP, LLC

Provides a list of topics and definitions. Also includes Midtronics Customer Service phone numbers.

CHARGE/TEST MENU

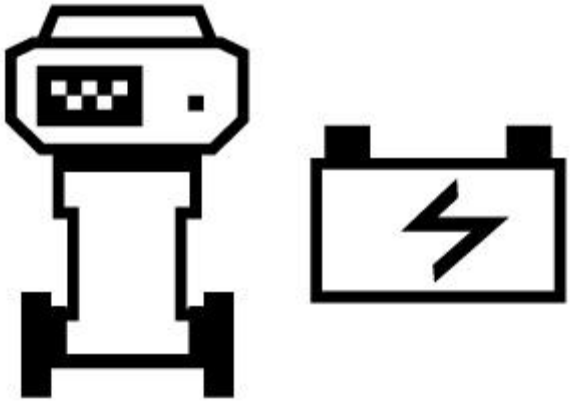

2906844

Fig. 10: Charge/Test Menu Icon 1
Courtesy of CHRYSLER GROUP, LLC

Automatically tests and charges battery, starting, and charging system. Generates a warranty code for Replace and Bad Cell decisions.

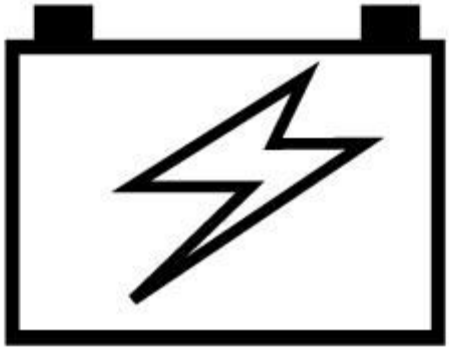

2906961

Fig. 11: Charge/Test Menu Icon 2
Courtesy of CHRYSLER GROUP, LLC

Pre Delivery Inspection (PDI): For testing delivered vehicles and lot maintenance. Uses the same inputs as a diagnostic charge.

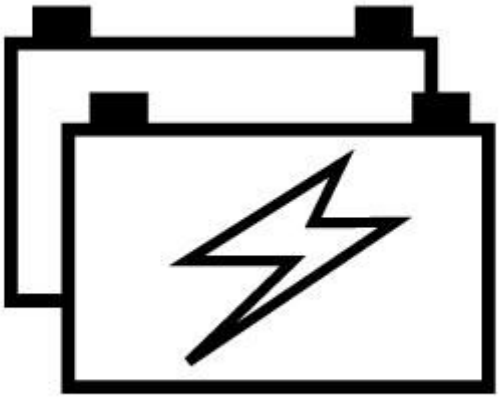

2906860

Fig. 12: Charge/Test Menu Icon 3
Courtesy of CHRYSLER GROUP, LLC

Dual Battery Charge mode allows the charger to be used with dual battery systems.

2906906

Fig. 13: Charge/Test Menu Icon 4
Courtesy of CHRYSLER GROUP, LLC

Makes high output current available to boost charge an in-vehicle battery and assist in starting the engine.

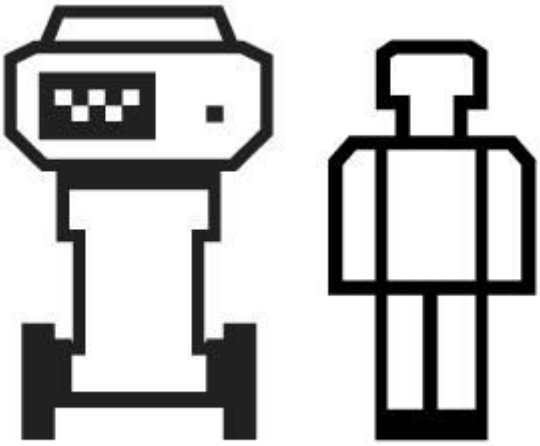

2906933

Fig. 14: Charge/Test Menu Icon 5
Courtesy of CHRYSLER GROUP, LLC

Provides a timed charge that ranges from 5 to 120 minutes or a continuous charge that ends when you press the STOP key.

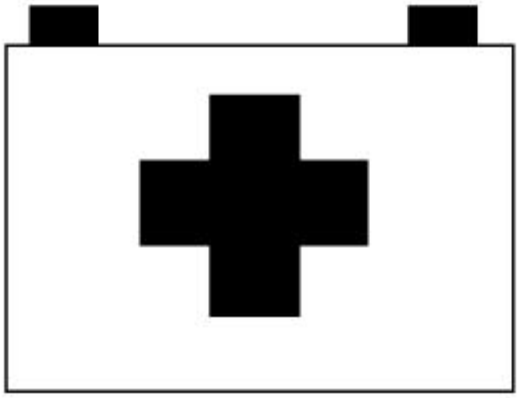

2906991

Fig. 15: Charge/Test Menu Icon 6
Courtesy of CHRYSLER GROUP, LLC

In this mode the charger can provide a trickle charge for long term, low amp battery charging.

2906871

Fig. 16: Charge/Test Menu Icon 7
Courtesy of CHRYSLER GROUP, LLC

Generates 15-digit warranty codes for physically defective batteries or customer good will.

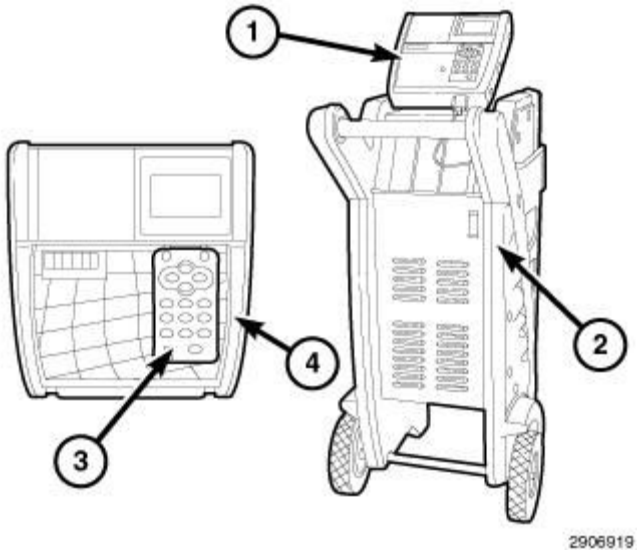

Fig. 17: Identifying GR8 Battery Tester
Courtesy of CHRYSLER GROUP, LLC

1. **Control module:** Backlit graphical display and keypad for data entry.
2. **ON/OFF switch:** ON/OFF switch Turns power on and off to the GR8.
3. **STATUS light:** Lights in conjunction with beeping alarm to indicate transitions and warnings.
4. **Data card slot:** For future upgrades via a data card. The slot contains a plastic filler card for protection.

REPLACE BATTERY DECISIONS

BATTERY DECISIONS

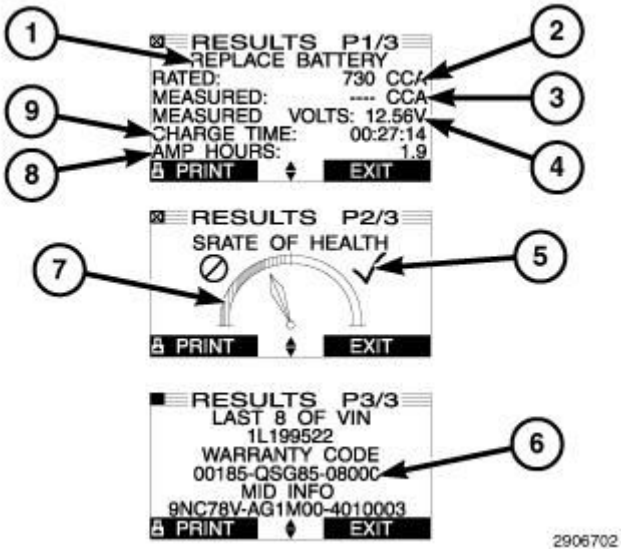

Fig. 18: Battery Test Screen - Example
Courtesy of CHRYSLER GROUP, LLC

1. Battery Decisions
2. Select Rating
3. Measured capacity
4. Measured voltage
5. Good Range

NOTE: The warranty code screen will only be displayed for REPLACE BATTERY and BAD CELL-REPLACE decisions.

6. Enter this number into wiTech
7. Replace range
8. Replaced AMP Hours
9. Charging Time

TEST RESULTS-CHARGING SYSTEM

A REPLACE BATTERY or BAD CELL-REPLACE decision gives you the option of generating a warranty code. For Chrysler vehicles model year 2011 or later, enter that warranty code into your wiTECH in the Midtronics warranty code validation routine.

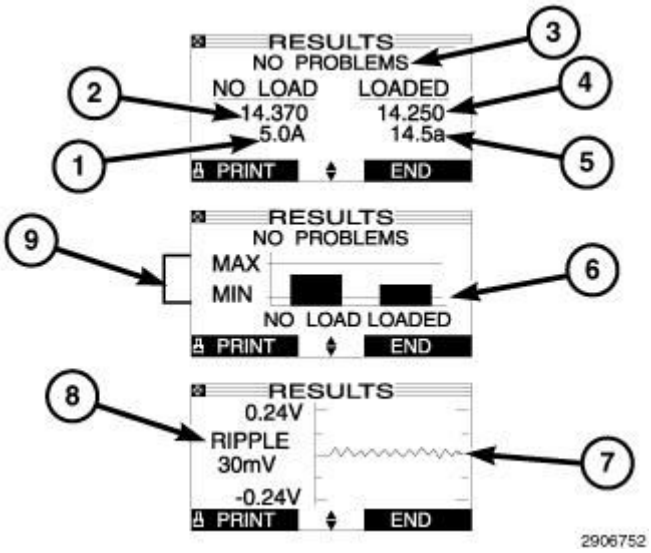

Fig. 19: Battery Tester Test Results Screen - Example
Courtesy of CHRYSLER GROUP, LLC

1. Loads-off current at rev if amp clamp is used
2. Loads-off DC voltage at rev
3. Decision
4. Loads-on DC voltage at rev
5. Loads-on current at rev if amp clamp is used

6. Bar graph of DC voltage within normal range (loads on and off)
7. Graph of diode waveform
8. Peak-to-peak AC voltage
9. Normal DC voltage range

TEST RESULTS-STARTER SYSTEM

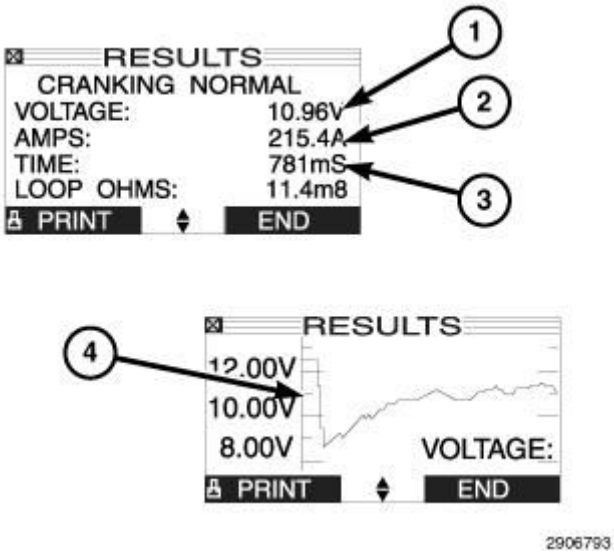

Fig. 20: Test Results-Starter System Example
Courtesy of CHRYSLER GROUP, LLC

1. Average cranking voltage
2. Average cranking current if amp clamp is used
3. Cranking time in seconds
4. Y axis = System performance: cranking voltage

IGNITION-OFF DRAW TEST

The term Ignition-Off Draw (IOD) identifies a normal condition where power is being drained from the battery with the ignition switch in the Off position. A normal vehicle electrical system will draw from five to thirty-five milliamperes (0.005 to 0.035 ampere) with the ignition switch in the Off position, and all non-ignition controlled circuits in proper working order. Up to thirty-five milliamperes are needed to enable the memory functions for the Powertrain Control Module (PCM), digital clock, electronically tuned radio, and other modules which may vary with the vehicle equipment.

Excessive IOD can be caused by:

- Electrical items left on.
- Inoperative or improperly adjusted switches.
- Inoperative or shorted electronic modules and components.

- An internally shorted generator.
- Intermittent shorts in the wiring.

If the IOD is over thirty-five milliamperes, the problem must be found and corrected before replacing a battery. In most cases, the battery can be charged and returned to service after the excessive IOD condition has been corrected.

1. Verify that all electrical accessories are off. Turn off all lamps, remove the ignition key, and close all doors. If the vehicle is equipped with an illuminated entry system or an electronically tuned radio, allow the electronic timer function of these systems to automatically shut off (time out). This may take up to ten minutes. See the Electronic Module Ignition-Off Draw Table for more information.

ELECTRONIC MODULE IGNITION-OFF DRAW TABLE

Module	Time Out? (If Yes, Interval And Wake-Up Input)	IOD	IOD After Time Out
Radio	No	1 to 3 milliamperes	N/A
Audio Power Amplifier	No	up to 1 milliampere	N/A
Powertrain Control Module (PCM)	No	0.95 milliampere	N/A
Instrument Cluster	No	0.44 milliampere	N/A

2. Determine that the underhood lamp is operating properly, then disconnect the lamp wire harness connector or remove the lamp bulb.
3. Turn off all electrical accessories.
4. Disconnect the battery negative cable.

CAUTION: Do not open any doors, or turn on any electrical accessories with the lowest milliampere scale selected, or the multi-meter may be damaged.

5. Connect a 10 amp fused jumper wire between the negative battery cable and the negative battery post.
6. Turn the ignition key ON and then OFF and wait 10 minutes for all systems to enter sleep mode.

NOTE: Do not break the connection between the 10 amp fused jumper wire and the battery. If the connection between the battery negative terminal post and the negative cable terminal clamp is lost during any part of the IOD test, the electronic timer function will be activated and all of the tests will

have to be repeated.

7. Set an electronic digital multi-meter to its highest amperage scale. Connect the multi-meter to the battery negative cable terminal clamp and the battery negative terminal post, but not on the jumper connection.
8. Remove the 10 amp jumper wire without breaking the digital multi-meter connection.
9. The multi-meter leads must be securely clamped to the battery negative cable terminal clamp and the battery negative terminal post, but not the 10 amp jumper wire.
10. The high-amperage IOD reading on the multi-meter should be very low or nonexistent, depending upon the electrical equipment in the vehicle. If the amperage reading remains high, remove and replace each fuse or circuit breaker in the BCM and PDC, one at a time until the amperage reading becomes very low, or nonexistent. Refer to the appropriate wiring information for complete BCM and PDC, circuit breaker, and circuit identification. This will isolate each circuit and identify the circuit that is the source of the high-amperage IOD. If the amperage reading remains high after removing and replacing each fuse, disconnect the wire harness from the generator. If the amperage reading now becomes very low or nonexistent, diagnose and repair the Charging System as necessary. After the high-amperage IOD has been corrected, switch the multi-meter to progressively lower amperage scales and, if necessary, repeat the fuse and circuit breaker remove-and-replace process to identify and correct all sources of excessive IOD. It is now safe to select the lowest milliampere scale of the multi-meter to check the low-amperage IOD.
11. Observe the multi-meter reading. The low-amperage IOD should not exceed thirty-five milliamperes (0.035 ampere). If the current draw exceeds thirty-five milliamperes, isolate each circuit using the fuse and circuit breaker remove-and-replace process in Step 10. The multi-meter reading will drop to within the acceptable limit when the source of the excessive current draw is disconnected. Repair this circuit as required; whether a wiring short, incorrect switch adjustment, or an inoperative component is the cause.

OPEN-CIRCUIT VOLTAGE TEST

A battery open-circuit voltage (no load) test will show the approximate state-of-charge of a battery.

Before proceeding with this test, completely charge the battery, refer to the appropriate battery charging procedure.

1. Before measuring the open-circuit voltage, the surface charge must be removed from the battery. Turn on the headlamps for fifteen seconds, then allow up to five minutes for the battery voltage to stabilize.
2. Disconnect and isolate both battery cables, negative cable first.
3. Using a voltmeter connected to the battery posts (see the instructions provided by the manufacturer of the voltmeter), measure the open-circuit voltage.

See the Open-Circuit Voltage Table. This voltage reading will indicate the battery state-of-charge, but will not reveal its cranking capacity. If a battery has an open-circuit voltage reading of 12.4 volts or greater, it may be load tested to reveal its cranking capacity.

OPEN-CIRCUIT VOLTAGE TABLE

Open Circuit Voltage	Charge Percentage
11.7 volts or less	0%

12.0 volts	25%
12.2 volts	50%
12.4 volts	75%
12.6 volts or more	100%

REMOVAL

REMOVAL

Fig. 21: Battery & Cables
Courtesy of CHRYSLER GROUP, LLC

1. Disconnect the battery negative cable (3).
2. Disconnect the battery positive side cable (1).

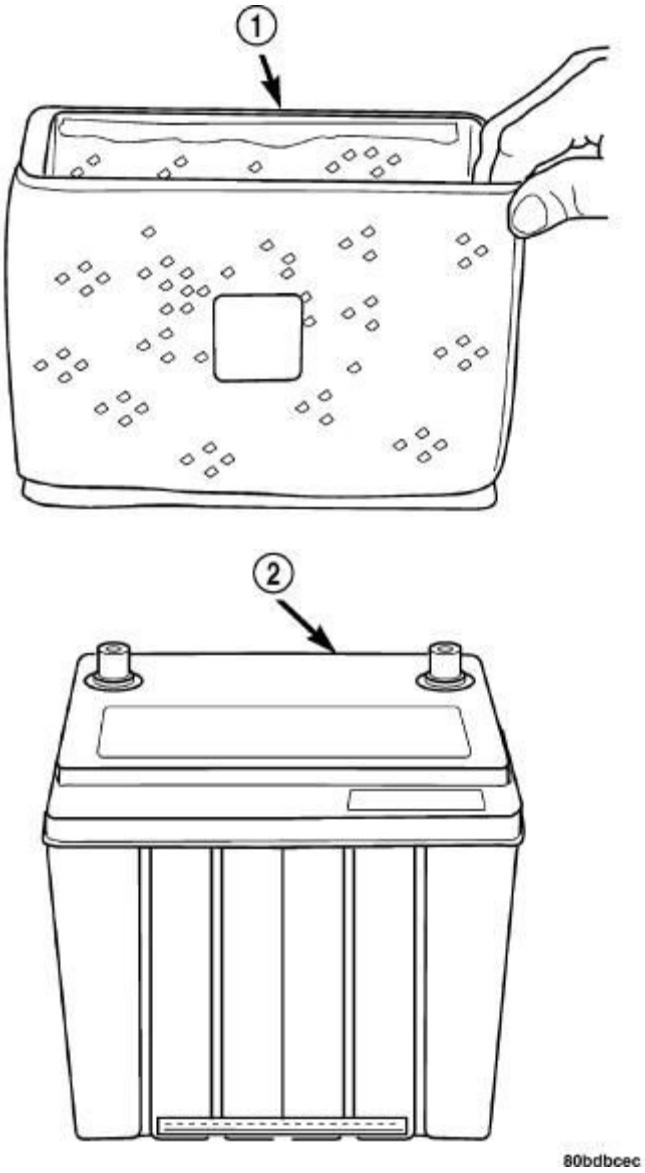

Fig. 22: Identifying Battery Case & Thermal Guard
Courtesy of CHRYSLER GROUP, LLC

3. Remove the thermal cover (1) by lifting upwards.

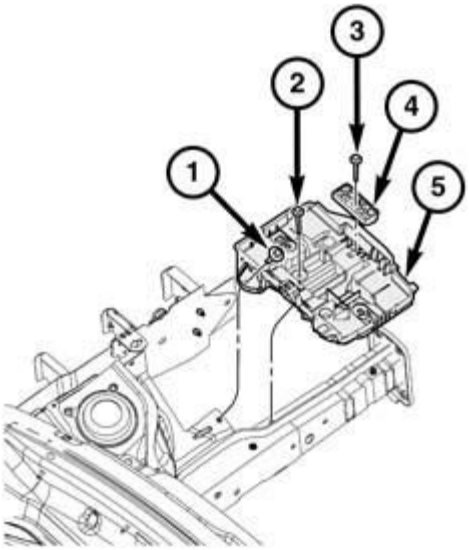

0909005837

Fig. 23: Identifying Battery Tray & Fasteners
Courtesy of CHRYSLER GROUP, LLC

4. Remove the clamp (4) that secures the battery to the battery tray.
5. Remove the battery (2) from the vehicle.

INSTALLATION

INSTALLATION

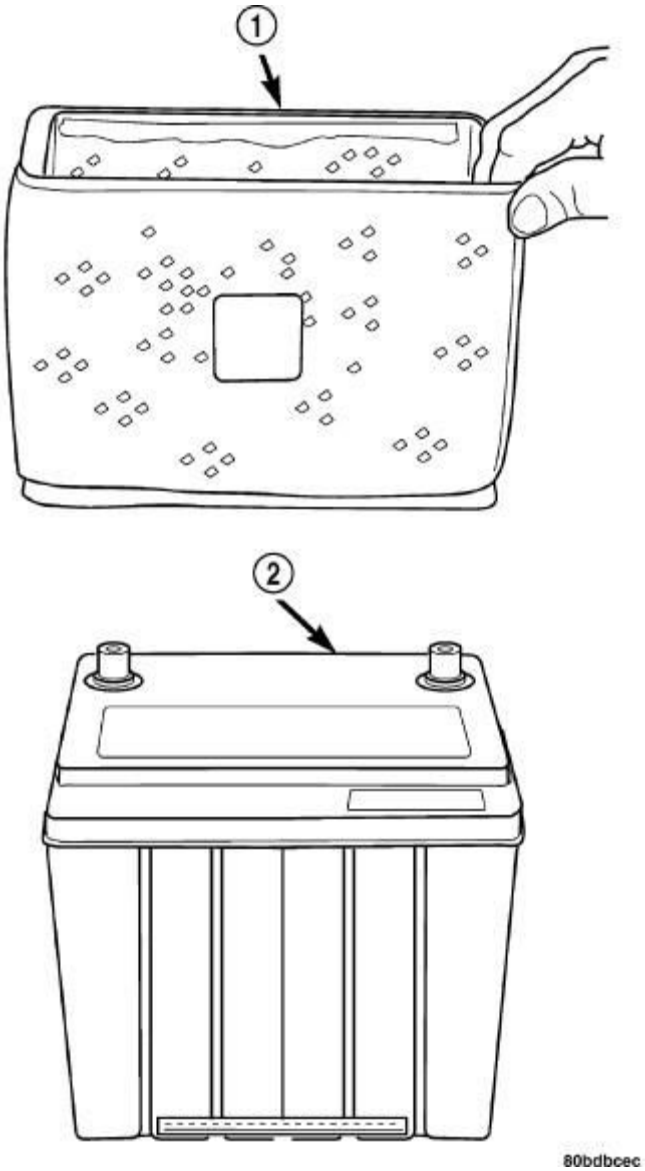

Fig. 24: Identifying Battery Case & Thermal Guard
Courtesy of CHRYSLER GROUP, LLC

1. Position the battery (2) onto the battery tray.
2. Install the battery hold down clamp. Tighten the bolt to 6 N.m (53 in. lbs.).
3. Install the battery thermal cover (1).

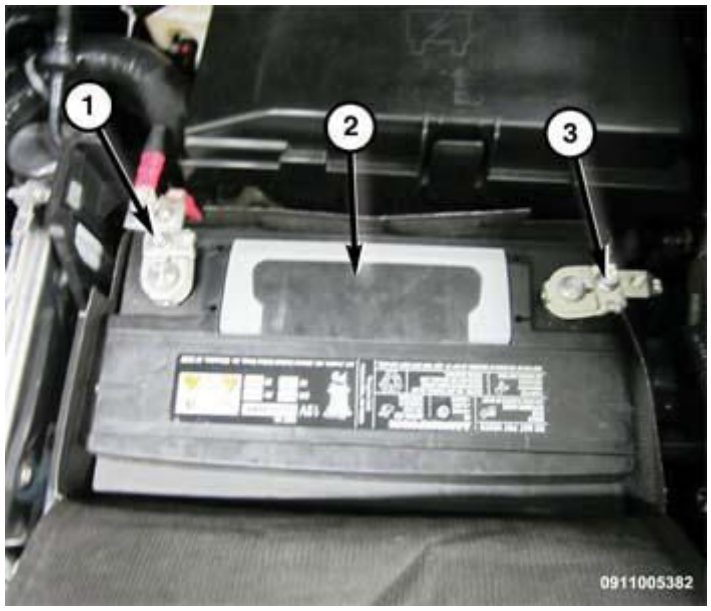

Fig. 25: Battery & Cables
Courtesy of CHRYSLER GROUP, LLC

4. Connect the battery positive cable (1). Tighten to 9 N.m (80 in. lbs.).
5. Connect the negative battery cable (3). Tighten the nut to 9 N.m (80 in. lbs.).

CABLES, BATTERY

DESCRIPTION

DESCRIPTION

The standard battery cables are large gauge, stranded copper wires sheathed within a heavy plastic or synthetic rubber insulating jacket. The battery cables for Stop/Start applications are a higher durability cable capable of withstanding the increased cycling that stop/start vehicles will experience. The wire used in the battery cables combines excellent flexibility and reliability with high electrical current carrying capacity. The battery cables feature a clamping type female battery terminal made of stamped sheet metal that is die cast onto one end of the battery cable wire. A pinch-bolt and nut are installed at the open end of the female battery terminal clamp. Large eyelet type terminals are crimped onto the opposite end of the battery cable wire and then soldered. The battery positive cable wires feature a larger female battery terminal clamp to allow connection to the larger battery positive terminal post. The battery negative cable wires have a smaller female battery terminal clamp.

The battery harness includes both the battery positive and negative cables to the remote battery connection and may include portions of the wiring circuits for other components on some vehicles. The starter harness includes both the battery positive and negative cables from the remote battery connection to the starter and engine ground location. The battery cables are part of the engine wiring harness. If the cables need to be serviced. The engine harness will need to be replaced as an assembly.

OPERATION

OPERATION

The battery cables connect the battery terminal posts to the vehicle electrical system. These cables also provide a path back to the battery for electrical current generated by the charging system for restoring the voltage potential of the battery. The female battery terminal clamps on the ends of the battery cable wires provide a strong and reliable connection of the battery cable to the battery terminal posts. The terminal pinch bolts allow the female terminal clamps to be tightened around the male terminal posts on the top of the battery. The eyelet terminals secured to the opposite ends of the battery cable wires from the female battery terminal clamps provide secure and reliable connection of the battery cables to the vehicle electrical system.

One wire has an eyelet terminal that connects the battery positive cable to the B(+) terminal stud of the Body Control Module (BCM), and the other wire has an eyelet terminal that connects the battery positive cable to the B(+) terminal stud of the engine starter motor solenoid. The battery negative cable terminal clamp has one wire as an eyelet terminal that connects the battery negative cable to the vehicle powertrain through a ground connection, typically on the engine cylinder block.

DIAGNOSIS AND TESTING

DIAGNOSIS AND TESTING - BATTERY CABLES

A voltage drop test will determine if there is excessive resistance in the battery cable terminal connections or the battery cable. If excessive resistance is found in the battery cable connections, the connection point should be disassembled, cleaned of all corrosion or foreign material, then reassembled. Following reassembly, check the voltage drop for the battery cable connection and the battery cable again to confirm repair.

When performing the voltage drop test, it is important to remember that the voltage drop is giving an indication of the resistance between the two points at which the voltmeter probes are attached. **EXAMPLE:** When testing the resistance of the battery positive cable, touch the voltmeter leads to the battery positive cable terminal clamp and to the battery positive cable eyelet terminal at the starter solenoid B(+) terminal stud. If you probe the battery positive terminal post and the battery positive cable eyelet terminal at the starter solenoid B(+) terminal stud, you are reading the combined voltage drop in the battery positive cable terminal clamp-to-terminal post connection and the battery positive cable.

VOLTAGE DROP TEST

The following operation will require a voltmeter accurate to 1/10 (0.10) volt. Before performing this test, be certain that the following procedures are accomplished:

- The battery is fully-charged and load tested. Refer to **STANDARD PROCEDURE** for the proper battery charging and load test procedures.
- Fully engage the parking brake.
- If the vehicle is equipped with an automatic transmission, place the gearshift selector lever in the Park position. If the vehicle is equipped with a manual transmission, place the gearshift selector lever in the Neutral position and block the clutch pedal in the fully depressed position.
- Verify that all lamps and accessories are turned off.
- To prevent the engine from starting, remove the Automatic Shut Down (ASD) relay. The ASD relay can

be found in the Junction Block located in the left front engine compartment area. See the layout label affixed to the underside of the Junction Block cover for ASD relay identification and location.

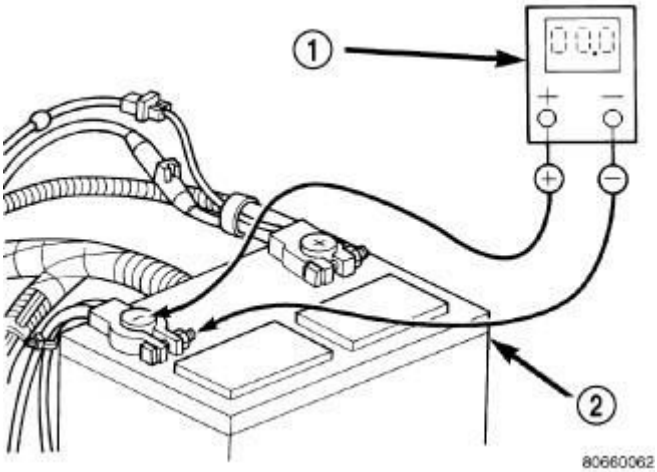

Fig. 26: Connecting Voltmeter Leads To Battery Negative Terminal
Courtesy of CHRYSLER GROUP, LLC

1. Connect the positive lead of the voltmeter (1) to the battery (2) negative terminal post. Connect the negative lead of the voltmeter (1) to the battery (2) negative cable terminal clamp. Rotate and hold the ignition switch in the Start position. Observe the voltmeter. If voltage is detected, correct the poor connection between the battery negative cable terminal clamp and the battery negative terminal post.

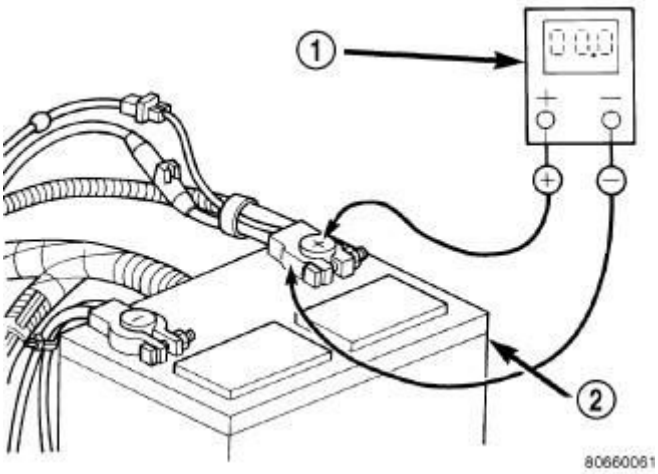

Fig. 27: Connecting Voltmeter Leads To Battery Positive Terminal
Courtesy of CHRYSLER GROUP, LLC

2. Connect the positive lead of the voltmeter (1) to the battery (2) positive terminal post. Connect the negative lead of the voltmeter (1) to the battery (2) positive cable terminal clamp. Rotate and hold the ignition switch in the Start position. Observe the voltmeter. If voltage is detected, correct the poor connection between the battery positive cable terminal clamp and the battery positive terminal post.

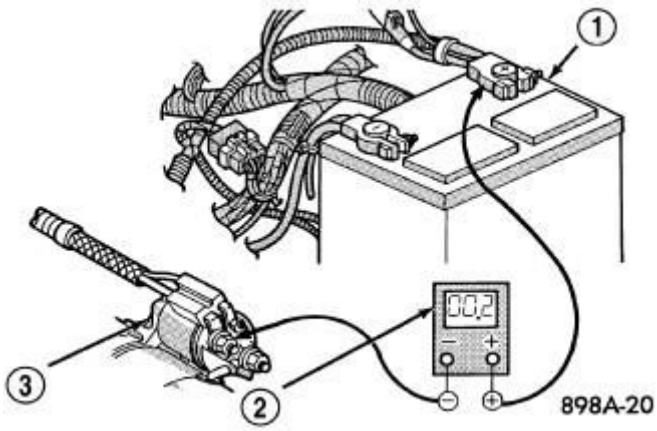

Fig. 28: Connecting Voltmeter To Terminal Clamp And Stud
Courtesy of CHRYSLER GROUP, LLC

3. Connect the voltmeter (2) to measure between the battery positive cable terminal clamp (1) and the starter solenoid B(+) terminal stud (3). Rotate and hold the ignition switch in the Start position. Observe the voltmeter. If the reading is above 0.2 volt, clean and tighten the battery positive cable eyelet terminal connection at the starter solenoid B(+) terminal stud. Repeat the test. If the reading is still above 0.2 volt, replace the faulty battery positive cable.

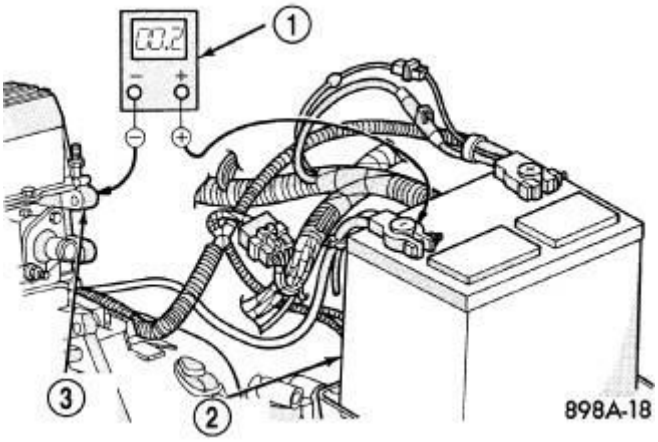

Fig. 29: Connecting Voltmeter To Battery And Engine Block
Courtesy of CHRYSLER GROUP, LLC

4. Connect the voltmeter (1) to measure between the battery (2) negative cable terminal clamp and a good clean ground on the engine block (3). Rotate and hold the ignition switch in the Start position. Observe the voltmeter. If the reading is above 0.2 volt, clean and tighten the battery negative cable eyelet terminal connection to the engine block. Repeat the test. If the reading is still above 0.2 volt, replace the faulty battery negative cable.

TRAY, BATTERY

DESCRIPTION

DESCRIPTION

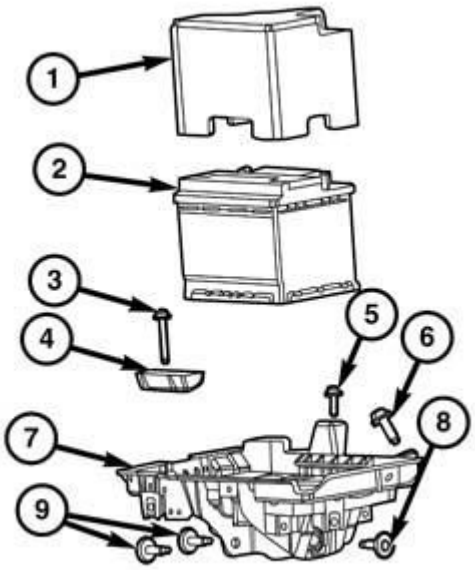

080770037

Fig. 30: Battery, Battery Tray And Related Components
Courtesy of CHRYSLER GROUP, LLC

The battery (2) is placed and secured in a plastic molded battery tray (7). The battery tray is located in the left front side of the vehicle, just ahead of the left front wheel and tire assembly. The battery tray is secured to the left front frame rail.

REMOVAL

DIESEL

Fig. 31: Battery & Cables
Courtesy of CHRYSLER GROUP, LLC

1. Remove the battery. Refer to **BATTERY, REMOVAL**.

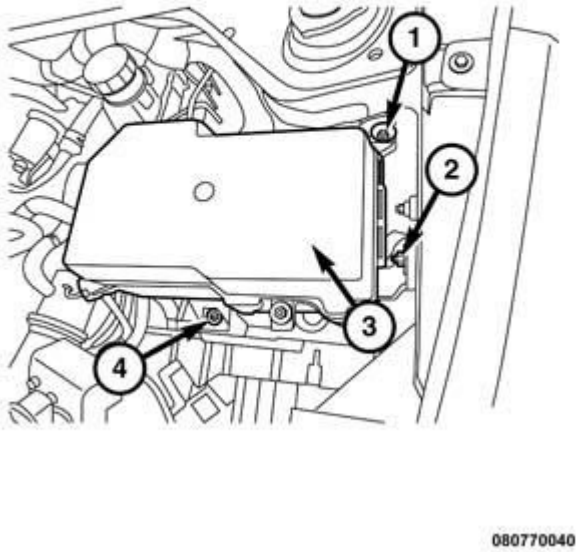

Fig. 32: Power Distribution Center
Courtesy of CHRYSLER GROUP, LLC

2. Remove the Power Distribution Center (PDC) (3) and position aside.

Fig. 33: Battery Tray & Engine Wire Harness Retainer
Courtesy of CHRYSLER GROUP, LLC

3. Detach the hood release cable from battery tray.
4. Remove the wiring harness retainer (1) from the battery tray (2).

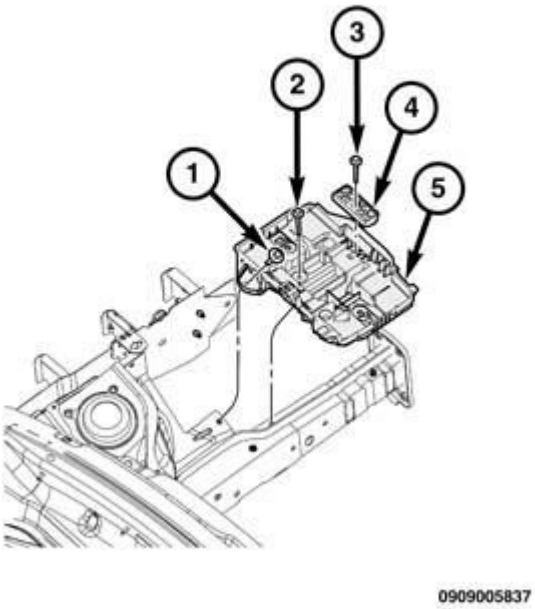

Fig. 34: Identifying Battery Tray & Fasteners
Courtesy of CHRYSLER GROUP, LLC

5. Remove the upper battery tray bolt (2).

6. Partially raise and support the vehicle. Refer to **HOISTING, STANDARD PROCEDURE** .
7. Remove the front left side tire.

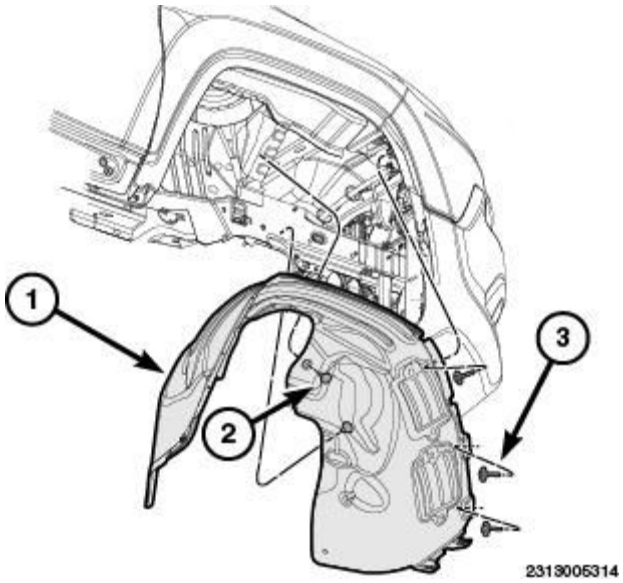

Fig. 35: Identifying Inner Wheel Splash Shield & Fasteners
Courtesy of CHRYSLER GROUP, LLC

8. Remove the inner wheel splash shield (1).
9. Remove the battery tray outer side rail bolt.
10. Remove the bolt (2) that secures the washer solvent bottle to the battery tray (1).
11. Raise the vehicle.

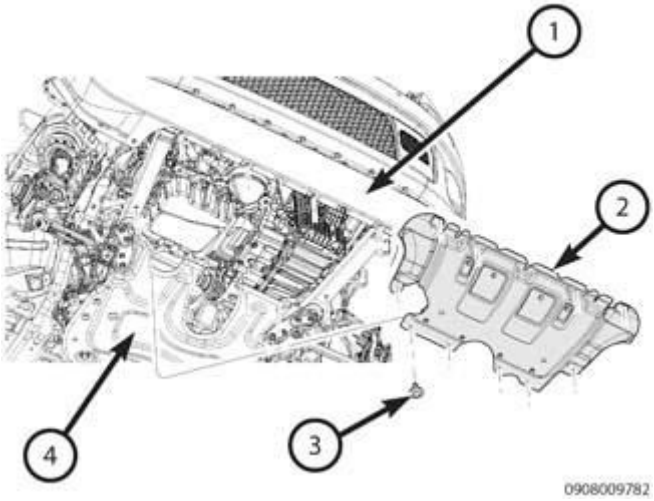

Fig. 36: Removing/Installing Starter
Courtesy of CHRYSLER GROUP, LLC

12. Remove the lower belly pan.

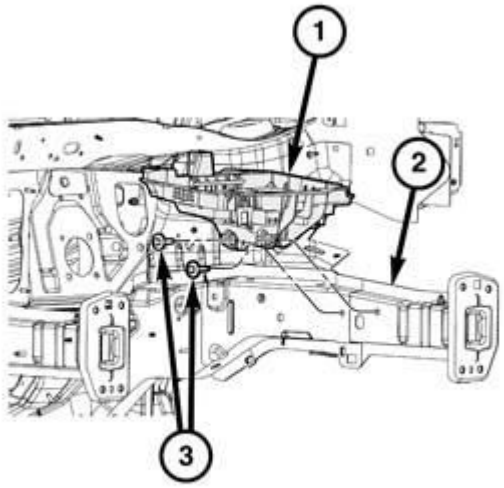

0909005828

Fig. 37: Identifying Battery Tray, Inner Frame Rail & Bolts
Courtesy of CHRYSLER GROUP, LLC

13. Remove the bolts (3) that secure the battery tray (1) to the inner frame rail (2).
14. Lower the vehicle.
15. Using care, remove the battery tray from the vehicle by rotating the tray.

REMOVAL

Fig. 38: Battery & Cables
Courtesy of CHRYSLER GROUP, LLC

1. Remove the battery. Refer to **BATTERY, REMOVAL**.
2. Remove the Power Distribution Center (PDC) and position aside.
3. Remove the Powertrain Control Module (PCM) from the mount.

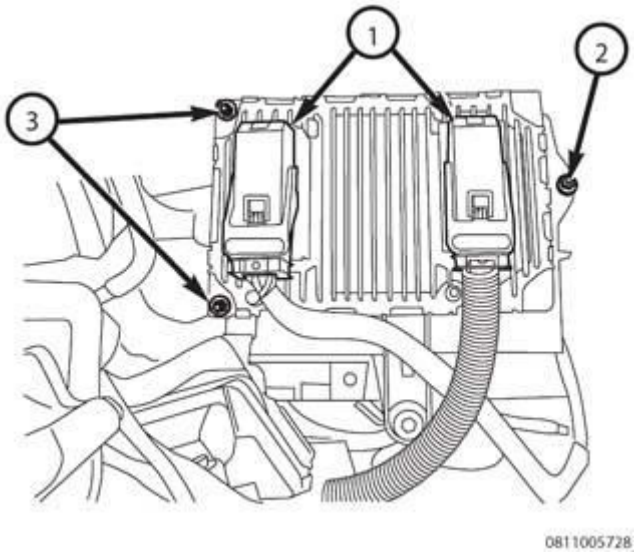

Fig. 39: Powertrain Control Module Electrical Connectors & Nuts
Courtesy of CHRYSLER GROUP, LLC

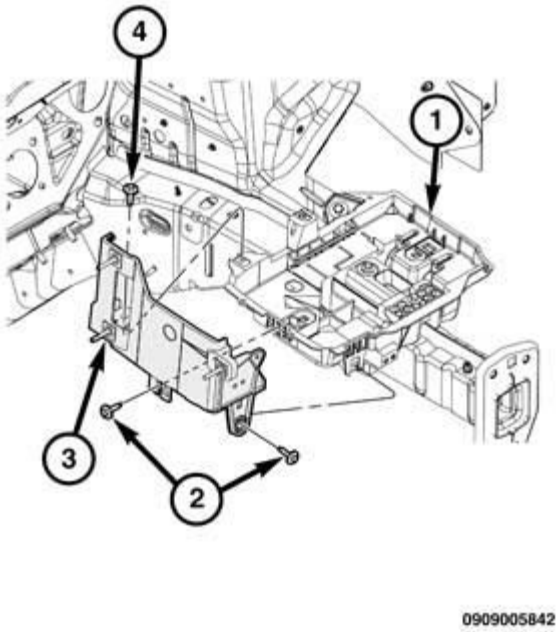

Fig. 40: Battery Tray, PCM Mount & Bolts
Courtesy of CHRYSLER GROUP, LLC

4. If required, remove the PCM mount.

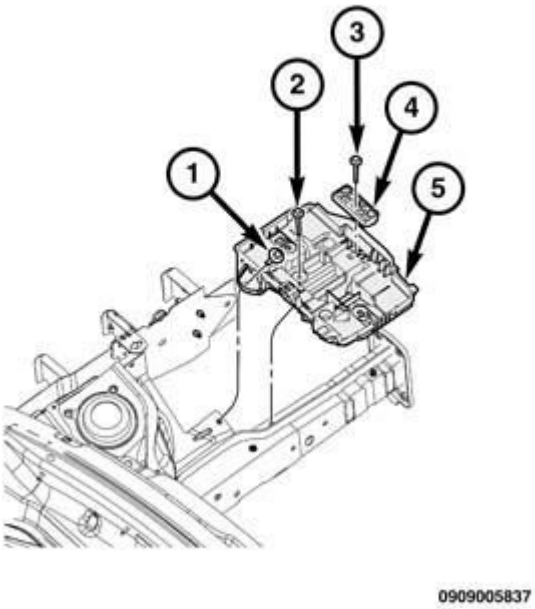

Fig. 41: Identifying Battery Tray & Fasteners
Courtesy of CHRYSLER GROUP, LLC

5. Remove the wiring harness retainers from the battery tray (5).
6. Remove the upper battery tray bolt (2).
7. Partially lift vehicle.
8. Remove the front left side tire.
9. Remove the inner wheel splash shield (1).

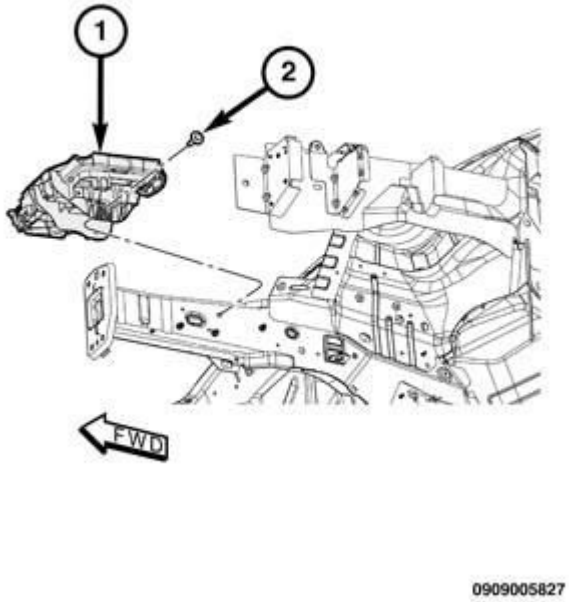

Fig. 42: Identifying Battery Tray & Bolt
Courtesy of CHRYSLER GROUP, LLC

10. Remove the bolt (2) that secures the washer solvent bottle to the battery tray (1).
11. Remove the wiring harness from the battery tray.
12. Lift the vehicle.

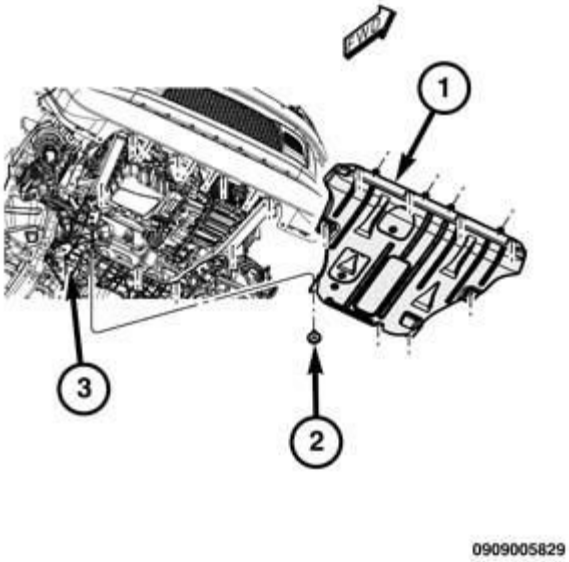

Fig. 43: Removing/Installing Belly Pans
Courtesy of CHRYSLER GROUP, LLC

13. Remove the lower belly pan.

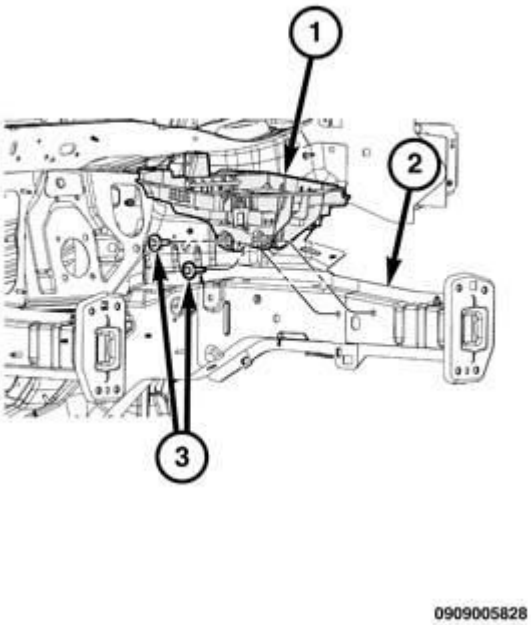

Fig. 44: Identifying Battery Tray, Inner Frame Rail & Bolts
Courtesy of CHRYSLER GROUP, LLC

14. Remove the bolts (3) that secure the battery tray (1) to the inner frame rail (2).
15. Lower the vehicle.
16. Using care, remove the battery tray from the vehicle by rotating the tray.

INSTALLATION

DIESEL

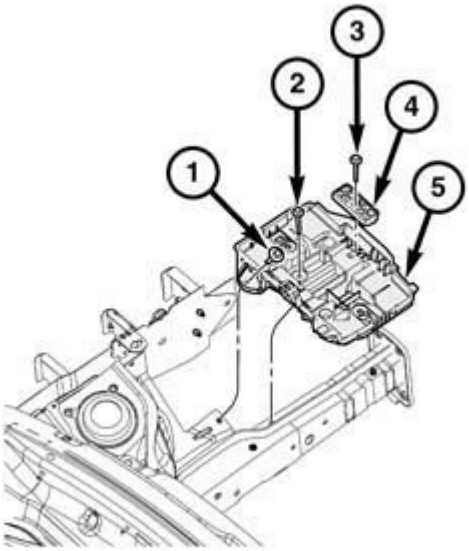

0909005837

Fig. 45: Identifying Battery Tray & Fasteners
Courtesy of CHRYSLER GROUP, LLC

1. Position the battery tray (5) onto the frame rail.
2. Loosely install the upper battery tray bolt (1, 2).
3. Partially lift the vehicle.
4. Install the bolt (2) that secures the washer solvent bottle to the battery tray (1) and tighten to 12 N.m (106 in. lbs.).
5. Install the outer side rail bolt (2). Tighten bolt to 12 N.m (106 in. lbs.).

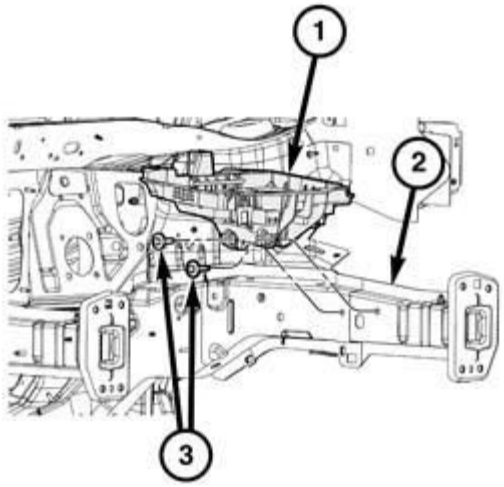

0909005828

Fig. 46: Identifying Battery Tray, Inner Frame Rail & Bolts
Courtesy of CHRYSLER GROUP, LLC

6. Install the inner battery tray to frame rail bolts (3). Tighten bolt to 12 N.m (106 in. lbs.).

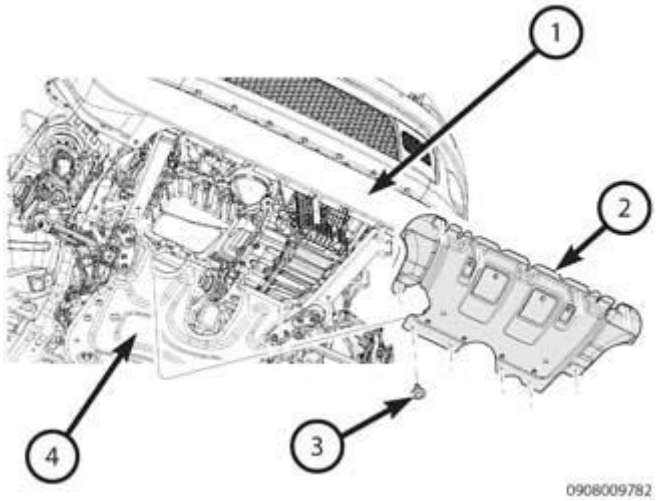

Fig. 47: Removing/Installing Starter
Courtesy of CHRYSLER GROUP, LLC

7. Raise the vehicle.
8. Install the belly pan. Tighten bolts (2) to 10 N.m (89 in. lbs.).
9. Lower the vehicle.

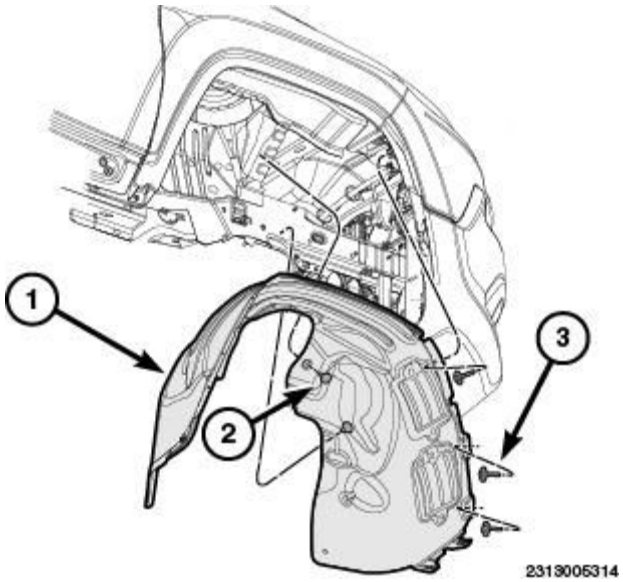

Fig. 48: Identifying Inner Wheel Splash Shield & Fasteners
Courtesy of CHRYSLER GROUP, LLC

10. Install the inner splash shield (1).
11. Install the wheel.

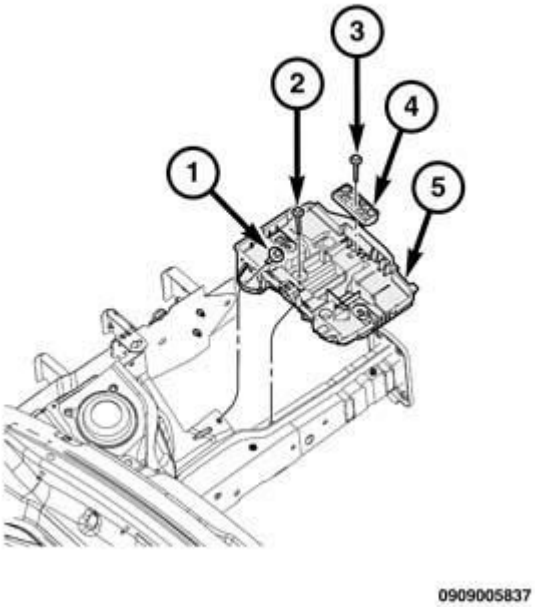

Fig. 49: Identifying Battery Tray & Fasteners
Courtesy of CHRYSLER GROUP, LLC

12. Tighten the upper battery tray bolts. Tighten bolt to 12 N.m (106 in. lbs.).

Fig. 50: Battery Tray & Engine Wire Harness Retainer
Courtesy of CHRYSLER GROUP, LLC

13. Attach the hood release cable from battery tray.
14. Install the wiring harness (1) onto the battery tray (2).

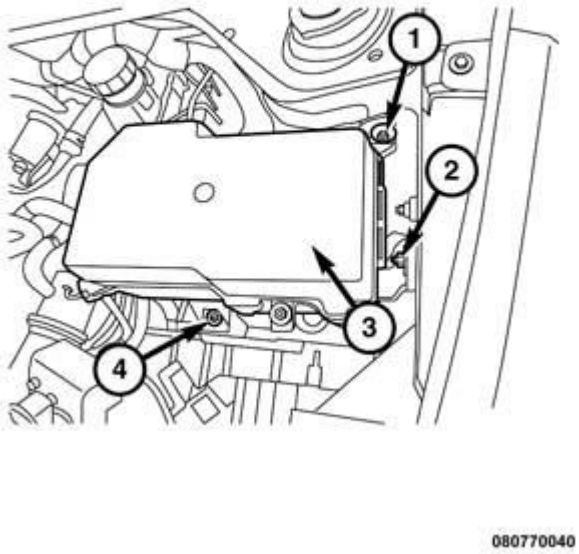

Fig. 51: Power Distribution Center
Courtesy of CHRYSLER GROUP, LLC

15. Install the PDC (3).

Fig. 52: Battery & Cables
Courtesy of CHRYSLER GROUP, LLC

16. Install the battery. Refer to **BATTERY, INSTALLATION**.

INSTALLATION

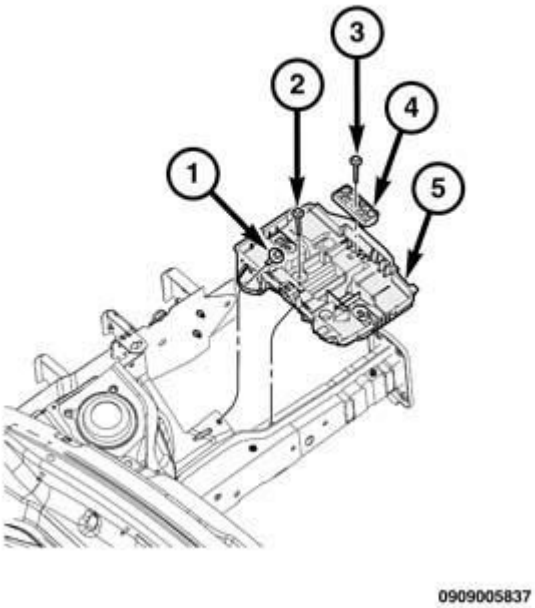

Fig. 53: Identifying Battery Tray & Fasteners
Courtesy of CHRYSLER GROUP, LLC

1. Position the battery tray onto the frame rail.
2. Loosely install the upper battery tray bolt (1, 2).
3. Partially lift the vehicle.

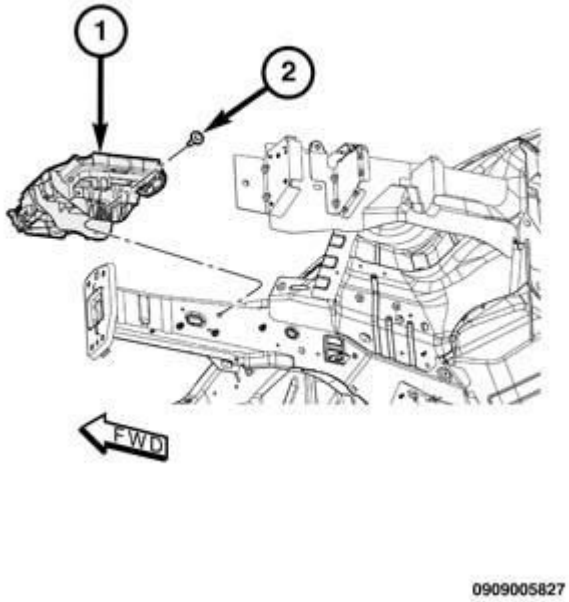

Fig. 54: Identifying Battery Tray & Bolt
Courtesy of CHRYSLER GROUP, LLC

4. Install the outer side rail bolt (2). Tighten bolt to 12 N.m (106 in. lbs.).
5. Install the inner splash shield (1).
6. Install the wiring harness onto the battery tray.
7. Install the wheel.
8. Raise the vehicle.

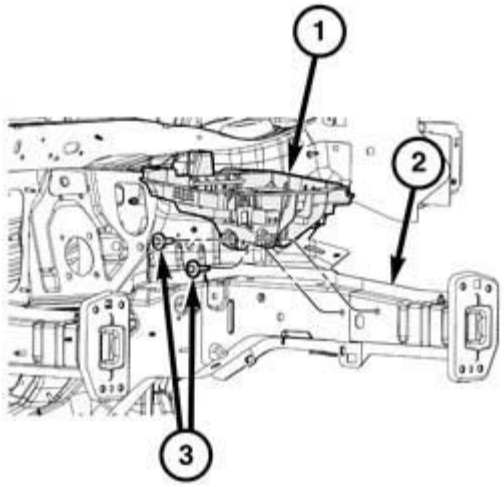

0909005828

Fig. 55: Identifying Battery Tray, Inner Frame Rail & Bolts
Courtesy of CHRYSLER GROUP, LLC

9. Install the inner battery tray to frame rail bolts (3). Tighten bolt to 12 N.m (106 in. lbs.).

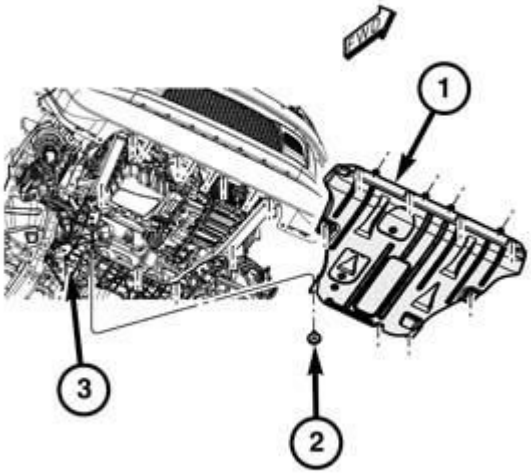

0909005829

Fig. 56: Removing/Installing Belly Pans
Courtesy of CHRYSLER GROUP, LLC

10. Install the belly pan. Tighten bolts (2) to 10 N.m (89 in. lbs.).
11. Lower the vehicle.

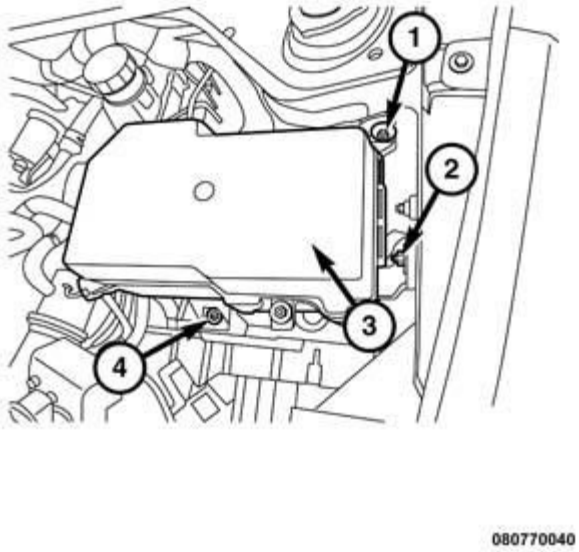

Fig. 57: Power Distribution Center
Courtesy of CHRYSLER GROUP, LLC

12. Tighten the upper battery tray bolts. Tighten bolt to 12 N.m (106 in. lbs.).
13. Install the PDC.
14. Install the wiring harness onto the battery tray.

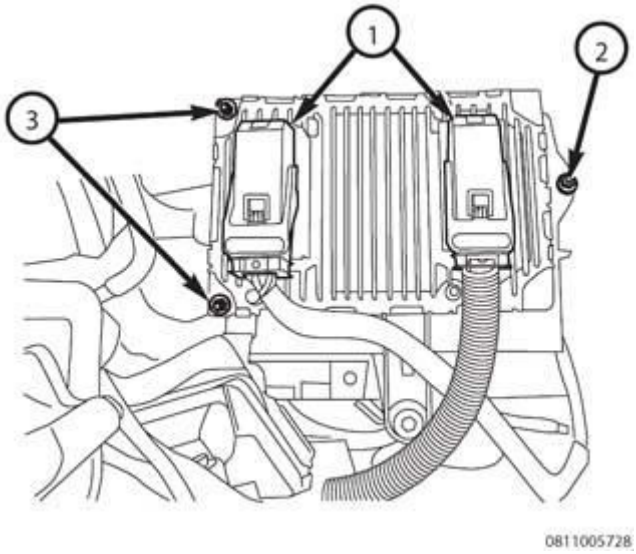

Fig. 58: Powertrain Control Module Electrical Connectors & Nuts

Courtesy of CHRYSLER GROUP, LLC

15. If removed, install the PCM.
16. Connect the electrical connectors (1).

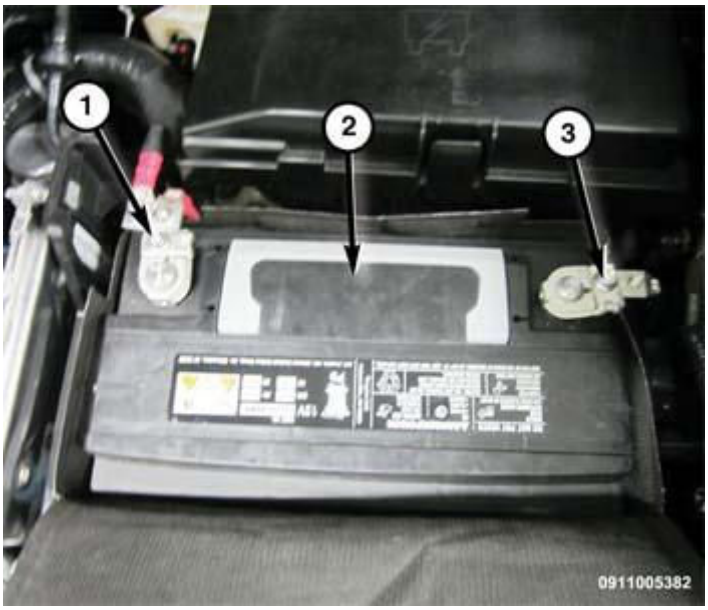

Fig. 59: Battery & Cables
Courtesy of CHRYSLER GROUP, LLC

17. Position the battery (2) onto the battery tray.
18. Install the battery hold down clamp. Tighten bolt to 6 N.m (53 in. lbs.).
19. Install the battery thermal cover.
20. Install the battery positive cable (1). Tighten bolt to 9 N.m (80 in. lbs.).
21. Install the negative battery cable (3). Tighten bolt to 9 N.m (80 in. lbs.).

MODULE, VOLTAGE STABILITY (VSM)

DESCRIPTION

DESCRIPTION

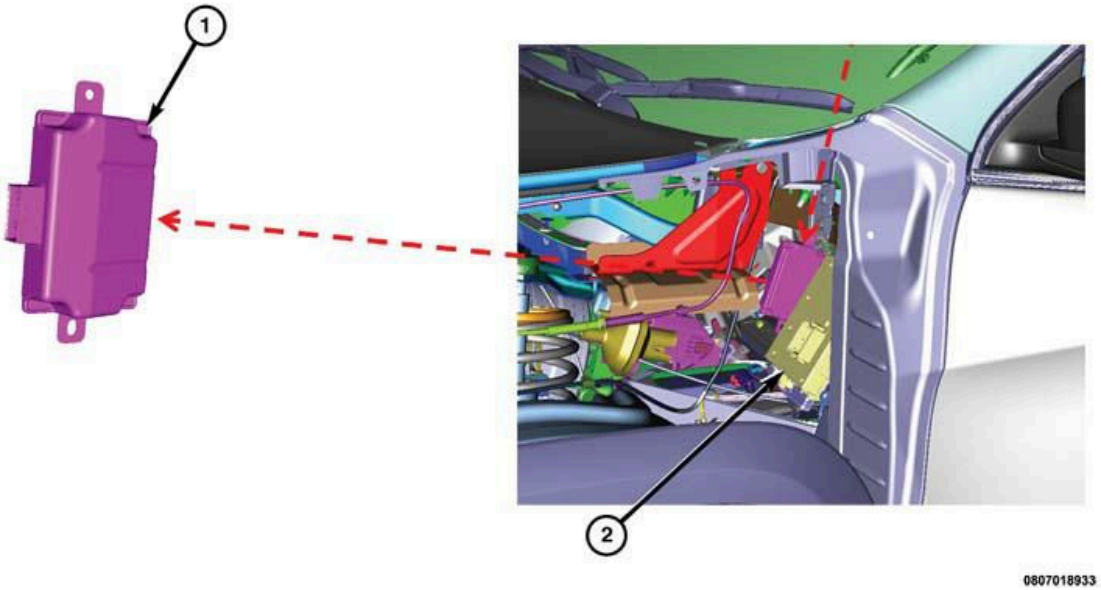

Fig. 60: Identifying Voltage Stability Module (VSM) & Body Control Module (BCM)
Courtesy of CHRYSLER GROUP, LLC

A Voltage Stability Module (VSM) (1) is an electronic module which converts a source of direct current (DC) from one voltage level to another. This model will use dual VSM setup located next to the BCM (2).

OPERATION

OPERATION

The Voltage Stability Module (VSM) supports the following items:

1. Exterior Lights
2. Radio
3. Display (Integrated center stack, various button and switch illuminations)
4. Instrument Cluster
5. HVAC electronic display and operation
6. Integrated Trailer Tow Module (ITBM)
7. Parktronics (PTS)

These components should work as designed and behave as if the engine is running during stop mode.

The AC compressor will not work during stop mode, but HVAC settings will be preserved. Under certain conditions, HVAC will force the engine to restart so that the blower will operate. The heated seats and windows will continue to run during a Stop event, however during period the vehicle restarts, heated seats will turn off temporarily to prevent draw on voltage. The windows will turn off temporarily during restart as well, due to anti-pinch algorithm. The indicator for the seats will remain on to the customer. Heated mirrors are unaffected.

The power outlets will experience a voltage dip during restart and depending what is currently plugged in, there will be different responses: resets, beeps, etc or in some cases no response noted. The 115V AC inverter will reset and may not immediately return to normal operation (depending on what is connected) and manually plugging out and back in of the device may be required.

All motors (e.g. windows, blowers, etc) running during stop will slow down but all should continue to operate normally after restart.

SENSOR, INTELLIGENT BATTERY (IBS)

DESCRIPTION

DESCRIPTION

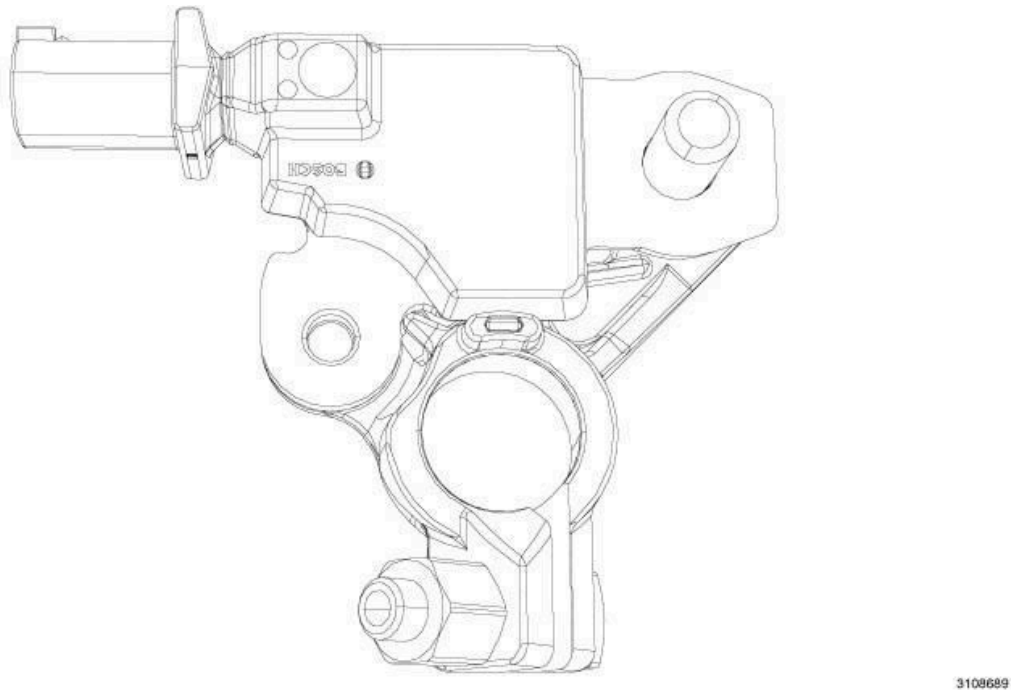

Fig. 61: Intelligent Battery Sensor (IBS) Component Location
Courtesy of CHRYSLER GROUP, LLC

The Intelligent Battery Sensor (IBS) serves to record and process measured battery variable values (current, voltage, temperature) for the vehicle power net management system. The Intelligent Battery Sensor (IBS) will calculate the Battery 'state of charge', 'state of health', and 'state of function'.

The mechanical part of the IBS is comprised of the battery clamp for the negative terminal and a captured bolt to attach the ground cable to. The functional tasks include establishing the electrical contact between the body and the negative battery post, housing the electronic module (actual sensor element) and the provision of an adequate thermal contact between the sensor system temperature sensor and the negative battery post. The mechanical part of the IBS also protects the sensitive electronic components from external influences.

The IBS is mounted directly on the 12 VDC battery's negative post. The battery post clamp nut is a captive nut and the stud will break if the nut is removed.

OPERATION

OPERATION

The battery sensor measures, calculates and reports battery: voltage, current, temperature, state of charge and other parameters via a LIN (Local Interconnect Network) bus to a master control module (engine controller, body controller etc). The battery sensor is used to optimize vehicle performance (maintain battery charge, fuel economy etc) via the vehicles electrical system

The battery sensor is readable/diagnosable via a "scan tool" that can display all of the available parameters needed for vehicle servicing or trouble shooting.

Information the Intelligent Battery Sensor (IBS) send out on the CAN Bus is

- SOC = Battery State of Charge: Percentage the residual charge of the battery in respect to its nominal capacity. In few words represents how much the battery is charged.
- SOH = Battery State of Health: Send a percentage of the real capacity of the battery in respect to the nominal capacity of the battery. It's so called because during the functioning, the battery is subject to irreversible processes that reduce its capacity to be recharged and to give energy (battery ageing).
- SOF = Battery State of Function: The prediction of the minimum voltage that will be reached during a cranking phase

When the IBS is powered up for the first time or is powered after a power disconnection, it goes into a so called "recalibration" phase, where the IBS must recognize the type of battery and its characteristics and state. So in this phase the tolerances on the state functions (SOC, SOF, SOH) are greater than in normal working condition.

REMOVAL

REMOVAL

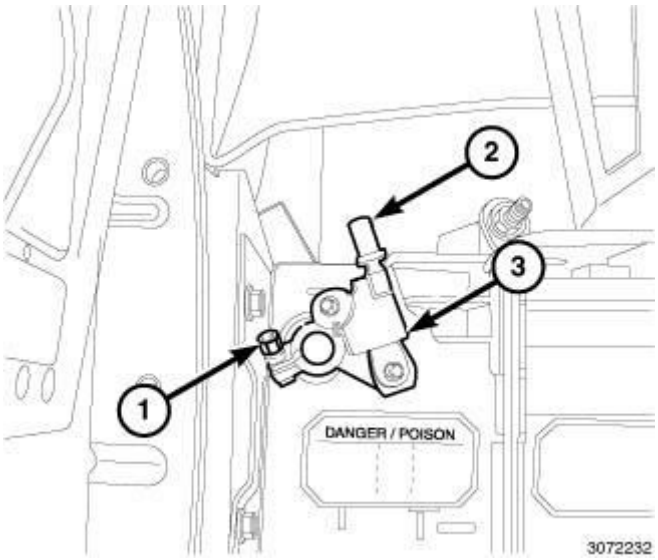

Fig. 62: Intelligent Battery Sensor (IBS) Component Location
Courtesy of CHRYSLER GROUP, LLC

1. Remove the components to access the battery. Refer to **BATTERY, REMOVAL**.

WARNING: Do not remove the captive nut, doing so will cause the stud to break.

2. Loosen the captive nut (1).
3. Disconnect the harness from the Intelligent Battery Sensor (IBS) (2).
4. Remove the IBS (3) from the negative battery post.
5. Remove the negative battery cable retainer to the IBS.
6. Remove the IBS.

INSTALLATION

INSTALLATION

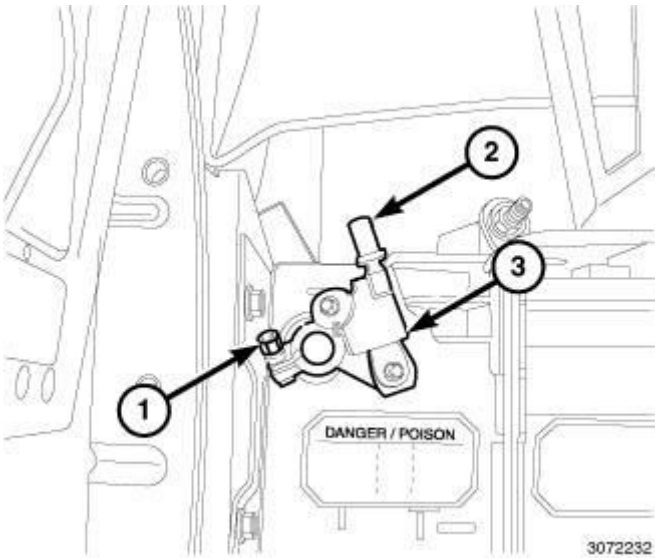

Fig. 63: Intelligent Battery Sensor (IBS) Component Location
Courtesy of CHRYSLER GROUP, LLC

NOTE: Connecting the negative battery cable to the Intelligent Battery Sensor (IBS) must be done before installing on the battery post.

1. Place the IBS onto the negative battery post and push the IBS (3) down until properly seated on the cone of the post.
2. Fasten Ground terminal to M8 (max 20Nm +/-2Nm).

NOTE: M8 has much higher torque than the M6 clamp and can break IBS free if the M6 is tightened prior.

3. Secure the M6 pole clamp (max 6Nm +/- 1.5Nm).
4. Install amp 2 pin connector (Power & LIN) making sure there is no stress on the wires.
5. Install the components removed to access the battery. Refer to **BATTERY, INSTALLATION**.

2014 ELECTRICAL

Charging - Service Information - Cherokee

DESCRIPTION

DESCRIPTION

The charging system consists of:

- Generator
- Electronic Voltage Regulator (EVR) circuitry within the Powertrain Control Module (PCM)
- Ignition switch (refer to the **IGNITION SYSTEM - SERVICE INFORMATION** article for information)
- Battery (refer to the **BATTERY SYSTEM - SERVICE INFORMATION** article for information)
- Inlet Air Temperature (calculated battery temperature) (If equipped)
- Voltmeter (refer to the **INSTRUMENT CLUSTER - SERVICE INFORMATION** article for information if equipped)
- Wiring harness and connections (refer to the appropriate Wiring Information for information)
- Accessory drive belt (refer to the **ENGINE COOLING SYSTEM** article for more information)

DIAGNOSIS AND TESTING

DIAGNOSIS AND TESTING - ON-BOARD DIAGNOSTIC SYSTEM

The Powertrain Control Module (PCM) monitors critical input and output circuits of the charging system, making sure they are operational. A Diagnostic Trouble Code (DTC) is assigned to each input and output circuit monitored by the OBD system. Some circuits are checked continuously and some are checked only under certain conditions.

If the OBD system senses that a monitored circuit is bad, it will put a DTC into electronic memory. The DTC will stay in electronic memory as long as the circuit continues to be bad. The PCM is programmed to clear the memory after 40 good trips if the problem does not occur again.

The following procedures may be used to diagnose the charging system if:

- the check gauges lamp or battery lamp is illuminated with the engine running
- the voltmeter (if equipped) does not register properly
- an undercharged or overcharged battery condition occurs.

Remember that an undercharged battery is often caused by:

- accessories being left on with the engine not running

- a faulty or improperly adjusted switch that allows a lamp to stay on. Refer to Ignition-Off Draw Test. Refer to **BATTERY, STANDARD PROCEDURE** .
- loose generator belt.

DIAGNOSTIC TROUBLE CODES

A DTC description can be read using the scan tool. Refer to the appropriate ELECTRICAL DIAGNOSTICS article for information.

A DTC does not identify which component in a circuit is bad. Thus, a DTC should be treated as a symptom, not as the cause for the problem. In some cases, because of the design of the diagnostic test procedure, a DTC can be the reason for another DTC to be set. Therefore, it is important that the test procedures be followed in sequence, to understand what caused a DTC to be set.

ERASING DIAGNOSTIC TROUBLE CODES

The scan tool must be used to erase a DTC.

INSPECTION

The Powertrain Control Module (PCM) monitors critical input and output circuits of the charging system, making sure they are operational. A Diagnostic Trouble Code (DTC) is assigned to each input and output circuit monitored by the On-Board Diagnostic (OBD) system. Some charging system circuits are checked continuously, and some are checked only under certain conditions.

Refer to Diagnostic Trouble Codes in **DTC INDEX** for more DTC information. This will include a complete list of DTCs including DTCs for the charging system.

To perform a complete test of the charging system, refer to the appropriate ELECTRICAL DIAGNOSTICS article and the scan tool. Perform the following inspections before attaching the scan tool.

1. Inspect the battery condition. Refer to the **BATTERY SYSTEM - SERVICE INFORMATION** article for procedures. Refer to **DIAGNOSIS AND TESTING** .
2. Inspect condition of battery cable terminals, battery posts, connections at engine block, starter solenoid and relay. They should be clean and tight. Repair as required.
3. Inspect all fuses in the fuse block for tightness in receptacles. They should be properly installed and tight. Repair or replace as required.
4. Inspect generator mounting bolts for tightness. Replace or tighten bolts if required. Refer to the **GENERATOR** Removal/Installation for torque specifications. Refer to **SPECIFICATIONS**.
5. Inspect generator drive belt condition and tension. Tighten or replace belt as required.
6. Inspect decoupler pulley (if equipped). Ensure decoupler pulley is driving the alternator rotor.
7. Inspect automatic belt tensioner (if equipped). Refer to **ENGINE COOLING SYSTEM** article for more information.
8. Inspect generator electrical connections at generator field, battery output, and ground terminal (if equipped). Also check generator ground wire connection at engine (if equipped). They should all be clean

and tight. Repair as required.

SPECIFICATIONS

GENERATOR

MANUFACTURER	ENGINE	NOMINAL RATING	MINIMUM OUTPUT (AMPS) (@ SPECIFIED TEST CONDITIONS)
MITSUBISHI ELECTRIC	2.0L, 2.4L	160A	120A
DENSO	3.2L Light Duty Cooling	160A	120A
DENSO	3.2L Heavy Duty Cooling	180A	130A
TEST CONDITIONS			
1. Engine RPM : 2500 RPM (ENGINE HOT)			
2. Voltage Output : 13.0 - 16.0 V			

TORQUE-DIESEL

DESCRIPTION	N.m	Ft. Lbs.	In. Lbs.
Battery Terminal Nut	9	-	80
Generator Mounting Bolts	70	52	-
Generator B+ Cable Terminal Nut	10	-	89

TORQUE

DESCRIPTION	N.m	Ft. Lbs.	In. Lbs.
Battery Hold Down Clamp Bolt	16	-	142
Battery Terminal Nut	16.5	-	145
Generator B+ nut	4	-	36
Generator Mounting Bolt	25	18	-
Negative Battery Cable Remote Terminal Nut	16.5	-	145

GENERATOR

REMOVAL

2.4L

1. Remove the engine cover.

2. Disconnect the negative battery cable.

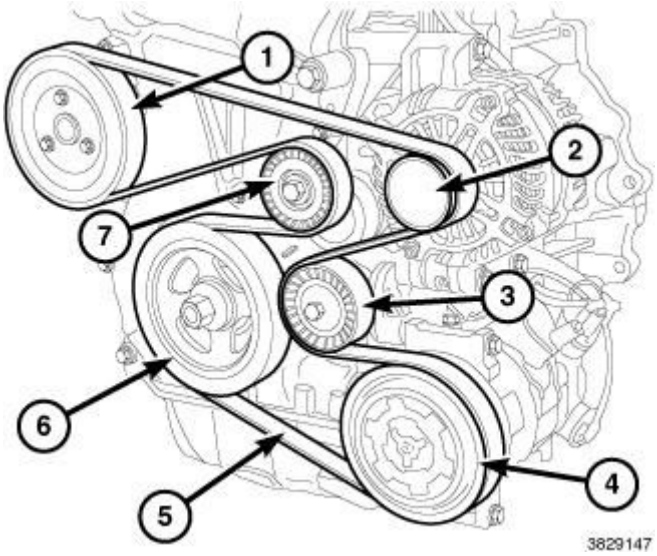

Fig. 1: Accessory Drive Belt Routing
Courtesy of CHRYSLER GROUP, LLC

3. Remove the accessory drive belt. Refer to **BELT, SERPENTINE, REMOVAL** .

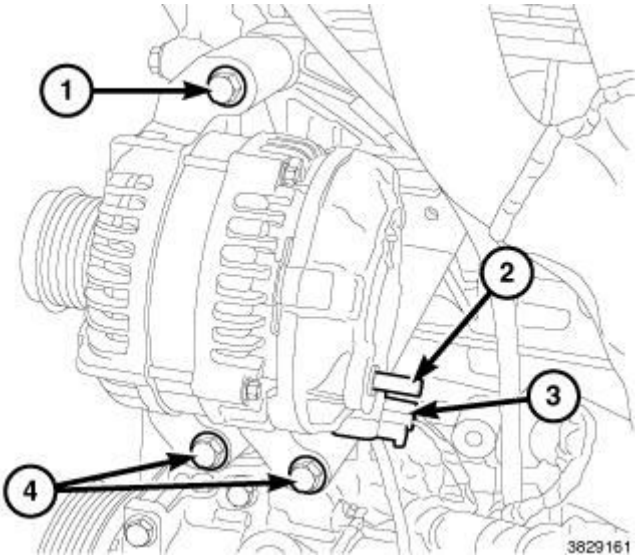

Fig. 2: Generator Stud, Bolts & Connector
Courtesy of CHRYSLER GROUP, LLC

4. Disconnect the field generator harness connector (3).
5. Remove the B+ cable from the generator stud (2).
6. Remove the upper generator bolt (1).
7. Remove the lower generator bolts (4).

3.2L

1. Perform the fuel system pressure release. Refer to **FUEL SYSTEM PRESSURE RELEASE PROCEDURE** .
2. Disconnect and isolate the battery negative cable.

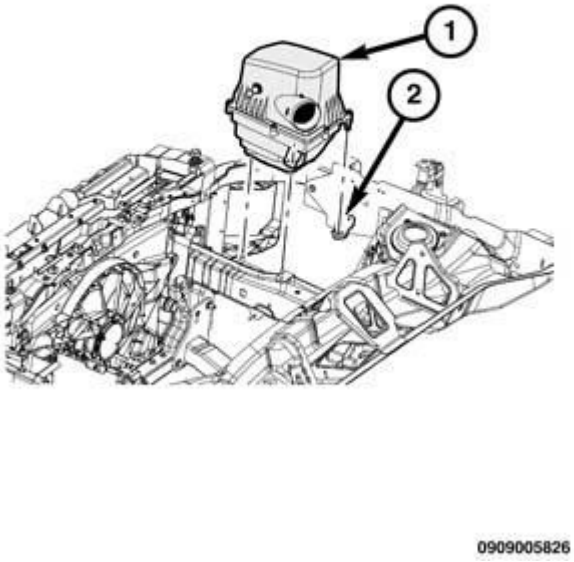

Fig. 3: Air Filter Housing Body
Courtesy of CHRYSLER GROUP, LLC

3. Remove the air filter housing body (1). Refer to **BODY, AIR CLEANER, REMOVAL** .
4. Raise and support the vehicle.

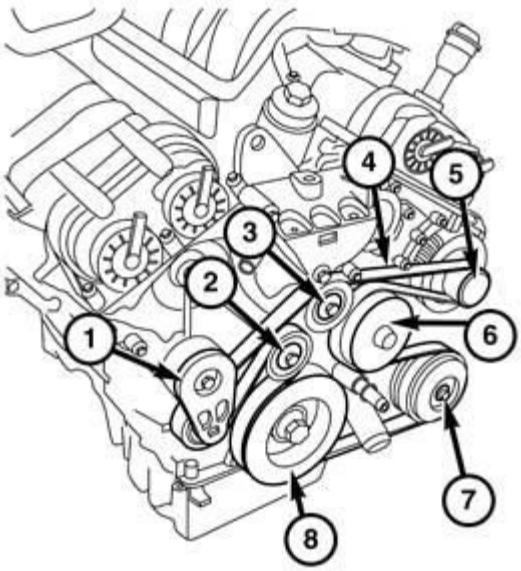

0708003948

Fig. 4: Removing/Installing Accessory Drive Belt
Courtesy of CHRYSLER GROUP, LLC

5. Remove the right side front wheel.
6. Remove the accessory drive belt. Refer to **BELT, SERPENTINE, REMOVAL** .

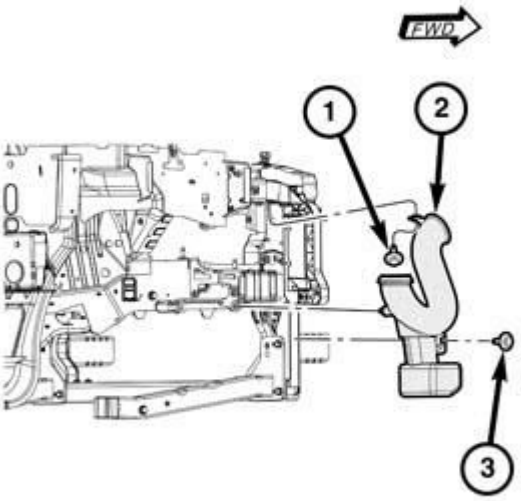

0909005840

Fig. 5: Air Intake Inlet Tube

Courtesy of CHRYSLER GROUP, LLC

7. Remove the air intake inlet tube (2).
8. Raise the vehicle.

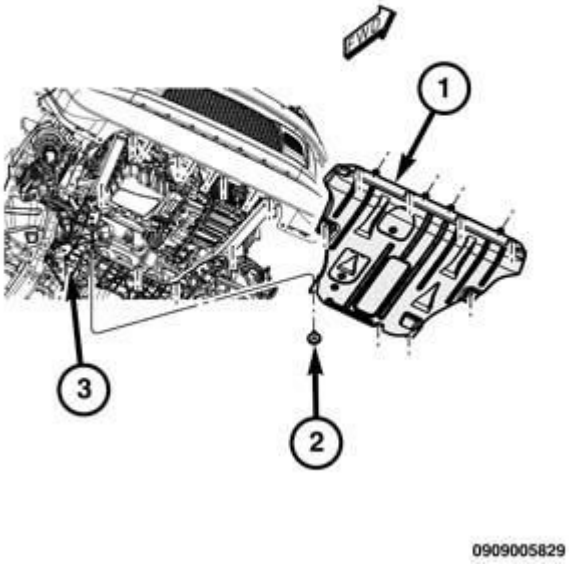

Fig. 6: Removing/Installing Belly Pans
Courtesy of CHRYSLER GROUP, LLC

9. Remove the belly pan (1).

NOTE: **The A/C compressor bolts are removed to allow for extra clearance for the generator to pass between the upper and lower frame.**

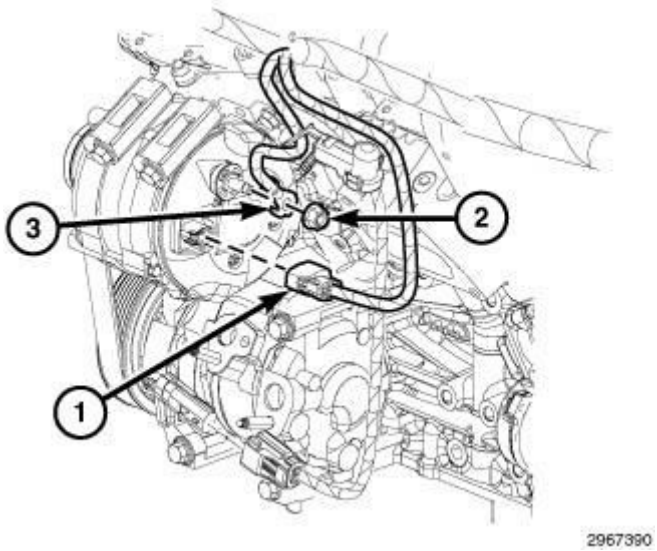

Fig. 7: Generator Field Electrical Connector & B+ Retainer
Courtesy of CHRYSLER GROUP, LLC

10. Remove the A/C compressor bolts.
11. Disconnect the field generator harness connector (1).
12. Remove the B+ cable (3) from the generator.
13. Lower the vehicle.
14. Using a suitable jack. Support the engine.

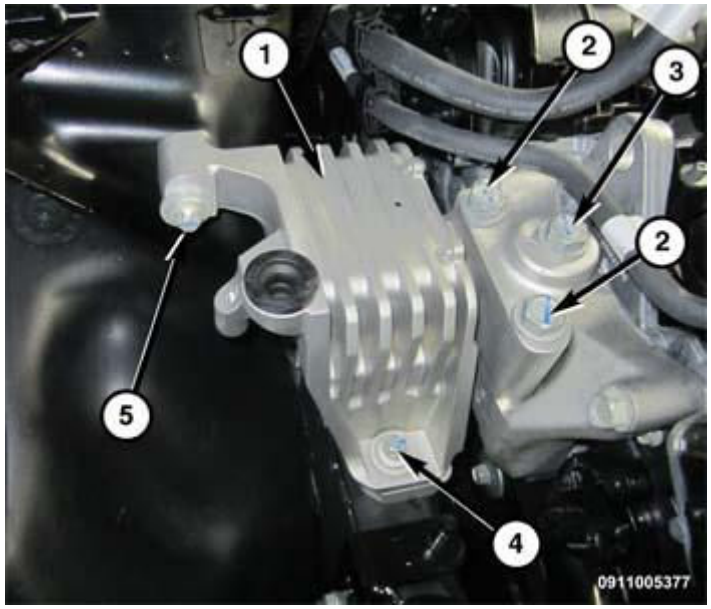

Fig. 8: Removing/Installing Right Engine Mount Assembly
Courtesy of CHRYSLER GROUP, LLC

15. Remove the upper engine mount bolts to engine mount bracket (2, 3).

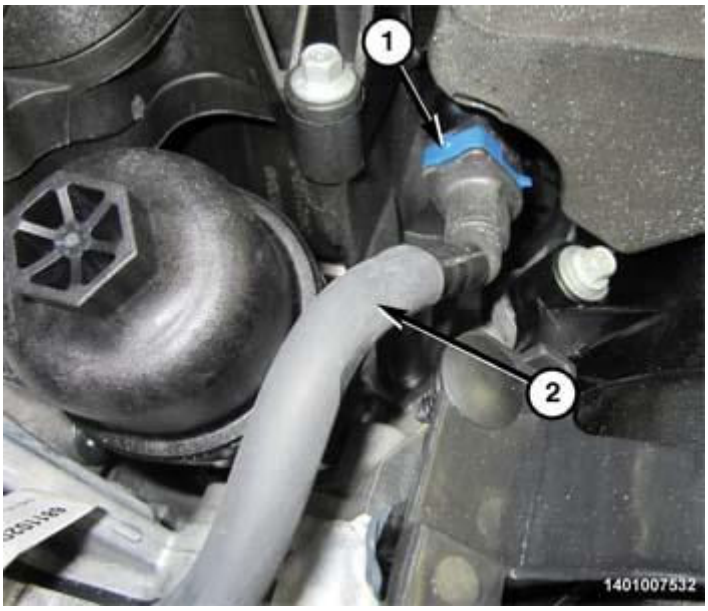

Fig. 9: Fuel Line At Fuel Rail
Courtesy of CHRYSLER GROUP, LLC

16. Remove the fuel line (2) at the fuel rail.

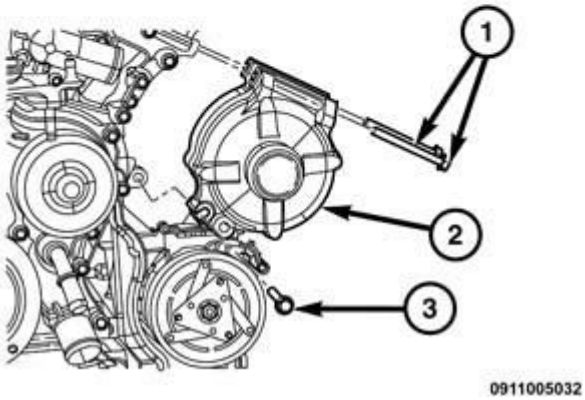

Fig. 10: Generator & Mounting Bolts
Courtesy of CHRYSLER GROUP, LLC

17. Remove the lower generator mounting bolt (3).
18. Remove the top two generator mounting bolts (1).

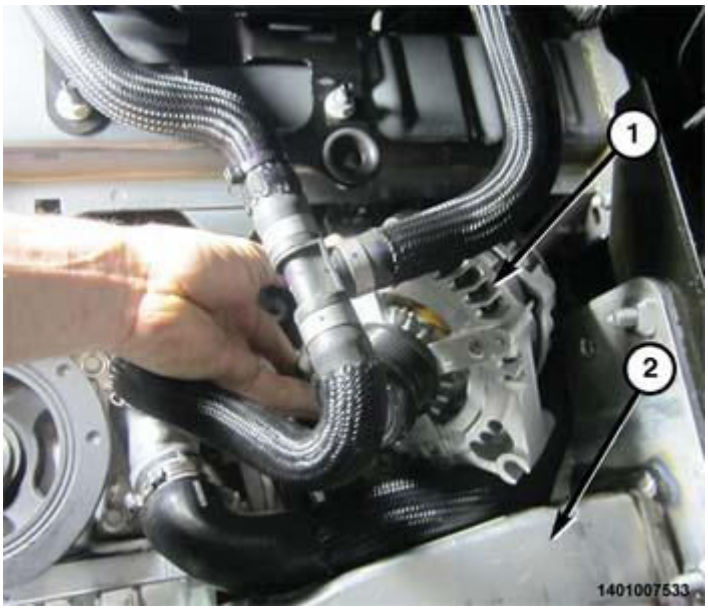

Fig. 11: Generator & Frame Rails
Courtesy of CHRYSLER GROUP, LLC

19. Carefully remove the generator (1) between the upper and lower frame rail (2).

2.0L DIESEL

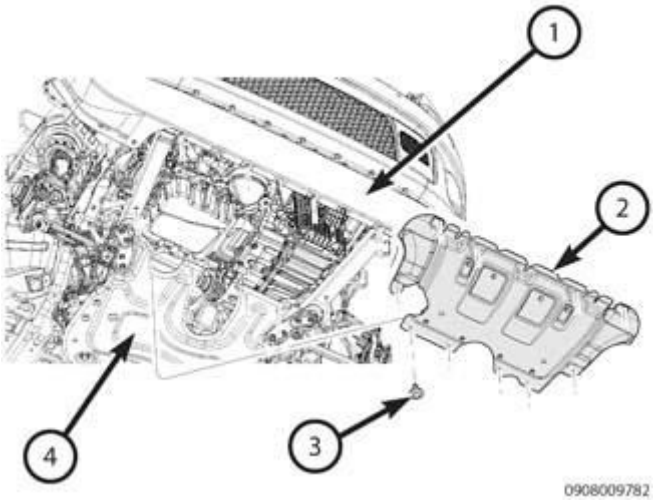

Fig. 12: Removing/Installing Starter
Courtesy of CHRYSLER GROUP, LLC

1. Disconnect and isolate the negative battery cable.
2. Remove bolts (3) and the belly pan (2).

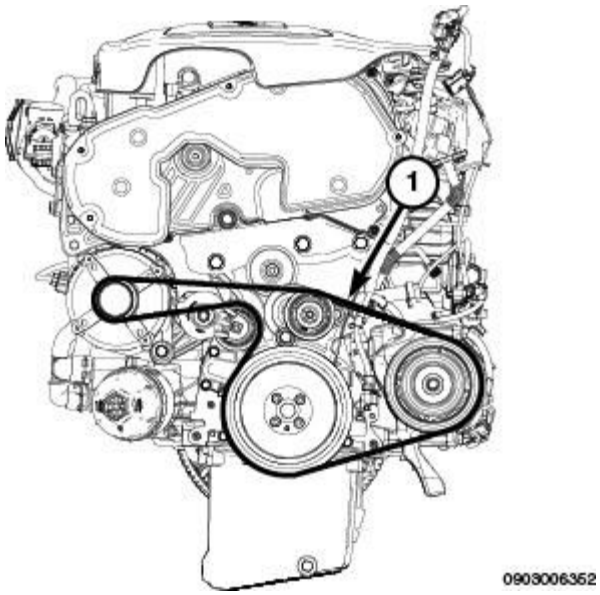

Fig. 13: Accessory Drive Belt Routing - 2.0L Diesel
Courtesy of CHRYSLER GROUP, LLC

3. Remove the accessory drive belt (1). Refer to **BELT, SERPENTINE, REMOVAL** .

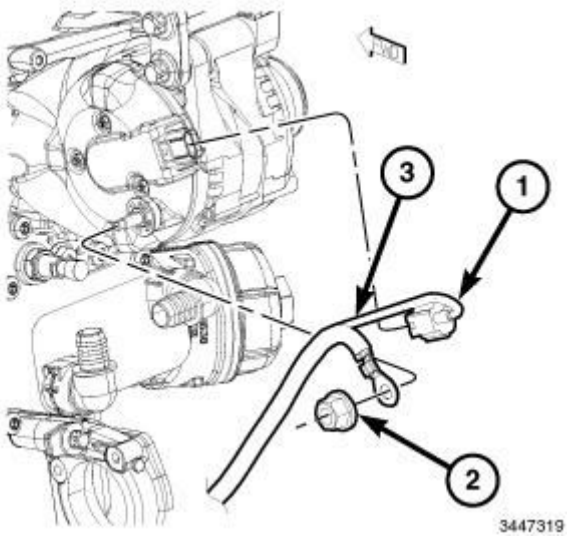

Fig. 14: B+ Retainer, Generator Field Connector & B+ Cable
Courtesy of CHRYSLER GROUP, LLC

4. Remove the B+ nut (2).
5. Disconnect the generator field connector (1) and position aside the B+ cable (3).

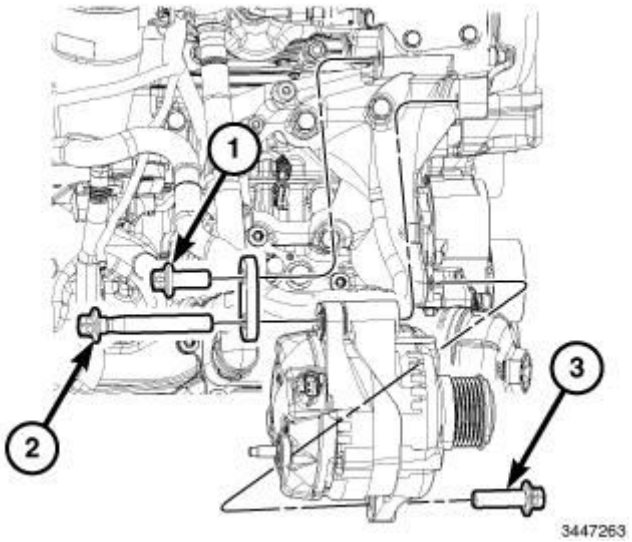

Fig. 15: Generator Rear Support Bracket Retainer, Upper Generator Mounting Retainer & Lower Generator Mounting Retainer
Courtesy of CHRYSLER GROUP, LLC

6. Loosen the upper generator rear support bracket bolt (1) (not necessary to remove).
7. Remove bolts (2, 3) and the generator.

INSTALLATION

2.4L

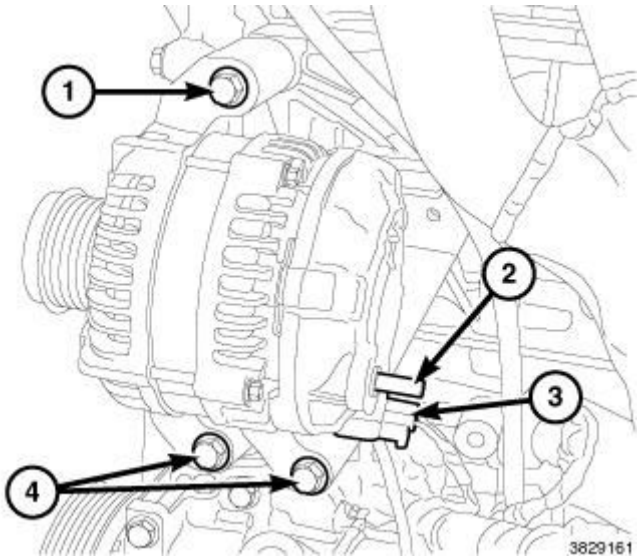

Fig. 16: Generator Stud, Bolts & Connector
Courtesy of CHRYSLER GROUP, LLC

1. Install the generator to the engine block. Tighten the bolts to 25 N.m (18 ft. lbs.).

2. Install the positive cable to the rear of the generator stud. Tighten the nut to 4 N.m (36 In. lbs.).
3. Connect the field generator harness connector.

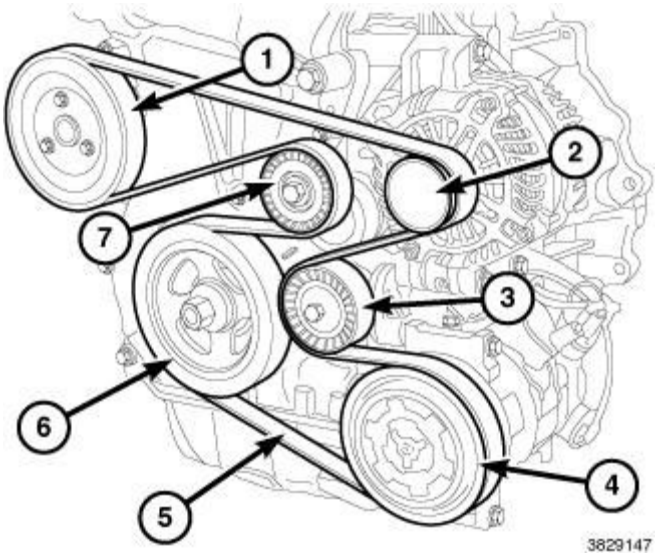

Fig. 17: Accessory Drive Belt Routing
Courtesy of CHRYSLER GROUP, LLC

4. Install the accessory drive belt. Refer to **BELT, SERPENTINE, INSTALLATION** .
5. Connect the negative battery cable.
6. Install the engine cover.

3.2L

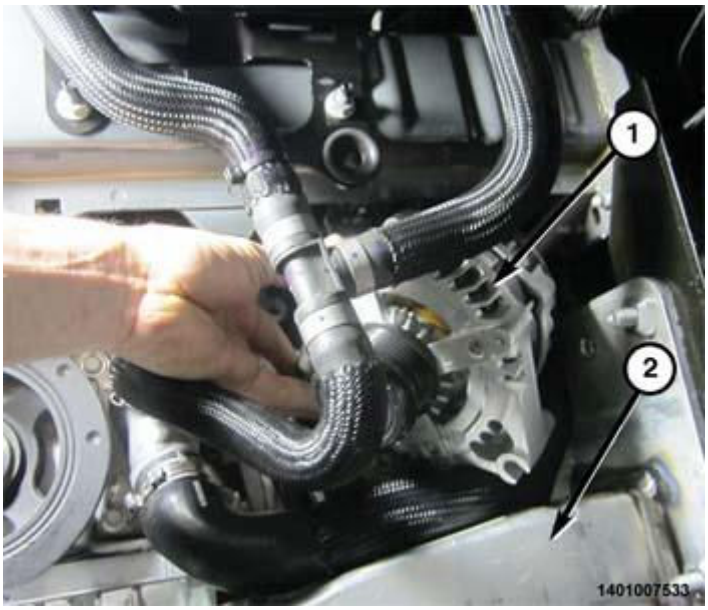

Fig. 18: Generator & Frame Rails

Courtesy of CHRYSLER GROUP, LLC

1. Carefully position the generator (1) up to the engine block.

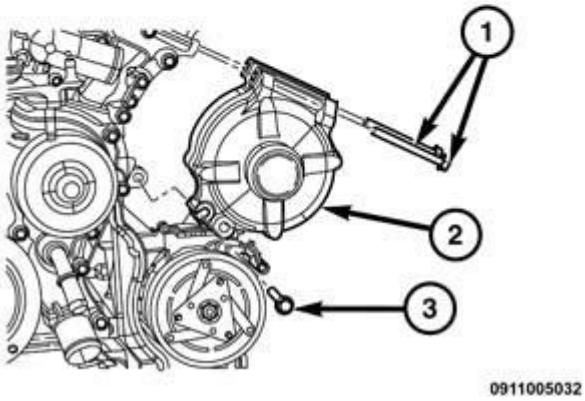

Fig. 19: Generator & Mounting Bolts
Courtesy of CHRYSLER GROUP, LLC

2. Loosely install the top two generator mounting retainers (2).
3. Install the lower generator mounting bolt (3).

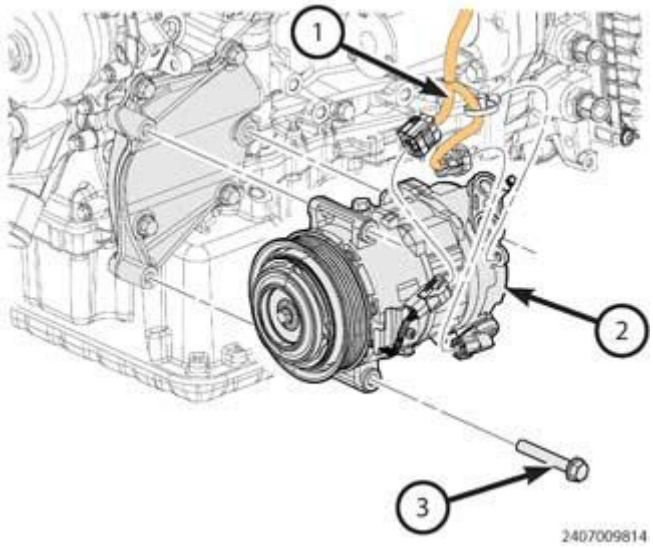

Fig. 20: Removing/Installing A/C Compressor

Courtesy of CHRYSLER GROUP, LLC

4. Position the A/C compressor (2) to the engine. Tighten the bolts to 28 N.m (21 ft. lbs.).
5. Lower the vehicle.

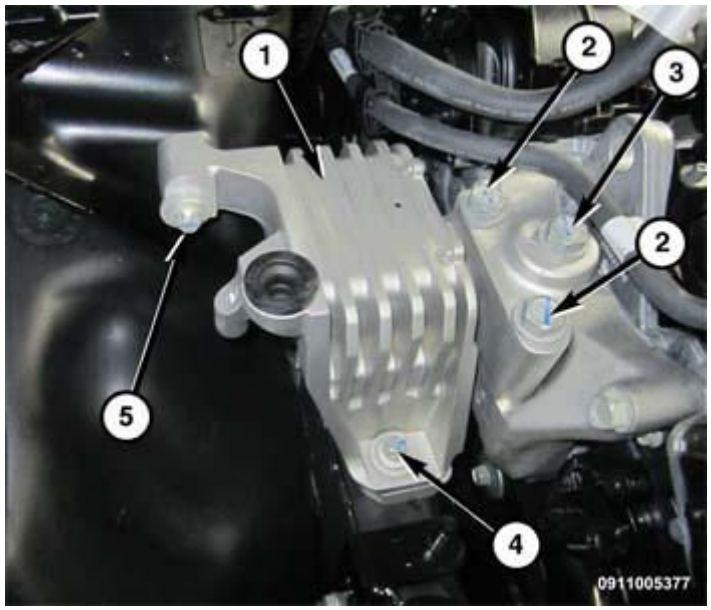

Fig. 21: Removing/Installing Right Engine Mount Assembly
Courtesy of CHRYSLER GROUP, LLC

6. Install the upper engine mount bolts (2, 3). Tighten mount to mount bracket bolts (2, 3) to 72 N.m (53 ft. lbs.).

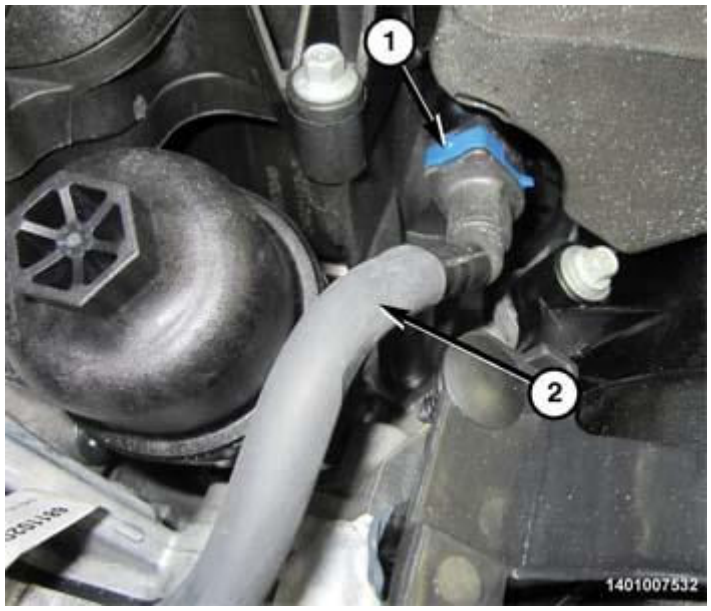

Fig. 22: Fuel Line At Fuel Rail
Courtesy of CHRYSLER GROUP, LLC

7. Install the fuel line (2) at the fuel rail.

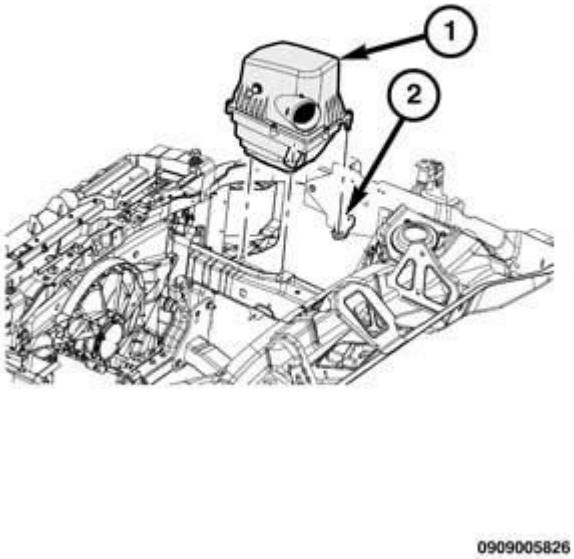

Fig. 23: Air Filter Housing Body
Courtesy of CHRYSLER GROUP, LLC

8. Install the air filter housing body (1). Refer to **BODY, AIR CLEANER, INSTALLATION** .

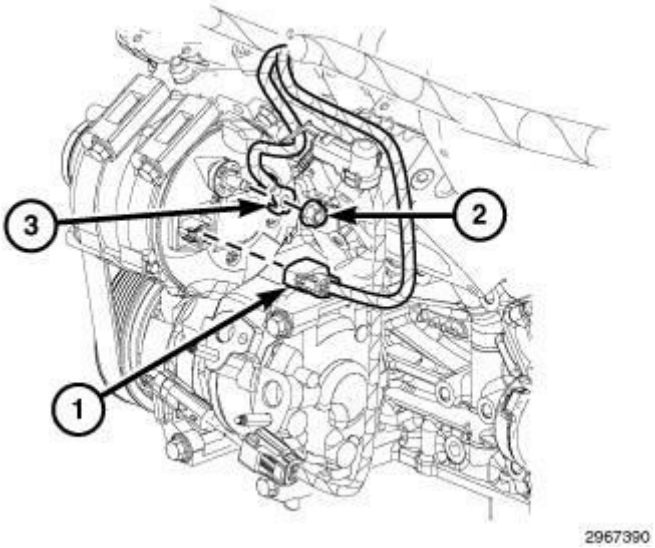

Fig. 24: Generator Field Electrical Connector & B+ Retainer
Courtesy of CHRYSLER GROUP, LLC

9. Raise the vehicle.

10. Tighten the generator mounting retainers to 25 N.m (18 ft. lbs.).
11. Install the generator B+ cable (3) on the generator stud.
12. Install the B+ cable nut (2), and tighten to 4 N.m (36 In. lbs.).
13. Connect the field generator harness Connector (1).

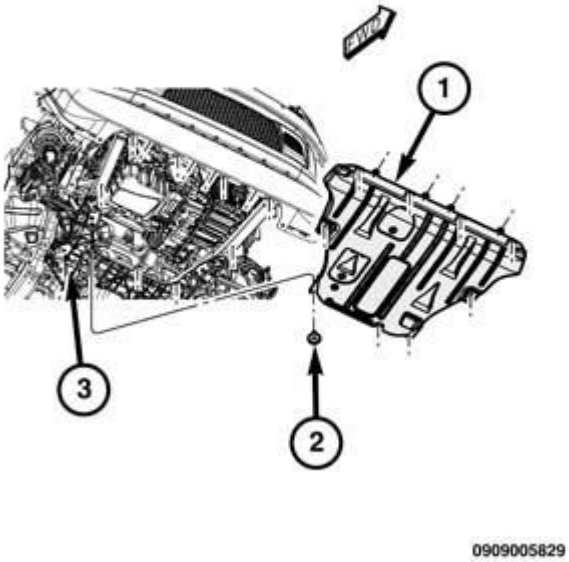

Fig. 25: Removing/Installing Belly Pans
Courtesy of CHRYSLER GROUP, LLC

14. Install the belly pan (1).
15. Partially lower the vehicle.

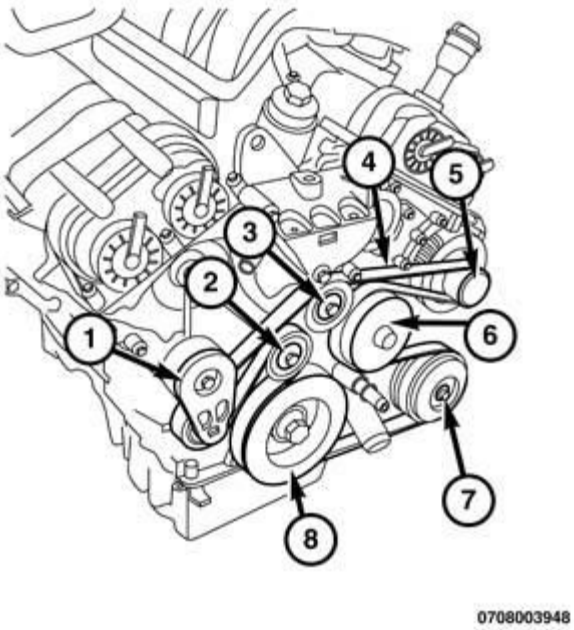

Fig. 26: Removing/Installing Accessory Drive Belt
Courtesy of CHRYSLER GROUP, LLC

16. Install the accessory drive belt. Refer to **BELT, SERPENTINE, INSTALLATION** .
17. Install the wheel.
18. Lower the vehicle.
19. Connect the battery negative cable.
20. Start the engine and verify the generator is operating properly.

2.0L DIESEL

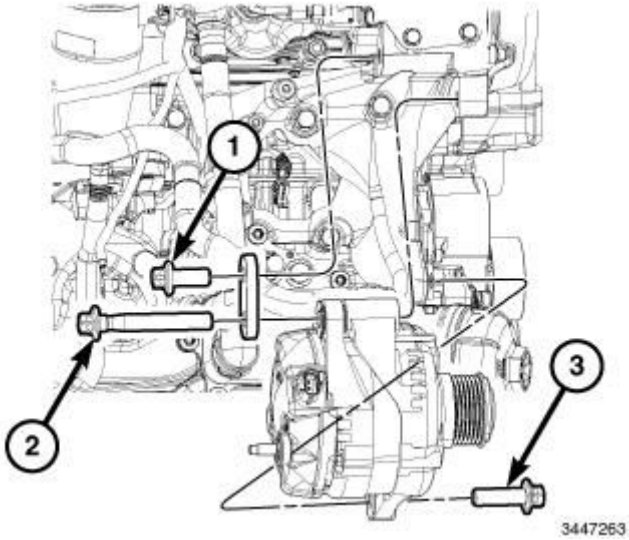

Fig. 27: Generator Rear Support Bracket Retainer, Upper Generator Mounting Retainer & Lower Generator Mounting Retainer
Courtesy of CHRYSLER GROUP, LLC

1. Install the generator. Tighten bolts (2 and 3) to 70 N.m (52 ft. lbs.).
2. Tighten bracket bolt (1) to 70 N.m (52 ft. lbs.).

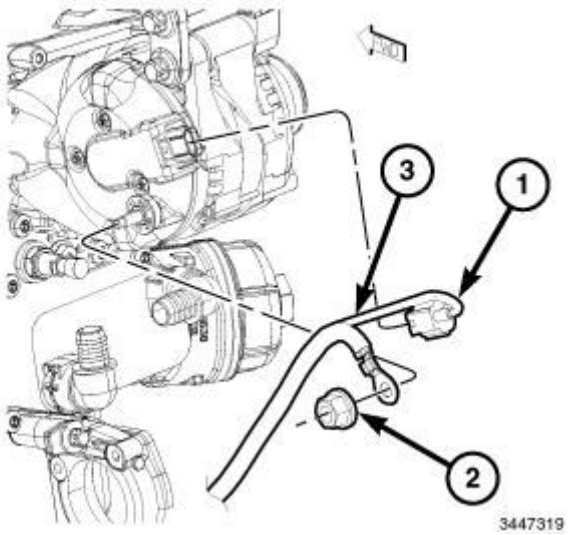

Fig. 28: B+ Retainer, Generator Field Connector & B+ Cable
Courtesy of CHRYSLER GROUP, LLC

3. Connect the generator field connector (1) and position the B+ cable (3) to the generator stud.
4. Install the B+ nut (2). Tighten nut to 10 N.m (89 in. lbs.).

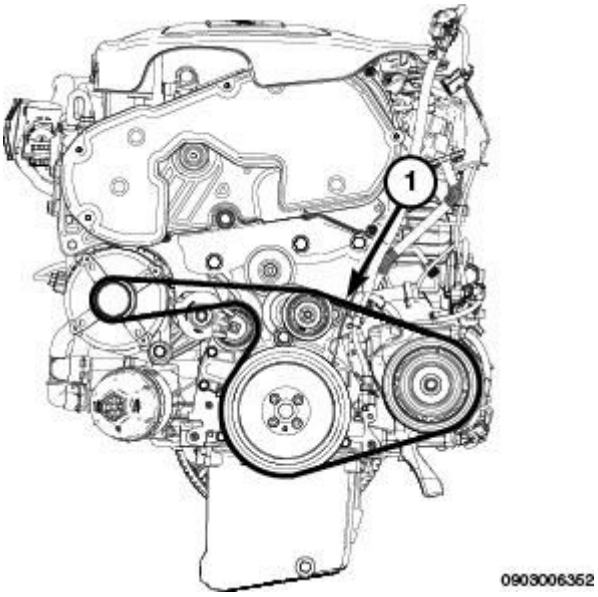

Fig. 29: Accessory Drive Belt Routing - 2.0L Diesel

Courtesy of CHRYSLER GROUP, LLC

5. Install the accessory drive belt (1). Refer to **BELT, SERPENTINE, INSTALLATION** .

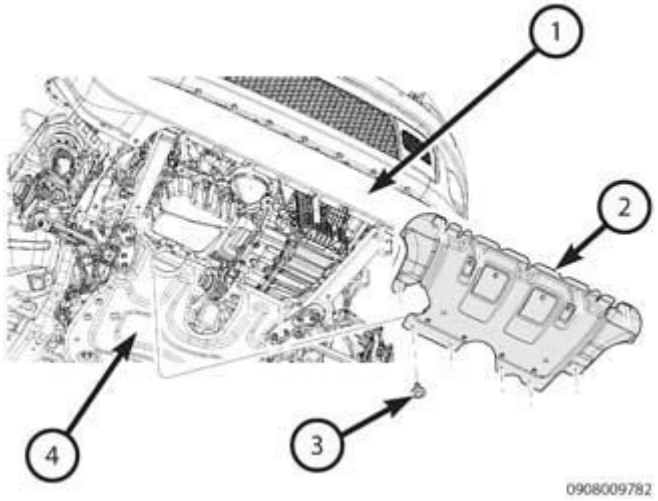

Fig. 30: Removing/Installing Starter
Courtesy of CHRYSLER GROUP, LLC

6. Install the belly pan (2) and securely tighten bolts (3).
7. Connect the negative battery cable.

2014 ELECTRICAL

Power Distribution - Cherokee

CENTER, POWER DISTRIBUTION (PDC)

DESCRIPTION

DESCRIPTION - POWER DISTRIBUTION CENTER

Fig. 1: Power Distribution Center (PDC)
Courtesy of CHRYSLER GROUP, LLC

This group covers the various standard and optional power distribution components used on this model. The power distribution system for this vehicle consists of the following components:

- Body Control Module (BCM)
- Power Distribution Center (PDC)
- Auxiliary PDC for vehicles equipped with a diesel engine
- Z Fuse Array attached to the PDC.
- 12 Volt Power Outlets
- Power Inverter Module
- NAFTA model 115 Volt Power Outlet.
- BUX model 220 Volt Power Outlet

The PDC also incorporates various types of circuit control and protection features, including:

- Automatic resetting circuit breakers

- Blade-type fuses
- Cartridge fuses
- Fusible links
- Standard and Micro-Relays

Following are general descriptions of the major components in the power distribution system. See the owner's manual in the vehicle glove box for more information on the features and use of all of the power distribution system components. Refer to **SYSTEM WIRING DIAGRAMS** for complete circuit diagrams.

For specific fuse location and types. Refer to **FUSE - RELAY LOCATIONS AND TYPES, SPECIFICATIONS** .

The PDC is serviced as part of the engine compartment body harness.

EXTERNALLY MOUNTED Z-CASE FUSE ARRAY

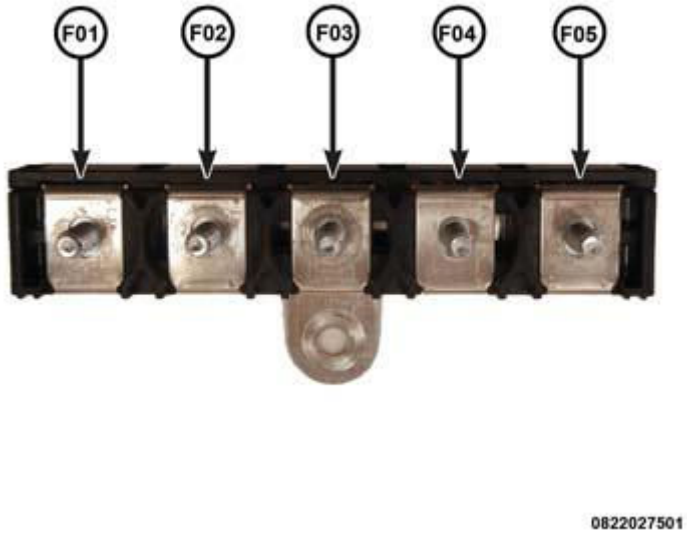

Fig. 2: High Current Z-Case Fuse Assembly
Courtesy of CHRYSLER GROUP, LLC

A high-current Z-case fuse assembly (1) bolted to the outside of the Power Distribution Center (PDC) is used to direct battery power to high current devices. The assembly contains four fuses numbered F01, F03, F04, and F05. The connection at F02 is to attach the battery cable to the fuse array. The electric power steering (EPS) unit, generator, and PWM radiator fan controller receive battery power through the high-current fuses. The high-current fuses protect the wiring and devices from damage caused by unplanned over-current conditions. This component is serviced separate from the PDC.

Z Case Fuse Array	
F01	Electric Power Steering (EPS)

F02	Battery Cable to Fuse Array
F03	Auxiliary PDC - Diesel Only
F04	Generator (180 or 160 amperes)
F05	Pulse-Width Modulated (PWM) Radiator Fan Controller.

OPERATION

OPERATION

The power distribution system for this vehicle is designed to provide safe, reliable, and centralized distribution points for the electrical current required to operate all of the standard and optional factory-installed electrical and electronic powertrain, chassis, safety, security, comfort and convenience systems. At the same time, the power distribution system was designed to provide ready access to these electrical distribution points for the vehicle technician to use when conducting diagnosis and repair of faulty circuits. The power distribution system can also prove useful for the sourcing of additional electrical circuits that may be required to provide the electrical current needed to operate accessories that the vehicle owner may choose to have installed in the aftermarket.

REMOVAL

REMOVAL - PDC ASSEMBLY

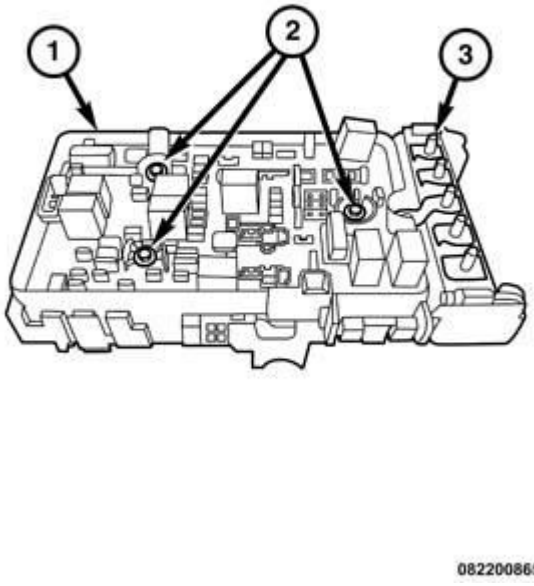

Fig. 3: Identifying Power Distribution Center, Power Feed Connections & Bolts
Courtesy of CHRYSLER GROUP, LLC

For complete circuit diagrams, refer to **SYSTEM WIRING DIAGRAMS** . The wiring information includes wiring diagrams, proper wire and connector repair procedures, further details on wire harness routing and

retention, as well as pin-out and location views for the various wire harness connectors, splices and grounds.

1. **Disconnect and isolate the battery negative cable.**
2. Remove the PDC cover.
3. Disconnect the power feed connections from the PDC (3).
4. Loosen the three bolts (2) that secure top section of the PDC in place. These bolts are captured and cannot be completely removed.

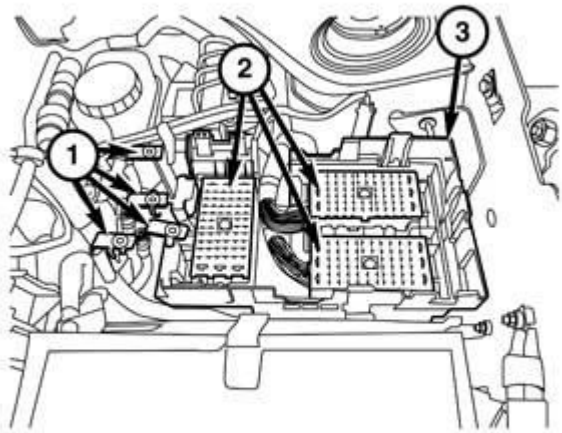

0822008651

Fig. 4: Power Distribution Center, Power Feed Connections & Bolts
Courtesy of CHRYSLER GROUP, LLC

5. Release the plastic clips that secure the PDC to the tray.
6. The PDC top will now lift upward. Carefully lift and disconnect the three bulkhead connectors (2) from the PDC.
7. Remove the PDC from the vehicle.

REMOVAL - POWER DISTRIBUTION Z-CASE FUSE ARRAY

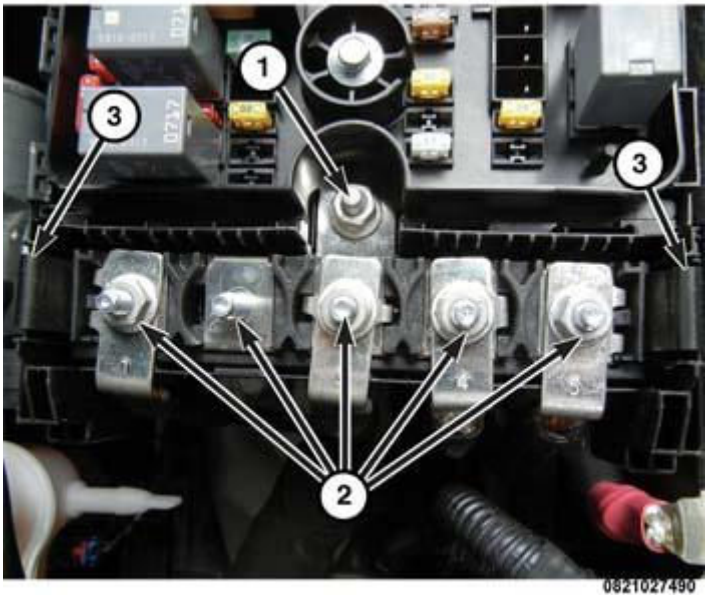

Fig. 5: Identifying Power Distribution Z-Case Fuse Array, Tabs & Nuts
Courtesy of CHRYSLER GROUP, LLC

For complete circuit diagrams, refer to **SYSTEM WIRING DIAGRAMS** . The wiring information includes wiring diagrams, proper wire and connector repair procedures, further details on wire harness routing and retention, as well as pin-out and location views for the various wire harness connectors, splices and grounds.

1. **Disconnect and isolate the battery negative cable.**
2. Remove the cover from the Power Distribution Center (PDC).
3. Remove the nuts (2) from Z case fuse array and move the eyelet connectors off and away from the Z case fuse array.
4. Remove the nut (1) attaching the fuse array to the PDC.
5. Press on the tabs (3) on the side of the fuse array to separate the array from the PDC.
6. Lift the fuse array away from the PDC.

INSTALLATION

INSTALLATION - PDC ASSEMBLY

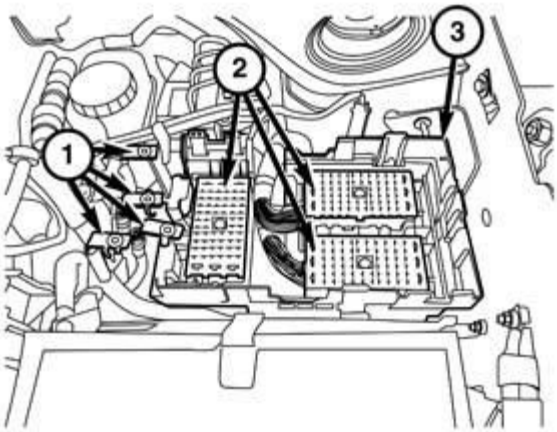

0822008651

Fig. 6: Power Distribution Center, Power Feed Connections & Bolts
Courtesy of CHRYSLER GROUP, LLC

1. Position the upper PDC component to the PDC base (3) in the engine compartment.
2. Connect the three bulkhead connectors (2) located in the base of the PDC to the upper PDC component.

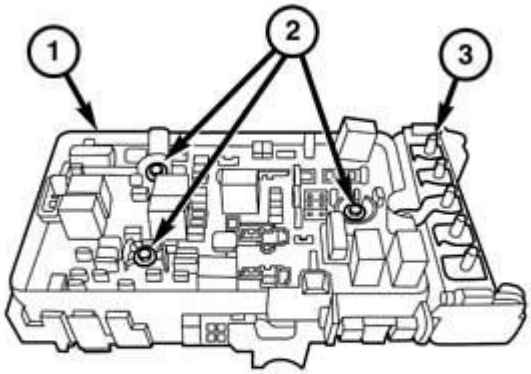

0822008650

Fig. 7: Identifying Power Distribution Center, Power Feed Connections & Bolts

Courtesy of CHRYSLER GROUP, LLC

3. Tighten three bolts (2) through the upper PDC component top until secure. Be sure to not over tighten and crack the base or upper tray.
4. Connect all power feeds to their PDC posts.
5. Install the PDC enclosure cover onto the assembled PDC assembly.
6. Connect the negative battery cable to the negative battery post.

INSTALLATION

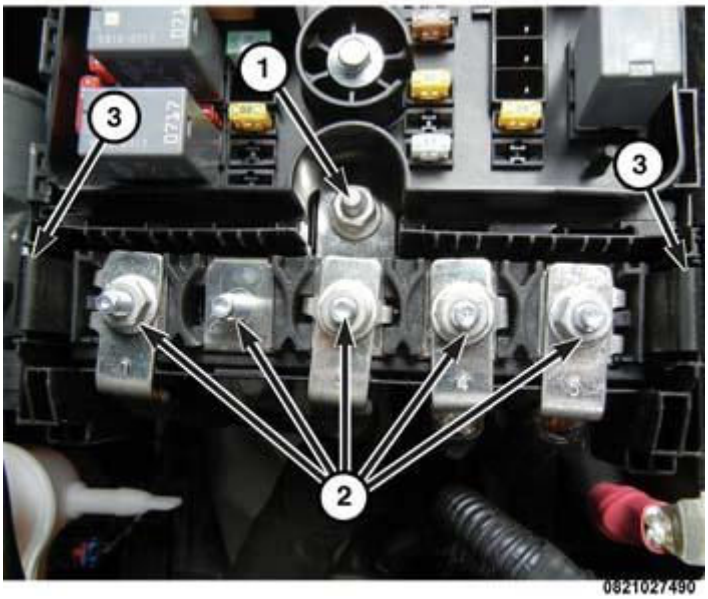

Fig. 8: Identifying Power Distribution Z-Case Fuse Array, Tabs & Nuts
Courtesy of CHRYSLER GROUP, LLC

1. Position the Z-case fuse array to the Power Distribution Center (PDC).
2. Press the Z-case down into position until the tabs (3) snap around the outer edges of the array indicating the array is firmly seated.
3. Install and tighten the nut (1) that secures the fuse array to the PDC case.
4. Connect all power feeds to their proper locations.
5. Secure the connectors to their posts using a nut (2).
6. Install the PDC cover into proper position on the assembled PDC assembly.
7. Connect the negative battery cable to the negative battery post.

OUTLET, POWER

DESCRIPTION

DESCRIPTION

This vehicle is equipped with 12 Volt (13 Amp) power outlets that can be used to power cellular phones, small electronics and other low powered electrical accessories. The power outlets are labeled with either a "key" or a "battery" symbol to indicate how the outlet is powered. Power outlets labeled with a "key" are powered when the ignition switch is in the ON or ACC position, while the outlets labeled with a "battery" are connected directly to the battery and powered at all times.

The outlets are located in the following locations:

- One outlet in the rear cargo area left quarter trim panel.
- One outlet in the instrument panel center stack under the heat/air conditioning controller.
- One outlet in the center console assembly.

OPERATION

12 VOLT POWER

The 12v power outlet consists of two major components: a knob and heating element unit, and a cigar lighter base or receptacle shell. The receptacle shell is connected to ground, and an insulated contact in the bottom of the shell is connected to battery current.

The cigar lighter knob and heating element are encased within a spring-loaded housing, which also features a sliding protective heat shield. When the knob and heating element are inserted in the receptacle shell, the heating element resistor coil is grounded through its housing to the receptacle shell. If the cigar lighter knob is pushed inward, the heat shield slides up toward the knob exposing the heating element, and the heating element extends from the housing toward the insulated contact in the bottom of the receptacle shell.

Two small spring-clip retainers are located on either side of the insulated contact inside the bottom of the receptacle shell. These clips engage and hold the heating element against the insulated contact long enough for the resistor coil to heat up. When the heating element is engaged with the contact, battery current can flow through the resistor coil to ground, causing the resistor coil to heat.

When the resistor coil becomes sufficiently heated, excess heat radiates from the heating element causing the spring-clips to expand. Once the spring-clips expand far enough to release the heating element, the spring-loaded housing forces the knob and heating element to pop back outward to their relaxed position. When the cigar lighter knob and element are pulled out of the receptacle shell, the protective heat shield slides downward on the housing so that the heating element is recessed and shielded around its circumference for safety.

The power outlet base or receptacle shell is connected to ground, and an insulated contact in the bottom of the shell is connected to battery current. The power outlet receives battery voltage from a fuse in the Power Distribution Center (PDC) when the ignition is in the ON or ACC positions.

REMOVAL

12 VOLT POWER

1. Disconnect and isolate the battery negative cable.

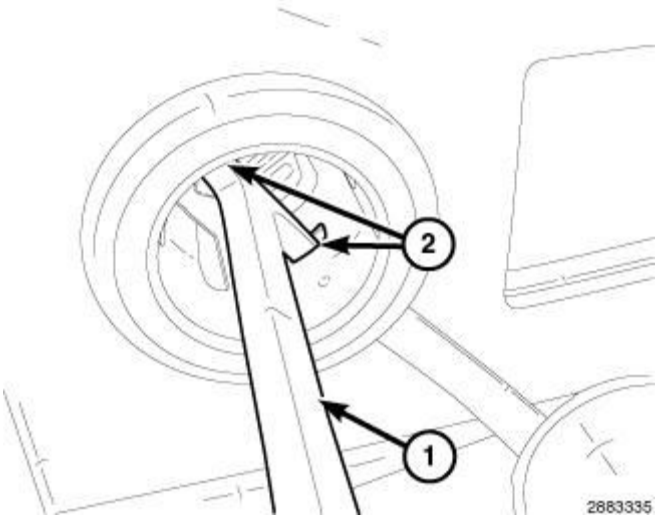

Fig. 9: Inserting Power Outlet Remover
Courtesy of CHRYSLER GROUP, LLC

2. Look inside and note position of the retaining bosses (2).
3. Insert Remover, Power Outlet (special tool #10246, Remover, Power Outlet) (1) into the retaining bosses (2) of the power outlet.
4. Pull out the base through the mounting ring by gently rocking the tool.

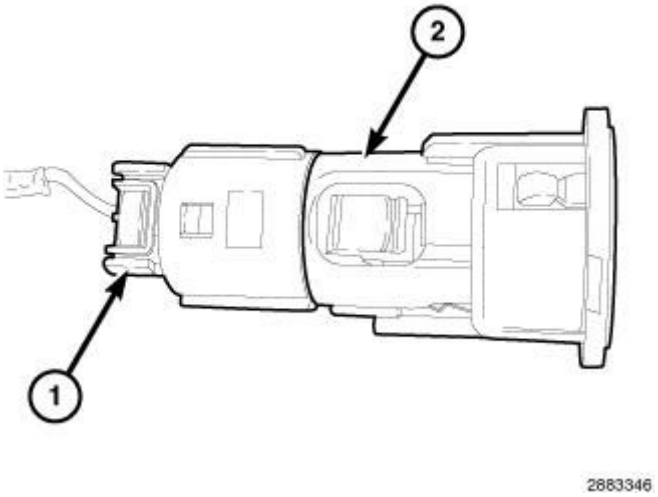

Fig. 10: Power Outlet & Connector
Courtesy of CHRYSLER GROUP, LLC

5. Disconnect the harness (1) from the power outlet (2).
6. Set the base aside and remove the base mount ring.

INSTALLATION

12 VOLT POWER

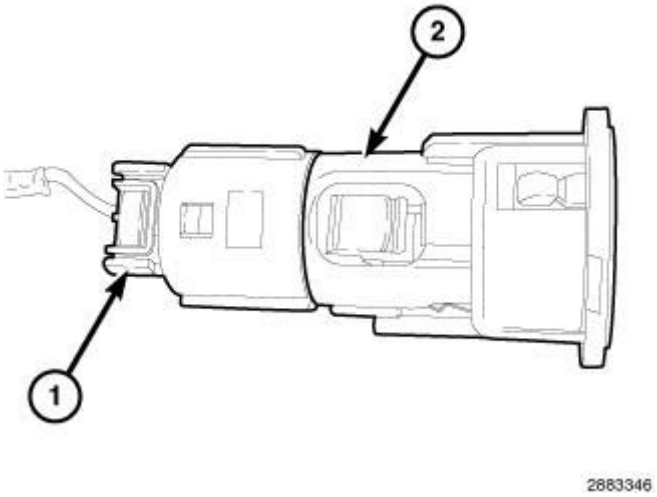

Fig. 11: Power Outlet & Connector
Courtesy of CHRYSLER GROUP, LLC

1. Connect the wire connector (1) to the power outlet receptacle (2).
2. Install the power outlet mount into the panel.
3. Align the splines on the outside of the power outlet receptacle base connector receptacle with the grooves on the inside of the mount.
4. Press firmly on the power outlet receptacle base until the retaining bosses of the mount are fully engaged in their receptacles.
5. Connect the battery negative cable.

OUTLET, POWER, 115 V

DESCRIPTION

DESCRIPTION

NOTE: The 115-volt outlet is used in NAFTA models. A 220-volt is used in BUX models.

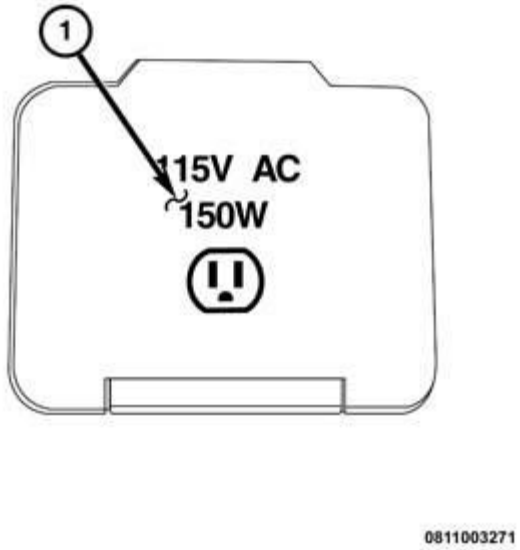

Fig. 12: 115 Volt AC Outlet
Courtesy of CHRYSLER GROUP, LLC

The DC/AC Inverter is an electrical device that converts direct current (DC) to alternating current (AC). This can only be used to supply small appliances. The output voltage of the inverter can be a full sine wave or a modified sine wave. The 115-volt AC outlet is used in NAFTA models. A 220-volt is used in BUX models. The AC outlet (3) is mounted in the rear of the center floor console (2). The vehicle is able to supply AC power through the use of a inverter module. The inverter module is located under the right rear seat cushion. The inverter converts the 12 Volt DC from the vehicle battery system to a 115 Volt AC output for NAFTA vehicles. The BUX model converts the 12 Volt DC from the battery system to a 220 Volt AC output.

OPERATION

OPERATION

The AC power outlet switch receives 12 volts from the Integrated Power Module (IPM) and passes it as an enable signal to the inverter module. The inverter module also receives 12 volts via the IPM and inverts this to a 115 volt AC output (220 for BUX models). The IPM sends a signal over the switch sense circuit advising the cluster that the outlet is active. The enable signal received from the power outlet switch enables the inverter to convert the received voltage and pass it to the power outlet to power external devices.

DIAGNOSIS AND TESTING

DIAGNOSIS AND TESTING - INVERTER MODULE

For complete circuit diagrams, refer to **SYSTEM WIRING DIAGRAMS** .

WARNING: Disable the airbag system before attempting any steering wheel, steering column, seat belt tensioner, side airbag or instrument panel component diagnosis or service. Disconnect and isolate the negative battery (ground) cable. Wait two minutes for the airbag system capacitor to discharge before performing further diagnosis or service. This is the only sure way to disable the airbag system. Failure to follow these instructions may result in accidental airbag deployment and possible serious or fatal injury.

115 VOLT POWER OUTLET DIAGNOSIS

CONDITION	POSSIBLE CAUSES	CORRECTION
NO POWER AT THE 115 VOLT POWER OUTLET. (220 VOLT POWER OUTLET FOR BUX MODEL)	1. Fuse inoperative.	1. Check Power Distribution Center (PDC) fuse. Replace fuse, if required.
	2. Power outlet connector damaged.	2. Check for loose or corroded power outlet connector. Repair, if required.
	3. Inverter module connector damaged.	3. Check for loose or corroded inverter module connector. Repair, if required.
	4. Wiring damaged.	4. Check for shorted or open wires. Repair wiring, if required.
	5. Inverter module ground damaged.	5. Check for continuity between the inverter module and a known good ground. There should be continuity. Repair ground, if required.
	6. Power outlet inoperative.	6. Replace the power outlet.
	7. Inverter module inoperative.	7. Replace the inverter module.
	8. Power outlet switch inoperative.	6. Replace the switch.

REMOVAL

REMOVAL

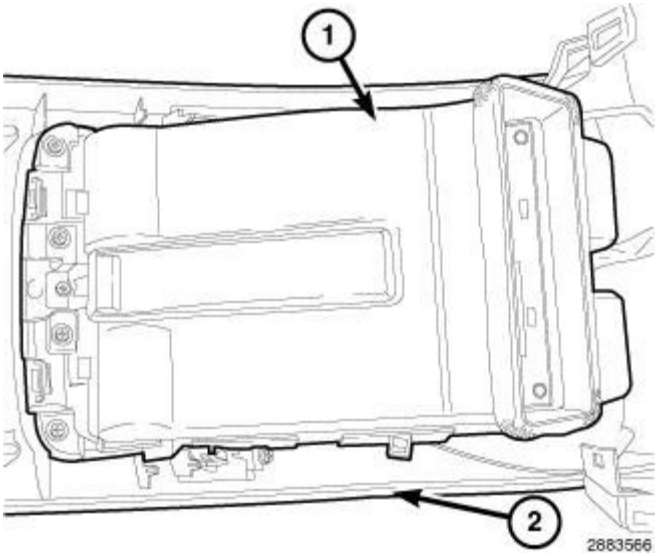

Fig. 13: Rear Center Console Bezel & Retainers
Courtesy of CHRYSLER GROUP, LLC

1. Disconnect and isolate the battery negative cable.
2. Using a trim stick remove the rear center console bezel.
3. Remove the retainers securing the duct work to the rear center console panel.

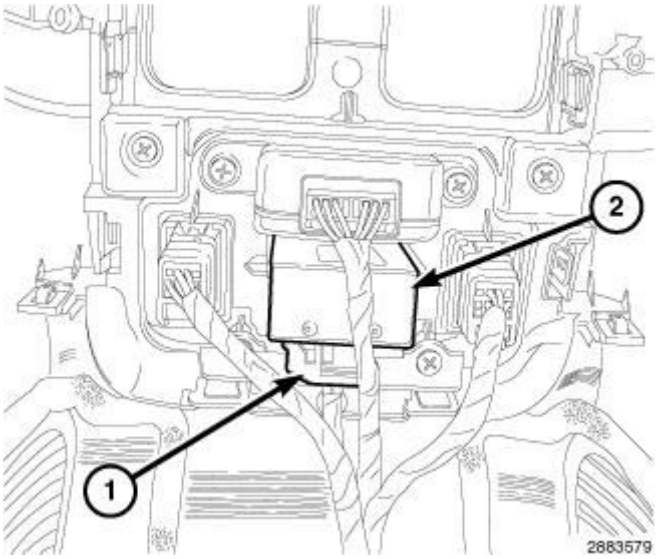

Fig. 14: Electrical Connector & 115v Power Outlet
Courtesy of CHRYSLER GROUP, LLC

4. Disconnect the electrical connector (1) for the 115v power outlet (2).
5. Release the clips holding the 115v power outlet and push through the panel.

INSTALLATION

INSTALLATION

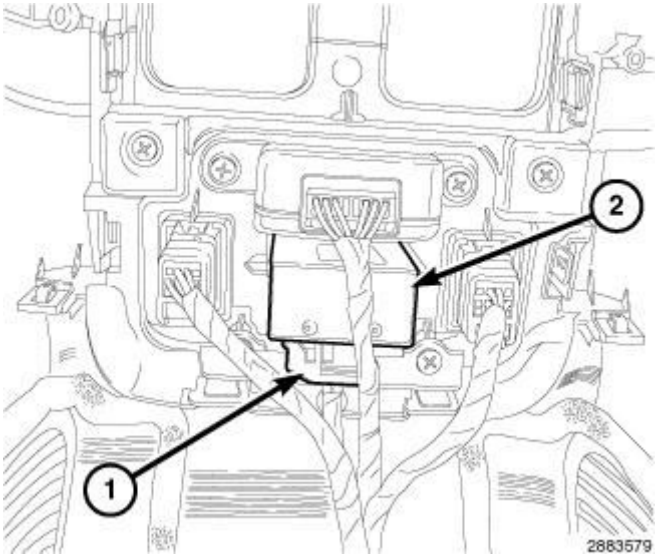

Fig. 15: Electrical Connector & 115v Power Outlet
Courtesy of CHRYSLER GROUP, LLC

1. Insert the 115v outlet into the panel.
2. Connect the electrical connector (1) to the 115v power outlet (2).

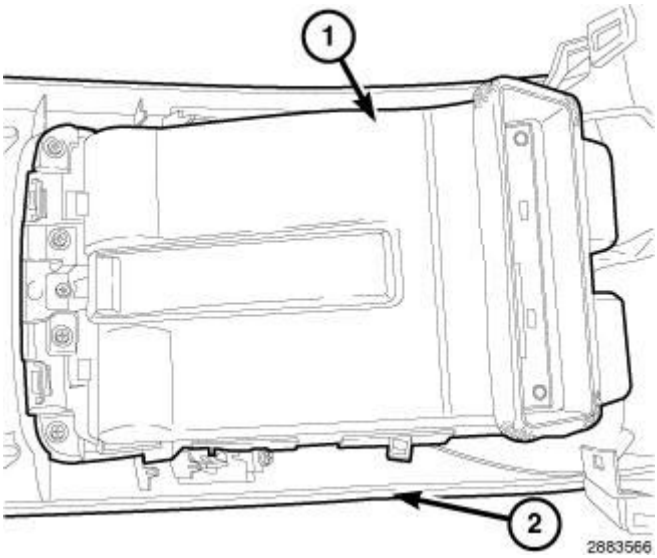

Fig. 16: Rear Center Console Bezel & Retainers
Courtesy of CHRYSLER GROUP, LLC

3. Install the duct to the trim panel.
4. Install the rear console trim panel.
5. Connect the negative battery cable.

MODULE, POWER INVERTER

DESCRIPTION

DESCRIPTION

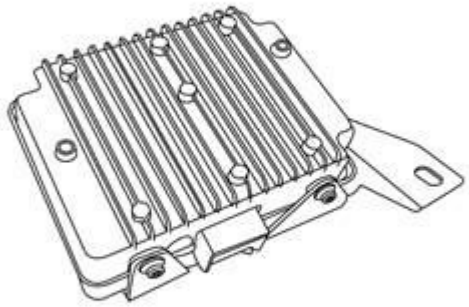

0821006695

Fig. 17: Power Inverter Module
Courtesy of CHRYSLER GROUP, LLC

The DC-to-AC Inverter Module provides 115V AC/220 V AC power for customer use. Such Inverters are intended to power user loads that are not essential to vehicle control or safety (e.g. battery chargers for mobile phones or laptop computers, audio and entertainment equipment, etc.).

The power inverter module is located beneath the instrument panel inboard of the steering column where it is concealed behind the instrument panel steering column opening cover.

The inverter module is rated at 150 watts. It will momentarily supply 300 watts to account for surges as devices are plugged in. This is true of the NAFTA 110-volt inverter and the BUX 220-volt inverter.

OPERATION

OPERATION

The AC power outlet receives 12 volts from the Power distribution Center (PDC) and passes it as an enable signal to the inverter module. The inverter module also receives 12 volts via the PDC and inverts this to a 115 volt AC output (220 volt for BUX models). The enable signal received from the power outlet enables the inverter to convert the received voltage and pass it to the power outlet to power external devices.

DIAGNOSIS AND TESTING

DIAGNOSIS AND TESTING - INVERTER MODULE

For complete circuit diagrams, refer to **SYSTEM WIRING DIAGRAMS** .

WARNING: Disable the airbag system before attempting any steering wheel, steering column, seat belt tensioner, side airbag or instrument panel component diagnosis or service. Disconnect and isolate the negative battery (ground) cable. Wait two minutes for the airbag system capacitor to discharge before performing further diagnosis or service. This is the only sure way to disable the airbag system. Failure to follow these instructions may result in accidental airbag deployment and possible serious or fatal injury.

115 VOLT POWER OUTLET DIAGNOSIS

CONDITION	POSSIBLE CAUSES	CORRECTION
NO POWER AT THE 115 VOLT POWER OUTLET	1. Fuse inoperative.	1. Replace fuse, if required. Refer to **FUSE - RELAY LOCATIONS AND TYPES, SPECIFICATIONS** .
	2. Power outlet connector or pin loose or damaged.	2. Check for loose or corroded power outlet connector. Repair, if required.
	3. Inverter module connector or pin loose or damaged.	3. Check for loose or corroded inverter module connector. Repair, if required.
	4. Wiring damaged.	4. Check for shorted or open wires. Repair wiring, if required. This includes power, ground, and return sense from the IPM. Refer to wiring diagrams for complete wiring and check all relative circuits for loose pins and/or damaged wiring.
	5. Inverter module ground damaged.	5. Check for continuity between the inverter module and a known good ground. There should be continuity. Repair ground, if required.
	6. Power outlet inoperative.	6. Replace the power outlet.
	7. Inverter module inoperative.	7. Check relative wiring, pins and connections to the IPM before replacing the inverter module.

REMOVAL

REMOVAL

1. Disconnect and isolate the negative battery cable.

2. Unsnap the upper end of the floor duct from the outlet (2) on the left end of the heater and air conditioner distribution housing. Refer to **DUCT, FLOOR DISTRIBUTION, REMOVAL** .
3. Remove the electrical connector from the Power Inverter Module (PIM).
4. Remove the two fasteners holding the PIM bracket in position.
5. Remove the PIM from the vehicle.

INSTALLATION

REMOVAL

1. Position the PIM and bracket to the proper position and install using two fasteners.
2. Connect the electrical connector to the PIM once the PIM has been secured in position by fasteners.
3. Position the duct into position and snap/secure in place. Refer to **DUCT, FLOOR DISTRIBUTION, INSTALLATION** .
4. Connect the battery cable to the negative battery post.

MODULE, WIRELESS CHARGING PAD

DESCRIPTION

DESCRIPTION

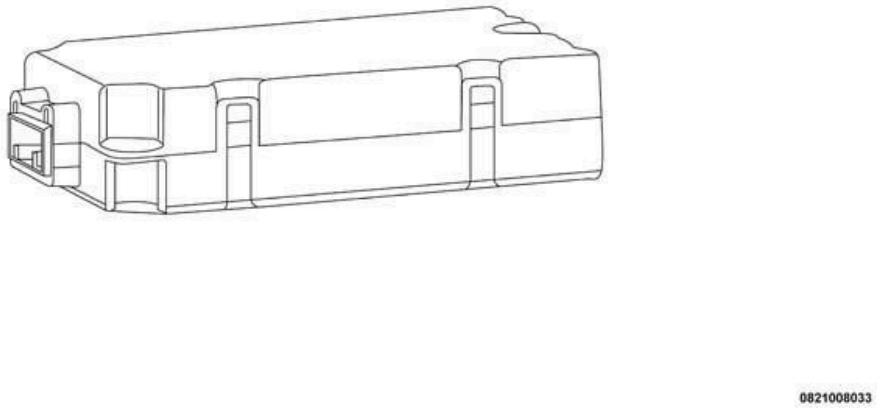

Fig. 18: Wireless Charging Pad Module
Courtesy of CHRYSLER GROUP, LLC

The wireless charging pad will charge a cell phone up to 5W through inductive charging. It follows the WPC (Wireless Power Consortium) Standard. The wireless charging pad is located within the top tray of the center

console.

This optional feature enables wireless charging of any cell phone that is Qi-wireless charging capable or has a Qi sleeve or backplate.

The wireless charging pad comes with a "phone retention feature" that holds that phone in place throughout up or down console movement and ensures efficient charge. The device must be aligned with the pad in order to charge correctly. An serviceable LED light will blink green to show the phone is charging and aligned correctly.

OPERATION

OPERATION

Wireless Charging Requirements - Wireless charging requires a transmitting coil (built into the charging pad tray) and a receiver coil which is integrated in the phone. The received coil gets aligned to the transmitting coil, and power is then transmitted.

Retention Feature - The retention feature is in place to hold the phone during vehicle and console movement. This also used to align the phone with the transmitting coil that is internal to the module. (Tolerance is +/- 10mm). This retention feature is designed to accommodate all WPC phones, larger and smallest, and all receiving coil replacement.

The Wireless Charging Module is capable of setting two Diagnostic Trouble Codes (DTC); Loss of communication and internal error faults. The module itself is not repairable and will need to be replaced if diagnostics lead to module failure.

Communication - The WCP communicates with the BCM over the LIN bus. The WCP outputs to the BCM if a device has been detected. If a valid device is detected, charging begins.

Timers - The WCP has a watch dog timer for two modes; the pad will automatically go into OFF mode after 5 minutes if no device is charging, and it will go into sleep mode 30 minutes after key off if a device has been left to charge with the ignition off. The WCP also has an idle mode where it will be continuously searching for a consumer device with the ignition ON.

Wireless Charging Pad Electrical Requirements

- Power to the Wireless Charging Pad (WCP) should be no greater than 10 watts.
- The WCP will transfer up to 5W to the receiver.
- The WCP has the capability to shut itself off if the system voltage drops below 12 volts with ignition off for a duration of 30 seconds.
- The WCP has an idle mode where it constantly searches for consumer devices with the ignition transittioned to the ON position.
- The nominal operating voltage of the WCP is 13.5v.

REMOVAL

REMOVAL

1. Remove the tray assembly from the center console.
2. Set the end stops to full out positions.

0821020289

Fig. 19: Prying Anti-Slip Mat
Courtesy of CHRYSLER GROUP, LLC

3. Using a flathead mini screwdriver gently pry one side of anti-slip mat.

0821020290

Fig. 20: Removing Anti Slip Mat
Courtesy of CHRYSLER GROUP, LLC

4. Proceed to remove the anti slip mat.

0821020291

Fig. 21: Removing Screws Using A Phillips #2 Screwdriver
Courtesy of CHRYSLER GROUP, LLC

5. Remove four screws using a Phillips #2 screwdriver.

0821020293

Fig. 22: Identifying Bottom Cover
Courtesy of CHRYSLER GROUP, LLC

6. The bottom cover should be free to come off now.

0821020294

Fig. 23: Identifying Tyco Connector
Courtesy of CHRYSLER GROUP, LLC

7. Remove the Tyco connector to separate the Lower Tray from the Upper tray assembly.

0821020297

Fig. 24: Identifying Lower & Upper Tray
Courtesy of CHRYSLER GROUP, LLC

8. Remove the rigid and flexible end stops by pressing down on the paddles and sliding them off each side.

0821020298

Fig. 25: Removing Screws Using Robertson #S2 Screwdriver
Courtesy of CHRYSLER GROUP, LLC

9. Remove three screws using the Robertson #S2 screwdriver that secure the wireless charging module to the upper tray.

0821020299

Fig. 26: Lifting Wireless Charging Module From Tray Assembly
Courtesy of CHRYSLER GROUP, LLC

10. The wireless charging module can now be lifted from the tray assembly.

0821020300

Fig. 27: Squeezing LED Lens Tabs Using Needle Nose Pliers
Courtesy of CHRYSLER GROUP, LLC

11. Using needle nose pliers, squeeze the tabs of the LED lens to pull the Lens out of its nest.

0821020303

Fig. 28: Squeezing LED Lens Legs
Courtesy of CHRYSLER GROUP, LLC

12. Squeeze the legs of the LED Lens to pull the LED out from the Lens.

Fig. 29: Peeling Harness Out Of Channel
Courtesy of CHRYSLER GROUP, LLC

13. Peel the harness out of the channel as shown in **Fig. 9** .

INSTALLATION

INSTALLATION

Fig. 30: Removing Screws Using Robertson #S2 Screwdriver
Courtesy of CHRYSLER GROUP, LLC

1. Attach wireless charging module to the upper tray with three screws using #S2 screwdriver.

Fig. 31: Attaching Wireless Charging Module
Courtesy of CHRYSLER GROUP, LLC

Fig. 32: Attaching Wireless Charging Module
Courtesy of CHRYSLER GROUP, LLC

2. Attach one end stop by pivoting it into the tray.

0821020307

Fig. 33: Installing Other End Stop To Tray
Courtesy of CHRYSLER GROUP, LLC

3. Repeat step 2 to install the other end stop to the tray.

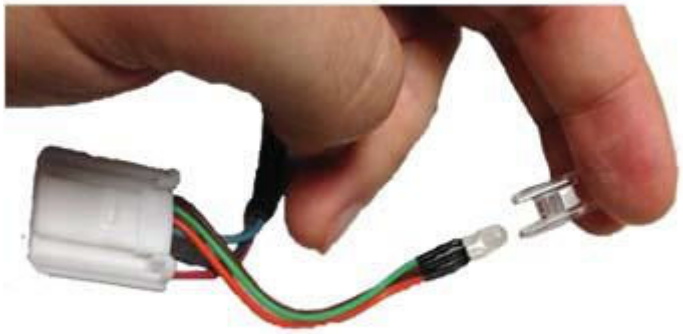

0821020308

Fig. 34: Inserting LED Into LED Lens
Courtesy of CHRYSLER GROUP, LLC

4. Insert the LED into the LED lens.

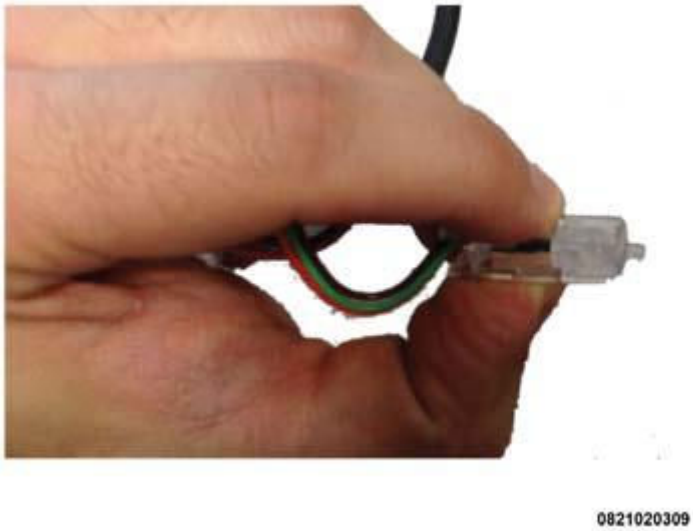

Fig. 35: Squeezing LED Lens Retaining Clips
Courtesy of CHRYSLER GROUP, LLC

5. Squeeze on the LED lens retaining clips to make sure they are engaged. Tug on the LED harness to confirm the LED is seated.

Fig. 36: Inserting LED Lens Into Lower Tray
Courtesy of CHRYSLER GROUP, LLC

6. Insert the LED Lens into the Lower Tray ensuring that the round portion of the Lens faces the opening in the Lower Tray.

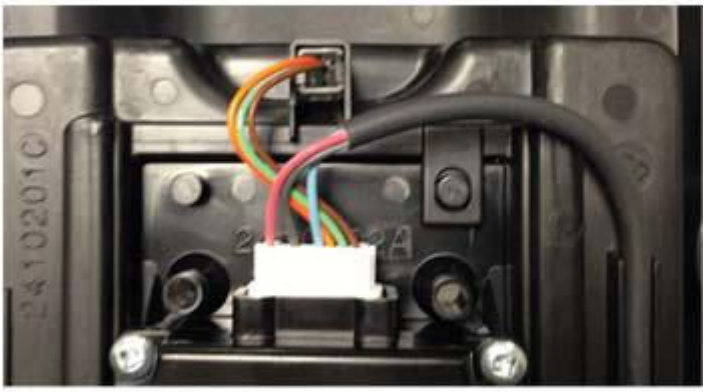

0821020311

Fig. 37: Identifying Upper Tray Assembly & Tyco Connector
Courtesy of CHRYSLER GROUP, LLC

7. Place upper tray assembly into lower tray and insert the Tyco connector into module and wire harness in the channel ensuring the routing of the harness mimics the related graphic exactly.

0821020312

Fig. 38: Identifying Distance From Connector To Channel Entry Point
Courtesy of CHRYSLER GROUP, LLC

8. The distance from the connector to channel entry point has to be 88mm±3mm. The distance from the exit of the tray to connector needs to be exactly 328±5mm.

Fig. 39: Holding Down Harness In Channel
Courtesy of CHRYSLER GROUP, LLC

9. Ensure also to hold down the harness in the channel at the back of the part while putting on bottom cover.

Fig. 40: Removing Screws Using A Phillips #2 Screwdriver
Courtesy of CHRYSLER GROUP, LLC

10. Attach bottom cover to upper tray with four screws using Phillips #2 screwdriver.

0821020290

Fig. 41: Removing Anti Slip Mat
Courtesy of CHRYSLER GROUP, LLC

11. Ensure end stops are at the full out positions.

0821020314

Fig. 42: Ensuring End Stops Are At Full Positions
Courtesy of CHRYSLER GROUP, LLC

12. Wedge the edge of the anti-slip mat under the rigid end stop bumper.

0821020315

Fig. 43: Identifying Edge Of Anti-Slip Mat Is Under Rigid End Stop Bumper
Courtesy of CHRYSLER GROUP, LLC

13. Slide the Bumper over the mat.

0821020316

Fig. 44: Sliding Bumper Over Mat
Courtesy of CHRYSLER GROUP, LLC

14. Push down the two pins into blind bosses.

Fig. 45: Pushing Two Pins On Mat Into Blind Bosses
Courtesy of CHRYSLER GROUP, LLC

15. Push down the two pins on the other side of the mat into blind bosses to fully seat anti slip mat.
16. Reconnect the negative battery cable.

2014 ELECTRICAL

Special Tools - Cherokee

SPECIAL TOOLS

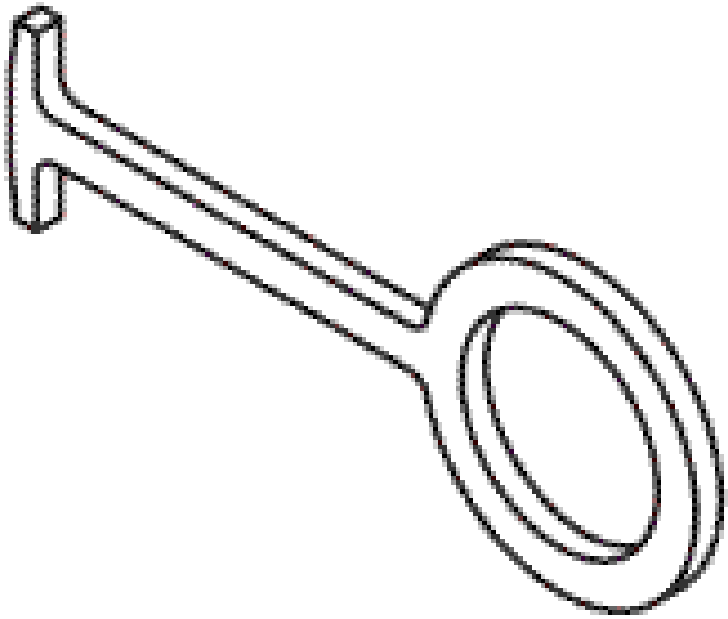	10246 - Remover, Power Outlet (Originally Shipped In Kit Number(s) 10246.)
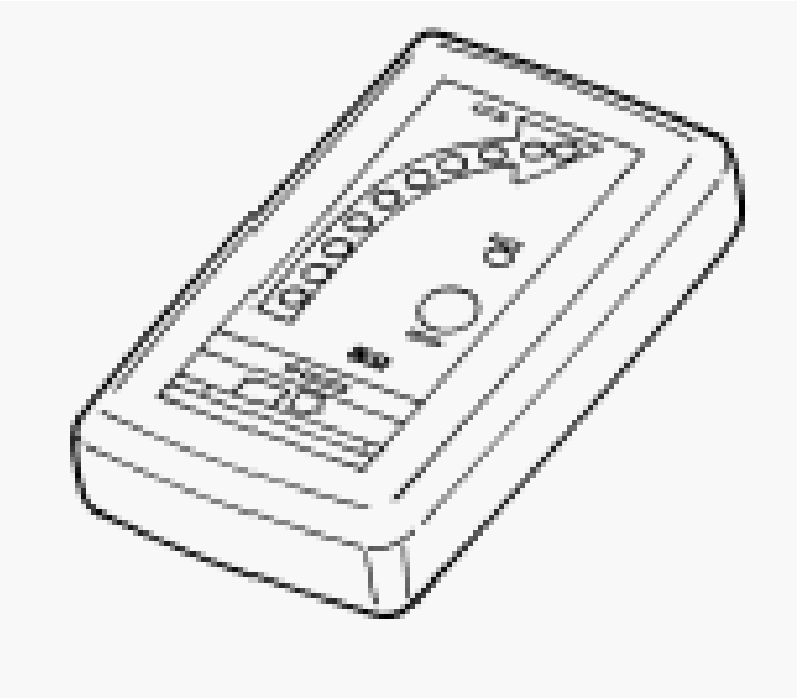	9001 - RF Detector (Originally Shipped In Kit Number(s) 9001.)

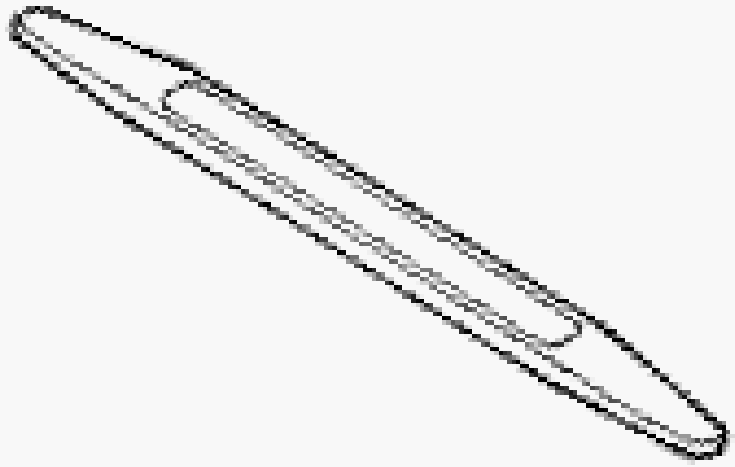	C-4755 - Trim Stick (Originally Shipped In Kit Number(s) 9299, 9299CC, 9299CC, 9300A-CAN.)
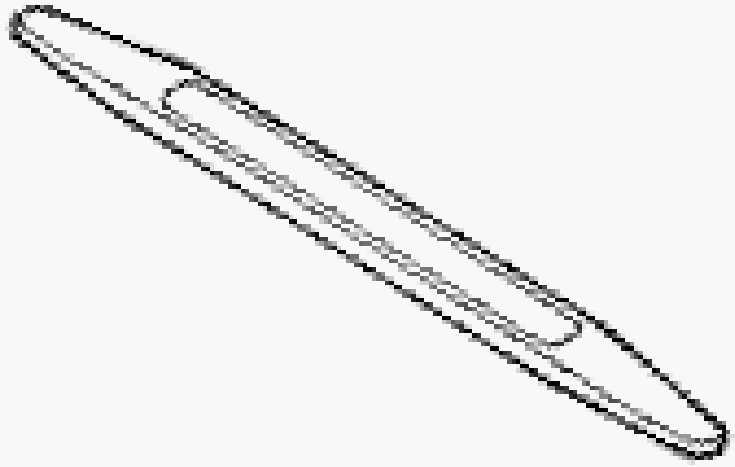	GR8-1220KIT-CHRY - AGM Battery Tester/Charger Station (Originally Shipped In Kit Number(s) GR8-1220KIT-CHRY.)

2014 ENGINE

2.0L Diesel - Service Information - Cherokee

DESCRIPTION

DESCRIPTION

This engine is equipped with a high pressure electronic injection system from Bosch Common Rail ECD 16 C39 fast diesel engine, fully managed by an Powertrain Control Module (PCM). The engine respects the Euro 5 regulation and is equipped with the following emission components:

- Exhaust system with Diesel Oxidation Catalyst (DOC)/Diesel Particulate Filter (DPF).
- Exhaust Gas Recirculation System (EGR).
- Crankcase oil vapor recirculation system.

STANDARD PROCEDURE

DUST COVERS AND CAPS

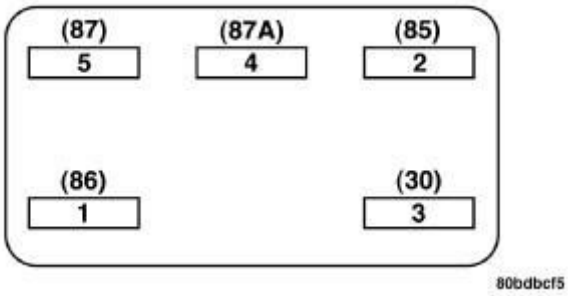

Fig. 1: Covers/Caps
Courtesy of CHRYSLER GROUP, LLC

Due to the high amounts of failures caused by dust, dirt, moisture and other foreign debris being introduced to the engine during service. Covers or caps are needed to reduce the possible damage that can be caused or created.

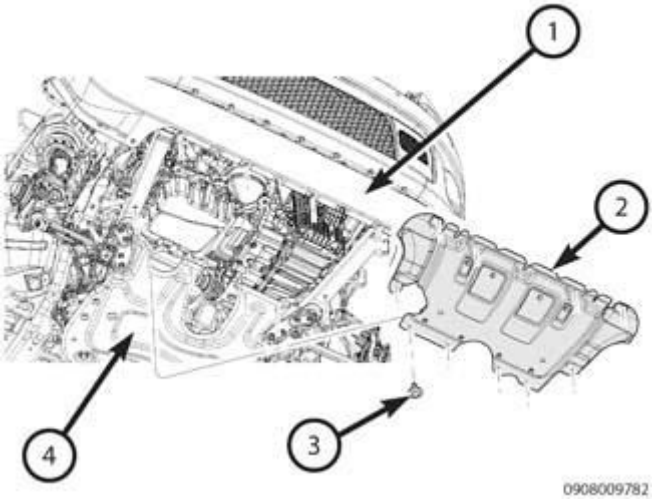

Fig. 2: Opening Cover
Courtesy of CHRYSLER GROUP, LLC

Covers over openings will reduce any possibilities for foreign materials to enter the engine systems. Using miller tool (special tool #10368, Set, Universal Protective Cap), Select the appropriated cover needed to the procedure.

FORM-IN-PLACE GASKETS AND SEALERS

There are numerous places where form-in-place gaskets are used on the engine. Care must be taken when applying form-in-place gaskets to assure obtaining the desired results.**Do not use form-in-place gasket material unless specified.** Bead size, continuity, and location are of great importance. Too thin a bead can result in leakage while too much can result in spill-over which can break off and obstruct fluid feed lines. A continuous bead of the proper width is essential to obtain a leak-free gasket.

There are numerous types of form-in-place gasket materials that are used in the engine area. Mopar® Engine RTV, Mopar® ATF-RTV, and Mopar® Gasket Maker gasket materials, each have different properties and can not be used in place of the other.

MOPAR® ENGINE RTV MS-GF44B

Mopar® Engine RTV is used to seal components exposed to engine oil. This material is a specially designed black silicone rubber RTV that retains adhesion and sealing properties when exposed to engine oil. Moisture in the air causes the material to cure. This material is available in three ounce tubes and has a shelf life of one year. After one year this material will not properly cure. Always inspect the package for the expiration date before use.

MOPAR® ATF RTV MS-GF41B

Mopar® ATF RTV is a specifically designed black silicone rubber RTV that retains adhesion and sealing properties to seal components exposed to automatic transmission fluid, engine coolants, and moisture. This

material is available in three ounce tubes and has a shelf life of one year. After one year this material will not properly cure. Always inspect the package for the expiration date before use.

MOPAR® GASKET MAKER MS-CD98D

Mopar® Gasket Maker is an anaerobic type gasket material. The material cures in the absence of air when squeezed between two metallic surfaces. It will not cure if left in the uncovered tube. The anaerobic material is for use between two machined surfaces. Do not use on flexible metal flanges.

MOPAR® GASKET SEALANT MS-CD78D

Mopar® Gasket Sealant is a slow drying, permanently soft sealer. This material is recommended for sealing threaded fittings and gaskets against leakage of oil and coolant. Can be used on threaded and machined parts under all temperatures. This material is used on engines with multi-layer steel (MLS) cylinder head gaskets. This material also will prevent corrosion. Mopar® Gasket Sealant is available in a 13 oz. aerosol can or 4oz./16 oz. can with applicator.

MOPAR® THREEBOND ENGINE RTV SEALANT

MOPAR® THREEBOND ENGINE RTV SEALANT is a unique gasket material that is specially made to retain adhesion and sealing properties when used to seal components exposed to engine oil.

FORM-IN-PLACE GASKET AND SEALER APPLICATION

Assembling parts using a form-in-place gasket requires care but it's easier than using precut gaskets.

Mopar® Gasket Maker material should be applied sparingly 1 mm (0.040 in.) diameter or less of sealant to one gasket surface. Be certain the material surrounds each mounting hole. Excess material can easily be wiped off. Components should be torqued in place within 15 minutes. The use of a locating dowel is recommended during assembly to prevent smearing material off the location.

Mopar® Engine RTV MS-GF44B or ATF RTV MS-GF41B gasket material should be applied in a continuous bead approximately 3 mm (0.120 in.) in diameter. All mounting holes must be circled. For corner sealing, a 3.17 or 6.35 mm (1/8 or 1/4 in.) drop is placed in the center of the gasket contact area. Uncured sealant may be removed with a shop towel. Components should be torqued in place while the sealant is still wet to the touch (within 10 minutes). The usage of a locating dowel is recommended during assembly to prevent smearing material off the location.

Mopar® Gasket Sealant in an aerosol can should be applied using a thin, even coat sprayed completely over both surfaces to be joined, and both sides of a gasket. Then proceed with assembly. Material in a can with applicator can be brushed on evenly over the sealing surfaces. Material in an aerosol can should be used on engines with multi-layer steel gaskets.

ENGINE GASKET SURFACE PREPARATION

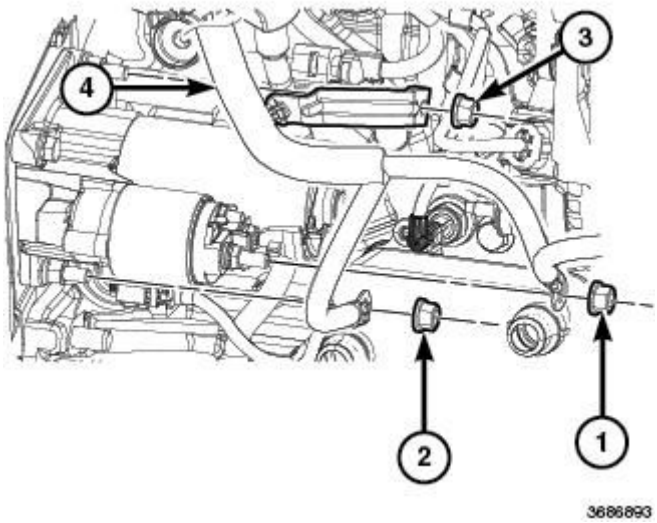

Fig. 3: Proper Tool Usage For Surface Preparation
Courtesy of CHRYSLER GROUP, LLC

To ensure engine gasket sealing, proper surface preparation must be performed, especially with the use of aluminum engine components and multi-layer steel cylinder head gaskets.

Never use the following to clean gasket surfaces:

- Metal scraper (1).
- High speed power tool with an abrasive pad or paper to clean the cylinder block and head (2).

NOTE: Multi-Layer Steel (MLS) head gaskets require a scratch free sealing surface.

Only use the following for cleaning gasket surfaces:

- Solvent or a commercially available gasket remover.
- High speed power tool with 3M Roloc™ Bristle Disc (white or yellow) (3).
- Plastic or wood scraper (4).

COMPRESSION TEST

1. Warm up engine to operating temperature (approximately 80 °C, 176 °F).
2. Shut off the engine.
3. Disable the low pressure fuel pump.
4. Remove the fuel injectors. Refer to **INJECTOR(S), FUEL, REMOVAL** .
5. Crank engine several times with the starter to eliminate combustion residues in the cylinders.

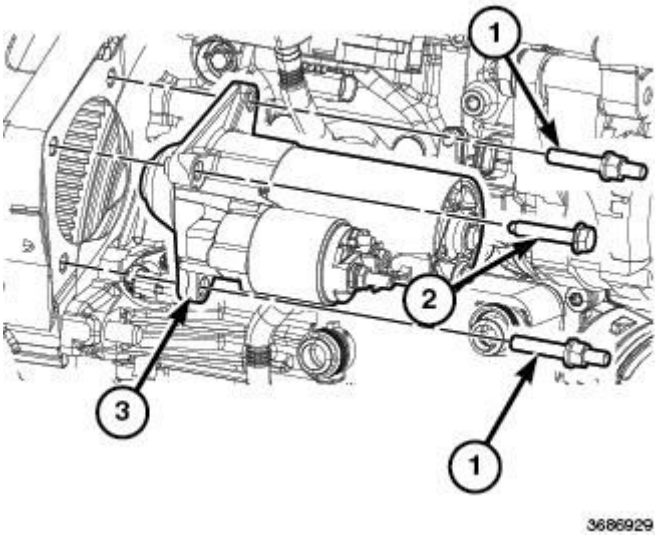

Fig. 4: Inserting Compression Test Adapter
Courtesy of CHRYSLER GROUP, LLC

6. Insert the (special tool #10497, Adapter, Compression Test) (1) into injector hole of cylinder to be tested. Install injector clamp, nut and securely tighten.
7. Test compression pressure by cranking engine with starter for at least 8 revolutions.

Cylinder compression Difference Between Cylinders	**25 %**

8. Carry out test procedure at the remaining cylinders in the same way.
9. Remove nut, injector clamp, and the (special tool #10497, Adapter, Compression Test) (1) from cylinder head.
10. Install the injectors. Refer to **INJECTOR(S), FUEL, INSTALLATION** .

REMOVAL

REMOVAL

CAUTION: When removing or disconnecting components, plug all inlet/outlet and fluid lines to prevent residual leakage and contamination.

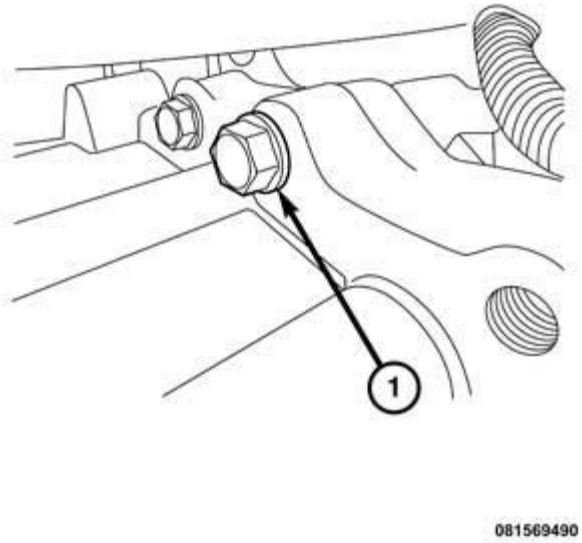

Fig. 5: Engine Cover
Courtesy of CHRYSLER GROUP, LLC

1. Disconnect the negative and positive battery cable.
2. Remove the engine cover (1).
3. Remove air cleaner body. Refer to **BODY, AIR CLEANER, REMOVAL** .

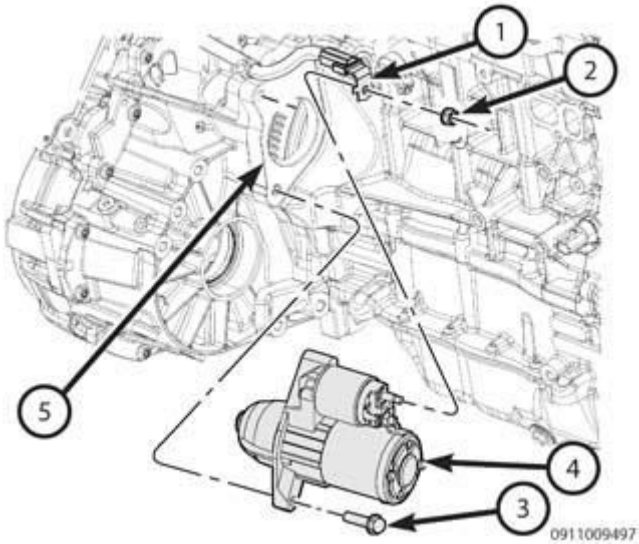

Fig. 6: Removing/Installing Starter
Courtesy of CHRYSLER GROUP, LLC

4. Raise the vehicle. Refer to **HOISTING, STANDARD PROCEDURE** .

5. Remove bolts (3) and the belly pan (2).
6. Drain the cooling system. Refer to **STANDARD PROCEDURE** .
7. Drain the engine oil. Using a new sealing washer tighten drain plug to 20 N.m (177 in. lbs.).
8. Drain the transaxle fluid.

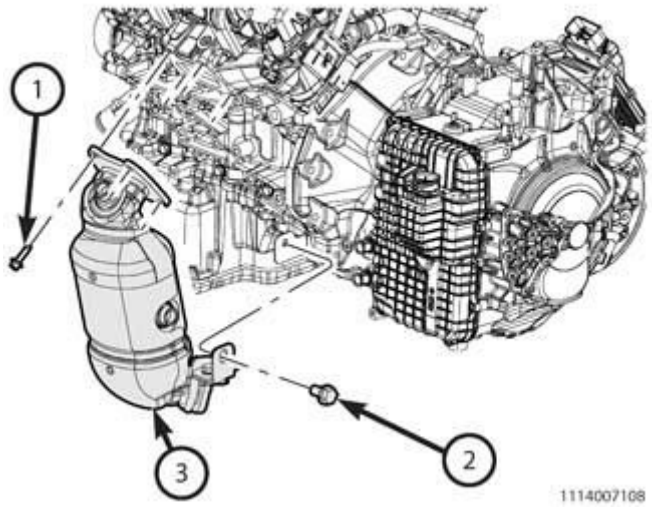

Fig. 7: Reverse Lamp Sensor & Wire Harness Connector
Courtesy of CHRYSLER GROUP, LLC

9. On MTX models, disconnect the reverse lamp sensor wire harness connector (2).
10. Lower the vehicle.

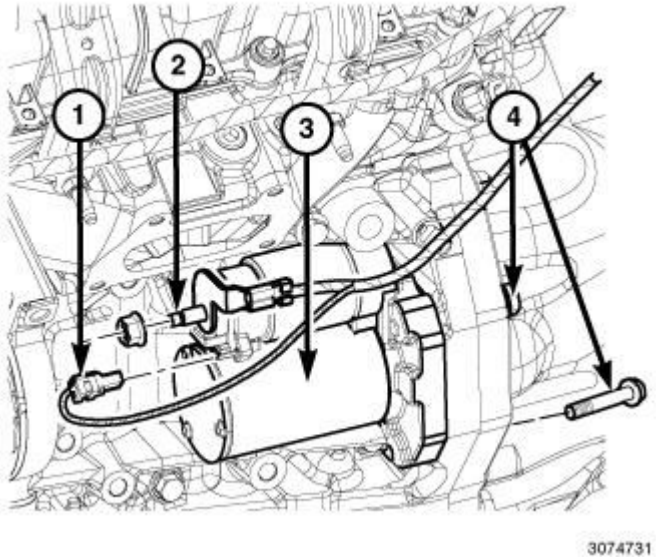

Fig. 8: Cable Connector & Release Tabs
Courtesy of CHRYSLER GROUP, LLC

11. On MTX models, pry up on the cable connector (1) to disengage from the lever.
12. On MTX models, disconnect the gear shift range cable at the bracket by squeezing the release tabs (2) while pulling upward.

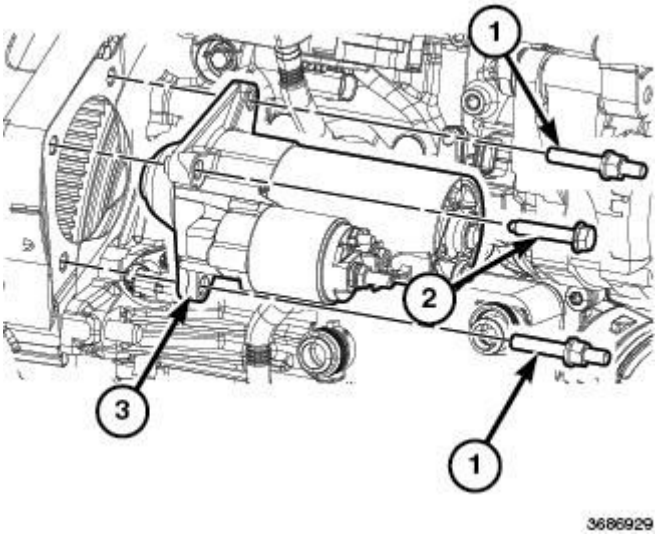

Fig. 9: Gear Shift Selector Cable & Manual Lever
Courtesy of CHRYSLER GROUP, LLC

13. On MTX models, disconnect the gear shift selector cable (1) at the manual lever (2).

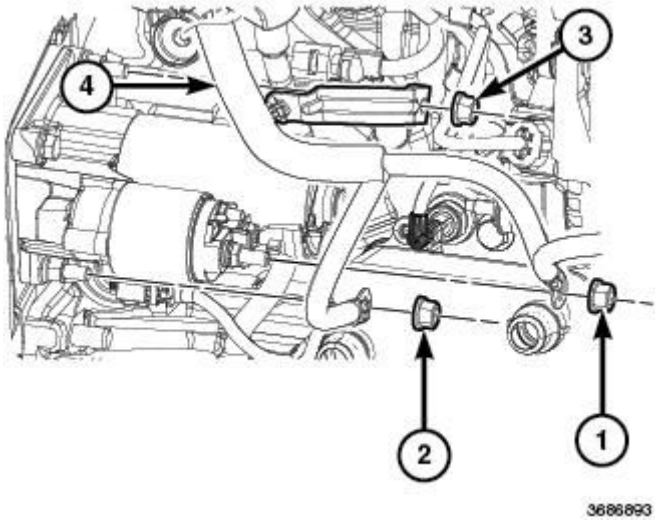

Fig. 10: Gear Shift Selector Cable & Bracket
Courtesy of CHRYSLER GROUP, LLC

14. On MTX models, disconnect the gear shift selector cable (1) at the bracket (2) by squeezing the release tabs while pulling upward.

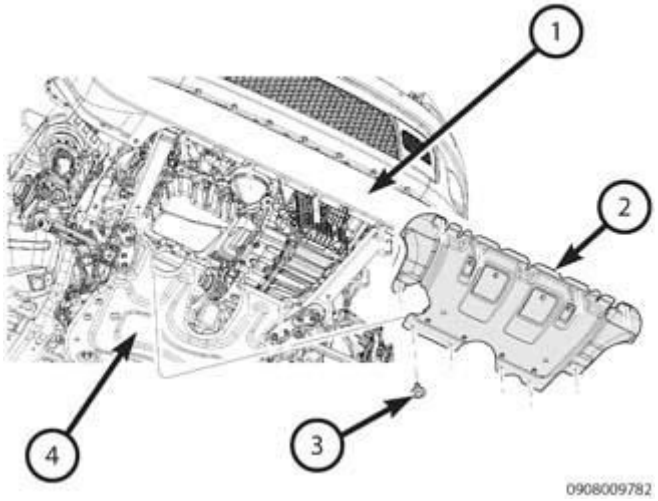

Fig. 11: Hydraulic Supply Pipe & Concentric Slave Cylinder
Courtesy of CHRYSLER GROUP, LLC

15. On MTX models, disconnect the hydraulic supply pipe for the concentric slave cylinder.

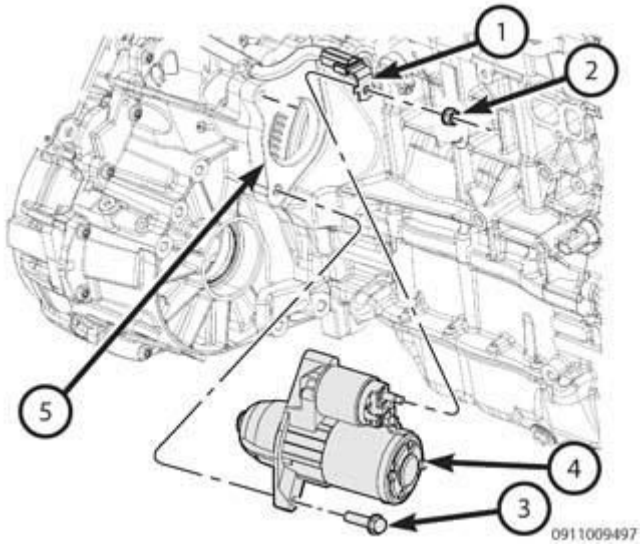

Fig. 12: Brake Booster Hose & Retainer Clip
Courtesy of CHRYSLER GROUP, LLC

16. Disconnect the brake booster hose (1) at vacuum pump and retainer clip (2).

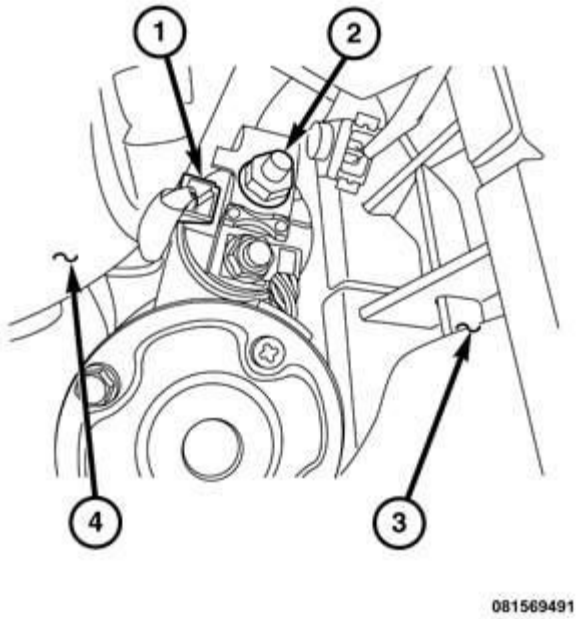

Fig. 13: Fuel Supply & Return Line Quick-Connect Fittings
Courtesy of CHRYSLER GROUP, LLC

17. Disconnect the fuel supply (2) line quick-connect fittings at fuel injection pump. Refer to **FITTING, QUICK CONNECT** .
18. Disconnect the fuel return line (1) near the fuel injection pump. Refer to **FITTING, QUICK CONNECT** .
19. Detach the fuel line routing clips.

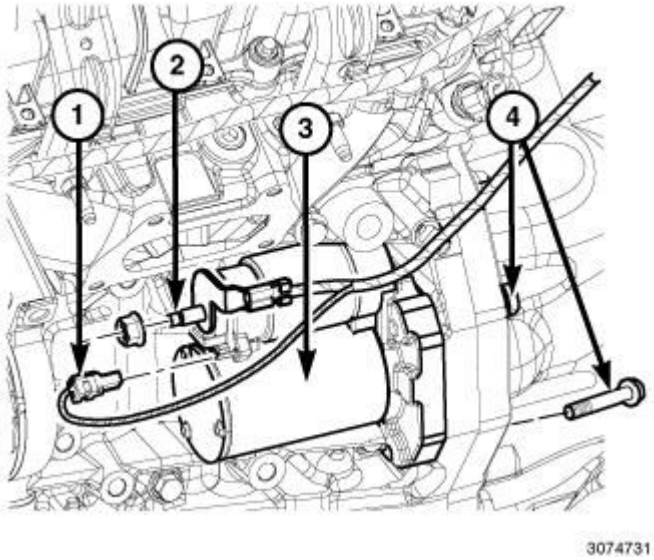

Fig. 14: Glow Plug Module & Connectors

Courtesy of CHRYSLER GROUP, LLC

20. Disconnect the two glow plug harness connector (3).

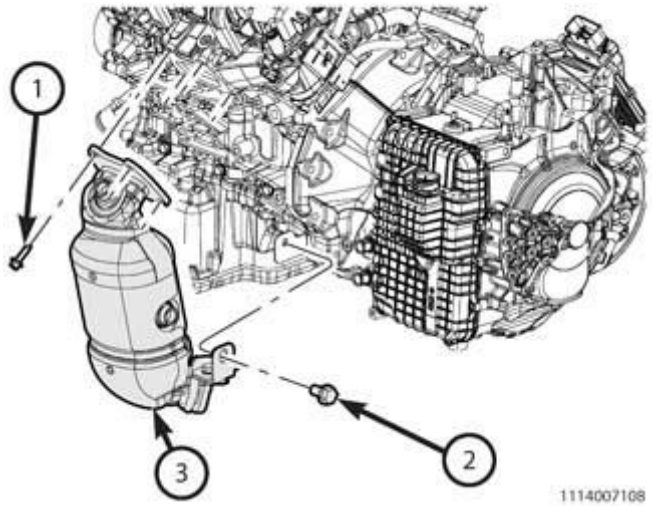

Fig. 15: Powertrain Control Module (PCM) & Harness Connectors
Courtesy of CHRYSLER GROUP, LLC

21. Unlock and disconnect the two PCM harness connectors (1) at the PCM (2).

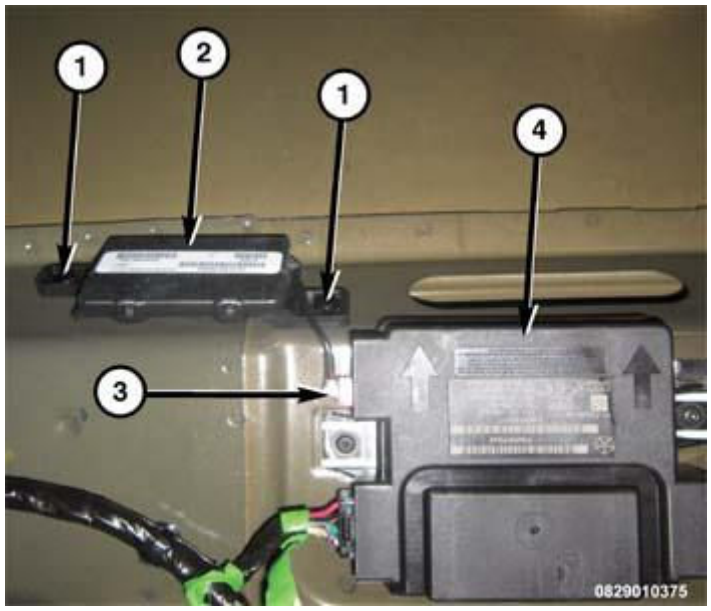

Fig. 16: Differential Pressure Sensor
Courtesy of CHRYSLER GROUP, LLC

22. Disconnect the differential pressure sensor wire harness connector (3).
23. Remove nut (1) and position aside the differential pressure sensor (2) from bracket.

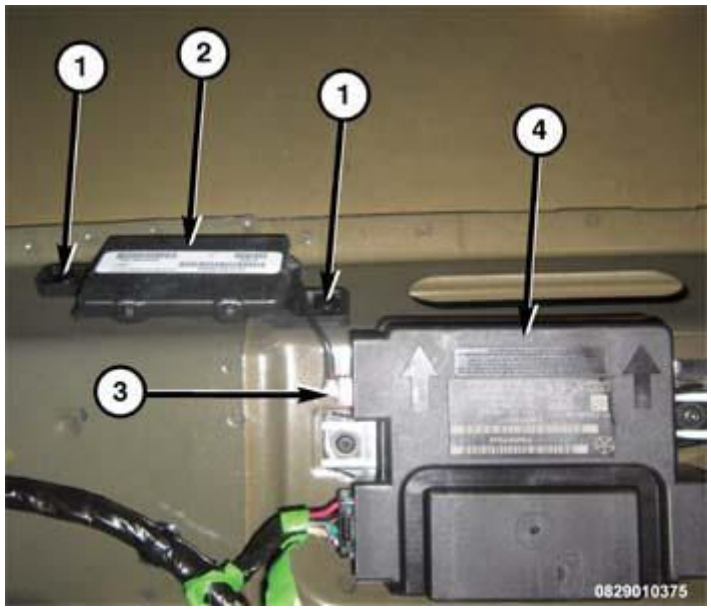

Fig. 17: Right PDC Cover
Courtesy of CHRYSLER GROUP, LLC

24. Remove the right PDC cover (1).

Fig. 18: B+ Cable & Nut
Courtesy of CHRYSLER GROUP, LLC

25. Remove nut (1) and the B+ cable (2) from the right PDC.
26. Remove retainers and the right and left lower splash shield.
27. Remove the lower front closeout panel. Refer to **SHIELD, SPLASH, FRONT WHEELHOUSE, REMOVAL** .

28. Remove the accessory drive belt. Refer to **BELT, SERPENTINE, REMOVAL** .
29. Remove the right and left half shafts. Refer to **REMOVAL** .
30. Remove the exhaust crossunder pipe. Refer to **PIPE, EXHAUST CROSSUNDER, REMOVAL** .
31. Remove the diesel particulate filter. Refer to **FILTER, DIESEL PARTICULATE, REMOVAL** .

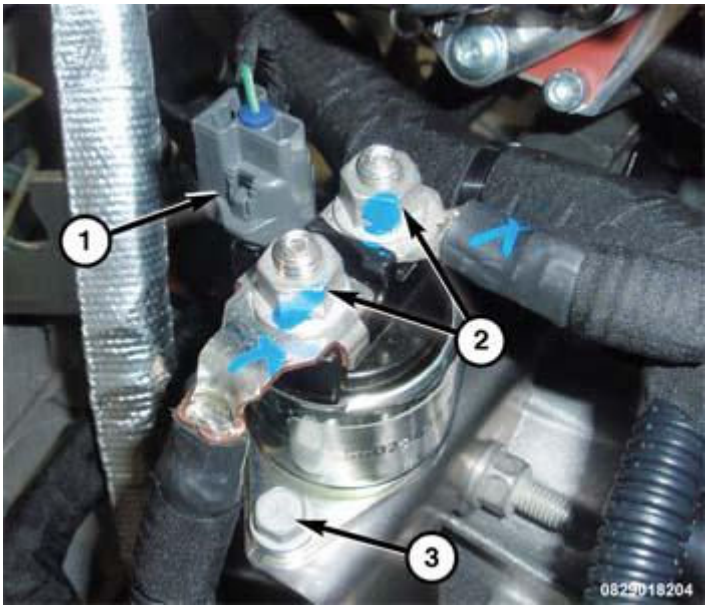

Fig. 19: Lower CAC Hoses
Courtesy of CHRYSLER GROUP, LLC

32. Remove the right lower CAC hose (2).

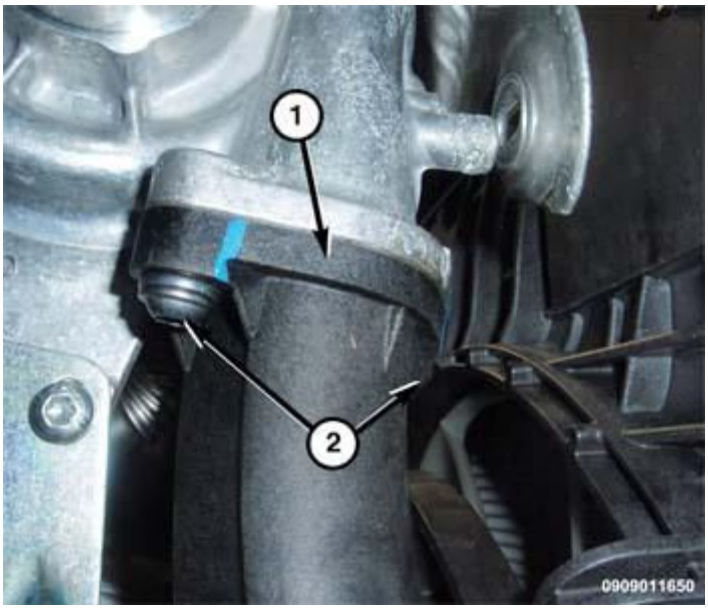

Fig. 20: Right CAC Tube & Bolts
Courtesy of CHRYSLER GROUP, LLC

33. Remove bolts (2) and the right CAC tube (1) from turbocharger.

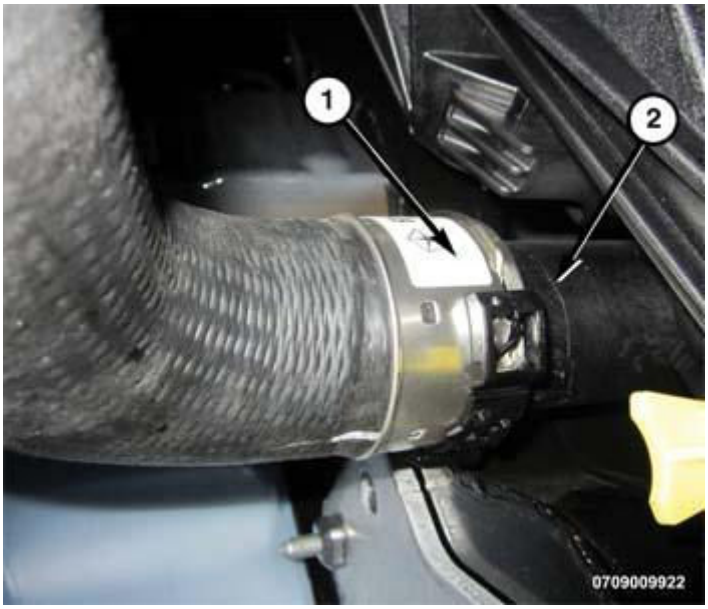

Fig. 21: Left Charge Air Cooler (CAC) & Hose
Courtesy of CHRYSLER GROUP, LLC

34. Remove the left side Charge Air Cooler (CAC) hose (1).

Fig. 22: CAC Air Tube & Nut
Courtesy of CHRYSLER GROUP, LLC

35. Remove the left CAC tube support bracket nut (1).

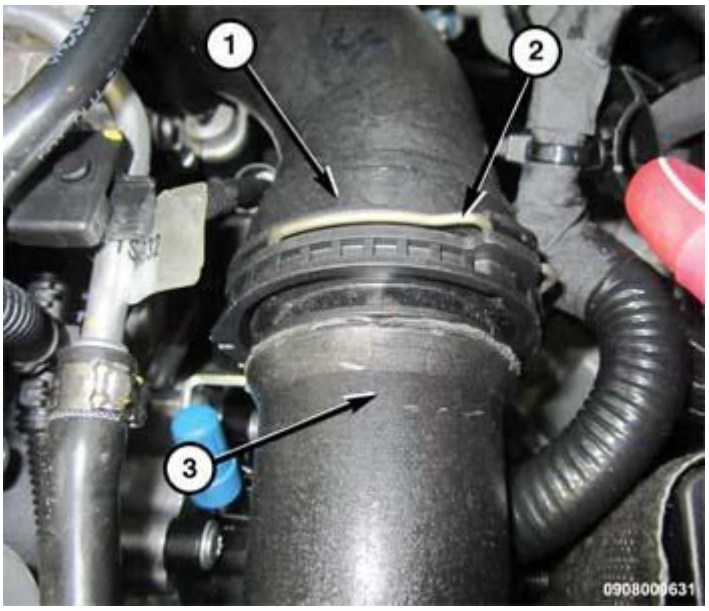

Fig. 23: EGR Air Flow Control Valve Inlet Tube, CAC Tube Wire Retainer & CAC Hose
Courtesy of CHRYSLER GROUP, LLC

36. Release spring clip (2) and disconnect the left side CAC tube (3).

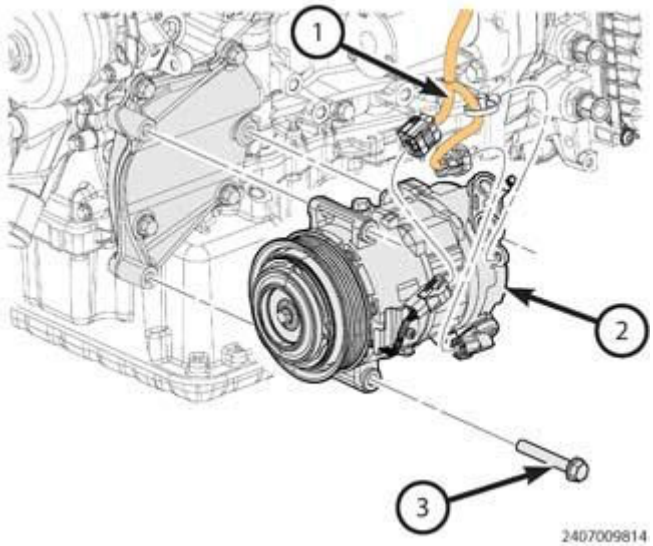

Fig. 24: Removing/Installing A/C Compressor
Courtesy of CHRYSLER GROUP, LLC

37. Disconnect the two A/C compressor wire harness connector (1).

NOTE: **The A/C compressor for 2.0L diesel models uses three bolts to secure the A/C compressor to the engine.**

38. Support the A/C compressor (2) and remove the three bolts (3) that secure the compressor to the engine

and position aside.

39. Lower the vehicle.

Fig. 25: Thermostat Housing & Hoses
Courtesy of CHRYSLER GROUP, LLC

40. Using the (special tool #10288, Pliers, Hose Clamp) to release clamp (1) and remove the upper radiator hose at engine.

Fig. 26: Lower Radiator Hose
Courtesy of CHRYSLER GROUP, LLC

41. Using the (special tool #10288, Pliers, Hose Clamp) to release clamp and remove the lower radiator hose

(1) at engine.

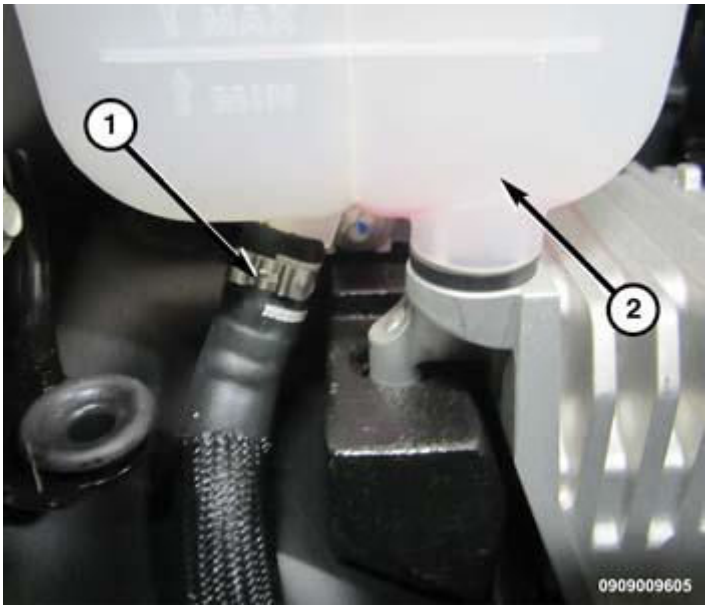

Fig. 27: Coolant Bottle & Lower Hose
Courtesy of CHRYSLER GROUP, LLC

42. Using the (special tool #10288, Pliers, Hose Clamp) to release clamp and remove the coolant hose from pressurized coolant bottle.

Fig. 28: Heater Hose
Courtesy of CHRYSLER GROUP, LLC

43. Disconnect the Heater Hose (1) at heater core.
44. Raise and support the vehicle. Refer to **HOISTING, STANDARD PROCEDURE** .

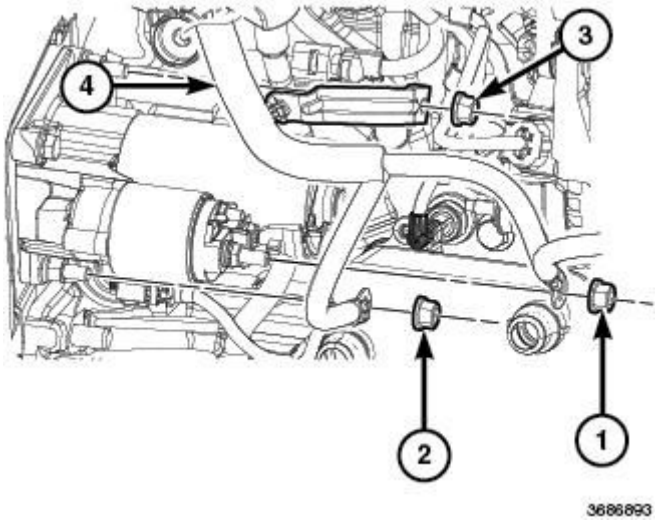

Fig. 29: B+ Cable Retainer
Courtesy of CHRYSLER GROUP, LLC

45. Remove nut (2) and the solenoid wire from starter.
46. Remove nut (1) and the B+ cable (4) from starter.

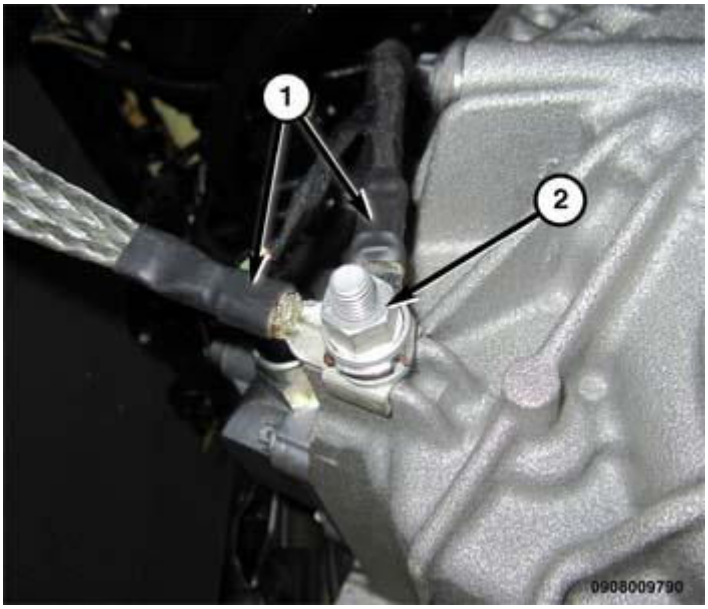

Fig. 30: Ground Cables & Nut
Courtesy of CHRYSLER GROUP, LLC

47. Remove nut (2) and the ground cables (1).

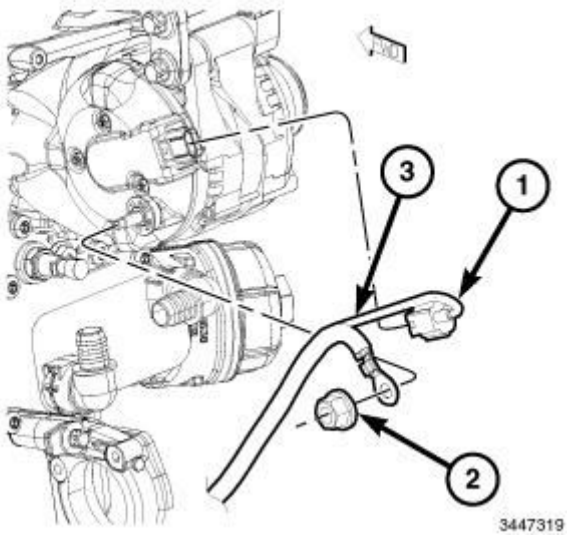

Fig. 31: B+ Retainer, Generator Field Connector & B+ Cable
Courtesy of CHRYSLER GROUP, LLC

48. Remove nut (2) and the B+ cable from generator.
49. Disconnect the generator field wire harness connector (1) from generator.
50. Remove the lower DPF mounting bracket.
51. Remove the rear mount assembly. Refer to **INSULATOR, ENGINE MOUNT, REAR, REMOVAL** .
52. Remove the coolant crossover tube.

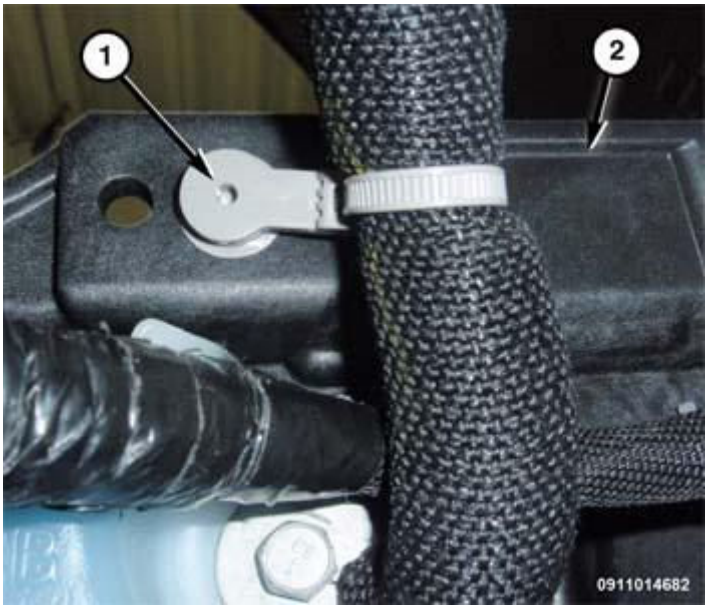

Fig. 32: Battery Tray & Engine Wire Harness Retainer
Courtesy of CHRYSLER GROUP, LLC

53. Detach the engine wire harness retainer (1) from battery tray (2).

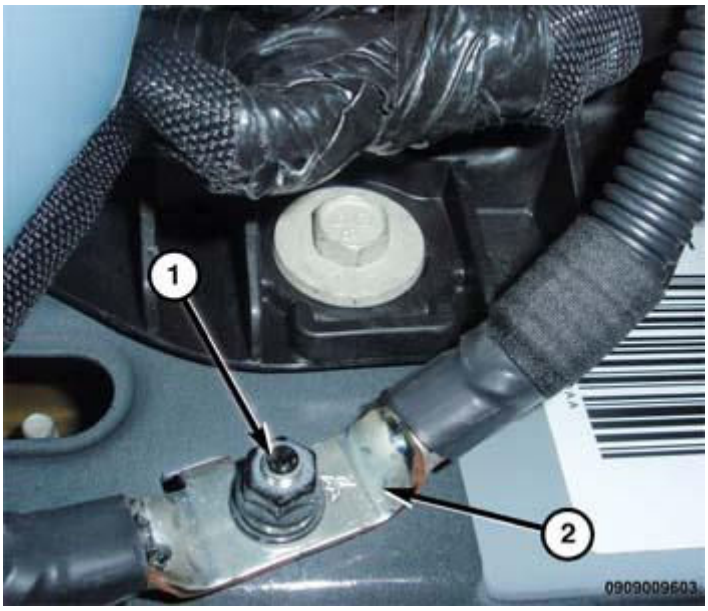

Fig. 33: Nut & Wire Harness
Courtesy of CHRYSLER GROUP, LLC

54. Remove nut securing wire harness by battery.

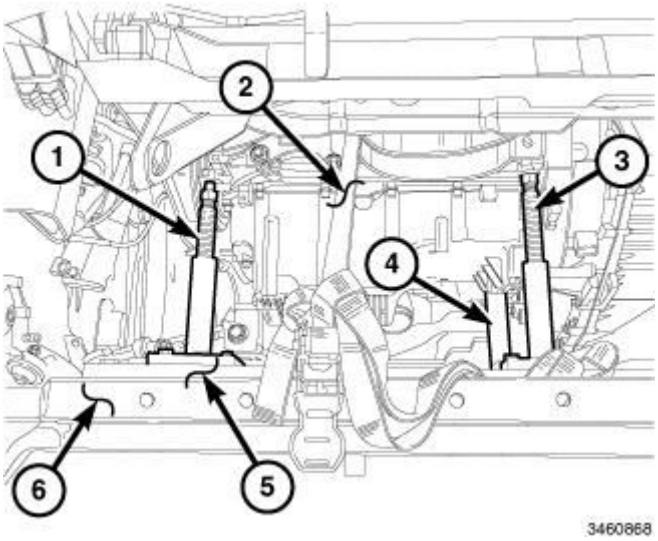

Fig. 34: Engine Support Cradle, Cradle Posts, Safety Strap & Power Train Dolly
Courtesy of CHRYSLER GROUP, LLC

55. Assemble the Dolly (special tool #6135, Dolly, Power Train), Cradle (special tool #6710A, Cradle, Engine Support).
56. Lower vehicle and position Dolly (special tool #6135, Dolly, Power Train) (6), and Cradle (special tool #6710A, Cradle, Engine Support) (5) under engine.
57. Adjust the Cradle Posts (special tool #6848, Posts, Cradle) (1, 3, 4) to seat engine on Cradle Posts.

WARNING: Safety straps must be used to secure engine to the dolly fixture.

58. Install, tighten and lock safety strap (2) around engine and attach them to the cradle.
59. Lower vehicle so that only the weight of the engine and transaxle assembly is on dolly fixture.

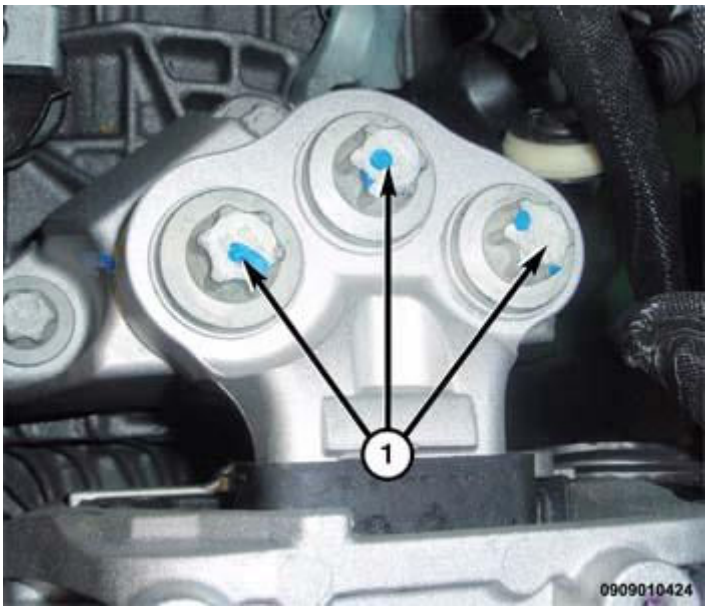

Fig. 35: Left Transaxle Mount Bolts
Courtesy of CHRYSLER GROUP, LLC

60. Remove left mount to transaxle bolts (1).

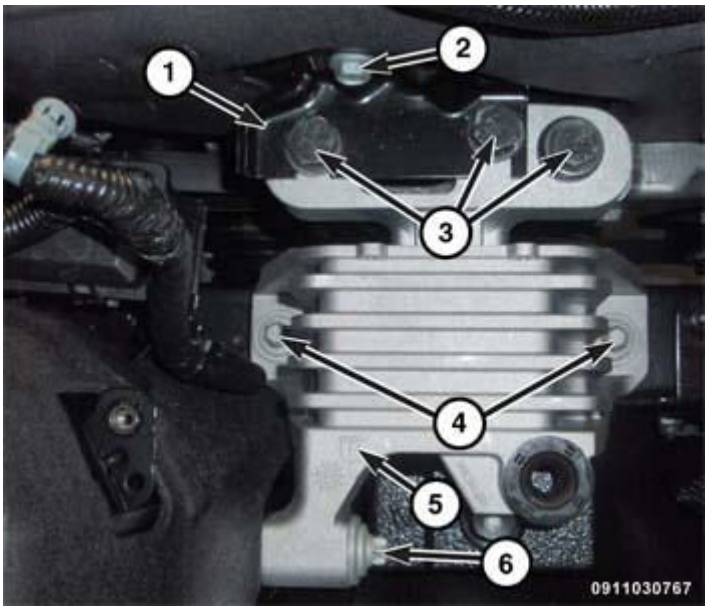

Fig. 36: Right Transaxle Mount Bolts

Courtesy of CHRYSLER GROUP, LLC

61. Remove the right engine mount bracket bolt (2).
62. Remove the three engine mount bolts (3) and the mount bracket (1).

CAUTION: It may be necessary to adjust the engine and transmission assembly, with the dolly fixture attached, to successfully clear the engine compartment.

63. While watching for obstructions, slowly raise the vehicle until the engine and transmission assembly clear the engine compartment.
64. Separate engine and transmission.

INSTALLATION

INSTALLATION

1. On MTX models, install the transmission and tighten bolts to. Refer to **SPECIFICATIONS** .

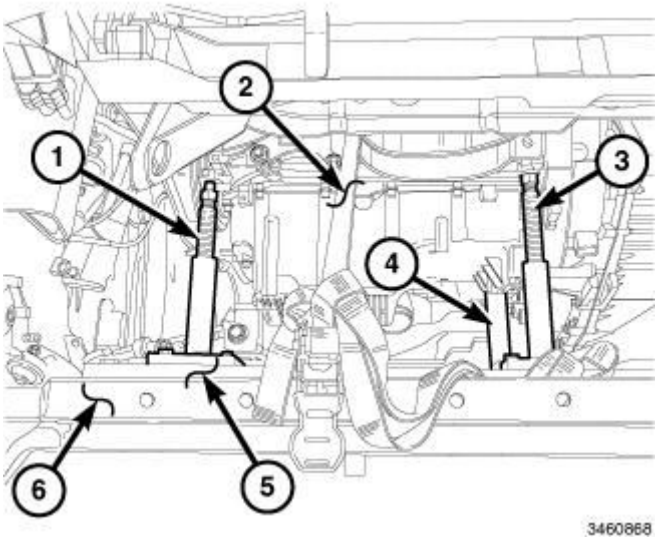

Fig. 37: Engine Support Cradle, Cradle Posts, Safety Strap & Power Train Dolly
Courtesy of CHRYSLER GROUP, LLC

WARNING: Safety straps must be used to secure engine to the dolly fixture.

NOTE: The fourth post is hidden behind the support strap.

2. Position the engine onto Cradle Post (special tool #6848, Posts, Cradle) (1, 3, 4), Engine Support (special tool #6710A, Cradle, Engine Support), and Dolly (special tool #6135, Dolly, Power Train) then install

safety strap (2) around engine, securing it to the Dolly (6).

3. Position the engine and transmission assemblies below vehicle engine compartment.

CAUTION: It may be necessary to adjust the engine and transmission assembly, with the dolly fixture attached, to successfully clear the engine compartment.

4. While watching for obstructions, slowly lower the vehicle until the engine and transaxle assembly clearly fit the engine compartment.

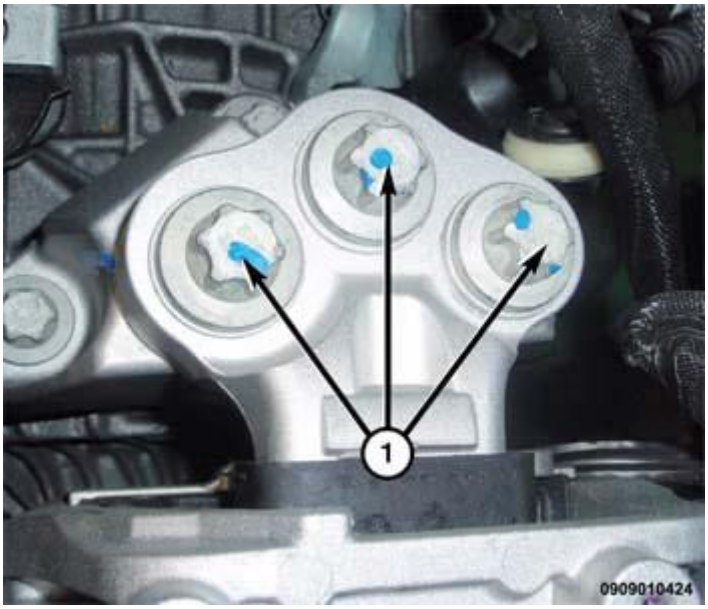

Fig. 38: Left Transaxle Mount Bolts
Courtesy of CHRYSLER GROUP, LLC

5. Install left mount to transaxle bolts (1). Tighten bolts 157 N.m (116 ft. lbs.).

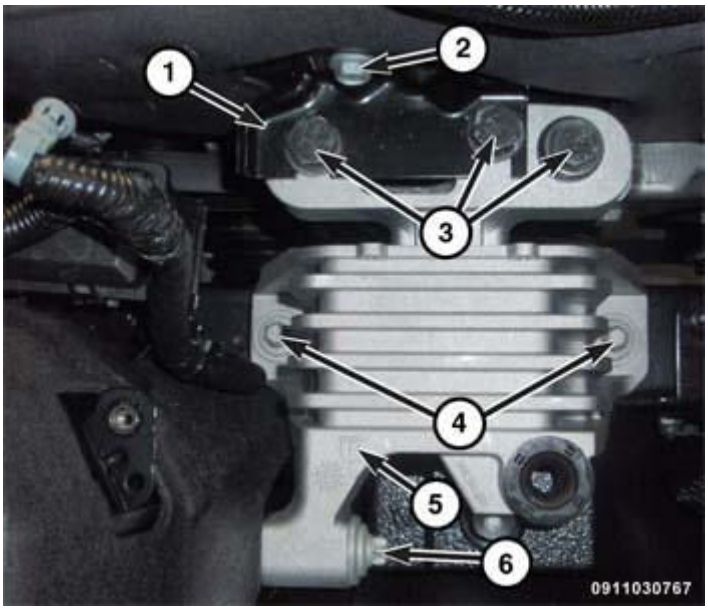

Fig. 39: Right Transaxle Mount Bolts
Courtesy of CHRYSLER GROUP, LLC

6. Install right mount bracket (1) to frame rail retaining bolts and tighten to 90 N.m (66 ft. lbs.).

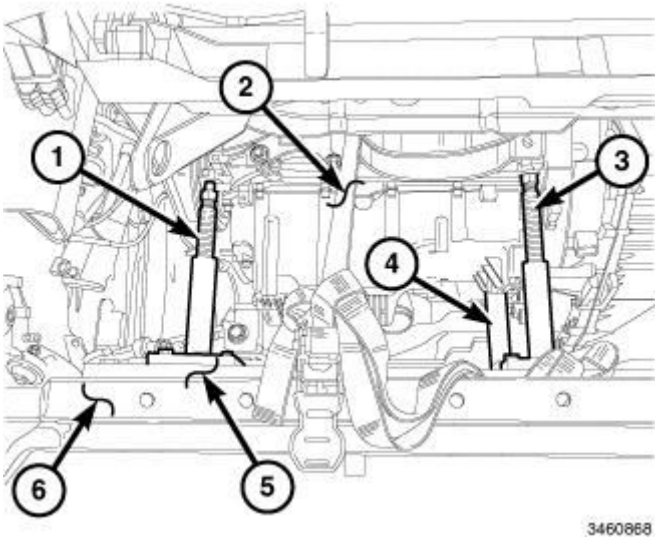

Fig. 40: Engine Support Cradle, Cradle Posts, Safety Strap & Power Train Dolly
Courtesy of CHRYSLER GROUP, LLC

7. Remove safety strap (2) and the Dolly (special tool #6135, Dolly, Power Train) (6).

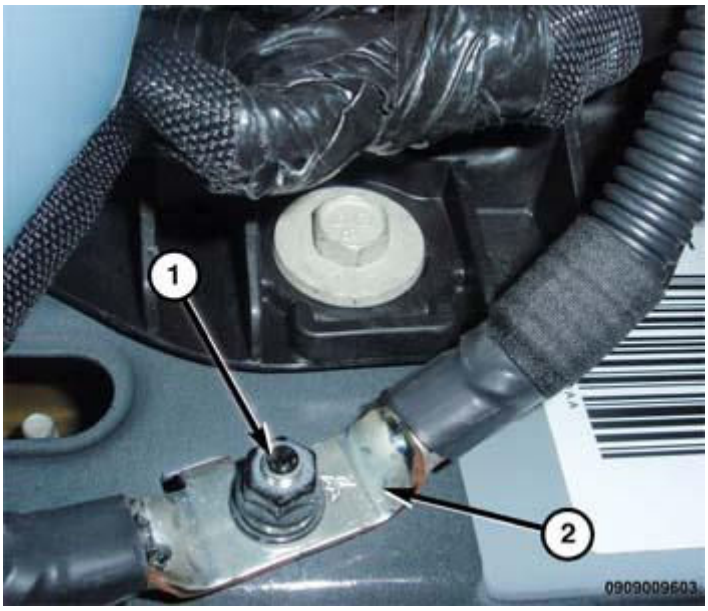

Fig. 41: Nut & Wire Harness
Courtesy of CHRYSLER GROUP, LLC

8. Install nut securing engine wire harness by battery.

Fig. 42: Battery Tray & Engine Wire Harness Retainer
Courtesy of CHRYSLER GROUP, LLC

9. Attach the engine wire harness retainer (1) to battery tray (2).
10. Install the coolant crossover tube.
11. Install the rear mount assembly. Refer to **INSULATOR, ENGINE MOUNT, REAR, INSTALLATION** .

12. Install the lower DPF mounting bracket.

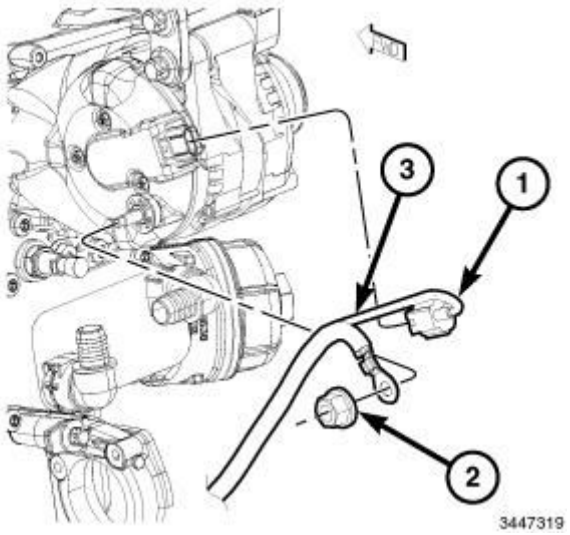

Fig. 43: B+ Retainer, Generator Field Connector & B+ Cable
Courtesy of CHRYSLER GROUP, LLC

13. Connect the generator field wire harness connector (1).
14. Install the B+ cable. Tighten nut (2) to 10 N.m (89 in. lbs.).

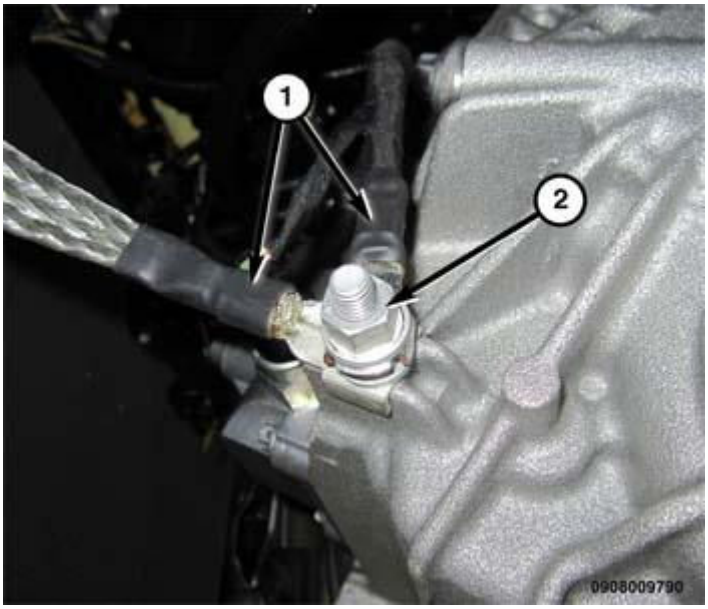

Fig. 44: Ground Cables & Nut
Courtesy of CHRYSLER GROUP, LLC

15. Install the ground cables (1). Tighten nut (2) to 20 N.m (177 in. lbs.).

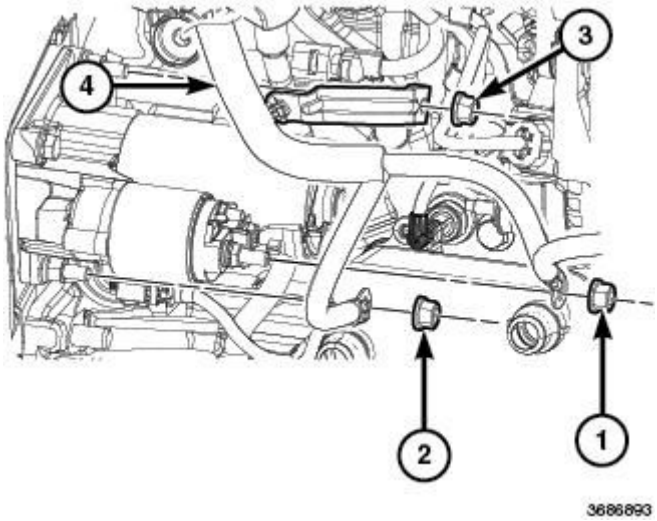

Fig. 45: B+ Cable Retainer
Courtesy of CHRYSLER GROUP, LLC

16. Install the B+ cable (4) to starter. Tighten nut (1) to 10 N.m (89 in. lbs.).
17. Install the solenoid wire to starter and securely tighten nut (2).
18. Lower the vehicle.

Fig. 46: Heater Hose
Courtesy of CHRYSLER GROUP, LLC

19. Install the heater hoses (1) at heater core.
20. Connect the heater hose at intake manifold.

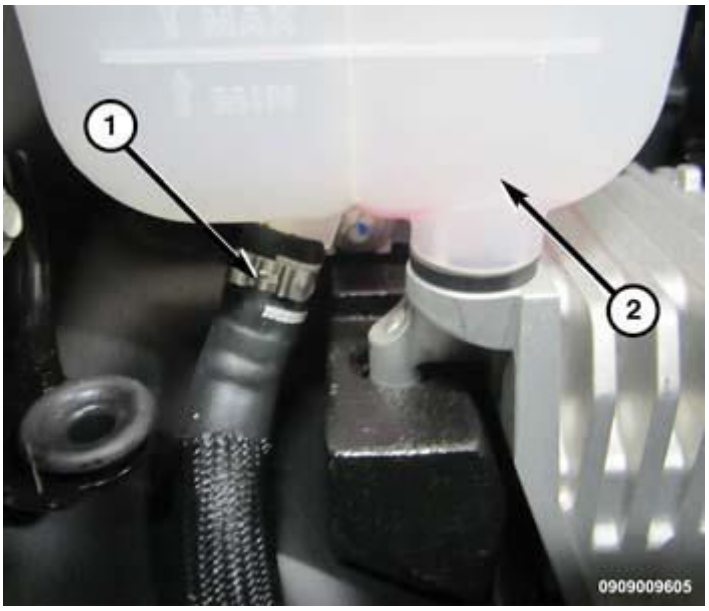

Fig. 47: Coolant Bottle & Lower Hose
Courtesy of CHRYSLER GROUP, LLC

21. Install the pressurized coolant reservoir hose (1). Using the (special tool #10288, Pliers, Hose Clamp) lock the clamp.

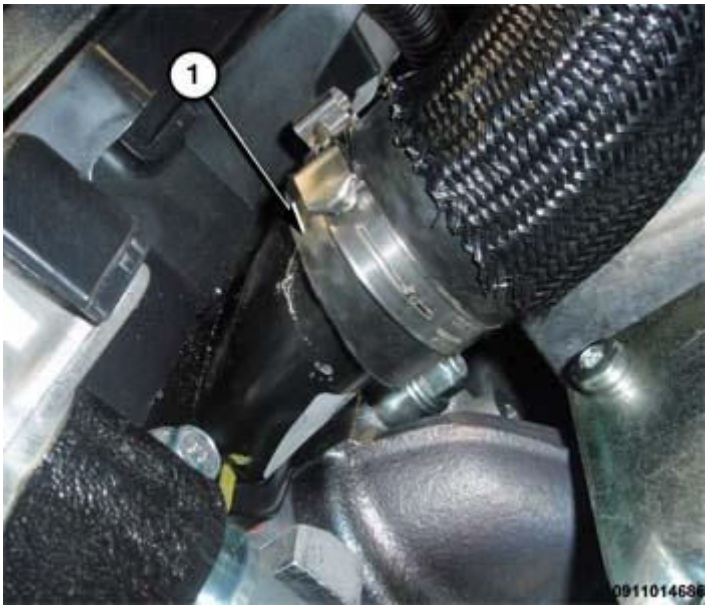

Fig. 48: Lower Radiator Hose
Courtesy of CHRYSLER GROUP, LLC

22. Install the lower radiator hose (1) at engine. Using the (special tool #10288, Pliers, Hose Clamp) lock the clamp.

Fig. 49: Thermostat Housing & Hoses
Courtesy of CHRYSLER GROUP, LLC

23. Install the upper radiator (2) hose at engine. Using the (special tool #10288, Pliers, Hose Clamp) lock the clamp (1).
24. Raise and support the vehicle. Refer to **HOISTING, STANDARD PROCEDURE** .

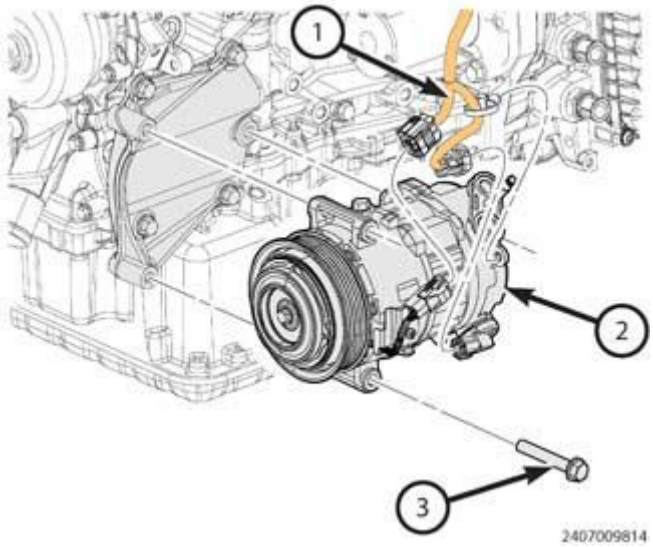

Fig. 50: Removing/Installing A/C Compressor
Courtesy of CHRYSLER GROUP, LLC

NOTE: The A/C compressor for 2.0L diesel models uses three bolts to secure the A/C compressor to the engine.

25. Install the A/C compressor (2). Tighten the three bolts (3) to 25 N.m (18 ft. lbs.).

26. Connect the two A/C compressor wire harness connector (1).

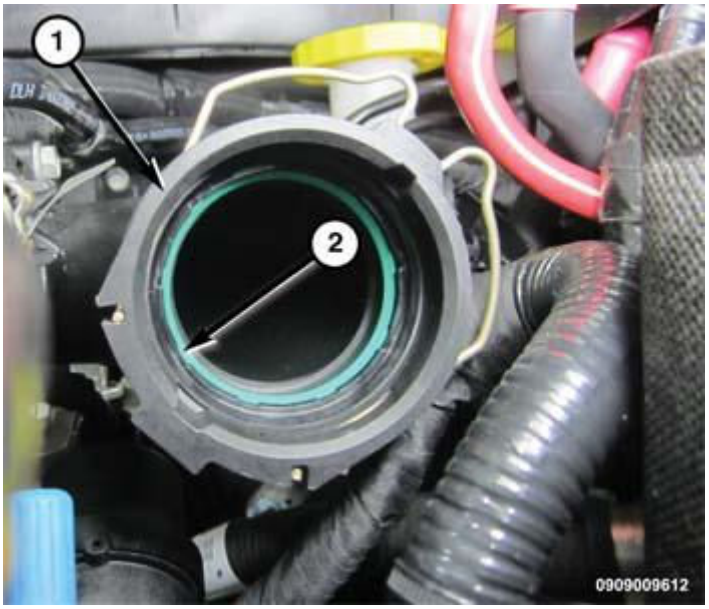

Fig. 51: O-Ring & EGR Air Flow Control Valve Inlet Tube
Courtesy of CHRYSLER GROUP, LLC

27. Install a new Inlet tube O-ring seal (2).

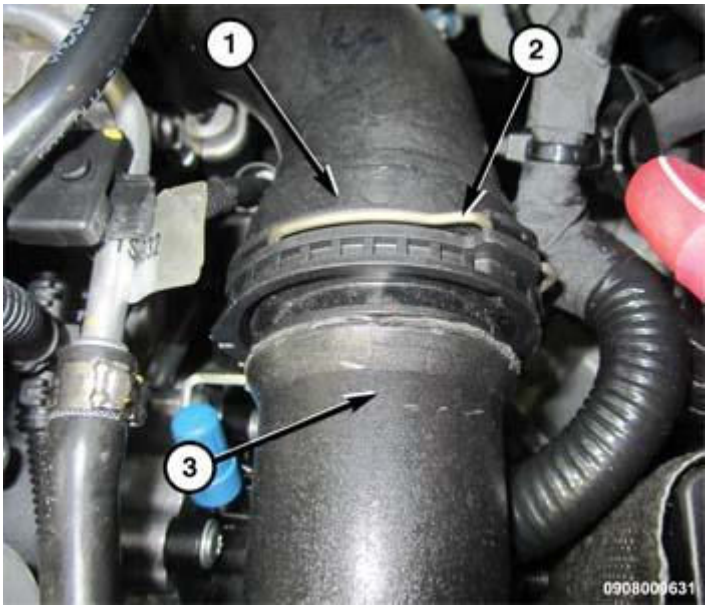

Fig. 52: EGR Air Flow Control Valve Inlet Tube, CAC Tube Wire Retainer & CAC Hose
Courtesy of CHRYSLER GROUP, LLC

28. Connect the left side Charge Air Cooler (CAC) tube (3) and install spring clip (2).

Fig. 53: CAC Air Tube & Nut
Courtesy of CHRYSLER GROUP, LLC

29. Install the left CAC tube support bracket nut (1). Tighten nut to 9 N.m (80 in. lbs.).

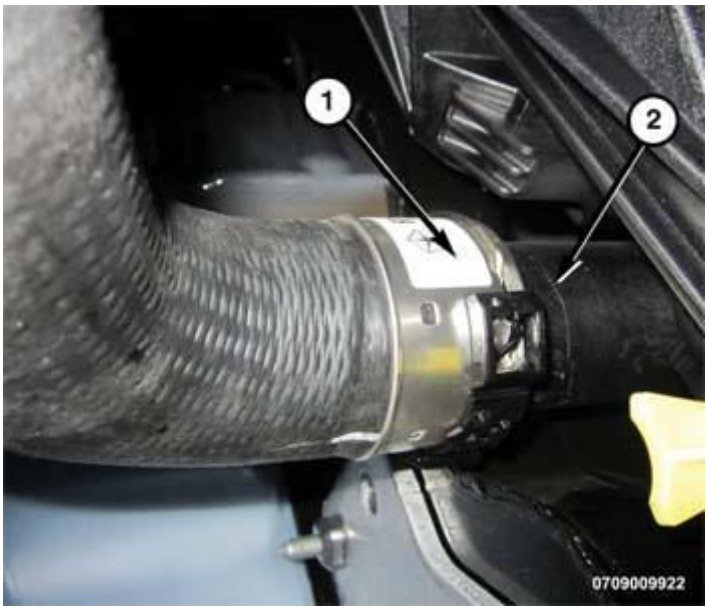

Fig. 54: Left Charge Air Cooler (CAC) & Hose
Courtesy of CHRYSLER GROUP, LLC

30. Install the right side CAC hose (3).

Fig. 55: CAC Tube & O-Ring Seal
Courtesy of CHRYSLER GROUP, LLC

31. Install the CAC tube O-ring seal (1).

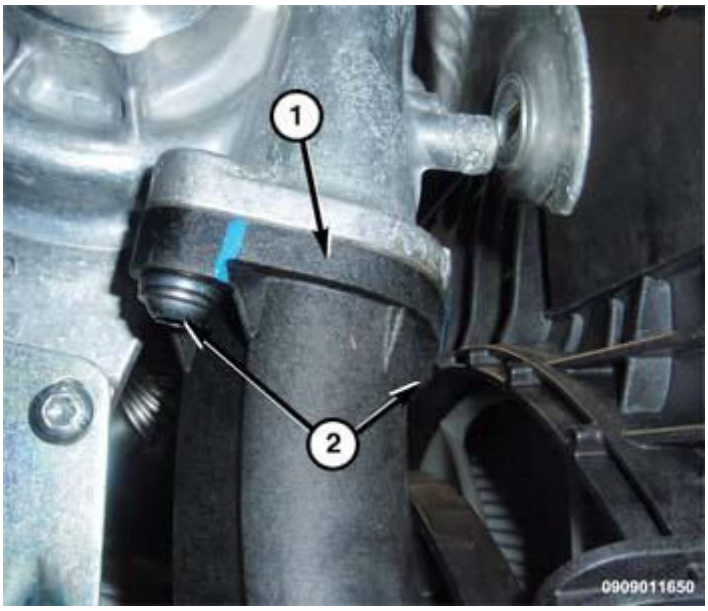

Fig. 56: Right CAC Tube & Bolts
Courtesy of CHRYSLER GROUP, LLC

32. Install the right CAC tube (1) to turbocharger flange. Tighten the bolts (2) to 10 N.m (89 in. lbs.).
33. Install the diesel particulate filter. Refer to **FILTER, DIESEL PARTICULATE, INSTALLATION** .
34. Install the exhaust crossunder pipe. Refer to **PIPE, EXHAUST CROSSUNDER, INSTALLATION** .
35. Install the right and left halfshafts. Refer to **INSTALLATION** .

36. Install the accessory drive belt. Refer to **BELT, SERPENTINE, INSTALLATION** .
37. Install the right and left lower splash shield and retainers.

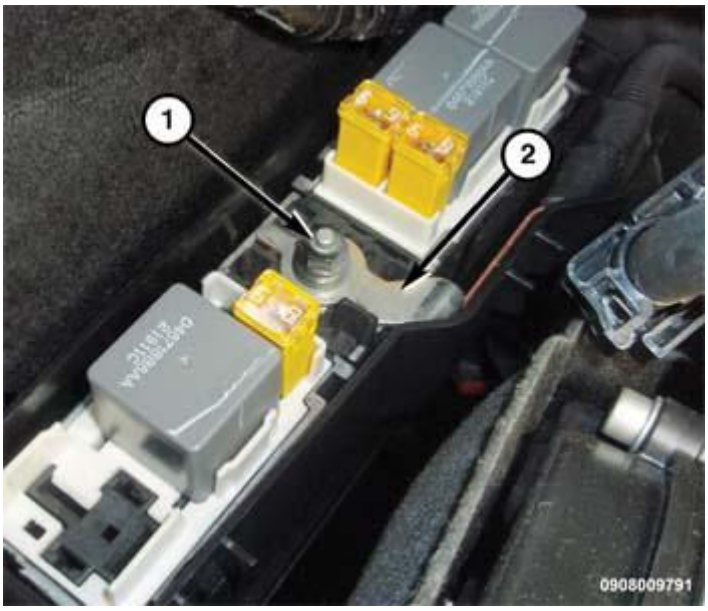

Fig. 57: B+ Cable & Nut
Courtesy of CHRYSLER GROUP, LLC

38. Install the B+ cable (2) to the right PDC and securely tighten nut (1).

Fig. 58: Right PDC Cover
Courtesy of CHRYSLER GROUP, LLC

39. Install the right PDC cover (1).

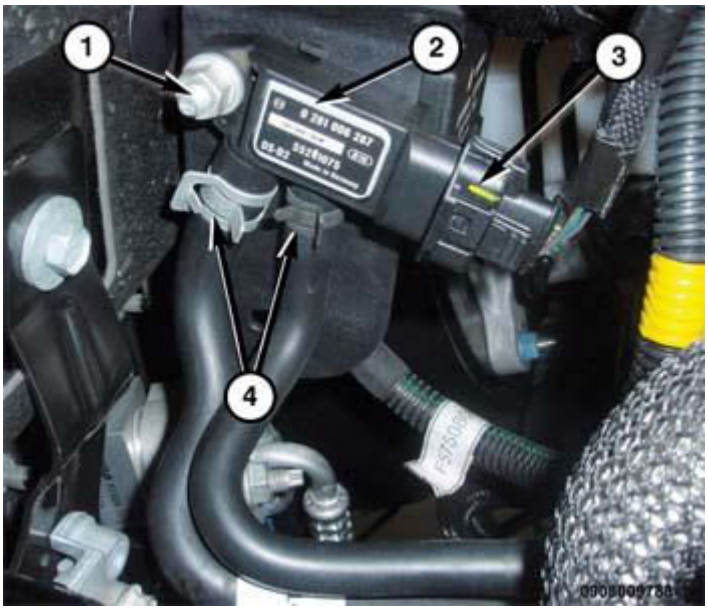

Fig. 59: Differential Pressure Sensor
Courtesy of CHRYSLER GROUP, LLC

40. Install the differential pressure sensor (2) and securely tighten nut (1).
41. Connect the differential pressure sensor wire harness connector (3).

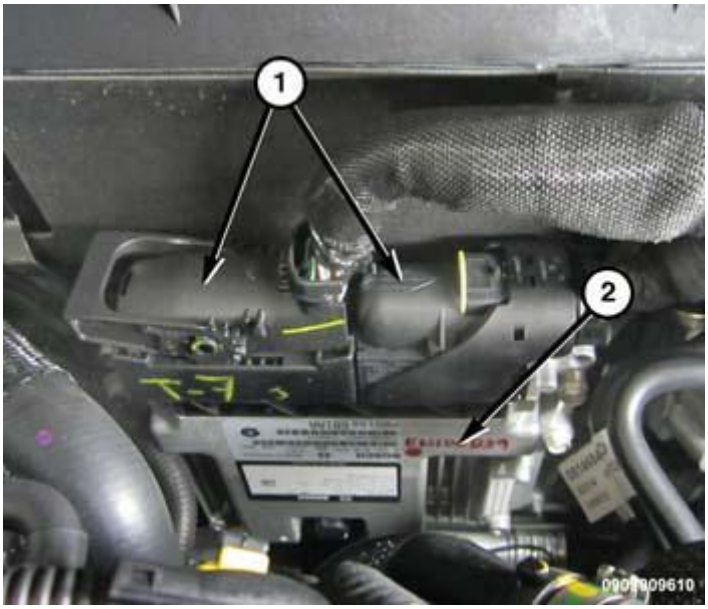

Fig. 60: Powertrain Control Module (PCM) & Harness Connectors
Courtesy of CHRYSLER GROUP, LLC

42. Connect and lock the two PCM harness connectors (1) at the PCM (2).

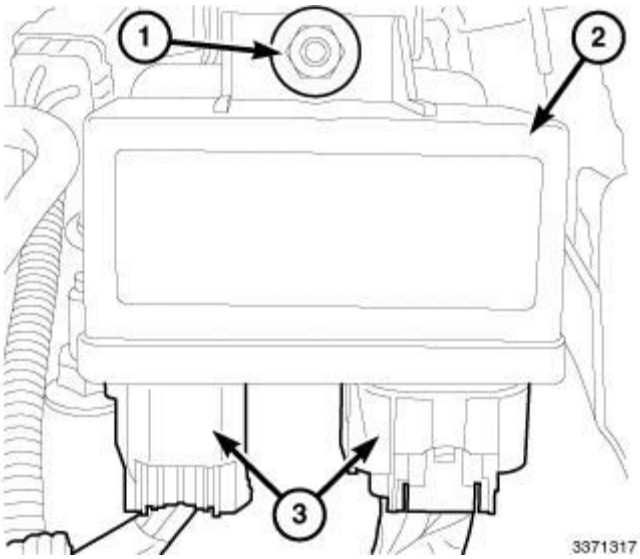

Fig. 61: Glow Plug Module & Connectors
Courtesy of CHRYSLER GROUP, LLC

43. Connect the two glow plug harness connector (3).

Fig. 62: Fuel Supply & Return Line Quick-Connect Fittings
Courtesy of CHRYSLER GROUP, LLC

44. Attach the fuel line routing clips.
45. Connect the fuel return line (1) near the fuel injection pump.
46. Connect the fuel supply (2) line quick-connect fitting at fuel injection pump.

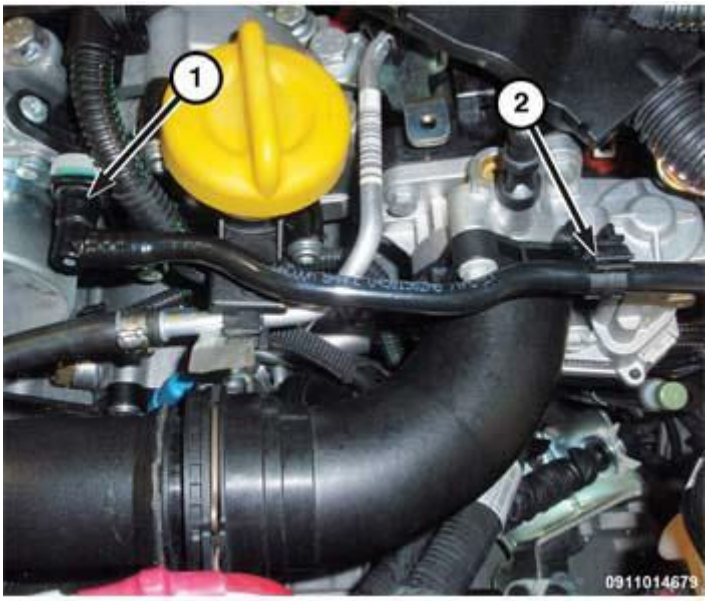

Fig. 63: Brake Booster Hose & Retainer Clip
Courtesy of CHRYSLER GROUP, LLC

47. Connect the brake booster hose (1) at vacuum pump and retainer clip (2).

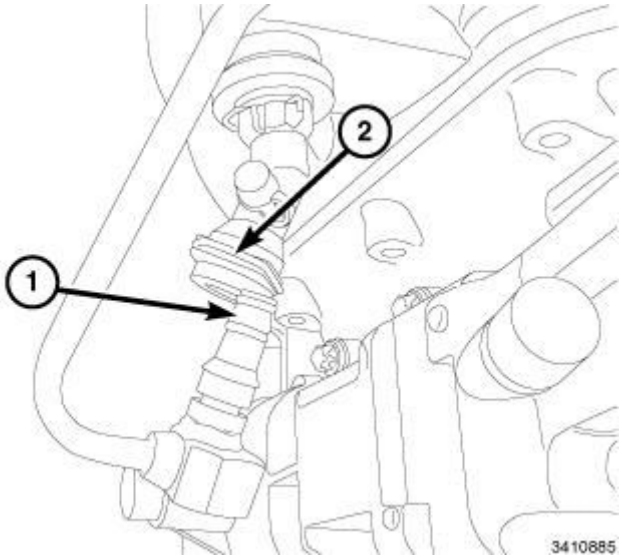

Fig. 64: Hydraulic Supply Pipe & Concentric Slave Cylinder
Courtesy of CHRYSLER GROUP, LLC

48. Connect the hydraulic supply pipe for the concentric slave cylinder.

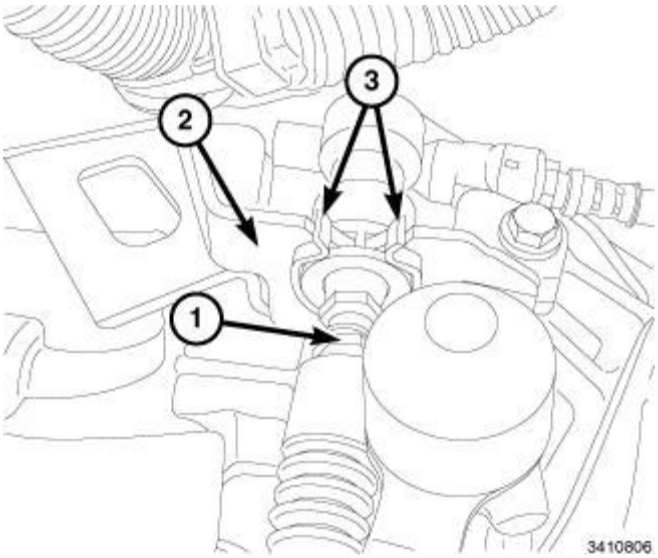

Fig. 65: Gear Shift Selector Cable & Bracket
Courtesy of CHRYSLER GROUP, LLC

49. Connect the gear shift selector cable (1) to the bracket (2).

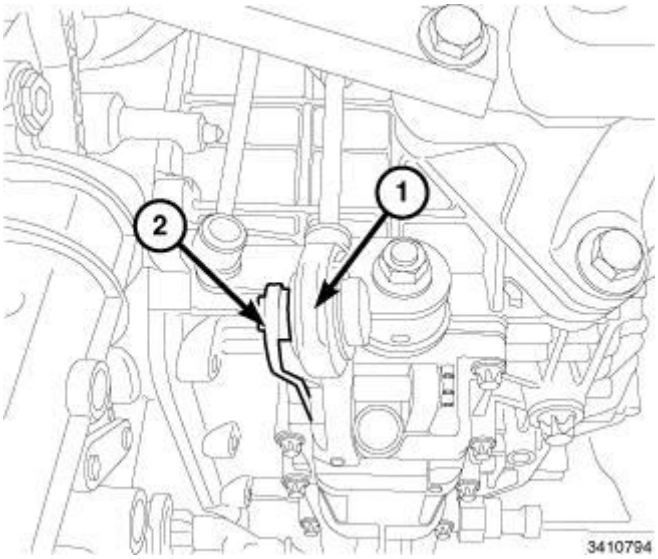

Fig. 66: Gear Shift Selector Cable & Manual Lever
Courtesy of CHRYSLER GROUP, LLC

50. Connect the gear shift selector cable (1) to the manual lever (2).

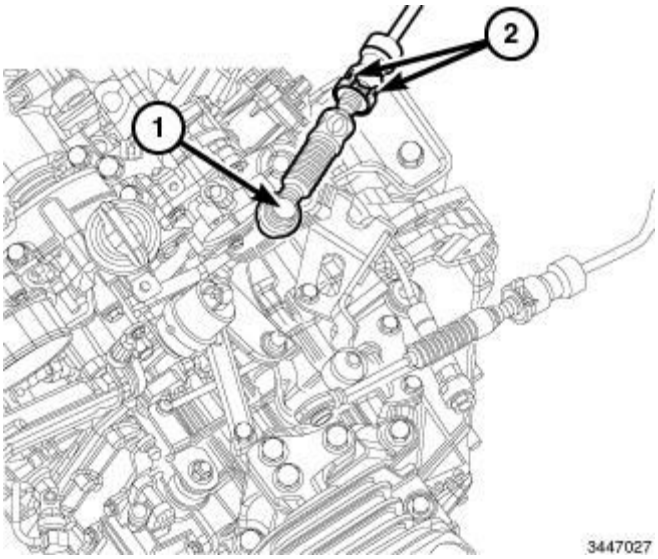

Fig. 67: Cable Connector & Release Tabs
Courtesy of CHRYSLER GROUP, LLC

51. Push the cable connector (1) to the lever.
52. Connect the gear shift range cable at the bracket.

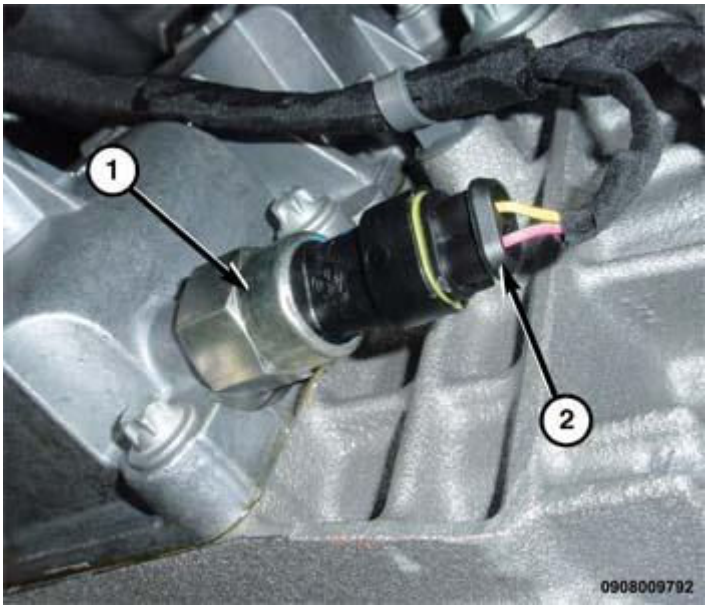

Fig. 68: Reverse Lamp Sensor & Wire Harness Connector
Courtesy of CHRYSLER GROUP, LLC

53. Raise and support the vehicle. Refer to **HOISTING, STANDARD PROCEDURE** .
54. Connect the reverse lamp wire harness connector (2).

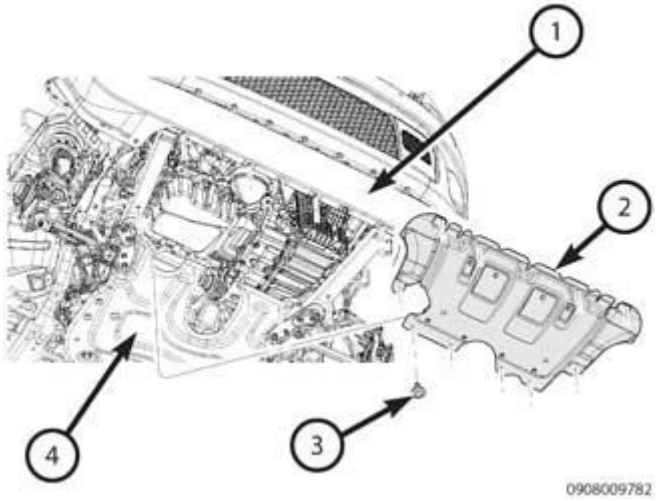

Fig. 69: Removing/Installing Starter
Courtesy of CHRYSLER GROUP, LLC

55. Install the belly pan (2) and securely tighten bolts (3).
56. Lower the vehicle.
57. Install the air cleaner body. Refer to **BODY, AIR CLEANER, INSTALLATION** .
58. Fill the transaxle with the recommended oil. Refer to **CAPACITIES AND RECOMMENDED FLUIDS, SPECIFICATIONS** .
59. Fill the cooling system. Refer to **STANDARD PROCEDURE** .
60. Install a new oil filter and fill the engine with recommended oil. Refer to **CAPACITIES AND RECOMMENDED FLUIDS, SPECIFICATIONS** .

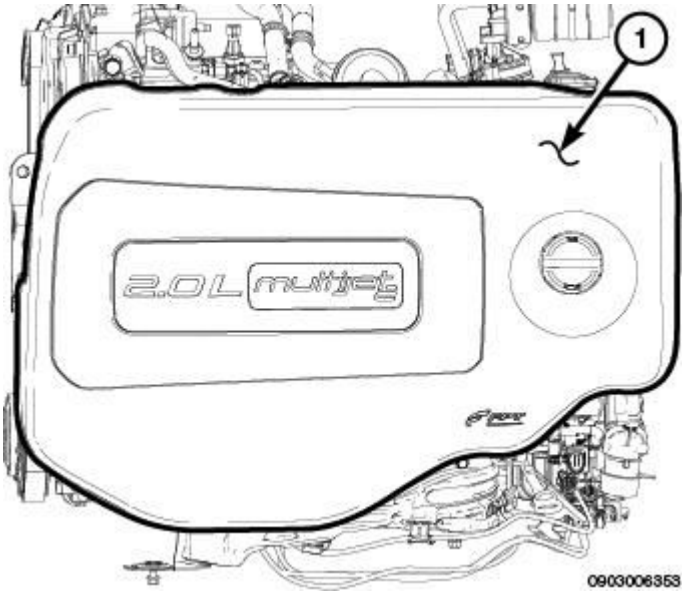

Fig. 70: Engine Cover
Courtesy of CHRYSLER GROUP, LLC

61. Connect the negative and positive battery cable.
62. Start engine and check for leaks.
63. Install engine cover (1).

SPECIFICATIONS

SPECIFICATIONS - 2.0L DIESEL ENGINE

GENERAL

DESCRIPTION	SPECIFICATION	
	Metric	Standard
Type	In-Line OHV, DOHC	
Number of Cylinders	4	
Firing Order	1 - 3 - 4 - 2	
Compression Ratio	16.5:1	
Max. Variation Between Cylinders	25%	
Displacement	2.0 L	122 CID

CYLINDER BLOCK

DESCRIPTION	SPECIFICATION	
	Metric	Standard
Material	Cast Iron	
Cylinder Liner Inner Diameter		
Grade A	83.000 - 83.010 mm	3.2677 - 3.2681 in.
Grade B	83.010 - 83.020 mm	3.2681 - 3.2684 in.
Grade C	83.020 - 83.030 mm	3.2684 - 3.2688 in.
Cylinder Liner Taper	< 0.005 mm	0.0002 in.
Cylinder Liner Out-of-Round	< 0.050 mm	0.002 in.
Cylinder Liner Inner Diameter Oversize	0.10 mm	0.0004 in.

CYLINDER HEAD

DESCRIPTION	SPECIFICATION	
	Metric	Standard
Engine Cylinder Head Lower Surface Flatness	< 0.1 mm	0.0039 in.
Cylinder Head Nominal Height	107 mm ± 0.05 mm	4.213 ± 0.002 mm
Cylinder Head Gasket Size With Maximum Piston Projection		
Projection	+0.110 - +0.230 mm	+0.004 - +0.009 in.
Thickness (No Opening)	0.95 ± 0.05 mm	+0.037 ± 0.002 in.
Cylinder Head Gasket Size With		

Maximum Piston Projection		
Projection	+0.331 ± 0.425 mm	+0.013 - +0.017 in.
Thickness (Two Opening)	1.15 ± 0.05 mm	+0.045 ± 0.002 in.

PISTONS

DESCRIPTION	SPECIFICATION	
	Metric	Standard
Permitted Weight Difference Between Pistons	± 5 Grams	
Piston Outer Diameter - Grade A	82.930 - 82.940	3.2649 - 3.2653 in.
Piston Outer Diameter - Grade B	82.940 - 82.950	3.2653 - 3.2657 in.
Piston Outer Diameter - Grade C	82.950 - 82.960	3.2657 - 3.2661 in.
Piston Outer Diameter Oversize	0.1	0.0039

CONNECTING RODS

DESCRIPTION	SPECIFICATION	
	Metric	Standard
Permitted Difference in Weight Between Connecting Rod Assemblies	± 2.5 Grams	
Small End Bush Inner Diameter	30.006 - 30.014	1.1813 - 1.1817 in.
Big End Inner Diameter	53.897 - 53.909	2.1220 - 2.1224 in.

PISTONS PINS

DESCRIPTION	SPECIFICATION	
	Metric	Standard
Piston Pin Outer Diameter	29.975 - 29.980	1.1801 - 1.1803 in.
Piston Pin Outer Diameter	29.985 - 29.990	1.1805 - 1.1807 in.

PISTON RINGS

DESCRIPTION	SPECIFICATION	
	Metric	Standard
Cylinder Compression 1st Sealing Ring Gap	0.20 - 0.35 mm	0.0080 - 0.0140 in.
Cylinder Compression 2nd Sealing Ring Gap	0.60 - 0.80	0.0240 - 0.0314 in.
Engine Piston Oil Scraper Ring Gap	0.25 - 0.50 mm	0.0100 - 0.0200 in.
Sealing Ring Seat in Piston - 1st Groove	1.620 - 1.640 mm	0.0638 - 0.0645 in.
Sealing Ring Seat in Piston - 2nd Groove	1.550 - 1.570 mm	0.0610 - 0.0618 in.
Sealing Ring Seat in Piston - 3rd Groove	2.020 - 2.040 mm	0.07952 - 0.0803 in.

Cylinder Compression 1st Sealing Ring Thickness	1.470 - 1.495 mm	0.0579 - 0.0589 in.
Cylinder Compression 2nd Sealing Ring Thickness	1.470 - 1.495 mm	0.0579 - 0.0589 in.
Engine Piston Oil Scraper Ring Thickness	1.970 - 1.990 mm	0.0776 - 0.0783 in.
Cylinder Compression 1st Sealing Ring End Float	0.125 - 0.170 mm	0.0049 -0.0067 in.
Cylinder Compression 2nd Sealing Ring End Float	0.055 - 0.100 mm	0.0022 - 0.0039 in.
Engine Piston Oil Scraper Ring End Float	0.030 - 0.070 mm	0.0012 - 0.0028 in.

CONNECTING RODS

DESCRIPTION	SPECIFICATION	
	Metric	Standard
Bearing Clearance	0.03 - 0.08 mm	0.001 - 0.003 in.
Side Clearance	0.37 mm	0.014 in.

CRANKSHAFT / MAIN JOURNALS / CRANKPINS

DESCRIPTION	SPECIFICATION	
	Metric	Standard
Crankshaft End Float	0.049 - 0.211 mm	0.0019 - 0.0083 in.
Main Journal Seat Diameter	63.705 - 63.718 mm	2.508 - 2.509 in.
Main Journal Diameter - Grade A	59.995 - 60.002 mm	2.3620 - 2.3623 in.
Main Journal Diameter - Grade B	59.988 - 59.995 mm	2.3617 -2.3620 in.
Main Journal Diameter - Grade C	59.981 - 59.988 mm	2.3615 - 2.3617 in.
Main Journal Diameter Undersized	0.127 mm	0.005 in.
Crankpin Diameter - Grade A	50.800 - 50.807 mm	1.9999 - 2.0002 in.
Crankpin Diameter - Grade B	50.793 - 50.800 mm	1.9997 - 1.9999 in.
Crankpin Diameter - Grade C	50.786 - 50.793 mm	1.9994 - 1.9997 in.
Crankpin Diameter Undersized	0.127 mm	0.005 in.
Main journal half-bearings - Grade A (Red)	1.832- 1.836 mm	0.0721 - 0.0723 in.
Main Journal Half-Bearings - Grade B (Blue)	1.835 - 1.839 mm	0.0722 - 0.0724 in.
Main Journal Half-Bearings - Grade C (Yellow)	1.838 - 1.842 mm	0.0724 - 0.0725 in.
Main Journal/Crankpin Half-Bearings oversize - Grade A (Brown)	0.127 mm	0.005 in.
Main Journal/Crankpin Half-Bearings Oversize - Grade B (Green)	0.127 mm	0.005 in.

Main Journal/Crankpin Half-Bearings Oversize - Grade C (Black)	0.127 mm	0.005 in.
Main Journal/Crankpin Half-Bearing Oversize	0.254 mm	0.010 in.
Clearance Between Main Bearings - Crankshaft Main Journals	0.031 - 0.051 mm	0.0012 - 0.0020 in.
Crankpin Half-Bearings - Grade A (Red)	1.528 - 1.532 mm	0.0602 - 0.0603 in.
Crankpin Half-Bearings - Grade B (Blue)	1.532 - 1.536 mm	0.0603 - 0.0605 in.
Crankpin Half-Bearings - Grade C (Yellow)	1.535 - 1.539 mm	0.0604 - 0.0606 in.
Clearance Between Connecting Rod Bearings - Crankpin Bearings	0.030 - 0.056 mm	0.0012 - 0.0022 in.

CAMSHAFT

DESCRIPTION	SPECIFICATION	
	Metric	Standard
Camshaft First Journal Diameter	43.600 - 43.615	1.7165 - 1.7171 in.
Camshaft Second Journal Diameter	43.400 - 43.415	1.7087 - 1.7092 in.
Camshaft Third Journal Diameter	43.200 - 43.215	1.7010 - 1.7014 in.
Camshaft Fourth Journal Diameter	43.000 - 43.015	1.6930 - 1.6935 in.
Camshaft Fifth Journal Diameter	30.000 - 30.015	1.1811 - 1.1817 in.
Nominal Exhaust Cam Lift	8.0	0.3150 in.
Nominal Intake Cam Lift	8.0	0.3150 in.
Camshaft First Support Diameter	43.646 - 43.671	1.7183 - 1.7193 in.
Camshaft Second Mounting Diameter	43.446 - 43.471	1.7105 - 1.7115 in.
Camshaft Third Support Diameter	43.246 - 43.271	1.7026 - 1.7036 in.
Camshaft Fourth Support Diameter	43.046 - 43.071	1.6947 - 1.6957 in.
Camshaft Fifth Support Diameter	30.045 - 30.070	1.1829 - 1.1839 in.
Camshaft End Float	0.100 - 0.230	0.0039 - 0.0091 in.

VALVES

DESCRIPTION	SPECIFICATION	
	Metric	Standard
Intake Valve Stem Diameter	4.982 - 5.000 mm	0.1961 - 0.1968 in.
Exhaust Valve Stem Diameter	4.972 - 5.990 mm	0.1957 - 0.2358 in.

VALVE GUIDE

DESCRIPTION	SPECIFICATION	
	Metric	Standard
Valve Guide Inner Diameter	5.015 - 5.033 mm	0.051 in.

Valve Guide Inner Diameter	10.010 - 10.030 mm	0.3941 - 0.3950 in.
Valve Guide Outer Diameter Oversize	0.05 - 0.10 - 0.25 mm	0.002 - 0.004 - 0.010 in.

VALVES SPRINGS

DESCRIPTION	SPECIFICATION	
	Metric	Standard
Valve Spring Free Length	44.1 mm	1.736 in.
Length of Valve Springs Under a Load of 228 - 252 N.m	34.0 mm	1.339 in.
Length of Valve Springs Under a Load of 439 - 481 N.m	25.5	1.004 in.

ENGINE OIL PUMP

DESCRIPTION	SPECIFICATION	
	Metric	Standard
Clearance Between Pump Casing Support Plane and Top of Gears	0.080 - 0.186 mm	0.0031 - 0.0073 in.
Endfloat Between Pump Casing Support Plane and Top of Gears	0.025 - 0.070 mm	0.0010 - 0.0028 in.
Height of Engine Oil Pressure Limit Valve Spring Under Load of 88 - 97 N.m	36.0 mm	1.4173 in.

VALVES SEATS

DESCRIPTION	SPECIFICATION	
	Metric	Standard
Intake Valve Seat Outer Diameter	29.600 - 29.611	1.1653 - 1.1660 in.
Exhaust Valve Seat Outer Diameter	26.100 - 26.111	1.0275 - 1.0280 in.
Valve Seat Band Angle in Contact With Valves - Inlet	45° 30' ± 1°	
Valve Seat Band Angle in Contact With Valves - Exhaust	45° 0' ± 1°	

OIL PRESSURE

DESCRIPTION	SPECIFICATION	
	Metric	Standard
At Curb Idle Speed*	1.0 bar	14.50 psi
At 4000 RPM*	4.5 bar	65.27 psi

CAUTION:
***If pressure is ZERO at curb idle, DO NOT run engine at 4000 RPM.**

TORQUE SPECIFICATIONS

ENGINE BLOCK

DESCRIPTIONS	N.m	In. Lbs.	Ft. Lbs.
A/C Compressor Bolts	25	-	18
A/C Compressor Bracket Bolts	45	-	33
Connecting Rod Caps Bolts	25 + 60°	18 + 60°	-
Crankcase Vent (CCV) Tube Bolt	9	-	80
Crankshaft Bearing Caps Bolts	25 + 100°	18 + 100°	-
Crankshaft Position Sensor Bolt	9	-	80
Dipstick Tube Bolt (head)	11	97	-
Dipstick Tube Bolt (sump)	9	80	-
Generator Bolts	70	-	52
Generator Bracket Bolts	70	-	52
Generator B+ Cable Nut	10	89	-
Ground Cable Nut (starter).	20	177	-
Ground Cable (transaxle)	10	89	-
Oil Cooler Bolts	30	-	22
Oil Drain Plug	25	-	18
Oil Filter Cap	25	-	18
Oil Filter Housing Bolts	30	-	22
Oil Pan Bolt (M6)	8	71	-
Oil Pan Bolts (M8)	25	-	18
Oil Pan-to-Transmission Bolts	55	-	41
Oil Pressure Regulator Bolt	25	-	18
Oil Pressure Sensor	23	-	17
Starter Bolts	24	-	18
Starter B + Cable Nut	10	89	-
Windage Tray	11	97	-

CYLINDER HEAD

DESCRIPTION	N.m	Ft. Lbs.	In. Lbs.
Camshaft Gear Bolt	30 + 40°	22 + 40°	-
Camshaft Housing Plug	15	-	133
Camshaft Housing Bolt	25	18	-
Camshaft Position Sensor Bolt	9	-	80
Camshaft Sprocket Bolt	30 + 40°	22 + 40°	-
Cylinder Head Bolts	Refer to **CYLINDER HEAD, INSTALLATION** .		
Cylinder Head Cover Bolts	25	18	-
Exhaust Manifold Nuts	21	15	-
Fuel Injection Pump Mounting Bracket Bolt	25	18	-
Intake Manifold Fasteners	25	18	-
Thermostat Bolts	25	18	-

Vacuum Pump Bolts	18	-	159
Water Pump Bolts	25	18	-

FRONT ENGINE

DESCRIPTIONS	N.m	Ft. Lbs.	In. Lbs.
Crankshaft Sprocket Bolt	340	251	-
Front Engine Cover Bolts	9	-	80
Serpentine Belt Tensioner Bolt	50	37	-
Timing Chain Cover Bolts (lower) (M8)	25	18	-
Timing Chain Cover Bolts (lower) (M10)	54	40	-
Timing Chain Cover Bolts (upper)	6	-	53
Timing Belt Tensioner Bolt	28 + 40°	21 + 40°	-
Vacuum Pump Bolts	30	22	-
Vibration Damper Bolt	30	22	-

REAR ENGINE

DESCRIPTION	N.m	In. Lbs.	Ft. Lbs.
Crankshaft Position Sensor Bolts	6	53	-
Rear Crankshaft Oil Seal Carrier Bolts	9	-	80
Torque Converter Bolts	37	-	27
Transmission Bolts (MTX)	Refer to **SPECIFICATIONS** .		

TURBOCHARGER

DESCRIPTION	N.m	Ft. Lbs.	In. Lbs.
Charge Air Cooler (CAC) Bolts	35	18	-
Charge Air Cooler (CAC) Tube-to-Turbocharger Flange Bolts	10	-	89
Diesel Particulate Filter Clamp Bolt	25	18	-
Turbocharger Heat Shield Bolts	12	-	106
Turbocharger Heat Shield Nuts	8	-	71
Turbocharger Nuts	24	18	-
Turbocharger Oil Return Line Bolt	9	-	80
Turbocharger Oil Supply Line Banjo Bolt	15	-	133

ENGINE MOUNTS

DESCRIPTION	N.m	Ft. Lbs.	In. Lbs.
Left Mount Bolts	157	116	-

Left Mount-to-Frame Rail Bolts	105	77	-
Left Mount-to-Shock Tower Bolt	64	47	-
Left Mount Bracket-to-Transaxle Bolts	105	77	-
Rear Engine Mount-to-Transaxle Bracket Bolts (MTX)	147	108	-
Rear Engine Mount Nut	220	162	-
Rear Engine Mount-to-Rear Mount Bracket Nut (Cradle)	105	77	-
Rear Mount Bracket-to-Cradle Nuts	75	55	-
Rear Engine Mount Bracket-to-Tranaxle Bolt	40	30	-
Rear Engine Mount-to- Transmission Bracket Bolts	125	92	-
Rear Engine Mount Bolt	110	81	-
Right Engine Mount Bracket Bolt	25	18	-
Right Engine Mount Bolts	90	66	-
Right Engine Mount-to-Frame Rail Bolts	70	52	-
Right Engine Mount-to-Shock Tower Bolt	65	48	-

SPECIAL TOOLS

SPECIAL TOOLS

	10288 - Pliers, Hose Clamp

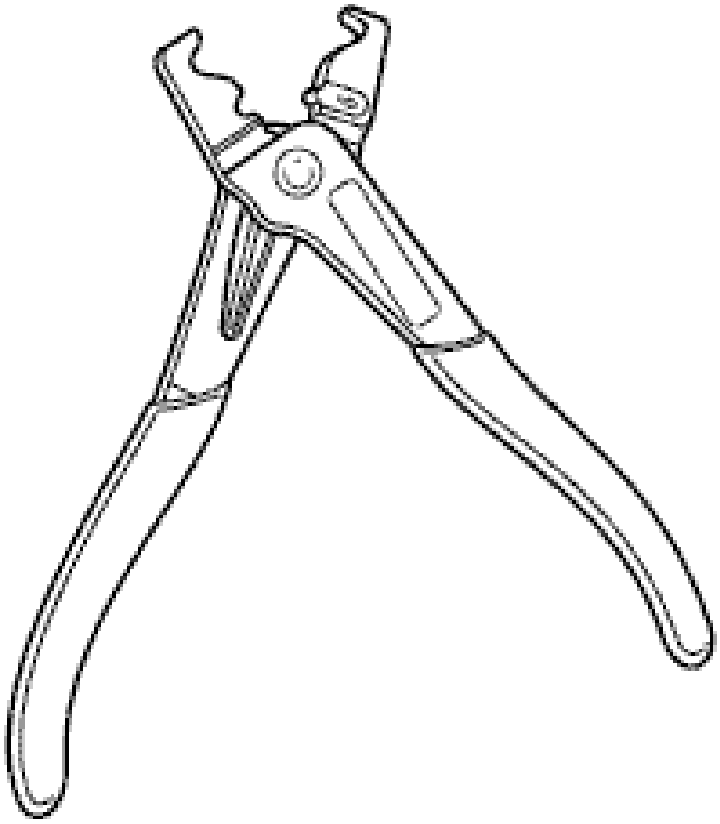

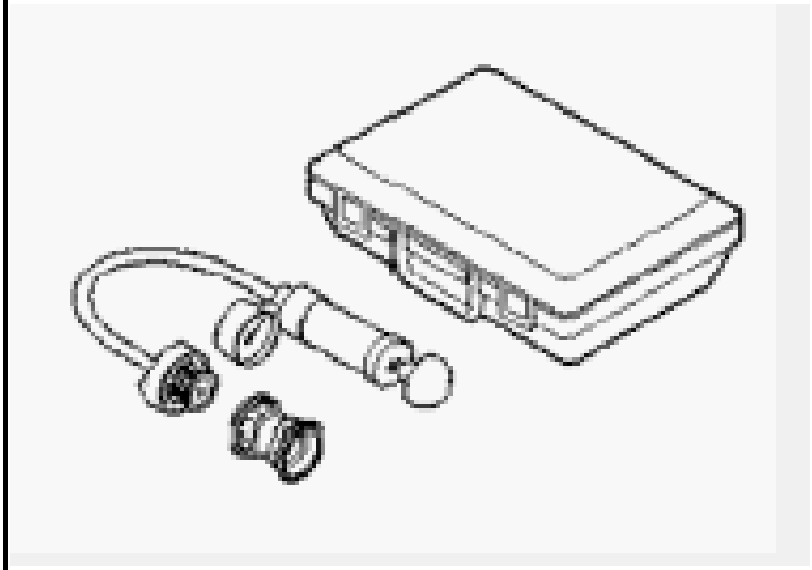

10368 - Set, Universal Protective Cap

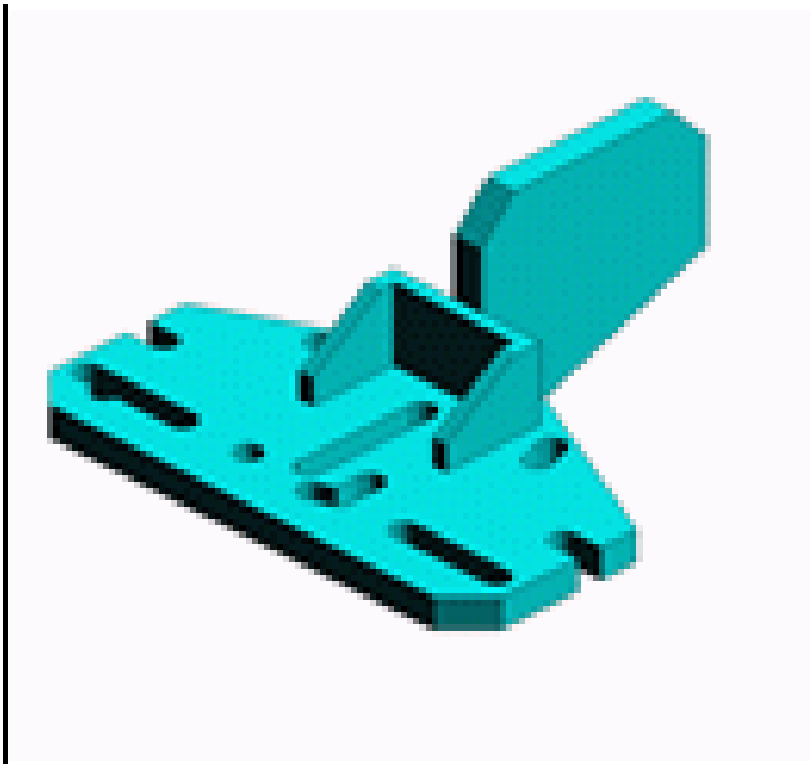	20106 - Fixture, Cylinder Head Holding
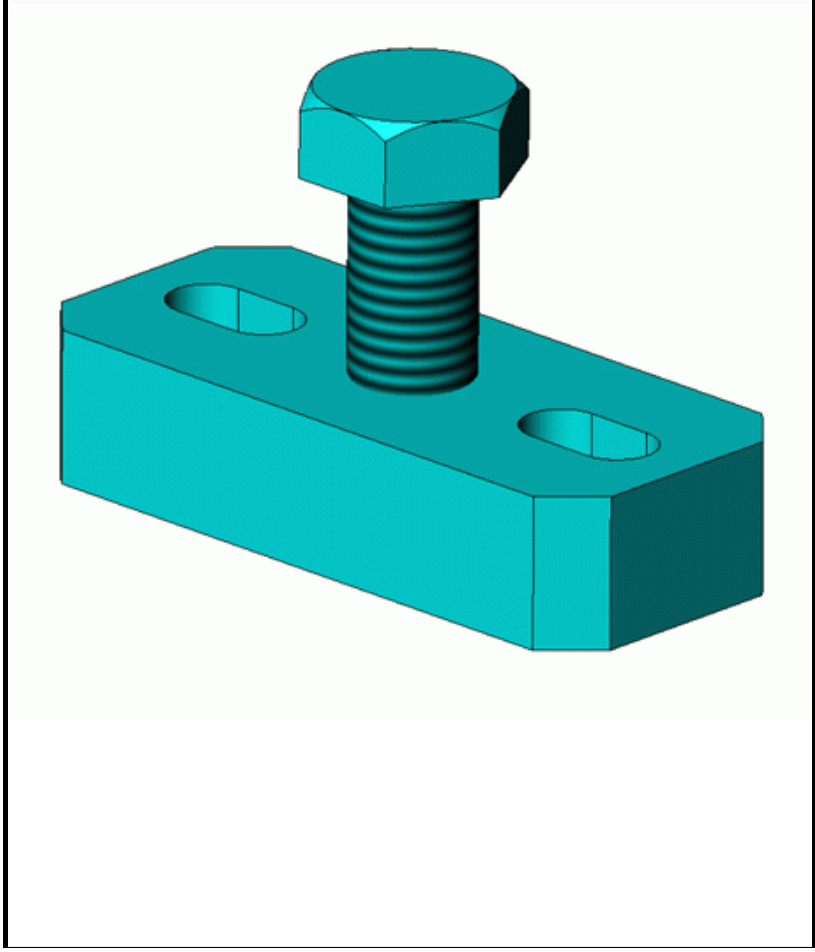	20107 - Compressor, Valve Spring

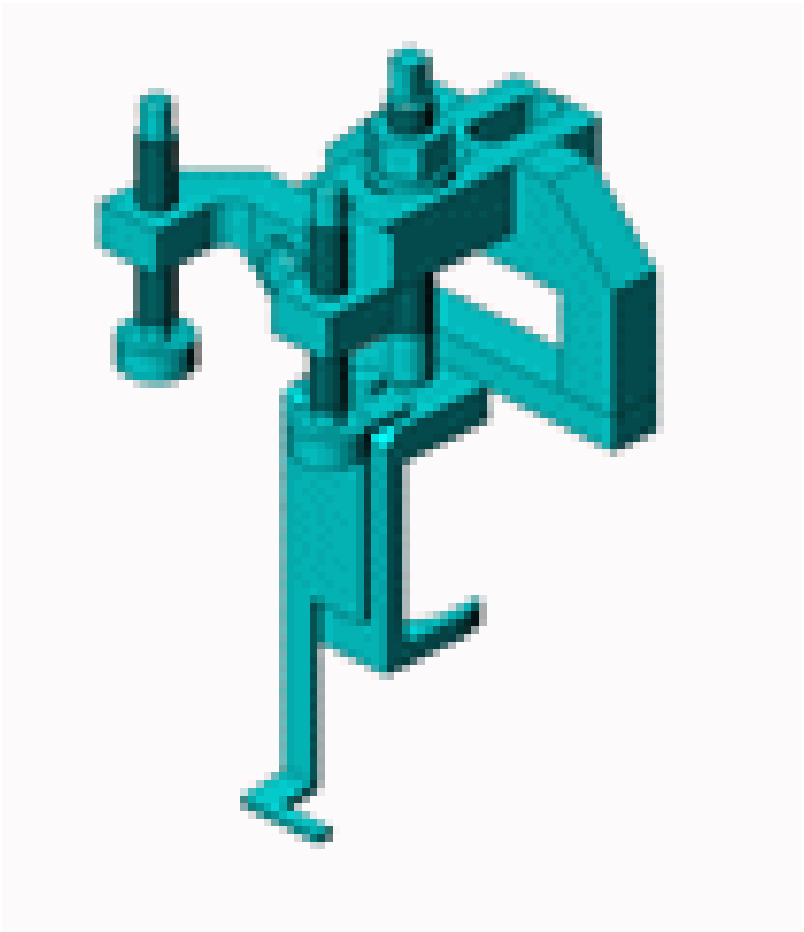

20108 - Support, Cylinder Head Bench Valve

20109 - Tool, Crankshaft Rotation

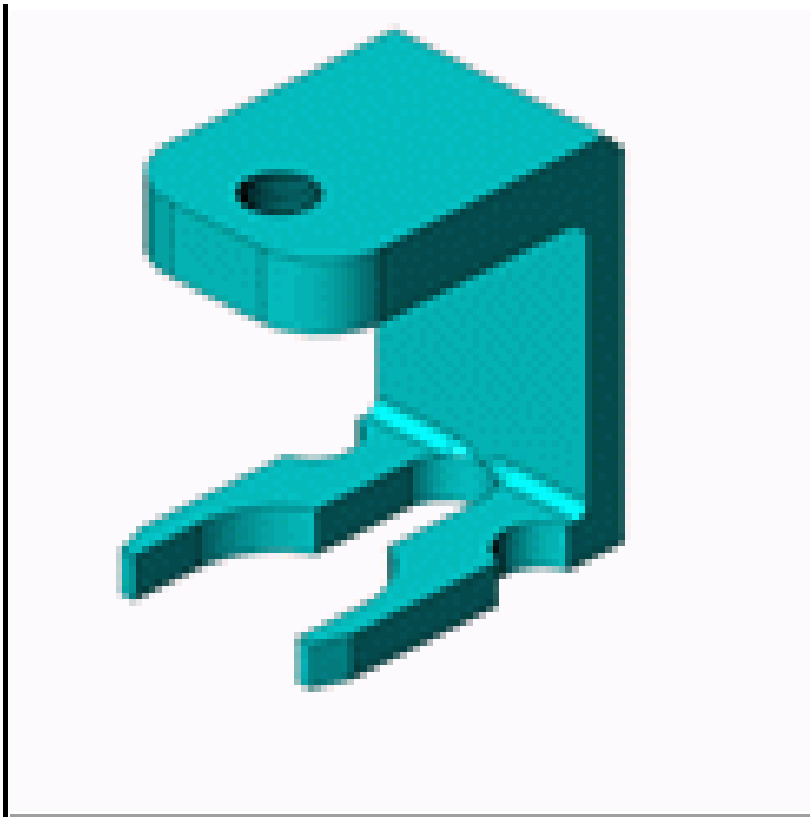

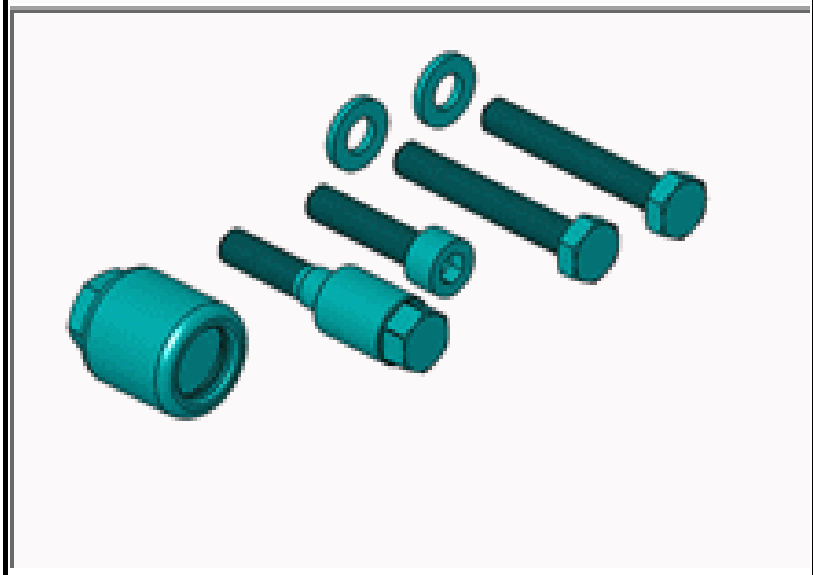

20110 - Remover/Installer, Crankshaft Sump

20111 - Remover/Installer, Cylinder Head Bolt

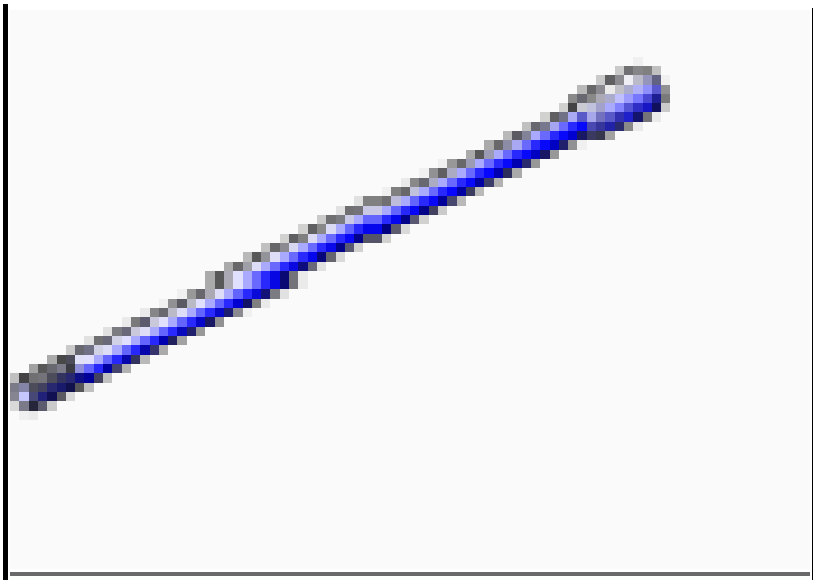	
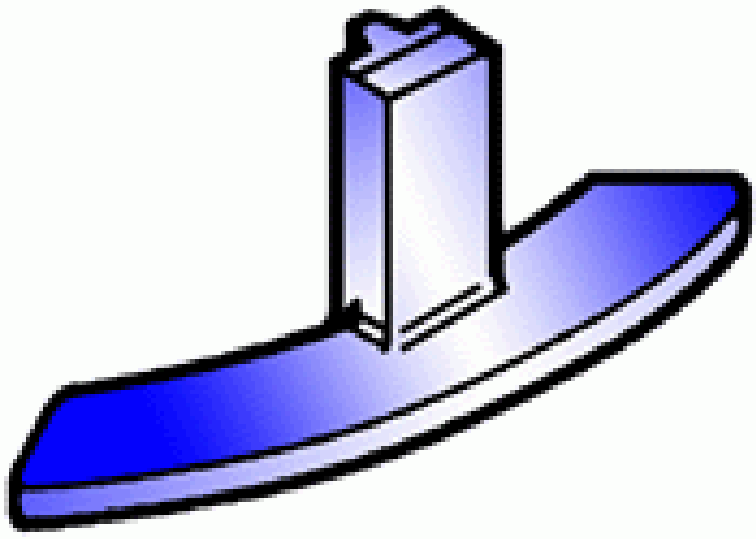	20115 - Tool, Flywheel Locking
	20126 - Remover/Installer, Camshaft Pulley

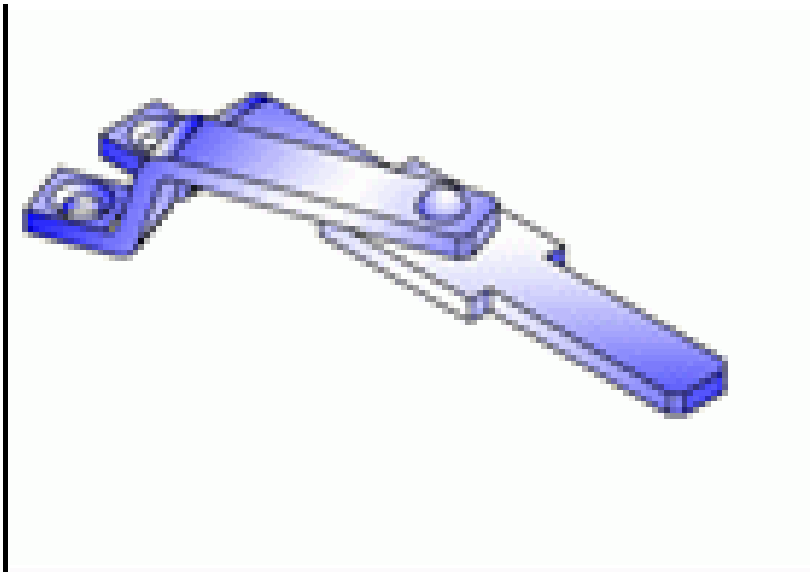	
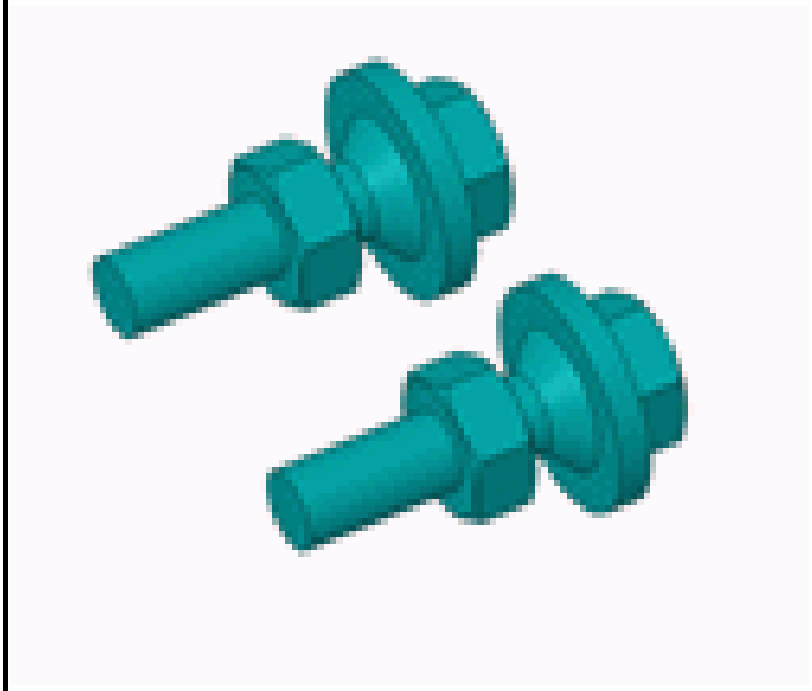	20127 - Pins, Camshaft Pulley Remover/Installer
	20131 - Installer, Camshaft Oil Seal

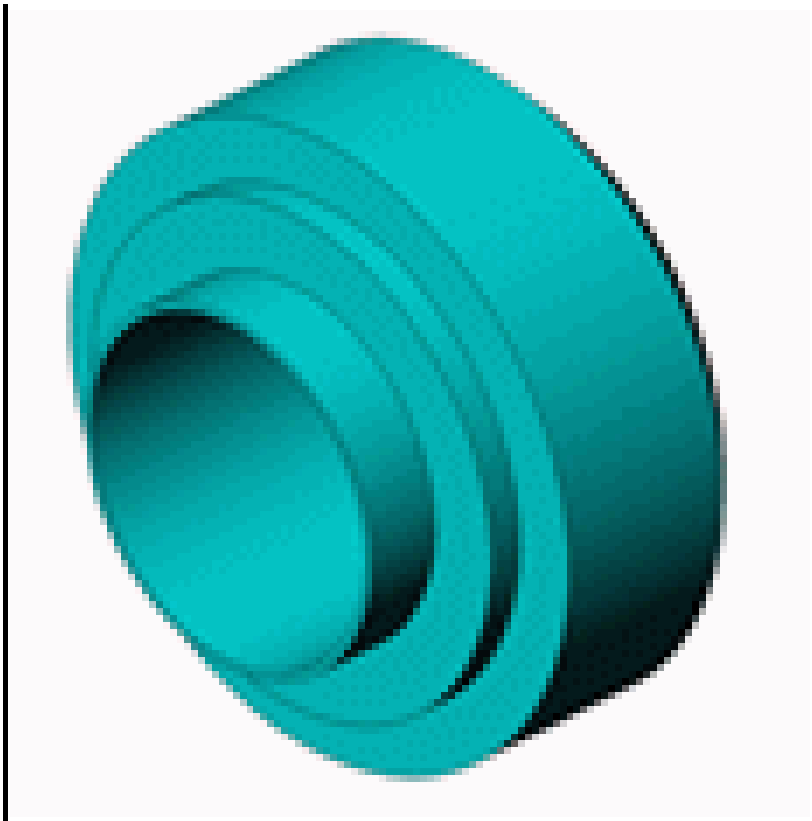	
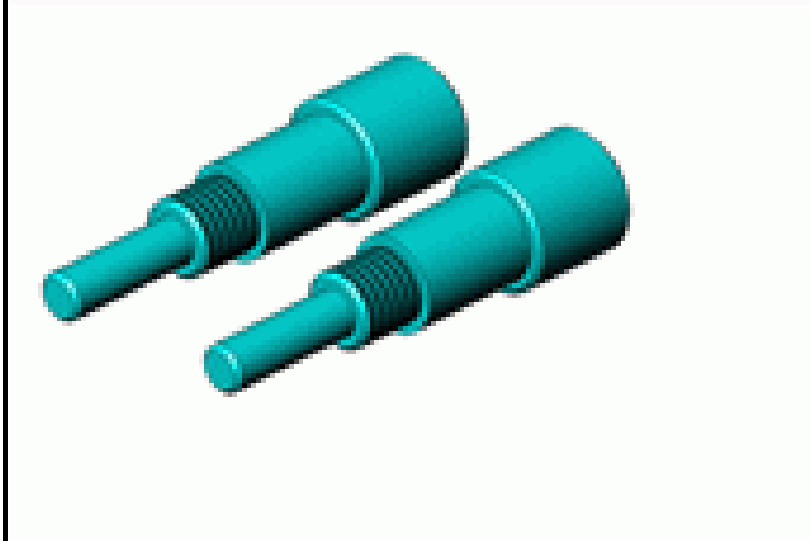	20132 - Tool, Timing Belt Locking 20133 - Remover/Installer, Valve Guide Oil Seal

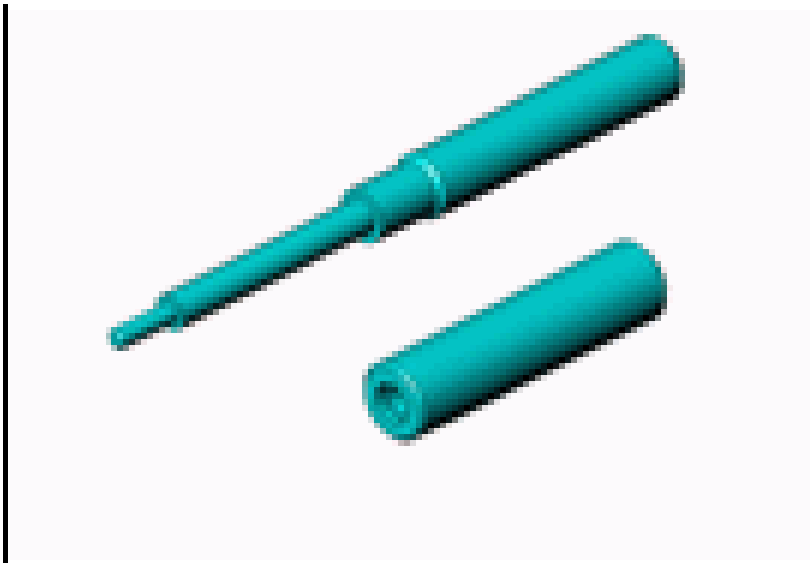	
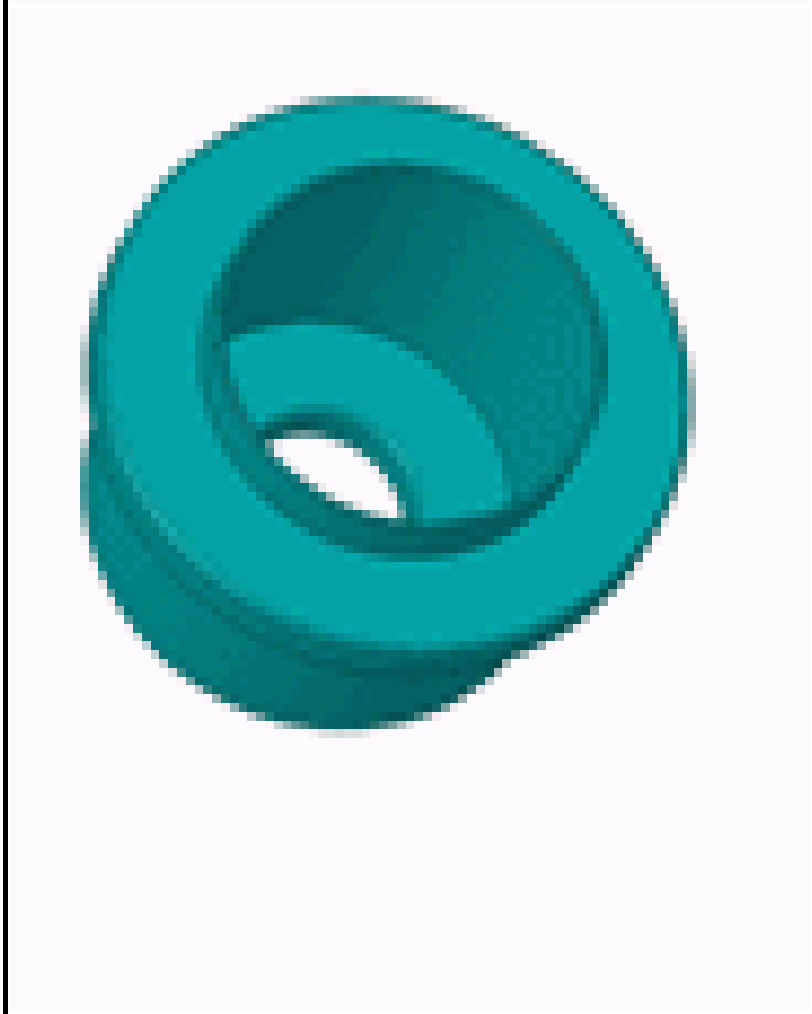	20145 - Installer, Crankshaft Front Oil Seal

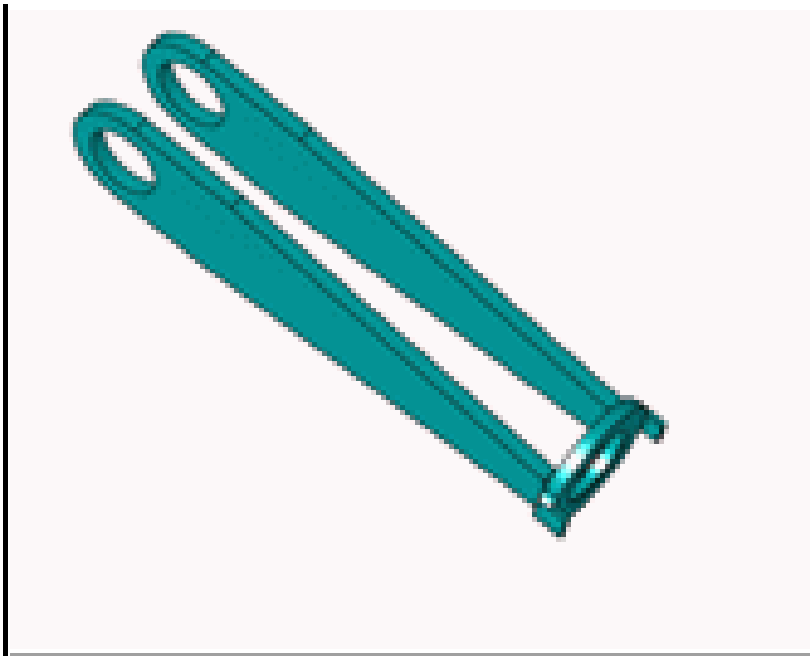	20149 - Adapter, Valve Spring Compressor
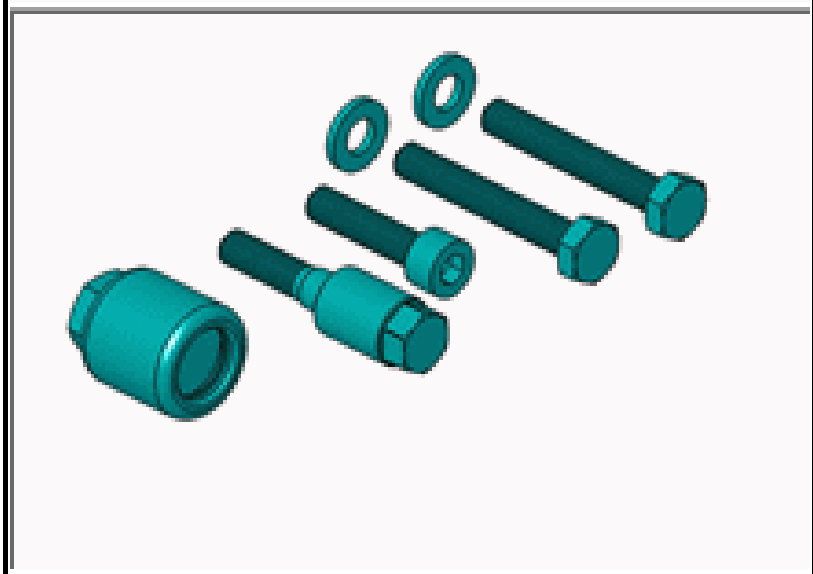	20150 - Remover/Installer, High Pressure Fuel Pump
	20164 - Tool, Crankshaft Timing Locking

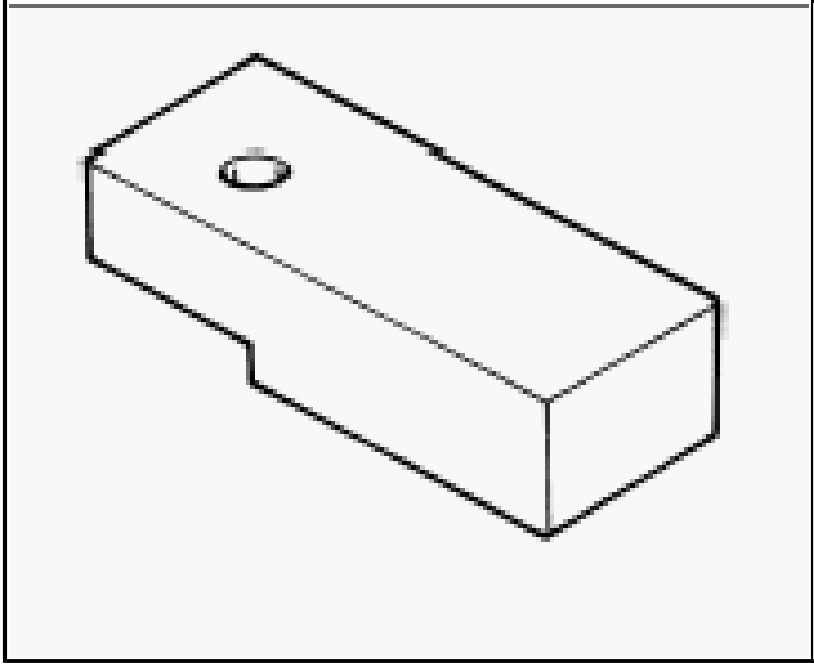

D-115-2A - Block, Scooter
(Originally Shipped In Kit Number(s) 9329-SUP, 9515-SUP, 9516-SUP, 9517-SUP, 9518, 9519, 9540-SUP, 9541-SUP, 9694, 9926.)

COVER, ENGINE

REMOVAL

REMOVAL

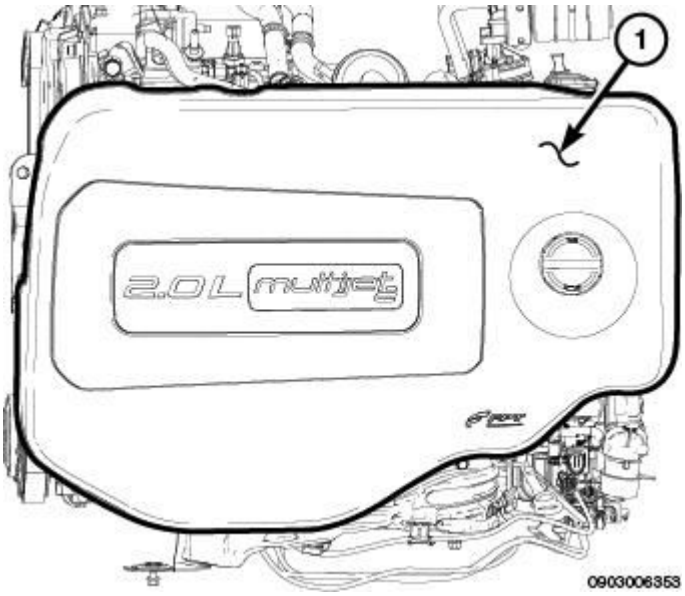

Fig. 71: Engine Cover
Courtesy of CHRYSLER GROUP, LLC

1. Remove engine cover (1) by lifting upwards.

INSTALLATION

INSTALLATION

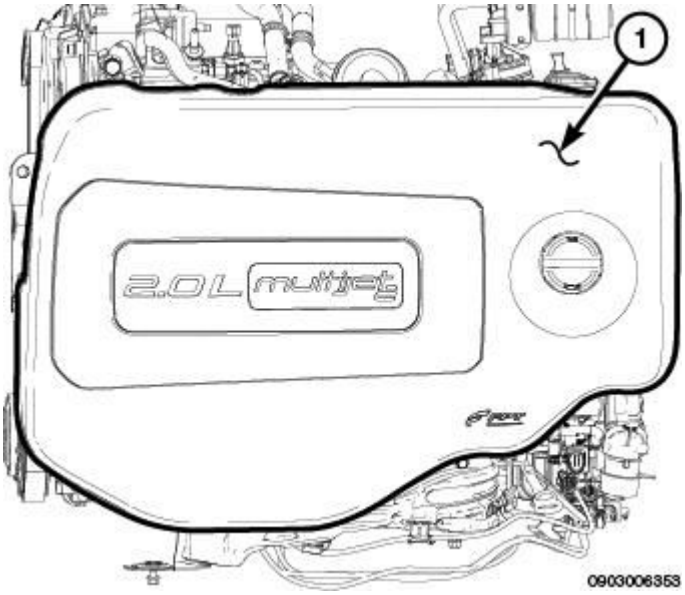

Fig. 72: Engine Cover

Courtesy of CHRYSLER GROUP, LLC

1. Align engine cover (1) with mounting retainers.
2. Firmly press cover onto mounting studs.

CYLINDER HEAD

DESCRIPTION

DESCRIPTION

The cylinder head is a one-piece design and is made from aluminum alloy and silicon.

Two, ductile cast iron, overhead camshafts in a camshaft housing; they are operated by a belt and gears.

The four valves per cylinder, parallel and vertical, are positioned in the valve guides and are controlled by rocker arms operated by camshaft cams and kept in contact with the valves through hydraulic tappets.

Valve guides are press-fitted in the cylinder head seats. A special reamer is used to produce the inner diameter after fitting.

Unlike cylinder heads with ante-chambers, the entire combustion process takes place in the combustion chamber on the piston.

The gasket between the cylinder head and crankcase is made of metal. No cylinder head tightening is required throughout the life of the engine.

REMOVAL

REMOVAL

1. Disconnect the negative battery cable.
2. Remove air cleaner body. Refer to **BODY, AIR CLEANER, REMOVAL** .

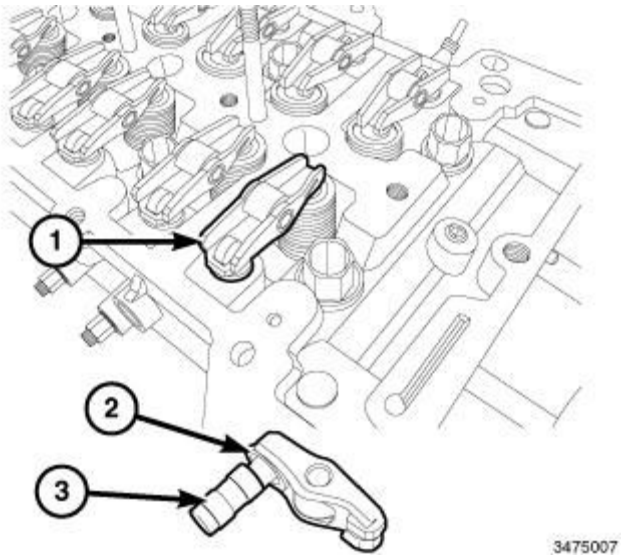

Fig. 73: Rocker Arm, Retaining Clip & Lifter
Courtesy of CHRYSLER GROUP, LLC

3. Remove the cylinder head cover. Refer to **COVER(S), CYLINDER HEAD, REMOVAL** .

NOTE: Number the position of each rocker arm and lifter as it is removed.

4. Remove all the rocker arm (1) and lifters (3).
5. Remove the intake manifold. Refer to **MANIFOLD, INTAKE, REMOVAL** .
6. Remove the exhaust manifold. Refer to **MANIFOLD, EXHAUST, REMOVAL** .
7. Remove the EGR cooler manifold assembly. Refer to **COOLER, EGR, REMOVAL** .

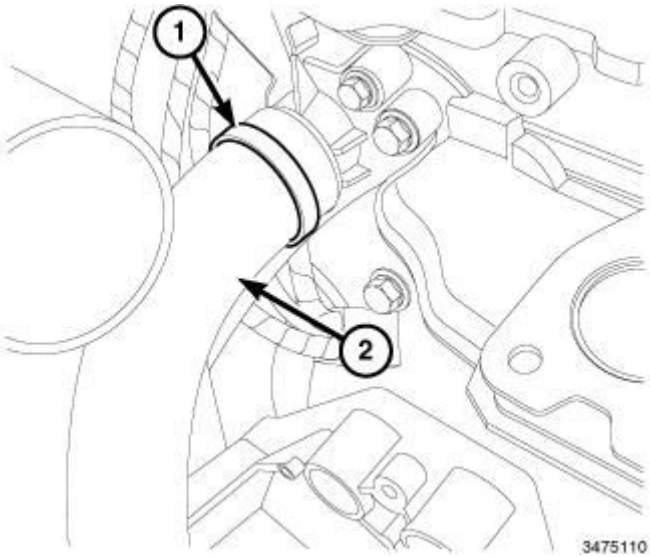

Fig. 74: Upper Radiator Hose & Clamp
Courtesy of CHRYSLER GROUP, LLC

8. Using the (special tool #10288, Pliers, Hose Clamp) to release clamp (1) and remove the upper radiator hose (2) at engine.

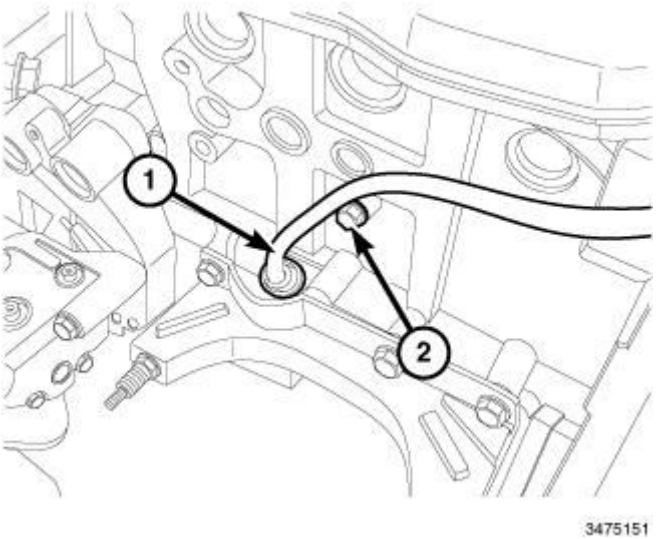

Fig. 75: Engine Oil Dipstick Tube & Bolt
Courtesy of CHRYSLER GROUP, LLC

9. Remove bolt (2) and the engine oil dipstick tube (1).

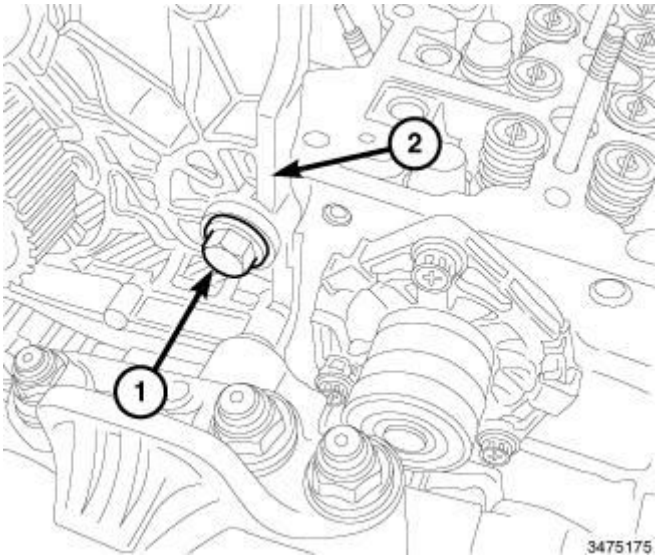

Fig. 76: Fuel Injection Pump Mounting Bracket & Bolt
Courtesy of CHRYSLER GROUP, LLC

10. Remove bolt (1) and the fuel injection pump mounting bracket (2) from the cylinder head.
11. Remove power steering pump and support bracket.

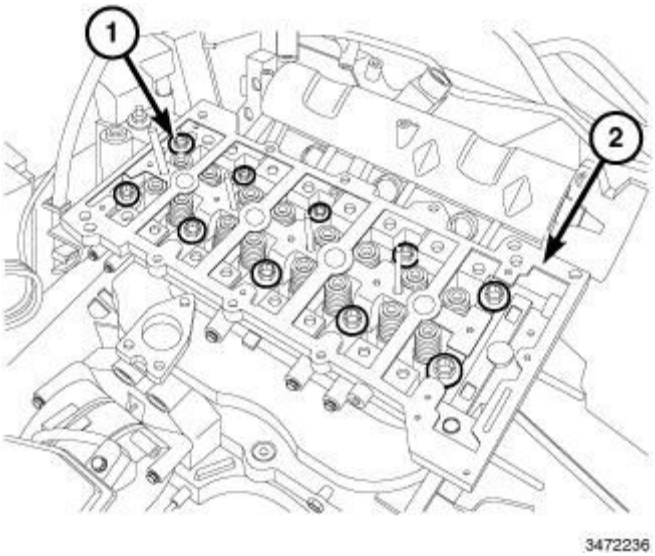

Fig. 77: Cylinder Head Assembly & Bolts
Courtesy of CHRYSLER GROUP, LLC

12. Remove bolts (1) and the cylinder head assembly (2).

CLEANING

CLEANING

To ensure engine gasket sealing, proper surface preparation must be performed, especially with the use of aluminum engine components and multi-layer steel cylinder head gaskets.

NOTE: Multi-Layer Steel (MLS) head gaskets require a scratch free sealing surface.

Remove all gasket material from cylinder head and block. Refer to **ENGINE - STANDARD PROCEDURE** . Be careful not to gouge or scratch the aluminum head sealing surface.

Clean all engine oil passages.

INSPECTION

INSPECTION

NOTE: Cylinder head cannot be resurfaced.

NOTE: Replacement cylinder heads will come complete with valves, seals, springs, retainers, keepers.

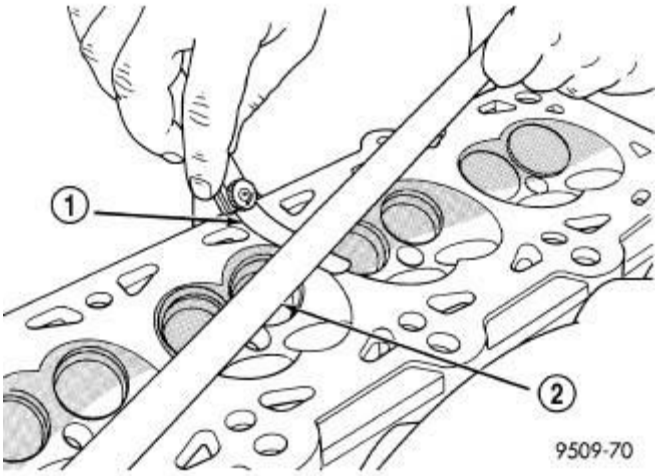

Fig. 78: Checking Cylinder Head Flatness
Courtesy of CHRYSLER GROUP, LLC

1 - FEELER GAUGE 2 - STRAIGHT EDGE

1. Cylinder head must be flat within 0.1 mm (0.004 in.).

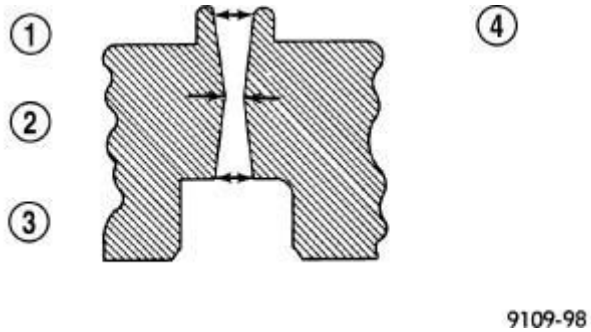

Fig. 79: Checking Wear on Valve Guide-Typical
Courtesy of CHRYSLER GROUP, LLC

1 - TOP 2 - MIDDLE 3 - BOTTOM 4 - CUT AWAY VIEW OF VALVE GUIDE MEASUREMENT LOCATIONS

2. Inspect camshaft bearing journals for scoring.
3. Remove carbon and varnish deposits from inside of valve guides with a reliable guide cleaner.
4. Using a small hole gauge and a micrometer, measure valve guides in 3 places top (1), middle (2), and bottom (3). Replace guides if they are not within specification. Refer to **SPECIFICATIONS - 2.0L DIESEL ENGINE** .
5. Check valve guide height.

6. Prior to installing cylinder head, the cylinder block should be checked for flatness.

INSTALLATION

INSTALLATION

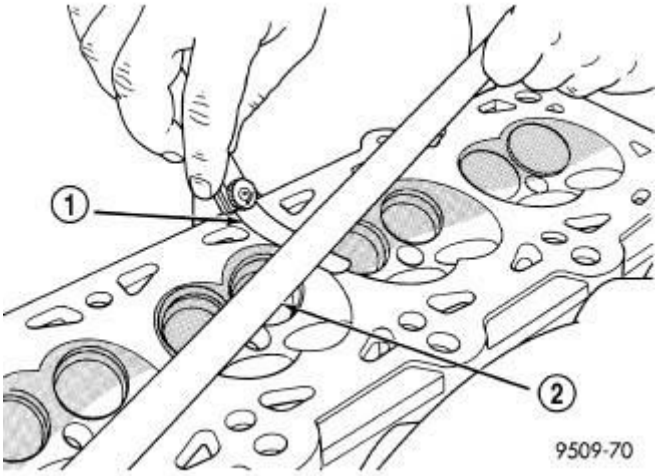

Fig. 80: Checking Cylinder Head Flatness
Courtesy of CHRYSLER GROUP, LLC

NOTE: **If piston or connecting rods have been replaced, measure piston projection to ensure proper head gasket selection. Refer to ENGINE BLOCK - STANDARD PROCEDURE .**

1. Clean the old gasket from the cylinder head and engine block. Refer to **ENGINE - STANDARD PROCEDURE** .
2. Check that the flatness of the cylinder head lower surface corresponds to the recommended values.

Cylinder Head	Value
Engine cylinder head lower surface flatness	0.1 mm (0.004 in.)
Cylinder head nominal height	107 +/- 0.05

NOTE: **The locating dowel pins between the engine block and cylinder head are shorter (12.5 mm) than the dowel pins between the cylinder head and the camshaft housing. Take great care not to reverse them as this could impair engine operation.**

3. If removed, install the engine block dowel pins.
4. Use a new gasket that is the same thickness as the one removed. If this is not the case, the thickness of the new cylinder head gasket must be determined by checking piston protrusion. Refer to **ENGINE BLOCK - STANDARD PROCEDURE** .

5. Position the first cylinder at TDC; rotate the crankshaft a further two teeth of the toothed drive pulley to lower the pistons, thereby preventing any resistance of the valves while fitting the cylinder head.

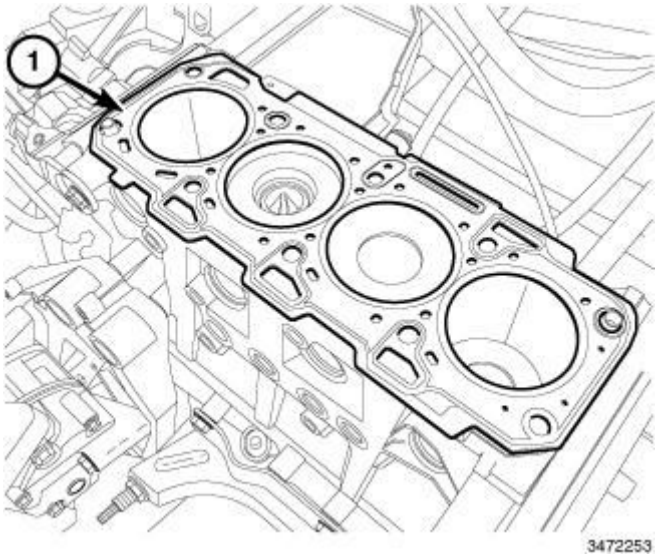

Fig. 81: Cylinder Head Gasket
Courtesy of CHRYSLER GROUP, LLC

6. Install the cylinder head gasket (1).

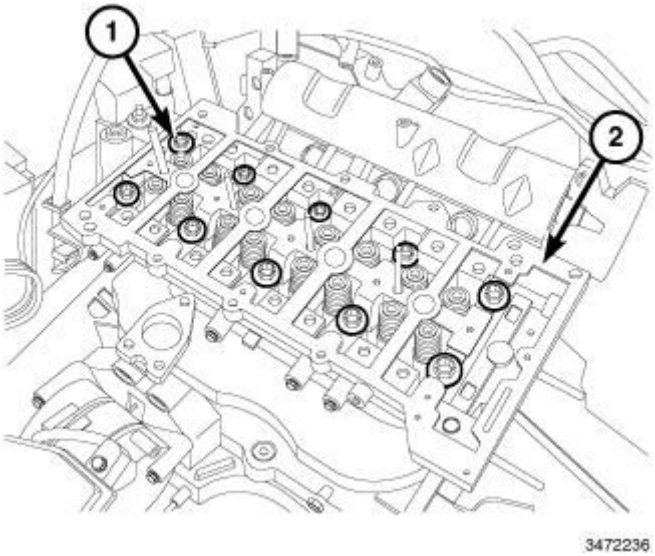

Fig. 82: Cylinder Head Assembly & Bolts
Courtesy of CHRYSLER GROUP, LLC

NOTE: **Do not reuse the cylinder head bolts more than four times because they undergo permanent lengthening whenever they are tightened. If the previous tightening torque is unknown, a replacement is necessary.**

7. Install the cylinder head (2) onto the engine block and tighten the bolts (1) finger tight.

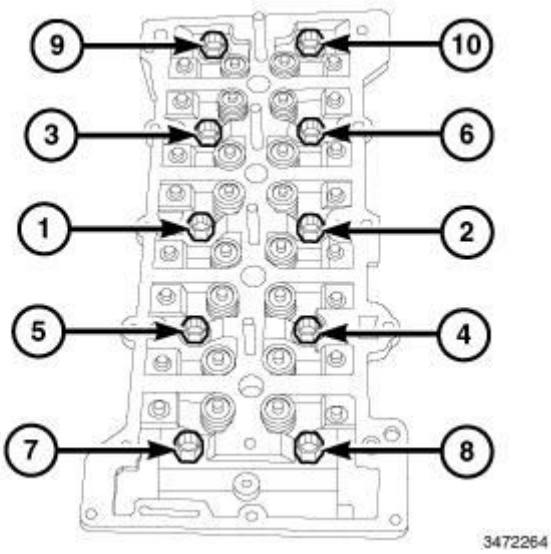

Fig. 83: Cylinder Head Bolt Tightening Sequence
Courtesy of CHRYSLER GROUP, LLC

8. Tighten the cylinder head bolts in the following order shown in illustration to:
   a. Tighten bolts to 62 N.m (46 ft. lbs.).
   b. Tighten bolts to 69 N.m (51 ft. lbs.).
   c. Tighten bolts an additional 90° turn.
   d. Tighten bolts an additional 90° turn.
   e. Tighten bolts an additional 90° turn.

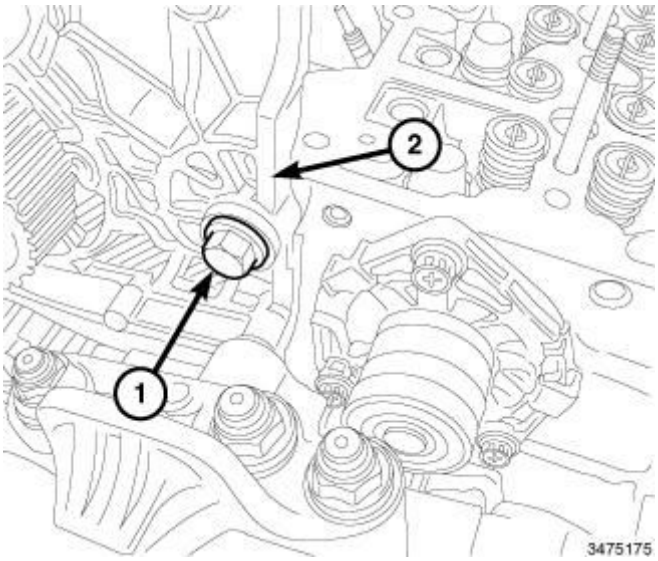

Fig. 84: Fuel Injection Pump Mounting Bracket & Bolt
Courtesy of CHRYSLER GROUP, LLC

9. Install the power steering pump support bracket. Tighten bolts to 30 N.m (22 ft. lbs.).
10. Install the fuel injection pump and mounting bracket (2) to the cylinder head. Tighten bolt (1) to 25 N.m (18 ft. lbs.).

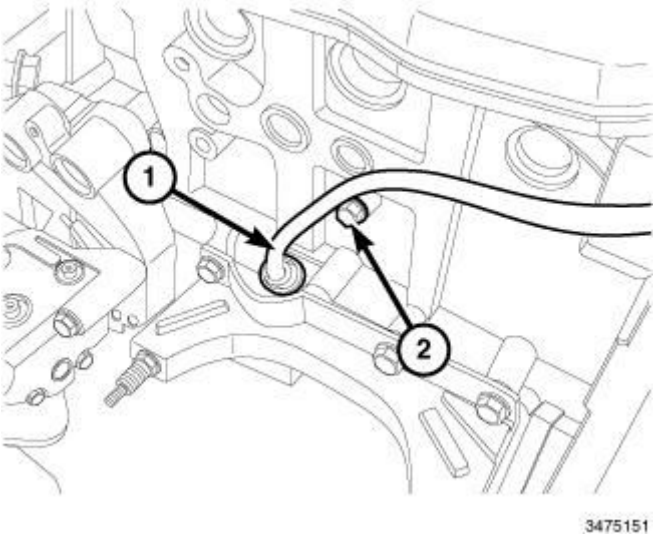

Fig. 85: Engine Oil Dipstick Tube & Bolt
Courtesy of CHRYSLER GROUP, LLC

11. Install the oil dipstick tube (1). Tighten bolt (2) to 9 N.m (80 in. lbs.).

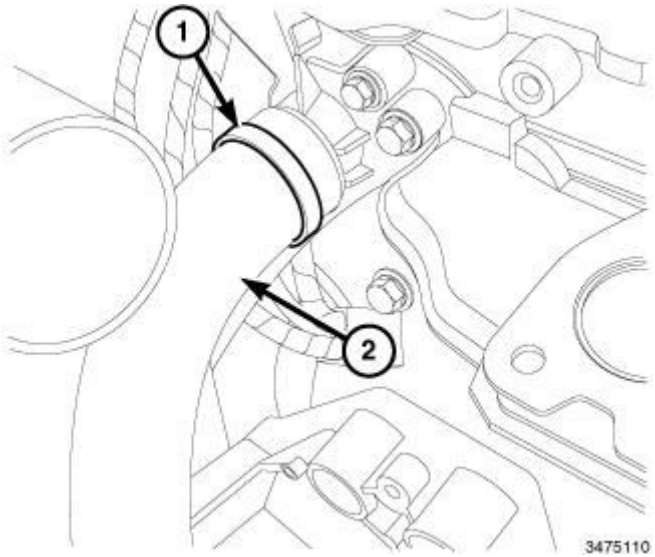

Fig. 86: Upper Radiator Hose & Clamp
Courtesy of CHRYSLER GROUP, LLC

12. Install the upper radiator (2) hose at engine. Using the (special tool #10288, Pliers, Hose Clamp) lock the clamp (1).
13. Install the EGR cooler manifold. Refer to **COOLER, EGR, INSTALLATION** .

14. Install exhaust manifold. Refer to **MANIFOLD, EXHAUST, INSTALLATION** .
15. Install intake manifold. Refer to **MANIFOLD, INTAKE, INSTALLATION** .

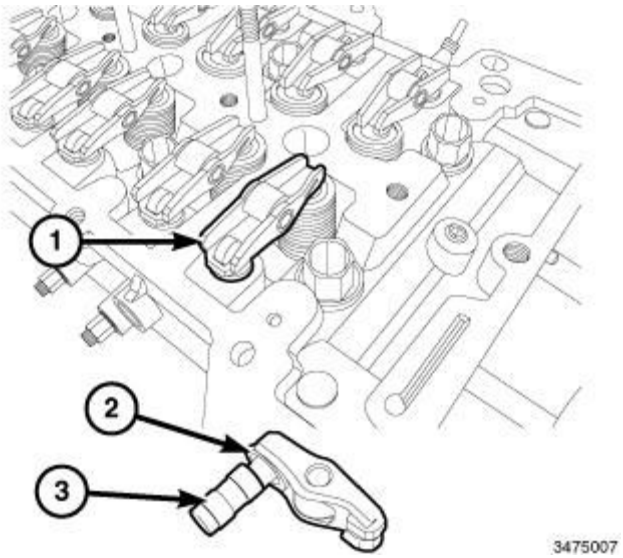

Fig. 87: Rocker Arm, Retaining Clip & Lifter
Courtesy of CHRYSLER GROUP, LLC

NOTE: Install the lifters and rocker arm into the original location as noted from removal.

16. Install all the lifters (3) and rocker arms (1) back into their original location.
17. Install the cylinder head cover. Refer to **COVER(S), CYLINDER HEAD, INSTALLATION** .
18. Fill the cooling system. Refer to **STANDARD PROCEDURE** .
19. Install new oil filter and fill with oil. Refer to **CAPACITIES AND RECOMMENDED FLUIDS, SPECIFICATIONS** .
20. Install air cleaner body. Refer to **BODY, AIR CLEANER, INSTALLATION** .
21. Connect the negative battery cable.
22. Start engine and check for leaks.

CAMSHAFT, ENGINE

DESCRIPTION

DESCRIPTION

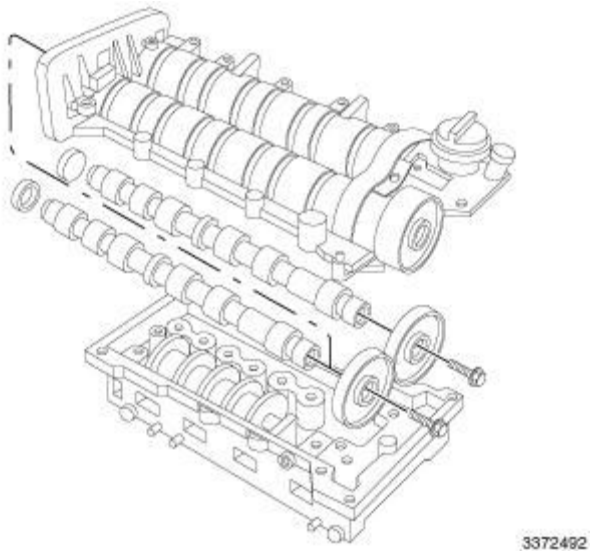

Fig. 88: Camshaft Assembly
Courtesy of CHRYSLER GROUP, LLC

The exhaust camshaft is controlled directly by the timing belt and transmits power to the inlet camshaft by means of a pair of straight toothed gears.

The exhaust camshaft also controls the vacuum unit fitted on the gears side.

REMOVAL

REMOVAL

1. Disconnect the negative battery cable.
2. Remove the cylinder head cover. Refer to **COVER(S), CYLINDER HEAD, REMOVAL** .

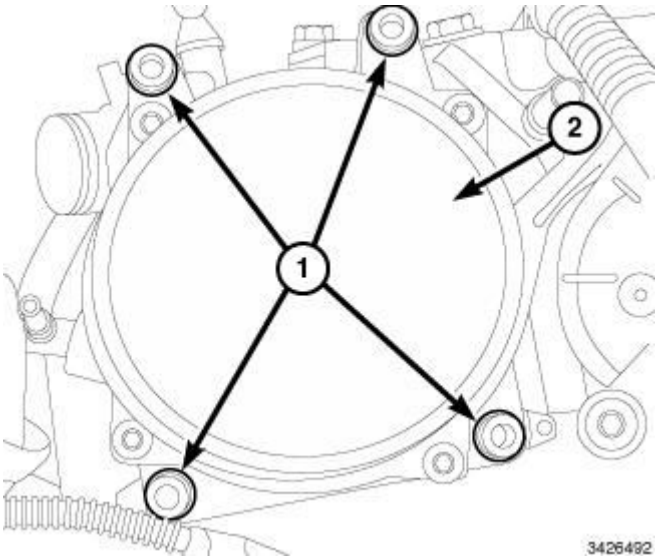

Fig. 89: Vacuum Pump & Bolts

Courtesy of CHRYSLER GROUP, LLC

3. Remove bolts (1) and the vacuum pump (2).

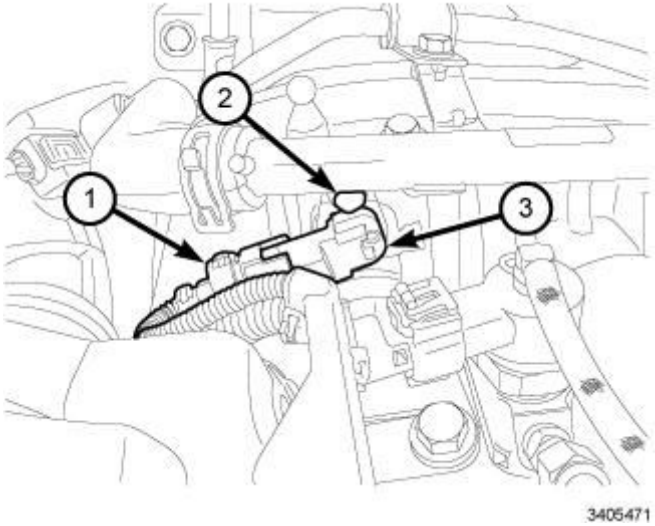

Fig. 90: Camshaft Position Sensor, Connector & Bolt
Courtesy of CHRYSLER GROUP, LLC

4. Remove bolt (2) and the camshaft position sensor (3).

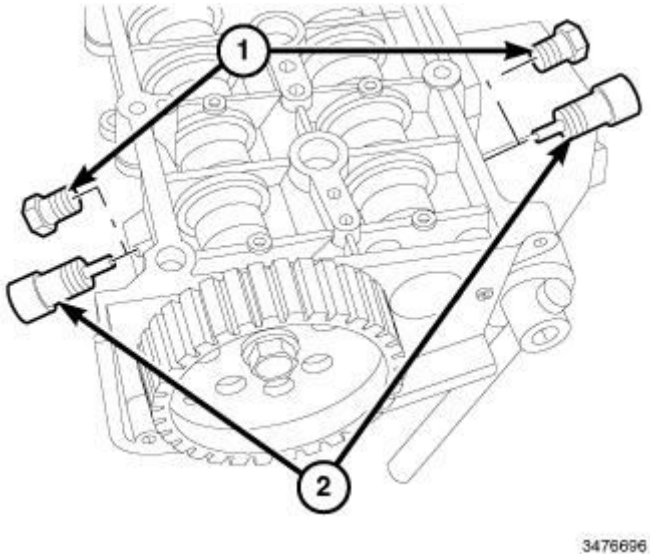

Fig. 91: Plugs & Camshaft Timing Tools
Courtesy of CHRYSLER GROUP, LLC

5. Remove plugs (1) and install the Camshaft Timing Tools (2) (special tool #20132, Tool, Timing Belt Locking) into the camshaft housing.

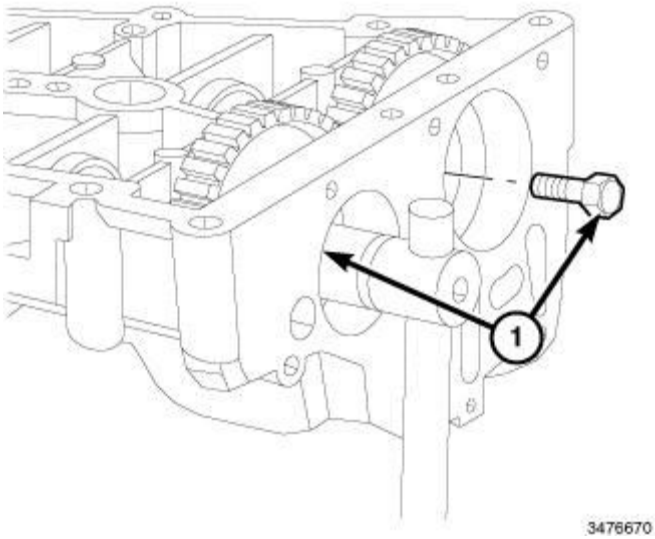

Fig. 92: Camshaft Gear Bolts
Courtesy of CHRYSLER GROUP, LLC

6. Remove the bolts (1) securing the camshaft gears.

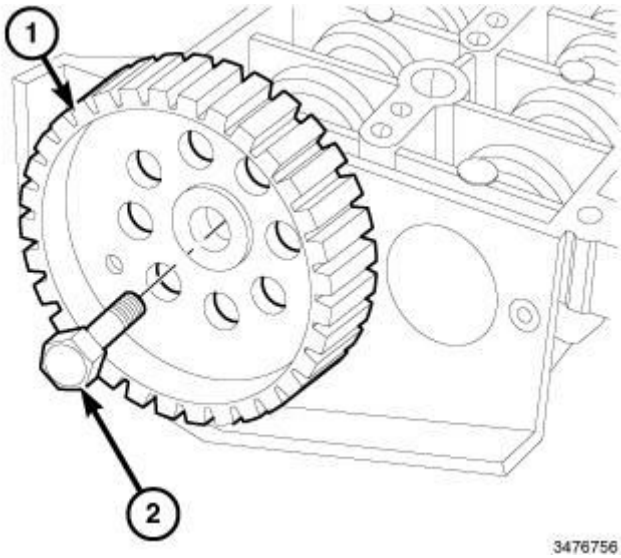

Fig. 93: Camshaft Timing Belt Sprocket & Bolt
Courtesy of CHRYSLER GROUP, LLC

7. Using the Counter Torque Tool (3) (special tool #6847, Holder, Camshaft Sprocket) and Pins (2) (special tool #20127, Pins, Camshaft Pulley Remover/Installer) to hold camshaft sprocket (1) remove bolt (2) and the camshaft timing belt sprocket (1).

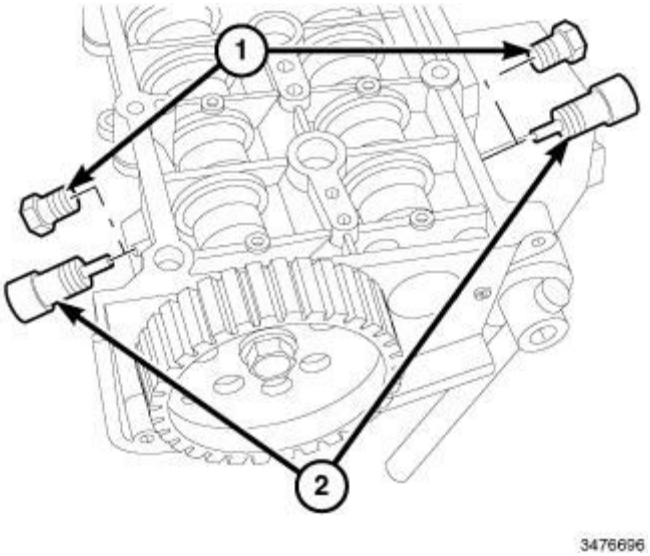

Fig. 94: Plugs & Camshaft Timing Tools
Courtesy of CHRYSLER GROUP, LLC

8. Remove the Camshaft Timing Tools (2) (special tool #20132, Tool, Timing Belt Locking).

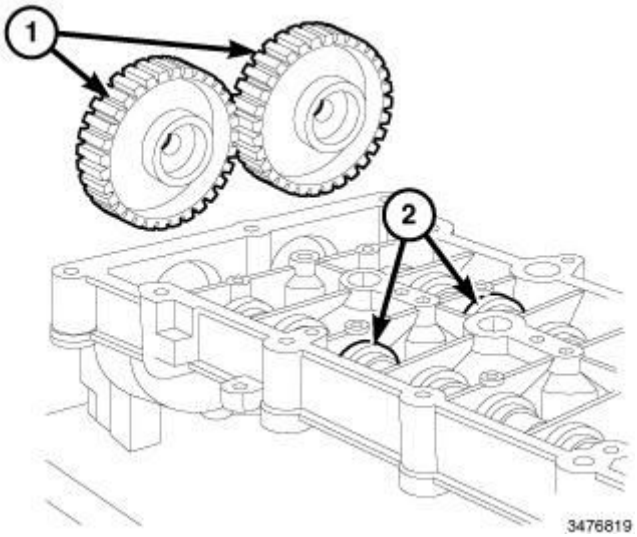

Fig. 95: Camshaft Gears & Camshafts
Courtesy of CHRYSLER GROUP, LLC

9. Withdraw the camshafts (2) as far as necessary and remove the camshaft gears (1).

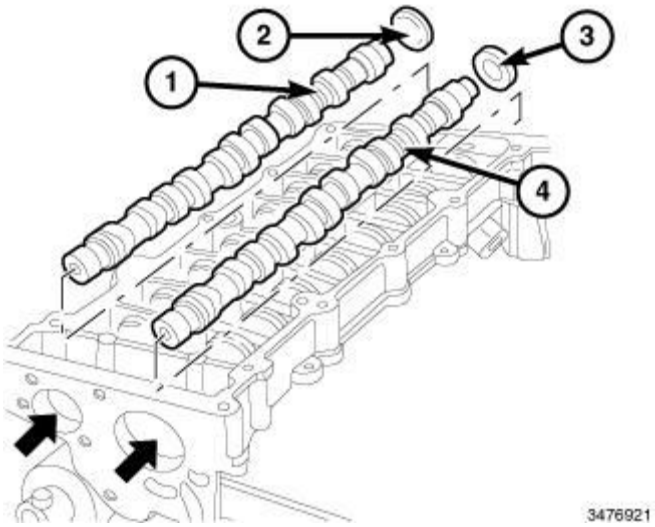

Fig. 96: Intake Camshaft, Plug, Exhaust Camshaft & Oil Seal
Courtesy of CHRYSLER GROUP, LLC

10. Using a suitable drift, extract the intake camshaft (1) and plug (2).
11. Using a suitable drift, extract the exhaust camshaft (4) and the oil seal (3).

INSTALLATION

INSTALLATION

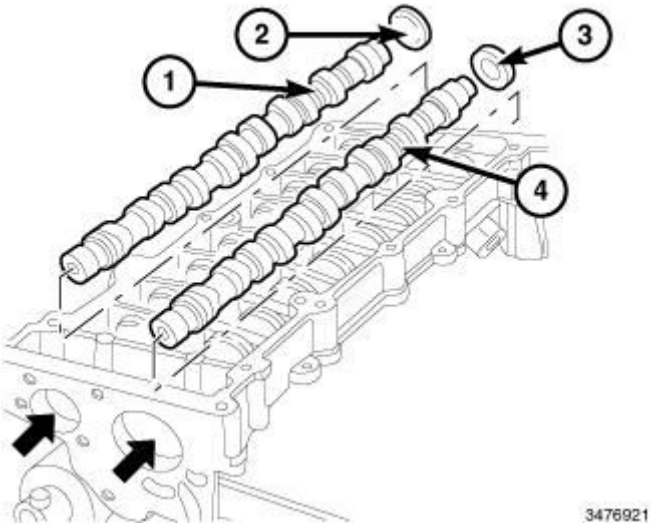

Fig. 97: Intake Camshaft, Plug, Exhaust Camshaft & Oil Seal
Courtesy of CHRYSLER GROUP, LLC

1. Lubricate the camshaft bearings with clean engine oil.
2. Install the camshafts (1 and 4) in their housings.

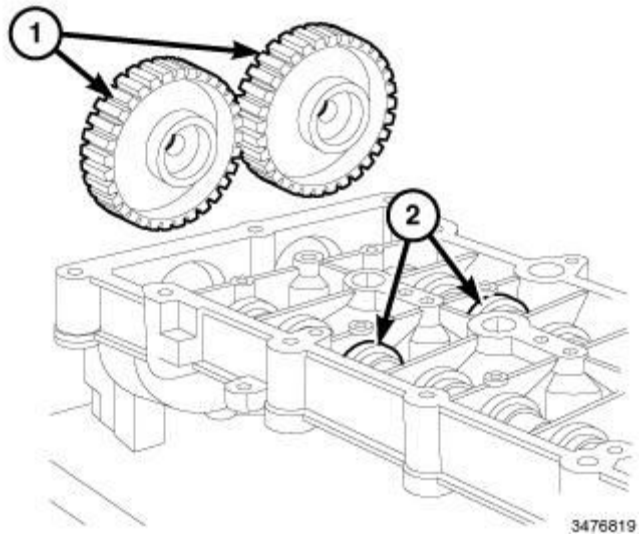

Fig. 98: Camshaft Gears & Camshafts
Courtesy of CHRYSLER GROUP, LLC

3. Install the camshaft gears (1) in their housings and secure them without tightening the bolts.

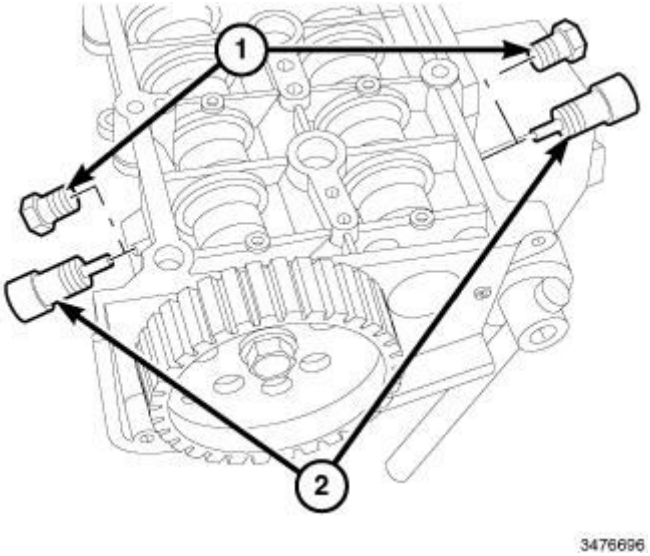

Fig. 99: Plugs & Camshaft Timing Tools
Courtesy of CHRYSLER GROUP, LLC

NOTE: Check that the tools are correctly fitted in the housings in the camshafts.

4. Install the Camshaft Timing Shaft Tools (2) (special tool #20132, Tool, Timing Belt Locking) into the camshaft housing.

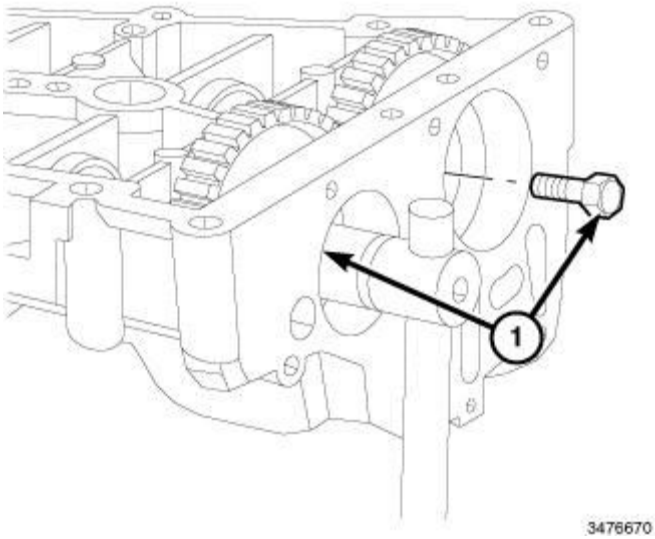

Fig. 100: Camshaft Gear Bolts
Courtesy of CHRYSLER GROUP, LLC

5. Tighten the camshaft gear bolts to 30 N.m (22 ft. lbs.) plus an additional 40° turn.

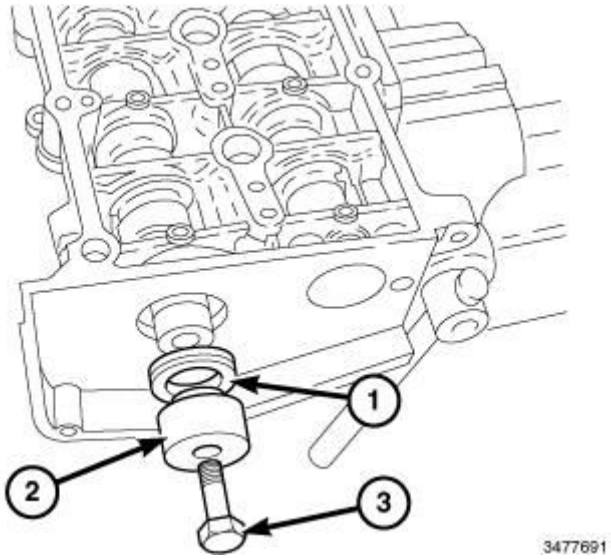

Fig. 101: Camshaft Oil Seal, Fitting Tool & Bolt
Courtesy of CHRYSLER GROUP, LLC

6. Using the Fitting Tool (2) (special tool #20131, Installer, Camshaft Oil Seal) position new camshaft seal (1) onto Fitting Tool (2) and install the camshaft oil seal (1) by drawing in the seal using the bolt (3).
7. Remove the Fitting Tool (2).

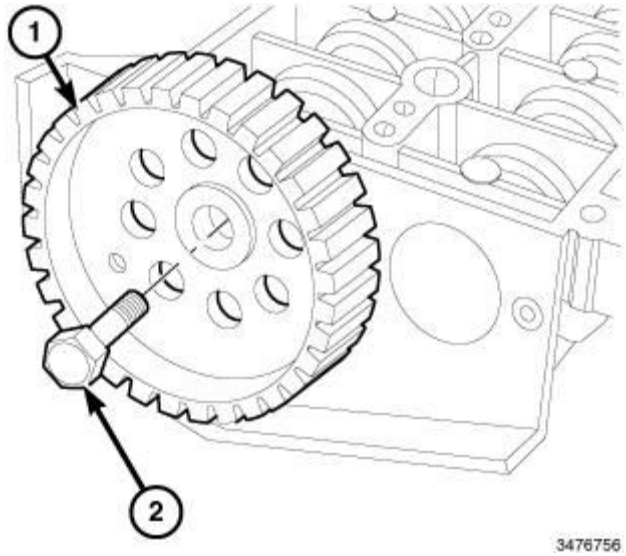

Fig. 102: Camshaft Timing Belt Sprocket & Bolt
Courtesy of CHRYSLER GROUP, LLC

8. Install the camshaft sprocket (1) and tighten bolt finger tight (2).
9. Using the Counter Torque Tool (3) (special tool #6847, Holder, Camshaft Sprocket) and Pins (2) (special tool #20127, Pins, Camshaft Pulley Remover/Installer) to hold camshaft sprocket (1) and tighten the bolt (4) to 30 N.m (22 ft. lbs.) plus an additional 40° turn.

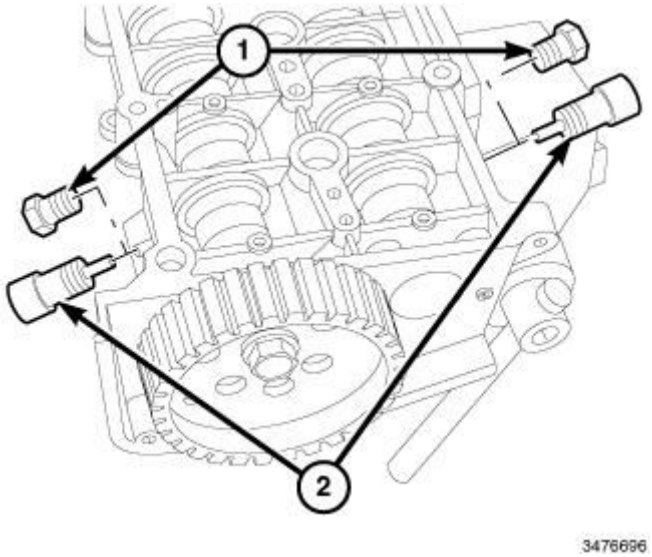

Fig. 103: Plugs & Camshaft Timing Tools
Courtesy of CHRYSLER GROUP, LLC

10. Install the inlet side camshaft plug (1).
11. Place the exhaust side camshaft timing belt sprocket in its housing and secure it without tightening the bolt.
12. Remove the Camshaft Timing Shaft Tools (2) (special tool #20132, Tool, Timing Belt Locking).

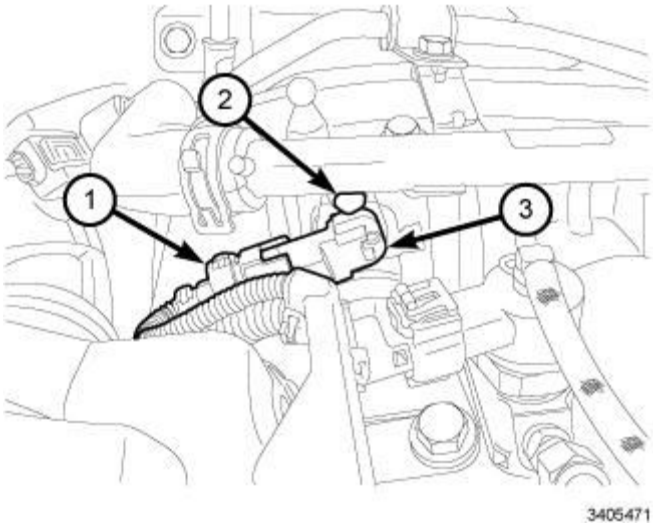

Fig. 104: Camshaft Position Sensor, Connector & Bolt
Courtesy of CHRYSLER GROUP, LLC

13. Install the camshaft position sensor (3). Tightening bolt (2) to 9 N.m (80 in. lbs.).

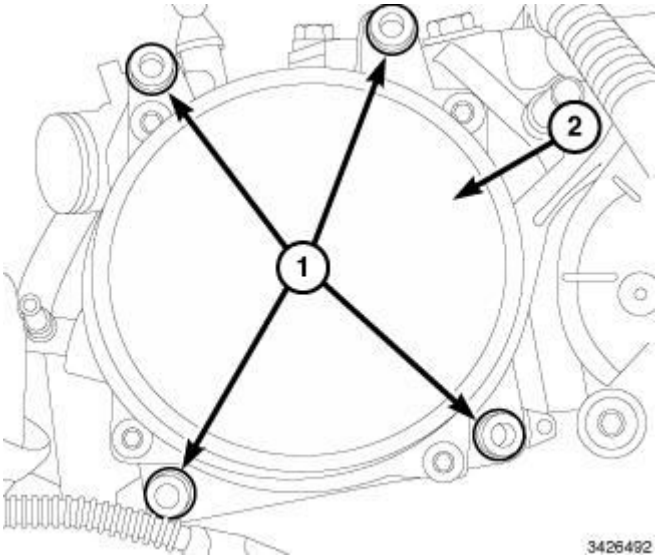

Fig. 105: Vacuum Pump & Bolts
Courtesy of CHRYSLER GROUP, LLC

14. Using a new gasket, position driver gear on rear of pump and install vacuum pump (2). Tighten bolts (1) to 18 N.m (159 in. lbs.).
15. Using a new gasket, install the engine oil filler. Tighten the bolts to 8 N.m 71 in. lbs.).
16. Install the cylinder head cover. Refer to **COVER(S), CYLINDER HEAD, INSTALLATION** .
17. Connect negative battery cable.

COVER(S), CYLINDER HEAD

REMOVAL

REMOVAL

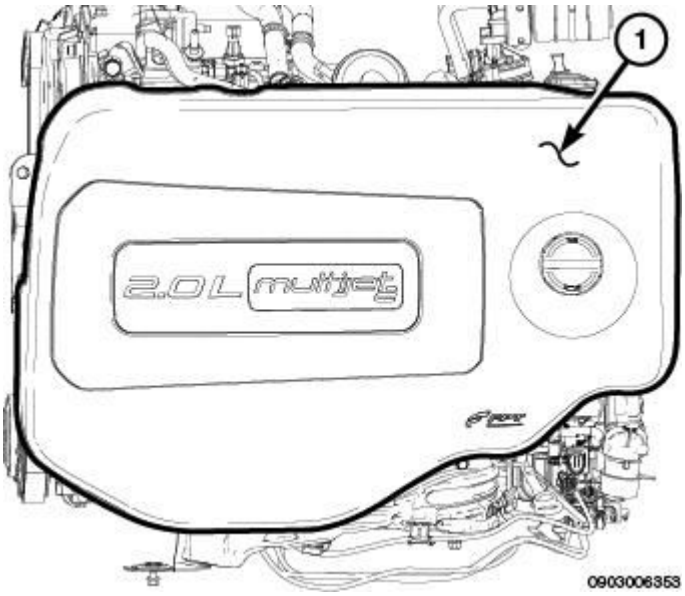

Fig. 106: Engine Cover
Courtesy of CHRYSLER GROUP, LLC

1. Disconnect the negative battery cable.
2. Remove the engine cover (1).

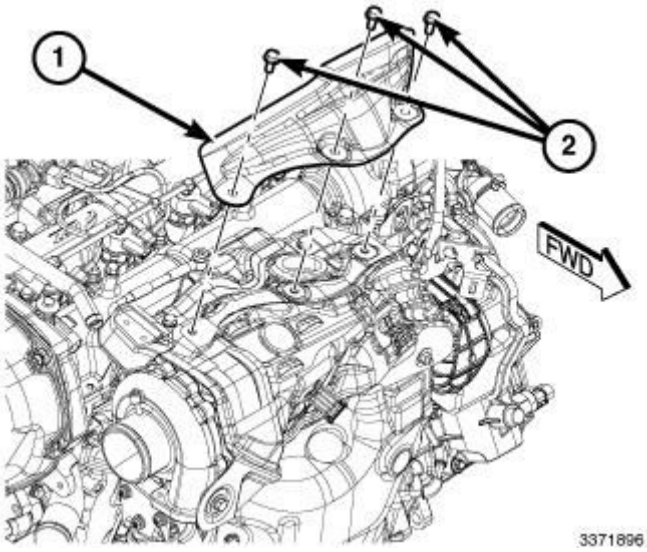

Fig. 107: Upper Turbocharger Heat Shield & Mid Upper Turbocharger Heat Shield
Courtesy of CHRYSLER GROUP, LLC

3. Remove the upper turbocharger heat shield (1).

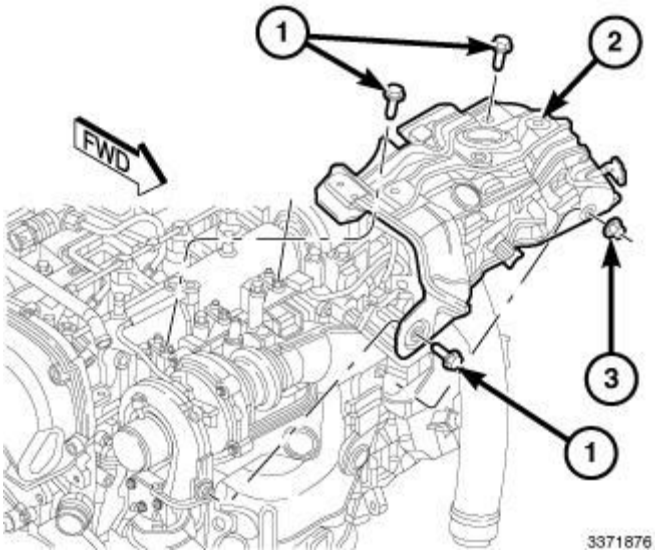

Fig. 108: Turbocharger Heat Shield & Fasteners
Courtesy of CHRYSLER GROUP, LLC

4. Remove the bolts (1), the nut (3), and the turbocharger heat shield (2).

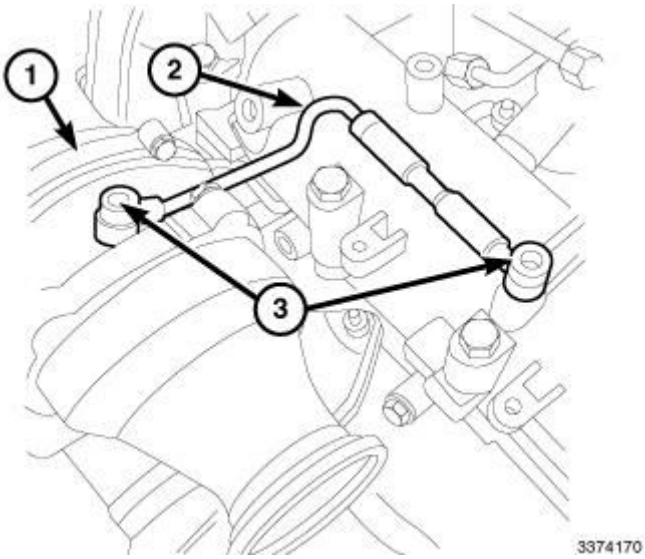

Fig. 109: Turbocharger, Oil Feed Line & Banjo Bolts
Courtesy of CHRYSLER GROUP, LLC

5. Remove Banjo bolts (3) and the engine oil feed line (2) to the turbocharger (3).
6. Remove the timing belt. Refer to **BELT, TIMING, REMOVAL**.

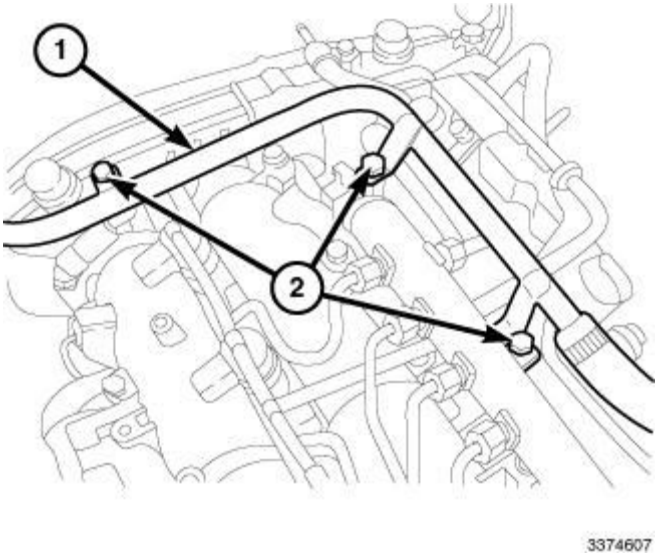

Fig. 110: Oil Vapor Recovery Pipe & Bolts
Courtesy of CHRYSLER GROUP, LLC

7. Using the (special tool #10288, Pliers, Hose Clamp) loosen band clamp and disconnect hose from vapor recovery pipe.
8. Remove bolts (2) securing the engine oil vapor recovery pipe (1) to the camshaft housing.
9. Remove the screws securing the engine oil recovery pipe to the air chamber.

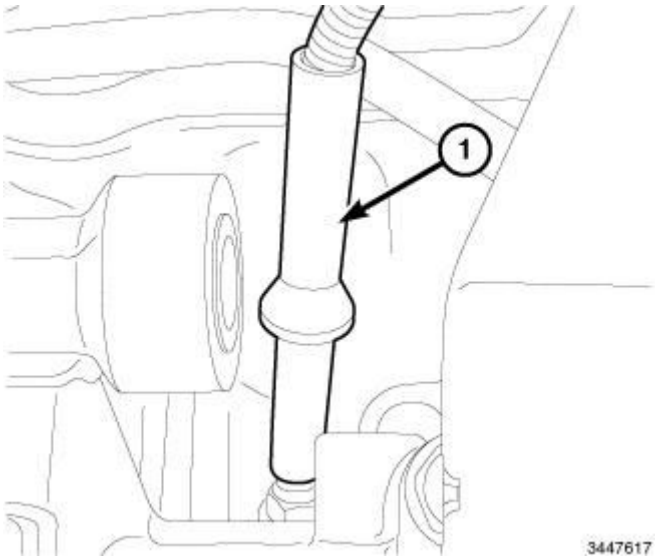

Fig. 111: Glow Plug Harness Connector
Courtesy of CHRYSLER GROUP, LLC

10. Disconnect the glow plug wire harness connector (1) from each glow plug.
11. Remove the bolts, and release the degassing pipe retaining clip and remove the intake chamber reinforcement bracket.

Fig. 112: Fuel Supply & Return Line Quick-Connect Fittings
Courtesy of CHRYSLER GROUP, LLC

12. Disconnect the fuel supply (2) line quick-connect fittings at fuel injection pump. Refer to **FITTING, QUICK CONNECT** .
13. Disconnect the fuel return line (1) near the fuel injection pump.
14. Detach the fuel line routing clips.
15. Remove the fuel injectors. Refer to **INJECTOR(S), FUEL, REMOVAL** .

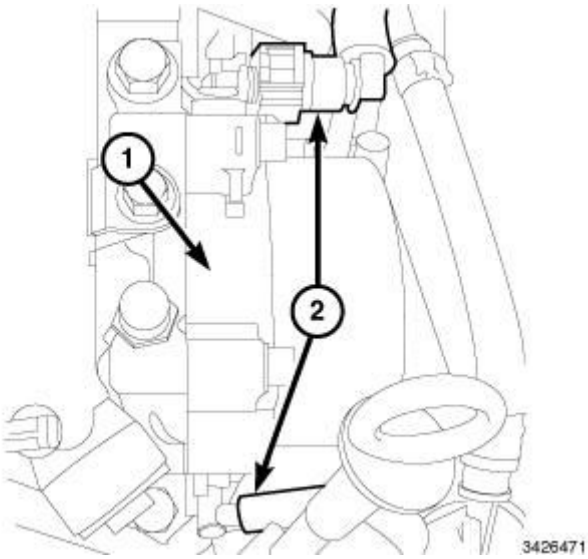

Fig. 113: Vacuum Pump & Vacuum Lines
Courtesy of CHRYSLER GROUP, LLC

16. Remove the vacuum lines (2) at vacuum pump (1).

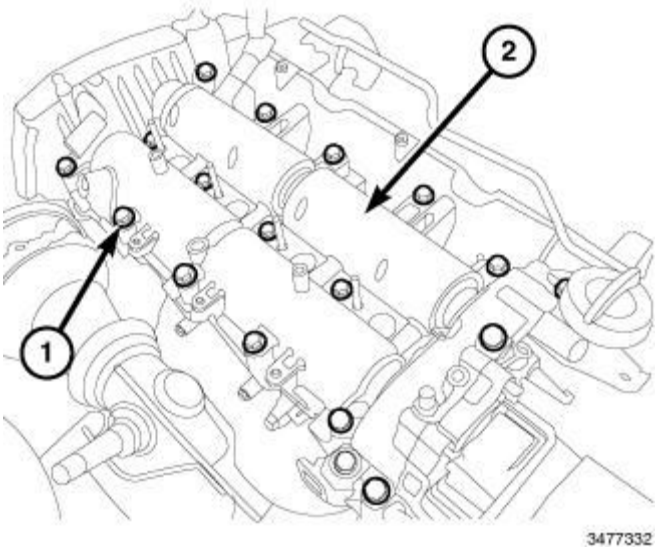

Fig. 114: Cylinder Head Cover & Bolts
Courtesy of CHRYSLER GROUP, LLC

17. Remove the bolts (1) and the cylinder head cover (2).
18. Remove and discard the gasket.

INSTALLATION

INSTALLATION

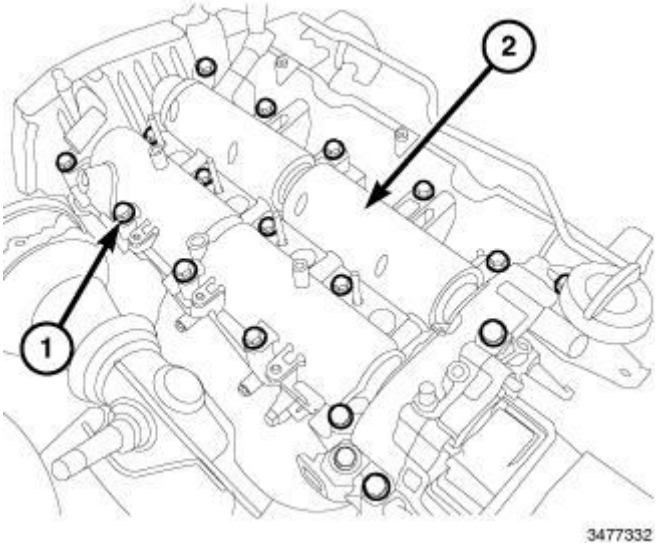

Fig. 115: Cylinder Head Cover & Bolts
Courtesy of CHRYSLER GROUP, LLC

1. Clean sealing surfaces. Refer to **ENGINE - STANDARD PROCEDURE** .
2. Install new cylinder head cover gasket.

3. Install cylinder head cover (2). Tighten bolts (1) to 25 N.m (18 ft. lbs.).

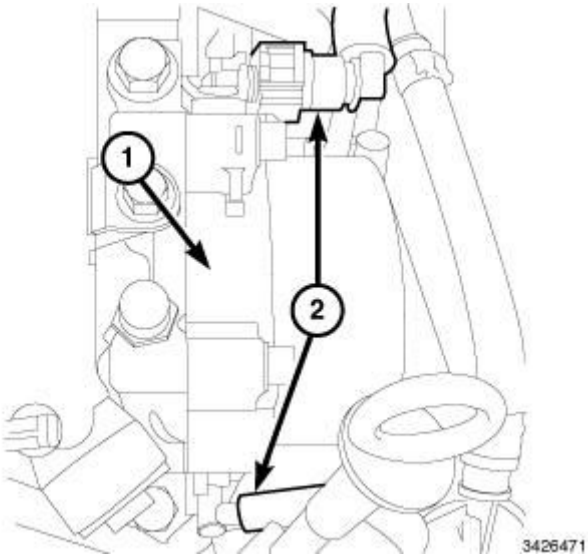

Fig. 116: Vacuum Pump & Vacuum Lines
Courtesy of CHRYSLER GROUP, LLC

4. Install the vacuum lines (2) to the vacuum pump (1).

Fig. 117: Fuel Supply & Return Line Quick-Connect Fittings
Courtesy of CHRYSLER GROUP, LLC

5. Install the fuel injectors. Refer to **INJECTOR(S), FUEL, INSTALLATION** .
6. Attach the fuel line routing clips.
7. Connect the fuel return line (1) near the fuel injection pump.

8. Connect the fuel supply (2) line quick-connect fittings at fuel injection pump.

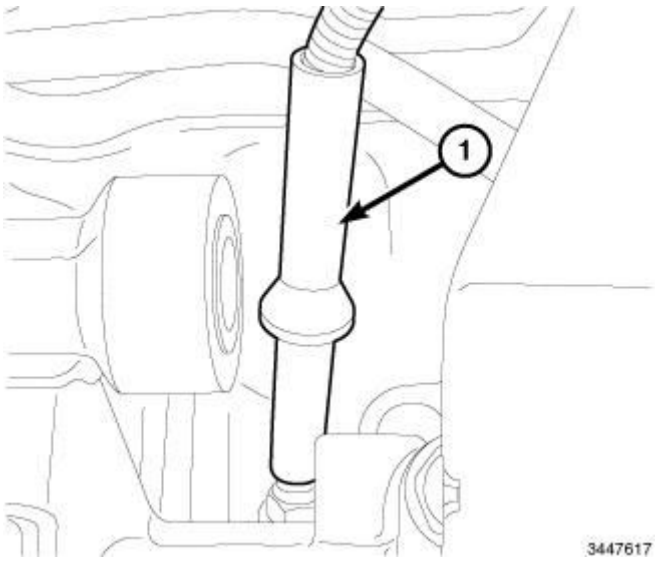

Fig. 118: Glow Plug Harness Connector
Courtesy of CHRYSLER GROUP, LLC

9. Install the intake chamber reinforcement bracket and the degassing pipe retaining clip and securely tighten bolt.
10. Disconnect the glow plug wire harness connector (1) from each glow plug.

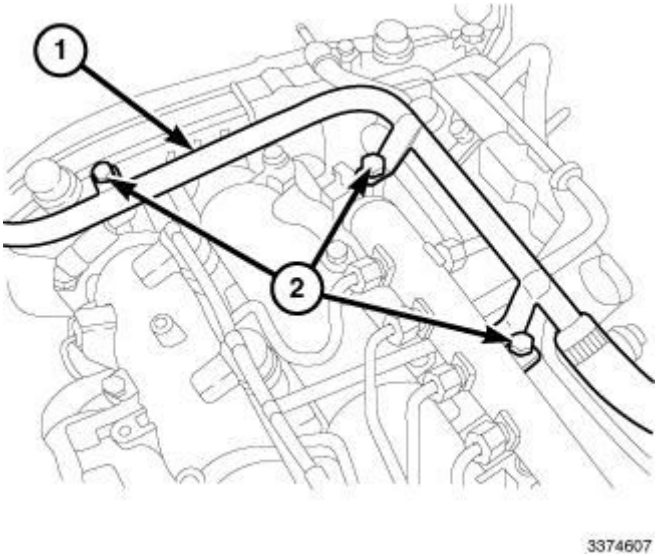

Fig. 119: Oil Vapor Recovery Pipe & Bolts
Courtesy of CHRYSLER GROUP, LLC

11. Install the screws securing the engine oil recovery pipe to the air chamber and securely tighten.
12. Install the bolts (2) securing the engine oil vapor recovery pipe (1) to the camshaft housing.
13. Connect the hose to the vapor recovery pipe

14. Using the (special tool #10288, Pliers, Hose Clamp) to crimp band clamp.

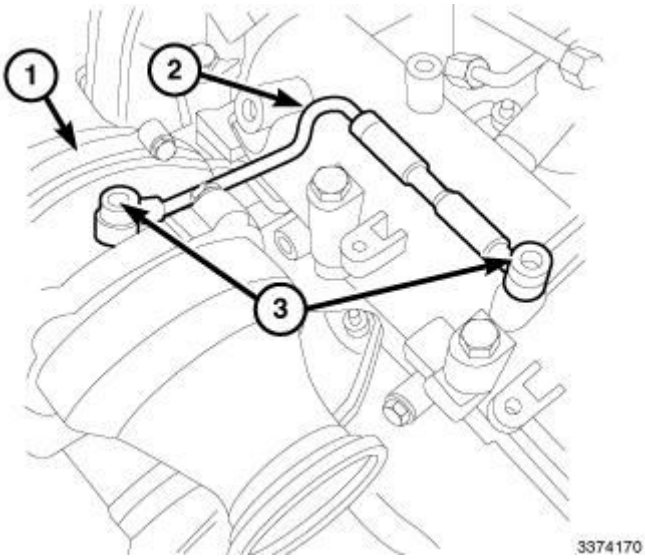

Fig. 120: Turbocharger, Oil Feed Line & Banjo Bolts
Courtesy of CHRYSLER GROUP, LLC

15. Install the timing belt. Refer to **BELT, TIMING, INSTALLATION**.
16. Install the engine oil feed line (2) to the turbocharger (3). Tighten the Banjo bolts (3) to 18 N.m (159 in. lbs.).

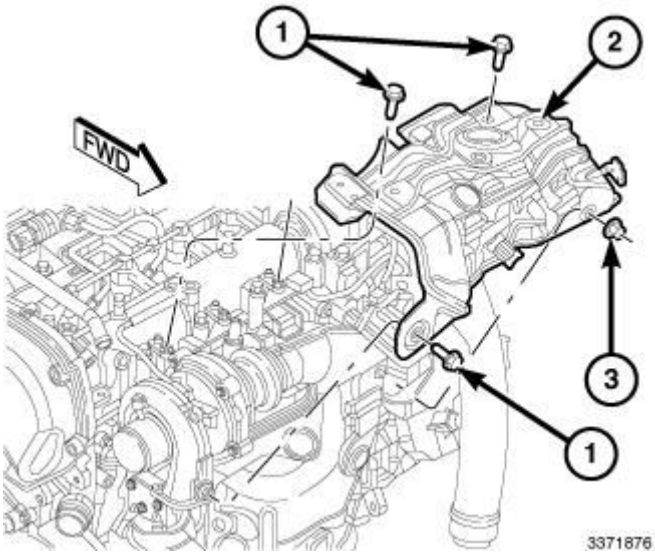

Fig. 121: Turbocharger Heat Shield & Fasteners
Courtesy of CHRYSLER GROUP, LLC

17. Install the turbo heat shield. Tighten the bolts (1) to 12 N.m (106 in. lbs.) and the nut (3) to 8 N.m (71 in. lbs.).

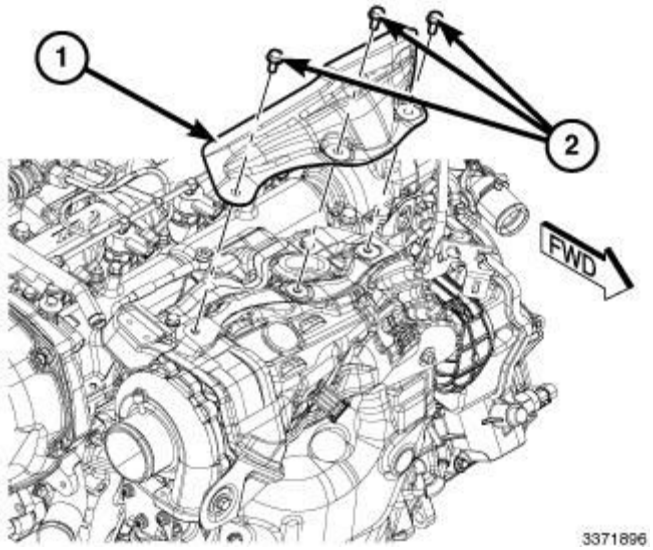

Fig. 122: Upper Turbocharger Heat Shield & Mid Upper Turbocharger Heat Shield
Courtesy of CHRYSLER GROUP, LLC

18. Install the upper turbo heat shield (2) Tighten the bolts (1) to 12 N.m (106 in. lbs.).

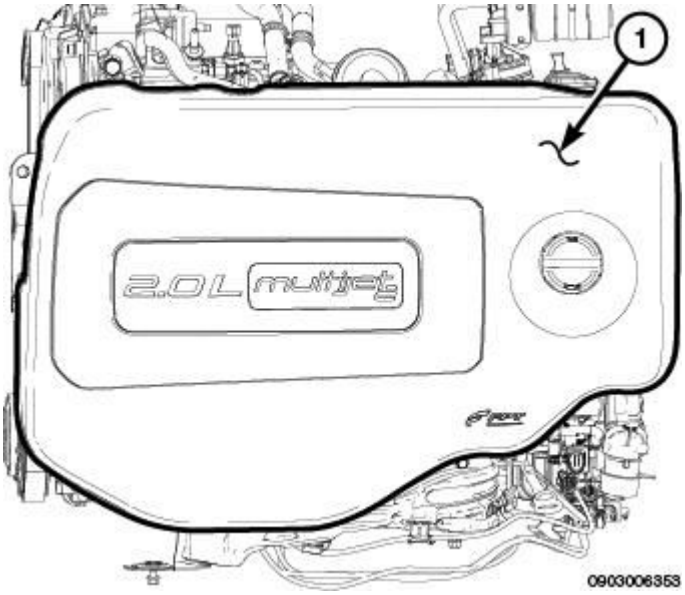

Fig. 123: Engine Cover
Courtesy of CHRYSLER GROUP, LLC

19. Install the engine cover (1).
20. Connect the negative battery cable.

LIFTER(S), HYDRAULIC

REMOVAL

REMOVAL

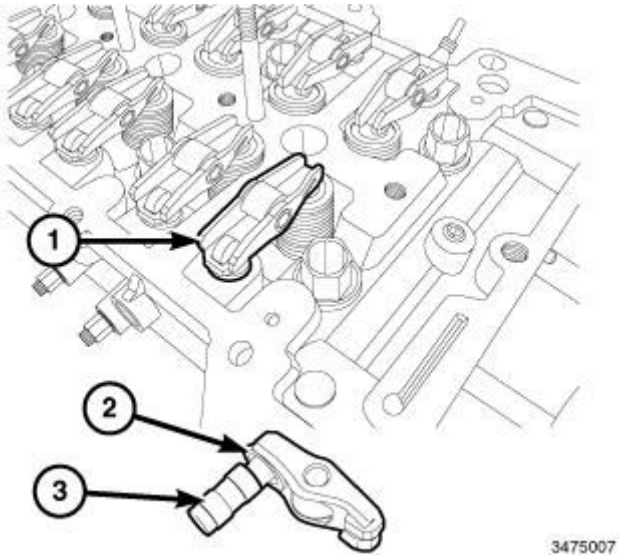

Fig. 124: Rocker Arm, Retaining Clip & Lifter
Courtesy of CHRYSLER GROUP, LLC

1. Disconnect the negative battery cable.
2. Remove the rocker arm and lifter. Refer to **ROCKER ARM, VALVE, REMOVAL** .
3. Remove retaining clip (2) and separate the rocker arm (1) from lifter (3).

INSTALLATION

INSTALLATION

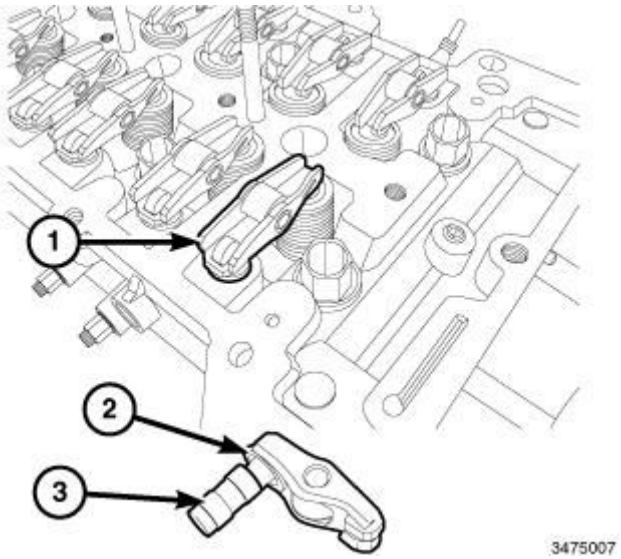

Fig. 125: Rocker Arm, Retaining Clip & Lifter
Courtesy of CHRYSLER GROUP, LLC

1. Assemble the rocker arm (1) to the lifter (3) and install the retaining clip (2).
2. Install the rocker arm and lifter. Refer to **ROCKER ARM, VALVE, INSTALLATION** .
3. Connect the negative battery cable.

ROCKER ARM, VALVE

REMOVAL

REMOVAL

1. Disconnect the negative battery cable.
2. Remove the cylinder head cover. Refer to **COVER(S), CYLINDER HEAD, REMOVAL** .

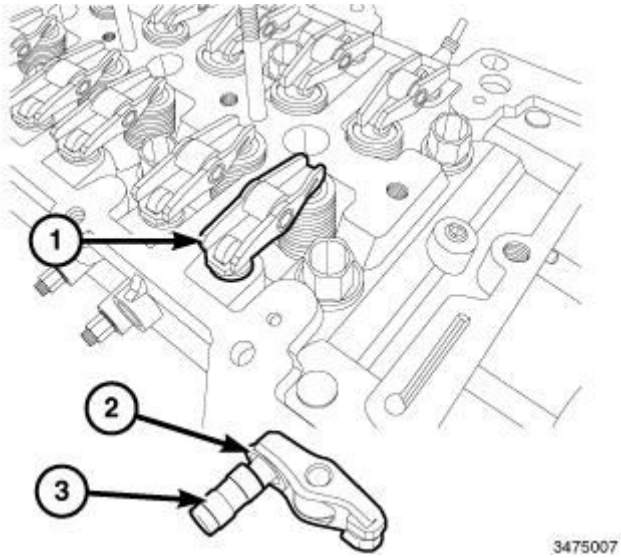

Fig. 126: Rocker Arm, Retaining Clip & Lifter
Courtesy of CHRYSLER GROUP, LLC

NOTE: Label the order in which the rocker arms were removed.

3. Remove the rocker arm and lifter assembly (1).

INSTALLATION

INSTALLATION

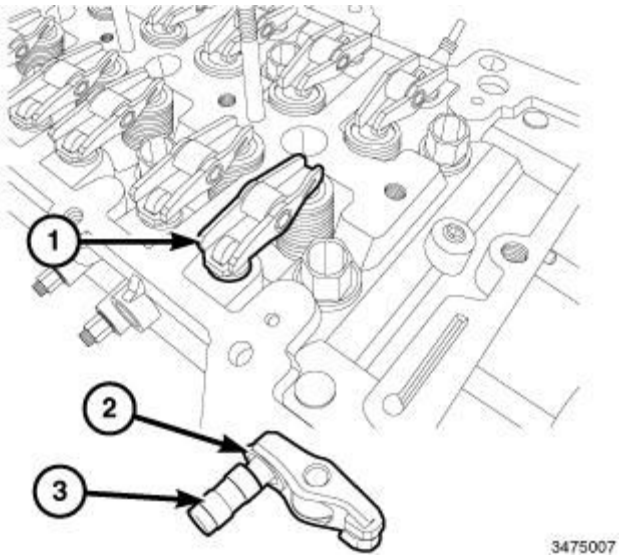

Fig. 127: Rocker Arm, Retaining Clip & Lifter
Courtesy of CHRYSLER GROUP, LLC

1. Install the rocker arm and lifter assembly back to its original location as noted during the removal process.
2. Install the cylinder head cover. Refer to **COVER(S), CYLINDER HEAD, INSTALLATION** .
3. Connect the negative battery cable.

SEAL(S), CAMSHAFT

REMOVAL

REMOVAL

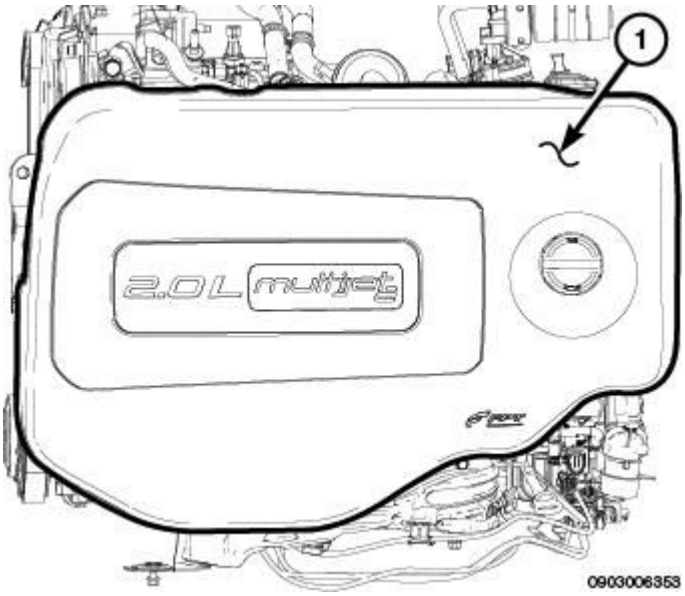

Fig. 128: Engine Cover

Courtesy of CHRYSLER GROUP, LLC

1. Remove the engine cover (1).
2. Remove the camshaft timing belt sprocket. Refer to **BELT AND SPROCKETS, TIMING, REMOVAL**.

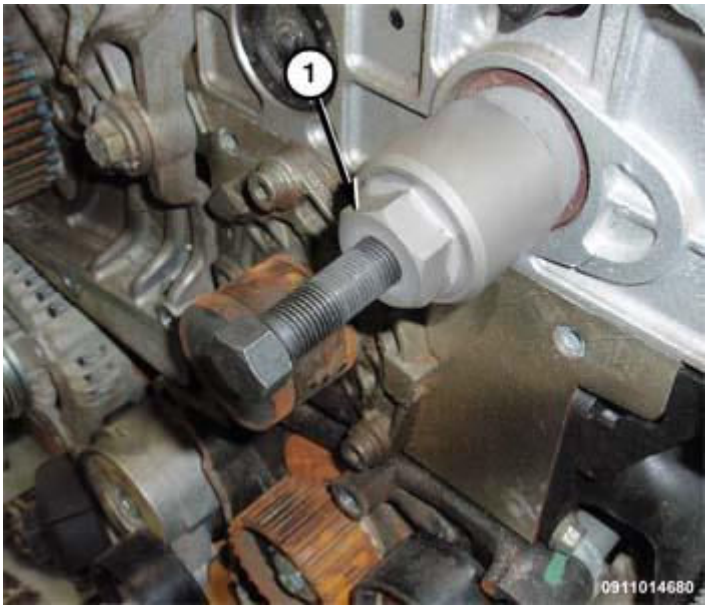

Fig. 129: Seal Remover Tool
Courtesy of CHRYSLER GROUP, LLC

3. Using the (special tool #10498, Remover, Seal) Tool (1), remove the camshaft oil seals.

INSTALLATION

INSTALLATION

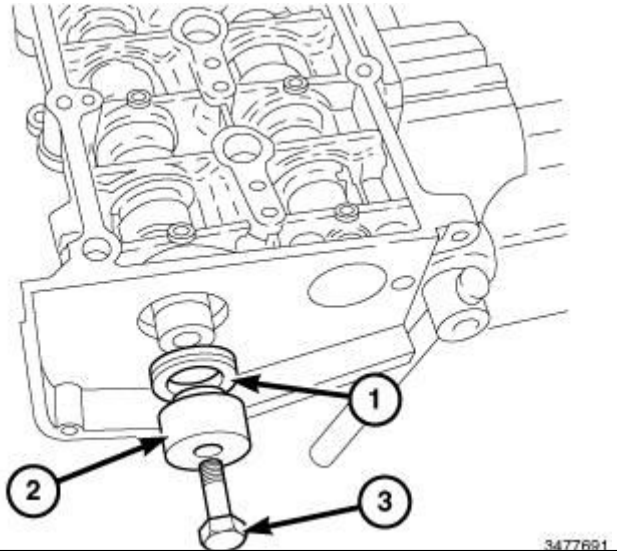

Fig. 130: Camshaft Oil Seal, Fitting Tool & Bolt
Courtesy of CHRYSLER GROUP, LLC

1. Using the Fitting Tool (2) (special tool #20131, Installer, Camshaft Oil Seal), position new camshaft seal (1) onto Fitting Tool (2) and install the camshaft oil seal (1) by drawing in the seal using the bolt (3).
2. Remove the Fitting Tool.
3. Install the camshaft timing belt sprocket. Refer to **BELT AND SPROCKETS, TIMING, INSTALLATION**.

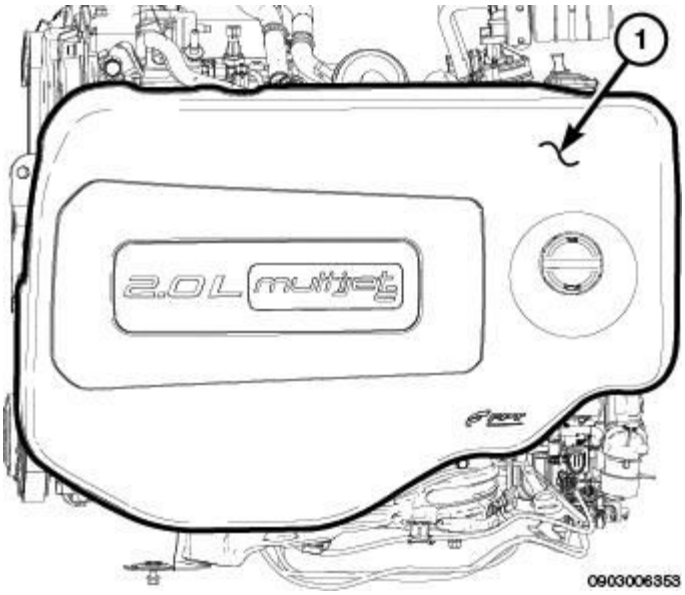

Fig. 131: Engine Cover
Courtesy of CHRYSLER GROUP, LLC

4. Install the engine cover (1).

SPRING(S), VALVE

REMOVAL

REMOVAL

1. Disconnect negative battery cable.
2. Remove the cylinder head cover. Refer to **COVER(S), CYLINDER HEAD, REMOVAL** .
3. Assemble the (special tool #MD998772A, Compressor, Valve Spring) to the (special tool #10224, Adapter, Valve Spring) and install onto cylinder head.

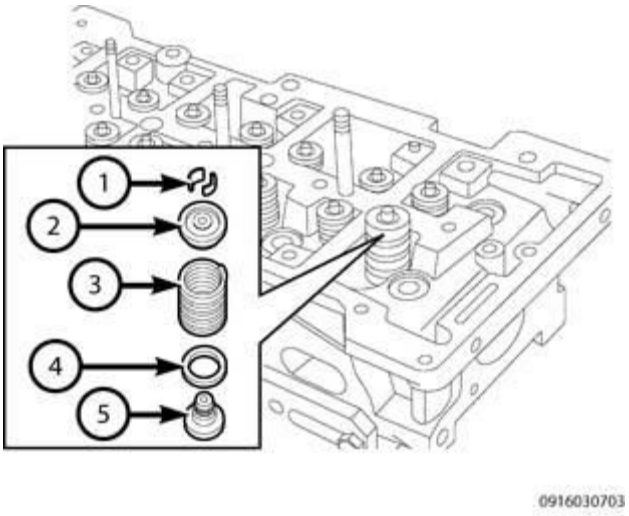

Fig. 132: Valve Spring Components
Courtesy of CHRYSLER GROUP, LLC

4. Compress the valve spring (3) and remove the valve keepers (1).
5. Remove the valve upper shim (2).
6. Remove the valve spring (3).
7. Remove the lower shim (4) (exhaust valve only).
8. Repeat procedure for each cylinder as necessary.

INSTALLATION

INSTALLATION

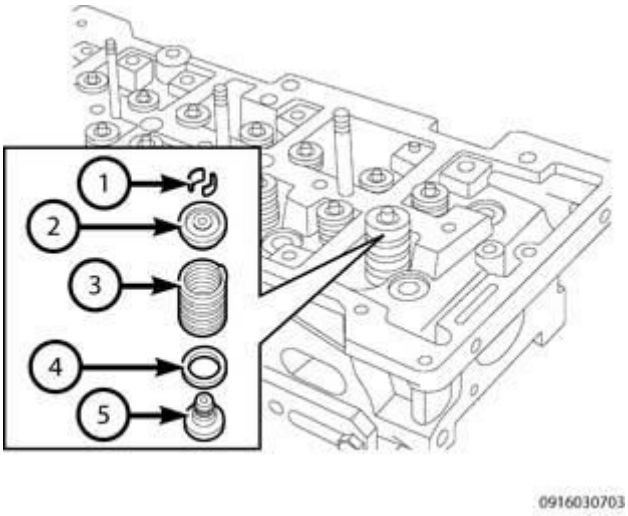

Fig. 133: Valve Spring Components
Courtesy of CHRYSLER GROUP, LLC

NOTE: Inspect all valve springs and retainers for wear or damage. Replace as necessary.

1. Install the lower shim (4) (exhaust valve only).
2. Install valve spring (3).
3. Install valve upper shim (2).
4. Assemble the (special tool #MD998772A, Compressor, Valve Spring) to the (special tool #10224, Adapter, Valve Spring) and install onto cylinder head.

NOTE: Ensure that the valve keepers are seated properly.

5. Compress valve spring (3) and install valve keepers (1).
6. Repeat procedure for each cylinder as necessary.
7. Install the cylinder head cover. Refer to **COVER(S), CYLINDER HEAD, INSTALLATION** .
8. Connect negative battery cable.

VALVES, INTAKE AND EXHAUST

REMOVAL

REMOVAL

NOTE: As a good practice, determine if the valve faces or valve seats require servicing. Measuring the valve height on a known good valve. If the replacement or refinished valve height is greater than the measurement of the known good valve height, machine enough material from the stem of the valves to give you the valve height of the good valve.

NOTE: Valves can not be ground, only lapping is permitted.

1. Disconnect the negative battery cable.
2. Remove the cylinder head. Refer to **CYLINDER HEAD, REMOVAL** .
3. Assemble the (special tool #MD998772A, Compressor, Valve Spring) to the (special tool #10224, Adapter, Valve Spring) and install onto cylinder head.

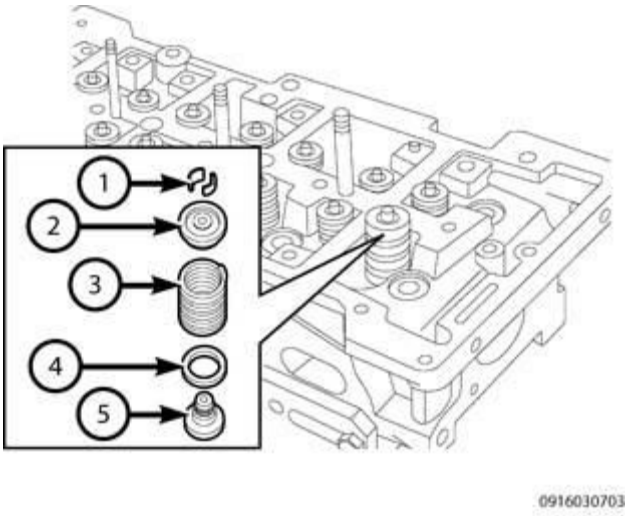

Fig. 134: Valve Spring Components
Courtesy of CHRYSLER GROUP, LLC

CAUTION: Valves, springs and retainers must be kept in order of the cylinder they were removed.

4. Compress the valve spring (3) and remove the valve keepers (1).
5. Remove the valve upper shim (2).
6. Remove the valve spring (3).
7. Remove the lower shim (4) (exhaust valve only).

CAUTION: Suitably mark the valve and the position in the cylinder head before removal. Failure to do so will result in improperly seated valves and possible engine damage after reassembly.

8. Remove valve stem seal (5).
9. Repeat steps 3 through 7 for each valve as necessary.
10. Remove the valves and replace as necessary.

INSTALLATION

INSTALLATION

WARNING: Valves must be kept in their original positions in cylinder head. Failure to do so will result in engine damage.

NOTE: Inspect all valves, springs and retainers for wear or damage. Replace as necessary.

1. Install valves in their original position in the cylinder head.

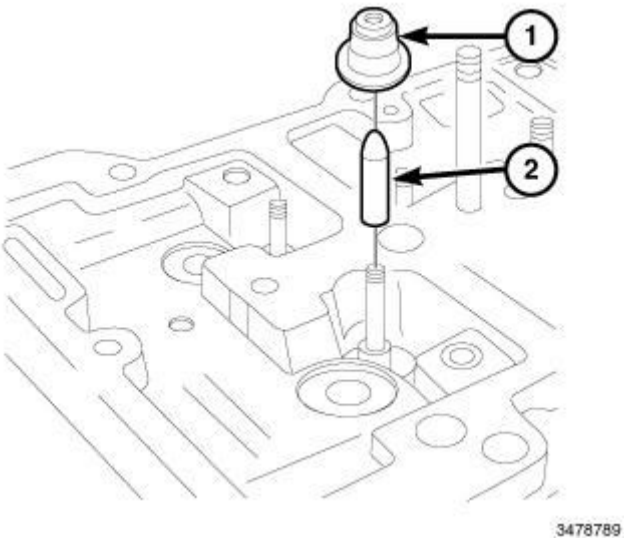

Fig. 135: Valve Stem Seal & Fitting Tool
Courtesy of CHRYSLER GROUP, LLC

2. Install the valve seal Fitting Tool (2) onto valve stem.
3. Install valve stem seal (1).
4. Remove the valve seal Fitting Tool (2) from the valve stem.

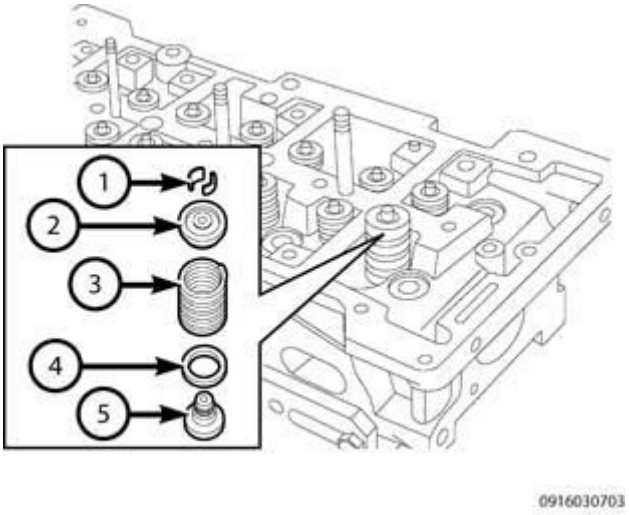

Fig. 136: Valve Spring Components
Courtesy of CHRYSLER GROUP, LLC

5. Install the lower shim (4) (exhaust valve only).
6. Install the valve spring (3).
7. Install the valve upper shim (2).

8. Assemble the (special tool #MD998772A, Compressor, Valve Spring) to the (special tool #10224, Adapter, Valve Spring) and install onto cylinder head.

NOTE: Ensure that the valve keepers are seated properly.

9. Compress the valve spring (3) and install the valve keepers (1).
10. Repeat steps 3 through 10 for each valve as necessary.
11. Install the cylinder head. Refer to **CYLINDER HEAD, INSTALLATION** .
12. Connect the negative battery cable.

ENGINE BLOCK

DESCRIPTION

DESCRIPTION

This engine is equipped with a high pressure electronic injection system from Bosch Common Rail ECD 16 C39 fast diesel engine, fully managed by an Powertrain Control Module (PCM). The engine respects the Euro 5 regulation and is equipped with the following emission components:

- Exhaust system with Diesel Oxidation Catalyst (DOC)/Diesel Particulate Filter (DPF).
- Exhaust Gas Recirculation System (EGR).
- Crankcase oil vapor recirculation system.

STANDARD PROCEDURE

BEARING SELECTION CHARTS

CRANKSHAFT BEARINGS

Crankshaft Main Journal Diameter	
Bearing Size	**Specification**
Main journal half-bearings - Grade A (Red) numerical code 1 (94 00)	1.832 - 1.836 mm (0.0721 - 0.0722 in.)
Main journal half-bearings - Grade B (Blue) numerical code 2 (88 94)	1.835 - 1.839 mm (0.0722 - 0.0724 in.)
Main journal half-bearings - Grade C (Yellow) numerical code 3 (82 88)	1.838 - 1.842 mm (0.0723 - 0.0725 in.)
Crankshaft Main Journal Diameter (Oversize)	
Main journal/crankpin half-bearings oversize - Grade A (brown)	0.127 mm (0.0049 in.)
Main journal/crankpin half-bearings oversize - Grade B (green)	0.127 mm (0.0049 in.)
Clearance between connecting rod bearings -	0.030 - 0.056 mm (0.0011 - 0.0022 in.)

crankpin bearings	
Main Journal Identification	
Main journal grade A (normal), RED paint mark, numerical code 1 (94 00)*	52.994 - 53.000 mm (2.0863 - 20.866 in.)
Main journal grade B (normal), BLUE paint mark, numerical code 2 (88 94)*	52.982 - 52.994 mm (2.0858 - 2.0863 in.)
Main journal grade C (normal), YELLOW paint mark, numerical code 3 (82 88)*	52.982 - 52.998 mm (2.0858 - 2.0865 in.)
Main journal grade D (0.127 mm undersize), BROWN paint mark, numerical code 6 (67 73)*	52.867- 52.873 mm (2.0813 - 2.0816 in.)
Main journal grade E (0.127 mm undersize), GREEN paint mark, numerical code 7 (61 67)*	52.861 - 52.867 mm (2.0811 - 2.0813 in.)
Main journal grade F (0.127 mm undersize), BLACK paint mark, numerical code 8 (55 61)*	52.855 - 52.861 mm (2.0808 in.)

NOTE: (*) Last two numbers (thousandth part) of the main journal dimensions.

NOTE: If using a crankshaft where the maximum undersize for the bearings is 0.127 mm through grindings, the grade should be selected by measuring the diameter of the bearing using the above as a reference.

NOTE: Having defined the grade and the color of each new or reground crankshaft bearing, it is necessary to select the bearing pair or thickness; these should be the same color as the corresponding journal; the pair of half-bearings required can be ordered from the Parts Dept. by quoting the order number.

NOTE: The above is designed to guarantee the optimum operational clearances for all pins.

NOTE: Lastly, we wish to point out that, in general, the clearance between the main journal and the half-bearing, produced through the selection method described above, should be min. 0.011 - max; 0.071 mm; this figure can be measured, as part of the final check, using the calibrated wire (Plastigage) following the instructions described below.

ROD BEARINGS

Connecting Rod Journal Diameter	
Bearing Size	**Specification**
Crankpin half-bearings - Grade A (red)	1.525 - 1.532 mm (0.0600 - 0.0603 in.)
Crankpin half-bearings - Grade B (blue)	1.532 - 1.536 mm (0.0603 - 0.0605 in.)
Crankpin half-bearings - Grade C (yellow)	1.535 - 1.539 mm (0.0604 - 0.0606
Connecting Rod Journal Diameter (Oversize)	
Main journal/crankpin half-bearings oversize - Grade	

A (brown)	0.127 mm (0.0049 in.)
Main journal/crankpin half-bearings oversize - Grade B (green)	0.127 mm (0.0049 in.)
Clearance between connecting rod bearings - crankpin bearings	0.030 - 0.056 mm (0.0011 - 0.0022 in.)
Main journal/crankpin half-bearing oversize	0.254 mm (0.0099 in.)

REPLACING ENGINE CORE AND OIL GALLERY PLUGS

Using a blunt tool such as a drift and a hammer, strike the bottom edge of the cup plug. With the cup plug rotated, grasp firmly with pliers or other suitable tool and remove plug .

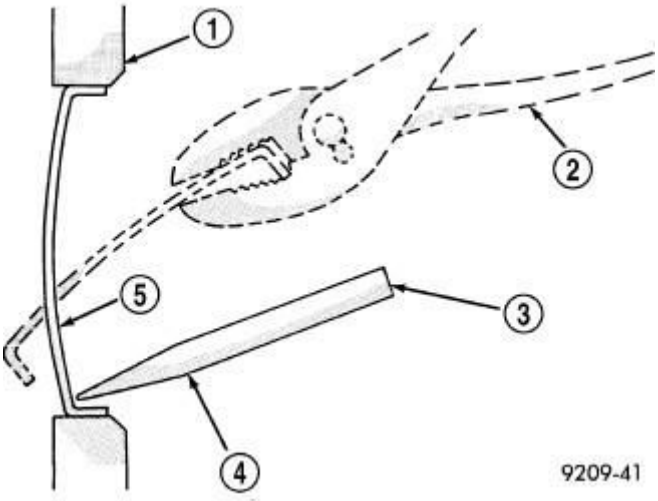

Fig. 137: Core Hole Plug Removal
Courtesy of CHRYSLER GROUP, LLC

1 - CYLINDER BLOCK
2 - REMOVE PLUG WITH PLIERS
3 - STRIKE HERE WITH HAMMER
4 - DRIFT PUNCH
5 - CUP PLUG

CAUTION: Do not drive cup plug into the casting as restricted cooling can result and cause serious engine problems.

Thoroughly clean inside of cup plug hole in cylinder block or head. Be sure to remove old sealer. Lightly coat inside of cup plug hole with Mopar® Stud and Bearing Mount. Make certain the new plug is cleaned of all oil or grease. Using proper drive plug, drive plug into hole so that the sharp edge of the plug is at least 0.5 mm (0.020 in.) inside the lead-in chamfer.

It is not necessary to wait for curing of the sealant. The cooling system can be refilled and the vehicle placed in

service immediately.

MEASURING CYLINDER BORES

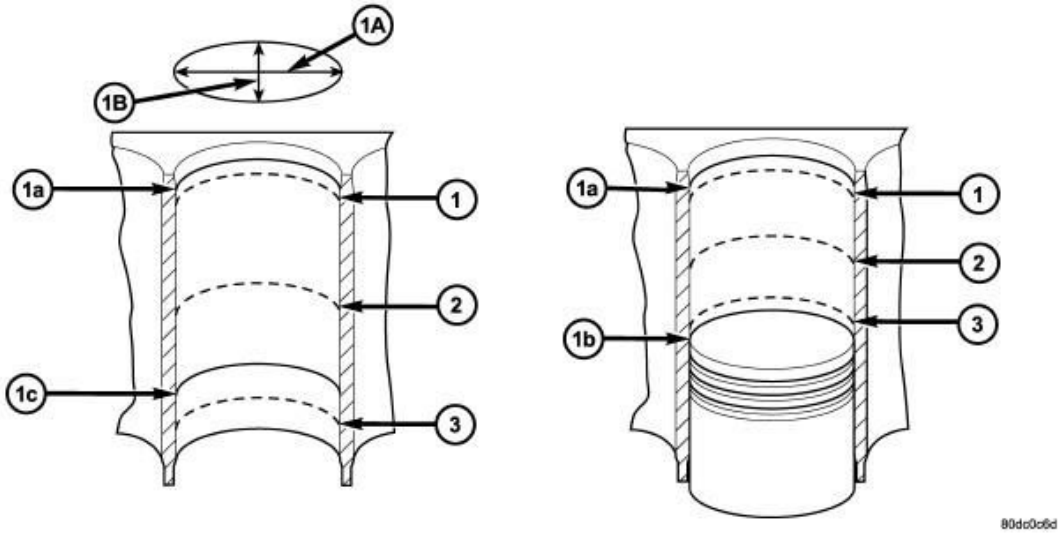

Fig. 138: Measuring Cylinder Bores
Courtesy of CHRYSLER GROUP, LLC

1 - MEASURING POINT OF CYLINDER BORE
2 - MEASURING POINT OF CYLINDER BORE
3 - MEASURING POINT OF CYLINDER BORE
1a - UPPER REVERSAL POINT OF #1 PISTON RING
1b - BOTTOM DEAD CENTER OF PISTON
1c - BOTTOM REVERSAL POINT OF OIL SCRAPER RING
1A - LONGITUDINAL DIRECTION
1B - TRANSVERSE DIRECTION

NOTE: This must be done with engine completely disassembled.

1. Thoroughly clean all cylinder bores with appropriate cleaning solvent.
2. Measure each cylinder at the three measuring points shown in illustration.
3. Using the three measurement points, measure cylinder in the longitudinal and in the transverse direction.

PISTON PROTRUSION

NOTE: Any time a rod or piston is replaced, the piston protrusion must be checked.

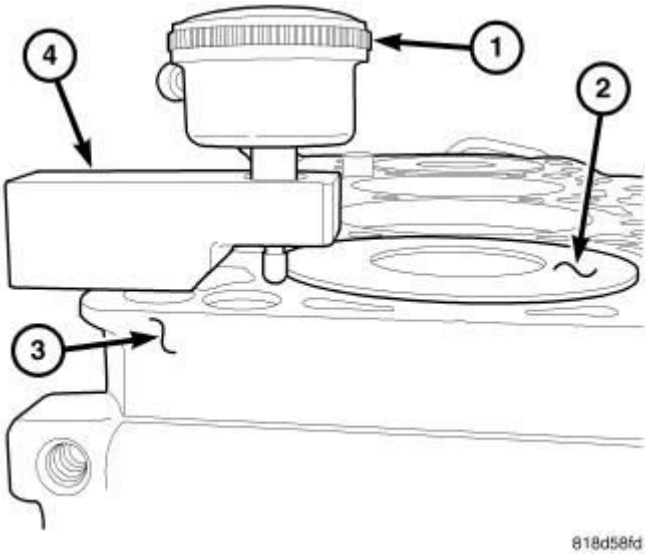

Fig. 139: Zero Dial Indicator
Courtesy of CHRYSLER GROUP, LLC

1. Position scooter block (special tool #D-115-2A, Block, Scooter) (4) and a dial indicator flat on the cylinder block (3) head surface and zero the dial indicator.

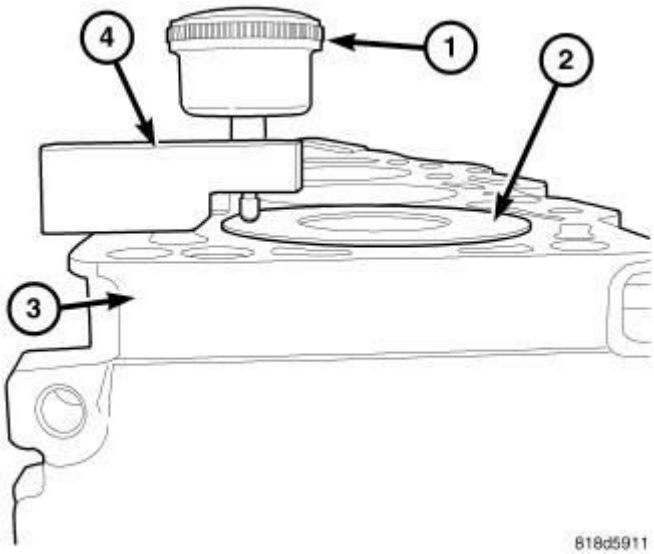

Fig. 140: Piston Height
Courtesy of CHRYSLER GROUP, LLC

2. Slide Scooter block (special tool #D-115-2A, Block, Scooter) (4) so that the dial indicator (1) is now on the piston (2).
3. Read measurement and refer to the chart below for the correct head gasket:

HEAD GASKET SELECTION

Piston Protrusion		Head Gasket Identification

0.110 - 0.203 mm	0.035 - 0.039 in.	No Hole
0.231 - 0.330 mm	0.040 - 0.043 in.	One Hole
0.331 - 0.425 mm	0.044 - 0.047 in.	Two Hole

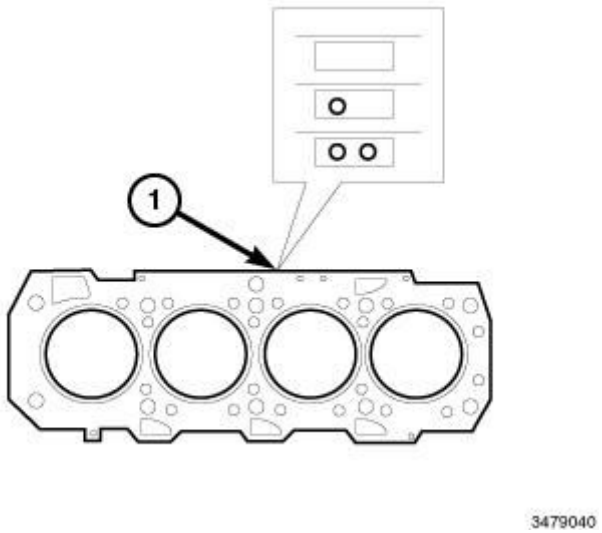

Fig. 141: Head Gasket Identification
Courtesy of CHRYSLER GROUP, LLC

4. Look up piston protrusion measurement in the table to find the correct head gasket. The head gasket is marked round holes (1).

COVER, ENGINE, FRONT

REMOVAL

REMOVAL

1. Disconnect the negative battery cable.

NOTE: The crankshaft sprocket bolt is a left handed thread.

2. Remove the crankshaft sprocket. Refer to **BELT AND SPROCKETS, TIMING, REMOVAL**.

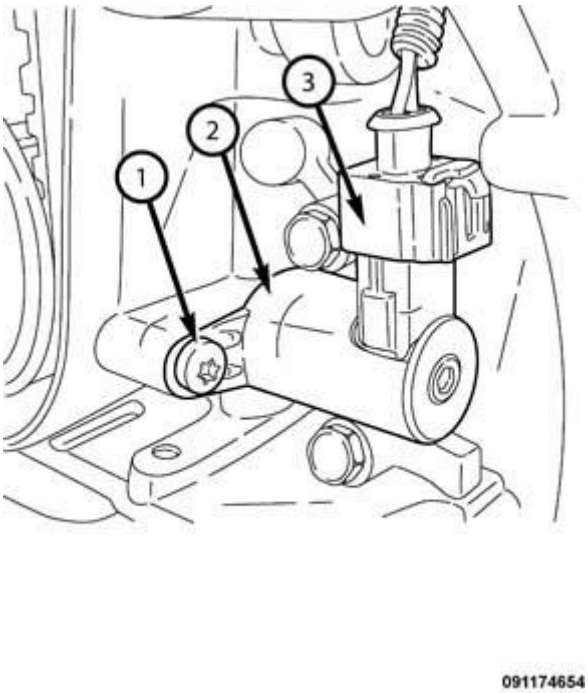

Fig. 142: Oil Pressure Regulator, Bolt & Connector
Courtesy of CHRYSLER GROUP, LLC

3. Disconnect the oil pressure regulator wire harness connector (3).
4. Remove the oil pan. Refer to **PAN, OIL, REMOVAL** .

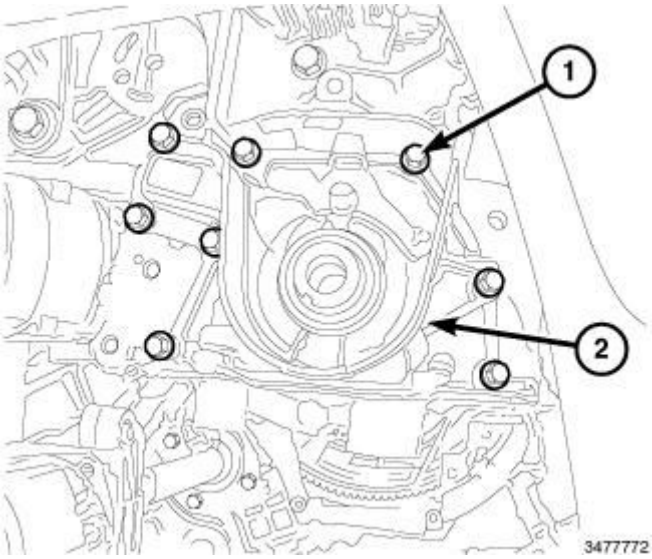

Fig. 143: Front Cover & Bolts
Courtesy of CHRYSLER GROUP, LLC

5. Remove bolts (1) and the front cover (2).

INSTALLATION

INSTALLATION

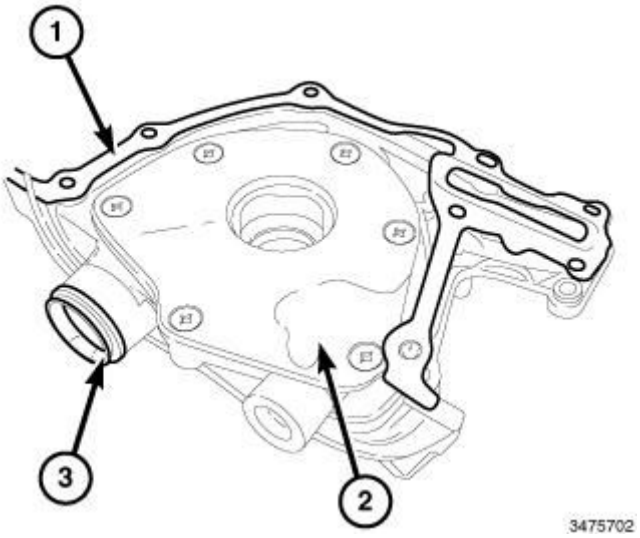

Fig. 144: Front Cover, Gasket & Seal
Courtesy of CHRYSLER GROUP, LLC

1. Clean all gasket mating surfaces. Refer to **ENGINE - STANDARD PROCEDURE** .
2. Install the front cover gasket (1) and seal (3).

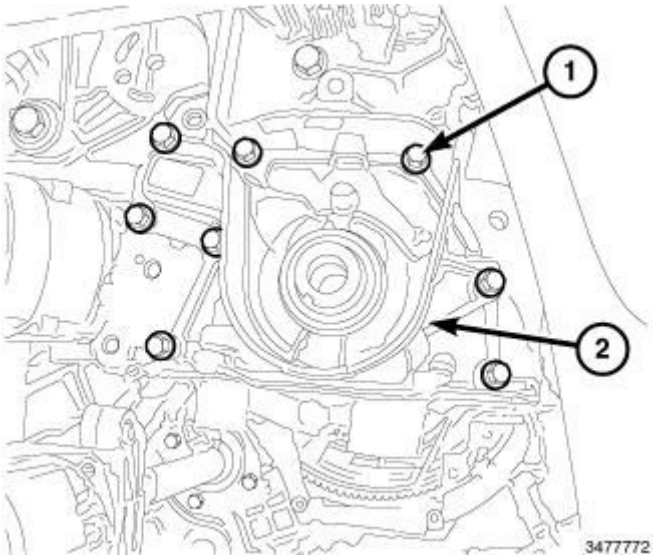

Fig. 145: Front Cover & Bolts
Courtesy of CHRYSLER GROUP, LLC

3. Install the oil pan. Refer to **PAN, OIL, INSTALLATION** .
4. Install the front cover assembly (2). Tighten bolts (1) 9 N.m (80 in. lbs.).

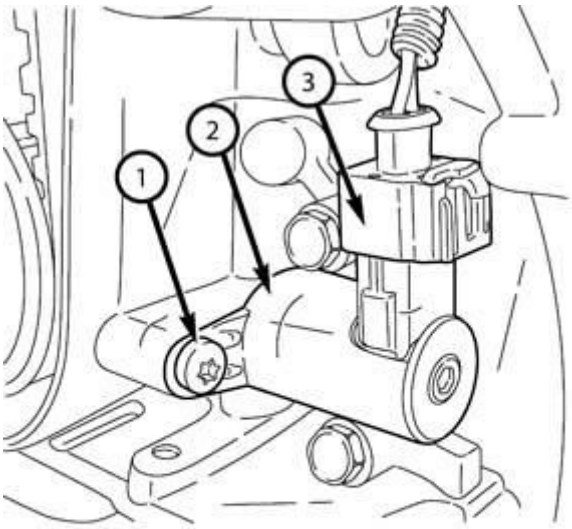

091174654

Fig. 146: Oil Pressure Regulator, Bolt & Connector
Courtesy of CHRYSLER GROUP, LLC

5. Connect the oil pressure regulator wire harness connector (3).
6. If necessary, install a new front crankshaft oil seal. Refer to **SEAL, CRANKSHAFT OIL, FRONT, INSTALLATION** .

NOTE: The crankshaft sprocket bolt is a left handed thread.

7. Install the crankshaft sprocket. Refer to **BELT AND SPROCKETS, TIMING, INSTALLATION**.
8. Connect the negative battery cable.

CRANKSHAFT

DESCRIPTION

DESCRIPTION

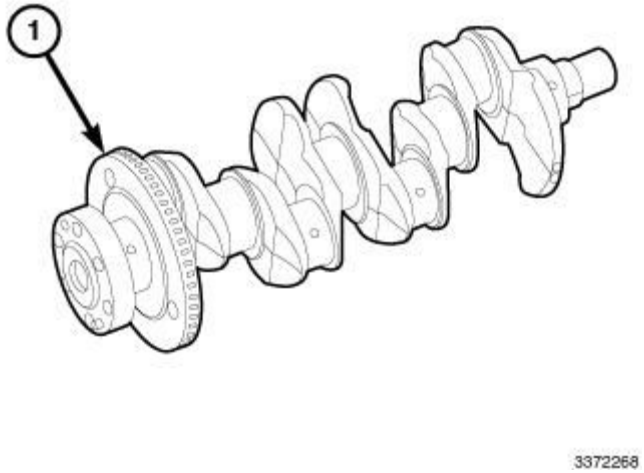

Fig. 147: Crankshaft Tone Wheel
Courtesy of CHRYSLER GROUP, LLC

- The crankshaft is made of cast iron and rests on five main bearings. Shaft axial clearance is governed by two half-rings housed in the rear main bearing.
- Eight counterweights accurately balance the crankshaft rotating masses.
- A set of ducts runs along the crankshaft to lubricate the main journals and crankpins.
- A tone wheel (1) is fitted at the rear of the crankshaft and is used for the RPM sensor.

STANDARD PROCEDURE

STANDARD PROCEDURE - MEASURE CRANKSHAFT AND BLOCK JOURNALS

NOTE: After bearing damage has occurred, remove all debris which is present in the main oil gallery, connecting rod bores, and in the crankshaft and oil galleries. Include removal of the inserting steel ball of the main oil gallery before cleaning.

1. Remove crankshaft. Refer to **CRANKSHAFT, REMOVAL** .
2. Clean all engine parts thoroughly.

CAUTION: After bearing damage has occurred, replace connecting rods which have suffered overheating because of bearing damage. The connecting rod must not have any cross scores and notches.

3. Inspect connecting rod. If damage is present, inspect crankshaft, replace as necessary.
4. Inspect crankcase.
5. Inspect standard size of crankshaft bearing shells.
6. Inspect crankshaft bearing cap.

7. Mount crankshaft radially.
8. Inspect crankshaft bearing play.

NOTE: Radial mounting of the main bearings of standard size crankshaft is possible by assigning the color-coded bearing shells.

9. Assign crankshaft bearing shells.
10. Mount crankshaft axially.
11. Inspect crankshaft bearing play.

ASSIGN CRANKSHAFT BEARING SHELLS

The oil pan rail of the cylinder block is marked with chisel punches indicating which bearing shells are used.

REMOVAL

REMOVAL

NOTE: The engine must be removed from the vehicle to service crankshaft.

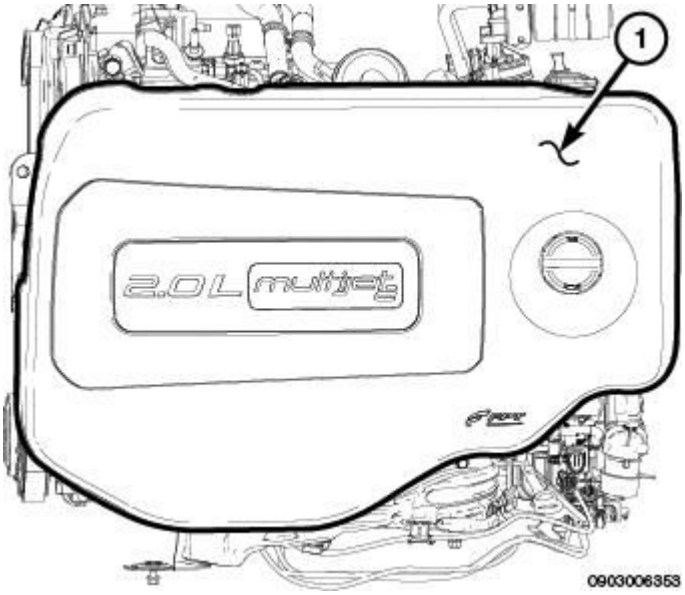

Fig. 148: Engine Cover
Courtesy of CHRYSLER GROUP, LLC

1. Disconnect negative battery cable.
2. Remove the engine cover (1).
3. Remove the engine from the vehicle and place on an overhaul stand. Refer to **REMOVAL** .
4. Unscrew the drain plug from the engine oil pan and drain the engine oil. Tighten drain plug to 20 N.m (177 in. lbs.).

5. Remove the cylinder head assembly. Refer to **CYLINDER HEAD, REMOVAL** .
6. Remove the oil pan. Refer to **PAN, OIL, REMOVAL** .
7. Remove the catalytic converter DPF support.
8. Remove the wiring retaining bracket.

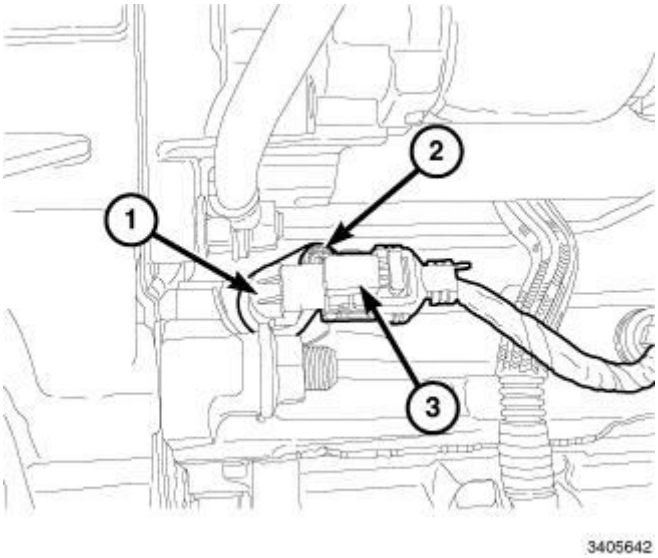

Fig. 149: Crankshaft Position Sensor, Connector & Bolt
Courtesy of CHRYSLER GROUP, LLC

9. Remove the crankshaft position sensor.
10. Remove the engine oil cooler.
11. Remove the alternator.
12. Remove the front cover. Refer to **COVER, ENGINE, FRONT, REMOVAL**.

NOTE: Mark piston and rod location prior to removal with paint pen. Do not use a punch.

13. Rotate the crankshaft until connecting rod number one is at bottom dead center.
14. Remove piston and connecting rod assemblies. Refer to **ROD, PISTON AND CONNECTING, REMOVAL** .
15. Remove rear crankshaft oil seal cover. Refer to **SEAL, CRANKSHAFT OIL, REAR, REMOVAL** .

NOTE: Crankshaft end play specification is 0.049 mm. If the value for the crankshaft end play does not correspond with the specification, when refitting, regrind the engine block seat and use suitable oversize thrust half-washers.

16. Check the amount of end play in the crankshaft using a dial indicator.

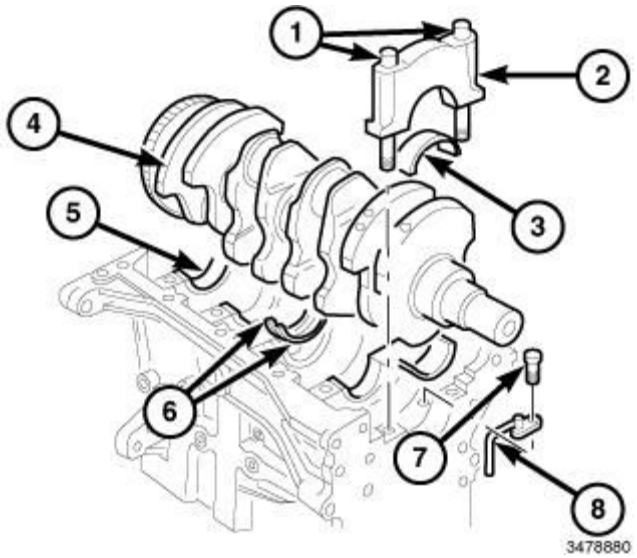

Fig. 150: Crankshaft Assembly
Courtesy of CHRYSLER GROUP, LLC

17. Unbolt crankshaft bearing caps (10.
18. Remove the bearing caps (2).
19. Remove the lower main half-bearings (3).
20. Inspect crankshaft bearing caps and bolts for wear and stretching.
21. Remove crankshaft (4) from engine block.
22. Remove the upper main half-bearings (5).
23. Remove the thrust half-washers (6).
24. Undo the bolts (7) and remove the oil jets (8) from the engine block.
25. Remove the engine block from the overhaul stand, and place it on a workbench.
26. Drill and remove the water/oil sealing plugs from the engine block to allow for washing the ducts.
27. Wash the dismantled components.
28. Fit the water/oil sealing plugs in the engine block using suitable fitting tools.

INSTALLATION

INSTALLATION

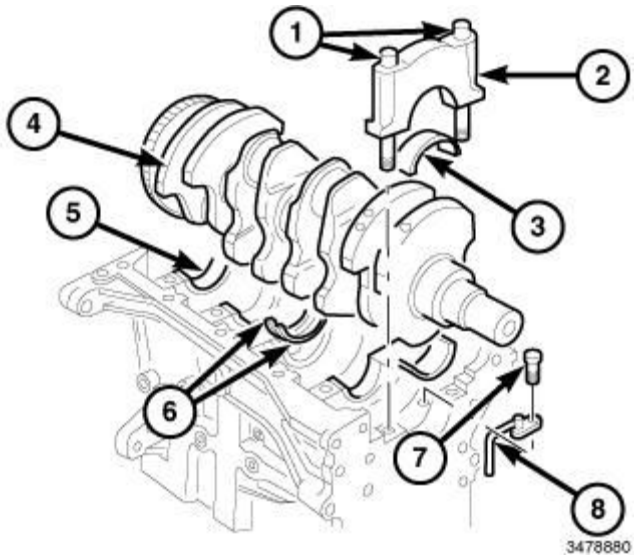

Fig. 151: Crankshaft Assembly
Courtesy of CHRYSLER GROUP, LLC

1. Replace the engine block on the overhaul stand using the mounting bracket.
2. Install the oil jets (8) in the engine block and securely tighten bolts (7).
3. Fit the main bearing caps into the block.
4. Torque the main bearing caps to specification. 25 N.m (18 ft. lbs), then an additional 100° turn.
5. Check that there are no deposits or blockages in the crankshaft lubrication ducts.
6. Measure the diameter of the main journals and compare them to the specifications. (Class A - 59.995 mm, Class B - 59.998 mm, Class C - 59.981 mm).

NOTE: **If the diameter of the main journals is not correct, stop reassembly and replace the engine assembly.**

7. Remove the main bearing caps (1).

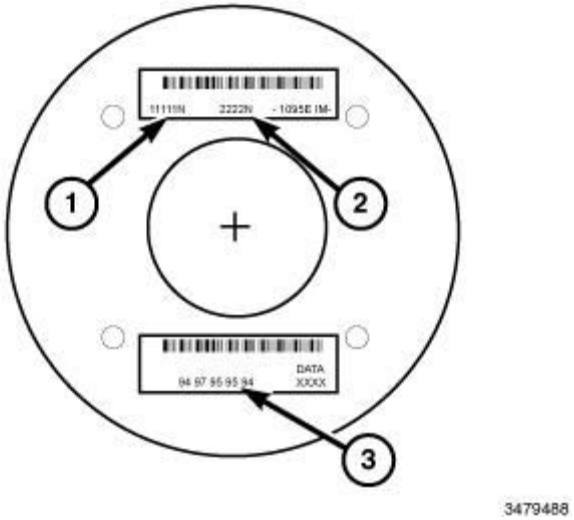

Fig. 152: Crankshaft Bearing Identification & Size Identification
Courtesy of CHRYSLER GROUP, LLC

8. Locate the crankshaft journal letter class stamp on the toothed wheel at the rear of the crankshaft.

NOTE: **In the case of the example, the numbers 11111N indicate that all five main bearings are Grade A (red) as indicated (1). Numerical code of main journal identification: the first number on the left refers to the first timing side bearing; the final "N" has no value.**

NOTE: **In the case of the example, the numbers 2222N indicate that all four connecting rod bearings as indicated (2). Numerical code of main journal identification: the first number on the left refers to the first timing side bearing; the final "N" has no value.**

NOTE: **In the case of the example, the number 94 (first on the left) (3) corresponds to the dimensions 52.994 for the first timing side bearing which identifies Grade A (red); the same method should be applied for other groups of two digits for the same reference 3 (97 -95 -95 -94).**

9. Select the proper bearing sizes for the main bearings and connecting rod bearings. Refer to **ENGINE BLOCK - STANDARD PROCEDURE** .

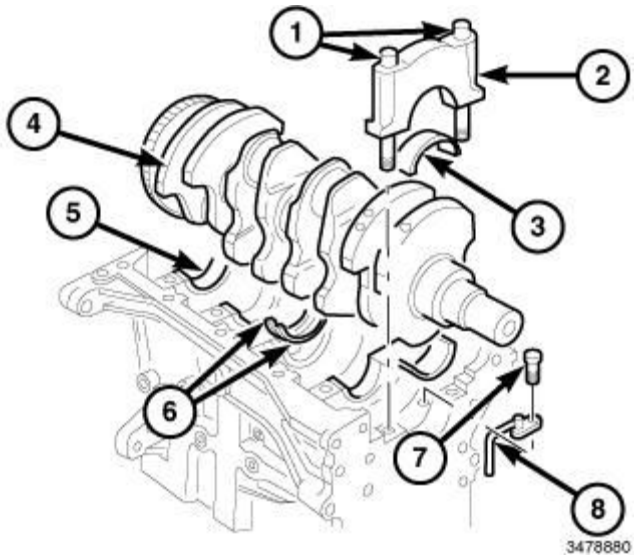

Fig. 153: Crankshaft Assembly
Courtesy of CHRYSLER GROUP, LLC

10. Install the upper bearing halves (5) into the engine block.
11. Lubricate the upper bearing halves with engine oil.
12. Install the upper thrust bearing (7) into the engine block.
13. Install the crankshaft (4) into the engine block.
14. Install the lower thrust bearing.
15. Install the lower main bearing halves into the main bearing caps.
16. Lubricate the lower bearing halves with engine oil
17. Install the main bearing caps into the block. Tighten bolts to 25 N.m (18 ft. lbs), then 100° additional turn.
18. Install the piston and connecting rod assemblies. Refer to **ROD, PISTON AND CONNECTING, INSTALLATION** .
19. Place the front engine cover in its seat complete with gasket and tighten the bolts to 9 N.m (80 in lbs.).
20. Place the front crank seal in its seat on the crankshaft oil seal front cover using the (special tool #20145, Installer, Crankshaft Front Oil Seal).
21. Install the crankshaft position sensor and tighten bolt to 9 N.m (80 in lbs.).
22. Place the timing belt tensioner mounting assembly in position and tighten the bolts to 25 N.m (18 ft. lbs.).
23. Install rear crankshaft oil seal and cover. Refer to **SEAL, CRANKSHAFT OIL, REAR, INSTALLATION** .
24. Apply silicone sealant to the entire perimeter of the engine oil pan assembly.
25. Position oil pan and install bolts. Tighten bolts to 25 N.m (18 ft. lbs.).
26. Install the two oil pan-to-rear oil seal carrier bolts and tighten bolts to 9 N.m (80 in. lbs.).
27. Install the crankshaft sprocket. Tighten bolt to 340 N.m (251 ft. lbs.).
28. Install cylinder head. Refer to **CYLINDER HEAD, INSTALLATION** .
29. Install the engine. Refer to **INSTALLATION** .

30. Fill crankcase with the correct engine oil, to the proper level.
31. Fill cooling system with the proper coolant, to the proper level. Refer to **STANDARD PROCEDURE** .
32. Connect negative battery cable.

WARNING: Use extreme caution when the engine is operating. Do not stand in a direct line with the fan. Do not put your hands near the pulleys, belts, or fan. Do not wear loose clothes.

33. Start engine and inspect for leaks.

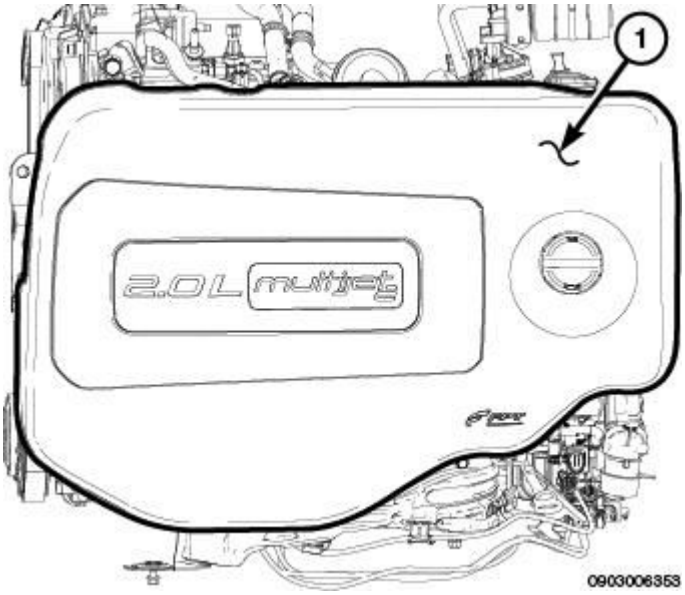

Fig. 154: Engine Cover
Courtesy of CHRYSLER GROUP, LLC

34. Install engine cover (1). Refer to **INSTALLATION** .

DAMPER, VIBRATION

REMOVAL

REMOVAL

1. Disconnect negative battery cable.
2. Raise and support the vehicle. Refer to **HOISTING, STANDARD PROCEDURE** .
3. Remove the accessory drive belt. Refer to **BELT, SERPENTINE, REMOVAL** .

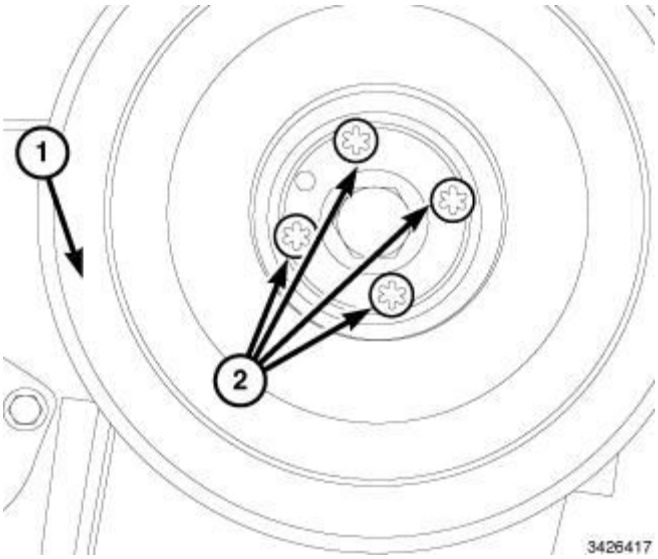

Fig. 155: Vibration Damper & Bolts
Courtesy of CHRYSLER GROUP, LLC

4. Remove bolts (2) and the vibration damper (1).

INSTALLATION

INSTALLATION

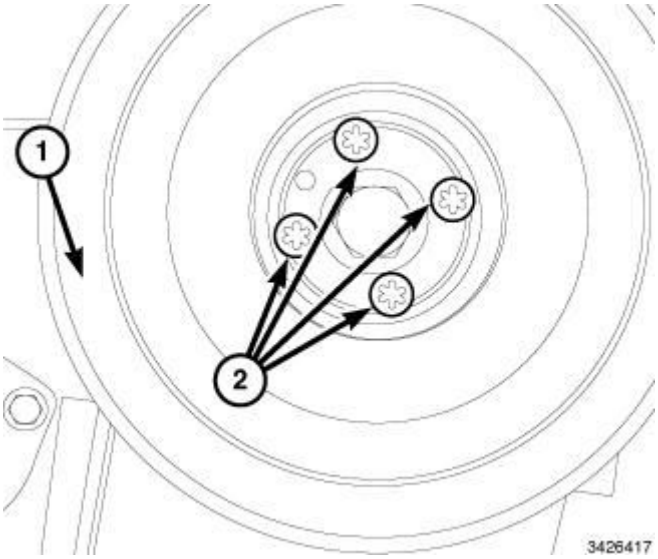

Fig. 156: Vibration Damper & Bolts
Courtesy of CHRYSLER GROUP, LLC

1. Install the vibration damper (1). Tighten bolts (2) to 30 N.m (22 ft. lbs.).
2. Installed the accessory drive belt. Refer to **BELT, SERPENTINE, INSTALLATION** .
3. Lower the vehicle.

4. Connect the negative battery cable.

PUMP, VACUUM

REMOVAL

REMOVAL

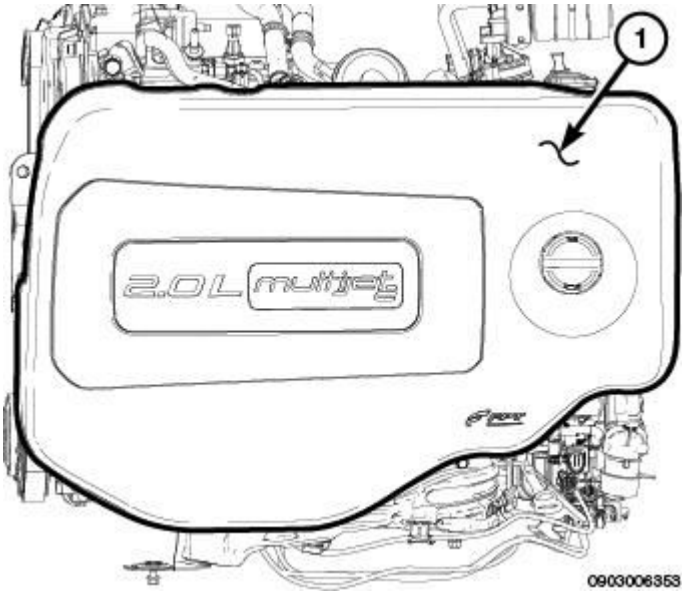

Fig. 157: Engine Cover
Courtesy of CHRYSLER GROUP, LLC

1. Disconnect negative battery cable.
2. Remove the engine cover (1).

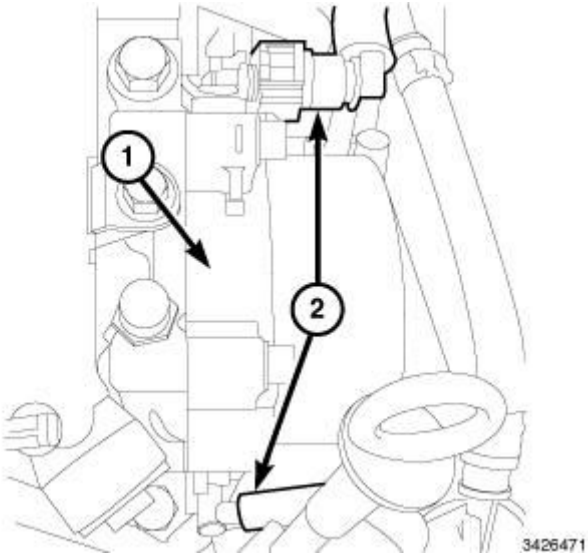

Fig. 158: Vacuum Pump & Vacuum Lines

Courtesy of CHRYSLER GROUP, LLC

3. Remove the vacuum line (2) at vacuum pump (1).
4. Remove the thermostat housing. Refer to **THERMOSTAT, REMOVAL** .

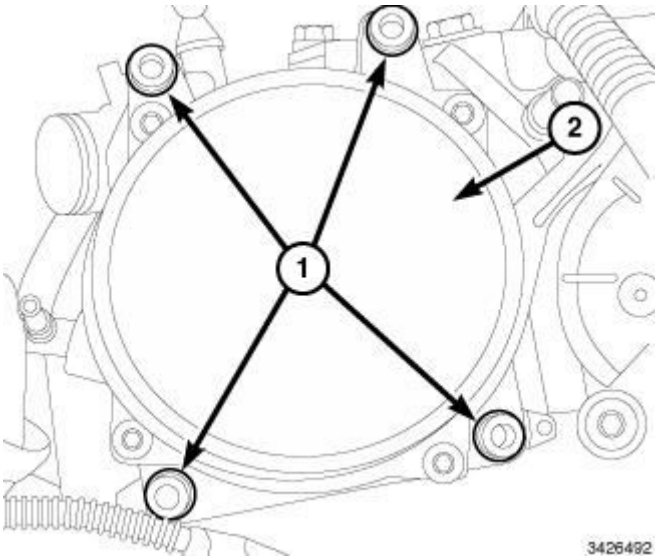

Fig. 159: Vacuum Pump & Bolts
Courtesy of CHRYSLER GROUP, LLC

NOTE: Observe the position of drive gear on rear of pump upon removal.

5. Remove bolts (1) and the vacuum pump (2).
6. Remove and discard gasket.

INSTALLATION

INSTALLATION

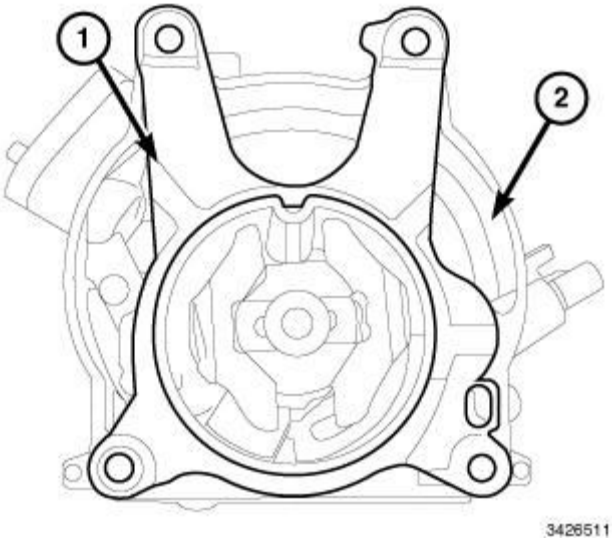

Fig. 160: Vacuum Pump & Gasket
Courtesy of CHRYSLER GROUP, LLC

1. Clean all gasket sealing surfaces.
2. Install new gasket (1) onto the vacuum pump (2).

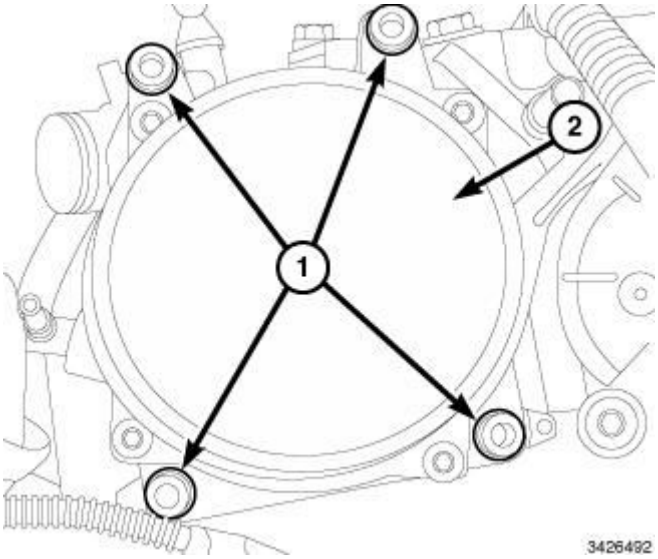

Fig. 161: Vacuum Pump & Bolts
Courtesy of CHRYSLER GROUP, LLC

3. Position driver gear on rear of pump and install vacuum pump (2) and securely tighten bolts.
4. Install the thermostat. Refer to **THERMOSTAT, INSTALLATION** .

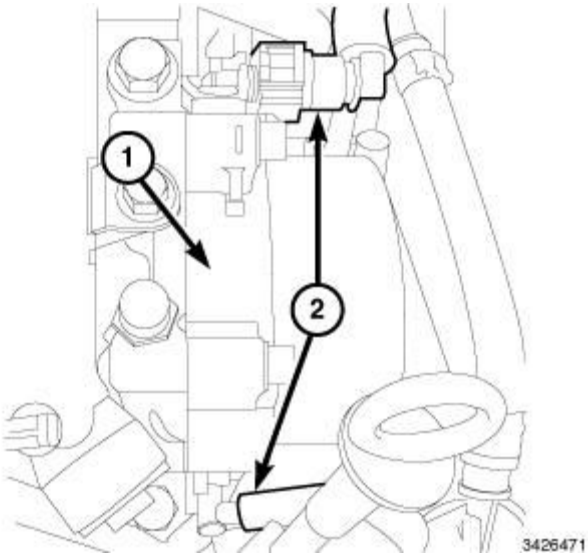

Fig. 162: Vacuum Pump & Vacuum Lines
Courtesy of CHRYSLER GROUP, LLC

5. Install vacuum lines (2) onto the vacuum pump (1).

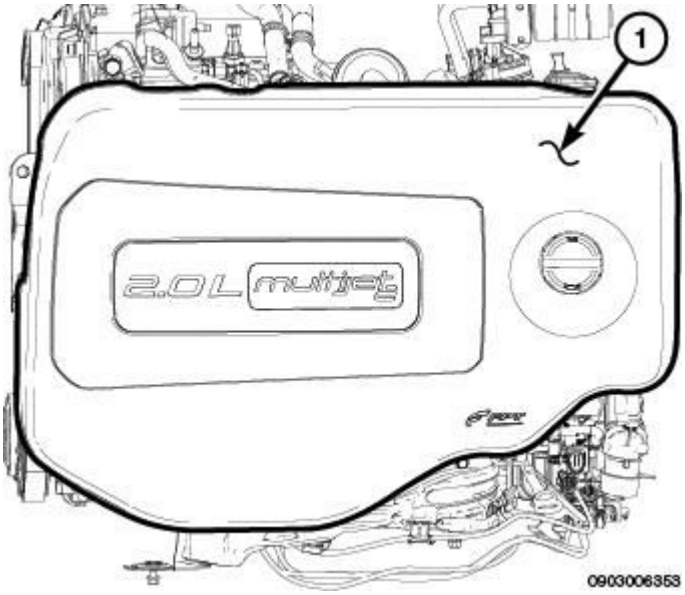

Fig. 163: Engine Cover
Courtesy of CHRYSLER GROUP, LLC

6. Install the engine cover (1).
7. Connect the negative battery cable.

ROD, PISTON AND CONNECTING

DESCRIPTION

DESCRIPTION

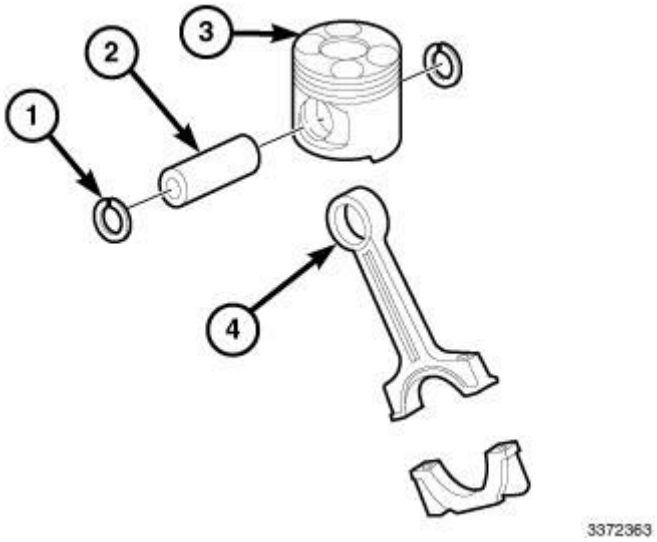

Fig. 164: Piston & Connecting Rod Assembly
Courtesy of CHRYSLER GROUP, LLC

The pistons (3) are made of silicon aluminium alloy with self-heating inserts and are divided into three size categories.

An OMEGA-shaped combustion chamber in the piston crown improves combustion efficiency.

There is a channel inside the piston through which the oil, sent by the jet, flows, ensuring improved piston cooling.

The piston (3) is coupled to the pin by means of two copper alloy bushes.

The connecting rods (4) are made of hardened and tempered steel with a copper bush fitted for matching with the pin (2).

The floating pins are held in place by two expansion retaining rings (1) that are housed in the grooves in the piston hubs.

REMOVAL

REMOVAL

1. Remove the engine from the vehicle. Refer to **REMOVAL** .
2. Remove the cylinder head. Refer to **CYLINDER HEAD, REMOVAL** .
3. Remove the oil pan. Refer to **PAN, OIL, REMOVAL** .

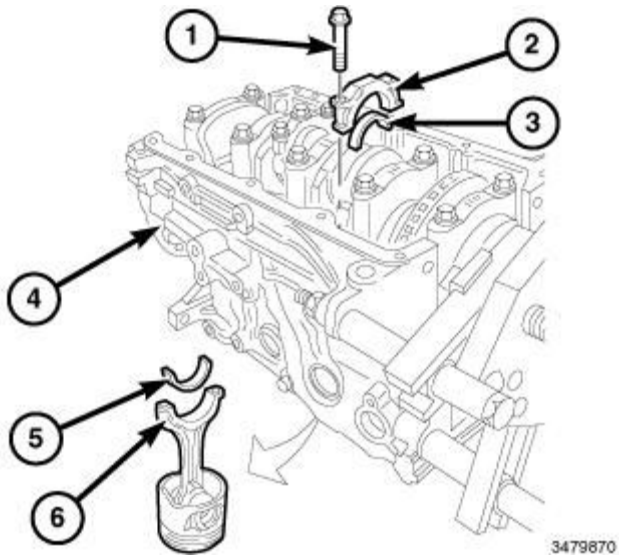

Fig. 165: Piston-Connecting Rods Assembly
Courtesy of CHRYSLER GROUP, LLC

NOTE: Do not use a punch to mark connecting rods.

4. Mark connecting rods with paint marker.
5. Remove the bolts (1) and remove the connecting rod caps (2) complete with bearings (3).
6. Withdraw and remove the piston-connecting rods assemblies (6) with bearings (5).

PISTON RINGS

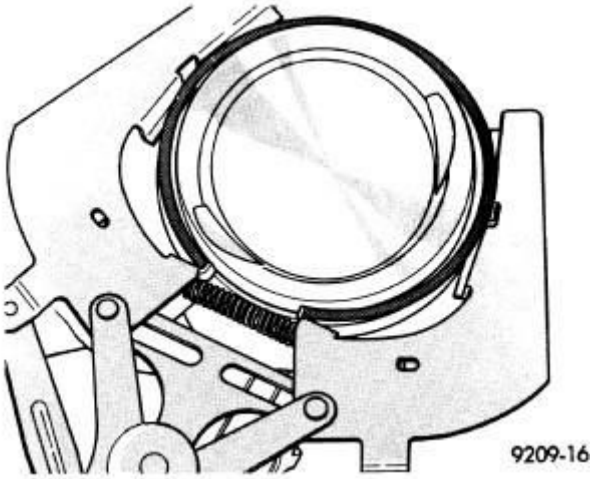

Fig. 166: Piston Rings - Removal/Installation
Courtesy of CHRYSLER GROUP, LLC

1. Using a suitable ring expander, remove the top and second piston rings.
2. Remove the upper oil ring side rail, lower oil ring side rail and then the oil expander from the piston.

3. Carefully clean carbon from the piston crowns, skirts and ring grooves.
4. Repeat this procedure for the remaining pistons and connecting rod assemblies.

PISTON PIN

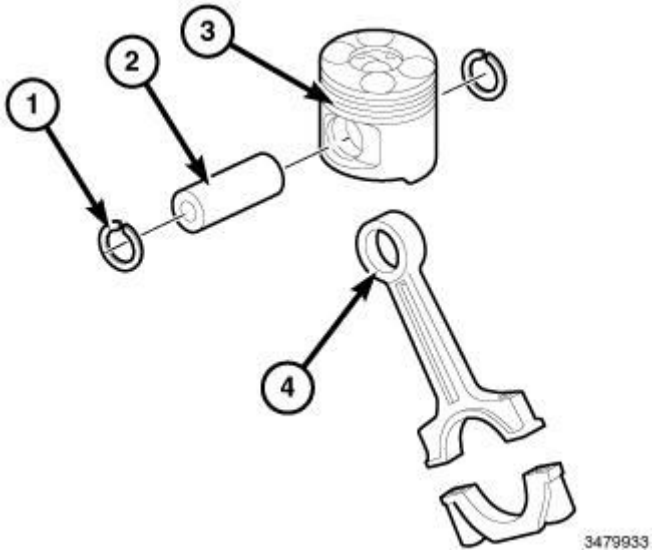

Fig. 167: Piston & Connecting Rod Assembly
Courtesy of CHRYSLER GROUP, LLC

1. Secure the connecting rod (4) in a soft jawed vice.
2. Remove the two snap rings (1) securing the piston pin (2).
3. Push the piston pin (2) out of the piston (3) and the connecting rod (4).
4. Remove the piston (3) from the connecting rod (4).
5. Measure the diameter of the piston pin in the center and on both ends. Refer to **SPECIFICATIONS - 2.0L DIESEL ENGINE** .
6. Repeat this procedure for the remaining pistons and connecting rod assemblies.

INSTALLATION

INSTALLATION

NOTE: The piston-connecting rod assemblies should be fitted in the cylinder block/crankcase so that the drain on the piston skirt is aligned with the oil jet on the crankcase.

1. Make sure the ring end gaps are properly staggered.
2. Lubricate the piston and rings with clean engine oil.
3. Compress piston rings with a ring compressor.

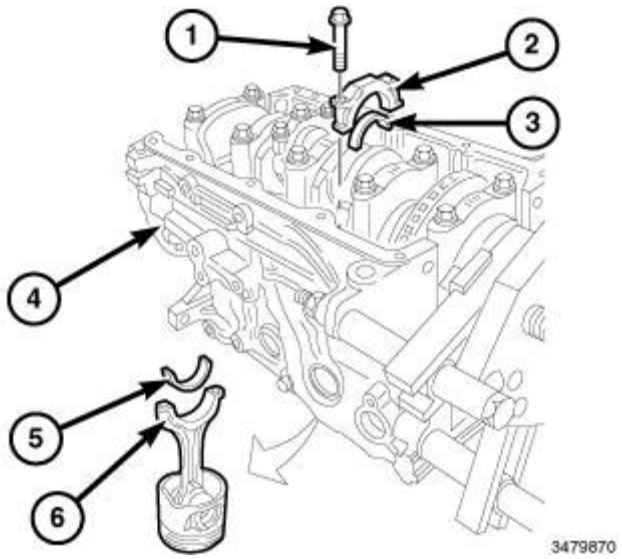

Fig. 168: Piston-Connecting Rods Assembly
Courtesy of CHRYSLER GROUP, LLC

4. Install the upper rod bearing shell (5) into connecting rod (6) and oil bearing shell.

NOTE: **The piston-connecting rod assemblies should be fitted in the cylinder block/crankcase so that the drain on the piston skirt is aligned with the oil jet on the crankcase.**

5. Push piston into cylinder.

NOTE: **Be careful when guiding rod into place not to nick the crankshaft journals.**

NOTE: **Fit the connecting rod caps so that the number stamped on each rod faces toward the same side as the number stamped on the big end (inlet side).**

6. Install lower bearing shell (3) into connecting rod cap (2).
7. Lubricate lower bearing shell and position rod cap.
8. Install new rod bolts and tighten to 25 N.m (18 ft. lbs.) plus an additional 60° turn.
9. Install oil pan. Refer to **PAN, OIL, INSTALLATION** .
10. Install cylinder head. Refer to **CYLINDER HEAD, INSTALLATION** .
11. Install engine into vehicle. Refer to **INSTALLATION** .
12. Replace oil filter and fill with oil. Refer to **FILTER, ENGINE OIL, INSTALLATION** .
13. Fill cooling system. Refer to **STANDARD PROCEDURE** .
14. Start engine and check for leaks.

PISTON RINGS

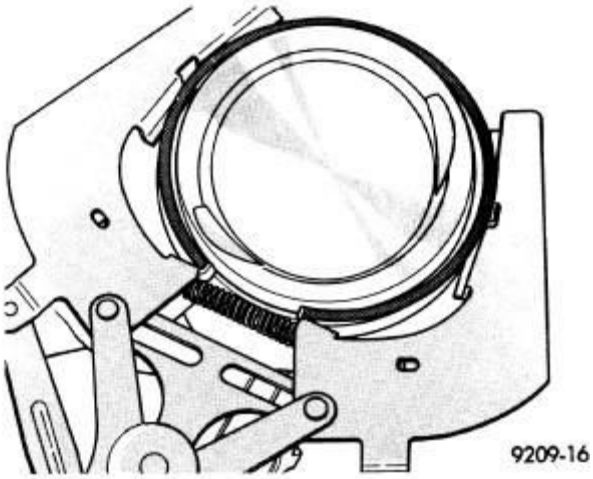

Fig. 169: Piston Rings - Removal/Installation
Courtesy of CHRYSLER GROUP, LLC

1. Install rings on the pistons using a suitable ring expander.

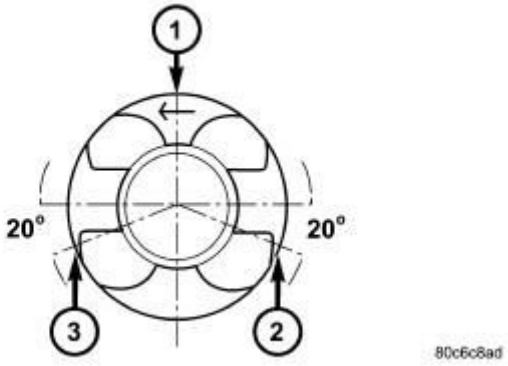

Fig. 170: Piston Ring Gap Location
Courtesy of CHRYSLER GROUP, LLC

1 - SECOND COMPRESSION RING GAP POSITION
2 - OIL CONTROL RING GAP POSITION
3 - TOP COMPRESSION RING GAP POSITION

2. Top compression ring is tapered and chromium plated. The second ring is of the scraper type and must be installed with scraping edge facing bottom of the piston. The third is an oil control ring. Ring gaps must be positioned, before inserting piston into the liners, as follows.
3. Top ring gap must be positioned at the No. 3 position (looking at the piston crown from above).
4. Second piston ring gap should be positioned at the No. 1 position.
5. Oil control ring gap should be positioned at the No. 2 position.

PISTON PIN

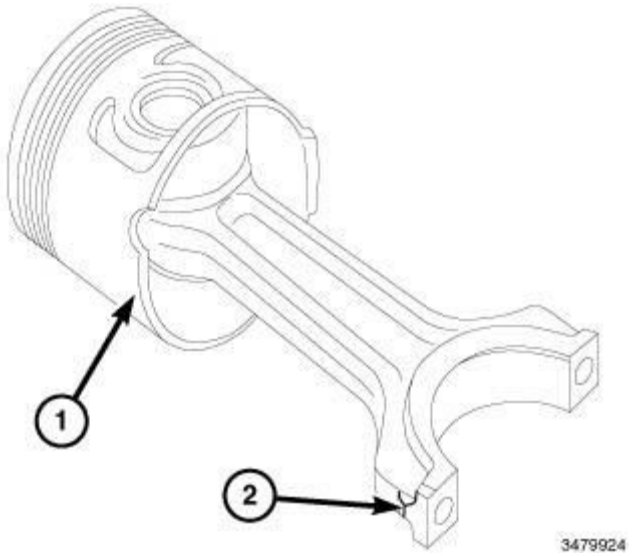

Fig. 171: Piston & Connecting Rod
Courtesy of CHRYSLER GROUP, LLC

1. Join the connecting rods to the pistons so that the number printed on connecting rod head (2) is facing notch (1) on the piston skirt for the oil jet housing.

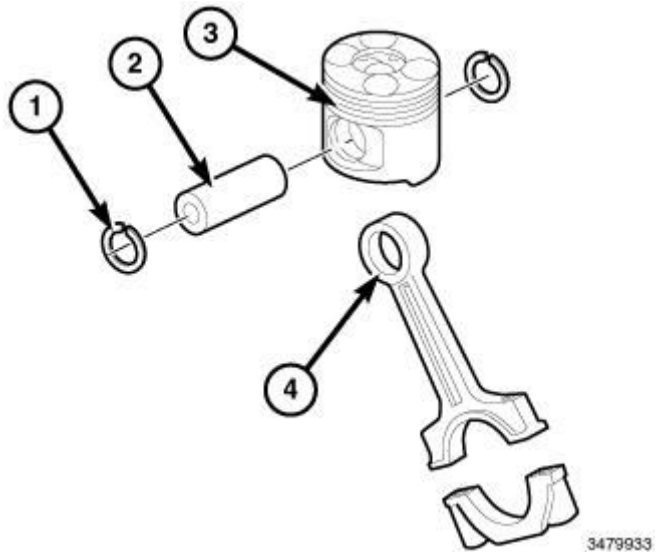

Fig. 172: Piston & Connecting Rod Assembly
Courtesy of CHRYSLER GROUP, LLC

2. Install the pins (2) into the piston (3) and rod (4) assembly and secure them using the retaining rings (1).

SEAL, CRANKSHAFT OIL, FRONT

REMOVAL

REMOVAL

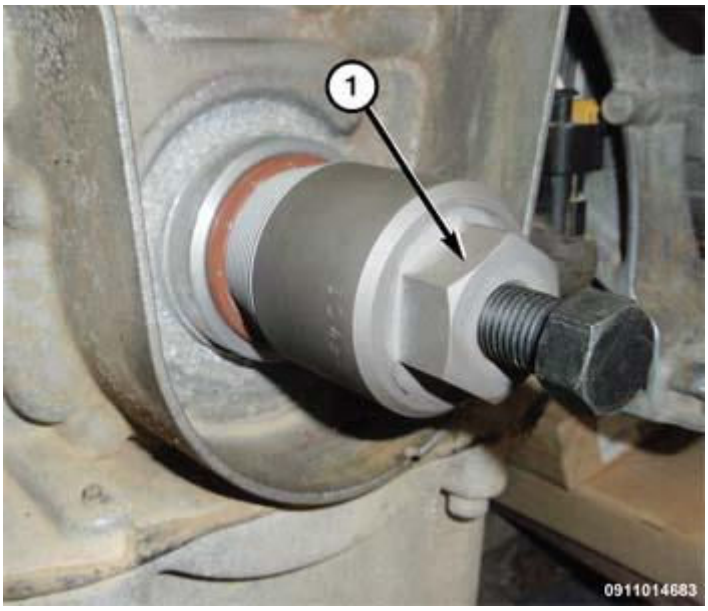

Fig. 173: Seal Remover Tool
Courtesy of CHRYSLER GROUP, LLC

1. Disconnect negative battery cable.
2. Remove the vibration damper. Refer to **DAMPER, VIBRATION, REMOVAL** .
3. Using the (special tool #10498, Remover, Seal) (1), remove the front crankshaft seal.

INSTALLATION

INSTALLATION

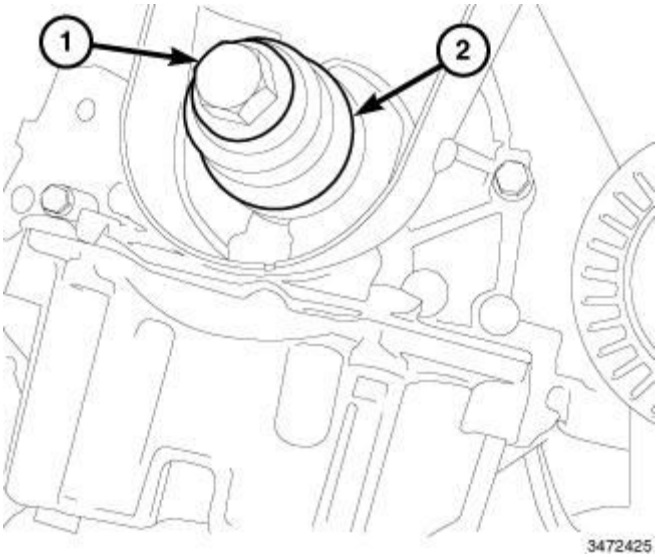

Fig. 174: Crankshaft Sprocket Bolt & Oil Seal
Courtesy of CHRYSLER GROUP, LLC

1. Position the new front crankshaft oil seal onto (special tool #20145, Installer, Crankshaft Front Oil Seal) tool.
2. Using the (special tool #20145, Installer, Crankshaft Front Oil Seal), install the front crankshaft oil seal (2) using the crankshaft sprocket bolt (1) to draw the seal in place.
3. Remove bolt (1) and the (special tool #20145, Installer, Crankshaft Front Oil Seal).
4. Install the vibration damper. Refer to **DAMPER, VIBRATION, INSTALLATION** .
5. Connect the negative battery cable.

SEAL, CRANKSHAFT OIL, REAR

REMOVAL

REMOVAL

1. Disconnect the negative battery cable.
2. On MTX models, remove the flywheel. Refer to **FLYWHEEL, REMOVAL** .

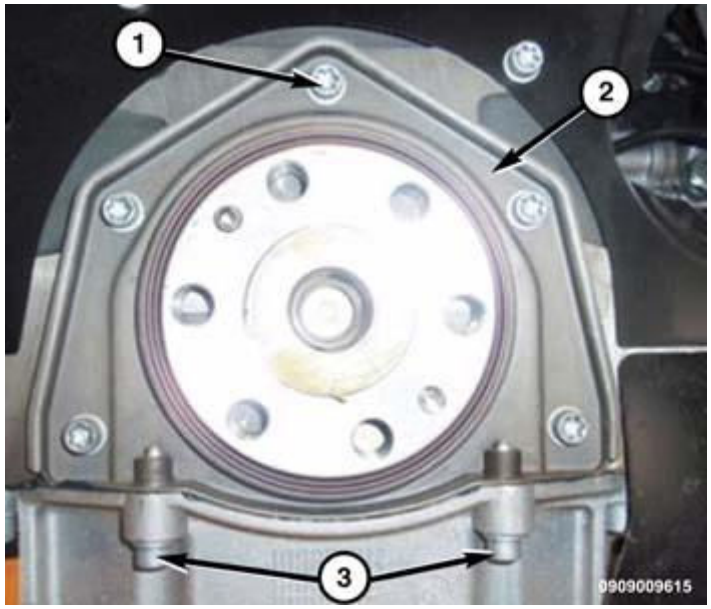

Fig. 175: Rear Crankshaft Oil Seal Carrier & Bolts
Courtesy of CHRYSLER GROUP, LLC

3. Remove the five rear crankshaft oil seal carrier bolts (1).
4. Remove the two oil pan-to-rear crankshaft oil seal carrier bolts (3).
5. Using a suitable pry bar, remove the rear crankshaft oil seal (2).

INSTALLATION

INSTALLATION

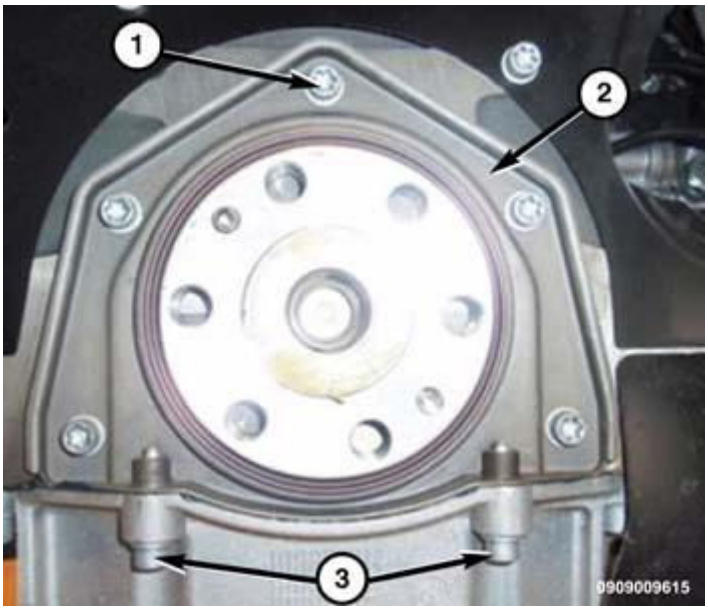

Fig. 176: Rear Crankshaft Oil Seal Carrier & Bolts
Courtesy of CHRYSLER GROUP, LLC

1. Clean any residues of sealant from the mating surface between the flywheel side oil seal cover and the crankcase oil pan.
2. Apply MS-GF-44B or equivalent RTV silicone sealant to the mating surface of the crankcase oil pan and the flywheel side oil seal cover. Refer to **ENGINE - STANDARD PROCEDURE** .
3. Install the rear crankshaft oil seal carrier (2). Tighten bolts (1, 3) to 9 N.m (80 in. lbs.).
4. On MTX models, install the flywheel. Refer to **FLYWHEEL, INSTALLATION** .
5. Connect the negative battery cable.

LUBRICATION

DIAGNOSIS AND TESTING

DIAGNOSIS AND TESTING - CHECKING ENGINE OIL PRESSURE

1. Disconnect and remove oil pressure switch. Refer to **SENSOR, OIL PRESSURE, REMOVAL** .
2. Install oil pressure gauge.
3. Start engine and record oil pressure. Refer to Specifications for correct oil pressure requirements. Refer to **SPECIFICATIONS - 2.0L DIESEL ENGINE** .

CAUTION: *If pressure is ZERO at curb idle, DO NOT run engine at 4000 RPM.

4. If oil pressure is 0 at idle, shut off engine. Check for a failed oil pressure regulator, a clogged oil pickup screen or a damaged oil pickup tube gasket.

5. Remove the oil pressure regulator and inspect the regulator and wire harness. Refer to **REGULATOR, OIL PRESSURE, REMOVAL**.
6. Remove oil pan and inspect for debris and repair as necessary. Refer to **PAN, OIL, REMOVAL** .
7. After test is complete, remove test gauge and fitting.
8. Install oil pressure switch. Refer to **SENSOR, OIL PRESSURE, INSTALLATION** .

FILTER, ENGINE OIL

REMOVAL

REMOVAL

1. Raise and support the vehicle. Refer to **HOISTING, STANDARD PROCEDURE** .
2. Remove the bellypan. Refer to **BELLY PAN, REMOVAL** .

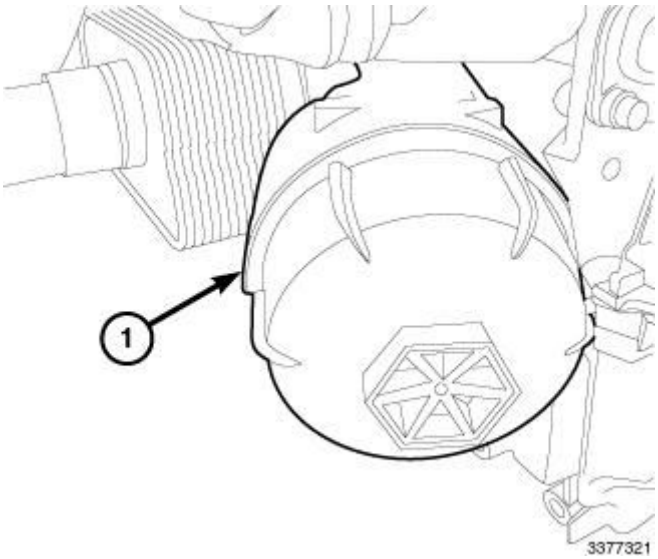

Fig. 177: Oil Filter Housing
Courtesy of CHRYSLER GROUP, LLC

3. Remove oil filter housing cover (1).

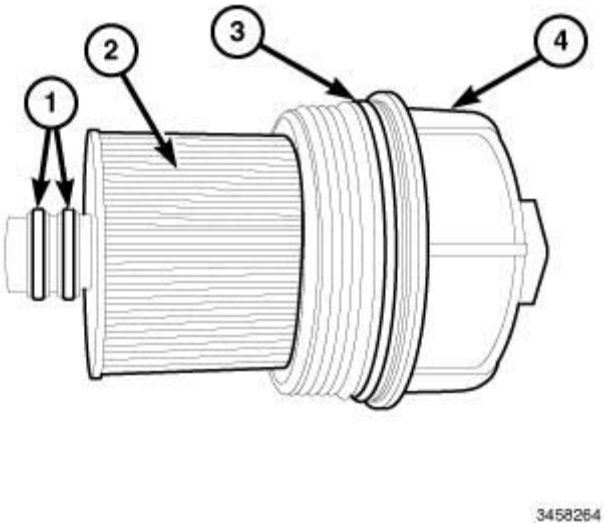

Fig. 178: O-Ring Seals, Oil Filter Cartridge, O-Ring & Cover
Courtesy of CHRYSLER GROUP, LLC

4. Pull the oil filter cartridge (2) out of the filter housing cover (4) and discard.

INSTALLATION

INSTALLATION

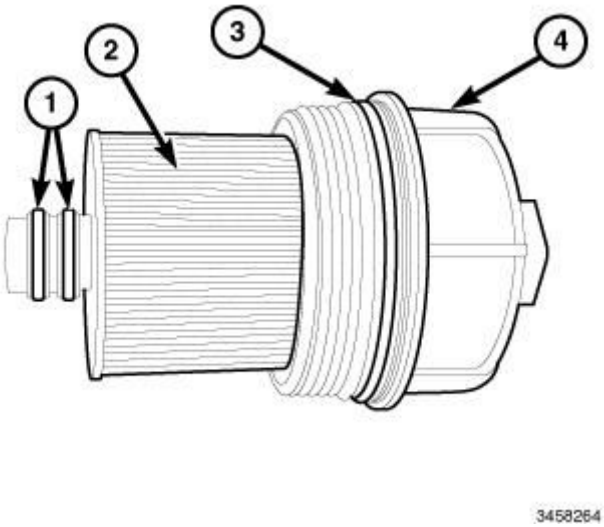

Fig. 179: O-Ring Seals, Oil Filter Cartridge, O-Ring & Cover
Courtesy of CHRYSLER GROUP, LLC

1. Lubricate and install new O-ring (3) onto cover (4).
2. position the oil filter cartridge (2) into cover and lubricate O-ring seals (1).

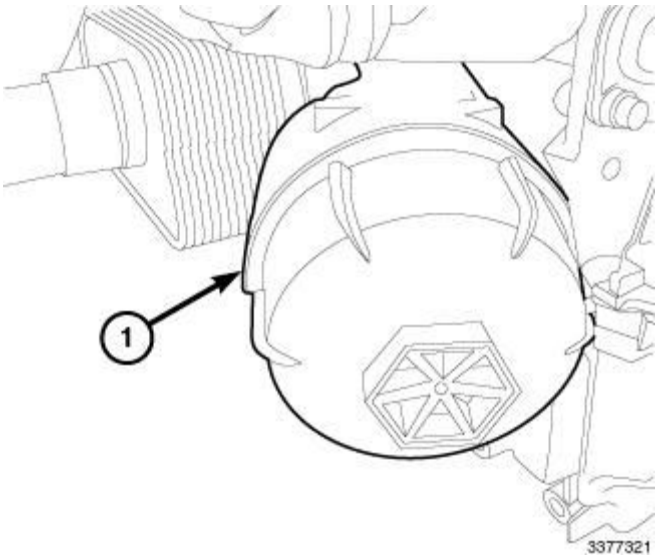

Fig. 180: Oil Filter Housing
Courtesy of CHRYSLER GROUP, LLC

3. Install oil filter housing cover. Tighten cover to 25 N.m (18 ft. lbs.).
4. Install the bellypan. Refer to **BELLY PAN, INSTALLATION** .
5. Lower the vehicle.

HOUSING, OIL FILTER

REMOVAL

REMOVAL

1. Disconnect the negative battery cable.
2. Raise and support the vehicle Refer to **HOISTING, STANDARD PROCEDURE** .
3. Drain the cooling system. Refer to **STANDARD PROCEDURE** .

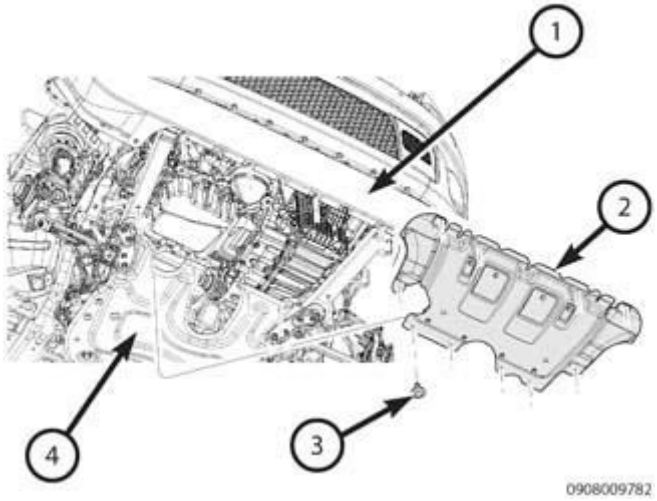

Fig. 181: Removing/Installing Starter
Courtesy of CHRYSLER GROUP, LLC

4. Remove bolts (3) and the belly pan (2).
5. Remove the serpentine belt. Refer to **BELT, SERPENTINE, REMOVAL** .
6. Remove the right front half shaft and intermediate shaft. Refer to **REMOVAL** .

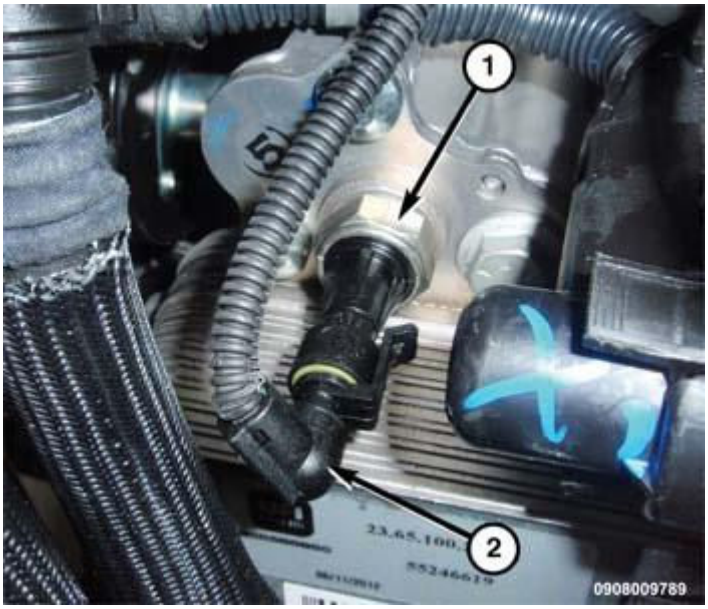

Fig. 182: Oil Pressure Sensor 1/1 & Wire Harness Connectors
Courtesy of CHRYSLER GROUP, LLC

7. Disconnect oil pressure sensor 1/1 wire harness connectors (2).

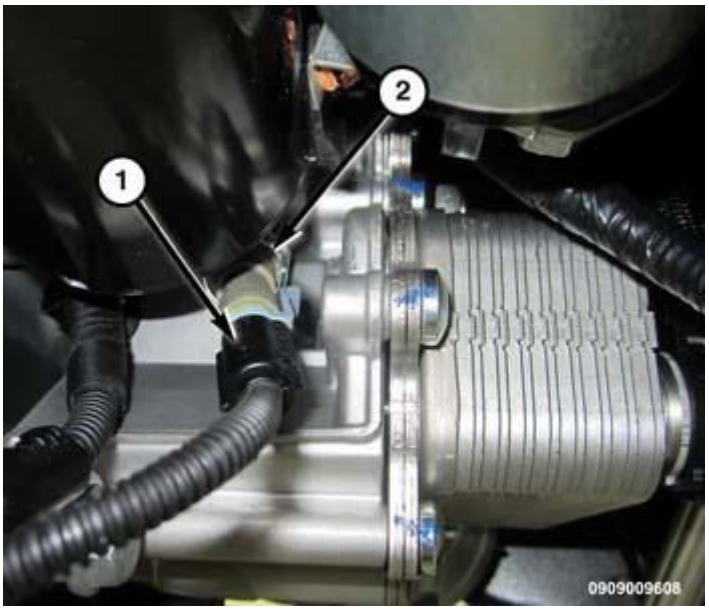

Fig. 183: Oil Pressure Sensor 1/2 & Wire Harness Connectors
Courtesy of CHRYSLER GROUP, LLC

8. Disconnect oil pressure sensor 1/2 wire harness connectors (1).

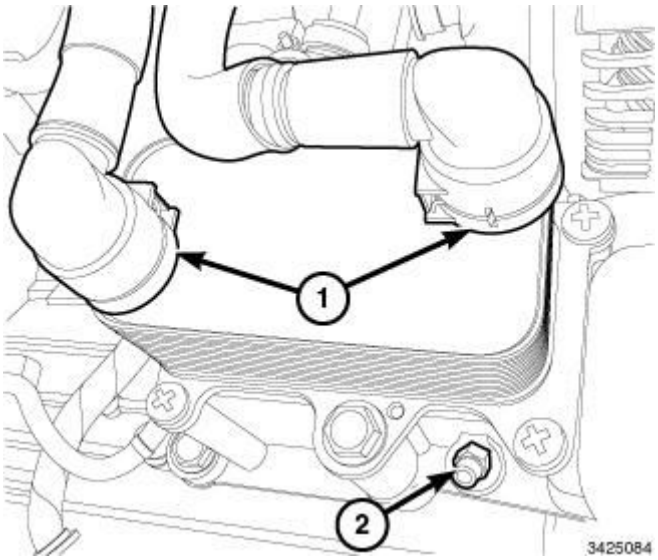

Fig. 184: Oil Cooler Hoses & Drain Valve
Courtesy of CHRYSLER GROUP, LLC

9. Disconnect both oil cooler hoses (1).
10. Open drain valve (2) to drain the oil filter housing and securely tighten drain valve.

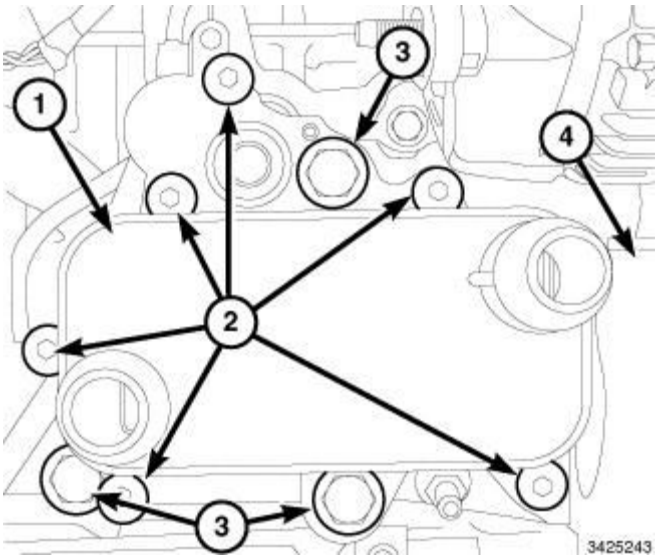

Fig. 185: Engine Oil Cooler, Oil Filter Housing & Bolts
Courtesy of CHRYSLER GROUP, LLC

11. Remove bolts (3) and the oil filter/cooler housing (1).

INSTALLATION

INSTALLATION

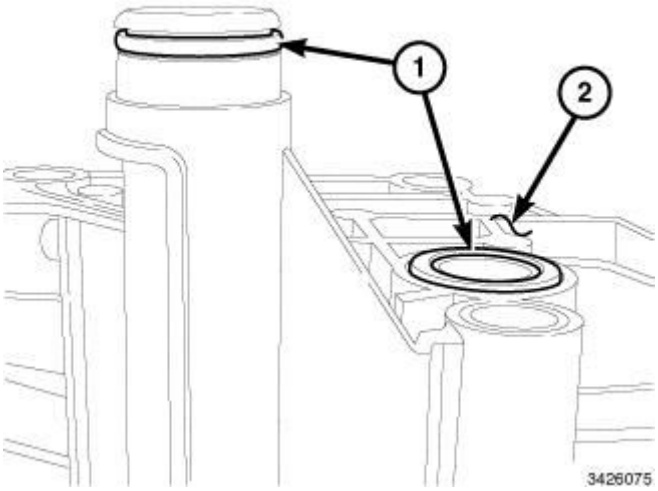

Fig. 186: Oil Filter Housing & O-Ring Seal
Courtesy of CHRYSLER GROUP, LLC

1. Clean the gasket sealing surfaces.
2. Install new O-ring seal (1) onto the oil filter housing (2).

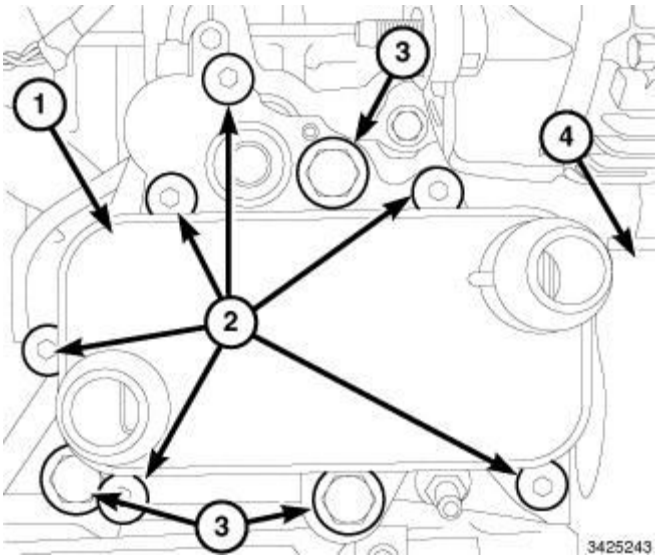

Fig. 187: Engine Oil Cooler, Oil Filter Housing & Bolts
Courtesy of CHRYSLER GROUP, LLC

3. Install oil filter/cooler housing (1). Tighten bolts (3) to 30 N.m (22 ft. lbs.).

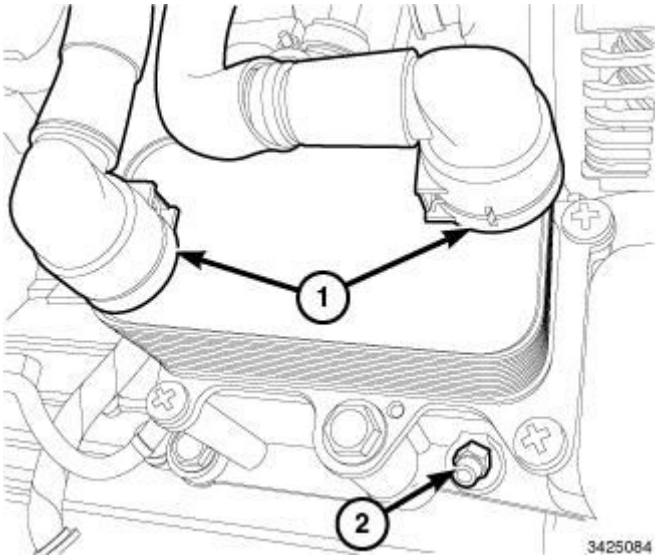

Fig. 188: Oil Cooler Hoses & Drain Valve
Courtesy of CHRYSLER GROUP, LLC

4. Connect both oil cooler hoses (1).

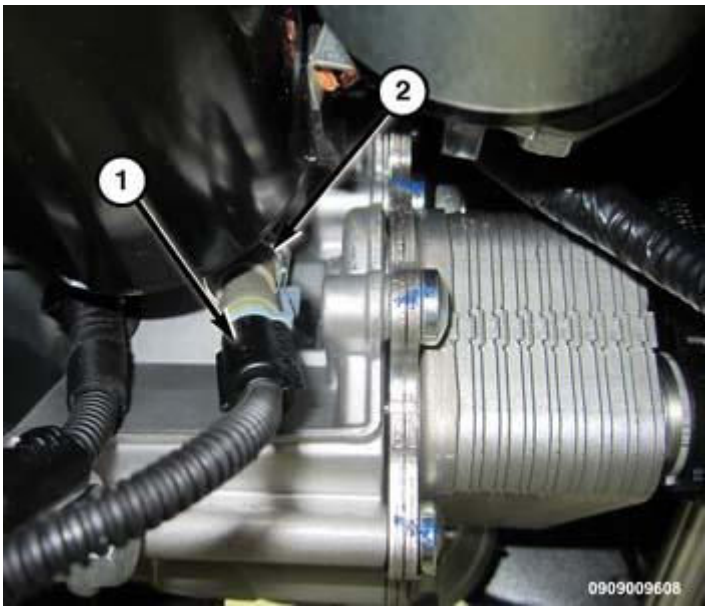

Fig. 189: Oil Pressure Sensor 1/2 & Wire Harness Connectors
Courtesy of CHRYSLER GROUP, LLC

5. Connect oil pressure sensor 1/2 wire harness connectors (1).

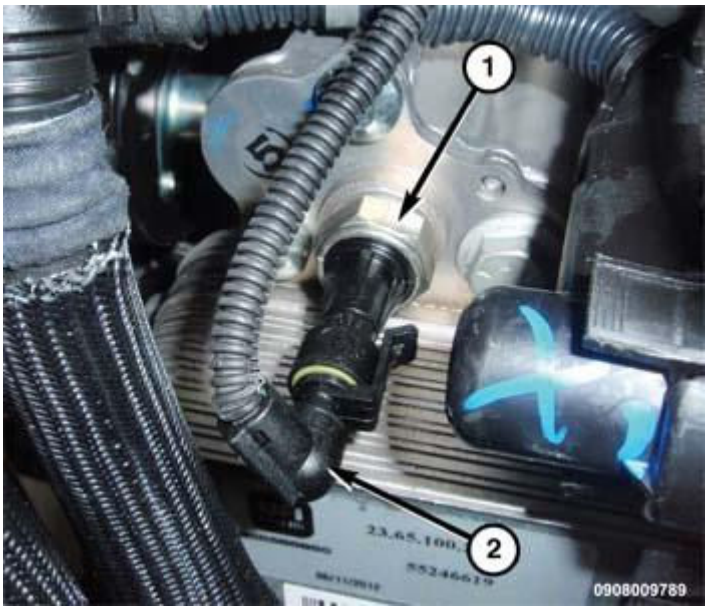

Fig. 190: Oil Pressure Sensor 1/1 & Wire Harness Connectors
Courtesy of CHRYSLER GROUP, LLC

6. Connect oil pressure sensor 1/1 wire harness connectors (2).
7. Install the right front half shaft and intermediate shaft. Refer to **INSTALLATION** .
8. Install the serpentine belt. Refer to **BELT, SERPENTINE, INSTALLATION** .

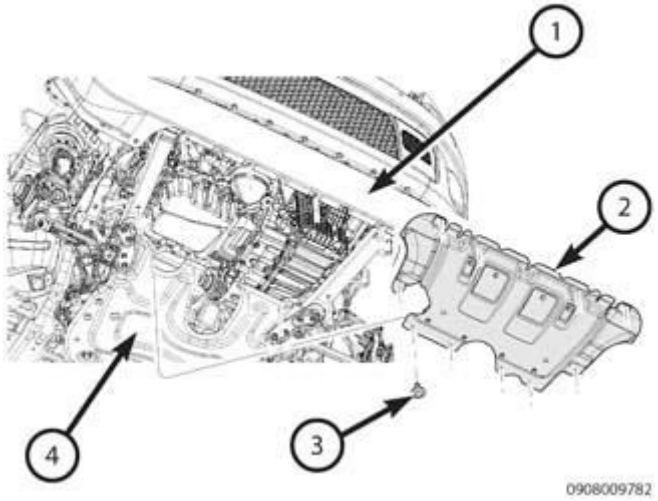

Fig. 191: Removing/Installing Starter
Courtesy of CHRYSLER GROUP, LLC

9. Install the belly pan (2) and securely tighten bolts (3).
10. Fill the cooling system. Refer to **STANDARD PROCEDURE** .
11. Lower the vehicle.
12. Connect the negative battery cable.

OIL

STANDARD PROCEDURE

STANDARD PROCEDURE - ENGINE OIL AND FILTER CHANGE

WARNING: New or used engine oil can be irritating to the skin. Avoid prolonged or repeated skin contact with engine oil. Contaminants in used engine oil, caused by internal combustion, can be hazardous to your health. Thoroughly wash exposed skin with soap and water. Do not wash skin with gasoline, diesel fuel, thinner, or solvents, health problems can result. Do not pollute, dispose of used engine oil properly. Contact your dealer or government agency for location of collection center in your area.

Change engine oil at mileage and time intervals described in the Maintenance Schedule. Refer to **MAINTENANCE SCHEDULES, DESCRIPTION** .

1. Run engine until achieving normal operating temperature.
2. Position the vehicle on a level surface and turn engine off.
3. Remove oil fill cap.
4. Raise vehicle on hoist. Refer to **HOISTING, STANDARD PROCEDURE** .

5. Place a suitable oil collecting container under oil pan drain plug.

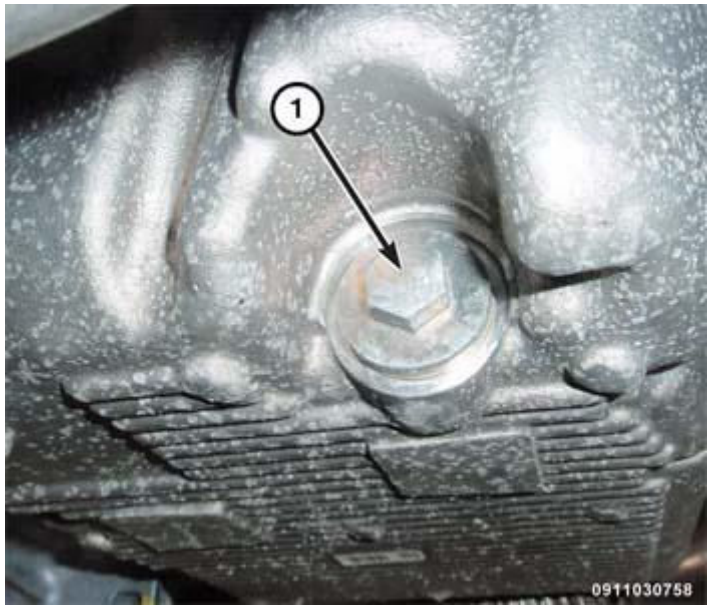

Fig. 192: Oil Pan Drain Plug
Courtesy of CHRYSLER GROUP, LLC

6. Remove oil pan drain plug (1) or and allow oil to drain into collecting container. Inspect drain plug threads for stretching or other damage. Replace drain plug and gasket if damaged.
7. Remove the oil filter. Refer to **FILTER, ENGINE OIL, REMOVAL** .
8. Install oil pan drain plug (1) and tighten to 25 N.m (18 ft. lbs.).
9. Install new oil filter. Refer to **FILTER, ENGINE OIL, INSTALLATION** .
10. Lower vehicle and fill crankcase with specified type and amount of engine oil . Refer to **CAPACITIES AND RECOMMENDED FLUIDS, SPECIFICATIONS** and **CAPACITIES AND RECOMMENDED FLUIDS, DESCRIPTION** .
11. Install oil fill cap.
12. Start engine and inspect for leaks.
13. Stop engine and inspect oil level.

OIL FILTER SPECIFICATION

All engines are equipped with a high quality full-flow, disposable type oil filter. Replace oil filter with a Mopar® oil filter or the equivalent.

USED ENGINE OIL DISPOSAL

Care should be exercised when disposing used engine oil after it has been drained from a vehicle engine. Refer to the WARNING under **STANDARD PROCEDURE - ENGINE OIL AND FILTER CHANGE**.

PAN, OIL

REMOVAL

REMOVAL

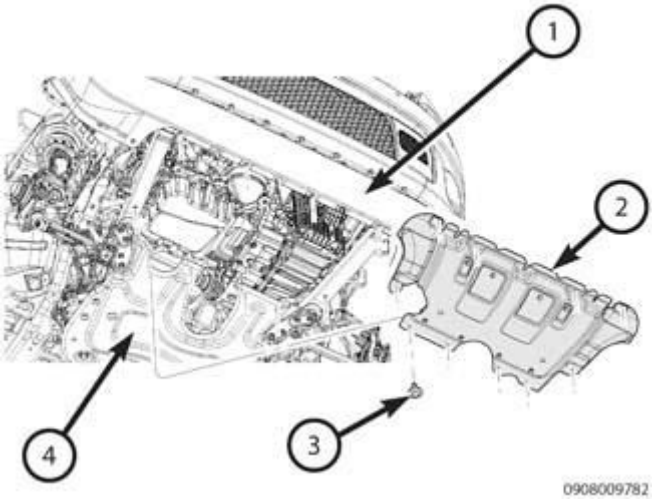

Fig. 193: Removing/Installing Starter
Courtesy of CHRYSLER GROUP, LLC

1. Disconnect the negative battery cable.
2. Raise vehicle on hoist. Refer to **HOISTING, STANDARD PROCEDURE** .
3. Remove bolts (3) and the belly pan (2).
4. Drain engine oil using a new sealing washer tighten drain plug to 25 N.m (18 ft. lbs.).
5. Remove fasteners and the oil dipstick.

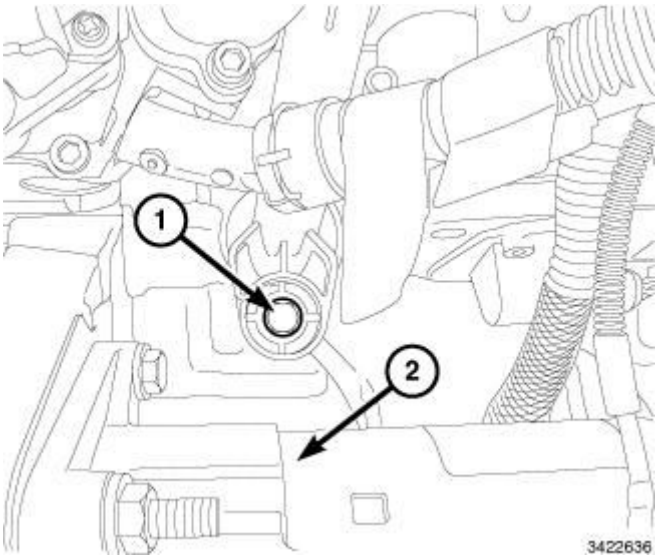

Fig. 194: CCV Housing Lower Bolt & Starter
Courtesy of CHRYSLER GROUP, LLC

6. Remove the starter (2). Refer to **STARTER, REMOVAL** .

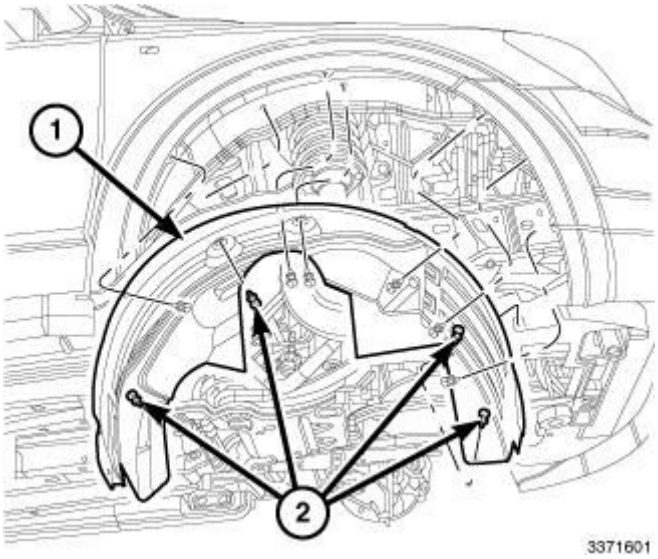

Fig. 195: Inner Fender Splash Shield
Courtesy of CHRYSLER GROUP, LLC

7. Remove retainers (2) and the right inner fender splash shield (1).
8. Remove the right halfshafts and intermediate shaft. Refer to **REMOVAL** .

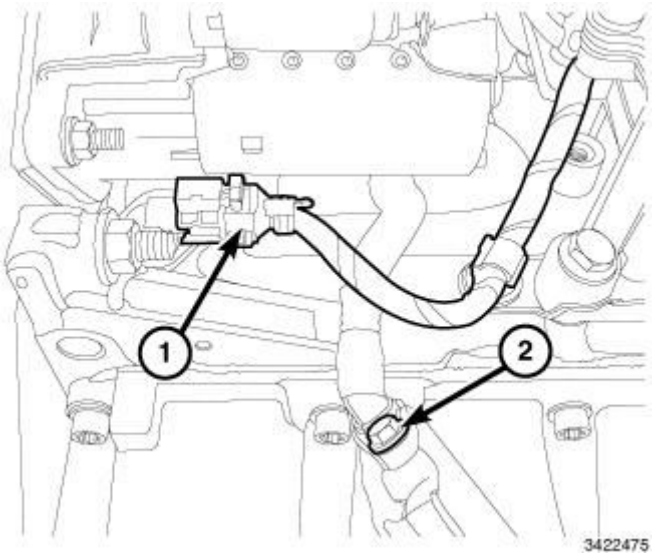

Fig. 196: Crankshaft Position Sensor Harness Connector & CCV Tube Bolt
Courtesy of CHRYSLER GROUP, LLC

9. Disconnect the Crankshaft Position (CKP) Sensor wire harness connector (1).
10. Remove bolt (2) and the lover CCV tube.
11. Remove the rear mount (2). Refer to **INSULATOR, ENGINE MOUNT, REAR, REMOVAL** .
12. Remove the cowl panel cover. Refer to **COVER, COWL PANEL, REMOVAL** .

13. Support the engine using the (special tool #8534B, Fixture, Driveline Support).
14. On MTX models, remove the flywheel. Refer to **FLYWHEEL, REMOVAL** .

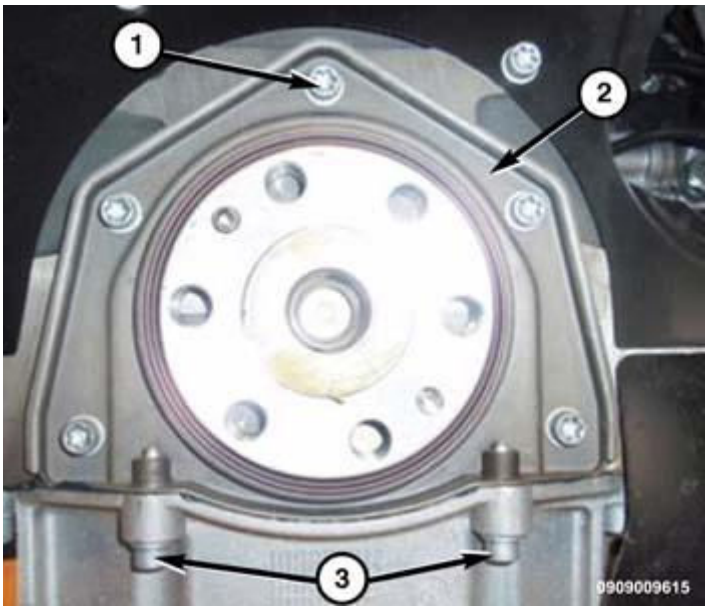

Fig. 197: Rear Crankshaft Oil Seal Carrier & Bolts
Courtesy of CHRYSLER GROUP, LLC

15. Remove the oil pan-to-front cover bolts.
16. Remove the two oil pan-to-rear oil seal carrier bolts (3).

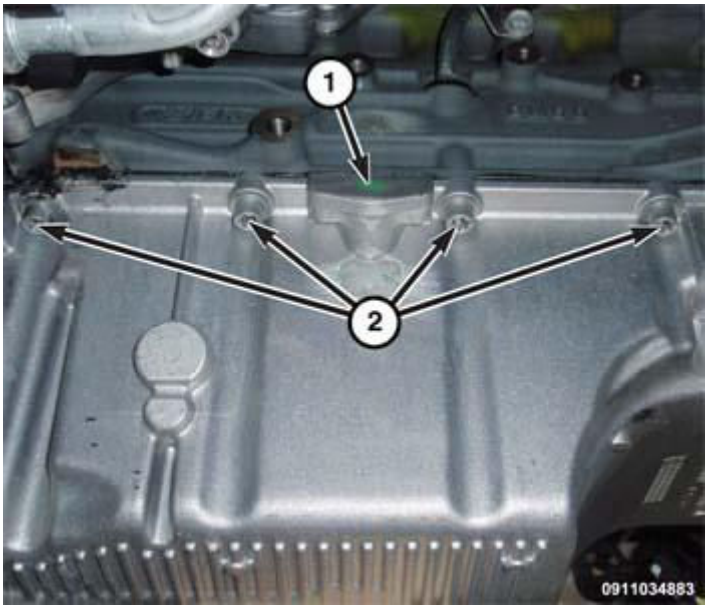

Fig. 198: Oil Pan & Bolts
Courtesy of CHRYSLER GROUP, LLC

17. Remove the oil pan bolts (2).
18. Remove oil pan by prying off with suitable pry bar.

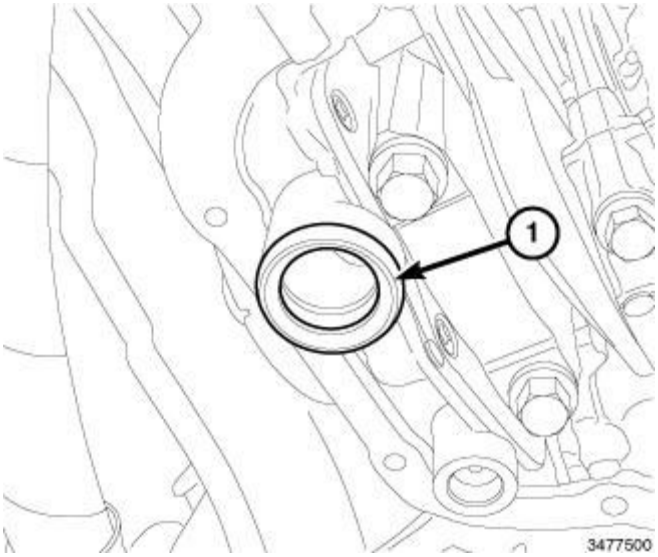

Fig. 199: Oil Pump Intake Gasket
Courtesy of CHRYSLER GROUP, LLC

19. Remove the oil pump intake connector gasket.
20. Clean oil pan and engine block sealing surfaces.

INSTALLATION

INSTALLATION

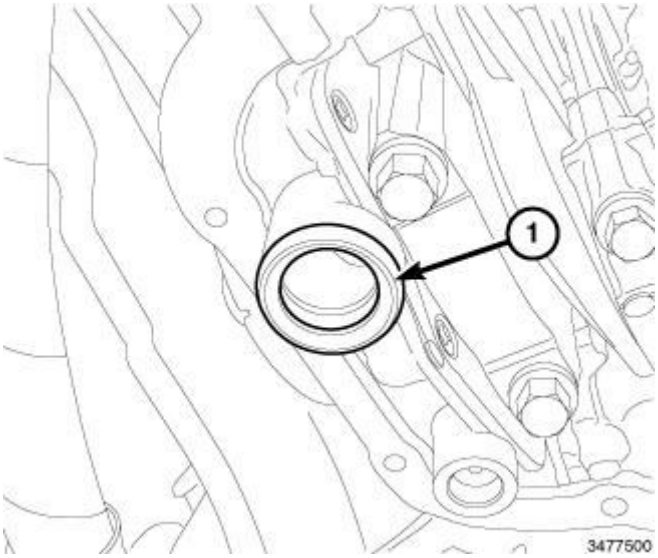

Fig. 200: Oil Pump Intake Gasket
Courtesy of CHRYSLER GROUP, LLC

1. Clean oil pan and all sealing surfaces. Refer to **ENGINE - STANDARD PROCEDURE** .
2. Install a new gasket (1) onto the oil pump intake.
3. Apply a 3 mm bead of Engine Sealant RTV MS-GF-44B or equivalent to oil pan. Refer to **ENGINE - STANDARD PROCEDURE** .

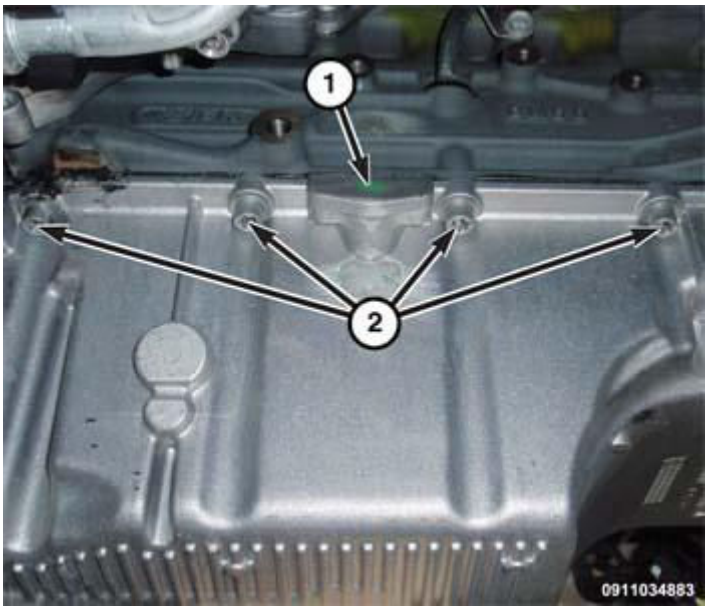

Fig. 201: Oil Pan & Bolts
Courtesy of CHRYSLER GROUP, LLC

4. Install the oil pan (1). Tighten bolts (2) to 25 N.m (18 ft. lbs.).

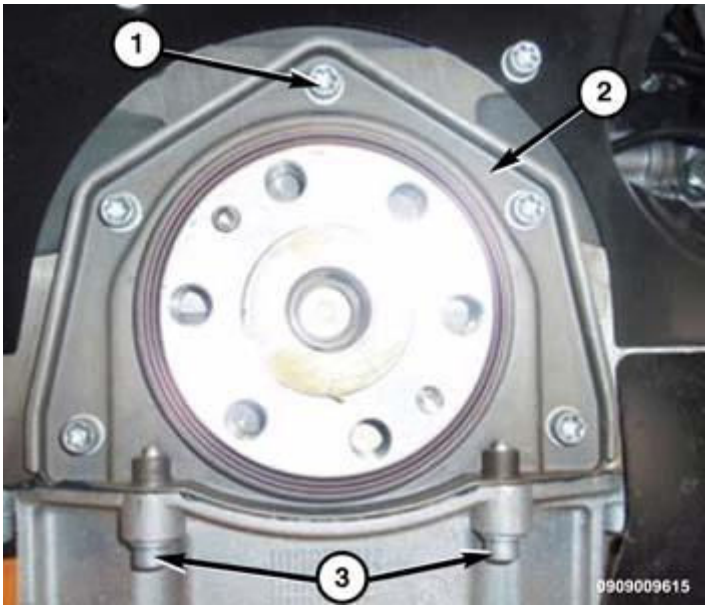

Fig. 202: Rear Crankshaft Oil Seal Carrier & Bolts
Courtesy of CHRYSLER GROUP, LLC

5. Install the two oil pan-to-rear oil seal carrier bolts (3) and tighten to 8 N.m (71 in. lbs.).
6. Install the oil pan-to-front cover bolts and tighten to 8 N.m (71 in. lbs.).
7. On MTX models, install the flywheel. Refer to **FLYWHEEL, INSTALLATION** .
8. Remove the (special tool #8534B, Fixture, Driveline Support).
9. Install the cowl panel cover. Refer to **COVER, COWL PANEL, INSTALLATION** .
10. Install the rear mount (2). Refer to **INSULATOR, ENGINE MOUNT, REAR, INSTALLATION** .

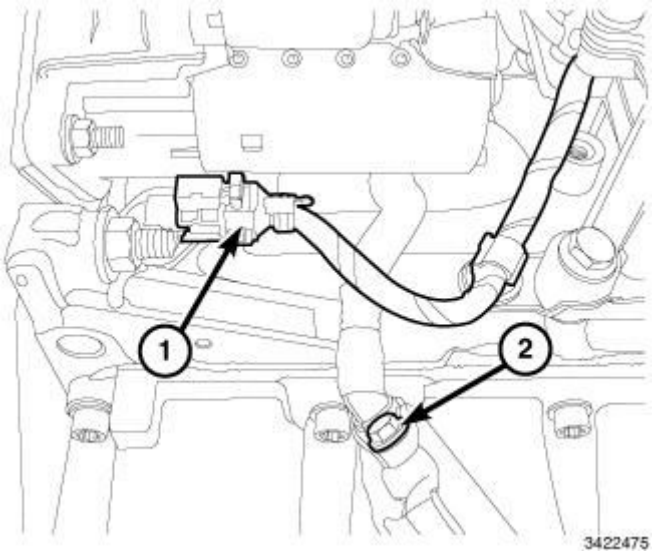

Fig. 203: Crankshaft Position Sensor Harness Connector & CCV Tube Bolt
Courtesy of CHRYSLER GROUP, LLC

11. Install the lover CCV tube. Tighten bolt (2) to 9 N.m 80 in. lbs.).
12. Connect the Crankshaft Position (CKP) Sensor wire harness connector (1).

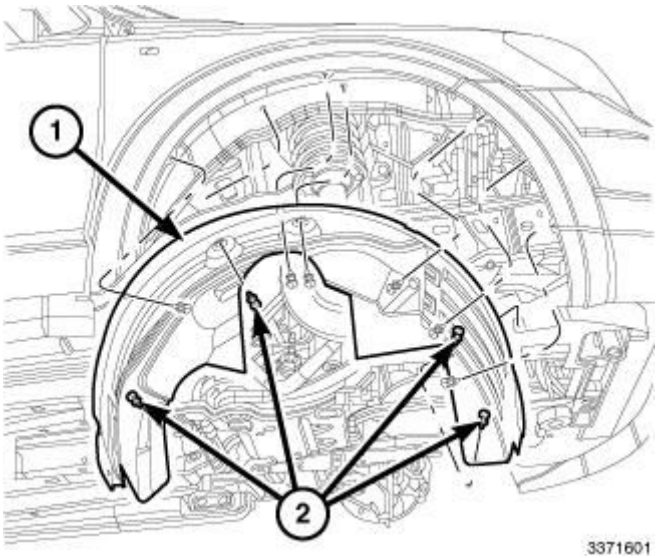

Fig. 204: Inner Fender Splash Shield

Courtesy of CHRYSLER GROUP, LLC

13. Install the right intermediate shaft and halfshafts. Refer to **INSTALLATION** .
14. Position the right inner fender splash shield (1) and install retainers (2).

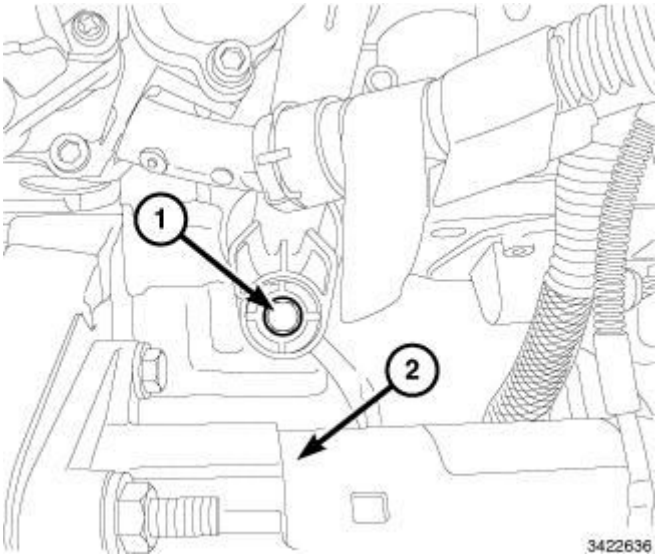

Fig. 205: CCV Housing Lower Bolt & Starter
Courtesy of CHRYSLER GROUP, LLC

15. Install the starter (2). Refer to **STARTER, INSTALLATION** .

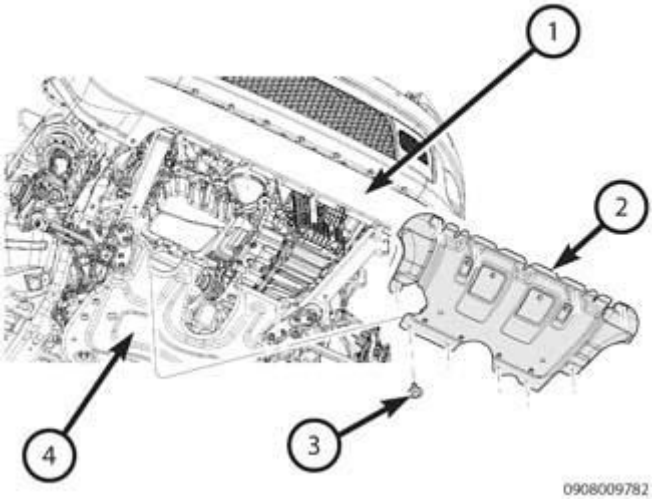

Fig. 206: Removing/Installing Starter
Courtesy of CHRYSLER GROUP, LLC

16. Install the oil dipstick tube and securely tighten fasteners.
17. Install the belly pan (2) and securely tighten bolts (3).

18. Lower the vehicle.
19. Fill the engine with recommended oil. Refer to **CAPACITIES AND RECOMMENDED FLUIDS, SPECIFICATIONS** .
20. Connect the negative battery cable.
21. Start engine and check for leaks.

REGULATOR, OIL PRESSURE

DESCRIPTION

DESCRIPTION

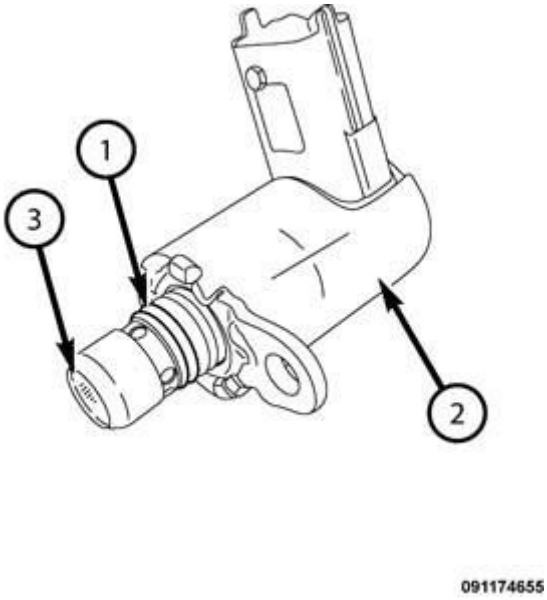

Fig. 207: Oil Pressure Regulator
Courtesy of CHRYSLER GROUP, LLC

The oil pressure regulator (2) regulates oil pressure at the variable rate oil pump and is located on the engine front cover. The PCM energize the Variable Oil Pump Solenoid to increase the oil pressure to the upper limit.

REMOVAL

REMOVAL

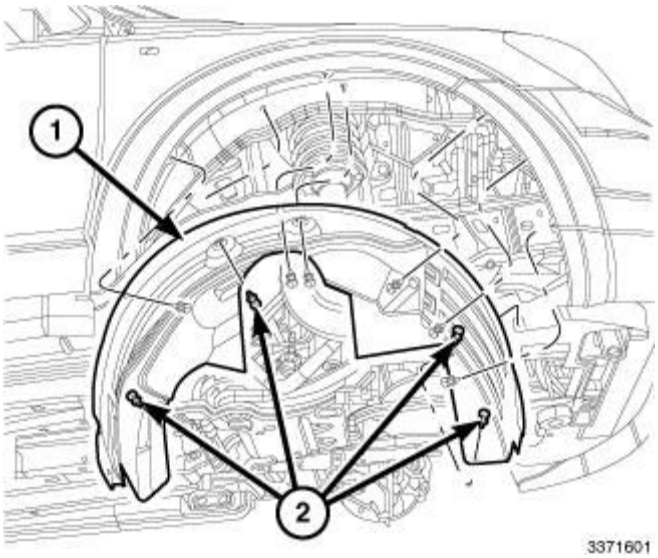

Fig. 208: Inner Fender Splash Shield
Courtesy of CHRYSLER GROUP, LLC

1. Disconnect and isolate the negative battery cable.
2. Remove the right front wheel and tire Refer to **REMOVAL** .

   .

3. Remove fasteners (2) and the right inner fender splash shield (2).

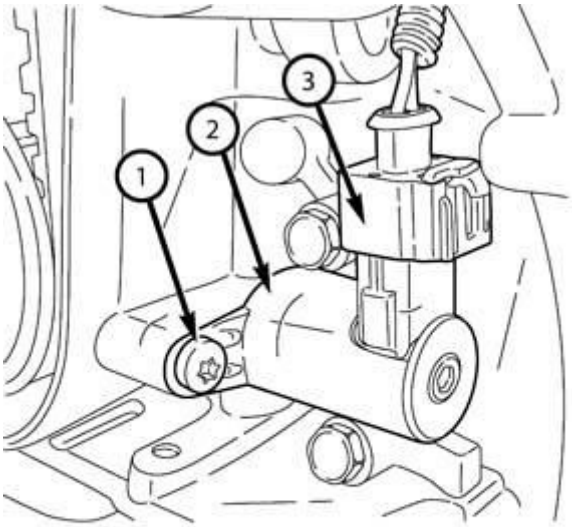

Fig. 209: Oil Pressure Regulator, Bolt & Connector
Courtesy of CHRYSLER GROUP, LLC

4. Disconnect oil pressure regulator wire harness connector (3).
5. Remove bolt (1) and oil pressure regulator (2).

INSTALLATION

INSTALLATION

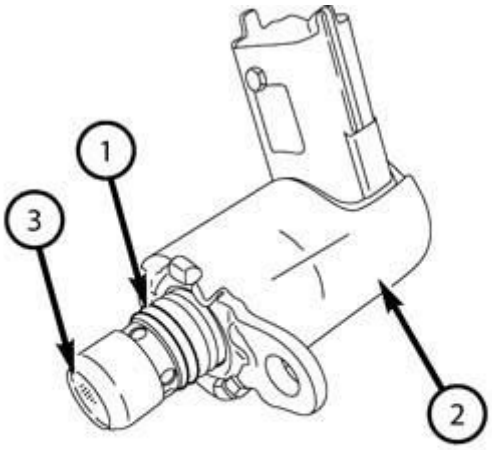

091174655

Fig. 210: Oil Pressure Regulator
Courtesy of CHRYSLER GROUP, LLC

1. Replace the oil pressure regulator O-ring seal (1) and clean and inspect the inlet screen (3).

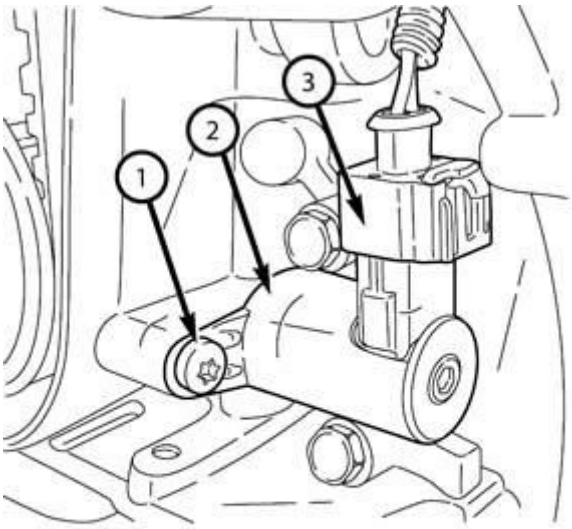

091174654

Fig. 211: Oil Pressure Regulator, Bolt & Connector
Courtesy of CHRYSLER GROUP, LLC

2. Install oil pressure regulator (3) and tighten bolt (1) to 25 N.m (18 ft. lbs.).
3. Connect oil pressure regulator wire harness connector (3).

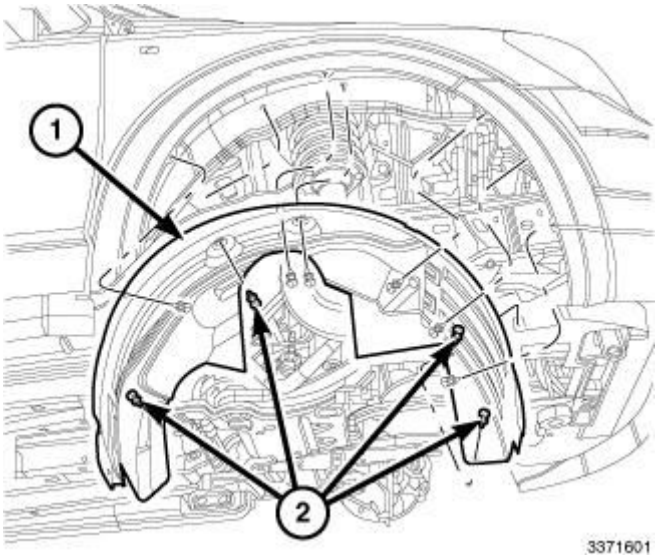

Fig. 212: Inner Fender Splash Shield
Courtesy of CHRYSLER GROUP, LLC

4. Install the right inner fender splash shield (1) and fasteners (2).
5. Install the right front wheel and tire. Refer to **INSTALLATION** .

6. Connect the negative battery cable.

PICK-UP, OIL PUMP

REMOVAL

REMOVAL

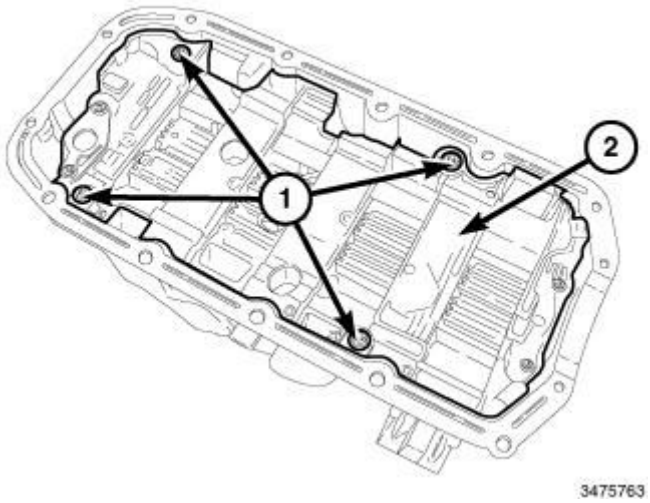

Fig. 213: Crankcase Oil Pickup Tube/Anti-Splash Shield & Bolts
Courtesy of CHRYSLER GROUP, LLC

1. Disconnect the negative battery cable.
2. Remove the oil pan. Refer to **PAN, OIL, REMOVAL** .
3. Remove bolts (1) and the crankcase oil pickup tube/anti-splash shield (2) from oil pan.

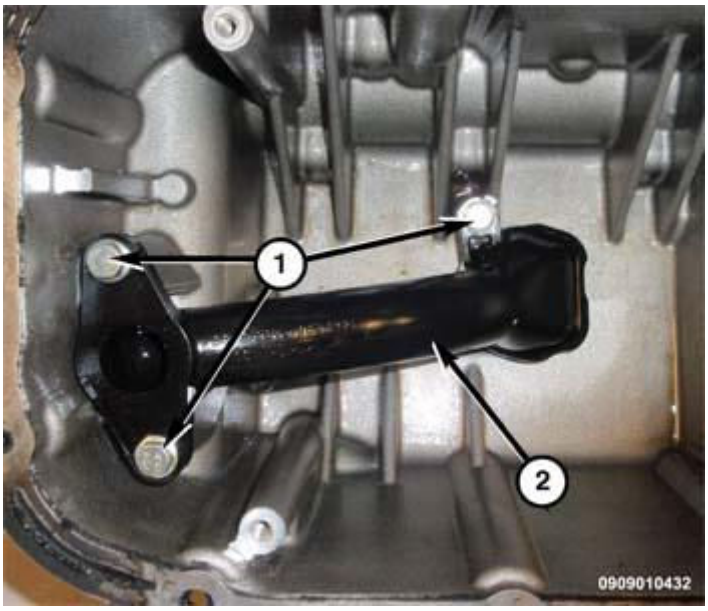

Fig. 214: Oil Pickup Tube & Bolts
Courtesy of CHRYSLER GROUP, LLC

4. Remove bolts (1) and the oil pickup tube (2).

INSTALLATION

INSTALLATION

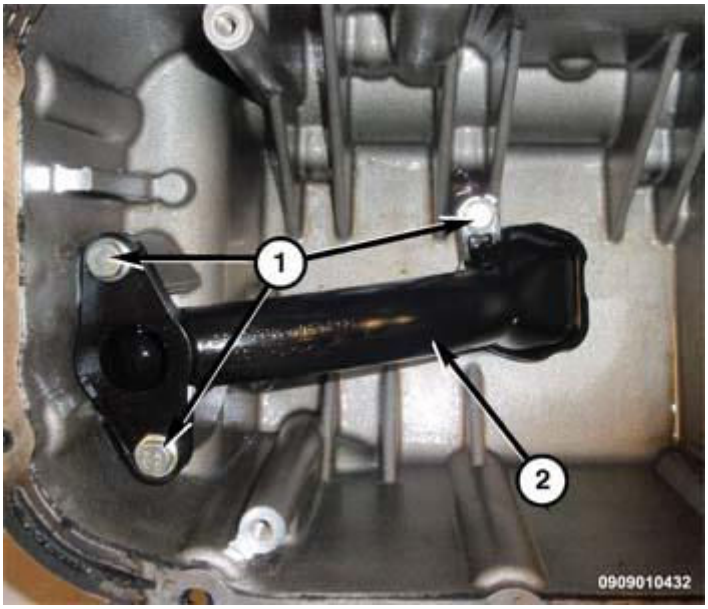

Fig. 215: Oil Pickup Tube & Bolts
Courtesy of CHRYSLER GROUP, LLC

1. Clean the gasket mating surfaces.

2. Install the oil pickup tube (2) and securely tighten bolts (1).

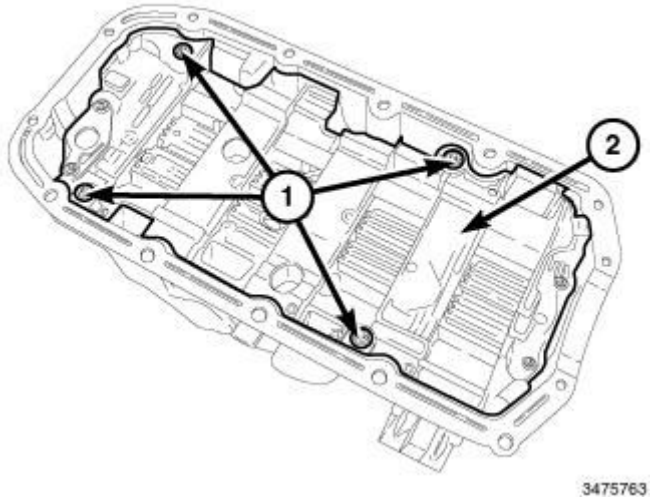

Fig. 216: Crankcase Oil Pickup Tube/Anti-Splash Shield & Bolts
Courtesy of CHRYSLER GROUP, LLC

3. Install the crankcase oil pickup tube/anti-splash shield (2) into oil pan and securely tighten bolts (1).
4. Install the oil pan. Refer to **PAN, OIL, INSTALLATION** .
5. Connect the negative battery cable.

PUMP, ENGINE OIL

REMOVAL

REMOVAL

NOTE: The oil pump is part of the front engine cover and if diagnosis has lead you to replace the oil pump then the front engine cover needs to be replaced.

1. Disconnect the negative battery cable.
2. Remove the front engine cover. Refer to **COVER, ENGINE, FRONT, REMOVAL**.

INSTALLATION

INSTALLATION

1. Install the front engine cover. Refer to **COVER, ENGINE, FRONT, INSTALLATION**.
2. Connect the negative battery cable.

SENSOR, OIL PRESSURE

DESCRIPTION

DESCRIPTION

There are two oil pressure switch is located on the backside of the engine attached to the oil cooler housing. The oil pressure switch is a pressure sensitive switch that is activated by the engine's oil pressure (in the main oil gallery). The switch is a single terminal device.

OPERATION

OPERATION

The Powertrain Control Module sends a pull up signal to both Oil Pressure Switches. The Oil Pressure Switches are normally closed (connected to ground) with no oil pressure. When oil pressure surpasses a certain threshold for each switch, the switch becomes open. The PCM interprets the Oil Pressure Switch inputs as follows in the chart below.

Oil Pressure Switch inputs to PCM		
Oil Pressure Switch 1	Oil Pressure Switch 2	PCM INTERPRETATION
Closed	Closed	Oil Pressure below 0.5 bar (7.25 psi)
Open	Closed	Oil pressure between 0.5 bar (7.25 psi) and 1.5 bar (21.75 psi)
Open	Open	Oil pressure above 1.5 bar (21.75 psi)
Closed	Open	switches implausible

REMOVAL

OIL PRESSURE SWITCH 1

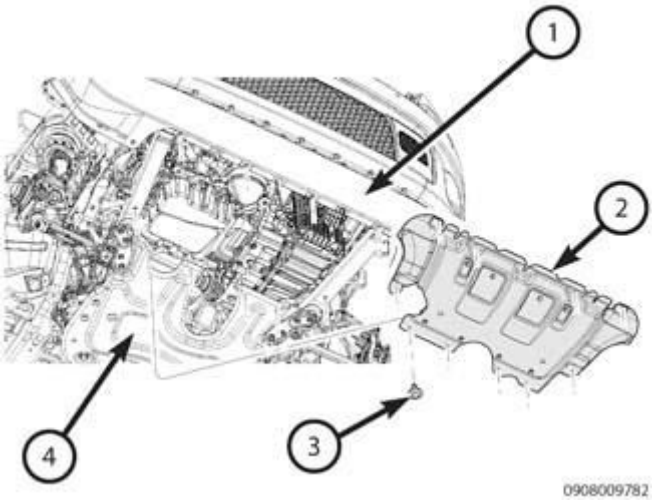

Fig. 217: Removing/Installing Starter
Courtesy of CHRYSLER GROUP, LLC

NOTE: Engine Oil Cooler Hoses Removed for Clarity.

1. Disconnect the negative battery cable.
2. Remove bolts (3) and the belly pan (2).

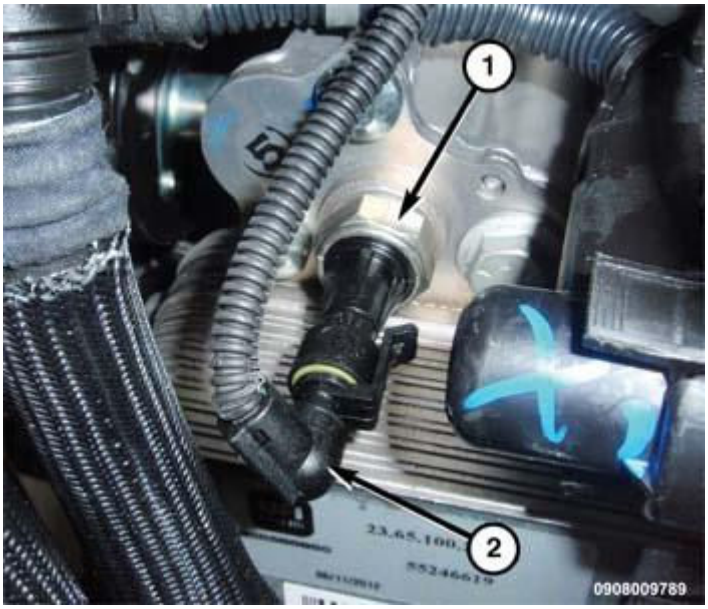

Fig. 218: Oil Pressure Sensor 1/1 & Wire Harness Connectors
Courtesy of CHRYSLER GROUP, LLC

3. Disconnect oil pressure sensor harness connector (2).
4. Remove oil pressure sensor (1).

OIL PRESSURE SWITCH 2

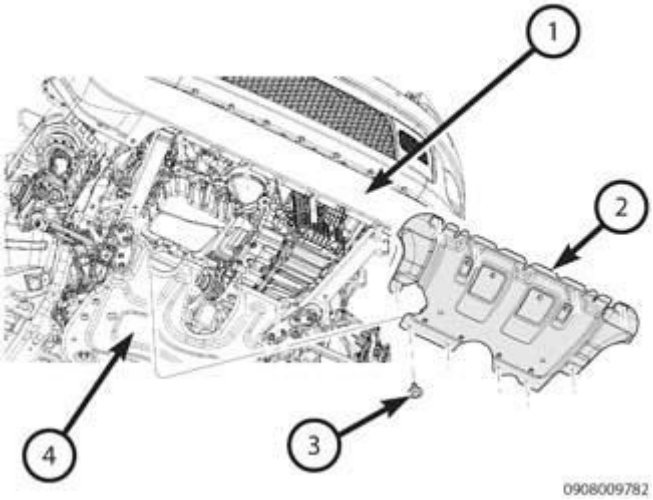

Fig. 219: Removing/Installing Starter

Courtesy of CHRYSLER GROUP, LLC

NOTE: Engine Oil Cooler Hoses Removed for Clarity.

1. Disconnect the negative battery cable.
2. Remove bolts (3) and the belly pan (2).

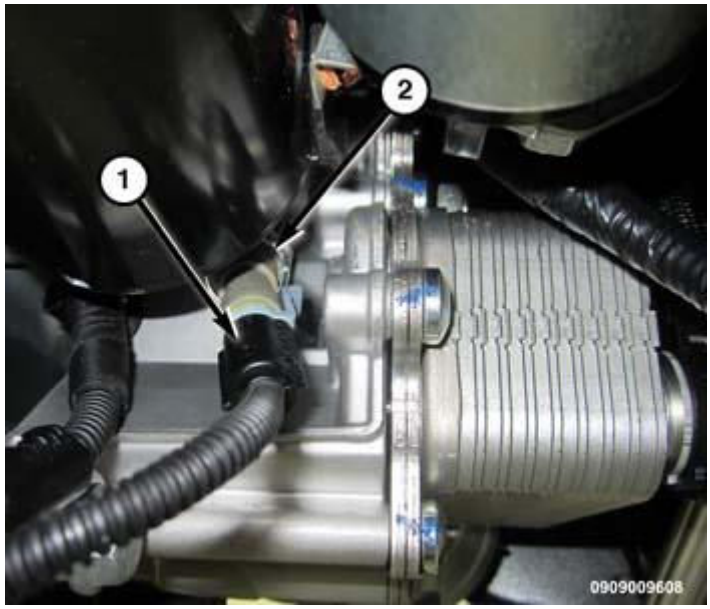

Fig. 220: Oil Pressure Sensor 1/2 & Wire Harness Connectors
Courtesy of CHRYSLER GROUP, LLC

3. Disconnect oil pressure sensor wire harness connector (1).
4. Remove the oil pressure sensor (2).

INSTALLATION

OIL PRESSURE SWITCH 1

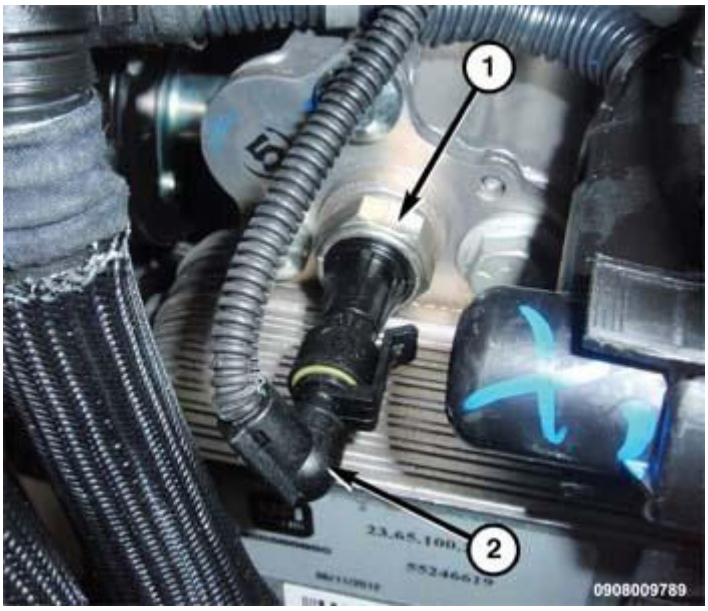

Fig. 221: Oil Pressure Sensor 1/1 & Wire Harness Connectors
Courtesy of CHRYSLER GROUP, LLC

NOTE: Engine Oil Cooler Hoses Removed for Clarity.

1. Install oil pressure sensor (1) and tighten to 23 N.m (17 ft. lbs.).
2. Connect oil pressure sensor harness connector (2).

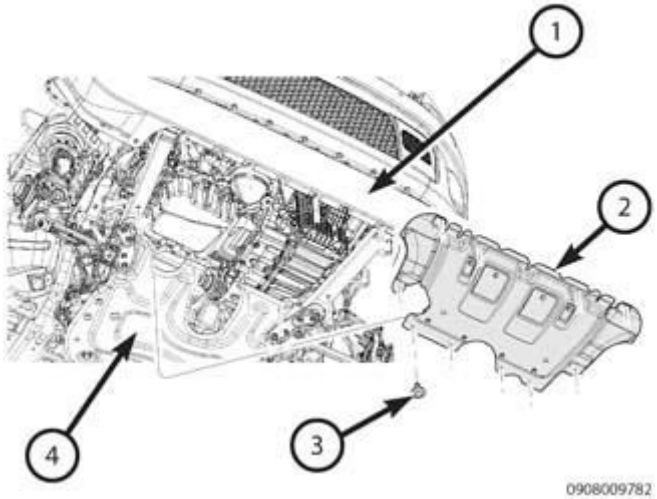

Fig. 222: Removing/Installing Starter
Courtesy of CHRYSLER GROUP, LLC

3. Install the belly pan (2) and securely tighten bolts (3).
4. Connect the negative battery cable.

OIL PRESSURE SWITCH 2

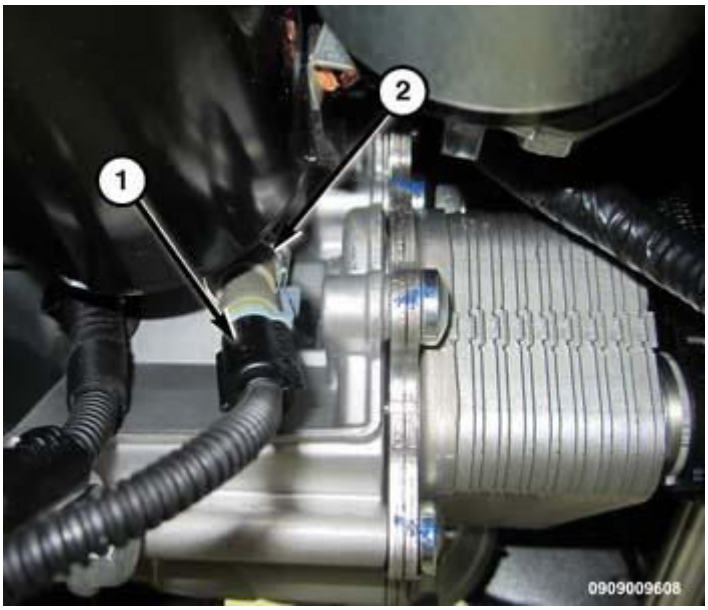

Fig. 223: Oil Pressure Sensor 1/2 & Wire Harness Connectors
Courtesy of CHRYSLER GROUP, LLC

NOTE: Engine Oil Cooler Hoses Removed for Clarity.

1. Install oil pressure sensor (2) and tighten to 23 N.m (17 in. lbs.).
2. Connect oil pressure sensor wire harness connector (1).

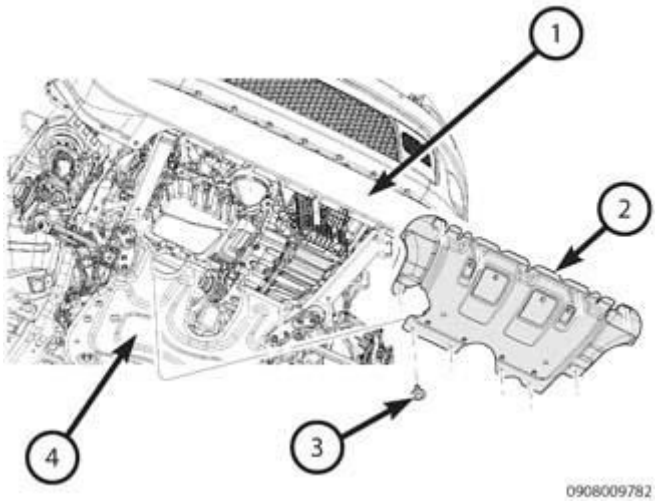

Fig. 224: Removing/Installing Starter
Courtesy of CHRYSLER GROUP, LLC

3. Install the belly pan (2) and securely tighten bolt (3).

4. Connect the negative battery cable.

VALVE TIMING

BELT AND SPROCKETS, TIMING

REMOVAL

CAMSHAFT SPROCKET

1. Disconnect the negative battery cable.
2. Remove timing belt (1). Refer to **BELT, TIMING, REMOVAL**.
3. Assemble the (special tool #6847, Holder, Camshaft Sprocket) and (special tool #10494, Pins, Holding).

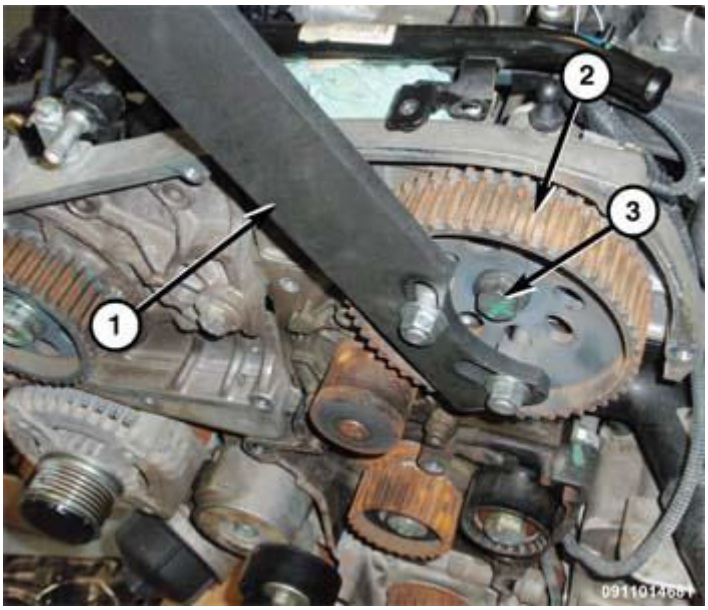

Fig. 225: Camshaft Sprocket Holder Tool, Camshaft Sprocket & Bolts
Courtesy of CHRYSLER GROUP, LLC

4. Using the Camshaft Sprocket Holder Tool 6847 and Pins 104294 (1) to hold camshaft sprocket, remove bolt (3) and the camshaft sprocket (2).

CRANKSHAFT SPROCKET

1. Disconnect the negative battery cable.
2. Remove the timing belt (1). Refer to **BELT, TIMING, REMOVAL**.
3. Remove the nuts and the flywheel lower guard.

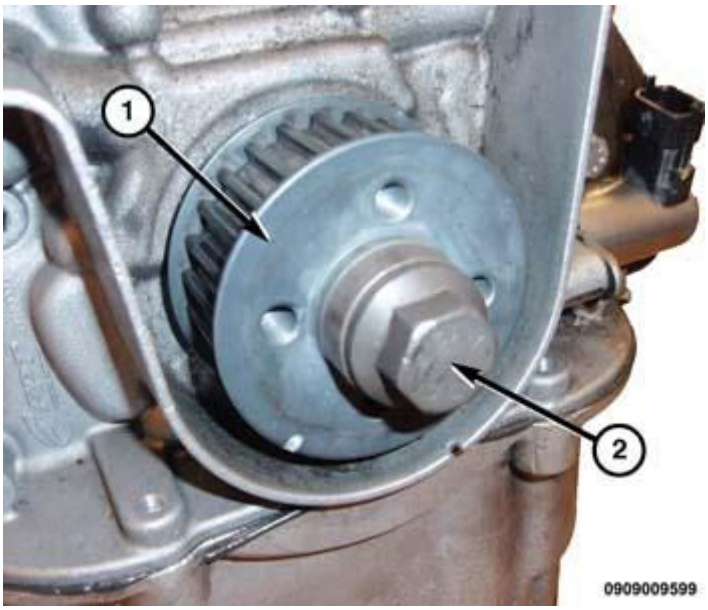

Fig. 226: Camshaft Sprocket & Bolt
Courtesy of CHRYSLER GROUP, LLC

NOTE: The crankshaft sprocket bolt is a left handed thread.

4. Remove bolt (2) and the crankshaft sprocket (1).

INSTALLATION

CAMSHAFT SPROCKET

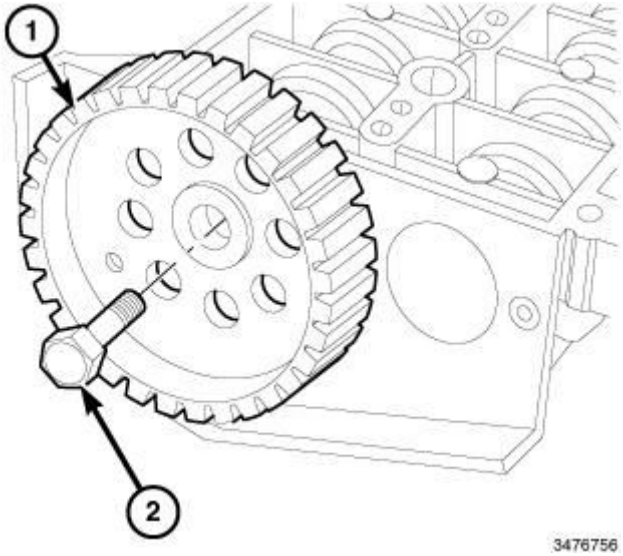

Fig. 227: Camshaft Timing Belt Sprocket & Bolt
Courtesy of CHRYSLER GROUP, LLC

1. Install the camshaft (1) sprocket and tighten bolt (2) finger tight.

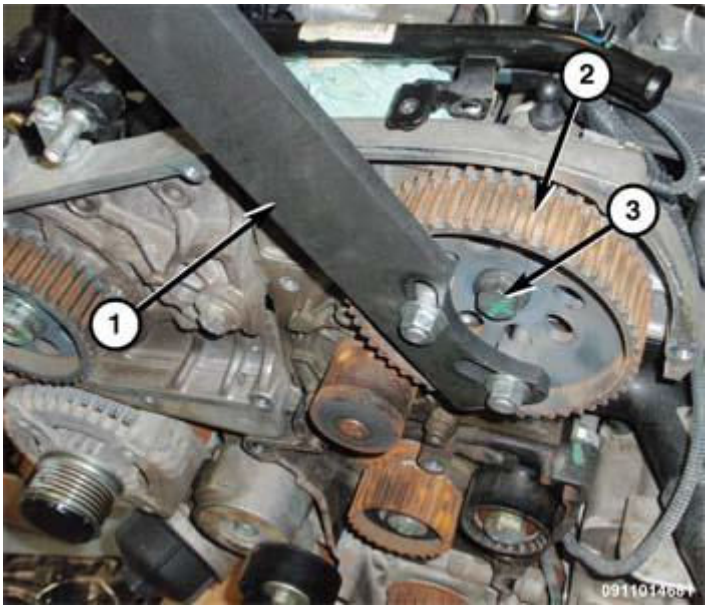

Fig. 228: Camshaft Sprocket Holder Tool, Camshaft Sprocket & Bolts
Courtesy of CHRYSLER GROUP, LLC

2. Using the Camshaft Sprocket Holder Tool (special tool #6847, Holder, Camshaft Sprocket) and (special tool #10494, Pins, Holding) (1) to hold camshaft sprocket (2) and tighten the bolt (3) to 30 N.m (22 ft. lbs.) plus an additional 40° turn.
3. Install the timing belt (1). Refer to **BELT, TIMING, INSTALLATION**.
4. Connect the negative battery cable.

CRANKSHAFT SPROCKET

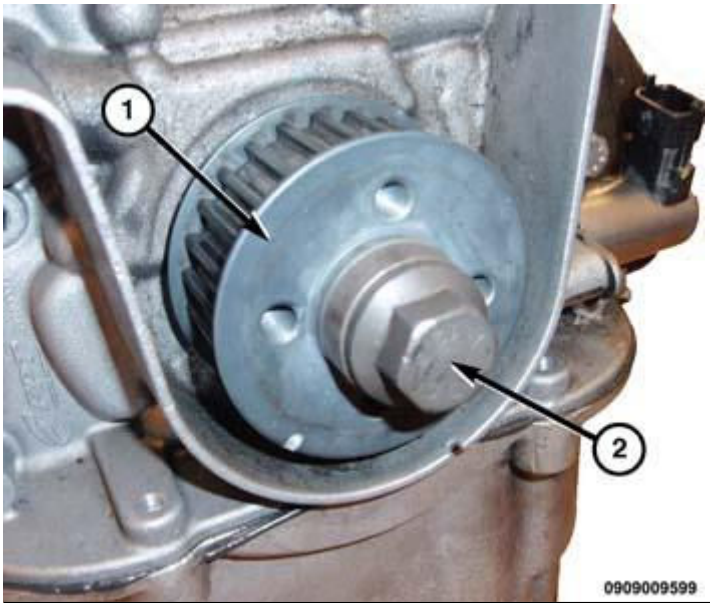

Fig. 229: Camshaft Sprocket & Bolt
Courtesy of CHRYSLER GROUP, LLC

NOTE: The crankshaft sprocket bolt is a left handed thread.

1. Install the crankshaft sprocket (1). Tighten bolt (2) to 340 N.m (251 ft. lbs.).
2. Install the flywheel lower guard and securely tighten the nuts.
3. Install the timing belt (1). Refer to **BELT, TIMING, INSTALLATION**.
4. Connect the negative battery cable.

BELT, TIMING

REMOVAL

REMOVAL

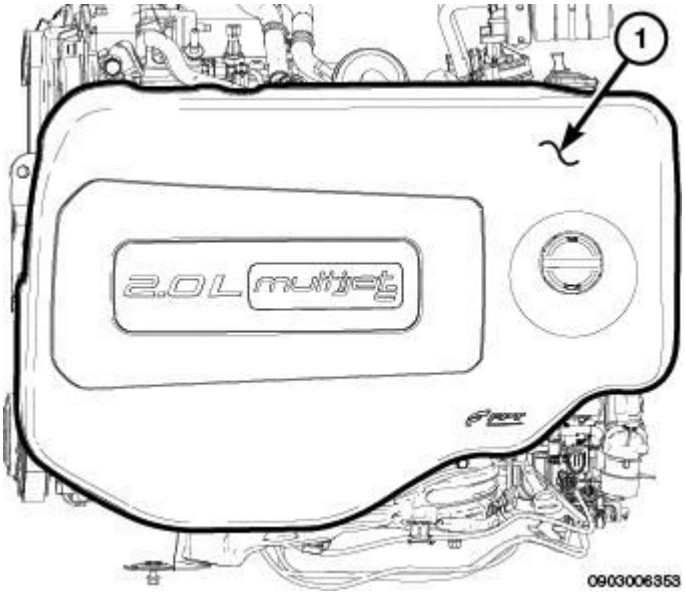

Fig. 230: Engine Cover
Courtesy of CHRYSLER GROUP, LLC

1. Disconnect the negative battery cable.
2. Remove the engine cover (1).
3. Remove the vibration damper. Refer to **DAMPER, VIBRATION, REMOVAL** .

Fig. 231: Upper Timing Cover Insulator
Courtesy of CHRYSLER GROUP, LLC

4. Remove the upper timing cover insulator (1).

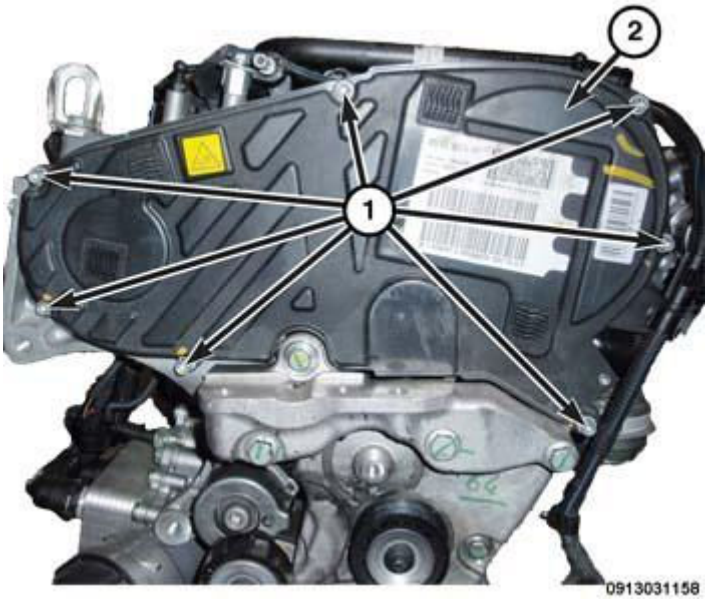

Fig. 232: Upper Timing Cover Fasteners
Courtesy of CHRYSLER GROUP, LLC

5. Remove the seven upper timing cover fasteners.
6. Remove the lower timing belt cover. Refer to **COVER(S), ENGINE TIMING, REMOVAL** .

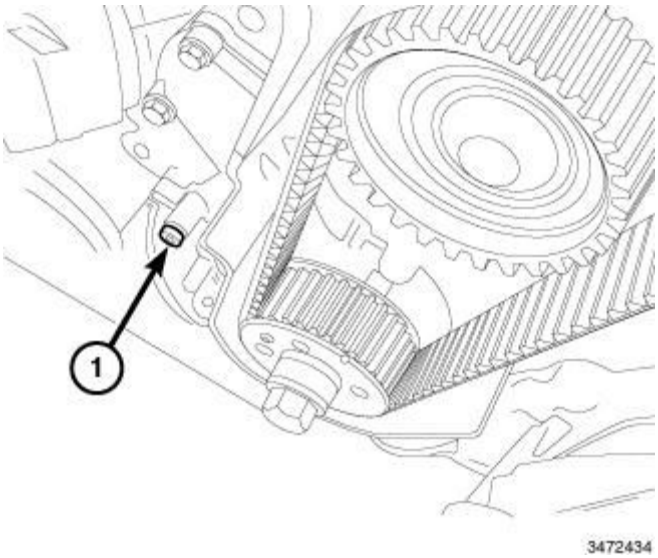

Fig. 233: Engine Block Front Cover Left Lower Bolt
Courtesy of CHRYSLER GROUP, LLC

NOTE: The crankshaft must be rotated, with small movements, to allow the locating dowel on the toothed timing drive belt pulley to be inserted in the opening in the tool.

7. Remove the left lower bolt (1) from the engine block front cover.

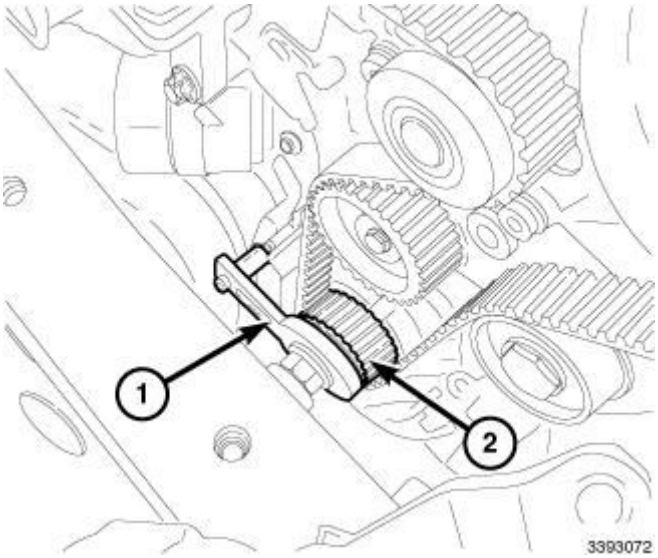

Fig. 234: Crankshaft Locking Tool & Sprocket
Courtesy of CHRYSLER GROUP, LLC

NOTE: The timing marks are located on the timing belt. Proper positioning of the timing marks is required before installation of a new belt can be performed.

8. Rotate engine to TDC and verify the timing marks on the belt are aligned to their respective gear. Insert the (special tool #10496, Tool, Crankshaft Timing Locking) (1) temporarily to check crankshaft timing.
9. Disconnect the fuel pressure sensor wire harness connector.

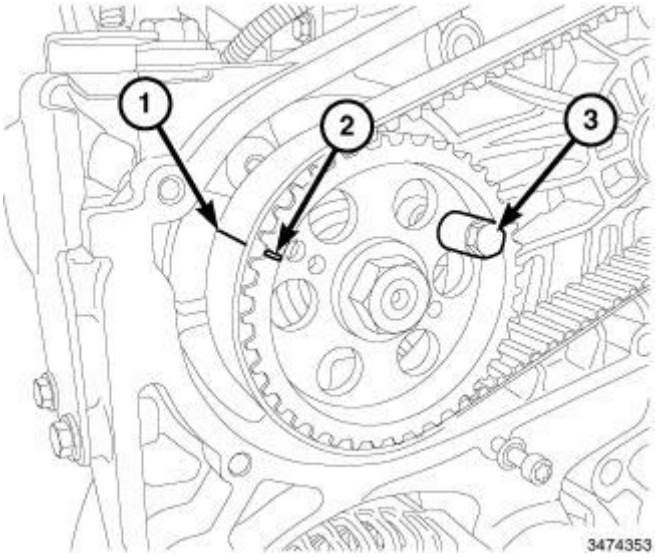

Fig. 235: Aligning Timing Marks On Belt & Sprocket Using Removal/Refitting Tool
Courtesy of CHRYSLER GROUP, LLC

10. Install the Removal/Refitting Tool (3) (special tool #20150, Remover/Installer, High Pressure Fuel Pump) to lock the pressure pump sprocket.

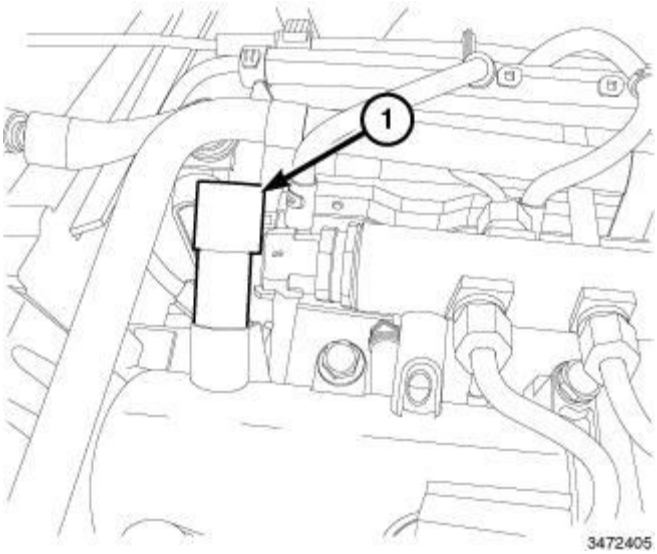

Fig. 236: Camshaft Timing Tool
Courtesy of CHRYSLER GROUP, LLC

11. Remove the threaded plug from the camshaft housing.

NOTE: **Check that the tool is correctly inserted in the housing in the inlet side camshaft, rotating the crankshaft until the pin for the tool can be heard engaging correctly in the housing in the camshaft.**

12. Install the Camshaft Timing Tool (1) (special tool #20132, Tool, Timing Belt Locking), (intake side).
13. Remove the Crankshaft Timing Tool.

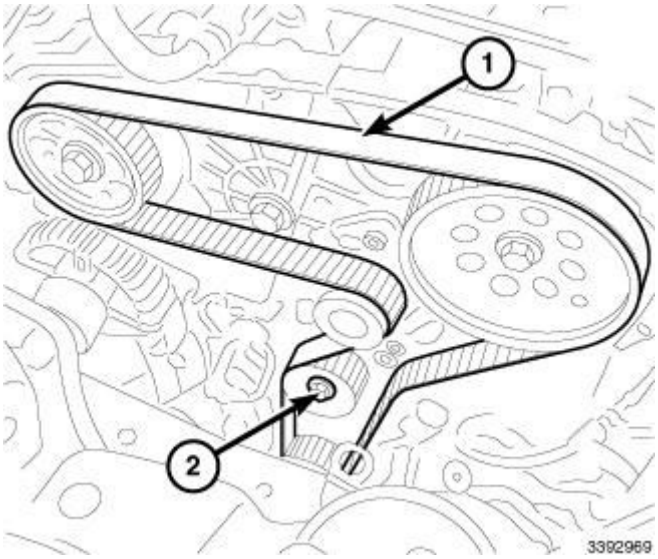

Fig. 237: Timing Belt & Tensioner Retaining Nut
Courtesy of CHRYSLER GROUP, LLC

14. Loosen tensioner retaining nut (2).
15. Remove timing belt (1).

INSTALLATION

INSTALLATION

CAUTION: **IT IS ESSENTIAL that the installation procedure is followed exactly. Failure to do so will result in severe engine damage.**

NOTE: **The timing marks are located on the timing belt. Proper positioning of the timing marks is required before installation of a new belt can be performed.**

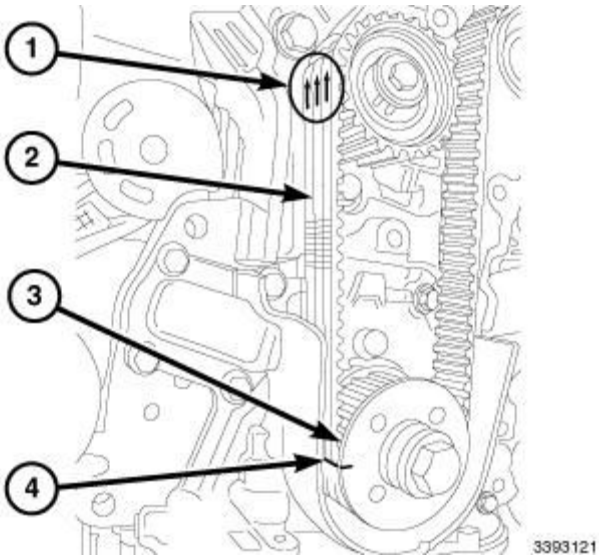

Fig. 238: Rotation Arrows, Timing Belt, Crankshaft Sprocket & Timing Mark On Belt
Courtesy of CHRYSLER GROUP, LLC

1. Start the timing belt (2) around the crankshaft sprocket (3) with the rotation arrows (1) pointing clockwise.
2. Align the timing mark on the belt (4) with the mark on the crankshaft gear.
3. Wrap belt around water pump pulley and tensioner.

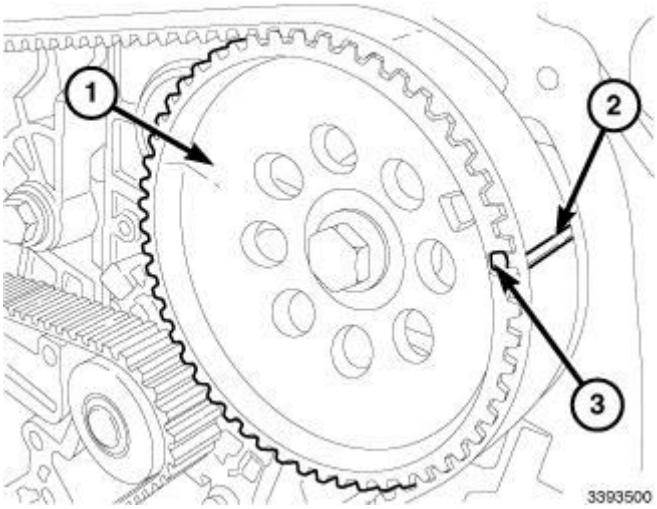

Fig. 239: Camshaft Sprocket, Timing Marks On Belt & Camshaft Drive Gears
Courtesy of CHRYSLER GROUP, LLC

4. Position belt over camshaft sprocket (1) and align the timing marks on the belt (2) with the marks on the camshaft drive gears (3).

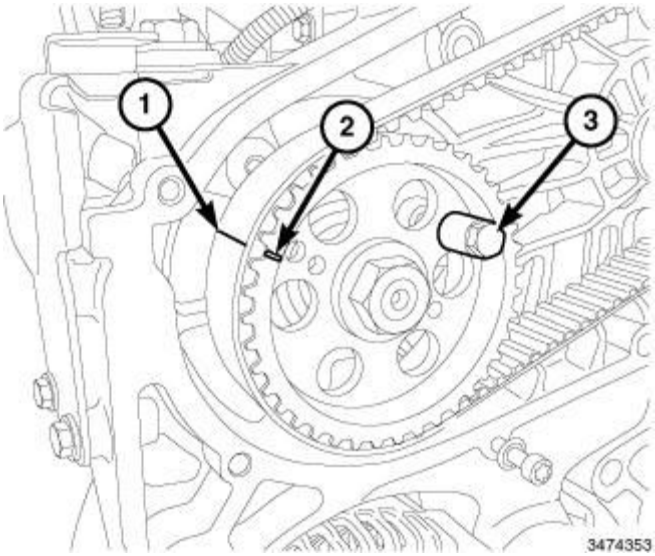

Fig. 240: Aligning Timing Marks On Belt & Sprocket Using Removal/Refitting Tool
Courtesy of CHRYSLER GROUP, LLC

5. Position belt over pressure pump sprocket and align the timing marks on the belt (1) with the marks on the pressure pump sprocket (2).

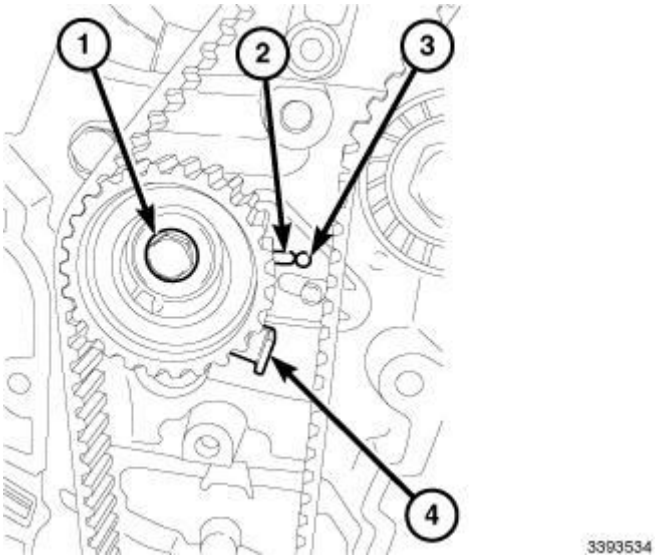

Fig. 241: Bolt, Tensioner Arrow, Mark & Tensioner Tab
Courtesy of CHRYSLER GROUP, LLC

6. Using a screwdriver. Pry down on the tensioner tab (4) till the tensioner arrow (3) aligns with the mark (3).
7. Tighten tensioner nut to 28 N.m (21 ft. lbs.) plus an additional 40° turn.

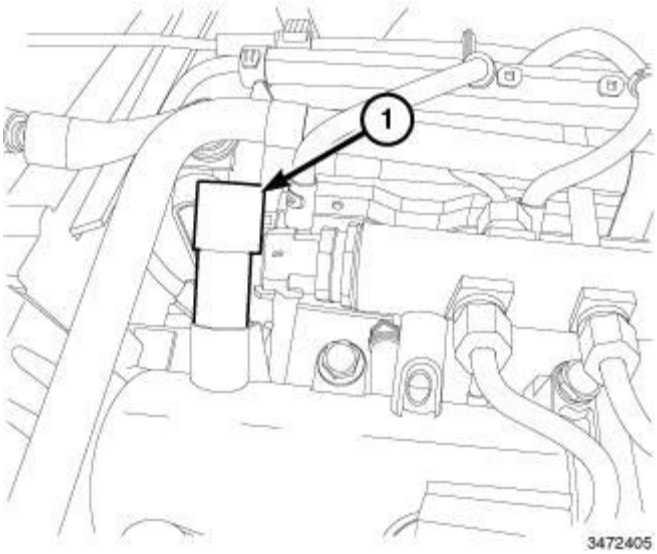

Fig. 242: Camshaft Timing Tool
Courtesy of CHRYSLER GROUP, LLC

8. Remove the Camshaft Timing Tool 20132, (intake side).

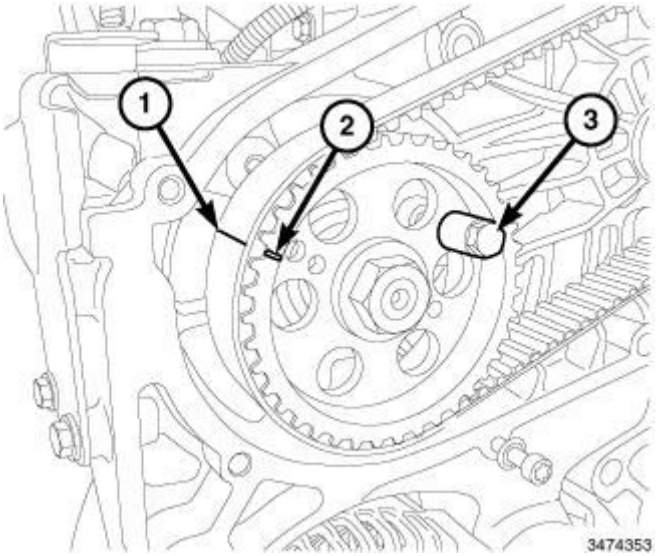

Fig. 243: Aligning Timing Marks On Belt & Sprocket Using Removal/Refitting Tool
Courtesy of CHRYSLER GROUP, LLC

9. Remove the Removal/Refitting Tool (3)

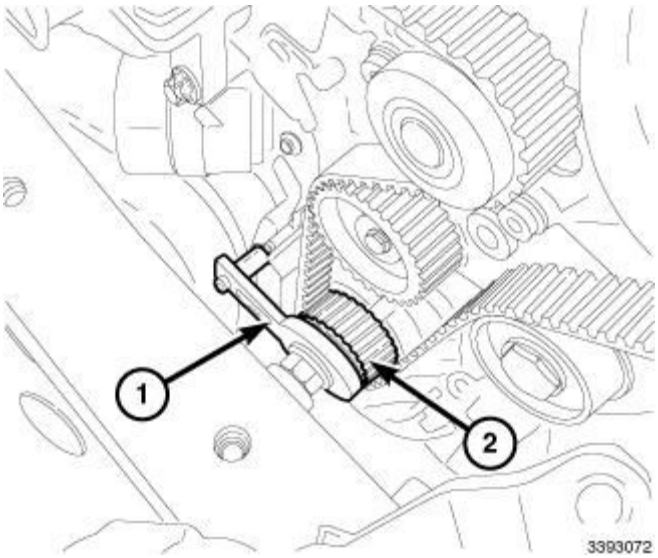

Fig. 244: Crankshaft Locking Tool & Sprocket
Courtesy of CHRYSLER GROUP, LLC

10. Remove Crankshaft Locking Tool (1).
11. Rotate the crankshaft two full revolutions to allow for the timing belt to settle.
12. Loosen the timing belt tensioner and repeat step **5 and 6** .
13. Install the right lower screw for the engine block front cover and tighten to 9 N.m (80 in. lbs.).
14. Install the threaded plug from the camshaft housing and securely tighten.
15. Connect the fuel pressure sensor wire harness connector.
16. Install lower timing belt cover. Refer to **COVER(S), ENGINE TIMING, INSTALLATION** .

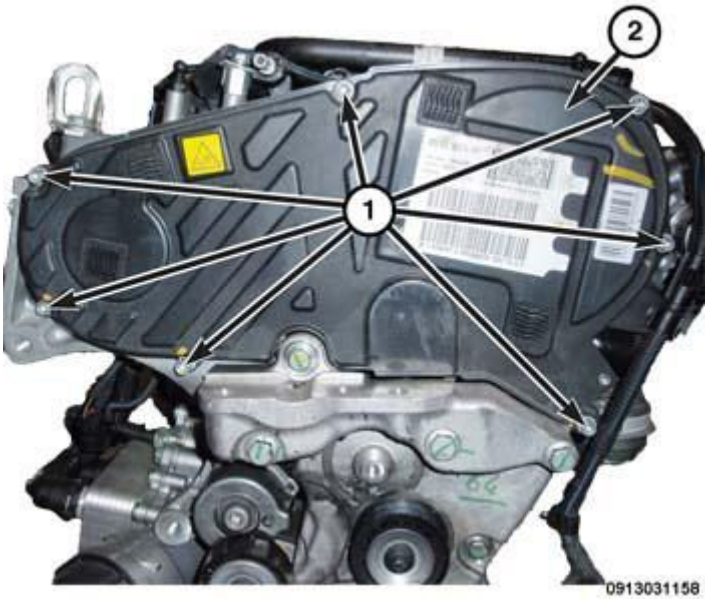

Fig. 245: Upper Timing Cover Fasteners
Courtesy of CHRYSLER GROUP, LLC

17. Install upper timing belt cover (2). Tighten the seven fasteners (1) securely.

Fig. 246: Upper Timing Cover Insulator
Courtesy of CHRYSLER GROUP, LLC

18. Install the upper timing cover insulator (1).
19. Install the vibration damper. Refer to **DAMPER, VIBRATION, INSTALLATION** .

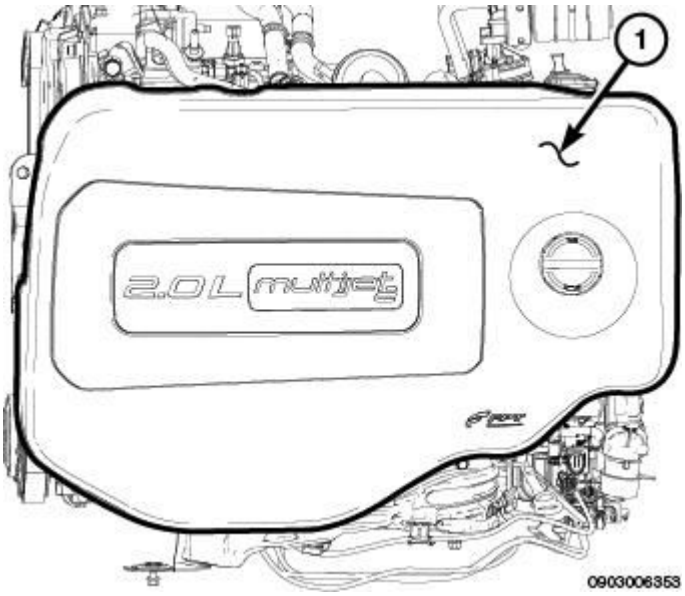

Fig. 247: Engine Cover
Courtesy of CHRYSLER GROUP, LLC

20. Install the engine cover (1).
21. Connect the negative battery cable.

COVER(S), ENGINE TIMING

REMOVAL

UPPER TIMING COVER

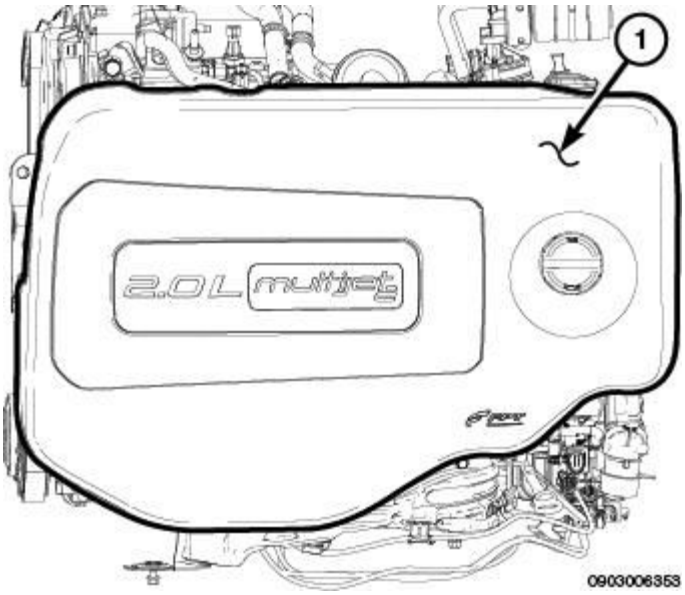

Fig. 248: Engine Cover
Courtesy of CHRYSLER GROUP, LLC

1. Disconnect the negative battery cable.
2. Remove the engine cover (1).

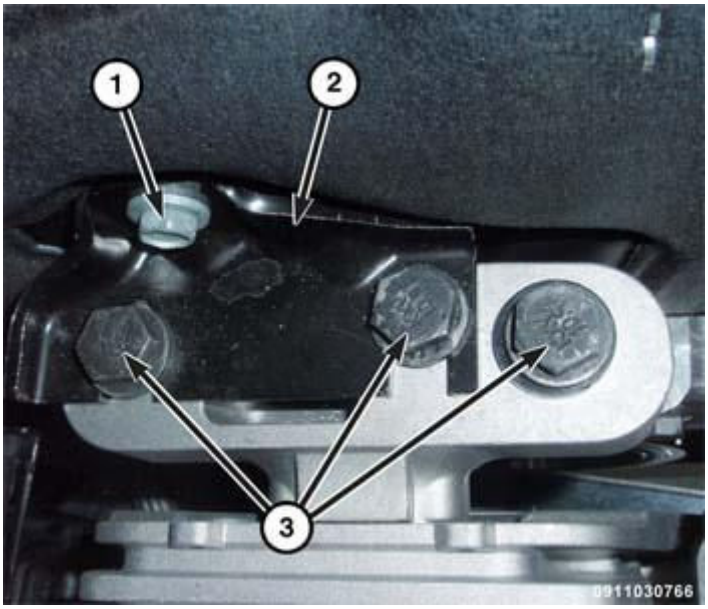

Fig. 249: Right Mount Bracket Bolt

Courtesy of CHRYSLER GROUP, LLC

3. Remove the right mount bracket bolt (1).
4. Remove the left and middle right mount bracket bolts (3) and remove the mount bracket (2).

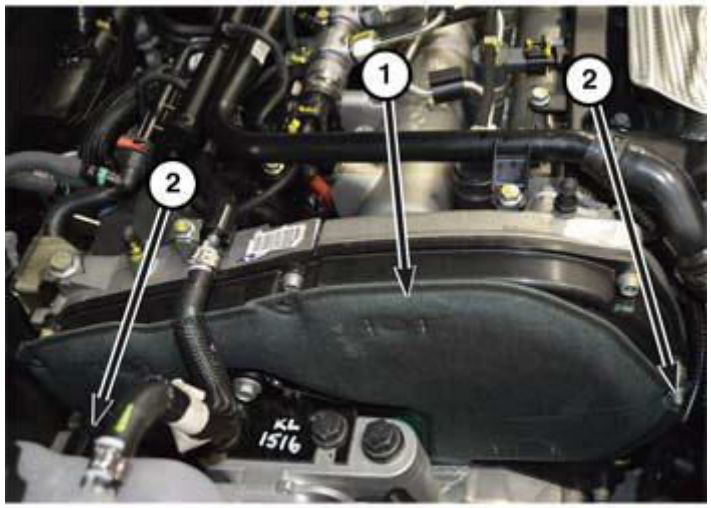

Fig. 250: Upper Timing Cover Insulator & Fasteners
Courtesy of CHRYSLER GROUP, LLC

5. Remove fasteners (2) and the upper timing cover insulator (1).

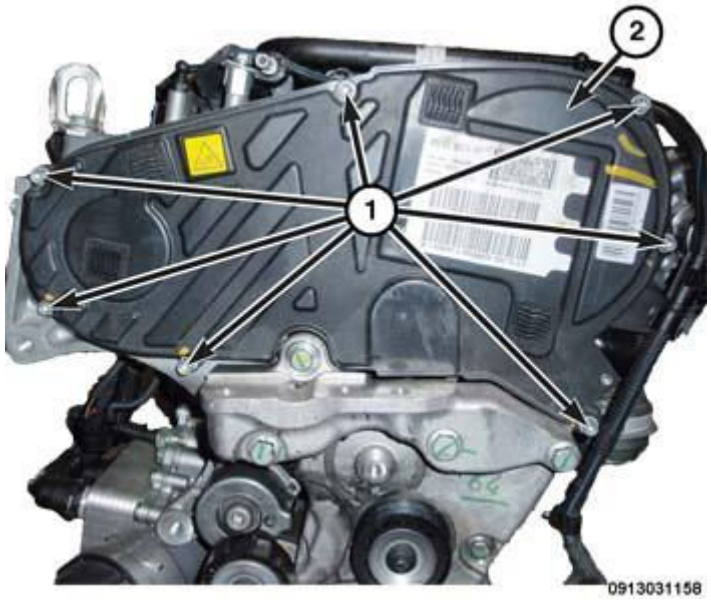

Fig. 251: Upper Timing Cover Fasteners
Courtesy of CHRYSLER GROUP, LLC

6. Remove bolts (1) and the upper timing belt cover (2).

LOWER TIMING COVER

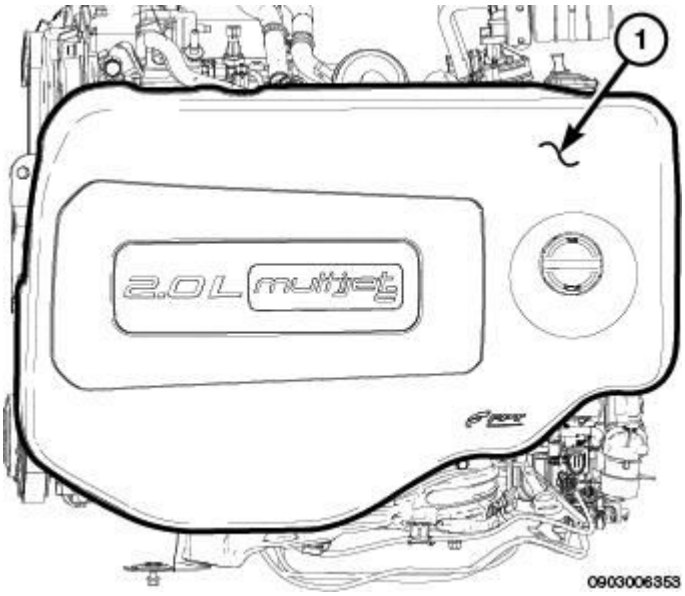

Fig. 252: Engine Cover
Courtesy of CHRYSLER GROUP, LLC

1. Disconnect the negative battery cable.
2. Remove the engine cover (1).

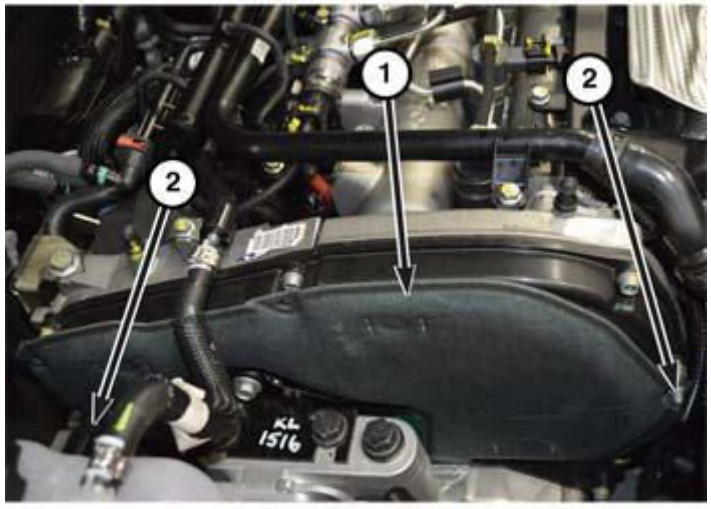

Fig. 253: Upper Timing Cover Insulator & Fasteners
Courtesy of CHRYSLER GROUP, LLC

3. Remove fasteners (2) and the upper timing cover insulator (1).

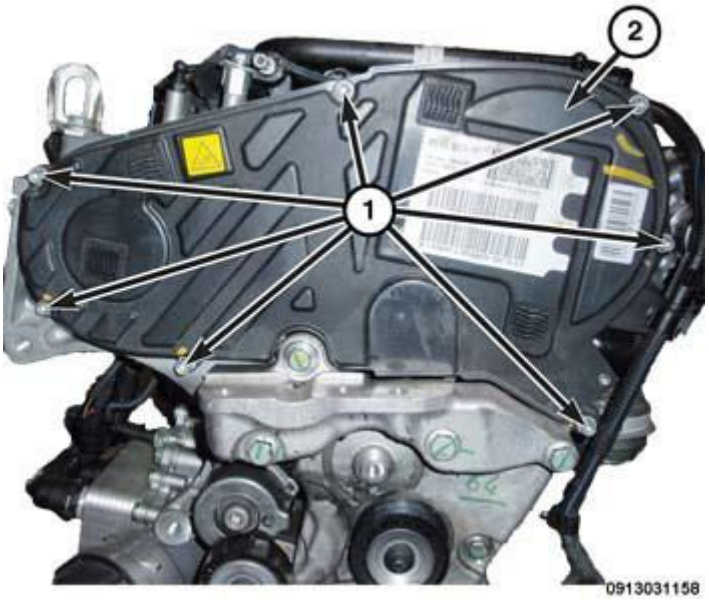

Fig. 254: Upper Timing Cover Fasteners
Courtesy of CHRYSLER GROUP, LLC

4. Remove bolts (1) and the upper timing belt cover (2).

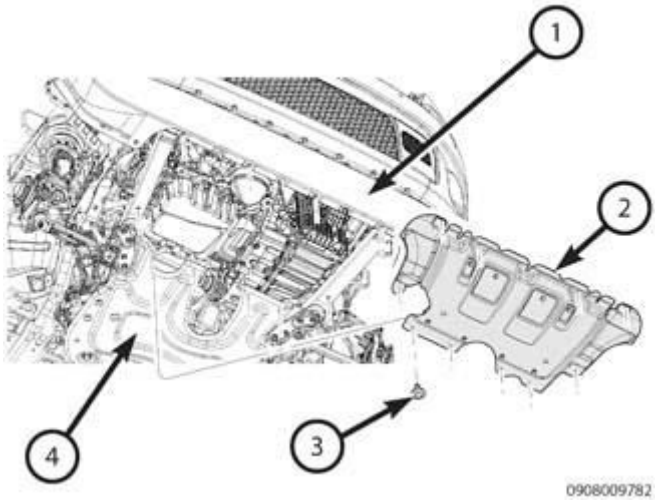

Fig. 255: Removing/Installing Starter
Courtesy of CHRYSLER GROUP, LLC

5. Raise and support the vehicle. Refer to **HOISTING, STANDARD PROCEDURE** .
6. Remove bolts (3) and the bellypan (2).

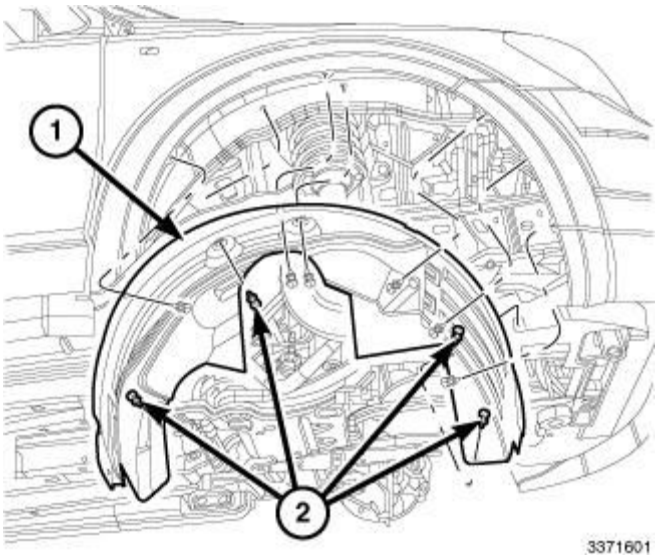

Fig. 256: Inner Fender Splash Shield
Courtesy of CHRYSLER GROUP, LLC

7. Remove the right side wheel and tire.
8. Remove the inner fender splash shield (1).
9. Remove the vibration dampener. Refer to **DAMPER, VIBRATION, REMOVAL** .

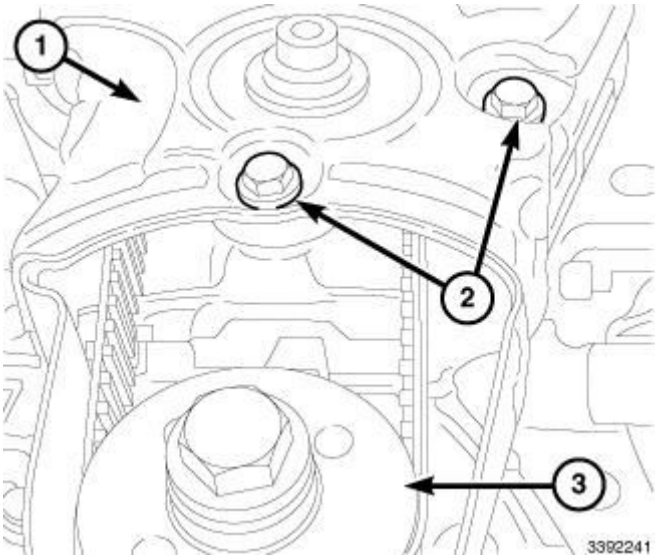

Fig. 257: Lower Timing Belt Cover & Bolts
Courtesy of CHRYSLER GROUP, LLC

10. Remove the lower timing belt cover bolts (2).
11. Lower the vehicle.
12. Remove the right side engine mount. Refer to **INSULATOR, ENGINE MOUNT, RIGHT, REMOVAL** .

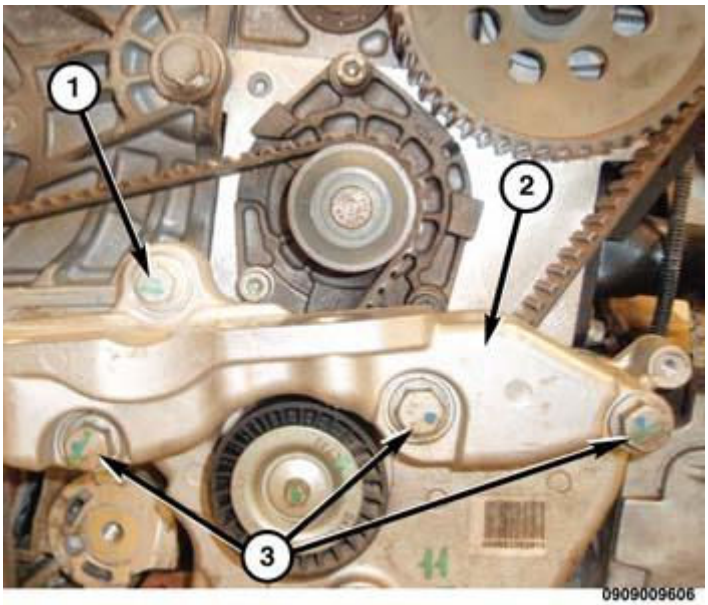

Fig. 258: Lower Timing Belt Cover & Bolts
Courtesy of CHRYSLER GROUP, LLC

13. Remove bolts (1, 3) and the lower timing belt cover.

INSTALLATION

UPPER TIMING COVER

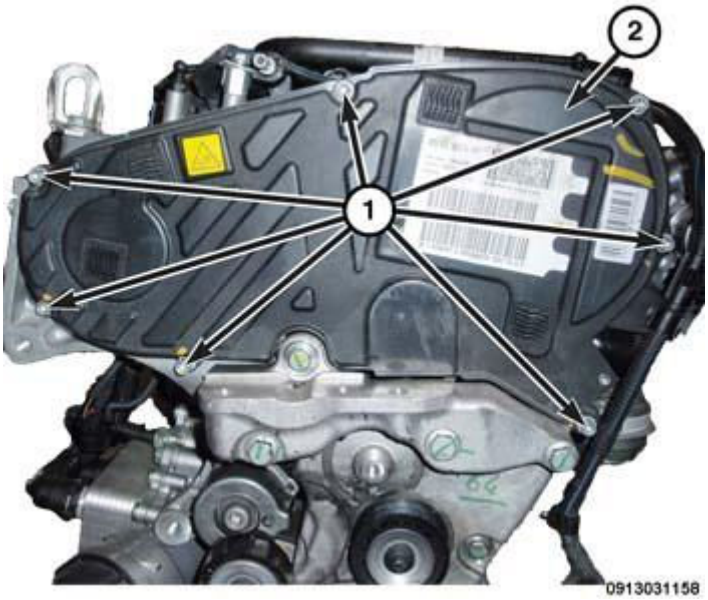

Fig. 259: Upper Timing Cover Fasteners
Courtesy of CHRYSLER GROUP, LLC

1. Install the upper timing belt cover (1). Tighten the seven bolts (1) to 6 N.m (53 in. lbs.).

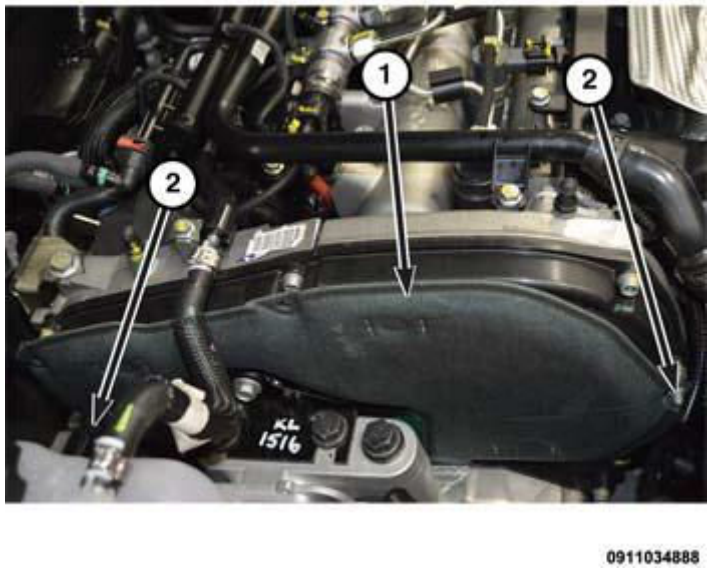

Fig. 260: Upper Timing Cover Insulator & Fasteners
Courtesy of CHRYSLER GROUP, LLC

2. Install the upper timing cover insulator (1) and securely tighten fasteners.

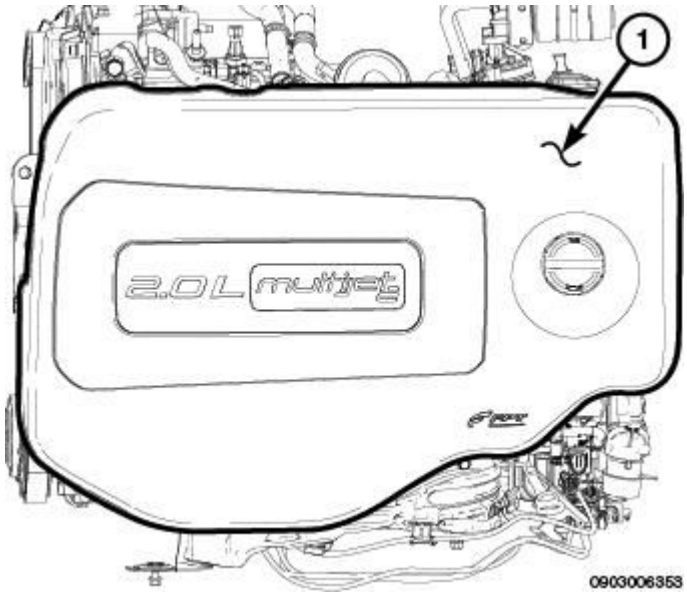

Fig. 261: Engine Cover
Courtesy of CHRYSLER GROUP, LLC

3. Install the engine cover (1).
4. Connect the negative battery cable.

LOWER TIMING COVER

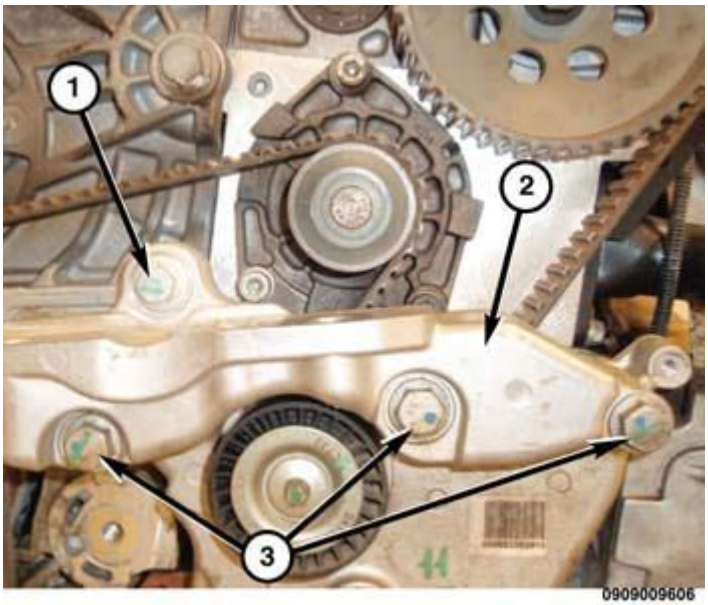

Fig. 262: Lower Timing Belt Cover & Bolts
Courtesy of CHRYSLER GROUP, LLC

1. Position the lower timing belt cover onto the engine.
2. Install the four bolts (2) into the cover (1).
    - Tighten the M8 bolts (1) to 25 N.m (18 ft. lbs.).
    - Tighten the M10 bolts (3) to 54 N.m (40 ft. lbs.).

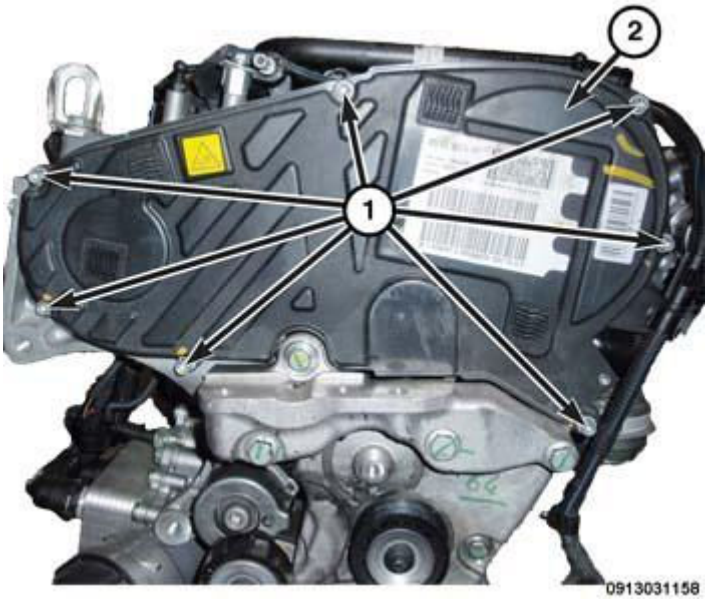

Fig. 263: Upper Timing Cover Fasteners
Courtesy of CHRYSLER GROUP, LLC

3. Install the upper timing belt cover (2). Tighten bolts (1) to 6 N.m (53 in. lbs.).

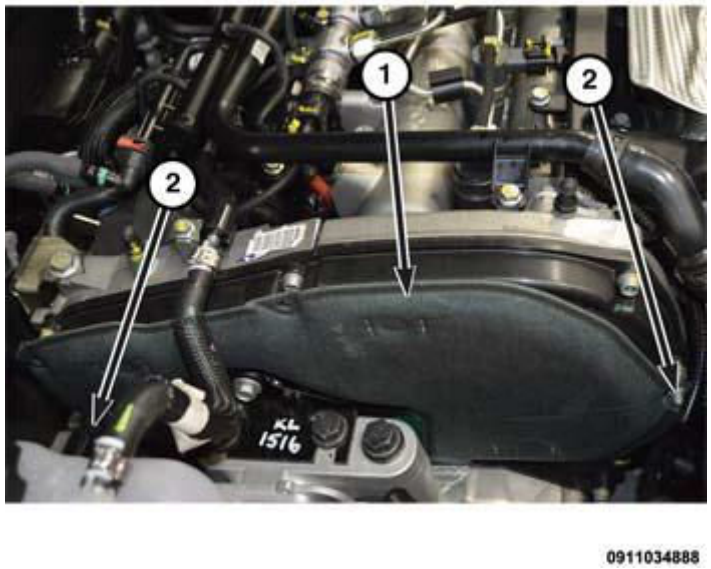

Fig. 264: Upper Timing Cover Insulator & Fasteners
Courtesy of CHRYSLER GROUP, LLC

4. Install the upper timing cover insulator (1) and securely tighten fasteners (2).
5. Install the right side engine mount. Refer to **INSULATOR, ENGINE MOUNT, RIGHT, INSTALLATION** .
6. Raise and support vehicle. Refer to **HOISTING, STANDARD PROCEDURE** .

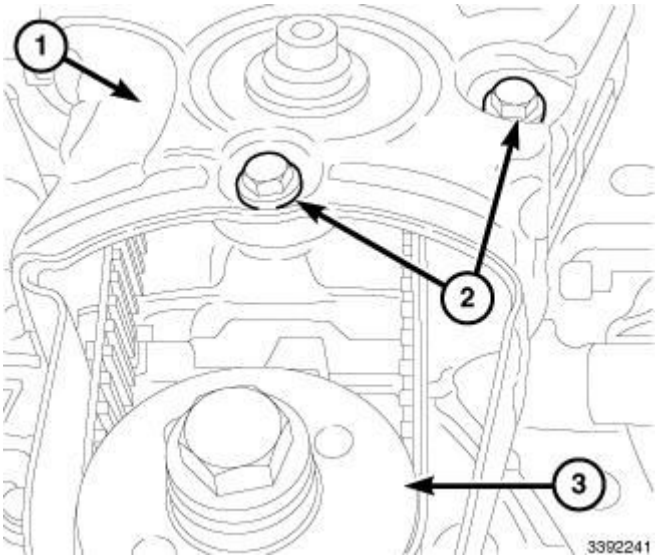

Fig. 265: Lower Timing Belt Cover & Bolts
Courtesy of CHRYSLER GROUP, LLC

7. Install the lower timing belt cover bolts (2). Tighten the bolts to 25 N.m (18 ft. lbs.).
8. Install the vibration dampener. Refer to **DAMPER, VIBRATION, INSTALLATION** .

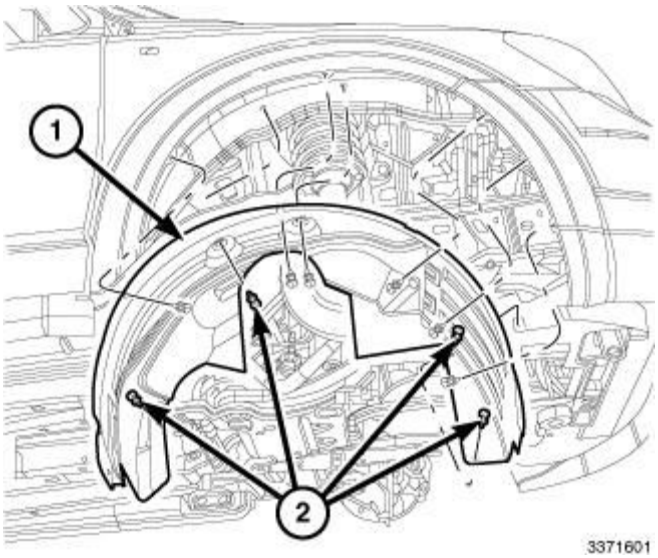

Fig. 266: Inner Fender Splash Shield
Courtesy of CHRYSLER GROUP, LLC

9. Install the inner fender splash shield (1).
10. Install the right front wheel.

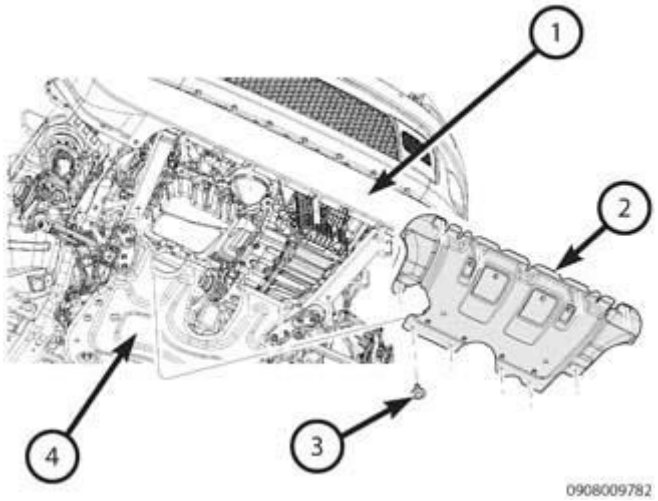

Fig. 267: Removing/Installing Starter
Courtesy of CHRYSLER GROUP, LLC

11. Install the belly pan (2) and securely tighten bolts (3).
12. Lower the vehicle.

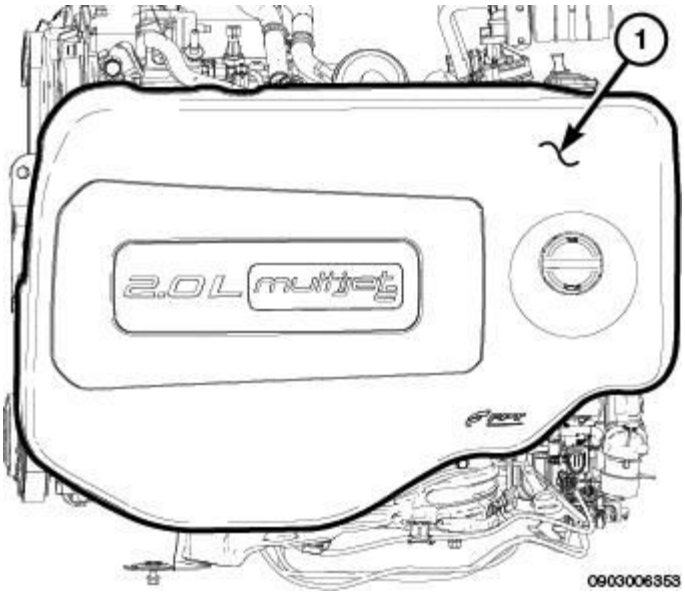

Fig. 268: Engine Cover
Courtesy of CHRYSLER GROUP, LLC

13. Install the engine cover (1).
14. Connect the negative battery cable.

TENSIONER, ENGINE TIMING

REMOVAL

REMOVAL

1. Disconnect the negative battery cable.
2. Remove the timing belt. Refer to **BELT, TIMING, REMOVAL**.

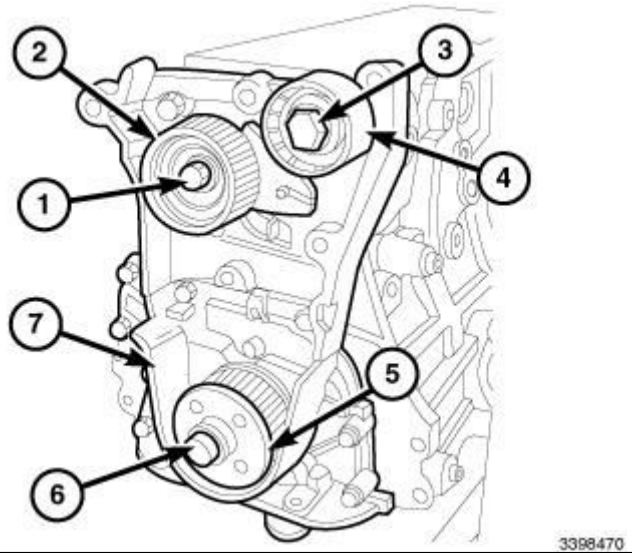

Fig. 269: Timing Belt Tensioner, Pulley & Bolts
Courtesy of CHRYSLER GROUP, LLC

3. Remove bolt (1) and the timing belt tensioner (2).

INSTALLATION

INSTALLATION

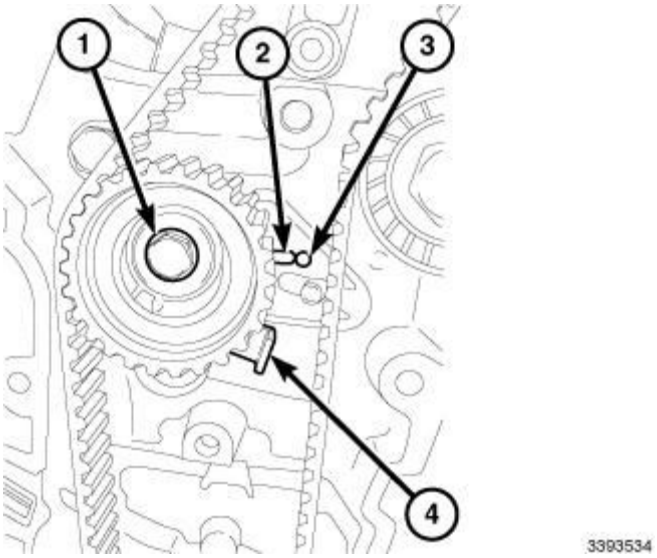

Fig. 270: Bolt, Tensioner Arrow, Mark & Tensioner Tab
Courtesy of CHRYSLER GROUP, LLC

1. Position timing belt tensioner so the guide finger (3) is in slot (2) and tighten bolt (1) finger tight.
2. Install the timing belt. Refer to **BELT, TIMING, INSTALLATION**.
3. Connect the negative battery cable.

MANIFOLDS

MANIFOLD, EXHAUST

REMOVAL

REMOVAL

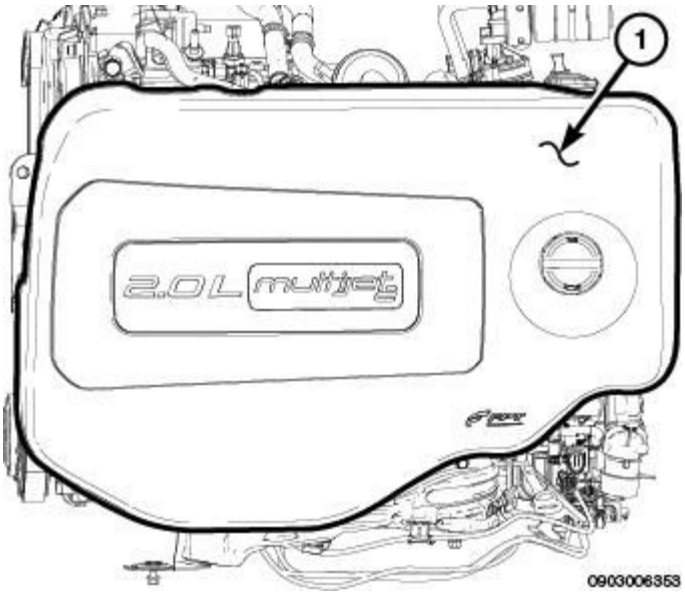

Fig. 271: Engine Cover
Courtesy of CHRYSLER GROUP, LLC

1. Disconnect the negative battery cable.
2. Remove the engine cover (1).
3. Remove the turbocharger. Refer to **TURBOCHARGER, REMOVAL**.

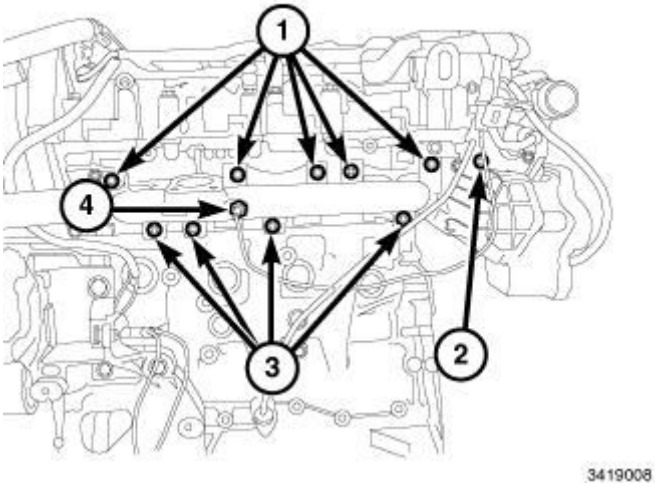

Fig. 272: Upper And Bottom Exhaust Manifold Nuts, Upper Oil Indicator Tube Bolt & Temperature Sensor
Courtesy of CHRYSLER GROUP, LLC

4. Remove the temperature sensor (4).
5. Remove the upper exhaust manifold nuts (1).
6. Remove the upper oil indicator tube bolt (2).

7. Remove the bottom exhaust manifold nuts (3).
8. Remove the exhaust manifold and discard the gasket.

INSTALLATION

INSTALLATION

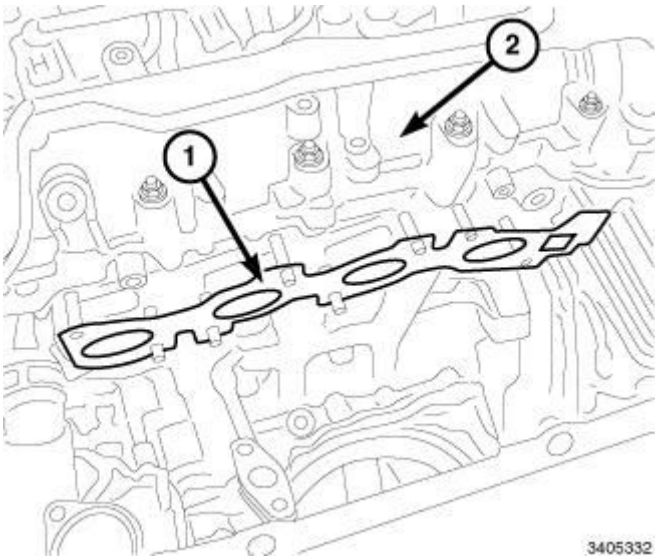

Fig. 273: Exhaust Manifold Gasket & Manifold Assembly
Courtesy of CHRYSLER GROUP, LLC

1. Install a new exhaust manifold gasket.
2. Position the exhaust manifold assembly in place.

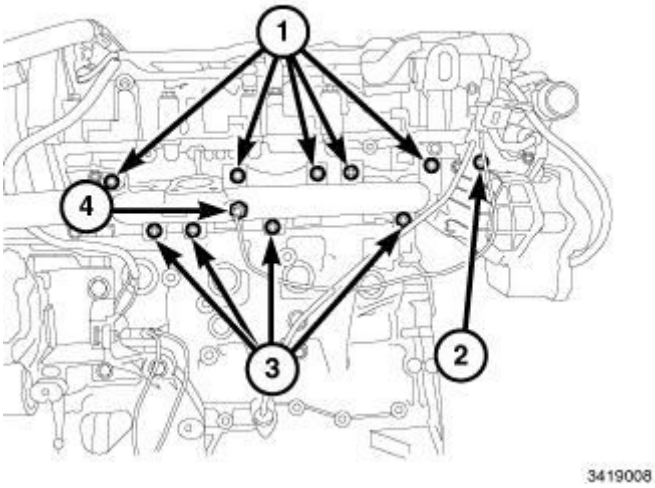

Fig. 274: Upper And Bottom Exhaust Manifold Nuts, Upper Oil Indicator Tube Bolt & Temperature Sensor

Courtesy of CHRYSLER GROUP, LLC

3. Install the exhaust manifold. Tighten nuts (1 and 3) to 21 N.m (15 ft. lbs.).
4. Install the temperature sensor (4).
5. Install the oil indicator tube upper bolt (2). Tighten the nuts to 10 N.m (89 in. lbs.).
6. Install the turbocharger. Refer to **TURBOCHARGER, INSTALLATION**.

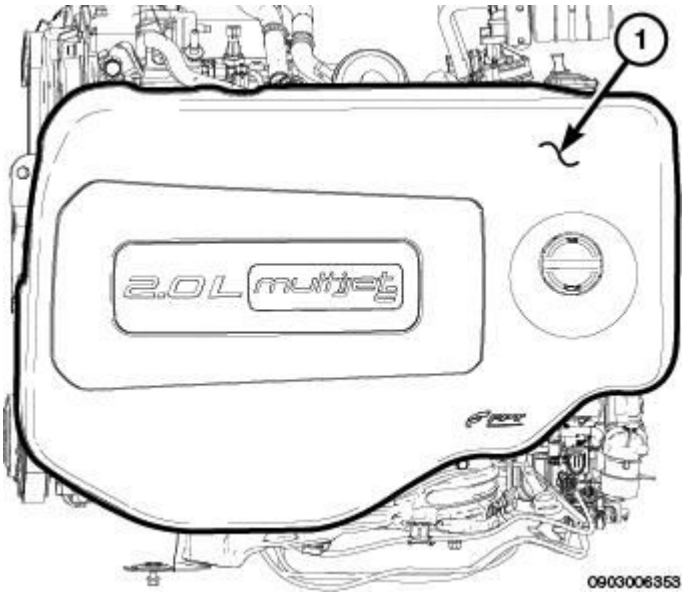

Fig. 275: Engine Cover
Courtesy of CHRYSLER GROUP, LLC

7. Install the engine cover (1).
8. Connect the negative battery cable.

MANIFOLD, INTAKE

REMOVAL

REMOVAL

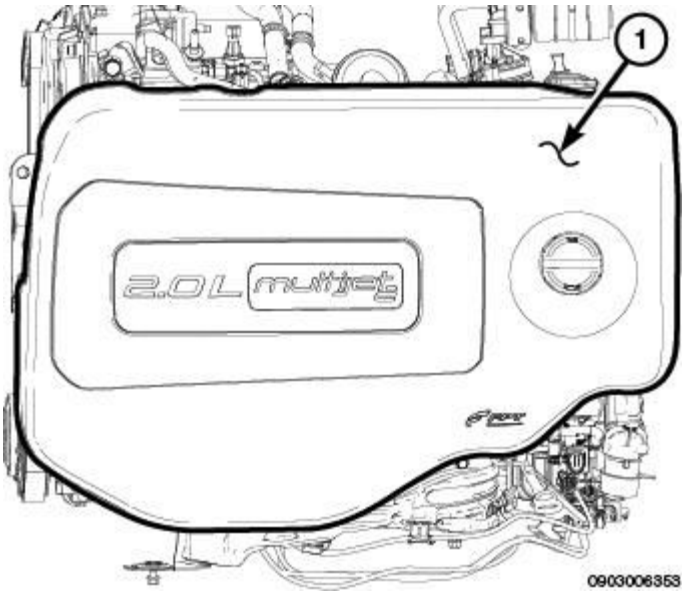

Fig. 276: Engine Cover
Courtesy of CHRYSLER GROUP, LLC

1. Disconnect the negative battery cable.
2. Remove the engine cover (1).
3. Partially the drain cooling system. Refer to **STANDARD PROCEDURE** .

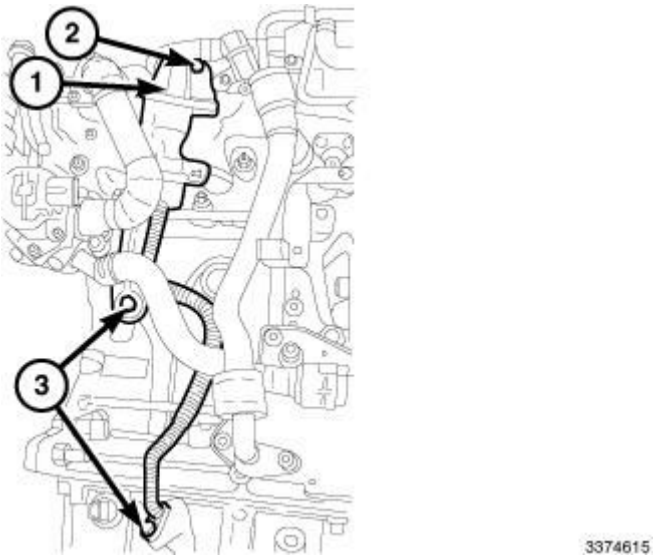

Fig. 277: Oil Vapor Separator & Bolts
Courtesy of CHRYSLER GROUP, LLC

4. Remove bolts (2, 3) and the oil vapor separator (1) complete with pipes.

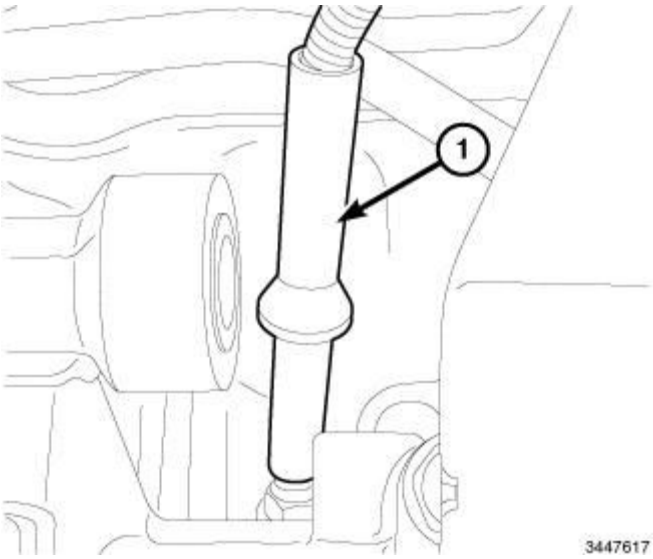

Fig. 278: Glow Plug Harness Connector
Courtesy of CHRYSLER GROUP, LLC

5. Disconnect the glow plug wire harness connector from each glow plug.

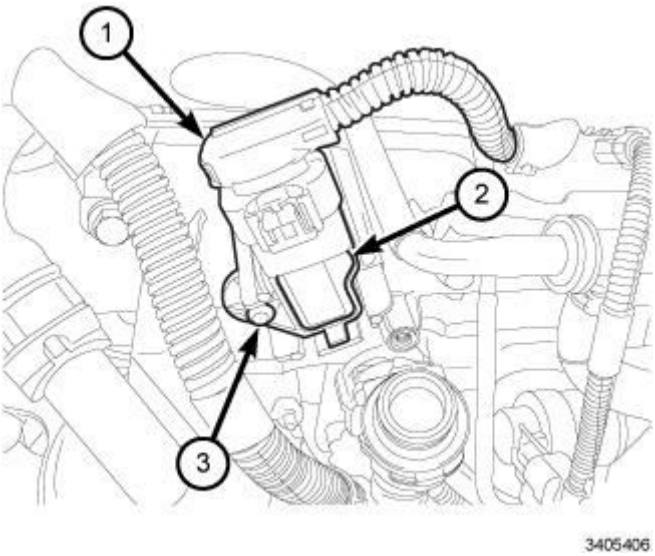

Fig. 279: Fuel Quantity Solenoid Wire Harness Connector
Courtesy of CHRYSLER GROUP, LLC

6. Disconnect the boost pressure wire harness connector.

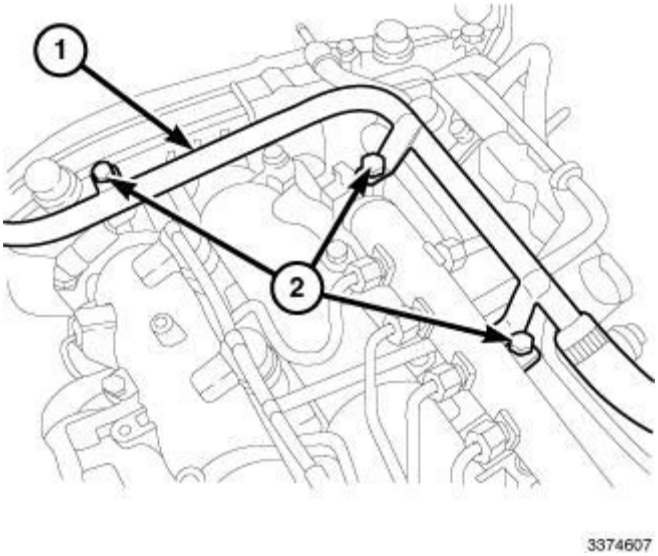

Fig. 280: Oil Vapor Recovery Pipe & Bolts
Courtesy of CHRYSLER GROUP, LLC

7. Remove bolts (2) securing the engine oil vapor recovery pipe (1) to the camshaft housing.
8. Remove fasteners and position aside the engine wire harness.
9. Remove the fuel injection pump. Refer to **PUMP, FUEL INJECTION, HIGH PRESSURE, REMOVAL** .
10. Remove the EGR air flow control valve. Refer to **VALVE, EXHAUST GAS RECIRCULATION (EGR) AIRFLOW CONTROL, REMOVAL** .

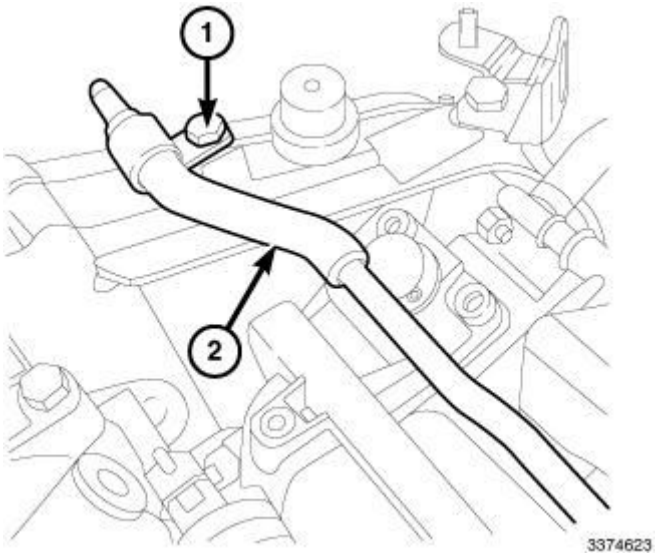

Fig. 281: Degassing Pipe & Bolt
Courtesy of CHRYSLER GROUP, LLC

11. Remove bolt (1) securing the degassing pipe (2) to the pressure pump mounting.

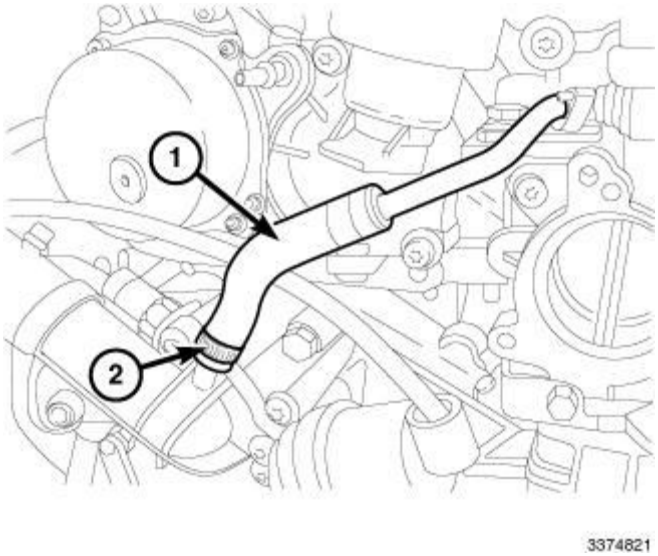

Fig. 282: Degassing Pipe, Clamp & Support Bracket
Courtesy of CHRYSLER GROUP, LLC

12. Loosen the gear clamp (2) and remove the degassing pipe (1).
13. Disconnect the swirl valve wire harness connector.
14. Remove fasteners and the support bracket.
15. Remove fasteners and the intake manifold.

INSTALLATION

INSTALLATION

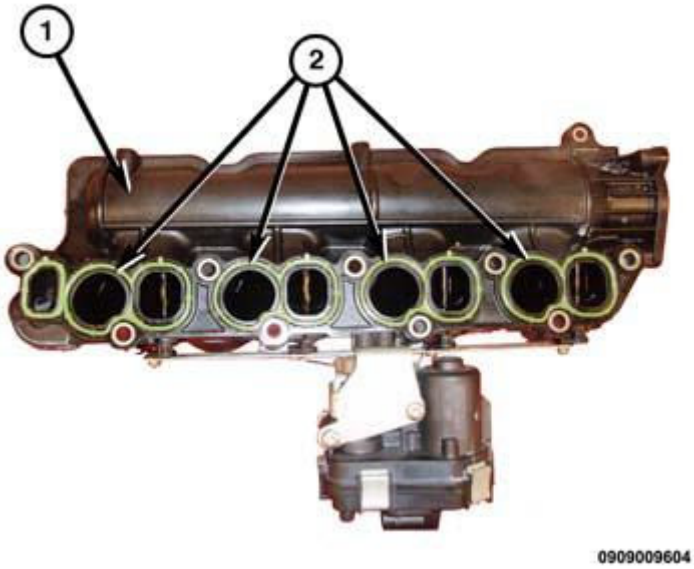

Fig. 283: Intake Manifold & Gasket
Courtesy of CHRYSLER GROUP, LLC

1. Clean gasket mating surfaces. Refer to **ENGINE - STANDARD PROCEDURE** .
2. Install new gasket (2) onto the intake manifold (1).
3. Install the intake manifold (1). Tighten fasteners to 25 N.m (18 ft. lbs.).
4. Install the support bracket and securely tighten fasteners.
5. Connect the swirl valve wire harness connector.

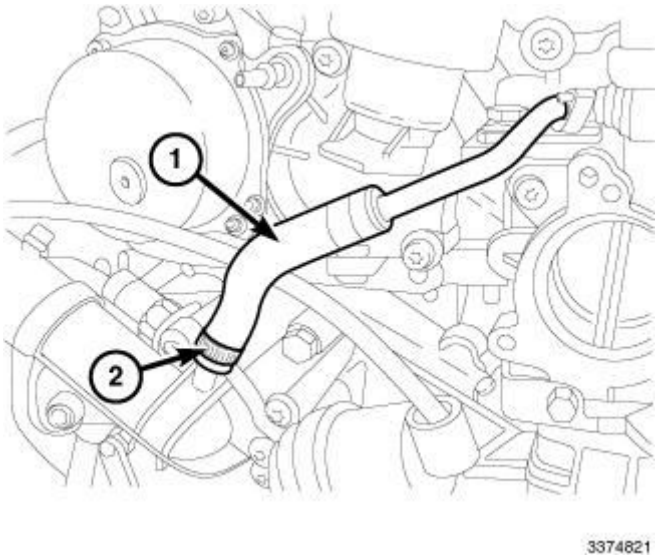

Fig. 284: Degassing Pipe, Clamp & Support Bracket
Courtesy of CHRYSLER GROUP, LLC

6. Install the degassing pipe (1) and tighten the gear clamp (2).

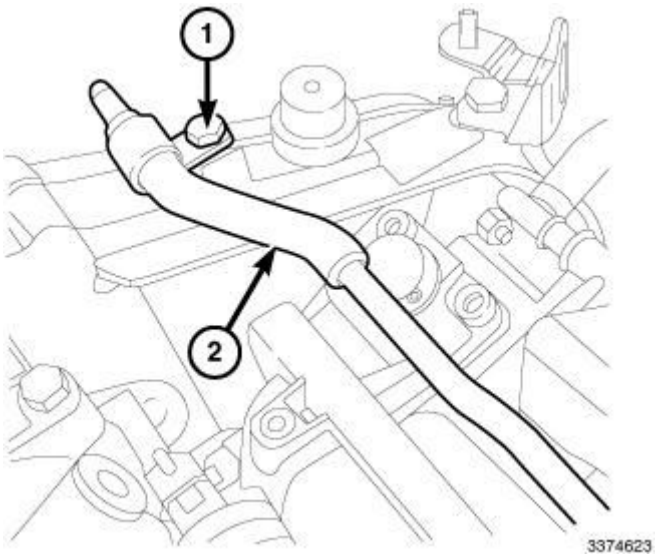

Fig. 285: Degassing Pipe & Bolt
Courtesy of CHRYSLER GROUP, LLC

7. Install bolt (1) securing the degassing pipe (2) to the pressure pump mounting and securely tighten.

8. Install EGR air flow control valve. Refer to **VALVE, EXHAUST GAS RECIRCULATION (EGR) AIRFLOW CONTROL, INSTALLATION** .
9. Install right and left engine cover brackets.
10. Install the fuel injection pump. Refer to **PUMP, FUEL INJECTION, HIGH PRESSURE, INSTALLATION** .
11. Position the engine wire harness and securely tighten fasteners.

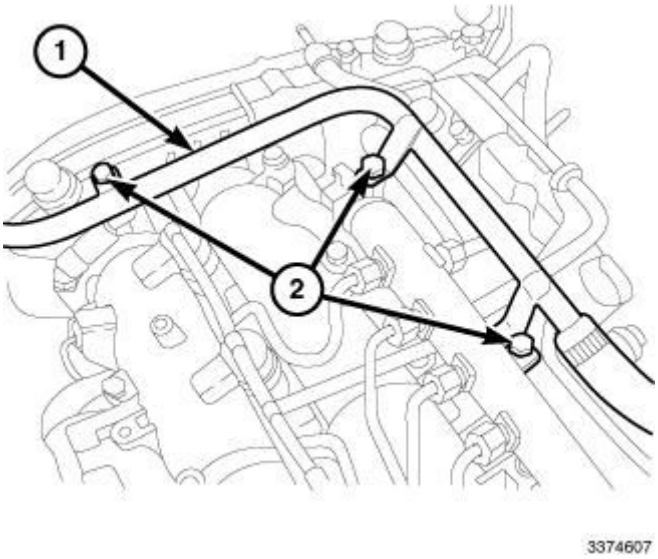

Fig. 286: Oil Vapor Recovery Pipe & Bolts
Courtesy of CHRYSLER GROUP, LLC

12. Install the engine oil vapor recovery pipe (1) to the camshaft housing and securely tighten bolts (2).

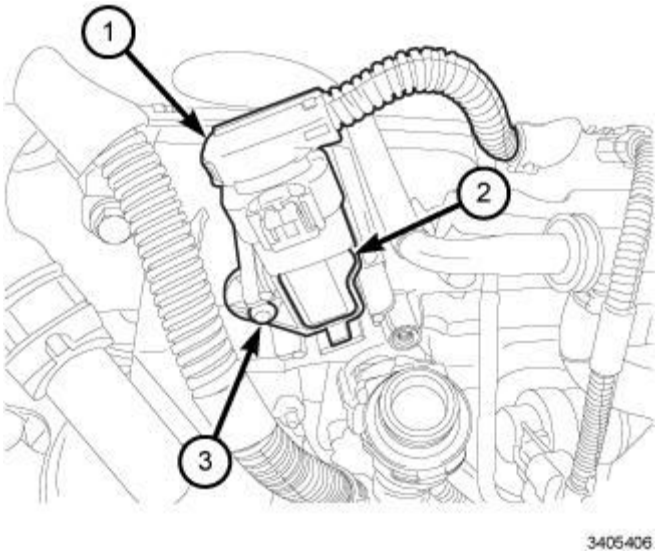

Fig. 287: Fuel Quantity Solenoid Wire Harness Connector
Courtesy of CHRYSLER GROUP, LLC

13. Disconnect the boost pressure wire harness connector.

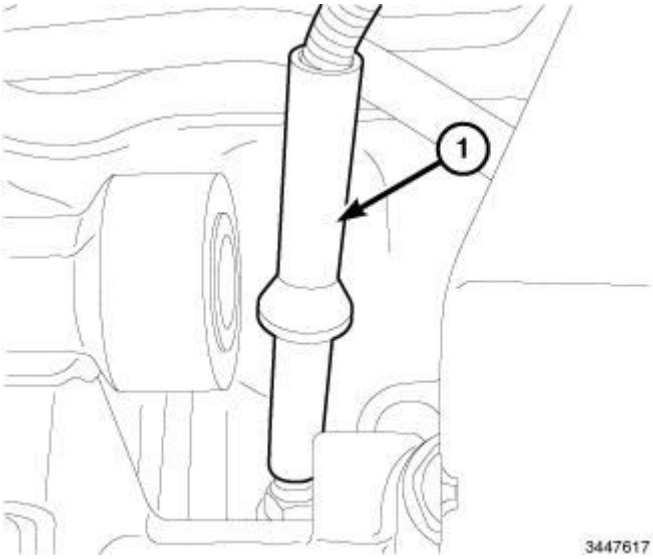

Fig. 288: Glow Plug Harness Connector
Courtesy of CHRYSLER GROUP, LLC

14. Connect the glow plug wire harness connector from each glow plug.

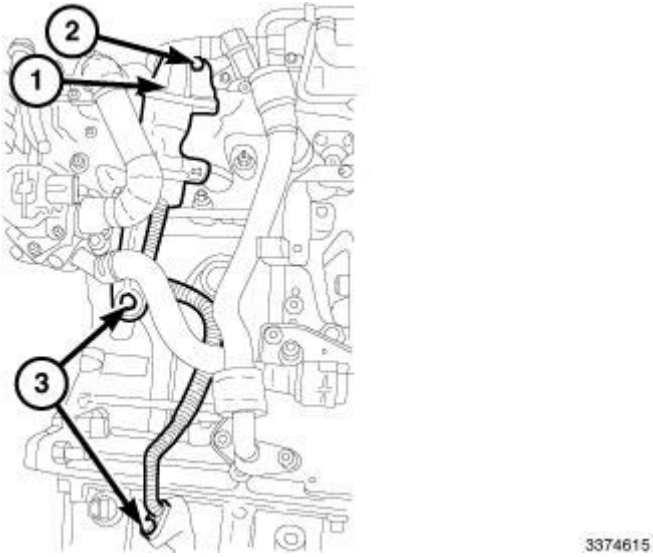

Fig. 289: Oil Vapor Separator & Bolts
Courtesy of CHRYSLER GROUP, LLC

15. Remove bolts (2, 3) and the oil vapor separator (1) complete with pipes.
16. Install EGR pipe support bracket.
17. Fill the cooling system. Refer to **STANDARD PROCEDURE** .
18. Connect the negative battery cable (1).
19. Start the engine and check for leaks.

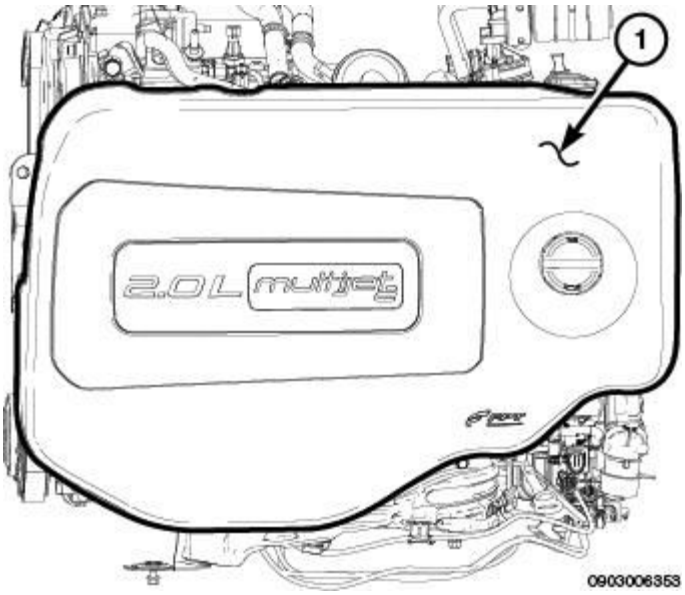

Fig. 290: Engine Cover
Courtesy of CHRYSLER GROUP, LLC

20. Install the engine cover (1).
21. Connect the negative battery cable.

AIR INTAKE SYSTEM

AIR CLEANER

REMOVAL

REMOVAL

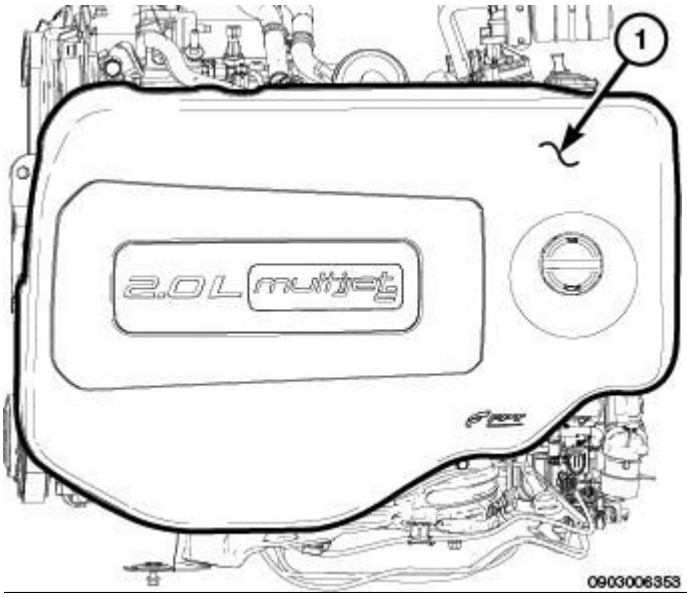

Fig. 291: Engine Cover
Courtesy of CHRYSLER GROUP, LLC

1. Disconnect the negative battery cable.
2. Remove the engine cover (1).

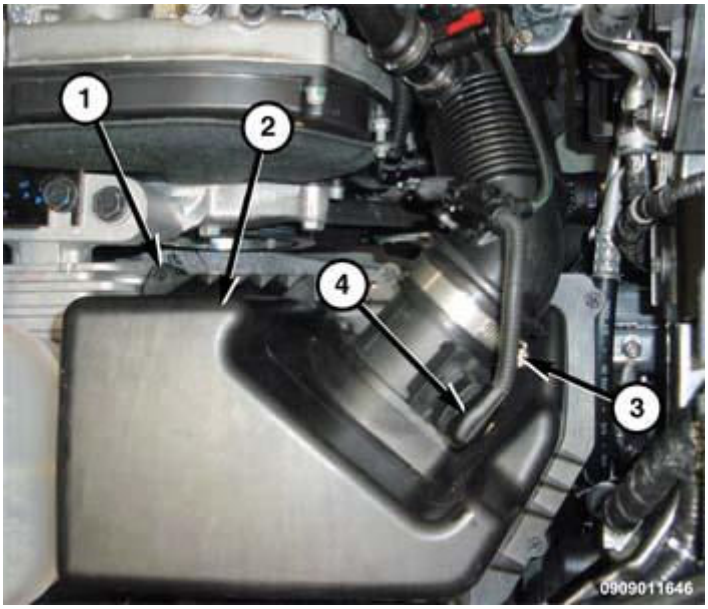

Fig. 292: Fasteners, Air Cleaner Cover, Clamp & MAF Sensor Wire Harness Connector
Courtesy of CHRYSLER GROUP, LLC

3. Disconnect the Mass Air Flow (MAF) sensor wire harness connector (4).
4. Loosen clamp (3) and remove hose.
5. Loosen the four fasteners (1) and position aside the air cleaner cover (2).

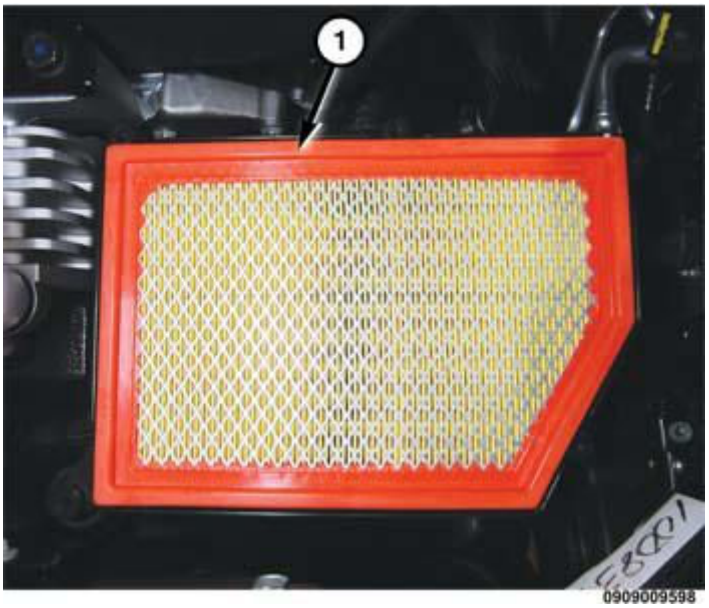

Fig. 293: Air Filter Element
Courtesy of CHRYSLER GROUP, LLC

6. Remove the air filter element (1).
7. If necessary, clean the inside of the air cleaner housing.

INSTALLATION

INSTALLATION

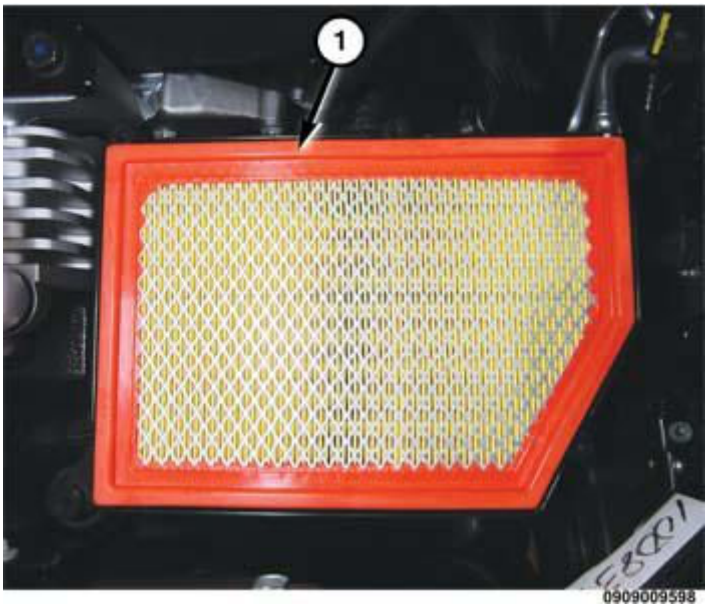

Fig. 294: Air Filter Element
Courtesy of CHRYSLER GROUP, LLC

1. Clean out any dirt or debris from bottom of air cleaner body.
2. Install the new air filter element (1).

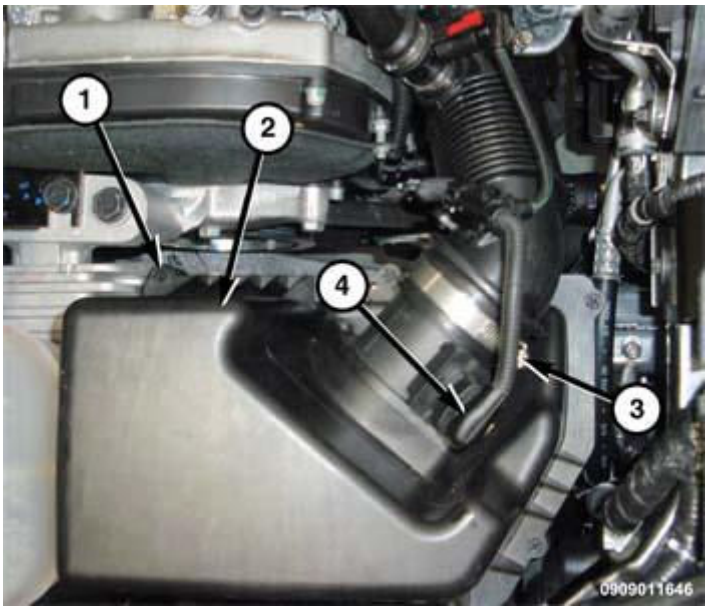

Fig. 295: Fasteners, Air Cleaner Cover, Clamp & MAF Sensor Wire Harness Connector
Courtesy of CHRYSLER GROUP, LLC

3. Position the air cleaner cover (2) and securely tighten fasteners (1).
4. Install hose and securely tighten clamp (3).
5. Connect the Mass Air Flow (MAF) sensor wire harness connector (4).

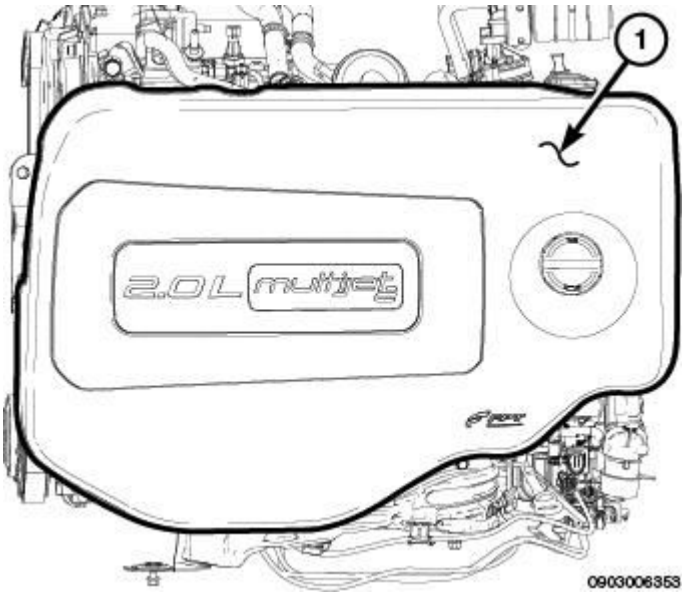

Fig. 296: Engine Cover
Courtesy of CHRYSLER GROUP, LLC

6. Install the engine cover (1).
7. Connect the negative battery cable.

BODY, AIR CLEANER

REMOVAL

REMOVAL

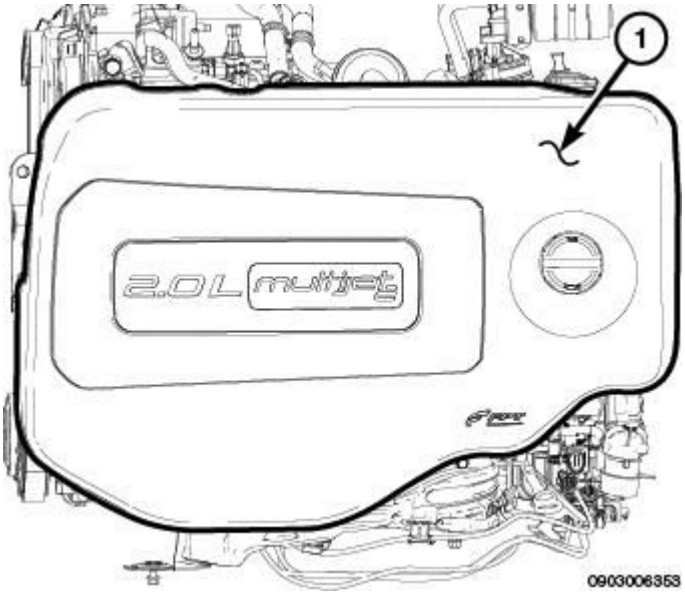

Fig. 297: Engine Cover
Courtesy of CHRYSLER GROUP, LLC

1. Disconnect the negative battery cable.
2. Removal the engine cover (1).

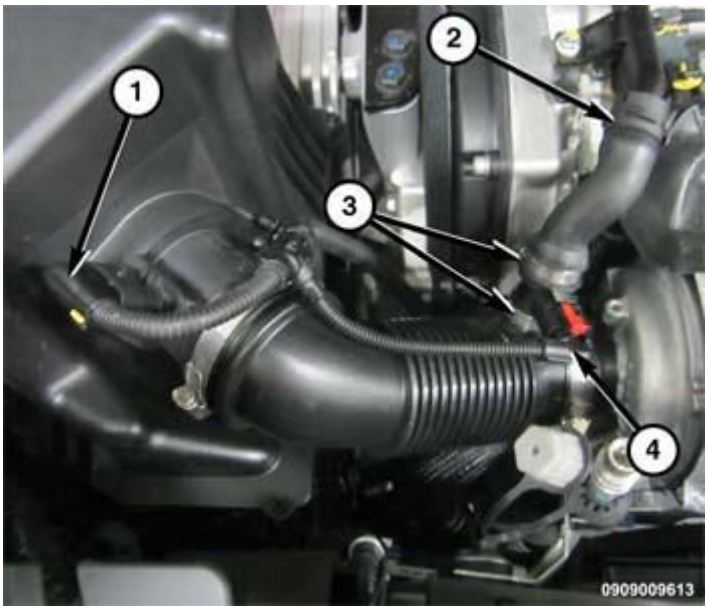

Fig. 298: MAF Sensor Harness Connector
Courtesy of CHRYSLER GROUP, LLC

3. Disconnect MAF sensor harness connector (2).

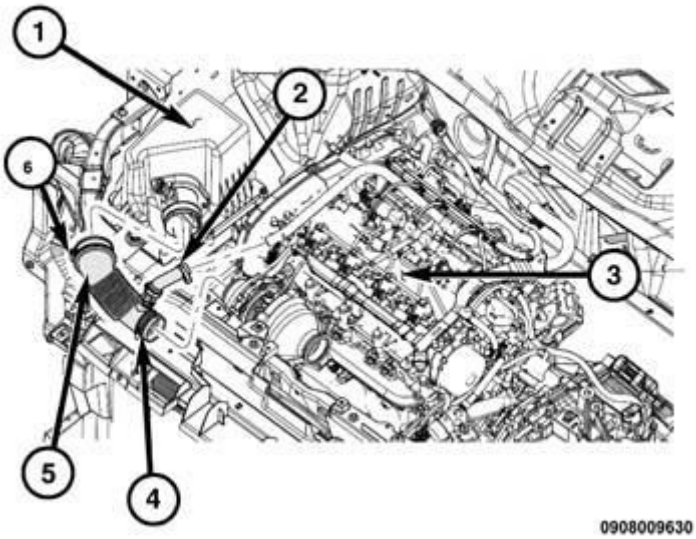

Fig. 299: Turbocharger Inlet Hose & Clamp
Courtesy of CHRYSLER GROUP, LLC

4. Loosen clamp (6) and disconnect turbocharger inlet hose (5) from the Mass Air Flow (MAF) sensor.

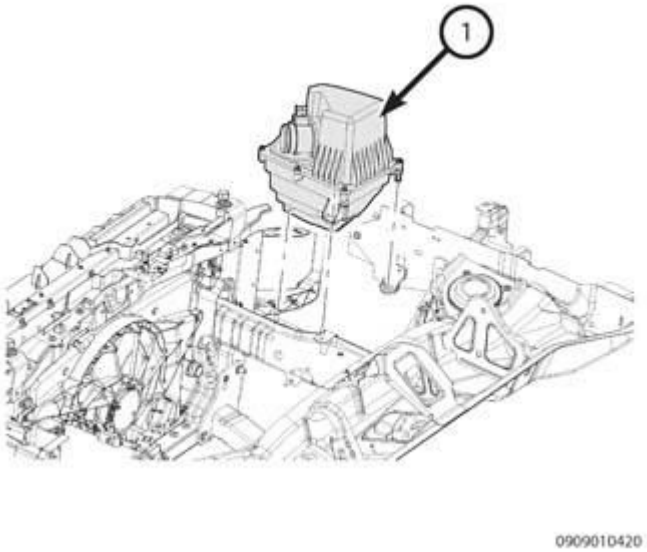

Fig. 300: Air Cleaner Body
Courtesy of CHRYSLER GROUP, LLC

5. Pull air cleaner body (1) straight up to remove.

INSTALLATION

INSTALLATION

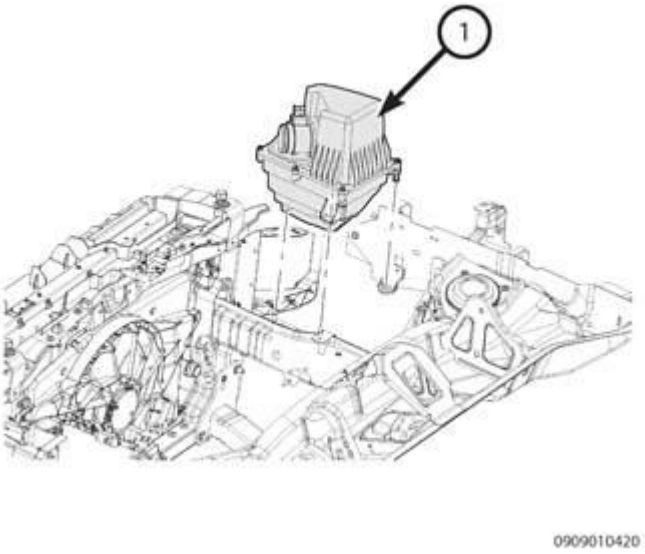

Fig. 301: Air Cleaner Body
Courtesy of CHRYSLER GROUP, LLC

1. Position the air cleaner body into the grommets and push the air cleaner body (1) down until fully seated.

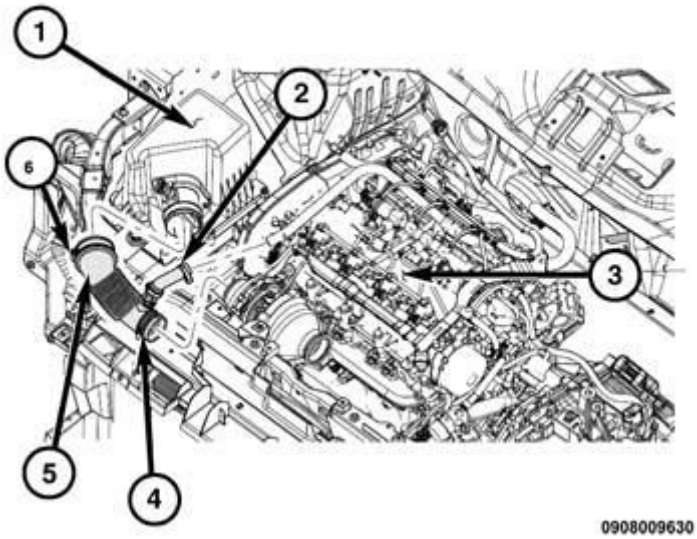

Fig. 302: Turbocharger Inlet Hose & Clamp
Courtesy of CHRYSLER GROUP, LLC

2. Connect turbocharger inlet hose (5) to the (MAF) sensor and securely tighten clamp (6).

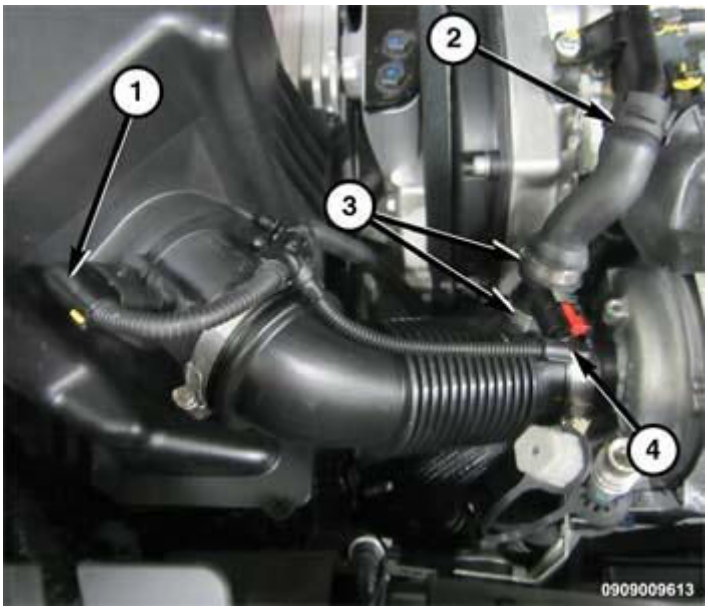

Fig. 303: MAF Sensor Harness Connector
Courtesy of CHRYSLER GROUP, LLC

3. Connect Mass Air Flow (MAF) sensor connector (2).
4. Install the engine cover (1).
5. Connect the negative battery cable.

ENGINE MOUNTING

DESCRIPTION

DESCRIPTION

The engine mounting system consists of a three-point system utilizing two load-carrying mounts and one torque controlling mounts. The load-carrying mounts are located on each frame rail. The right and left mounts are hydro-elastic mounts. The one torque controlling mounts are attached to rear of the engine.

OPERATION

OPERATION

The three-point engine mounting system minimizes the transmission of structure-borne engine noise to the passenger compartment. The load-carrying right and left mounts dampen and isolate vertical motion and vibration. The rear mounts absorb torque reaction forces and torsional vibrations.

BRACKET, ENGINE MOUNT, LEFT

REMOVAL

REMOVAL

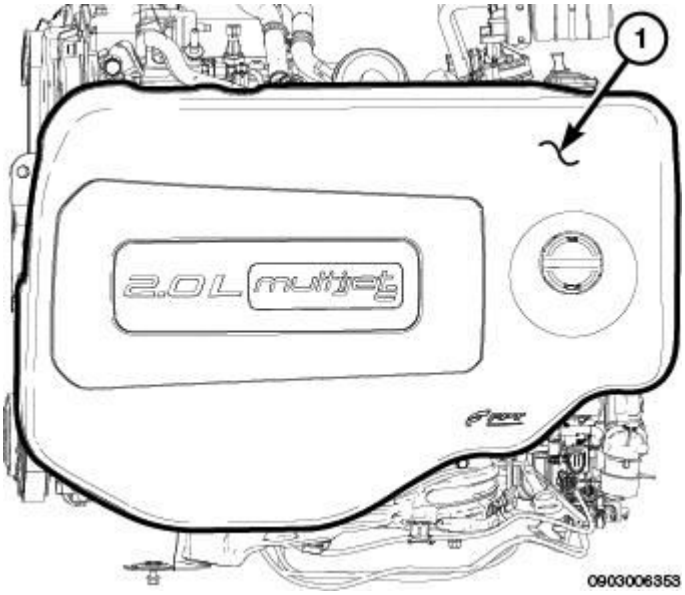

Fig. 304: Engine Cover
Courtesy of CHRYSLER GROUP, LLC

1. Remove the engine cover (1).

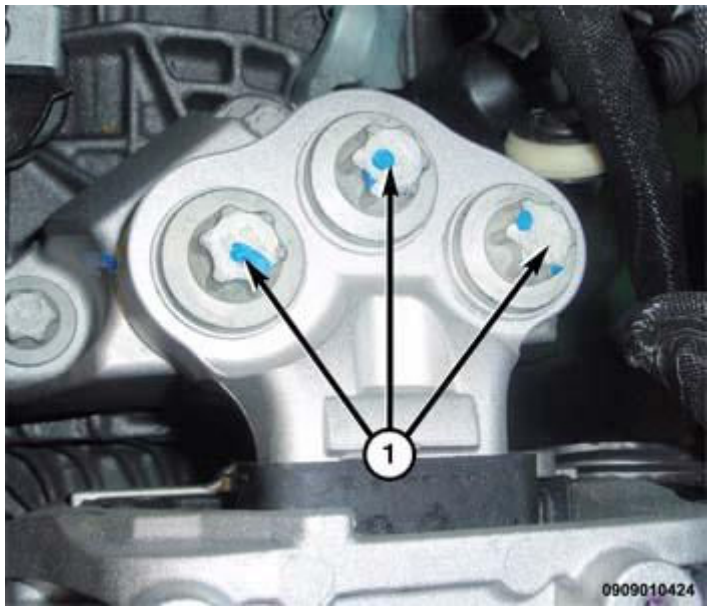

Fig. 305: Left Transaxle Mount Bolts
Courtesy of CHRYSLER GROUP, LLC

2. Using a suitable jack. Support the transaxle.
3. Remove left mount to transaxle retaining bolts (1).

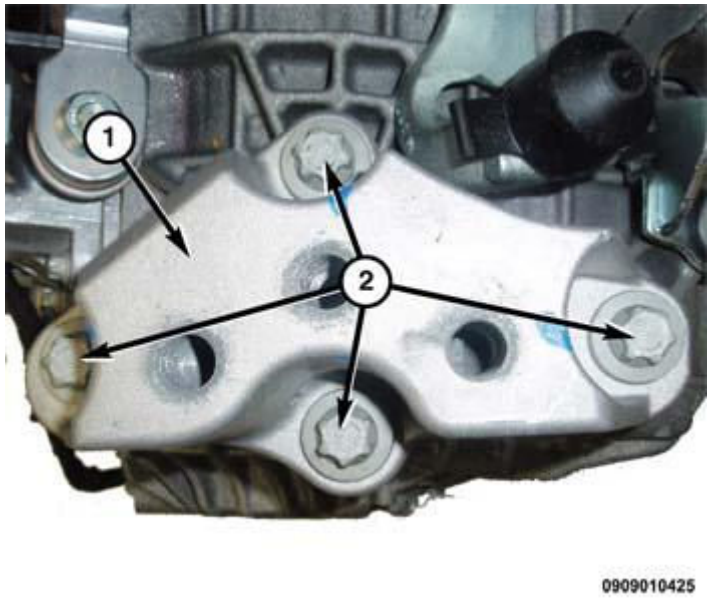

Fig. 306: Left Transaxle Mount Bracket & Bolts
Courtesy of CHRYSLER GROUP, LLC

4. Lower the transaxle.
5. Remove bolts (2) and the left transaxle mount bracket (1).

INSTALLATION

INSTALLATION

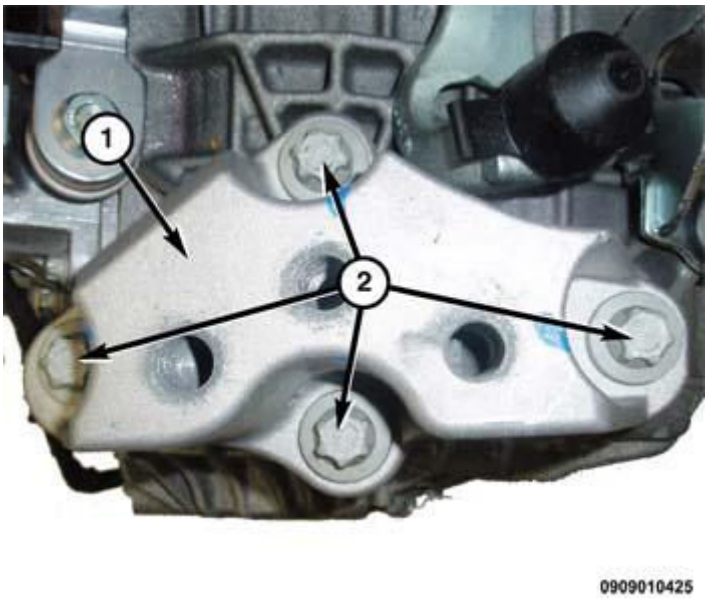

Fig. 307: Left Transaxle Mount Bracket & Bolts
Courtesy of CHRYSLER GROUP, LLC

1. Install the left transaxle mount bracket (1). Tighten bolts (2) to 105 N.m (77 ft. lbs.).
2. Using a suitable jack, raise the transaxle.

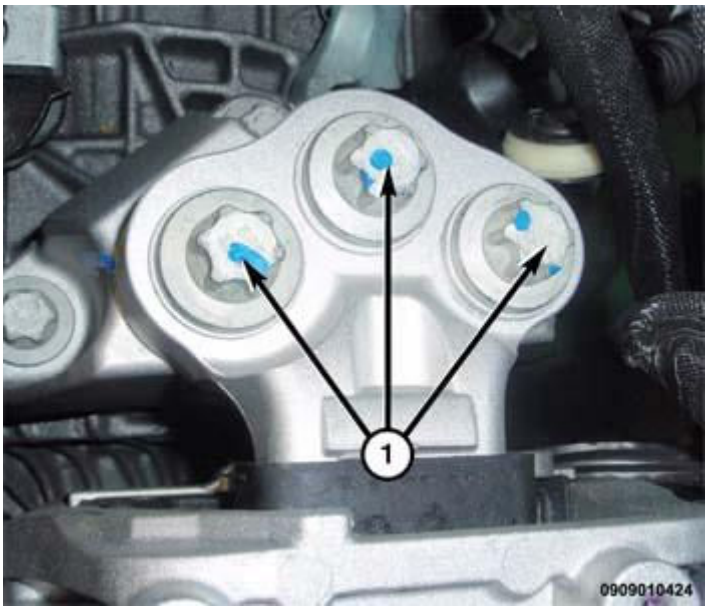

Fig. 308: Left Transaxle Mount Bolts
Courtesy of CHRYSLER GROUP, LLC

3. Install the left mount to transaxle retaining bolts (1) and tighten to 157 N.m (116 ft. lbs.).
4. Remove the jack.

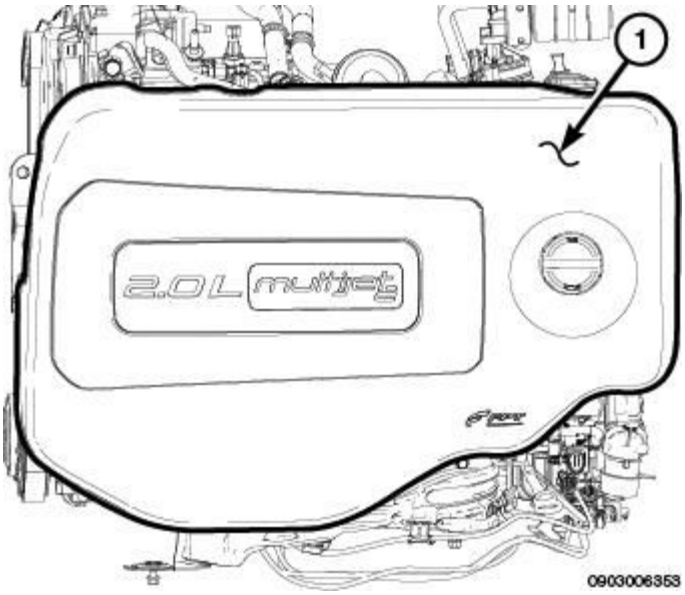

Fig. 309: Engine Cover
Courtesy of CHRYSLER GROUP, LLC

5. Install the engine cover (1).

BRACKET, ENGINE MOUNT, REAR MOUNT

REMOVAL

REMOVAL

1. Remove the rear mount. Refer to **INSULATOR, ENGINE MOUNT, REAR, REMOVAL** .

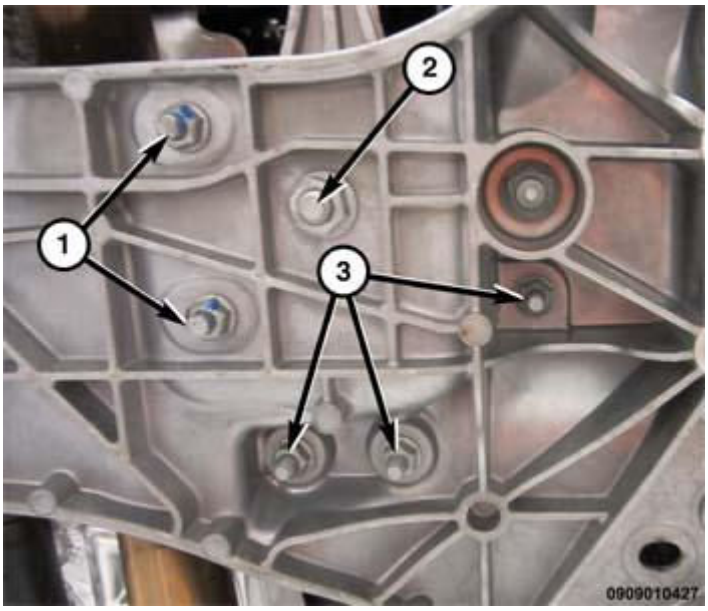

Fig. 310: Rear Mount Bracket Nuts

Courtesy of CHRYSLER GROUP, LLC

2. Remove the rear mount bracket nuts (1).
3. Using a wrench to hold bolt, remove the rear mount nuts (2, 3).

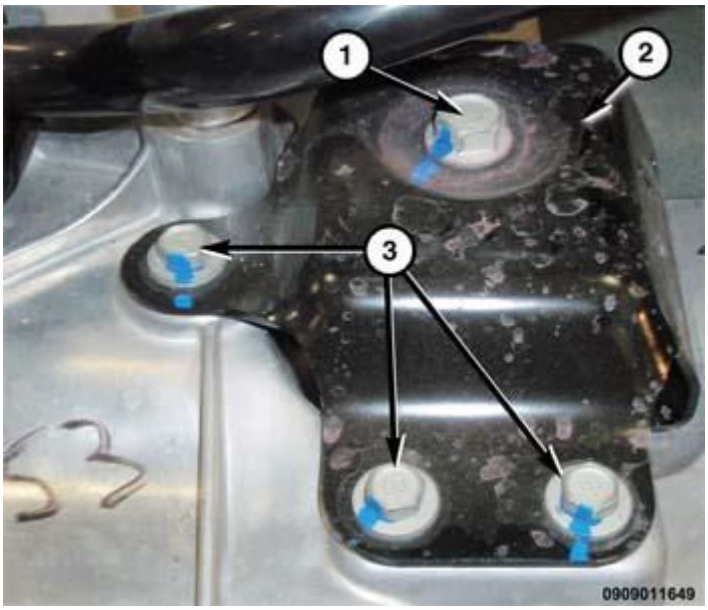

Fig. 311: Rear Mount Bracket Bolts
Courtesy of CHRYSLER GROUP, LLC

4. Remove bolts (1, 3) and the rear mount bracket (2).

INSTALLATION

INSTALLATION

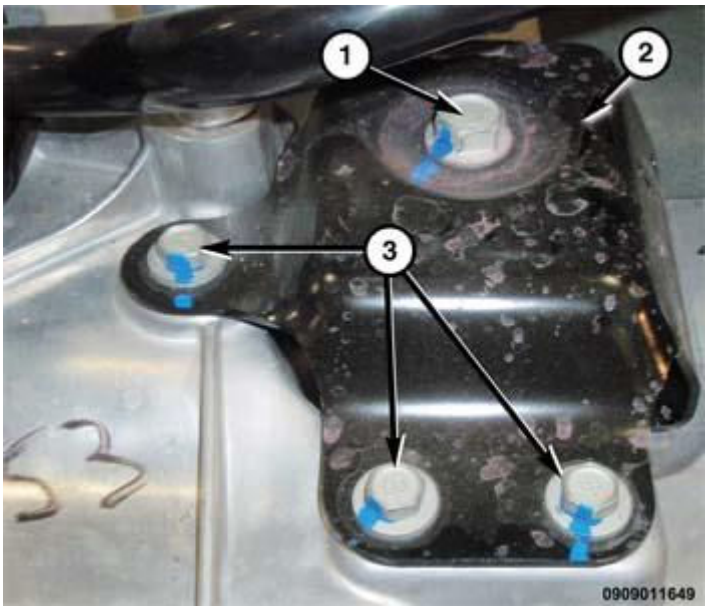

Fig. 312: Rear Mount Bracket Bolts
Courtesy of CHRYSLER GROUP, LLC

1.
2. Position the rear mount bracket and install bolts (1, 3).

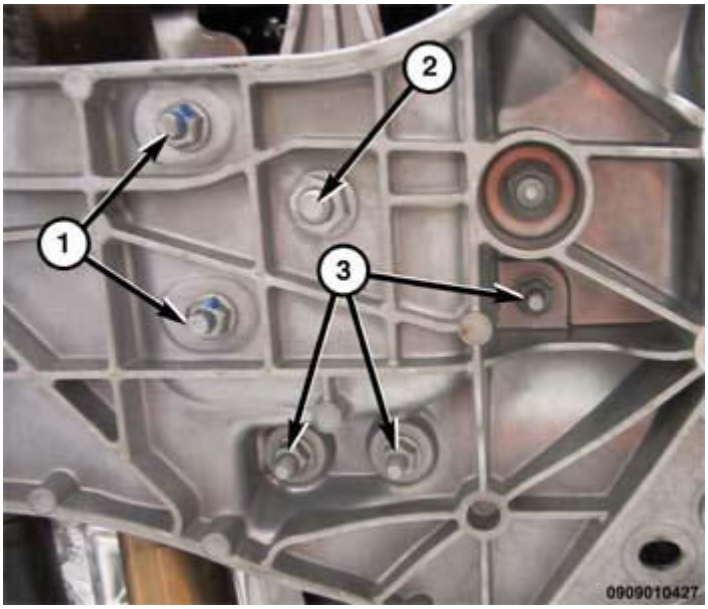

Fig. 313: Rear Mount Bracket Nuts
Courtesy of CHRYSLER GROUP, LLC

3. Install the rear mount bracket nuts (1, 3). Using a backing wrench to hold bolt, and tighten nuts (1, 3) to 75 N.m (55 ft. lbs.).
4. Using a backing wrench to hold bolt, and tighten nut (2) to 135 N.m (81 ft. lbs.).

5. Install the rear mount. Refer to **INSULATOR, ENGINE MOUNT, REAR, INSTALLATION** .

INSULATOR, ENGINE MOUNT, RIGHT

REMOVAL

REMOVAL

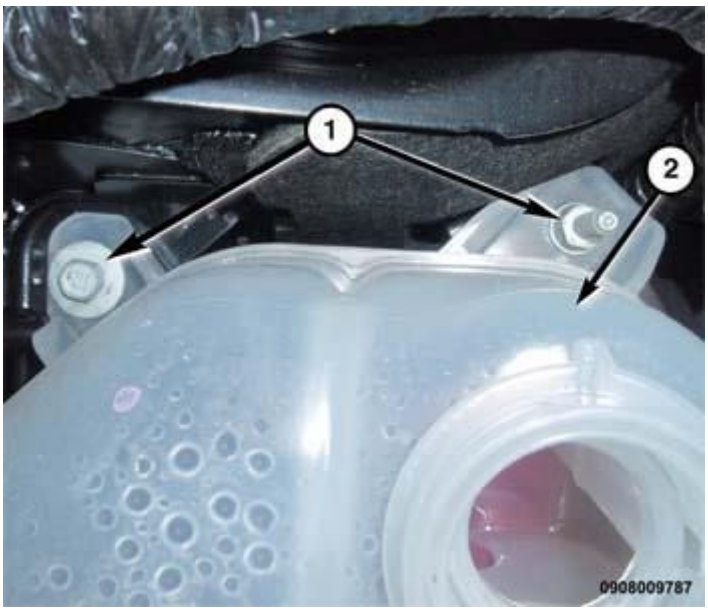

Fig. 314: Coolant Bottle & Fasteners
Courtesy of CHRYSLER GROUP, LLC

1. Remove bolt and nut (1) and position aside the coolant bottle (2).

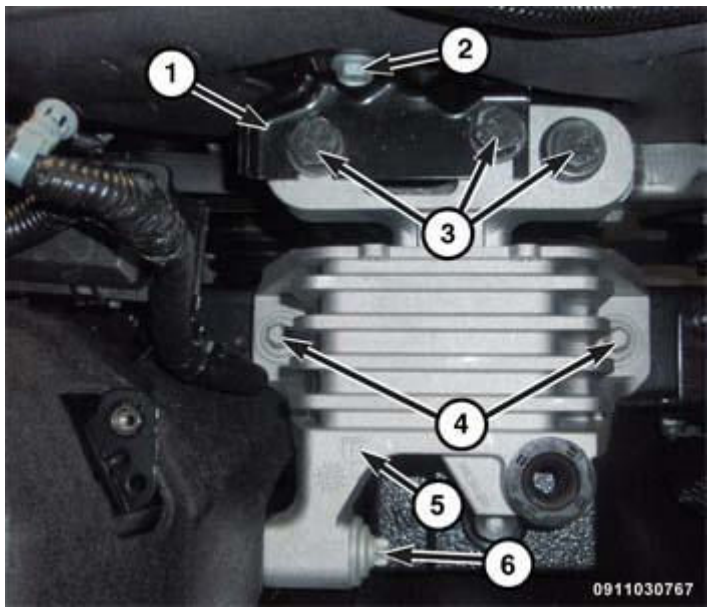

Fig. 315: Right Transaxle Mount Bolts
Courtesy of CHRYSLER GROUP, LLC

2. Remove the belly pan. Refer to **BELLY PAN, REMOVAL** .
3. Using a suitable jack. Support the engine.
4. Remove the right engine mount bracket bolt (2).
5. Remove the three engine mount bolts (3) and mount bracket (1).
6. Remove bolts (4, 6) and the right engine mount (5).

INSTALLATION

INSTALLATION

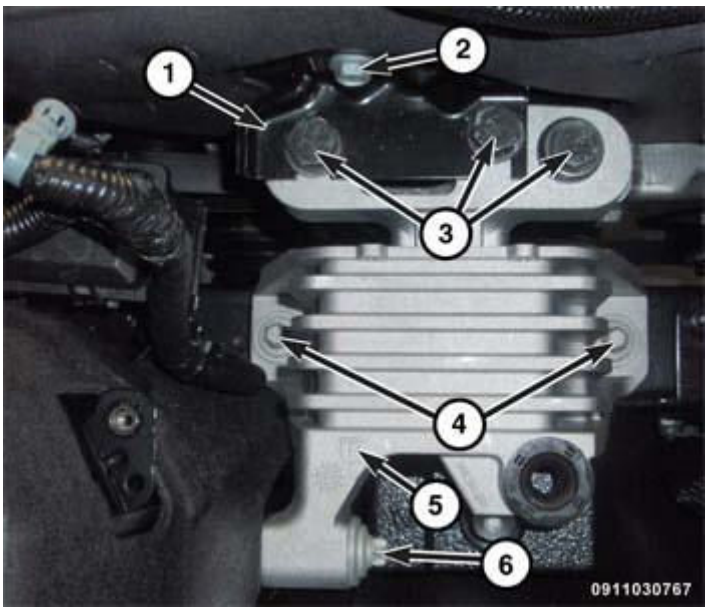

Fig. 316: Right Transaxle Mount Bolts
Courtesy of CHRYSLER GROUP, LLC

1. Install the right engine mount (5). Tighten bolts (3, 4) finger tight.
2. Install the right mount bracket (1) and tighten bolt (2) finger tight.
3. Install the right mount bolts (3) finger tight.
4. Tighten engine mount bolts to:
   - Tighten bolts (4) to 70 N.m (52 ft. lbs.).
   - Tighten bolt (6) to 65 N.m (48 ft. lbs.).
   - Tighten bolts (3) to 90 N.m (66 ft. lbs.).
   - Tighten bolt (2) to 25 N.m (18 ft. lbs.).
5. Remove the jack.
6. Install the bellypan. Refer to **BELLY PAN, INSTALLATION** .

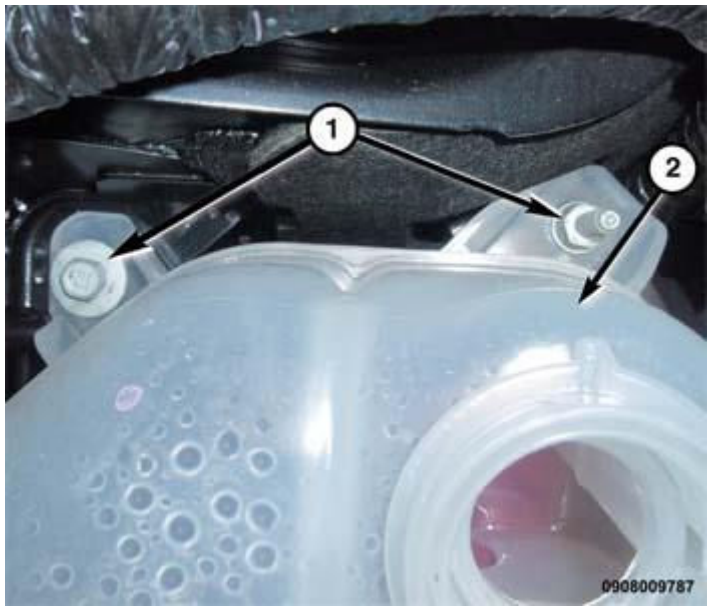

Fig. 317: Coolant Bottle & Fasteners
Courtesy of CHRYSLER GROUP, LLC

7. Install the coolant bottle (1). Tighten nuts and bolts (1) to 8 N.m (71 in. lbs.).

INSULATOR, ENGINE MOUNT, LEFT

REMOVAL

REMOVAL

1. Remove the battery tray. Refer to **TRAY, BATTERY, REMOVAL** .
2. Remove the PDC (1) assembly. Refer to **CENTER, POWER DISTRIBUTION (PDC), REMOVAL** .
3. Remove the belly pan. Refer to **BELLY PAN, REMOVAL** .
4. Position a jack under transaxle to support the transaxle.

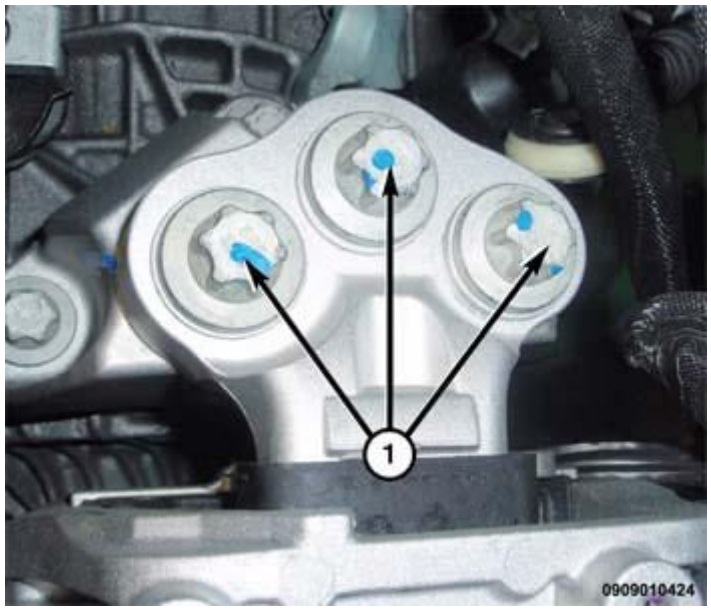

Fig. 318: Left Transaxle Mount Bolts
Courtesy of CHRYSLER GROUP, LLC

5. Remove the left mount bolts (1).

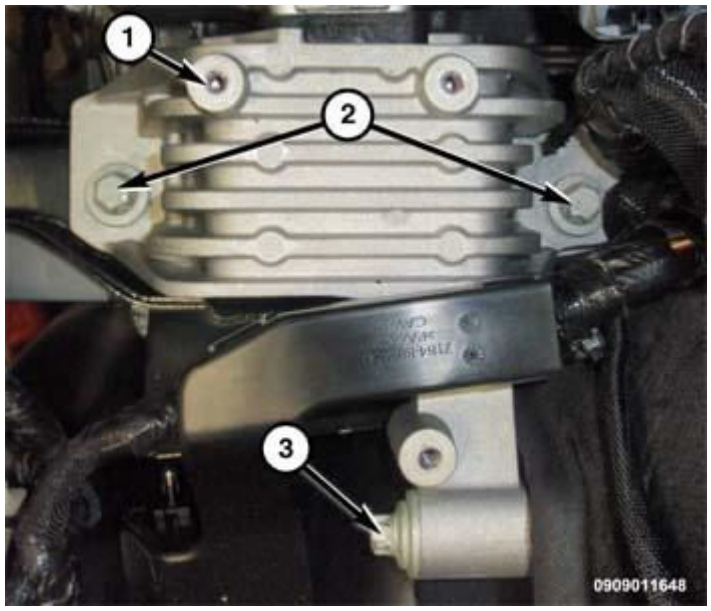

Fig. 319: Left Mount Bolts
Courtesy of CHRYSLER GROUP, LLC

6. Remove left mount to shock tower bolt (3).
7. Remove bolts (2) and the left mount (1).

INSTALLATION

INSTALLATION

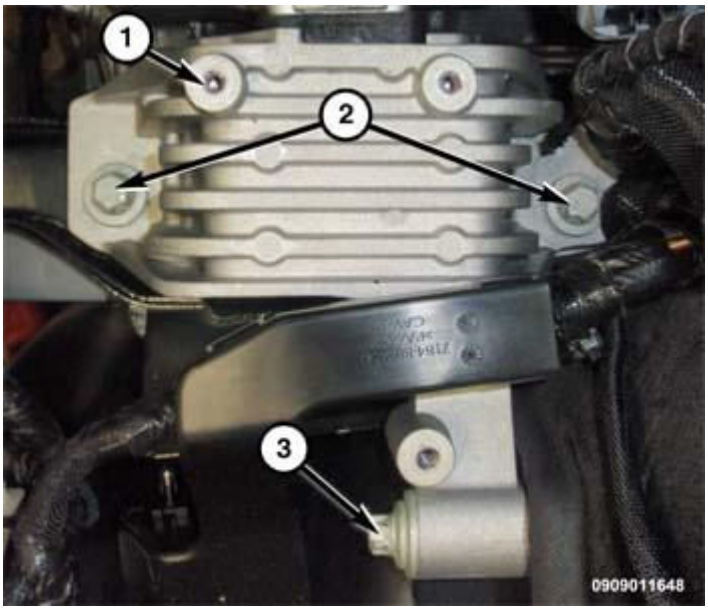

Fig. 320: Left Mount Bolts
Courtesy of CHRYSLER GROUP, LLC

1. Install the left mount (1) on frame rail. Tighten bolts (2) to 105 N.m (77 ft. lbs.).
2. Install left mount to shock tower bolt (3) and tighten to 64 N.m (47 ft. lbs.).

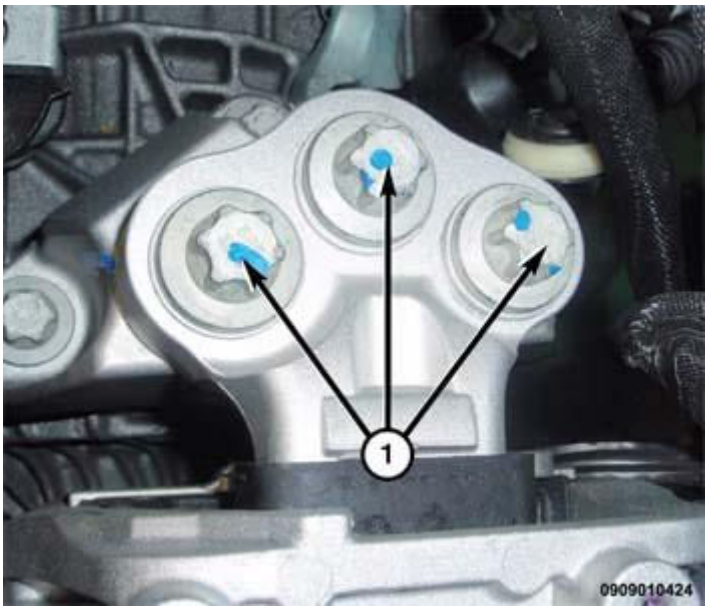

Fig. 321: Left Transaxle Mount Bolts
Courtesy of CHRYSLER GROUP, LLC

3. Install left mount bolts (1). Tighten bolt 157 N.m (116 ft. lbs.).
4. Remove the jack.

5. Install the belly pan Refer to **BELLY PAN, INSTALLATION** .
6. Install the PDC. Refer to **CENTER, POWER DISTRIBUTION (PDC), INSTALLATION** .
7. Install the battery tray. Refer to **TRAY, BATTERY, INSTALLATION** .

INSULATOR, ENGINE MOUNT, REAR

REMOVAL

MTX

1. Raise and support the vehicle. Refer to **HOISTING, STANDARD PROCEDURE** .
2. Remove the belly pan. Refer to **BELLY PAN, REMOVAL** .
3. Remove the exhaust crossunder pipe. Refer to **PIPE, EXHAUST CROSSUNDER, REMOVAL** .

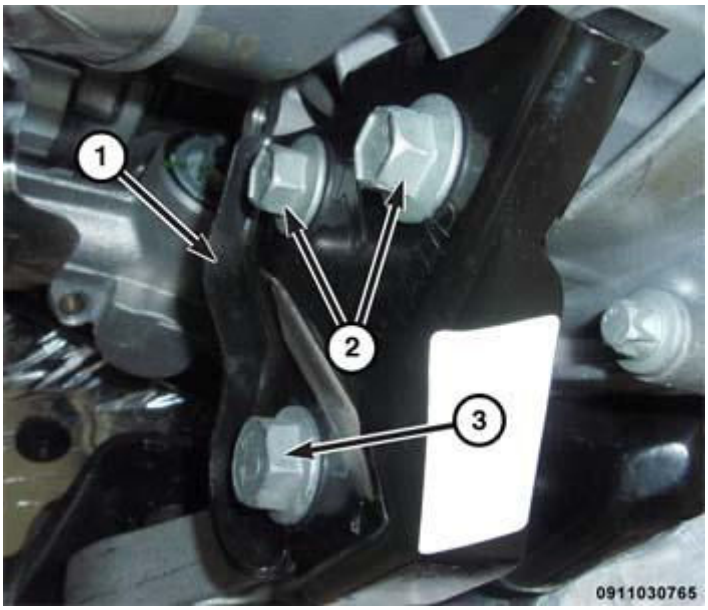

Fig. 322: Rear Mount Bracket & Bolts
Courtesy of CHRYSLER GROUP, LLC

4. Remove the rear mount bolt (3).
5. Remove bolts (2) and the rear mount bracket (1).

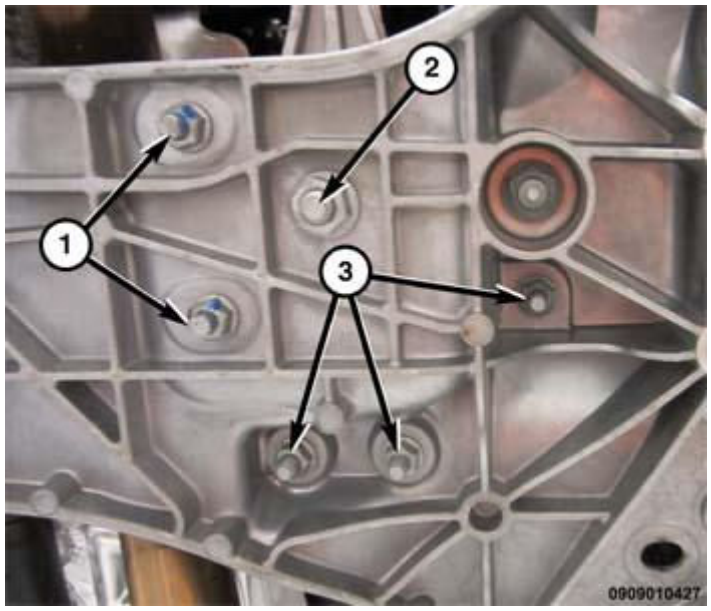

Fig. 323: Rear Mount Bracket Nuts
Courtesy of CHRYSLER GROUP, LLC

6. Using a wrench to hold bolt, remove the rear mount nut (2).

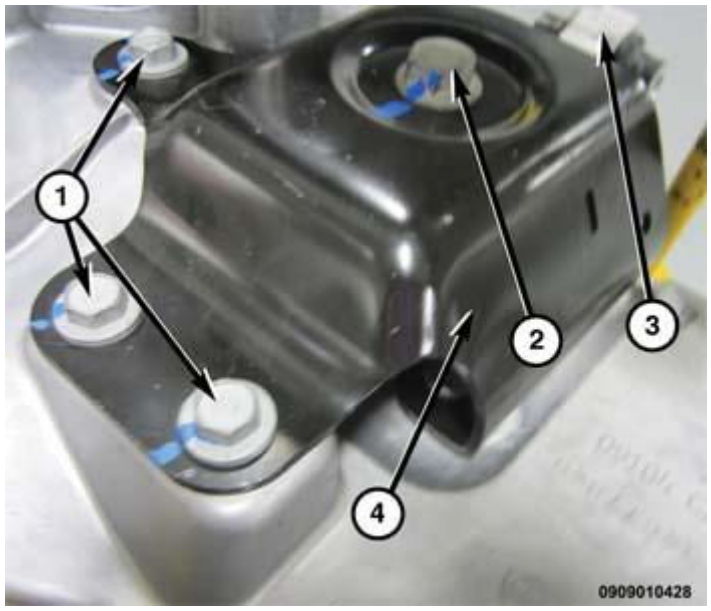

Fig. 324: Rear Mount & Bolts
Courtesy of CHRYSLER GROUP, LLC

7. Remove bolt (2) and the rear mount (3).

INSTALLATION

MTX

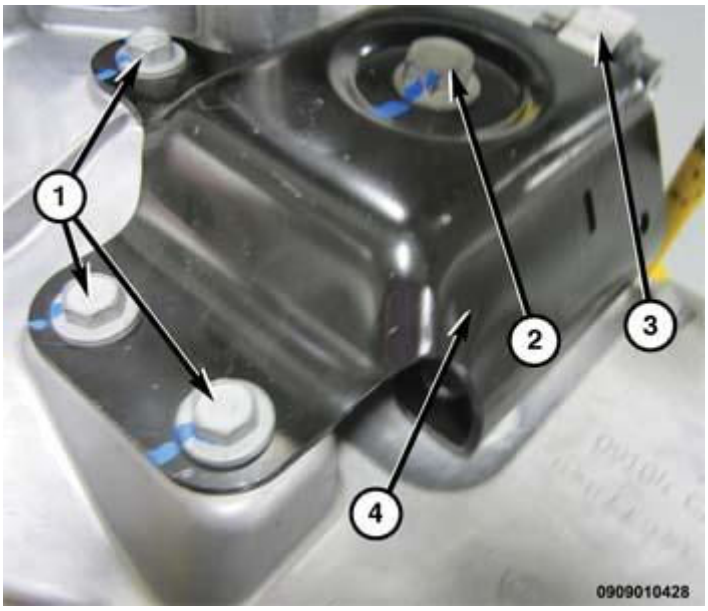

Fig. 325: Rear Mount & Bolts
Courtesy of CHRYSLER GROUP, LLC

1. Install the rear mount (3) into the engine mount bracket (4).
2. Install the rear engine mount bolt (2) and nut.

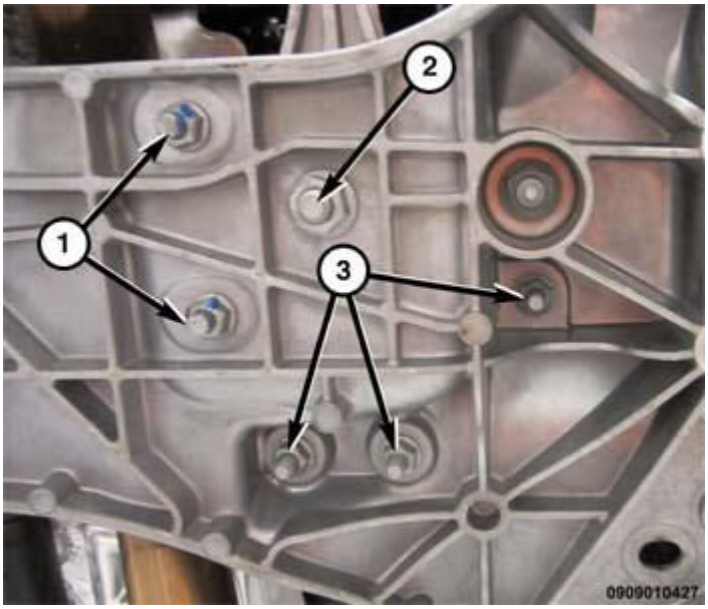

Fig. 326: Rear Mount Bracket Nuts
Courtesy of CHRYSLER GROUP, LLC

3. Using a backing wrench to hold bolt, Tighten nut (2) to 115 N.m (85 ft. lbs.).

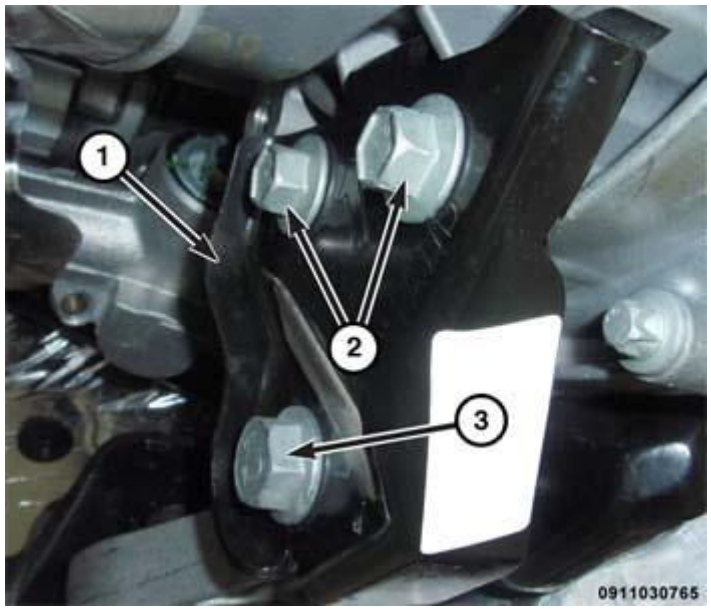

Fig. 327: Rear Mount Bracket & Bolts
Courtesy of CHRYSLER GROUP, LLC

4. Install the rear engine mount-to-transaxle bracket (1). Tighten bolt (2) to 147 N.m (108 ft. lbs.).
5. Install the rear engine mount bolt (3). Tighten bolt to 220 N.m (162 ft. lbs.).

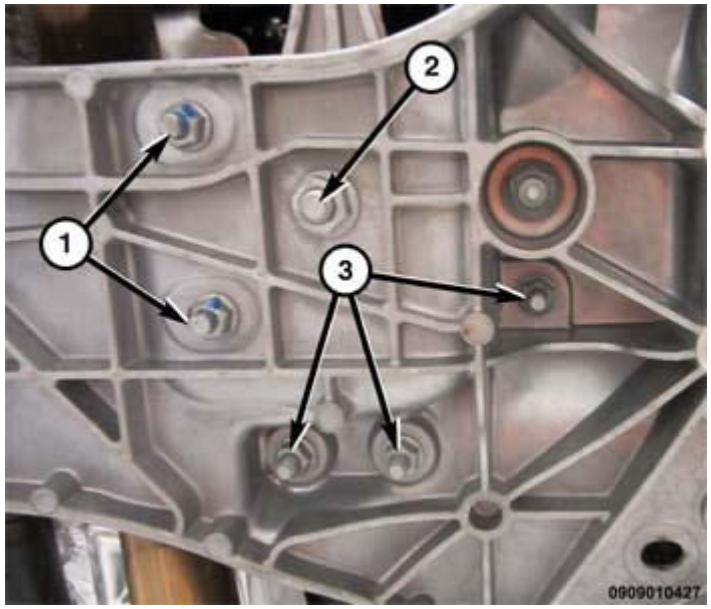

Fig. 328: Rear Mount Bracket Nuts
Courtesy of CHRYSLER GROUP, LLC

6. Tighten nuts (1) to 75 N.m (55 ft. lbs.).
7. Using a backing wrench to hold bolt, Tighten nuts (3) to 75 N.m (55 ft. lbs.).

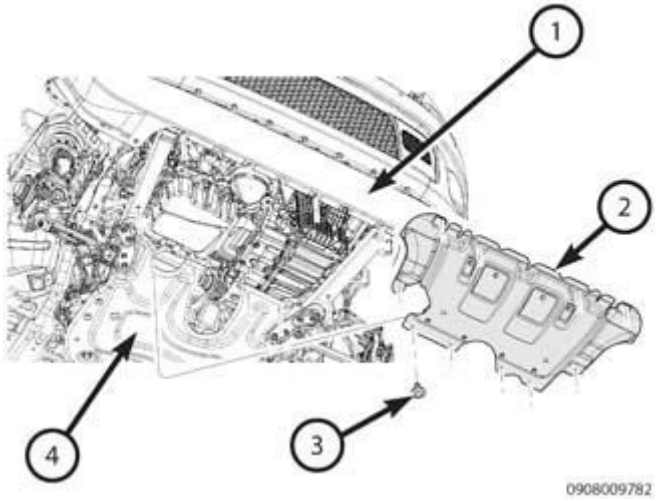

Fig. 329: Removing/Installing Starter
Courtesy of CHRYSLER GROUP, LLC

8. Install the exhaust crossunder pipe. Refer to **PIPE, EXHAUST CROSSUNDER, INSTALLATION** .
9. Install the belly pan. Refer to **BELLY PAN, INSTALLATION** .
10. Lower the vehicle.

TURBOCHARGER SYSTEM

COOLER AND HOSES, CHARGE AIR

REMOVAL

COOLER

CAUTION: Do not use any tools to remove the rubber isolators-remove by hand only. Soapy water or silicone based lubricant spray may be used to assist removal/installation of isolators. DO NOT use a petroleum based lubricant on the isolators, as damage to the rubber material can occur.

1. Raise and support vehicle. Refer to **HOISTING, STANDARD PROCEDURE** .
2. Remove the belly pan. Refer to **BELLY PAN, REMOVAL** .
3. Remove the front fascia. Refer to **FASCIA, FRONT, REMOVAL** .

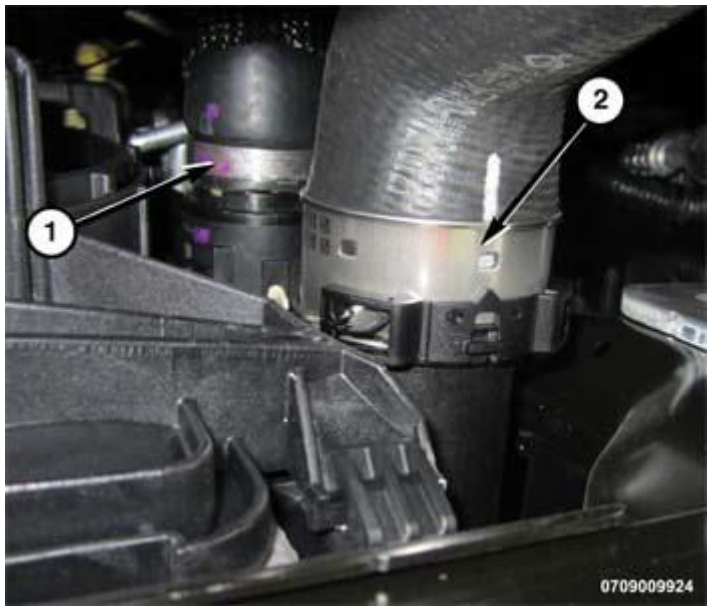

Fig. 330: Lower CAC Hoses
Courtesy of CHRYSLER GROUP, LLC

4. Remove the right side Charge Air Cooler (CAC) hose (2).

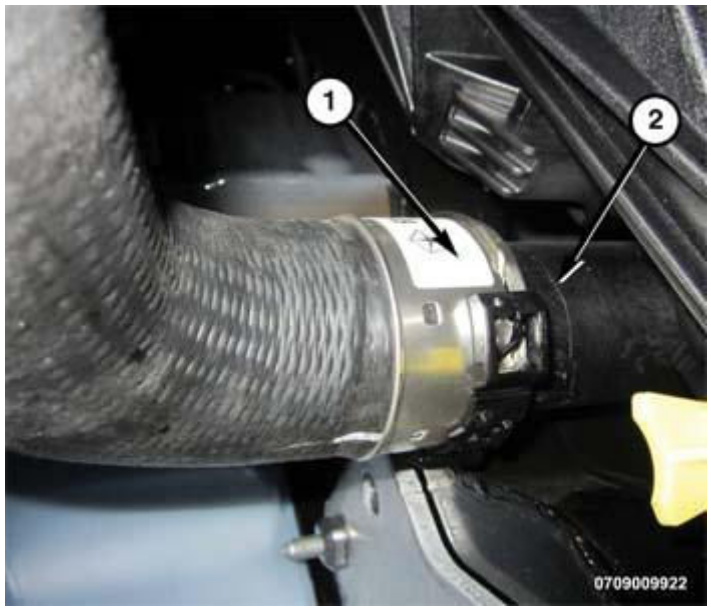

Fig. 331: Left Charge Air Cooler (CAC) & Hose
Courtesy of CHRYSLER GROUP, LLC

5. Remove the left side Charge Air Cooler (CAC) hose (1).

Fig. 332: Right Side Air Deflector Pushpin Retainers
Courtesy of CHRYSLER GROUP, LLC

6. Remove the two right side air deflector pushpin retainers (1).

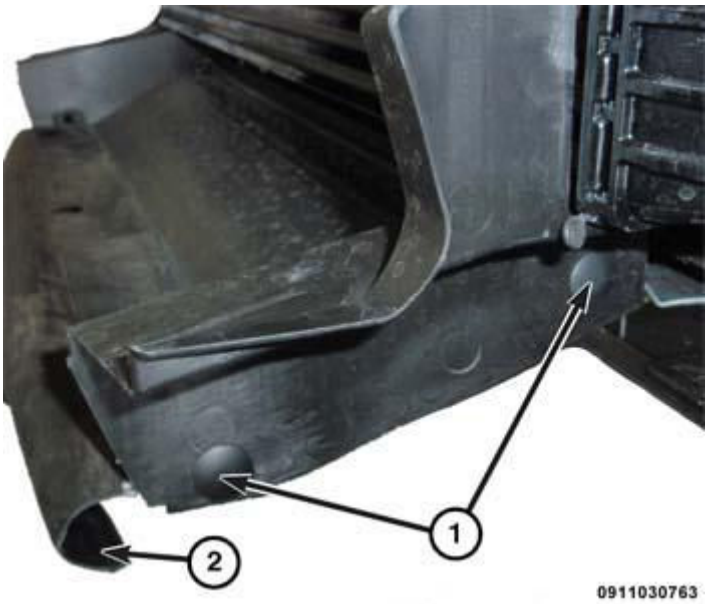

Fig. 333: Left Side Air Deflector Pushpin Retainers
Courtesy of CHRYSLER GROUP, LLC

7. Remove the two left side air deflector pushpin retainers (1).

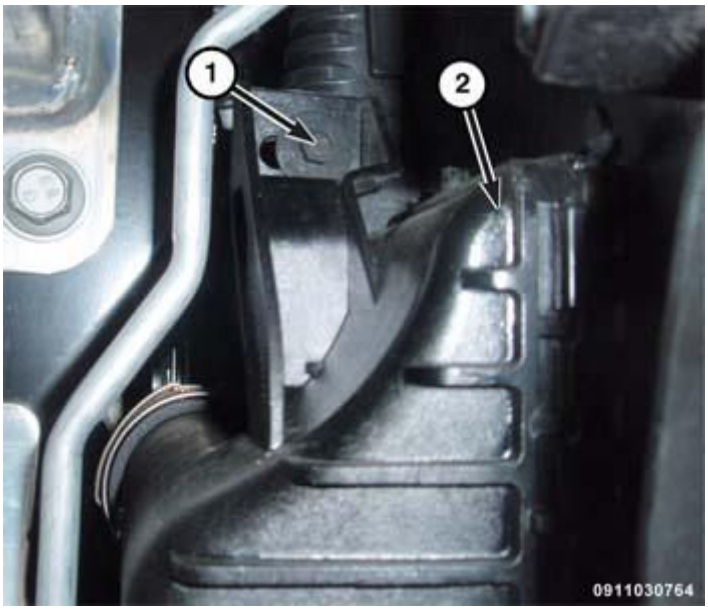

Fig. 334: Right Side Charge Air Cooler Bolt
Courtesy of CHRYSLER GROUP, LLC

8. Remove the right side charge air cooler (CAC) bolt (1).

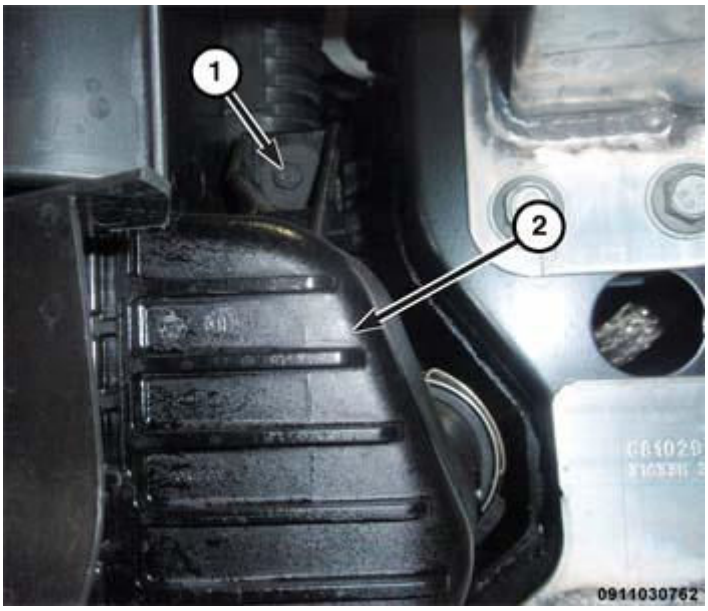

Fig. 335: Left Side Charge Air Cooler Bolt
Courtesy of CHRYSLER GROUP, LLC

9. Remove left side bolt (1) and the CAC (2).

HOSES

1. Raise and support the vehicle. Refer to **HOISTING, STANDARD PROCEDURE** .

2. Remove the belly pan. Refer to **BELLY PAN, REMOVAL** .

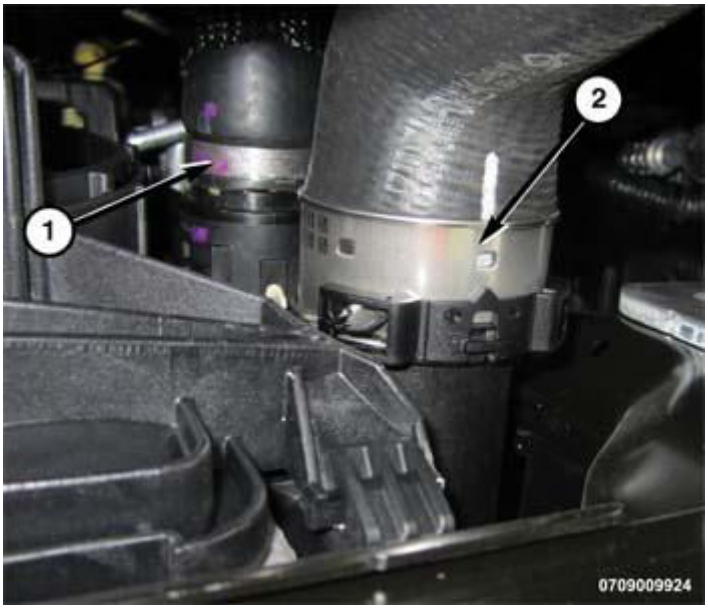

Fig. 336: Lower CAC Hoses
Courtesy of CHRYSLER GROUP, LLC

3. Disconnect the right side Charge Air Cooler (CAC) hose (2).

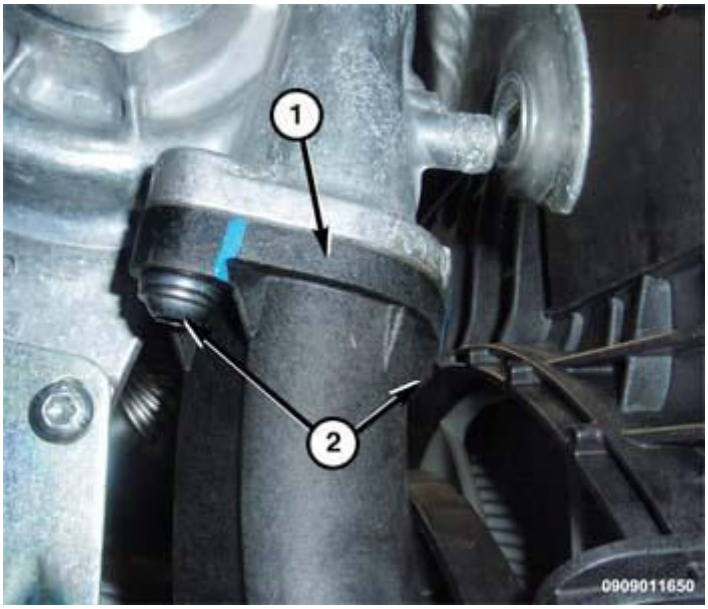

Fig. 337: Right CAC Tube & Bolts
Courtesy of CHRYSLER GROUP, LLC

4. Remove bolts (2) and the right side CAC tube (1).

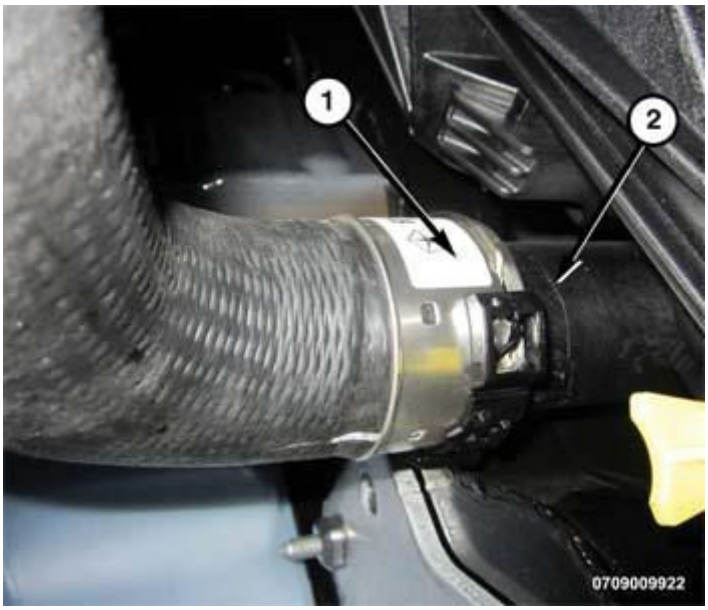

Fig. 338: Left Charge Air Cooler (CAC) & Hose
Courtesy of CHRYSLER GROUP, LLC

5. Disconnect the left side CAC hose (1).

Fig. 339: CAC Air Tube & Nut
Courtesy of CHRYSLER GROUP, LLC

6. Remove the left CAC tube support bracket nut (1).

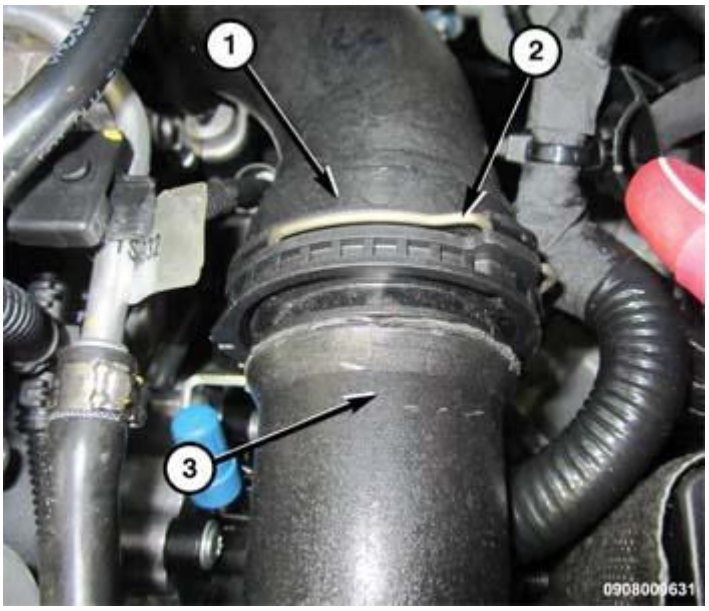

Fig. 340: EGR Air Flow Control Valve Inlet Tube, CAC Tube Wire Retainer & CAC Hose
Courtesy of CHRYSLER GROUP, LLC

7. Release spring clip (2) and disconnect the left side CAC tube (3) from elbow and remove tube.

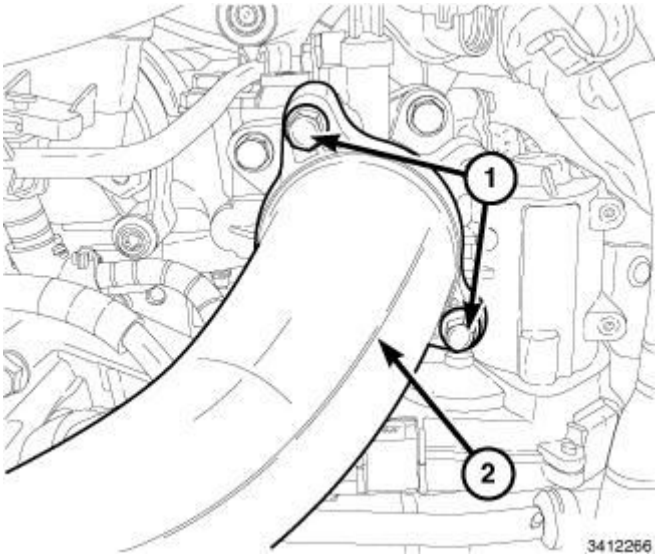

Fig. 341: Bolts & Charge Air Cooler (CAC) Air Tube
Courtesy of CHRYSLER GROUP, LLC

8. Remove bolts (1) and the left side CAC air tube (2).

INSTALLATION

COOLER

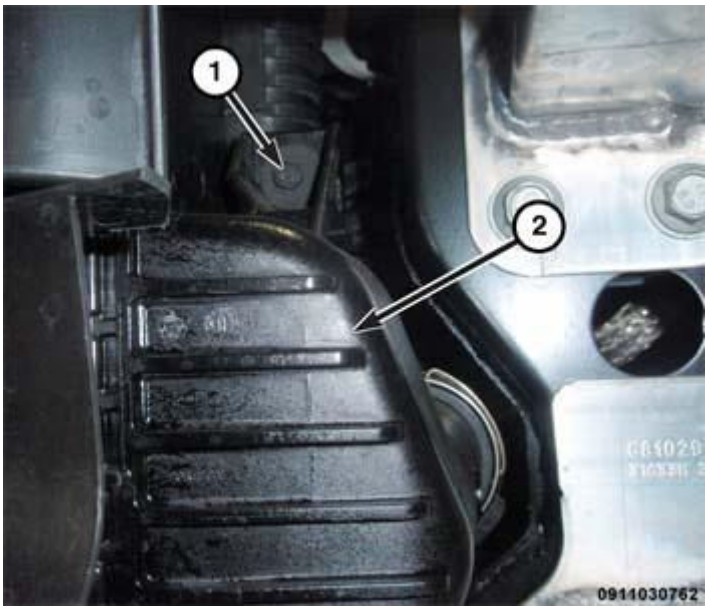

Fig. 342: Left Side Charge Air Cooler Bolt
Courtesy of CHRYSLER GROUP, LLC

1. Position Charge Air Cooler (CAC) (2) and install the left bolt (1). Tighten bolt to 35 N.m (25 ft. lbs.).

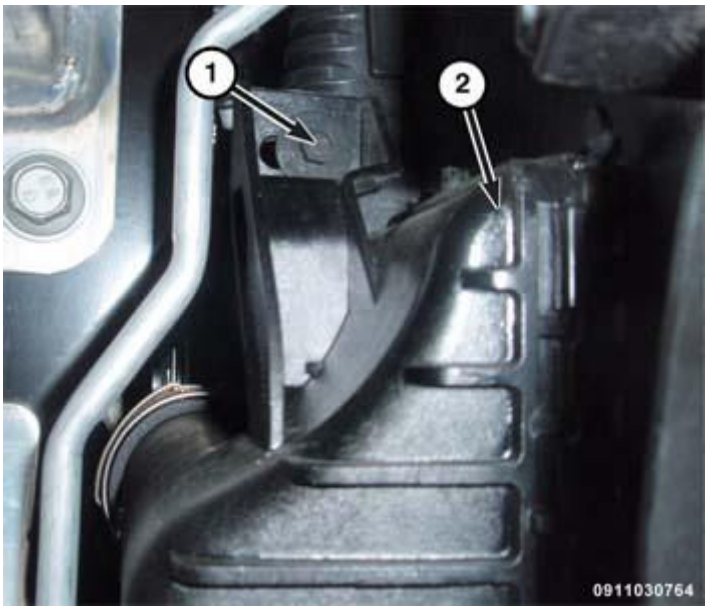

Fig. 343: Right Side Charge Air Cooler Bolt
Courtesy of CHRYSLER GROUP, LLC

2. Install the left CAC bolt (1). Tighten bolt to 35 N.m (25 ft. lbs.).

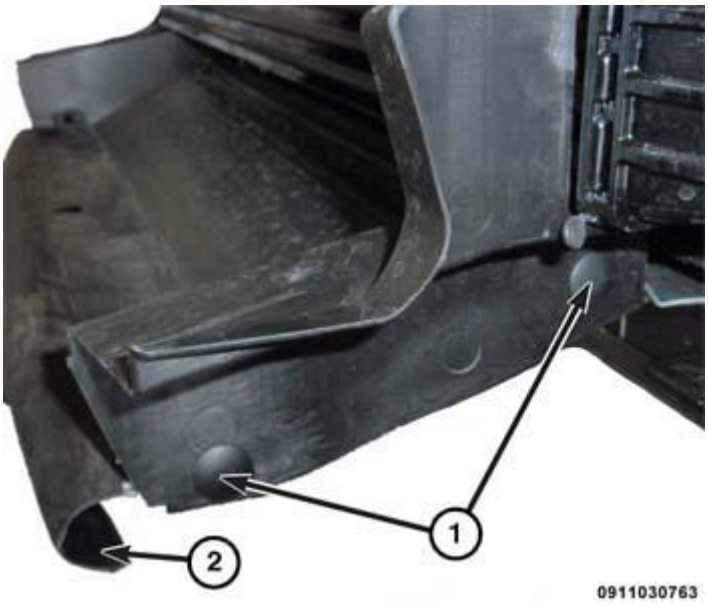

Fig. 344: Left Side Air Deflector Pushpin Retainers
Courtesy of CHRYSLER GROUP, LLC

3. Install the two left side air deflector pushpin retainers (1).

Fig. 345: Right Side Air Deflector Pushpin Retainers
Courtesy of CHRYSLER GROUP, LLC

4. Install the two right side air deflector pushpin retainers (1).

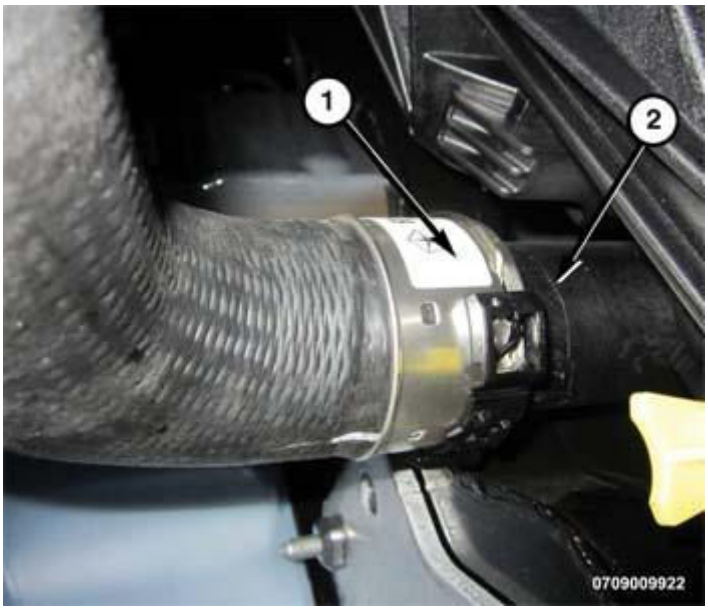

Fig. 346: Left Charge Air Cooler (CAC) & Hose
Courtesy of CHRYSLER GROUP, LLC

5. Install the left side Charge Air Cooler (CAC) hose (1).

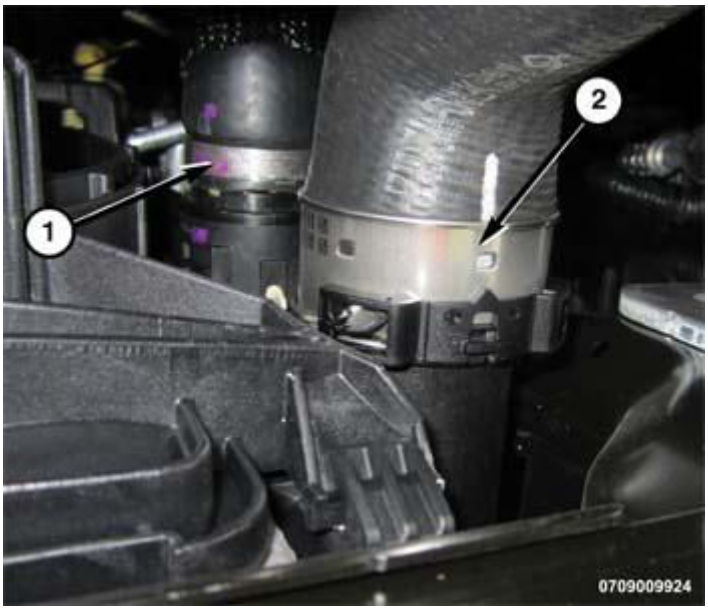

Fig. 347: Lower CAC Hoses
Courtesy of CHRYSLER GROUP, LLC

6. Install the right side Charge Air Cooler (CAC) hose (2).
7. Install the front fascia. Refer to **FASCIA, FRONT, INSTALLATION** .
8. Install the belly pan. Refer to **BELLY PAN, INSTALLATION** .
9. Lower the vehicle.

HOSES

Fig. 348: Charge Air Cooler Air Tube & O-Ring Seal
Courtesy of CHRYSLER GROUP, LLC

1. Inspect the Charge Air Cooler (CAC) air tube (1) O-ring seal (2) and replace as necessary.

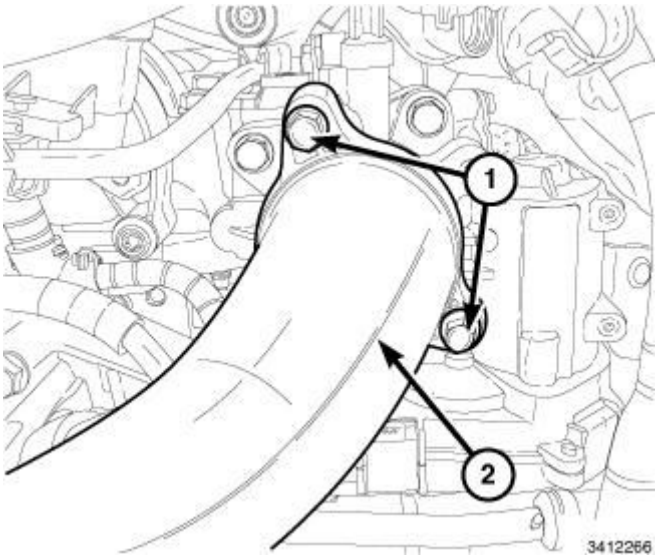

Fig. 349: Bolts & Charge Air Cooler (CAC) Air Tube
Courtesy of CHRYSLER GROUP, LLC

2. Install the CAC air tube (2) to the EGR air flow control valve. Tighten bolts (1) to 9 N.m (80 in. lbs.).

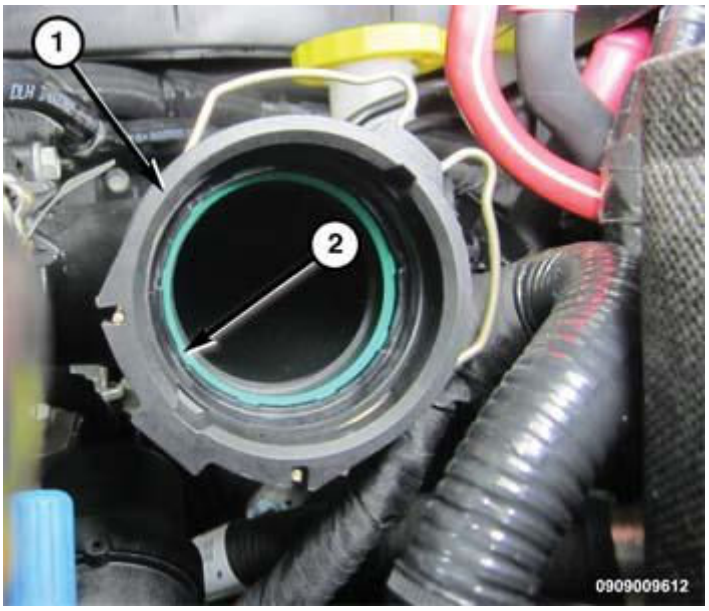

Fig. 350: O-Ring & EGR Air Flow Control Valve Inlet Tube
Courtesy of CHRYSLER GROUP, LLC

3. Inspect the CAC air tube (1) O-ring seal (2) and replace as necessary.

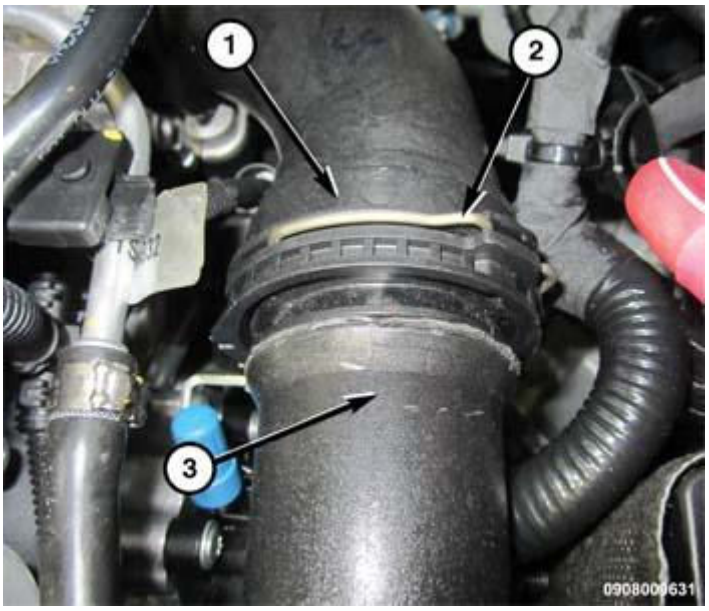

Fig. 351: EGR Air Flow Control Valve Inlet Tube, CAC Tube Wire Retainer & CAC Hose
Courtesy of CHRYSLER GROUP, LLC

4. Install the left side CAC air tube (3) and install clip (2).

Fig. 352: CAC Air Tube & Nut
Courtesy of CHRYSLER GROUP, LLC

5. Install the left CAC air tube nut (1) and tighten to 9 N.m (80 in. lbs.).

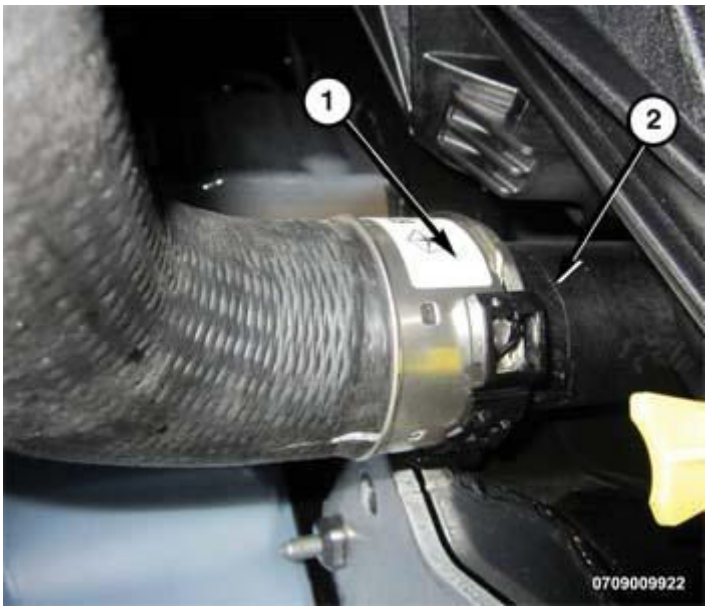

Fig. 353: Left Charge Air Cooler (CAC) & Hose
Courtesy of CHRYSLER GROUP, LLC

6. Connect the left lower CAC hose (1).

Fig. 354: CAC Tube & O-Ring Seal
Courtesy of CHRYSLER GROUP, LLC

7. Install a new O-ring seal (1) on the CAC tube (2).

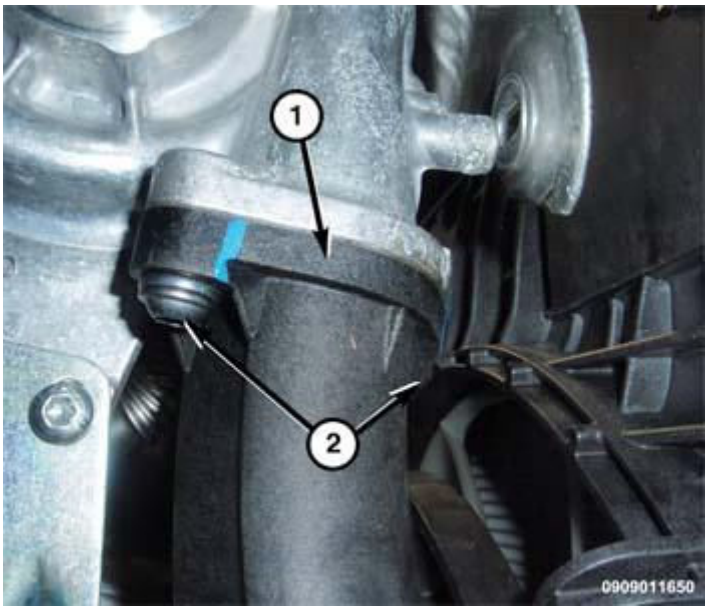

Fig. 355: Right CAC Tube & Bolts
Courtesy of CHRYSLER GROUP, LLC

8. Install the CAC tube (1) to the turbocharger flange. Tighten bolts (2) to 10 N.m (89 in. lbs.).

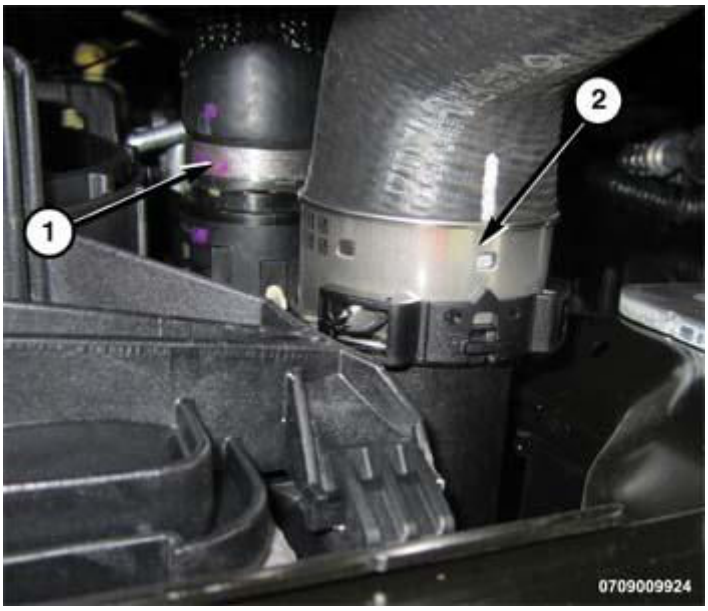

Fig. 356: Lower CAC Hoses
Courtesy of CHRYSLER GROUP, LLC

9. Install the right side CAC hose (2).

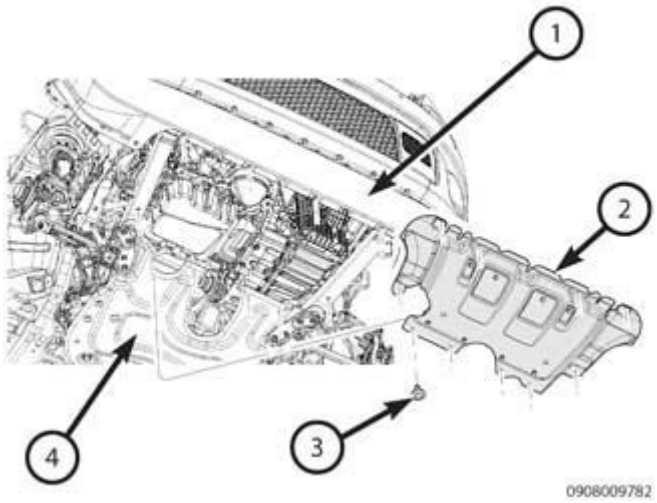

Fig. 357: Removing/Installing Starter
Courtesy of CHRYSLER GROUP, LLC

10. Install the belly pan (2) and securely tighten bolts (3).
11. Lower the vehicle

TURBOCHARGER

REMOVAL

REMOVAL

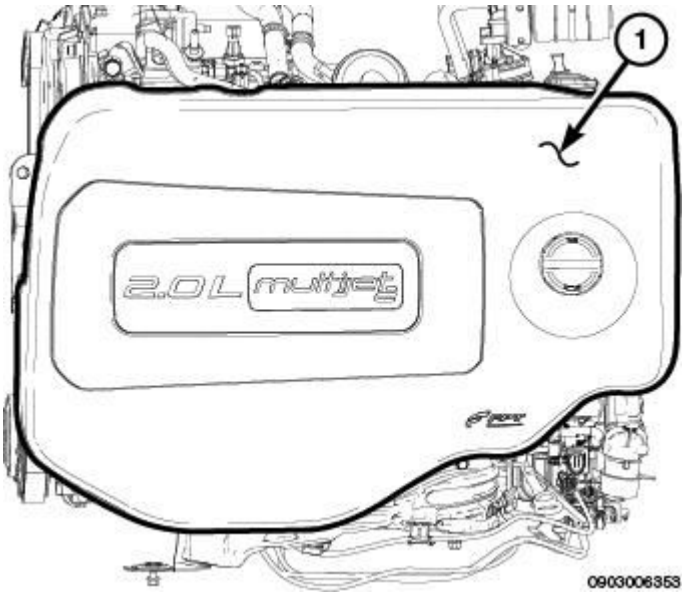

Fig. 358: Engine Cover
Courtesy of CHRYSLER GROUP, LLC

1. Disconnect the negative battery cable.
2. Remove the engine cover (1).

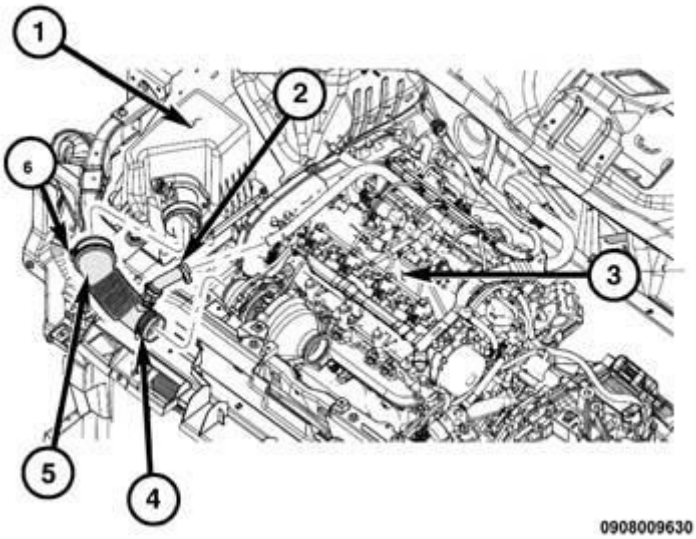

Fig. 359: Turbocharger Inlet Hose & Clamp
Courtesy of CHRYSLER GROUP, LLC

3. Loosen clamps (4, 6) and remove the air clean to turbocharger air tube (5).

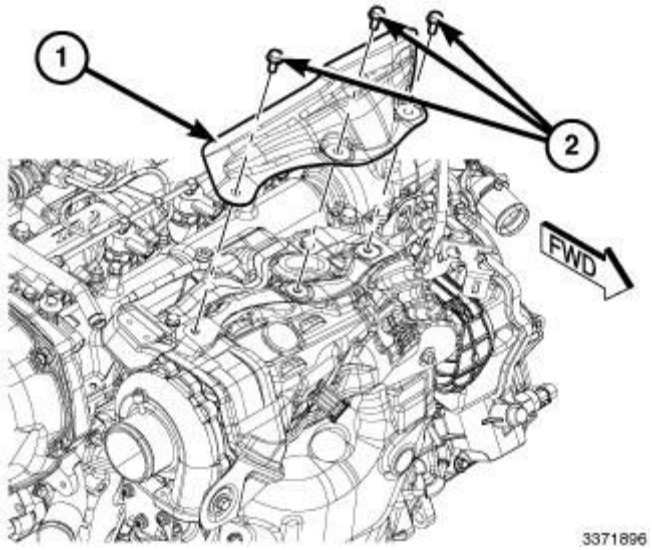

Fig. 360: Upper Turbocharger Heat Shield & Mid Upper Turbocharger Heat Shield
Courtesy of CHRYSLER GROUP, LLC

4. Remove the upper turbocharger heat shield (1).

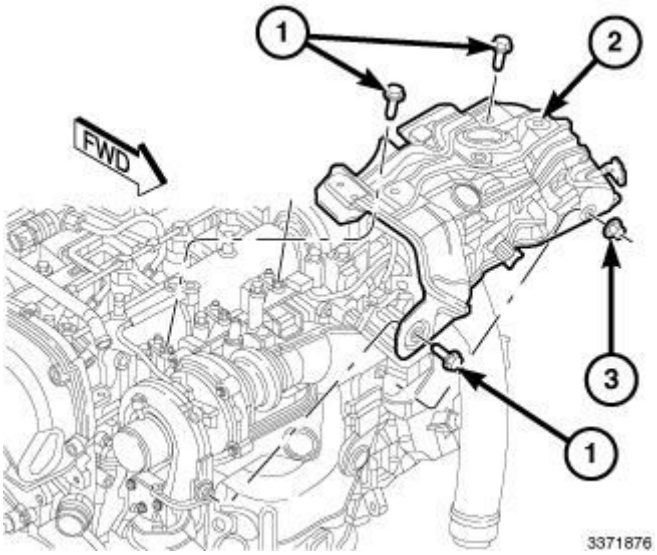

Fig. 361: Turbocharger Heat Shield & Fasteners
Courtesy of CHRYSLER GROUP, LLC

5. Remove the turbocharger heat shield (2).

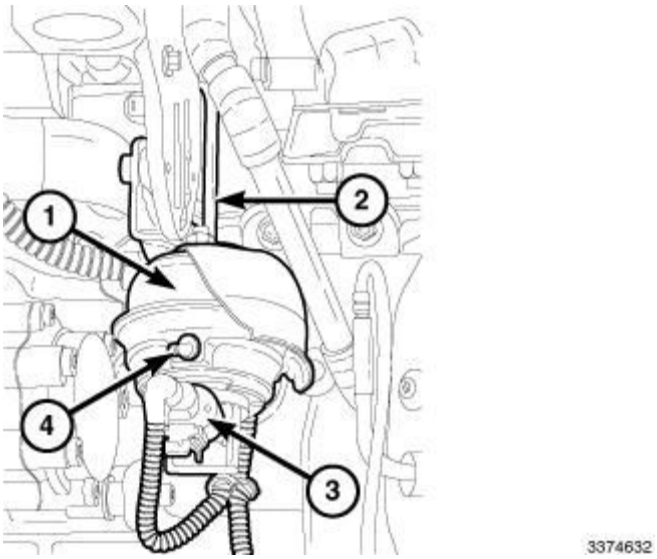

Fig. 362: Turbocharger Actuator, Bracket, Connector & Vacuum Line
Courtesy of CHRYSLER GROUP, LLC

6. Disconnect the vacuum line (4).
7. Disconnect the turbocharger actuator (1) wire harness connector (3).
8. Remove the Diesel Particulate Filter (DPF). Refer to **FILTER, DIESEL PARTICULATE, REMOVAL** .
9. Raise and support the vehicle. Refer to **HOISTING, STANDARD PROCEDURE** .
10. Remove the belly pan. Refer to **BELLY PAN, REMOVAL** .

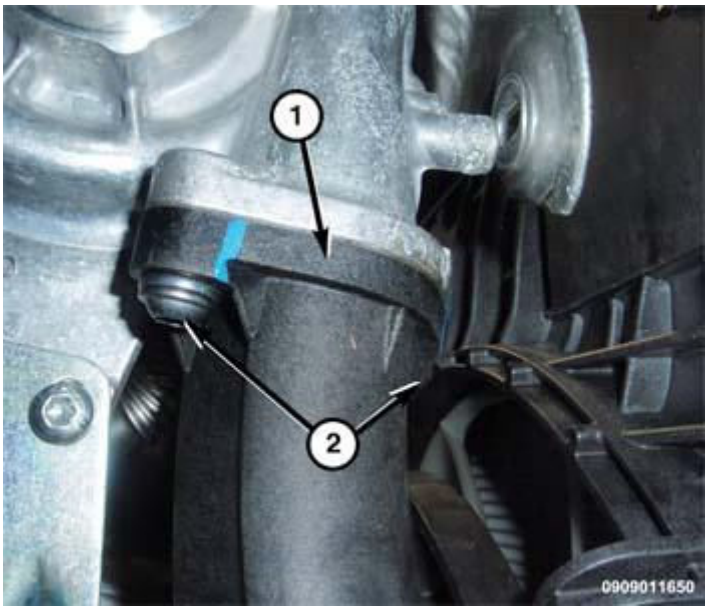

Fig. 363: Right CAC Tube & Bolts
Courtesy of CHRYSLER GROUP, LLC

11. Remove the turbocharger to CAC tube bolts (2) and position aside.
12. Lower the vehicle.

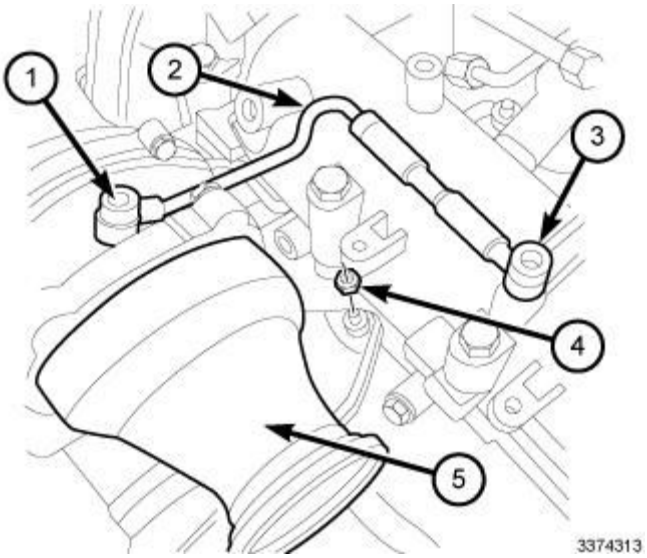

Fig. 364: Turbocharger, Oil Supply Line & Fasteners
Courtesy of CHRYSLER GROUP, LLC

13. Remove the turbocharger oil supply line (2) at the turbocharger (1).
14. Remove the upper turbocharger flange nut (4).

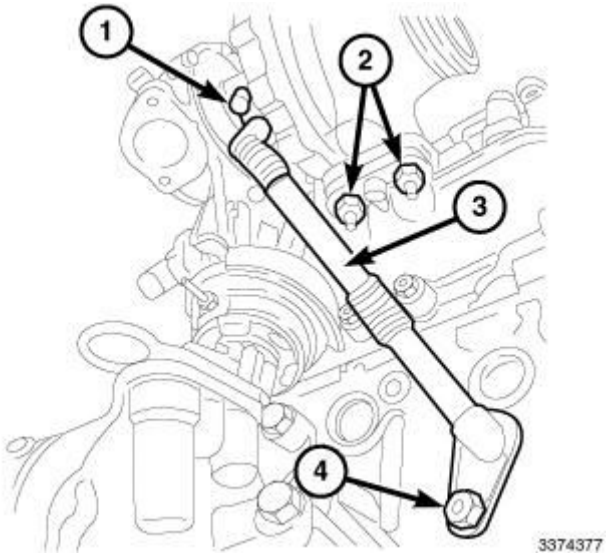

Fig. 365: Turbocharger, Oil Send And Return Line & Fasteners
Courtesy of CHRYSLER GROUP, LLC

15. Remove the turbocharger oil return line (3) from the turbocharger (1).
16. Remove the turbocharger-to-exhaust manifold nuts (2).
17. Remove the turbocharger from the vehicle.

INSTALLATION

INSTALLATION

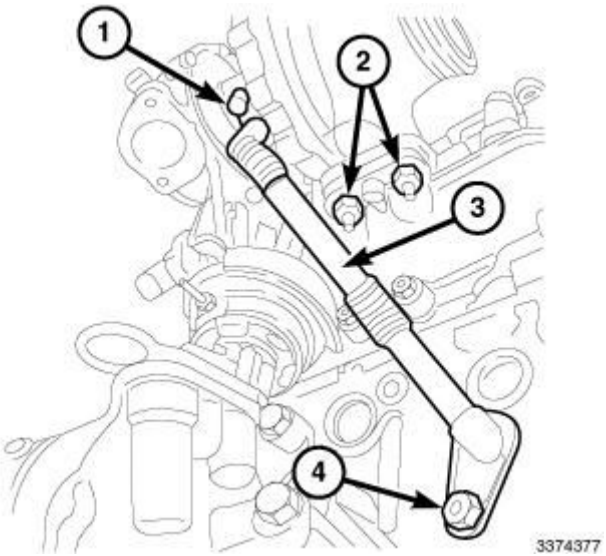

Fig. 366: Turbocharger, Oil Send And Return Line & Fasteners
Courtesy of CHRYSLER GROUP, LLC

1. Clean the gasket sealing surface.
2. Using a new gasket, install the turbocharger. Tighten nuts (2) to 24 N.m (18 ft. lbs.).
3. Install the turbocharger oil return line (2) to the turbocharger (1). Tighten the bolts to 9 N.m (80 in. lbs.).

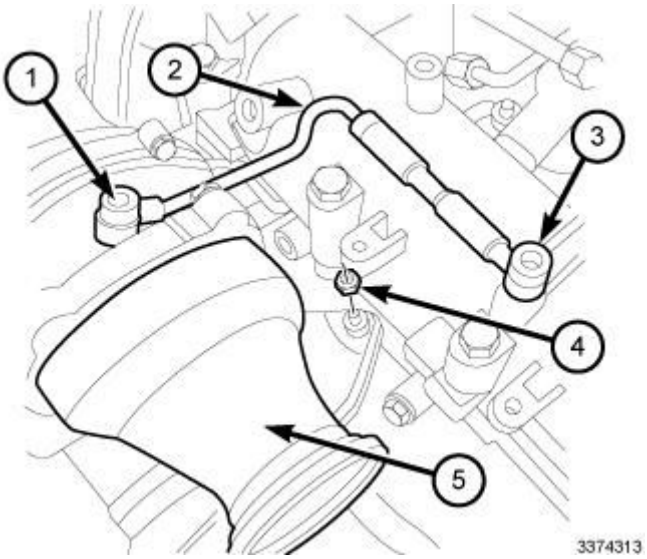

Fig. 367: Turbocharger, Oil Supply Line & Fasteners
Courtesy of CHRYSLER GROUP, LLC

4. Install the upper turbocharger flange nut (4). Tighten nut to 24 N.m (18 ft. lbs.).

5. Install new copper washers to the turbocharger oil feed line (2). Tighten the banjo bolt (1) to 24 N.m (18 ft. lbs.).
6. Install the Diesel Particulate Filter (DPF). Refer to **FILTER, DIESEL PARTICULATE, INSTALLATION** .

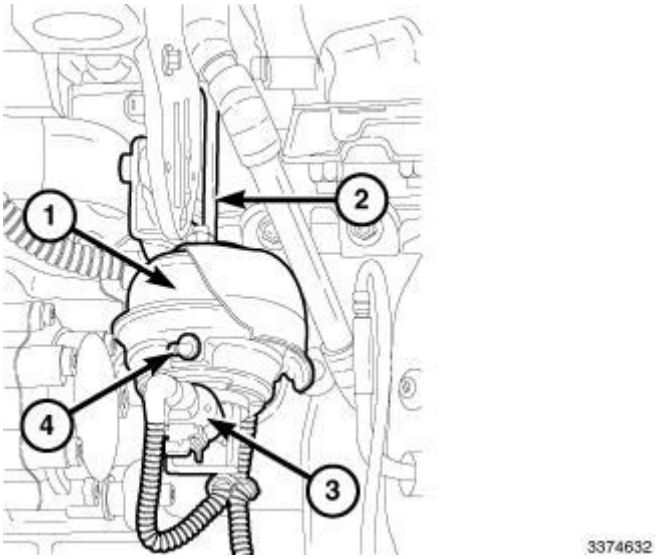

Fig. 368: Turbocharger Actuator, Bracket, Connector & Vacuum Line
Courtesy of CHRYSLER GROUP, LLC

7. Install the vacuum line to the actuator (4).
8. Connect the turbocharger actuator (1) wire harness connector (3).
9. Raise and support the vehicle. Refer to **HOISTING, STANDARD PROCEDURE** .

Fig. 369: CAC Tube & O-Ring Seal

Courtesy of CHRYSLER GROUP, LLC

10. Install a new O-ring seal (1) on the Charge Air Cooler (CAC) tube (2).

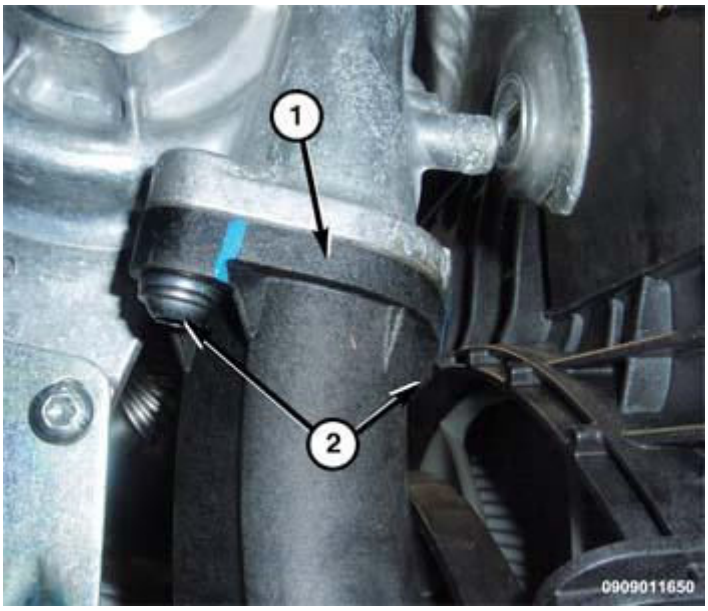

Fig. 370: Right CAC Tube & Bolts
Courtesy of CHRYSLER GROUP, LLC

11. Install the CAC tube (1) to the turbocharger flange. Tighten bolts (2) to 10 N.m (89 in. lbs.).
12. Install the bellypan. Refer to **BELLY PAN, INSTALLATION** .
13. Lower the vehicle.

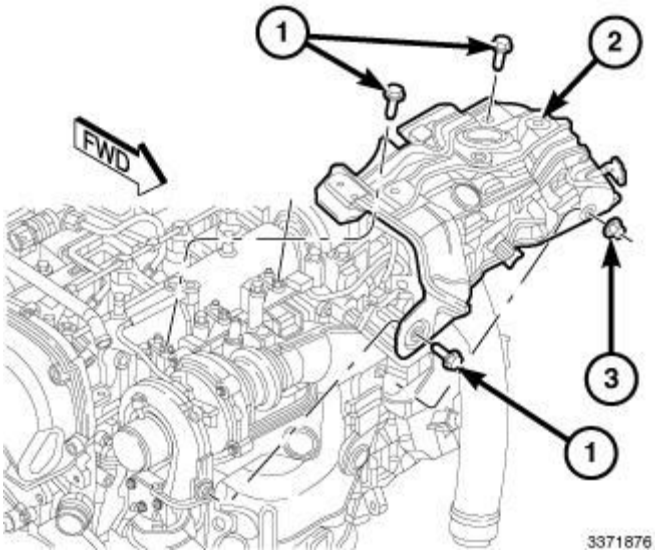

Fig. 371: Turbocharger Heat Shield & Fasteners
Courtesy of CHRYSLER GROUP, LLC

14. Install the turbocharger heat shield:
    - Tighten the bolts (1) to 12 N.m (106 in. lbs.).
    - Tighten the nut (3) to 8 N.m (71 in. lbs.).

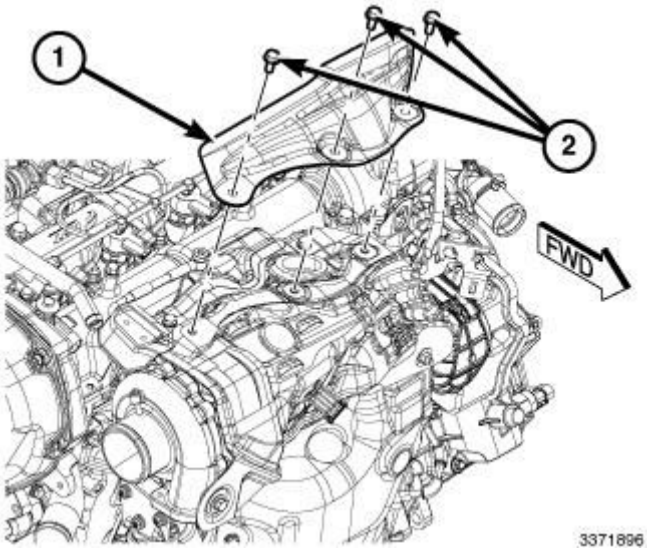

Fig. 372: Upper Turbocharger Heat Shield & Mid Upper Turbocharger Heat Shield
Courtesy of CHRYSLER GROUP, LLC

15. Install the upper turbo heat shield (2) Tighten the bolts (1) to 12 N.m (106 in. lbs.).

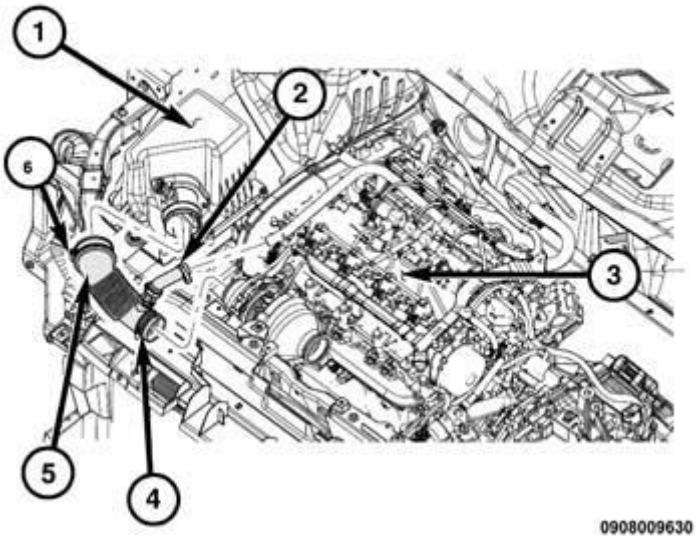

Fig. 373: Turbocharger Inlet Hose & Clamp
Courtesy of CHRYSLER GROUP, LLC

16. Install the turbocharger to air clean air tube (5) and securely tighten clamp (4, 6).

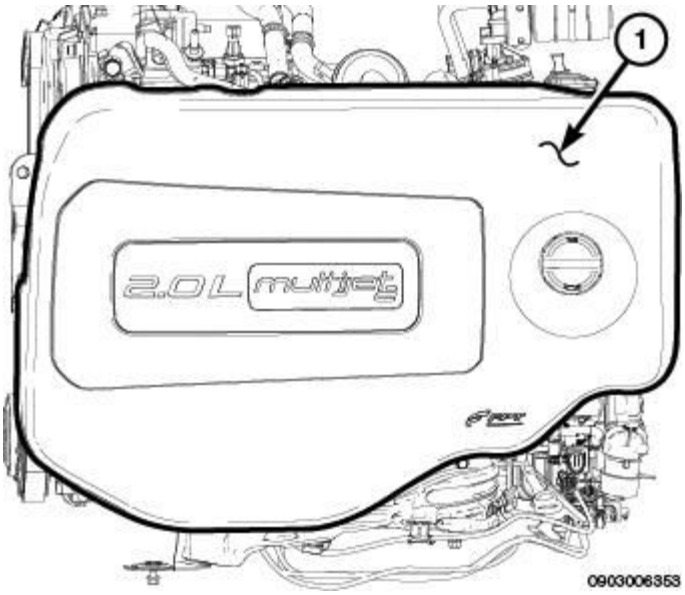

Fig. 374: Engine Cover
Courtesy of CHRYSLER GROUP, LLC

17. Install the engine cover (1).
18. Connect the negative battery cable.

2014 ENGINE

2.4L - Service Information - Cherokee

DESCRIPTION

DESCRIPTION

The 2.4 Liter (146 cu. in.) Tigershark in-line four cylinder engine is a single over head camshaft with mechanical lash adjusters and four valves per cylinder design. This engine is NOT free-wheeling; meaning that the pistons will contact the valves in the event of a timing chain failure.

The cylinders are numbered from front of the engine to the rear. The firing order is 1-3-4-2.

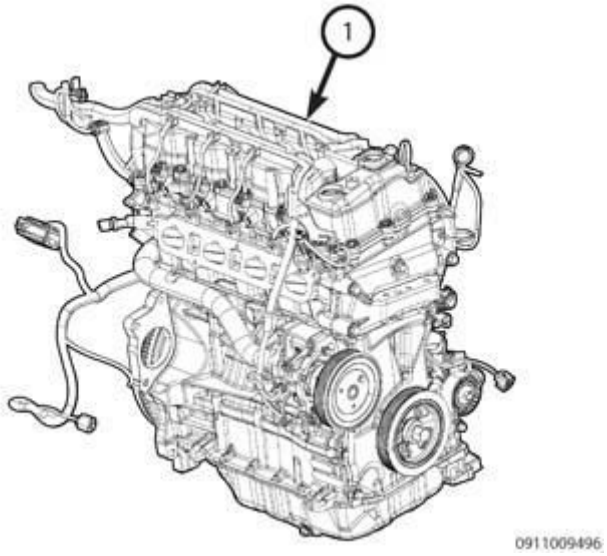

Fig. 1: 2.4 Liter (146 Cu. In.) Engine
Courtesy of CHRYSLER GROUP, LLC

The cylinder head is designed with a variable valve actuator assembly (VVAA) that takes the place of a conventional intake camshaft assembly. The cylinder block and cylinder head are cast aluminum. The engine is mounted in the vehicle transversely.

DIAGNOSIS AND TESTING

ENGINE DIAGNOSIS - INTRODUCTION

Engine diagnosis is helpful in determining the causes of malfunctions not detected and remedied by routine maintenance.

These malfunctions may be classified as either performance (e.g., engine idles rough and stalls) or mechanical (e.g., a strange noise).

Refer to the Engine Mechanical and the Engine Performance diagnostic charts, for possible causes and corrections of malfunctions. Refer to **PERFORMANCE** and **ENGINE MECHANICAL DIAGNOSTIC TABLE** for possible causes and corrections of malfunctions. . Refer to **FUEL SYSTEM** article for the fuel system diagnosis.

Additional tests and diagnostic procedures may be necessary for specific engine malfunctions that can not be isolated with the Service Diagnosis charts. Information concerning additional tests and diagnosis is provided within the following diagnosis:

- Cylinder Compression Pressure Test. Refer to **CYLINDER COMPRESSION PRESSURE LEAKAGE** .
- Cylinder Combustion Pressure Leakage Test. Refer to **CYLINDER COMBUSTION PRESSURE LEAKAGE** .
- Engine Cylinder Head Gasket Failure Diagnosis. Refer to **CYLINDER HEAD GASKET - DIAGNOSIS AND TESTING** .
- Intake Manifold Leakage Diagnosis. Refer to **MANIFOLD, INTAKE, DIAGNOSIS AND TESTING** .

PERFORMANCE

CONDITION	POSSIBLE CAUSE	CORRECTION
ENGINE WILL NOT START	1. Weak battery.	1. Test battery. Charge or replace as necessary. Refer to **DIAGNOSIS AND TESTING** .
	2. Corroded or loose battery connections.	2. Clean and tighten battery connections. Apply a coat of light mineral grease to terminals.
	3. Faulty starter.	3. Test starting system. Check for codes. (Refer to **DIAGNOSIS AND TESTING**)
	4. Faulty coil(s) or control unit.	4. Test and replace as needed. (Refer to Appropriate Diagnostic Information)
	5. Incorrect spark plug gap.	5. Set gap. Refer to **SPECIFICATIONS** .
	6. Contamination in fuel system.	6. Clean system and replace fuel filter.
	7. Faulty fuel pump.	7. Test fuel pump and replace as needed. (Refer to Appropriate Diagnostic Information)
	8. Incorrect engine timing.	8. Check for a skipped timing belt/chain.
ENGINE STALLS OR IDLES ROUGH	1. Idle speed too low.	1. Test minimum air flow. (Refer to Appropriate Diagnostic Information)
	2. Incorrect fuel mixture.	2. (Refer to Appropriate Diagnostic Information)

	3. Intake manifold leakage.	3. Inspect intake manifold, manifold gasket, and vacuum hoses.
	4. Faulty ignition coil(s).	4. Test and replace as necessary. (Refer to Appropriate Diagnostic Information)
	5. Contamination in Oil Control Valve (OCV). **ECK Only**	5. Remove OCV and inspect for contamination. Replace OCV if contaminated. **ECK Only**
ENGINE LOSS OF POWER	1. Dirty or incorrectly gapped plugs.	1. Clean plugs and set gap.
	2. Contamination in fuel system.	2. Clean system and replace fuel filter.
	3. Faulty fuel pump.	3. Test and replace as necessary. (Refer to Appropriate Diagnostic Information)
	4. Incorrect valve timing.	4. Correct valve timing.
	5. Leaking cylinder head gasket.	5. Replace cylinder head gasket.
	6. Low compression.	6. Test compression of each cylinder.
	7. Burned, warped, or pitted valves.	7. Replace valves.
	8. Plugged or restricted exhaust system.	8. Perform exhaust restriction test. Install new parts, as necessary. Refer to **DIAGNOSIS AND TESTING** .
	9. Faulty ignition coil(s).	9. Test and replace as necessary. (Refer to Appropriate Diagnostic Information)
ENGINE MISSES ON ACCELERATION	1. Dirty or incorrectly gapped spark plugs.	1. Clean spark plugs and set gap.
	2. Contamination in Fuel System.	2. Clean fuel system and replace fuel filter.
	3. Burned, warped, or pitted valves.	3. Replace valves.
	4. Faulty ignition coil(s).	4. Test and replace as necessary. (Refer to Appropriate Diagnostic Information)
ENGINE MISSES AT HIGH SPEED	1. Dirty or incorrect spark plug gap.	1. Clean spark plugs and set gap.
	2. Faulty ignition coil(s).	2. Test and replace as necessary. (Refer to Appropriate Diagnostic Information)
	3. Dirty fuel injector(s).	3. Test and replace as necessary. (Refer to Appropriate Diagnostic Information)

	4. Contamination in fuel system.	4. Clean system and replace fuel filter.

ENGINE MECHANICAL DIAGNOSTIC TABLE

CONDITION	POSSIBLE CAUSES	CORRECTIONS
NOISY VALVES	1. High or low oil level in crankcase.	1. Refer to **OIL - STANDARD PROCEDURE** .
	2. Thin or diluted oil.	2. Change oil and filter.
	3. Low oil pressure.	3. Check oil pump, if Ok, check rod and main bearings for excessive wear.
	4. Dirt in lash adjusters.	4. Replace as necessary.
	5. Worn rocker arms.	5. Replace as necessary.
	6. Worn lash adjusters	6. Replace as necessary.
	7. Worn valve guides.	7. Inspect the valve guides for wear, cracks or looseness. If either condition exists, replace the cylinder head. Refer to **CYLINDER HEAD, REMOVAL** .
	8. Excessive runout of valve seats on valve faces.	8. Refer to **VALVES, INTAKE AND EXHAUST - STANDARD PROCEDURE** .
CONNECTING ROD NOISE	1. Insufficient oil supply.	1. Refer to **OIL - STANDARD PROCEDURE** .
	2. Low oil pressure.	2. Check oil pump, if OK, check rod and main bearings for excessive wear.
	3. Thin or diluted oil.	3. Change oil and filter.
	4. Excessive bearing clearance.	4. Replace as necessary.
	5. Connecting rod journal out-of-round.	5. Service or replace crankshaft.
	6. Misaligned connecting rods.	6. Replace bent connecting rods.
MAIN BEARING NOISE	1. Insufficient oil supply.	1. Refer to **OIL - STANDARD PROCEDURE** .
	2. Low oil pressure.	2. Check oil pump, if OK, check rod and main bearings for excessive wear.
	3. Thin or diluted oil.	3. Change oil and filter.
	4. Excessive bearing clearance.	4. Replace as necessary.
	5. Excessive end play.	5. Check thrust washers for wear.
	6. Crankshaft journal out-of round.	6. Service or replace crankshaft.

	7. Loose flywheel or torque converter.	7. Tighten to correct torque

CYLINDER COMPRESSION PRESSURE LEAKAGE

NOTE: To perform a compression test on a MULTI-AIR equipped engine, the ignition MUST remain in the "key on" position. If the ignition is in the "off" position, the intake valves will not actuate and the result will be no compression.

NOTE: The results of a cylinder compression pressure test can be utilized to diagnose several engine malfunctions.

NOTE: Be certain the battery is completely charged and the engine starter motor is in good operating condition. Otherwise the indicated compression pressures may not be valid for diagnosis purposes.

1. Clean the spark plug recesses with compressed air.
2. Remove the spark plugs and record the cylinder number of each spark plug for future reference.
3. Inspect the spark plug electrodes for abnormal firing indicators such as fouled, hot, oily, etc.
4. Disable the fuel system and perform the fuel system pressure release procedure. Refer to **FUEL SYSTEM PRESSURE RELEASE PROCEDURE** .
5. Insert a compression pressure gauge and rotate the engine with the engine starter motor for three revolutions.
6. Record the compression pressure on the 3rd revolution. Continue the test for the remaining cylinders.

NOTE: The recommended compression pressures are to be used only as a guide to diagnosing engine problems. An engine should not be disassembled to determine the cause of low compression unless some malfunction is present.

7. Compression should not be less than 689 kPa (100 psi) and not vary more than 25 percent from cylinder to cylinder.
8. If one or more cylinders have abnormally low compression pressures, repeat the compression test.

NOTE: If the same cylinder or cylinders repeat an abnormally low reading on the second compression test, it could indicate the existence of a problem in the cylinder in question.

9. If one or more cylinders continue to have abnormally low compression pressures, perform the cylinder combustion pressure leakage test. Refer to **CYLINDER COMBUSTION PRESSURE LEAKAGE** .

CYLINDER COMBUSTION PRESSURE LEAKAGE

The combustion pressure leakage test provides an accurate means for determining engine condition.

Combustion pressure leakage testing will detect:

- Exhaust and intake valve leaks (improper seating).
- Leaks between adjacent cylinders or into water jacket.
- Any causes for combustion/compression pressure loss.

1. Check the coolant level and fill as required. DO NOT install the radiator cap.
2. Start and operate the engine until it attains normal operating temperature, then turn the engine OFF.
3. Remove the spark plugs.
4. Remove the oil filler cap.
5. Remove the air cleaner hose.
6. Calibrate the tester according to the manufacturer's instructions. The shop air source for testing should maintain 483 kPa (70 psi) minimum, 1, 379 kPa (200 psi) maximum and 552 kPa (80 psi) recommended.
7. Perform the test procedures on each cylinder according to the tester manufacturer's instructions. Set piston of cylinder to be tested at TDC compression. While testing, listen for pressurized air escaping through the throttle body, tailpipe and oil filler cap opening. Check for bubbles in the radiator coolant.

All gauge pressure indications should be equal, with no more than 25% leakage.

FOR EXAMPLE: At 552 kPa (80 psi) input pressure, a minimum of 414 kPa (60 psi) should be maintained in the cylinder.

CYLINDER COMBUSTION PRESSURE LEAKAGE DIAGNOSIS CHART

CONDITION	POSSIBLE CAUSE	CORRECTION
AIR ESCAPES THROUGH THROTTLE BODY	Intake valve bent, burnt, or not seated properly	Inspect valve and valve seat. Reface or replace, as necessary. Inspect valve springs. Replace as necessary.
AIR ESCAPES THROUGH TAILPIPE	Exhaust valve bent, burnt, or not seated properly	Inspect valve and valve seat. Reface or replace, as necessary. Inspect valve springs. Replace as necessary.
AIR ESCAPES THROUGH RADIATOR	Head gasket leaking or cracked cylinder head or block	Remove cylinder head and inspect. Replace defective part
MORE THAN 50% LEAKAGE FROM ADJACENT CYLINDERS	Head gasket leaking or crack in cylinder head or block between adjacent cylinders	Remove cylinder head and inspect. Replace gasket, head, or block as necessary
MORE THAN 25% LEAKAGE AND AIR ESCAPES THROUGH OIL FILLER CAP OPENING ONLY	Stuck or broken piston rings; cracked piston; worn rings and/or cylinder wall	Inspect for broken rings or piston. Measure ring gap and cylinder diameter, taper and out-of-round. Replace defective part as necessary

OIL CONSUMPTION TEST AND DIAGNOSIS

The following diagnostic procedures are used to determine the source of excessive internal oil Consumption, these procedures and tests apply to vehicles with 50, 000 miles or less.

NOTE: Engine oil consumption may be greater than normal during engine break-in. Repairs should be delayed until vehicle has been driven at least 7, 500 miles.

Severe service (high ambient temperature, short trips, heavy loading, trailer towing, taxi, off-road, or law enforcement use) may result in greater oil consumption than normal.

Sustained high speed driving and high engine RPM operation may result in increased oil consumption.

Failure to comply with the recommended oil type and viscosity rating, as outlined in the Owner's Manual, may impact oil economy as well as fuel economy.

Oil consumption may increase with vehicle age and mileage due to normal engine wear.

NOTE: Because a few drops of external oil leakage per mile can quickly account for the loss of one quart of oil in a few hundred miles, ensure no external engine oil leaks are present.

- **Oil leakage is not the same as oil consumption and all external leakage must be eliminated before any action can be taken to verify and/or correct oil consumption complaints.**
- **Verify that the engine has the correct oil level dipstick and dipstick tube installed.**
- **Verify that the engine is not being run in an overfilled condition. Check the oil level 15 minutes after a hot shutdown with the vehicle parked on a level surface. In no case should the level be above MAX or the FULL mark on the dipstick.**

OIL CONSUMPTION TEST

1. Check the oil level at least 15 minutes after a hot shutdown.
2. If the oil level is low, top off with the proper viscosity and API service level engine oil. Add one bottle of MOPAR® 4-In-1 Leak Detection Dye into the engine oil.
3. Tamper proof the oil pan drain plug, oil filter, dipstick and oil fill cap.
4. Record the vehicle mileage.
5. Instruct the customer to drive the vehicle as usual.
6. Ask the customer to return to the servicing dealer after accumulating 500 miles, Check the oil level at least 15 minutes after a hot shutdown. If the oil level is half way between the "FULL" and "ADD" mark continue with the next step.
7. Using a black light, re-check for any external engine oil leaks, repair as necessary, if no external engine oil leaks are present, continue with oil consumption diagnosis.

OIL CONSUMPTION DIAGNOSIS

1. Check the positive crankcase ventilation (PCV) system. Make sure the system is not restricted and the

PCV valve has the correct part number and correct vacuum source (18-20 in. Hg at idle below 3000 ft. above sea level is considered normal).

2. Perform a cylinder compression test and cylinder leak down test using the standard leak down gauge following manufacturers suggested best practices.

NOTE: Verify the spark plugs are not oil saturated. If the spark plugs are oil saturated and compression is good it can be assumed the valve seals or valve guides are at fault.

3. If one or more cylinders have more than 15% leak down further engine tear down and inspection will be required.

TOP 19 REASONS THAT MAY LEAD TO ENGINE OIL CONSUMPTION

1. **Tapered and Out-of-Round Cylinders**

   The increased piston clearances permit the pistons to rock in the worn cylinders. While tilted momentarily, an abnormally large volume of oil is permitted to enter on one side of the piston. The rings, also tilted in the cylinder, permit oil to enter on one side. Upon reversal of the piston on each stroke, some of this oil is passed into the combustion chamber.

2. **Distorted Cylinders**

   This may be caused by unequal heat distribution or unequal tightening of cylinder head bolts. This condition presents a surface which the rings may not be able to follow completely. In this case, there may be areas where the rings will not remove all of the excess oil. When combustion takes place, this oil will be burned and cause high oil consumption.

3. **Improper operation of "PCV" system**

   The main purpose of the Positive Crankcase Ventilation (PCV) valve is to recirculate blow-by gases back from the crankcase area through the engine to consume unburned hydrocarbons. The PCV system usually has a one way check valve and a make up air source. The system uses rubber hoses that route crankcase blow by gases to the intake manifold. Vacuum within the engine intake manifold pulls the blow by gases out of the crankcase into the combustion chamber along with the regular intake air and fuel mixture.

   The PCV system can become clogged with sludge and varnish deposits and trap blow by gases in the crankcase. This degrades the oil, promoting additional formation of deposit material. If left uncorrected, the result is plugged oil rings, oil consumption, rapid ring wear due to sludge buildup, ruptured gaskets and seals due to crankcase pressurization.

   If equipped with an engine driven vacuum pump, high oil consumption can be caused by unchecked airflow into the pump. This can be caused by anything that opens the vacuum pump intake port up to the atmosphere such as a faulty vacuum pump, hose fitting, hose and brake booster. If there is not a restriction (normally caused by the pump pulling vacuum on the brake booster), then the vacuum pump will pump a high volume of air. This high volume of air will pressurize the crankcase and cause excessive

oil burning and oil flow through the PCV system.

4. **Worn Piston Ring Grooves**

   For piston rings to form a good seal, the sides of the ring grooves must be true and flat - not flared or shouldered. Piston rings in tapered or irregular grooves will not seal properly and, consequently, oil will pass around behind the rings into the combustion chamber.

5. **Worn, Broken or Stuck Piston Rings**

   When piston rings are broken, worn or stuck to such an extent that the correct tension and clearances are not maintained, this will allow oil to be drawn into the combustion chamber on the intake stroke and hot gases of combustion to be blown down the cylinder past the piston on the power stroke. All of these conditions will result in burning and carbon build up of the oil on the cylinders, pistons and rings.

6. **Cracked or Broken Ring Lands**

   Cracked or broken ring lands prevent the rings from seating completely on their sides and cause oil pumping. This condition will lead to serious damage to the cylinders as well as complete destruction of the pistons and rings. Cracked or broken ring lands cannot be corrected by any means other than piston replacement.

7. **Worn Valve Stems and Guides**

   When wear has taken place on valve stems and valve guides, the vacuum in the intake manifold will draw oil and oil vapor between the intake valve stems and guides into the intake manifold and then into the cylinder where it will be burned.

8. **Bent or Misaligned Connecting Rods**

   Bent or misaligned connecting rods will not allow the pistons to ride straight in the cylinders. This will prevent the pistons and rings from forming a proper seal with the cylinder walls and promote oil consumption. In addition, it is possible that a bearing in a bent connect rod will not have uniform clearance on the connecting rod wrist pin. Under these conditions, the bearing will wear rapidly and throw off an excessive amount of oil into the cylinder.

9. **Fuel Dilution**

   If raw fuel is allowed to enter the lubrication system, the oil will become thinner and more volatile and will result in higher oil consumption. The following conditions will lead to higher oil consumption;

   - Excess fuel can enter and mix with the oil via a leaking fuel injector
   - Gasoline contaminated with diesel fuel
   - Restricted air intake
   - Excessive idling

10. **Contaminated Cooling Systems**

Corrosion, rust, scale, sediment or other formations in the water jacket and radiator will prevent a cooling system from extracting heat efficiently. This is likely to cause cylinder distortion thus leading to higher oil consumption.

11. **Oil Viscosity**

The use of oil with a viscosity that is too light may result in high oil consumption. Refer to the vehicle Owner's Manual for the proper oil viscosity to be used under specific driving conditions and/or ambient temperatures.

12. **Dirty Engine Oil**

Failure to change the oil and filter at proper intervals may cause the oil to be so dirty that it will promote accumulation of sludge and varnish and restrict oil passages in the piston rings and pistons. This will increase oil consumption; dirty oil by nature is also consumed at a higher rate than clean oil.

13. **Crankcase Overfull**

Due to an error in inserting the oil dip stick so that it does not come to a seat on its shoulder, a low reading may be obtained. Additional oil may be added to make the reading appear normal with the stick in this incorrect position which will actually make the oil level too high. If the oil level is so high that the lower ends of the connecting rods touch the oil in the oil pan excessive quantities of oil will be thrown on the cylinder walls and some of it will work its way up into the combustion chamber.

14. **Excessively High Oil Pressure**

A faulty oil pressure relief valve may cause the oil pressure to be too high. The result will be that the engine will be flooded with an abnormally large amount of oil in a manner similar to that which occurs with worn bearings. This condition may also cause the oil filter to burst.

15. **Aftermarket Performance Chips and Modification**

Increasing performance through the use of performance/power enhancement products to a stock or factory engine will increase the chance of excessive oil consumption.

16. **Lugging Engine**

Lugging is running the engine at a lower RPM in a condition where a higher RPM (more power/torque) should be implemented. Especially susceptible on vehicles equipped with a manual transmission. This driving habit causes more stress loading on the piston and can lead to increases in engine oil consumption.

17. **Turbocharged Engines**

There is a possibility for PCV "push-over" due to higher crankcase pressure (as compared to naturally aspirated engines) which is normal for turbocharged engines. This condition causes varying amounts of engine oil to enter the intake manifold, charge air cooler and associated plumbing to and from the charge

air cooler, also a leaking turbocharger seal will draw oil into the combustion chamber where it will burn (blue smoke from tail pipe may be present) and form carbon deposits which contribute to further oil consumption as they interfere with proper engine function.

18. **Restricted Air Intake**

    Excessive restriction in the air intake system will increase engine vacuum and can increase oil consumption, an extremely dirty air filter would be one example of this situation.

19. **Intake Manifold port seals**

    Engines that have a "V" configuration and a "wet valley" (3.3/3.8L) could draw oil into the intake ports due to improper sealing between the intake manifold ports and cylinder head. Causes may include improper torque of intake manifold bolts, corrosion (aluminum intake manifold) and or warped sealing surface.

ENGINE LUBRICATION DIAGNOSTIC TABLE

CONDITION	POSSIBLE CAUSES	CORRECTION
OIL LEAKS	1. Gaskets and O-rings. Misaligned or damaged.	1. Replace as necessary.
	(a) Loose fasteners, broken or porous metal parts.	(a) Tighten fasteners, Repair or replace metal parts.
	2. Crankshaft rear oil seal.	2. Replace rear crankshaft oil seal. Refer to **SEAL, CRANKSHAFT OIL, REAR, REMOVAL** .
	3. Crankshaft rear oil seal surface. Scratched, nicked or grooved.	3. Polish or replace crankshaft.
	4. Oil pan flange cracked.	4. Replace oil pan. Refer to **PAN, OIL, REMOVAL** .
	5. Crankshaft front oil seal.	5. Replace front crankshaft oil seal. Refer to **SEAL, CRANKSHAFT OIL, FRONT, REMOVAL** .
	6. Crankshaft front oil seal surface. Scratched, nicked or grooved.	6. Polish or replace crankshaft.
OIL PRESSURE DROP	1. Low oil level.	1. Check and correct oil level.
	2. Faulty oil pressure switch.	2. Replace switch (Refer to **SENSOR, OIL PRESSURE**).
	3. Low oil pressure.	3. Check main bearing clearance. Refer to **BEARING(S), CRANKSHAFT, MAIN - STANDARD PROCEDURE** . 3. Check rod bearing clearance.

		Refer to **BEARING(S), CONNECTING ROD - STANDARD PROCEDURE** .
	4. Clogged oil filter.	4. Replace oil filter. Refer to **FILTER, ENGINE OIL, REMOVAL** .
	5. Worn oil pump.	5. Replace oil pump. Refer to **PUMP, ENGINE OIL, REMOVAL** .
	6. Thin or diluted oil.	6. Change oil and filter. Refer to **OIL - STANDARD PROCEDURE** .
	7. Excessive bearing clearance.	7. Replace crankshaft bearings. Refer to **BEARING(S), CRANKSHAFT, MAIN - STANDARD PROCEDURE** . 7. Replace rod bearings. Refer to **BEARING(S), CONNECTING ROD - STANDARD PROCEDURE** .
	8. Oil pump relief valve stuck.	8. Replace oil pump. Refer to **PUMP, ENGINE OIL, REMOVAL** .
	9. Oil pump pick-up tube loose, damaged or clogged.	9. Replace oil pump pick-up. .
OIL PUMPING AT RINGS; SPARK PLUGS FOULING	1. Worn or damaged rings.	1. Hone cylinder bores and replace rings. Refer to **RING(S), PISTON - STANDARD PROCEDURE** .
	2. Carbon in oil ring slots.	2. Replace rings. Refer to **ROD, PISTON AND CONNECTING, REMOVAL** .
	3. Worn valve guides.	3. Replace cylinder heads. Refer to **CYLINDER HEAD, REMOVAL** .
	4. Leaking valve guide seals.	4. Replace valve guide seals. Refer to **SEAL(S), VALVE GUIDE, REMOVAL** .

STANDARD PROCEDURE

DUST COVERS AND CAPS

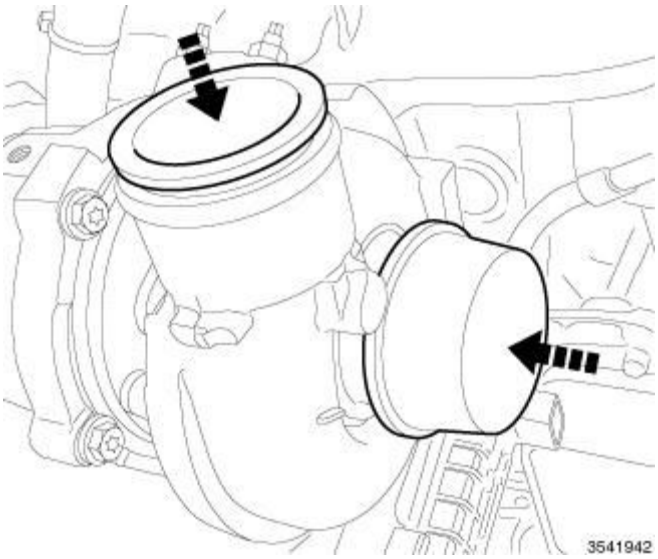

Fig. 2: Covers/Caps
Courtesy of CHRYSLER GROUP, LLC

Due to the high amounts of failures caused by dust, dirt, moisture and other foreign debris being introduced to the engine during service. Covers or caps are needed to reduce the possible damage that can be caused or created.

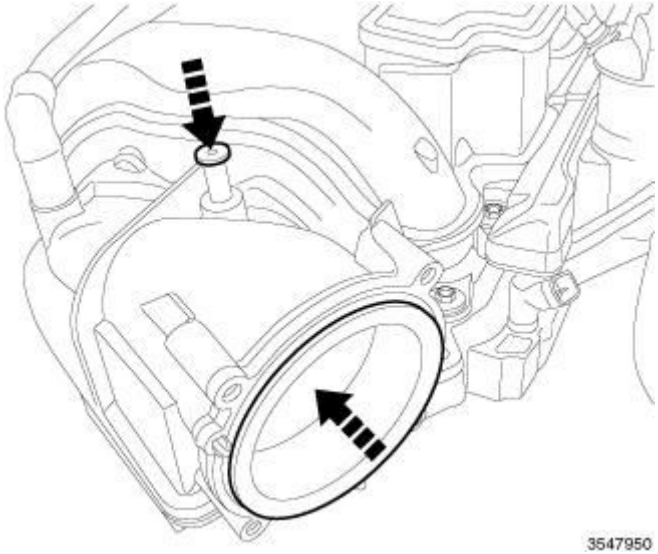

Fig. 3: Opening Cover
Courtesy of CHRYSLER GROUP, LLC

Covers over openings will reduce any possibilities for foreign materials to enter the engine systems. Using miller tool (special tool #10368, Set, Universal Protective Cap), Select the appropriated cover needed to the procedure.

ENGINE GASKET SURFACE PREPARATION

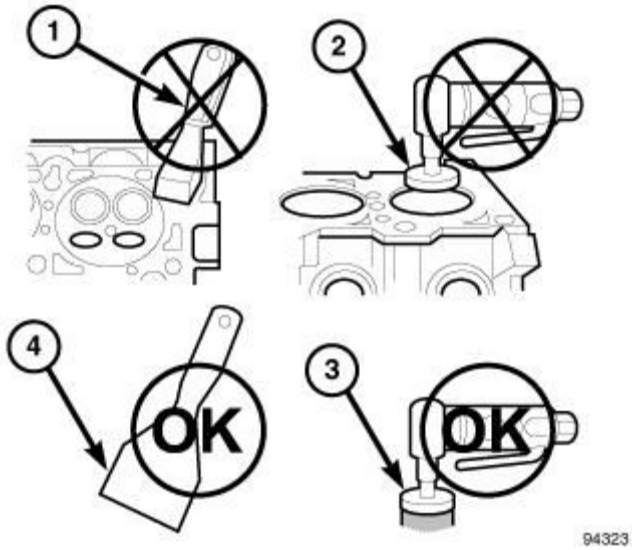

Fig. 4: Proper Tool Usage For Surface Preparation
Courtesy of CHRYSLER GROUP, LLC

To ensure engine gasket sealing, proper surface preparation must be performed, especially with the use of aluminum engine components and multi-layer steel cylinder head gaskets.

Never use the following to clean gasket surfaces:

- Metal scraper (1).
- Abrasive pad or paper to clean cylinder block and head.
- High speed power tool with an abrasive pad or a wire brush (2).

Fig. 5: Proper Tool Usage For Surface Preparation
Courtesy of CHRYSLER GROUP, LLC

NOTE: Multi-Layer Steel (MLS) head gaskets require a scratch free sealing surface.

Only use the following for cleaning gasket surfaces:

- Solvent or a commercially available gasket remover
- Plastic or wood scraper (4).
- High speed power tool with a plastic bristle brush style disc (3).

Sealing surfaces must be free of grease or oil residue. Clean surfaces with Mopar® brake parts cleaner (or equivalent).

FORM-IN-PLACE GASKETS AND SEALERS

NOTE: All of the sealants mentioned below are not used on every engine, they are listed as general reference guide. See appropriate Service Information for specific sealer usage.

There are numerous places where form-in-place gaskets are used on the engine. Care must be taken when applying form-in-place gaskets to assure obtaining the desired results.**Do not use form-in-place gasket material unless specified.** Bead size, continuity, and location are of great importance. Too thin a bead can result in leakage while too much can result in spill-over which can break off and obstruct fluid feed lines. A continuous bead of the proper width is essential to obtain a leak-free gasket. All sealing surfaces that use form-in-place gaskets and sealers **must** free of grease or oil. Surfaces should be cleaned with Mopar® brake parts cleaner prior to sealer application. After the sealer is applied, the parts should be assembled in no more than 10 minutes.

There are numerous types of form-in-place gasket materials that are used in the engine area. Mopar® Engine RTV GEN II, Mopar® ATF-RTV, and Mopar® Gasket Maker gasket materials, each have different properties and can not be used in place of the other.

MOPAR® ENGINE RTV GEN II is used to seal components exposed to engine oil. This material is a specially designed black silicone rubber RTV that retains adhesion and sealing properties when exposed to engine oil. Moisture in the air causes the material to cure. This material is available in three ounce tubes and has a shelf life of one year. After one year this material will not properly cure. Always inspect the package for the expiration date before use.

MOPAR® ATF RTV is a specifically designed black silicone rubber RTV that retains adhesion and sealing properties to seal components exposed to automatic transmission fluid, engine coolants, and moisture. This material is available in three ounce tubes and has a shelf life of one year. After one year this material will not properly cure. Always inspect the package for the expiration date before use.

MOPAR® GASKET MAKER is an anaerobic type gasket material. The material cures in the absence of air when squeezed between two metallic surfaces. It will not cure if left in the uncovered tube. The anaerobic material is for use between two machined surfaces. Do not use on flexible metal flanges.

MOPAR® BED PLATE SEALANT is a unique (green-in-color) anaerobic type gasket material that is

specially made to seal the area between the bed plate and cylinder block without disturbing the bearing clearance or alignment of these components. The material cures slowly in the absence of air when torqued between two metallic surfaces, and will rapidly cure when heat is applied.

MOPAR® GASKET SEALANT is a slow drying, permanently soft sealer. This material is recommended for sealing threaded fittings and gaskets against leakage of oil and coolant. Can be used on threaded and machined parts under all temperatures. This material also will prevent corrosion. Mopar® Gasket Sealant is available in a 13 oz. aerosol can or 4oz./16 oz. can w/applicator.

SEALER APPLICATION

Mopar® Gasket Maker material should be applied sparingly 1 mm (0.040 in.) diameter or less of sealant to one gasket surface. Be certain the material surrounds each mounting hole. Excess material can easily be wiped off. Components should be torqued in place within 15 minutes. The use of a locating dowel is recommended during assembly to prevent smearing material off the location.

Mopar® Engine RTV GEN II or ATF RTV gasket material should be applied in a continuous bead approximately 3 mm (0.120 in.) in diameter. All mounting holes must be circled. For corner sealing and "T" joint locations, a 3.17 or 6.35 mm (1/8 or 1/4 in.) drop is placed in the center of the gasket contact area. Uncured sealant may be removed with a shop towel. Components should be torqued in place while the sealant is still wet to the touch (within 10 minutes). The usage of a locating dowel is recommended during assembly to prevent smearing material off the location.

Mopar® Gasket Sealant in an aerosol can should be applied using a thin, even coat sprayed completely over both surfaces to be joined, and both sides of a gasket. Then proceed with assembly. Material in a can w/applicator can be brushed on evenly over the sealing surfaces.

MEASURING BEARING CLEARANCE USING PLASTIGAGE

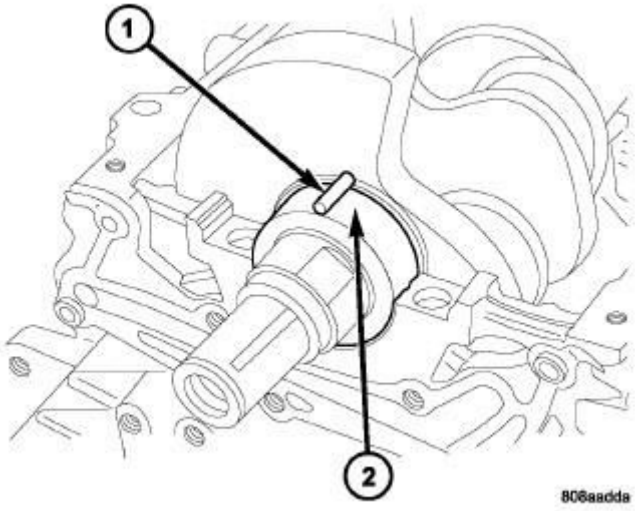

Fig. 6: Plastigage Placed In Lower Shell-Typical

Courtesy of CHRYSLER GROUP, LLC

Engine crankshaft bearing clearances can be determined by use of Plastigage or equivalent. The following is the recommended procedure for the use of Plastigage:

1. Remove oil film from surface to be checked. Plastigage is soluble in oil.
2. Place a piece of Plastigage (1) across the entire width of the journal. (In addition, suspected areas can be checked by placing the Plastigage in the suspected area). Torque the bearing cap bolts of the bearing being checked to the proper specifications.
3. Remove the bearing cap and compare the width of the flattened Plastigage with the scale provided on the package. Locate the band closest to the same width. This band shows the amount of clearance. Differences in readings between the ends indicate the amount of taper present. Record all readings taken. Compare clearance measurements to specs found in engine specifications. Refer to **ENGINE SPECIFICATIONS** . **Plastigage generally is accompanied by two scales. One scale is in inches, the other is a metric scale.**

   NOTE: Plastigage is available in a variety of clearance ranges. Use the most appropriate range for the specifications you are checking.

4. Install the proper crankshaft bearings to achieve the specified bearing clearances.

SPECIFICATIONS

ENGINE SPECIFICATIONS

GENERAL SPECIFICATIONS

DESCRIPTION	SPECIFICATION	
	Metric	Standard
Type	In-Line OHV, SOHC	
Number of Cylinders	4	
Firing Order	1-3-4-2	
Compression Ratio	10.0:1	
Displacement	2.4 L	146 cu. in.
Bore	88 mm	3.465 in.
Stroke	97 mm	3.819 in.
Compression Pressure	1172 - 1551 kPa	170 - 225 psi
Max. Variation Between Cylinders	25%	

CYLINDER BLOCK

DESCRIPTION	SPECIFICATION	
	Metric	Standard
Material	Cast Aluminum	
Cylinder Bore Diameter		

A	88.000 - 88.010 mm	3.4645 - 3.4649 in.
B	88.010 - 88.020 mm	3.4649 - 3.4653 in.
C	88.020 - 88.030 mm	3.4653 - 3.4657 in.
Cylinder Bore Out-of-Round (Max.)	0.020 mm	0.0008 in.
Cylinder Bore Taper (Max.)	0.028 mm	0.001 in.
Deck Surface Flatness (Max.)	0.0254 mm	.001 in.
Main Bearing Bore Diameter		
1	56.000 - 56.006 mm	2.2047 - 2.2049 in.
2	56.006 - 56.012 mm	2.2049 - 2.2051 in.
3	56.012 - 56.018 mm	2.2051 - 2.2054 in.
Main Bearing Bore Diameter Taper (Max.)	0.0082 mm	0.0003 in.

PISTONS

DESCRIPTION	SPECIFICATION	
	Metric	Standard
Piston Diameter		
A	87.995 - 88.015 mm	3.4644 - 3.4652 in.
B	88.005 - 88.025 mm	3.4648 - 3.4656 in.
C	88.015 - 88.035 mm	3.4652 - 3.4659 in.
Clearance to Bore	(-0.015) - 0.015 mm	(-0.0006) - 0.0006 in.
Weight	345 - 355 grams	12.17 - 12.52 oz.
Land Clearance (Diametrical)	0.60 - 0.73 mm	0.0236 - 0.0287 in.
Piston Length	51.5 mm	2.028 in.
Piston Ring Groove Depth No. 1	3.51 - 3.68 mm	0.1382 - 0.0256 in.
Piston Ring Groove Depth No. 2	4.05 - 4.25 mm	0.1594 - 0.1673 in.
Piston Ring Groove Depth No. 3	2.70 - 2.90 mm	0.1063 - 0.1142 in.

PISTON RINGS

DESCRIPTION	SPECIFICATION	
	Metric	Standard
Ring Gap-Top Compression Ring	0.15 - 0.30 mm	0.0059 - 0.0118 in.
Wear Limit	0.8 mm	0.031 in.
Ring Gap-2nd Compression Ring	0.30 - 0.45 mm	0.0118 - 0.0177 in.
Wear Limit	0.8 mm	0.031 in.
Ring Gap-Oil Control Steel Rails	0.20 - 0.70 mm	0.0079 - 0.0276 in.
Wear Limit	1.0 mm	0.039 in.
Ring Side Clearance-Compression Rings	0.03 - 0.07 mm	0.1182 - 0.0028 in.
Wear Limit	0.10 mm	0.004 in.
Ring Side Clearance-Oil Ring Pack	0.06 - 0.15 mm	0.0024 - 0.0059 in.

Ring Width-Top Compression Ring	2.95 - 3.25 mm	0.1161 - 0.1280 in.
Ring Width-2nd Compression Ring	3.45 - 3.75 mm	0.1358 - 0.1476 in.
Ring Width-Oil Ring Pack	2.30 - 2.60 mm	0.0906 - 0.1024 in.
Ring Thickness-Top Compression Ring	1.17 - 1.19 mm	0.0461 - 0.0469 in.
Ring Thickness-2nd Compression Ring	1.17 - 1.19 mm	0.0461 - 0.0469 in.
Ring Thickness-Oil Ring Pack	1.88 - 1.95 mm	0.0740 - 0.0768 in.

CONNECTING ROD

DESCRIPTION	SPECIFICATION	
	Metric	Standard
Bearing Clearance	0.032 - 0.060 mm	0.001 - 0.002 in.
Wear Limit	0.070 mm	0.0027 in.
Bore Diameter-Piston Pin	20.974 - 20.985 mm	0.8257 - 0.8261 in.
Bore Diameter-Crankshaft End	51 - 51.015 mm	2.0078 - 2.0084 in.
Side Clearance	0.1 - 0.25 mm	0.0039 - 0.00098 in.
Wear Limit	0.27 mm	0.0106 in.
Weight-Total (Less Bearing)	484 grams	17.07 oz.

CRANKSHAFT

DESCRIPTION	SPECIFICATION	
	Metric	Standard
Connecting Rod Journal Diameter		
Journal Grade		
1	47.966 - 47.972 mm	1.8884 - 1.8886 in.
2	47.960 - 47.966 mm	1.8884 - 1.8881 in.
3	47.954 - 47.960 mm	1.8879 - 1.8881 in.
Rod Journal- Taper (Max)	0.005 mm	0.0001 in.
Main Bearing Journal Diameter		
Journal Grade		
0	51.985 - 51.988 mm	2.0466 - 2.0467 in.
1	51.982 - 51.985 mm	2.0465 - 2.0466 in.
2	51.979 - 51.982 mm	2.0464 - 2.0465 in.
3	51.976 - 51.979 mm	2.0462 - 2.0464 in.
4	51.973 - 51.976 mm	2.0461 - 2.0462 in.
Journal Out-of-Round (Max.)	0.005 mm	0.0001 in.
Journal Taper (Max.)	0.006 mm	0.0002 in.
End Play	0.05 - 0.25 mm	0.0019 - 0.0098 in.
Wear Limit	0.30 mm	0.0118 in.
Main Bearing Diametrical Clearance	0.028 - 0.048 mm	0.0011 - 0.0018 in.

Main Bearing Diametrical Clearance (Max)	0.058 mm	0.0022 in.

CYLINDER HEAD CAMSHAFT BEARING BORE DIAMETER

DESCRIPTION	SPECIFICATION	
	Metric	Standard
Cam Bearing Bore		
Cam Bearing Bore	24.000 - 24.021 mm	0.9448 - 0.9457 in.

CAMSHAFT

DESCRIPTION	SPECIFICATION	
	Metric	Standard
Cam Journal Diameter		
Cam Journal Diameter	23.954 - 23.970 mm	0.943 - 0.944 in.
Bearing Clearance - Diametrical		
Cam Journal Clearance	0.020 - 0.067 mm	0.0008 - 0.0026 in.
End Play	0.11 - 0.25 mm	0.004 - 0.009 in.
Max Lift @ 0.2mm (0.007 in.) lash		
Intake	9.2 mm	0.362 in.
Max Lift @ 0.28mm (0.011 in.) lash		
Exhaust	8.42 mm	0.331 in.
Intake Valve Timing		
Closes (ABDC)	Control By VVAA	
Opens (ATDC)	Control By VVAA	
Duration	Control By VVAA	
Exhaust Valve Timing		
Closes (BTDC)	8.45°	
Opens (BBDC)	45°	
Duration	216.55°	
Valve Overlap @ 0.5mm (0.019 in.) w/ VVT in lock-pin position	18.75°	
* All reading in crankshaft degrees at 0.5 mm (0.019 in.) valve lift.		

CYLINDER HEAD

DESCRIPTION	SPECIFICATION	
	Metric	Standard
Material	Cast Aluminum - Heat treated	
Gasket Thickness (Compressed)	0.54 mm	0.021 in.
Valve Tappet Bore I.D.	32.000 - 32.025 mm	1.2598 - 1.2608 in.
Valve Tappet O.D	31.964 - 31.980 mm	1.2584 - 1.2590 in.
Flatness (Head Gasket Surface)	.05 mm	.002 in.

VALVE SEAT

DESCRIPTION	SPECIFICATION	
	Metric	Standard
Angle	44.75° - 45.10°	
Seat Outer Diameter - Intake	34.45 - 34.61 mm	1.3562 - 1.3625 in.
Seat Outer Diameter - Exhaust	28.04 - 28.20 mm	1.1039 - 1.1102 in.
Runout (Max.)	0.05 mm	0.002 in.
Valve Seat Width		
Intake	1.16 - 1.46 mm	0.0456 - 0.0574 in.
Service Limit	2.0 mm	0.079 in.
Exhaust	1.35 - 1.65 mm	0.0531 - 0.0649 in.
Service Limit	2.5 mm	0.098 in.

VALVE GUIDE

DESCRIPTION	SPECIFICATION	
	Metric	Standard
Diameter I.D.	5.500 - 5.518 mm	0.2165 - 0.2172 in.
Guide Bore Diameter	10.983 - 11.001 mm	0.432 - 0.4331 in.
Guide Height (spring seat to guide tip)	14.6 - 15.2 mm	0.5748 - 0.5984 in.

VALVES

DESCRIPTION	SPECIFICATION	
	Metric	Standard
Face Angle - Intake and Exhaust	45.25° - 45.75°	
Head Diameter - Intake	34.9 - 35.1 mm	1.374 - 1.3818 in.
Head Diameter - Exhaust	28.9 - 29.1 mm	1.1377 - 1.1456 in.
Valve Lash		
Intake	0.17 - 0.23 mm	0.006 - 0.009 in.
Exhaust	0.27 - 0.33 mm	0.010 - 0.012 in.
Valve Length (Overall)		
Intake	113.18 mm	4.455 in.
Exhaust	105.887 mm	4.168 in.
Valve Stem Diameter		
Intake	5.465 - 5.480 mm	0.2151 - 0.2157 in.
Exhaust	5.458 - 5.470 mm	0.2148 - 0.2153 in.

VALVE MARGIN

DESCRIPTION	SPECIFICATION	
	Metric	Standard
Intake	0.672 mm	0.0264 in.
Exhaust	0.744 mm	0.02929 in.

VALVE STEM TIP

DESCRIPTION	SPECIFICATION	
	Metric	Standard
Intake	48.04 mm	1.891 in.
Exhaust	47.99 mm	1.889 in.

VALVE STEM TO GUIDE CLEARANCE

DESCRIPTION	SPECIFICATION	
	Metric	Standard
Intake	0.020 - 0.053 mm	0.0008 - 0.0021 in.
Max. Allowable	0.076 mm	0.003 in.
Exhaust	0.030 - 0.060 mm	0.0012 - 0.0024 in.
Max. Allowable	0.101 mm	0.004 in.

VALVE SPRINGS

DESCRIPTION	SPECIFICATION	
	Metric	Standard
Free Length (Approx.)	47.0 mm	1.850 in.
Nominal Force (Valve Closed)	179.5 N ± 9 @ 35.0 mm	40.35 lbs. @ 1.38 in.
Nominal Force (Valve Open)	364.8 N ± 17 N @ 29.25 mm	82.01 lbs. ± 3.82 lbs. @ 1.152 in.
Installed Height	35.00 mm	1.378 in.
Number of Coils	8.5 ± 0.1	
Wire Diameter	2.90 mm ± 0.03	0.114 in ± 0.001 in.

OIL PRESSURE

DESCRIPTION	SPECIFICATION	
	Metric	Standard
At Curb Idle Speed*	25 kPa	4 psi. min.
At 3000 RPM	170 - 550 kPa	25 - 80 psi.

CAUTION:
***If pressure is ZERO at curb idle, DO NOT run engine at 3000 RPM.**

TORQUE SPECIFICATIONS

DESCRIPTION	N.m	Ft. Lbs.	In. Lbs.
AIR BOX LID TO LOWER A/BOX	4		35
ALTERNATOR TO ALTERNATOR BRACKET & ENGINE BLOCK	23	17	
BALANCE SHAFT MODULE	Refer to **PUMP, ENGINE OIL - INSTALLATION** Procedure		

BALANCE SHAFT CHAIN GUIDE TO LADDER	12	-	106
BATTERY POSITIVE TO TERMINAL POST	9	-	80
B+ CABLE TO STARTER	10	-	89
Camshaft Bearing Cap-Bolts CAMSHAFT BEARING CAPS FRONT EXHAUST CAMSHAFT CAP	15	11	-
REMAINING EXHAUST CAMSHAFT CAPS	9.5	-	85
CAMSHAFT SPROCKET	59	44	-
CONNECTING ROD CAPS	20 + 90°	15 + 90°	-
COOLANT TEMPERATURE SENSOR	50	36	-
CRANKSHAFT MAIN BEARING CAPS	Refer to **CRANKSHAFT - INSTALLATION** Procedure		
CRANKSHAFT POSITION SENSOR TO CYLINDER BLOCK	9		80
CRANKSHAFT DAMPER	210	155	-
CYLINDER HEAD	Refer to **CYLINDER HEAD - INSTALLATION** Procedure		
DUCT TO FEM	4		35
ENGINE COVER BALL STUD TO VALVE COVER	3	-	27
ENGINE OIL COOLER SHIELD TO COOLER	8		71
ENGINE OIL COOLER TO ADAPTOR	49	36	-
ENGINE OIL COOLER TUBE TO CYLINDER BLOCK	25	18	-
ENGINE SUPPORT BRACKET	Refer to **ENGINE - INSTALLATION** Procedure		
ENGINE TO TRANSMISSION	50	37	-
EXHAUST MANIVERTER TO CYLINDER HEAD	34	25	-
EXHAUST MANIFOLD HEAT SHIELD	12		105
EXHAUST PIPE TO OIL PAN	25	18	
FLEX PLATE TO CRANKSHAFT	95	70	-
HEATER RETURN TO LEFT (TRANS) MOUNT BRACKET	8		71
IGNITION COILS	8	-	71

INTAKE MANIFOLD TO CYLINDER HEAD	12	9	-
INTAKE MANIFOLD SILENCER COVER	2.5	-	22
INTAKE MANIFOLD SUPPORT TO PTU BRACKET	12	-	106
INTERMEDIATE SHAFT BRACKET TO ENGINE BLOCK	55	41	
KNOCK SENSOR TO ENGINE BLOCK	28	21	
LADDER FRAME TO BLOCK	Refer to **FRAME, LADDER - INSTALLATION** Procedure		
LEFT ENGINE MOUNT TO FRAME RAIL	105	77	-
LEFT ENGINE MOUNT TO STRUT TOWER	64	47	-
LEFT ENGINE MOUNT TO ADAPTER BRACKET	157	115	-
MANIVERTER TO SUPPORT BRACKET	20	15	
MASS AIRFLOW SENSOR TO AIRBOX LID	4		35
MULTIAIR FILL PORT PLUG TO CYLINDER HEAD COVER	21	15	-
OIL COOLER TO ADAPTOR	49	36	-
OIL COOLER TO BLOCK	49	36	-
OIL FILTER	14	10	-
OIL JET FASTENER	12	-	105
OIL LEVEL INDICATOR TUBE TO CYLINDER BLOCK	22	16	
OIL PAN TO BLOCK M6 BOLTS	12	-	105
M8 BOLTS	22	-	195
OIL PAN DRAIN PLUG	40	30	-
OIL PRESSURE SENSOR	48	35	-
OIL TEMPERATURE SENSOR	48	35	-
OXYGEN SENSOR	50	37	-
PCV VALVE	135	100	-
RIGHT ENGINE MOUNT TO FRAME RAIL	70	52	-
RIGHT ENGINE MOUNT TO STRUT TOWER	65	48	-
RIGHT ENGINE MOUNT TO			

TIMING COVER	75	55	-
SPARK PLUGS	27	20	-
STARTER MOTOR TO BLOCK	36	27	-
TENSIONER TO ACCESSORY DRIVE BRACKET	26	19	
THROTTLE BODY BRACKET TO THROTTLE BODY	12		106
THROTTLE BODY BRACKET TO THERMOSTAT HOUSING	9		80
THROTTLE BODY SUPPORT TO CYLINDER HEAD	24	18	
THROTTLE BODY TO INTAKE MANIFOLD	5.4		48
TIMING CHAIN COVER M10 BOLTS M6 BOLTS	 65 9	 48 -	 - 80
M8 BOLTS	26	19	-
TIMING CHAIN TENSIONER ASSEMBLY	12	-	105
TIMING CHAIN GUIDE	12	-	106
TORQUE STRUT (REAR ENGINE MOUNT) TO CRADLE ***See Note**	150	111	-
TORQUE STRUT (REAR ENGINE MOUNT) TO PIVOT BRACKET	220	162	-
TORQUE STRUT BRACKET TO CRADLE	73	54	-
TRANSMISSION TO ENGINE	50	37	-
VACUUM PUMP TO CYLINDER HEAD	23	17	
VALVE COVER TO CYLINDER HEAD	10	-	89
WATER INLET TUBE TO CYLINDER BLOCK	24	18	

NOTE: * READ THE TORQUE VALUE AT THE NUT ONLY.

REMOVAL

REMOVAL

CAUTION: If the original engine has experienced a catastrophic failure or an individual failure with the piston, cylinder bore, engine block, valve or valve seat, the intake manifold MUST be replaced with a new manifold.

1. Release the fuel pressure. Refer to **FUEL SYSTEM PRESSURE RELEASE PROCEDURE** .

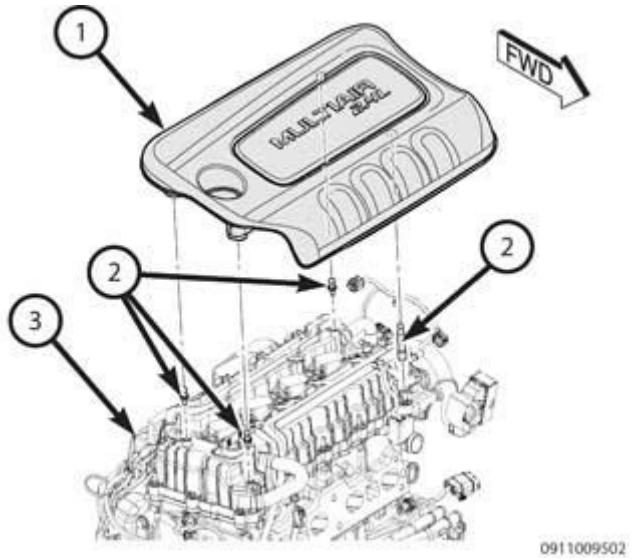

Fig. 7: Engine Cover & Pins
Courtesy of CHRYSLER GROUP, LLC

2. Remove the engine cover (1) from the ball studs (2).
3. Secure the steering wheel.

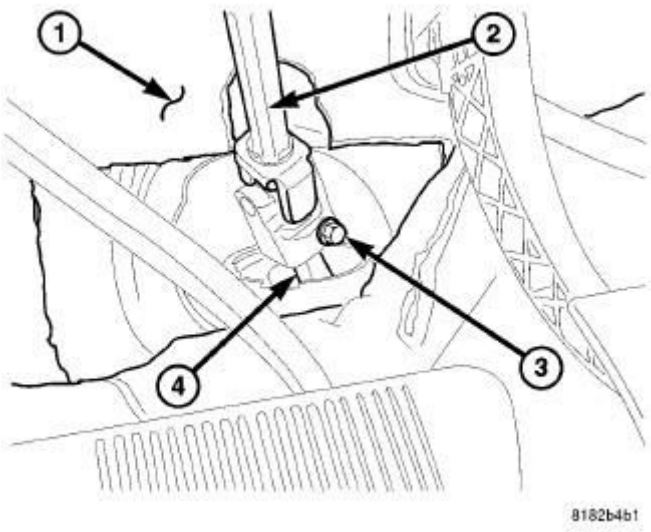

Fig. 8: Lower Coupling Bolt
Courtesy of CHRYSLER GROUP, LLC

4. Remove the steering coupler bolt (3). Position the shaft out of the way.
5. Raise and support the vehicle. Refer to **HOISTING, STANDARD PROCEDURE** .
6. Drain the coolant.
7. Lower the vehicle.

Fig. 9: Battery Cover
Courtesy of CHRYSLER GROUP, LLC

8. Remove the battery cover (1)

.

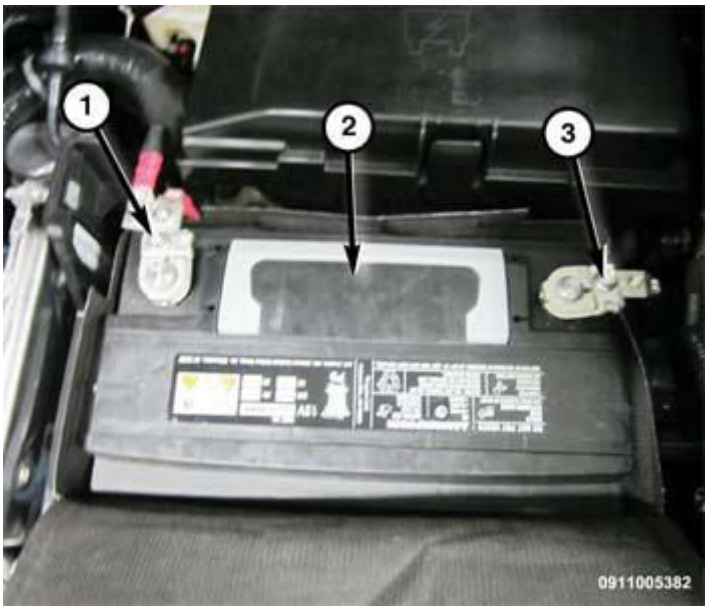

Fig. 10: Battery & Cables
Courtesy of CHRYSLER GROUP, LLC

9. Disconnect the battery connectors (1 & 3).
10. Remove the battery (2). Refer to **BATTERY, REMOVAL** .

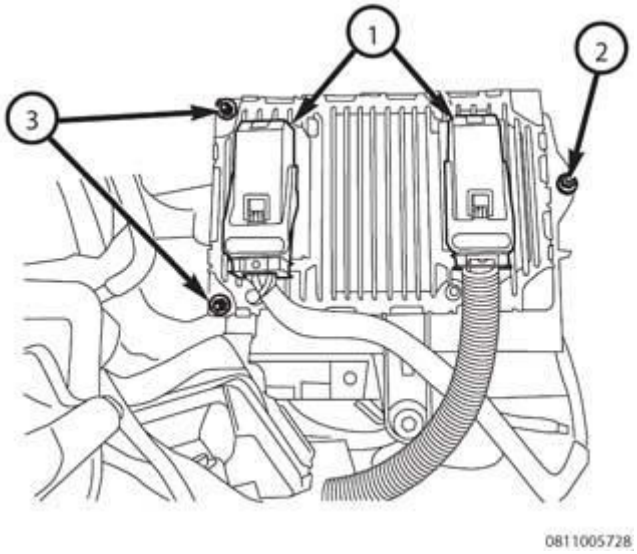

Fig. 11: Powertrain Control Module Electrical Connectors & Nuts
Courtesy of CHRYSLER GROUP, LLC

11. Remove the PCM. Refer to **MODULE, POWERTRAIN CONTROL, REMOVAL** .

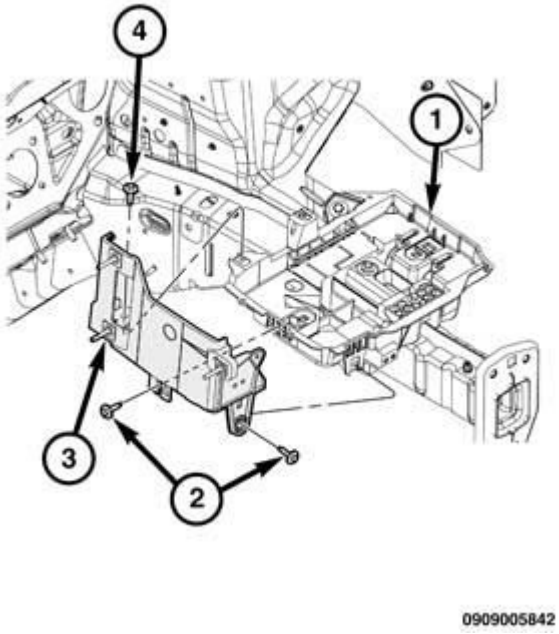

Fig. 12: Battery Tray, PCM Mount & Bolts
Courtesy of CHRYSLER GROUP, LLC

12. Remove the PCM mount bracket bolts (2 & 4). Remove the bracket (3) from the battery tray (1).
13. Disconnect the heater core supply and return hoses at the fittings nearest the thermostat housing.
14. Remove the bolt securing the heater supply pipe at the left engine mount bracket.
15. Disconnect the heater hose at the thermostat outlet connector.
16. Separate the wire harness retainers at the transmission bell housing.
17. Loosen the upper starter bolt completely.

NOTE: The upper bolt will not back out completely due to lack of clearance. Leave the bolt in the bell housing.

18. Release the two harness retainers that are secured to the PDC bracket.
19. Remove the PDC. Refer to **CENTER, POWER DISTRIBUTION (PDC), REMOVAL** .
20. Unlock and separate engine harness connectors at the front of the battery tray.
21. Release the connectors from the battery tray.

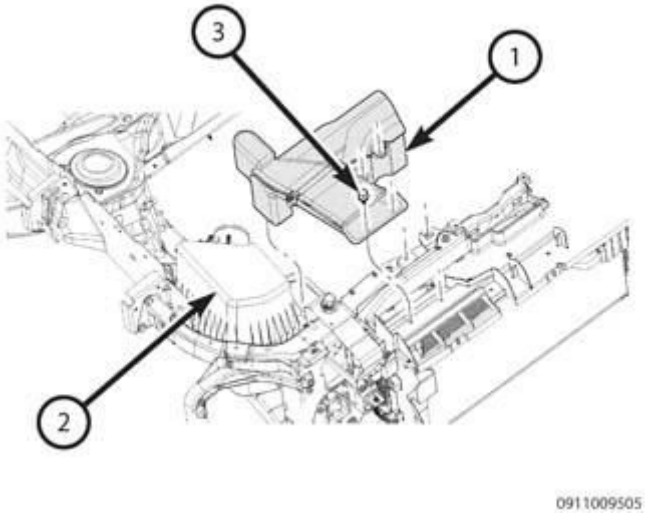

Fig. 13: Removing/Installing Inlet Assembly
Courtesy of CHRYSLER GROUP, LLC

22. Remove the fresh air hose from valve cover.
23. Remove the air cleaner inlet snorkel push pins (3). Remove the inlet assembly (1).

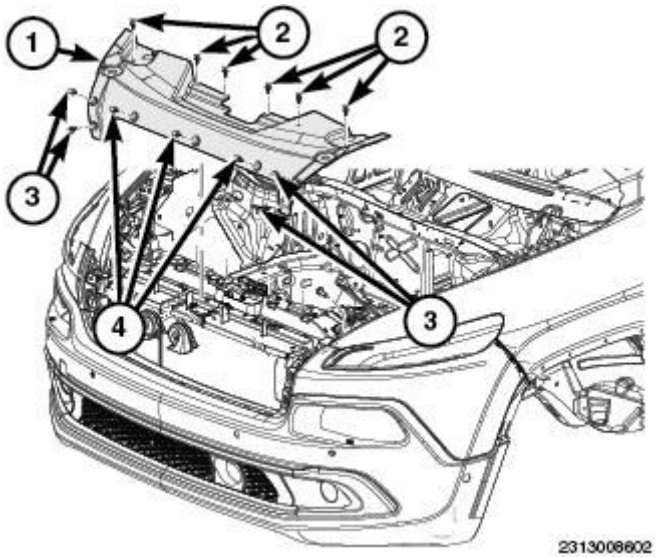

Fig. 14: Upper Close Out Panel Cover Components
Courtesy of CHRYSLER GROUP, LLC

24. Remove the radiator upper closeout panel push pins (2).
25. Remove the radiator upper closeout panel bolts (4).
26. Remove the radiator upper closeout panel bolts (3).

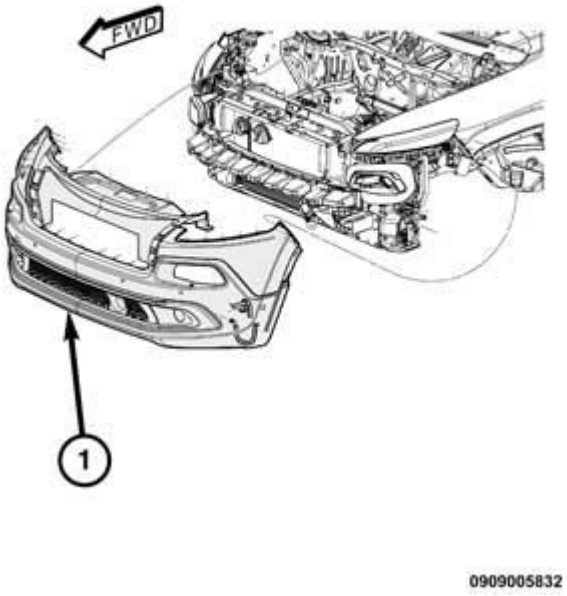

Fig. 15: Front Fascia Assembly
Courtesy of CHRYSLER GROUP, LLC

27. Remove the front fascia assembly (1). Refer to **FASCIA, FRONT, REMOVAL** .

28. Remove the radiator inlet hose clamp.
29. Remove the radiator outlet hose clamp.
30. Remove the oil cooler inlet and outlet hose clamps at the tubes.
31. Remove the serpentine belt.

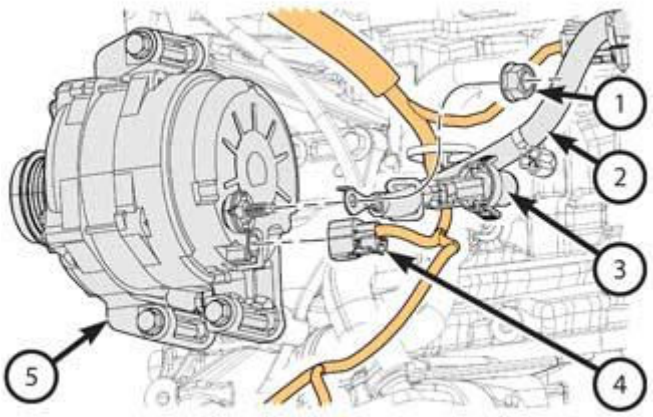

0912009645

Fig. 16: Removing/Installing Generator
Courtesy of CHRYSLER GROUP, LLC

32. Open the 12 volt protective cover (3).
33. Remove the generator 12 volt connector nut (1).
34. Disconnect the generator fielding connector (4).
35. Reposition the harness (2) aside.
36. Remove the generator bolts.
37. Remove the generator (5).

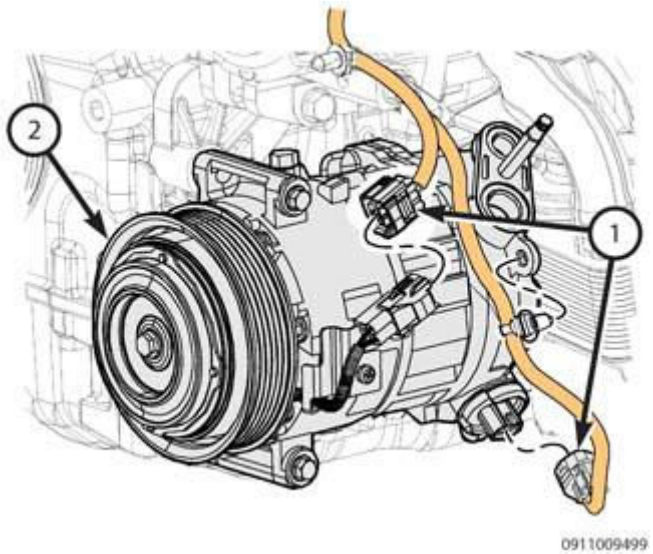

Fig. 17: Air Conditioning Compressor Electrical Connectors
Courtesy of CHRYSLER GROUP, LLC

38. Disconnect the air conditioning compressor electrical connectors (1).

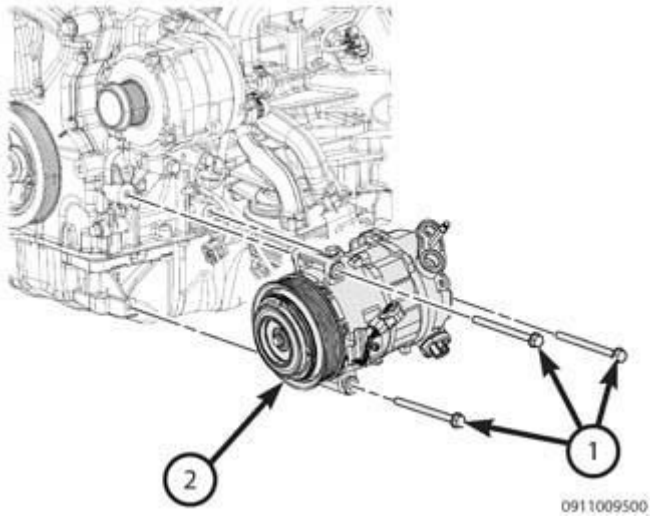

Fig. 18: Air Conditioning Compressor & Bolts
Courtesy of CHRYSLER GROUP, LLC

39. Remove the air conditioning compressor bolts (1). Position the compressor (2) aside and secure with a strap.

NOTE: The is no need to separate the lines from the compressor.

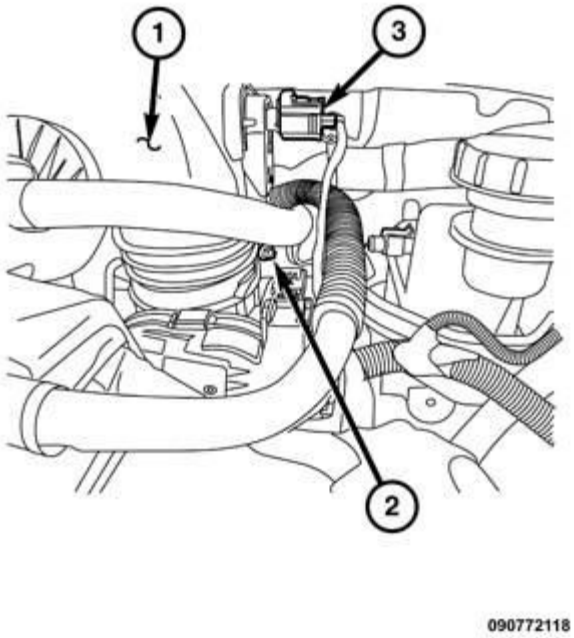

Fig. 19: Resonator, Clamp & Connector
Courtesy of CHRYSLER GROUP, LLC

40. Loosen the snorkel to throttle body clamp (2).
41. Disconnect the IAT sensor (3).

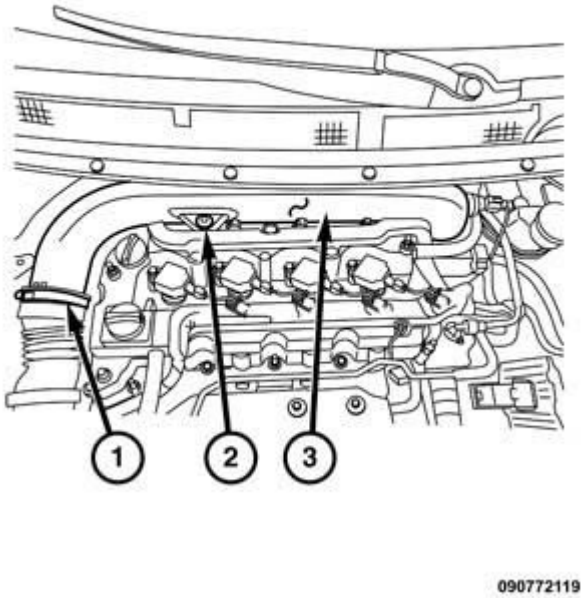

Fig. 20: Resonator, Bolt & Clamp

Courtesy of CHRYSLER GROUP, LLC

42. Loosen the snorkel clamp (1).
43. Remove the air intake snorkel bolt (2) and remove the snorkel (3).

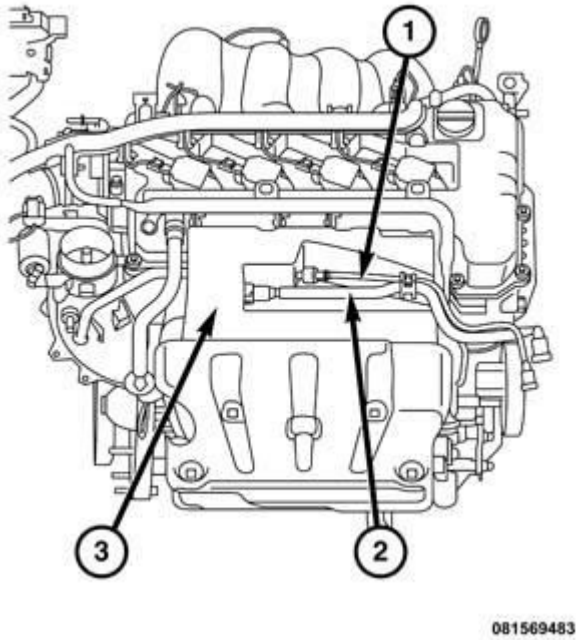

Fig. 21: Foam Insulator, Fuel Line & Purge Line
Courtesy of CHRYSLER GROUP, LLC

44. Disconnect the fuel line (1) and the purge line (2) quick connects.
45. Disconnect the MAP sensor connector.
46. Disconnect the oil temperature sensor connector.

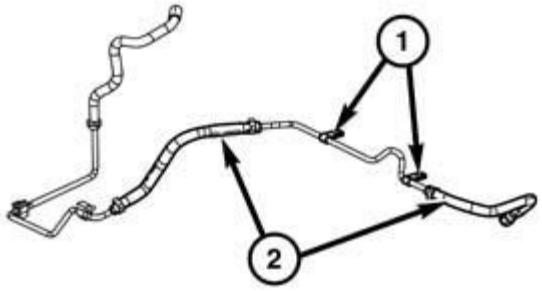

090974919

Fig. 22: Hose Assembly & Hot Bottle Return Pipe Bolts
Courtesy of CHRYSLER GROUP, LLC

47. Remove the coolant reservoir return hose bolts (1). Disconnect both ends of the pipe. Remove the hose assembly (2).
48. Release the engine wire harness retainers.
49. Disconnect the transmission cooler hoses at the transmission fittings. Install plugs to limit the fluid loss.
50. Raise and support the vehicle.
51. Remove the forward skid plate fasteners (if equipped).
52. Remove the rearward skid plate fasteners (if equipped)
53. Remove both skid plates (if equipped)
54. Remove the front wheels.
55. Remove the left wheel well liner.
56. Remove the bolt holding the windshield washer reservoir to the battery tray.
57. Release the retainer from the harness at the bottom of the battery tray.
58. Remove the battery tray. Refer to **TRAY, BATTERY, REMOVAL** .
59. Raise and support the vehicle.
60. Remove the left and right axle shafts. Refer to **REMOVAL** .
61. Remove the left and right wheel well liners.
62. Remove the belly pan. Refer to **BELLY PAN, REMOVAL** .
63. Remove the upper radiator hose.
64. Remove the lower radiator hose.
65. Remove the front tow hooks. Refer to **HOOK(S), TOW, FRONT, REMOVAL** .

66. Remove the radiator fan assembly. Refer to **FAN, COOLING, REMOVAL** .

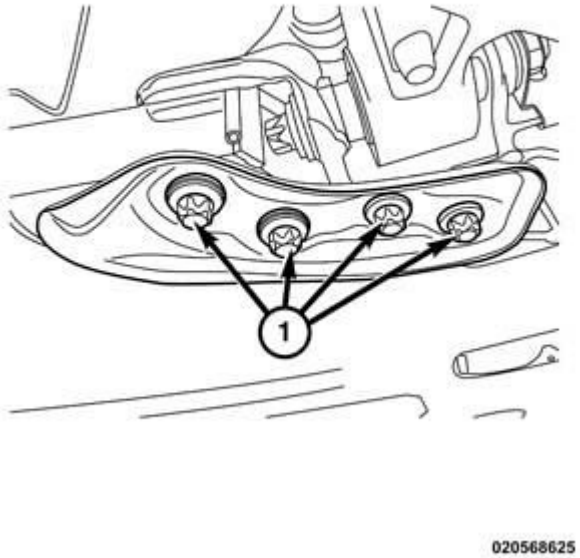

Fig. 23: Crossmember To Fascia Support Beams Bracket Retaining Bolts
Courtesy of CHRYSLER GROUP, LLC

67. Remove the four bracket retaining bolts (1) from the cross member to fascia support beams bracket, then remove the bracket.

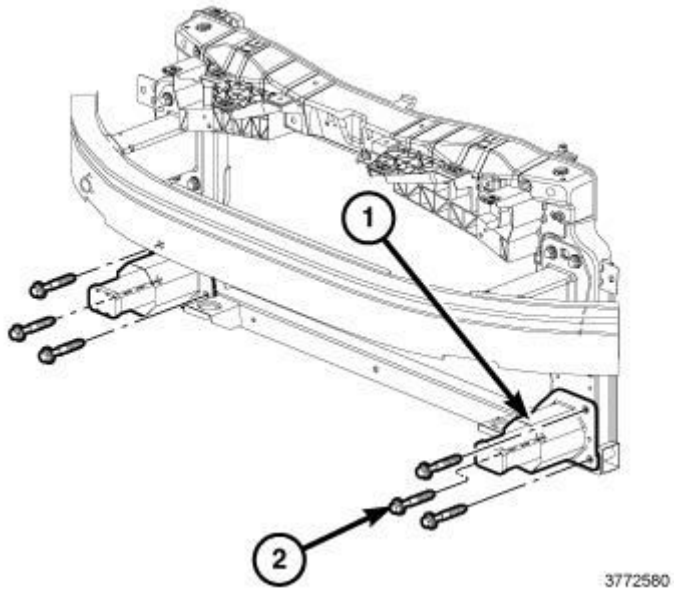

Fig. 24: Lower Bumper Reinforcements & Fasteners
Courtesy of CHRYSLER GROUP, LLC

68. Remove the fasteners (2) securing the lower bumper reinforcement (1) and front fascia support beams to the frame/front end module.

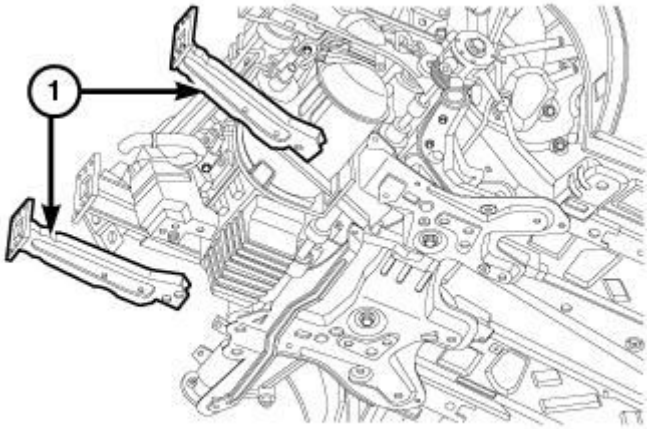

3140748

Fig. 25: Front Fascia Support Beams
Courtesy of CHRYSLER GROUP, LLC

69. Remove the front fascia support beams (1).

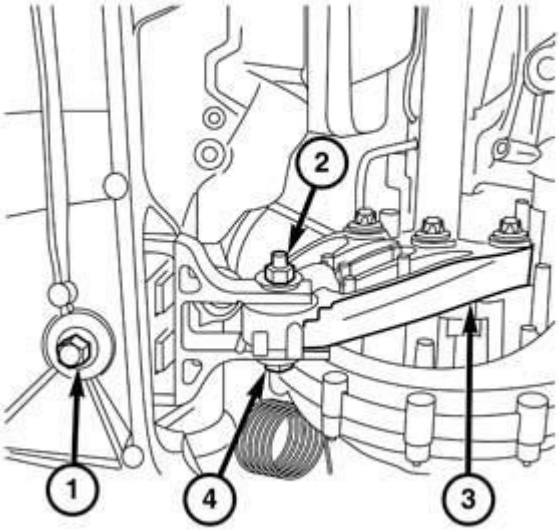

081569486

Fig. 26: Rear Engine Isolator To Engine Mount Bracket Bolt
Courtesy of CHRYSLER GROUP, LLC

70. Remove the rear engine mount to bracket through bolt (4) and nut (2)

    .

71. Remove the rear engine mount to crossmember through bolt (1).
72. Reposition the engine forward to allow the mount to be removed from the pocket past the engine bracket (3).
73. Remove the front suspension crossmember. Refer to **CROSSMEMBER, FRONT SUSPENSION, REMOVAL** .
74. Remove the exhaust cross-under pipe assembly. Refer to **PIPE, EXHAUST CROSSUNDER, REMOVAL** .

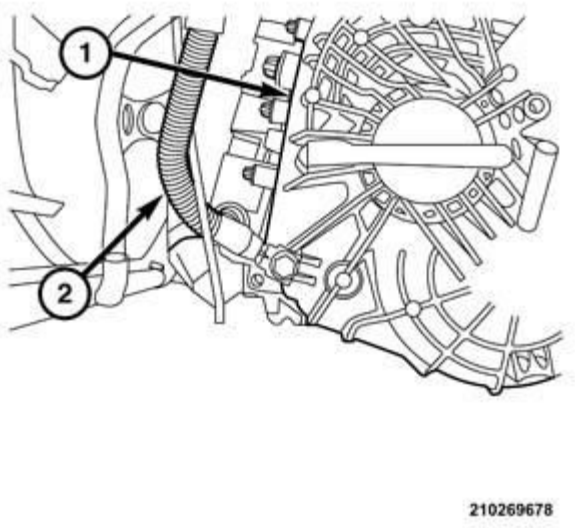

Fig. 27: Transaxle & Ground Cable
Courtesy of CHRYSLER GROUP, LLC

75. Remove the bolt holding the ground cable (2) to transaxle and separate cable from transaxle (1).
76. Remove the bolt holding the ground strap to left frame rail.
77. Disconnect the shifter cables from the transmission. Refer to **CABLE, GEARSHIFT CONTROL, REMOVAL** .
78. Reposition the main wire harness away from the engine.

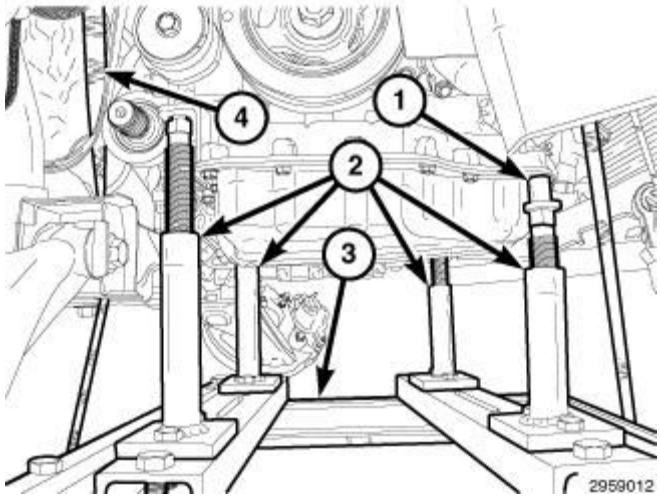

Fig. 28: Adapter, Engine Support Cradle, Power Train Dolly & Safety Straps
Courtesy of CHRYSLER GROUP, LLC

79. Raise and position the vehicle height to allow Power Train Dolly (special tool #6135, Dolly, Power Train) (3) and Engine Support Cradle (special tool #6710A, Cradle, Engine Support) (2) to be installed under the engine/transaxle assembly.
80. Loosen the cradle engine mounts to allow movement for positioning onto the engine locating holes on the engine block and oil pan rail. Place Adapter (special tool #6848-3, Adapter) (1) on the front post and align to the oil pan mounting stud. Lower the vehicle and position cradle until the engine is resting on the posts. Tighten the post mounts to the cradle frame. Secure the engine/transaxle assembly to the dolly/cradle with safety straps (4).
81. Remove the left engine mount. Refer to **INSULATOR, ENGINE MOUNT, LEFT, REMOVAL** .
82. Remove the right engine mount. Refer to **INSULATOR, ENGINE MOUNT, RIGHT** .
83. Slowly raise the vehicle to allow the it to clear the powertrain assembly.

CAUTION: Make sure that all components are clear of obstructions while raising the vehicle off of the powertrain assembly.

84. On vehicles equipped with an automatic transaxle, remove torque converter bolts.

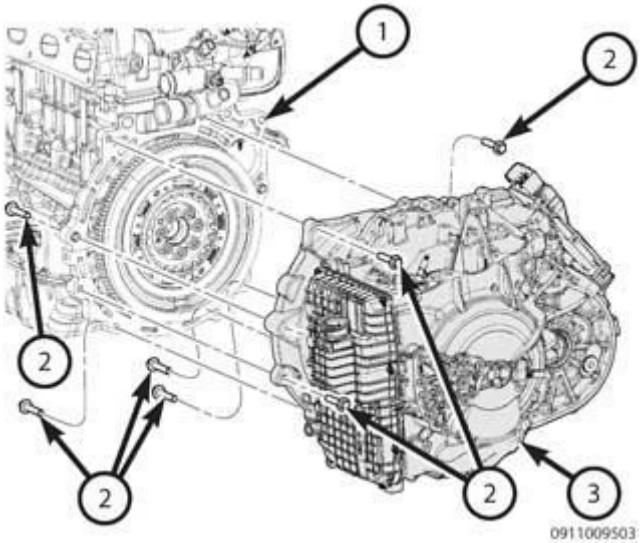

Fig. 29: Removing/Installing Bell-Housing
Courtesy of CHRYSLER GROUP, LLC

85. Affix a chain to the transmission mount bracket to be used as a lifting point.
86. Using an engine hoist, remove the slack from the lifting chain.
87. Remove the bell-housing bolts (2).
88. Separate engine (1) and transmission (2).

INSTALLATION

INSTALLATION

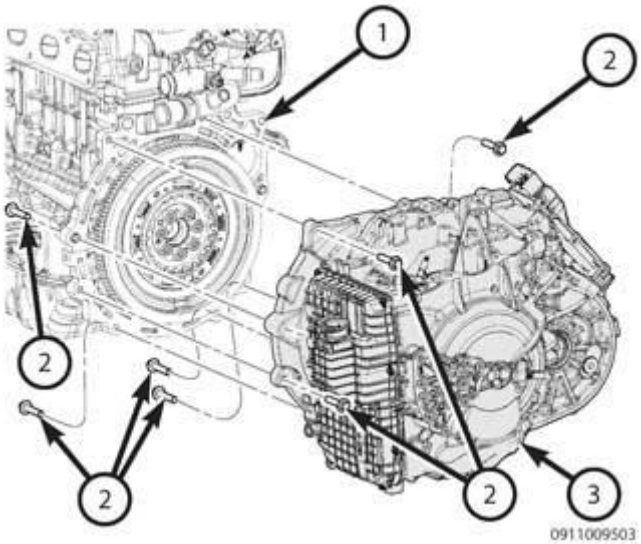

Fig. 30: Removing/Installing Bell-Housing
Courtesy of CHRYSLER GROUP, LLC

1. Push the bell housing against the engine block until the guide pins engage.
2. Install transmission bolts (2). Refer to **SPECIFICATIONS** .
3. On vehicles equipped with an automatic transaxle, install torque converter bolts.

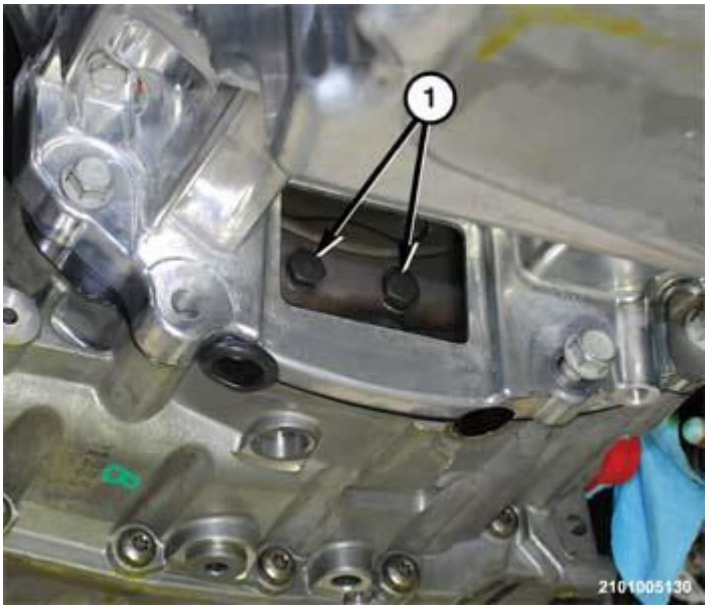

Fig. 31: Flexplate-To-Torque Converter Bolts
Courtesy of CHRYSLER GROUP, LLC

4. Through the access door opening, Install the bolts (1) to hold the flexplate to the torque converter. Refer to **SPECIFICATIONS** . Apply Mopar® Lock & Seal Adhesive or replace the bolts on the threads. Rotate the crankshaft to bring each set of bolts into view through the access door.

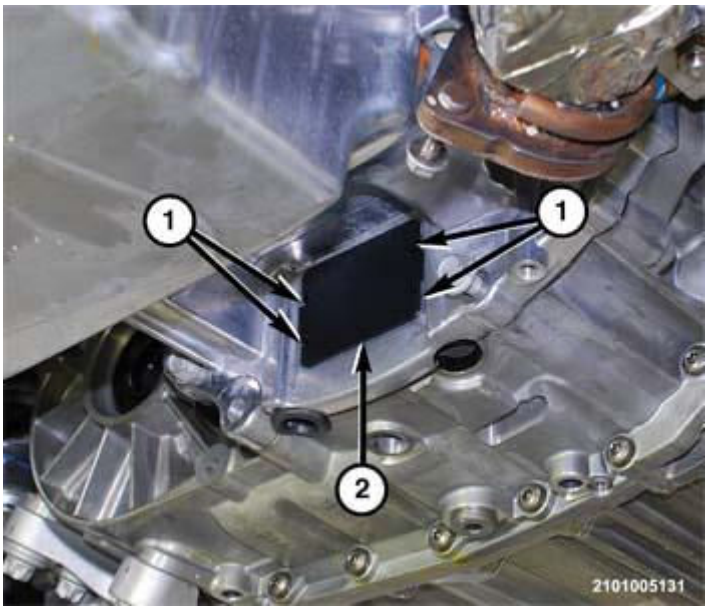

Fig. 32: Access Door In Splash Shield

Courtesy of CHRYSLER GROUP, LLC

5. Install the access door in the splash shield on the bellhousing.
6. Slowly lower the vehicle to allow it to clear the powertrain assembly.

CAUTION: Make sure that all components are clear of obstructions while raising the vehicle off of the powertrain assembly.

7. Install the left engine mount. Refer to **INSULATOR, ENGINE MOUNT, LEFT, INSTALLATION** .
8. Install the right engine mount. Refer to **INSULATOR, ENGINE MOUNT, RIGHT, INSTALLATION** .
9. Remove the Power Train Dolly.
10. Connect the shifter cables from the transmission.

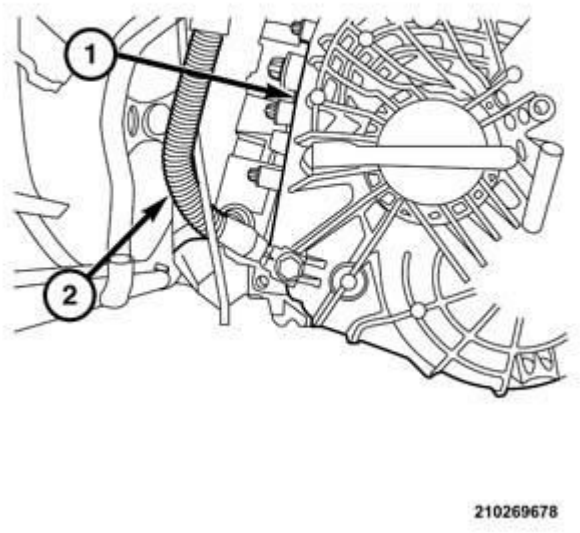

Fig. 33: Transaxle & Ground Cable
Courtesy of CHRYSLER GROUP, LLC

11. Install the bolt holding the ground cable (2) to transaxle (1). Refer to **SPECIFICATIONS** .
12. Install the exhaust cross-under pipe assembly. Refer to **PIPE, EXHAUST CROSSUNDER, INSTALLATION** .
13. Install the front suspension crossmember. Refer to **CROSSMEMBER, FRONT SUSPENSION, INSTALLATION** .
14. Install the rear engine mount. Refer to **INSULATOR, ENGINE MOUNT, REAR, INSTALLATION** .

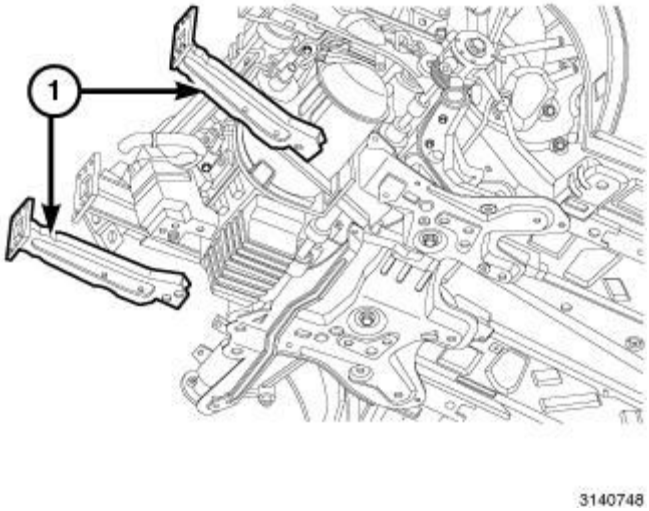

Fig. 34: Front Fascia Support Beams
Courtesy of CHRYSLER GROUP, LLC

15. Install the front fascia support beams (1). Refer to **FRAME, SPECIFICATIONS** .

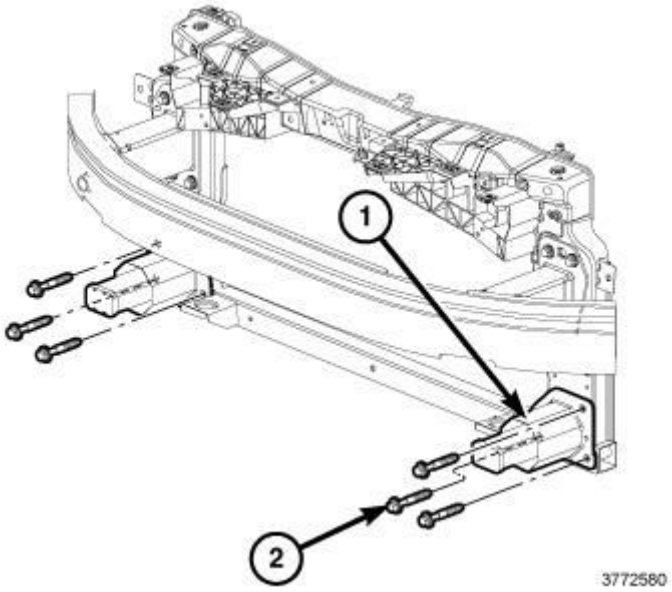

Fig. 35: Lower Bumper Reinforcements & Fasteners
Courtesy of CHRYSLER GROUP, LLC

16.
17. Install the fasteners (2) securing the lower bumper reinforcement (1) and front fascia support beams to the frame/front end module. Refer to **FRAME, SPECIFICATIONS** .

.

18. Install the radiator fan assembly. Refer to **FAN, COOLING, INSTALLATION** .

    .

19. Install the front tow hooks. Refer to **HOOK(S), TOW, FRONT, INSTALLATION** .
20. Install the upper radiator hose.
21. Install the lower radiator hose.
22. Install the belly pan. Refer to **BELLY PAN** .
23. Install the left and right axle shafts. Refer to **INSTALLATION** .

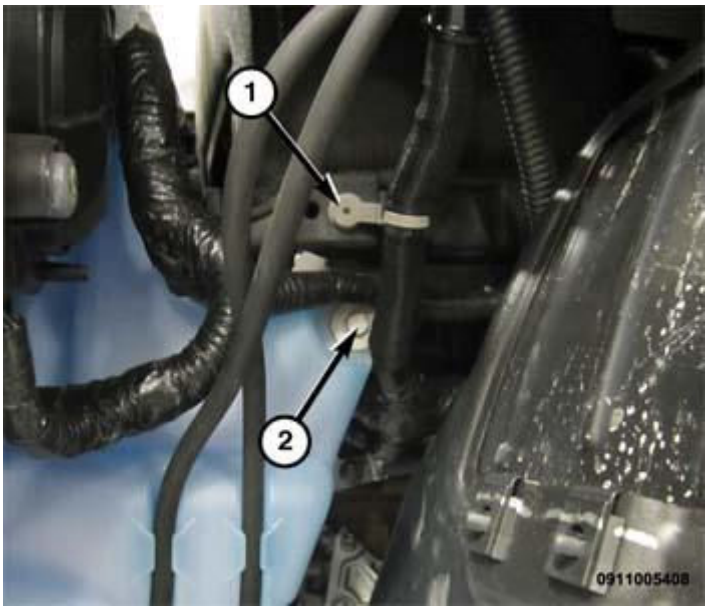

Fig. 36: Windshield Washer Reservoir-To-Battery Tray Bolt
Courtesy of CHRYSLER GROUP, LLC

24. Install the bolt (2) holding the windshield washer reservoir to the battery tray.
25. Insert the harness retainer to the battery tray.
26. Install the left wheel well liner.
27. Install both skid plates (if equipped).
28. Install the forward skid plate fasteners (if equipped).
29. Install the rearward skid plate fasteners (if equipped).
30. Install the front wheels.
31. Install the engine wire harness retainers.
32. Connect the transmission cooler hoses at the transmission fittings.

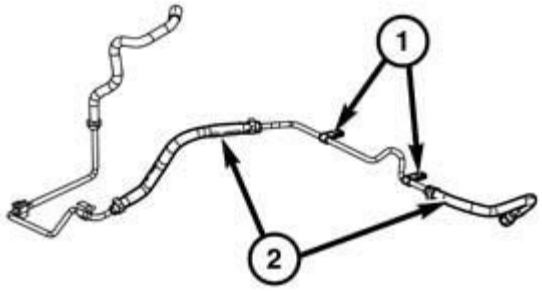

090974919

Fig. 37: Hose Assembly & Hot Bottle Return Pipe Bolts
Courtesy of CHRYSLER GROUP, LLC

33. Install the coolant reservoir return hose assembly (2) Install the hose bolts (1). Connect both ends of the pipe.
34. Connect the MAP sensor connector.
35. Connect the oil temperature sensor connector.

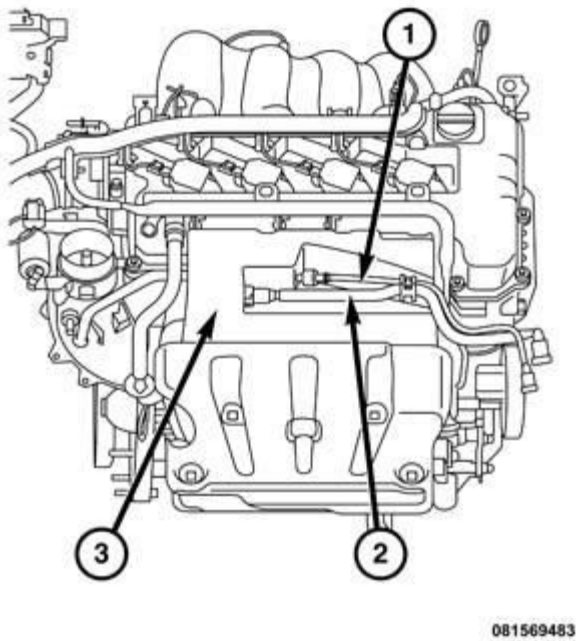

Fig. 38: Foam Insulator, Fuel Line & Purge Line
Courtesy of CHRYSLER GROUP, LLC

36. Install the fuel injector insulator (3).
37. Connect the fuel line (1) and the purge line (2) quick connects.

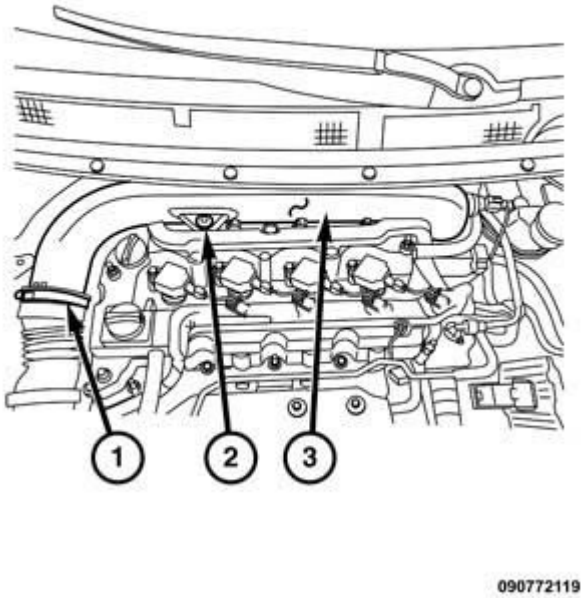

Fig. 39: Resonator, Bolt & Clamp

Courtesy of CHRYSLER GROUP, LLC

38. Install the air intake snorkel (3) and snorkel bolt (2). Refer to **ENGINE SPECIFICATIONS** .
39. Tighten the snorkel clamp (1).

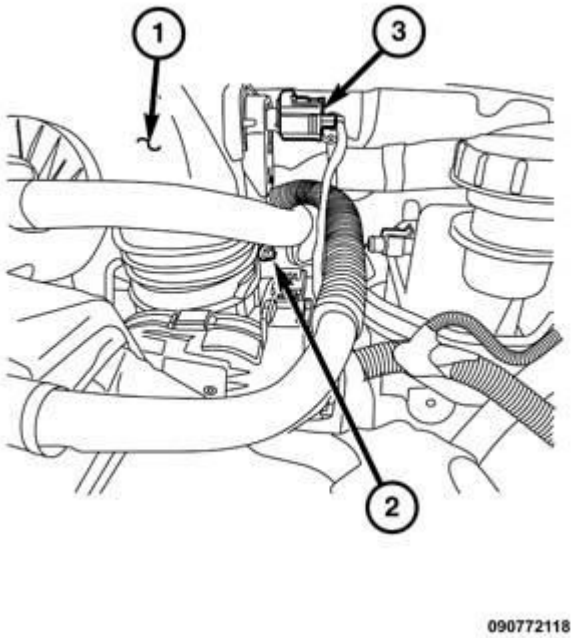

Fig. 40: Resonator, Clamp & Connector
Courtesy of CHRYSLER GROUP, LLC

40. Connect the IAT sensor (3).
41. Tighten the snorkel to throttle body clamp (2).

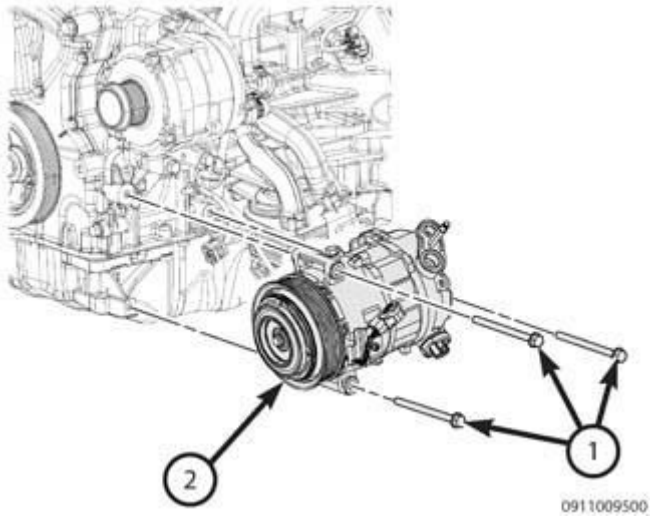

Fig. 41: Air Conditioning Compressor & Bolts
Courtesy of CHRYSLER GROUP, LLC

42. Install the air conditioning compressor (2).
43. Install the compressor bolts (1). Refer to **SPECIFICATIONS** .

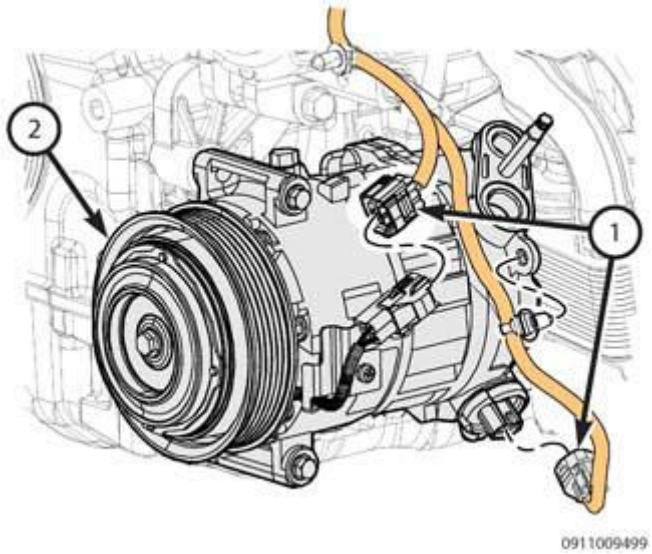

Fig. 42: Air Conditioning Compressor Electrical Connectors
Courtesy of CHRYSLER GROUP, LLC

44. Disconnect the air conditioning compressor electrical connectors (1).

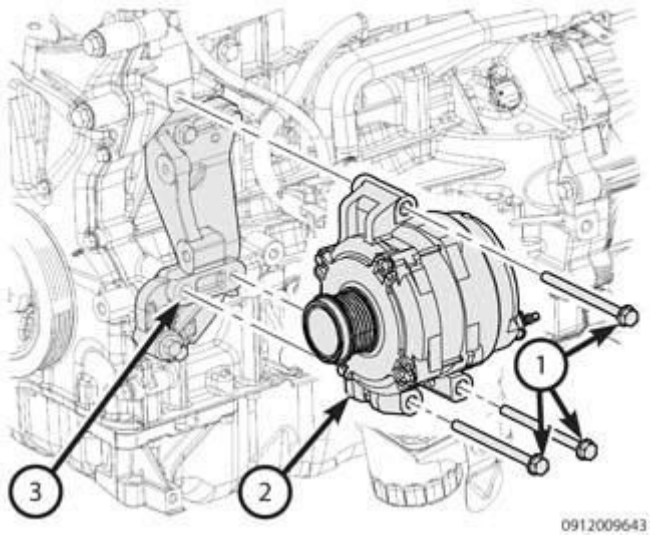

Fig. 43: Generator, Bolts & Bracket
Courtesy of CHRYSLER GROUP, LLC

45. Install the generator (2) to the bracket (3).

46. Install the generator bolts (1). Refer to **ENGINE SPECIFICATIONS** .

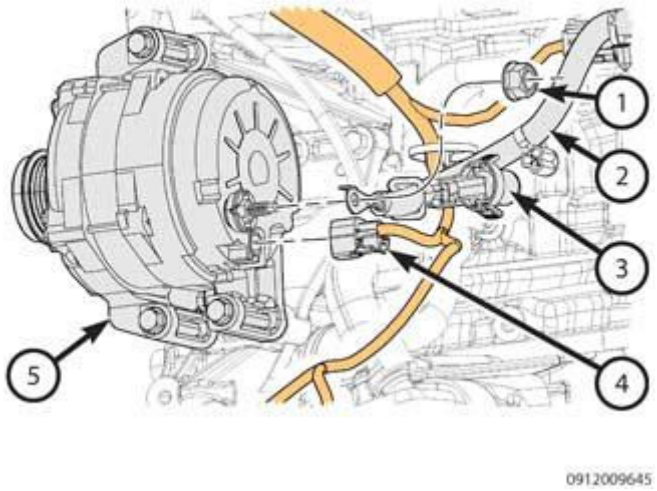

Fig. 44: Removing/Installing Generator
Courtesy of CHRYSLER GROUP, LLC

47. Install the generator electrical connectors (1 & 2).
48. Install the nut (1). Tighten to 12 N.m (106 in. lbs.).
49. Close the 12 volt protective cover (3).
50. Install the serpentine belt.
51. Install the radiator inlet hose clamp.
52. Install the radiator outlet hose clamp.
53. Install the oil cooler inlet and outlet hose clamps at the tubes.

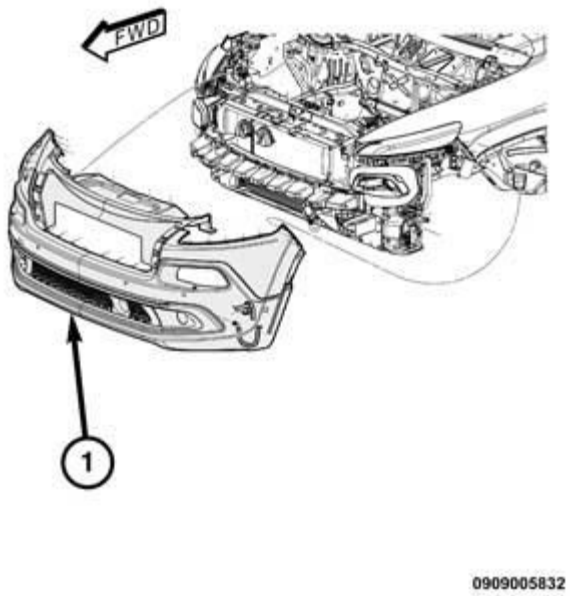

Fig. 45: Front Fascia Assembly
Courtesy of CHRYSLER GROUP, LLC

54. Install the front fascia. Refer to **FASCIA, FRONT, INSTALLATION** .

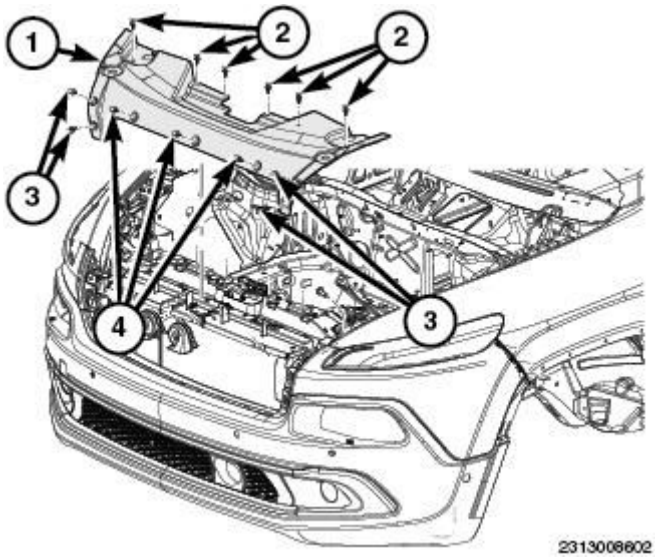

Fig. 46: Upper Close Out Panel Cover Components
Courtesy of CHRYSLER GROUP, LLC

55. Install the radiator upper closeout panel push pins (2).
56. Install the radiator upper closeout panel bolts (4).
57. Install the radiator upper closeout panel bolts (3).

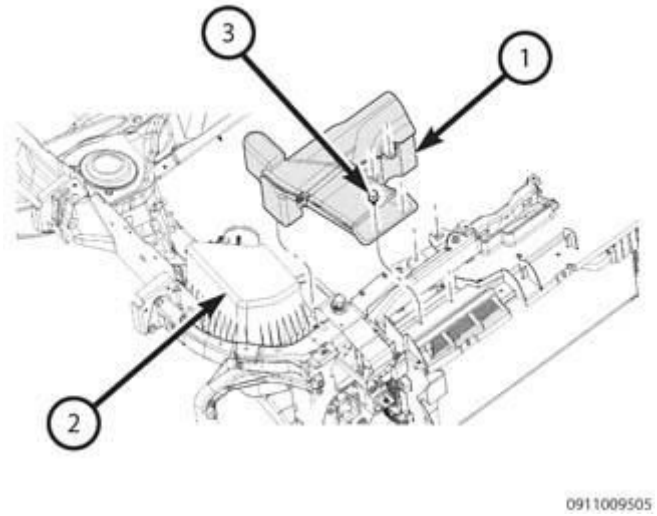

Fig. 47: Removing/Installing Inlet Assembly
Courtesy of CHRYSLER GROUP, LLC

58. Install the fresh air hose to the valve cover.
59. Install the air cleaner inlet assembly (1). Install the inlet snorkel push pins (3).
60. Install the inline connectors at the front of the battery tray.
61. Lock the engine harness connectors at the front of the battery tray.
62. Install the PDC. Refer to **CENTER, POWER DISTRIBUTION (PDC), INSTALLATION** .

    .

63. Install the two harness retainers that are secured to the PDC bracket.
64. Separate the wire harness retainers at the transmission bell housing.
65. Connect the heater core supply and return hoses at the fittings nearest the thermostat housing.

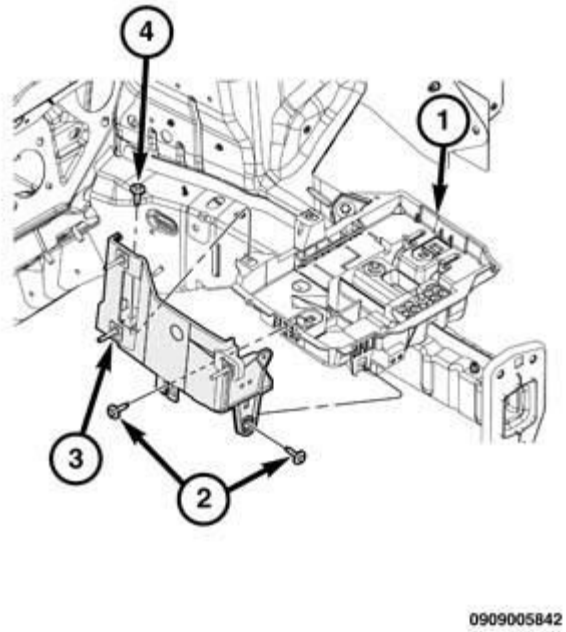

Fig. 48: Battery Tray, PCM Mount & Bolts
Courtesy of CHRYSLER GROUP, LLC

66. Install the PCM bracket (3) to the battery tray (1). Install the PCM mount bracket bolts (2 & 4).
67. Install the PCM. Refer to **MODULE, POWERTRAIN CONTROL, INSTALLATION** .

.

Fig. 49: Battery & Cables
Courtesy of CHRYSLER GROUP, LLC

68. Install the battery (2).
69. Connect the battery connectors (1 & 3).

Fig. 50: Battery Cover
Courtesy of CHRYSLER GROUP, LLC

70. Install the battery cover (1)
71. Fill the cooling system.

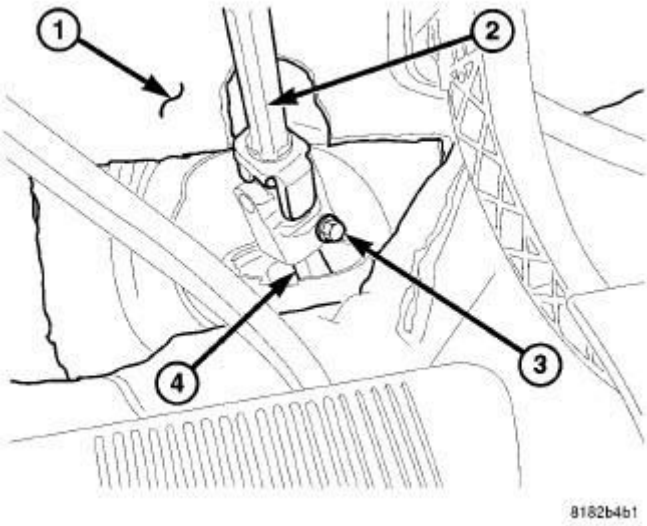

Fig. 51: Lower Coupling Bolt
Courtesy of CHRYSLER GROUP, LLC

72. Install the steering coupler bolt (3). Refer to **SPECIFICATIONS** .

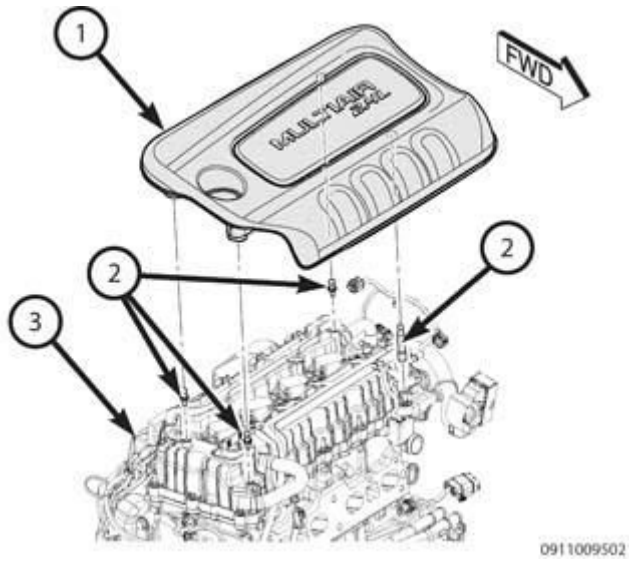

Fig. 52: Engine Cover & Pins
Courtesy of CHRYSLER GROUP, LLC

73. Install the engine cover (1) to the ball studs (2).
74. Add engine oil and transmission fluid as necessary.
75. Start engine, check for leaks.
76. Bleed the cooling system. Refer to **STANDARD PROCEDURE** .

SPECIAL TOOLS

SPECIAL TOOLS

	10224 - Adapter, Valve Spring (Originally Shipped In Kit Number(s) 10223.)

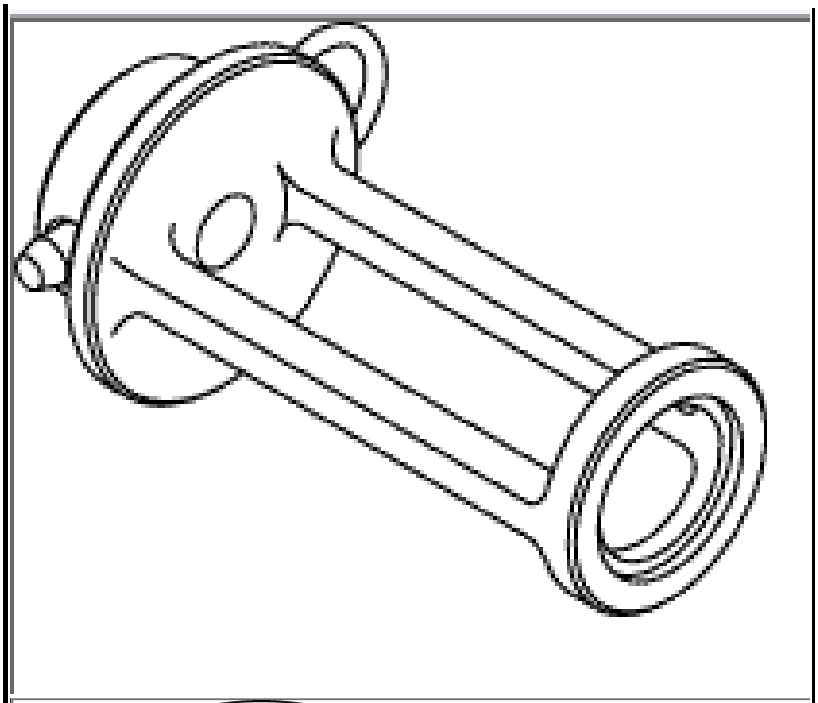

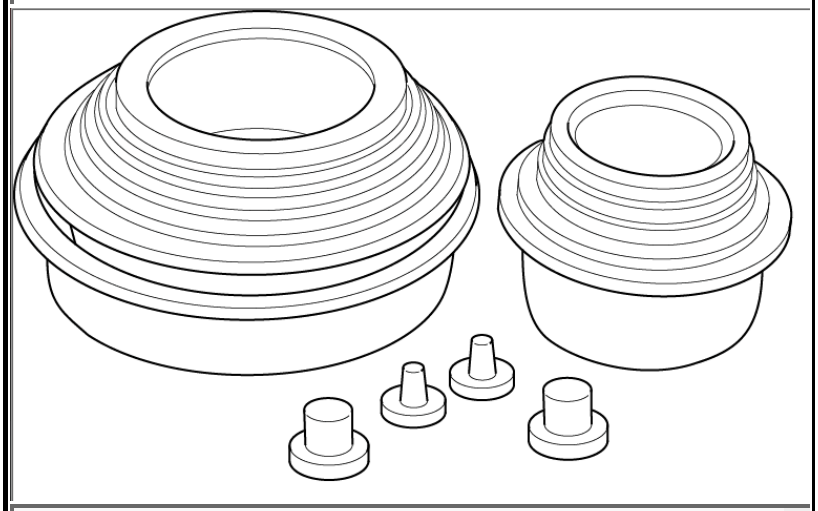

10368 - Set, Universal Protective Cap

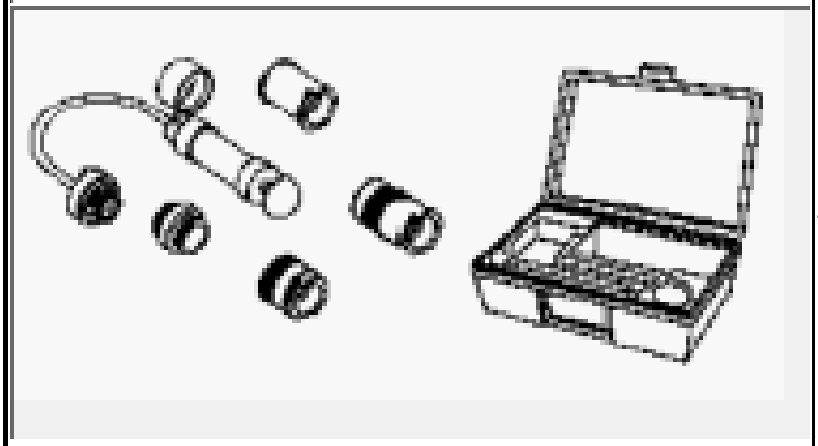

7700-A - Tester, Cooling System

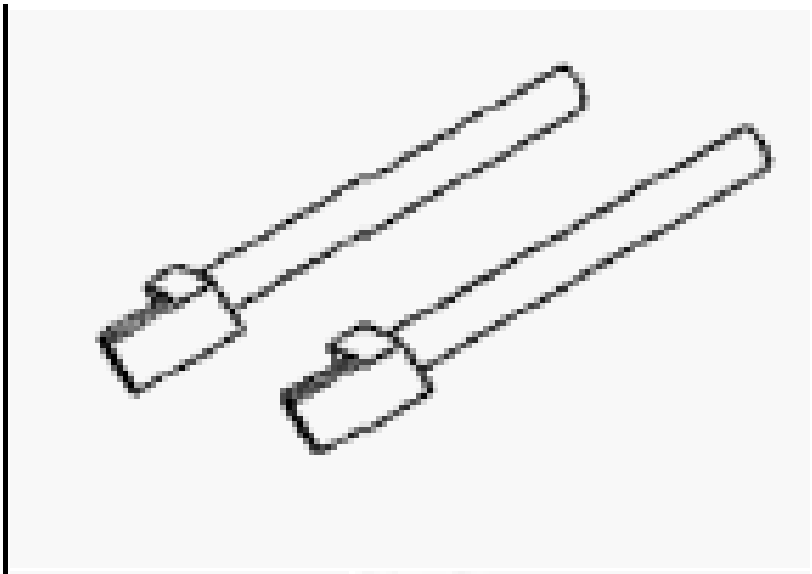	8189 - Guide Pins (Originally Shipped In Kit Number(s) 8180, 8180CC, 8263, 8263CC.)
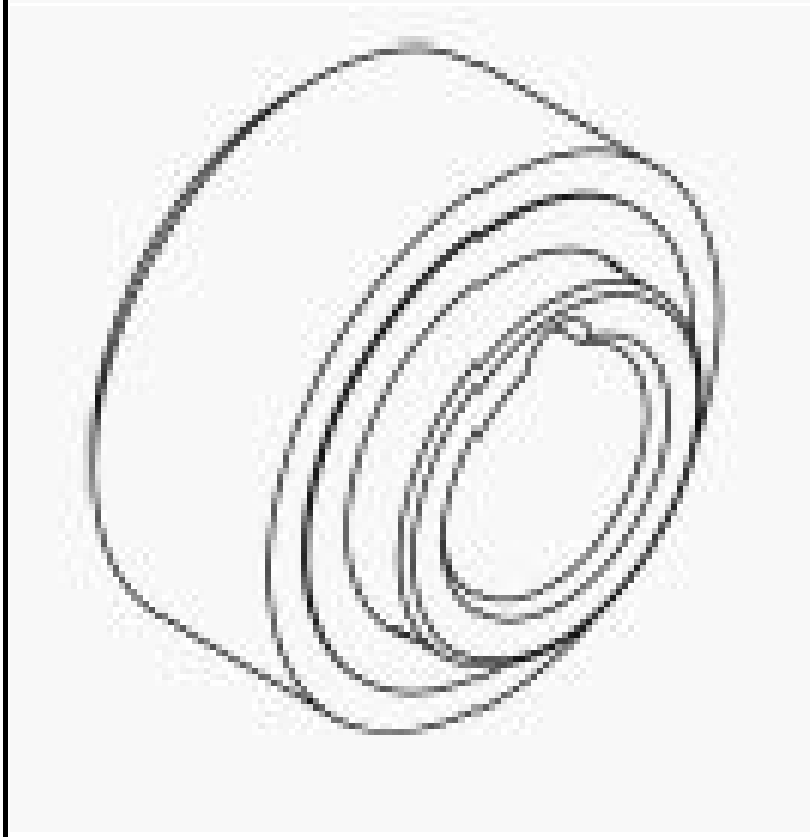	9506 - Installer, Oil Seal (Originally Shipped In Kit Number(s) 9610, 9970.)

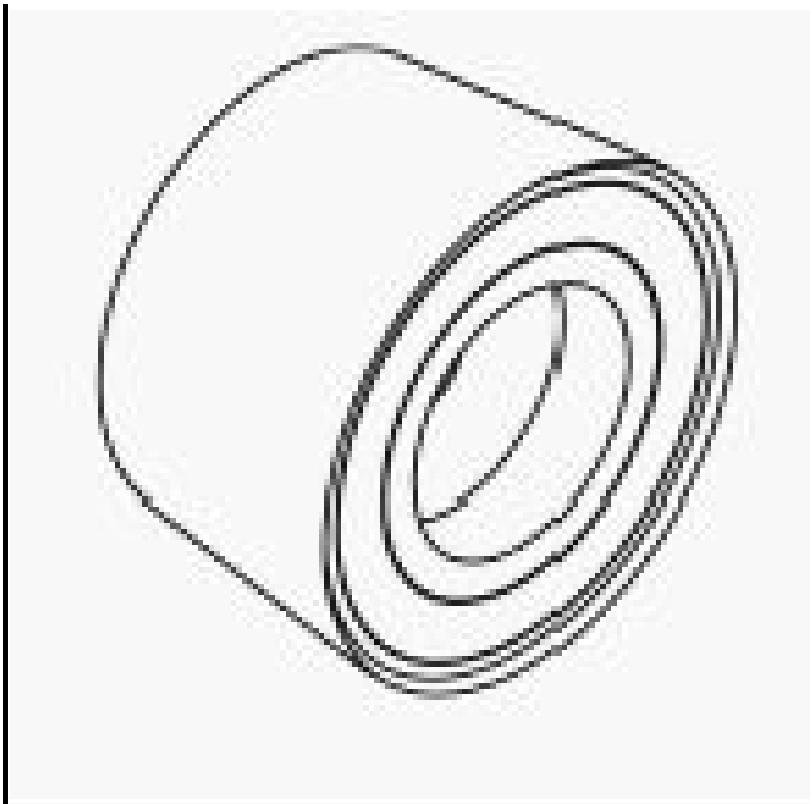	9509 - Installer, Oil Seal (Originally Shipped In Kit Number(s) 9610, 9970.)
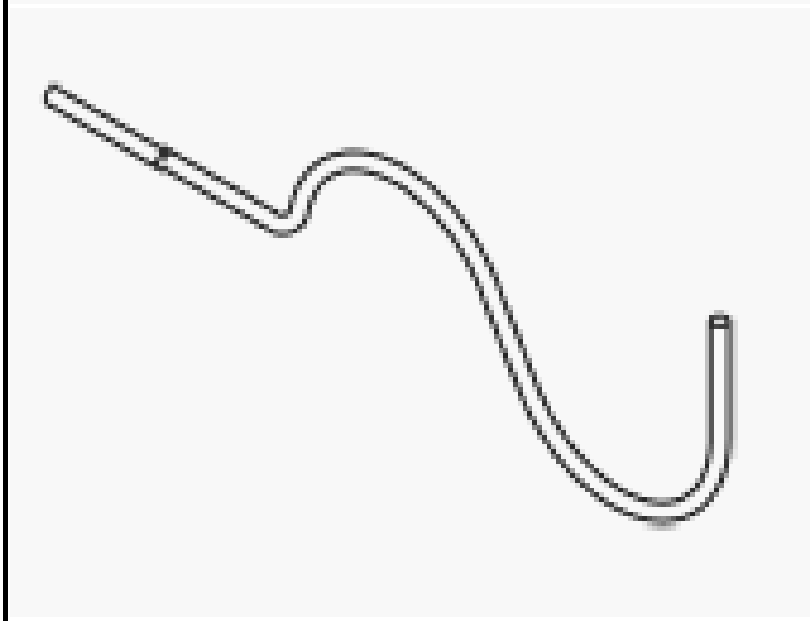	9703 - Pin, Tensioner (Originally Shipped In Kit Number(s) 9610, 9970.)

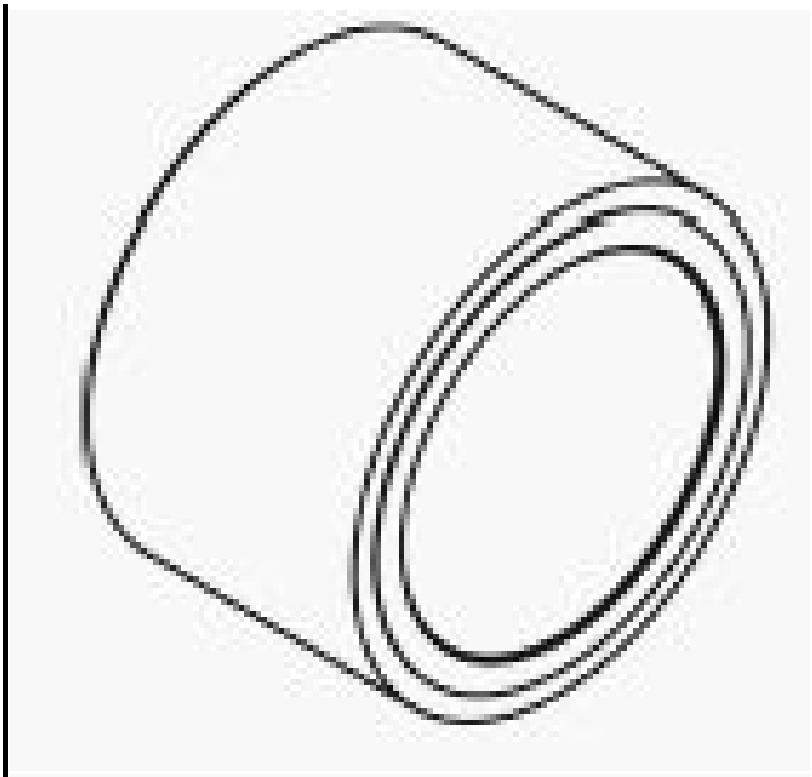

9706 - Installer, Crankshaft Rear Oil Seal (Originally Shipped In Kit Number(s) 9610, 9970.)

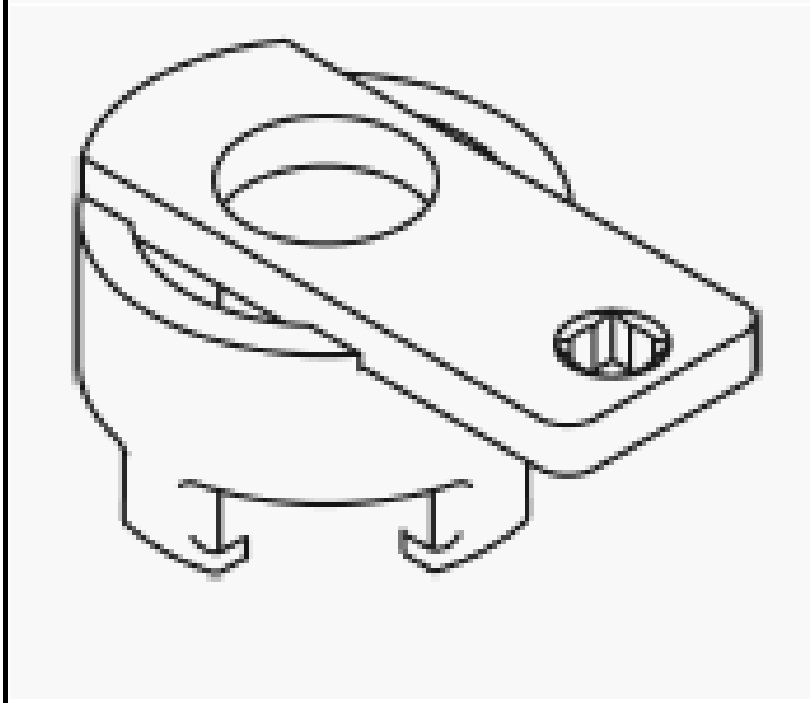

9707 - Holder, Vibration Damper (Originally Shipped In Kit Number(s) 9610, 9970.)

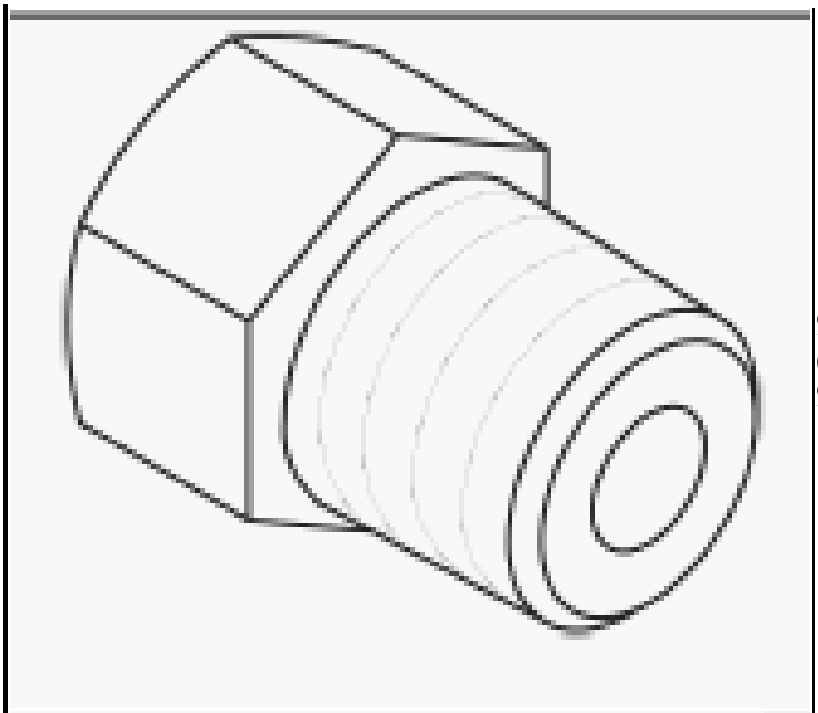	9879 - Adapter, Oil Pressure Test (Originally Shipped In Kit Number(s) 9998.)
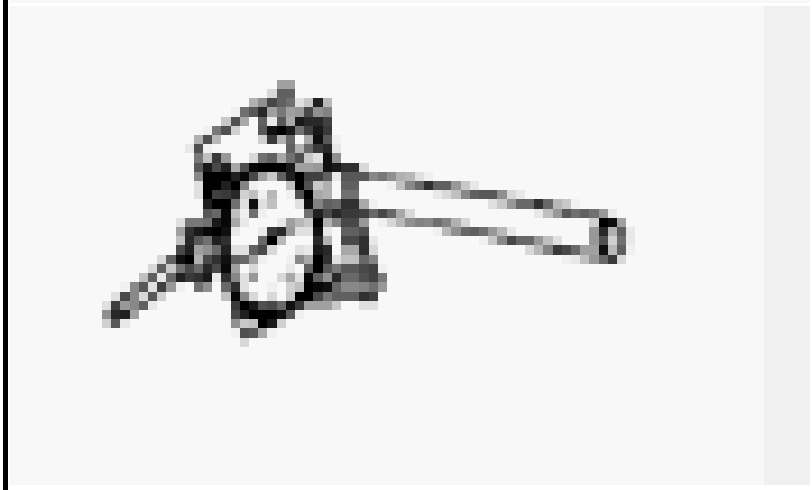	C-119 - Cylinder Indicator
	C-3339A - Set, Dial Indicator (Originally Shipped In Kit Number(s) 9202.)

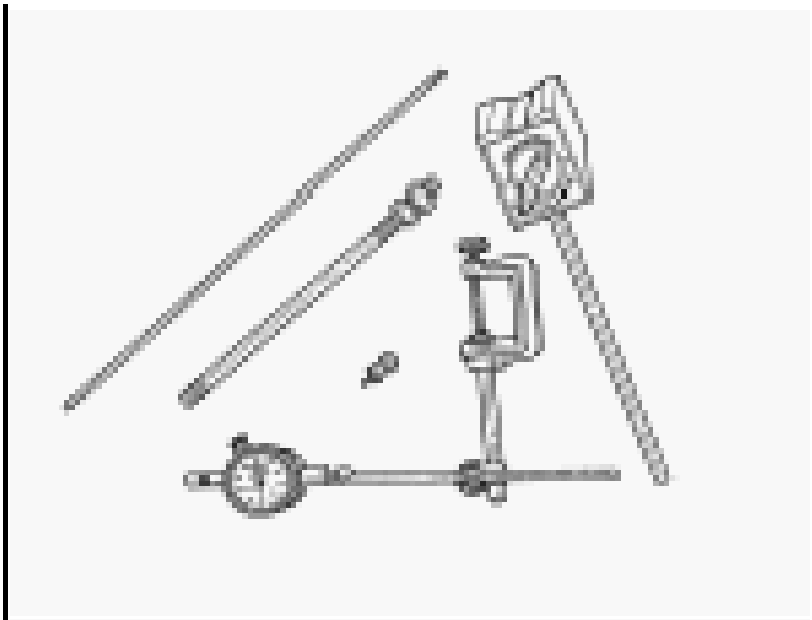	
	C-3685-A - Bloc-Chek Kit
	C-385 - Compressor, Piston

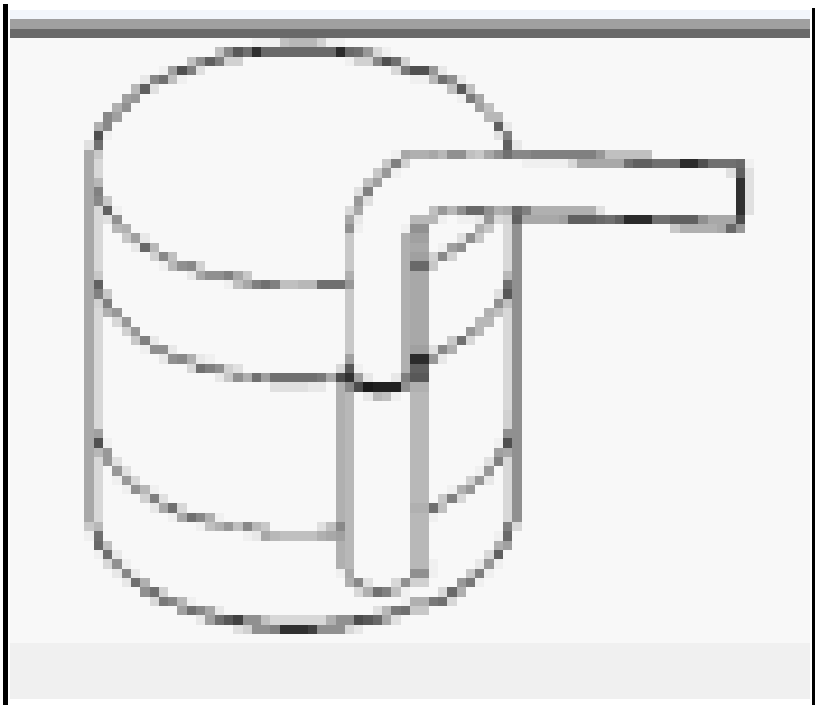

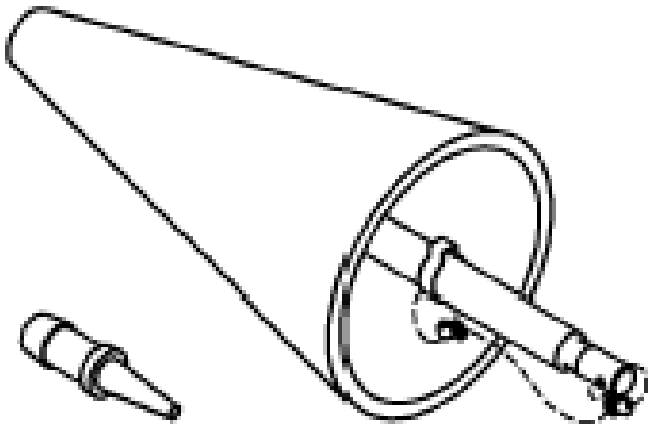

C-4171 - Driver Handle, Universal (Originally Shipped In Kit Number(s) 9202, 9202A-CAN, 9202CC, 9299, 9299CC, 9299CC, 9300A-CAN.)

C-4597 - Socket, Oil Pressure

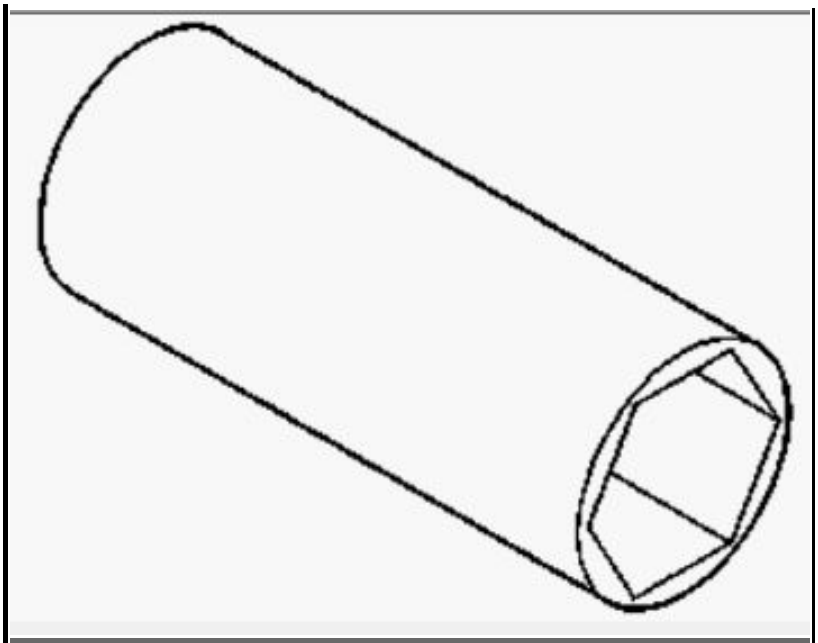

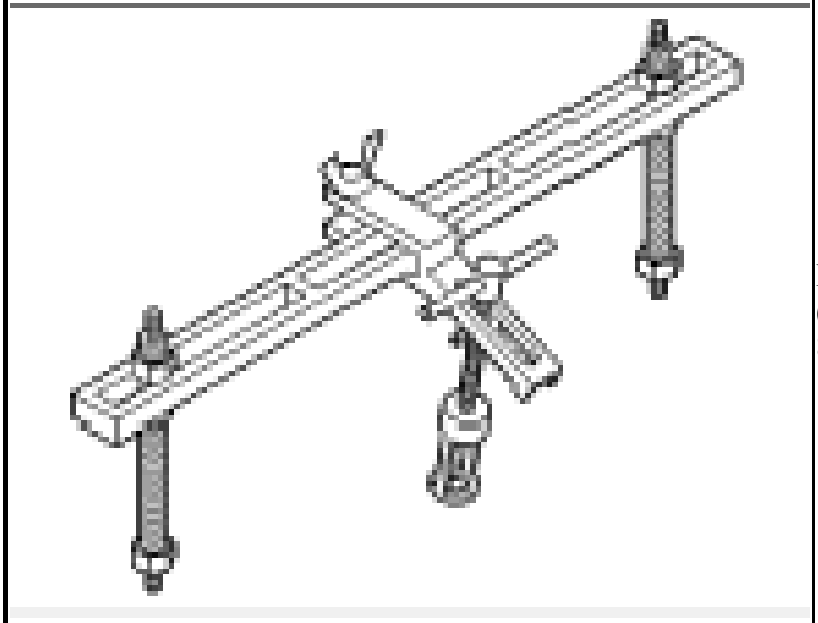

MD998772A - Compressor, Valve Spring (Originally Shipped In Kit Number(s) 8678, 8853, 8854.)

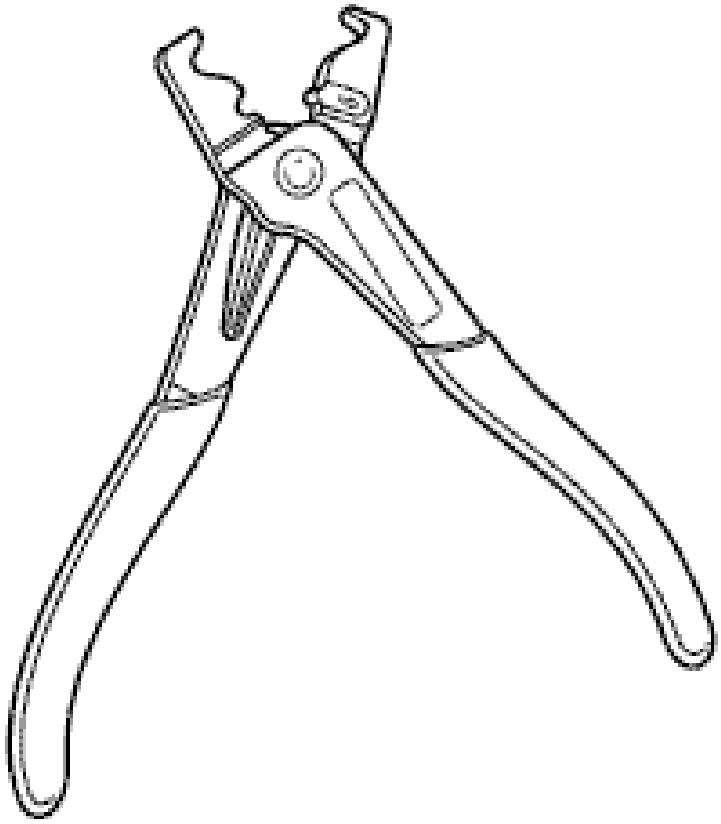

10288 - Pliers, Hose Clamp

10259B - Compressor, MultiAir® Spring

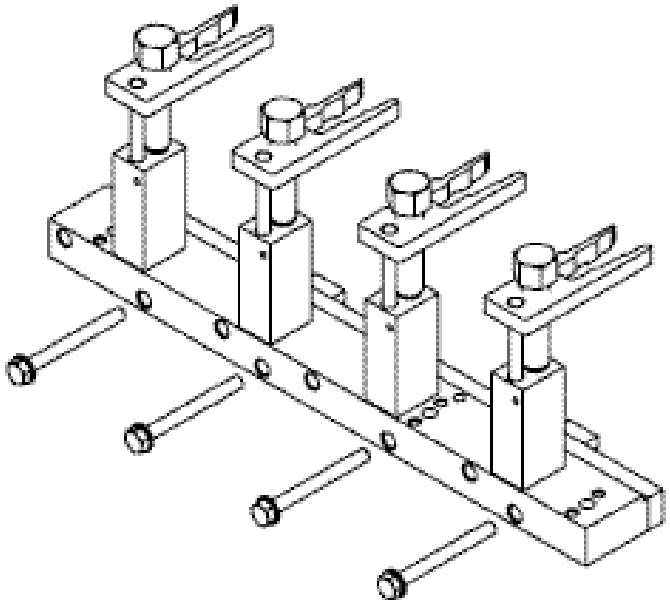	
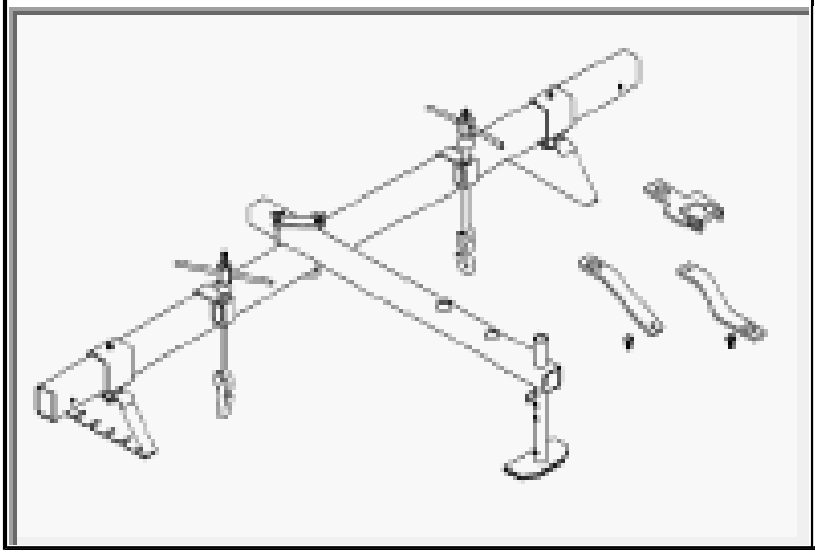	8534B - Fixture, Driveline Support (Originally Shipped In Kit Number(s) 8534, 8534B, 8849, 9565.)

AIR INTAKE SYSTEM

AIR CLEANER

REMOVAL

REMOVAL

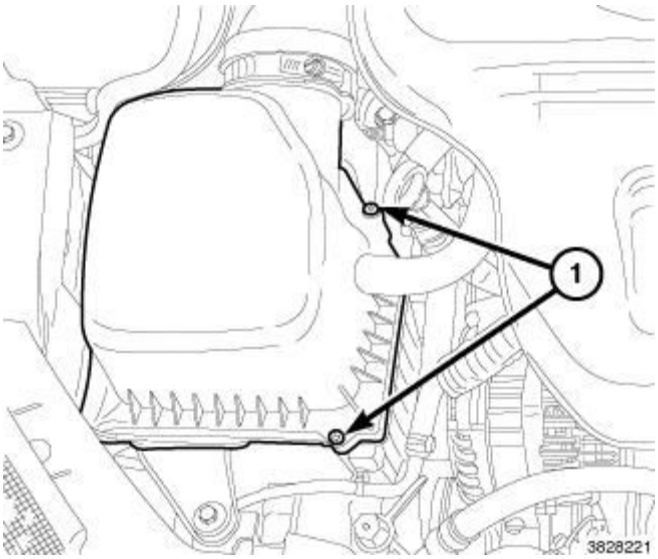

Fig. 53: Air Cleaner Housing Cover Screws
Courtesy of CHRYSLER GROUP, LLC

1. Remove two screws (1) from the air cleaner housing cover.

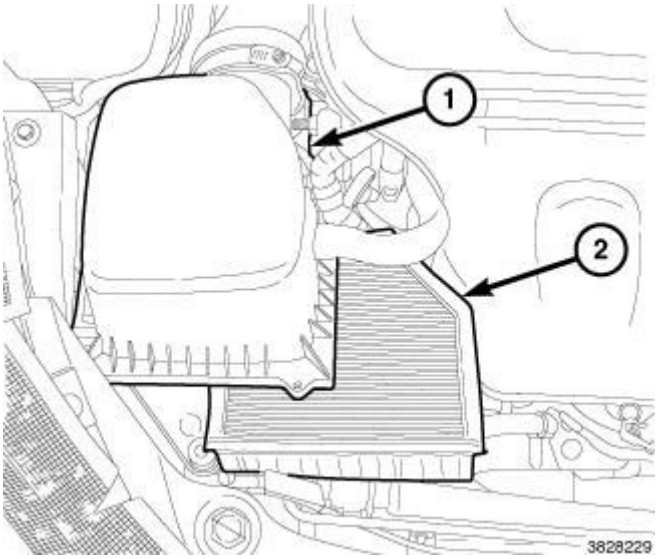

Fig. 54: Air Cleaner Housing Cover & Air Filter
Courtesy of CHRYSLER GROUP, LLC

2. Lift the air cleaner housing cover (1).
3. Pull the cover to disengage the rear tabs.
4. Remove the air filter element (2).

INSTALLATION

INSTALLATION

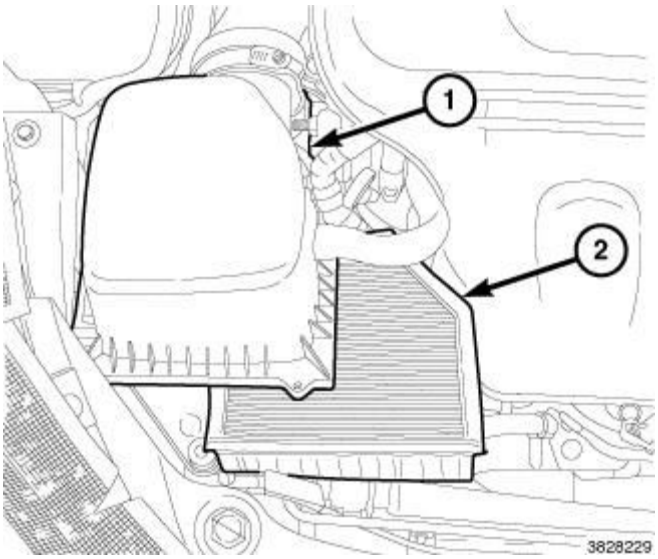

Fig. 55: Air Cleaner Housing Cover & Air Filter
Courtesy of CHRYSLER GROUP, LLC

1. Install the air filter element (2) into the air cleaner housing.
2. Install the cover (1) so that the rear tabs insert into the lower air box.

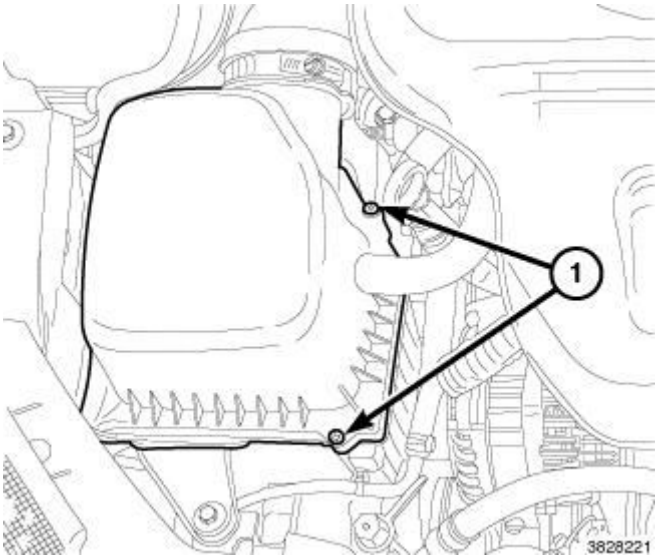

Fig. 56: Air Cleaner Housing Cover Screws
Courtesy of CHRYSLER GROUP, LLC

3. Seat the cover onto the housing and tighten the two housing cover screws (1).

BODY, AIR CLEANER

REMOVAL

REMOVAL

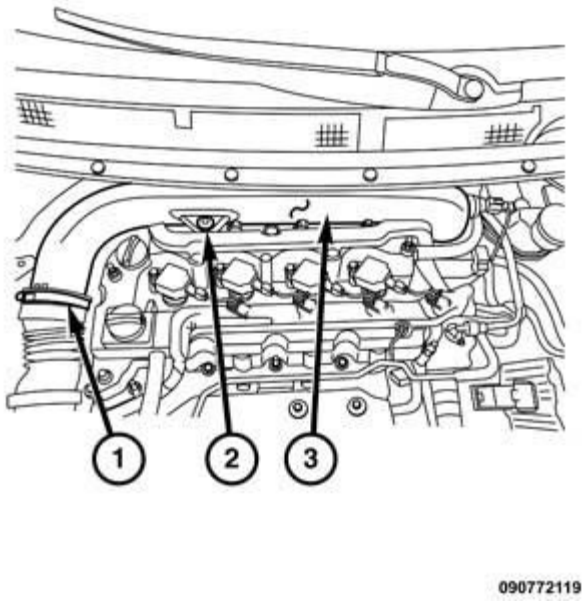

Fig. 57: Resonator, Bolt & Clamp
Courtesy of CHRYSLER GROUP, LLC

1. Loosen the clamp (1) and disengage the hose from the resonator (3).
2. Remove the make up air hose from the air cleaner body.

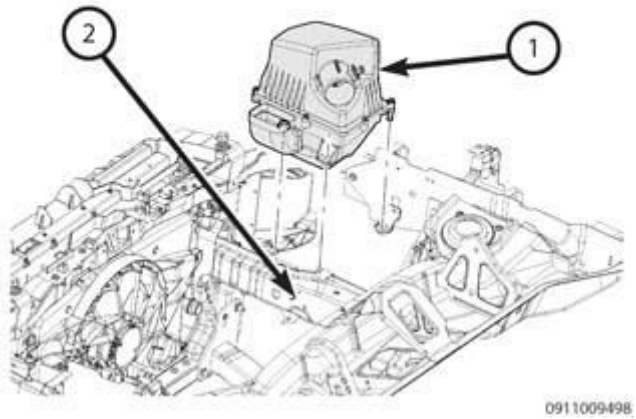

Fig. 58: Removing/Installing Air Cleaner Body
Courtesy of CHRYSLER GROUP, LLC

3. Lift the air cleaner body (1) straight up off of the locating pins at frame rail (2).

INSTALLATION

INSTALLATION

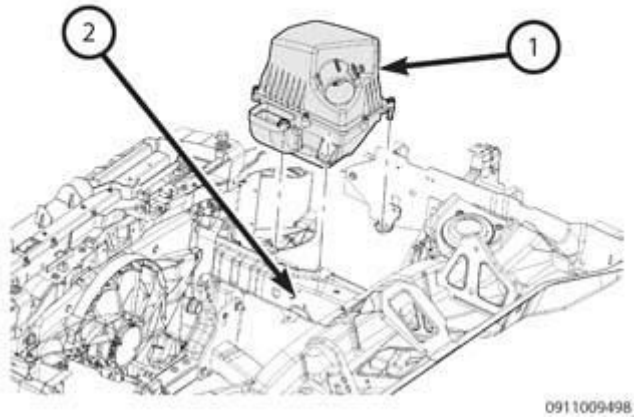

Fig. 59: Removing/Installing Air Cleaner Body
Courtesy of CHRYSLER GROUP, LLC

1. Install the air cleaner body (1) straight down on the locating pins.

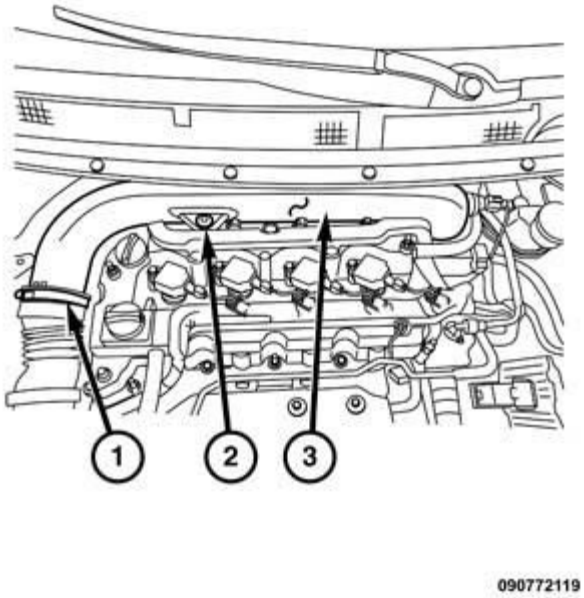

Fig. 60: Resonator, Bolt & Clamp
Courtesy of CHRYSLER GROUP, LLC

2. Install the hose to the resonator and tighten the clamp (1) to 4 N.m (35 in. lbs.).
3. Install the make up air hose.

RESONATOR, AIR CLEANER

REMOVAL

REMOVAL

1. Remove the engine cover.

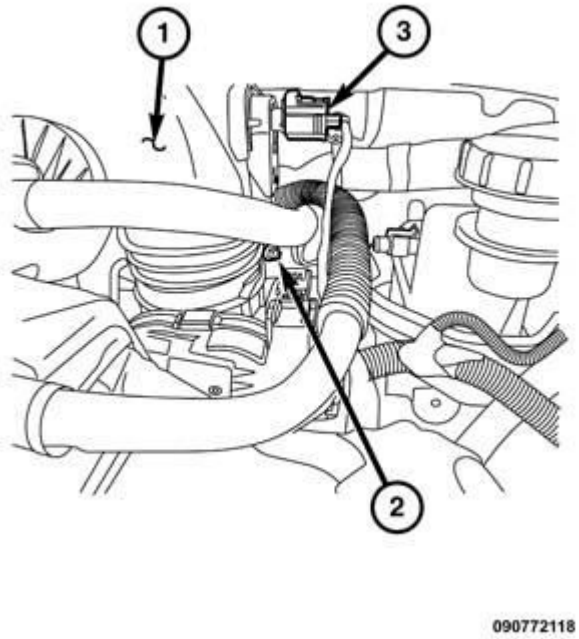

Fig. 61: Resonator, Clamp & Connector
Courtesy of CHRYSLER GROUP, LLC

2. Disconnect the electrical connector (2) from the Inlet Air Temperature (IAT) sensor.
3. Loosen the clamp (2) that secures the resonator (1) to the throttle body inlet.

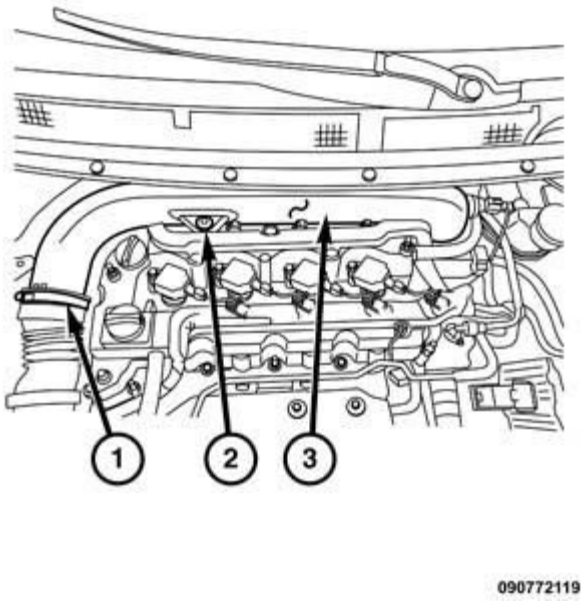

Fig. 62: Resonator, Bolt & Clamp
Courtesy of CHRYSLER GROUP, LLC

4. Loosen the clamp (1) and remove the air inlet hose from the resonator (3).
5. Remove the bolt (2) that secures the resonator to the cylinder head cover.
6. Pull the resonator (3) up while tipping the top edge of the resonator slightly forward and remove from the vehicle.

INSTALLATION

INSTALLATION

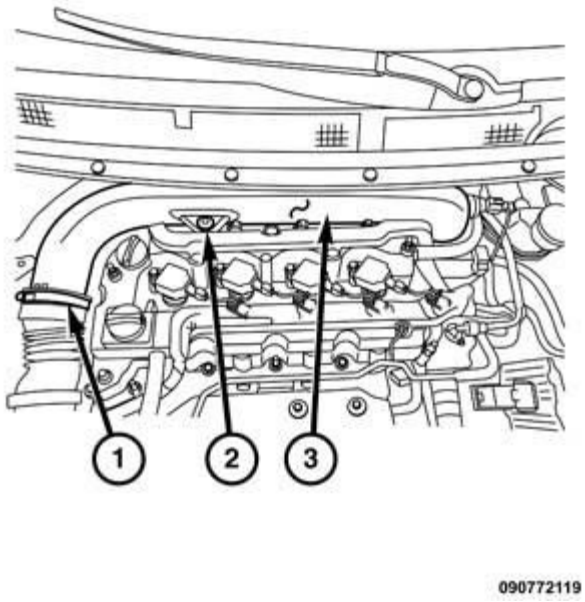

Fig. 63: Resonator, Bolt & Clamp
Courtesy of CHRYSLER GROUP, LLC

1. Position the resonator (3) between the forward edge of the cowl and the cylinder head cover. Align the openings with the throttle body intake and the airbox flex hose.
2. Install the bolt. Tighten the bolt to 9 N.m (81 in. lbs.).
3. Tighten the hose clamp (1).

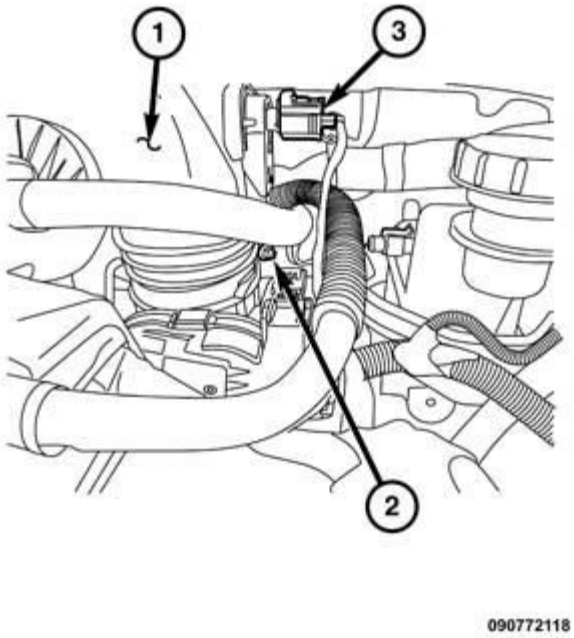

Fig. 64: Resonator, Clamp & Connector
Courtesy of CHRYSLER GROUP, LLC

4. Tighten the clamp (2) at the resonator outlet (1).
5. Connect the IAT connector (3).
6. Install the engine cover. Push downward to make sure all four rubber mounts are secure.

CYLINDER HEAD

DESCRIPTION

DESCRIPTION

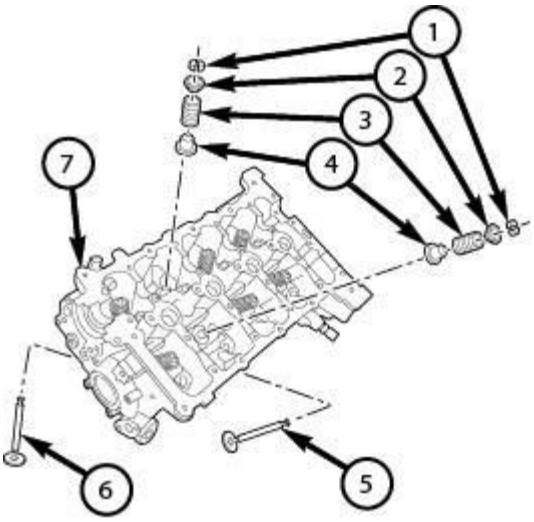

091072939

Fig. 65: Cylinder Head, Valves & Springs
Courtesy of CHRYSLER GROUP, LLC

The MultiAir, aluminum cylinder head (7) contains an exhaust camshaft and a variable valve actuator assembly (VVAA) with four valves per cylinder. The valves are arranged in two in-line banks. The exhaust valves (6) face toward the front of the vehicle. The intake valves face the dash panel (5). The valvetrain uses roller rocker arms with hydraulic lifters. The cylinder head incorporates pressed in powdered metal valve guides. The valve guides are not serviceable. The cylinder head is sealed to the block using a multi-layer steel head gasket and retaining bolts. The valves contain a stem seal (4), spring (3), spring retainer (2) and three groove keepers (1).

Integral oil galleries provide lubrication passages to the VVAA, camshaft, and valve mechanisms.

DIAGNOSIS AND TESTING

CYLINDER HEAD GASKET

A cylinder head gasket leak can be located between adjacent cylinders or between a cylinder and the adjacent water jacket.

Possible indications of the cylinder head gasket leaking between adjacent cylinders are:

- Loss of engine power
- Engine misfiring
- Poor fuel economy

Possible indications of the cylinder head gasket leaking between a cylinder and an adjacent water jacket are:

- Engine overheating
- Loss of coolant

- Excessive steam (white smoke) emitting from exhaust
- Coolant foaming

CYLINDER-TO-CYLINDER LEAKAGE TEST

To determine if an engine cylinder head gasket is leaking between the cylinders located next to each other, follow the procedures in Cylinder Compression Pressure Test. Refer to **CYLINDER COMPRESSION PRESSURE LEAKAGE** . An engine cylinder head gasket leaking between the cylinders will result in approximately a 50 - 70% reduction in compression pressure.

CYLINDER-TO-WATER JACKET LEAKAGE TEST

WARNING: USE EXTREME CAUTION WHEN THE ENGINE IS OPERATING WITH COOLANT PRESSURE CAP REMOVED.

VISUAL TEST METHOD

With the engine cool, remove the coolant pressure cap. Start the engine and allow it to warm up until thermostat opens.

If a large combustion/compression pressure leak exists, bubbles will be visible in the coolant.

COOLING SYSTEM TESTER METHOD

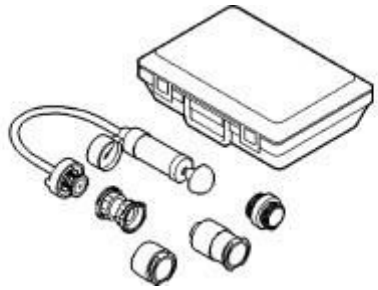

Fig. 66: Cooling System Pressure Tester - 7700-A
Courtesy of CHRYSLER GROUP, LLC

WARNING: WITH THE COOLING SYSTEM TESTER IN PLACE, PRESSURE WILL BUILD UP FAST. EXCESSIVE PRESSURE BUILT UP BY CONTINUOUS ENGINE OPERATION MUST BE RELEASED TO A SAFE PRESSURE POINT. NEVER PERMIT THE PRESSURE TO EXCEED 138 kPa (20 psi).

Install Cooling System Tester (special tool #7700-A, Tester, Cooling System) or equivalent to pressure cap neck. Start the engine and observe the tester's pressure gauge. If gauge pulsates with every power stroke of a cylinder a combustion pressure leak is evident.

CHEMICAL TEST METHOD

Fig. 67: Bloc-Chek-Kit - C-3685-A
Courtesy of CHRYSLER GROUP, LLC

Combustion leaks into the cooling system can also be checked by using a (special tool #C-3685-A, Bloc-Chek Kit) or equivalent. Perform the test following the procedures supplied with the tool kit.

HYDRAULIC LASH ADJUSTER

A tappet-like noise may be produced from several items. Check the following items.

1. Engine oil level too high or too low. This may cause aerated oil to enter the adjusters and cause them to be spongy.
2. Insufficient running time after rebuilding the cylinder head. Low speed running up to one hour may be required.
3. Turn engine off and let set for a few minutes before restarting. Repeat this several times after engine has reached normal operating temperature.
4. Low oil pressure.
5. The oil screen in cylinder head or the oil passage to the cylinder head is plugged with debris.
6. Air ingested into oil due to broken or cracked oil pump pick-up.
7. Worn valve guides.
8. Rocker arm ears contacting valve spring retainer.
9. Rocker arm loose, adjuster stuck or at maximum extension and still leaves lash in the system.
10. Oil leak or excessive cam bore wear in the cylinder head.
11. Faulty lash adjuster.

- Check lash adjusters for "sponginess" while installed in the cylinder head and cam lobe at base circle. Depress part of rocker arm over the adjuster. Normal adjusters should feel firm when pressed quickly. When pressed very slowly, lash adjusters should collapse.
- Remove suspected lash adjusters, and replace.
- Before installation, make sure adjusters are full of oil. This can be verified by little plunger travel when lash adjuster is depressed quickly.

REMOVAL

REMOVAL

1. Perform the fuel system pressure release procedure. Refer to **FUEL SYSTEM PRESSURE RELEASE PROCEDURE** .

2. Disconnect and isolate the battery negative cable.
3. Remove the engine cover.

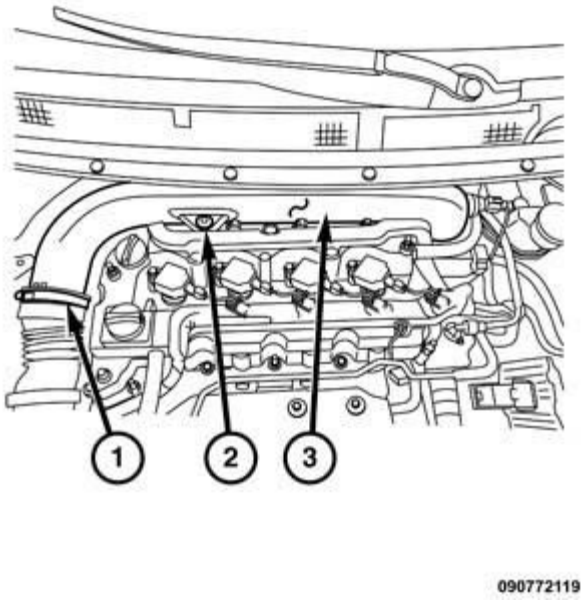

Fig. 68: Resonator, Bolt & Clamp
Courtesy of CHRYSLER GROUP, LLC

4. Remove the resonator (3). Refer to **RESONATOR, AIR CLEANER, REMOVAL** .
5. Remove the air cleaner body. Refer to **BODY, AIR CLEANER, REMOVAL** .
6. Raise and support the vehicle. Refer to **HOISTING, STANDARD PROCEDURE** .
7. Drain the cooling system. Refer to **STANDARD PROCEDURE** .

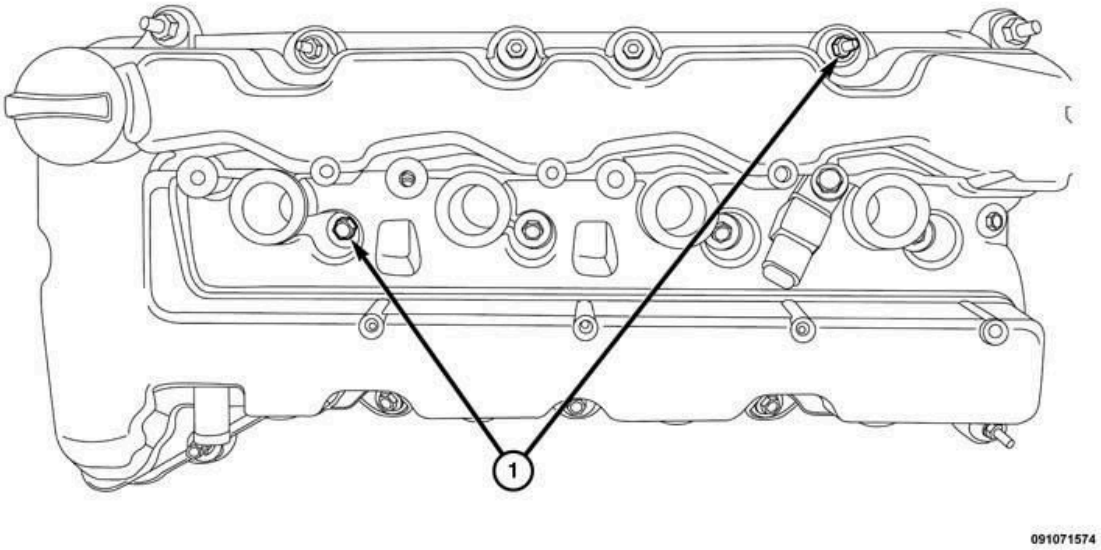

Fig. 69: Cylinder Head Cover Bolts
Courtesy of CHRYSLER GROUP, LLC

8. Remove the cylinder head cover. Refer to **COVER(S), CYLINDER HEAD, REMOVAL** .

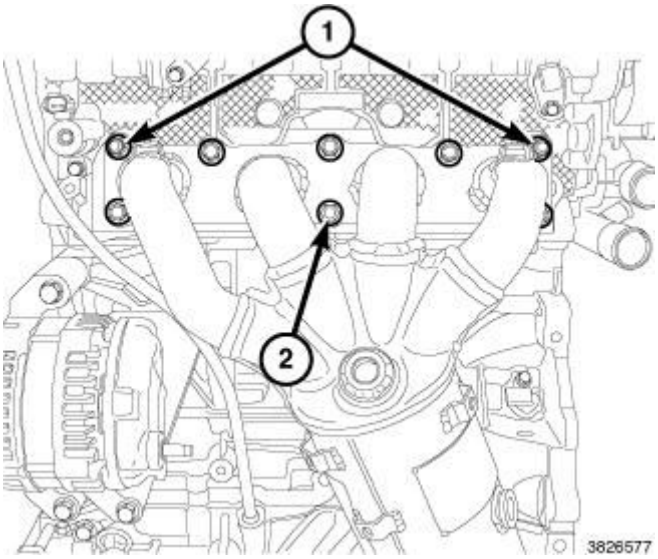

Fig. 70: Exhaust Manifold Bolts
Courtesy of CHRYSLER GROUP, LLC

9. Remove the maniverter. Refer to **MANIFOLD, EXHAUST, REMOVAL**.

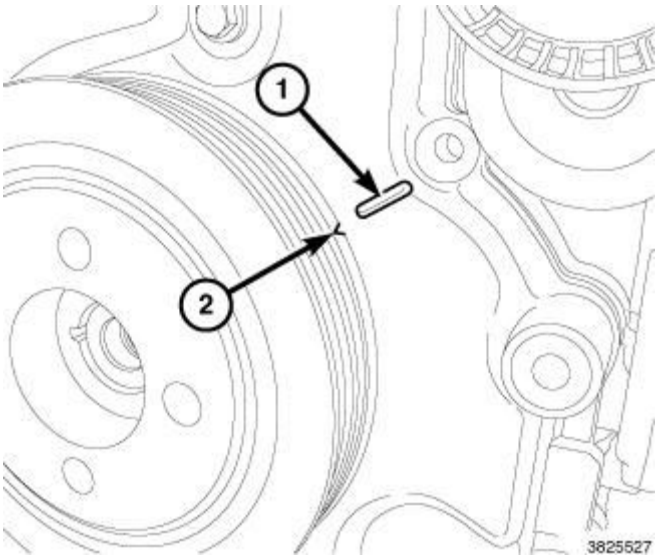

Fig. 71: Timing Cover Mark & Notch
Courtesy of CHRYSLER GROUP, LLC

10. Raise and support the vehicle. Refer to **HOISTING, STANDARD PROCEDURE** .

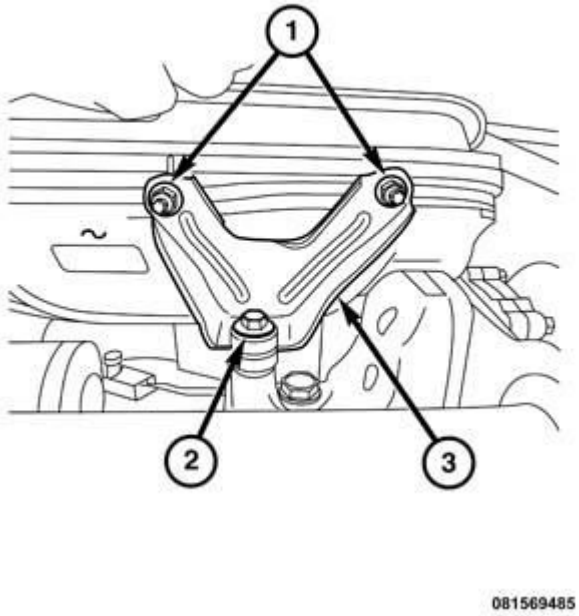

Fig. 72: Intake Manifold Lower Bracket, Nuts & Bolts
Courtesy of CHRYSLER GROUP, LLC

11. Drain the coolant.
12. Remove the two nuts (1), the bolt (2) and the intake manifold lower bracket (3).
13. Remove the frame cover portion of the right splash shield. Refer to **SHIELD, SPLASH, FRONT**

WHEELHOUSE, REMOVAL .

CAUTION: When aligning timing marks, always rotate engine by turning the crankshaft. Failure to do so will result in valve and/or piston damage.

14. Rotate the crankshaft clockwise (as viewed from the front) to align the timing cover mark (1) with the damper notch (2) to place the number one cylinder piston at top-dead-center on the compression stroke.

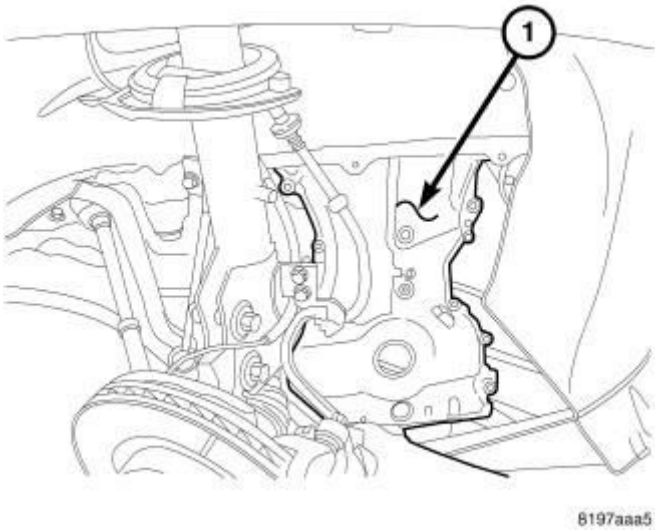

Fig. 73: Timing Chain Cover Removal/Installation
Courtesy of CHRYSLER GROUP, LLC

15. Remove the engine timing cover (1). Refer to **COVER(S), ENGINE TIMING, REMOVAL** .

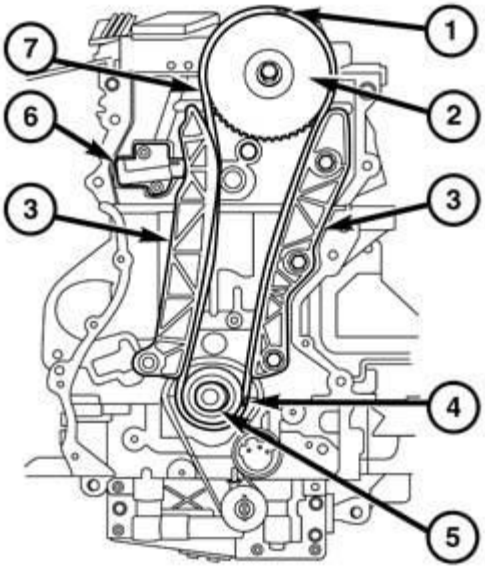

091073256

Fig. 74: Timing Chain, Sprockets, Tensioner & Guides
Courtesy of CHRYSLER GROUP, LLC

16. Remove the tensioner (6) and timing chain (7). Refer to **CHAIN AND SPROCKETS, TIMING, REMOVAL** .
17. Remove the timing chain guides (3).

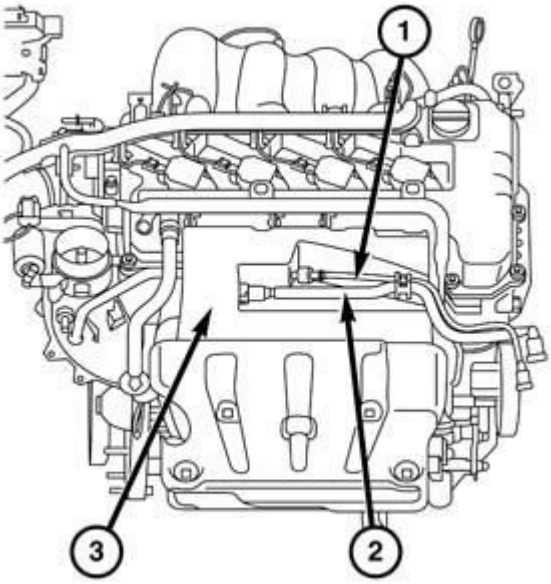

081569483

Fig. 75: Foam Insulator, Fuel Line & Purge Line
Courtesy of CHRYSLER GROUP, LLC

18. Disconnect the vapor line (2) at the purge vapor solenoid end of the line.
19. Remove the NVH foam pad (3) prior to disconnecting the fuel line (1).

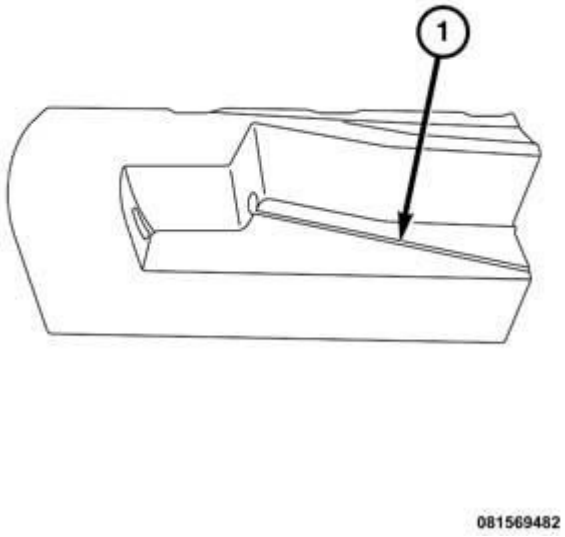

Fig. 76: Score Line
Courtesy of CHRYSLER GROUP, LLC

20. To remove the foam pad, cut the pad along the score line (1). Make sure care is taken to not make contact with any other components while cutting the pad. **Do not cut beyond the line** . Remove the pad from the fuel rail once split.
21. Disconnect the fuel line from the fuel rail. Refer to **FUEL SYSTEM PRESSURE RELEASE PROCEDURE** .
22. Unplug the Electronic Throttle Control (ETC) connector.
23. Disconnect the VVAA solenoids.
24. Unplug the purge solenoid.

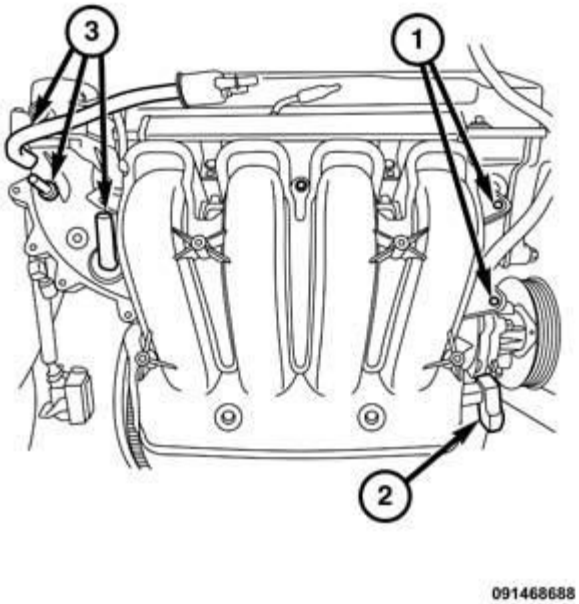

Fig. 77: MAP Sensor Connector & Fittings
Courtesy of CHRYSLER GROUP, LLC

25. Disconnect the three hoses from the intake manifold fittings (3).
26. Using a permanent ink or paint marker, identify the location and position on each camshaft bearing cap.

CAUTION: DO NOT STAMP OR STRIKE THE CAMSHAFT BEARING CAPS. SEVERE DAMAGE WILL OCCUR TO THE BEARING CAPS.

27. Loosen the camshaft bearing cap bolts and remove the camshaft bearing caps.
28. Remove the camshafts.

NOTE: If the rocker arms are to be reused, identify their positions so that they can be reassembled into their original locations.

29. Remove the rocker arm(s).

NOTE: If the hydraulic lifters are to be reused, identify their positions so that they can be reassembled into their original locations.

30. Remove the hydraulic lifter(s).

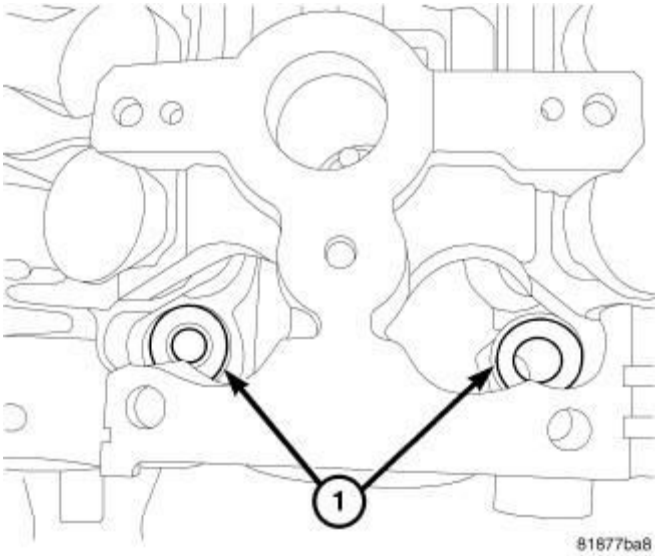

Fig. 78: Front Head Bolt Washers
Courtesy of CHRYSLER GROUP, LLC

NOTE: All of the cylinder head bolts have captured washers EXCEPT the front two (1).

31. Remove the cylinder head bolts and two uncaptured washers (1).
32. Remove the cylinder head from the engine block.

NOTE: There is a foam insulator that is sandwiched between the intake manifold and the engine black that may fall off when the cylinder head is removed. The foam pad must be reinstalled during assembly.

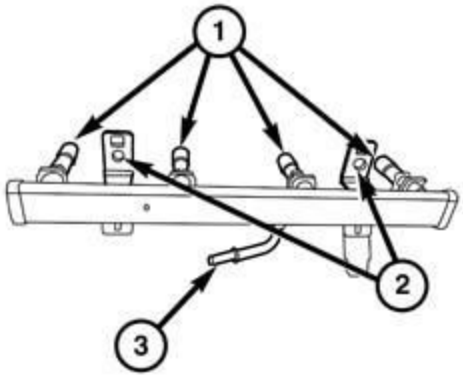

091469530

Fig. 79: Fuel Injectors & Rail
Courtesy of CHRYSLER GROUP, LLC

33. Disconnect the fuel injector electrical connectors (1). Remove the two bolts at the fuel rail (2).

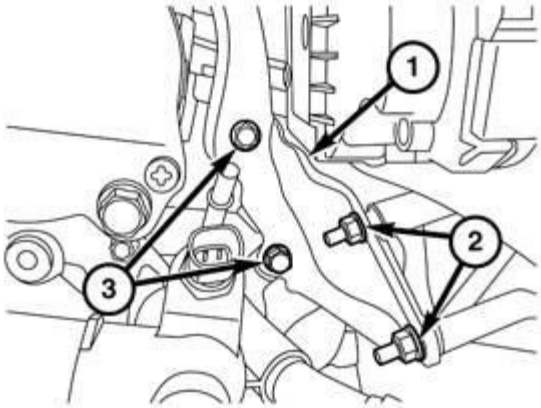

091468958

Fig. 80: Intake Manifold Upper Support Bracket, Bolts & Nuts
Courtesy of CHRYSLER GROUP, LLC

34. Remove the throttle body bracket bolts (3), loosen the nuts (2). Allow the throttle body bracket bolts to remain with the intake manifold.

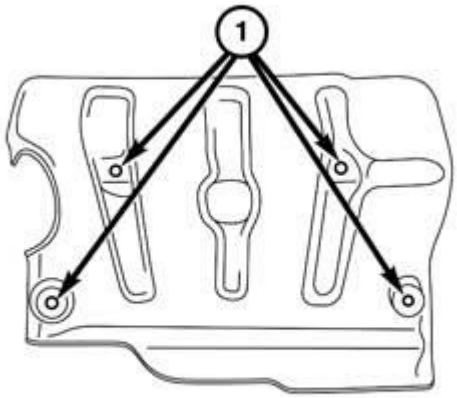

091468686

Fig. 81: Intake Manifold Silencer Pad Screws
Courtesy of CHRYSLER GROUP, LLC

35. Remove the four screws that secure the intake manifold silencer to the manifold (1).

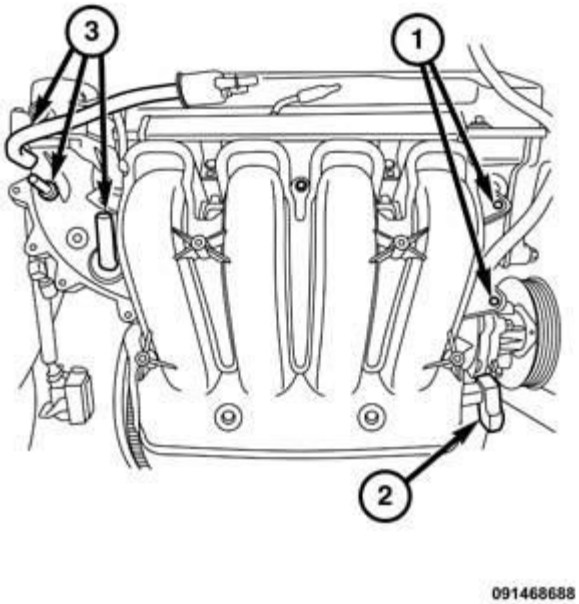

Fig. 82: MAP Sensor Connector & Fittings
Courtesy of CHRYSLER GROUP, LLC

36. Remove wiring harness retainer from the intake manifold eyelets (1)
37. Unplug the MAP sensor connector (2).

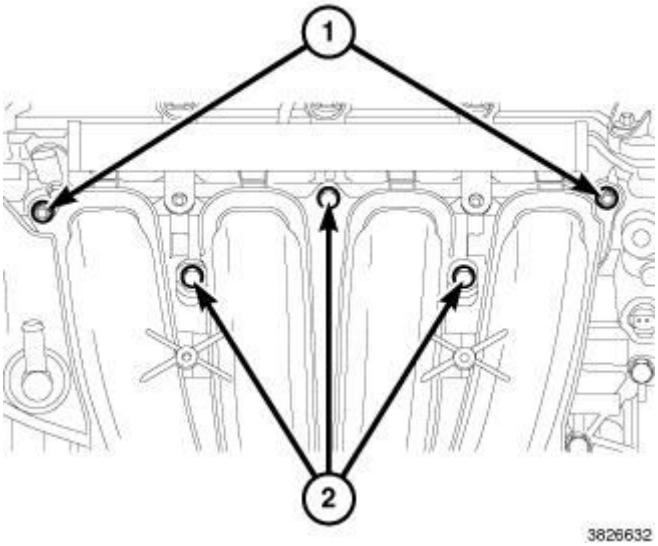

Fig. 83: Intake Manifold Retaining Bolts & Nuts
Courtesy of CHRYSLER GROUP, LLC

38. Remove intake manifold retaining bolts (2) and nuts (1).
39. Remove the intake manifold from the cylinder head.

40. Inspect the cylinder head and cylinder head components. Refer to **CYLINDER HEAD - INSPECTION** .

NOTE: Ensure cylinder head bolt holes in the block are clean, dry (free of residual oil or coolant), and threads are not damaged.

CLEANING

CLEANING

CAUTION: When cleaning cylinder head and cylinder block surfaces, DO NOT use a metal scraper because the surfaces could be cut or ground. Use ONLY a wooden or plastic scraper.

To ensure engine gasket sealing, proper surface preparation must be performed, especially with the use of aluminum engine components and multi-layer steel cylinder head gaskets.

NOTE: Multi-Layer Steel (MLS) head gaskets require a scratch free sealing surface.

1. Remove all gasket material from cylinder head and block. Refer to **ENGINE - STANDARD PROCEDURE** . Be careful not to gouge or scratch the aluminum head sealing surface.
2. Clean all engine oil passages.
3. Clean out the cylinder head bolt holes in the engine block.

INSPECTION

INSPECTION

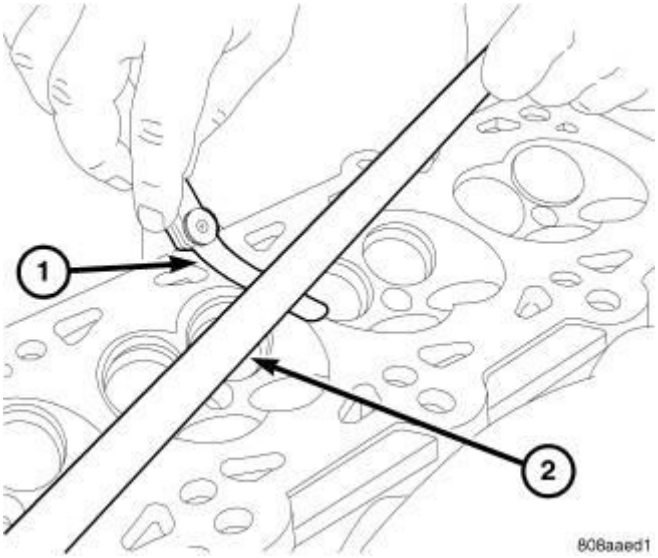

Fig. 84: Checking Cylinder Head Flatness
Courtesy of CHRYSLER GROUP, LLC

NOTE: Typical Cylinder Head shown in illustration.

1. Check for cylinder head warping with a straight edge (2) and feeler gauge (1).
2. Cylinder head must be flat within specification. Refer to **ENGINE SPECIFICATIONS** .
3. Remove carbon and varnish deposits from inside of valve guides with a reliable guide cleaner.
4. Inspect the following components and verify that they are within specification. Refer to **ENGINE SPECIFICATIONS** .
   - Springs
   - Valve Seats
   - Valve Guides
   - Valves

INSTALLATION

INSTALLATION

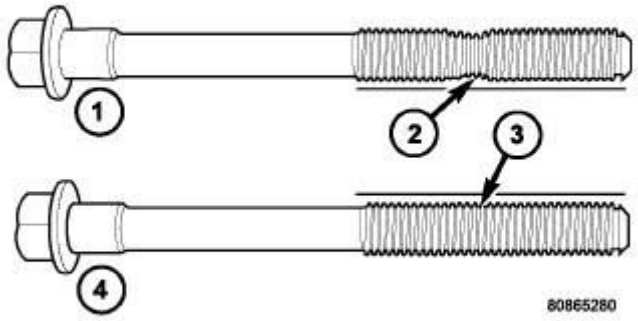

Fig. 85: Checking Cylinder Head Bolts For Stretching (Necking)
Courtesy of CHRYSLER GROUP, LLC

CAUTION: The cylinder head bolts are tightened using a torque plus angle procedure. The bolts must be examined BEFORE reuse. If the threads are necked down the bolts must be replaced.

1. Check the cylinder head bolts for necking by holding a scale or straight edge against the threads. If all the threads do not contact the scale (2) the bolt must be replaced.

NOTE: Ensure cylinder head bolt holes in the block are clean, dry (free of residual

oil or coolant), and threads are not damaged.

NOTE: Prior to installing the cylinder head to the block, the intake manifold must installed onto the cylinder head.

2. Replace the variable valve timing filter screen (3).
3. Clean all gasket surfaces.
4. Replace intake manifold gasket seals.
5. Position the foam pad over the coolant transfer tube.
6. **Apply 3-5 dabs of RTV to the foam pad where it makes contact with the coolant transfer tube prior to setting the foam pad in position. This will aid in holding the pad in the proper position while setting the head on the block.**

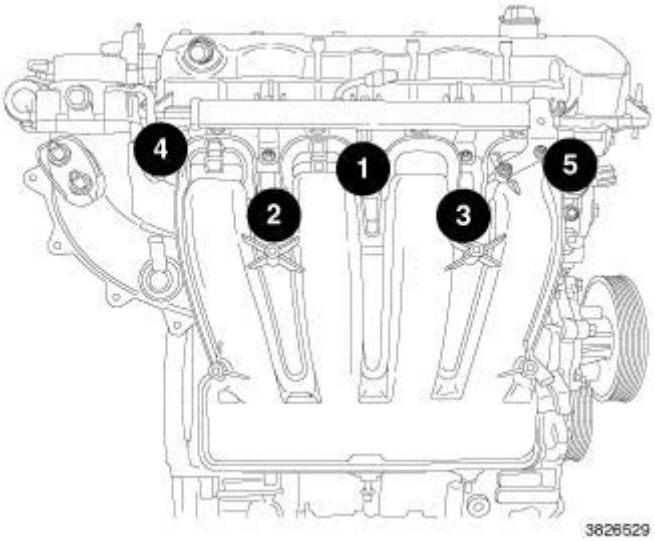

Fig. 86: Intake Manifold Bolts Tightening Sequence
Courtesy of CHRYSLER GROUP, LLC

7. Position the intake manifold onto the cylinder head.
8. Install the three bolts and two nuts. Using the torque sequence pattern as a guide, tighten the bolts and nuts to 25 N.m (18 ft. lbs.).

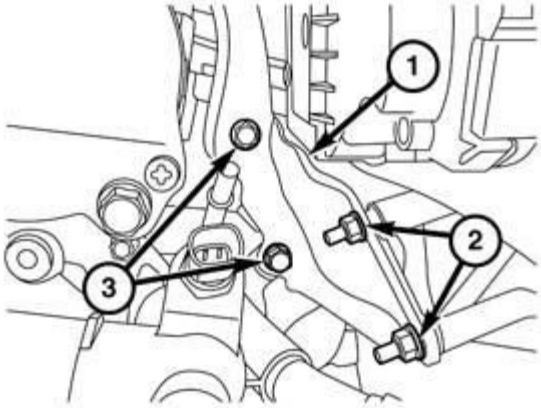

091468958

Fig. 87: Intake Manifold Upper Support Bracket, Bolts & Nuts
Courtesy of CHRYSLER GROUP, LLC

9. Install the manifold to head bracket (1). Tighten the nuts (2) and bolts to 9 N.m (81 in. lbs.)
10. Install the fuel rail assembly. Refer to **RAIL, FUEL, INSTALLATION** .

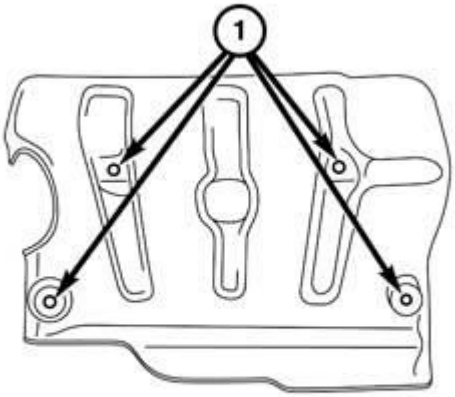

091468686

Fig. 88: Intake Manifold Silencer Pad Screws

Courtesy of CHRYSLER GROUP, LLC

11. Install the intake manifold silencer pad and screws. Tighten the screws to 2.5 N.m (22 in. lbs.).

NOTE: When using RTV, components should be assembled within 10 minutes and tighten to specification within 45 minutes.

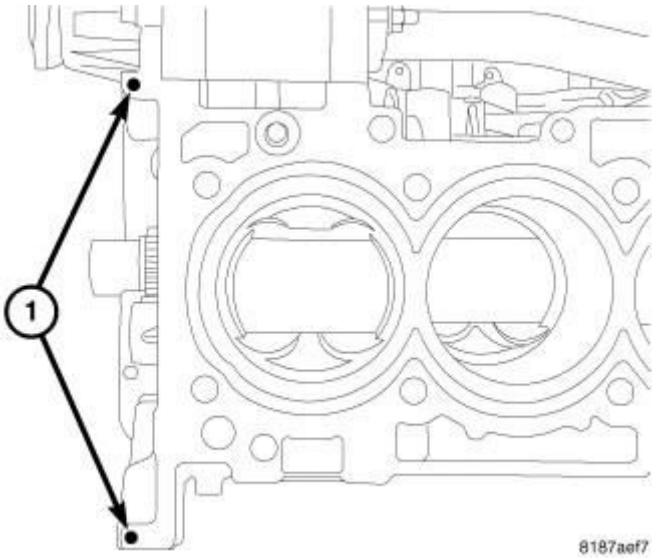

Fig. 89: Engine Sealant RTV Location
Courtesy of CHRYSLER GROUP, LLC

12. Place two pea size dots of Mopar® engine sealant RTV or equivalent (1) on the cylinder block as shown in illustration.
13. Position the new cylinder head gasket on the engine block with the part number facing up. Ensure gasket is seated over the locating dowels in the block.
14. Route the knock sensor wiring harness between the coolant transfer tube and the engine block. Insert the harness retainer into the holder.
15. Position the cylinder head onto the engine block.

NOTE: Make sure the foam pad is not out of position. Inspect the positioning of the pad from below to make sure that no part of the pad is between the cylinder head and the engine block surface.

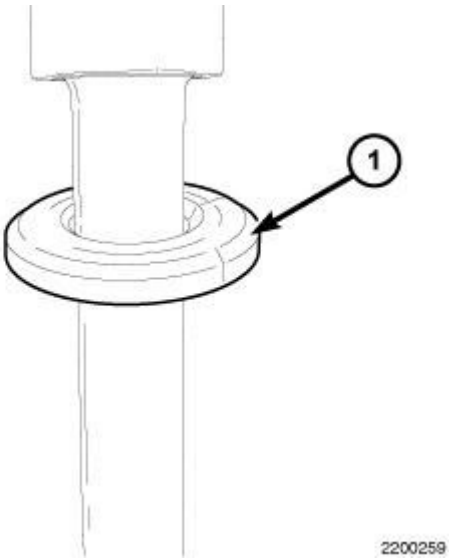

Fig. 90: Washers Must Be Installed With Bevel Edge Up Towards Bolt Head
Courtesy of CHRYSLER GROUP, LLC

NOTE: **The front two cylinder head bolts do not have captured washers. The washers must be installed with the bevel edge (1) up towards the bolt head.**

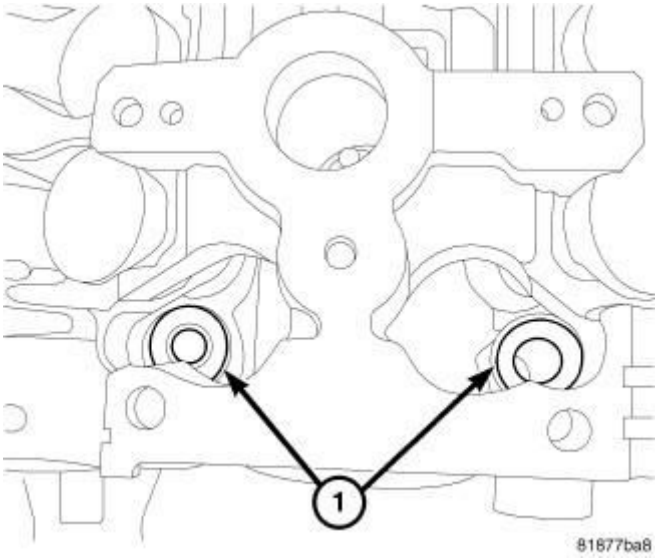

Fig. 91: Front Head Bolt Washers
Courtesy of CHRYSLER GROUP, LLC

16. Install washers (1) for the front two cylinder head bolts with the beveled edge facing up.

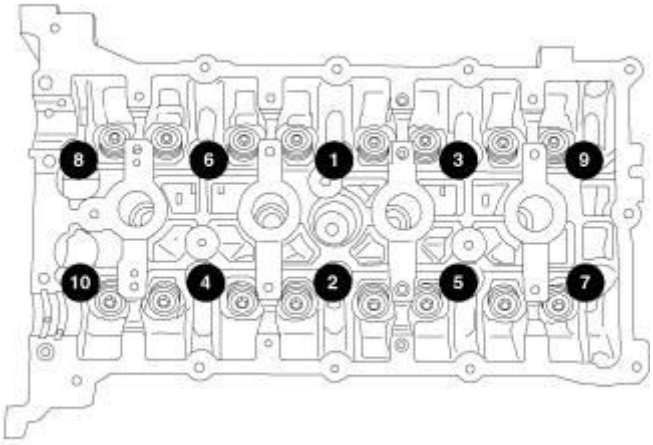

Fig. 92: Cylinder Head Bolt Tightening Sequence
Courtesy of CHRYSLER GROUP, LLC

NOTE: DOHC shown in illustration, SOHC same sequence.

NOTE: Before installing the cylinder head bolts, lubricate the threads with clean engine oil.

17. Install the ten cylinder head bolts finger tight.
18. Tighten the cylinder head bolts in the sequence shown in illustration, following this 4 step torque plus angle method. Tighten according to the following torque values:
    - Step 1: All to 30 N.m (22 ft. lbs.)
    - Step 2: All to 73 N.m (54 ft. lbs.)
    - Step 3: All again to 73 N.m (54 ft. lbs.)
    - Step 4: All an additional 90° Turn. **Do not use a torque wrench for this step.**
19. If the hydraulic lifters are being reused, reassemble them into their original locations.
20. Install the exhaust hydraulic lifters.

NOTE: If the rocker arms are being reused, reassemble them into their original locations.

21. Install the exhaust rocker arms.
22. Oil all of the camshaft journals with clean engine oil.
23. Install the camshaft. Refer to **CAMSHAFT, ENGINE, INSTALLATION** .
24. Install the VVAA. Refer to **ASSEMBLY, VARIABLE VALVE ACTUATION, INSTALLATION**.
25. Install timing chain and tensioner. Refer to **CHAIN AND SPROCKETS, TIMING, INSTALLATION** .

26. Install timing chain cover, engine mount, pulleys and accessory drive belt. Refer to **COVER(S), ENGINE TIMING, INSTALLATION** .

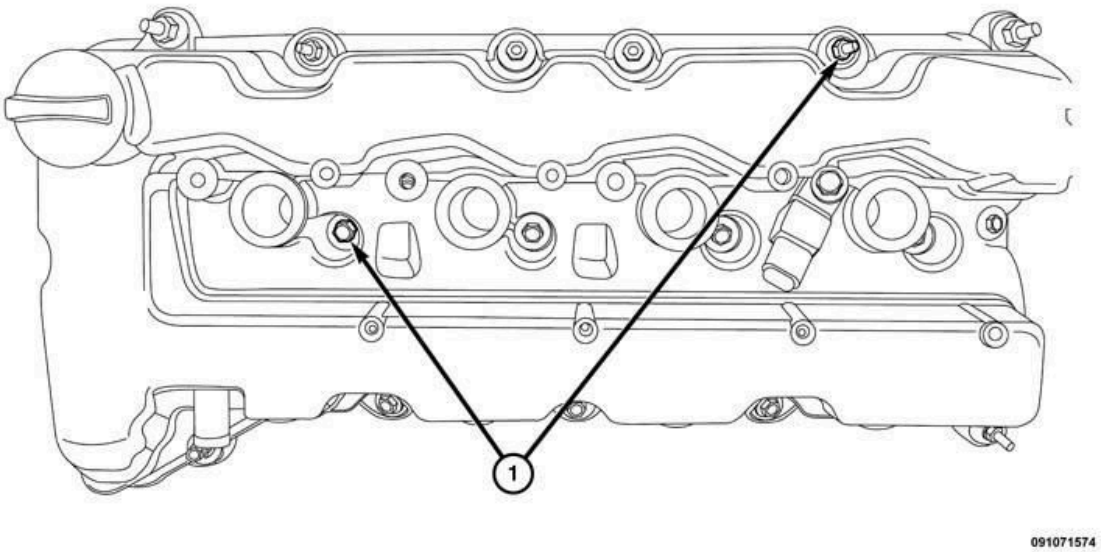

Fig. 93: Cylinder Head Cover Bolts
Courtesy of CHRYSLER GROUP, LLC

27. Install the cylinder head cover and ignition coils. Refer to **COVER(S), CYLINDER HEAD, INSTALLATION** .

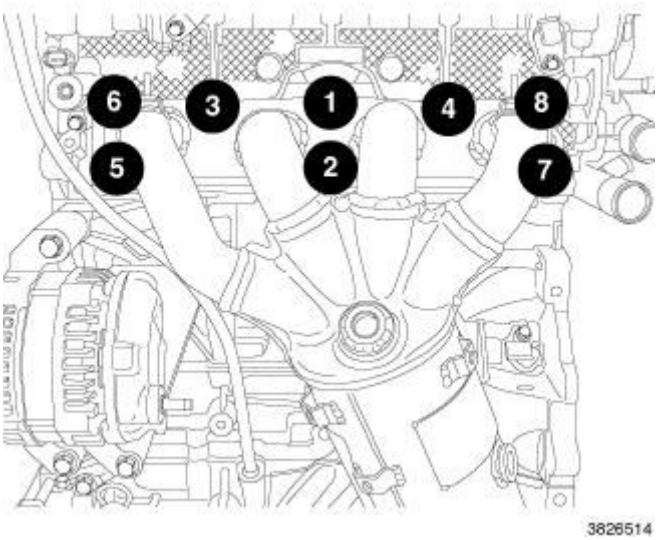

Fig. 94: Exhaust Manifold Bolts Tightening Sequence
Courtesy of CHRYSLER GROUP, LLC

28. Install the exhaust manifold. Refer to **MANIFOLD, EXHAUST, INSTALLATION**.

29. Connect the electrical connectors to the ignition coils and fuel injectors.

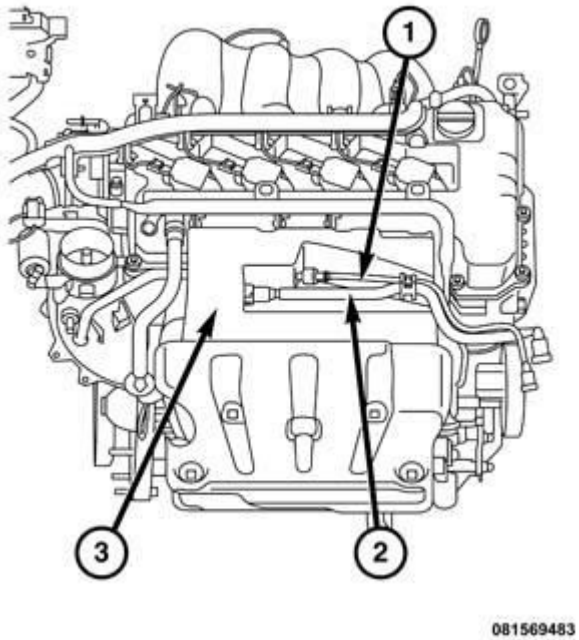

Fig. 95: Foam Insulator, Fuel Line & Purge Line
Courtesy of CHRYSLER GROUP, LLC

30. Insert the foam insulator (3) over the fuel rail.
31. Connect fuel line (1).
32. Connect the purge vapor line (2). Remove wiring harness retainer from the intake manifold eyelets (1).
33. Connect the three hose connectors (3).
34. Connect the knock sensor connector.

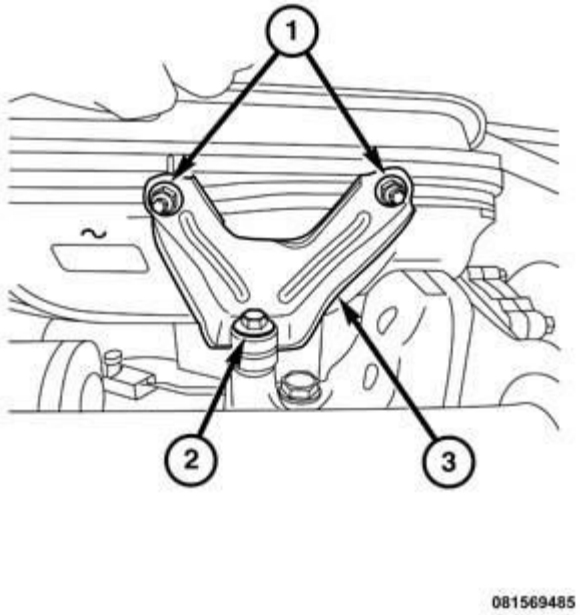

Fig. 96: Intake Manifold Lower Bracket, Nuts & Bolts
Courtesy of CHRYSLER GROUP, LLC

35. Install the intake manifold lower bracket (3). Install the nuts (1) and bolt (2). Tighten to 9 N.m (81 in. lbs.)
36. Connect the VVAA solenoids.
37. Connect the MAP sensor connector (2).

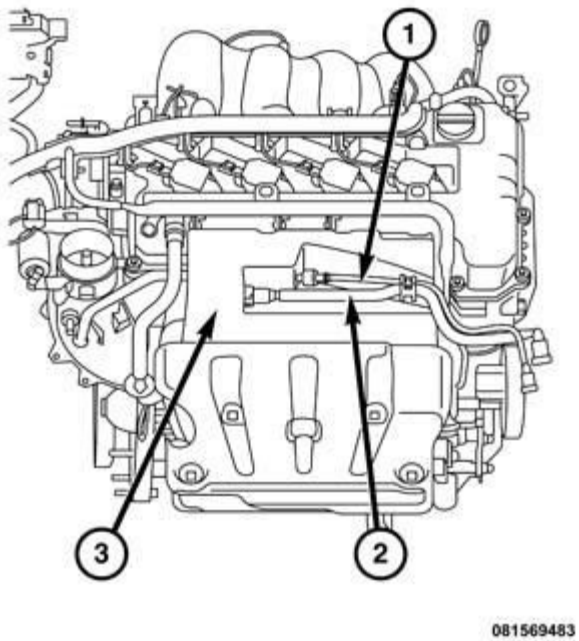

Fig. 97: Foam Insulator, Fuel Line & Purge Line
Courtesy of CHRYSLER GROUP, LLC

38. Inspect quick connect fittings for damage, replace if necessary. Refer to **FITTING, QUICK CONNECT** .

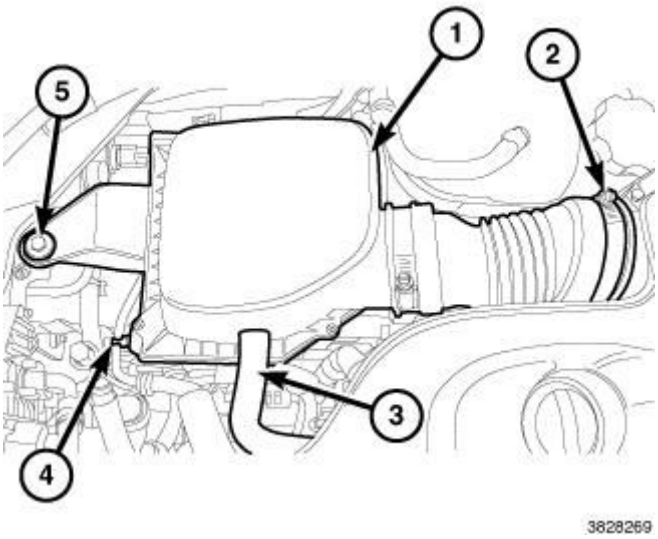

Fig. 98: Air Cleaner Body, Clamp, Make Up Air Hose, Retainer & Bolt
Courtesy of CHRYSLER GROUP, LLC

39. Install the air cleaner body (1). Refer to **BODY, AIR CLEANER, INSTALLATION** .

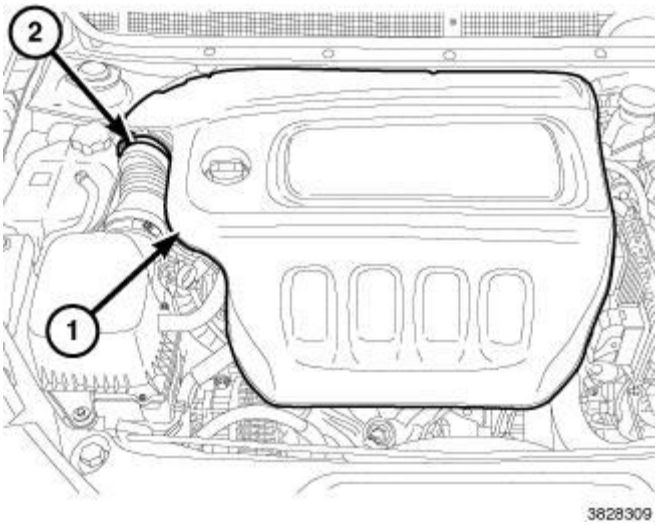

Fig. 99: Engine Cover & Air Resonator Clamp
Courtesy of CHRYSLER GROUP, LLC

40. If removed, install the oil filter and fill the engine crankcase with the proper oil to the correct level. Refer to **OIL - STANDARD PROCEDURE** .
41. Fill the cooling system. Refer to **STANDARD PROCEDURE** .
42. Recharge the air conditioning system. Refer to **PLUMBING, STANDARD PROCEDURE** .
43. Install the resonator. Refer to **RESONATOR, AIR CLEANER, INSTALLATION** .
44. Connect the battery negative cable and tighten nut to 5 N.m (45 in. lbs.).
45. Run the engine until it reaches normal operating temperature. Check cooling system for correct fluid level. Refer to **STANDARD PROCEDURE** .
46. The Cam/Crank Variation Relearn procedure must be performed using the scan tool anytime there has been a repair/replacement made to a powertrain system, for example: flywheel, valvetrain, camshaft and/or crankshaft sensors or components. .

CAMSHAFT, ENGINE

DESCRIPTION

DESCRIPTION

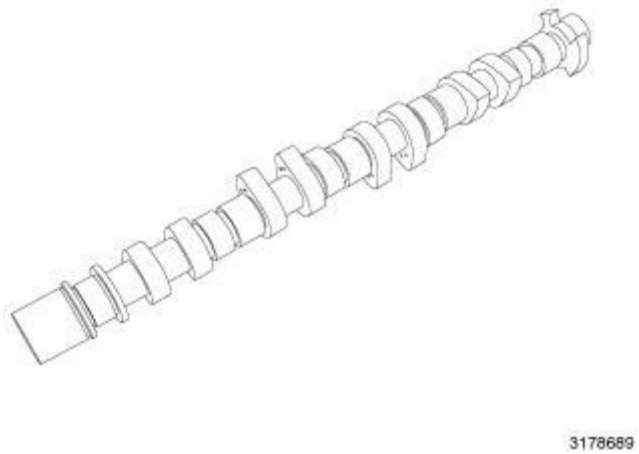

Fig. 100: Engine Camshaft
Courtesy of CHRYSLER GROUP, LLC

The 2.4L engine uses a Single Over Head Camshaft (SOHC) to provide valve actuation but the camshaft is in the standard position of an exhaust camshaft in a Dual Over Head Camshaft (DOHC) engine. The camshaft has five bearing journal surfaces and three cam lobes per cylinder. The camshaft is built up on a hollow tube with cam lobes, bearing journals and end caps pressed into position. The front end cap includes the camshaft sprocket mounting. The middle (number three) bearing surface has thrust walls machined into it to control end play. The rear has a camshaft position sensor pick-up wheel and also drives the vacuum pump.

OPERATION

OPERATION

The camshaft is driven by the crankshaft via a drive sprocket and a chain. The camshaft has precisely machined lobes to provide accurate valve timing and duration.

STANDARD PROCEDURE

STANDARD PROCEDURE - CAMSHAFT END PLAY

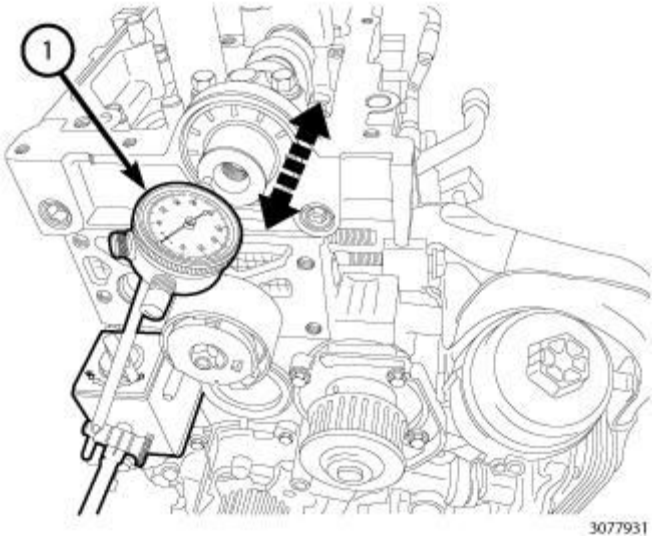

Fig. 101: Measuring Camshaft End Play
Courtesy of CHRYSLER GROUP, LLC

STANDARD PROCEDURE - CAMSHAFT ENDPLAY

1. Remove the cylinder head cover. Refer to **COVER(S), CYLINDER HEAD, REMOVAL** .
2. Mount Dial Indicator Set (special tool #C-3339A, Set, Dial Indicator) (1) to a stationary point at the front of the engine. Locate the probe perpendicular against the nose of the camshaft.
3. Move the camshaft all the way to the rear of its travel.
4. Zero the dial indicator.
5. Move the camshaft forward to the limit of travel and read the dial indicator. Compare the measured end play to the specification. Refer to **ENGINE SPECIFICATIONS** .

REMOVAL

REMOVAL

1. Disconnect and isolate the battery negative cable.
2. Remove the cylinder head cover . Refer to **COVER(S), CYLINDER HEAD, REMOVAL** .
3. Remove the spark plugs. Refer to **SPARK PLUG, REMOVAL** .
4. Raise and support the vehicle. Refer to **HOISTING, STANDARD PROCEDURE** .

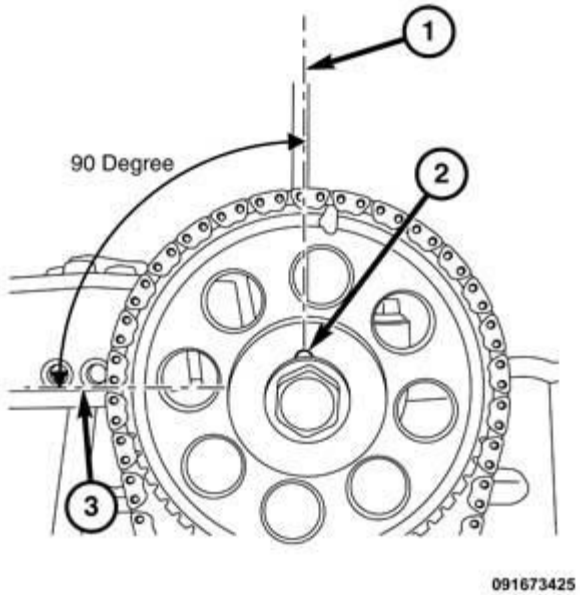

Fig. 102: Vertical Center Line Of Camshaft, Dowel & Cylinder Head
Courtesy of CHRYSLER GROUP, LLC

5. Remove the frame cover portion of the right splash shield. Refer to **SHIELD, SPLASH, FRONT WHEELHOUSE, REMOVAL** .

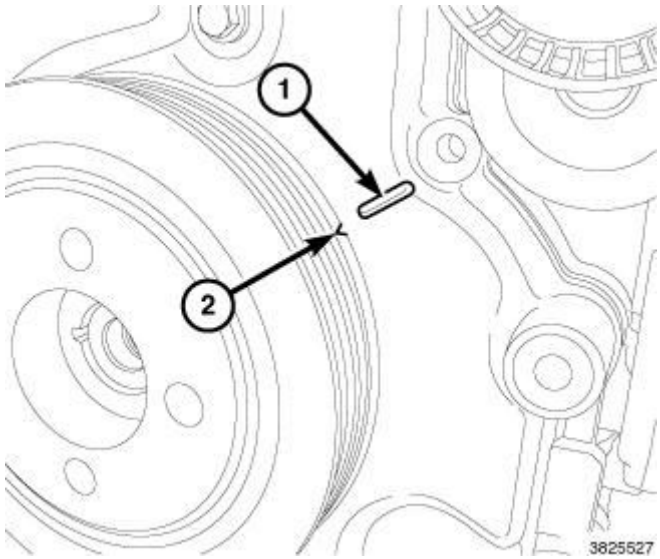

Fig. 103: Timing Cover Mark & Notch
Courtesy of CHRYSLER GROUP, LLC

6. Rotate the crankshaft clockwise (as viewed from the front) to align the timing cover mark (1) with the damper notch (2) to place the number one cylinder piston at top-dead-center on the compression stroke.

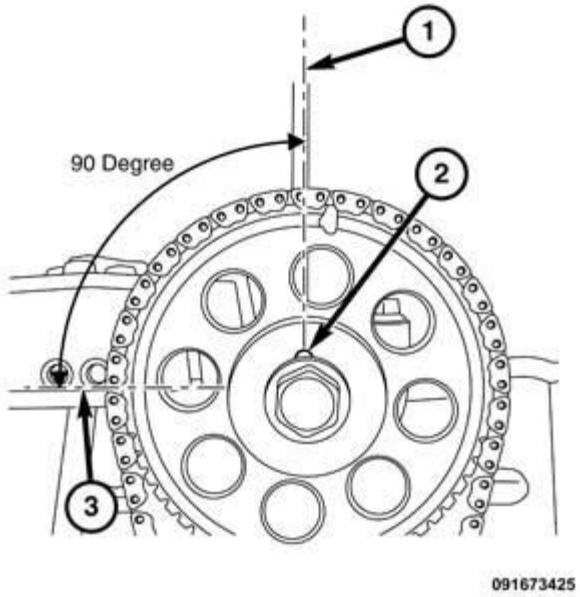

Fig. 104: Vertical Center Line Of Camshaft, Dowel & Cylinder Head
Courtesy of CHRYSLER GROUP, LLC

7. Verify that the camshaft timing is correct as viewed above. The vertical center line of the camshaft (1) and the horizontal surface of the top of the cylinder head (3)

   MUST be

   90° from each other.

   NOTE: The camshaft dowel (2) is slightly visible above the camshaft center bolt and should be at 12 o'clock when set.

8. Lower the vehicle and support the engine with a jack stand.

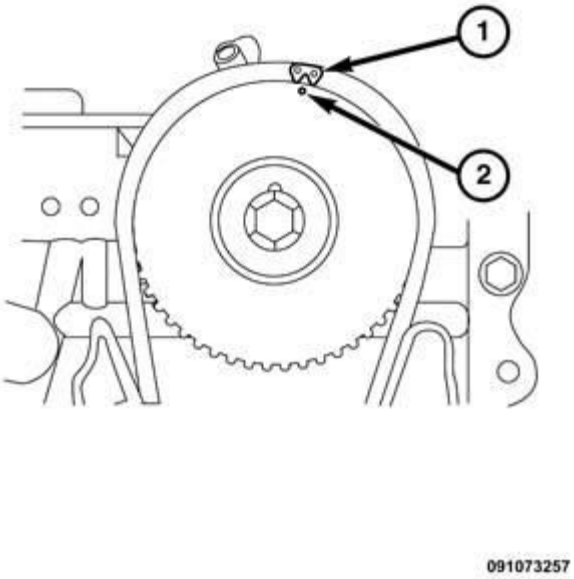

Fig. 105: Sprocket Mark & Painted Link
Courtesy of CHRYSLER GROUP, LLC

9. Using a paint pen or equivalent, mark both camshaft sprockets and corresponding chain links (1 and 2) to aid in reassembly.

NOTE: Camshaft bearing caps should have been marked during engine manufacturing. For example, number one exhaust camshaft bearing is marked "E1>".

CAUTION: DO NOT STAMP OR STRIKE THE CAMSHAFT BEARING CAPS. SEVERE DAMAGE WILL OCCUR TO THE BEARING CAPS.

10. Remove the vacuum pump.
11. Remove the right engine mount. Refer to **INSULATOR, ENGINE MOUNT, RIGHT, REMOVAL** .
12. Remove the timing cover. Refer to **COVER(S), ENGINE TIMING, REMOVAL** .
13. Using a permanent ink or paint marker, identify the location and position on each camshaft bearing cap.

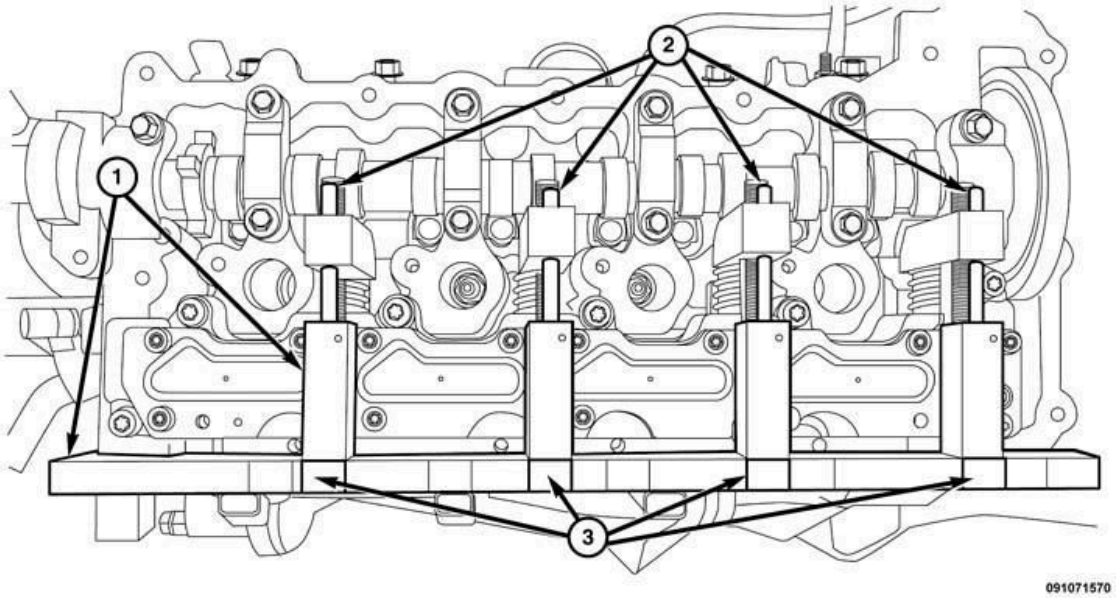

Fig. 106: Special Tool, Spring Compressor & Indicators
Courtesy of CHRYSLER GROUP, LLC

14. Using special tool 10259A (1), loosen the spring compressors (2) to fit over the valve and spring assemblies. Adjust the tool to align with the 2.4L indicators (3).
15. Install the (special tool #10259B, Compressor, MultiAir® Spring) spring compressor
16. Rotate the spring compressors counterclockwise until the springs are fully seated.

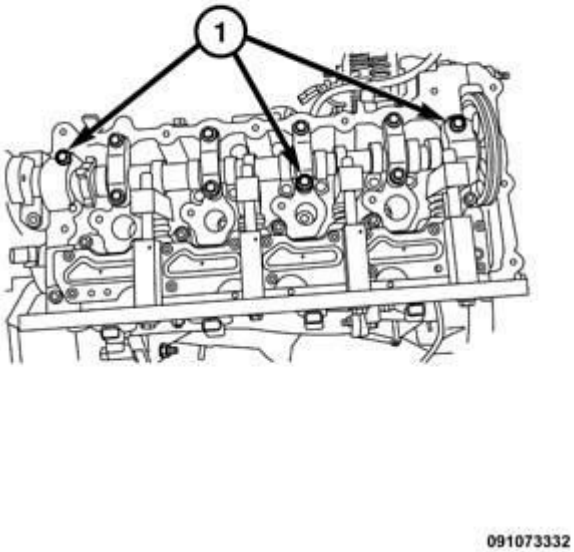

Fig. 107: Bearing Cap Bolts

Courtesy of CHRYSLER GROUP, LLC

17. **Slowly** remove the exhaust camshaft bearing cap bolts (1) one turn at a time. Remove the camshaft bearing caps.

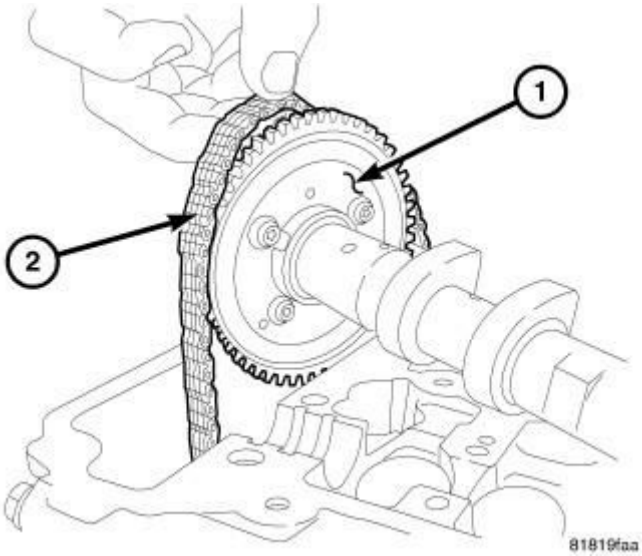

Fig. 108: Chain Removal
Courtesy of CHRYSLER GROUP, LLC

18. Lift the timing chain (2) off of the sprocket (1).
19. Remove the camshaft.
20. Remove the sprocket from the camshaft.

INSPECTION

INSPECTION

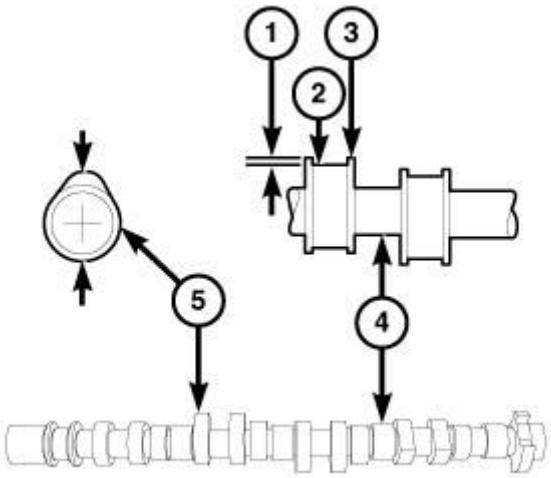

Fig. 109: Inspecting Camshaft Wear Areas
Courtesy of CHRYSLER GROUP, LLC

1. Inspect the camshaft bearing journals (4) for damage and binding. If the journals are binding, check the camshaft bearing housing for damage. Also check the oil supply holes for clogging.
2. Check the surface of the cam lobes (5) for abnormal wear (1). Measure and compare the unworn area (3) to the worn area (2). Replace the camshaft if it is not within specification. Refer to **ENGINE SPECIFICATIONS** .

INSTALLATION

INSTALLATION

NOTE: Camshaft bearing caps are marked during engine manufacturing. For example, the front camshaft bearing cap is marked 1, the read cap is marked with a 5. The markings on the caps must be read while looking from the left bank of the engine (closest to the front of the vehicle).

NOTE: Following the installation of each camshaft bearing cap, visually verify that the camshaft has some endplay.

1. Lubricate camshaft journals with clean engine oil.
2. Apply a seam of Anaerobic Loctite® 518 Sealant on the camshaft housing in the contact area of the front and rear camshaft caps.

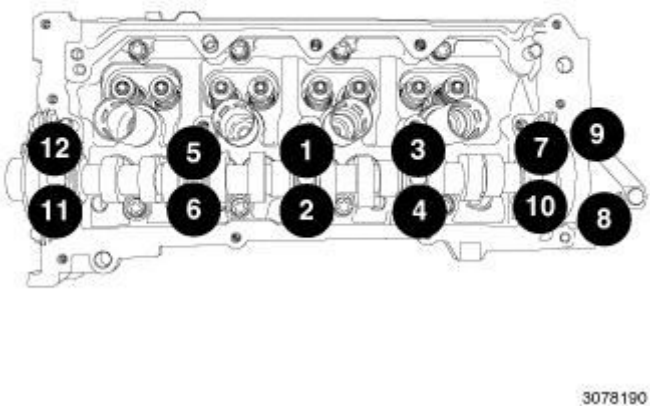

Fig. 110: Camshaft Bearing Cap Tightening Sequence
Courtesy of CHRYSLER GROUP, LLC

Torque Sequence

NOTE: VVAA removed for clarity

3. Install the camshaft and camshaft bearing caps. Tighten the twelve bolts in two steps following the sequence shown in illustration:
   - Step 1: All to 5 N.m (44 in. lbs.).
   - Step 2: All to 10 N.m (89 in. lbs.).

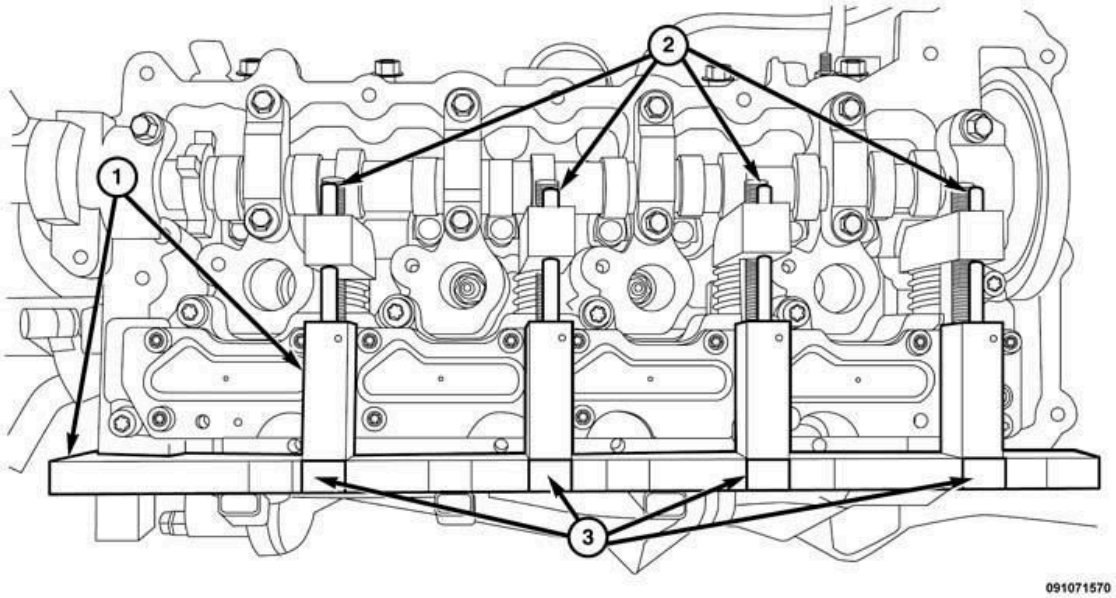

Fig. 111: Special Tool, Spring Compressor & Indicators
Courtesy of CHRYSLER GROUP, LLC

4. Loosen the spring compressors (2), remove the tool (special tool #10259B, Compressor, MultiAir® Spring) (1).

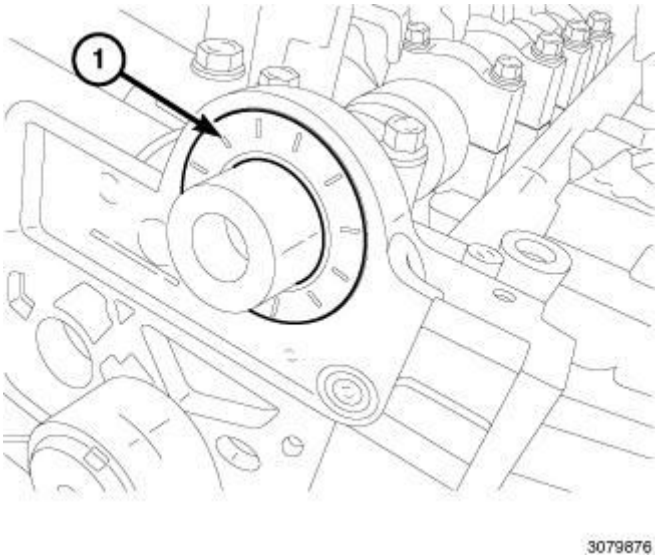

Fig. 112: Camshaft Seal
Courtesy of CHRYSLER GROUP, LLC

5. If required, install a new camshaft seal (1). Refer to **SEAL(S), CAMSHAFT, INSTALLATION** .
6. Install the camshaft sprocket and timing chain. Refer to **CHAIN AND SPROCKETS, TIMING, INSTALLATION** .
7. Install the timing cover. Refer to **COVER(S), ENGINE TIMING, INSTALLATION** .
8. Install the cylinder head cover. Refer to **COVER(S), CYLINDER HEAD, INSTALLATION** .

NOTE: **The Cam/Crank Variation Relearn procedure must be performed using the scan tool anytime there has been a repair/replacement made to a powertrain system, for example: flywheel, valvetrain, camshaft and/or crankshaft sensors or components.**

COVER(S), CYLINDER HEAD

DESCRIPTION

DESCRIPTION

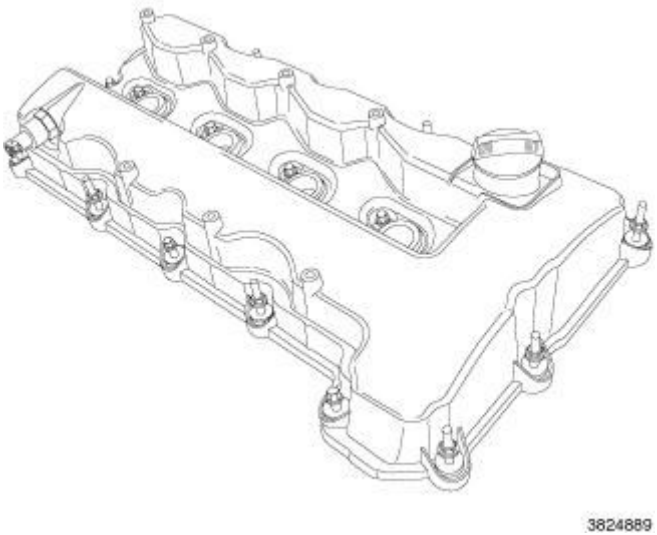

Fig. 113: Cylinder Head Cover
Courtesy of CHRYSLER GROUP, LLC

The cylinder head cover is made of die cast aluminum. The cylinder head cover is sealed with press-in-place gaskets at the cylinder head and spark plug ports. RTV is used to seal the T-joint at the cylinder head cover, front timing cover and cylinder head. RTV is also used to seal the cylinder head cover to the rear camshaft bearing cap at the vacuum pump.

REMOVAL

REMOVAL

1. Remove the engine cover assembly.
2. Disconnect and isolate the battery negative cable.
3. Remove the make up air hose from the cylinder head cover fitting.
4. Remove the positive crankcase ventilation (PCV) hose.
5. Disconnect and remove the ignition coils. Refer to **COIL, IGNITION, REMOVAL** .

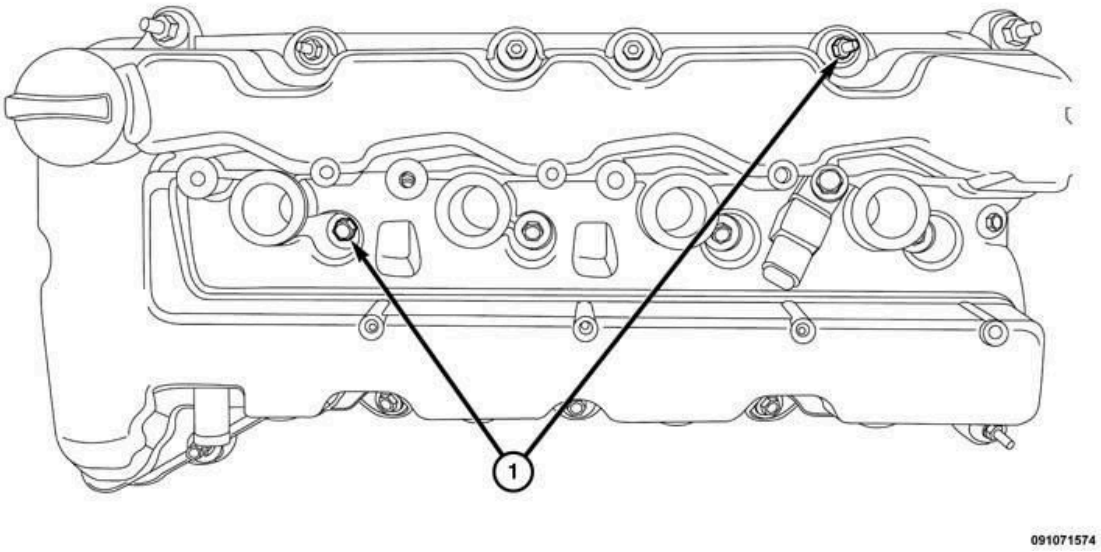

Fig. 114: Cylinder Head Cover Bolts
Courtesy of CHRYSLER GROUP, LLC

6. Use compressed air to blow dirt and debris off of the cylinder head cover prior to removal.
7. Remove the push pins that secure the coil harness to the cover.

NOTE: **If any of the push pins break off in the cover, use a pick to rotate the lodged portion counterclockwise to back the portion out of the hole.**

8. Loosen twelve cylinder head cover mounting bolts and six stud bolts (1).
9. Remove the cylinder head cover from the cylinder head.

NOTE: **With the help of an assistant, hold the coil harness up and spread open as the cover is removed through the area between the left and right harness runs.**

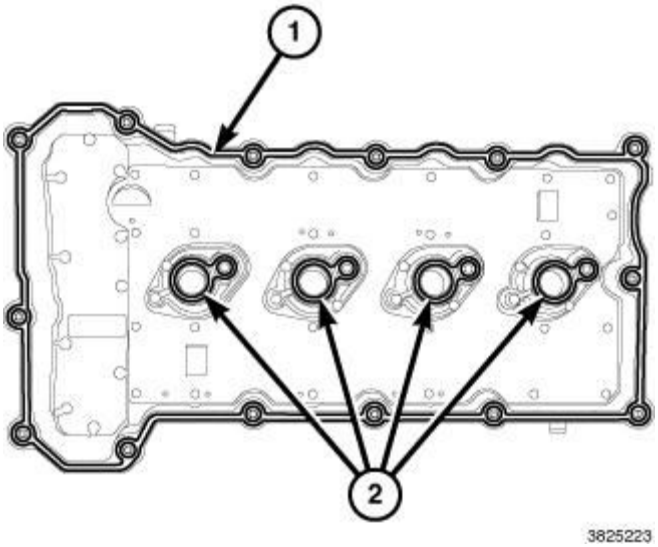

Fig. 115: Cylinder Head Cover Gaskets
Courtesy of CHRYSLER GROUP, LLC

10. Remove and discard the cylinder head cover gaskets (1 and 2).

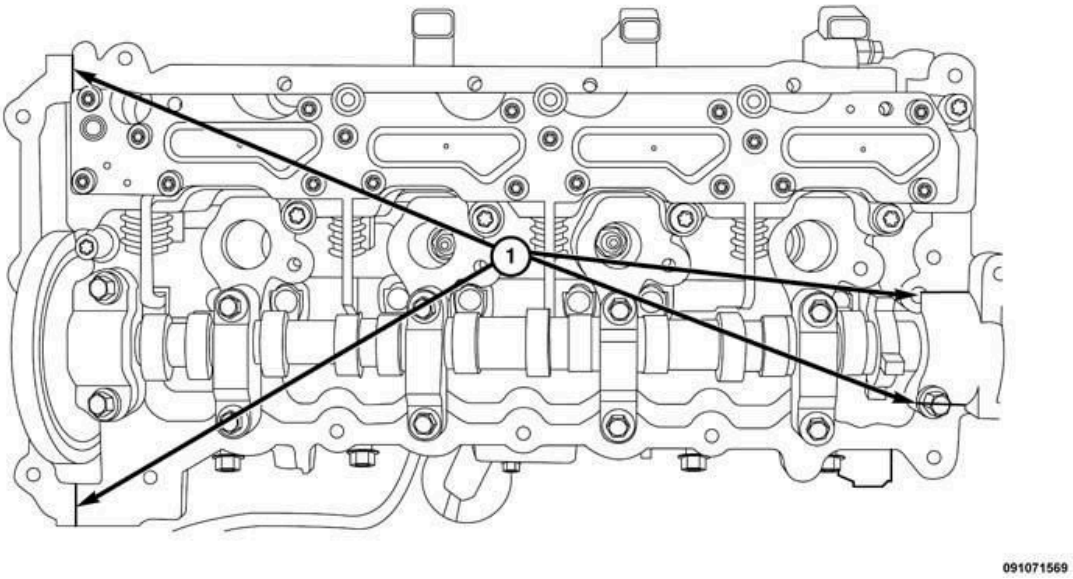

Fig. 116: Sealant Application Areas
Courtesy of CHRYSLER GROUP, LLC

11. Remove all residual sealant (1) from the cylinder head, timing chain cover, rear exhaust camshaft bearing cap and cylinder head cover mating surfaces. Refer to **ENGINE - STANDARD PROCEDURE** .

INSTALLATION

INSTALLATION

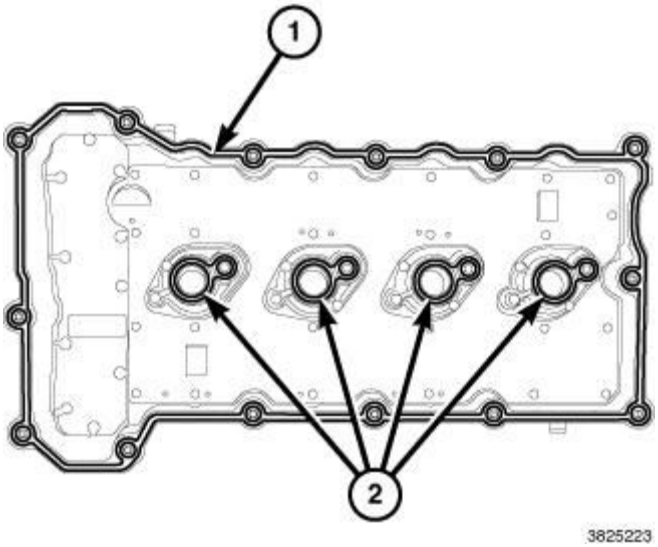

Fig. 117: Cylinder Head Cover Gaskets
Courtesy of CHRYSLER GROUP, LLC

1. Install new cylinder head cover gaskets (1 and 2).

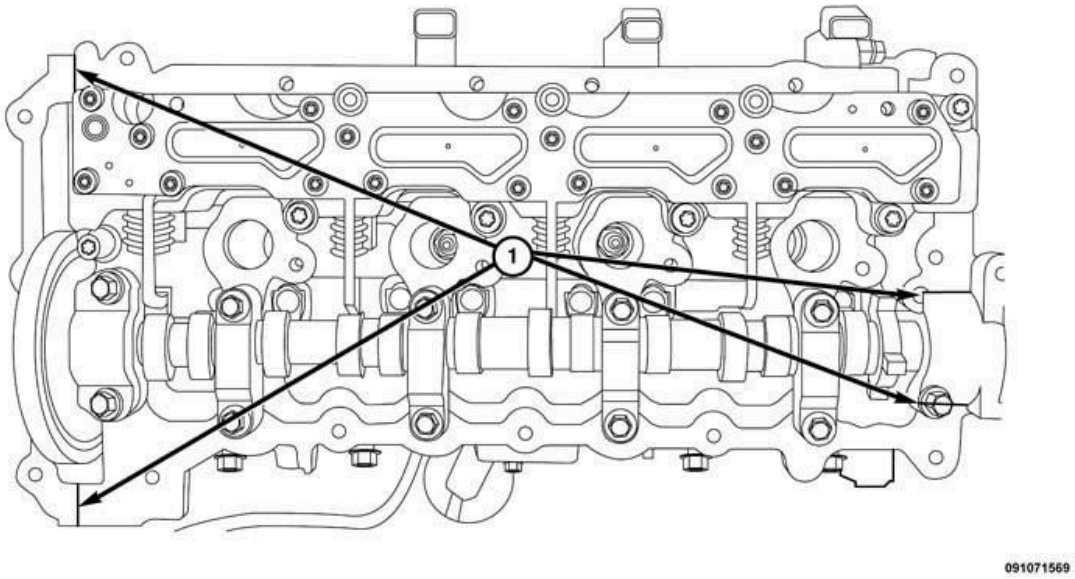

Fig. 118: Sealant Application Areas
Courtesy of CHRYSLER GROUP, LLC

NOTE: **When using RTV, the sealing surfaces must be clean and free from grease and oil.**

NOTE: **When using RTV, components should be assembled within 10 minutes and tighten to specification within 45 minutes.**

2. Apply a 2 to 3 mm wide bead of Mopar® engine sealant RTV or equivalent to the cylinder head/front cover T-joint (1) and the rear exhaust camshaft bearing cap/cylinder head T-joint (1).

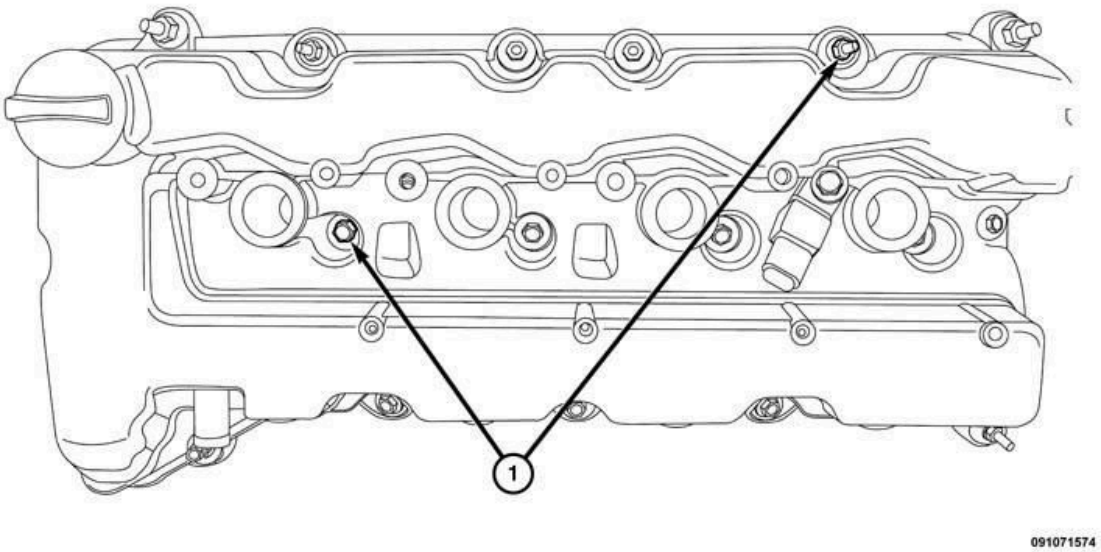

Fig. 119: Cylinder Head Cover Bolts
Courtesy of CHRYSLER GROUP, LLC

3. Install the cylinder head cover to the cylinder head with twelve bolts and six stud bolts (1). Tighten all eighteen fasteners to 10 N.m (90 in. lbs.).
4. Install the cylinder cover ground strap and nut. Tighten the nut to 10 N.m (90 in. lbs.)
5. Install and connect the ignition coils. Refer to **COIL, IGNITION, INSTALLATION** .
6. If removed, install the positive crankcase ventilation (PCV) valve and tighten to 4 N.m (37 in. lbs.).

NOTE: Make sure the O-ring is seated on the shoulder of the opening prior to reading the torque.

7. Connect the PCV hose to the PCV valve.
8. Connect the make up air hose.
9. Connect the battery negative cable and tighten nut to 5 N.m (45 in. lbs.).
10. Install the engine cover assembly.

LIFTER(S), HYDRAULIC

DIAGNOSIS AND TESTING

DIAGNOSIS AND TESTING - LASH ADJUSTER (TAPPET) NOISE

Proper noise diagnosis is essential in locating the source of an NVH complaint. Locating a lash adjuster (tappet)

type noise can sometimes be difficult. As a result, an initial misdiagnosis may occur.

Refer to the following chart for possible causes and correction of a lash adjuster (tappet) type noise:

LASH ADJUSTER (TAPPET) NOISE CHART

POSSIBLE CAUSES	CORRECTION
1. Engine oil level-too high or too low. This may allow aerated oil to enter the adjusters and cause them to be spongy.	1. Check and correct the engine oil level.
2. Insufficient running time after rebuilding a cylinder head.	2. Low speed running of up to 1 hour may be required to fully evacuate trapped air from the valve train system. During this time, turn engine off and let set for a few minutes before restarting. Repeat this several times after engine has reached normal operating temperature.
3. Air trapped in the lash adjuster (after 1 hour of run time).	3. See below: (a) Check lash adjusters for sponginess while installed in the cylinder head. Depress the lash adjuster. Normal adjusters should feel very firm. Very spongy adjusters can be bottomed out easily. (b) If the lash adjuster(s) are still spongy, replace the lash adjuster(s). Refer to **LIFTER(S), HYDRAULIC, REMOVAL** .
4. Low oil pressure.	4. See below: (a) Check and correct the engine oil level. (b) Check the engine oil pressure. Refer to **LUBRICATION - DIAGNOSIS AND TESTING** . (c) Check for excessive main bearing clearance and correct. Refer to **BEARING(S), CRANKSHAFT, MAIN - STANDARD PROCEDURE** . (d) Check for a worn oil pump.
5. Oil passage to the cylinder head(s) plugged with debris.	5. Check cylinder head oil passages for blockage. Clean or replace as necessary.
6. Worn valve guide(s).	6. Measure valve stem-to-guide clearance. Refer to **VALVES, INTAKE AND EXHAUST - STANDARD PROCEDURE** .
7. Air ingested into oil due to broken or cracked oil pump pickup tube.	7. Inspect pickup tube and replace as necessary.
8. Collapsed lash adjuster due to debris ingestion.	8. Clean debris from engine and replace lash adjuster (s). Refer to **LIFTER(S), HYDRAULIC, REMOVAL** .

REMOVAL

REMOVAL

1. Disconnect and isolate the negative battery cable.

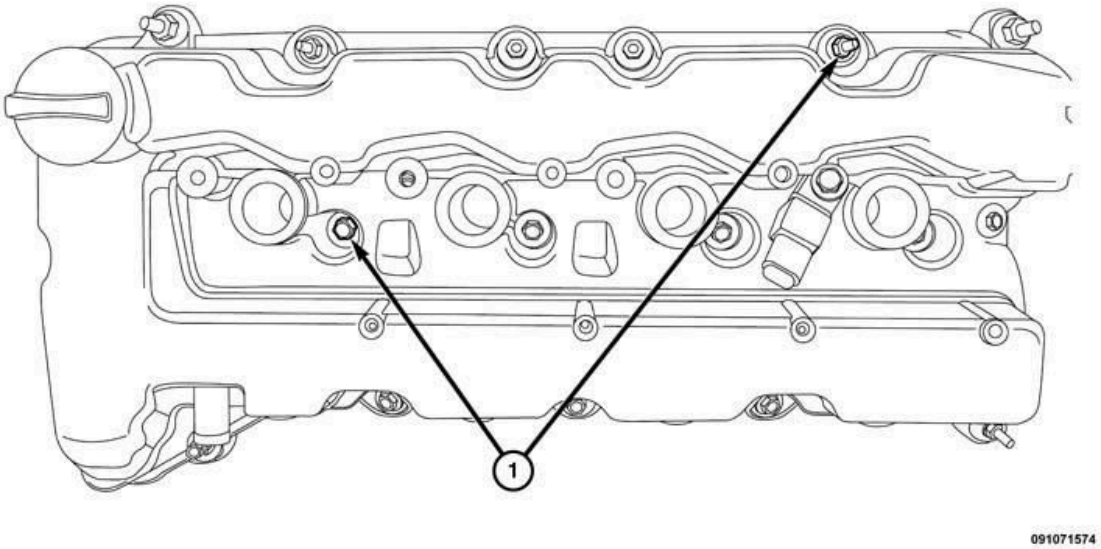

Fig. 120: Cylinder Head Cover Bolts
Courtesy of CHRYSLER GROUP, LLC

2. Remove the cylinder head cover assembly bolts (1) and remove the cover from the cylinder head.

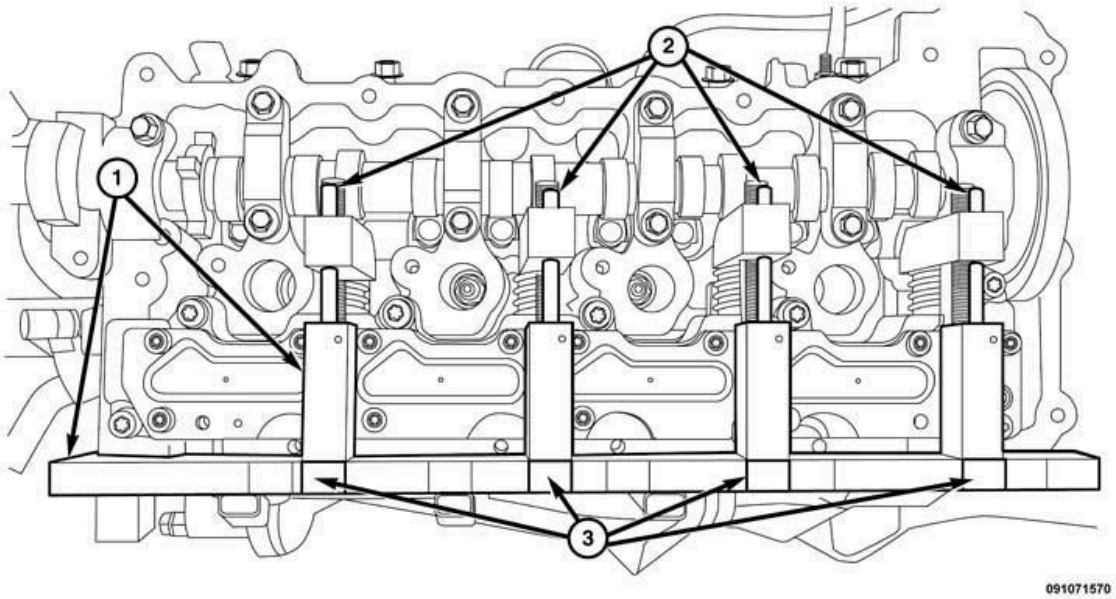

Fig. 121: Special Tool, Spring Compressor & Indicators
Courtesy of CHRYSLER GROUP, LLC

3. Install special (1) tool to the cylinder head. With the spring compressors lined up in the 2.4L position of the bridge (3), rotate the screw jacks counterclockwise to compress the springs enough to allow slight

movement of the rockers.

4. Remove the camshaft(s). Refer to **CAMSHAFT, ENGINE, REMOVAL** .

NOTE: If the rocker arms are to be reused, identify their positions so that they can be reassembled into their original locations.

5. Remove the rocker arm(s). Refer to **ROCKER ARM, VALVE, REMOVAL** .

NOTE: If the hydraulic lifters are to be reused, identify their positions so that they can be reassembled into their original locations.

6. Remove the hydraulic lifter(s).

INSTALLATION

INSTALLATION

1. Verify that the hydraulic lifters are at least partially full of oil. There should be little or no plunger travel when the hydraulic lifter is depressed.

NOTE: If the hydraulic lifters are being reused, reassemble them into their original locations.

2. Install the hydraulic lifter(s)

NOTE: If the rocker arms are being reused, reassemble them into their original locations.

3. Install the rocker arm(s). Refer to **ROCKER ARM, VALVE, INSTALLATION** .
4. Install the camshaft. Refer to **CAMSHAFT, ENGINE, INSTALLATION** .

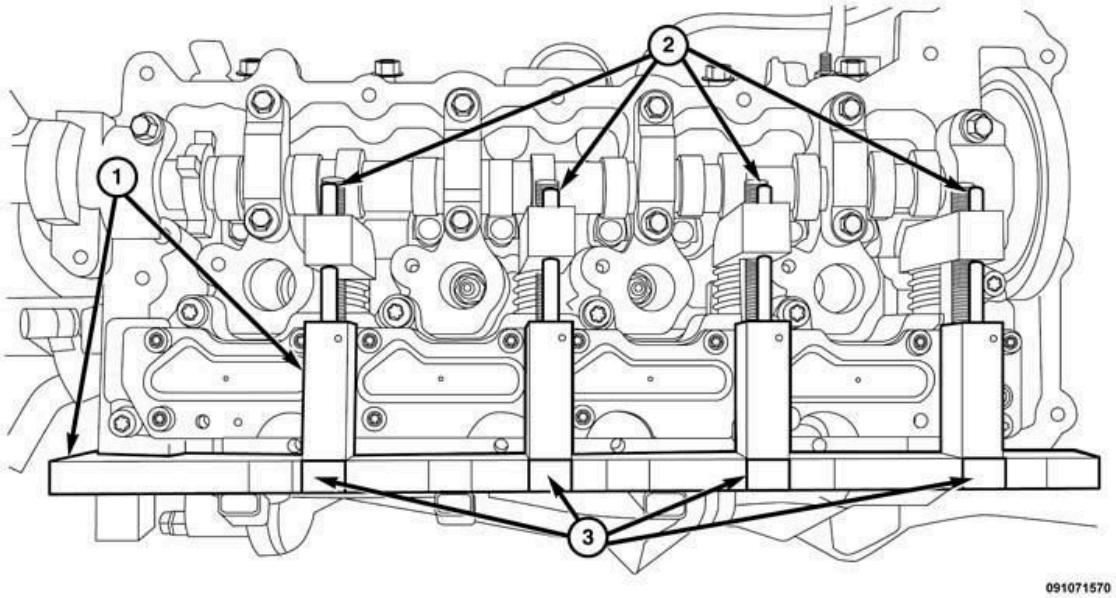

Fig. 122: Special Tool, Spring Compressor & Indicators
Courtesy of CHRYSLER GROUP, LLC

5. Install the VVAA. Refer to **ASSEMBLY, VARIABLE VALVE ACTUATION, INSTALLATION**.
6. Install the cylinder head cover. Refer to **COVER(S), CYLINDER HEAD, INSTALLATION** .
7. Connect the battery negative cable and tighten nut to 5 N.m (45 in. lbs.).

ROCKER ARM, VALVE

DESCRIPTION

DESCRIPTION

Fig. 123: Valve Rocker Arm

Courtesy of CHRYSLER GROUP, LLC

The valve rocker arms are steel stampings with an integral roller bearing. A spring clip helps to hold the rocker arm in position on the ball socket when removing or installing the variable valve actuation assembly. The rocker arm ball socket also incorporates a 0.5 mm oil hole for roller and camshaft lubrication.

REMOVAL

REMOVAL

1. Disconnect and isolate the battery negative cable.
2. If the exhaust rockers are to be serviced, remove the exhaust camshaft. Refer to **CAMSHAFT, ENGINE, REMOVAL** .

NOTE: If the rocker arms are to be reused, identify their positions so that they can be reassembled into their original locations.

3. If the intake rockers are to be serviced, remove the Variable Valve Actuator Assembly (VVAA). Refer to **ASSEMBLY, VARIABLE VALVE ACTUATION, REMOVAL**.
4. Remove the rocker arm(s).

INSPECTION

INSPECTION

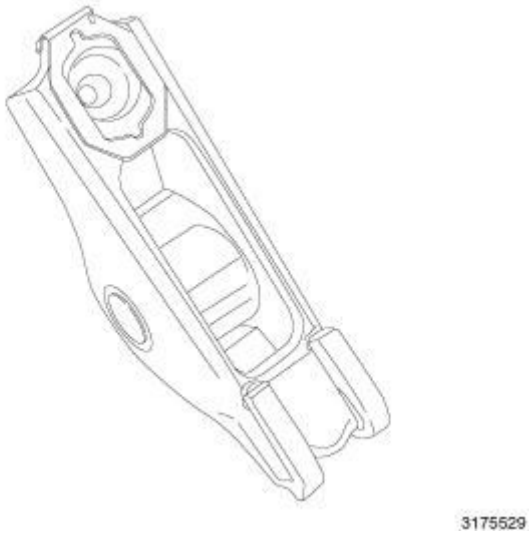

Fig. 124: Valve Rocker Arm
Courtesy of CHRYSLER GROUP, LLC

Inspect the valve rocker arm for wear or damage. Replace as necessary.

INSTALLATION

INSTALLATION

1. Lubricate the rocker arms with clean engine oil before installation.

NOTE: If the rocker arms are being reused, reassemble them into their original locations.

2. Install the rocker arm(s).
3. If the intake rockers were serviced, install the VVAA. Refer to **ASSEMBLY, VARIABLE VALVE ACTUATION, INSTALLATION**.
4. If the exhaust rockers were serviced, Install the camshaft and cylinder head cover. Refer to **CAMSHAFT, ENGINE, INSTALLATION** .
5. Connect the battery negative cable and tighten nut to 5 N.m (45 in. lbs.).

SEAL(S), VALVE GUIDE

DESCRIPTION

DESCRIPTION

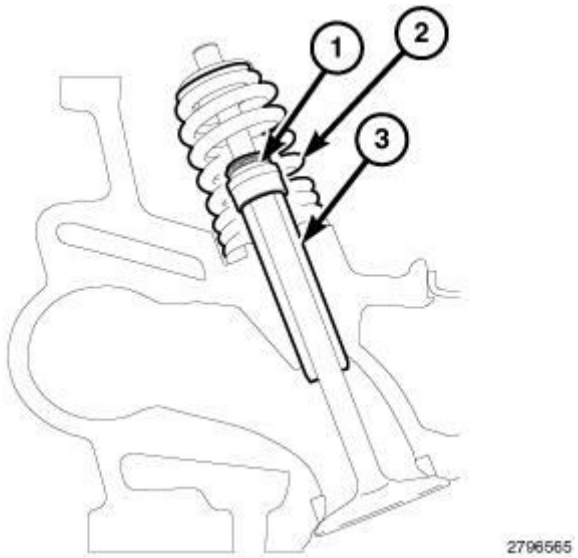

Fig. 125: Valve Stem Oil Seal, Valve Spring & Valve Guide
Courtesy of CHRYSLER GROUP, LLC

NOTE: Typical valve configuration shown in illustration.

The valve stem oil seals (1) are made of elastomer over-molded steel in a non-integrated type guide mounted configuration. The seal is not held in place by the valve spring (2). The valve stem seals are not reusable if removed from the valve guides (3), they must be replaced. Always coat the valve seals with clean engine oil before installing the valves.

REMOVAL

REMOVAL

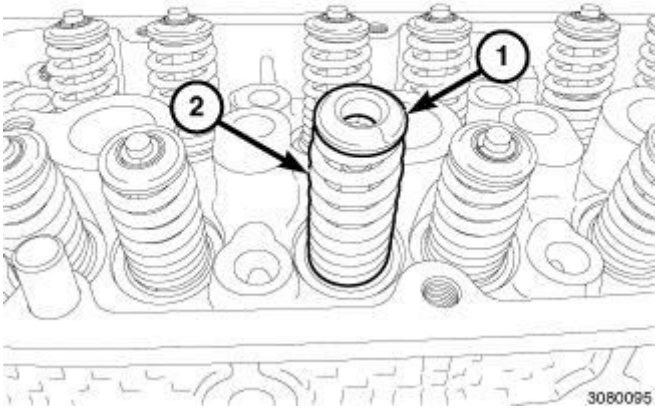

Fig. 126: Valve Spring & Retainer
Courtesy of CHRYSLER GROUP, LLC

NOTE: **If the springs are to be reused, identify their positions so that they can be reassembled into their original locations. Number 2 cylinder exhaust valve spring shown in illustration, all other valve springs similar.**

1. Remove the valve spring(s) (2). Refer to **SPRING(S), VALVE, REMOVAL** .

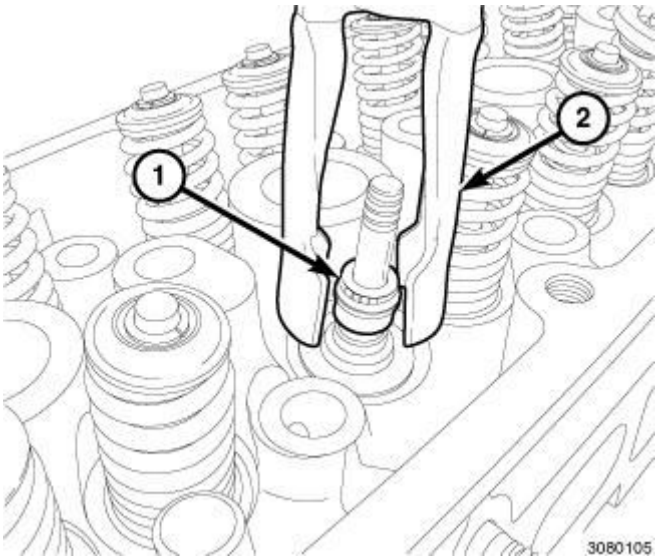

Fig. 127: Valve Guide Seal & Valve Seal Tool
Courtesy of CHRYSLER GROUP, LLC

NOTE: **Number 2 cylinder exhaust valve guide seal shown in illustration, all other valve guide seals similar.**

2. Remove the valve guide seal (1) using a valve seal tool (2). Discard the removed seal.

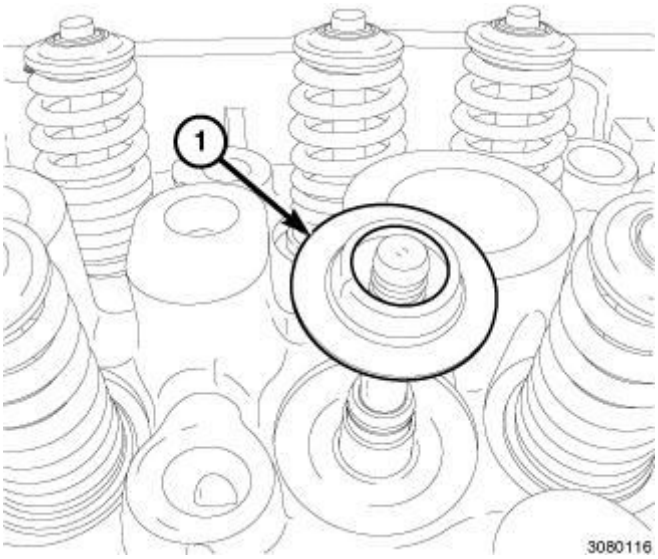

Fig. 128: Valve Spring Seat
Courtesy of CHRYSLER GROUP, LLC

NOTE: **Number 2 cylinder exhaust valve spring seat shown in illustration. Exhaust valve spring seats are marked with the letter "S" and have a thickness of 0.8 mm (0.031 in.). Intake valve spring seats are marked with the letter "A" and have a thickness of 3.2 mm (0.126 in.).**

3. If required, remove the valve spring seat (1).
4. If required, remove the valve(s). Refer to **VALVES, INTAKE AND EXHAUST, REMOVAL** .

INSTALLATION

INSTALLATION

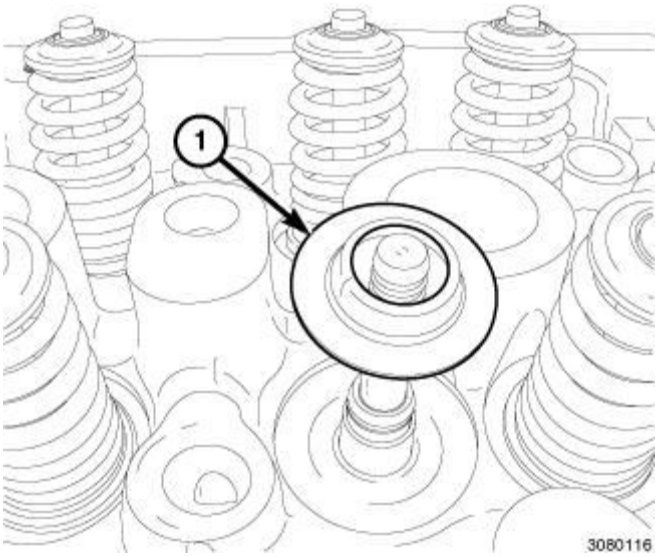

Fig. 129: Valve Spring Seat
Courtesy of CHRYSLER GROUP, LLC

NOTE: **Reassemble the valves into their original locations. If the valves or valve seats have been refinished, verify that the valve stem tip height is within specification. Refer to ENGINE SPECIFICATIONS .**

1. If removed, install the valve(s). Refer to **VALVES, INTAKE AND EXHAUST, INSTALLATION** .

   NOTE: **Number 2 cylinder exhaust valve spring seat shown in illustration. Exhaust valve spring seats are marked with the letter "S" and have a thickness of 0.8 mm (0.031 in.). Intake valve spring seats are marked with the letter "A" and have a thickness of 3.2 mm (0.126 in.).**

2. If removed, install the spring seat (1) over the valve guide.

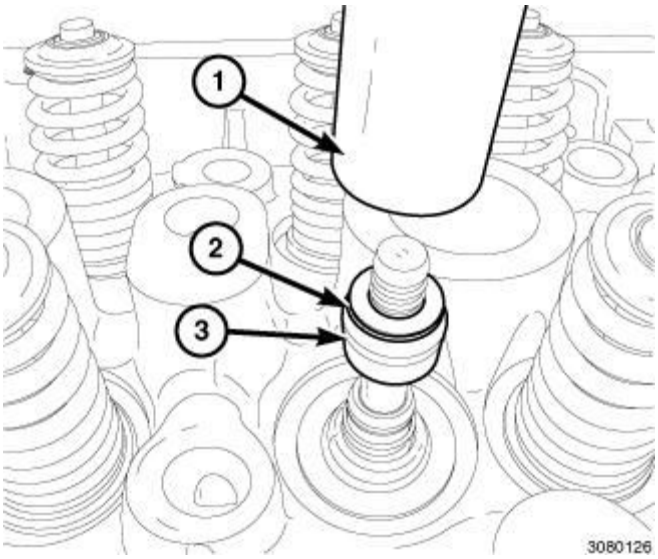

Fig. 130: Driver, Garter Spring & Valve Guide Seal
Courtesy of CHRYSLER GROUP, LLC

3. Apply engine oil to the lip of the valve guide seal (3). Install the valve guide seal (3) over the valve stem. Using an appropriate driver (1), push the seal firmly and squarely over the valve guide. **Do Not Force** the seal against the top of guide.

NOTE: Make sure that the garter spring (2) is intact around the top of the valve guide seal (3). Number 2 cylinder exhaust valve guide seal shown in illustration, all other valves similar.

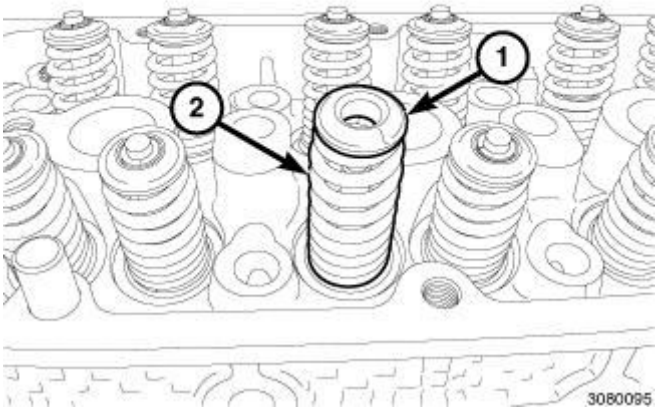

Fig. 131: Valve Spring & Retainer
Courtesy of CHRYSLER GROUP, LLC

NOTE: If the valve springs are being reused, reassemble them into their original

locations. Number 2 cylinder exhaust valve spring shown in illustration, all other valves similar.

4. Install the valve spring(s) (2). Refer to **SPRING(S), VALVE, INSTALLATION** .

SPRING(S), VALVE

DESCRIPTION

DESCRIPTION

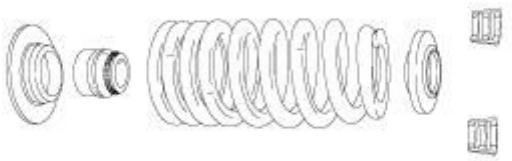

Fig. 132: Valve Springs Assembly
Courtesy of CHRYSLER GROUP, LLC

The valve springs are a beehive design and made from high strength chrome silicon steel. The springs are common for intake and exhaust applications. Valve guide seals are rubber overmolded on a steel support cylinder with a garter spring at the seal lip. The seals are not integrated with the valve spring seat. The steel valve spring retainers are designed for use with beehive springs and the valve spring retainer locks are a three bead Butt type design to promote valve rotation.

REMOVAL

ON VEHICLE

NOTE: The intake and exhaust springs are NOT interchangeable. Make sure the springs are marked if reused. If they are being replaced, correctly identify the part numbers prior to installation.

1. Remove the variable valve actuator assembly. Refer to **ASSEMBLY, VARIABLE VALVE ACTUATION, REMOVAL**.
2. Remove the exhaust camshaft. Refer to **CAMSHAFT, ENGINE, REMOVAL** .

NOTE: **If the rocker arms are to be reused, identify their positions so that they can be reassembled into their original locations.**

3. Remove the rocker arm(s). Refer to **ROCKER ARM, VALVE, REMOVAL** .
4. Install the (special tool #10224, Adapter, Valve Spring) (2) on the (special tool #MD998772A, Compressor, Valve Spring) (1).

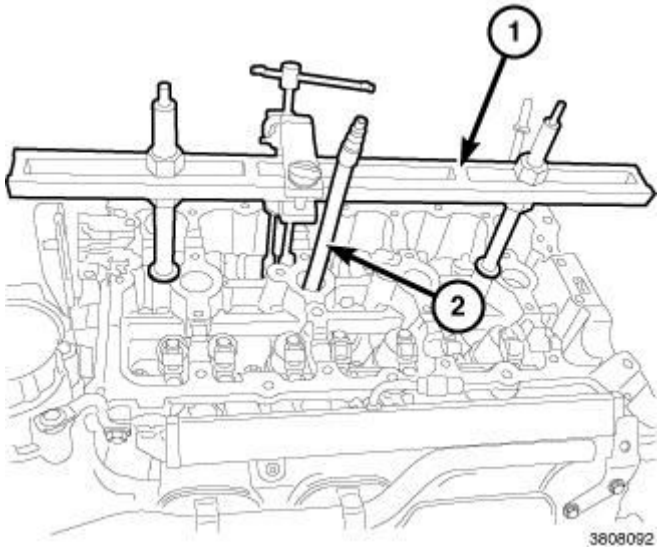

Fig. 133: Valve Spring Compressor & Air Hose
Courtesy of CHRYSLER GROUP, LLC

NOTE: **Number 3 cylinder exhaust valve spring compression shown in illustration, all other valves similar.**

5. Remove the spark plug. Refer to **SPARK PLUG, REMOVAL** .
6. Install the (special tool #MD998772A, Compressor, Valve Spring) (1) onto the cylinder head.
7. Install a spark plug adapter attached to a regulated shop air supply (2). Pressurize the cylinder being serviced to 620.5 - 689 kPa (90 - 100 psi) to hold the valves in place.

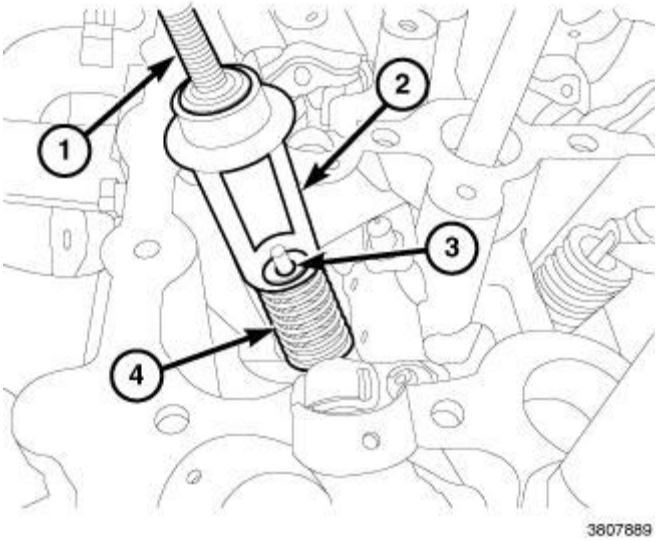

Fig. 134: Compressing Valve Spring
Courtesy of CHRYSLER GROUP, LLC

NOTE: Number 3 cylinder exhaust valve spring compression shown in illustration, all other valves similar.

CAUTION: Air pressure must be maintained as long as the valve springs are removed to prevent the valves from dropping into the cylinders.

8. Using the (special tool #10224, Adapter, Valve Spring) (2), compress valve spring (4) and remove valve retaining locks (3).

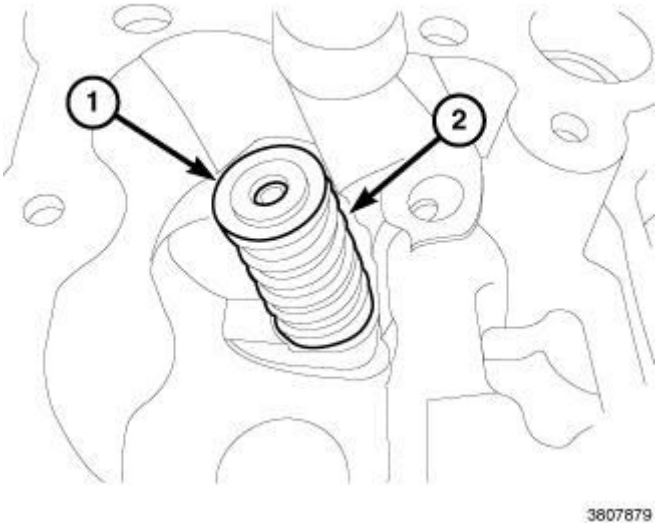

Fig. 135: Valve Spring & Retainer
Courtesy of CHRYSLER GROUP, LLC

NOTE: **The intake and exhaust springs are NOT interchangeable. Make sure the springs are marked if reused. If they are being replaced, correctly identify the part numbers prior to installation.**

NOTE: **If the springs are to be reused, identify their positions so that they can be reassembled into their original locations. Number 2 cylinder exhaust valve spring shown in illustration, all other valve springs similar.**

9. Release the valve spring compression and remove the valve spring retainer (1) and valve spring (2).
10. If required, remove the valve guide seal. Refer to **SEAL(S), VALVE GUIDE, REMOVAL** .

OFF VEHICLE

NOTE: **The intake and exhaust springs are NOT interchangeable. Make sure the springs are marked if reused. If they are being replaced, correctly identify the part numbers prior to installation.**

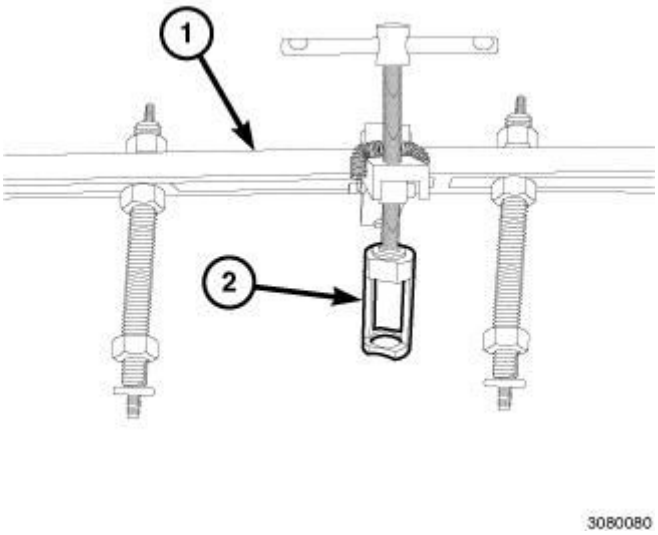

Fig. 136: Valve Spring Compressor & Adapter
Courtesy of CHRYSLER GROUP, LLC

1. Remove the variable valve actuator assembly. Refer to **ASSEMBLY, VARIABLE VALVE ACTUATION, REMOVAL**.
2. Install the (special tool #10224, Adapter, Valve Spring) (2) on the (special tool #MD998772A, Compressor, Valve Spring) (1).

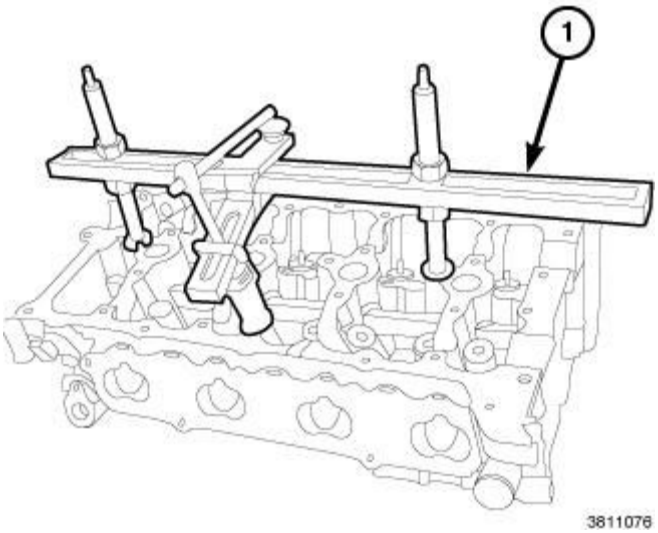

Fig. 137: Valve Spring Compressor
Courtesy of CHRYSLER GROUP, LLC

NOTE: Number 3 intake valve spring compression shown in illustration, all other valves similar.

3. Install the (special tool #MD998772A, Compressor, Valve Spring) (1) onto the cylinder head.
4. Place a cushion of foam padding or a ball of rags in the dome area of the cylinder head to hold the valves in place during the retaining lock removal process.

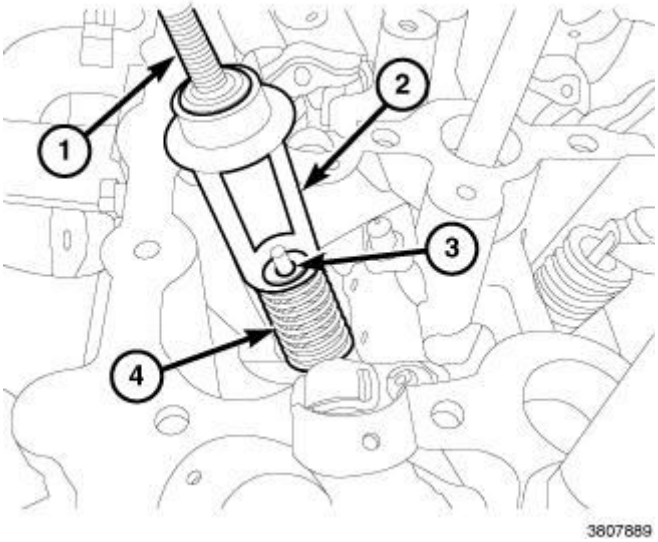

Fig. 138: Compressing Valve Spring
Courtesy of CHRYSLER GROUP, LLC

NOTE: Number 3 cylinder exhaust valve spring compression shown in illustration, all other valves similar.

5. Using the (special tool #10224, Adapter, Valve Spring) (2), compress valve spring (4) and remove valve retaining locks (3).

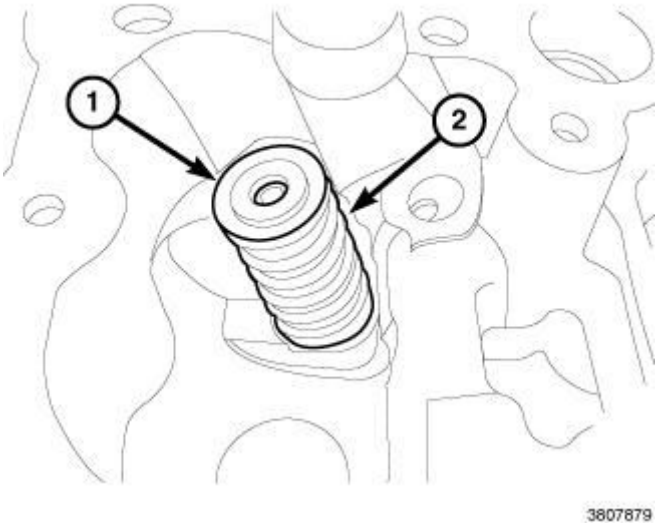

Fig. 139: Valve Spring & Retainer
Courtesy of CHRYSLER GROUP, LLC

NOTE: **The intake and exhaust springs are NOT interchangeable. Make sure the springs are marked if being reused. If they are being replaced, correctly identify the part numbers prior to installation.**

NOTE: **If the springs are to be reused, identify their positions so that they can be reassembled into their original locations. Number 2 cylinder exhaust valve spring shown in illustration, all other valve springs similar.**

6. Release the valve spring compression and remove the valve spring retainer (1) and valve spring (2).
7. If required, remove the valve guide seal. Refer to **SEAL(S), VALVE GUIDE, REMOVAL** .

INSPECTION

INSPECTION

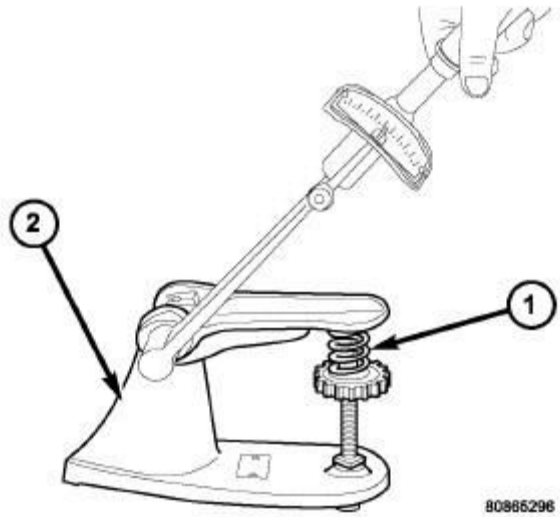

Fig. 140: Testing Valve Spring
Courtesy of CHRYSLER GROUP, LLC

When valves have been removed for inspection, reconditioning or replacement, valve springs should be checked against specifications for free-length, spring force and spring installed height. Refer to **ENGINE SPECIFICATIONS** .

Spring force can be measured with a test fixture (2). Follow the tool manufactures instructions. Replace any springs that do not meet specifications.

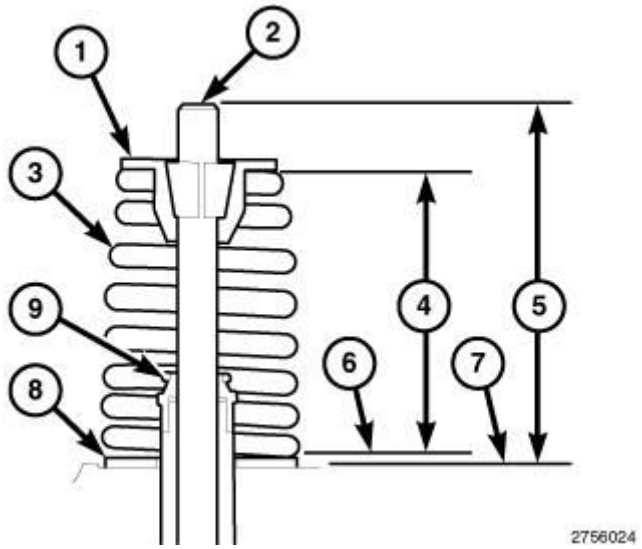

Fig. 141: Checking Valve Spring Installed Height
Courtesy of CHRYSLER GROUP, LLC

Installed height of the valve spring must be checked with the valve assembled into the cylinder head. Refer to **SPRING(S), VALVE, INSTALLATION** .

If the valves or valve seats have been refinished, check the installed height of the valve springs (4). Make sure the measurement is taken from the top of spring seat (6) to the bottom surface of spring retainer (1). Refer to **ENGINE SPECIFICATIONS** .

INSTALLATION

ON VEHICLE

NOTE: The intake and exhaust springs are NOT interchangeable. Make sure the springs are marked if reused. If they are being replaced, correctly identify the part numbers prior to installation.

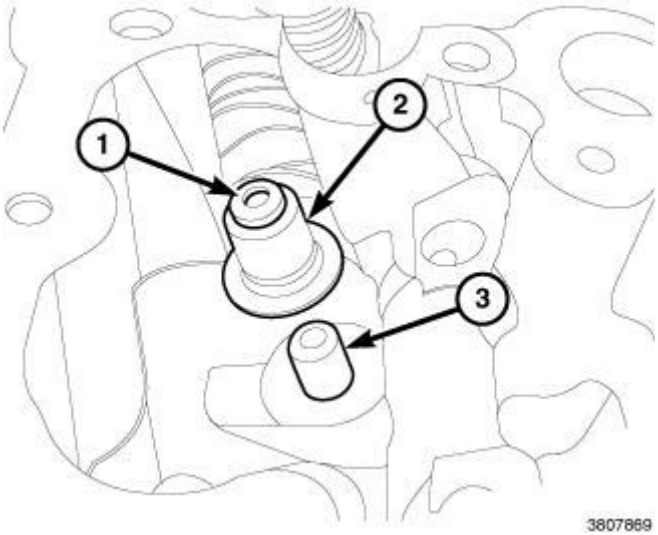

Fig. 142: Valve Guide Seal & Valve
Courtesy of CHRYSLER GROUP, LLC

1. If removed, install the valve guide seal (2) over the valve guide (3). Refer to **SEAL(S), VALVE GUIDE, INSTALLATION** .

NOTE: Make sure that the garter spring (1) is intact around the top of the valve guide seal (2). Number 2 cylinder exhaust valve guide seal shown in illustration, all other valves similar.

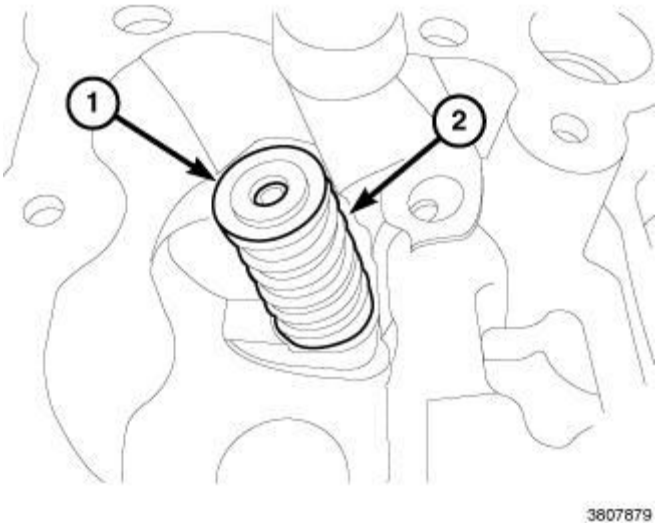

Fig. 143: Valve Spring & Retainer
Courtesy of CHRYSLER GROUP, LLC

NOTE: **The intake and exhaust springs are NOT interchangeable. Make sure the springs are marked if reused. If they are being replaced, correctly identify the part numbers prior to installation.**

NOTE: **If the valve springs are being reused, reassemble them into their original locations. Number 2 cylinder exhaust valve spring shown in illustration, all other valves similar.**

2. Install the valve spring (2) and valve spring retainer (1).

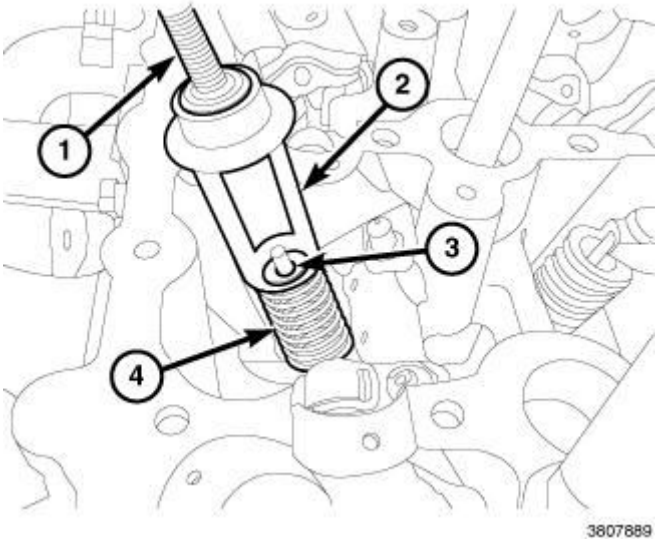

Fig. 144: Compressing Valve Spring
Courtesy of CHRYSLER GROUP, LLC

NOTE: Number 3 cylinder exhaust valve spring compression shown in illustration, all other valves similar.

3. Using the (special tool #10224, Adapter, Valve Spring) (2) with the (special tool #MD998772A, Compressor, Valve Spring) (1), compress the valve spring (4) **only enough** to install the valve retaining locks (3).
4. Relieve the air pressure and remove the spark plug adapter.
5. Install the spark plug and tighten to 19 N.m (14 ft. lbs.). Refer to **SPARK PLUG, INSTALLATION** .

NOTE: If the rocker arms are being reused, reassemble them into their original locations.

6. Install the rocker arm(s). Refer to **ROCKER ARM, VALVE, INSTALLATION** .
7. Install the camshaft. Refer to **CAMSHAFT, ENGINE, INSTALLATION** .
8. Connect the battery negative cable and tighten nut to 5 N.m (45 in. lbs.).

OFF VEHICLE

NOTE: The intake and exhaust springs are NOT interchangeable. Make sure the springs are marked if reused. If they are being replaced, correctly identify the part numbers prior to installation.

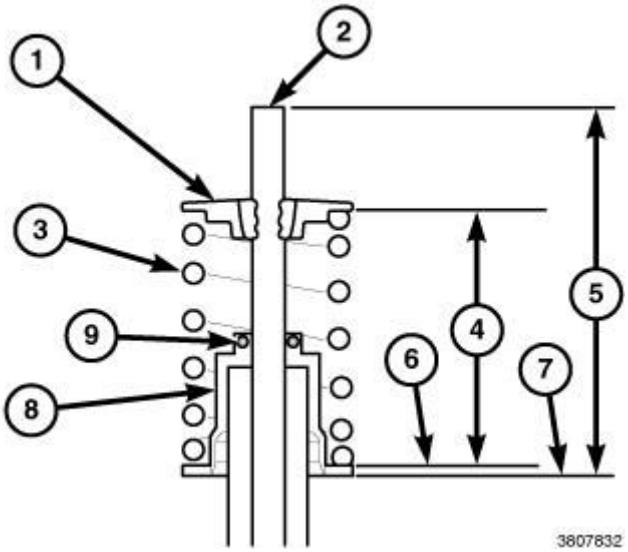

Fig. 145: Valve Spring Component Measurements
Courtesy of CHRYSLER GROUP, LLC

1. If removed, install the valve(s). Refer to **VALVES, INTAKE AND EXHAUST, INSTALLATION** .

NOTE: Reassemble the valves into their original locations. If the valves or valve seats have been refinished, verify that the valve stem tip height (5) is

within specification. Refer to ENGINE SPECIFICATIONS .

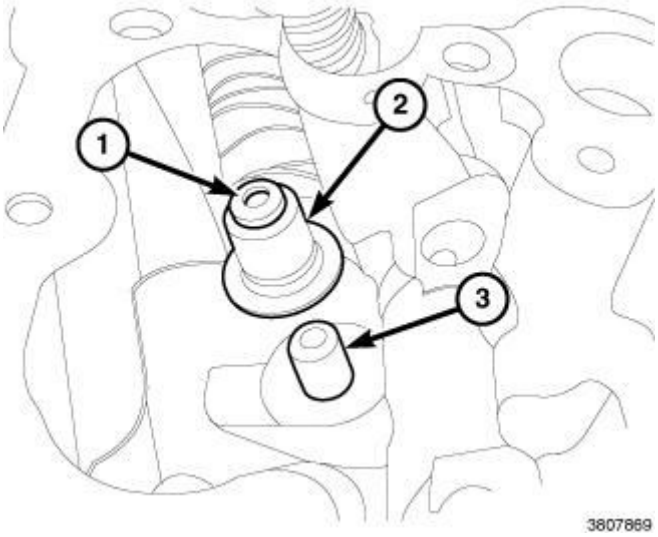

Fig. 146: Valve Guide Seal & Valve
Courtesy of CHRYSLER GROUP, LLC

2. If removed, install the valve guide seal (2) over the valve guide (3). Refer to **SEAL(S), VALVE GUIDE, INSTALLATION** .

NOTE: Make sure that the garter spring (1) is intact around the top of the valve guide seal (2). Number 2 cylinder exhaust valve guide seal shown in illustration, all other valves similar.

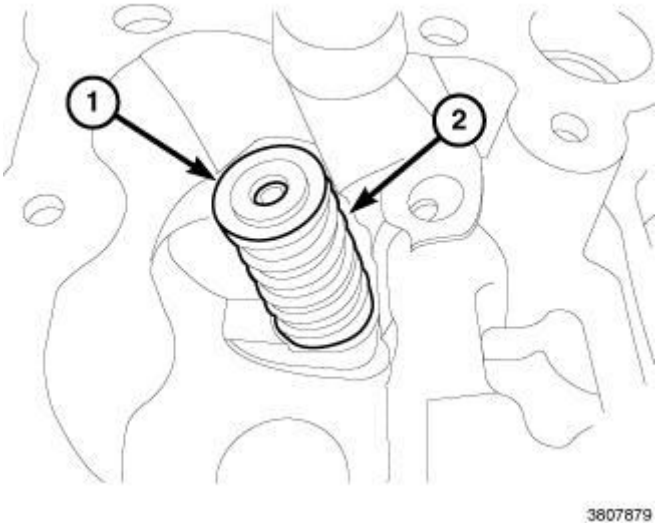

Fig. 147: Valve Spring & Retainer
Courtesy of CHRYSLER GROUP, LLC

NOTE: **The intake and exhaust springs are NOT interchangeable. Make sure the springs are marked if reused. If they are being replaced, correctly identify the part numbers prior to installation.**

NOTE: **If the valve springs are being reused, reassemble them into their original locations. Number 2 cylinder exhaust valve spring shown in illustration, all other valves similar.**

3. Install the valve spring (2) and valve spring retainer (1).

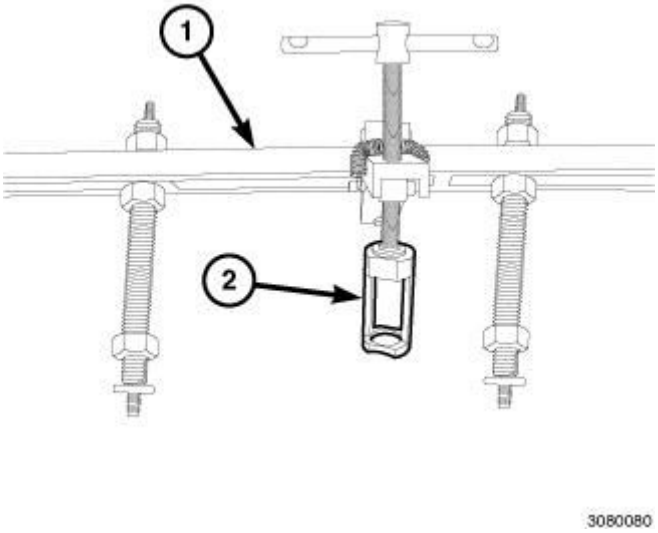

Fig. 148: Valve Spring Compressor & Adapter
Courtesy of CHRYSLER GROUP, LLC

4. Install the (special tool #10224, Adapter, Valve Spring) (2) on the (special tool #MD998772A, Compressor, Valve Spring) (1).

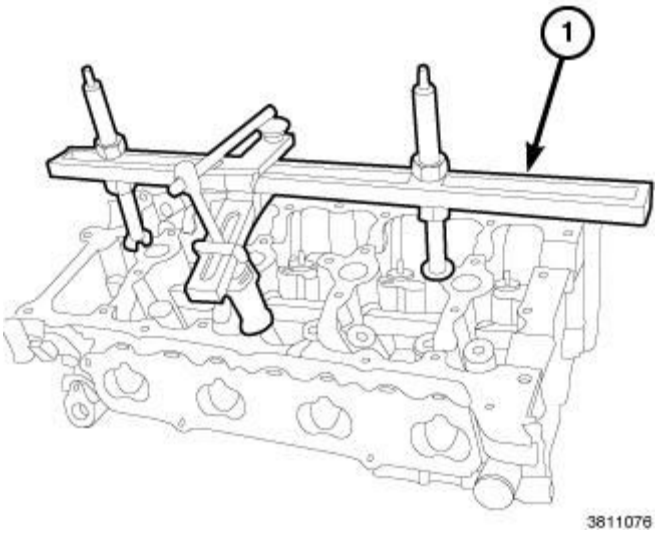

Fig. 149: Valve Spring Compressor
Courtesy of CHRYSLER GROUP, LLC

NOTE: Number 3 intake valve spring compression shown in illustration, all other valves similar.

5. Install the (special tool #MD998772A, Compressor, Valve Spring) (1) onto the cylinder head.
6. Place a ball of rags in the combustion chamber to hold the valves in place.

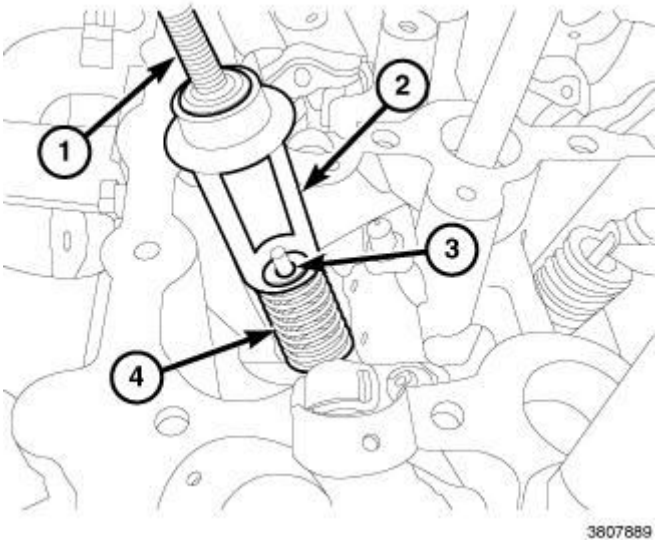

Fig. 150: Compressing Valve Spring
Courtesy of CHRYSLER GROUP, LLC

NOTE: Number 3 cylinder exhaust valve spring compression shown in illustration, all other valves similar.

7. Using the (special tool #10224, Adapter, Valve Spring) (2) with the (special tool #MD998772A, Compressor, Valve Spring) (1), compress the valve spring (4) **only enough** to install the valve retaining locks (3).

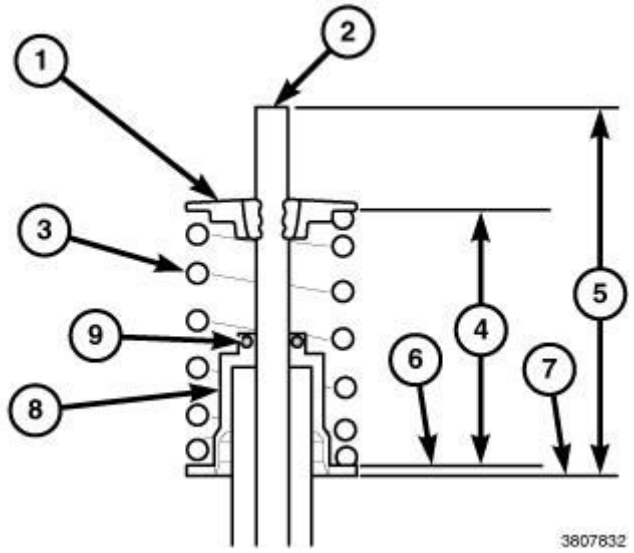

Fig. 151: Valve Spring Component Measurements
Courtesy of CHRYSLER GROUP, LLC

8. If the valves or valve seats have been refinished, verify that the installed height of the valve springs (4) are within specification. Make sure the measurement is taken from the top of spring seat (6) to the bottom surface of spring retainer (1). Refer to **ENGINE SPECIFICATIONS** .
9. Install the cylinder head. Refer to **CYLINDER HEAD, INSTALLATION** .

VALVES, INTAKE AND EXHAUST

DESCRIPTION

DESCRIPTION

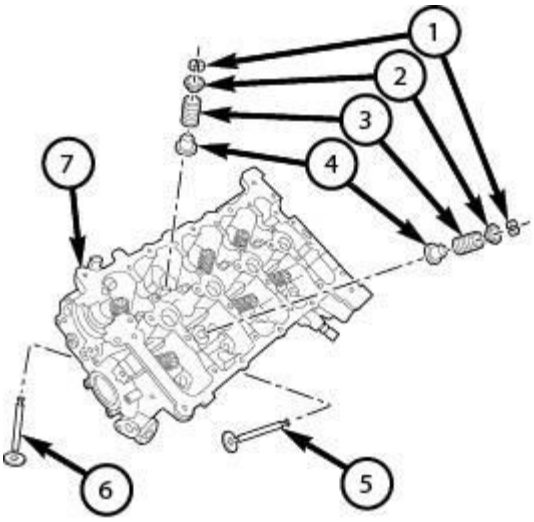

091072939

Fig. 152: Cylinder Head, Valves & Springs
Courtesy of CHRYSLER GROUP, LLC

Each of the four combustion chambers contains four valves, two intake and two exhaust, for a total of 16 valves. The valves are made of heat resistant steel. They have nitrided stems to prevent scuffing. Viton rubber valve stem seals are integral with the spring seats. All valves use three bead lock keepers (1) to retain springs (3) and to promote valve rotation.

STANDARD PROCEDURE

STANDARD PROCEDURE - REFACING - INTAKE AND EXHAUST VALVES

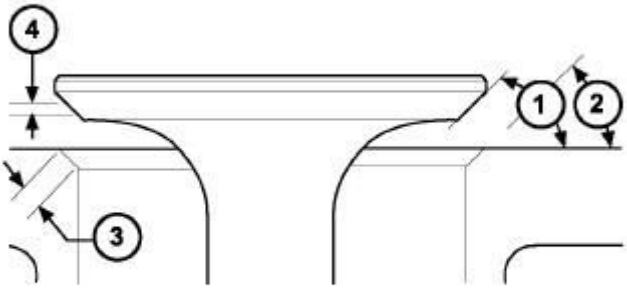

809c3e98

Fig. 153: Valve Face & Seat
Courtesy of CHRYSLER GROUP, LLC

1 - SEAT WIDTH 2 - FACE ANGLE 3 - SEAT ANGLE 4 - SEAT CONTACT AREA

The intake and exhaust valves have a 44.5 to 45 degree face angle (1). The valve seats (2) have a 45 to 45.5 degree face angle.

VALVES

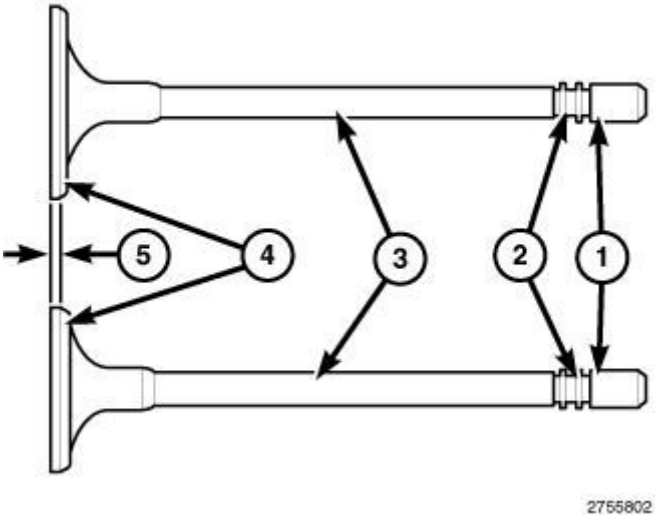

Fig. 154: Inspecting Valve Margin
Courtesy of CHRYSLER GROUP, LLC

Inspect the remaining margin (5) after the valves are refaced. Refer to **ENGINE SPECIFICATIONS** .

VALVE SEATS

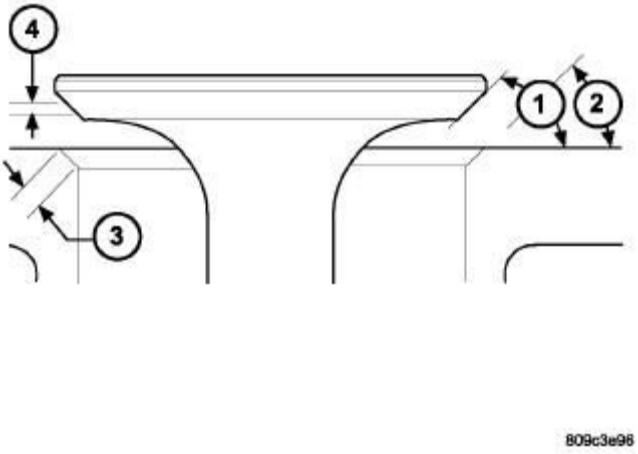

Fig. 155: Valve Face & Seat
Courtesy of CHRYSLER GROUP, LLC

1 - SEAT WIDTH
2 - FACE ANGLE
3 - SEAT ANGLE
4 - SEAT CONTACT AREA

NOTE: **When refacing the valve seats, it is important that the correct size valve guide pilot be used for the reseating stones. A true and complete surface must be obtained.**

1. Measure the concentricity of the valve seat using a dial indicator. Refer to **ENGINE SPECIFICATIONS** .
2. Inspect the valve seat (3) with Prussian blue to determine where the valve contacts the seat. To do this, coat the valve seat (3) **LIGHTLY** with Prussian blue then set the valve in place. Rotate the valve with light pressure. If the blue is transferred to the center of the valve face (4), contact is satisfactory. If the blue is transferred to the top edge of the valve face, then lower the valve seat with a 15 degree stone. If the blue is transferred to the bottom edge of the valve face, then raise the valve seat with a 65 degree stone.

   NOTE: **Valve seats which are worn or burned can be reworked, provided that the correct angle and seat width are maintained. Otherwise the cylinder head must be replaced.**

3. When the seat is properly positioned the width of the intake and exhaust seats should be within specification. Refer to **ENGINE SPECIFICATIONS** .

VALVE AND SPRING INSTALLED HEIGHT

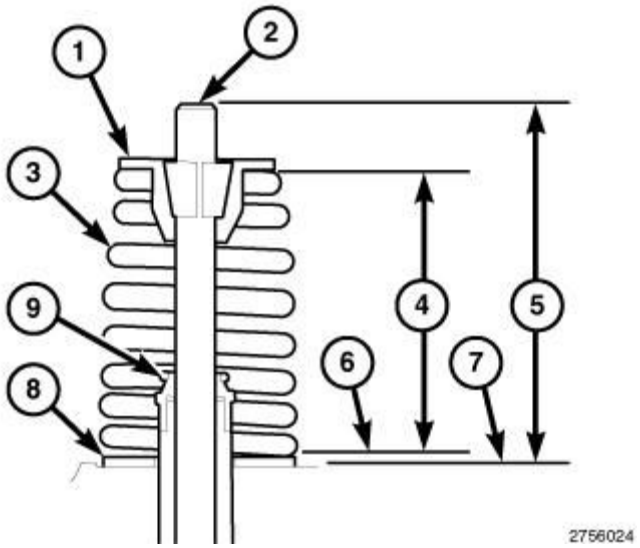

Fig. 156: Checking Valve Spring Installed Height
Courtesy of CHRYSLER GROUP, LLC

1. Coat the valve stems (2) with clean engine oil and install the valves into the cylinder head.

   NOTE: If the valves are being reused, reassemble them into their original locations.

2. If the valves or valve seats have been refinished, check the valve tip height (5). If the valve tip height (5) exceeds the specification, grind the valve tip until it is within specification. Refer to **ENGINE SPECIFICATIONS** . Make sure the measurement is taken from the cylinder head surface (7) to the top of the valve stem (2).

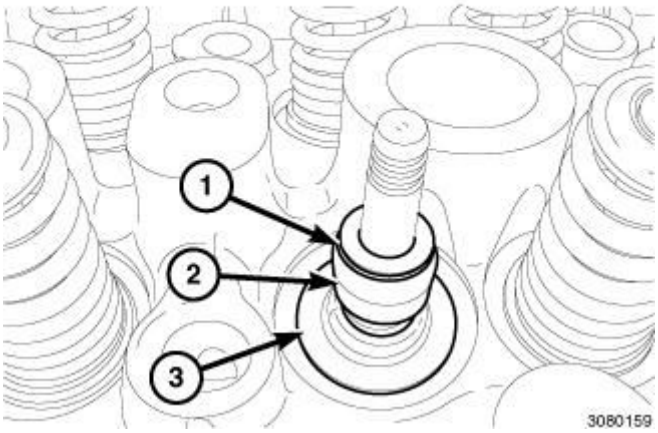

Fig. 157: Garter Spring, Valve Guide Seal & Spring Seat
Courtesy of CHRYSLER GROUP, LLC

3. If removed, install the spring seat (3) and valve guide seal (2) over the valve guide. Refer to **SEAL(S), VALVE GUIDE, INSTALLATION** .

NOTE: **Ensure that the garter spring (1) is intact around the top of the valve guide seal (2). Number 2 cylinder exhaust valve guide seal shown in illustration, all other valves similar.**

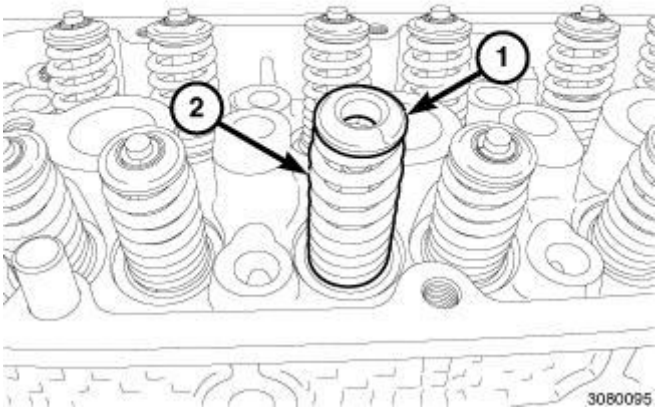

Fig. 158: Valve Spring & Retainer
Courtesy of CHRYSLER GROUP, LLC

NOTE: **If the valve springs are being reused, reassemble them into their original locations. Number 2 cylinder exhaust valve spring shown in illustration, all other valves similar.**

4. Install the valve spring (2) and valve spring retainer (1).

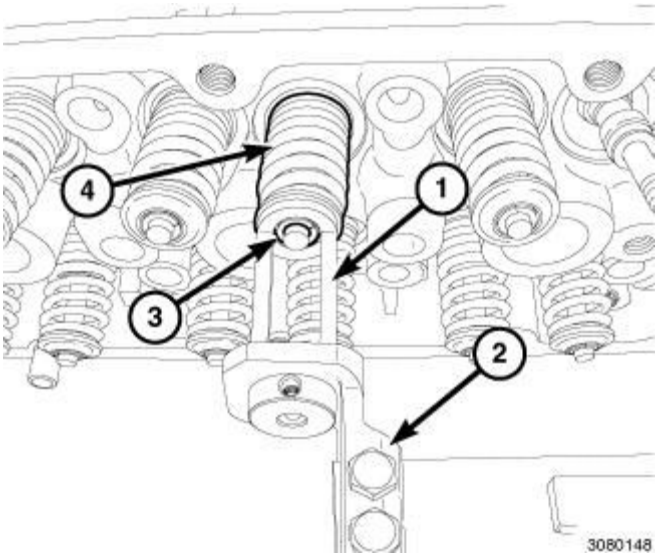

Fig. 159: Valve Spring Adapter, Valve Spring Compressor, Retaining Locks & Valve Springs
Courtesy of CHRYSLER GROUP, LLC

NOTE: Number 3 cylinder exhaust valve spring compression shown in illustration, all other valves similar.

5. Compress valve springs (4) with the Valve Spring Compressor Adapter (special tool #10224, Adapter, Valve Spring) (1) mounted in the Valve Spring Compressor (special tool #C-3422-D, Compressor, Valve Spring) (2). Install the retaining locks (3) and release the valve spring compression.

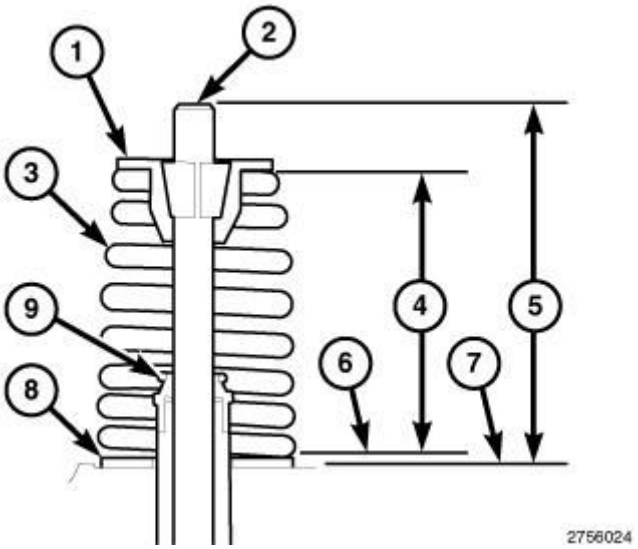

Fig. 160: Checking Valve Spring Installed Height
Courtesy of CHRYSLER GROUP, LLC

6. If the valves or valve seats have been refinished, check the installed height of the valve springs (4). Make sure the measurement is taken from the top of spring seat (6) to the bottom surface of spring retainer (1). Refer to **ENGINE SPECIFICATIONS** .

REMOVAL

REMOVAL

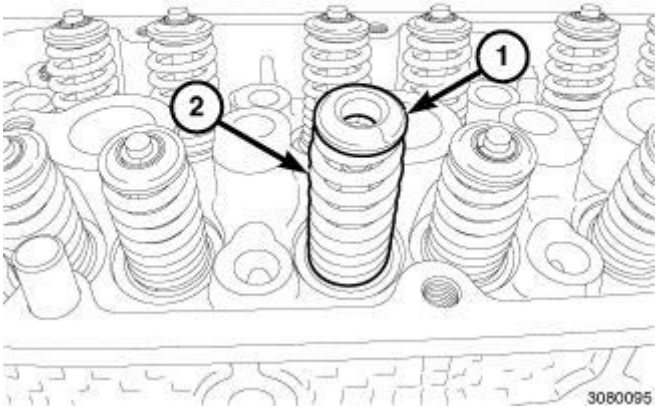

Fig. 161: Valve Spring & Retainer
Courtesy of CHRYSLER GROUP, LLC

1. Remove the cylinder head. Refer to **CYLINDER HEAD, REMOVAL** .

NOTE: **If the springs are to be reused, identify their positions so that they can be reassembled into their original locations. Number 2 cylinder exhaust valve spring shown in illustration, all other valve springs similar.**

2. Remove the valve spring(s) (2). Refer to **SPRING(S), VALVE, REMOVAL** .

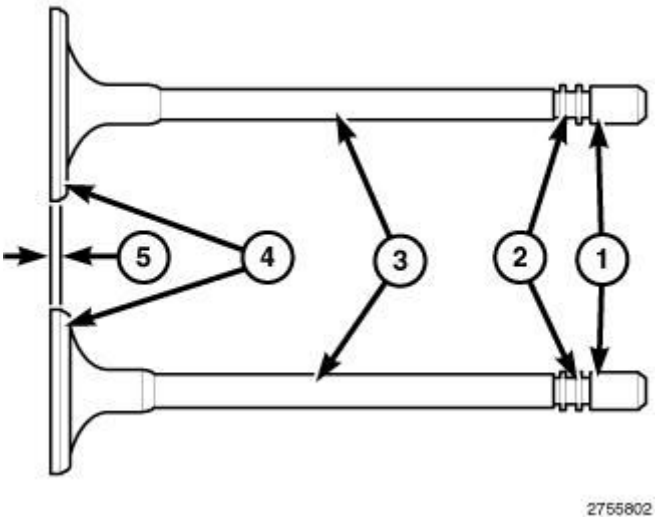

Fig. 162: Inspecting Valve Margin

Courtesy of CHRYSLER GROUP, LLC

CAUTION: Before removing the valves, remove any burrs from the valve stem retainer lock grooves (2) and stem tip (1) to prevent damage to the valve guides.

3. Remove the valve(s). Identify each valve to ensure installation in the original location.

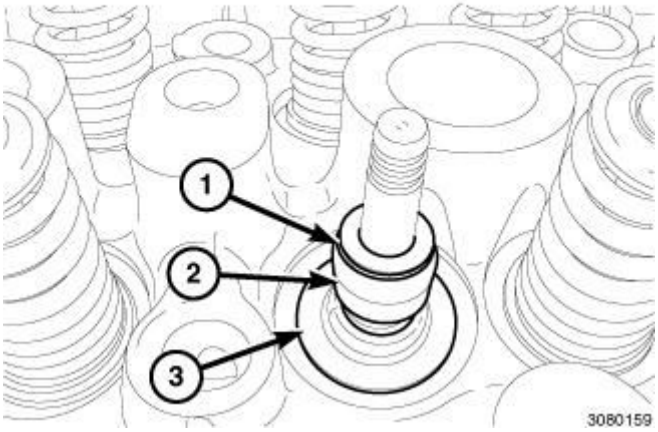

Fig. 163: Garter Spring, Valve Guide Seal & Spring Seat
Courtesy of CHRYSLER GROUP, LLC

4. If required, remove the valve guide seal (2) and spring seat (3). Refer to **SEAL(S), VALVE GUIDE, REMOVAL** .

INSPECTION

INSPECTION

VALVES

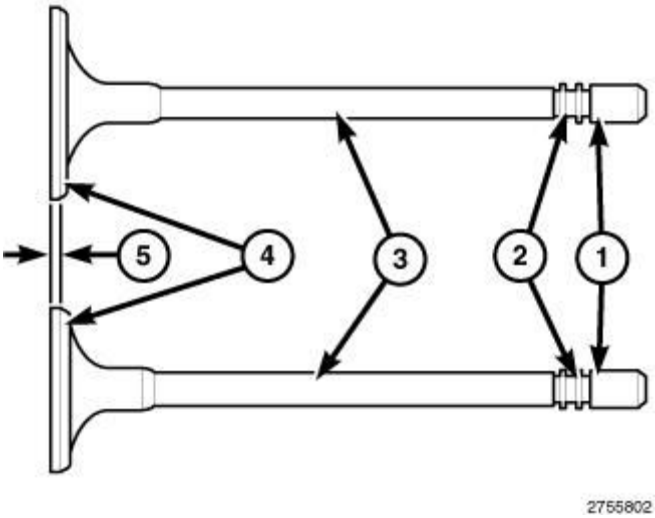

Fig. 164: Inspecting Valve Margin
Courtesy of CHRYSLER GROUP, LLC

1. Clean and inspect the valves thoroughly. Replace burned, warped and cracked valves.
2. Inspect the retainer lock grooves for wear or damage (2).
3. Inspect the valve face (4) for wear and pitting.
4. Measure the valve stems (3) and margins (5) for wear. Refer to **ENGINE SPECIFICATIONS** .

VALVE GUIDES

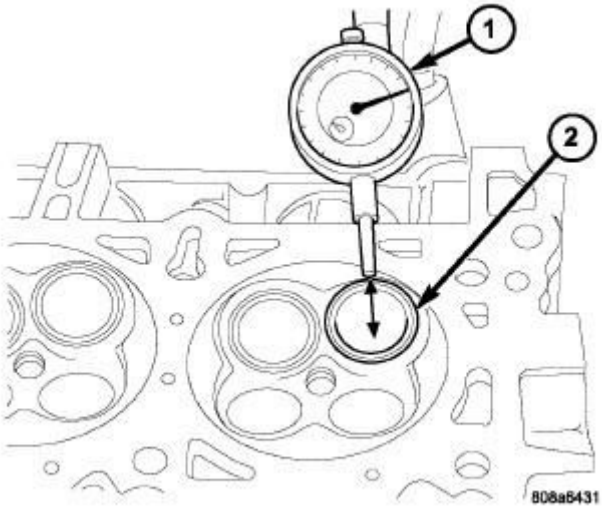

Fig. 165: Measuring Valve Guide Wear
Courtesy of CHRYSLER GROUP, LLC

NOTE: Typical cylinder head shown in illustration.

1. Remove carbon and varnish deposits from inside of the valve guides with a reliable guide cleaner.
2. Measure valve stem-to-guide clearance as follows:
3. Install the valve (2) into the cylinder head so that it is 15 mm (0.590 inch.) off of the valve seat. A small piece of hose may be used to hold the valve in place.
4. Attach the Dial Indicator Set (special tool #C-3339A, Set, Dial Indicator) (1) to the cylinder head and set it at a right angle to the valve stem being measured.
5. Move the valve to and from the indicator. Compare this reading to the specification. Refer to **ENGINE SPECIFICATIONS** .

NOTE: If stem-to-guide clearance exceeds specifications, you must measure the valve stem. If the valve stem is within specification or if the valve guide is loose in the cylinder head, replace the cylinder head.

INSTALLATION

INSTALLATION

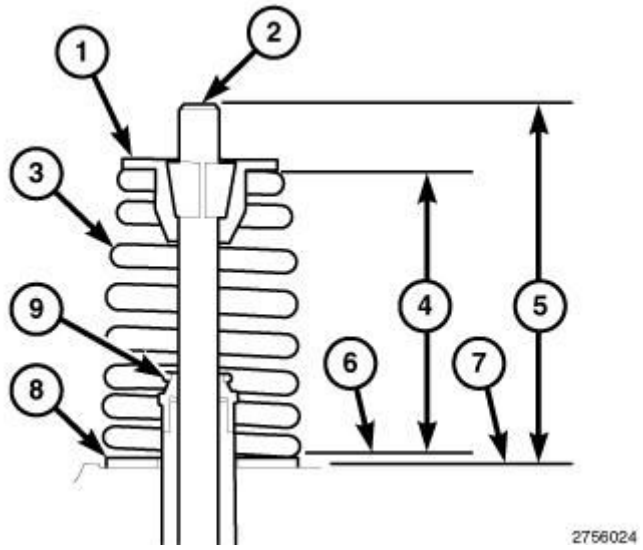

Fig. 166: Checking Valve Spring Installed Height
Courtesy of CHRYSLER GROUP, LLC

1. Coat the valve stems (2) with clean engine oil and install the valves into the cylinder head.

NOTE: If the valves are being reused, reassemble them into their original locations.

2. If the valves or valve seats have been refinished, check the valve tip height (5). If the valve tip height (5) exceeds the specification, grind the valve tip until it is within specification. Refer to **ENGINE SPECIFICATIONS** . Make sure the measurement is taken from the cylinder head surface (7) to the top of the valve stem (2).

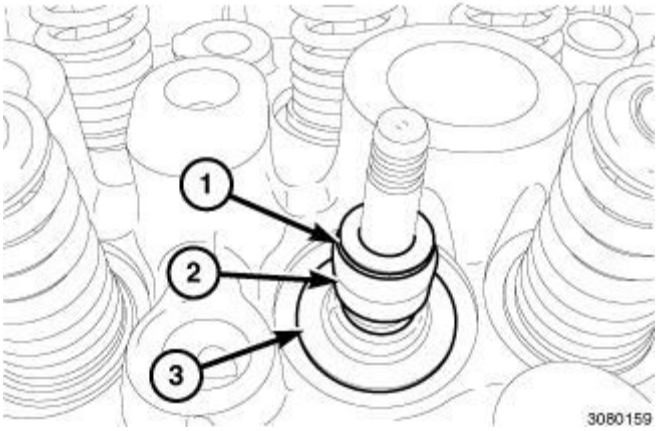

Fig. 167: Garter Spring, Valve Guide Seal & Spring Seat
Courtesy of CHRYSLER GROUP, LLC

3. If removed, install the spring seat (3) and valve guide seal (2) over the valve guide. Refer to **SEAL(S), VALVE GUIDE, INSTALLATION** .

NOTE: **Make sure that the garter spring (1) is intact around the top of the valve guide seal (2). Number 2 cylinder exhaust valve guide seal shown in illustration, all other valves similar.**

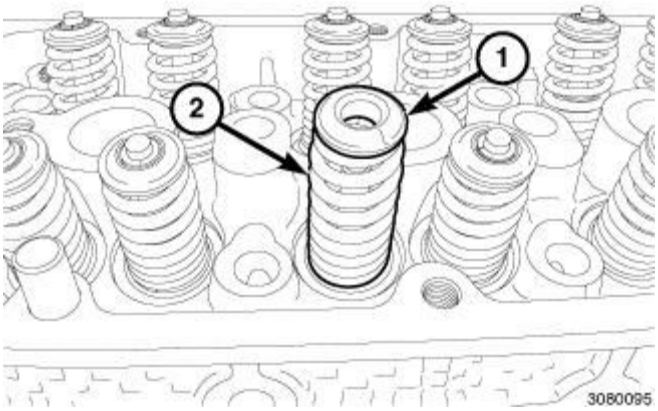

Fig. 168: Valve Spring & Retainer
Courtesy of CHRYSLER GROUP, LLC

4. Install the valve spring(s) (2). Refer to **SPRING(S), VALVE, INSTALLATION** .

NOTE: **Reassemble the valves springs into their original locations. If the valves or valve seats have been refinished, verify that the valve spring installed height is within specification. Refer to ENGINE SPECIFICATIONS . Number 2 cylinder exhaust valve spring shown in illustration, all other valves springs similar.**

5. Install the cylinder head. Refer to **CYLINDER HEAD, INSTALLATION** .

PUMP, VACUUM

DESCRIPTION

DESCRIPTION

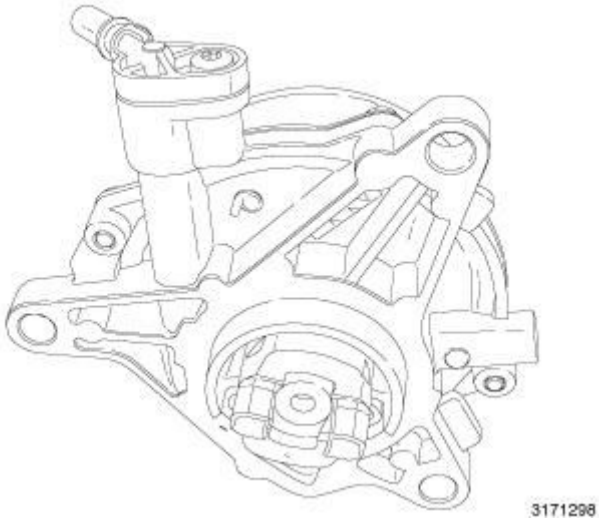

Fig. 169: Vacuum Pump
Courtesy of CHRYSLER GROUP, LLC

The vane-type vacuum pump is mounted to the rear of the cylinder head and is driven by the camshaft. The vacuum pump supplies vacuum to the brake booster.

REMOVAL

REMOVAL

1. Remove the engine cover. Refer to **RESONATOR, AIR CLEANER, REMOVAL** .
2. Remove the battery. Refer to **BATTERY, REMOVAL** .

NOTE: **Oil may leak from the vacuum pump drive when the pump is removed. Place a shop towel under the pump to prevent oil leakage onto the engine or transmission assembly.**

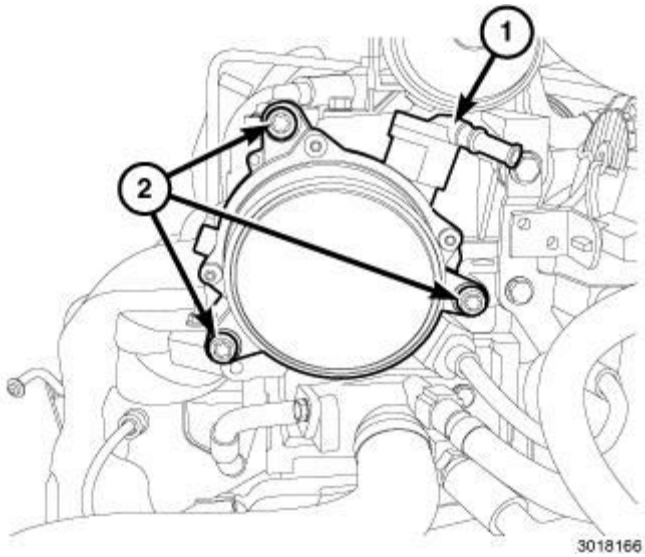

Fig. 170: Vacuum Pump & Bolts
Courtesy of CHRYSLER GROUP, LLC

3. Disconnect the vacuum line at the pump (1).
4. Remove the vacuum pump mounting bolts (2) and the vacuum pump.

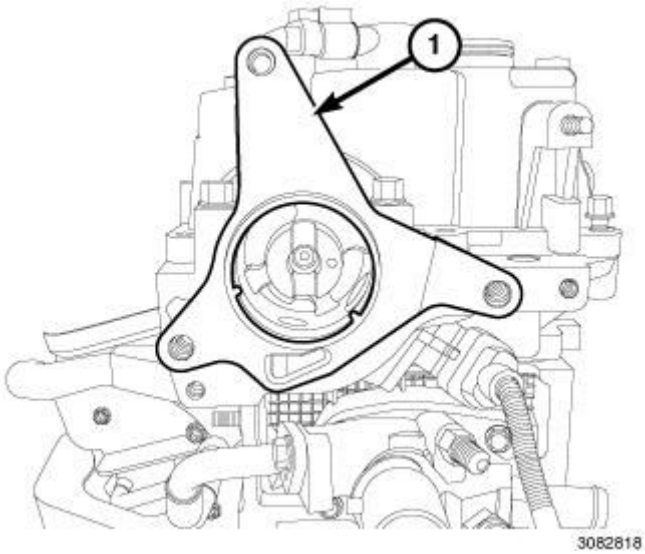

Fig. 171: Vacuum Pump Gasket
Courtesy of CHRYSLER GROUP, LLC

5. Remove and discard the vacuum pump gasket (1). Note the location of the pump drive tab.

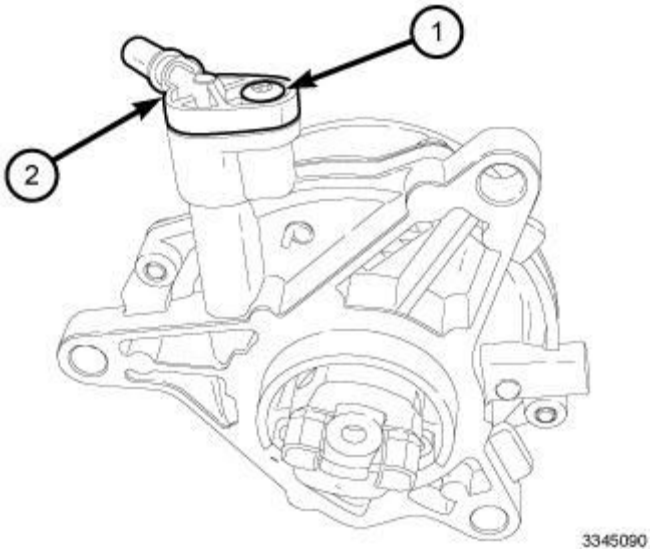

Fig. 172: Vacuum Fitting & Screw
Courtesy of CHRYSLER GROUP, LLC

6. If required, remove the screw (1) and the vacuum fitting (2).

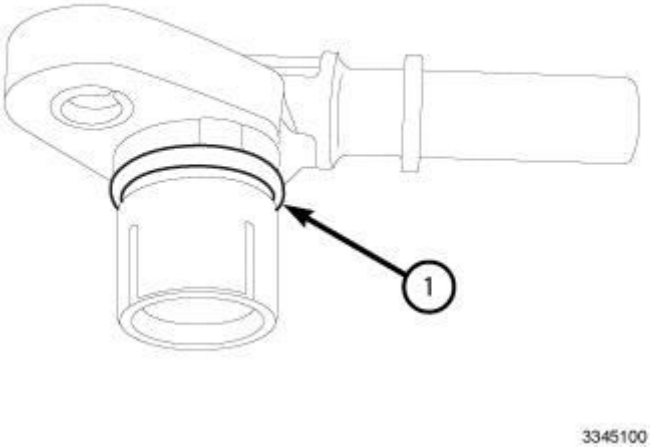

Fig. 173: Vacuum Fitting O-Ring Seal
Courtesy of CHRYSLER GROUP, LLC

7. The vacuum fitting O-ring seal (1) can be reused if not damaged.

INSTALLATION

INSTALLATION

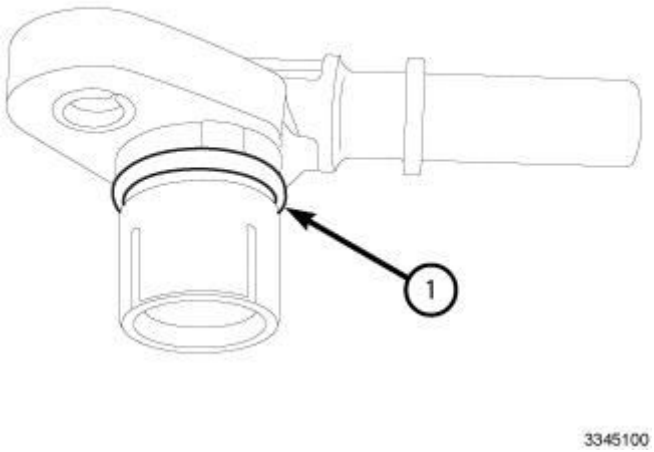

Fig. 174: Vacuum Fitting O-Ring Seal
Courtesy of CHRYSLER GROUP, LLC

1. The vacuum fitting O-ring seal (1) can be reused if not damaged. If removed, lightly lubricate the O-ring seal (1) with clean engine oil and install on the vacuum fitting.

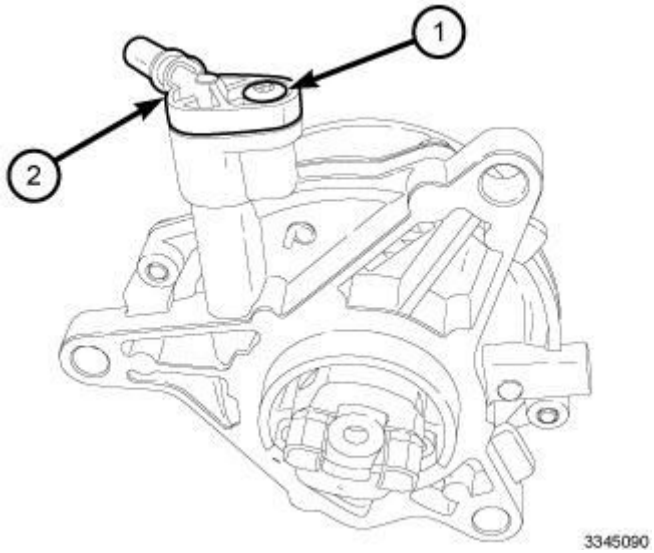

Fig. 175: Vacuum Fitting & Screw
Courtesy of CHRYSLER GROUP, LLC

2. If removed, install the vacuum fitting (2) to the vacuum pump with the screw (1) tightened to 8 N.m (71 in. lbs.).
3. Clean the mating surfaces of the cylinder head and the vacuum pump. Install a new vacuum pump gasket.
4. Align the pump drive tab with the pump drive slot located on the cam shaft.
5. Install the vacuum pump mounting bolts. Tighten the bolts to 20 N.m (15 ft. lbs.).
6. Connect the vacuum supply line to the pump.

CAUTION: When servicing components near the vacuum pump, avoid contact with the plastic nipple that connects the vacuum pump to the brake booster hose. It is possible to crack the plastic nipple resulting in a brake booster vacuum leak.

7. Install the battery (4). Refer to **BATTERY, INSTALLATION** .
8. Install the engine cover. Refer to **RESONATOR, AIR CLEANER, INSTALLATION** .
9. Run the engine a check the vacuum pump for proper operation.

ASSEMBLY, VARIABLE VALVE ACTUATION

DESCRIPTION

DESCRIPTION

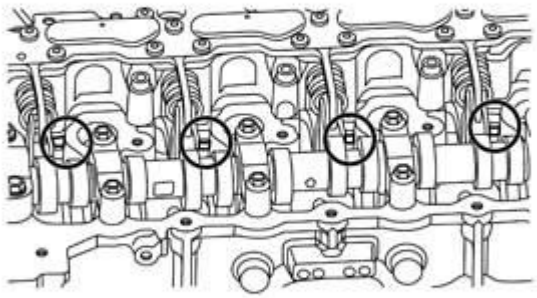

Fig. 176: Intake Valve Tips
Courtesy of CHRYSLER GROUP, LLC

The primary component of variable valve actuation is the variable valve actuation module. The variable valve actuation module is bolted to the top of the camshaft bearing housing above the intake valves, next to the camshaft. The intake lobes on the camshaft operate hydraulic pumping elements instead of directly acting on the valves. The pumping elements provide high-pressure oil to open the intake valves. The relationship between the camshaft lobe and the intake valves is controlled by a solenoid operated hydraulic port. By varying the solenoid operation, the Powertrain Control Module (PCM) is able to control intake valve lift and duration. The actuators sit directly on top of the intake valve tips (circled).

OPERATION

OPERATION

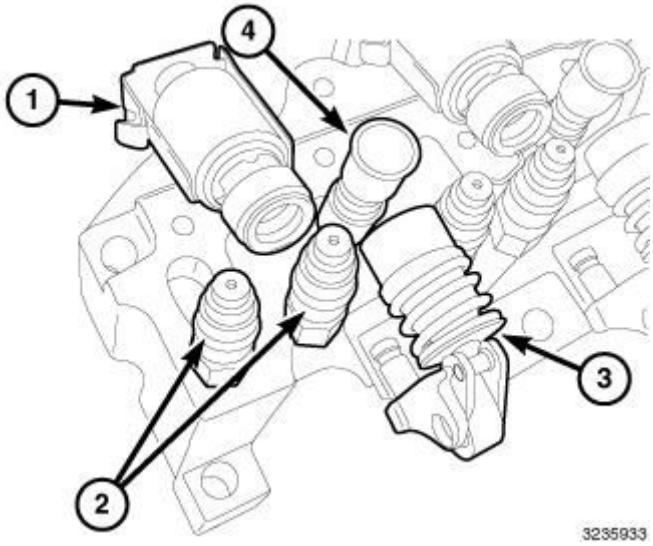

Fig. 177: Solenoid Valve, Hydraulic Brake Pumping Element/Hydraulic Lash Adjusters, Upper Pumping Element & Oil Accumulator
Courtesy of CHRYSLER GROUP, LLC

Variable valve actuation controls the operation of the intake valves. By using a hydraulic link between the camshaft and the intake valves, the valve lift and timing can be adjusted infinitely.

The main components of variable valve actuation are the Powertrain Control Module (PCM) programming and the variable valve actuation module. The variable valve actuation module contains one set of the following components for each cylinder:

- Upper Pumping Element (3)
- Solenoid Valve (1)
- Hydraulic Brake Pumping Element/Hydraulic Lash Adjusters (2)
- Oil Accumulator (4)

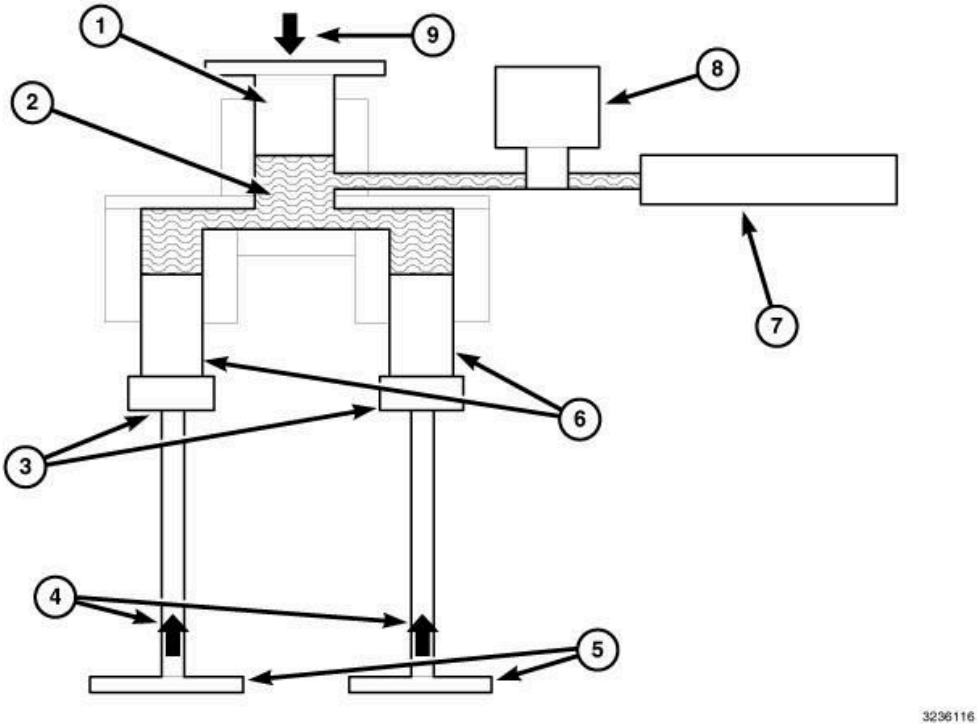

Fig. 178: Variable Valve Actuation Assembly Operating Description
Courtesy of CHRYSLER GROUP, LLC

The upper pumping elements (1) in the variable valve actuator are filled with oil from the engine lubrication system. The upper pumping elements (1) are driven by the rocker arms through camshaft motion (9) to create high-pressure oil inside the oil chamber (2). As the camshaft continues to rotate and the camshaft lobe ramps down, a spring in the upper pumping element returns the piston and the rocker arm to their home positions.

The high-pressure oil in the oil chamber passageway is delivered to the solenoid valve (8) from the upper pumping element. The solenoid valve (8) is a normally open hydraulic control valve. Therefore, the high-pressure oil is vented from the oil chamber to the accumulator (7) unless the solenoid valve is powered. When the solenoid valve is supplied 12 volts, the valve closes and high pressure oil instead acts upon the hydraulic brake pumping elements (6) to operate the intake valves (5).

The hydraulic brake pumping element (6) is essentially a piston that is operated by the high-pressure oil to open the intake valves (5). It also functions as a brake to stop the movement of the pumping element and intake valves. The braking function is the result of vent holes around the perimeter of the element's cylinder. When the piston approaches full stroke, the lower perimeter vent holes bleed off oil. This stops the piston from moving any farther. When the pressure from the solenoid is taken away, the upper supply holes in the cylinder become bleed holes that allow the piston to return to the home position. The piston is pushed back to the home position by the force of the intake valve springs. As the piston approaches the home position, some of the bleed holes are covered and the speed of the piston is regulated as it approaches the final resting position. This also controls the valve speed as it seats in the cylinder head. The hydraulic brake pumping element also functions as a hydraulic lash adjuster (3) because the valve stem clearance is hydraulically taken up by the piston. This occurs because the hydraulic brake pumping element/hydraulic lash adjuster is always under some oil pressure from the engine oil lubrication system. This creates enough pressure to take up valve clearance.

The variable valve actuator features three areas that function together as an oil reservoir so that the actuator always has a ready supply of engine oil. The engine lubrication system provides oil to the lower reservoir area and keeps it full of oil. To flow from the lower reservoir to the upper reservoir, the oil must pass through very small holes. This helps to purge air from the lower reservoir and to maintain engine oil pressure in the lower reservoir. The third reservoir area, the oil accumulator (7), is filled by oil vented from the oil chamber by the solenoid valve (8). The oil accumulator is a spring loaded accumulator that absorbs the hydraulic shock that would otherwise be created when the solenoid valves are opened. This helps to increase the durability of the system, maintains higher pressure in the lower pressure side of the system and lowers the overall load on the engine oil pump.

Variable valve actuation provides five possible phases of operation. Each phase offers unique advantages compared to normal camshaft operation. The five phases are:

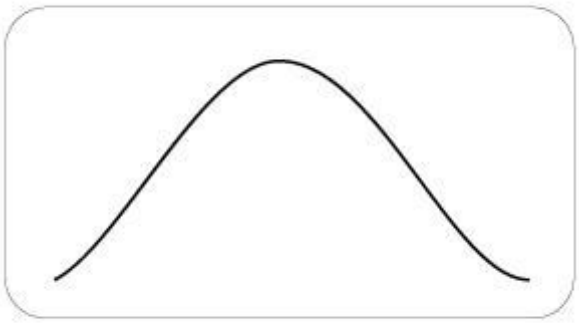

3250421

Fig. 179: Full Lift
Courtesy of CHRYSLER GROUP, LLC

- Full Lift. When variable valve actuation functions in the full lift phase, all of the camshaft lobe lift is transferred to the intake valves. The intake camshaft lobe is designed with a very aggressive lift and duration profile. This results in good power in the upper RPM ranges with high loads. This profile would rarely be used in everyday driving.

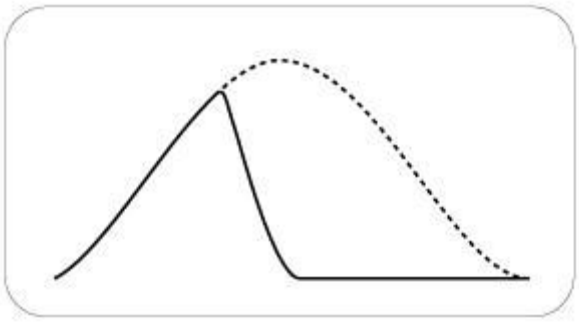

3250433

Fig. 180: Early Intake Valve Closing (EIVC)
Courtesy of CHRYSLER GROUP, LLC

- Early intake valve closing (EIVC). When variable valve actuation functions in the EIVC phase, the camshaft lobe lift is transferred to the intake valves at the beginning of the lift duration cycle. However, the hydraulic connection between the camshaft lobe and the valves is taken away before the lobe reaches full lift. The exact timing and lift can be infinitely varied to meet driver requirements. EIVC provides smooth engine performance and more torque at lower engine speeds.

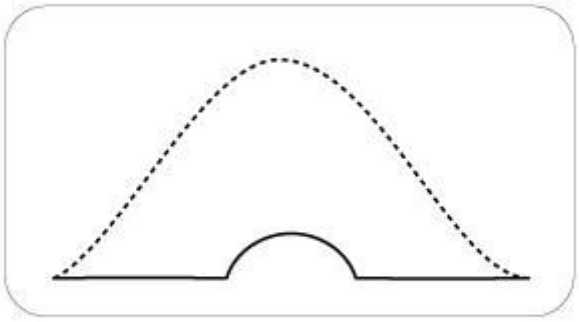

3250447

Fig. 181: Late Intake Valve Opening (LIVO)
Courtesy of CHRYSLER GROUP, LLC

- Late intake valve opening (LIVO). When variable valve actuation functions in the LIVO phase, the camshaft lobe lift is NOT transferred to the intake valves at the beginning of the lift duration cycle. The hydraulic connection between the camshaft lobe and the valves is completed after the rocker arm has already begun riding the ramp of the camshaft lobe. When the hydraulic connection is completed, the

intake valves will begin to open. The valve lift timing can be varied infinitely within the full profile of the camshaft lobe. Therefore, as long as the hydraulic connection is completed before the camshaft lobe reaches its maximum lift, some valve lift will result. The lift profile will follow the camshaft lobe profile for the time that the hydraulic link is complete. Like EIVC, the exact timing and lift can be infinitely varied to meet driver requirements. LIVO provides lower emissions and a higher efficiency at lower loads or idle conditions.

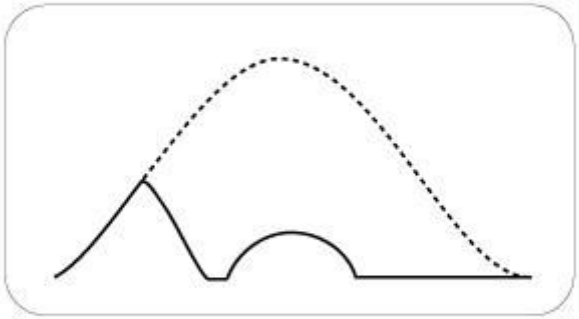

3250458

Fig. 182: Multi-Lift
Courtesy of CHRYSLER GROUP, LLC

- Multi-Lift. Multi-Lift is a combination of EIVC and LIVO because the hydraulic connection between the camshaft lobe and the intake valves is closed early and then re-opened later in the cycle. This creates a longer duration valve lift with a smaller amount of lift. The result is a higher velocity of air flow into the cylinder over a longer period of time. Multi-Lift may be used in mixed driving of acceleration and deceleration with moderate engine speeds.

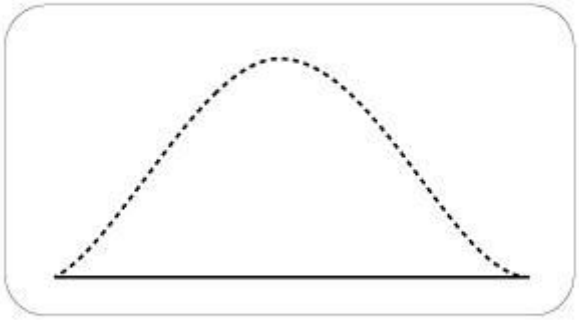

3250466

Fig. 183: Closed
Courtesy of CHRYSLER GROUP, LLC

- Closed. The closed phase simply leaves the intake valves closed by not utilizing the camshaft lobe to lift the intake valves.

REMOVAL

REMOVAL

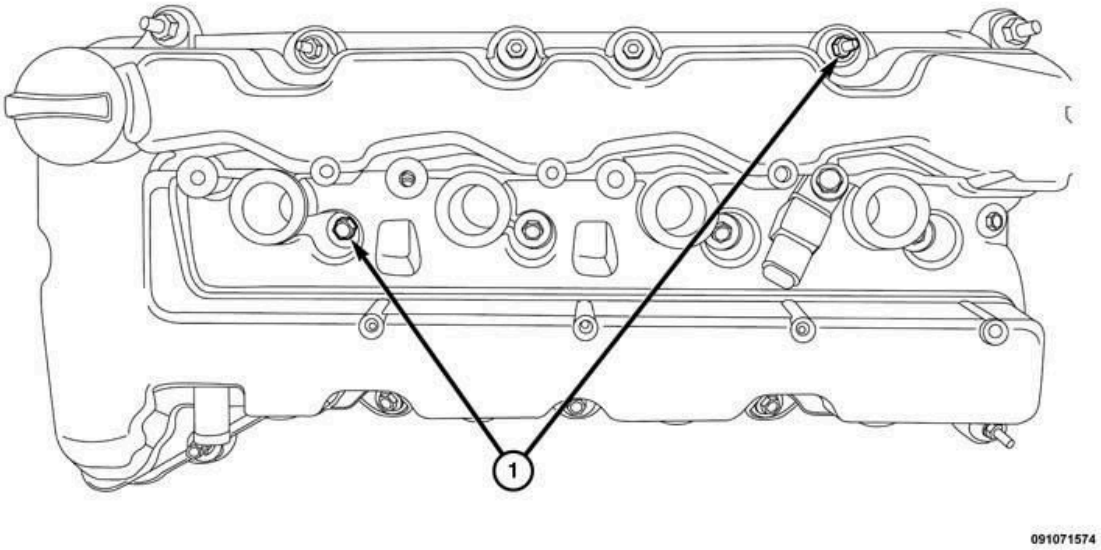

Fig. 184: Cylinder Head Cover Bolts
Courtesy of CHRYSLER GROUP, LLC

1. Remove the cylinder head cover bolts (1). Remove the cylinder head cover. Refer to **COVER(S), CYLINDER HEAD, REMOVAL** .
2. Unlock and disconnect the four variable valve timing actuator electrical connectors.

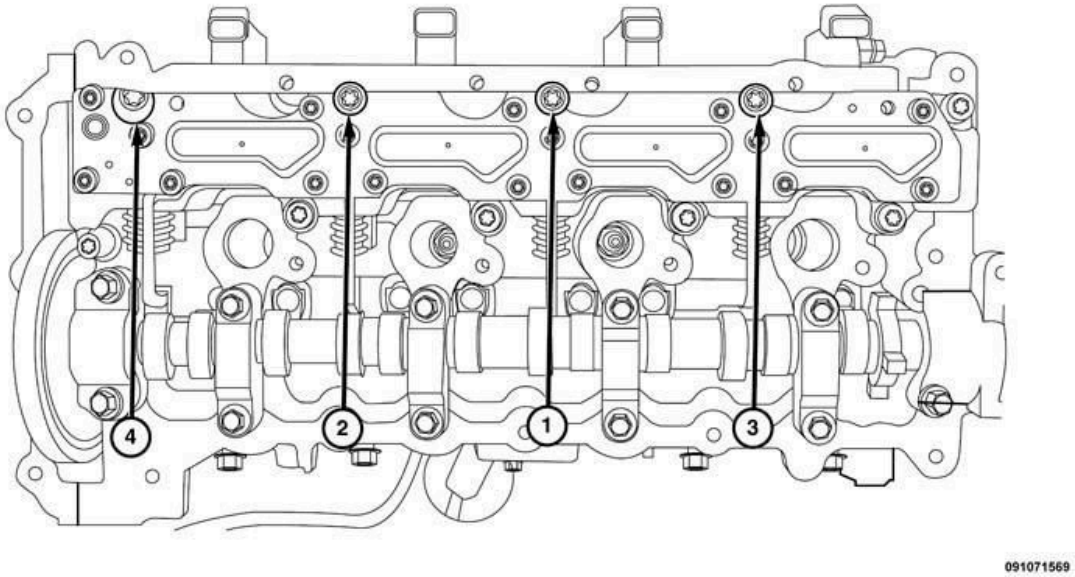

Fig. 185: VVAA Block Removal Sequence (1 Of 2)
Courtesy of CHRYSLER GROUP, LLC

3. Remove four bolts from the VVAA block.

NOTE: **The bolts need to be removed prior to the installation of the compressor tool due to the tool obstructs access to these bolts once the tool is installed.**

NOTE: **Be sure to follow the sequence shown in illustration above when removing the bolts.**

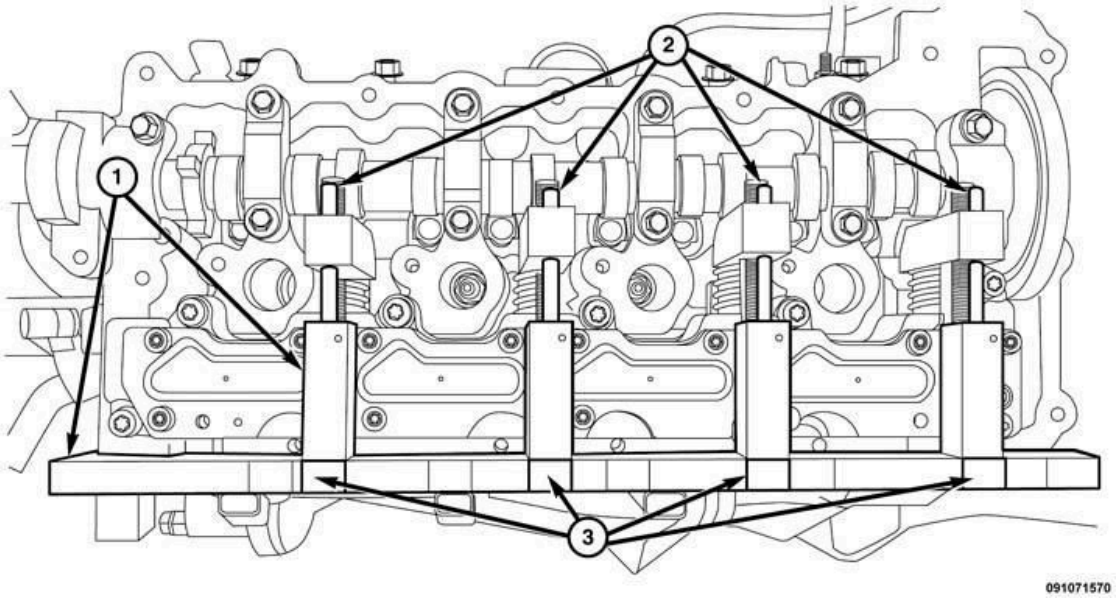

Fig. 186: Special Tool, Spring Compressor & Indicators
Courtesy of CHRYSLER GROUP, LLC

4. Using special tool 10259A (1), loosen the spring compressors (2) to fit over the valve and spring assemblies. Adjust the tool to align with the 2.4L indicators (3).
5. Install the (special tool #10259B, Compressor, MultiAir® Spring) spring compressor.
6. Rotate the spring compressors counterclockwise until the springs are fully seated.

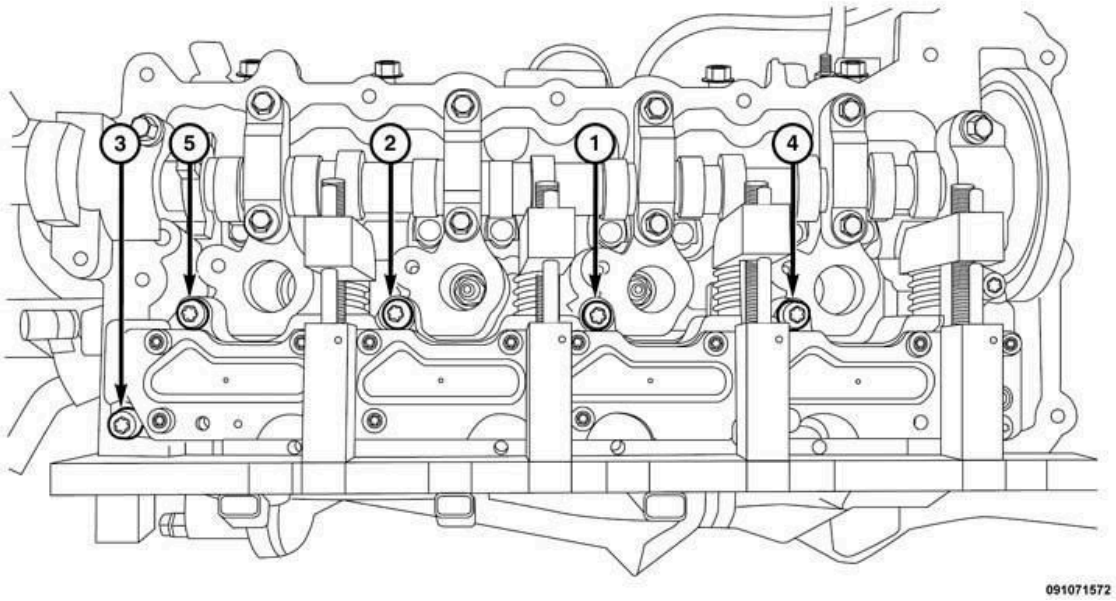

Fig. 187: VVAA Block Removal Sequence (2 Of 2)
Courtesy of CHRYSLER GROUP, LLC

CAUTION: Do not invert the variable valve actuation assembly when it is removed from the engine. Oil will drain from the assembly and excessive engine cranking will be required to refill the assembly and start the engine.

7. Remove the remaining five bolts from the VVAA.

NOTE: Be sure to follow the sequence shown in illustration above when removing the bolts.

8. Remove the variable valve timing actuation assembly, with the spring compressor attached, from the camshaft bearing housing.

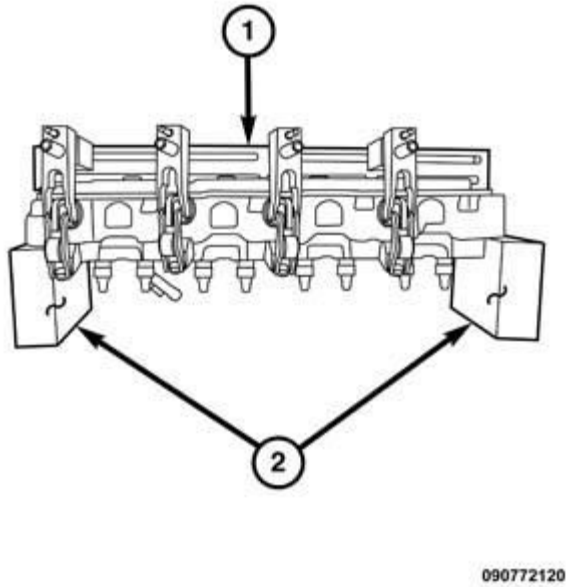

Fig. 188: VVAA Assembly On Blocks Of Wood
Courtesy of CHRYSLER GROUP, LLC

9. Set the assembly (1) onto two blocks of wood (2) to store during repairs.

NOTE: Be sure to store the assembly in the upright position

AT ALL TIMES

to prevent oil related issues within the assembly.

NOTE: There are two locating pins/dowels that properly position the VVAA. Be careful that both dowels remain installed in cylinder head after removing

the VVAA. If a dowel comes loose,

locate the missing dowel and discard it

A new dowel will need to be used upon installation.

DO NOT REUSE A DOWEL THAT HAS BEEN REMOVED FROM THE CYLINDER HEAD.

10. Remove and discard the variable valve actuation assembly gasket.

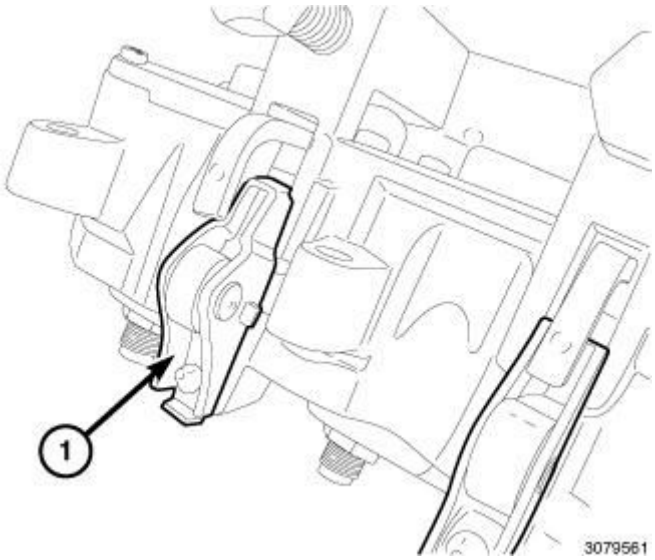

Fig. 189: Rocker Arms
Courtesy of CHRYSLER GROUP, LLC

11. If required, remove the rocker arms. Refer to **ROCKER ARM, VALVE, REMOVAL** .

INSPECTION

INSPECTION

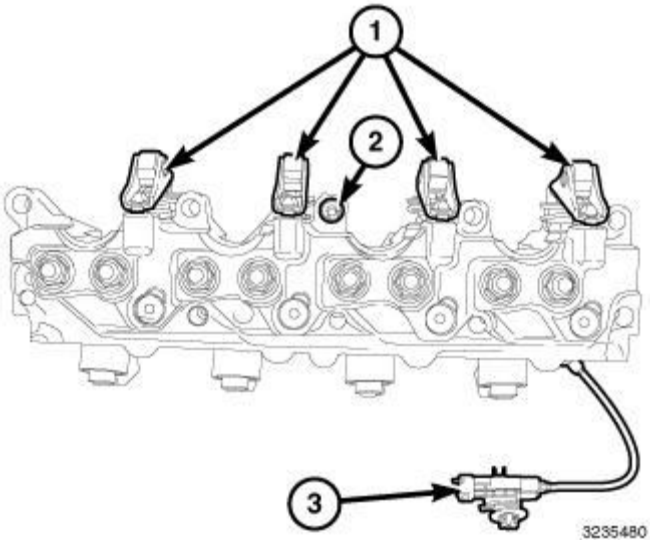

Fig. 190: Valve Rocker Arms, Oil Supply O-Ring & Oil Temperature Sensor
Courtesy of CHRYSLER GROUP, LLC

Because variable valve actuation is so closely monitored, the diagnostics of the system are strongly Diagnostic Trouble Code (DTC) driven. If the system does not perform according to design, many DTC's may be produced from a condition in the variable valve actuation system.

The variable valve actuation module includes very few serviceable components. The module has no internal components that are serviceable. The following components are serviceable:

- Valve rocker arms (1)
- Oil supply O-ring (2)
- Oil temperature sensor (3)

INSTALLATION

INSTALLATION

YouTube	A multimedia supplement to the instructions contained in this article is available. To view the multimedia example of the condition described go to; **http://www.youtube.com/user/Mitchell1Tips** **then type "A00641417.vid1" into the "Search Channel" box.**

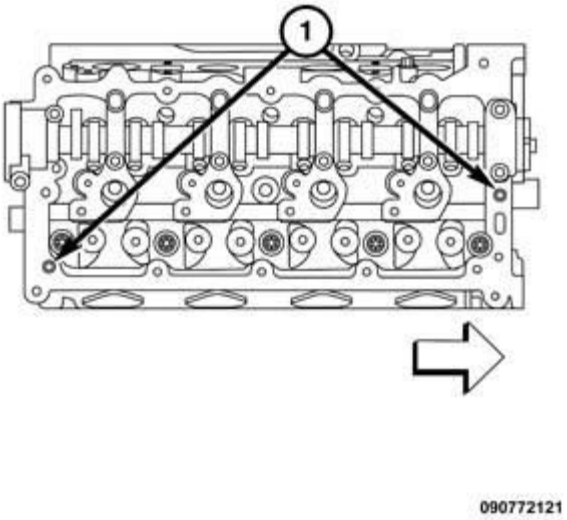

Fig. 191: Locating Pins
Courtesy of CHRYSLER GROUP, LLC

1. If the dowel/locating pins were removed, install two **NEW** variable valve actuation assembly locating pins (1).

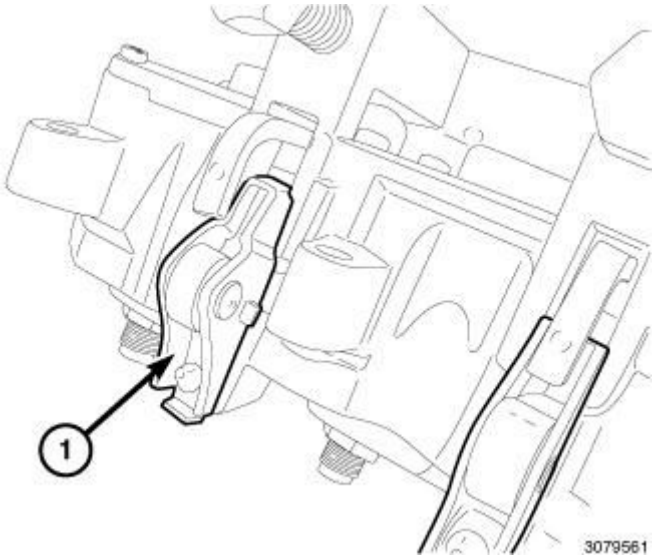

Fig. 192: Rocker Arms
Courtesy of CHRYSLER GROUP, LLC

2. If removed, install the rocker arms (1). Refer to **ROCKER ARM, VALVE, INSTALLATION** .

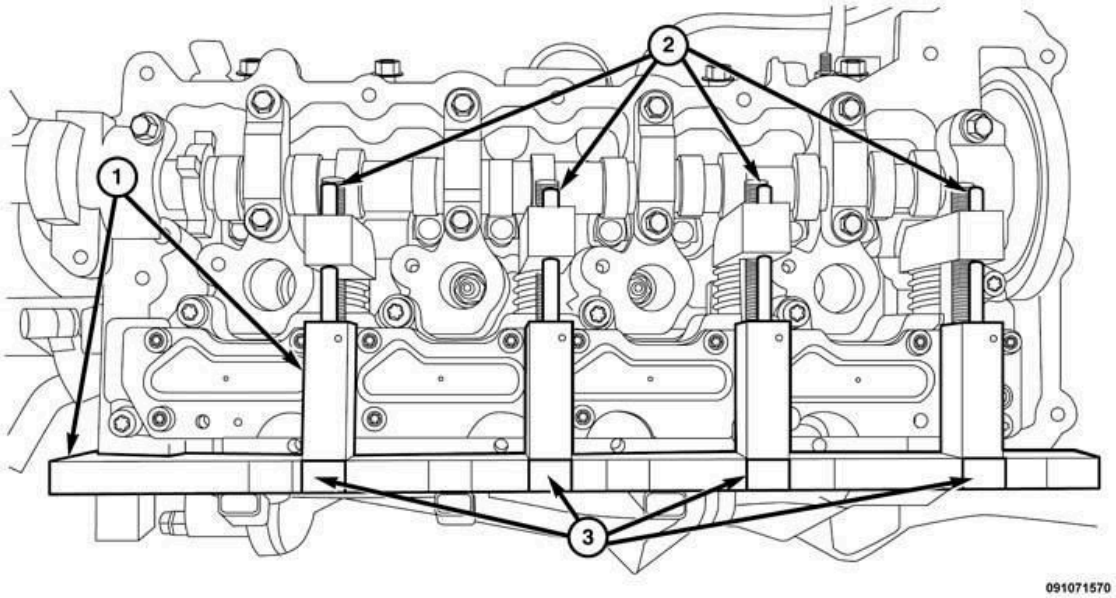

Fig. 193: Special Tool, Spring Compressor & Indicators
Courtesy of CHRYSLER GROUP, LLC

CAUTION: Do not invert the variable valve actuation assembly when it is removed from the engine. Oil will drain from the assembly and excessive engine cranking will be required to refill the assembly and start the engine.

3. Rotate the spring compressors (2) counterclockwise until fully seated.
4. Install a **new** gasket.

NOTE: To assist in the proper placement of the assembly, it is recommended to apply NEW/CLEAN MS-272 white grease or similar like Vaseline® onto the tips of the plungers to hold them in the retracted position. This will help to locate the assembly correctly while preventing the plunger tips from interfering with the valve stem tips. Use just enough to hold the plungers retracted.

5. Set the VVAA into position onto the two dowels.

NOTE: It is very important that the plungers of the VVAA are centered over the valve stem tips. When properly aligned, the VVAA will set down onto the cylinder head evenly and will not have a tendency to wobble when set onto the head.

NOTE: The VVAA should sit relatively flush to cylinder head with no more then a 1 to 2 mm gap between the mating surfaces. An excessive gap indicates the VVAA is not seated properly.

6. Visually inspect the alignment of the VVAA plungers.

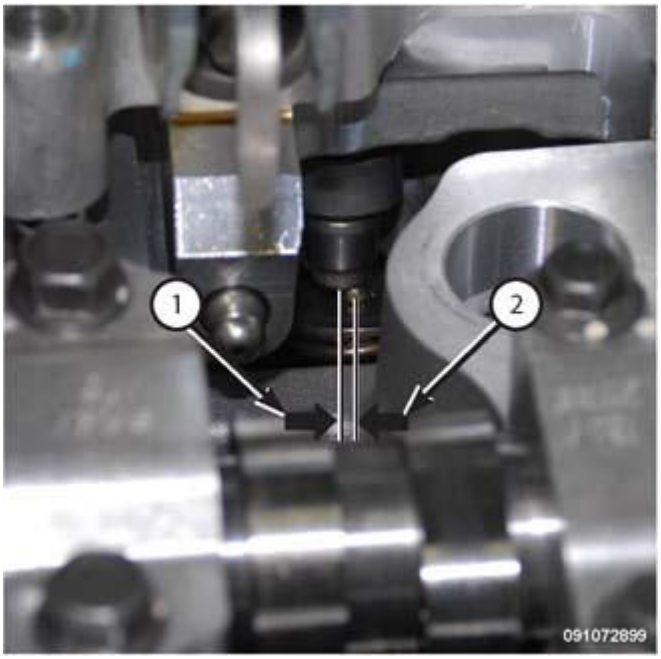

Fig. 194: Improperly Aligned VVAA
Courtesy of CHRYSLER GROUP, LLC

7. This is a visual indication of an IMPROPERLY aligned VVAA. The centerline of the plunger (1) and the centerline of the valve stem (2) are misaligned.

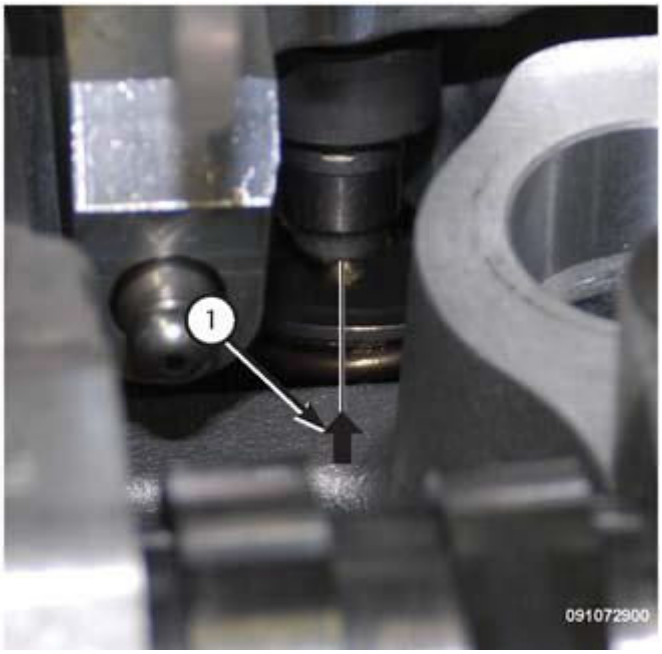

Fig. 195: Properly Aligned VVAA
Courtesy of CHRYSLER GROUP, LLC

8. This is a visual indication of a PROPERLY aligned VVAA. The centerline (1) of both the plunger and the valve stem are aligned.

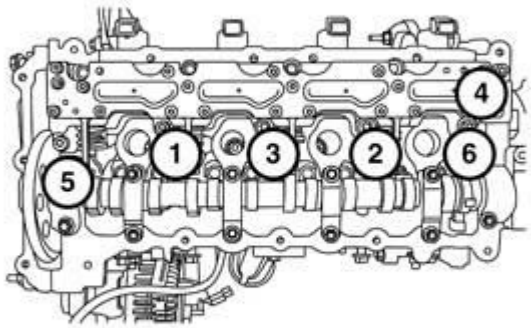

091072145

Fig. 196: Six VVAA Retaining Bolts Hand Tightening Sequence
Courtesy of CHRYSLER GROUP, LLC

9. Install the six accessible bolts. Hand tighten the VVAA retaining bolts.

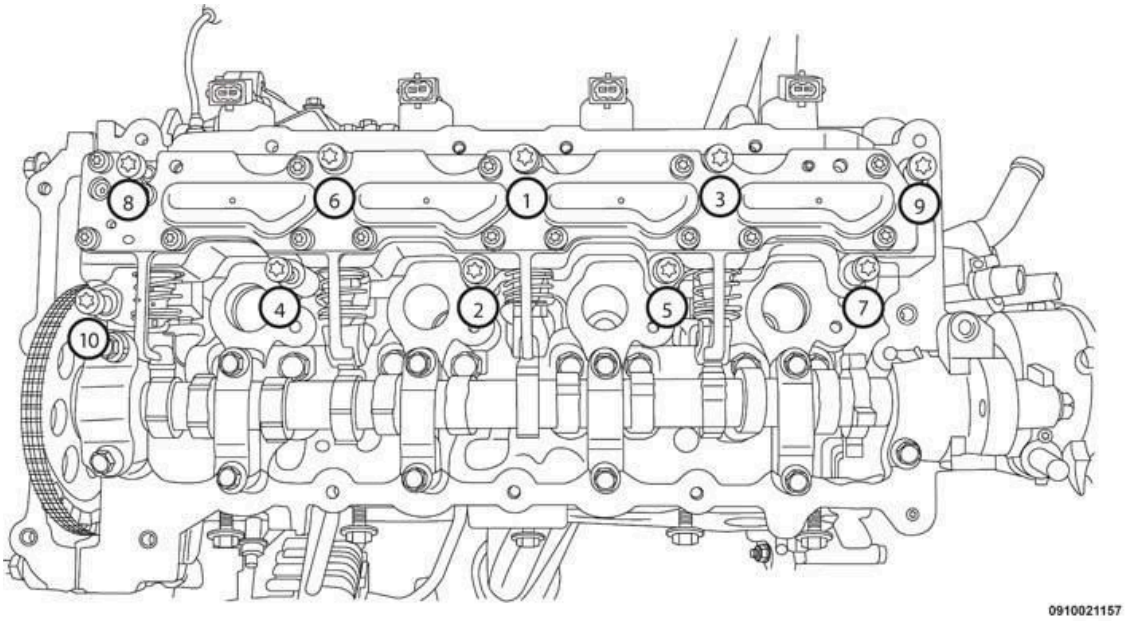

0910021157

Fig. 197: Variable Valve Actuation Assembly Tightening Sequence

Courtesy of CHRYSLER GROUP, LLC

10. Remove the spring compressor and tighten the ten bolts in three steps following the sequence shown in illustration:
    - Step 1: All to 10 N.m (89 in. lbs.).
    - Step 2: All to 22 N.m (16 ft. lbs.).
    - Step 3: All again to 22 N.m (16 ft. lbs.).
11. Connect and lock the four variable valve timing actuator electrical connectors.
12. Connect and lock the oil temperature sensor electrical connector.
13. Engage the oil temperature electrical connector to the bracket.

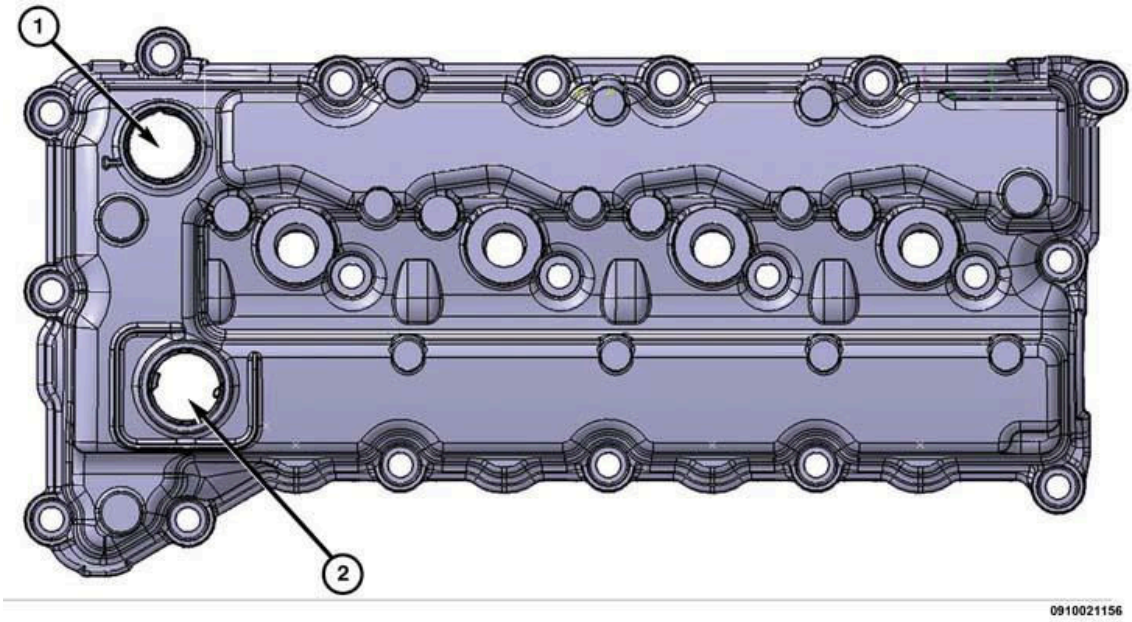

Fig. 198: Cylinder Head Cover
Courtesy of CHRYSLER GROUP, LLC

14. Install the cylinder head cover. Refer to **COVER(S), CYLINDER HEAD, INSTALLATION** .

NOTE: **If the VVAA is being replaced (new part), it is recommended that the VVAA be primed with NEW/CLEAN oil after installation. This will limit the amount of time it takes for the assembly to fill while cranking the engine. If the cylinder head cover is installed the service port can be accessed through the opening at the rear of the cover (1).**

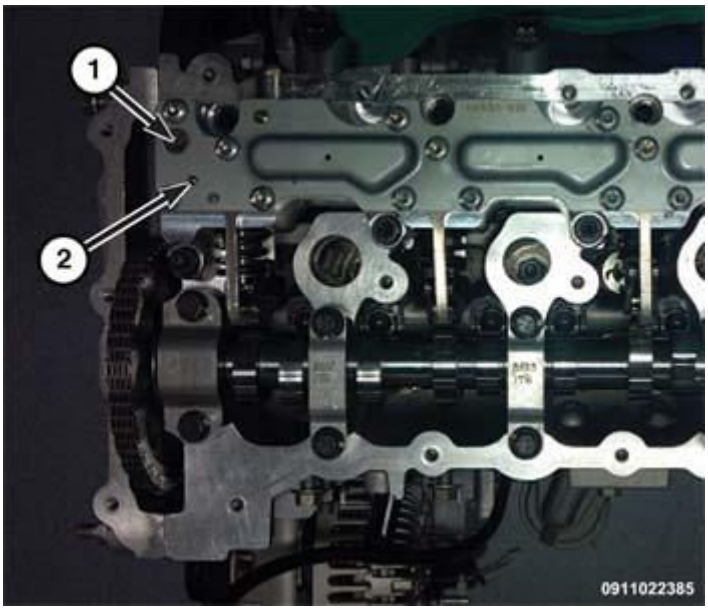

Fig. 199: Service Port & Bleed Port
Courtesy of CHRYSLER GROUP, LLC

15. Using an oil can with a **CLEAN** soft tip or similar tool like a **NEW** plastic syringe, force **CLEAN, UNUSED** oil into the service port (1). Continue to inject oil until oil flows continuously from the bleed port (2) or until a maximum of 200 mL has been injected.
16. The Cam/Crank Variation Relearn procedure must be performed using the scan tool anytime there has been a repair/replacement made to a powertrain system, for example: flywheel, valvetrain, camshaft and/or crankshaft sensors or components. .

ENGINE BLOCK

DESCRIPTION

DESCRIPTION

The die cast aluminum cylinder block is a two-piece assembly, consisting of the cylinder block and ladder frame. The block is an open deck design with cast in place cast iron cylinder liners. The cast iron cylinder liners are recessed below the aluminum deck surface. The ladder frame bolts to the cylinder block and does not incorporate the main bearing caps. This design offers a much stronger lower end and increased cylinder block and transaxle rigidity. The rear oil seal retainer is integral with the block and ladder frame. The ladder frame and block are serviced as an assembly.

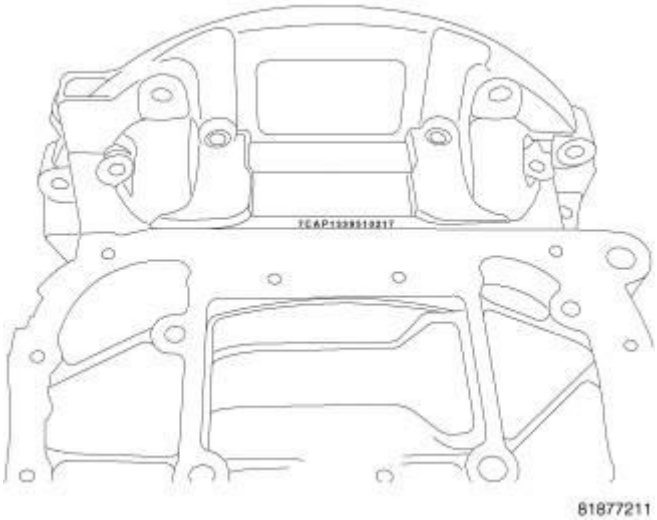

Fig. 200: Serial Number Location
Courtesy of CHRYSLER GROUP, LLC

The engine serial number is located on the bottom of the ladder frame just behind the oil pan. The date can be seen with the oil pan in place.

STANDARD PROCEDURE

CYLINDER BORE DEGLAZING

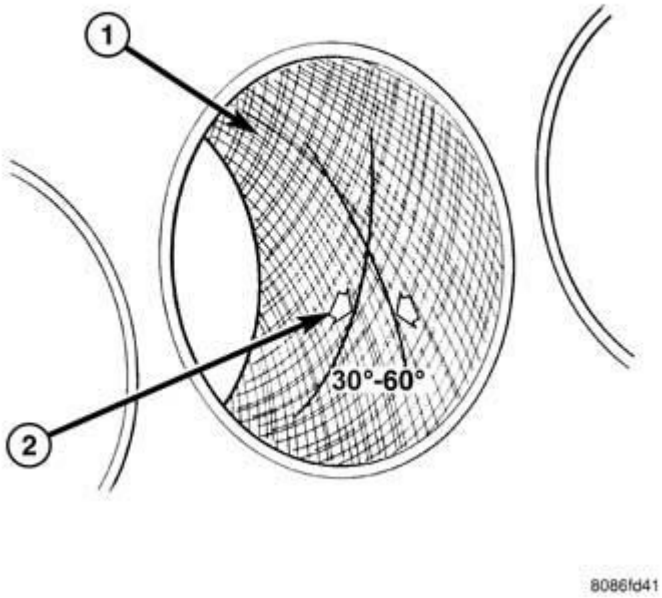

Fig. 201: Cylinder Bore Crosshatch Pattern
Courtesy of CHRYSLER GROUP, LLC

Before deglazing, mask the crankcase area to keep abrasive materials from entering the engine lower end. Tape off any openings to prevent abrasive material from entering the coolant and oil circuits.

CAUTION: DO NOT use rigid type hones to remove cylinder wall glaze.

1. Select an appropriate size flexible ball hone.
2. Deglazing of the cylinder walls may be done if the cylinder bore is straight and round. About 20-60 strokes, depending on the condition of the cylinder bore, will be sufficient to provide a satisfactory surface. Use a light **honing** oil, available from major oil distributors.

CAUTION: DO NOT use engine or transmission oil, mineral spirits, or kerosene.

3. Deglazing should be done by moving the hone up and down fast enough to get a crosshatch pattern. The hone marks should intersect at 30° to 60° inclusive angle for proper seating of rings.
4. A controlled hone motor speed between 200 and 300 RPM is necessary to obtain the proper crosshatch angle (1). The number of up and down strokes per minute can be regulated to get the desired 30° to 60° inclusive angle (2). Faster up and down strokes increase the crosshatch angle.
5. After deglazing, it is necessary that the block be cleaned to remove all traces of abrasive. Use a brush to wash parts with a solution of hot water and detergent. Dry parts thoroughly. Use a clean, white, lint-free cloth to check that the bore is clean. Oil the bores after cleaning to prevent rusting. Upon completion, perform a visual inspection of the cylinder block passages to inspect for abrasive debris. If any debris is found, repeat the cleaning process.

NOTE: Cylinder bore diameter should not increase more than 20 microns during deglazing process from original nominal bore diameter, if the maximum of 20 microns is exceeded, the cylinder block must be replaced. If deglazing the cylinder bore cannot remove the light scratches and scuffs the cylinder block should be replaced.

MEASURING BEARING CLEARANCE USING PLASTIGAGE

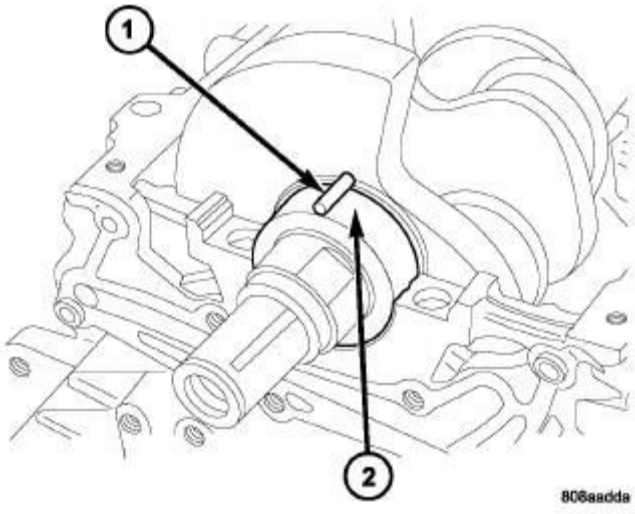

Fig. 202: Plastigage Placed In Lower Shell
Courtesy of CHRYSLER GROUP, LLC

NOTE: Typical crankshaft journal shown in illustration.

Engine crankshaft and connecting rod bearing clearances can be determined by the use of Plastigage or equivalent. The following is the recommended procedure for the use of Plastigage:

1. Remove the oil film from surface to be checked. Plastigage is soluble in oil.
2. Place a piece of Plastigage (1) across the entire width of the journal (In addition, suspected areas can be checked by placing the Plastigage in the suspected area). Plastigage must not crumble in use. If brittle, obtain fresh stock.
3. Torque the bearing cap bolts of the bearing being checked to the proper specification. Refer to **TORQUE SPECIFICATIONS** .

NOTE: DO NOT rotate the crankshaft. Plastigage will smear, causing inaccurate results.

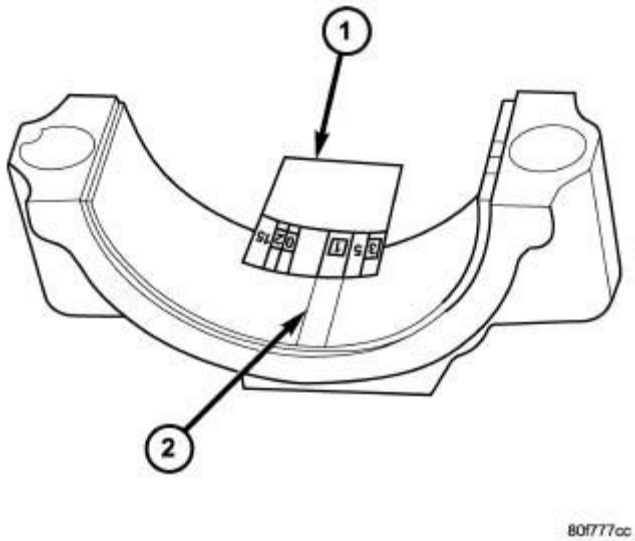

Fig. 203: Measuring Bearing Clearance With Plastigage
Courtesy of CHRYSLER GROUP, LLC

NOTE: Typical connecting rod cap shown in illustration.

4. Remove the bearing cap and compare the width of the flattened Plastigage (2) with the scale provided on the package (1). Locate the band closest to the same width. This band shows the amount of clearance. Differences in readings between the ends indicate the amount of taper present or the possibility of foreign material trapped under the bearing insert.
5. Record all readings taken. Compare clearance measurements to. Refer to **ENGINE SPECIFICATIONS** .

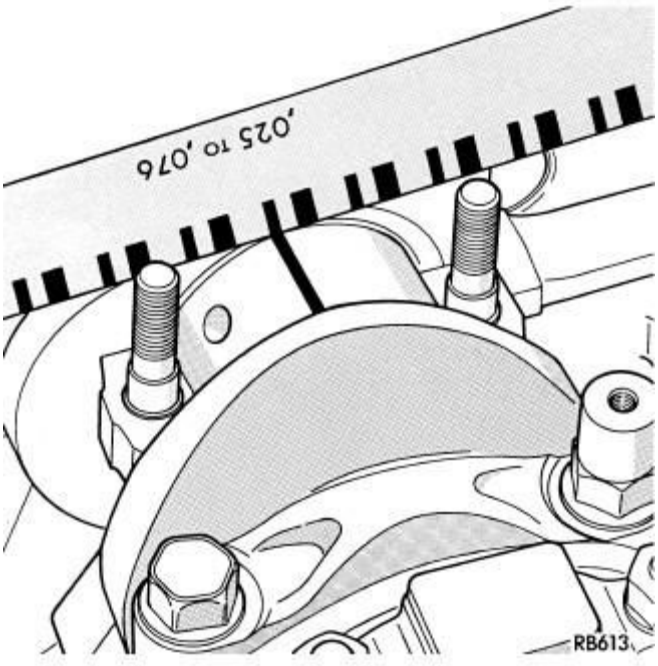

Fig. 204: Checking Connecting Rod Bearing Clearance With Plastigage
Courtesy of CHRYSLER GROUP, LLC

NOTE: **Typical connecting rod journal shown in illustration.**

NOTE: **Plastigage is available in a variety of clearance ranges. Use the most appropriate range for the specifications you are checking. Plastigage generally is accompanied by two scales. One scale is in inches, the other is a metric scale.**

6. Install the proper bearings to achieve the specified bearing clearances.
7. Repeat the Plastigage measurement to verify your bearing selection prior to final assembly.

INSPECTION

INSPECTION

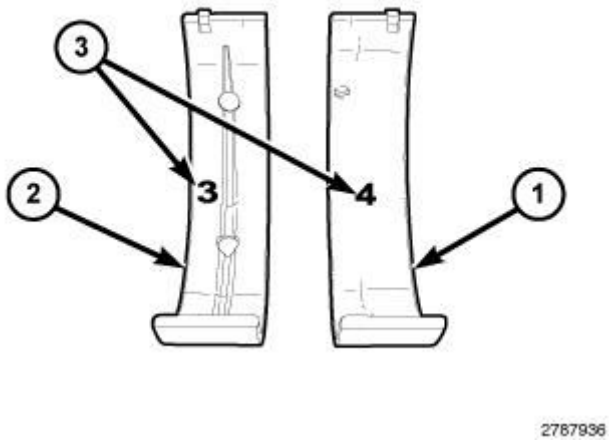

Fig. 205: Main Bearing Inserts
Courtesy of CHRYSLER GROUP, LLC

1. Wipe the bearing inserts (1, 2) clean.
2. Inspect the inserts for abnormal wear patterns, scoring, grooving, fatigue, pitting and for metal or other foreign material imbedded in the lining.
3. Inspect the back of the inserts for fractures, scrapes, or irregular wear patterns.
4. Inspect the insert locking tabs for damage.
5. Inspect the crankshaft thrust washers for scoring, scratches, wear or blueing.
6. Replace any bearing that shows abnormal wear. Refer to **BEARING(S), CRANKSHAFT, MAIN - STANDARD PROCEDURE** .
7. Inspect the main bearing bores for signs of scoring, nicks and burrs.
8. If the cylinder block main bearing bores show damage the engine block must be replaced.

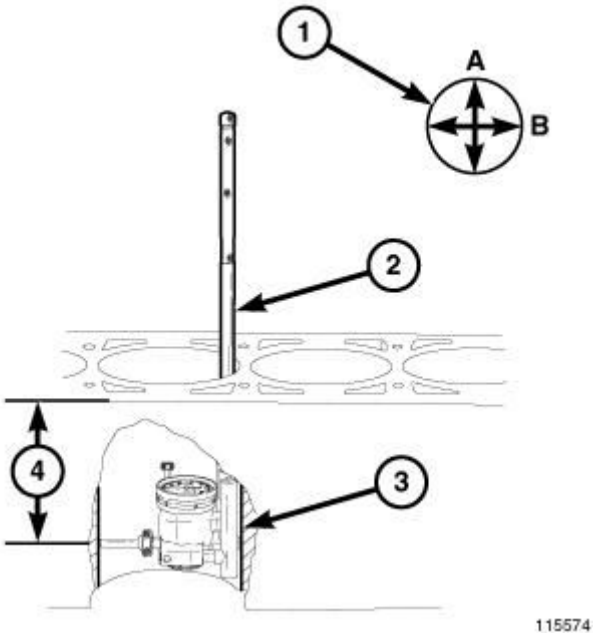

Fig. 206: Measuring Cylinder Bore Diameter
Courtesy of CHRYSLER GROUP, LLC

9. Use the Cylinder Indicator (special tool #C-119, Cylinder Indicator) (2) to correctly measure the inside diameter of the cylinder bore (3). A cylinder bore gauge capable of reading in 0.003 mm (0.0001 in.) INCREMENTS is required. If a bore gauge is not available, do not use an inside micrometer.
10. Measure the inside diameter of the cylinder bore at three levels below the top of the bore (4). Start at the top of the bore, perpendicular (across or at 90 degrees) to the axis of the crankshaft at point A (1).
11. Repeat the measurement near the middle of the bore, then repeat the measurement near the bottom of the bore.
12. Determine taper by subtracting the smaller diameter from the larger diameter.
13. Rotate the Cylinder Indicator 90° to point B (1) and repeat the three measurements. Verify that the maximum taper is within specification. Refer to **ENGINE SPECIFICATIONS** .
14. Determine out-of-roundness by comparing the difference between A and B at each of the three levels. Verify that the maximum out of round is within specification. Refer to **ENGINE SPECIFICATIONS** .
15. If cylinder bore taper and out-of-roundness are within specification, the cylinder bore can be honed. Refer to **ENGINE BLOCK - STANDARD PROCEDURE** . If the cylinder bore taper or out-of-round condition exceeds the maximum limits, the cylinder block must be replaced.

NOTE: A slight amount of taper always exists in the cylinder bore after the engine has been in use for a period of time.

BEARING(S), CONNECTING ROD

STANDARD PROCEDURE

STANDARD PROCEDURE - CONNECTING ROD - FITTING

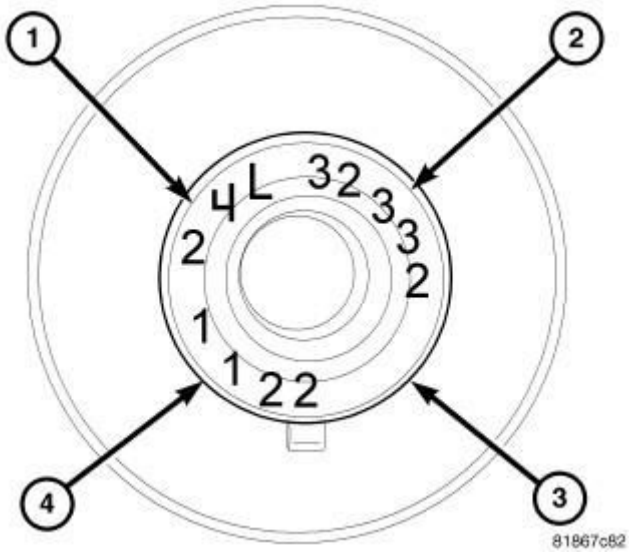

Fig. 207: Bearing Selection
Courtesy of CHRYSLER GROUP, LLC

There are three different sizes of rod bearings available. Connecting rod bearing identification (4) can be found on the nose of the crankshaft (3). Use the table below for proper bearing selection:

CONNECTING ROD BEARING SELECTION

CRANKSHAFT PIN DIAMETER GRADE	DIMENSION	CONNECTING ROD BEARING CLASSIFICATION	CONNECTING ROD BEARING DIMENSION
1	48 mm	1 (Black)	1.5 mm
2	48 mm	2 (No Color)	1.5 mm
3	48 mm	3 (Green)	1.5 mm

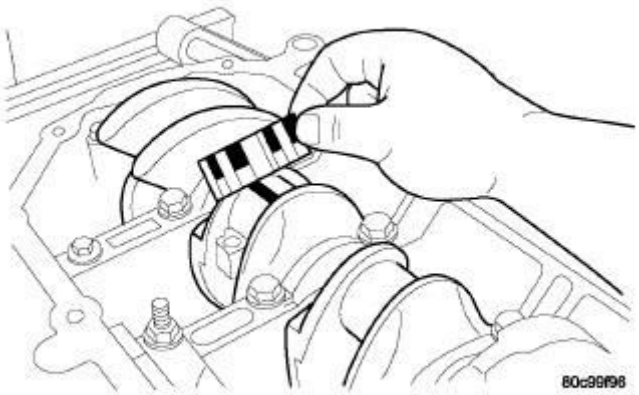

Fig. 208: Connecting Rod Bearing Clearance - Typical
Courtesy of CHRYSLER GROUP, LLC

1. For measuring connecting rod bearing clearance procedure and use of Plastigage, refer to **ENGINE - STANDARD PROCEDURE** . For bearing clearance, refer to **ENGINE SPECIFICATIONS** .

   NOTE: The rod bolts should not be reused.

2. Before installing the **NEW** rod bolts the threads and under the bolt head should be oiled with clean engine oil.
3. Install each bolt finger tight then alternately tighten each bolt to assemble the cap properly.
4. Tighten the connecting rod bolts using the 2 step torque-turn method. Tighten according to the following values:

   CAUTION: Do not use a torque wrench for the second step.

   - Tighten the bolts to 20 N.m (15 ft. lbs.).
   - Tighten the connecting rod bolts an additional 90°.

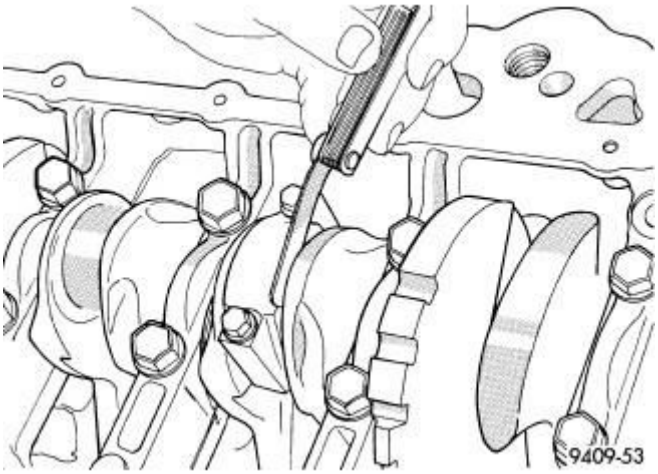

Fig. 209: Connecting Rod Side Clearance
Courtesy of CHRYSLER GROUP, LLC

5. Using a feeler gauge, check connecting rod side clearance. For clearance specifications, refer to **ENGINE SPECIFICATIONS** .

CONNECTING ROD BEARING REPLACEMENT

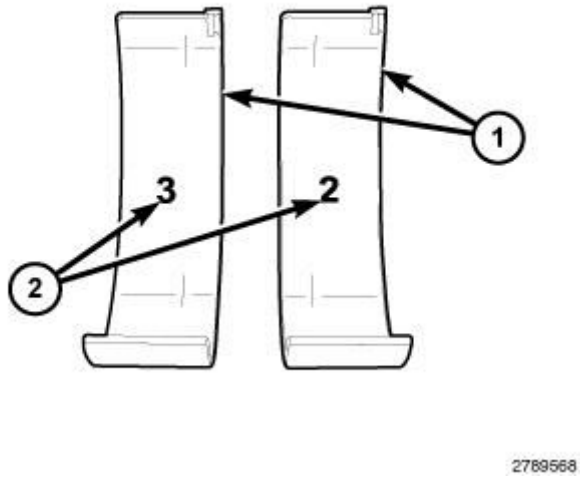

Fig. 210: Connecting Rod Bearing Shells & Bearing Size
Courtesy of CHRYSLER GROUP, LLC

The connecting rod bearings (1) are serviced in-vehicle. They must be replaced one-at-a-time in order to prevent the pistons from contacting the valves. The connecting rod bearings are "select fit" to achieve proper oil clearances. Refer to **BEARING(S), CONNECTING ROD - STANDARD PROCEDURE** .

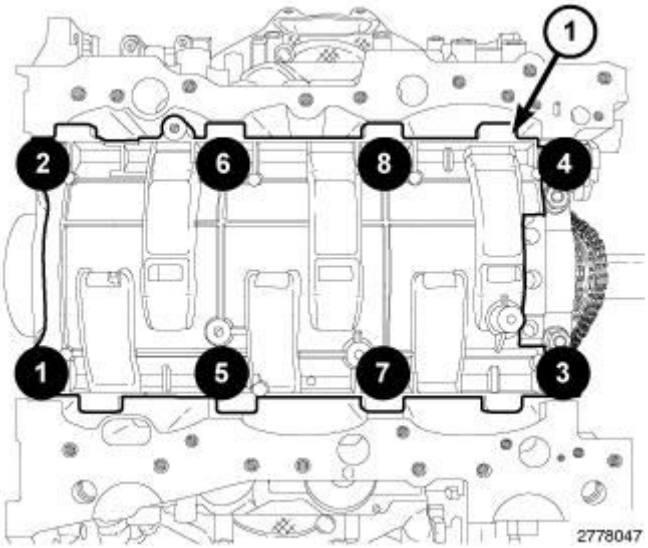

Fig. 211: Main Bearing Cap Bolts From Windage Tray Removal Sequence
Courtesy of CHRYSLER GROUP, LLC

1. Disconnect and isolate the battery negative cable.
2. Remove the spark plugs. Refer to **SPARK PLUG, REMOVAL** .
3. Remove the oil pan, oil pump pick-up and engine oil pump. Refer to **PUMP, ENGINE OIL, REMOVAL** .
4. Remove the eight main bearing cap bolts in the sequence shown.

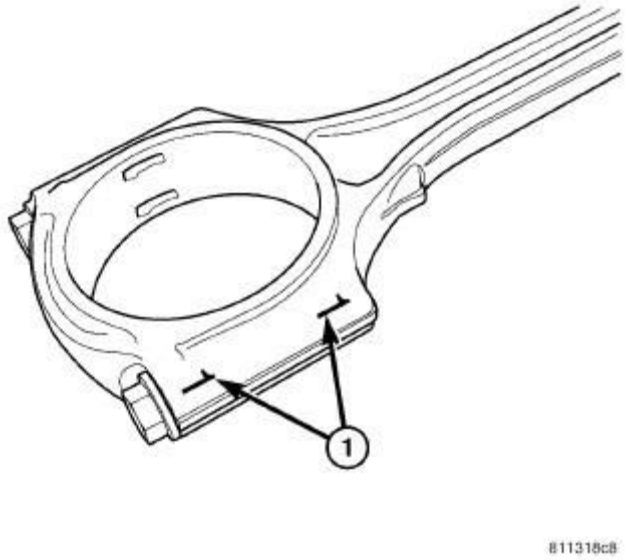

Fig. 212: Connecting Rod To Cylinder Identification
Courtesy of CHRYSLER GROUP, LLC

CAUTION: DO NOT use a number stamp or a punch to mark connecting rods or caps, as damage to connecting rods could occur

NOTE: Connecting rods and bearing caps are not interchangeable and should be marked before removing to ensure correct reassembly.

5. Mark connecting rod and bearing cap positions (1) using a permanent ink marker or scribe tool.

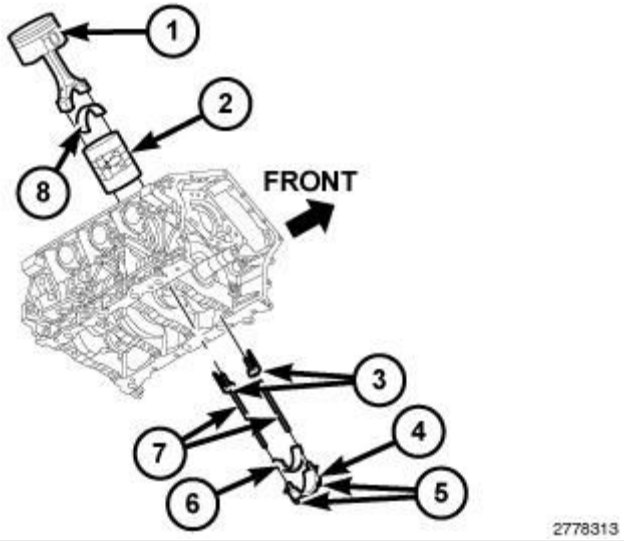

Fig. 213: Piston, Connecting Rod Cap, Bolts, Plastic Guide Plates & Guide Pins
Courtesy of CHRYSLER GROUP, LLC

NOTE: Typical V6 engine configuration shown.

CAUTION: Replace only one connecting rod bearing at a time while all other connecting rod bearing caps remain properly tightened. If all connecting rod bearing caps are removed, crankshaft rotation will result in valve and/or piston damage.

CAUTION: Care must be taken not to damage the fractured rod and cap joint face surfaces, as engine damage may occur.

6. Remove the connecting rod cap bolts (5) and the connecting rod cap (4). Discard the cap bolts.
7. Remove the plastic guide plates (3) from the Guide Pins (special tool #8189, Guide Pins) (7) and install the Guide Pins to the connecting rod being removed.

CAUTION: Care must be taken not to nick crankshaft journals, as engine damage may occur.

8. Rotate the crankshaft away from the connecting rod and remove the bearing shell.
9. If required, select and fit new bearings to the connecting rod. Refer to **BEARING(S), CONNECTING ROD - STANDARD PROCEDURE** .
10. Install the bearing shell (8) on the connecting rod with the tang inserted into the machined groove in the rod. Lubricate the bearing surface with clean engine oil.
11. Rotate the crankshaft while guiding the connecting rod into position over the rod journal.

CAUTION: The connecting rod bolts must not be reused. Always replace the connecting rod bolts whenever they are loosened or removed.

12. Install the bearing shell (6) on the connecting rod cap (4) with the tang inserted into the machined groove in the cap. Lubricate the bearing surface with clean engine oil.

NOTE: Do not lubricate the threads of the connecting rod cap bolts (5).

13. Install the connecting rod cap and bearing with the tang on the same side as the rod. Tighten the **NEW** connecting rod cap bolts (5) to 20 N.m (15 ft. lbs.) plus 90°.
14. If required, check the connecting rod side clearance. Refer to **ROD, PISTON AND CONNECTING - STANDARD PROCEDURE** .
15. Repeat the previous steps for each connecting rod bearing being replaced.

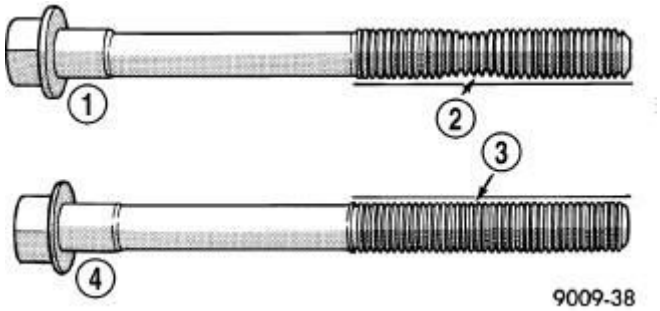

Fig. 214: Checking Cylinder Head Bolts For Stretching (Necking)
Courtesy of CHRYSLER GROUP, LLC

CAUTION: The main bearing cap bolts are tightened using a torque plus angle procedure. The bolts must be examined BEFORE reuse. If the threads are necked down the bolts must be replaced.

16. Check the main bearing cap bolts for necking by holding a scale or straight edge against the threads. If all the threads do not contact the scale (2) the bolt must be replaced.

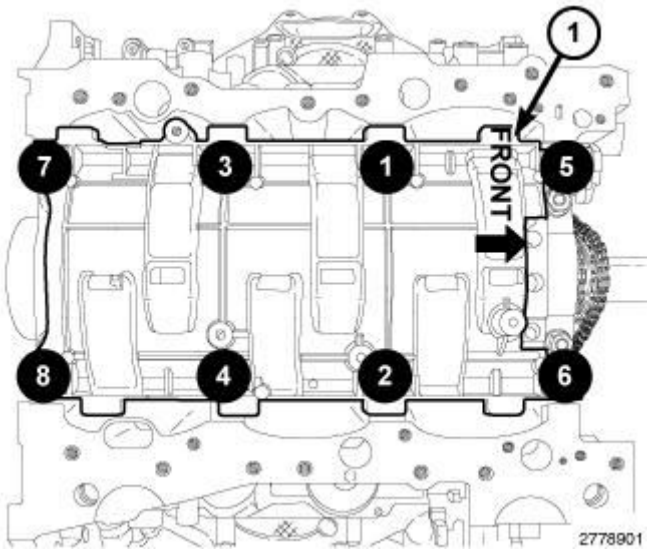

Fig. 215: Windage Tray With Main Bearing Cap Bolts Installation Sequence
Courtesy of CHRYSLER GROUP, LLC

17. Install the eight main bearing cap bolts. Tighten the bolts in the sequence shown to 21 N.m (16 ft. lbs.) plus 90°.
18. Install the engine oil pump, oil pump pick-up and oil pan. Refer to **PUMP, ENGINE OIL, INSTALLATION** .
19. Install the spark plugs and ignition coils. Refer to **SPARK PLUG, INSTALLATION** .
20. If removed, install the oil filter and fill the engine crankcase with the proper oil to the correct level. Refer to **OIL - STANDARD PROCEDURE** .
21. Connect the battery negative cable and tighten nut to 5 N.m (45 in. lbs.).

22. Operate the engine until it reaches normal operating temperature.

BEARING(S), CRANKSHAFT, MAIN

STANDARD PROCEDURE

STANDARD PROCEDURE - CONNECTING ROD - FITTING

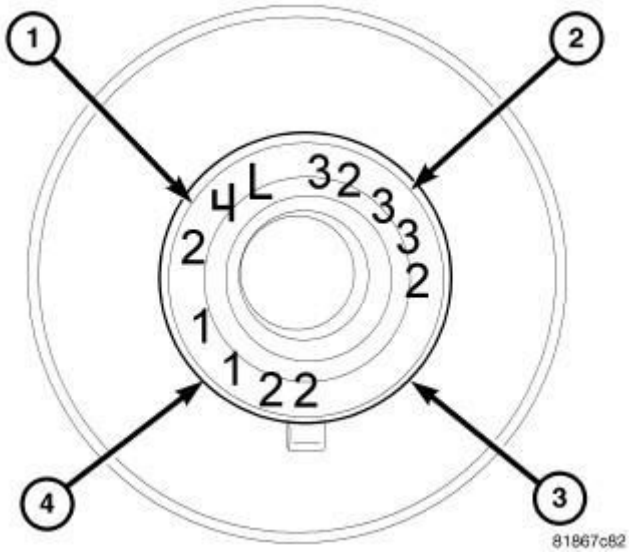

Fig. 216: Bearing Selection
Courtesy of CHRYSLER GROUP, LLC

There are three different sizes of rod bearings available. Connecting rod bearing identification (4) can be found on the nose of the crankshaft (3). Use the table below for proper bearing selection:

CONNECTING ROD BEARING SELECTION

CRANKSHAFT PIN DIAMETER GRADE	DIMENSION	CONNECTING ROD BEARING CLASSIFICATION	CONNECTING ROD BEARING DIMENSION
1	48 mm	1 (Black)	1.5 mm
2	48 mm	2 (No Color)	1.5 mm
3	48 mm	3 (Green)	1.5 mm

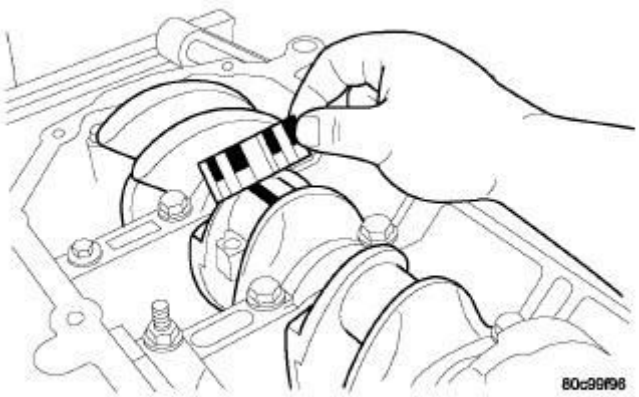

Fig. 217: Connecting Rod Bearing Clearance - Typical
Courtesy of CHRYSLER GROUP, LLC

1. For measuring connecting rod bearing clearance procedure and use of Plastigage, refer to **ENGINE - STANDARD PROCEDURE** . For bearing clearance, refer to **ENGINE SPECIFICATIONS** .

   NOTE: The rod bolts should not be reused.

2. Before installing the **NEW** rod bolts the threads and under the bolt head should be oiled with clean engine oil.
3. Install each bolt finger tight then alternately tighten each bolt to assemble the cap properly.
4. Tighten the connecting rod bolts using the 2 step torque-turn method. Tighten according to the following values:

   CAUTION: Do not use a torque wrench for the second step.

   - Tighten the bolts to 20 N.m (15 ft. lbs.).
   - Tighten the connecting rod bolts an additional 90°.

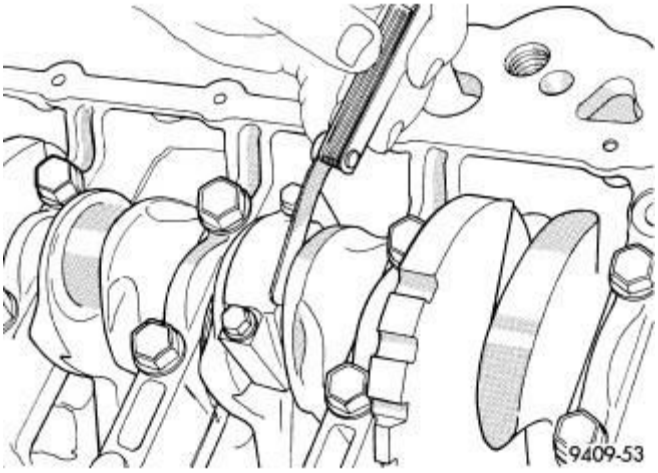

Fig. 218: Connecting Rod Side Clearance
Courtesy of CHRYSLER GROUP, LLC

5. Using a feeler gauge, check connecting rod side clearance. For clearance specifications, refer to **ENGINE SPECIFICATIONS** .

CONNECTING ROD BEARING REPLACEMENT

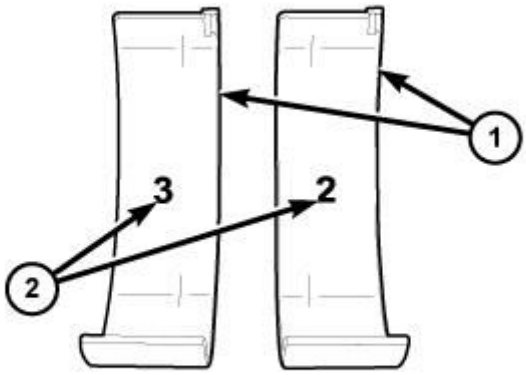

Fig. 219: Connecting Rod Bearing Shells & Bearing Size
Courtesy of CHRYSLER GROUP, LLC

The connecting rod bearings (1) are serviced in-vehicle. They must be replaced one-at-a-time in order to prevent the pistons from contacting the valves. The connecting rod bearings are "select fit" to achieve proper oil clearances. Refer to **BEARING(S), CONNECTING ROD - STANDARD PROCEDURE** .

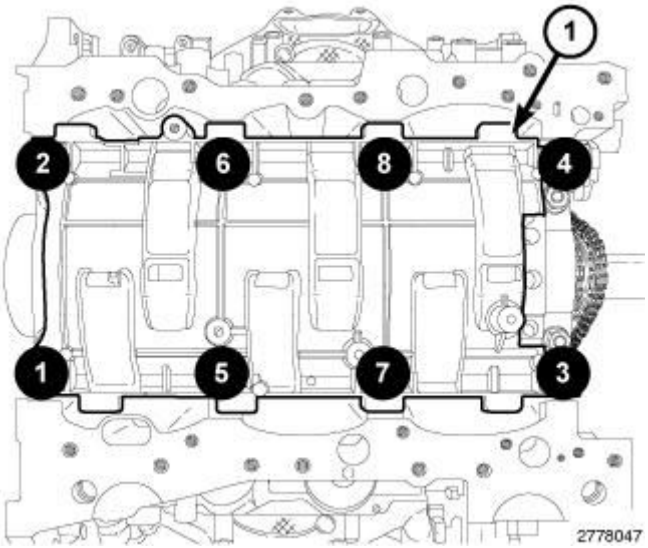

Fig. 220: Main Bearing Cap Bolts From Windage Tray Removal Sequence
Courtesy of CHRYSLER GROUP, LLC

1. Disconnect and isolate the battery negative cable.
2. Remove the spark plugs. Refer to **SPARK PLUG, REMOVAL** .
3. Remove the oil pan, oil pump pick-up and engine oil pump. Refer to **PUMP, ENGINE OIL, REMOVAL** .
4. Remove the eight main bearing cap bolts in the sequence shown.

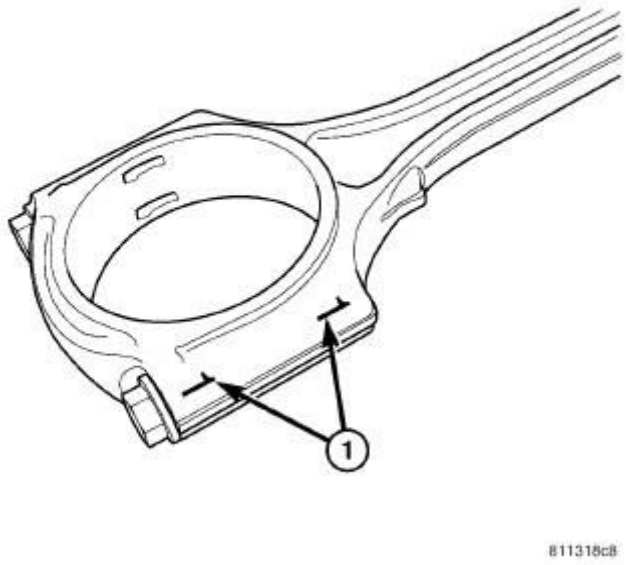

Fig. 221: Connecting Rod To Cylinder Identification
Courtesy of CHRYSLER GROUP, LLC

CAUTION: DO NOT use a number stamp or a punch to mark connecting rods or caps, as damage to connecting rods could occur

NOTE: Connecting rods and bearing caps are not interchangeable and should be marked before removing to ensure correct reassembly.

5. Mark connecting rod and bearing cap positions (1) using a permanent ink marker or scribe tool.

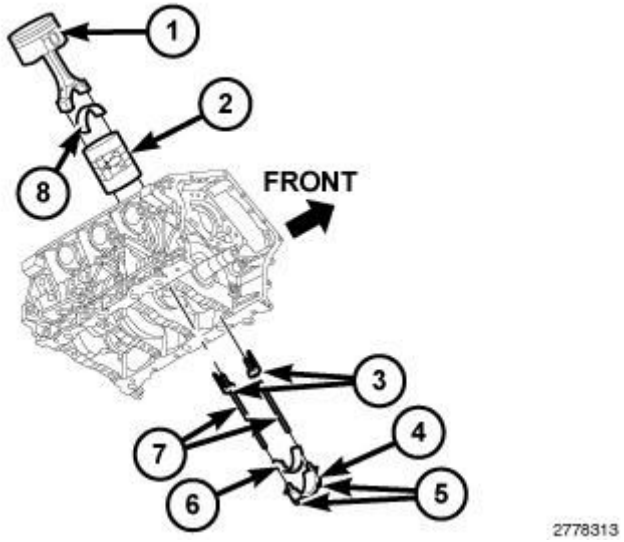

Fig. 222: Piston, Connecting Rod Cap, Bolts, Plastic Guide Plates & Guide Pins
Courtesy of CHRYSLER GROUP, LLC

NOTE: Typical V6 engine configuration shown.

CAUTION: Replace only one connecting rod bearing at a time while all other connecting rod bearing caps remain properly tightened. If all connecting rod bearing caps are removed, crankshaft rotation will result in valve and/or piston damage.

CAUTION: Care must be taken not to damage the fractured rod and cap joint face surfaces, as engine damage may occur.

6. Remove the connecting rod cap bolts (5) and the connecting rod cap (4). Discard the cap bolts.
7. Remove the plastic guide plates (3) from the Guide Pins (special tool #8189, Guide Pins) (7) and install the Guide Pins to the connecting rod being removed.

CAUTION: Care must be taken not to nick crankshaft journals, as engine damage may occur.

8. Rotate the crankshaft away from the connecting rod and remove the bearing shell.
9. If required, select and fit new bearings to the connecting rod. Refer to **BEARING(S), CONNECTING ROD - STANDARD PROCEDURE** .
10. Install the bearing shell (8) on the connecting rod with the tang inserted into the machined groove in the rod. Lubricate the bearing surface with clean engine oil.
11. Rotate the crankshaft while guiding the connecting rod into position over the rod journal.

CAUTION: The connecting rod bolts must not be reused. Always replace the connecting rod bolts whenever they are loosened or removed.

12. Install the bearing shell (6) on the connecting rod cap (4) with the tang inserted into the machined groove in the cap. Lubricate the bearing surface with clean engine oil.

NOTE: Do not lubricate the threads of the connecting rod cap bolts (5).

13. Install the connecting rod cap and bearing with the tang on the same side as the rod. Tighten the **NEW** connecting rod cap bolts (5) to 20 N.m (15 ft. lbs.) plus 90°.
14. If required, check the connecting rod side clearance. Refer to **ROD, PISTON AND CONNECTING - STANDARD PROCEDURE** .
15. Repeat the previous steps for each connecting rod bearing being replaced.

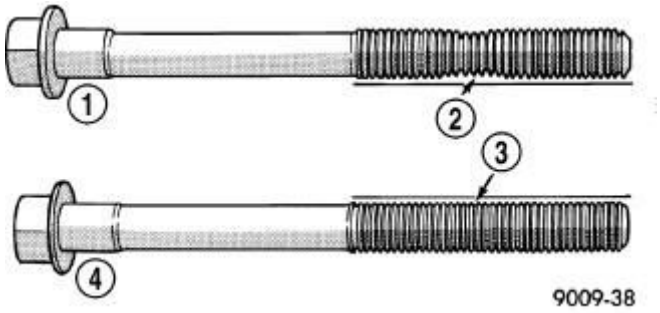

Fig. 223: Checking Cylinder Head Bolts For Stretching (Necking)
Courtesy of CHRYSLER GROUP, LLC

CAUTION: The main bearing cap bolts are tightened using a torque plus angle procedure. The bolts must be examined BEFORE reuse. If the threads are necked down the bolts must be replaced.

16. Check the main bearing cap bolts for necking by holding a scale or straight edge against the threads. If all the threads do not contact the scale (2) the bolt must be replaced.

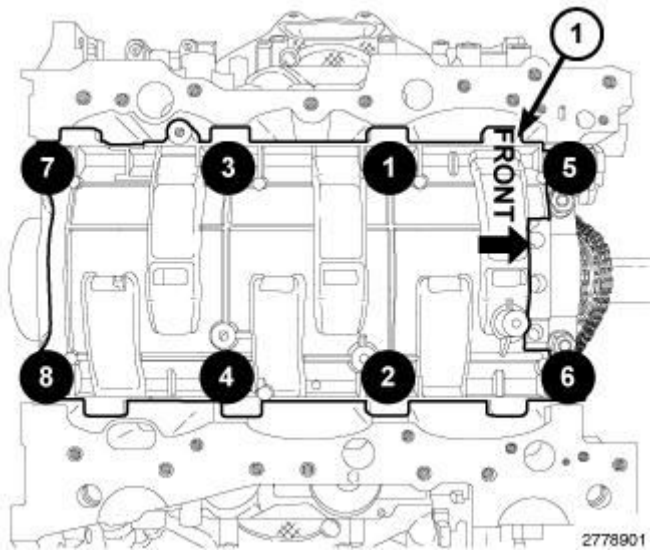

Fig. 224: Windage Tray With Main Bearing Cap Bolts Installation Sequence
Courtesy of CHRYSLER GROUP, LLC

17. Install the eight main bearing cap bolts. Tighten the bolts in the sequence shown to 21 N.m (16 ft. lbs.) plus 90°.
18. Install the engine oil pump, oil pump pick-up and oil pan. Refer to **PUMP, ENGINE OIL, INSTALLATION** .
19. Install the spark plugs and ignition coils. Refer to **SPARK PLUG, INSTALLATION** .
20. If removed, install the oil filter and fill the engine crankcase with the proper oil to the correct level. Refer to **OIL - STANDARD PROCEDURE** .
21. Connect the battery negative cable and tighten nut to 5 N.m (45 in. lbs.).
22. Operate the engine until it reaches normal operating temperature.

CRANKSHAFT

DESCRIPTION

DESCRIPTION

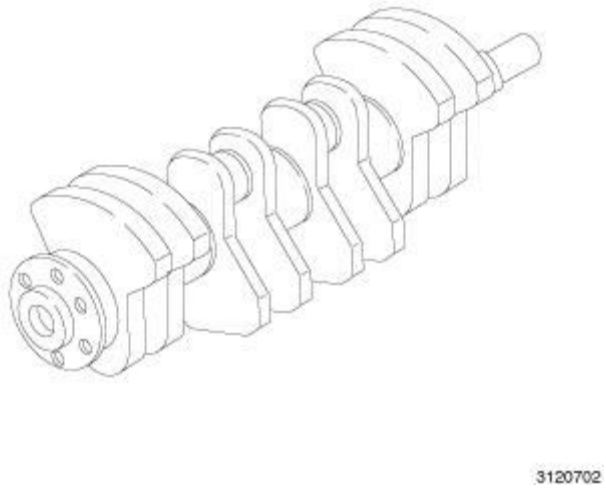

Fig. 225: Crankshaft
Courtesy of CHRYSLER GROUP, LLC

The crankshaft is made from induction hardened forged steel. Eight counterweights at 180° balance the crankshaft rotary mass. The main journals are crossed drilled for rod bearing lubrication. The crankshaft is supported by five select fit main bearings with the center bearing serving as the thrust washer location. Both the front and rear seals are a single piece design and are mounted to the oil pump and cylinder block.

STANDARD PROCEDURE

STANDARD PROCEDURE - MEASURING CRANKSHAFT END PLAY

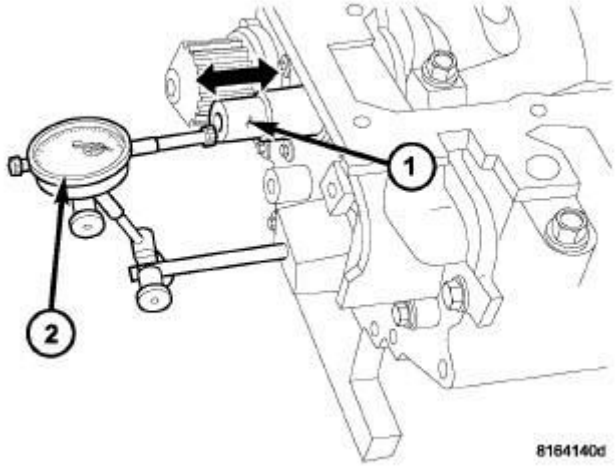

Fig. 226: Checking Crankshaft End Play
Courtesy of CHRYSLER GROUP, LLC

1 - Crankshaft
2 - DIAL INDICATOR

1. Mount a dial indicator (2) to front of engine with the locating probe on nose of crankshaft (1).
2. Move crankshaft all the way to the rear of its travel.
3. Zero the dial indicator.
4. Move crankshaft all the way to the front and read the dial indicator. for end play specification. Refer to **ENGINE SPECIFICATIONS** .

REMOVAL

REMOVAL

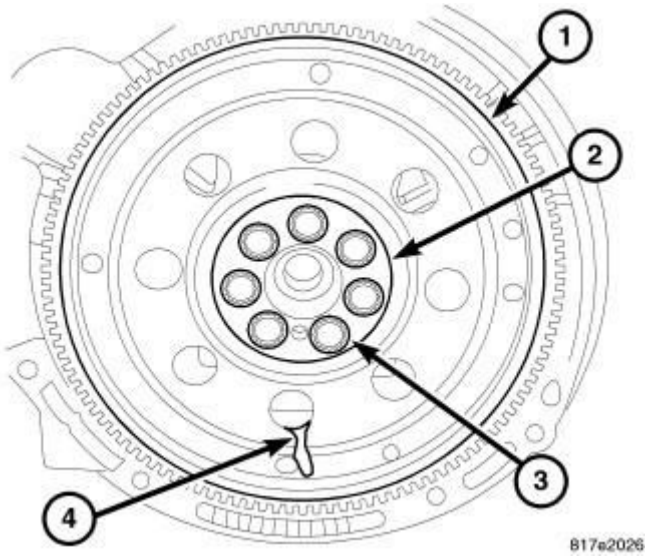

Fig. 227: Flex Plate
Courtesy of CHRYSLER GROUP, LLC

NOTE: Crankshaft can not be removed when engine is in vehicle.

1. Remove engine assembly from vehicle. Refer to **REMOVAL** .
2. Remove flex plate/flywheel (1).
3. Remove crankshaft rear oil seal. Refer to **SEAL, CRANKSHAFT OIL, REAR, REMOVAL** .

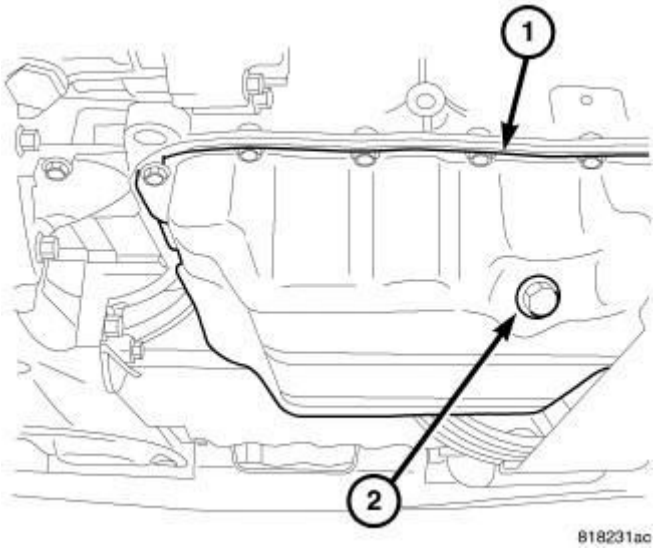

Fig. 228: Oil Drain Plug & Oil Pan
Courtesy of CHRYSLER GROUP, LLC

4. Install engine on suitable stand.
5. Drain engine oil (2).

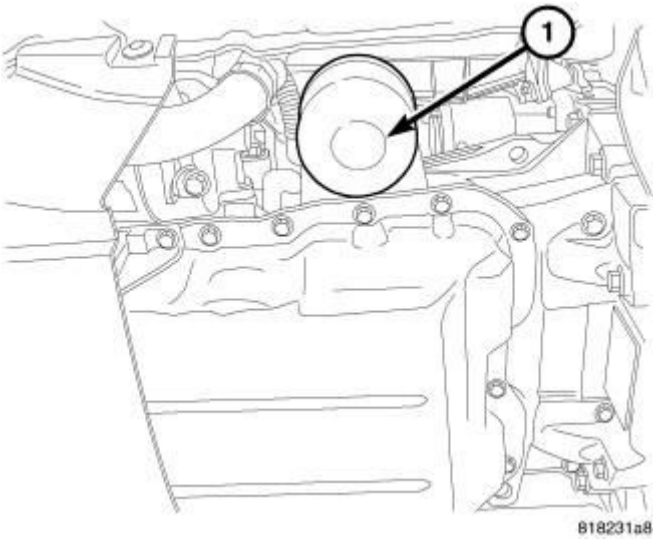

Fig. 229: Oil Filter
Courtesy of CHRYSLER GROUP, LLC

6. Remove oil filter (1).
7. Remove crankshaft vibration damper. Refer to **DAMPER, VIBRATION, REMOVAL** .
8. Remove water pump pulley.

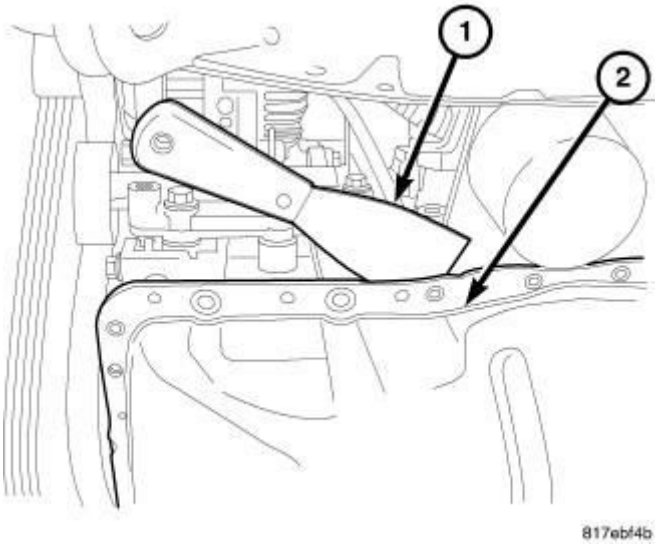

Fig. 230: Using Putty Knife To Loosen Seal Around Oil Pan
Courtesy of CHRYSLER GROUP, LLC

9. Remove the oil pan (2). Refer to **PAN, OIL, REMOVAL** .
10. Remove timing chain cover. Refer to **COVER(S), ENGINE TIMING, REMOVAL** .
11. Remove the timing chain. Refer to **CHAIN AND SPROCKETS, TIMING, REMOVAL** .
12. Remove balance shaft module.

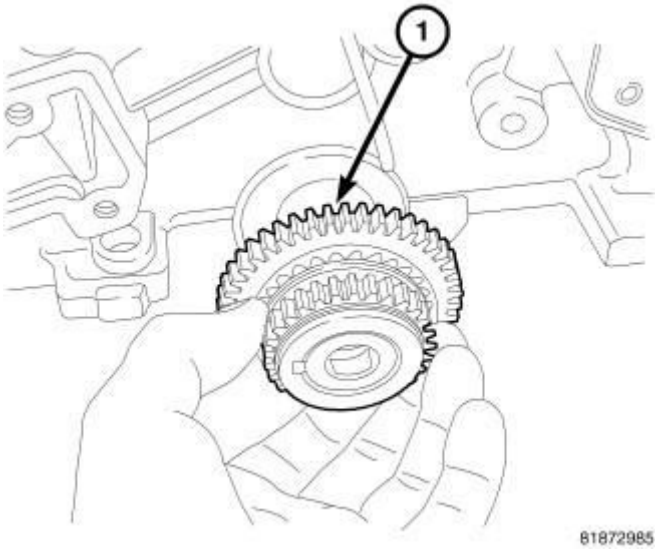

Fig. 231: Crankshaft Sprocket
Courtesy of CHRYSLER GROUP, LLC

13. Remove the crankshaft sprocket (1).

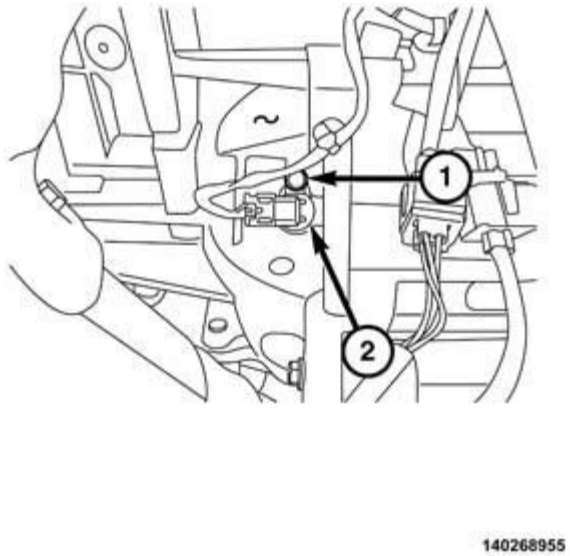

Fig. 232: Crankshaft Position Sensor & Bolt
Courtesy of CHRYSLER GROUP, LLC

14. Remove crankshaft position sensor retaining bolt (1) and remove sensor (2).
15. Remove ladder frame. Refer to **FRAME, LADDER, REMOVAL**.

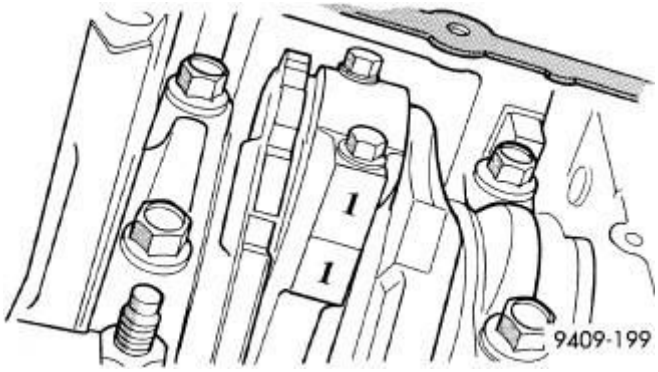

Fig. 233: Identify Connecting Rod To Cylinder-Typical
Courtesy of CHRYSLER GROUP, LLC

NOTE: **If piston/connecting rod replacement is necessary, remove cylinder head. Refer to CYLINDER HEAD, REMOVAL .**

CAUTION: DO NOT use a number stamp or a punch to mark connecting rods. Damage to connecting rod could occur.

16. Using a permanent ink or paint marker, identify cylinder number on each connecting rod and cap.
17. Remove all connecting rod bolts and caps. Care should be taken not to damage the fracture rod and cap surfaces.

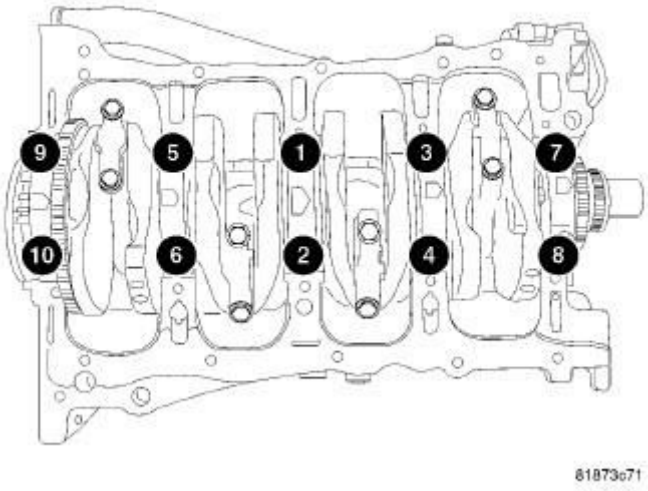

Fig. 234: Main Bearing Cap Removal/Installation Sequence
Courtesy of CHRYSLER GROUP, LLC

NOTE: Do not reuse connecting rod bolts.

18. Remove main bearing caps.

CAUTION: Use extreme care when handling crankshaft. Tone wheel damage can occur if crankshaft is mis-handled.

19. Lift out crankshaft from cylinder block. Do not damage the main bearings or journals when removing the crankshaft.

INSPECTION

INSPECTION

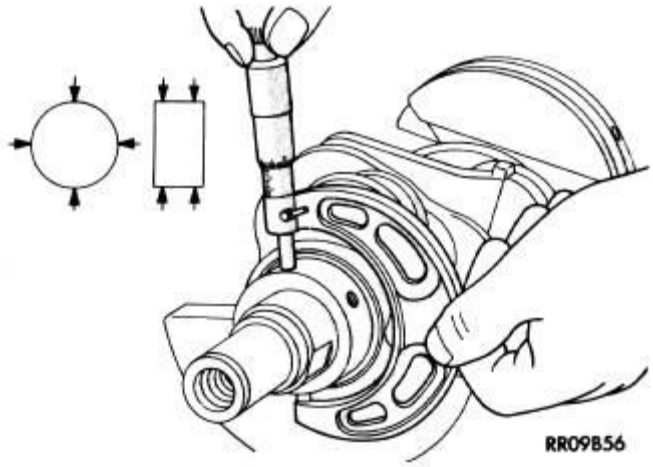

Fig. 235: Measuring Crankshaft Journal
Courtesy of CHRYSLER GROUP, LLC

NOTE: Typical crankshaft journal measurements shown.

1. Clean the oil off the bearing journals.
2. Determine the maximum diameter of the journals with a micrometer. Measure at two locations 90° apart at each end of the journals.
3. Compare the measured rod journal diameter to the crankshaft connecting rod bearing journal diameter grade marking chart. Refer to **BEARING(S), CONNECTING ROD - STANDARD PROCEDURE** . Select the bearing size that corresponds to the crankshaft markings for each rod bearing journal that will provide the proper oil clearance.
4. Compare the measured main bearing journal diameter to the crankshaft main bearing journal diameter grade marking chart. Refer to **BEARING(S), CRANKSHAFT, MAIN - STANDARD PROCEDURE** . Obtain the main bearing journal grade identification marks from the engine block and select the upper and lower main bearing sizes that will provide the proper oil clearance.
5. For connecting rod journals, verify that the maximum taper and maximum out of round are within specifications. Refer to **ENGINE SPECIFICATIONS** .
6. For main bearing journals, verify that the maximum taper and maximum out of round are within specifications. Refer to **ENGINE SPECIFICATIONS** .

INSTALLATION

INSTALLATION

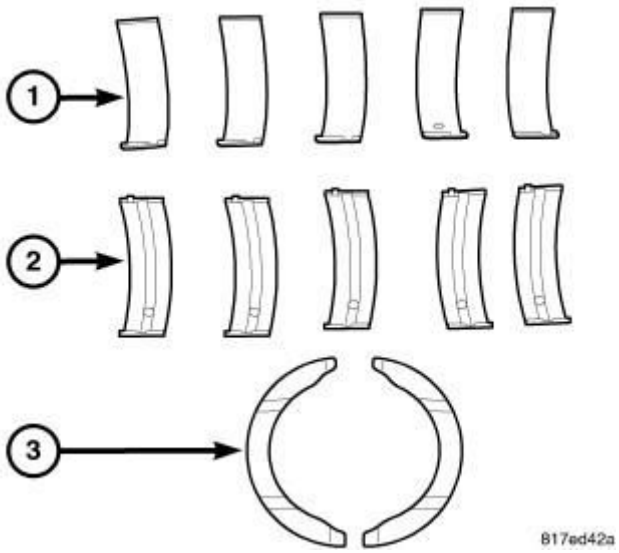

Fig. 236: Bearing Identification
Courtesy of CHRYSLER GROUP, LLC

The crankshaft is supported in five main bearings. All upper bearing shells (2) in the crankcase have oil grooves and holes. All lower bearing shells (1) are smooth. Crankshaft end play is controlled by a two piece thrust bearing (3) on the number three main bearing journal.

1. Clean main bearing cap bolt holes with Mopar® brake parts cleaner or equivalent and blow out with compressed air.
2. Install the main bearing upper (2) shells with the lubrication groove and oil hole in the engine block.
3. Make certain oil holes in block line up with oil hole in bearings and bearing tabs seat in the block tab slots.

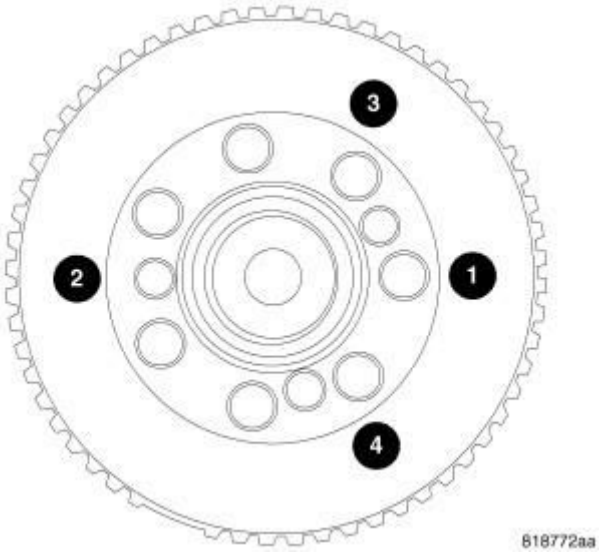

Fig. 237: Target Wheel
Courtesy of CHRYSLER GROUP, LLC

NOTE: If the crankshaft is sent out for machine work, it must be balanced as an assembly with the target ring installed.

4. Clean crankshaft and target ring with Mopar® brake parts cleaner or equivalent and dry with compressed air to ensure that the crankshaft mating surface and target ring mounting holes are free from oil and lock patch debris.

NOTE: Always use NEW mounting screws whether installing original or new target ring.

5. Install **NEW** mounting screws finger tight starting with the #1 location. Make sure engagement occurs with the shoulder of the screws and mounting hole before starting all other screws.
6. Tighten all mounting screws to 13 N.m (110 in. lbs.) in the sequence shown.

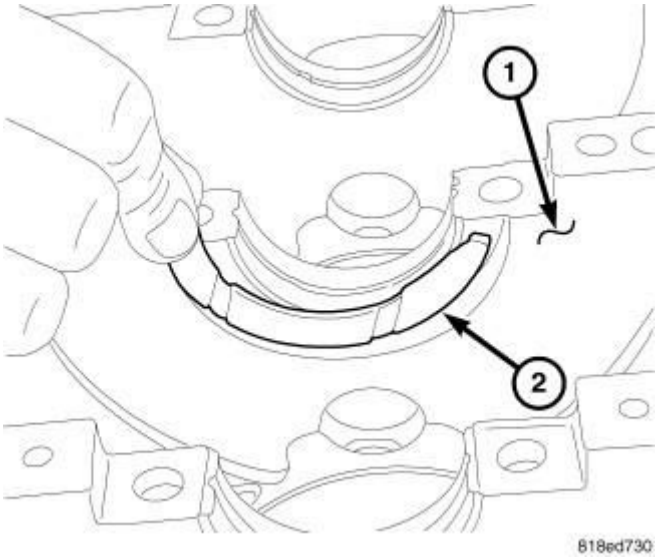

Fig. 238: Installing Thrust Bearing
Courtesy of CHRYSLER GROUP, LLC

NOTE: Lightly apply trans gel to thrust bearings to hold bearings in block.

NOTE: The thrust bearings must be installed with the notches facing the crankshaft.

7. Install thrust bearings (2) in block (1).

CAUTION: Do not get oil on the ladder frame mating surface. It will affect the ability of the RTV to seal the ladder frame to cylinder block.

NOTE: Ensure main bearing cap bolt holes in the block are clean, dry (free of

residual oil or coolant), and threads are not damaged.

8. Oil the bearings and journals. Install crankshaft in engine block.

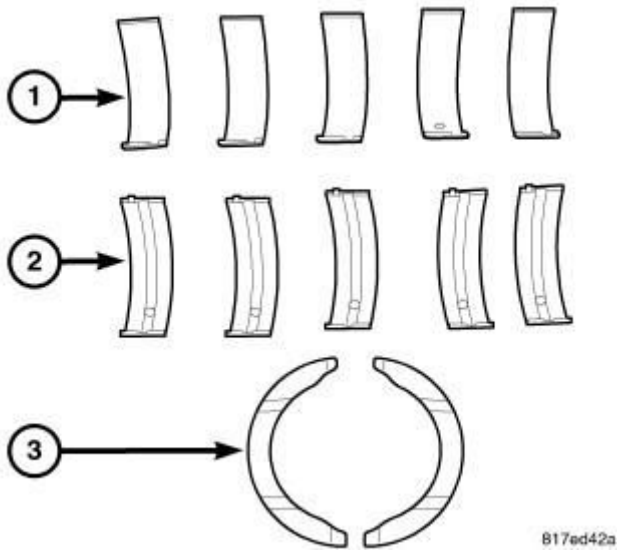

Fig. 239: Bearing Identification
Courtesy of CHRYSLER GROUP, LLC

9. Install lower main bearings (1) into main bearing cap. Make certain the bearing tabs are seated into the bearing cap slots.

NOTE: Main bearing caps are stamped 1 - 5 front to rear. Arrows on the caps must point towards the front of the engine.

10. Install main bearing caps to engine block.
11. Before installing the bolts the threads should be clean and dry.
12. Loosely install main bearing cap bolts.
13. To ensure correct thrust bearing alignment, perform the following steps:
    - Step 1: Rotate crankshaft until number 4 piston is at TDC.
    - Step 2: Move crankshaft rearward to limits of travel.
    - Step 3: Then, move crankshaft forward to limits of travel.
    - Step 4: Wedge an appropriate tool between the rear of the cylinder block and the rear crankshaft counterweight. This will hold the crankshaft in its furthest forward position.

CAUTION: There are different sets main bolts supplied with this engine. Each bolt set has a different torque value and engine damage could result if bolts are not torqued correctly. The bolts are not interchangeable.

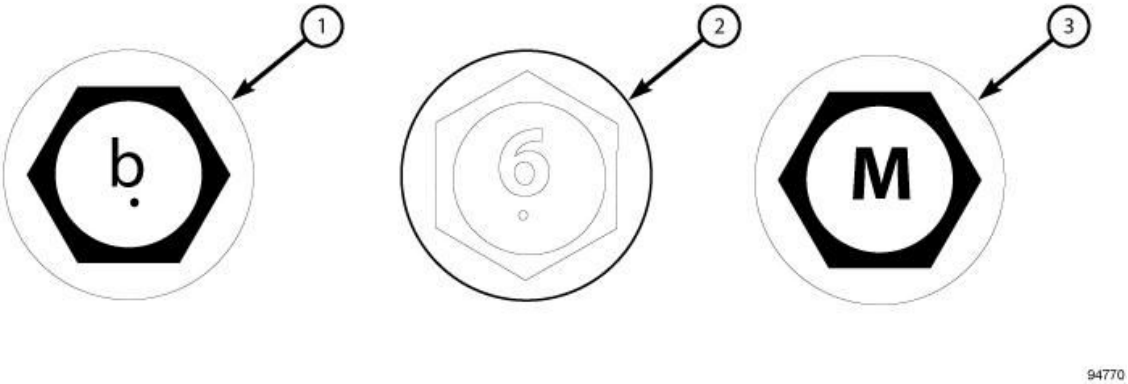

Fig. 240: Main Bolt Identification
Courtesy of CHRYSLER GROUP, LLC

14. If your bolt heads are marked with **b** (1) or **6** (2), go to step 15. If your bolt heads are marked with **M** (3) or any other marking, go to step 16.

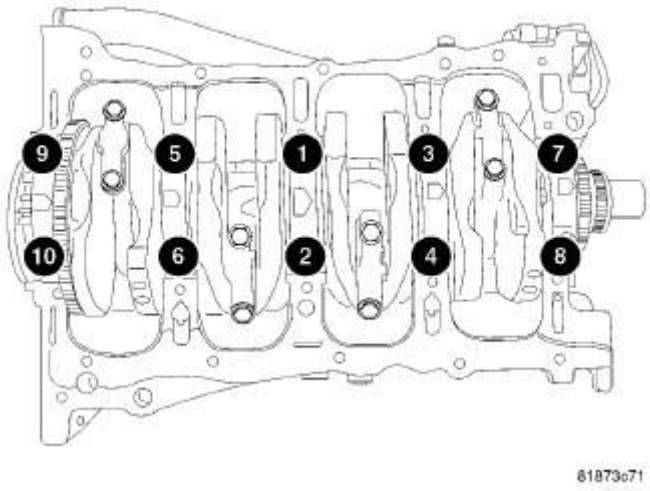

Fig. 241: Main Bearing Cap Removal/Installation Sequence
Courtesy of CHRYSLER GROUP, LLC

CAUTION: Before tightening bolts, you must identify the bolt head to obtain the correct torque value. Failure to identify the bolts correctly, could result in improperly tightened bolts which could result in engine damage.

15. Tighten bolts marked with **b** or **6** using the following three step method, in the sequence shown in illustration:
    - Tighten all bolts to 15 N.m (11 ft. lbs.)

- Tighten all bolts to 27 N.m (20 ft. lbs.)
- Tighten all bolts an additional 45°.

16. Tighten bolts marked with **M** using the following three step method, in the sequence shown in illustration:
    - Tighten all bolts to 15 N.m (11 ft. lbs.)
    - Tighten all bolts to 45 N.m (33 ft. lbs.)
    - Tighten all bolts an additional 45°.
17. Remove wedge tool used to hold crankshaft.
18. Check the crankshaft turning torque, it should not exceed 5.6 N.m (50 in. lbs.).
19. Check crankshaft end play. Refer to **CRANKSHAFT - STANDARD PROCEDURE** .
20. Install connecting rod bearings and caps. **Do Not Reuse Connecting Rod Bolts.** Tighten connecting rod bolts to 20 N.m + 90° (15 ft. lbs.) + 90°. Refer to **ROD, PISTON AND CONNECTING, INSTALLATION** .
21. Install the ladder frame assembly. Refer to **FRAME, LADDER, INSTALLATION**.
22. Install the balance shaft module. Refer to **PUMP, ENGINE OIL, INSTALLATION** .

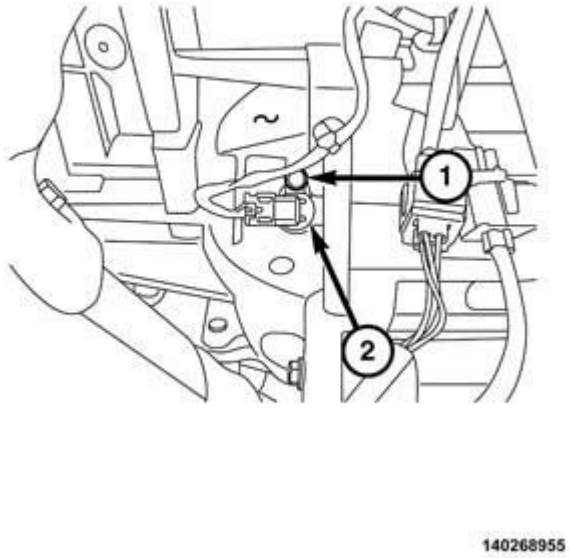

Fig. 242: Crankshaft Position Sensor & Bolt
Courtesy of CHRYSLER GROUP, LLC

23. Install crankshaft position sensor (2) and bolt (1). Tighten the bolt to 9 N.m (80 in. lbs.)
24. Install cylinder head if it was removed. Refer to **CYLINDER HEAD, INSTALLATION** .

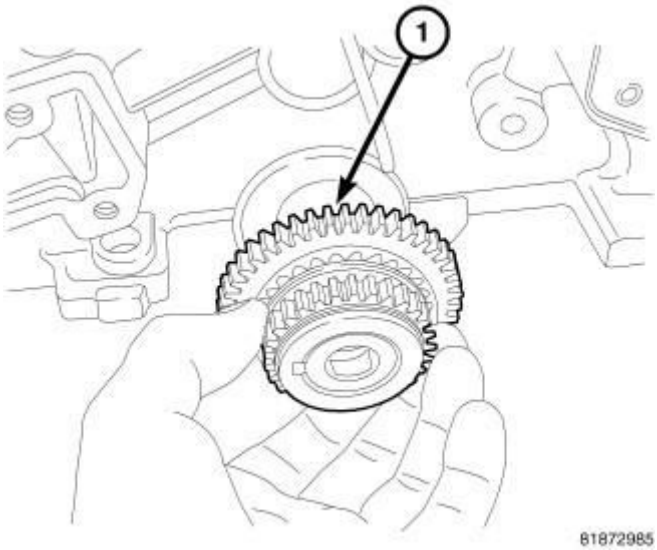

Fig. 243: Crankshaft Sprocket
Courtesy of CHRYSLER GROUP, LLC

25. Install front crankshaft sprocket (1).
26. Install the timing chain. Refer to **CHAIN AND SPROCKETS, TIMING, INSTALLATION** .
27. Install the timing chain front cover . Refer to **COVER(S), ENGINE TIMING, INSTALLATION** .
28. Install the oil pan. Refer to **PAN, OIL, INSTALLATION** .
29. Install rear crankshaft oil seal. Refer to **SEAL, CRANKSHAFT OIL, REAR, INSTALLATION** .
30. Install front crankshaft oil seal. Refer to **SEAL, CRANKSHAFT OIL, FRONT, INSTALLATION** .
31. Install crankshaft vibration damper. Refer to **DAMPER, VIBRATION, INSTALLATION** .
32. Install water pump pulley. Refer to **PUMP, WATER, INSTALLATION** .
33. Install crankshaft rear oil seal. Refer to **SEAL, CRANKSHAFT OIL, REAR, INSTALLATION** .
34. Install drive plate/flex plate using **new** bolts. Tighten bolts to 95 N.m (70 ft. lbs.).
35. Attach transaxle to engine. Tighten bellhousing bolts to 101 N.m (75 ft. lbs.).
36. Install the engine assembly into the vehicle. Refer to **INSTALLATION** .

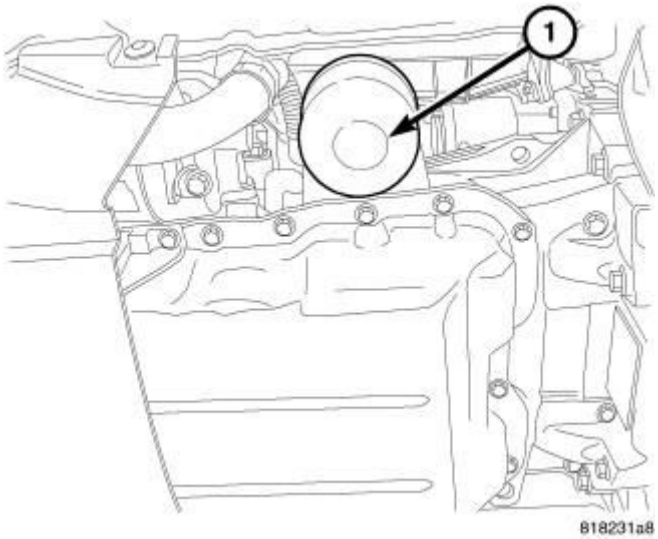

Fig. 244: Oil Filter
Courtesy of CHRYSLER GROUP, LLC

37. Install new oil filter (1) and fill with oil.
38. Fill with coolant. Refer to **STANDARD PROCEDURE** .
39. Start engine and check for leaks.
40. Install engine cover.

DAMPER, VIBRATION

REMOVAL

REMOVAL

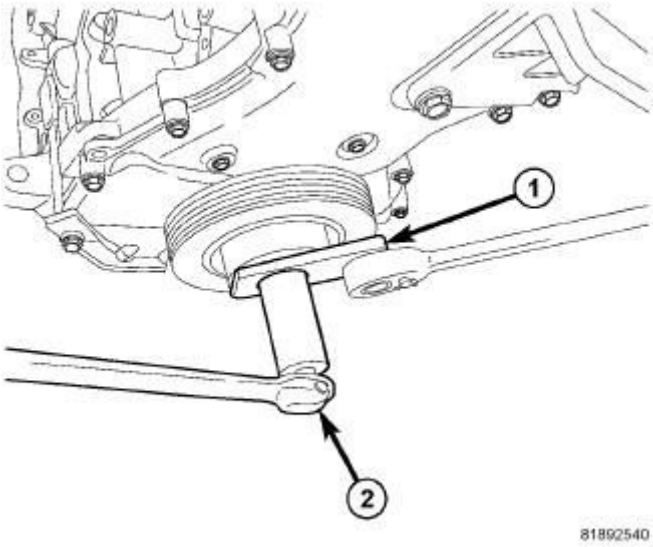

Fig. 245: Removing/Installing Crankshaft Damper Bolt
Courtesy of CHRYSLER GROUP, LLC

1. Remove accessory drive belts. Refer to **BELT, SERPENTINE, REMOVAL** .
2. Install Damper holder (special tool #9707, Holder, Vibration Damper) (1).
3. Remove crankshaft damper bolt.
4. Pull damper off crankshaft.

INSTALLATION

INSTALLATION

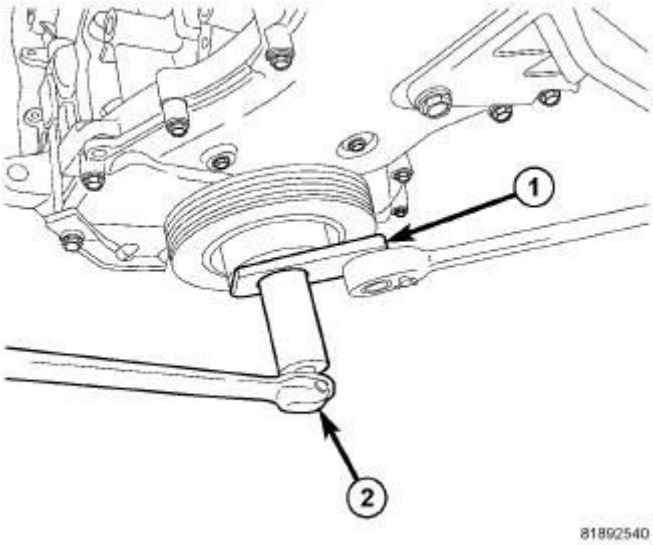

Fig. 246: Removing/Installing Crankshaft Damper Bolt
Courtesy of CHRYSLER GROUP, LLC

1. Install crankshaft damper.
2. Apply clean engine oil crankshaft damper bolt threads and between bolt head and washer. Tighten bolt to 210 N.m (155 ft. lbs.).
3. Install accessory drive belts. Refer to **BELT, SERPENTINE, INSTALLATION** .

FLEX PLATE

REMOVAL

REMOVAL

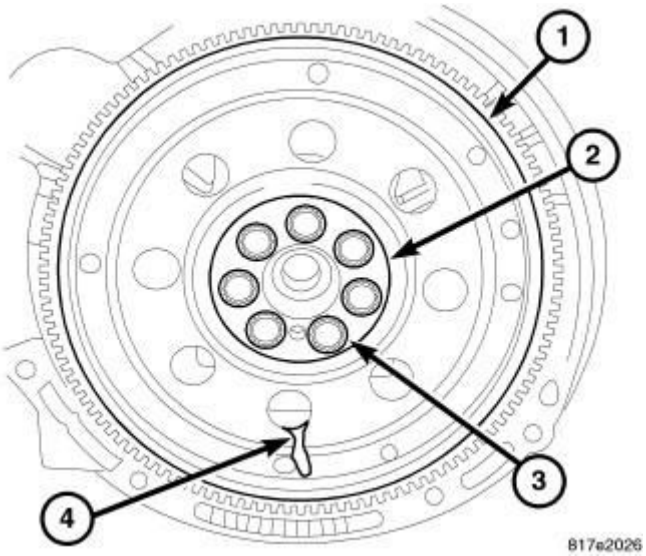

Fig. 247: Flex Plate
Courtesy of CHRYSLER GROUP, LLC

1. Remove transmission.
2. Remove flex plate bolts (3) and discard.
3. Remove washer (2).
4. Remove flex plate (1).

INSTALLATION

INSTALLATION

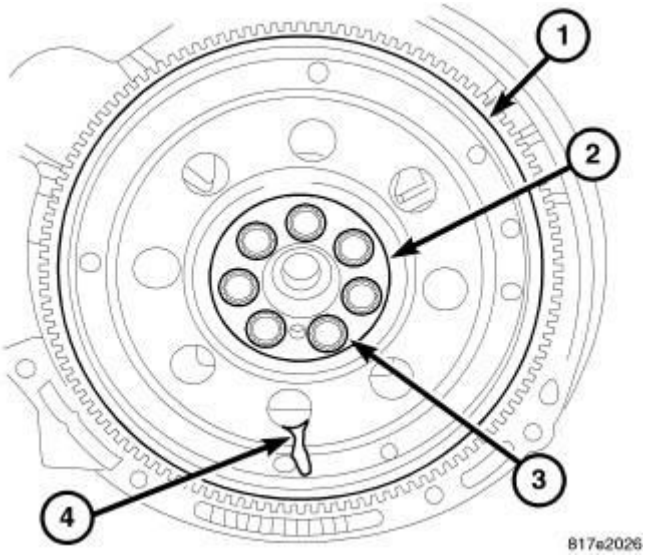

Fig. 248: Flex Plate
Courtesy of CHRYSLER GROUP, LLC

1. Install flex plate (1).
2. Install washer (2).
3. Install **new** flex plate bolts (3) and tighten in a criss-cross pattern to 95 N.m (70 ft. lbs.).
4. Install transaxle.

FRAME, LADDER

REMOVAL

REMOVAL

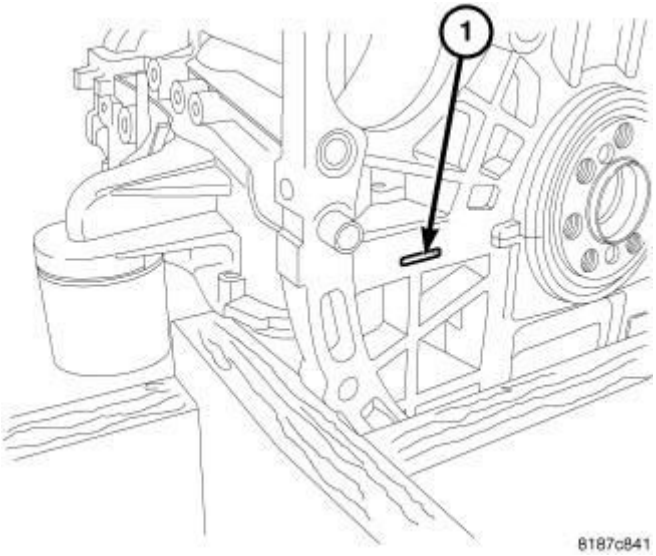

Fig. 249: Pry Point 1
Courtesy of CHRYSLER GROUP, LLC

1. Remove oil pan. Refer to **PAN, OIL, REMOVAL** .
2. Remove balance shaft assembly. Refer to **PUMP, ENGINE OIL, REMOVAL** .
3. Remove ladder frame retaining bolts.
4. Remove ladder frame using pry point cast in the rear of the block (1).

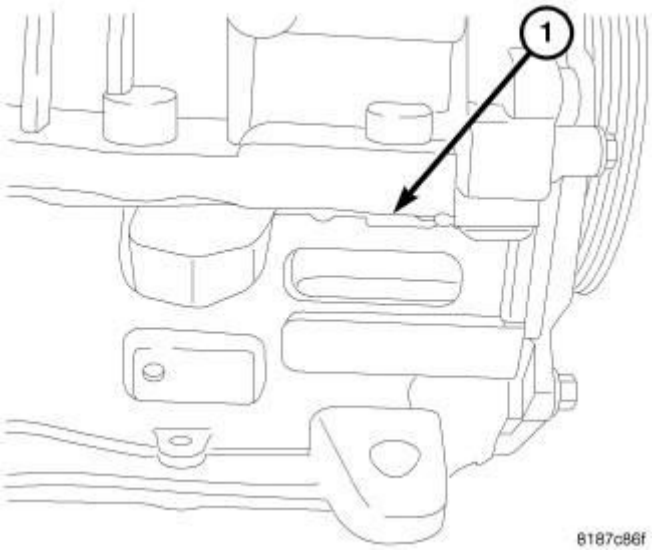

Fig. 250: Pry Point 2
Courtesy of CHRYSLER GROUP, LLC

5. To assist in removing the ladder frame another (1) pry point cast in the right side of the block.

INSTALLATION

INSTALLATION

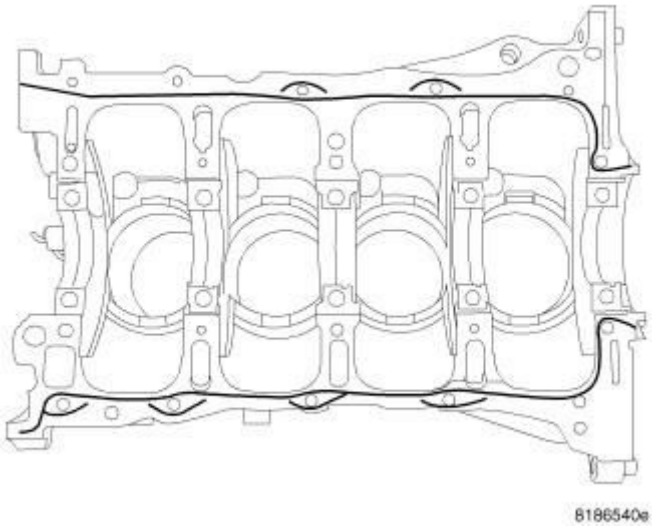

Fig. 251: Sealing Ladder Frame
Courtesy of CHRYSLER GROUP, LLC

NOTE: When using RTV, the sealing surfaces must be clean and free from grease and oil.

NOTE: **When using RTV, parts should be assembled in 10 minutes and tighten to final torque within 45 minutes.**

1. Apply a 2 mm bead of Mopar® engine sealant RTV or equivalent as shown in illustration.

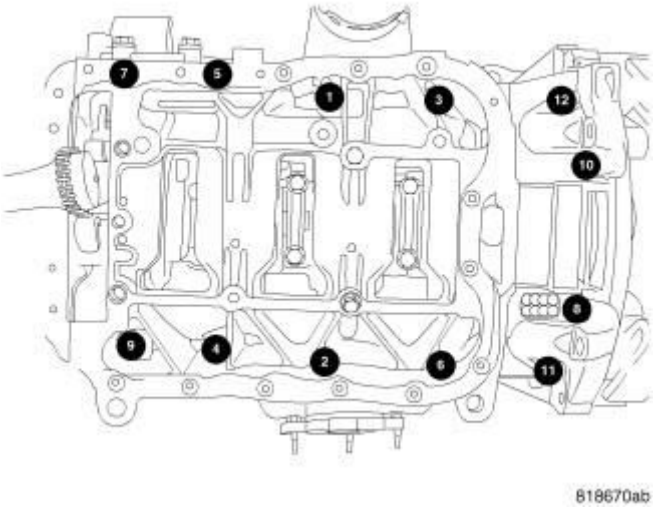

Fig. 252: Ladder Frame Bolts Tightening Sequence
Courtesy of CHRYSLER GROUP, LLC

2. Install bolts and tighten as shown in illustration following a two step method.
   - First: All to 10 N.m (89 in. lbs.).
   - Second: All to 26 N.m (19 ft. lbs.).
3. Install balance shaft module. Refer to **PUMP, ENGINE OIL, INSTALLATION** .
4. Install oil pan. Refer to **PAN, OIL, INSTALLATION** .

RING(S), PISTON

STANDARD PROCEDURE

STANDARD PROCEDURE - PISTON RING FITTING

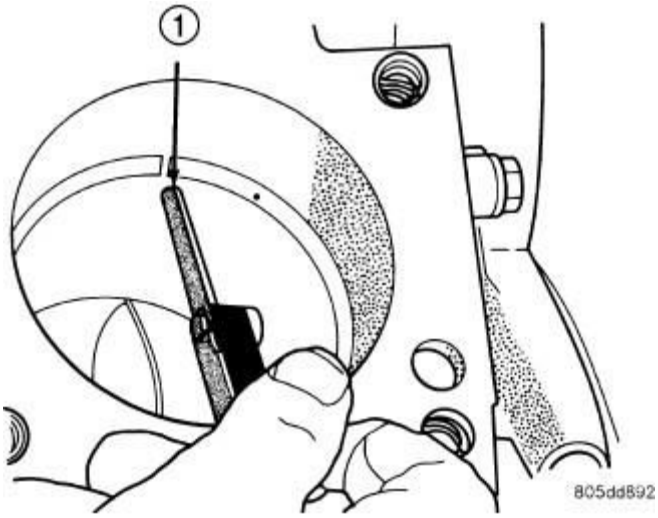

Fig. 253: Measuring Piston Ring End Gap
Courtesy of CHRYSLER GROUP, LLC

1. Wipe the cylinder bore clean.
2. Using a piston, to ensure that the ring is squared in the cylinder bore, slide the ring downward into the cylinder to a position 12 mm (0.50 in.) from the bottom of the cylinder bore.
3. Using a feeler gauge (1), check the ring end gap. Replace any rings not within specification.

Ring Position	Ring End Gap
No. 1 (top) Ring	0.25 - 0.40 mm (0.010 - 0.016 in.)
No. 2 (center) Ring	0.30 - 0.45 mm (0.012 - 0.018 in.)
Oil Control Ring (Steel Rail)	0.15 - 0.66 mm (0.006- 0.26 in.)

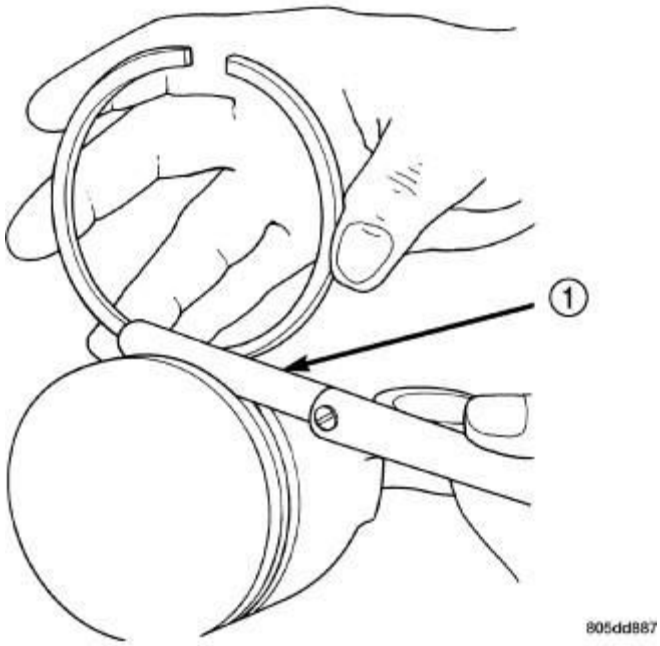

Fig. 254: Checking Piston Ring Grooves Clearances
Courtesy of CHRYSLER GROUP, LLC

4. Clean the piston ring grooves. Remove any nicks or burrs.
5. Measure the ring side clearance as shown in illustration. Make sure the feeler gauge (1) fits snugly between the ring land and the ring. Replace any ring not within specification.

Ring Position	Ring Side Clearance
No. 1 (top) Ring	0.025 - 0.033 mm (0.0010 - 0.0013 in.)
No. 2 (center) Ring	0.030 - 0.078 mm (0.0012 - 0.0031 in.)
Oil Control Ring (Steel Rails)	0.007 - 0.173 mm (.0003 - 0.0068 in.)

REMOVAL

REMOVAL

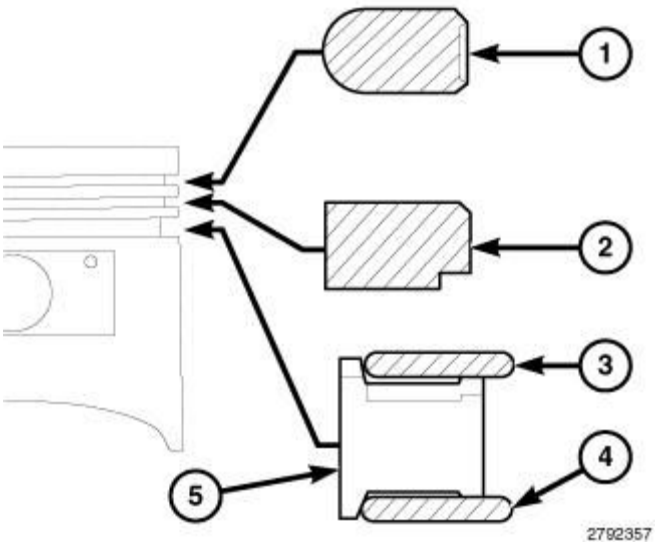

Fig. 255: Piston Ring Removal/Installation Sequence
Courtesy of CHRYSLER GROUP, LLC

NOTE: Typical piston shown in illustration.

1. Remove the piston and connecting rod(s). Refer to **ROD, PISTON AND CONNECTING, REMOVAL** .

CAUTION: To avoid damage to the piston rings, they must be removed in the following order:

- **No. 1 (upper) piston ring (1)**
- **No. 2 (intermediate) piston ring (2)**
- **Oil ring upper side rail (3)**
- **Oil ring lower side rail (4)**
- **Oil ring expander (5)**

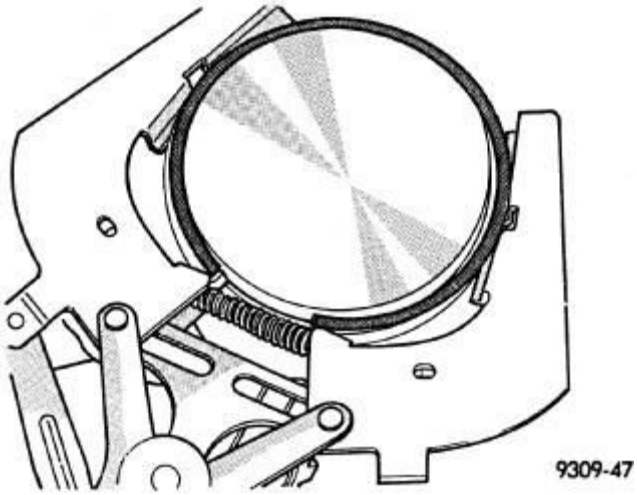

Fig. 256: Removing/Installing Upper & Intermediate Rings
Courtesy of CHRYSLER GROUP, LLC

NOTE: Typical piston shown in illustration.

2. Remove the No. 1 (upper) piston ring using a ring expander tool.
3. Remove the No. 2 (intermediate) piston ring using a ring expander tool.

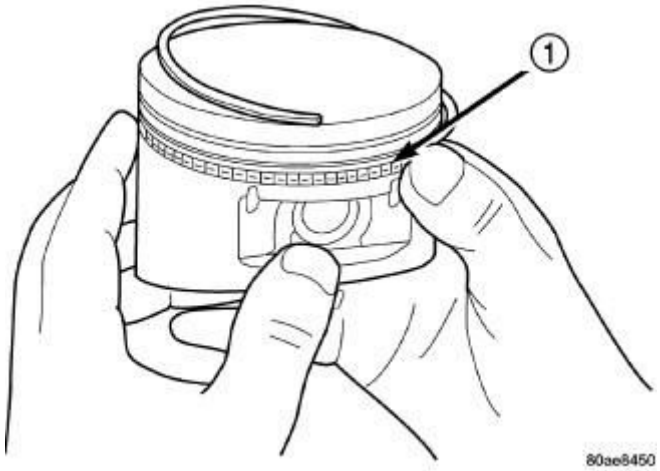

Fig. 257: Removing/Installing Piston Ring Side Rail
Courtesy of CHRYSLER GROUP, LLC

NOTE: Typical piston shown in illustration. Do not use a piston ring expander to remove the oil ring side rails.

4. Remove the oil ring upper side rail.
5. Remove the oil ring lower side rail.
6. Remove the oil ring expander (1).

INSTALLATION

INSTALLATION

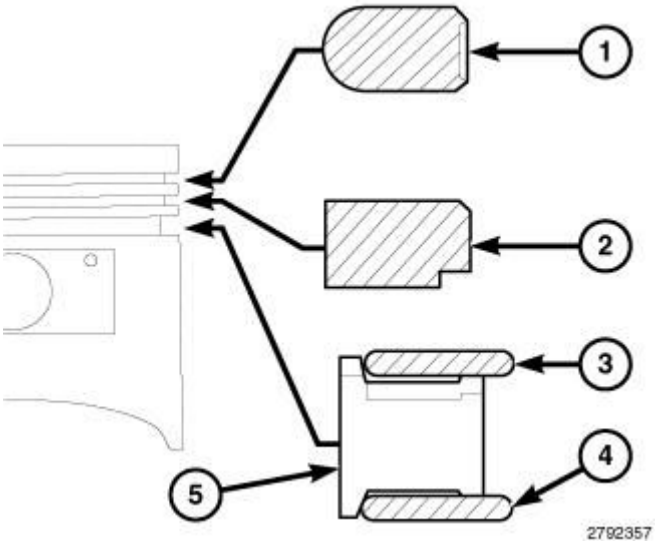

Fig. 258: Piston Ring Removal/Installation Sequence
Courtesy of CHRYSLER GROUP, LLC

NOTE: Typical piston shown in illustration.

1. If required, fit new rings to the piston. Refer to **RING(S), PISTON - STANDARD PROCEDURE** .

CAUTION: To avoid damage to the piston rings, they must be installed in the following order:

- **Oil ring expander (5)**
- **Oil ring lower side rail (4)**
- **Oil ring upper side rail (3)**
- **No. 2 (intermediate) piston ring (2)**
- **No. 1 (upper) piston ring (1)**

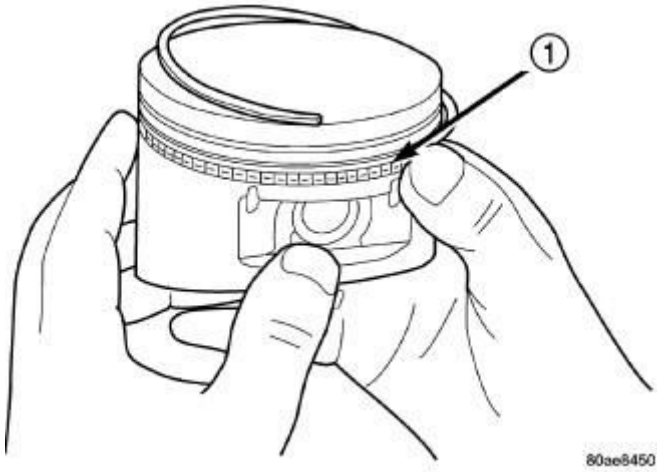

Fig. 259: Removing/Installing Piston Ring Side Rail
Courtesy of CHRYSLER GROUP, LLC

NOTE: Typical piston shown in illustration. Do not use a piston ring expander to install the oil ring side rails.

2. Install the oil ring expander (1).
3. Install the oil ring lower side rail by placing one end between the piston ring groove and the oil ring expander. Hold this end firmly and press down the portion to be installed until the side rail is in position.
4. Install the oil ring upper side rail in the same manner as the lower side rail.

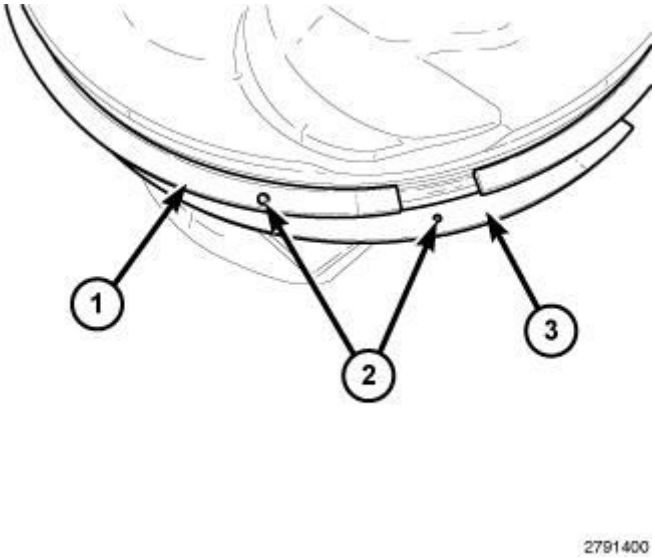

Fig. 260: Dot Marks On Piston Rings
Courtesy of CHRYSLER GROUP, LLC

NOTE: The No. 1 (upper) piston ring (1) and No. 2 (intermediate) piston ring (3) have a different cross section. Install the rings with manufacturers I.D.

mark (dot) (2) facing up, towards the top of the piston.

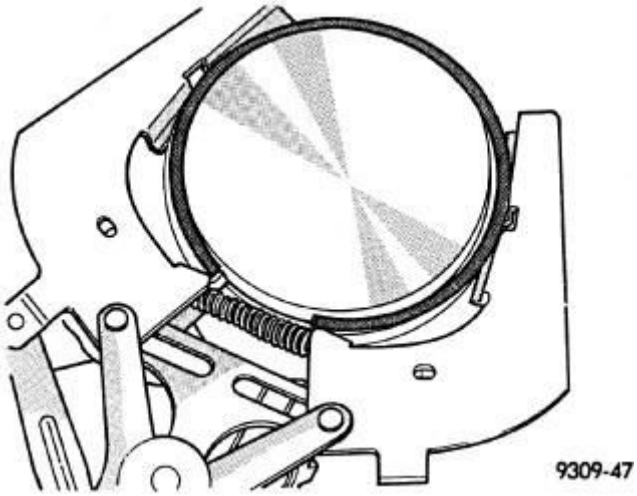

Fig. 261: Removing/Installing Upper & Intermediate Rings
Courtesy of CHRYSLER GROUP, LLC

NOTE: Typical piston shown in illustration.

5. Install the No. 2 (intermediate) piston ring using a ring expander tool.
6. Install the No. 1 (upper) piston ring using a ring expander tool.
7. Rotate the rings around the piston, the rings must rotate in the grooves with out binding.

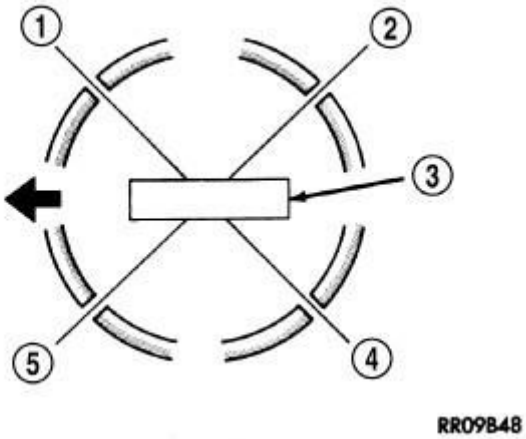

Fig. 262: Piston Ring End Gap Position
Courtesy of CHRYSLER GROUP, LLC

8. Position the piston ring end gaps as follows:
   - Oil ring expander gap (5)
   - Oil ring lower side rail end gap (4)

- Oil ring upper side rail end gap (1)
- No. 2 (intermediate) ring end gap (5)
- No. 1 (upper) ring end gap (2)

9. Install the piston and connecting rod(s). Refer to **ROD, PISTON AND CONNECTING, INSTALLATION** .

ROD, PISTON AND CONNECTING

DESCRIPTION

DESCRIPTION

0911009495

Fig. 263: Piston & Connecting Rod
Courtesy of CHRYSLER GROUP, LLC

CAUTION: Do not use a metal stamp to mark connecting rods as damage may result, instead use ink or a scratch awl.

The pistons are a lightweight design with ultra low tension piston rings for improved fuel economy. The pistons are made of a high strength aluminum alloy and the piston skirt has a Moly® coating. The top piston ring land has an anodized coating for improved wear. The piston is connected to the rod using a full floating pin with two locking clips. The connecting rod is forged steel with a bolted cracked cap design. The connecting rod bolts are not reusable. Pistons are available in two different diameters with grade markings for each bore indicated on the side of the cylinder block. The upper compression ring is a 1.2 mm steel ring with a spray coating. The intermediate compression ring is 1.2 mm micro napier design. Both compression rings have a dot or a mark on the piston ring. The marked side of the ring must face the top of the piston. The 2 mm three piece oil control ring is very thin. These are chrome plated rings and have a stainless steel expander.

Fig. 264: Piston Components
Courtesy of CHRYSLER GROUP, LLC

- 1 - Head
- 2 - Valve Relief
- 3 - Upper or Top Land
- 4 - Second Land
- 5 - Third Land
- 6 - Moly® Coating
- 7 - Wrist Pin
- 8 - Locking Ring
- 9 - Skirt
- 10 - Oil Ring
- 11 - Secondary Compression Ring
- 12 - Top Compressor Ring

STANDARD PROCEDURE

PISTON FITTING

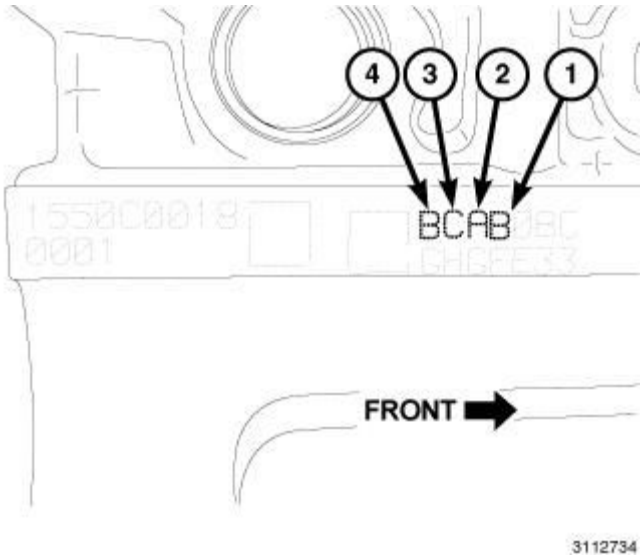

Fig. 265: Engine Block Cylinder Bore Diameter Grade Markings
Courtesy of CHRYSLER GROUP, LLC

The pistons are "select fit" to achieve proper oil clearance. Engine block cylinder bore diameter grade markings are stamped into the right side of the engine block. These marks are read from front to rear, corresponding with cylinder number 1, 2, 3, 4.

Engine block cylinder bore diameter grade markings correspond to specific cylinder bore diameters. The chart below identifies the three engine block grade markings and their associated cylinder bore diameters.

Engine Block Marking	Cylinder Bore Size mm (in.)	
	Metric	Standard
A	72.000 - 72.010 mm	2.8346 - 2.8350 in.
B	72.010 - 72.020 mm	2.8350 - 2.8354 in.
C	72.020 - 72.030 mm	2.8354 - 2.8358 in.

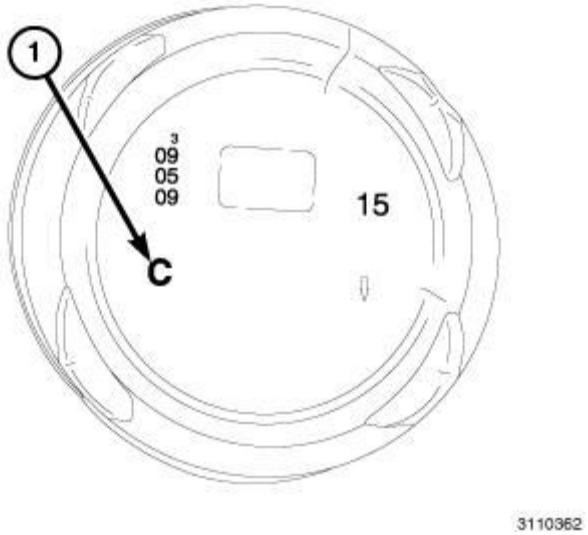

Fig. 266: Piston Size Mark
Courtesy of CHRYSLER GROUP, LLC

The piston is marked with the piston size (1) on the piston crown. The pistons are available in three different sizes in order to achieve the desired oil clearance. Select the piston size that corresponds to the engine block cylinder bore diameter grade markings for each cylinder.

Pistons are available in three sizes. The chart below identifies the three piston sizes.

Piston Marking	Piston Size mm (in.)	
	Metric	Standard
A	71.960 - 71.970 mm	2.8331 - 2.8835 in.
B	71.970 - 71.980 mm	2.8835 - 2.8339 in.
C	71.980 - 71.990 mm	2.8339 - 2.8342 in.

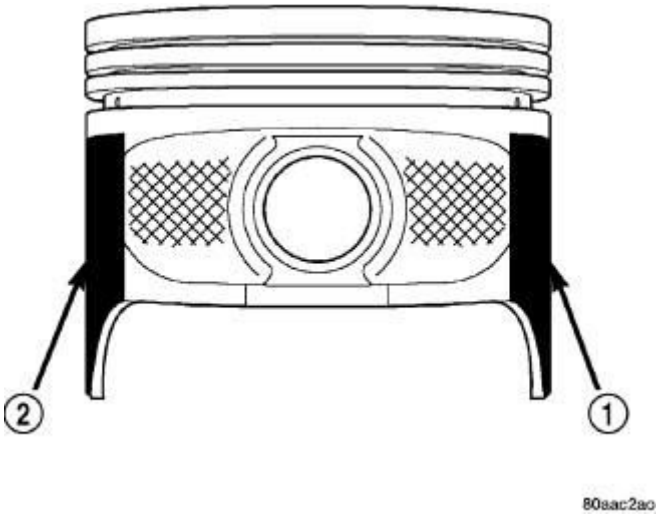

Fig. 267: Coating Material On Piston

Courtesy of CHRYSLER GROUP, LLC

NOTE: Typical coated piston shown in illustration.

The coated pistons are serviced with the piston pin and connecting rod pre-assembled. The coating material (1 and 2) is applied to the piston after the final piston machining process. Piston installation into the cylinder bore requires slightly more pressure than that required for non-coated pistons. The bonded coating on the piston will give the appearance of a line-to-line fit with the cylinder bore.

CONNECTING ROD SIDE CLEARANCE

DIAL INDICATOR

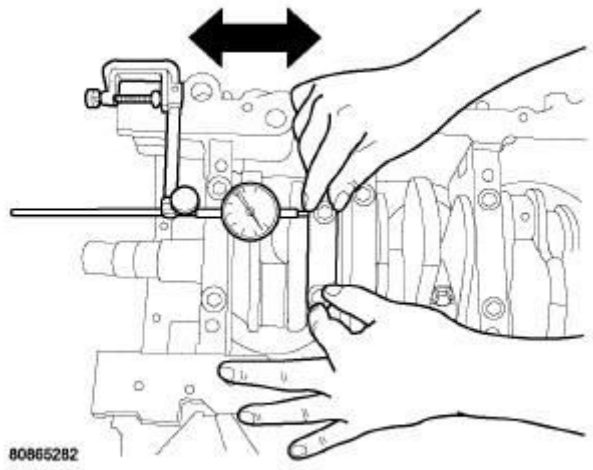

Fig. 268: Measuring Connecting Rod Side Clearance
Courtesy of CHRYSLER GROUP, LLC

1. Mount Dial Indicator Set (special tool #C-3339A, Set, Dial Indicator) to a stationary point on the engine. Locate the probe perpendicular to and resting against the connecting rod cap being checked.
2. Move the connecting rod all the way to the rear of its travel.
3. Zero the dial indicator.
4. Move the connecting rod forward to the limit of travel and read the dial indicator. Compare the measured side clearance to the specification. Refer to **ENGINE SPECIFICATIONS** .
5. Repeat this procedure for each connecting rod. Rotate the crankshaft for connecting rod accessibility.

FEELER GAUGE

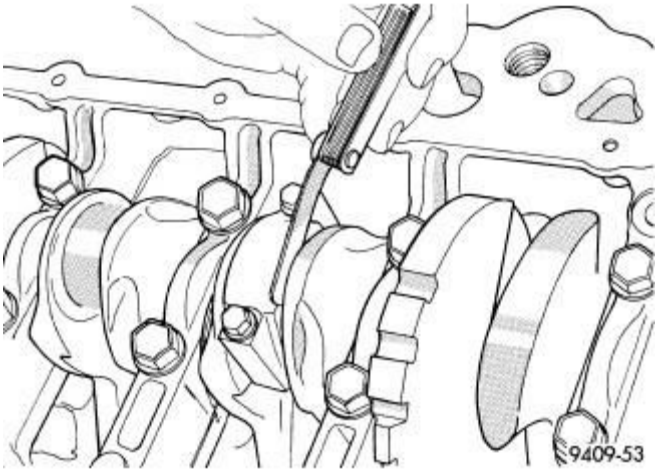

Fig. 269: Connecting Rod Side Clearance
Courtesy of CHRYSLER GROUP, LLC

NOTE: Typical four cylinder engine shown in illustration.

1. Slide a snug-fitting feeler gauge between the connecting rod and crankshaft journal flange. Compare the measured side clearance to the specification. Refer to **ENGINE SPECIFICATIONS** .
2. Repeat this procedure for each connecting rod. Rotate the crankshaft for connecting rod accessibility.

REMOVAL

REMOVAL

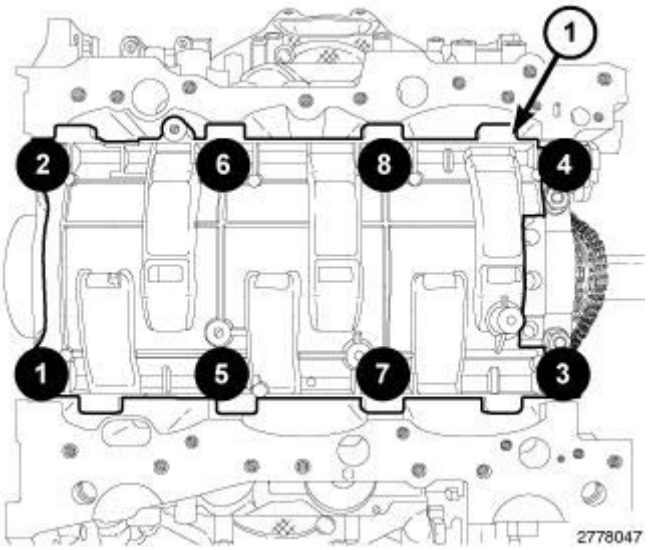

Fig. 270: Main Bearing Cap Bolts From Windage Tray Removal Sequence
Courtesy of CHRYSLER GROUP, LLC

1. Disconnect and isolate the negative battery cable.

2. Remove the oil pans, engine timing cover and cylinder heads. Refer to **CYLINDER HEAD, REMOVAL** .
3. Remove the engine oil pump. Refer to **PUMP, ENGINE OIL, REMOVAL** .
4. Remove the eight main bearing cap bolts from the windage tray in the sequence shown in illustration and remove the windage tray (1).

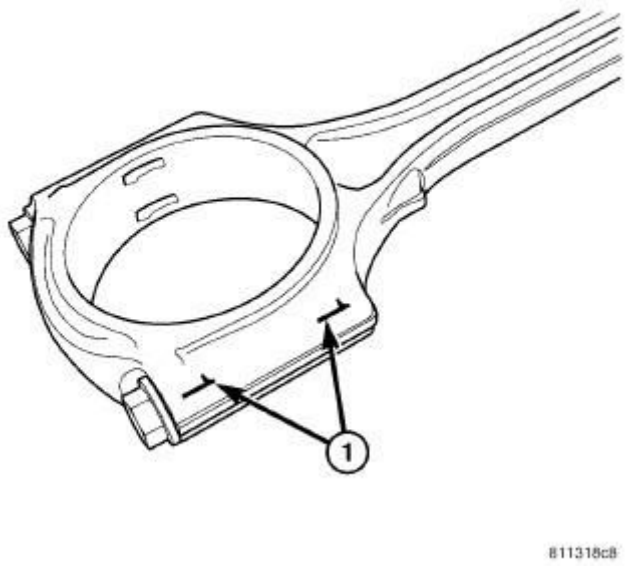

Fig. 271: Connecting Rod To Cylinder Identification
Courtesy of CHRYSLER GROUP, LLC

5. If necessary, remove the top ridge of the cylinder bores with a reliable ridge reamer before removing the pistons from the engine block. **Be sure to keep the tops of pistons covered during this operation.** Pistons and connecting rods must be removed from the top of the engine block. When removing piston and connecting rod assemblies from the engine, rotate the crankshaft CW so that each connecting rod is centered in the cylinder bore.

CAUTION: DO NOT use a number stamp or a punch to mark connecting rods or caps, as damage to connecting rods could occur

NOTE: Connecting rods and bearing caps are not interchangeable and should be marked before removing to ensure correct reassembly.

6. Mark connecting rod and bearing cap positions (1) using a permanent ink marker or scribe tool.

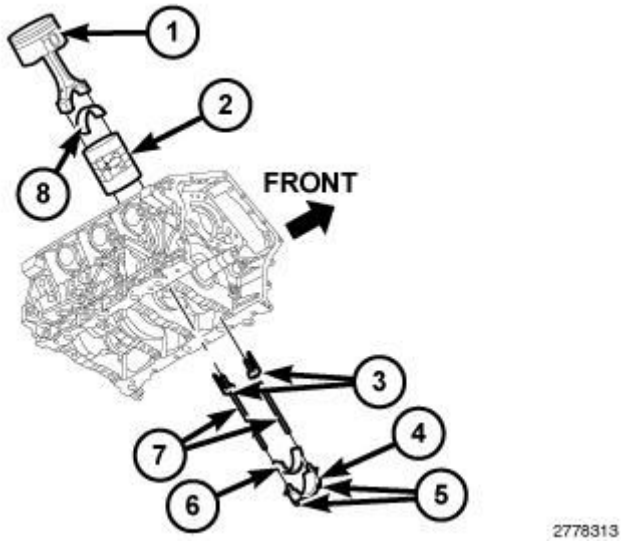

Fig. 272: Piston, Connecting Rod Cap, Bolts, Plastic Guide Plates & Guide Pins
Courtesy of CHRYSLER GROUP, LLC

NOTE: Typical V6 engine configuration shown in illustration.

CAUTION: Care must be taken not to damage the fractured rod and cap joint face surfaces, as engine damage may occur.

7. Remove the connecting rod cap bolts (5) and the connecting rod cap (4). Discard the cap bolts.

CAUTION: Care must be taken not to nick crankshaft journals, as engine damage may occur.

8. Remove the plastic guide plates (3) from the Guide Pins (special tool #8189, Guide Pins) (7) and install the Guide Pins to the connecting rod being removed.

CAUTION: Avoid contact with the piston oil cooler jet(s). Positioning of the oil cooler jet(s) is critical for proper engine operation.

9. Remove the piston and connecting rod (1) from cylinder bore.
10. Repeat the previous steps for each piston being removed.
11. Immediately after piston and connecting rod removal, reinstall the bearing cap (4) on the mating connecting rod to prevent damage to the fractured cap and rod surfaces.
12. If required, remove the piston rings. Refer to **RING(S), PISTON, REMOVAL** .
13. Repeat the previous steps for each piston being removed.

CLEANING

CLEANING

CAUTION: DO NOT use a wire wheel or other abrasive cleaning devise to clean the pistons or connecting rods. The pistons have a Moly coating, this coating must not be damaged.

CAUTION: Do not remove the piston pin from the piston and connecting rod assembly.

1. Using a suitable cleaning solvent clean the pistons in warm water and towel dry.
2. Use a wood or plastic scraper to clean the ring land grooves.

INSPECTION

INSPECTION

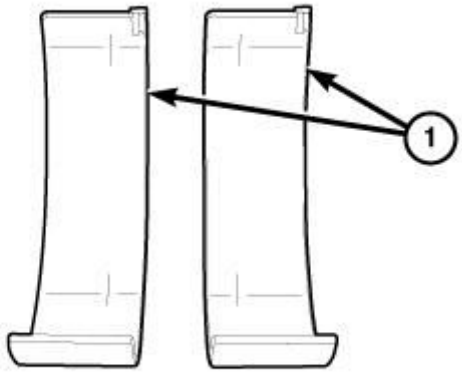

3170166

Fig. 273: Inserts
Courtesy of CHRYSLER GROUP, LLC

1. Wipe the inserts (1) clean.
2. Inspect the inserts for abnormal wear patterns, scoring, grooving, fatigue, pitting and for metal or other foreign material imbedded in the lining.
3. Inspect the back of the inserts for fractures, scrapes, or irregular wear patterns.
4. Inspect the insert locking tabs for damage.
5. Replace any bearing that shows abnormal wear. Refer to **BEARING(S), CONNECTING ROD - STANDARD PROCEDURE** .

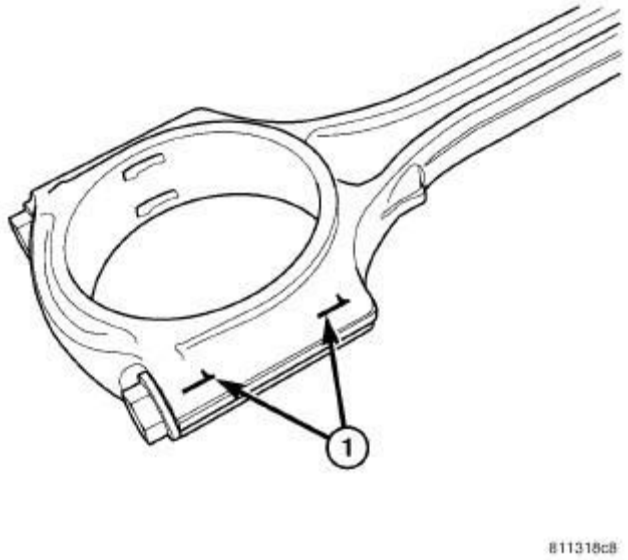

Fig. 274: Connecting Rod To Cylinder Identification
Courtesy of CHRYSLER GROUP, LLC

6. Inspect the connecting rod bearing bores for signs of scoring, nicks and burrs.

NOTE: **Misaligned or bent connecting rods can cause abnormal wear on pistons, piston rings, cylinder walls, connecting rod bearings and crankshaft connecting rod journals. If wear patterns or damage to any of these components indicate the probability of a misaligned connecting rod, inspect it for correct rod alignment.**

7. Replace misaligned, bent or twisted connecting rods.

NOTE: **Connecting rods are serviced with the piston pre-assembled. The pistons are "select fit" to achieve proper oil clearance. Refer to ROD, PISTON AND CONNECTING - STANDARD PROCEDURE .**

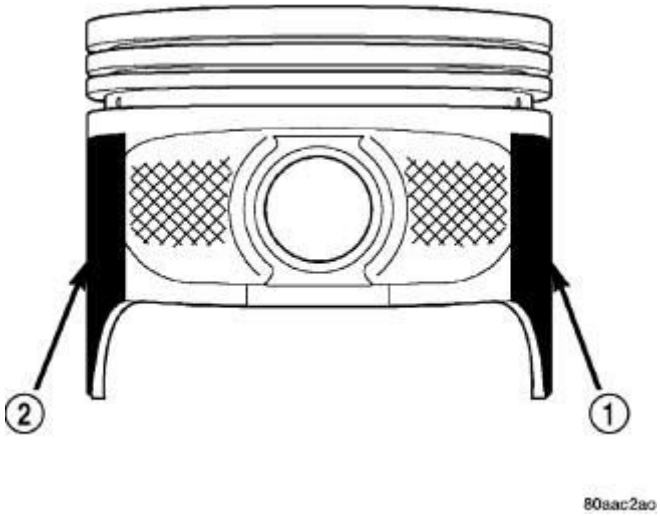

Fig. 275: Coating Material On Piston
Courtesy of CHRYSLER GROUP, LLC

NOTE: Typical coated piston shown in illustration.

8. Inspect the piston for scoring or scraping marks in the piston skirts. Check the ring lands for cracks and/or deterioration.

NOTE: The coating material (1 and 2) is applied to the piston after the final piston machining process. This coating may affect the outside diameter measurement of a coated piston may not provide accurate results.

9. Check the piston for taper and out of round shape.

NOTE: Piston installation into the cylinder bore may require slightly more pressure than that required for non-coated pistons. The bonded coating on the piston will give the appearance of a line-to-line fit with the cylinder bore.

NOTE: The coated pistons will be serviced with the piston pin and connecting rod pre-assembled.

INSTALLATION

INSTALLATION

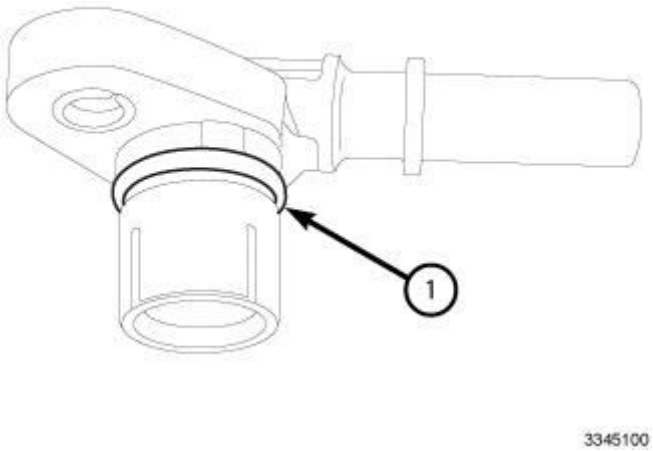

Fig. 276: Vacuum Fitting O-Ring Seal
Courtesy of CHRYSLER GROUP, LLC

1. The vacuum fitting O-ring seal (1) can be reused if not damaged. If removed, lightly lubricate the O-ring seal (1) with clean engine oil and install on the vacuum fitting.

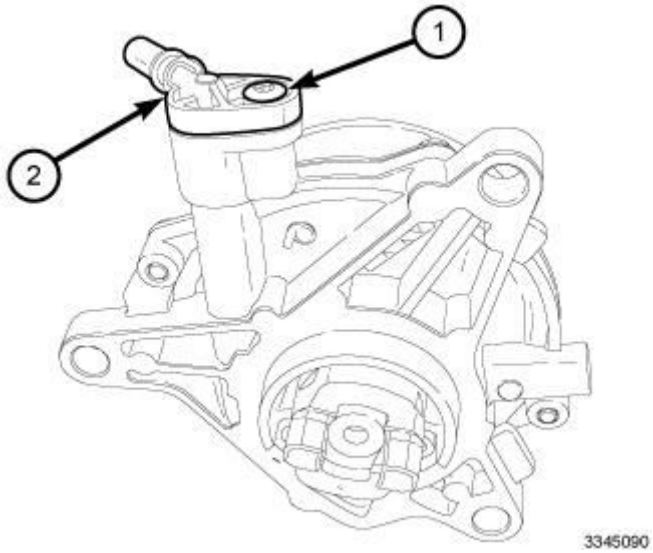

Fig. 277: Vacuum Fitting & Screw
Courtesy of CHRYSLER GROUP, LLC

2. If removed, install the vacuum fitting (2) to the vacuum pump with the screw (1) tightened to 8 N.m (71 in. lbs.).
3. Clean the mating surfaces of the cylinder head and the vacuum pump. Install a new vacuum pump gasket.
4. Align the pump drive tab with the pump drive slot located on the cam shaft.
5. Install the vacuum pump mounting bolts. Tighten the bolts to 20 N.m (15 ft. lbs.).
6. Connect the vacuum supply line to the pump.

CAUTION: When servicing components near the vacuum pump, avoid contact with the plastic nipple that connects the vacuum pump to the brake booster hose. It is possible to crack the plastic nipple resulting in a brake booster vacuum leak.

7. Install the battery (4). Refer to **BATTERY, INSTALLATION** .
8. Install the engine cover. Refer to **RESONATOR, AIR CLEANER, INSTALLATION** .
9. Run the engine a check the vacuum pump for proper operation.

SEAL, CRANKSHAFT OIL, FRONT

REMOVAL

REMOVAL

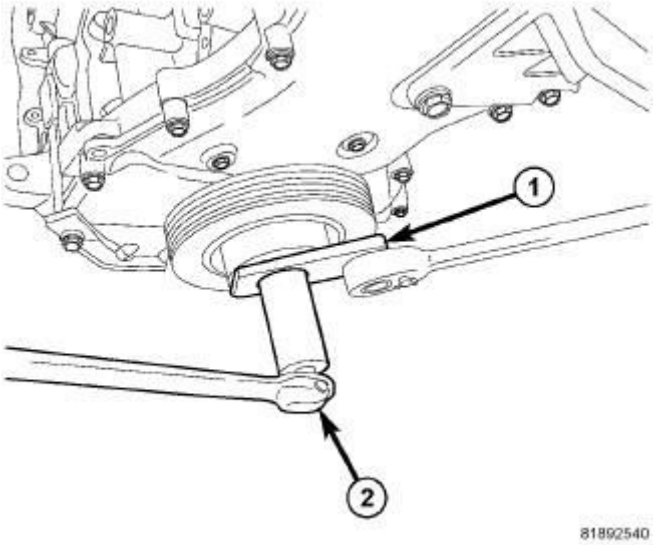

Fig. 278: Removing/Installing Crankshaft Damper
Courtesy of CHRYSLER GROUP, LLC

1. Remove accessory drive belt.
2. Install Damper Holder (special tool #9707, Holder, Vibration Damper) (1) and remove damper retaining bolt.
3. Pull damper off crankshaft.

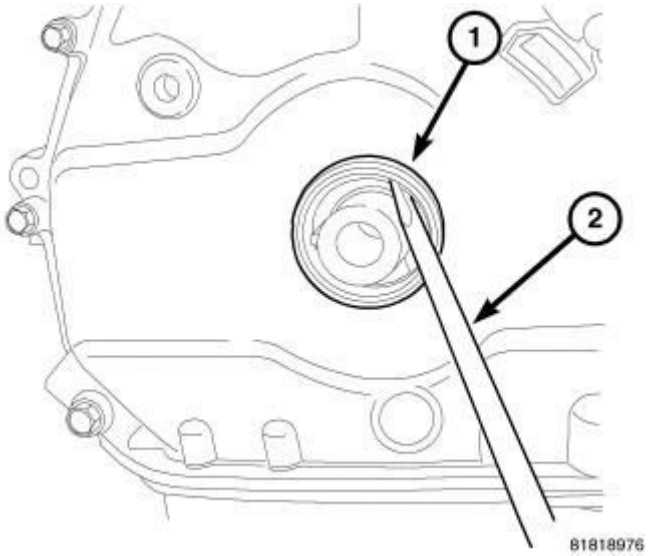

Fig. 279: Removing Front Crankshaft Oil Seal By Prying Out With Screwdriver
Courtesy of CHRYSLER GROUP, LLC

4. Remove front crankshaft oil seal (1) by prying out with a screw driver (2). Be careful not to damage the cover seal surface.

INSTALLATION

INSTALLATION

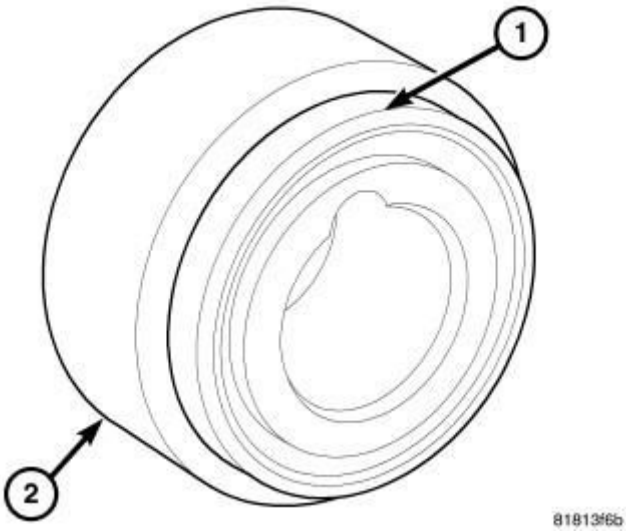

Fig. 280: Crankshaft Oil Seal & Seal Installer 9506
Courtesy of CHRYSLER GROUP, LLC

1. Place seal (1) onto Front Crankshaft Seal Installer (special tool #9506, Installer, Oil Seal) (2) with seal spring towards the inside of engine.

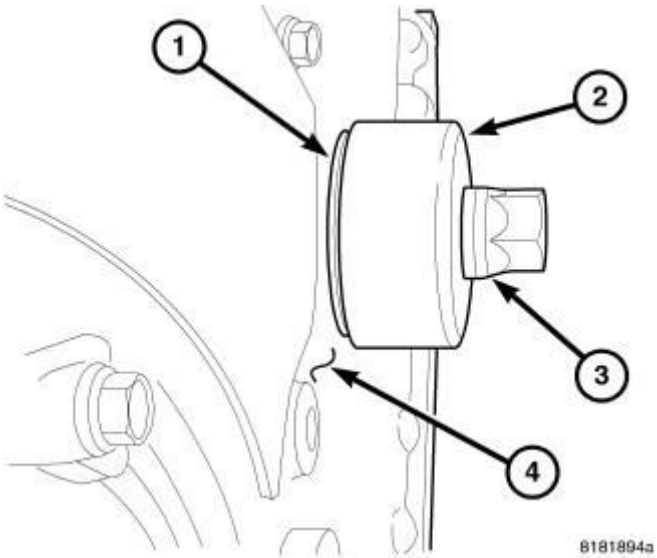

Fig. 281: Installing New Seal By Using Seal Installer 9506 & Crankshaft Damper Bolt
Courtesy of CHRYSLER GROUP, LLC

2. Install new seal (1) by using Front Crankshaft Seal Installer (special tool #9506, Installer, Oil Seal) (2) and crankshaft damper bolt (3).

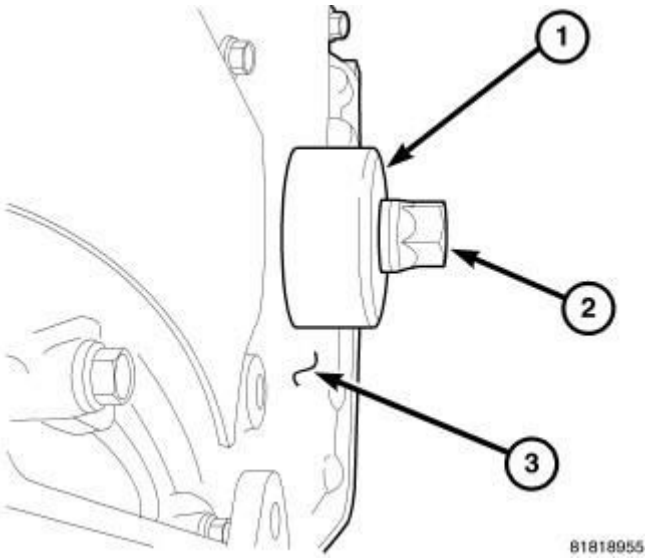

Fig. 282: Pressing Seal Into Front Cover Until Seal Installer
Courtesy of CHRYSLER GROUP, LLC

3. Press seal into front cover until Front Crankshaft Seal Installer (special tool #9506, Installer, Oil Seal) (1) seats against timing chain cover (3).
4. Remove Front Crankshaft Seal Installer (special tool #9506, Installer, Oil Seal) (1).

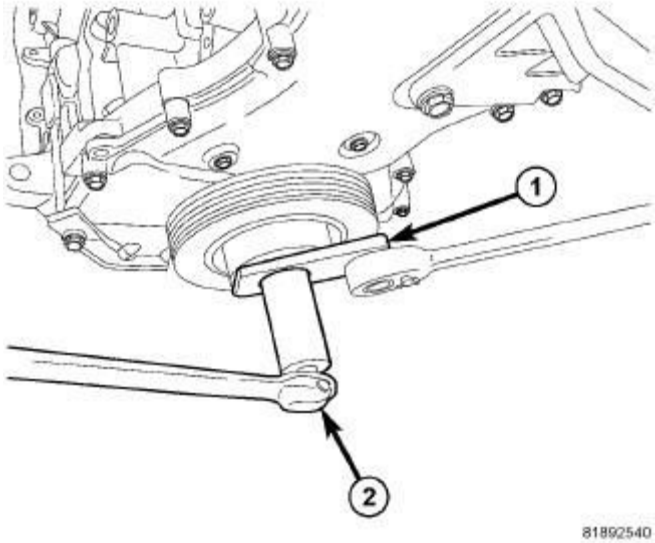

Fig. 283: Installing Damper Holder 9707
Courtesy of CHRYSLER GROUP, LLC

5. Install crankshaft vibration damper.
6. Oil the bolt threads and between the bolt head and washer.
7. Install damper retaining bolt and Damper Holder (special tool #9707, Holder, Vibration Damper) (1). Tighten bolt to 210 N.m (155 ft. lbs.).

SEAL, CRANKSHAFT OIL, REAR

REMOVAL

REMOVAL

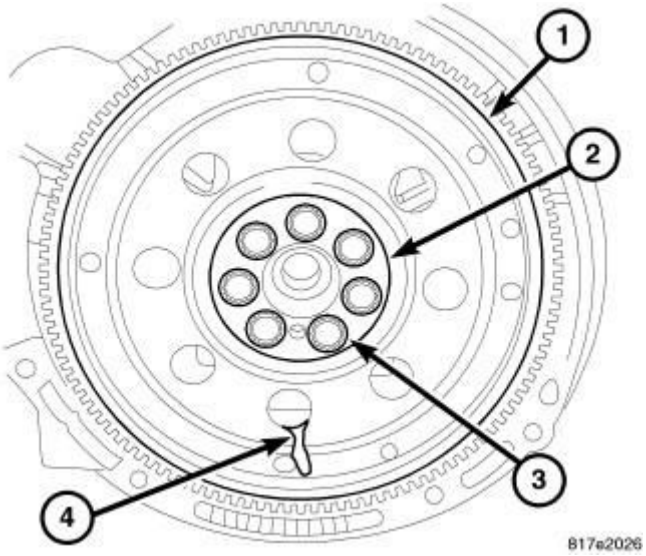

Fig. 284: Flex Plate
Courtesy of CHRYSLER GROUP, LLC

1. Remove transmission and flexplate (1). Refer to **FLEXPLATE, REMOVAL** .

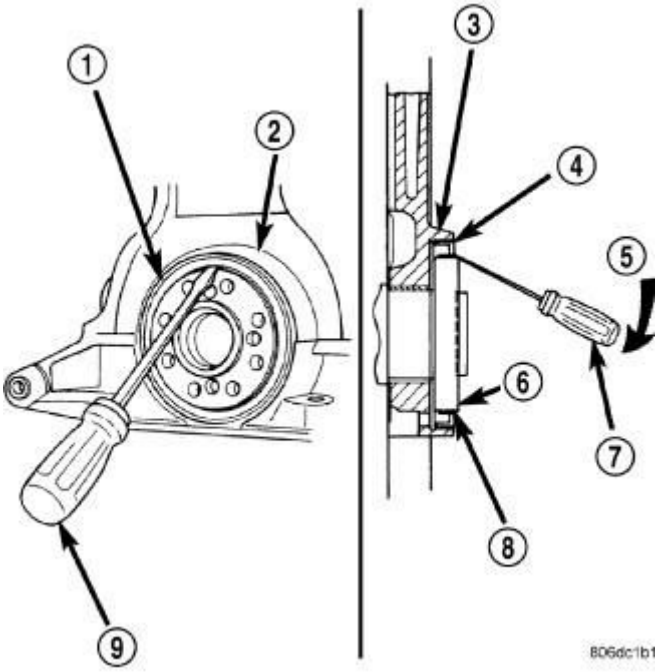

Fig. 285: Rear Crankshaft Oil Seal - Removal
Courtesy of CHRYSLER GROUP, LLC

2. Insert a 3/16 flat bladed screwdriver (7) between the dust lip (8) and the metal case (4) of the crankshaft seal (1). Angle the screwdriver through the dust lip against metal case of the seal. Pry out seal.

CAUTION: Do not permit the screwdriver blade to contact crankshaft seal surface. Contact of the screwdriver blade against crankshaft edge (chamfer) is permitted.

3. Check to make sure the seals garter spring is not on the crankshaft.

INSTALLATION

INSTALLATION

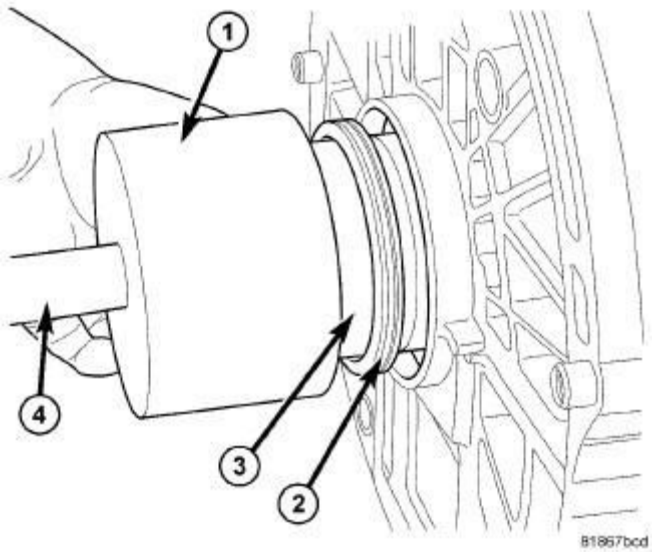

Fig. 286: Rear Main Seal Installation
Courtesy of CHRYSLER GROUP, LLC

CAUTION: If a burr or scratch is present on the crankshaft edge (chamfer), cleanup with 800 emery cloth to prevent seal damage during installation of new seal. If emery cloth is used, the crankshaft must be cleaned off Mopar® brake parts cleaner.

NOTE: When installing seal, lubricate Seal Guide (special tool #9509, Installer, Oil Seal) with clean engine oil.

1. Place Seal Guide (special tool #9509, Installer, Oil Seal) (3) on crankshaft.
2. Position seal (2) over guide tool. Guide tool should remain on crankshaft during installation of seal. Ensure that the lip of the seal is facing towards the crankcase during installation.
3. Drive the seal into the block using Seal Driver (special tool #9706, Installer, Crankshaft Rear Oil Seal) (1) and Driver Handle (special tool #C-4171, Driver Handle, Universal) (4) until Seal Driver (special tool #9706, Installer, Crankshaft Rear Oil Seal) bottoms out against the block.

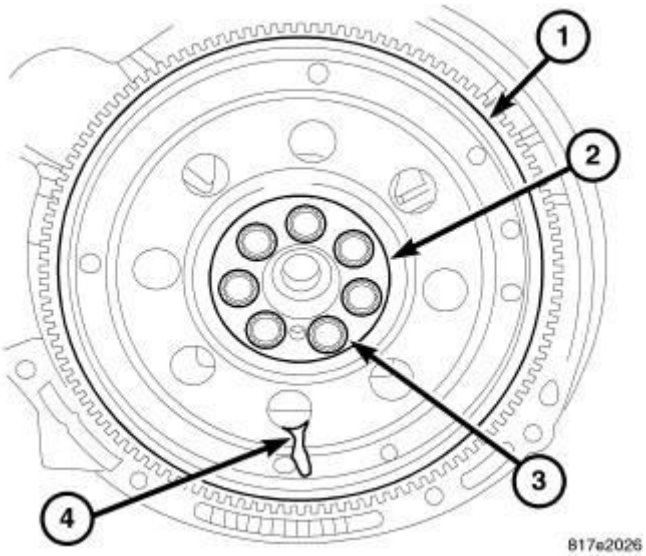

Fig. 287: Flex Plate
Courtesy of CHRYSLER GROUP, LLC

4. Install the flexplate (1) and transmission. Refer to **FLEXPLATE, INSTALLATION** .

ENGINE MOUNTING

INSULATOR, ENGINE MOUNT, LEFT

REMOVAL

REMOVAL

1. Raise and support the vehicle
2. Remove the belly pan. Refer to **BELLY PAN, REMOVAL** .
3. Lower the vehicle.
4. Remove the engine cover to prevent contact with the cowl.
5. Remove the battery and tray. Refer to **TRAY, BATTERY, REMOVAL** .
6. Support transaxle with a suitable jack.

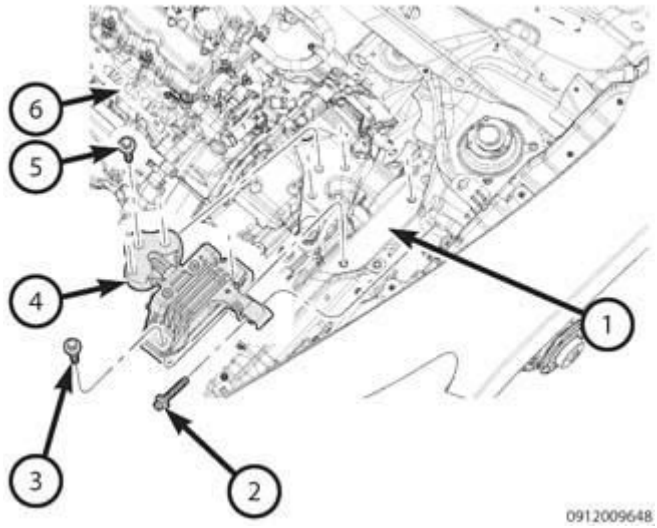

Fig. 288: Removing/Installing Left Engine Mount Insulator
Courtesy of CHRYSLER GROUP, LLC

7. Remove the two mount to frame rail bolts (3).
8. Remove the three mount to transaxle bracket bolts (5).

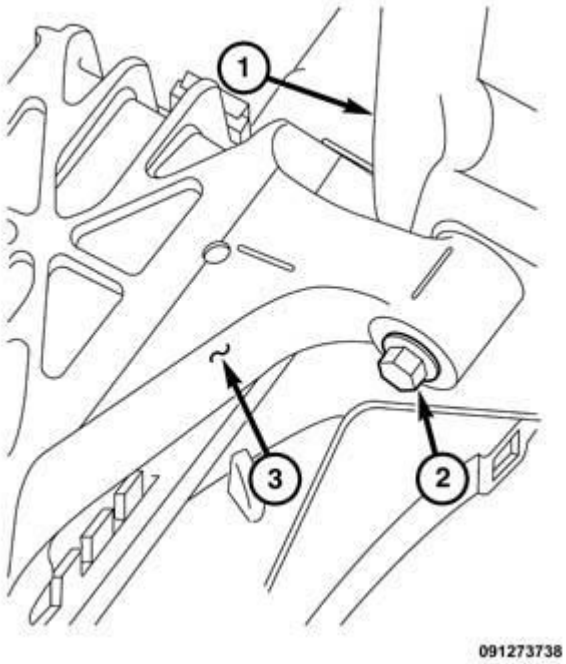

Fig. 289: Strut Tower, Trans Mount & Bolt
Courtesy of CHRYSLER GROUP, LLC

9. Loosen, **but do not remove** the bolt (2) for the trans mount (3) to strut tower (1) attachment.
10. Remove the mount (4).

INSTALLATION

INSTALLATION

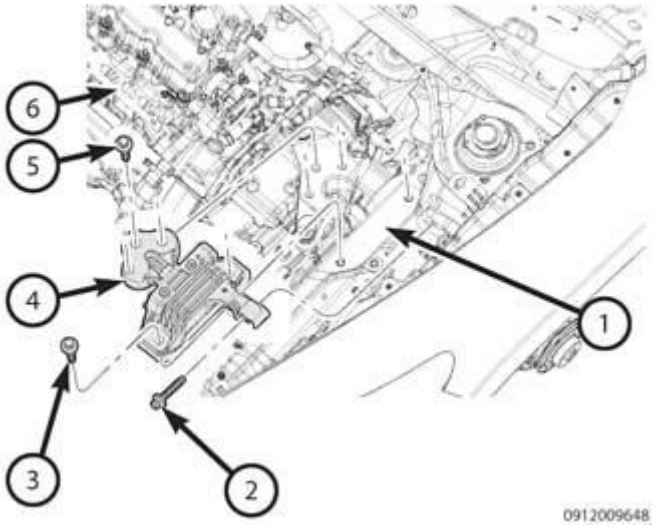

Fig. 290: Removing/Installing Left Engine Mount Insulator
Courtesy of CHRYSLER GROUP, LLC

1. Set the mount (4) into position between the engine block (6) and the frame rail (1).

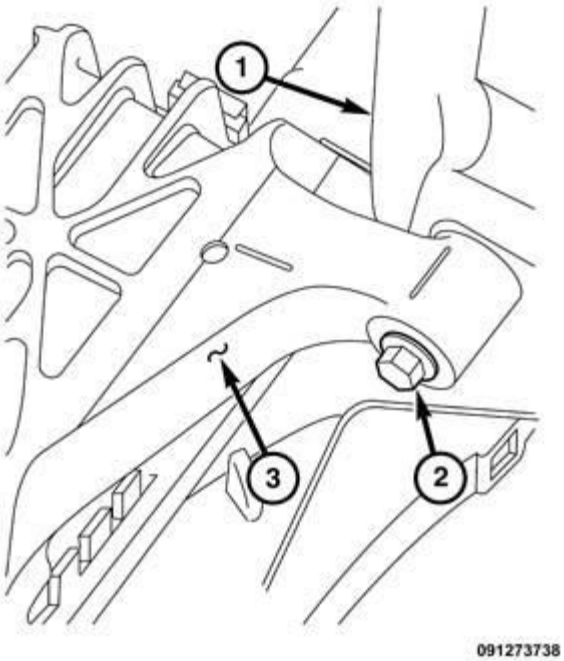

Fig. 291: Strut Tower, Trans Mount & Bolt
Courtesy of CHRYSLER GROUP, LLC

2. Tighten the left mount to strut tower bolt (2) finger tight.

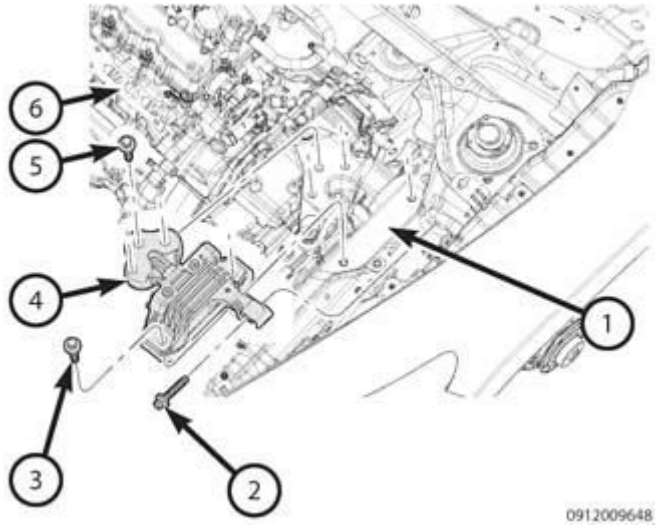

Fig. 292: Removing/Installing Left Engine Mount Insulator
Courtesy of CHRYSLER GROUP, LLC

3. Install the left mount to frame rail bolts (3). Finger tighten the bolts.
4. Install the left mount to transmission bracket bolts (5). Finger tighten the bolts.
5. Tighten the left mount to strut tower bolt (2) to 64 N.m (47 ft. lbs.).
6. Tighten the left mount to transmission bracket bolts (5) to 157 N.m (115 ft. lbs.).
7. Tighten the left mount to frame rail bolts to 70 N.m (52 ft. lbs.).
8. Remove the jack.
9. Install the battery tray. Refer to **TRAY, BATTERY, INSTALLATION** .
10. Install the belly pan. Refer to **BELLY PAN, INSTALLATION** .
11. Install the engine cover assembly.

INSULATOR, ENGINE MOUNT, REAR

REMOVAL

REMOVAL

1. Raise and support the vehicle.
2. If equipped, remove the front skid plate

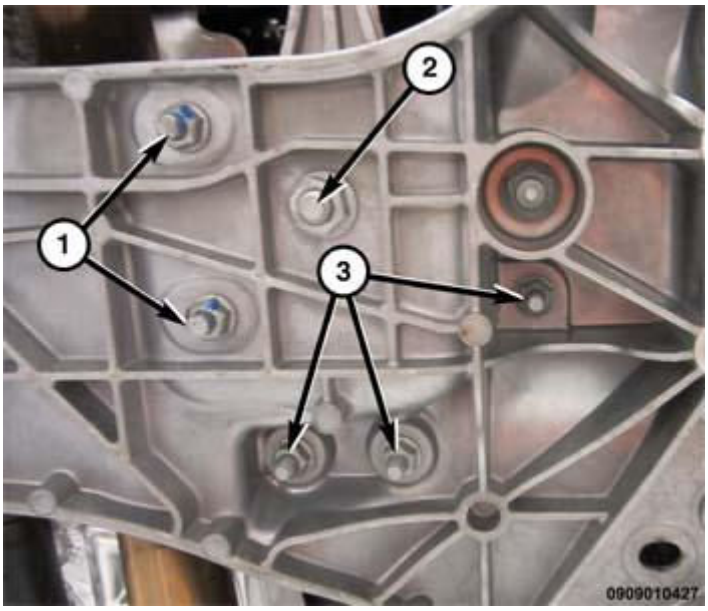

Fig. 293: Rear Mount Bracket Nuts
Courtesy of CHRYSLER GROUP, LLC

3. Remove the mount to bracket through bolt nut (2).

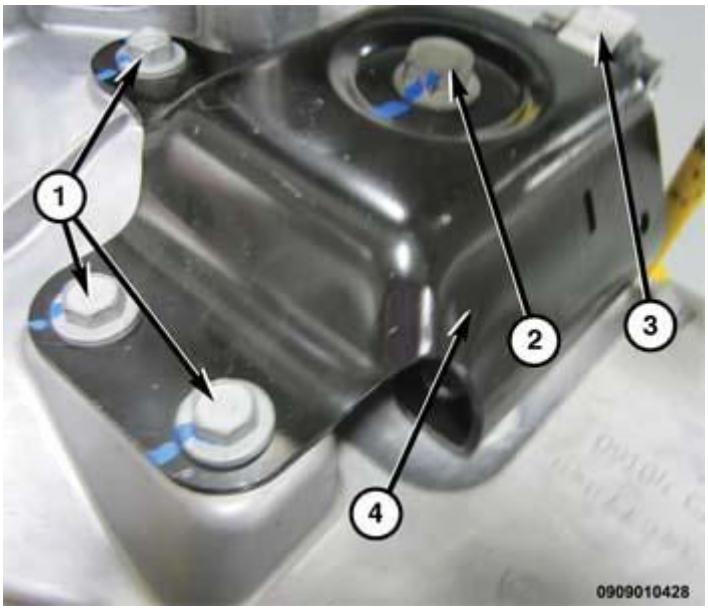

Fig. 294: Rear Mount & Bolts
Courtesy of CHRYSLER GROUP, LLC

4. Remove the mount to through bolt (2).

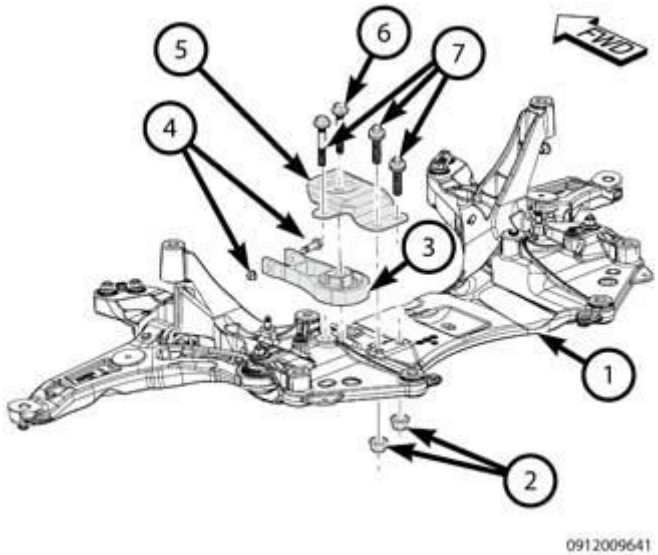

Fig. 295: Removing/Installing Rear Engine Mount Insulator
Courtesy of CHRYSLER GROUP, LLC

5. Remove the mount to bracket through bolt and nut (4).
6. Reposition the engine forward to allow the mount to be removed from the pocket past the mount bracket (5).

NOTE: The exhaust system can remain intact. Carefully pry the engine forward enough to clear the bracket but not to overextend the exhaust hangers.

7. Remove rear mount (3).

INSTALLATION

INSTALLATION

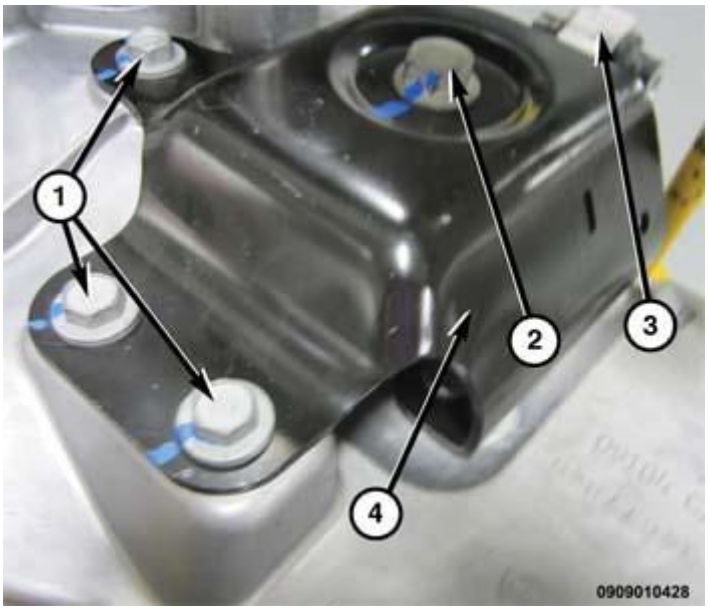

Fig. 296: Rear Mount & Bolts
Courtesy of CHRYSLER GROUP, LLC

1. Position rear mount (3) into the crossmember pocket (4).
2. Install the through bolt (2) into the cradle portion of the mount.

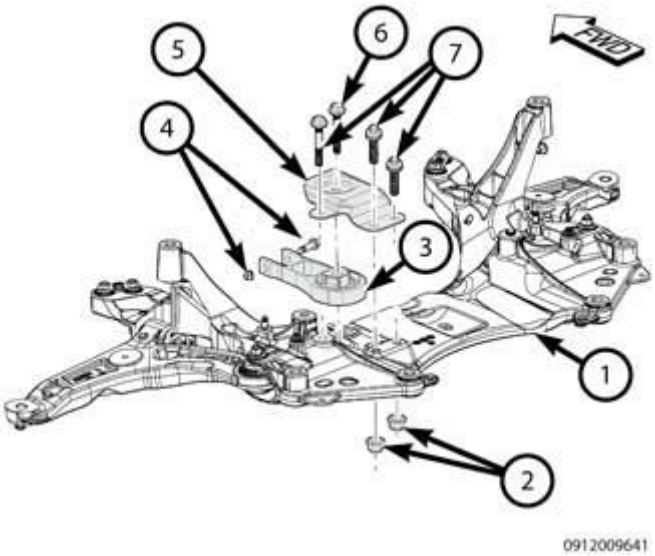

Fig. 297: Removing/Installing Rear Engine Mount Insulator
Courtesy of CHRYSLER GROUP, LLC

3. Position the front arm of the mount around the bracket and install the through bolt and nut (4).

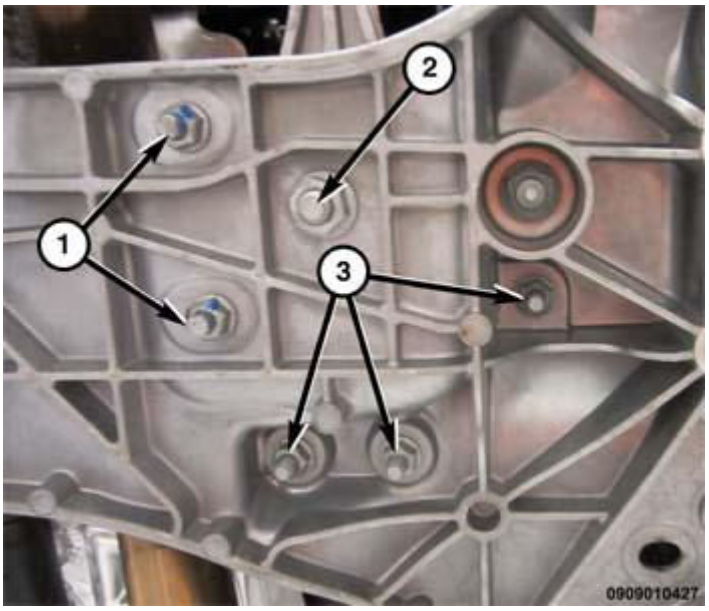

Fig. 298: Rear Mount Bracket Nuts
Courtesy of CHRYSLER GROUP, LLC

4. Tighten the nut (2) to 150 N.m (111 ft. lbs.).

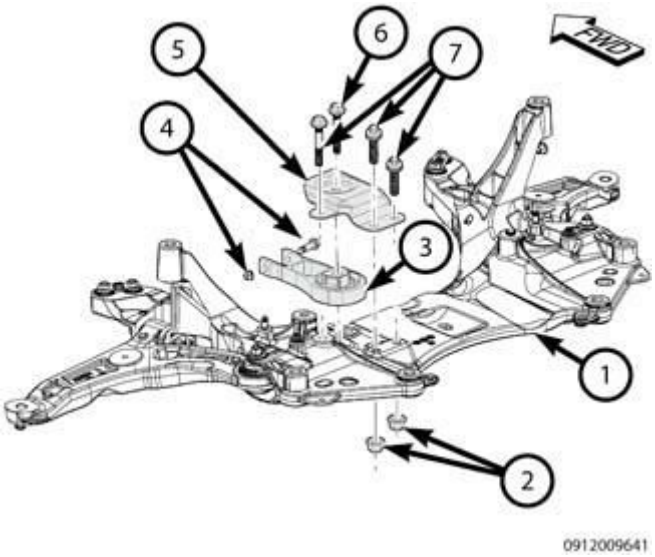

Fig. 299: Removing/Installing Rear Engine Mount Insulator
Courtesy of CHRYSLER GROUP, LLC

5. Tighten the rear mount to engine bracket through bolt and nut (4) to 220 N.m (162 ft. lbs.).
6. If equipped, install the front skid plate.

INSULATOR, ENGINE MOUNT, RIGHT

REMOVAL

REMOVAL

1. Remove the engine cover.
2. Remove the air cleaner assembly. Refer to **BODY, AIR CLEANER, REMOVAL** .
3. Remove the coolant reservoir bolts. Set the reservoir aside.
4. Raise and support the vehicle. Refer to **HOISTING, STANDARD PROCEDURE** .
5. Remove the belly pan. Refer to **BELLY PAN, REMOVAL** .
6. Support the powertrain with a suitable jack.

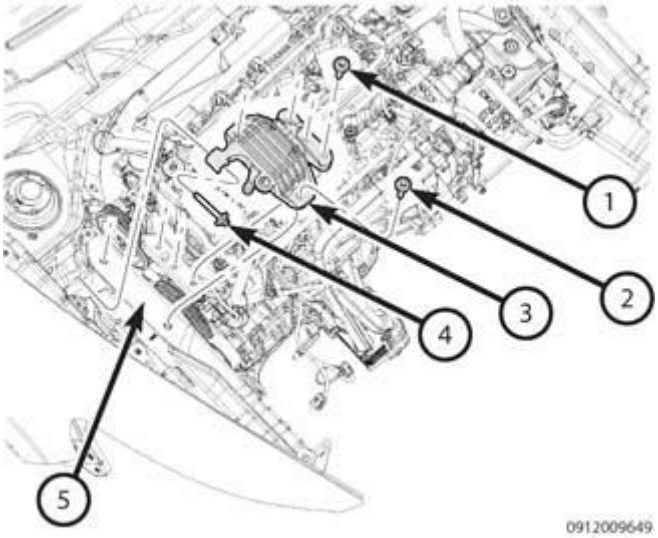

Fig. 300: Removing/Installing Right Engine Mount Insulator
Courtesy of CHRYSLER GROUP, LLC

7. Remove the three mount to timing cover bolts (1).
8. Remove the two mount to frame bolts (2).
9. Loosen, **but do not remove** the mount to strut tower bolt (4).
10. Lift the mount off of the frame rail (5).
11. Remove the engine mount (3).

INSTALLATION

INSTALLATION

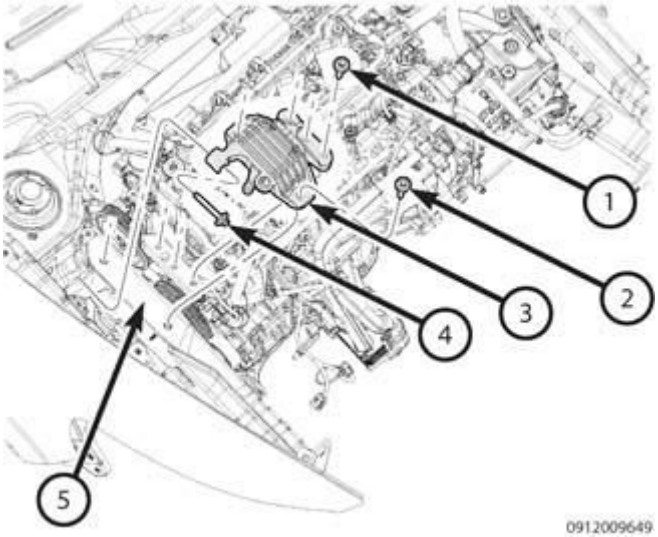

Fig. 301: Removing/Installing Right Engine Mount Insulator
Courtesy of CHRYSLER GROUP, LLC

1. Set the mount into position.
2. Tighten the right mount to strut tower bolt (4) finger tight.
3. Install engine mount to frame retaining bolts (2). Finger tighten the bolts.
4. Install the right mount to timing cover bolts (1). Finger tighten the bolts.

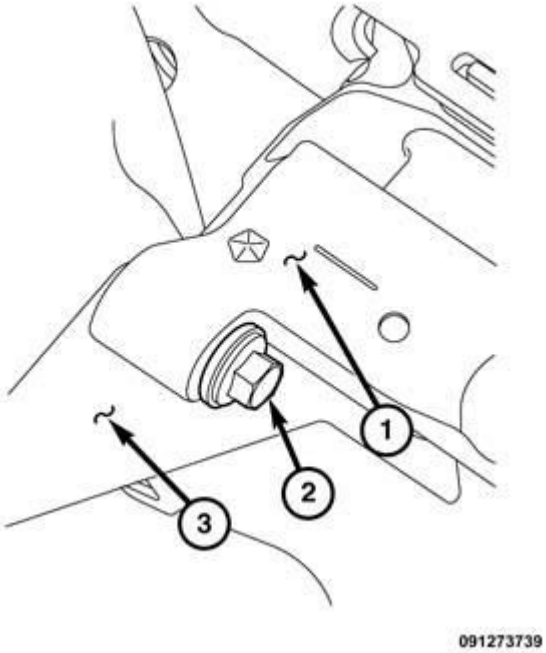

Fig. 302: Strut Tower, Mount & Bolt
Courtesy of CHRYSLER GROUP, LLC

5. Tighten the right mount to strut tower bolt to 65 N.m (48 ft. lbs.).

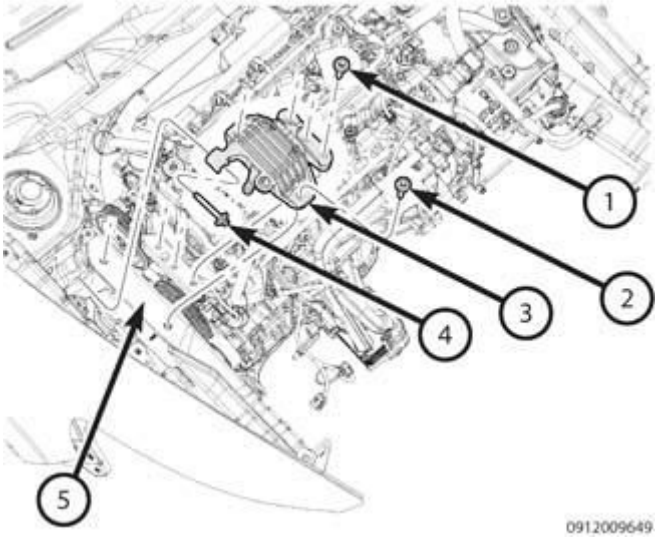

Fig. 303: Removing/Installing Right Engine Mount Insulator
Courtesy of CHRYSLER GROUP, LLC

6. Tighten the right mount to frame rail bolts (2) to 70 N.m (52 ft. lbs.).

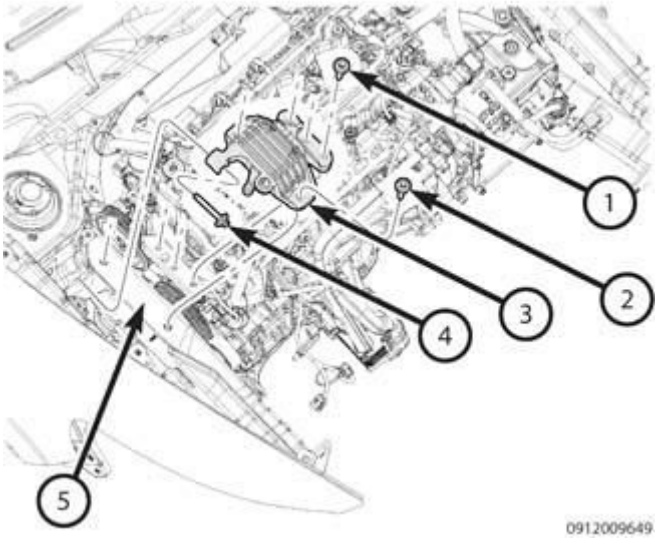

Fig. 304: Removing/Installing Right Engine Mount Insulator
Courtesy of CHRYSLER GROUP, LLC

7. Tighten the engine mount to timing cover bolts (1). Tighten to 63 N.m (46 ft. lbs.).
8. Remove the jack stand.
9. Install the coolant reservoir bottle. Tighten bolt to 9 N.m (80 in. lbs.).
10. Install the air cleaner assembly. Refer to **BODY, AIR CLEANER, REMOVAL** .

11. Install the engine cover.
12. Refer to **BELLY PAN, INSTALLATION** .

MANIFOLDS

MANIFOLD, EXHAUST

REMOVAL

REMOVAL

1. Remove engine cover.
2. Disconnect battery negative cable.
3. Disconnect the upstream and downstream oxygen sensors.
4. Raise and support the vehicle.
5. Remove the belly pan.

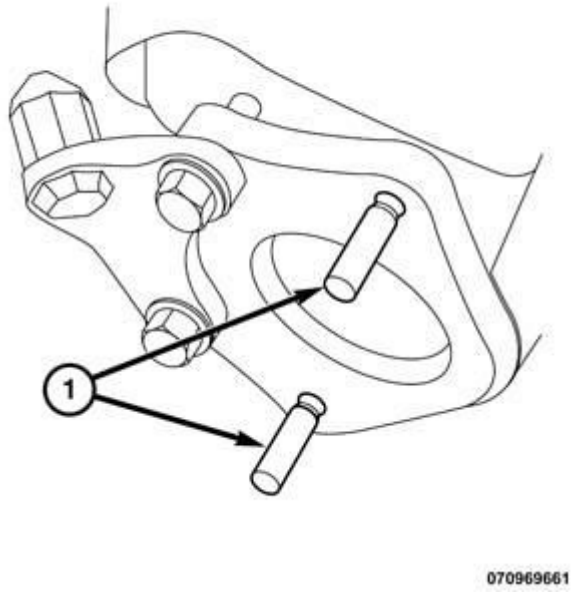

Fig. 305: Converter Outlet Studs
Courtesy of CHRYSLER GROUP, LLC

6. Remove the two nuts from the converter outlet. Discard the gasket

   .

7. Lower the vehicle.

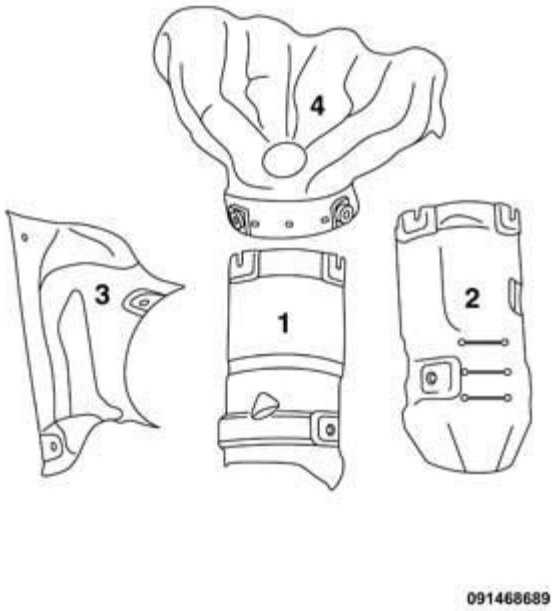

Fig. 306: Exhaust Manifold Heat Shields
Courtesy of CHRYSLER GROUP, LLC

8. Remove the four bolts from the upper shield (2)

.

9. Remove the upper shield (2).

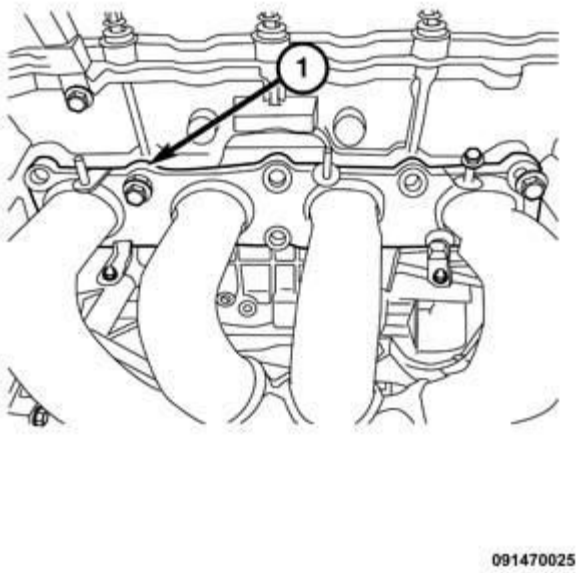

Fig. 307: Exhaust Manifold Bolt
Courtesy of CHRYSLER GROUP, LLC

10. Remove the exhaust manifold bolts (1).
11. Remove the manifold out the top of the vehicle.
12. Remove and discard manifold gasket.

INSTALLATION

INSTALLATION

1. Install a new exhaust manifold gasket. **DO NOT APPLY SEALER** .
2. Set the manifold into position. Install the manifold bolts.

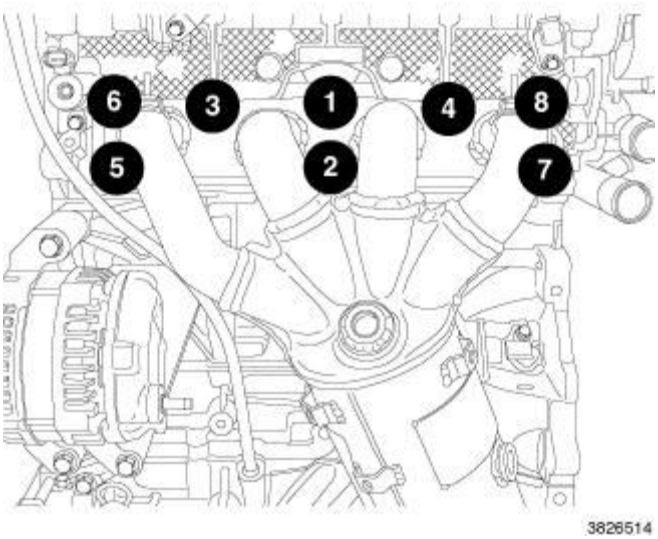

Fig. 308: Exhaust Manifold Bolts Tightening Sequence
Courtesy of CHRYSLER GROUP, LLC

3. Following the torque sequence, tighten the exhaust manifold bolts to 34 N.m (25 ft. lbs.).

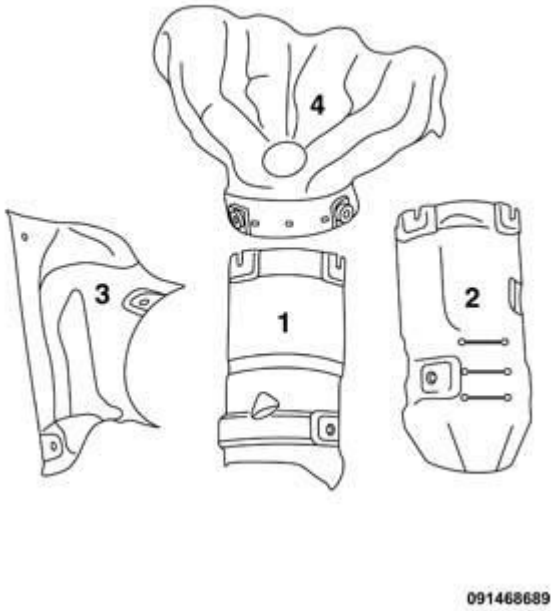

Fig. 309: Exhaust Manifold Heat Shields
Courtesy of CHRYSLER GROUP, LLC

4. Install the four shields in the proper sequence. Tighten bolts to 12 N.m (105 in. lbs.).
5. Install a new manifold lower gasket.
6. Install flange nuts. Tighten nuts to 28 N.m (21 ft. lbs.)

7. Install exhaust pipe to manifold (1). Tighten fasteners to (250 in. lbs.).
8. Install the oxygen sensors. Tighten to 50 N.m (37 ft. lbs.).
9. Connect the oxygen sensor connectors.
10. Install belly pan.
11. Lower vehicle.
12. Connect oxygen sensor electrical connector (3).
13. Connect negative cable to battery.
14. Install the engine cover.

MANIFOLD, INTAKE

REMOVAL

REMOVAL

1. Remove the engine cover.
2. Perform the fuel pressure release procedure. Refer to **FUEL SYSTEM PRESSURE RELEASE PROCEDURE** .
3. Disconnect the battery negative cable.
4. Raise and support the vehicle. Refer to **HOISTING, STANDARD PROCEDURE** .
5. **If equipped:** remove the skid plates

.

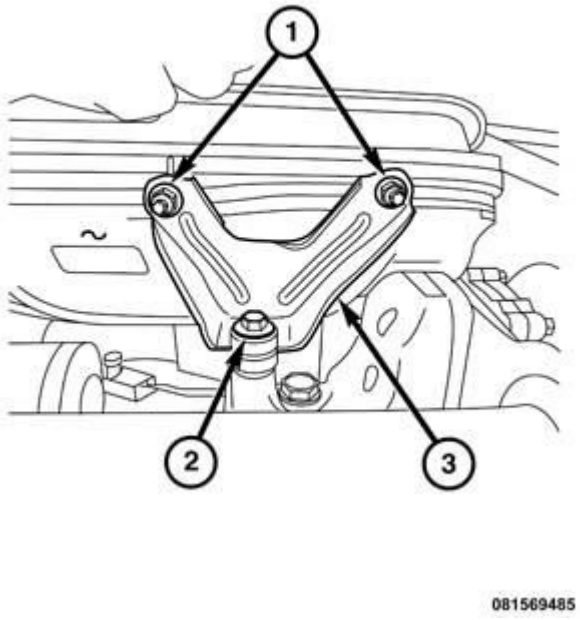

Fig. 310: Intake Manifold Lower Bracket, Nuts & Bolts
Courtesy of CHRYSLER GROUP, LLC

6. Remove the intake manifold lower bracket nuts (1).
7. Remove the intake manifold lower bracket bolt (2).
8. Remove the intake manifold lower bracket (3).
9. Lower the vehicle.

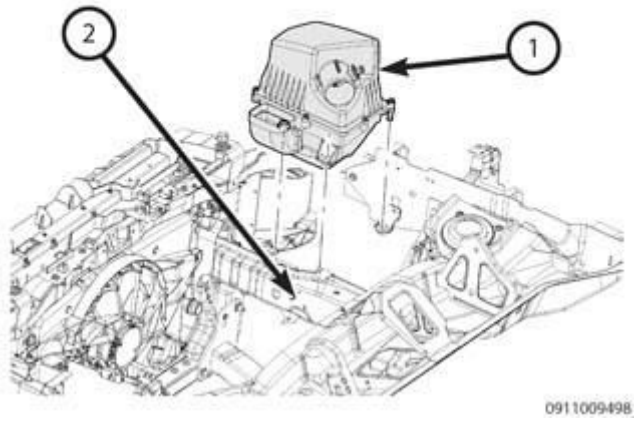

Fig. 311: Removing/Installing Air Cleaner Body
Courtesy of CHRYSLER GROUP, LLC

10. Remove the airbox assembly

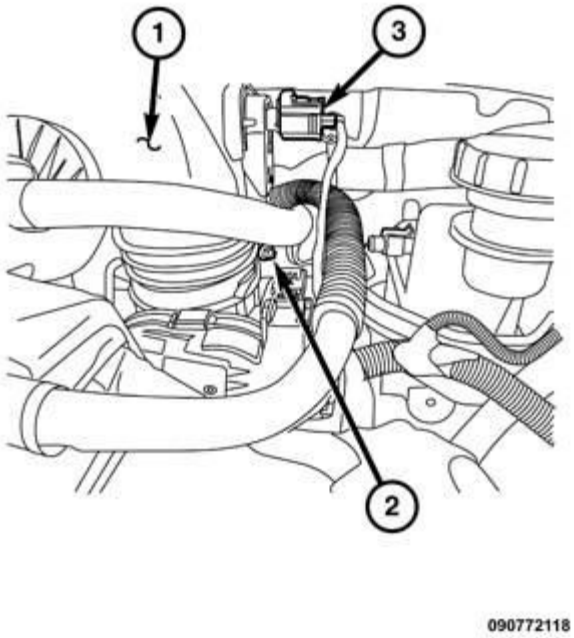

Fig. 312: Resonator, Clamp & Connector
Courtesy of CHRYSLER GROUP, LLC

.

11. Loosen the snorkel clamp (2).
12. Disconnect the intake temperature sensor (IAT) connector (3).

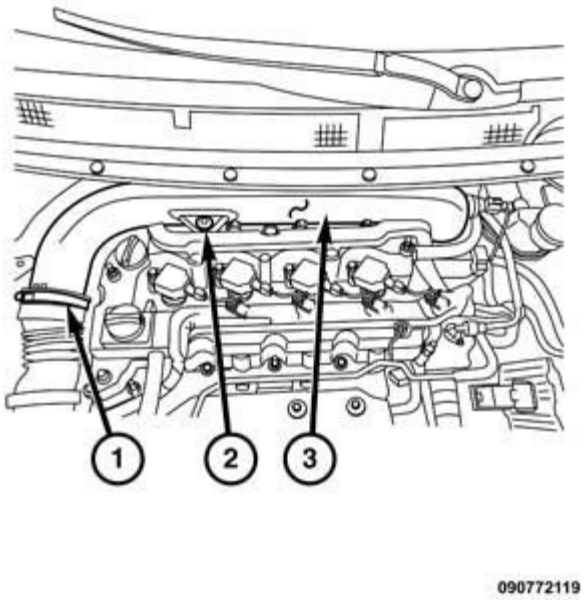

Fig. 313: Resonator, Bolt & Clamp
Courtesy of CHRYSLER GROUP, LLC

13. Remove the snorkel bolt (2) and the snorkel clamp (1).
14. Remove the snorkel (3).
15. Remove the coolant reservoir bottle bolts. Position the bottle aside.

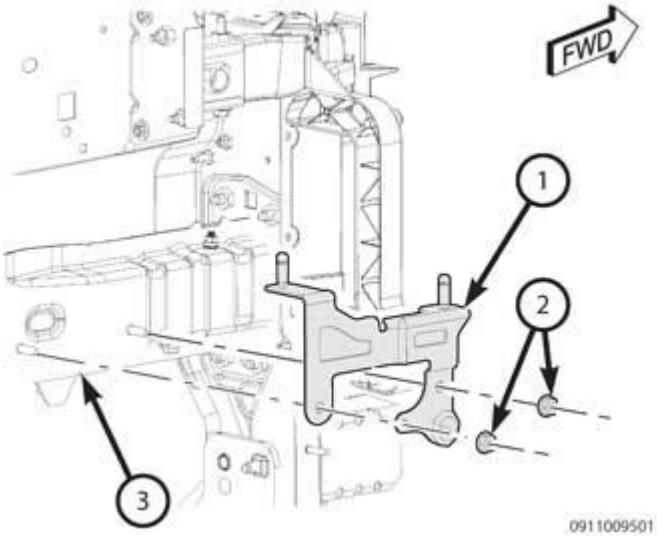

Fig. 314: Removing/Installing Airbox Bracket
Courtesy of CHRYSLER GROUP, LLC

16. Remove the airbox bracket nuts (2) from the right frame rail (3). Remove the bracket (1).

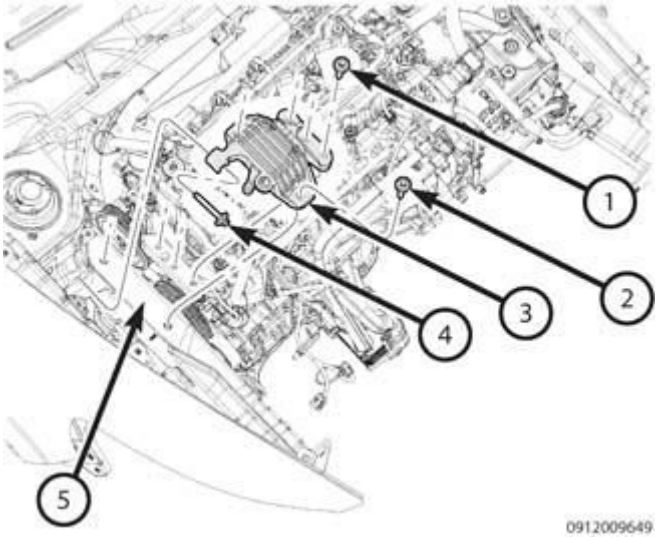

Fig. 315: Removing/Installing Right Engine Mount Insulator
Courtesy of CHRYSLER GROUP, LLC

17. Remove the 2 frame rail bolts from the right engine mount (2).
18. Remove the right engine mount to strut tower bolt (4).
19. Position a floor lack under the air conditioning compressor bracket.

NOTE: Use a block of wood or similar between the jack pad and the bracket.

20. Raise the engine enough to remove the load from the right engine mount

Fig. 316: Measuring Three Inches
Courtesy of CHRYSLER GROUP, LLC

21. With the help of an assistant, pull the engine forward until 3 inches are between the strut tower bolt ear and the strut tower (1).

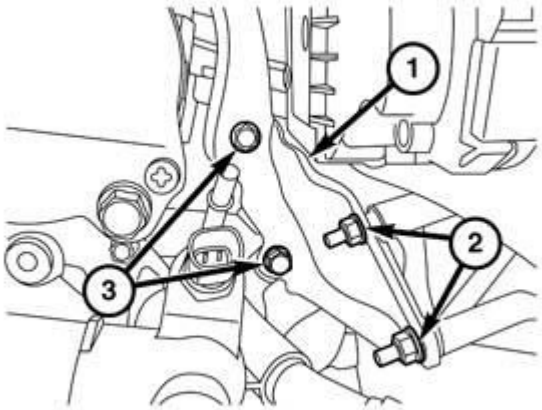

091468958

Fig. 317: Intake Manifold Upper Support Bracket, Bolts & Nuts
Courtesy of CHRYSLER GROUP, LLC

22. Remove the intake manifold upper support bracket bolts (3) and loosen the nuts to allow for ample movement.

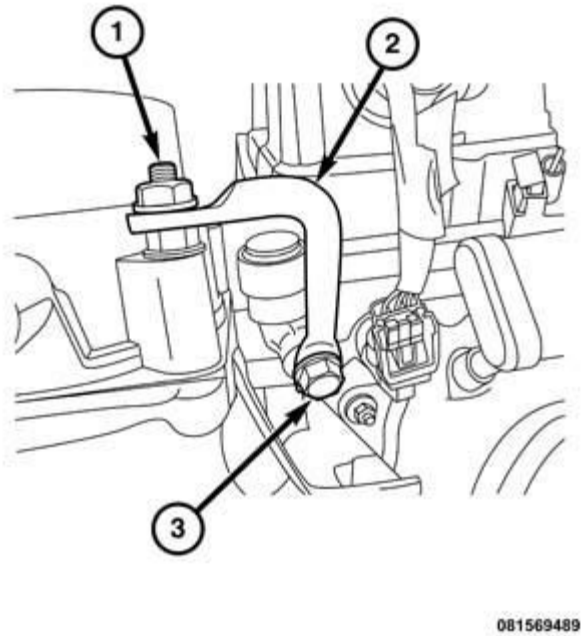

Fig. 318: Throttle Body Support Bracket, Nut & Bolt
Courtesy of CHRYSLER GROUP, LLC

23. Remove the throttle body bracket (2).

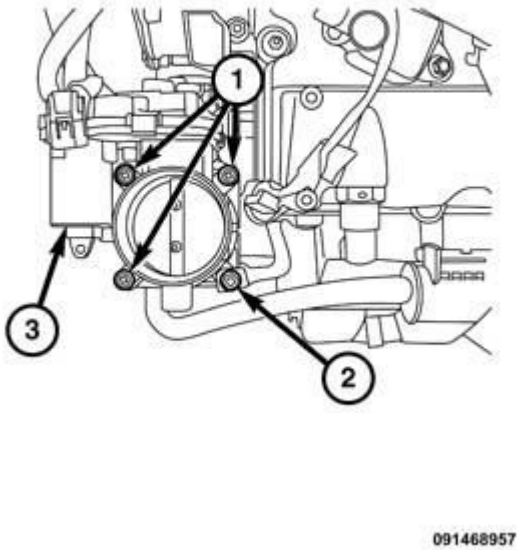

Fig. 319: Throttle Body, Gasket & Bolts
Courtesy of CHRYSLER GROUP, LLC

24. Remove the throttle body fasteners (1 & 2). Remove the throttle body (3).

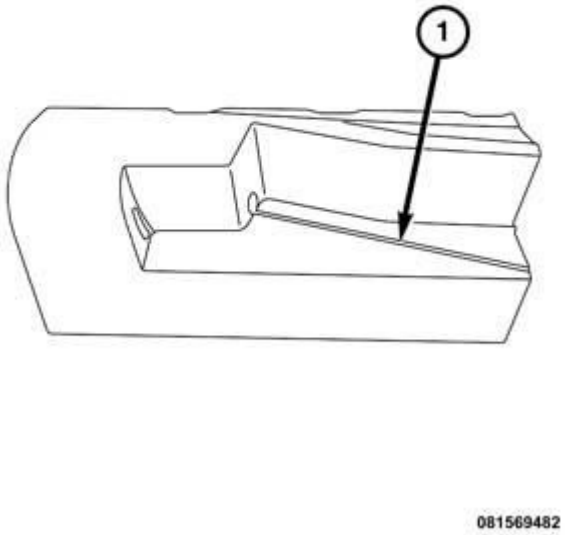

Fig. 320: Score Line
Courtesy of CHRYSLER GROUP, LLC

25. Cut the injector silencer pad at the score line (1).
26. Remove the injector silencer pad.
27. Disconnect the VVAA solenoids.

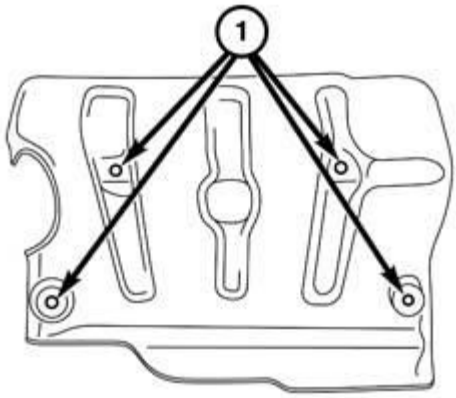

091468686

Fig. 321: Intake Manifold Silencer Pad Screws
Courtesy of CHRYSLER GROUP, LLC

28. Remove the intake silencer cover screws (1). Remove the cover.
29. Disconnect the fuel injectors.

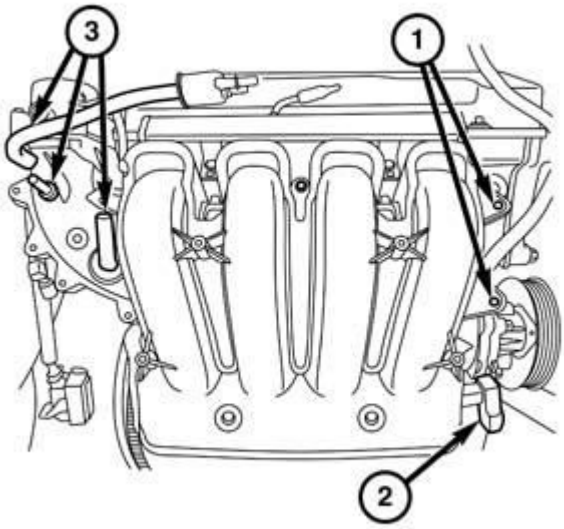

091468688

Fig. 322: MAP Sensor Connector & Fittings

Courtesy of CHRYSLER GROUP, LLC

30. Disconnect the vacuum hoses at the intake manifold (3).
31. Disconnect the MAP sensor (2).
32. Release the harness from the manifold eyelets (1).

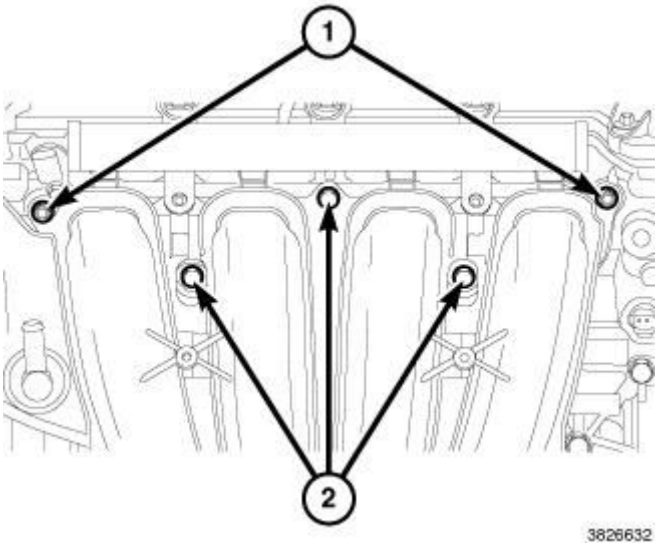

Fig. 323: Intake Manifold Retaining Bolts & Nuts
Courtesy of CHRYSLER GROUP, LLC

33.
34. Remove the intake manifold nuts (1).
35. Remove the intake manifold bolts (2).
36. Remove the intake manifold by lifting upward and out of the engine bay.

INSTALLATION

INSTALLATION

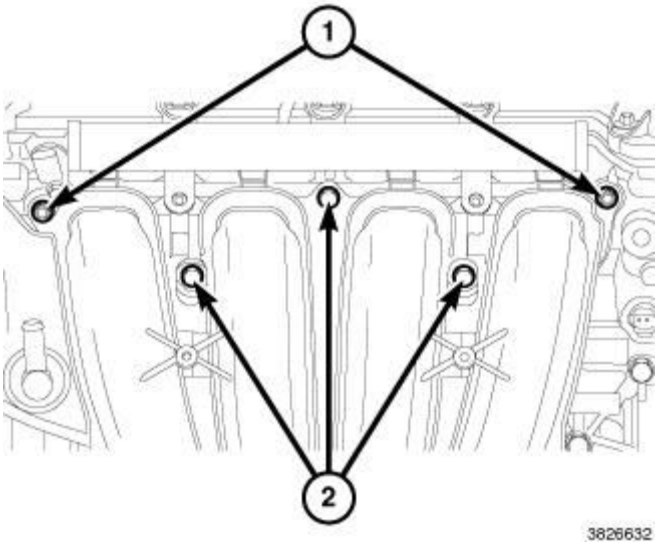

Fig. 324: Intake Manifold Retaining Bolts & Nuts
Courtesy of CHRYSLER GROUP, LLC

1. Clean all gasket surfaces.
2. Replace intake manifold gasket seals.
3. Position the foam pad over the coolant transfer tube.
4. Position the manifold onto the two studs.
5. Install intake manifold, tighten the fasteners (1 & 2) to 12 N.m (9 ft. lbs.).

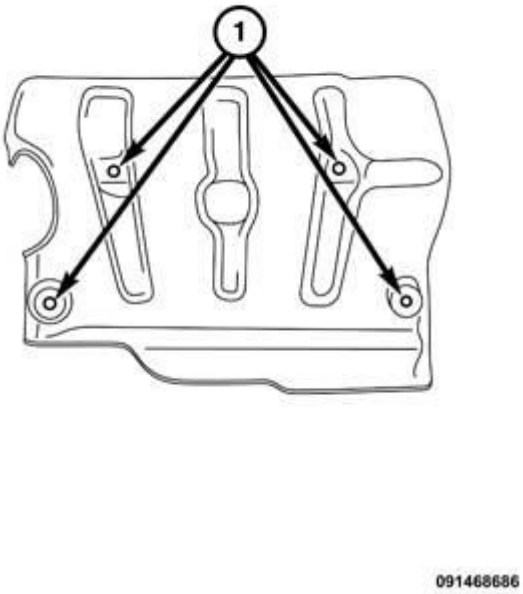

Fig. 325: Intake Manifold Silencer Pad Screws
Courtesy of CHRYSLER GROUP, LLC

6. Install the intake manifold silencer cover and screws. Tighten the screws to 2.5 N.m (22 in. lbs.).

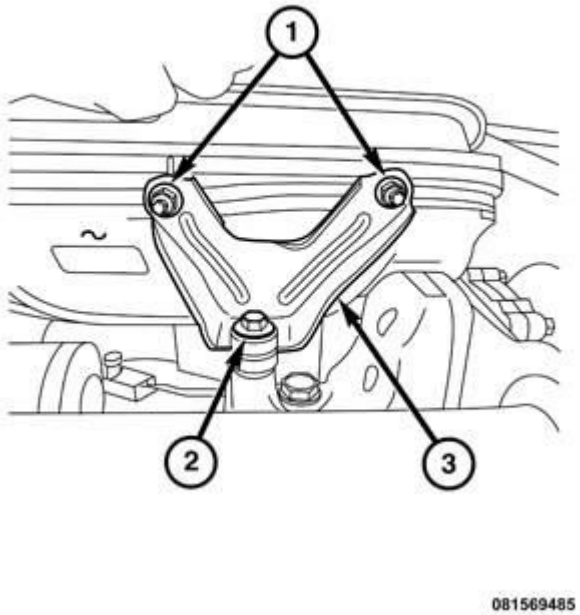

Fig. 326: Intake Manifold Lower Bracket, Nuts & Bolts
Courtesy of CHRYSLER GROUP, LLC

7. Install the intake manifold lower bracket (3). Install the two nuts (1) and one bolt (2). Tighten to 9 N.m (80 in. lbs.).
8. Connect fuel injector electrical connectors.
9. Inspect quick connect fittings for damage, replace if necessary. Refer to **FITTING, QUICK CONNECT** .
10. Connect the purge solenoid electrical connector.

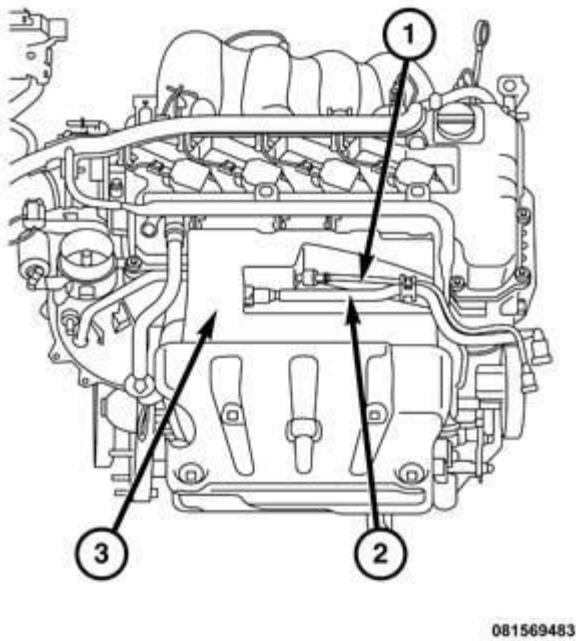

Fig. 327: Foam Insulator, Fuel Line & Purge Line
Courtesy of CHRYSLER GROUP, LLC

11. Insert the foam insulator over the fuel rail (3).
12. Connect fuel line (1).
13. Connect the purge vapor line (2).

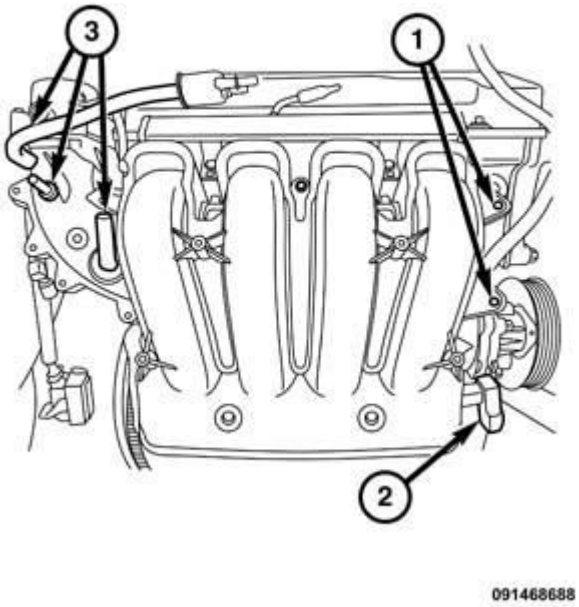

Fig. 328: MAP Sensor Connector & Fittings
Courtesy of CHRYSLER GROUP, LLC

14. Insert the harness retainers to the intake manifold eyelets (1).
15. Connect the three hose connectors (3).
16. Connect the MAP sensor connector (2).

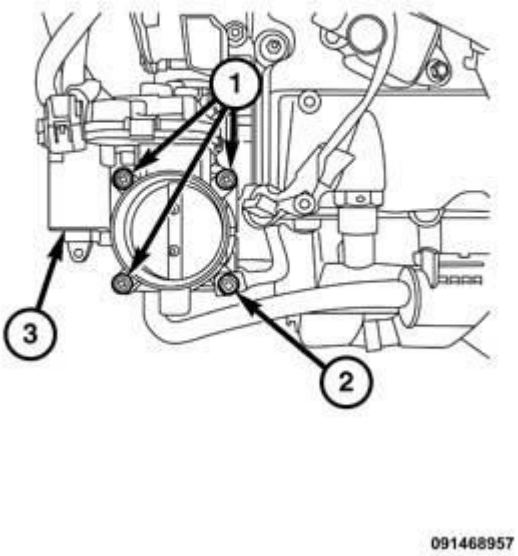

Fig. 329: Throttle Body, Gasket & Bolts
Courtesy of CHRYSLER GROUP, LLC

17. Install throttle body (3) onto the intake manifold.
18. Install the three throttle body screws (1) and one throttle body bolt (2). Tighten to 8 N.m (71 in. lbs.).

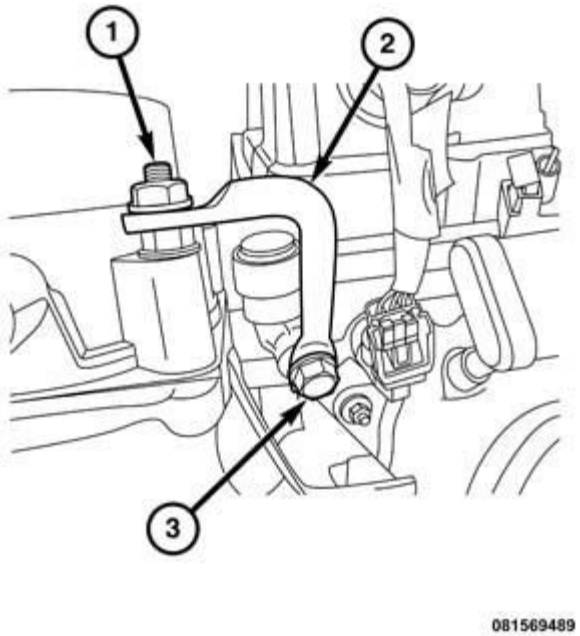

Fig. 330: Throttle Body Support Bracket, Nut & Bolt
Courtesy of CHRYSLER GROUP, LLC

19. Install the throttle body upper support (2). Tighten the fasteners to 8 N.m (71 in. lbs.).

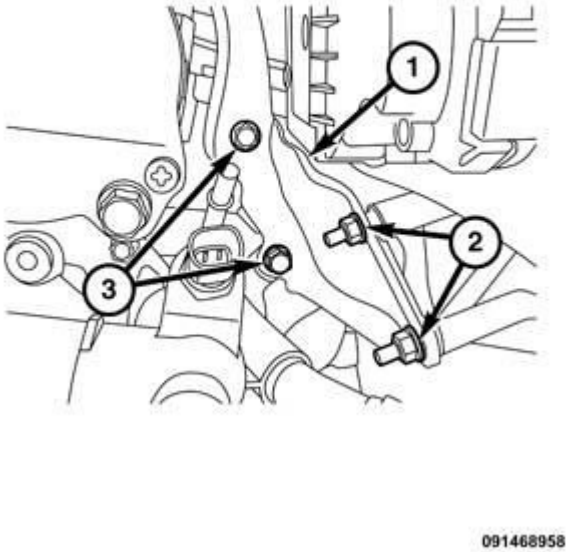

Fig. 331: Intake Manifold Upper Support Bracket, Bolts & Nuts
Courtesy of CHRYSLER GROUP, LLC

20. Install the intake manifold upper bracket (1). Install bolts (3) and nuts (2). Tighten to 9 N.m (80 in. lbs.).
21. Connect the PCV valve hose.
22. With assistance, slide the engine rearward back into its proper position. **Make sure the mount is not against the frame while being moved.**

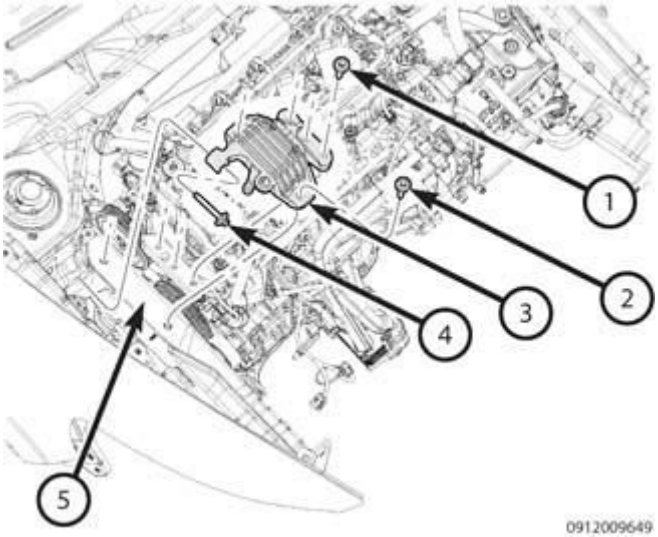

Fig. 332: Removing/Installing Right Engine Mount Insulator
Courtesy of CHRYSLER GROUP, LLC

23. Lower the floor jack once the mount is in proper alignment.
24. Install the 2 engine mount to frame rail bolts (2).
25. Install the right engine mount to strut tower bolt (4).
26. Tighten the mount to strut tower bolt to 65 N.m (48 ft. lbs.).
27. Tighten the mount to frame rail bolts to 105 N.m (77 ft. lbs.)

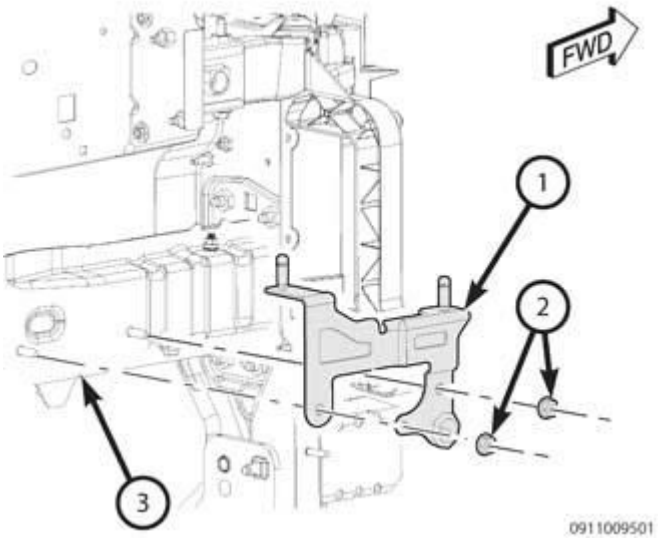

Fig. 333: Removing/Installing Airbox Bracket
Courtesy of CHRYSLER GROUP, LLC

28. Install the air cleaner bracket (1). Install the nuts (2).
29. Tighten the nuts to 8 N.m (71 in. lbs.).

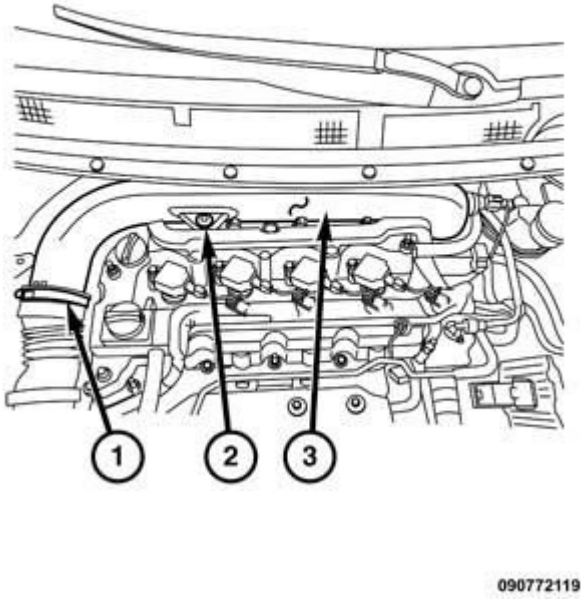

Fig. 334: Resonator, Bolt & Clamp
Courtesy of CHRYSLER GROUP, LLC

30. Install the intake snorkel (3).
31. Install the snorkel fastener (2). Tighten to 8 N.m (71 in lbs.).

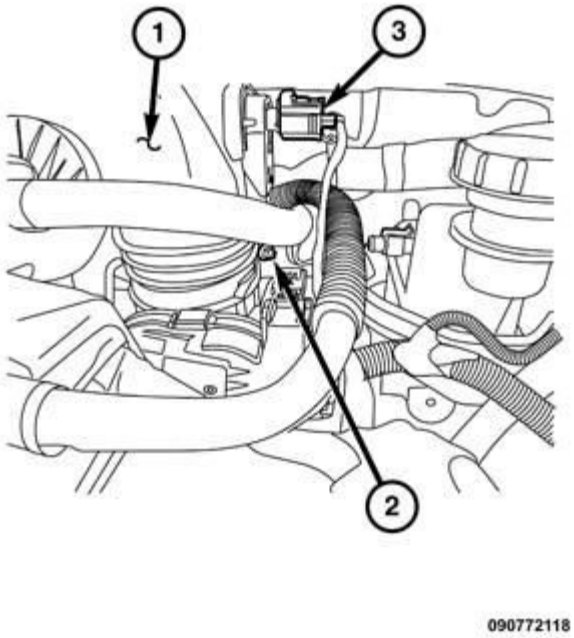

Fig. 335: Resonator, Clamp & Connector
Courtesy of CHRYSLER GROUP, LLC

32. Connect the IAT sensor (3).
33. Tighten the clamp (2) to 4 N.m (35 in. lbs.).
34. Install the engine cover.

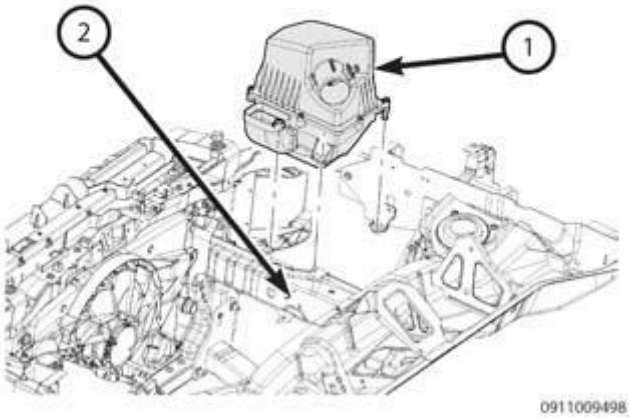

Fig. 336: Removing/Installing Air Cleaner Body
Courtesy of CHRYSLER GROUP, LLC

35. Install the air cleaner assembly (1). Refer to **BODY, AIR CLEANER, INSTALLATION** .

36. Connect negative cable to battery.

LUBRICATION

DESCRIPTION

DESCRIPTION

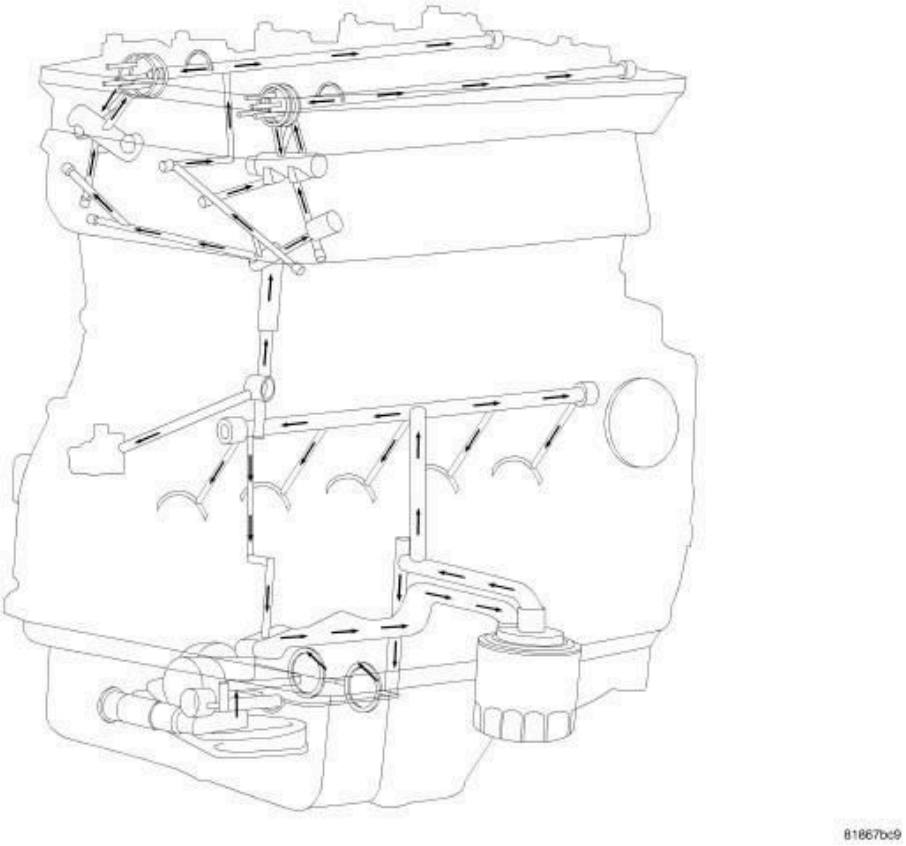

Fig. 337: Oil Flow Diagram
Courtesy of CHRYSLER GROUP, LLC

The lubrication system is a full-flow filtration, pressure feed type. The balance shaft module (BSM) is mounted below the ladder frame and chain driven by the crankshaft. The BSM consists of a non-serviceable pump, oil pressure relief valve, and a non-serviceable balance assembly.

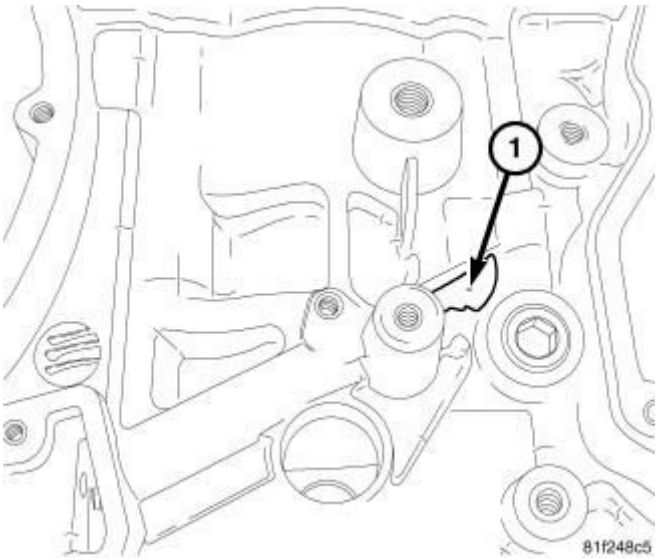

Fig. 338: Oil Hole
Courtesy of CHRYSLER GROUP, LLC

NOTE: Not all blocks have the bolt on timing chain oil squirter. Engine blocks either have a bolt-on oil squirter or a 1.0 mm hole (1) drilled into the oil gallery passage. Engine blocks with the 1.0 mm hole no longer use an oil squirter even though the threaded mounting hole may still be present.

OPERATION

OPERATION

Engine oil is drawn up through the pickup tube and is pressurized by the oil pump and routed through the full-flow filter to the main oil gallery running the length of the cylinder block. A diagonal hole in each bulkhead feeds oil to each main bearing. Drilled passages within the crankshaft route oil from main bearing journals to connecting rod journals. Balance shaft lubrication is provided through an internal oil passage at the #3 bearing location around the balance shaft module (BSM) mounting bolt. A vertical hole at the number one bulkhead routes pressurized oil through a filter screen and head gasket up to the cylinder head. The oil then divides into two passages; one to the variable valve actuator assembly (VVAA) and one to the exhaust camshaft. The passage to the camshaft feeds the hollow exhaust camshaft at the second cam journal. The rest of the cam journals are feed oil through the hollow camshaft. Oil returning to the pan from pressurized components supplies lubrication to the valve stems, cam lobes, and tappets. Cylinder bores and wrist pins are splash lubricated from directed slots on the connecting rod thrust collars.

DIAGNOSIS AND TESTING

ENGINE OIL LEAK

Begin with a thorough visual inspection of the engine, particularly at the area of the suspected leak. If an oil leak source is not readily identifiable, the following steps should be followed:

1. Do not clean or de-grease the engine at this time because some solvents may cause rubber to swell, temporarily stopping the leak.
2. Add an oil soluble dye (use as recommended by the manufacturer). Start the engine and let idle for approximately 15 minutes. Check the oil dipstick to make sure the dye is thoroughly mixed as indicated with a bright yellow color under a black light.
3. Using a black light, inspect the entire engine for fluorescent dye, particularly at the suspected area of the oil leak. If the oil leak is found and identified, repair per Service Information instructions.
4. If dye is not observed, drive the vehicle at various speeds for approximately 24 km (15 miles), and repeat the inspection.

   If the oil leak source is not positively identified at this time, proceed with the **AIR LEAK DETECTION TEST METHOD**.

AIR LEAK DETECTION TEST METHOD

1. Disconnect the fresh air make-up hose from the oil filler neck. Cap or plug the make-up air hose nipple.
2. Remove the PCV hose from the PCV valve. Cap or plug the PCV valve nipple.
3. Attach an air hose with a pressure gauge and regulator to the dipstick tube.

CAUTION: Do not subject the engine assembly to more than 20.6 kPa (3 PSI) of test pressure.

4. Gradually increase air pressure from 7 kPa (1 psi) to 17 kPa (2.5 psi) maximum while applying soapy water at the suspected leak source. Adjust the regulator to a suitable test pressure within this range that provides the best bubble generation which will pinpoint the leak source. If the oil leak is detected and identified, repair per Service Information procedures.
5. If the leakage occurs at the rear crankshaft oil seal area, follow the procedures for rear seal area leaks. Refer to **LUBRICATION - DIAGNOSIS AND TESTING** .
6. If no leaks are detected, turn off the air supply and remove the air hose and all plugs and caps. Install the PCV valve and make-up air hoses.
7. Clean the oil off of the suspect oil leak area using a suitable solvent. Drive the vehicle at various speeds approximately 24 km (15 miles). Inspect the engine for signs of an oil leak by using a black light.

CHECKING ENGINE OIL PRESSURE

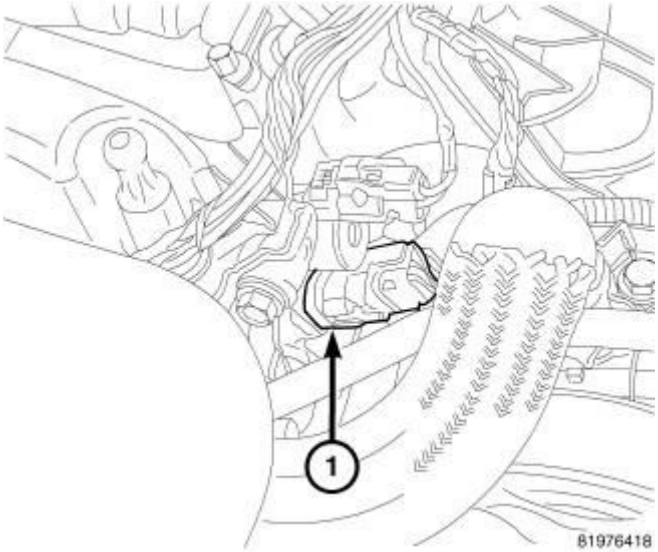

Fig. 339: Oil Temperature Sensor
Courtesy of CHRYSLER GROUP, LLC

NOTE: Anytime the oil temperature sensor is removed, it should be replaced with a new sensor.

1. Disconnect and remove oil temperature sensor (1).

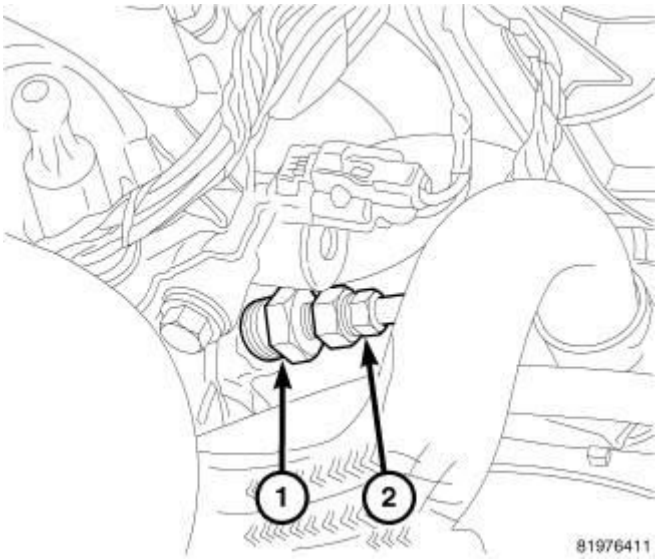

Fig. 340: Oil Pressure Adapter 9879
Courtesy of CHRYSLER GROUP, LLC

CAUTION: Threads in cylinder head are British Standard Pipe (BSP). Do not install a NPT threaded adapter, this could crack the cylinder block.

2. Install threaded adapter (special tool #9879, Adapter, Oil Pressure Test) (1).

3. Install oil pressure gauge (2).

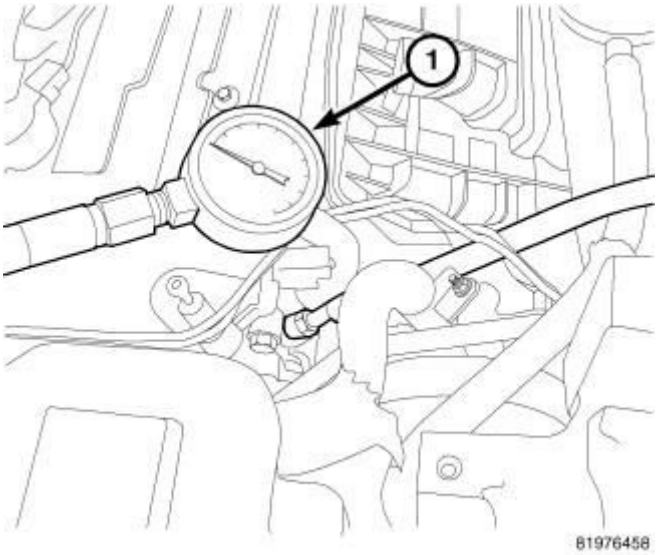

Fig. 341: Oil PSI Gauge
Courtesy of CHRYSLER GROUP, LLC

4. Start engine and record reading on oil pressure gauge (1).

CAUTION: If oil pressure is 0 at idle, do not perform the 3000 RPM test

5. If oil pressure is 0 at idle, shut off engine. Check for pressure relief valve stuck open or a clogged oil pick-up screen.
6. Remove oil pan and inspect for debris. Refer to **PAN, OIL, REMOVAL** .
7. Remove oil pressure relief valve. Refer to **VALVE, OIL PRESSURE RELIEF, REMOVAL**. and
8. Inspect oil pressure relief valve if damaged replace. Refer to **VALVE, OIL PRESSURE RELIEF, INSPECTION**.
9. If pressure relief valve is Ok, replace balance shaft module assembly. Refer to **PUMP, ENGINE OIL, REMOVAL** .

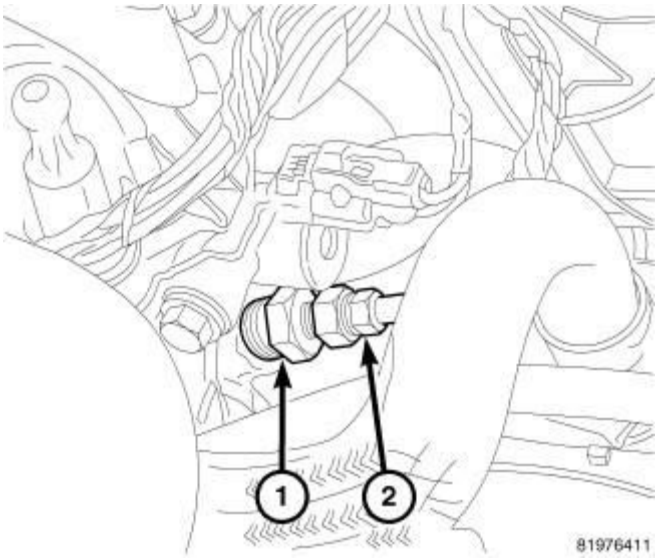

Fig. 342: Oil Pressure Adapter 9879
Courtesy of CHRYSLER GROUP, LLC

10. After test is complete, remove oil pressure gauge (2) and adapter (special tool #9879, Adapter, Oil Pressure Test) (1).

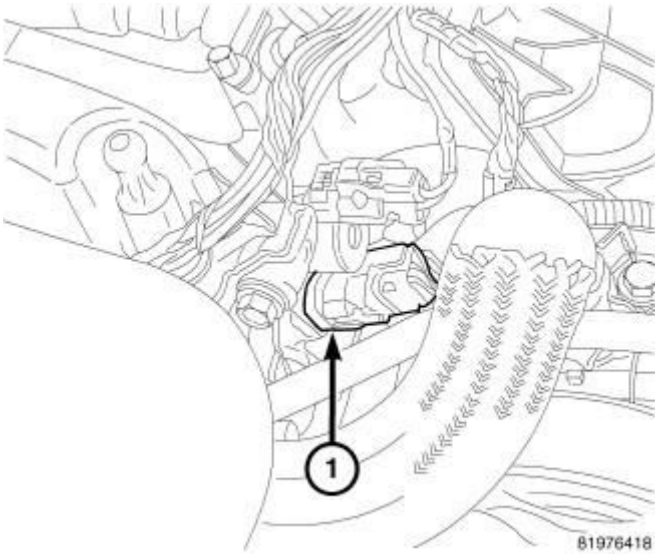

Fig. 343: Oil Temperature Sensor
Courtesy of CHRYSLER GROUP, LLC

11. Install a new oil pressure temperature sensor (1) and connect electrical connector.

CHECKING VVT OIL PRESSURE

This test can be used to help diagnose VVT faults.

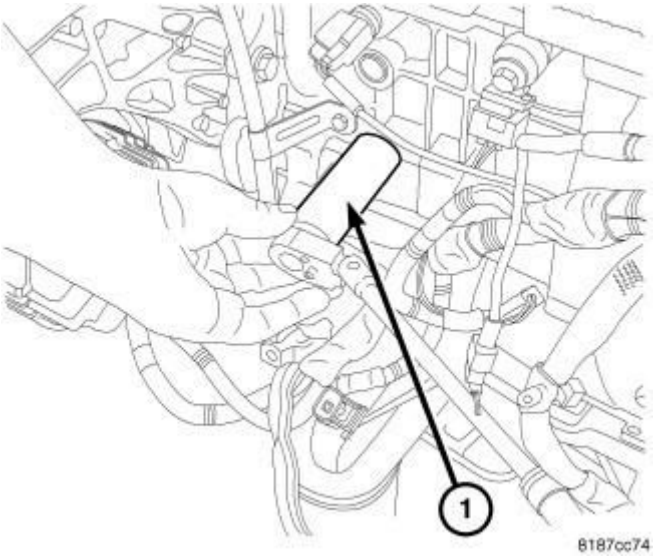

Fig. 344: Oil Sender
Courtesy of CHRYSLER GROUP, LLC

1. Disconnect and remove oil pressure sensor (1).

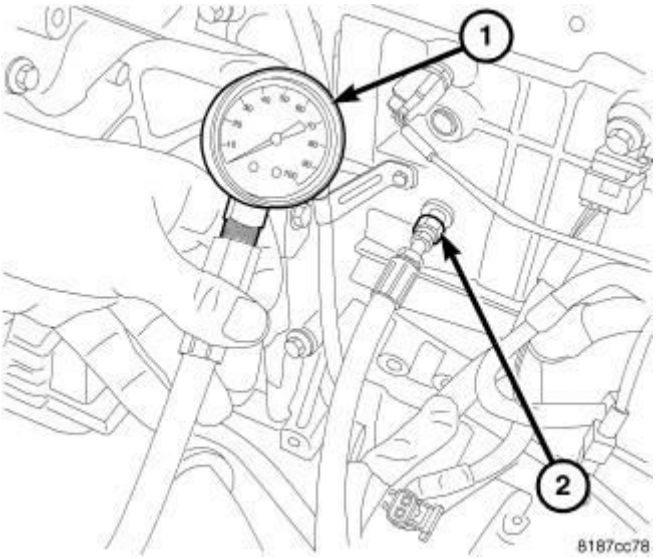

Fig. 345: Oil Pressure Gauge
Courtesy of CHRYSLER GROUP, LLC

CAUTION: Threads in block are 1/8"-28 British Standard Pipe (BSP). Do not install a National Pipe Thread (NPT) threaded adapter, this could crack the cylinder block.

2. Install an 1/8-28 BSP male to 1/8-27 female threaded adapter (2).
3. Install oil pressure gauge (1).
4. Start engine and record oil pressure.

CAUTION: If oil pressure is 0 at idle, do not perform the 3000 RPM test

5. If oil pressure is 0 at idle, shut off engine. Check for pressure relief valve stuck open or a clogged oil pick-up screen.
6. Remove oil pan and inspect for debris. Refer to **PAN, OIL, REMOVAL** .
7. Remove oil pressure relief valve and inspect, if damaged replace pressure relief valve. Refer to **VALVE, OIL PRESSURE RELIEF, REMOVAL**.
8. If pressure relief valve is Ok, replace balance shaft module assembly. Refer to **PUMP, ENGINE OIL, REMOVAL** .

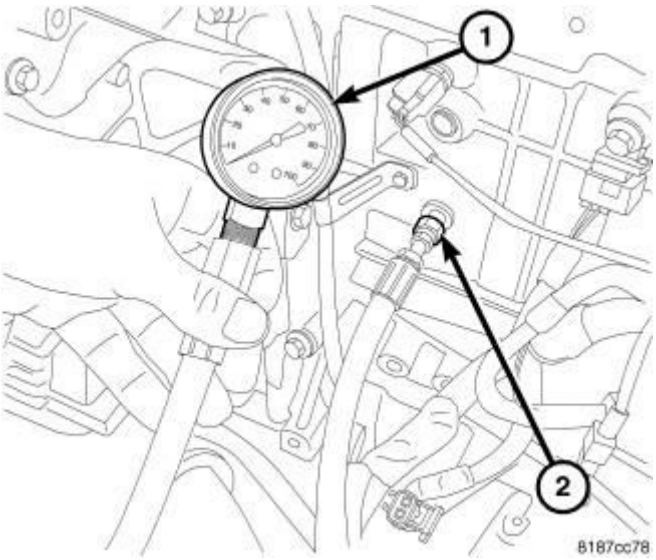

Fig. 346: Oil Pressure Gauge
Courtesy of CHRYSLER GROUP, LLC

9. After test is complete, remove test gauge (1) and fitting (2).

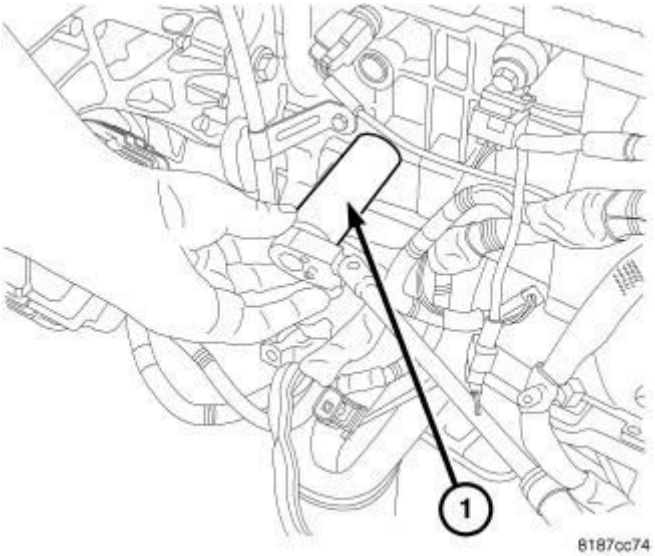

Fig. 347: Oil Sender
Courtesy of CHRYSLER GROUP, LLC

10. Install oil pressure sensor and electrical connector.

COOLER, OIL

DESCRIPTION

DESCRIPTION

An engine oil cooler is used on some engine packages. The cooler is a coolant-to-oil type and mounted between the oil filter and oil filter adapter.

REMOVAL

REMOVAL

NOTE: The oil cooler can not be cleaned out. In the event that the engine requires rebuilding or replacement, the oil cooler should be replaced.

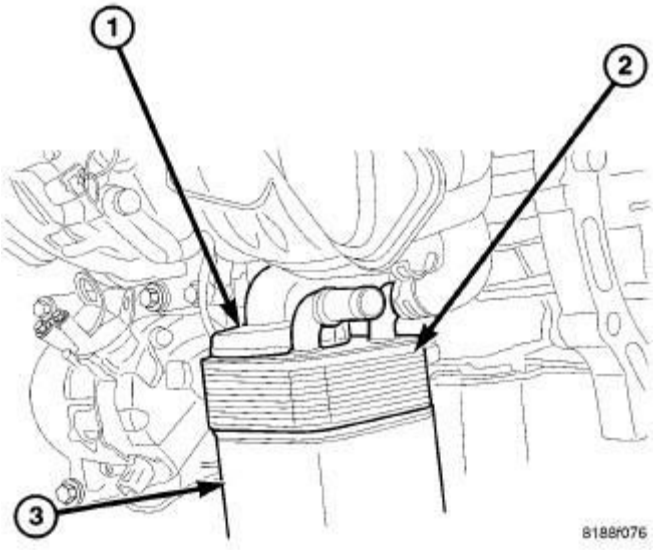

Fig. 348: Identifying Oil Cooler
Courtesy of CHRYSLER GROUP, LLC

1. Raise vehicle on hoist.
2. Drain cooling system. Refer to **STANDARD PROCEDURE** .
3. Disconnect oil cooler coolant hoses.
4. Remove oil filter (3).

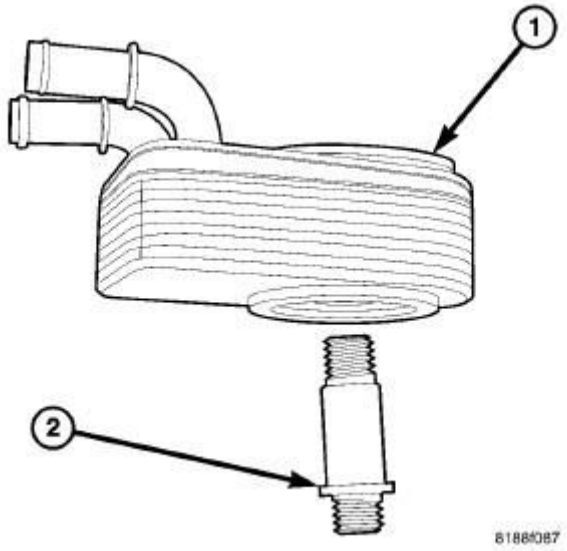

Fig. 349: Oil Cooler Mounting
Courtesy of CHRYSLER GROUP, LLC

5. Remove oil cooler connector bolt (2).

6. Remove oil cooler (1).

INSTALLATION

INSTALLATION

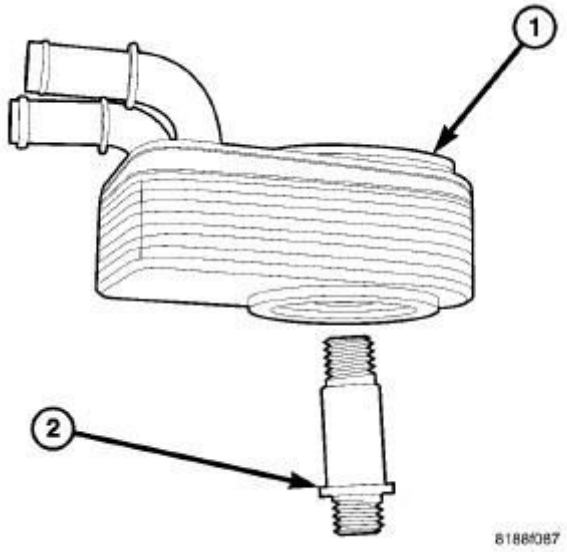

Fig. 350: Oil Cooler Mounting
Courtesy of CHRYSLER GROUP, LLC

1. Replace oil cooler seal (1).
2. Lubricate seal and position oil cooler to oil filter adapter, aligning notch to tab.
3. Install oil cooler connector bolt (2). Tighten connector bolt to 49 N.m (36 ft. lbs.).

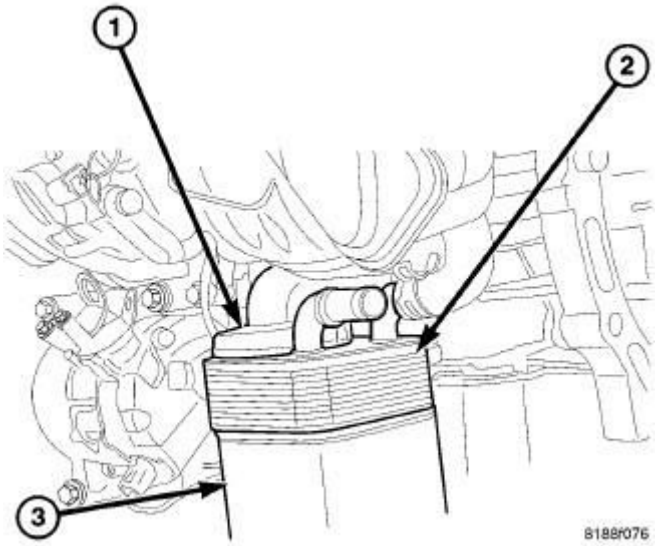

Fig. 351: Identifying Oil Cooler
Courtesy of CHRYSLER GROUP, LLC

4. Install oil filter (3).
5. Connect oil cooler coolant hose.
6. Lower vehicle.
7. Fill cooling system. Refer to **STANDARD PROCEDURE** .

FILTER, ENGINE OIL

REMOVAL

REMOVAL

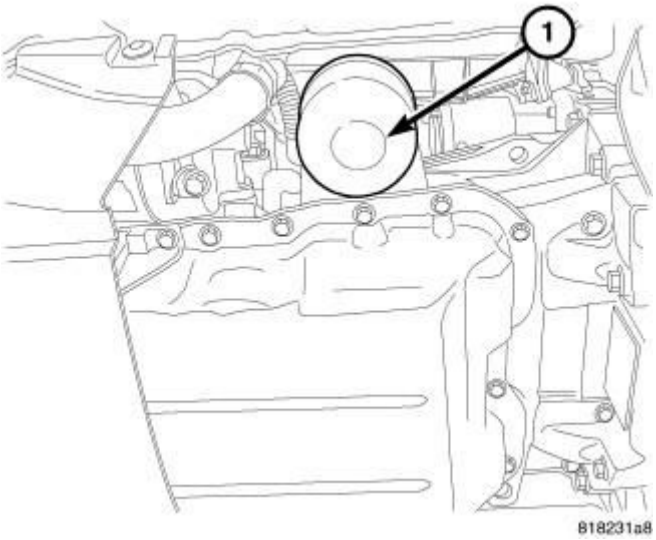

Fig. 352: Oil Filter
Courtesy of CHRYSLER GROUP, LLC

CAUTION: When servicing the oil filter, avoid deforming the filter can by installing the remove/install tool band strap against the can to base lock seam. The lock seam joining the can to the base is reinforced by the base plate.

1. Using a suitable filter wrench, turn oil filter (1) counterclockwise to remove.

INSTALLATION

INSTALLATION

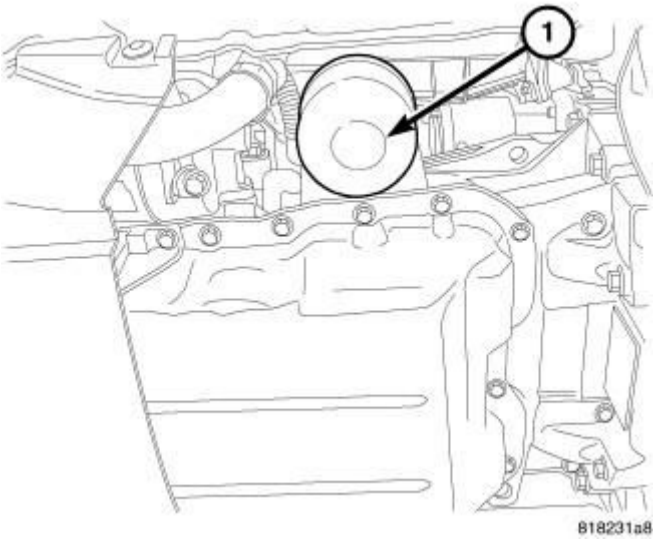

Fig. 353: Oil Filter
Courtesy of CHRYSLER GROUP, LLC

1. Clean and check filter mounting surface. The surface must be smooth, flat and free of debris or pieces of gasket.
2. Lubricate new oil filter gasket.
3. Screw oil filter (1) on until the gasket contacts base. Tighten to 14 N.m (124 in. lbs.).

OIL

STANDARD PROCEDURE

ENGINE OIL LEVEL CHECK

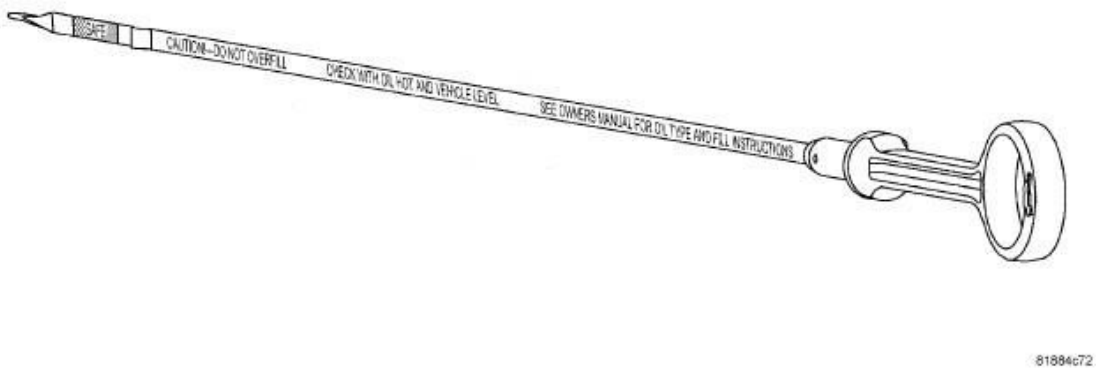

Fig. 354: Oil Level Indicator
Courtesy of CHRYSLER GROUP, LLC

NOTE: The engine must be HOT when checking oil level.

The best time to check engine oil level is after the engine is at operating temperature. Allow the engine to be shut off for at least 5 minutes before checking oil level.

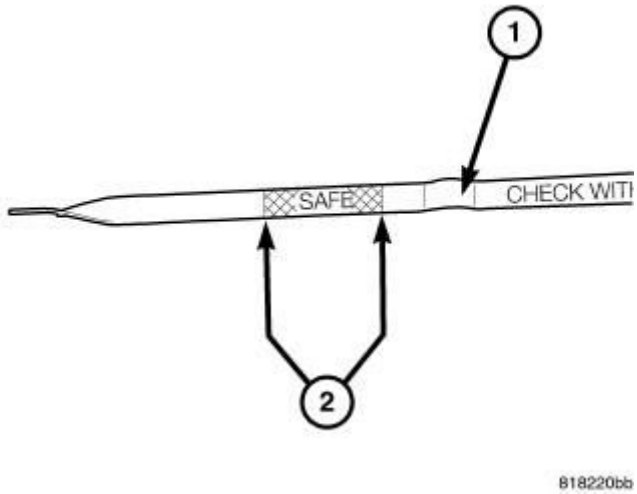

Fig. 355: Dip Stick
Courtesy of CHRYSLER GROUP, LLC

Checking the oil while the vehicle is on level ground will improve the accuracy of the oil level reading. Remove dipstick (1), and observe oil level. Add oil only when the level is at or below the SAFE mark. If the oil level is in the safe (2) range, do not add oil.

CAUTION: Do not operate engine if the oil level is above the MAX mark on the dipstick. Excessive oil volume can cause oil aeration which can lead to engine failure due to loss of oil pressure or increase in oil temperature.

ENGINE OIL AND FILTER CHANGE

WARNING: New or used engine oil can be irritating to the skin. Avoid prolonged or repeated skin contact with engine oil. Contaminants in used engine oil, caused by internal combustion, can be hazardous to your health. Thoroughly wash exposed skin with soap and water. Do not wash skin with gasoline, diesel fuel, thinner, or solvents, health problems can result. Do not pollute, dispose of used engine oil properly. Contact your dealer or government agency for location of collection center in your area.

CAUTION: On export vehicles, refer to the Owner's Manual for the correct grade of oil.

Change engine oil at mileage and time intervals described in the Maintenance Schedule. Refer to

MAINTENANCE SCHEDULES, DESCRIPTION .

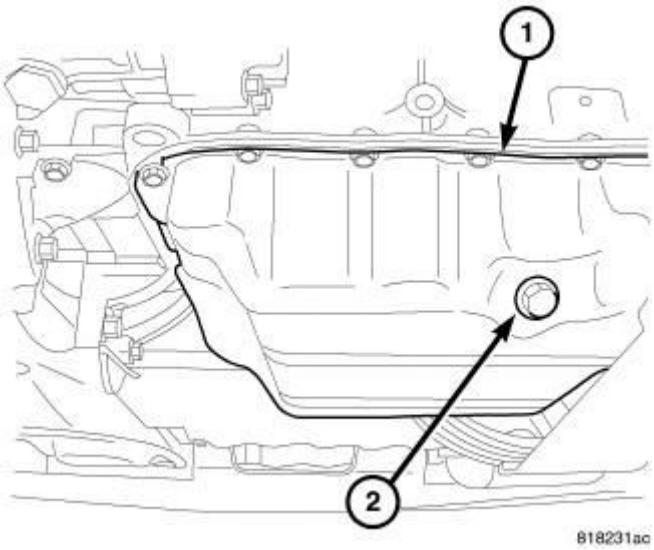

Fig. 356: Oil Drain Plug & Oil Pan
Courtesy of CHRYSLER GROUP, LLC

1. Run engine until achieving normal operating temperature.
2. Position the vehicle on a level surface and turn engine off.
3. Remove oil fill cap.
4. Raise vehicle on hoist.
5. Place a suitable oil collecting container under oil pan drain plug (2).
6. Remove oil pan drain plug (2) or and allow oil to drain into collecting container. Inspect drain plug threads for stretching or other damage. Replace drain plug and gasket if damaged.

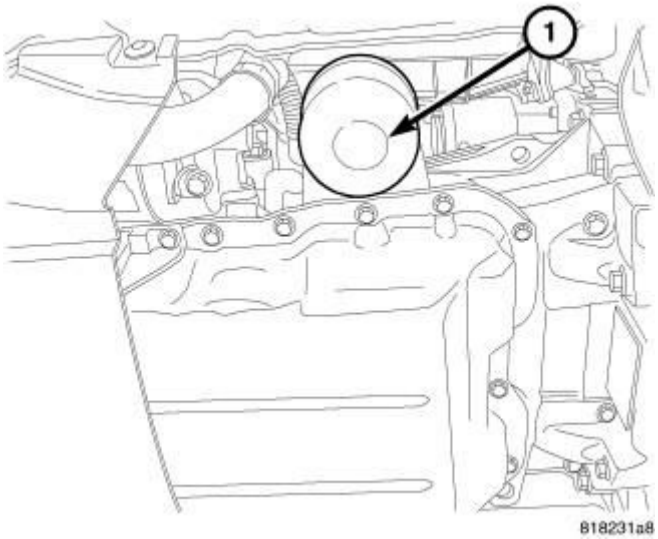

Fig. 357: Oil Filter

Courtesy of CHRYSLER GROUP, LLC

7. Remove oil filter (1). Refer to **FILTER, ENGINE OIL, REMOVAL** .

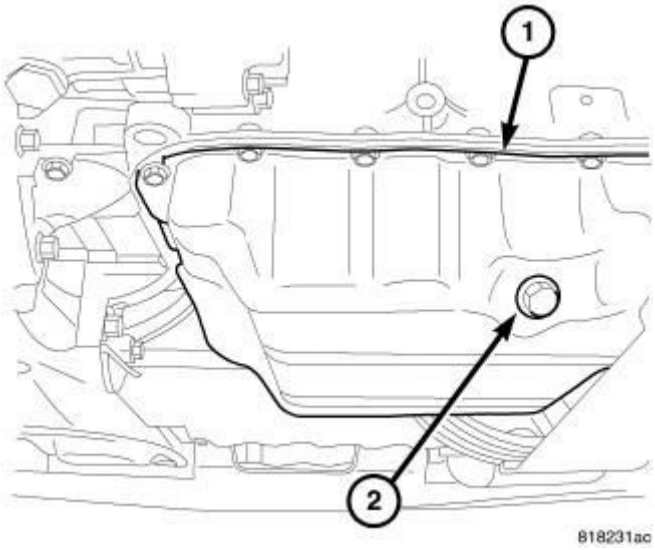

Fig. 358: Oil Drain Plug & Oil Pan
Courtesy of CHRYSLER GROUP, LLC

8. Install oil pan drain plug (2) and tighten drain plug to 40 N.m (30 ft. lbs.).

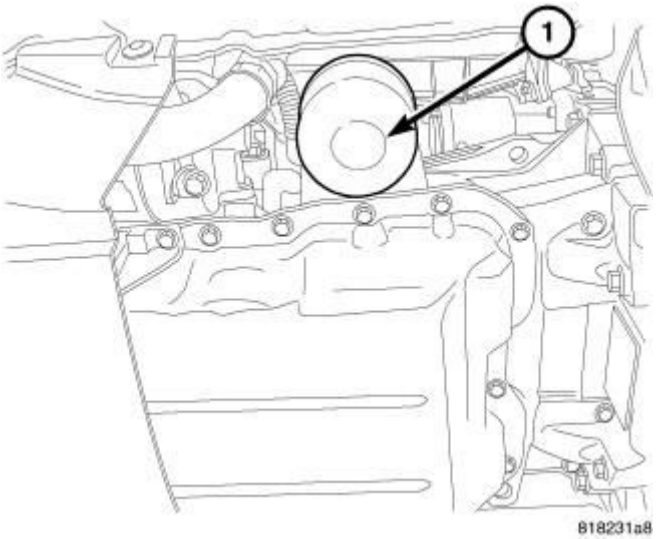

Fig. 359: Oil Filter
Courtesy of CHRYSLER GROUP, LLC

9. Install new oil filter (1). Refer to **FILTER, ENGINE OIL, INSTALLATION** .
10. Lower vehicle and fill crankcase with specified type and amount of engine oil . Refer to **CAPACITIES AND RECOMMENDED FLUIDS, SPECIFICATIONS** and **CAPACITIES AND**

RECOMMENDED FLUIDS, DESCRIPTION .

11. Install oil fill cap.
12. Start engine and inspect for leaks.
13. Stop engine and inspect oil level.

OIL FILTER SPECIFICATION

All engines are equipped with a high quality full-flow, disposable type oil filter. Replace oil filter with a Mopar® or the equivalent.

USED ENGINE OIL DISPOSAL

Care should be exercised when disposing used engine oil after it has been drained from a vehicle engine. Refer to WARNING under **ENGINE OIL AND FILTER CHANGE** .

PAN, OIL

REMOVAL

REMOVAL

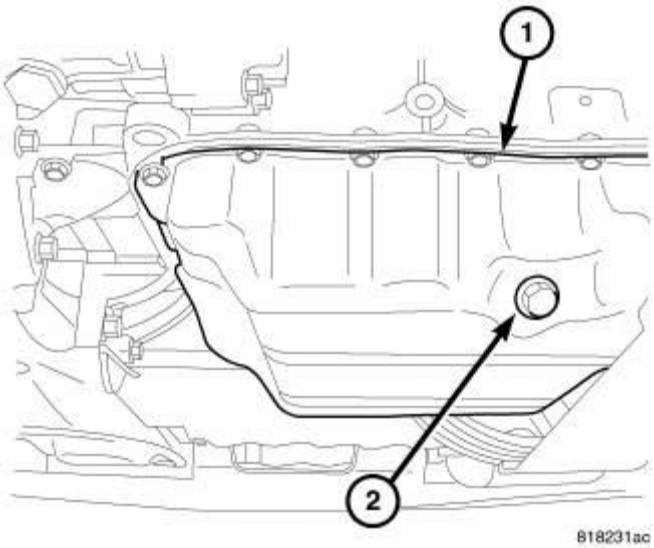

Fig. 360: Oil Drain Plug & Oil Pan
Courtesy of CHRYSLER GROUP, LLC

1. Raise vehicle on hoist.
2. Remove oil drain plug (2) and drain the engine oil.
3. Remove accessory drive belt splash shield.

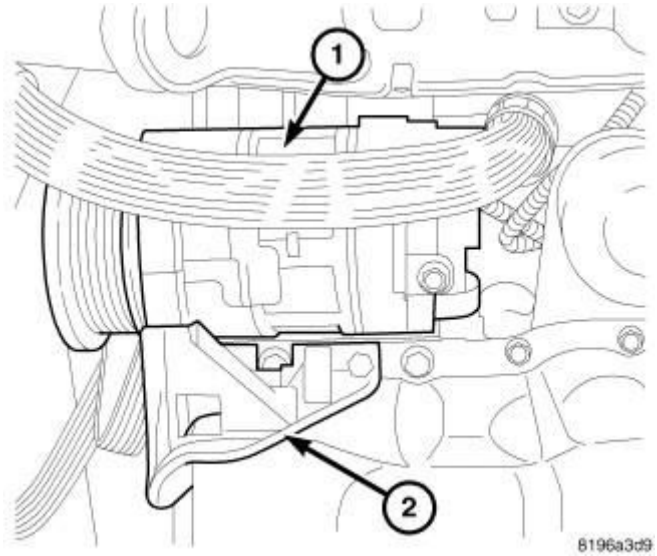

Fig. 361: Locating A/C Compressor
Courtesy of CHRYSLER GROUP, LLC

4. Remove lower A/C compressor mounting bolt (if equipped).
5. Remove A/C mounting bracket (2).

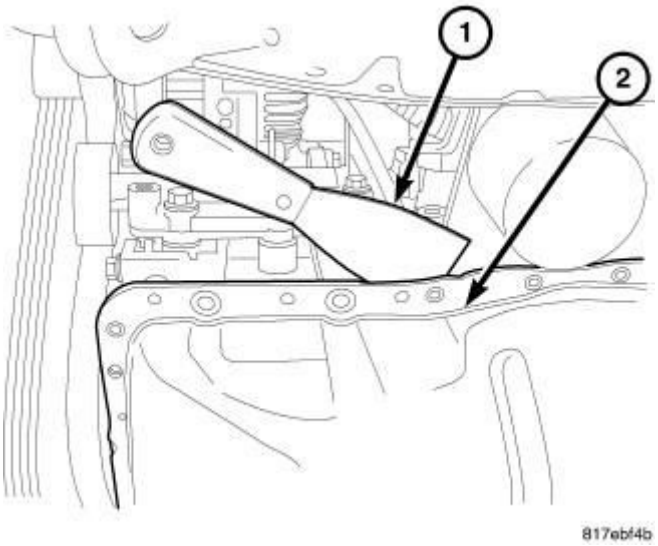

Fig. 362: Using Putty Knife To Loosen Seal Around Oil Pan
Courtesy of CHRYSLER GROUP, LLC

NOTE: Do not use pry points in block to remove oil pan.

6. Remove oil pan retaining bolts.
7. Using a putty knife (1), loosen seal around oil pan (2).
8. Remove oil pan (2).

INSTALLATION

INSTALLATION

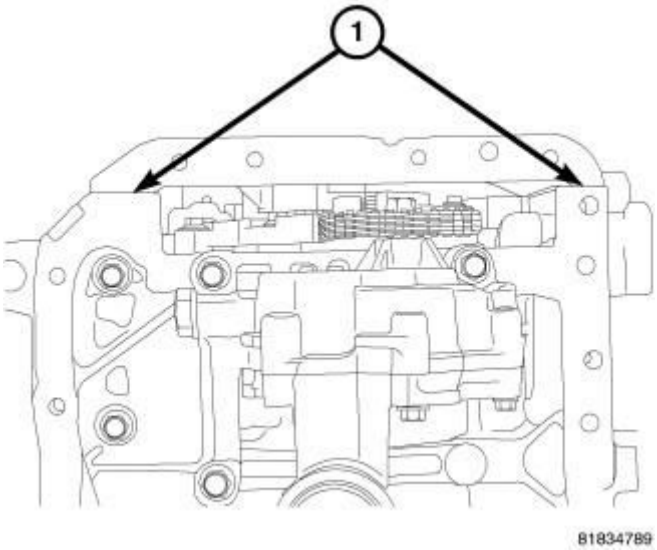

Fig. 363: Sealer Location
Courtesy of CHRYSLER GROUP, LLC

NOTE: Oil pan sealing surfaces must be free of grease or oil.

NOTE: Parts must be assembled within 10 minutes of applying RTV.

1. Apply Mopar® Engine RTV GEN II at the front cover to engine block parting lines (1).

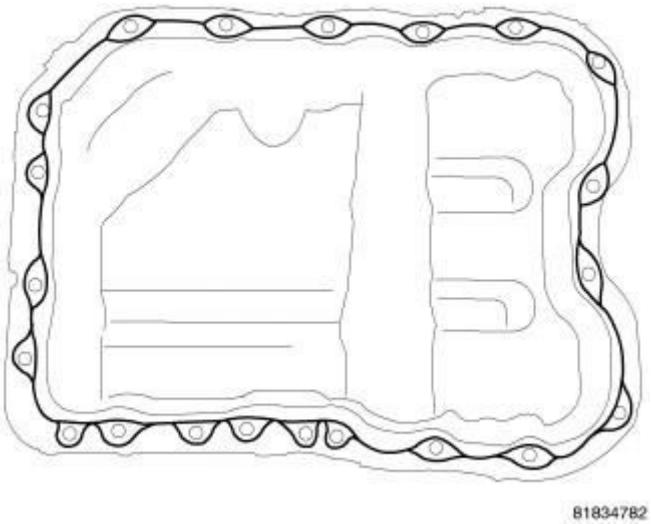

Fig. 364: Sealing Oil Pan
Courtesy of CHRYSLER GROUP, LLC

2. Apply a 2 mm bead of Mopar® Engine RTV GEN II around the oil pan as shown in illustration.
3. Position oil pan and install bolts. Tighten bolts to 12 N.m (105 in. lbs.).

NOTE: The 2 long bolts must be tightened to 22 N.m (195 in. lbs.).

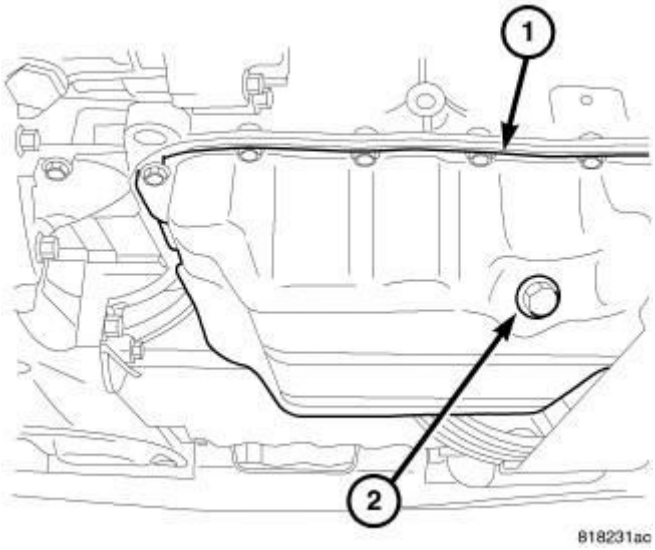

Fig. 365: Oil Drain Plug & Oil Pan
Courtesy of CHRYSLER GROUP, LLC

4. Install oil drain plug (2).
5. Lower vehicle and fill engine crankcase with proper oil to correct level.
6. Start engine and check for leaks.

PLUG, OIL

DESCRIPTION

DESCRIPTION

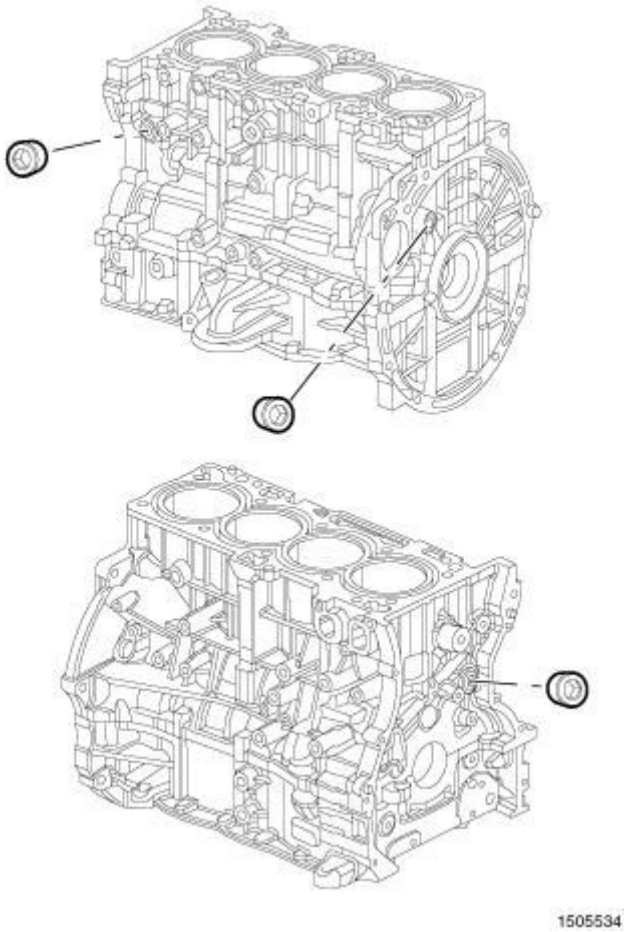

Fig. 366: Tapered Plugs
Courtesy of CHRYSLER GROUP, LLC

The engine block has three tapered plugs sealing the high pressure oil gallery. These threaded plugs do not have a torque specification but instead are installed to a specific depth. Do not attempt to further tighten these plugs, damage to the engine block could result. Whenever these plugs are removed they must be replaced. Service plugs have a lock patch and do not require the application of additional sealant.

REMOVAL

REMOVAL

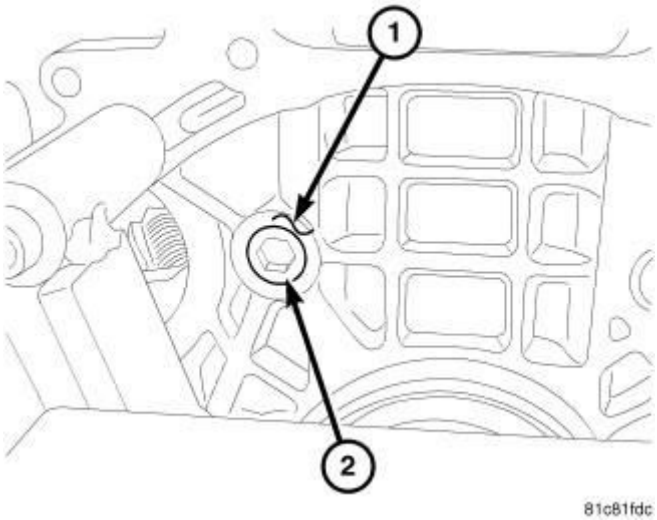

Fig. 367: Gallery Plug
Courtesy of CHRYSLER GROUP, LLC

CAUTION: Excessive use of brake parts cleaner to clean threads in block could cause #5 main bearing failure.

NOTE: Rear plug shown in illustration, other plugs are similar.

1. Remove the plug (2) from the engine block.
2. Use Mopar® Brake Parts Cleaner (or equivalent) sparingly to clean the block.

INSTALLATION

INSTALLATION

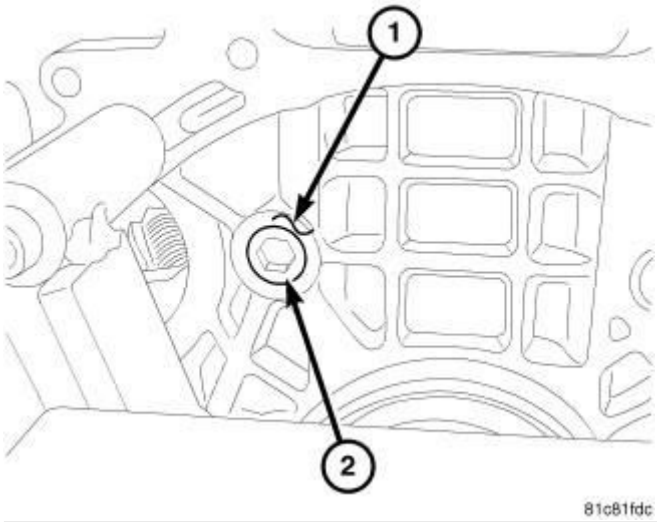

Fig. 368: Gallery Plug
Courtesy of CHRYSLER GROUP, LLC

CAUTION: Excessive use of brake parts cleaner to clean threads in block could cause #5 main bearing failure.

NOTE: Rear plug shown in illustration, other plugs are similar.

1. Use Mopar® Brake Parts Cleaner (or equivalent) sparingly to clean the block.
2. Install the plug (2) flush with the block boss face (1). The plug (2) is correctly installed when it is flush or protruding no more than 1 mm from the block boss face (1).

PUMP, ENGINE OIL

DESCRIPTION

DESCRIPTION

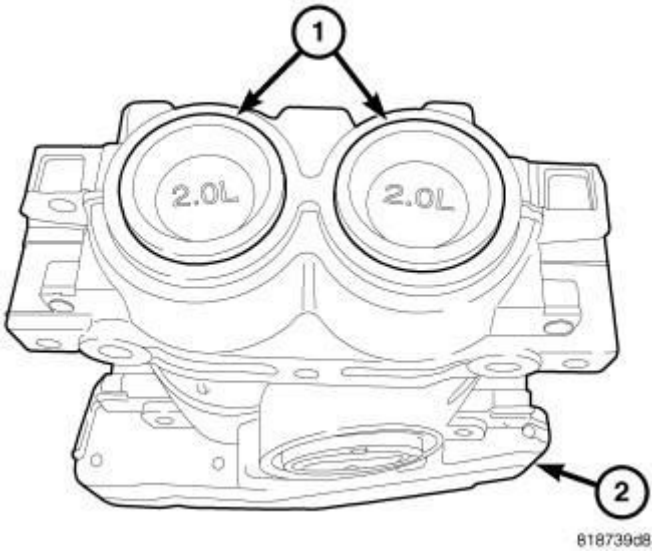

Fig. 369: Balance Shaft Module & End Caps
Courtesy of CHRYSLER GROUP, LLC

The oil pump is integral to the balance shaft module (BSM) (2). The oil pump cannot be disassembled for inspection. The pressure relief valve is serviceable and can be removed and inspected. The BSM can be identified by the plastic end caps (1).

REMOVAL

REMOVAL

	A multimedia supplement to the instructions contained in this article is

YouTube	available. To view the multimedia example of the condition described go to; **http://www.youtube.com/user/Mitchell1Tips** **then type "A00641417.vid2" into the "Search Channel" box.**

When removing and installing the Balance Shaft/Oil Pump assembly in the vehicle, it is not necessary to align the plated links on the drive chain as long as the reference marks are created during the procedure.

1. Remove the oil pan. Refer to **PAN, OIL, REMOVAL** .

Fig. 370: Aligning Balance Shaft/Oil Pump Drive Gear And Housing Indicator
Courtesy of CHRYSLER GROUP, LLC

2. Rotate the engine clockwise until the balance shaft/oil pump drive gear and the housing indicator are aligned.

NOTE: **IT IS VERY IMPORTANT THAT THE CRANKSHAFT STAYS STATIONARY DURING THE FOLLOWING STEPS. DO NOT MOVE THE CRANKSHAFT UNTIL THE INSTALLATION PROCEDURE IS COMPLETED.**

3. Clean the balance shaft/oil pump assembly drive gear with Mopar® brake cleaner or similar.

NOTE: **Make sure the gear is clear of any oil to allow for marking.**

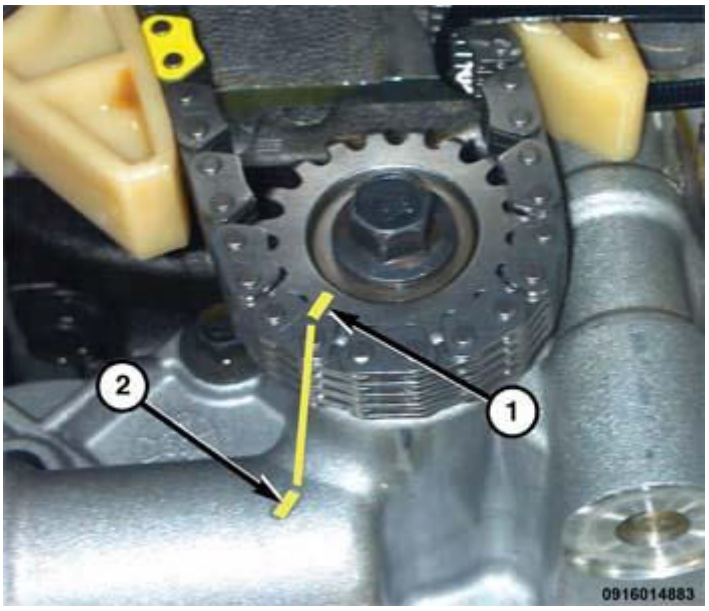

Fig. 371: Oil Pump Chain And Sprocket To Module Body Marks
Courtesy of CHRYSLER GROUP, LLC

4. If the balance shaft/oil pump assembly is being reused, mark the oil pump chain and the sprocket (1) to the module body (2) for reassembly.
5. Install one air-conditioning compressor bracket bolt into the left forward corner thread boss.

NOTE: The bolt will provide a sturdy point to secure a tie strap to hold the tensioner in the compressed position.

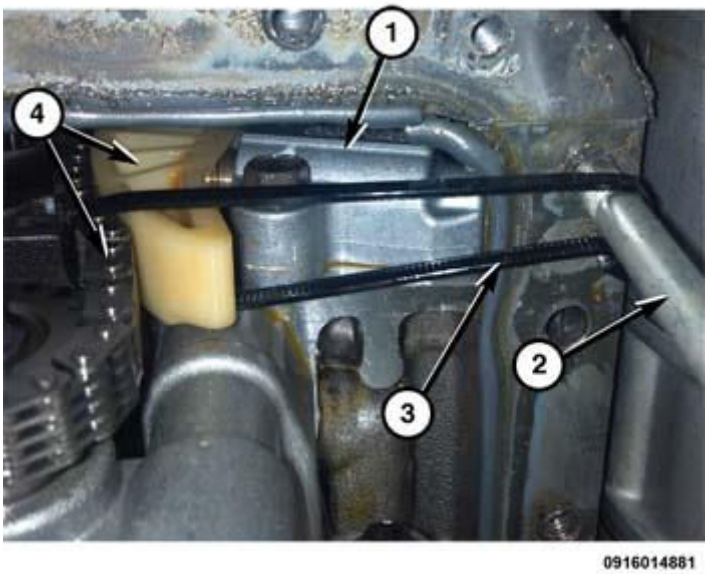

Fig. 372: Positioning Plastic Tie Strap
Courtesy of CHRYSLER GROUP, LLC

6. Position a plastic tie strap (3) around the chain, tensioner (4) and bolt (2) that was previously installed.
7. Push the chain, guide and tensioner (1) to the compressed position.
8. Tighten the tie strap to hold the components together.

NOTE: The tighter the strap, the more room for removal and installation.

9. Remove the balance shaft/oil pump assembly mounting bolts.
10. Remove assembly from the engine by tilting the rear of the balance shaft/oil pump assembly downward while lifting the drive gear out of the chain links.

INSPECTION

INSPECTION

1. Remove timing chain cover . Refer to **COVER(S), ENGINE TIMING, REMOVAL** .
2. Remove oil pan. Refer to **PAN, OIL, REMOVAL** .

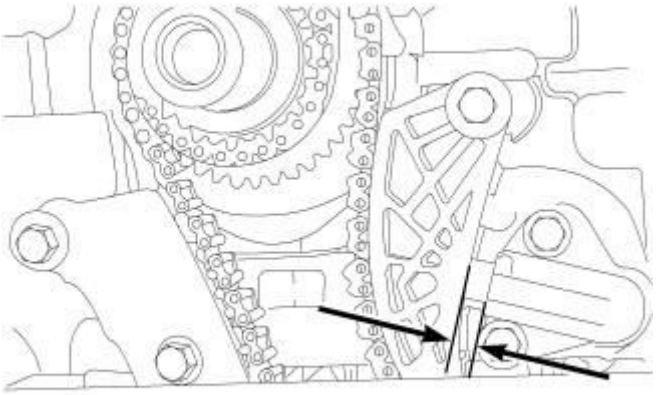

Fig. 373: Measuring Distance Between Tensioner Body & Guide Shoe
Courtesy of CHRYSLER GROUP, LLC

3. Measure the distance between the tensioner body and the guide shoe as shown in illustration.
4. If the distance is 10.1 mm (0.397 in.) or greater, replace the chain.

INSTALLATION

INSTALLATION

YouTube	A multimedia supplement to the instructions contained in this article is available.

	To view the multimedia example of the condition described go to; **http://www.youtube.com/user/Mitchell1Tips** **then type "A00641417.vid3" into the "Search Channel" box.**

CAUTION: There are two different Balance Shaft Module (BSM) to engine block bolts used. 180 mm bolts with a lock-patch on the threads or 185 mm bolts without lock-patch. Do not reuse the 180 mm bolts. Always discard 180 mm bolts after removing. Failure to replace these bolts can result in engine damage. The 185 mm bolts are reusable. Install the same length bolts that were removed and use either four new 180 mm bolts or four 185 mm bolts.

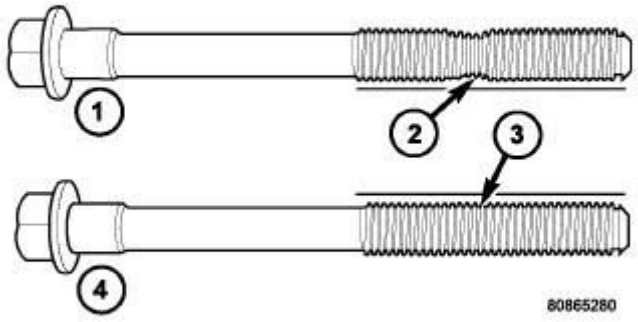

Fig. 374: Checking Cylinder Head Bolts For Stretching (Necking)
Courtesy of CHRYSLER GROUP, LLC

1. The 185 mm (7.283 in.) length bolts must be checked for stretching. Check the bolts with a straight edge for necking (2). If the bolts are necked down, they must be replaced.
2. Clean the balance shaft/oil pump assembly mounting holes with Mopar® brake parts cleaner.
3. Align the marks on the balance shaft/oil pump assembly and drive sprocket.

Fig. 375: Aligning Balance Shaft/Oil Pump Drive Gear And Housing Indicator
Courtesy of CHRYSLER GROUP, LLC

4. With the rear of the balance shaft/oil pump assembly on a slight downward angle, position the gear into the chain links. Make sure the paint marks are aligned.
5. Pivot balance shaft/oil pump assembly upwards and position on ladder frame.

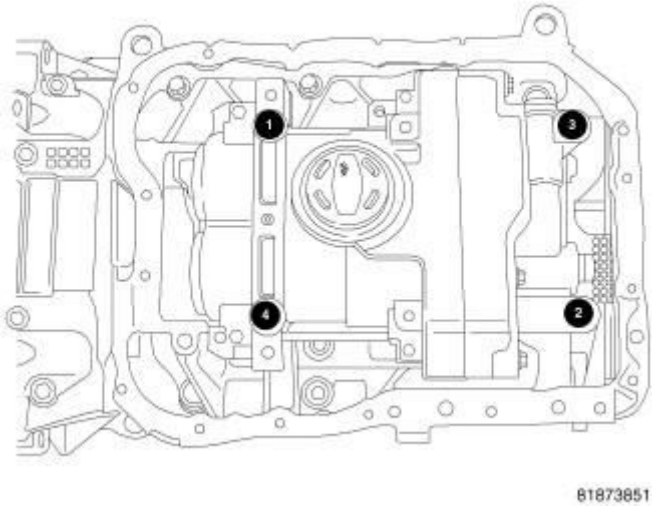

Fig. 376: BSM Mounting Bolts Tightening Sequence
Courtesy of CHRYSLER GROUP, LLC

6. Start balance shaft/oil pump assembly mounting bolts by hand.

NOTE: **Use a three step procedure when tightening balance shaft/oil pump assembly mounting bolts. For new 180 mm bolts, go to step 7. For 185 mm**

bolts, go to step 8.

7. Tighten new 180 mm balance shaft/oil pump assembly mounting bolts as follows:
   a. Tighten to 15 N.m (11 ft. lbs.) in the sequence shown in illustration.
   b. Tighten to 33 N.m (24 ft. lbs.) in the sequence shown in illustration.
   c. Rotate bolts an additional 90° in the sequence shown in illustration.
8. Tighten 185 mm balance shaft/oil pump assembly mounting bolts as follows:
   1. Tighten to 15 N.m (11 ft. lbs.) in the sequence shown in illustration.
   2. Tighten to 29 N.m (22 ft. lbs.) in the sequence shown in illustration.
   3. Rotate bolts an additional 90° in the sequence shown in illustration.

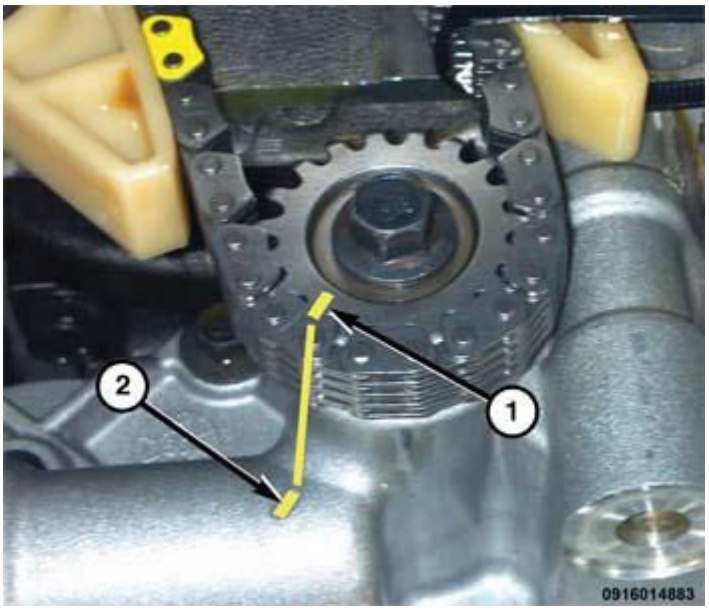

Fig. 377: Oil Pump Chain And Sprocket To Module Body Marks
Courtesy of CHRYSLER GROUP, LLC

9. Double check the alignment marks to ensure the gear (1) and balance shaft/oil pump assembly indicator (2) is aligned.

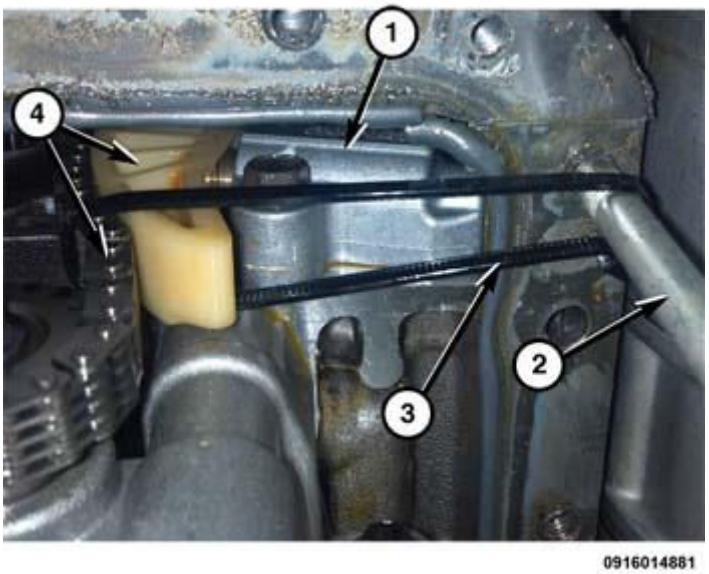

Fig. 378: Positioning Plastic Tie Strap
Courtesy of CHRYSLER GROUP, LLC

10. Remove the tie strap (3).
11. Remove the bracket bolt (2).
12. Inspect that the tensioner (1) has fully extended and applied pressure to the guide and chain (4).
13. Install the oil pan. Refer to **PAN, OIL, INSTALLATION** .
14. Fill engine with oil.
15. Start engine and check for leaks.

SENSOR, OIL TEMPERATURE

DESCRIPTION

DESCRIPTION

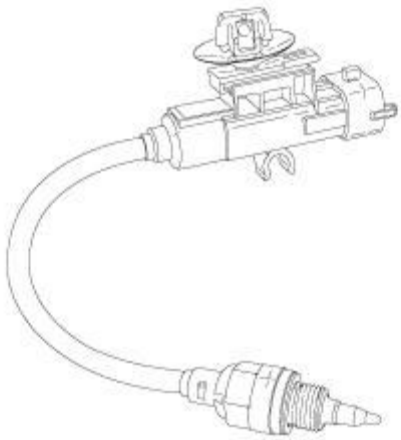

Fig. 379: Oil Temperature Sensor
Courtesy of CHRYSLER GROUP, LLC

The oil temperature sensor is a two wire sensor located on the variable valve actuation assembly at the cylinder head. The sensor probe is mounted to the variable valve actuation assembly through an access hole. A compression washer seals the oil temperature sensor to the variable valve actuation assembly.

REMOVAL

REMOVAL

1. Disconnect the battery negative cable.

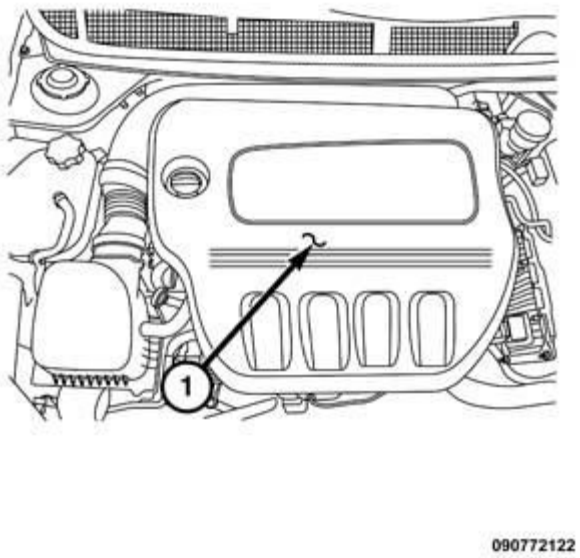

Fig. 380: Engine Cover
Courtesy of CHRYSLER GROUP, LLC

2. Remove the engine cover (1).

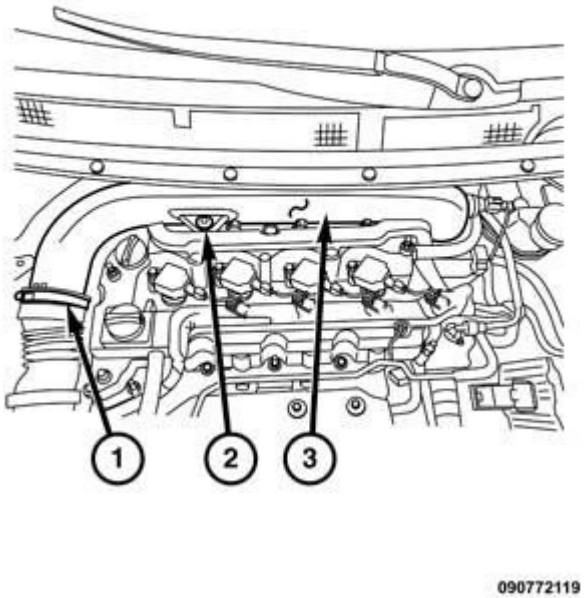

Fig. 381: Resonator, Bolt & Clamp
Courtesy of CHRYSLER GROUP, LLC

Loosen the intake clamp (1), remove the resonator bolt (2) and resonator (3).

3. Remove the engine cover (1).
4. Remove the wiring harness fastener from the intake manifold.
5. Disconnect oil temperature sensor electrical connector.

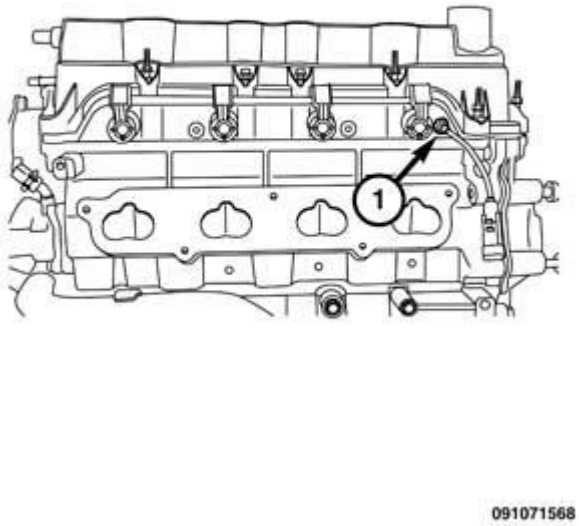

Fig. 382: Oil Temperature Sensor Location
Courtesy of CHRYSLER GROUP, LLC

6. Remove sensor (1).

INSTALLATION

INSTALLATION

1. If re-using the oil temperature sensor, coat the threads with Mopar® thread sealant.

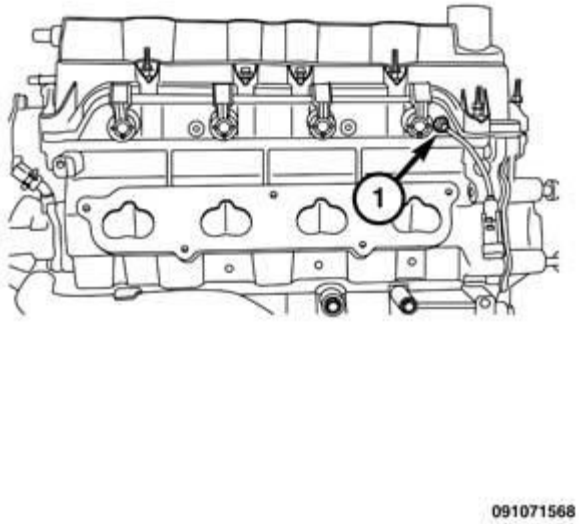

Fig. 383: Oil Temperature Sensor Location
Courtesy of CHRYSLER GROUP, LLC

2. Install oil temperature sensor (1). Tighten to 18 N.m (160 in. lbs.).

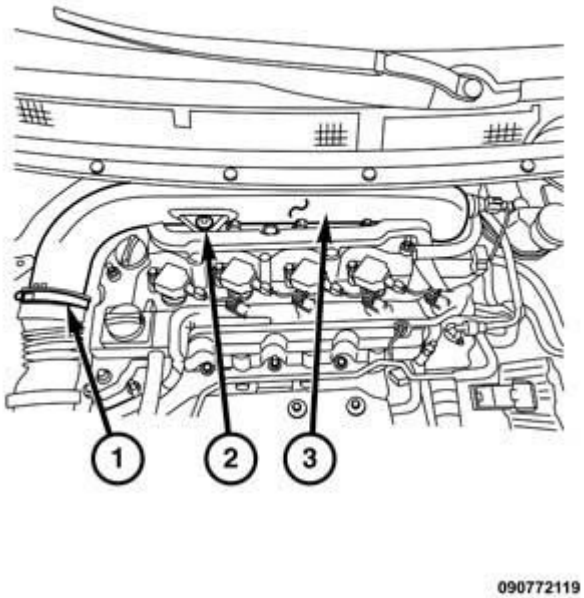

Fig. 384: Resonator, Bolt & Clamp
Courtesy of CHRYSLER GROUP, LLC

3. Install the resonator (3), bolt (2) and clamp (1). Tighten the bolt to 5 N.m (81 in. lbs.). Tighten the clamp.
4. Connect electrical connector.

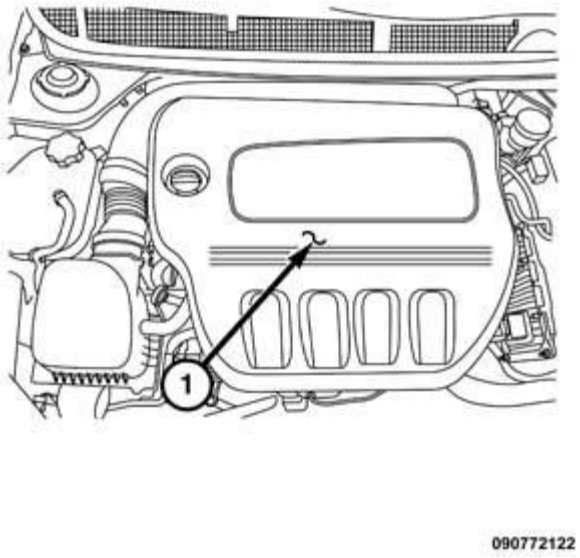

Fig. 385: Engine Cover
Courtesy of CHRYSLER GROUP, LLC

5. Install the engine cover (1).

SENSOR, OIL PRESSURE

DESCRIPTION

DESCRIPTION

The oil pressure sensor is located on the right front side of the engine block. The oil pressure sensor is a pressure sensitive switch that is activated by the engine's oil pressure (in the main oil galley). The sensor is a three terminal device.

OPERATION

OPERATION

The oil pressure sending unit returns a voltage signal back to the PCM relating oil pressure. Ground for the sensor is supplied by the PCM.

REMOVAL

REMOVAL

NOTE: The oil pressure sensor is screwed into the cylinder block below the water pump.

1. Raise and support the vehicle.
2. Remove the belly pan. Refer to **BELLY PAN, REMOVAL** .

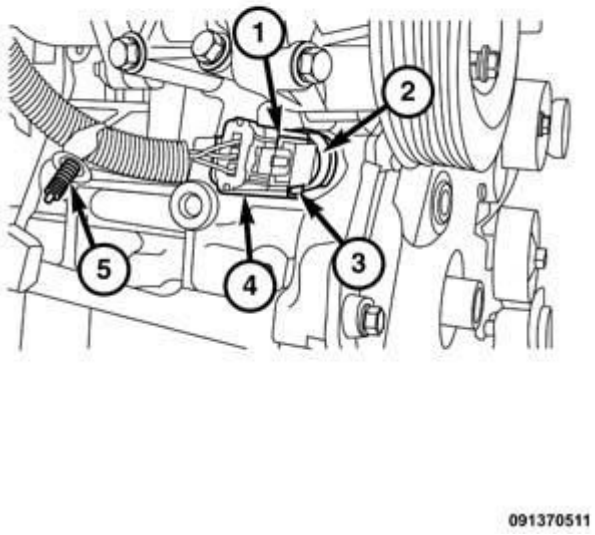

Fig. 386: Oil Temperature Sensor & Connector
Courtesy of CHRYSLER GROUP, LLC

3. Disengage the sensor harness at the block (5).
4. Unlock the connector (3).
5. Disconnect oil temperature sensor electrical connector (4).
6. Unscrew the sensor (2) from the cylinder block.
7. Remove sensor.

INSTALLATION

INSTALLATION

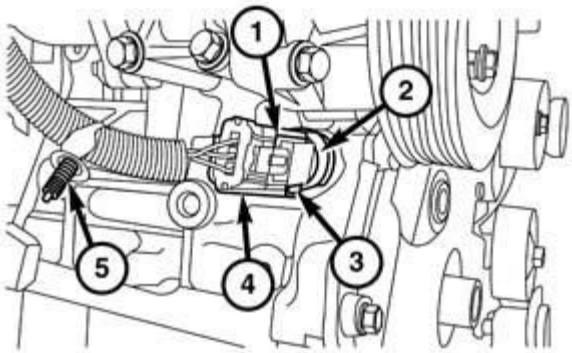

091370511

Fig. 387: Oil Temperature Sensor & Connector
Courtesy of CHRYSLER GROUP, LLC

1. Screw the sensor (2) into the block.
2. Tighten the sensor to 48 N.m (35 ft. lbs.).
3. Install the connector (4).
4. Lock the connector (3).
5. Engage the harness retainer (5) into the block.
6. Install the belly pan. Refer to **BELLY PAN, INSTALLATION** .

VALVE, OIL PRESSURE RELIEF

REMOVAL

REMOVAL

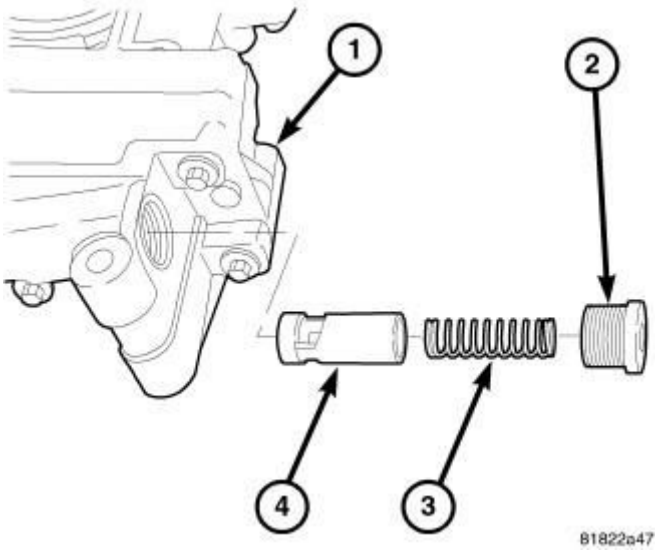

Fig. 388: Oil Pressure Relief Valve
Courtesy of CHRYSLER GROUP, LLC

1. Remove oil pan. Refer to **PAN, OIL, REMOVAL** .
2. Remove pressure regulating valve cap (2).
3. Remove pressure regulating valve spring (3) and valve (4).

INSPECTION

INSPECTION

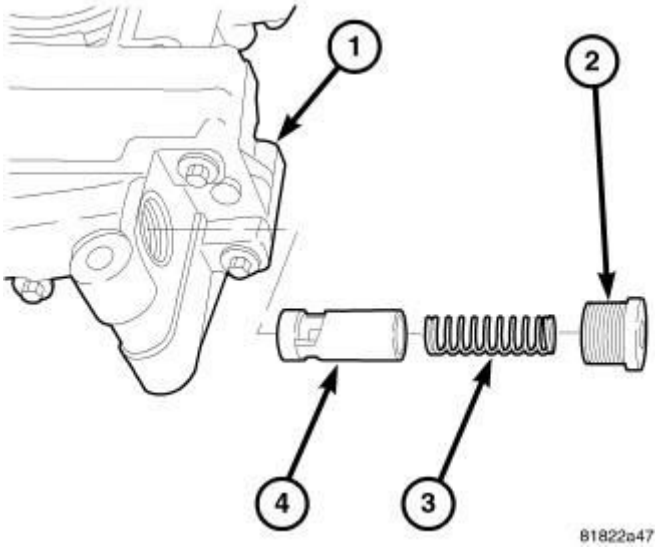

Fig. 389: Oil Pressure Relief Valve
Courtesy of CHRYSLER GROUP, LLC

NOTE: Pressure regulating valve (4) can be serviced separately from the oil pump

assembly.

1. Inspect pressure relief valve (4) scoring, gouging, or debris. Replace as needed.
2. Inspect the pressure relief valve bore in the pump for scoring, gouging, or debris.
3. If pump bore is damaged, replace balance shaft module.

INSTALLATION

INSTALLATION

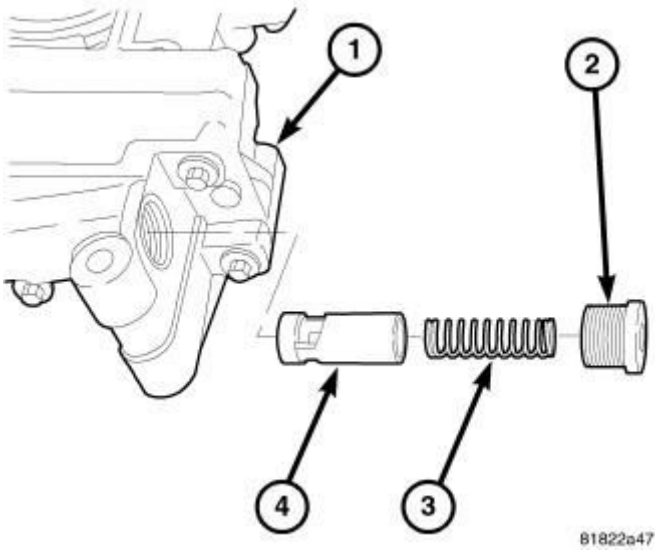

Fig. 390: Oil Pressure Relief Valve
Courtesy of CHRYSLER GROUP, LLC

1. Lightly coat pressure regulating valve with clean engine oil and install valve (4).
2. Install spring (3) and cap (2).
3. Tighten cap to 44 N.m (32 lbs. ft.).

VALVE TIMING

STANDARD PROCEDURE

STANDARD PROCEDURE - VALVE TIMING VERIFICATION

CAUTION: Painted or colored chain links are used during initial engine assembly and can not be relied upon for valve timing verification. Only use top-dead-center marks, cylinder head cover mounting surface and camshaft sprocket marks to verify valve timing or engine damage may result.

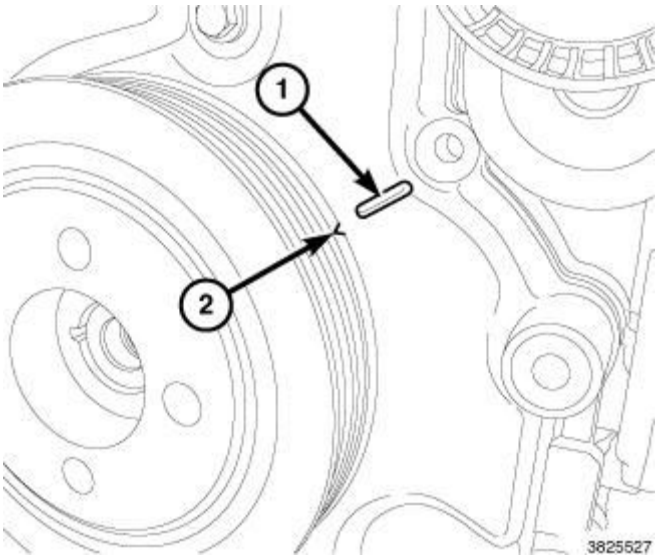

Fig. 391: Timing Cover Mark & Notch
Courtesy of CHRYSLER GROUP, LLC

Correct timing is critical for the NON free-wheeling designed engine. Engine timing can be verified by using the following procedures:

1. Remove the cylinder head cover. Refer to **COVER(S), CYLINDER HEAD, REMOVAL** .
2. Remove the spark plugs. Refer to **SPARK PLUG, REMOVAL** .

CAUTION: When aligning timing marks, always rotate engine by turning the crankshaft. Failure to do so will result in valve and/or piston damage.

3. Rotate the crankshaft clockwise (as viewed from the front) to align the timing cover mark (1) with the damper notch (2) to place the number one cylinder piston at top-dead-center on the compression stroke.

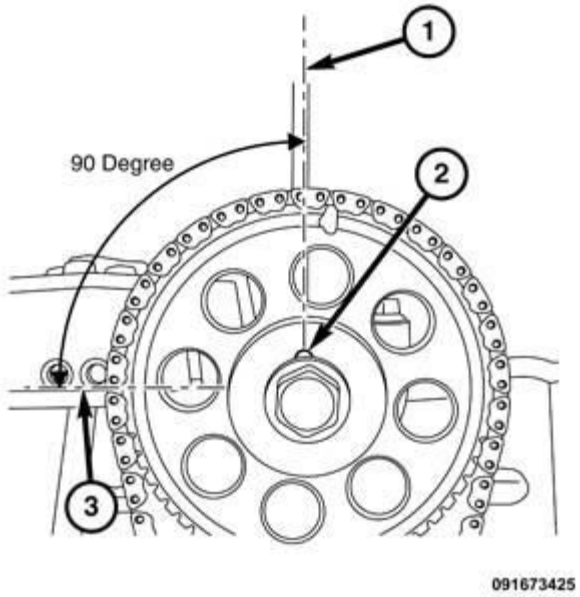

Fig. 392: Vertical Center Line Of Camshaft, Dowel & Cylinder Head
Courtesy of CHRYSLER GROUP, LLC

4. While maintaining this alignment, verify that the **dowel window** (2) on the camshaft sprocket point toward 12 o'clock.
5. Using a straightedge tool (1), place the tool vertically at the center of the cam gear. Using the top edge of the cylinder head (3) as a reference point, the angle between the straightedge and the cylinder head needs to be 90°.
6. If the engine timing is not correct, proceed to Timing Chain and Sprockets for service procedures. Refer to **CHAIN AND SPROCKETS, TIMING, REMOVAL** .

CHAIN AND SPROCKETS, TIMING

REMOVAL

TIMING CHAIN

1. Remove the timing chain cover. Refer to **COVER(S), ENGINE TIMING, REMOVAL** .
2. Verify that the number one cylinder piston is still set to top-dead-center on the compression stroke.

NOTE: **If the timing chain plated links can no longer be seen, the timing chain links corresponding to the timing marks must be marked prior to removal if the chain is to be reused.**

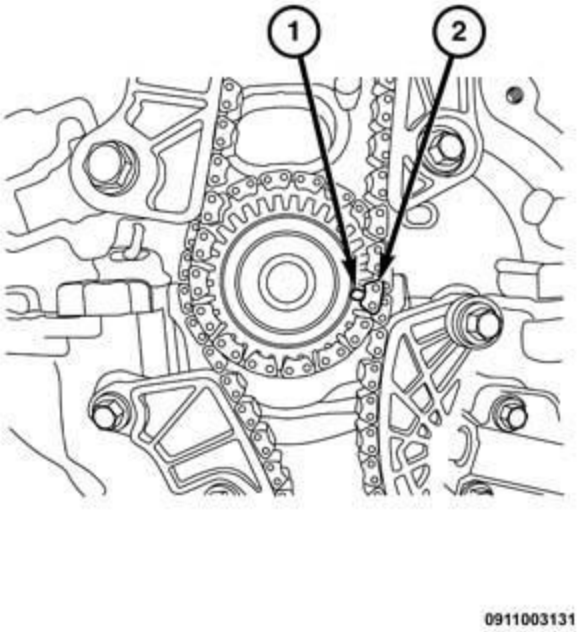

Fig. 393: Chain Link & Crankshaft Timing Mark
Courtesy of CHRYSLER GROUP, LLC

3. Mark chain link (2) corresponding to crankshaft timing mark (1).

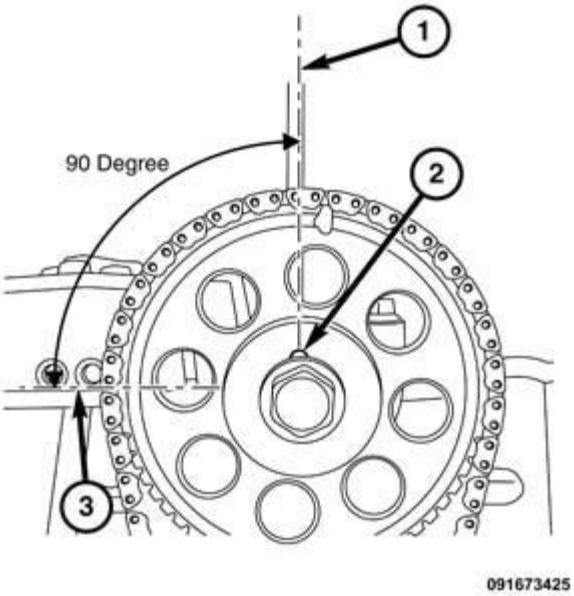

Fig. 394: Vertical Center Line Of Camshaft, Dowel & Cylinder Head
Courtesy of CHRYSLER GROUP, LLC

4. While maintaining this alignment, verify that the camshaft dowel (2) is at the 12 o'clock position. The dowel center line (1) will be 90° from the horizontal surface line at the top of the cylinder head (3).
5. Mark the chain links corresponding to camshaft and crankshaft timing marks.

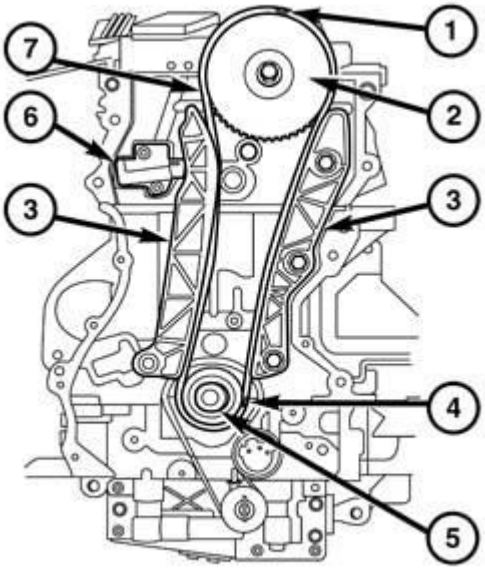

Fig. 395: Timing Chain, Sprockets, Tensioner & Guides
Courtesy of CHRYSLER GROUP, LLC

6. Remove timing chain tensioner (6). Refer to **TENSIONER, ENGINE TIMING, REMOVAL**.
7. Rotate the tensioner guide (3) away from the chain.
8. Remove timing chain (7).

CAMSHAFT SPROCKET

1. Set the timing at TDC. Refer to **VALVE TIMING - STANDARD PROCEDURE** .

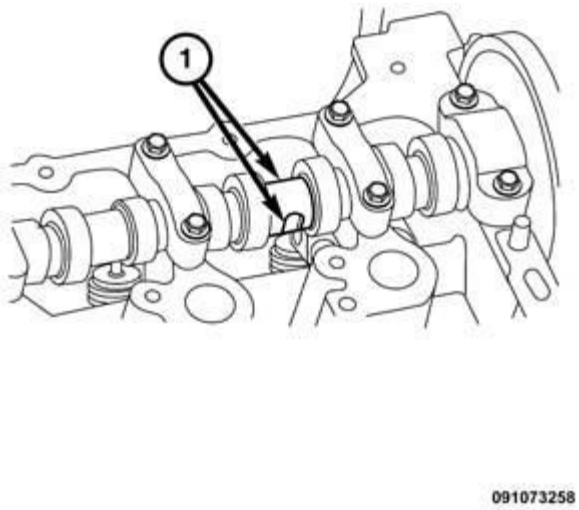

Fig. 396: Wrench Flats
Courtesy of CHRYSLER GROUP, LLC

2. Remove the timing cover. Refer to **COVER(S), ENGINE TIMING, REMOVAL** .
3. Hold the camshaft stationary by the wrench flats (1).

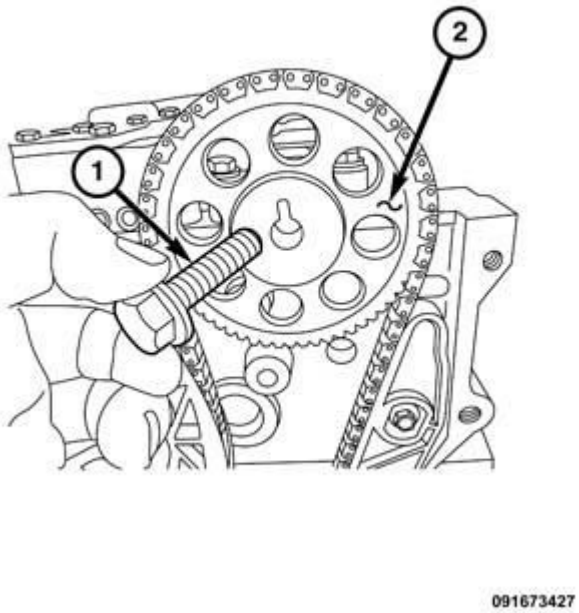

Fig. 397: Camshaft Center Bolt & Sprocket

Courtesy of CHRYSLER GROUP, LLC

4. Remove the camshaft center bolt (1) from the sprocket (2).
5. Once the sprocket is clear of the alignment dowel, lower the sprocket to allow chain to slacken, then remove the chain from the sprocket.
6. Remove the sprocket from the engine.

CRANKSHAFT SPROCKET

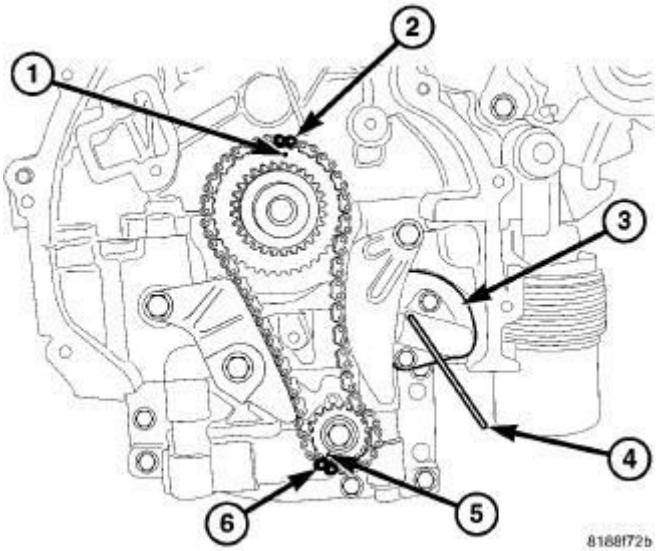

Fig. 398: BSM Timing Chain Marks
Courtesy of CHRYSLER GROUP, LLC

1. Remove the timing chain. Refer to **CHAIN AND SPROCKETS, TIMING, REMOVAL** .
2. Remove the oil pan. Refer to **PAN, OIL, REMOVAL** .
3. Remove the oil pump drive chain tensioner (3).
4. Remove the oil pump drive chain.

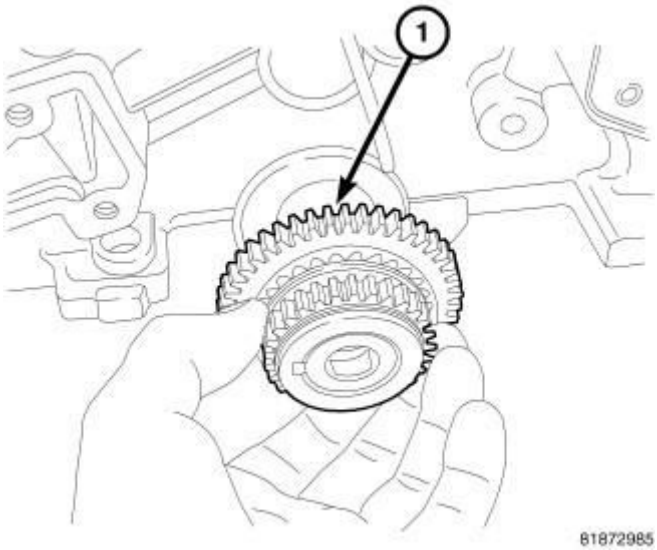

Fig. 399: Crankshaft Sprocket
Courtesy of CHRYSLER GROUP, LLC

5. Remove the crankshaft sprocket (1).

INSPECTION

INSPECTION

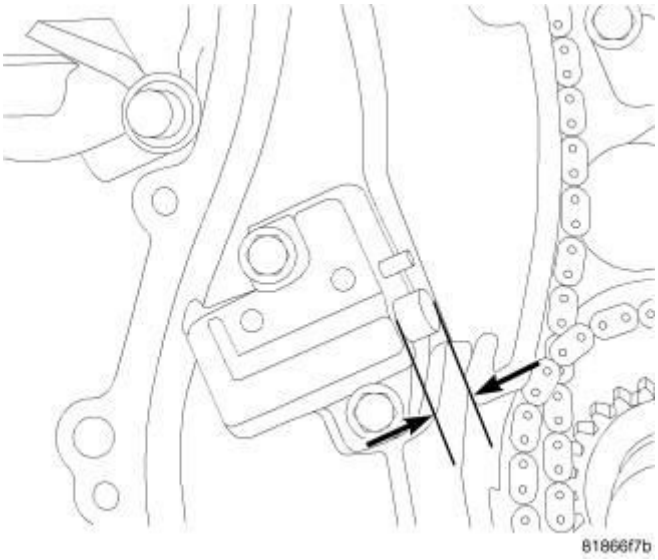

Fig. 400: Measuring Distance From Tensioner Body To Edge Of Chain Guide
Courtesy of CHRYSLER GROUP, LLC

Inspect timing chain for stretching prior to removal.

1. Rotate engine while watching timing chain tensioner plunger. When the plunger reaches its maximum travel stop rotating engine.

2. Measure the distance from the tensioner body and the edge of the chain guide as shown in illustration.
3. If the distance is greater than 20.5 mm (0.81 in.) inspect guide shoes for excessive wear.
4. If guides are okay, replace timing chain.

INSTALLATION

TIMING CHAIN

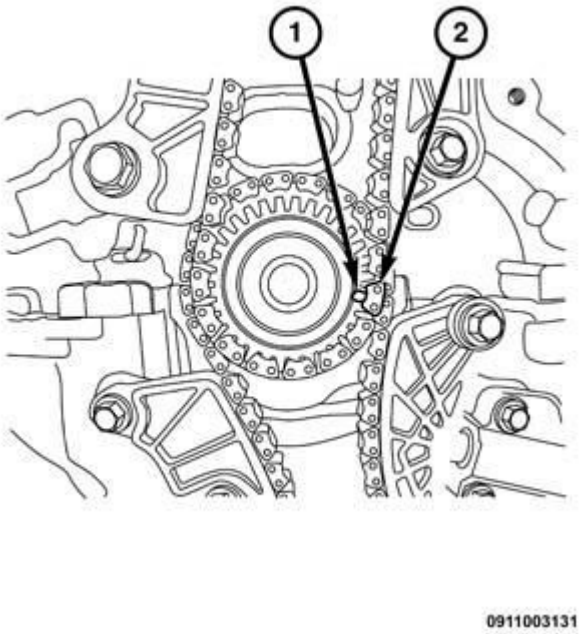

Fig. 401: Chain Link & Crankshaft Timing Mark
Courtesy of CHRYSLER GROUP, LLC

1. Align the timing chain onto the crank sprocket mark (1) using the painted link (2) as a guide.

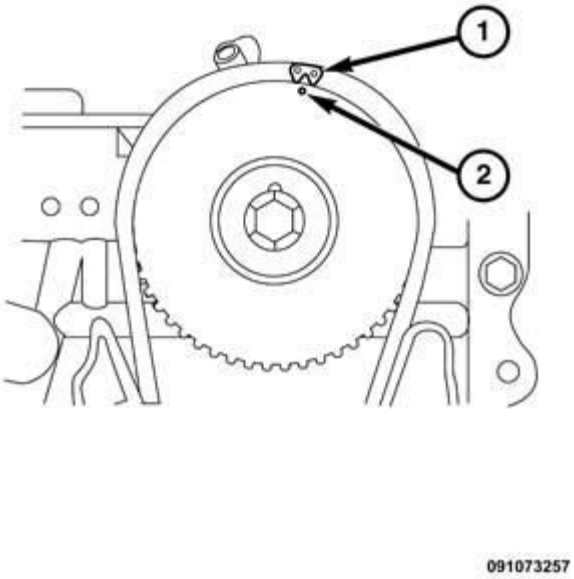

Fig. 402: Sprocket Mark & Painted Link
Courtesy of CHRYSLER GROUP, LLC

2. Align the timing chain onto the camshaft sprocket mark (2) using the painted link (1) as a guide.

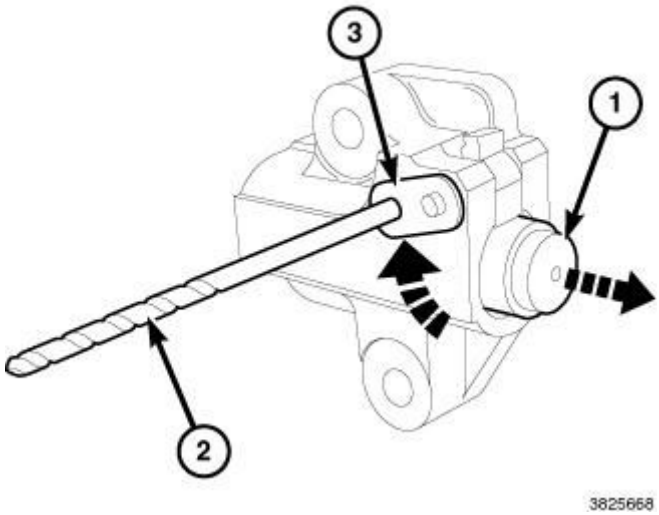

Fig. 403: Piston, Ratchet Arm & Drill Bit
Courtesy of CHRYSLER GROUP, LLC

3. Reset the cam chain tensioner. Refer to **VALVE TIMING - STANDARD PROCEDURE** .

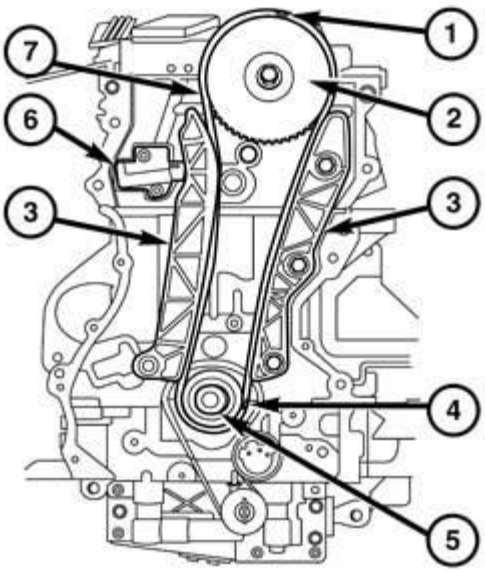

091073256

Fig. 404: Timing Chain, Sprockets, Tensioner & Guides
Courtesy of CHRYSLER GROUP, LLC

NOTE: Keep the slack in the timing chain on the tensioner side.

4. Install timing chain tensioner (6) and tighten bolts to 12 N.m (105 in. lbs.).
5. Remove the pin (1/8 in. drill bit) from the timing chain tensioner.
6. Verify that the valve timing is correct. Refer to **VALVE TIMING - STANDARD PROCEDURE** .
7. Install the engine timing cover. Refer to **COVER(S), ENGINE TIMING, INSTALLATION** .
8. If removed, install the oil filter and fill the engine crankcase with the proper oil to the correct level. Refer to **OIL - STANDARD PROCEDURE** .
9. Connect the battery negative cable and tighten nut to 5 N.m (45 in. lbs.).
10. Install the resonator. Refer to **RESONATOR, AIR CLEANER, INSTALLATION** .
11. Install the engine cover.
12. Run the engine until it reaches normal operating temperature. Check cooling system for correct fluid level. Refer to **STANDARD PROCEDURE** .

NOTE: The Cam/Crank Variation Relearn procedure must be performed using the scan tool anytime there has been a repair/replacement made to a powertrain system, for example: flywheel, valvetrain, camshaft and/or crankshaft sensors or components.

CAMSHAFT SPROCKET(S)

NOTE: **Do not use an impact wrench to tighten the camshaft sprocket bolt. Damage to the camshaft dowel pin and camshaft may occur.**

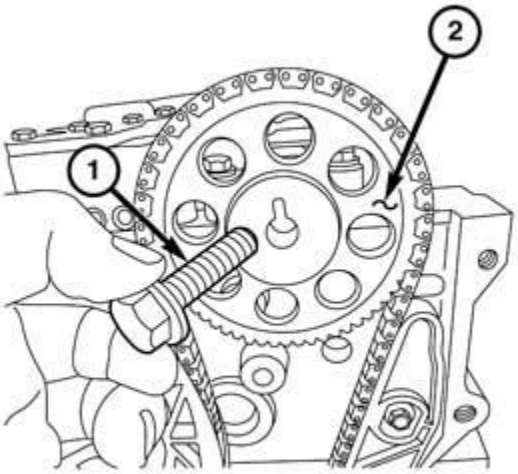

091673427

Fig. 405: Camshaft Center Bolt & Sprocket
Courtesy of CHRYSLER GROUP, LLC

1. Install the chain onto the sprocket (2), insert the bolt (1).

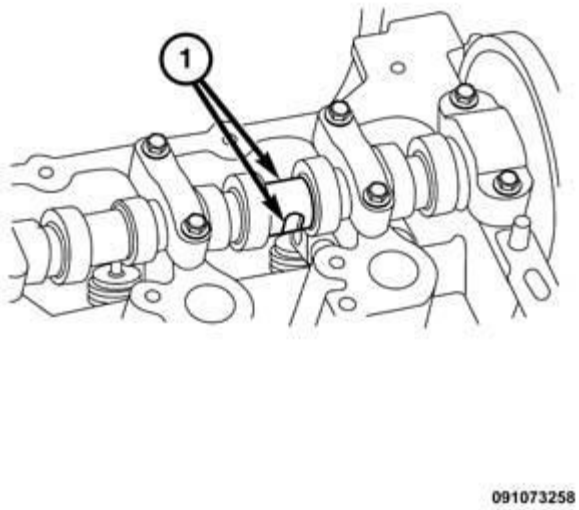

Fig. 406: Wrench Flats
Courtesy of CHRYSLER GROUP, LLC

2. Using a wrench to hold the camshaft flats (1) tighten the sprocket bolt to 10 N.m + 65° (88 in. lbs. + 65°).
3. Verify correct timing. Refer to **VALVE TIMING - STANDARD PROCEDURE** .
4. Install the timing cover. Refer to **COVER(S), ENGINE TIMING, INSTALLATION** .
5. Install the cylinder head cover. Refer to **COVER(S), CYLINDER HEAD, INSTALLATION** .
6. Install engine cover.

CRANKSHAFT SPROCKET

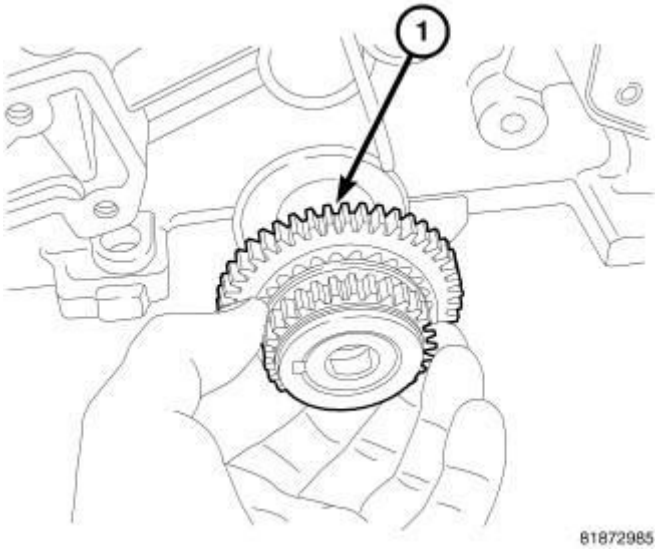

Fig. 407: Crankshaft Sprocket
Courtesy of CHRYSLER GROUP, LLC

1. Install the crankshaft sprocket (1) onto the crankshaft.

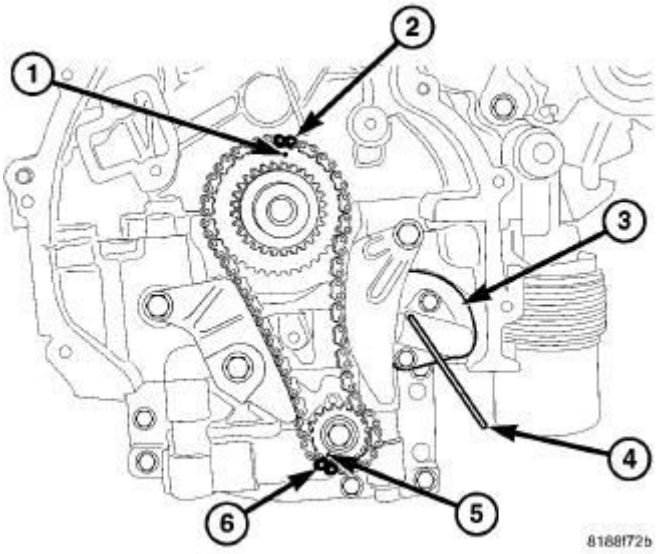

Fig. 408: BSM Timing Chain Marks
Courtesy of CHRYSLER GROUP, LLC

2. Install the oil pump drive chain. Verify that the oil pump is correctly timed (1, 2, 5, 6).

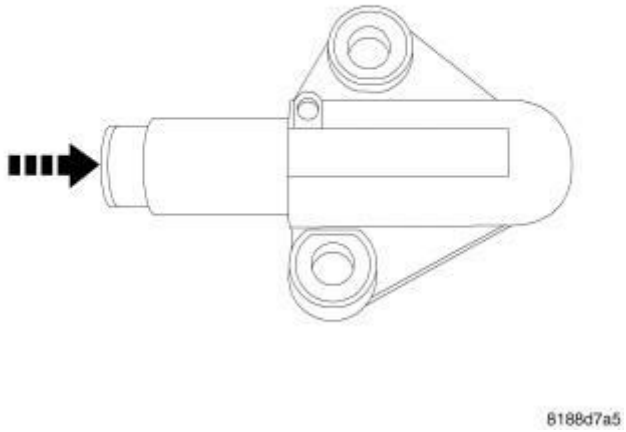

Fig. 409: Pushing Tensioner Piston Back Into Tensioner Body
Courtesy of CHRYSLER GROUP, LLC

3. Reset the oil pump drive chain tensioner by pushing the plunger inward and installing (special tool #9703,

Pin, Tensioner).

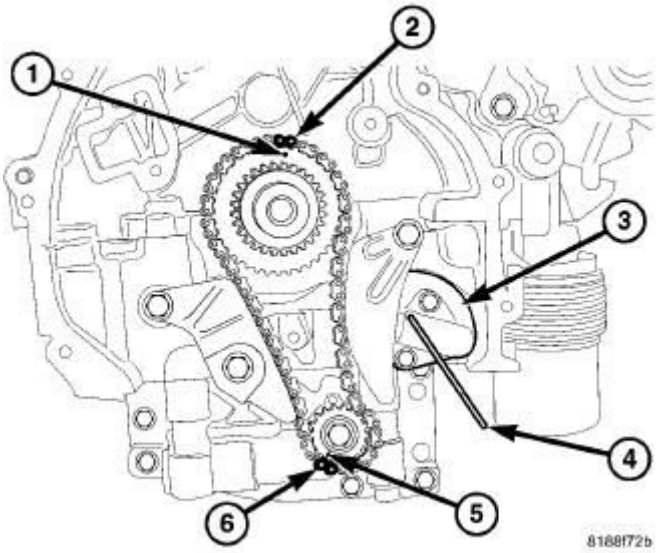

Fig. 410: BSM Timing Chain Marks
Courtesy of CHRYSLER GROUP, LLC

4. Install the oil pump drive chain tensioner (3) and remove (special tool #9703, Pin, Tensioner) (4).
5. Install the timing chain and timing chain cover. Refer to **CHAIN AND SPROCKETS, TIMING, INSTALLATION** .
6. Install the oil pan. Refer to **PAN, OIL, INSTALLATION** .
7. If removed, install the oil filter and fill the engine crankcase with the proper oil to the correct level. Refer to **OIL - STANDARD PROCEDURE** .
8. Connect the negative battery cable and tighten nut to 5 N.m (45 in. lbs.).
9. Run the engine until it reaches normal operating temperature. Check cooling system for correct fluid level. Refer to **STANDARD PROCEDURE** .

NOTE: **The Cam/Crank Variation Relearn procedure must be performed using the scan tool anytime there has been a repair/replacement made to a powertrain system, for example: flywheel, valvetrain, camshaft and/or crankshaft sensors or components.**

COVER(S), ENGINE TIMING

REMOVAL

REMOVAL

1. Perform the fuel pressure release procedure. Refer to **FUEL SYSTEM PRESSURE RELEASE PROCEDURE** .

2. Disconnect and isolate the battery negative cable.
3. Remove the resonator. Refer to **RESONATOR, AIR CLEANER, REMOVAL** .
4. Remove the air cleaner body. Refer to **BODY, AIR CLEANER, REMOVAL** .
5. Remove the coolant recovery bottle. Refer to **BOTTLE, PRESSURIZED COOLANT, REMOVAL** .

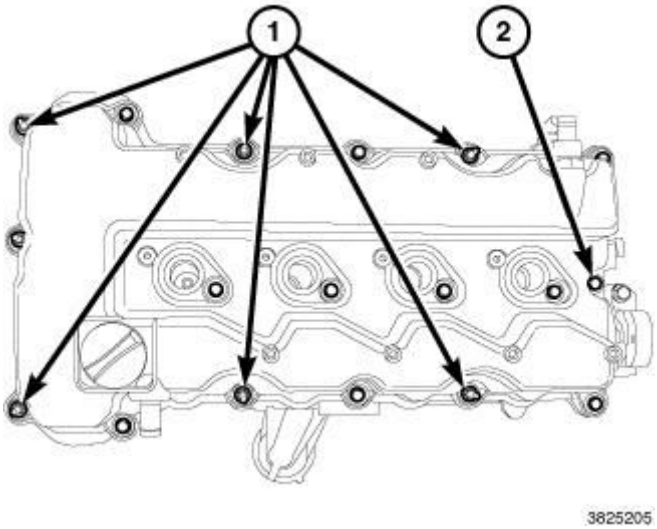

Fig. 411: Identifying Six Stud Bolts
Courtesy of CHRYSLER GROUP, LLC

6. Remove the cylinder head cover. Refer to **COVER(S), CYLINDER HEAD, REMOVAL** .

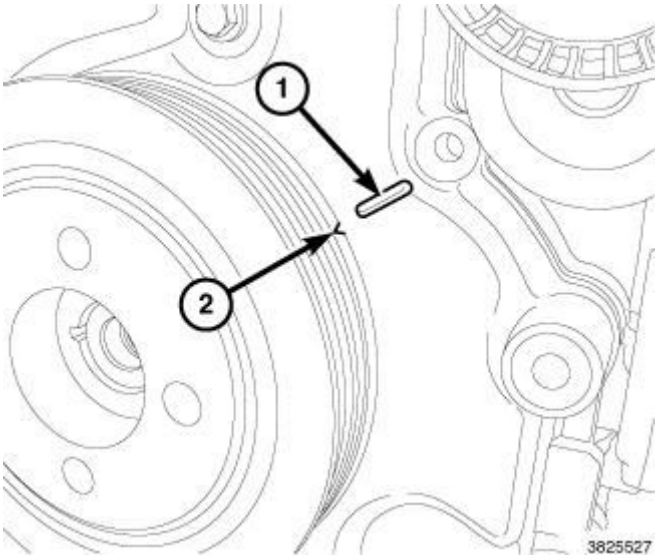

Fig. 412: Timing Cover Mark & Notch
Courtesy of CHRYSLER GROUP, LLC

7. Raise and support the vehicle. Refer to **HOISTING, STANDARD PROCEDURE** .
8. Remove the frame cover portion of the right splash shield. Refer to **SHIELD, SPLASH, FRONT**

WHEELHOUSE, REMOVAL .

CAUTION: When aligning timing marks, always rotate engine by turning the crankshaft. Failure to do so will result in valve and/or piston damage.

9. Rotate the crankshaft clockwise (as viewed from the front) to align the timing cover mark (1) with the damper notch (2) to place the number one cylinder piston at top-dead-center on the compression stroke.

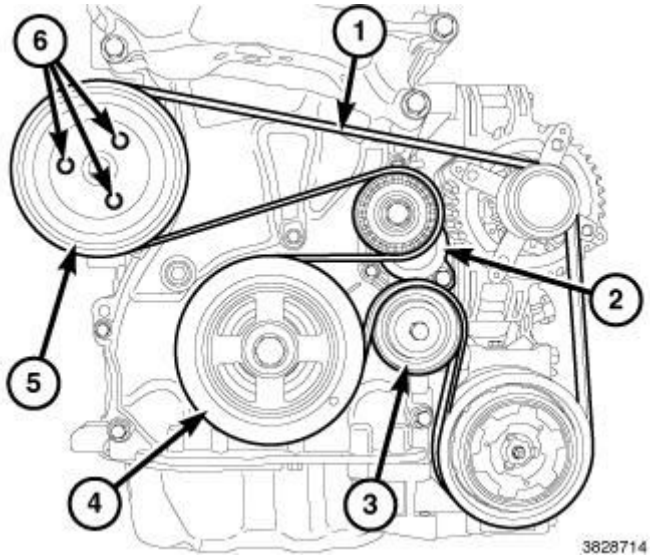

Fig. 413: Accessory Drive Components & Belt Routing
Courtesy of CHRYSLER GROUP, LLC

10. Remove the accessory drive belt (1). Refer to **BELT, SERPENTINE, REMOVAL** .
11. Remove the accessory drive belt idler pulley (3).
12. Remove the accessory drive belt tensioner (2).
13. Remove the crankshaft damper (4). Refer to **DAMPER, VIBRATION, REMOVAL** .
14. Remove three bolts (6) and the water pump pulley (5) from the water pump.

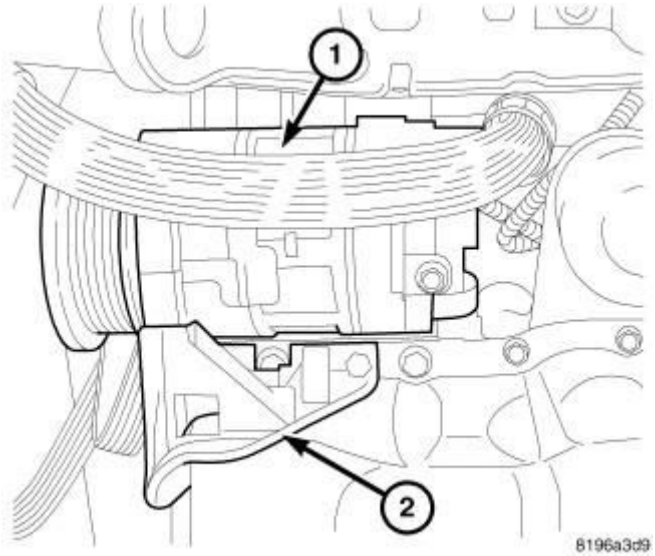

Fig. 414: A/C Compressor & Bracket
Courtesy of CHRYSLER GROUP, LLC

NOTE: **The oil pan will need to be removed and immediately reinstalled. This procedure is necessary because the oil pan sealant must be broken to allow the timing cover to be removed without damage to the oil pan. The reason the pan is to be reinstalled is to allow for a support surface when the timing cover is removed.**

15. Remove the oil pan. Refer to **PAN, OIL, REMOVAL** .
16. Temporarily reinstall the oil pan.
17. Install the oil pan bolts finger tight. **Do not install** the four oil pan to timing cover bolts (1) at this time.
18. Lower the vehicle.
19. Support the engine with a suitable jack.
20. Remove the right engine mount insulator. Refer to **INSULATOR, ENGINE MOUNT, RIGHT, REMOVAL** .
21. Remove one M8 studbolt (1), six M6 bolts (2), two M8 bolts (3) and five M10 bolts (4).

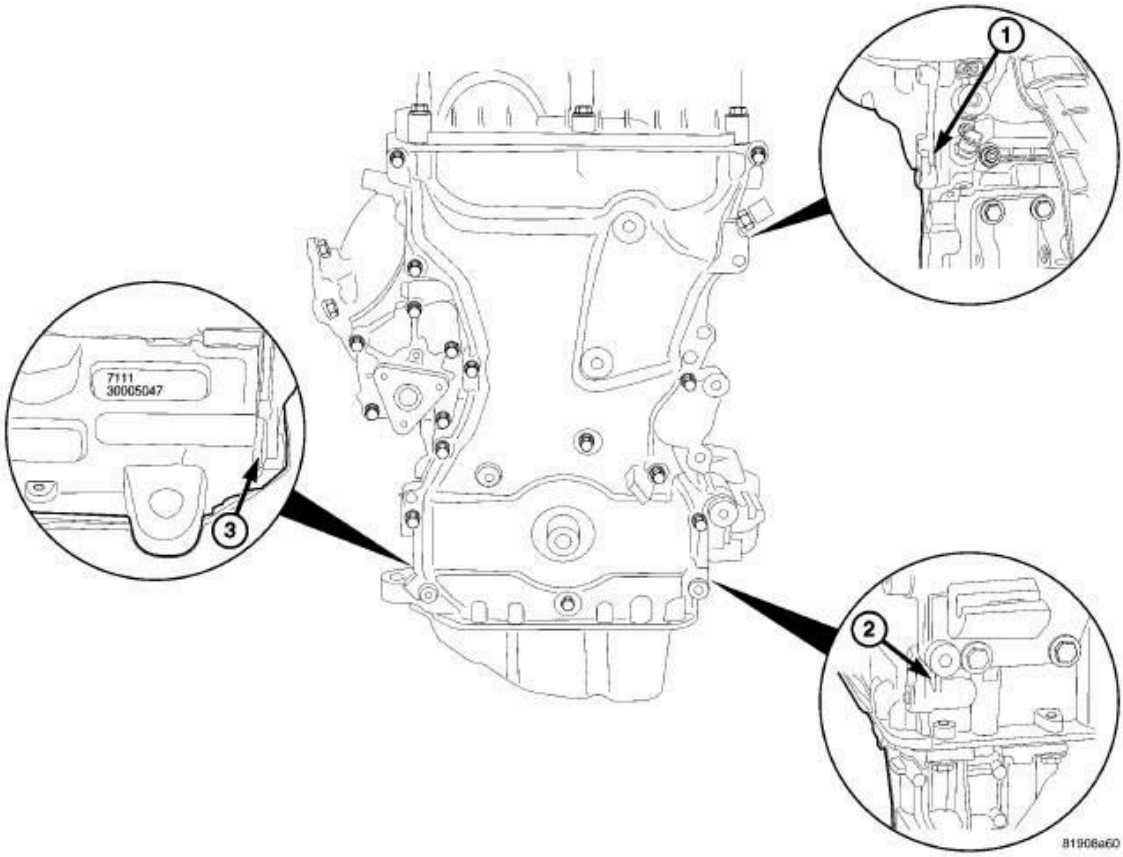

Fig. 415: Timing Chain Cover Pry Points
Courtesy of CHRYSLER GROUP, LLC

22. Remove the engine timing cover using pry points (1, 2 and 3).

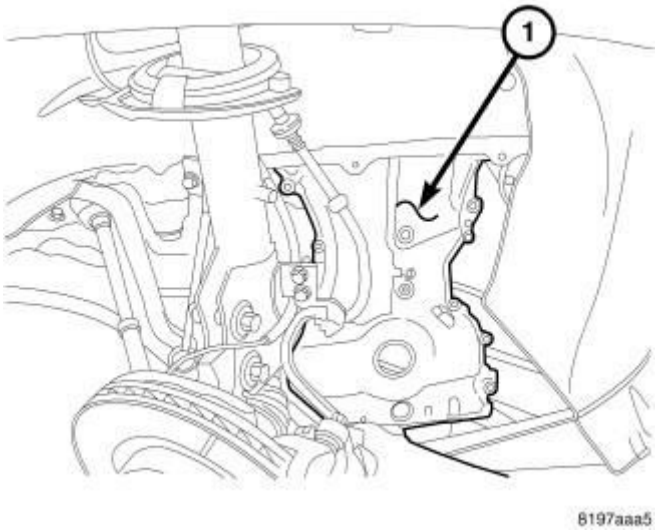

Fig. 416: Timing Chain Cover Removal/Installation
Courtesy of CHRYSLER GROUP, LLC

23. Remove the engine timing cover (1) out through the bottom of the vehicle.

INSTALLATION

INSTALLATION

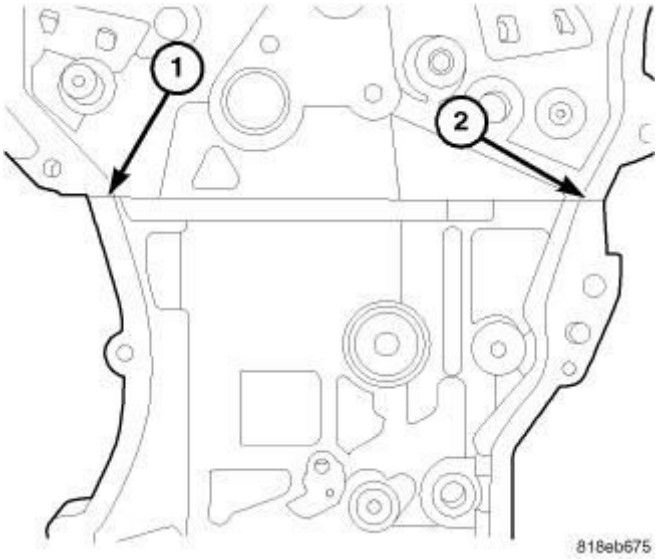

Fig. 417: Applying Engine Sealant RTV (Or Equivalent) At Cylinder Head To Block Parting Line
Courtesy of CHRYSLER GROUP, LLC

NOTE: When using RTV, the sealing surfaces must be clean and free from grease and oil.

NOTE: When using RTV, parts should be assembled in 10 minutes and tighten to final torque within 45 minutes.

1. Install a new crankshaft seal if necessary.
2. Clean all sealing surfaces. Refer to **ENGINE - STANDARD PROCEDURE** .
3. Apply Mopar® engine sealant RTV (or equivalent) as shown in illustration at the cylinder head to block parting line (1 and 2).

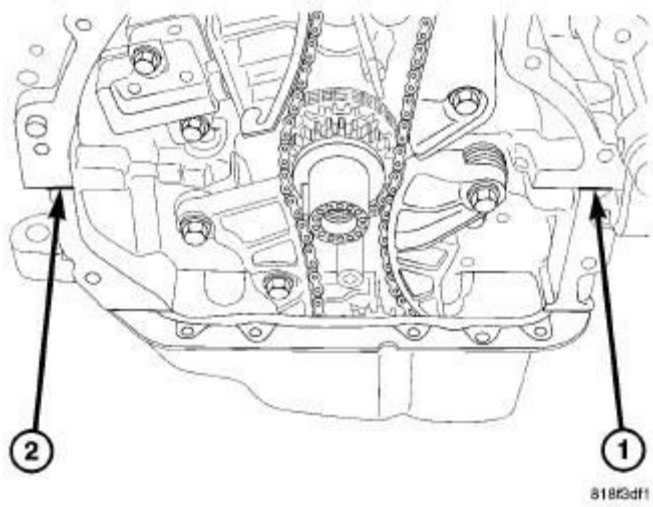

Fig. 418: Applying Engine Sealant RTV (Or Equivalent) At Ladder Frame To Block Parting Line
Courtesy of CHRYSLER GROUP, LLC

4. Apply Mopar® engine sealant RTV (or equivalent) as shown in illustration at the ladder frame to block parting line (1 and 2).

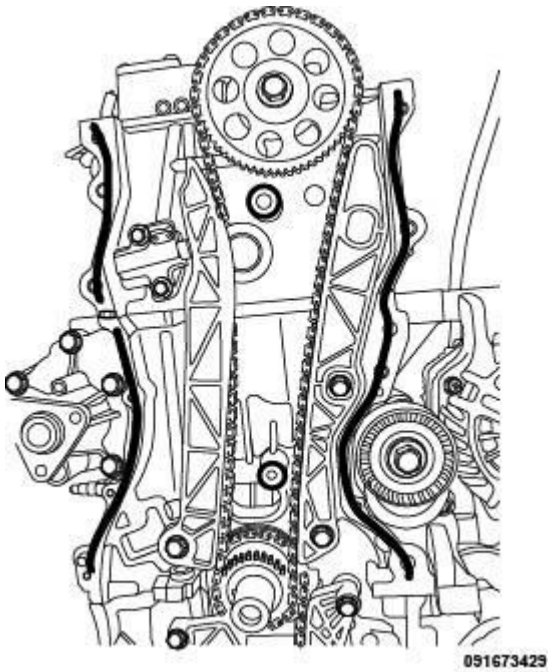

Fig. 419: Engine Block And Cylinder Head To Timing Cover Sealant Application Points
Courtesy of CHRYSLER GROUP, LLC

5. Apply 2 mm bead of Mopar® MS-GF-46 (or equivalent) to the engine block and cylinder head to timing cover mating surfaces as shown in illustration. Be sure to apply a bead at the two center bolt lands that are

between the timing chain.

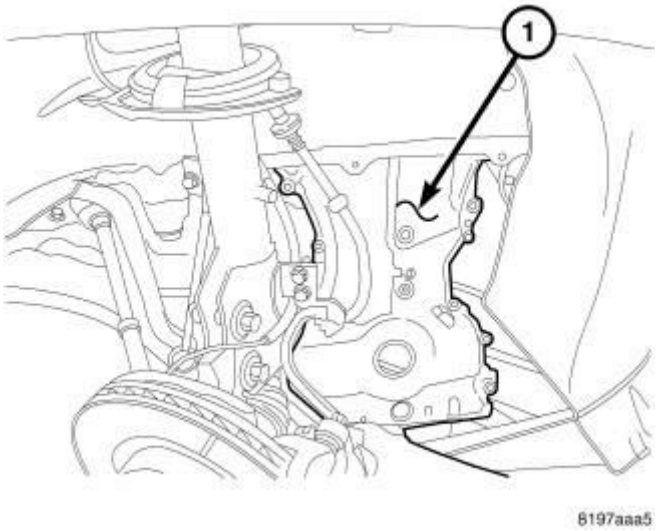

Fig. 420: Timing Chain Cover Removal/Installation
Courtesy of CHRYSLER GROUP, LLC

6. Install timing chain cover (1) upwards from under the vehicle.
7. Install the timing chain cover retaining bolts. Tighten six M6 bolts (2) to 9 N.m (80 in. lbs.), two M8 bolts (3) and one studbolt (1) to 26 N.m (19 ft. lbs.) and five M10 bolts (4) to 65 N.m (48 ft. lbs.).
8. Install the right engine mount. Refer to **INSULATOR, ENGINE MOUNT, RIGHT, INSTALLATION** .
9. Install the coolant reservoir bottle. Tighten bolt to 9 N.m (80 in. lbs.).

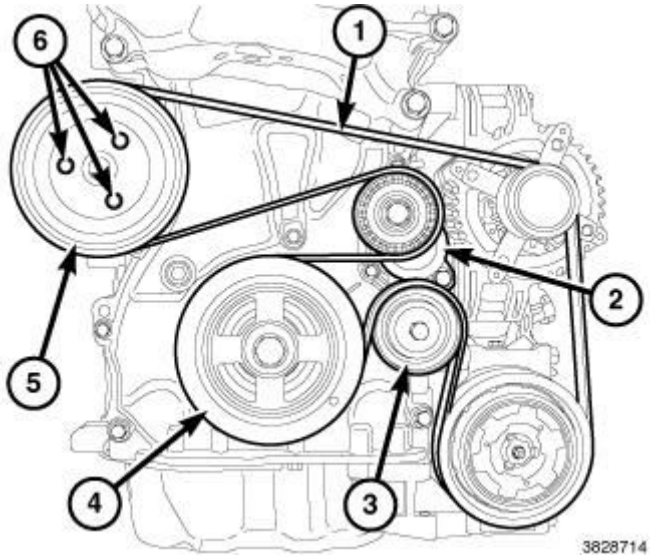

Fig. 421: Accessory Drive Components & Belt Routing
Courtesy of CHRYSLER GROUP, LLC

10. Install the water pump pulley (5) and tighten three bolts (6) to 9 N.m (80 in. lbs.).
11. Install the crankshaft damper (4). Refer to **DAMPER, VIBRATION, INSTALLATION** .
12. Install the accessory drive belt tensioner (2).
13. Install the accessory drive belt idler pulley (3). Tighten bolt to 25 N.m (18 ft. lbs.).
14. Install the accessory drive belt (1). Refer to **BELT, SERPENTINE, INSTALLATION** .
15. Reseal the oil pan. Refer to **PAN, OIL, INSTALLATION** .
16. Install the right lower splash shield. Refer to **SHIELD, SPLASH, FRONT WHEELHOUSE, INSTALLATION** .

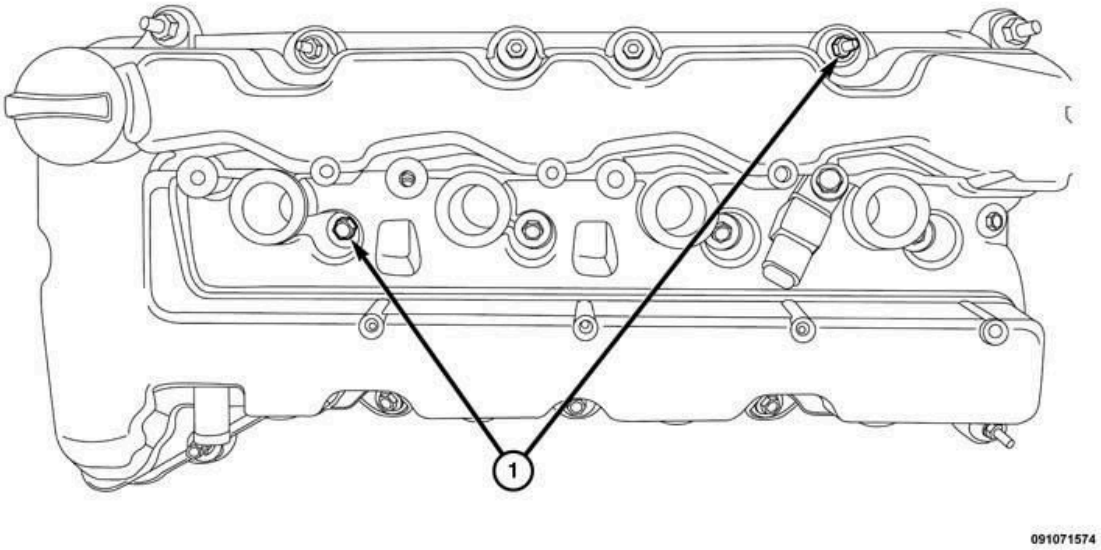

Fig. 422: Cylinder Head Cover Bolts
Courtesy of CHRYSLER GROUP, LLC

17. Install the cylinder head cover and ignition coils . Refer to **COVER(S), CYLINDER HEAD, INSTALLATION** .
18. Install the air cleaner body. Refer to **BODY, AIR CLEANER, INSTALLATION** .

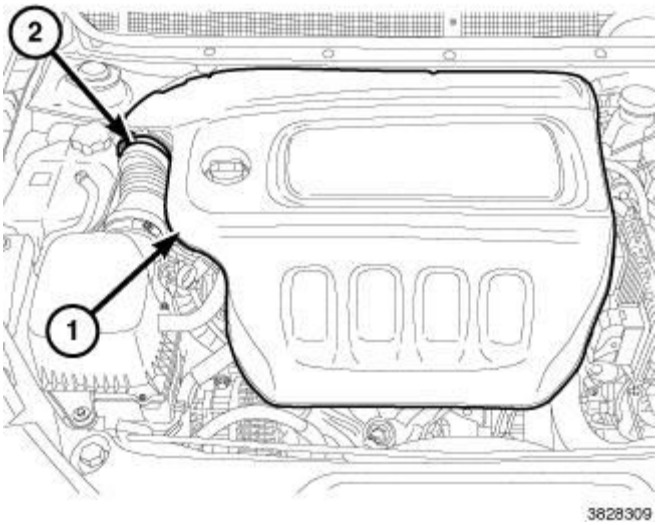

Fig. 423: Engine Cover & Air Resonator Clamp
Courtesy of CHRYSLER GROUP, LLC

19. Install the engine cover (1).
20. If removed, install the oil filter and fill the engine crankcase with the proper oil to the correct level. Refer to **OIL - STANDARD PROCEDURE** .
21. Install the resonator (1). Refer to **RESONATOR, AIR CLEANER, INSTALLATION** .
22. Connect the battery negative cable and tighten nut to 5 N.m (45 in. lbs.).
23. Run the engine until it reaches normal operating temperature. Check cooling system for possible leaks and correct fluid level. Refer to **STANDARD PROCEDURE** .

NOTE: **The Cam/Crank Variation Relearn procedure must be performed using the scan tool anytime there has been a repair/replacement made to a powertrain system, for example: flywheel, valvetrain, camshaft and/or crankshaft sensors or components.**

TENSIONER, ENGINE TIMING

REMOVAL

REMOVAL

1. Remove the engine timing cover. Refer to **COVER(S), ENGINE TIMING, REMOVAL** .

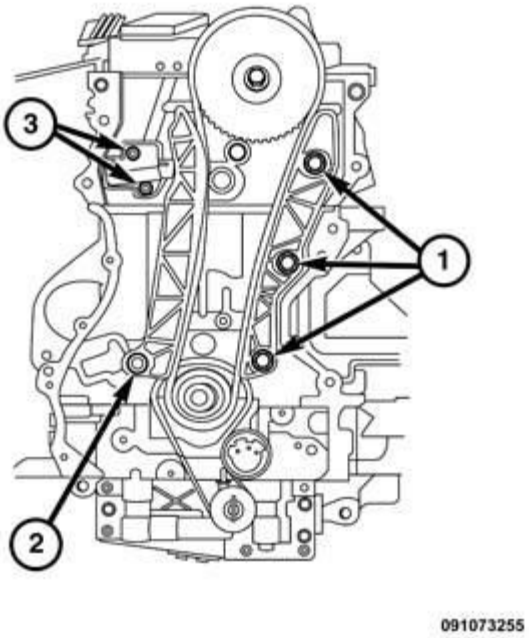

Fig. 424: Timing Chain Tensioner Retaining Bolts
Courtesy of CHRYSLER GROUP, LLC

2. Remove timing chain tensioner retaining bolts (3).
3. Remove the tensioner.

INSTALLATION

INSTALLATION

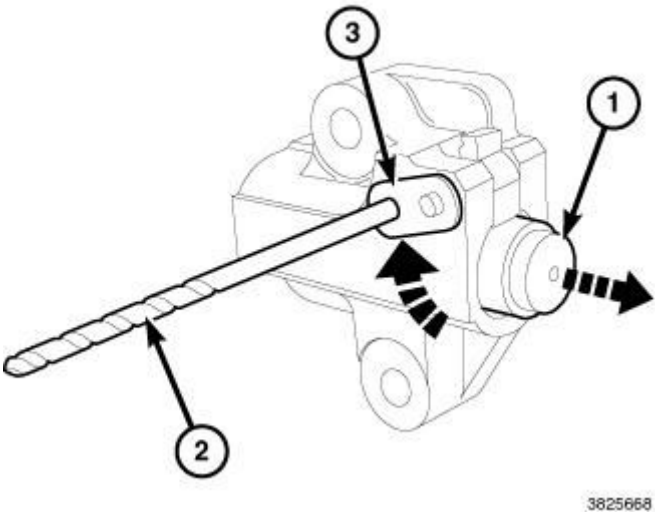

Fig. 425: Piston, Ratchet Arm & Drill Bit
Courtesy of CHRYSLER GROUP, LLC

1. Reset the cam chain tensioner. Refer to **VALVE TIMING - STANDARD PROCEDURE** .

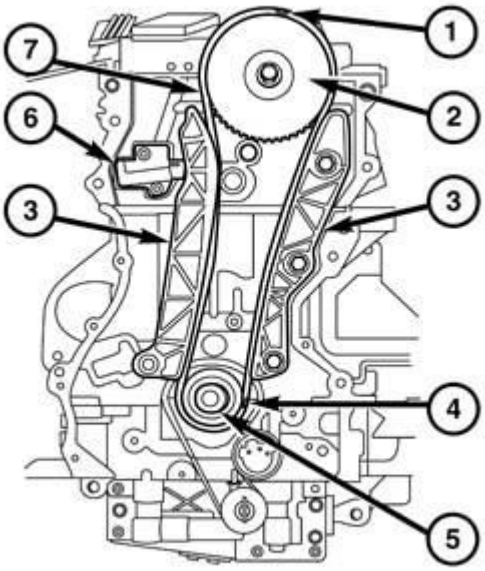

Fig. 426: Timing Chain, Sprockets, Tensioner & Guides
Courtesy of CHRYSLER GROUP, LLC

NOTE: Keep the slack in the timing chain on the tensioner side.

2. Install timing chain tensioner (6) and tighten bolts to 12 N.m (105 in. lbs.).
3. Remove the pin (1/8 in. drill bit) from the timing chain tensioner.
4. Verify that the valve timing is correct. Refer to **VALVE TIMING - STANDARD PROCEDURE** .
5. Install the engine timing cover. Refer to **COVER(S), ENGINE TIMING, INSTALLATION** .
6. If removed, install the oil filter and fill the engine crankcase with the proper oil to the correct level. Refer to **OIL - STANDARD PROCEDURE** .
7. Connect the battery negative cable and tighten nut to 5 N.m (45 in. lbs.).
8. Install the resonator. Refer to **RESONATOR, AIR CLEANER, INSTALLATION** .
9. Install the engine cover.
10. Run the engine until it reaches normal operating temperature. Check cooling system for correct fluid level. Refer to **STANDARD PROCEDURE** .

NOTE: The Cam/Crank Variation Relearn procedure must be performed using the scan tool anytime there has been a repair/replacement made to a powertrain system, for example: flywheel, valvetrain, camshaft and/or crankshaft sensors or components.

2014 ENGINE

3.2L - Service Information - Cherokee

DESCRIPTION

DESCRIPTION

CAUTION: If the engine has experienced a catastrophic failure, THE INTAKE MANIFOLD MUST BE REPLACED!

Fig. 1: 3.2 Liter (195.3 CID) Flexible Fuel V-6 Engine
Courtesy of CHRYSLER GROUP, LLC

NOTE: RWD engine configuration shown in illustration, FWD similar.

The 3.2 liter (195.3 CID) flexible fuel V-6 engine features Variable Valve Timing (VVT), Dual Overhead Camshafts (DOHC) and a high-pressure die-cast aluminum cylinder block with steel liners in a 60° configuration. The 3.2 liter engine has a chain driven variable discharge oil pump with a two-stage pressure regulator for improved fuel economy. The exhaust manifolds are integrated into the cylinder heads for reduced weight. The cylinders are numbered from front to rear. The right bank is numbered 1, 3, 5 and the left bank is numbered 2, 4, 6. The firing order is 1-2-3-4-5-6. The engine serial number is located on the left side of the cylinder block at the transmission flange.

DIAGNOSIS AND TESTING

ENGINE DIAGNOSIS - INTRODUCTION

This Service Information can be helpful in determining the causes of malfunctions not detected and remedied by routine maintenance.

These malfunctions are classified as Performance (e.g., engine idles rough and stalls) or Mechanical (e.g., a strange noise).

Refer to **ENGINE PERFORMANCE DIAGNOSTIC TABLE** and **ENGINE MECHANICAL DIAGNOSTIC TABLE** for possible causes and corrections of malfunctions. Refer to **FUEL SYSTEM** article for the fuel system diagnosis.

Additional diagnosis and testing procedures may be necessary for specific engine malfunctions that can not be isolated with the Service Diagnosis charts. Information concerning additional tests and diagnosis is provided within the following diagnosis:

- Cylinder Compression Pressure Test. Refer to **CYLINDER COMPRESSION PRESSURE LEAKAGE** .
- Cylinder Combustion Pressure Leakage Test. Refer to **CYLINDER COMBUSTION PRESSURE LEAKAGE** .
- Engine Cylinder Head Gasket Failure Diagnosis. Refer to **CYLINDER HEAD, DIAGNOSIS AND TESTING** .
- Intake Manifold Leakage Diagnosis. Refer to **MANIFOLD, INTAKE, DIAGNOSIS AND TESTING**.

ENGINE PERFORMANCE DIAGNOSTIC TABLE

CONDITION	POSSIBLE CAUSE	CORRECTION
ENGINE WILL NOT START	1. Weak battery	1. Charge or replace as necessary. Refer to **BATTERY, DIAGNOSIS AND TESTING** .
	2. Corroded or loose battery connections.	2. Clean and tighten battery connections. Refer to **CLEANING** .
	3. Faulty engine starting system.	3. Diagnose engine starting system. Refer to **DIAGNOSIS AND TESTING** .
	4. Faulty coil or control unit.	4. Replace ignition coil. Refer to **COIL, IGNITION, REMOVAL** .
	5. Incorrect spark plug gap.	5. Correct as necessary.
	6. Incorrect cam timing.	6. Verify cam timing. Refer to **VALVE TIMING - STANDARD PROCEDURE** .
	7. Dirt or water in fuel system.	7. Clean fuel system.
	8. Faulty fuel pump or wiring.	8. Repair or replace as necessary.
	9. Faulty Camshaft Position (CMP) sensor.	9. Replace sensor. Refer to **SENSOR, CAMSHAFT POSITION, REMOVAL** .

	10. Faulty Crankshaft Position (CKP) sensor.	10. Replace sensor. Refer to **SENSOR, CRANKSHAFT POSITION, REMOVAL** .
ENGINE STALLS OR ROUGH IDLE	1. Vacuum leak.	1. Inspect intake manifold and vacuum hoses, repair or replace as necessary.
	2. Faulty Crankshaft Position (CKP) sensor.	2. Replace sensor. Refer to **SENSOR, CRANKSHAFT POSITION, REMOVAL** .
	3. Faulty ignition coil.	3. Replace ignition coil. Refer to **COIL, IGNITION, REMOVAL** .
	4. Incorrect cam timing.	4. Verify cam timing. Refer to **VALVE TIMING - STANDARD PROCEDURE** .
ENGINE LOSS OF POWER	1. Dirty or incorrectly gapped spark plugs.	1. Correct as necessary. Refer to **SPARK PLUG, REMOVAL** .
	2. Dirt or water in fuel system.	2. Clean fuel system.
	3. Faulty fuel pump.	3. Replace fuel pump. Refer to **MODULE, FUEL PUMP, REMOVAL** .
	4. Leaking cylinder head gasket.	4. Replace cylinder head gasket. Refer to **CYLINDER HEAD, REMOVAL**.
	5. Low compression.	5. Determine the cause and repair as necessary. Refer to **ENGINE, DIAGNOSIS AND TESTING** .
	6. Burned, warped or pitted valves.	6. Replace as necessary. Refer to **VALVES, INTAKE AND EXHAUST, REMOVAL**.
	7. Plugged or restricted exhaust system.	7. Inspect and replace as necessary.
	8. Faulty ignition coil.	8. Replace ignition coil. Refer to **COIL, IGNITION, REMOVAL** .
	9. Incorrect cam timing.	9. Verify cam timing. Refer to **VALVE TIMING - STANDARD PROCEDURE** .
ENGINE MISSES ON ACCELERATION	1. Dirty or incorrectly gapped spark plugs.	1. Correct as necessary. Refer to **SPARK PLUG, REMOVAL** .
	2. Dirt in fuel system.	2. Clean fuel system.
	3. Burned, warped or pitted valves.	3. Replace as necessary. Refer to **VALVES, INTAKE AND EXHAUST, REMOVAL**.
	4. Faulty ignition coil.	4. Replace ignition coil. Refer to **COIL, IGNITION, REMOVAL** .

ENGINE MISSES AT HIGH SPEED	1. Dirty or incorrectly gapped spark plugs.	1. Correct as necessary. Refer to **SPARK PLUG, REMOVAL** .
	4. Faulty ignition coil.	2. Replace ignition coil. Refer to **COIL, IGNITION, REMOVAL** .
	3. Dirt or water in fuel system.	3. Clean fuel system.

ENGINE MECHANICAL DIAGNOSTIC TABLE

CONDITION	POSSIBLE CAUSES	CORRECTIONS
NOISY VALVES	1. High or low oil level in crankcase.	1. Refer to **OIL, STANDARD PROCEDURE** .
	2. Thin or diluted oil.	2. Change oil and filter.
	3. Low oil pressure.	3. Check oil pump, if Ok, check rod and main bearings for excessive wear.
	4. Dirt in lash adjusters.	4. Replace as necessary.
	5. Worn rocker arms.	5. Replace as necessary.
	6. Worn lash adjusters	6. Replace as necessary.
	7. Worn valve guides.	7. Inspect the valve guides for wear, cracks or looseness. If either condition exists, replace the cylinder head. Refer to **CYLINDER HEAD, REMOVAL**.
	8. Excessive runout of valve seats on valve faces.	8. Refer to **VALVES, INTAKE AND EXHAUST, STANDARD PROCEDURE** .
CONNECTING ROD NOISE	1. Insufficient oil supply.	1. Refer to **OIL, STANDARD PROCEDURE** .
	2. Low oil pressure.	2. Check oil pump, if OK, check rod and main bearings for excessive wear.
	3. Thin or diluted oil.	3. Change oil and filter.
	4. Excessive bearing clearance.	4. Replace as necessary.
	5. Connecting rod journal out-of-round.	5. Service or replace crankshaft.
	6. Misaligned connecting rods.	6. Replace bent connecting rods.
MAIN BEARING NOISE	1. Insufficient oil supply.	1. Refer to **OIL, STANDARD PROCEDURE** .
	2. Low oil pressure.	2. Check oil pump, if OK, check rod and main bearings for excessive wear.
	3. Thin or diluted oil.	3. Change oil and filter.
	4. Excessive bearing clearance.	4. Replace as necessary.

	5. Excessive end play.	5. Check thrust washers for wear.
	6. Crankshaft journal out-of round.	6. Service or replace crankshaft.
	7. Loose flywheel or torque converter.	7. Tighten to correct torque

CYLINDER COMPRESSION PRESSURE LEAKAGE

NOTE: To perform a compression test on a MULTI-AIR equipped engine, the ignition MUST remain in the "key on" position. If the ignition is in the "off" position, the intake valves will not actuate and the result will be no compression.

NOTE: The results of a cylinder compression pressure test can be utilized to diagnose several engine malfunctions.

NOTE: Be certain the battery is completely charged and the engine starter motor is in good operating condition. Otherwise the indicated compression pressures may not be valid for diagnosis purposes.

1. Clean the spark plug recesses with compressed air.
2. Remove the spark plugs and record the cylinder number of each spark plug for future reference.
3. Inspect the spark plug electrodes for abnormal firing indicators such as fouled, hot, oily, etc.
4. Disable the fuel system and perform the fuel system pressure release procedure. Refer to **FUEL SYSTEM PRESSURE RELEASE PROCEDURE** .
5. Insert a compression pressure gauge and rotate the engine with the engine starter motor for three revolutions.
6. Record the compression pressure on the 3rd revolution. Continue the test for the remaining cylinders.

NOTE: The recommended compression pressures are to be used only as a guide to diagnosing engine problems. An engine should not be disassembled to determine the cause of low compression unless some malfunction is present.

7. Compression should not be less than 689 kPa (100 psi) and not vary more than 25 percent from cylinder to cylinder.
8. If one or more cylinders have abnormally low compression pressures, repeat the compression test.

NOTE: If the same cylinder or cylinders repeat an abnormally low reading on the second compression test, it could indicate the existence of a problem in the cylinder in question.

9. If one or more cylinders continue to have abnormally low compression pressures, perform the cylinder combustion pressure leakage test. Refer to **CYLINDER COMBUSTION PRESSURE LEAKAGE** .

CYLINDER COMBUSTION PRESSURE LEAKAGE

The combustion pressure leakage test provides an accurate means for determining engine condition.

Combustion pressure leakage testing will detect:

- Exhaust and intake valve leaks (improper seating).
- Leaks between adjacent cylinders or into water jacket.

1. Check the coolant level and fill as required. DO NOT install the radiator cap.
2. Start and operate the engine until it attains normal operating temperature.
3. Turn the engine OFF.
4. Remove the spark plugs.
5. Remove the oil filler cap.
6. Remove the air cleaner hose.
7. **Calibrate the tester according to the manufacturer's instructions.** The shop air source for testing should maintain a regulated air pressure at 552 kPa (80 psi).
8. Perform the test procedures on each cylinder according to the tester manufacturer's instructions. Set the piston of the cylinder to be tested at TDC on the compression stroke.
9. As each cylinder is pressurized, listen for the air escaping through the throttle body, tailpipe and oil filler cap opening. Check for bubbles in the radiator coolant.

All gauge pressure indications should be equal, with **no more** than 25% leakage. Refer to **CYLINDER COMBUSTION PRESSURE LEAKAGE DIAGNOSIS CHART**.

CYLINDER COMBUSTION PRESSURE LEAKAGE DIAGNOSIS CHART

CONDITION	POSSIBLE CAUSE	CORRECTION
AIR ESCAPES THROUGH THROTTLE BODY	Intake valve bent, burnt, or not seated properly	Inspect valve and valve seat. Reface or replace, as necessary. Inspect valve springs. Replace as necessary.
AIR ESCAPES THROUGH TAILPIPE	Exhaust valve bent, burnt, or not seated properly	Inspect valve and valve seat. Reface or replace, as necessary. Inspect valve springs. Replace as necessary.
AIR ESCAPES THROUGH RADIATOR	Head gasket leaking or cracked cylinder head or block	Remove cylinder head and inspect. Replace defective part
MORE THAN 50% LEAKAGE FROM ADJACENT CYLINDERS	Head gasket leaking or crack in cylinder head or block between adjacent cylinders	Remove cylinder head and inspect. Replace gasket, head, or block as necessary
MORE THAN 25% LEAKAGE AND AIR ESCAPES THROUGH OIL FILLER CAP OPENING ONLY	Stuck or broken piston rings; cracked piston; worn rings and/or cylinder wall	Inspect for broken rings or piston. Measure ring gap and cylinder diameter, taper and out-of-round. Replace defective part as necessary

OIL CONSUMPTION TEST AND DIAGNOSIS

The following diagnostic procedures are used to determine the source of excessive internal oil consumption, these procedures and tests apply to vehicles with 50, 000 miles or less.

NOTE: Engine oil consumption may be greater than normal during engine break-in. Repairs should be delayed until vehicle has been driven at least 7, 500 miles.

Severe service (high ambient temperature, short trips, heavy loading, trailer towing, taxi, off-road, or law enforcement use) may result in greater oil consumption than normal.

Sustained high speed driving and high engine RPM operation may result in increased oil consumption.

Failure to comply with the recommended oil type and viscosity rating, as outlined in the Owner's Manual, may impact oil economy as well as fuel economy.

Oil consumption may increase with vehicle age and mileage due to normal engine wear.

NOTE: Because a few drops of external oil leakage per mile can quickly account for the loss of one quart of oil in a few hundred miles, be certain there is no external engine oil leaks present.

- **Oil leakage is not the same as oil consumption and all external leakage must be eliminated before any action can be taken to verify and/or correct oil consumption complaints.**
- **Verify that the engine has the correct oil level dipstick and dipstick tube installed.**
- **Verify that the engine is not being run in an overfilled condition. Check the oil level 15 minutes after a hot shutdown with the vehicle parked on a level surface. In no case should the level be above MAX or the FULL mark on the dipstick.**

OIL CONSUMPTION TEST

1. Check the oil level at least 15 minutes after a hot shutdown.
2. If the oil level is low, top off with the proper viscosity and API service level engine oil. Add one bottle of MOPAR® 4-In-1 Leak Detection Dye into the engine oil.
3. Tamper proof the oil pan drain plug, oil filter, dipstick and oil fill cap.
4. Record the vehicle mileage.
5. Instruct the customer to drive the vehicle as usual.
6. Ask the customer to return to the servicing dealer after accumulating 500 miles, Check the oil level at least 15 minutes after a hot shutdown. If the oil level is half way between the "FULL" and "ADD" mark continue with the next step.
7. Using a black light, re-check for any external engine oil leaks, repair as necessary, if no external engine oil leaks are present, continue with oil consumption diagnosis.

OIL CONSUMPTION DIAGNOSIS

1. Check the positive crankcase ventilation (PCV) system. Make sure the system is not restricted and the PCV valve has the correct part number and correct vacuum source (18-20 in. Hg at idle below 3000 ft. above sea level is considered normal).
2. Perform a cylinder compression test and cylinder leak down test using the standard leak down gauge following manufacturers suggested best practices.

NOTE: Verify the spark plugs are not oil saturated. If the spark plugs are oil saturated and compression is good it can be assumed the valve seals or valve guides are at fault.

3. If one or more cylinders have more than 15% leak down further engine tear down and inspection will be required.

TOP 19 REASONS THAT MAY LEAD TO ENGINE OIL CONSUMPTION

1. **Tapered and Out-of-Round Cylinders**

   The increased piston clearances permit the pistons to rock in the worn cylinders. While tilted momentarily, an abnormally large volume of oil is permitted to enter on one side of the piston. The rings, also tilted in the cylinder, permit oil to enter on one side. Upon reversal of the piston on each stroke, some of this oil is passed into the combustion chamber.

2. **Distorted Cylinders**

   This may be caused by unequal heat distribution or unequal tightening of cylinder head bolts. This condition presents a surface which the rings may not be able to follow completely. In this case, there may be areas where the rings will not remove all of the excess oil. When combustion takes place, this oil will be burned and cause high oil consumption.

3. **Improper operation of "PCV "system**

   The main purpose of the Positive Crankcase Ventilation (PCV) valve is to recirculate blow-by gases back from the crankcase area through the engine to consume unburned hydrocarbons. The PCV system usually has a one way check valve and a make up air source. The system uses rubber hoses that route crankcase blow by gases to the intake manifold. Vacuum within the engine intake manifold pulls the blow by gases out of the crankcase into the combustion chamber along with the regular intake air and fuel mixture.

   The PCV system can become clogged with sludge and varnish deposits and trap blow by gases in the crankcase. This degrades the oil, promoting additional formation of deposit material. If left uncorrected, the result is plugged oil rings, oil consumption, rapid ring wear due to sludge buildup, ruptured gaskets and seals due to crankcase pressurization.

4. **Worn Piston Ring Grooves**

   For piston rings to form a good seal, the sides of the ring grooves must be true and flat - not flared or shouldered. Piston rings in tapered or irregular grooves will not seal properly and, consequently, oil will

pass around behind the rings into the combustion chamber.

5. **Worn, Broken or Stuck Piston Rings**

   When piston rings are broken, worn or stuck to such an extent that the correct tension and clearances are not maintained, this will allow oil to be drawn into the combustion chamber on the intake stroke and hot gases of combustion to be blown down the cylinder past the piston on the power stroke. All of these conditions will result in burning and carbon build up of the oil on the cylinders, pistons and rings.

6. **Cracked or Broken Ring Lands**

   Cracked or broken ring lands prevent the rings from seating completely on their sides and cause oil pumping. This condition will lead to serious damage to the cylinders as well as complete destruction of the pistons and rings. Cracked or broken ring lands cannot be corrected by any means other than piston replacement.

7. **Worn Valve Stems and Guides**

   When wear has taken place on valve stems and valve guides, the vacuum in the intake manifold will draw oil and oil vapor between the intake valve stems and guides into the intake manifold and then into the cylinder where it will be burned.

8. **Bent or Misaligned Connecting Rods**

   Bent or misaligned connecting rods will not allow the pistons to ride straight in the cylinders. This will prevent the pistons and rings from forming a proper seal with the cylinder walls and promote oil consumption. In addition, it is possible that a bearing in a bent connect rod will not have uniform clearance on the connecting rod wrist pin. Under these conditions, the bearing will wear rapidly and throw off an excessive amount of oil into the cylinder.

9. **Fuel Dilution**

   If raw fuel is allowed to enter the lubrication system, the oil will become thinner and more volatile and will result in higher oil consumption. The following conditions will lead to higher oil consumption;

   - Excess fuel can enter and mix with the oil via a leaking fuel injector
   - Gasoline contaminated with diesel fuel
   - Restricted air intake
   - Excessive idling

10. **Contaminated Cooling Systems**

    Corrosion, rust, scale, sediment or other formations in the water jacket and radiator will prevent a cooling system from extracting heat efficiently. This is likely to cause cylinder distortion thus leading to higher oil consumption.

11. **Oil Viscosity**

The use of oil with a viscosity that is too light may result in high oil consumption. Refer to the vehicle Owner's Manual for the proper oil viscosity to be used under specific driving conditions and/or ambient temperatures.

12. **Dirty Engine Oil**

    Failure to change the oil and filter at proper intervals may cause the oil to be so dirty that it will promote accumulation of sludge and varnish and restrict oil passages in the piston rings and pistons. This will increase oil consumption; dirty oil by nature is also consumed at a higher rate than clean oil.

13. **Crankcase Overfull**

    Due to an error in inserting the oil dip stick so that it does not come to a seat on its shoulder, a low reading may be obtained. Additional oil may be added to make the reading appear normal with the stick in this incorrect position which will actually make the oil level too high. If the oil level is so high that the lower ends of the connecting rods touch the oil in the oil pan excessive quantities of oil will be thrown on the cylinder walls and some of it will work its way up into the combustion chamber.

14. **Excessively High Oil Pressure**

    A faulty oil pressure relief valve may cause the oil pressure to be too high. The result will be that the engine will be flooded with an abnormally large amount of oil in a manner similar to that which occurs with worn bearings. This condition may also cause the oil filter to burst.

15. **Aftermarket Performance Chips and Modification**

    Increasing performance through the use of performance/power enhancement products to a stock or factory engine will increase the chance of excessive oil consumption.

16. **Lugging Engine**

    Lugging is running the engine at a lower RPM in a condition where a higher RPM (more power/torque) should be implemented. Especially susceptible on vehicles equipped with a manual transmission. This driving habit causes more stress loading on the piston and can lead to increases in engine oil consumption.

17. **Turbocharged Engines**

    There is a possibility for PCV "push-over" due to higher crankcase pressure (as compared to naturally aspirated engines) which is normal for turbocharged engines. This condition causes varying amounts of engine oil to enter the intake manifold, charge air cooler and associated plumbing to and from the charge air cooler, also a leaking turbocharger seal will draw oil into the combustion chamber where it will burn (blue smoke from tail pipe may be present) and form carbon deposits which contribute to further oil consumption as they interfere with proper engine function.

18. **Restricted Air Intake**

Excessive restriction in the air intake system will increase engine vacuum and can increase oil consumption, an extremely dirty air filter would be one example of this situation.

19. **Intake Manifold port seals**

Engines that have a "V" configuration and a "wet valley" (3.3/3.8L) could draw oil into the intake ports due to improper sealing between the intake manifold ports and cylinder head. Causes may include improper torque of intake manifold bolts, corrosion (aluminum intake manifold) and or warped sealing surface.

ENGINE LUBRICATION DIAGNOSTIC TABLE

CONDITION	POSSIBLE CAUSES	CORRECTION
OIL LEAKS	1. Gaskets and O-rings. Misaligned or damaged.	1. Replace as necessary.
	(a) Loose fasteners, broken or porous metal parts.	(a) Tighten fasteners, Repair or replace metal parts.
	2. Crankshaft rear oil seal.	2. Replace rear crankshaft oil seal. Refer to **SEAL, CRANKSHAFT OIL, REAR, REMOVAL**.
	3. Crankshaft seal flange. Scratched, nicked or grooved.	3. Polish or replace crankshaft.
	4. Oil pan flange cracked.	4. Replace oil pan. Refer to **PAN, OIL, REMOVAL**.
	5. Engine timing cover seal, damaged or misaligned.	5. Replace seal. Refer to **SEAL, CRANKSHAFT OIL, FRONT, REMOVAL**.
	6. Scratched or damaged vibration damper hub.	6. Polish or replace damper.
OIL PRESSURE DROP	1. Low oil level.	1. Check and correct oil level.
	2. Faulty oil pressure sensor.	2. Replace sensor. Refer to **SENSOR, OIL PRESSURE, REMOVAL**.
	3. Low oil pressure.	3. Check main bearing clearance. Refer to **BEARING(S), CRANKSHAFT, STANDARD PROCEDURE** . 3. Check rod bearing clearance. Refer to **BEARING(S), CONNECTING ROD, STANDARD PROCEDURE** .
	4. Clogged oil filter.	4. Replace oil filter. Refer to **FILTER, ENGINE OIL, REMOVAL**.
	5. Worn oil pump.	5. Replace oil pump. Refer to

		PUMP, ENGINE OIL, REMOVAL.
	6. Thin or diluted oil.	6. Change oil and filter. Refer to **OIL, STANDARD PROCEDURE** .
	7. Excessive bearing clearance.	7. Replace crankshaft bearings. Refer to **BEARING(S), CRANKSHAFT, STANDARD PROCEDURE** . 7. Replace rod bearings. Refer to **BEARING(S), CONNECTING ROD, STANDARD PROCEDURE** .
	8. Oil pump relief valve stuck.	8. Replace oil pump. Refer to **PUMP, ENGINE OIL, REMOVAL**.
	9. Oil pump pick-up tube loose, damaged or clogged.	9. Replace oil pump pick-up. Refer to **PICK-UP, OIL PUMP, REMOVAL**.
OIL PUMPING AT RINGS	1. Worn or damaged rings.	1. Hone cylinder bores and replace rings. Refer to **RING(S), PISTON, STANDARD PROCEDURE** .
	2. Carbon in oil ring slots.	2. Replace rings. Refer to **ROD, PISTON AND CONNECTING, REMOVAL**.
	3. Worn valve guides.	3. Replace cylinder heads. Refer to **CYLINDER HEAD, REMOVAL**.
	4. Leaking valve guide seals.	4. Replace valve guide seals. Refer to **SEAL(S), VALVE GUIDE, REMOVAL**.

STANDARD PROCEDURE

DUST COVERS AND CAPS

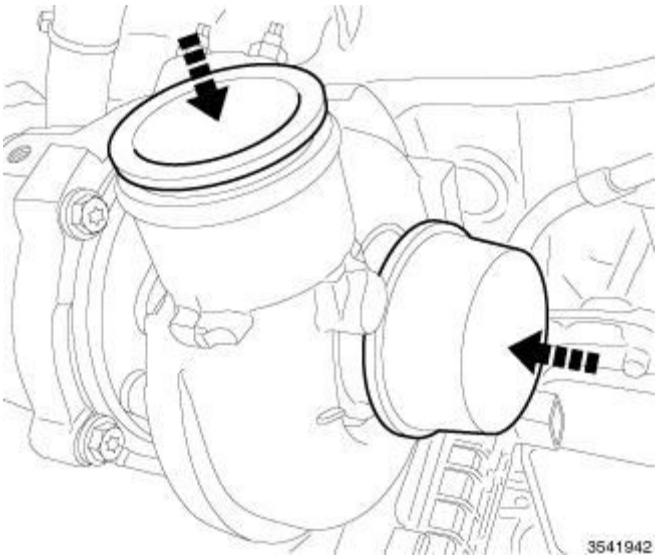

Fig. 2: Covers/Caps
Courtesy of CHRYSLER GROUP, LLC

Due to the high amounts of failures caused by dust, dirt, moisture and other foreign debris being introduced to the engine during service. Covers or caps are needed to reduce the possible damage that can be caused or created.

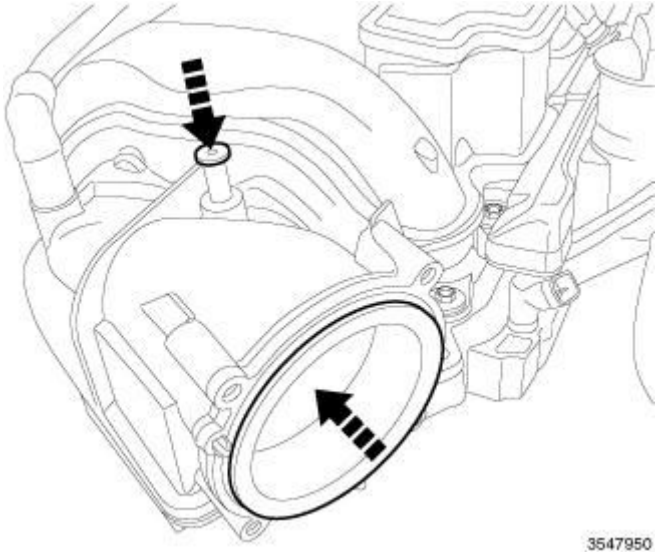

Fig. 3: Opening Cover
Courtesy of CHRYSLER GROUP, LLC

Covers over openings will reduce any possibilities for foreign materials to enter the engine systems. Using miller tool (special tool #10368, Set, Universal Protective Cap), Select the appropriated cover needed to the procedure.

REPAIR DAMAGED OR WORN THREADS

CAUTION: Be sure that the tapped holes maintain the original center line.

Damaged or worn threads can be repaired. Essentially, this repair consists of:

- Drilling out worn or damaged threads.
- Tapping the hole with a special Heli-Coil Tap, or equivalent.
- Installing an insert into the tapped hole to bring the hole back to its original thread size.

FORM-IN-PLACE GASKETS AND SEALERS

NOTE: All of the sealants mentioned below are not used on every engine, they are listed as a general reference guide. See appropriate Service Information for specific sealer usage.

There are numerous places where form-in-place gaskets are used on the engine. Care must be taken when applying form-in-place gaskets to assure obtaining the desired results.**Do not use form-in-place gasket material unless specified.** Bead size, continuity, and location are of great importance. Too thin a bead can result in leakage while too much can result in spill-over which can break off and obstruct fluid feed lines. A continuous bead of the proper width is essential to obtain a leak-free gasket. All sealing surfaces that use form-in-place gaskets and sealers **must** be free of grease or oil. Surfaces should be cleaned with Mopar® brake parts cleaner prior to sealer application. After the sealer is applied, the parts should be assembled within 10 minutes.

There are numerous types of form-in-place gasket materials that are used in the engine area. Mopar® Engine RTV GEN II, Mopar® ATF-RTV, and Mopar® Gasket Maker gasket materials, each have different properties and can not be used in place of the other.

MOPAR® ENGINE RTV GEN II is used to seal components exposed to engine oil. This material is a specially designed black silicone rubber RTV that retains adhesion and sealing properties when exposed to engine oil. Moisture in the air causes the material to cure. This material is available in three ounce tubes and has a shelf life of one year. After one year this material will not properly cure. Always inspect the package for the expiration date before use.

MOPAR® ATF RTV is a specifically designed black silicone rubber RTV that retains adhesion and sealing properties to seal components exposed to automatic transmission fluid, engine coolants, and moisture. This material is available in three ounce tubes and has a shelf life of one year. After one year this material will not properly cure. Always inspect the package for the expiration date before use.

MOPAR® GASKET MAKER is an anaerobic type gasket material. The material cures in the absence of air when squeezed between two metallic surfaces. It will not cure if left in the uncovered tube. The anaerobic material is for use between two machined surfaces. Do not use on flexible metal flanges.

MOPAR® BED PLATE SEALANT is a unique (green-in-color) anaerobic type gasket material that is specially made to seal the area between the bed plate and cylinder block without disturbing the bearing clearance or alignment of these components. The material cures slowly in the absence of air when torqued

between two metallic surfaces, and will rapidly cure when heat is applied.

MOPAR® THREEBOND ENGINE RTV SEALANT is a unique gasket material that is specially made to retain adhesion and sealing properties when used to seal components exposed to engine oil.

SEALER APPLICATION

Mopar® Gasket Maker material should be applied sparingly 1 mm (0.040 in.) diameter or less of sealant to one gasket surface. Be certain the material surrounds each mounting hole. Excess material can easily be wiped off. Components should be torqued in place within 15 minutes. The use of a locating dowel is recommended during assembly to prevent smearing material off the location.

Mopar® Engine RTV GEN II or ATF RTV gasket material should be applied in a continuous bead approximately 3 mm (0.120 in.) in diameter. All mounting holes must be circled. For corner sealing and "T" joint locations, a 3.17 or 6.35 mm (1/8 or 1/4 in.) drop is placed in the center of the gasket contact area. Uncured sealant may be removed with a shop towel. Components should be torqued in place while the sealant is still wet to the touch (within 10 minutes). The usage of a locating dowel is recommended during assembly to prevent smearing material off the location.

Mopar® Threebond Engine RTV Sealant gasket material should be applied in a continuous bead approximately 3 mm (0.120 in.) in diameter. The gasket surfaces should be cleaned with isopropyl alcohol wipes in preparation for sealant application. All mounting holes must be circled. For corner sealing and "T" joint locations, a 3.17 or 6.35 mm (1/8 or 1/4 in.) drop is placed in the center of the gasket contact area. Uncured sealant may be removed with a shop towel. Components should be assembled within 20 minutes and torqued in place within 45 minutes. The usage of a locating dowel is recommended during assembly to prevent smearing material off the location.

ENGINE GASKET SURFACE PREPARATION

Fig. 4: Proper Tool Usage For Surface Preparation

Courtesy of CHRYSLER GROUP, LLC

1 - ABRASIVE PAD
2 - 3M ROLOC™ BRISTLE DISC
3 - PLASTIC/WOOD SCRAPER

To ensure engine gasket sealing, proper surface preparation must be performed, especially with the use of aluminum engine components and multi-layer steel cylinder head gaskets.

Never use the following to clean gasket surfaces:

- Metal scraper.
- Abrasive pad or paper to clean cylinder block and head.
- High speed power tool with an abrasive pad or a wire brush (1).

NOTE: Multi-Layer Steel (MLS) head gaskets require a scratch free sealing surface.

Only use the following for cleaning gasket surfaces:

- Solvent or a commercially available gasket remover
- Plastic or wood scraper (3).
- Drill motor with 3M Roloc™ Bristle Disc (white or yellow) (2).

CAUTION: Excessive pressure or high RPM (beyond the recommended speed), can damage the sealing surfaces. The mild (white, 120 grit) bristle disc is recommended. If necessary, the medium (yellow, 80 grit) bristle disc may be used on cast iron surfaces with care.

SPECIFICATIONS

ENGINE SPECIFICATIONS

GENERAL SPECIFICATIONS

Description	Specification
Type	60° DOHC V-6 24-Valve
Compression Ratio	10.7:1
Lead Cylinder	#1 Right Bank
Firing Order	1-2-3-4-5-6

Description	Metric	Standard
Displacement	3.2 Liters	195 Cubic Inches
Bore and Stroke	91.0 x 83.0 mm	3.583 in. x 3.268 in.

CYLINDER BLOCK

Description	Specification	
	Metric	Standard
Cylinder Bore Diameter - Grade 1	90.995 mm ± 0.005 mm	3.5825 in. ± 0.0002 in.
Cylinder Bore Diameter - Grade 2	91.005 mm ± 0.005 mm	3.5829 in. ± 0.0002 in.
Cylinder Bore Out-of-Round (Max.)	0.009 mm	0.00035 in.
Cylinder Bore Cylindricity	0.014 mm	0.0006 in.
Crankshaft Bore Taper* (Max.)	0.006 mm	0.0002 in.
Engine Oil Galley Plug**	0.0 mm - 2.0 mm	0.0 in - 0.0787 in
*Measured over length of bulkhead		
**Measured proud of machined surface		

PISTONS

Description	Specification	
	Metric	Standard
Material	Cast Aluminum Alloy	
Piston Diameter (Metal to Metal) - Grade 1	90.955 mm ± 0.005 mm	3.5809 in. ± 0.0002 in.
Piston Diameter (Metal to Metal) - Grade 2	90.965 mm ± 0.005 mm	3.5813 in. ± 0.0002 in.
Piston Diameter (Metal to Coating) - Grade 1	90.970 - 91.000 mm	3.5815 - 3.5827 in.
Piston Diameter (Metal to Coating) - Grade 2	90.980 - 91.010 mm	3.5819 - 3.5831 in.
Clearance at Size Location (Metal to Metal)	0.030 - 0.050 mm	0.0012 - 0.0020 in.
Clearance at Size Location (Metal to Coating)	-0.010 - 0.030 mm	-0.0004 - 0.0012 in.
Piston Weight	351.4 - 361.4 grams	12.395 - 12.748 oz.
Piston Pin Offset	0.8 mm	0.031 in.
Piston Ring Groove Diameter - No. 1	83.85 - 83.65 mm	3.301 - 3.293 in.
Piston Ring Groove Diameter - No. 2	82.05 - 81.85 mm	3.230 - 3.222 in.
Piston Ring Groove Diameter - No. 3	84.20 - 84.00 mm	3.315 - 3.307 in.

PISTON PINS

Description	Specification	
	Metric	Standard
Type	Full Floating	
Pin Diameter	21.9985 ± 0.0015 mm	0.86608 ± 0.00006 in.

Clearance in Piston	0.003 - 0.012 mm	0.0001 - 0.0005 in.
Clearance in Rod	0.011 - 0.024 mm	0.0004 - 0.0009 in.

PISTON RINGS

Description	Specification	
	Metric	Standard
Ring Gap - Number 1 Ring (Top)	0.22 - 0.37 mm	0.009 - 0.015 in.
Ring Gap - Number 2 Ring (Center)	0.27 - 0.42 mm	0.011 - 0.017 in.
Ring Gap - Oil Control Ring (Steel Rails)	0.15 - 0.66 mm	0.006 - 0.026 in.

PISTON RING SIDE CLEARANCE

Description	Specification	
	Metric	Standard
Number 1 Ring (Top)	0.025 - 0.083 mm	0.0010 - 0.0033 in.
Number 2 Ring (Center)	0.030 - 0.078 mm	0.0012 - 0.0031 in.
Oil Control Ring (Steel Rails)	0.061 - 0.210 mm	0.0024 - 0.0083 in.

PISTON RING WIDTH

Description	Specification	
	Metric	Standard
Number 1 Ring (Top)	2.80 - 3.00 mm	0.110 - 0.118 in.
Number 2 Ring (Center)	3.37 - 3.67 mm	0.133 - 0.144 in.
Oil Control Ring (Steel Rails)	1.930 - 2.083 mm	0.076 - 0.082 in.

CONNECTING RODS

Description	Specification	
	Metric	Standard
Bearing Clearance (With Crush)	0.023 - 0.064 mm	0.0009 - 0.0025 in.
Side Clearance	0.070 - 0.370 mm	0.0028 - 0.0146 in.
Side Clearance (Max.)	0.370 mm	0.0146 in.
Piston Pin Bore Diameter	22.016 ± 0.005 mm	0.8668 ± 0.0002 in.
Bearing Bore Out of Round (Max.)	0.008 mm	0.0003 in.
Total Weight (Less Bearing)	512.6 ± 8 grams	18.08 ± 0.28 oz.

CRANKSHAFT MAIN BEARING JOURNALS

Description	Specification	
	Metric	Standard
Diameter	67.996 ± 0.011 mm	2.677 ± 0.0004 in.
Bearing Clearance	0.024 - 0.050 mm	0.0009 - 0.0020 in.
Bearing Clearance (Max.)	0.050 mm	0.0020 in.

Out of Round (Max.)	0.005 mm	0.0002 in.
Taper (Max.)	0.005 mm	0.0002 in.
End Play	0.050 - 0.290 mm	0.0020 - 0.0114 in.
End Play (Max.)	0.290 mm	0.0114 in.

CONNECTING ROD JOURNALS

Description	Specification	
	Metric	Standard
Diameter	59.0 ± 0.009 mm	2.3228 ± 0.0035 in.
Bearing Clearance	0.023 - 0.064 mm	0.0009 - 0.0025 in.
Out of Round (Max.)	0.005 mm	0.0002 in.
Taper (Max.)	0.005 mm	0.0002 in.

CAMSHAFT

Description	Specification	
	Metric	Standard
Bore Diameter - No. 1 Cam Towers	32.020 - 32.041 mm	1.2606 - 1.2615 in.
Bore Diameter - No. 2, 3, 4 Cam Towers	24.020 - 24.041 mm	0.9457 - 0.9465 in.
Bearing Journal Diameter - No. 1	31.976 - 31.995 mm	1.2589 - 1.2596 in.
Bearing Journal Diameter - No. 2, 3, 4	23.977 - 23.996	0.9440 - 0.9447 in.
Bearing Clearance - No. 1	0.025 - 0.065 mm	0.00010 - 0.0026 in.
Bearing Clearance - No. 2, 3, 4	0.024 - 0.064 mm	0.0009 - 0.0025 in.
End Play	0.114 - 0.214 mm	0.004 - 0.008 in.

VALVE TIMING-INTAKE VALVES

Description	Specification
Opens	5.4° (ATDC)
Closes	79.4° (ABDC) or 259.4° (ATDC)
Duration	254°
Centerline	131.4°
Note: Units are in crank degrees, using 0.1524 mm (0.006 in.) valve lift as the threshold.	

VALVE TIMING-EXHAUST VALVES

Description	Specification
Opens	84° (BBDC) or 264° (BTDC)
Centerline	129°
Closes	11° (ATDC)
Duration	275°
Valve Overlap	56°

Note: Units are in crank degrees, using 0.1524 mm (0.006 in.) valve lift as the threshold.

CYLINDER HEAD

Description	Specification	
	Metric	Standard
Gasket Thickness* (Compressed)	0.52 - 0.62 mm	0.020 - 0.024 in.
Flatness (Head Gasket Surface)	0.09 mm	0.0035 in.
Valve Seat Angle	44.75° ± 0.25° from the valve guide axis	
Valve Seat Runout (relative to the valve guide axis) - Intake and Exhaust	0.050 mm	0.002 in.
Intake Valve Seat Width	0.95 - 1.25 mm	0.04 - 0.05 in.
Exhaust Valve Seat Width	1.36 - 1.66 mm	0.054 - 0.065 in.
Guide Bore Diameter (Std.)	6.00 - 6.02 mm	0.236 - 0.237 in.
Valve Guide Height** - Intake and Exhaust	16.05 - 16.55 mm	0.632 - 0.652 in.
*Measured at the fire ring, not at the outer edge **Measured from cylinder head valve spring seat surface to top of guide		

VALVES

Description	Specification	
	Metric	Standard
Face Angle	45.25° ± 0.25°	
Head Diameter - Intake	37.3 ± 0.100 mm	1.469 ± 0.004 in.
Head Diameter - Exhaust	30.0 ± 0.100 mm	1.181 ± 0.004 in.
Length-Intake (Overall)	115.269 ± 0.23 mm	4.538 ± 0.009 in.
Length-Exhaust (Overall)	115.6 ± 0.23 mm	4.551 ± 0.009 in.
Stem Diameter - Intake	5.968 ± 0.009 mm	0.2350 ± 0.0004 in.
Stem Diameter - Exhaust	5.961± 0.009 mm	0.2347 ± 0.0004 in.
Stem-to-Guide Clearance - Intake (New)	0.023 - 0.061 mm	0.0009 - 0.0024 in.
Stem-to-Guide Clearance - Exhaust (New)	0.030 - 0.068 mm	0.0012 - 0.0027 in.
Stem-to-Guide Clearance-Intake (Max., Rocking Method)	0.29 mm	0.011 in.
Stem-to-Guide Clearance - Exhaust (Max., Rocking Method)	0.37 mm	0.015 in.
Valve Lift-Intake (Zero Lash)	10.6 mm	0.417 in.
Valve Lift-Exhaust (Zero Lash)	9.67 mm	0.381 in.
Valve Stem Tip Height* - Intake	52.4 - 53.5 mm	2.063 - 2.106 in.
Valve Stem Tip Height* - Exhaust	51.8 - 52.9 mm	2.039 - 2.083 in.
*Valve tip to aluminum spring seat boss		

VALVE SPRING

Description	Specification	
	Metric	Standard
Free Length - Intake AND Exhaust (Approx.)	52.5 mm	2.067 in.
Spring Force - Intake AND Exhaust (Valve Closed)	295 ± 13 N @ 40.0 mm	66 ± 3 lbs. @ 1.57 in.
Spring Force - Intake (Valve Open)	699 ± 31 N @ 10.6 mm	150.4 ± 7 lbs. @ 0.4173 in.
Spring Force - Exhaust (Valve Open)	663 ± 31 N @ 9.67 mm	149 ± 7 lbs. @ 0.3807 in.
Number of Coils - Intake AND Exhaust	9.35	
Wire Diameter - Intake AND Exhaust	3.18 x 3.99 mm (ovate)	0.125 x 0.157 in. (ovate)
Installed Height - Intake AND Exhaust (Spring seat top to bottom of retainer)	40.0 mm	1.575 in.

OIL PRESSURE

Description	Specification	
	Metric	Standard
(Note: At Normal Operating Temperatures)		
Pressure @ Curb Idle Speed*	34.7 kPa Min.	5 psi Min.
Pressure @ 600 - 1200 RPM	34.7 (warm) - 958.0 (cold) kPa	5 (warm) - 139 (cold) psi
Pressure @ 1201 - 3500 RPM	206.8 (warm) - 958.0 (cold) kPa	30 (warm) - 139 (cold) psi
Pressure @ 3501 - 6400 RPM	427.0 (warm) - 958.0 (cold) kPa	62 (warm) - 139 (cold) psi
*CAUTION: If oil pressure is zero at idle, DO NOT run engine at 3000 RPM.		

TORQUE SPECIFICATIONS

DESCRIPTION	N.m	Ft. Lbs.	In. Lbs.	NEW FASTENER
Camshaft Chain Tensioner (Primary) - M6 T30	12	-	106	
Camshaft Chain Guide (Primary) - M6 T30	12	-	106	
Camshaft Chain Idler Sprocket - M8 T45	26	18	-	
Camshaft Chain LH Tensioner (Secondary) - M6 T30	12	-	106	
Camshaft Chain LH Guide (Secondary) - M6 T30	12	-	106	
Camshaft Chain RH Tensioner (Secondary) - M6 T30	12	-	106	

Camshaft Chain RH Guide (Secondary) - M6 T30	12	-	106	
Camshaft Position (CMP) Sensor to Cylinder Head - M6 T30	9	-	80	
Camshaft Bearing Cap - M6 T30	10	-	89	
Connecting Rod Cap - M9 Bolts	20 + 90° Turn	15 + 90° Turn	-	
Coolant Pump to Engine Timing Cover - M10 Bolt	55	40	-	
Crankshaft Target Wheel to Counterweight - M6 T30	11	-	97	
Crankshaft Outer Main Bearing Cap and Windage Tray - M8 Bolts	21 + 90° Turn	16 + 90° Turn	-	
Crankshaft Inner Main Bearing Cap - M11 Bolts	20 + 90° Turn	15 + 90° Turn	-	
Crankshaft Side Main Bearing Cap (Tie Bolt) - M8 Bolts	30	-	266	
Crankshaft Vibration Damper - M16 Bolt	40 + 105° Turn	30 + 105° Turn	-	
Crankshaft Position (CKP) Sensor to Engine Block - M6 Bolt	12	-	106	
Crankshaft Rear Oil Seal Retainer - M6 T30	10	-	89	
Cylinder Head Oil Galley Plugs	18	9	-	
Cylinder Head Oil Restrictor - M8 Plug	15	-	133	
Cylinder Head to Engine Block - M12 Bolts in Sequence	See **INSTALLATION** Procedure			
Cylinder Head Cover - M6 Bolts	12	-	106	
Catalytic Converter to Cylinder Head Flange Bolts - M8 Bolts	23	17	-	
Flexplate to Crankshaft - M10 Bolts	95	70	-	
Left Engine Mount Bracket to Transaxle	105	77	-	
Left Engine Mount to Strut Tower	64	47	-	
Left Engine Mount to Mount Bracket	185	136	-	
Left Engine Mount to Frame Rail	105	77	-	
Front Right Engine Mount Bracket to Timing Cover				
M8	25	18	-	
M12	72	53	-	
Right Engine Mount to Engine Mount Bracket	72	53	-	
Right Engine Mount Isolator to				

Frame Rail	65	48	-	
Right Engine Mount Isolator to Strut Tower	65	48	-	
Fuel Rail to Lower Intake Manifold - M6 Bolts	7	-	62	
Ground Cable to Transaxle	12	-	106	
Heater Core Supply Tube to Cylinder Head - M8 Bolt	12	-	106	
Idler Pulley to Engine Timing Cover - Accessory Drive Bolts	27	20	-	
Ignition Capacitor to Cylinder Head - M6 Bolts	10	-	89	
Ignition Coil to Cylinder Head Cover - M6 Bolts	8	-	71	
Intake Manifold (Upper) - M6 Bolts	10	-	89	
Intake Manifold (Lower) - M6 Bolts	12	-	106	
Intermediate Shaft Support Bracket	23	17	-	
Knock Sensor to Engine Block - M8 T40	21	16	-	
Oil Control Valve - Cam Phaser M18	150	111	-	
Oil Pan to Engine Block	23	17	-	
Lower Oil Pan to Upper Oil Pan	9	-	80	
Transaxle to Upper Oil Pan - M10 Bolts	50	37	-	
Oil Cooler to Oil Filter Housing Screws	12	-	106	
Oil Pan to Rear Seal Retainer Bolts	12	-	106	
Oil Pan Drain - Plug M14	23	17	-	
Oil Pressure Sensor to Oil Filter Housing	23	17	-	
Oil Temperature Sensor to Oil Filter Housing	30	22	-	
Piston Oil Cooler Jet to Engine Block - M5	6	-	53	
Oil Filter Housing/Oil Cooler to Engine Block - M6 Bolts	12	-	106	
Oil Filter Housing Cap	25	18	-	
Oil Pump to Engine Block - M6 Bolts	12	-	106	
Oil Level Indicator to Engine Block - M10 Bolt	35	26	-	
Oil Level Indicator to Cylinder Head	17	-	151	

- M6 Bolt				
Oil Pump Sprocket - M8 T45	26	18	-	
Oil Pump Pick Up Tube Bracket to Windage Tray - M6 Bolt	12	-	106	
Oil Pump Pick Up Tube to Oil Pump - M6 Bolt	12	-	106	
Oxygen Sensor to Exhaust Pipe - M18	50	37	-	
PCV Valve - M5 T25	4	-	35	
Spark Plug to Cylinder Head - M12	18	13	-	
Starter Mounting - M10 Bolts	47	35	-	
Tensioner to Engine Timing Cover - Accessory Drive M10 Bolt	55	41	-	
Throttle Body - M6 Bolts	9	-	80	
Engine Timing Cover - M6 Bolts	12	-	106	
Engine Timing Cover - M8 Bolt	25	18	-	
Engine Timing Cover - M10 Bolts	55	41	-	
Transaxle to Engine Block - M10 Bolts	50	37	-	
Torque Converter - M8 Bolts	95	70	-	
Upper Intake Manifold Support Bracket to Cylinder Head - M8 Bolt	17	-	177	
Upper Intake Manifold Support Bracket to Upper Intake Manifold - M6 Nuts	9	-	80	
Variable Valve Timing Solenoid to Cylinder Head Cover - M5 T25	4	-	35	
Wire Harness Retainer Bracket to LH Cylinder Head - M6 T30	10	-	89	
Rear Transmission Strut to Crossmember	150	111	-	
Rear Transmission Strut mount to Crossmember Bracket Nuts	73	54	-	
Rear Transmission Strut to Transmission Pivot	220	162	-	
Rear Transmission Pivot	160	118	-	
*NEW FASTENER: Do not reuse these fasteners. If removed, a new fastener must be installed and tightened to the proper specification torque specification.				

REMOVAL

REMOVAL

CAUTION: If the original engine has experienced a catastrophic failure or an individual failure with the piston, cylinder bore, engine block, valve or valve seat, the intake manifold MUST be replaced with a new manifold.

Fig. 5: Engine Cover & Ball Studs
Courtesy of CHRYSLER GROUP, LLC

1. Remove the engine cover (1).
2. Perform the fuel system pressure release procedure. Refer to **FUEL SYSTEM PRESSURE RELEASE PROCEDURE** .
3. Remove the battery. Refer to **BATTERY, REMOVAL** .

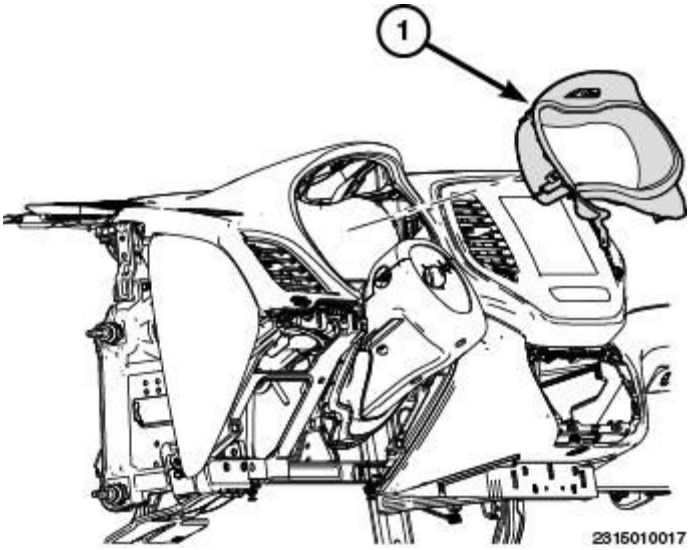

Fig. 6: Identifying Intermediate Shaft, Pinch Bolt And Steering Gear Pinion Shaft
Courtesy of CHRYSLER GROUP, LLC

4. Remove the pinch bolt (3) from the intermediate shaft (1).
5. Separate the intermediate shaft from the steering gear shaft (2).

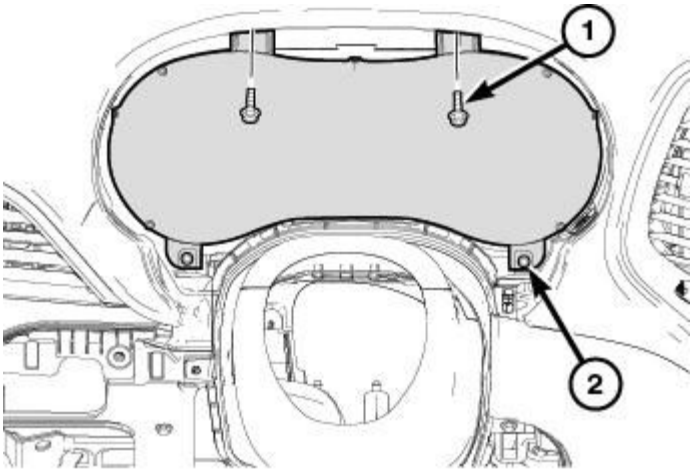

2315010018

Fig. 7: Identifying Power Distribution Z-Case Fuse Array, Tabs & Nuts
Courtesy of CHRYSLER GROUP, LLC

6. Remove the cover from the Power Distribution Center (PDC).
7. Remove the nuts (2) from Z case fuse array and move the eyelet connectors off and away from the Z case fuse array.

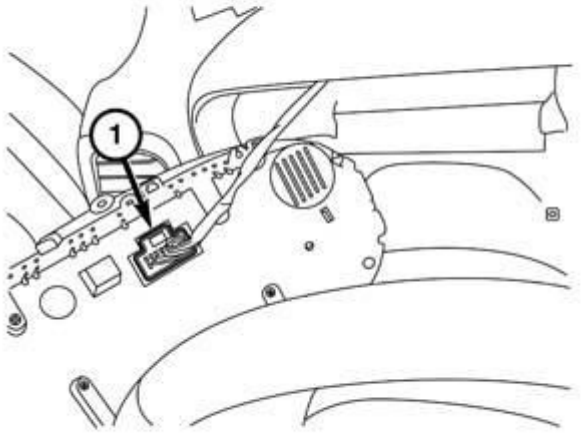

2407003117

Fig. 8: PDC & Engine Harness Connector
Courtesy of CHRYSLER GROUP, LLC

8. Remove the bolt (2) that secures the engine harness connector to the PDC (1).
9. Release the plastic clips that secure the PDC to the lower cover.
10. Using care, lift the PDC away from the lower cover.
11. Separate the engine harness from the base of the PDC and position aside.

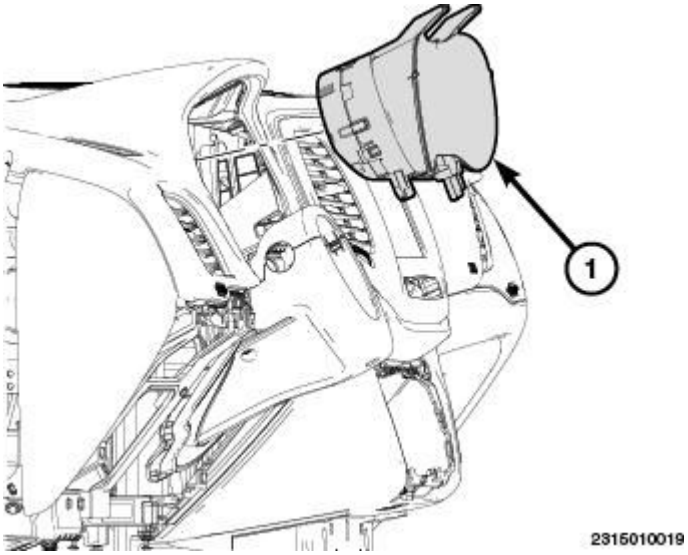

Fig. 9: PCM, Connectors, Strap & Nuts
Courtesy of CHRYSLER GROUP, LLC

12. Disconnect the Powertrain Control Module (PCM) harness connectors (2).
13. Remove the nut (3) that secures the ground strap (4) to the PCM.
14. Recover the refrigerant from the A/C system. Refer to **PLUMBING, STANDARD PROCEDURE** .
15. Remove the purge control valve from the intake manifold (Refer to **VALVE, PURGE CONTROL** /Removal).

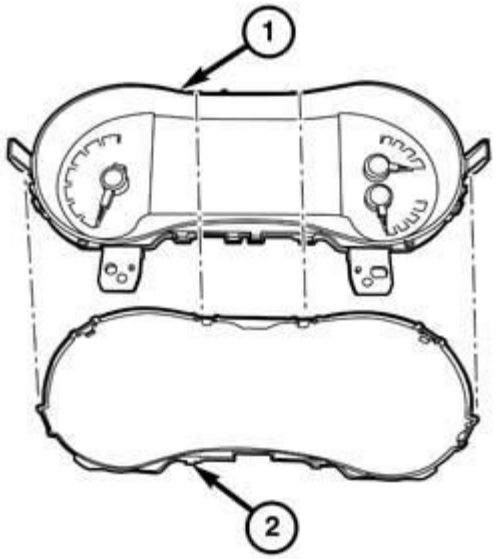

2407003113

Fig. 10: IHX, Suction/Liquid Line Manifold & Nut
Courtesy of CHRYSLER GROUP, LLC

16. Remove the nut (3) and separate the suction/liquid line manifold (2) from the Internal Heat Exchanger (IHX) (1).
17. Separate the air cleaner body from the air cleaner tray. Refer to **BODY, AIR CLEANER, REMOVAL**.
18. Remove the air resonator. Refer to **RESONATOR, AIR CLEANER, REMOVAL**.

NOTE: Removal of the Intake Resonator will allow access to the rear O2 Sensors and the upper Catalytic Converter bolts.

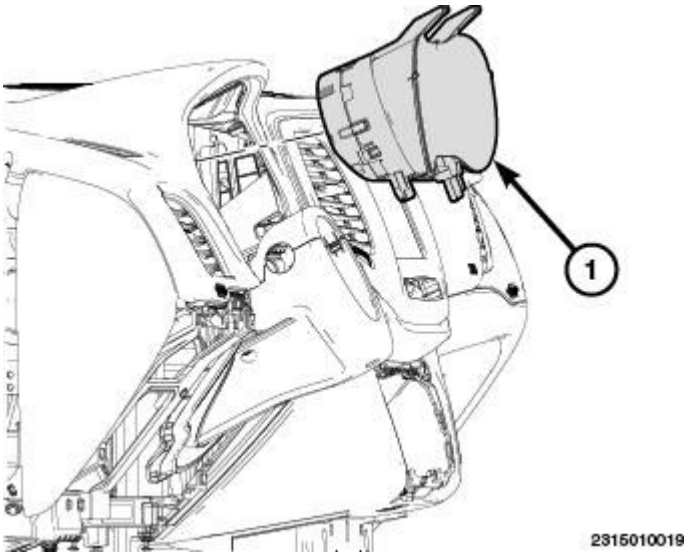

2315010019

Fig. 11: Removing/Installing Oxygen Sensors
Courtesy of CHRYSLER GROUP, LLC

19. Disconnect both rear side O2 Sensor harness connectors (1, 2).

NOTE: The catalytic converter is removed from under the vehicle.

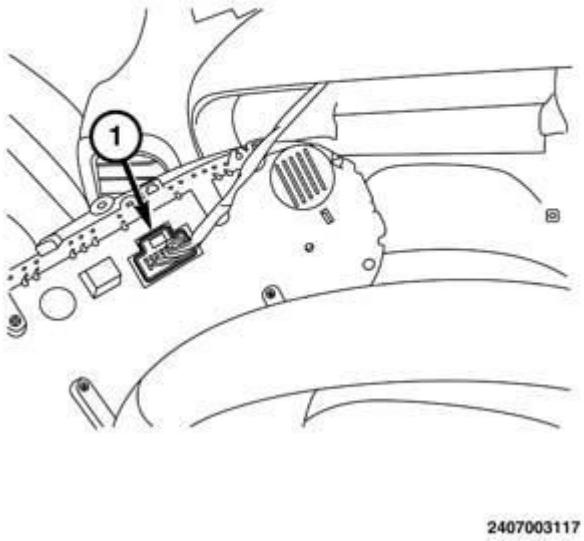

Fig. 12: Removing/Installing Catalytic Converter
Courtesy of CHRYSLER GROUP, LLC

20. Remove the rear side catalytic converter support bracket bolt (4).
21. Remove the catalytic converter upper flange bolts (5).

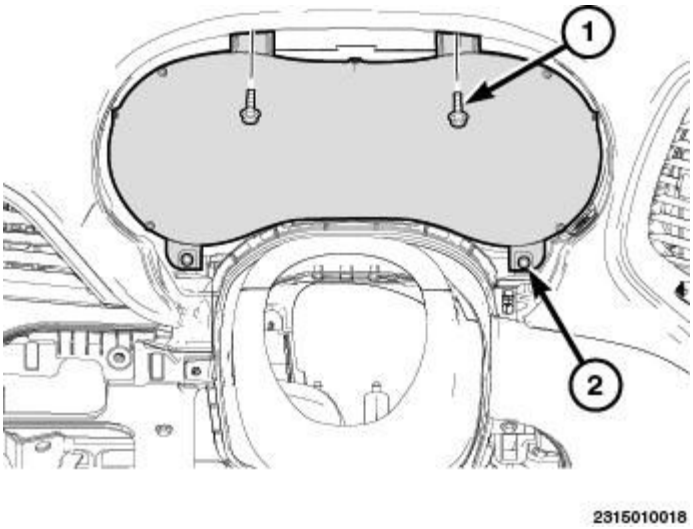

Fig. 13: Block Heater Electrical Cord Clip, Engine Harness Connector & Engine Wiring Harness Retainer
Courtesy of CHRYSLER GROUP, LLC

22. If equipped, separate the block heater electrical cord clip (1) from the battery tray.
23. Separate the engine wiring harness retainer (3) from the battery tray.
24. Separate the engine harness connector (2) from the battery tray.

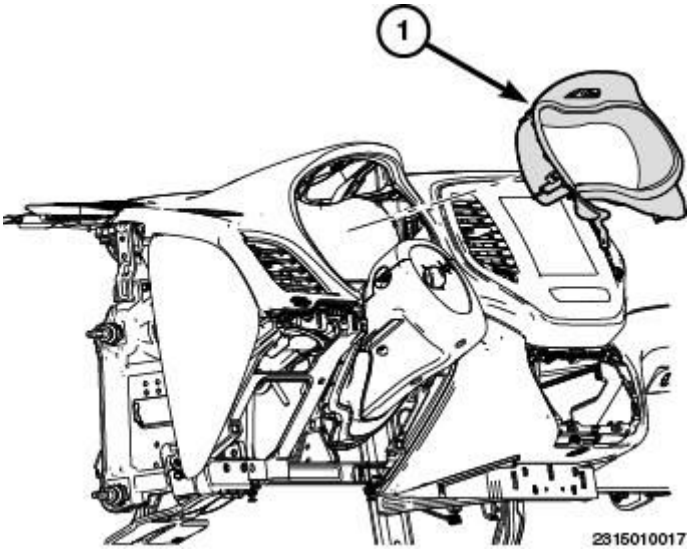

Fig. 14: Body Side Harness Connector & Engine Side Harness Connector
Courtesy of CHRYSLER GROUP, LLC

25. Disconnect the engine side harness connector (4) from the body side harness connector (1).

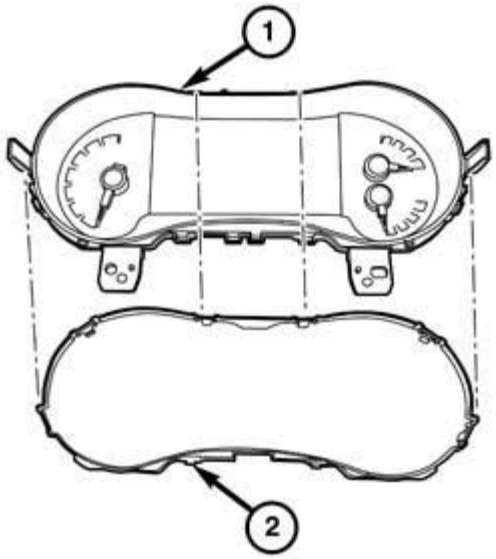

2407003113

Fig. 15: Belly Pan & Bolts
Courtesy of CHRYSLER GROUP, LLC

26. Remove the upper battery tray bolts (1, 2).
27. Raise and support the vehicle.
28. Remove the belly pan (3). Refer to **BELLY PAN, REMOVAL** .
29. Drain the cooling system. Refer to **STANDARD PROCEDURE** .
30. Partially lower the vehicle.
31. Remove the front bumper fascia. Refer to **FASCIA, FRONT, REMOVAL** .
32. Remove both front wheel assemblies. Refer to **REMOVAL** .
33. Remove both axle shafts. Refer to **REMOVAL** .
34. Remove both front wheel house splash shields. Refer to **SHIELD, SPLASH, FRONT WHEELHOUSE, REMOVAL** .

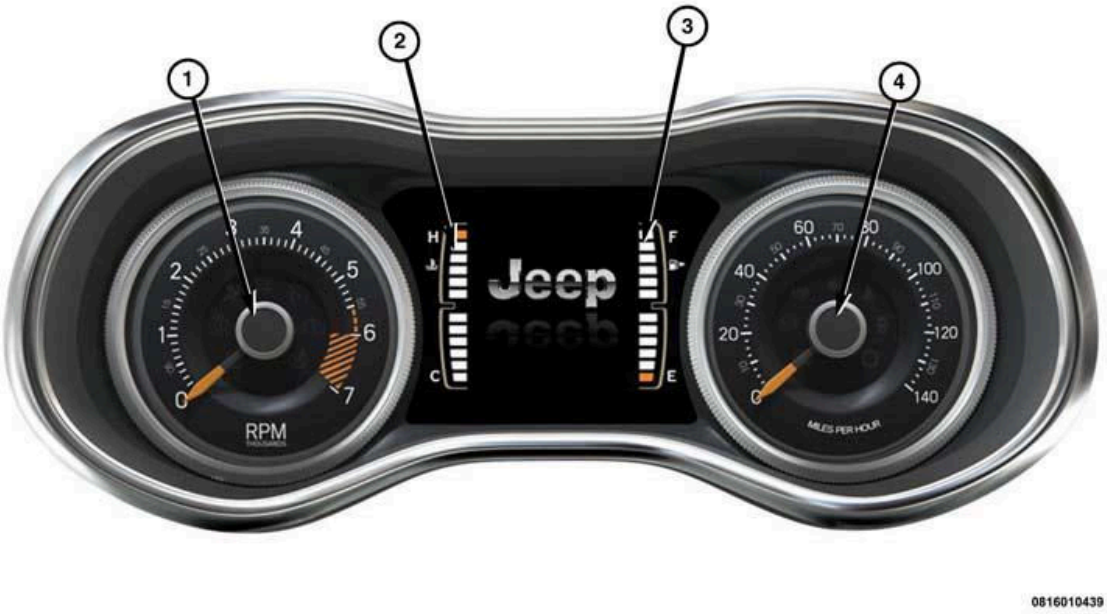

Fig. 16: Installing Lower Radiator Hose & Heater Core Return Hose
Courtesy of CHRYSLER GROUP, LLC

35. Remove the heater hose (1) from the water pump.
36. Remove the lower radiator hose (2) from the water pump.

Fig. 17: Windshield Washer Reservoir-To-Battery Tray Bolt
Courtesy of CHRYSLER GROUP, LLC

37. Separate the wiring harness retainer (1) from the battery tray.
38. Remove the bolt (2) that secures the washer reservoir bottle to the battery tray.

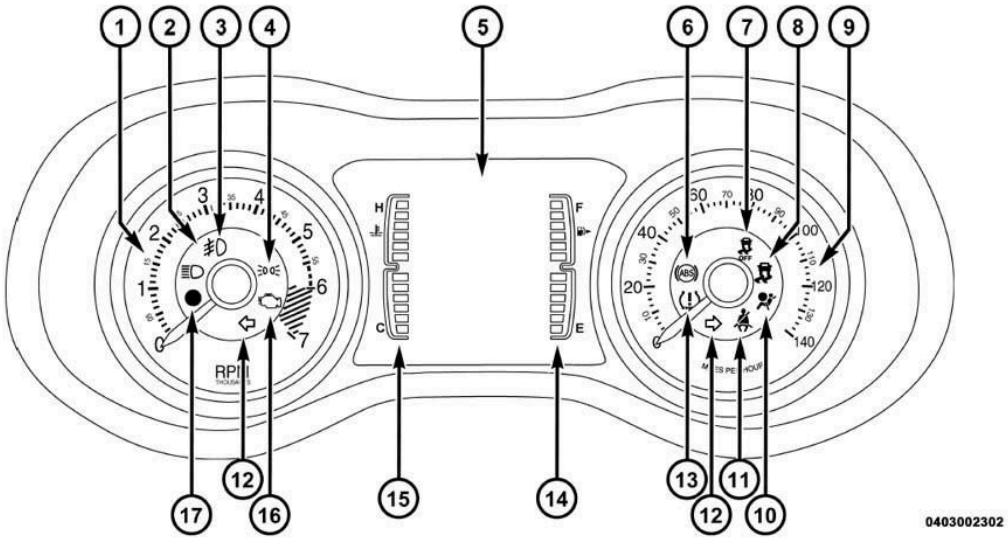

Fig. 18: Battery Tray & Bolt
Courtesy of CHRYSLER GROUP, LLC

39. Remove the outer battery tray bolt (2).
40. Raise and secure the vehicle.
41. Remove the exhaust crossunder pipe. Refer to **PIPE, EXHAUST CROSSUNDER, REMOVAL** .

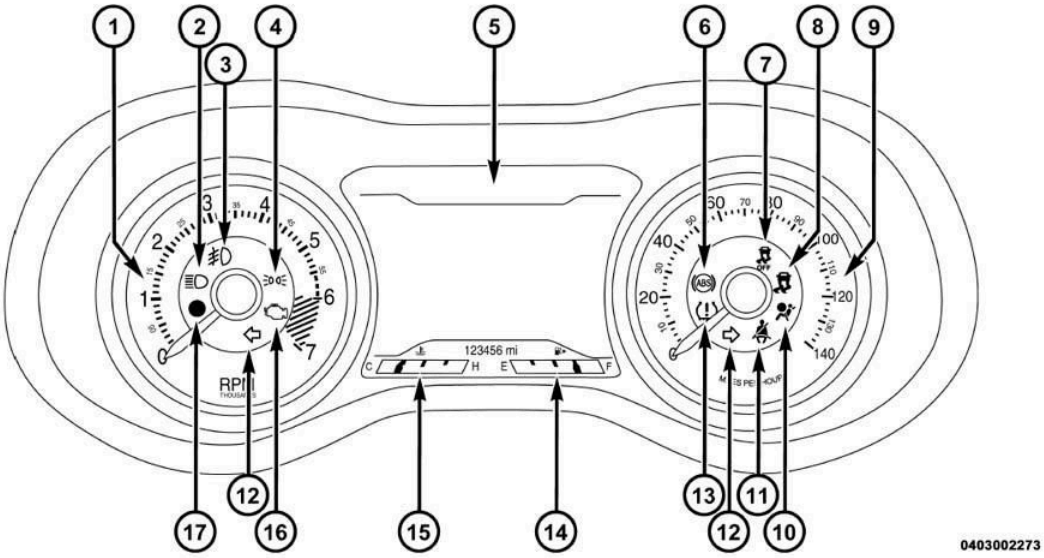

Fig. 19: Y-Pipe
Courtesy of CHRYSLER GROUP, LLC

42. Separate the Y-pipe (4) from the rear catalytic converter.

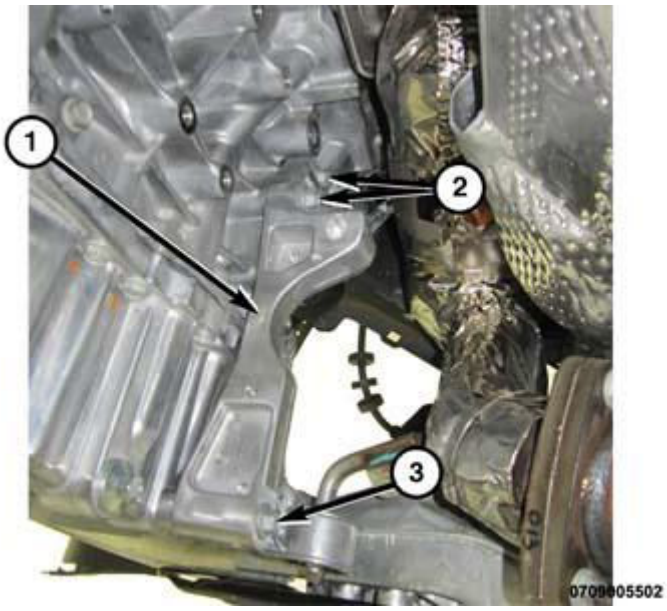

Fig. 20: Removing/Installing Lower Intermediate Shaft Support Bracket
Courtesy of CHRYSLER GROUP, LLC

NOTE: **FWD**

intermediate shaft bracket shown in illustration.

AWD

intermediate shaft bracket similar.

43. If equipped, remove the Power Transfer Unit (PTU). Refer to **REMOVAL** .
44. Remove the catalytic converter from its mount and position aside.
45. Remove the bolts (2, 3) that secure the intermediate shaft support bracket (1).
46. Remove the rear catalytic converter from the vehicle.

NOTE: **If the transmission is to be separated from the engine, removal of the torque converter bolts and lower transmission mounting bolts are best accomplished at this time.**

Replacement Components

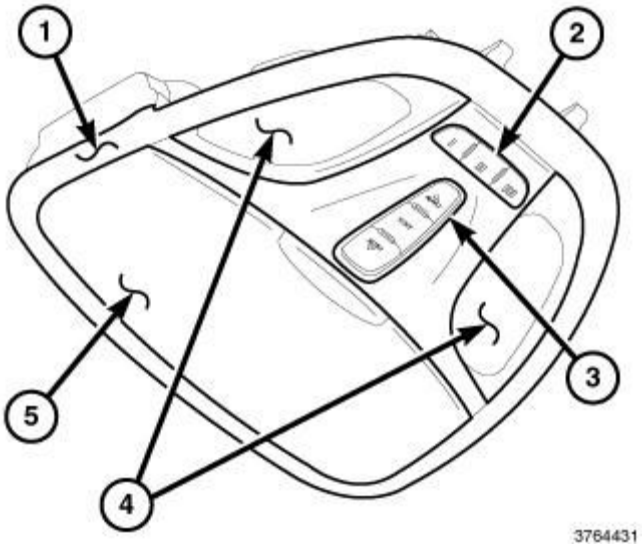

Fig. 21: Ground Strap & Bolt
Courtesy of CHRYSLER GROUP, LLC

47. Remove the bolt (2) that secures the ground wire (1) to the transmission.

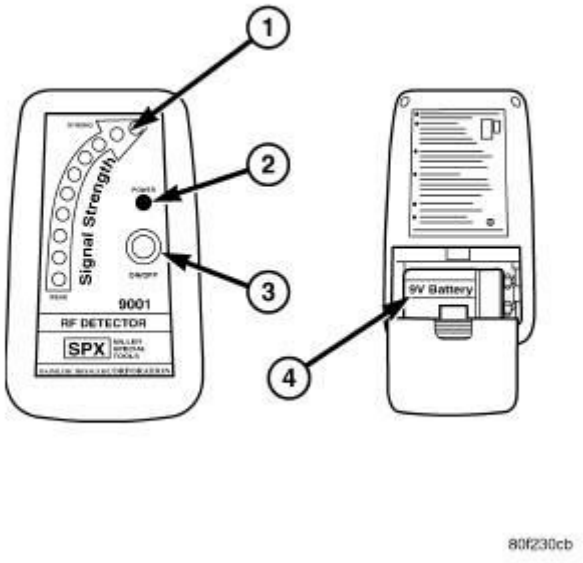

Fig. 22: Bellhousing Access Door
Courtesy of CHRYSLER GROUP, LLC

48. If required, remove the transaxle torque converter housing dust cover (2) and the lower rubber plugs.

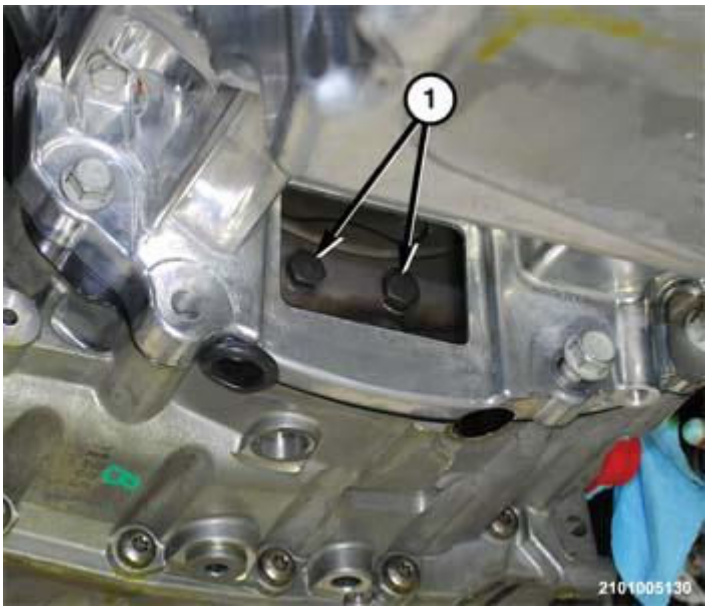

Fig. 23: Torque Converter Bolts
Courtesy of CHRYSLER GROUP, LLC

49. If required, remove the torque converter-to-flexplate bolts (1).
50. If required, remove the lower engine oil pan-to-transmission bolts.

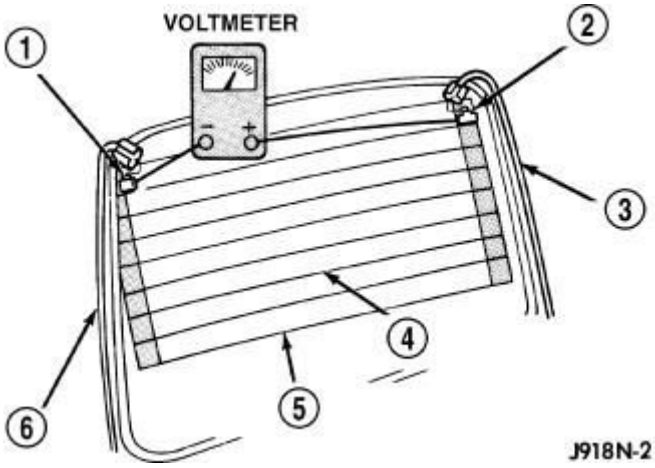

Fig. 24: Transmission Cooler Lines
Courtesy of CHRYSLER GROUP, LLC

51. Disconnect the oil cooler lines (1) from transmission using the (special tool #9546, Disconnect Tool).
52. Remove the front suspension crossmember. Refer to **CROSSMEMBER, FRONT SUSPENSION, REMOVAL** .

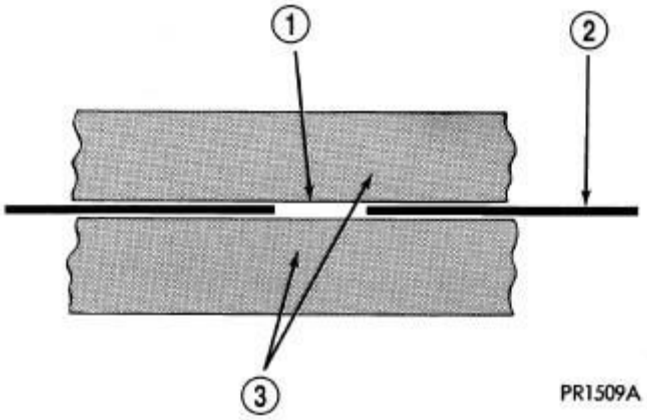

Fig. 25: Identifying Battery Tray, Inner Frame Rail & Bolts
Courtesy of CHRYSLER GROUP, LLC

53. Remove the lower bolts (3) that secure the battery tray (1) to the upper frame (2).
54. Lower the vehicle.
55. Remove the battery tray from the vehicle.
56. If required, remove the electric vacuum pump and mounting bracket. Refer to **PUMP, ELECTRIC VACUUM, REMOVAL** .

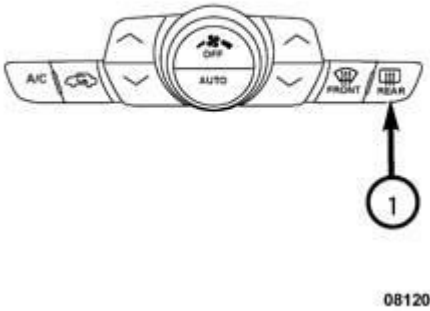

Fig. 26: Coolant Bottle & Components
Courtesy of CHRYSLER GROUP, LLC

57. Remove the coolant return line (2) from the coolant bottle (3).

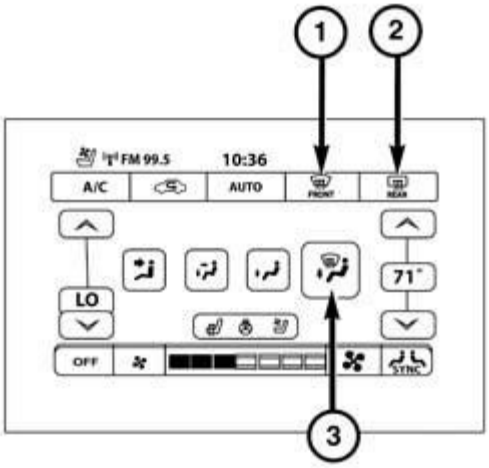

0812002402

Fig. 27: Refrigerant Lines, Heater Core Hoses & Fastener
Courtesy of CHRYSLER GROUP, LLC

58. Disconnect the heater core supply hose (2).
59. Disconnect the heater core return hose (3).

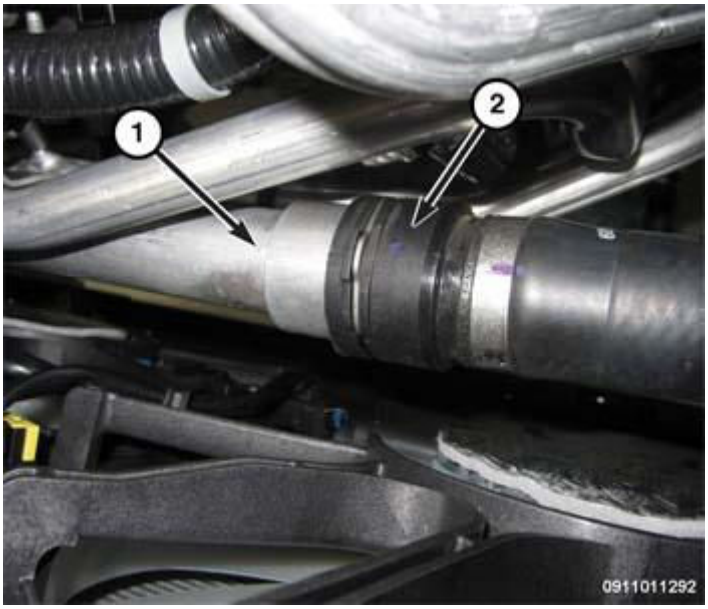

Fig. 28: Radiator Inlet Pipe & Upper Radiator Hose
Courtesy of CHRYSLER GROUP, LLC

60. Separate the upper radiator hose (2) from the radiator inlet pipe (1).

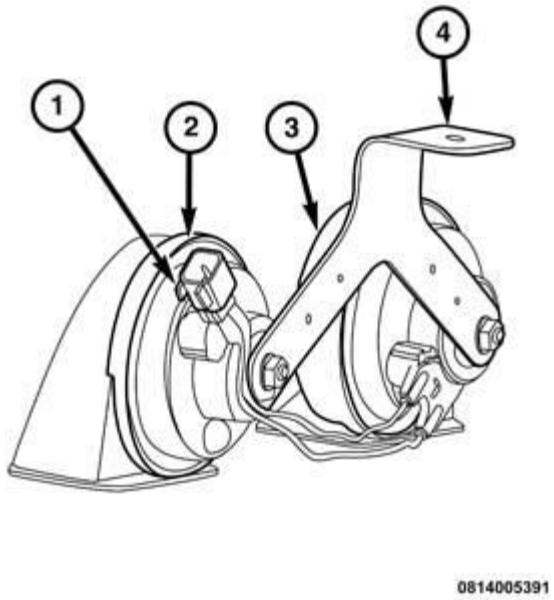

Fig. 29: A/C-To-IHX Lines
Courtesy of CHRYSLER GROUP, LLC

61. Remove the nuts that secure the A/C lines (1) to the IHX.

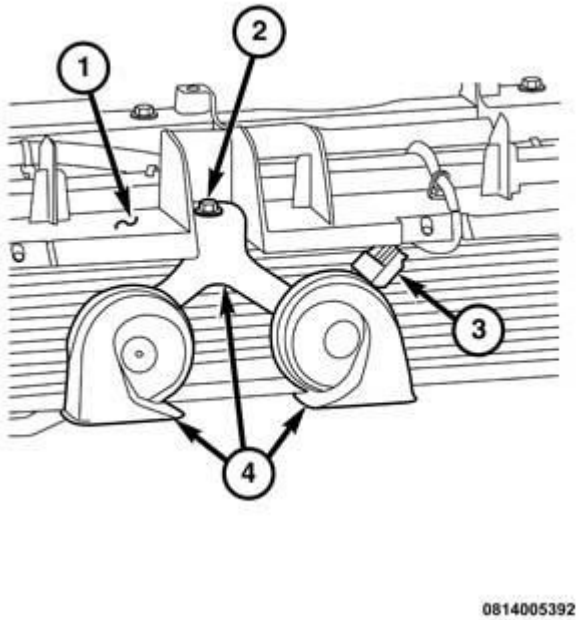

Fig. 30: View Of Shift Cable Housing & Mount Bracket
Courtesy of CHRYSLER GROUP, LLC

62. Disconnect the shift cable end from the manual valve lever on the transmission.
63. Release the locks holding the shift cable housing (2) to the mount bracket (1) on the transmission.
64. Separate the shift cable from the mount bracket.
65. Disconnect the fuel line from the fuel rail inlet. Refer to **FITTING, QUICK CONNECT** .

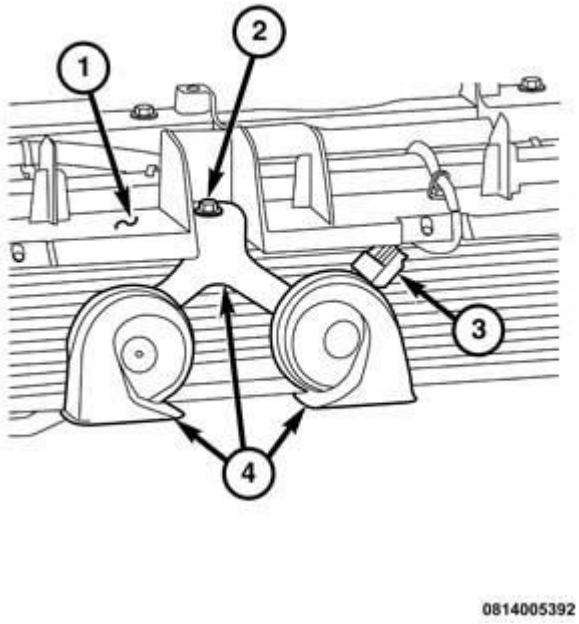

Fig. 31: Ground Wire, Nut & Right Side Upper Frame
Courtesy of CHRYSLER GROUP, LLC

66. Remove the nut (2) that secures the ground wire (1) to the right side upper frame (3).

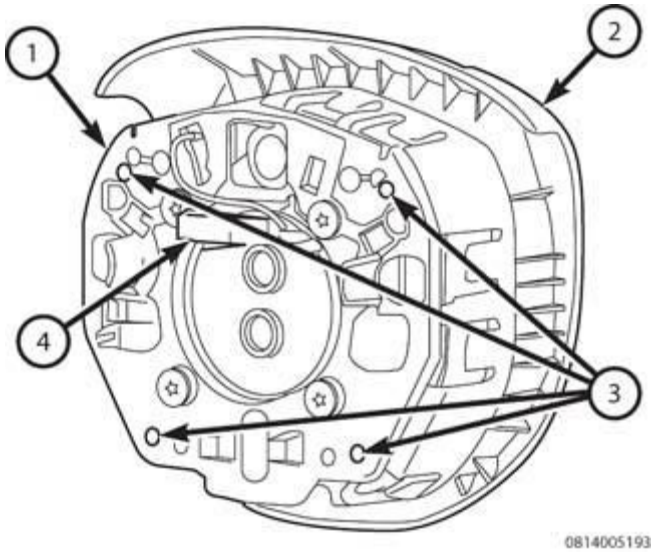

Fig. 32: Adapter, Engine Support Cradle, Power Train Dolly & Safety Straps

Courtesy of CHRYSLER GROUP, LLC

67. Raise and position vehicle height to allow the Dolly, Power Train (special tool #6135, Dolly, Power Train) (3) and the Cradle, Engine Support (special tool #6710A, Cradle, Engine Support) (2) to be installed under the engine/transmission assembly.
68. Loosen the cradle assembly from the power train dolly to allow for adjustment.
69. Position the Adapter (special tool #6848-3, Adapter) to the engine locating holes (1) on the engine block and oil pan rail.
70. Lower the vehicle and position the cradle/dolly fixture until the engine is resting on the adapters.
71. Tighten the engine cradle adapter to the cradle frame.
72. Secure the engine/transmission assembly to the dolly/cradle with safety straps (4).
73. Using care, lower the vehicle so that all of the weight of the engine and transmission is on the cradle/dolly fixture.

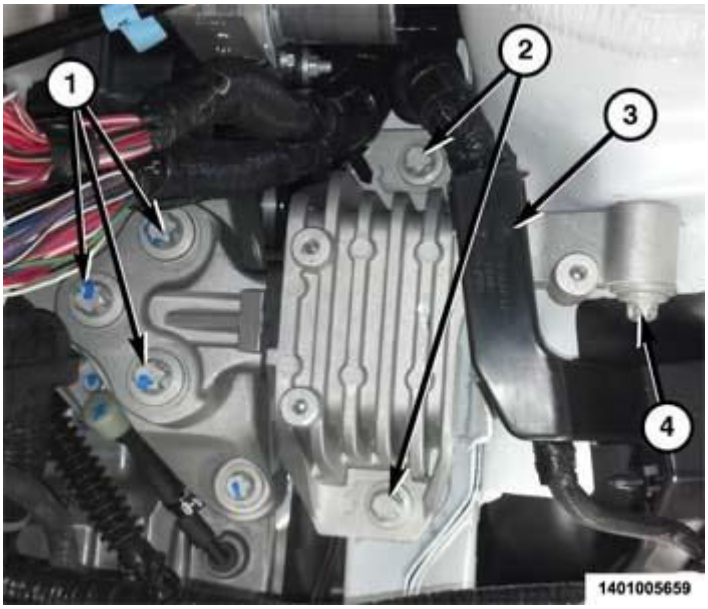

Fig. 33: Left Engine Mount-To-Transmission Mount Bracket Bolts
Courtesy of CHRYSLER GROUP, LLC

74. Remove the bolts (1) that secure the left engine mount to transmission mount bracket.

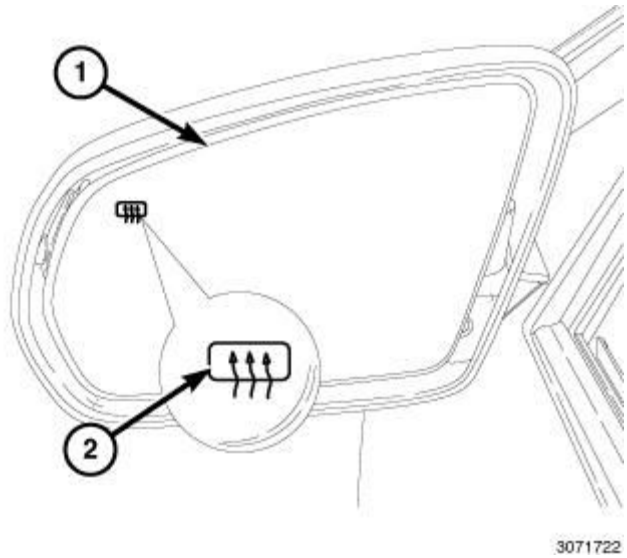

Fig. 34: Removing/Installing Right Engine Mount Assembly
Courtesy of CHRYSLER GROUP, LLC

75. Remove the bolts (2, 3) that secure the right engine mount to engine mount bracket.
76. Slowly raise the vehicle in small increments while inspecting each interval for potential engine or transmission contact to vehicle components.
77. Move the cradle/dolly fixture as necessary to allow for removal clearance.

NOTE: Perform the following steps to remove the transmission from the engine if required:

78. Position and secure a transmission jack under the transmission.
79. Remove the starter. Refer to **STARTER, REMOVAL** .

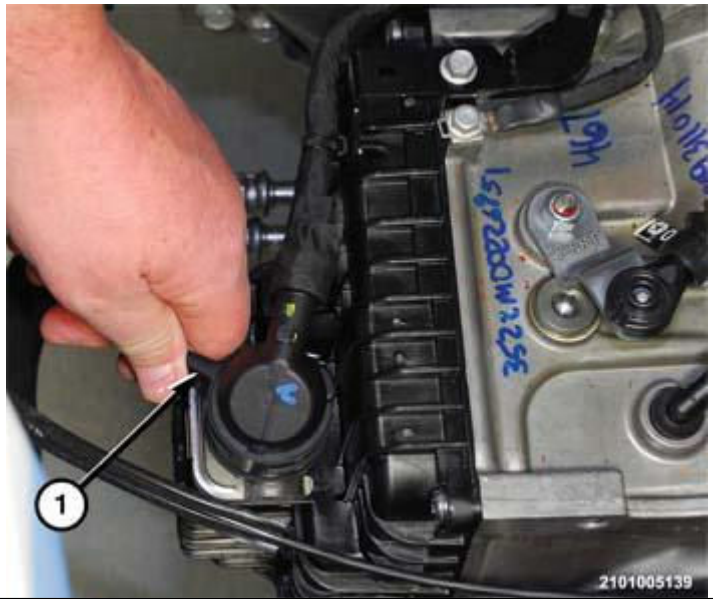

Fig. 35: Transmission Valve Body Solenoid Connector
Courtesy of CHRYSLER GROUP, LLC

80. Rotate the lock lever (1) counterclockwise on the transmission harness connector.
81. Separate the transmission harness connector from the transmission.

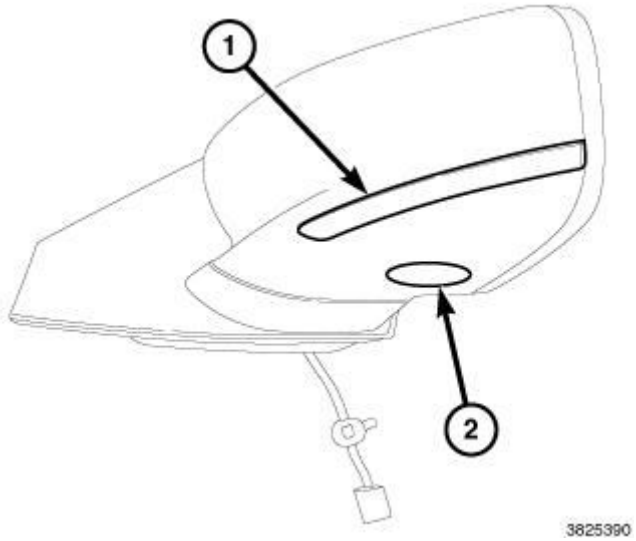

Fig. 36: Removing/Installing Bellhousing
Courtesy of CHRYSLER GROUP, LLC

82. Remove the remaining transmission upper bellhousing-to-block bolts (3).
83. Separate the transmission (4) and the spacer plate (2) from the engine.
84. Remove the bolts that secure the drive plate (1) to the crankshaft.

NOTE: Perform the following steps to remove the engine from the cradle/dolly fixture if required:

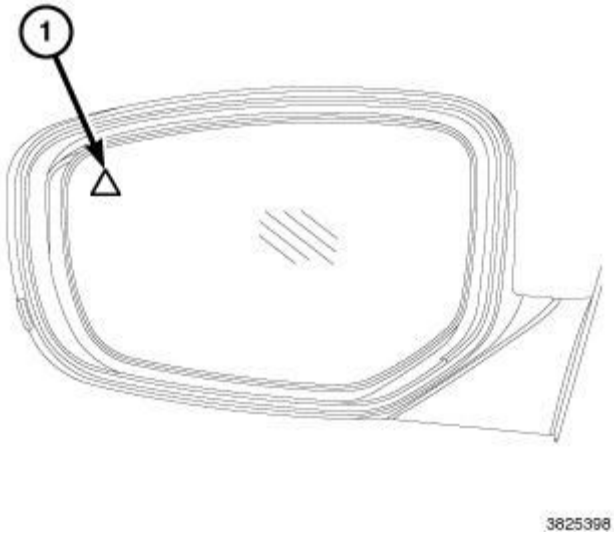

Fig. 37: Engine Assembly On Cradle/Dolly Fixture
Courtesy of CHRYSLER GROUP, LLC

85. If required, remove all the necessary components from the engine.
86. Position an engine hoist to the engine assembly (1).
87. Affix a chain to the engine.
88. Using care, separate the engine from the cradle/dolly fixture (2, 3).
89. Secure the engine to a engine stand.

INSTALLATION

INSTALLATION

CAUTION: If the original engine has experienced a catastrophic failure or an individual failure with the piston, cylinder bore, engine block, valve or valve seat, the intake manifold MUST be replaced with a new manifold.

NOTE: If installing a replacement engine, transfer all the components to the replacement engine.

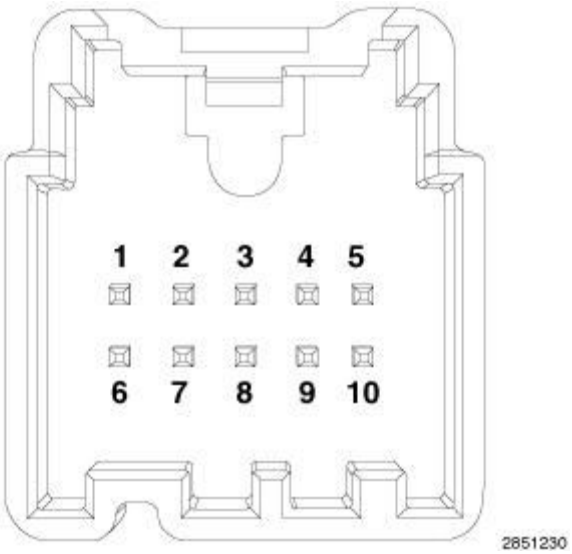

Fig. 38: Adapter, Engine Support Cradle, Power Train Dolly & Safety Straps
Courtesy of CHRYSLER GROUP, LLC

1. Position the engine to the Dolly, Power Train (special tool #6135, Dolly, Power Train) (3) and the Cradle, Engine Support (special tool #6710A, Cradle, Engine Support).
2. If required, loosen the cradle assembly from the power train dolly to allow for adjustment.
3. Position the Adapter (special tool #6848-3, Adapter) post (2) to the engine locating holes (1) on the engine block and oil pan rail.
4. Lower the engine until it is resting on the posts of the adapters.
5. If required, tighten the engine cradle adapter to the cradle frame.
6. Secure the engine assembly to the dolly/cradle with safety straps (4).

NOTE: **Perform the following steps to install the transmission to the engine if required:**

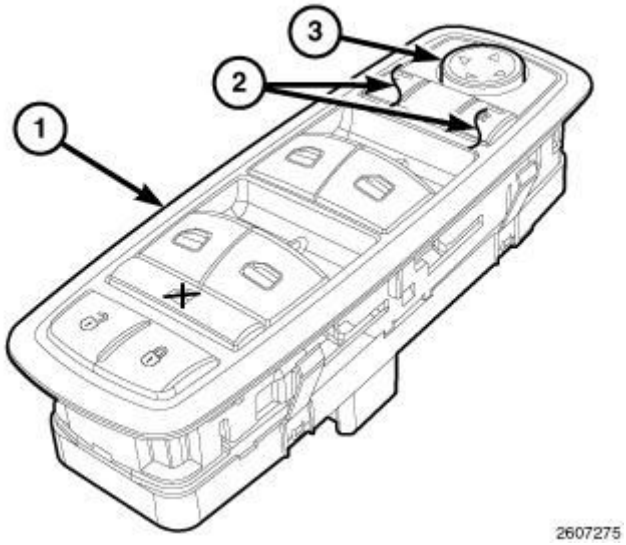

Fig. 39: Removing/Installing Bellhousing
Courtesy of CHRYSLER GROUP, LLC

7. If removed, position the flexplate (1) to the crankshaft. Tighten the bolts to the proper specification. Refer to **TORQUE SPECIFICATIONS** .
8. Position the spacer plate (2) to the engine.
9. Align the transmission (4) to the engine.
10. Install the upper transmission to engine bolts (3). Tighten the bolts to the proper specification. Refer to **SPECIFICATIONS** .
11. Position the engine/transmission assembly under the vehicle.
12. Slowly lower the vehicle in small increments while inspecting each interval for potential engine or transmission contact to vehicle components. Move the cradle/dolly fixture as necessary to allow for clearance.

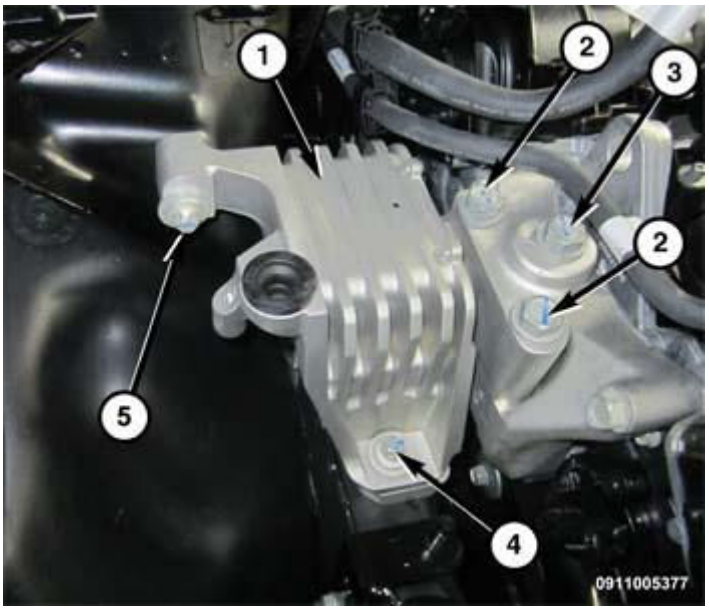

Fig. 40: Removing/Installing Right Engine Mount Assembly
Courtesy of CHRYSLER GROUP, LLC

13. Hand start the right side engine mount bolts (2, 3) to engine mount bracket. Tighten the bolt to the proper specification. Refer to **TORQUE SPECIFICATIONS** .

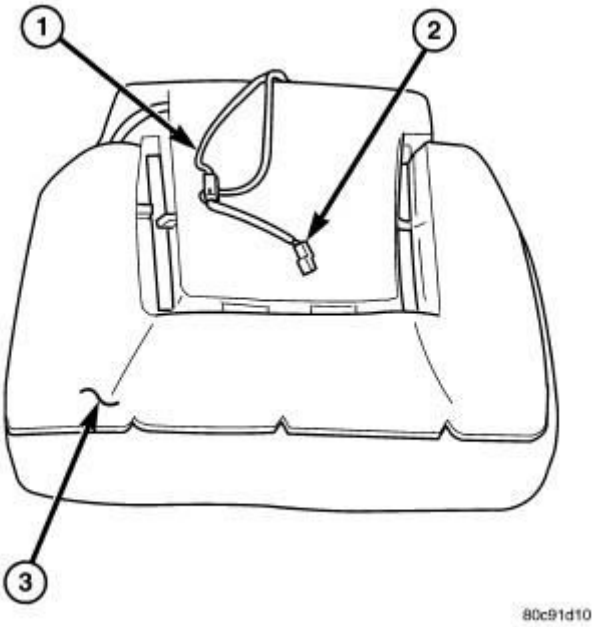

Fig. 41: Left Engine Mount-To-Transmission Mount Bracket Bolts
Courtesy of CHRYSLER GROUP, LLC

14. Hand start the left side engine mount bolts (1) to transmission mount bracket. Tighten the bolt to the

proper specification. Refer to **TORQUE SPECIFICATIONS** .

15. Remove the dolly/cradle safety straps.
16. Raise vehicle enough to allow the dolly/cradle fixture to be removed from under the vehicle.
17. Lower the vehicle.

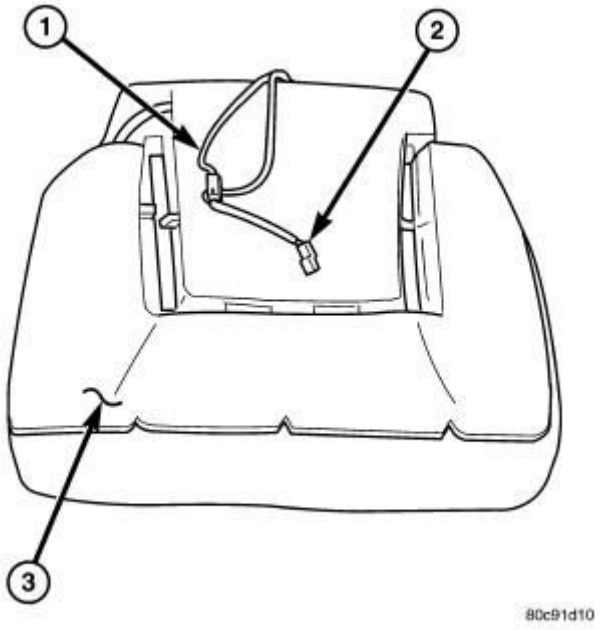

Fig. 42: Transmission Valve Body Solenoid Connector
Courtesy of CHRYSLER GROUP, LLC

18. Connect the transmission harness connector (1) into transmission.
19. Rotate the lock lever (1) clockwise on the transmission connector.

Fig. 43: View Of Shift Cable Housing & Mount Bracket
Courtesy of CHRYSLER GROUP, LLC

20. Press the shift cable (2) onto the mount bracket (1).
21. Press the shift cable onto the transmission manual shift valve lever.
22. If removed, install the electric vacuum pump and mounting bracket. Refer to **PUMP, ELECTRIC VACUUM, INSTALLATION** .

Fig. 44: Ground Wire, Nut & Right Side Upper Frame
Courtesy of CHRYSLER GROUP, LLC

23. Install the ground strap (1) to right side upper frame (3). Tighten the nut (2) to proper specification. Refer to **TORQUE SPECIFICATIONS** .
24. Install the wiring harness retainers (2) to the lower air box housing.

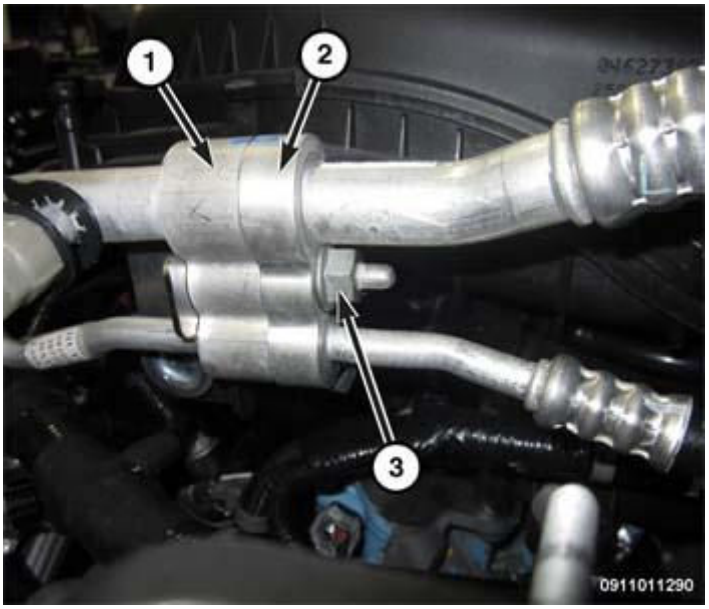

Fig. 45: IHX, Suction/Liquid Line Manifold & Nut
Courtesy of CHRYSLER GROUP, LLC

25. Install the suction/liquid line manifold (2) to the Internal Heat Exchanger (IHX) (1) and install the nut (3). Tighten the nut to the proper specification. Refer to **SPECIFICATIONS** .

Fig. 46: Belly Pan & Bolts
Courtesy of CHRYSLER GROUP, LLC

26. Install the battery tray. Tighten the bolts (1, 2) to the proper specification. Refer to **SPECIFICATIONS** .

0804005802

Fig. 47: Body Side Harness Connector & Engine Side Harness Connector
Courtesy of CHRYSLER GROUP, LLC

27. Connect the main engine harness connector (4) to the body side harness at the left front upper frame.

0804005802

Fig. 48: Block Heater Electrical Cord Clip, Engine Harness Connector & Engine Wiring Harness Retainer
Courtesy of CHRYSLER GROUP, LLC

28. Install the main engine harness connector (2) to the battery tray.
29. Install the engine harness retainer (3) onto the battery tray.

30. If equipped, install the engine block heater electrical cord clip (1) to the battery tray.

Fig. 49: PDC & Engine Harness Connector
Courtesy of CHRYSLER GROUP, LLC

31. Connect the engine harness to the Power Distribution Center (PDC) base. Hand tighten the bolt (2).
32. Install the PDC (1) into proper position on the lower cover.
33. Press down on the PDC until the tabs lock.

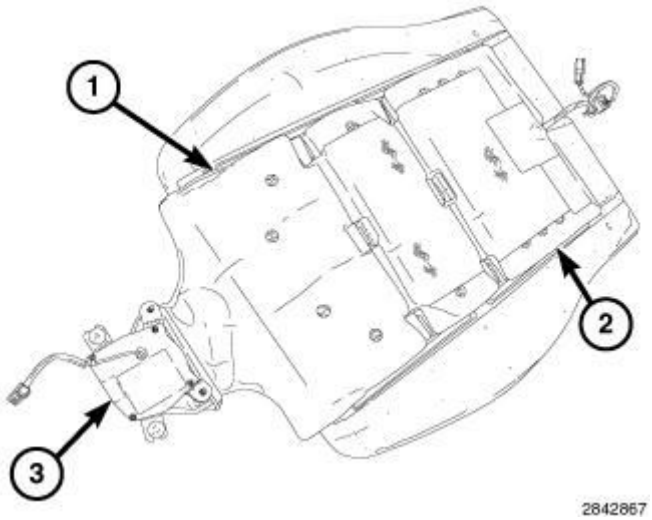

Fig. 50: Identifying Power Distribution Z-Case Fuse Array, Tabs & Nuts
Courtesy of CHRYSLER GROUP, LLC

34. Position the positive cables onto the Z-case fuse array at the PDC.

35. Install and hand tighten the nuts (2) that secure the cables to the PDC case.
36. Install the PDC cover into proper position on the PDC assembly.

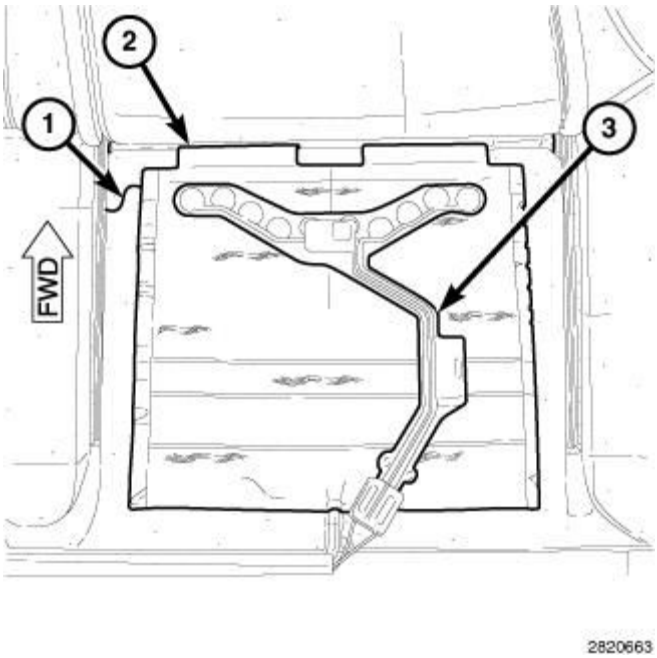

Fig. 51: PCM, Connectors, Strap & Nuts
Courtesy of CHRYSLER GROUP, LLC

37. Connect the engine harness connectors (2) to the Powertrain Control Module (PCM).
38. Position the ground cable (4) to the PCM mounting stud. Hand tighten the nut (3).
39. Raise and support the vehicle.

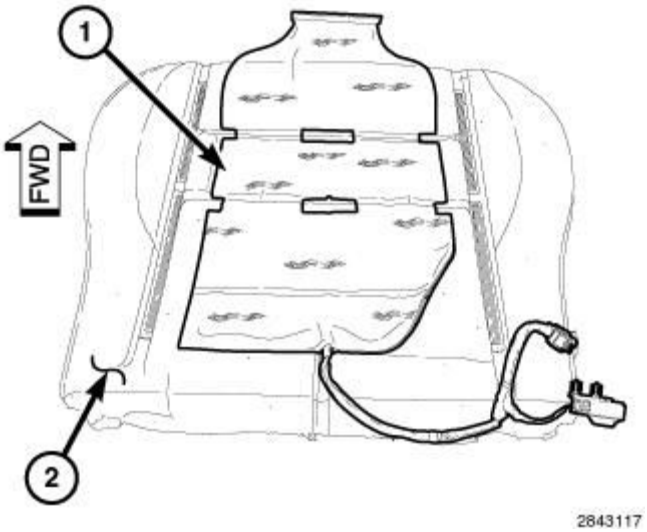

Fig. 52: Identifying Battery Tray, Inner Frame Rail & Bolts
Courtesy of CHRYSLER GROUP, LLC

40. Install the lower battery tray bolts (3). Tighten the bolt to the proper specification. Refer to **SPECIFICATIONS** .

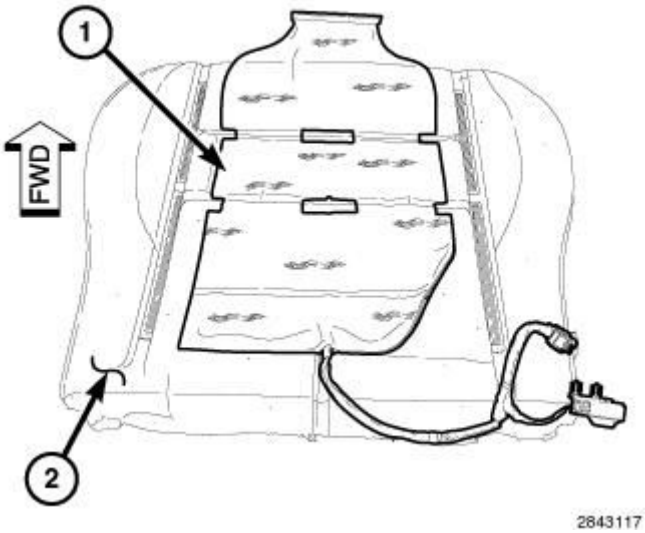

Fig. 53: Transmission Cooler Lines
Courtesy of CHRYSLER GROUP, LLC

41. Connect the oil cooler lines (1) to transmission.

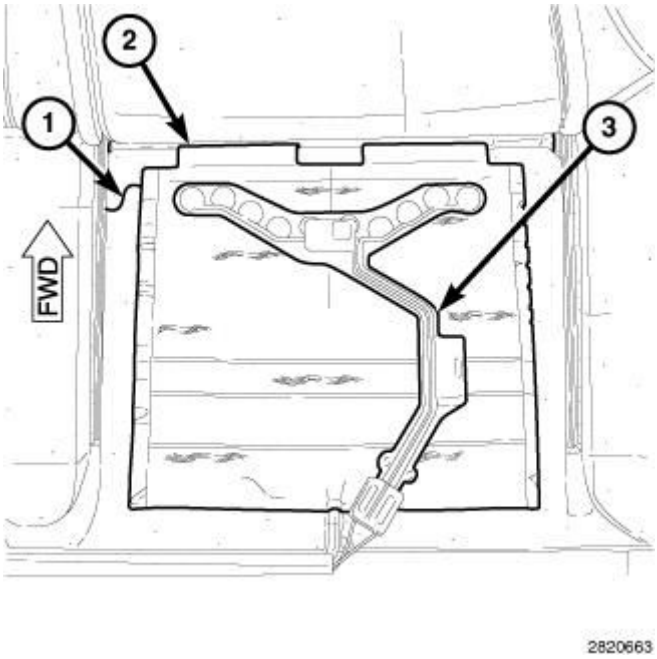

Fig. 54: Torque Converter Bolts
Courtesy of CHRYSLER GROUP, LLC

42. If required, install the torque converter-to-flexplate bolts (1). Tighten the bolts to the proper specification. Refer to **SPECIFICATIONS** .

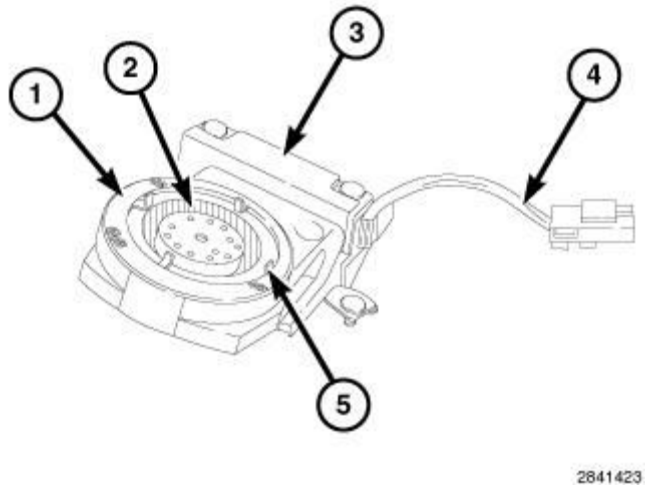

Fig. 55: Bellhousing Access Door
Courtesy of CHRYSLER GROUP, LLC

43. If required, install the transaxle torque converter housing dust cover (2) and rubber plugs.
44. If required, install the lower transmission-to-engine bolts and tighten to proper specification. Refer to **SPECIFICATIONS** .

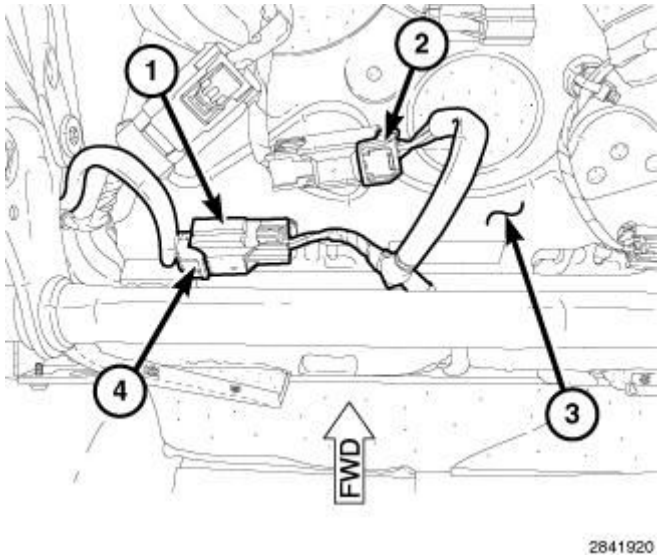

Fig. 56: Refrigerant Lines, Heater Core Hoses & Fastener
Courtesy of CHRYSLER GROUP, LLC

45. Connect the heater core supply hose (2).
46. Connect the heater core return hose (3).

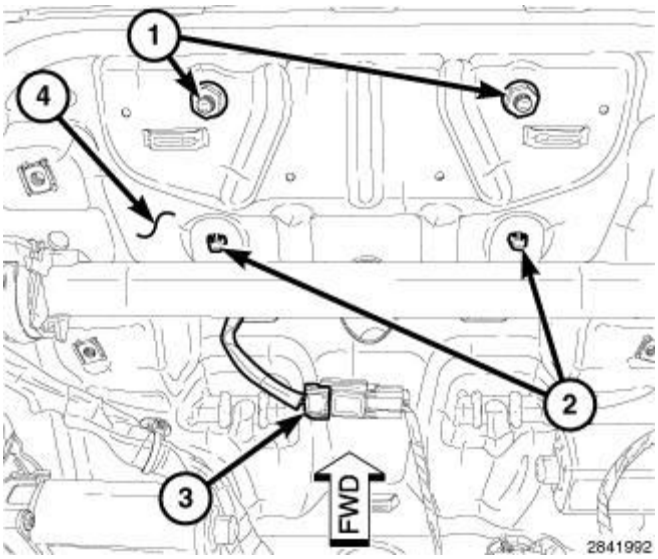

Fig. 57: Retainer Plate & Exhaust Manifold Flange
Courtesy of CHRYSLER GROUP, LLC

47. If the gaskets need replacing, position new gasket onto the manifold flange and install the lower retainer plate (2). Loosely install all four bolts to align the gasket. Tighten the lower retainer (2) bolts to the proper specification. Refer to **SPECIFICATIONS** .
48. Remove the upper catalytic converter flange bolts.
49. Install the crossmember assembly. Refer to **CROSSMEMBER, FRONT SUSPENSION, INSTALLATION** .
50. Position the rear catalytic converter to the cylinder head.
51. If equipped, install the PTU to the transmission. Refer to **INSTALLATION** .

NOTE: FWD support bracket shown in illustration; AWD support bracket similar.

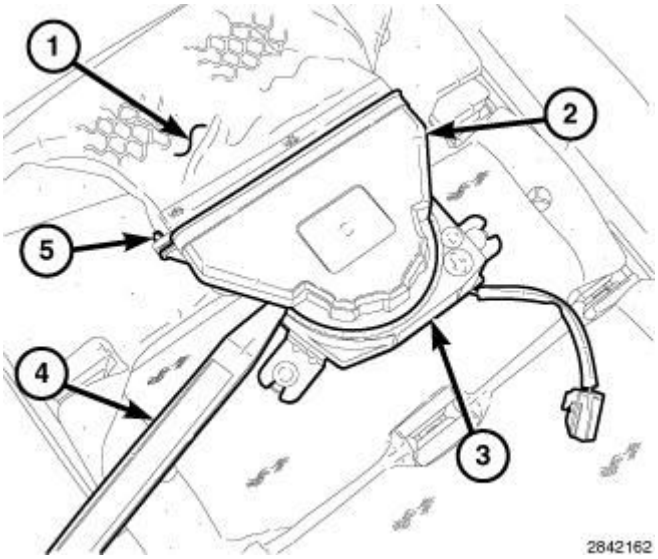

Fig. 58: Removing/Installing Lower Intermediate Shaft Support Bracket

Courtesy of CHRYSLER GROUP, LLC

52. Install the intermediate shaft support bracket (1). Tighten the bolts (2, 3) to the proper specification. Refer to **TORQUE SPECIFICATIONS** .
53. Install the cross under pipe. Refer to **PIPE, EXHAUST CROSSUNDER, INSTALLATION** .

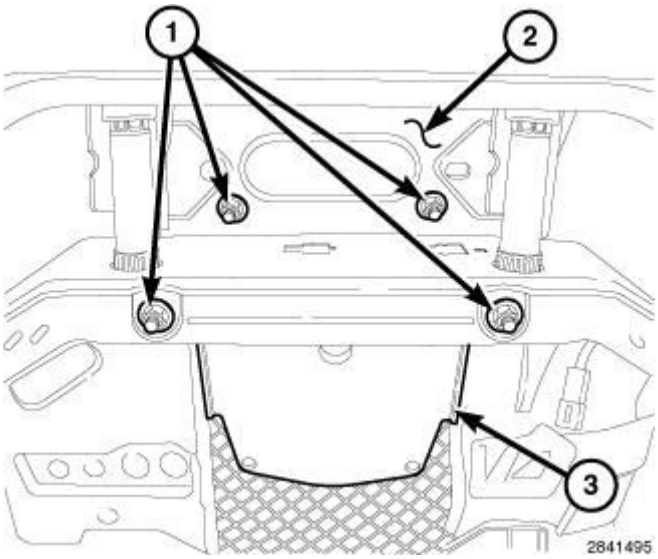

Fig. 59: Y-Pipe
Courtesy of CHRYSLER GROUP, LLC

54. Align the Y-pipe (4) to the rear catalytic converter. Tighten the nuts (5) to the proper specification. Refer to **SPECIFICATIONS** .

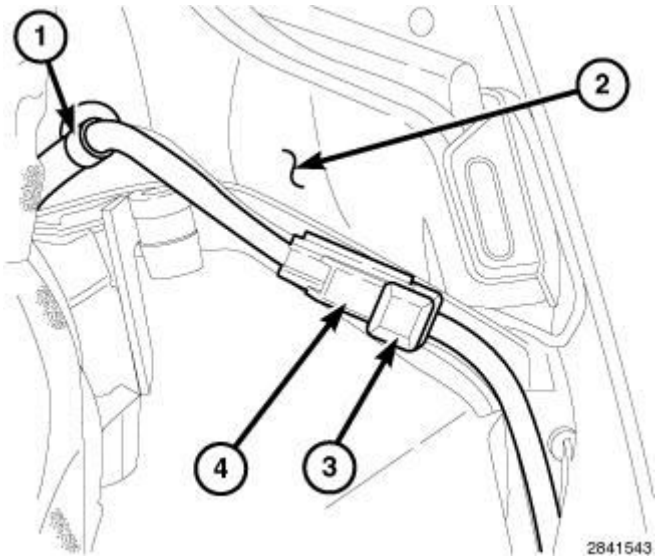

Fig. 60: Ground Strap & Bolt
Courtesy of CHRYSLER GROUP, LLC

55. Install the ground strap (1) to the transmission. Tighten the bolt (2) to the proper specification. Refer to

TORQUE SPECIFICATIONS .

56. Partially lower the vehicle.

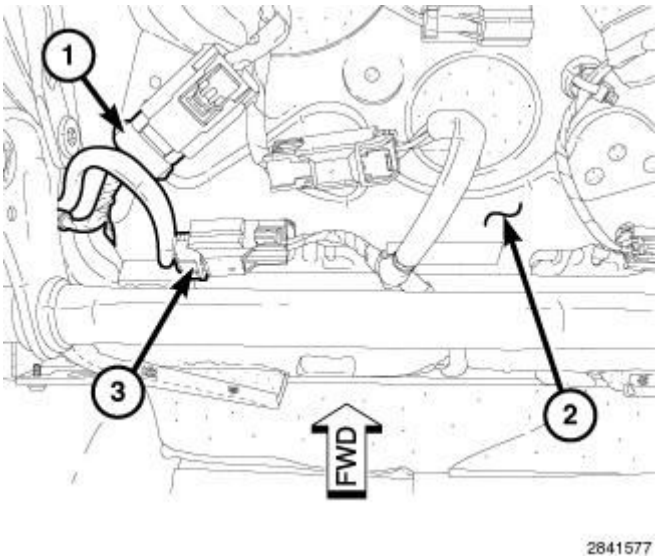

Fig. 61: Installing Lower Radiator Hose & Heater Core Return Hose
Courtesy of CHRYSLER GROUP, LLC

57. Install the lower radiator hose (2) to the water pump.
58. Install the heater hose (1) to the water pump.
59. Install both axle shafts. Refer to **INSTALLATION** .
60. Install both front tire and wheel assemblies. Refer to **INSTALLATION** .

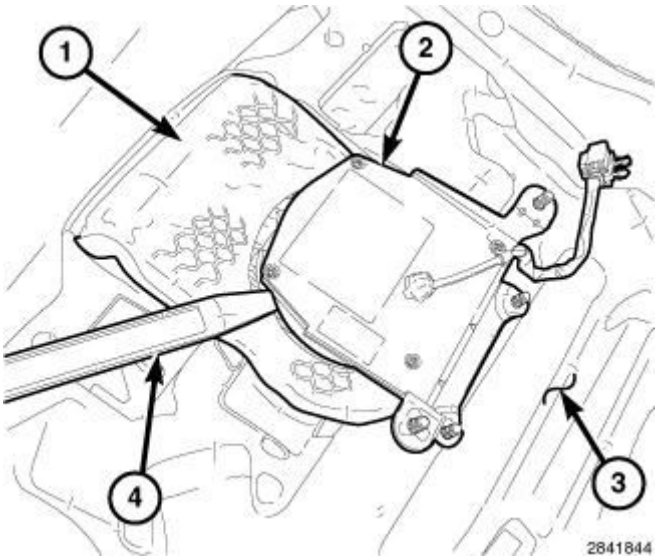

Fig. 62: Battery Tray & Bolt
Courtesy of CHRYSLER GROUP, LLC

61. Install the outer battery tray (1) to frame. Tighten the bolt (2) to the proper specification. Refer to

SPECIFICATIONS .

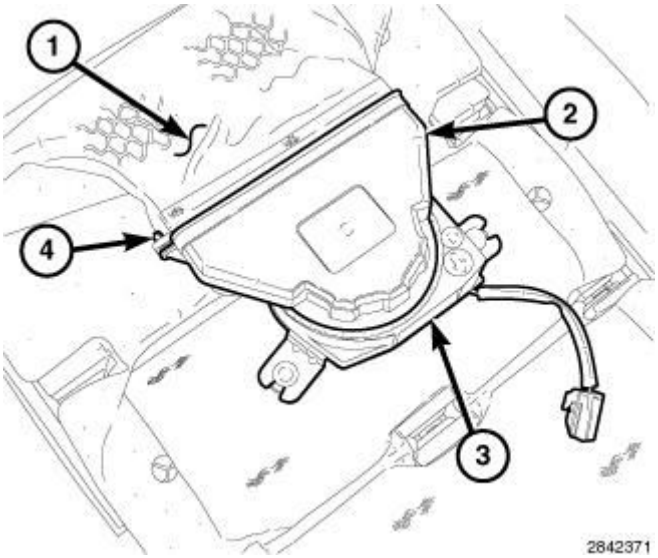

Fig. 63: Windshield Washer Reservoir-To-Battery Tray Bolt
Courtesy of CHRYSLER GROUP, LLC

62. Install the bolt (2) that secures the washer solvent bottle to the battery tray. Tighten the bolt to the proper specification. Refer to **SPECIFICATIONS** .
63. Install the wiring harness retainer (1) onto the battery tray.
64. Install the inner wheel house splash shields. Refer to **SHIELD, SPLASH, FRONT WHEELHOUSE, INSTALLATION** .
65. Install the front bumper fascia . Refer to **FASCIA, FRONT, INSTALLATION** .
66. Raise the vehicle.
67. Install the engine belly pan (3). Refer to **BELLY PAN, INSTALLATION** .
68. Lower the vehicle.

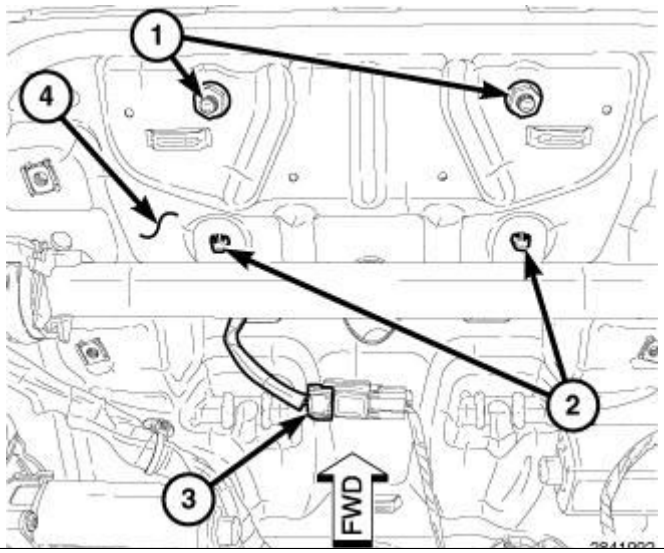

Fig. 64: Radiator Inlet Pipe & Upper Radiator Hose
Courtesy of CHRYSLER GROUP, LLC

69. Install the upper radiator hose (2) to the radiator inlet pipe (1).

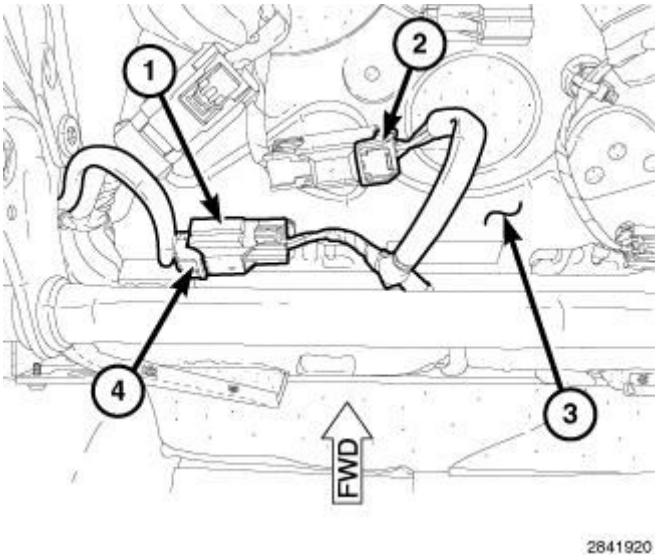

Fig. 65: A/C-To-IHX Lines
Courtesy of CHRYSLER GROUP, LLC

70. Install the A/C lines (1) to the IHX. Tighten the nuts (2) to the proper specification. Refer to **SPECIFICATIONS** .

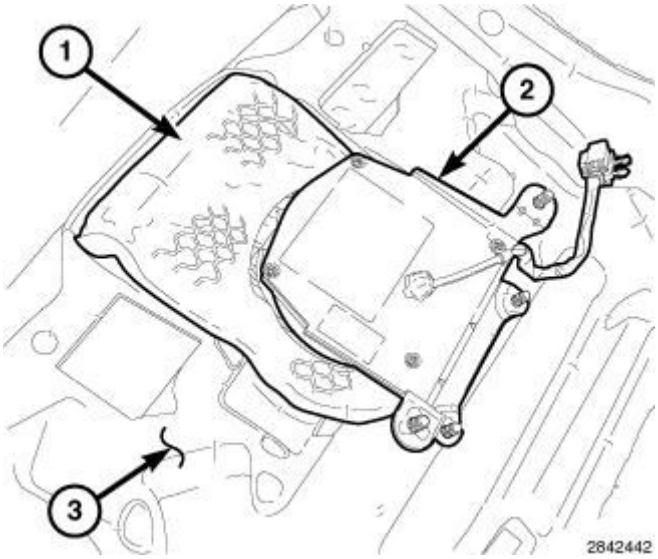

Fig. 66: Coolant Bottle & Components
Courtesy of CHRYSLER GROUP, LLC

71. Install the coolant return line. Tighten the clamp (2).

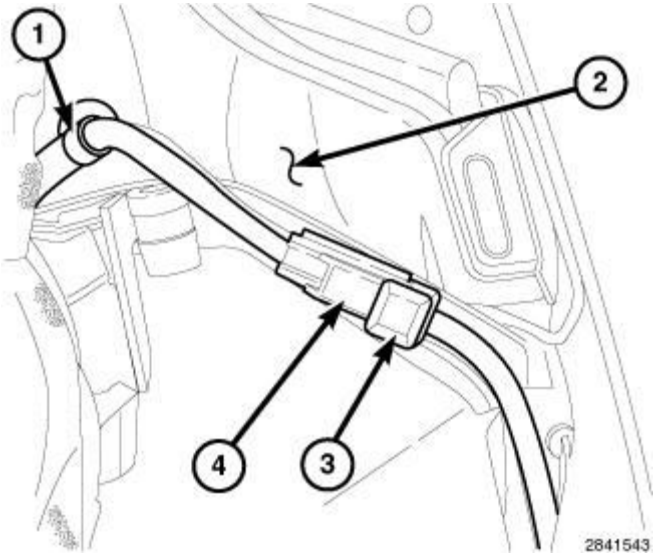

Fig. 67: Fuel Line Inlet
Courtesy of CHRYSLER GROUP, LLC

72. Connect the fuel line (1) to the fuel rail inlet.

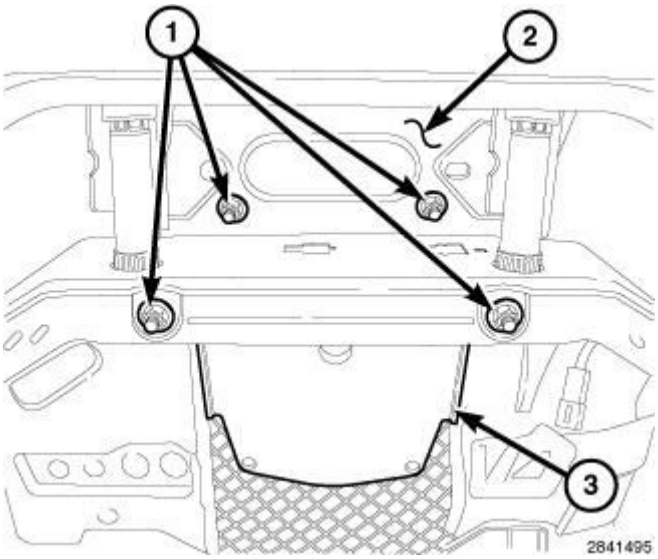

Fig. 68: Removing/Installing Catalytic Converter
Courtesy of CHRYSLER GROUP, LLC

73. Install the upper catalytic convertor flange bolts (5). Tighten the bolts to the proper specification. Refer to **TORQUE SPECIFICATIONS** .

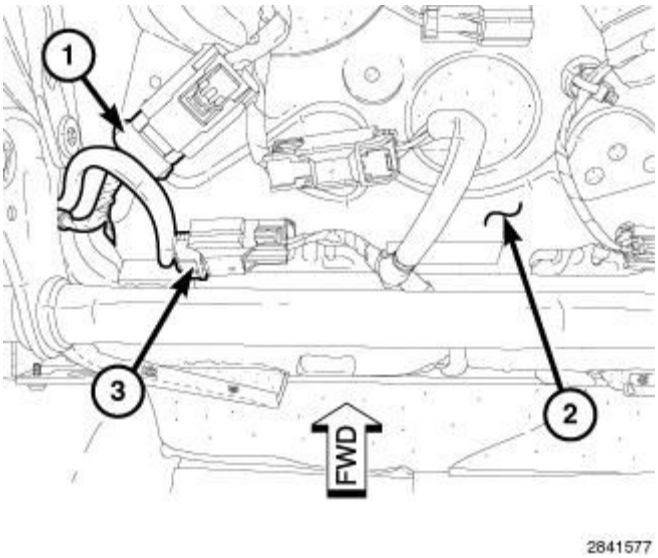

Fig. 69: Removing/Installing Oxygen Sensors
Courtesy of CHRYSLER GROUP, LLC

74. Connect both rear side O2 sensor harness connectors (1, 2).
75. Install the air intake resonator. Refer to **RESONATOR, AIR CLEANER, INSTALLATION**.
76. Install the air cleaner body. Refer to **BODY, AIR CLEANER, INSTALLATION**.
77. Install the purge control valve (Refer to **VALVE, PURGE CONTROL** /Installation).

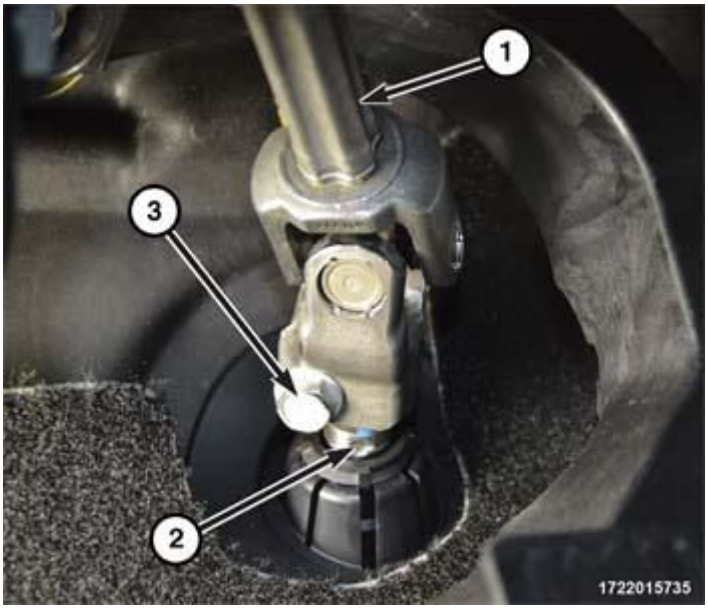

Fig. 70: Identifying Intermediate Shaft, Pinch Bolt And Steering Gear Pinion Shaft
Courtesy of CHRYSLER GROUP, LLC

78. Align the intermediate shaft (1) to the steering gear shaft (2).
79. Install a **NEW** pinch bolt (3). Tighten the bolt to the proper specification. Refer to **FRAME,**

SPECIFICATIONS .

80. Fill the engine crankcase with proper oil to correct level.
81. Evacuate and recharge the A/C system. Refer to **PLUMBING, STANDARD PROCEDURE** .
82. Fill the cooling system. Refer to **STANDARD PROCEDURE** .
83. Install the battery. Refer to **BATTERY, INSTALLATION** .

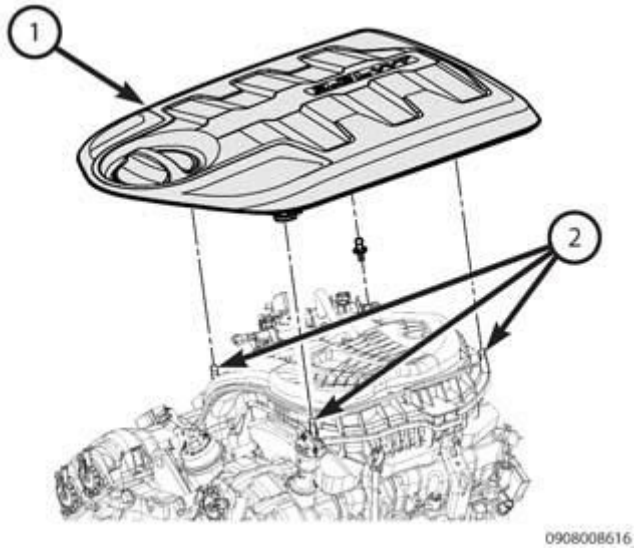

Fig. 71: Engine Cover & Ball Studs
Courtesy of CHRYSLER GROUP, LLC

84. Install the engine cover (1) onto the tabs (2).
85. Run the engine until it reaches normal operating temperature. Check cooling system for correct fluid level. Refer to **STANDARD PROCEDURE** .

NOTE: **The Cam/Crank Variation Relearn procedure must be performed using the scan tool anytime there has been a repair/replacement made to a powertrain system, for example: flywheel, valvetrain, camshaft and/or crankshaft sensors or components.**

SPECIAL TOOLS

SPECIAL TOOLS

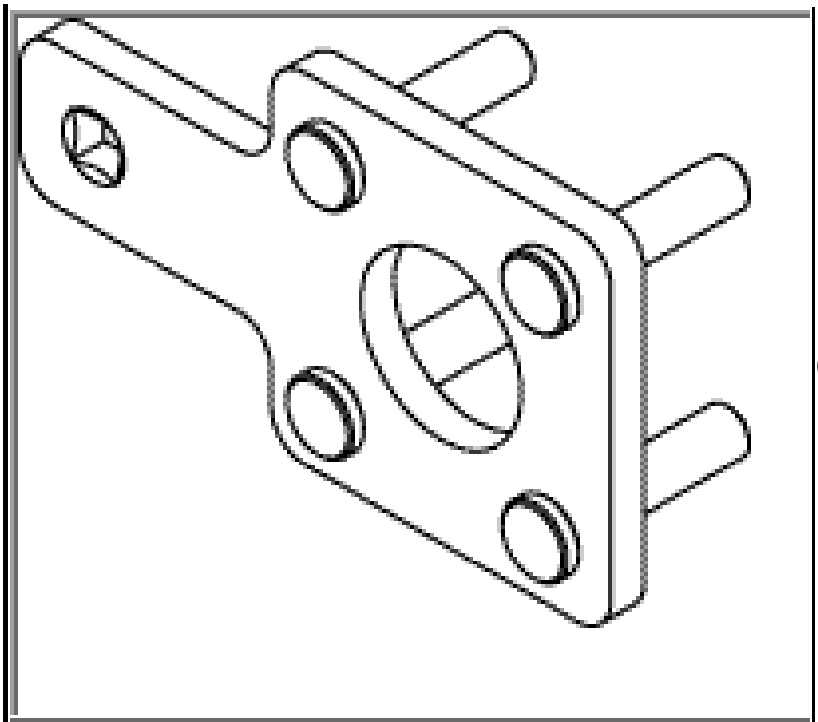

10198 - Holder, Vibration Damper
(Originally Shipped In Kit Number(s) 10223.)

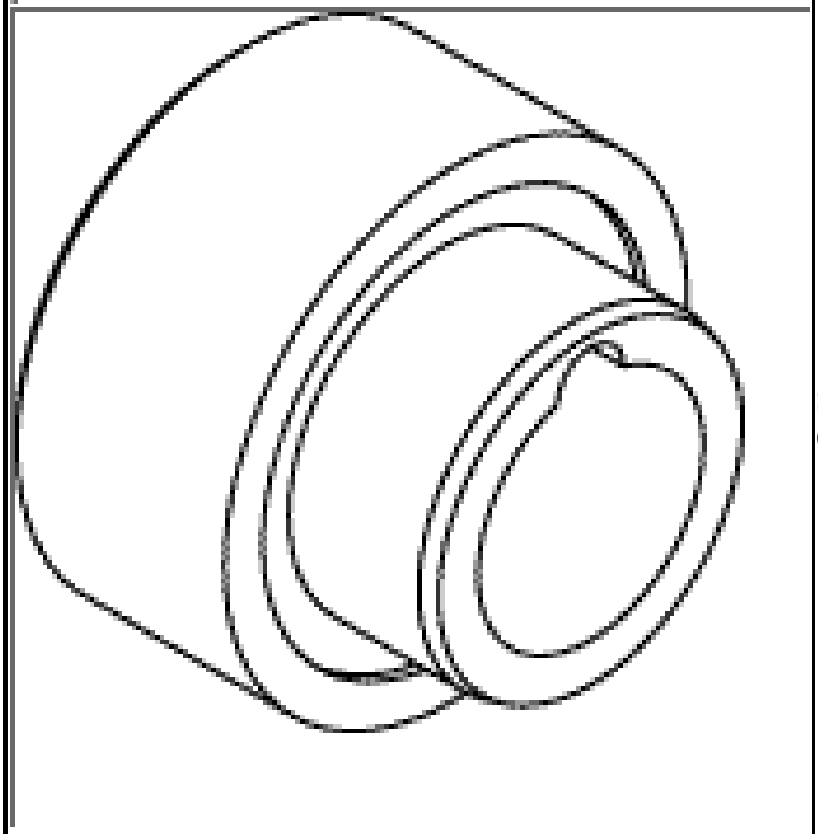

10199 - Installer, Crankshaft Front Oil Seal
(Originally Shipped In Kit Number(s) 10223.)

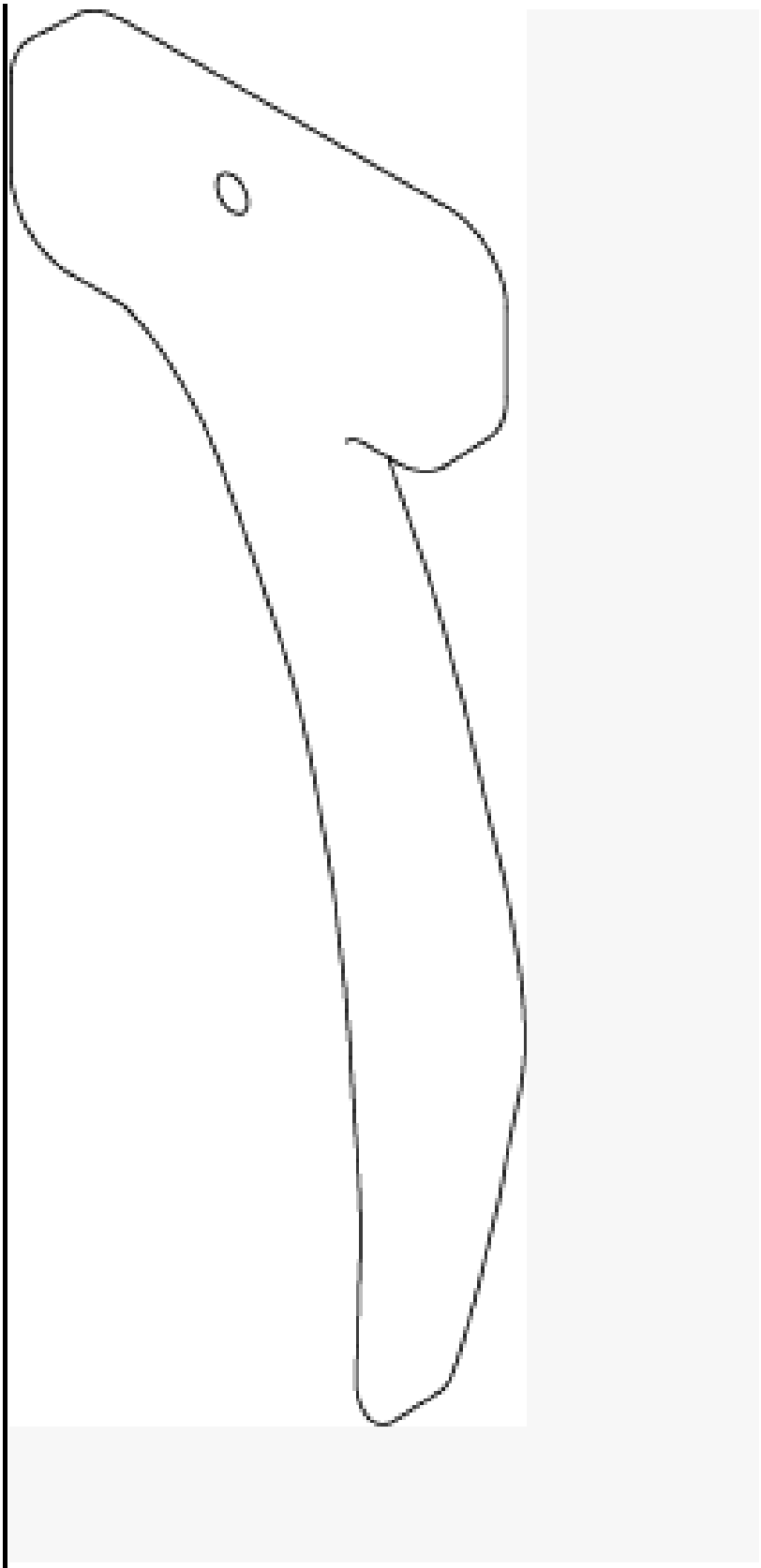

10200-1 - Holder, Timing Chain, Left Side

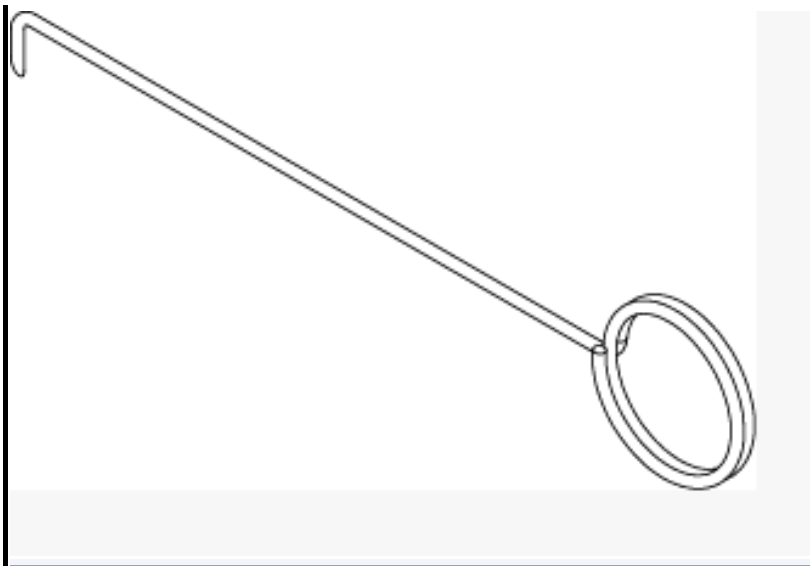	10200-3 - Pin
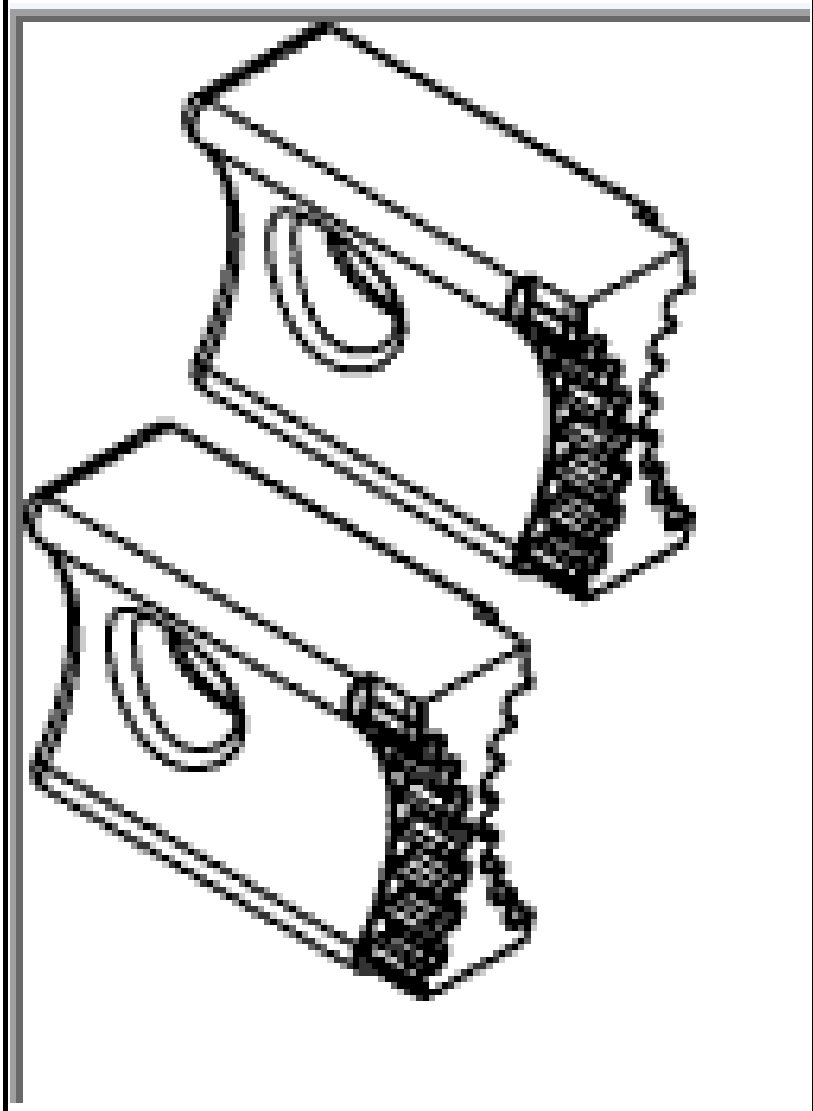	10202 - Locks, Camshaft/Phaser

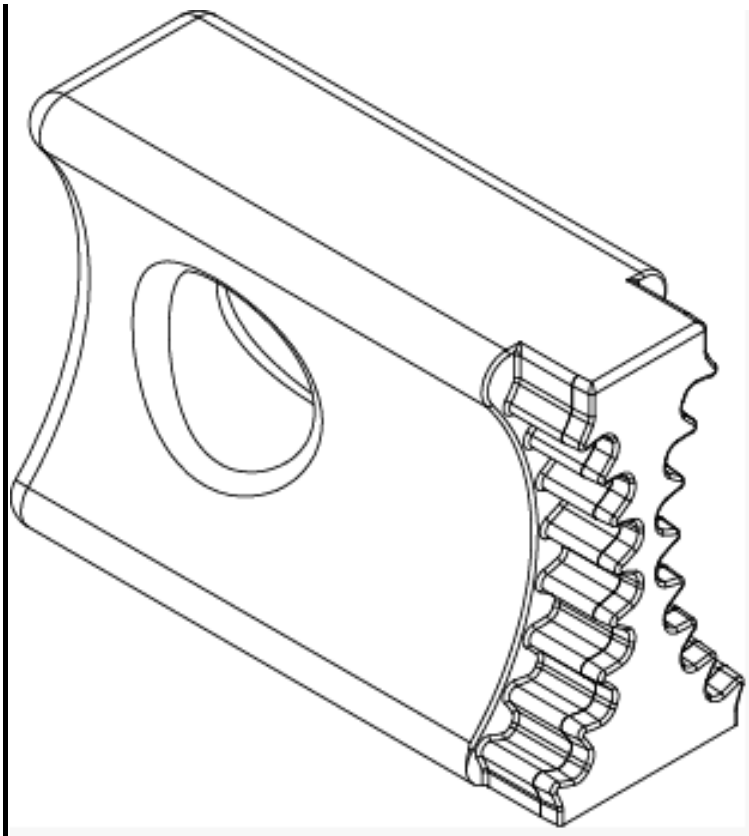

10202-1 - Lock, Camshaft/Phaser, Right Side

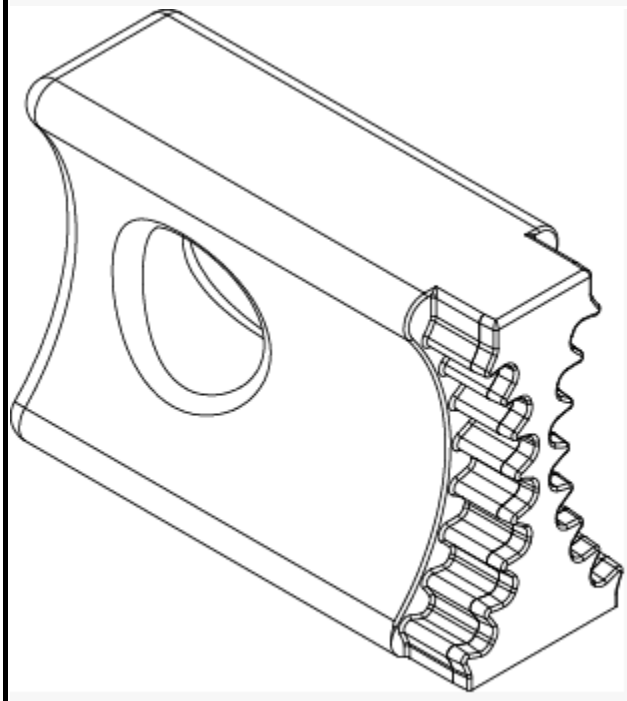

10202-2 - Lock, Camshaft/Phaser, Left Side

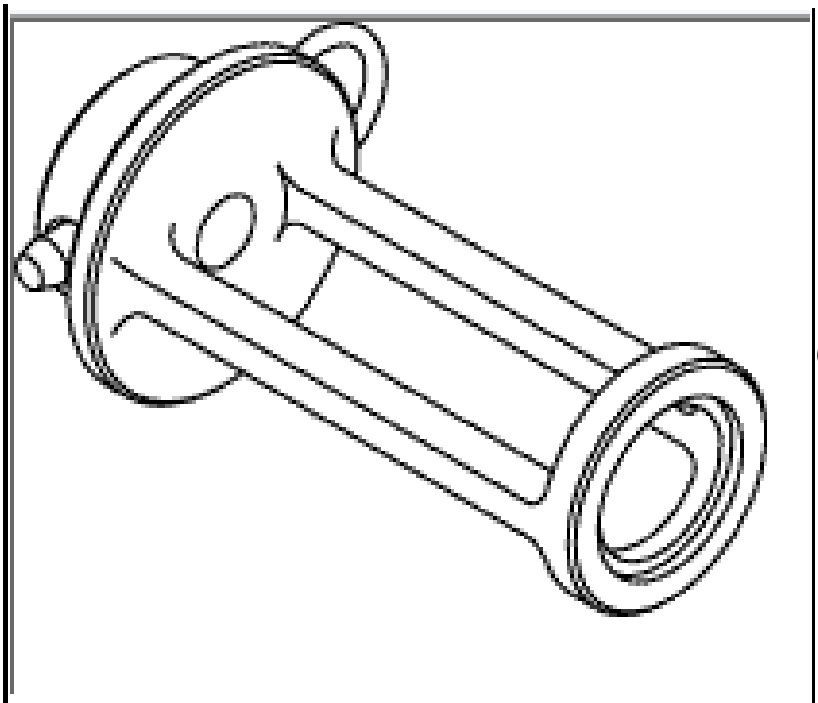

10224 - Adapter, Valve Spring
(Originally Shipped In Kit Number(s) 10223.)

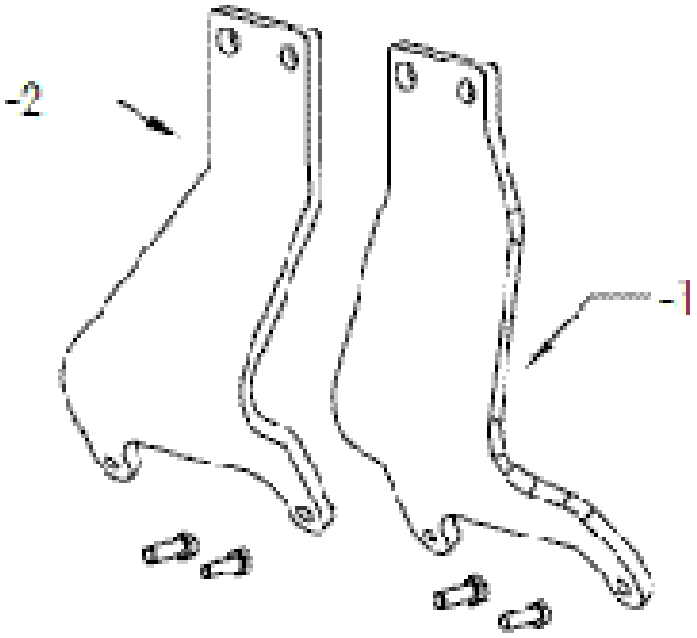

10242-1 - Brackets, Engine Lifting, Left Side
(Originally Shipped In Kit Number(s) 10223.)

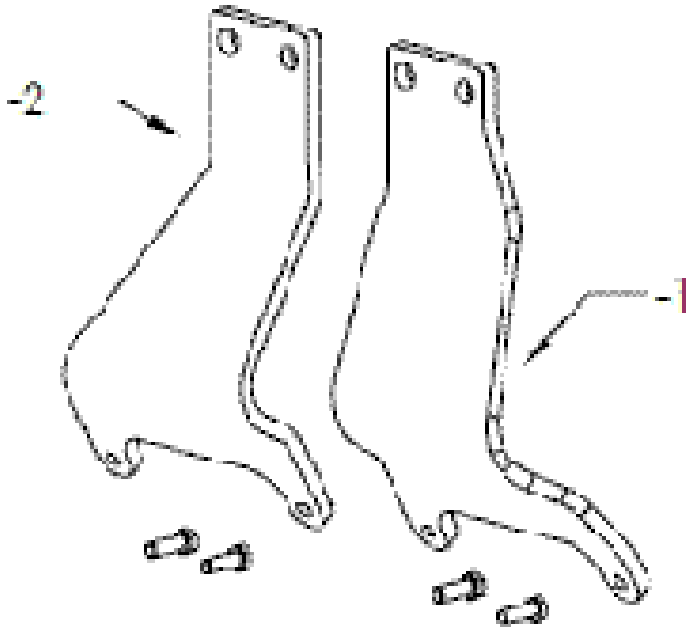

10242-2 - Brackets, Engine Lifting, Right Side
(Originally Shipped In Kit Number(s) 10223.)

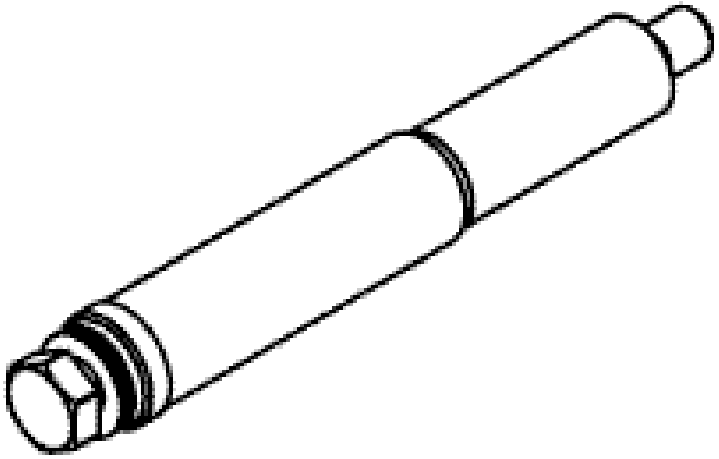

10255 - Installer, Spark Plug Tube

10256 - Installer, Cam Installer, Cam Sensor/Spark Plug Tube Seal

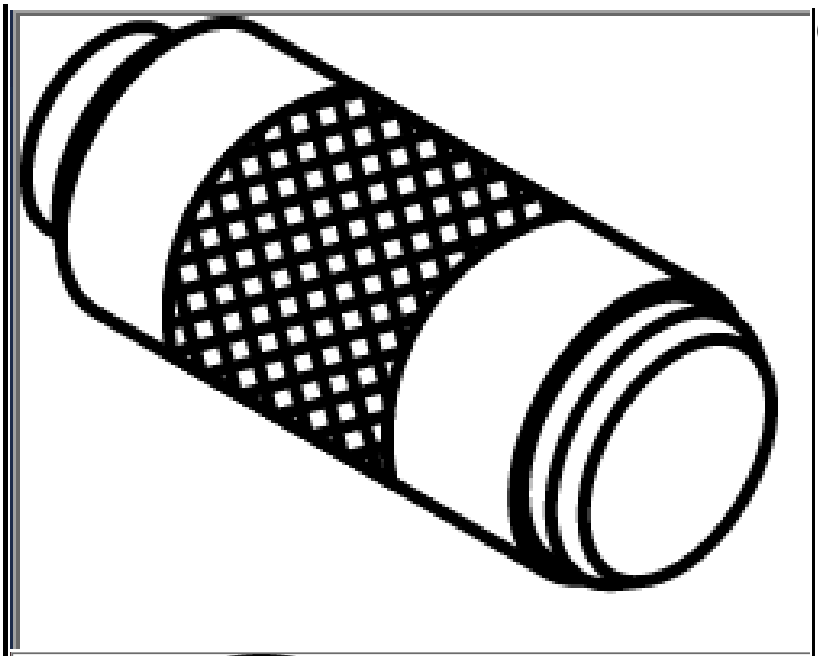	(Originally Shipped In Kit Number(s) 10256.)
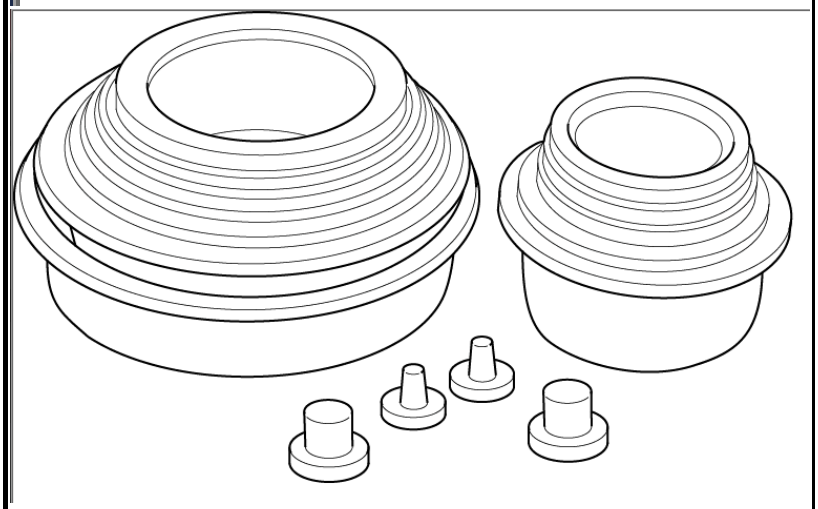	10368 - Set, Universal Protective Cap

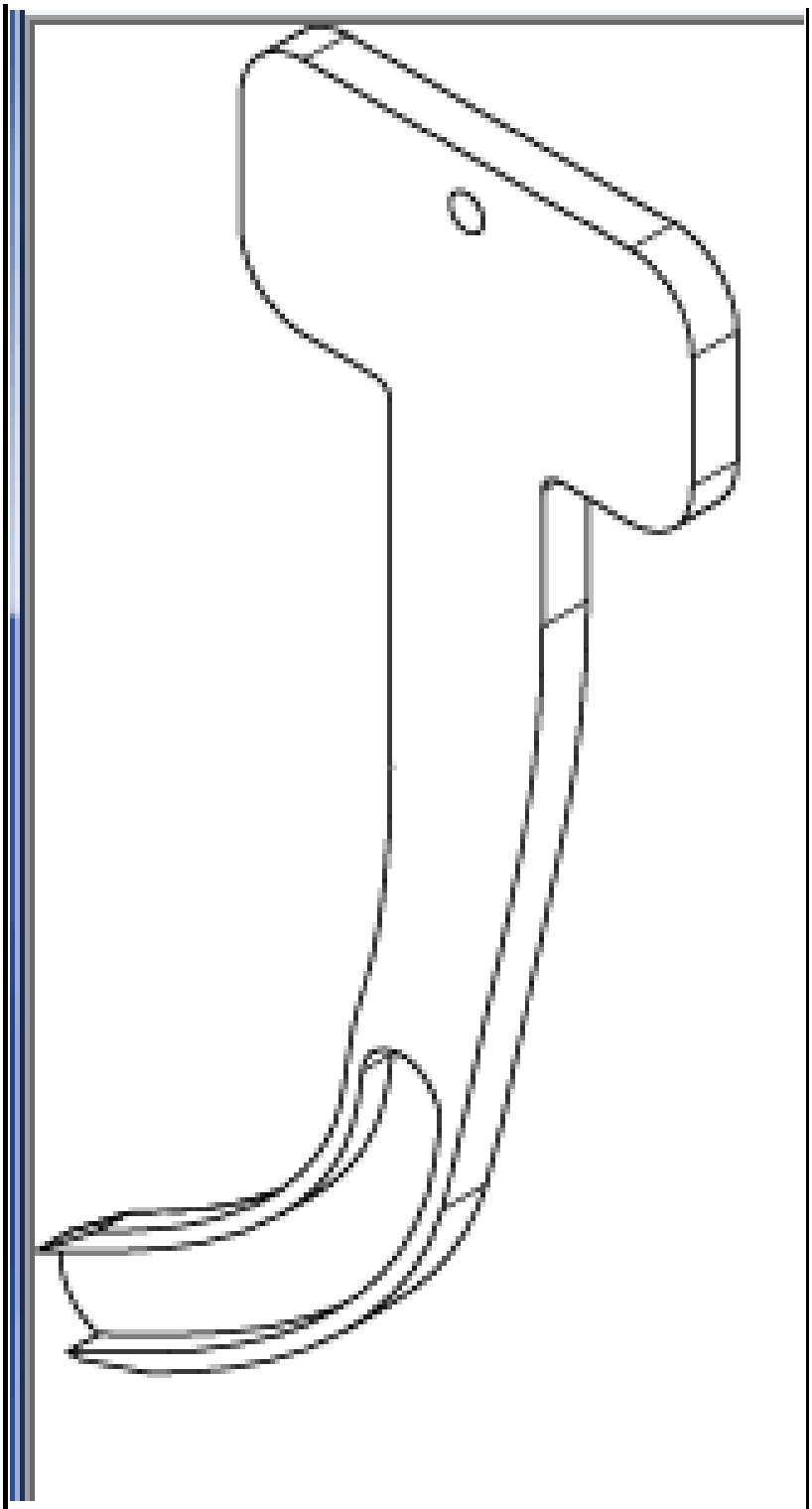

10369 - Holder, Timing Chain

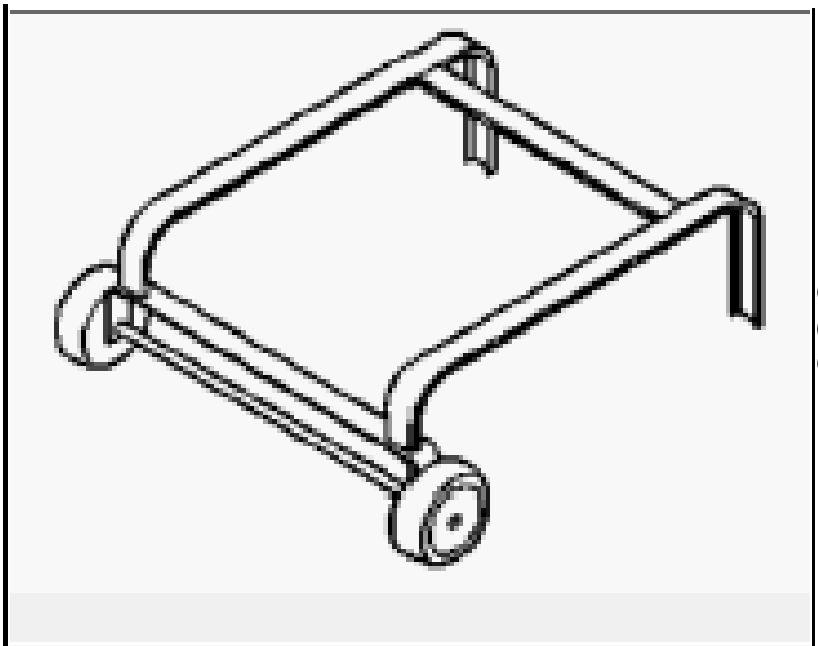

6135 - Dolly, Power Train
(Originally Shipped In Kit Number(s) 6784C.)

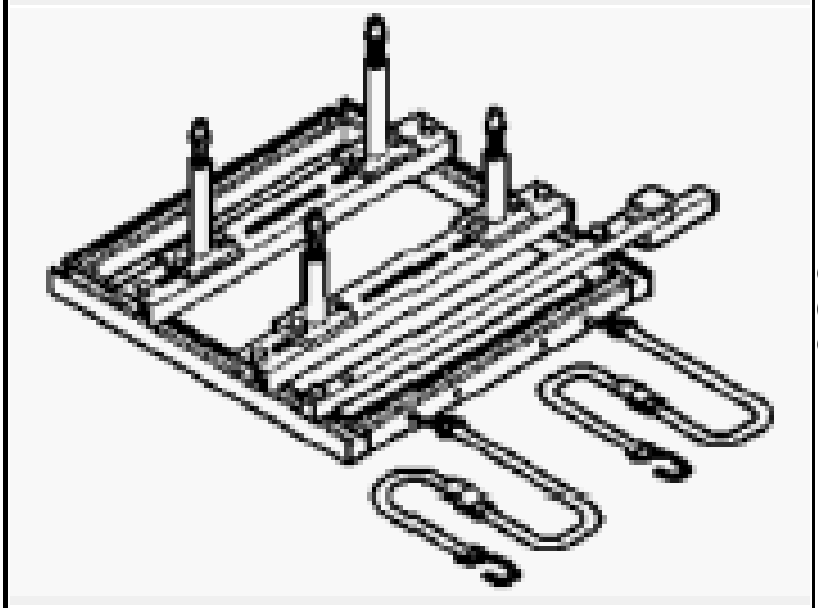

6710A - Cradle, Engine Support
(Originally Shipped In Kit Number(s) 6784, 6809.)

6848-3 - Adapter

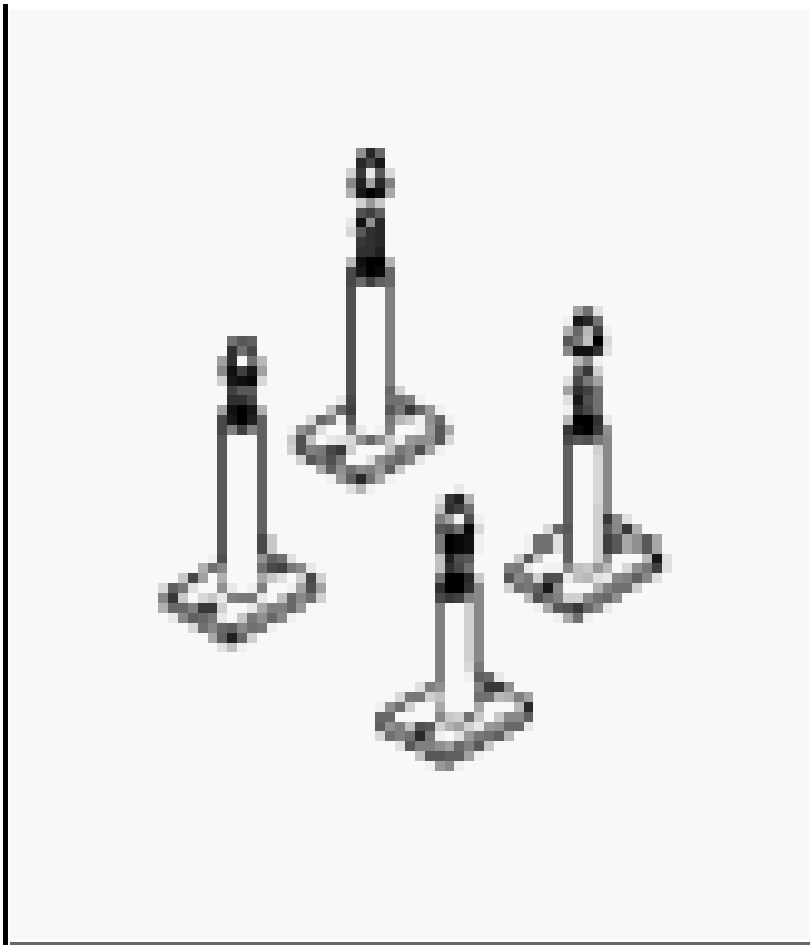	(Originally Shipped In Kit Number(s) 6880, 6881, 6882, 6883.)
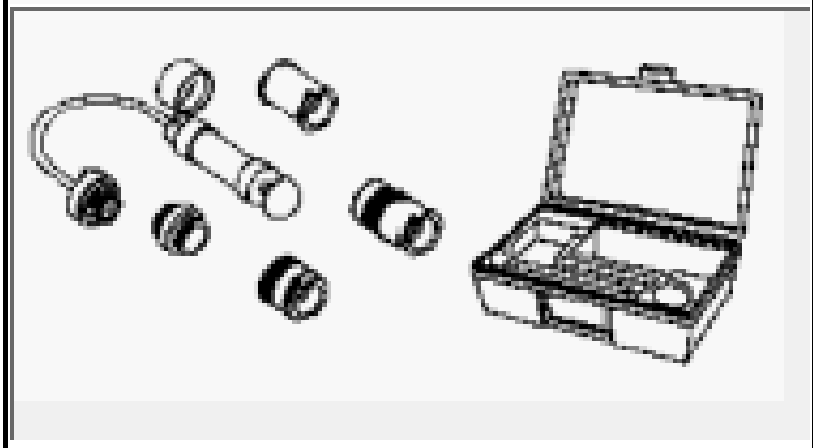	7700-A - Tester, Cooling System
	8189 - Guide Pins (Originally Shipped In Kit Number(s)

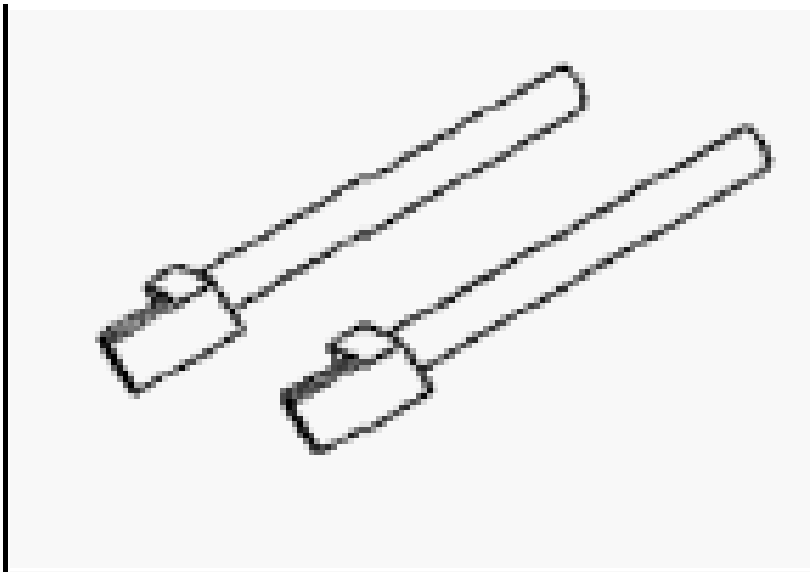	8180, 8180CC, 8263, 8263CC.)
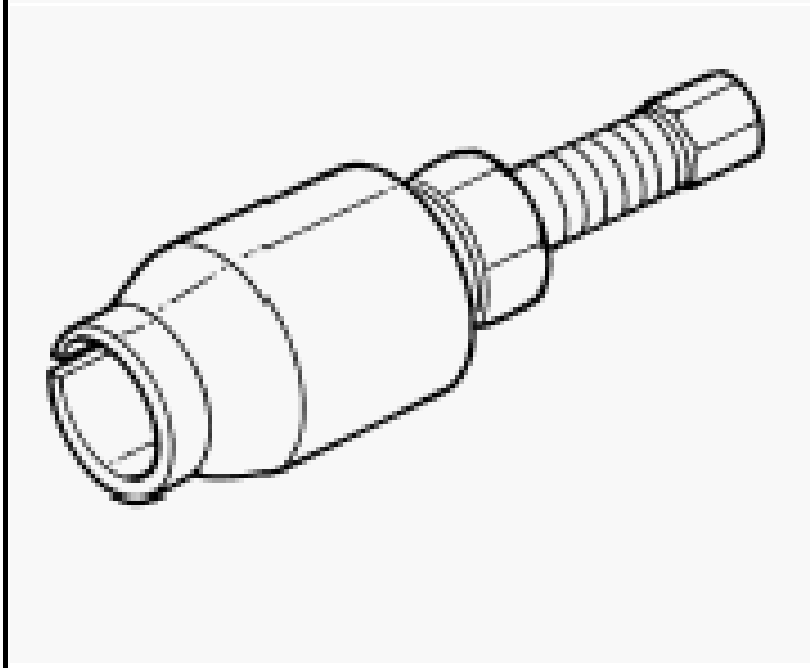	8511 - Remover, Seal (Originally Shipped In Kit Number(s) 8283, 8283CC, 8527, 8527CC, 8575, 8575CC, 9975.)
	8514 - Pins, Tensioner (Originally Shipped In Kit Number(s) 8283, 8283CC, 8527, 8527CC, 8575, 8575CC, 9975.)

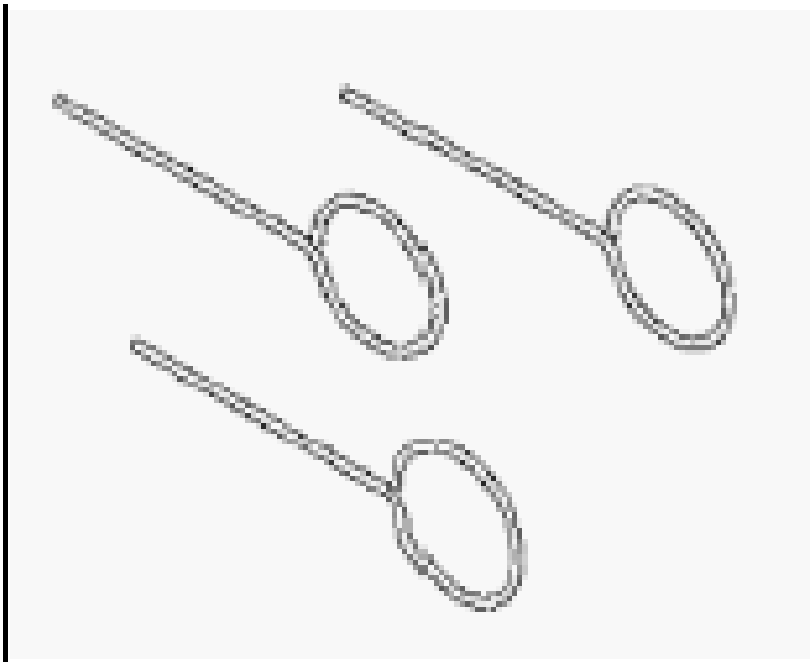

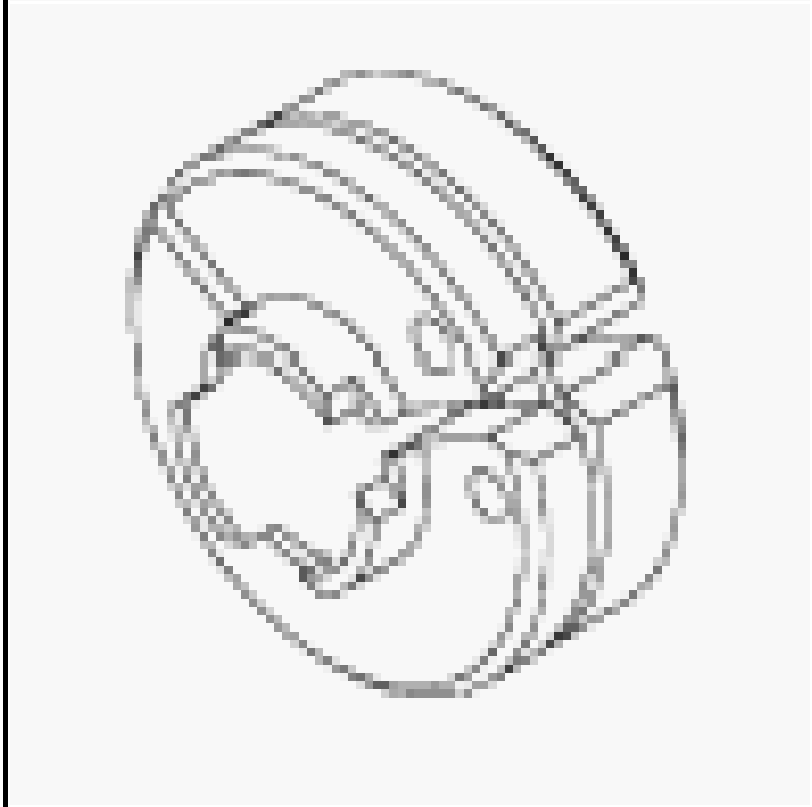

8875A - Disconnect, Transmission Cooler Line
(Originally Shipped In Kit Number(s) 9202, 9328, 9328-CAN, 9329, 9516, 9575.)

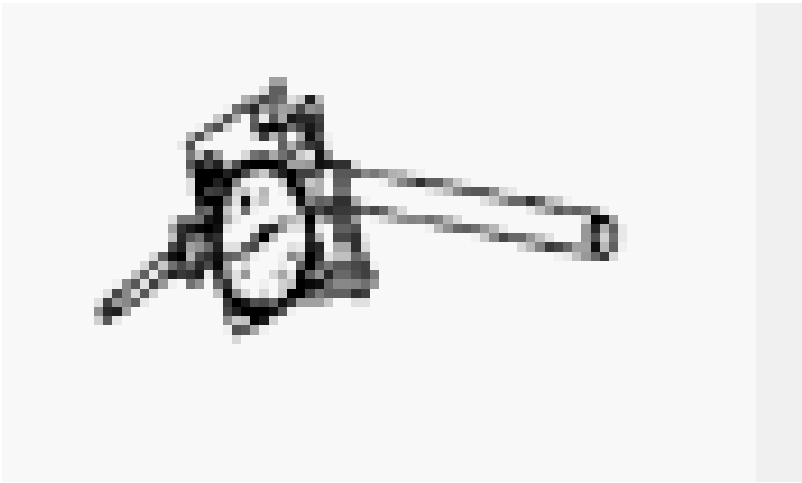	C-119 - Cylinder Indicator
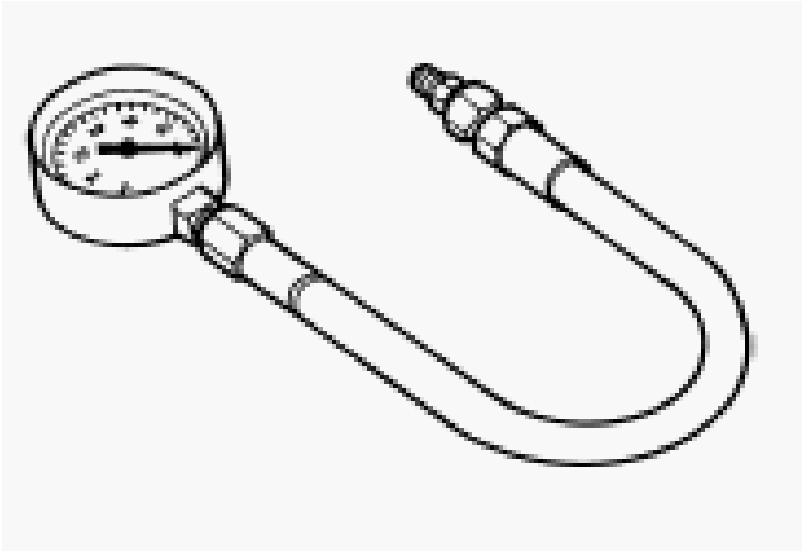	C-3292A - Gauge, Pressure
	C-3339A - Set, Dial Indicator (Originally Shipped In Kit Number(s) 9202.)

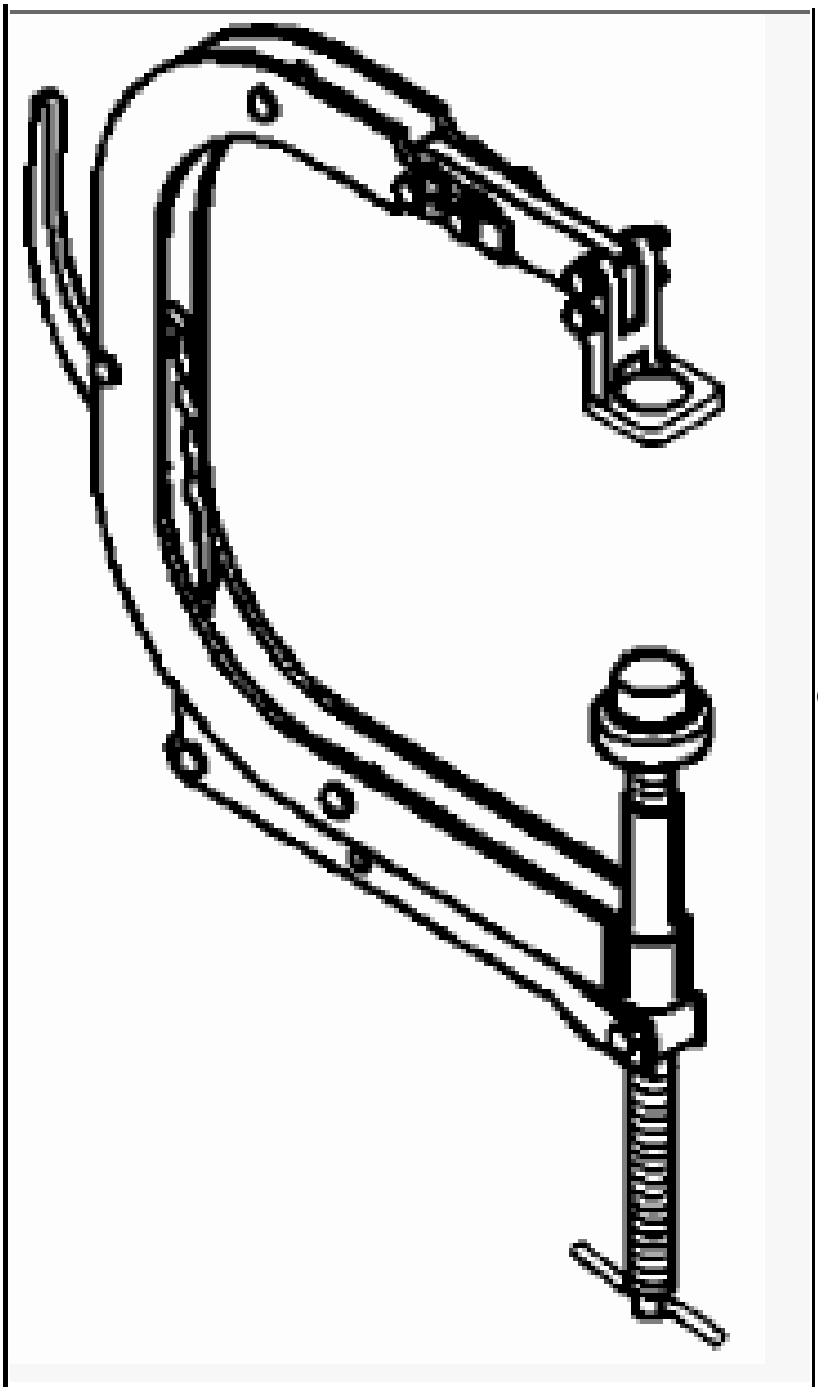

C-3422-D - Compressor, Valve Spring

	C-3685-A - Bloc-Chek Kit
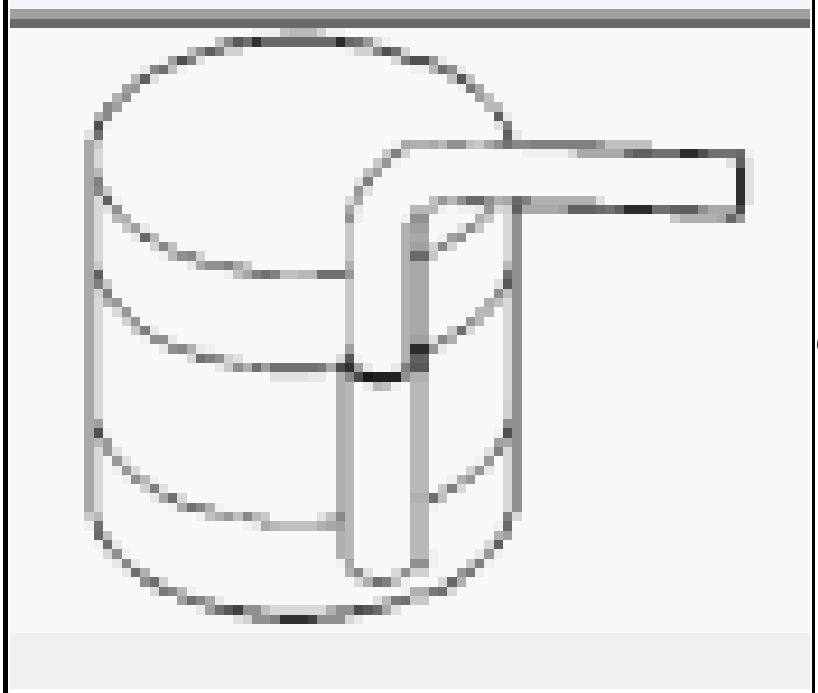	C-385 - Compressor, Piston
	MD998772A - Compressor, Valve Spring

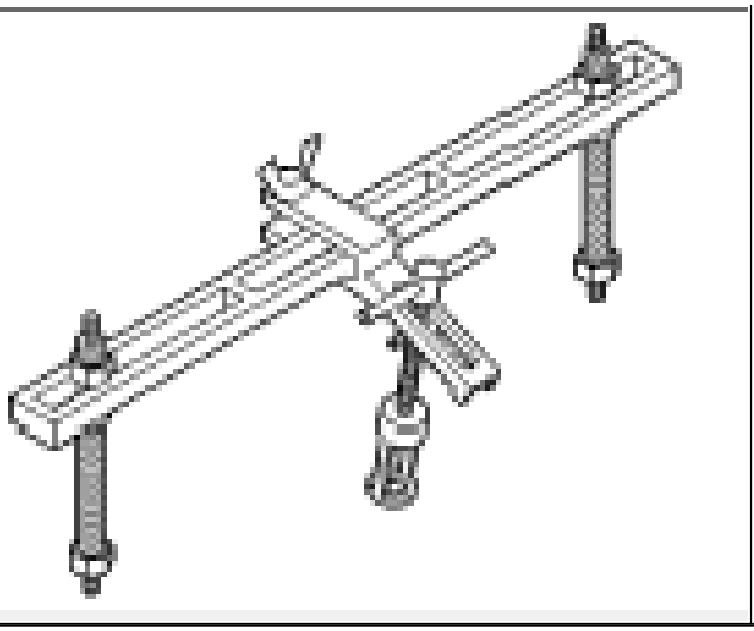	(Originally Shipped In Kit Number(s) 8678, 8853, 8854.)

AIR INTAKE SYSTEM

AIR CLEANER

REMOVAL

REMOVAL

1. Remove the screws that secures the air filter housing cover to the lower housing.

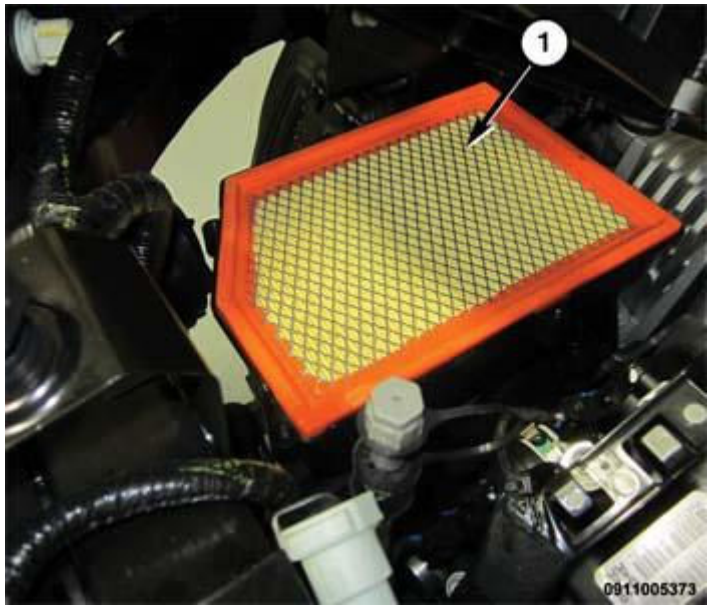

Fig. 72: Air Cleaner Element
Courtesy of CHRYSLER GROUP, LLC

2. Lift the cover and remove the air cleaner element (1).

CAUTION: Do not use compressed air to clean out the air cleaner housing without first covering the air inlet to the throttle body. Dirt or foreign objects could enter the intake manifold causing engine damage.

3. Remove any dirt or debris from the bottom of the air cleaner housing.

INSTALLATION

INSTALLATION

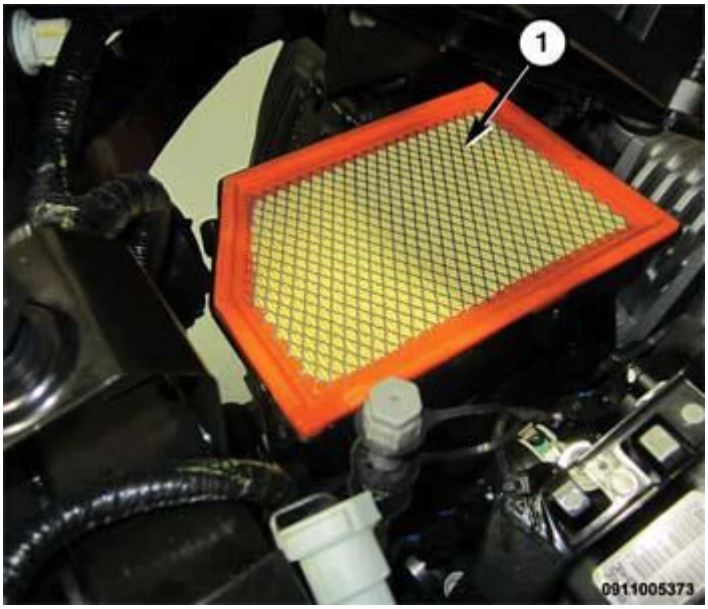

Fig. 73: Air Cleaner Element
Courtesy of CHRYSLER GROUP, LLC

1. Install the air cleaner element (1) into the air cleaner housing.
2. Seat the cover onto the housing and secure the screws.

BODY, AIR CLEANER

REMOVAL

REMOVAL

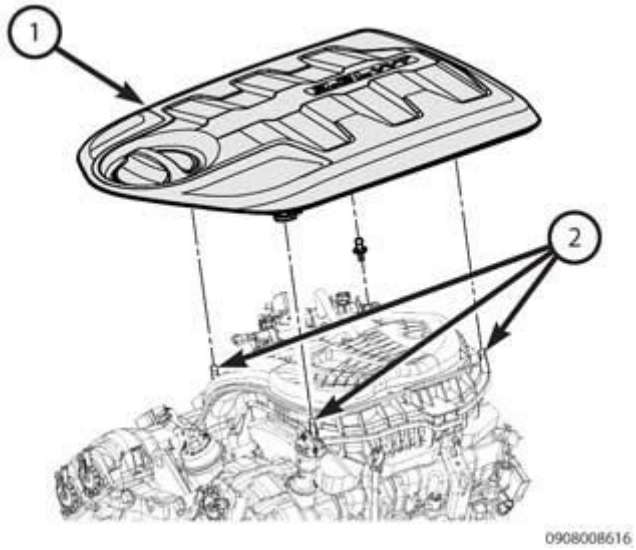

Fig. 74: Engine Cover & Ball Studs
Courtesy of CHRYSLER GROUP, LLC

1. Remove the engine cover (1).

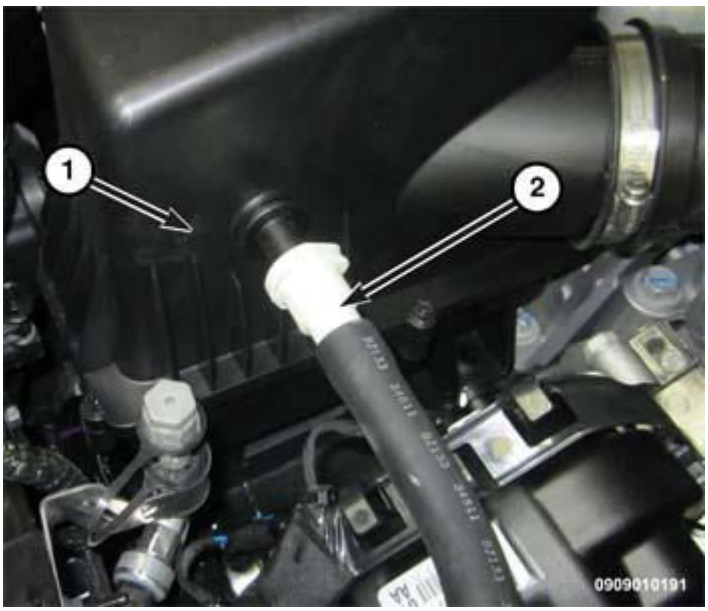

Fig. 75: Air Filter Body Cover & Breather Hose
Courtesy of CHRYSLER GROUP, LLC

2. Separate the breather hose (2) from the air filter body cover (1).
3. Loosen the clamp and remove the hose from the air cleaner body (1).

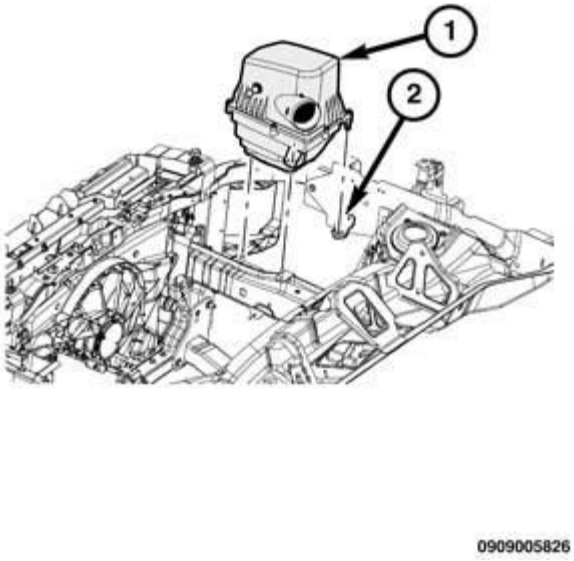

Fig. 76: Air Cleaner Body
Courtesy of CHRYSLER GROUP, LLC

4. Pull the air cleaner body (1) straight up to disengage the locating pins from the rubber mount sockets (2).

INSTALLATION

INSTALLATION

NOTE: Upper air filter body has been removed for clarity of the installation of the intake tube and seal to the air filter body.

Fig. 77: Air Filter Body, Seal & Air Filter Body
Courtesy of CHRYSLER GROUP, LLC

1. Lubricate the three rubber mount sockets (2) with Mopar® Rubber Bushing Installation Lube.
2. Install the air cleaner housing body.
3. Align the intake tube (3) to the air filter body (1) making sure the seal (2) is centered.
4. Engage the air inlet tube and install the air cleaner body straight down on the locating pins until the rubber mount sockets are fully seated.
5. Install the hose to the air cleaner body and tighten the clamp (3) to 5 N.m (44 in. lbs.).

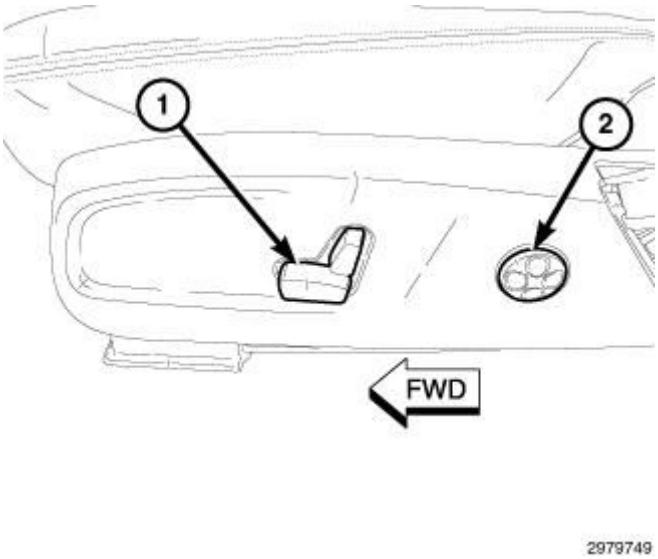

Fig. 78: Air Filter Body Cover & Breather Hose
Courtesy of CHRYSLER GROUP, LLC

6. Connect the breather hose (2) to the air cleaner body cover (1).
7. Install the engine cover (1).

RESONATOR, AIR CLEANER

REMOVAL

REMOVAL

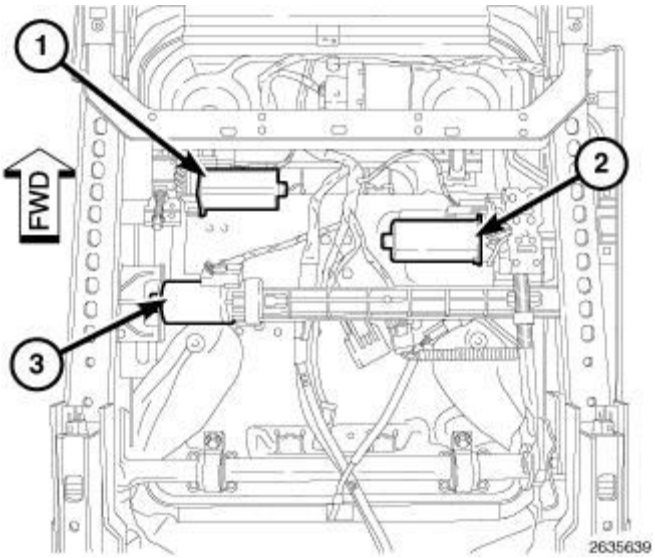

Fig. 79: Engine Cover & Ball Studs
Courtesy of CHRYSLER GROUP, LLC

1. Disconnect and isolate the negative battery cable.
2. Remove the engine cover (1).

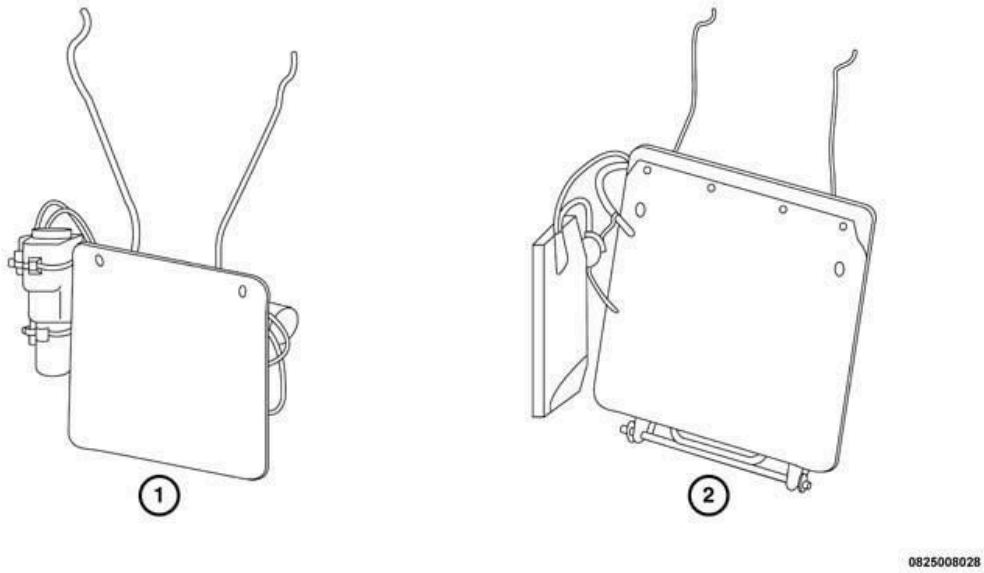

Fig. 80: Air Cleaner Resonator & IAT Sensor
Courtesy of CHRYSLER GROUP, LLC

3. Disconnect the harness connector (2) from the Inlet Air Temperature (IAT) sensor (3).

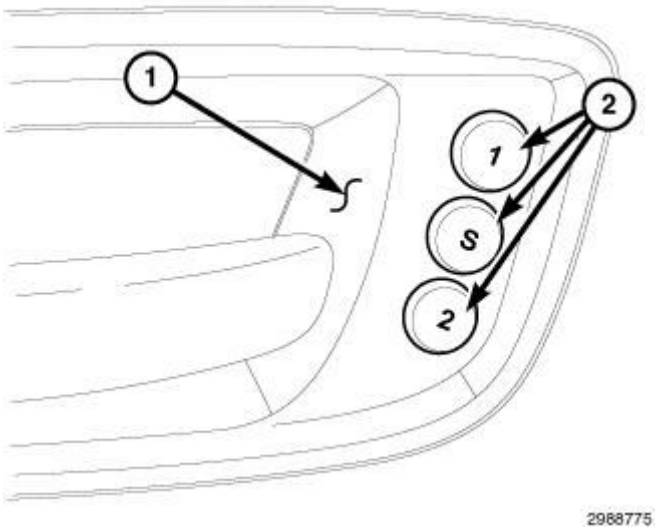

Fig. 81: Intake Resonator
Courtesy of CHRYSLER GROUP, LLC

4. Separate the clean air hose from the resonator (1).
5. Remove the vapor line retainer (4) from the resonator.
6. Remove the push pin (3) that secures the resonator to the intake manifold.
7. Pull the resonator straight up off of the two locating pins on the right cylinder head cover. Disengage and remove the resonator from the throttle body inlet.

INSTALLATION

INSTALLATION

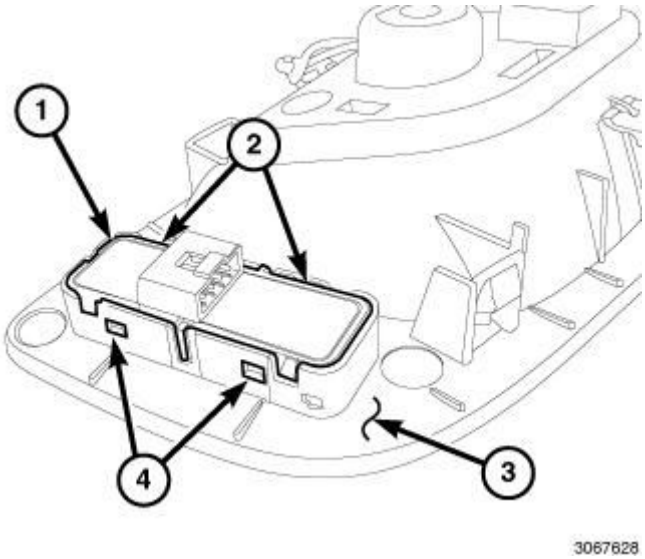

Fig. 82: IAT Sensor Connector, Throttle Body & Air Inlet Hose Housing
Courtesy of CHRYSLER GROUP, LLC

1. Lubricate the rubber mount sockets on the resonator (6) with Mopar® Rubber Bushing Installation Lube.
2. Install the resonator to the throttle body inlet (3). Push the resonator down onto the locating pins until the rubber mount sockets are fully seated.
3. Install the clean air hose (5) to the resonator. Hand tighten the clamp (4).
4. Install the push pin (2).

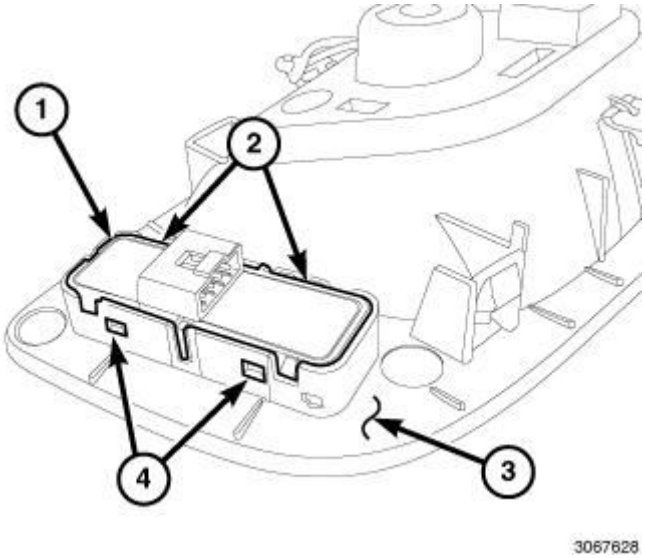

Fig. 83: Air Cleaner Resonator & IAT Sensor
Courtesy of CHRYSLER GROUP, LLC

5. Connect the harness connector (2) to the Intake Air Temperature (IAT) Sensor (1).

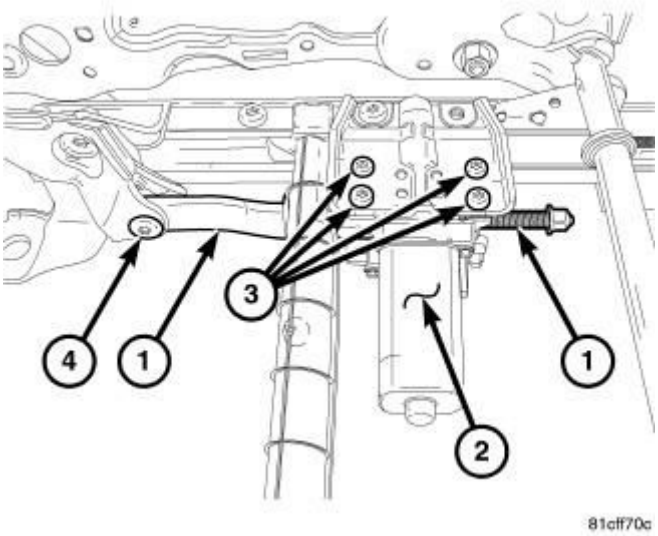

Fig. 84: Intake Resonator
Courtesy of CHRYSLER GROUP, LLC

Engage the vapor line retainer (4) to the resonator (1).

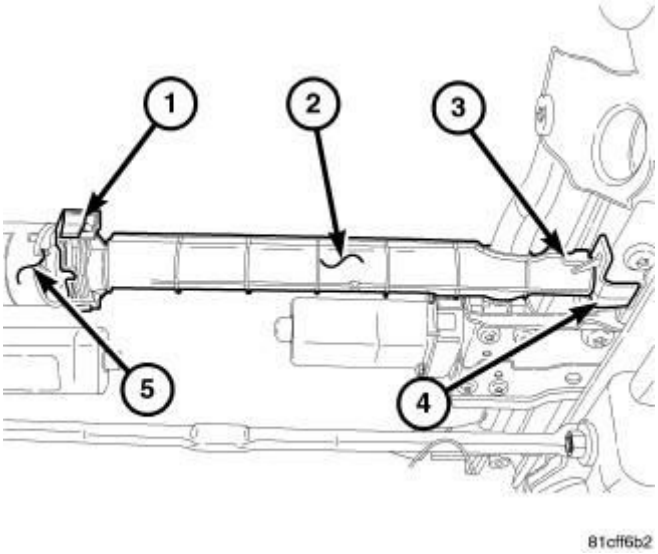

Fig. 85: Engine Cover & Ball Studs
Courtesy of CHRYSLER GROUP, LLC

6. Install engine cover (1).
7. Connect the negative battery cable and tighten nut to 5 N.m (44 in. lbs.).

CYLINDER HEAD

DESCRIPTION

DESCRIPTION

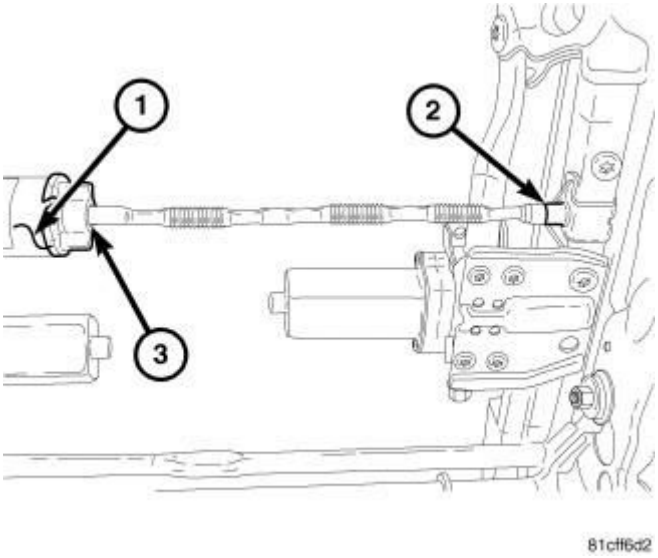

Fig. 86: Aluminum Cylinder Head
Courtesy of CHRYSLER GROUP, LLC

The aluminum cylinder heads are a unique design with left and right castings. The exhaust manifolds are integrated into the cylinder heads. The cylinder head features four valves per cylinder with pressed in powdered metal valve guides. The valve guides are not serviceable. The DOHC valvetrain uses roller rocker arms with hydraulic lifters. The cylinder head's camshaft bearing caps are made of powdered metal and the location and direction of each cap is marked on the side of the caps. The spark plug tubes are pressed into the cylinder heads and sealed in place. The tubes are a thin wall design and caution must be taken when working in the spark plug tube area.

DIAGNOSIS AND TESTING

CYLINDER HEAD GASKET

A cylinder head gasket leak can be located between adjacent cylinders or between a cylinder and the adjacent water jacket.

Possible indications of the cylinder head gasket leaking between adjacent cylinders are:

- Loss of engine power
- Engine misfiring
- Poor fuel economy

Possible indications of the cylinder head gasket leaking between a cylinder and an adjacent water jacket are:

- Engine overheating

- Loss of coolant
- Excessive steam (white smoke) emitting from exhaust
- Coolant foaming

CYLINDER-TO-CYLINDER LEAKAGE TEST

To determine if an engine cylinder head gasket is leaking between the cylinders located next to each other, follow the procedures in Cylinder Compression Pressure Test. Refer to **CYLINDER COMPRESSION PRESSURE LEAKAGE** . An engine cylinder head gasket leaking between the cylinders will result in approximately a 50 - 70% reduction in compression pressure.

CYLINDER-TO-WATER JACKET LEAKAGE TEST

WARNING: USE EXTREME CAUTION WHEN THE ENGINE IS OPERATING WITH COOLANT PRESSURE CAP REMOVED.

VISUAL TEST METHOD

With the engine cool, remove the coolant pressure cap. Start the engine and allow it to warm up until thermostat opens.

If a large combustion/compression pressure leak exists, bubbles will be visible in the coolant.

COOLING SYSTEM TESTER METHOD

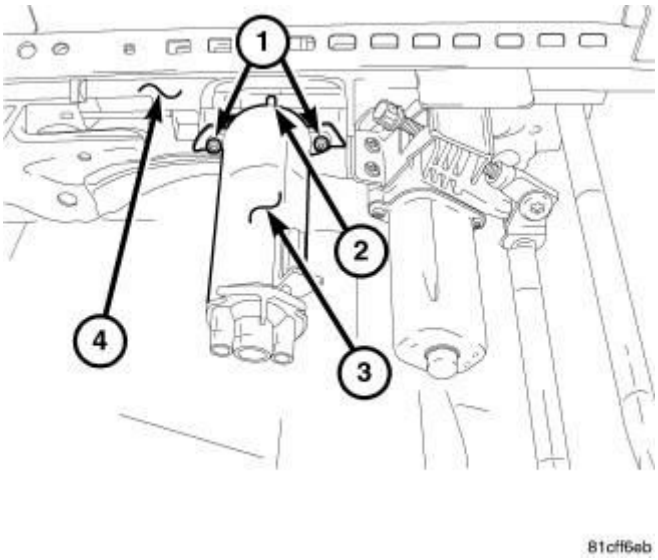

Fig. 87: Cooling System Pressure Tester - 7700-A
Courtesy of CHRYSLER GROUP, LLC

WARNING: WITH THE COOLING SYSTEM TESTER IN PLACE, PRESSURE WILL BUILD UP FAST. EXCESSIVE PRESSURE BUILT UP BY CONTINUOUS

ENGINE OPERATION MUST BE RELEASED TO A SAFE PRESSURE POINT. NEVER PERMIT THE PRESSURE TO EXCEED 138 kPa (20 psi).

Install Cooling System Tester (special tool #7700-A, Tester, Cooling System) or equivalent to pressure cap neck. Start the engine and observe the tester's pressure gauge. If gauge pulsates with every power stroke of a cylinder a combustion pressure leak is evident.

CHEMICAL TEST METHOD

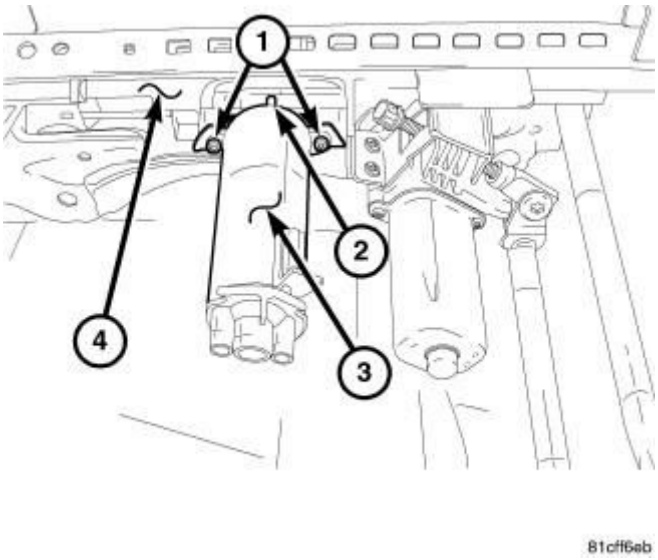

Fig. 88: Bloc-Chek-Kit - C-3685-A
Courtesy of CHRYSLER GROUP, LLC

Combustion leaks into the cooling system can also be checked by using a (special tool #C-3685-A, Bloc-Chek Kit) or equivalent. Perform the test following the procedures supplied with the tool kit.

HYDRAULIC LASH ADJUSTER

A tappet-like noise may be produced from several items. Check the following items.

1. Engine oil level too high or too low. This may cause aerated oil to enter the adjusters and cause them to be spongy.
2. Insufficient running time after rebuilding cylinder head. Low speed running up to 1 hour may be required.
3. Turn engine off and let set for a few minutes before restarting. Repeat this several times after engine has reached normal operating temperature.
4. Low oil pressure.
5. The oil restrictor in cylinder head gasket or the oil passage to the cylinder head is plugged with debris.
6. Air ingested into oil due to broken or cracked oil pump pick up.
7. Worn valve guides.
8. Rocker arm ears contacting valve spring retainer.

9. Rocker arm loose, adjuster stuck or at maximum extension and still leaves lash in the system.
10. Oil leak or excessive cam bore wear in cylinder head.
11. Faulty lash adjuster.

- Check lash adjusters for "sponginess" while installed in cylinder head and cam on camshaft at base circle. Depress part of rocker arm over adjuster. Normal adjusters should feel firm when pressed quickly. When pressed very slowly, lash adjusters should collapse.
- Remove suspected lash adjusters, and replace.
- Before installation, make sure adjusters are full of oil. This can be verified by little plunger travel when lash adjuster is depressed quickly.

REMOVAL

LEFT CYLINDER HEAD

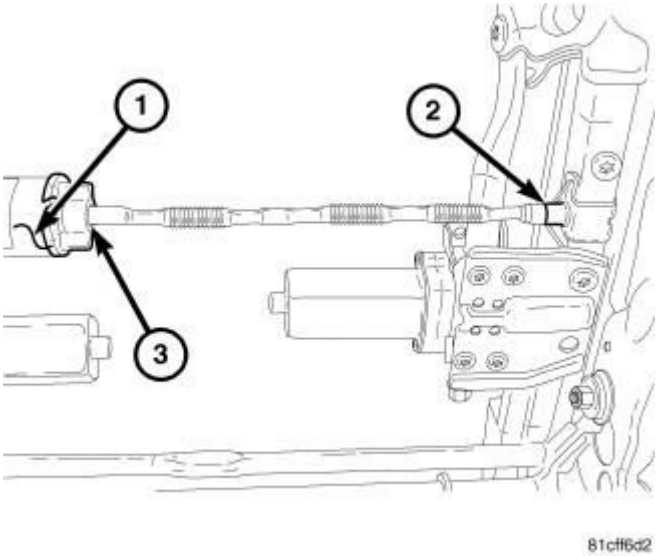

Fig. 89: Magnetic Timing Wheels
Courtesy of CHRYSLER GROUP, LLC

CAUTION: The magnetic timing wheels (1) must not come in contact with magnets (pickup tools, trays, etc.) or any other strong magnetic field. This will destroy the timing wheels ability to correctly relay camshaft position to the camshaft position sensor.

1. Perform the fuel system pressure release procedure. Refer to **FUEL SYSTEM PRESSURE RELEASE PROCEDURE** .
2. Raise and support the vehicle. Refer to **HOISTING, STANDARD PROCEDURE** .
3. Remove the belly pan. Refer to **BELLY PAN, REMOVAL** .
4. Drain the cooling system. Refer to **STANDARD PROCEDURE** .
5. Drain the engine oil. Refer to **OIL, STANDARD PROCEDURE** .

6. Lower the vehicle.

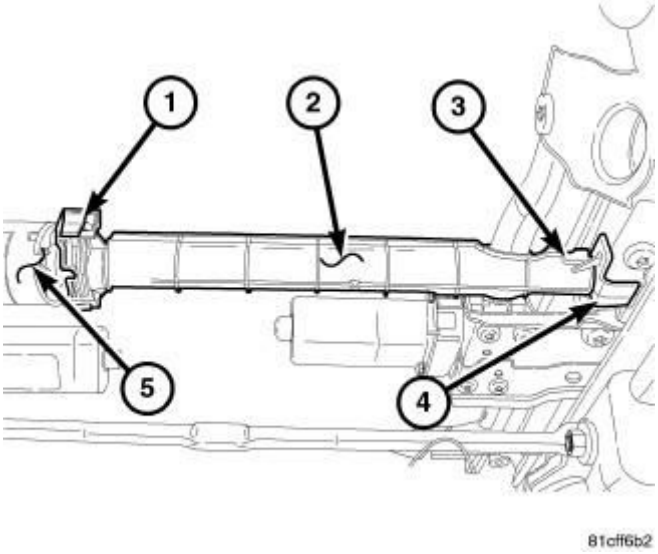

Fig. 90: Engine Cover & Ball Studs
Courtesy of CHRYSLER GROUP, LLC

7. Remove the engine cover (1).
8. Recover the refrigerant from the A/C system. Refer to **PLUMBING, STANDARD PROCEDURE** .
9. Remove the air cleaner body. Refer to **BODY, AIR CLEANER, REMOVAL**.
10. Remove the air cleaner resonator. Refer to **RESONATOR, AIR CLEANER, REMOVAL**.
11. Remove the upper and lower intake manifolds and insulator. Refer to **MANIFOLD, INTAKE, REMOVAL**.
12. Remove the spark plugs. Refer to **SPARK PLUG, REMOVAL** .
13. Remove the PCM. Refer to **MODULE, POWERTRAIN CONTROL, REMOVAL** .

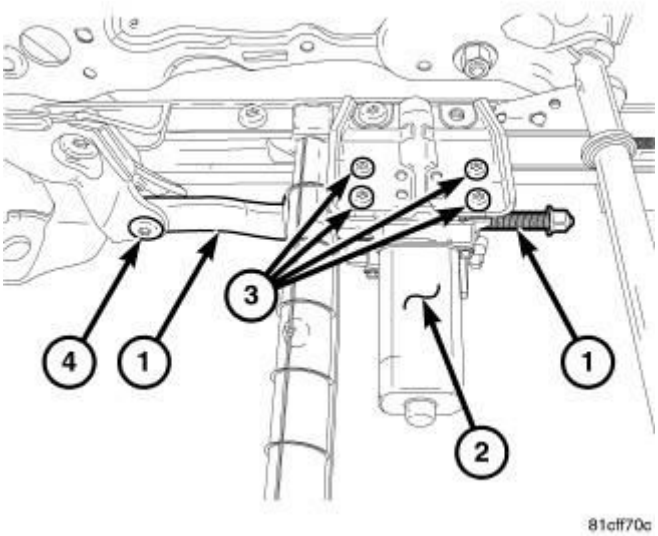

Fig. 91: Identifying Engine Coolant Temperature Sensor
Courtesy of CHRYSLER GROUP, LLC

14. Disconnect the Engine Coolant Temperature (ECT) sensor harness connector (2).

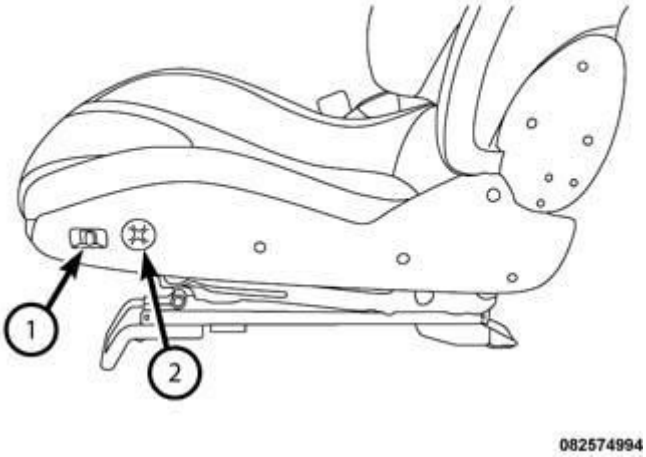

Fig. 92: Electrical Connector, Mounting Bolt & Ignition Capacitor
Courtesy of CHRYSLER GROUP, LLC

15. Disconnect the ignition coil capacitor harness connector (1).

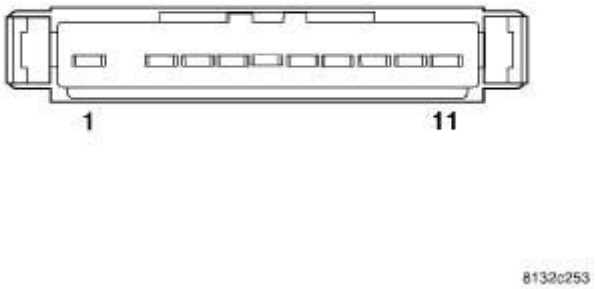

Fig. 93: Engine Injection/Ignition Harness & Engine Oil Pressure/Temperature Harness
Courtesy of CHRYSLER GROUP, LLC

16. Disconnect the main harness from the engine injection/ignition harness (1) at the rear of the left cylinder head.
17. Disconnect the main harness from the engine oil pressure/temperature harness (2) at the rear of the left cylinder head.

18. Remove the thermostat housing assembly. Refer to **THERMOSTAT, REMOVAL** .
19. Remove the engine timing cover. Refer to **COVER(S), ENGINE TIMING, REMOVAL**.
20. Remove the generator. Refer to **GENERATOR, REMOVAL** .

CAUTION: When aligning timing marks, always rotate engine by turning the crankshaft. Failure to do so will result in valve and/or piston damage.

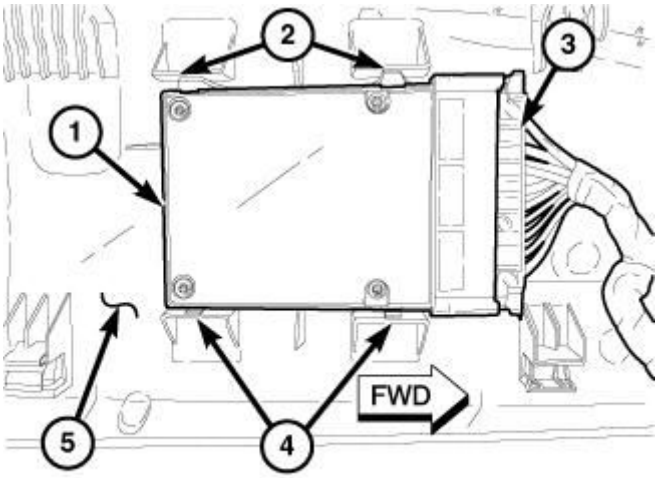

2980599

Fig. 94: Rotating Crankshaft Clockwise To Position No. 1 Piston At TDC On Exhaust Stroke
Courtesy of CHRYSLER GROUP, LLC

21. Rotate the crankshaft clockwise to place the number one piston at TDC on the exhaust stroke by aligning the dimple (4) on the crankshaft with the block/bearing cap junction (5). The left side cam phaser arrows (2) should point toward each other and be parallel to the valve cover sealing surface (3). The right side cam phaser arrows (7) should point away from each other and the scribe lines (9) should be parallel to the valve cover sealing surface (8).

CAUTION: Always reinstall timing chains so that they maintain the same direction of rotation. Inverting a previously run chain on a previously run sprocket will result in excessive wear to both the chain and sprocket.

22. Mark the direction of rotation on the timing chain using a paint pen or equivalent to aid in reassembly.

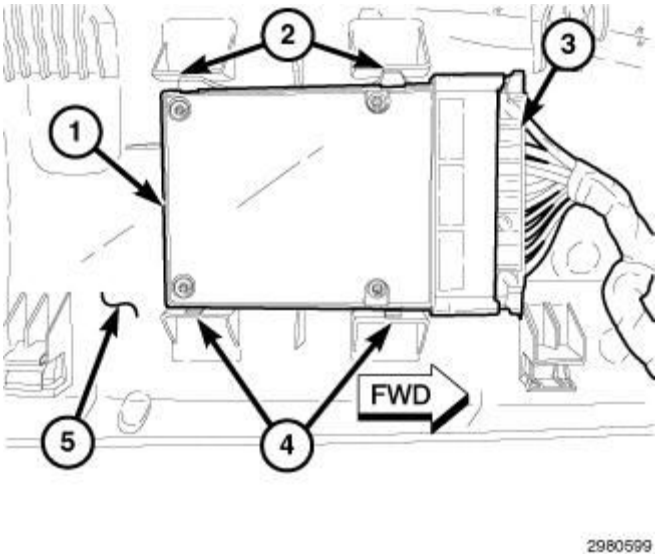

Fig. 95: Resetting Left Cam Chain Tensioner
Courtesy of CHRYSLER GROUP, LLC

CAUTION: When the timing chains are removed and the cylinder heads are still installed, DO NOT rotate the camshafts or crankshaft without first locating the proper crankshaft position. Failure to do so will result in valve and/or piston damage.

23. Reset the LH cam chain tensioner by lifting the pawl (1), pushing back the piston (2) and installing Tensioner Pin (special tool #8514, Pins, Tensioner) (3). Refer to **VALVE TIMING - STANDARD PROCEDURE** .

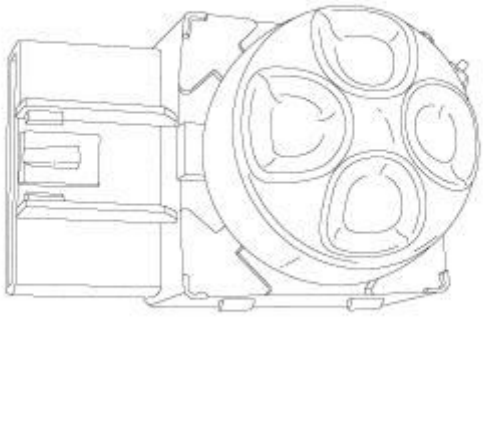

Fig. 96: Phaser Timing Marks, Oil Control Valves & LH Camshaft Phaser Lock
Courtesy of CHRYSLER GROUP, LLC

NOTE: Minor rotation of a camshaft (a few degrees) may be required to install the camshaft phaser lock.

24. Install the LH Camshaft Phaser Lock (special tool #10202, Locks, Camshaft/Phaser) (4).
25. Loosen the intake oil control valve (6) and exhaust oil control valve (2).
26. Remove the LH Camshaft Phaser Lock (special tool #10202, Locks, Camshaft/Phaser) (4).
27. Remove the oil control valve (2) from the left side exhaust cam phaser and pull the phaser off of the camshaft.
28. Remove the oil control valve (6) from the left side intake cam phaser and pull the phaser off of the camshaft.

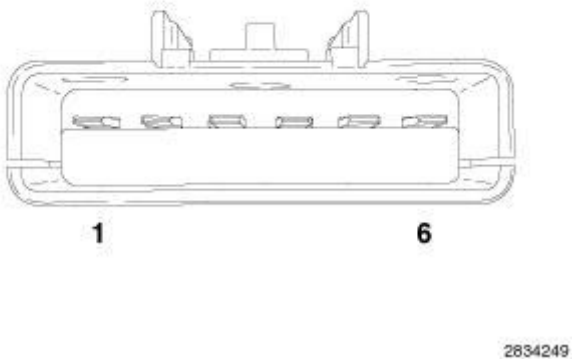

Fig. 97: Left Cam Chain Tensioner, Arm, Guide & Bolts
Courtesy of CHRYSLER GROUP, LLC

29. Remove the LH cam chain tensioner arm (1).
30. Remove two T30 bolts (6) and the LH cam chain tensioner (5).
31. Remove two T30 bolts (4) and the LH cam chain guide (2).

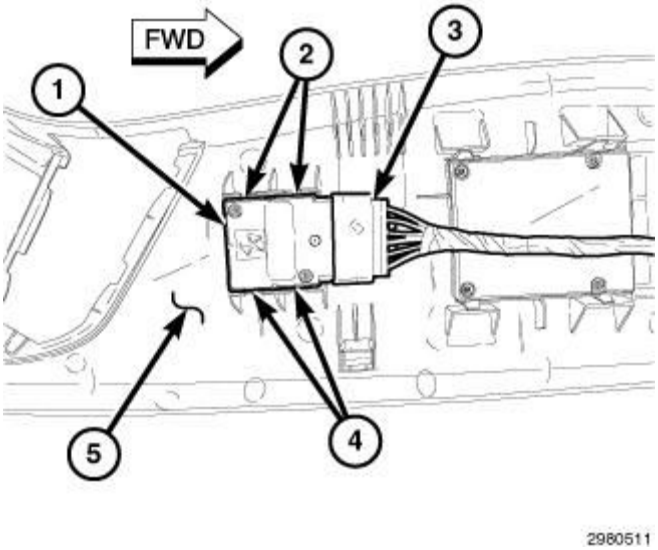

Fig. 98: Cylinder Head Retaining Bolt Removal Sequence - Left
Courtesy of CHRYSLER GROUP, LLC

32. Remove the left camshafts. Refer to **CAMSHAFT, ENGINE, REMOVAL**.

NOTE: **If the rocker arms are to be reused, identify their positions so that they can be reassembled into their original locations.**

33. Remove the rocker arms. Refer to **ROCKER ARM, VALVE, REMOVAL**.

NOTE: **If the hydraulic lifters are to be reused, identify their positions so that they can be reassembled into their original locations.**

34. If required, remove the hydraulic lifters. Refer to **LIFTER(S), HYDRAULIC, REMOVAL**.
35. Using the sequence shown in illustration, remove the cylinder head retaining bolts.

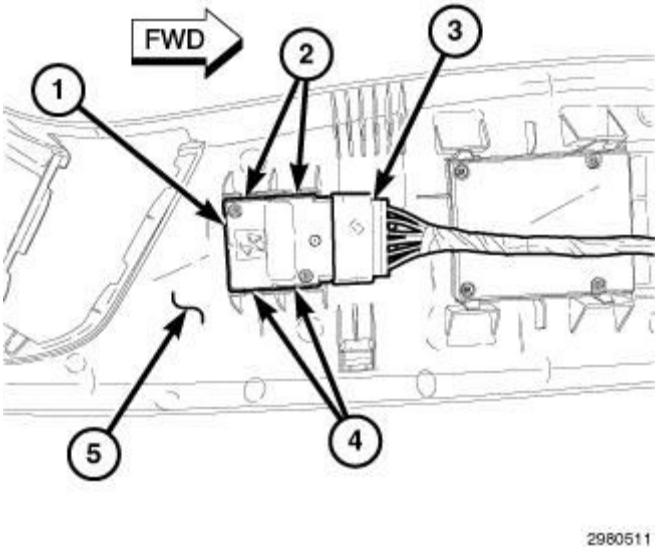

Fig. 99: Head Gasket & Locating Dowels
Courtesy of CHRYSLER GROUP, LLC

NOTE: **Right head gasket shown in illustration, left head gasket similar.**

WARNING: **The multi-layered steel head gaskets have very sharp edges that could cause personal injury if not handled carefully.**

NOTE: **The head gasket (1) crimps the locating dowels (2) and the dowels may pull out of the engine block when the head gasket is removed.**

CAUTION: **Do not lay the cylinder head on its gasket sealing surface, due to the design of the cylinder head gasket, any distortion to the cylinder head sealing surface may prevent the gasket from properly sealing resulting in leaks.**

36. Remove the cylinder head and gasket (1). Discard the gasket.

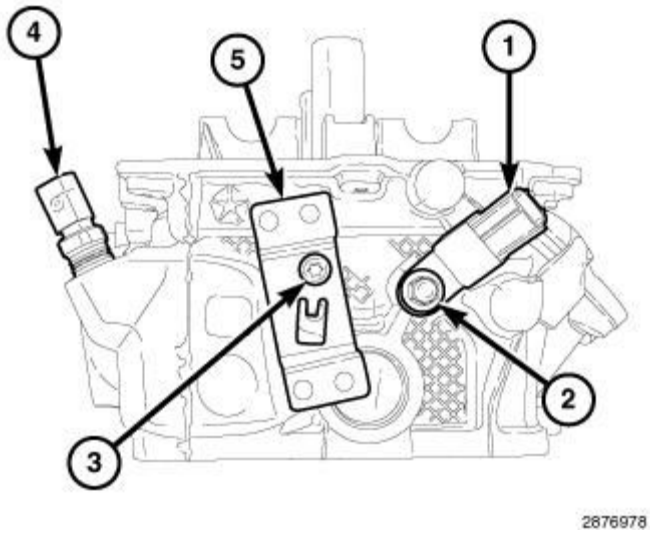

Fig. 100: ECT Sensor, Ignition Coil Capacitor, Engine Wire Harness Retainer Bracket & Bolts
Courtesy of CHRYSLER GROUP, LLC

37. If required, remove the Engine Coolant Temperature (ECT) sensor (4).
38. If required, remove the bolt (2) and the ignition coil capacitor (1).
39. If required, remove the bolt (3) and the engine wire harness retainer bracket (5).

RIGHT CYLINDER HEAD

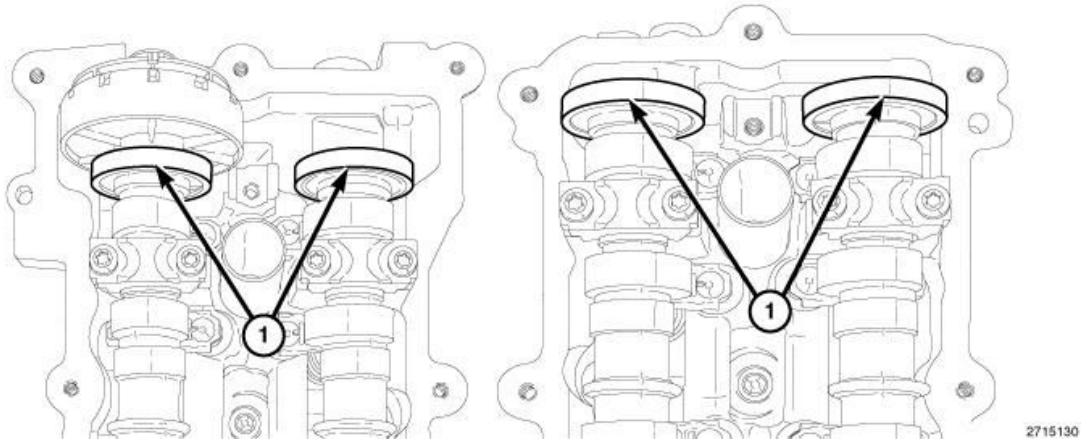

Fig. 101: Magnetic Timing Wheels
Courtesy of CHRYSLER GROUP, LLC

CAUTION: The magnetic timing wheels (1) must not come in contact with magnets (pickup tools, trays, etc.) or any other strong magnetic field. This will destroy the timing wheels ability to correctly relay camshaft position to the camshaft position sensor.

1. Perform the fuel system pressure release procedure. Refer to **FUEL SYSTEM PRESSURE RELEASE**

PROCEDURE .

2. Disconnect and isolate the negative battery cable.
3. Raise and support the vehicle. Refer to **HOISTING, STANDARD PROCEDURE** .
4. Remove the belly pan. Refer to **BELLY PAN, REMOVAL** .
5. Drain the cooling system. Refer to **STANDARD PROCEDURE** .
6. Drain the engine oil. Refer to **OIL, STANDARD PROCEDURE** .
7. Remove the right side catalytic converter. Refer to **CONVERTER, CATALYTIC , REMOVAL** .
8. Lower the vehicle.

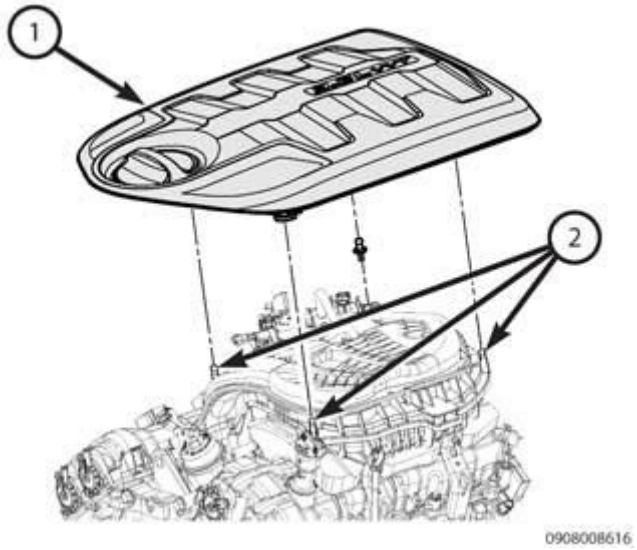

Fig. 102: Engine Cover & Ball Studs
Courtesy of CHRYSLER GROUP, LLC

9. Remove the engine cover (1).
10. Recover the refrigerant from the A/C system. Refer to **PLUMBING, STANDARD PROCEDURE** .
11. Remove the air cleaner body. Refer to **BODY, AIR CLEANER, REMOVAL**.
12. Remove the air cleaner resonator. Refer to **RESONATOR, AIR CLEANER, REMOVAL**.
13. Remove the upper and lower intake manifolds and insulator. Refer to **MANIFOLD, INTAKE, REMOVAL**.
14. Remove the spark plugs. Refer to **SPARK PLUG, REMOVAL** .

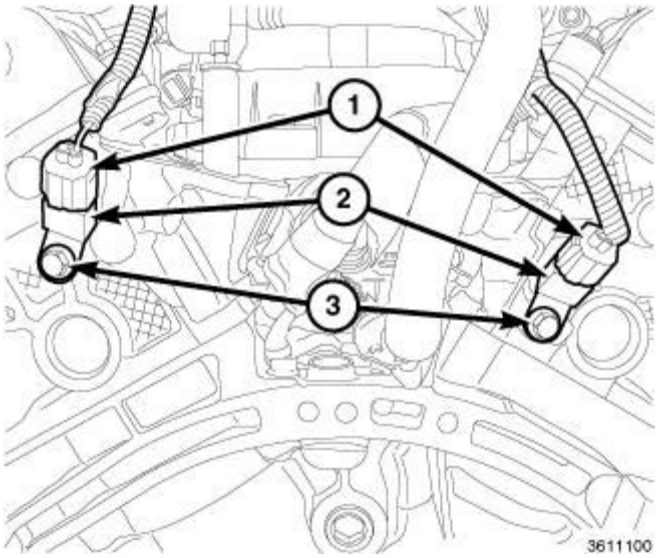

Fig. 103: Electrical Connector, Mounting Bolt & Ignition Capacitor
Courtesy of CHRYSLER GROUP, LLC

15. Disconnect the ignition coil capacitor harness connector (1).
16. Remove the engine timing cover. Refer to **COVER(S), ENGINE TIMING, REMOVAL**.

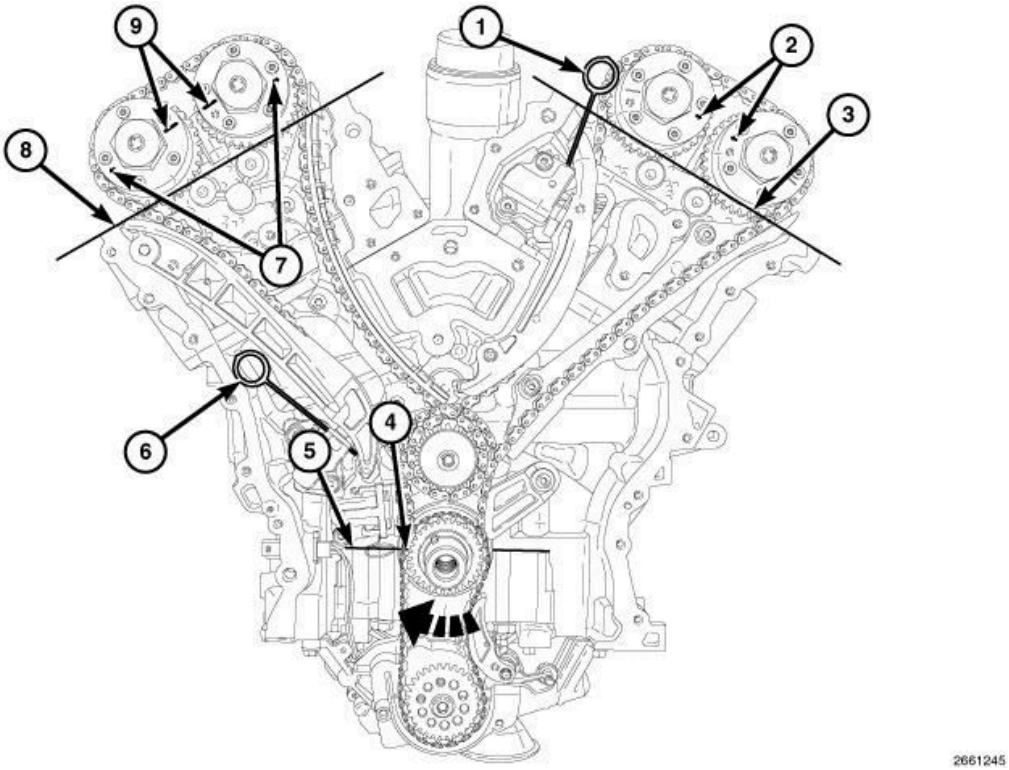

Fig. 104: Rotating Crankshaft Clockwise To Position No. 1 Piston At TDC On Exhaust Stroke
Courtesy of CHRYSLER GROUP, LLC

CAUTION: When aligning timing marks, always rotate engine by turning the crankshaft. Failure to do so will result in valve and/or piston damage.

17. Rotate the crankshaft clockwise to place the number one piston at TDC on the exhaust stroke by aligning the dimple (4) on the crankshaft with the block/bearing cap junction (5). The left side cam phaser arrows (2) should point toward each other and be parallel to the valve cover sealing surface (3). The right side cam phaser arrows (7) should point away from each other and the scribe lines (9) should be parallel to the valve cover sealing surface (8).

CAUTION: Always reinstall timing chains so that they maintain the same direction of rotation. Inverting a previously run chain on a previously run sprocket will result in excessive wear to both the chain and sprocket.

18. Mark the direction of rotation on the timing chain using a paint pen or equivalent to aid in reassembly.

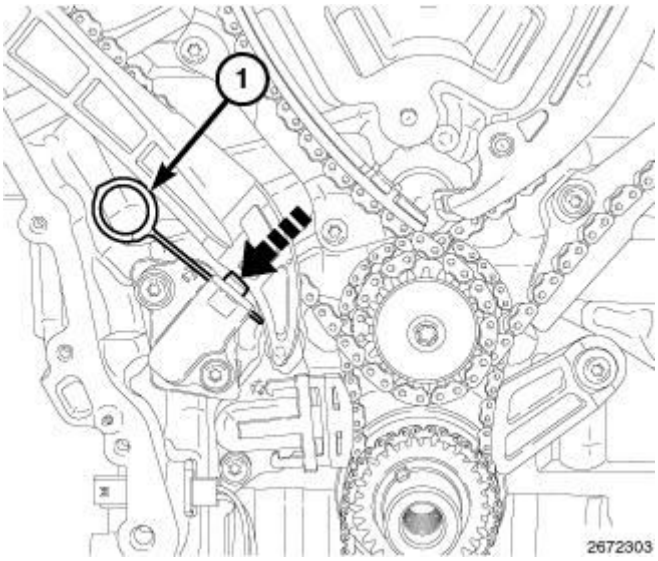

Fig. 105: Resetting Right Cam Chain Tensioner
Courtesy of CHRYSLER GROUP, LLC

CAUTION: When the timing chains are removed and the cylinder heads are still installed, DO NOT rotate the camshafts or crankshaft without first locating the proper crankshaft position. Failure to do so will result in valve and/or piston damage.

19. Reset the RH cam chain tensioner by pushing back the tensioner piston and installing Tensioner Pin (special tool #8514, Pins, Tensioner) (1).

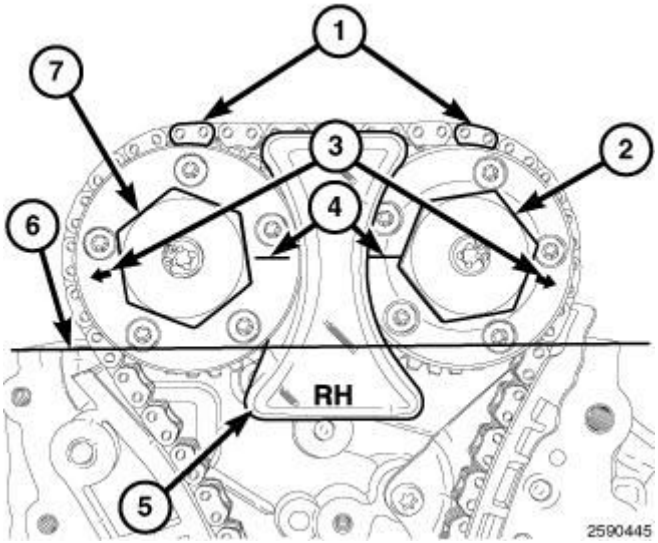

Fig. 106: Phaser Timing Marks, Oil Control Valves & RH Camshaft Phaser Lock
Courtesy of CHRYSLER GROUP, LLC

NOTE: Minor rotation of a camshaft (a few degrees) may be required to install the camshaft phaser lock.

20. Install the RH Camshaft Phaser Lock (special tool #10202, Locks, Camshaft/Phaser) (5).
21. Loosen the intake oil control valve (2) and exhaust oil control valve (7).
22. Remove the RH Camshaft Phaser Lock (special tool #10202, Locks, Camshaft/Phaser) (5).
23. Remove the oil control valve (2) from the right side intake cam phaser and pull the phaser off of the camshaft.
24. Remove the oil control valve (7) from the right side exhaust cam phaser and pull the phaser off of the camshaft.

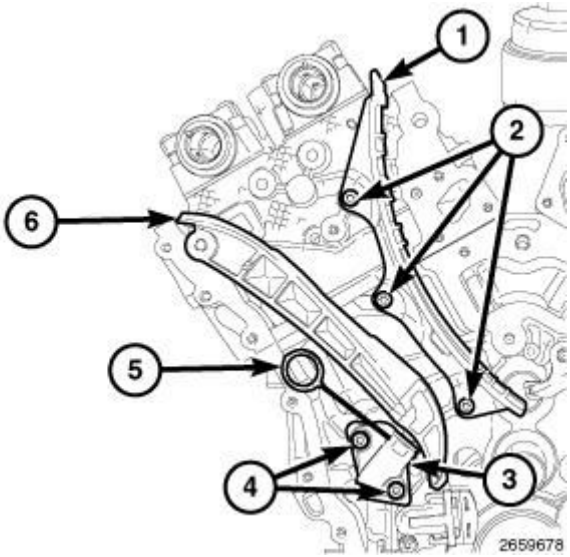

Fig. 107: Right Cam Chain Tensioner, Arm, Guide & Bolts
Courtesy of CHRYSLER GROUP, LLC

25. Remove the RH cam chain tensioner arm (6).
26. Remove two T30 bolts (4) and the RH cam chain tensioner (3).
27. Remove three T30 bolts (2) and the RH cam chain guide (1).
28. Remove the right camshafts. Refer to **CAMSHAFT, ENGINE, REMOVAL**.

NOTE: **If the rocker arms are to be reused, identify their positions so that they can be reassembled into their original locations.**

29. Remove the rocker arms. Refer to **ROCKER ARM, VALVE, REMOVAL**.

NOTE: **If the hydraulic lifters are to be reused, identify their positions so that they can be reassembled into their original locations.**

30. If required, remove the hydraulic lifters. Refer to **LIFTER(S), HYDRAULIC, REMOVAL**.
31. Using the sequence shown in illustration, remove the cylinder head retaining bolts.

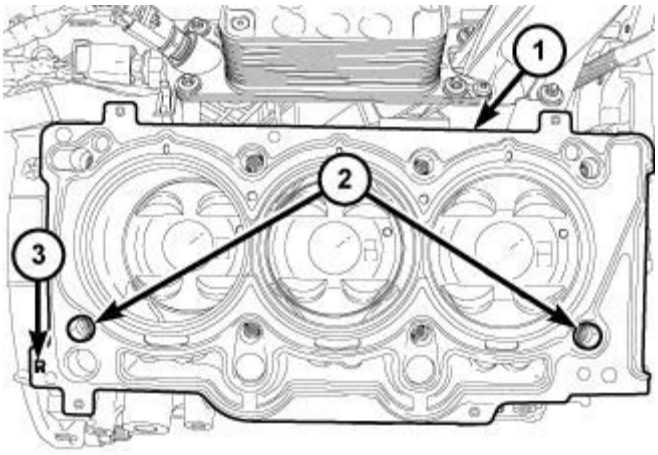

Fig. 108: Head Gasket & Locating Dowels
Courtesy of CHRYSLER GROUP, LLC

WARNING: **The multi-layered steel head gaskets have very sharp edges that could cause personal injury if not handled carefully.**

NOTE: **The head gasket (1) crimps the locating dowels (2) and the dowels may pull out of the engine block when the head gasket is removed.**

32. Remove the cylinder head and gasket. Discard the gasket.

CAUTION: Do not lay the cylinder head on its gasket sealing surface, due to the design of the cylinder head gasket, any distortion to the cylinder head sealing surface may prevent the gasket from properly sealing resulting in leaks.

Fig. 109: Ignition Coil Capacitor & Bolt
Courtesy of CHRYSLER GROUP, LLC

33. If required, remove the bolt (2) and the ignition coil capacitor (1).

CLEANING

CLEANING

CAUTION: When cleaning cylinder head and cylinder block surfaces, DO NOT use a metal scraper because the surfaces could be cut or ground. Use ONLY a wooden or plastic scraper.

To ensure engine gasket sealing, proper surface preparation must be performed, especially with aluminum engine components and multi-layer steel cylinder head gaskets.

NOTE: Multi-Layer Steel (MLS) head gaskets require a scratch free sealing surface.

1. Remove all gasket material from cylinder head and block. Refer to **ENGINE, STANDARD PROCEDURE** . Be careful not to gouge or scratch the aluminum head sealing surface.
2. Clean all engine oil passages.

CAUTION: Non-compressible debris such as oil, coolant or RTV sealants that are not removed from bolt holes can cause the aluminum casting to crack when tightening the bolts.

3. Clean out the cylinder head bolt holes in the engine block.

   DO NOT USE any adhesives when installing the MLS head gaskets. The use of adhesives may cause the gasket not to seal properly and may leak. MLS gaskets are to be installed on a surface free of debris and oils.

INSPECTION

INSPECTION

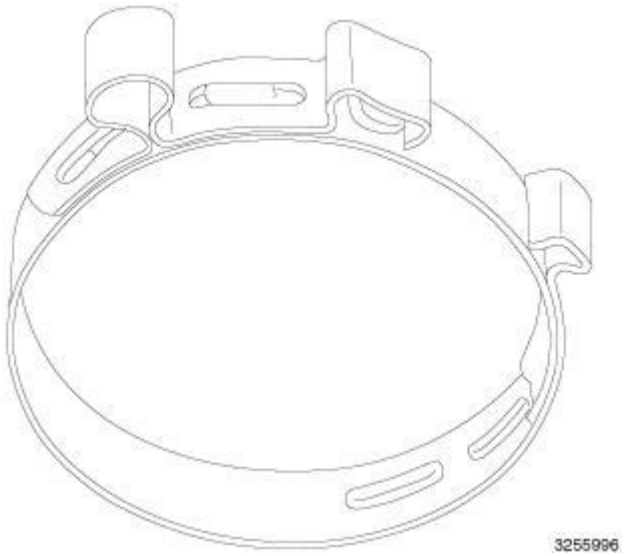

Fig. 110: Checking Cylinder Head Flatness
Courtesy of CHRYSLER GROUP, LLC

1. Check the cylinder head for warping with a straight edge (2) and feeler gauge (1).
2. Cylinder head must be flat within specification. Refer to **ENGINE SPECIFICATIONS** .
3. Verify that the valve tappets move freely in their bores and that they have been rotating.
4. Inspect camshaft bearing journals for scoring.
5. Remove carbon and varnish deposits from inside of valve guides with a reliable guide cleaner.
6. Inspect the following components and verify that they are within specification. Refer to **ENGINE SPECIFICATIONS** .
   - Camshafts
   - Valve Tappets
   - Springs
   - Valve Seats

- Valve Guides
- Valves

INSTALLATION

LEFT CYLINDER HEAD

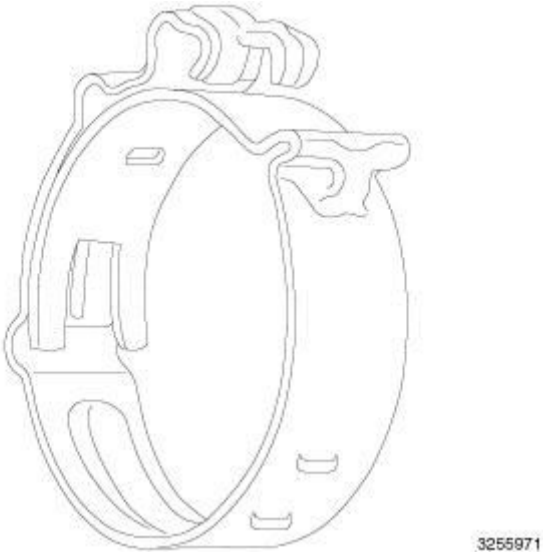

Fig. 111: Magnetic Timing Wheels
Courtesy of CHRYSLER GROUP, LLC

CAUTION: The magnetic timing wheels (1) must not come in contact with magnets (pickup tools, trays, etc.) or any other strong magnetic field. This will destroy the timing wheels ability to correctly relay camshaft position to the camshaft position sensor.

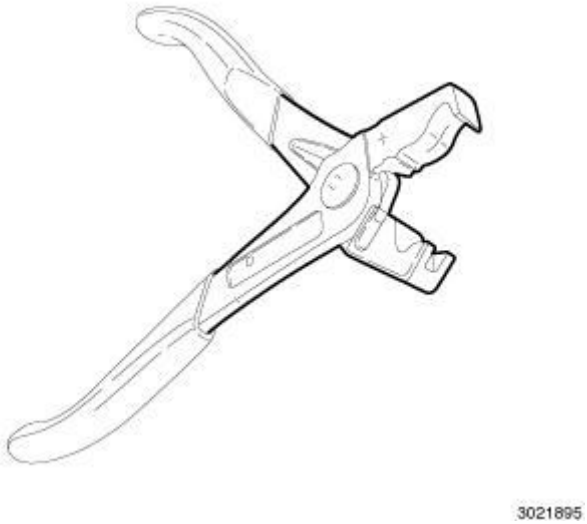

Fig. 112: ECT Sensor, Ignition Coil Capacitor, Engine Wire Harness Retainer Bracket & Bolts
Courtesy of CHRYSLER GROUP, LLC

1. If removed, install the Engine Coolant Temperature (ECT) sensor (4) and tighten to the proper specification. Refer to **TORQUE SPECIFICATIONS** .
2. If removed, install the ignition coil capacitor (1). Tighten the bolt (2) to the proper specification. Refer to **TORQUE SPECIFICATIONS** .
3. If removed, install the engine wire harness retainer bracket (5). Tighten the bolt (3) to the proper specification. Refer to **TORQUE SPECIFICATIONS** .

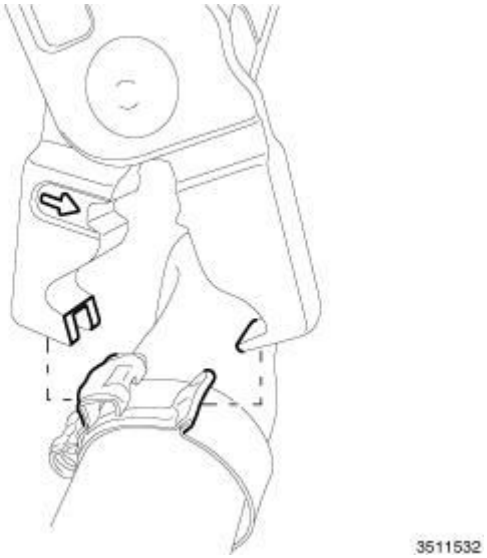

Fig. 113: Checking Cylinder Head Bolts For Stretching (Necking)
Courtesy of CHRYSLER GROUP, LLC

CAUTION: The cylinder head bolts are tightened using a torque plus angle procedure. The bolts must be examined BEFORE reuse. If the threads are necked down the bolts must be replaced.

NOTE: Typical cylinder head bolt shown in illustration.

4. Check cylinder head bolts for necking by holding a scale or straight edge against the threads. If all of the threads do not contact the scale (2) the bolt must be replaced.

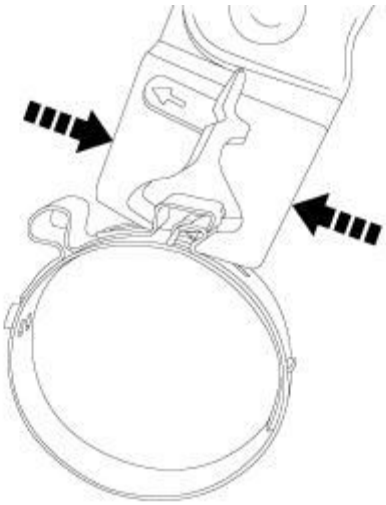

Fig. 114: Head Gasket & Locating Dowels
Courtesy of CHRYSLER GROUP, LLC

NOTE: Right head gasket shown in illustration, left head gasket similar.

CAUTION: When cleaning cylinder head and cylinder block surfaces, DO NOT use a metal scraper because the surfaces could be cut or ground. Use ONLY a wooden or plastic scraper.

5. Clean and prepare the gasket sealing surfaces of the cylinder head and block. Refer to **ENGINE, STANDARD PROCEDURE** .

CAUTION: Non-compressible debris such as oil, coolant or RTV sealants that are not removed from bolt holes can cause the aluminum casting to crack when tightening the bolts.

6. Clean out the cylinder head bolt holes in the engine block.

WARNING: The multi-layered steel head gaskets have very sharp edges that could cause personal injury if not handled carefully.

CAUTION: The installation of the cylinder head gaskets are not interchangeable between the left and right cylinder heads. They are clearly marked (3) with "R" for right and "L" for left. They must be applied on a dry surface, without the use of any adhesives.

7. Position the new cylinder head gasket (1) on the locating dowels (2).

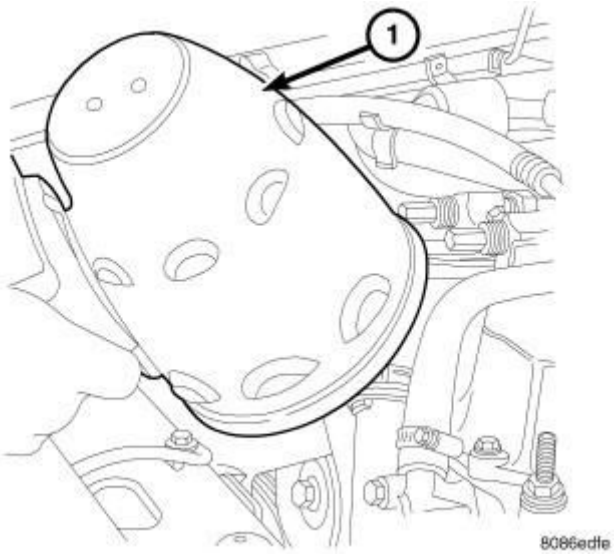

Fig. 115: Cylinder Head Retaining Bolt Tightening Sequence - Left
Courtesy of CHRYSLER GROUP, LLC

8. Using care, position the cylinder head onto the engine block.

NOTE: Do not apply any oil to the bolt threads.

9. Install the eight head bolts finger tight.
10. Tighten the cylinder head bolts in the sequence shown in illustration, following this 9-step torque plus angle method. Tighten according to the following torque values:
    - Step 1: All to 30 N.m (22 ft. lbs.)
    - Step 2: All to 45 N.m (33 ft. lbs.)
    - Step 3: All + 75° Turn **Do not use a torque wrench for this step.**
    - Step 4: All + 50° Turn **Do not use a torque wrench for this step.**
    - Step 5: Loosen all fasteners in reverse of sequence shown in illustration
    - Step 6: All to 30 N.m (22 ft. lbs.)
    - Step 7: All to 45 N.m (33 ft. lbs.)
    - Step 8: All + 70° Turn **Do not use a torque wrench for this step.**
    - Step 9: All + 70° Turn **Do not use a torque wrench for this step.**

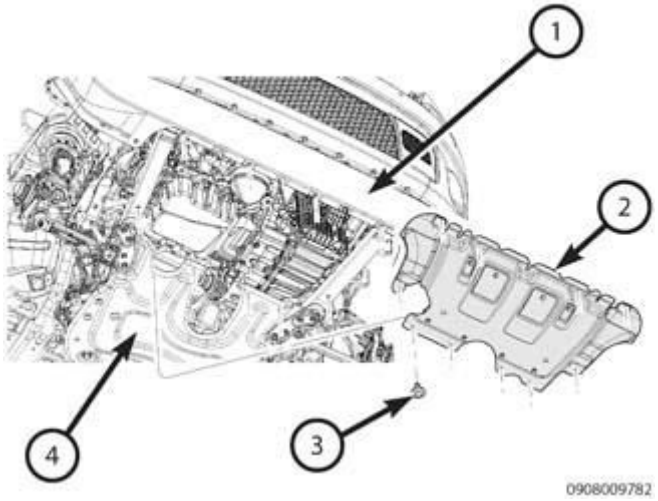

Fig. 116: Positioning Camshaft Alignment Holes Vertically
Courtesy of CHRYSLER GROUP, LLC

NOTE: If the hydraulic lifters are being reused, reassemble them into their original locations.

11. If removed, install the hydraulic lifters. Refer to **LIFTER(S), HYDRAULIC, INSTALLATION**.

NOTE: If the rocker arms are being reused, reassemble them into their original locations.

CAUTION: Do not rotate the camshafts more than a few degrees independently of the crankshaft. Valve to piston contact could occur resulting in possible valve damage. If the camshafts need to be rotated more than a few degrees, first move the pistons away from the cylinder heads by rotating the crankshaft counterclockwise to a position 30° before-top-dead-center. Once the camshafts are returned to their top-dead-center position, rotate the crankshaft clockwise to return the crankshaft to top-dead-center.

12. Install the rocker arms and camshafts. Refer to **CAMSHAFT, ENGINE, INSTALLATION**.

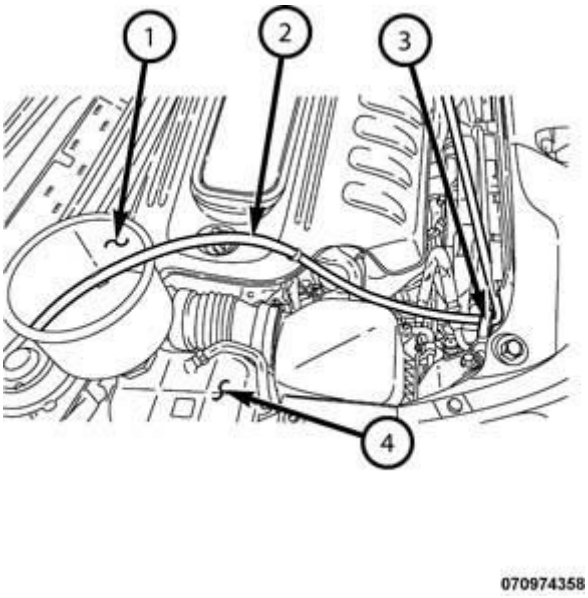

Fig. 117: Left Cam Chain Tensioner, Arm, Guide & Bolts
Courtesy of CHRYSLER GROUP, LLC

13. Install the LH cam chain guide (2) with two bolts (4). Tighten the bolts to the proper specification. Refer to **TORQUE SPECIFICATIONS** .
14. Install the LH cam chain tensioner (5) to the cylinder head with two bolts (6). Tighten the bolts to the proper specification. Refer to **TORQUE SPECIFICATIONS** .
15. Reset the LH cam chain tensioner (5) by lifting the pawl (3), pushing back the piston and installing Tensioner Pin (special tool #8514, Pins, Tensioner) (7). Refer to **VALVE TIMING - STANDARD PROCEDURE** .
16. Install the LH tensioner arm (1).

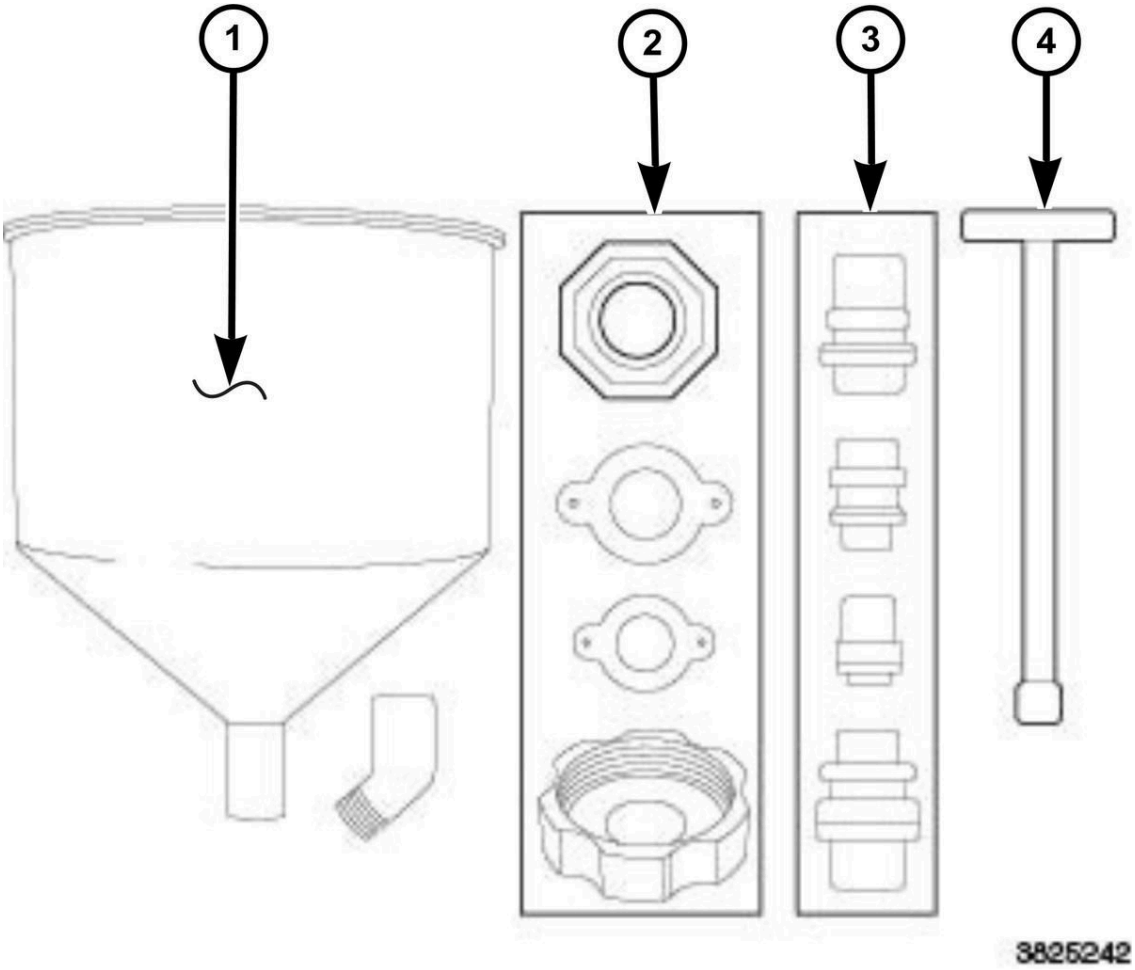

Fig. 118: Idler Sprocket, Plated Link & Arrow
Courtesy of CHRYSLER GROUP, LLC

17. Press the LH intake cam phaser onto the intake camshaft. Install and hand tighten the oil control valve.

CAUTION: Always reinstall timing chains so that they maintain the same direction of rotation. Inverting a previously run chain on a previously run sprocket will result in excessive wear to both the chain and sprocket.

18. Drape the left side cam chain over the LH intake cam phaser and onto the idler sprocket (1) so that the arrow (3) is aligned with the plated link (2) on the cam chain.

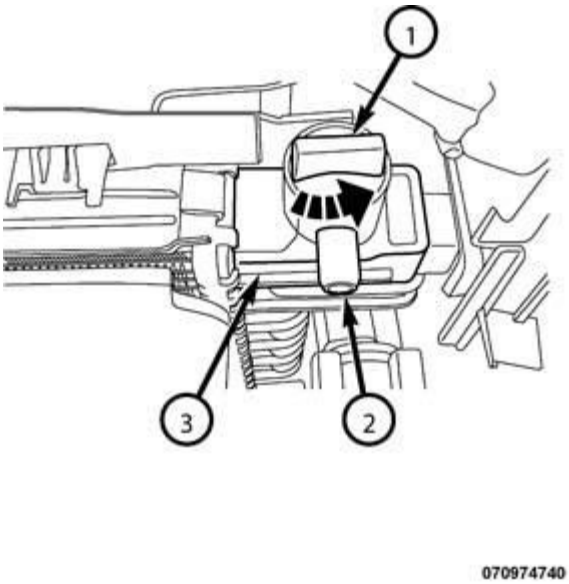

Fig. 119: Aligning Timing Marks
Courtesy of CHRYSLER GROUP, LLC

19. While maintaining this alignment, route the cam chain around the exhaust and intake cam phasers so that the plated links (2) are aligned with the phaser timing marks (1, 3). Position the cam phasers so that the arrows (4) point toward each other and are parallel to the valve cover sealing surface. Press the exhaust cam phaser onto the exhaust cam, install and hand tighten the oil control valve.

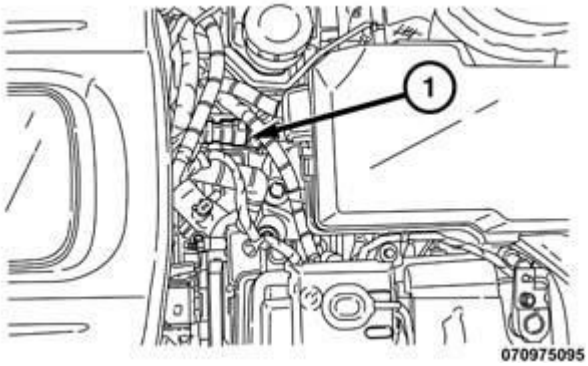

Fig. 120: Camshaft Phaser Lock, Oil Control Valves & Wrench
Courtesy of CHRYSLER GROUP, LLC

NOTE: Minor rotation of a camshaft (a few degrees) may be required to install the camshaft phaser or phaser lock.

20. Install the LH Camshaft Phaser Lock (special tool #10202, Locks, Camshaft/Phaser) (1) and tighten the oil control valves (2, 3) to the proper specification. Refer to **TORQUE SPECIFICATIONS** .

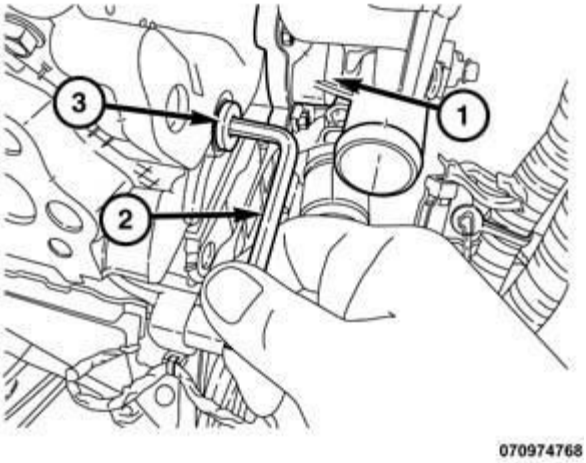

Fig. 121: Rotating Crankshaft Clockwise To Position No. 1 Piston At TDC On Exhaust Stroke
Courtesy of CHRYSLER GROUP, LLC

21. Remove the LH Camshaft Phaser Lock (special tool #10202, Locks, Camshaft/Phaser).
22. Remove the Tensioner Pin (special tool #8514, Pins, Tensioner) (1) from the LH cam chain tensioner.
23. Rotate the crankshaft clockwise two complete revolutions stopping when the dimple (4) on the crankshaft is aligned the with the block/bearing cap junction (5).
24. While maintaining this alignment, verify that the arrows on the left side cam phasers (2) point toward each other and are parallel to the valve cover sealing surface (3) and that the right side cam phaser arrows (7) point away from each other and the scribe lines (9) are parallel to the valve cover sealing surface (8).

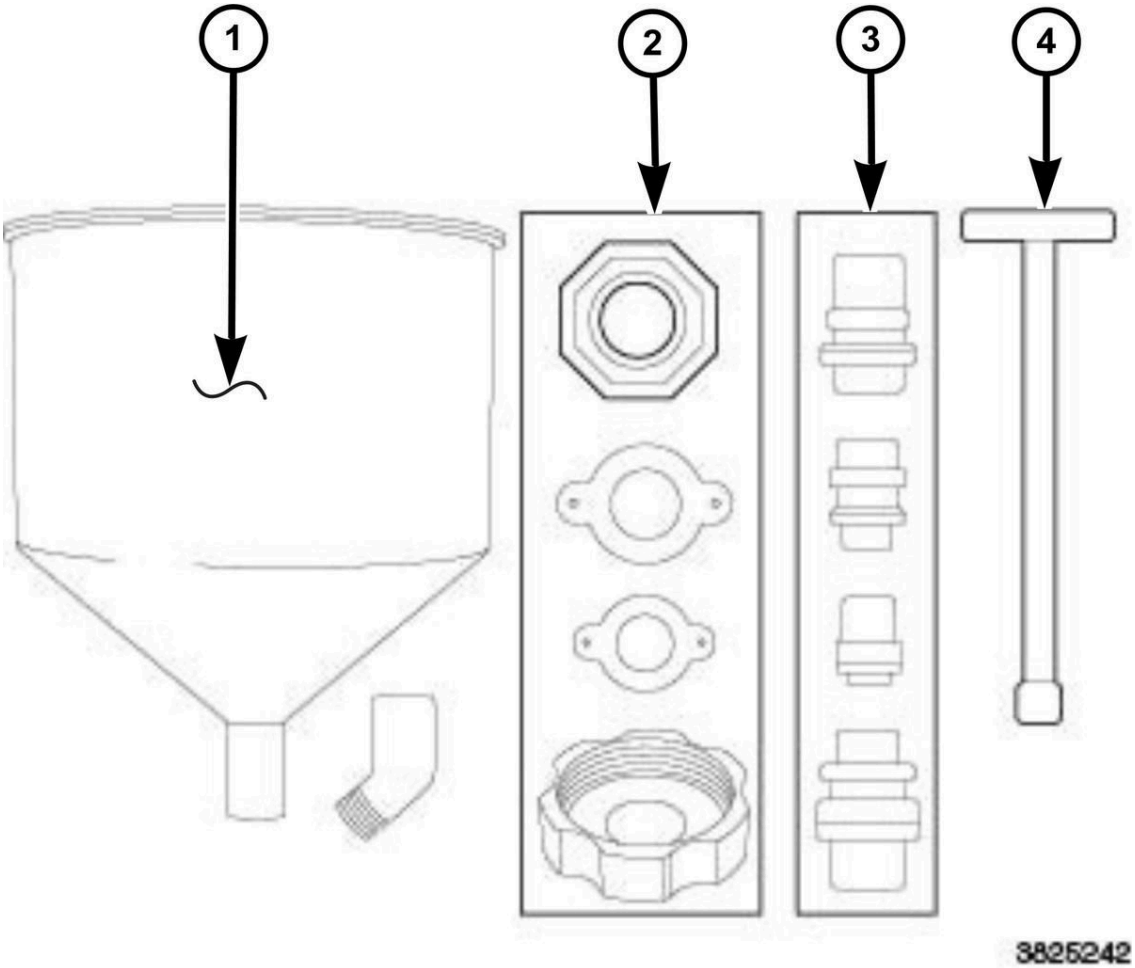

Fig. 122: Chain Pins, Exhaust Cam Phaser Triangle Marking & Circle Marking
Courtesy of CHRYSLER GROUP, LLC

25. There should be 12 chain pins (2) between the exhaust cam phaser triangle marking (1) and the intake cam phaser circle marking (3).
26. If the engine timing is not correct, loosen the timing chain by resetting the cam chain tensioner and repeat the camshaft alignment procedure. Refer to **VALVE TIMING - STANDARD PROCEDURE** .
27. Install the generator. Refer to **GENERATOR, INSTALLATION** .
28. Install the engine timing cover. Refer to **COVER(S), ENGINE TIMING, INSTALLATION**.
29. Install the spark plugs. Refer to **SPARK PLUG, INSTALLATION** .

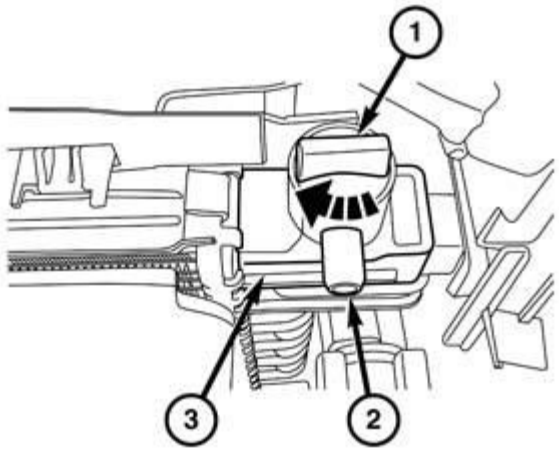

091274253

Fig. 123: Engine Injection/Ignition Harness & Engine Oil Pressure/Temperature Harness
Courtesy of CHRYSLER GROUP, LLC

30. Connect the main harness to the engine oil pressure/temperature harness (2) at the rear of the left cylinder head.
31. Connect the main harness to the engine injection/ignition harness (1) at the rear of the left cylinder head.

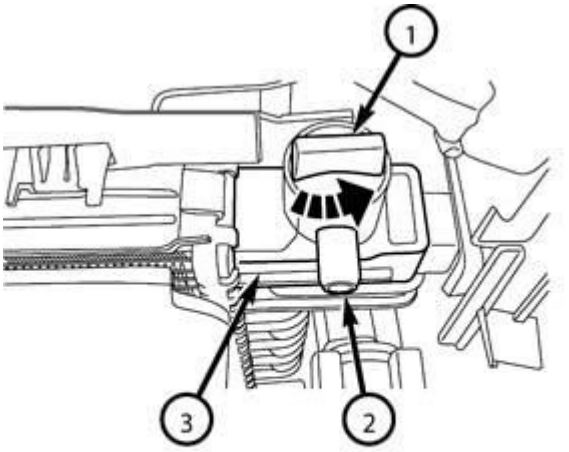

070974740

Fig. 124: Electrical Connector, Mounting Bolt & Ignition Capacitor
Courtesy of CHRYSLER GROUP, LLC

32. Connect the ignition coil capacitor harness connector (1).

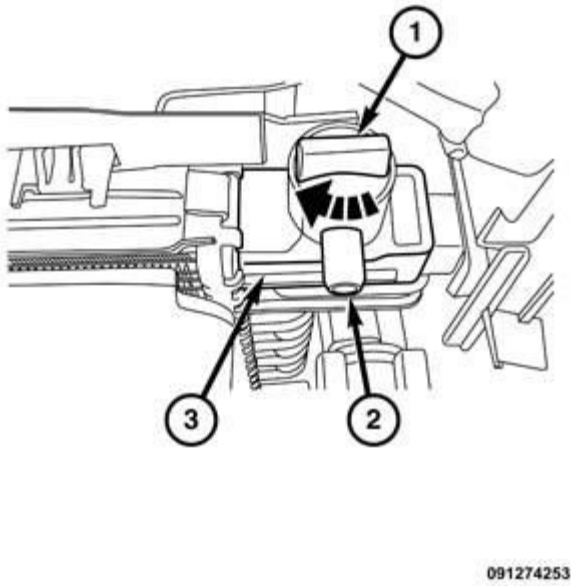

Fig. 125: Identifying Engine Coolant Temperature Sensor
Courtesy of CHRYSLER GROUP, LLC

33. Connect the Engine Coolant Temperature (ECT) sensor harness connector (2).
34. Install the lower and upper intake manifolds and insulator. Refer to **MANIFOLD, INTAKE, INSTALLATION**.
35. Install the Powertrain Control Module (PCM). Refer to **MODULE, POWERTRAIN CONTROL, INSTALLATION** .
36. Install the air resonator. Refer to **RESONATOR, AIR CLEANER, INSTALLATION**.
37. Install the air cleaner body. Refer to **BODY, AIR CLEANER, INSTALLATION**.
38. Evacuate and charge the A/C system. Refer to **PLUMBING, STANDARD PROCEDURE** .

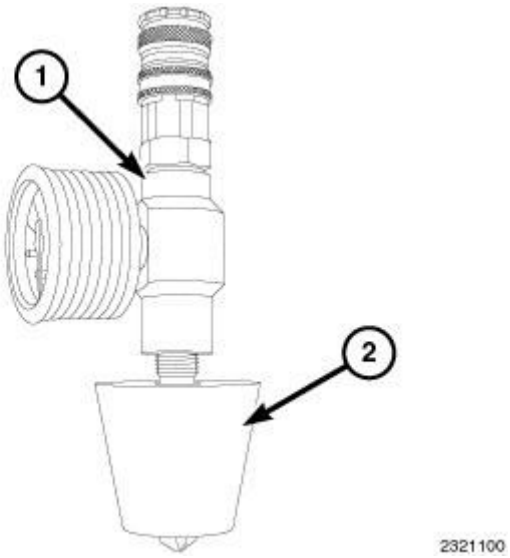

Fig. 126: Engine Cover & Ball Studs
Courtesy of CHRYSLER GROUP, LLC

39. Install the engine cover (1).
40. If removed, install the oil filter and fill the engine crankcase with the proper oil to the correct level. Refer to **OIL, STANDARD PROCEDURE** .
41. Fill the cooling system. Refer to **STANDARD PROCEDURE** .
42. Raise and support the vehicle. Refer to **HOISTING, STANDARD PROCEDURE** .
43. Install the belly pan. Refer to **BELLY PAN, INSTALLATION** .
44. Lower the vehicle.
45. Connect the negative battery cable and tighten nut to the proper specification. Refer to **SPECIFICATIONS** .
46. Run the engine until it reaches normal operating temperature. Check cooling system for correct fluid level. Refer to **STANDARD PROCEDURE** .

NOTE: The Cam/Crank Variation Relearn procedure must be performed using the scan tool anytime there has been a repair/replacement made to a powertrain system, for example: flywheel, valvetrain, camshaft and/or crankshaft sensors or components.

RIGHT CYLINDER HEAD

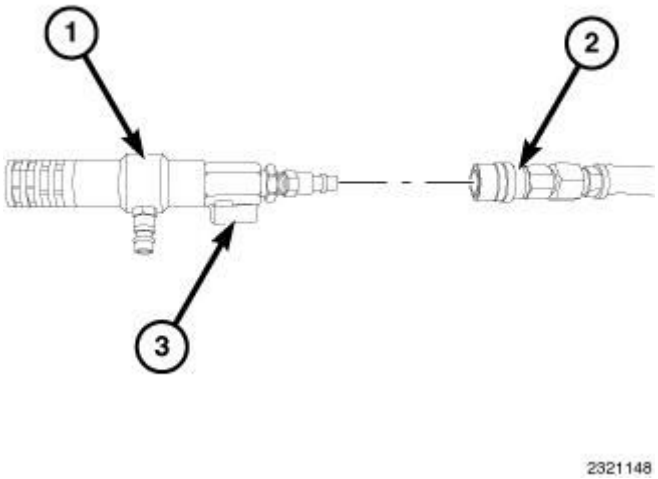

Fig. 127: Magnetic Timing Wheels
Courtesy of CHRYSLER GROUP, LLC

CAUTION: The magnetic timing wheels (1) must not come in contact with magnets (pickup tools, trays, etc.) or any other strong magnetic field. This will destroy the timing wheels ability to correctly relay camshaft position to the camshaft position sensor.

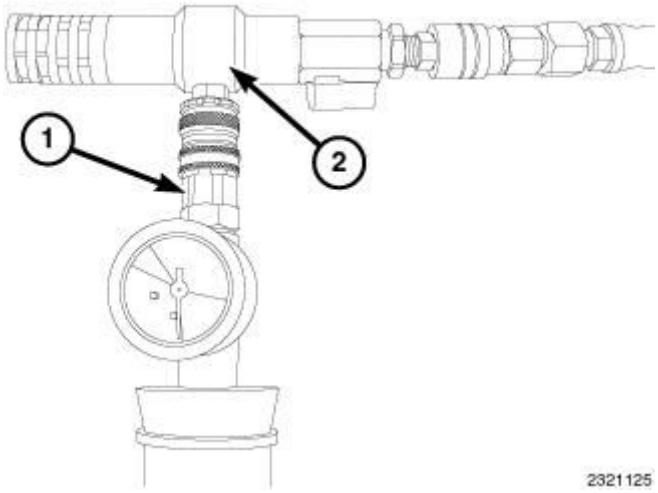

Fig. 128: Ignition Coil Capacitor & Bolt
Courtesy of CHRYSLER GROUP, LLC

1. If removed, install the ignition coil capacitor (1). Tighten the bolt (2) to the proper specification. Refer to **TORQUE SPECIFICATIONS** .

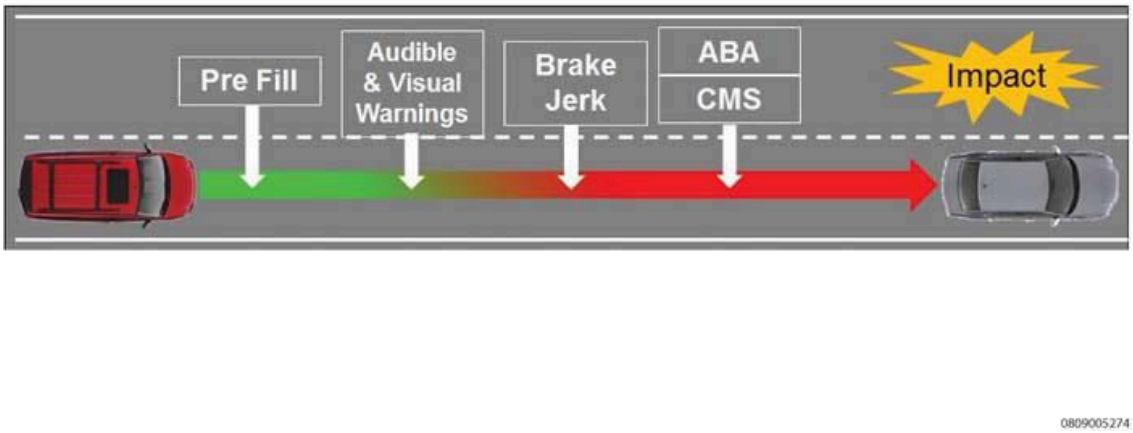

Fig. 129: Checking Cylinder Head Bolts For Stretching (Necking)
Courtesy of CHRYSLER GROUP, LLC

CAUTION: The cylinder head bolts are tightened using a torque plus angle procedure. The bolts must be examined BEFORE reuse. If the threads are necked down the bolts must be replaced.

NOTE: Typical cylinder head bolt shown in illustration.

2. Check cylinder head bolts for necking by holding a scale or straight edge against the threads. If all the threads do not contact the scale (2) the bolt must be replaced.

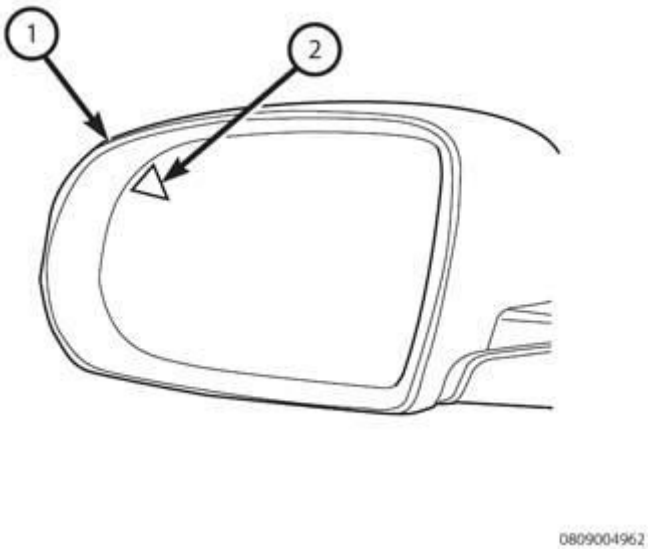

Fig. 130: Head Gasket & Locating Dowels
Courtesy of CHRYSLER GROUP, LLC

CAUTION: When cleaning cylinder head and cylinder block surfaces, DO NOT use a metal scraper because the surfaces could be cut or ground. Use ONLY a wooden or plastic scraper.

3. Clean and prepare the gasket sealing surfaces of the cylinder head and block. Refer to **ENGINE, STANDARD PROCEDURE** .

CAUTION: Non-compressible debris such as oil, coolant or RTV sealants that are not removed from bolt holes can cause the aluminum casting to crack when tightening the bolts.

4. Clean out the cylinder head bolt holes in the engine block.

WARNING: The multi-layered steel head gaskets have very sharp edges that could cause personal injury if not handled carefully.

CAUTION: The installation of the cylinder head gaskets are not interchangeable between the left and right cylinder heads. They are clearly marked (3) with "R" for right and "L" for left. They must be applied on a dry surface, without the use of any adhesives.

5. Position the new cylinder head gasket (1) on the locating dowels (2).

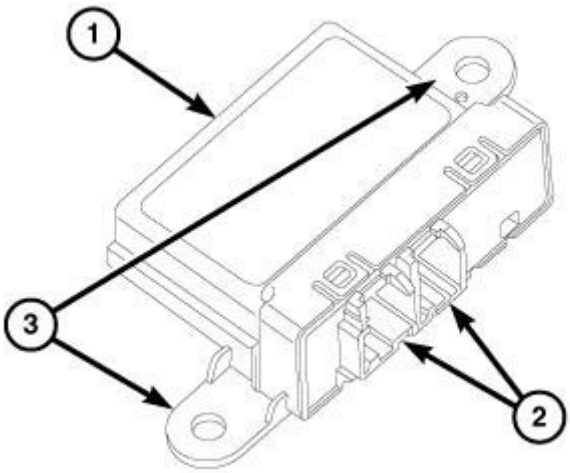

3767779

Fig. 131: Cylinder Head Retaining Bolt Tightening Sequence - Right
Courtesy of CHRYSLER GROUP, LLC

6. Position the cylinder head onto the cylinder block.

NOTE: Do not apply any oil to the bolt threads.

7. Install the eight head bolts finger tight.
8. Tighten the cylinder head bolts in the sequence shown in illustration, following this 9-step torque plus angle method. Tighten according to the following torque values:
   - Step 1: All to 30 N.m (22 ft. lbs.)
   - Step 2: All to 45 N.m (33 ft. lbs.)
   - Step 3: All + 75° Turn **Do not use a torque wrench for this step.**
   - Step 4: All + 50° Turn **Do not use a torque wrench for this step.**
   - Step 5: Loosen all fasteners in reverse of sequence shown in illustration
   - Step 6: All to 30 N.m (22 ft. lbs.)
   - Step 7: All to 45 N.m (33 ft. lbs.)
   - Step 8: All + 70° Turn **Do not use a torque wrench for this step.**
   - Step 9: All + 70° Turn **Do not use a torque wrench for this step.**

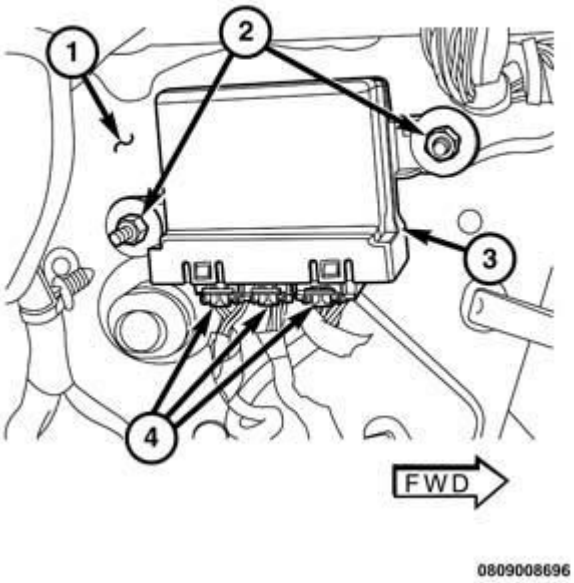

Fig. 132: Positioning Camshaft Alignment Holes Vertically
Courtesy of CHRYSLER GROUP, LLC

NOTE: **If the hydraulic lifters are being reused, reassemble them into their original locations.**

9. If removed, install the hydraulic lifters. Refer to **LIFTER(S), HYDRAULIC, INSTALLATION**.

NOTE: **If the rocker arms are being reused, reassemble them into their original locations.**

CAUTION: Do not rotate the camshafts more than a few degrees independently of the crankshaft. Valve to piston contact could occur resulting in possible valve damage. If the camshafts need to be rotated more than a few degrees, first move the pistons away from the cylinder heads by rotating the crankshaft counterclockwise to a position 30° before-top-dead-center. Once the camshafts are returned to their top-dead-center position, rotate the crankshaft clockwise to return the crankshaft to top-dead-center.

10. Install the rocker arms and camshafts. Refer to **CAMSHAFT, ENGINE, INSTALLATION**.

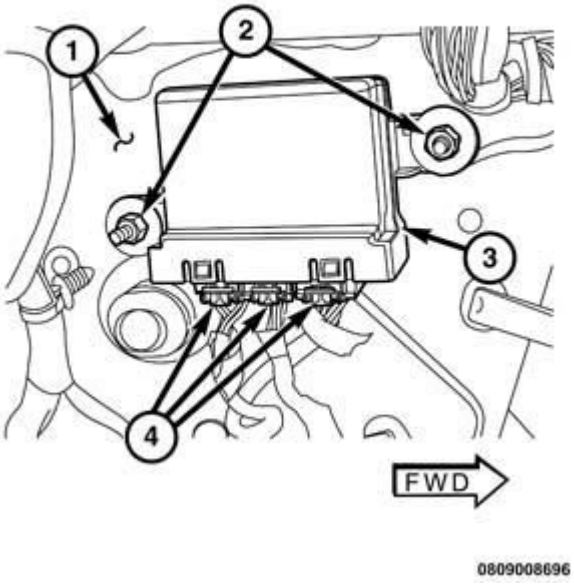

Fig. 133: Right Cam Chain Tensioner, Arm, Guide & Bolts
Courtesy of CHRYSLER GROUP, LLC

11. Install the RH cam chain guide (1) with three bolts (2). Tighten the bolts to the proper specification. Refer to **TORQUE SPECIFICATIONS** .
12. Install the RH cam chain tensioner (3) to the engine block with two bolts (4). Tighten the bolts to the proper specification. Refer to **TORQUE SPECIFICATIONS** .
13. Reset the RH cam chain tensioner (3) by pushing back the tensioner piston and installing Tensioner Pin (special tool #8514, Pins, Tensioner) (5).
14. Install the RH tensioner arm (6).

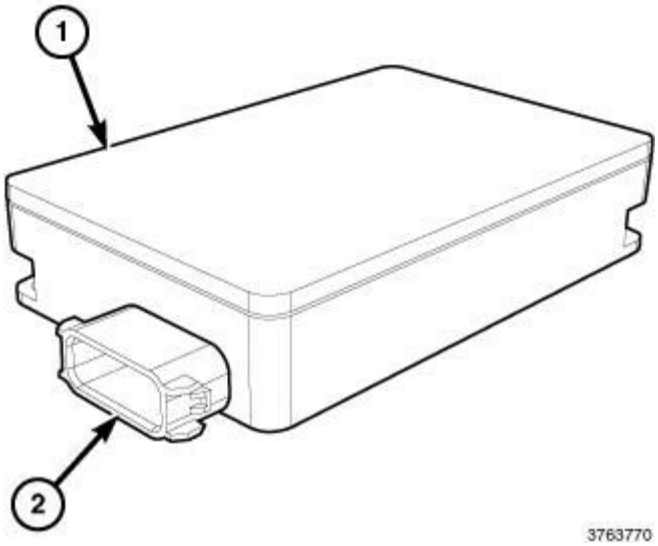

Fig. 134: Idler Sprocket, Dimple & Plated Link
Courtesy of CHRYSLER GROUP, LLC

15. Press the RH exhaust cam phaser onto the exhaust camshaft. Install and hand tighten the oil control valve.

CAUTION: Always reinstall timing chains so that they maintain the same direction of rotation. Inverting a previously run chain on a previously run sprocket will result in excessive wear to both the chain and sprocket.

16. Drape the right side cam chain over the RH exhaust cam phaser and onto the idler sprocket (1) so that the dimple (2) is aligned with the plated link (3) on the cam chain.

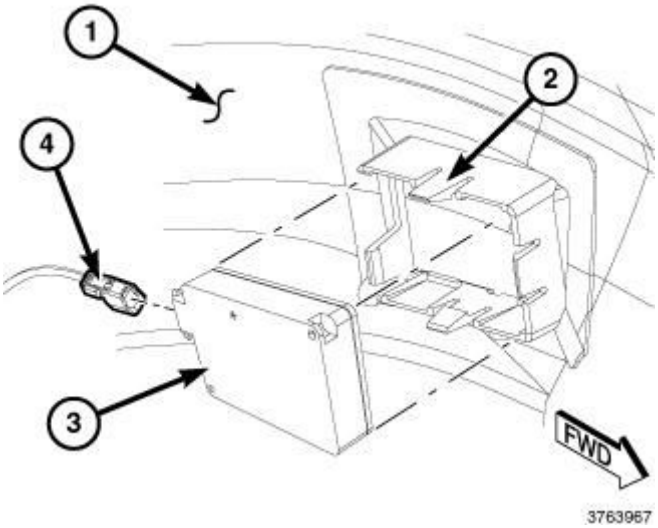

Fig. 135: Aligning Timing Marks
Courtesy of CHRYSLER GROUP, LLC

17. While maintaining this alignment, route the cam chain around the exhaust and intake cam phasers so that the plated links are aligned with the phaser timing marks (2, 4). Position the cam phasers so that the scribe lines (3) are parallel to the valve cover sealing surface. Press the intake cam phaser onto the intake cam, install and hand tighten the oil control valve.

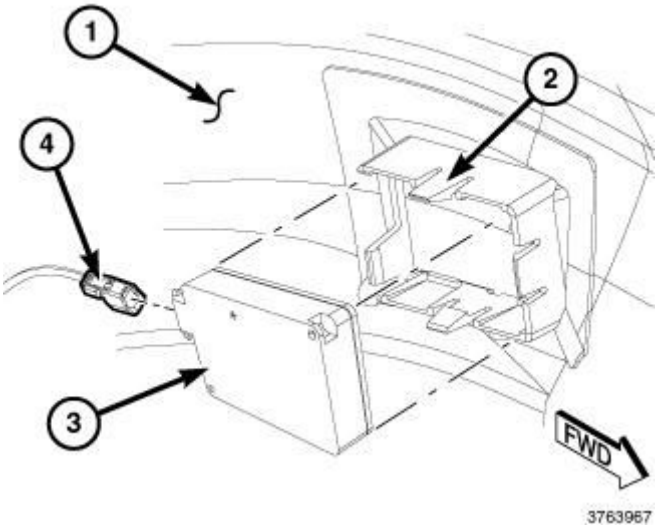

Fig. 136: Camshaft Phaser Lock, Oil Control Valves & Wrench
Courtesy of CHRYSLER GROUP, LLC

NOTE: Minor rotation of a camshaft (a few degrees) may be required to install the camshaft phaser or phaser lock.

18. Install the RH Camshaft Phaser Lock (special tool #10202, Locks, Camshaft/Phaser) (1) and tighten the oil control valves (2, 3) to the proper specification. Refer to **TORQUE SPECIFICATIONS** .

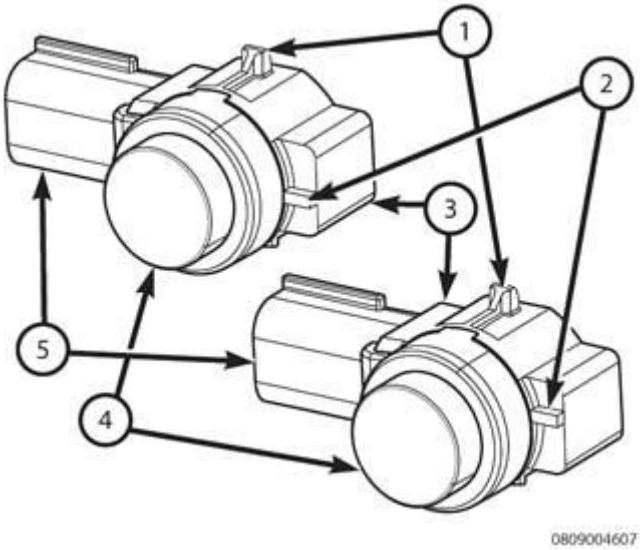

Fig. 137: Rotating Crankshaft Clockwise To Position No. 1 Piston At TDC On Exhaust Stroke

Courtesy of CHRYSLER GROUP, LLC

19. Remove the RH Camshaft Phaser Lock (special tool #10202, Locks, Camshaft/Phaser).
20. Remove the Tensioner Pin (special tool #8514, Pins, Tensioner) (6) from the RH cam chain tensioner.
21. Rotate the crankshaft clockwise two complete revolutions stopping when the dimple (4) on the crankshaft is aligned the with the block/bearing cap junction (5).
22. While maintaining this alignment, verify that the arrows on the left side cam phasers (2) point toward each other and are parallel to the valve cover sealing surface (3) and that the right side cam phaser arrows (7) point away from each other and the scribe lines (9) are parallel to the valve cover sealing surface (8).

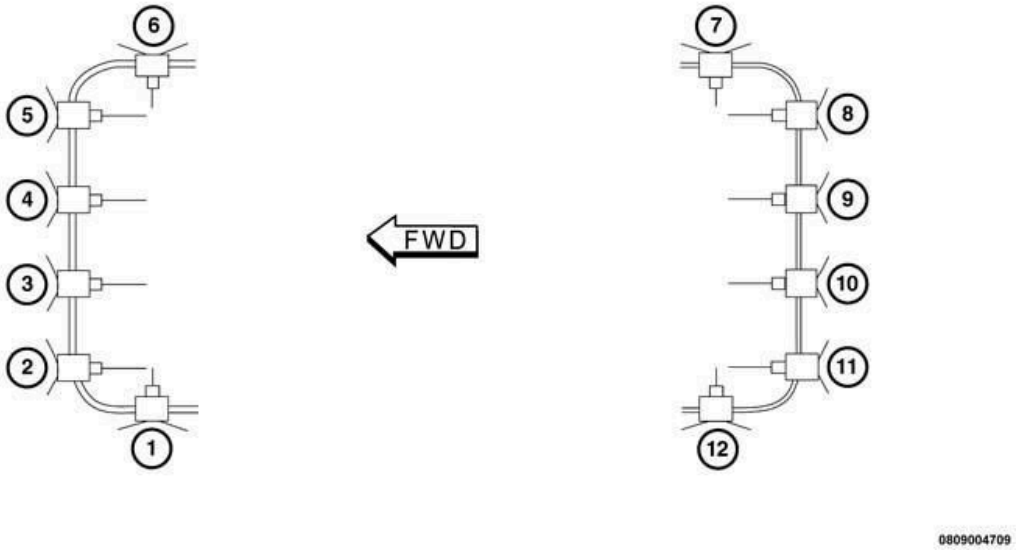

Fig. 138: Chain Pins, Exhaust Cam Phaser Triangle Marking & Circle Marking
Courtesy of CHRYSLER GROUP, LLC

23. There should be 12 chain pins (2) between the exhaust cam phaser triangle marking (1) and the intake cam phaser circle marking (3).
24. If the engine timing is not correct, loosen the timing chain by resetting the right side cam chain tensioner and repeat the camshaft alignment procedure.
25. Install the engine timing cover. Refer to **COVER(S), ENGINE TIMING, INSTALLATION**.
26. Install the spark plugs. Refer to **SPARK PLUG, INSTALLATION** .
27. Install the upper intake manifold support bracket (2) with the studbolt (3) hand tight.
28. Engage the wire harness retainer (3) from the intake manifold support bracket.

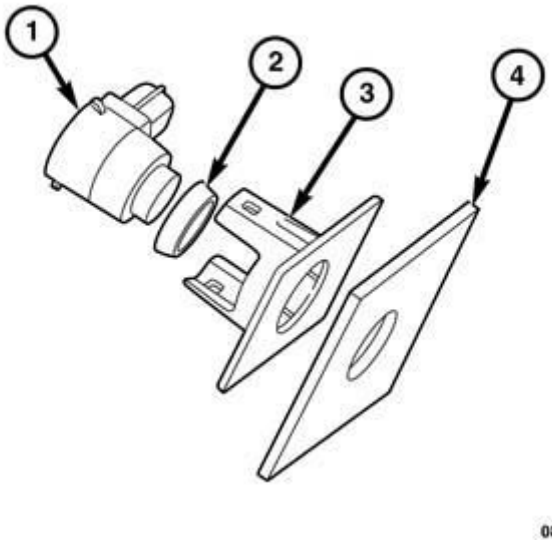

Fig. 139: Electrical Connector, Mounting Bolt & Ignition Capacitor
Courtesy of CHRYSLER GROUP, LLC

29. Connect the ignition coil capacitor harness connector (1).
30. Install the upper and lower intake manifolds and insulator. Refer to **MANIFOLD, INTAKE, INSTALLATION**.
31. Install the resonator. Refer to **RESONATOR, AIR CLEANER, INSTALLATION**.
32. Install the air cleaner body. Refer to **BODY, AIR CLEANER, INSTALLATION**.

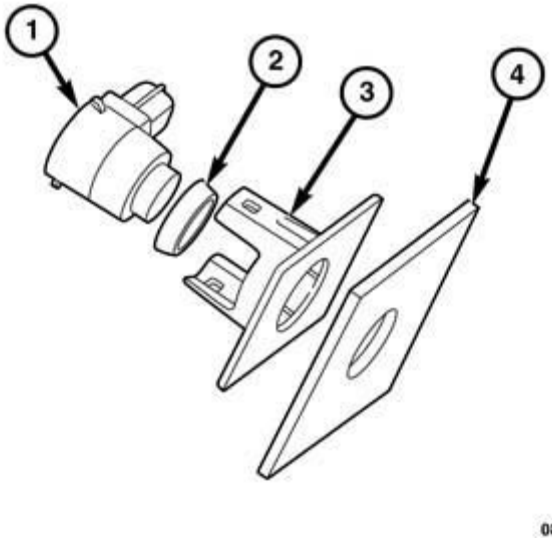

Fig. 140: Engine Cover & Ball Studs
Courtesy of CHRYSLER GROUP, LLC

33. Evacuate and charge the A/C system. Refer to **PLUMBING, STANDARD PROCEDURE** .
34. Install the engine cover (1).
35. If removed, install the oil filter and fill the engine crankcase with the proper oil to the correct level. Refer to **OIL, STANDARD PROCEDURE** .
36. Fill the cooling system. Refer to **STANDARD PROCEDURE** .
37. Raise and support the vehicle. Refer to **HOISTING, STANDARD PROCEDURE** .
38. Install the belly pan. Refer to **BELLY PAN, INSTALLATION** .
39. Lower the vehicle.
40. Connect the negative battery cable and tighten nut to the proper specification. Refer to **SPECIFICATIONS** .
41. Run the engine until it reaches normal operating temperature. Check cooling system for correct fluid level. Refer to **STANDARD PROCEDURE** .

NOTE: The Cam/Crank Variation Relearn procedure must be performed using the scan tool anytime there has been a repair/replacement made to a powertrain system, for example: flywheel, valvetrain, camshaft and/or crankshaft sensors or components.

ASSEMBLY, VARIABLE VALVE TIMING, PHASER/OIL CONTROL VALVE

DESCRIPTION

DESCRIPTION

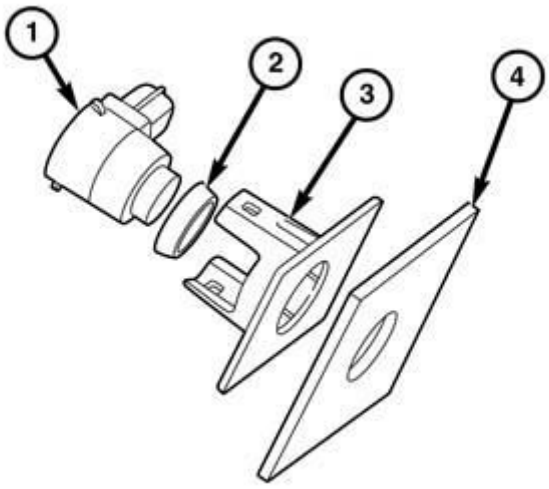

080968288

Fig. 141: Exhaust Phaser Assembly
Courtesy of CHRYSLER GROUP, LLC

The engine is equipped with Variable Valve Timing (VVT). This system adjusts the timing of all four

camshafts independently using solenoids and oil control valves to direct oil pressure into the camshaft phaser assemblies. The camshaft phaser assembly advances and/or retards camshaft timing to improve engine performance, mid-range torque, idle quality, fuel economy, and reduce emissions. The four phasers are located on the front of the camshafts, behind the VVT solenoids, inside of the engine timing cover. The exhaust phasers are identified with EXH and the intake phasers are identified with INT. The exhaust phaser has a clockspring, the intake phaser does not. The camshaft sprockets are integrated with the camshaft phaser and are serviced as an assembly. Do not attempt to disassemble the phasers, they are not serviceable. Phasers are interchangeable between the right and left cylinder heads but should be installed in the same location as removed.

The engine has an Oil Control Valve (OCV) for each phaser. The OCV also acts as a bolt for mounting the Phaser to the camshaft. The OCVs spool valve is spring loaded and should move freely within the OCV body. The four OCVs are identical but should be installed in the same location as removed.

OPERATION

OPERATION

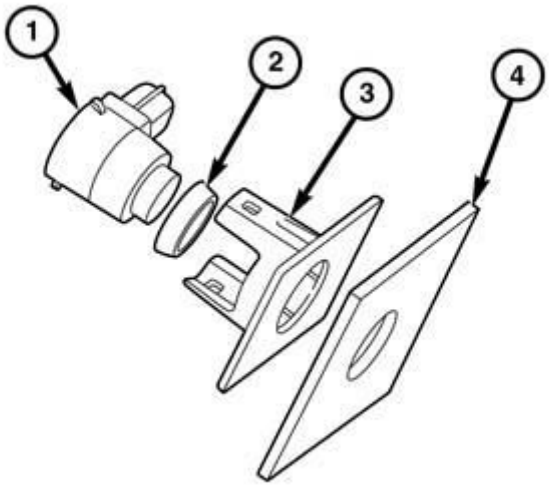

080968288

Fig. 142: Oil Control Valve (OCV), VVT Solenoid, Solenoid Pintle & Internal Spool Valve
Courtesy of CHRYSLER GROUP, LLC

Each phaser position is adjusted using regulated oil pressure through the Oil Control Valve (OCV) (3). To begin phaser movement, a voltage signal is applied to the VVT solenoid (1) to extend or retract the solenoid pintle (4). The pintle pushes against an internal spool valve (2) within the OCV moving the valve forward and backward to direct oil flow.

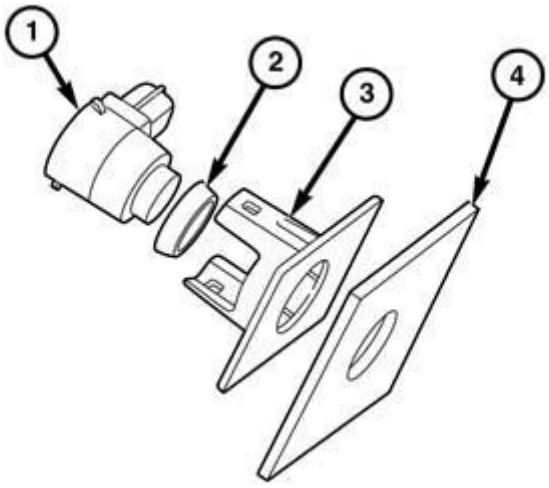

080968288

Fig. 143: Phasers In Lock-Pin Position
Courtesy of CHRYSLER GROUP, LLC

At engine startup, system oil pressure overcomes spring pressure and unlocks the phaser lock-pin (1) in preparation for phasing. The phasers remain in this position until a PCM signal is given to pulse-width modulate the VVT solenoid. At engine shutdown, as oil pressure is reduced, both Phasers return to their lock-pin position.

Because the exhaust Phaser needs to travel to a position above and beyond the standard camshaft clockwise rotation, the assistance of a clock spring is required. The intake Phaser on the other hand, simply relies on the torsional resistance from the valvetrain to push it back towards lock-pin position.

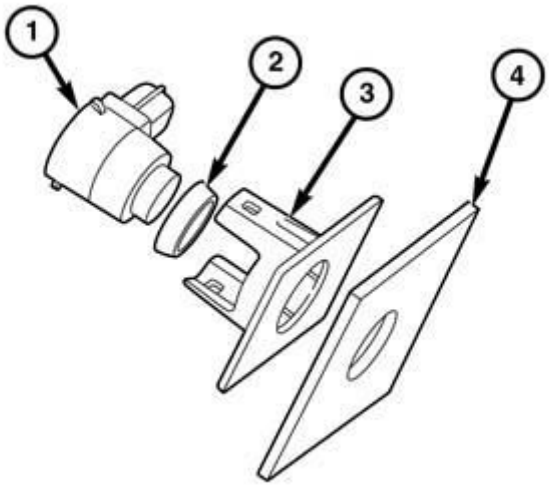

080968288

Fig. 144: Spool Valve, Vanes, OCV & Advance, Hold Or Retard Position

Courtesy of CHRYSLER GROUP, LLC

The position of the spool valve (1) inside the OCV (2) determines which ports and chambers inside the phaser are being fed, either to advance (3), hold (4) or retard (5) the timing of the phaser sprocket relative to the camshaft. The spool valve also returns oil from the chambers to the sump (6). The Camshaft Position (CMP) sensor monitors the position of the camshaft with respect to the crankshaft and provides feedback to the PCM. As oil pressure pushes against the vanes (6) of the phaser rotor, the rotor begins to move. Since this rotor is physically attached to the camshaft, rotor rotation causes the camshaft position to rotate relative to the standard sprocket (7) position.

REMOVAL

LEFT OIL CONTROL VALVES

YouTube	A multimedia supplement to the instructions contained in this article is available. To view the multimedia example of the condition described go to; **http://www.youtube.com/user/Mitchell1Tips** **then type "A00641418.vid1" into the "Search Channel" box.**

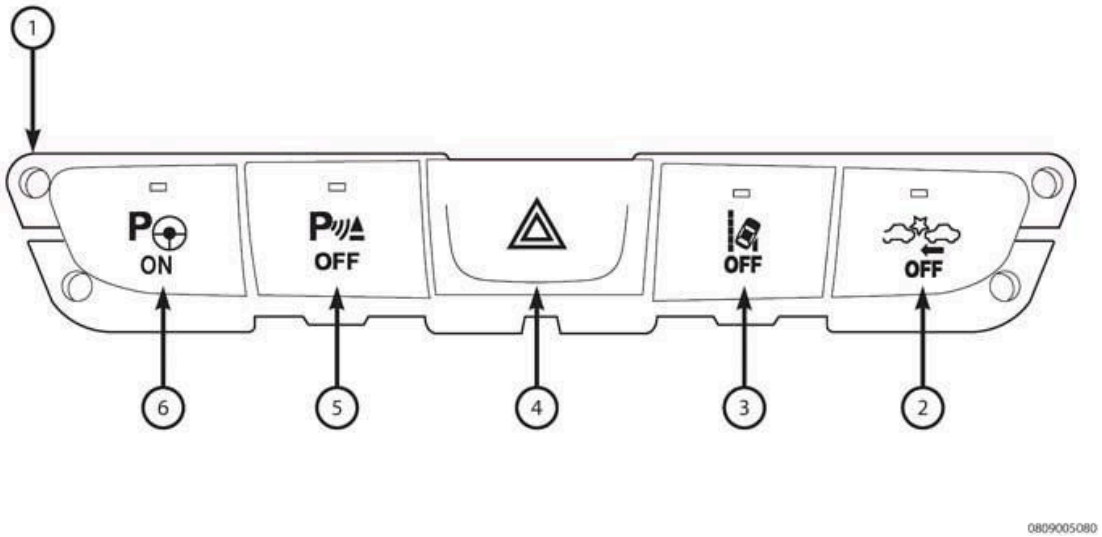

Fig. 145: Magnetic Timing Wheels
Courtesy of CHRYSLER GROUP, LLC

CAUTION: The magnetic timing wheels (1) must not come in contact with magnets (pickup tools, trays, etc.) or any other strong magnetic field. This will destroy the timing wheels ability to correctly relay camshaft position to the camshaft position sensor.

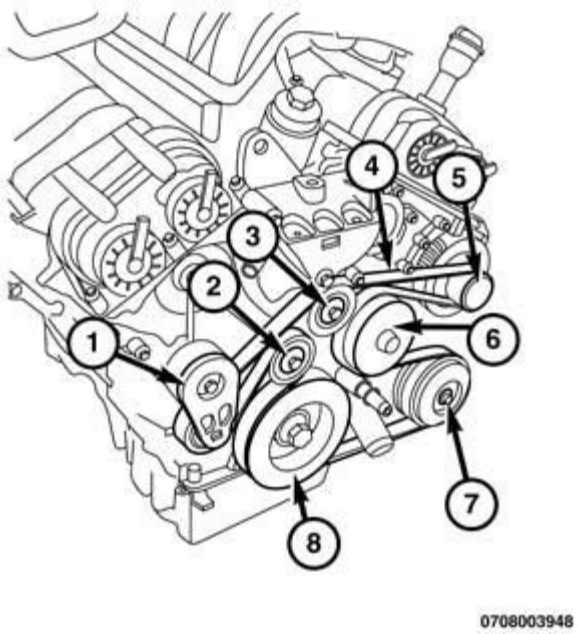

Fig. 146: Positioning Dial Indicator & Setting #4 Cylinder At Top-Dead-Center Compression Stroke
Courtesy of CHRYSLER GROUP, LLC

1. Remove the left cylinder head cover. Refer to **COVER(S), CYLINDER HEAD, REMOVAL**.
2. Remove the right ignition coils and all spark plugs. Refer to **SPARK PLUG, REMOVAL** .

CAUTION: When aligning timing marks, always rotate engine by turning the crankshaft. Failure to do so will result in valve and/or piston damage.

3. Mount Dial Indicator Set (special tool #C-3339A, Set, Dial Indicator) (1) to a stationary point on the engine, such as the left camshaft position (CMP) sensor mount. Position the indicator probe into the number four cylinder, rotate the crankshaft clockwise (as viewed from the front) to place the number four cylinder piston at top-dead-center on the compression stroke and set the indicator dial to zero.

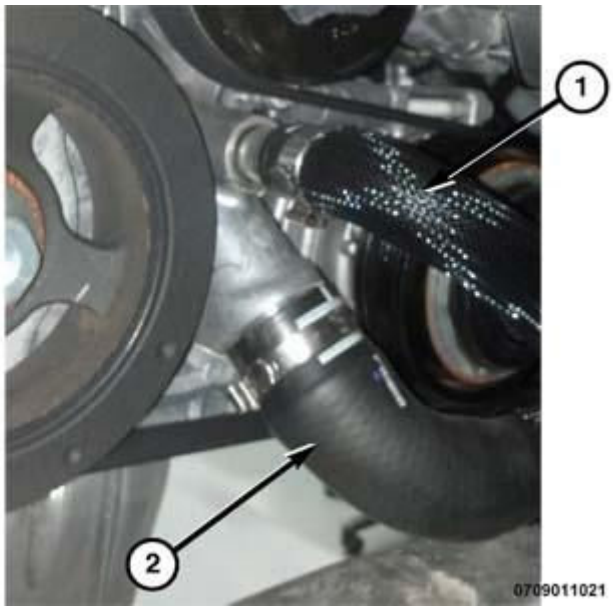

Fig. 147: Arrows, Scribe Lines & Cylinder Head Cover Mounting Surface
Courtesy of CHRYSLER GROUP, LLC

4. The left side cam phaser **SCRIBE LINES** (3) should face away from each other and the **ARROWS** (1) should point toward each other and be parallel to the cylinder head cover mounting surface (2) when the number four cylinder piston is positioned at top-dead-center on the compression stroke.

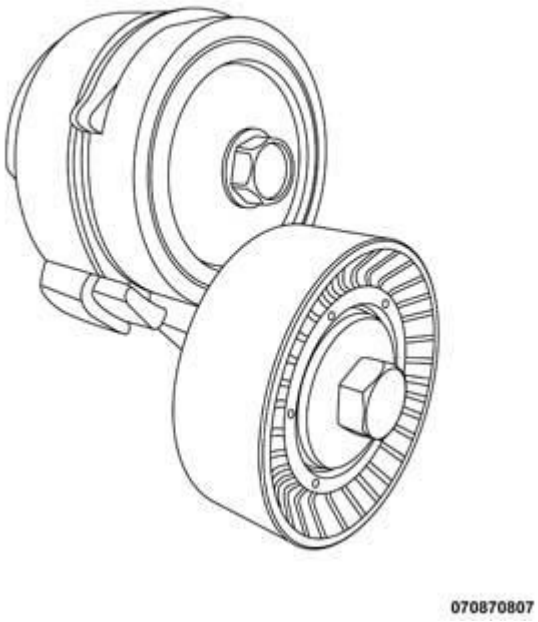

Fig. 148: Phaser Timing Mark, Chain Pins, Exhaust Cam Phaser Triangle Marking, Oil Control Valve, Scribe Lines & Arrows
Courtesy of CHRYSLER GROUP, LLC

NOTE: The phaser markings (1 and 3) could align with either an external or internal chain link. Either alignment is acceptable as long as there are twelve chain pins between the markings.

5. There should be twelve chain pins (2) **BETWEEN** the exhaust cam phaser triangle marking (3) and the intake cam phaser circle marking (1) as viewed from either the front or rear of the cam phasers.
6. Mark both sides of the cam chain at the phaser timing marks (1 and 3) using a paint pen or equivalent to aid in reassembly.

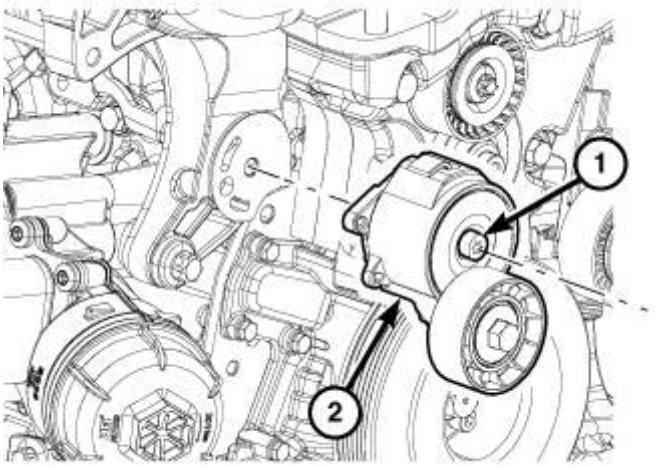

Fig. 149: Camshaft Phaser Lock, Oil Control Valves & Wrench
Courtesy of CHRYSLER GROUP, LLC

NOTE: It may be necessary to rock the camshaft slightly (a few degrees) with a wrench (4) when installing the camshaft phaser lock.

7. Install the (special tool #10202-2, Lock, Camshaft/Phaser, Left Side) (1) against the cylinder head cover mounting surface with the tool number facing up.
8. Loosen, but do not remove, the exhaust oil control valve (2) and the intake oil control valve (3).
9. Remove the (special tool #10202-2, Lock, Camshaft/Phaser, Left Side) (1).

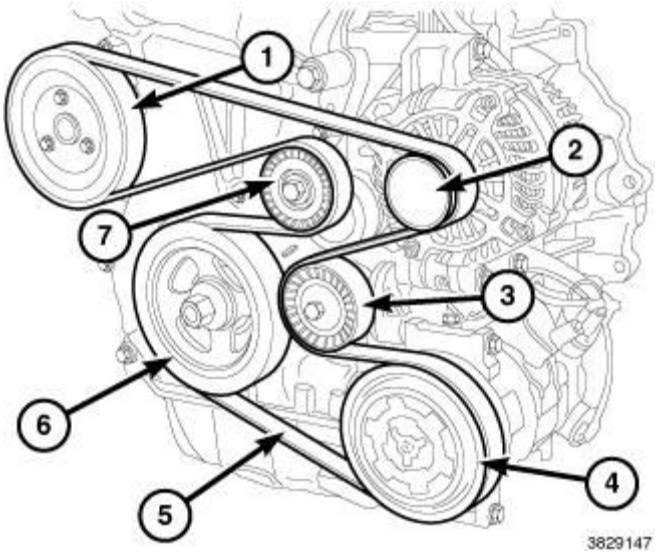

Fig. 150: Pin, Rack & Timing Chain Holder
Courtesy of CHRYSLER GROUP, LLC

NOTE: Graphic shows engine timing cover removed for clarity.

10. Insert the (special tool #10200-3, Pin) (2) into to hole located on the side of the tensioner housing, lift the pawl off of the rack (3). While holding the pawl off of the rack, push (special tool #10200-1, Holder, Timing Chain, Left Side) (1) into place between the cylinder head boss and the tensioner arm to force the rack and piston back into the tensioner body. The Timing Chain Holder remains in place while the phasers are removed.

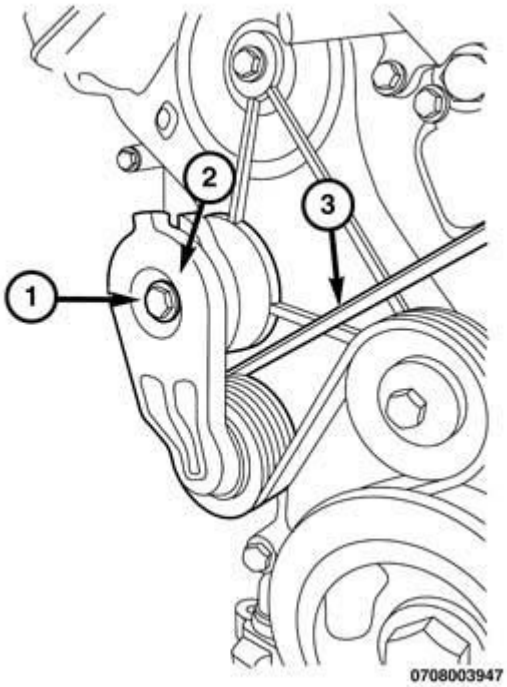

Fig. 151: Pin, Rack, Timing Chain Holder & Oil Control Valves
Courtesy of CHRYSLER GROUP, LLC

11. If required, remove the oil control valve (4) and pull the left side exhaust cam phaser off of the camshaft.
12. If required, remove the oil control valve (3) and pull the left side intake cam phaser off of the camshaft.

RIGHT OIL CONTROL VALVES

YouTube	A multimedia supplement to the instructions contained in this article is available. To view the multimedia example of the condition described go to; **http://www.youtube.com/user/Mitchell1Tips** **then type "A00641418.vid2" into the "Search Channel" box.**

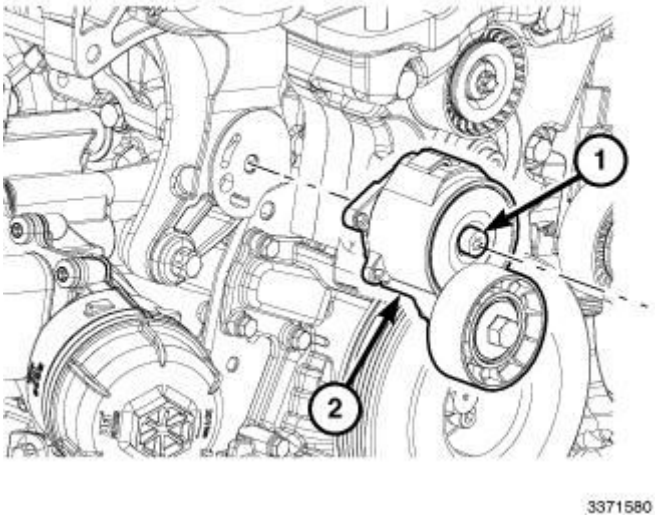

Fig. 152: Magnetic Timing Wheels
Courtesy of CHRYSLER GROUP, LLC

CAUTION: The magnetic timing wheels (1) must not come in contact with magnets (pickup tools, trays, etc.) or any other strong magnetic field. This will destroy the timing wheels ability to correctly relay camshaft position to the camshaft position sensor.

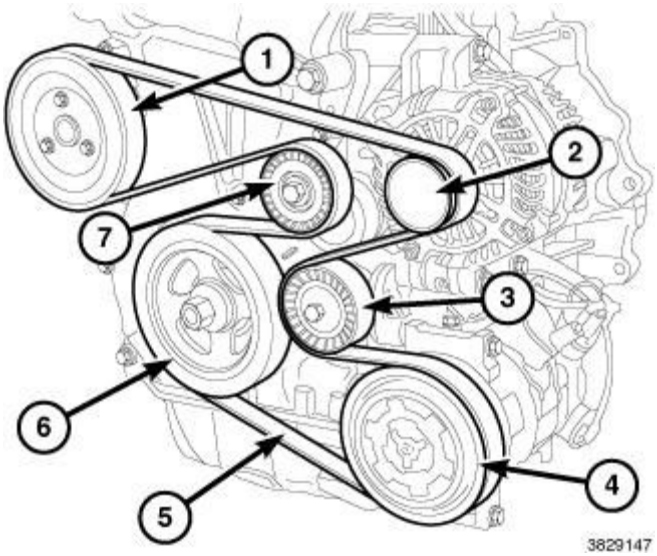

Fig. 153: Positioning Dial Indicator & Setting #4 Cylinder At Top-Dead-Center Compression Stroke
Courtesy of CHRYSLER GROUP, LLC

1. Remove the upper intake manifold, right ignition coils and right cylinder head cover. Refer to **COVER (S), CYLINDER HEAD, REMOVAL**.
2. Remove the left ignition coils and all spark plugs. Refer to **SPARK PLUG, REMOVAL** .

CAUTION: When aligning timing marks, always rotate engine by turning the crankshaft. Failure to do so will result in valve and/or piston damage.

3. Mount Dial Indicator Set (special tool #C-3339A, Set, Dial Indicator) (1) to a stationary point on the engine, such as the number six cylinder ignition coil mount. Position the indicator probe into the number four cylinder, rotate the crankshaft clockwise (as viewed from the front) to place the number four cylinder piston at top-dead-center on the compression stroke and set the indicator dial to zero.

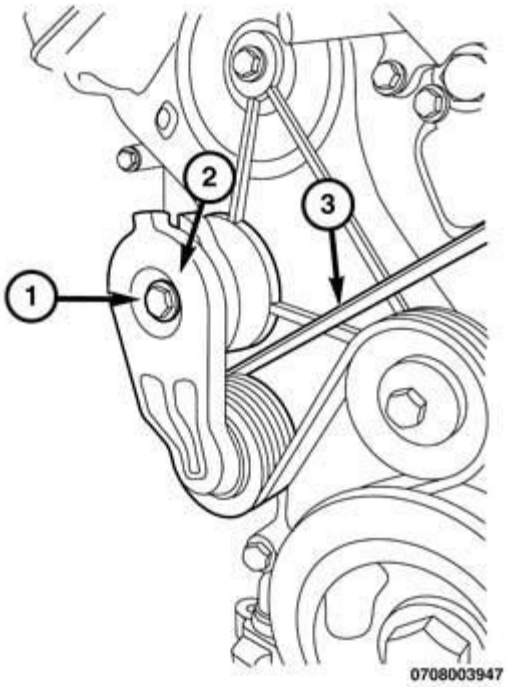

Fig. 154: Arrows, Scribe Lines & Cylinder Head Cover Mounting Surface
Courtesy of CHRYSLER GROUP, LLC

4. The right side cam phaser **ARROWS** (2) should point away from each other and the **SCRIBE LINES** (1) should be parallel to the cylinder head cover mounting surface (3) when the left side number four cylinder piston is positioned at top-dead-center on the compression stroke.

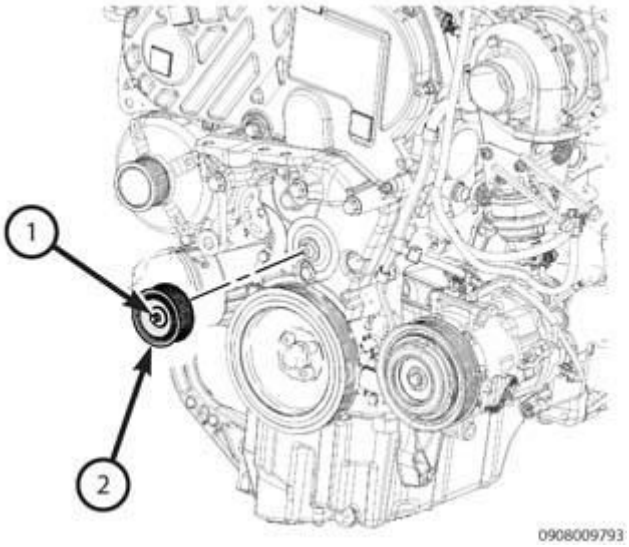

Fig. 155: Phaser Timing Mark, Chain Pins, Exhaust Cam Phaser Triangle Marking, Oil Control Valve, Scribe Lines & Arrows
Courtesy of CHRYSLER GROUP, LLC

NOTE: **The phaser markings (1 and 3) could align with either an external or internal chain link. Either alignment is acceptable as long as there are twelve chain pins between the markings.**

5. There should be twelve chain pins (2) **BETWEEN** the exhaust cam phaser triangle marking (1) and the intake cam phaser circle marking (3) as viewed from either the front or rear of the cam phasers.
6. Mark both sides of the cam chain at the phaser timing marks (1 and 3) using a paint pen or equivalent to aid in reassembly.

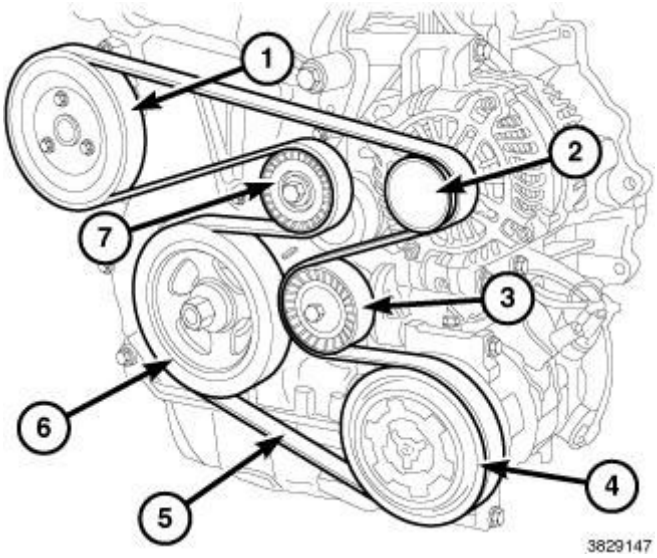

Fig. 156: Camshaft Phaser Lock, Oil Control Valves & Wrench
Courtesy of CHRYSLER GROUP, LLC

NOTE: **It may be necessary to rock the camshaft slightly (a few degrees) with a wrench (4) when installing the camshaft phaser lock.**

7. Install the (special tool #10202-1, Lock, Camshaft/Phaser, Right Side) (1) against the cylinder head cover mounting surface with the tool number facing up.
8. Loosen, but do not remove, the exhaust oil control valve (3) and the intake oil control valve (2).
9. Remove the (special tool #10202-1, Lock, Camshaft/Phaser, Right Side) (1).

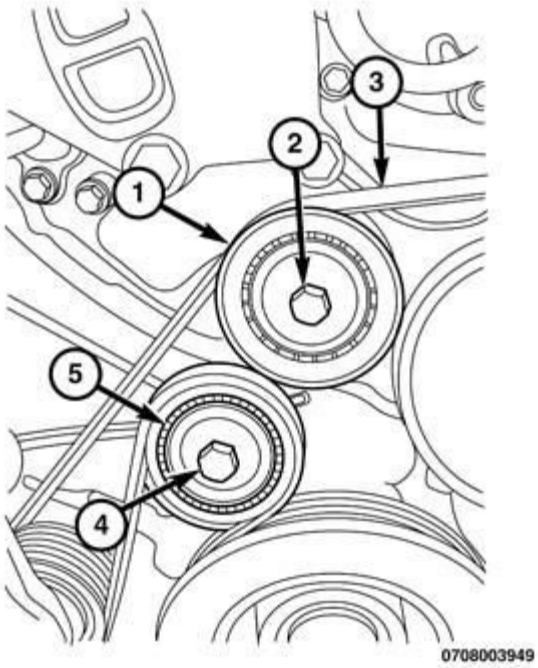

Fig. 157: Compressing Tensioner By Slightly Rotating Exhaust Camshaft Clockwise
Courtesy of CHRYSLER GROUP, LLC

CAUTION: Do not insert the Timing Chain Holder into position without first compressing the tensioner. The Timing Chain Holder is not designed to compress the tensioner and excessive force can damage the timing chain tensioner arm.

10. Use the timing chain to compress the tensioner by slightly rotating the exhaust camshaft clockwise (4). Insert (special tool #10369, Holder, Timing Chain) (1) into place between the cylinder head boss and the tensioner arm to hold the tensioner in the compressed position. The Timing Chain Holder remains in place while the phasers are removed.

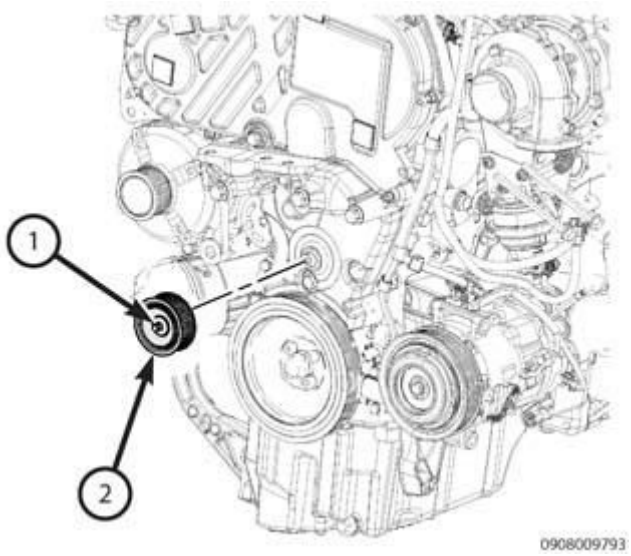

Fig. 158: Timing Chain Holder, Trim Stick & Tensioner Arm
Courtesy of CHRYSLER GROUP, LLC

NOTE: **If the Timing Chain Holder (1) does not engage or slips from position, wedge a trim stick (2) or equivalent between the front cover and the tensioner arm (3) to push the tensioner arm towards the rear of the engine and then repeat the previous step.**

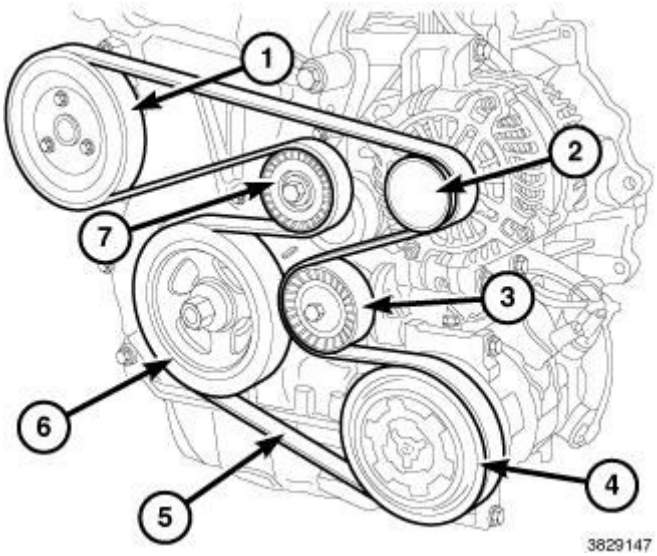

Fig. 159: Compressing Tensioner By Slightly Rotating Exhaust Camshaft Clockwise
Courtesy of CHRYSLER GROUP, LLC

11. If required, remove the oil control valve (3) and pull the right side exhaust cam phaser off of the camshaft.
12. If required, remove the oil control valve (2) and pull the right side intake cam phaser off of the camshaft.

INSTALLATION

LEFT OIL CONTROL VALVES

YouTube	A multimedia supplement to the instructions contained in this article is available. To view the multimedia example of the condition described go to; **http://www.youtube.com/user/Mitchell1Tips** **then type "A00641418.vid3" into the "Search Channel" box.**

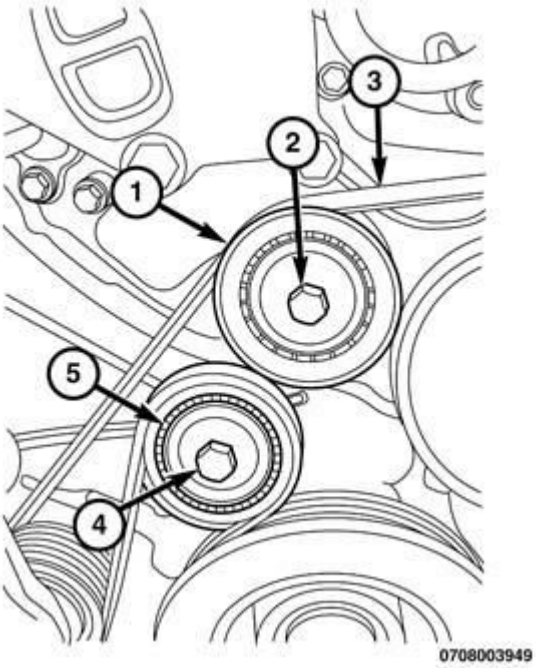

Fig. 160: Magnetic Timing Wheels
Courtesy of CHRYSLER GROUP, LLC

CAUTION: The magnetic timing wheels (1) must not come in contact with magnets (pickup tools, trays, etc.) or any other strong magnetic field. This will destroy the timing wheels ability to correctly relay camshaft position to the camshaft position sensor.

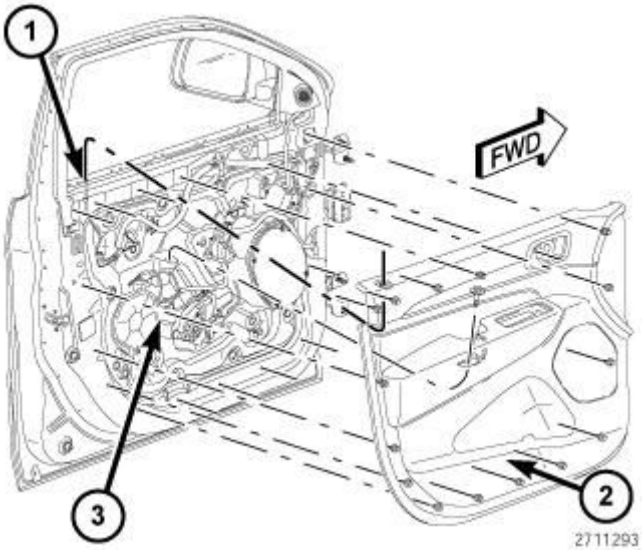

Fig. 161: Positioning Dial Indicator & Setting #4 Cylinder At Top-Dead-Center Compression Stroke
Courtesy of CHRYSLER GROUP, LLC

CAUTION: Do not rotate the crankshaft more than a few degrees independently of the camshafts. Piston to valve contact could occur resulting in possible valve damage. If the crankshaft needs to be rotated more than a few degrees, first remove the camshafts.

1. Verify that the indicator dial (1) is set to zero when the left side number four cylinder piston is positioned at top-dead-center on the compression stroke.

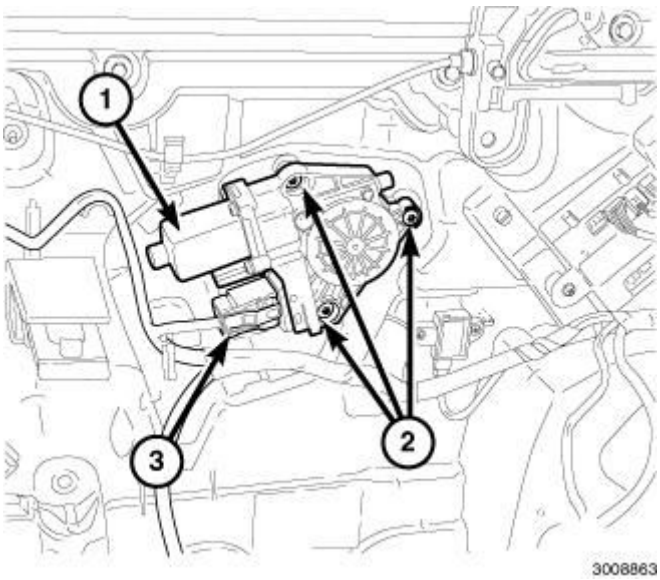

Fig. 162: Positioning Camshaft Alignment Holes Vertically
Courtesy of CHRYSLER GROUP, LLC

CAUTION: Do not rotate the camshafts more than a few degrees independently

of the crankshaft. Valve to piston contact could occur resulting in possible valve damage.

2.
3. Verify that the camshafts are set at top-dead-center by positioning the alignment holes (1) vertically.

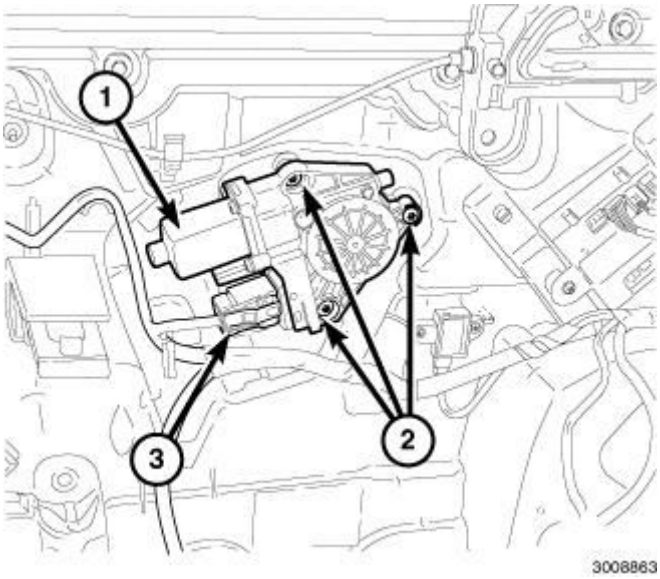

Fig. 163: Timing Chain Holder
Courtesy of CHRYSLER GROUP, LLC

NOTE: **The Timing Chain Holder (1) should still be in place as inserted during the Removal procedure. If required, the Timing Chain Holder can be reinserted by repeating Step 10 of the Removal procedure. Refer to ASSEMBLY, VARIABLE VALVE TIMING, PHASER / OIL CONTROL VALVE, REMOVAL.**

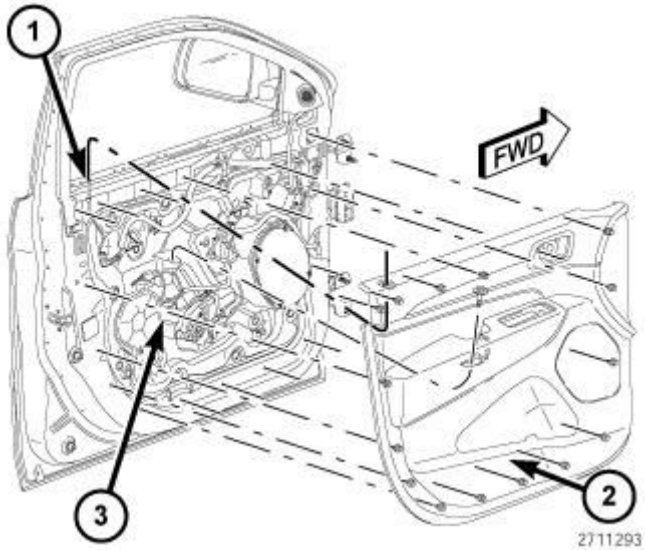

Fig. 164: Phaser Timing Mark, Chain Pins, Exhaust Cam Phaser Triangle Marking, Oil Control Valve, Scribe Lines & Arrows
Courtesy of CHRYSLER GROUP, LLC

NOTE: Minor rotation of a camshaft (a few degrees) may be required to install the camshaft phaser.

4. Route the cam chain around the left intake cam phaser while aligning the paint mark with the phaser timing mark (1). Press the left intake cam phaser onto the intake camshaft. Install and hand tighten the oil control valve (7).
5. While maintaining this alignment, route the cam chain around the exhaust cam phaser so that the paint mark is aligned with the phaser timing mark (3). Press the exhaust cam phaser onto the exhaust cam, install and hand tighten the oil control valve (4).
6. The **SCRIBE LINES** (5) on the cam phasers should face away from each other and the **ARROWS** (6) should point toward each other and be parallel to the cylinder head cover mounting surface. There should be twelve chain pins (2) **BETWEEN** the exhaust cam phaser triangle marking (3) and the intake cam phaser circle marking (1).

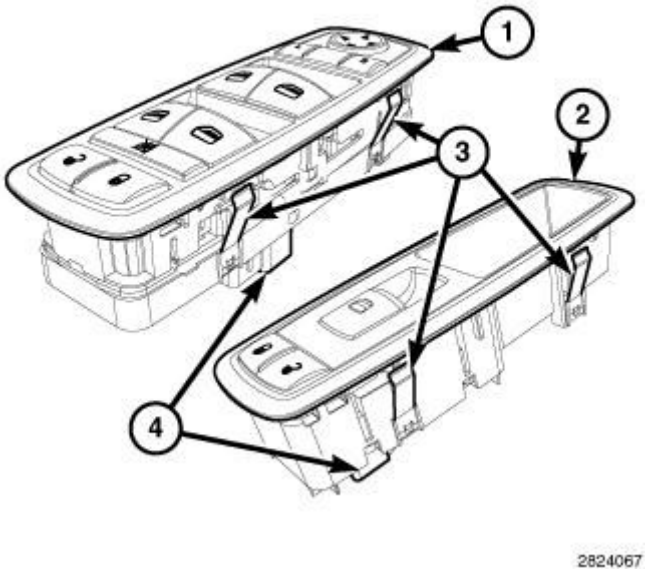

Fig. 165: Camshaft Phaser Lock, Oil Control Valves & Wrench
Courtesy of CHRYSLER GROUP, LLC

NOTE: It may be necessary to rock the camshaft slightly (a few degrees) with a wrench (4) when installing the camshaft phaser lock.

7. Install the Camshaft Phaser Lock (special tool #10202-2, Lock, Camshaft/Phaser, Left Side) (1) against the cylinder head cover mounting surface with the tool number facing up.
8. Tighten the oil control valves (2, 3) to the proper specification. Refer to **TORQUE**

SPECIFICATIONS .

9. Remove the Camshaft Phaser Lock (1) and the Timing Chain Holder.

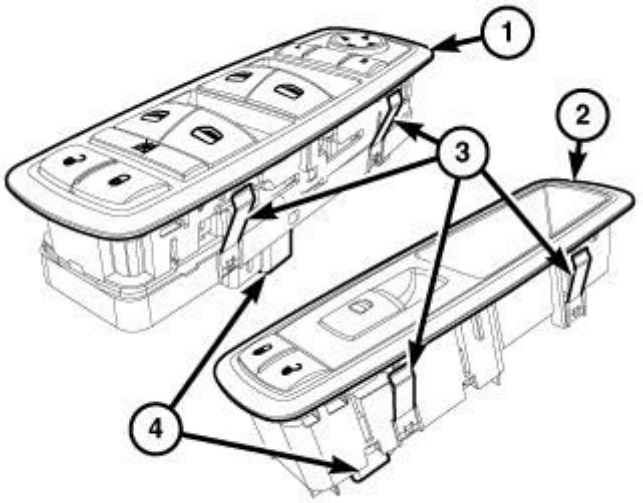

2824067

Fig. 166: Chain Pins, Arrows, Scribe Lines, Cam Phaser Triangle Marking & Circle Marking
Courtesy of CHRYSLER GROUP, LLC

10. Rotate the crankshaft clockwise two complete revolutions stopping when the left side number four cylinder piston is again positioned at top-dead-center on the compression stroke. To assure correct engine timing, verify the following;
    - The indicator dial is set to **ZERO** when the left side number four cylinder piston is positioned at top-dead-center on the compression stroke.
    - The **SCRIBE LINES** (3) on the left side cam phasers face away from each other.
    - The **ARROWS** (4) on the left side cam phasers point toward each other and are parallel to the cylinder head cover mounting surface.
    - There are twelve chain pins (2) **BETWEEN** the exhaust cam phaser triangle marking (1) and the intake cam phaser circle marking (3).
11. If the engine timing is not correct, repeat this procedure.
12. Install all of the spark plugs. Refer to **SPARK PLUG, INSTALLATION** .
13. Install the right ignition coils. Refer to **COIL, IGNITION, INSTALLATION** .
14. Install the left cylinder head cover. Refer to **COVER(S), CYLINDER HEAD, INSTALLATION**.
15. Install the upper intake manifold. Refer to **MANIFOLD, INTAKE, INSTALLATION**.
16. Connect the negative battery cable and tighten nut to the proper specification. Refer to **TORQUE SPECIFICATIONS** .
17. Start the engine and perform the following Powertrain Verification Tests. Refer to appropriate Diagnostic Information .

- Cam/Crank Variation Relearn
- Target Coefficient Relearn

NOTE: Following the first restart after a DTC driven phaser replacement, clear all DTCs and verify that subsequent restarts do not set any additional codes. For any DTCs that reset, refer to DTC INDEX article .

RIGHT OIL CONTROL VALVES

YouTube	A multimedia supplement to the instructions contained in this article is available. To view the multimedia example of the condition described go to; **http://www.youtube.com/user/Mitchell1Tips** **then type "A00641418.vid4" into the "Search Channel" box.**

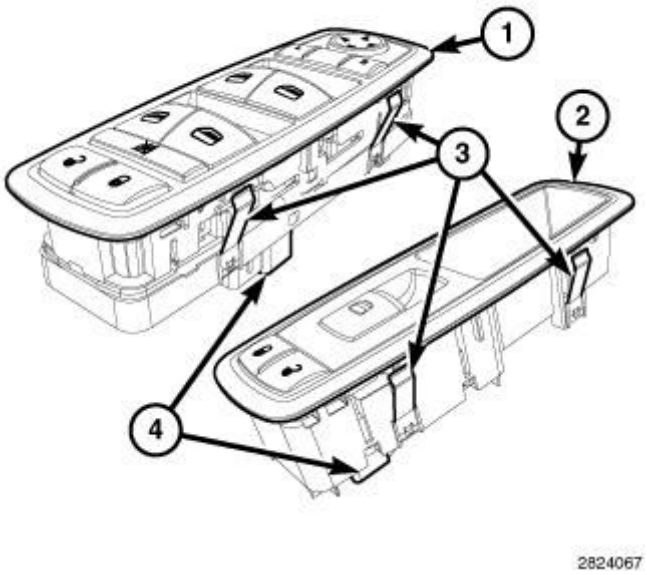

Fig. 167: Magnetic Timing Wheels
Courtesy of CHRYSLER GROUP, LLC

CAUTION: The magnetic timing wheels (1) must not come in contact with magnets (pickup tools, trays, etc.) or any other strong magnetic field. This will destroy the timing wheels ability to correctly relay camshaft position to the camshaft position sensor.

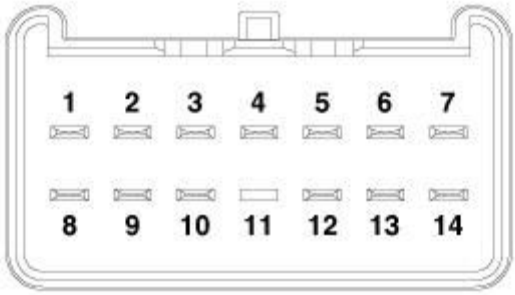

3834819

Fig. 168: Positioning Dial Indicator & Setting #4 Cylinder At Top-Dead-Center Compression Stroke
Courtesy of CHRYSLER GROUP, LLC

CAUTION: Do not rotate the crankshaft more than a few degrees independently of the camshafts. Piston to valve contact could occur resulting in possible valve damage. If the crankshaft needs to be rotated more than a few degrees, first remove the camshafts.

1. Verify that the indicator dial (1) is set to zero when the left side number four cylinder piston is positioned at top-dead-center on the compression stroke.

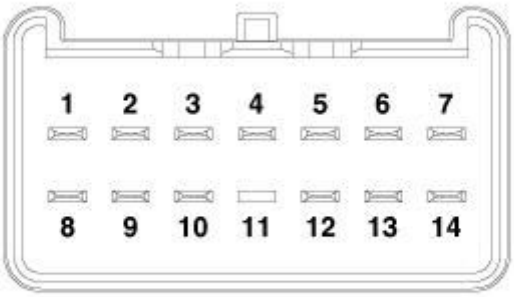

3834819

Fig. 169: Positioning Camshaft Alignment Holes Vertically
Courtesy of CHRYSLER GROUP, LLC

CAUTION: Do not rotate the camshafts more than a few degrees independently

of the crankshaft. Valve to piston contact could occur resulting in possible valve damage.

2.
3. Verify that the camshafts are set at top-dead-center by positioning the alignment holes (1) vertically.

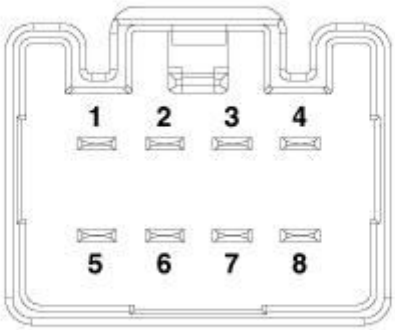

3835020

Fig. 170: Timing Chain Holder
Courtesy of CHRYSLER GROUP, LLC

NOTE: **The Timing Chain Holder (1) should still be in place as inserted during the Removal procedure. If required, the Timing Chain Holder can be reinserted by installing the exhaust cam phaser and repeating Step 10 of the Removal procedure. Refer to ASSEMBLY, VARIABLE VALVE TIMING, PHASER / OIL CONTROL VALVE, REMOVAL.**

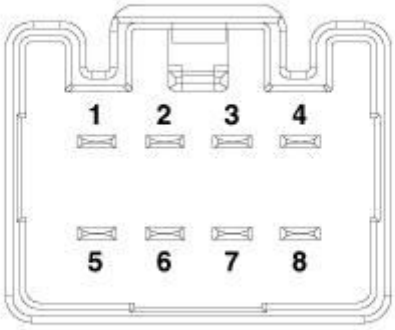

3835020

Fig. 171: Phaser Timing Mark, Chain Pins, Exhaust Cam Phaser Triangle Marking, Oil Control Valve, Scribe Lines & Arrows
Courtesy of CHRYSLER GROUP, LLC

NOTE: Minor rotation of a camshaft (a few degrees) may be required to install the camshaft phaser.

4. Route the cam chain around the right exhaust cam phaser while aligning the paint mark with the phaser timing mark (1). Press the right exhaust cam phaser onto the exhaust camshaft. Install and hand tighten the oil control valve (7).
5. While maintaining this alignment, route the cam chain around the intake cam phaser so that the paint mark is aligned with the phaser timing mark (3). Press the intake cam phaser onto the intake cam, install and hand tighten the oil control valve (4).
6. The **ARROWS** (5) on the cam phasers should point away from each other and the **SCRIBE LINES** (6) should be parallel to the cylinder head cover mounting surface. There should be twelve chain pins (2) **BETWEEN** the exhaust cam phaser triangle marking (1) and the intake cam phaser circle marking (3).

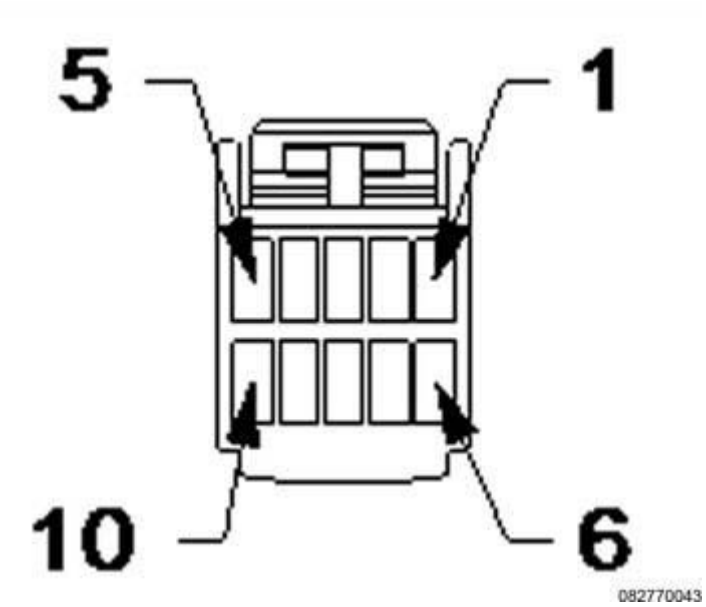

Fig. 172: Camshaft Phaser Lock, Oil Control Valves & Wrench
Courtesy of CHRYSLER GROUP, LLC

NOTE: It may be necessary to rock the camshaft slightly (a few degrees) with a wrench (4) when installing the camshaft phaser lock.

7. Install the Camshaft Phaser Lock (special tool #10202-1, Lock, Camshaft/Phaser, Right Side) (1) against the cylinder head cover mounting surface with the tool number facing up.
8. Tighten the oil control valves (2) and (3) to the proper specification. Refer to **TORQUE SPECIFICATIONS** .
9. Remove the Camshaft Phaser Lock (1) and the Timing Chain Holder.

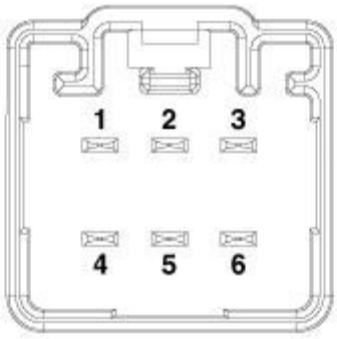

3835039

Fig. 173: Chain Pins, Arrows, Scribe Lines, Cam Phaser Triangle Marking & Circle Marking Courtesy of CHRYSLER GROUP, LLC

10. Rotate the crankshaft clockwise two complete revolutions stopping when the left side number four cylinder piston is again positioned at top-dead-center on the compression stroke. To assure correct engine timing, verify the following;
    - The indicator dial is set to **ZERO** when the left side number four cylinder piston is positioned at top-dead-center on the compression stroke.
    - The **ARROWS** (4) on the right side cam phasers point away from each other.
    - The **SCRIBE LINES** (5) on the right side cam phasers are parallel to the cylinder head cover mounting surface.
    - There are twelve chain pins (2) **BETWEEN** the exhaust cam phaser triangle marking (1) and the intake cam phaser circle marking (3).
11. If the engine timing is not correct, repeat this procedure.
12. Install all of the spark plugs. Refer to **SPARK PLUG, INSTALLATION** .
13. Install the left ignition coils. Refer to **COIL, IGNITION, INSTALLATION** .
14. Install the right cylinder head cover. Refer to **COVER(S), CYLINDER HEAD, INSTALLATION**.
15. Install the upper intake manifold. Refer to **MANIFOLD, INTAKE, INSTALLATION**.
16. Connect the negative battery cable and tighten nut to the proper specification. Refer to **TORQUE SPECIFICATIONS** .
17. Start the engine and perform the following Powertrain Verification Tests. Refer to appropriate Diagnostic Information .
    - Cam/Crank Variation Relearn
    - Target Coefficient Relearn

NOTE: **Following the first restart after a DTC driven phaser replacement, clear all DTCs and verify that subsequent restarts do not set any additional codes. For any DTCs that reset, refer to DTC INDEX article .**

CAMSHAFT, ENGINE

DESCRIPTION

DESCRIPTION

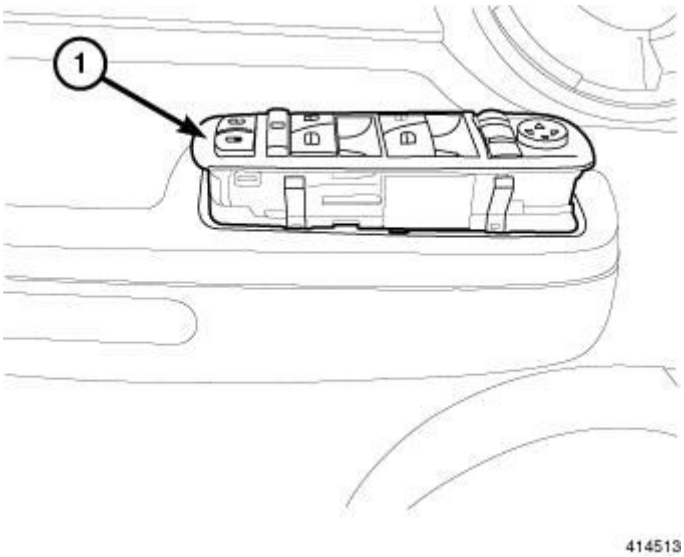

Fig. 174: Dual Over Head Camshaft (DOHC) Configuration
Courtesy of CHRYSLER GROUP, LLC

The Pentastar engine uses a Dual Over Head Camshaft (DOHC) configuration. The camshafts are a nodular cast iron design. Each camshaft has a pressed on magnetic timing wheel that is magnetically encoded. The two Camshaft Position (CMP) sensors are located between the timing wheels. Attached to the rear of the right exhaust camshaft is a centrifuge which is part of the crankcase ventilation system.

The centrifuge is used to separate oil droplets from the crankcase gases before they enter the PCV valve. Four bearing journals are machined into the camshaft. Camshaft end play is controlled by two thrust walls that border the nose piece journal.

OPERATION

OPERATION

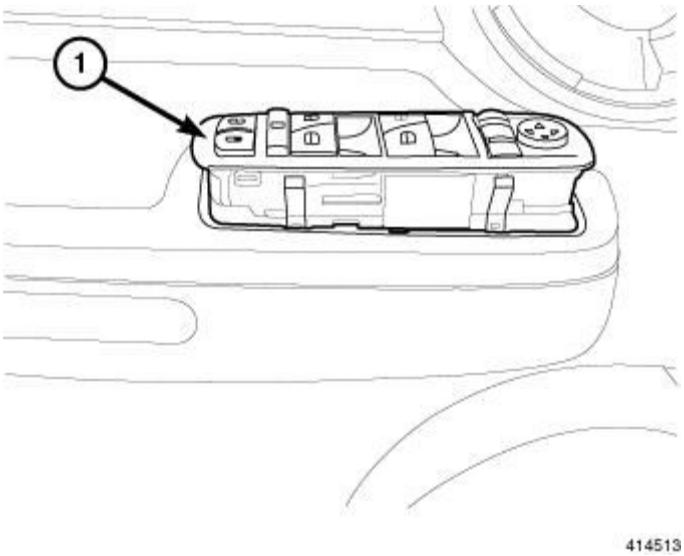

Fig. 175: Right Hand Camshafts
Courtesy of CHRYSLER GROUP, LLC

NOTE: RH camshafts shown in illustration, LH camshafts similar.

The camshaft has precisely machined (egg shaped) lobes to provide accurate valve timing and duration. The camshaft is driven by the crankshaft via drive sprockets and chains.

STANDARD PROCEDURE

CAMSHAFT END PLAY

1. Remove the cylinder head cover. Refer to **COVER(S), CYLINDER HEAD, REMOVAL**.

NOTE: Cylinder #1 or #4 must be used when checking for Top Dead Center (TDC).

NOTE: Right intake camshaft shown in illustration, other camshafts similar.

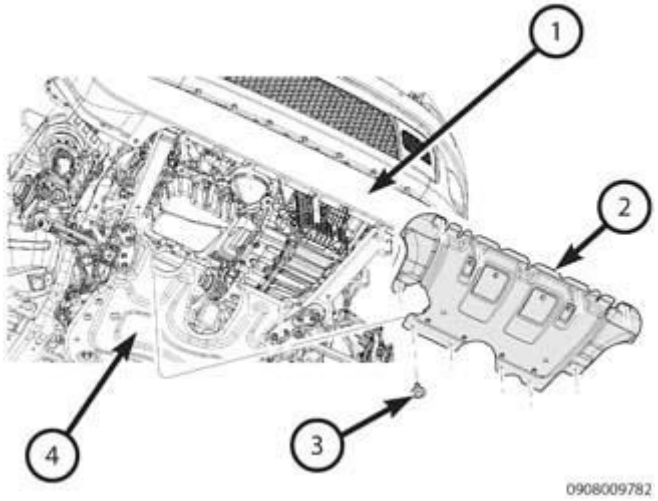

Fig. 176: Measuring Camshaft End Play Using Dial Indicator
Courtesy of CHRYSLER GROUP, LLC

2. Mount Dial Indicator Set (special tool #C-3339A, Set, Dial Indicator) (1) to a stationary point at the front of the engine. Place the probe perpendicular against the Oil Control Valve of the camshaft.
3. Move the camshaft all the way to the rear of its travel.
4. Zero the dial indicator.
5. Move the camshaft forward to the limit of travel and read the dial indicator. Compare the measured end play to the specification. Refer to **ENGINE SPECIFICATIONS** .

REMOVAL

LEFT

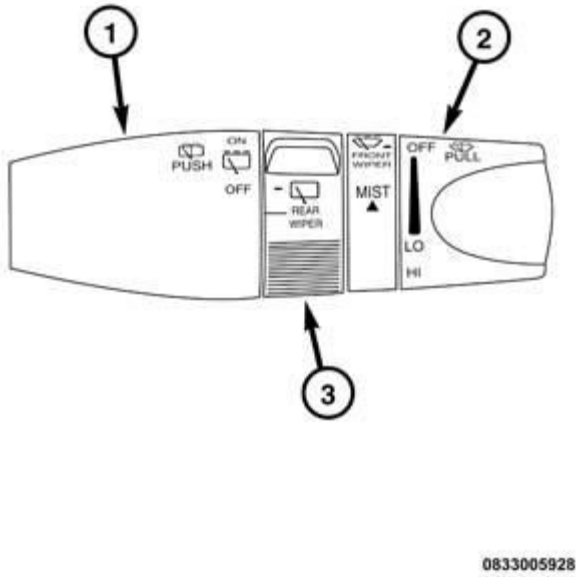

Fig. 177: Magnetic Timing Wheels
Courtesy of CHRYSLER GROUP, LLC

CAUTION: The magnetic timing wheels (1) must not come in contact with magnets (pickup tools, trays, etc.) or any other strong magnetic field. This will destroy the timing wheels ability to correctly relay camshaft position to the camshaft position sensor.

CAUTION: When the timing chain is removed and the cylinder heads are still installed, Do not forcefully rotate the camshafts or crankshaft independently of each other. Severe valve and/or piston damage can occur.

CAUTION: DO NOT STAMP OR STRIKE THE CAMSHAFT BEARING CAPS. SEVERE DAMAGE WILL OCCUR TO THE BEARING CAPS.

1. Remove the upper intake manifold, all ignition coils, all spark plugs and left cylinder head cover. Refer to **COVER(S), CYLINDER HEAD, REMOVAL**.

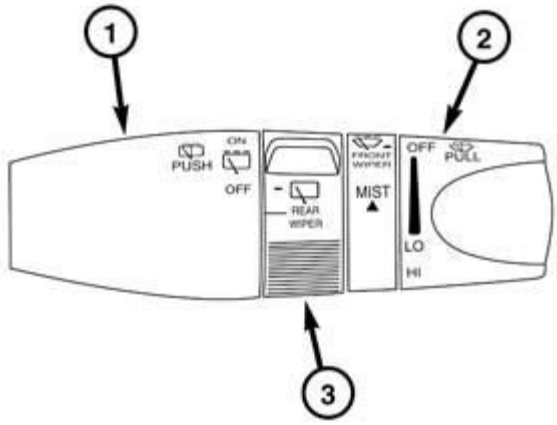

0833005928

Fig. 178: Arrows, Scribe Lines & Cylinder Head Cover Mounting Surface
Courtesy of CHRYSLER GROUP, LLC

2. The left side cam phaser **SCRIBE LINES** (3) should face away from each other and the **ARROWS** (1) should point toward each other and be parallel to the cylinder head cover mounting surface (2). The number one cylinder piston is positioned at top-dead-center on the exhaust stroke.
3. Mark the camshaft phasers to the timing chain with a paint pen or equivalent.

NOTE: Graphic shows engine timing cover removed for clarity.

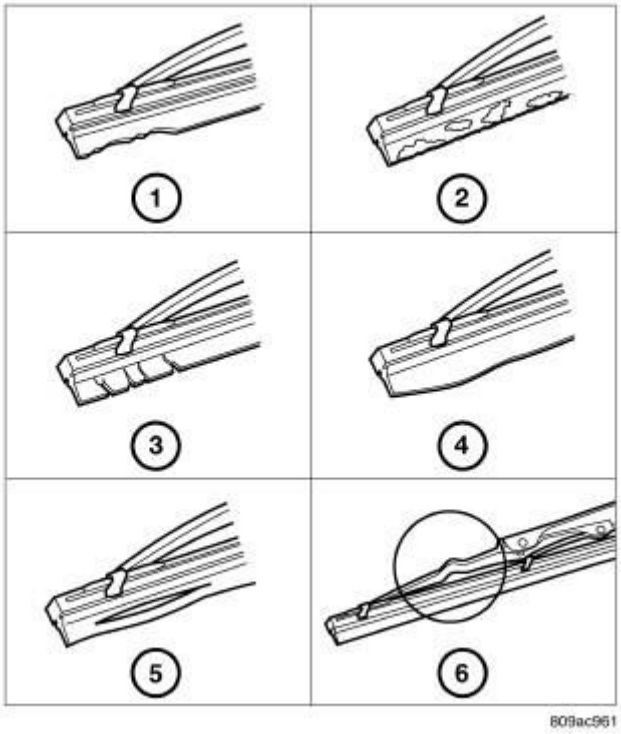

Fig. 179: Pin, Rack & Timing Chain Holder
Courtesy of CHRYSLER GROUP, LLC

4. Using the (special tool #10200-3, Pin) (2), lift the pawl off of the rack (3). While holding the pawl off of the rack, push (special tool #10200-1, Holder, Timing Chain, Left Side) (1) into place between the cylinder head and the cam chain guide to force the rack and piston back into the tensioner body.

NOTE: The holder remains in place while the phasers are removed.

NOTE: Minor rotation of a camshaft (a few degrees) may be required when installing the LH Camshaft/Phaser Lock.

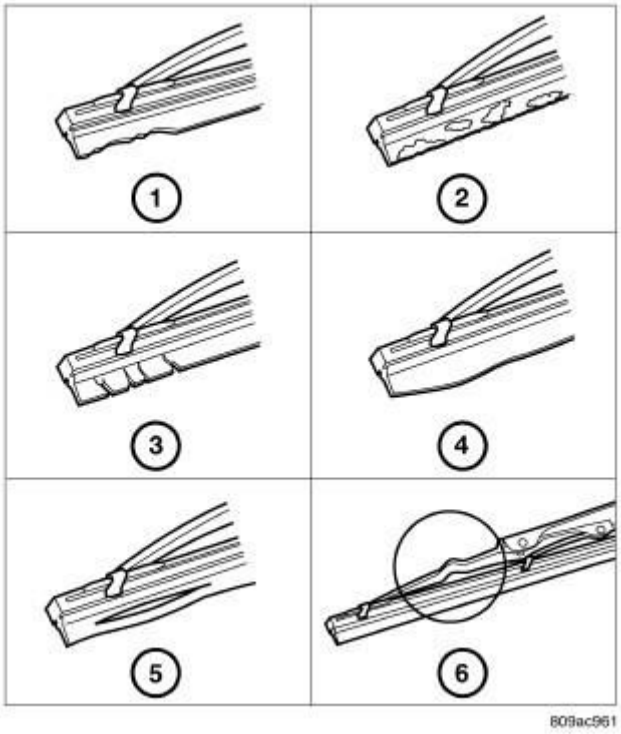

Fig. 180: Phaser Timing Marks, Oil Control Valves & LH Camshaft Phaser Lock
Courtesy of CHRYSLER GROUP, LLC

5. Install the (special tool #10202, Locks, Camshaft/Phaser) (4).
6. Remove the exhaust oil control valve (2) and the intake oil control valve (6).

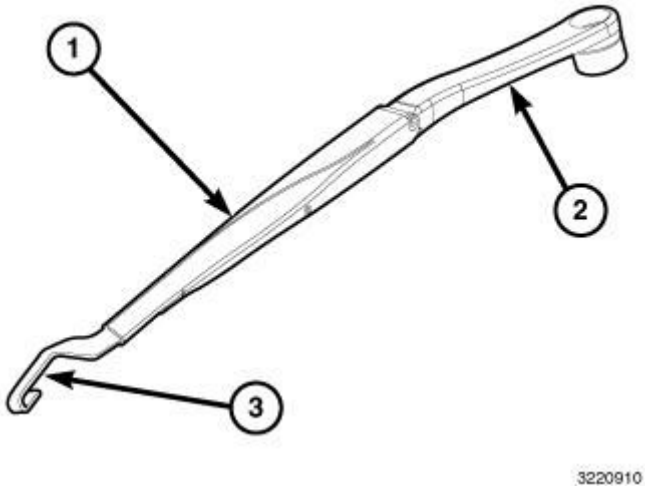

Fig. 181: Alignment Marks
Courtesy of CHRYSLER GROUP, LLC

NOTE: The alignment marks located on the camshaft specifies the location of the drive pin in reference to the phaser alignment mark.

7. Using care. Remove both the intake and exhaust oil control valves simultaneously.

NOTE: DO NOT REMOVE THE PHASER LOCK.

NOTE: Camshaft bearing caps should have been marked during engine manufacturing. For example, the number one exhaust camshaft bearing cap is marked "1E->". The caps should be installed with the notch forward.

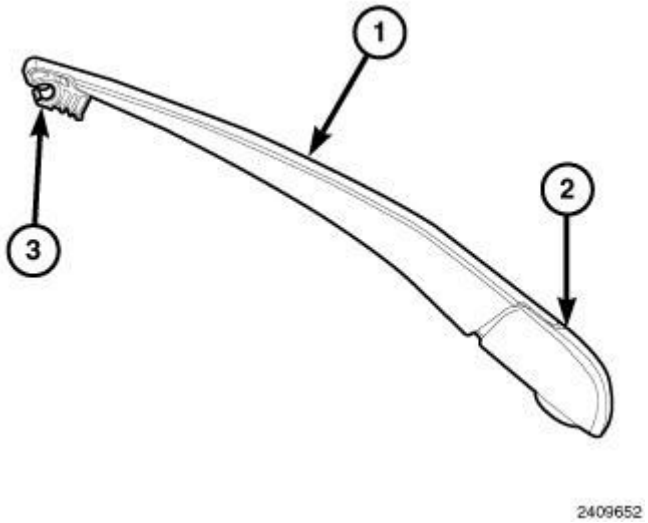

Fig. 182: Camshaft Bearing Cap Bolts Removal Sequence - Left
Courtesy of CHRYSLER GROUP, LLC

8. Rotate the camshafts counterclockwise to position the alignment holes (1) **approximately 30° before top-dead-center** . This places the camshafts in the neutral position (no valve load).
9. Loosen the camshaft bearing cap bolts in the sequence shown in illustration.

NOTE: When the camshaft is removed the rocker arms may slide downward, mark the rocker arms before removing the camshaft.

10. Remove the camshaft bearing caps and the camshafts.

RIGHT

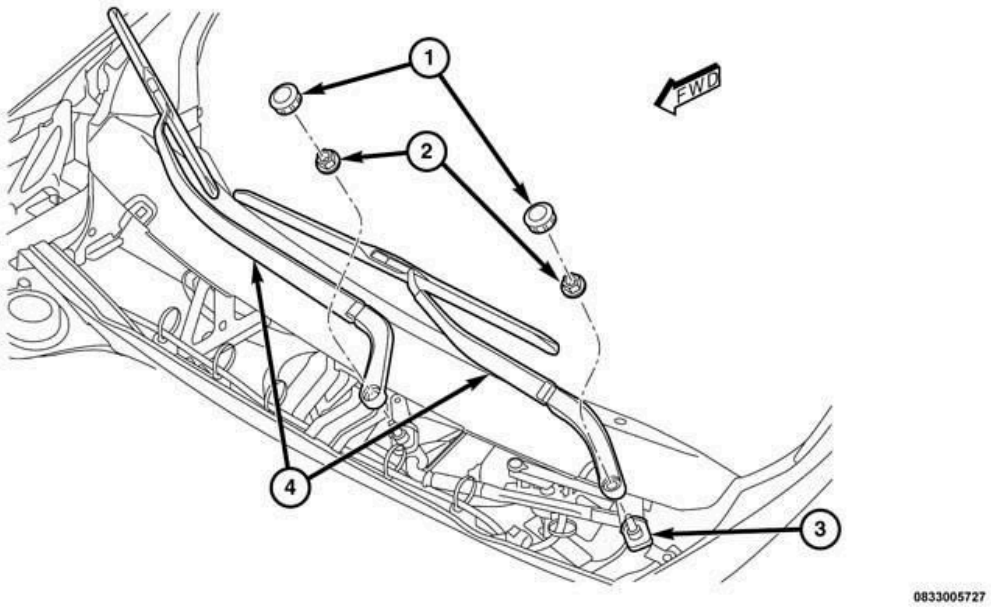

Fig. 183: Magnetic Timing Wheels
Courtesy of CHRYSLER GROUP, LLC

CAUTION: The magnetic timing wheels (1) must not come in contact with magnets (pickup tools, trays, etc.) or any other strong magnetic field. This will destroy the timing wheels ability to correctly relay camshaft position to the camshaft position sensor.

CAUTION: When the timing chain is removed and the cylinder heads are still installed, Do not forcefully rotate the camshafts or crankshaft independently of each other. Severe valve and/or piston damage can occur.

CAUTION: DO NOT STAMP OR STRIKE THE CAMSHAFT BEARING CAPS. SEVERE DAMAGE WILL OCCUR TO THE BEARING CAPS.

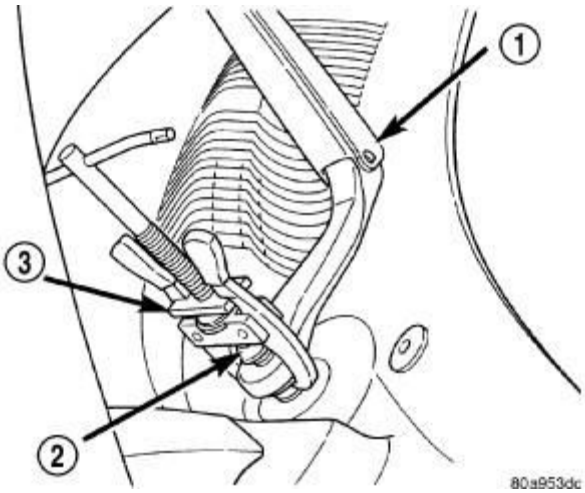

Fig. 184: Arrows, Scribe Lines & Cylinder Head Cover Mounting Surface
Courtesy of CHRYSLER GROUP, LLC

1. Remove the upper intake manifold, all ignition coils, all spark plugs, right cylinder head cover. Refer to **COVER(S), CYLINDER HEAD, REMOVAL**.
2. The right side cam phaser **ARROWS** (2) should point away from each other and the **SCRIBE LINES** (1) should be parallel to the cylinder head cover mounting surface (3) when the right side number one cylinder piston is positioned at top-dead-center on the exhaust stroke.
3. Mark the camshaft phasers to the timing chain with a paint pen or equivalent.

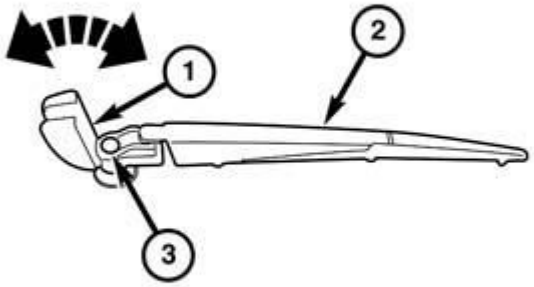

Fig. 185: Compressing Tensioner By Slightly Rotating Exhaust Camshaft Clockwise
Courtesy of CHRYSLER GROUP, LLC

4. Use the timing chain to compress the tensioner by slightly rotating the exhaust camshaft clockwise (4). Insert the (special tool #10369, Holder, Timing Chain) (1) into place between the cylinder head boss and the tensioner arm to hold the tensioner in the compressed position. The Timing Chain Holder remains in place while the phasers are removed.

NOTE: Minor rotation of a camshaft (a few degrees) may be required when installing the RH Camshaft/Phaser Lock.

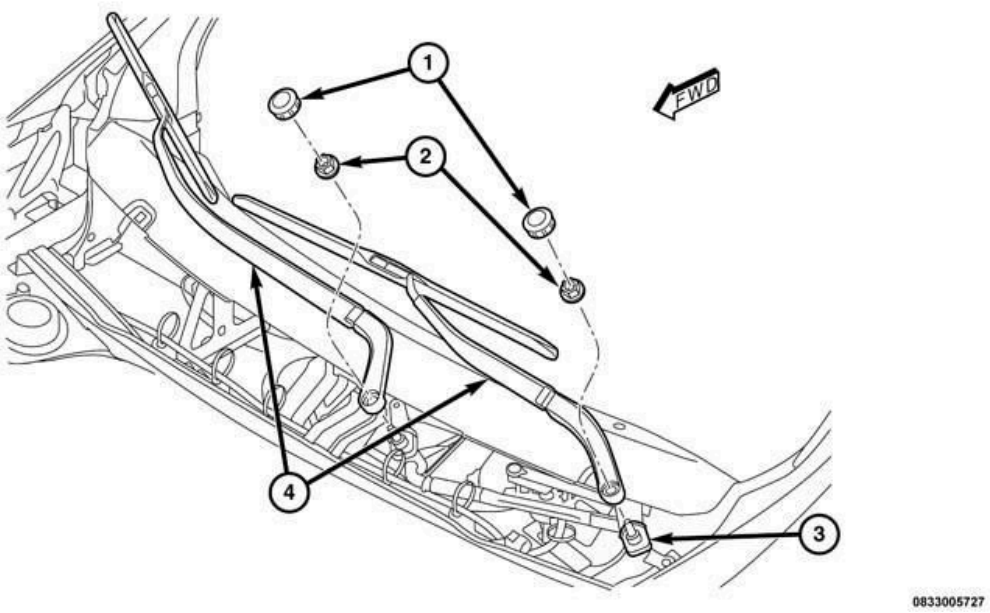

Fig. 186: Camshaft Phaser Lock, Oil Control Valves & Wrench
Courtesy of CHRYSLER GROUP, LLC

5. Install (special tool #10202-1, Lock, Camshaft/Phaser, Right Side) (1).
6. Remove both the intake (2) and exhaust (3) oil control valves.

NOTE: Left side shown in illustration. Right side similar.

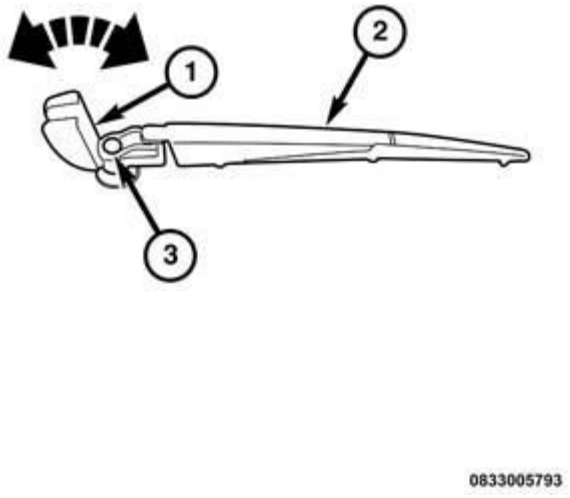

Fig. 187: Alignment Marks
Courtesy of CHRYSLER GROUP, LLC

7. Using care. Remove both the intake and exhaust oil control valves simultaneously.

NOTE: DO NOT REMOVE THE PHASER LOCK

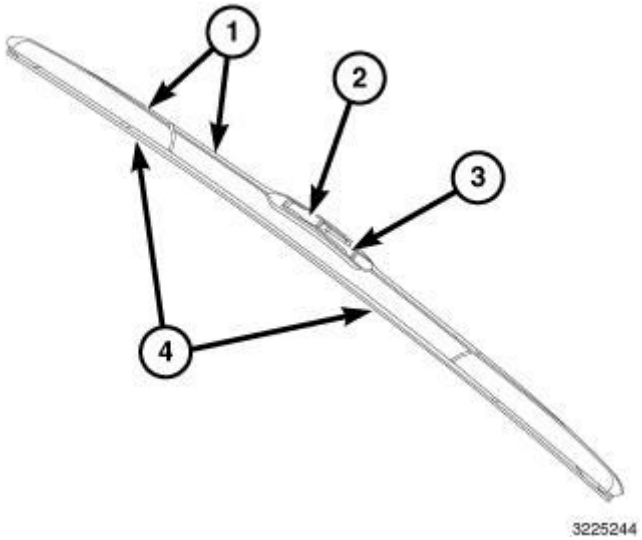

Fig. 188: Camshaft Bearing Cap Bolts Removal Sequence - Right
Courtesy of CHRYSLER GROUP, LLC

8. Camshaft bearing caps should have been marked during engine manufacturing. For example, the number

one exhaust camshaft bearing cap is marked "1E->". The caps should be installed with the notch forward.

NOTE: Loosen the camshaft bearing cap bolts in the sequence shown in illustration.

NOTE: When the camshaft is removed the rocker arms may slide downward, mark the rocker arms before removing the camshaft.

9. Remove the camshaft bearing caps and the camshafts.

INSPECTION

INSPECTION

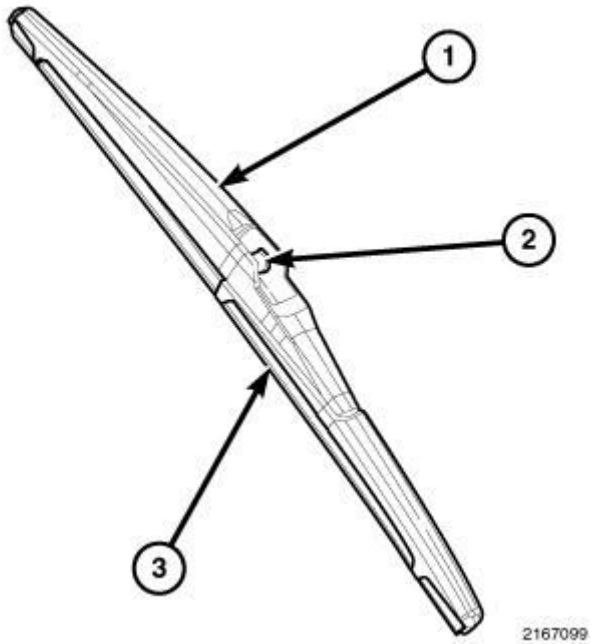

Fig. 189: Inspecting Camshaft Bearing Journals & Cam Lobes
Courtesy of CHRYSLER GROUP, LLC

NOTE: RH intake camshaft shown in illustration, other camshafts similar.

1. Inspect camshaft bearing journals (4) for damage and binding. If journals are binding, check the cylinder head for damage. Also check cylinder head oil holes for clogging.
2. Check the surface of the cam lobes (5) for abnormal wear (3). Measure and compare the unworn area (1) to the worn area (2). Replace camshafts that are not within specification. Refer to **ENGINE SPECIFICATIONS** .

INSTALLATION

LEFT

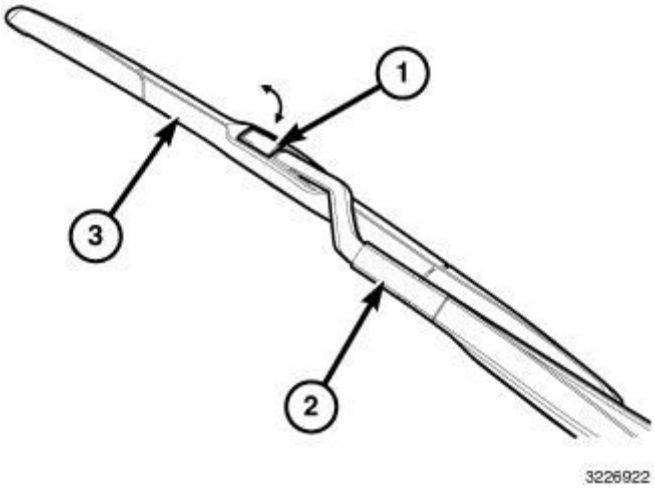

Fig. 190: Magnetic Timing Wheels
Courtesy of CHRYSLER GROUP, LLC

CAUTION: The magnetic timing wheels (1) must not come in contact with magnets (pickup tools, trays, etc.) or any other strong magnetic field. This will destroy the timing wheels ability to correctly relay camshaft position to the camshaft position sensor.

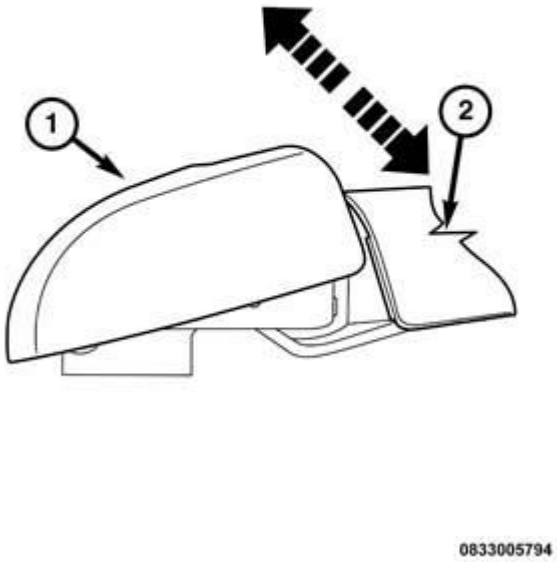

Fig. 191: Bearing Cap Retaining Bolts Tightening Sequence - Left
Courtesy of CHRYSLER GROUP, LLC

1. Lubricate the camshaft journals with clean engine oil.

CAUTION: Do not rotate the camshafts more than a few degrees independently of the crankshaft. Valve to piston contact could occur resulting in possible valve damage. If the camshafts need to be rotated more than a few degrees, first move the pistons away from the cylinder heads by rotating the crankshaft counterclockwise to a position 30° before-top-dead-center. Once the camshafts are returned to their top-dead-center position, rotate the crankshaft clockwise to return the crankshaft to top-dead-center.

2. Install the left side camshaft(s) with the alignment holes (1) positioned approximately 30° before top-dead-center. This will place the camshafts at the neutral position (no valve load) easing the installation of the camshaft bearing caps.

   Caps are identified numerically (1 through 4), intake or exhaust (I or E) and should be installed from the front to the rear of the engine. All caps should be installed with the notch forward so that the stamped arrows (<) on the caps point toward the front of the engine.

3. Verify the rocker arms are aligned to the cam lobe. Refer to **ROCKER ARM, VALVE, INSTALLATION**.

   .

4. Install the camshaft bearing caps and hand tighten the retaining bolts to the proper specification. Refer to **TORQUE SPECIFICATIONS** .
5. Tighten the bearing cap retaining bolts in the sequence shown in illustration to the proper specification. Refer to **TORQUE SPECIFICATIONS** .

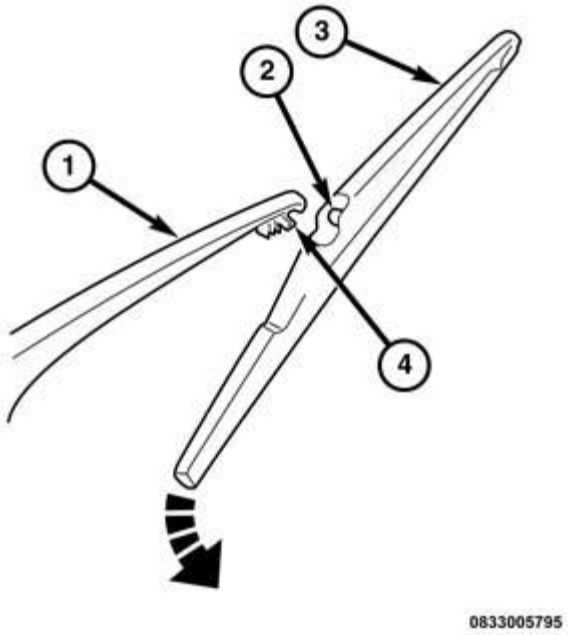

Fig. 192: Positioning Camshaft Alignment Holes Vertically
Courtesy of CHRYSLER GROUP, LLC

6. Rotate the camshafts clockwise to top-dead-center by positioning the alignment holes (1) vertically.
7. Install the timing chain tensioner holder.

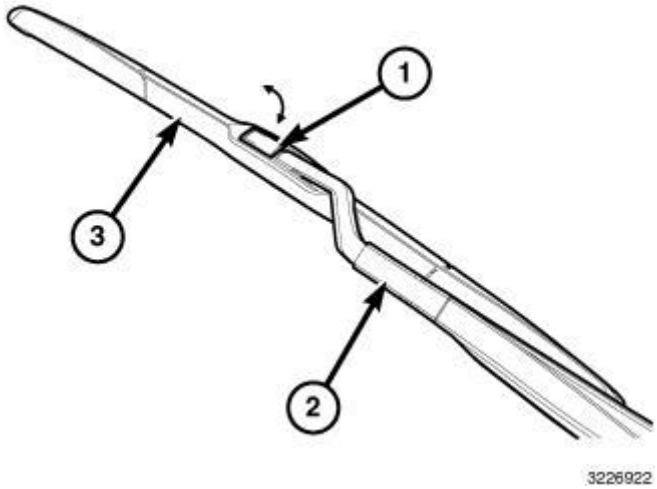

Fig. 193: Marks On Timing Chain
Courtesy of CHRYSLER GROUP, LLC

NOTE: **Minor rotation of a camshaft (a few degrees) may be required when installing the LT Camshaft/Phasers to the camshaft alignment pins.**

8. Verify the cam phasers are aligned with the marks (2) made on the timing chain.
9. Install the camshaft phasers onto the camshafts.

0833005794

Fig. 194: Arrows, Scribe Lines & Cylinder Head Cover Mounting Surface
Courtesy of CHRYSLER GROUP, LLC

10. Using care, slowly rotate the engine four revolutions to verify the valve to piston clearance and camshaft phaser timing mark alignment (1).
11. Install the cylinder head cover, spark plugs, ignition coils and the upper intake manifold. Refer to **ASSEMBLY, VARIABLE VALVE TIMING, PHASER/OIL CONTROL VALVE, INSTALLATION**.

NOTE: **The Cam/Crank Variation Relearn procedure must be performed using the scan tool anytime there has been a repair/replacement made to a powertrain system, for example: flywheel, valvetrain, camshaft and/or crankshaft sensors or components.**

RIGHT

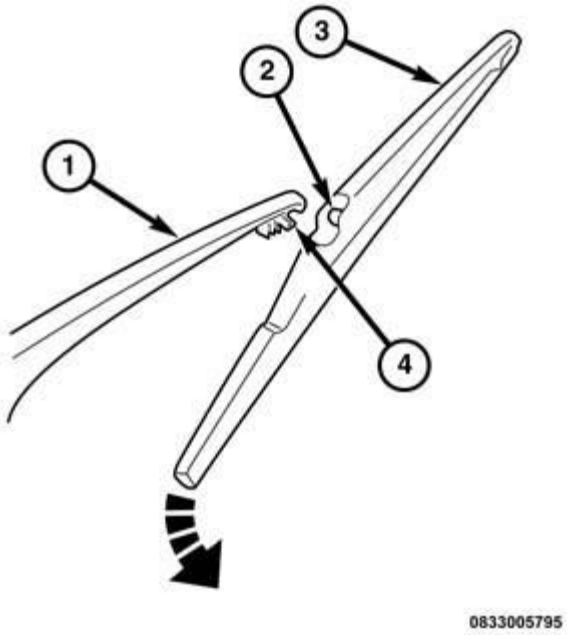

Fig. 195: Magnetic Timing Wheels
Courtesy of CHRYSLER GROUP, LLC

CAUTION: The magnetic timing wheels (1) must not come in contact with magnets (pickup tools, trays, etc.) or any other strong magnetic field. This will destroy the timing wheels ability to correctly relay camshaft position to the camshaft position sensor.

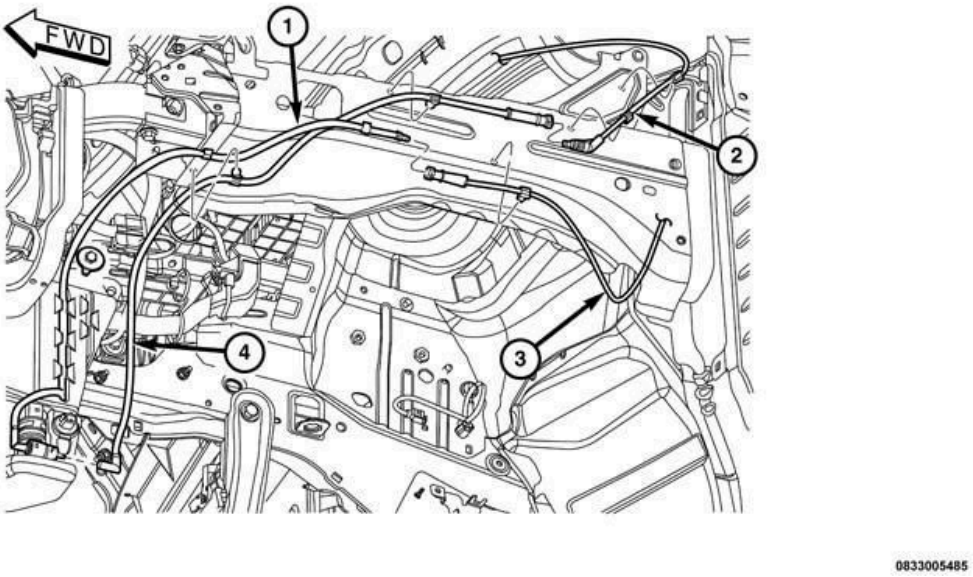

Fig. 196: Bearing Cap Retaining Bolts Tightening Sequence - Right

Courtesy of CHRYSLER GROUP, LLC

1. Lubricate camshaft journals with clean engine oil.

CAUTION: Do not rotate the camshafts more than a few degrees independently of the crankshaft. Valve to piston contact could occur resulting in possible valve damage. If the camshafts need to be rotated more than a few degrees, first move the pistons away from the cylinder heads by rotating the crankshaft counterclockwise to a position 30° before-top-dead-center. Once the camshafts are returned to their top-dead-center position, rotate the crankshaft clockwise to return the crankshaft to top-dead-center.

2. Install the right side camshaft(s) at top-dead-center by positioning the alignment holes (1) vertically. This will place the camshafts at the neutral position (no valve load) easing the installation of the camshaft bearing caps.

NOTE: Caps are identified numerically (1 through 4), intake or exhaust (I or E) and should be installed from the front to the rear of the engine. All caps should be installed with the notch forward so that the stamped arrows (<) on the caps point toward the front of the engine.

3. Install the camshaft bearing caps and hand tighten the retaining bolts to the proper specification. Refer to **TORQUE SPECIFICATIONS** .
4. Verify the rocker arms are aligned to the cam lobe

   Refer to **ROCKER ARM, VALVE, INSTALLATION**.

5. Tighten the bearing cap retaining bolts in the sequence shown in illustration to the proper specification. Refer to **TORQUE SPECIFICATIONS** .

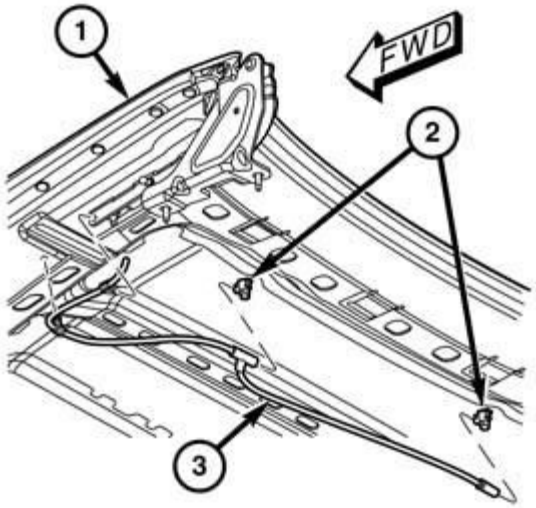

0833005488

Fig. 197: Positioning Camshaft Alignment Holes Vertically
Courtesy of CHRYSLER GROUP, LLC

6. Verify the alignment holes are vertical to the cylinder head surface.

NOTE: **Minor rotation of a camshaft (a few degrees) may be required when installing the RT Camshaft/Phasers to the camshaft alignment pins.**

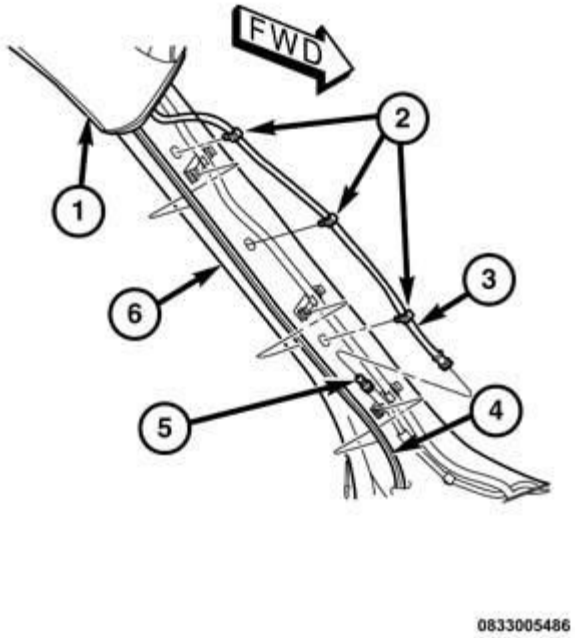

Fig. 198: Marks On Timing Chain
Courtesy of CHRYSLER GROUP, LLC

7. Verify the cam phasers (3 and 4) are aligned to the marks (2) made on the timing chain.
8. Install the phasers (3 and 4) onto the camshafts.
9. Install the oil control valves. Tighten to the proper specification. Refer to **TORQUE SPECIFICATIONS** .

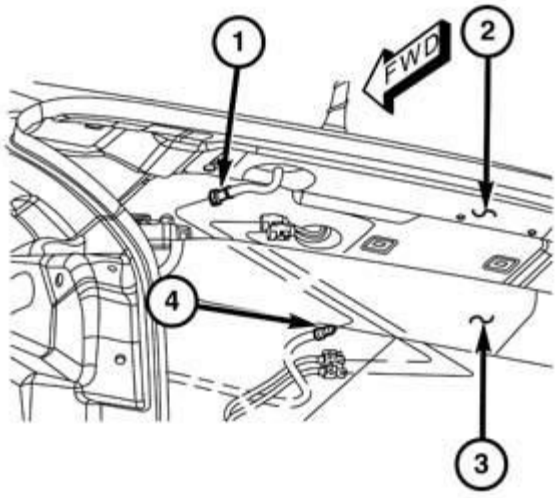

0833005487

Fig. 199: Arrows, Scribe Lines & Cylinder Head Cover Mounting Surface
Courtesy of CHRYSLER GROUP, LLC

10. Using care, slowly rotate the engine four revolutions to verify the valve to piston clearance and camshaft phaser timing mark alignment (1).
11. Install the cylinder head cover, spark plugs, ignition coils and the upper intake manifold. Refer to **ASSEMBLY, VARIABLE VALVE TIMING, PHASER/OIL CONTROL VALVE, INSTALLATION**.

NOTE: The Cam/Crank Variation Relearn procedure must be performed using the scan tool anytime there has been a repair/replacement made to a powertrain system, for example: flywheel, valvetrain, camshaft and/or crankshaft sensors or components.

COVER(S), CYLINDER HEAD

DESCRIPTION

DESCRIPTION

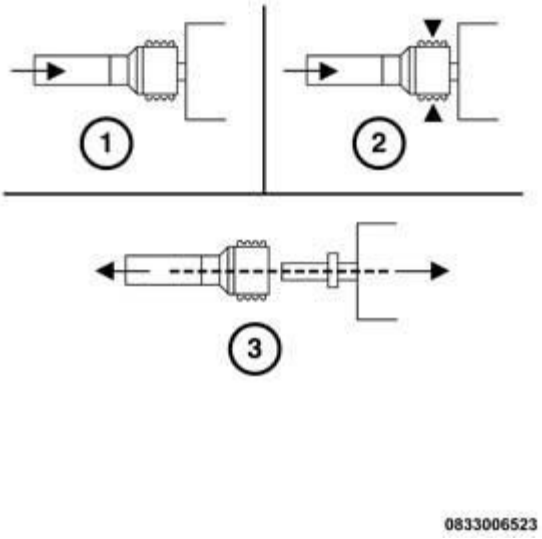

Fig. 200: Cylinder Head Covers
Courtesy of CHRYSLER GROUP, LLC

The cylinder head covers are made of a carbon and fiberglass composite. The cylinder head covers are not interchangable from side-to-side. The cylinder head covers are sealed with a press-in-place gasket that is designed to isolate the cover from the cylinder head for improved NVH. There are two dowel pins on the outboard side of the cover flange to locate the cover to holes in the cylinder head. RTV is used to seal the T-joint at the timing cover, cylinder head and cylinder head cover.

REMOVAL

LEFT

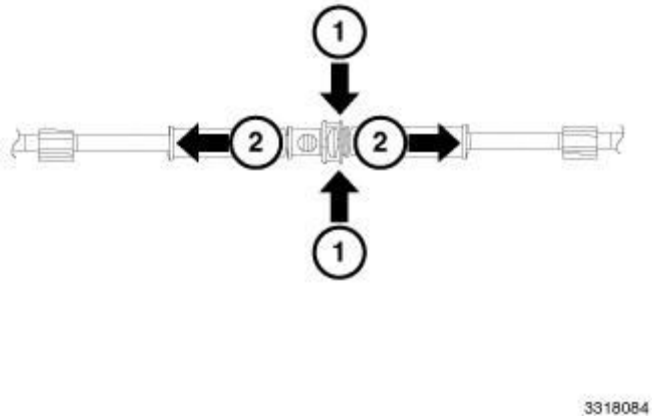

Fig. 201: Magnetic Timing Wheels
Courtesy of CHRYSLER GROUP, LLC

CAUTION: The magnetic timing wheels (1) must not come in contact with magnets (pickup tools, trays, etc.) or any other strong magnetic field. This will destroy the timing wheels ability to correctly relay camshaft position to the camshaft position sensor.

1. Remove the engine cover.
2. Evacuate the A/C system. Refer to **STANDARD PROCEDURE** .
3. Disconnect and isolate the negative battery cable.
4. Drain the cooling system.
5. Remove the air cleaner body, resonator and upper intake manifold. Refer to **MANIFOLD, INTAKE, REMOVAL**.

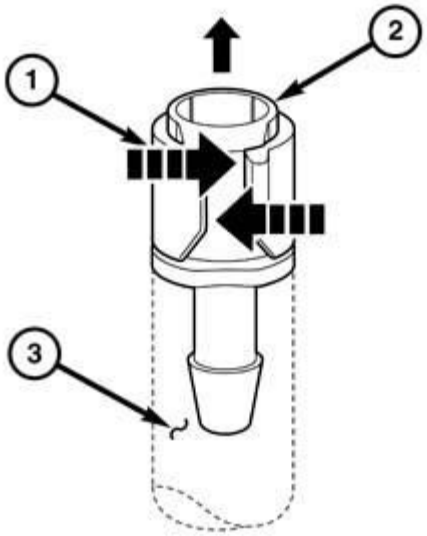

0833006926

Fig. 202: Intake Ports, Insulator & Alignment Posts
Courtesy of CHRYSLER GROUP, LLC

6. Cover the open intake ports (1) to prevent debris from entering the engine.
7. Remove the insulator (2) from the LH cylinder head cover.

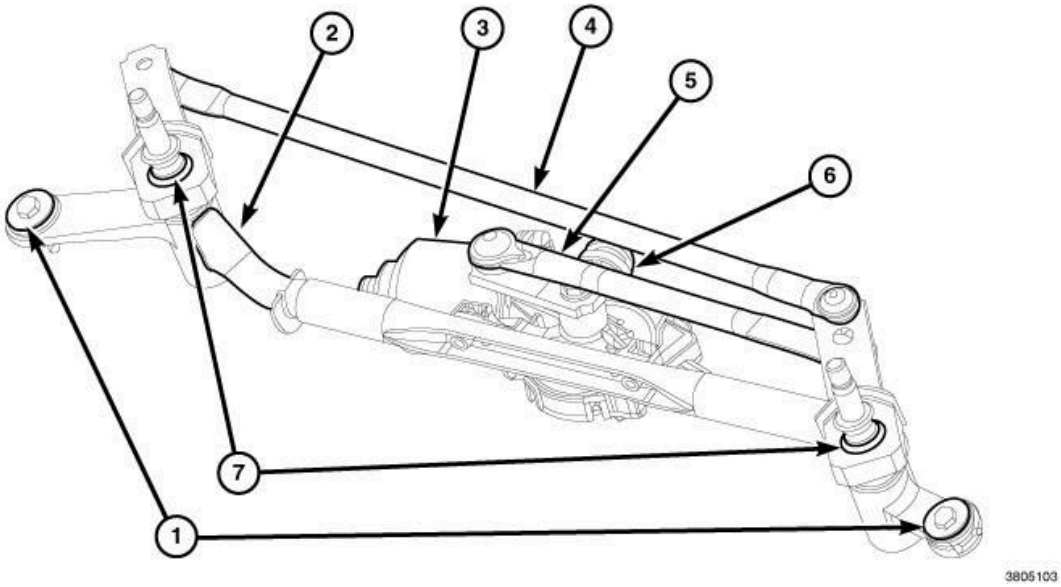

Fig. 203: Wire Harness Retainers & Variable Valve Timing Solenoid Connectors
Courtesy of CHRYSLER GROUP, LLC

NOTE: Mark the variable valve timing solenoid connectors (2) with a paint pen or

equivalent so that they may be reinstalled in their original locations.

8. Disconnect the electrical connectors (2) from the variable valve timing solenoids on the left cylinder head cover.
9. Disengage three wire harness retainers (1) from the left cylinder head cover.

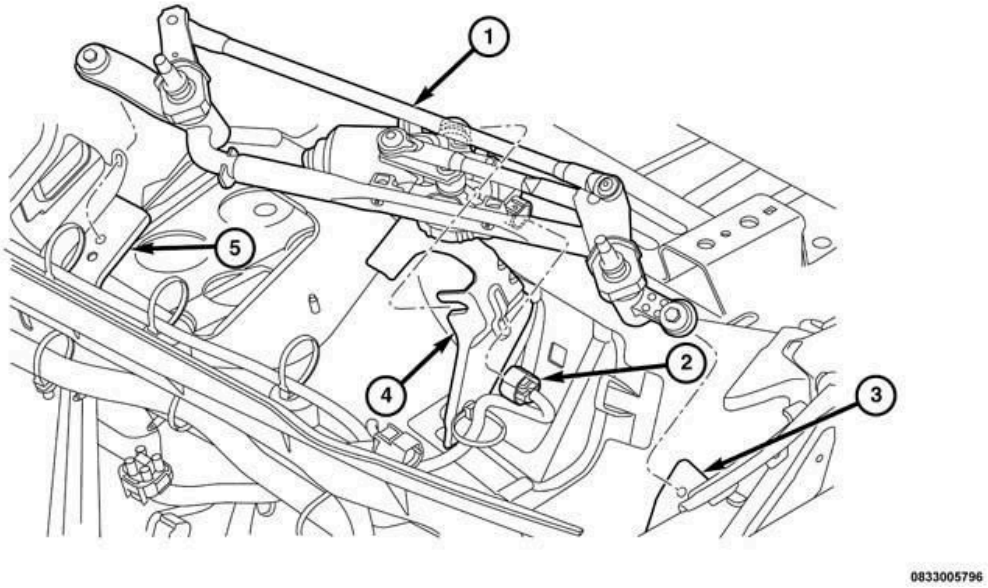

Fig. 204: Variable Valve Timing Solenoids, Connectors & Bolts
Courtesy of CHRYSLER GROUP, LLC

10. Mark the variable valve timing solenoids (2 and 4) with a paint pen or equivalent so that they may be reinstalled in their original locations.
11. Remove the variable valve timing solenoids.

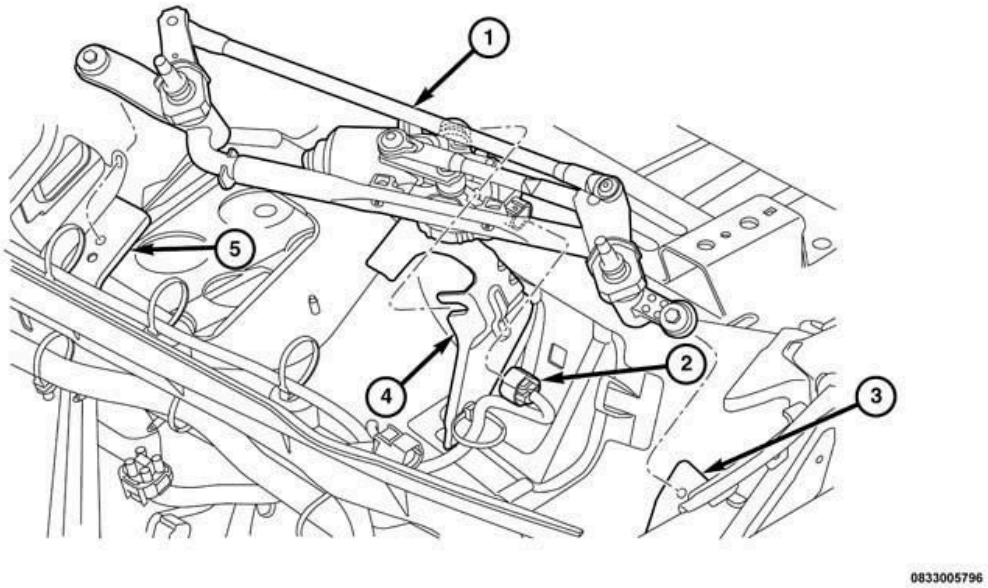

Fig. 205: Engine Coolant Temperature (ECT) Sensor Connector, Camshaft Position (CMP) Sensor & Harness Retainers
Courtesy of CHRYSLER GROUP, LLC

12. Disconnect the left Camshaft Position (CMP) sensor (5).
13. Disengage one main wire harness retainer (2) from the cylinder head cover and one main wire harness retainer (4) from the cylinder head cover mounting stud.

NOTE: **The RH CMP sensor is shown in illustration, the LH CMP sensor is similar. If removing both RH and LH CMP sensors, mark the sensors so they can be installed in their original locations.**

14. Remove the camshaft position sensor. Refer to **SENSOR, CAMSHAFT POSITION, REMOVAL** .

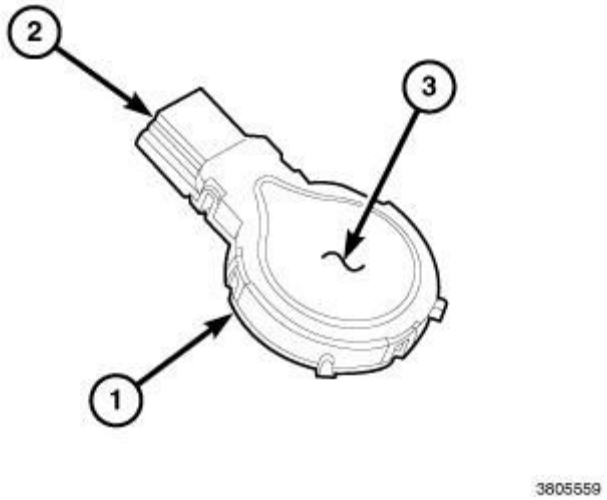

Fig. 206: Injection/Ignition Harness Retainers
Courtesy of CHRYSLER GROUP, LLC

15. Disengage two injection/ignition harness retainers (1) from the left cylinder head cover.

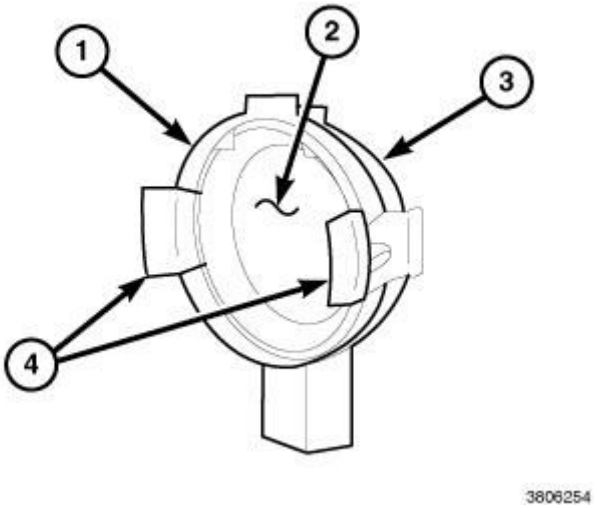

Fig. 207: Electrical Connector, Ignition Coils & Ignition Coil Retaining Bolts
Courtesy of CHRYSLER GROUP, LLC

16. Remove the ignition coils (2). Refer to **COIL, IGNITION, REMOVAL** .

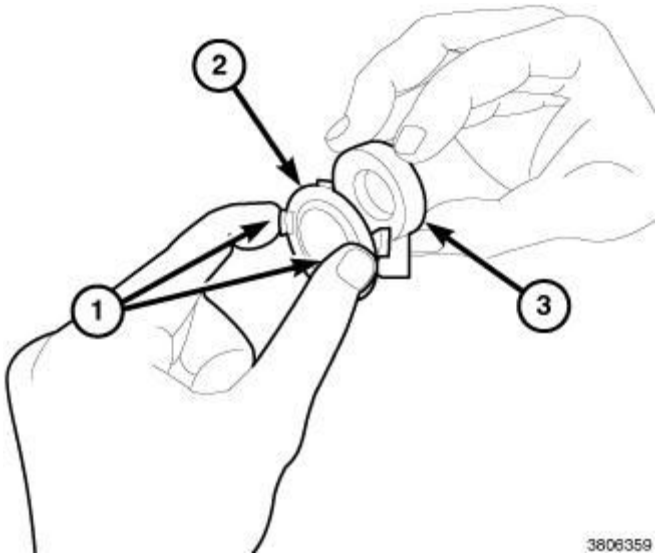

Fig. 208: IHX, Suction/Liquid Line Manifold & Nut
Courtesy of CHRYSLER GROUP, LLC

17. Remove the nut (3) and separate the suction/liquid line manifold (2) from the Internal Heat Exchanger (IHX) (1).

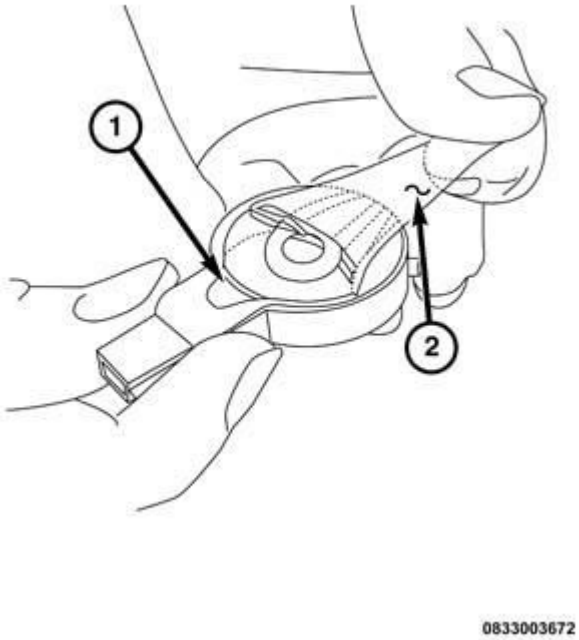

Fig. 209: A/C-To-IHX Lines
Courtesy of CHRYSLER GROUP, LLC

18. Remove the nuts that secure the A/C lines (1) to the IHX.

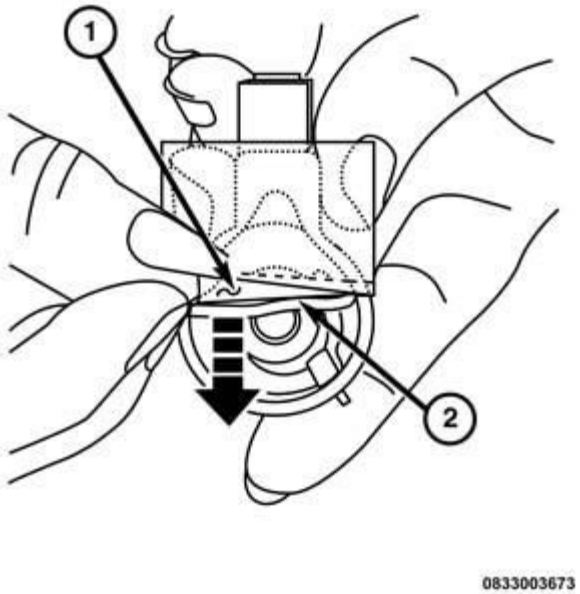

Fig. 210: Support Nuts, Upper Radiator Hose & Heater Line
Courtesy of CHRYSLER GROUP, LLC

19. Remove the heater line (3) support nuts (1).
20. Disengage the wiring harness (2) and position aside.

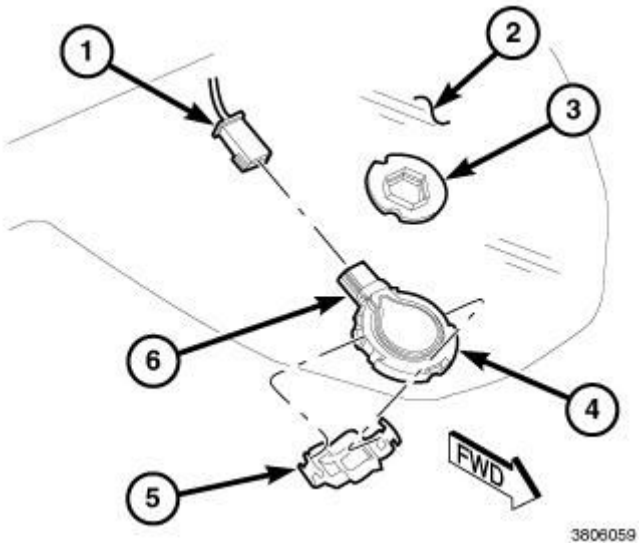

Fig. 211: Radiator Inlet Pipe & Upper Radiator Hose
Courtesy of CHRYSLER GROUP, LLC

21. Separate the upper radiator hose (2) from the radiator inlet pipe (1).
22. Remove the front bumper fascia. Refer to **FASCIA, FRONT, REMOVAL** .

23. Raise the vehicle.
24. Remove the belly pan. Refer to **BELLY PAN, REMOVAL** .
25. Remove the left side catalytic converter. Refer to **CONVERTER, CATALYTIC , REMOVAL** .

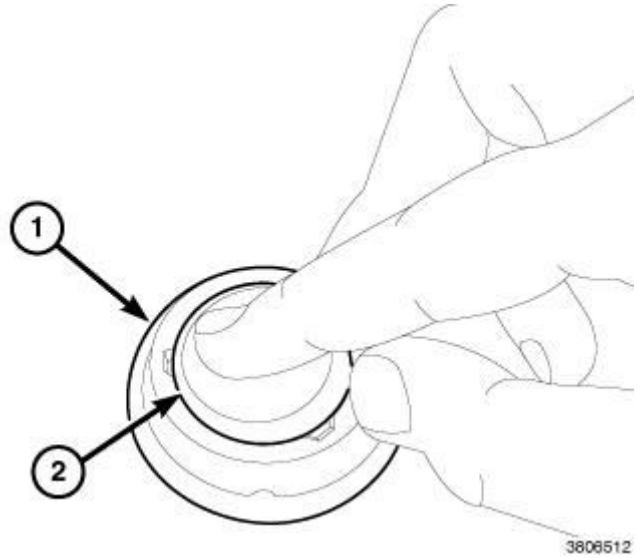

Fig. 212: A/C Line Support Brace Nut & Brace
Courtesy of CHRYSLER GROUP, LLC

26. Remove the A/C line support brace nut (1) and position the brace (2) away.

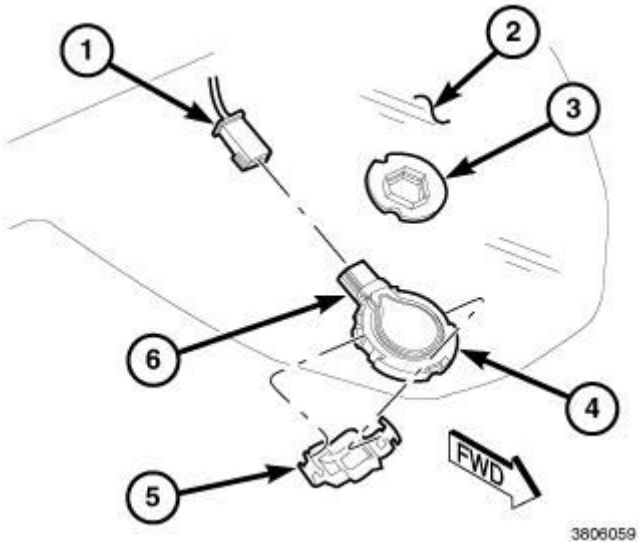

Fig. 213: Intake Manifold Left/Forward Support Bracket & Stud Bolt
Courtesy of CHRYSLER GROUP, LLC

27. Remove the intake manifold left/forward support bracket stud bolt (2).

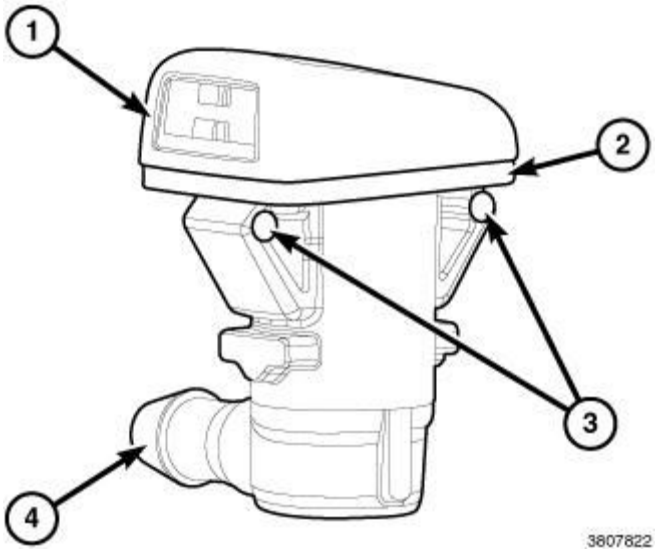

Fig. 214: Intake Manifold Left/Rearward Support Bracket & Stud Bolt
Courtesy of CHRYSLER GROUP, LLC

28. Remove the intake manifold left/rearward support bracket stud bolt (2).

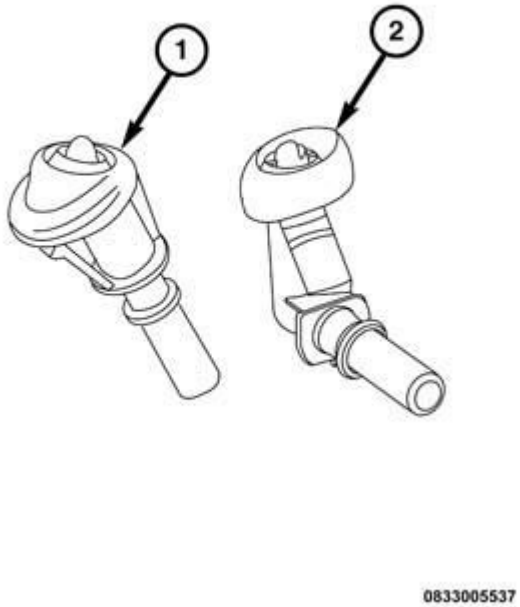

Fig. 215: A/C Compressor, IHX Manifold Line & Fasteners
Courtesy of CHRYSLER GROUP, LLC

29. Remove the A/C lines (2) at the A/C compressor (3).
30. Lower the vehicle.

NOTE: **The intake manifold support brackets are fastened to the A/C line bracket and is removed as an assembly.**

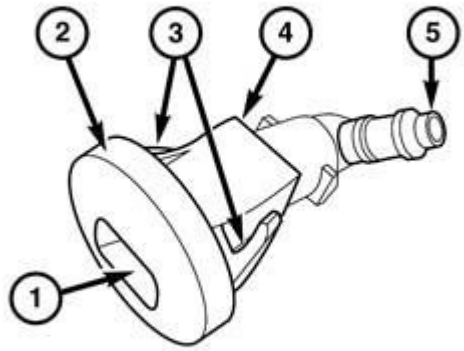

0833008962

Fig. 216: A/C Line
Courtesy of CHRYSLER GROUP, LLC

31. Using care. Remove the A/C line (1) from the vehicle.
32. Position the heater line and the cooling system pipe aside.

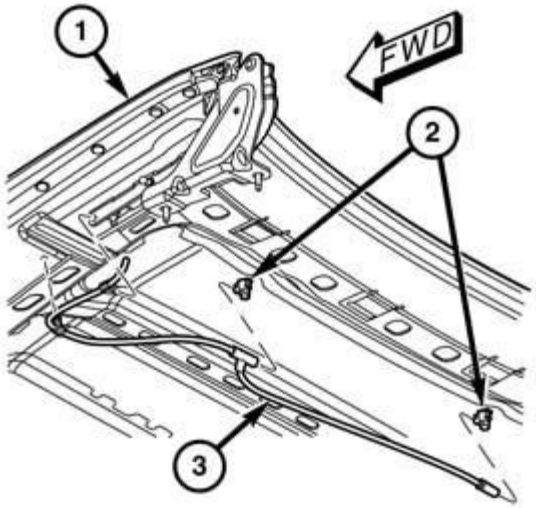

0833005488

Fig. 217: Cylinder Head Cover Mounting Bolts & Studbolts
Courtesy of CHRYSLER GROUP, LLC

33. Loosen ten cylinder head cover mounting bolts (1) and two studbolts (2) and remove the cylinder head cover.

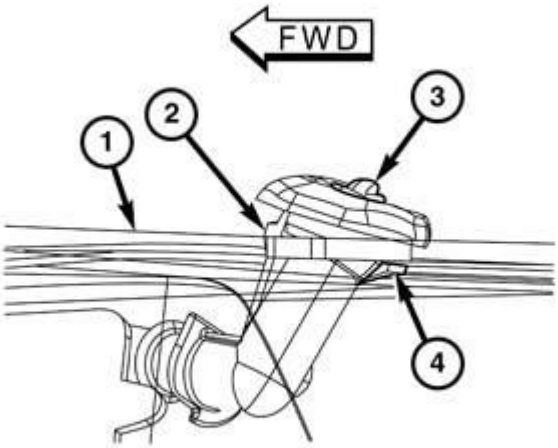

0833005538

Fig. 218: Cylinder Head Cover Gasket & Spark Plug Tube Seals
Courtesy of CHRYSLER GROUP, LLC

34. Remove and discard the cylinder head cover gasket (1).
35. The spark plug tube seals (2) can be reused if not damaged.

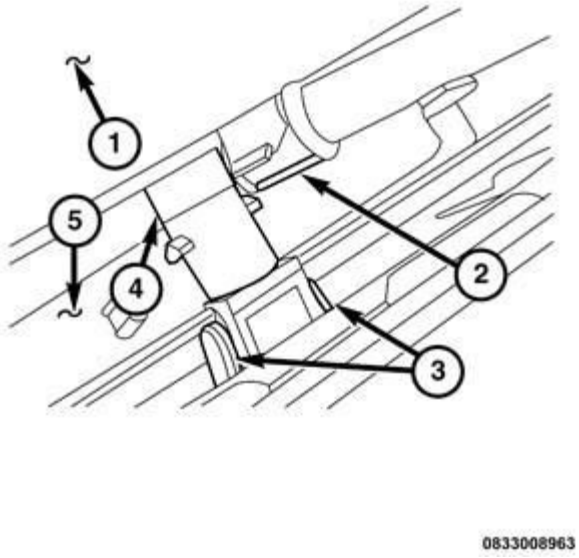

Fig. 219: RTV Sealant Locations
Courtesy of CHRYSLER GROUP, LLC

CAUTION: Do not use oil based liquids, wire brushes, abrasive wheels or metal scrapers to clean the engine gasket surfaces. Use only isopropyl (rubbing) alcohol, along with plastic or wooden scrapers. Improper gasket surface preparation may result in engine fluid leakage.

36. Remove all residual sealant (1) from the cylinder head, timing chain cover and cylinder head cover mating surfaces. Refer to **ENGINE, STANDARD PROCEDURE** .

RIGHT

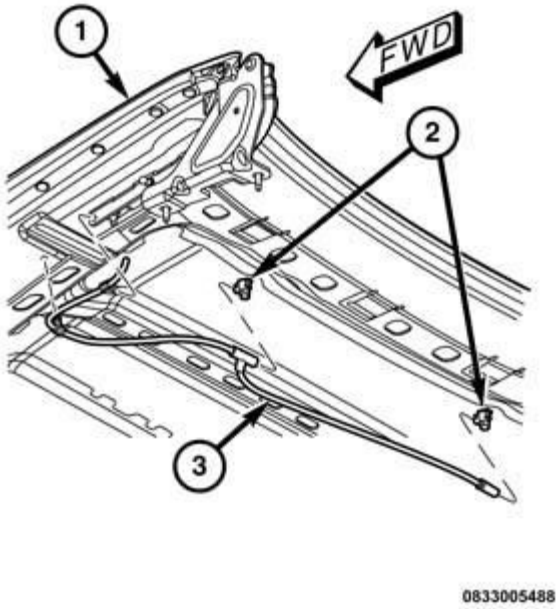

Fig. 220: Magnetic Timing Wheels
Courtesy of CHRYSLER GROUP, LLC

CAUTION: The magnetic timing wheels (1) must not come in contact with magnets (pickup tools, trays, etc.) or any other strong magnetic field. This will destroy the timing wheels ability to correctly relay camshaft position to the camshaft position sensor.

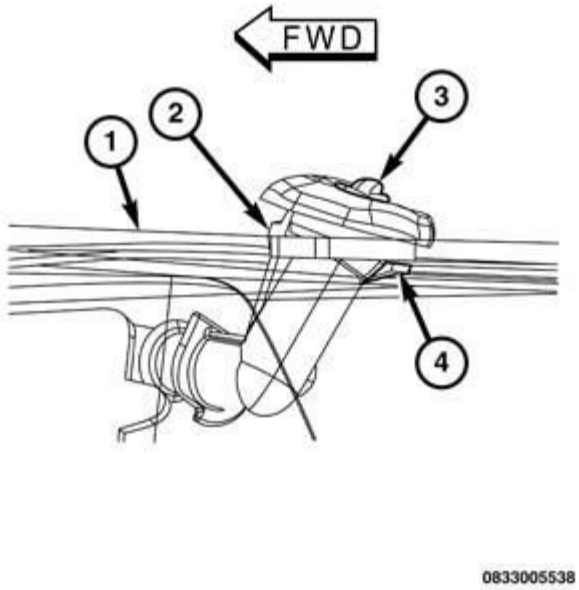

Fig. 221: Upper Intake Manifold & Bolts
Courtesy of CHRYSLER GROUP, LLC

1. Disconnect and isolate the negative battery cable.
2. Remove the air cleaner body, resonator and upper intake manifold (2). Refer to **MANIFOLD, INTAKE, REMOVAL**.

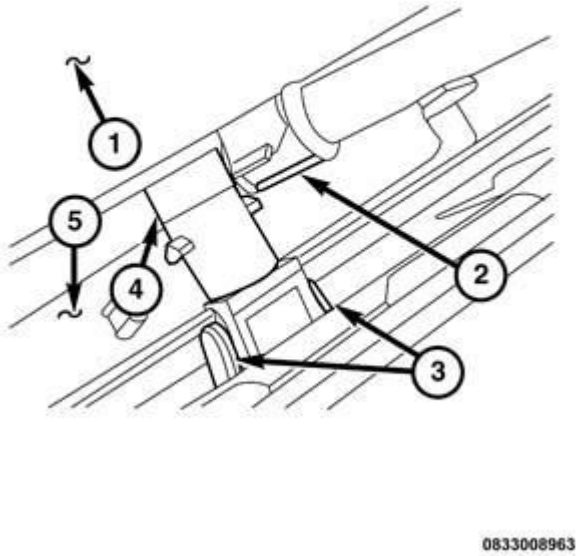

Fig. 222: Intake Ports, Insulator & Alignment Posts
Courtesy of CHRYSLER GROUP, LLC

3. Cover the open intake ports (1) to prevent debris from entering the engine.

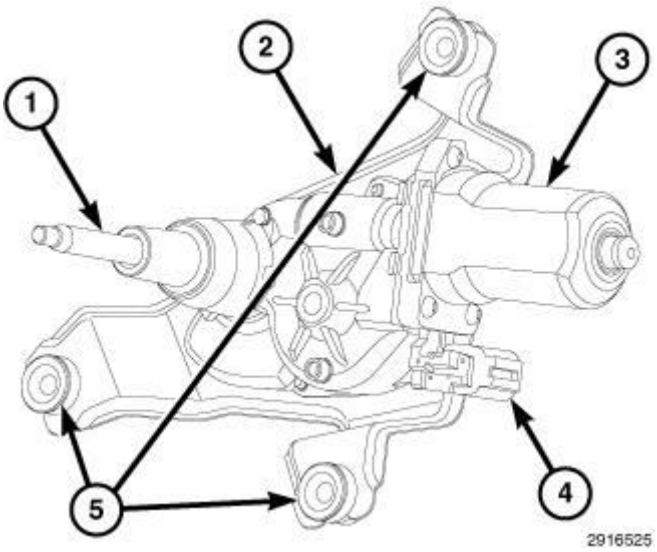

Fig. 223: Wire Harness Retainers & Variable Valve Timing Solenoid Connectors
Courtesy of CHRYSLER GROUP, LLC

NOTE: Mark the variable valve timing solenoid connectors (2) with a paint pen or equivalent so that they may be reinstalled in their original locations.

4. Disconnect the electrical connectors (2) from the variable valve timing solenoids on the right cylinder head.
5. Disengage two wire harness retainers (1) from the right cylinder head cover.

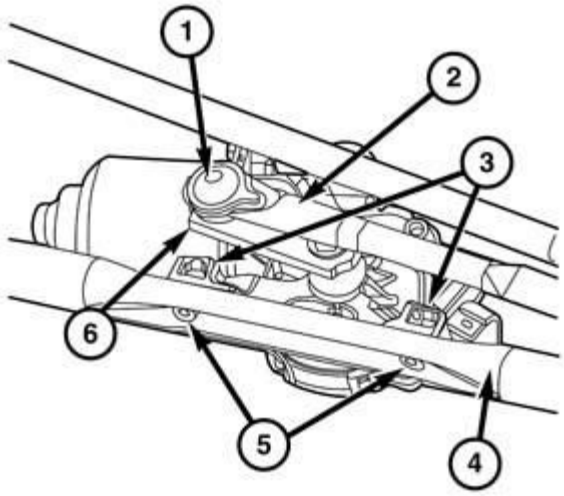

0833005471

Fig. 224: Variable Valve Timing Solenoids, Connectors & Bolts
Courtesy of CHRYSLER GROUP, LLC

6. Mark the variable valve timing solenoids (2 and 4) with a paint pen or equivalent so that they may be reinstalled in their original locations.
7. Remove the variable valve timing solenoids.

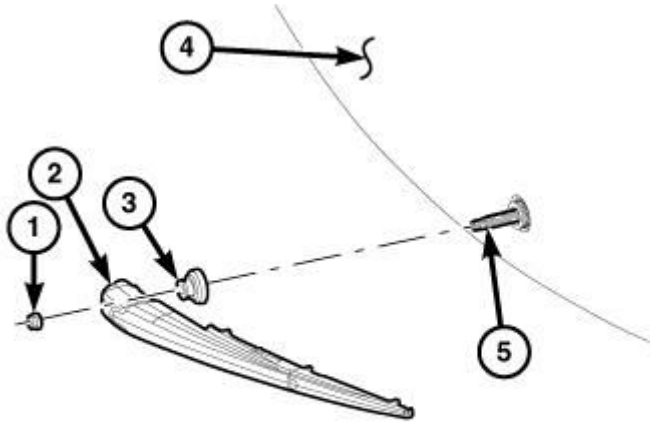

2918916

Fig. 225: Main Wire Harness Retainers
Courtesy of CHRYSLER GROUP, LLC

8. Disengage three main wire harness retainers (1) from the right cylinder head cover.

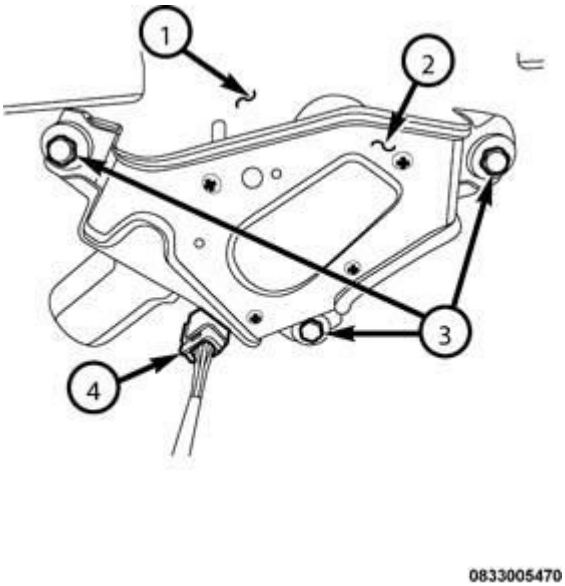

Fig. 226: Camshaft Position (CMP) Sensor Connector & Harness Retainers
Courtesy of CHRYSLER GROUP, LLC

9. Disconnect the electrical connector (1) from the right Camshaft Position (CMP) sensor.

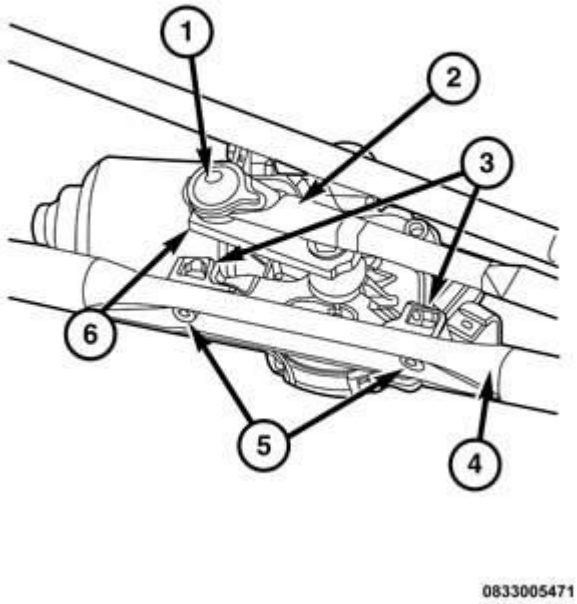

Fig. 227: CMP Sensor & Bolt
Courtesy of CHRYSLER GROUP, LLC

NOTE: If removing both RH and LH CMP sensors, mark the sensors so they can be installed in their original locations.

10. Remove the camshaft position sensor. Refer to **SENSOR, CAMSHAFT POSITION, REMOVAL** .

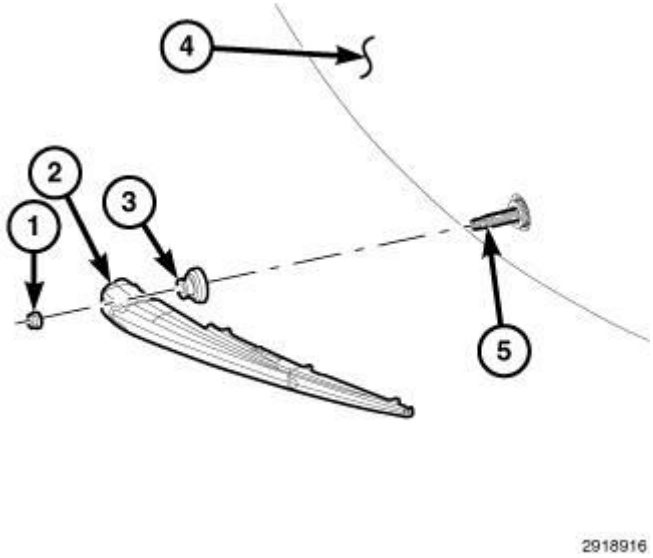

Fig. 228: Injection/Ignition Harness Retainers
Courtesy of CHRYSLER GROUP, LLC

11. Disengage three injection/ignition harness retainers (1) from the right cylinder head cover.

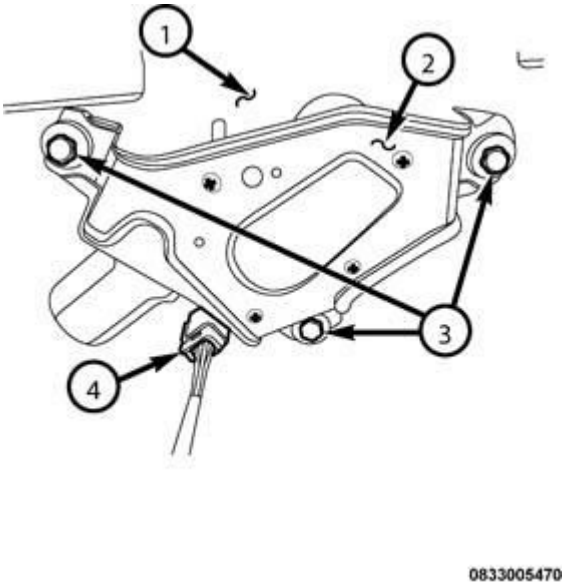

Fig. 229: Electrical Connector, Ignition Coils & Ignition Coil Retaining Bolts
Courtesy of CHRYSLER GROUP, LLC

NOTE: The LH ignition coils are shown in illustration, the RH ignition coils are similar.

12. Remove the ignition coils (2). Refer to **COIL, IGNITION, REMOVAL** .

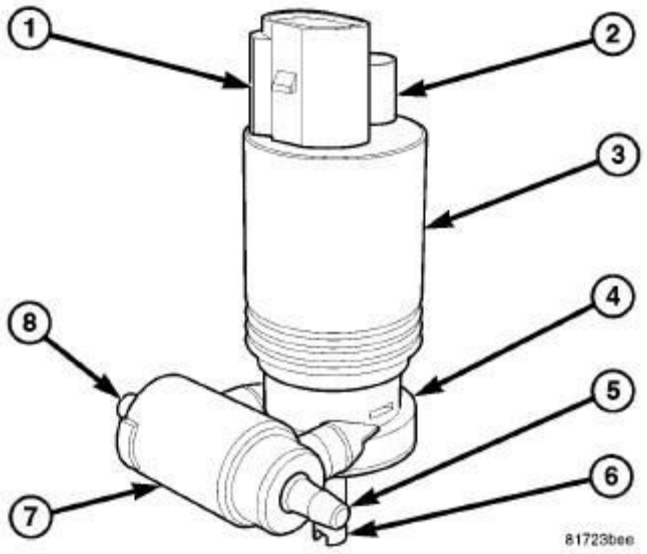

Fig. 230: PCV Valve & Screws
Courtesy of CHRYSLER GROUP, LLC

13. Remove the PCV valve (1). Refer to **VALVE, POSITIVE CRANKCASE VENTILATION (PCV), REMOVAL** .

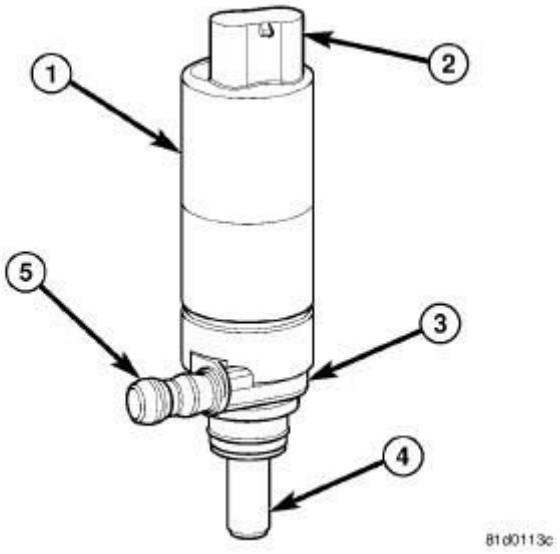

Fig. 231: Resonator Mounts
Courtesy of CHRYSLER GROUP, LLC

14. Remove the two resonator mounts (1) from the studbolts.

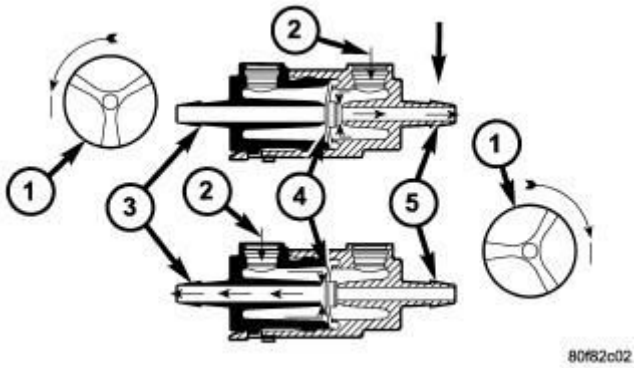

Fig. 232: Cylinder Head Cover Mounting Bolts & Studbolts
Courtesy of CHRYSLER GROUP, LLC

15. Loosen nine cylinder head cover mounting bolts (1) and three studbolts (2) and remove the cylinder head cover.

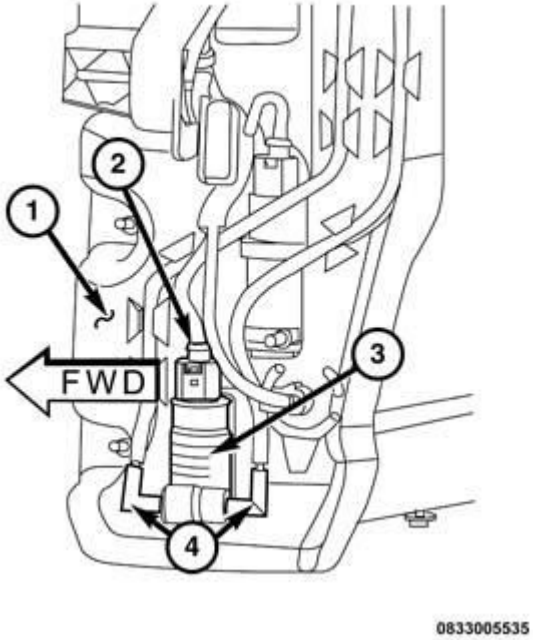

Fig. 233: Cylinder Head Cover Gasket & Spark Plug Tube Seals
Courtesy of CHRYSLER GROUP, LLC

NOTE: The LH cylinder head cover is shown in illustration, the RH cylinder head cover is similar.

16. Remove and discard the cylinder head cover gasket (1).
17. The spark plug tube seals (2) can be reused if not damaged.

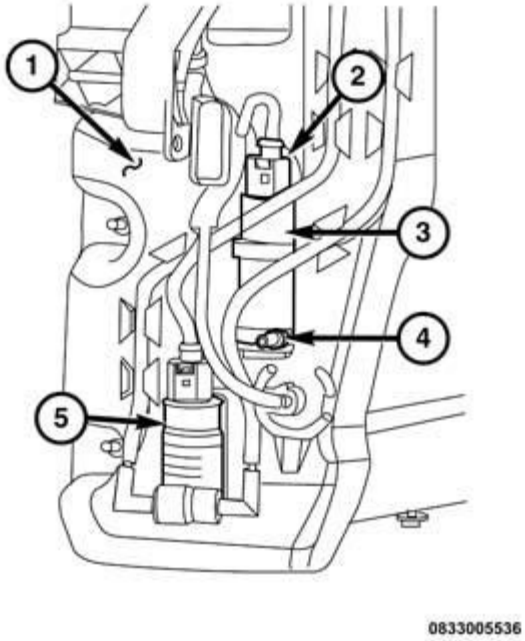

Fig. 234: RTV Sealant Locations
Courtesy of CHRYSLER GROUP, LLC

NOTE: **The LH cylinder head cover T-joints are shown in illustration, the RH cylinder head cover T-joints are similar.**

CAUTION: Do not use oil based liquids, wire brushes, abrasive wheels or metal scrapers to clean the engine gasket surfaces. Use only isopropyl (rubbing) alcohol, along with plastic or wooden scrapers. Improper gasket surface preparation may result in engine fluid leakage.

18. Remove all residual sealant (1) from the cylinder head, timing chain cover and cylinder head cover mating surfaces. Refer to **ENGINE, STANDARD PROCEDURE** .

INSTALLATION

LEFT

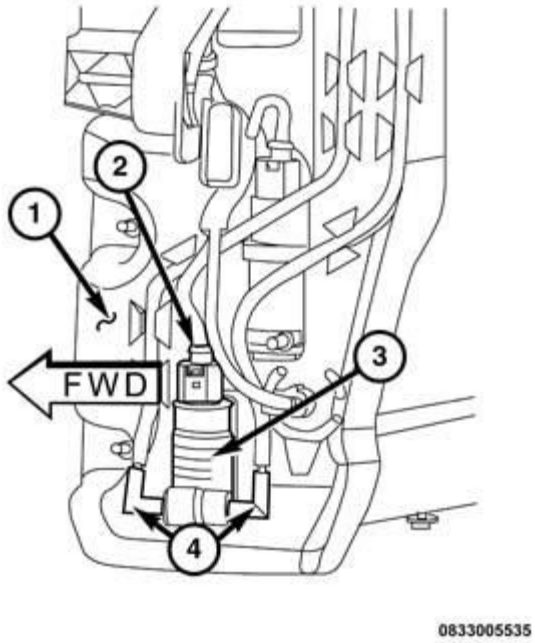

Fig. 235: Magnetic Timing Wheels
Courtesy of CHRYSLER GROUP, LLC

CAUTION: The magnetic timing wheels (1) must not come in contact with magnets (pickup tools, trays, etc.) or any other strong magnetic field. This will destroy the timing wheels ability to correctly relay camshaft position to the camshaft position sensor.

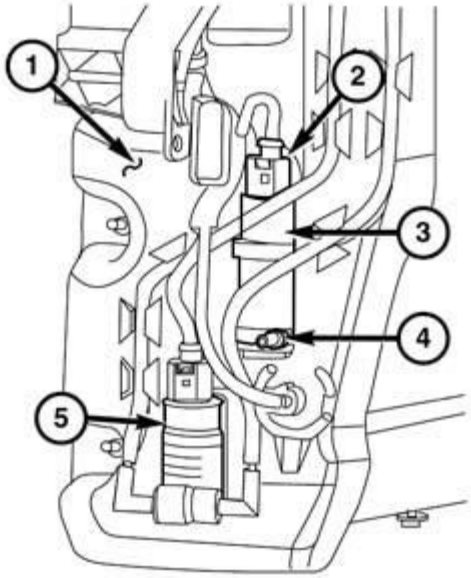

0833005536

Fig. 236: Cylinder Head Cover Gasket & Spark Plug Tube Seals
Courtesy of CHRYSLER GROUP, LLC

1. Install the cylinder head cover gasket (1).
2. The spark plug tube seals (2) can be reused if not damaged.

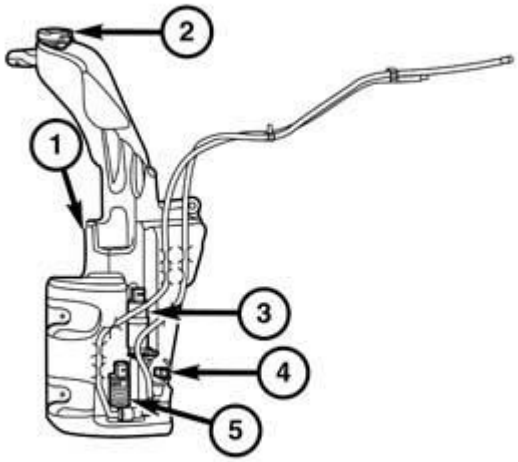

0833005656

Fig. 237: Spark Plug Tube Seal & Installer

Courtesy of CHRYSLER GROUP, LLC

3. If required, install new spark plug tube seals (2) in the cylinder head cover:
   - Lubricate the spark plug tube seal inner and outer diameters with clean engine oil.
   - Place the spark plug tube seal (2) on the Cam Sensor/Spark Plug Tube Seal Installer (special tool #10256, Installer, Cam Installer, Cam Sensor/Spark Plug Tube Seal) (1).
   - Push the seal into the cylinder head cover until the base of the seal is seated.
   - Remove the tool.

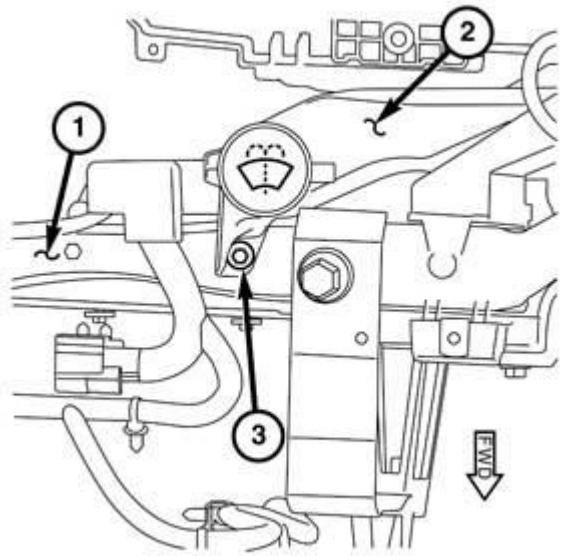

Fig. 238: RTV Sealant Locations
Courtesy of CHRYSLER GROUP, LLC

4. Clean the timing engine timing cover, cylinder head and cylinder head cover mating surfaces with isopropyl alcohol in preparation for sealant application.

CAUTION: Engine assembly requires the use of a unique sealant that is compatible with engine oil. Using a sealant other than Mopar® Threebond Engine RTV Sealant may result in engine fluid leakage.

CAUTION: Following the application of Mopar® Threebond Engine RTV Sealant to the gasket surfaces, the components must be assembled within 20 minutes and the attaching fasteners must be tightened to specification within 45 minutes. Prolonged exposure to the air prior to assembly may result in engine fluid leakage.

5. Apply a 2 to 3 mm wide bead of Mopar® Threebond Engine RTV Sealant (1) to the two engine timing cover to cylinder head T-joints as shown in illustration.

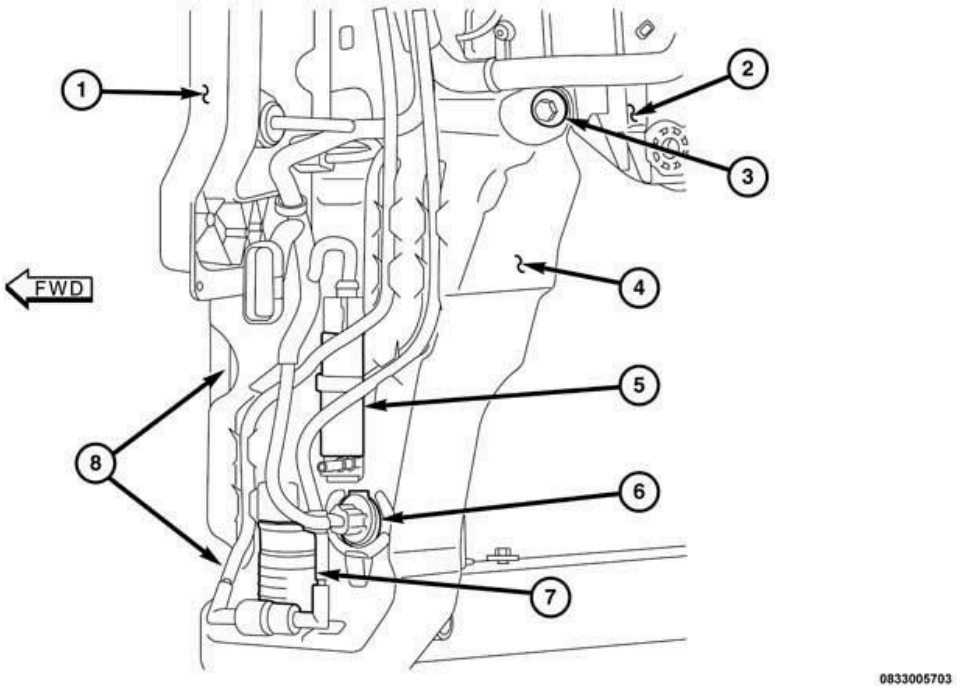

Fig. 239: Cylinder Head Cover Bolts & Double Ended Studs Tightening Sequence - Left
Courtesy of CHRYSLER GROUP, LLC

6. Align the locator pins (1) to the cylinder head and install the cylinder head cover.
7. Tighten the cylinder head cover bolts and double ended studs in the sequence shown in illustration to the proper specification. Refer to **TORQUE SPECIFICATIONS** .
8. If removed, install the spark plugs. Refer to **SPARK PLUG, INSTALLATION** .
9. Install the ignition coils. Refer to **COIL, IGNITION, INSTALLATION** .

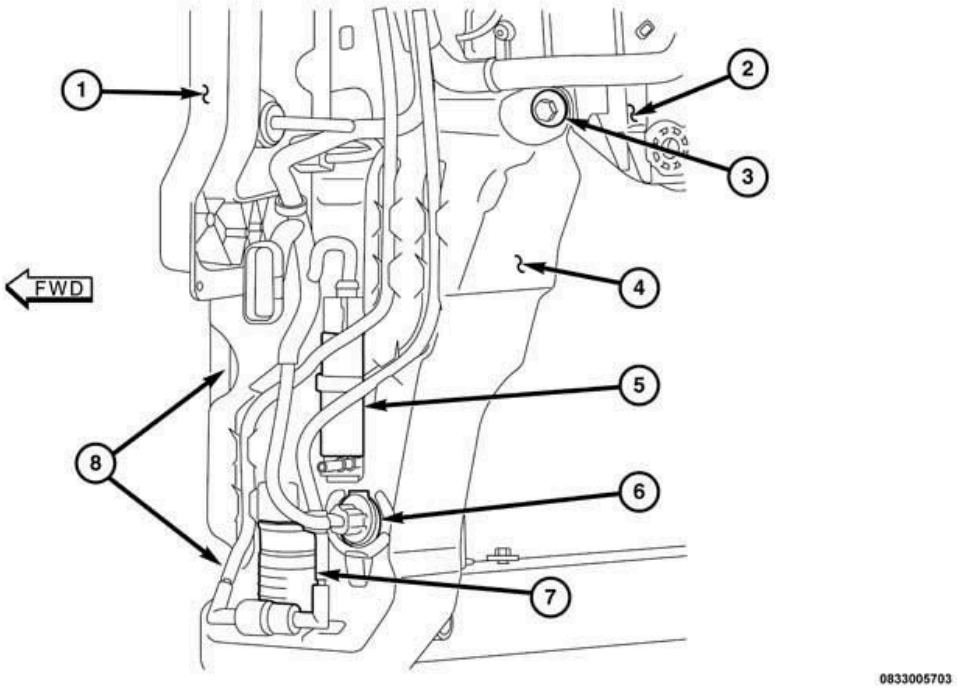

Fig. 240: Injection/Ignition Harness Retainers
Courtesy of CHRYSLER GROUP, LLC

10. Engage two injection/ignition harness retainers (1) to the left cylinder head cover.

NOTE: **If both RH and LH CMP sensors where removed, install them into their original locations.**

11. Install the camshaft position sensor. Refer to **SENSOR, CAMSHAFT POSITION, INSTALLATION** .

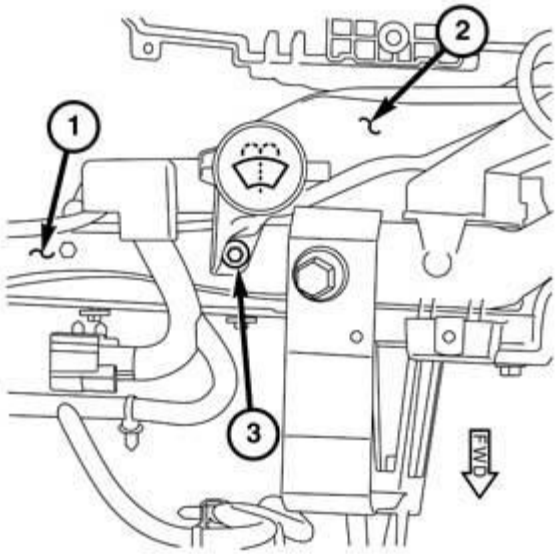

Fig. 241: Engine Coolant Temperature (ECT) Sensor Connector, Camshaft Position (CMP) Sensor & Harness Retainers
Courtesy of CHRYSLER GROUP, LLC

12. Connect the electrical connector (5) to the left Camshaft Position (CMP) sensor.
13. Engage one main wire harness retainer (2) to the cylinder head cover and one main wire harness retainer (4) to the cylinder head cover mounting stud.

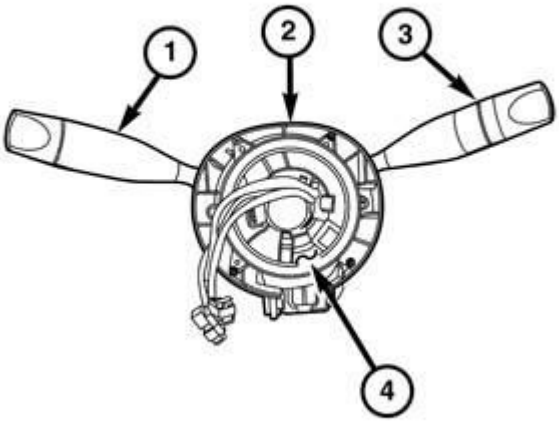

1012006656

Fig. 242: Variable Valve Timing Solenoids, Connectors & Bolts
Courtesy of CHRYSLER GROUP, LLC

14. Refer to the markings made at disassembly and install the variable valve timing solenoids (2 and 4) in their original locations.

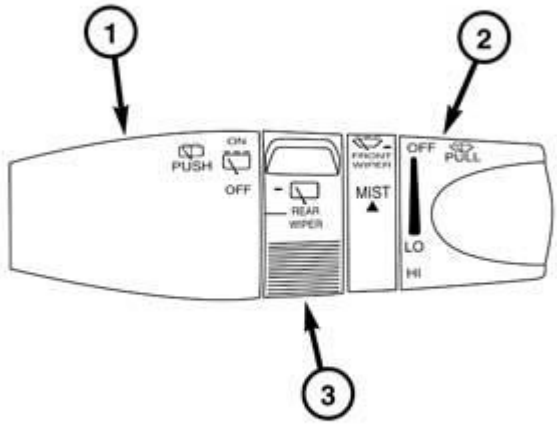

0833005928

Fig. 243: Wire Harness Retainers & Variable Valve Timing Solenoid Connectors
Courtesy of CHRYSLER GROUP, LLC

15. Engage three wire harness retainers (1) to the left cylinder head cover.
16. Connect the electrical connectors (2) to the left variable valve timing solenoids.

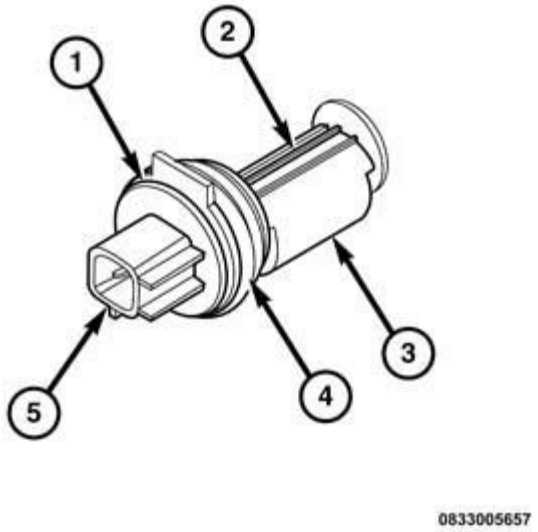

Fig. 244: A/C Line
Courtesy of CHRYSLER GROUP, LLC

17. Position the A/C line into the vehicle.
18. Raise the vehicle.

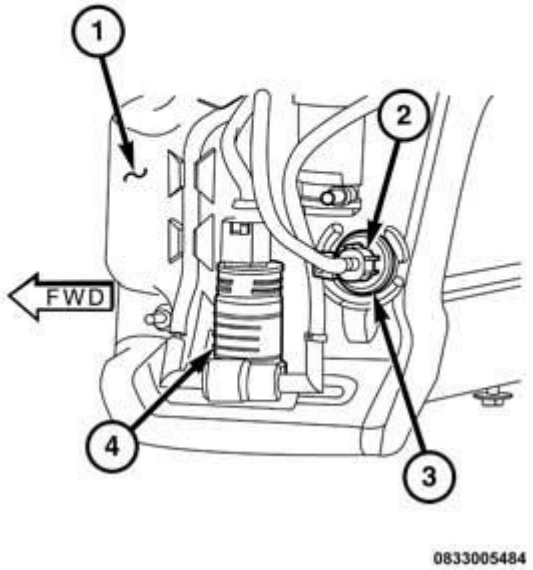

Fig. 245: A/C Compressor, IHX Manifold Line & Fasteners

Courtesy of CHRYSLER GROUP, LLC

19. Install the A/C lines (2) onto the compressor (3). Tighten the bolt (1) to the proper specification. Refer to **SPECIFICATIONS** .

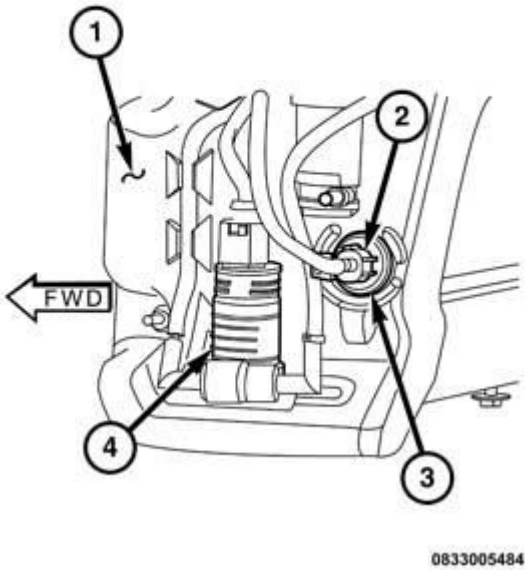

Fig. 246: Intake Manifold Left/Rearward Support Bracket & Stud Bolt
Courtesy of CHRYSLER GROUP, LLC

20. Install the intake manifold left/rearward support bracket stud bolt (2).

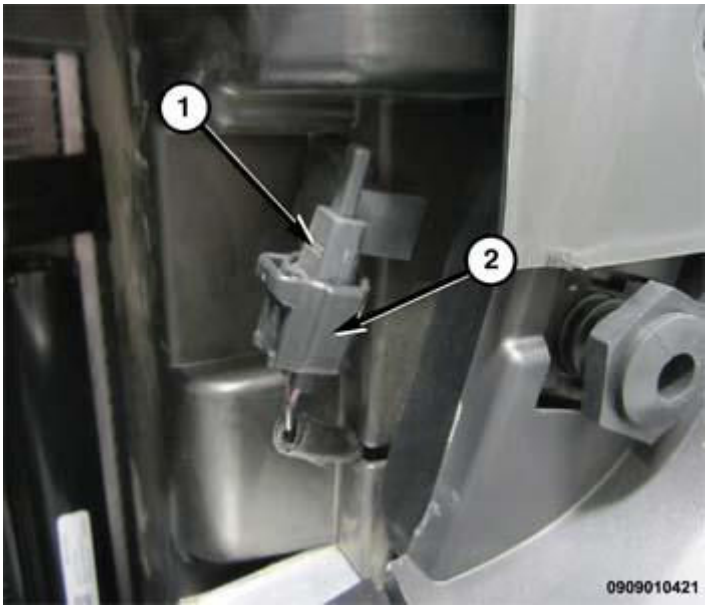

Fig. 247: A/C Line Support Brace Nut & Brace
Courtesy of CHRYSLER GROUP, LLC

21. Position the A/C line support brace (2) onto the stud bolt. Tighten the nut (1) to the proper specification. Refer to **SPECIFICATIONS** .

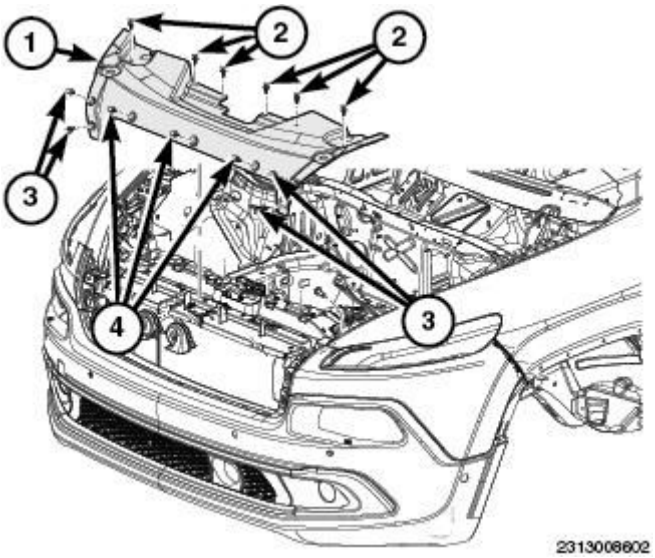

Fig. 248: Intake Manifold Left/Forward Support Bracket & Stud Bolt
Courtesy of CHRYSLER GROUP, LLC

22. Install the intake manifold left/forward support bracket stud bolt (2).
23. Install the left side catalytic converter. Refer to **CONVERTER, CATALYTIC , INSTALLATION** .
24. Install the front bumper fascia. Refer to **FASCIA, FRONT, INSTALLATION** .
25. Install the belly pan. Refer to **BELLY PAN, INSTALLATION** .
26. Lower the vehicle.

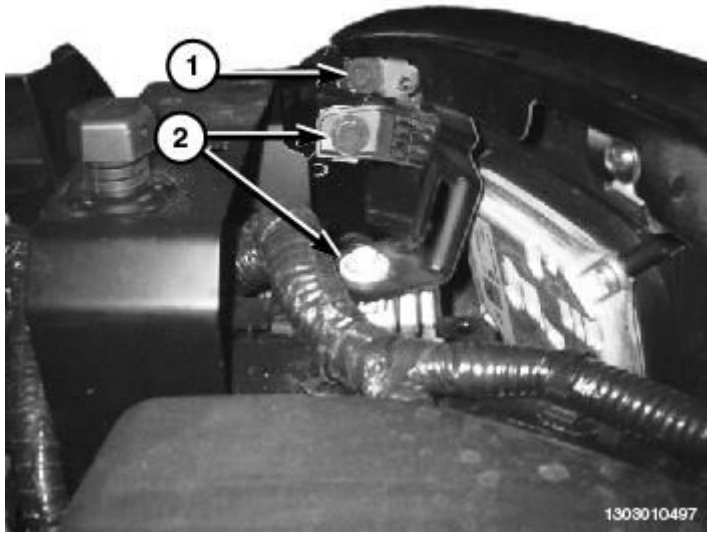

Fig. 249: Support Nuts, Upper Radiator Hose & Heater Line
Courtesy of CHRYSLER GROUP, LLC

27. Position the heater pipe (3) and the cooling system pipe onto the A/C line support bracket. Tighten the nuts (1) to the proper specification. Refer to **SPECIFICATIONS** .
28. Position the wiring harness (2) to the cylinder head cover stud bolts.

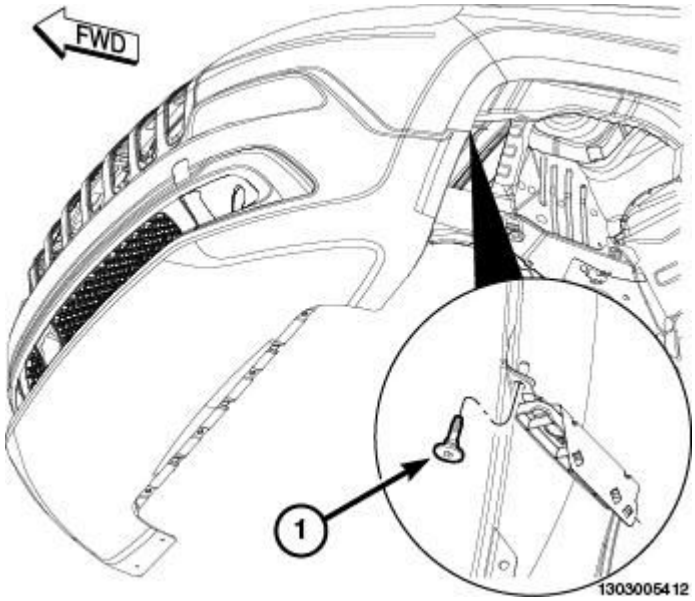

Fig. 250: Radiator Inlet Pipe & Upper Radiator Hose
Courtesy of CHRYSLER GROUP, LLC

29. Install the upper radiator hose (2) to the cooling pipe (1).

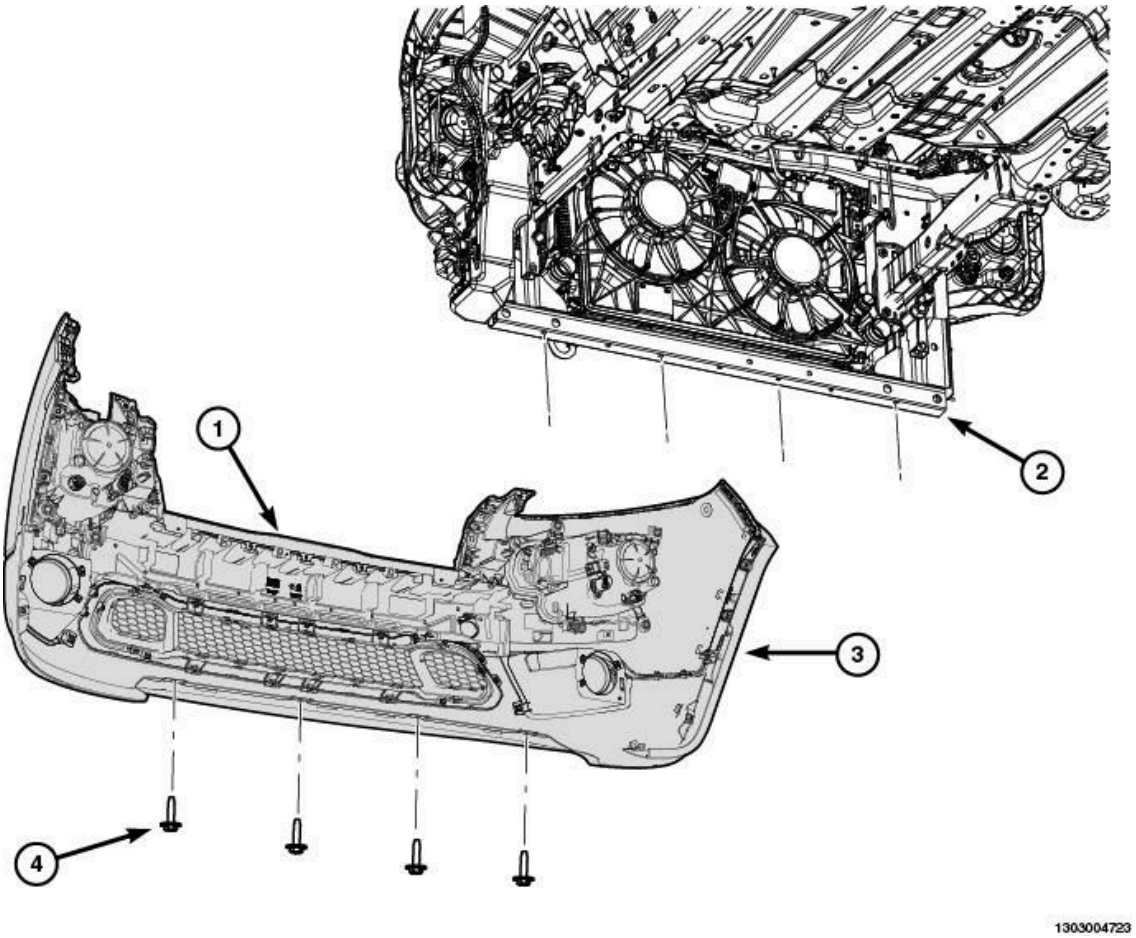

Fig. 251: A/C-To-IHX Lines
Courtesy of CHRYSLER GROUP, LLC

30. Install the A/C lines (1) to the Internal Heat Exchanger (IHX). Tighten the nuts (2) to the proper specification. Refer to **SPECIFICATIONS** .

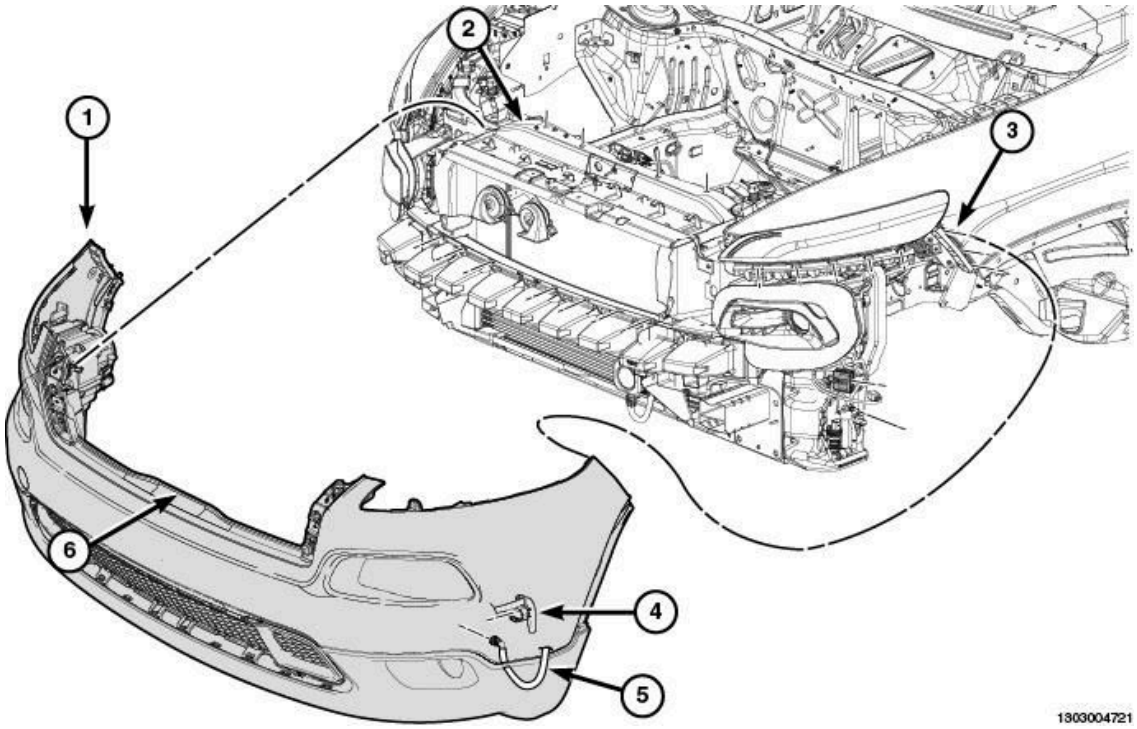

Fig. 252: IHX, Suction/Liquid Line Manifold & Nut
Courtesy of CHRYSLER GROUP, LLC

31. Install the A/C lines (2) to the IHX (1). Tighten the nut (3) to the proper specification. Refer to **SPECIFICATIONS** .

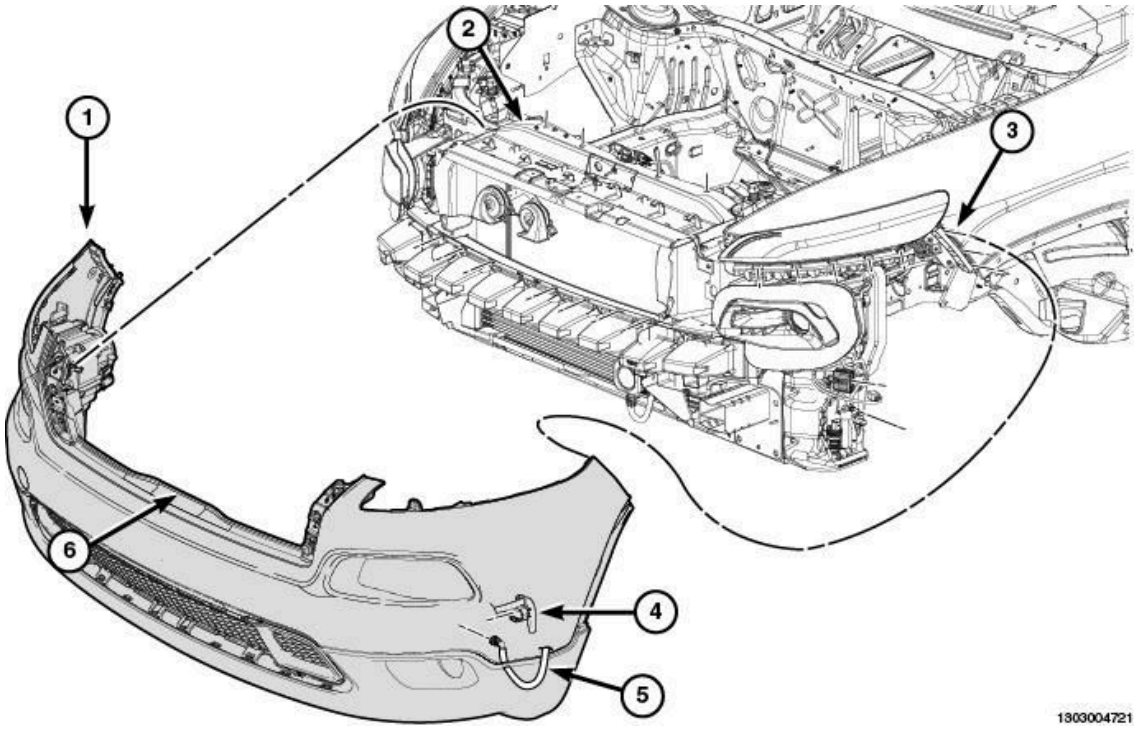

Fig. 253: Intake Ports, Insulator & Alignment Posts
Courtesy of CHRYSLER GROUP, LLC

32. Install the insulator (2) to the two alignment posts (3) on top of the LH cylinder head cover.
33. Install the upper intake manifold, support brackets, resonator and air cleaner body. Refer to **MANIFOLD, INTAKE, INSTALLATION**.
34. Connect the negative battery cable and tighten nut to the proper specification. Refer to **SPECIFICATIONS** .
35. Install the engine cover.

NOTE: The Cam/Crank Variation Relearn procedure must be performed using the scan tool anytime there has been a repair/replacement made to a powertrain system, for example: flywheel, valvetrain, camshaft and/or crankshaft sensors or components.

RIGHT

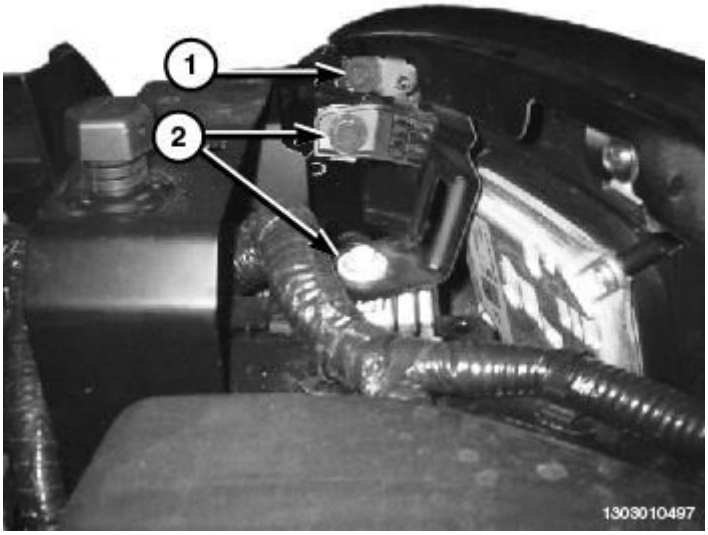

Fig. 254: Magnetic Timing Wheels
Courtesy of CHRYSLER GROUP, LLC

CAUTION: The magnetic timing wheels (1) must not come in contact with magnets (pickup tools, trays, etc.) or any other strong magnetic field. This will destroy the timing wheels ability to correctly relay camshaft position to the camshaft position sensor.

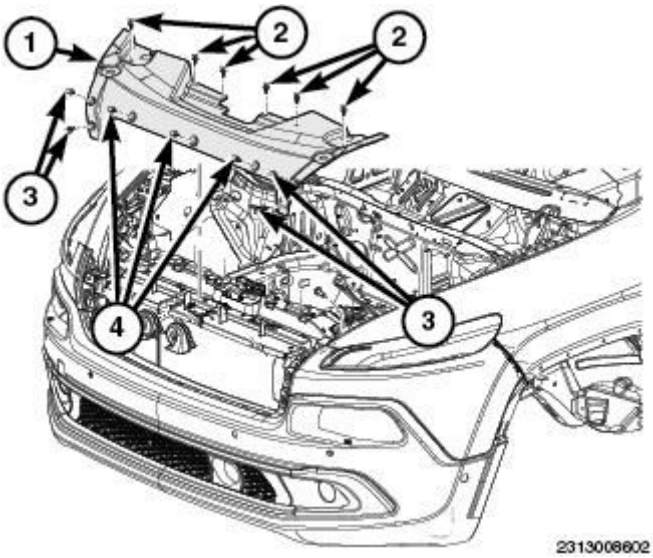

Fig. 255: Cylinder Head Cover Gasket & Spark Plug Tube Seals
Courtesy of CHRYSLER GROUP, LLC

NOTE: The LH cylinder head cover is shown in illustration, the RH cylinder head cover is similar.

1. Install the cylinder head cover gasket (1).
2. The spark plug tube seals (2) can be reused if not damaged.

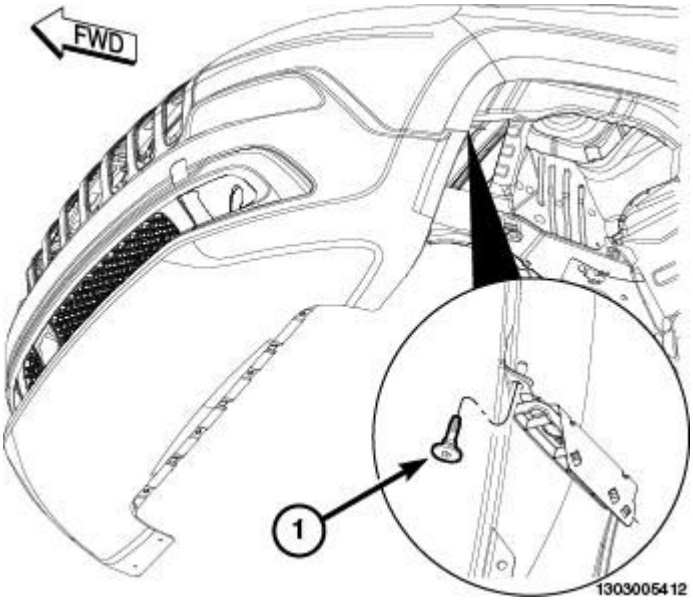

Fig. 256: Spark Plug Tube Seal & Installer
Courtesy of CHRYSLER GROUP, LLC

3. If required, install new spark plug tube seals (2) in the cylinder head cover:
   - Lubricate the spark plug tube seal inner and outer diameters with clean engine oil.

- Place the spark plug tube seal (2) on the Cam Sensor/Spark Plug Tube Seal Installer (special tool #10256, Installer, Cam Installer, Cam Sensor/Spark Plug Tube Seal) (1).
- Push the seal into the cylinder head cover until the base of the seal is seated.
- Remove the tool.

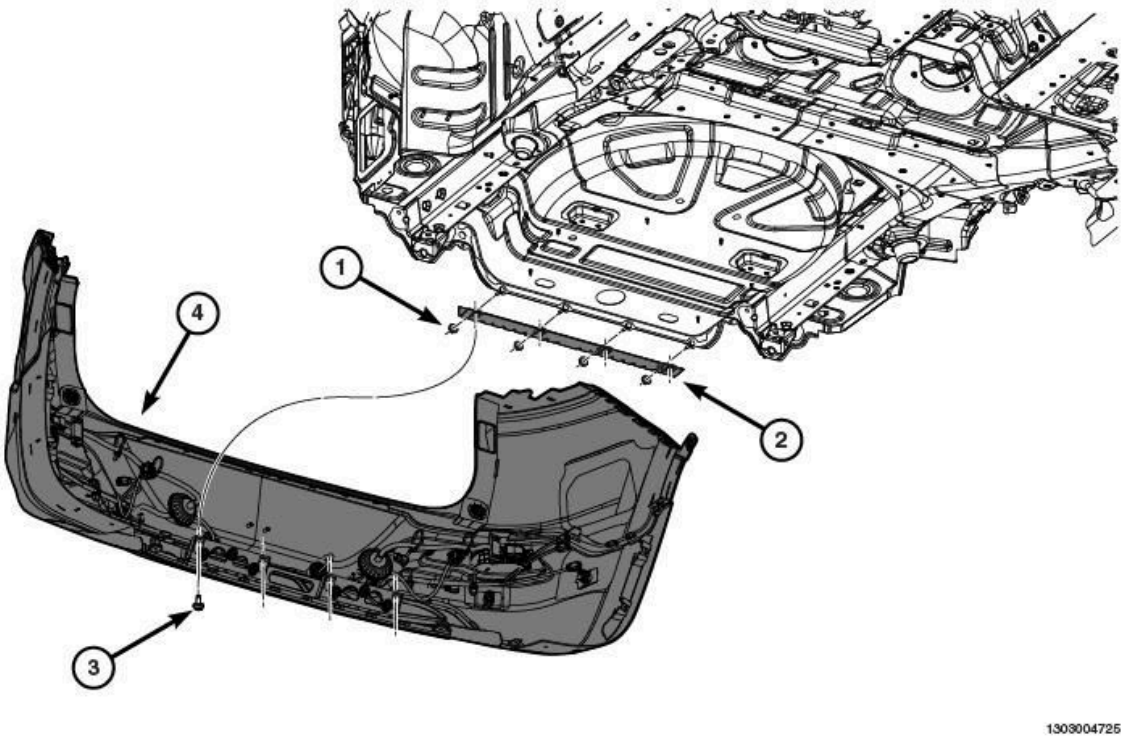

Fig. 257: RTV Sealant Locations
Courtesy of CHRYSLER GROUP, LLC

NOTE: The LH cylinder head cover T-joint is shown in illustration, the RH cylinder head cover T-joint is similar.

4. Clean the engine timing cover, cylinder head and cylinder head cover mating surfaces with isopropyl alcohol in preparation for sealant application.

CAUTION: Engine assembly requires the use of a unique sealant that is compatible with engine oil. Using a sealant other than Mopar® Threebond Engine RTV Sealant may result in engine fluid leakage.

CAUTION: Following the application of Mopar® Threebond Engine RTV Sealant to the gasket surfaces, the components must be assembled within 20 minutes and the attaching fasteners must be tightened to specification within 45 minutes. Prolonged exposure to the air prior to assembly may result in engine fluid leakage.

5. Apply a 2 to 3 mm wide bead of Mopar® Threebond Engine RTV Sealant (1) to the two engine timing cover to cylinder head T-joints as shown in illustration.

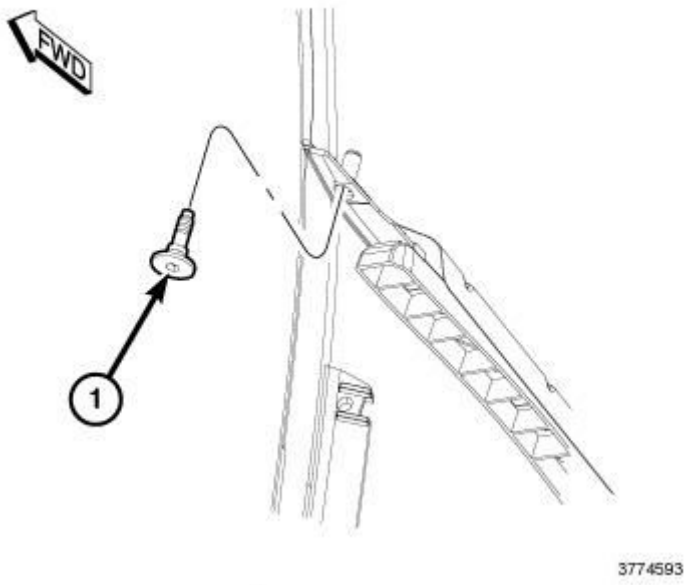

Fig. 258: Cylinder Head Cover Bolts & Double Ended Studs Tightening Sequence - Right
Courtesy of CHRYSLER GROUP, LLC

6. Align the locator pins (1) to the cylinder head and install the cylinder head cover.
7. Tighten the cylinder head cover bolts and double ended studs in the sequence shown in illustration to 12 N.m (106 in. lbs.).

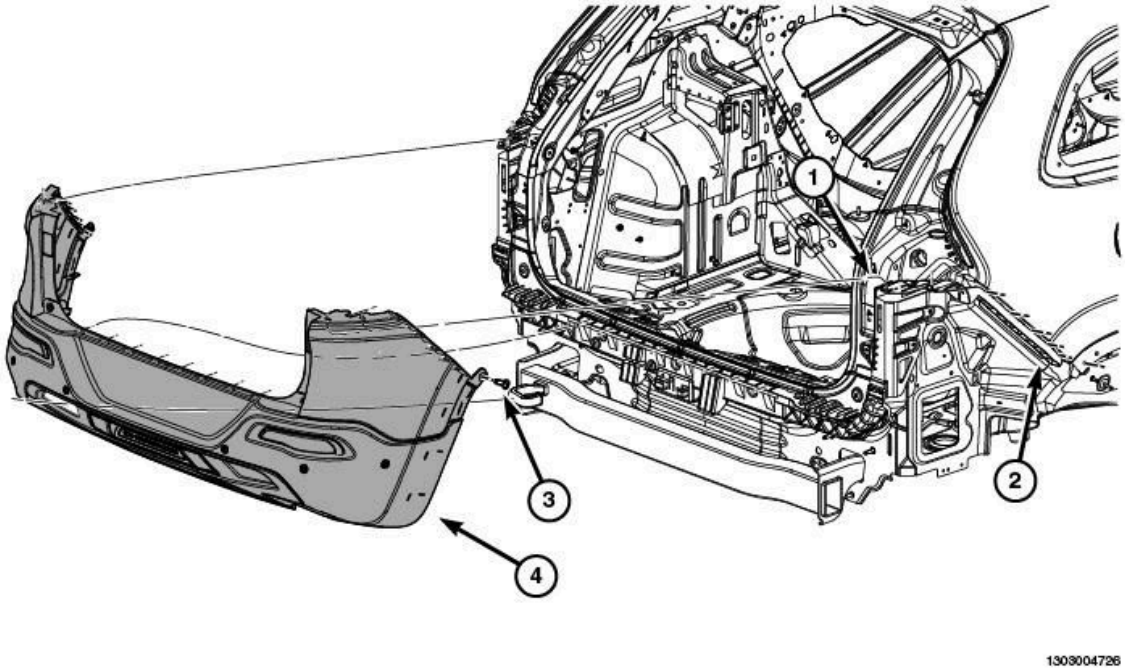

Fig. 259: Resonator Mounts
Courtesy of CHRYSLER GROUP, LLC

8. Install the two resonator mounts (1) to the studbolts.

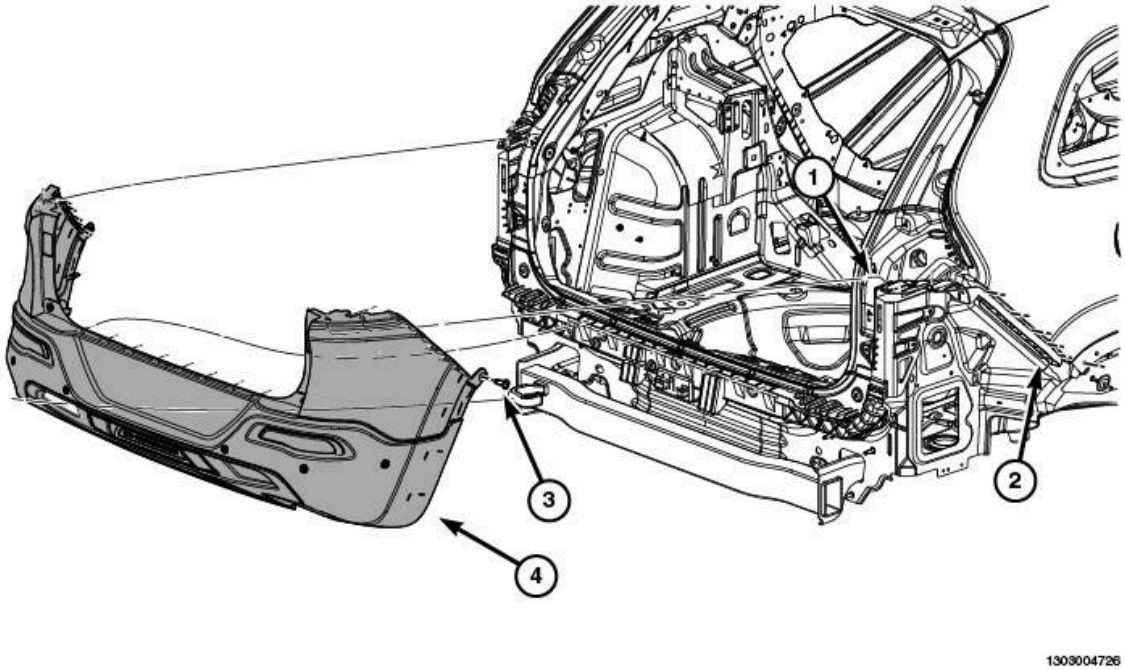

Fig. 260: PCV Valve & Screws
Courtesy of CHRYSLER GROUP, LLC

9. Install the PCV valve (1). Refer to **VALVE, POSITIVE CRANKCASE VENTILATION (PCV), REMOVAL** .

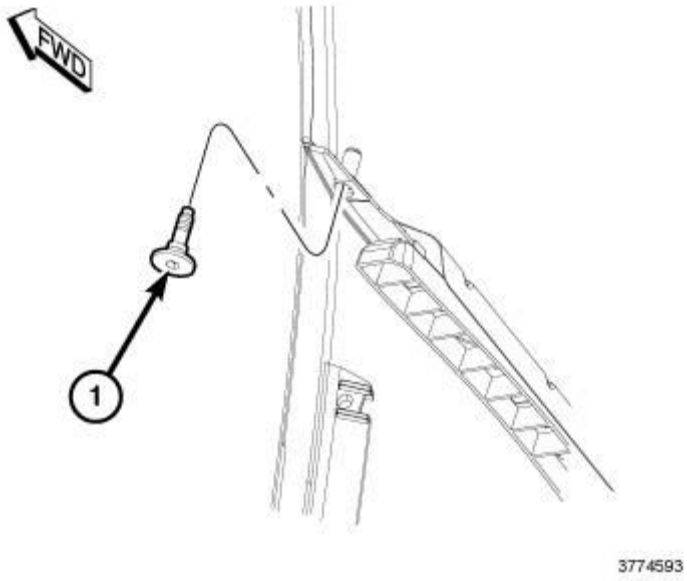

Fig. 261: Electrical Connector, Ignition Coils & Ignition Coil Retaining Bolts
Courtesy of CHRYSLER GROUP, LLC

NOTE: The LH ignition coils are shown in illustration, the RH ignition coils are similar.

10. If removed, install the spark plugs. Refer to **SPARK PLUG, INSTALLATION** .
11. Install the ignition coils (2). Refer to **COIL, IGNITION, INSTALLATION** .

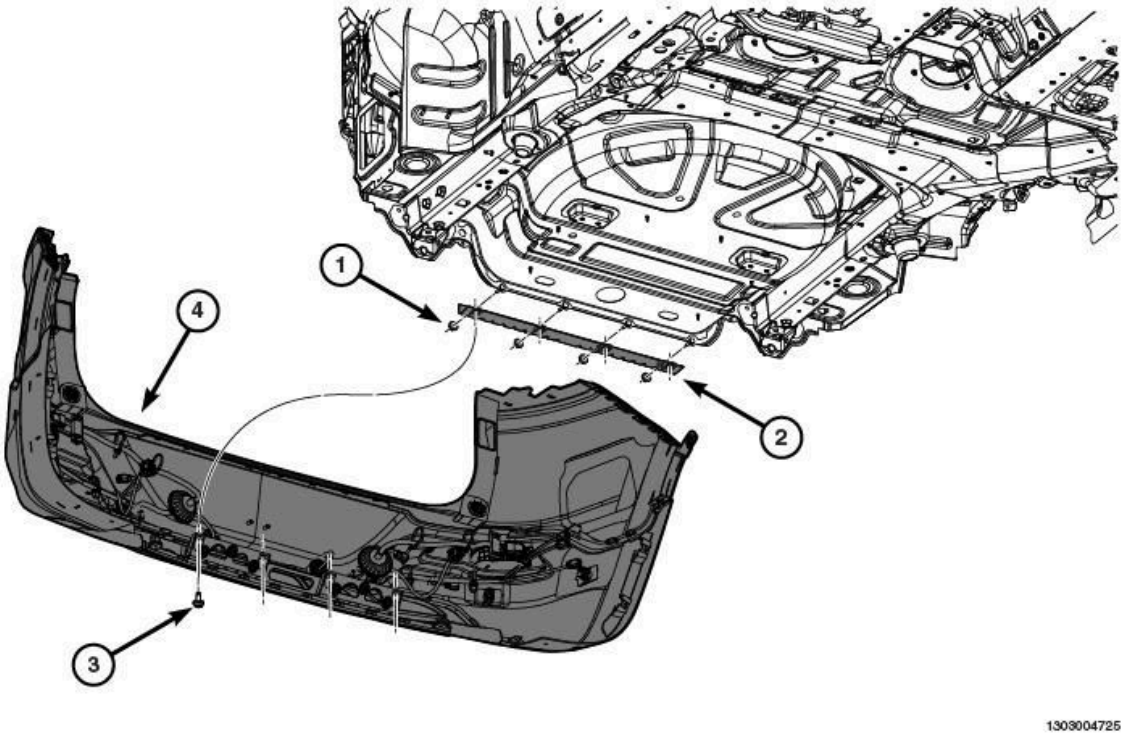

Fig. 262: Injection/Ignition Harness Retainers
Courtesy of CHRYSLER GROUP, LLC

12. Engage three injection/ignition harness retainers (1) to the right cylinder head cover.

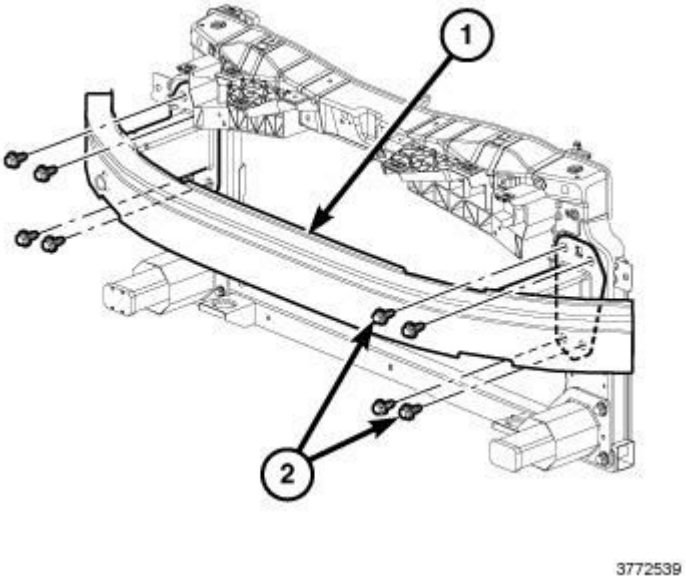

Fig. 263: CMP Sensor & Bolt
Courtesy of CHRYSLER GROUP, LLC

NOTE: **If both RH and LH CMP sensors where removed, install them into their original locations.**

13. Install the camshaft position sensor. Refer to **SENSOR, CAMSHAFT POSITION, INSTALLATION** .

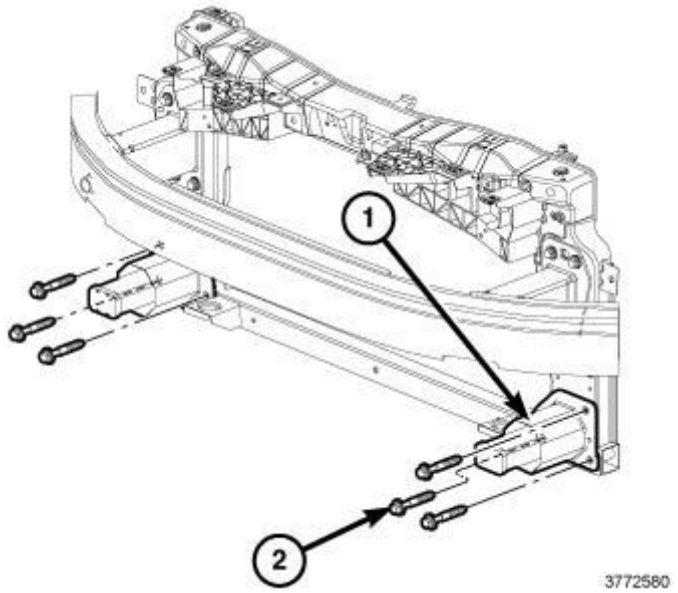

Fig. 264: Camshaft Position (CMP) Sensor Connector & Harness Retainers
Courtesy of CHRYSLER GROUP, LLC

14. Connect the electrical connector (1) to the right Camshaft Position (CMP) sensor.

Fig. 265: Main Wire Harness Retainers
Courtesy of CHRYSLER GROUP, LLC

15. Engage three main wire harness retainers (1) to the right cylinder head cover.

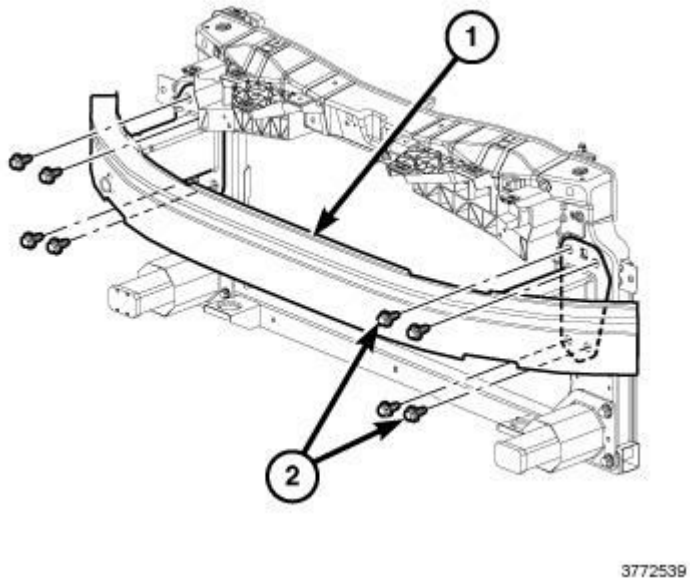

Fig. 266: Variable Valve Timing Solenoids, Connectors & Bolts
Courtesy of CHRYSLER GROUP, LLC

16. Refer to the markings made at disassembly and install the variable valve timing solenoids (2 and 4) in their original locations.

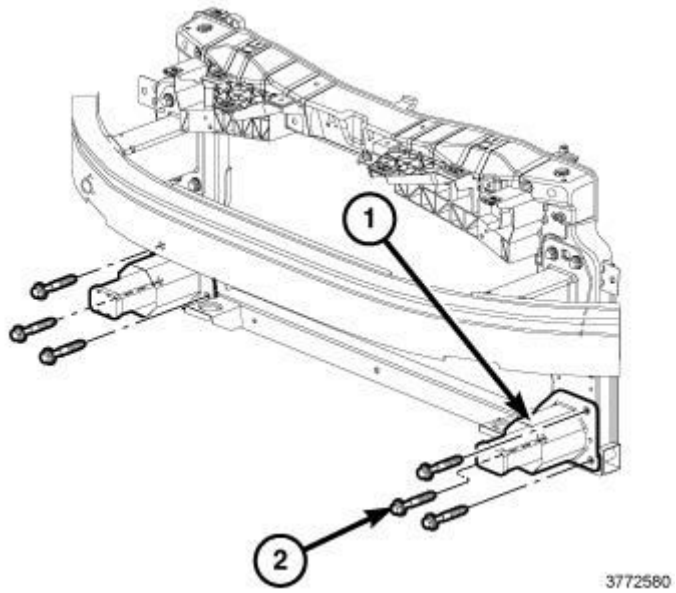

Fig. 267: Wire Harness Retainers & Variable Valve Timing Solenoid Connectors
Courtesy of CHRYSLER GROUP, LLC

17. Connect the electrical connectors (2) to the variable valve timing solenoids on the right cylinder head.
18. Engage two wire harness retainers (1) to the right cylinder head cover.

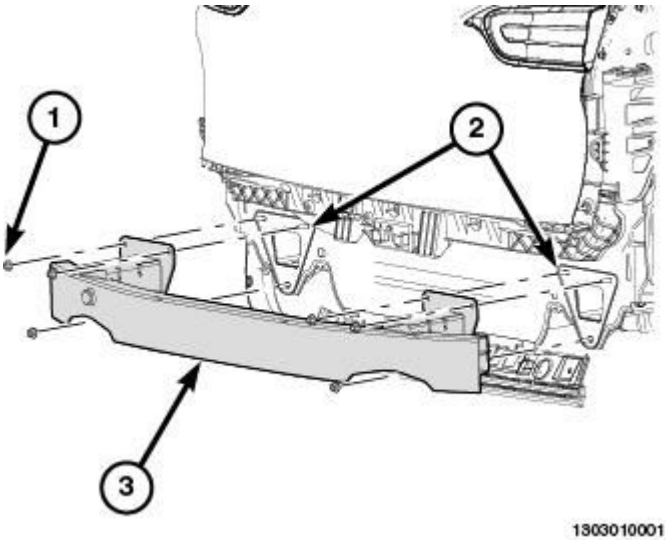

Fig. 268: Intake Ports, Insulator & Alignment Posts
Courtesy of CHRYSLER GROUP, LLC

19. If removed, install the insulator (2) to the two alignment posts (3) on top of the LH cylinder head cover.

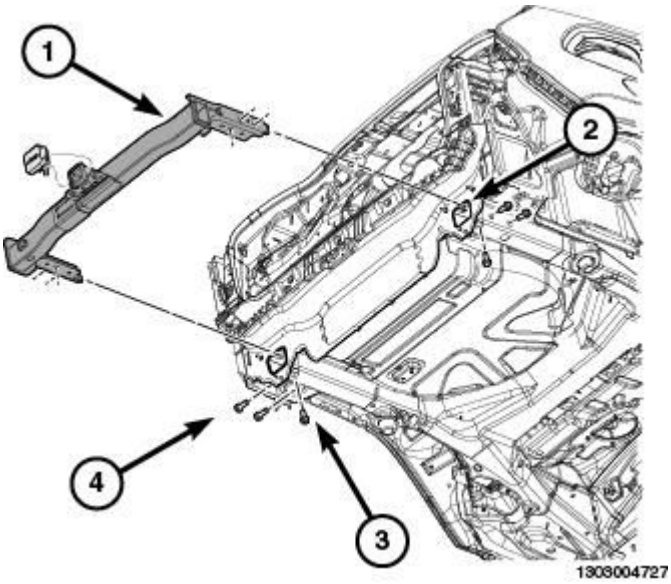

Fig. 269: Upper Intake Manifold & Bolts
Courtesy of CHRYSLER GROUP, LLC

20. Install the upper intake manifold (1), support brackets, resonator and air cleaner body. Refer to **MANIFOLD, INTAKE, INSTALLATION**.
21. Connect the negative battery cable and tighten nut to 5 N.m (45 in. lbs.).

NOTE: **The Cam/Crank Variation Relearn procedure must be performed using the scan tool anytime there has been a repair/replacement made to a powertrain system, for example: flywheel, valvetrain, camshaft and/or crankshaft sensors or**

components.

LIFTER(S), HYDRAULIC

DIAGNOSIS AND TESTING

DIAGNOSIS AND TESTING - HYDRAULIC LIFTER(S) NOISE DIAGNOSIS

Proper noise diagnosis is essential in locating the source of an NVH complaint. Locating a lash adjuster (tappet) type noise can sometimes be difficult. As a result, an initial misdiagnosis may occur. Refer to the following chart for possible causes and correction of a lash adjuster (tappet) type noise.

LASH ADJUSTER (TAPPET) NOISE CHART

POSSIBLE CAUSES	CORRECTION
1. Engine oil level-too high or too low. This may allow aerated oil to enter the adjusters and cause them to be spongy.	1. Check and correct the engine oil level.
2. Insufficient running time after rebuilding a cylinder head.	2. Low speed running of up to 1 hour may be required to fully evacuate trapped air from the valve train system. During this time, turn engine off and let set for a few minutes before restarting. Repeat this several times after engine has reached normal operating temperature.
3. Air trapped in the lash adjuster (after 1 hour of run time).	3. See below: (a) Check the lash adjusters for sponginess while installed in the cylinder head. Press down on the rocker arm in a manner that could collapse the lash adjuster. Normal adjusters should feel very firm. Very spongy adjusters can be bottomed out easily. (b) If the lash adjuster(s) are still spongy, replace the lash adjuster(s). Refer to **LIFTER(S), HYDRAULIC, REMOVAL**.
4. Low oil pressure.	4. See below: (a) Check and correct the engine oil level. (b) Check the engine oil pressure. Refer to **LUBRICATION, DIAGNOSIS AND TESTING** . (c) Check for excessive main bearing clearance and correct. Refer to **BEARING(S), CRANKSHAFT, STANDARD PROCEDURE** . (d) Check for a worn oil pump. Refer to **PUMP, ENGINE OIL, INSPECTION** . Check the camshaft journals and the bearing bores for abnormal wear patterns, scoring, grooving, fatigue, pitting or a foreign material. Refer to **CAMSHAFT, ENGINE, REMOVAL**.

5. A plugged oil restrictor in the oil passages to the cylinder head(s).	5. Check the cylinder head oil passages for blockage. Clean or replace as necessary.
6. Worn valve guide(s).	6. Measure the valve stem-to-guide clearance. Refer to **VALVES, INTAKE AND EXHAUST, INSPECTION** .
7. Rocker arm loose, adjuster stuck or at maximum extension and still leaves lash in the system.	7. See below: (a) Check the camshaft journal and lobe for abnormal wear patterns, scoring, grooving, fatigue, pitting or a foreign material Refer to **CAMSHAFT, ENGINE, REMOVAL**. (b) Check the rocker arm(s) for proper alignment to the camshaft lobe(s) and valve stem(s) Refer to **ROCKER ARM, VALVE, REMOVAL**.
	(c) Check the lash adjuster(s) for proper operation and replace as necessary Refer to **LIFTER(S), HYDRAULIC, REMOVAL**.
8. Air ingested into the engine oil due to a broken or cracked oil pump pickup tube.	8. Check the pickup tube and replace as necessary. Refer to **PICK-UP, OIL PUMP, REMOVAL**.
9. Faulty lash adjuster.	9. Replace the lash adjuster(s). Refer to **LIFTER(S), HYDRAULIC, REMOVAL**.

REMOVAL

REMOVAL

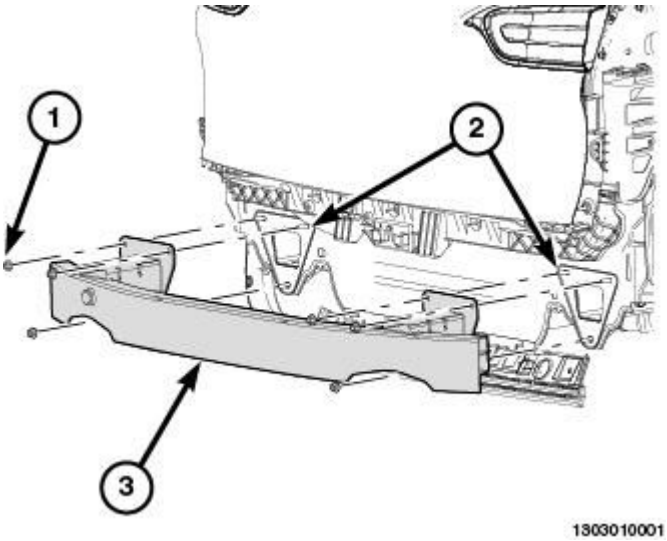

Fig. 270: Hydraulic Lifters
Courtesy of CHRYSLER GROUP, LLC

NOTE: The LH cylinder head hydraulic lifters are shown in illustration, the RH cylinder

head hydraulic lifters are similar.

1. Disconnect and isolate the negative battery cable.
2. Remove the camshaft(s). Refer to **CAMSHAFT, ENGINE, REMOVAL**.

NOTE: If the rocker arms are to be reused, identify their positions so that they can be reassembled into their original locations.

3. Remove the rocker arm(s). Refer to **ROCKER ARM, VALVE, REMOVAL**.

NOTE: If the hydraulic lifters are to be reused, identify their positions so that they can be reassembled into their original locations.

4. Remove the hydraulic lifter(s) (1).

INSTALLATION

INSTALLATION

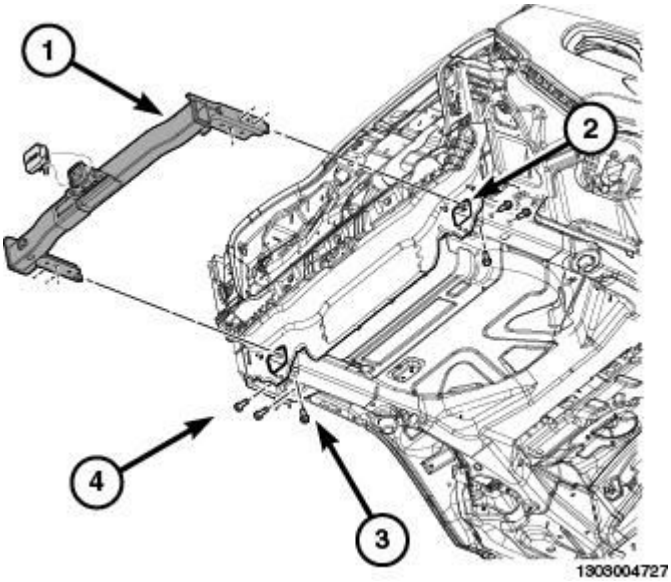

Fig. 271: Hydraulic Lifters
Courtesy of CHRYSLER GROUP, LLC

NOTE: The LH cylinder head hydraulic lifters are shown in illustration, the RH cylinder head hydraulic lifters are similar. If the hydraulic lifters are being reused, reassemble them into their original locations.

1. Verify that the hydraulic lifters are at least partially full of oil. There should be little or no plunger travel when the hydraulic lifter is depressed.
2. Install the hydraulic lifter(s) (1).

NOTE: **If the rocker arms are being reused, reassemble them into their original locations.**

3. Install the rocker arm(s). Refer to **ROCKER ARM, VALVE, INSTALLATION**.
4. Install the camshaft(s), phasers, cylinder head cover(s) and upper intake manifold. Refer to **CAMSHAFT, ENGINE, INSTALLATION**.
5. Connect the negative battery cable and tighten nut to the proper specification. Refer to **SPECIFICATIONS** .

ROCKER ARM, VALVE

DESCRIPTION

DESCRIPTION

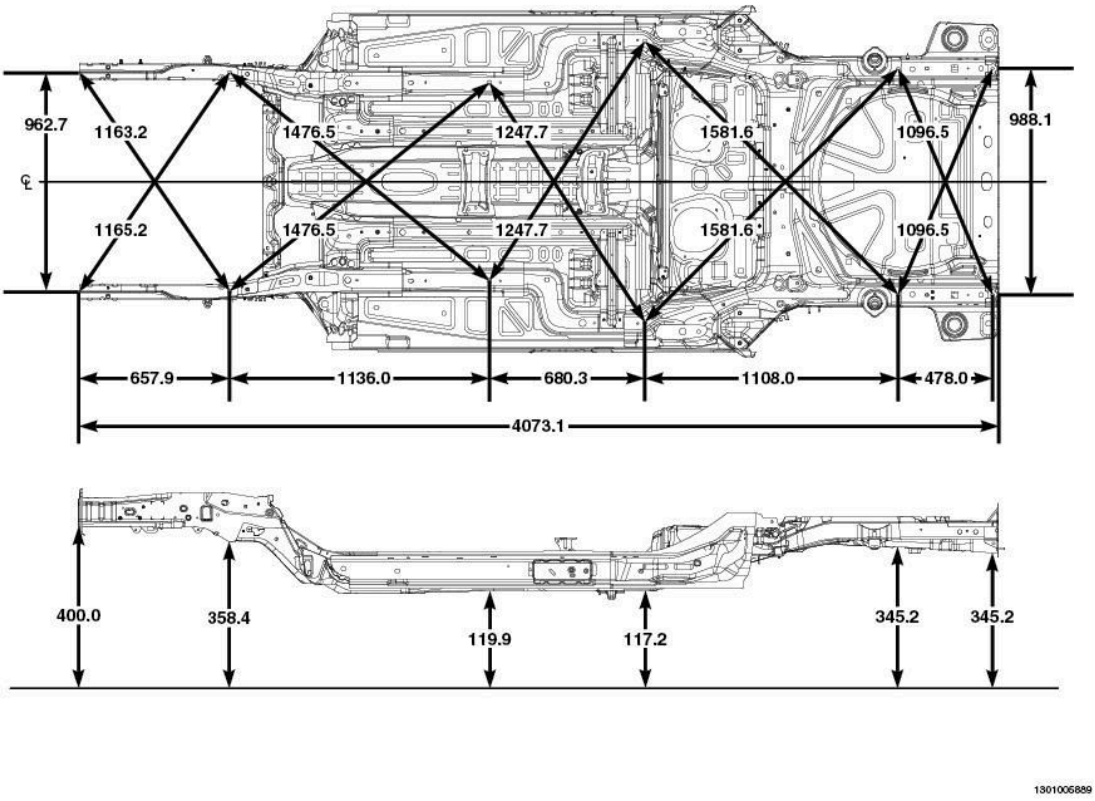

Fig. 272: Rocker Arm
Courtesy of CHRYSLER GROUP, LLC

The rocker arms are steel stampings with an integral roller bearing. The rocker arms incorporate a 0.5 mm oil hole in the lash adjuster socket for roller and camshaft lubrication.

REMOVAL

REMOVAL

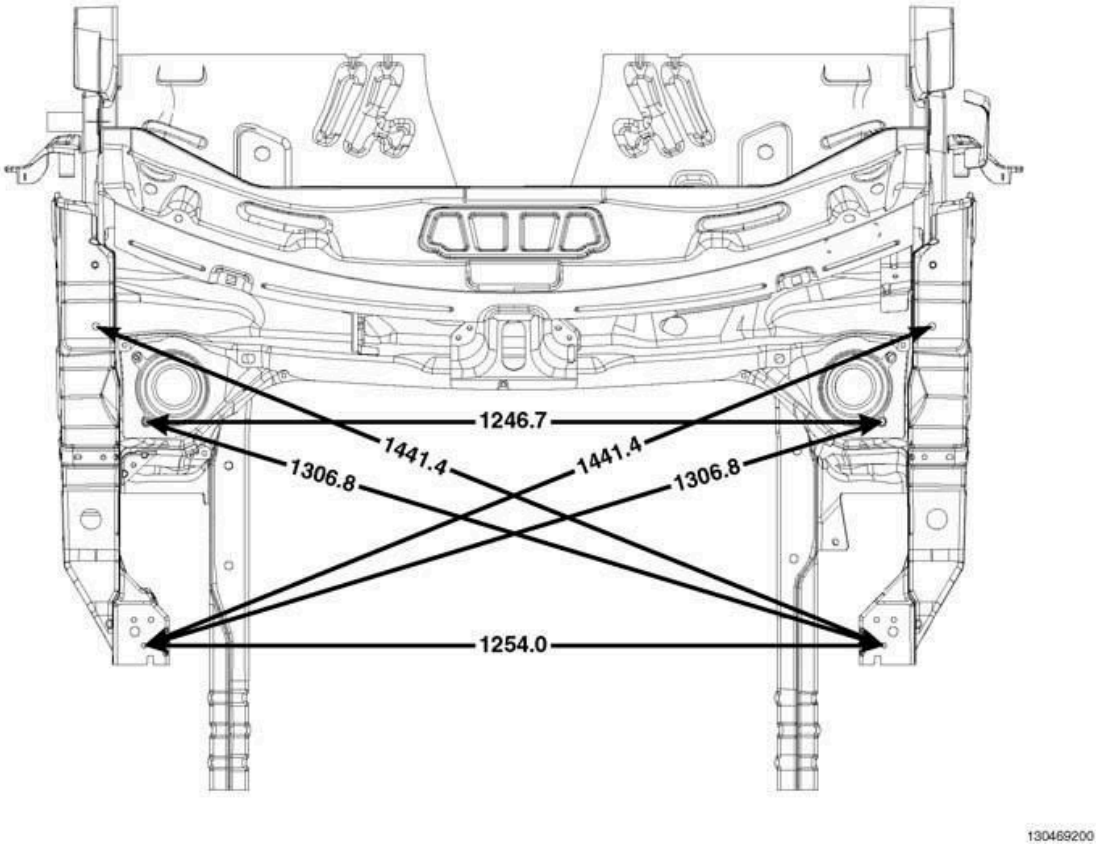

Fig. 273: Locating Rocker Arms
Courtesy of CHRYSLER GROUP, LLC

NOTE: The LH cylinder head rocker arms are shown in illustration, the RH cylinder head rocker arms are similar.

1. Disconnect and isolate the negative battery cable.
2. Remove the camshaft(s). Refer to **CAMSHAFT, ENGINE, REMOVAL**.

NOTE: If the rocker arms are to be reused, identify their positions so that they can be reassembled into their original locations.

3. Remove the rocker arm(s) (1).

INSPECTION

INSPECTION

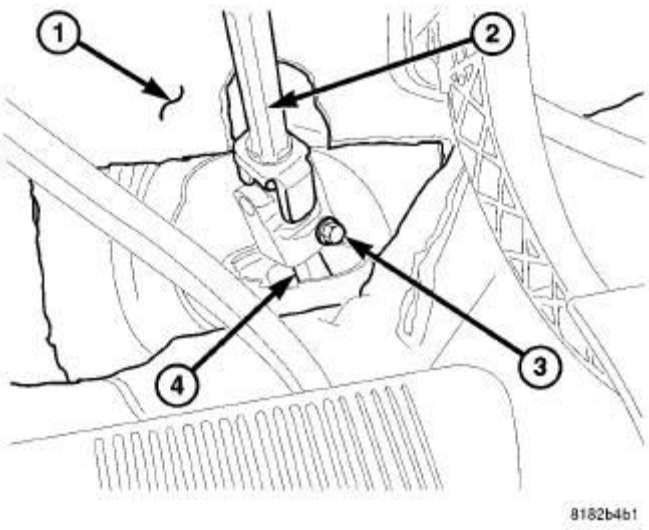

Fig. 274: Rocker Arm
Courtesy of CHRYSLER GROUP, LLC

Inspect the cam follower assembly for wear or damage. Replace as necessary.

INSTALLATION

INSTALLATION

YouTube	A multimedia supplement to the instructions contained in this article is available. To view the multimedia example of the condition described go to; **http://www.youtube.com/user/Mitchell1Tips** **then type "A00641418.vid5" into the "Search Channel" box.**

CAUTION: Proper inspection of the rocker arms is required to ensure proper installation. Inspection from the top and also side view is critical to verify the proper seated position of each and every rocker arm. Failure to install the rocker arms correctly may cause severe engine damage.

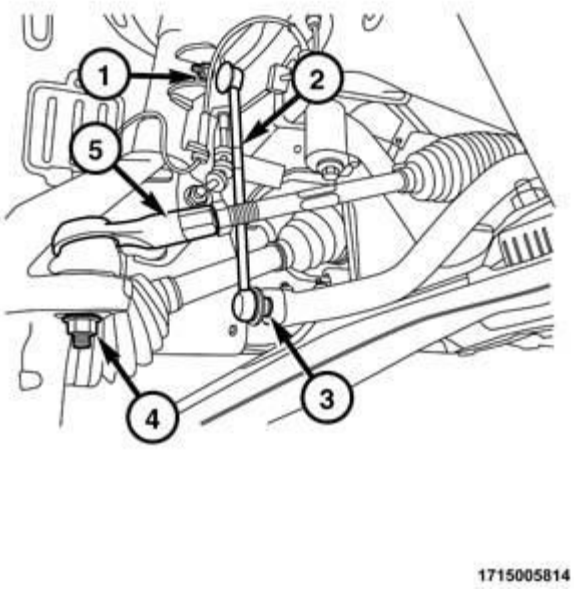

Fig. 275: Locating Rocker Arms
Courtesy of CHRYSLER GROUP, LLC

NOTE: The LH cylinder head rocker arms are shown in illustration, the RH cylinder head rocker arms are similar. If the rocker arms are being reused, reassemble them into their original locations.

1. Lubricate the rocker arms with clean engine oil before installation.

   NOTE: When placing the rocker arms. The valve stem should fit securely into the rocker arm guides.

2. Position the rocker arm(s) (1) onto the lifter(s) and valve stem(s).

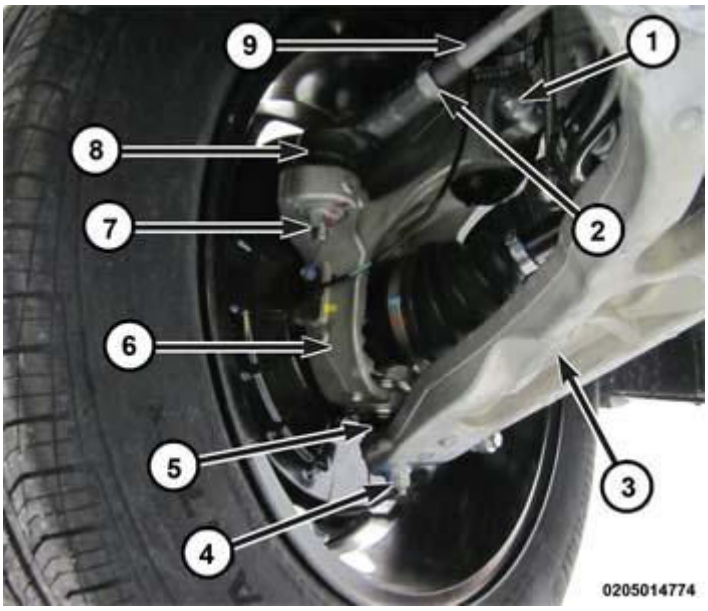

Fig. 276: Rocker Arm & Lifter
Courtesy of CHRYSLER GROUP, LLC

3. Position the camshaft(s) onto the mounts and install the camshaft caps. Hand tighten the cap retaining bolts to the proper specification. Refer to **TORQUE SPECIFICATIONS** .

NOTE: **If any of the rocker arms are not installed properly. Loosen the camshaft caps and reposition the rocker arms.**

4. Verify that the rocker arm (3) is positioned over the lifter (4).
5. Verify that the rocker arm roller (2) is seated to the camshaft lobe (1).

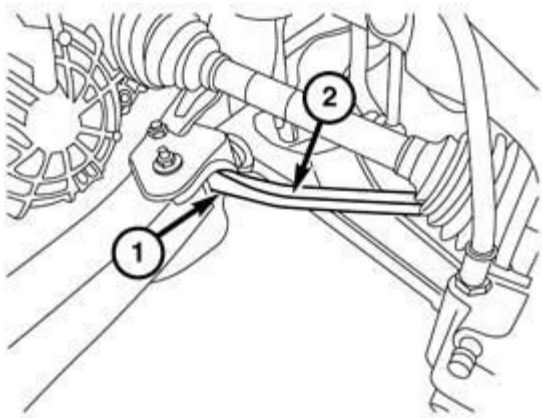

020568629

Fig. 277: Camshaft Lobe, Rocker Arm Roller, Rocker Arm Guide & Valve Stem
Courtesy of CHRYSLER GROUP, LLC

6. Use a mirror to verify the valve stem (4) is centered between the rocker arm guides (3).
7. Verify the camshaft lobe (1) is centered over the rocker arm roller (2).
8. Tighten the camshaft caps. Refer to **CAMSHAFT, ENGINE, INSTALLATION**.

SEAL(S), VALVE GUIDE

DESCRIPTION

DESCRIPTION

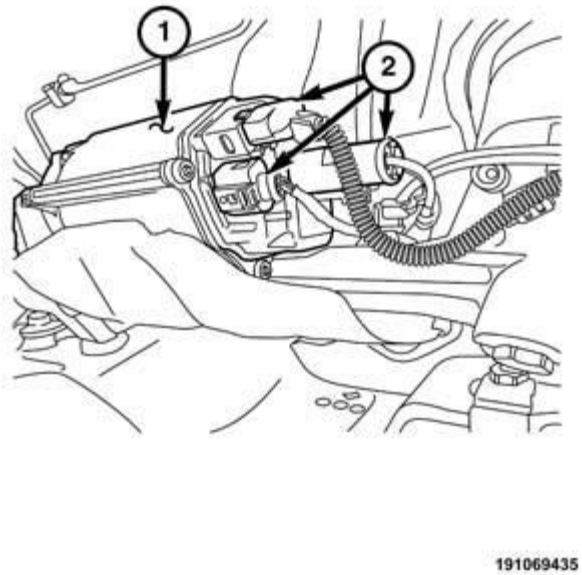

Fig. 278: Valve Stem Oil Seal, Valve Spring & Valve Guide
Courtesy of CHRYSLER GROUP, LLC

The valve stem oil seals (1) are made of elastomer over-molded steel in a non-integrated type guide mounted configuration. The seal is not held in place by the valve spring (2). The valve stem seals are not reusable if removed from the valve guides (3), they must be replaced. Always coat the valve seals with clean engine oil before installing the valves.

REMOVAL

REMOVAL

NOTE: If the springs are to be reused, identify their positions so that they can be reassembled into their original locations.

1. Remove the valve spring(s) (2). Refer to **SPRING(S), VALVE, REMOVAL**.

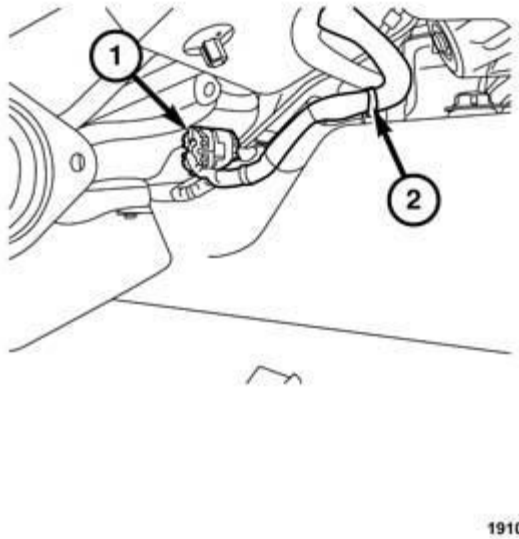

Fig. 279: Valve Guide Seal & Valve Seal Tool
Courtesy of CHRYSLER GROUP, LLC

NOTE: Number 5 cylinder exhaust valve guide seal shown in illustration, all other valve guide seals similar.

2. Remove the valve guide seal (1) using a valve seal tool (2). Discard the removed seal.

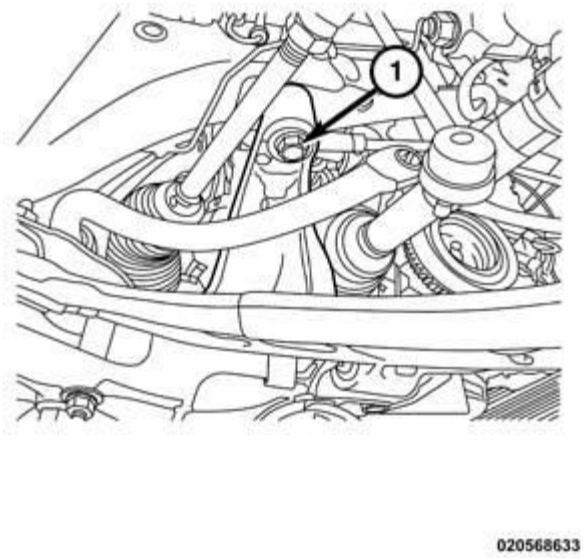

Fig. 280: Valve Spring Seat
Courtesy of CHRYSLER GROUP, LLC

NOTE: Number 5 cylinder exhaust valve spring seat shown in illustration, all other valve spring seats similar.

3. If required, remove the valve spring seat (1).
4. If required, remove the valve(s). Refer to **VALVES, INTAKE AND EXHAUST, REMOVAL**.

INSTALLATION

INSTALLATION

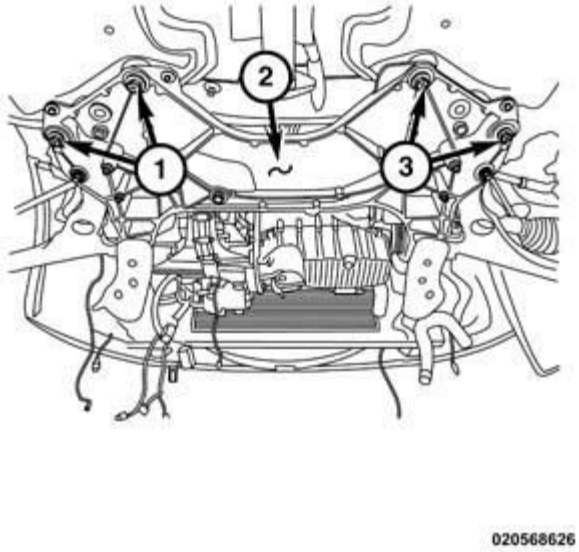

Fig. 281: Valve Spring Seat
Courtesy of CHRYSLER GROUP, LLC

1. If removed, install the valve(s). Refer to **VALVES, INTAKE AND EXHAUST, INSTALLATION**.

   NOTE: Reassemble the valves into their original locations. If the valves or valve seats have been refinished, verify that the valve stem tip height is within specification. Refer to ENGINE SPECIFICATIONS . Number 5 cylinder exhaust valve shown in illustration, all other valves similar.

2. If removed, install the spring seat (1) over the valve guide.

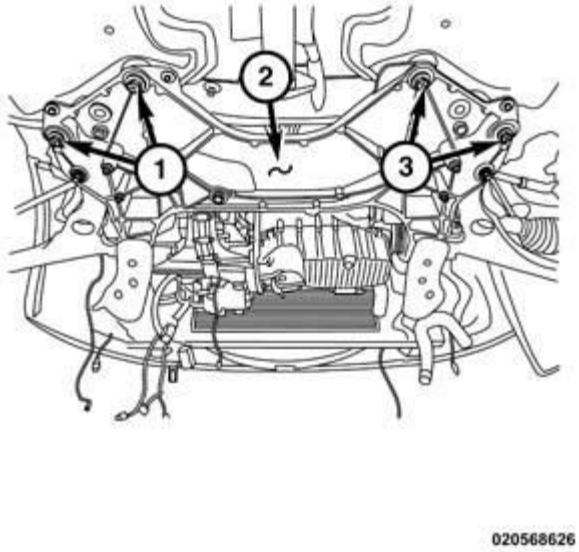

Fig. 282: Installing Valve Guide Seal
Courtesy of CHRYSLER GROUP, LLC

3. Apply engine oil to the lip of the valve guide seal (3). Install the valve guide seal (3) over the valve stem. Using an appropriate driver (1), push the seal firmly and squarely over the valve guide. **Do Not Force** the seal against the top of guide.

NOTE: **Ensure that the garter spring (2) is intact around the top of the valve guide seal (3). Number 5 cylinder exhaust valve guide seal shown in illustration, all other valves similar.**

NOTE: **If the valve springs are being reused, reassemble them into their original locations.**

4. Install the valve spring(s). Refer to **SPRING(S), VALVE, INSTALLATION**.

SPRING(S), VALVE

DESCRIPTION

DESCRIPTION

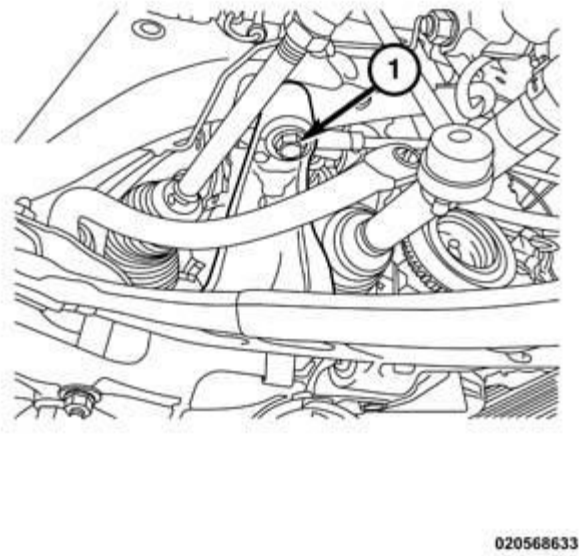

Fig. 283: Valve Spring Components
Courtesy of CHRYSLER GROUP, LLC

The valve springs are a beehive design and made from high strength chrome silicon steel. The springs are common for intake and exhaust applications. Valve guide seals are rubber overmolded on a steel support cylinder with a garter spring at the seal lip. The seals are not integrated with the valve spring seat. The valve spring seat is a flat steel washer. The steel valve spring retainers are designed for use with beehive springs and the valve spring retainer locks are a three bead Butt type design.

REMOVAL

ON VEHICLE

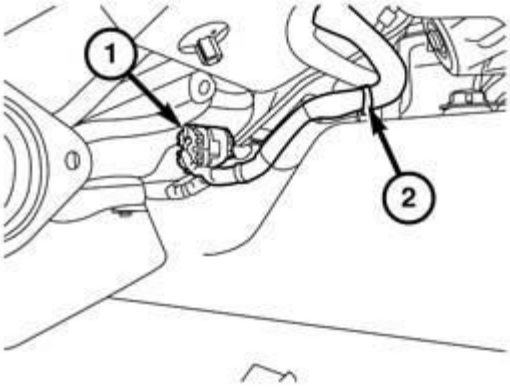

191069436

Fig. 284: Magnetic Timing Wheels
Courtesy of CHRYSLER GROUP, LLC

CAUTION: The magnetic timing wheels (1) must not come in contact with magnets (pickup tools, trays, etc.) or any other strong magnetic field. This will destroy the timing wheels ability to correctly relay camshaft position to the camshaft position sensor.

1. Disconnect and isolate the negative battery cable.
2. Remove both cylinder head covers. Refer to **COVER(S), CYLINDER HEAD, REMOVAL**.

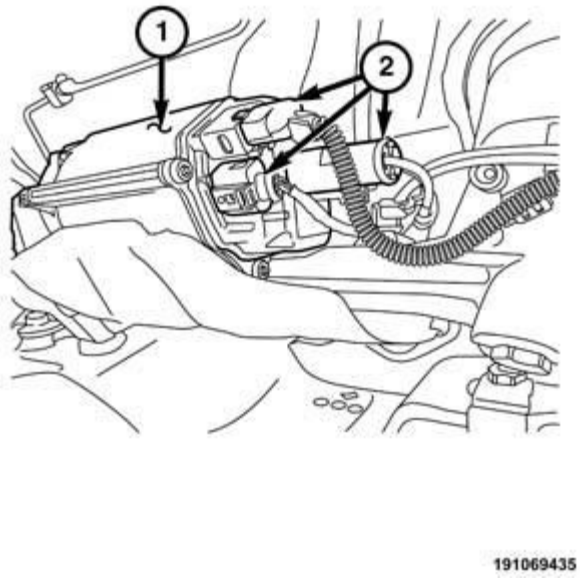

Fig. 285: Locating Rocker Arms
Courtesy of CHRYSLER GROUP, LLC

NOTE: **The LH cylinder head rocker arms are shown in illustration, the RH cylinder head rocker arms are similar.**

NOTE: **Only remove the camshafts from one head at a time. The opposite head must remain assembled in order to lock the crankshaft against rotation.**

NOTE: **If the rocker arms are to be reused, identify their positions so that they can be reassembled into their original locations.**

3. Remove the rocker arm(s) (1). Refer to **ROCKER ARM, VALVE, REMOVAL**.

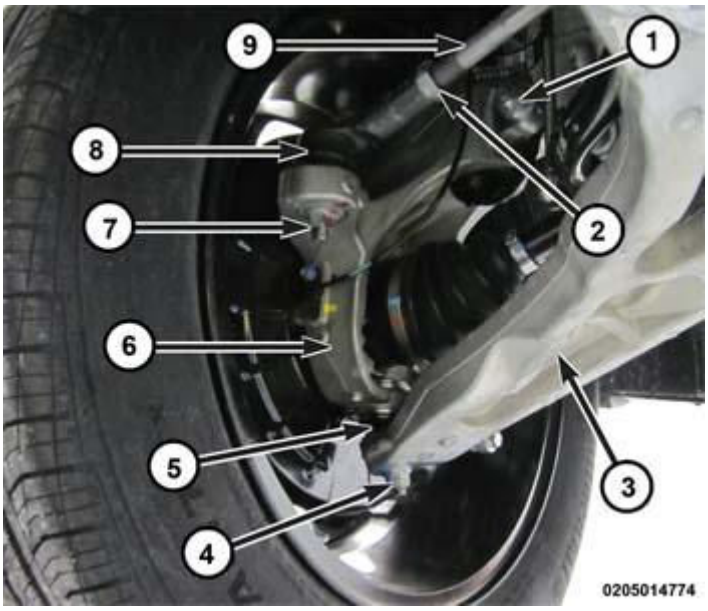

Fig. 286: Phaser Timing Marks, Oil Control Valves & RH Camshaft Phaser Lock
Courtesy of CHRYSLER GROUP, LLC

NOTE: RH camshaft phaser lock shown in illustration, LH camshaft phaser lock similar.

CAUTION: Air pressure applied to the cylinder holds the valves in place. This air pressure also has a tendency to force the piston down and rotate the crankshaft. Do not allow the crankshaft to rotate. Crankshaft rotation may damage the timing chain or front timing cover and affect camshaft timing.

4. If removing the LH camshafts, install the RH Camshaft Phaser Lock (special tool #10202, Locks, Camshaft/Phaser) (5) to lock the crankshaft against rotation. If removing the RH camshafts, install the LH Camshaft Phaser Lock (special tool #10202, Locks, Camshaft/Phaser) to lock the crankshaft against rotation.

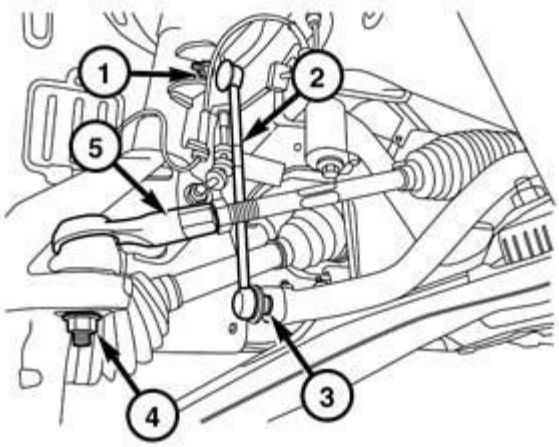

1715005814

Fig. 287: Shop Air Supply & Valve Spring Compressor
Courtesy of CHRYSLER GROUP, LLC

NOTE: Number 4 cylinder intake valve spring compression shown in illustration, all other valves similar.

5. Remove the spark plug. Refer to **SPARK PLUG, REMOVAL** .
6. Install Valve Spring Compressor (special tool #MD998772A, Compressor, Valve Spring) (2) onto the cylinder head.

CAUTION: Air pressure must be maintained as long as the valve springs are removed to prevent the valves from dropping into the cylinders.

7. Install a spark plug adapter attached to a regulated shop air supply (1). Pressurize the cylinder being serviced to 620.5 - 689 kPa (90 - 100 psi) to hold the valves in place.
8. Using Valve Spring Compressor Adapter (special tool #10224, Adapter, Valve Spring) (3), compress valve spring (4) and remove valve retaining locks (5).

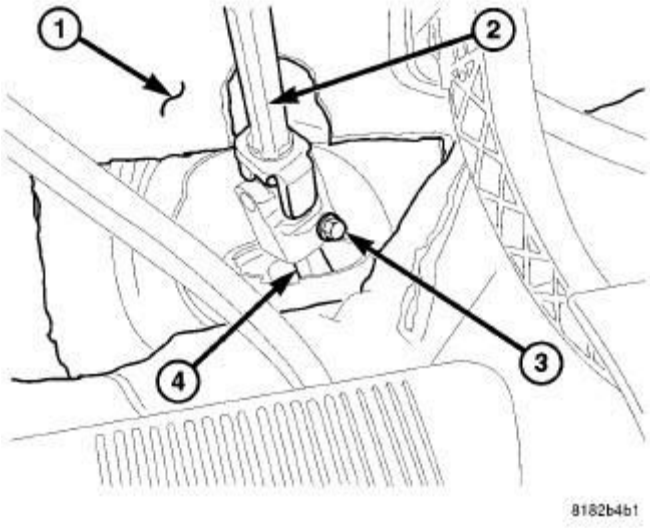

Fig. 288: Valve Spring & Valve Spring Retainer
Courtesy of CHRYSLER GROUP, LLC

NOTE: **If the springs are to be reused, identify their positions so that they can be reassembled into their original locations. Number 5 cylinder exhaust valve spring shown in illustration, all other valve springs similar.**

9. Release the valve spring compressor and remove the valve spring retainer (1) and valve spring (2).
10. If required, remove the valve guide seal and spring seat. Refer to **SEAL(S), VALVE GUIDE, REMOVAL**.

OFF VEHICLE

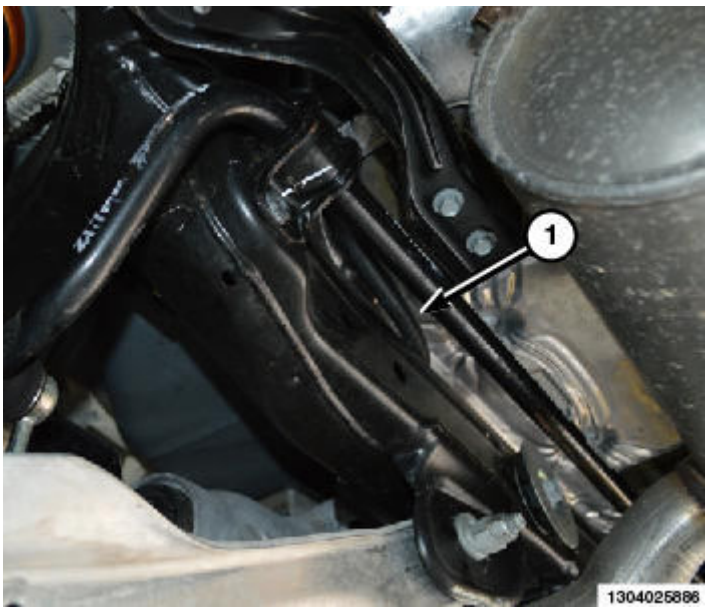

Fig. 289: Valve Spring Compressor Components
Courtesy of CHRYSLER GROUP, LLC

1. Remove the cylinder head(s). Refer to **CYLINDER HEAD, REMOVAL**.
2. Position the Valve Spring Compressor Adapter (special tool #10224, Adapter, Valve Spring) (2) in the Valve Spring Compressor (special tool #C-3422-D, Compressor, Valve Spring) (1).

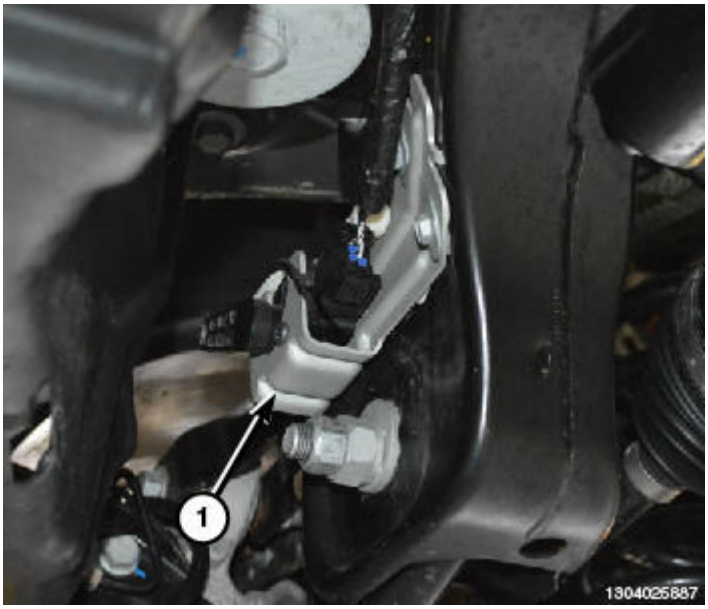

Fig. 290: Compressing Valve Spring & Locating Valve Retaining Locks
Courtesy of CHRYSLER GROUP, LLC

NOTE: Number 3 cylinder intake valve spring compression shown in illustration, all other valves similar.

3. Compress the valve spring (3) and remove the valve retaining locks (4).

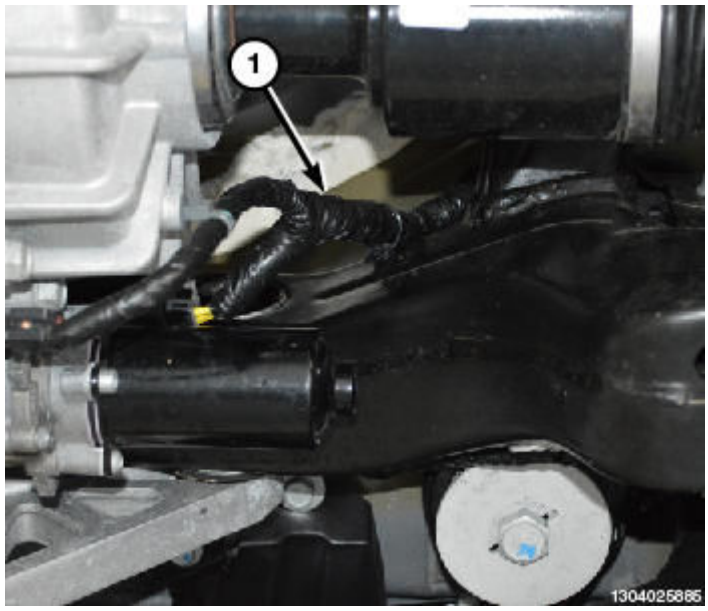

Fig. 291: Valve Spring & Valve Spring Retainer
Courtesy of CHRYSLER GROUP, LLC

NOTE: **If the springs are to be reused, identify their positions so that they can be reassembled into their original locations. Number 5 cylinder exhaust valve spring shown in illustration, all other valves similar.**

4. Release the valve spring compressor and remove the valve spring retainer (1) and valve spring (2).
5. If required, remove the valve(s). Refer to **VALVES, INTAKE AND EXHAUST, REMOVAL**.
6. If required, remove the valve guide seal and spring seat. Refer to **SEAL(S), VALVE GUIDE, REMOVAL**.

INSPECTION

INSPECTION

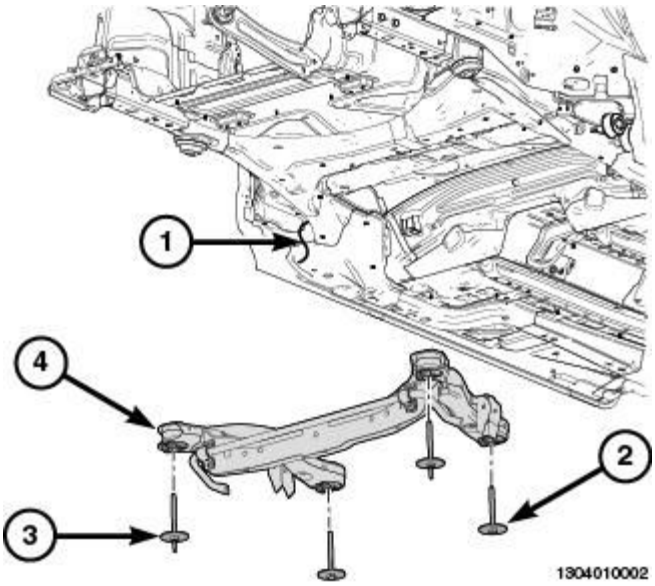

Fig. 292: Testing Valve Spring
Courtesy of CHRYSLER GROUP, LLC

When valves have been removed for inspection, reconditioning or replacement, valve springs should be checked against specifications for free-length, spring force and spring installed height. Refer to **ENGINE SPECIFICATIONS** .

Spring force can be measured with a test fixture (2). Follow the tool manufactures instructions. Replace any springs that do not meet specifications.

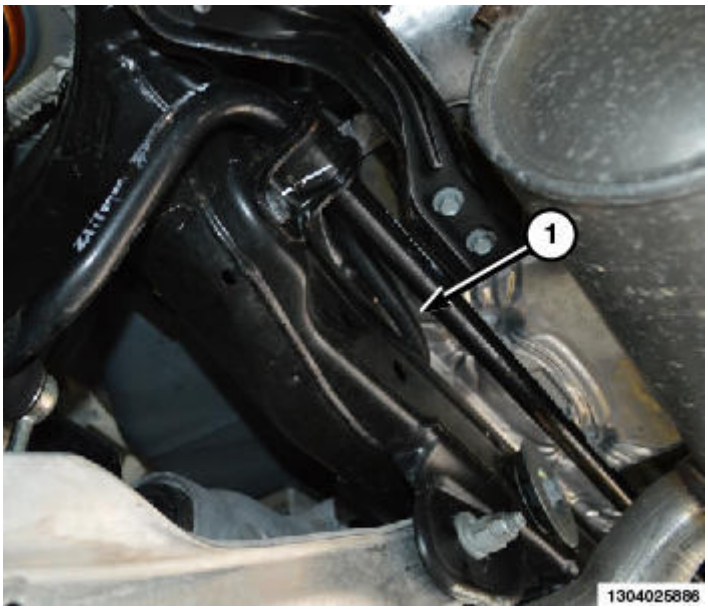

Fig. 293: Checking Valve Spring Installed Height
Courtesy of CHRYSLER GROUP, LLC

Installed height of the valve spring must be checked with the valve assembled into the cylinder head. Refer to

SPRING(S), VALVE, INSTALLATION.

If the valves or valve seats have been refinished and the installed valve spring height (4) is greater than 40.0 mm (1.575 in.). Install a second spring seat (8) in the head counter bore under the original valve spring seat to bring the spring height within specification. Make sure the measurement is taken from the top of spring seat (6) to the bottom surface of spring retainer (1).

INSTALLATION

ON VEHICLE

1. If removed, install the spring seat and valve guide seal over the valve guide. Refer to **SEAL(S), VALVE GUIDE, INSTALLATION**.

NOTE: Make sure that the valve spring is intact around the top of the valve guide seal.

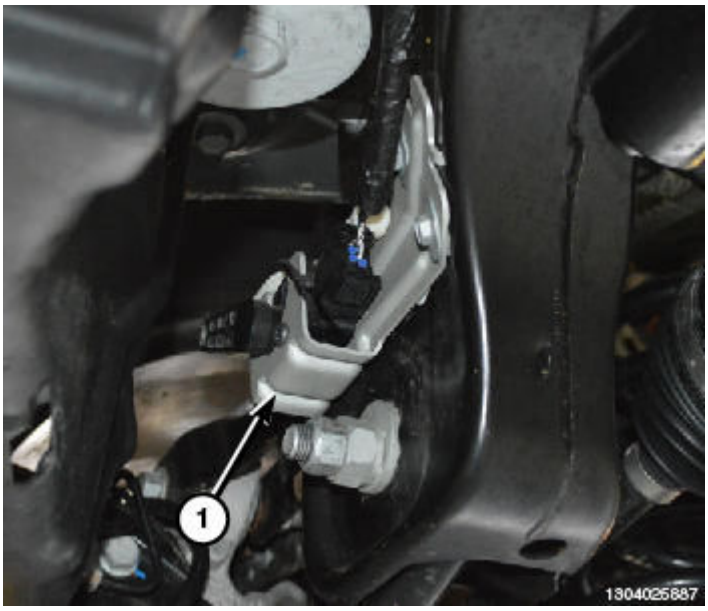

Fig. 294: Valve Spring & Valve Spring Retainer
Courtesy of CHRYSLER GROUP, LLC

NOTE: If the valve springs are being reused, reassemble them into their original locations. Number 5 cylinder exhaust valve spring shown in illustration, all other valves similar.

2. Install the valve spring (2) and valve spring retainer (1).

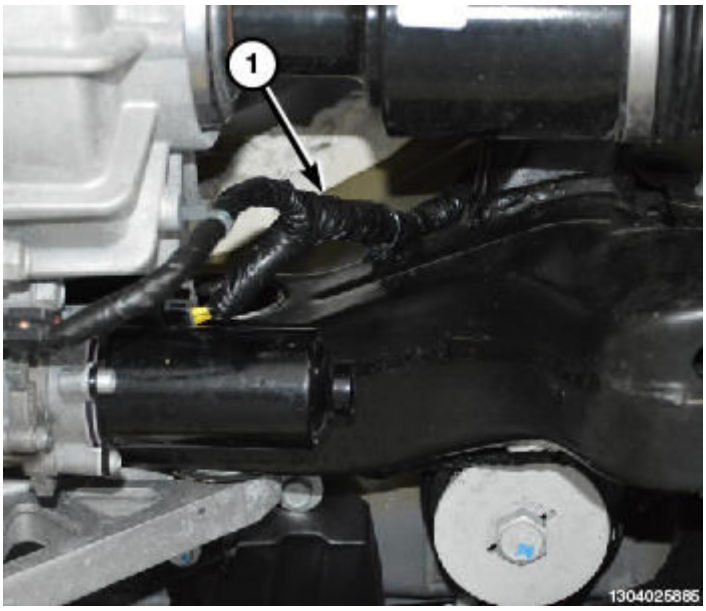

Fig. 295: Shop Air Supply & Valve Spring Compressor
Courtesy of CHRYSLER GROUP, LLC

NOTE: Number 4 cylinder intake valve spring compression shown in illustration, all other valves similar.

3. Compress the valve springs (4) with the Valve Spring Compressor Adapter 10224 (3) mounted in the Valve Spring Compressor C-3422-D (2).
4. Install the valve retaining locks (5) and release the valve spring compressor.
5. Relieve the air pressure from the combustion chamber and remove the spark plug adapter (1).
6. Install the spark plug. Refer to **SPARK PLUG, INSTALLATION** .

NOTE: If the rocker arms are being reused, reassemble them into their original locations.

7. Install the rocker arm(s). Refer to **ROCKER ARM, VALVE, INSTALLATION**.
8. Connect the negative battery cable and tighten the nut to the proper specification. Refer to **SPECIFICATIONS** .

OFF VEHICLE

1. If removed, install the valve(s). Refer to **VALVES, INTAKE AND EXHAUST, INSTALLATION**.

NOTE: Reassemble the valves into their original locations. If the valves or valve seats have been refinished, verify that the valve stem tip height is within specification. Refer to ENGINE SPECIFICATIONS .

2. If removed, install the spring seat (3) and valve guide seal (1) over the valve guide. Refer to **SEAL(S),**

VALVE GUIDE, INSTALLATION.

NOTE: Ensure that the garter spring (2) is intact around the top of the valve guide seal (1). Number 5 cylinder exhaust valve guide seal shown in illustration, all other valves similar.

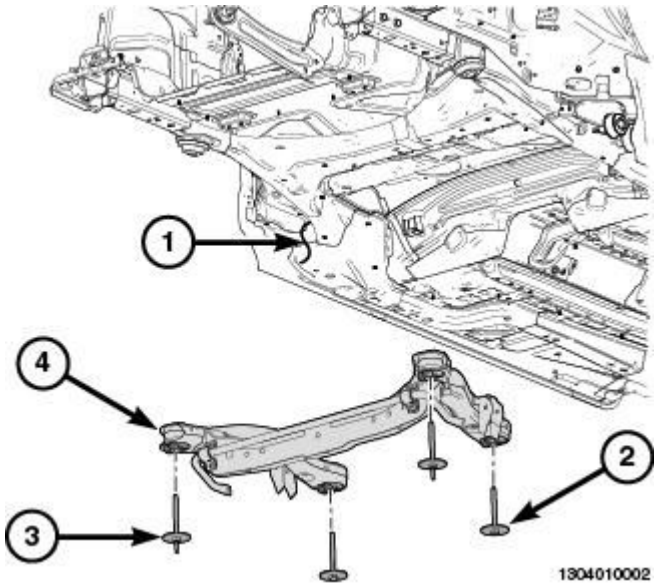

Fig. 296: Valve Spring & Valve Spring Retainer
Courtesy of CHRYSLER GROUP, LLC

NOTE: If the valve springs are being reused, reassemble them into their original locations. Number 5 cylinder exhaust valve spring shown in illustration, all other valves similar.

3. Install the valve spring (2) and valve spring retainer (1).

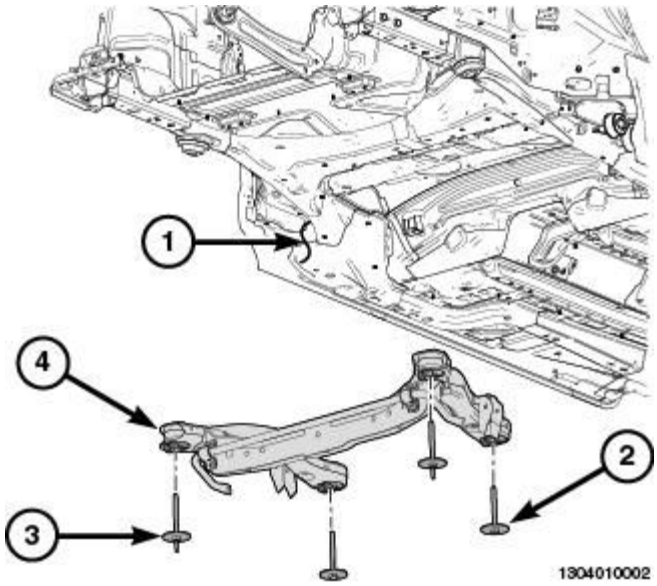

Fig. 297: Compressing Valve Spring & Locating Valve Retaining Locks
Courtesy of CHRYSLER GROUP, LLC

NOTE: Number 3 cylinder intake valve spring compression shown in illustration, all other valves similar.

4. Compress valve springs (3) with the Valve Spring Compressor Adapter (special tool #10224, Adapter, Valve Spring) (2) mounted in the Valve Spring Compressor (special tool #C-3422-D, Compressor, Valve Spring) (1). Install the retaining locks (4) and release the valve spring compression.

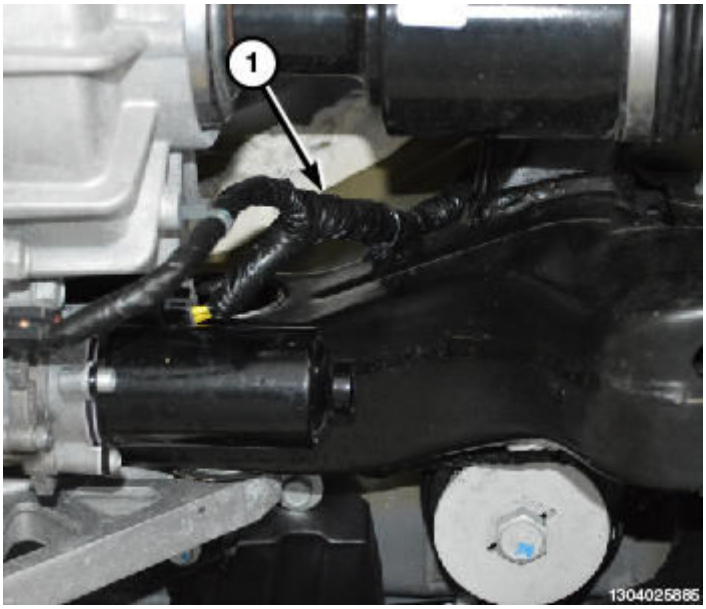

Fig. 298: Checking Valve Spring Installed Height
Courtesy of CHRYSLER GROUP, LLC

5. If the valves or valve seats have been refinished, check the installed height of the valve springs (4). If the installed valve spring height (4) is greater than 40.0 mm (1.575 in.), install an additional spring seat (8) in the head counterbore under the original valve spring seat (8) to bring the spring height back within specification. Make sure the measurement is taken from the top of spring seat (6) to the bottom surface of spring retainer (1).
6. Install the cylinder head(s). Refer to **CYLINDER HEAD, INSTALLATION**.

TUBE, SPARK PLUG

REMOVAL

REMOVAL

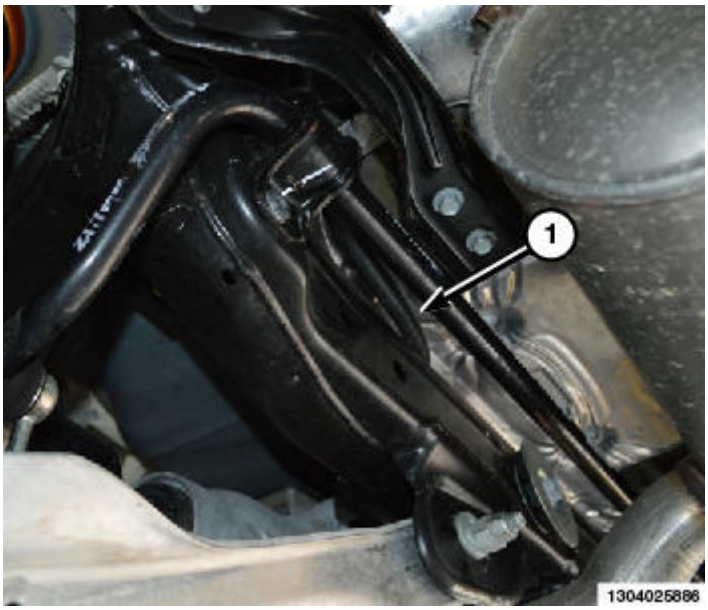

Fig. 299: Magnetic Timing Wheels
Courtesy of CHRYSLER GROUP, LLC

CAUTION: The magnetic timing wheels (1) must not come in contact with magnets (pickup tools, trays, etc.) or any other strong magnetic field. This will destroy the timing wheels ability to correctly relay camshaft position to the camshaft position sensor.

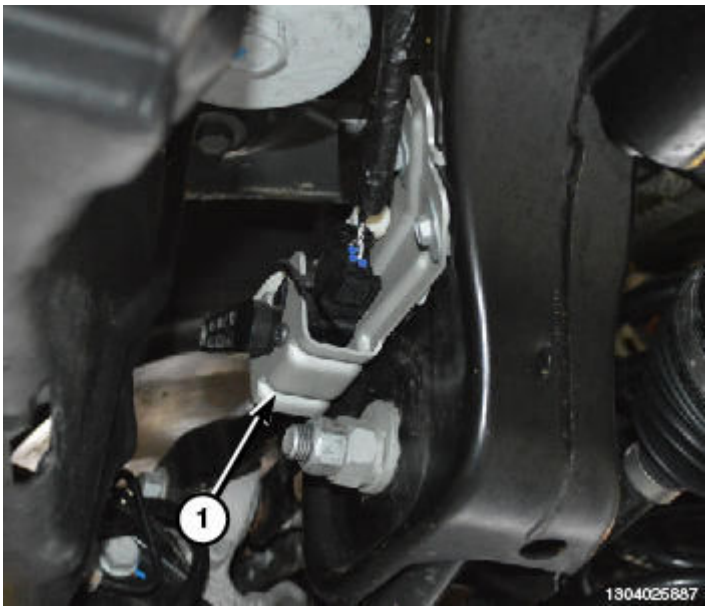

Fig. 300: Spark Plug Tube Installer & Spark Plug Tube
Courtesy of CHRYSLER GROUP, LLC

1. Disconnect and isolate the negative battery cable.
2. Remove the ignition coils. Refer to **COIL, IGNITION, REMOVAL** .
3. Using compressed air, blow out any dirt or contaminates from around the top of the spark plugs.
4. Remove the cylinder head cover(s). Refer to **COVER(S), CYLINDER HEAD, REMOVAL**.
5. Install the top half of Spark Plug Tube Installer (special tool #10255, Installer, Spark Plug Tube) (1) into the spark plug tube to be removed (2).

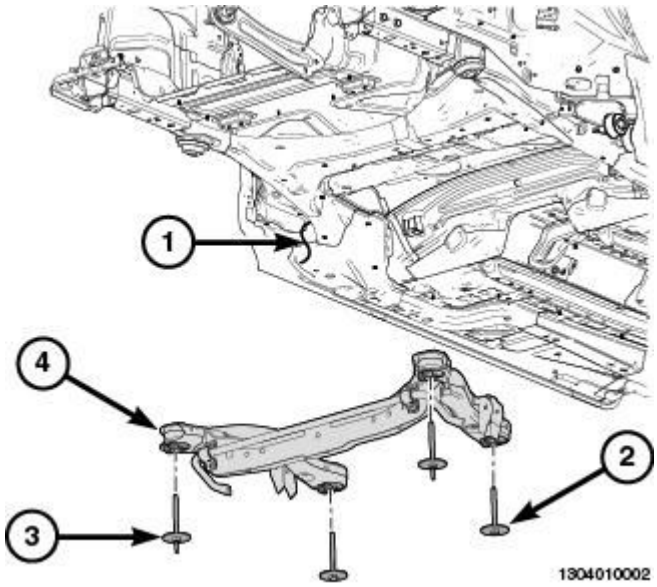

Fig. 301: Locking Pliers & Spark Plug Tube
Courtesy of CHRYSLER GROUP, LLC

6. Using suitable locking pliers (1), remove the spark plug tube (2) from the cylinder head and discard the tube.
7. Clean the area around the spark plug tube mounting with Mopar® Parts Cleaner or equivalent.

INSTALLATION

INSTALLATION

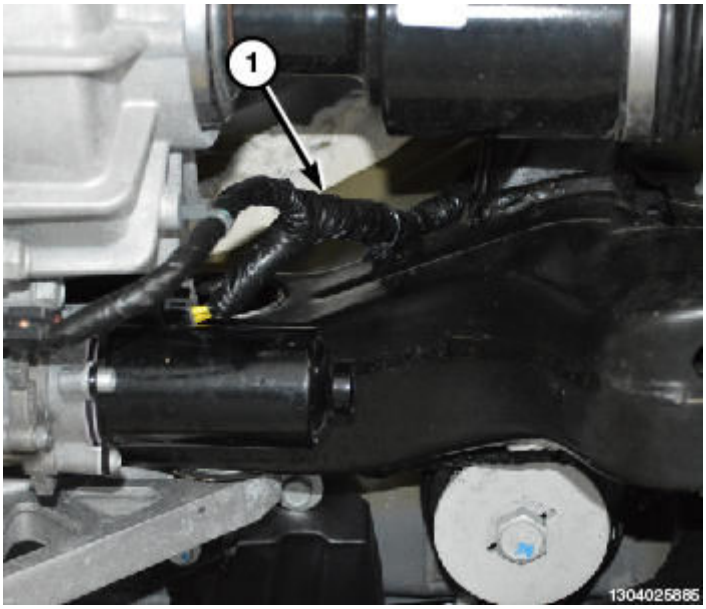

Fig. 302: Magnetic Timing Wheels
Courtesy of CHRYSLER GROUP, LLC

CAUTION: The magnetic timing wheels (1) must not come in contact with magnets (pickup tools, trays, etc.) or any other strong magnetic field. This will destroy the timing wheels ability to correctly relay camshaft position to the camshaft position sensor.

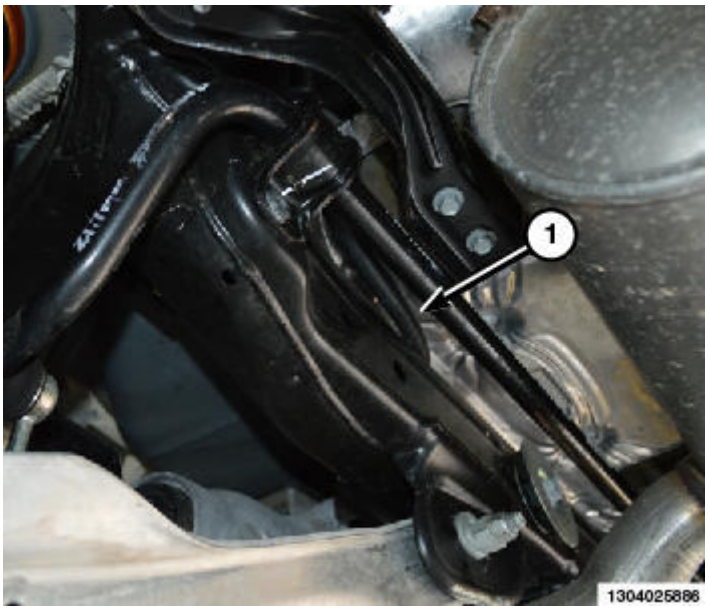

Fig. 303: Spark Plug Tube Installer
Courtesy of CHRYSLER GROUP, LLC

1. Remove the spark plug. Refer to **SPARK PLUG, REMOVAL** .
2. Install the lower half of Spark Plug Tube Installer (special tool #10255, Installer, Spark Plug Tube) (1) into the cylinder head and tighten to 17.5 N.m (13 ft. lbs.).

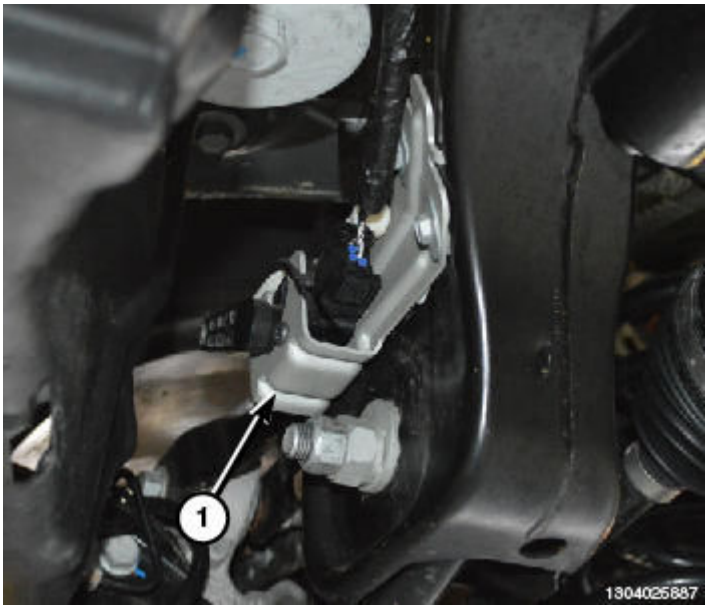

Fig. 304: Applying Stud & Bearing Mount Bead To Spark Plug Tube
Courtesy of CHRYSLER GROUP, LLC

3. Apply Mopar® Stud and Bearing Mount to the new spark plug tube approximately 3 mm (0.118 in.) from the end of the tube, in a 2 mm (0.078 in.) wide bead (1).

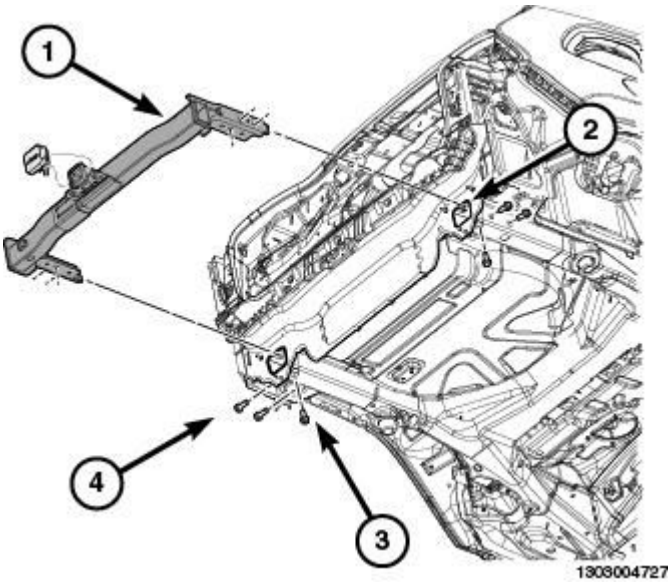

Fig. 305: Spark Plug Tube, Thrust Washers, Spark Plug Tube Installer & Bolt
Courtesy of CHRYSLER GROUP, LLC

4. Position the spark plug tube (3) on the top half of Spark Plug Tube Installer (special tool #10255, Installer, Spark Plug Tube) (2) and assemble the tool on the cylinder head. Make sure there are two thrust washers (4) installed.

CAUTION: Do not overtighten the bolt (1). Overtightening can damage the cylinder head spark plug threads.

5. Tighten the bolt (1) to draw the spark plug tube into position. When the top half of the tool contacts the bottom half of the tool, the tube is installed.

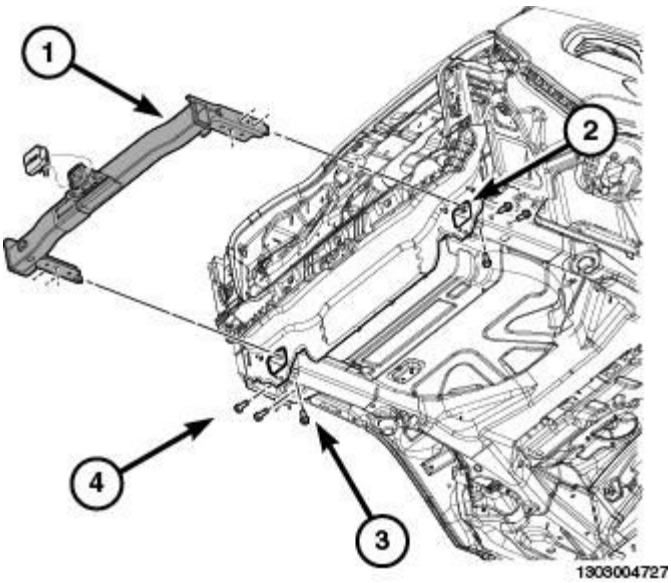

Fig. 306: Cylinder Head Cover Gasket & Spark Plug Tube Seals

Courtesy of CHRYSLER GROUP, LLC

NOTE: LH cylinder head cover shown in illustration, RH cylinder head cover similar.

CAUTION: Spark plug torque is critical and must not exceed the specified value. Overtightening stretches the spark plug shell reducing its heat transfer capability resulting in possible catastrophic engine failure.

6. Install the spark plug. Refer to **SPARK PLUG, INSTALLATION** .
7. If required, install a new spark plug tube seal (2).
8. Install the cylinder head cover(s). Refer to **COVER(S), CYLINDER HEAD, INSTALLATION**. Connect the negative battery cable and tighten the nut to proper specification. Refer to **SPECIFICATIONS** .

VALVES, INTAKE AND EXHAUST

DESCRIPTION

DESCRIPTION

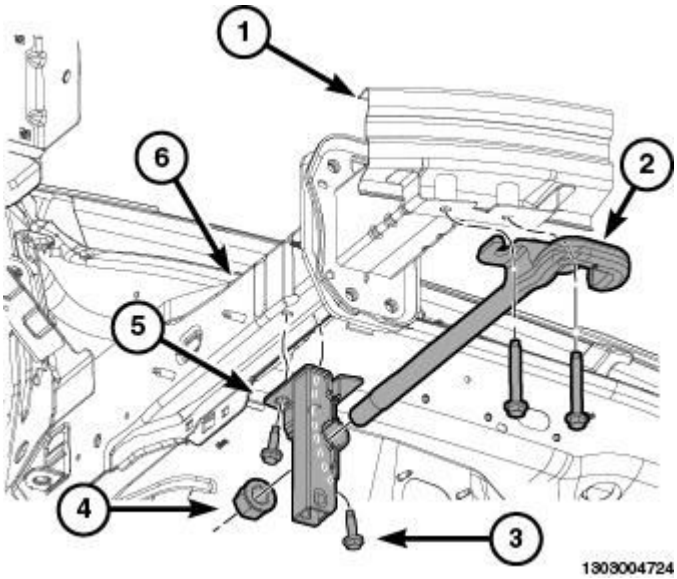

Fig. 307: Intake Valve & Exhaust Valve Component Configuration
Courtesy of CHRYSLER GROUP, LLC

The intake valve (6) is made from a one piece forged heat resistant (martensitic) steel. The exhaust valve (7) is a two piece construction with a forged (austenitic) head welded to the (martensitic) stem. Both valves have a nitrided surface treatment to prevent scuffing except at the tip and lock grooves. The four valves per cylinder are actuated by roller rocker arms, which pivot on stationary lash adjusters. All valves use three bead lock keepers (1) to retain springs (3) and to promote valve rotation.

STANDARD PROCEDURE

REFACING INTAKE AND EXHAUST VALVES

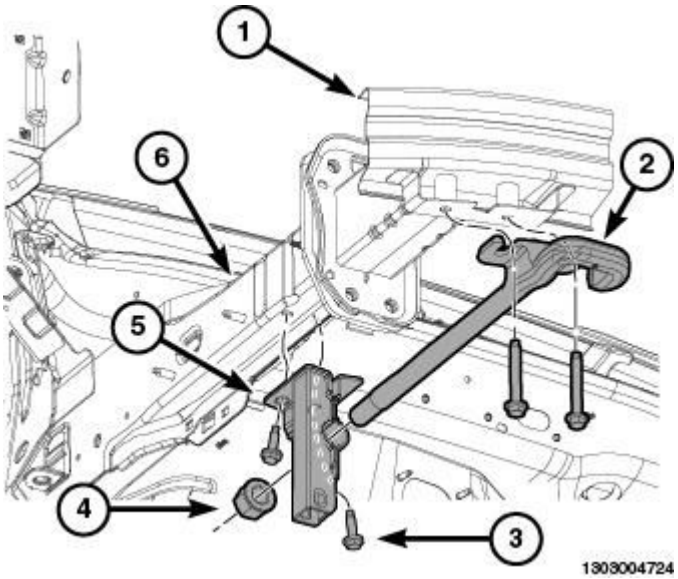

Fig. 308: Valve Face & Seat
Courtesy of CHRYSLER GROUP, LLC

1 - SEAT WIDTH
2 - FACE ANGLE
3 - SEAT ANGLE
4 - SEAT CONTACT AREA

The intake and exhaust valves have a 45.25 ± 0.25 degree face angle (1). The valve seats (2) have a 44.75 ± 0.25 degree face angle.

VALVES

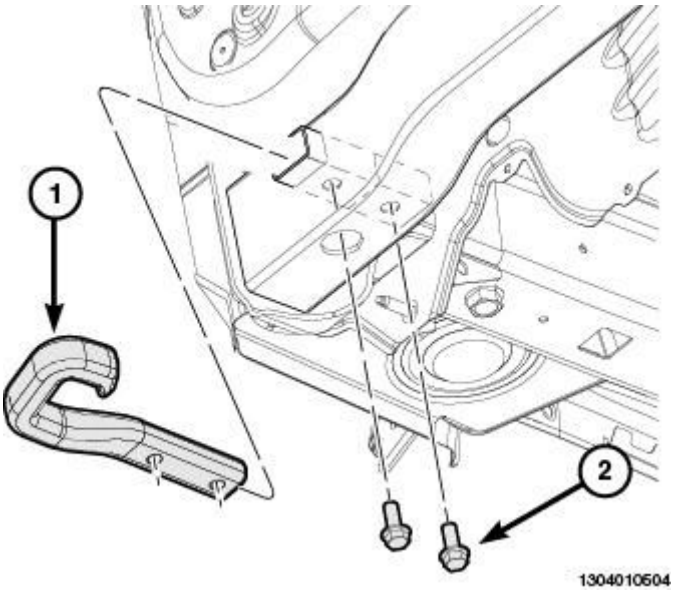

Fig. 309: Inspecting Valve Margin
Courtesy of CHRYSLER GROUP, LLC

Inspect the remaining margin (5) after the valves are refaced. Refer to **ENGINE SPECIFICATIONS** .

VALVE SEATS

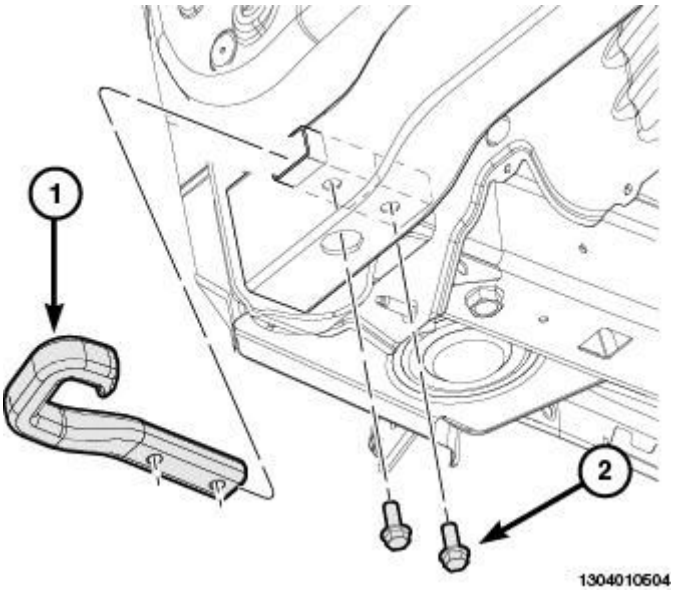

Fig. 310: Valve Face & Seat
Courtesy of CHRYSLER GROUP, LLC

1 - SEAT WIDTH 2 - FACE ANGLE 3 - SEAT ANGLE 4 - SEAT CONTACT AREA

NOTE: When refacing the valve seats, it is important that the correct size valve guide pilot be used for the reseating stones. A true and complete surface must be obtained.

1. Measure the concentricity of the valve seat using a dial indicator. Total runout should not exceed 0.050 mm (0.002 inch.) total indicator reading.

   NOTE: Valve seats which are worn or burned can be reworked, provided that the correct angle and seat width are maintained. Otherwise the cylinder head must be replaced.

2. Check the sealing of the valve(s) to the valve seat(s) on the cylinder head(s):
   - Coat the valve seat (3) **LIGHTLY** with Prussian blue.
   - Install the valve into the cylinder head.
   - Rotate the valve onto the valve seat using light pressure.
   - Using care not to wipe the Prussian blue. Remove the valve from the cylinder head.
   - If the blue is transferred to the center of the valve face (4), contact is within specifications.
   - If the blue is transferred to the top edge of the valve face, then lower the valve seat with a 15 degree stone.
   - If the blue is transferred to the bottom edge of the valve face, then raise the valve seat with a 65 degree stone.
3. When the seat is properly positioned. The width of the intake seat should be 1.0 - 1.2 mm (0.04 - 0.05 in.) and the exhaust seats should be 1.41 - 1.61 mm (0.055 - 0.063 in.).

VALVE AND SPRING INSTALLED HEIGHT

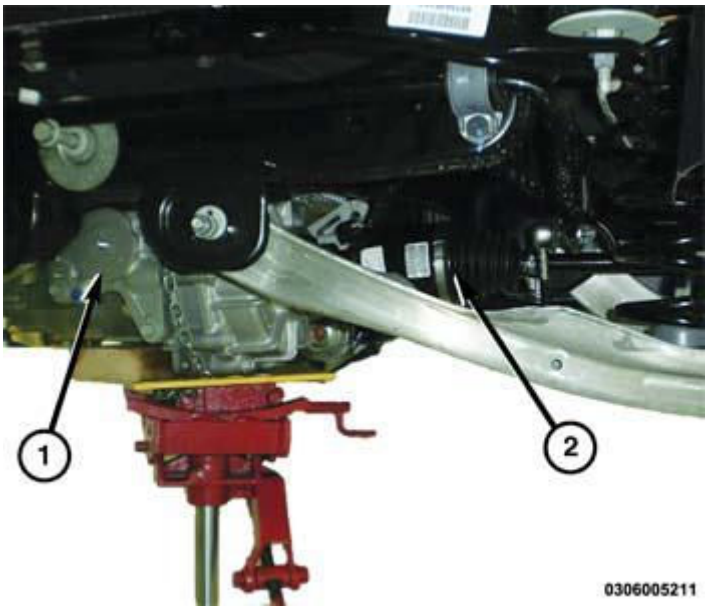

Fig. 311: Checking Valve Spring Installed Height

Courtesy of CHRYSLER GROUP, LLC

NOTE: If the valves are being reused, reassemble them into their original locations.

1. Coat the valve stems (2) with clean engine oil and install the valves onto the cylinder head.
2. If the valves or valve seats have been refinished, check the valve tip height (5). If the valve tip height (5) exceeds the specification, grind the valve tip until it is within specification. Refer to **ENGINE SPECIFICATIONS** . Make sure the measurement is taken from the cylinder head surface (7) to the top of the valve stem (2).
3. If removed, install the spring seat and valve guide seal over the valve guide. Refer to **SEAL(S), VALVE GUIDE, INSTALLATION**.

NOTE: Make sure that the garter spring is intact around the top of the valve guide seal.

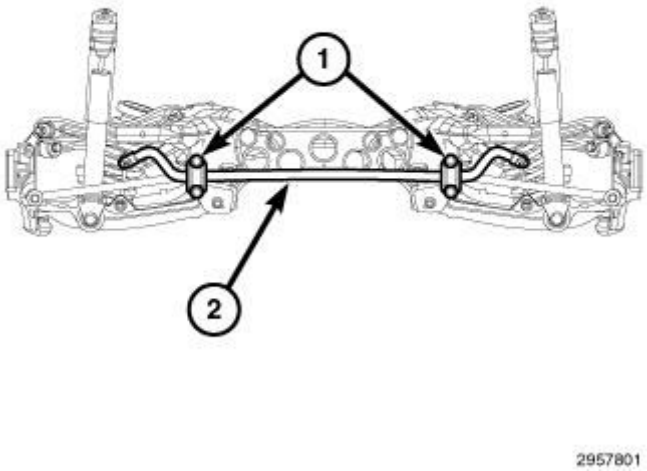

Fig. 312: Valve Spring & Valve Spring Retainer
Courtesy of CHRYSLER GROUP, LLC

NOTE: If the valve springs are being reused, reassemble them into their original locations. Number 5 cylinder exhaust valve spring shown in illustration, all other valves similar.

4. Install the valve spring (2) and valve spring retainer (1).

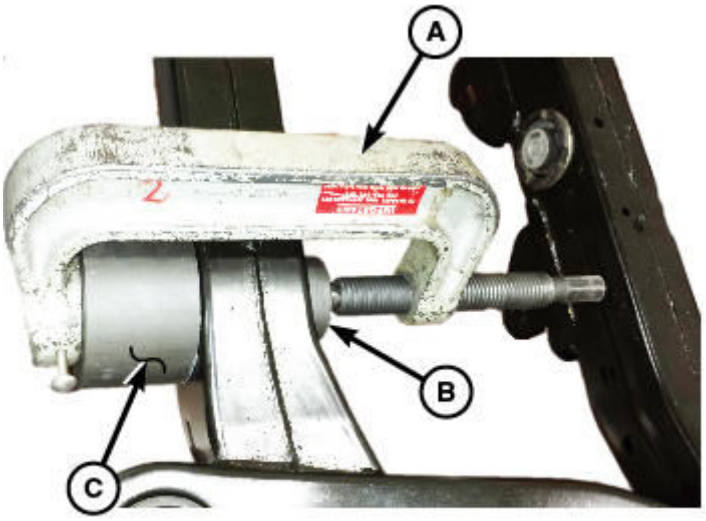

1304019335

Fig. 313: Compressing Valve Spring & Locating Valve Retaining Locks
Courtesy of CHRYSLER GROUP, LLC

NOTE: Number 3 cylinder intake valve spring compression shown in illustration, all other valves similar.

5. Compress the valve spring (3) with the Valve Spring Compressor Adapter (special tool #10224, Adapter, Valve Spring) (2) mounted in the Valve Spring Compressor (special tool #C-3422-D, Compressor, Valve Spring) (1). Install the retaining locks (4) and release the valve spring compressor.

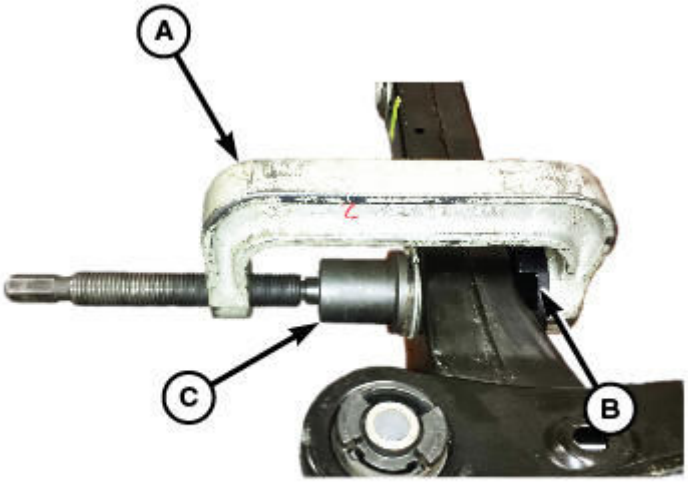

1304019334

Fig. 314: Checking Valve Spring Installed Height
Courtesy of CHRYSLER GROUP, LLC

6. If the valves or valve seats have been refinished and the installed valve spring height (4) is greater than 40.0 mm (1.575 in.). Install a second spring seat (8) in the head counter bore under the original valve spring seat to bring the spring height within specification. Make sure the measurement is taken from the top of spring seat (6) to the bottom surface of spring retainer (1).

REMOVAL

REMOVAL

1. Remove the cylinder head(s). Refer to **CYLINDER HEAD, REMOVAL**.

NOTE: If the springs are to be reused, identify their positions so that they can be reassembled into their original locations.

2. Remove the valve spring(s). Refer to **SPRING(S), VALVE, REMOVAL**.

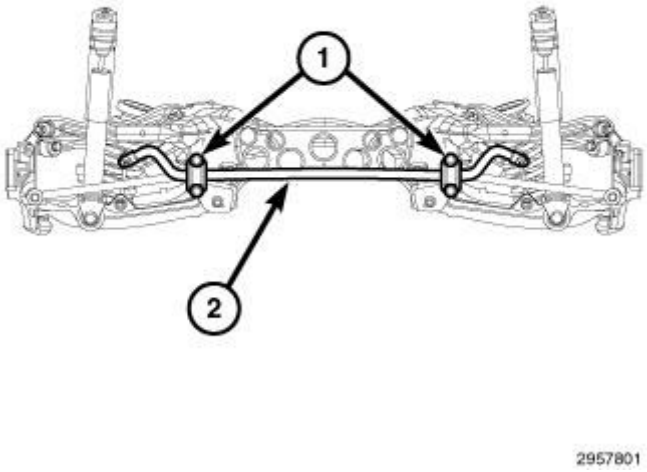

Fig. 315: Inspecting Valve Margin
Courtesy of CHRYSLER GROUP, LLC

CAUTION: Before removing the valves, remove any burrs from the valve stem retainer lock grooves (2) and stem tip (1) to prevent damage to the valve guides.

3. Remove the valve(s) (3). Identify each valve to ensure installation in the original location.
4. If required, remove the valve guide seal and spring seat. Refer to **SEAL(S), VALVE GUIDE, REMOVAL**.

INSPECTION

INSPECTION

VALVES

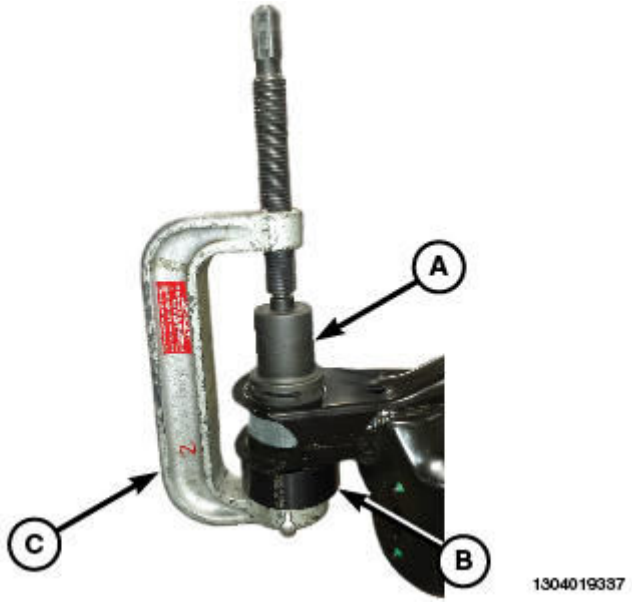

Fig. 316: Inspecting Valve Margin
Courtesy of CHRYSLER GROUP, LLC

1. Clean and inspect the valves thoroughly. Replace burned, warped and cracked valves.
2. Inspect the retainer lock grooves for wear or damage (2).
3. Inspect the valve face (4) for wear and pitting.
4. Measure the valve stems (3) and margins (5) for wear. Refer to **ENGINE SPECIFICATIONS** .

VALVE GUIDES

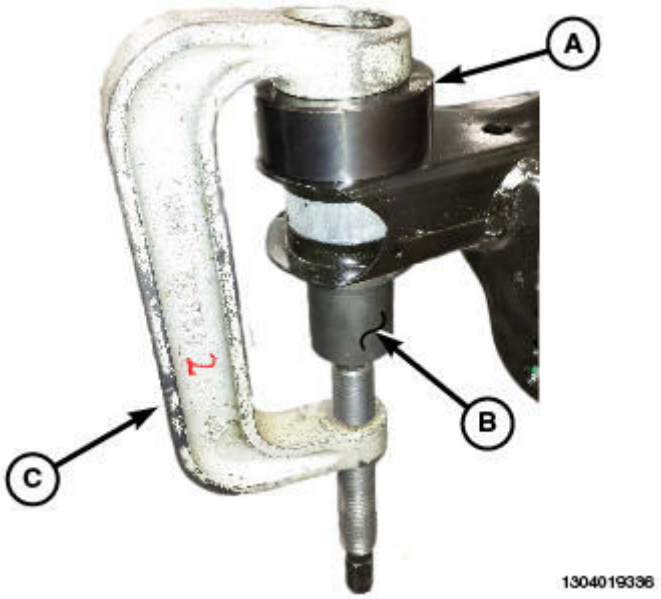

Fig. 317: Measuring Valve Guide Wear
Courtesy of CHRYSLER GROUP, LLC

1. Remove carbon and varnish deposits from inside of the valve guides with a reliable guide cleaner.
2. Measure valve stem-to-guide clearance as follows:
3. Install the valve (2) into the cylinder head so that it is 15 mm (0.590 inch.) off of the valve seat. A small piece of hose may be used to hold the valve in place.
4. Attach the Dial Indicator Set (special tool #C-3339A, Set, Dial Indicator) (1) to the cylinder head and set it at a right angle to the valve stem being measured.
5. Move the valve to and from the indicator. Compare this reading to the specification. Refer to **ENGINE SPECIFICATIONS** .

NOTE: **If stem-to-guide clearance exceeds specifications, you must measure the valve stem. If the valve stem is within specification or if the valve guide is loose in the cylinder head, replace the cylinder head.**

INSTALLATION

INSTALLATION

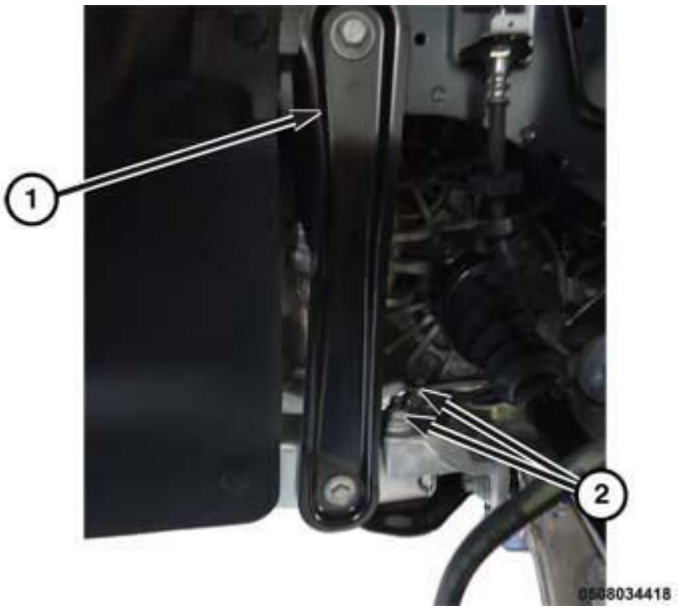

Fig. 318: Checking Valve Spring Installed Height
Courtesy of CHRYSLER GROUP, LLC

1. Coat the valve stems (2) with clean engine oil and install the valves into the cylinder head.

NOTE: **If the valves are being reused, reassemble them into their original locations.**

2. If the valves or valve seats have been refinished, check the valve tip height (5). If the valve tip height (5) exceeds the specification, grind the valve tip until it is within specification. Refer to **ENGINE SPECIFICATIONS** . Make sure the measurement is taken from the cylinder head surface (7) to the top of the valve stem (2).
3. If removed, install the spring seat and valve guide seal over the valve guide. Refer to **SEAL(S), VALVE GUIDE, INSTALLATION**.

NOTE: **Reassemble the valves springs into their original locations. If the valves or valve seats have been refinished, verify that the valve spring installed height is within specification. Refer to ENGINE SPECIFICATIONS .**

4. Install the valve spring(s). Refer to **SPRING(S), VALVE, INSTALLATION**.
5. Install the cylinder head(s). Refer to **CYLINDER HEAD, INSTALLATION**.

ENGINE BLOCK

DESCRIPTION

DESCRIPTION

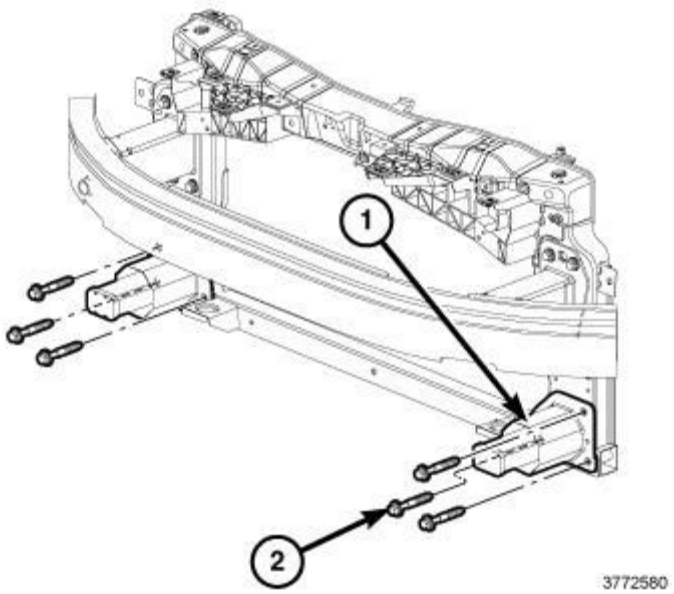

Fig. 319: Cylinder Block & Main Bearing Caps
Courtesy of CHRYSLER GROUP, LLC

The cylinder block is a 60 degree high-pressure die cast aluminum design with cast steel cylinder liners. The leading side of the block is on the right side and houses cylinders 1, 3 and 5. The cylinder block is an open deck design with cut slots between each cylinder. Two knock sensors are located in the block valley. The cylinder block has three sets of piston cooling jets which are attached to the main oil gallery. The four powdered metal main bearing caps are a cross-bolted design and have directional arrows molded into the caps. The number 2 main bearing is the location for the two piece upper half thrust bearings. The thrust bearings are installed with the oil groves facing outward. The main bearing caps are a 6-bolt design and cross-bolted for improved lower end strength. There are three oil drain back drillings located on each of the cylinder banks.

STANDARD PROCEDURE

MEASURING BEARING CLEARANCE USING PLASTIGAGE

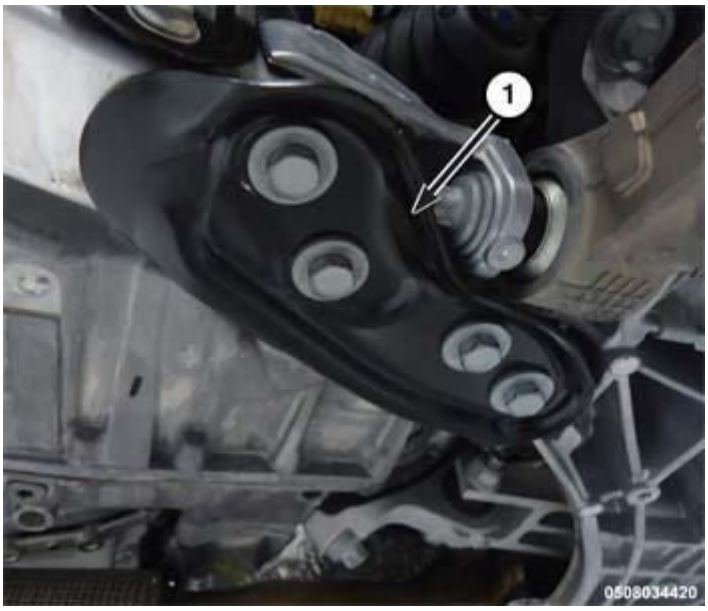

Fig. 320: Plastigage Placed In Lower Shell
Courtesy of CHRYSLER GROUP, LLC

NOTE: Typical crankshaft journal shown in illustration.

Engine crankshaft and connecting rod bearing clearances can be determined by the use of Plastigage or equivalent. The following is the recommended procedure for the use of Plastigage:

1. Remove the oil film from surface to be checked. Plastigage is soluble in oil.
2. Place a piece of Plastigage (1) across the entire width of the journal (In addition, suspected areas can be checked by placing the Plastigage in the suspected area). Plastigage must not crumble in use. If brittle, obtain fresh stock.
3. Torque the bearing cap bolts of the bearing being checked to the proper specification. Refer to **TORQUE SPECIFICATIONS** .

NOTE: DO NOT rotate the crankshaft. Plastigage will smear, causing inaccurate results.

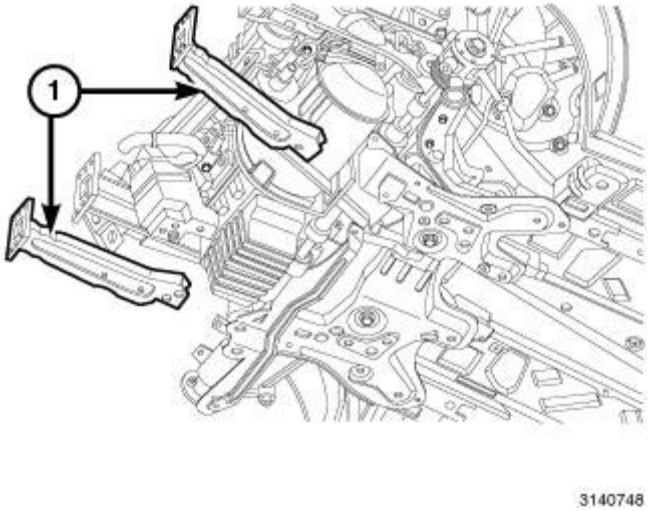

Fig. 321: Measuring Bearing Clearance With Plastigage
Courtesy of CHRYSLER GROUP, LLC

NOTE: Typical connecting rod cap shown in illustration.

4. Remove the bearing cap and compare the width of the flattened Plastigage (2) with the scale provided on the package (1). Locate the band closest to the same width. This band shows the amount of clearance. Differences in readings between the ends indicate the amount of taper present or the possibility of foreign material trapped under the bearing insert.
5. Record all readings taken. Compare clearance measurements to. Refer to **ENGINE SPECIFICATIONS** .

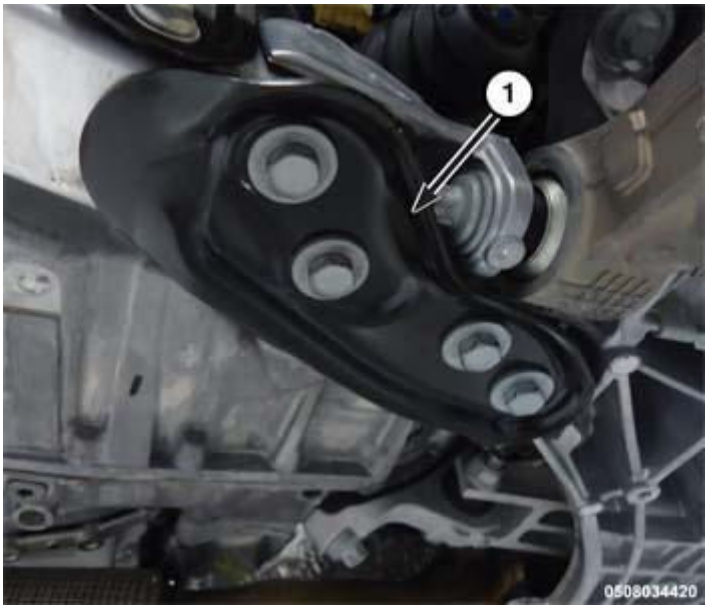

Fig. 322: Checking Connecting Rod Bearing Clearance With Plastigage
Courtesy of CHRYSLER GROUP, LLC

NOTE: **Typical connecting rod journal shown in illustration.**

NOTE: **Plastigage is available in a variety of clearance ranges. Use the most appropriate range for the specifications you are checking. Plastigage generally is accompanied by two scales. One scale is in inches, the other is a metric scale.**

6. Install the proper bearings to achieve the specified bearing clearances.
7. Repeat the Plastigage measurement to verify your bearing selection prior to final assembly.

CYLINDER BORE DEGLAZING

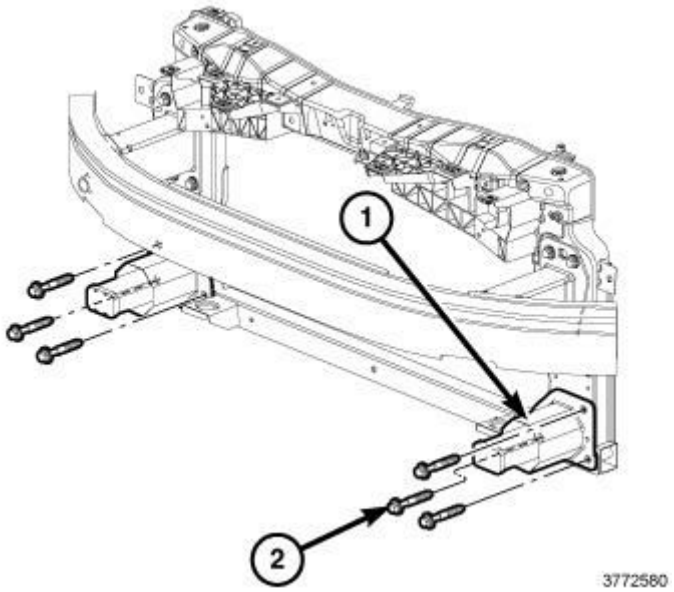

Fig. 323: Cylinder Bore Crosshatch Pattern
Courtesy of CHRYSLER GROUP, LLC

Before deglazing, mask the crankcase area to keep abrasive materials from entering the engine lower end. Tape off any openings to prevent abrasive material from entering the coolant and oil circuits.

CAUTION: DO NOT use rigid type hones to remove cylinder wall glaze.

1. Select an appropriate size flexible ball hone.
2. Deglazing of the cylinder walls may be done if the cylinder bore is straight and round. About 20-60 strokes, depending on the condition of the cylinder bore, will be sufficient to provide a satisfactory surface. Use a light **honing** oil, available from major oil distributors.

CAUTION: DO NOT use engine or transmission oil, mineral spirits, or kerosene.

3. Deglazing should be done by moving the hone up and down fast enough to get a crosshatch pattern. The hone marks should intersect at 30° to 60° inclusive angle for proper seating of rings.
4. A controlled hone motor speed between 200 and 300 RPM is necessary to obtain the proper crosshatch angle (1). The number of up and down strokes per minute can be regulated to get the desired 30° to 60° inclusive angle (2). Faster up and down strokes increase the crosshatch angle.
5. After deglazing, it is necessary that the block be cleaned to remove all traces of abrasive. Use a brush to wash parts with a solution of hot water and detergent. Dry parts thoroughly. Use a clean, white, lint-free cloth to check that the bore is clean. Oil the bores after cleaning to prevent rusting. Upon completion, perform a visual inspection of the cylinder block passages to inspect for abrasive debris. If any debris is found, repeat the cleaning process.

NOTE: **Cylinder bore diameter should not increase more than 20 microns during deglazing process from original nominal bore diameter, if the maximum of 20 microns is exceeded, the cylinder block must be replaced. If deglazing the cylinder bore cannot remove the light scratches and scuffs the cylinder block should be replaced.**

INSPECTION

INSPECTION

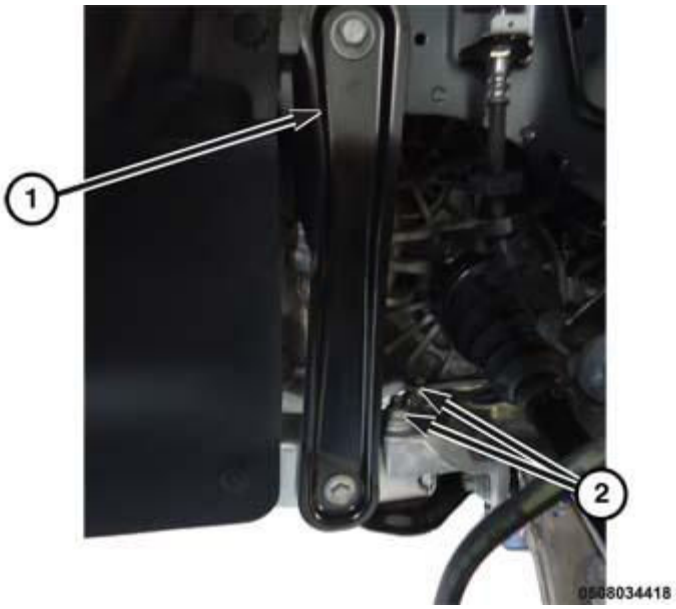

Fig. 324: Main Bearing Inserts
Courtesy of CHRYSLER GROUP, LLC

1. Wipe the bearing inserts (1, 2) clean.
2. Inspect the inserts for abnormal wear patterns, scoring, grooving, fatigue, pitting and for metal or other foreign material imbedded in the lining.

3. Inspect the back of the inserts for fractures, scrapes, or irregular wear patterns.
4. Inspect the insert locking tabs for damage.
5. Inspect the crankshaft thrust washers for scoring, scratches, wear or blueing.
6. Replace any bearing that shows abnormal wear. Refer to **BEARING(S), CRANKSHAFT, STANDARD PROCEDURE** .
7. Inspect the main bearing bores for signs of scoring, nicks and burrs.
8. If the cylinder block main bearing bores show damage the engine block must be replaced.

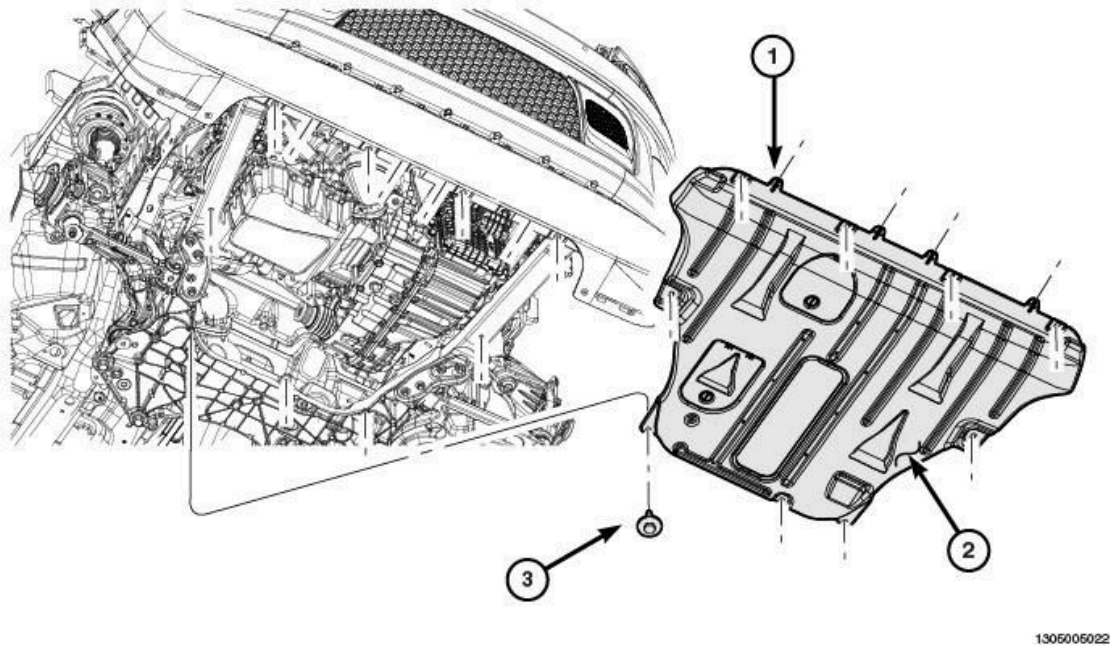

Fig. 325: Measuring Cylinder Bore Diameter
Courtesy of CHRYSLER GROUP, LLC

9. Use the Cylinder Indicator (special tool #C-119, Cylinder Indicator) (2) to correctly measure the inside diameter of the cylinder bore (3). A cylinder bore gauge capable of reading in 0.003 mm (0.0001 in.) INCREMENTS is required. If a bore gauge is not available, do not use an inside micrometer.
10. Measure the inside diameter of the cylinder bore at three levels below the top of the bore (4). Start at the top of the bore, perpendicular (across or at 90 degrees) to the axis of the crankshaft at point A (1).
11. Repeat the measurement near the middle of the bore, then repeat the measurement near the bottom of the bore.
12. Determine taper by subtracting the smaller diameter from the larger diameter.
13. Rotate the Cylinder Indicator 90° to point B (1) and repeat the three measurements. Verify that the maximum taper is within specification. Refer to **ENGINE SPECIFICATIONS** .
14. Determine out-of-roundness by comparing the difference between A and B at each of the three levels. Verify that the maximum out of round is within specification. Refer to **ENGINE SPECIFICATIONS** .

15. If cylinder bore taper and out-of-roundness are within specification, the cylinder bore can be honed. Refer to **ENGINE SPECIFICATIONS** . If the cylinder bore taper or out-of-round condition exceeds the maximum limits, the cylinder block must be replaced.

NOTE: A slight amount of taper always exists in the cylinder bore after the engine has been in use for a period of time.

BEARING(S), CONNECTING ROD

STANDARD PROCEDURE

CONNECTING ROD BEARING FITTING

Bearing oil clearance can also be determined by using Plastigage or equivalent. Refer to **ENGINE BLOCK, STANDARD PROCEDURE** .

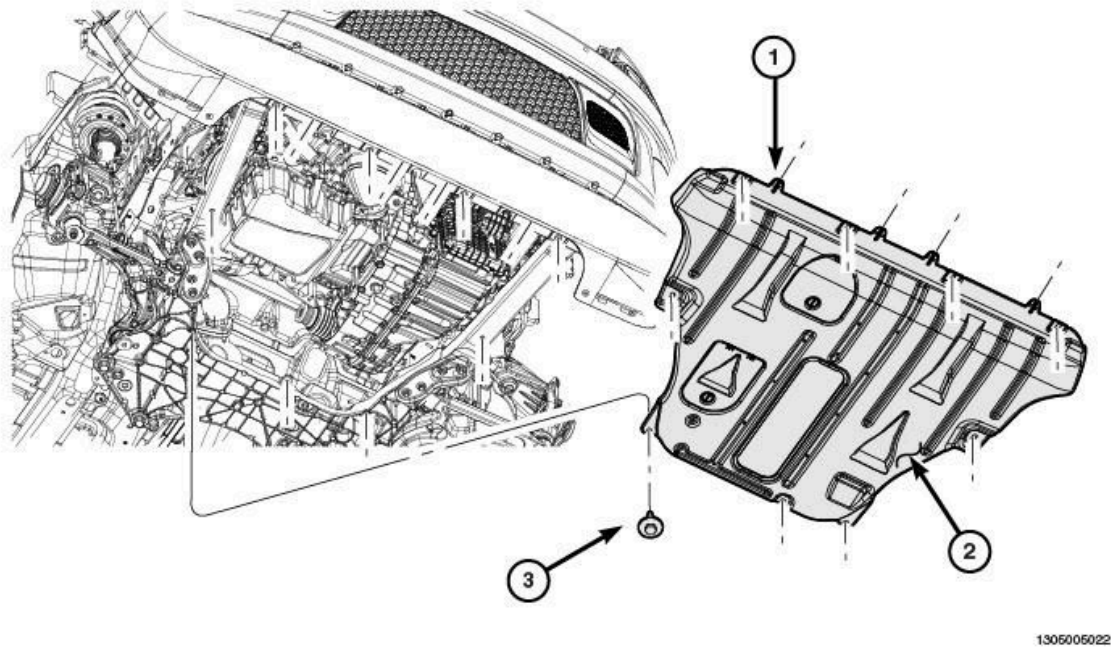

Fig. 326: Crankshaft Main Bearing Journal Diameter Grade Markings & Connecting Rod Bearing Journal Diameter Grade Markings
Courtesy of CHRYSLER GROUP, LLC

The connecting rod bearings are "select fit" to achieve proper oil clearance. Connecting rod bearing journal diameter grade markings (2) are stamped into the front crankshaft counterweight. These marks are read from left to right, corresponding with journal number 1, 2, 3, 4, 5, 6. Select the bearing size that corresponds to the crankshaft markings for each rod bearing journal.

Connecting rod bearing journal diameter grade markings correspond to specific journal diameters. The chart below identifies the three crankshaft grade markings and their associated journal diameters.

Crankshaft Marking	Journal Size mm (in.)
1	58.9910 - 58.9969 mm (2.3225 - 2.3227 in.)
2	58.9970 - 59.0029 mm (2.3227 - 2.3229 in.)
3	59.0030 - 59.0090 mm (2.3229 - 2.3232 in.)

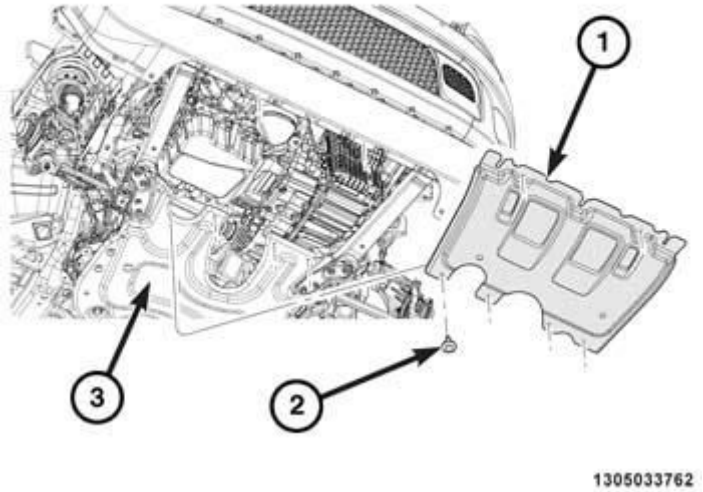

Fig. 327: Connecting Rod Bearing Shells & Bearing Size
Courtesy of CHRYSLER GROUP, LLC

NOTE: Install the rod bearings in pairs. Do not mix sizes or use a new bearing half with an old bearing half.

The connecting rod bearing shells (1) are marked with the bearing size (2) on the bearing lining surface. The bearings are available in three different sizes in order to achieve the desired oil clearance.

Rod bearing shells are available in three sizes. The chart below identifies the three bearing sizes.

Bearing Marking	Size mm (in.)
1	1.583 - 1.580 mm (0.0623 - 0.0622 in.)
2	1.580 - 1.577 mm (0.0622 - 0.0621 in.)
3	1.577 - 1.574 mm (0.0621 - 0.0620 in.)

CONNECTING ROD BEARING REPLACEMENT

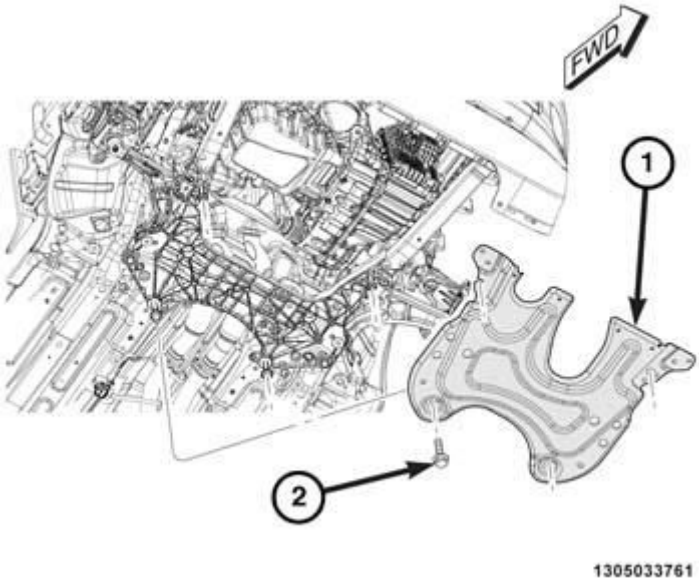

Fig. 328: Connecting Rod Bearing Shells & Bearing Size
Courtesy of CHRYSLER GROUP, LLC

The connecting rod bearings (1) can be serviced in-vehicle. They must be replaced one-at-a-time in order to prevent the pistons from contacting the valves. The connecting rod bearings are "select fit" to achieve proper oil clearances. Refer to **BEARING(S), CONNECTING ROD, STANDARD PROCEDURE** .

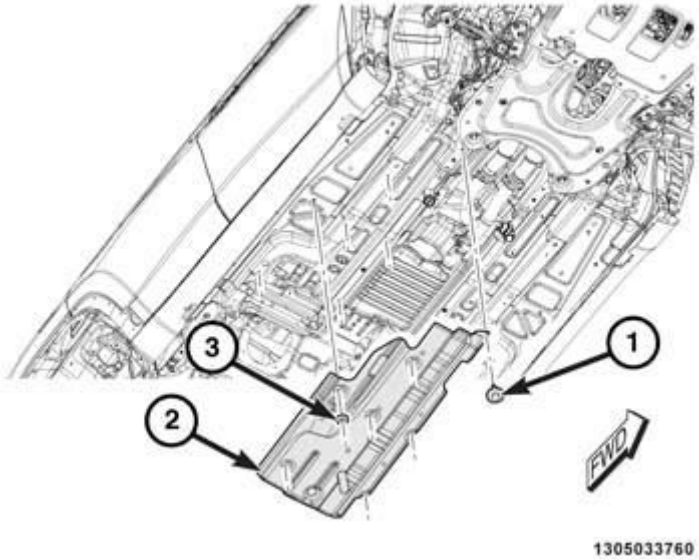

Fig. 329: Main Bearing Cap Bolts From Windage Tray Removal Sequence
Courtesy of CHRYSLER GROUP, LLC

1. Disconnect and isolate the negative battery cable.
2. Remove the spark plugs. Refer to **SPARK PLUG, REMOVAL** .
3. Remove the oil pan, oil pump pick-up and engine oil pump. Refer to **PUMP, ENGINE OIL,**

REMOVAL.

4. Remove the eight main bearing cap bolts from the windage tray in the sequence shown in illustration and remove the windage tray (1).

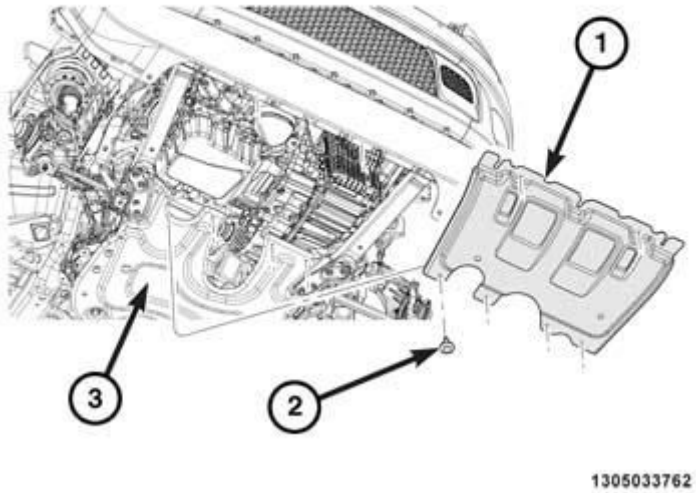

Fig. 330: Connecting Rod To Cylinder Identification
Courtesy of CHRYSLER GROUP, LLC

CAUTION: DO NOT use a number stamp or a punch to mark connecting rods or caps, as damage to connecting rods could occur

NOTE: Connecting rods and bearing caps are not interchangeable and should be marked before removing to ensure correct reassembly.

5. Mark connecting rod and bearing cap positions (1) using a permanent ink marker or scribe tool.

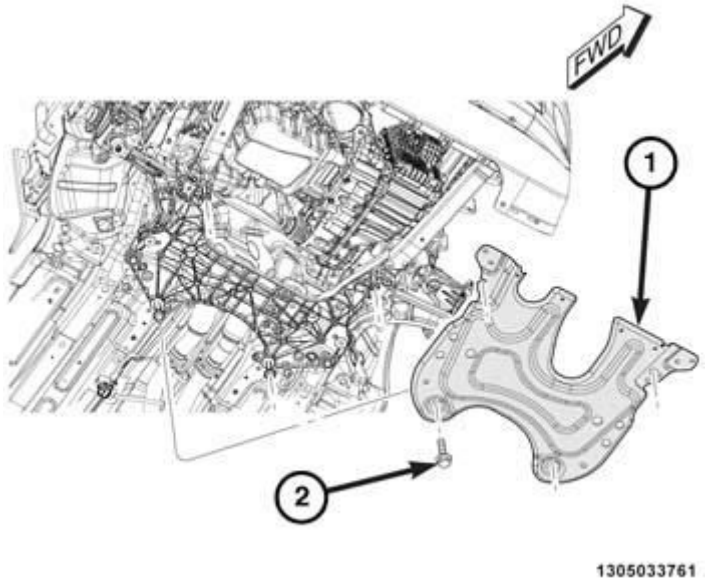

Fig. 331: Piston, Connecting Rod Cap, Bolts, Plastic Guide Plates & Guide Pins
Courtesy of CHRYSLER GROUP, LLC

NOTE: Typical V6 engine configuration shown in illustration.

CAUTION: Replace only one connecting rod bearing at a time while all other connecting rod bearing caps remain properly tightened. If all connecting rod bearing caps are removed, crankshaft rotation will result in valve and/or piston damage.

CAUTION: Care must be taken not to damage the fractured rod and cap joint face surfaces, as engine damage may occur.

6. Remove the connecting rod cap bolts (5) and the connecting rod cap (4). Discard the cap bolts.
7. Remove the plastic guide plates (3) from the Guide Pins (special tool #8189, Guide Pins) (7) and install the Guide Pins to the connecting rod being removed.

CAUTION: Care must be taken not to nick crankshaft journals, as engine damage may occur.

8. Rotate the crankshaft away from the connecting rod and remove the bearing shell.
9. Inspect the rods and bearings for abnormal wear patterns, scoring, grooving, fatigue, pitting and for metal or other foreign material imbedded in the lining. Refer to **ENGINE BLOCK, INSPECTION** .
10. If required, check the connecting rod bearing clearances by the use of Plastigage or equivalent. Refer to **ENGINE BLOCK, STANDARD PROCEDURE** .
11. If required, select and fit new bearings to the connecting rod. Refer to **BEARING(S), CONNECTING ROD, STANDARD PROCEDURE** .

12. Install the bearing shell (8) on the connecting rod with the tang inserted into the machined groove in the rod. Lubricate the bearing surface with clean engine oil.
13. Rotate the crankshaft while guiding the connecting rod into position over the rod journal.

CAUTION: The connecting rod bolts must not be reused. Always replace the connecting rod bolts whenever they are loosened or removed.

14. Install the bearing shell (6) on the connecting rod cap (4) with the tang inserted into the machined groove in the cap. Lubricate the bearing surface with clean engine oil.

NOTE: Do not lubricate the threads of the connecting rod cap bolts (5).

15. Install the connecting rod cap and bearing with the tang on the same side as the rod. Tighten the **NEW** connecting rod cap bolts (5) to the proper specification. Refer to **TORQUE SPECIFICATIONS** .
16. If required, check the connecting rod side clearance. Refer to **ROD, PISTON AND CONNECTING, STANDARD PROCEDURE** .
17. Repeat the previous steps for each connecting rod bearing being replaced.

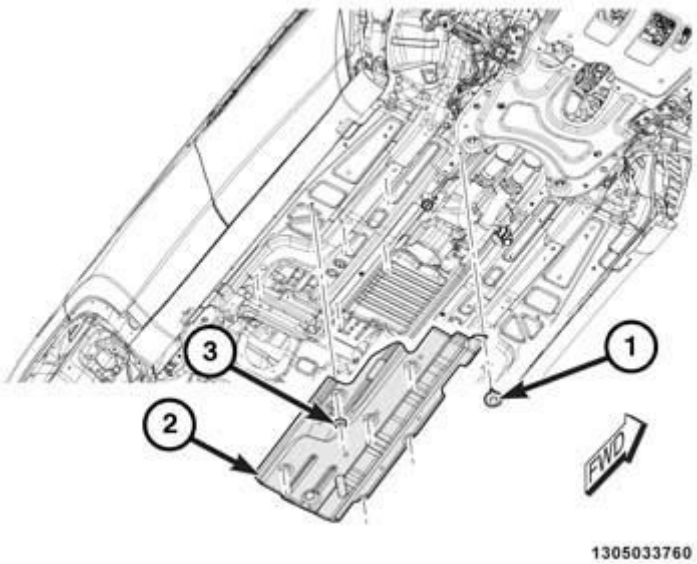

Fig. 332: Checking Cylinder Head Bolts For Stretching (Necking)
Courtesy of CHRYSLER GROUP, LLC

CAUTION: The main bearing cap bolts are tightened using a torque plus angle procedure. The bolts must be examined BEFORE reuse. If the threads are necked down the bolts must be replaced.

18. Check the main bearing cap bolts for necking by holding a scale or straight edge against the threads. If all the threads do not contact the scale (2) the bolt must be replaced.

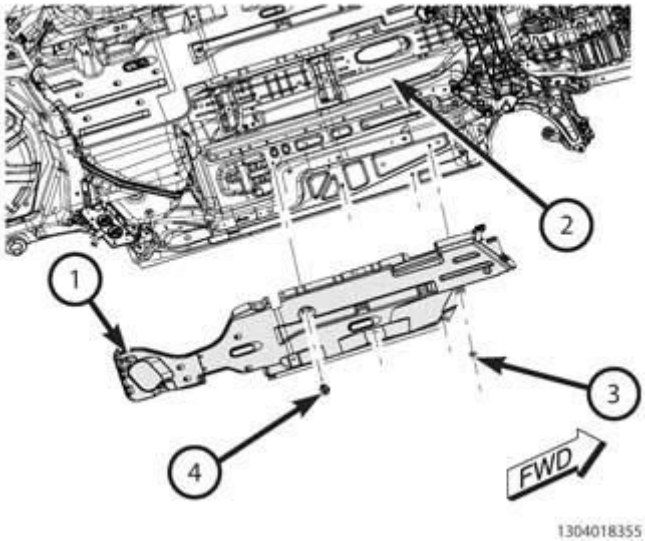

Fig. 333: Windage Tray With Main Bearing Cap Bolts Installation Sequence
Courtesy of CHRYSLER GROUP, LLC

19. Install the windage tray with eight main bearing cap bolts. Tighten the bolts in the sequence shown in illustration to 21 N.m (16 ft. lbs.) plus 90°.
20. Install the engine oil pump, oil pump pick-up and oil pan. Refer to **PUMP, ENGINE OIL, INSTALLATION**.
21. Install the spark plugs and ignition coils. Refer to **SPARK PLUG, INSTALLATION** .
22. If removed, install the oil filter and fill the engine crankcase with the proper oil to the correct level. Refer to **OIL, STANDARD PROCEDURE** .
23. Connect the negative battery cable and tighten nut to the proper specification. Refer to **SPECIFICATIONS** .
24. Operate the engine until it reaches normal operating temperature.

BEARING(S), CRANKSHAFT

STANDARD PROCEDURE

MAIN BEARING FITTING

NOTE: Crankshaft thrust washers are not selectable and are only available in a single thickness.

Bearing oil clearance can also be determined by using Plastigage or equivalent. Refer to **ENGINE BLOCK, STANDARD PROCEDURE** .

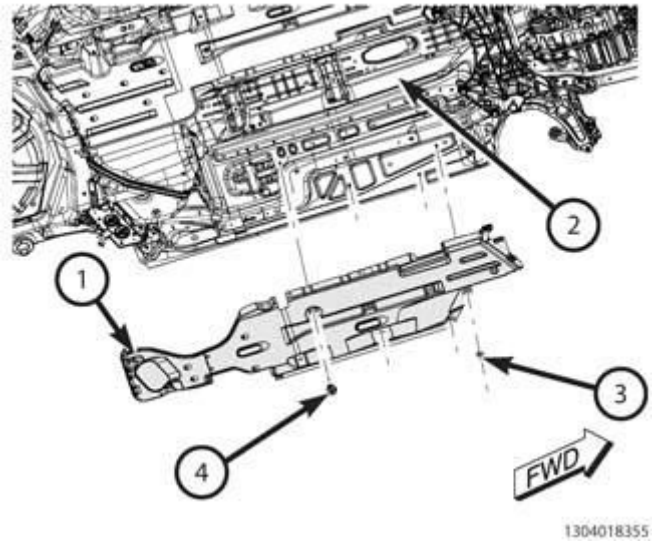

Fig. 334: Crankshaft Main Bearing Journal Diameter Grade Markings & Connecting Rod Bearing Journal Diameter Grade Markings
Courtesy of CHRYSLER GROUP, LLC

The upper and lower main bearings are "select fit" to achieve proper oil clearances. Crankshaft main bearing journal diameter grade markings (1) are stamped into the front crankshaft counterweight. These marks are read from left to right, corresponding with journal number 1, 2, 3, 4.

Crankshaft main bearing journal diameter grade markings correspond to specific journal diameters. The chart below identifies the five crankshaft grade markings and their associated journal diameters.

Crankshaft Marking	Journal Size mm (in.)
1	71.9870 - 71.9905 mm (2.8341 - 2.8343 in.)
2	71.9906 - 71.9941 mm (2.8343 - 2.8344 in.)
3	71.9942 - 71.9977 mm (2.8344 - 2.8345 in.)
4	71.9978 - 72.0013 mm (2.8346 - 2.8347 in.)
5	72.0014 - 72.0050 mm (2.8347 - 2.8348 in.)

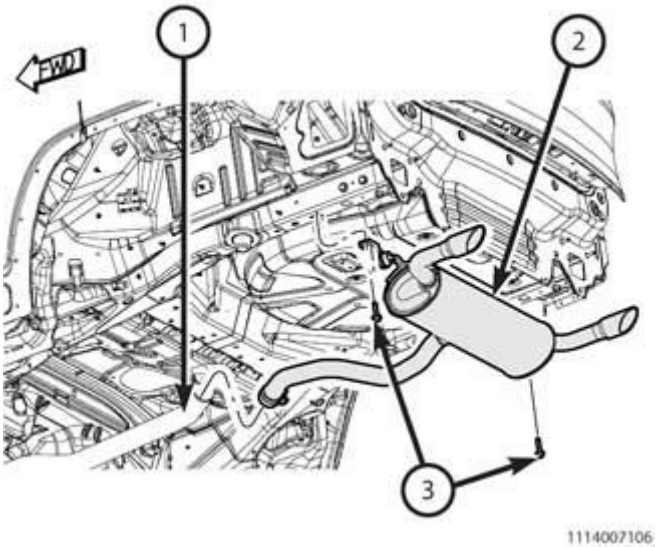

Fig. 335: Engine Block Main Bearing Journal Diameter Grade Markings
Courtesy of CHRYSLER GROUP, LLC

Engine block main bearing journal diameter grade markings (2) are stamped into the left side of the engine block. These marks are read from left to right, corresponding with journal number 1, 2, 3, 4.

Engine block main bearing journal grade markings correspond to specific journal diameters. The chart below identifies the five engine block grade markings and their associated journal diameters.

Engine Block Marking	Journal Size mm (in.)
1	77.0055 - 77.0090 mm (3.0317 - 3.0318 in.)
2	77.0019 - 77.0054 mm (3.0316 - 3.0317 in.)
3	76.9983 - 77.0018 mm (3.0314 - 3.0316 in.)
4	76.9947 - 76.9982 mm (3.0313 - 3.0314 in.)
5	76.9910 - 76.9946 mm (3.0311 - 3.0313 in.)

For upper and lower main bearing selection, obtain the grade identification marks from the crankshaft and engine block. Main bearings are available in five sizes. Upper and lower sizes can be mixed on a journal in order to achieve the desired oil clearance. The chart below identifies the five sizes available and how they should be selected based on crankshaft and engine block grade markings.

Engine Block Marking	Crankshaft Marking				
	1	**2**	**3**	**4**	**5**
1	1/1	1/2	2/2	2/3	3/3
2	1/2	2/2	2/3	3/3	3/4
3	2/2	2/3	3/3	3/4	4/4
4	2/3	3/3	3/4	4/4	4/5
5	3/3	3/4	4/4	4/5	5/5
	UPPER/LOWER Main Bearings to Achieve 0.024 - 0.050 mm (0.0009 - 0.0020				

	in.) Oil Clearance

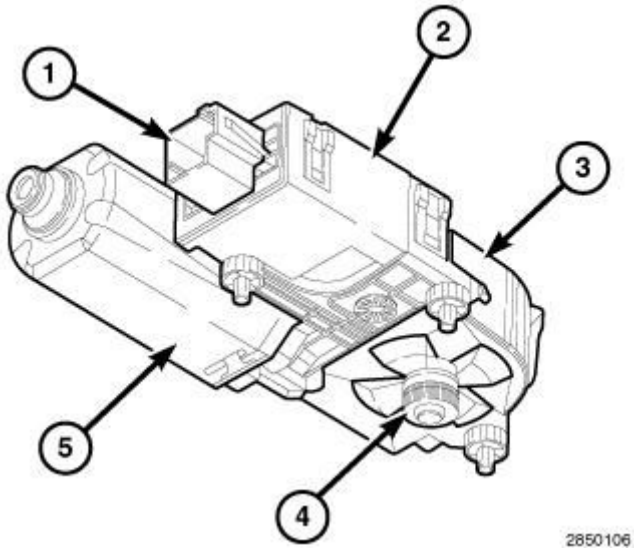

Fig. 336: Main Bearing Inserts
Courtesy of CHRYSLER GROUP, LLC

The upper main bearing shell (2) and lower main bearing shell (1) are marked with the bearing size (3) on the bearing lining surface. The upper and lower bearings are available in five different sizes and can be mixed on a journal in order to achieve the proper oil clearance.

Upper and lower main bearing shells are available in five sizes. The chart below identifies the five bearing sizes.

Bearing Marking	Size mm (in.)
1	2.4951 - 2.4987 mm (0.0982 - 0.0984 in.)
2	2.4915 - 2.4951 mm (0.0981 - 0.0982 in.)
3	2.4879 - 2.4915 mm (0.0979 - 0.0981 in.)
4	2.4843 - 2.4879 mm (0.0978 - 0.0979 in.)
5	2.4807 - 2.4843 mm (0.0977 - 0.0978 in.)

MAIN BEARING REPLACEMENT

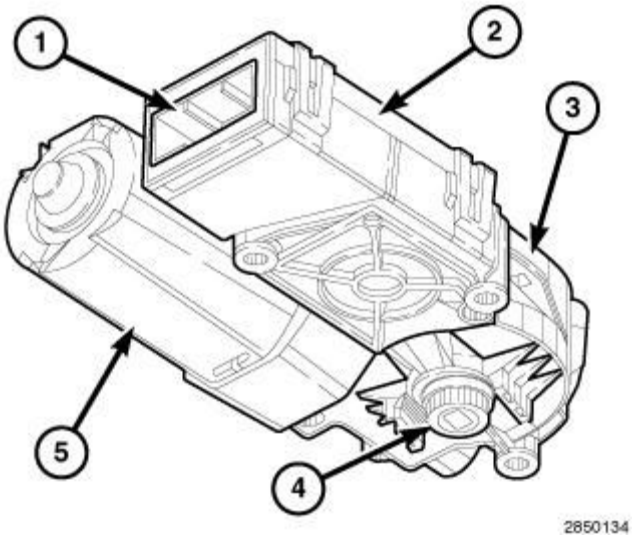

Fig. 337: Main Bearing Identification
Courtesy of CHRYSLER GROUP, LLC

The main bearings are serviced in-vehicle. They must be replaced one-at-a-time in order to properly support the crankshaft. The upper and lower main bearing shells are NOT interchangeable. The upper and lower main bearings are "select fit" to achieve proper oil clearances. Refer to **BEARING(S), CRANKSHAFT, STANDARD PROCEDURE** .

1. Disconnect and isolate the negative battery cable.

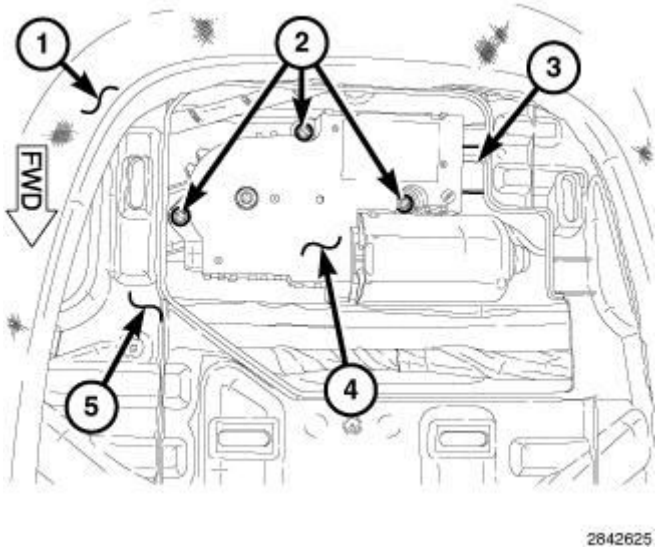

Fig. 338: Main Bearing Cap Bolts From Windage Tray Removal Sequence
Courtesy of CHRYSLER GROUP, LLC

2. Remove the oil pan, oil pump pick-up and engine oil pump. Refer to **PUMP, ENGINE OIL, REMOVAL**.
3. Remove the eight main bearing cap bolts from the windage tray in the sequence shown in illustration and

remove the windage tray (1).

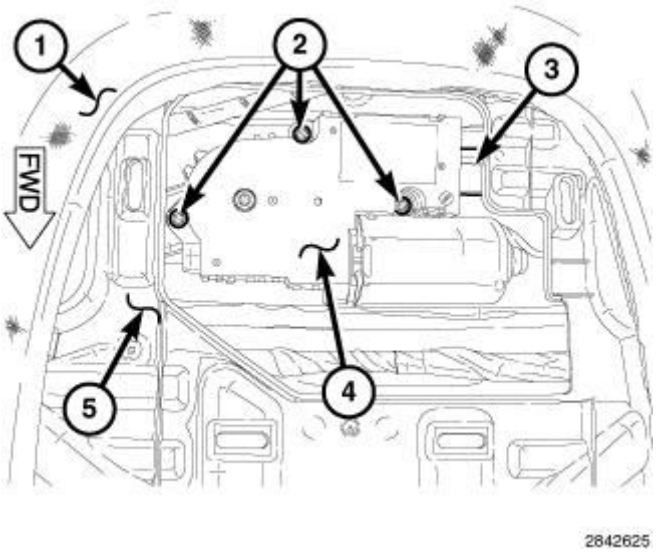

Fig. 339: Main Bearing Tie Bolts Removal Sequence
Courtesy of CHRYSLER GROUP, LLC

NOTE: Typical V6 engine configuration shown in illustration.

4. Remove the eight main bearing tie bolts in the sequence shown in illustration.

CAUTION: DO NOT use a number stamp or a punch to mark main bearing caps, as damage to main bearings could occur.

NOTE: Main bearing caps are not interchangeable and are marked to insure correct assembly.

5. Mark the main bearing cap positions using a permanent ink marker or a scribe tool.

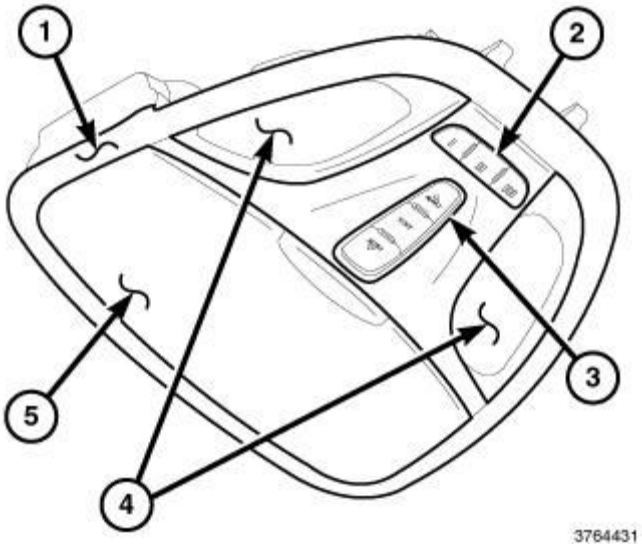

Fig. 340: Main Bearing Caps, Bolts, Crankshaft & Engine Block
Courtesy of CHRYSLER GROUP, LLC

NOTE: Typical V6 engine configuration shown in illustration.

CAUTION: Replace only one main bearing at a time while all other main bearing caps remain properly tightened. If all main bearing caps are removed, the weight of the unsupported crankshaft will damage the crankshaft oil seals.

NOTE: Replace the main bearings in the following order; 2, 3, 1, 4.

6. Remove the two cap bolts (2) and remove the main bearing cap (1).
7. When removing the No. 2 bearing cap, also remove the thrust washers (5).
8. Slide the upper main bearing half (6) out from between the crankshaft and the engine block.
9. Inspect the crankshaft and bearings for abnormal wear patterns, scoring, grooving, fatigue, pitting and for metal or other foreign material imbedded in the lining. Refer to **ENGINE BLOCK, INSPECTION** .
10. If required, check the crankshaft bearing clearances by the use of Plastigage or equivalent. Refer to **ENGINE BLOCK, INSPECTION** .
11. If required, select fit new main bearings to the engine block. Refer to **BEARING(S), CRANKSHAFT, STANDARD PROCEDURE** .
12. Lubricate the upper main bearing half (6) with clean engine oil and slide the bearing into position.

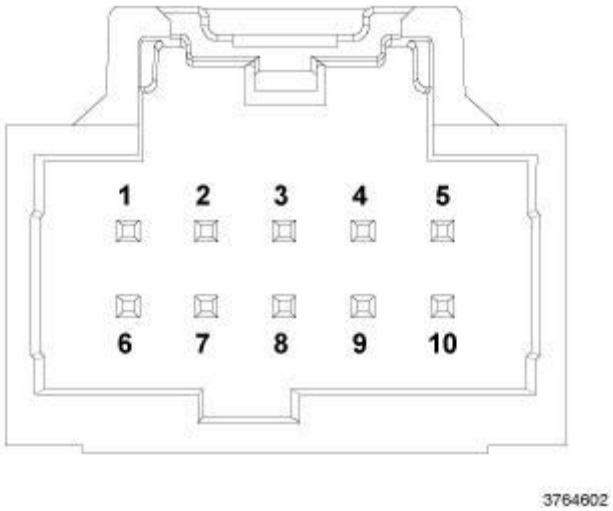

Fig. 341: Thrust Washer Installation
Courtesy of CHRYSLER GROUP, LLC

NOTE: Typical V6 engine configuration shown in illustration.

13. When installing the thrust washers (1) at the No. 2 main bearing location, use the following procedure:
    a. Move the crankshaft forward to the limit of travel. Lubricate and install the front thrust washer (1) by rolling the washer onto the machined shelf between the No. 2 upper main bulk head and crankshaft thrust surface.
    b. Move the crankshaft rearward to the limit of travel. Lubricate and install the rear thrust washer by rolling the washer onto the machined shelf between the No. 2 upper main bulk head and crankshaft thrust surface.

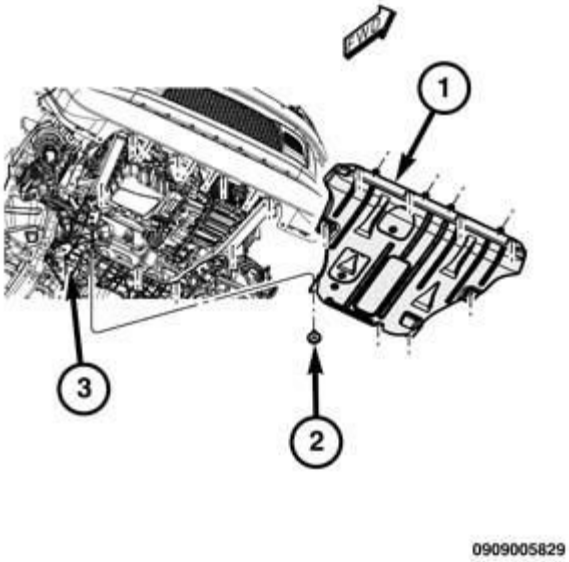

Fig. 342: Checking Cylinder Head Bolts For Stretching (Necking)
Courtesy of CHRYSLER GROUP, LLC

CAUTION: The main bearing cap bolts are tightened using a torque plus angle procedure. The bolts must be examined BEFORE reuse. If the threads are necked down the bolts must be replaced.

14. Check the main bearing cap bolts for necking by holding a scale or straight edge against all of the threads. If all of the threads do not contact the scale (2) the bolt must be replaced.

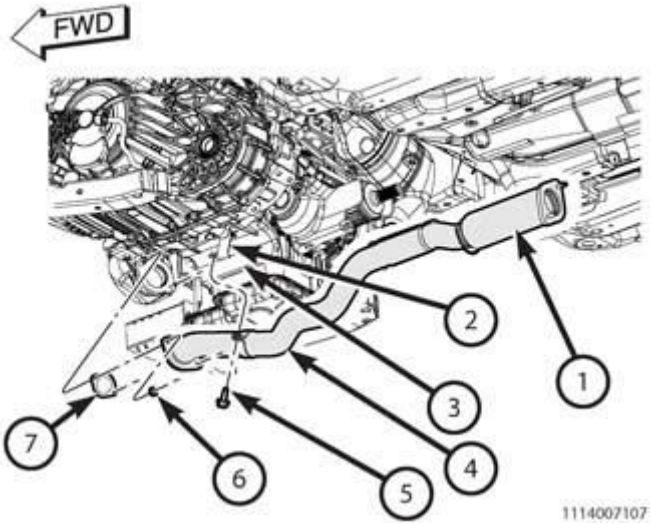

Fig. 343: Main Bearing Caps, Bolts, Crankshaft & Engine Block

Courtesy of CHRYSLER GROUP, LLC

NOTE: Typical V6 engine configuration shown in illustration.

15. Lubricate and install the lower bearing half (3) onto the main cap (1).
16. Install the main bearing cap (1) with two inner main bearing cap bolts (2). Tightened to the proper specification. Refer to **TORQUE SPECIFICATIONS** .
17. Repeat the previous steps for main bearings 3, 1 and 4.
18. Measure crankshaft end play. Refer to **CRANKSHAFT, STANDARD PROCEDURE** .

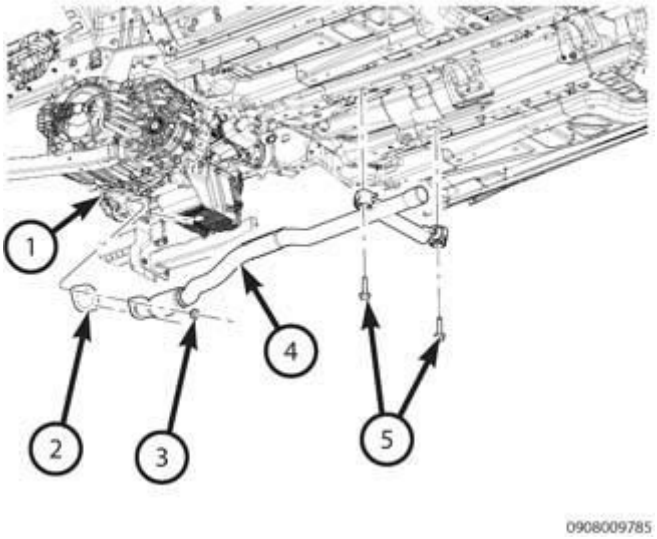

Fig. 344: Windage Tray With Main Bearing Cap Bolts Installation Sequence
Courtesy of CHRYSLER GROUP, LLC

19. Position the windage tray on to the engine block.
20. Install the windage tray with eight main bearing cap bolts. Tighten the bolts in the sequence shown in illustration to the proper specification. Refer to **TORQUE SPECIFICATIONS** .

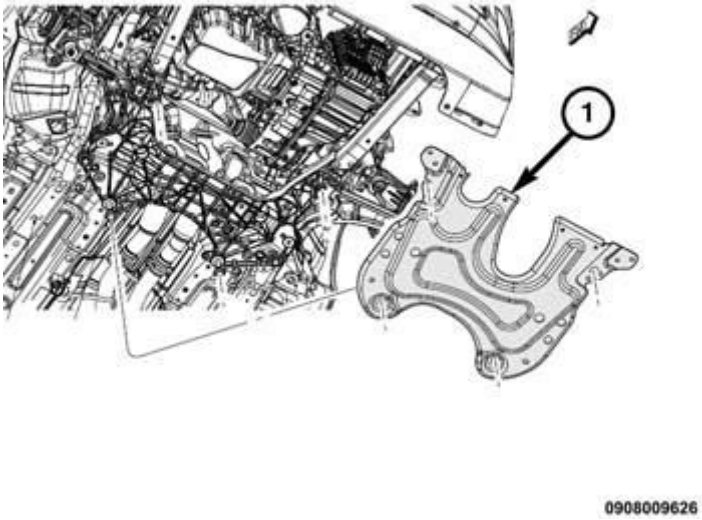

Fig. 345: Main Bearing Tie Bolts Installation Sequence
Courtesy of CHRYSLER GROUP, LLC

NOTE: Typical V6 engine configuration shown in illustration.

21. Install the eight main bearing tie bolts. Tighten the bolts in the sequence shown in illustration to the proper specification. Refer to **TORQUE SPECIFICATIONS** .
22. Install the engine oil pump, oil pump pick-up and oil pan. Refer to **PUMP, ENGINE OIL, INSTALLATION**.
23. Install the spark plugs and ignition coils. Refer to **SPARK PLUG, INSTALLATION** .
24. If removed, install the oil filter and fill the engine crankcase with the proper oil to the correct level. Refer to **OIL, STANDARD PROCEDURE** .
25. Connect the negative battery cable and tighten nut to the proper specification. Refer to **SPECIFICATIONS** .
26. Operate the engine until it reaches normal operating temperature.

CRANKSHAFT

DESCRIPTION

DESCRIPTION

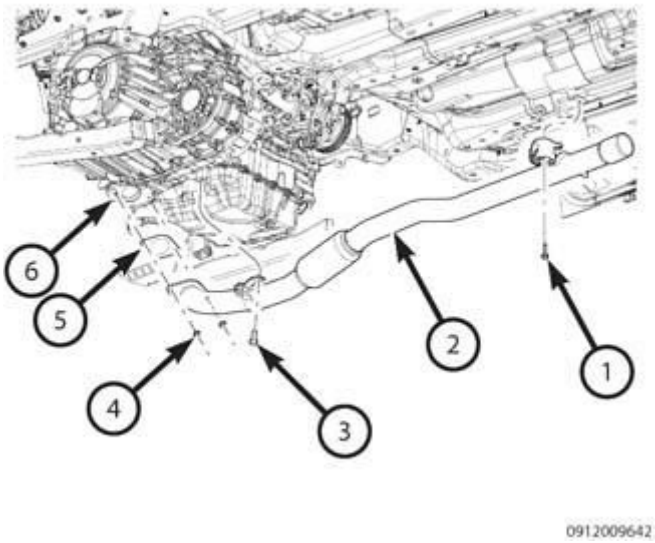

Fig. 346: Crankshaft
Courtesy of CHRYSLER GROUP, LLC

The crankshaft is a cast design and is constructed using ductile iron. The crankshaft is a three throw split pin design with counterweights for balancing purposes. The main journals are crossed drilled for rod bearing lubrication. The crankshaft is supported by four select fit main bearings with number 2 serving as the thrust washer location. The rear counterweight has provisions for crankshaft position sensor target wheel mounting. Both the front and rear seals are a single piece design and are mounted to the timing cover and cylinder block.

STANDARD PROCEDURE

STANDARD PROCEDURE - END PLAY

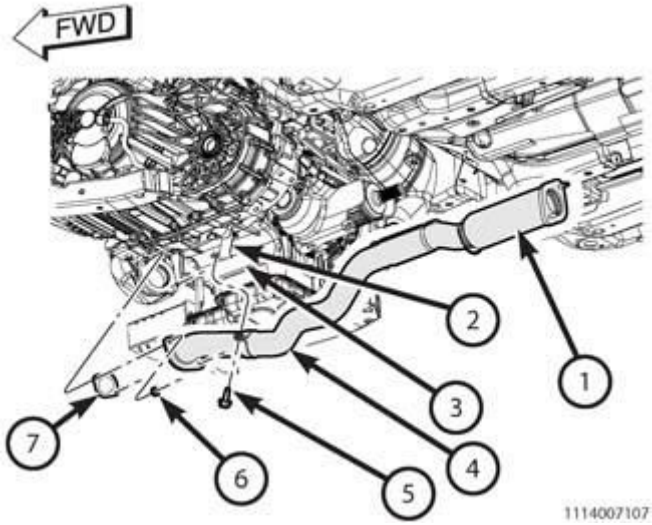

Fig. 347: Checking Crankshaft End Play
Courtesy of CHRYSLER GROUP, LLC

NOTE: Typical V6 engine shown in illustration.

1. Mount Dial Indicator Set (special tool #C-3339A, Set, Dial Indicator) to a stationary point at the front of the engine. Locate the probe perpendicular against the nose of the crankshaft.
2. Move the crankshaft all the way to the rear of its travel.
3. Zero the dial indicator.
4. Move the crankshaft forward to the limit of travel and read the dial indicator. Compare the measured end play to the specification. Refer to **ENGINE SPECIFICATIONS** .

NOTE: Crankshaft thrust washers are not selectable and are only available in a single thickness.

REMOVAL

REMOVAL

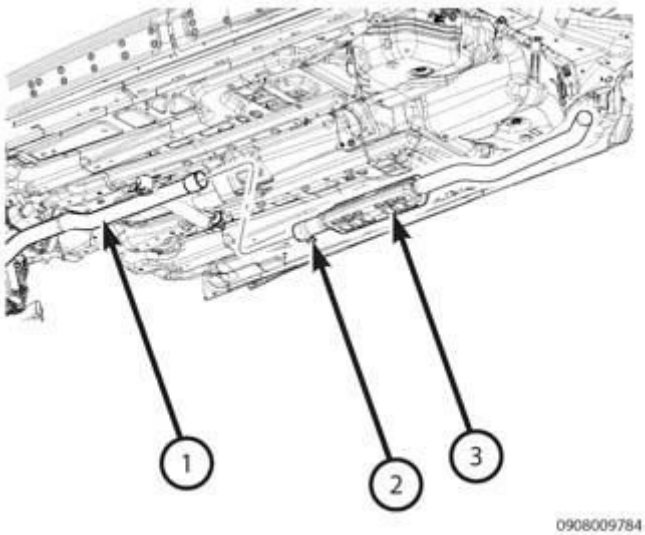

Fig. 348: Main Bearing Cap Bolts From Windage Tray Removal Sequence
Courtesy of CHRYSLER GROUP, LLC

NOTE: To remove the crankshaft from the engine, the engine must be removed from the vehicle.

1. Remove the engine. Refer to **REMOVAL**.
2. Remove the cylinder head covers, spark plugs, oil pan, engine timing cover, timing chain and sprockets. Refer to **CHAIN AND SPROCKETS, TIMING, REMOVAL**.
3. Remove the flexplate and the rear crankshaft oil seal. Refer to **SEAL, CRANKSHAFT OIL, REAR, REMOVAL**.
4. Remove the oil pump pick-up and engine oil pump. Refer to **PUMP, ENGINE OIL, REMOVAL**.
5. Remove the eight main bearing cap bolts from the windage tray in the sequence shown in illustration and

remove the windage tray (1).

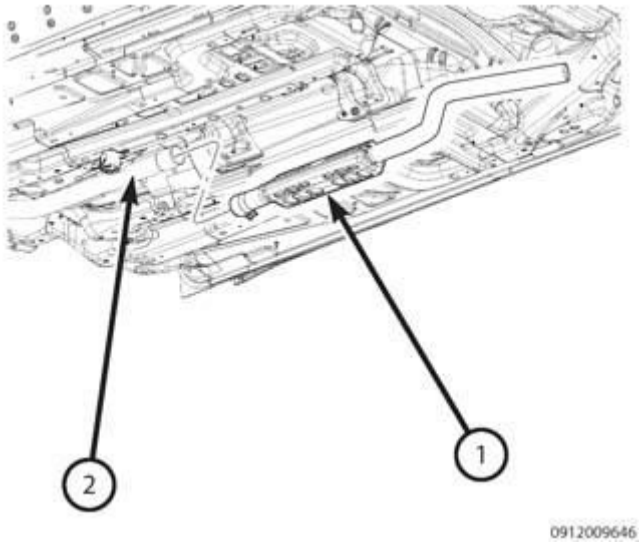

Fig. 349: Connecting Rod To Cylinder Identification
Courtesy of CHRYSLER GROUP, LLC

CAUTION: DO NOT use a number stamp or a punch to mark connecting rods or caps, as damage to connecting rods could occur

NOTE: Connecting rods and bearing caps are not interchangeable and should be marked before removing to ensure correct reassembly.

6. Mark connecting rod and bearing cap positions (1) using a permanent ink marker or scribe tool.

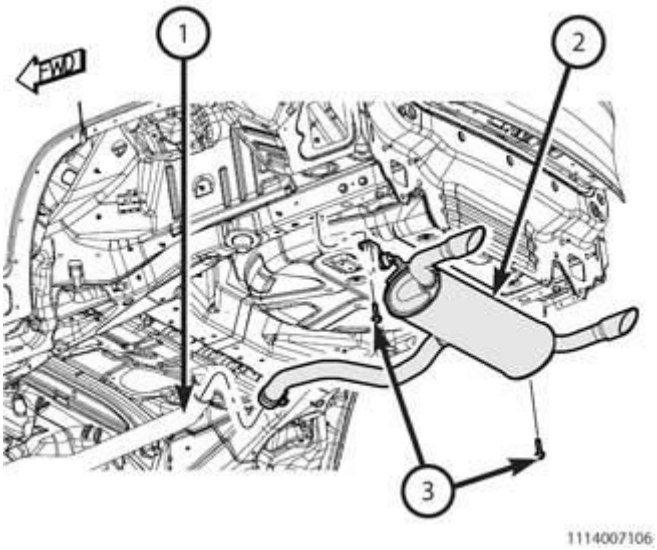

Fig. 350: Piston, Connecting Rod Cap, Bolts, Plastic Guide Plates & Guide Pins
Courtesy of CHRYSLER GROUP, LLC

NOTE: Typical V6 engine configuration shown in illustration.

CAUTION: Care must be taken not to damage the fractured rod and cap joint face surfaces, as engine damage may occur.

7. Remove the connecting rod cap bolts (5) and the connecting rod caps (4). Discard the cap bolts.
8. Remove the plastic guide plates (3) from the Guide Pins (special tool #8189, Guide Pins) (7) and install the Guide Pins to the connecting rod.

CAUTION: Care must be taken not to nick crankshaft journals, as engine damage may occur.

9. Push the connecting rod and piston into the cylinder until the connecting rod is clear of the crankshaft journal. Remove the guide pins. Repeat this procedure at each cylinder until all of the connecting rods are clear of the crankshaft.

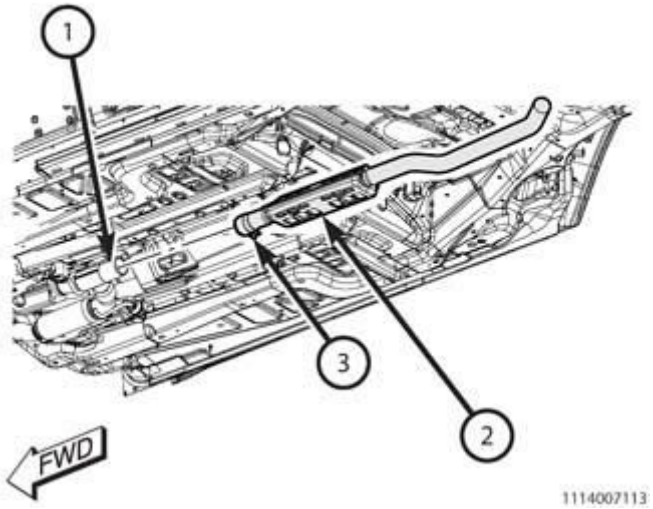

Fig. 351: Main Bearing Tie Bolts Removal Sequence
Courtesy of CHRYSLER GROUP, LLC

NOTE: Typical V6 engine configuration shown in illustration.

Remove the main bearing cross bolts in the sequence shown in illustration.

CAUTION: DO NOT use a number stamp or a punch to mark main bearing caps, as damage to main bearings could occur.

NOTE: Main bearing caps are not interchangeable and are marked to insure correct assembly.

10. Mark the main bearing cap positions using a permanent ink marker or a scribe tool.

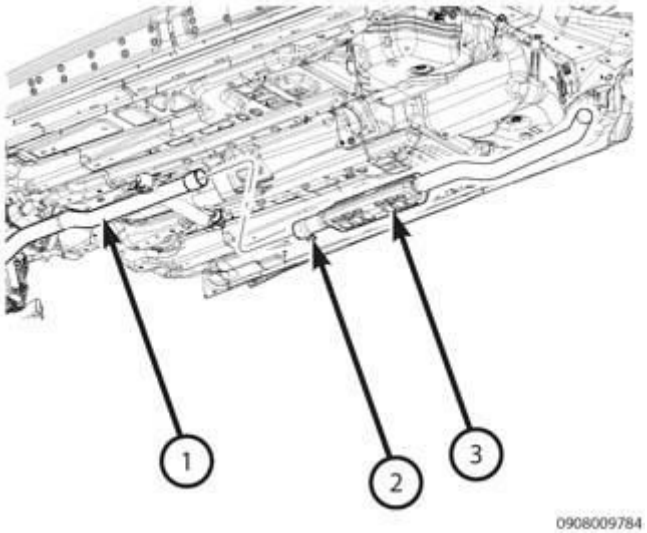

Fig. 352: Main Bearing Cap Bolts Removal Sequence
Courtesy of CHRYSLER GROUP, LLC

11. Remove the eight main bearing cap bolts in the sequence shown in illustration and remove the main bearing caps.

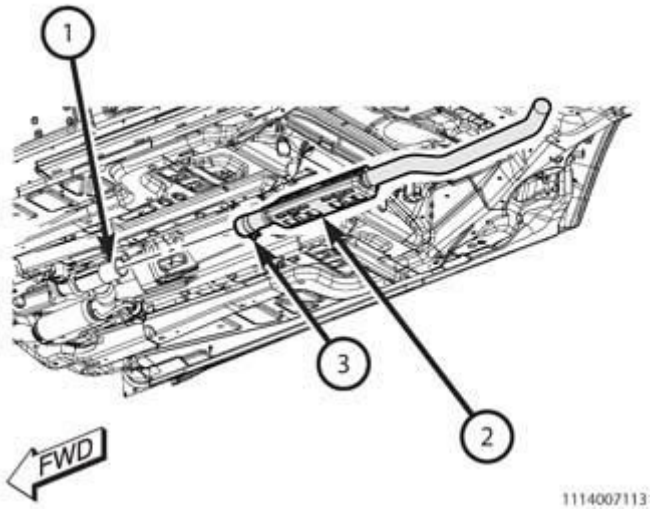

Fig. 353: Target Wheel & Bolts
Courtesy of CHRYSLER GROUP, LLC

CAUTION: Do not rest the crankshaft on the target wheel (1). Damaged or bent target wheel teeth will destroy the target wheels ability to correctly relay crankshaft position to the crankshaft position sensor.

12. Remove the crankshaft from the engine block.
13. If required, remove the four bolts (2) and the target wheel (1). Discard the four bolts.

INSPECTION

INSPECTION

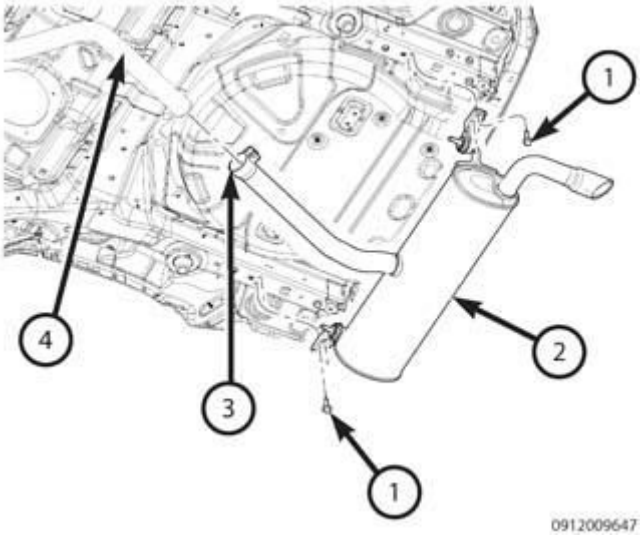

Fig. 354: Measuring Crankshaft Journal
Courtesy of CHRYSLER GROUP, LLC

NOTE: Typical crankshaft journal measurements shown in illustration.

1. Clean the oil off the bearing journals.
2. Determine the maximum diameter of the journals with a micrometer. Measure at two locations 90° apart at each end of the journals.
3. Compare the measured rod journal diameter to the crankshaft connecting rod bearing journal diameter grade marking chart. Refer to **BEARING(S), CONNECTING ROD, STANDARD PROCEDURE** . Select the bearing size that corresponds to the crankshaft markings for each rod bearing journal that will provide the proper oil clearance.
4. Compare the measured main bearing journal diameter to the crankshaft main bearing journal diameter grade marking chart. Refer to **BEARING(S), CRANKSHAFT, STANDARD PROCEDURE** . Obtain the main bearing journal grade identification marks from the engine block and select the upper and lower main bearing sizes that will provide the proper oil clearance.
5. For connecting rod journals, verify that the maximum taper and maximum out of round are within specifications. Refer to **ENGINE SPECIFICATIONS** .
6. For main bearing journals, verify that the maximum taper and maximum out of round are within specifications. Refer to **ENGINE SPECIFICATIONS** .

INSTALLATION

INSTALLATION

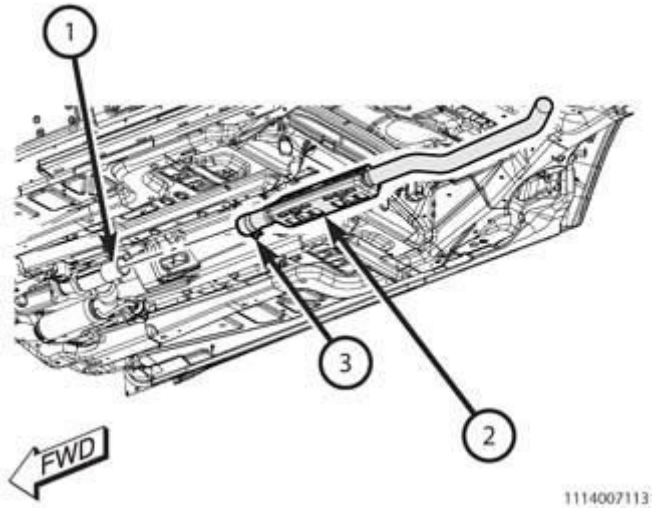

Fig. 355: Target Wheel & Bolts
Courtesy of CHRYSLER GROUP, LLC

1. If required, select and fit new crankshaft main bearings to the engine block. Refer to **BEARING(S), CRANKSHAFT, STANDARD PROCEDURE** .
2. If required, select and fit new bearings to the connecting rod. Refer to **BEARING(S), CONNECTING ROD, STANDARD PROCEDURE** .
3. If removed, install the target wheel (1) to the crankshaft with four new bolts (2). Ensure the threaded holes in the crankshaft are free of residual thread lock adhesive. Tighten the bolts to the proper specification. Refer to **TORQUE SPECIFICATIONS** .

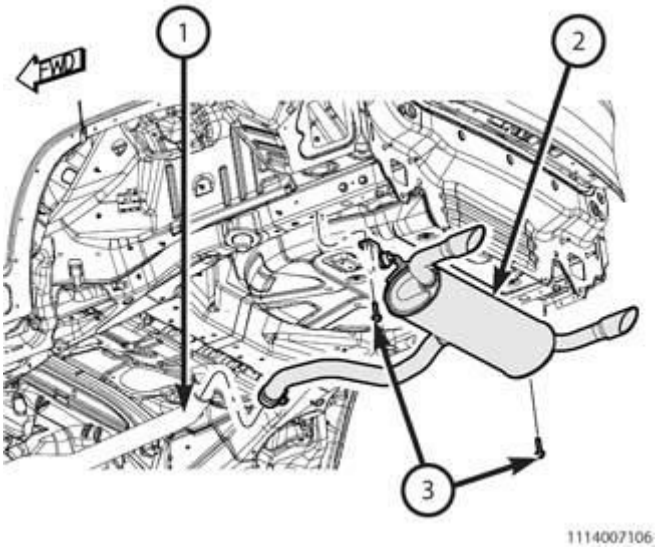

Fig. 356: Main Bearing Caps, Bolts, Crankshaft & Engine Block
Courtesy of CHRYSLER GROUP, LLC

NOTE: Typical V6 engine configuration shown in illustration.

4. If removed, lubricate and install the upper main bearing halves (6) into the engine block (7).

CAUTION: When installing the crankshaft, use care not to damage bearing surfaces on the crankshaft.

5. Install the crankshaft (4) into the engine block (7).

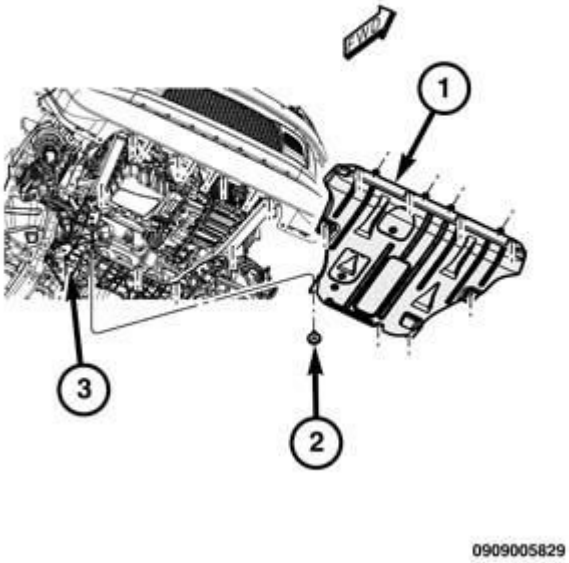

Fig. 357: Thrust Washer Installation
Courtesy of CHRYSLER GROUP, LLC

NOTE: Typical V6 engine configuration shown in illustration.

6. Installing thrust washers (1) at the No. 2 main bearing location, using the following procedure:
   a. Move the crankshaft forward to the limit of travel. Lubricate and install the front thrust washer (1) by rolling the washer onto the machined shelf between the No. 2 upper main bulk head and crankshaft thrust surface.
   b. Move the crankshaft rearward to the limit of travel. Lubricate and install the rear thrust washer by rolling the washer onto the machined shelf between the No. 2 upper main bulk head and crankshaft thrust surface.

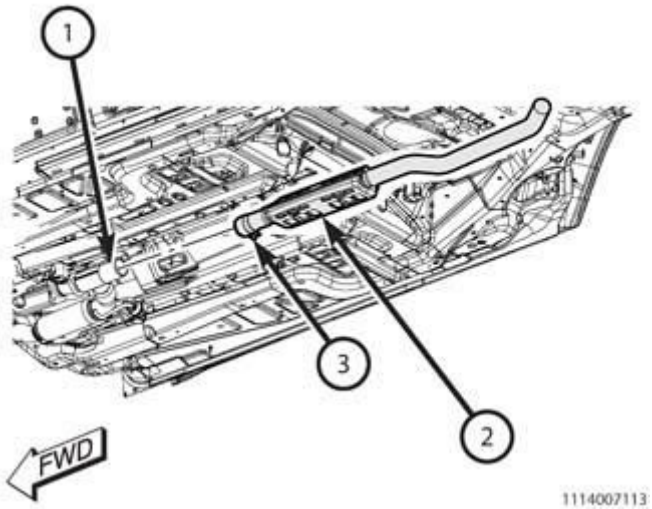

Fig. 358: Checking Cylinder Head Bolts For Stretching (Necking)
Courtesy of CHRYSLER GROUP, LLC

CAUTION: The main bearing cap bolts are tightened using a torque plus angle procedure. The bolts must be examined BEFORE reuse. If the threads are necked down the bolts must be replaced.

7. Check the main bearing cap bolts for necking by holding a scale or straight edge against the threads. If all the threads do not contact the scale (2) the bolt must be replaced.

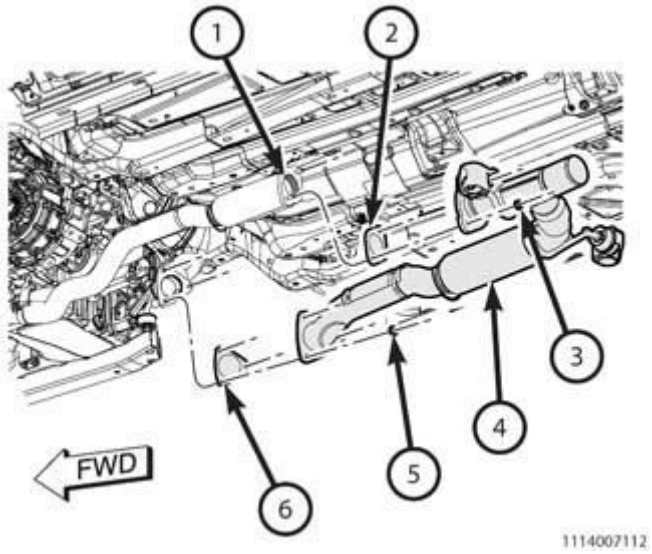

Fig. 359: Main Bearing Caps, Bolts, Crankshaft & Engine Block
Courtesy of CHRYSLER GROUP, LLC

NOTE: Typical V6 engine configuration shown in illustration.

8. If removed, lubricate and install the lower main bearing halves (3) onto the main caps (1).
9. Install the main bearing caps (1) with two inner main bearing cap bolts (2).

Fig. 360: Inner Main Bearing Cap Bolts Tightening Sequence
Courtesy of CHRYSLER GROUP, LLC

10. Tighten the inner main bearing cap bolts in the sequence shown in illustration to the proper specification. Refer to **TORQUE SPECIFICATIONS** .
11. Measure crankshaft end play. Refer to **CRANKSHAFT, STANDARD PROCEDURE** .

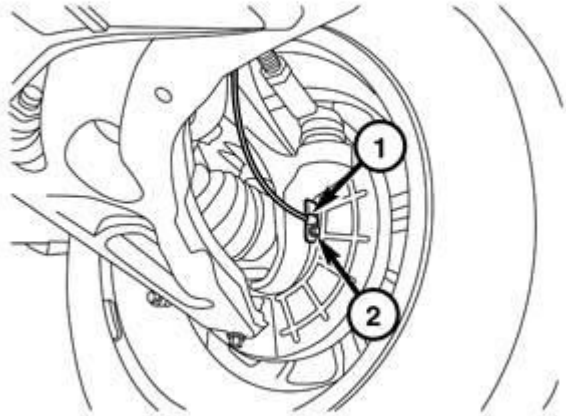

1715005813

Fig. 361: Piston, Connecting Rod Cap, Bolts, Plastic Guide Plates & Guide Pins
Courtesy of CHRYSLER GROUP, LLC

NOTE: Typical V6 engine configuration shown in illustration.

12. If removed, install the bearing shell (8) on the connecting rod with the tang inserted into the machined groove in the rod. Lubricate the bearing surface with clean engine oil.
13. Remove the plastic guide plates (3) from the Guide Pins (special tool #8189, Guide Pins) (7) and install the Guide Pins to the connecting rod.

CAUTION: Care must be taken not to nick crankshaft journals, as engine damage may occur.

14. Pull the connecting rod and piston toward the crankshaft until the connecting rod is seated on the crankshaft journal. Remove the guide pins.

CAUTION: The connecting rod bolts must not be reused. Always replace the connecting rod bolts whenever they are loosened or removed.

15. If removed, install the bearing shell (6) on the connecting rod cap (4) with the tang inserted into the machined groove in the cap. Lubricate the bearing surface with clean engine oil.

NOTE: Do not lubricate the threads of the connecting rod cap bolts (5).

16. Install the connecting rod cap and bearing with the tang on the same side as the rod. Tighten the **NEW** connecting rod cap bolts (5) to the proper specification. Refer to **TORQUE SPECIFICATIONS** .
17.
18. If required, check the connecting rod side clearance. Refer to **ROD, PISTON AND CONNECTING, STANDARD PROCEDURE** .
19. Repeat the previous steps for the remaining connecting rods.

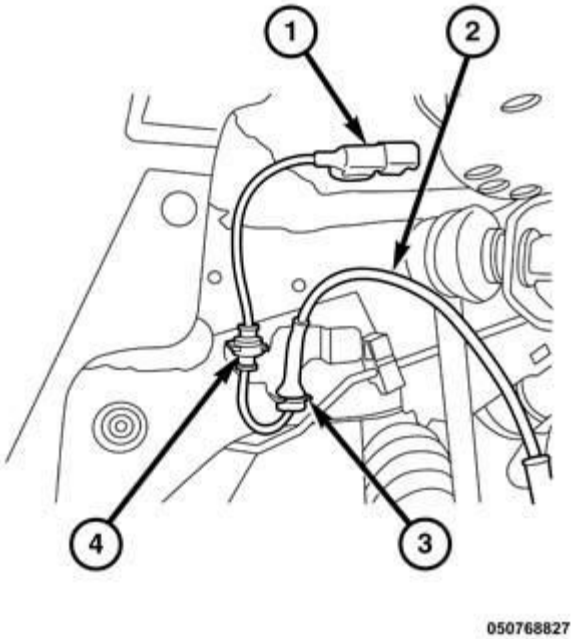

Fig. 362: Windage Tray With Main Bearing Cap Bolts Installation Sequence
Courtesy of CHRYSLER GROUP, LLC

20. Install the windage tray (1) with eight main bearing cap bolts. Tighten the bolts in the sequence shown in illustration to the proper specification. Refer to **TORQUE SPECIFICATIONS** .

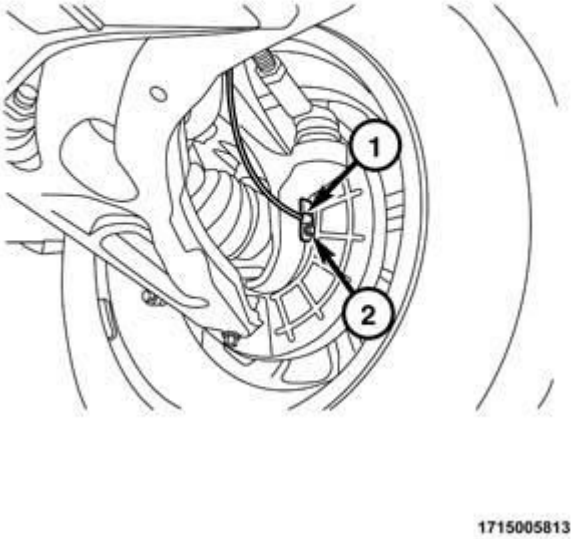

Fig. 363: Main Bearing Tie Bolts Installation Sequence
Courtesy of CHRYSLER GROUP, LLC

NOTE: Typical V6 engine configuration shown in illustration.

21. Install the eight main bearing tie bolts. Tighten the bolts in the sequence shown in illustration to the proper specification. Refer to **TORQUE SPECIFICATIONS** .
22. Install the engine oil pump and oil pump pick-up. Refer to **PUMP, ENGINE OIL, INSTALLATION**.
23. Install the rear crankshaft oil seal and flexplate. Refer to **SEAL, CRANKSHAFT OIL, REAR, INSTALLATION**.
24. Install the timing chain and sprockets, engine timing cover, oil pans, spark plugs and cylinder head covers. Refer to **CHAIN AND SPROCKETS, TIMING, INSTALLATION**.
25. Install the engine. Refer to **INSTALLATION**.
26. If removed, install the oil filter and fill the engine crankcase with the proper oil to the correct level. Refer to **OIL, STANDARD PROCEDURE** .
27. Connect the negative battery cable and tighten nut to the proper specification. Refer to **SPECIFICATIONS** .
28. Fill the cooling system. Refer to **STANDARD PROCEDURE** .
29. Operate the engine until it reaches normal operating temperature. Check cooling system for correct fluid level. Refer to **STANDARD PROCEDURE** .

NOTE: The Cam/Crank Variation Relearn procedure must be performed using the scan tool anytime there has been a repair/replacement made to a powertrain system, for example: flywheel, valvetrain, camshaft and/or crankshaft sensors or components.

DAMPER, VIBRATION

REMOVAL

REMOVAL

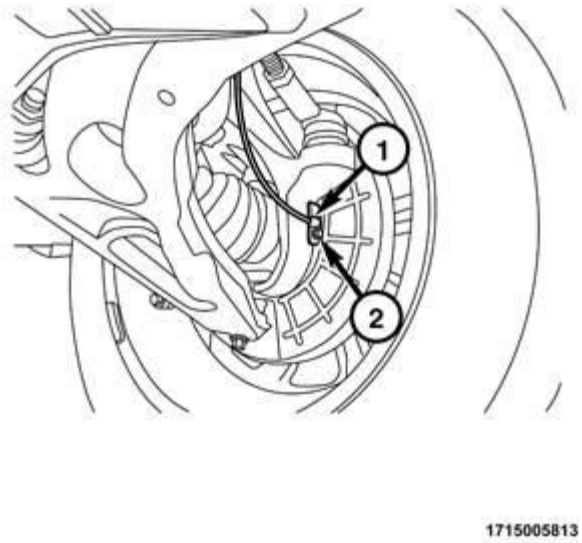

Fig. 364: Crankshaft Vibration Damper & Vibration Damper Holder
Courtesy of CHRYSLER GROUP, LLC

1. Remove the accessory drive belt. Refer to **BELT, SERPENTINE, REMOVAL** .

NOTE: **A force greater than 350 N.m (260 ft. lbs.) may be required to remove the crankshaft vibration damper bolt.**

2. Hold the crankshaft vibration damper (1) with Vibration Damper Holder (special tool #10198, Holder, Vibration Damper) (2) and remove the crankshaft vibration damper bolt.
3. Pull the crankshaft vibration damper (1) off of the crankshaft.

INSTALLATION

INSTALLATION

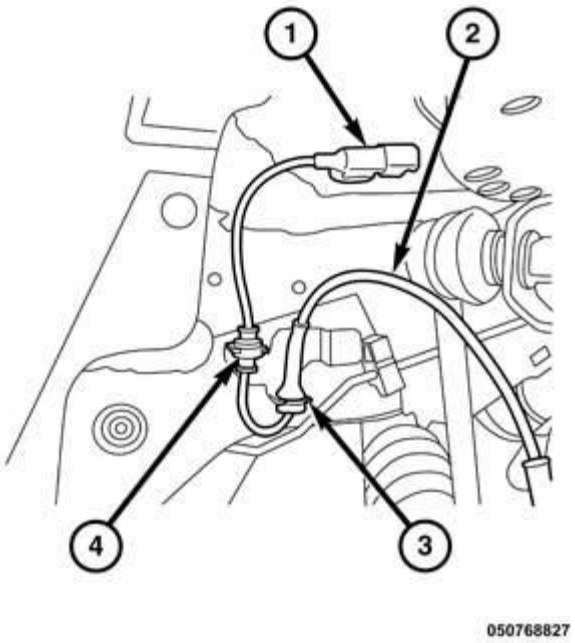

Fig. 365: Front Crankshaft Seal Surface
Courtesy of CHRYSLER GROUP, LLC

1. Apply a light coating of engine oil to the front crankshaft seal surface (1).

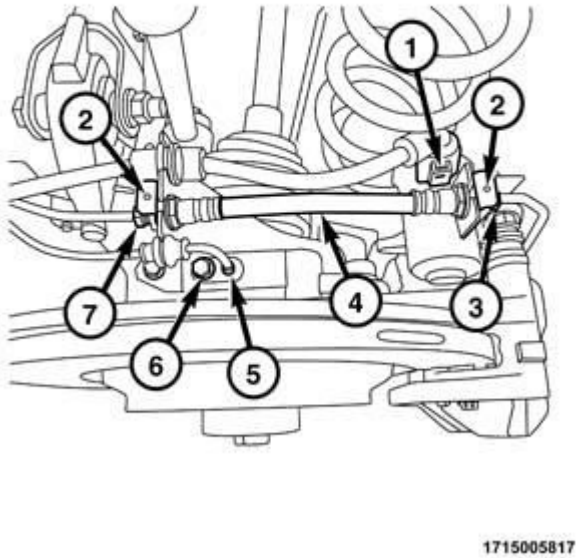

Fig. 366: Crankshaft Vibration Damper & Bolt
Courtesy of CHRYSLER GROUP, LLC

2. Align the crankshaft vibration damper (1) to the flywheel key on the crankshaft and install the damper. Seat the damper on the crankshaft sprocket.
3. Install and hand tighten the crankshaft vibration damper bolt (2).

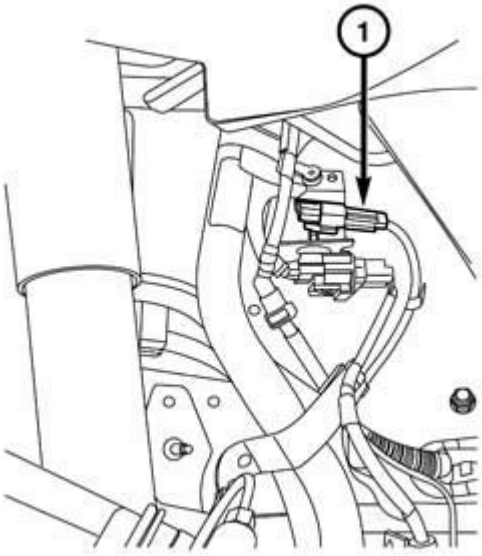

1715005822

Fig. 367: Crankshaft Vibration Damper & Vibration Damper Holder
Courtesy of CHRYSLER GROUP, LLC

4. Hold the crankshaft vibration damper (1) with Vibration Damper Holder (special tool #10198, Holder, Vibration Damper) (2) and tighten the crankshaft vibration damper bolt to the proper specification. Refer to **TORQUE SPECIFICATIONS** .
5. Install the accessory drive belt. Refer to **BELT, SERPENTINE, INSTALLATION** .

FLEXPLATE

REMOVAL

REMOVAL

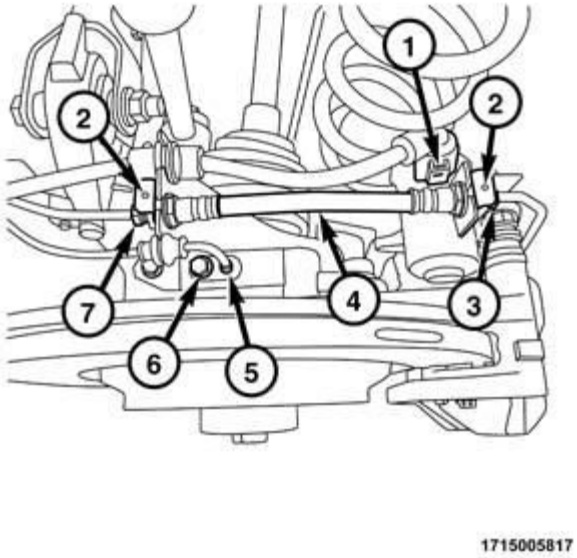

Fig. 368: Flexplate, Spacer Plate & Bolts
Courtesy of CHRYSLER GROUP, LLC

1. Remove the transmission. Refer to **REMOVAL** .
2. Remove the bolts (1) that secure the flexplate to the crankshaft.
3. Remove the flexplate (3).

INSTALLATION

INSTALLATION

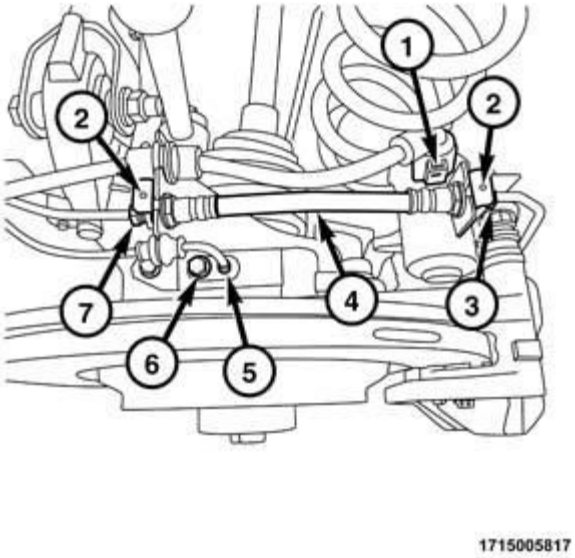

Fig. 369: Flexplate, Spacer Plate & Bolts
Courtesy of CHRYSLER GROUP, LLC

1. Position the flexplate (3) onto the crankshaft.
2. Install the bolts (1) hand tight.
3. Tighten the flexplate retaining bolts to the proper specification in a criss-cross pattern. Refer to **TORQUE SPECIFICATIONS** .
4. Install the transmission. Refer to **INSTALLATION** .

RING(S), PISTON

STANDARD PROCEDURE

STANDARD PROCEDURE-PISTON RING FITTING

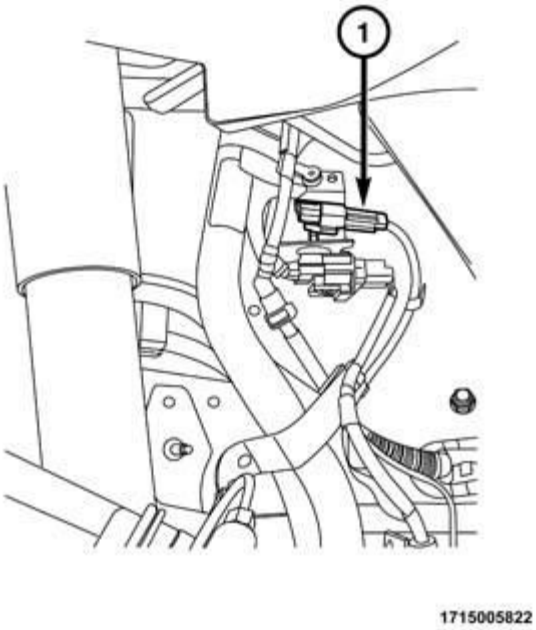

Fig. 370: Measuring Piston Ring End Gap
Courtesy of CHRYSLER GROUP, LLC

1. Wipe the cylinder bore clean.
2. Using a piston, to ensure that the ring is squared in the cylinder bore, slide the ring downward into the cylinder to a position 12 mm (0.50 in.) from the bottom of the cylinder bore.
3. Using a feeler gauge (1), check the ring end gap. Replace any rings not within specification.

Ring Position	Ring End Gap
No. 1 (top) Ring	0.22 - 0.37 mm (0.009 - 0.015 in.)
No. 2 (center) Ring	0.27 - 0.42 mm (0.011 - 0.017 in.)
Oil Control Ring (Steel Rail)	0.15 - 0.66 mm (0.006- 0.26 in.)

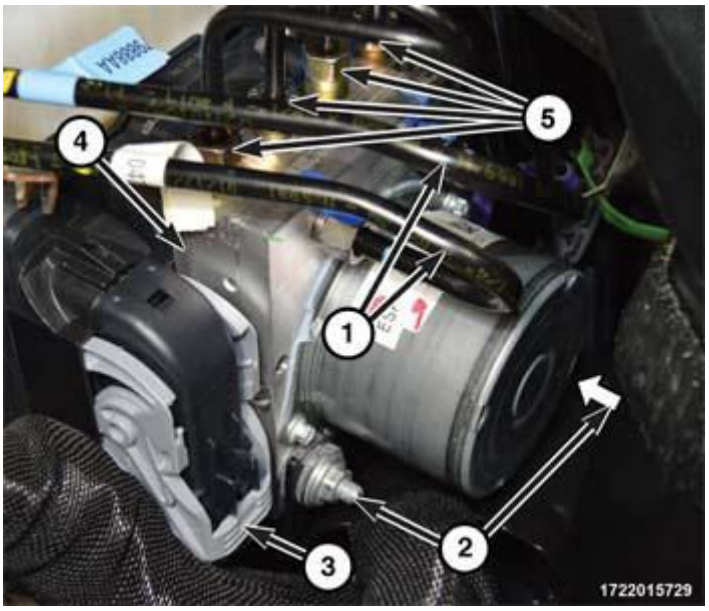

Fig. 371: Checking Piston Ring Grooves Clearances
Courtesy of CHRYSLER GROUP, LLC

4. Clean the piston ring grooves. Remove any nicks or burrs.
5. Measure the ring side clearance as shown in illustration. Make sure the feeler gauge (1) fits snugly between the ring land and the ring. Replace any ring not within specification.

Ring Position	Ring Side Clearance
No. 1 (top) Ring	0.025 - 0.033 mm (0.0010 - 0.0013 in.)
No. 2 (center) Ring	0.030 - 0.078 mm (0.0012 - 0.0031 in.)
Oil Control Ring (Steel Rails)	0.007 - 0.173 mm (.0003 - 0.0068 in.)

REMOVAL

REMOVAL

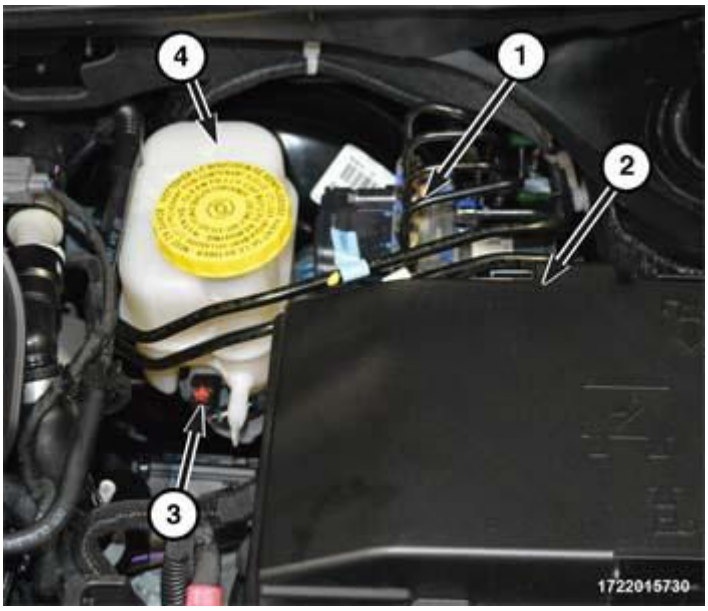

Fig. 372: Piston Ring Removal/Installation Sequence
Courtesy of CHRYSLER GROUP, LLC

NOTE: Typical piston shown in illustration.

1. Remove the piston and connecting rod(s). Refer to **ROD, PISTON AND CONNECTING, REMOVAL**.

CAUTION: To avoid damage to the piston rings, they must be removed in the following order:

- **No. 1 (upper) piston ring (1)**
- **No. 2 (intermediate) piston ring (2)**
- **Oil ring upper side rail (3)**
- **Oil ring lower side rail (4)**
- **Oil ring expander (5)**

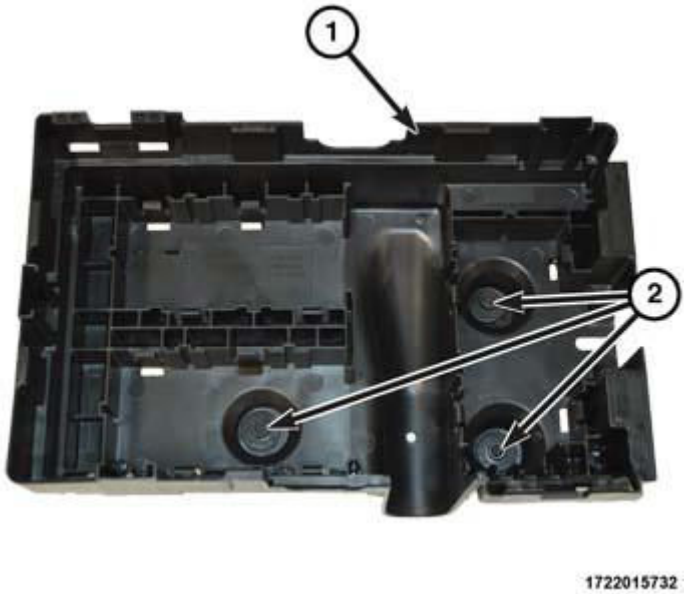

Fig. 373: Removing/Installing Upper & Intermediate Rings
Courtesy of CHRYSLER GROUP, LLC

NOTE: Typical piston shown in illustration.

2. Remove the No. 1 (upper) piston ring using a ring expander tool.
3. Remove the No. 2 (intermediate) piston ring using a ring expander tool.

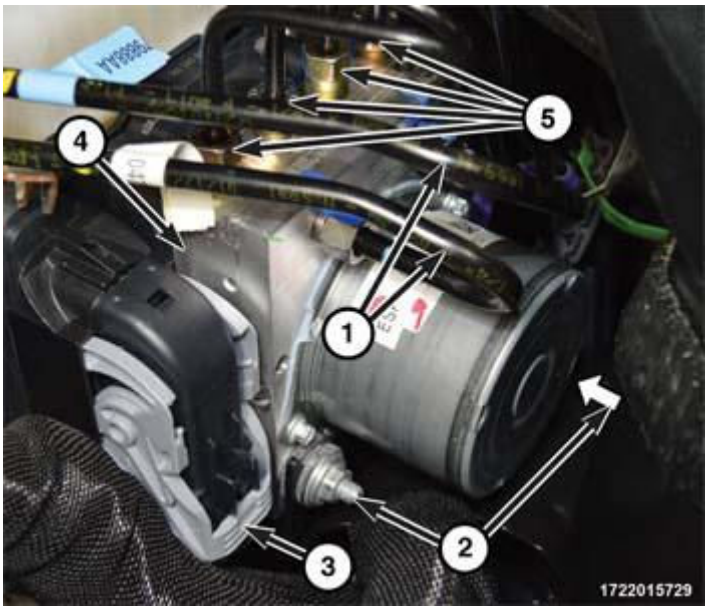

Fig. 374: Removing/Installing Piston Ring Side Rail
Courtesy of CHRYSLER GROUP, LLC

NOTE: Typical piston shown in illustration. Do not use a piston ring expander to

remove the oil ring side rails.

4. Remove the oil ring upper side rail.
5. Remove the oil ring lower side rail.
6. Remove the oil ring expander (1).

INSTALLATION

INSTALLATION

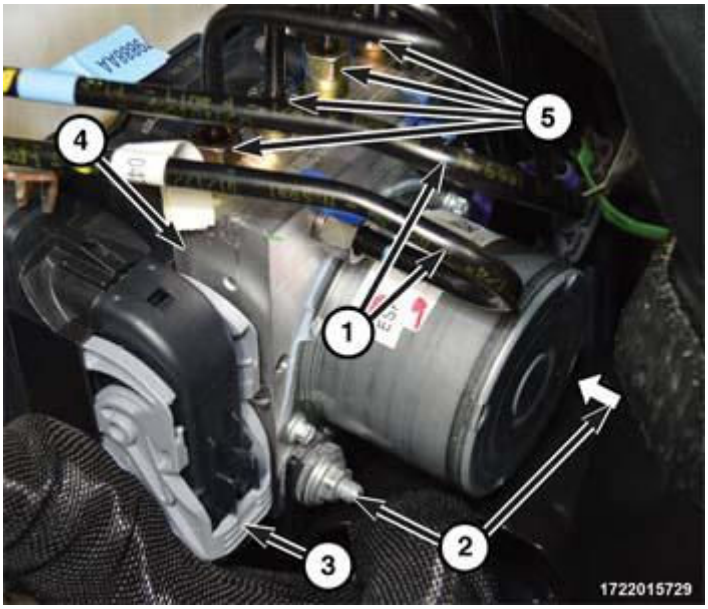

Fig. 375: Piston Ring Removal/Installation Sequence
Courtesy of CHRYSLER GROUP, LLC

NOTE: Typical piston shown in illustration.

1. If required, fit new rings to the piston. Refer to **RING(S), PISTON, STANDARD PROCEDURE** .

CAUTION: To avoid damage to the piston rings, they must be installed in the following order:

- **Oil ring expander (5)**
- **Oil ring lower side rail (4)**
- **Oil ring upper side rail (3)**
- **No. 2 (intermediate) piston ring (2)**
- **No. 1 (upper) piston ring (1)**

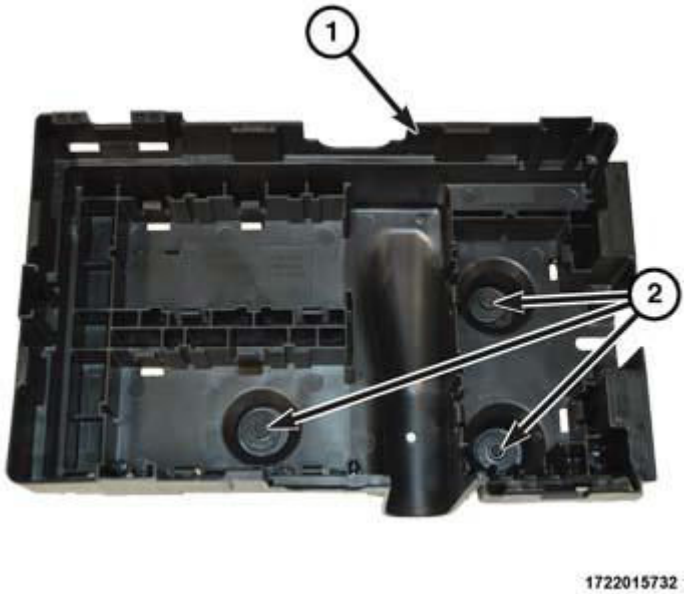

Fig. 376: Removing/Installing Piston Ring Side Rail
Courtesy of CHRYSLER GROUP, LLC

NOTE: Typical piston shown in illustration. Do not use a piston ring expander to install the oil ring side rails.

2. Install the oil ring expander (1).
3. Install the oil ring lower side rail by placing one end between the piston ring groove and the oil ring expander. Hold this end firmly and press down the portion to be installed until the side rail is in position.
4. Install the oil ring upper side rail in the same manner as the lower side rail.

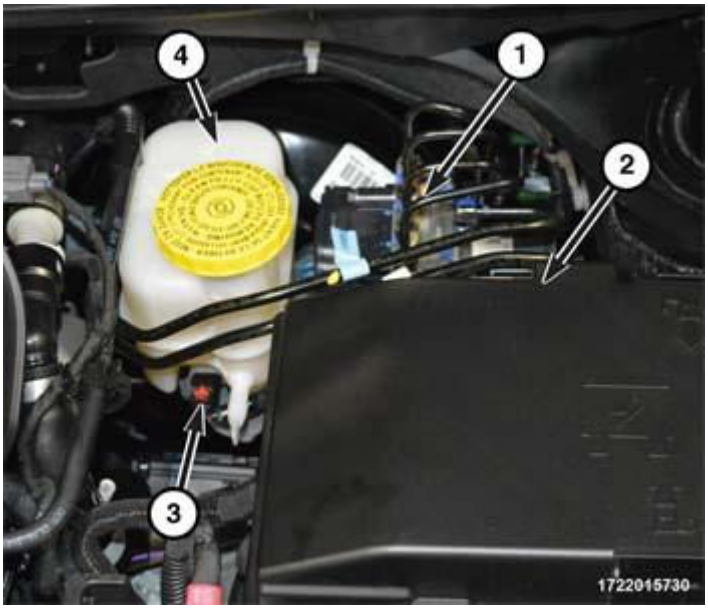

Fig. 377: Dot Marks On Piston Rings

Courtesy of CHRYSLER GROUP, LLC

NOTE: The No. 1 (upper) piston ring (1) and No. 2 (intermediate) piston ring (3) have a different cross section. Install the rings with manufacturers I.D. mark (dot) (2) facing up, towards the top of the piston.

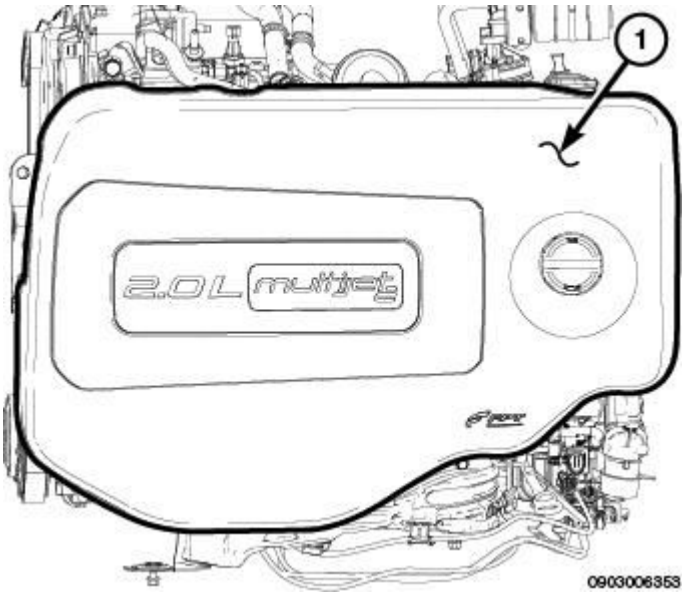

Fig. 378: Removing/Installing Upper & Intermediate Rings
Courtesy of CHRYSLER GROUP, LLC

NOTE: Typical piston shown in illustration.

5. Install the No. 2 (intermediate) piston ring using a ring expander tool.
6. Install the No. 1 (upper) piston ring using a ring expander tool.
7. Rotate the rings around the piston, the rings must rotate in the grooves with out binding.

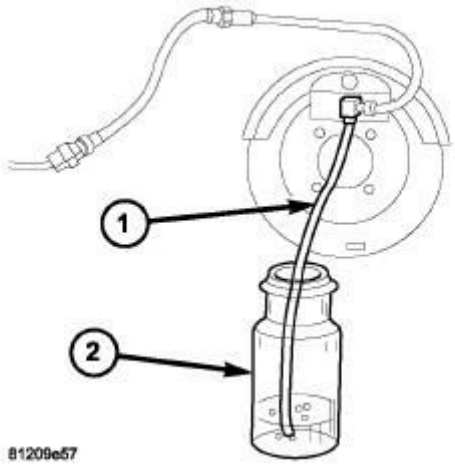

Fig. 379: Piston Ring End Gap Position
Courtesy of CHRYSLER GROUP, LLC

8. Position the piston ring end gaps as follows:
   - Oil ring expander gap (5)
   - Oil ring lower side rail end gap (4)
   - Oil ring upper side rail end gap (1)
   - No. 2 (intermediate) ring end gap (5)
   - No. 1 (upper) ring end gap (2)
9. Install the piston and connecting rod(s). Refer to **ROD, PISTON AND CONNECTING, INSTALLATION**.

ROD, PISTON AND CONNECTING

DESCRIPTION

DESCRIPTION

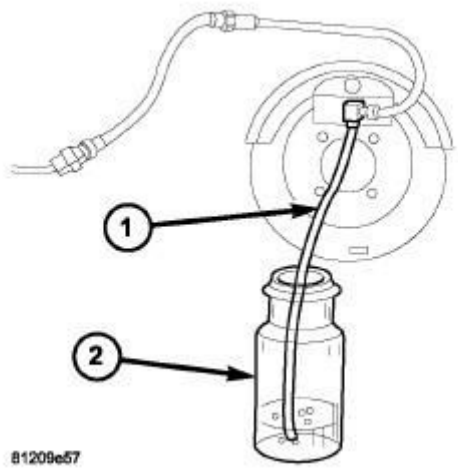

Fig. 380: Piston & Connecting Rod
Courtesy of CHRYSLER GROUP, LLC

CAUTION: Do not use a metal stamp to mark connecting rods as damage may result, instead use ink or a scratch awl.

The pistons are a lightweight design with ultra low tension piston rings for improved fuel economy. The pistons are made of a high strength aluminum alloy and the piston skirt has a Moly® coating. The top piston ring land has an anodized coating for improved wear. The piston is connected to the rod using a full floating pin with two locking clips. The connecting rod is forged steel with a bolted cracked cap design. The connecting rod bolts are not reusable. Pistons are available in two different diameters with grade markings for each bore indicated on the side of the cylinder block. The upper compression ring is a 1.2 mm steel ring with a spray coating. The intermediate compression ring is 1.2 mm micro Napier design. Both compression rings have a dot or a mark on

the piston ring. The marked side of the ring must face the top of the piston. The 2 mm three piece oil control ring is very thin. These are chrome plated rings and have a stainless steel expander.

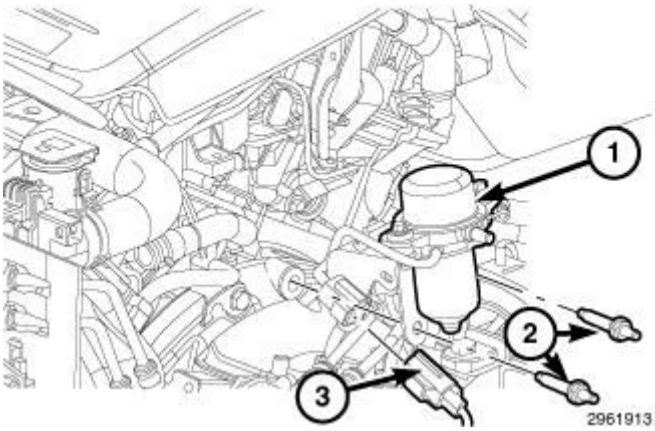

Fig. 381: Piston Components
Courtesy of CHRYSLER GROUP, LLC

- 1 - Head
- 2 - Valve Relief
- 3 - Upper or Top Land
- 4 - Second Land
- 5 - Third Land
- 6 - Moly® Coating
- 7 - Wrist Pin
- 8 - Locking Ring
- 9 - Skirt
- 10 - Oil Ring
- 11 - Secondary Compression Ring
- 12 - Top Compressor Ring

STANDARD PROCEDURE

PISTON FITTING

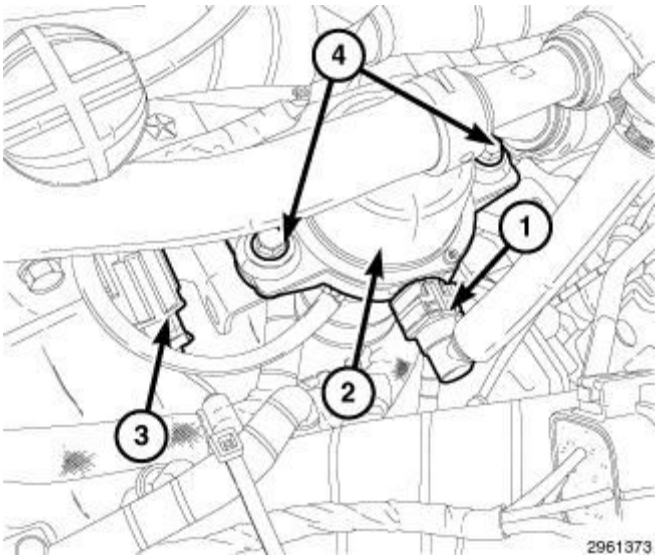

Fig. 382: Engine Block Main Bearing Journal Diameter Grade Markings
Courtesy of CHRYSLER GROUP, LLC

The pistons are "select fit" to achieve proper oil clearance. Engine block cylinder bore diameter grade markings (1) are stamped into the left side of the engine block. These marks are read from left to right, corresponding with cylinder number 1, 2, 3, 4, 5, 6.

Engine block cylinder bore diameter grade markings correspond to specific cylinder bore diameters. The chart below identifies the two engine block grade markings and their associated cylinder bore diameters.

Engine Block Marking	Cylinder Bore Size mm (in.)
1	90.995 ± 0.005 mm (3.58248 ± 0.0002 in.)
2	91.005 ± 0.005 mm (3.58287 ± 0.0002 in.)

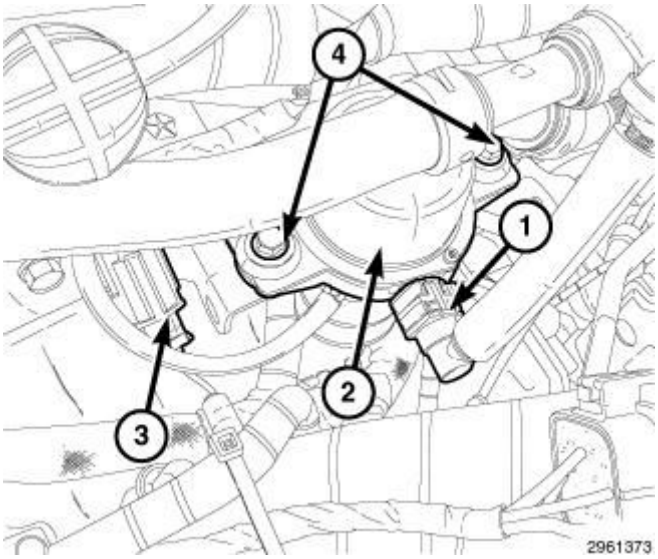

Fig. 383: Piston Markings

Courtesy of CHRYSLER GROUP, LLC

The piston is marked with the piston size (1) on the piston crown. The pistons are available in two different sizes in order to achieve the desired oil clearance. Select the piston size that corresponds to the engine block cylinder bore diameter grade markings for each cylinder.

The chart below identifies the two piston sizes.

Piston Marking	Size mm (in.)	
	Metal to Metal	Metal to Coating
1	90.995 ± 0.005 mm (3.7793 ± 0.0002 in.)	90.970 - 91.000 mm (3.7783 - 3.7795 in.)
2	90.965 ± 0.005 mm (3.7781 ± 0.0002 in.)	90.980 - 91.010 mm (3.7787 - 3.7835 in.)

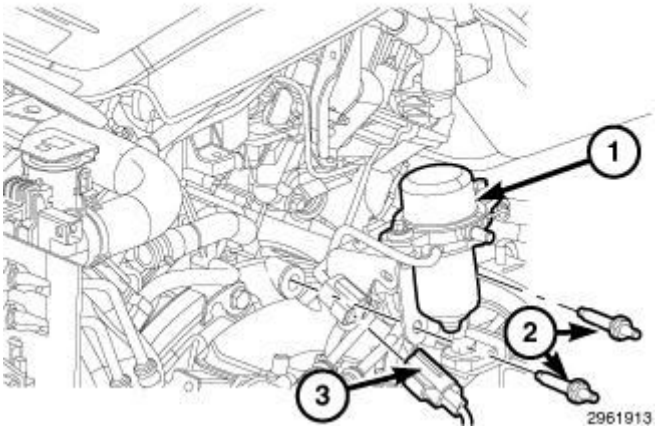

Fig. 384: Piston Components
Courtesy of CHRYSLER GROUP, LLC

NOTE: Typical coated piston shown in illustration.

The coated pistons are serviced with the piston pin and connecting rod pre-assembled. The coating material (6) is applied to the piston after the final piston machining process. Piston installation into the cylinder bore requires slightly more pressure than that required for non-coated pistons. The bonded coating on the piston will give the appearance of a line-to-line fit with the cylinder bore.

CONNECTING ROD SIDE CLEARANCE

DIAL INDICATOR

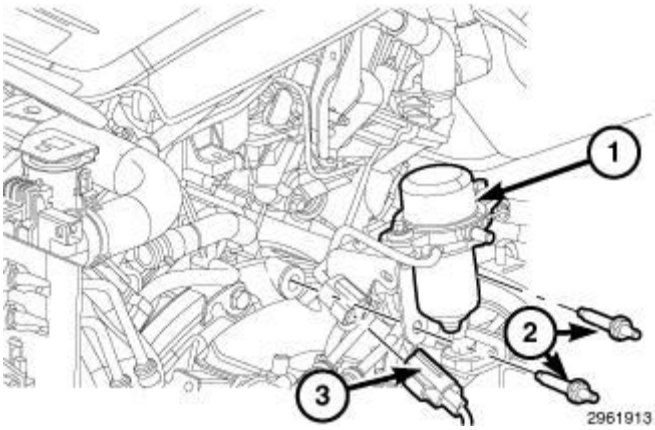

Fig. 385: Measuring Connecting Rod Side Clearance
Courtesy of CHRYSLER GROUP, LLC

1. Mount Dial Indicator Set (special tool #C-3339A, Set, Dial Indicator) to a stationary point on the engine. Locate the probe perpendicular to and resting against the connecting rod cap being checked.
2. Move the connecting rod all the way to the rear of its travel.
3. Zero the dial indicator.
4. Move the connecting rod forward to the limit of travel and read the dial indicator. Compare the measured side clearance to the proper specification. Refer to **ENGINE SPECIFICATIONS** .
5. Repeat this procedure for each connecting rod. Rotate the crankshaft for connecting rod accessibility.

FEELER GAUGE

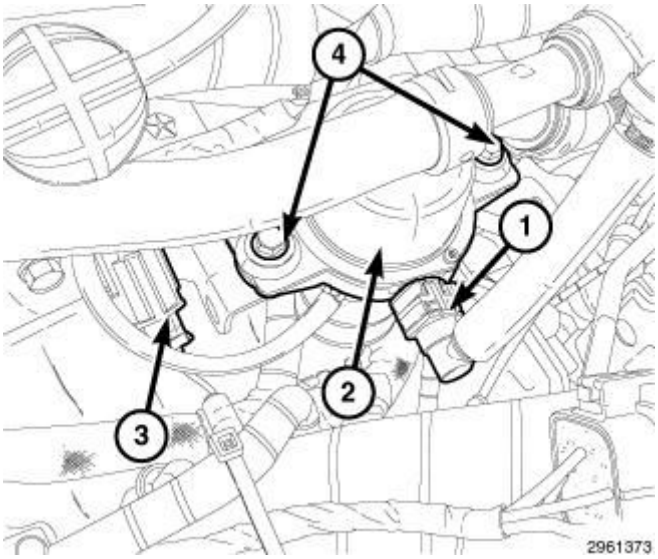

Fig. 386: Measuring Gap Between Connecting Rod & Crankshaft Journal Flange
Courtesy of CHRYSLER GROUP, LLC

1. Slide a snug-fitting feeler gauge between the connecting rod and crankshaft journal flange. Compare the measured side clearance to the proper specification. Refer to **ENGINE SPECIFICATIONS** .
2. Repeat this procedure for each connecting rod. Rotate the crankshaft for connecting rod accessibility.

REMOVAL

REMOVAL

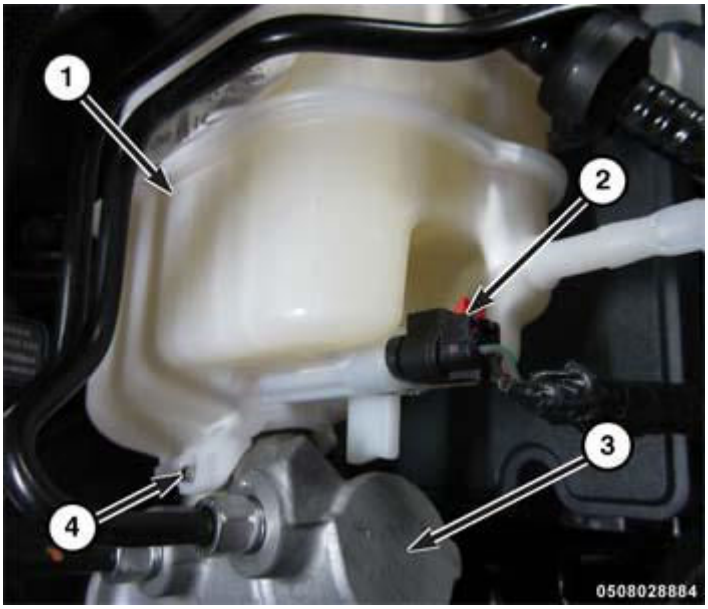

Fig. 387: Main Bearing Cap Bolts From Windage Tray Removal Sequence
Courtesy of CHRYSLER GROUP, LLC

1. Disconnect and isolate the negative battery cable.
2. Remove the oil pans, engine timing cover and cylinder heads. Refer to **CYLINDER HEAD, REMOVAL**.
3. Remove the engine oil pump. Refer to **PUMP, ENGINE OIL, REMOVAL**.
4. Remove the eight main bearing cap bolts from the windage tray in the sequence shown in illustration and remove the windage tray (1).

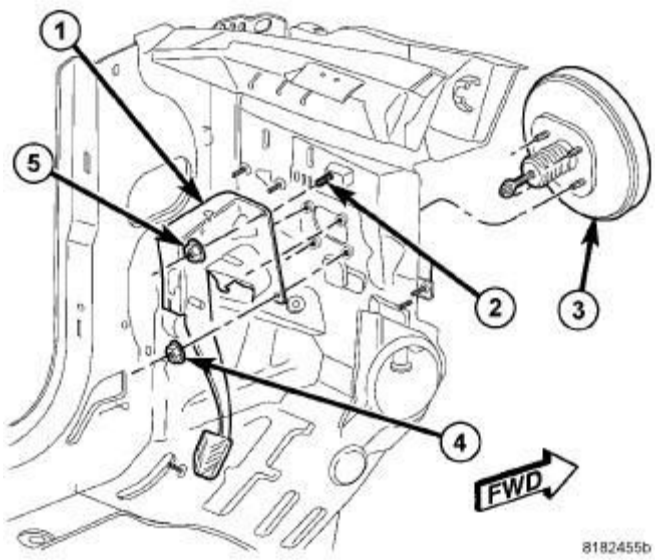

Fig. 388: Connecting Rod To Cylinder Identification
Courtesy of CHRYSLER GROUP, LLC

5. If necessary, remove the top ridge of the cylinder bores with a reliable ridge reamer before removing the pistons from the engine block. **Be sure to keep the tops of pistons covered during this operation.** Pistons and connecting rods must be removed from the top of the engine block. When removing piston and connecting rod assemblies from the engine, rotate the crankshaft clockwise so that each connecting rod is centered in the cylinder bore.

CAUTION: DO NOT use a number stamp or a punch to mark connecting rods or caps, as damage to connecting rods could occur

NOTE: Connecting rods and bearing caps are not interchangeable and should be marked before removing to ensure correct reassembly.

6. Mark connecting rod and bearing cap positions (1) using a permanent ink marker or scribe tool.

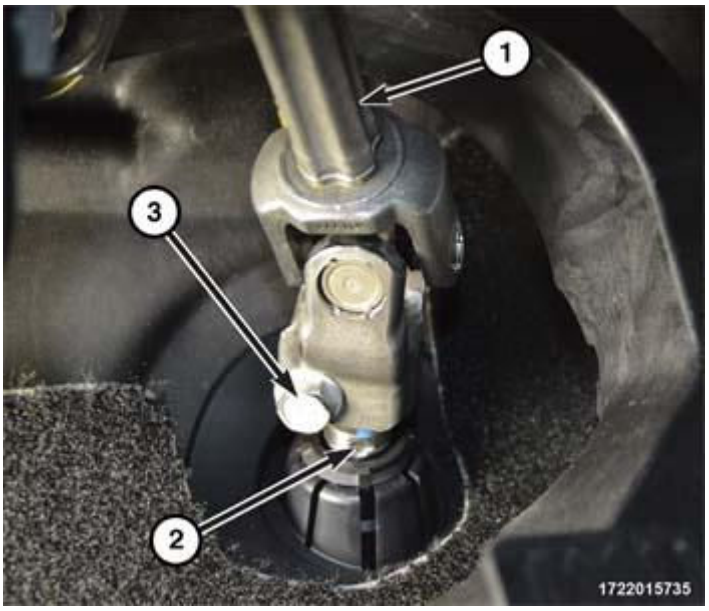

Fig. 389: Piston, Connecting Rod Cap, Bolts, Plastic Guide Plates & Guide Pins
Courtesy of CHRYSLER GROUP, LLC

NOTE: Typical V6 engine configuration shown in illustration.

CAUTION: Care must be taken not to damage the fractured rod and cap joint face surfaces, as engine damage may occur.

7. Remove the connecting rod cap bolts (5) and the connecting rod cap (4). Discard the cap bolts.

CAUTION: Care must be taken not to nick crankshaft journals, as engine damage may occur.

8. Remove the plastic guide plates (3) from the Guide Pins (special tool #8189, Guide Pins) (7) and install the Guide Pins to the connecting rod being removed.

CAUTION: Avoid contact with the piston oil cooler jet(s). Positioning of the oil cooler jet(s) is critical for proper engine operation.

9. Remove the piston and connecting rod (1) from cylinder bore.
10. Repeat the previous steps for each piston being removed.
11. Immediately after piston and connecting rod removal, reinstall the bearing cap (4) on the mating connecting rod to prevent damage to the fractured cap and rod surfaces.
12. If required, remove the piston rings. Refer to **RING(S), PISTON, REMOVAL**.
13. Repeat the previous steps for each piston being removed.

CLEANING

CLEANING

CAUTION: DO NOT use a wire wheel or other abrasive cleaning devise to clean the pistons or connecting rods. The pistons have a Moly coating, this coating must not be damaged.

CAUTION: Do not remove the piston pin from the piston and connecting rod assembly.

1. Using a suitable cleaning solvent clean the pistons in warm water and towel dry.
2. Use a wood or plastic scraper to clean the ring land grooves.

INSPECTION

INSPECTION

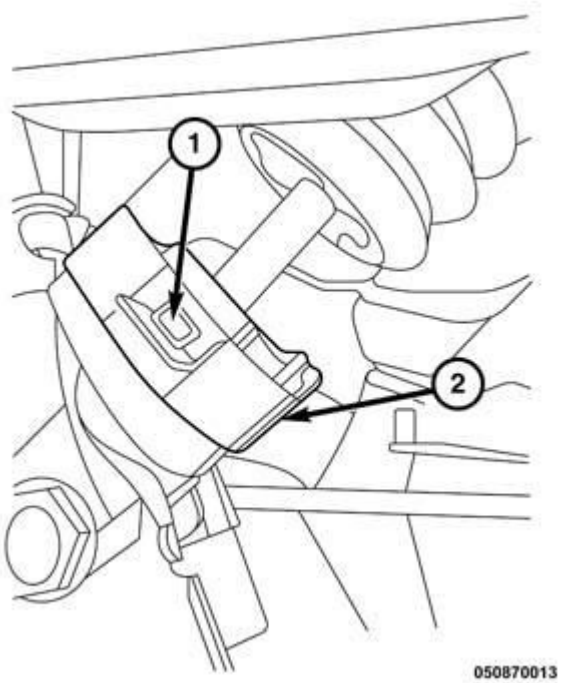

Fig. 390: Connecting Rod Bearing Shells & Bearing Size
Courtesy of CHRYSLER GROUP, LLC

1. Wipe the inserts (1) clean.
2. Inspect the inserts for abnormal wear patterns, scoring, grooving, fatigue, pitting and for metal or other foreign material imbedded in the lining.
3. Inspect the back of the inserts for fractures, scrapes, or irregular wear patterns.
4. Inspect the insert locking tabs for damage.

5. Replace any bearing that shows abnormal wear. Refer to **BEARING(S), CONNECTING ROD, STANDARD PROCEDURE** .

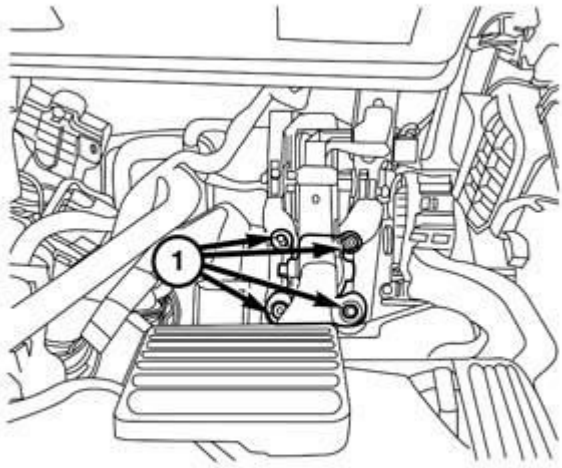

0508007146

Fig. 391: Connecting Rod To Cylinder Identification
Courtesy of CHRYSLER GROUP, LLC

6. Inspect the connecting rod bearing bores for signs of scoring, nicks and burrs.

NOTE: **Misaligned or bent connecting rods can cause abnormal wear on pistons, piston rings, cylinder walls, connecting rod bearings and crankshaft connecting rod journals. If wear patterns or damage to any of these components indicate the probability of a misaligned connecting rod, inspect it for correct rod alignment.**

7. Replace misaligned, bent or twisted connecting rods.

NOTE: **Connecting rods are serviced with the piston pre-assembled. The pistons are "select fit" to achieve proper oil clearance. Refer to ROD, PISTON AND CONNECTING, STANDARD PROCEDURE .**

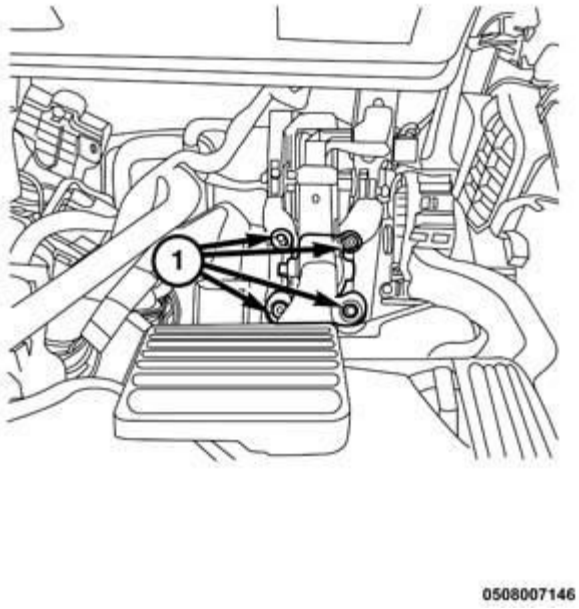

Fig. 392: Piston Components
Courtesy of CHRYSLER GROUP, LLC

NOTE: Typical coated piston shown in illustration.

8. Inspect the piston for scoring or scraping marks in the piston skirts. Check the ring lands for cracks and/or deterioration.
9. Check the piston for taper and out of round shape.

NOTE: The coating material (6) is applied to the piston after the final piston machining process. Measuring the outside diameter of a coated piston will not provide accurate results. Therefore measuring the inside diameter of the cylinder bore with a dial Bore Gauge is MANDATORY . Refer to ENGINE BLOCK, INSPECTION .

10. Compare the measured cylinder bore diameter to the engine block cylinder bore grade marking chart Select the piston size that corresponds to the engine block markings for each cylinder to provide the proper oil clearance. Refer to **ROD, PISTON AND CONNECTING, STANDARD PROCEDURE** .

NOTE: Piston installation into the cylinder bore requires slightly more pressure than that required for non-coated pistons. The bonded coating on the piston will give the appearance of a line-to-line fit with the cylinder bore.

NOTE: The coated pistons will be serviced with the piston pin and connecting rod pre-assembled.

INSTALLATION

INSTALLATION

1. If required, select and fit new piston and connecting rod assemblies to the engine block. Refer to **ROD, PISTON AND CONNECTING, STANDARD PROCEDURE** .
2. If required, select and fit new bearings to the connecting rod. Refer to **BEARING(S), CONNECTING ROD, STANDARD PROCEDURE** .
3. If required, hone the cylinder bores. Refer to **ENGINE BLOCK, STANDARD PROCEDURE** .
4. If removed, install the piston rings. Refer to **RING(S), PISTON, INSTALLATION**.

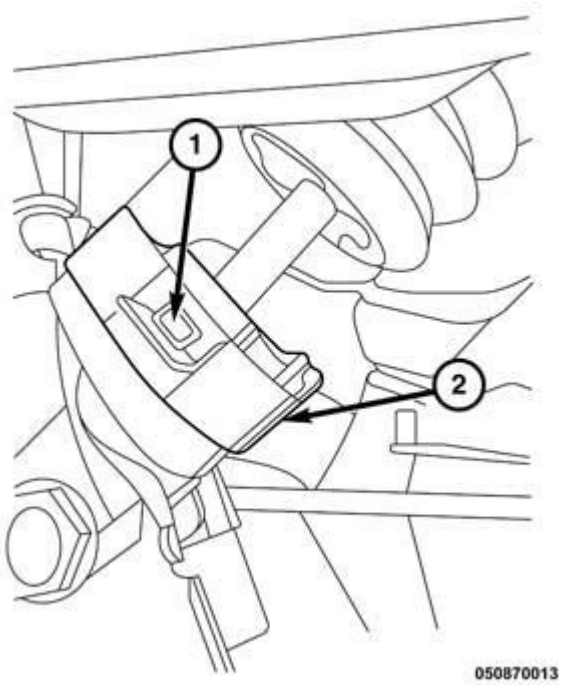

Fig. 393: Piston Ring End Gap Position
Courtesy of CHRYSLER GROUP, LLC

5. Position the piston ring end gaps as follows:
   - Oil ring expander gap (5)
   - Oil ring lower side rail end gap (4)
   - Oil ring upper side rail end gap (1)
   - No. 2 (intermediate) ring end gap (5)
   - No. 1 (upper) ring end gap (2)

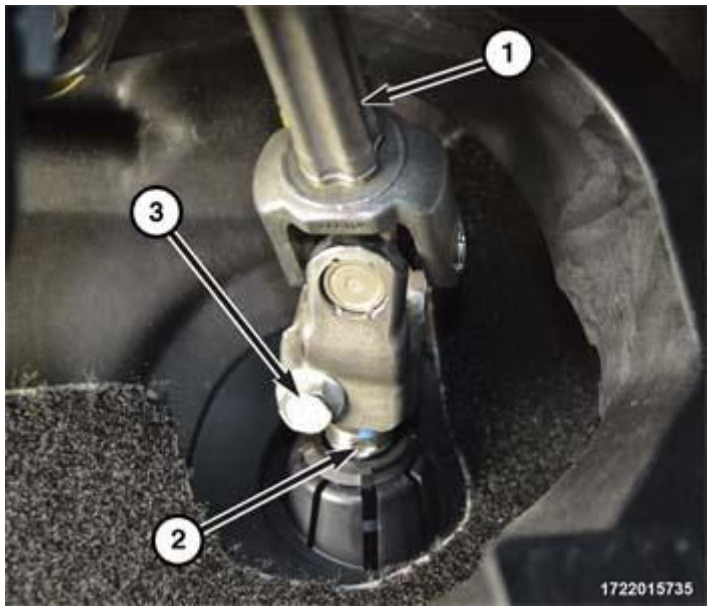

Fig. 394: Piston, Connecting Rod Cap, Bolts, Plastic Guide Plates & Guide Pins
Courtesy of CHRYSLER GROUP, LLC

NOTE: Typical V6 engine configuration shown in illustration.

NOTE: Ensure the position of the ring end gaps does not change when installing the ring compressor.

6. Lubricate the piston rings with clean engine oil. Position Piston Compressor (special tool #C-385, Compressor, Piston) (2) over the piston and rings. Tighten the compressor (2).

NOTE: Install the rod bearings in pairs. Do not mix sizes or use a new bearing half with an old bearing half.

7. Install the bearing shell (8) on the connecting rod with the tang inserted into the machined groove in the rod. Lubricate the bearing surface with clean engine oil.
8. Remove the plastic guide plates (3) from the Guide Pins (special tool #8189, Guide Pins) (7) and install the Guide Pins to the connecting rod being installed.

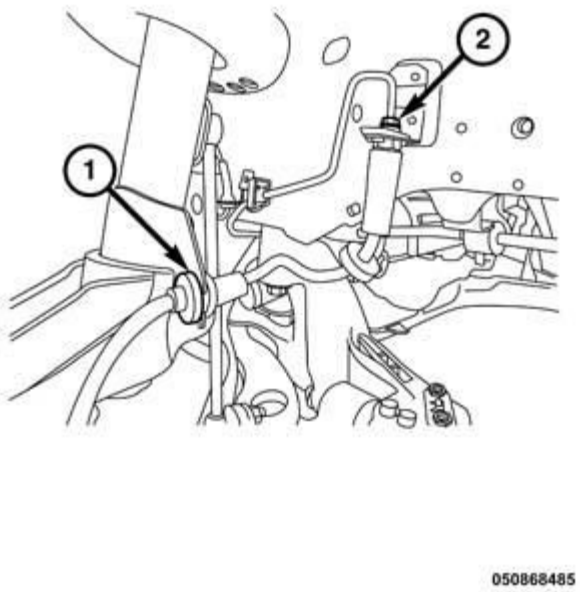

Fig. 395: Piston Installation Position
Courtesy of CHRYSLER GROUP, LLC

NOTE: Right cylinder bank shown in illustration, left cylinder bank similar.

9. The pistons crowns are stamped with a mark (1) indicating installation position. This mark must be positioned toward the front of engine on both cylinder banks.
10. Wipe the cylinder bore clean and lubricate with clean engine oil.
11. Rotate the crankshaft until the connecting rod journal is on the center of cylinder bore.

CAUTION: Avoid contact with the piston oil cooler jet(s). Positioning of the oil cooler jet(s) is critical for proper engine operation.

12. Insert the piston and connecting rod into the cylinder bore and carefully position the guide pins over the crankshaft journal.
13. Tap the piston down in the cylinder bore using a hammer handle while guiding the connecting rod into position over the rod journal.

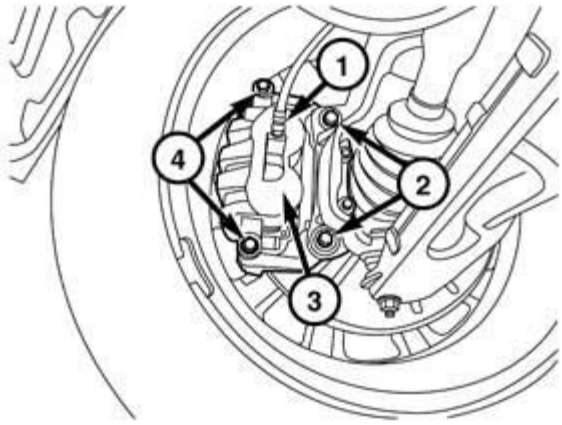

1715005815

Fig. 396: Piston, Connecting Rod Cap, Bolts, Plastic Guide Plates & Guide Pins
Courtesy of CHRYSLER GROUP, LLC

NOTE: Typical V6 engine configuration shown in illustration.

CAUTION: The connecting rod bolts must not be reused. Always replace the connecting rod bolts whenever they are loosened or removed.

14. Install the bearing shell (6) on the connecting rod cap (4) with the tang inserted into the machined groove in the cap. Lubricate the bearing surface with clean engine oil.

NOTE: Do not lubricate the threads of the connecting rod cap bolts (5).

15. Install the connecting rod cap and bearing with the tang on the same side as the rod. Tighten the **NEW** connecting rod cap bolts (5) to the proper specification. Refer to **TORQUE SPECIFICATIONS** .
16. If required, check the connecting rod side clearance. Refer to **ROD, PISTON AND CONNECTING, STANDARD PROCEDURE** .
17. Repeat the previous steps for each piston being installed.

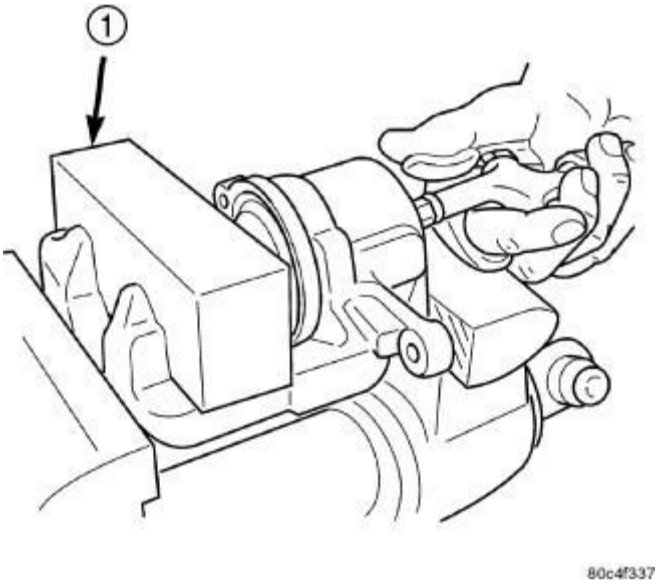

Fig. 397: Checking Cylinder Head Bolts For Stretching (Necking)
Courtesy of CHRYSLER GROUP, LLC

CAUTION: The main bearing cap bolts are tightened using a torque plus angle procedure. The bolts must be examined BEFORE reuse. If the threads are necked down the bolts must be replaced.

18. Check the main bearing cap bolts for necking by holding a scale or straight edge against the threads. If all the threads do not contact the scale (2) the bolt must be replaced.

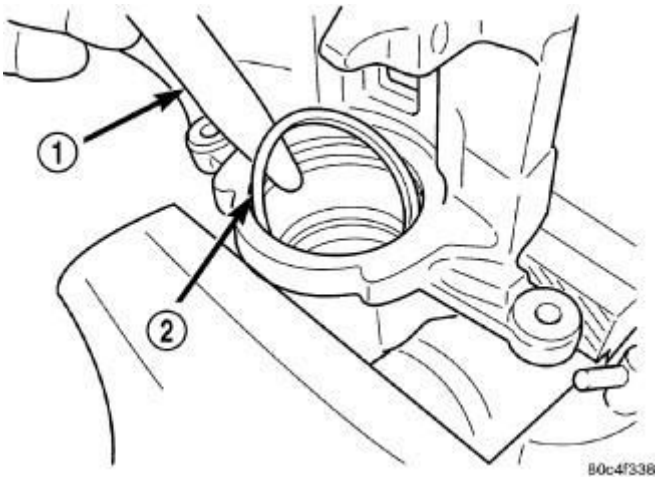

Fig. 398: Windage Tray With Main Bearing Cap Bolts Installation Sequence
Courtesy of CHRYSLER GROUP, LLC

19. Install the windage tray with eight main bearing cap bolts. Tighten the bolts in the sequence shown in illustration to the proper specification. Refer to **TORQUE SPECIFICATIONS** .
20. Install the engine oil pump and oil pump pick-up. Refer to **PUMP, ENGINE OIL, INSTALLATION**.

21. Install the cylinder heads, engine timing cover and oil pans. Refer to **CYLINDER HEAD, INSTALLATION**.
22. If removed, install the oil filter and fill the engine crankcase with the proper oil to the correct level. Refer to **OIL, STANDARD PROCEDURE** .
23. Connect the negative battery cable and tighten the nut to the proper specification. Refer to **SPECIFICATIONS** .
24. Fill the cooling system. Refer to **STANDARD PROCEDURE** .
25. Operate the engine until it reaches normal operating temperature. Check cooling system for correct fluid level. Refer to **STANDARD PROCEDURE** .

SEAL, CRANKSHAFT OIL, FRONT

REMOVAL

REMOVAL

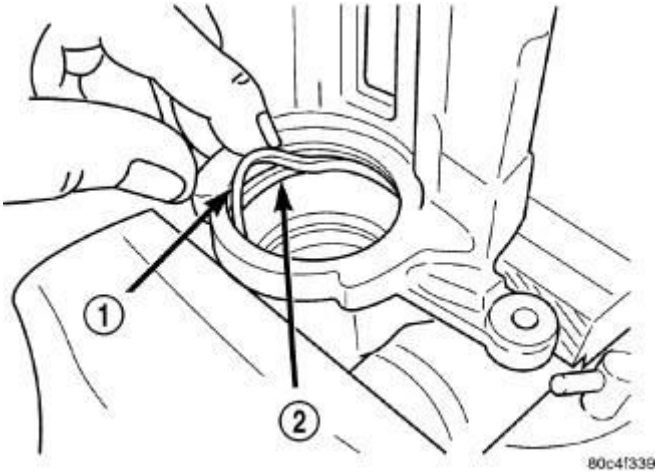

Fig. 399: Sleeve & Flywheel Key
Courtesy of CHRYSLER GROUP, LLC

1. Remove the serpentine belt. Refer to **BELT, SERPENTINE, REMOVAL** .
2. Remove the crankshaft vibration damper. Refer to **DAMPER, VIBRATION, REMOVAL**.
3. Install the sleeve (2) from Seal Remover (special tool #8511, Remover, Seal) around the flywheel key (1) and onto the nose of the crankshaft.

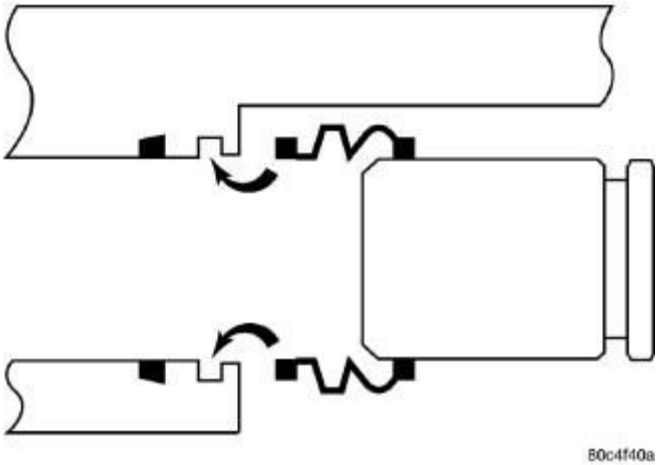

Fig. 400: Seal Remover & Front Crankshaft Oil Seal
Courtesy of CHRYSLER GROUP, LLC

4. Thread the Seal Remover (special tool #8511, Remover, Seal) (1) into the front crankshaft oil seal (2).

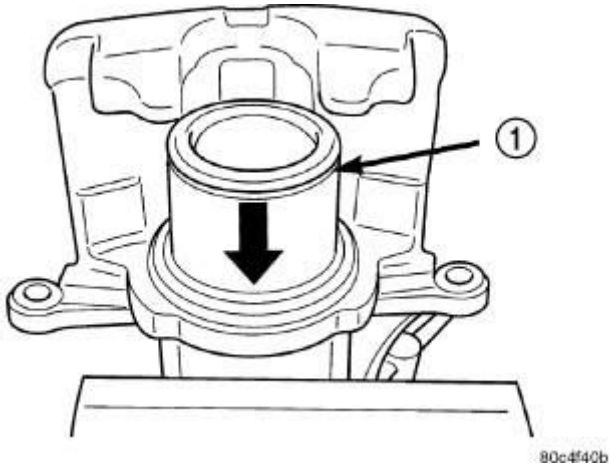

Fig. 401: Extractor Screw, Seal Remover & Front Crankshaft Oil Seal
Courtesy of CHRYSLER GROUP, LLC

5. Install the extractor screw (2) into the Seal Remover (special tool #8511, Remover, Seal) (1). Hold the seal remover stationary and tighten the extractor screw against the sleeve until the front crankshaft oil seal (3) is removed from the engine timing cover.

INSTALLATION

INSTALLATION

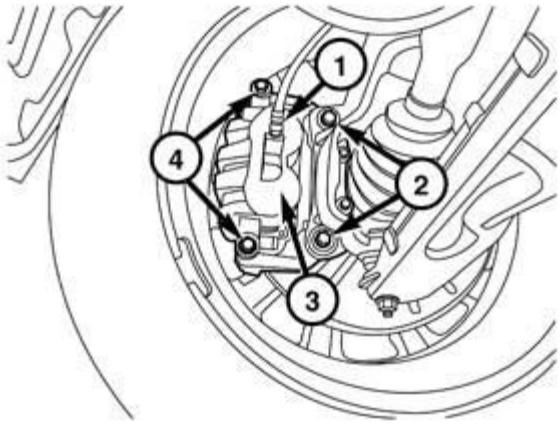

1715005815

Fig. 402: Front Crankshaft Seal Installer & Oil Seal
Courtesy of CHRYSLER GROUP, LLC

1. Position the front crankshaft oil seal (3) to engine timing cover.
2. Align the Front Crankshaft Seal Installer (special tool #10199, Installer, Crankshaft Front Oil Seal) (1) to the flywheel key on the crankshaft and against the front crankshaft oil seal (3).

CAUTION: Only tighten the crankshaft vibration damper bolt until the oil seal is seated in the cover. Overtightening of the bolt can crack the front timing cover.

3. Install and tighten the crankshaft vibration damper bolt (2) until the crankshaft oil seal is seated in the engine timing cover.
4. Install the crankshaft vibration damper. Refer to **DAMPER, VIBRATION, INSTALLATION**.
5. Install the serpentine belt. Refer to **BELT, SERPENTINE, INSTALLATION** .

SEAL, CRANKSHAFT OIL, REAR

REMOVAL

REMOVAL

1. Remove the oil pan. Refer to **PAN, OIL, REMOVAL**.

CAUTION: Do not attempt to support the weight of the engine on the windage tray. The windage tray is a thin cast aluminum construction and can

be easily damaged.

2. Support the rear of the engine with a screw-jack when removing the transmission. Position the support on the engine oil pan flange and not the windage tray.
3. Remove the transmission. Refer to **REMOVAL** .
4. Remove the flexplate. Refer to **FLEXPLATE, REMOVAL**.

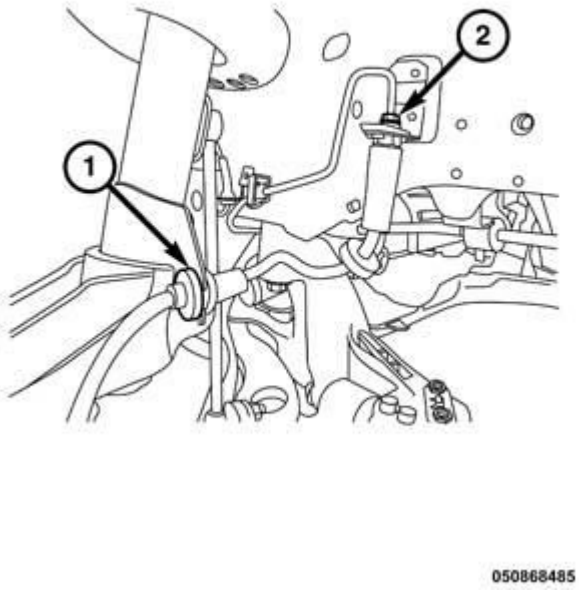

Fig. 403: Seal Retainer & Attaching Screws
Courtesy of CHRYSLER GROUP, LLC

NOTE: The rear crankshaft oil seal is incorporated into the seal retainer (2) and can not be removed from the retainer. The rear crankshaft oil seal and seal retainer (2) are serviced as an assembly.

5. Remove the eight seal retainer attaching screws (1).
6. Remove and discard the seal retainer (2).

INSTALLATION

INSTALLATION

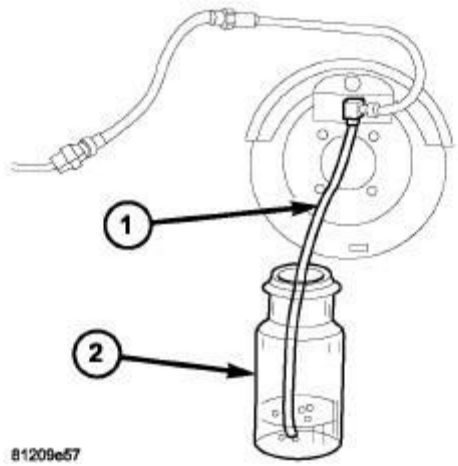

Fig. 404: Rear Crankshaft Oil Seal, Retainer & Seal Protector
Courtesy of CHRYSLER GROUP, LLC

CAUTION: The rear crankshaft oil seal (2) and retainer (1) are an assembly. To avoid damage to the seal lip, DO NOT remove the seal protector (3) from the rear crankshaft oil seal before installation onto the engine.

CAUTION: Whenever the crankshaft is replaced, the rear crankshaft oil seal must also be replaced. Failure to do so may result in engine fluid leakage.

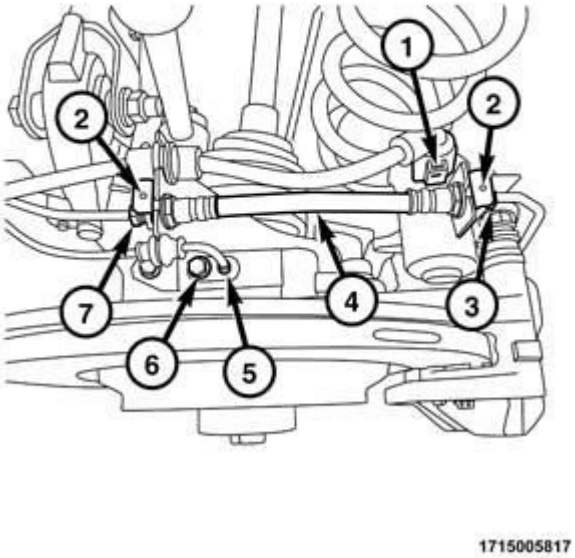

Fig. 405: Oil Seal Retainer Assembly & Seal Protector
Courtesy of CHRYSLER GROUP, LLC

1. Inspect the crankshaft to make sure there are no nicks or burrs on the seal surface.
2. Clean the engine block sealing surfaces thoroughly.

NOTE: **It is not necessary to lubricate the seal or the crankshaft when installing the seal retainer. Residual oil following installation can be mistaken for seal leakage.**

3. Carefully position the oil seal retainer assembly (2), and seal protector (1) on the crankshaft and push firmly into place on the engine block (during this step, the seal protector will be pushed from the rear oil seal assembly as a result of installing the rear oil seal).

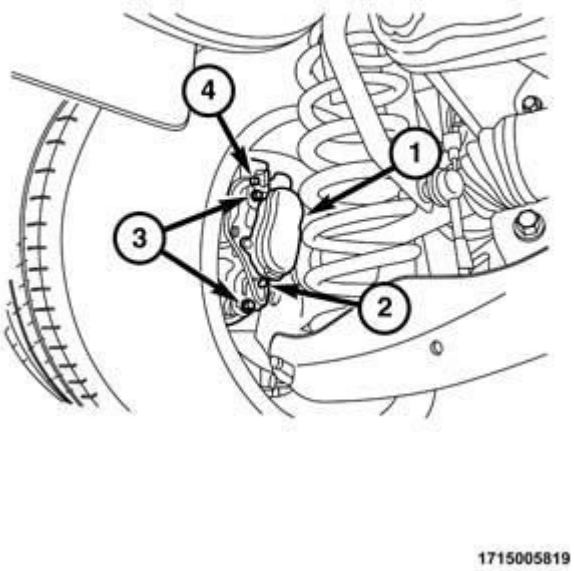

Fig. 406: Rear Seal Installed
Courtesy of CHRYSLER GROUP, LLC

4. Verify that the seal lip (2) on the retainer is uniformly curled inward toward the engine on the crankshaft (1).

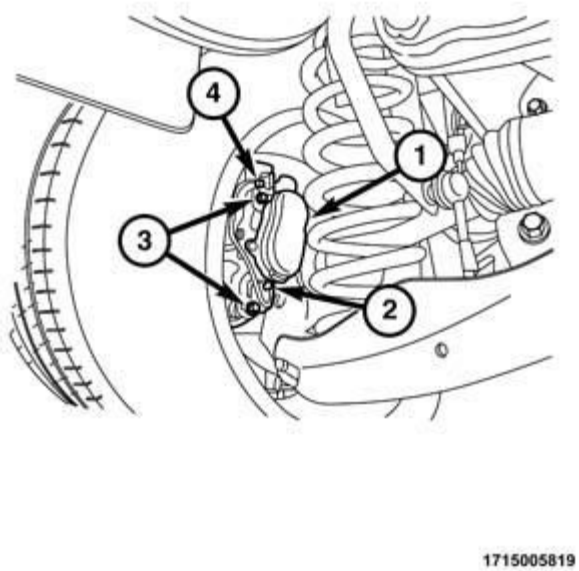

Fig. 407: Seal Retainer & Attaching Screws
Courtesy of CHRYSLER GROUP, LLC

NOTE: Make sure that the seal retainer flange is flush with the engine block oil pan sealing surface.

5. Install the eight seal retainer bolts (1) and tighten to the proper specification. Refer to **TORQUE SPECIFICATIONS** .
6. Install the flexplate. Refer to **FLEXPLATE, INSTALLATION**.
7. Install the transmission. Refer to **INSTALLATION** .
8. Install the oil pan. Refer to **PAN, OIL, INSTALLATION**.
9. Fill the engine crankcase with the proper oil to the correct level. Refer to **OIL, STANDARD PROCEDURE** .

ENGINE MOUNTING

INSULATOR, ENGINE MOUNT, LEFT

REMOVAL

REMOVAL

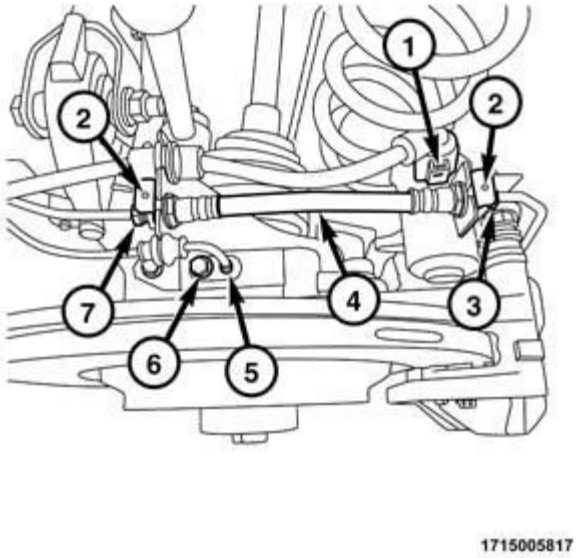

Fig. 408: Battery & Cables
Courtesy of CHRYSLER GROUP, LLC

1. Disconnect the battery's negative (3) and positive (1) cables.
2. Remove the battery (2).
3. Raise the vehicle.

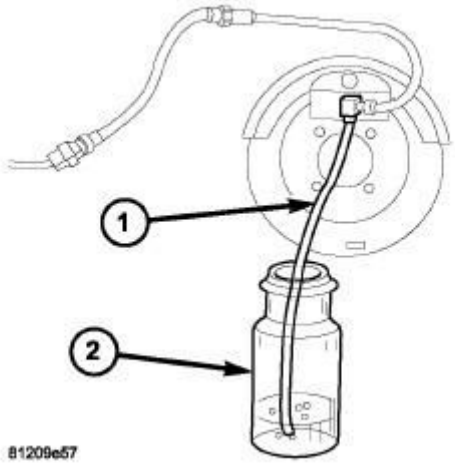

Fig. 409: Removing/Installing Belly Pans
Courtesy of CHRYSLER GROUP, LLC

4. Remove the belly pan.
5. Lower the vehicle.

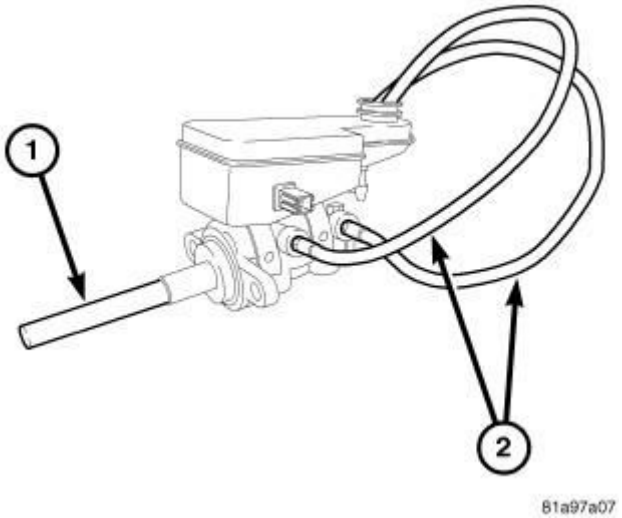

Fig. 410: Identifying Power Distribution Center, Power Feed Connections & Bolts
Courtesy of CHRYSLER GROUP, LLC

6. Remove the PDC (1) assembly. Refer to **CENTER, POWER DISTRIBUTION (PDC), REMOVAL** .
7. Carefully position a floor jack under transmission to support the transmission.

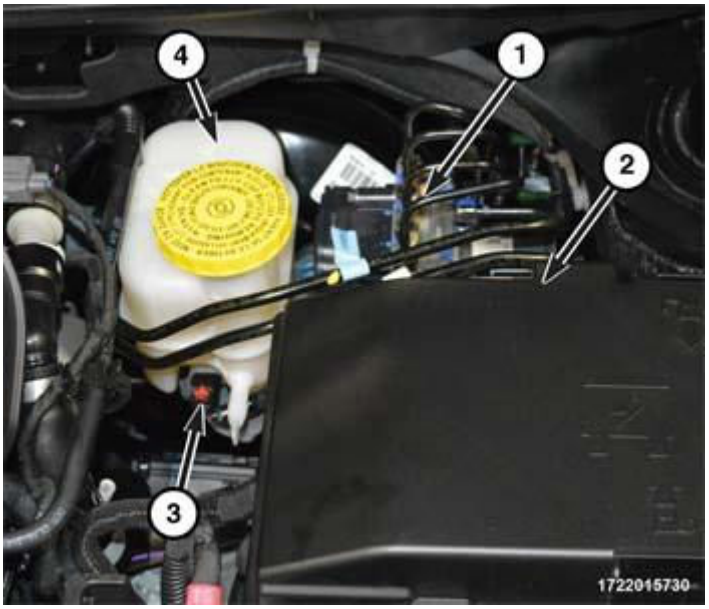

Fig. 411: Left Engine Mount-To-Transmission Mount Bracket Bolts
Courtesy of CHRYSLER GROUP, LLC

8. Using care, remove the wiring harness loom (3) from the mount.
9. Remove the transmission mount to frame bolts (2).
10. Loosen the mount to strut tower bolt (4).
11. Remove the bolts (1) at the transmission mount isolator to bracket.

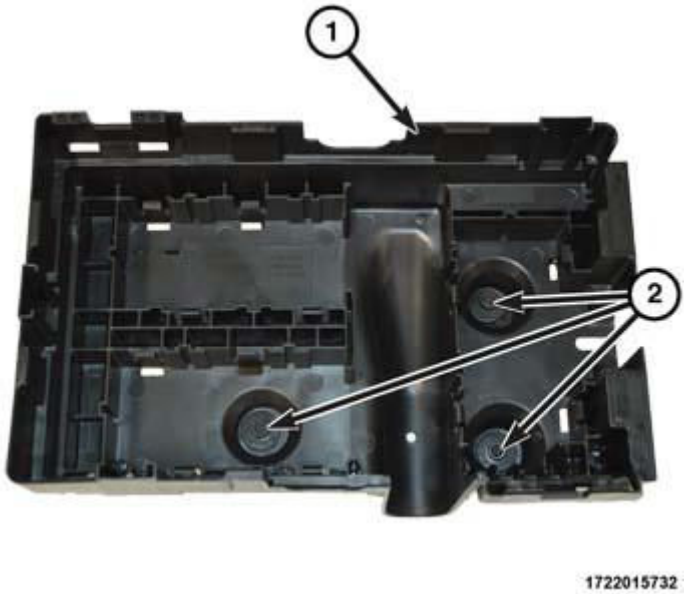

Fig. 412: Left Side Upper Transmission Mount Bracket
Courtesy of CHRYSLER GROUP, LLC

12. If required, remove the left side upper transmission mount bracket (1).

INSTALLATION

INSTALLATION

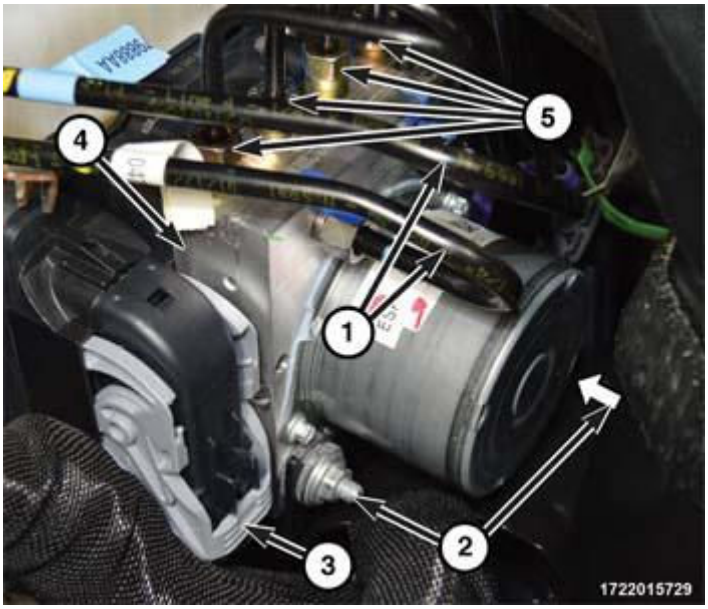

Fig. 413: Left Side Upper Transmission Mount Bracket
Courtesy of CHRYSLER GROUP, LLC

1. If removed, install the left side upper transmission mount bracket (1). Tighten bolts (2, 3) to 105 N.m (77

ft. lbs.).

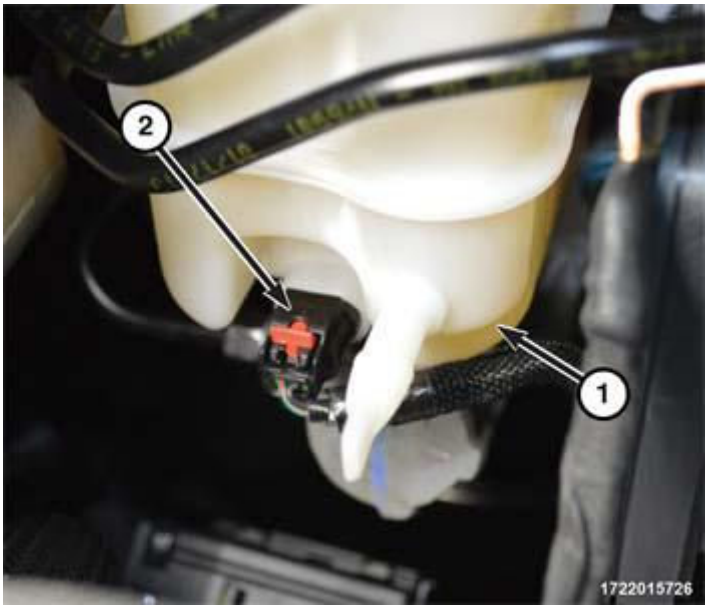

Fig. 414: Left Engine Mount-To-Transmission Mount Bracket Bolts
Courtesy of CHRYSLER GROUP, LLC

2. Position the left transmission mount onto the vehicle.
3. Hand start all the bolts.
4. Tighten the mount to frame rail bolts (2) to 105 N.m (77 ft. lbs.).
5. Tighten the mount to shock tower bolt (4) to 64 N.m (47 ft. lbs.).
6. Tighten the mount to transmission mount bracket bolts (1) to 157 N.m (116 ft. lbs.).

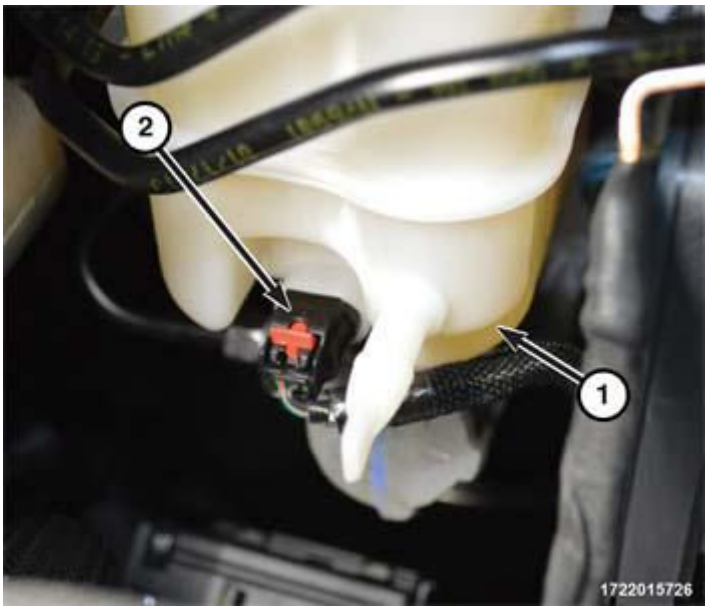

Fig. 415: Identifying Power Distribution Center, Power Feed Connections & Bolts

Courtesy of CHRYSLER GROUP, LLC

7. Install the PDC (1). Refer to **CENTER, POWER DISTRIBUTION (PDC), INSTALLATION** .
8. Remove the floor jack.
9. Raise the vehicle.

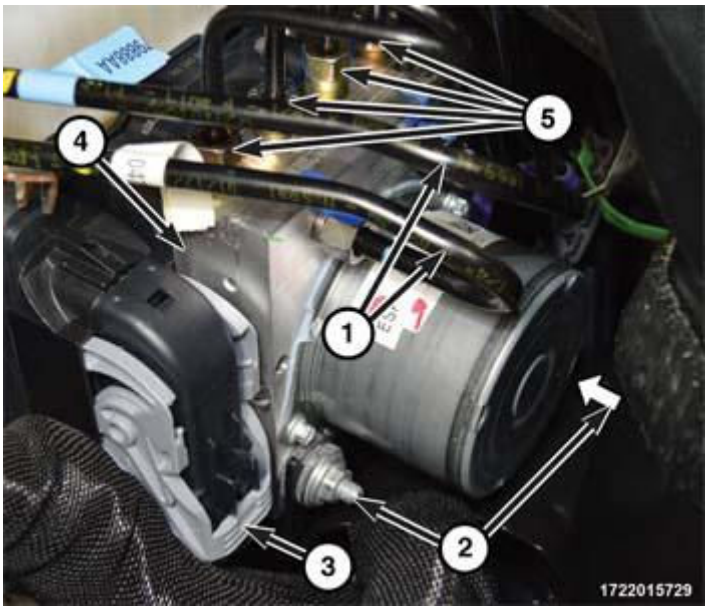

Fig. 416: Removing/Installing Belly Pans
Courtesy of CHRYSLER GROUP, LLC

10. Install the belly pan (1).
11. Lower the vehicle.

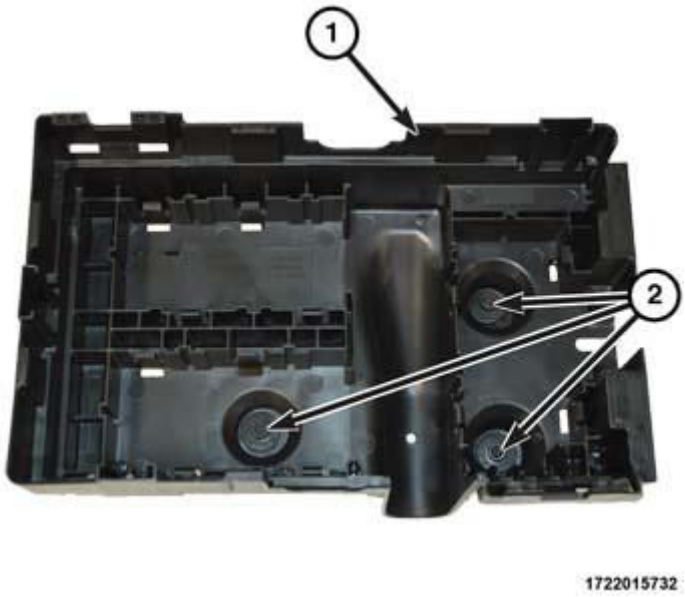

Fig. 417: Battery & Cables
Courtesy of CHRYSLER GROUP, LLC

12. Install the battery (2).
13. Connect the positive (1) and negative (3) battery cables and tighten nut to 9 N.m (80 in. lbs.).

INSULATOR, ENGINE MOUNT, RIGHT

REMOVAL

REMOVAL

1. Remove the air filter body. Refer to **BODY, AIR CLEANER, INSTALLATION**.

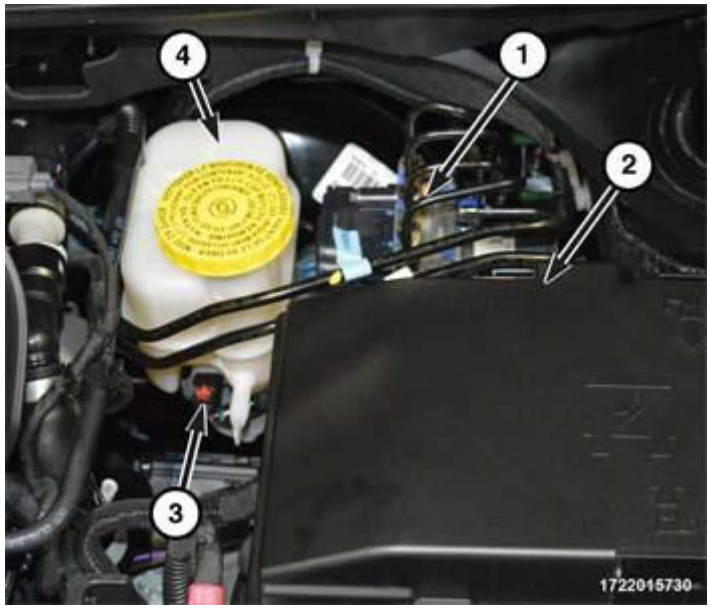

Fig. 418: Clean Air Hose & Clamps
Courtesy of CHRYSLER GROUP, LLC

2. Remove the coolant return line retainer from the clean air hose.
3. Remove the clean air hose (2) from the resonator.
4. Remove the overflow bottle from the mount and position aside.
5. Raise the vehicle.
6. Remove the belly pan. Refer to **BELLY PAN, REMOVAL** .
7. Lower the vehicle.
8. Carefully position a floor jack under the engine for support.

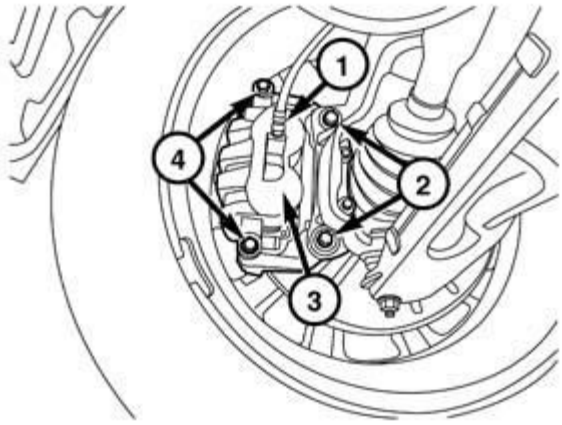

1715005815

Fig. 419: Removing/Installing Right Engine Mount Assembly
Courtesy of CHRYSLER GROUP, LLC

9. Remove the engine mount (1) to frame bolts (4).
10. Loosen the engine mount to strut tower bolt (5).
11. Remove the center engine mount to engine bracket bolt (3).
12. Remove the outer engine mount to engine bracket bolts (2).

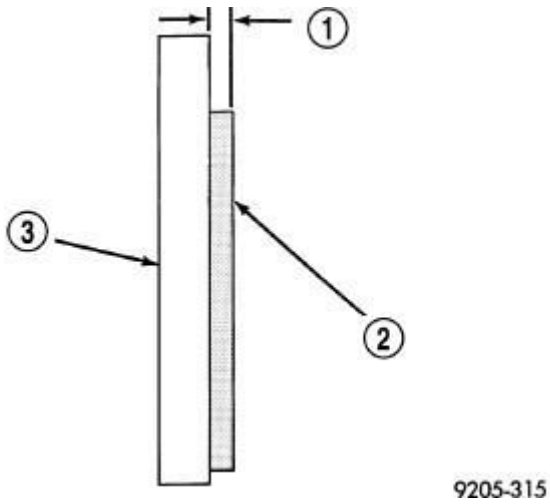

Fig. 420: Engine Mount Bracket & Bolts
Courtesy of CHRYSLER GROUP, LLC

13. If required, remove the engine mount bracket (1) to timing cover bolts (2).

INSTALLATION

INSTALLATION

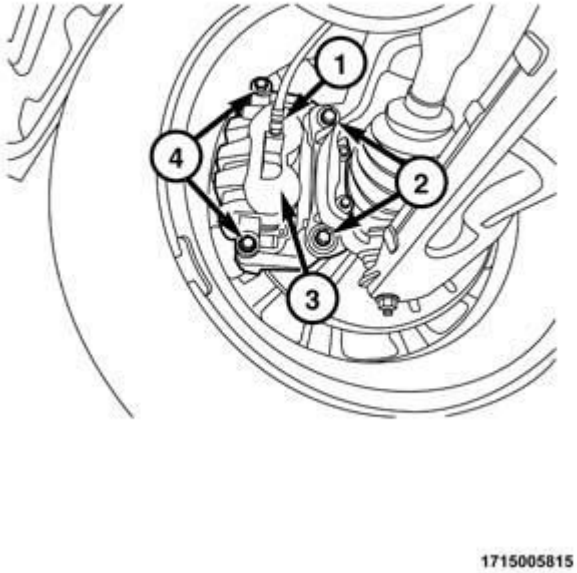

Fig. 421: Engine Mount Bracket & Bolts
Courtesy of CHRYSLER GROUP, LLC

1. If removed, install the right engine mount bracket (1) and tighten the bolts (2, 3) to the proper specification. Refer to **TORQUE SPECIFICATIONS** .

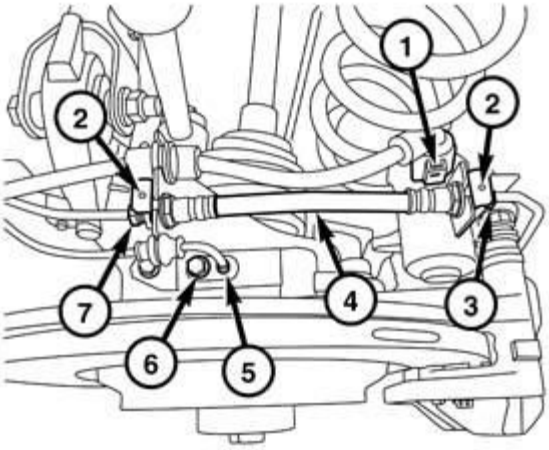

1715005817

Fig. 422: Removing/Installing Right Engine Mount Assembly
Courtesy of CHRYSLER GROUP, LLC

2. Position the right engine mount isolator (1):
   - Align the engine so that the engine mount bracket is flush against the engine mount.
   - Hand tighten the center engine mount to engine bracket bolt (3).
   - Hand tighten the outer engine mount to engine bracket bolts (2).
   - Hand start the engine mount to strut tower (5).
   - Tighten the engine mount to frame rail bolts (4) to the proper specification. Refer to **TORQUE SPECIFICATIONS** .
   - Tighten the mount to strut tower bolt to the proper specification. Refer to **TORQUE SPECIFICATIONS** .
   - Tighten mount to mount bracket bolts (2, 3) to the proper specification. Refer to **TORQUE SPECIFICATIONS** .
3. Remove the floor jack.
4. Raise the vehicle.
5. Install the belly pan. Refer to **BELLY PAN, INSTALLATION** .
6. Lower the vehicle.

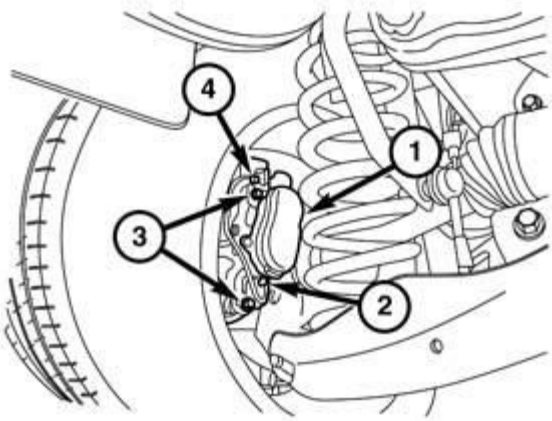

1715005819

Fig. 423: Coolant Bottle & Components
Courtesy of CHRYSLER GROUP, LLC

7. Install the overflow bottle (3). Tighten the bolts (4) to the proper specification. Refer to **SPECIFICATIONS** .

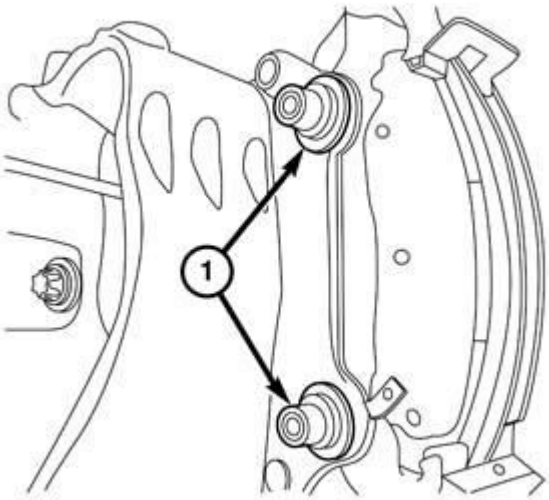

050868487

Fig. 424: Clean Air Hose & Clamps
Courtesy of CHRYSLER GROUP, LLC

8. Install the clean air hose (2) to the air resonator. Hand tighten the clamp (3).
9. Install the coolant return line retainer to the clean air hose.
10. Install the air filter body. Refer to **BODY, AIR CLEANER, REMOVAL**.

INSULATOR, ENGINE MOUNT, REAR

REMOVAL

REMOVAL

1. Raise the vehicle.
2. Remove the belly pan. Refer to **BELLY PAN, REMOVAL** .

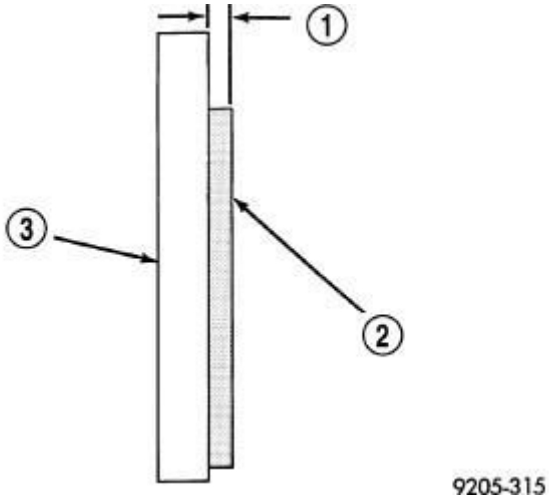

Fig. 425: Removing/Installing Rear Engine Mount Insulator
Courtesy of CHRYSLER GROUP, LLC

3. Remove the front transmission strut to pivot through bolt (1).
4. Remove the transmission strut to crossmember through bolt.

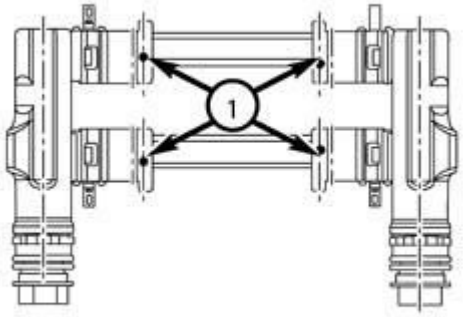

0508012591

Fig. 426: Removing/Installing Rear Engine Mount Insulator
Courtesy of CHRYSLER GROUP, LLC

5. Loosen the strut cover bracket nuts (2).
6. Rotate the engine forward and remove the strut (3).
7. If required, remove the transmission pivot mount bracket from the transmission.

INSTALLATION

INSTALLATION

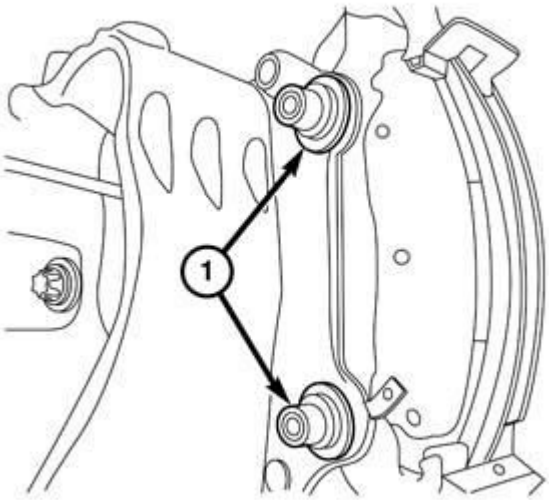

050868487

Fig. 427: Removing/Installing Rear Engine Mount Insulator
Courtesy of CHRYSLER GROUP, LLC

1. If removed, install the transmission pivot bracket to the transmission. Tighten the bolts to the proper specification. Refer to **TORQUE SPECIFICATIONS** .
2. Rotated the engine to allow the lower engine strut mount (3) to be installed.

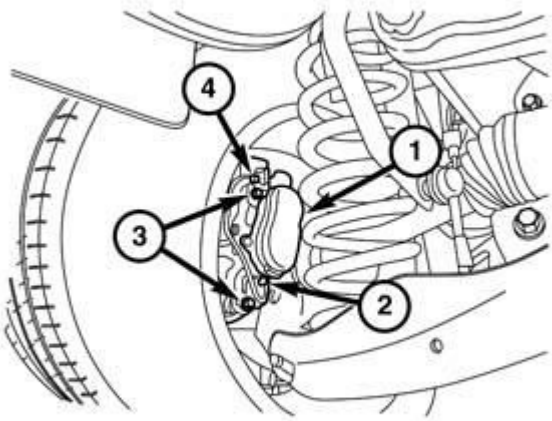

1715005819

Fig. 428: Removing/Installing Rear Engine Mount Insulator
Courtesy of CHRYSLER GROUP, LLC

3. Position the rear strut mount to the crossmember.
4. Install the torque strut (5) to pivot bracket through bolt (1). Tighten the nut (2) to the proper specification. Refer to **TORQUE SPECIFICATIONS** .
5. Install the rear torque strut to cradle through bolt. Tighten the nut (3) to the proper specification. Refer to **TORQUE SPECIFICATIONS** .

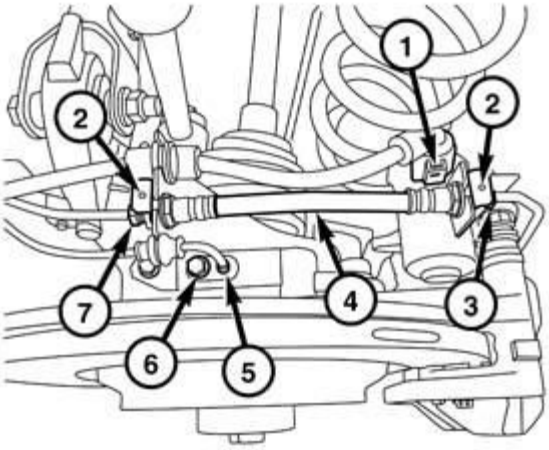

1715005817

Fig. 429: Rear Mount Bracket Nuts
Courtesy of CHRYSLER GROUP, LLC

6. Tighten the strut cover bracket nuts (1, 3) to the proper specification. Refer to **TORQUE SPECIFICATIONS** .
7. Install the belly pan. Refer to **BELLY PAN, INSTALLATION** .
8. Lower the vehicle.

LUBRICATION

DESCRIPTION

DESCRIPTION

The lubrication system is a full flow filtration, pressure feed type lubrication system. The oil pump is mounted to the bottom of the cylinder block and chain driven by the crankshaft sprocket. The oil pump pick-up tube is attached to the oil pump and supported at the windage tray. There are three oil gallery plugs installed in the engine block. A system oil pressure sensor allows oil pressure to be monitored with a diagnostic scan tool. The oil pressure and oil temperature sensors are located on the oil filter housing assembly which is mounted to the top of the engine block between the cylinder heads. The oil cooler is mounted to the oil filter housing. There is a pressure relief valve in the oil pump that is only activated on a cold start or for emergency relief since the oil pump output is self-regulating. There are three piston oil cooler jets mounted to the engine block. Each jet cools two pistons.

OPERATION

OPERATION

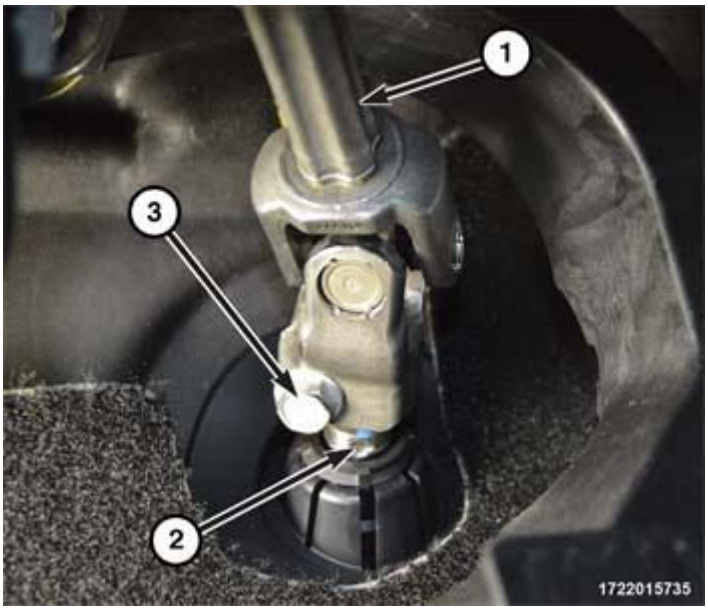

Fig. 430: Engine Lubrication Flow
Courtesy of CHRYSLER GROUP, LLC

The oil from the oil pan is pumped by a vane type oil pump mounted to the bottom of the cylinder block that is chain driven by the crankshaft sprocket. The oil from the pump travels to the oil filter element and then to the oil cooler assembly. After the oil has been filtered and cooled, the oil enters the main oil gallery. The pressurized oil travels through the main gallery to the four main journals to lubricate the crankshaft main bearings. The pressurized oil travels through the crankshaft main journals to cross-drilling supplying oil to the connecting rod journals. From the number one main bearing gallery, oil travels to the right secondary chain tensioner and to the primary chain idler shaft. The main oil gallery also supplies oil to three sets of piston oil cooling jets. From the cylinder block, the oil flows through the galleys into the left and right cylinder heads. Left cylinder head oil is supplied to the left secondary timing chain tensioner, camshaft journals and hydraulic lash adjusters. Right cylinder head oil is supplied to the right camshaft journals and hydraulic lash adjusters. The camshaft valve lobes and rocker arms are lubricated through a small hole in the rocker arm; oil flows through the lash adjuster then through the rocker arm and onto the camshaft lobe. Oil also flows through each of the four forward camshaft bearings into the camshafts and phasers.

ENGINE LUBRICATION FLOW CHART

FROM	TO
Oil Pickup Tube	Oil Pump
Oil Pump	Oil Filter
Oil Filter	Oil Cooler
Oil Cooler	Block Main Oil Gallery
Block Main Oil Gallery	1. Crankshaft Main Journals 2. Left Cylinder Head 3. Right Cylinder Head 4. Piston Cooling Jets
Crankshaft Number One Main Journal	1. Primary Chain Idler Shaft 2. Right Secondary Chain Tensioner

	3. Oil Pump Feedback
Crankshaft Main Journals	Crankshaft Rod Journals
Left Cylinder Head	1. Left Secondary Chain Tensioner 2. Hydraulic Lash Adjusters 3. Camshaft Journals 4. Phaser Oil Control Valves
Right Cylinder Head	1. Hydraulic Lash Adjusters 2. Camshaft Journals 3. Phaser Oil Control Valves
Hydraulic Lash Adjusters	1. Rocker Arms 2. Cam Lobes

DIAGNOSIS AND TESTING

ENGINE OIL LEAK

Begin with a thorough visual inspection of the engine, particularly at the area of the suspected leak. If an oil leak source is not readily identifiable, the following steps should be followed:

1. Do not clean or de-grease the engine at this time because some solvents may cause rubber to swell, temporarily stopping the leak.
2. Add an oil soluble dye (use as recommended by manufacturer). Start the engine and let idle for approximately 15 minutes. Check the oil dipstick to make sure the dye is thoroughly mixed as indicated with a bright yellow color under a black light.
3. Using a black light, inspect the entire engine for fluorescent dye, particularly at the suspected area of the oil leak. If the oil leak is found and identified, repair in accordance to the Service Information.
4. If dye is not observed, drive the vehicle at various speeds for approximately 24 km (15 miles), and repeat the inspection.

   If the oil leak source is not positively identified at this time, proceed with the **AIR LEAK DETECTION TEST METHOD**.

AIR LEAK DETECTION TEST METHOD

1. Disconnect the make-up air hose from the cylinder head cover. Cap or plug the make-up air hose nipple.
2. Remove the PCV hose from the PCV valve. Cap or plug the PCV valve nipple.
3. Attach an air hose with a pressure gauge and regulator to the dipstick tube.

CAUTION: Do not subject the engine assembly to more than 20.6 kPa (3 PSI) of test pressure.

4. Gradually increase air pressure from 1 psi to 2.5 psi maximum while applying soapy water at the suspected leak source. Adjust the regulator to a suitable test pressure within this range that provides the

best bubble generation which will pinpoint the leak source. If the oil leak is detected and identified, repair in accordance with the Service Information.

5. If the leakage occurs at the rear oil seal area, follow the procedures for rear seal area leaks. Refer to **LUBRICATION, DIAGNOSIS AND TESTING** .
6. If no leaks are detected, turn off the air supply and remove the air hose and all plugs and caps. Install the PCV valve and make-up air hoses.
7. Clean the oil off of the suspect oil leak area using a suitable solvent. Drive the vehicle at various speeds approximately 24 km (15 miles). Inspect the engine for signs of an oil leak by using a black light.

CHECKING ENGINE OIL PRESSURE

1. Disconnect and isolate the negative battery cable.
2. Remove the oil pressure sensor from the oil filter housing. Refer to **SENSOR, OIL PRESSURE, REMOVAL**.

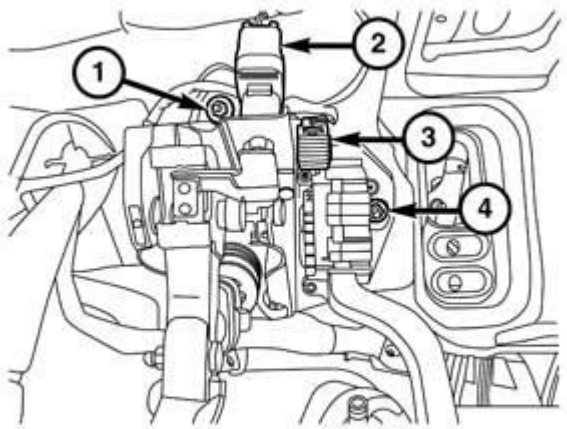

050868753

Fig. 431: Pressure Gauge Installed To Oil Pressure Port
Courtesy of CHRYSLER GROUP, LLC

3. Install Pressure Gauge (special tool #C-3292A, Gauge, Pressure) (1) to the oil pressure port. Tighten to 20 N.m (177 in. lbs.).
4. Install the intake manifold. Refer to **MANIFOLD, INTAKE, INSTALLATION**.
5. Connect the negative battery cable. Tighten the nut to the proper specification. Refer to **SPECIFICATIONS** .
6. Start and idle the engine. If oil pressure is 0 at idle, shut off the engine and consult the Engine Lubrication and Diagnostic Table. Refer to **ENGINE, DIAGNOSIS AND TESTING** .

7. Run the engine until it reaches normal operating temperature.
8. Verify that the engine has acceptable oil pressure. Refer to **ENGINE SPECIFICATIONS** .

DIAGNOSIS AND TESTING - REAR SEAL AREA LEAKS

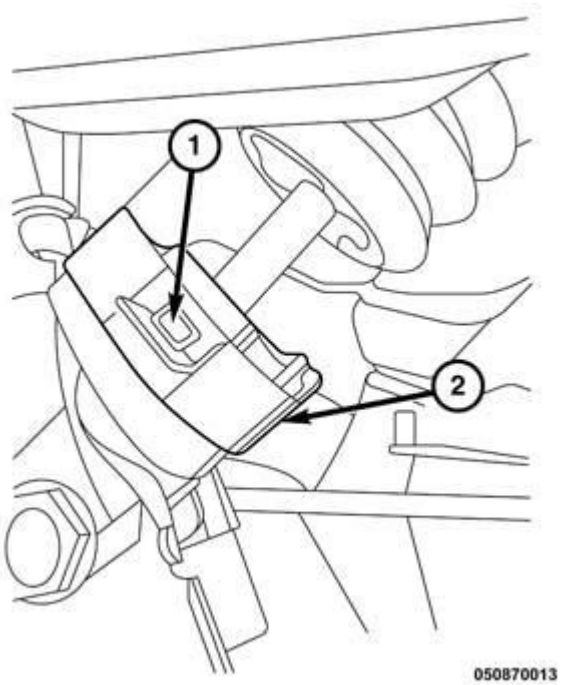

Fig. 432: Torque Converter Housing Dust Cover & Rubber Plugs
Courtesy of CHRYSLER GROUP, LLC

Since it is sometimes difficult to determine the source of an oil leak in the rear seal area of the engine, a more involved inspection is necessary. The following steps should be followed to help pinpoint the source of the leak.

If the leakage occurs at the crankshaft rear oil seal area:

1. Disconnect and isolate the negative battery cable.
2. Raise and support the vehicle. Refer to **HOISTING, STANDARD PROCEDURE** .
3. Remove the torque converter dust shield (1).
4. Remove two rubber plugs (2) covering the rear oil seal retainer flange bolts.
5. Inspect the flexplate and rear of the block for evidence of oil. Use a black light to check for the oil leak:
   a. Circular spray pattern generally indicates seal leakage or crankshaft damage.
   b. Where leakage tends to run straight down, possible causes are a porous block, rear oil seal retainer, oil galley pipe plug and rear seal retainer to oil pan mating surfaces.
6. If no leaks are detected, use the Air Leak Detection Method as outlined in Engine Oil Leak. Refer to **LUBRICATION, DIAGNOSIS AND TESTING** .

CAUTION: Do not subject the engine assembly to more than 20.6 kPa (3 PSI) of

test pressure.

7. If the leak is not detected, very slowly turn the crankshaft and watch for leakage. If a leak is detected between the crankshaft and seal while slowly turning the crankshaft, it is possible the crankshaft seal surface is damaged. The seal area on the crankshaft could have minor nicks or scratches that can be polished out with emery cloth.

CAUTION: Use extreme caution when crankshaft polishing is necessary to remove minor nicks or scratches. The crankshaft seal flange is specially machined to complement the function of the rear oil seal.

8. For bubbles that remain steady with shaft rotation, no further inspection can be done until disassembled. Refer to **SEAL, CRANKSHAFT OIL, REAR, REMOVAL**.

COOLER, OIL

DESCRIPTION

DESCRIPTION

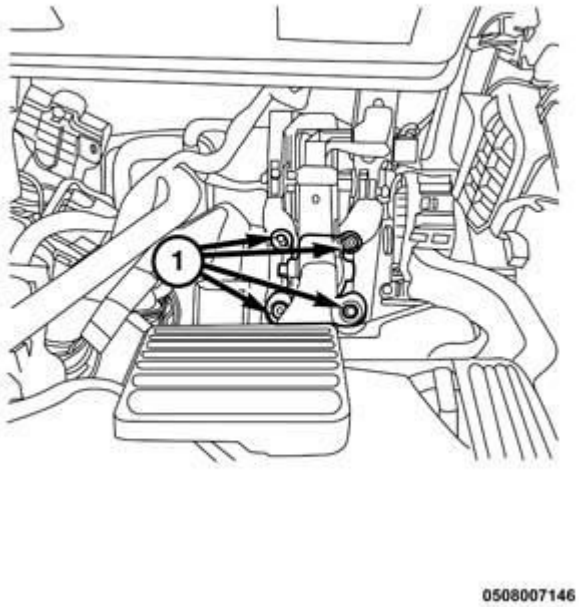

Fig. 433: Oil Filter Housing
Courtesy of CHRYSLER GROUP, LLC

The oil cooler is attached to the top of the oil filter housing which is located in the V of the cylinder block. The oil cooler is a plate style coolant-to-oil heat exchanger.

OPERATION

OPERATION

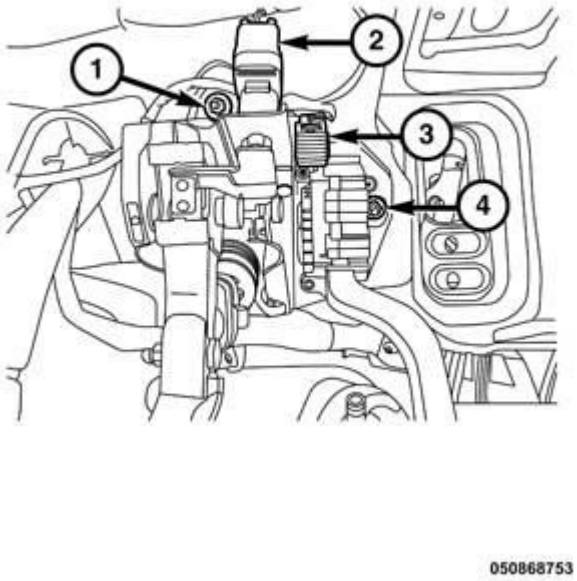

Fig. 434: Oil Flow & Coolant Flow Locations
Courtesy of CHRYSLER GROUP, LLC

Oil flows from the engine oil pump to the oil filter housing inlet (1) and to the oil filter element located within the oil filter housing. After the oil is filtered it travels internally through the engine oil cooler and then to the main oil gallery (5).

Coolant flows from the right cylinder block water jacket (3) and from the left cylinder block water jacket (4) into the housing. The coolant flows through the oil cooler and exits the housing from the rear hose nipple (6) where it is returned to the water pump. A coolant by-pass in the housing is designed to direct excessive coolant flow around the oil cooler for continuous circulation.

REMOVAL

REMOVAL

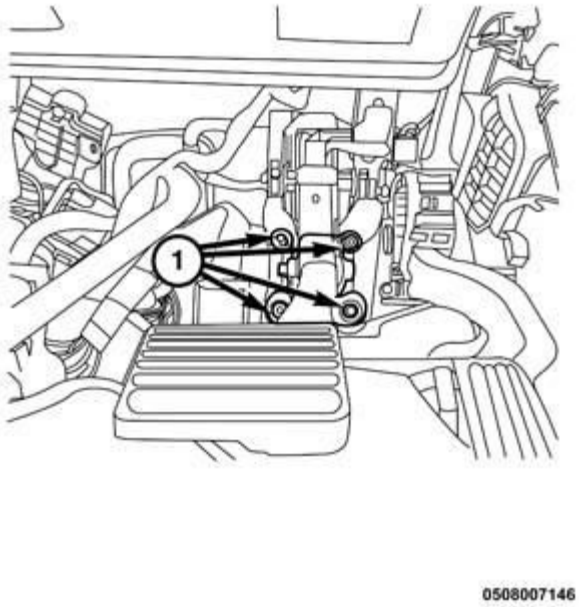

Fig. 435: Oil Cooler & Fasteners
Courtesy of CHRYSLER GROUP, LLC

NOTE: The oil cooler can not be cleaned out. In the event that the engine requires rebuilding or replacement, replace the oil cooler.

1. Perform the fuel pressure release procedure. Refer to **FUEL SYSTEM PRESSURE RELEASE PROCEDURE** .
2. Disconnect and isolate the negative battery cable.
3. Drain the cooling system. Refer to **STANDARD PROCEDURE** .
4. Remove the air cleaner housing assembly, upper and lower intake manifolds. Refer to **MANIFOLD, INTAKE, REMOVAL**.
5. Remove four bolts (2) and two screws (1) and (3).
6. Remove the oil cooler (4).

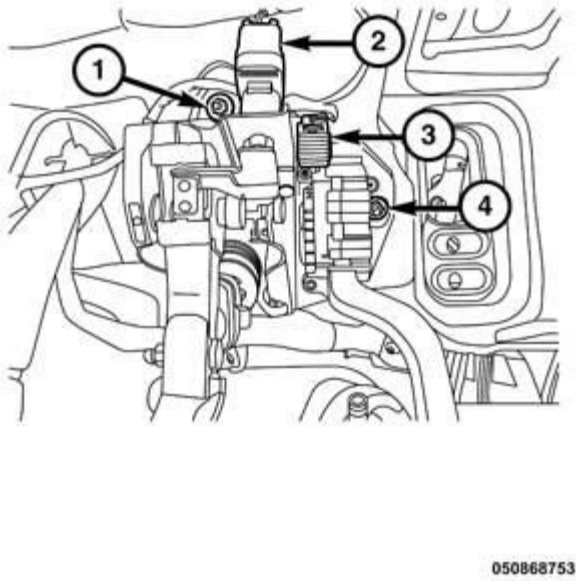

Fig. 436: Oil Cooler Seals & Oil Filter Housing
Courtesy of CHRYSLER GROUP, LLC

7. Remove and discard the oil cooler seals (1).

INSTALLATION

INSTALLATION

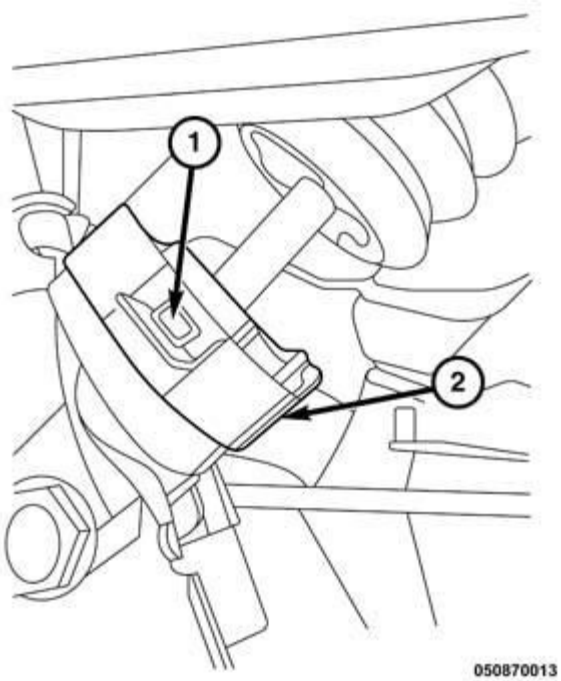

Fig. 437: Oil Cooler Seals & Oil Filter Housing
Courtesy of CHRYSLER GROUP, LLC

NOTE: Always use new dry seals (1) when installing the oil cooler. Do not lubricate the seals.

1. Clean and prepare the sealing surfaces of the oil cooler and the oil filter housing. Refer to **ENGINE, STANDARD PROCEDURE** .
2. Install the new oil cooler seals (1) onto the oil filter housing (2).

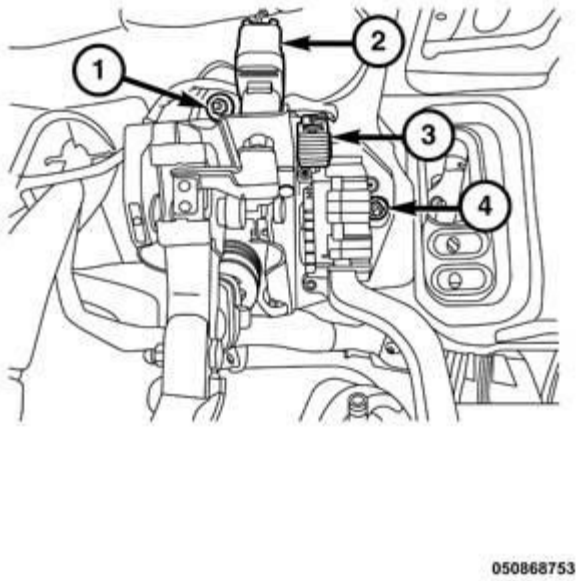

Fig. 438: Oil Cooler & Fasteners
Courtesy of CHRYSLER GROUP, LLC

3. Position the oil cooler (4) on the oil filter housing.
4. Install two screws (1) and (3). Tighten the screws to the proper specification. Refer to **TORQUE SPECIFICATIONS** .
5. Install four bolts (2) and tighten to the proper specification. Refer to **TORQUE SPECIFICATIONS** .
6. Install the upper and lower intake manifolds and air cleaner housing assembly. Refer to **MANIFOLD, INTAKE, INSTALLATION**.
7. Fill the engine crankcase with the proper oil to the correct level. Refer to **OIL, STANDARD PROCEDURE** .
8. Connect the negative battery cable and tighten nut to the proper specification. Refer to **SPECIFICATIONS** .
9. Fill the cooling system. Refer to **STANDARD PROCEDURE** .
10. Operate the engine until it reaches normal operating temperature. Check cooling system for correct fluid level. Refer to **STANDARD PROCEDURE** .

FILTER, ENGINE OIL

REMOVAL

REMOVAL

All engines are equipped with a high quality full-flow, disposable type oil filter. Chrysler Corporation recommends a Mopar® or equivalent oil filter be used.

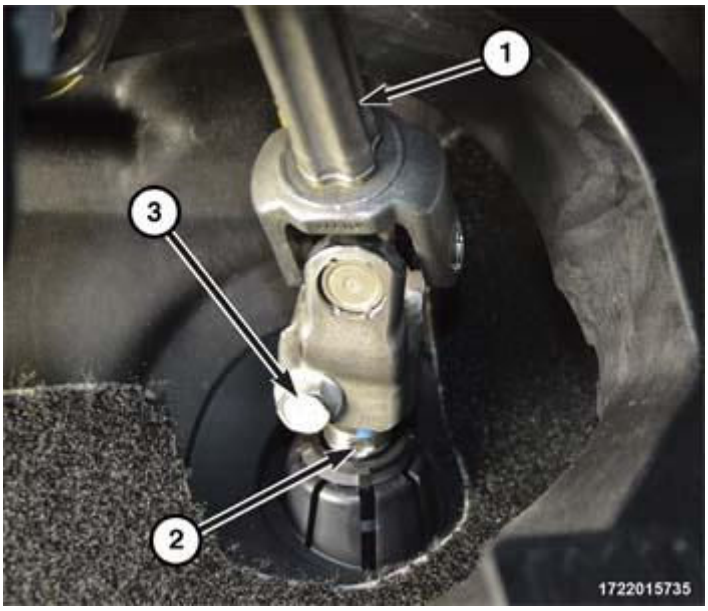

Fig. 439: Oil Filter Cap, O-Ring Seal & Oil Filter
Courtesy of CHRYSLER GROUP, LLC

CAUTION: When performing an engine oil change, the oil filter cap must be removed. Removing the oil filter cap releases oil held within the oil filter cavity and allows it to drain into the sump. Failure to remove the cap prior to reinstallation of the drain plug will not allow complete draining of the used engine oil.

1. Place an oil absorbent cloth around the oil filter housing at the base of the oil filter cap.

NOTE: The oil filter is attached to the oil filter cap.

2. Rotate the oil filter cap (1) counterclockwise and remove.

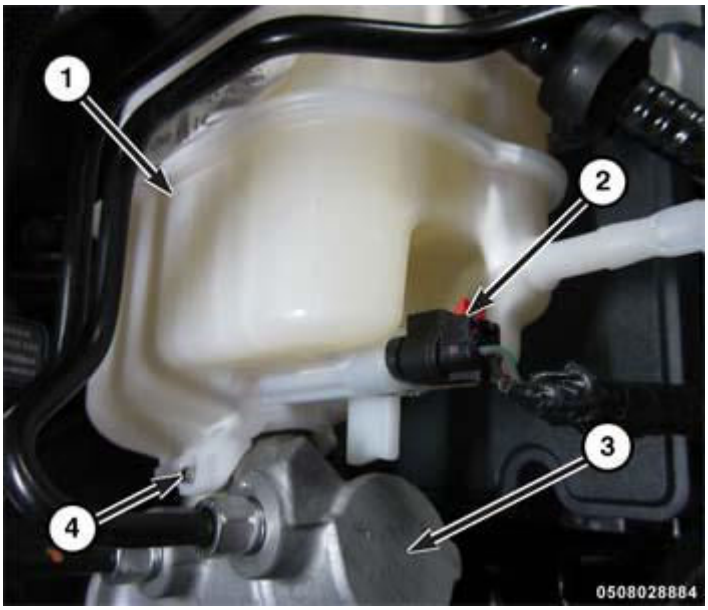

Fig. 440: O-Ring Seal, Oil Filter Cap & Oil Filter
Courtesy of CHRYSLER GROUP, LLC

3. Remove the oil filter (3) from the oil filter cap (2).
4. Remove and discard the O-ring seal (1).

INSTALLATION

INSTALLATION

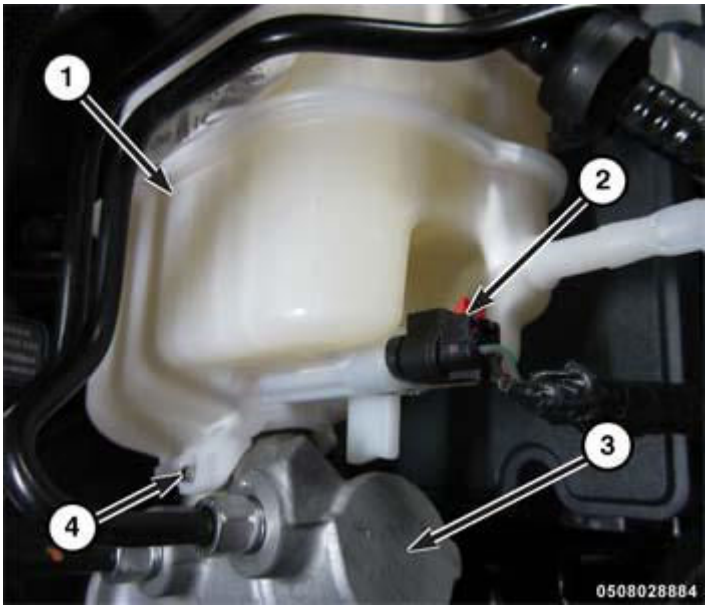

Fig. 441: O-Ring Seal, Oil Filter Cap & Oil Filter
Courtesy of CHRYSLER GROUP, LLC

NOTE: It is not necessary to pre-oil the oil filter or fill the oil filter housing.

1. Lightly lubricate the new O-ring seal (1) with clean engine oil.
2. Install the O-ring seal (1) on the filter cap (2).
3. Install the new oil filter (3) into the oil filter cap (2).

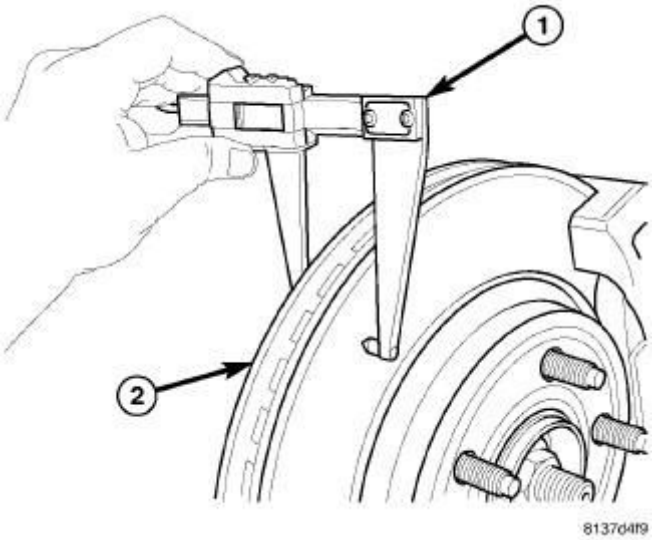

Fig. 442: Oil Filter Cap, O-Ring Seal & Oil Filter
Courtesy of CHRYSLER GROUP, LLC

4. Thread the oil filter cap (1) into the oil filter housing and tighten to the proper specification. Refer to **TORQUE SPECIFICATIONS** .
5. Add oil, verify crankcase oil level and start engine. Inspect for oil leaks. Refer to **OIL, STANDARD PROCEDURE** .

HOUSING, OIL FILTER

DESCRIPTION

DESCRIPTION

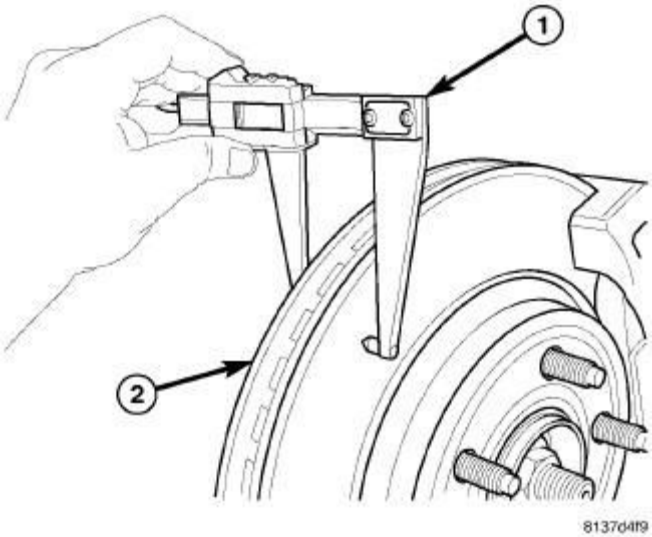

Fig. 443: Oil Filter Housing
Courtesy of CHRYSLER GROUP, LLC

The oil filter housing is located in the V of the cylinder block. The oil filter element is located within the housing and the engine oil cooler is attached to the top of the housing. Both the oil pressure and oil temperature sensors are located at the rear of the housing.

OPERATION

OPERATION

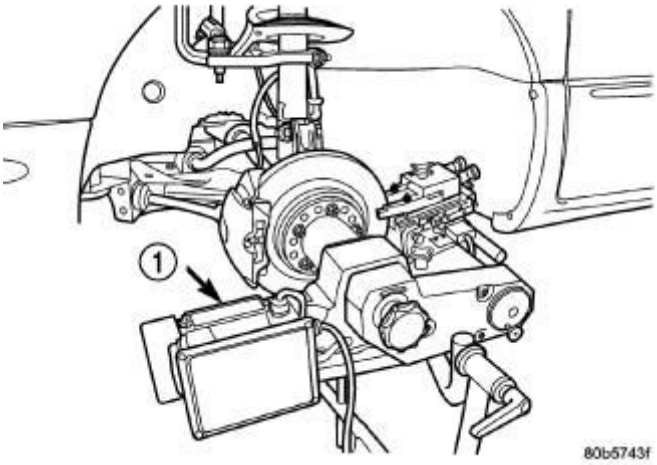

Fig. 444: Oil Flow & Coolant Flow Locations
Courtesy of CHRYSLER GROUP, LLC

Oil flows from the engine oil pump to the oil filter housing inlet (1) and to the oil filter element located within the oil filter housing. After the oil is filtered and then cooled it travels to the main oil gallery (5). An oil filter by-pass is built into the housing and is not serviceable. Removing the oil filter cap from the housing allows oil

to drain from the oil filter cavity into to the crankcase (2).

Coolant flows from the right cylinder block water jacket (3) and from the left cylinder block water jacket (4) into the housing. The coolant flows through the oil cooler and exits the housing from the rear hose nipple (6) where it is returned to the water pump. A coolant by-pass in the housing is designed to direct excessive coolant flow around the oil cooler for continuous circulation.

REMOVAL

REMOVAL

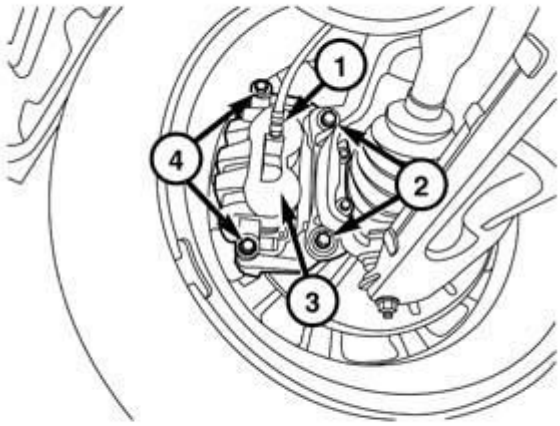

1715005815

Fig. 445: Oil Temperature Sensor Electrical Connector, Oil Pressure Sensor Electrical Connector, Oil Filter Housing, Heater Hose & Bolts
Courtesy of CHRYSLER GROUP, LLC

1. Perform the fuel system pressure release procedure. Refer to **FUEL SYSTEM PRESSURE RELEASE PROCEDURE** .
2. Disconnect and isolate the negative battery cable.
3. Drain the cooling system. Refer to **STANDARD PROCEDURE** .
4. Remove the lower intake manifold. Refer to **MANIFOLD, INTAKE, REMOVAL**.
5. Disconnect the oil temperature sensor electrical connector (5).
6. Disconnect the oil pressure sensor electrical connector (4).
7. Remove five bolts (2) and remove the oil filter housing (1).
8. Lift the oil filter housing and remove the heater hose (3).

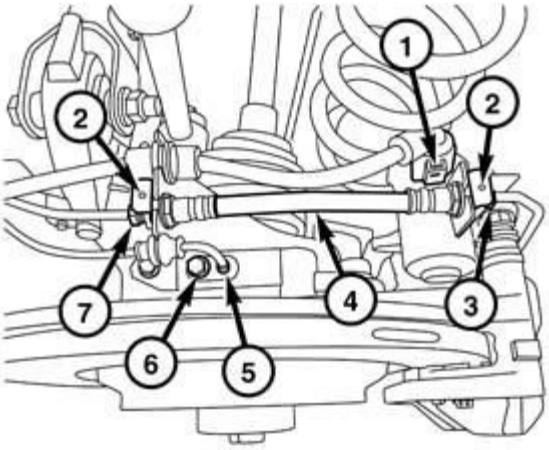

1715005817

Fig. 446: Oil Filter Housing Seals & O-Ring Seal
Courtesy of CHRYSLER GROUP, LLC

9. Remove and discard the oil filter housing seals (2). The O-ring seal (1) can be reused.

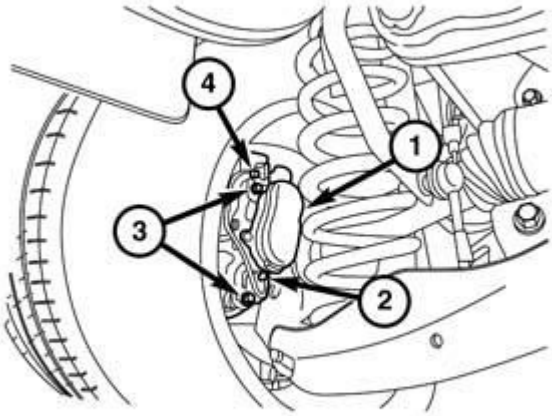

1715005819

Fig. 447: Oil Cooler & Fasteners
Courtesy of CHRYSLER GROUP, LLC

10. If required, remove the two screws (1, 3) and remove the oil cooler (4) from the oil filter housing.

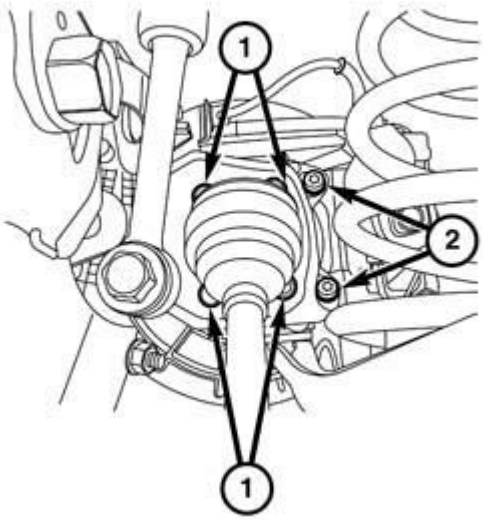

1715005821

Fig. 448: Oil Cooler Seals & Oil Filter Housing
Courtesy of CHRYSLER GROUP, LLC

11. Remove and discard the oil cooler seals (1).

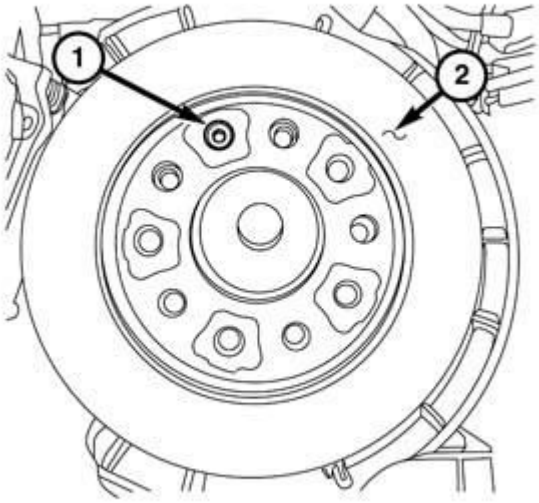

050870142

Fig. 449: Oil Temperature Sensor, Oil Pressure Sensor & Oil Filter Housing

Courtesy of CHRYSLER GROUP, LLC

12. If required, remove the oil temperature sensor (1) from the oil filter housing (3).
13. If required, remove the oil pressure sensor (2) from the oil filter housing (3).

INSTALLATION

INSTALLATION

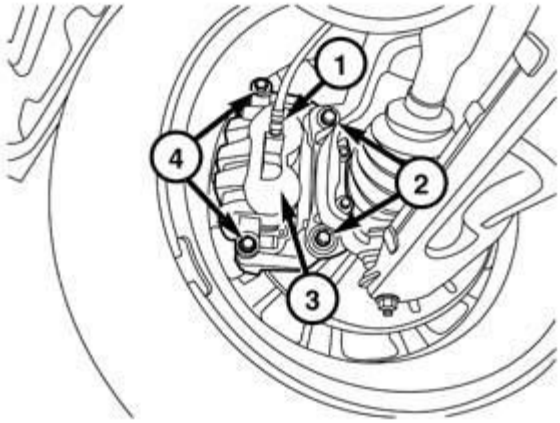

1715005815

Fig. 450: Oil Temperature Sensor, Oil Pressure Sensor & Oil Filter Housing
Courtesy of CHRYSLER GROUP, LLC

1. If removed, install the oil pressure sensor (2) and tighten to the proper specification. Refer to **TORQUE SPECIFICATIONS** .
2. If removed, install the oil temperature sensor (1) and tighten to the proper specification. Refer to **TORQUE SPECIFICATIONS** .

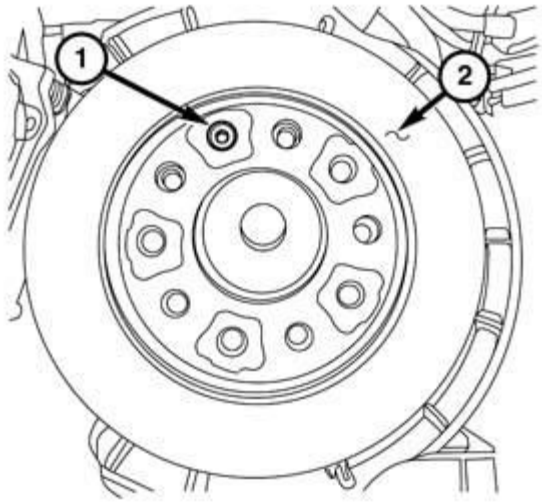

050870142

Fig. 451: Oil Cooler Seals & Oil Filter Housing
Courtesy of CHRYSLER GROUP, LLC

NOTE: Always use new dry seals (1) when installing the oil cooler. Do not lubricate the seals.

3. If removed, install the new oil cooler seals (1) onto the oil filter housing (2).

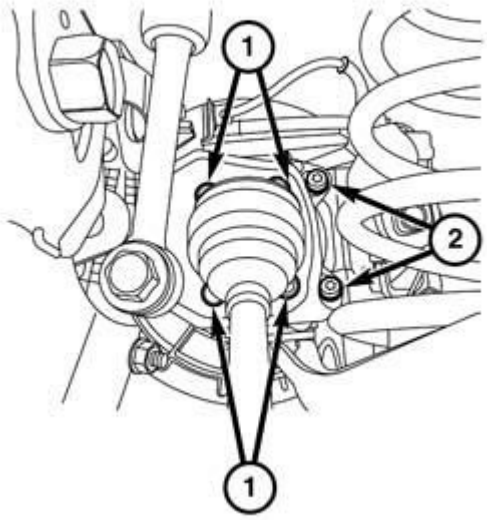

1715005821

Fig. 452: Oil Cooler & Fasteners
Courtesy of CHRYSLER GROUP, LLC

4. If removed, position the oil cooler (4) on the oil filter housing.

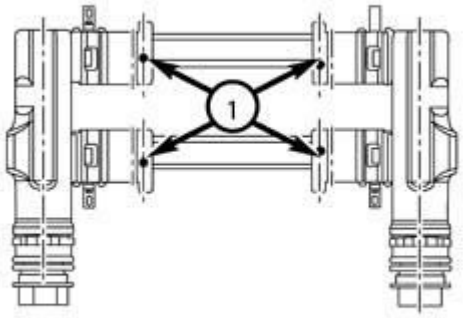

0508012591

Fig. 453: Oil Filter Housing Seals & O-Ring Seal
Courtesy of CHRYSLER GROUP, LLC

NOTE: Always use new dry seals (2) when installing the oil filter housing. Lubricate the O-ring seal with clean engine oil prior to installation.

5. Install new oil filter housing seals (2) onto the oil filter housing.

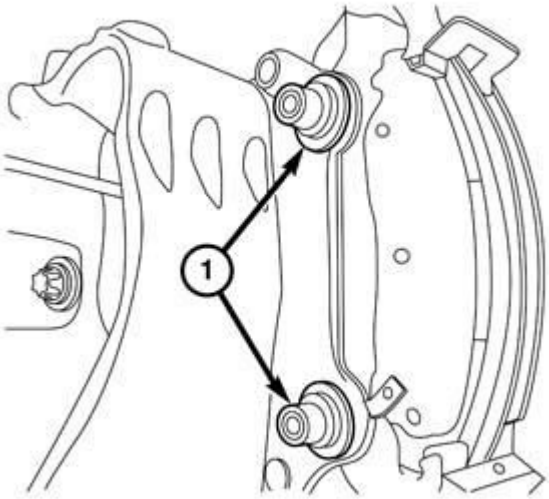

050868487

Fig. 454: Heater Hose, Electrical Connectors, Oil Filter Housing & Bolt Tightening Sequence
Courtesy of CHRYSLER GROUP, LLC

6. Install the heater hose (2) to the oil filter housing (1).
7. Position the oil filter housing (1) on the engine block.
8. Install five bolts and tighten in the sequence shown in illustration to the proper specification. Refer to **TORQUE SPECIFICATIONS** .
9. Connect the oil pressure sensor electrical connector (3).
10. Connect the oil temperature sensor electrical connector (4).
11. Install the lower intake manifold. Refer to **MANIFOLD, INTAKE, INSTALLATION**.
12. If required, install the oil filter and fill the engine crankcase with the proper oil to the correct level. Refer to **OIL, STANDARD PROCEDURE** .
13. Connect the negative battery cable and tighten the nut to the proper specification. Refer to **SPECIFICATIONS** .
14. Fill the cooling system. Refer to **STANDARD PROCEDURE** .
15. Operate the engine until it reaches normal operating temperature. Check cooling system for correct fluid level. Refer to **STANDARD PROCEDURE** .

JET, PISTON OIL COOLER

DESCRIPTION

DESCRIPTION

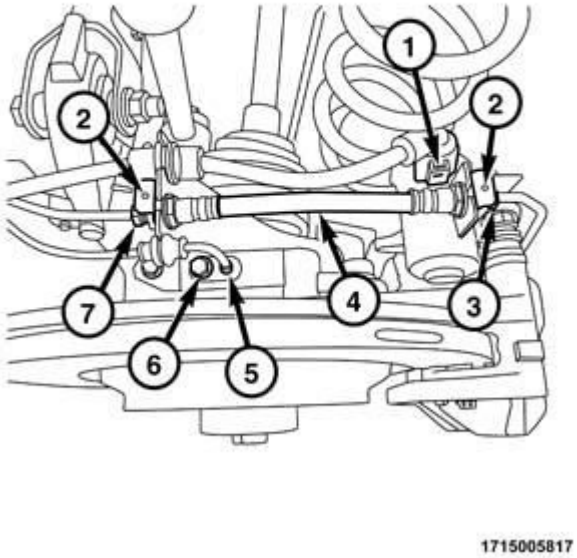

Fig. 455: Engine Blocked-Mounted Oil Jets

Courtesy of CHRYSLER GROUP, LLC

The Piston Oil Cooler Jet (1) is used to aid in the cooling of the pistons and the cylinder walls. There are three Piston Oil Cooler Jets used. Each jet is supplied oil by the main oil gallery. The oil is sprayed upwards onto the bottom of the pistons and sides of the cylinder walls. A Piston Oil Cooler Jet is mounted to the engine block under each pair of opposing cylinders.

Each jet has a check valve that closes below 241 kPa (35 psi) to maintain ample oil pressure at idle. All three oil jets are identical and seal to the engine block using an O-ring and fastener.

REMOVAL

REMOVAL

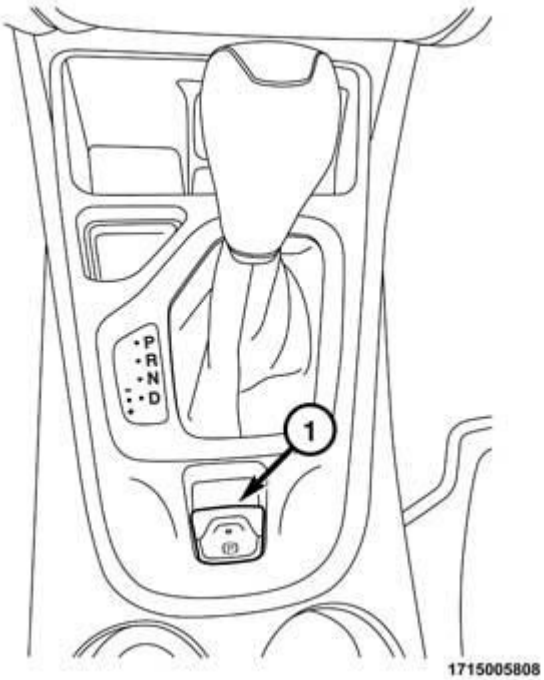

Fig. 456: Piston Oil Cooler Jet & Bolt
Courtesy of CHRYSLER GROUP, LLC

NOTE: Piston oil cooler jet for cylinders one/two shown in illustration. Piston oil cooler jets for cylinders three/four and five/six are similar.

1. Remove the crankshaft. Refer to **CRANKSHAFT, REMOVAL**.
2. Remove the bolt (1) and the piston oil cooler jet(s) (2) from the engine block.

Fig. 457: Piston Oil Cooler Jet O-Ring Seal
Courtesy of CHRYSLER GROUP, LLC

3. Remove and discard the O-ring seal (1) from the piston oil cooler jet(s).

INSTALLATION

INSTALLATION

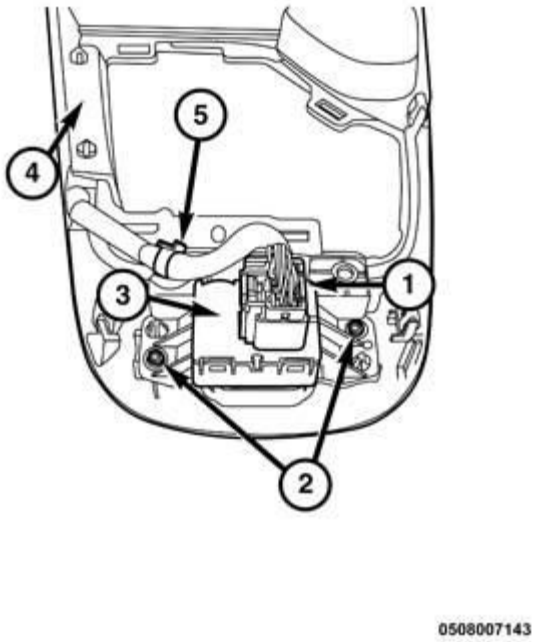

Fig. 458: Piston Oil Cooler Jet O-Ring Seal
Courtesy of CHRYSLER GROUP, LLC

1. Lubricate a new O-ring seal (1) with engine oil and install on the piston oil cooler jet(s).

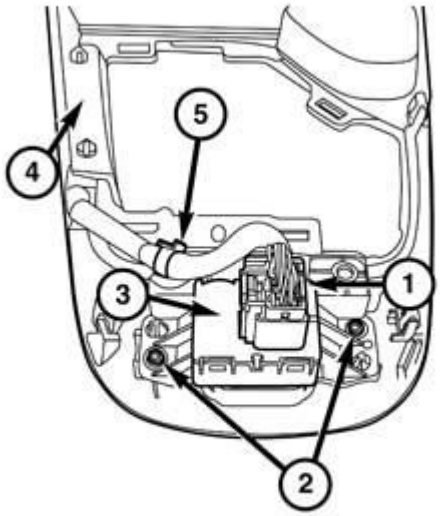

0508007143

Fig. 459: Piston Oil Cooler Jet & Bolt
Courtesy of CHRYSLER GROUP, LLC

NOTE: Piston oil cooler jet for cylinders one/two shown in illustration. Piston oil cooler jets for cylinders three/four and five/six are similar.

2. Install the piston oil cooler jet(s) (2) into the engine block and tighten the retaining bolt (1) to the proper specification. Refer to **TORQUE SPECIFICATIONS** .
3. Install the crankshaft. Refer to **CRANKSHAFT, INSTALLATION**.
4. If removed, install the oil filter and fill the engine crankcase with the proper oil to the correct level. Refer to **OIL, STANDARD PROCEDURE** .
5. Fill the cooling system. Refer to **STANDARD PROCEDURE** .
6. Connect the negative battery cable and tighten the nut to the proper specification. Refer to **SPECIFICATIONS** .
7. Run the engine until it reaches normal operating temperature. Check cooling system for correct fluid level. Refer to **STANDARD PROCEDURE** .

OIL

STANDARD PROCEDURE

STANDARD PROCEDURE - ENGINE OIL AND FILTER CHANGE

ENGINE OIL SERVICE

WARNING: New or used engine oil can be irritating to the skin. Avoid prolonged or repeated skin contact with engine oil. Contaminants in used engine oil, caused by internal combustion, can be hazardous to your health. Thoroughly wash exposed skin with soap and water. Do not wash skin with gasoline, diesel fuel, thinner, or solvents, health problems can result. Do not pollute, dispose of used engine oil properly. Contact your dealer or government agency for location of collection center in your area.

Change the engine oil and filter at mileage and time intervals described in the Maintenance Schedule. Refer to **MAINTENANCE SCHEDULES, DESCRIPTION** .

1. Run the engine until achieving normal operating temperature.
2. Position the vehicle on a level surface and turn the engine off.
3. Remove the engine cover.

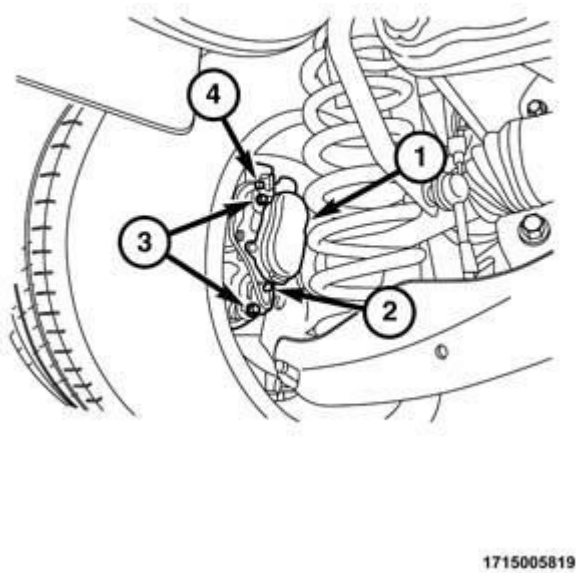

Fig. 460: Oil Filter Cap, O-Ring Seal & Oil Filter
Courtesy of CHRYSLER GROUP, LLC

CAUTION: When performing an engine oil change, the oil filter cap must be removed. Removing the oil filter cap releases oil held within the oil filter cavity and allows it to drain into the sump. Failure to remove the cap prior to reinstallation of the drain plug will not allow complete draining of the used engine oil.

4. Place an oil absorbent cloth around the oil filter housing at the base of the oil filter cap.

NOTE: The oil filter is attached to the oil filter cap.

5. Rotate the oil filter cap (1) counterclockwise and remove.
6. Raise and support the vehicle. Refer to **HOISTING, STANDARD PROCEDURE** .

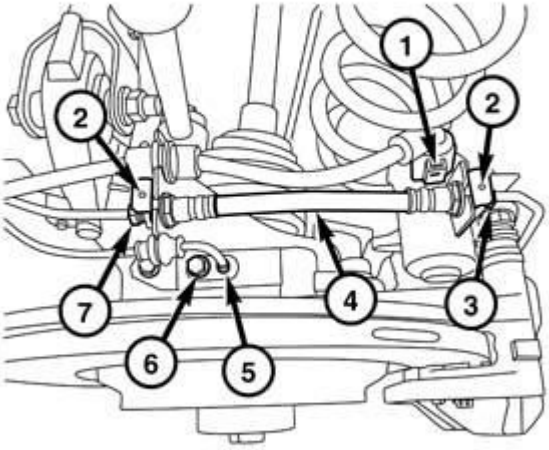

1715005817

Fig. 461: Crankcase Drain Plug
Courtesy of CHRYSLER GROUP, LLC

7. Place a suitable drain pan under the crankcase drain plug (1).
8. Remove the drain plug (1) from oil pan and allow the oil to drain into the drain pan. Inspect the drain plug threads for stretching or other damage. Replace the drain plug and gasket if damaged.
9. Install the drain plug (1) in the oil pan and tighten to the proper specification. Refer to **TORQUE SPECIFICATIONS** .
10. Lower the vehicle.

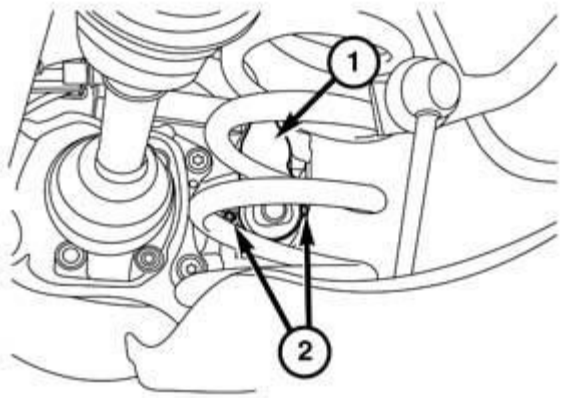

1710009336

Fig. 462: O-Ring Seal, Oil Filter Cap & Oil Filter
Courtesy of CHRYSLER GROUP, LLC

11. Remove the oil filter (3) from the oil filter cap (2).
12. Remove and discard the O-ring seal (1).

NOTE: It is not necessary to pre-oil the oil filter or fill the oil filter housing.

13. Lightly lubricate the new O-ring seal (1) with clean engine oil.
14. Install the O-ring seal (1) on the filter cap (2).
15. Install the new oil filter (3) into the oil filter cap (2).

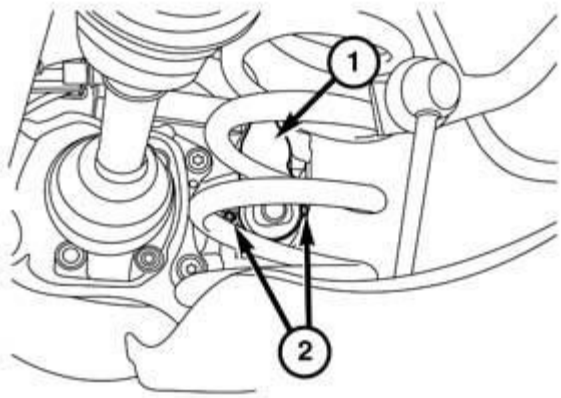

1710009336

Fig. 463: Oil Filter Cap, O-Ring Seal & Oil Filter
Courtesy of CHRYSLER GROUP, LLC

16. Thread the oil filter cap (1) into the oil filter housing and tighten to the proper specification. Refer to **TORQUE SPECIFICATIONS** .
17. Remove the oil fill cap. Fill the crankcase with the specified type and amount of engine oil. Refer to **CAPACITIES AND RECOMMENDED FLUIDS, SPECIFICATIONS** .
18. Install the oil fill cap.
19. Start the engine and inspect for leaks.
20. Stop the engine and check the oil level.
21. Install the engine cover.

OIL FILTER SPECIFICATION

All engines are equipped with a high quality full-flow, disposable type oil filter. When replacing oil filter, use a Mopar® filter or equivalent.

USED ENGINE OIL DISPOSAL

Care should be exercised when disposing of used engine oil after it has been drained from a vehicle engine. Refer to WARNING under **ENGINE OIL SERVICE**.

PAN, OIL

DESCRIPTION

DESCRIPTION

ONE PIECE

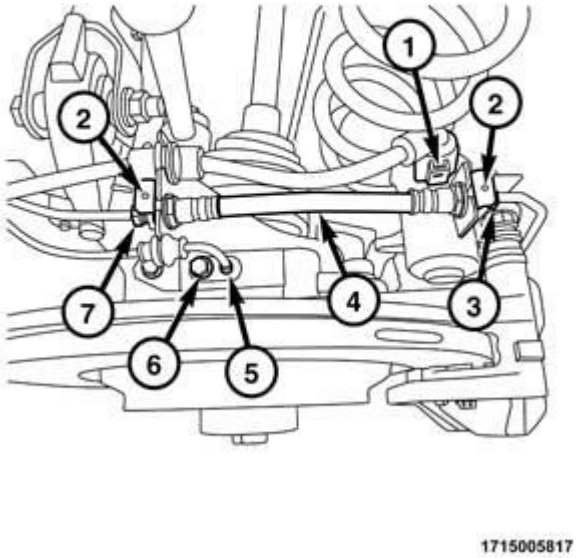

Fig. 464: One-Piece Oil Pan
Courtesy of CHRYSLER GROUP, LLC

The oil pan (2) is cast aluminum and also serves as the lower end structural support. The oil pan is sealed using Mopar® Threebond Engine RTV Sealant.

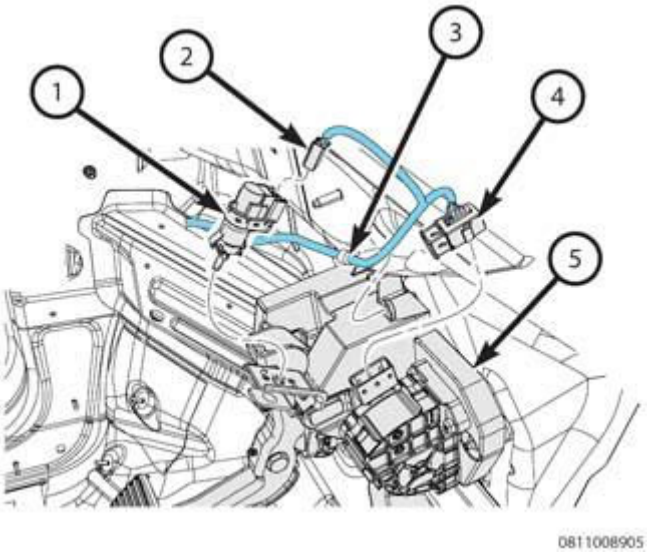

Fig. 465: Windage Tray
Courtesy of CHRYSLER GROUP, LLC

The high pressure die cast aluminum windage tray is mounted to the main bearing caps and is designed to keep oil off of the connecting rods as the crankshaft rotates. When the oil is kept off the connecting rods, the engine rotates easier and oil foaming decreases. Like the oil pan, the windage tray is designed to stiffen the lower end of the engine. The tray is directional and the main bearing cap bolts hold it in place.

TWO PIECE

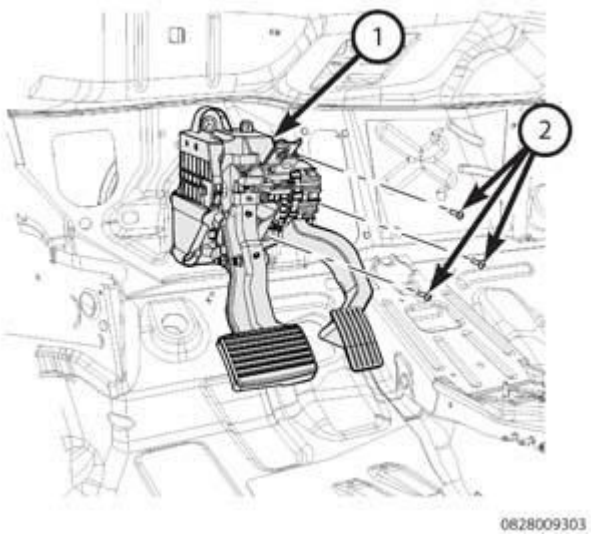

Fig. 466: Upper & Lower Oil Pan
Courtesy of CHRYSLER GROUP, LLC

There is an upper and lower oil pan. The upper oil pan is cast aluminum and also serves as the lower end structural support. The lower pan is a stamped steel design. Both upper and lower oil pans are sealed using Mopar® Threebond Engine RTV Sealant. The lower oil pan must be removed in order to access all of the upper oil pan attaching bolts.

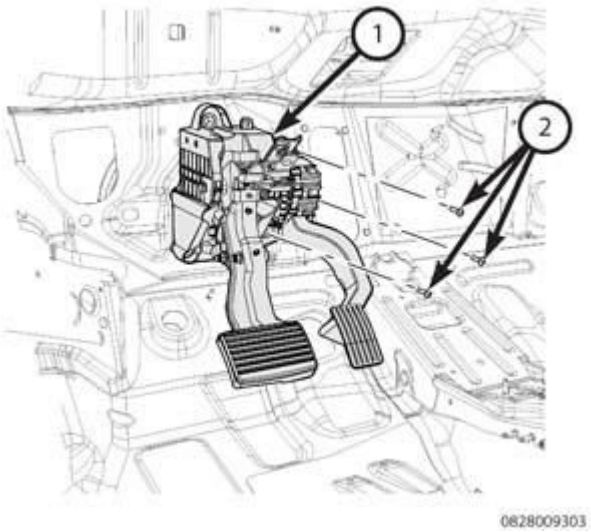

Fig. 467: Windage Tray

Courtesy of CHRYSLER GROUP, LLC

The high pressure die cast aluminum windage tray is mounted to the main bearing caps and is designed to keep oil off of the connecting rods as the crankshaft rotates. When the oil is kept off the connecting rods, the engine rotates easier and oil foaming decreases. Like the oil pan, the windage tray is designed to stiffen the lower end of the engine. The tray is directional and the main bearing cap bolts hold it in place.

REMOVAL

ONE PIECE

1. Disconnect and isolate the negative battery cable.
2. Raise and support the vehicle. Refer to **HOISTING, STANDARD PROCEDURE** .
3. Remove the belly pan.
4. Drain the engine oil. Refer to **OIL, STANDARD PROCEDURE** .
5. Remove the crossunder pipe. Refer to **PIPE, EXHAUST CROSSUNDER, REMOVAL** .

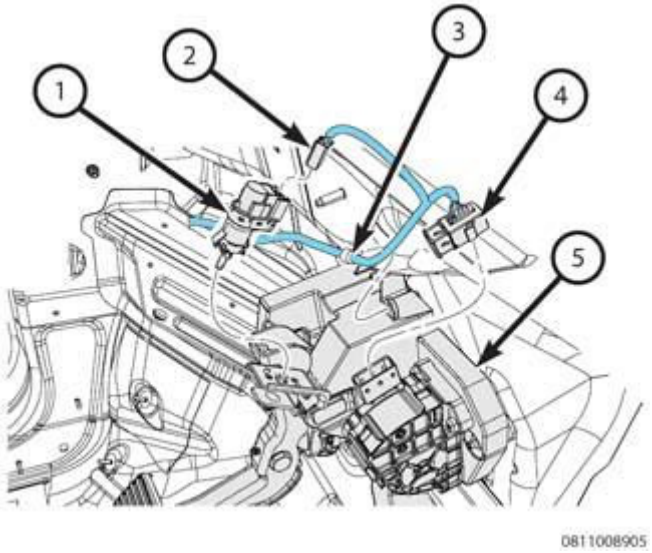

Fig. 468: Torque Converter Housing Dust Cover & Rubber Plugs
Courtesy of CHRYSLER GROUP, LLC

6. Remove the oil pan to transmission bolts.
7. Remove the torque converter bolt access cover (1).
8. Remove two rubber plugs (2) covering the rear oil seal retainer flange bolts.

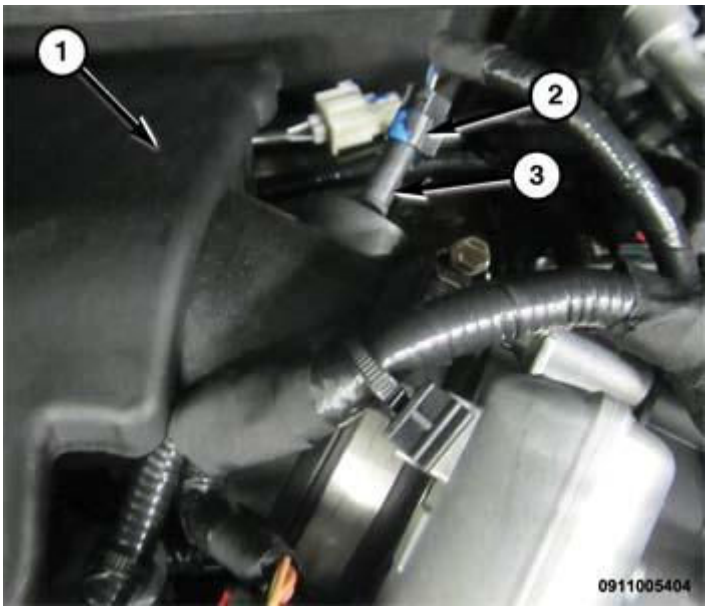

Fig. 469: Rear Oil Seal Retainer Flange Bolts
Courtesy of CHRYSLER GROUP, LLC

NOTE: Shown in illustration with transmission removed for clarity.

CAUTION: There are two hidden M6 bolts that must be removed from the rear of the upper oil pan flange. If these bolts are not removed, the rear oil seal retainer flange will be severely damaged.

9. Remove the bolts (1) from the rear oil seal retainer flange.

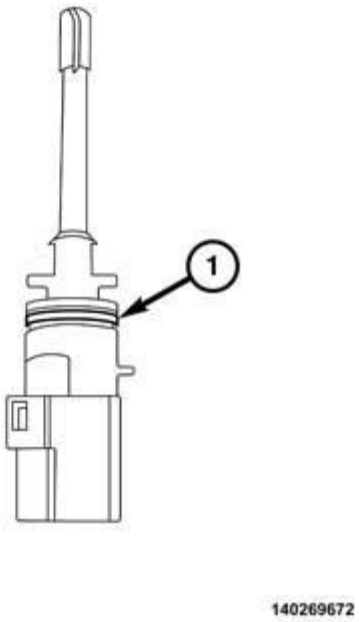

Fig. 470: Oil Level Indicator Tube & Bolt
Courtesy of CHRYSLER GROUP, LLC

10. Remove the nut (2) that secures the oil indicator tube (1) to the cylinder head.

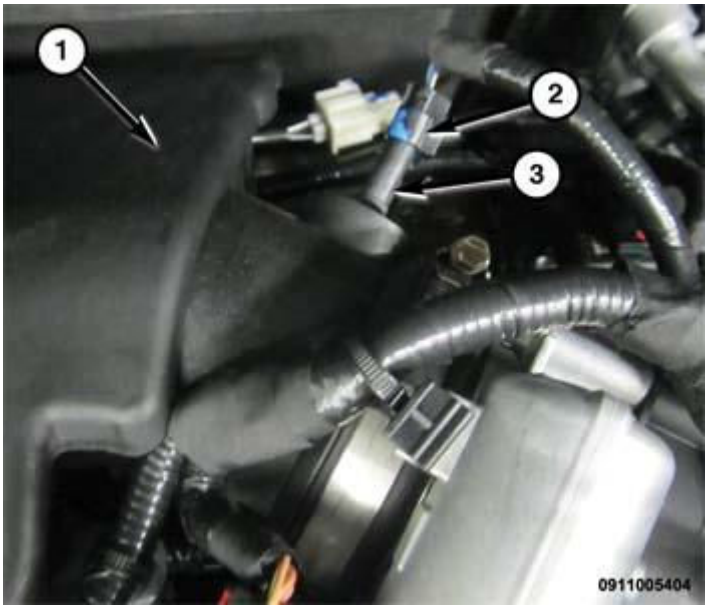

Fig. 471: One-Piece Oil Pan
Courtesy of CHRYSLER GROUP, LLC

11. Remove the oil pan mounting bolts (1).
12. Using the pry points, carefully remove the upper oil pan.

13. Remove all residual sealant (1) from the upper and lower oil pans, timing chain cover, rear seal retainer and engine block mating surfaces. Refer to **PAN, OIL, CLEANING**.

TWO PIECE

LOWER

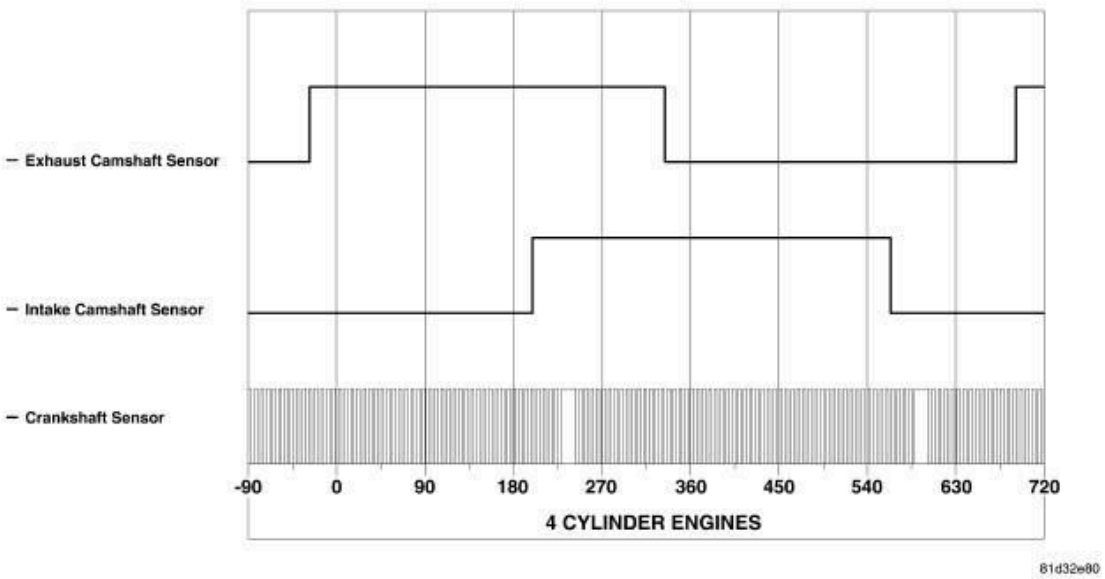

Fig. 472: Lower Oil Pan & Fasteners
Courtesy of CHRYSLER GROUP, LLC

1. Raise and support the vehicle. Refer to **HOISTING, STANDARD PROCEDURE** .
2. Drain the engine oil. Refer to **OIL, STANDARD PROCEDURE** .
3. Remove the front skid plate. Refer to **PLATE, SKID, FRONT, REMOVAL** .

NOTE: The lower oil pan must be removed to access all of the upper oil pan retaining bolts.

4. Remove sixteen bolts (2), two nuts (3) and two studs (4) from the flange of the lower oil pan (1).

CAUTION: Do not pry on the lower oil pan flange. There are no designated pry points for lower oil pan removal. Prying on only one or a few locations could bend the flange and damage the pan.

5. Using care, apply a side force to the lower oil pan in order to shear the sealant bond and remove the pan.
6. Remove all residual sealant from the upper and lower oil pans. Refer to **PAN, OIL, CLEANING**.

UPPER

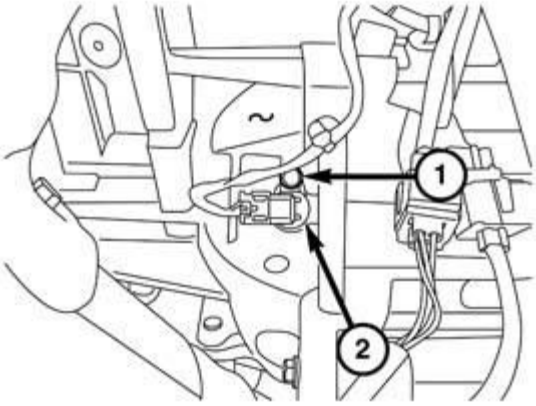

140268955

Fig. 473: Oil Level Indicator Tube & Bolt
Courtesy of CHRYSLER GROUP, LLC

1. Disconnect and isolate the negative battery cable.
2. **Loosen** the bolt (2) that secures the oil level indicator tube (1) to the cylinder head.
3. Raise and support the vehicle. Refer to **HOISTING, STANDARD PROCEDURE** .
4. Remove the front and middle skid plates. Refer to **PLATE, SKID, FRONT, REMOVAL** .
5. Drain the engine oil. Refer to **OIL, STANDARD PROCEDURE** .

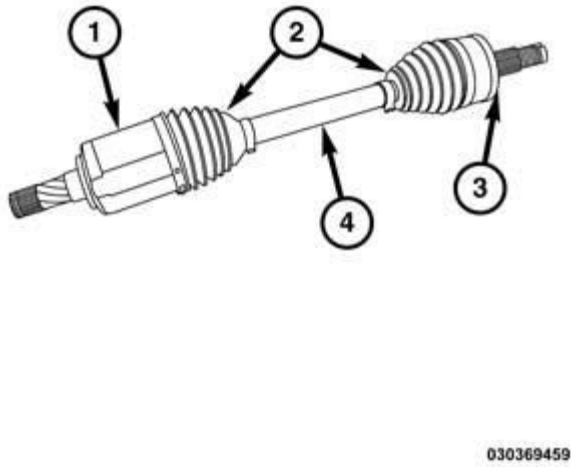

Fig. 474: PTU Support Bracket & Bolts At Block & Oil Pan
Courtesy of CHRYSLER GROUP, LLC

6. Remove the bolts (4) that secure the Power Transfer Unit (PTU) support bracket (2) to the engine block and oil pan (3).
7. Remove the bolts (1) that secure the support bracket to the PTU.
8. Remove the PTU support bracket from the vehicle.
9. Remove the crossunder pipe. Refer to **PIPE, EXHAUST CROSSUNDER, REMOVAL** .

NOTE: The lower oil pan must be removed to access all of the upper oil pan retaining bolts.

10. Remove the lower oil pan. Refer to **PAN, OIL, REMOVAL**.

CAUTION: There are two hidden M6 bolts that must be removed from the rear of the upper oil pan flange. If these bolts are not removed, the rear oil seal retainer flange will be severely damaged.

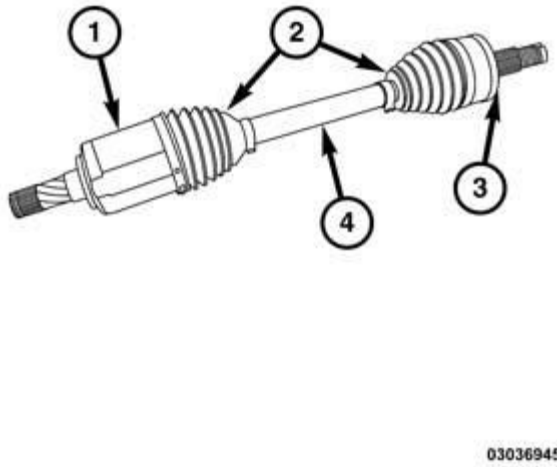

Fig. 475: Torque Converter Housing Dust Cover & Rubber Plugs
Courtesy of CHRYSLER GROUP, LLC

11. Remove the torque converter bolt access cover (1).
12. Remove two rubber plugs (2) covering the rear oil seal retainer flange bolts.

NOTE: Shown in illustration with transmission removed for clarity.

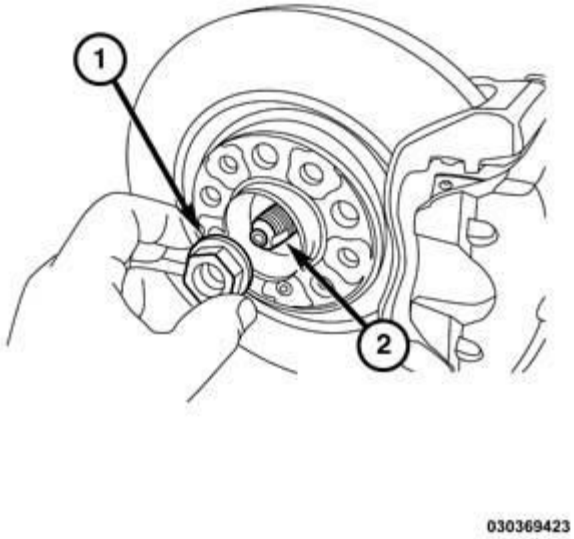

Fig. 476: Rear Oil Seal Retainer Flange Bolts
Courtesy of CHRYSLER GROUP, LLC

13. Remove the two bolts (1) from the rear oil seal retainer flange.

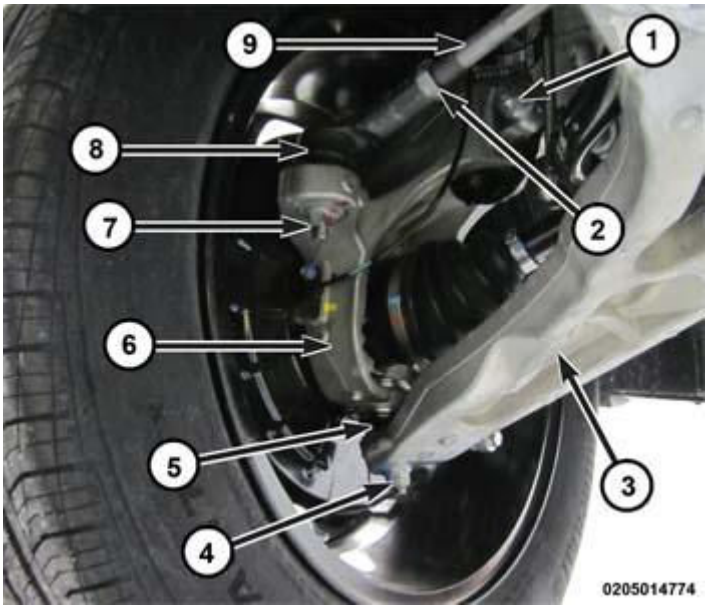

Fig. 477: Removing/Installing Upper Oil Pan
Courtesy of CHRYSLER GROUP, LLC

14. Remove the five oil pan to transmission bolts (1).
15. Remove the bolts (2, 3) that secure the oil pan to the engine block.

16. Using the pry points, carefully remove the upper oil pan.
17. Remove all residual sealant (1) from the upper and lower oil pans, timing chain cover, rear seal retainer and engine block mating surfaces. Refer to **PAN, OIL, CLEANING**.

CLEANING

CLEANING

CAUTION: Clean the upper and lower oil pans, timing chain cover, rear seal retainer and engine block mating surfaces thoroughly with isopropyl alcohol in preparation for sealant application. All surfaces that seal with RTV must be oil and contamination free to ensure proper adhesion of the RTV to the mating surface to prevent leaks.

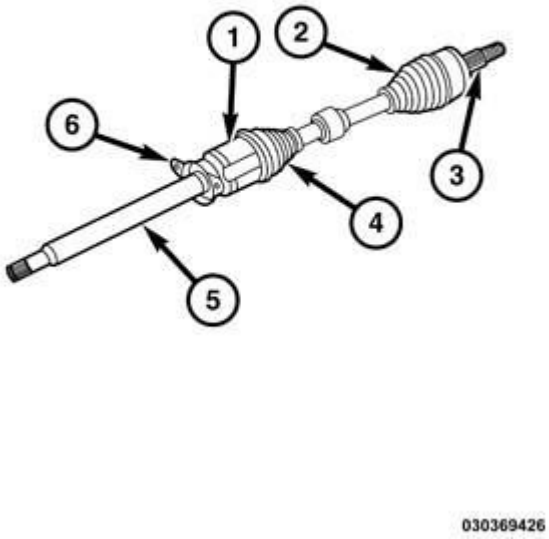

Fig. 478: RTV Sealant
Courtesy of CHRYSLER GROUP, LLC

1. Clean the oil pan in solvent and wipe dry with a clean cloth.

CAUTION: Do not use oil based liquids, wire brushes, abrasive wheels or metal scrapers to clean the engine gasket surfaces. Use only isopropyl (rubbing) alcohol, along with plastic or wooden scrapers. Improper gasket surface preparation may result in engine fluid leakage.

2. Remove all residual sealant (1) from the oil pan. Refer to **ENGINE, STANDARD PROCEDURE** .

INSTALLATION

INSTALLATION

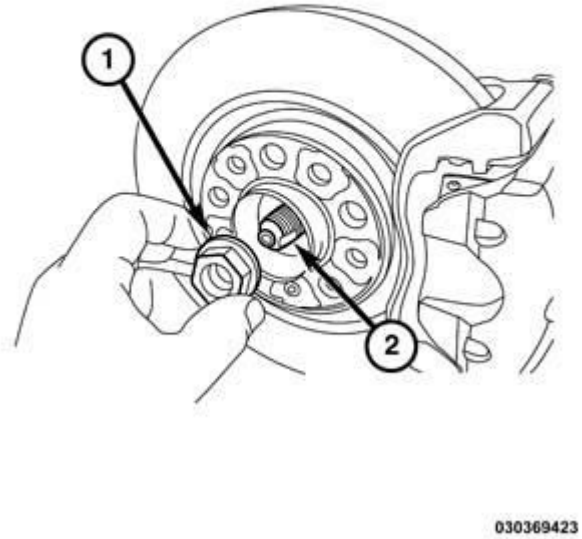

Fig. 479: Locating Sealant On Upper Oil Pan
Courtesy of CHRYSLER GROUP, LLC

CAUTION: Engine assembly requires the use of a unique sealant that is compatible with engine oil. Using a sealant other than Mopar® Threebond Engine RTV Sealant may result in engine fluid leakage.

CAUTION: Clean the upper and lower oil pans, timing chain cover, rear seal retainer and engine block mating surfaces thoroughly with isopropyl alcohol in preparation for sealant application. All surfaces that seal with RTV must be oil and contamination free to ensure proper adhesion of the RTV to the mating surface to prevent leaks.

CAUTION: Following the application of Mopar® Threebond Engine RTV Sealant to the gasket surfaces, the components must be assembled within 20 minutes and the attaching fasteners must be tightened to specification within 45 minutes. Prolonged exposure to the air prior to assembly may result in engine fluid leakage.

1. Apply a 2 to 3 mm wide bead of Mopar® Threebond Engine RTV Sealant to the upper oil pan as shown in illustration in the following locations:
   - Oil pan to engine block flange (1)

- Two timing cover to engine block T-joints (2)
- Two rear seal retainer to engine block T-joints (3)

CAUTION: Make sure that the rear face of the oil pan is flush to the transmission bell housing before tightening any of the oil pan mounting bolts. A gap between the oil pan and the transmission could crack the oil pan or transmission casting.

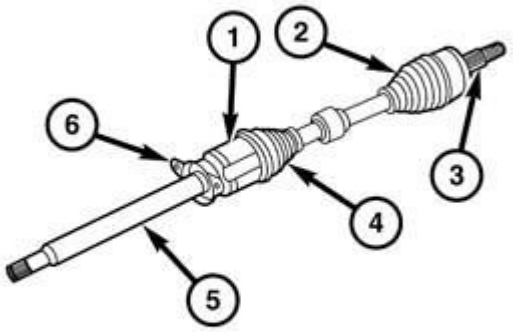

030369426

Fig. 480: One-Piece Oil Pan
Courtesy of CHRYSLER GROUP, LLC

2. Install the oil pan (2) to the engine block and flush to the transmission bell housing. Secure the oil pan to the engine block with the oil pan mounting bolts (1) finger tight.
3. Install the five oil pan to transmission bolts and tighten to the proper specification. Refer to **TORQUE SPECIFICATIONS** .
4. Tighten the oil pan mounting bolts to the proper specification. Refer to **TORQUE SPECIFICATIONS** .

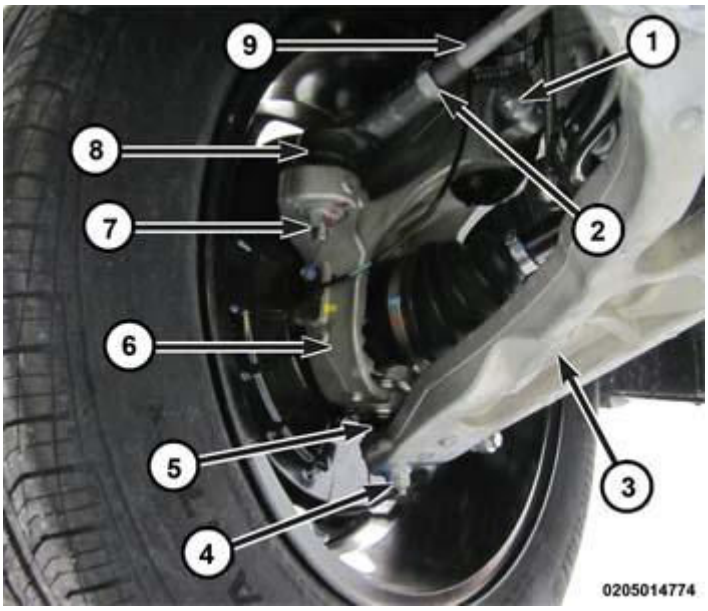

Fig. 481: Rear Oil Seal Retainer Flange Bolts
Courtesy of CHRYSLER GROUP, LLC

NOTE: Shown in illustration with transmission removed for clarity.

5. Install the two bolts (1) to the rear oil seal retainer flange and tighten to the proper specification. Refer to **TORQUE SPECIFICATIONS** .

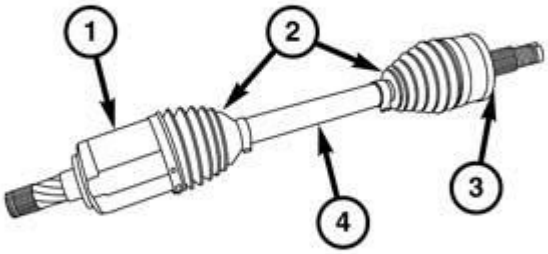

Fig. 482: Torque Converter Housing Dust Cover & Rubber Plugs
Courtesy of CHRYSLER GROUP, LLC

6. Install the torque converter bolt access cover (1).
7. Install the two rubber plugs (2) covering the rear oil seal retainer flange bolts.
8. Install the crossunder pipe. Refer to **PIPE, EXHAUST CROSSUNDER, INSTALLATION** .
9. Install the belly pan.
10. Lower the vehicle.

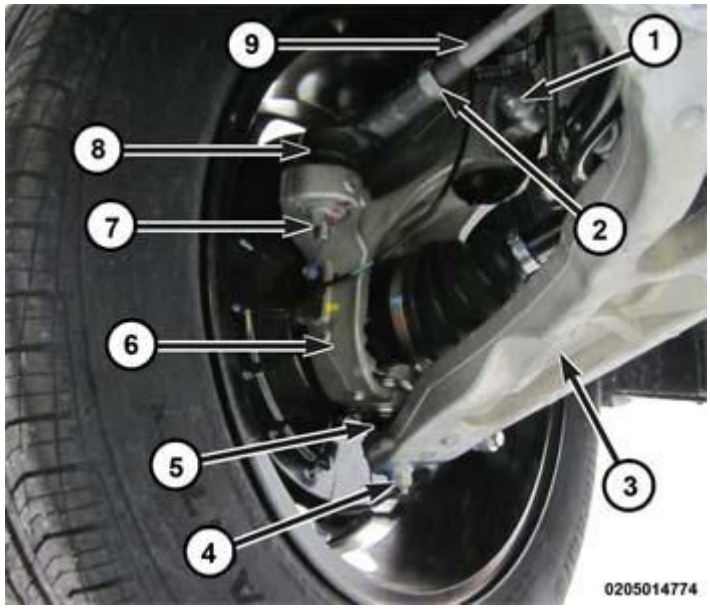

Fig. 483: Oil Level Indicator Tube & Bolt
Courtesy of CHRYSLER GROUP, LLC

11. Install the oil level indicator tube (1) into the oil pan.
12. Tighten the nut (2) to the proper specification. Refer to **TORQUE SPECIFICATIONS** .
13. If removed, install the oil filter and fill the engine crankcase with the proper oil to the correct level. Refer to **OIL, STANDARD PROCEDURE** .
14. Connect the negative battery cable and tighten nut to the proper specification. Refer to **SPECIFICATIONS** .
15. Run the engine until it reaches normal operating temperature.

TWO PIECE

LOWER

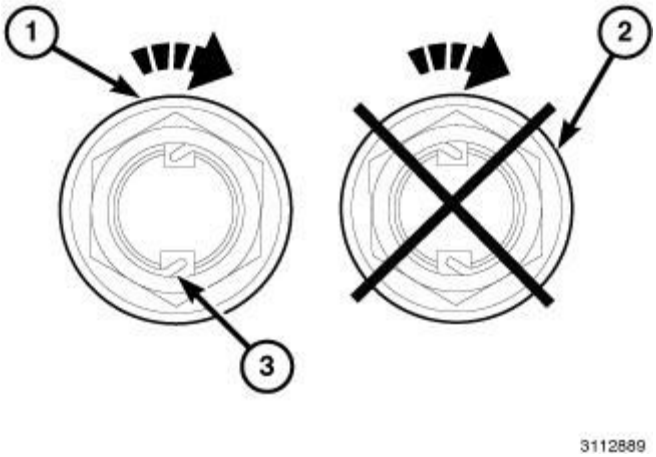

Fig. 484: Lower Oil Pan & Fasteners
Courtesy of CHRYSLER GROUP, LLC

1. Clean the upper and lower oil pan mating surfaces with isopropyl alcohol in preparation for sealant application.

CAUTION: Engine assembly requires the use of a unique sealant that is compatible with engine oil. Using a sealant other than Mopar® Threebond Engine RTV Sealant may result in engine fluid leakage.

CAUTION: Following the application of Mopar® Threebond Engine RTV Sealant to the gasket surfaces, the components must be assembled within 20 minutes and the attaching fasteners must be tightened to specification within 45 minutes. Prolonged exposure to the air prior to assembly may result in engine fluid leakage.

2. Apply a 2 to 3 mm wide bead of Mopar® Threebond Engine RTV Sealant to the lower oil pan.
3. Install the two studs (4) into the upper oil pan flange.
4. Install the lower oil pan to the upper oil pan with sixteen bolts (2) and two nuts (3). Tighten to the proper specification. Refer to **TORQUE SPECIFICATIONS** .

CAUTION: Following assembly, the Mopar® Threebond Engine RTV Sealant must be allowed to dry for 45 minutes prior to adding oil and engine operation. Premature exposure to oil prior to drying may result in engine fluid leakage.

5. Install the front skid plate. Refer to **PLATE, SKID, FRONT, INSTALLATION** .
6. Lower the vehicle.
7. If removed, install the oil filter and fill the engine crankcase with the proper oil to the correct level. Refer

to **OIL, STANDARD PROCEDURE** .

8. Run the engine until it reaches normal operating temperature.
9. Check the oil pan for leaks.

UPPER

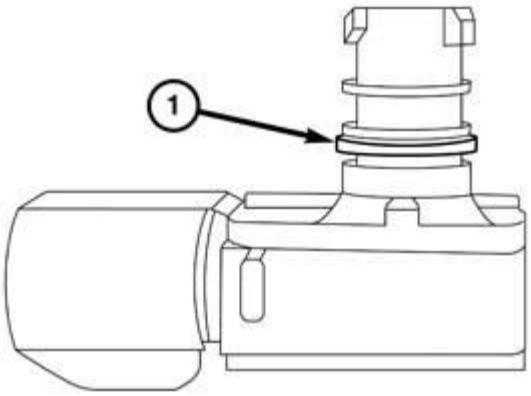

140269670

Fig. 485: RTV Sealant
Courtesy of CHRYSLER GROUP, LLC

CAUTION: Engine assembly requires the use of a unique sealant that is compatible with engine oil. Using a sealant other than Mopar® Threebond Engine RTV Sealant may result in engine fluid leakage.

CAUTION: Clean the upper and lower oil pans, timing chain cover, rear seal retainer and engine block mating surfaces thoroughly with isopropyl alcohol in preparation for sealant application. All surfaces that seal with RTV must be oil and contamination free to ensure proper adhesion of the RTV to the mating surface to prevent leaks.

CAUTION: Following the application of Mopar® Threebond Engine RTV Sealant to the gasket surfaces, the components must be assembled within 20 minutes and the attaching fasteners must be tightened to specification within 45 minutes. Prolonged exposure to the air prior to assembly may result in engine fluid leakage.

1. Apply a 2 to 3 mm wide bead of Mopar® Threebond Engine RTV Sealant to the upper oil pan as shown

in illustration in the following locations:

- Oil pan to engine block flange (1)
- Two timing cover to engine block T-joints (2)
- Two rear seal retainer to engine block T-joints (3)

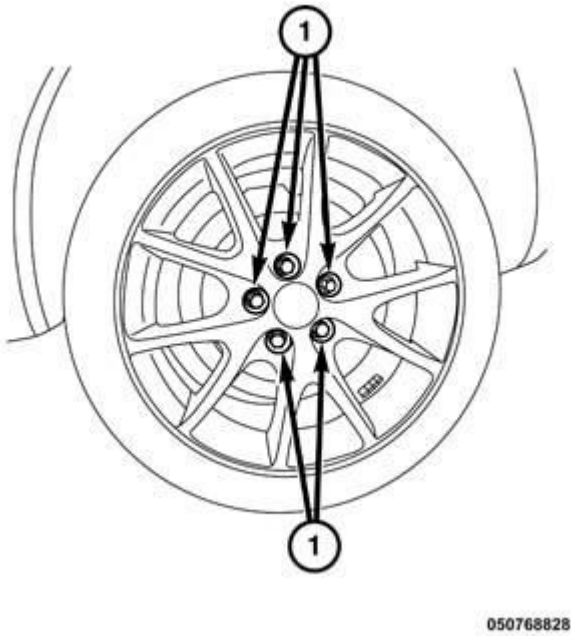

Fig. 486: Removing/Installing Upper Oil Pan
Courtesy of CHRYSLER GROUP, LLC

CAUTION: Make sure that the rear face of the oil pan is flush to the transmission bell housing before tightening any of the oil pan mounting bolts. A gap between the oil pan and the transmission could crack the oil pan or transmission casting.

2. Guide the oil indicator tube into the oil pan while positioning the oil pan to the engine and the transmission bell housing.
3. Secure the oil pan to the engine block with nineteen oil pan mounting bolts (2, 3) finger tight.
4. Install the five oil pan to transmission bolts (1) and tighten to the proper specification. Refer to **TORQUE SPECIFICATIONS** .
5. Tighten the nineteen previously installed oil pan mounting bolts (2, 3) to the proper specification. Refer to **TORQUE SPECIFICATIONS** .

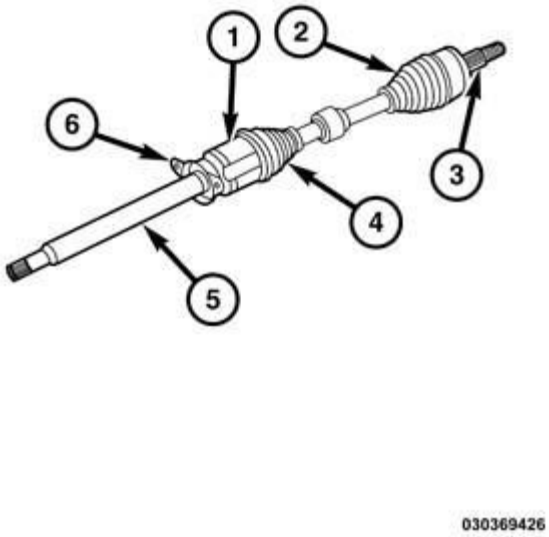

Fig. 487: Rear Oil Seal Retainer Flange Bolts
Courtesy of CHRYSLER GROUP, LLC

NOTE: Shown in illustration with transmission removed for clarity.

6. Install the two bolts (1) to the rear oil seal retainer flange and tighten to the proper specification. Refer to **TORQUE SPECIFICATIONS** .

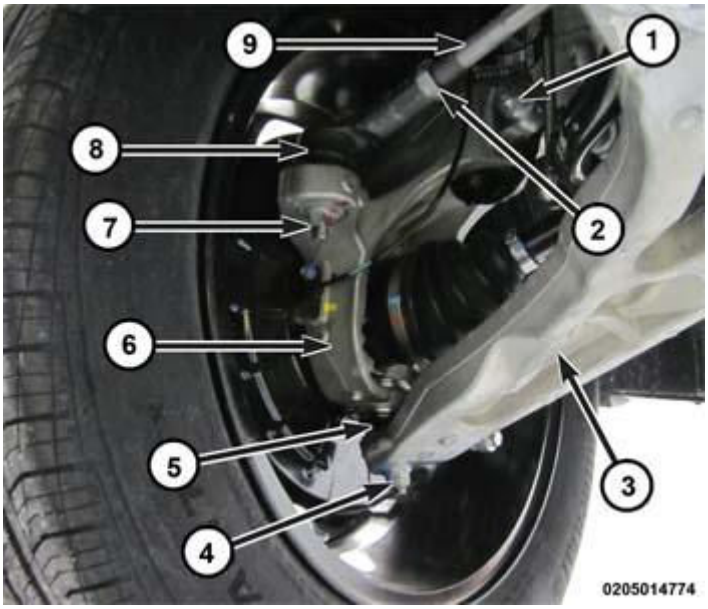

Fig. 488: Torque Converter Housing Dust Cover & Rubber Plugs
Courtesy of CHRYSLER GROUP, LLC

7. Install the torque converter bolt access cover (1).
8. Install the two rubber plugs (2) covering the rear oil seal retainer flange bolts.
9. Install the lower oil pan. Refer to **PAN, OIL, INSTALLATION**.

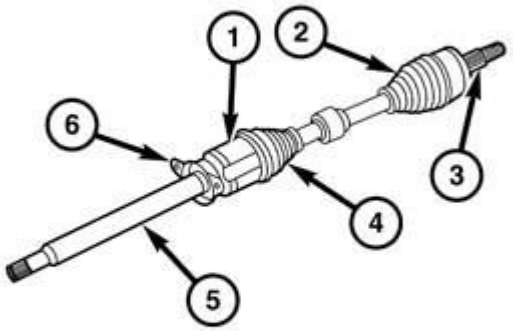

030369426

Fig. 489: PTU Support Bracket & Bolts At Block & Oil Pan
Courtesy of CHRYSLER GROUP, LLC

10. Position the Power Transfer Unit (PTU) support bracket (2) to the engine block and oil pan (3). Hand start the bolts (4).
11. Tighten the PTU support bracket to the PTU assembly bolts (1) to the proper specification. Refer to **SPECIFICATIONS** .
12. Tighten the PTU support bracket to the engine block and oil pan to the proper specification. Refer to **SPECIFICATIONS** .
13. Install the crossunder pipe (2). Refer to **PIPE, EXHAUST CROSSUNDER, INSTALLATION** .
14. Install the front skid plate. Refer to **PLATE, SKID, FRONT, INSTALLATION** .
15. Lower the vehicle.

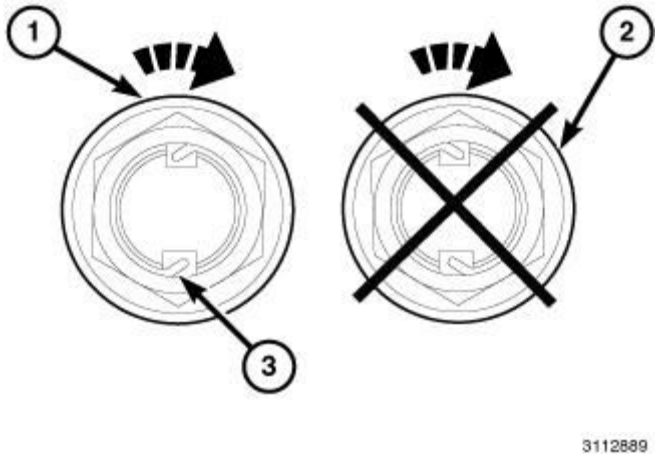

Fig. 490: Oil Level Indicator Tube & Bolt
Courtesy of CHRYSLER GROUP, LLC

16. Tighten the oil level indicator bolt (2) to the proper specification. Refer to **TORQUE SPECIFICATIONS** .
17. If removed, install the oil filter and fill the engine crankcase with the proper oil to the correct level. Refer to **OIL, STANDARD PROCEDURE** .
18. Connect the negative battery cable and tighten nut to the proper specification. Refer to **SPECIFICATIONS** .
19. Run the engine until it reaches normal operating temperature.
20. Check the oil pan for leaks.

PICK-UP, OIL PUMP

REMOVAL

REMOVAL

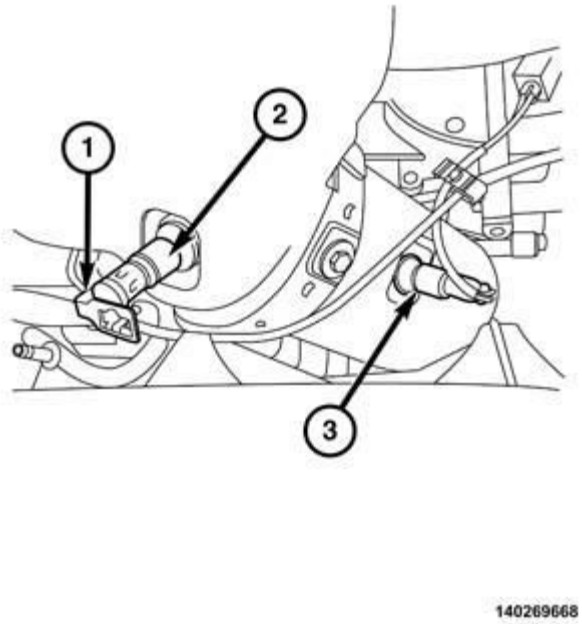

Fig. 491: Oil Pick-Up Tube & Bolt
Courtesy of CHRYSLER GROUP, LLC

1. Disconnect and isolate the negative battery cable.
2. Remove the oil pan. Refer to **PAN, OIL, REMOVAL**.
3. Remove the bolt (3) and the oil pick-up tube (1) from the oil pump.

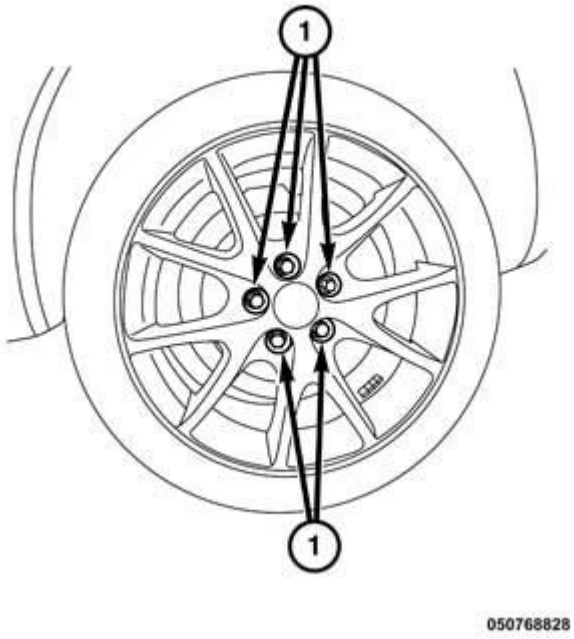

Fig. 492: Oil Pick-Up Tube O-Ring Seal
Courtesy of CHRYSLER GROUP, LLC

4. Remove and discard the O-ring seal (1) from the oil pick-up tube.

INSTALLATION

INSTALLATION

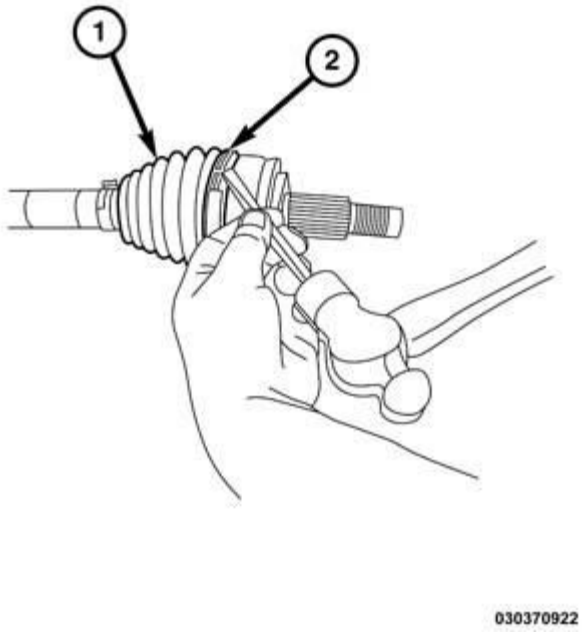

Fig. 493: Oil Pick-Up Tube O-Ring Seal
Courtesy of CHRYSLER GROUP, LLC

1. Lightly lubricate the new O-ring seal (1) with engine oil and install on the oil pick-up tube.

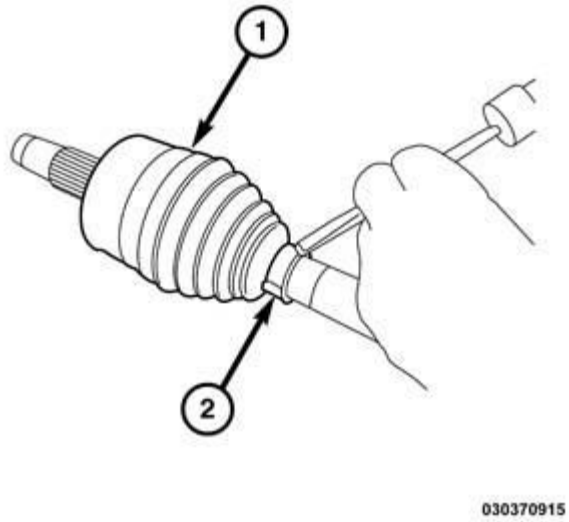

Fig. 494: Oil Pick-Up Tube & Bolt
Courtesy of CHRYSLER GROUP, LLC

2. Install the oil pick-up tube (1). Tighten the bolt (3) to the proper specification. Refer to **TORQUE SPECIFICATIONS** .
3. Install the oil pan. Refer to **PAN, OIL, INSTALLATION**.
4. If removed, install the oil filter and fill the engine crankcase with the proper oil to the correct level. Refer to **OIL, STANDARD PROCEDURE** .
5. Connect the negative battery cable and tighten nut to. Refer to **SPECIFICATIONS** .
6. Run the engine until it reaches normal operating temperature.

PUMP, ENGINE OIL

DESCRIPTION

DESCRIPTION

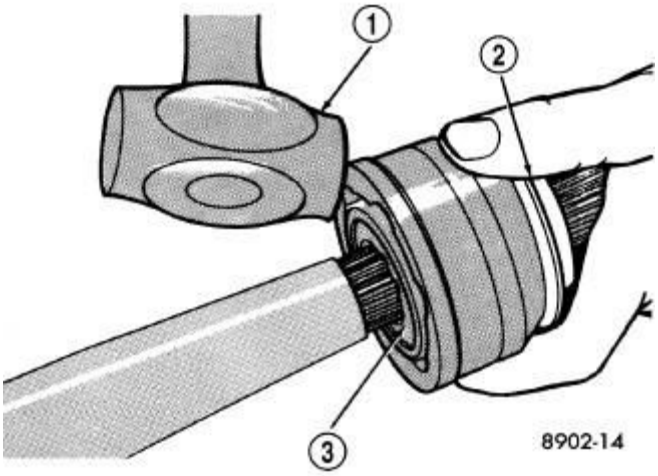

Fig. 495: Oil Pump Chain
Courtesy of CHRYSLER GROUP, LLC

The vane type engine oil pump is mounted to the underside of the cylinder block and is driven by the oil pump chain off the crankshaft at a 1:1 drive ratio. This pump location improves efficiency compared to an on-crankshaft location. The pump is driven with a silent chain which is tensioned using a spring loaded tensioner. The pump is not timed to the engine.

An internal mechanical ball and spring type relief valve prevents excess pressure in the engine by dumping oil into the sump and provides emergency protection at conditions such as a cold start with high engine speed.

The pump has a moving slide mechanism for variable displacement capability and an on-off solenoid for two-stage pressure regulation. The pump and the solenoid are not to be disassembled. Both are non-serviceable components and are to be replaced as a complete assembly.

OPERATION

OPERATION

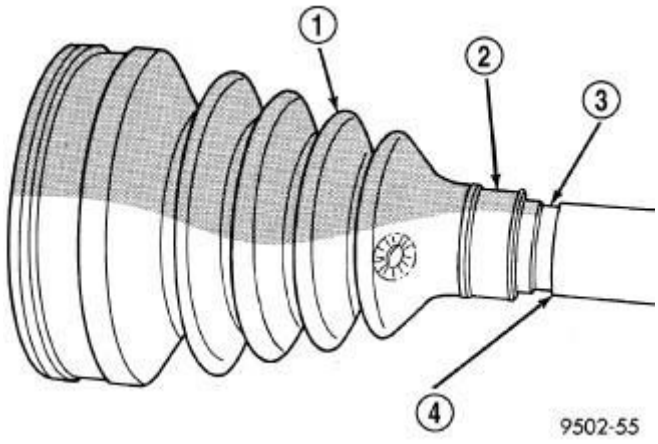

Fig. 496: Moving Element, On/Off Solenoid & Relief Valve

Courtesy of CHRYSLER GROUP, LLC

The engine oil pump features seven vanes and a moving element (1) that continuously adjusts to maintain a regulated oil pressure supply by varying the displacement of the pump. The pump has two regulated pressure stages of operation controlled by an on/off solenoid (2). Low pressure mode regulation (solenoid on) is approximately 200 kPa (29 psi) and high pressure mode regulation (solenoid off) is approximately 450 kPa (65 psi). The Powertrain Control Module (PCM) switches the pump between stages based on engine operating conditions, oil and coolant temperatures, speed and load. Under most typical conditions, the pump will run in low mode from idle up to around 3000 rpm, and switch from low to high mode between 3000 and 4000 rpm.

The maximum oil pressure in the engine is limited to 1000 kPa (145 psi) by the relief valve (3). Pressure in the main oil gallery of the engine can be monitored with diagnostic equipment through the oil pressure sensor mounted on the rear of the oil filter module. The minimum pressure for the engine is 41 kPa (6 psi) at any operating condition. Anything under this pressure could result in damage to critical moving parts.

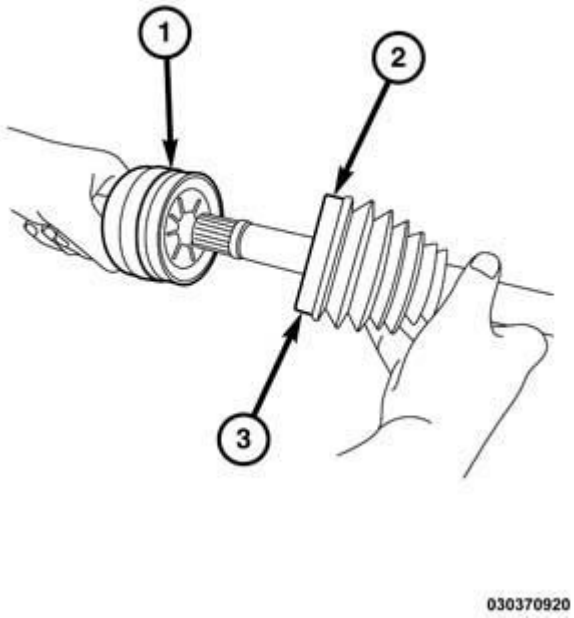

Fig. 497: Moving Element, Main Gallery Oil Pressure, Spring Pressure & Pump Driveshaft
Courtesy of CHRYSLER GROUP, LLC

In high pressure mode regulation (solenoid off) main gallery oil pressure (2) is applied to the moving element (1). The main gallery oil pressure works against spring pressure (3) to move the element to a more concentric location about the pump driveshaft (4) thus reducing displacement and pump output.

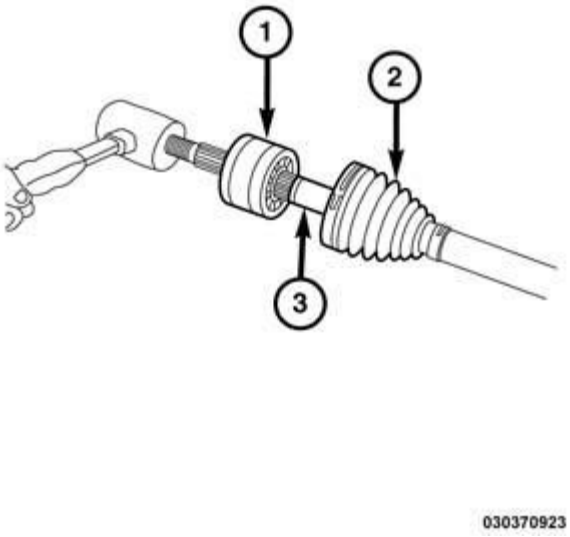

Fig. 498: Chamber & Spring
Courtesy of CHRYSLER GROUP, LLC

In low pressure mode regulation (solenoid on) the energized solenoid opens an additional chamber (1) to main gallery oil pressure increasing the force on the spring (2) to further reduce displacement and output pressure.

REMOVAL

REMOVAL

1. Disconnect and isolate the negative battery cable.
2. Remove the oil pan. Refer to **PAN, OIL, REMOVAL**.
3. Remove the oil pump pick-up. Refer to **PICK-UP, OIL PUMP, REMOVAL**.

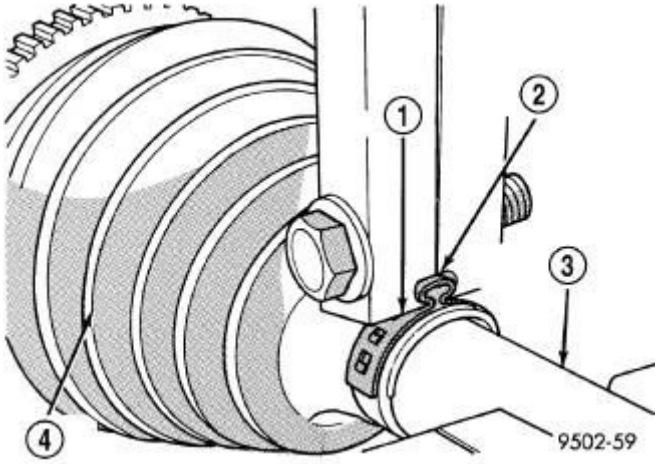

Fig. 499: Oil Pump Solenoid Electrical Connector
Courtesy of CHRYSLER GROUP, LLC

4. Disconnect the engine wire harness from the oil pump solenoid electrical connector (1).

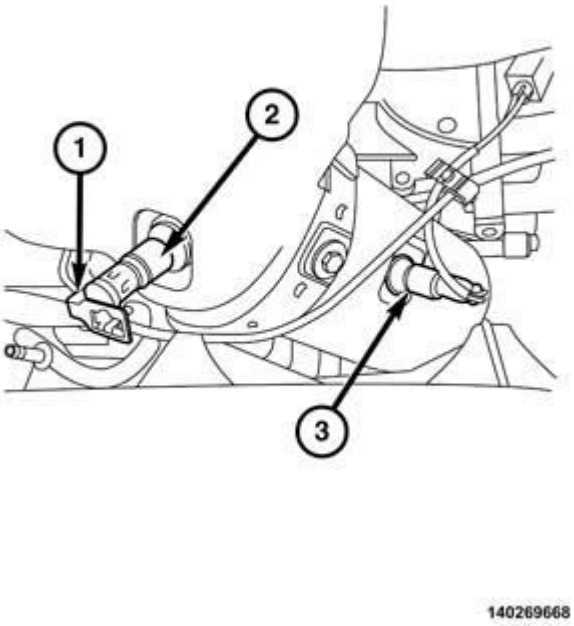

Fig. 500: Oil Pump Solenoid Electrical Connector & Locking Clip
Courtesy of CHRYSLER GROUP, LLC

5. Remove the locking clip (1) from the oil pump solenoid electrical connector (2).

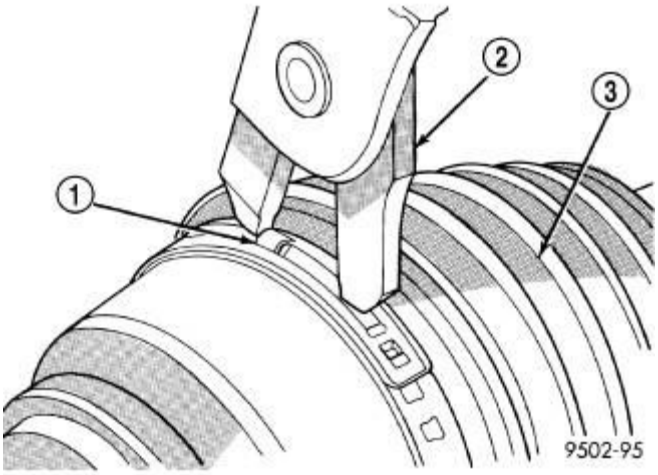

Fig. 501: Oil Pump Solenoid Electrical Connector & Primary Chain Tensioner Mounting Bolt
Courtesy of CHRYSLER GROUP, LLC

6. Push the oil pump solenoid electrical connector into the engine block, rotate the connector slightly CW, push it past the primary chain tensioner mounting bolt (1) and into the engine.

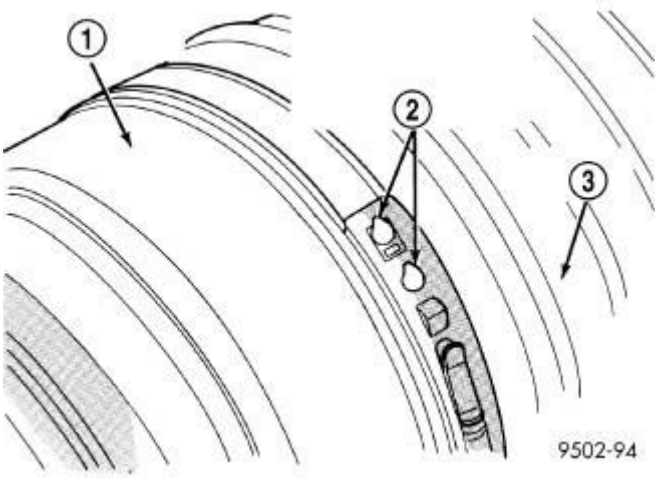

Fig. 502: Oil Pump Chain Tensioner & Retaining Pin
Courtesy of CHRYSLER GROUP, LLC

7. Push back the oil pump chain tensioner (2) and insert a suitable retaining pin (1) such as a 3 mm Allen wrench.

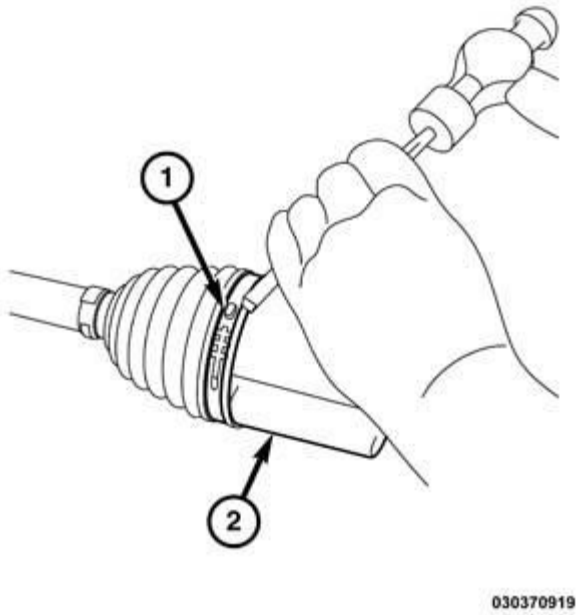

Fig. 503: Retaining Pin, Retaining Bolt, Oil Pump Chain & Sprocket
Courtesy of CHRYSLER GROUP, LLC

CAUTION: Always reinstall timing chains so that they maintain the same direction of rotation. Inverting a previously run chain on a previously run sprocket will result in excessive wear to both the chain and sprocket.

8. Mark the direction of rotation on the oil pump chain (3) and sprocket (4) using a paint pen or equivalent to aid in reassembly.

NOTE: There are no timing marks on the oil pump gear or chain. Timing of the oil pump is not required.

9. Remove the oil pump sprocket T45 retaining bolt (2) and remove the oil pump sprocket (4).

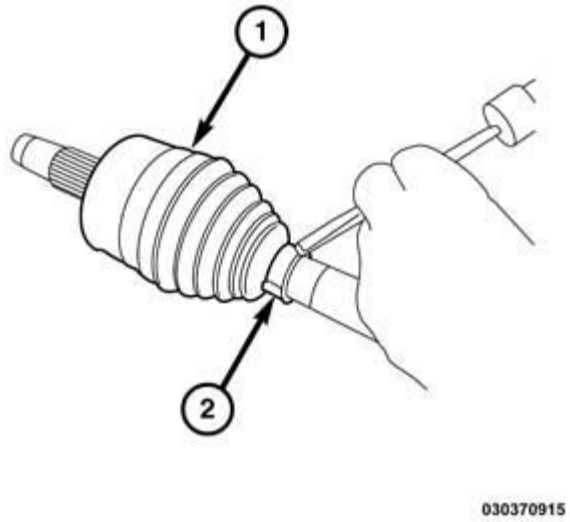

Fig. 504: Retaining Pin, Oil Pump Chain Tensioner Spring & Dowel Pin
Courtesy of CHRYSLER GROUP, LLC

10. Remove the retaining pin (3) and disengage the oil pump chain tensioner spring (1) from the dowel pin (2).
11. Remove the oil pump chain tensioner from the oil pump.

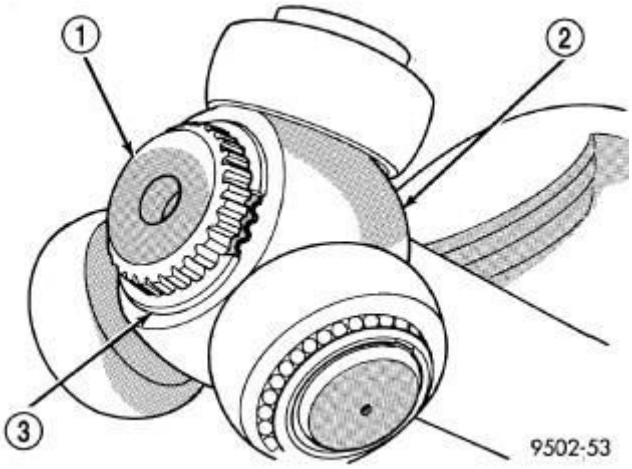

Fig. 505: Oil Pump, Locator Pins & Bolts
Courtesy of CHRYSLER GROUP, LLC

12. Remove the four oil pump bolts (1) and remove the oil pump (3).

INSPECTION

INSPECTION

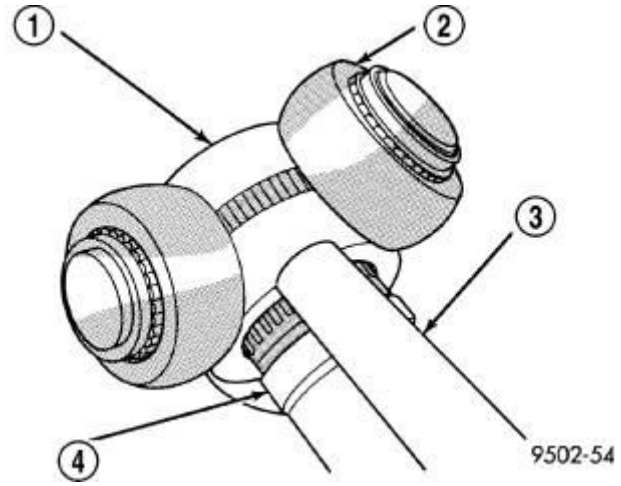

Fig. 506: Solenoid Wires, Connector Retention Lock Tab & O-Ring Seal
Courtesy of CHRYSLER GROUP, LLC

NOTE: **The Oil pump is released as an assembly. The assembly includes both the pump and the solenoid. There are no serviceable sub-assembly components. In the event the oil pump or solenoid are not functioning or out of specification they must be replaced as an assembly.**

1. Inspect the solenoid wires (1) for cuts or chaffing.
2. Inspect the condition of the connector O-ring seal (3).

INSTALLATION

INSTALLATION

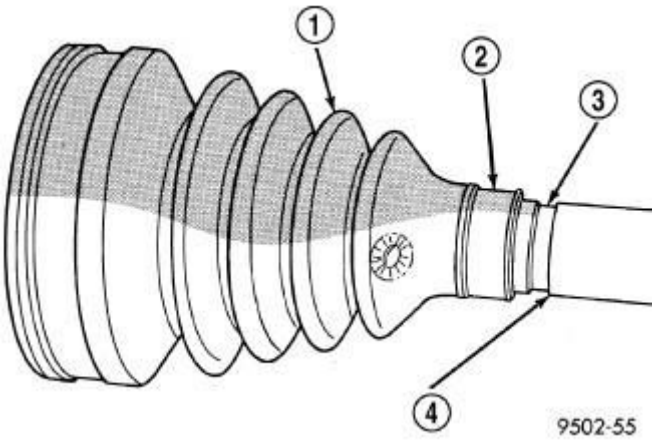

Fig. 507: Oil Pump, Locator Pins & Bolts
Courtesy of CHRYSLER GROUP, LLC

1. Align the locator pins (2) to the engine block and install the oil pump (3) with four bolts (1). Tighten the bolts to the proper specification. Refer to **TORQUE SPECIFICATIONS** .

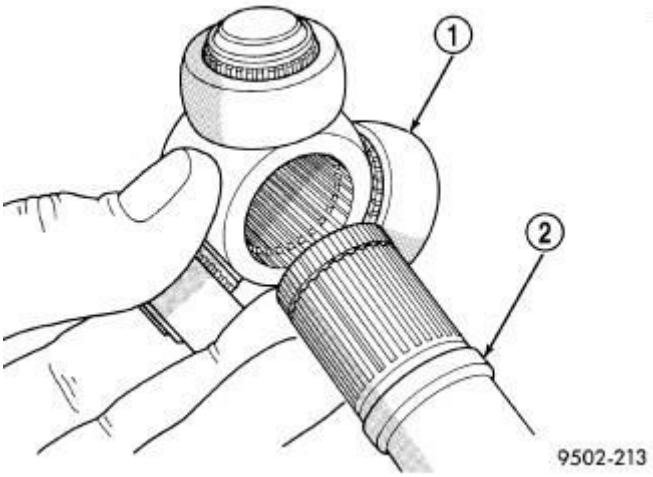

Fig. 508: Retaining Pin, Oil Pump Chain Tensioner Spring & Dowel Pin
Courtesy of CHRYSLER GROUP, LLC

2. Install the oil pump chain tensioner on the oil pump.
3. Position the oil pump chain tensioner spring (1) above the dowel pin (2).
4. Push back the oil pump chain tensioner and insert a suitable retaining pin (3) such as a 3 mm Allen wrench.

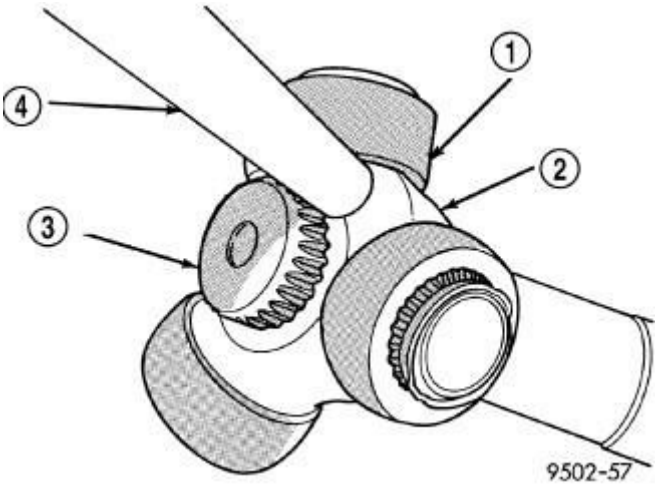

Fig. 509: Retaining Pin, Retaining Bolt, Oil Pump Chain & Sprocket
Courtesy of CHRYSLER GROUP, LLC

NOTE: There are no timing marks on the oil pump gear or chain. Timing of the oil pump is not required.

CAUTION: Always reinstall timing chains so that they maintain the same

direction of rotation. Inverting a previously run chain on a previously run sprocket will result in excessive wear to both the chain and sprocket.

5. Place the oil pump sprocket (4) into the oil pump chain (3). Align the oil pump sprocket with the oil pump shaft and install the sprocket. Install the T45 retaining bolt (2) and tighten to 25 N.m (18 ft. lbs.).
6. Remove the retaining pin (1). Verify that the oil pump chain is centered on the tensioner and crankshaft sprocket.
7. Rotate the crankshaft CW one complete revolution to verify proper oil pump chain installation.

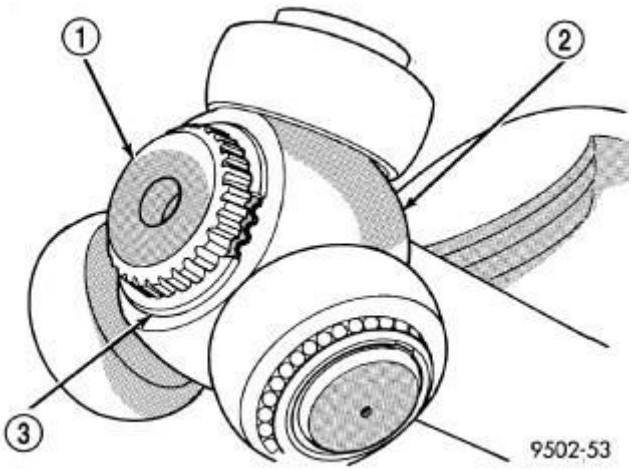

Fig. 510: Oil Pump Solenoid Electrical Connector & Primary Chain Tensioner Mounting Bolt
Courtesy of CHRYSLER GROUP, LLC

NOTE: Graphic shows the engine timing cover removed for clarity.

8. Position the oil pump solenoid electrical connector (2) into the engine block. Rotate the connector so that it can be pushed past the primary chain tensioner mounting bolt (1). Then rotate the connector slightly CCW and push it into the engine block until it locks in place.

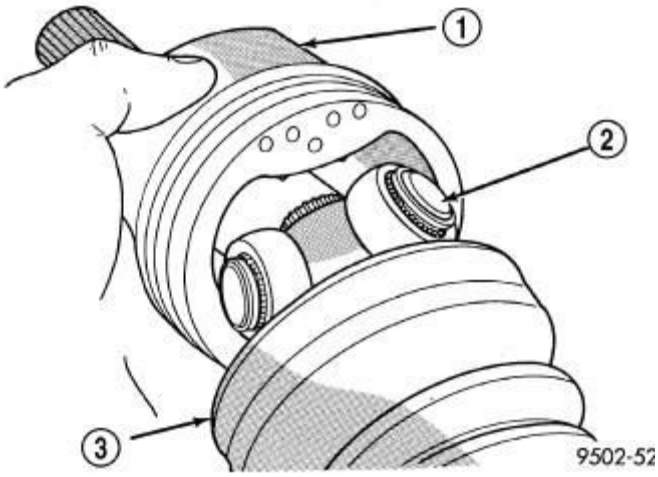

Fig. 511: Oil Pump Solenoid Electrical Connector & Locking Clip
Courtesy of CHRYSLER GROUP, LLC

9. Verify that the oil pump solenoid electrical connector lock clip (1) is engaged to the electrical connector (2).

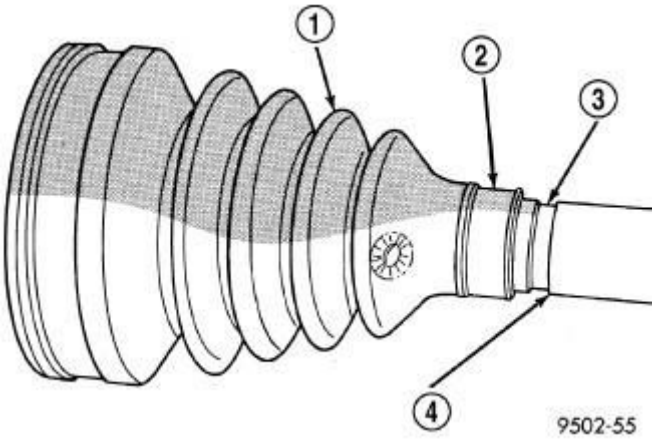

Fig. 512: Oil Pump Solenoid Electrical Connector
Courtesy of CHRYSLER GROUP, LLC

10. Connect the engine wire harness to the oil pump solenoid electrical connector (1).
11. Install the oil pump pick-up. Refer to **PICK-UP, OIL PUMP, INSTALLATION**.
12. Install the oil pan. Refer to **PAN, OIL, INSTALLATION**.
13. If removed, install the oil filter and fill the engine crankcase with the proper oil to the correct level. Refer to **OIL, STANDARD PROCEDURE** .
14. Connect the negative battery cable and tighten nut to the proper specification. Refer to **SPECIFICATIONS** .

CAUTION: A MIL or low oil pressure indicator that remains illuminated for more than 2 seconds may indicate low or no engine oil pressure. Stop the

engine and investigate the cause of the indication.

15. Start and run the engine until it reaches normal operating temperature.

SENSOR, OIL PRESSURE

DESCRIPTION

DESCRIPTION

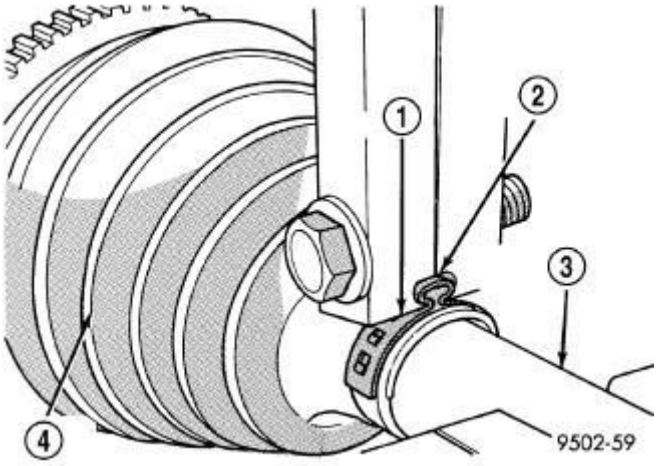

Fig. 513: Oil Temperature Sensor, Oil Pressure Sensor & Oil Filter Housing
Courtesy of CHRYSLER GROUP, LLC

The oil pressure sensor (2) is located on the oil filter housing (3). The oil pressure sensor is a three wire sensor with a tapered threaded sensor port. The sensor port is mounted to the oil filter housing through an access hole. A thread lock patch seals the oil pressure sensor to the oil filter housing.

OPERATION

OPERATION

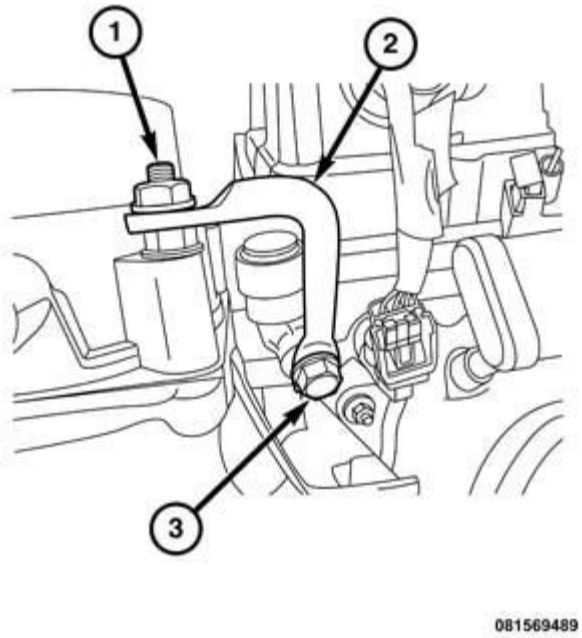

Fig. 514: Oil Pressure Sensor
Courtesy of CHRYSLER GROUP, LLC

The oil pressure sensor is a silicon based sensing unit that measures the pressure of the engine oil. The Powertrain Control Module (PCM) supplies a 5 volt reference and a ground to the sensor. The input to the PCM occurs on the signal return circuit. The oil pressure sensor is a linear sensor; as pressure changes, voltage changes proportionately and returns a voltage signal to the PCM that reflects oil pressure. The zero pressure reading is 0.5 volt and full scale is 4.5 volt.

REMOVAL

REMOVAL

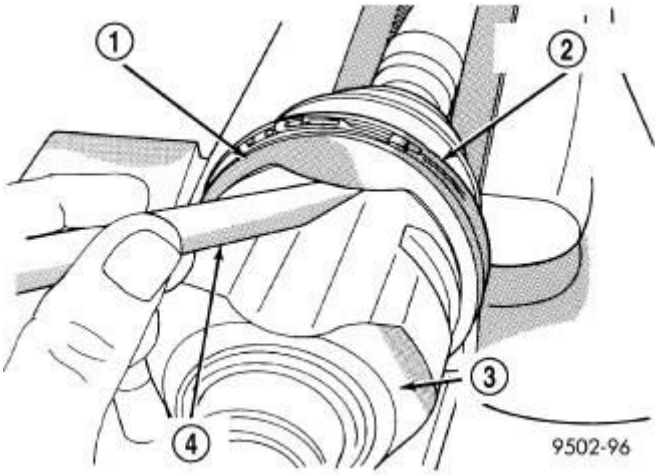

Fig. 515: Lower Intake Manifold & Bolts
Courtesy of CHRYSLER GROUP, LLC

1. Release fuel system pressure. Refer to **FUEL SYSTEM PRESSURE RELEASE PROCEDURE** .
2. Disconnect and isolate the negative battery cable.
3. Remove the air inlet hose, upper intake manifold and lower intake manifold with the fuel injectors and fuel rail (2). Refer to **MANIFOLD, INTAKE, REMOVAL**.

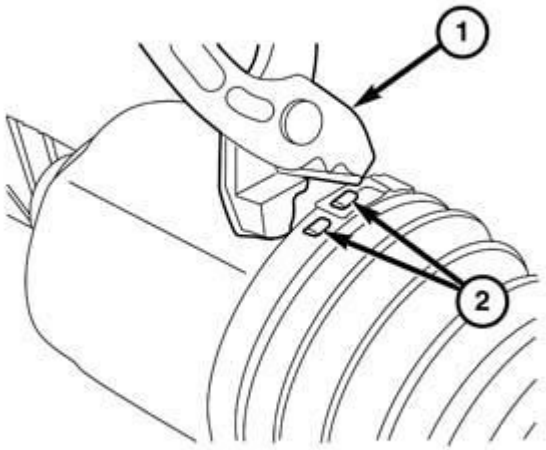

030370916

Fig. 516: Oil Temperature Sensor Electrical Connector, Oil Pressure Sensor Electrical Connector, Oil Filter Housing, Heater Hose & Bolts
Courtesy of CHRYSLER GROUP, LLC

4. Disconnect the oil pressure sensor electrical connector (4).

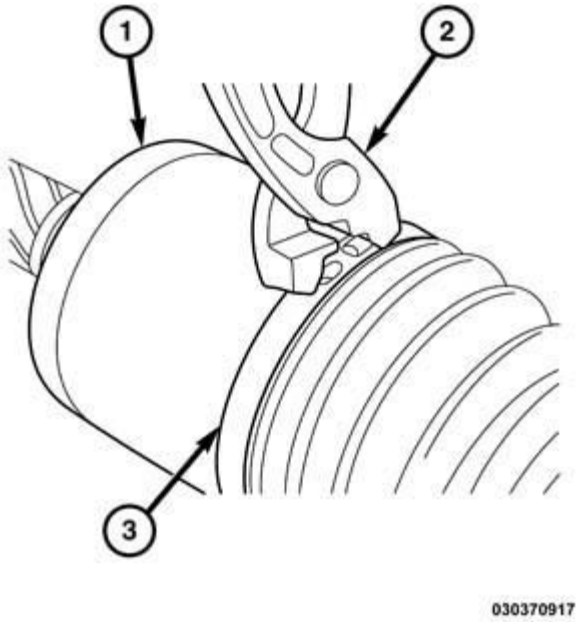

Fig. 517: Oil Temperature Sensor, Oil Pressure Sensor & Oil Filter Housing
Courtesy of CHRYSLER GROUP, LLC

5. Remove the oil pressure sensor (2) from the oil filter housing (3).

INSTALLATION

INSTALLATION

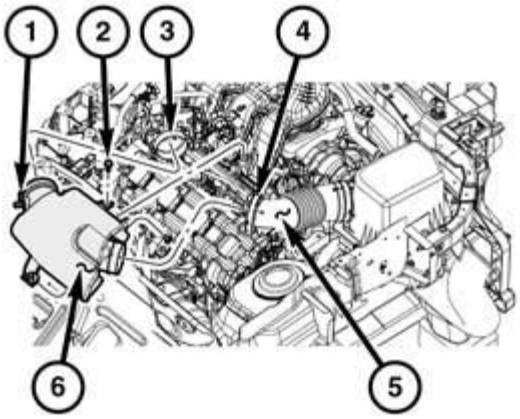

0909005845

Fig. 518: Oil Temperature Sensor, Oil Pressure Sensor & Oil Filter Housing
Courtesy of CHRYSLER GROUP, LLC

1. Install the oil pressure sensor (2) and tighten to the proper specification. Refer to **TORQUE SPECIFICATIONS** .

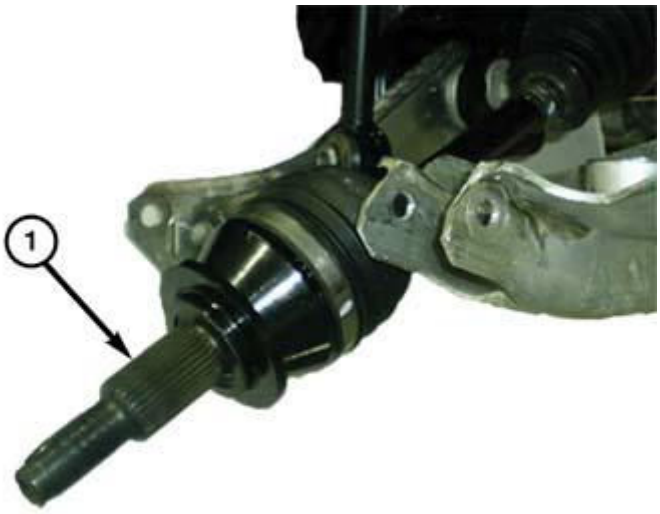

0306005204

Fig. 519: Heater Hose, Electrical Connectors, Oil Filter Housing & Bolt Tightening Sequence
Courtesy of CHRYSLER GROUP, LLC

2. Connect the oil pressure sensor electrical connector (3).

3. Install the upper and lower intake manifolds and air cleaner housing assembly. Refer to **MANIFOLD, INTAKE, INSTALLATION**.
4. Connect the negative battery cable and tighten the nut to the proper specification. Refer to **SPECIFICATIONS** .

SENSOR, OIL TEMPERATURE

DESCRIPTION

DESCRIPTION

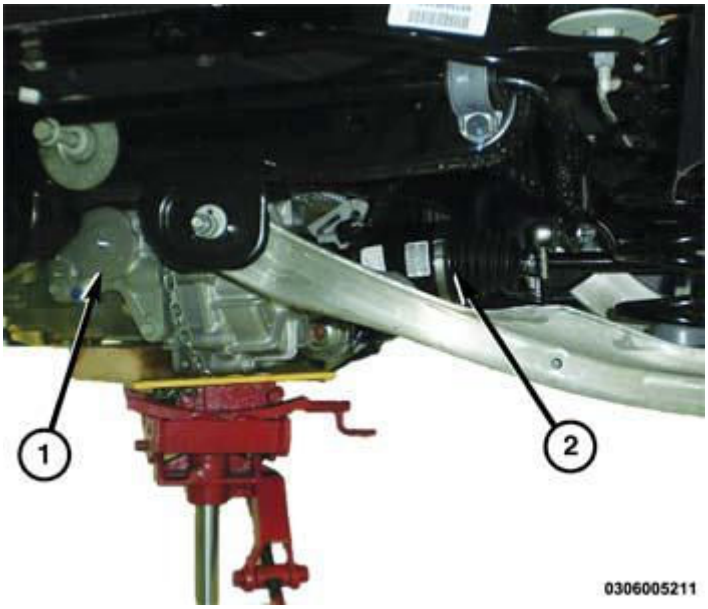

Fig. 520: Oil Temperature Sensor, Oil Pressure Sensor & Oil Filter Housing
Courtesy of CHRYSLER GROUP, LLC

The oil temperature sensor (1) is located on the oil filter housing (3). The oil temperature sensor is a two wire sensor with a tapered threaded sensor probe. The sensor probe is mounted to the oil filter housing through an access hole. A thread lock patch seals the oil temperature sensor to the oil filter housing.

OPERATION

OPERATION

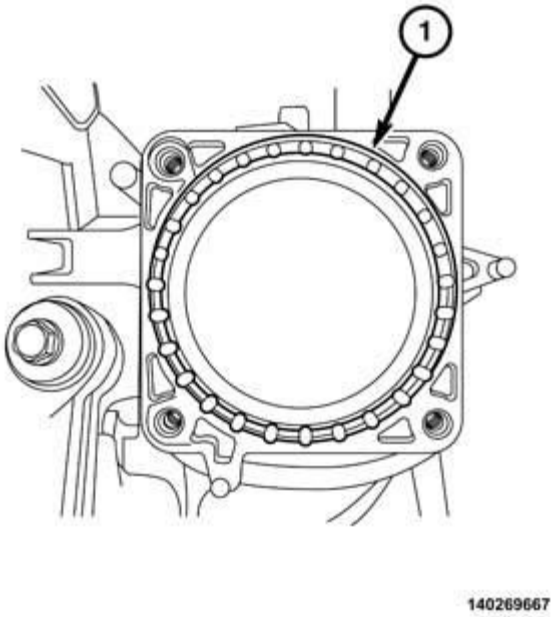

Fig. 521: Oil Temperature Sensor
Courtesy of CHRYSLER GROUP, LLC

The oil temperature sensor is a variable resistor that measures the temperature of the engine oil. The Powertrain Control Module (PCM) supplies a 5 volt reference and a ground to the sensors low reference signal circuit. When the oil temperature is low, the sensor resistance is high. When the oil temperature is high, the sensor resistance is low.

REMOVAL

REMOVAL

1. Release fuel system pressure. Refer to **FUEL SYSTEM PRESSURE RELEASE PROCEDURE** .
2. Disconnect and isolate the negative battery cable.
3. Remove the upper intake manifold and lower intake manifold. Refer to **MANIFOLD, INTAKE, REMOVAL**.

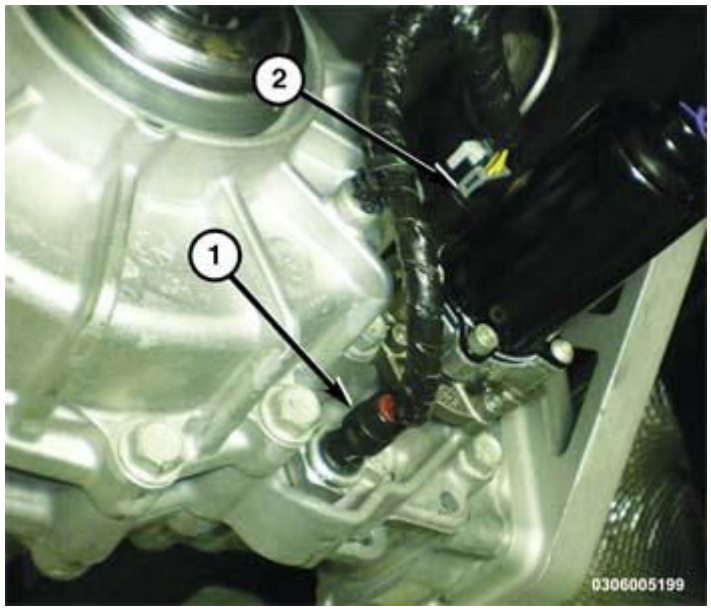

Fig. 522: Oil Temperature Sensor Electrical Connector, Oil Pressure Sensor Electrical Connector, Oil Filter Housing, Heater Hose & Bolts
Courtesy of CHRYSLER GROUP, LLC

4. Disconnect the oil temperature sensor electrical connector (5).

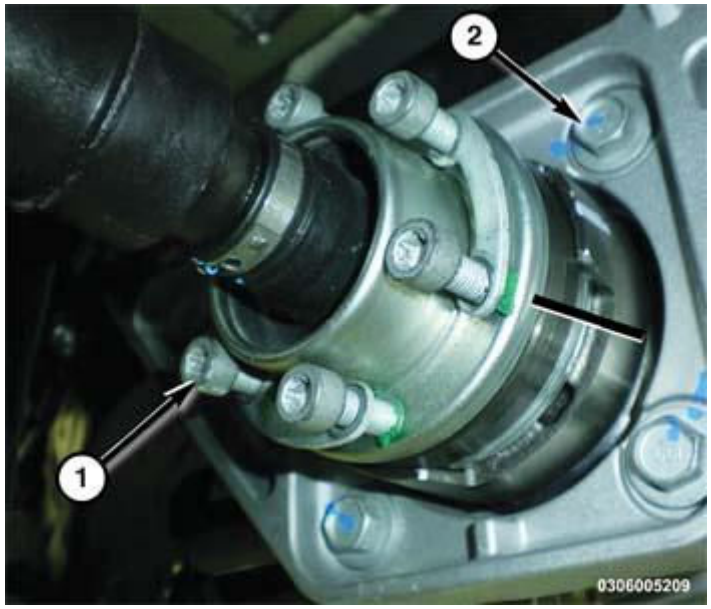

Fig. 523: Oil Temperature Sensor, Oil Pressure Sensor & Oil Filter Housing
Courtesy of CHRYSLER GROUP, LLC

5. Remove the oil temperature sensor (1) from the oil filter housing (3).

INSTALLATION

INSTALLATION

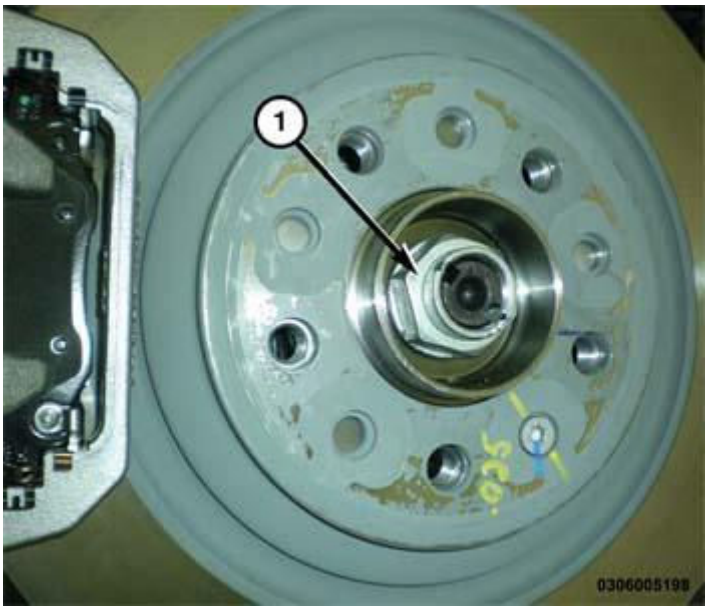

Fig. 524: Oil Temperature Sensor, Oil Pressure Sensor & Oil Filter Housing
Courtesy of CHRYSLER GROUP, LLC

Install the oil temperature sensor (1) and tighten to the proper specification. Refer to **TORQUE SPECIFICATIONS** .

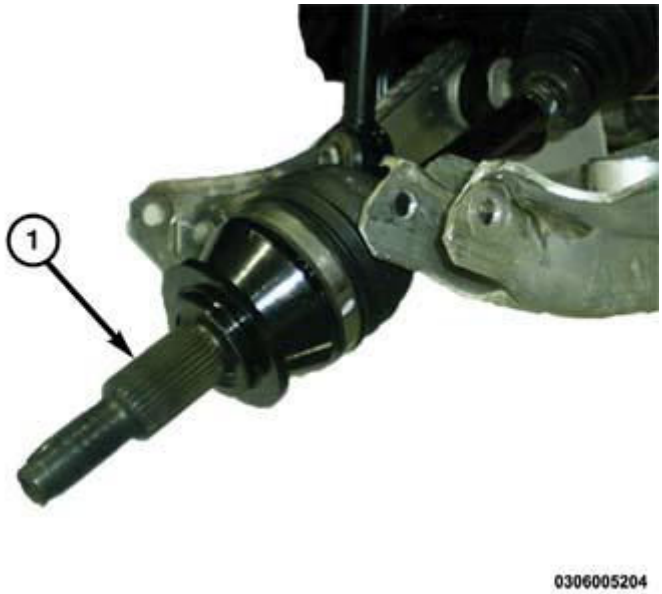

Fig. 525: Heater Hose, Electrical Connectors, Oil Filter Housing & Bolt Tightening Sequence
Courtesy of CHRYSLER GROUP, LLC

1. Connect the oil temperature sensor electrical connector (4).
2. Install the upper and lower intake manifolds. Refer to **MANIFOLD, INTAKE, INSTALLATION**.

3. Connect the negative battery cable and tighten nut to the proper specification. Refer to **SPECIFICATIONS** .

MANIFOLDS

MANIFOLD, EXHAUST

DESCRIPTION

DESCRIPTION

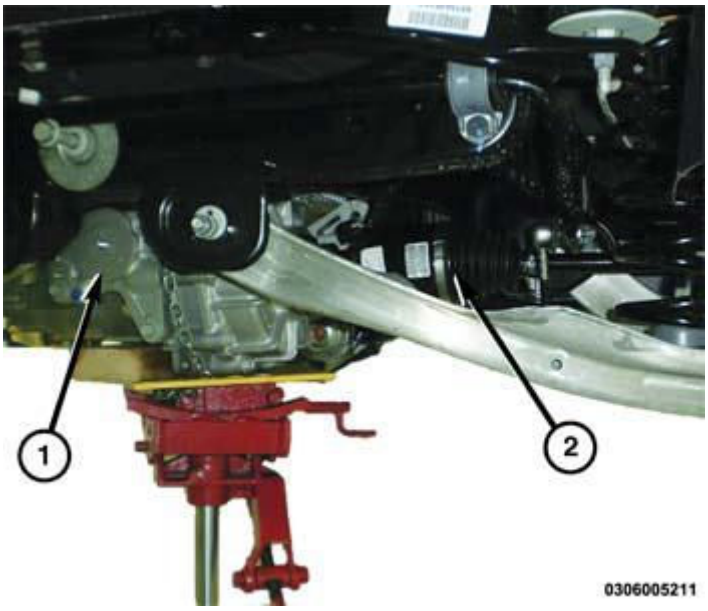

Fig. 526: Aluminum Cylinder Head
Courtesy of CHRYSLER GROUP, LLC

The aluminum cylinder heads are a unique design with left and right castings. The exhaust manifolds are integrated into the cylinder heads. If any damaged is found to the exhaust manifold portion, the cylinder head must be removed for repair or replacement. Refer to **CYLINDER HEAD, REMOVAL**.

MANIFOLD, INTAKE

DESCRIPTION

DESCRIPTION

UPPER INTAKE MANIFOLD

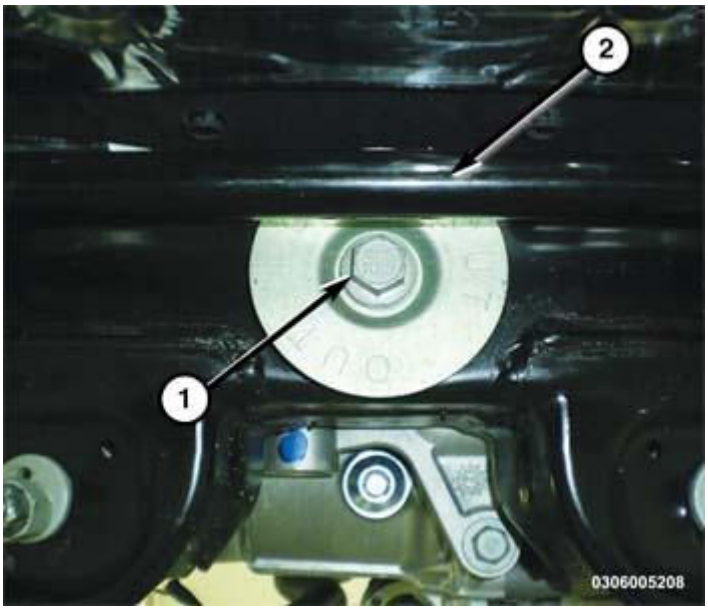

Fig. 527: Upper Intake Manifold Design
Courtesy of CHRYSLER GROUP, LLC

The upper intake manifold is an injection molded nylon composite design. The upper intake manifold is sealed to the lower intake manifold using six individual press-in-place port silicone gaskets. Replace the gaskets whenever the upper intake manifold is removed from the engine. There is a silencer pad positioned between the upper and lower intake manifolds for improved noise, vibration and harshness (NVH). The left cylinder head cover has two alignment posts to aid proper installation of the silencer pad. The seven upper intake manifold fasteners thread directly into the composite lower intake manifold and are a self-taping design. If the upper intake manifold is damaged or cracked, it must be replaced.

The Electronic Throttle Control (ETC) and Manifold Air Pressure (MAP) sensor are attached directly to the upper intake manifold. The upper intake manifold also provides vacuum ports for brake booster, positive crankcase ventilation (PCV) and emissions control.

LOWER INTAKE MANIFOLD

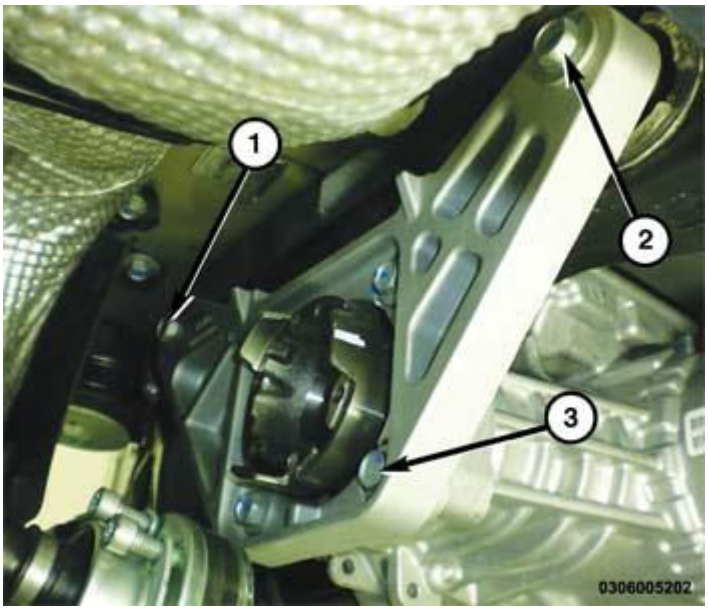

Fig. 528: Lower Intake Manifold Design
Courtesy of CHRYSLER GROUP, LLC

The lower intake manifold is an injection molded nylon composite design. The lower intake manifold is sealed to the cylinder heads using six individual press-in-place port silicone gaskets. Replace the gaskets whenever the lower intake manifold is removed from the engine. The seven upper intake manifold fasteners thread directly into the composite lower intake manifold and are a self-taping design.

The fuel injection fuel rail is also a composite design. The four fuel rail fasteners thread directly into the composite lower intake manifold and are a self-taping design. The lower intake manifold can be serviced without removing the fuel injector rail. The fuel rail and fuel injectors must be installed into the lower intake manifold as an assembly. Do not attempt to install the fuel rail when the injectors are in the manifold. Always install new O-rings on the fuel injectors.

If the lower intake manifold is damaged or cracked, it must be replaced.

DIAGNOSIS AND TESTING

DIAGNOSIS AND TESTING - INTAKE MANIFOLD LEAKS

An intake manifold air leak is characterized by lower than normal manifold vacuum. Also, one or more cylinders may not be functioning.

> **WARNING: Use extreme caution when the engine is operating. Do not stand in a direct line with the fan. Do not put your hands near the pulleys, belts or the fan. Do not wear loose clothing.**

1. Start the engine.
2. Spray a small stream of water (spray bottle) at the suspected leak area.

3. If engine RPM'S change, the area of the suspected leak has been found.
4. Repair as required.

REMOVAL

UPPER INTAKE MANIFOLD

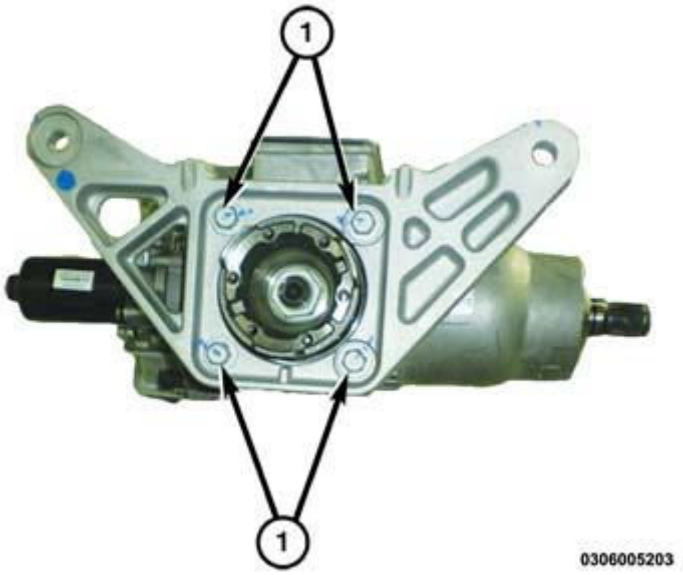

Fig. 529: Engine Cover & Ball Studs
Courtesy of CHRYSLER GROUP, LLC

1. Disconnect and isolate the negative battery cable.
2. Remove the engine cover (1).
3. Remove the intake resonator. Refer to **RESONATOR, AIR CLEANER, REMOVAL**.

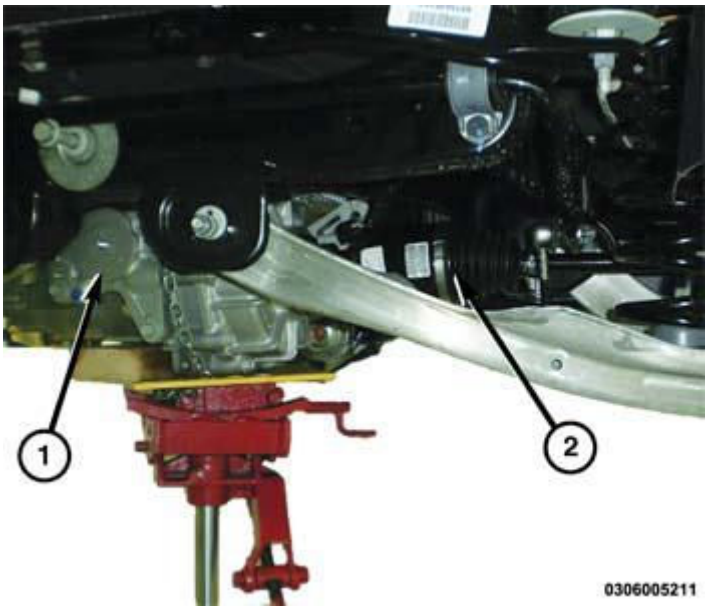

Fig. 530: MAP Sensor, ETC, PCV Hose, Brake Booster Vacuum Hose, EVAP Vapor Purge Line, Clip & Wire Harness Retainer
Courtesy of CHRYSLER GROUP, LLC

4. Disconnect the electrical connectors from the Manifold Absolute Pressure (MAP) sensor (1) and the Electronic Throttle Control (ETC) (7).
5. Disengage the ETC harness from the clip (8) on the throttle body. Disengage the wire harness retainers (4 and 5) from the upper intake manifold near the MAP sensor and reposition the wire harness.
6. Disconnect the following hoses from the upper intake manifold:
   - Positive Crankcase Ventilation (PCV) (3)
   - vapor purge (6)
   - brake booster (2)

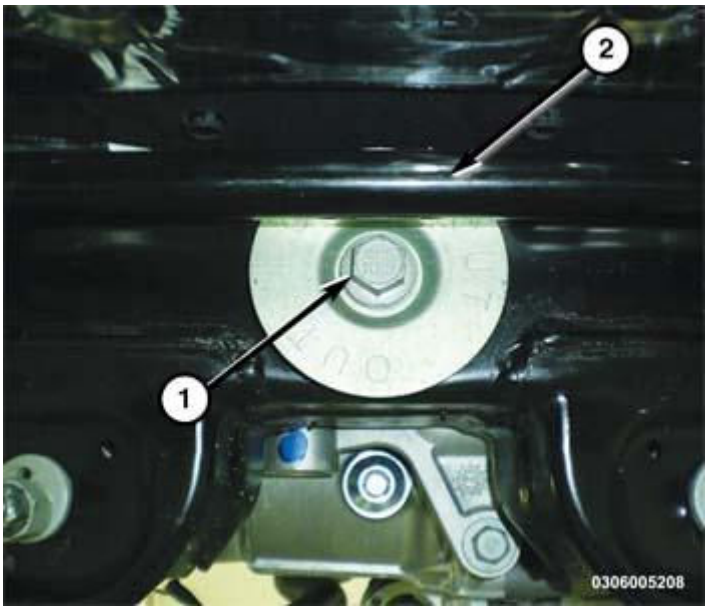

Fig. 531: Upper Intake Manifold Support Bracket, Stud & Fasteners
Courtesy of CHRYSLER GROUP, LLC

7. Disengage the wire harness retainer (4) from the upper intake manifold support bracket (5).
8. Disengage the wire harness retainer (3) from the stud-bolt (2).
9. Remove the upper nuts (1).
10. Remove the lower stud. (2).
11. Remove the bracket from the manifold.

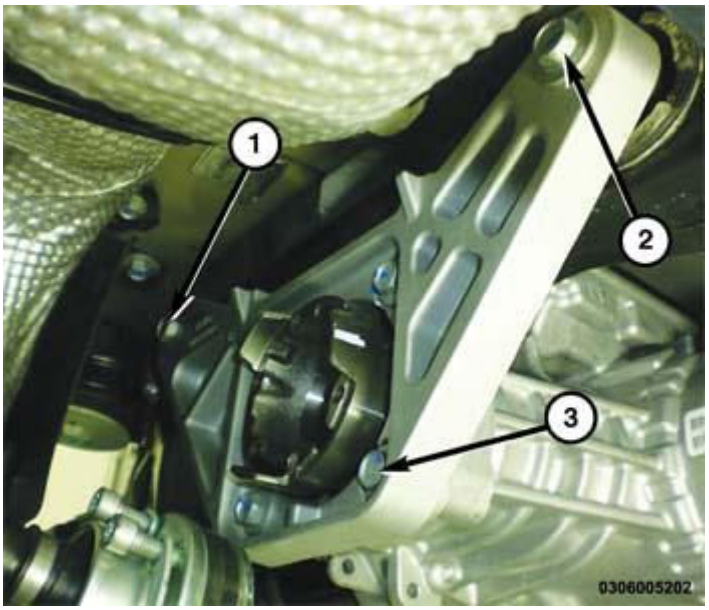

Fig. 532: Nuts, Stud Retainers & Upper Intake Manifold Support Brackets
Courtesy of CHRYSLER GROUP, LLC

12. Remove two upper nuts (1).

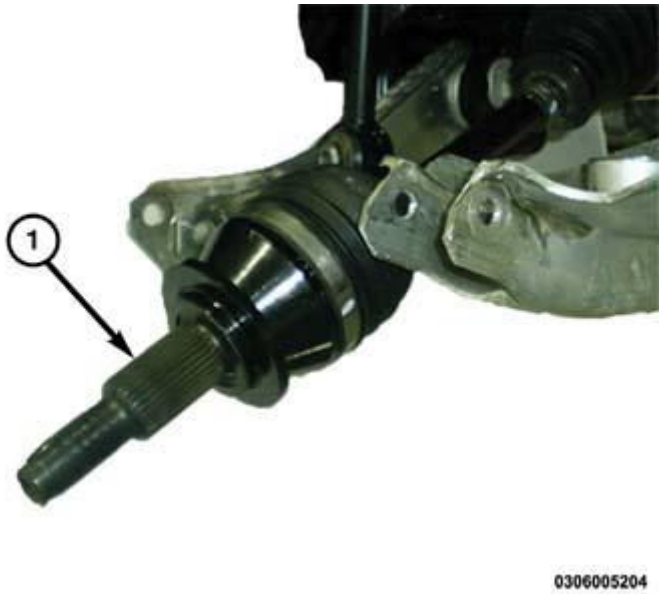

Fig. 533: Upper Intake Manifold & Bolts
Courtesy of CHRYSLER GROUP, LLC

NOTE: **The upper intake manifold attaching bolts are captured in the upper intake manifold. Once loosened, the bolts will have to be lifted out of the lower intake manifold and held while removing the upper intake manifold.**

NOTE: **Exercise care not to loosen the two fuel rail attachment bolts that are in close proximity of the upper intake manifold attaching bolts.**

13. Remove seven manifold attaching bolts (1) and remove the upper intake manifold (2).

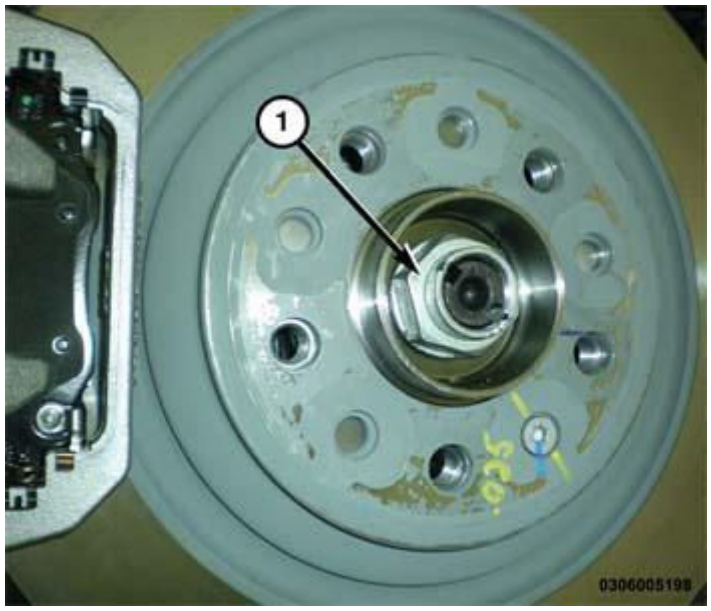

Fig. 534: Intake Ports, Insulator & Alignment Posts
Courtesy of CHRYSLER GROUP, LLC

14. Remove and discard the six upper to lower intake manifold seals (1).
15. Cover the open intake ports to prevent debris from entering the engine.
16. If required, remove the insulator (2) from the LH cylinder head cover.

LOWER INTAKE MANIFOLD

1. Release the fuel system pressure. Refer to **FUEL SYSTEM PRESSURE RELEASE PROCEDURE** .
2. Disconnect and isolate the negative battery cable.
3. Remove the resonator and upper intake manifold. Refer to **MANIFOLD, INTAKE, REMOVAL**.

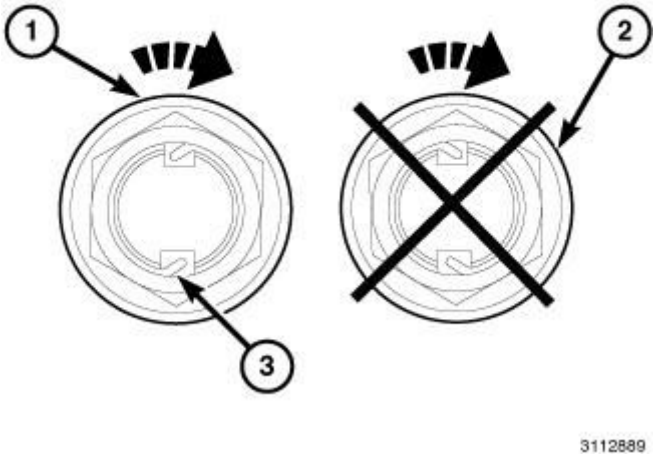

Fig. 535: Intake Ports, Insulator & Alignment Posts

Courtesy of CHRYSLER GROUP, LLC

4. Remove the insulator (2) from the LH cylinder head cover.

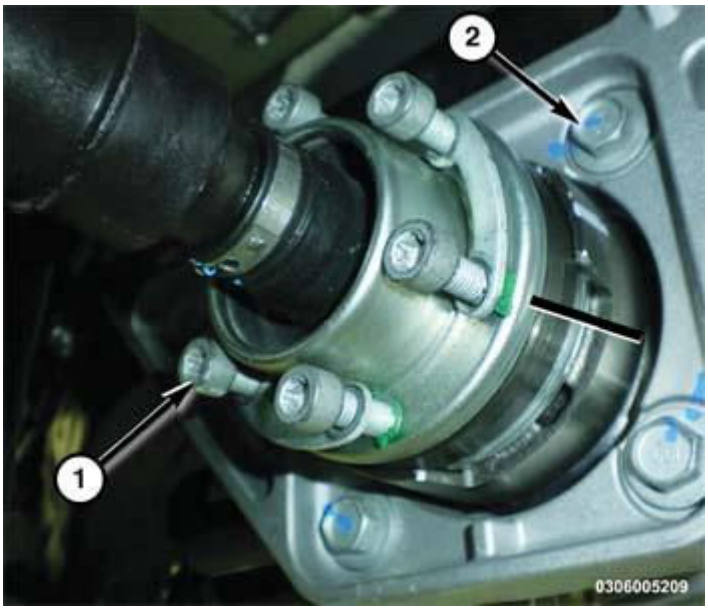

Fig. 536: Fuel Supply Line And Connectors
Courtesy of CHRYSLER GROUP, LLC

5. Disconnect the fuel supply hose (2) from the fuel rail inlet. Refer to **FITTING, QUICK CONNECT** .
6. Disconnect the fuel injector electrical connectors (1).

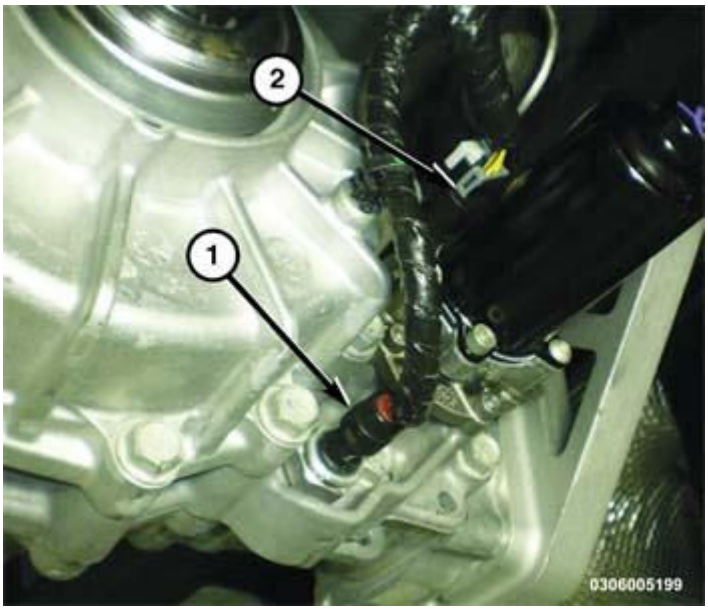

Fig. 537: Injection/Ignition Harness Retainer & Main Wire Harness Retainer
Courtesy of CHRYSLER GROUP, LLC

7. Disengage the injection/ignition harness retainer (1) from the rear of the lower intake manifold.
8. Disengage the main wire harness retainer (2) from the rear of the lower intake manifold.

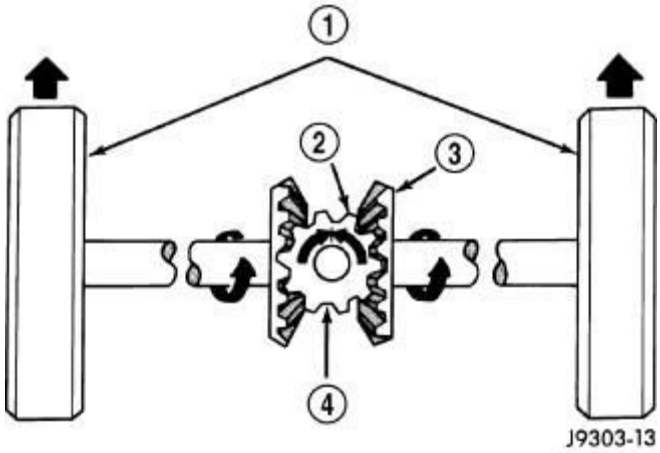

Fig. 538: Lower Intake Manifold & Bolts
Courtesy of CHRYSLER GROUP, LLC

9. Remove the eight lower intake manifold attaching bolts (1).
10. Remove the lower intake manifold (2) with the fuel injectors and fuel rail.

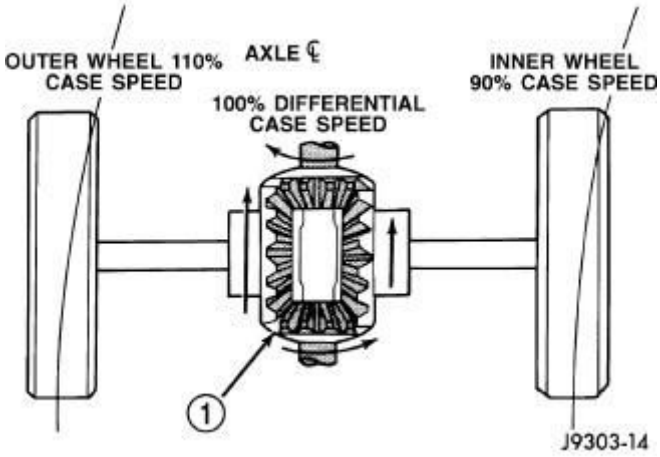

Fig. 539: Lower Intake Manifold To Cylinder Head Seals
Courtesy of CHRYSLER GROUP, LLC

11. Remove and discard the six lower intake manifold to cylinder head seals (1).
12. If required, remove the fuel rail and fuel injectors from the lower intake manifold. Refer to **RAIL, FUEL, REMOVAL** .

INSPECTION

INSPECTION

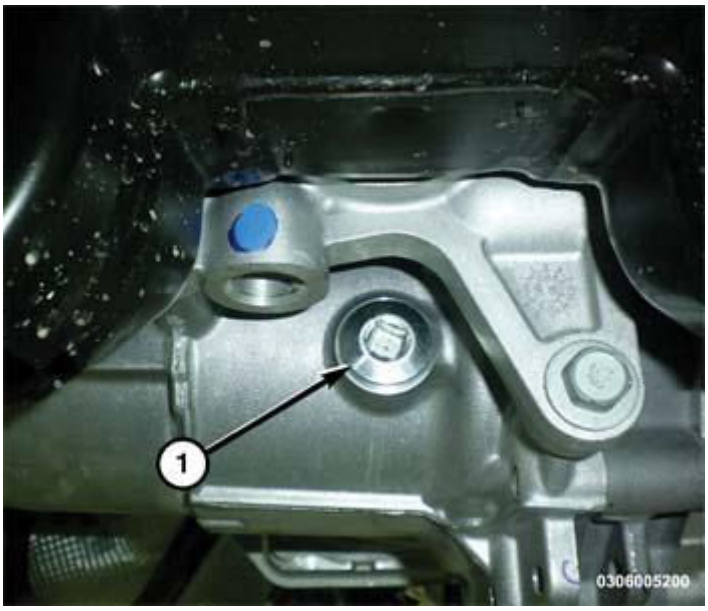

Fig. 540: Non-Repairable Damage To Lower Intake Manifold Due To Cross Threading Of An Upper Intake Manifold Attaching Bolt
Courtesy of CHRYSLER GROUP, LLC

NOTE: When the upper intake manifold (3) and lower intake manifold (1) are not aligned properly, cross threading of the upper intake manifold attaching bolts can occur. The graphic shows non-repairable damage to the lower intake manifold (1) due to cross threading of an upper intake manifold attaching bolt (2).

Check both the upper and lower intake manifolds for:

- Damage and cracks
- Gasket surface damage or warping

Check the lower intake manifold for:

- Damaged fuel injector ports

If either the upper or lower manifold exhibits any damaged or warped conditions, replace the manifold.

INSTALLATION

UPPER INTAKE MANIFOLD

NOTE: Prior to installing the upper intake manifold, verify that the four fuel rail bolts were not loosened. Refer to RAIL, FUEL, INSTALLATION .

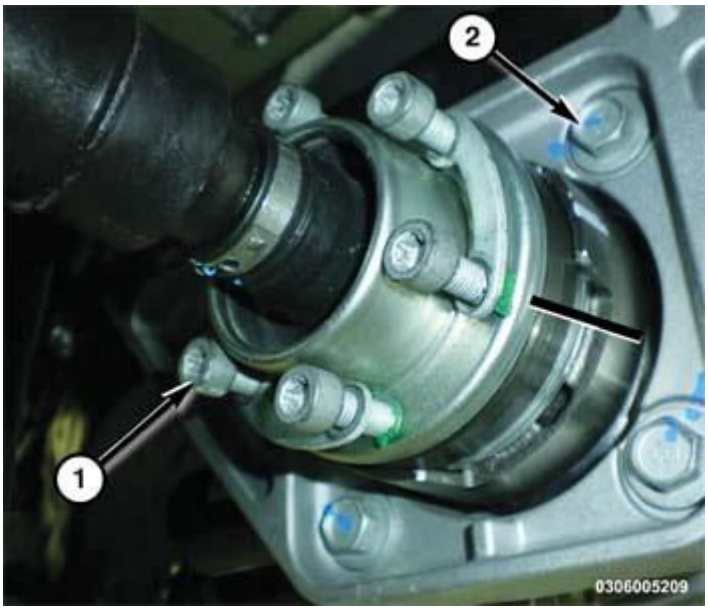

Fig. 541: Intake Ports, Insulator & Alignment Posts
Courtesy of CHRYSLER GROUP, LLC

1. Clean and inspect the sealing surfaces. Install new upper to lower intake manifold seals (1).

NOTE: **Make sure the fuel injectors and wiring harnesses are in the correct position so that they don't interfere with the upper intake manifold installation.**

2. If removed, install the insulator (2) to the two alignment posts (3) on top of the LH cylinder head cover.

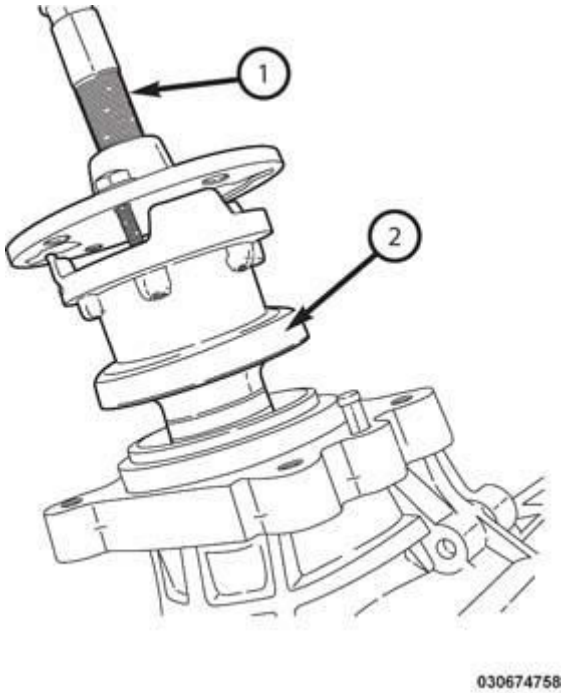

Fig. 542: Upper Intake Attaching Bolts, Locating Posts & Holes
Courtesy of CHRYSLER GROUP, LLC

3. Lift and hold the seven upper intake attaching bolts (1) clear of the mating surface. Back the bolts out slightly or if required, use an elastic band to hold the bolts clear of the mating surface.
4. Position the upper intake manifold (1) onto the lower intake manifold so that the two locating posts (2) on the upper intake manifold align with corresponding holes (3) in the lower intake manifold.

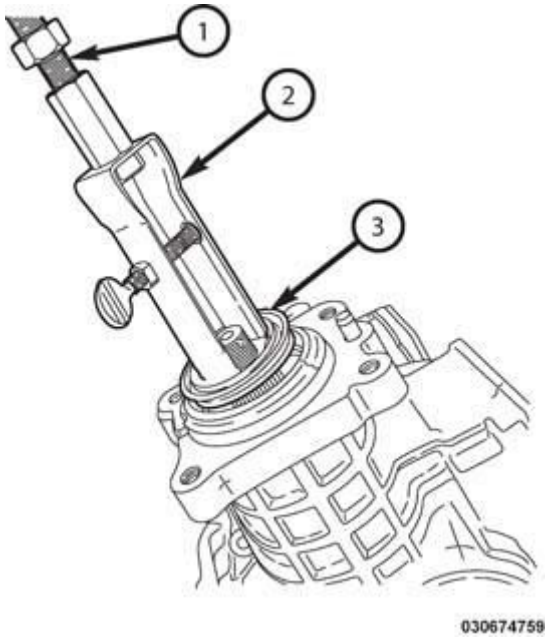

Fig. 543: Upper Intake Manifold Bolt Tightening Sequence
Courtesy of CHRYSLER GROUP, LLC

5. Install the upper intake manifold attaching bolts. Tighten the bolts in the sequence shown in illustration to the proper specification. Refer to **TORQUE SPECIFICATIONS** .

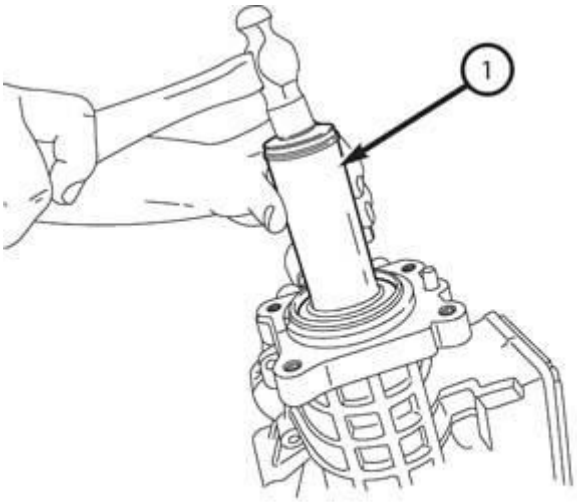

030674760

Fig. 544: Upper Intake Manifold Support Bracket, Stud & Fasteners
Courtesy of CHRYSLER GROUP, LLC

6. Position the support bracket (5) to the intake manifold studs.
7. Install the two nuts (1) to the upper intake manifold support bracket. Tighten the nuts (1) to the proper specification and tighten the studbolt (2) to the proper specification. Refer to **TORQUE SPECIFICATIONS** .
8. Install the wire harness retainer (3) to the studbolt (2).
9. Install the wire harness retainer (4) to the upper intake manifold support bracket (5).

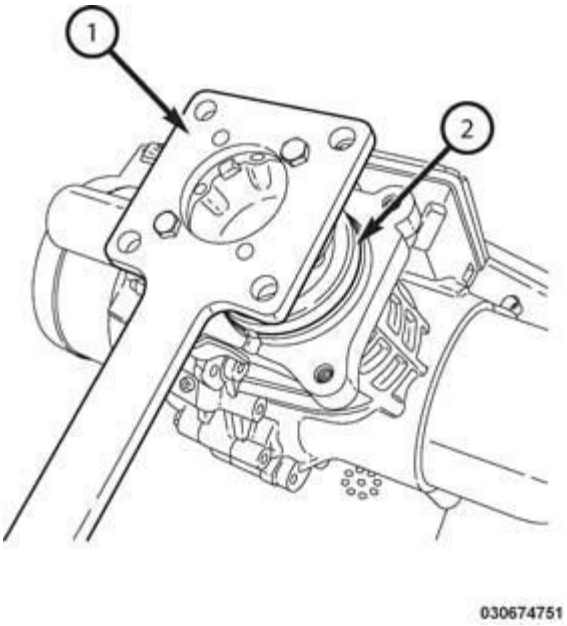

Fig. 545: Nuts, Stud Retainers & Upper Intake Manifold Support Brackets
Courtesy of CHRYSLER GROUP, LLC

10. Install the two upper intake manifold support brackets nuts (1). Tighten the nuts to the proper specification. Refer to **TORQUE SPECIFICATIONS** .

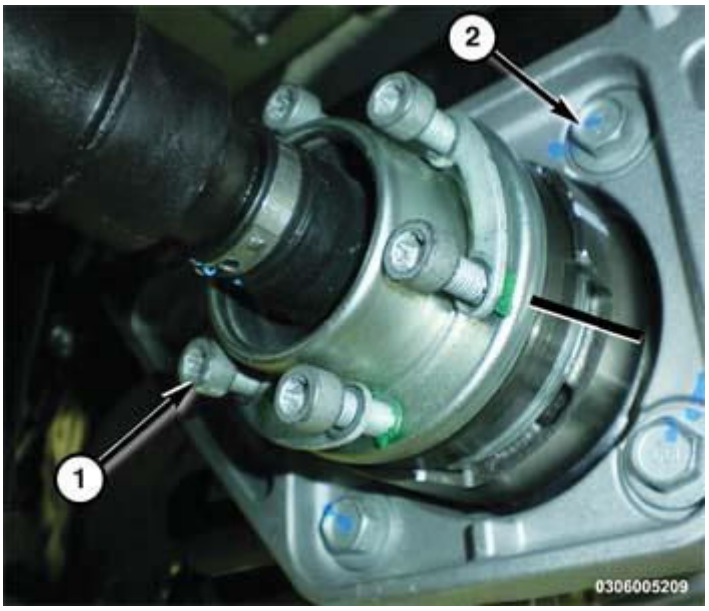

Fig. 546: MAP Sensor, ETC, PCV Hose, Brake Booster Vacuum Hose, EVAP Vapor Purge Line, Clip & Wire Harness Retainer
Courtesy of CHRYSLER GROUP, LLC

11. Connect the following hoses to the upper intake manifold:
    - Positive Crankcase Ventilation (PCV) (3)

- vapor purge (6)
- brake booster (2)

12. Connect the electrical connectors to the Manifold Absolute Pressure (MAP) sensor (1) and the Electronic Throttle Control (ETC) (7).
13. Secure the ETC harness to the clip (7) on the throttle body and engage the wire harness retainers (4 and 5) to the upper intake manifold near the MAP sensor.
14. Install the intake resonator. Refer to **RESONATOR, AIR CLEANER, INSTALLATION**.

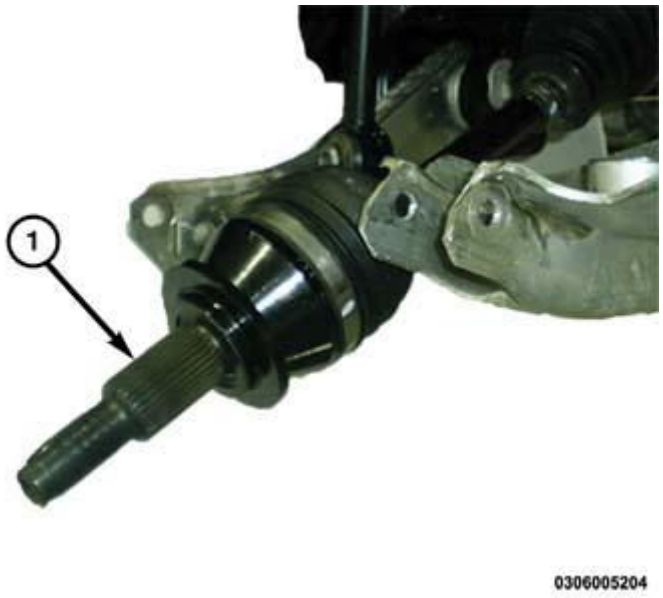

Fig. 547: Engine Cover & Ball Studs
Courtesy of CHRYSLER GROUP, LLC

15. Connect the negative battery cable and tighten nut to. Refer to **SPECIFICATIONS** .
16. Install the engine cover (1).

LOWER INTAKE MANIFOLD

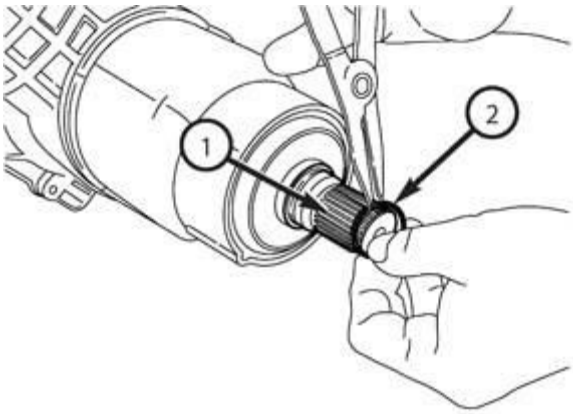

030674756

Fig. 548: Lower Intake Manifold To Cylinder Head Seals
Courtesy of CHRYSLER GROUP, LLC

1. Clean and inspect the sealing surfaces. Install new lower intake manifold to cylinder head seals (1).
2. If removed, install the fuel injectors and the fuel rail to the lower intake manifold. Refer to **RAIL, FUEL, INSTALLATION** .

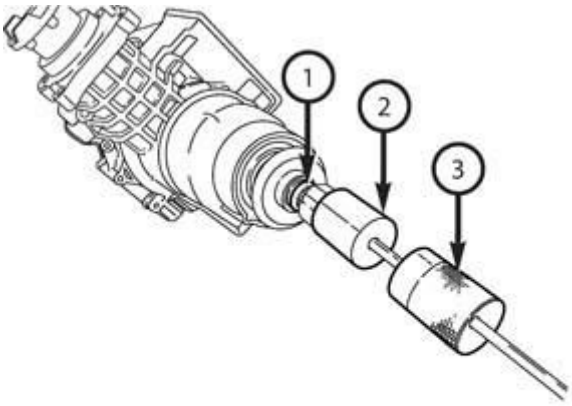

030674757

Fig. 549: Lower Intake Manifold Tightening Sequence
Courtesy of CHRYSLER GROUP, LLC

3. Position the lower intake manifold (1) on the cylinder head surfaces.
4. Tighten the bolts to the proper specification in the sequence shown in illustration. Refer to **TORQUE SPECIFICATIONS** .

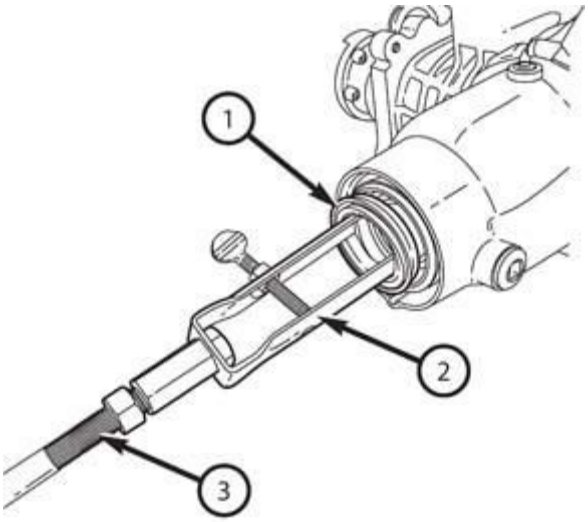

030674754

Fig. 550: Injection/Ignition Harness Retainer & Main Wire Harness Retainer
Courtesy of CHRYSLER GROUP, LLC

5. Engage the main wire harness retainer (2) to the rear of the lower intake manifold.
6. Engage the injection/ignition harness retainer (1) to the rear of the lower intake manifold.

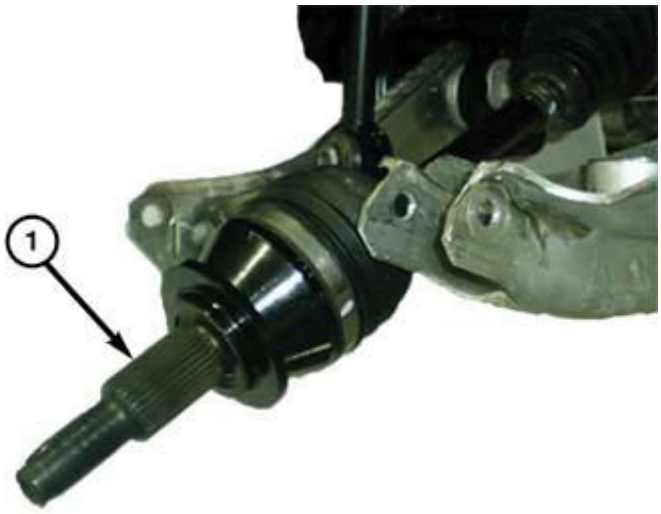

0306005204

Fig. 551: Fuel Supply Line And Connectors
Courtesy of CHRYSLER GROUP, LLC

7. Connect the fuel injector harness connectors (1).
8. Connect the fuel supply hose (2) to the fuel rail. Refer to **FITTING, QUICK CONNECT** .

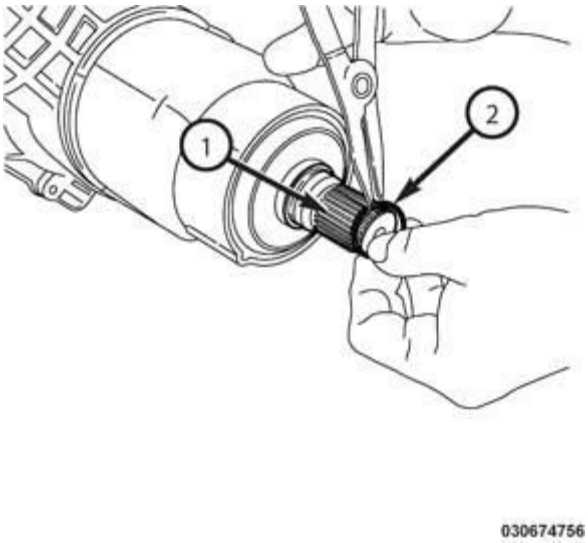

Fig. 552: Intake Ports, Insulator & Alignment Posts
Courtesy of CHRYSLER GROUP, LLC

9. Install the insulator (2) to the two alignment posts (3) on top of the LH cylinder head cover.
10. Install the upper intake manifold, support brackets and resonator. Refer to **MANIFOLD, INTAKE, INSTALLATION**.
11. Connect the negative battery cable and tighten the nut to the proper specification. Refer to **SPECIFICATIONS** .
12. Start the engine and check for leaks.

VALVE TIMING

DESCRIPTION

DESCRIPTION

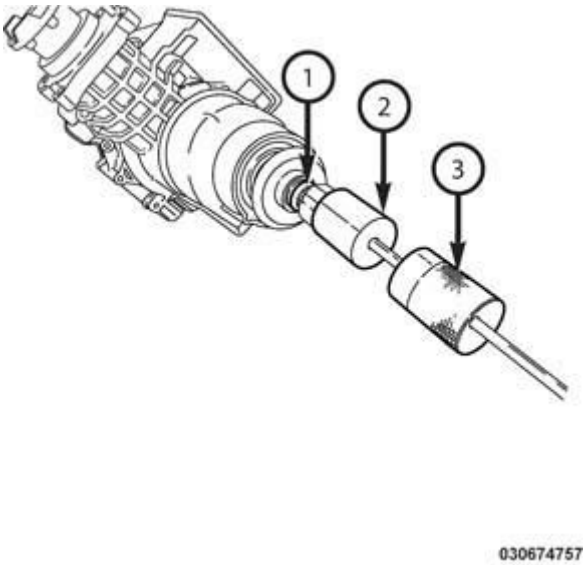

Fig. 553: Valve Timing System Components
Courtesy of CHRYSLER GROUP, LLC

The timing drive uses four silent chains. The silent chain link design improves sprocket engagement and reduces noise, vibration and harshness (NVH). One chain (5) drives the oil pump (4) and three chains drive the camshafts in a two stage design. The left secondary camshaft chain (1) uses an oil pressure controlled chain tensioner (9) with a ratcheting device. The right secondary camshaft chain (8) uses an oil pressure controlled tensioner (7) without a ratchet. The primary chain (2) also uses an oil pressure controlled tensioner (6) without a ratchet. A spring loaded tensioner (3) takes up the slack in the oil pump chain (5). The chain guides and tensioner arms are made of glass filled nylon with nylon wear faces.

OPERATION

OPERATION

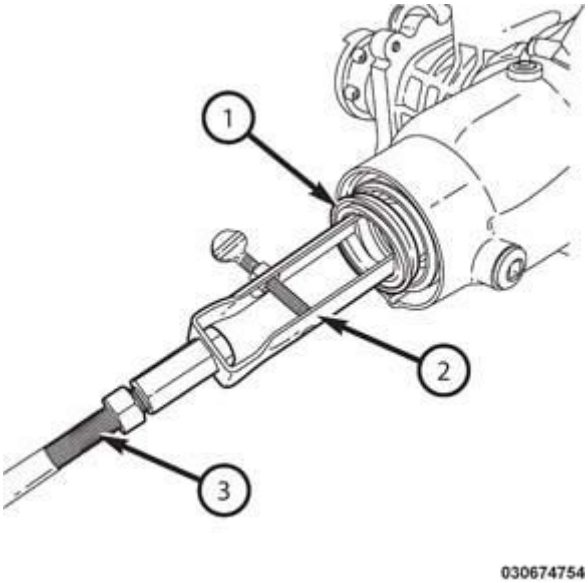

Fig. 554: Primary Chain, Idler Sprocket & Crankshaft Sprocket
Courtesy of CHRYSLER GROUP, LLC

The primary timing chain is a silent type. The primary chain drives the 28 tooth idler sprocket directly from a 21 tooth crankshaft sprocket. This results in a 75% speed reduction to the idler sprocket. The idler sprocket assembly connects the primary chain drive and the secondary chain drive. The idler sprocket assembly consists of two integral 22 tooth sprockets a 28 tooth sprocket. The idler sprocket assembly spins on a stationary idler shaft. The idler shaft is a light press-fit into the cylinder block. A large washer on the idler shaft bolt and the rear flange of the idler shaft are used to control sprocket thrust movement. Pressurized oil is routed through the center of the idler shaft to provide lubrication for the bushings used in the idler sprocket assembly. Primary chain motion is controlled by a hydraulic oil damped tensioner and a fixed guide. The tensioner and the guide both use nylon plastic wear faces for low friction and long wear. The primary chain receives oil splash lubrication.

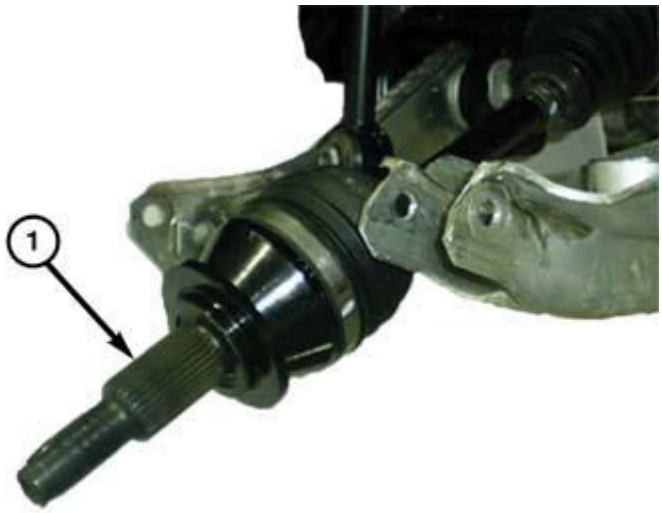

0306005204

Fig. 555: Secondary Drive Chains
Courtesy of CHRYSLER GROUP, LLC

There are two identical secondary drive chains, both are silent type, one to drive the camshafts in each double overhead cam (DOHC) cylinder head. The secondary chains drive the 33 tooth camshaft sprockets directly from the 22 tooth idler sprockets. This speed reduction combined with the crankshaft to idler sprocket speed reduction produces the required 2:1 camshaft drive ratio. A fixed chain guide and a hydraulic oil damped tensioner are used to maintain tension in each secondary chain system. The left hydraulic secondary chain tensioner is fed from the main oil gallery through the cylinder head. The right hydraulic secondary chain tensioner is fed from the number one main bearing journal. Each tensioner incorporates a controlled leak path through a device known as a vent disc located in the nose of the piston to manage chain loads. Only the left tensioner has a mechanical ratchet system that limits chain slack if the tensioner piston bleeds down after engine shut down. The tensioner arms and guides also utilize nylon wear faces for low friction and long wear. The two secondary timing chains are lubricated by holes in the oil controlled tensioners that spray oil through an opening in the tensioner arms. The holes are protected from clogging by a fine mesh screen which is located on the back of the hydraulic tensioners.

STANDARD PROCEDURE

RESETTING LEFT CAM CHAIN TENSIONER

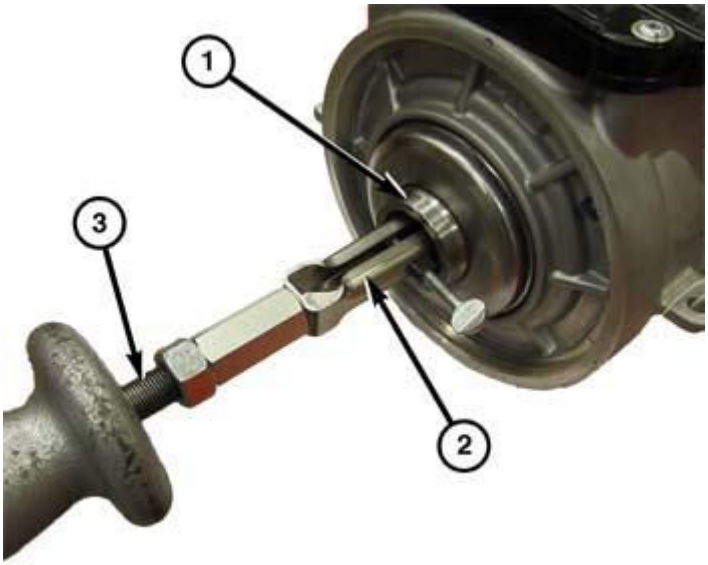

1722017968

Fig. 556: Left Side Cam Chain Tensioner Ratchet Components
Courtesy of CHRYSLER GROUP, LLC

The left side can chain tensioner used on the 3.6L engine is equipped with a ratchet. The ratchet consists of a rack (2) and a pawl (1). In use, the rack (2) extends with the piston (3) from the tensioner body. The pawl (1) will not allow the rack (2) to retract back into the tensioner body. In order to reset the tensioner, the pawl (1) must be disengaged from the rack (2) so that the piston (3) and rack (2) can be pushed back (4) into the tensioner body.

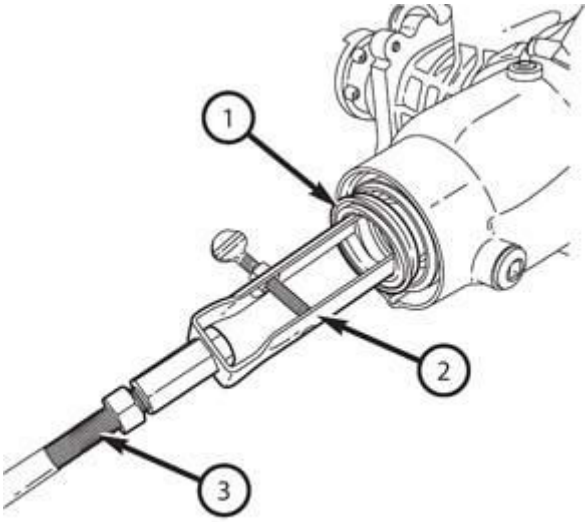

030674754

Fig. 557: Locating Slot In Rack & Allen Wrench

Courtesy of CHRYSLER GROUP, LLC

WITH ENGINE TIMING COVER REMOVED

NOTE: The slot (2) in the rack provides an anchor point for a pin that holds the rack in the retracted position.

1. Using a suitable tool, such as an allen wrench (1), lift the pawl off of the rack.
2. While holding the pawl off of the rack, push the rack and the piston into the tensioner body.

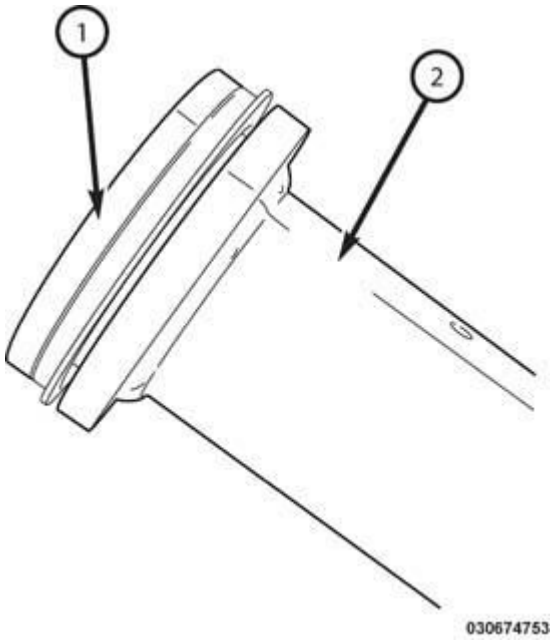

Fig. 558: Inserting Tensioner Pin To Hold Rack & Piston In Retracted Position
Courtesy of CHRYSLER GROUP, LLC

3. When the slot is aligned with the hole in the tensioner body, insert Tensioner Pin (special tool #8514, Pins, Tensioner) (1) to hold the rack and piston in the retracted position.

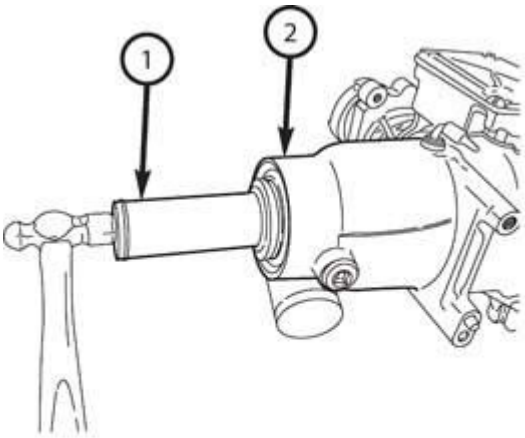

030674755

Fig. 559: Pin, Rack & Timing Chain Holder
Courtesy of CHRYSLER GROUP, LLC

WITH ENGINE TIMING COVER INSTALLED

NOTE: Graphic shows timing cover removed for clarity.

1. Using (special tool #10200-3, Pin) (2), lift the pawl off of the rack (3).

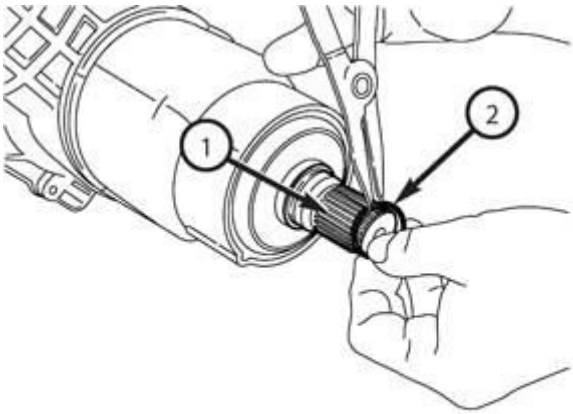

030674756

Fig. 560: Positioning Timing Chain Holder To Force Rack & Piston Back Into Tensioner Body
Courtesy of CHRYSLER GROUP, LLC

2. While holding the pawl off of the rack, push (special tool #10200-1, Holder, Timing Chain, Left Side) (1) into place between the cylinder head and the cam chain guide to force the rack and piston back into the

tensioner body. The holder must remain in place during service to keep the rack and piston in the retracted position.

MEASURING TIMING CHAIN WEAR

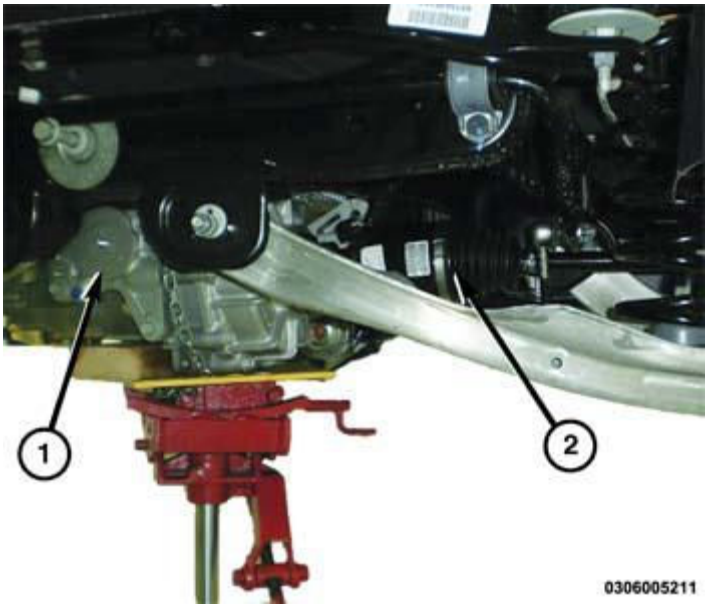

Fig. 561: Piston Extension & RH Cam Chain Tensioner
Courtesy of CHRYSLER GROUP, LLC

1. Remove the engine timing chain cover. Refer to **COVER(S), ENGINE TIMING, REMOVAL**.
2. To determine if the timing chains are worn, rotate the crankshaft clockwise until maximum tensioner piston extension (1) is obtained on the RH cam chain tensioner (2). Measure the distance between the secondary timing chain tensioner housing and the step ledge on the tensioner piston (1). Piston extension (1) must be less than 16 mm (0.630 in.).
3. Piston extension greater than 16 mm (0.630 in.) indicates that all timing chains are worn and require replacement. Refer to **CHAIN AND SPROCKETS, TIMING, REMOVAL**.

ENGINE TIMING VERIFICATION

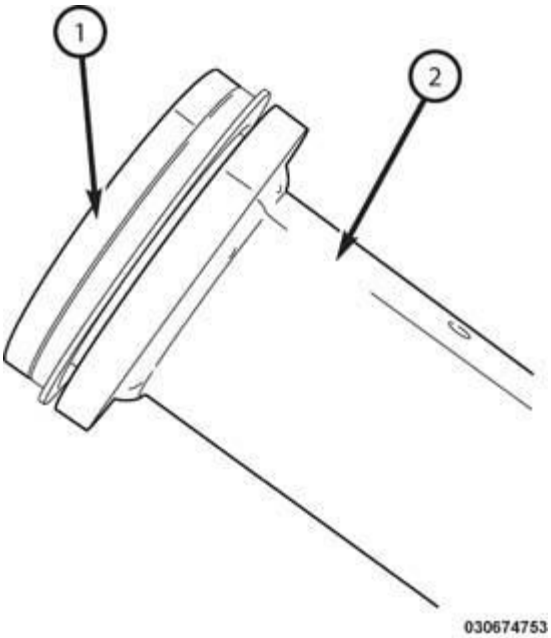

Fig. 562: Magnetic Timing Wheels
Courtesy of CHRYSLER GROUP, LLC

CAUTION: The magnetic timing wheels (1) must not come in contact with magnets (pickup tools, trays, etc.) or any other strong magnetic field. This will destroy the timing wheels ability to correctly relay camshaft position to the camshaft position sensor.

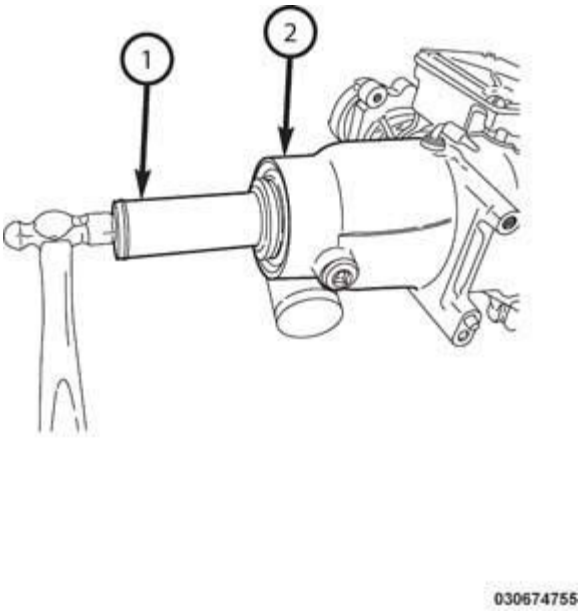

Fig. 563: Positioning Dial Indicator & Setting #4 Cylinder At Top-Dead-Center Compression Stroke
Courtesy of CHRYSLER GROUP, LLC

Correct timing is critical for the NON free-wheeling designed, 3.6L engine. Engine timing can be verified by

using the following procedures:

1. Remove the upper intake manifold and both cylinder head covers. Refer to **COVER(S), CYLINDER HEAD, REMOVAL**.
2. Remove the spark plugs. Refer to **SPARK PLUG, REMOVAL** .

CAUTION: When aligning timing marks, always rotate engine by turning the crankshaft. Failure to do so will result in valve and/or piston damage.

3. Mount Dial Indicator Set (special tool #C-3339A, Set, Dial Indicator) (1) to a stationary point on the engine, such as the left camshaft position (CMP) sensor mount. Position the indicator probe into the number four cylinder, rotate the crankshaft clockwise (as viewed from the front) to place the number four cylinder piston at top-dead-center on the compression stroke and set the indicator dial to **ZERO** .

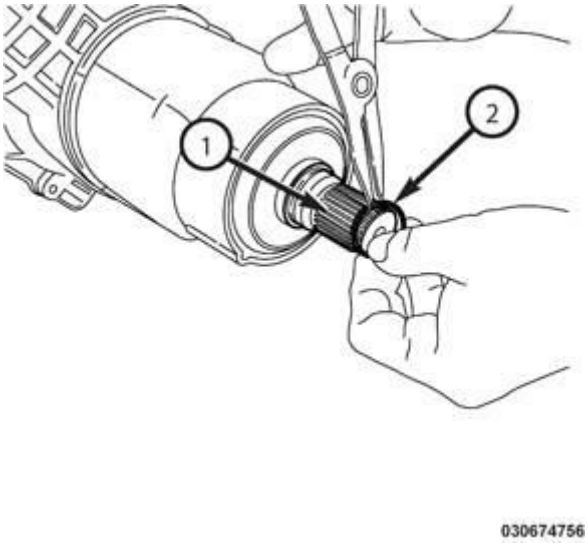

Fig. 564: Arrows, Scribe Lines & Cam Phasers
Courtesy of CHRYSLER GROUP, LLC

4. While maintaining this alignment, verify that the **ARROWS** (1) on the left side cam phasers point toward each other and are parallel to the cylinder head cover mounting surface (2) and that the right side cam phaser **ARROWS** (3) point away from each other and the **SCRIBE LINES** (5) are parallel to the cylinder head cover mounting surface (4).

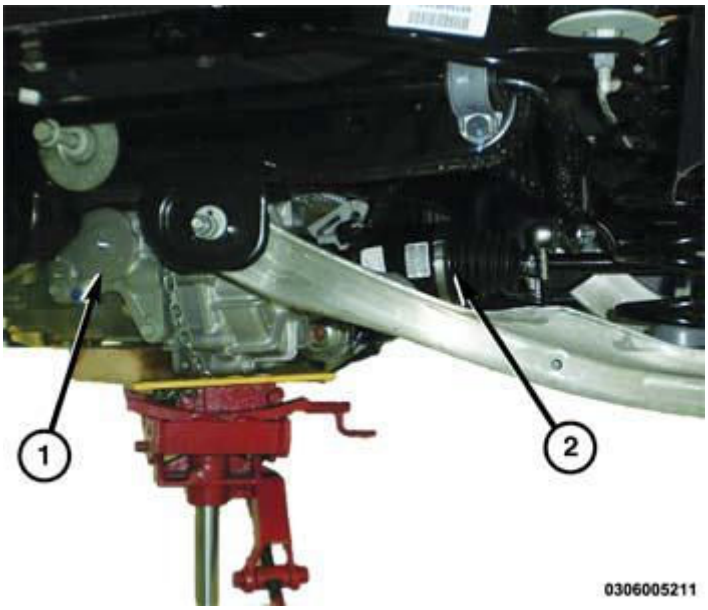

Fig. 565: Chain Pins, Exhaust Cam Phaser Triangle Marking & Circle Marking
Courtesy of CHRYSLER GROUP, LLC

NOTE: The phaser markings (1 and 3) could align with either an external or internal chain link. Either alignment is acceptable as long as there are twelve chain pins between the markings.

5. There should be twelve chain pins (2) **BETWEEN** the exhaust cam phaser triangle marking (1) and the intake cam phaser circle marking (3) as viewed from either the front or rear of the cam phasers.
6. If the engine timing is not correct, proceed to Timing Chain and Sprockets for service procedures. Refer to **CHAIN AND SPROCKETS, TIMING, REMOVAL**.

CHAIN AND SPROCKETS, TIMING

REMOVAL

REMOVAL

Fig. 566: Magnetic Timing Wheels
Courtesy of CHRYSLER GROUP, LLC

CAUTION: The magnetic timing wheels (1) must not come in contact with magnets (pickup tools, trays, etc.) or any other strong magnetic field. This will destroy the timing wheels ability to correctly relay camshaft position to the camshaft position sensor.

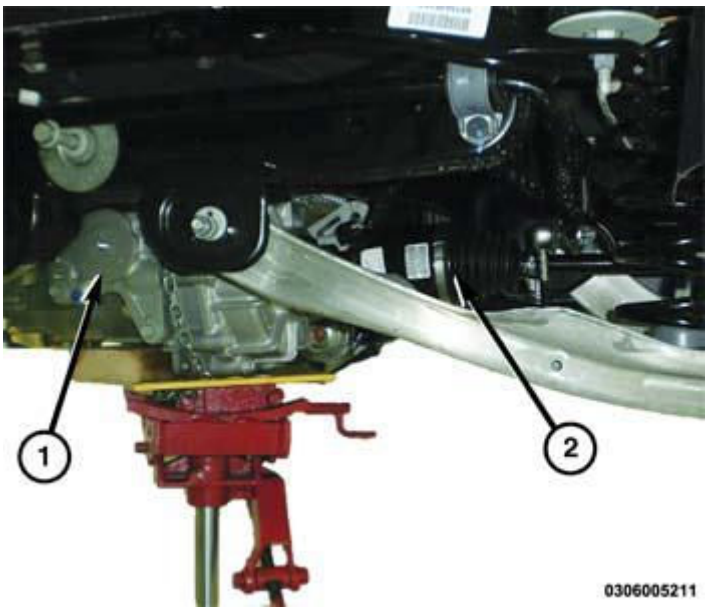

Fig. 567: Piston Extension & RH Cam Chain Tensioner
Courtesy of CHRYSLER GROUP, LLC

CAUTION: When the timing chains are removed and the cylinder heads are still

installed, DO NOT rotate the camshafts or crankshaft without first locating the proper crankshaft position. Failure to do so will result in valve and/or piston damage.

NOTE: The Variable Valve Timing (VVT) assemblies (Phasers) and Oil Control Valves (OCVs) can be serviced without removing the engine timing cover. Refer to ASSEMBLY, VARIABLE VALVE TIMING, PHASER/OIL CONTROL VALVE, REMOVAL.

1. Disconnect and isolate the negative battery cable.
2. Remove the air cleaner housing assembly and upper intake manifold. Refer to **MANIFOLD, INTAKE, REMOVAL**.
3. Remove both cylinder head covers. Refer to **COVER(S), CYLINDER HEAD, REMOVAL**.
4. Remove the spark plugs. Refer to **SPARK PLUG, REMOVAL** .
5. Raise and support the vehicle. Refer to **HOISTING, STANDARD PROCEDURE** .
6. Drain the cooling system. Refer to **STANDARD PROCEDURE** .
7. Remove the oil pan, accessory drive belts, crankshaft vibration damper and engine timing cover. Refer to **COVER(S), ENGINE TIMING, REMOVAL**.

NOTE: Take this opportunity to measure timing chain wear. Refer to VALVE TIMING - STANDARD PROCEDURE .

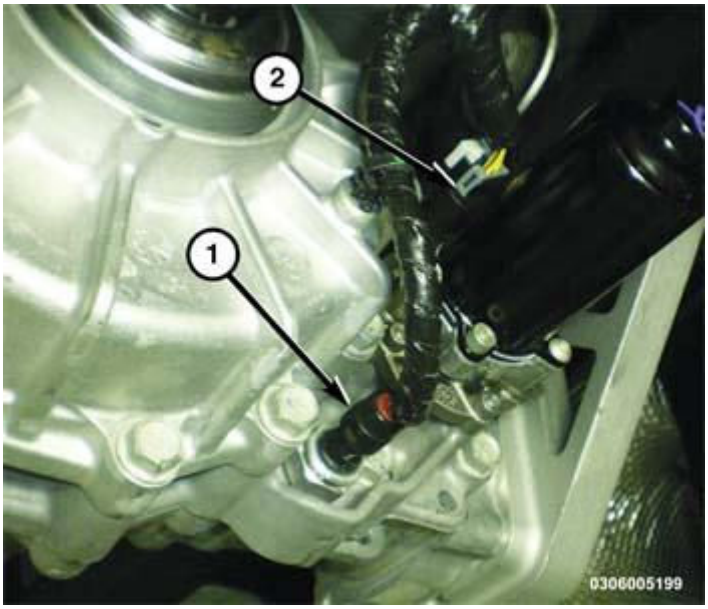

Fig. 568: Rotating Crankshaft Clockwise To Position No. 1 Piston At TDC On Exhaust Stroke
Courtesy of CHRYSLER GROUP, LLC

CAUTION: When aligning timing marks, always rotate engine by turning the crankshaft. Failure to do so will result in valve and/or piston damage.

8. Rotate the crankshaft clockwise (as viewed from the front) to place the number one cylinder piston at top-dead-center on the exhaust stroke by aligning the dimple (4) on the crankshaft with the block/bearing cap junction (5).
9. While maintaining this alignment, verify that the **ARROWS** (2) on the left side cam phasers point toward each other and are parallel to the cylinder head cover mounting surface (3) and that the right side cam phaser **ARROWS** (7) point away from each other and the **SCRIBE LINES** (9) are parallel to the cylinder head cover mounting surface (8).

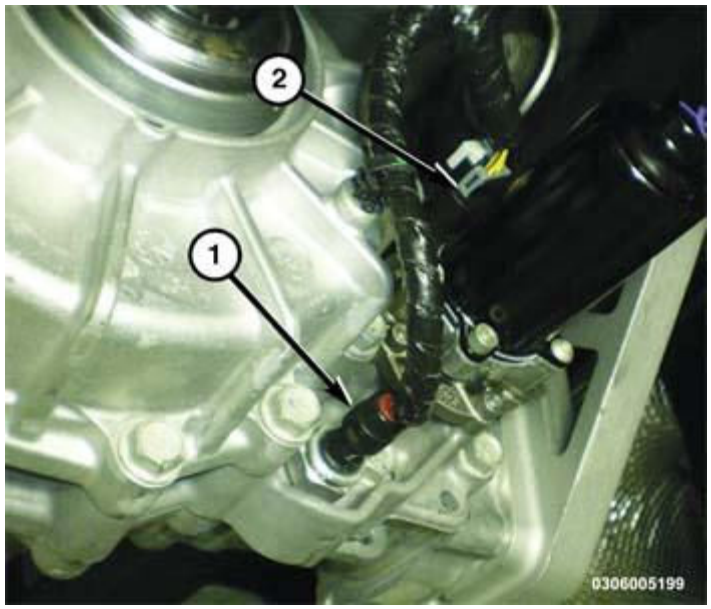

Fig. 569: Chain Pins, Exhaust Cam Phaser Triangle Marking & Circle Marking
Courtesy of CHRYSLER GROUP, LLC

NOTE: The phaser markings (1 and 3) could align with either an external or internal chain link. Either alignment is acceptable as long as there are twelve chain pins between the markings.

10. There should be twelve chain pins (2) **BETWEEN** the exhaust cam phaser triangle marking (1) and the intake cam phaser circle marking (3) as viewed from either the front or rear of the cam phasers.

CAUTION: Always reinstall timing chains so that they maintain the same direction of rotation. Inverting a previously run chain on a previously run sprocket will result in excessive wear to both the chain and sprocket.

11. Mark the direction of rotation on the following timing chains using a paint pen or equivalent to aid in reassembly:
    - Left side cam chain
    - Right side cam chain
    - Oil pump chain

- Primary chain

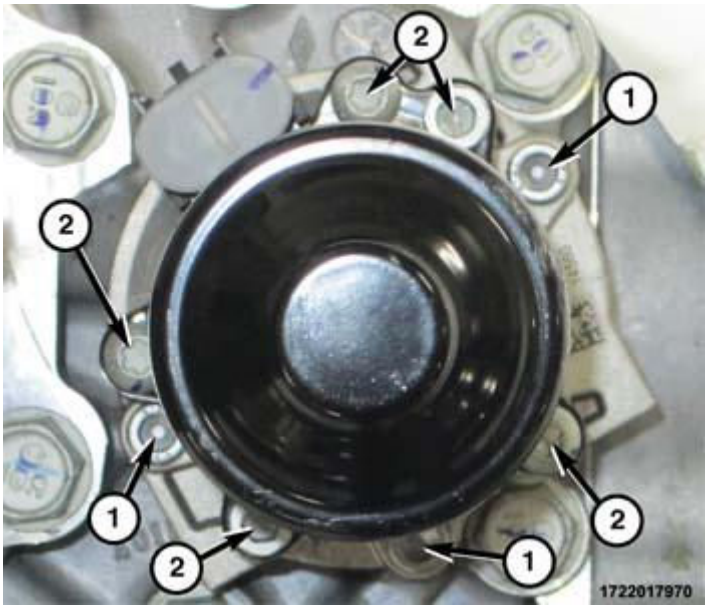

Fig. 570: Resetting Right Cam Chain Tensioner
Courtesy of CHRYSLER GROUP, LLC

12. Reset the right side cam chain tensioner by pushing back the tensioner piston and installing Tensioner Pin (special tool #8514, Pins, Tensioner) (1).

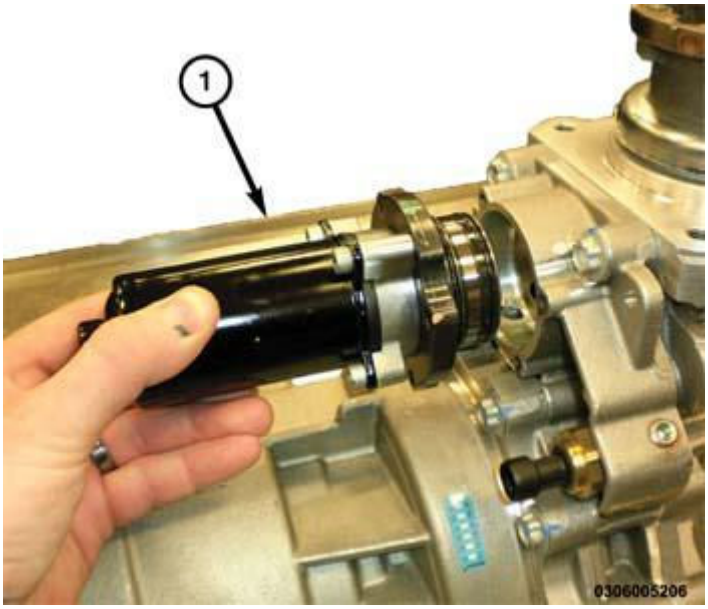

Fig. 571: Resetting Left Cam Chain Tensioner
Courtesy of CHRYSLER GROUP, LLC

13. Reset the left side cam chain tensioner by lifting the pawl (1), pushing back the piston (2) and installing Tensioner Pin (special tool #8514, Pins, Tensioner) (3). Refer to **VALVE TIMING - STANDARD**

PROCEDURE .

1722017966

Fig. 572: Oil Pump Chain Tensioner, Spring, Retaining Bolt, Dowel Pin, Oil Pump Sprocket & Oil Pump Chain
Courtesy of CHRYSLER GROUP, LLC

14. Disengage the oil pump chain tensioner spring (3) from the dowel pin (2) and remove the oil pump chain tensioner (1).
15. Remove the oil pump sprocket T45 retaining bolt (4) and remove the oil pump sprocket (5) and oil pump chain (6).

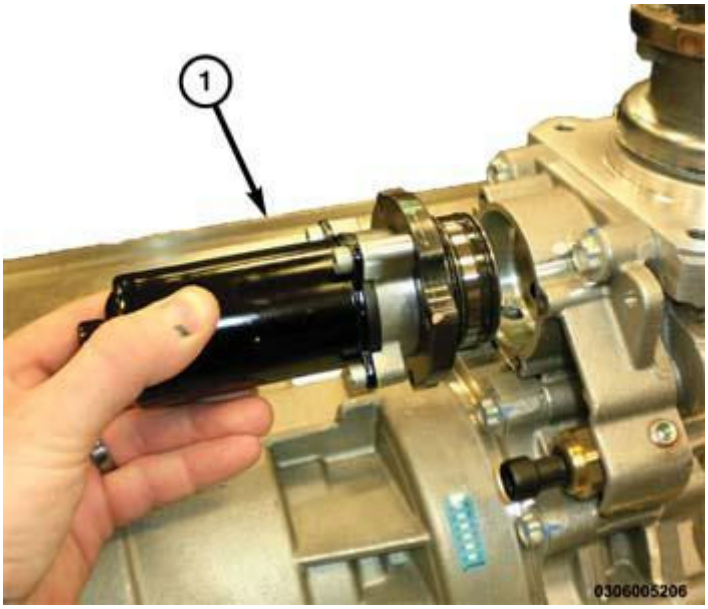

Fig. 573: Camshaft Phaser Lock, Oil Control Valves & Wrench
Courtesy of CHRYSLER GROUP, LLC

NOTE: It may be necessary to rock the camshaft slightly (a few degrees) with a wrench (4) when installing the camshaft phaser lock.

16. Install the (special tool #10202-1, Lock, Camshaft/Phaser, Right Side) (1) with the tool number facing up.
17. Loosen, but do not remove, the exhaust oil control valve (3) and the intake oil control valve (2).
18. Remove the (special tool #10202-1, Lock, Camshaft/Phaser, Right Side) (1).
19. Remove the oil control valve (2) from the right side intake cam phaser.
20. Pull the right side intake cam phaser off of the camshaft and remove the right side cam chain.
21. If required, remove the oil control valve (3) and pull the right side exhaust cam phaser off of the camshaft.

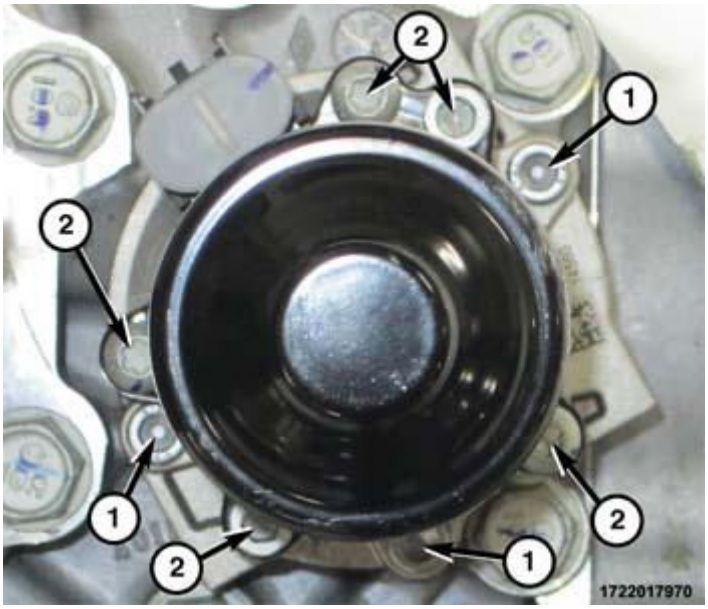

Fig. 574: Camshaft Phaser Lock, Oil Control Valves & Wrench
Courtesy of CHRYSLER GROUP, LLC

NOTE: It may be necessary to rock the camshaft slightly (a few degrees) with a wrench (4) when installing the camshaft phaser lock.

22. Install the (special tool #10202-2, Lock, Camshaft/Phaser, Left Side) (1) with the tool number facing up.
23. Loosen, but do not remove, the exhaust oil control valve (2) and the intake oil control valve (3).
24. Remove the (special tool #10202-2, Lock, Camshaft/Phaser, Left Side) (1).
25. Remove the oil control valve (2) from the left side exhaust cam phaser.
26. Pull the left side exhaust cam phaser off of the camshaft and remove the left side cam chain.
27. If required, remove the oil control valve (3) and pull the left side intake cam phaser off of the camshaft.

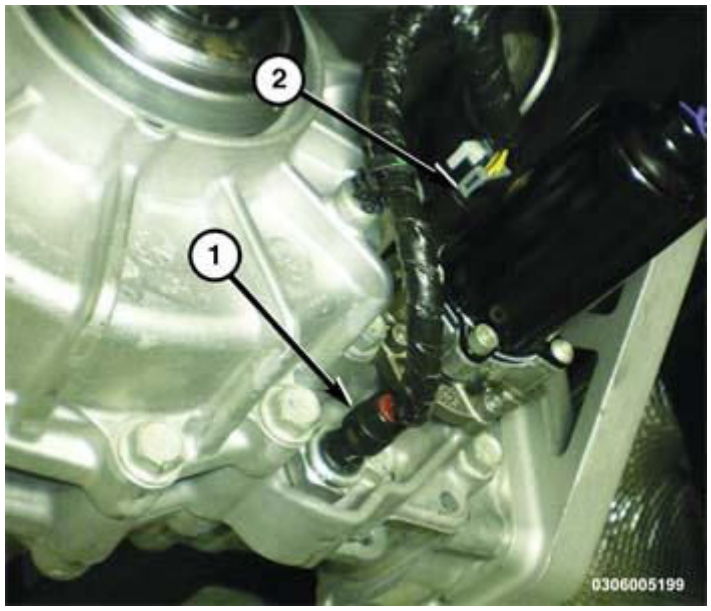

Fig. 575: Primary Chain Tensioner, Tensioner Pin, Primary Chain Guide & Bolts
Courtesy of CHRYSLER GROUP, LLC

28. Reset the primary chain tensioner (5) by pushing back the tensioner piston and installing Tensioner Pin (special tool #8514, Pins, Tensioner) (3). Remove two T30 bolts (4) and remove the primary chain tensioner.
29. Remove the T30 bolt (1) and the primary chain guide (2).

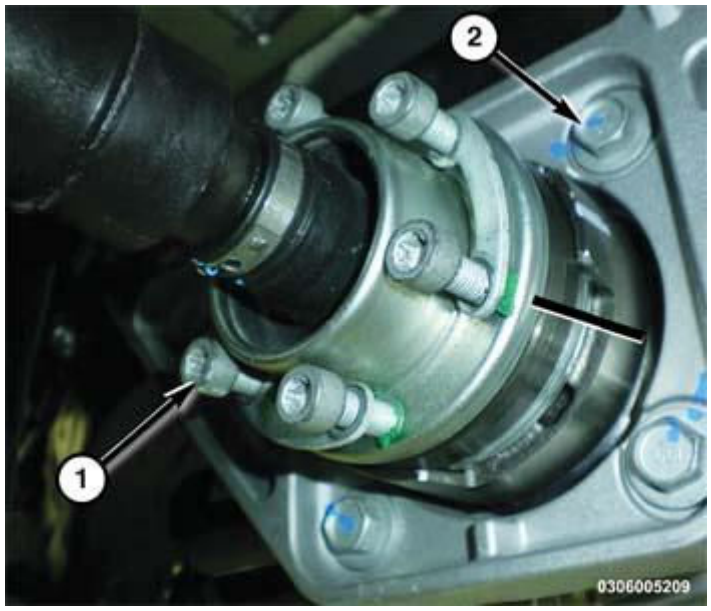

Fig. 576: Timing Chain Plated Link At 12 O'Clock, Washer, Retaining Bolt, Block/Bearing Cap Junction & Dimple
Courtesy of CHRYSLER GROUP, LLC

30. Remove the idler sprocket T45 retaining bolt (2) and washer (3).

31. Remove the primary chain, idler sprocket and crankshaft sprocket as an assembly.

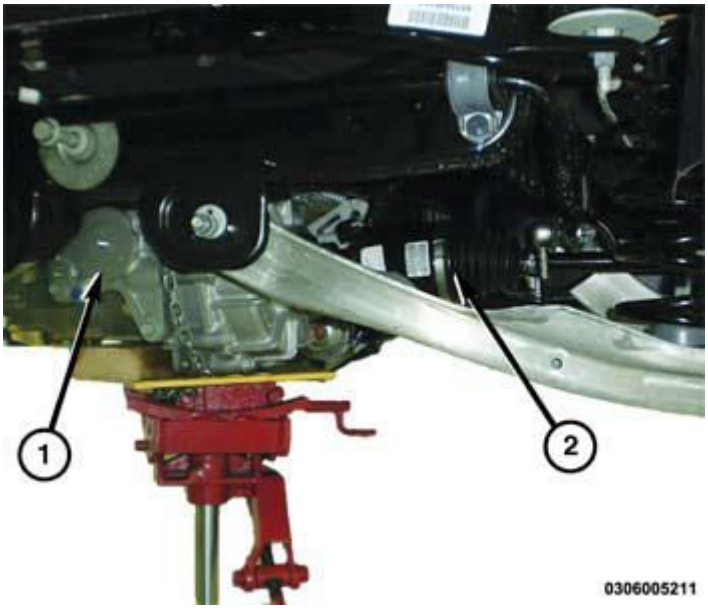

Fig. 577: Left Cam Chain Tensioner, Arm, Guide & Bolts
Courtesy of CHRYSLER GROUP, LLC

32. If required, remove two T30 bolts (6) and the left side cam chain tensioner (5).
33. If required, remove two T30 bolts (4) and the left side cam chain guide (2) and tensioner arm (1).

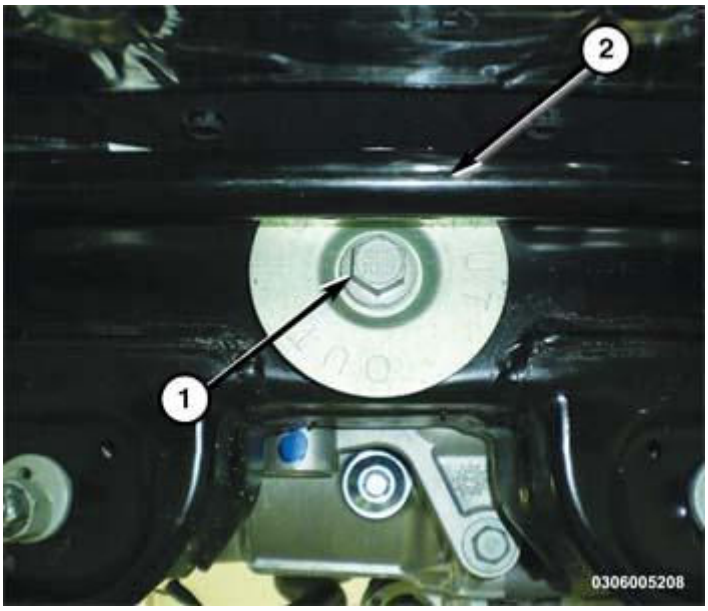

Fig. 578: Right Cam Chain Tensioner, Arm, Guide & Bolts
Courtesy of CHRYSLER GROUP, LLC

34. If required, remove two T30 bolts (4) and the right side cam chain tensioner (3).

35. If required, remove three T30 bolts (2) and the right side cam chain guide (1) and tensioner arm (6).
36. Inspect all sprockets and chain guides. Replace if damaged.

INSPECTION

INSPECTION

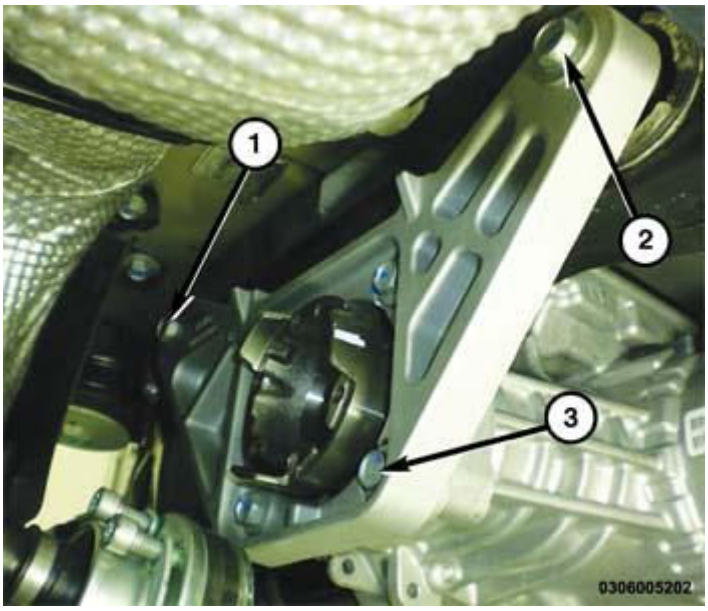

Fig. 579: Piston Extension & RH Cam Chain Tensioner
Courtesy of CHRYSLER GROUP, LLC

Prior to disassembly of the timing chains and sprockets, measure the timing chain wear (1). Refer to **VALVE TIMING - STANDARD PROCEDURE** .

Inspect the following valve timing components:

- Sprockets for excessive tooth wear. Some tooth markings are normal and not a cause for sprocket replacement.
- Idler sprocket assembly bushing and shaft for excessive wear.
- Chain guides and tensioner arms. Replace these parts if grooving in plastic face is more than 1 mm (0.039 in.) deep.
- Secondary chain tensioner piston and ratcheting device. Inspect for evidence of heavy contact between tensioner piston and tensioner arm. If this condition exist the tensioner arm and chain should be replaced.
- Primary chain tensioner plastic faces. Replace as required.

INSTALLATION

INSTALLATION

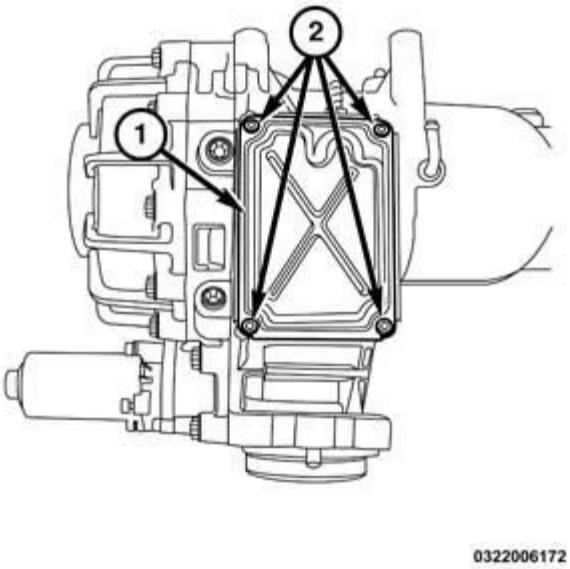

Fig. 580: Magnetic Timing Wheels
Courtesy of CHRYSLER GROUP, LLC

CAUTION: The magnetic timing wheels (1) must not come in contact with magnets (pickup tools, trays, etc.) or any other strong magnetic field. This will destroy the timing wheels ability to correctly relay camshaft position to the camshaft position sensor.

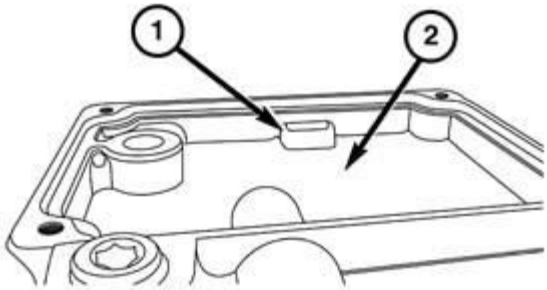

0322006171

Fig. 581: Right Cam Chain Tensioner, Arm, Guide & Bolts
Courtesy of CHRYSLER GROUP, LLC

1. Inspect all sprockets and chain guides. Replace if damaged.
2. If removed, install the right side cam chain guide (1) and tensioner arm (6). Tighten to the proper specification. Refer to **TORQUE SPECIFICATIONS** .
3. If removed, install the right side cam chain tensioner (3) to the engine block with two bolts (4). Tighten to the proper specification. Refer to **TORQUE SPECIFICATIONS** .
4. Reset the right side cam chain tensioner (3) by pushing back the tensioner piston and installing Tensioner Pin (special tool #8514, Pins, Tensioner) (5).

Fig. 582: Left Cam Chain Tensioner, Arm, Guide & Bolts
Courtesy of CHRYSLER GROUP, LLC

5. If removed, install the left side cam chain guide (2) and tensioner arm (1). Tighten to the proper specification. Refer to **TORQUE SPECIFICATIONS** .
6. If removed, install the left side cam chain tensioner (5) to the cylinder head with two bolts (6). Tighten to the proper specification. Refer to **TORQUE SPECIFICATIONS** .
7. Reset the left side cam chain tensioner (5) by lifting the pawl (3), pushing back the piston and installing Tensioner Pin (special tool #8514, Pins, Tensioner) (7). Refer to **VALVE TIMING - STANDARD PROCEDURE** .

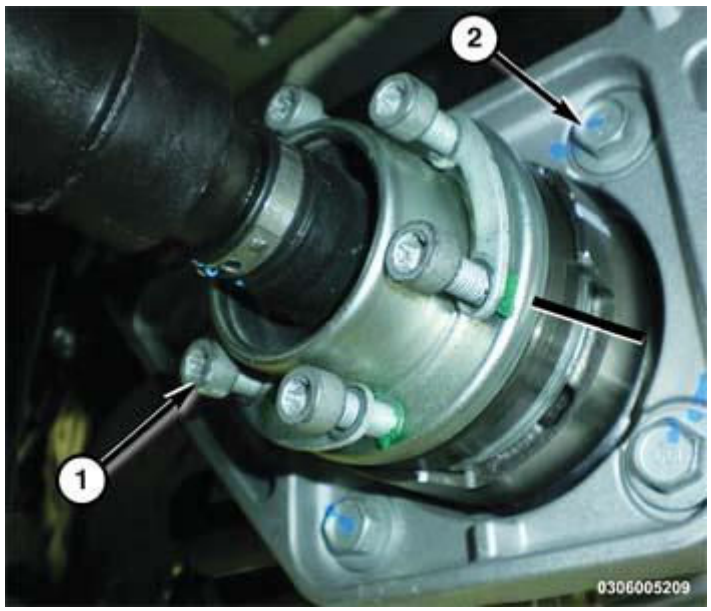

Fig. 583: Crankshaft Key, Dimple & Block/Bearing Cap Junction
Courtesy of CHRYSLER GROUP, LLC

8. Verify that the key (3) is installed in the crankshaft.

CAUTION: Do not rotate the crankshaft more than a few degrees independently of the camshafts. Piston to valve contact could occur resulting in possible valve damage. If the crankshaft needs to be rotated more than a few degrees, first remove the camshafts.

9.
10. Verify that the number one cylinder piston is positioned at top-dead-center by aligning the dimple (2) on the crankshaft with the block/bearing cap junction (1).

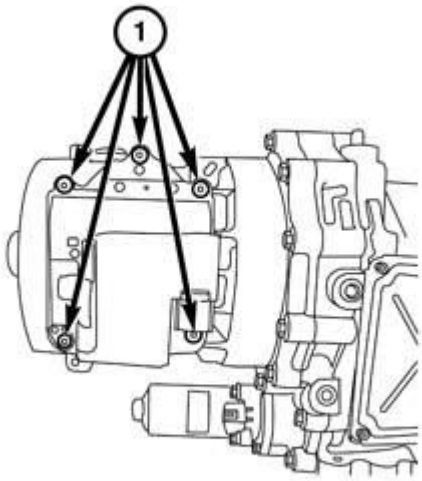

0322008595

Fig. 584: Positioning Camshaft Alignment Holes Vertically
Courtesy of CHRYSLER GROUP, LLC

CAUTION: Do not rotate the camshafts more than a few degrees independently of the crankshaft. Valve to piston contact could occur resulting in possible valve damage. If the camshafts need to be rotated more than a few degrees, first move the pistons away from the cylinder heads by rotating the crankshaft counterclockwise to a position 30° before-top-dead-center. Once the camshafts are returned to their top-dead-center position, rotate the crankshaft clockwise to return the crankshaft to top-dead-center.

11.
12. Verify that the camshafts are set at top-dead-center by positioning the alignment holes (1) vertically.

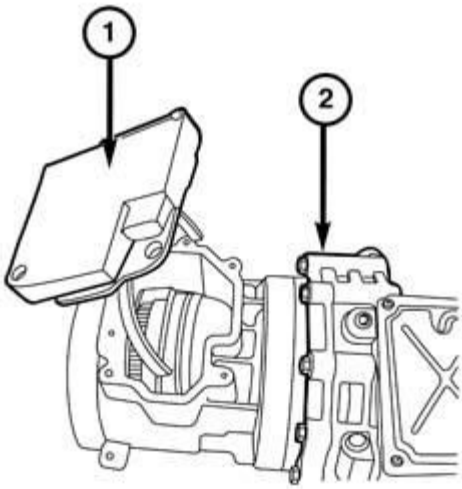

0322008596

Fig. 585: Aligning Arrow With Plated Link On Primary Chain
Courtesy of CHRYSLER GROUP, LLC

CAUTION: Always reinstall timing chains so that they maintain the same direction of rotation. Inverting a previously run chain on a previously run sprocket will result in excessive wear to both the chain and sprocket.

13. Place the primary chain onto the crankshaft sprocket (3) so that the arrow (2) is aligned with the plated link (1) on the timing chain.

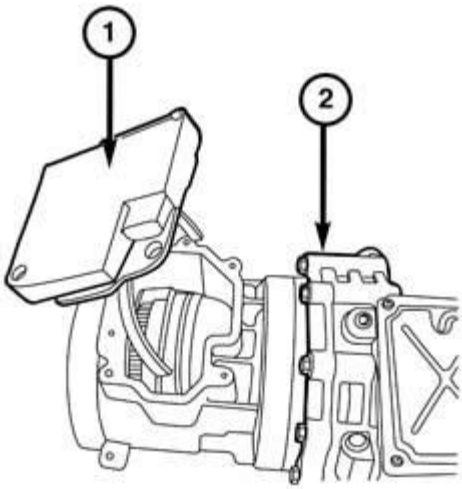

0322008596

Fig. 586: Placing Idler Sprocket Into Timing Chain So That Dimple Is Aligned With Plated Link On Timing Chain
Courtesy of CHRYSLER GROUP, LLC

14. While maintaining this alignment, invert the crankshaft sprocket and timing chain and place the idler sprocket (4) into the timing chain so that the dimple (2) is aligned with the plated link (1) on the timing chain.

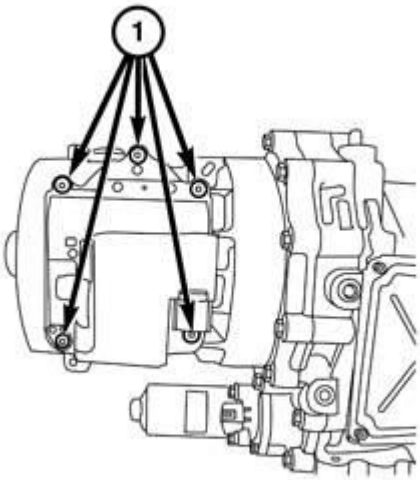

0322008595

Fig. 587: Timing Chain Plated Link At 12 O'Clock, Washer, Retaining Bolt, Block/Bearing Cap Junction & Dimple
Courtesy of CHRYSLER GROUP, LLC

15. While maintaining this alignment, lubricate the idler sprocket bushing with clean engine oil and install the sprockets and timing chain on the engine. To verify that the timing is still correct, the timing chain plated link (6) should be located at 12:00 (1) when the dimple (5) on the crankshaft is aligned with the block/bearing cap junction (4).
16. Install the idler sprocket retaining bolt (2) and washer (3). Tighten to the proper specification. Refer to **TORQUE SPECIFICATIONS** .

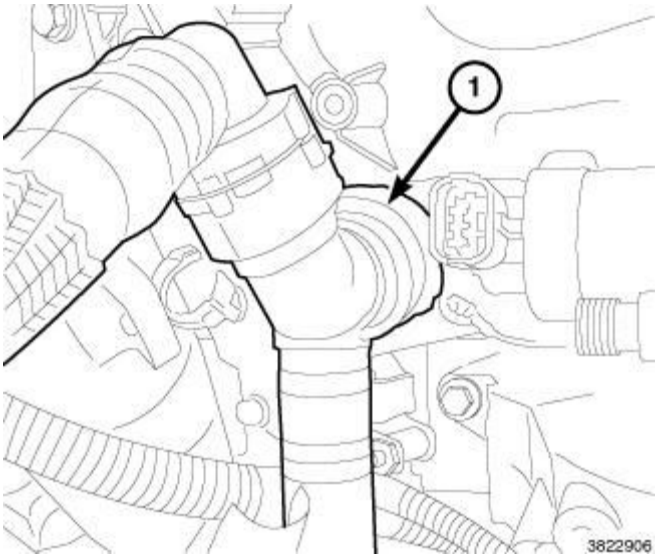

Fig. 588: Primary Chain Tensioner, Tensioner Pin, Primary Chain Guide & Bolts
Courtesy of CHRYSLER GROUP, LLC

17. Install the primary chain guide (2). Tighten to the proper specification. Refer to **TORQUE SPECIFICATIONS** .
18. Reset the primary chain tensioner (5) by pushing back the tensioner piston and installing Tensioner Pin (special tool #8514, Pins, Tensioner) (3).
19. Install the primary chain tensioner (5) to the engine block with two bolts (4). Tighten to the proper specification. Refer to **TORQUE SPECIFICATIONS** .

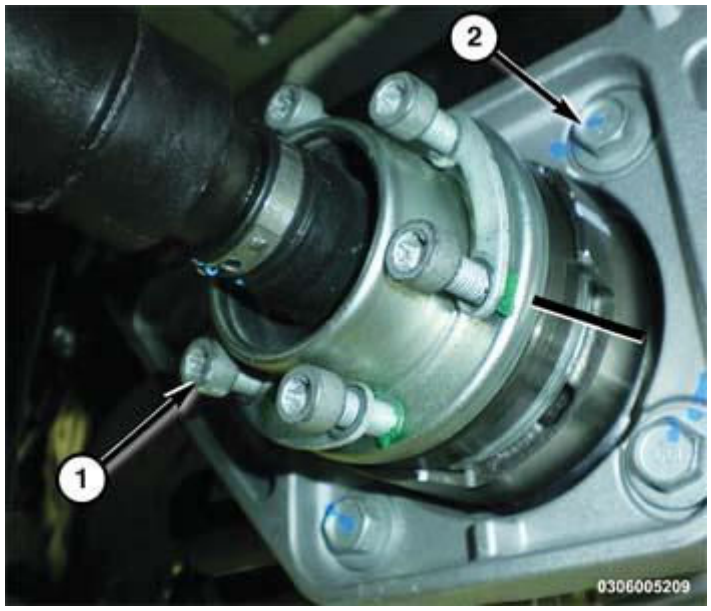

Fig. 589: Phaser Timing Marks, Oil Control Valves & LH Camshaft Phaser Lock
Courtesy of CHRYSLER GROUP, LLC

20. Press the left side intake cam phaser onto the intake camshaft. Install and hand tighten the oil control valve (6).

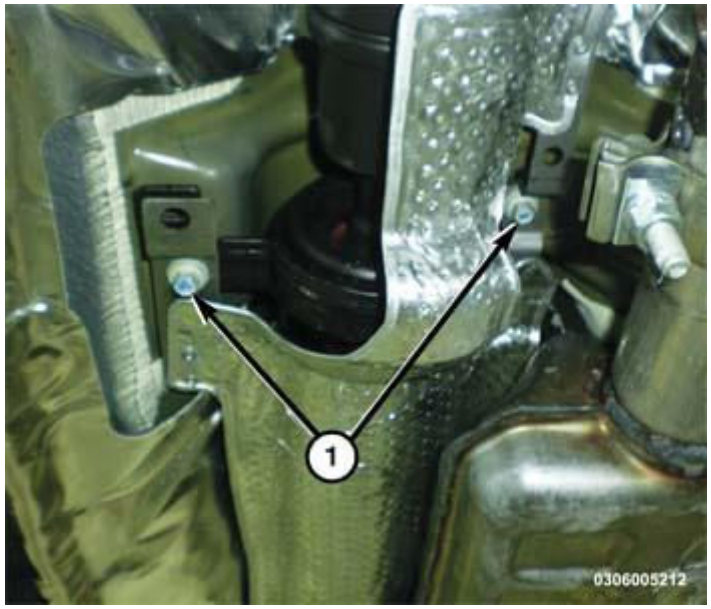

Fig. 590: Idler Sprocket, Plated Link & Arrow
Courtesy of CHRYSLER GROUP, LLC

NOTE: The left side and right side cam chains are identical.

CAUTION: Always reinstall timing chains so that they maintain the same

direction of rotation. Inverting a previously run chain on a previously run sprocket will result in excessive wear to both the chain and sprocket.

21. Drape the left side cam chain over the left side intake cam phaser and onto the idler sprocket (1) so that the arrow (3) is aligned with the plated link (2) on the cam chain.

Fig. 591: Phaser Timing Marks, Oil Control Valves & LH Camshaft Phaser Lock
Courtesy of CHRYSLER GROUP, LLC

22. While maintaining this alignment, route the cam chain around the exhaust and intake cam phasers so that the plated links are aligned with the phaser timing marks (1). Position the left side cam phasers so that the arrows (3) point toward each other and are parallel to the cylinder head cover mounting surface (5). Press the exhaust cam phaser onto the exhaust cam, install and hand tighten the oil control valve (2).

NOTE: Minor rotation of a camshaft (a few degrees) may be required to install the camshaft phaser or phaser lock.

23. Install the (special tool #10202-2, Lock, Camshaft/Phaser, Left Side) (4) with the tool number facing up.
24. Tighten the oil control valves (2) and (6). Tighten to the proper specification. Refer to **TORQUE SPECIFICATIONS** .
25. Remove the Camshaft Phaser Lock (4).

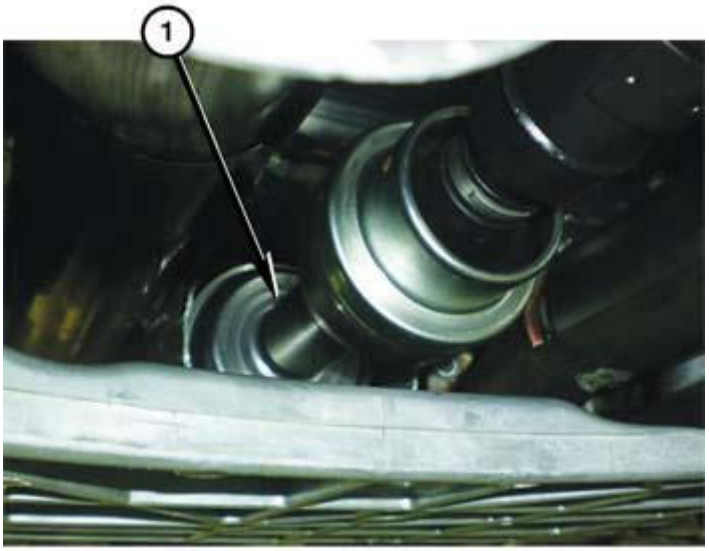

0306005213

Fig. 592: Phaser Timing Marks, Oil Control Valves & RH Camshaft Phaser Lock
Courtesy of CHRYSLER GROUP, LLC

26. Press the right side exhaust cam phaser onto the exhaust camshaft. Install and hand tighten the oil control valve (7).

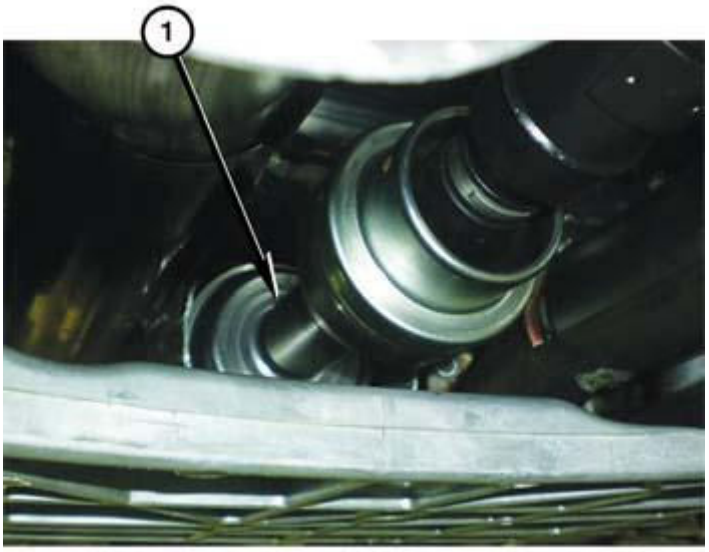

0306005213

Fig. 593: Idler Sprocket, Dimple & Plated Link
Courtesy of CHRYSLER GROUP, LLC

CAUTION: Always reinstall timing chains so that they maintain the same direction of rotation. Inverting a previously run chain on a previously run sprocket will result in excessive wear to both the chain and sprocket.

27. Drape the right side cam chain over the right side exhaust cam phaser and onto the idler sprocket (1) so that the dimple (2) is aligned with the plated link (3) on the cam chain.

Fig. 594: Phaser Timing Marks, Oil Control Valves & RH Camshaft Phaser Lock
Courtesy of CHRYSLER GROUP, LLC

28. While maintaining this alignment, route the cam chain around the exhaust and intake cam phasers so that the plated links are aligned with the phaser timing marks (1). Position the right side cam phasers so that the arrows (3) point away from each other and the scribe lines (4) are parallel to the cylinder head cover mounting surface (6). Press the intake cam phaser onto the intake cam, install and hand tighten the oil control valve (2).

NOTE: Minor rotation of a camshaft (a few degrees) may be required to install the camshaft phaser or phaser lock.

29. Install the (special tool #10202-1, Lock, Camshaft/Phaser, Right Side) (5) with the tool number facing up.
30. Tighten the oil control valves (2) and (7). Tighten to the proper specification. Refer to **TORQUE SPECIFICATIONS** .
31. Remove the Camshaft Phaser Lock (5).

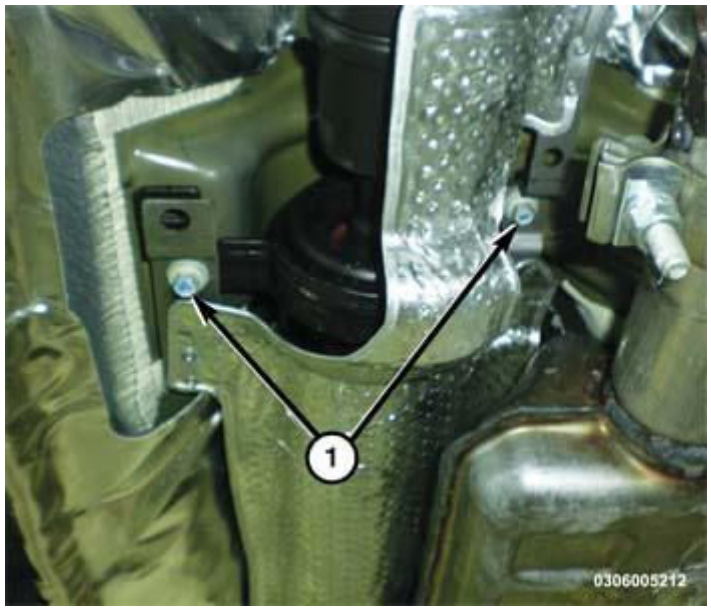

Fig. 595: Oil Pump Chain Tensioner, Spring, Retaining Bolt, Dowel Pin, Oil Pump Sprocket & Oil Pump Chain
Courtesy of CHRYSLER GROUP, LLC

NOTE: There are no timing marks on the oil pump gear or chain.

CAUTION: Always reinstall timing chains so that they maintain the same direction of rotation. Inverting a previously run chain on a previously run sprocket will result in excessive wear to both the chain and sprocket.

32. Place the oil pump sprocket (5) into the oil pump chain (6). Place the oil pump chain onto the crankshaft sprocket while aligning the oil pump sprocket with the oil pump shaft. Install the oil pump sprocket T45 retaining bolt (4). Tighten to the proper specification. Refer to **TORQUE SPECIFICATIONS** .
33. Install the oil pump chain tensioner (1). Insure that the spring (3) is positioned above the dowel pin (2).

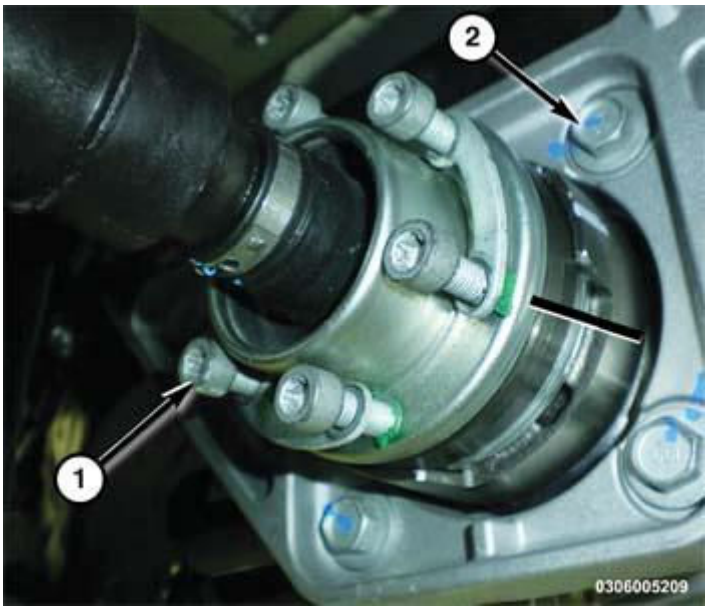

Fig. 596: Timing Gear Splash Shield & Bolts
Courtesy of CHRYSLER GROUP, LLC

34. Install the timing gear splash shield (1). Tighten to the proper specification. Refer to **TORQUE SPECIFICATIONS** .

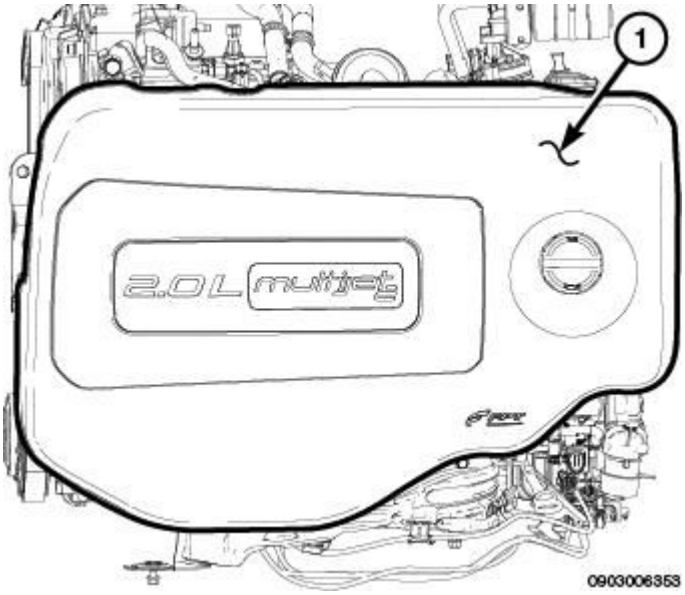

Fig. 597: Rotating Crankshaft Clockwise To Position No. 1 Piston At TDC On Exhaust Stroke
Courtesy of CHRYSLER GROUP, LLC

35. Remove the Tensioner Pins (special tool #8514, Pins, Tensioner) (1) and (6) from the right side and left side cam chain tensioners.
36. Rotate the crankshaft clockwise (as viewed from the front) two complete revolutions stopping when the dimple (4) on the crankshaft is aligned with the block/bearing cap junction (5).

37. While maintaining this alignment, verify that the **ARROWS** (2) on the left side cam phasers point toward each other and are parallel to the cylinder head cover mounting surface (3) and that the right side cam phaser **ARROWS** (7) point away from each other and the **SCRIBE LINES** (9) are parallel to the cylinder head cover mounting surface (8).

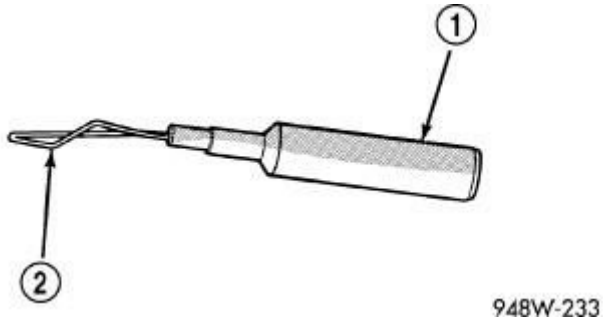

Fig. 598: Chain Pins, Exhaust Cam Phaser Triangle Marking & Circle Marking
Courtesy of CHRYSLER GROUP, LLC

38. There should be 12 chain pins (2) **BETWEEN** the exhaust cam phaser triangle marking (1) and the intake cam phaser circle marking (3) as viewed from either the front or rear of the cam phasers.
39. If the engine timing is not correct, repeat this procedure.
40. Install the engine timing cover, crankshaft vibration damper, accessory drive belts and oil pan. Refer to **COVER(S), ENGINE TIMING, INSTALLATION**.
41. Install the spark plugs. Refer to **SPARK PLUG, INSTALLATION** .
42. Install the cylinder head covers. Refer to **COVER(S), CYLINDER HEAD, INSTALLATION**.
43. Install the upper intake manifold and air cleaner housing assembly. Refer to **MANIFOLD, INTAKE, INSTALLATION**.
44. Fill the engine crankcase with the proper oil to the correct level. Refer to **OIL, STANDARD PROCEDURE** .
45. Connect the negative battery cable. Tighten to the proper specification. Refer to **SPECIFICATIONS** .
46. Fill the cooling system. Refer to **STANDARD PROCEDURE** .
47. Operate the engine until it reaches normal operating temperature. Check cooling system for correct fluid level. Refer to **STANDARD PROCEDURE** .

NOTE: **The Cam/Crank Variation Relearn procedure must be performed using the scan tool anytime there has been a repair/replacement made to a powertrain system, for example: flywheel, valvetrain, camshaft and/or crankshaft sensors or components.**

COVER(S), ENGINE TIMING

REMOVAL

REMOVAL

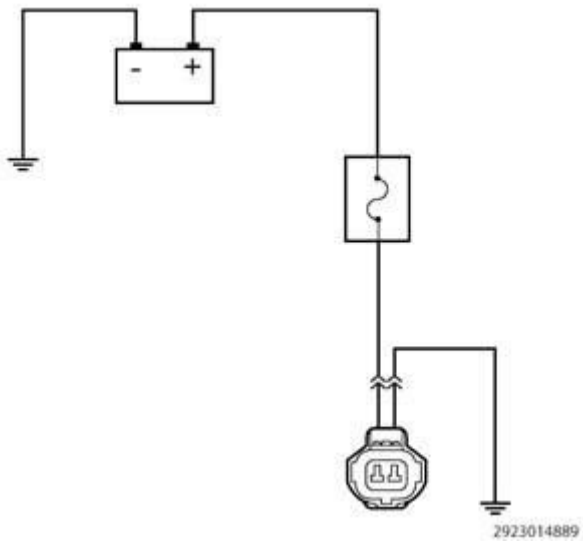

Fig. 599: Engine Cover & Ball Studs
Courtesy of CHRYSLER GROUP, LLC

1. Disconnect and isolate the negative battery cable.
2. Remove the engine cover (1).
3. Drain the cooling system. Refer to **STANDARD PROCEDURE** .
4. Drain the engine oil.

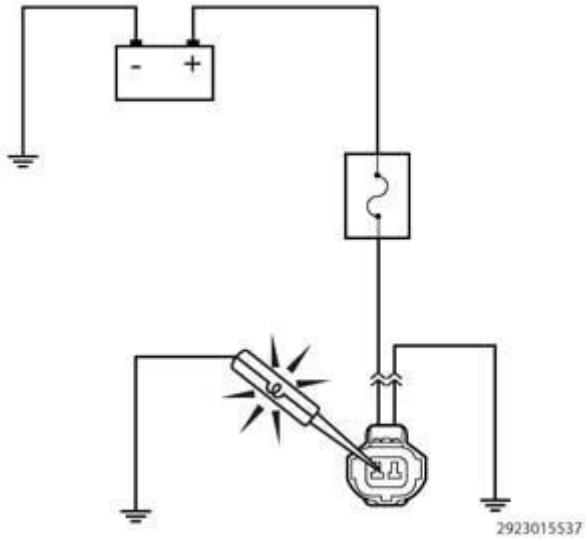

Fig. 600: Removing/Installing Cowl Panel
Courtesy of CHRYSLER GROUP, LLC

5. Remove the cowl panel (1). Refer to **COVER, COWL PANEL, REMOVAL** .

NOTE: Remove the oil pan while the vehicle is in the air during the valve cover removal procedure.

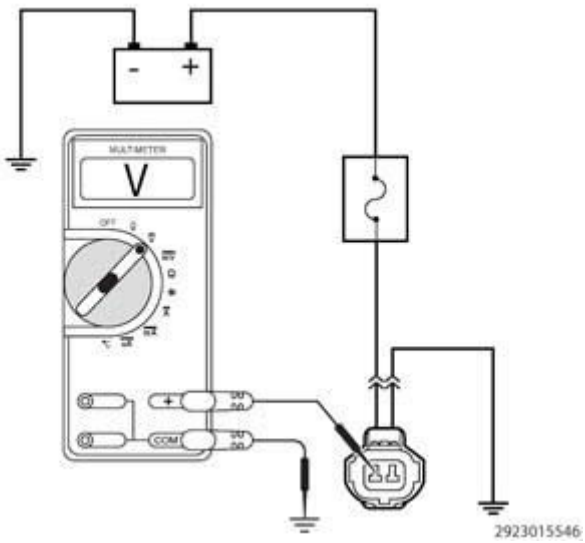

Fig. 601: Cylinder Head Cover Mounting Bolts & Studbolts
Courtesy of CHRYSLER GROUP, LLC

6. Remove the valve covers. Refer to **COVER(S), CYLINDER HEAD, REMOVAL**.

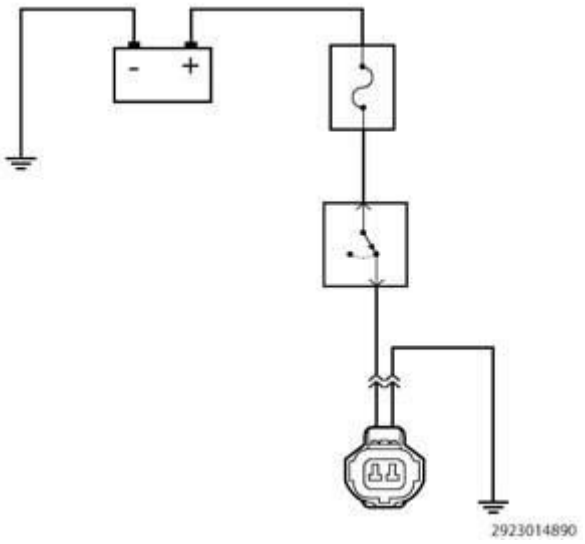

Fig. 602: Removing/Installing Cross Under Pipe
Courtesy of CHRYSLER GROUP, LLC

7. Remove the cross under pipe.

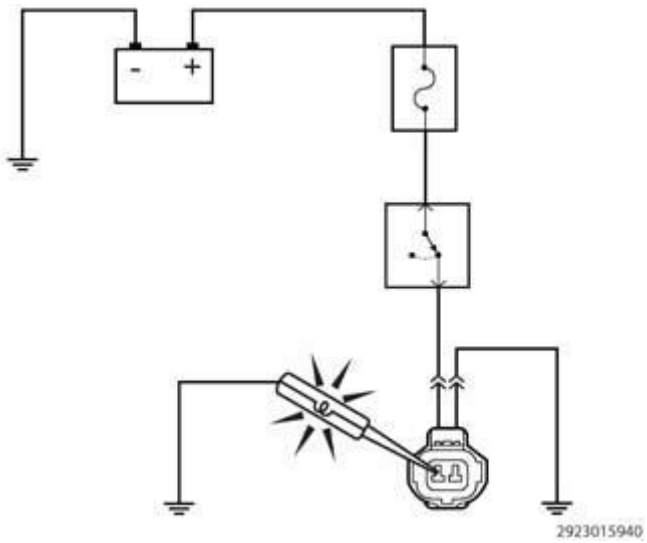

Fig. 603: One-Piece Oil Pan
Courtesy of CHRYSLER GROUP, LLC

8. Remove the oil pan (2).
9. Lower the vehicle.

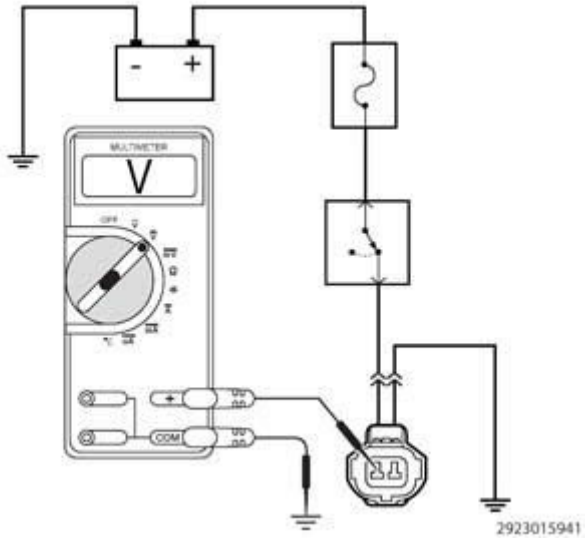

Fig. 604: Removing/Installing Thermostat Housing
Courtesy of CHRYSLER GROUP, LLC

10. Remove the heater core supply hose (1) from the coolant outlet housing (2).
11. Remove the upper radiator hose (2) with the cooling pipe (3) and thermostat housing (1).
12. Remove the left side hood stabilizer support brace.

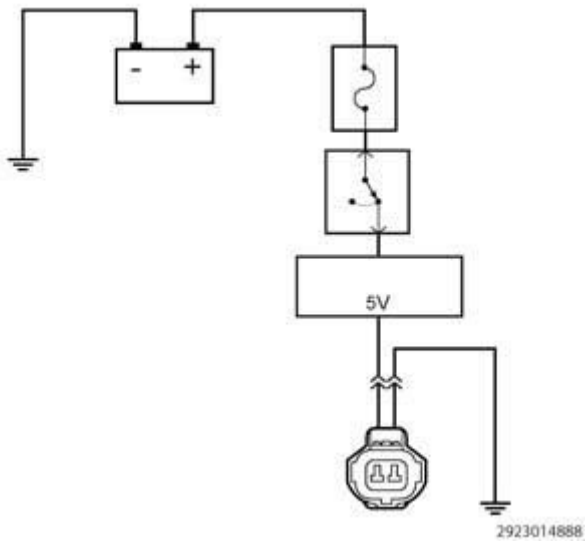

Fig. 605: Driveline Support Fixture
Courtesy of CHRYSLER GROUP, LLC

13. Support the engine assembly using the (special tool #8534B, Fixture, Driveline Support).

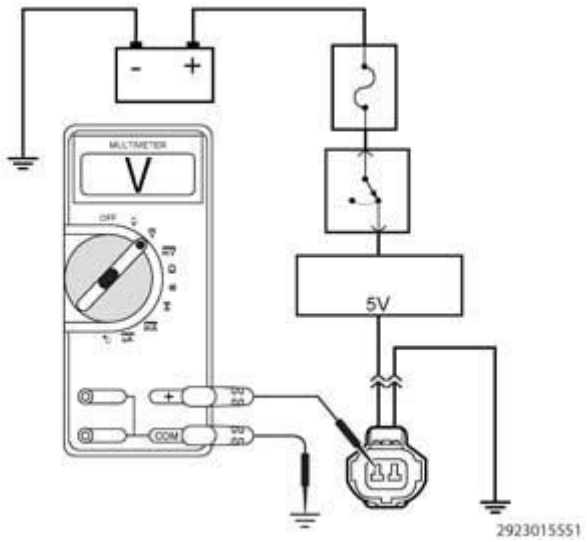

Fig. 606: Supporting Engine At Cylinder Head
Courtesy of CHRYSLER GROUP, LLC

14. Support the engine at the cylinder head.
15. Partially raise the vehicle.

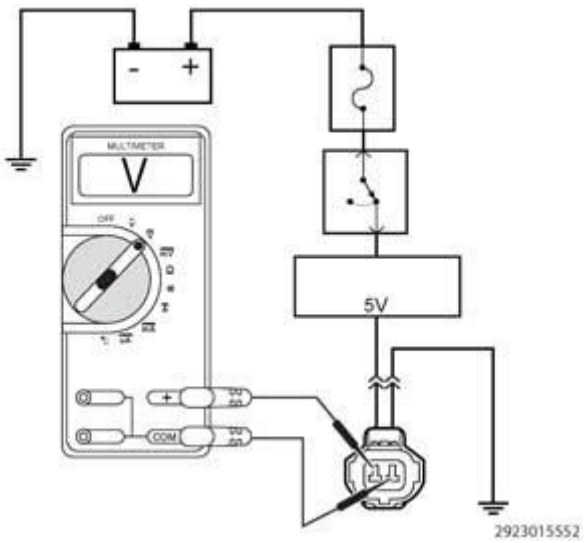

Fig. 607: Installing Lower Radiator Hose & Heater Core Return Hose
Courtesy of CHRYSLER GROUP, LLC

16. Remove the heater core return hose (1) from the water pump housing.
17. Remove the lower radiator hose (2) from the water pump housing.

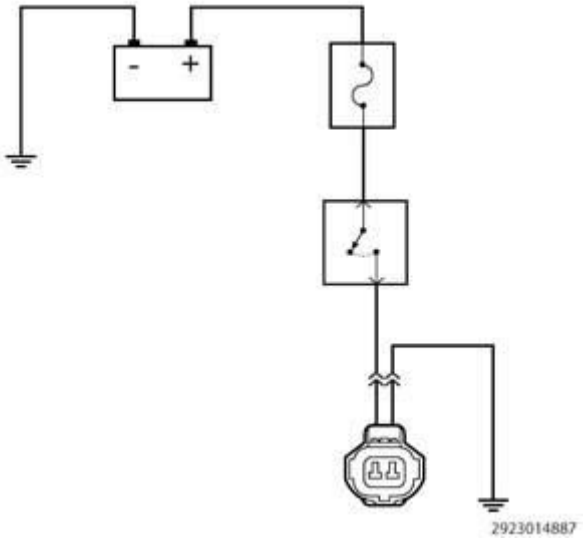

Fig. 608: Removing/Installing Accessory Drive Belt
Courtesy of CHRYSLER GROUP, LLC

18. Remove the accessory drive belt (4). Refer to **BELT, SERPENTINE, REMOVAL** .

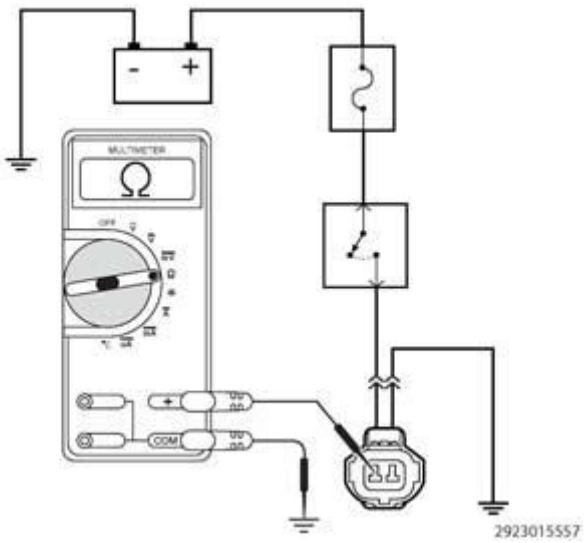

Fig. 609: Installing Accessory Drive Belt Tensioner
Courtesy of CHRYSLER GROUP, LLC

19. Remove the accessory drive belt tensioner (2).

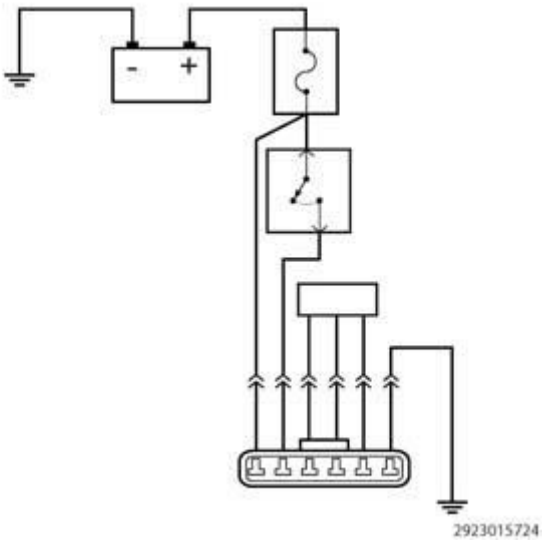

Fig. 610: Removing/Installing Accessory Idler Pulley
Courtesy of CHRYSLER GROUP, LLC

20. Remove the accessory idler pulleys (1, 5).

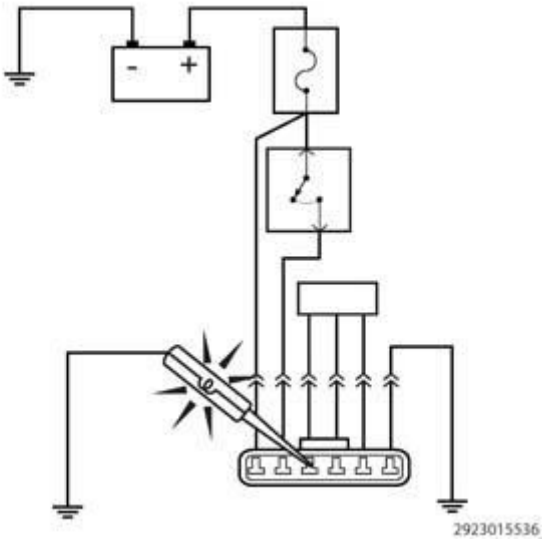

Fig. 611: Crankshaft Vibration Damper & Vibration Damper Holder
Courtesy of CHRYSLER GROUP, LLC

21. Remove the crankshaft vibration damper (1). Refer to **DAMPER, VIBRATION, REMOVAL**.

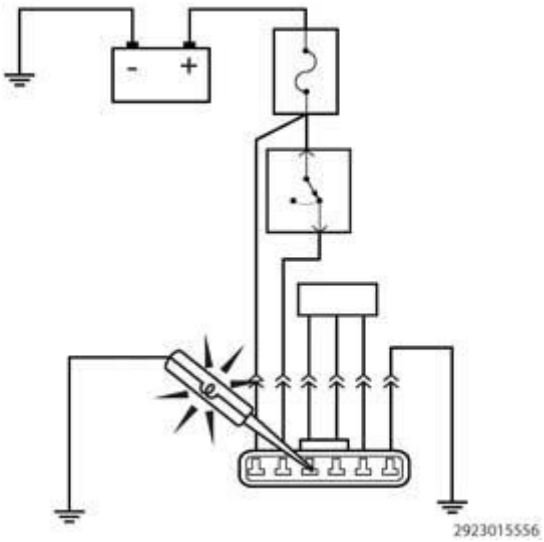

Fig. 612: Removing/Installing Water Pump
Courtesy of CHRYSLER GROUP, LLC

22. Remove the water pump M6 bolts (2, 3).
23. Remove the water pump M8 bolt (4).
24. Remove the water pump from the vehicle.

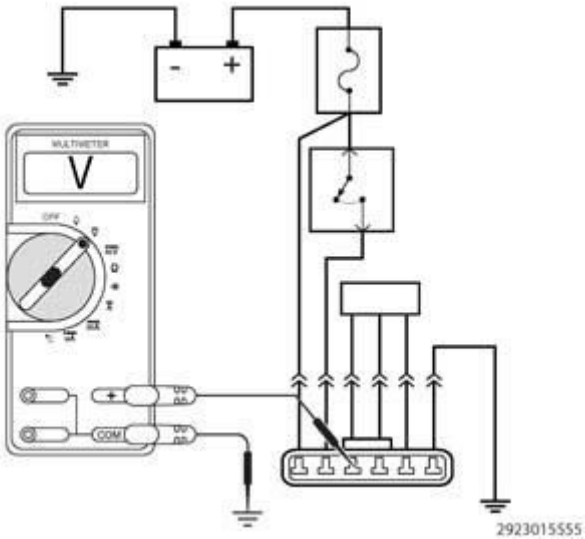

Fig. 613: Engine Timing Cover(s) Bolts Removing/Tightening Sequence
Courtesy of CHRYSLER GROUP, LLC

25. Remove the timing cover M8 bolts (2).
26. Remove the timing cover M6 bolts (3).

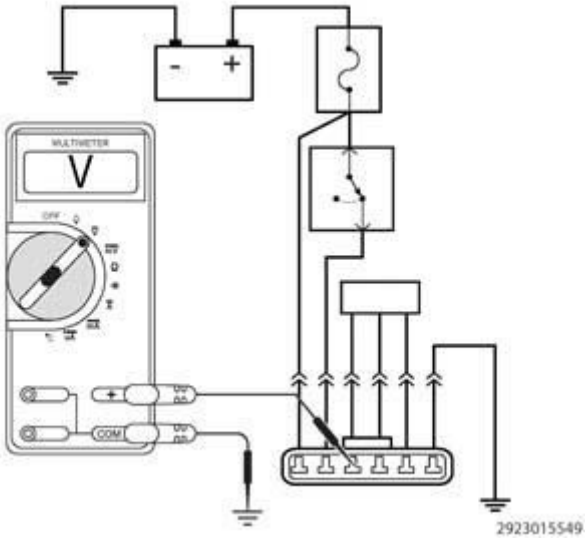

Fig. 614: Timing Cover Removal Pry Points
Courtesy of CHRYSLER GROUP, LLC

27. Using the seven indicated pry points, carefully remove the timing cover.

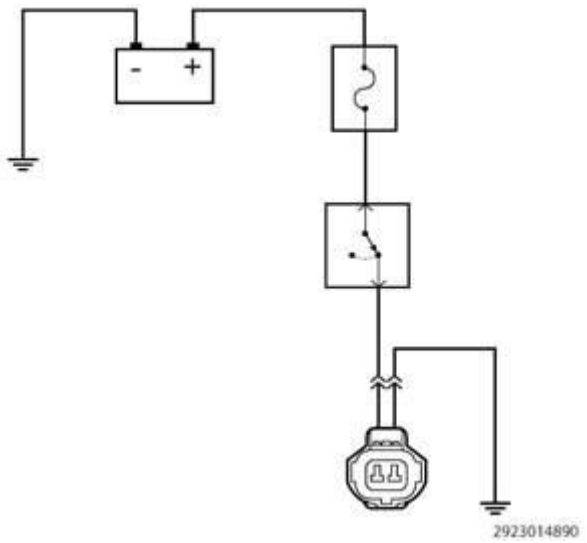

Fig. 615: Coolant Outlet Housing, Water Pump & Bolts
Courtesy of CHRYSLER GROUP, LLC

28. If required, remove the remaining four M6 bolts (2) and the coolant outlet housing (1) from the engine timing cover.

CAUTION: Do not use oil based liquids, wire brushes, abrasive wheels or metal scrapers to clean the engine gasket surfaces. Use only isopropyl (rubbing) alcohol, along with plastic or wooden scrapers. Improper gasket surface preparation may result in engine fluid leakage.

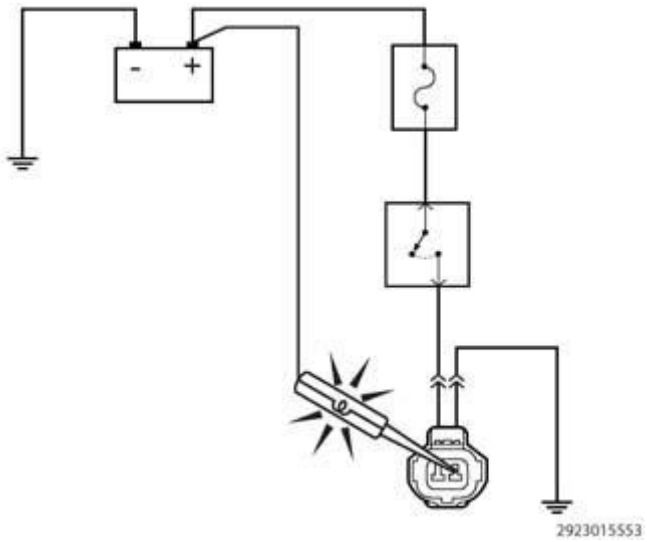

Fig. 616: Sealant At Cylinder Head Bosses, Right & Left Flanges, Cylinder Head-To-Engine Block T-Joints & Cover To Right Cam Chain Tensioner Gap
Courtesy of CHRYSLER GROUP, LLC

29. Remove all residual sealant from the timing chain cover, cylinder head and engine block mating surfaces. Refer to **ENGINE, STANDARD PROCEDURE** .

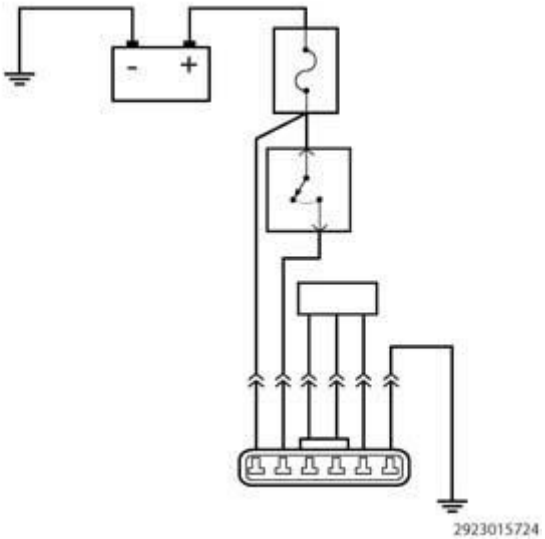

Fig. 617: Coolant Outlet Housing Gasket & Water Pump Gasket
Courtesy of CHRYSLER GROUP, LLC

30. Remove and discard the coolant outlet housing gasket (1) and the water pump gasket (2).

INSTALLATION

INSTALLATION

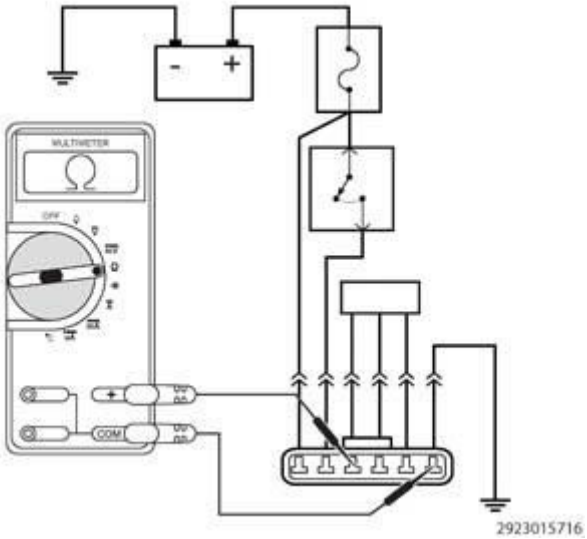

Fig. 618: Coolant Outlet Housing, Water Pump & Bolts
Courtesy of CHRYSLER GROUP, LLC

1. If removed, install the coolant outlet housing (1) to the timing cover with a new gasket using only the

four bolts (2) shown in illustration tightened to 12 N.m (106 in. lbs.).

2. If removed, install the water pump (3) to the timing cover using only the four bolts (4) shown in illustration tightened to 12 N.m (106 in. lbs.). Refer to **PUMP, WATER, INSTALLATION** .

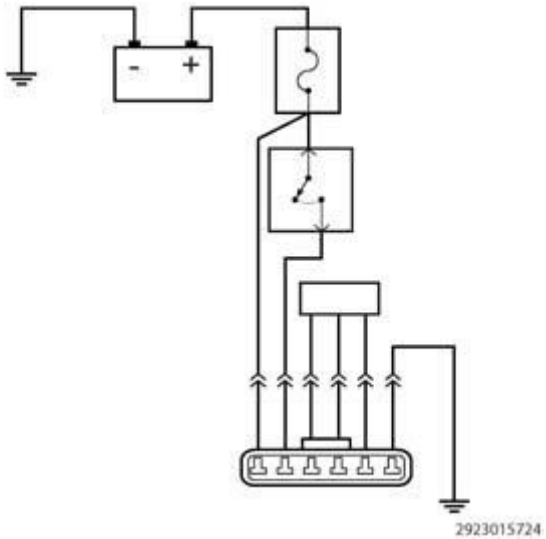

Fig. 619: Coolant Outlet Housing Gasket & Water Pump Gasket
Courtesy of CHRYSLER GROUP, LLC

3. Install the coolant outlet housing gasket (1) and the water pump gasket (2).

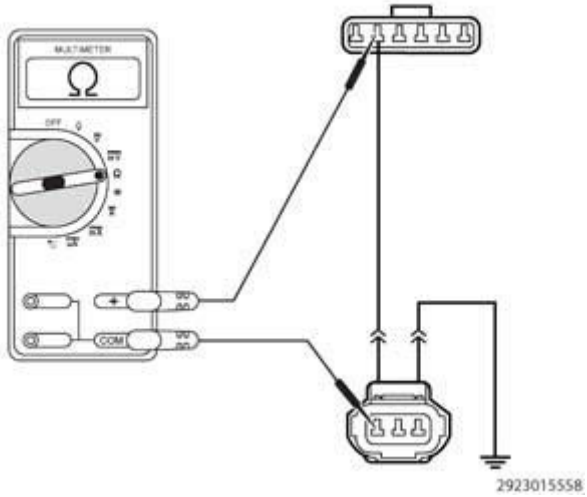

Fig. 620: Sealant At Cylinder Head Bosses, Right & Left Flanges, Cylinder Head-To-Engine Block T-Joints & Cover To Right Cam Chain Tensioner Gap
Courtesy of CHRYSLER GROUP, LLC

4. Clean the engine timing cover, cylinder head and block mating surfaces with isopropyl alcohol in preparation for sealant application.

CAUTION: Engine assembly requires the use of a unique sealant that is compatible with engine oil. Using a sealant other than Mopar® Threebond Engine RTV Sealant may result in engine fluid leakage.

CAUTION: Following the application of Mopar® Threebond Engine RTV Sealant to the gasket surfaces, the components must be assembled within 20 minutes and the attaching fasteners must be tightened to specification within 45 minutes. Prolonged exposure to the air prior to assembly may result in engine fluid leakage.

5. Apply a 2 to 3 mm wide bead of Mopar® Threebond Engine RTV Sealant to the front cover as shown in illustration in the following locations:
   - Three cylinder head bosses (1)
   - Right and left flanges (2)
   - Four cylinder head to engine block T-joints (3)
   - Cover to right cam chain tensioner gap (4)

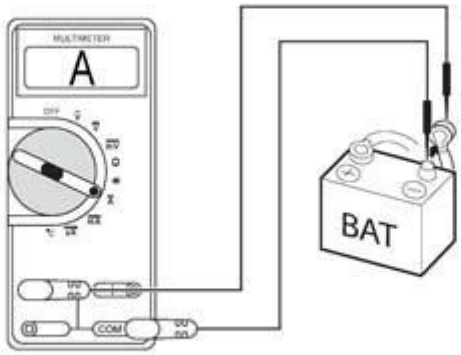

2923014738

Fig. 621: Engine Timing Cover(s) Bolts Removing/Tightening Sequence
Courtesy of CHRYSLER GROUP, LLC

6. Align the locator pins on the engine block to the engine timing cover and install the cover.
7. Install the M6 bolts (3). Tighten to 12 N.m (106 in. lbs.).
8. Install the water pump. Tighten the M6 bolts (3) to 12 N.m (106 in. lbs.) and the M8 bolt (2) to 25 N.m (18 ft. lbs.).
9. Install the M8 bolts (2). Tighten to 25 N.m (18 ft. lbs.).
10. Partially raise the vehicle.

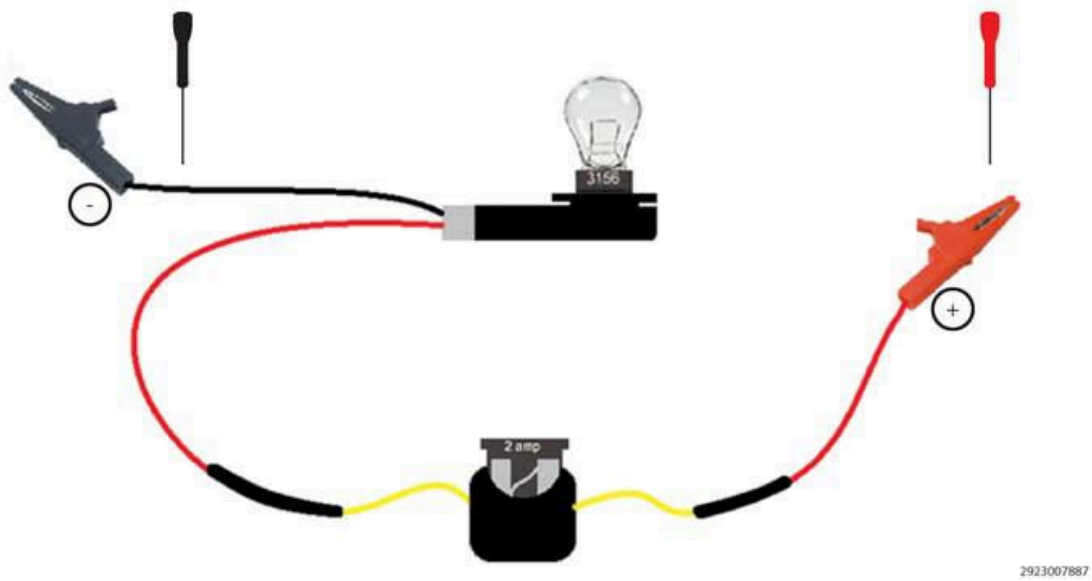

Fig. 622: Crankshaft Vibration Damper & Vibration Damper Holder
Courtesy of CHRYSLER GROUP, LLC

11. Install the crankshaft vibration damper (6). Refer to **DAMPER, VIBRATION, INSTALLATION**.

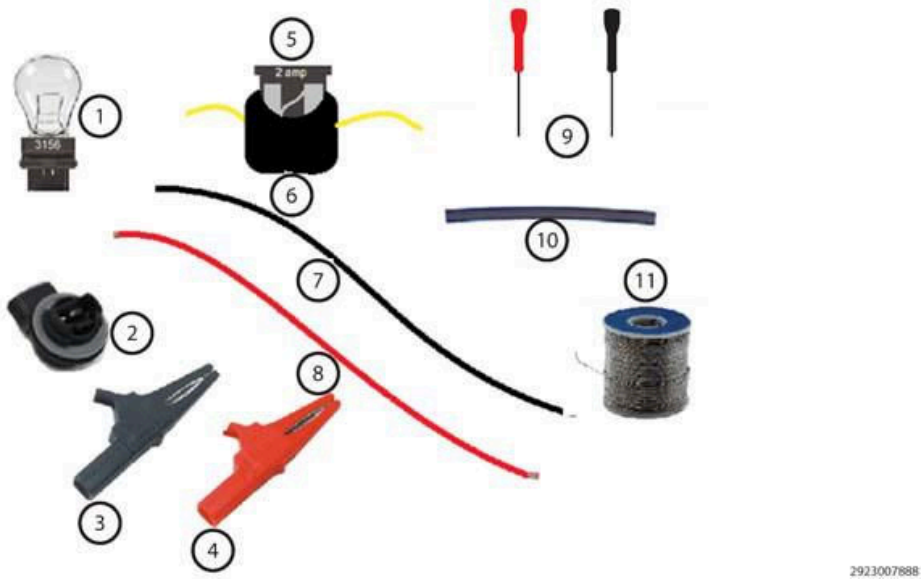

Fig. 623: Removing/Installing Accessory Idler Pulley
Courtesy of CHRYSLER GROUP, LLC

12. Install the accessory idler pulley (1, 5). Refer to **PULLEY, IDLER, INSTALLATION** .

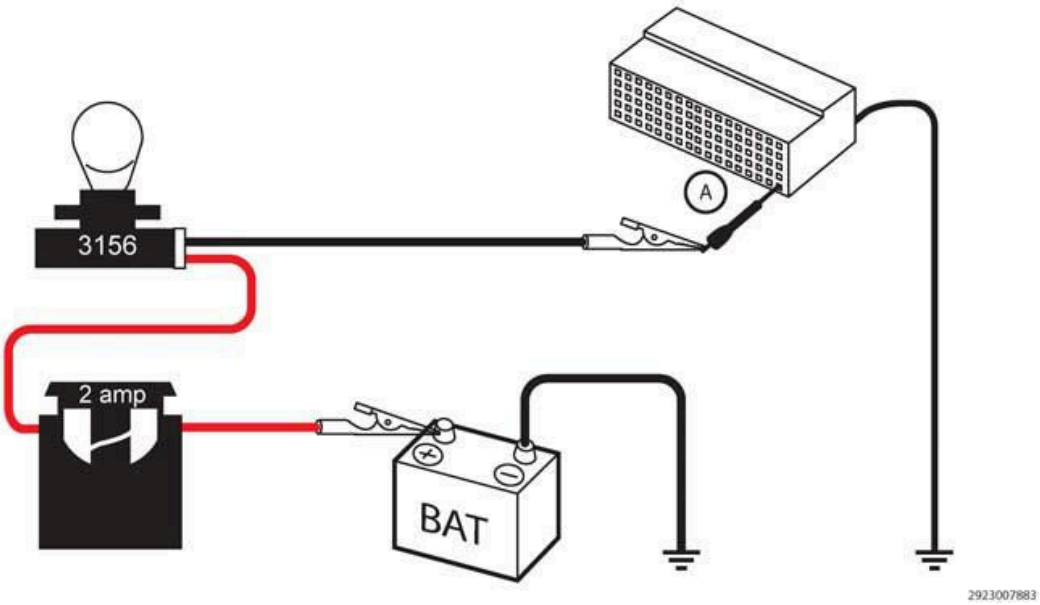

Fig. 624: Installing Accessory Drive Belt Tensioner
Courtesy of CHRYSLER GROUP, LLC

13. Install accessory drive belt tensioner (8). Refer to **TENSIONER, BELT, INSTALLATION** .

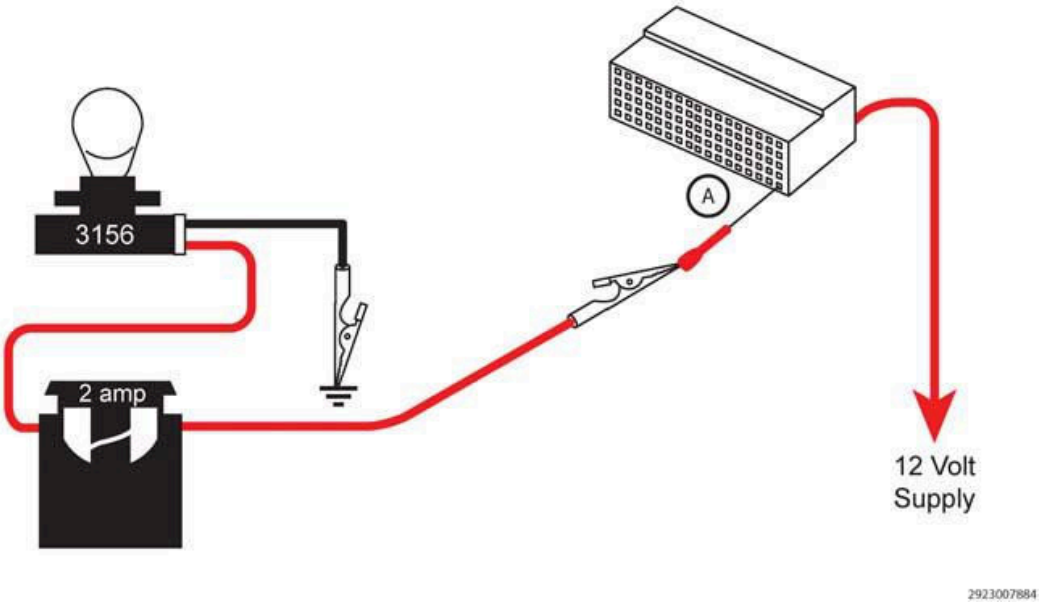

Fig. 625: Removing/Installing Accessory Drive Belt
Courtesy of CHRYSLER GROUP, LLC

14. Install the accessory drive belt (7). Refer to **BELT, SERPENTINE, REMOVAL** .

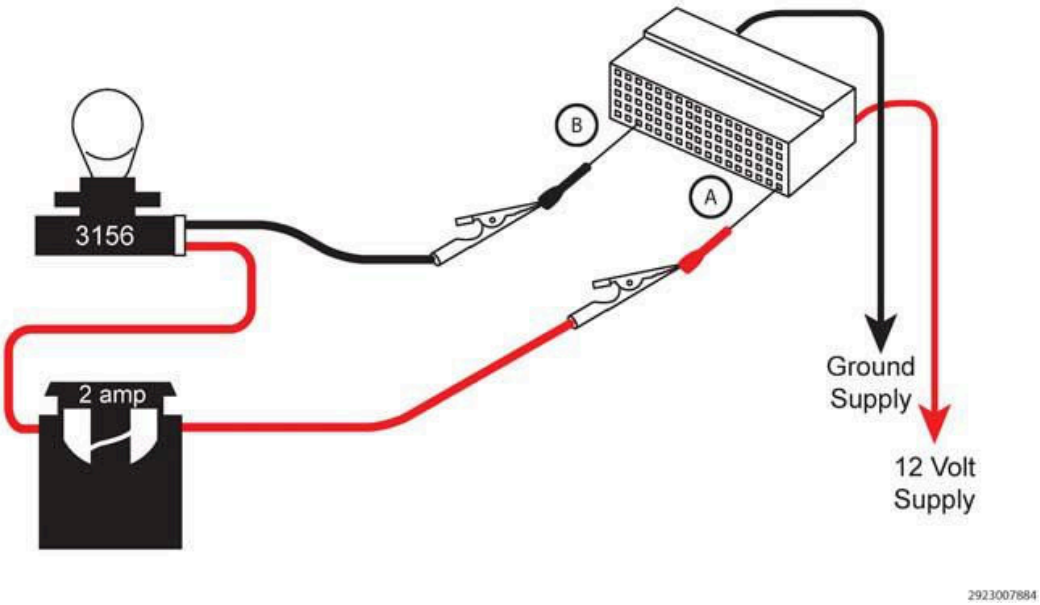

Fig. 626: Installing Lower Radiator Hose & Heater Core Return Hose
Courtesy of CHRYSLER GROUP, LLC

15. Install the lower radiator hose (2) to the water pump housing.
16. Install the heater core return hose (1) to the water pump housing.
17. Raise the vehicle.

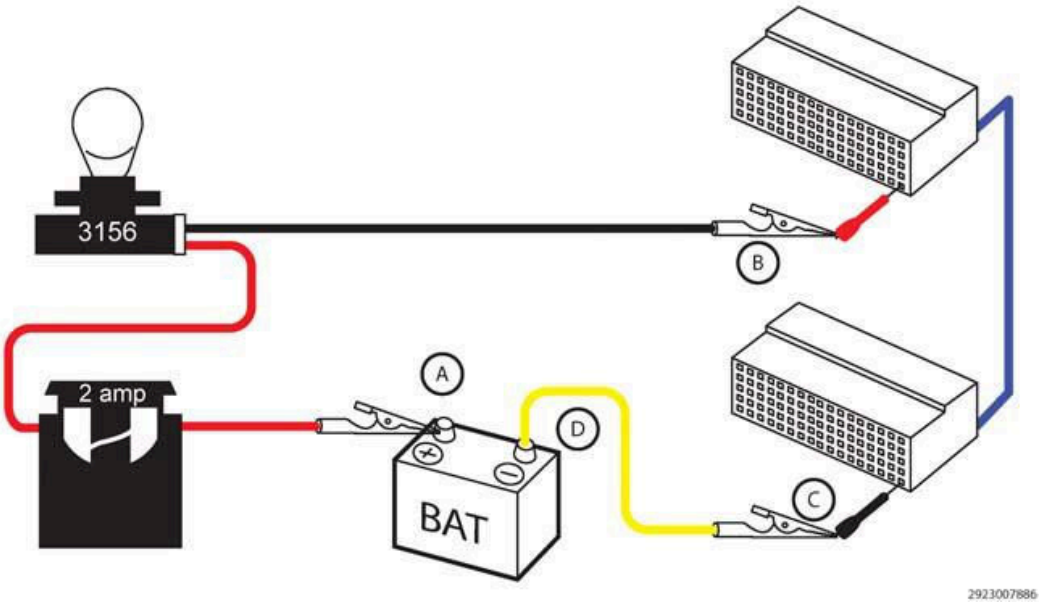

Fig. 627: One-Piece Oil Pan
Courtesy of CHRYSLER GROUP, LLC

18. Install the oil pan (1). Refer to **PAN, OIL, INSTALLATION**.

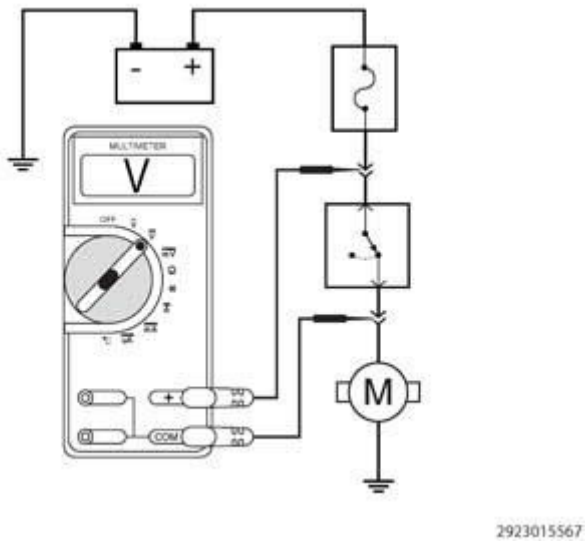

Fig. 628: Removing/Installing Cross Under Pipe
Courtesy of CHRYSLER GROUP, LLC

19. Install the cross under pipe (4). Refer to **PIPE, EXHAUST CROSSUNDER, INSTALLATION** .

Fig. 629: Removing/Installing Right Engine Mount Assembly
Courtesy of CHRYSLER GROUP, LLC

20. Install the right engine mount assembly (1). Refer to **INSULATOR, ENGINE MOUNT, RIGHT, INSTALLATION** .

NOTE: Left cylinder head cover shown in illustration, right cylinder head cover similar.

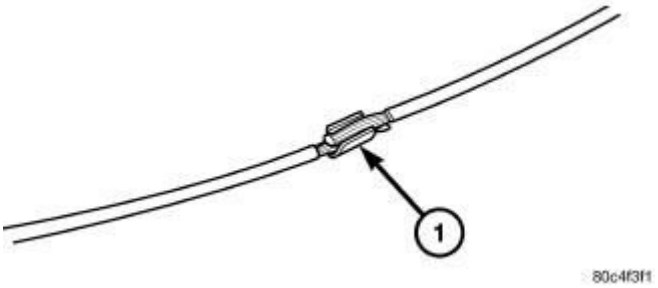

Fig. 630: Cylinder Head Cover Mounting Bolts & Studbolts
Courtesy of CHRYSLER GROUP, LLC

21. Install the right and left cylinder head covers and upper intake manifold. Refer to **COVER(S), CYLINDER HEAD, INSTALLATION**.

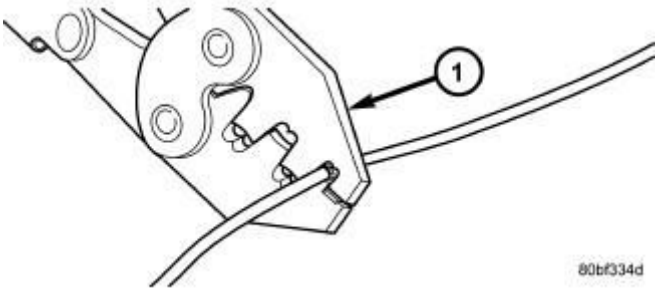

Fig. 631: Heater Core Supply Hose & Coolant Outlet Housing
Courtesy of CHRYSLER GROUP, LLC

22. Install the heater core supply hose (1) to the coolant outlet housing (2).

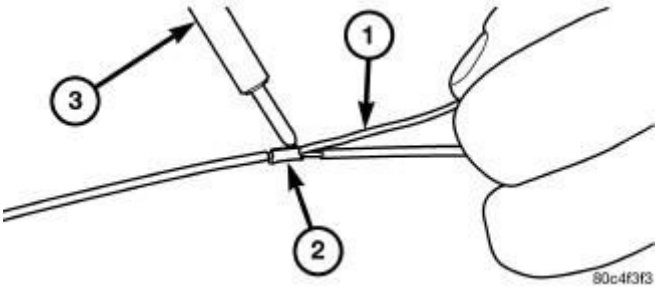

Fig. 632: Removing/Installing Thermostat Housing
Courtesy of CHRYSLER GROUP, LLC

23. Install the thermostat housing (1) and upper radiator hose (2). Refer to **THERMOSTAT, REMOVAL** .
24. Fill the cooling system. Refer to **STANDARD PROCEDURE** .

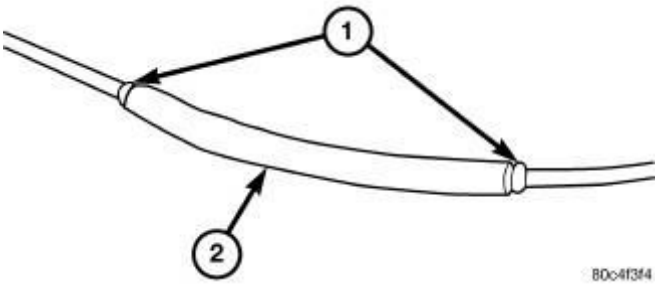

Fig. 633: Removing/Installing Cowl Panel
Courtesy of CHRYSLER GROUP, LLC

25. If removed, install the cowl panel. Refer to **COVER, COWL PANEL, INSTALLATION** .

26. If removed, install the oil filter and fill the engine crankcase with the proper oil to the correct level. Refer to **OIL, STANDARD PROCEDURE** .
27. Connect the negative battery cable and tighten nut to 5 N.m (45 in. lbs.).
28. Run the engine until it reaches normal operating temperature. Check cooling system for correct fluid level. Refer to **STANDARD PROCEDURE** .

2014 ENGINE

Cooling System - Cherokee

DESCRIPTION

DESCRIPTION

The cooling system regulates engine operating temperature. It allows the engine to reach normal operating temperature as quickly as possible, maintains normal operating temperature and prevents overheating.

The cooling system also provides a means of heating the passenger compartment. The cooling system is pressurized and uses a centrifugal water pump to circulate coolant throughout the system. A separate and remotely mounted, coolant bottle is used.

COOLING SYSTEM COMPONENTS

The cooling system consists of:

- Electric cooling fan
- Radiator
- A coolant recovery system
- Thermostat
- Water pump
- Transmission oil cooler (ATX only)
- Radiator pressure cap
- Coolant
- Water pump
- Hoses and hose clamps
- A core support mounted coolant crossover tube (2.0L/2.4L only)
- Thermostat housing assembly
- After-run pump and hoses assembly (1.4L Turbocharged only)

Fig. 1: New Style Hose Clamps
Courtesy of CHRYSLER GROUP, LLC

A new style hose clamps called the CLIC E® and the CLIC R® are used to ensure a more even distribution of the clamping force.

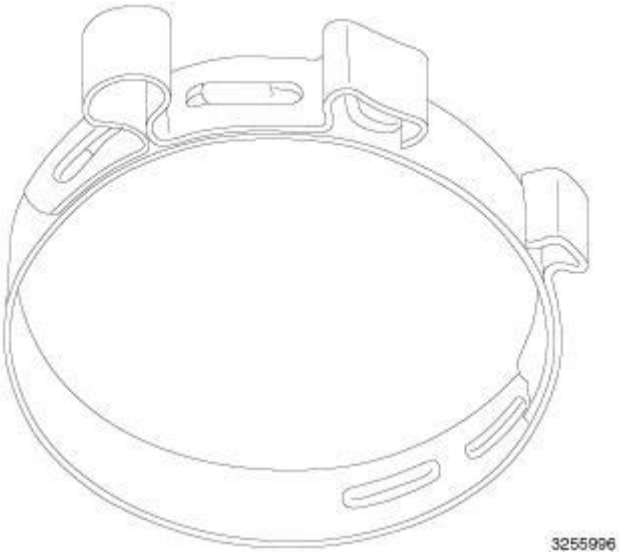

Fig. 2: CLIC E® Clamp
Courtesy of CHRYSLER GROUP, LLC

CLIC E®

- Used for most applications that have a large variation of expansion and contraction. Equipped with a spring. The clamp is able to adjust while ensuring proper tension. If the clamp is removed for repairs. It can be reused.

NOTE: Always use Special tool 10288 Pliers when removing and installing the hose

clamps to avoid damaging the clamp. The Click E type clamp can be reused if the clamp is in serviceable condition.

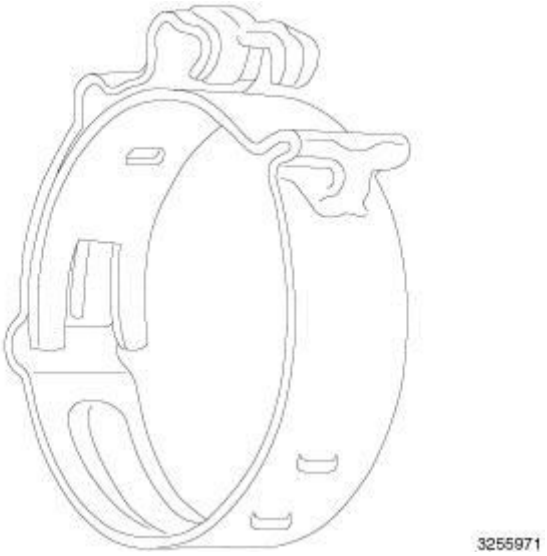

Fig. 3: CLIC R® Clamp
Courtesy of CHRYSLER GROUP, LLC

CLIC R®

- Used for most applications that require a capacity reserve designed to compensate for the tolerance ranges of the hoses and spigots to be tightened. If the clamp needs to be removed for repairs. The clamp must be replaced to ensure proper fitting to that component.

NOTE: **If the hose or the fitting is not replaced, the same Click R type clamp can be re-used given it is installed in the same orientation and same location on the hose. If the fitting or the hose is replaced, the Click R type clamp MUST be replaced.**

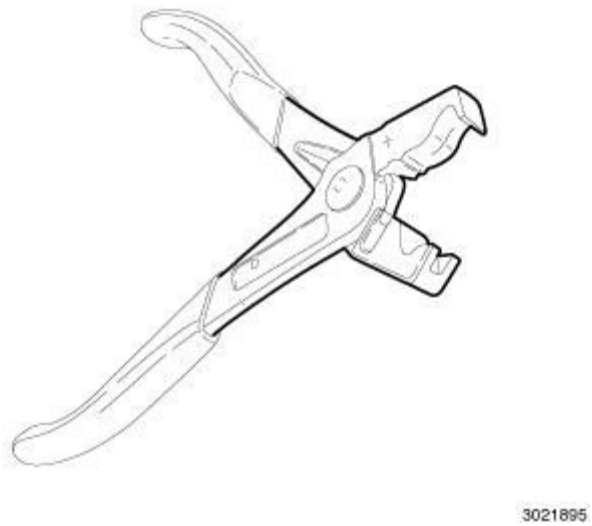

Fig. 4: CLIC® Style Pliers
Courtesy of CHRYSLER GROUP, LLC

It is highly recommended that the use of a CLIC style pliers (Miller tool # (special tool #10288, Pliers, Hose Clamp)) be used for proper installation and removal of the CLIC® clamps. The use of specific tools for the clamp, will allow it to be reused.

The use of non CLIC® style pliers (screwdrivers, vice grips, channel locks, etc.) may damage the clamp and the clamp must be replaced.

OPERATION

OPERATION

The cooling system regulates engine operating temperature. It allows the engine to reach normal operating temperature as quickly as possible. It also maintains normal operating temperature and prevents overheating.

The cooling system also provides a source of hot coolant for heating the passenger compartment and cooling the automatic transmission fluid (if equipped). The cooling system is pressurized and uses a centrifugal water pump to circulate coolant throughout the system.

- When engine is cold the thermostat is closed. The cooling system has no flow through the radiator. The coolant flows through the engine, water pump, and heater.
- When engine is warm the thermostat is full open. On the gas engine coolant flows through the engine, radiator, heater, and water pump.

An optional factory installed maximum duty cooling package is available on most models. This package will provide additional cooling capacity for vehicles used under extreme conditions such as trailer towing in high ambient temperatures.

CLIC© HOSE CLAMP PLIERS - USAGE

When CLIC© style clamps are used. It requires that miller tool (special tool #10288, Pliers, Hose Clamp) for proper installation and removal.

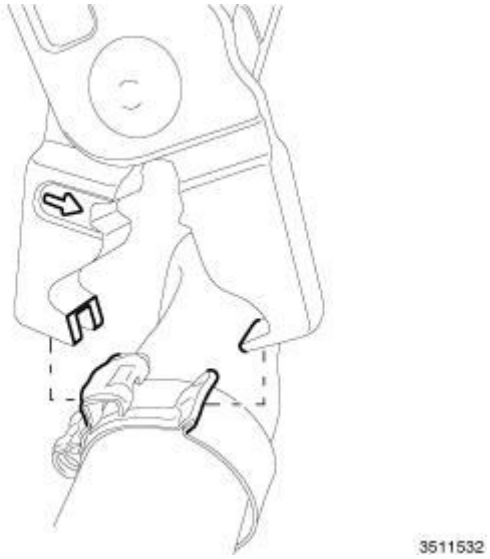

Fig. 5: Flat Blade Of The Pliers
Courtesy of CHRYSLER GROUP, LLC

Installation of the hose clamp requires the flat blade of the pliers to rest against the latch lock side of the clamp. The notched end of the pliers will position to the protruded guide on the latch side. Squeeze the pliers until a **CLICK** sound is heard.

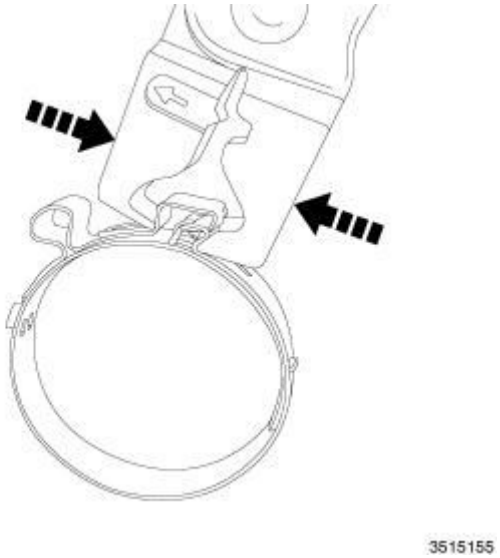

Fig. 6: Notched End Of The Pliers
Courtesy of CHRYSLER GROUP, LLC

Removal of the hose clamp requires the notched end of the pliers to rest against the latch side of the clamp. Squeezing the pliers will cause the hook of the latch lock to ride up the beveled edging of the notched side, releasing itself from the lock.

DIAGNOSIS AND TESTING

AERATION

If coolant level drops below a certain point, aeration will occur drawing air into the water pump resulting in the following:

- High reading shown on the temperature gauge.
- Loss of coolant flow through the heater core.
- Corrosion in the cooling system.
- Transmission oil will become hotter (automatic transmission equipped vehicles).
- Water pump seal may run dry, increasing the risk of premature seal failure.
- Combustion gas leaks into the coolant can also cause the above problems.

DEAERATION

As air is removed from the cooling system, it gathers in the coolant recovery container. This pressure is released into the atmosphere through the pressure valve located in the radiator pressure cap when pressure reaches 96 - 124 kPa (14 - 18 psi). This air is replaced with coolant from the coolant recovery container.

NOTE: Deaeration does not occur at engine idle, higher engine speeds are required. Normal driving will deaerate cooling system.

To effectively deaerate the system, multiple thermal cycles of the system may be required.

PRELIMINARY CHECKS

ENGINE COOLING SYSTEM OVERHEATING

Establish what driving conditions caused the complaint. Abnormal loads on the cooling system such as the following may be the cause:

- Prolonged idle
- Very high ambient temperature
- Slow traffic
- Traffic jams
- High speed or steep grades
- Debris on front of the grill or the cooling module that is restricting airflow

Driving techniques that avoid overheating are:

- Idle with A/C off when temperature gauge is at end of normal range.
- Increasing engine speed up to 2000 RPM with transmission in park or neutral for more airflow is

recommended.

RECENT SERVICE OR ACCIDENT REPAIR:

Determine if any recent service has been performed on vehicle that may affect the cooling system. This may be:

- Engine adjustments (incorrect timing)
- Slipping engine accessory drive belt(s)
- Brakes (possibly dragging)
- Changed parts. Incorrect water pump or pump rotating in wrong direction due to belt not correctly routed
- Reconditioned radiator or cooling system refilling (possibly under filled or air trapped in system).
- Service to electrically controlled viscous fan clutch

NOTE: If investigation reveals none of the previous items as a cause for an engine overheating complaint, refer to the COOLING SYSTEM. Refer to DIAGNOSIS AND TESTING.

COOLING SYSTEM

CONDITION	POSSIBLE CAUSE	CORRECTION
TEMPERATURE GAUGE READS LOW	1. Diagnostic Trouble Code (DTC) has been set indicating a stuck open engine thermostat.	1. Replace thermostat, if necessary. If a (DTC) has not been set, the problem may be with the temperature gauge.
	2. Engine Coolant Temperature Sensor.	2. Check connector at Engine Coolant Temperature Sensor. Repair as necessary.
	3. Inoperative temperature gauge.	3. Check gauge operation. Refer to **OPERATION** .
	4. Coolant level low during cold ambient temperature, accompanied by poor heater performance.	4. Check coolant level in the coolant recovery/reserve container and the radiator. Inspect the system for leaks. Repair as necessary. Refer to WARNINGS under **COOLANT** before removing pressure cap.
TEMPERATURE GAUGE READS HIGH OR ENGINE COOLANT WARNING LAMP ILLUMINATES. COOLANT MAY OR MAY NOT BE LOST FROM SYSTEM.	1. Trailer being towed, a steep hill being climbed, vehicle being operated in slow moving traffic, or engine idling during high ambient (outside) temperatures with air conditioning on. High altitudes could also cause these conditions.	1. This may be a temporary condition and repair is not necessary. Turn off the air conditioning and drive the vehicle without any of the previous conditions. Observe the temperature gauge. The gauge should return to the normal range.

	If the gauge does not return to the normal range, determine the cause of the overheating and repair.
2. Inoperative temperature gauge.	2. Check gauge operation. Refer to **OPERATION** .
3. Is temperature warning lamp (if equipped) illuminating unnecessarily?	3. Check warning lamp operation. Refer to **INDICATORS, INSTRUMENT CLUSTER, OPERATION** .
4. Coolant low in recovery/reserve bottle and radiator?	4. Check for coolant leaks and repair as necessary.
5. Pressure cap not installed tightly. If cap is loose, boiling point of coolant will be lowered. Also refer to the following step 6.	5. Tighten cap.
6. Poor seals at pressure cap.	6. (a) Check condition of cap and cap seals. Refer to **CAP, RADIATOR, DIAGNOSIS AND TESTING**. Replace cap if necessary.
	(b) Check condition of filler neck. If neck is warped or damaged, replace neck.
7. Coolant level low in radiator, but not in coolant recovery/reserve bottle. This indicates the radiator is not drawing coolant from the coolant recovery/reserve bottle as the engine cools. As the engine cools, a vacuum is formed inside the cooling system. If the pressure cap seals are defective, or the cooling system has a leak, a vacuum cannot be formed.	7. (a) Check condition of pressure cap and cap seals. Replace cap if necessary.
	(b) Check condition of filler neck. Replace if damaged.
	(c) Check condition of hose from filler neck to coolant container. It should be tight at both ends without any kinks or tears. Replace hose as necessary.
	(d) Check coolant recovery/reserve bottle and hose for blockage. Repair as necessary.
8. Freeze point of coolant not correct. Mixture ratio may be too rich.	8. Check coolant concentration. Refer to **COOLANT, DIAGNOSIS AND TESTING**. Adjust glycol-to-water ratio as required.
9. Coolant not flowing through	9. Check for coolant flow at filler

	system.	neck with some coolant removed, engine warm, and thermostat open. Coolant should be observed flowing through filler neck. If flow is not observed, determine reason for lack of flow and repair as necessary.
	10. Radiator air seals missing or improperly installed.	10. Inspect air seals. Correct as necessary.
	11. Radiator or A/C condenser fins are dirty or clogged.	11. Clean obstruction from fins.
	12. Radiator core is plugged or corroded.	12. Replace or clean radiator.
	13. Fuel or ignition system problems.	13. Refer to the appropriate ELECTRICAL DIAGNOSTICS article .
	14. Dragging Brakes.	14. Inspect brake system and repair as necessary. Refer to **BRAKES - DIAGNOSIS AND TESTING** .
	15. Bug screen or other aftermarket accessory is being used causing reduced air flow.	15. Remove bug screen or accessory.
	16. Thermostat partially or completely closed.	16. Check thermostat operation and replace as necessary. Refer to **THERMOSTAT, REMOVAL**.
	17. Cooling fan not operating properly.	17. Check electric fan operation and repair as necessary.
	18. Cylinder head gasket leaking.	18. Check cylinder head gasket for leaks. Refer to **DIAGNOSIS AND TESTING**.
	19. Heater core leaking.	19. Check heater core for leaks.
TEMPERATURE GAUGE READING IS INCONSISTENT (FLUCTUATES, CYCLES OR IS ERRATIC)	1. The gauge may cycle up and down. This is due to the cycling of the electric radiator fan.	1. A normal condition. No correction is necessary. If gauge cycling is the hot zone, check electric fan operation and repair as necessary.
	2. During cold weather operation with the heater blower in the high position, the gauge reading may drop slightly.	2. A normal condition. No correction is necessary.
	3. Temperature gauge or Engine Coolant Temperature Sensor is defective or shorted.	3. Check gauge operation. Refer to **OPERATION** .
	4. Gauge reading rises when	4. A normal condition. No

	vehicle is brought to a stop after heavy use (engine still running).	correction is necessary. The gauge should return to normal range after vehicle is driven.
	5. Gauge reading high after restarting a warmed-up (hot) engine.	5. A normal condition. No correction is necessary. The gauge should return to normal range after a few minutes of engine operation.
	6. Coolant level low in radiator (air will build up in the cooling system causing the thermostat to open late).	6. Check and correct coolant leaks.
	7. Cylinder head gasket leaking allowing exhaust gas to enter cooling system. This will cause thermostat to open late.	7. (a) Check for cylinder head gasket leaks using Tool C-3685-A Block Leak Tester or the equivalent. Repair as necessary.
		(b) Check for coolant in the engine oil. Inspect for white steam emitting from exhaust system. Repair as necessary.
	8. Water pump impeller loose on shaft.	8. Check water pump and replace as necessary.
	9. Air leak on the suction side of water pump allows air to build up in cooling system. This will cause the thermostat to open late.	9. Locate leak and repair as necessary.
PRESSURE CAP IS BLOWING OFF STEAM AND/OR COOLANT FLOWING INTO RECOVERY BOTTLE. TEMPERATURE GAUGE READING MAY BE ABOVE NORMAL, BUT NOT HIGH. COOLANT LEVEL MAY BE HIGH IN RECOVERY BOTTLE.	1. Pressure relief valve in pressure cap is defective.	1. Check condition of pressure cap and seals. Refer to **CAP, RADIATOR, DIAGNOSIS AND TESTING**. Replace as necessary.
COOLANT LOSS TO THE GROUND WITHOUT PRESSURE CAP BLOWOFF. GAUGE IS READING HIGH OR HOT.	1. Coolant leaks in radiator, cooling system hoses, water pump or engine.	1. Pressure test cooling system and repair as necessary.
DETONATION OR PRE-IGNITION (NOT CAUSED BY IGNITION SYSTEM). GAUGE MAY OR MAY NOT BE READING HIGH.	1. Engine overheating.	1. Check reason for overheating and repair as necessary.
	2. Freeze point of coolant not correct.	2. Check the freeze point of the coolant. Refer to **COOLANT,**

		DIAGNOSIS AND TESTING. Adjust glycol-to-water ratio as required.
HOSE OR HOSES COLLAPSE WHEN ENGINE IS COOLING	1. Vacuum created in cooling system on engine cool-down is not being relieved through coolant recovery/reserve system.	1. (a) Pressure cap relief valve stuck. Refer to **CAP, RADIATOR, DIAGNOSIS AND TESTING**. Replace as necessary. (b) Hose between coolant recovery/reserve bottle and outlet connector is kinked. Repair as necessary.
		(c) Vent at coolant recovery/reserve bottle is plugged. Clean vent and repair as necessary.
		(d) Recovery/reserve bottle is internally blocked or plugged. Check for blockage and repair as necessary.
RADIATOR FAN OPERATES ALL THE TIME	1. Malfunctioning electrical component or circuit.	1. Refer to appropriate ELECTRICAL DIAGNOSTICS article . Repair as necessary.
	2. Check for low coolant level.	2. Repair as necessary.
RADIATOR FAN WILL NOT OPERATE, GAUGE READING HIGH OR HOT	1. Fan motor defective.	1. Refer to appropriate ELECTRICAL DIAGNOSTICS article for operation of the scan tool. Repair as necessary.
	2. Fan relay, powertrain control module (PCM) or engine coolant temperature sensor defective.	2. Refer to appropriate ELECTRICAL DIAGNOSTICS article for operation of the scan tool. Repair as necessary.
	3. Blown fuse in power distribution center (PDC).	3. Determine cause for blown fuse and repair as necessary.
NOISY FAN	1. Fan blade loose.	1. Replace radiator fan assembly.
	2. Fan blade striking a surrounding object.	2. Locate point of fan blade contact and repair as necessary.
	3. Air obstructions at radiator or A/C condenser.	3. Remove obstructions and/or clean debris from radiator and/or A/C condenser.
	4. Electric fan motor defective.	4. Replace radiator fan assembly.
INADEQUATE AIR CONDITIONER PERFORMANCE (COOLING SYSTEM SUSPECTED)	1. Electric radiator fan not operating when A/C is on.	1. Refer to appropriate ELECTRICAL DIAGNOSTICS article for operation of the scan tool. Repair as necessary.

	2. Radiator and/or air conditioning condenser is restricted, obstructed or dirty.	2. Remove restriction and/or clean as necessary.
	3. Radiator air seals missing or improperly installed.	3. Inspect air seals. Repair as necessary.
	4. Engine is overheating (heat may be transferred from radiator to A/C condenser). High underhood temperature due to engine overheating may also transfer heat to A/C components.	4. Correct overheating condition. Refer to this Service Information.
INADEQUATE HEATER PERFORMANCE	1. Has a diagnostic trouble code (DTC) been set?	1. Refer to appropriate ELECTRICAL DIAGNOSTICS article Procedures.
	2. Coolant level low.	2. Check cooling system for leaks. Repair as necessary.
	3. Obstructions in heater hose fittings at engine.	3. Remove heater hoses at both ends and check for obstructions. Repair as necessary.
	4. Heater hose kinked.	4. Locate kinked area and repair as necessary.
	5. Water pump is not pumping coolant through the heater core. When the engine is fully warmed up, both heater hoses should be hot to the touch.	5. Check accessory drive belt operation. Repair as necessary.
HEAT ODOR	1. Various heat shields are used at certain components. One or more of these shields may be missing.	1. Locate missing shields and replace or repair as necessary.
	2. Is temperature gauge reading above the normal range?	2. Check gauge operation. Refer to **OPERATION** .
	3. Is cooling fan operating correctly?	3. Repair as necessary.
	4. Has undercoating been applied to any unnecessary component.	4. Clean undercoating as necessary.
	5. Engine may be running rich causing the catalytic converter to overheat.	5. Refer to appropriate ELECTRICAL DIAGNOSTICS article for operation of the scan tool. Repair as necessary.
POOR DRIVEABILITY (THERMOSTAT POSSIBLY STUCK OPEN). GAUGE MAY BE READING LOW	1. Has a diagnostic trouble code (DTC) been set?	1. Refer to appropriate ELECTRICAL DIAGNOSTICS article for checking a DTC related to the thermostat.

STEAM IS COMING FROM FRONT OF VEHICLE NEAR GRILLE AREA WHEN WEATHER IS WET, ENGINE IS WARMED UP, RUNNING, AND VEHICLE IS STATIONARY. TEMPERATURE GAUGE IS IN NORMAL RANGE.	1. During wet weather, moisture (snow, ice or rain condensation) on the radiator will evaporate when the thermostat opens. This opening allows heated water into the radiator. When the moisture contacts the hot radiator, steam may be emitted. This usually occurs in cold weather with no fan or airflow to blow it away.	1. Occasional steam emitting from this area is normal. No repair is necessary.
COOLANT COLOR	1. Coolant color is not necessarily an indication of adequate corrosion or temperature protection. Do not rely on coolant color for determining condition of coolant.	1. Check the freeze point of the coolant. Refer to **COOLANT, DIAGNOSIS AND TESTING**. Adjust the glycol-to-water ratio as required.
COOLANT LEVEL CHANGES IN COOLANT RECOVERY/RESERVE BOTTLE	1. Level changes are to be expected as coolant volume fluctuates with engine temperature. If the level in the bottle was between the FULL HOT and ADD marks at normal engine operating temperature, the level should return to within that range after operation at elevated temperatures.	1. A normal condition. No repair is necessary.

LEAK TESTING

ULTRAVIOLET LIGHT METHOD

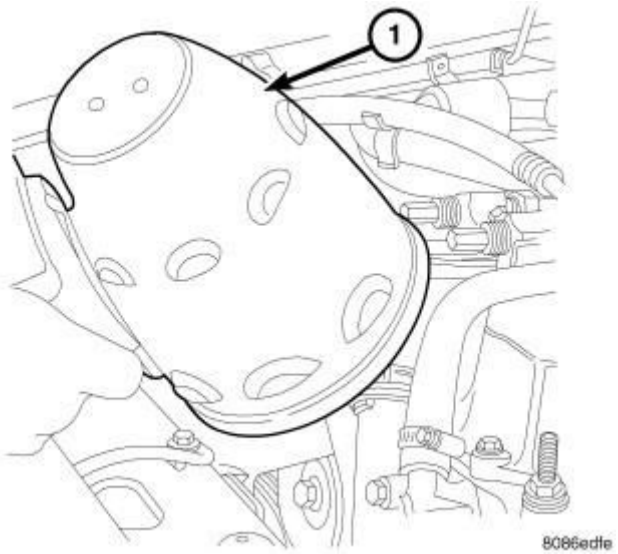

Fig. 7: Leak Detection Using Black Light-Typical
Courtesy of CHRYSLER GROUP, LLC

1 - TYPICAL BLACK LIGHT TOOL

A leak detection additive is available through the parts department that can be added to cooling system. The additive is highly visible under ultraviolet light (black light) (1). Pour one ounce of additive into cooling system. Place heater control unit in HEAT position. Start and operate the engine until the radiator upper hose is warm to the touch. Aim the commercially available black light tool at the components to be checked. If leaks are present, the black light will cause the additive to glow a bright green color.

The black light can be used in conjunction with a pressure tester to determine if any external leaks exist.

PRESSURE TESTER METHOD

The engine should be at normal operating temperature. Recheck the system cold if the cause of coolant loss is not located during the warm engine examination.

WARNING: Hot, pressurized coolant can cause injury by scalding.

Carefully remove the radiator pressure cap from the filler neck and check the coolant level. Push down on the cap to disengage it from the stop tabs. Wipe the inside of the filler neck and examine the lower inside sealing seat for nicks, cracks, paint, dirt and solder residue. Inspect the radiator-to- reserve/overflow tank hose for internal obstructions. Insert a wire through the hose to be sure it is not obstructed.

Inspect the cams on the outside of the filler neck. If the cams are damaged, seating of the pressure cap valve and tester seal will be affected.

Attach pressure tester ((special tool #7700, Tester, Cooling System) or an equivalent) to radiator filler neck.

Operate the tester pump to apply 103.4 kPa (15 psi) pressure to the system. If the hoses enlarge excessively or bulges while testing, replace as necessary. Observe the gauge pointer and determine the condition of the cooling system according to following criteria:

Holds Steady: If the pointer remains steady for two minutes, serious coolant leaks are not present in system. However, there could be an internal leak that does not appear with normal system test pressure. If it is certain that coolant is being lost and leaks cannot be detected, inspect for interior leakage or perform Internal Leakage Test. Refer to **INTERNAL LEAKAGE INSPECTION**.

Drops Slowly: Indicates a small leak or seepage is occurring. Examine all of the connections for seepage or slight leakage with a flashlight. Inspect the radiator, hoses, gasket edges and heater. Seal the small leak holes with a Sealer Lubricant (or equivalent). Repair the leak holes and inspect the system again with pressure applied.

Drops Quickly: Indicates that serious leakage is occurring. Examine the system for external leakage. Block side panels are embossed to highlight core plugs. Remove embossed noise panels to inspect and or repair core plugs. If leaks are not visible, inspect for internal leakage.

INTERNAL LEAKAGE INSPECTION

Remove the engine oil pan drain plug and drain a small amount of engine oil. If coolant is present in the pan, it will drain first because it is heavier than oil. An alternative method is to operate engine for a short period to churn the oil. After this is done, remove the engine dipstick and inspect for water globules. Also inspect the transmission dipstick for water globules and transmission fluid cooler for leakage.

WARNING: **With radiator pressure tester tool installed on radiator, do not allow pressure to exceed 145 kPa (21 psi). Pressure will build up quickly if a combustion leak is present. To release pressure, rock tester from side to side. When removing tester, do not turn tester more than 1/2 turn if system is under pressure.**

Operate the engine without the pressure cap on the radiator until the thermostat opens. Attach a Pressure Tester to the filler neck. If pressure builds up quickly it indicates a combustion leak exists. This is usually the result of a cylinder head gasket leak or crack in engine. Repair as necessary.

If there is not an immediate pressure increase, pump the Pressure Tester. Do this until indicated pressure is within system range of 110 kPa (16 psi). Fluctuation of the gauge pointer indicates compression or combustion leakage into cooling system.

Because the vehicle is equipped with a catalytic converter, **do not** short out cylinders to isolate compression leak.

If the needle on dial of the pressure tester does not fluctuate, race engine a few times to check for an abnormal amount of coolant or steam. This would be emitting from exhaust pipe. Coolant or steam from exhaust pipe may indicate a faulty cylinder head gasket, cracked engine cylinder block or cylinder head.

COMBUSTION LEAKAGE TEST - WITHOUT PRESSURE TESTER

DO NOT WASTE reusable coolant. If the solution is clean, drain the coolant into a clean container for reuse.

WARNING: Do not remove cylinder block drain plugs or loosen radiator draincock with system hot and under pressure. Serious burns from coolant can occur.

Drain sufficient coolant to allow thermostat removal. Refer to **THERMOSTAT, REMOVAL**. Remove accessory drive belt. Refer to **BELT, SERPENTINE, REMOVAL**.

Add coolant to radiator to bring level to within 6.3 mm (1/4 in) of the top of the thermostat housing.

CAUTION: Avoid overheating. Do not operate engine for an excessive period of time. Open draincock immediately after test to eliminate boil over.

Start engine and accelerate rapidly three times, to approximately 3000 RPM while observing coolant. If internal engine combustion gases are leaking into cooling system, bubbles will appear in coolant. If bubbles do not appear, internal combustion gas leakage is not present.

STANDARD PROCEDURE

DRAINING

When servicing the cooling system, it is essential that coolant does not drip onto the accessory drive belts and/or pulleys. Shield the belts with shop towels before working on the cooling system. If coolant contacts the belts or pulleys, flush both with clean water.

WARNING: Make sure engine cooling system is cool before servicing. Do not remove any clamps or hoses, pressure cap, or open the radiator draincock. When the system is hot and under pressure serious burns from coolant can occur.

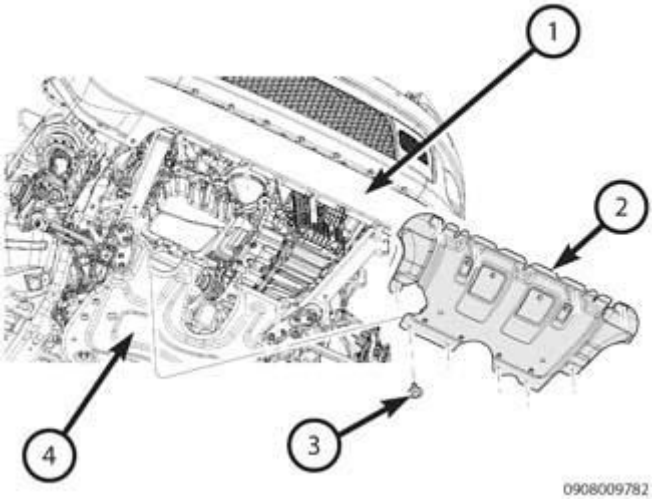

Fig. 8: Removing/Installing Starter
Courtesy of CHRYSLER GROUP, LLC

1. Raise and support the vehicle. Refer to **HOISTING, STANDARD PROCEDURE** .
2. Remove fasteners (3) and the belly pan (2).
3. Position a drain pan under draincock location.
4. Open radiator draincock located at the lower left side of radiator. Turn draincock counterclockwise until it stops and allow to drain.
5. Remove coolant pressure cap.

REVERSE FLUSHING

CAUTION: The cooling system normally operates at 97-124 kPa (14-18 psi) pressure. Exceeding this pressure may damage the radiator or hoses.

Reverse flushing of the cooling system is the forcing of water through the cooling system. This is done using air pressure in the opposite direction of normal coolant flow. It is usually only necessary with very dirty systems with evidence of partial plugging.

CHEMICAL CLEANING

If visual inspection indicates the formation of sludge or scaly deposits, use a radiator cleaner (Mopar® Radiator Kleen or equivalent) before flushing. This will soften scale and other deposits and aid the flushing operation.

CAUTION: Be sure instructions on the container are followed.

REVERSE FLUSHING RADIATOR

Disconnect the radiator hoses from the radiator fittings. Attach a section of radiator hose to the radiator bottom outlet fitting and insert the flushing gun. Connect a water supply hose and air supply hose to the flushing gun.

CAUTION: The cooling system normally operates at 97-124 kPa (14-18 psi) pressure. Exceeding this pressure may damage the radiator or hoses.

Allow the radiator to fill with water. When radiator is filled, apply air in short blasts allowing radiator to refill between blasts. Continue this reverse flushing until clean water flows out through rear of radiator cooling tube passages. For more information, refer to operating instructions supplied with flushing equipment. Have radiator cleaned more extensively by a radiator repair shop.

REVERSE FLUSHING ENGINE

Drain the cooling system. Refer to **STANDARD PROCEDURE**. Remove the thermostat housing and thermostat. Install the thermostat housing. Disconnect the radiator upper hose from the radiator and attach the flushing gun to the hose. Disconnect the radiator lower hose from the water pump. Attach a lead away hose to the water pump inlet fitting.

CAUTION: Be sure that the heater control valve is closed (heat off). This is done to prevent coolant flow with scale and other deposits from entering the heater core.

Connect the water supply hose and air supply hose to the flushing gun. Allow the engine to fill with water. When the engine is filled, apply air in short blasts, allowing the system to fill between air blasts. Continue until clean water flows through the lead away hose. For more information, refer to operating instructions supplied with flushing equipment.

Remove the lead away hose, flushing gun, water supply hose and air supply hose. Remove the thermostat housing. Refer to **THERMOSTAT, REMOVAL**. Install the thermostat and housing with a replacement gasket. Refer to **THERMOSTAT, INSTALLATION**. Connect the radiator hoses. Refill the cooling system with the correct antifreeze/water mixture. Refer to **STANDARD PROCEDURE**.

STANDARD PROCEDURE

COOLANT FILL - 2.4L

1. If using the universal fill funnel, special tool (special tool #8195A, Funnel) select the appropriate fitting extension, locking ring and attach to the fill neck of the cooling system.
2. Make sure the adapter seal fits firmly against the inside of the fill neck base to ensure a good seal. After the extension and locking ring are installed, make sure the extension can not be moved. This will confirm a good seal.

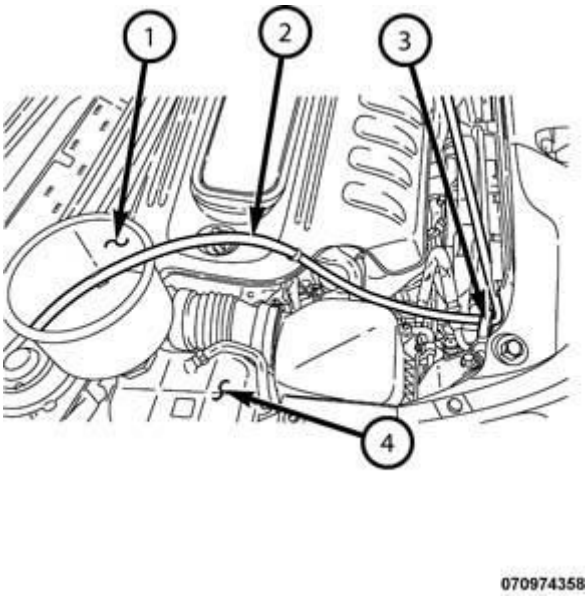

Fig. 9: Fill Funnel, Vent Outlet & Hose
Courtesy of CHRYSLER GROUP, LLC

3. Select a length of clear hose that is long enough to reach from the radiator fill vent outlet to the coolant bottle.
4. Attach the hose (2) to the radiator fill vent outlet (3) and place the other end in the fill funnel (1).

NOTE: The hose attachment will aid in air removal.

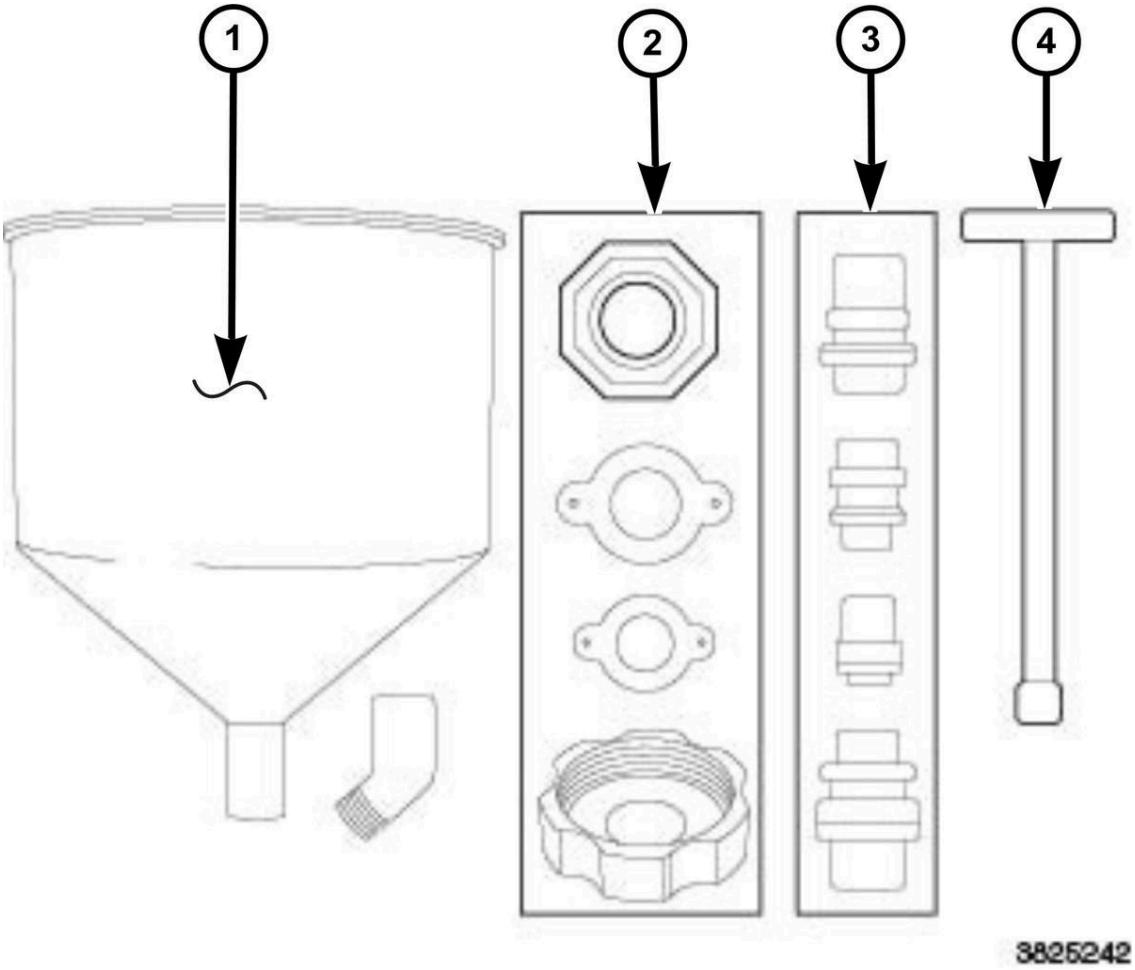

Fig. 10: Locating Funnel, Locking Ring, Fitting Extension & Stopper
Courtesy of CHRYSLER GROUP, LLC

5. Disconnect the coolant bottle return hose at the bottle end of the hose. Cap the coolant bottle nipple.
6. Attach the funnel (1) to the extension (3) and fill with coolant.

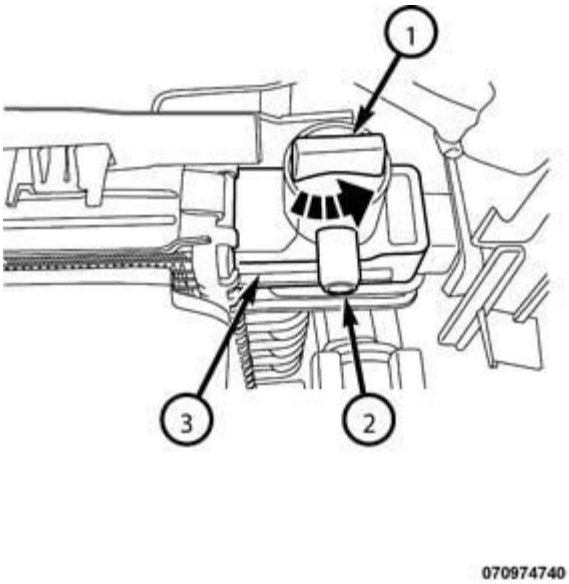

Fig. 11: Rotating Radiator Valve Counterclockwise
Courtesy of CHRYSLER GROUP, LLC

7. Rotate the radiator vent valve handle (1) counterclockwise approximately 180°.

NOTE: **The valve will need to opened enough to allow air and coolant to escape into the attached hose.**

DO NOT

remove the valve (1) from the radiator (3).

8. Add coolant to the funnel.

NOTE: **Make sure a sign of coolant is present in the clear hose. It may be necessary to add more coolant to the funnel to accomplish this.**

NOTE: **The higher the fluid level, the better the bleed results.**

Continue to add coolant until it is free of bubbles and settles at a level.

NOTE: **Make sure the funnel does not become empty during the fill and bleed procedure.**

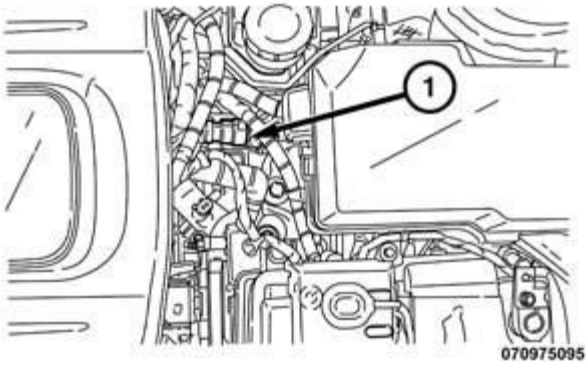

Fig. 12: Heater Core Return Hose Quick Connect
Courtesy of CHRYSLER GROUP, LLC

9. Release the heater core return hose quick connect (1) by squeezing the two release tabs. Wait until a stream of coolant is present.

NOTE: Venting air from the heater core return hose will help the water pump to prime.

10. Attach the quick connect.

Make sure the fitting is completely seated.

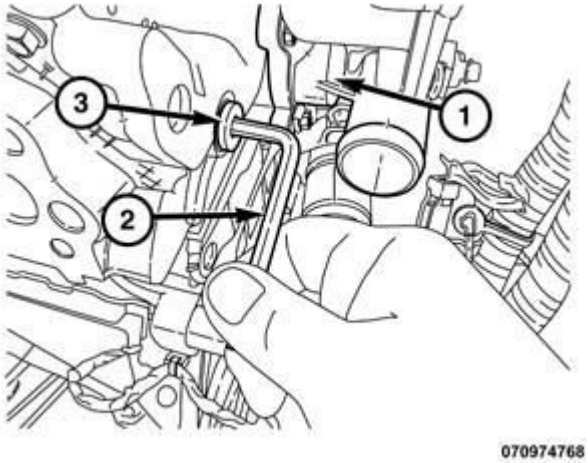

Fig. 13: Thermostat Housing, Drain Plug & Hex Wrench
Courtesy of CHRYSLER GROUP, LLC

11. Locate the cylinder head drain plug (3). It is located on the rear face of the head just forward of the thermostat housing (1).
12. Using a 6 mm hex wrench (2), loosen the drain plug 5 full turns.
13. Once fluid starts to seep from the area between the plug and the cylinder head, observe for fluid that is free of air bubbles. Once the fluid is clear of air, tighten the plug.

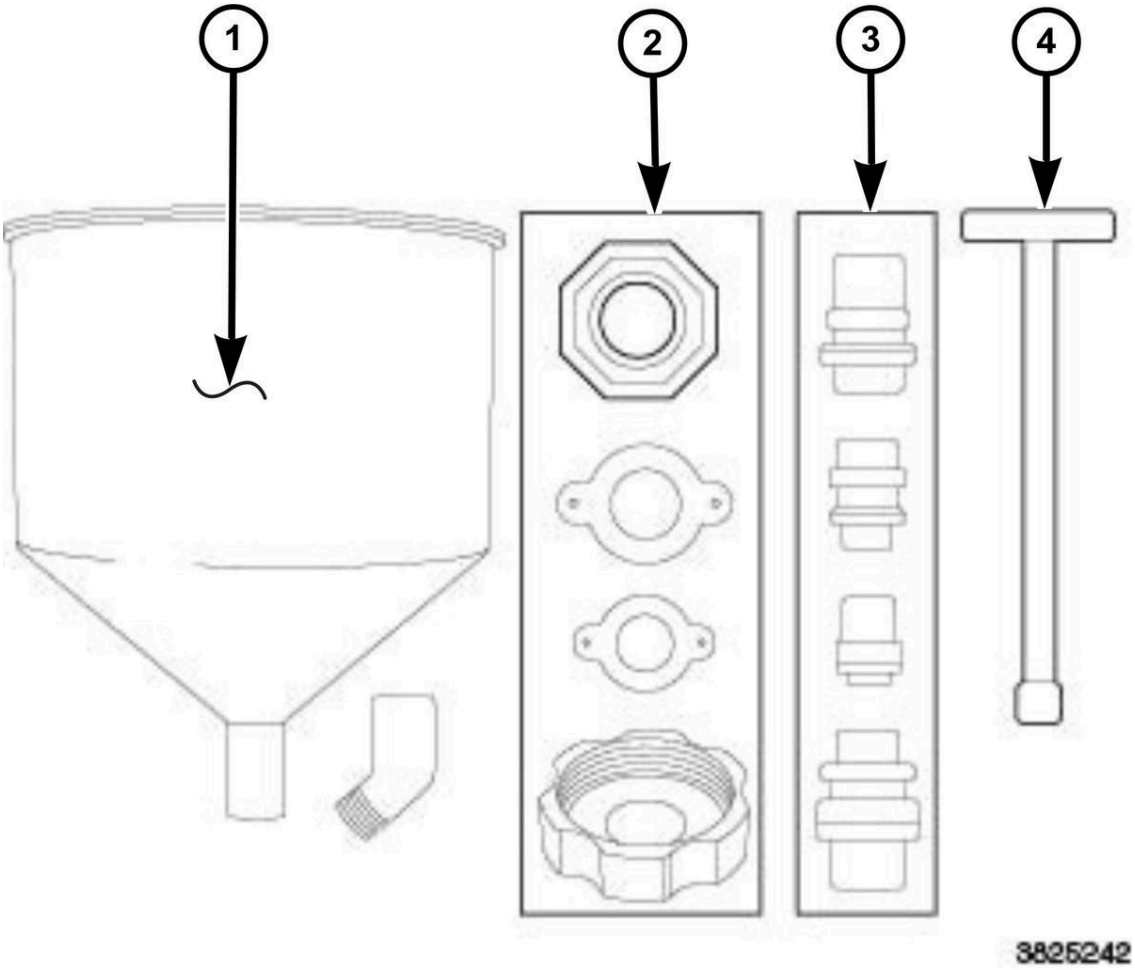

Fig. 14: Locating Funnel, Locking Ring, Fitting Extension & Stopper
Courtesy of CHRYSLER GROUP, LLC

14. Install the stopper (4) into the funnel base. The stopper will prevent the fluid that is left in the funnel from spilling out when separated from the extension.

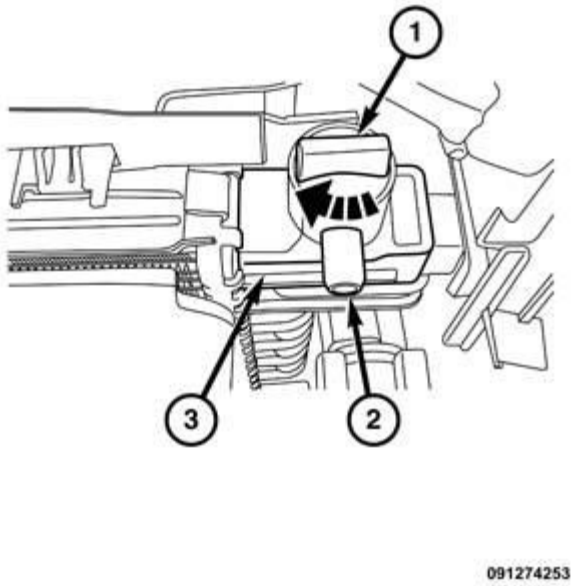

Fig. 15: Rotating Radiator Valve Clockwise
Courtesy of CHRYSLER GROUP, LLC

15. Rotate the radiator valve (1) clockwise to the closed position.
16. Fill coolant recovery container to the FULL mark.
17. Remove the funnel, extension and locking ring.
18. Remove the cap from the coolant bottle nipple.
19. Attach the coolant bottle return hose to the bottle with a

    NEW

    CLIC E® clamp.

20. Top off the coolant bottle to the FULL line and install the cap.
21. Start the engine and accelerate from idle to 3000 RPM while an assistant observes the coolant bottle return hose inlet at the top of the bottle.

    CAUTION: If there is no flow present at the coolant bottle return hose inlet, you must repeat the procedure beginning at step 1 or engine damage may occur.

    While the engine RPM's are up, the fluid will push through the hose and into the bottle. Once the fluid is free of air pockets/bubbles and the hose becomes warm, allow the engine to return to idle.

22. Run the engine until the thermostat opens, upper radiator hose will be warm to the touch.

23. Pinch off the upper radiator hose for a minimum of 30 seconds and as long as 1 minute while running the engine at 3000 RPM.

NOTE: Forcing coolant through the oil cooler will purge air trapped in the oil cooler lines.

24. Allow the engine to return to idle. Shut the engine off. Allow the cooling system to settle and cool down.
25. Remove the coolant bottle cap.

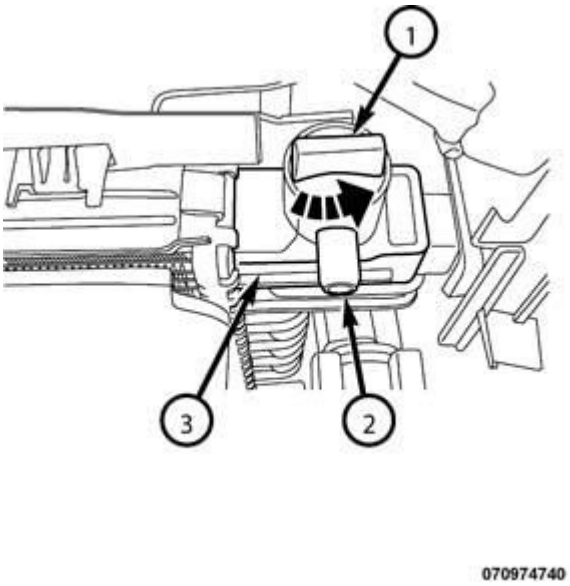

Fig. 16: Rotating Radiator Valve Counterclockwise
Courtesy of CHRYSLER GROUP, LLC

26. Open the radiator vent valve (1) until a solid flow of coolant is preset in the hose.

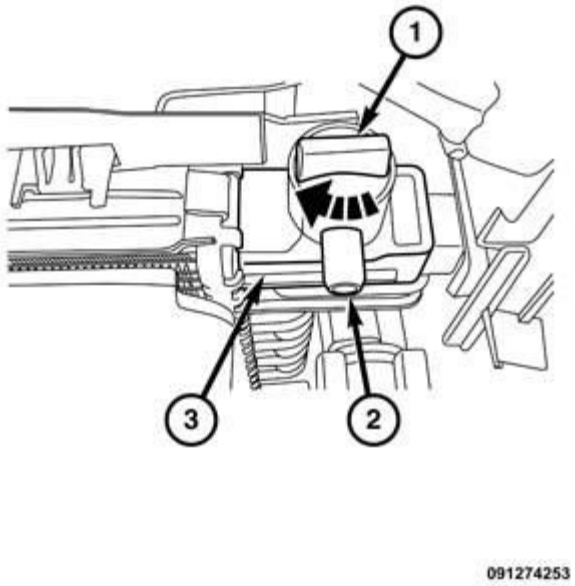

Fig. 17: Rotating Radiator Valve Clockwise
Courtesy of CHRYSLER GROUP, LLC

27. Once coolant is evident in the hose, close the valve (1).
28. Remove the clear hose from the fitting.
29. Fill the coolant bottle to the FULL line. Install the cap.
30. Check for leaks.

COOLANT AIR EVACUATION

CAUTION: Failure to purge air from the cooling system can result in an overheating condition and severe engine damage.

NOTE: The preferred way to remove air from the cooling system is to use Chrysler PSE (Pentastar Service Equipment) (special tool #399-550000, Tool, UView Airlift™ Cooling System Refill)If this tool is not available, Special tool 8195A MUST BE USED and the procedure addressing the proper use of that tool is described below.

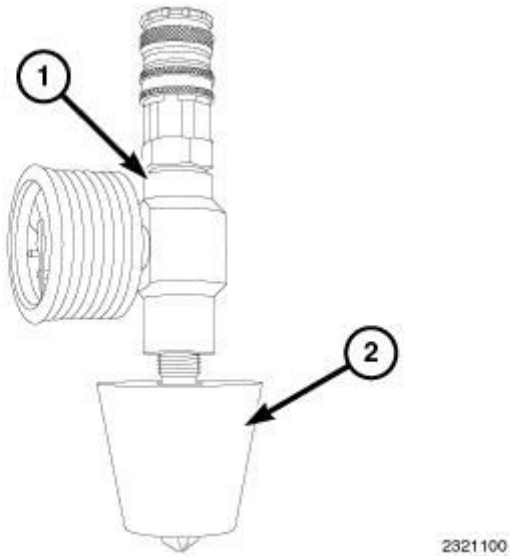

Fig. 18: Pressurized Air Operated Vacuum Generator
Courtesy of CHRYSLER GROUP, LLC

Evacuating or purging air from the cooling system involves the use of a pressurized air operated vacuum generator. The vacuum created allows for a quick and complete coolant refilling while removing any airlocks present in the system components.

NOTE: **To avoid damage to the cooling system, ensure that no component would be susceptible to damage when a vacuum is drawn on the system.**

WARNING: **ANTIFREEZE IS AN ETHYLENE GLYCOL BASE COOLANT AND IS HARMFUL IF SWALLOWED OR INHALED. IF SWALLOWED, DRINK TWO GLASSES OF WATER AND INDUCE VOMITING. IF INHALED, MOVE TO FRESH AIR AREA. SEEK MEDICAL ATTENTION IMMEDIATELY. DO NOT STORE IN OPEN OR UNMARKED CONTAINERS. WASH SKIN AND CLOTHING THOROUGHLY AFTER COMING IN CONTACT WITH ETHYLENE GLYCOL. KEEP OUT OF REACH OF CHILDREN. DISPOSE OF GLYCOL BASED COOLANT PROPERLY. CONTACT YOUR DEALER OR GOVERNMENT AGENCY FOR LOCATION OF COLLECTION CENTER IN YOUR AREA. DO NOT OPEN A COOLING SYSTEM WHEN THE ENGINE IS AT OPERATING TEMPERATURE OR HOT UNDER PRESSURE; PERSONAL INJURY CAN RESULT. AVOID RADIATOR COOLING FAN WHEN ENGINE COMPARTMENT RELATED SERVICE IS PERFORMED; PERSONAL INJURY CAN RESULT.**

WARNING: **WEAR APPROPRIATE EYE AND HAND PROTECTION WHEN PERFORMING THIS PROCEDURE.**

NOTE: **The service area where this procedure is performed should have a minimum shop air requirement of 80 PSI (5.5 bar) and should be equipped with an air**

dryer system.

NOTE: For best results, the radiator should be empty.

1. Refer to the Chrysler PSE (Pentastar Service Equipment) (special tool #399-550000, Tool, UView Airlift™ Cooling System Refill) or equivalent tool's operating manual for specific assembly steps.
2. Choose an appropriate adapter cone that will fit the reservoir tank neck.
3. Attach the adapter cone (2) to the vacuum gauge (1).

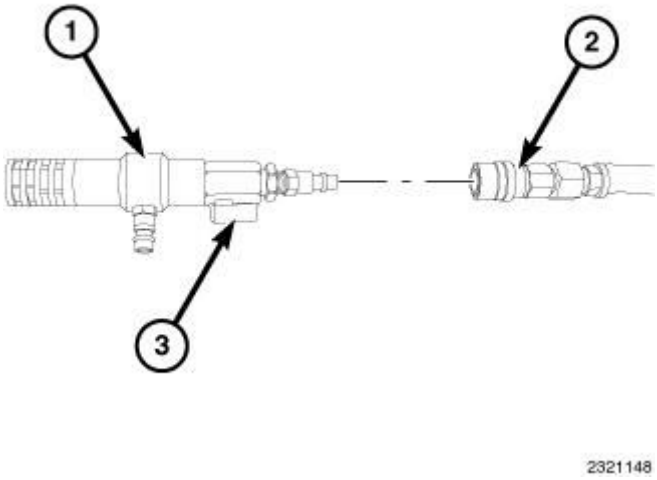

Fig. 19: Vacuum Generator/Venturi Ball Valve
Courtesy of CHRYSLER GROUP, LLC

4. Make sure the vacuum generator/venturi ball valve (3) is closed and attach an airline hose (2) (minimum shop air requirement of 80 psi/5.5 bar) to the vacuum generator/venturi (1).
5. Position the adaptor cone/vacuum gauge assembly into the reservoir tank neck. Ensure that the adapter cone is sealed properly.

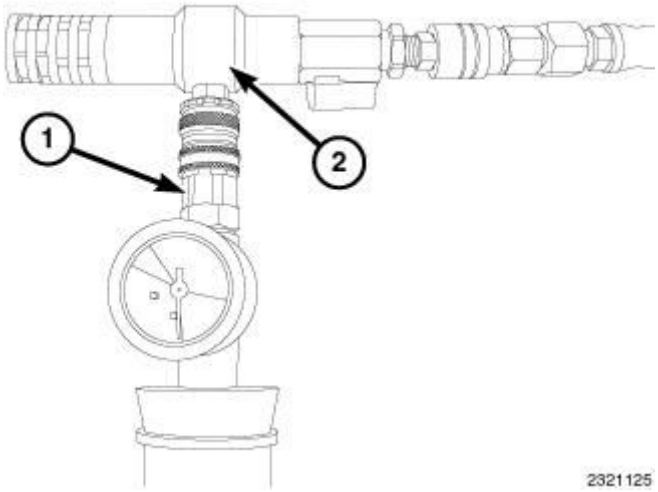

Fig. 20: Vacuum Generator/Venturi
Courtesy of CHRYSLER GROUP, LLC

6. Connect the vacuum generator/venturi (2) to the positioned adaptor cone/vacuum gauge assembly (1).
7. Open the vacuum generator/venturi ball valve.

NOTE: **Do not bump or move the assembly as it may result in loss of vacuum. Some radiator overflow hoses may need to be clamped off to obtain vacuum.**

8. Let the system run until the vacuum gauge shows a good vacuum through the cooling system. Refer to the tool's operating manual for appropriate pressure readings.

NOTE: **If a strong vacuum is being created in the system, it is normal to see the radiator hoses collapse.**

9. Close the vacuum generator/venturi ball valve.

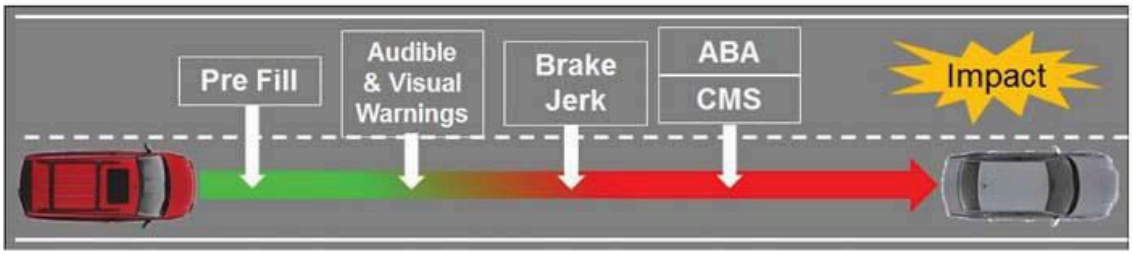

0809005274

Fig. 21: Vacuum Generator/Venturi And Air Line
Courtesy of CHRYSLER GROUP, LLC

10. Disconnect the vacuum generator/venturi (1) and airline from the adaptor cone/vacuum gauge assembly (2).
11. Wait approximately 20 seconds, if the pressure readings do not move, the system has no leaks. If the pressure readings move, a leak could be present in the system and the cooling system should be checked for leaks and the procedure should be repeated.

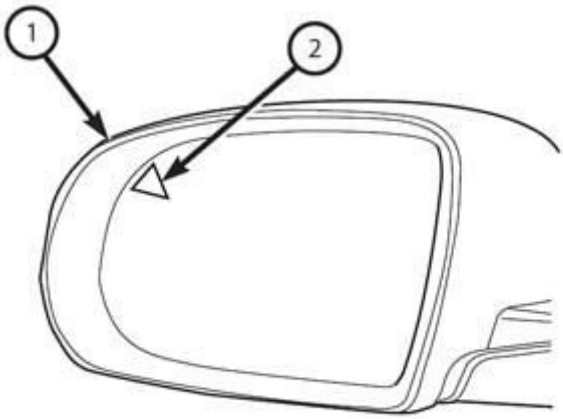

0809004962

Fig. 22: Suction Hose Ball Valve
Courtesy of CHRYSLER GROUP, LLC

View typical

12. Place the tool's suction hose (2) into the coolant's container.

NOTE: **Ensure there is a sufficient amount of coolant, mixed to the required strength/protection level available for use. For best results and to assist the refilling procedure, place the coolant container at the same height as the radiator filler neck. Always draw more coolant than required. If the coolant level is too low, it will pull air into the cooling system which could result in airlocks in the system.**

13. Pre-fill the tool suction hose (2) with coolant.
14. Connect the tool's suction hose (2) to the adaptor cone/vacuum gauge assembly (3).

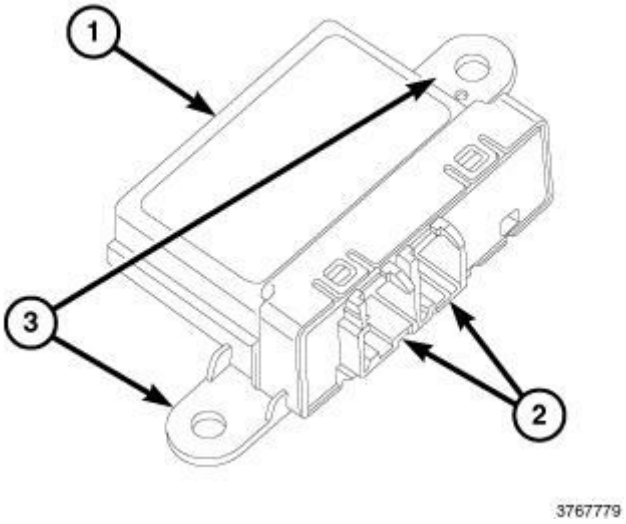

Fig. 23: Suction Hose Ball Valve
Courtesy of CHRYSLER GROUP, LLC

NOTE: **View typical**

15. Open the suction hose's ball valve to begin refilling the cooling system.
16. When the vacuum gauge reads zero and the proper level is reached in the coolant bottle, the system is filled.
17. Close the suction hose's ball valve and remove the suction hose from the adaptor cone/vacuum gauge assembly.
18. Remove the adaptor cone/vacuum gauge assembly from the coolant bottle neck.
19. Install the coolant bottle cap.
20. With heater control unit in the HEAT position, start the engine.
21. Run the engine at 3, 000 RPM to help purge the air back to the bottle.
22. Look for flow at the coolant bottle return hose inlet.

CAUTION: If there is no flow present at the coolant bottle return hose inlet, you must repeat the procedure beginning at step 1 or engine damage may occur.

23. After engine has reached normal operating temperature, shut engine off and allow it to cool. Use the radiator vent valve to purge any remaining air from the radiator.
24. Add coolant to the coolant bottle as necessary. **Only add coolant to the container when the engine is cold. Coolant level in a warm engine will be higher due to thermal expansion.** Add necessary coolant to raise container level to the FULL mark after each cool down period.
25. Once the appropriate coolant level is achieved, install the cap.

STANDARD PROCEDURE - COOLANT AIR EVACUATION

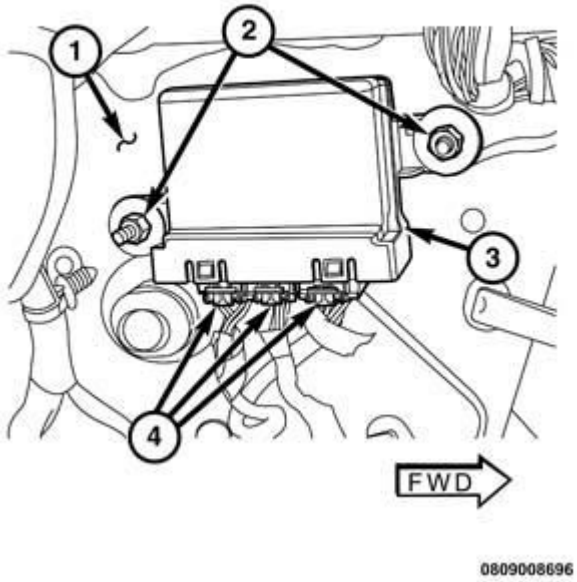

Fig. 24: Pressurized Air Operated Vacuum Generator
Courtesy of CHRYSLER GROUP, LLC

Evacuating or purging air from the cooling system involves the use of a pressurized air operated vacuum generator. The vacuum created allows for a quick and complete coolant refilling while removing any airlocks present in the system components.

NOTE: To avoid damage to the cooling system, ensure that no component would be susceptible to damage when a vacuum is drawn on the system.

WARNING: ANTIFREEZE IS AN ETHYLENE GLYCOL BASE COOLANT AND IS HARMFUL IF SWALLOWED OR INHALED. IF SWALLOWED, DRINK TWO GLASSES OF WATER AND INDUCE VOMITING. IF INHALED, MOVE TO

FRESH AIR AREA. SEEK MEDICAL ATTENTION IMMEDIATELY. DO NOT STORE IN OPEN OR UNMARKED CONTAINERS. WASH SKIN AND CLOTHING THOROUGHLY AFTER COMING IN CONTACT WITH ETHYLENE GLYCOL. KEEP OUT OF REACH OF CHILDREN. DISPOSE OF GLYCOL BASED COOLANT PROPERLY. CONTACT YOUR DEALER OR GOVERNMENT AGENCY FOR LOCATION OF COLLECTION CENTER IN YOUR AREA. DO NOT OPEN A COOLING SYSTEM WHEN THE ENGINE IS AT OPERATING TEMPERATURE OR HOT UNDER PRESSURE; PERSONAL INJURY CAN RESULT. AVOID RADIATOR COOLING FAN WHEN ENGINE COMPARTMENT RELATED SERVICE IS PERFORMED; PERSONAL INJURY CAN RESULT.

WARNING: **WEAR APPROPRIATE EYE AND HAND PROTECTION WHEN PERFORMING THIS PROCEDURE.**

NOTE: **The service area where this procedure is performed should have a minimum shop air requirement of 80 PSI (5.5 bar) and should be equipped with an air dryer system.**

NOTE: **For best results, the radiator should be empty. The vehicle's heater control should be set to the heat position (ignition may need to be turned to the on position but do not start the motor).**

1. Refer to the Chrysler Pentastar Service Equipment (Chrysler PSE) Coolant Refiller #85-15-0650 or equivalent tool's operating manual for specific assembly steps.
2. Choose an appropriate adapter cone that will fit the vehicle's radiator filler neck or reservoir tank.
3. Attach the adapter cone (2) to the vacuum gauge (1).

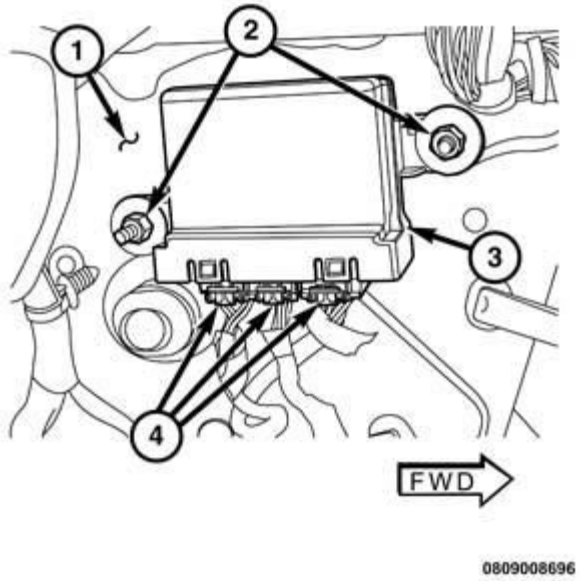

Fig. 25: Vacuum Generator/Venturi Ball Valve
Courtesy of CHRYSLER GROUP, LLC

4. Make sure the vacuum generator/venturi ball valve (3) is closed and attach an airline hose (2) (minimum shop air requirement of 80 psi/5.5 bar) to the vacuum generator/venturi (1).
5. Position the adaptor cone/vacuum gauge assembly into the radiator filler neck or reservoir tank. Ensure that the adapter cone is sealed properly.

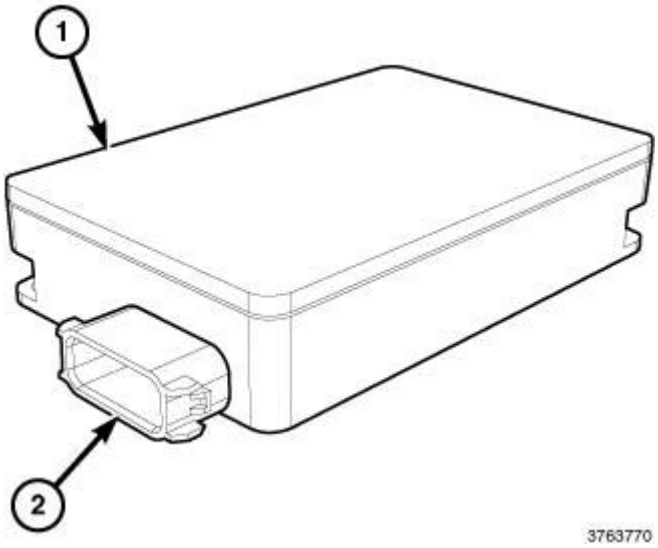

Fig. 26: Vacuum Generator/Venturi
Courtesy of CHRYSLER GROUP, LLC

6. Connect the vacuum generator/venturi (2) to the positioned adaptor cone/vacuum gauge assembly (1).
7. Open the vacuum generator/venturi ball valve.

NOTE: **Do not bump or move the assembly as it may result in loss of vacuum. Some radiator overflow hoses may need to be clamped off to obtain vacuum.**

8. Let the system run until the vacuum gauge shows a good vacuum through the cooling system. Refer to the tool's operating manual for appropriate pressure readings.

NOTE: **If a strong vacuum is being created in the system, it is normal to see the radiator hoses to collapse.**

9. Close the vacuum generator/venturi ball valve.

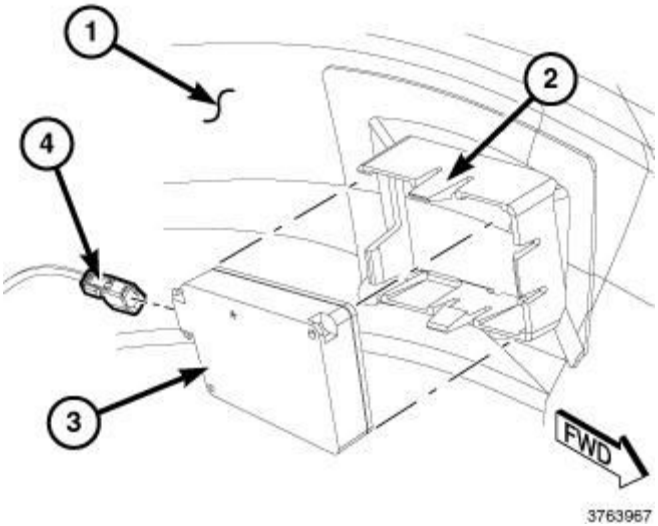

Fig. 27: Vacuum Generator/Venturi And Air Line
Courtesy of CHRYSLER GROUP, LLC

10. Disconnect the vacuum generator/venturi and airline from the adaptor cone/vacuum gauge assembly.
11. Wait approximately 20 seconds, if the pressure readings do not move, the system has no leaks. If the pressure readings move, a leak could be present in the system and the cooling system should be checked for leaks and the procedure should be repeated.
12. Place the tool's suction hose into the coolant's container.

NOTE: **Ensure there is a sufficient amount of coolant, mixed to the required strength/protection level available for use. For best results and to assist the refilling procedure, place the coolant container at the same height as the radiator filler neck. Always draw more coolant than required. If the coolant level is too low, it will pull air into the cooling system which could**

result in airlocks in the system.

13. Connect the tool's suction hose (1) to the adaptor cone/vacuum gauge assembly (2).

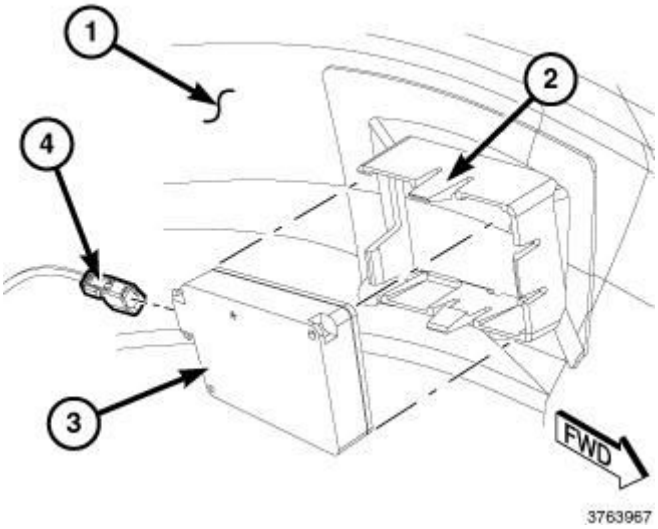

Fig. 28: Suction Hose Ball Valve
Courtesy of CHRYSLER GROUP, LLC

NOTE: View typical

14. Open the suction hose's ball valve to begin refilling the cooling system.
15. When the vacuum gauge reads zero, the system is filled.

NOTE: On some remote pressurized tanks, it is recommended to stop filling when the proper level is reached.

16. Close the suction hose's ball valve and remove the suction hose from the adaptor cone/vacuum gauge assembly.
17. Remove the adaptor cone/vacuum gauge assembly from the radiator filler neck or reservoir tank.
18. With heater control unit in the HEAT position, operate engine with container cap in place.
19. After engine has reached normal operating temperature, shut engine off and allow it to cool. When engine is cooling down, coolant will be drawn into the radiator from the pressure container.
20. Add coolant to the recovery bottle/container as necessary. **Only add coolant to the container when the engine is cold. Coolant level in a warm engine will be higher due to thermal expansion.** Add necessary coolant to raise container level to the COLD MINIMUM mark after each cool down period.
21. Once the appropriate coolant level is achieved, attach the radiator cap or reservoir tank cap.

ADDING ADDITIONAL COOLANT

WARNING: ANTIFREEZE IS AN ETHYLENE GLYCOL BASE COOLANT AND IS HARMFUL IF SWALLOWED OR INHALED. IF SWALLOWED, DRINK TWO GLASSES OF WATER AND INDUCE VOMITING. IF INHALED, MOVE TO FRESH AIR AREA. SEEK MEDICAL ATTENTION IMMEDIATELY. DO NOT STORE IN OPEN OR UNMARKED CONTAINERS. WASH SKIN AND CLOTHING THOROUGHLY AFTER COMING IN CONTACT WITH ETHYLENE GLYCOL. KEEP OUT OF REACH OF CHILDREN. DISPOSE OF GLYCOL BASED COOLANT PROPERLY. CONTACT YOUR DEALER OR GOVERNMENT AGENCY FOR LOCATION OF COLLECTION CENTER IN YOUR AREA. DO NOT OPEN A COOLING SYSTEM WHEN THE ENGINE IS AT OPERATING TEMPERATURE OR HOT UNDER PRESSURE; PERSONAL INJURY CAN RESULT. AVOID RADIATOR COOLING FAN WHEN ENGINE COMPARTMENT RELATED SERVICE IS PERFORMED; PERSONAL INJURY CAN RESULT.

2.4L - Coolant will normally be in the pressure chamber side of the coolant bottle. If additional coolant is to be added, use the indicators on the bottle as a guide. If the bottle was empty, perform the Deaeration procedure to properly remove any trapped air in the cooling system. Refer to **STANDARD PROCEDURE**.

3.6L - When additional coolant is needed, it should be added to the Pressurized Coolant Bottle. With the engine cold, add enough coolant to set the level between the add and full indicators on the bottle.

For the proper type of coolant. Refer to **CAPACITIES AND RECOMMENDED FLUIDS, DESCRIPTION** .

SPECIFICATIONS

GAS FILL VOLUMES

DESCRIPTION	SPECIFICATION	
	US	METRIC
2.4L	7.2 Quarts	6.8 Liters
3.2L	10 Quarts	9.5 Liters
Use only **MOPAR® OAT** coolant.		

DIESEL FILL VOLUMES

SPECIFICATION		
DESCRIPTION	Metric	US
2.0L Diesel*	7.3L	7.7 qts
* 2.0 Diesel Engine uses Parafull coolant		

TORQUE SPECIFICATIONS - GAS

2.4L

DESCRIPTION	N.m	Ft. Lbs.	In. Lbs.
Accessory Drive Belt Tensioner Bolt	26	19	-
Block Heater	2	-	21
Condenser to Radiator	8	-	70
Coolant Reservoir	8	-	70
Coolant Return Tube to Water/Coolant Pump Inlet Pipe	45	33	-
Coolant Return Tube to Oil Filter Housing	40	30	-
Coolant Supply Tube to Oil Filter Housing	9	-	80
Coolant Supply Tube to Thermostat Housing	9	-	80
Engine Coolant Temperature (ECT) Sensor	20	15	-
Fan Shroud to Radiator Mounting	8	-	70
Radiator Lower Isolator Bracket to Crossmember	8	-	70
Thermostat Housing	10	-	89
Water/Coolant Pump Bolts and Nut	10	-	89
Water/Coolant Pump Inlet Tube	9	-	80
Water/Coolant Pump Inlet Pipe Support Bracket Bolt	10	-	89

3.2L

DESCRIPTION	N.m	Ft. Lbs.	In. Lbs.
Accessory Drive Belt Tensioner Bolt	50	37	-
Block Heater	12	-	106
Condenser to Radiator	8	-	70
Coolant Reservoir	10	-	89
Coolant Return Tube to Oil Filter Housing	40	30	-
Coolant Supply Tube to Oil Filter Housing	9	-	80
Cross Over to Front Cover	12	-	106
Engine Coolant Temperature (ECT) Sensor	30	22	-
Idler Pulley Bolt	27	20	-
Radiator Lower Isolator Bracket to Crossmember	8	-	70
Thermostat Housing	12	-	106
Water/Coolant Pump Bolts			
M6	12	-	106
M8	23	17	-

TORQUE SPECIFICATIONS - DIESEL

DESCRIPTION	N.m	Ft. Lbs.	In. Lbs.

A/C Condenser to Radiator	5	-	44
Accessory Drive Belt Tensioner Bolt	28	21	-
Charge Air Cooler (CAC) Nut	9	-	80
Cooling Fan Bolts	6	-	53
EGR Cooler Manifold Bolts	3	-	27
EGR Tube Bolts	3	-	27
Engine Cooling Temperature (ECT) Sensor	11	-	97
Idler Pulley Bolt	50	37	-
Pressurized Coolant Bottle Bolt	8	-	71
Pressurized Coolant Bottle Nut	8	-	71
Radiator Isolator Bolts	8	-	71
Thermostat Housing Bolts	9	-	80
Water Pump Bolts	28	21	-

SPECIAL TOOLS

SPECIAL TOOLS

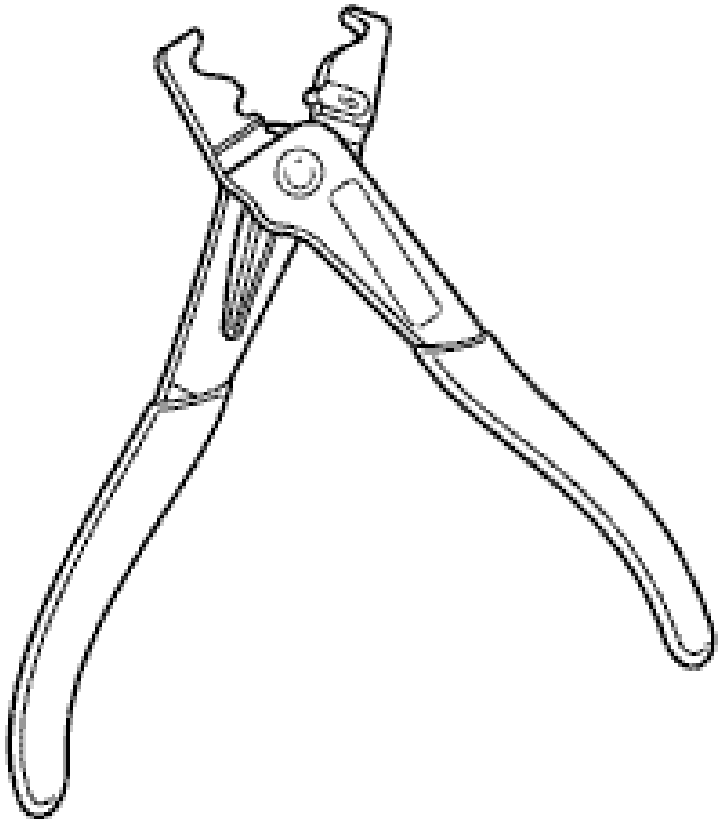	10288 - Pliers, Hose Clamp

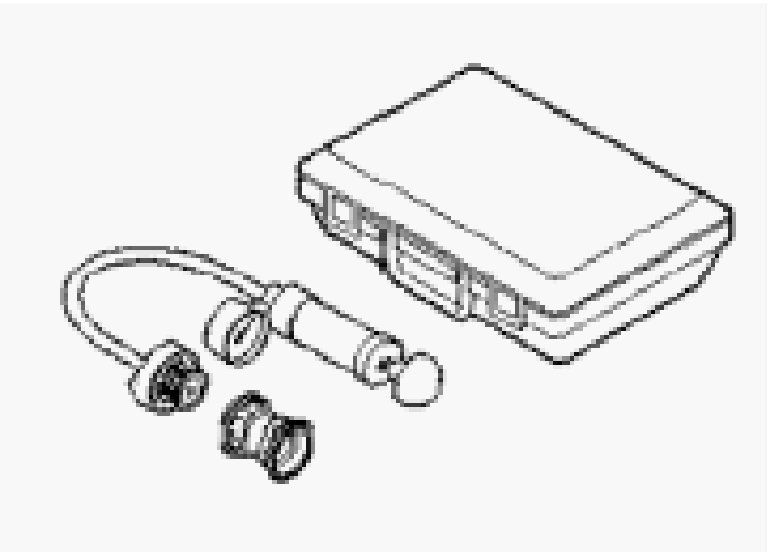	7700 - Tester, Cooling System (Originally Shipped In Kit Number(s) 7700-A.)
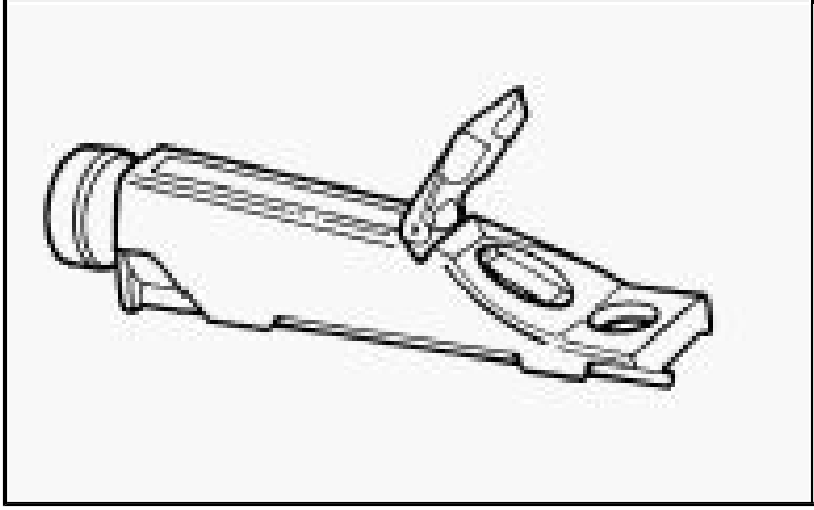	8286 - Refractometer

ACCESSORY DRIVE

BELT, SERPENTINE

DIAGNOSIS AND TESTING

DIAGNOSIS AND TESTING - SERPENTINE BELT

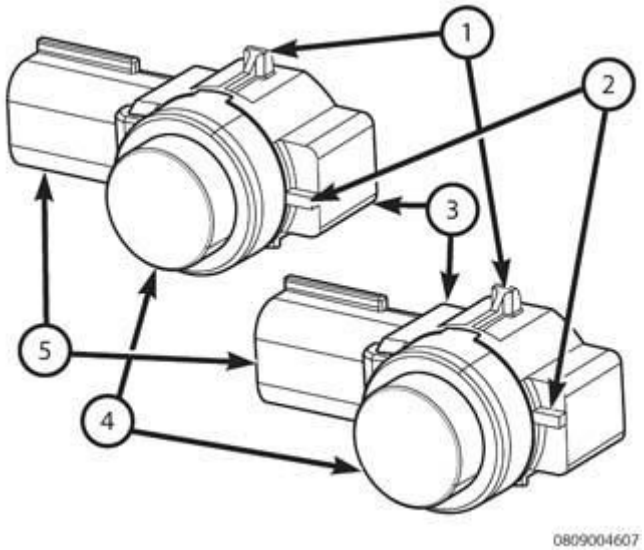

Fig. 29: Serpentine Accessory Drive Belt Wear Patterns
Courtesy of CHRYSLER GROUP, LLC

1 - NORMAL CRACKS, BELT OK 2 - ABNORMAL CRACKS, REPLACE BELT

When diagnosing serpentine drive belts, small cracks (1) that run across ribbed surface of belt from rib to rib, are considered normal. These are not a reason to replace belt. However, cracks running along a rib (not across) are **not** normal. Any belt with cracks running along a rib must be replaced. Also replace belt if it has excessive wear, frayed cords or severe glazing.

SERPENTINE DRIVE BELT DIAGNOSIS CHART

CONDITION	POSSIBLE CAUSES	CORRECTION
BELT SEPARATION (ONE OR MORE RIBS HAS SEPARATED FROM BELT BODY)	1. Foreign objects imbedded in pulley grooves.	1. Remove foreign objects from pulley grooves. Replace belt. Correct the root cause of the foreign objects in the belt/pulley system.
	2. Fluids contacting the belt.	2. Identify the source of the fluid and correct as necessary.
RIB OR BELT WEAR	1. Pulley(s) misaligned.	1. Align pulley(s).
	2. Fluid contamination.	2. Clean pulley(s). Replace belt if necessary.
	3. Rusted pulley(s).	3. Clean rust from pulley(s).
	4. Sharp or jagged pulley groove tips.	4. Replace pulley.
	5. Rubber deteriorated.	5. Replace belt.
LONGITUDINAL BELT CRACKING (CRACKS BETWEEN TWO RIBS)	1. Belt has clashed with the pulley grooves.	1. Replace belt. Align pulley(s), components as necessary.

	2. Pulley groove tip has worn away rubber to tensile member.	2. Replace belt.
BELT SLIPS	1. Belt slipping because of insufficient tension.	1. Replace automatic belt tensioner.
	2. Belt routed incorrectly.	2. Verify belt routing.
	3. Incorrect belt.	3. Replace belt.
	4. Belt or pulley subjected to substance (belt dressing, oil ethylene glycol) that has reduced friction.	4. Replace belt and clean pulleys.
	5. Driven component bearing failure.	5. Replace faulty component bearing.
	6. Belt glazed and hardened from heat and excessive slippage.	6. Replace belt.
"GROOVE JUMPING" (BELT DOES NOT MAINTAIN CORRECT POSITION ON PULLEY)	1. Belt tension either too high or too low.	1. Replace automatic belt tensioner.
	2. Belt routed incorrectly.	2. Verify belt routing.
	3. Incorrect belt.	3. Replace belt.
	4. Pulley(s) not within design tolerance.	4. Replace pulley(s).
	5. Foreign object(s) in grooves.	5. Remove foreign objects from grooves.
	6. Pulley misalignment.	6. Inspect pulleys and accessories. Inspect the mounting components. Apply chalk to the edges of the belt and rotate the engine 2-3 revolutions to transfer the chalk to the misaligned pulley. Adjust or replace as necessary.
	7. Belt cord line is broken.	7. Replace belt.
BELT BROKEN (NOTE: IDENTIFY AND CORRECT PROBLEM BEFORE NEW BELT IS INSTALLED)	1. Excessive tension.	1. Replace belt and automatic belt tensioner.
	2. Incorrect belt.	2. Replace belt.
	3. Tensile member damaged during belt installation.	3. Replace belt.
	4. Severe misalignment.	4. Check and replace.
	5. Bracket, pulley, or bearing failure.	5. Replace defective component and belt.
	6. Component failure/locked up pulley.	6. Inspect for smooth rotation of all component pulleys. Repair failed component.
NOISE (OBJECTIONABLE SQUEAL, SQUEAK, OR RUMBLE IS HEARD OR FELT	1. Belt slippage.	1. Replace belt or automatic belt tensioner.
	2. Bearing noise.	2. Locate and repair.

WHILE DRIVE BELT IS IN OPERATION)	3. Belt misalignment.	3. Replace belt.
	4. Belt-to-pulley mismatch.	4. Install correct belt.

REMOVAL

2.0L DIESEL

1. Disconnect the negative battery cable.
2. Raise and support the vehicle. Refer to **HOISTING, STANDARD PROCEDURE** .
3. Remove the right side front wheel.

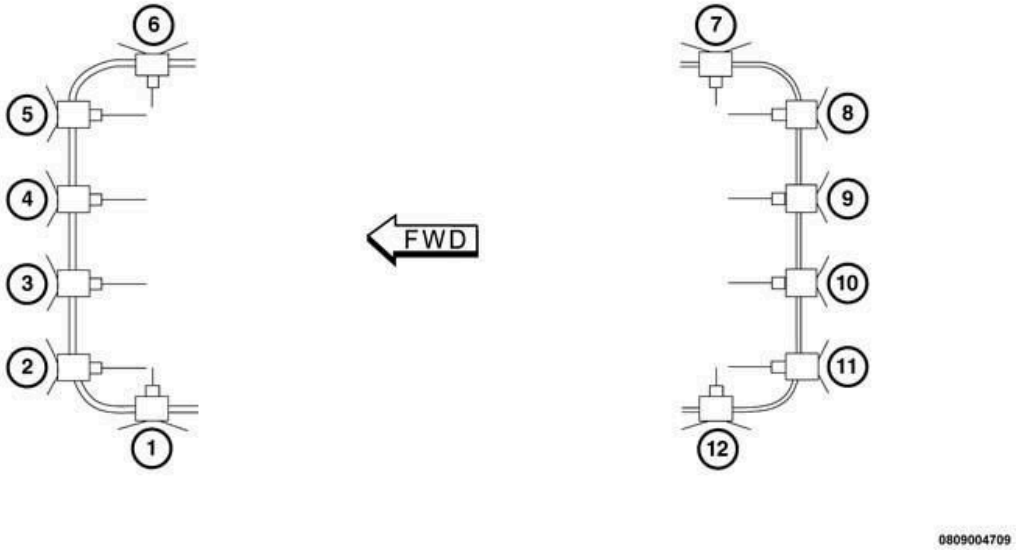

Fig. 30: Inner Fender Splash Shield
Courtesy of CHRYSLER GROUP, LLC

4. Remove fasteners and the inner fender splash shield (1).

CAUTION: Do not allow the tensioner to snap back to the unloaded position. Damage to the tensioner may occur.

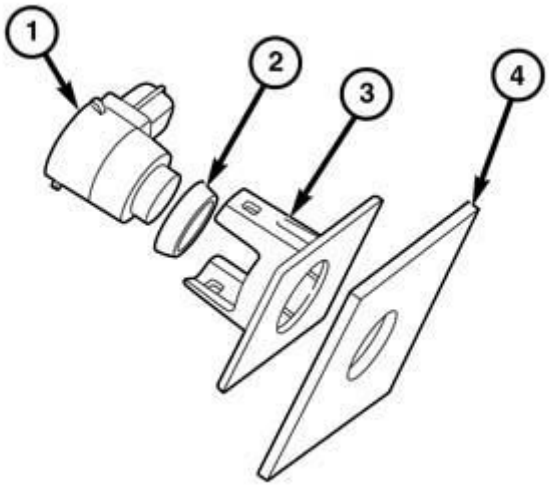

080968288

Fig. 31: Accessory Drive Belt Routing
Courtesy of CHRYSLER GROUP, LLC

5. Using a wrench, rotate the belt tensioner until the locking pin can be installed.
6. Remove the accessory drive belt (1).

2.4L

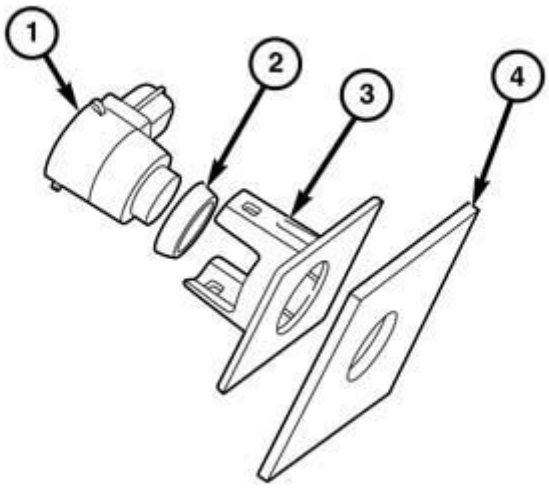

080968288

Fig. 32: Accessory Drive Belt Routing
Courtesy of CHRYSLER GROUP, LLC

1. Remove the engine cover.
2. Remove the air cleaner body

Refer to **BODY, AIR CLEANER, REMOVAL** .

3. Release the tensioner (7) by rotating the center bolt counterclockwise.
4. Remove the serpentine belt (5).
5. Slowly release the tensioner to the fully extended position.

3.2L

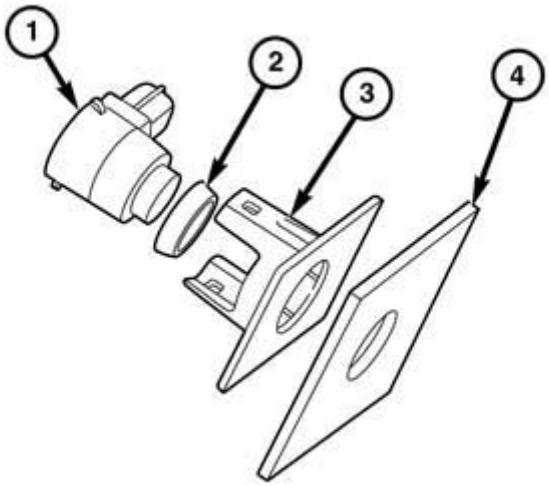

080968288

Fig. 33: Installing Lower Radiator Hose & Heater Core Return Hose
Courtesy of CHRYSLER GROUP, LLC

1. Hoist the vehicle.
2. Remove the wheel well splash shield.
3. Drain the cooling system.
4. Remove the heater hose (1) at the water pump.
5. Remove the lower radiator hose (2) at the water pump.

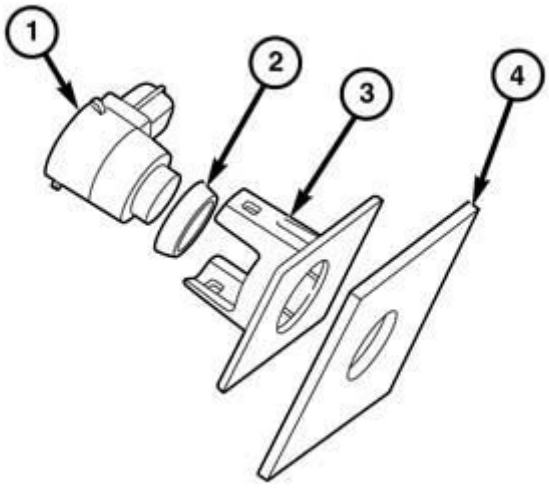

080968288

Fig. 34: Installing Accessory Drive Belt
Courtesy of CHRYSLER GROUP, LLC

6. Release the serpentine belt tensioner (1) by rotating the pulley counterclockwise.
7. Remove the accessory drive belt (4).

INSTALLATION

2.0L DIESEL

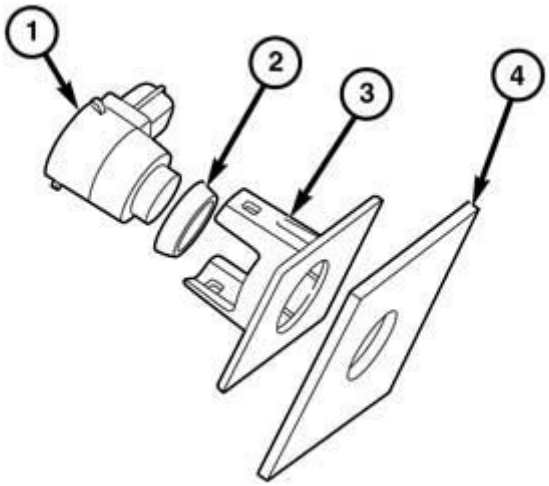

080968288

Fig. 35: Accessory Drive Belt Routing
Courtesy of CHRYSLER GROUP, LLC

NOTE: When installing accessory drive belt, be sure belt is routed around all accessories correctly.

1. Install belt over all pulleys.

CAUTION: Do not let the tensioner arm snap back to the freearm position, severe damage may occur to the tensioner.

2. Using a wrench, rotate the cam tensioner (5) until the locking pin can be removed from the tensioner (8).
3. Check the belt for proper alignment.

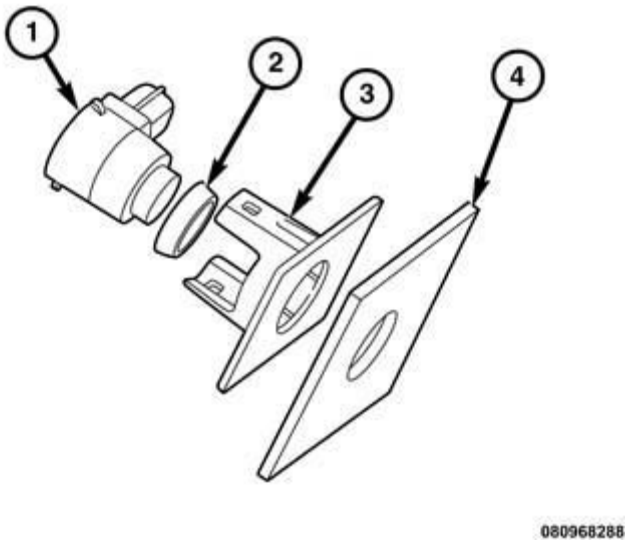

Fig. 36: Inner Fender Splash Shield
Courtesy of CHRYSLER GROUP, LLC

4. Install the lower belt splash shield (2).
5. Install the right side front wheel.
6. Lower the vehicle.
7. Connect the negative battery cable.

2.4L

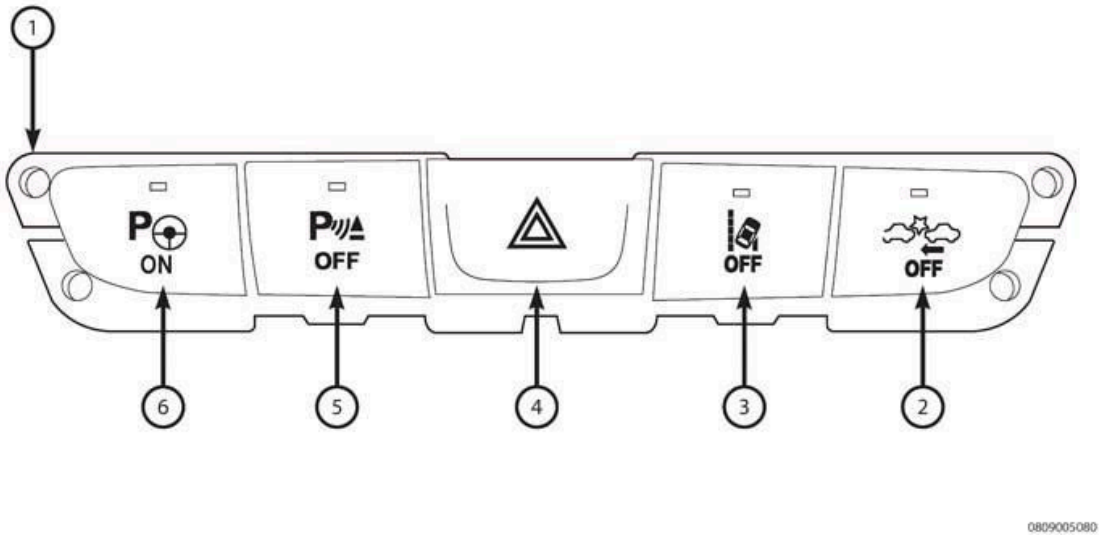

Fig. 37: Accessory Drive Belt Routing
Courtesy of CHRYSLER GROUP, LLC

1. Install the serpentine drive belt (5) by positioning the belt over all of the pulleys with the exception of the tensioner pulley.
2. Rotate the tensioner center bolt counterclockwise to allow the belt to be installed onto the tensioner pulley.
3. Slowly release the tensioner and allow it to adjust in a clockwise manner.
4. Visually inspect the belt to pulley alignment.
5. Start the engine and allow to run at idle momentarily. Shut the engine off and reinspect the belt alignment.
6. Install the air cleaner body Refer to **BODY, AIR CLEANER, INSTALLATION** .

   .

7. Install the engine cover.

3.2L

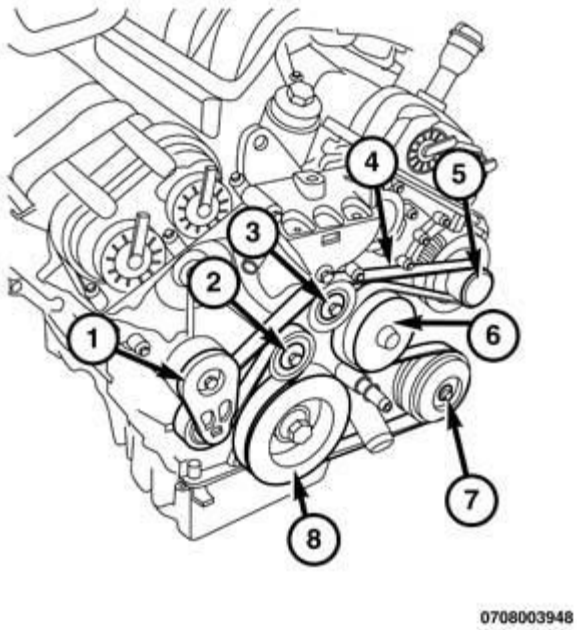

Fig. 38: Installing Accessory Drive Belt
Courtesy of CHRYSLER GROUP, LLC

CAUTION: Do not let the tensioner arm snap back to the freearm position, severe damage may occur to the tensioner.

1. Position the serpentine belt (4) around the pulleys.
2. Rotate the tensioner (1) counterclockwise
3. Position the belt around the tensioner pulley.
4. Verify the belt is properly positioned around all of the pulleys.

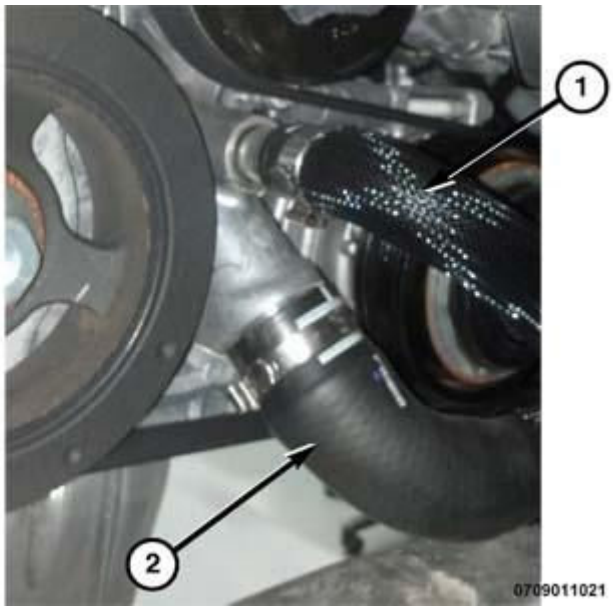

Fig. 39: Installing Lower Radiator Hose & Heater Core Return Hose
Courtesy of CHRYSLER GROUP, LLC

5. Install the lower radiator hose (2).
6. Install the heater hose (1) to the water pump
7. Install the wheel well splash shield.
8. Lower the vehicle.
9. Fill the cooling system. Refer to **STANDARD PROCEDURE**.

TENSIONER, BELT

DESCRIPTION

DESCRIPTION

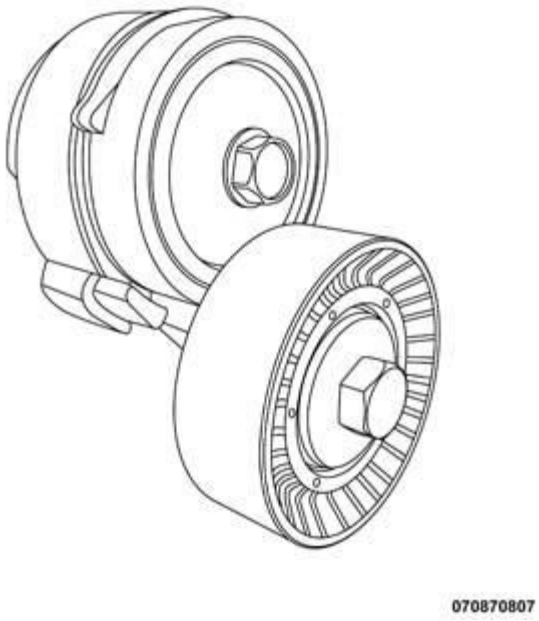

Fig. 40: Belt Tensioner
Courtesy of CHRYSLER GROUP, LLC

Correct drive belt tension is required to ensure optimum performance of the belt driven engine accessories. If specified tension is not maintained, belt slippage may cause; engine overheating, loss of air conditioning performance, reduced generator output rate, and greatly reduced belt life.

It is not necessary to adjust belt tension. The tensioner maintains correct accessory drive belt tension at all times.

OPERATION

OPERATION

WARNING: The automatic belt tensioner assembly is spring loaded. Do not attempt to disassemble the tensioner assembly.

The automatic belt tensioner maintains correct belt tension using a coiled spring within the tensioner housing. The spring applies pressure to the tensioner arm pressing the arm into the belt, keeping the belt tight. The belt tensioner will maintain positive pressure on the back side of the belt at all times including engine load and engine speed changes. It is normal to observe torsional variances while the engine is running.

REMOVAL

2.0L DIESEL

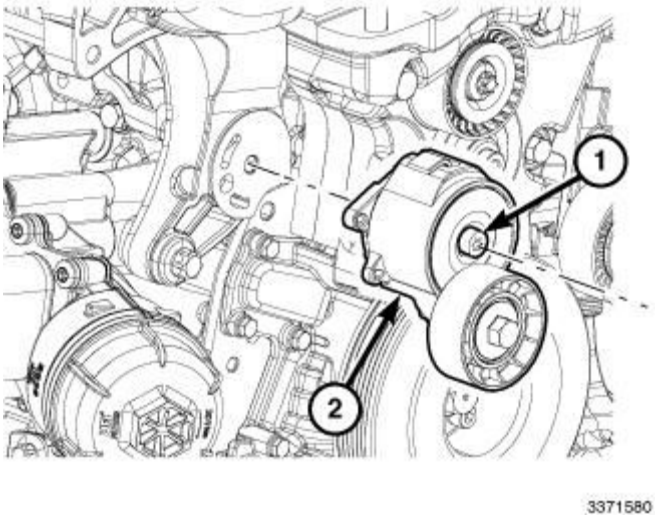

Fig. 41: Tensioner Mounting Bolt
Courtesy of CHRYSLER GROUP, LLC

1. Remove the accessory drive belt. Refer to **BELT, SERPENTINE, REMOVAL**.
2. Remove bolt (1) and the belt tensioner (2).

2.4L

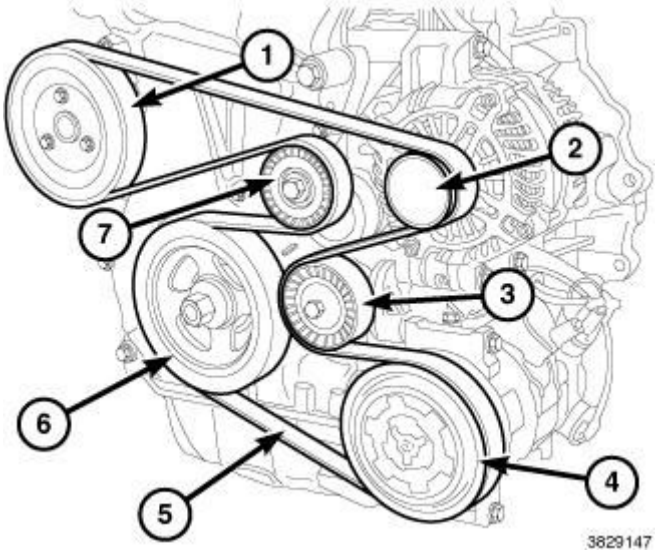

Fig. 42: Accessory Drive Belt Routing
Courtesy of CHRYSLER GROUP, LLC

1. Remove the engine cover.
2. Remove the air cleaner body

   Refer to **BODY, AIR CLEANER, REMOVAL** .

3. Release the tensioner (7) by rotating the center bolt counterclockwise.
4. Remove the serpentine belt (5).
5. Slowly release the tensioner to the fully extended position.

3.2L

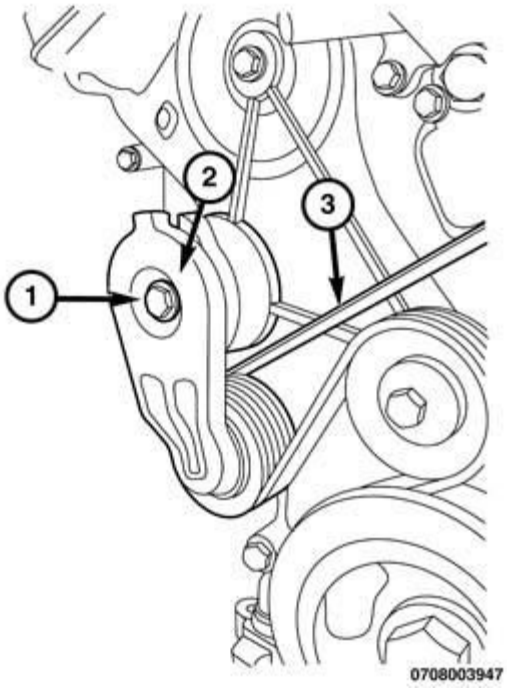

Fig. 43: Installing Accessory Drive Belt Tensioner
Courtesy of CHRYSLER GROUP, LLC

NOTE: The belt and tensioner can be removed from the bottom of the vehicle.

1. Raise the vehicle.
2. Remove the right front wheel well inner splash shield.
3. Rotate the belt tensioner (2) counterclockwise.

CAUTION: Do not let the tensioner arm snap back to the freearm position, severe damage may occur to the tensioner.

4. Remove the serpentine belt (3).
5. Remove the tensioner mounting bolt (1).
6. Remove the tensioner from the vehicle.

INSTALLATION

2.0L DIESEL

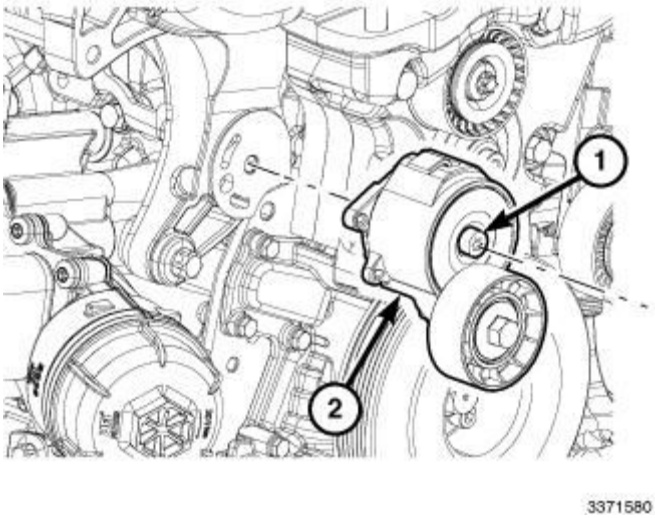

Fig. 44: Tensioner Mounting Bolt
Courtesy of CHRYSLER GROUP, LLC

1. Install the belt tensioner (2). Tighten bolt (1) to 50 N.m (37 ft. lbs.).
2. Install the accessory drive belt. Refer to **BELT, SERPENTINE, INSTALLATION**.

2.4L

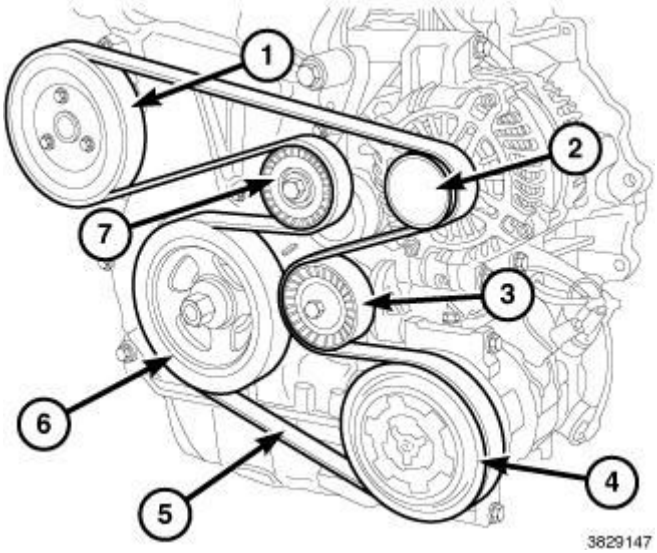

Fig. 45: Accessory Drive Belt Routing
Courtesy of CHRYSLER GROUP, LLC

CAUTION: Do not let the tensioner arm snap back to the freearm position, severe damage may occur to the tensioner.

1. Position the tensioner into place through the wheel well opening.

2. Loosely install the lower bolt.
3. Lower the vehicle.
4. Install the upper bolt. Tighten the upper and lower bolts to 28 N.m (21 ft. lbs)
5. Install the accessory drive belt. Refer to **BELT, SERPENTINE, INSTALLATION**.
6. Install the inner wheel splash shield.
7. Install the right front wheel.
8. Connect the negative battery.
9. Install the engine cover.

3.2L

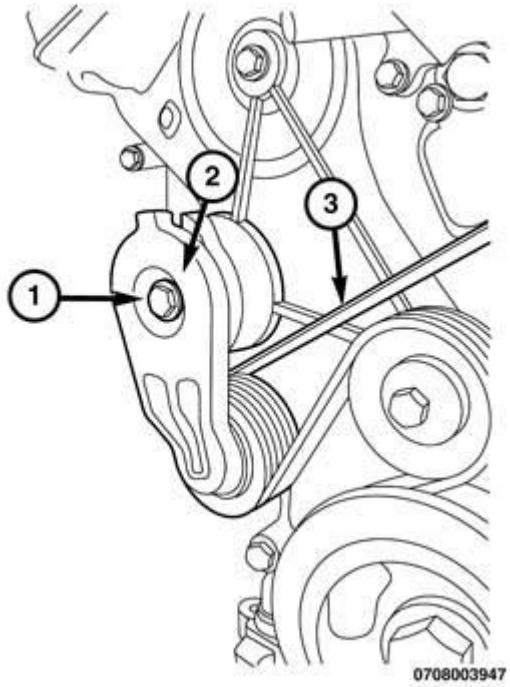

Fig. 46: Installing Accessory Drive Belt Tensioner
Courtesy of CHRYSLER GROUP, LLC

1. Position the tensioner (2) into position.
2. Align the belt tensioner tabs to the holes on the accessory bracket.
3. Install the mounting bolt (1). Tighten bolt (1) to 50 N.m (37 ft. lbs.).
4. Rotate the tensioner pulley bolt (2) counterclockwise and install the accessory drive belt (3).

PULLEY, IDLER

REMOVAL

2.0L DIESEL

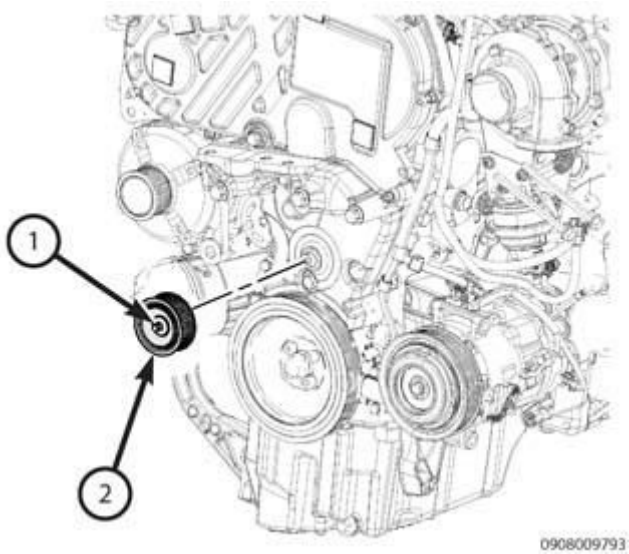

Fig. 47: Idler Pulley - 2.0L Diesel
Courtesy of CHRYSLER GROUP, LLC

1. Disconnect the negative battery cable.
2. Remove the accessory drive belt. Refer to **BELT, SERPENTINE, REMOVAL**.
3. From under the vehicle, remove bolt (1) and the idler pulley (2).

2.4L

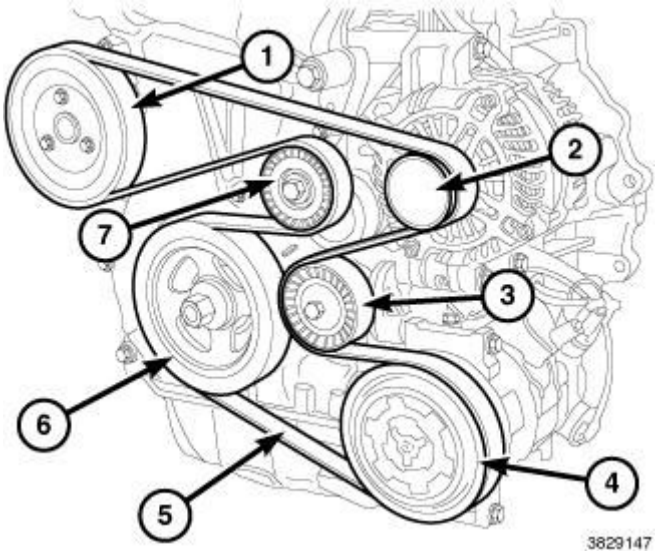

Fig. 48: Accessory Drive Belt Routing
Courtesy of CHRYSLER GROUP, LLC

1. Remove the serpentine belt (5).
2. Remove the idler pulley (3) center bolt.
3. Remove the idler pulley.

3.2L

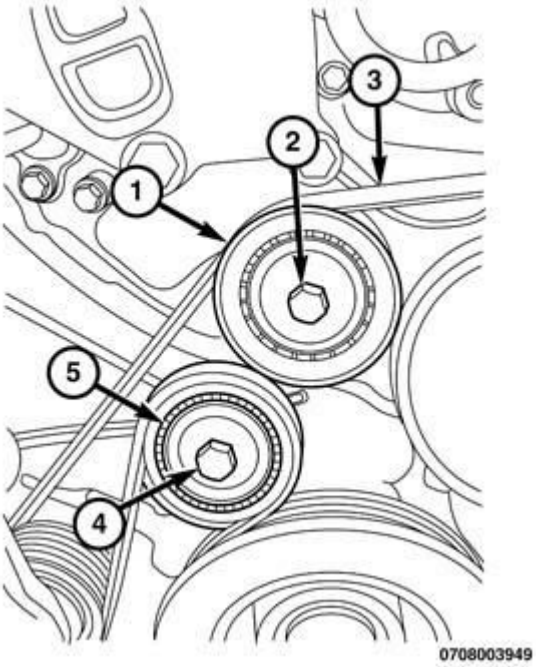

Fig. 49: Installing Accessory Idler Pulley
Courtesy of CHRYSLER GROUP, LLC

1. Remove the accessory drive belt (5). Refer to **BELT, SERPENTINE, REMOVAL**.
2. If Required, remove the upper idler pulley (1) center bolt (2).
3. If Required, remove the lower idler pulley (5) center bolt (4).
4. Remove the pulley from the cover.

INSTALLATION

2.0L DIESEL

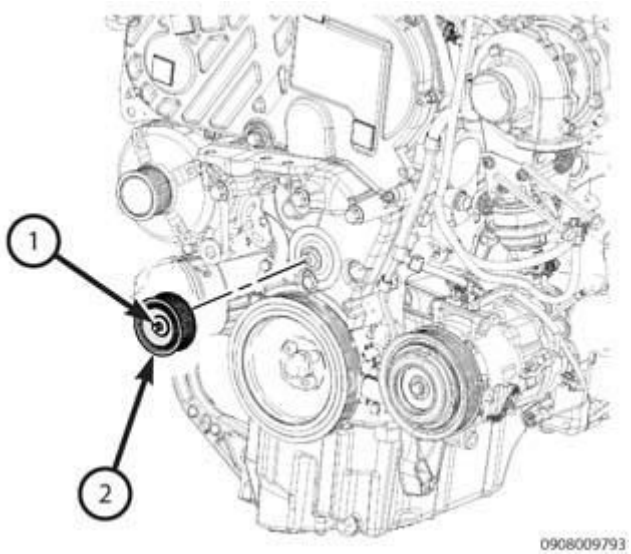

Fig. 50: Idler Pulley - 2.0L Diesel
Courtesy of CHRYSLER GROUP, LLC

1. Install the idler pulley (2) from under the vehicle. Tighten bolt (1) to 28 N.m (21 ft. lbs.).
2. Install the accessory drive belt. Refer to **BELT, SERPENTINE, REMOVAL**.
3. Connect the negative battery cable.

2.4L

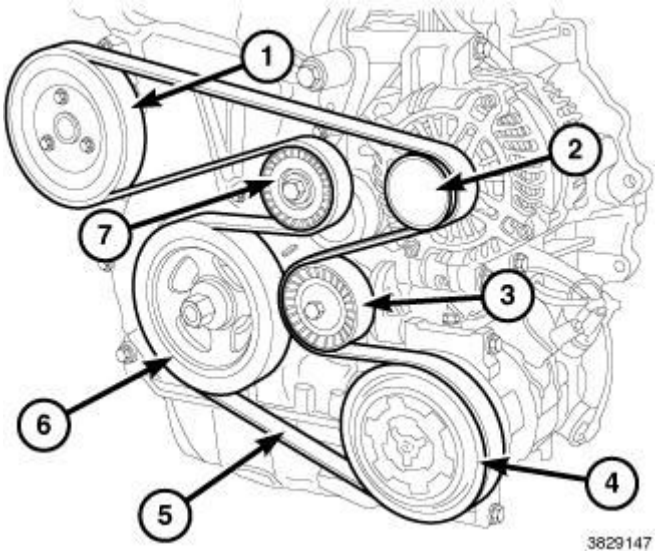

Fig. 51: Accessory Drive Belt Routing
Courtesy of CHRYSLER GROUP, LLC

1. Position the idler pulley (3) into position.
2. Install the center bolt. Tighten the bolt to 28 N.m (21 ft. lbs).
3. Install the accessory drive belt (5). Refer to **BELT, SERPENTINE, INSTALLATION**.

3.2L

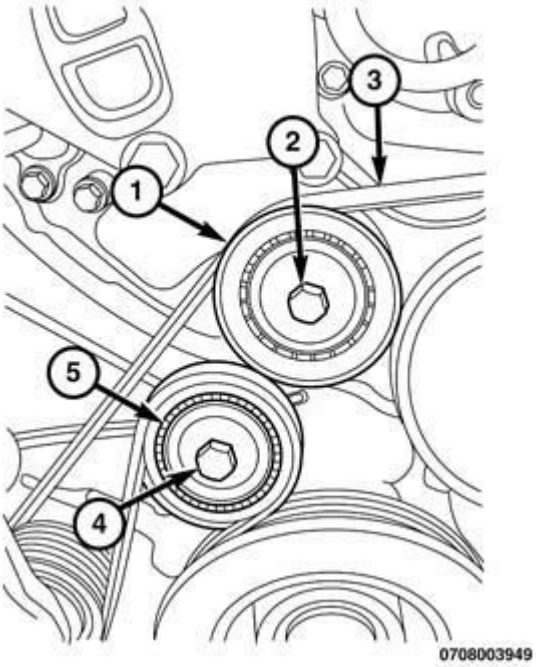

Fig. 52: Installing Accessory Idler Pulley
Courtesy of CHRYSLER GROUP, LLC

1. If removed, position the lower idler pulley (5) into position.
2. If removed, position the upper idler pulley (2) into position.
3. Install the center bolt. Tighten the bolt to 27 N.m (20 ft. lbs.).
4. Install the accessory drive belt (3). Refer to **BELT, SERPENTINE, INSTALLATION**.

ENGINE

BOTTLE, PRESSURIZED COOLANT

REMOVAL

DIESEL

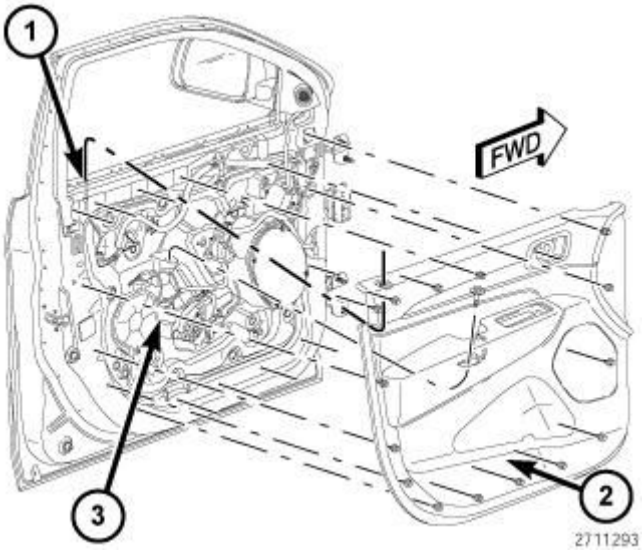

Fig. 53: Coolant Bottle & Hose
Courtesy of CHRYSLER GROUP, LLC

WARNING: Do not remove cylinder block drain plugs, pressure caps, or loosen radiator draincock with system hot and under pressure. Serious burns from coolant can occur.

1. Disconnect the negative battery cable.
2. Drain the coolant level below the pressurized coolant bottle. Refer to **STANDARD PROCEDURE**.
3. Remove the coolant hose (2) from top of coolant bottle (1).

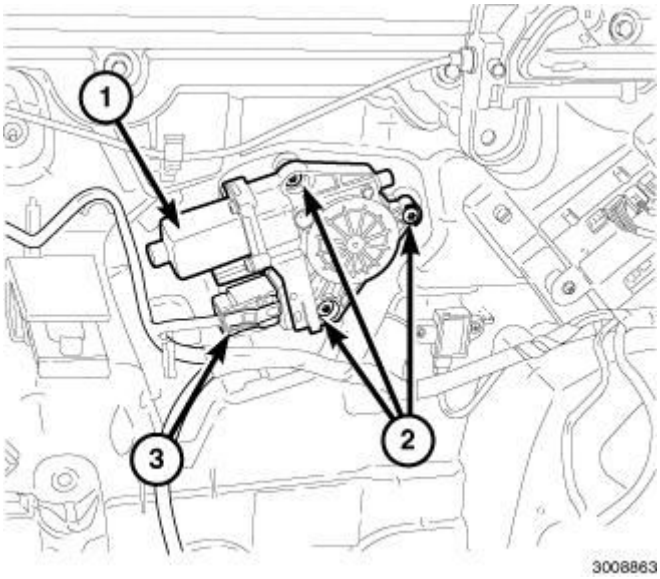

Fig. 54: Coolant Bottle & Fasteners
Courtesy of CHRYSLER GROUP, LLC

4. Remove the bolt and nut (1) securing the coolant bottle (2).

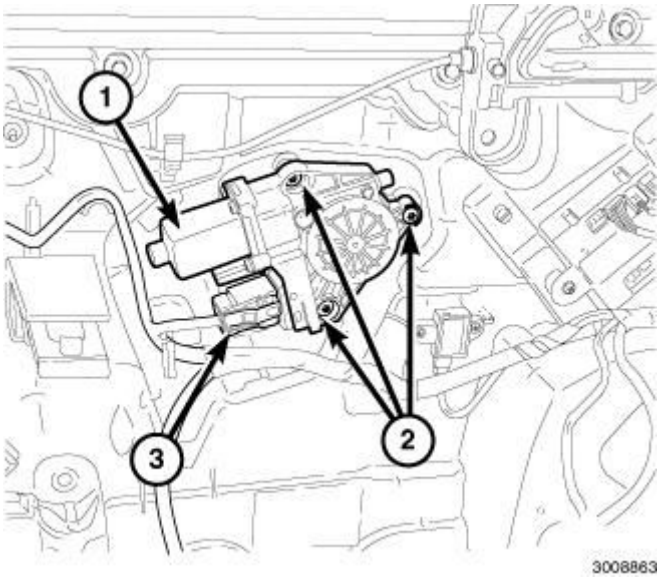

Fig. 55: Coolant Bottle & Lower Hose
Courtesy of CHRYSLER GROUP, LLC

5. Remove lower coolant hose (1) and the pressurized coolant bottle (2) from vehicle.

GAS

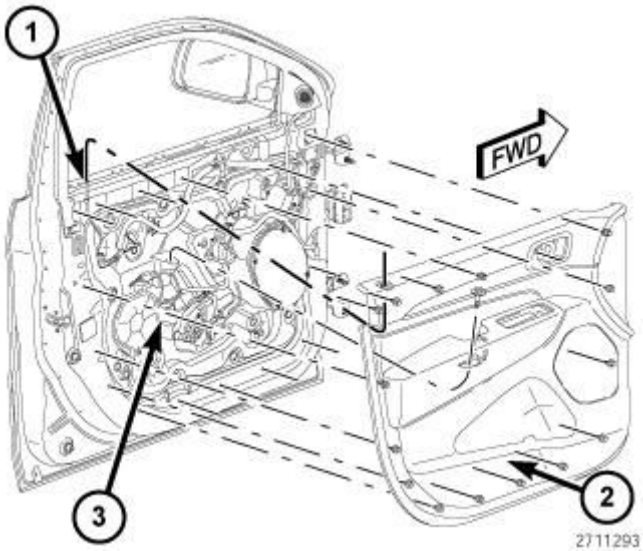

Fig. 56: Coolant Bottle & Components
Courtesy of CHRYSLER GROUP, LLC

WARNING: Do not remove cylinder block drain plugs, pressure caps, or loosen radiator draincock with system hot and under pressure. Serious burns from coolant can occur.

1. Disconnect the negative battery cable.
2. Drain the coolant level below the coolant recovery bottle. Refer to **STANDARD PROCEDURE**.
3. Remove the air cleaner body. Refer to **BODY, AIR CLEANER, REMOVAL** for 2.4L or **BODY, AIR CLEANER, REMOVAL** for 3.2L.
4. Remove the return hose (2).
5. Remove the bolt (4).
6. Remove the body harness retainer (5) from the stud bolt.
7. Remove the stud bolt.
8. Remove the lower heater supply hose.
9. Remove the coolant recovery bottle from the strut tower.

INSTALLATION

DIESEL

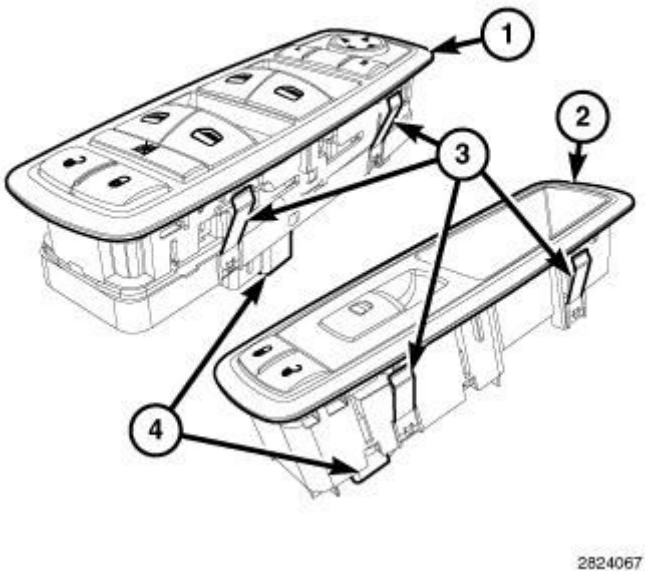

Fig. 57: Coolant Bottle & Lower Hose
Courtesy of CHRYSLER GROUP, LLC

1. Install the lower coolant hose (1) to pressurized coolant bottle (2).

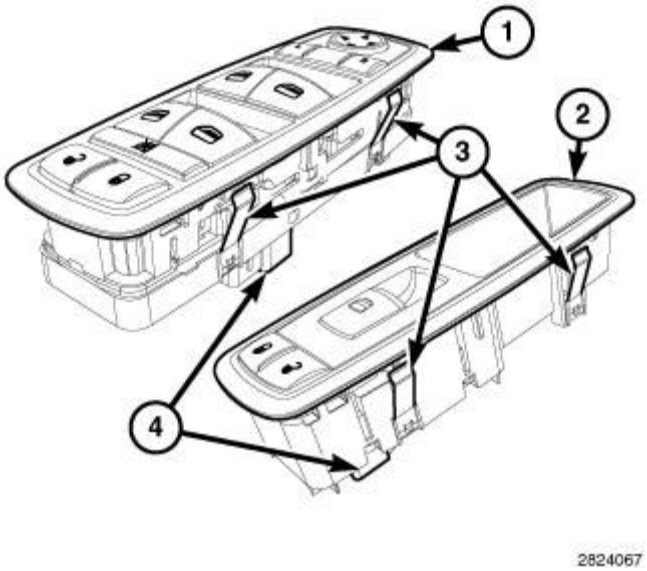

Fig. 58: Coolant Bottle & Fasteners
Courtesy of CHRYSLER GROUP, LLC

2. Install the pressurized coolant bottle (2).
   - Tighten bolt (1) to 8 N.m (70 in. lbs.).
   - Tighten nut to 8 N.m (70 in. lbs.).

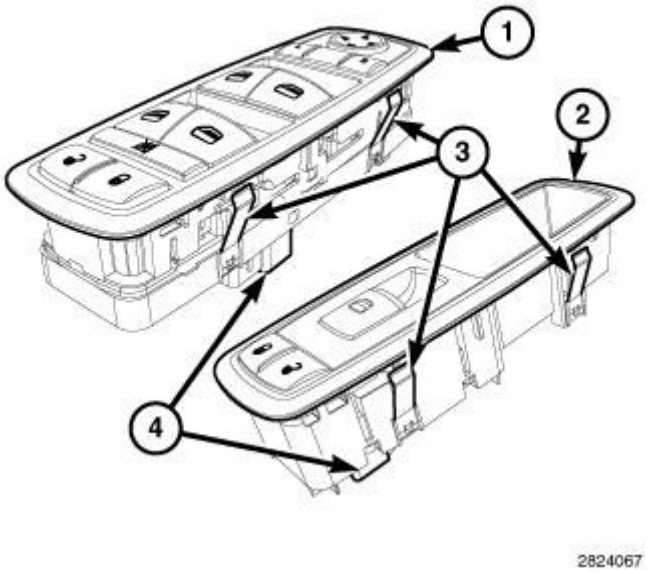

Fig. 59: Coolant Bottle & Hose
Courtesy of CHRYSLER GROUP, LLC

3. Install the coolant return hose (2) to top of pressurized coolant bottle (1).
4. Fill the cooling system. Refer to **STANDARD PROCEDURE**.
5. Connect the negative battery cable.

GAS

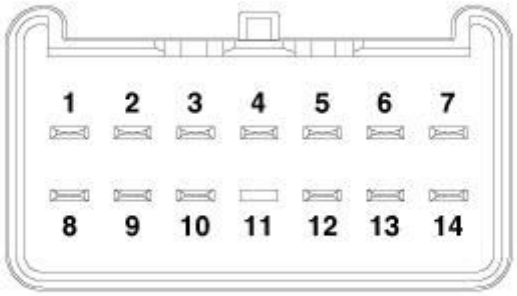

3834819

Fig. 60: Coolant Bottle & Components
Courtesy of CHRYSLER GROUP, LLC

1. Install the lower heater supply hose. Tighten the clamp.
2. Position the coolant bottle onto the rubber mount located on the right upper engine mount.
3. Install the bolt (4) and stud bolt. Tighten to the proper specification. Refer to **TORQUE SPECIFICATIONS - GAS** .
4. Install the body harness retainer (5) onto the stud bolt.
5. Install the return hose (2). Tighten the clamp.
6. Fill the cooling system. Refer to **STANDARD PROCEDURE**.

CAP, RADIATOR

DESCRIPTION

DESCRIPTION

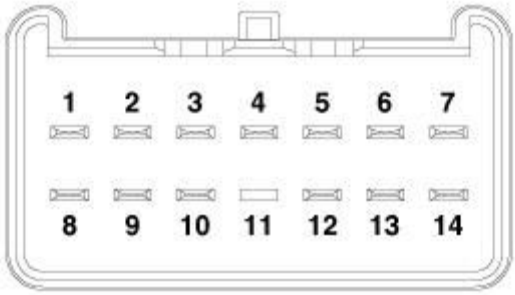

3834819

Fig. 61: Radiator Cap
Courtesy of CHRYSLER GROUP, LLC

All cooling systems are equipped with a pressure cap. For 2013 diesel engines, the pressure cap is located on top of the pressurized coolant bottle. The cap releases pressure at some point within a range of 145 kPa (21 psi). The pressure relief point (in pounds) is engraved on top of the cap.

The cooling system will operate at pressures slightly above atmospheric pressure. This results in a higher coolant boiling point allowing increased radiator cooling capacity. The cap contains a spring-loaded pressure relief valve. This valve opens when system pressure reaches the release range of 145 kPa (21 psi).

Two O-ring gasket seals the pressurized coolant bottle. This is done to maintain vacuum during coolant cool-down and to prevent leakage when system is under pressure.

DIAGNOSIS AND TESTING

RADIATOR CAP

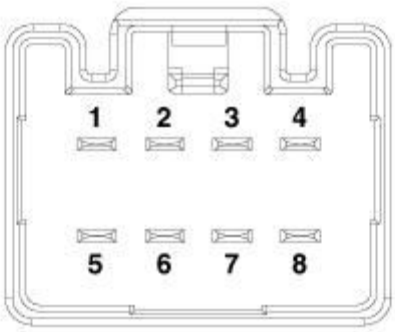

3835020

Fig. 62: Pressure Testing Radiator Pressure Cap-Typical
Courtesy of CHRYSLER GROUP, LLC

1 - PRESSURE CAP
2 - TYPICAL COOLING SYSTEM PRESSURE TESTER

Remove the cap from the radiator. Be sure that the sealing surfaces are clean. Moisten the rubber gasket with water and install the cap on the pressure tester (special tool #7700, Tester, Cooling System) or an equivalent.

Using the cooling system tester, bring the pressure up to the pressure prescribed on cap. If the pressure cap fails to hold pressure, replace the cap. Refer to the following **CAUTION** .

The pressure cap may test properly while positioned on tool (special tool #7700, Tester, Cooling System) (or equivalent). It may not hold pressure or vacuum when installed on the radiator. If so, inspect the radiator filler neck and radiator cap's top gasket for damage. Also inspect for dirt or distortion that may prevent the cap from sealing properly.

CAUTION: Radiator pressure testing tools are very sensitive to small air leaks which will not cause cooling system problems. A pressure cap that does not have a history of coolant loss should not be replaced just because it leaks slowly when tested with this tool. Add water to tool. Turn tool upside down and recheck pressure cap to confirm that cap needs replacement.

INSPECTION

INSPECTION

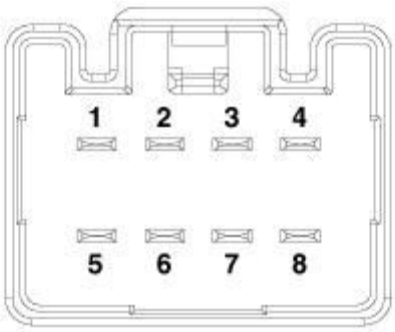

3835020

Fig. 63: Radiator Cap Components
Courtesy of CHRYSLER GROUP, LLC

1 - VENT VALVE
2 - LOWER O-RING SEAL
3 - MAIN SPRING
4 - UPPER O-RING SEAL

The vent valve at bottom of cap should closed. A slight downward pull on the vent valve should open it. If the rubber gasket has swollen and prevents vent valve from opening, replace cap.

Hold cap at eye level, upside down. If any light can be seen between vent valve and rubber gasket, replace cap. A replacement cap must be the type designed for a coolant reserve/overflow system with a completely sealed diaphragm spring and a rubber gasket. This gasket is used to seal to radiator filler neck top surface.

COOLANT

DESCRIPTION

DESCRIPTION

CAUTION: Mopar® Antifreeze/Coolant, is a Lifetime of Engine Formula. IT MAY NOT BE MIXED WITH ANY OTHER TYPES OF ANTIFREEZE. Mixing of coolants other than specified (non-OAT or other OAT), may result in engine damage that may not be covered under the new vehicle warranty, and decreased corrosion protection.

To find the coolant needed. Refer to **CAPACITIES AND RECOMMENDED FLUIDS, SPECIFICATIONS** .

WARNING: ANTIFREEZE IS AN ETHYLENE-GLYCOL BASE COOLANT AND IS HARMFUL IF SWALLOWED OR INHALED. IF SWALLOWED, DRINK TWO GLASSES OF WATER AND INDUCE VOMITING. IF INHALED, MOVE TO FRESH AIR AREA. SEEK MEDICAL ATTENTION IMMEDIATELY. DO NOT STORE IN OPEN OR UNMARKED CONTAINERS. WASH SKIN AND CLOTHING THOROUGHLY AFTER COMING IN CONTACT WITH ETHYLENE-GLYCOL. KEEP OUT OF REACH OF CHILDREN. DISPOSE OF GLYCOL BASE COOLANT PROPERLY, CONTACT YOUR DEALER OR GOVERNMENT AGENCY FOR LOCATION OF COLLECTION CENTER IN YOUR AREA. DO NOT OPEN A COOLING SYSTEM WHEN THE ENGINE IS AT OPERATING TEMPERATURE OR HOT UNDER PRESSURE, PERSONAL INJURY CAN RESULT. AVOID RADIATOR COOLING FAN WHEN ENGINE COMPARTMENT RELATED SERVICE IS PERFORMED, PERSONAL INJURY CAN RESULT.

CAUTION: Mixing of engine coolant (antifreeze) other than specified Organic Additive Technology (OAT) engine coolant (antifreeze), may result in engine damage and may decrease corrosion protection. Organic Additive Technology (OAT) engine coolant is different and should not be mixed with Hybrid Organic Additive Technology (HOAT) engine coolant (antifreeze). If a non-OAT engine coolant (antifreeze) is introduced into the cooling system in an emergency, it should be replaced with the specified engine coolant (antifreeze) as soon as possible.

The cooling system is designed around the coolant. The coolant must accept heat from engine metal, in the cylinder head area near the exhaust valves and engine block. Then coolant carries the heat to the radiator where the tube/fin radiator can transfer the heat to the air.

The use of aluminum cylinder blocks, cylinder heads, and water pumps requires special corrosion protection. Mopar® Antifreeze/Coolant, or the equivalent ethylene-glycol base coolant with organic corrosion inhibitors (called OAT, for Organic Additive Technology) is recommended. This coolant offers the best engine cooling without corrosion when mixed with 50% ethylene-glycol and 50% distilled water to obtain a freeze point of -37°C (-35°F). If it loses color or becomes contaminated, drain, flush, and replace with fresh properly mixed coolant solution.

COOLANT PERFORMANCE

CAUTION: Mixing of engine coolant (antifreeze) other than specified Organic Additive Technology (OAT) engine coolant (antifreeze), may result in engine damage and may decrease corrosion protection. Organic Additive Technology (OAT) engine coolant is different and should not be mixed with Hybrid Organic Additive Technology (HOAT) engine coolant (antifreeze). If a non-OAT engine coolant (antifreeze) is introduced into the cooling system in an emergency, it should be replaced with the specified engine coolant (antifreeze) as soon as possible.

CAUTION: Richer antifreeze mixtures cannot be measured with normal field equipment and can cause problems associated with 100 percent ethylene-glycol.

The required ethylene-glycol (antifreeze) and water mixture depends upon climate and vehicle operating conditions. The coolant performance of various mixtures follows:

Pure Water- Water can absorb more heat than a mixture of water and ethylene-glycol, but this is not suitable for use in a cooling system. Water also freezes at a higher temperature, boils at a lower temperature and allows corrosion.

100 percent Ethylene-Glycol - The corrosion inhibiting additives in ethylene-glycol need the presence of water to dissolve. Without water, additives form deposits in system. These act as insulation causing temperature to rise to as high as 149°C (300°F). This temperature is hot enough to melt plastic and soften solder. The increased temperature can result in engine detonation. In addition, 100 percent ethylene-glycol freezes at -22°C (-8°F).

50/50 Ethylene-Glycol and Water - Is the recommended mixture, it provides protection against freezing to -37°C (-34°F). The antifreeze concentration **must always** be a minimum of 44 percent, year-round in all climates. If percentage is lower, engine parts may be eroded by cavitation. Maximum protection against freezing is provided with a 68 percent antifreeze concentration, which prevents freezing down to -67.7°C (-90° F). A higher percentage will freeze at a warmer temperature. Also, a higher percentage of antifreeze can cause the engine to overheat because specific heat of antifreeze is lower than that of water.

OAT coolant is a **Life of the Engine** coolant. Maintenance of the cooling system is not required unless a repair has been made with loss of coolant or the coolant has been contaminated.

COOLANT SELECTION AND ADDITIVES

The use of aluminum cylinder blocks, cylinder heads and water pumps requires special corrosion protection. Only Mopar® Antifreeze/Coolant (glycol base coolant with corrosion inhibitors called OAT, for Organic Additive Technology) is recommended. This coolant offers the best engine cooling without corrosion when mixed with 50% distilled water to obtain to obtain a freeze point of -37°C (-35°F). If it loses color or becomes contaminated, drain, flush, and replace with fresh properly mixed coolant solution.

CAUTION: Do not use coolant additives that are claimed to improve engine cooling.

DIAGNOSIS AND TESTING

DIAGNOSIS AND TESTING - COOLANT CONCENTRATION TESTING

Check coolant concentration when any additional coolant is added to the system, or after a coolant drain, flush and refill. Use of a hydrometer or Refractometer Tool (special tool #8286, Refractometer), refractometer can be used to test coolant concentration.

A hydrometer tests the amount of glycol in a mixture by measuring the specific gravity of the mixture. The

higher the concentration of ethylene glycol, the larger the number of balls that will float, and the higher the freeze protection (up to a maximum of 60% by volume glycol).

A Refractometer Tool (special tool #8286, Refractometer) tests the amount of glycol in a coolant mixture by measuring the amount a beam of light bends as it passes through the fluid.

Some coolant manufacturers use other types of glycols into their coolant formulations. Propylene glycol is the most common new coolant. However, propylene glycol based coolants do not provide the same freezing protection and corrosion protection and are not recommended.

CAUTION: Do not mix types of coolant - corrosion protection will be severely reduced.

FAN, COOLING

REMOVAL

DIESEL

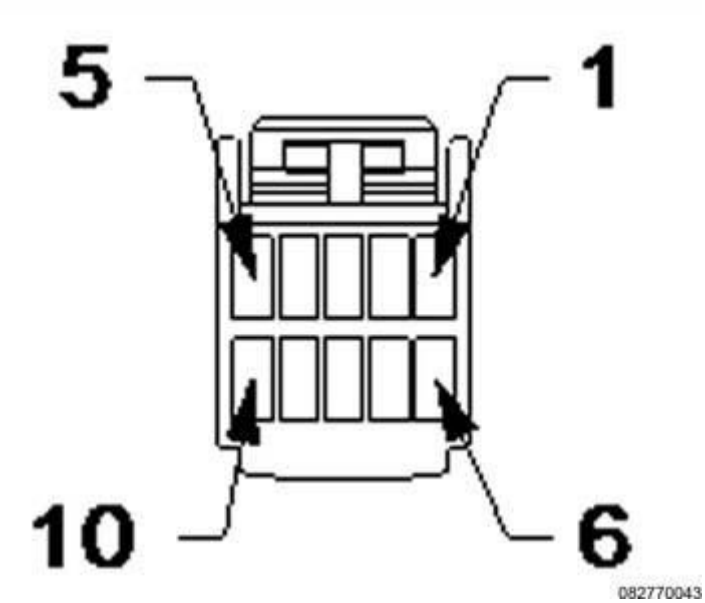

Fig. 64: Engine Cover
Courtesy of CHRYSLER GROUP, LLC

1. Disconnect the negative battery cable.
2. Remove the engine cover (1).

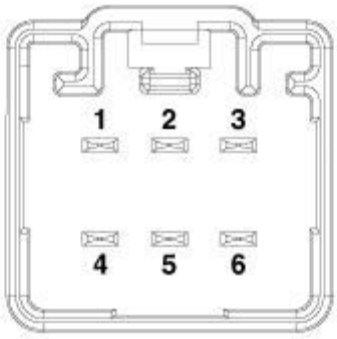

3835039

Fig. 65: Cooling Fan Module & Harness Connector
Courtesy of CHRYSLER GROUP, LLC

3. Disconnect the cooling fan module harness connector (1).

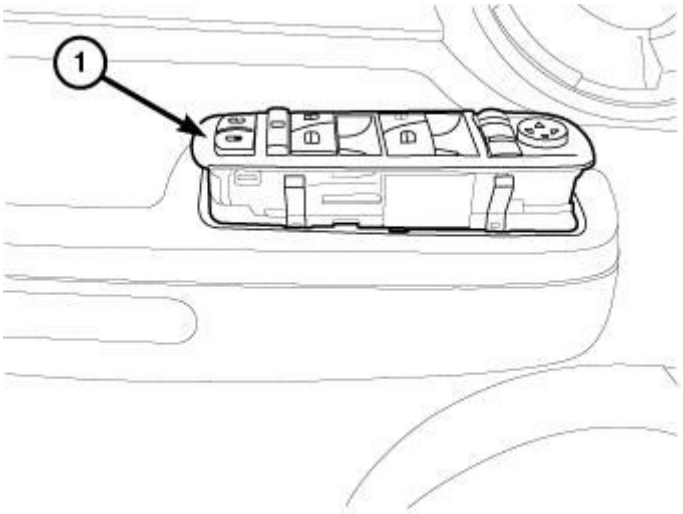

414513

Fig. 66: MAF Sensor Harness Connector
Courtesy of CHRYSLER GROUP, LLC

4. Remove the breather hose (2) from breather tube.
5. Disconnect the Closed Crankcase Ventilation (CCV) heater wire harness connector (4).

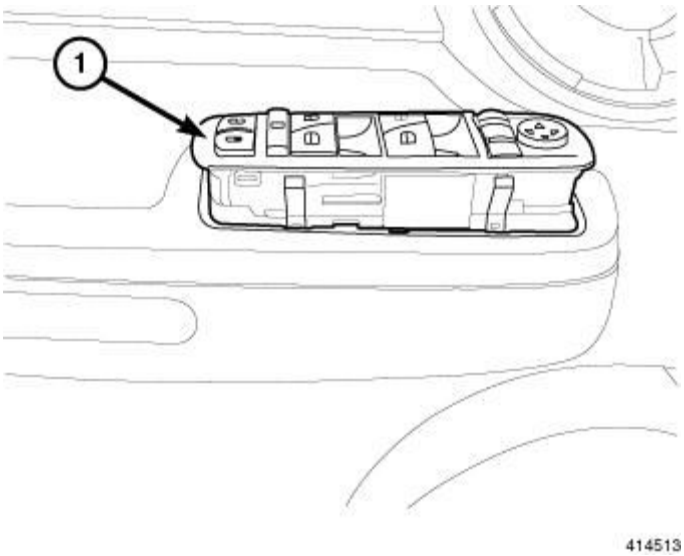

Fig. 67: Turbocharger Inlet Hose & Clamp
Courtesy of CHRYSLER GROUP, LLC

6. Loosen clamps (4, 6) and remove the turbocharger inlet tube (5).
7. Remove the bolts that secure the cooling fan assembly to the radiator.
8. Raise and support the vehicle. Refer to **HOISTING, STANDARD PROCEDURE** .

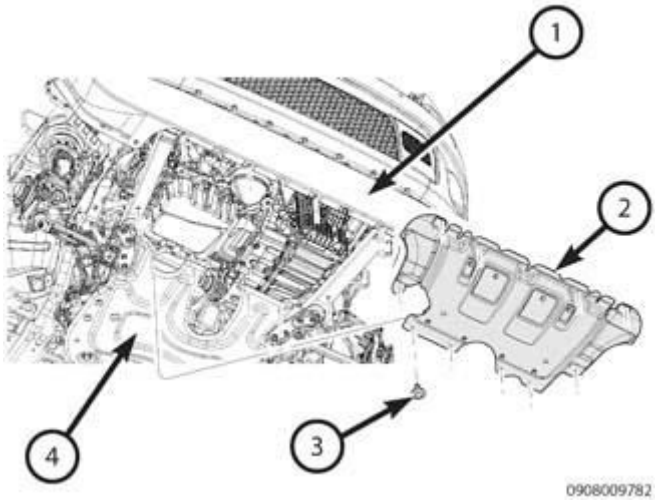

Fig. 68: Removing/Installing Starter
Courtesy of CHRYSLER GROUP, LLC

9. Remove bolts (3) and the belly pan (2).

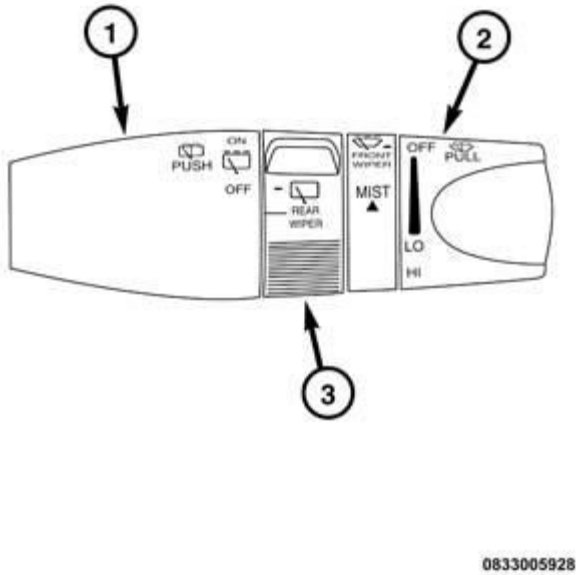

Fig. 69: Left Charge Air Cooler (CAC) & Hose
Courtesy of CHRYSLER GROUP, LLC

10. Disconnect the left Charge Air Cooler (CAC) hose (1) from cooler (2).

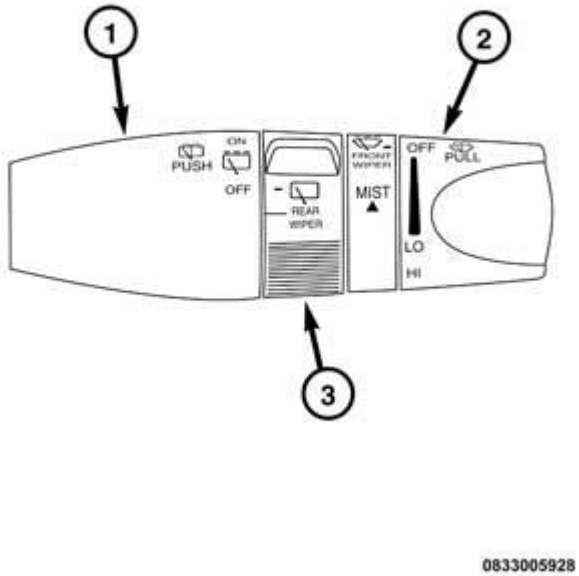

Fig. 70: CAC Tube-To-Engine Nut
Courtesy of CHRYSLER GROUP, LLC

11. Remove nut (1) securing CAC tube (2) to engine.
12. Lower the vehicle.

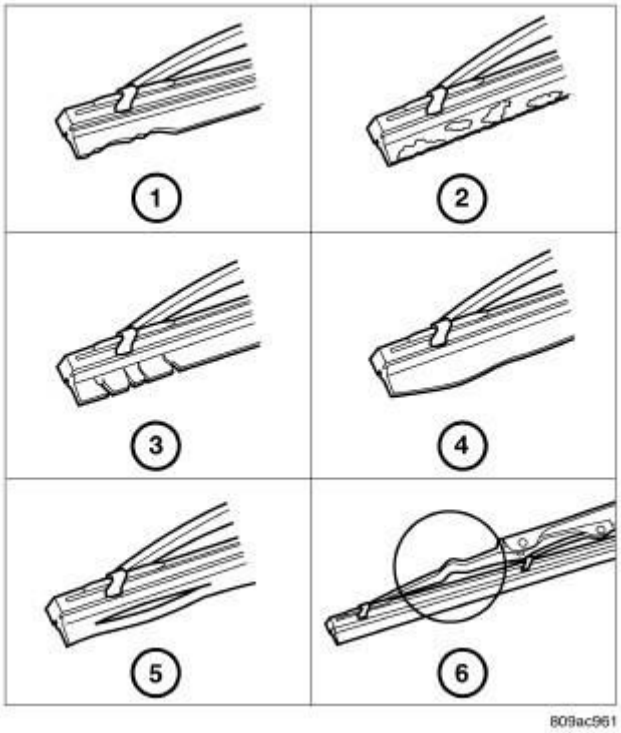

Fig. 71: EGR Air Flow Control Valve Inlet Tube, CAC Tube Wire Retainer & CAC Hose
Courtesy of CHRYSLER GROUP, LLC

13. Unlock CAC tube wire retainer (2).
14. Separate the CAC hose (3) at from EGR air flow control valve inlet tube (1).
15. Raise the vehicle.
16. Using care, lift the fan slightly upward.

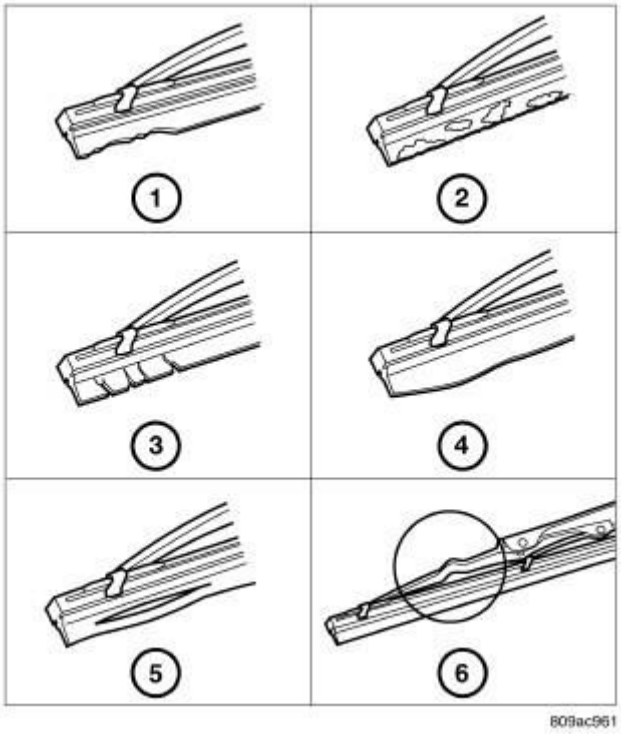

Fig. 72: Cooling Fan Assembly
Courtesy of CHRYSLER GROUP, LLC

17. Tilt the cooling fan down to allow for the upper mounting tab to clear the upper radiator hose.
18. Remove the fan assembly from the vehicle.

GAS

1. Disconnect the negative battery cable.
2. Remove the engine cover.
3. Raise the vehicle.

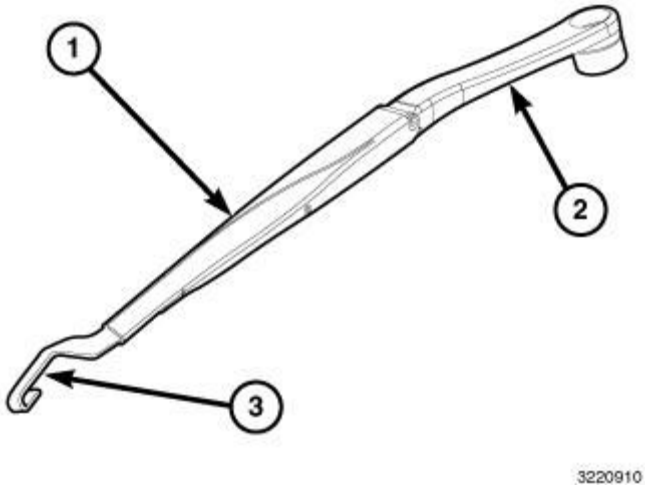

Fig. 73: Removing/Installing Belly Pans
Courtesy of CHRYSLER GROUP, LLC

4. Remove the lower belly pan (1).
5. Partially drain the cooling system.

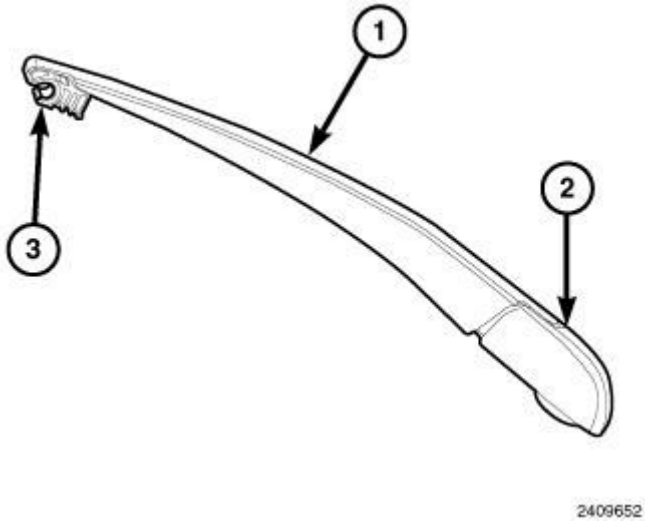

Fig. 74: Push Pins, Side Close Out Deflector & Lower Deflector
Courtesy of CHRYSLER GROUP, LLC

6. Remove the push pins (1) that secure the side close out deflector from the lower deflector (2).
7. Lower the vehicle.

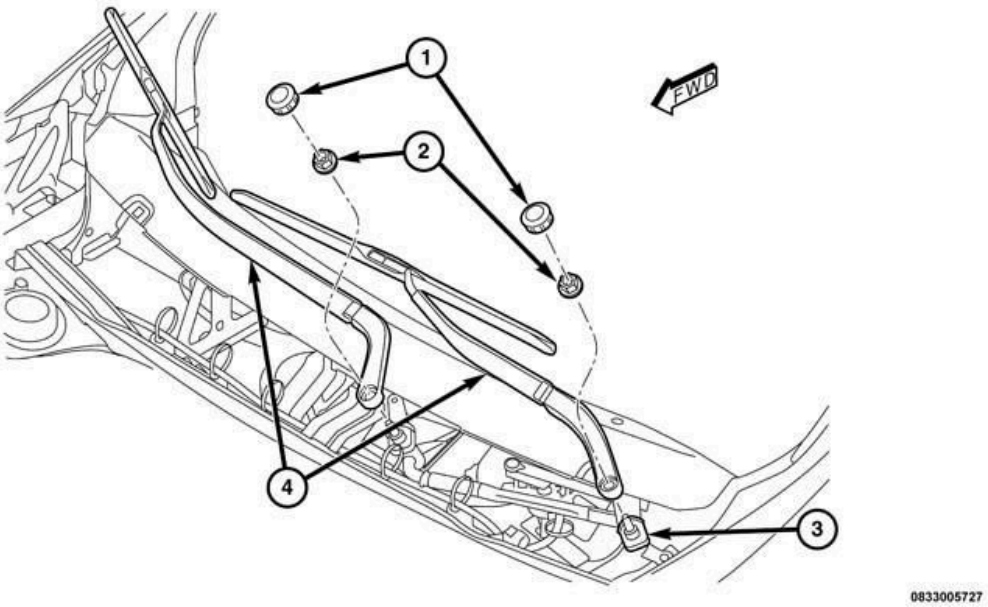

Fig. 75: Upper Close Out Panel Cover Components
Courtesy of CHRYSLER GROUP, LLC

8. Remove the upper close out panel cover (1).

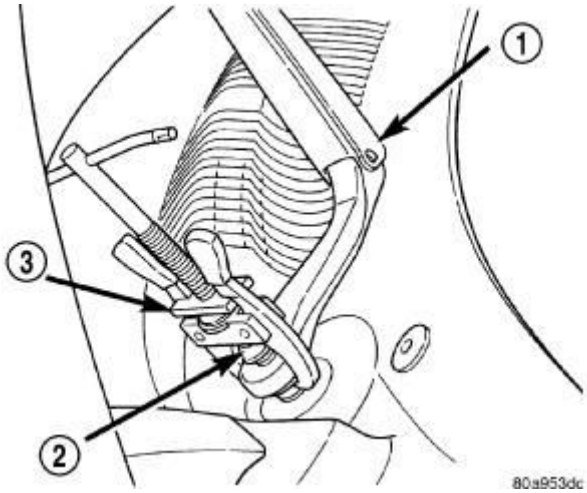

Fig. 76: Side Air Deflectors & Upper Radiator Closeout Panel
Courtesy of CHRYSLER GROUP, LLC

9. Separate the side air deflectors from the upper radiator closeout panel.

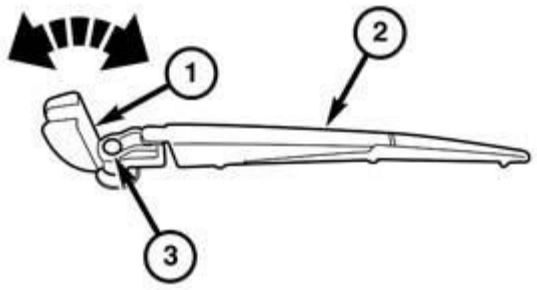

0833005793

Fig. 77: Removing/Installing Upper Air Deflector
Courtesy of CHRYSLER GROUP, LLC

10. Disconnect the cooling fan module harness connector (4).
11. Disconnect the ambient air temperature sensor (5).
12. Disconnect the horn electrical connectors (6).
13. Remove the hood release cable (3) from the air deflector.
14. Remove the wiring harness (7) from the air deflector.
15. Remove the upper air deflector (1).

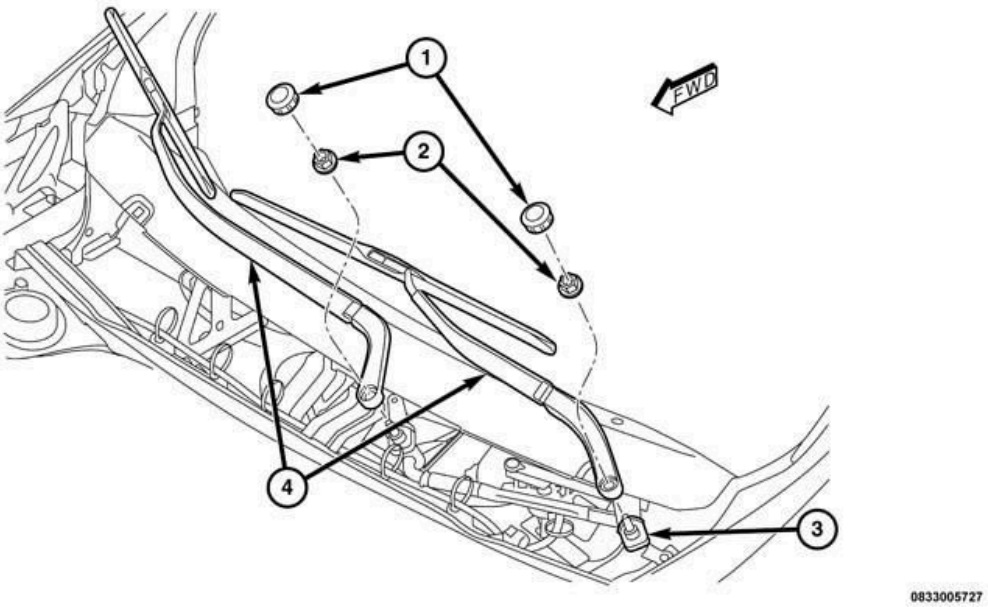

Fig. 78: Removing/Installing A/C Fill Port Support Bracket
Courtesy of CHRYSLER GROUP, LLC

16. Remove the A/C fill port support bracket (2) and position aside.

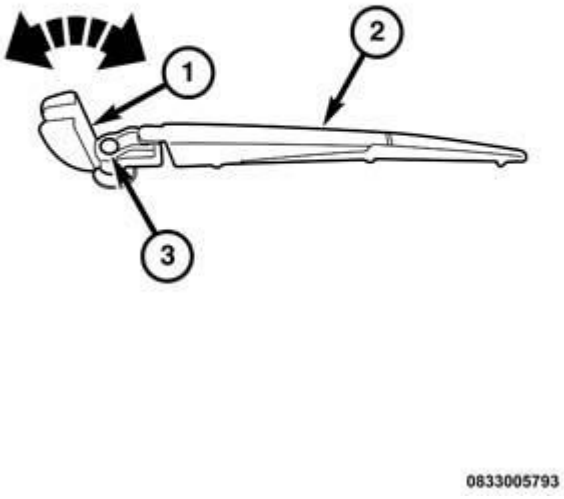

Fig. 79: Removing/Installing Transmission Cooler Line Support Bracket Bolt
Courtesy of CHRYSLER GROUP, LLC

17. Separate the transmission cooler line support brace bolt (1).

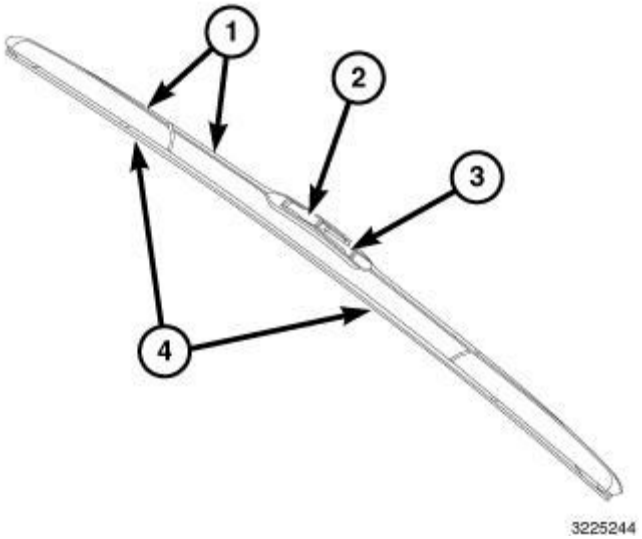

Fig. 80: Transmission Oil Cooler
Courtesy of CHRYSLER GROUP, LLC

18. Separate the transmission cooler (2) from the condenser and position aside.

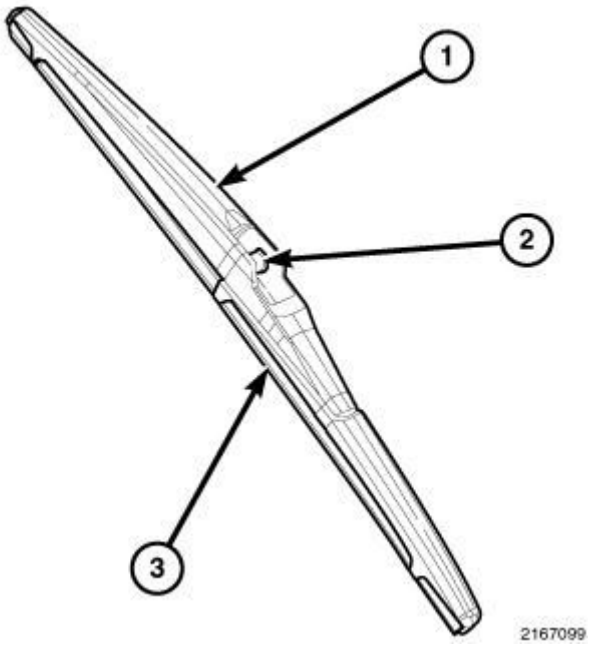

Fig. 81: Removing/Installing Upper Radiator Mounts
Courtesy of CHRYSLER GROUP, LLC

19. Separate the upper radiator hose from the radiator.
20. Remove the upper radiator mounts (1).

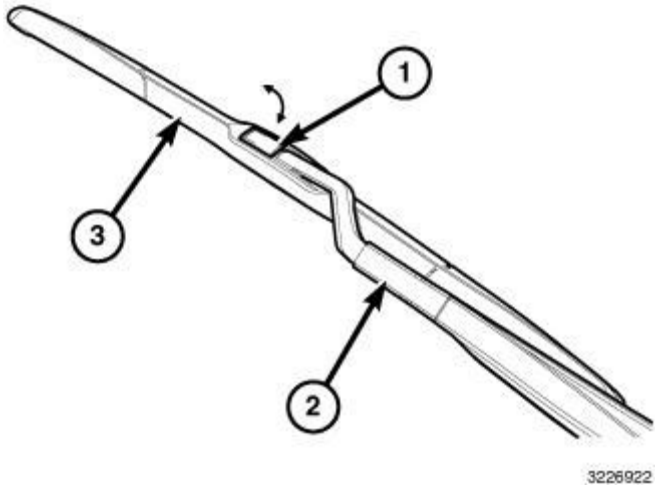

Fig. 82: Removing/Installing Fan Assembly
Courtesy of CHRYSLER GROUP, LLC

21. Remove the cooling fan module wiring harness from the module (2).
22. Remove the bolts (1) that secure the cooling fan assembly to the radiator.
23. Using care, lift the fan slightly upward.
24. Tilt the cooling fan down to allow for the upper mounting tab to clear the upper radiator hose.
25. Remove the fan assembly from the vehicle.

INSTALLATION

DIESEL

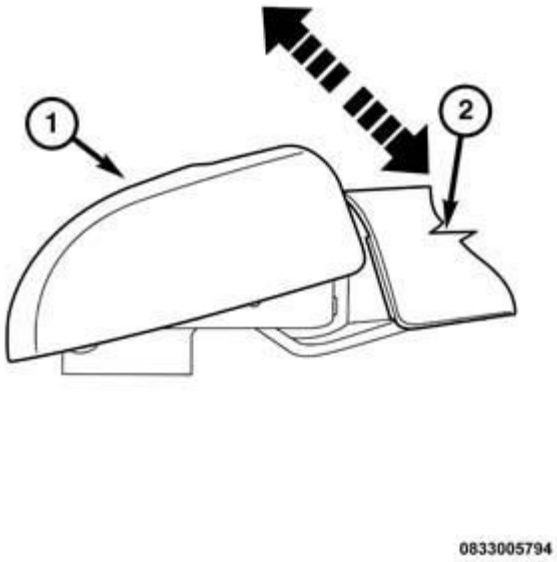

Fig. 83: Cooling Fan Assembly
Courtesy of CHRYSLER GROUP, LLC

1. Guide the cooling fan into position onto the radiator while clearing the upper radiator hose.
2. Once into position, insert the lower tabs into the retainers.
3. Install the bolts (1). Tighten to 8 N.m (71 in. lbs.).
4. Lower the vehicle.

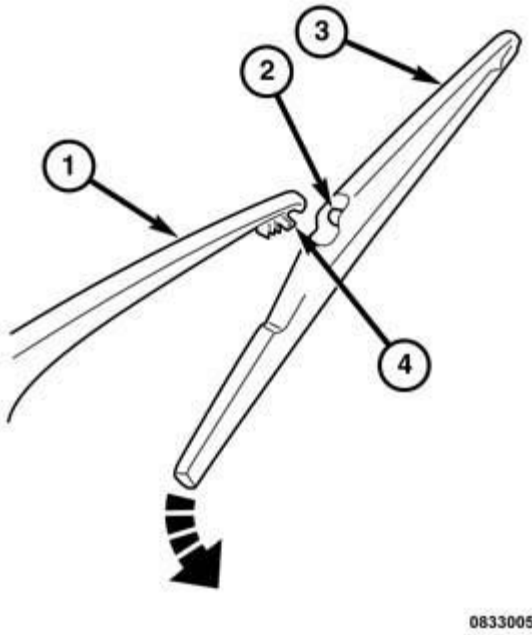

Fig. 84: O-Ring & EGR Air Flow Control Valve Inlet Tube
Courtesy of CHRYSLER GROUP, LLC

5. Install a new O-ring seal (2) onto the EGR air flow control valve inlet tube (1).

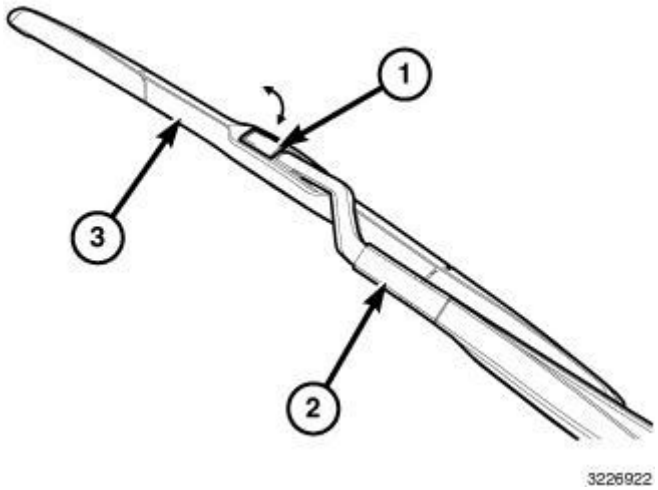

Fig. 85: EGR Air Flow Control Valve Inlet Tube, CAC Tube Wire Retainer & CAC Hose
Courtesy of CHRYSLER GROUP, LLC

6. Connect the Charge Air Cooler (CAC) hose (3) to the EGR air flow control valve inlet tube (1).
7. Lock CAC tube wire retainer (2).

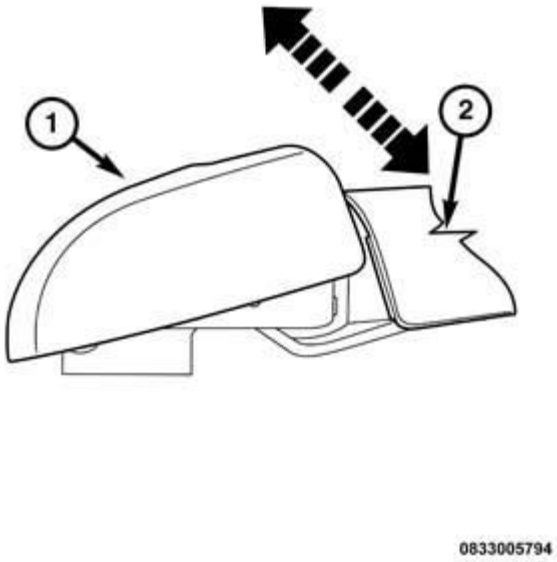

Fig. 86: CAC Tube-To-Engine Nut
Courtesy of CHRYSLER GROUP, LLC

8. Raise the vehicle.
9. Install the nut (1) securing CAC tube (2) to engine and tighten to 9 N.m (80 in. lbs.).

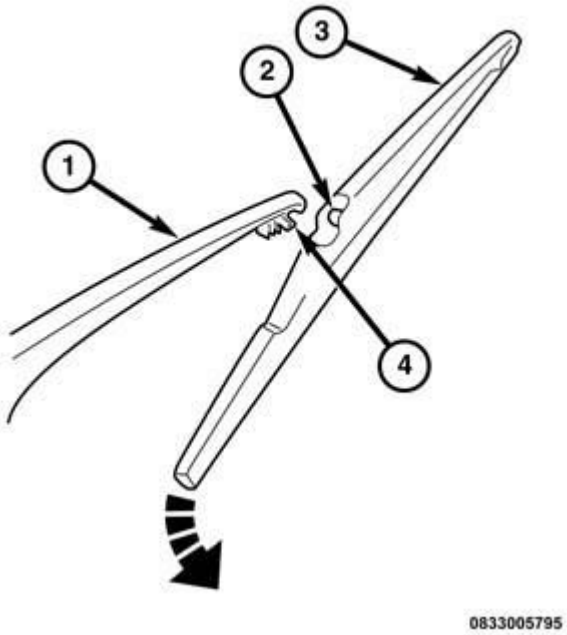

Fig. 87: Left Charge Air Cooler (CAC) & Hose

Courtesy of CHRYSLER GROUP, LLC

10. Connect the left CAC hose (1) to cooler (2).

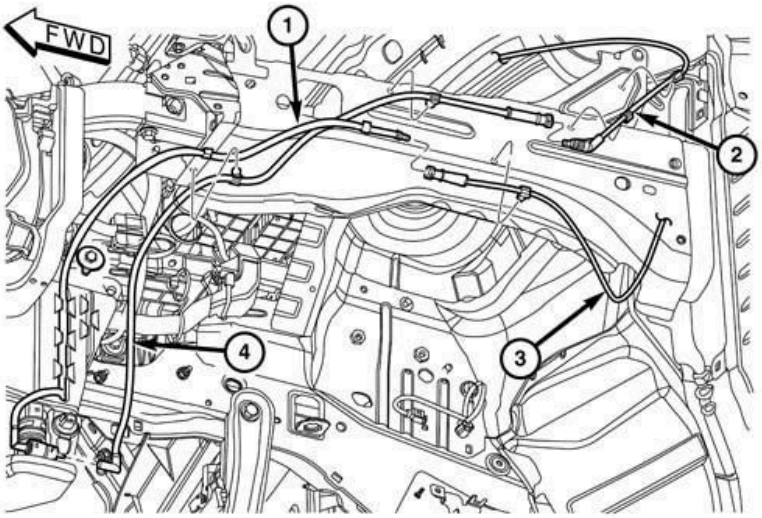

0833005485

Fig. 88: Removing/Installing Starter
Courtesy of CHRYSLER GROUP, LLC

11. Install the belly pan (2) and securely tighten bolts (2).
12. Lower the vehicle.

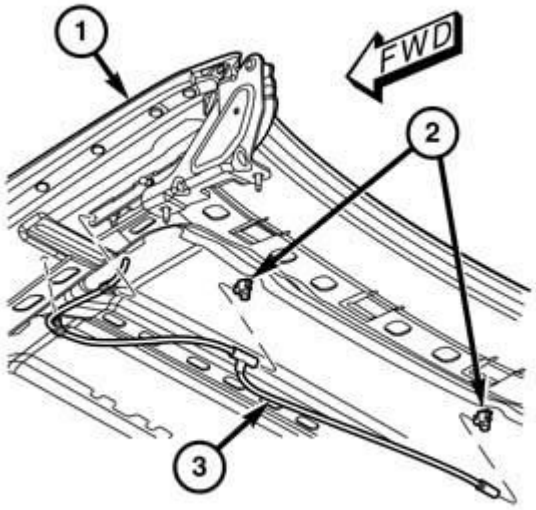

0833005488

Fig. 89: Turbocharger Inlet Hose & Clamp
Courtesy of CHRYSLER GROUP, LLC

13. Install the turbocharger inlet tube (5) and securely tighten clamps (4, 6).

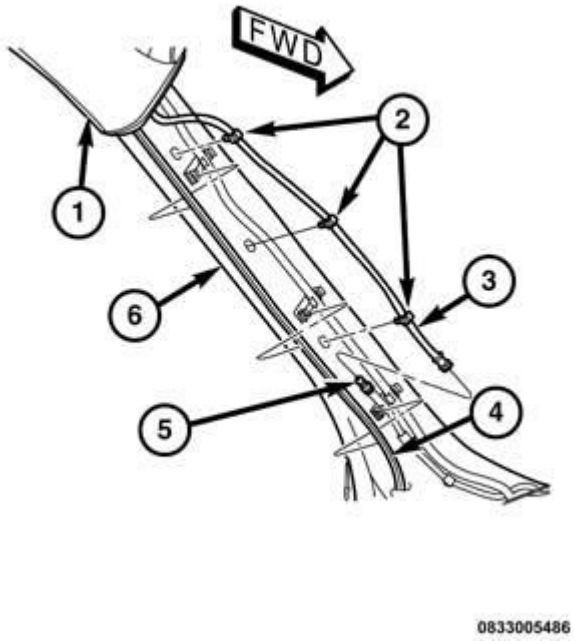

Fig. 90: MAF Sensor Harness Connector
Courtesy of CHRYSLER GROUP, LLC

14. Connect the Closed Crankcase Ventilation (CCV) heater wire harness connector (4).
15. Install the breather hose (2) onto breather tube.

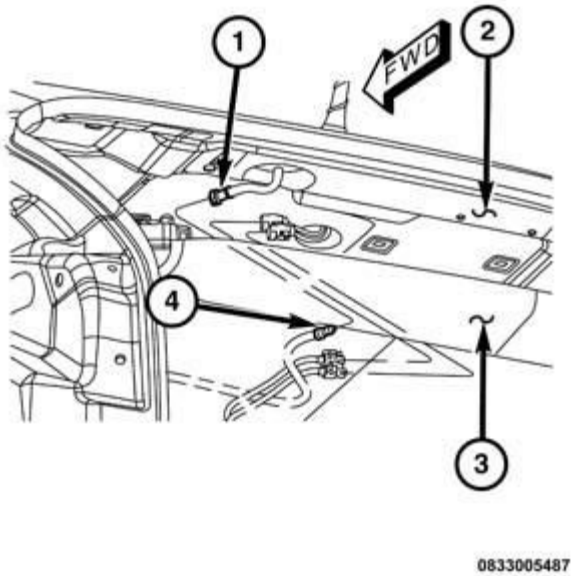

Fig. 91: Cooling Fan Module & Harness Connector
Courtesy of CHRYSLER GROUP, LLC

16. Connect the cooling fan wiring harness connector (1).

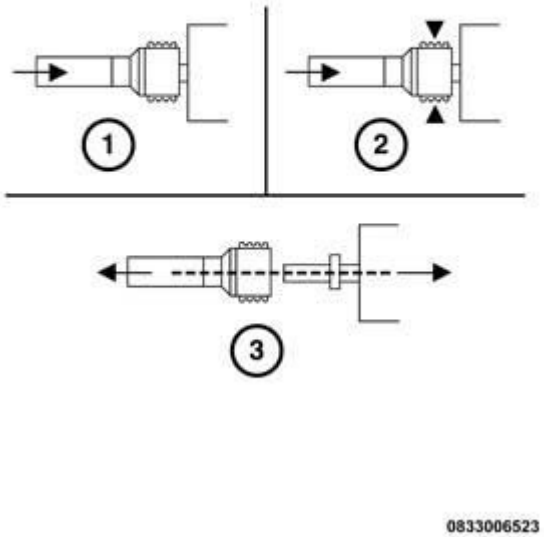

Fig. 92: Engine Cover
Courtesy of CHRYSLER GROUP, LLC

17. Install the engine cover (1).
18. Connect the negative battery cable.

GAS

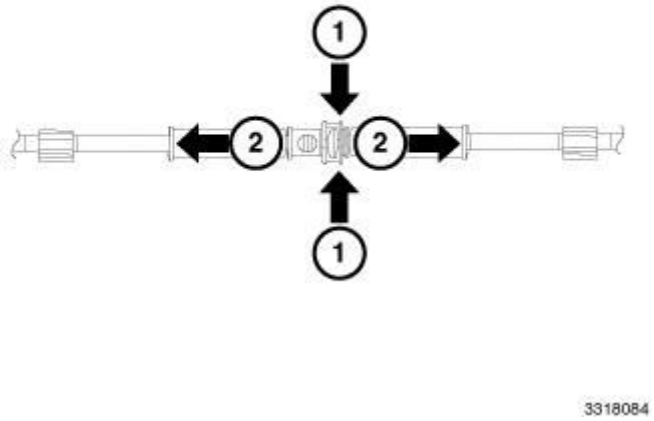

Fig. 93: Fan Assembly & Components
Courtesy of CHRYSLER GROUP, LLC

1. Guide the cooling fan into position onto the radiator while clearing the upper radiator hose.
2. Once into position, insert the lower tabs into the retainers (3, 5).
3. Install the bolts (1). Tighten to 9 N.m (80 in. lbs.).

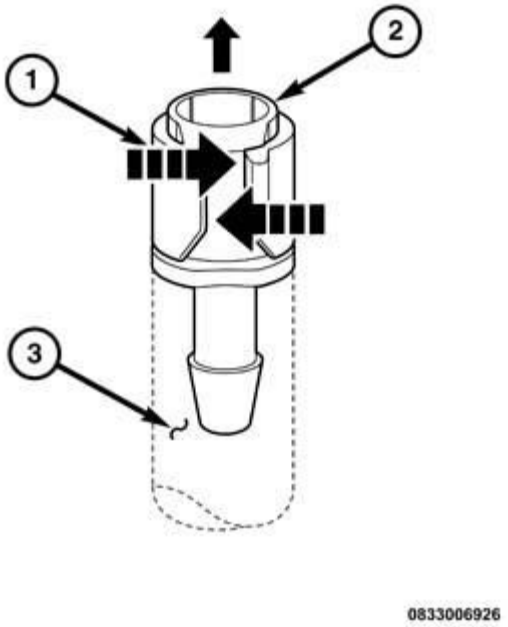

Fig. 94: Removing/Installing Upper Radiator Mounts
Courtesy of CHRYSLER GROUP, LLC

4. Install the upper radiator mounts (1). Tighten mounting bolts (2) to 9 N.m (80 in. lbs.).

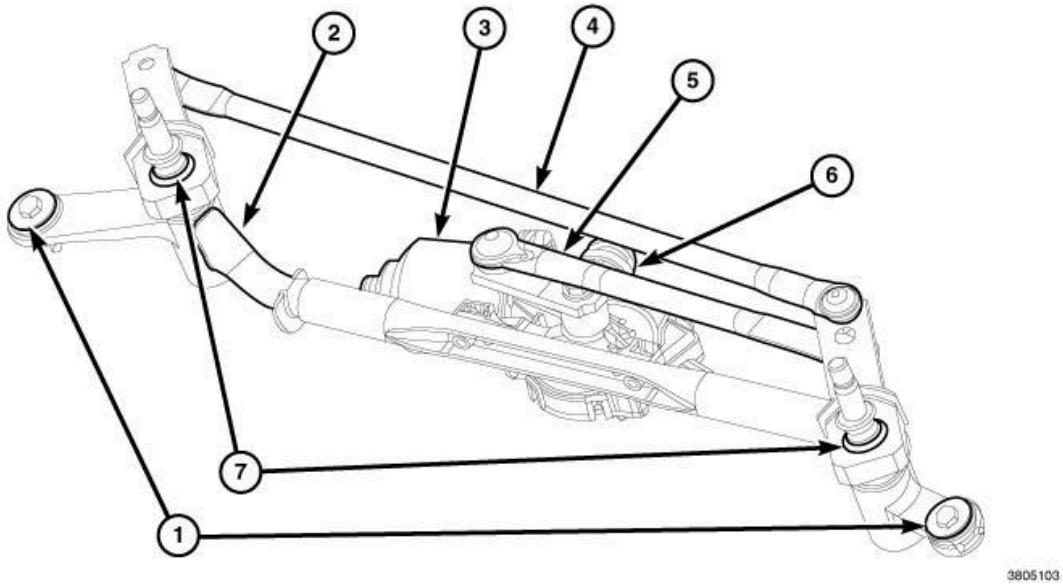

Fig. 95: Removing/Installing Fan Assembly
Courtesy of CHRYSLER GROUP, LLC

5. Install the wire harness connector to the cooling fan module (2).
6. Install the upper cooling fan module wiring harness (2).

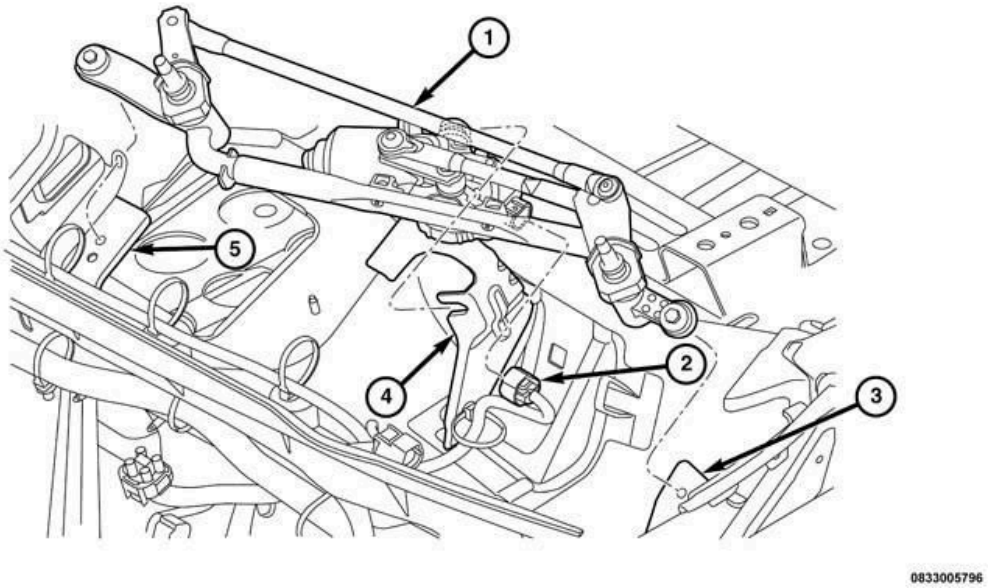

Fig. 96: Transmission Oil Cooler
Courtesy of CHRYSLER GROUP, LLC

7. Install the transmission oil cooler. Tighten mounting bolts (2) to 8 N.m (70 in. lbs.).

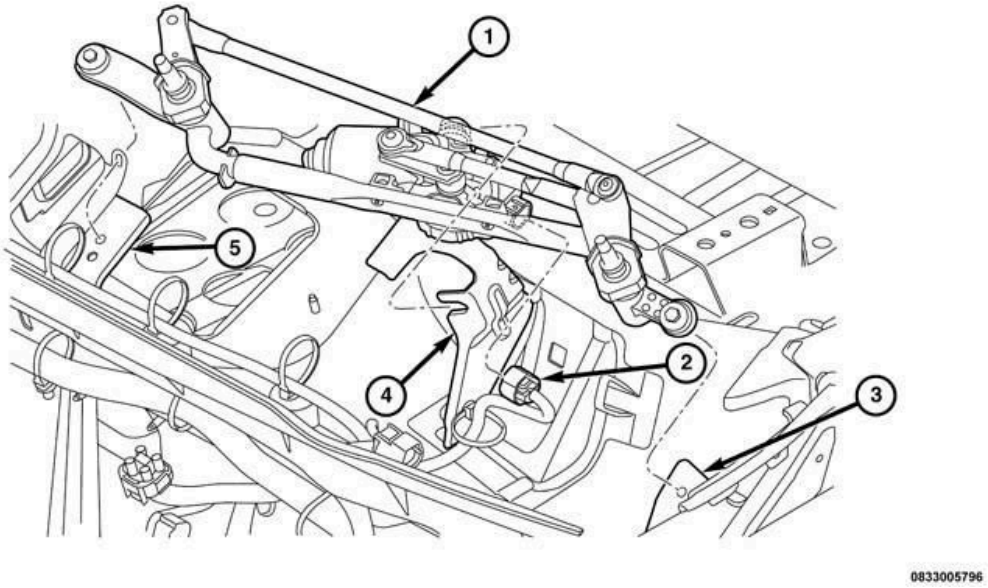

Fig. 97: Removing/Installing Transmission Cooler Line Support Bracket Bolt
Courtesy of CHRYSLER GROUP, LLC

8. Install the transmission cooler lines support brace bolt (1). Tighten to 8 N.m (70 in. lbs.).

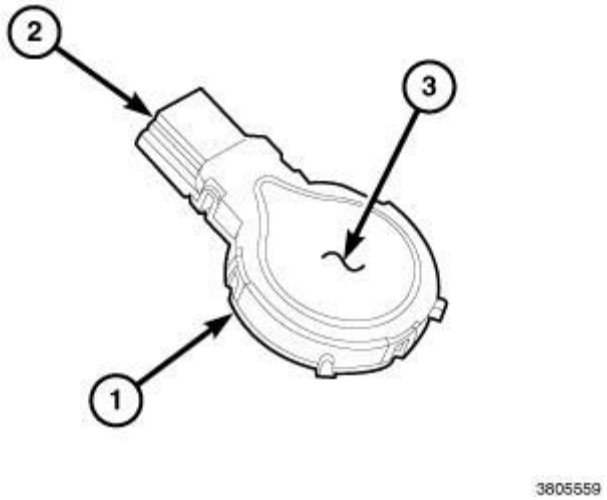

Fig. 98: Removing/Installing Upper Air Deflector
Courtesy of CHRYSLER GROUP, LLC

9. Install the upper air deflector (1).
10. Install the hood release cable (3).
11. Install the wiring harness (7).
12. Connect the ambient air temperature sensor (5).

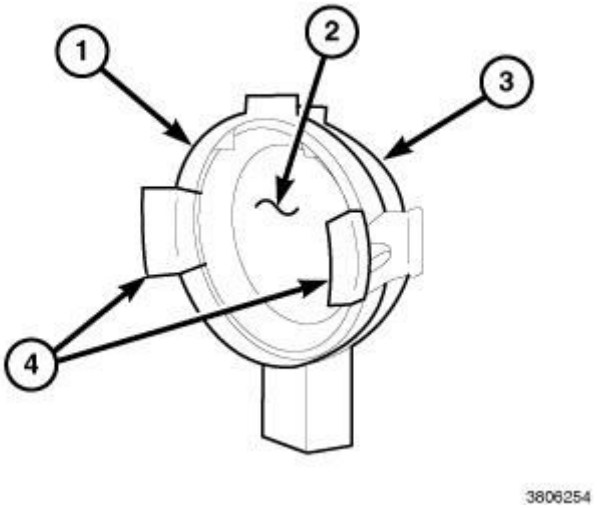

Fig. 99: Cooling Fan Wiring Harness
Courtesy of CHRYSLER GROUP, LLC

13. Connect the cooling fan wiring harness (1).
14. Install the engine cover and air intake assembly. Refer to **RESONATOR, AIR CLEANER, INSTALLATION** for 2.4L or **RESONATOR, AIR CLEANER, INSTALLATION** for 3.2L.

COOLER, EGR

REMOVAL

COOLER

The exhaust gas recirculation (EGR) cooler is not available separately and is serviced as part of the EGR manifold assembly, for removal. Refer to **COOLER, EGR, REMOVAL**.

EGR COOLER MANIFOLD

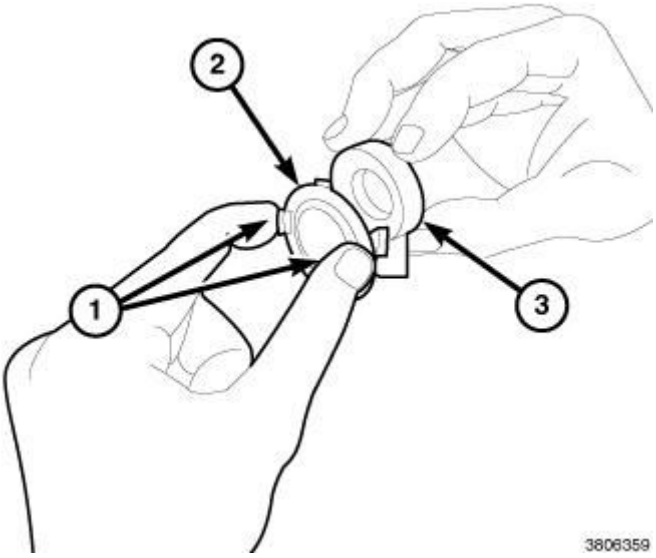

Fig. 100: Engine Cover
Courtesy of CHRYSLER GROUP, LLC

1. Disconnect the negative battery cable.
2. Remove the engine cover (1).
3. Drain the engine cooling system. Refer to **STANDARD PROCEDURE**.
4. Remove the engine air cleaner housing and inlet tube. Refer to **BODY, AIR CLEANER, REMOVAL** for 2.0L Diesel, **BODY, AIR CLEANER, REMOVAL** for 2.4L or **BODY, AIR CLEANER, REMOVAL** for 3.2L.
5. Remove the charge air cooler outlet tube from the Exhaust Gas Recirculation (EGR) flow control valve and position it out of the way. Refer to **COOLER AND HOSES, CHARGE AIR, REMOVAL** .

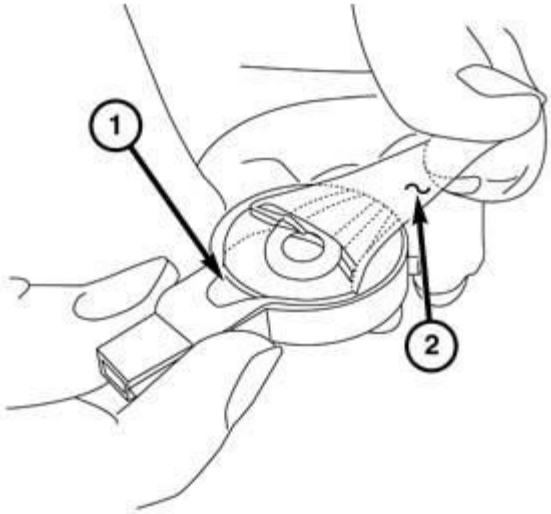

0833003672

Fig. 101: Engine Oil Dipstick Tube Bolt & Wire Harness Connector
Courtesy of CHRYSLER GROUP, LLC

6. Remove the engine oil dipstick tube bolt (2) and carefully position the tube out of the way.
7. Disconnect the wire harness connector (1) from the EGR vacuum solenoid.

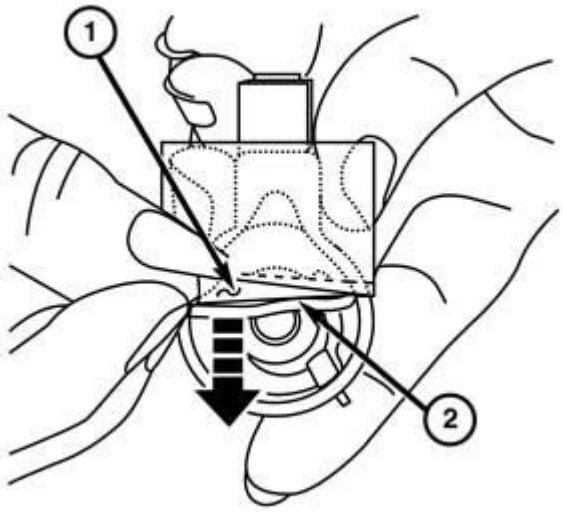

0833003673

Fig. 102: Vacuum Supply Hose, Vacuum Hose & Vacuum Hose

Courtesy of CHRYSLER GROUP, LLC

8. Disconnect the radiator hose from the thermostat housing outlet and position the hose out of the way.
9. Disconnect the vacuum supply hose (1) for the vacuum reservoir.
10. If required, disconnect the vacuum hose (2) for the EGR valve solenoid.
11. Disconnect the vacuum hose (3) for the EGR vacuum valve solenoid.

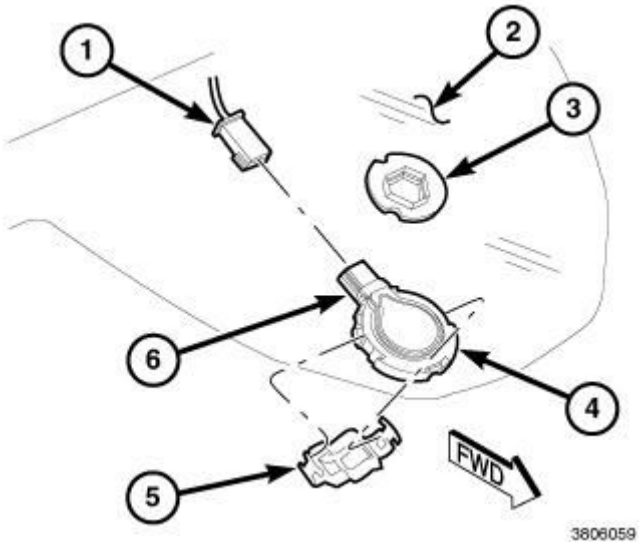

Fig. 103: Clamp & Particulate Filter Intermediate Pressure Hose
Courtesy of CHRYSLER GROUP, LLC

12. Loosen the clamp (1) and disconnect the particulate filter intermediate pressure hose (2).

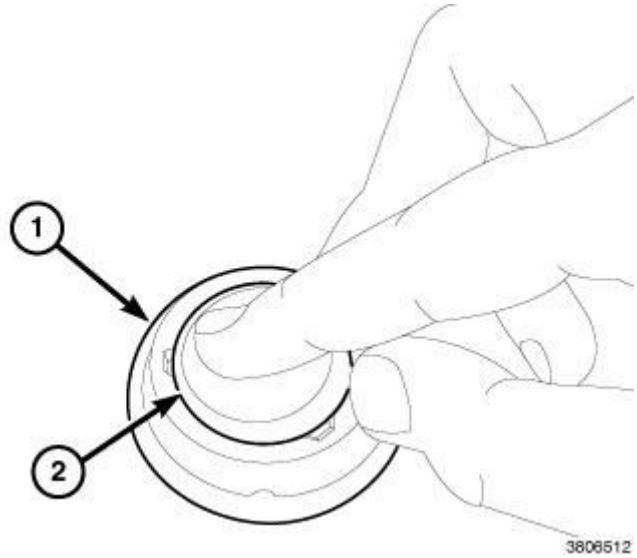

Fig. 104: Wiring Harness Connector, Clamp & Degassing Hose
Courtesy of CHRYSLER GROUP, LLC

13. Disconnect the wiring harness connector (1) from the engine coolant temperature sensor.
14. Loosen the clamp (1) and disconnect the degassing hose (2) from the thermostat housing.

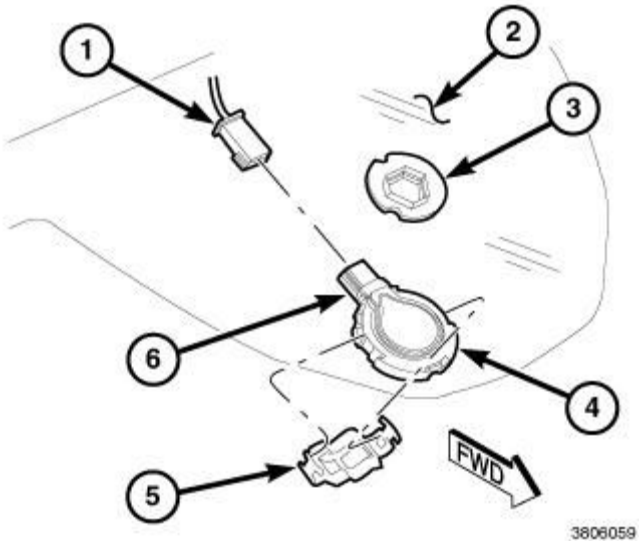

Fig. 105: Clamp & Heater Hose
Courtesy of CHRYSLER GROUP, LLC

15. Loosen the clamp (2) and disconnect the heater hose (1) from the heater tube.
16. Remove the EGR tube. Refer to **TUBE, EXHAUST GAS RECIRCULATION (EGR), REMOVAL** .

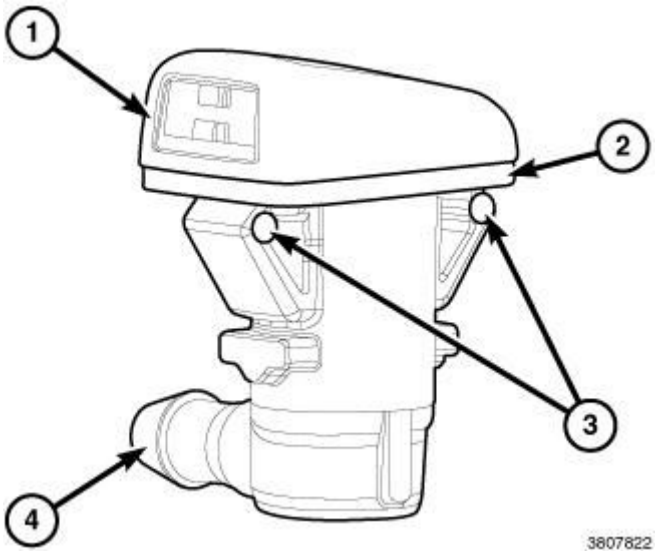

Fig. 106: Wiring Harness Connector
Courtesy of CHRYSLER GROUP, LLC

17. Disconnect the wiring harness connector (1) from the EGR valve.
18. Disengage the retaining clip (3) and disconnect the coolant hose (2) to the engine oil cooler.

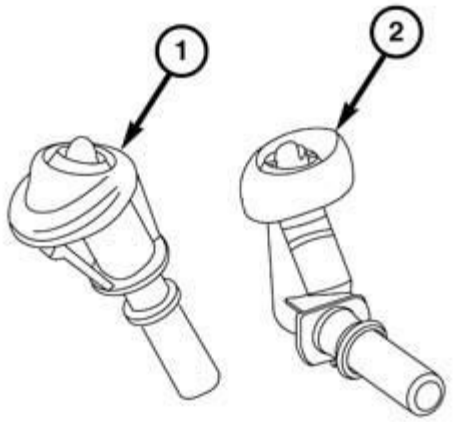

0833005537

Fig. 107: Four Bolts
Courtesy of CHRYSLER GROUP, LLC

19. Remove the four bolts (1, 2 and 3) that secure the EGR cooler manifold to the engine.
20. Remove the EGR cooler manifold and gasket from the engine and place the manifold on a workbench.
21. If required, remove the EGR valve from the EGR cooler manifold. Refer to **VALVE, EXHAUST GAS RECIRCULATION (EGR), REMOVAL** .
22. If required, remove the EGR vacuum solenoid from the EGR cooler manifold. Refer to **SOLENOID, EXHAUST GAS RECIRCULATION (EGR), 2.0L DIESEL, REMOVAL** .
23. If required, remove the thermostat housing from the EGR cooler manifold. Refer to **THERMOSTAT, REMOVAL**.
24. If required, remove the engine coolant temperature sensor from the EGR cooler manifold. Refer to **SENSOR, COOLANT TEMPERATURE, REMOVAL**.

INSTALLATION

COOLER

The exhaust gas recirculation (EGR) cooler is not available separately and is serviced as part of the EGR manifold assembly, for installation. Refer to **COOLER, EGR, INSTALLATION**.

EGR COOLER MANIFOLD

1. Clean all gasket mating surfaces.
2. If removed, install the engine coolant temperature sensor onto the EGR cooler manifold. Refer to **SENSOR, COOLANT TEMPERATURE, INSTALLATION**.

3. If removed, install the thermostat housing onto the EGR cooler manifold. Refer to **THERMOSTAT, INSTALLATION**.
4. If removed, install the EGR vacuum solenoid onto the EGR cooler manifold. Refer to **SOLENOID, EXHAUST GAS RECIRCULATION (EGR), 2.0L DIESEL, REMOVAL** .
5. If removed, install the Exhaust Gas Recirculation (EGR) valve onto the EGR cooler manifold. Refer to **VALVE, EXHAUST GAS RECIRCULATION (EGR), REMOVAL** .

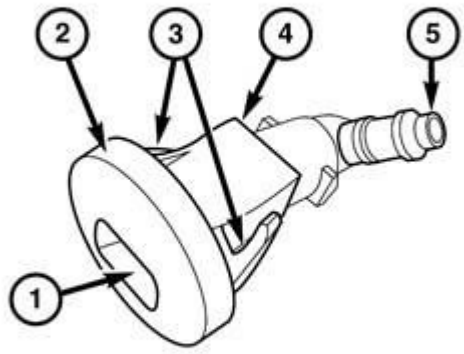

0833008962

Fig. 108: Four Bolts
Courtesy of CHRYSLER GROUP, LLC

6. Position the EGR cooler manifold and a new gasket to the engine.
7. Install the four bolts (1, 2 and 3) that secure the EGR cooler manifold to the engine. Tighten the bolts to 3 N.m (27 in. lbs.).

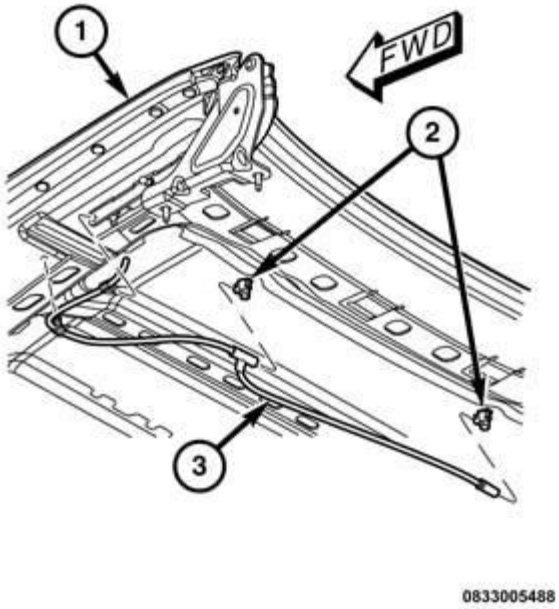

Fig. 109: Wiring Harness Connector
Courtesy of CHRYSLER GROUP, LLC

8. Connect the wiring harness connector (1) to the EGR valve.
9. Connect the oil cooler coolant hose (2) and engage the retaining clip (3). Make sure the retaining clip and hose connector are fully engaged.
10. Using a new gasket, install the EGR tube. Refer to **TUBE, EXHAUST GAS RECIRCULATION (EGR), INSTALLATION** .

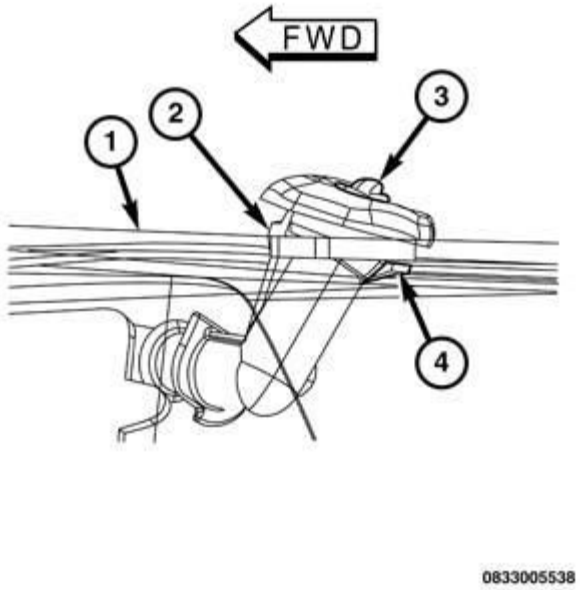

Fig. 110: Clamp & Heater Hose
Courtesy of CHRYSLER GROUP, LLC

11. Connect the heater hose (1) to the heater tube and tighten the hose clamp (2) securely.

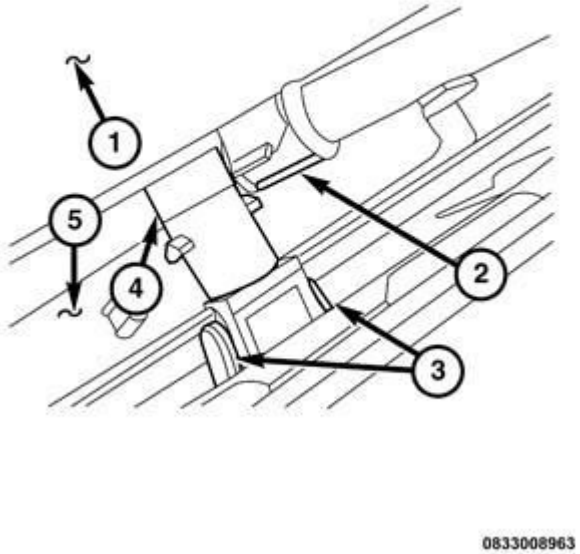

Fig. 111: Wiring Harness Connector, Clamp & Degassing Hose
Courtesy of CHRYSLER GROUP, LLC

12. Connect the wiring harness connector (1) to the engine coolant temperature sensor.
13. Connect the degassing hose (2) to the heater tube and tighten the hose clamp (3) securely.

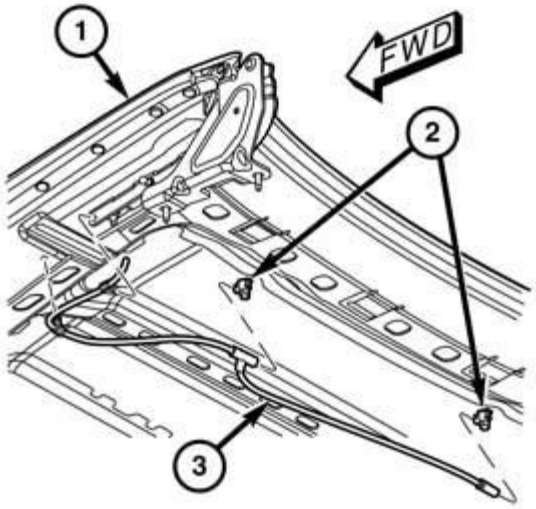

0833005488

Fig. 112: Clamp & Particulate Filter Intermediate Pressure Hose
Courtesy of CHRYSLER GROUP, LLC

14. Connect the particulate filter intermediate pressure hose (1) and tighten the hose clamp (2) securely.

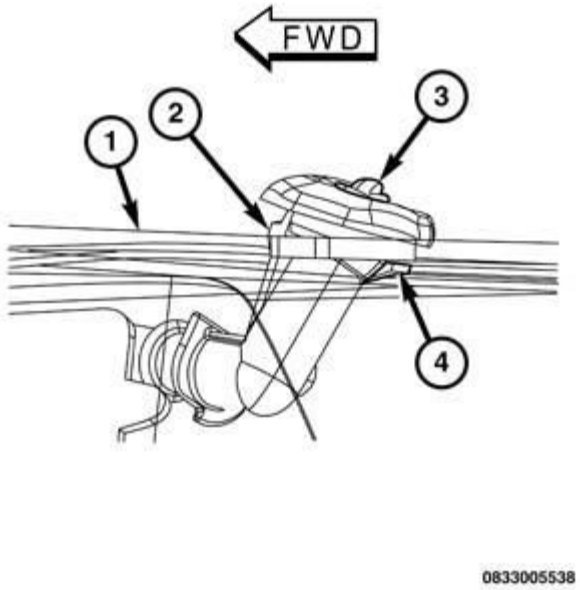

Fig. 113: Vacuum Supply Hose, Vacuum Hose & Vacuum Hose
Courtesy of CHRYSLER GROUP, LLC

15. Connect the vacuum hose (3) for the EGR vacuum valve solenoid.
16. If required, connect the vacuum hose (2) for the EGR vacuum solenoid.
17. Connect the vacuum supply hose (1) for the vacuum reservoir.
18. Connect the radiator hose to the thermostat housing outlet.

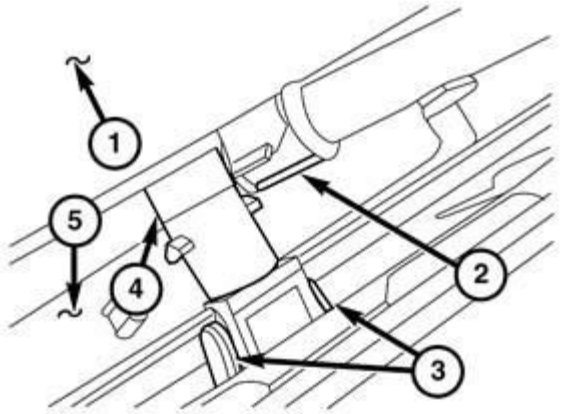

0833008963

Fig. 114: Engine Oil Dipstick Tube Bolt & Wire Harness Connector
Courtesy of CHRYSLER GROUP, LLC

19. Connect the wire harness connector (1) to the EGR vacuum solenoid.
20. Reposition the engine oil dipstick tube and install the retaining bolt (2). Tighten the bolt to 2 N.m (18 in. lbs.).
21. Install the charge air cooler outlet tube to the EGR flow control valve. Refer to **COOLER AND HOSES, CHARGE AIR, INSTALLATION** .
22. Install the engine air cleaner housing and inlet tube. Refer to **BODY, AIR CLEANER, INSTALLATION** for 2.0L Diesel, **BODY, AIR CLEANER, INSTALLATION** for 2.4L or **BODY, AIR CLEANER, INSTALLATION** for 3.2L.
23. Fill the cooling system. Refer to **STANDARD PROCEDURE**.

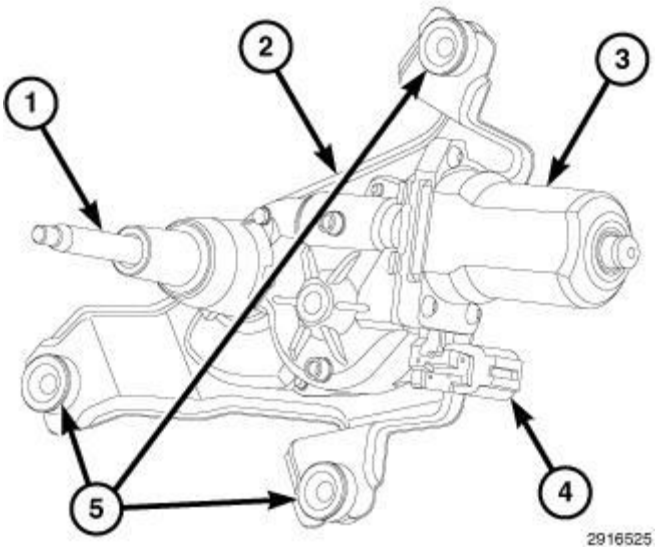

Fig. 115: Engine Cover
Courtesy of CHRYSLER GROUP, LLC

24. Install the engine cover (1).
25. Connect the negative battery cable.

HEATER, ENGINE BLOCK

DESCRIPTION

DESCRIPTION

The engine block heater is available as an optional accessory on all models. The heater is operated by ordinary house current (110 Volt A.C.) through a power cord located behind the radiator grille. This provides easier engine starting and faster warm-up when vehicle is operated in areas having extremely low temperatures. The heater is mounted in a hole in the engine block.

DIAGNOSIS AND TESTING

DIAGNOSIS AND TESTING - ENGINE BLOCK HEATER

If the unit does not operate, possible causes can be either the power cord or the heater element. Test the power cord for continuity with a 110-volt voltmeter or 110-volt test light. Test heater element continuity with an ohmmeter or a 12-volt test light.

CAUTION: To prevent damage, the power cord must be secured in it's retainer clips and away from any components that may cause abrasion or damage, such as linkages, exhaust components, etc.

REMOVAL

2.4L

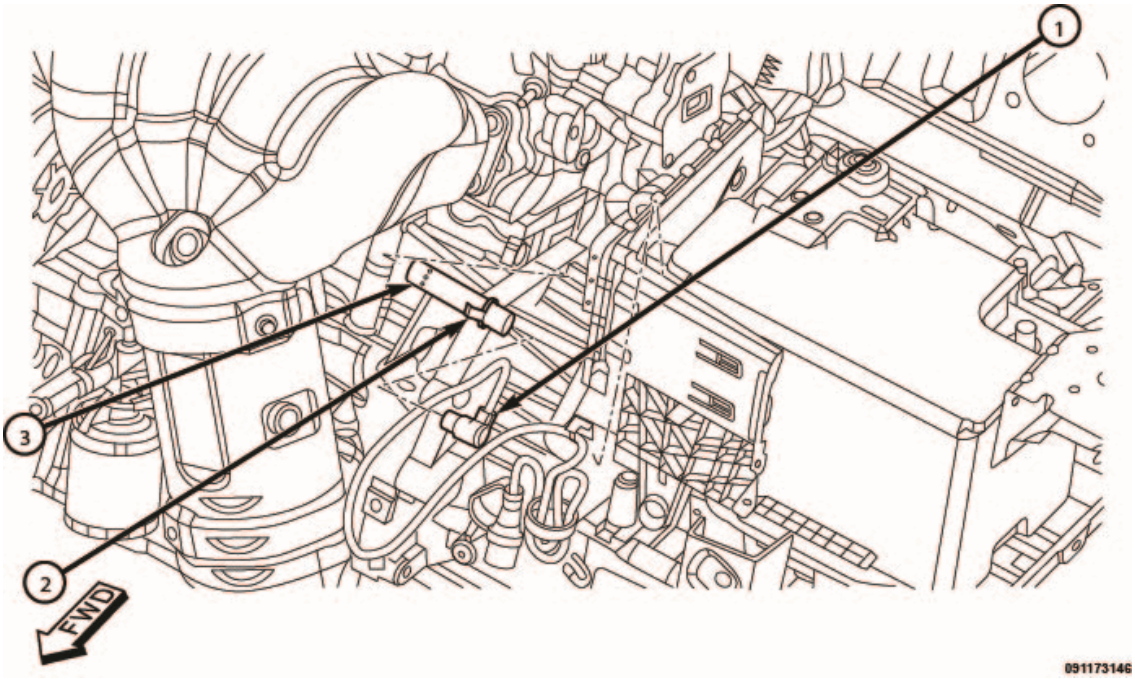

Fig. 116: Removing/Installing Engine Block Heater
Courtesy of CHRYSLER GROUP, LLC

1. Remove the engine cover.
2. Unplug the power cord from block heater (1).
3. Pull the tab (2) away from the cylinder block.
4. Slide the block heater (3) to the right and out of the bore.
5. Remove the heater from the vehicle.

3.2L

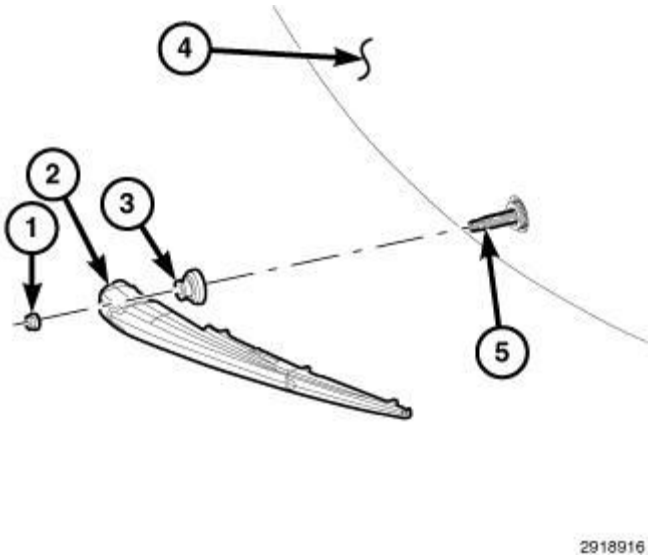

Fig. 117: Removing/Installing Generator
Courtesy of CHRYSLER GROUP, LLC

1. Remove the generator

   Refer to **GENERATOR, REMOVAL** .

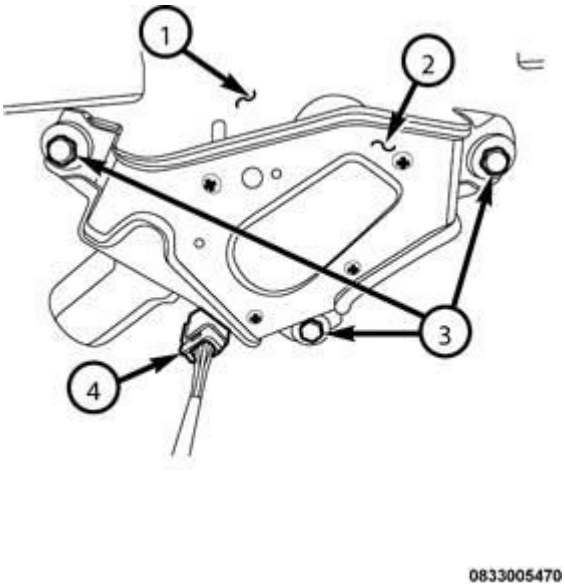

Fig. 118: Removing/Installing Engine Block Heater
Courtesy of CHRYSLER GROUP, LLC

2. Disconnect the power cord plug (2) from block heater (4).
3. Loosen the bolt (3) from the heater.

INSTALLATION

2.4L

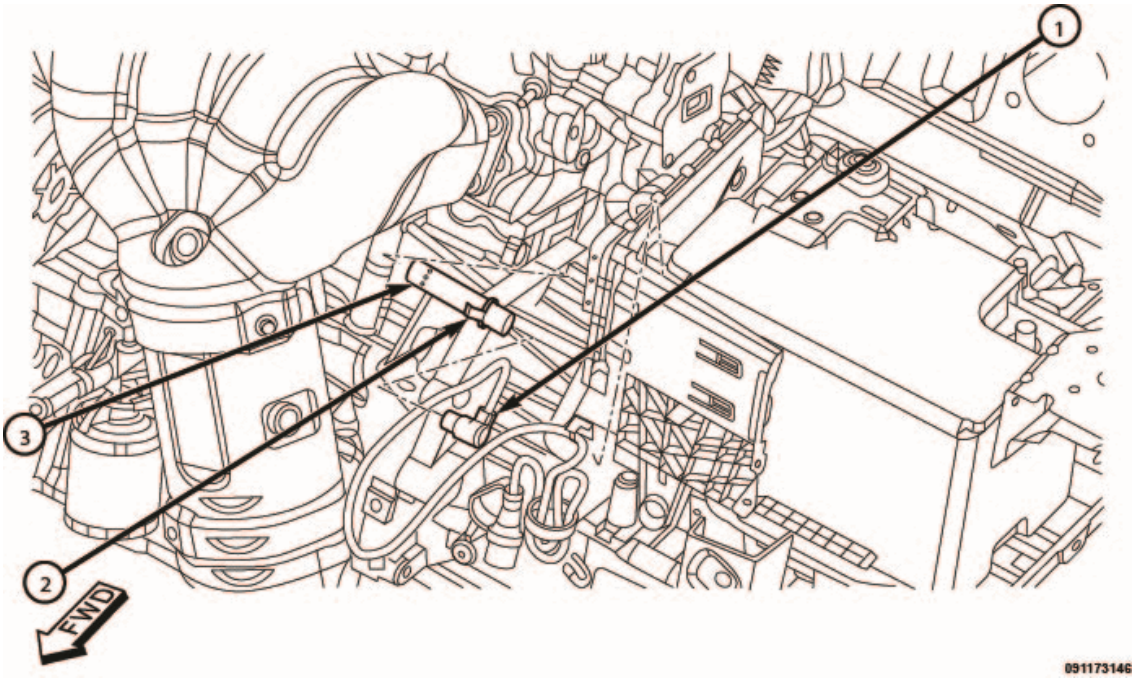

Fig. 119: Removing/Installing Engine Block Heater
Courtesy of CHRYSLER GROUP, LLC

1. Insert the block heater (3) into the block bore.
2. Push the heater to the left until the tab (2) catches onto the block.
3. Plug the block heater cord (1) into the heater.
4. Install the engine cover.

3.2L

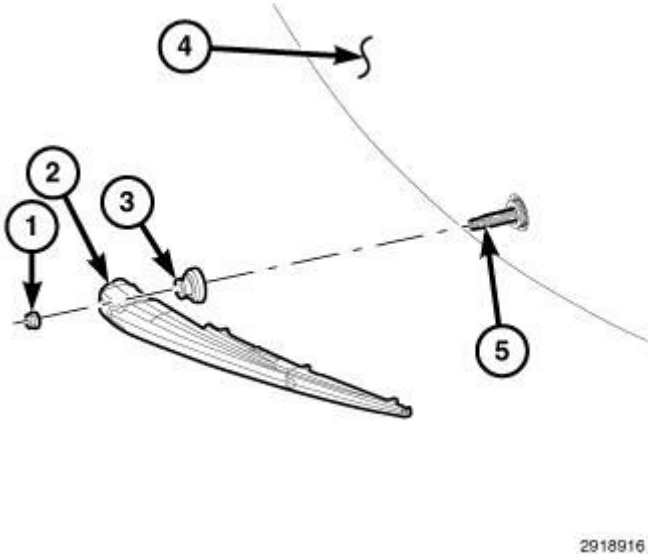

Fig. 120: Removing/Installing Engine Block Heater
Courtesy of CHRYSLER GROUP, LLC

1. Clean block core hole (1) and heater seat.
2. Insert heater block (4) assembly.
3. With block heater seated, tighten bolt (3) to 12 N.m (106 in. lbs.) to assure a positive seal.
4. Install power cord plug to block heater (2).

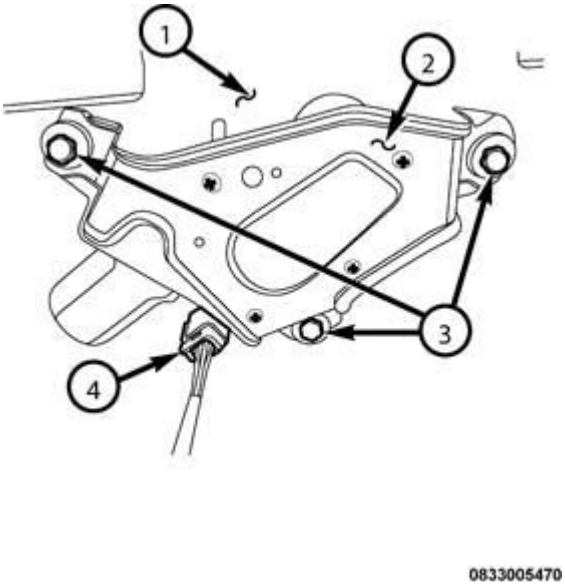

Fig. 121: Removing/Installing Generator
Courtesy of CHRYSLER GROUP, LLC

5. Install the generator (2). Refer to **GENERATOR, INSTALLATION** .

PUMP, WATER

REMOVAL

2.0L DIESEL

1. Disconnect and isolate the negative battery cable.
2. Raise and support the vehicle. Refer to **HOISTING, STANDARD PROCEDURE** .

NOTE: Drain the fluid in a clean container, free of debris. Save the fluid for re-use.

3. Drain the cooling system. Refer to **STANDARD PROCEDURE**.
4. Remove the timing belt. Refer to **BELT, TIMING, REMOVAL** .

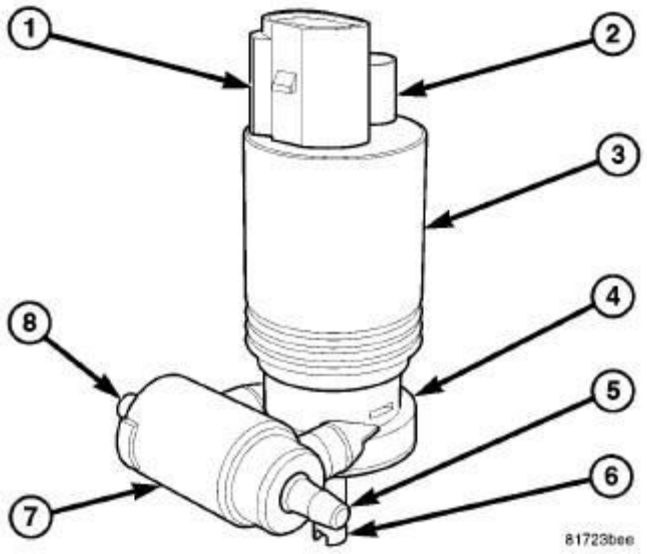

Fig. 122: Water Pump Mounting Bolts & Water Pump
Courtesy of CHRYSLER GROUP, LLC

5. Remove the water pump mounting bolts (2).
6. Separate the water pump (1) and the gasket from the cylinder head.

2.4L

1. Raise and support the vehicle.

   Refer to **HOISTING, STANDARD PROCEDURE** .

2. Remove the right front tire.
3. Remove the belly pan
4. Remove the front closeout panel.
5. Drain the coolant.

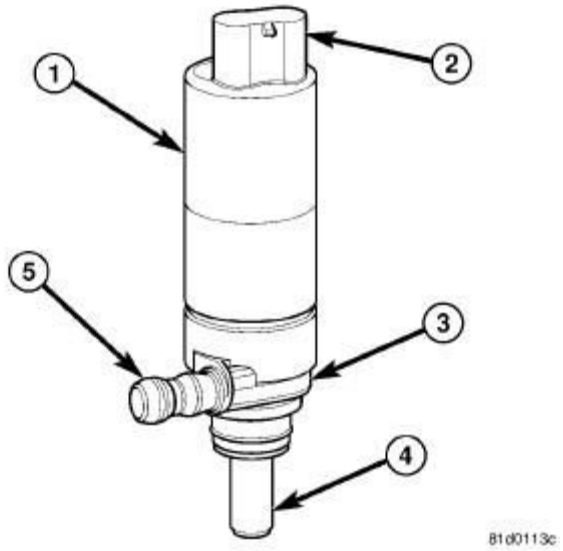

Fig. 123: Removing/Installing Front Splash Shields
Courtesy of CHRYSLER GROUP, LLC

6. Remove the 3 fender screws and the 3 push pins from the forward portion of the right front wheel liner. This will allow the liner to be positioned rearward to gain access to the accessory drive components.
7. Remove the serpentine belt.

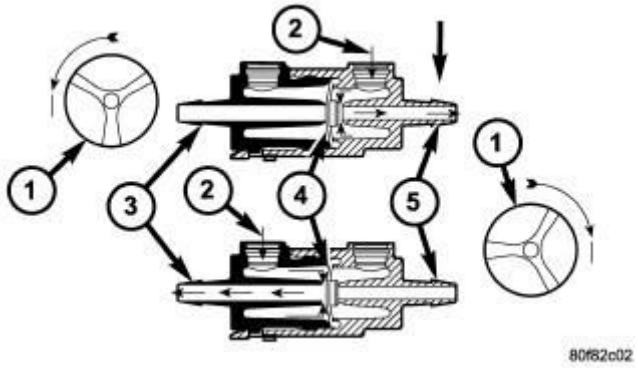

Fig. 124: Water Pump Pulley, Adapter And Gasket
Courtesy of CHRYSLER GROUP, LLC

8. Remove the 3 water pump pulley bolts (1).
9. Remove the water pump pulley (2).
10. Remove the water pump bolts (3).
11. Remove the water pump (4) and the water pump gasket (8).
12. Inspect the water pump housing (6) for impeller contact.
13. Clean the mating surface.
14. Remove the water pump.

3.2L

The water pump on 3.2L engines is bolted directly to the engine timing chain case cover.

1. Disconnect and isolate the battery negative cable.

WARNING: Constant tension hose clamps are used on most cooling system hoses. When removing or installing, use only tools designed for servicing this type of clamp. Always wear safety glasses when servicing constant tension clamps.

CAUTION: A number or letter is stamped into the tongue of constant tension clamps. If replacement is necessary, use only an original equipment clamp with matching number or letter.

2. Support the engine with an engine support fixture.
3. Remove the air cleaner body (1). Refer to **BODY, AIR CLEANER, REMOVAL** .
4. Remove the clean air hose from the intake resonator.
5. Remove the overflow bottle. Refer to **BOTTLE, PRESSURIZED COOLANT, REMOVAL**.

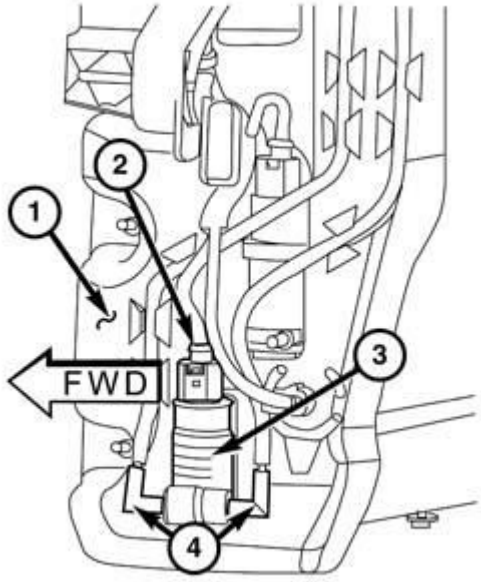

0833005535

Fig. 125: Removing/Installing Right Engine Mount Assembly
Courtesy of CHRYSLER GROUP, LLC

6. Remove the right side engine mount assembly (1).

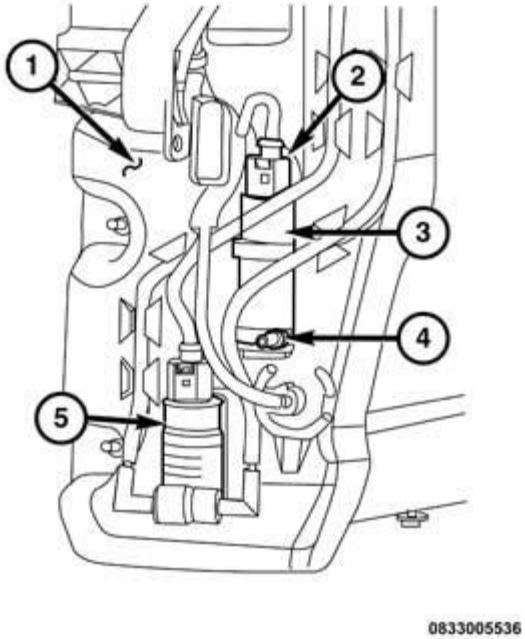

Fig. 126: Engine Mount Bracket & Bolts
Courtesy of CHRYSLER GROUP, LLC

7. Using care, raise the engine to gain access to the right side engine mount bracket (1).
8. Remove the bolts (2, 3) that secure the bracket to the timing cover and cylinder head.
9. Raise the vehicle.
10. Remove the belly pan. Refer to **BELLY PAN, REMOVAL** .
11. Drain coolant into clean container for reuse. Refer to **STANDARD PROCEDURE**.
12. Remove the inner wheel housing splash shield. Refer to **SHIELD, SPLASH, FRONT WHEELHOUSE, REMOVAL** .

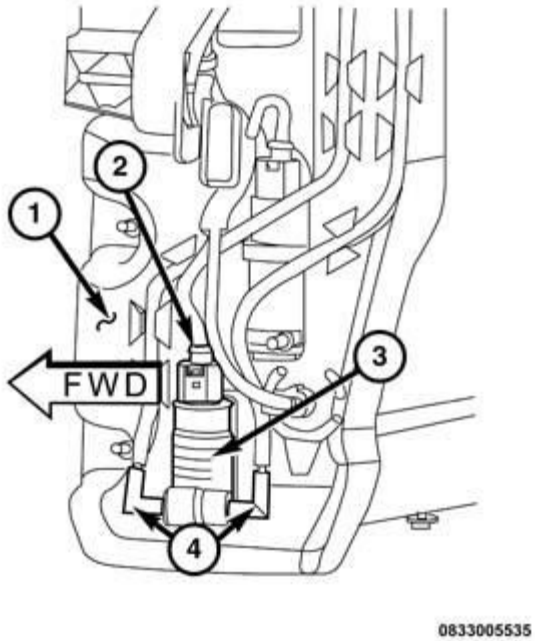

Fig. 127: Installing Accessory Idler Pulley
Courtesy of CHRYSLER GROUP, LLC

13. Remove the accessory drive belt (3). Refer to **BELT, SERPENTINE, REMOVAL**.
14. Remove the upper accessory drive belt idler pulley (1).

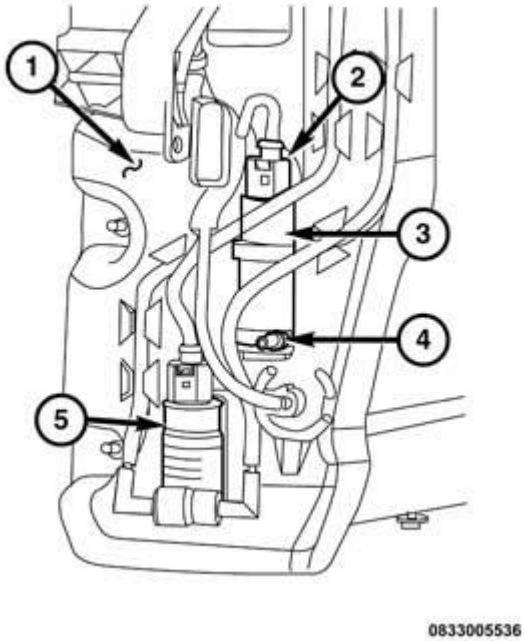

Fig. 128: Removing/Installing Water Pump

Courtesy of CHRYSLER GROUP, LLC

15. Remove the lower heater hose and the lower radiator hose from the water pump and position aside.

CAUTION: Do not pry on the water pump at the timing chain case/cover. The machined surfaces may be damaged resulting in leaks.

16. Remove the remaining water pump mounting bolts (1, 2, 4). Take notice to the four water pump bolts (3) that mount directly to the timing chain cover.
17. Remove the water pump and discard the seal.

INSTALLATION

2.0L DIESEL

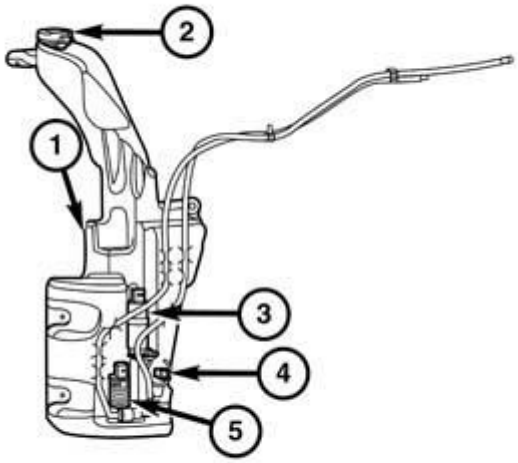

0833005656

Fig. 129: Water Pump, New Gasket & Cylinder Head
Courtesy of CHRYSLER GROUP, LLC

1. Position the water pump (3) with a new gasket (2) onto the cylinder head (1). Tighten the bolts (4) to 28 N.m (21 ft. lbs.).
2. Install the timing belt. Refer to **BELT, TIMING, INSTALLATION** .
3. Evacuate air and refill cooling system. Refer to **STANDARD PROCEDURE**.
4. Connect the negative battery cable.
5. Check cooling system for leaks. Refer to **DIAGNOSIS AND TESTING**.

2.4L

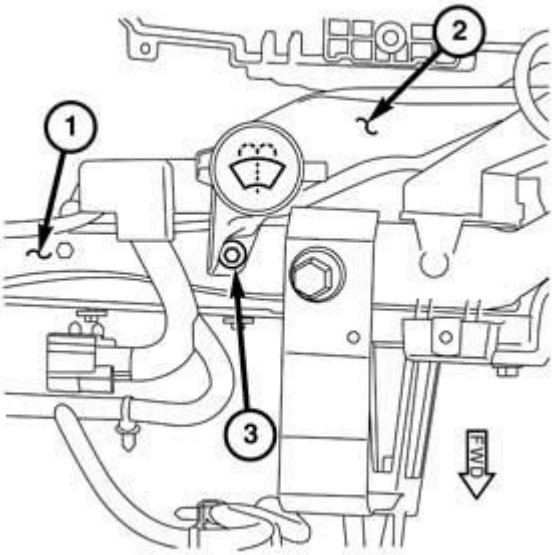

Fig. 130: Water Pump Pulley, Adapter And Gasket
Courtesy of CHRYSLER GROUP, LLC

1. Position the water pump (4) into position with a new gasket (8).
2. Install the water pump bolts (3). Tighten the bolts to 24 N.m (18 ft. lbs.)
3. Install the water pump pulley (2).
4. Install the pulley bolts (1). Tighten the bolts to 9 N.m (80 in lbs.).
5. Install the serpentine belt. Refer to **BELT, SERPENTINE, INSTALLATION**.
6. Install the belly pan and closeout panel

   Refer to **BELLY PAN, INSTALLATION** .

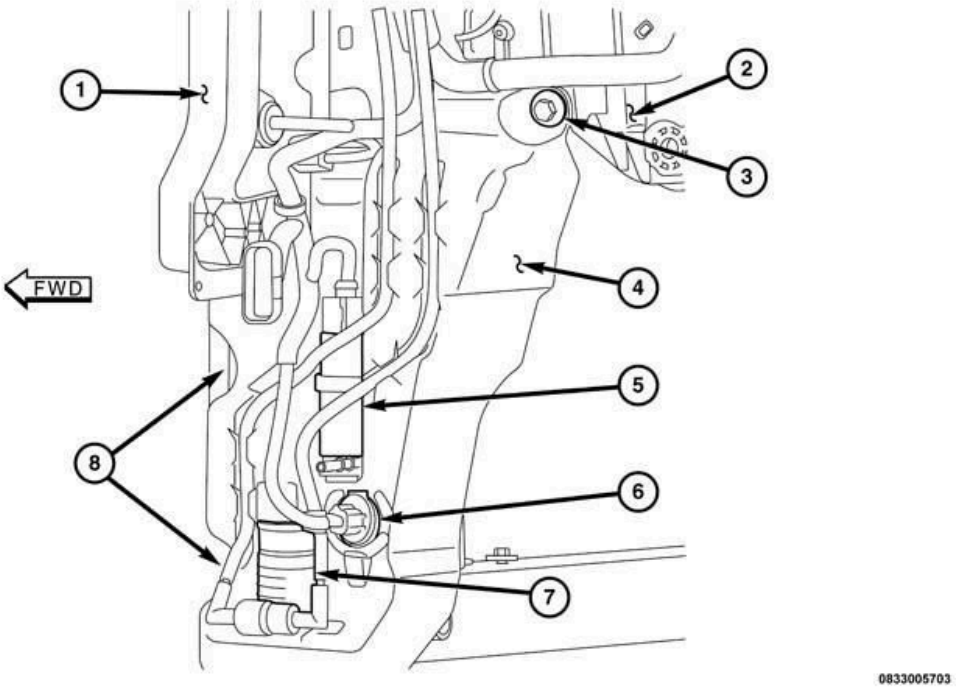

Fig. 131: Removing/Installing Front Splash Shields
Courtesy of CHRYSLER GROUP, LLC

7. Install the 3 fender screws and the 3 push pins in the right front wheel liner.
8. Install the tire/wheel assembly.

3.2L

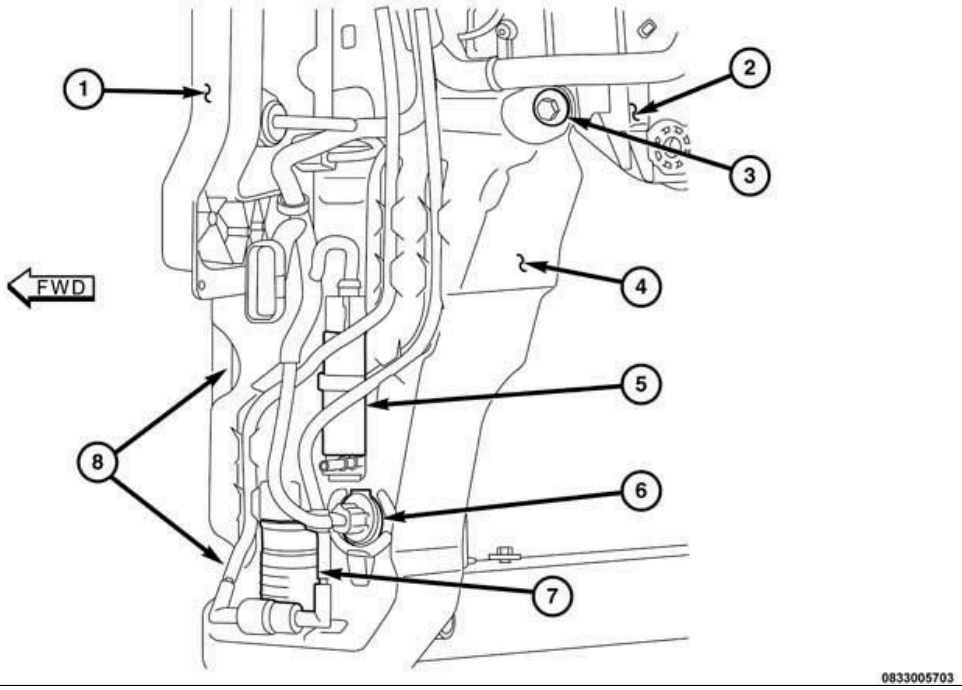

Fig. 132: Removing/Installing Water Pump
Courtesy of CHRYSLER GROUP, LLC

The water pump on 3.2L engines is bolted directly to the engine timing chain case cover.

1. Clean mating surfaces.
2. Using a new seal, position water pump and install mounting bolts (1, 2). Note the shorter bolts (3) bolt directly to the timing cover. Tighten the M6 water pump mounting bolts to the proper specification. Refer to **TORQUE SPECIFICATIONS - GAS**. Tighten the M8 water pump mounting bolt (4) to the proper specification. Refer to **TORQUE SPECIFICATIONS - GAS**.
3. Spin water pump to be sure that pump impeller does not rub against timing chain case/cover (1).
4. Install the lower radiator hose and the bypass hose.

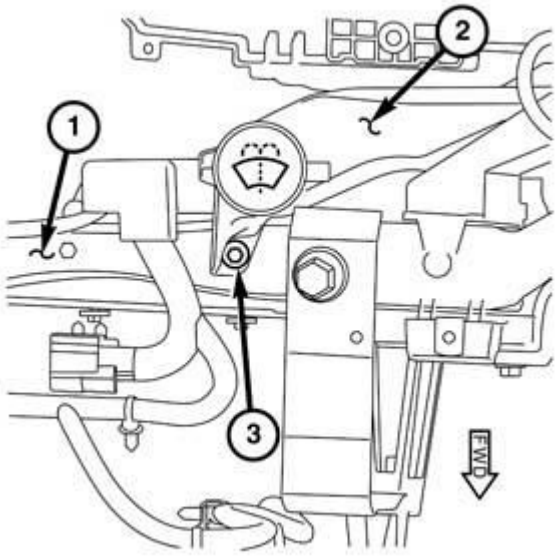

Fig. 133: Installing Accessory Idler Pulley
Courtesy of CHRYSLER GROUP, LLC

5. Install the idler pulley (1). Tighten the mounting bolt (2) to the proper specification. Refer to **TORQUE SPECIFICATIONS - GAS**.

CAUTION: When installing the serpentine accessory drive belt, belt must be routed correctly. If not, engine may overheat due to water pump rotating in wrong direction.

6. Install accessory drive belt (3).
7. Install the inner wheel housing splash shield. Refer to **SHIELD, SPLASH, FRONT WHEELHOUSE, INSTALLATION** .

8. Install the belly pan. Refer to **BELLY PAN, INSTALLATION** .
9. Lower vehicle.

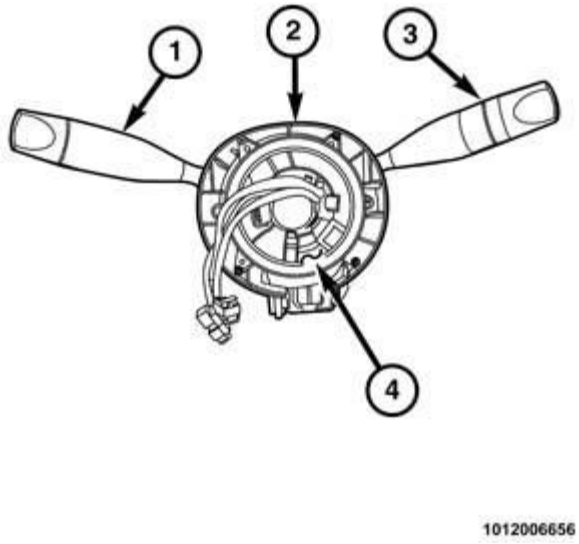

Fig. 134: Engine Mount Bracket & Bolts
Courtesy of CHRYSLER GROUP, LLC

10. slightly raise the engine to install the engine mount bracket (1). Tighten the M8 mounting bolt (3) to the proper specification. Refer to **TORQUE SPECIFICATIONS - GAS** . Tighten the M12 mounting bolts (2) to the proper specification. Refer to **TORQUE SPECIFICATIONS - GAS** .

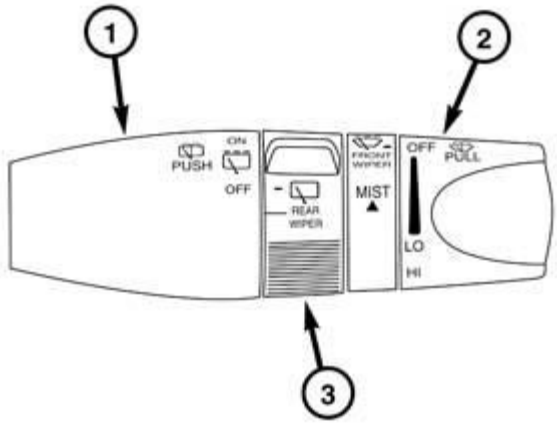

0833005928

Fig. 135: Removing/Installing Right Engine Mount Assembly
Courtesy of CHRYSLER GROUP, LLC

11. Install the right engine mount isolator (1) and tighten bolts:
    - Align the engine so that the engine is flush against the engine mount.
    - Hand tighten the center engine to engine bracket bolt (3).
    - Hand tighten the outer engine to engine bracket bolts (2).
    - Hand start the engine mount to strut tower (5).
    - Tighten mount to frame rail bolts (4) to 65 N.m (48 ft. lbs.).
    - Tighten the mount to strut tower bolt to 65 N.m (48 ft. lbs.).
    - Tighten mount to mount bracket bolts (2, 3) to 72 N.m (53 ft. lbs.).
12. Install the overflow bottle. Refer to **BOTTLE, PRESSURIZED COOLANT, INSTALLATION**.
13. Install the air cleaner body. Refer to **BODY, AIR CLEANER, INSTALLATION** .
14. Evacuate air and refill cooling system. Refer to **STANDARD PROCEDURE**.
15. Remove the engine support fixture.
16. Connect negative battery cable. Tighten the nut to the proper specification. Refer to **SPECIFICATIONS** .
17. Check the cooling system for leaks. Refer to **DIAGNOSIS AND TESTING**.

RADIATOR, ENGINE COOLING

REMOVAL

2.0L DIESEL

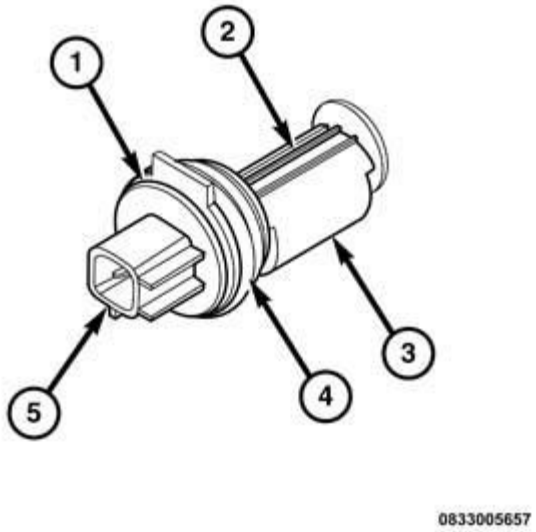

Fig. 136: Engine Cover
Courtesy of CHRYSLER GROUP, LLC

1. Disconnect the battery negative cable.
2. Remove the engine cover (1).
3. Remove the battery tray. Refer to **TRAY, BATTERY, REMOVAL** .

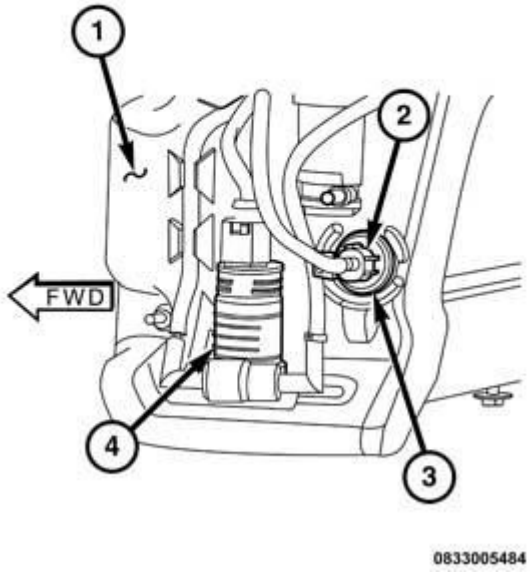

Fig. 137: Upper Close Out Panel Cover Components
Courtesy of CHRYSLER GROUP, LLC

4. Remove fasteners (2, 3, 4) and the upper close out panel cover (1).
5. Raise and support the vehicle. Refer to **HOISTING, STANDARD PROCEDURE** .
6. Remove the front fascia. Refer to **FASCIA, FRONT, REMOVAL** .
7. Drain the cooling system. Refer to **STANDARD PROCEDURE**.
8. Remove the A/C condenser. Refer to **CONDENSER, A/C, REMOVAL** .
9. Remove the Charge Air Cooler (CAC). Refer to **COOLER AND HOSES, CHARGE AIR, REMOVAL** .

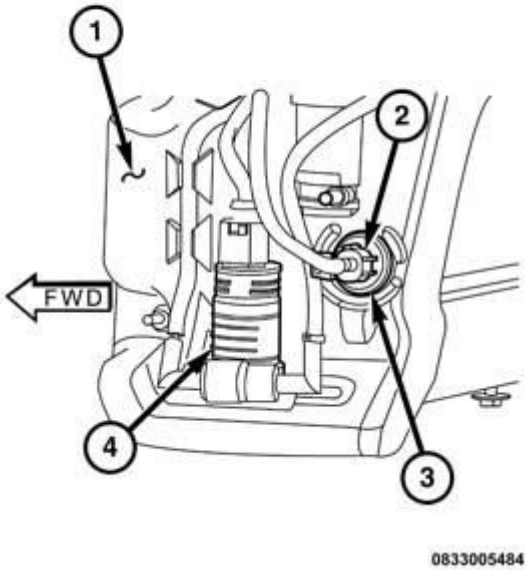

Fig. 138: Cooling Fan Module & Harness Connector
Courtesy of CHRYSLER GROUP, LLC

10. Disconnect the cooling fan module (2) wire harness connector (1).
11. Disconnect the horn wire harness connector.
12. Remove the hood release cable from the air deflector.

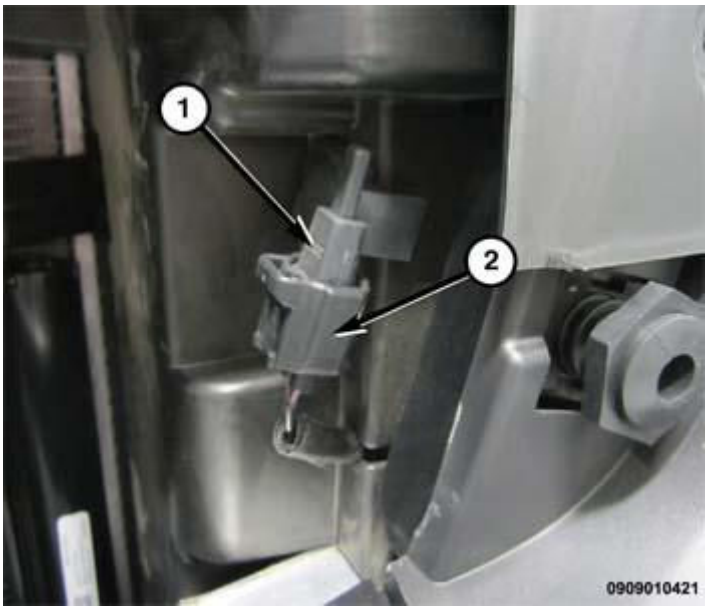

Fig. 139: Ambient Air Temperature Sensor & Wire Harness Connector
Courtesy of CHRYSLER GROUP, LLC

13. Disconnect the ambient air temperature sensor wire harness connector (2).
14. Remove the left side radiator air deflector.
15. Remove the right side radiator air deflector.
16. Remove the washer reservoir. Refer to **RESERVOIR, WINDSHIELD WASHER, REMOVAL** .

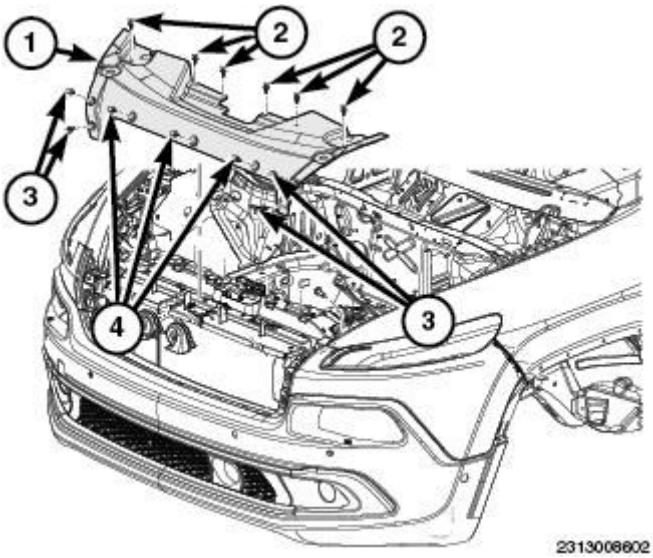

Fig. 140: Removing/Installing Lower Radiator Hose
Courtesy of CHRYSLER GROUP, LLC

17. release clip (2) and remove the lower radiator hose (3).

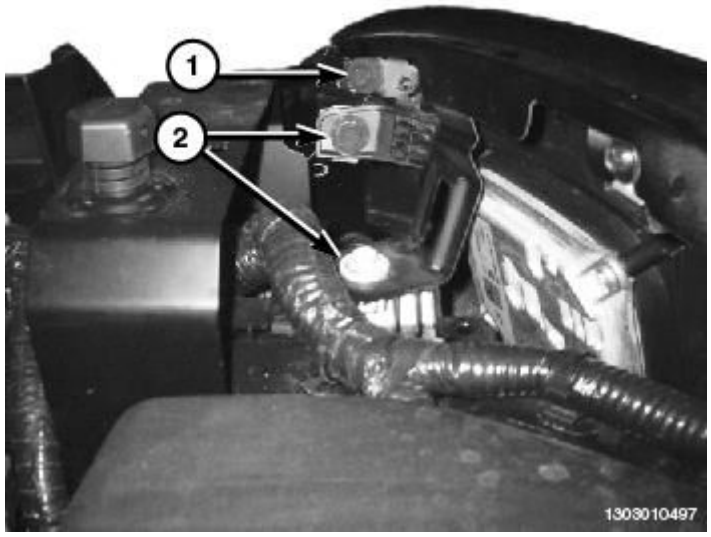

Fig. 141: Removing/Installing Upper Radiator Hose
Courtesy of CHRYSLER GROUP, LLC

18. Remove the upper radiator hose (1).
19. Remove pushpin retainers securing wire harness and position aside wire harness.
20. Remove the isolators screws from the upper core support from the left and right mounting locators.

NOTE: **The radiator and cooling fan should be removed from the top by slightly rotating the components down on the right while tilting the component rearward. The left end of the component should lead out of the vehicle.**

21. Remove the radiator from the vehicle.
22. Remove bolts the cooling fan assembly from radiator.

2.4L

1. Disconnect the battery negative cable.
2. Remove the engine cover.
3. Raise the vehicle.

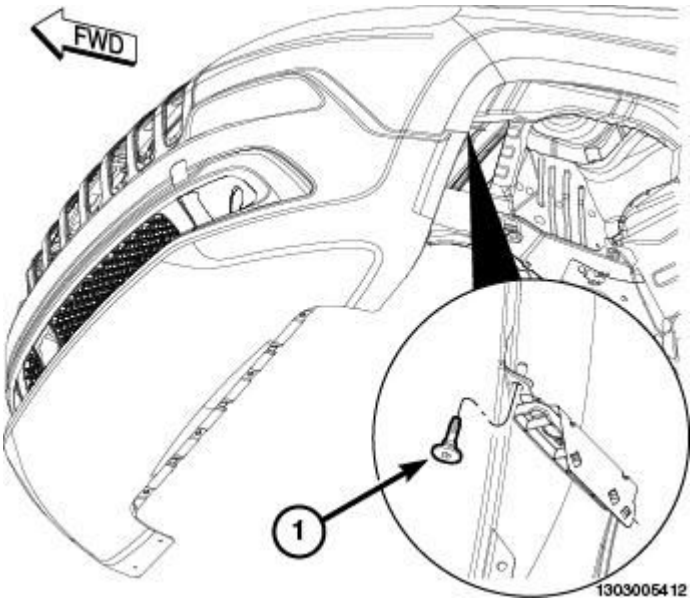

Fig. 142: Removing/Installing Belly Pans
Courtesy of CHRYSLER GROUP, LLC

4. Remove the lower belly pan.
5. Drain the cooling system. Refer to **STANDARD PROCEDURE**.

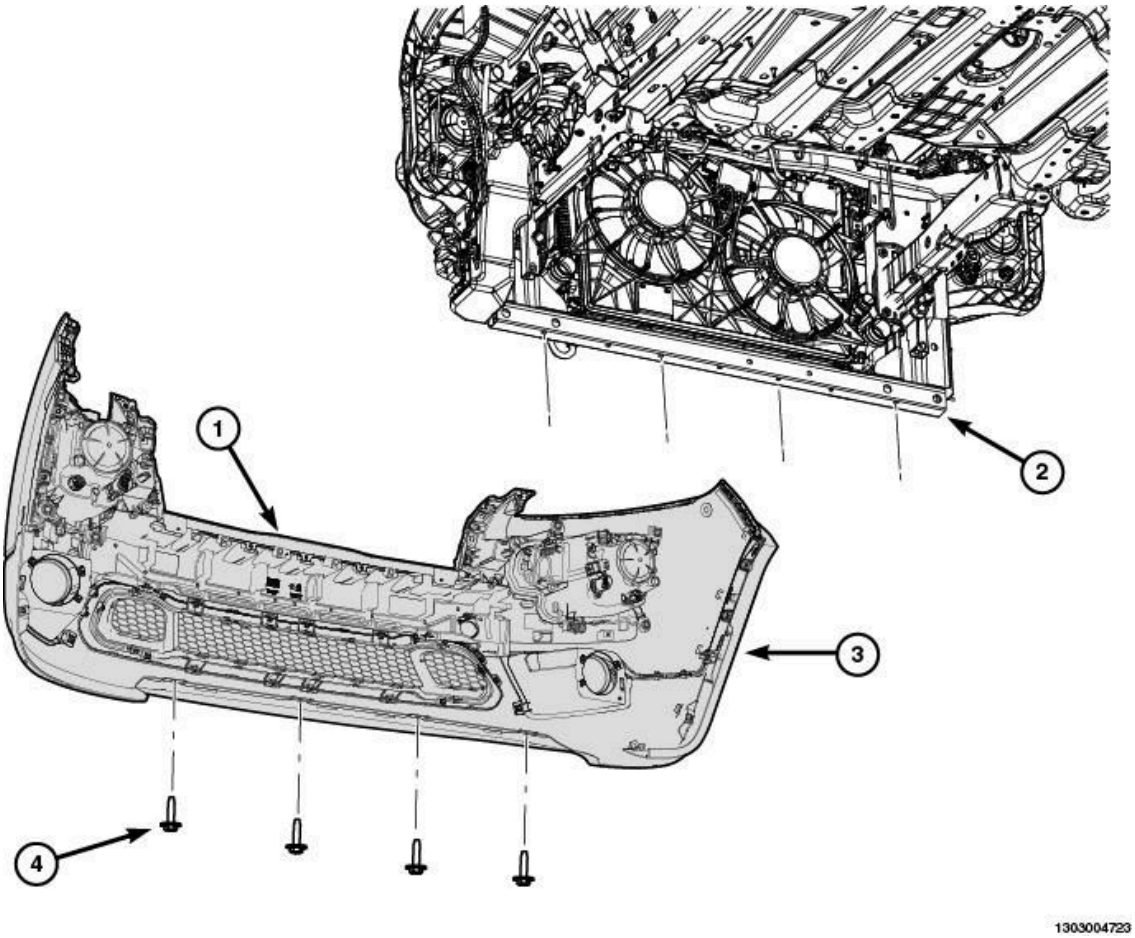

Fig. 143: Push Pins, Side Close Out Deflector & Lower Deflector
Courtesy of CHRYSLER GROUP, LLC

6. Separate the lower air deflector (2).
7. Separate the lower radiator hose at the radiator.

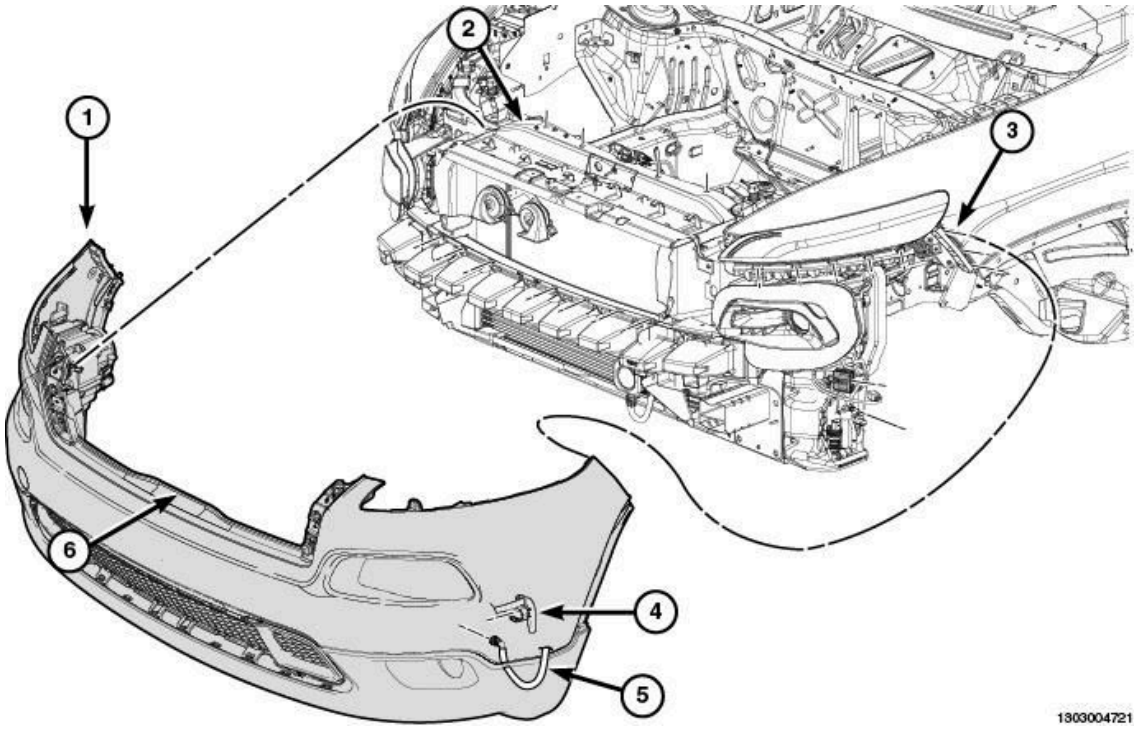

Fig. 144: Upper Close Out Panel Cover Components
Courtesy of CHRYSLER GROUP, LLC

8. Remove the upper close out panel cover (1).

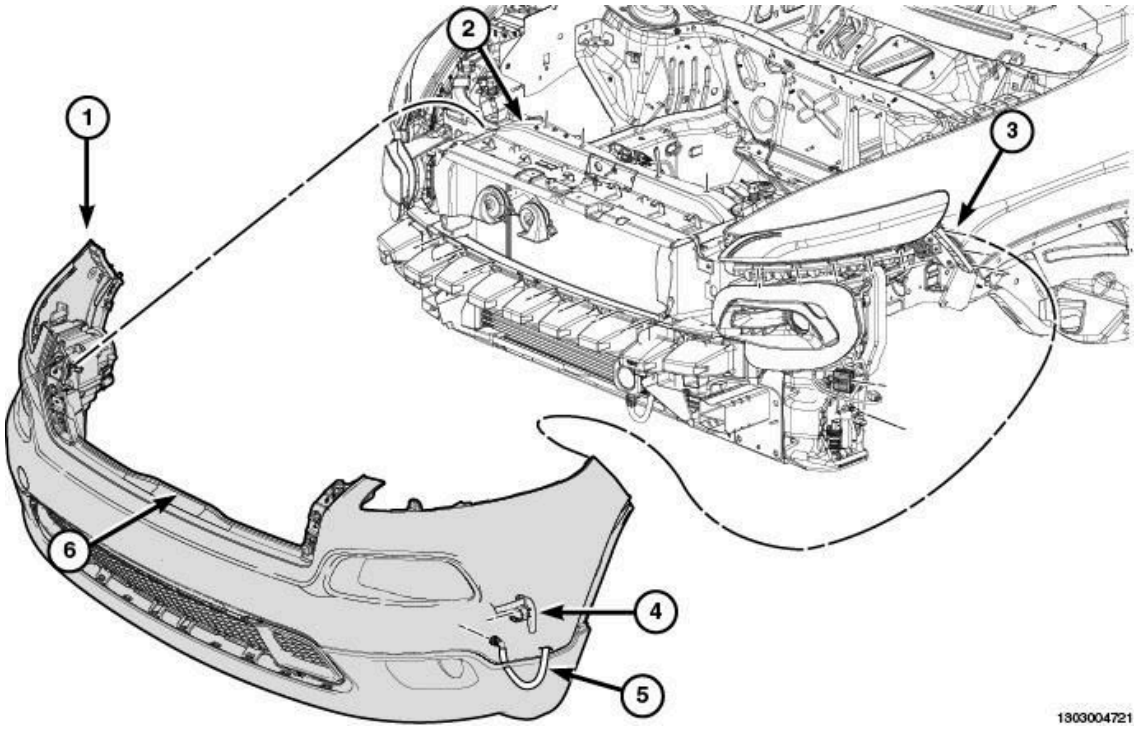

Fig. 145: Side Air Deflectors & Upper Radiator Closeout Panel

Courtesy of CHRYSLER GROUP, LLC

9. Separate the side air deflectors from the upper radiator closeout panel.

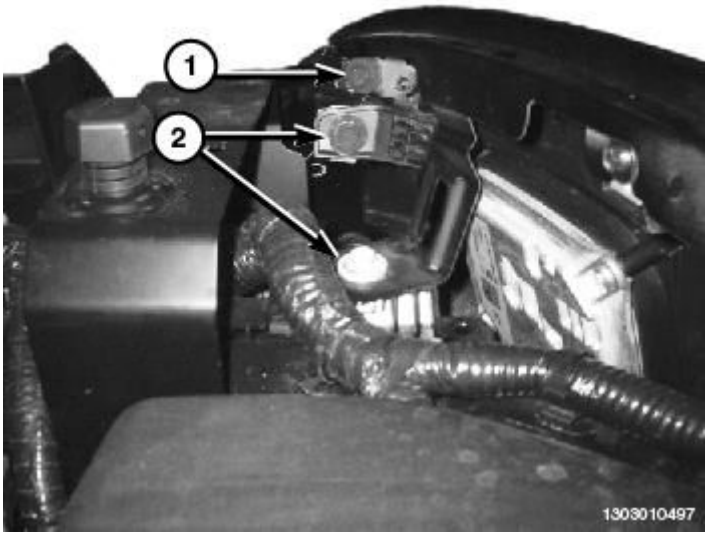

Fig. 146: Removing/Installing Upper Air Deflector
Courtesy of CHRYSLER GROUP, LLC

10. Disconnect the cooling fan module harness connector (4).
11. Disconnect the ambient air temperature sensor (5).
12. Disconnect the horn electrical connectors (6).
13. Remove the hood release cable (3) from the air deflector.
14. Remove the wiring harness (7) from the air deflector.
15. Remove the upper air deflector (1).

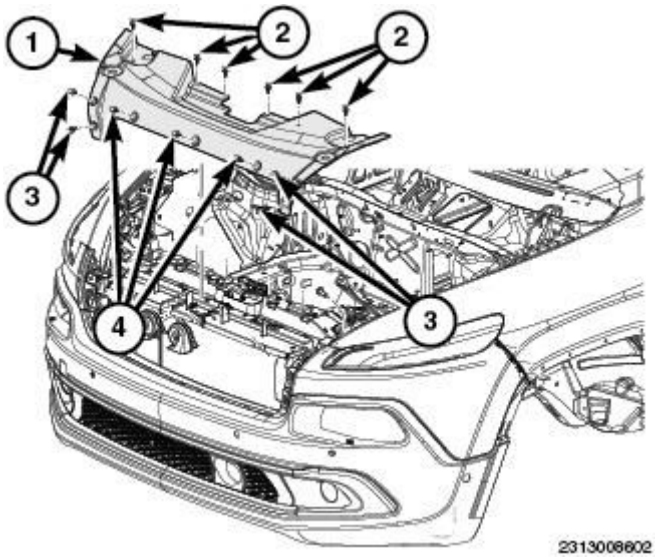

Fig. 147: Removing/Installing A/C Fill Port Support Bracket
Courtesy of CHRYSLER GROUP, LLC

16. Remove the A/C fill port support bracket (2) and position aside.

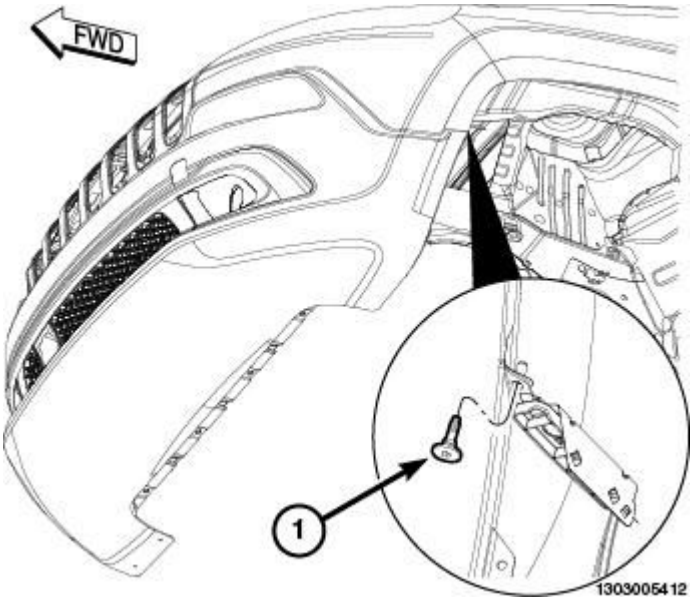

Fig. 148: Removing/Installing Transmission Cooler Line Support Bracket Bolt
Courtesy of CHRYSLER GROUP, LLC

17. Separate the transmission cooler line support brace bolt (1).

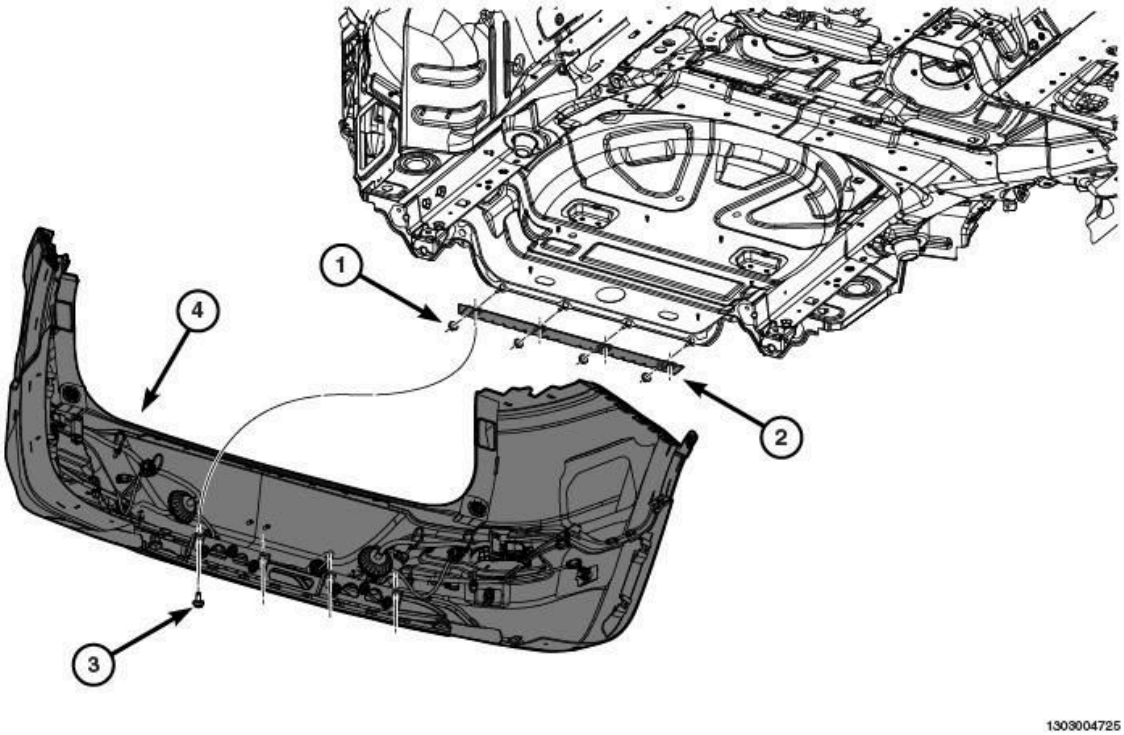

Fig. 149: Radiator & Bolt
Courtesy of CHRYSLER GROUP, LLC

18. Separate the condenser from the radiator (1).

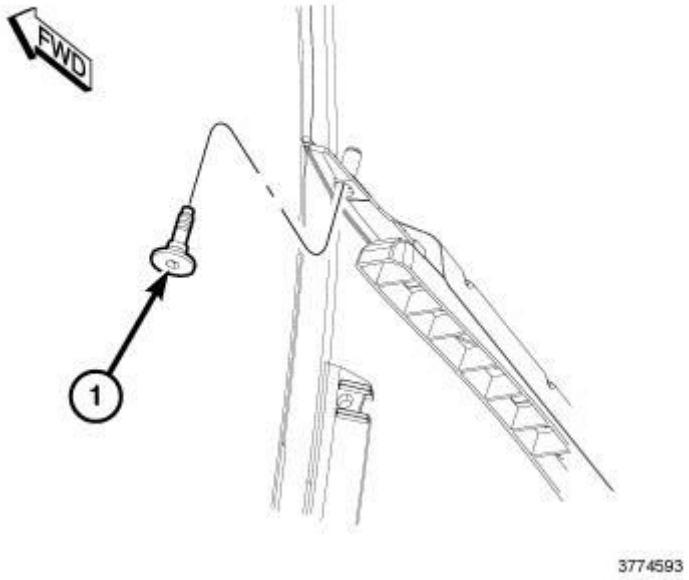

Fig. 150: Removing/Installing Upper Radiator Mounts
Courtesy of CHRYSLER GROUP, LLC

19. Separate the upper radiator hose from the upper cross over pipe.
20. Remove the upper radiator mounts (1).
21. Disconnect the electrical connector at the cooling fan module.
22. Remove the radiator from the vehicle.
23. Remove the radiator fan assembly.

3.2L

1. Disconnect the battery negative cable.
2. Remove the engine cover.
3. Raise the vehicle.

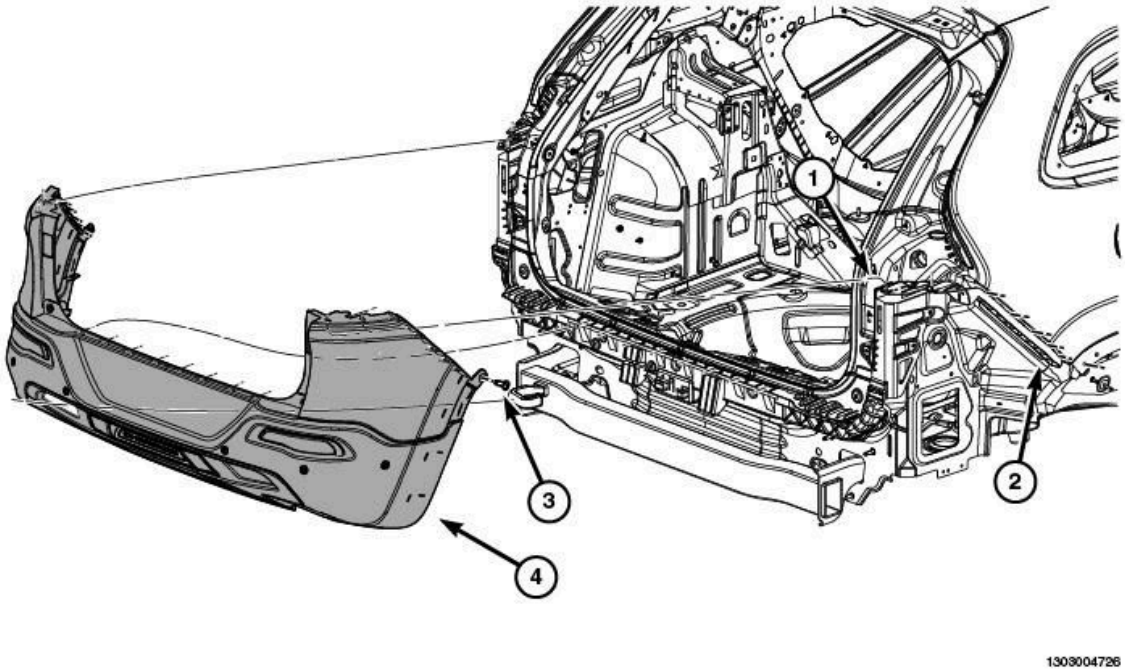

Fig. 151: Removing/Installing Belly Pans
Courtesy of CHRYSLER GROUP, LLC

4. Remove the lower belly pan.
5. Separate the lower radiator hose at the radiator.
6. Drain the cooling system. Refer to **STANDARD PROCEDURE**.

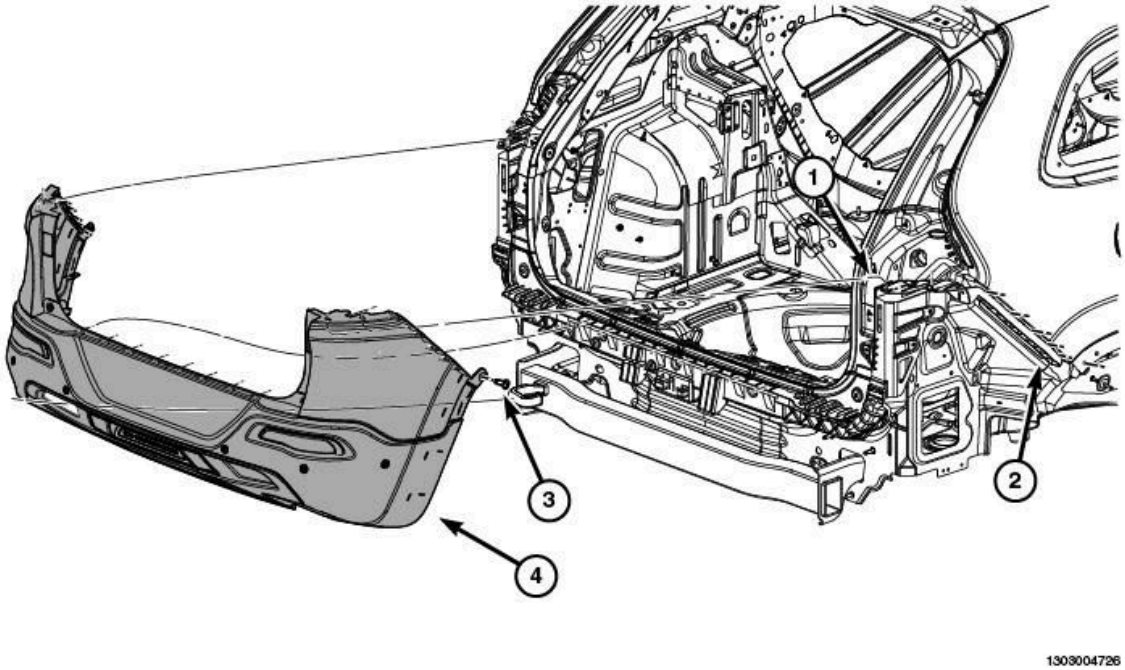

Fig. 152: Push Pins, Side Close Out Deflector & Lower Deflector
Courtesy of CHRYSLER GROUP, LLC

7. Separate the lower air deflector.
8. Remove the engine cover.

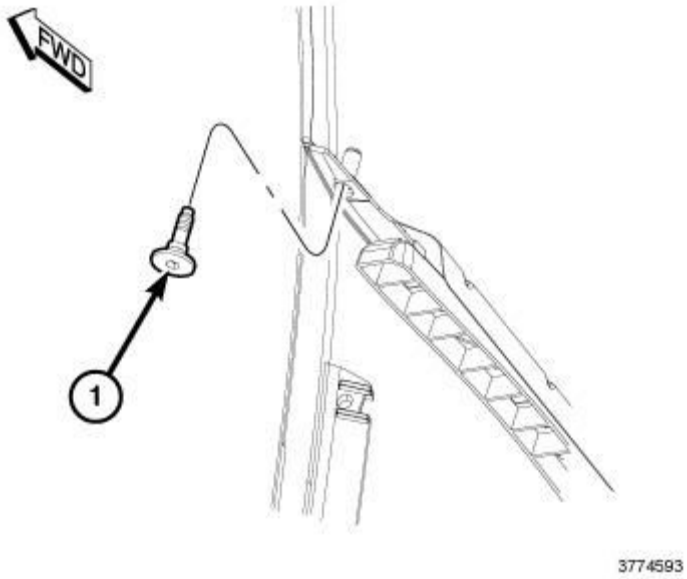

Fig. 153: Upper Close Out Panel Cover Components
Courtesy of CHRYSLER GROUP, LLC

9. Remove the upper close out panel cover (1).

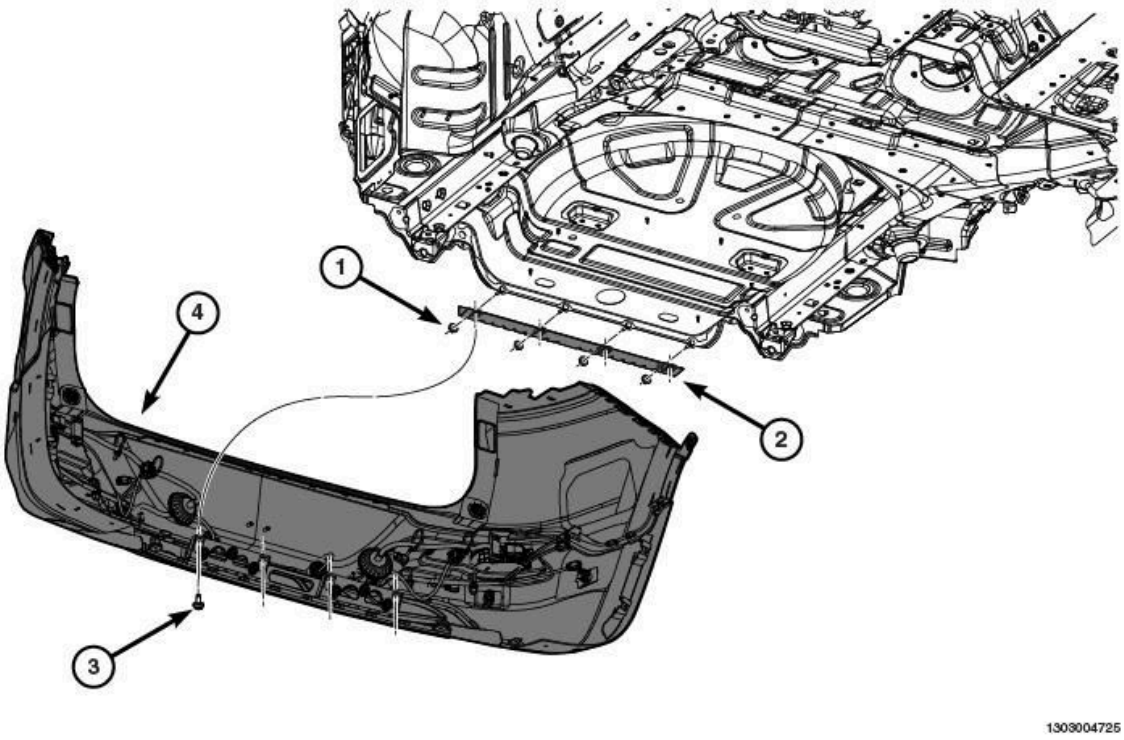

Fig. 154: Side Air Deflectors & Upper Radiator Closeout Panel
Courtesy of CHRYSLER GROUP, LLC

10. Separate the side air deflectors from the upper radiator closeout panel.

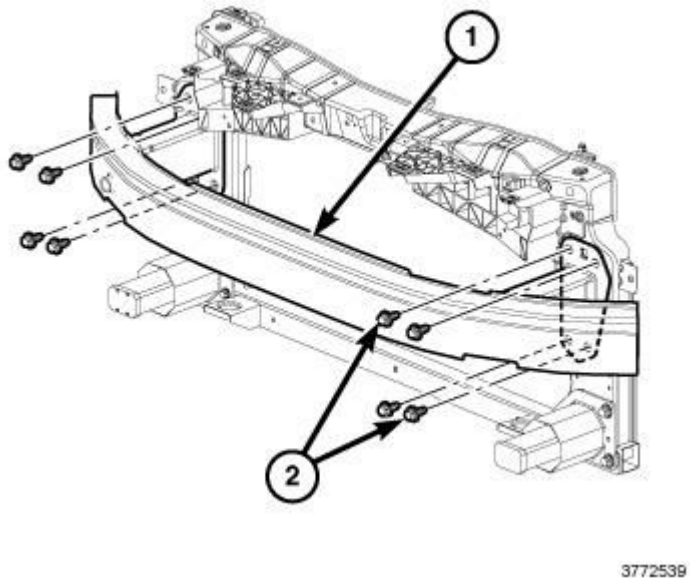

Fig. 155: Removing/Installing Upper Air Deflector
Courtesy of CHRYSLER GROUP, LLC

11. Disconnect the cooling fan module harness connector (4).
12. Disconnect the ambient air temperature sensor (5).
13. Disconnect the horn electrical connectors (6).
14. Remove the hood release cable (3) from the air deflector.
15. Remove the wiring harness (7) from the air deflector.
16. Remove the upper air deflector (1).

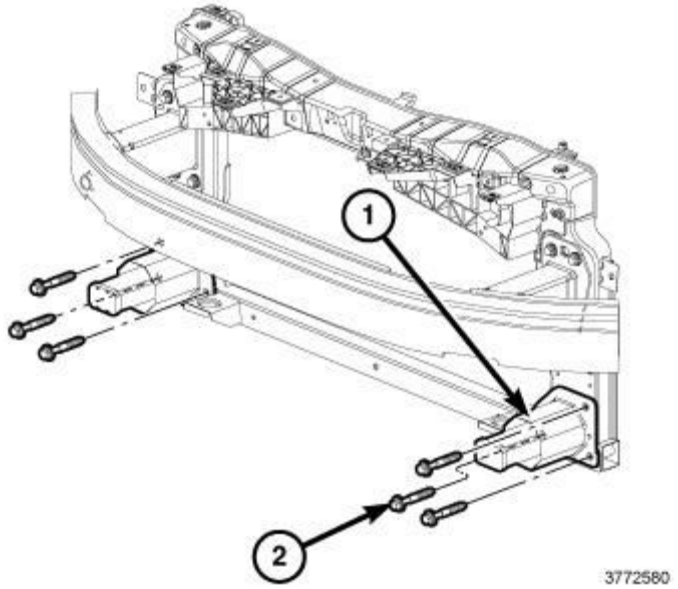

Fig. 156: Removing/Installing A/C Fill Port Support Bracket
Courtesy of CHRYSLER GROUP, LLC

17. Remove the A/C fill port support bracket (2) and position aside.

Fig. 157: Removing/Installing Transmission Cooler Line Support Bracket Bolt
Courtesy of CHRYSLER GROUP, LLC

18. Separate the transmission cooler line support brace bolt (1).

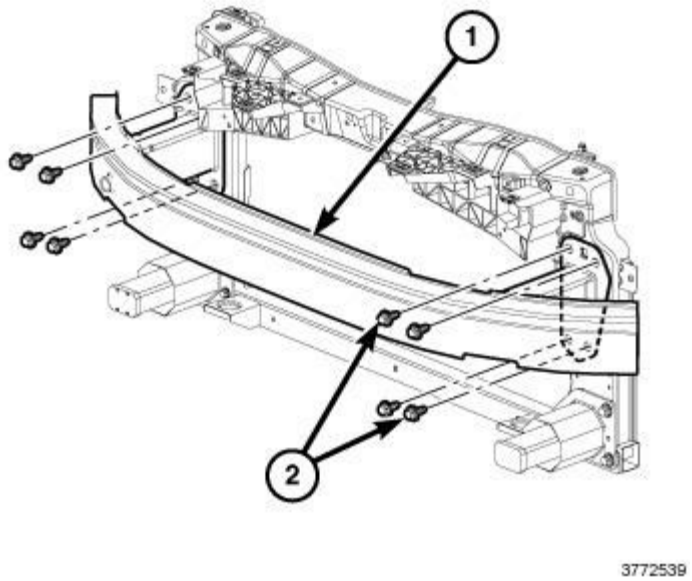

Fig. 158: Radiator & Bolt
Courtesy of CHRYSLER GROUP, LLC

19. Separate the condenser from the radiator (1).

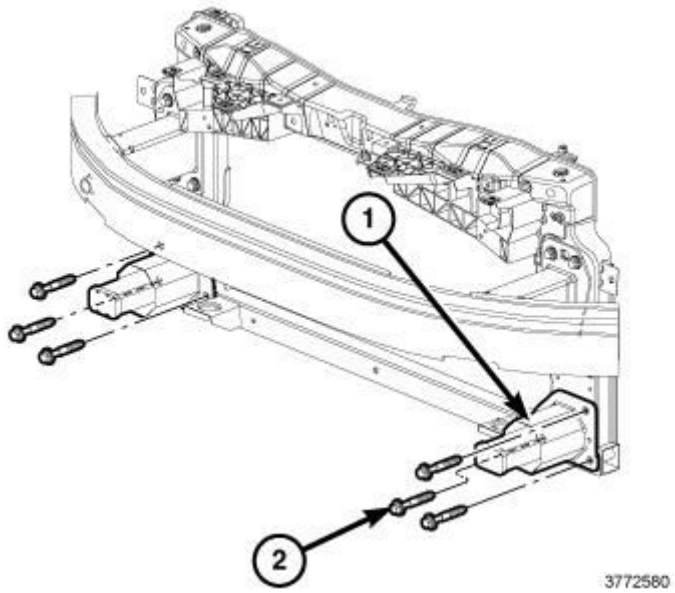

Fig. 159: Removing/Installing Upper Radiator Mounts
Courtesy of CHRYSLER GROUP, LLC

20. Separate the upper radiator hose from the upper cross over pipe.
21. Remove the upper radiator mounts (1).

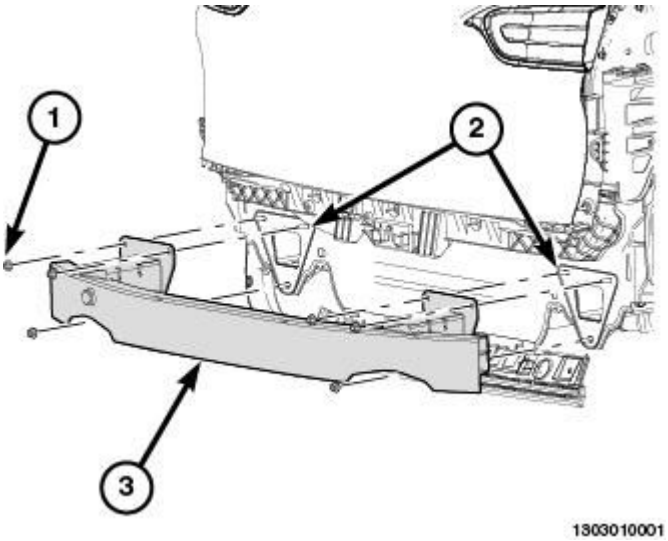

Fig. 160: Removing/Installing Fan Assembly
Courtesy of CHRYSLER GROUP, LLC

22. Disconnect the electrical connector (1) at the cooling fan module (2).
23. Remove the radiator from the vehicle.

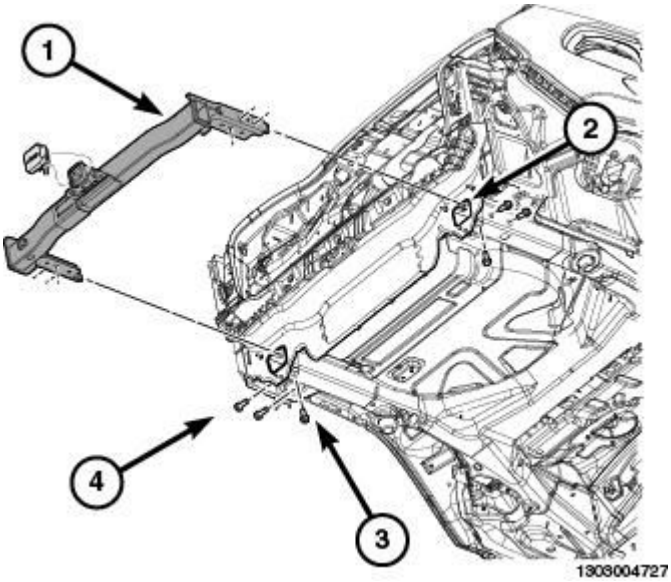

Fig. 161: Fan Assembly & Components
Courtesy of CHRYSLER GROUP, LLC

24. Remove the upper radiator hose (2).
25. Remove the radiator fan assembly.

INSTALLATION

2.0L DIESEL

NOTE: Care must be taken not to damage the radiator cooling fins and tubes during installation.

1. Install the cooling fan onto radiator. Tighten fasteners to 6 N.m (55 in. lbs.).
2. Install the radiator fan/shroud assembly.
3. Install the left and right mounting isolators. Tighten bolts to 8 N.m (71 in. lbs.).
4. Position the wire harness and install the pushpin retainers to secure wire harness.
5. Install the two remaining lower radiator fan shroud fasteners to radiator. Tighten fasteners to 6 N.m (53 in. lbs.).

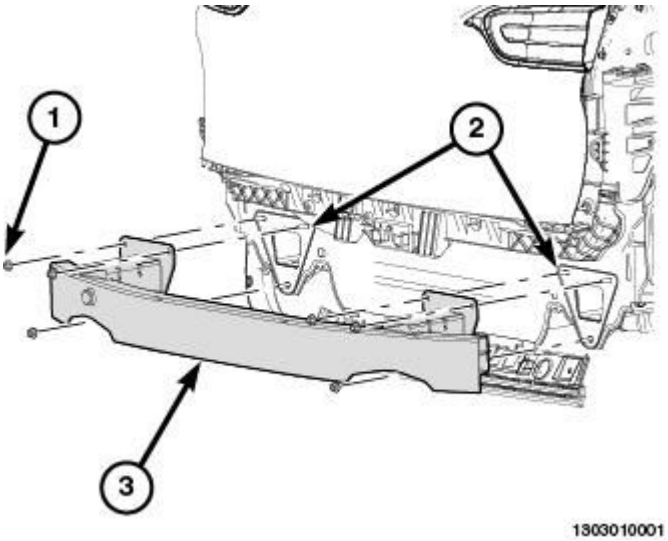

Fig. 162: Removing/Installing Upper Radiator Hose
Courtesy of CHRYSLER GROUP, LLC

6. Lower the vehicle.
7. Connect the upper radiator hose (1).

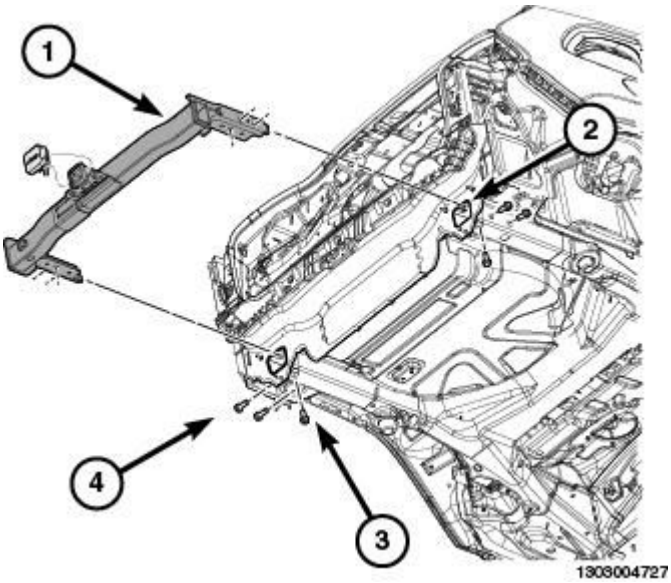

Fig. 163: Removing/Installing Lower Radiator Hose
Courtesy of CHRYSLER GROUP, LLC

8. Connect the lower radiator hose (3) and lock clip (2).

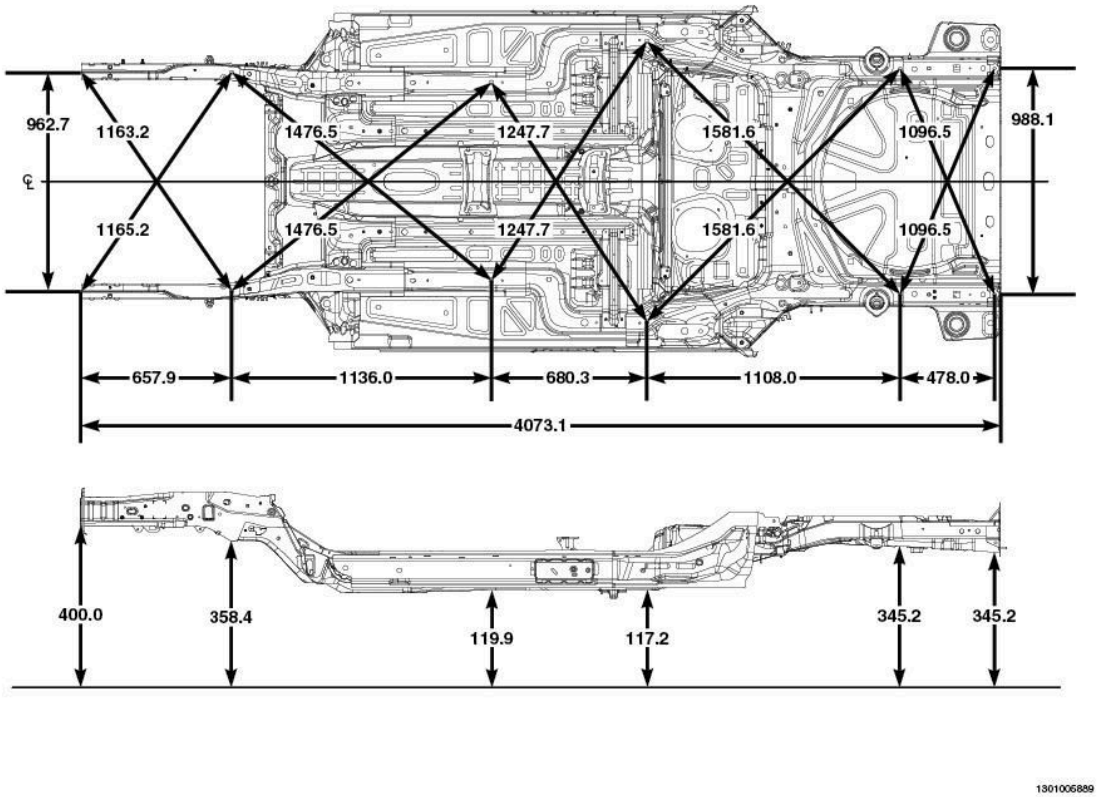

Fig. 164: Cooling Fan Module & Harness Connector
Courtesy of CHRYSLER GROUP, LLC

9. Install the washer reservoir. Refer to **RESERVOIR, WINDSHIELD WASHER, INSTALLATION** .
10. Install the right side radiator air deflector.
11. Install the left side radiator air deflector.

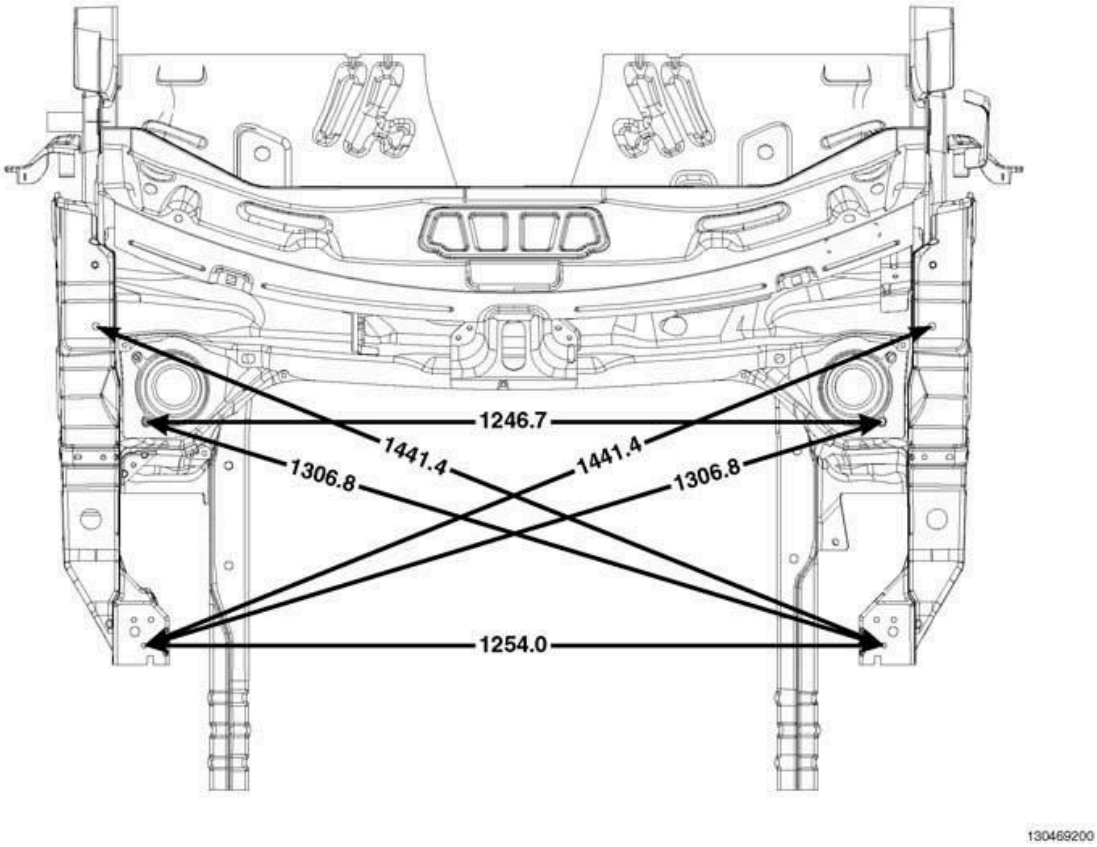

Fig. 165: Ambient Air Temperature Sensor & Wire Harness Connector
Courtesy of CHRYSLER GROUP, LLC

12. Connect the ambient air temperature sensor wire harness connector (2).
13. Install the hood release cable from the air deflector.
14. Connect the horn wire harness connector.
15. Connect the cooling fan module wire harness connector (1).
16. Raise and support the vehicle. Refer to **HOISTING, STANDARD PROCEDURE** .
17. Install the A/C condenser. Refer to **CONDENSER, A/C, INSTALLATION** .
18. Install the Charge Air Cooler (CAC). Refer to **COOLER AND HOSES, CHARGE AIR, INSTALLATION** .
19. Install the front fascia. Refer to **FASCIA, FRONT, INSTALLATION** .
20. Lower the vehicle.

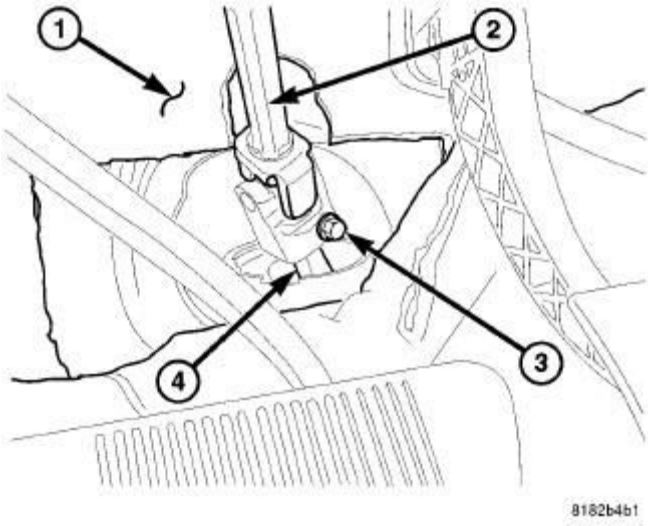

Fig. 166: Upper Close Out Panel Cover Components
Courtesy of CHRYSLER GROUP, LLC

21. Install the upper close out panel cover (1) and fasteners (2, 3, 4).

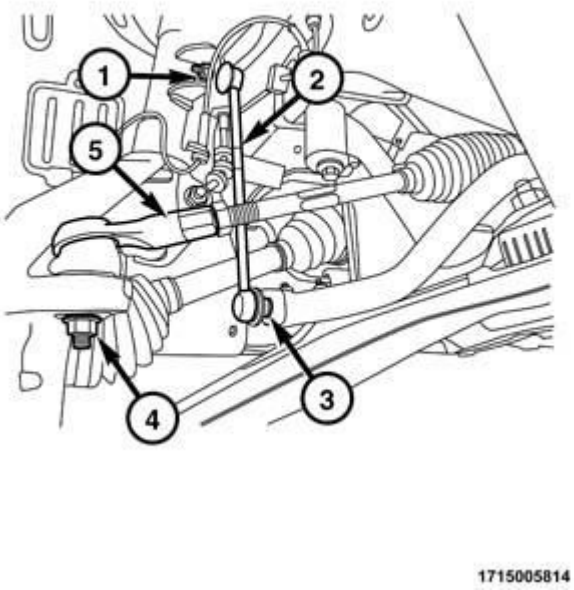

Fig. 167: Engine Cover
Courtesy of CHRYSLER GROUP, LLC

22. Fill the cooling system with appropriate coolant. Refer to **STANDARD PROCEDURE**.
23. Install the battery tray. Refer to **TRAY, BATTERY, INSTALLATION** .

24. Install the engine cover (1).
25. Connect the negative battery cable.
26. Operate the engine until it reaches normal operating temperature. Check the cooling system for correct fluid level.

2.4L

1. Install the cooling fan onto the radiator. Tighten to bolts 8 N.m (70 in. lbs.)

   .

2. Install the upper radiator hose.

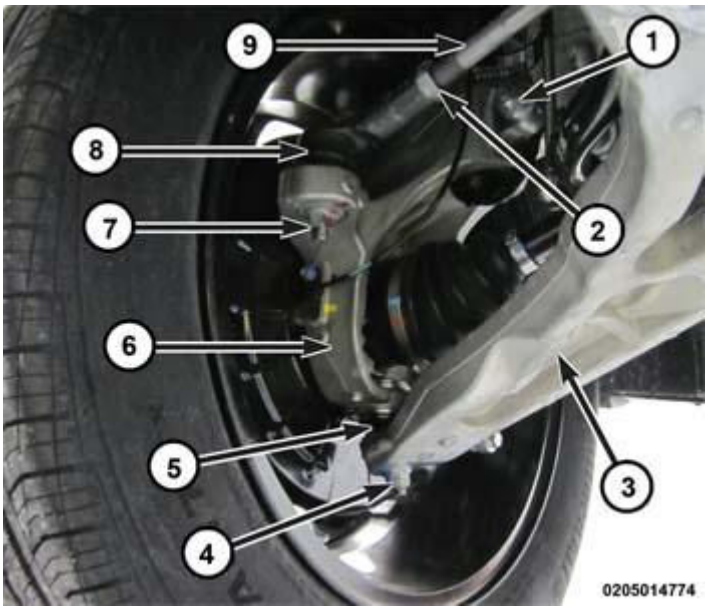

Fig. 168: Lower Mounting Isolator & Bolts
Courtesy of CHRYSLER GROUP, LLC

3. Position the radiator into the lower mounting (1) isolators on the radiator lower support.

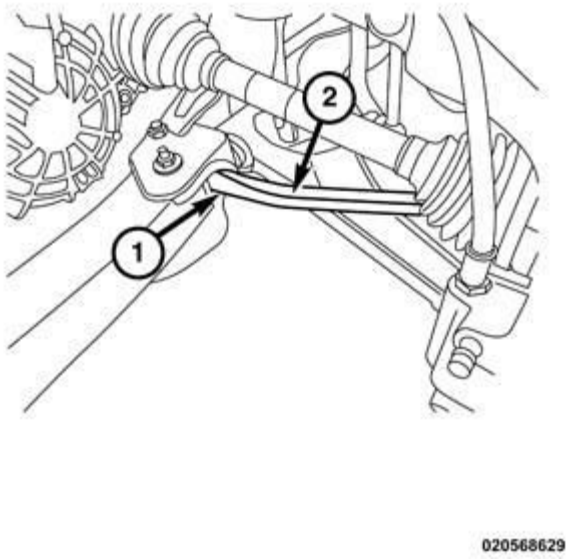

Fig. 169: Radiator & Bolt
Courtesy of CHRYSLER GROUP, LLC

4. Install the condenser to the radiator (1). Tighten the bolts (2) to 8 N.m (70 in. lbs.).

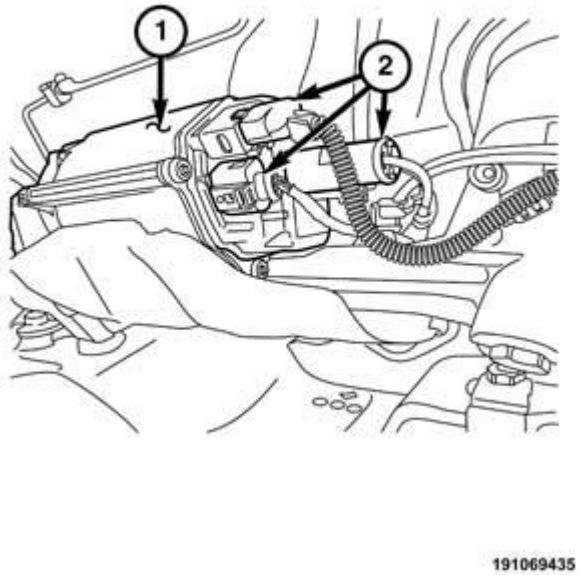

Fig. 170: Removing/Installing Upper Radiator Mounts
Courtesy of CHRYSLER GROUP, LLC

5. Install the upper radiator mounts (1). Tighten bolts to 11 N.m (97 in. lbs.).
6. Fill and bleed the cooling system. Refer to **STANDARD PROCEDURE**.
7. Connect the battery negative cable.

3.2L

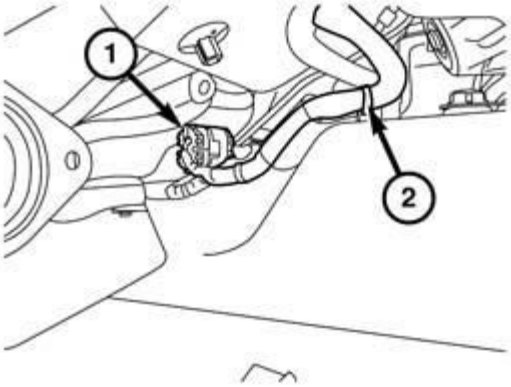

191069436

Fig. 171: Fan Assembly & Components
Courtesy of CHRYSLER GROUP, LLC

1. Install the cooling fan onto the radiator. Tighten to bolts (1) 9 N.m (80 in. lbs.).
2. Install the upper radiator hose (2).

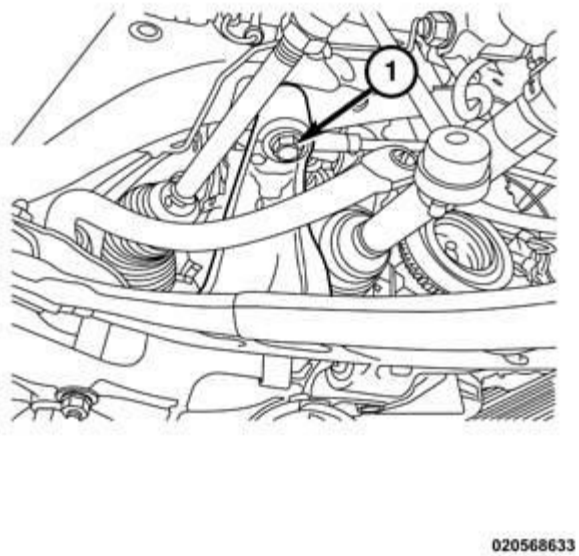

Fig. 172: Lower Mounting Isolator & Bolts
Courtesy of CHRYSLER GROUP, LLC

3. Position the radiator into the lower mounting (1) isolators on the radiator lower support.

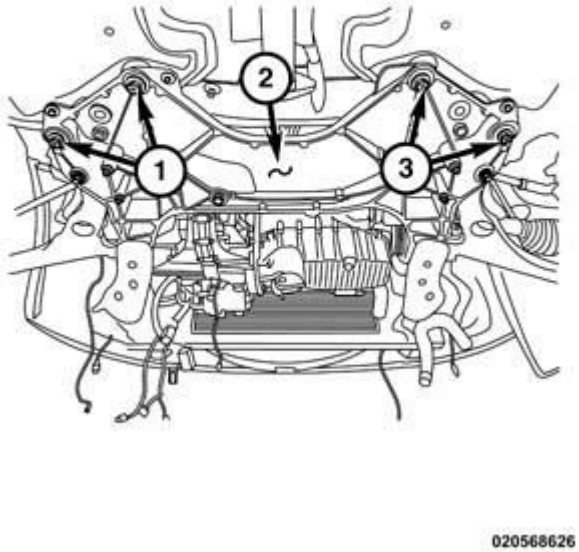

Fig. 173: Radiator & Bolt
Courtesy of CHRYSLER GROUP, LLC

4. Install the condenser to the radiator (1). Tighten the bolts (2) to 8 N.m (70 in. lbs.).

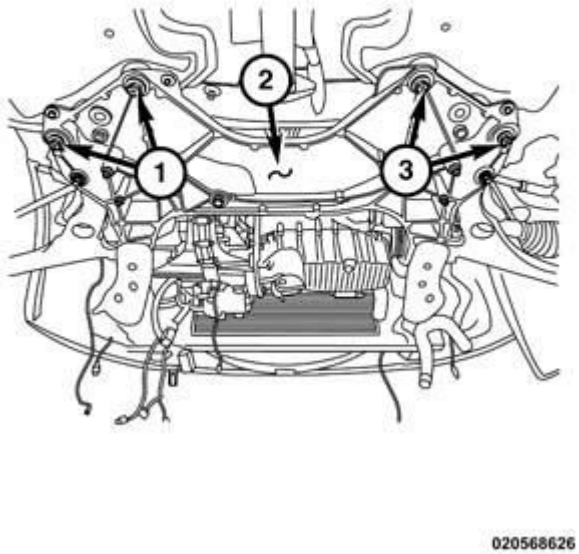

Fig. 174: Removing/Installing Upper Radiator Mounts
Courtesy of CHRYSLER GROUP, LLC

5. Install the upper radiator mounts (1). Tighten bolts to 9 N.m (80 in. lbs.).
6. Install the upper radiator hose
7. Connect the battery negative cable.

SENSOR, COOLANT TEMPERATURE

REMOVAL

2.0L DIESEL

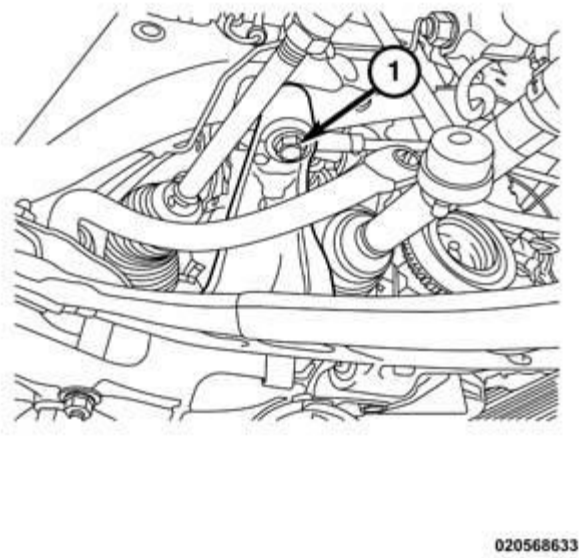

Fig. 175: Engine Cover
Courtesy of CHRYSLER GROUP, LLC

The Engine Coolant Temperature (ECT) sensor on the 2.0L engine is installed at the front of the cylinder head below the vacuum pump located on the EGR coolant control valve housing.

WARNING: Hot, pressurized coolant can cause injury by scalding. Cooling system must be partially drained before removing the coolant temperature sensor.

NOTE: Do not waste reusable coolant. If solution is clean, drain coolant into a clean container for reuse.

1. Disconnect and isolate the negative battery cable.
2. Remove the engine cover (1).
3. Partially drain the cooling system. Refer to **STANDARD PROCEDURE**.

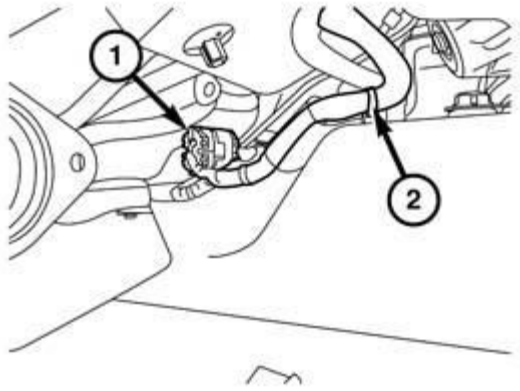

191069436

Fig. 176: Cooling Temperature Sensor & Wire Harness Connector
Courtesy of CHRYSLER GROUP, LLC

4. Disconnect the Engine Cooling Temperature (ECT) sensor wire harness connector (1).
5. Remove the ECT sensor (2) from the EGR coolant control valve housing.

2.4L

CAUTION: Do not loosen radiator draincock with system hot and pressurized. Serious burns from coolant can occur.

1. Remove the engine cover.
2. Disconnect and isolate the battery negative cable.
3. Raise and support the vehicle.
4. Remove the belly pan.
5. Drain the cooling system.
6. Lower vehicle.
7. Remove the battery

   Refer to **BATTERY, REMOVAL** .

8. Remove the PCM

   Refer to **MODULE, POWERTRAIN CONTROL, REMOVAL** .

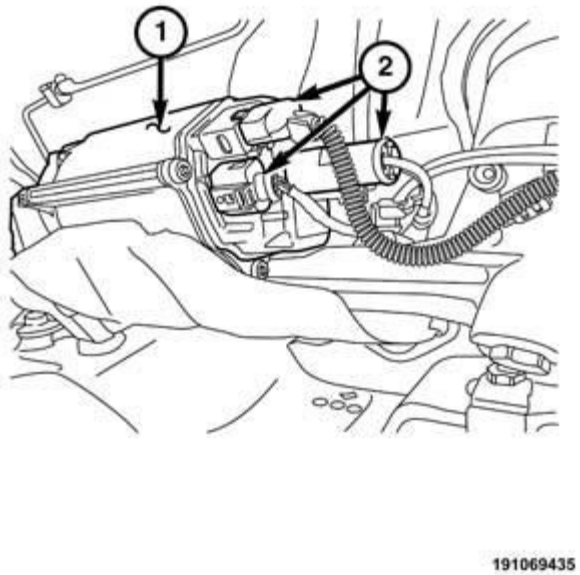

Fig. 177: Battery Tray, PCM Mount & Bolts
Courtesy of CHRYSLER GROUP, LLC

9. Remove the PCM mount bolts (2 & 4).
10. Remove the PCM mount (3) from the battery tray (1).

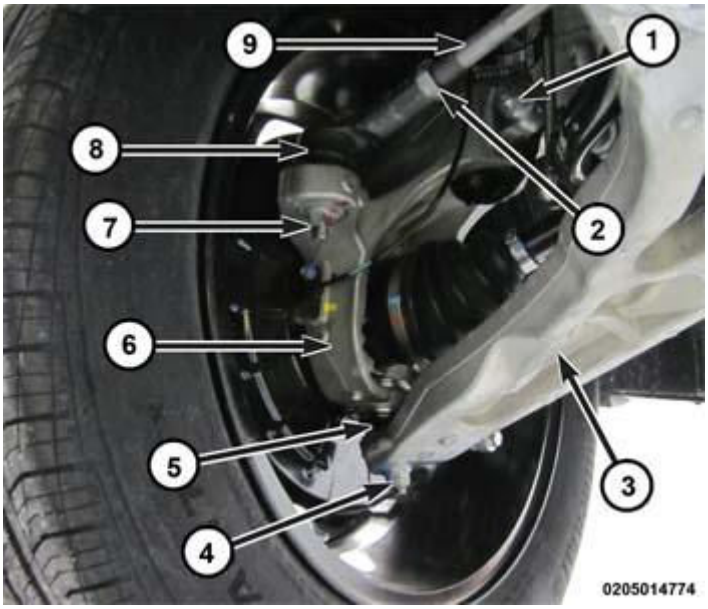

Fig. 178: Thermostat Housing, Hose Outlets/Inlets & Coolant Temperature Sensor
Courtesy of CHRYSLER GROUP, LLC

11. Disconnect the engine coolant temperature sensor harness connector.

12. Remove the engine coolant temperature sensor (2).

3.2L

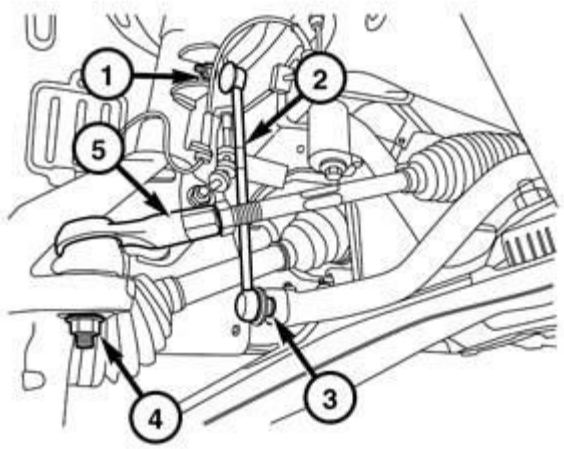

1715005814

Fig. 179: Identifying Engine Coolant Temperature Sensor
Courtesy of CHRYSLER GROUP, LLC

The Engine Coolant Temperature (ECT) sensor on the 3.2L engine is installed into a water jacket at rear of the cylinder head on the left side of the engine.

WARNING: Hot, pressurized coolant can cause injury by scalding. Cooling system must be partially drained before removing the coolant temperature sensor.

NOTE: Do not waste reusable coolant. If solution is clean, drain coolant into a clean container for reuse.

1. Partially raise the vehicle.
2. Partially drain the cooling system. Refer to **STANDARD PROCEDURE**.
3. Lower the vehicle.
4. Slide the heat shield (1) away from the temperature sensor (2).
5. Disconnect the electrical connector from the temperature sensor.
6. Remove the sensor from the cylinder head (3).

INSTALLATION

2.0L DIESEL

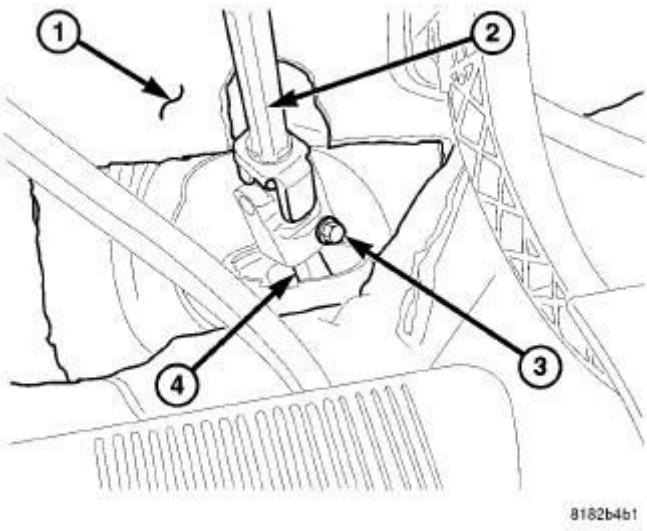

Fig. 180: Cooling Temperature Sensor & Wire Harness Connector
Courtesy of CHRYSLER GROUP, LLC

1. Apply MOPAR® thread sealant with PFTE part number 04318034 to sensor threads.
2. Install the Engine Cooling Temperature (ECT) sensor (2) to cylinder head. Tighten sensor to 11 N.m (97 in. lbs.).
3. Connect the ECT sensor wire harness connector (1).

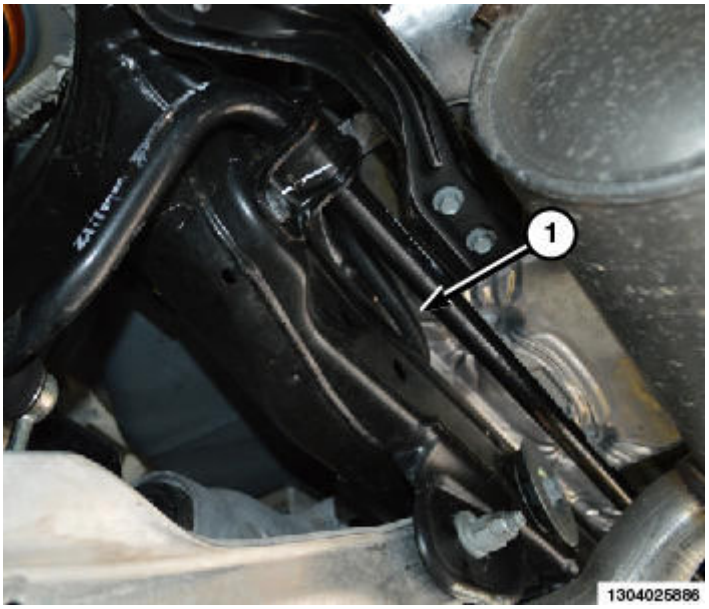

Fig. 181: Engine Cover
Courtesy of CHRYSLER GROUP, LLC

4. Install the engine cover.
5. Replace any lost engine coolant. Refer to **STANDARD PROCEDURE**.
6. Connect the negative battery cable.

2.4L

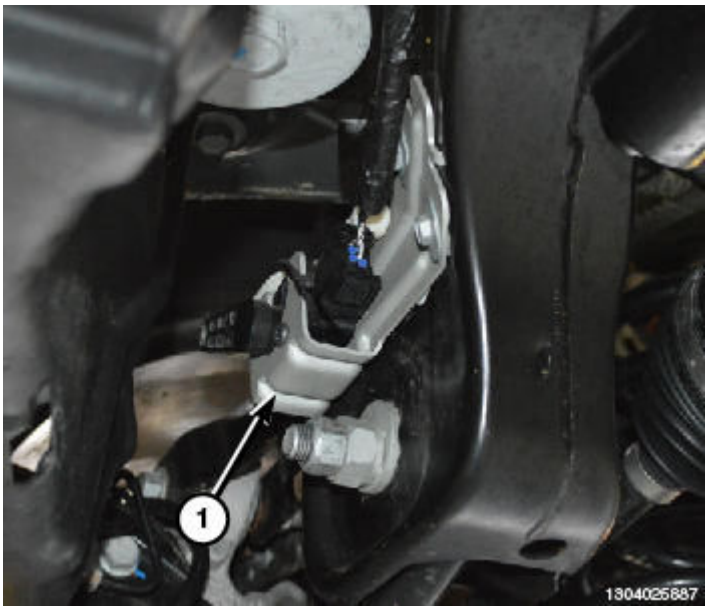

Fig. 182: Thermostat Housing, Hose Outlets/Inlets & Coolant Temperature Sensor
Courtesy of CHRYSLER GROUP, LLC

1. Install the engine coolant temperature sensor (2).
2. Connect the connector.

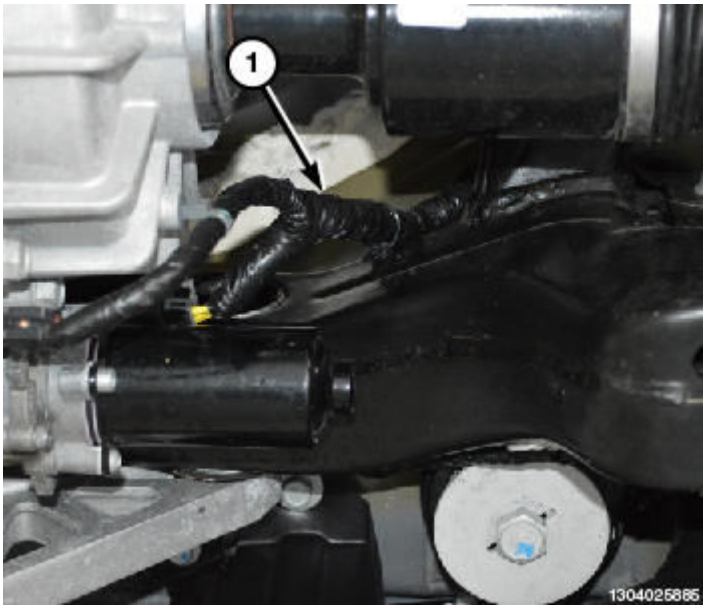

Fig. 183: Battery Tray, PCM Mount & Bolts
Courtesy of CHRYSLER GROUP, LLC

3. Install the PCM mount (3) to the battery tray (1).
4. Install the PCM mount bolts (2 & 4).
5. Install the PCM

   Refer to **MODULE, POWERTRAIN CONTROL, INSTALLATION** .

6. Install the battery. Tighten the clamp nut to 5 N.m (44 in. lbs.).
7. Fill the cooling system. Refer to **STANDARD PROCEDURE**.
8. Install the engine cover.

3.2L

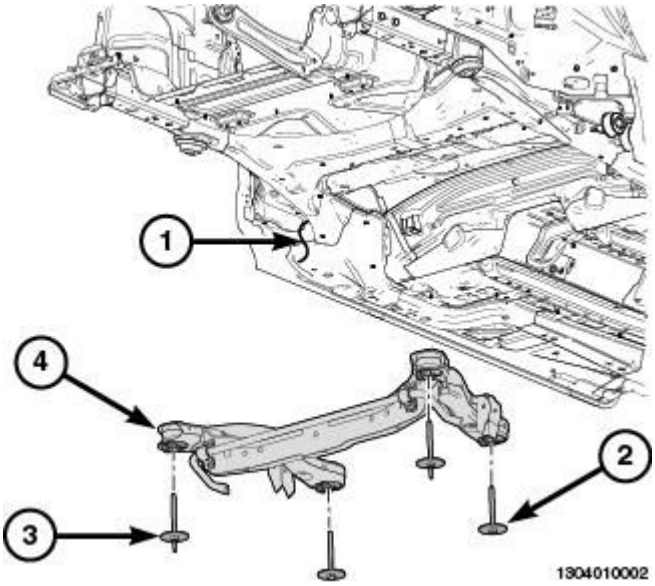

Fig. 184: Identifying Engine Coolant Temperature Sensor
Courtesy of CHRYSLER GROUP, LLC

1. Apply MOPAR® thread sealant with PFTE to sensor threads.
2. Install sensor (2) to cylinder head (3).
3. Tighten sensor to 30 N.m (22 ft. lbs.).
4. Connect electrical connector to temperature sensor.
5. Replace any lost engine coolant. Refer to **STANDARD PROCEDURE**.

THERMOSTAT

DESCRIPTION

2.0L DIESEL

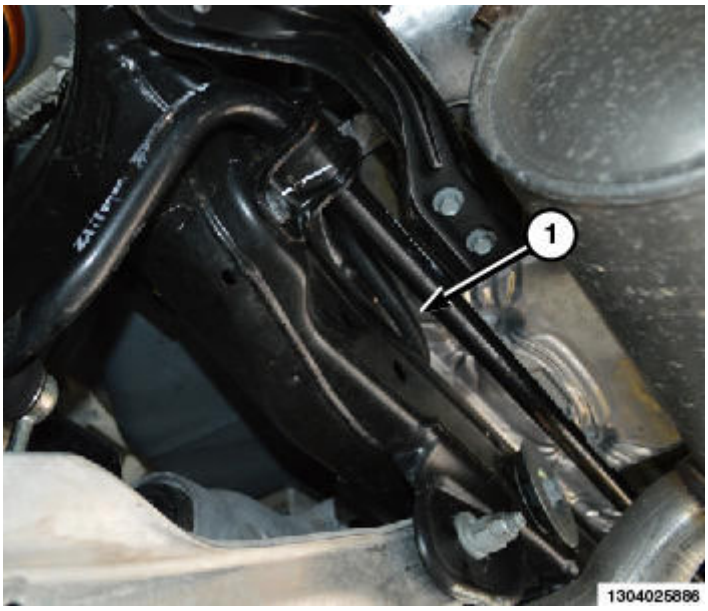

Fig. 185: Thermostat Housing Mounting Bolts & Lower Thermostat Support Brace Bolt
Courtesy of CHRYSLER GROUP, LLC

The thermostat for the 2.0L diesel engines is located on the left side of the engine by the EGR cooler manifold The thermostat housing is equipped with an air bleed vent.

OPERATION

OPERATION

The engine cooling thermostat is a wax pellet driven, reverse poppet choke type. The thermostat is designed to provide the fastest warm up possible operating temperature of 88°C (190°F). The thermostat also will automatically reach wide open so it will not restrict flow to the radiator as temperature of the coolant rises in hot weather. Above this temperature the coolant temperature is controlled by the radiator, fan, and ambient temperature, not the thermostat.

REMOVAL

2.0L DIESEL

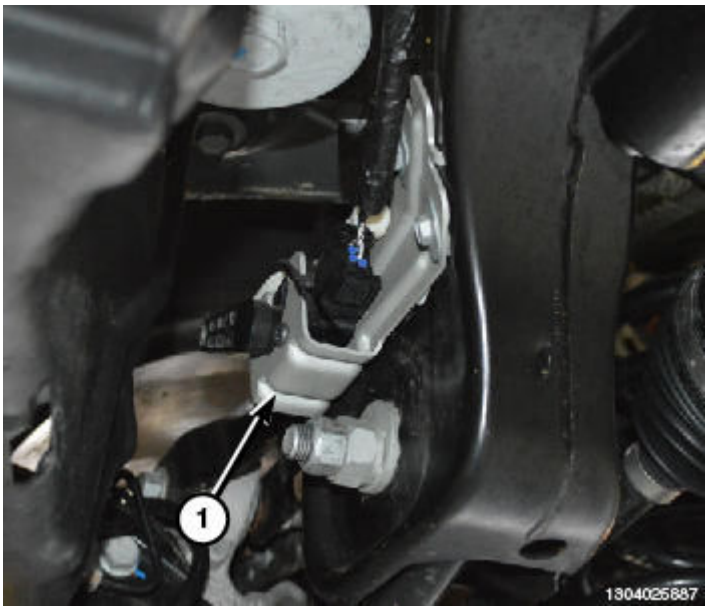

Fig. 186: Engine Cover
Courtesy of CHRYSLER GROUP, LLC

1. Disconnect the negative battery cable.
2. Remove the engine cover (1).
3. Drain the cooling system. Refer to **STANDARD PROCEDURE**.

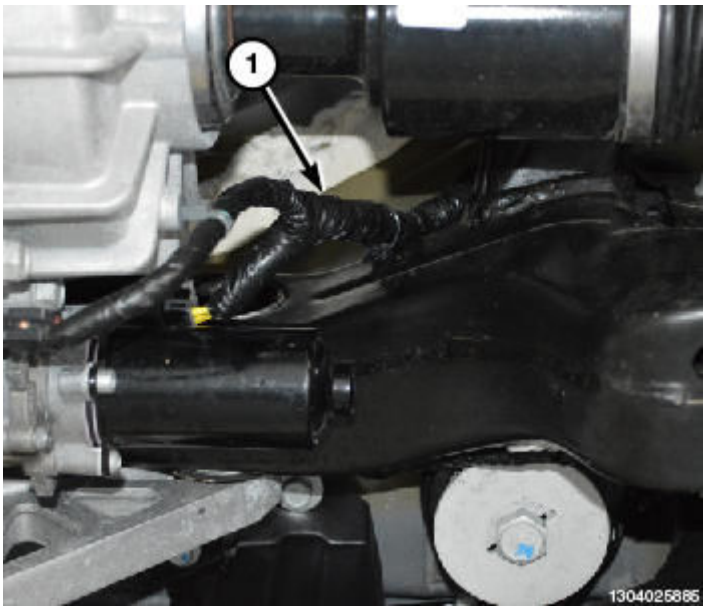

Fig. 187: Thermostat Housing & Hoses
Courtesy of CHRYSLER GROUP, LLC

4. Remove the coolant hose (2) from the thermostat housing.
5. Remove the upper radiator hose (1) from the thermostat housing.

6. Remove the left charge Air Cooler (CAC) hose. Refer to **COOLER AND HOSES, CHARGE AIR, REMOVAL** .

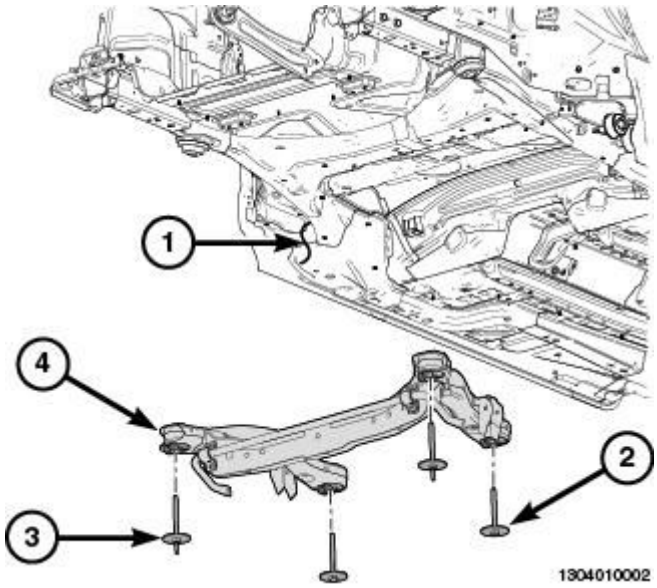

Fig. 188: Thermostat Housing Mounting Bolts & Lower Thermostat Support Brace Bolt
Courtesy of CHRYSLER GROUP, LLC

7. Remove bolts (1) and the thermostat housing.

2.4L

CAUTION: Do not loosen radiator draincock with system hot and pressurized. Serious burns from coolant can occur.

CAUTION: The Thermostat and housing is serviced as an assembly. Do not remove the thermostat from the housing, damage to the thermostat may occur.

1. Remove the engine cover.
2. Disconnect and isolate the battery negative cable.
3. Raise and support the vehicle.
4. Remove the belly pan.
5. Drain the cooling system.
6. Lower vehicle.
7. Remove the battery.
8. Remove the battery tray assembly

   Refer to **TRAY, BATTERY, REMOVAL** .

9. Remove the brake vacuum pump

   Refer to **PUMP, VACUUM, REMOVAL** .

10. Remove the three bolts that attach the PDC to the body.
11. Position the PDC to the side to allow for thermostat housing removal.

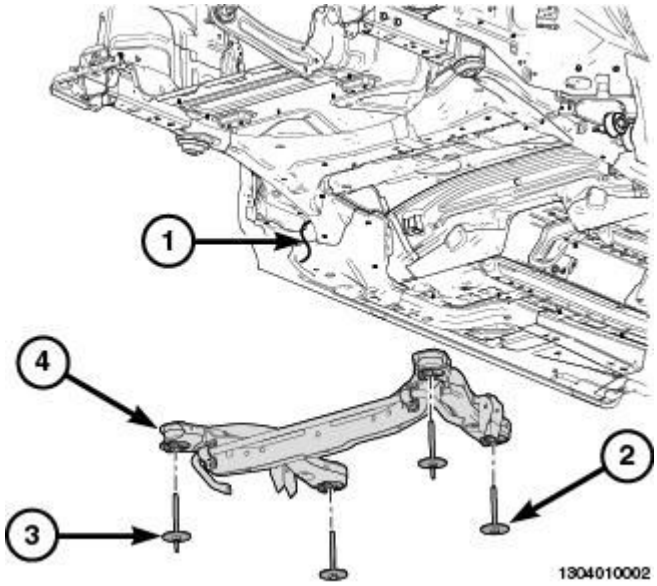

Fig. 189: Intake Manifold Upper Support Bracket, Bolts & Nuts
Courtesy of CHRYSLER GROUP, LLC

12. Remove the intake manifold upper support bracket (1) bolts (3).
13. Looses but do not remove the bracket nuts (2).

NOTE: **The bracket can not be removed at this time, loosening the nuts allow the necessary movement for the thermostat housing to be removed.**

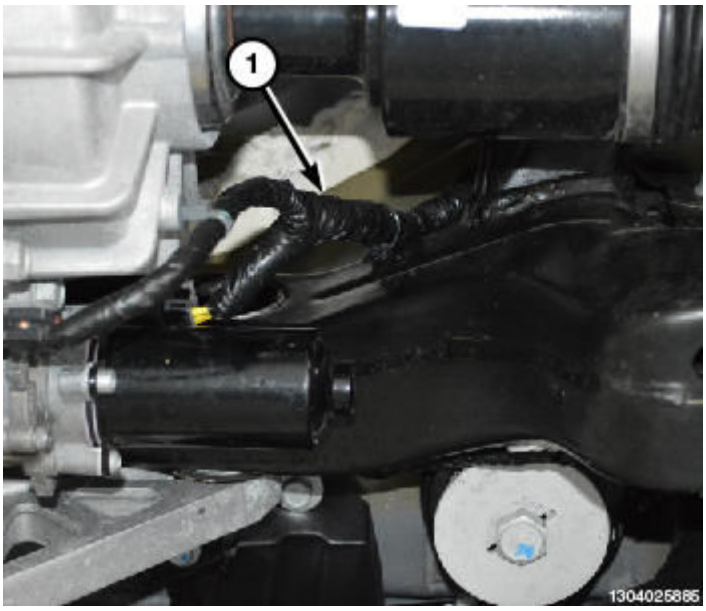

Fig. 190: Thermostat Housing, Hose Outlets/Inlets & Coolant Temperature Sensor
Courtesy of CHRYSLER GROUP, LLC

14. Remove the coolant recovery bottle return hose (1).
15. Disconnect the engine coolant temperature sensor harness connector (2).
16. Disconnect the forward most shift cable from the transmission lever.
17. Remove the heater core supply hose (4). (special tool #10288, Pliers, Hose Clamp)
18. Using Special Tool 10288, release the clamps at the heater core return (5) and thermostat outlet (7).
19. Remove the heater core return hose (5).
20. Remove the thermostat outlet hose (7).
21. Remove the thermostat housing bolts (3).
22. Remove the thermostat housing (6) from the engine.

3.2L

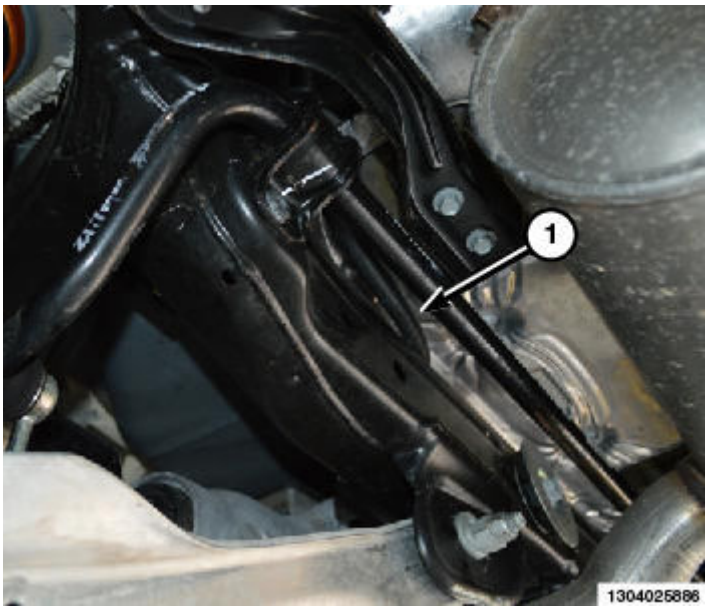

Fig. 191: Thermostat Housing & Thermostat
Courtesy of CHRYSLER GROUP, LLC

WARNING: Do not loosen radiator draincock with system hot and pressurized. Serious burns from coolant can occur.

CAUTION: The Thermostat and housing is serviced as an assembly. Do not remove the thermostat from the housing, damage to the thermostat may occur.

Do not waste reusable coolant. If solution is clean, drain coolant into a clean container for reuse.

If thermostat is being replaced, be sure that replacement is specified thermostat for vehicle model and engine type.

1. Disconnect negative battery cable at battery.
2. Remove the air intake assembly. Refer to **BODY, AIR CLEANER, REMOVAL** .
3. Drain cooling system. Refer to **STANDARD PROCEDURE**.

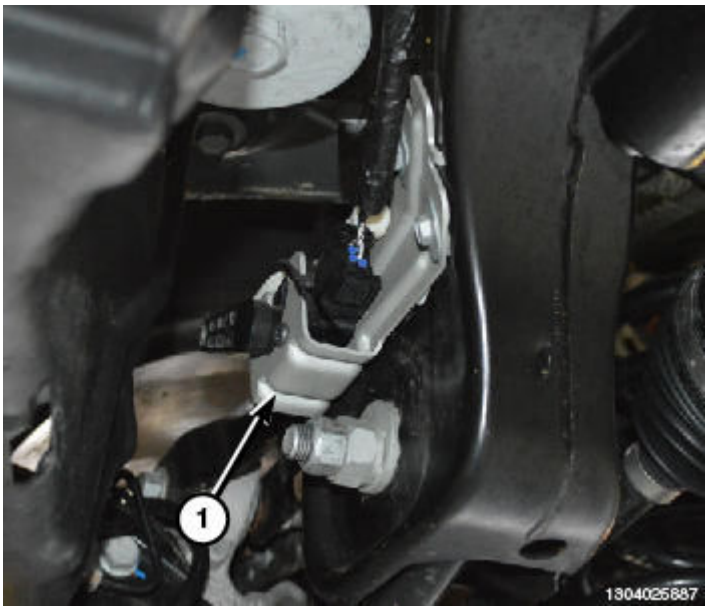

Fig. 192: Removing/Installing Thermostat
Courtesy of CHRYSLER GROUP, LLC

4. Remove upper radiator hose (3) at thermostat housing (2).
5. Remove thermostat housing mounting bolts (4).

INSTALLATION

2.0L DIESEL

NOTE: Use coolant on the seals of the thermostat housing so the seals wont become damaged and to help aid in installation.

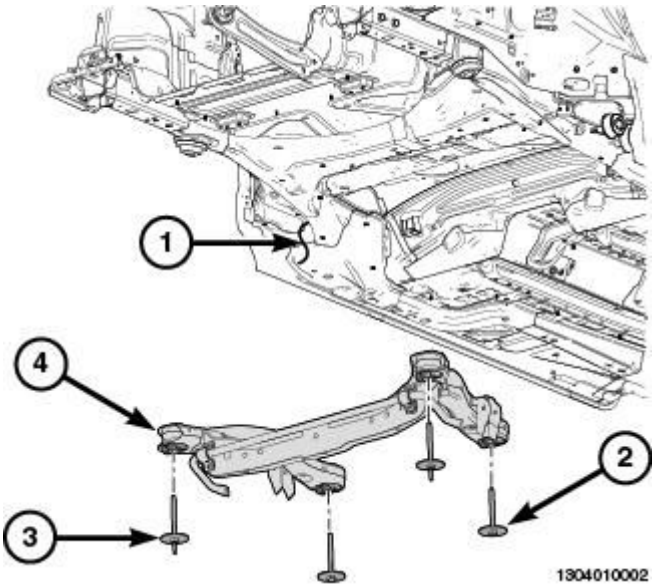

Fig. 193: Thermostat Housing Mounting Bolts & Lower Thermostat Support Brace Bolt
Courtesy of CHRYSLER GROUP, LLC

1. Install the thermostat onto the EGR coolant flow control valve (3).
2. Install the thermostat housing mounting bolts (1). Tighten the bolts to 9 N.m (80 in. lbs.).
3. Install the lower thermostat support brace bolt (5). Tighten the bolts to 9 N.m (80 in. lbs.).
4. Install the left charge Air Cooler (CAC) hose. Refer to **COOLER AND HOSES, CHARGE AIR, INSTALLATION** .

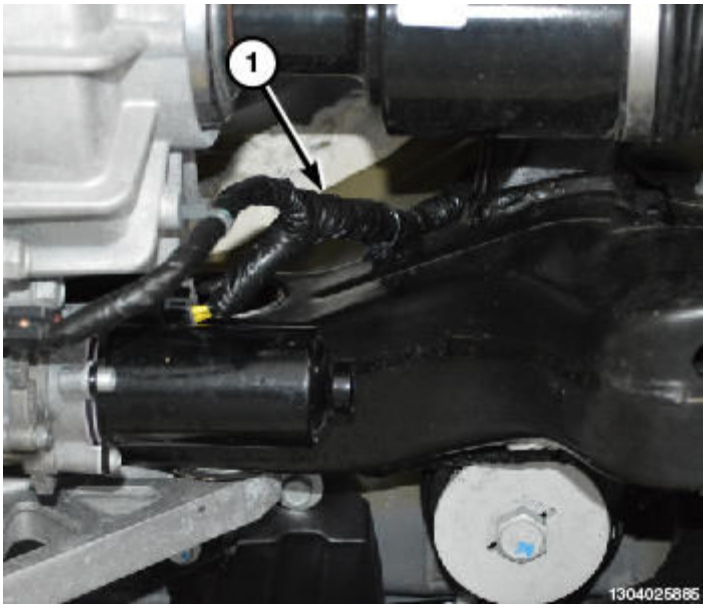

Fig. 194: Thermostat Housing & Hoses
Courtesy of CHRYSLER GROUP, LLC

5. Install the upper radiator hose (1) onto the thermostat housing.
6. Install the coolant hose (2) onto the thermostat housing.
7. Fill the cooling system. Refer to **STANDARD PROCEDURE**.

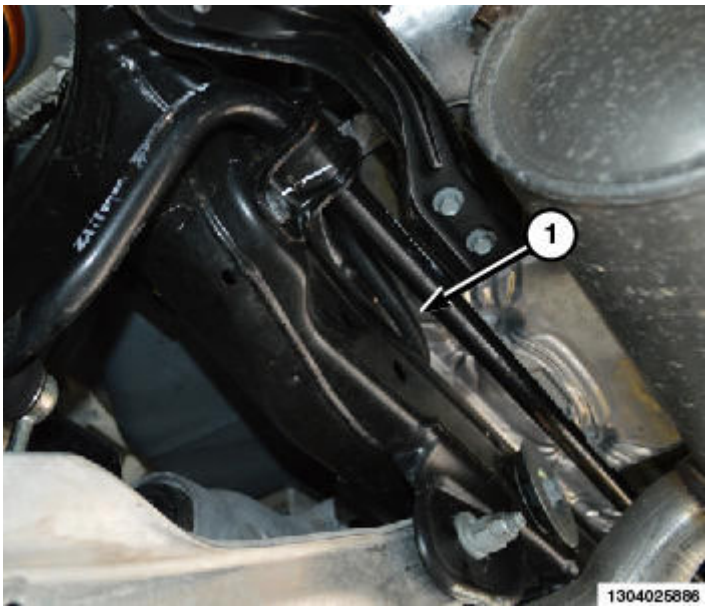

Fig. 195: Engine Cover
Courtesy of CHRYSLER GROUP, LLC

8. Install the engine cover (1).
9. Connect the negative battery cable.
10. Run engine to operating temperature, check for leaks and proper operation.

2.4L

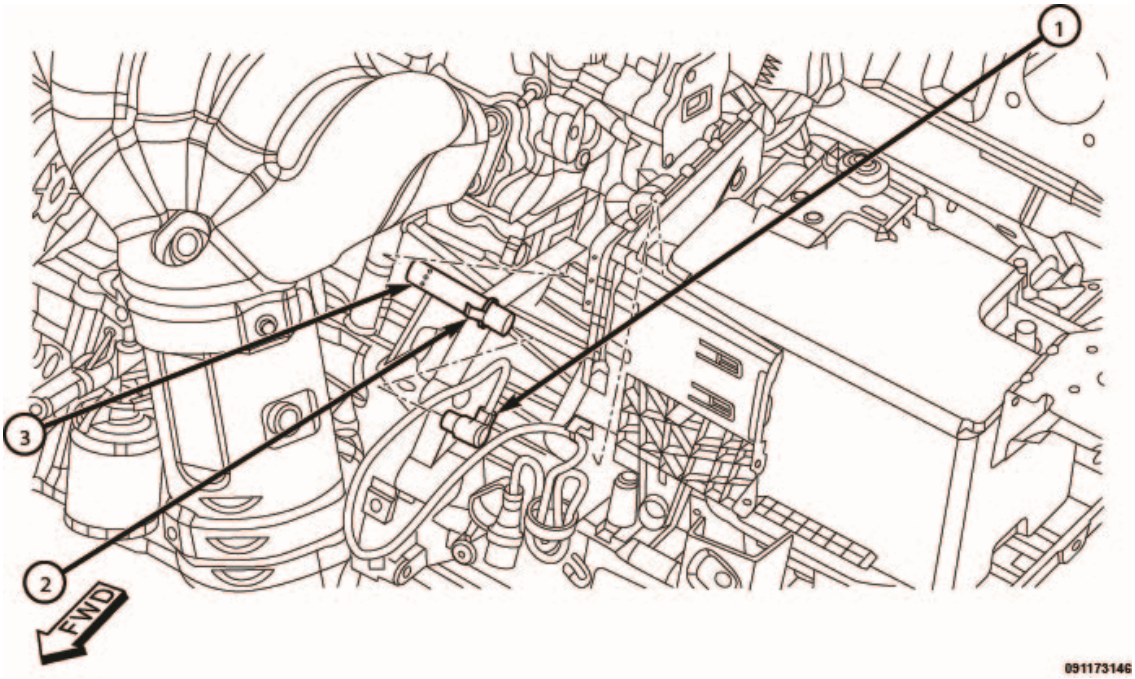

Fig. 196: Removing/Installing Engine Block Heater
Courtesy of CHRYSLER GROUP, LLC

1. Insert the block heater (3) into the block bore.
2. Push the heater to the left until the tab (2) catches onto the block.
3. Plug the block heater cord (1) into the heater.
4. Install the engine cover.

3.2L

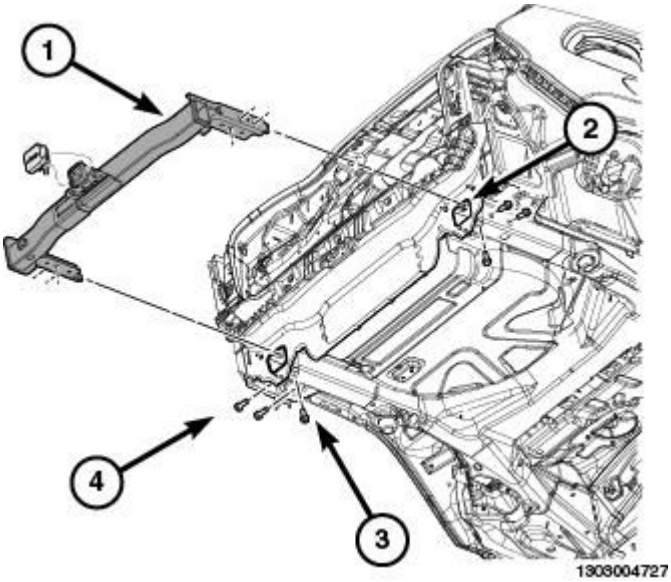

Fig. 197: Thermostat Housing & Thermostat
Courtesy of CHRYSLER GROUP, LLC

CAUTION: The Thermostat and housing is serviced as an assembly. Do not remove the thermostat from the housing, damage to the thermostat may occur.

1. Clean mating areas of timing chain cover and thermostat housing (1).
2. Install a new gasket on to the thermostat housing.

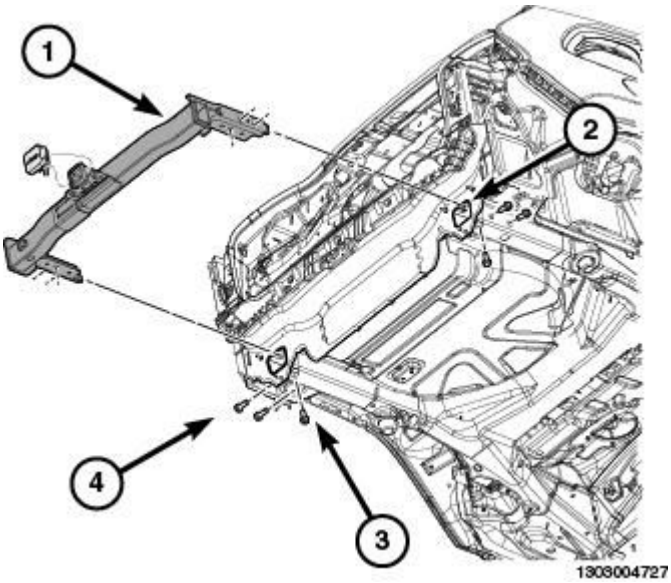

Fig. 198: Removing/Installing Thermostat
Courtesy of CHRYSLER GROUP, LLC

3. Position thermostat housing (1) on the water crossover.
4. Install two thermostat housing bolts (4). Tighten bolts to 12 N.m (106 in. lbs.).
5. Install upper radiator hose on thermostat housing (3).
6. Fill cooling system. Refer to **STANDARD PROCEDURE**.
7. Install the air intake system. Refer to **BODY, AIR CLEANER, INSTALLATION** .
8. Connect negative battery cable to battery.
9. Start and warm the engine. Check for leaks.

TRANSMISSION

COOLER, TRANSMISSION OIL

DESCRIPTION

DESCRIPTION

The automatic transmission cooler is located in the front of the condenser and behind the front fascia. The transmission cooler is a heat exchanger that allows heat in the transmission fluid to be transferred to the air passing over the cooler fins.

The Transmission oil cooler assembly is equipped with quick connect fitting for the transmission oil cooler lines.

OPERATION

OPERATION

Transmission oil is routed through the cooler where heat is removed from the transmission oil before returning to the transmission.

REMOVAL

REMOVAL

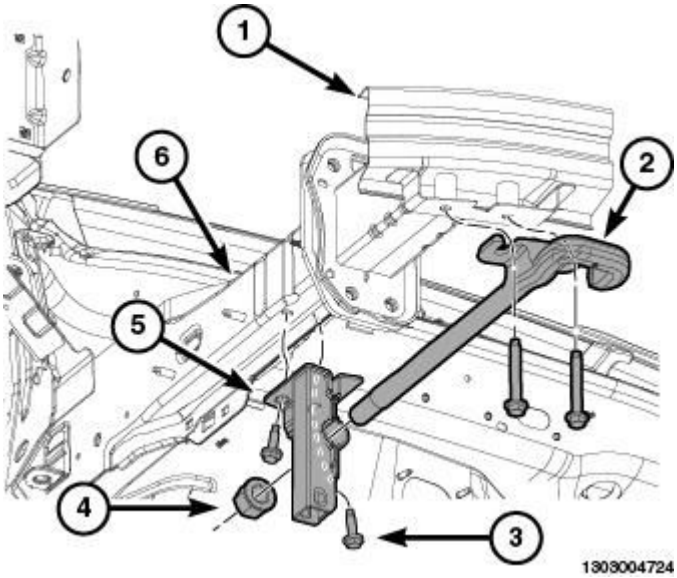

Fig. 199: Transmission Oil Cooler
Courtesy of CHRYSLER GROUP, LLC

1. Remove the cooler line bracket bolts (1, 3).
2. Release the lines from the cooler at the cooler quick connects (4, 5).

INSTALLATION

INSTALLATION

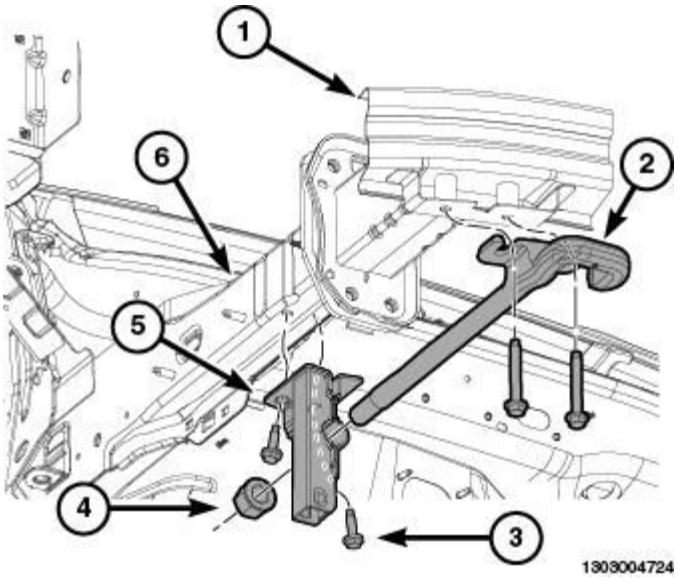

Fig. 200: Transmission Oil Cooler
Courtesy of CHRYSLER GROUP, LLC

1. Position the transmission oil cooler (2) to the condenser.
2. Tighten the bolts (1, 3) to 9 N.m (80 in. lbs.).
3. Install the transmission cooler (4, 5) lines to the transmission cooler.
4. Check transmission fluid level, add as necessary.

2014 ENGINE

Exhaust System - Cherokee

DESCRIPTION

DIESEL

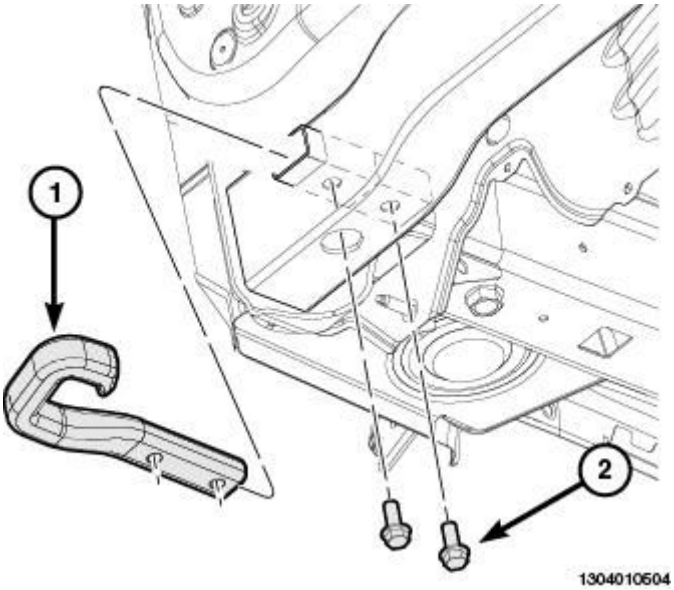

Fig. 1: Exhaust System Components
Courtesy of CHRYSLER GROUP, LLC

The exhaust system on the 2.0L diesel engine models consists of a Turbocharger, Diesel Particulate Filter (DPF), front exhaust pipe, resonator, muffler assembly, band clamp, and support isolators. The upstream oxygen sensor is located in the Diesel Particulate Filter (DPF).

DESCRIPTION

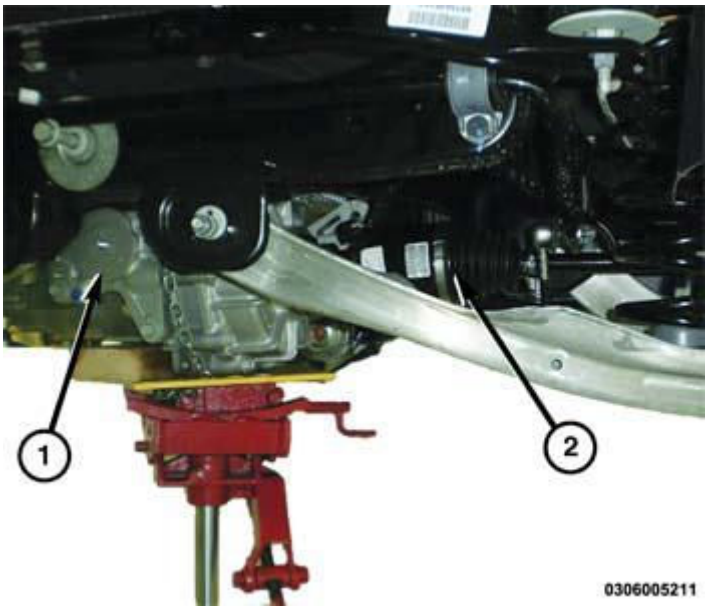

Fig. 2: Exhaust System Components
Courtesy of CHRYSLER GROUP, LLC

The exhaust system on the 2.4L exhaust engine models consists of a front mounted catalytic converter, resonator/pipe assembly, muffler/pipe assembly with two outlets, band clamps, and support isolators. The upstream oxygen sensor is located in the exhaust manifold. The downstream oxygen sensor is located in the catalytic converter.

The exhaust system on the 3.2L exhaust engine models consists of a front and rear mounted catalytic converter, cross under pipe, Y-pipe, resonator/pipe assembly, muffler/pipe assembly with a dual outlet, band clamps, and support isolators. The upstream oxygen sensor is located in the exhaust manifold. The downstream oxygen sensor is located in the catalytic converter.

Resonators, mufflers, and exhaust pipes are tuned to each powertrain combination.

DIAGNOSIS AND TESTING

EXCESSIVE EXHAUST SYSTEM NOISE

CONDITION	POSSIBLE CAUSES	CORRECTION
EXCESSIVE EXHAUST NOISE (UNDER HOOD)	1. Exhaust manifold cracked or broken.	1. Replace manifold.
	2. Manifold to cylinder head leak.	2. Tighten manifold and/or replace gasket.
	3. EGR Valve to manifold gasket leakage.	3. Tighten fasteners or replace gasket.
	4. EGR Valve to EGR tube gasket leakage.	4. Tighten fasteners or replace gasket.
	5. EGR tube to manifold tube	5. Tighten tube nut.

	leakage.	
	6. Exhaust flex-joint to manifold leak.	6. Tighten joint fasteners and/or replace gasket.
	7. Exhaust flex-joint.	7. Replace catalytic converter assembly.
	8. Pipe and shell noise from front exhaust pipe.	8. Characteristic of single wall pipe.
EXCESSIVE EXHAUST NOISE	1. Leak at exhaust pipe joints.	1. Tighten clamps at leaking joints.
	2. Burned or rusted out muffler assembly or exhaust pipe.	2. Replace muffler resonator tailpipe assembly or exhaust pipe with catalytic converter assembly.
	3. Burned or rusted out resonator.	3. Replace muffler resonator tailpipe assembly.
	4. Restriction in exhaust system.	4. Perform Exhaust System **RESTRICTION CHECK** . Replace component as necessary.
	5. Converter material in muffler.	5. Replace muffler and converter assemblies. Check fuel injection and ignition systems for proper operation.

RESTRICTION CHECK

Exhaust system restriction can be checked by measuring back pressure using the scan tool and PEP module pressure tester.

WARNING: **The normal operating temperature of the exhaust system is very high. Therefore, never work around or attempt to service any part of the exhaust system until it is cooled. Special care should be taken when working near the catalytic converter. The temperature of the converter rises to a high level after a short period of engine operation time.**

1. Disconnect and remove the upstream (before catalytic converter) oxygen sensor. Refer to **SENSOR, OXYGEN, REMOVAL** for Gas or **SENSOR, OXYGEN, REMOVAL** for Diesel.
2. Install the Exhaust Back Pressure Fitting Adaptor (special tool #CH8519, Hose, Exhaust Back Pressure).
3. Connect the Low Pressure Sensor (15 psi) CH7063 to the back pressure fitting.
4. Following the PEP module instruction manual, connect all required cables to the scan tool and PEP module. Select the available menu options on the scan display screen for using the digital pressure gauge function.
5. Apply the park brake and start the engine.
6. With transmission in Park or Neutral, raise engine speed to 2000 RPM. Monitor the pressure readings on the scan. Back pressure should not exceed specified limit. Refer to specification in table below.

NOTE: **For applications with dual catalytic converters, repeat test on opposite converter using the previous steps.**

7. If pressure exceeds maximum limits, inspect exhaust system for restricted component. For further catalytic converter inspection procedures. Refer to **CONVERTER, CATALYTIC , INSPECTION**. Replace component(s) as necessary.

EXHAUST BACK PRESSURE LIMITS

Exhaust Back Pressure Limit (Max)	
Vehicle in Park/Neutral (no load) @2000 RPM	3.45 kPa (0.5 psi)

LEAK TESTING

YouTube	A multimedia supplement to the instructions contained in this article is available. To view the multimedia example of the condition described go to; **http://www.youtube.com/user/Mitchell1Tips** **then type "A00641402.vid1" into the "Search Channel" box.**

WARNING: **The normal operating temperature of the exhaust system is very high. Therefore, never work around or attempt to service any part of the exhaust system until it is cooled. Special care should be taken when working near the catalytic converter. The temperature of the converter rises to a high level after a short period of engine operation time.**

1. Raise and support vehicle.

CAUTION: **The air pressure must not exceed 4 psi, otherwise engine damage can occur.**

2. Connect Tool (special tool #8404-ECT, Exhaust Cone, Truck), Exhaust Cone to an adjustable air pressure regulator.
3. Attach shop air to the air pressure regulator.
4. Adjust the air pressure regulator to 4 psi
5. Insert Tool (special tool #8404-ECT, Exhaust Cone, Truck), Exhaust Cone into the vehicle tail pipe.
6. If the vehicle is equipped with dual exhaust, use Tool (special tool #8404-ECT, Exhaust Cone, Truck), Exhaust Cone with equipped attached plug. Plug one side of the dual exhaust pipe. Pressurize the other as described.
7. Apply a mixture of liquid dish soap and water to the following areas:
   - All welded joints from 6 inches rearward of the downstream O2 sensor forward
   - O2 sensor seal points
   - O2 sensor boss welds

- Flange/joint connection(s)
- Exhaust manifold to cylinder head connection(s)
- EGR solenoid gasket base and tube seal points (if equipped)

8. Watch for the liquid/soapy water to bubble.
9. Use the following definitions to help determine if system or component repair/replacement is necessary:

- **Type 1 Leak** is defined as a leak where very small foam like bubbles 1mm (.039 in.) or less appear. Any Type 1 or greater leaks found in welded joints, O2 sensor seal points or O2 sensor boss welds must be repaired or the component must be replaced.
- **Type 2 Leak** is defined as a leak where larger bubbles 8mm (.031 in.) or greater appear. Any Type 2 or greater leaks found in flange or joint connections, exhaust manifold to cylinder head connections, or EGR gasket and tube seal points must be repaired or the components must be replaced.

Leak Location	Repair required if results at 4 psi reveal bubble size:
Welded joints	Type 1 - 1 mm (0.039 in.) or greater
O2 Sensor seal points	Type 1 - 1 mm (0.039 in.) or greater
O2 Sensor boss welds	Type 1 - 1 mm (0.039 in.) or greater
Flange/joint connections	Type 2 - 8 mm (0.315 in.) or greater
Exhaust Manifold to cylinder head connections	Type 2 - 8 mm (0.315 in.) or greater
EGR gasket and tube seal points	Type 2 - 8 mm (0.315 in.) or greater

If a leak is found that matches the above definition, repair or replace the component as necessary.

Once the repair is complete, repeat the procedure to verify that all leaks have been repaired.

ADJUSTMENTS

ADJUSTMENTS

A misaligned exhaust system is usually indicated by a vibration, rattling noise, or binding of exhaust system components. These noises are sometimes hard to distinguish from other chassis noises. Inspect exhaust system for broken or loose clamps, heat shields, isolators, and brackets. Replace or tighten as necessary. It is important that exhaust system clearances and alignment be maintained.

Perform the following procedures to align the exhaust system:

1. Loosen clamps and support brackets.
2. Align the exhaust system starting at the front, working rearward.
3. Tighten all clamps and brackets once alignment and clearances are achieved.

SPECIFICATIONS

SPECIFICATIONS

DESCRIPTION	N.m	Ft. Lbs.	In. Lbs.
Band Clamp Screw	19	14	168
Nuts-Exhaust Flange	19	14	168

TORQUE - DIESEL

DESCRIPTION	N.m	Ft. Lbs.	In. Lbs.
Body Heat Shield Fasteners	5	-	44
Diesel Particulate Filter to Turbocharger Band Clamp Nut	25	18	221
Diesel Particulate Filter bracket to Engine Block Bolts	20	-	177
Diesel Particulate Filter Heat Shield			
Bolt	12	-	106
Nut	8	-	71
Exhaust Temperature Sensor	45	33	-
Crossunder Pipe to Diesel Particulate Filter Flange Nuts	26	19	-
Isolator Mount Bolt	22	16	-
Muffler Clamp Nut	55	41	-
Resonator Clamp Nut	55	41	-
Turbocharger Heat Shield			
Bolt	8	-	71
Nut	8	-	71

REMOVAL

REMOVAL

NOTE: **Some service procedures require the removal of the entire exhaust system in order to gain better access to certain components for removal and installation. The following procedure explains how to remove the exhaust system from the crossunder pipe. Refer to specific procedures if replacing individual exhaust components.**

WARNING: **The normal operating temperature of the exhaust system is very high. Therefore, never work around or attempt to service any part of the exhaust system until it is cooled. Special care should be taken when working near the catalytic converter. The temperature of the converter rises to a high level after a short period of engine operation time.**

1. Raise and support the vehicle.
2. Apply penetrating oil to the fasteners that connect the exhaust system to the exhaust crossunder pipe

clamp.

3. Remove fasteners that attach exhaust system to exhaust crossunder pipe clamp.

CAUTION: Do not use any tools to remove the rubber isolators - remove by hand only. Soapy water may be used to assist removal/installation of isolators. DO NOT use a petroleum-based lubricant on the isolators, as damage to the rubber material can occur.

4. Remove all of the support isolators that support the exhaust system to the vehicle.
5. Remove the exhaust system from vehicle.

NOTE: When replacement is required on any component of the exhaust system, it is most important that original equipment parts (or their equivalent) be used for the following reasons:

- To insure proper alignment and size with other parts in the system.
- Provide acceptable exhaust noise levels.
- Does not change exhaust system back pressure that could affect emissions and performance.

INSPECTION

INSPECTION

Inspect the exhaust pipes, catalytic converters, muffler, and resonators for cracked joints, broken welds and corrosion damage that would result in a leaking exhaust system. Inspect the clamps, support brackets, and insulators for cracks and corrosion damage.

INSTALLATION

INSTALLATION

NOTE: When replacement is required on any component of the exhaust system, it is most important that original equipment parts (or their equivalent) be used for the following reasons:

- To insure proper alignment and size with other parts in the system.
- Provide acceptable exhaust noise levels.
- Does not change exhaust system back pressure that could affect emissions and performance.

NOTE: Always work from the front to rear of the exhaust system when aligning and tightening exhaust system components.

1. Loosely install the fasteners that attach the exhaust system to the exhaust crossunder pipe.

2. Install the support isolators to exhaust system supports.
3. Align the exhaust system to maintain position and proper clearance with underbody parts.
4. Make sure that all of the support isolators have equal load on them.
5. Tighten the fasteners that attach exhaust system to exhaust crossunder pipe to the proper. Refer to **SPECIFICATIONS**.
6. Lower the vehicle.
7. Start the engine and inspect for exhaust leaks. Repair exhaust leaks as necessary.
8. Check the exhaust system for contact with the body panels. Make the necessary adjustments, if needed.

SPECIAL TOOLS

SPECIAL TOOLS

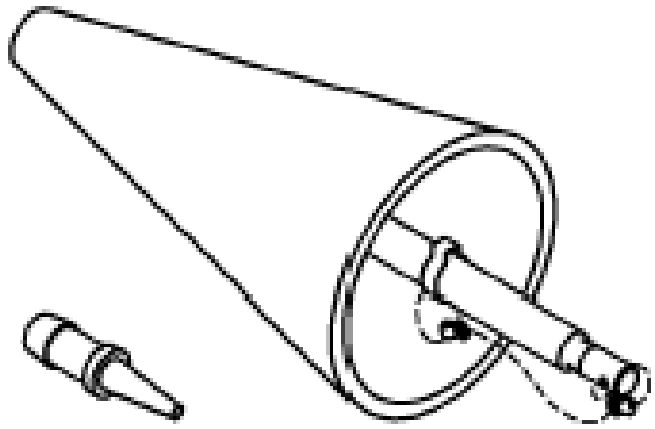	8404-ECT - Exhaust Cone, Truck (Originally Shipped In Kit Number(s) 8404-ECT.)
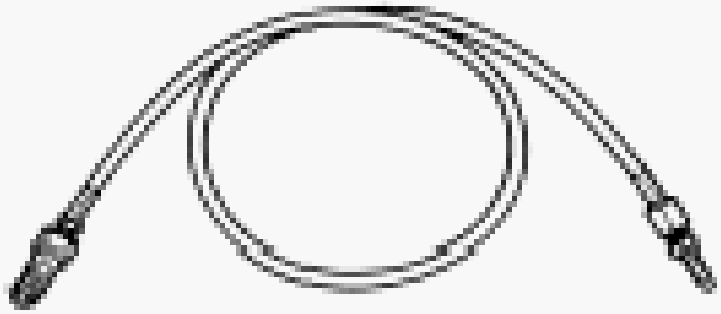	CH8519 - Hose, Exhaust Back Pressure

CONVERTER, CATALYTIC

DESCRIPTION

DESCRIPTION

TURBO

The catalytic converter is mounted between the turbocharger and the front exhaust pipe. The upstream O2 sensor boss is welded onto the inlet pipe.

The converter is mated to the turbocharger by way of a band clamp. The outlet pipe of the converter is secured by a two piece bracket and is attached to the front exhaust pipe by way of a flange. Both ends require gaskets.

NON TURBO

The gas engine exhaust system components consist of a maniverter, intermediate pipe, mufflers, and support isolators.

The catalytic converter is part of the exhaust manifold, called a maniverter. For removal of the maniverter, Refer to **MANIFOLD, EXHAUST, REMOVAL** for 2.0L Diesel of **MANIFOLD, EXHAUST, REMOVAL** for 2.4L.

REMOVAL

REMOVAL

FRONT CATALYTIC CONVERTER

1. Disconnect and isolate the negative battery.
2. Remove the lower engine belly pan. Refer to **BELLY PAN, REMOVAL** .

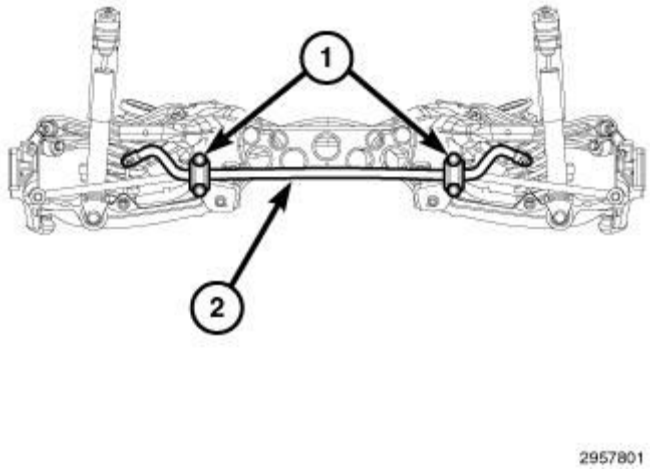

Fig. 3: Oxygen Sensors, Harness Connectors & Catalytic Converter
Courtesy of CHRYSLER GROUP, LLC

3. Disconnect the upstream (1) and down stream oxygen sensor harness connectors (2).

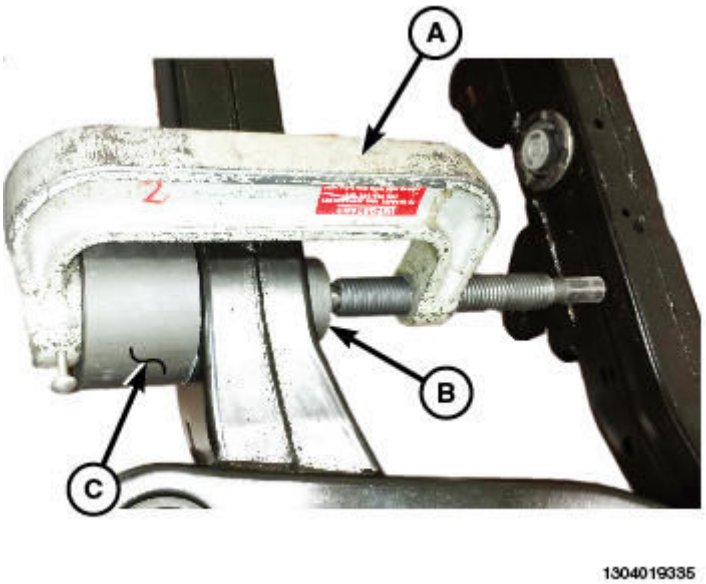

Fig. 4: Removing/Installing Cross Under Pipe
Courtesy of CHRYSLER GROUP, LLC

4. Separate the cross under pipe (4) from the front catalytic converter.

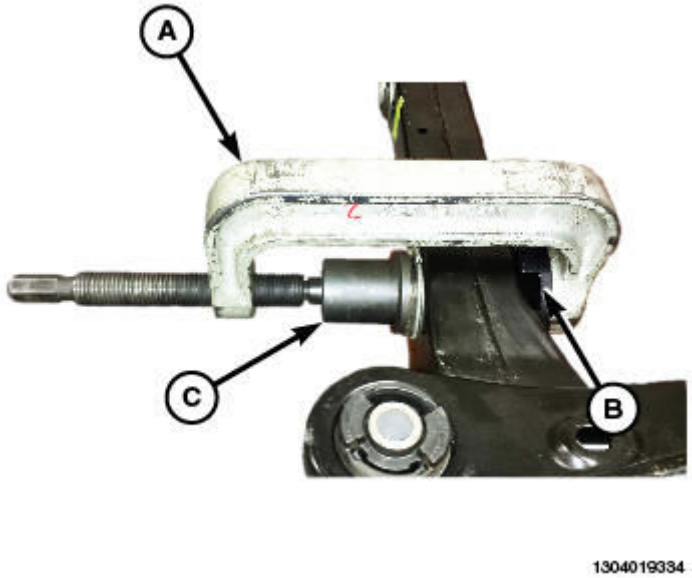

Fig. 5: Removing/Installing Front Catalytic Converter
Courtesy of CHRYSLER GROUP, LLC

5. Remove the converter to support bracket bolt (2).
6. Remove the catalytic converter to cylinder head flange upper bolts (1).
7. Remove the catalytic converter (3) by lifting and sliding the flange up and away from the cylinder head.
8. If required, remove the oxygen sensors.

REAR CATALYTIC CONVERTER

1. Disconnect and isolate the negative battery cable.
2. Remove the air intake resonator (1). Refer to **RESONATOR, AIR CLEANER, REMOVAL** .

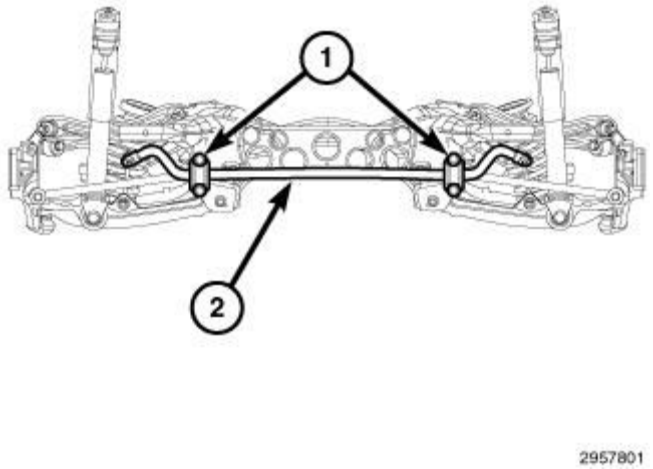

Fig. 6: Oxygen Sensor Harness Connectors
Courtesy of CHRYSLER GROUP, LLC

3. Disconnect the upstream (1) and the downstream (2) oxygen sensor harness connectors.

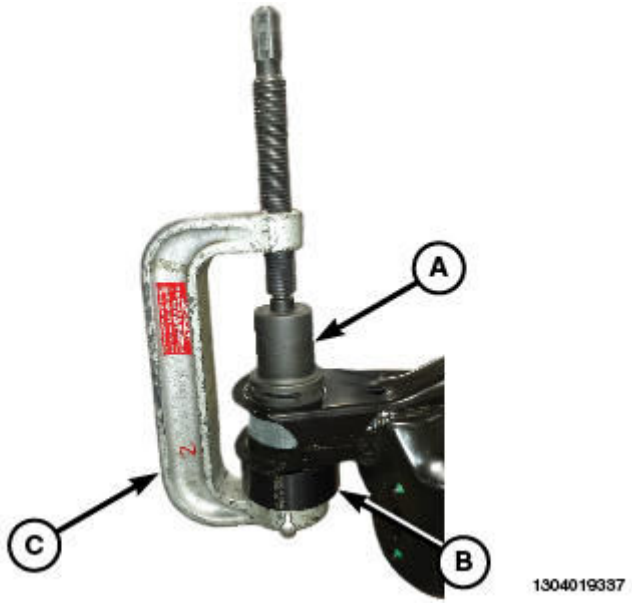

Fig. 7: Removing/Installing Oxygen Sensors
Courtesy of CHRYSLER GROUP, LLC

4. Remove the upstream (5) and downstream (3) oxygen sensors.

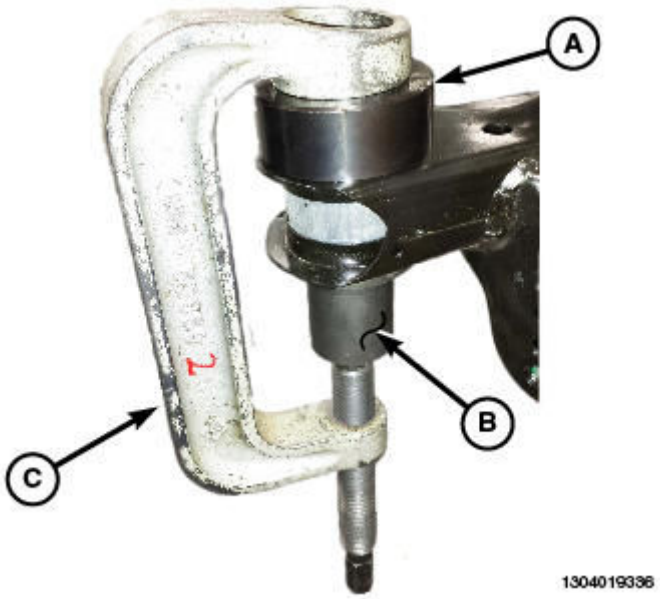

Fig. 8: Removing/Installing Upper Support Bracket Bolt
Courtesy of CHRYSLER GROUP, LLC

5. Remove the upper support bracket bolt (1).
6. If equipped with **FWD** , remove the right side intermediate shaft. Refer to **REMOVAL** .
7. Remove the lower engine belly pan Refer to **BELLY PAN, INSTALLATION** .

.

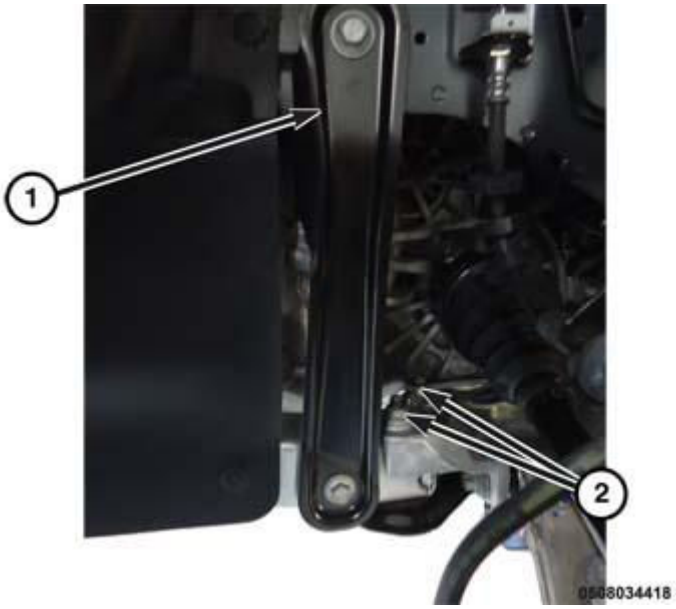

Fig. 9: Removing/Installing Lower Intermediate Shaft Support Bracket
Courtesy of CHRYSLER GROUP, LLC

8. Remove the lower intermediate shaft support bracket (1).

9. Remove the Y-pipe (Refer to **PIPE, EXHAUST**).
10. If quipped with **AWD** , remove the Power Transfer Unit (PTU) assembly. Refer to **REMOVAL** .

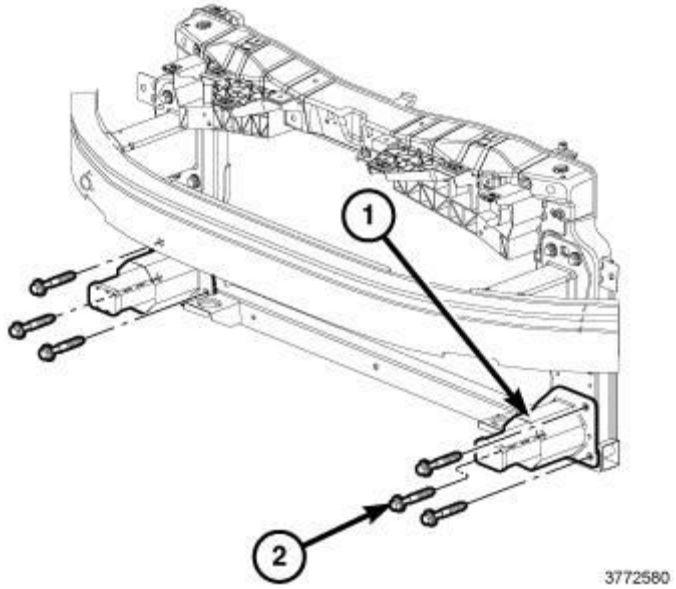

Fig. 10: Removing/Installing Catalytic Converter
Courtesy of CHRYSLER GROUP, LLC

11. Remove the catalytic converter to cylinder head upper flange bolts (5).
12. Remove the catalytic converter by lifting and sliding the flange up and away from the cylinder head.

INSPECTION

INSPECTION

WARNING: The normal operating temperature of the exhaust system is very high. Therefore, never attempt to service any part of the exhaust system until it is cooled. Special care should be taken when working near the catalytic converter. The temperature of the converter rises to a high level after a short period of engine operation time.

Check catalytic converter for a flow restriction. Exhaust System Restriction Check for procedure. Refer to **DIAGNOSIS AND TESTING**.

Visually inspect the catalytic converter element by using a borescope or equivalent. Remove oxygen sensor(s) and insert borescope. If borescope is not available, remove converter and inspect element using a flashlight. Inspect element for cracked or melted substrate.

NOTE: Before replacing a catalytic converter, determine the root cause of failure. Most catalytic converter failures are caused by air, fuel or ignition problems. (Refer to Appropriate Diagnostic Information for test procedures.)

INSTALLATION

INSTALLATION

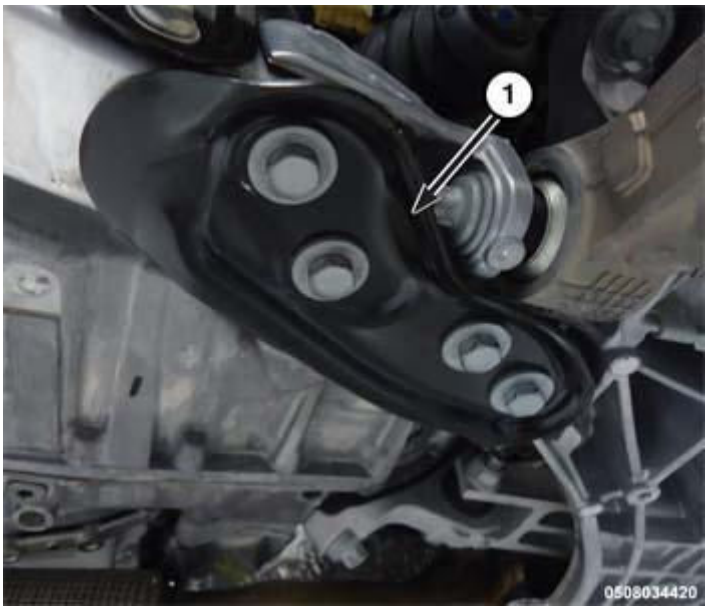

Fig. 11: Removing/Installing Front Catalytic Converter
Courtesy of CHRYSLER GROUP, LLC

FRONT CATALYTIC CONVERTER

1. If new gaskets need replacing, position new gasket onto the manifold flange. loosely install the lower bolt.
2. Position the catalytic converter (3) against the manifold.
3. Install the upper flange bolts. Tighten all the bolts (1) to 23 N.m (17 ft. lbs.).

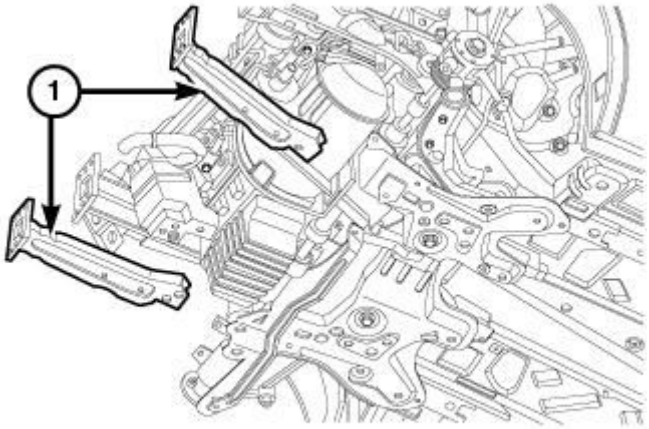

Fig. 12: Removing/Installing Cross Under Pipe
Courtesy of CHRYSLER GROUP, LLC

4. Position the cross under pipe (1) to the catalytic converter. Tighten the nuts (1) to 26 N.m (19 ft. lbs.).
5. Install the support bolt (5). Tighten to 23 N.m (17 ft. lbs.).

NOTE: Using care, do not to twist or kink the oxygen sensor wires.

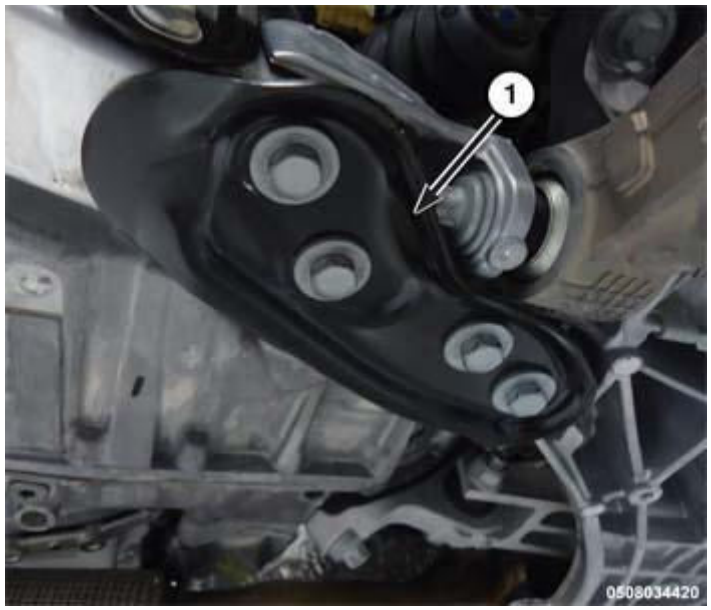

Fig. 13: Oxygen Sensors, Harness Connectors & Catalytic Converter
Courtesy of CHRYSLER GROUP, LLC

6. Reconnect the electrical connectors (1, 2).
7. If removed, install the oxygen sensors (3, 5). Tighten the sensors to 50 N.m (37 ft. lbs.).

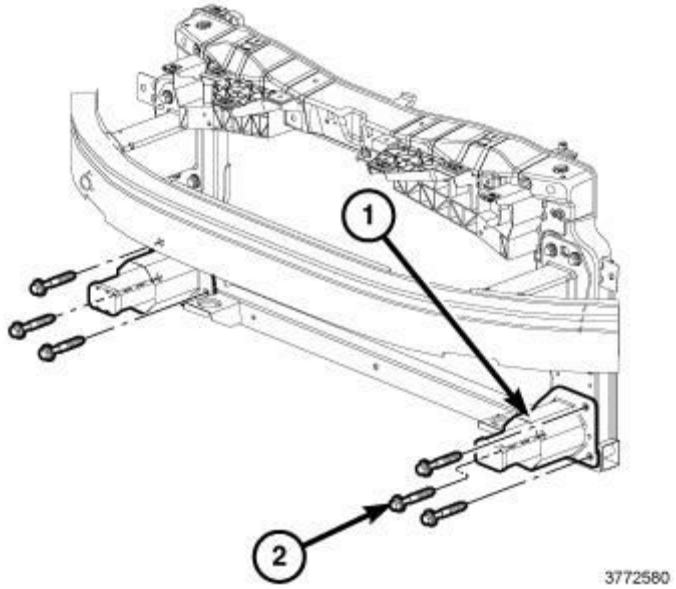

Fig. 14: Removing/Installing Belly Pans
Courtesy of CHRYSLER GROUP, LLC

8. Install the belly pans (1).
9. Lower the vehicle.
10. Start the engine and inspect for exhaust leaks. Repair exhaust leaks as necessary.
11. Check the exhaust system for contact with the body panels. Make the necessary adjustments, if needed.

REAR CATALYTIC CONVERTER

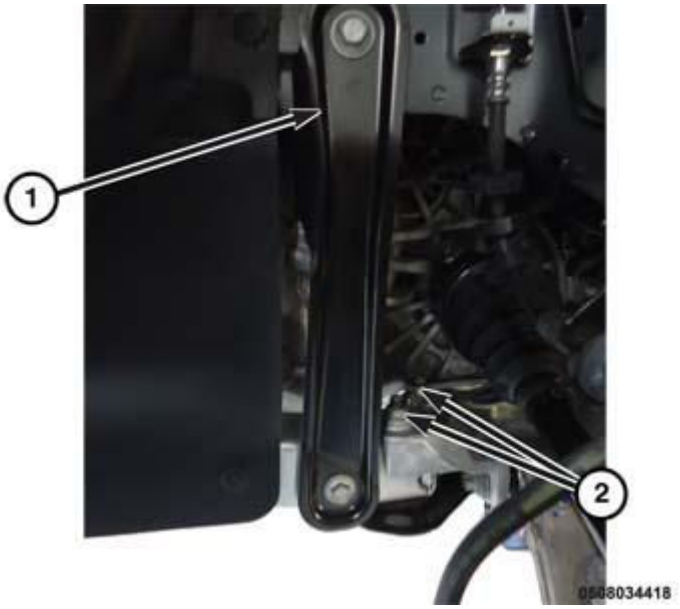

Fig. 15: Retainer Plate & Exhaust Manifold Flange
Courtesy of CHRYSLER GROUP, LLC

1. Position the catalytic converter (3) against the exhaust manifold. Position the converter flange (2) to the retainer.

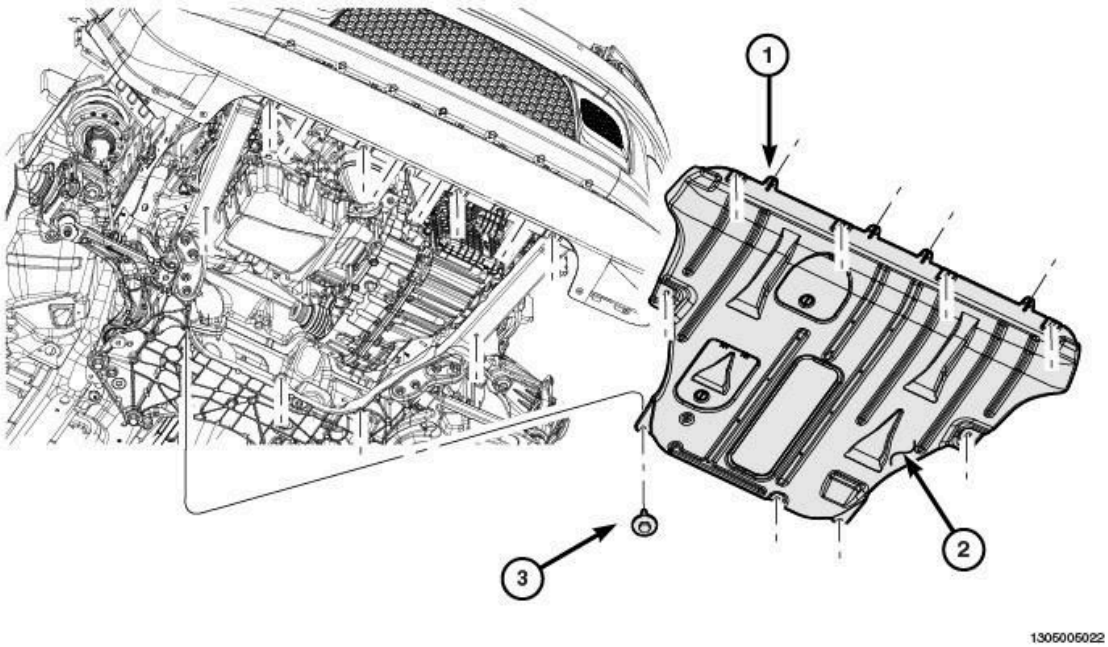

Fig. 16: Removing/Installing Catalytic Converter
Courtesy of CHRYSLER GROUP, LLC

2. Install the upper flange bolts (5). Tighten upper bolts to 23 N.m (17 ft. lbs.).

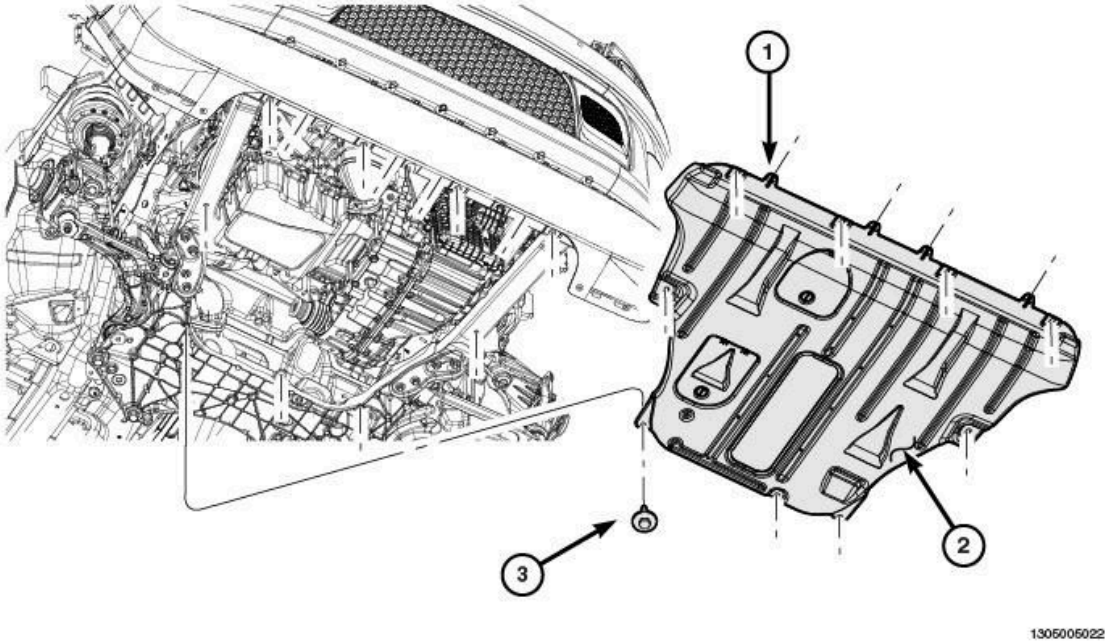

Fig. 17: Removing/Installing Lower Intermediate Shaft Support Bracket
Courtesy of CHRYSLER GROUP, LLC

3. If equipped with **2WD** , install the intermediate shaft support bracket. Tighten upper bolts to 23 N.m (17 ft. lbs.).
4. If equipped with **4WD** , install the PTU. Refer to **INSTALLATION** .

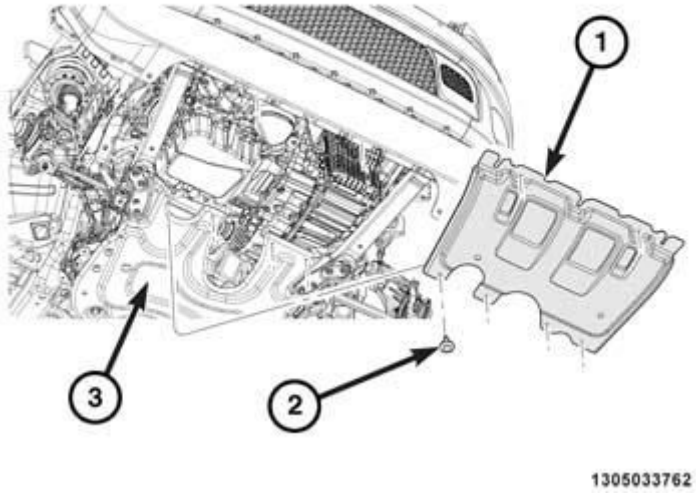

Fig. 18: Y-Pipe

Courtesy of CHRYSLER GROUP, LLC

5. Position the Y-pipe (4) to the rear catalytic converter. Tighten upper bolts to 26 N.m (19 ft. lbs.).

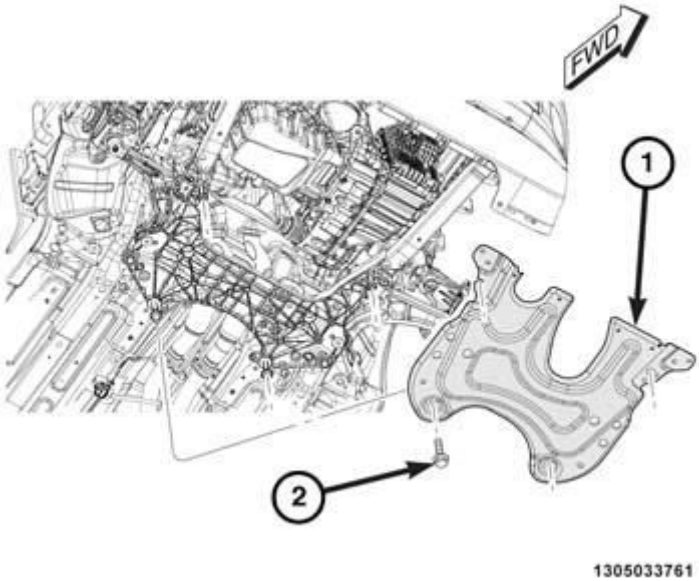

Fig. 19: Removing/Installing Upper Support Bracket Bolt
Courtesy of CHRYSLER GROUP, LLC

6. Loosely install the upper support bracket bolt (1). Tighten upper bolt to 23 N.m (17 ft. lbs.).

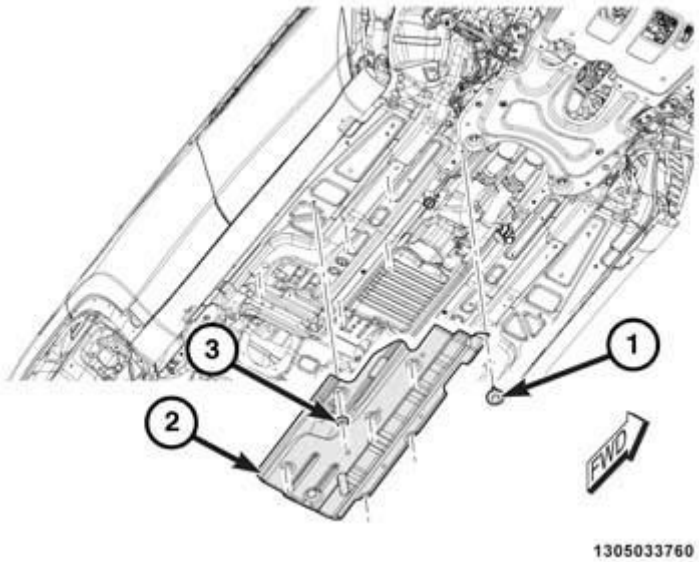

Fig. 20: Removing/Installing Belly Pans
Courtesy of CHRYSLER GROUP, LLC

7. Install the belly pan (1).

8. Lower the vehicle.

NOTE: Be careful not to twist or kink the oxygen sensor wires.

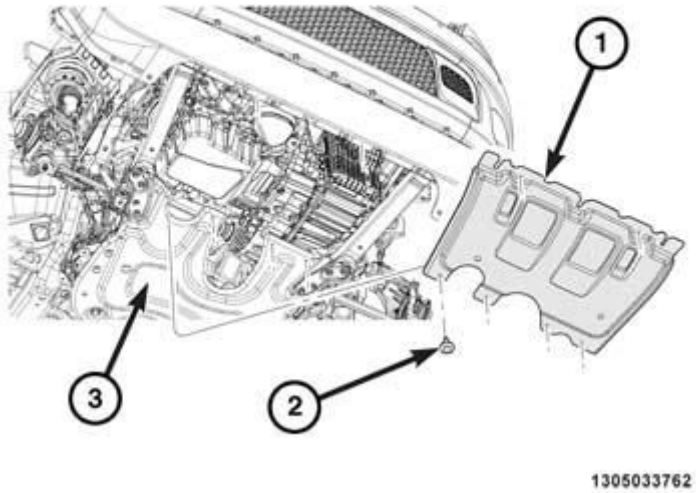

Fig. 21: Removing/Installing Oxygen Sensors
Courtesy of CHRYSLER GROUP, LLC

9. If removed, install the O2 sensors (3, 5). Tighten the O2 sensors to 50 N.m (37 ft. lbs.).

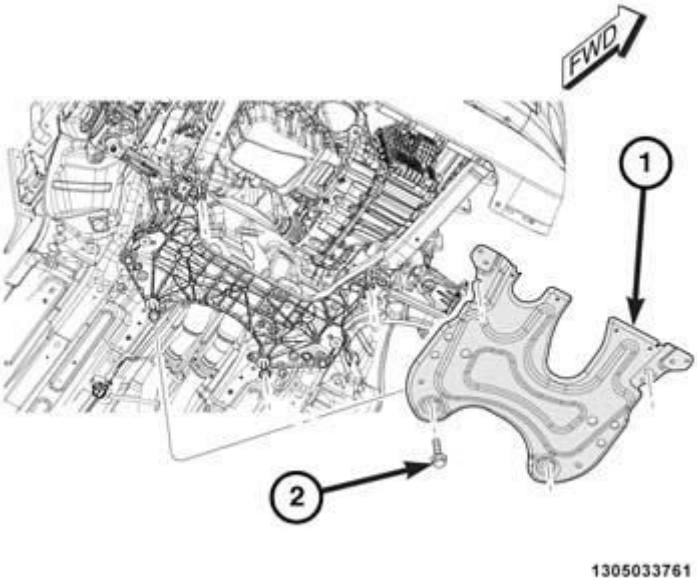

Fig. 22: Oxygen Sensor Harness Connectors
Courtesy of CHRYSLER GROUP, LLC

10. Connect the O2 sensors electrical connectors.

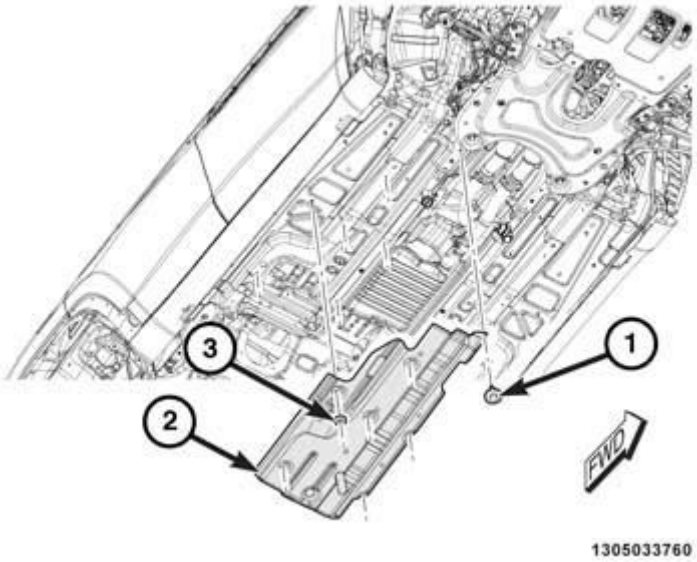

Fig. 23: Intake Resonator
Courtesy of CHRYSLER GROUP, LLC

11. Install the air intake resonator (1).
12. Connect the battery negative cable.
13. Start the engine and inspect for exhaust leaks. Repair exhaust leaks as necessary.
14. Check the exhaust system for contact with the body panels. Make the necessary adjustments, if needed.

MUFFLER, EXHAUST

REMOVAL

2.0L DIESEL

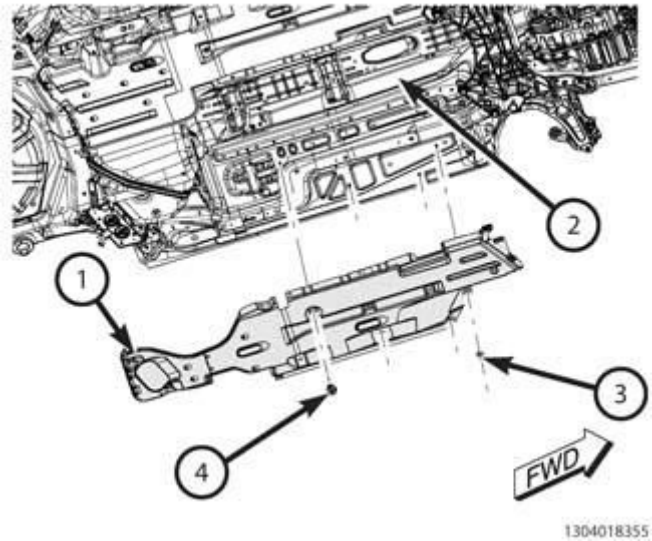

Fig. 24: Exhaust System - 2.0L Diesel
Courtesy of CHRYSLER GROUP, LLC

WARNING: The normal operating temperature of the exhaust system is very high. Therefore, never attempt to service any part of the exhaust system until it is cooled. Special care should be taken when working near the catalytic converter. The temperature of the converter rises to a high level after a short period of engine operation time.

NOTE: When replacement is required on any component of the exhaust system, it is most important that original equipment parts (or their equivalent) be used.

1. Raise and support the vehicle. Refer to **HOISTING, STANDARD PROCEDURE** .
2. Loosen the clamp at the muffler (2).
3. With the help of an assistant, remove the support bolts (3) from muffler supports.
4. Remove the muffler (4).

2.0L/2.4L

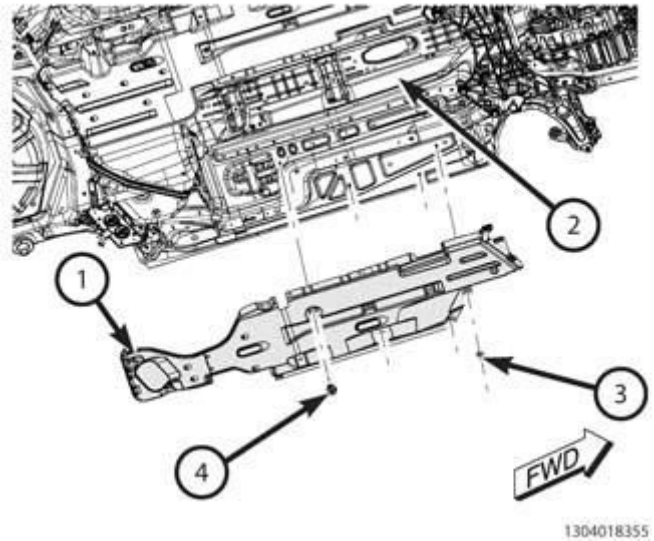

Fig. 25: Exhaust System Flanges, Isolators & Clamps
Courtesy of CHRYSLER GROUP, LLC

WARNING: The normal operating temperature of the exhaust system is very high. Therefore, never attempt to service any part of the exhaust system until it is cooled. Special care should be taken when working near the catalytic converter. The temperature of the converter rises to a high level after a short period of engine operation time.

NOTE: When replacement is required on any component of the exhaust system, it is most important that original equipment parts (or their equivalent) be used.

1. Raise and support the vehicle.
2. Remove the nuts (2) holding front to rear exhaust pipes together.

CAUTION: Do not use any tools to remove the rubber isolators-remove by hand only. Soapy water or silicone based lubricant spray may be used to assist removal/installation of isolators. DO NOT use a petroleum based lubricant on the isolators, as damage to the rubber material can occur.

3. With the help of an assistant remove front (3) and rear (4) support isolators from muffler supports.
4. Remove the one muffler/resonator assembly.
5. Remove and discard the exhaust flange gasket.

3.2L

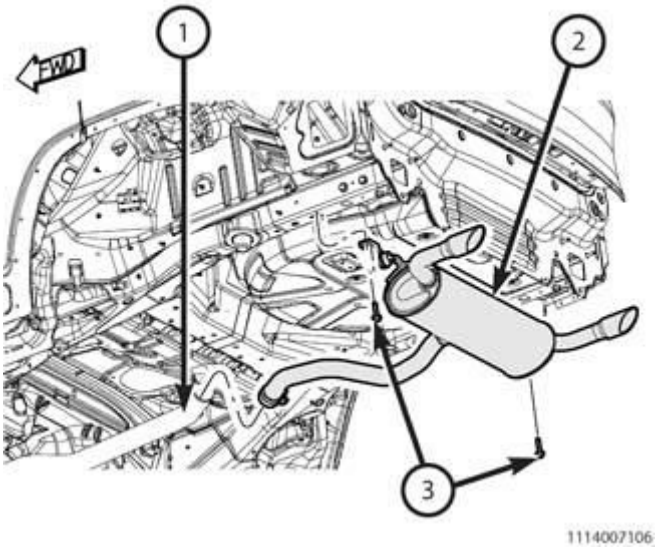

Fig. 26: Exhaust System - 3.2L
Courtesy of CHRYSLER GROUP, LLC

WARNING: The normal operating temperature of the exhaust system is very high. Therefore, never attempt to service any part of the exhaust system until it is cooled. Special care should be taken when working near the catalytic converter. The temperature of the converter rises to a high level after a short period of engine operation time.

NOTE: When replacement is required on any component of the exhaust system, it is most important that original equipment parts (or their equivalent) be used.

1. Raise and support the vehicle.
2. Loosen the holding clamp at the resonator exhaust pipe (1).

CAUTION: Do not use any tools to remove the rubber isolators-remove by hand only. Soapy water or silicone based lubricant spray may be used to assist removal/installation of isolators. DO NOT use a petroleum based lubricant on the isolators, as damage to the rubber material can occur.

3. With the help of an assistant. Remove the support bolts (3) from muffler supports.
4. Remove the muffler (2).

INSTALLATION

2.0L DIESEL

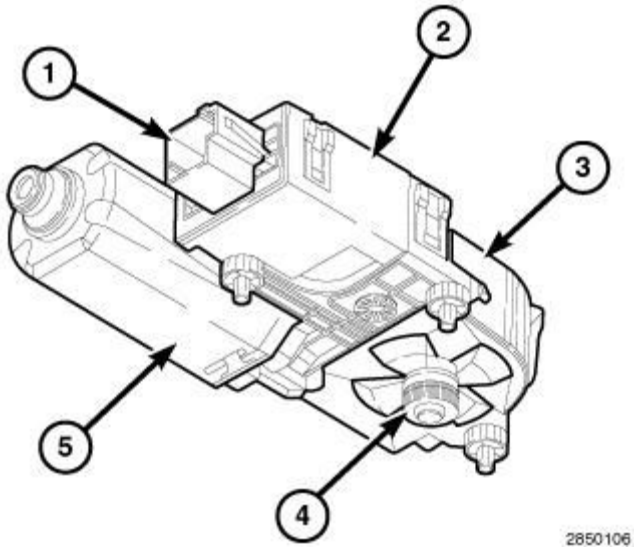

Fig. 27: Exhaust System - 2.0L Diesel
Courtesy of CHRYSLER GROUP, LLC

NOTE: Always work from the front to rear of exhaust system when aligning and tightening exhaust system components.

1. Position muffler (4) onto the resonator pipe (1).
2. Install the support isolator bolts (3). Tighten bolts to 22 N.m (16 ft. lbs.).
3. Align muffler and resonator assembly to maintain position and proper clearance with underbody parts. All support isolators should have equal load on them.
4. Tighten the clamp nut (2) to 52 N.m (38 ft. lbs.).
5. Lower the vehicle.
6. Start the engine and inspect for exhaust leaks. Repair exhaust leaks as necessary.
7. Check the exhaust system for contact with the body panels. Make the necessary adjustments, if needed.

2.4L

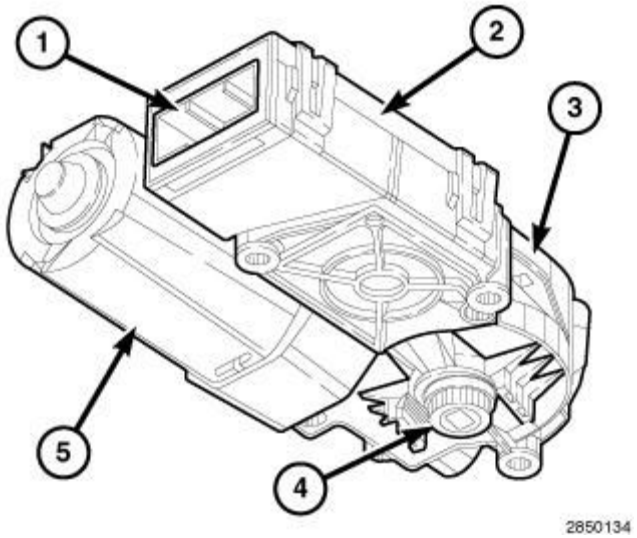

Fig. 28: Exhaust System - 2.4L
Courtesy of CHRYSLER GROUP, LLC

WARNING: The normal operating temperature of the exhaust system is very high. Therefore, never attempt to service any part of the exhaust system until it is cooled. Special care should be taken when working near the catalytic converter. The temperature of the converter rises to a high level after a short period of engine operation time.

1. Support the resonator pipe (4) with a stand.
2. Position the muffler pipe (3) onto the resonator pipe (4).
3. Install the muffler isolator bolts (1).
4. Remove the stand.
5. Align muffler and resonator assembly to maintain position and proper clearance with underbody parts. All support isolators should have equal load on them.
6. Tighten the isolator bolts to 19 N.m (168 in. lbs.).
7. Tighten the clamp (3) to 55 N.m (41 ft. lbs.).
8. Start the engine and inspect for exhaust leaks. Repair exhaust leaks as necessary.
9. Check the exhaust system for contact with the body panels. Make the necessary adjustments, if needed.

3.2L

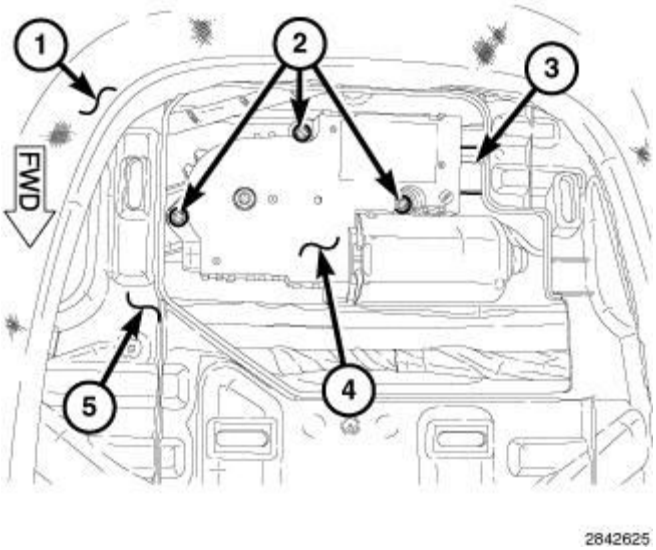

Fig. 29: Exhaust System - 3.2L
Courtesy of CHRYSLER GROUP, LLC

NOTE: Always work from the front to rear of exhaust system when aligning and tightening exhaust system components.

1. Position muffler pipe to the resonator pipe (1).
2. Install the support isolator bolts (3).
3. Align muffler and resonator assembly to maintain position and proper clearance with underbody parts. All support isolators should have equal load on them.
4. Tighten the front to rear pipe clamp. Tighten the nut to 19 N.m (168 in. lbs.).
5. Lower vehicle.
6. Start the engine and inspect for exhaust leaks. Repair exhaust leaks as necessary.
7. Check the exhaust system for contact with the body panels. Make the necessary adjustments, if needed.

PIPE, EXHAUST CROSSUNDER

REMOVAL

2.0L DIESEL

WARNING: The normal operating temperature of the exhaust system is very high. Therefore, never attempt to service any part of the exhaust system until it is cooled. Special care should be taken when working near the catalytic converter. The temperature of the converter rises to a high level after a short period of engine operation time.

1. Raise the vehicle.
2. Remove the belly pan. Refer to **BELLY PAN, REMOVAL** .

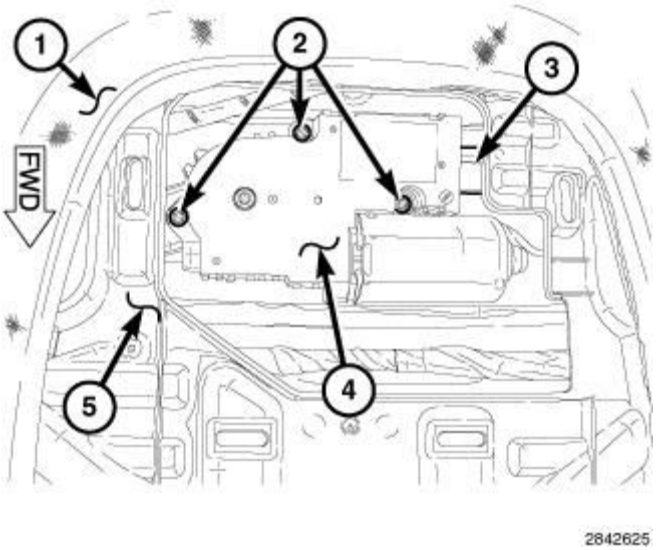

Fig. 30: Middle Belly Pan
Courtesy of CHRYSLER GROUP, LLC

3. Remove fasteners and the middle belly pan (1).

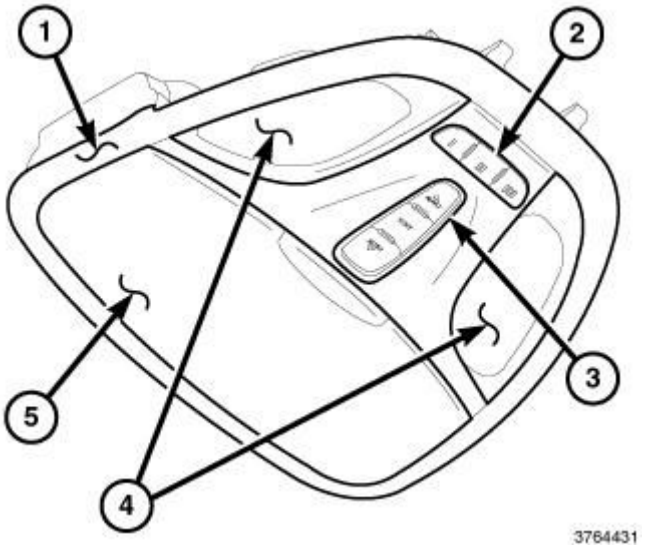

Fig. 31: Removing/Installing Resonator - 2.0L Diesel
Courtesy of CHRYSLER GROUP, LLC

4. Remove the exhaust resonator. Refer to **RESONATOR, EXHAUST, REMOVAL**.
5. Remove the cross under pipe isolator bolts (5).
6. Remove flange nuts (3) the cross under pipe (4) from the vehicle.

2.4L

WARNING: The normal operating temperature of the exhaust system is very high.

Therefore, never attempt to service any part of the exhaust system until it is cooled. Special care should be taken when working near the catalytic converter. The temperature of the converter rises to a high level after a short period of engine operation time.

1. Raise and support the vehicle.
2. Remove the front and rear skid plates if equipped.
3. Remove the belly pan if equipped.

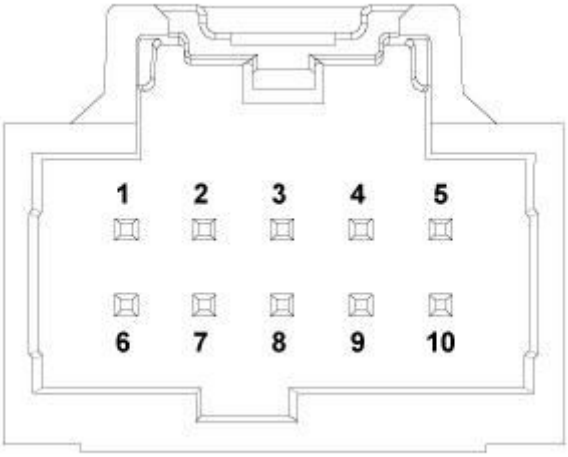

3764602

Fig. 32: Removing/Installing Resonator - 2.4L
Courtesy of CHRYSLER GROUP, LLC

4. Remove the exhaust resonator. Refer to **RESONATOR, EXHAUST, REMOVAL**.
5. Remove the cross under pipe isolator bolts (1).
6. Remove flange nuts (4) and flange gasket (5). Discard the gasket.
7. Remove the pipe support bolt (3).
8. Remove the cross under pipe (2) from the vehicle.

3.2L

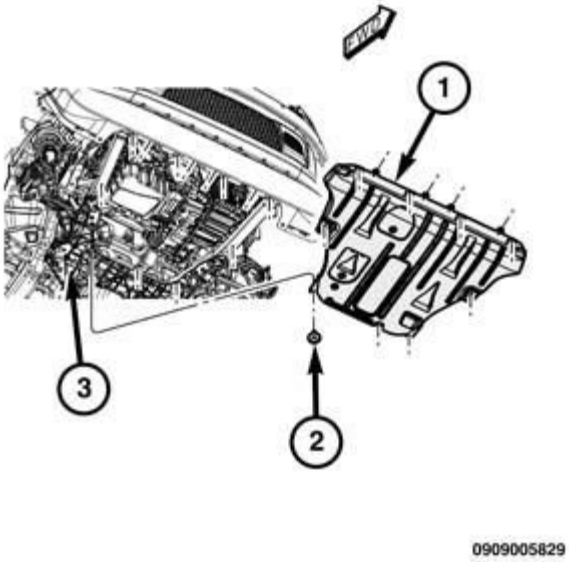

Fig. 33: Removing/Installing Belly Pans
Courtesy of CHRYSLER GROUP, LLC

WARNING: The normal operating temperature of the exhaust system is very high. Therefore, never attempt to service any part of the exhaust system until it is cooled. Special care should be taken when working near the catalytic converter. The temperature of the converter rises to a high level after a short period of engine operation time.

1. Raise the vehicle.
2. Remove the belly pan (1).

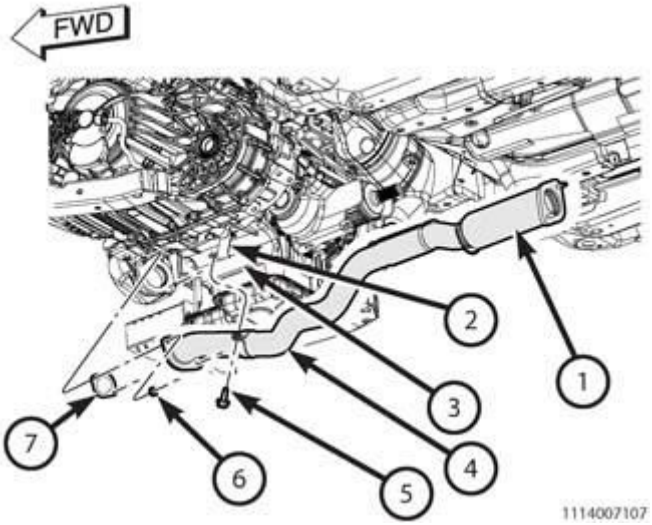

Fig. 34: Removing/Installing Cross Under Pipe
Courtesy of CHRYSLER GROUP, LLC

3. Remove the cross under pipe (1) rear flange nuts.
4. Remove the cross under center support bolt (5).
5. Remove the front cross under pipe flange nuts (6).
6. Remove the cross under pipe from the vehicle.

INSTALLATION

2.0L DIESEL

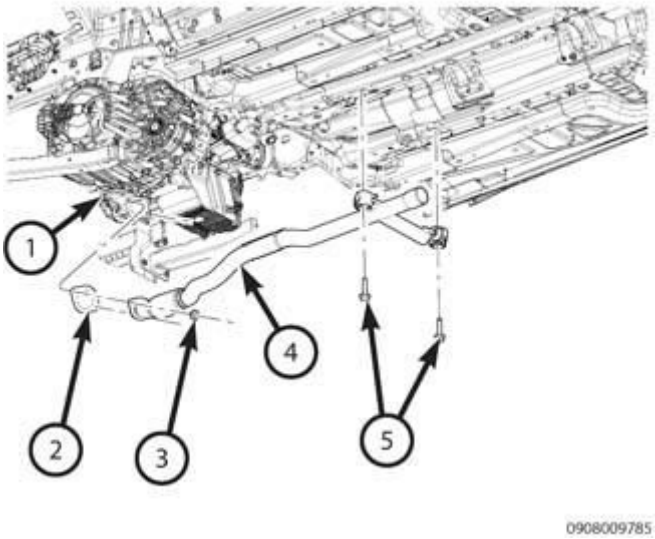

Fig. 35: Removing/Installing Resonator - 2.0L Diesel
Courtesy of CHRYSLER GROUP, LLC

1. Using a new gasket (2) install cross under pipe (4) to the Diesel Particulate Filter (DPF) and tighten nuts (3) finger tight.
2. Install the cross under pipe isolator bolts (5). Tighten bolts (5) to 22 N.m (16 ft. lbs.).
3. Tighten the cross under pipe to DPF flange nuts (3) to 26 N.m (19 ft. lbs.).
4. Install the exhaust resonator. Refer to **RESONATOR, EXHAUST, INSTALLATION**.
5. Check the exhaust system for contact with the body panels. Make the necessary adjustments, if needed.

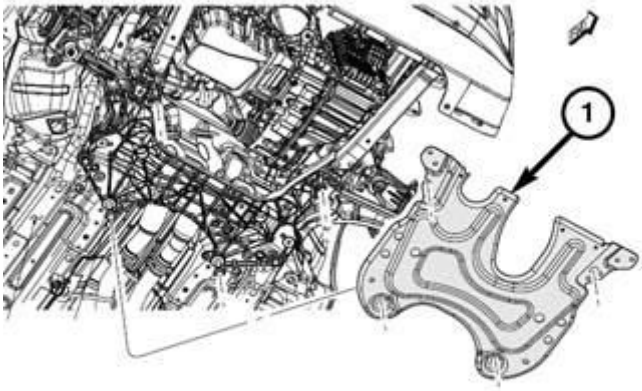

0908009626

Fig. 36: Middle Belly Pan
Courtesy of CHRYSLER GROUP, LLC

6. Install the middle belly pan (1) and securely tighten fasteners.
7. Install the belly pan. Refer to **BELLY PAN, INSTALLATION** .
8. Lower the vehicle.
9. Start the engine and inspect for exhaust leaks. Repair exhaust leaks as necessary.

2.4L

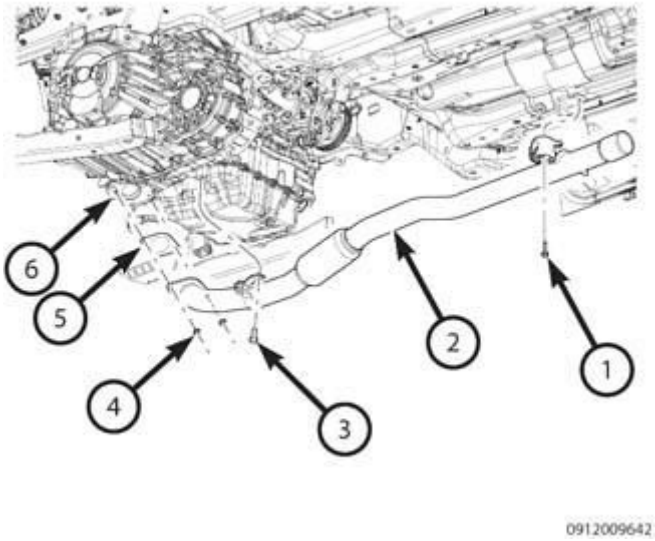

Fig. 37: Removing/Installing Resonator - 2.4L
Courtesy of CHRYSLER GROUP, LLC

1. Position a new flange gasket (5) into place.
2. Install the cross under pipe (2) to the catalytic converter outlet flange (6). Install the flange nuts (4) to hold the pipe in position.
3. Install the cross under pipe isolator bolts (1). Tighten bolts (5) to 22 N.m (16 ft. lbs.).
4. Install the exhaust pipe to oil pan support brace bolt (3).

   .

5. Tighten bolt to 25 N.m (18 ft. lbs.).
6. Tighten the cross under pipe flange nuts (4) to 26 N.m (19 ft. lbs.).
7. Install the exhaust resonator. Refer to **RESONATOR, EXHAUST, INSTALLATION**.
8. Check for proper pipe to shield/component clearance.
9. Check for exhaust leaks. Repair exhaust leaks as necessary.

3.2L

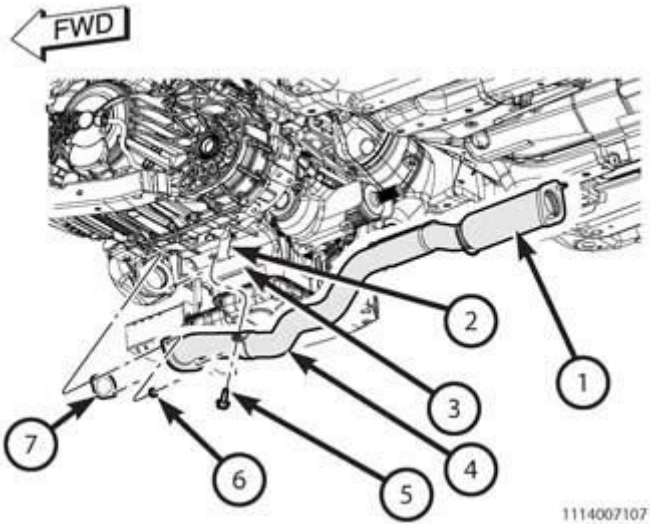

Fig. 38: Removing/Installing Cross Under Pipe
Courtesy of CHRYSLER GROUP, LLC

1. Loosely install cross under pipe (4) to the front catalytic converter.
2. Connect the resonator pipe to cross under pipe (1). Tighten nuts (3) to 26 N.m (19 ft. lbs.).
3. Install the center support bolt (5). Tighten bolt to 25 N.m (18 ft. lbs.).
4. Tighten the 2 nuts (6) for cross under pipe to catalytic convertor flange to 26 N.m (19 ft. lbs.).
5. Lower vehicle.
6. Start the engine and inspect for exhaust leaks. Repair exhaust leaks as necessary.
7. Check the exhaust system for contact with the body panels. Make the necessary adjustments, if needed.

RESONATOR, EXHAUST

REMOVAL

2.0L DIESEL

WARNING: The normal operating temperature of the exhaust system is very high. Therefore, never attempt to service any part of the exhaust system until it is cooled. Special care should be taken when working near the catalytic converter. The temperature of the converter rises to a high level after a short period of engine operation time.

1. Raise and support the vehicle. Refer to **HOISTING, STANDARD PROCEDURE** .
2. Remove the muffler (4). Refer to **MUFFLER, EXHAUST, REMOVAL**.

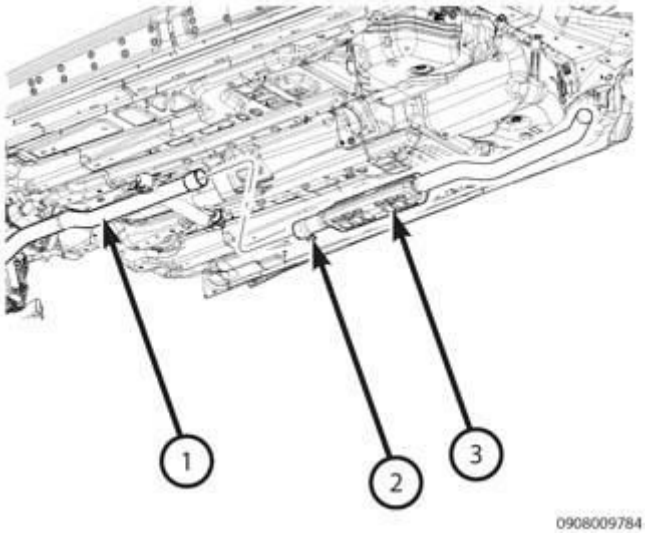

Fig. 39: Removing/Installing Resonator - 2.0L Diesel
Courtesy of CHRYSLER GROUP, LLC

3. Loosen clamp (2) and remove resonator (3) from vehicle.

2.4L

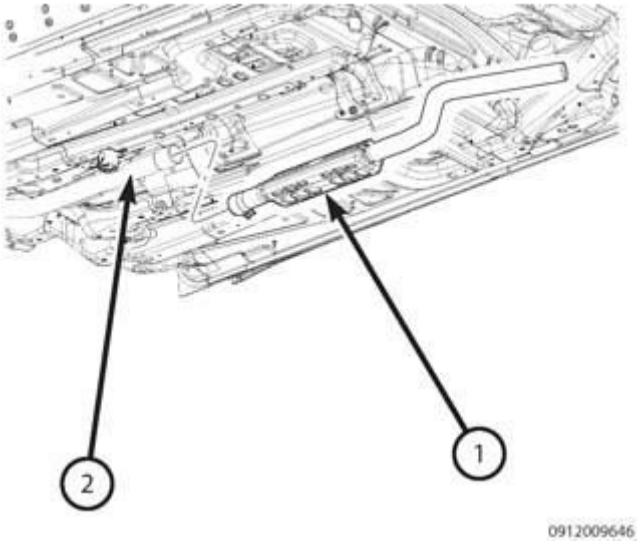

Fig. 40: Removing/Installing Resonator - 2.4L
Courtesy of CHRYSLER GROUP, LLC

1. Loosen the muffler clamp.
2. Loosen the resonator clamp.
3. Using a twisting motion, walk the resonator (1) off of the front exhaust pipe (2).
4. Walk the pipe out of the muffler inlet.

3.2L

WARNING: The normal operating temperature of the exhaust system is very high. Therefore, never attempt to service any part of the exhaust system until it is cooled. Special care should be taken when working near the catalytic converter. The temperature of the converter rises to a high level after a short period of engine operation time.

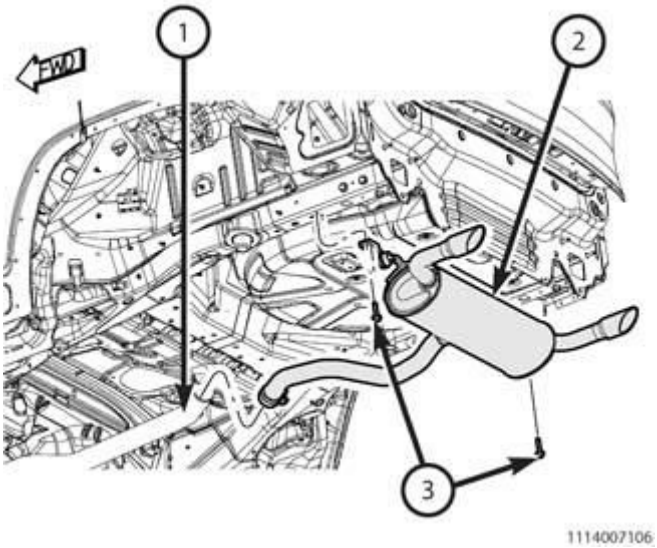

Fig. 41: Exhaust System - 3.2L
Courtesy of CHRYSLER GROUP, LLC

1. Raise the vehicle.
2. Separate the muffler (2) pipe from the resonator pipe (1).

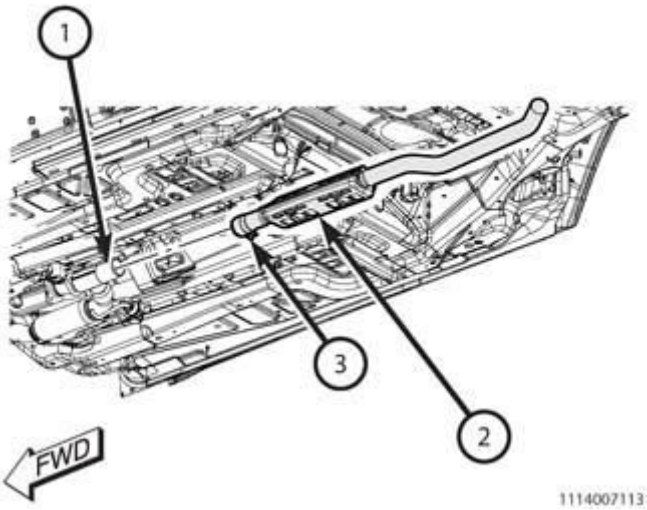

Fig. 42: Resonator & Y-Pipe

Courtesy of CHRYSLER GROUP, LLC

3. Separate resonator (2) from the Y-pipe (1).
4. Remove resonator from vehicle.

INSTALLATION

2.0L DIESEL

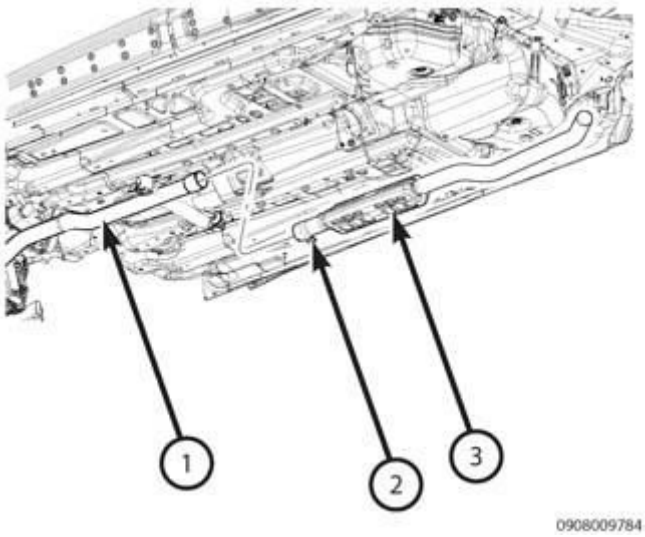

Fig. 43: Removing/Installing Resonator - 2.0L Diesel
Courtesy of CHRYSLER GROUP, LLC

1. Install the resonator (3) onto the crossunder pipe (1). Tighten the clamp (2) to 52 N.m (38 ft. lbs.).
2. Install the muffler. Refer to **MUFFLER, EXHAUST, INSTALLATION**.
3. Lower the vehicle.
4. Start the engine and inspect for exhaust leaks. Repair exhaust leaks as necessary.
5. Check the exhaust system for contact with the body panels. Make the necessary adjustments, if needed.

2.4L

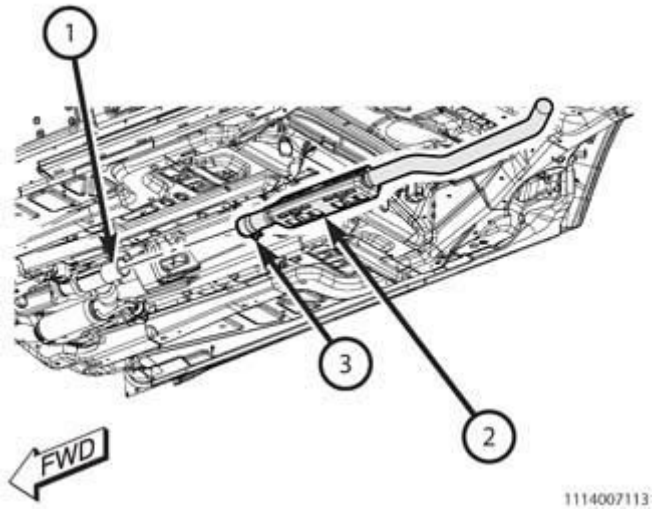

Fig. 44: Resonator & Y-Pipe
Courtesy of CHRYSLER GROUP, LLC

1. Install the resonator (2) onto the front exhaust pipe outlet (1). Tighten the clamp (3) to 55 N.m (41 ft. lbs.).

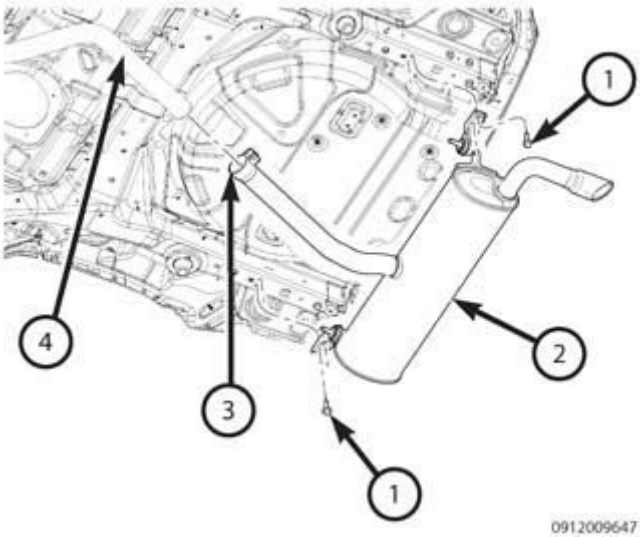

Fig. 45: Exhaust System - 2.4L
Courtesy of CHRYSLER GROUP, LLC

2. Insert the resonator pipe (4) into the muffler (2). Tighten the clamp (3) to 55 N.m (41 ft. lbs.).
3. Start the engine and inspect for exhaust leaks.
4. Check for proper clearance between the exhaust and the surrounding components.

INSTALLATION

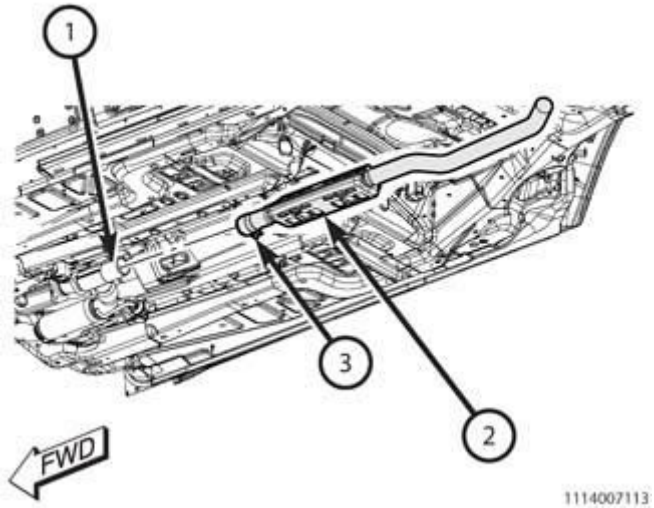

Fig. 46: Resonator & Y-Pipe
Courtesy of CHRYSLER GROUP, LLC

1. Install the resonator (2) into the Y-pipe (1). Tighten the clamp (3) to 55 N.m (41 ft. lbs.).

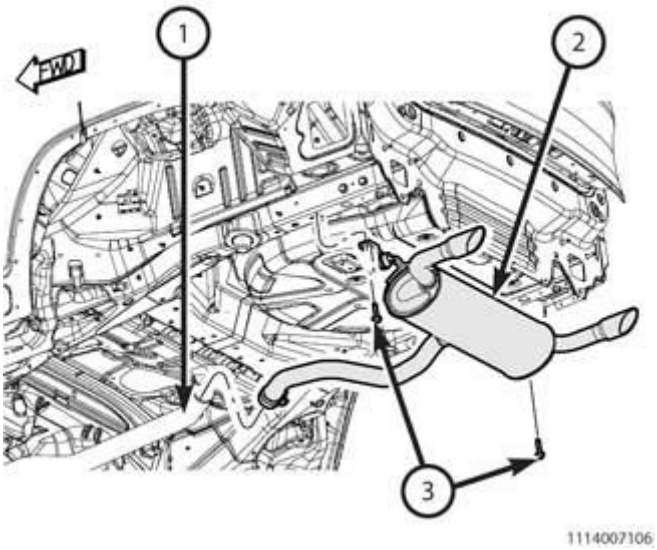

Fig. 47: Exhaust System - 3.2L
Courtesy of CHRYSLER GROUP, LLC

2. Install the resonator pipe (1) into the muffler (2) pipe. Tighten the clamp (3) to 55 N.m (41 ft. lbs.).
3. Lower the vehicle.
4. Start the engine and inspect for exhaust leaks. Repair exhaust leaks as necessary.
5. Check the exhaust system for contact with the body panels. Make the necessary adjustments, if needed.

SHIELD, HEAT

DESCRIPTION

DESCRIPTION

The exhaust system heat shields are attached to the under body of the vehicle.

OPERATION

OPERATION

Heat shields are needed to protect both the vehicle and the environment from the high temperatures developed near the catalytic converter.

Avoid application of rust prevention compounds or undercoating materials to exhaust system floor pan heat shields on vehicles so equipped. Light over spray near the edges is permitted. Application of coating will greatly reduce the efficiency of the heat shields resulting in excessive floor pan temperatures and objectionable fumes.

PIPE, EXHAUST

REMOVAL

3.2L

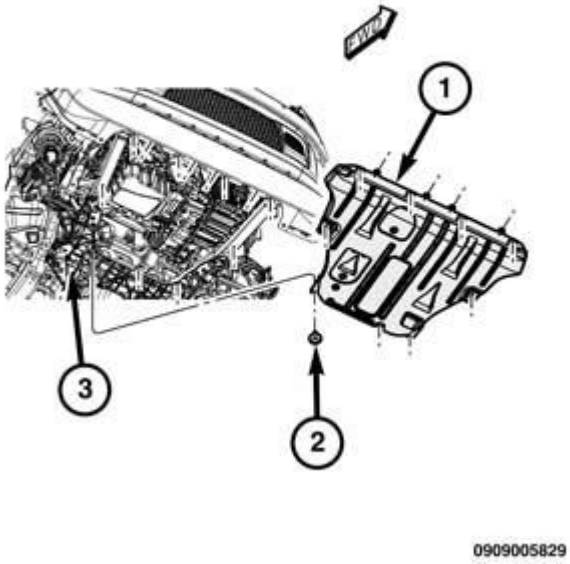

Fig. 48: Removing/Installing Belly Pans
Courtesy of CHRYSLER GROUP, LLC

1. Raise vehicle.
2. Remove the belly pan (1).

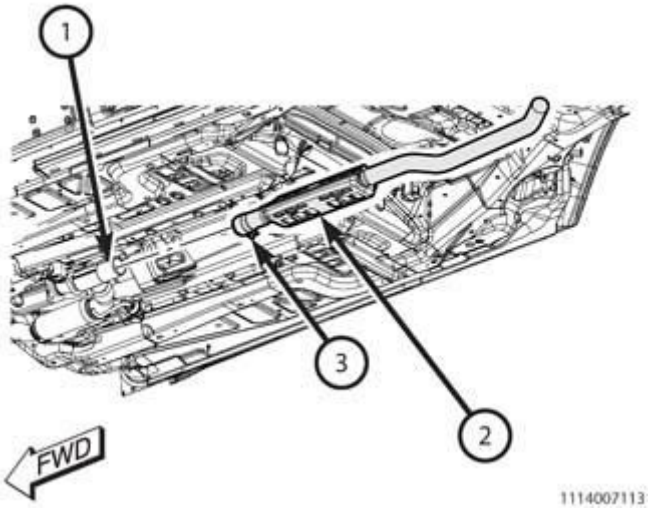

Fig. 49: Resonator & Y-Pipe
Courtesy of CHRYSLER GROUP, LLC

3. Using a jack or suitable stand. Position the stand under the resonator piping to help support and aid in removal from the cross under pipe.
4. Separate the resonator (2) from the Y-pipe (1).

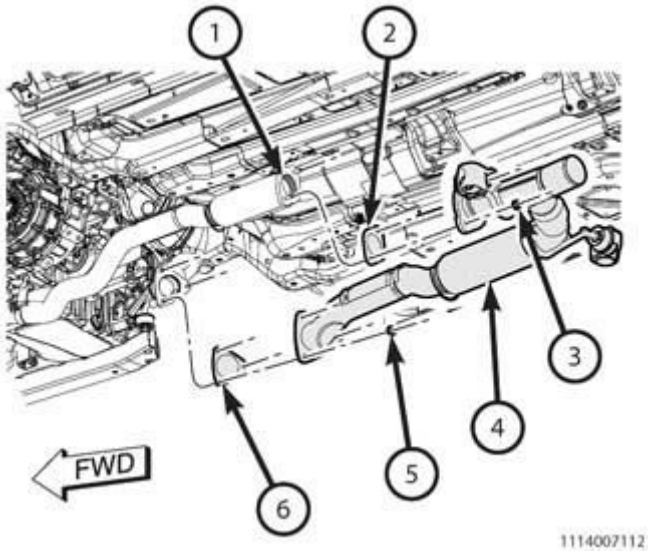

Fig. 50: Y-Pipe
Courtesy of CHRYSLER GROUP, LLC

5. Remove the Y-pipe (4) support isolator bolts.
6. Separate the cross under pipe (1) from the Y-pipe.

7. Separate the rear catalytic converter from the Y-pipe.

INSTALLATION

3.2L

Fig. 51: Resonator & Y-Pipe
Courtesy of CHRYSLER GROUP, LLC

1. Install the Y-pipe (1) to the resonator (2). Tighten the clamp (3) to 55 N.m (40 ft. lbs.).

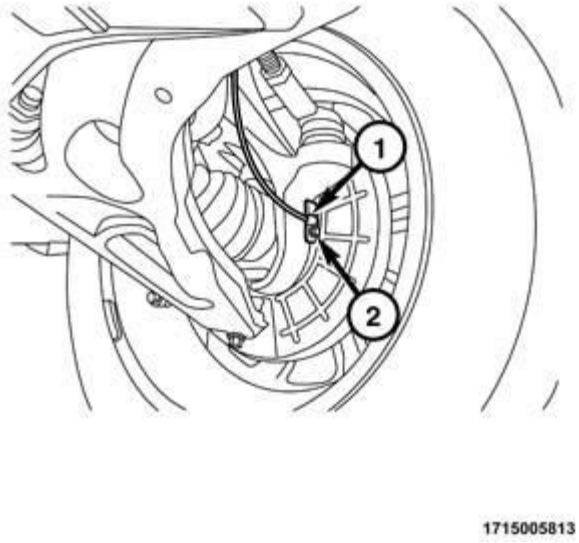

Fig. 52: Y-Pipe
Courtesy of CHRYSLER GROUP, LLC

2. Install the Y-pipe (4) isolator bolts.
3. If required, install new gaskets (2, 6).
4. Align the Y-pipe to the cross under pipe flange (1) and the rear catalytic converter flange. Tighten the nuts (3, 5) to 26 N.m (19 ft. lbs.).

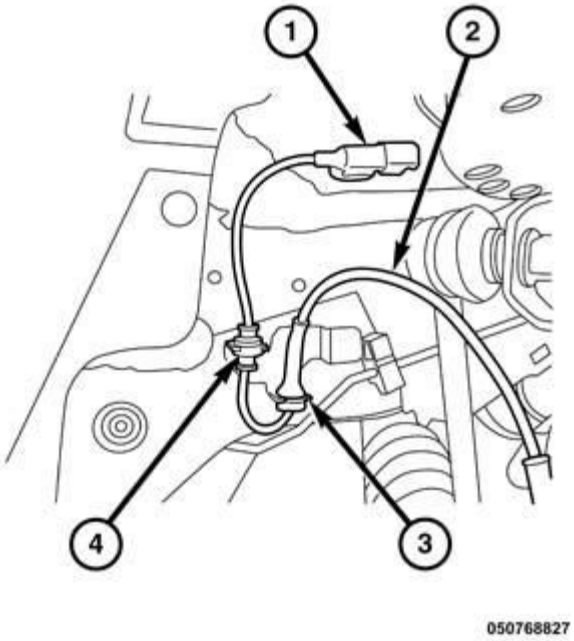

Fig. 53: Removing/Installing Belly Pans
Courtesy of CHRYSLER GROUP, LLC

5. Install the belly pan (1).
6. Lower vehicle.
7. Check for clearance of the exhaust to body.

FILTER, DIESEL PARTICULATE

DESCRIPTION

DESCRIPTION

A diesel particulate filter (DPF) is installed for exhaust gas after-treatment. The DPF filters, stores and burns particulate matter (soot) that is generated during the combustion process. The soot is oxidized to carbon dioxide CO2 at exhaust temperatures over 600° C (1, 112° F).

OPERATION

OPERATION

The oxidation catalysts raise the exhaust gas temperatures to regenerate the DPF, which is passive regeneration. If the passive regeneration cannot keep up with the build up of soot in the DPF, the Powertrain Control Module (PCM) will actively regenerate the DPF to burn off the soot. Residue remains inside the DPF in the form of non burnable ash. Ash comes from the oils and other materials that are trapped in the oils and are present in the soot. Ash is not eliminated by the regeneration cycle. Excessive ash accumulation requires the replacement of the DPF. The DPF uses a silicon carbide wall-flow monolith with a platinum coating to trap particulates. The

monolith contains a large number of square parallel channels, which run in the axial direction and are separated by thin porous walls. The channels are alternatively open at one end, but plugged at the other. The exhaust gases flow through the walls and escape through the pores in the wall material. Particulates, however, are too large to escape and are trapped in the monolith walls. The PCM starts the regeneration of the DPF if the soot load exceeds a performance map value. The PCM determines the load condition of the DPF based upon the exhaust gas pressure upstream and downstream of the DPF. A pressure differential sensor provides the pressure input to the PCM. During the regeneration process, the PCM raises the temperature in the DPF to burn off the soot accumulated. Under normal operation, the engine does not produce enough heat to oxidize the soot inside the DPF. This process requires temperatures above 550 °C (1, 022 °F). After regeneration, the PCM reads the actual pressure difference at the DPF and compares it with a reference value. From this comparison, the PCM determines the ash quantity inside the DPF.

REMOVAL

REMOVAL

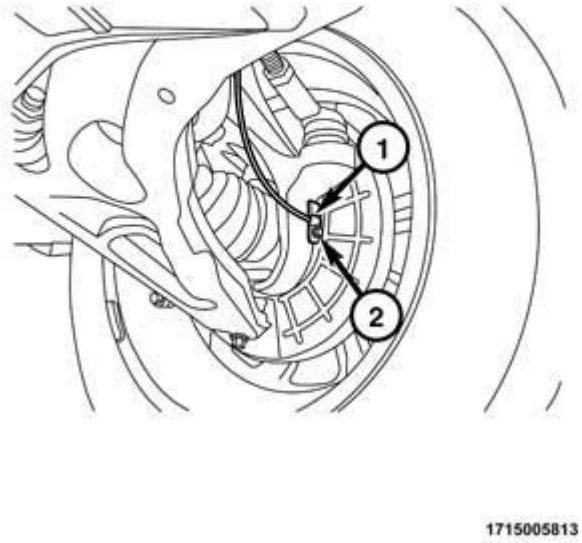

Fig. 54: Engine Cover
Courtesy of CHRYSLER GROUP, LLC

WARNING: The normal operating temperature of the exhaust system is very high. Therefore, never work around or attempt to service any part of the exhaust system until it is cooled. Special care should be taken when working near the catalytic converter. The temperature of the converter rises to a high level after a short period of engine operating time.

1. Disconnect the negative battery cable.
2. Remove the engine cover (1).

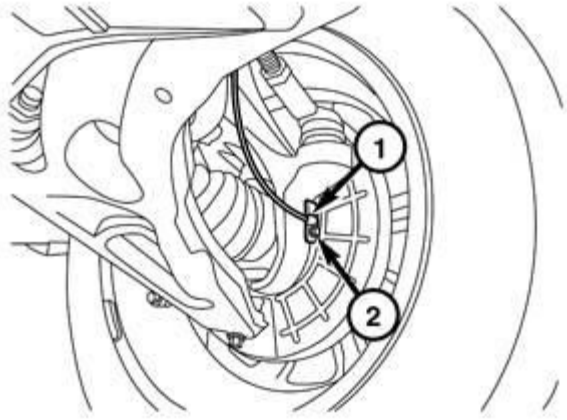

1715005813

Fig. 55: Upper Turbocharger Heat Shield & Mid Upper Turbocharger Heat Shield
Courtesy of CHRYSLER GROUP, LLC

3. Remove the upper turbocharger heat shield (1).

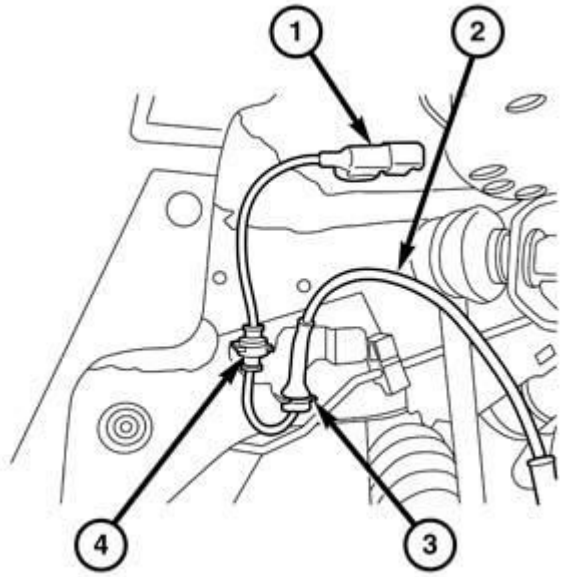

050768827

Fig. 56: Turbocharger Heat Shield & Fasteners
Courtesy of CHRYSLER GROUP, LLC

4. Disconnect the upstream O2 sensor wire harness connector.
5. Remove the mid upper turbocharger heat shield (2).

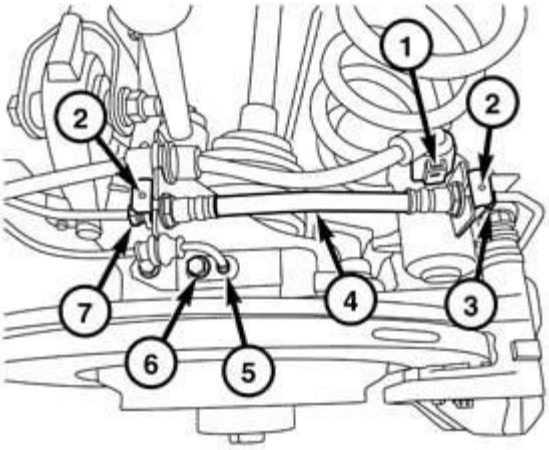

1715005817

Fig. 57: DPF, Heatshield & Bolts
Courtesy of CHRYSLER GROUP, LLC

6. Remove the pressure differential tubing from the DPF (2) and position aside.
7. Disconnect the temperature and downstream O2 sensor wire harness connectors.
8. Remove the DPF heat shield (1).
9. Raise and support the vehicle. Refer to **HOISTING, STANDARD PROCEDURE** .
10. Remove the belly pan. Refer to **BELLY PAN, REMOVAL** .
11. Remove the crossunder pipe. Refer to **PIPE, EXHAUST CROSSUNDER, REMOVAL**.
12. Lower the vehicle.

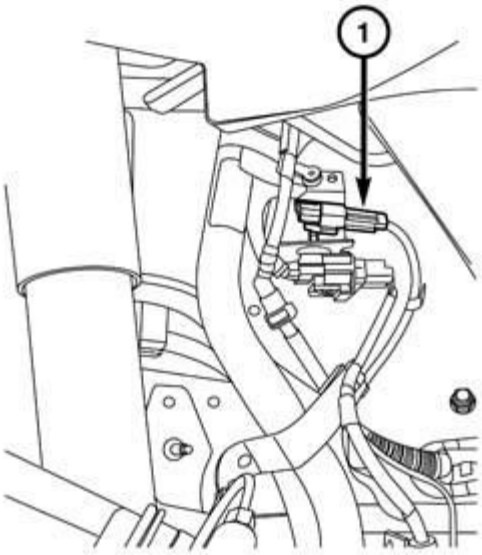

1715005822

Fig. 58: Clamp, Turbocharger & Two Attaching Bolts
Courtesy of CHRYSLER GROUP, LLC

13. Loosen the band clamp (1) from the DPF pipe to turbocharger (2).
14. Remove the two attaching bolts (3) and remove DPF.

INSTALLATION

INSTALLATION

NOTE: When replacement is required on any component of the exhaust system, original equipment parts (or equivalent) must be used.

CAUTION: Band clamps should never be tightened such that the two sides of the clamps are bottomed out against the center hourglass shaped center block. Once this occurs, the clamp band has been stretched and has lost its clamping force and must be replaced.

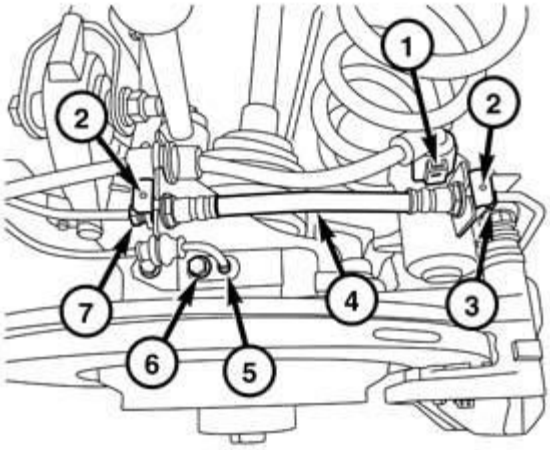

1715005817

Fig. 59: Clamp, Turbocharger & Two Attaching Bolts
Courtesy of CHRYSLER GROUP, LLC

1. Position the DPF (2) onto the engine block.
    - Tighten the band clamp (1) to 25 N.m (18 ft. lbs.).
    - Tighten the DPF bolts (3) to 20 N.m (177 in. lbs.).

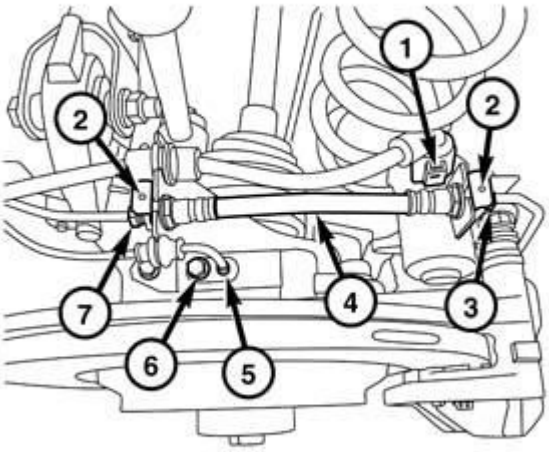

1715005817

Fig. 60: DPF, Heatshield & Bolts
Courtesy of CHRYSLER GROUP, LLC

2. Install the DPF heat shield (1):
   - Tighten the bolts (4) to 12 N.m (106 in. lbs.).
   - Tighten the nuts to (3) 8 N.m (71 in. lbs.).
3. Install the differential pressure tubing into DPF.
4. Connect the temperature sensor and the downstream O2 sensor wire harness connectors.

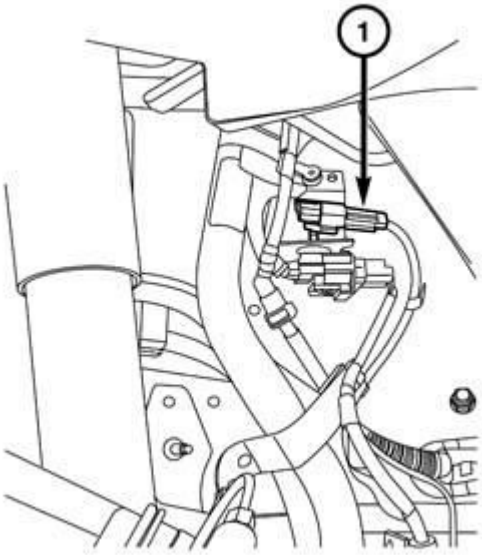

1715005822

Fig. 61: Turbocharger Heat Shield & Fasteners
Courtesy of CHRYSLER GROUP, LLC

5. Install the mid upper turbocharger heat shield:
   - Tighten the bolts (3) to 8 N.m (71 in. lbs.).
   - Tighten the nut to 8 N.m (71 in. lbs.).
6. Raise and support the vehicle. Refer to **HOISTING, STANDARD PROCEDURE** .
7. Install the cross under pipe. Refer to **PIPE, EXHAUST CROSSUNDER, INSTALLATION**.
8. Install the belly pan Refer to **BELLY PAN, INSTALLATION** .
9. Lower the vehicle.
10. Start the vehicle and check for leaks. Repair as necessary.

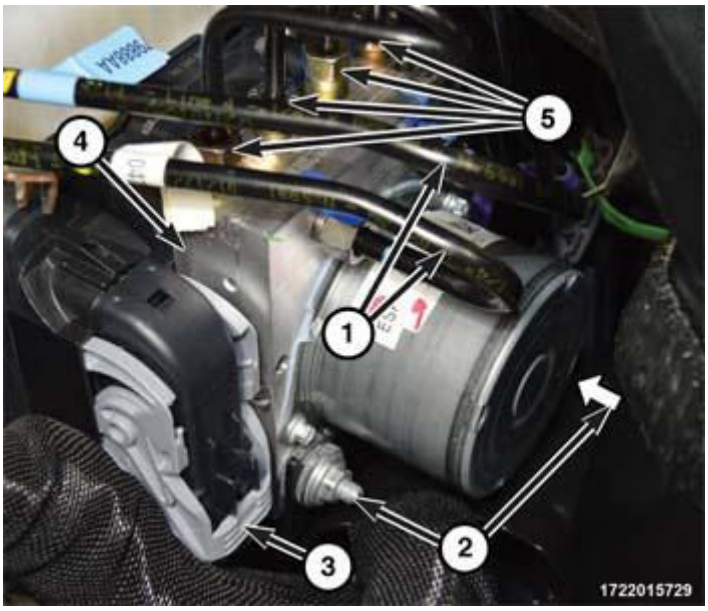

Fig. 62: Engine Cover
Courtesy of CHRYSLER GROUP, LLC

11. Install the engine cover (1).

SENSOR, DIFFERENTIAL PRESSURE

DESCRIPTION

DESCRIPTION

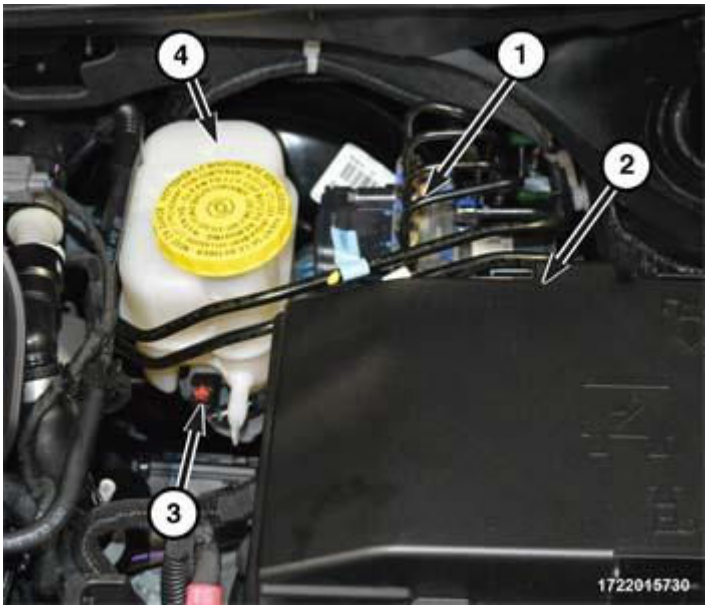

Fig. 63: Differential Pressure Sensor
Courtesy of CHRYSLER GROUP, LLC

The Differential Pressure Sensor (2) is located near the Powertrain Control Module (PCM). Two pressure tubes (4) measure pressure before and after the Diesel Particulate Filter (DPF)/Diesel Oxidation Catalyst (DOC). The sensor is critical for fail-safe of regeneration strategy, because it interprets high pressure drops as possible high soot loads.

REMOVAL

REMOVAL

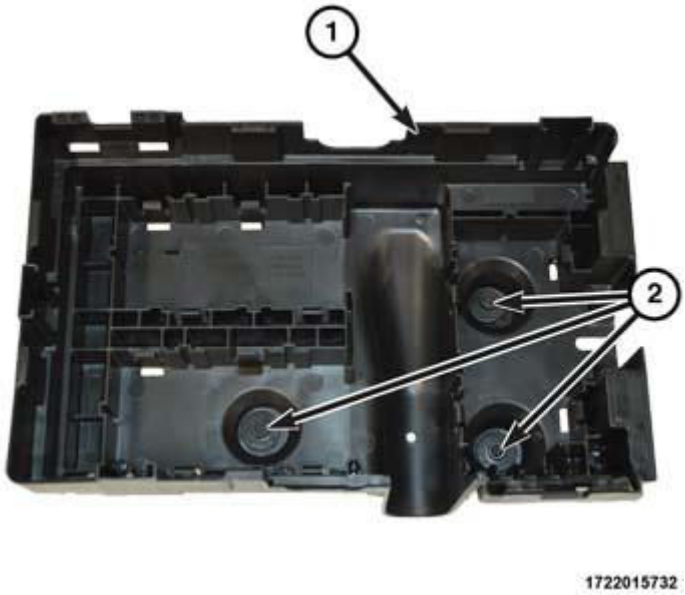

Fig. 64: Differential Pressure Sensor
Courtesy of CHRYSLER GROUP, LLC

1. Disconnect and isolate the negative battery cable.
2. Disconnect the differential pressure sensor wire harness connector (3).
3. Disconnect the differential pressure sensor vacuum hoses (4).
4. Remove nut (1) and differential pressure sensor (2).

INSTALLATION

INSTALLATION

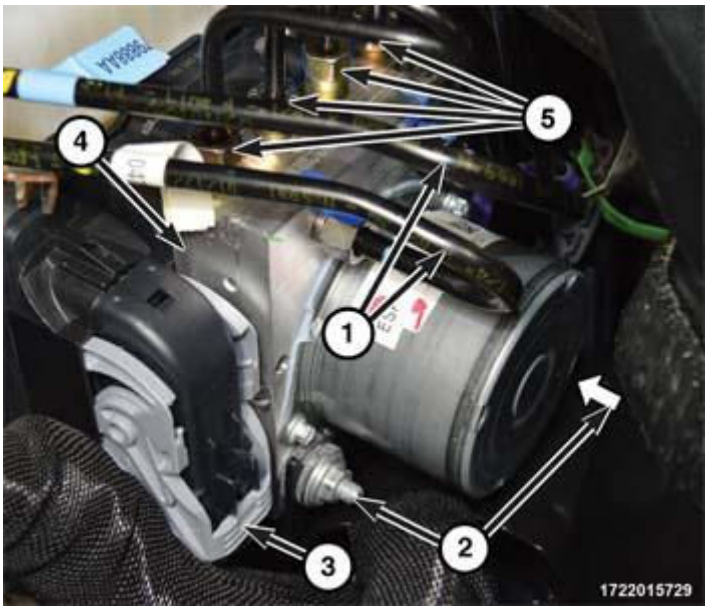

Fig. 65: Differential Pressure Sensor
Courtesy of CHRYSLER GROUP, LLC

1. Install the differential pressure sensor (2) and securely tighten nut (1).
2. Connect the differential pressure sensor vacuum hoses (4).
3. Connect the differential pressure sensor wire harness connector (3).
4. Connect the negative battery cable.

SENSOR, EXHAUST TEMPERATURE

REMOVAL

EXHAUST TEMPERATURE SENSOR 1/1

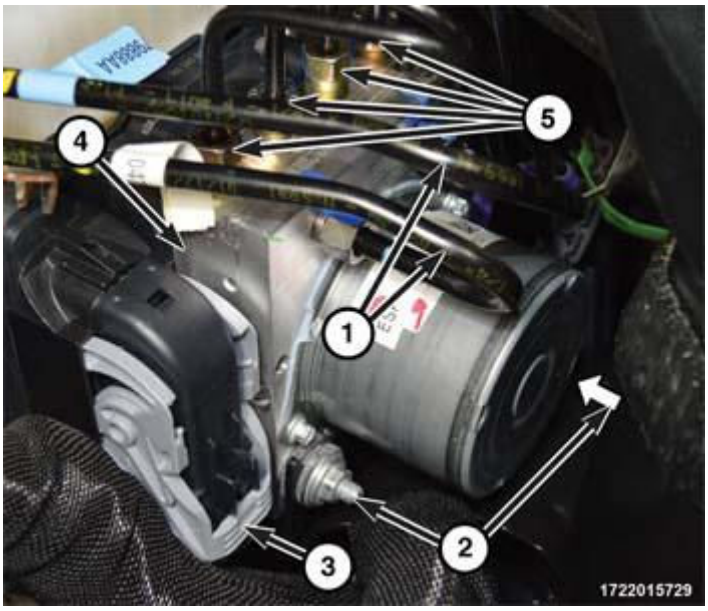

Fig. 66: Engine Cover
Courtesy of CHRYSLER GROUP, LLC

1. Disconnect the negative battery cable.
2. Remove the engine cover (1).

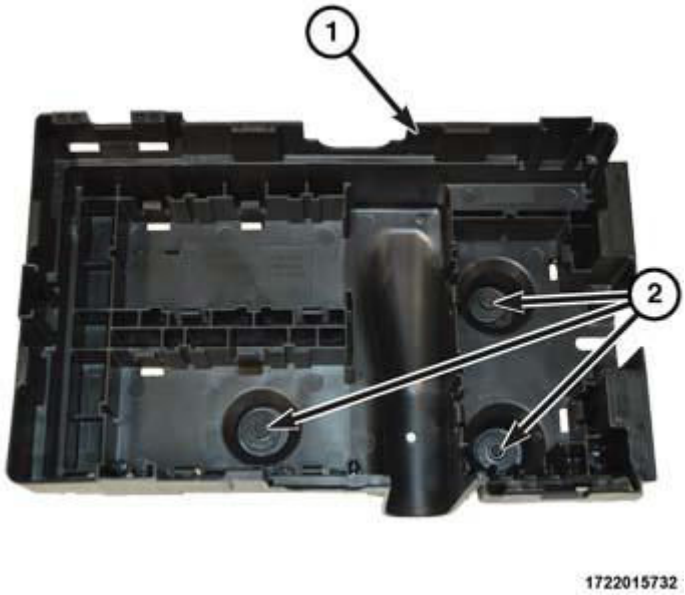

Fig. 67: Upstream Exhaust Temperature Sensor Connector
Courtesy of CHRYSLER GROUP, LLC

3. Disconnect the upstream exhaust temperature sensor 1/1 wire harness connector (1).

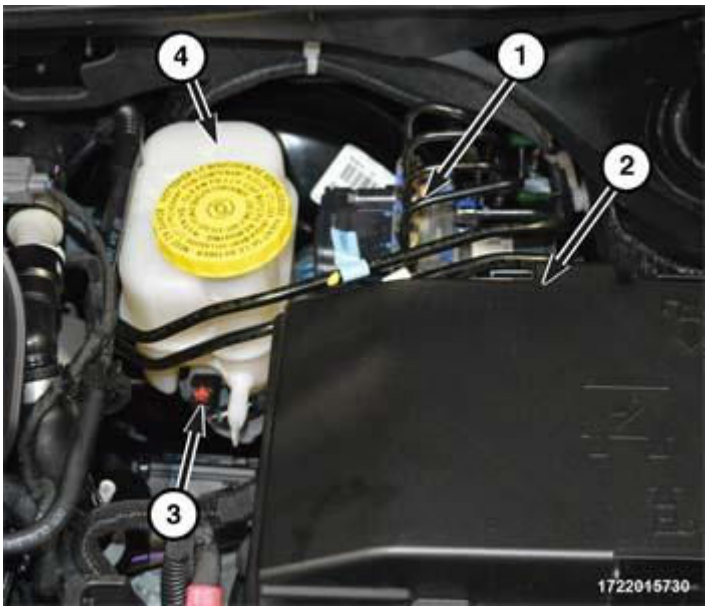

Fig. 68: Upstream Exhaust Temperature Sensor, Wire, Bracket & Connector
Courtesy of CHRYSLER GROUP, LLC

NOTE: The heat shield is removed for clarity.

4. Detach the upstream exhaust temperature sensor 1/1 wire (1) from heat shield (2).
5. Detach the upstream exhaust temperature sensor 1/1 wire harness connector (3) from bracket (4).
6. Remove the upstream exhaust temperature sensor 1/1 (5).

EXHAUST TEMPERATURE SENSOR 1/2

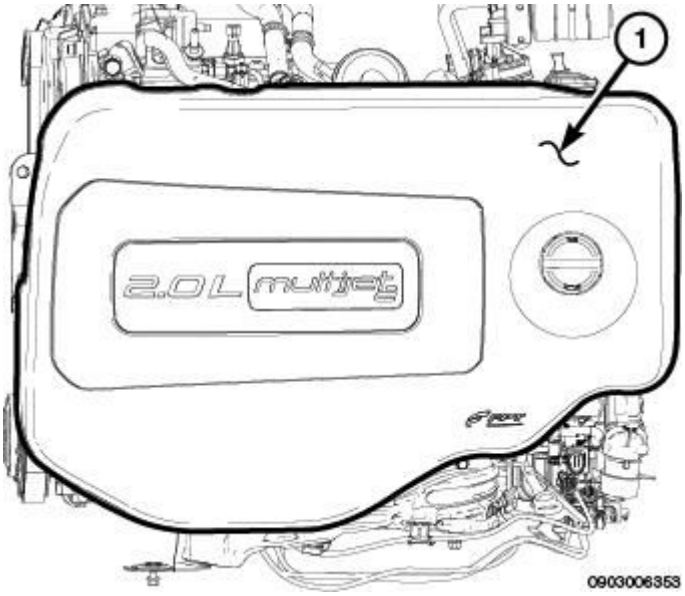

Fig. 69: Engine Cover
Courtesy of CHRYSLER GROUP, LLC

1. Disconnect the negative battery cable.
2. Remove the engine cover (1).

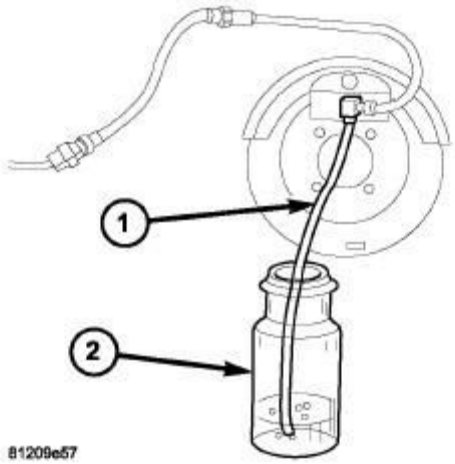

Fig. 70: Downstream Exhaust Temperature Sensor & Connector
Courtesy of CHRYSLER GROUP, LLC

3. Disconnect the downstream exhaust temperature sensor wire harness connector.
4. Detach the downstream exhaust temperature sensor wire harness connector (1) from bracket.
5. Remove the downstream exhaust temperature sensor (2).

INSTALLATION

EXHAUST TEMPERATURE SENSOR 1/1

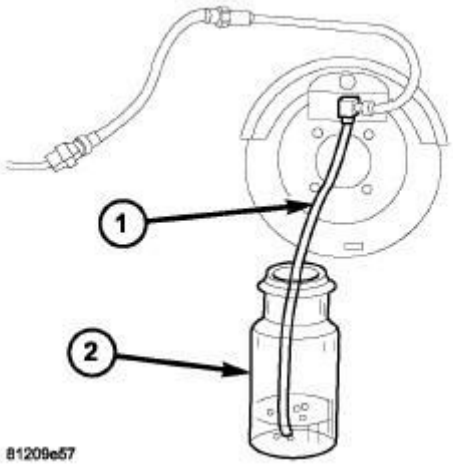

Fig. 71: Upstream Exhaust Temperature Sensor, Wire, Bracket & Connector
Courtesy of CHRYSLER GROUP, LLC

1. Install the upstream exhaust temperature sensor 1/1 (5) and tighten to 45 N.m (33 ft. lbs.).

2. Attach the upstream exhaust temperature sensor 1/1 wire harness connector (3) to bracket (4).
3. Attach the upstream exhaust temperature sensor 1/1 wire (1) to heat shield (2).

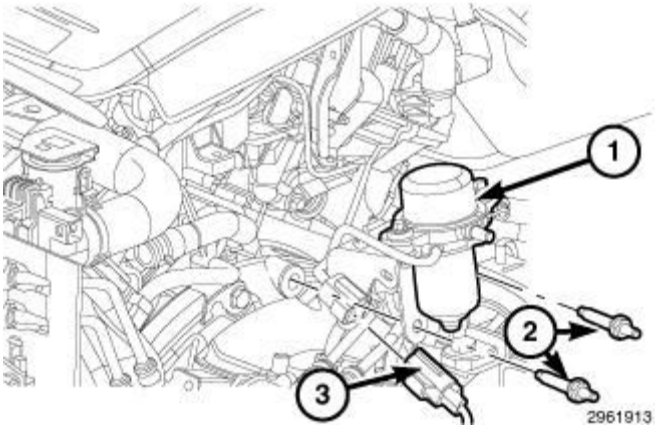

Fig. 72: Upstream Exhaust Temperature Sensor Connector
Courtesy of CHRYSLER GROUP, LLC

4. Connect the upstream temperature sensor wire harness connector (1).

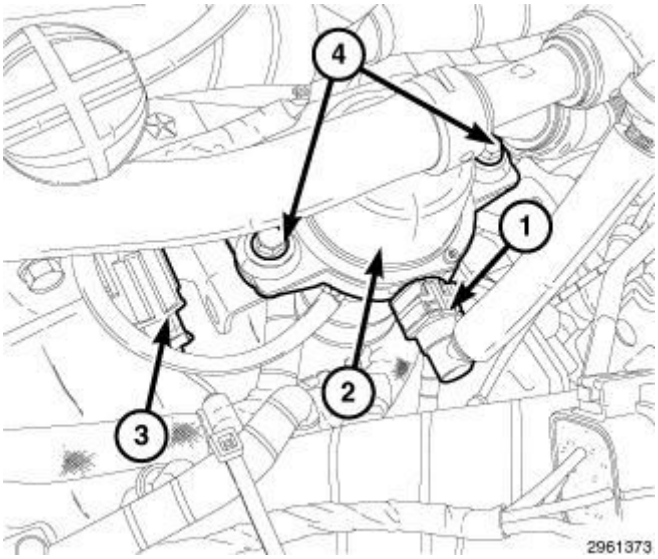

Fig. 73: Engine Cover
Courtesy of CHRYSLER GROUP, LLC

5. Install the engine cover (1).
6. Connect the negative battery cable.

EXHAUST TEMPERATURE SENSOR 1/2

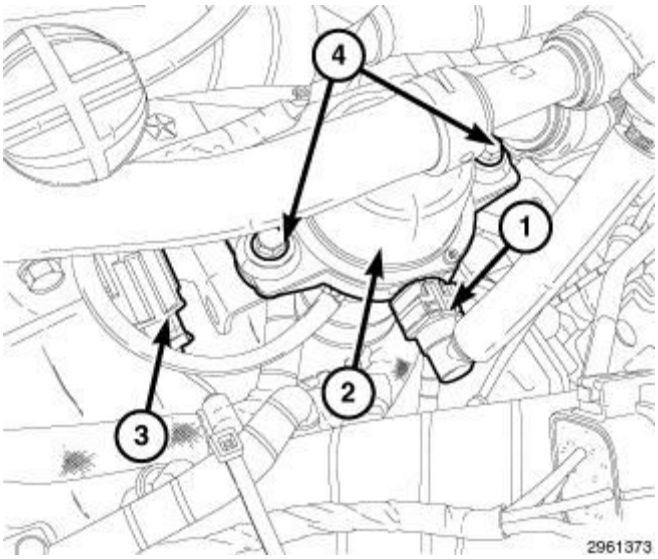

Fig. 74: Downstream Exhaust Temperature Sensor & Connector
Courtesy of CHRYSLER GROUP, LLC

1. Install the downstream exhaust temperature sensor 1/2 (2) and tighten to 45 N.m (33 ft. lbs.).
2. Attach the downstream exhaust temperature sensor 1/2 wire harness connector (1) to bracket.
3. Connect the downstream exhaust temperature sensor 1/2 wire harness connector.

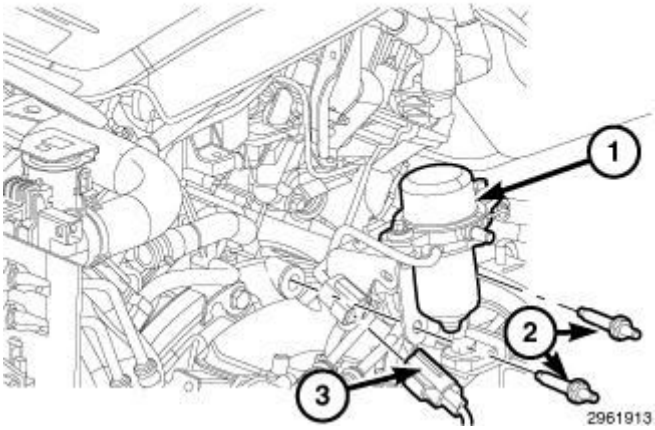

Fig. 75: Engine Cover
Courtesy of CHRYSLER GROUP, LLC

4. Install the engine cover (1).
5. Connect the negative battery cable.

2014 ENGINE

Fuel System - Cherokee

FUEL DELIVERY, GAS

STANDARD PROCEDURE

FUEL SYSTEM PRESSURE RELEASE PROCEDURE

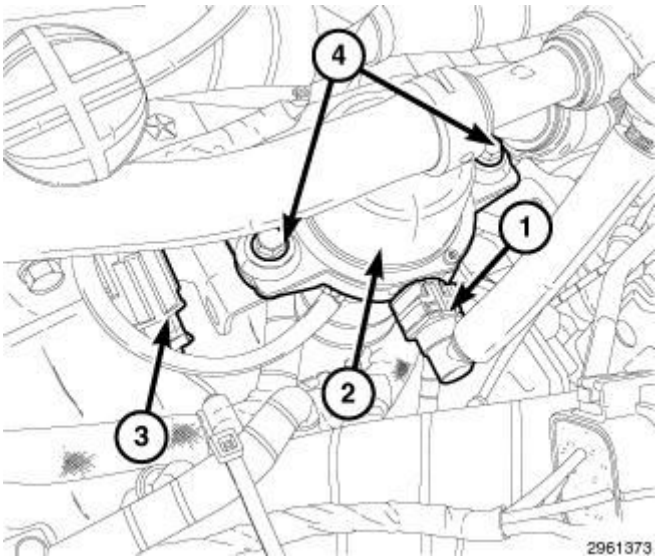

Fig. 1: Removing/Installing Rear Seat
Courtesy of CHRYSLER GROUP, LLC

WARNING: The fuel system is under constant pressure even with engine off. Until the fuel pressure has been properly relieved from the system, do not attempt to open the fuel system. Do not smoke or use open flames/sparks when servicing the fuel system. Wear protective clothing and eye protection. Make sure the area in which the vehicle is being serviced is in a well ventilated area.

A separate fuel pump relay is no longer used. A circuit within the Body Control Module (BCM) is used to control the electric fuel pump located within the fuel pump module.

1. Remove fuel fill cap.
2. Remove lower rear seat cushion.

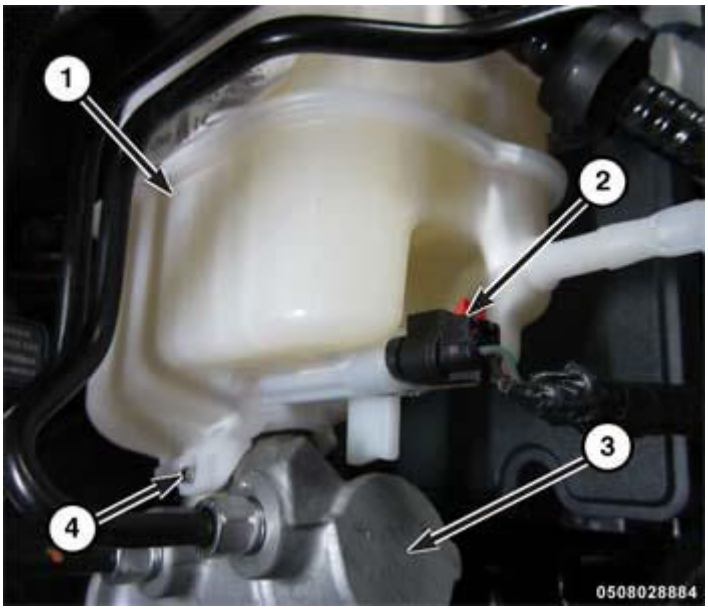

Fig. 2: Access Cover, Connector & Screws
Courtesy of CHRYSLER GROUP, LLC

3. Remove the fuel pump module cover (1).

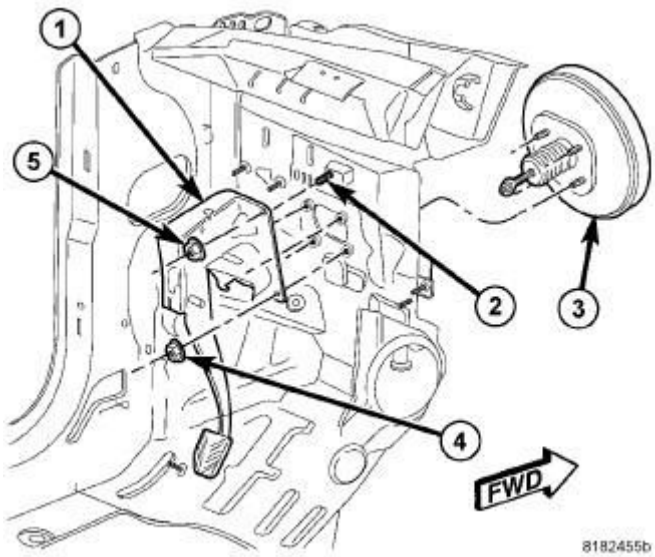

Fig. 3: Fuel Supply, Return & Vapor Lines
Courtesy of CHRYSLER GROUP, LLC

4. Disconnect electrical connector form fuel pump module.
5. Start and run engine until it stalls.
6. Attempt to restarting engine a few times until the engine will no longer start.
7. Turn ignition key to OFF position.

8. Disconnect negative battery cable.
9. Place a shop towel below and disconnect the fuel line quick-connect fittings at the fuel pump module. Refer to **STANDARD PROCEDURE - QUICK-CONNECT FITTINGS** .

NOTE: **After servicing the fuel system, one or more Diagnostic Trouble Codes (DTC's) may have been stored in Powertrain Control Module (PCM) memory due to disconnecting fuel pump module circuit. A diagnostic scan tool must be used to erase a DTC.**

DRAINING FUEL TANK

1. Release fuel system pressure. Refer to **FUEL SYSTEM PRESSURE RELEASE PROCEDURE** .
2. Remove the fuel pump module. Refer to **MODULE, FUEL PUMP, REMOVAL** .
3. Drain fuel from fuel tank with approved siphoning equipment, store fuel in approved fuel storage container.

SPECIFICATIONS

FUEL SYSTEM PRESSURE

DESCRIPTION	METRIC	STANDARD
Fuel Pressure	400 kPa ±34 kPa	58 psi ± 5 psi

TORQUE SPECIFICATIONS

DESCRIPTION	N.m	Ft. Lbs.	In. Lbs.
Fuel Fill Tube Clamp	3	-	27
Fuel Rail to Intake Manifold	7	-	62
Fuel Tank Strap Bolts	48	35	-
Filler Tube Mounting Nut	12	-	106

DIAGNOSIS AND TESTING

DIAGNOSIS AND TESTING - HARD TO FILL WITH FUEL

1. Disconnect the vapor recirculation tube at the fuel tank.
2. Attempt to refill fuel tank.
3. Does tank refill properly?
   a. Yes >> Proceed to next step.
   b. No > Proceed to step 8.
4. Reconnect the vapor recirculation tube at the fuel tank.
5. Disconnect the other end of the vapor recirculation tube at the fuel filler tube.

6. Attempt to refill fuel tank.
7. Does tank refill properly?
    a. Yes >> Replace fuel filler tube.
    b. No > Replace the vapor recirculation tube.
8. Disconnect the control valve to EVAP canister tube at the fuel tank.
9. Reconnect the vapor recirculation tube at the fuel tank.
10. Does tank refill properly?
    a. Yes >> Replace fuel tank.
    b. No > Proceed to step 11.
11. Reconnect the control valve to EVAP canister tube at the fuel tank.
12. Disconnect the control valve to EVAP canister tube at the EVAP canister.
13. Attempt to refill fuel tank.
14. Does tank refill properly?
    a. Yes >> Blockage is in the EVAP Canister, or ESIM, or Clean air hose (ESIM vent hose), or filter. Diagnose appropriately.
    b. No > Replace the control valve to EVAP canister tube.

SPECIAL TOOLS

SPECIAL TOOLS

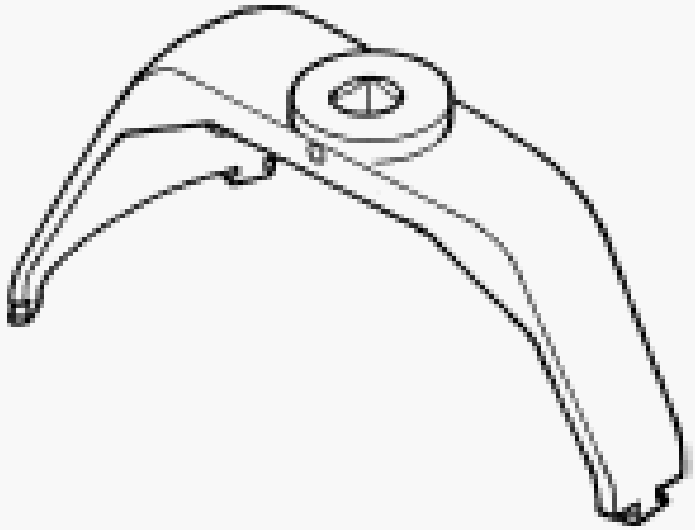	9340 - SAE Fuel Pump Lock Ring Wrench (Originally Shipped In Kit Number(s) 9327, 9327CC, 9397, 9575.)

FILTER, FUEL

DESCRIPTION

DESCRIPTION

The fuel filter is combined within the fuel pump module assembly. It is not serviceable separately.

FITTING, QUICK CONNECT

STANDARD PROCEDURE

STANDARD PROCEDURE - QUICK-CONNECT FITTINGS

Different types of quick-connect fittings are used to attach the various fuel system components, lines and tubes. Some quick-connect fittings require the use of a special tool for disconnection and removal.

NOTE: Care must be used when separating fittings. Over-flexing may cause the tube to become deformed or damaged.

These are the quick-connect fittings:

- Redundant Latch Single Button Type Fitting
- Single Button Type Fitting
- Pinch Type Fitting
- Single Tab Type Fitting
- Two Tab Type Fitting
- Plastic Retainer Ring Type Fitting
- Latch Clip Type 1 Fitting
- Latch Clip Type 2 Fitting
- Wing Type Fitting

DISCONNECTING

WARNING: On vehicles equipped with gasoline engines, the fuel system is under a constant pressure (even with engine off). Before servicing any fuel system hose, fitting or line, fuel system pressure must be released.

CAUTION: Before separating a Quick-Connect fitting, pay attention to what type of fitting is being used. This will prevent unnecessary fitting or fitting latch breakage.

CAUTION: The interior components (O-rings, clips) of quick-connect fittings are not serviced separately, but new plastic spacers and latches are available for some types. If service parts are not available, do not attempt to repair the damaged fitting or fuel line (tube). If repair is necessary, replace the complete fuel line (tube) assembly.

REDUNDANT LATCH SINGLE BUTTON TYPE FITTING:

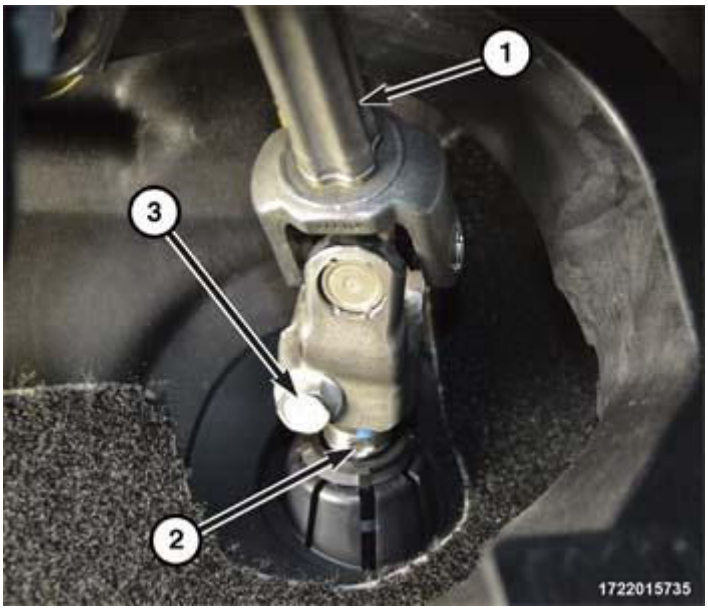

Fig. 4: Redundant Latch & Push Button
Courtesy of CHRYSLER GROUP, LLC

This type of quick-connect fitting is equipped with a redundant latch (2) and a single push button (1) that releases two internal latches located in the quick-connect fitting. Special tools are not required for removal.

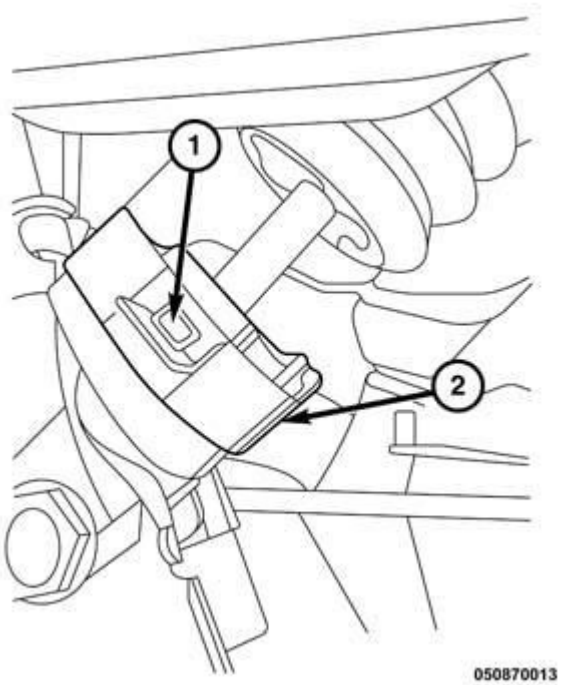

Fig. 5: Redundant Latch & Internal Latches
Courtesy of CHRYSLER GROUP, LLC

CAUTION: Do not pry or pull up on the push button as damage to the latches of the quick-connect fitting will occur.

1. Pull the redundant latch (2) out away from the quick-connect fitting.
2. Press on the push button with your thumb, release the internal latches (1) and remove the quick-connect fitting from the fuel system component.

SINGLE BUTTON TYPE FITTING:

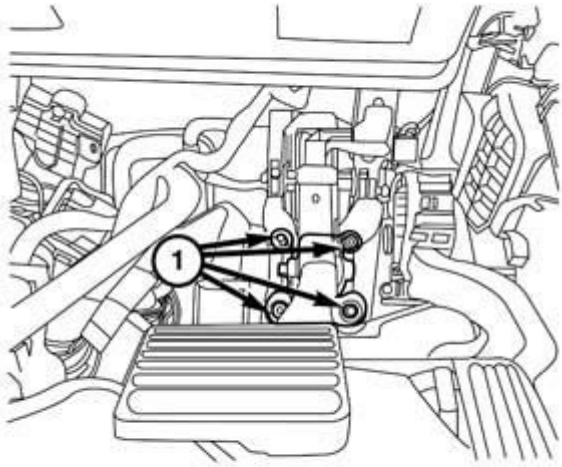

0508007146

Fig. 6: Single Button Fitting
Courtesy of CHRYSLER GROUP, LLC

CAUTION: Do not pry or pull up on the push button as damage to the latches of the quick-connect fitting will occur.

This type of quick-connect fitting is equipped with a single push button (2) that releases two internal latches located in the quick-connect fitting. Special tools are not required for removal.

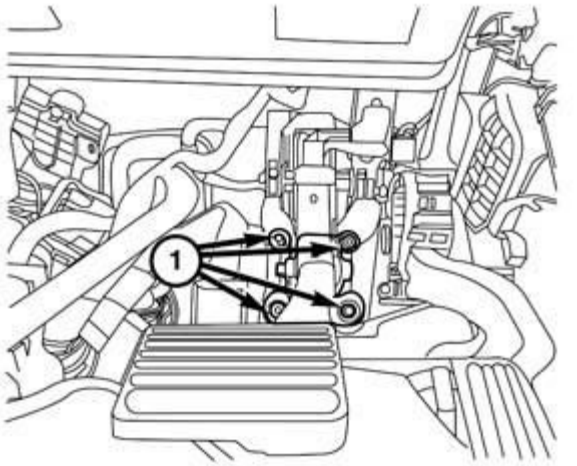

0508007146

Fig. 7: Ouick-Connect Fitting Latches
Courtesy of CHRYSLER GROUP, LLC

1. Press on the push button with your thumb, release the internal latches (1).
2. Remove the quick-connect fitting from the fuel system component.

2 BUTTON TYPE FITTING

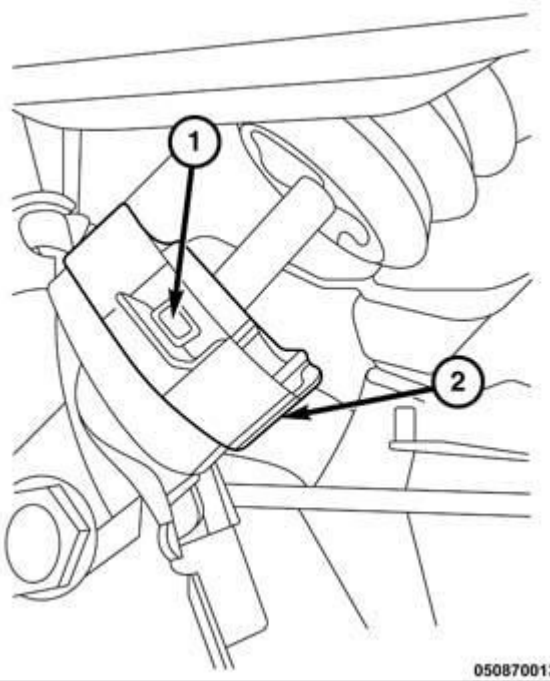

050870013

Fig. 8: 2-Button Type Fitting
Courtesy of CHRYSLER GROUP, LLC

This type of quick-connect fitting (1) is equipped with two push buttons (2) that releases two internal latches located in the quick-connect fitting. Special tools are not required for removal.

1. Press on both push buttons with your thumb, release the internal latches.
2. While holding the two push buttons simultaneously, remove the quick-connect fitting from the fuel system component.

PINCH TYPE FITTING

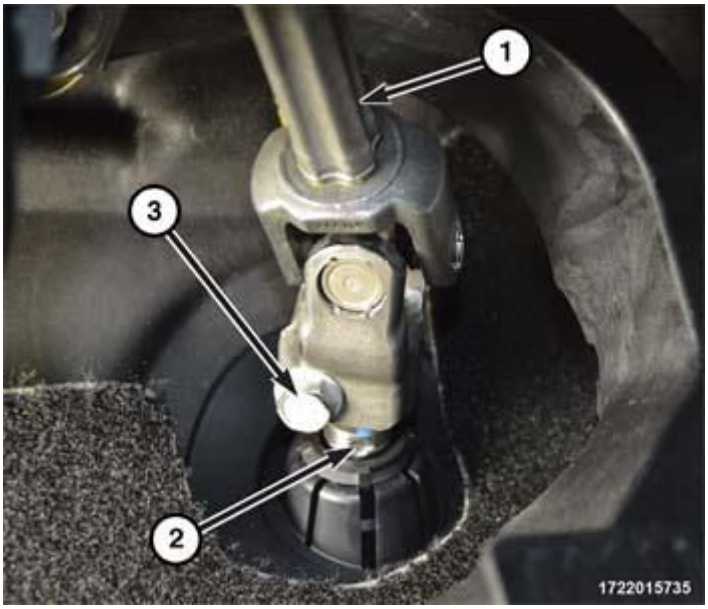

Fig. 9: Pinch Type Quick-Connect Fitting
Courtesy of CHRYSLER GROUP, LLC

This type of quick-connect fitting (1) is equipped with two finger tabs (2). Special tools are not required for removal.

1. Pinch both tabs (2) together and release the quick-connect fitting.
2. Remove the quick-connect fitting from the fuel system component.

SINGLE TAB TYPE FITTING

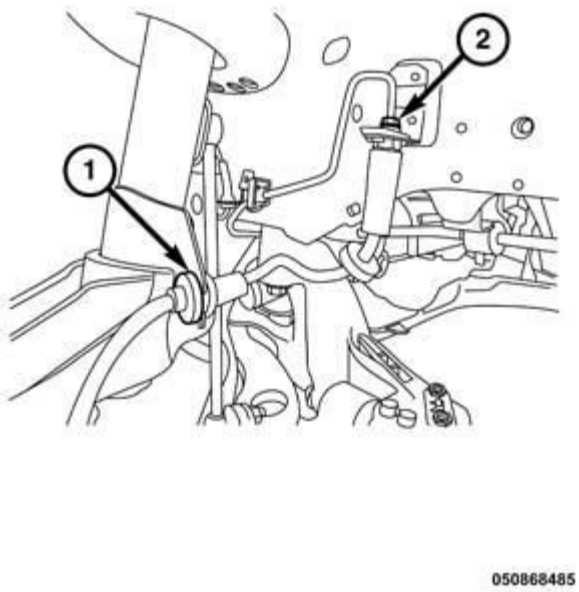

Fig. 10: Single-Tab Type Fitting
Courtesy of CHRYSLER GROUP, LLC

This type of quick-connect fitting (3) is equipped with a single pull tab (1). The tab is removable. After tab is removed the quick-connect fitting can be separated from the fuel system component. Special tools are not required for removal.

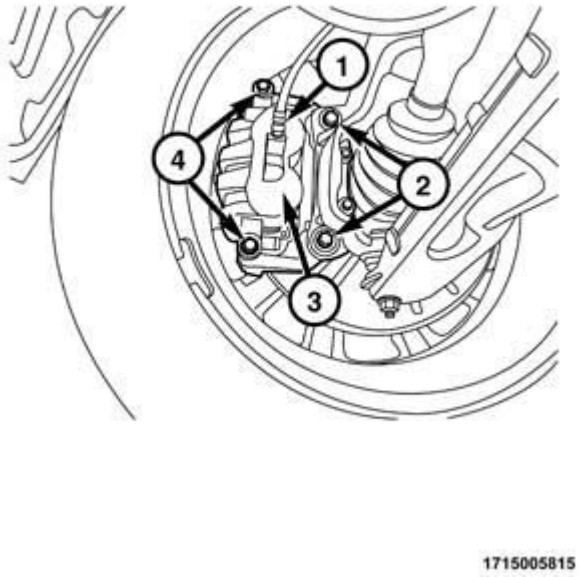

Fig. 11: Disconnecting Single-Tab Type Fitting

Courtesy of CHRYSLER GROUP, LLC

1. Press release tab on side of fitting to release pull tab (1). **If release tab is not pressed prior to releasing pull tab, pull tab will be damaged.**
2. While pressing the release tab on the side of the quick-connect fitting use a screwdriver (2) to pry up the pull tab.
3. Raise the pull tab until it separates from the quick-connect fitting.
4. Remove the quick-connect fitting from the fuel system component.

TWO TAB TYPE FITTING

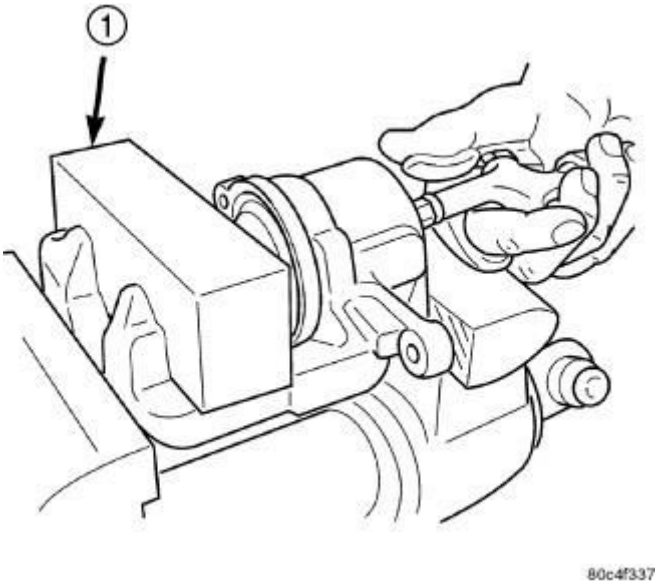

Fig. 12: Typical Two-Tab Type Quick-Connect Fitting
Courtesy of CHRYSLER GROUP, LLC

This type of quick-connect fitting (2) is equipped with tabs located on both sides of the fitting (1). These tabs are integral to the fuel system component. The plastic tabs will remain on the component being serviced after the quick-connect fitting is removed. The O-ring and spacer will remain in the quick-connect fitting. Special tools are not required for removal.

1. Squeeze the plastic tabs (1) against the sides of component being serviced with your fingers.
2. Remove the quick-connect fitting from the fuel system component.

PLASTIC RETAINER RING TYPE FITTING

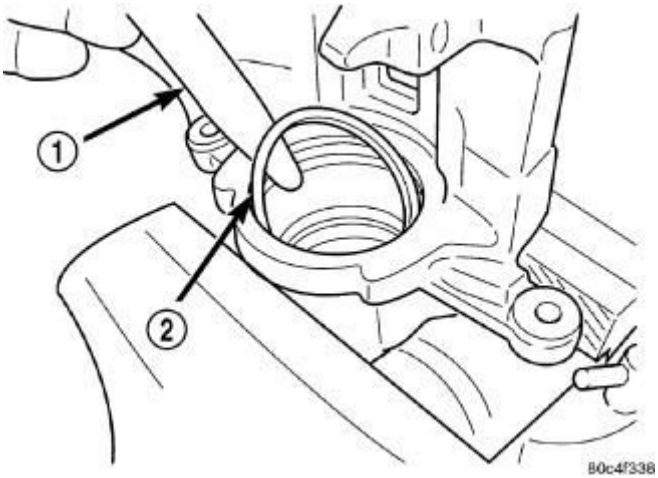

Fig. 13: Plastic Retainer Ring Type Fitting
Courtesy of CHRYSLER GROUP, LLC

This type of fitting can be identified by the use of a round plastic retainer ring (4) usually black in color. Special tools are not required for removal.

NOTE: **The round plastic retainer ring must be pressed squarely into the quick-connect fitting body. If this retainer is cocked during removal it will be difficult to disconnect the quick-connect fitting. Use an open-end wrench on the shoulder of the plastic retainer ring to aid in disconnection.**

1. Firmly push the quick-connect fitting (5) towards the component being serviced while firmly pushing the round plastic retainer ring into the quick-connect fitting (6). With the round plastic ring depressed, remove the quick-connect fitting from the fuel system component.
2. After removal the plastic retainer ring will remain with the quick-connect fitting.

LATCH CLIP TYPE 1 FITTING

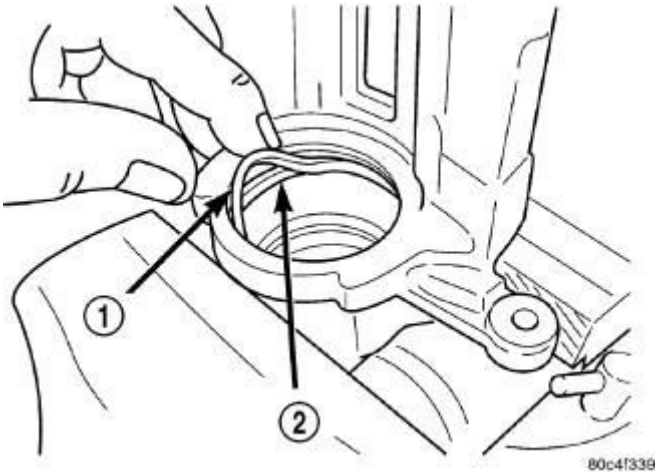

Fig. 14: Latch Clip Type 1
Courtesy of CHRYSLER GROUP, LLC

Depending on vehicle model and engine, 2 different types of safety latch clips are used. One is tethered (1) to fuel line and the other is not. A special tool will be necessary to disconnect the fuel line after latch clip is removed. The latch clip may be used on certain fuel line and fuel rail connections or to join fuel lines together.

1. Pry up on the latch clip (4) with a screwdriver (3).
2. Slide the latch clip away from the quick-connect fitting while lifting the screwdriver and position aside.

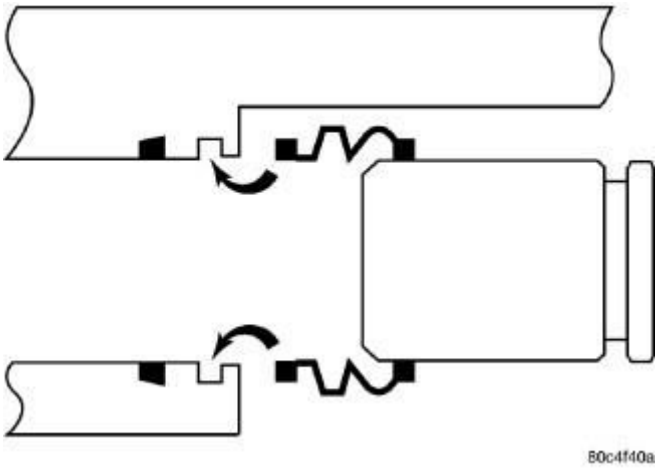

Fig. 15: Fuel Line Disconnection Using Special Tool
Courtesy of CHRYSLER GROUP, LLC

3. Insert the commercially available fuel line removal tool (1) into the quick-connect fitting and release the internal latches.

NOTE: After removal the internal latches will remain in the quick-connect fitting.

4. With the commercially available fuel line removal tool (1) still inserted, remove the quick-connect fitting from the fuel system component.

LATCH CLIP TYPE 2 FITTING

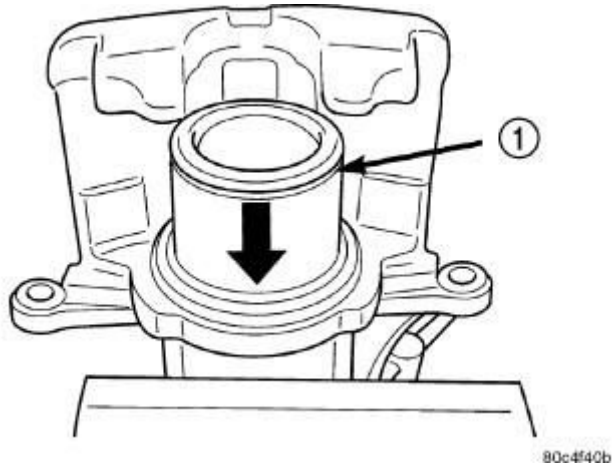

Fig. 16: Latch Clip Type 2
Courtesy of CHRYSLER GROUP, LLC

Depending on vehicle model and engine, 2 different types of safety latch clips are used. One is tethered to the fuel line and the other is not. A special tool will be necessary to disconnect the fuel line after the latch clip is removed. The latch clip may be used on certain fuel line and fuel rail connections or to join fuel lines together.

1. Unlatch the small arms on the end of clip, swing away and separate from the fuel system component.
2. Slide the latch clip away from the quick-connect fitting while lifting with a screwdriver and position aside.

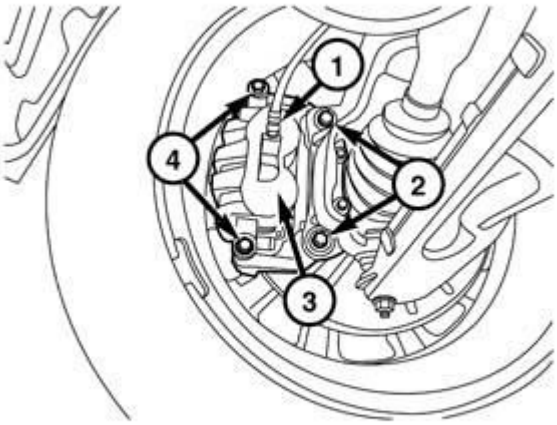

1715005815

Fig. 17: Fuel Line Disconnection Using Special Tool
Courtesy of CHRYSLER GROUP, LLC

3. Insert the commercially available fuel line removal tool (1) into the quick-connect fitting and release the internal latches.

NOTE: After removal the internal latches will remain in the quick-connect fitting.

4. With the commercially available fuel line removal tool (1) inserted, remove the quick-connect fitting from the fuel system component.

WING TYPE FITTING

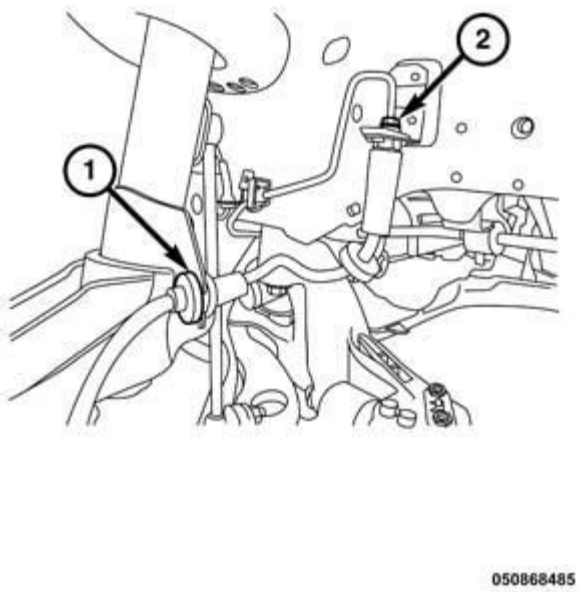

Fig. 18: EVAP Canister Vapor Hose
Courtesy of CHRYSLER GROUP, LLC

The wing type fitting is used on fuel system and emission components. The wing type fitting is most commonly used on the EVAP canister (3). Special tools are not required for removal.

1. Using two fingers, press both wings (2) and release the locking tabs.

NOTE: After removal the locking tabs will remain with the quick-connect fitting.

2. While holding the wings, remove the quick-connect fitting from the fuel system component.

CONNECTING

1. Inspect the quick-connect fitting body and fuel system components for damage. Replace as necessary.
2. Prior to connecting any quick-connect fitting to components, check condition of fitting and components. Clean parts with a lint-free cloth. Lubricate with clean engine oil.
3. Insert the quick-connect fitting onto the fuel tube or fuel system component until the built-in stop on the fuel tube or component rests against the back of fitting.
4. Continue pushing until a click is felt.
5. If Equipped:
   - **Redundant Latch Single Button Type Fitting:** Push redundant latch until it locks into position in the quick-connect fitting.
   - **Single Tab Type Fitting:** Push new tab down until it locks into position in the quick-connect fitting.

- **Latch Clip Type Fitting:** Install latch clip (snaps into position). **If latch clip will not snap into position, this indicates the quick-connect fitting is not properly installed onto fuel system component, recheck the connection.**

6. Verify a locked condition by firmly pulling on the quick-connect fitting connection of the fuel system component.

REGULATOR, FUEL PRESSURE

DESCRIPTION

DESCRIPTION

The fuel pressure regulator is located within the fuel pump module. It is serviced by replacing the fuel pump module assembly.

MODULE, FUEL PUMP

DESCRIPTION

DESCRIPTION

The fuel pump module is mounted on the top of the fuel tank and contains the following components:

- Mounting flange
- Electric fuel pump
- Fuel pump reservoir
- Inlet strainer
- Fuel pressure regulator
- Fuel level sending unit
- Fuel filter

The fuel level sending unit is the only serviceable component of the primary fuel pump module. If the electric fuel pump, fuel pressure regulator or fuel filter requires service, the fuel pump module must be replaced as an assembly.

OPERATION

OPERATION

An electric fuel pump is located within the fuel pump module. The electric fuel pump is a positive displacement, immersible pump with a permanent magnet electric motor capable of creating 860 kPa (125 psi) of operating pressure. The fuel pressure regulator limits fuel pressure to 400 kPa (58 psi).

The fuel gauge is controlled by the instrument cluster circuit board based upon cluster programming and a hard wired input received by the cluster from the fuel level sending unit on the module in the fuel tank.

The instrument cluster continually monitors the fuel tank sending unit to determine the level of fuel in the fuel tank. This information is available to other vehicle control modules via the Controller Area Network (CAN) data bus. Fuel gauge diagnosis is conducted as part of the instrument cluster circuitry. Refer to **DIAGNOSIS AND TESTING** .

REMOVAL

REMOVAL

NOTE: Fuel pump for the saddle style fuel tank shown in illustration. Single style similar.

WARNING: Risk of injury to eyes and skin from contact with fuel. Wear protective clothing and eye protection. Risk of poisoning from inhaling and swallowing fuel. Pour fuel only into appropriately marked and approved containers. Failure to follow these instructions may result in possible serious or fatal injury.

WARNING: The fuel system is under constant high pressure even with engine OFF. Until the fuel pressure has been properly released from the system, do not attempt to open the fuel system. Do not smoke or use open flames/sparks when servicing the fuel system. Make sure the area in which the vehicle is being serviced is in a well ventilated area. Failure to comply may result in serious or fatal injury.

1. Perform the fuel system pressure release procedure. Refer to **FUEL SYSTEM PRESSURE RELEASE PROCEDURE** .

NOTE: The fuel pump module has to be properly located in the fuel tank for the fuel level gauge to work properly.

2. Disconnect and isolate the negative battery cable.
3. Remove the right side rear seat for the single fuel pump module. For the saddle style fuel tank. Remove the rear seat assembly. Refer to **SEAT, REAR, REMOVAL** .

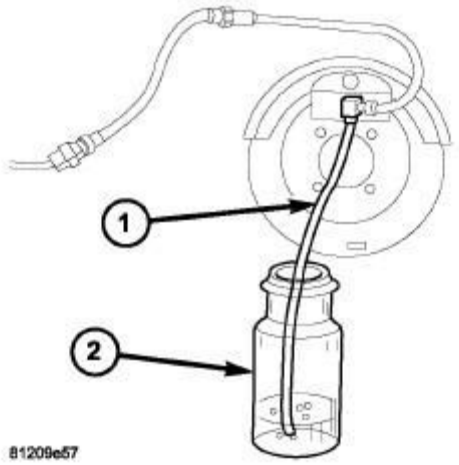

Fig. 19: Carpeting, Screws & Fuel Module Cover
Courtesy of CHRYSLER GROUP, LLC

4. Cut along the perforated lines in the carpeting and position aside (1).
5. Remove the screws (2) that secure the fuel module cover (3) to the floor.

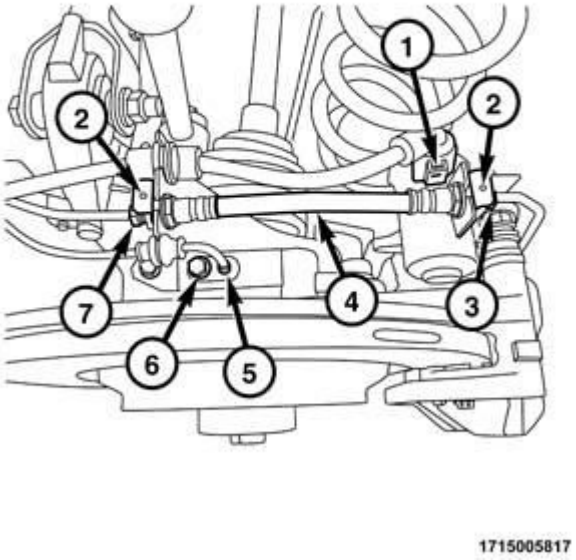

Fig. 20: Fuel Module Access Covers & Wire Harness Connectors
Courtesy of CHRYSLER GROUP, LLC

6. Lift up on the fuel pump module access cover (3, 4) and disconnect the wire harness connectors (2, 6).
7. Use a marker and place a mark across the position of the fuel pump module lock-ring, fuel pump module and the fuel tank prior to removal.

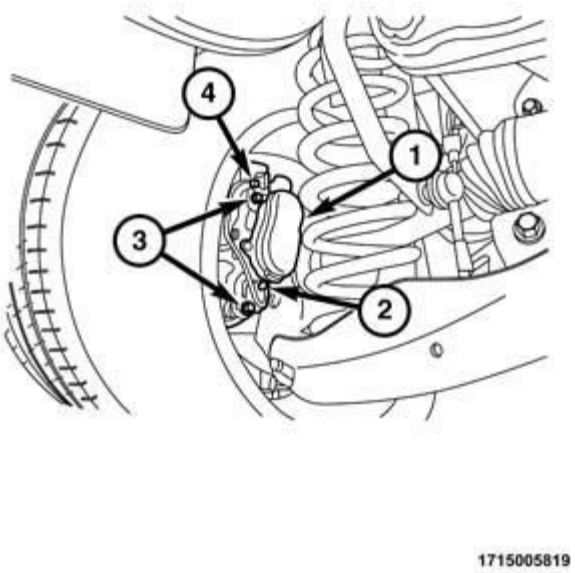

Fig. 21: Fuel Supply, Return & Vapor Lines
Courtesy of CHRYSLER GROUP, LLC

8. Disconnect the fuel tank vapor line (1, 3) from fuel pump module.
9. Disconnect the fuel lines (2) from the fuel pump module.

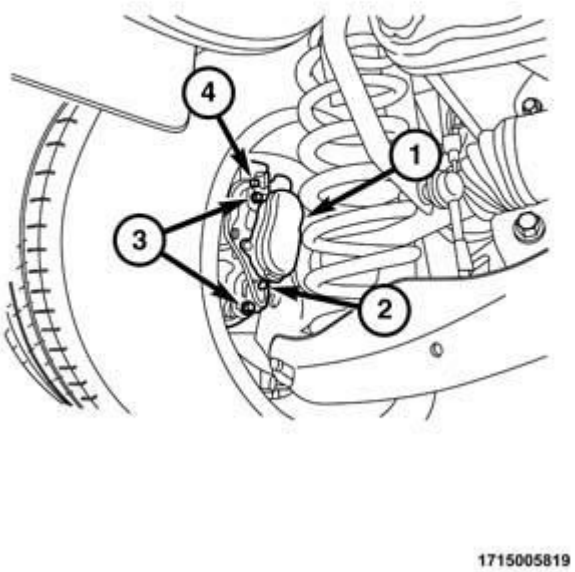

Fig. 22: Fuel Pump Module, Locking Ring & Lock Ring Wrench

Courtesy of CHRYSLER GROUP, LLC

NOTE: Prior to removing the fuel pump module, use compressed air to remove any accumulated dirt and debris from around fuel tank opening.

10. Position the lock-ring remover/installer (2) (special tool #9340, SAE Fuel Pump Lock Ring Wrench) or into the notches on the outside edge of the lock-ring (3).
11. Install a 1/2 inch drive breaker bar into the lock-ring remover/installer.
12. Rotate the breaker bar (1) counterclockwise and remove the lock-ring (3).

WARNING: The fuel pump module reservoir does not empty out when the tank is drained. The fuel in the reservoir will spill out when the module is removed.

NOTE: Do not spill fuel into the interior of the vehicle.

13. Lift up and removed the fuel pump module out of the fuel tank using caution not spill fuel inside the vehicle or bend the float arm.
14. Tip the fuel pump module on its side and drain all fuel from the reservoir.

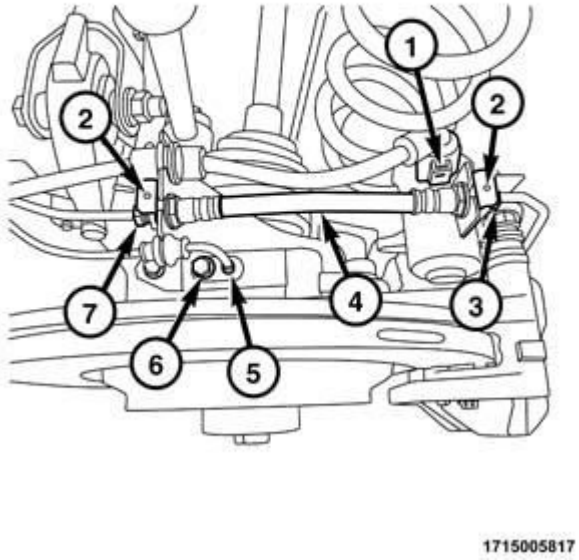

Fig. 23: Fuel Pump Module Seal
Courtesy of CHRYSLER GROUP, LLC

15. Remove and discard the rubber O-ring seal.

INSTALLATION

INSTALLATION

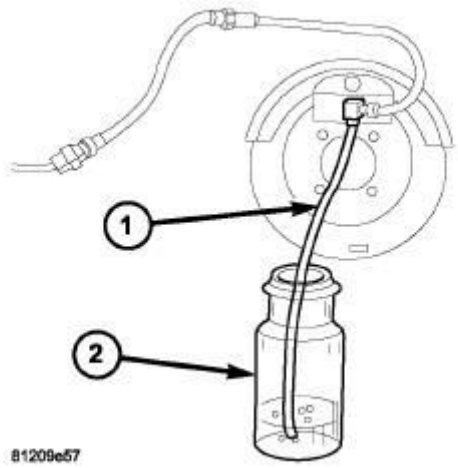

Fig. 24: Fuel Pump Module Seal
Courtesy of CHRYSLER GROUP, LLC

WARNING: Risk of injury to eyes and skin from contact with fuel. Wear protective clothing and eye protection. Risk of poisoning from inhaling and swallowing fuel. Pour fuel only into appropriately marked and approved containers. Failure to follow these instructions may result in possible serious or fatal injury.

CAUTION: Whenever the fuel pump module is serviced, the rubber O-ring seal must be replaced.

1. Clean the rubber O-ring seal area of the fuel tank and install a new rubber O-ring seal.
2. Lower the fuel pump module into the fuel tank using caution not to bend the float arm.

NOTE: The fuel pump module must be properly located in the fuel tank for the fuel level gauge to work properly.

3. Align the rubber O-ring seal and rotate the fuel pump module to the orientation marks noted during removal. This step must be performed for the fuel level gauge to work properly.

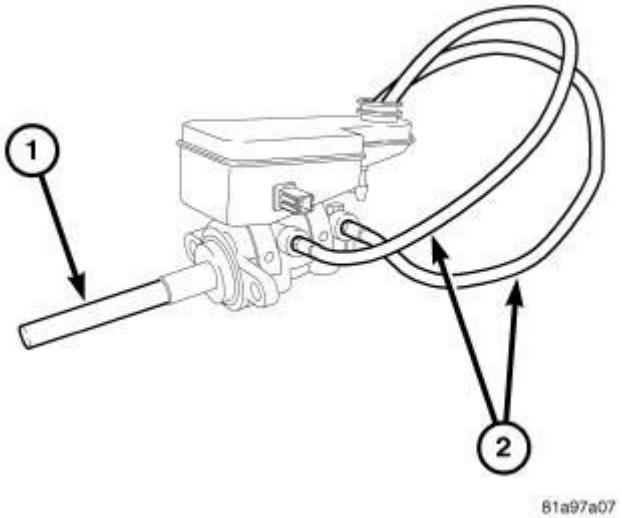

Fig. 25: Fuel Pump Module, Locking Ring & Lock Ring Wrench
Courtesy of CHRYSLER GROUP, LLC

4. Position the lock-ring (3) over top of the fuel pump module (4).
5. Position the lock-ring remover/installer (2) (special tool #9340, SAE Fuel Pump Lock Ring Wrench) into the notches on the outside edge of the lock-ring (3).
6. Install a 1/2 inch drive breaker bar (1) into the lock-ring remover/installer (2) (special tool #9340, SAE Fuel Pump Lock Ring Wrench).
7. Rotate the breaker bar (1) clockwise until all seven notches of the lock-ring (3) have engaged.

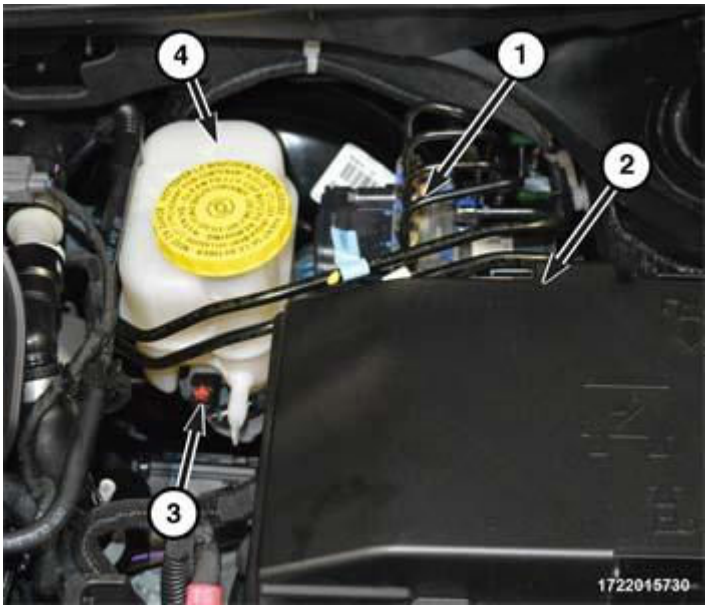

Fig. 26: Fuel Supply, Return & Vapor Lines
Courtesy of CHRYSLER GROUP, LLC

8. Connect the fuel lines (1, 2) to the fuel pump module.

9. Connect the fuel tank vapor line (3) to the fuel pump module.

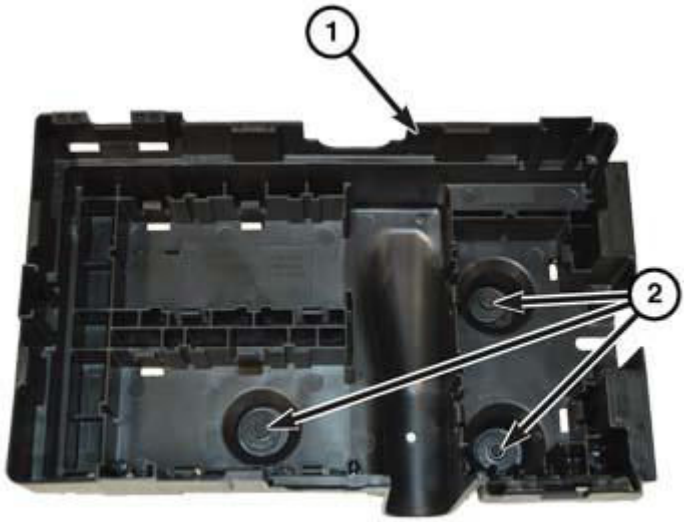

1722015732

Fig. 27: Fuel Module Access Covers & Wire Harness Connectors
Courtesy of CHRYSLER GROUP, LLC

10. Connect the fuel pump module wire harness connector (2, 6). Install the access cover (3, 4) and securely tighten the screws.
11. Install the rear seat. Refer to **SEAT, REAR, INSTALLATION** .
12. Connect the negative battery cable.
13. Use the Scan Tool to pressurize the system and check for leaks.

RAIL, FUEL

REMOVAL

2.4L

WARNING: Risk of injury to eyes and skin from contact with fuel. Wear protective clothing and eye protection. Risk of poisoning from inhaling and swallowing fuel. Pour fuel only into appropriately marked and approved containers. Failure to follow these instructions may result in possible serious or fatal injury.

NOTE: Wrap shop towels around hose to catch any gasoline spillage.

1. Release the fuel system pressure.
2. Disconnect and isolate the negative battery cable.
3. Remove the air cleaner resonator. Refer to **RESONATOR, AIR CLEANER, REMOVAL** .

4. Remove the purge control valve (Refer to **VALVE, PURGE CONTROL** /Removal).
5. Disconnect the fuel line from the fuel rail. Refer to **STANDARD PROCEDURE - QUICK-CONNECT FITTINGS** .

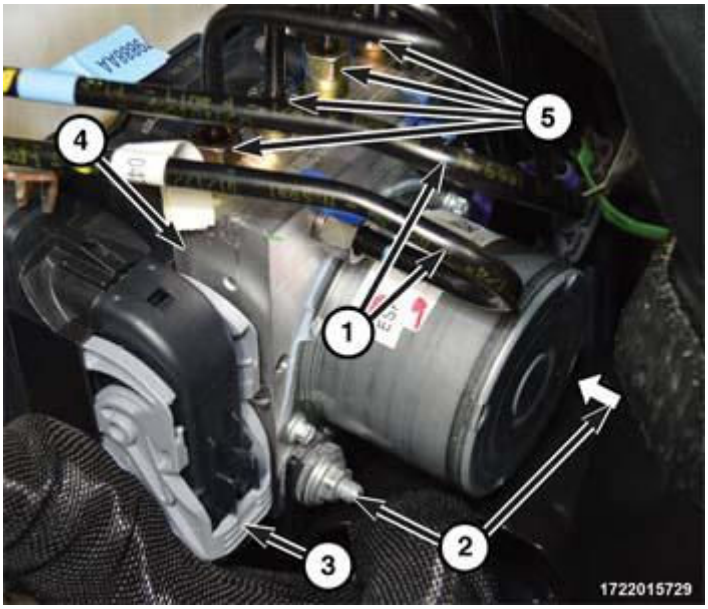

Fig. 28: Fuel Rail, Connectors & Bolts
Courtesy of CHRYSLER GROUP, LLC

6. Unlock and disconnect the fuel injectors wire harness connectors (1)
7. Remove bolts (3) and the fuel rail (2).

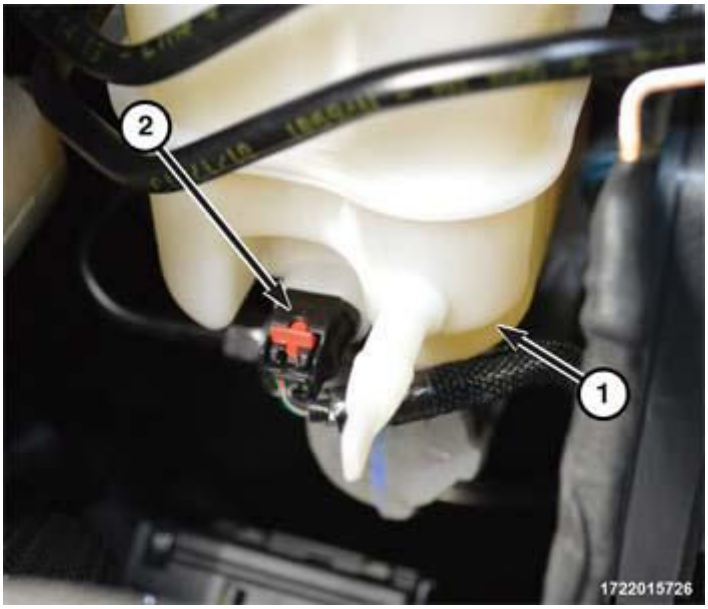

Fig. 29: Fuel Injector & Rail
Courtesy of CHRYSLER GROUP, LLC

8. If necessary, remove fuel injectors from the fuel rail.

3.2L

CAUTION: When removing the fuel supply line from the fuel inlet tube at the fuel rail, care must be taken that the fuel inlet tube is not being over-flexed. Damage to the fuel rail inlet tube may occur.

WARNING: The fuel system is under constant pressure even with engine off. Before servicing the fuel rail, fuel system pressure must be released.

1. Release fuel system pressure. Refer to **FUEL SYSTEM PRESSURE RELEASE PROCEDURE** .
2. Disconnect and isolate the negative battery cable.
3. Remove the upper intake manifold. Refer to **MANIFOLD, INTAKE, REMOVAL** .

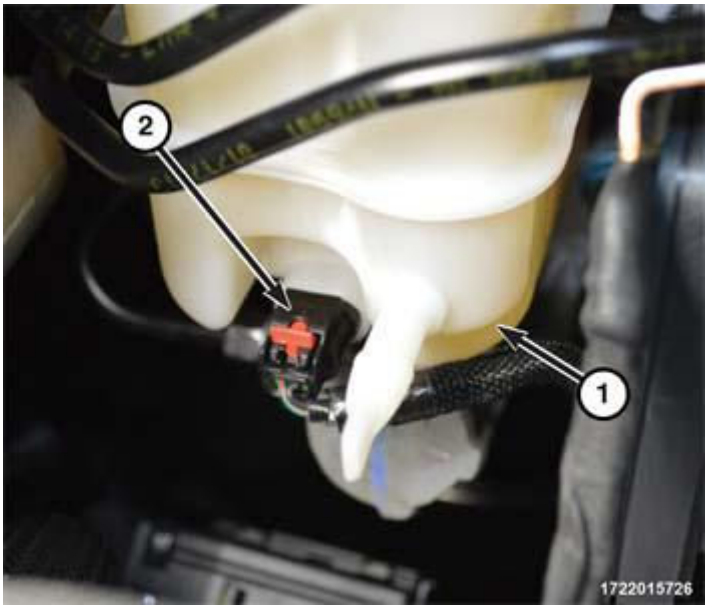

Fig. 30: Intake Ports, Insulator & Alignment Posts
Courtesy of CHRYSLER GROUP, LLC

4. Remove the insulator (2) from the LH cylinder head cover.

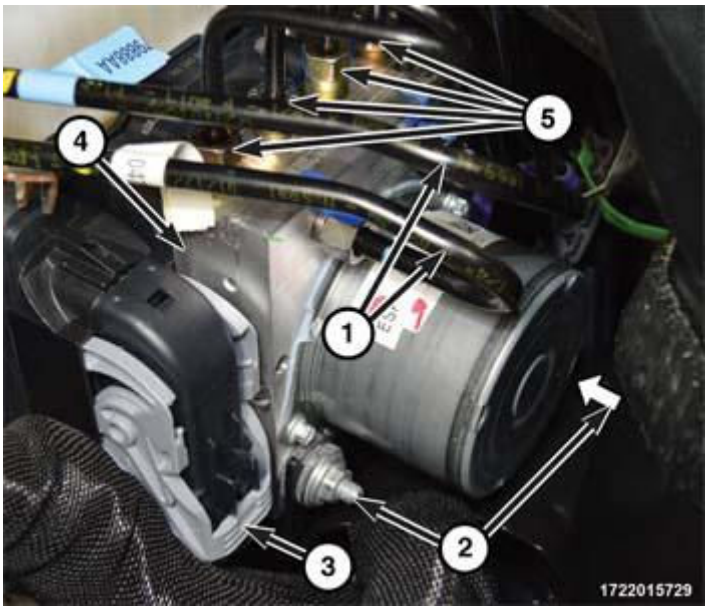

Fig. 31: Fuel Supply Line And Connectors
Courtesy of CHRYSLER GROUP, LLC

5. Disconnect the fuel injector electrical connectors (1).
6. Disconnect the fuel supply hose (2) from the fuel rail. Refer to **STANDARD PROCEDURE - QUICK-CONNECT FITTINGS** .

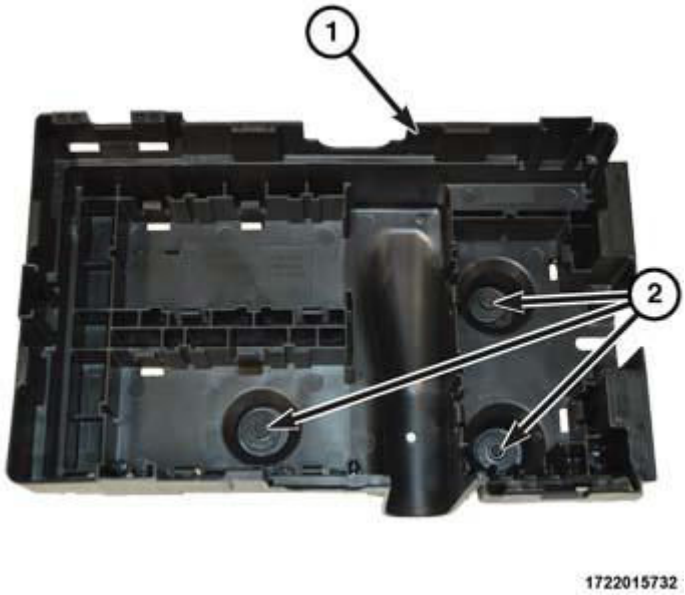

Fig. 32: Bolts & Fuel Rail
Courtesy of CHRYSLER GROUP, LLC

CAUTION: The left and right fuel rails are replaced as an assembly. Do not attempt to separate the rail halves at the connector tube. Due to the design of this tube, it does not use any clamps. Never attempt to

install a clamping device of any kind on the tube. When removing the fuel rail assembly for any reason, be careful not to bend or kink the tube.

7. Remove the four bolts (1) from the fuel rail (2).

CAUTION: When removing the fuel rail from the lower intake manifold, one or more fuel injectors may remain in the intake manifold resulting in residual fuel spilling onto the engine from the fuel rail.

8. Lift the fuel rail and the fuel injectors from the lower intake manifold.

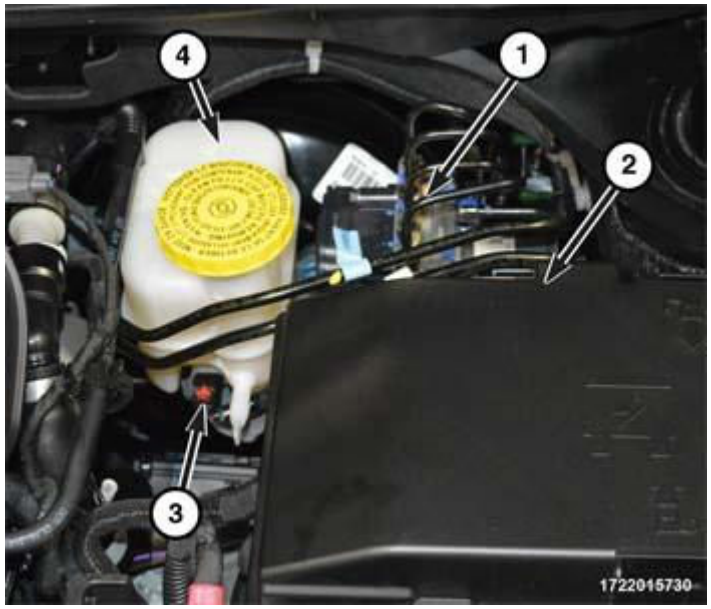

Fig. 33: Removing Fuel Injector From Intake Manifold
Courtesy of CHRYSLER GROUP, LLC

9. Remove any remaining fuel injectors (1) from the lower intake manifold.

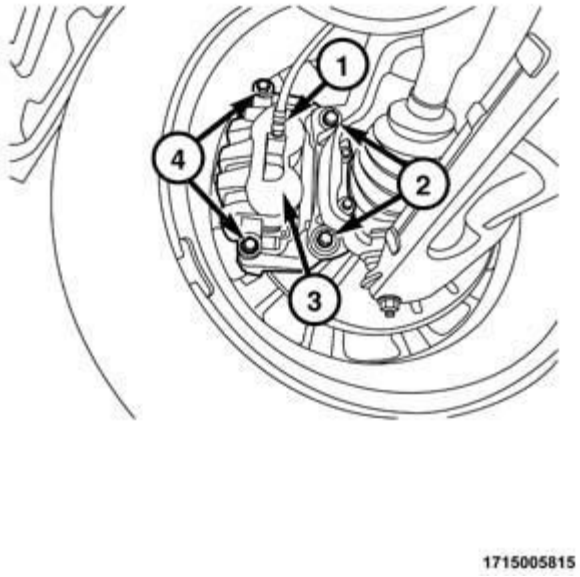

Fig. 34: O-Ring Seals
Courtesy of CHRYSLER GROUP, LLC

10. If required, remove the fuel injectors from the fuel rail. Refer to **INJECTOR(S), FUEL, REMOVAL** .
11. Remove and discard all fuel injector O-ring seals (1).

INSTALLATION

2.4L

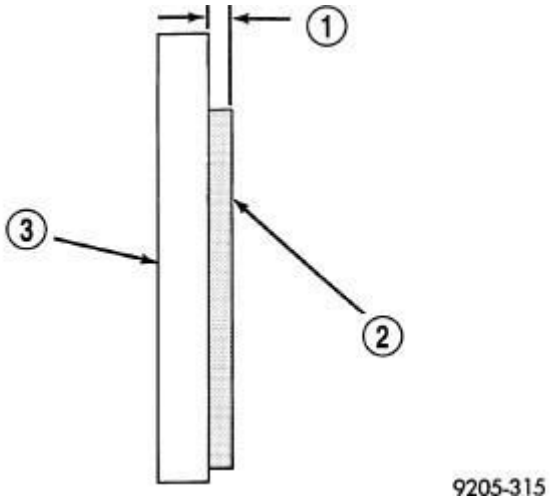

Fig. 35: Fuel Injector & Rail
Courtesy of CHRYSLER GROUP, LLC

1. Apply a light coating of clean engine oil to the O-ring on the nozzle end of each injector.
2. If necessary, install the fuel injectors into the fuel rail.

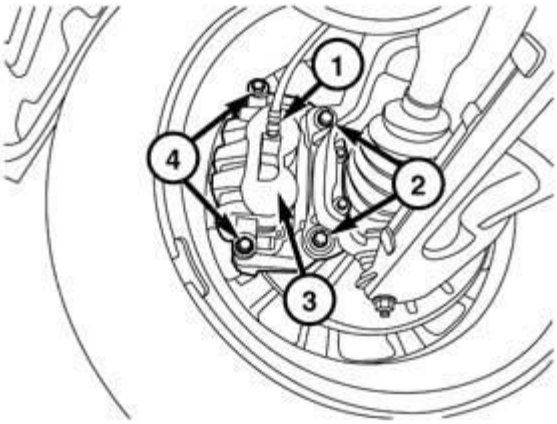

1715005815

Fig. 36: Fuel Rail, Injector & Retaining Clip
Courtesy of CHRYSLER GROUP, LLC

3. If necessary, install the fuel injectors retaining clip (2) and check to ensure injector is properly captured.

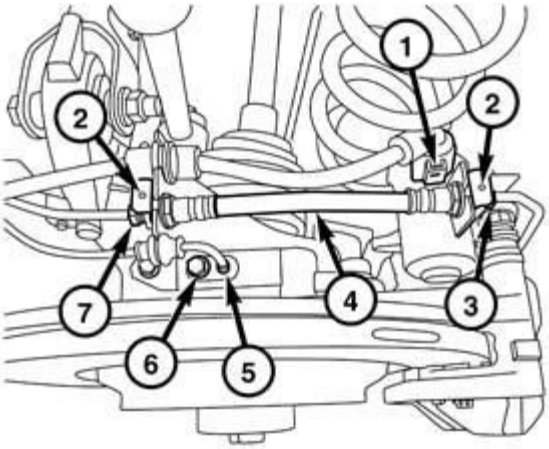

1715005817

Fig. 37: Fuel Rail, Connectors & Bolts
Courtesy of CHRYSLER GROUP, LLC

4. Install the fuel rail (2). Tighten bolts (3) to 7 N.m (62 in. lbs.).
5. Connect and lock the wire harness connectors (1).
6. Connect the fuel line to fuel rail.
7. Install the purge control valve (Refer to **VALVE, PURGE CONTROL** /Installation).
8. Install the air cleaner resonator. Refer to **RESONATOR, AIR CLEANER, INSTALLATION** .
9. Connect the battery negative cable.
10. Use the Scan Tool Fuel System Test to pressurize the fuel system. Check for leaks.

3.2L

CAUTION: When removing the fuel supply line from the fuel inlet tube at the fuel rail, care must be taken that the fuel inlet tube is not being over-flexed. Damage to the fuel rail inlet tube may occur.

WARNING: The fuel system is under constant pressure even with engine off. Before servicing the fuel rail, fuel system pressure must be released.

1. Release fuel system pressure. Refer to **FUEL SYSTEM PRESSURE RELEASE PROCEDURE** .
2. Disconnect and isolate the negative battery cable.
3. Remove the upper intake manifold. Refer to **MANIFOLD, INTAKE, REMOVAL** .

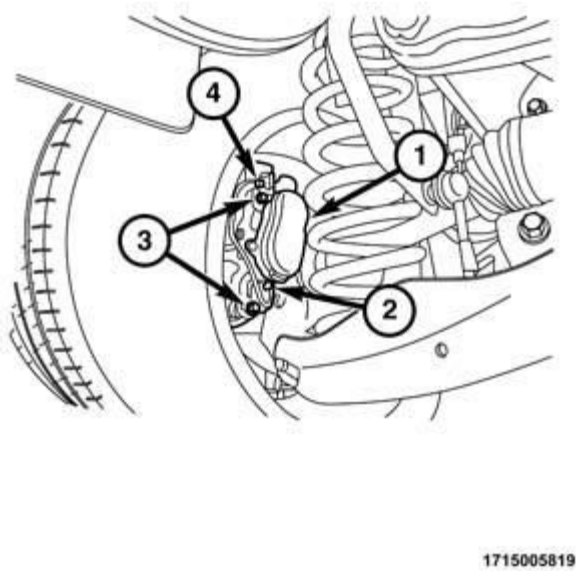

Fig. 38: Intake Ports, Insulator & Alignment Posts
Courtesy of CHRYSLER GROUP, LLC

4. Remove the insulator (2) from the LH cylinder head cover.

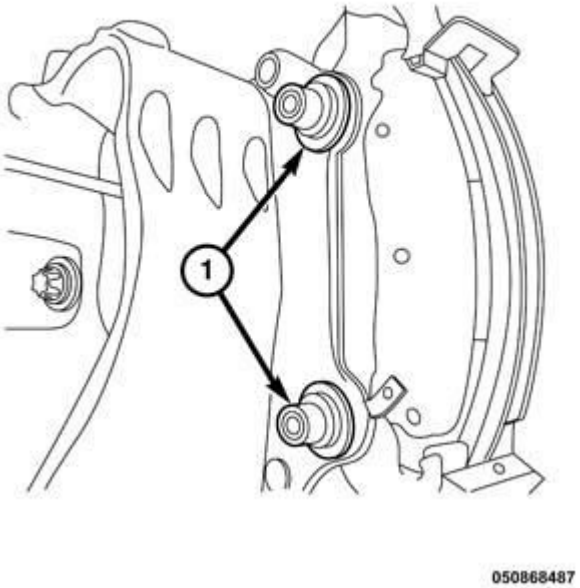

Fig. 39: Fuel Supply Line And Connectors
Courtesy of CHRYSLER GROUP, LLC

5. Disconnect the fuel injector electrical connectors (1).
6. Disconnect the fuel supply hose (2) from the fuel rail. Refer to **STANDARD PROCEDURE - QUICK-CONNECT FITTINGS** .

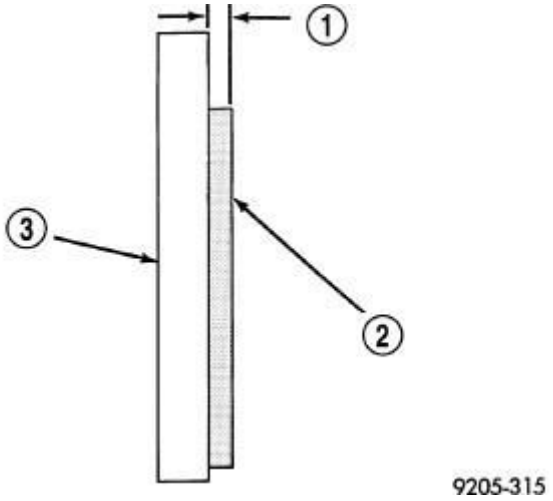

Fig. 40: Bolts & Fuel Rail
Courtesy of CHRYSLER GROUP, LLC

CAUTION: The left and right fuel rails are replaced as an assembly. Do not attempt to separate the rail halves at the connector tube. Due to the design of this tube, it does not use any clamps. Never attempt to install a clamping device of any kind on the tube. When removing the fuel rail assembly for any reason, be careful not to bend or kink the tube.

7. Remove the four bolts (1) from the fuel rail (2).

CAUTION: When removing the fuel rail from the lower intake manifold, one or more fuel injectors may remain in the intake manifold resulting in residual fuel spilling onto the engine from the fuel rail.

8. Lift the fuel rail and the fuel injectors from the lower intake manifold.

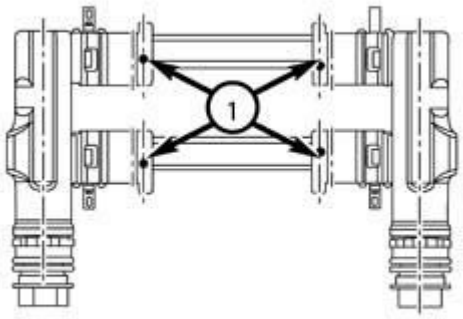

0508012591

Fig. 41: Removing Fuel Injector From Intake Manifold
Courtesy of CHRYSLER GROUP, LLC

9. Remove any remaining fuel injectors (1) from the lower intake manifold.

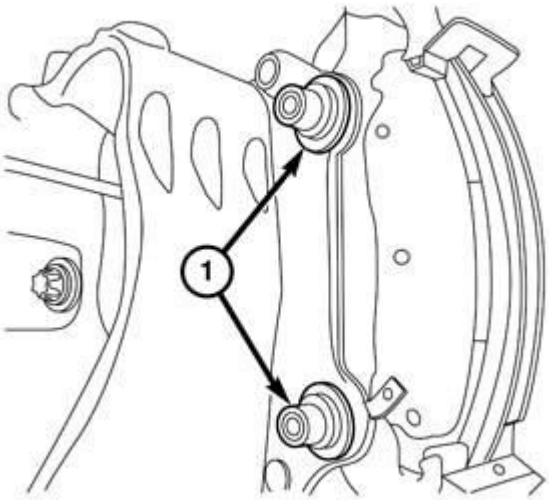

050868487

Fig. 42: O-Ring Seals
Courtesy of CHRYSLER GROUP, LLC

10. If required, remove the fuel injectors from the fuel rail. Refer to **INJECTOR(S), FUEL, REMOVAL** .
11. Remove and discard all fuel injector O-ring seals (1).

SENDING UNIT AND SENSOR, FUEL LEVEL

DESCRIPTION

DESCRIPTION

The fuel gauge sending unit (fuel level sensor) is attached to the fuel pump module. The sending unit consists of a float, an arm, and a variable resistor.

The sending unit/fuel level sensor is not serviceable. If the fuel level sensor sending unit has failed, the fuel pump module will need to be replaced. Refer to **MODULE, FUEL PUMP, REMOVAL** .

TANK, FUEL

REMOVAL

REMOVAL

NOTE: Saddle style fuel tank shown in illustration. Standard fuel tank.

WARNING: The fuel system is under constant pressure even with engine off. Until the fuel pressure has been properly relieved from the system, do not attempt to open the fuel system. Do not smoke or use open flames/sparks when servicing the fuel system. Wear protective clothing and eye protection. Make sure the area in which the vehicle is being serviced is in a well ventilated area.

1. Perform the draining fuel tank procedure. Refer to **DRAINING FUEL TANK** .
2. Disconnect and isolate the negative battery cable.
3. Remove the rear seat. Refer to **SEAT, REAR, REMOVAL** .

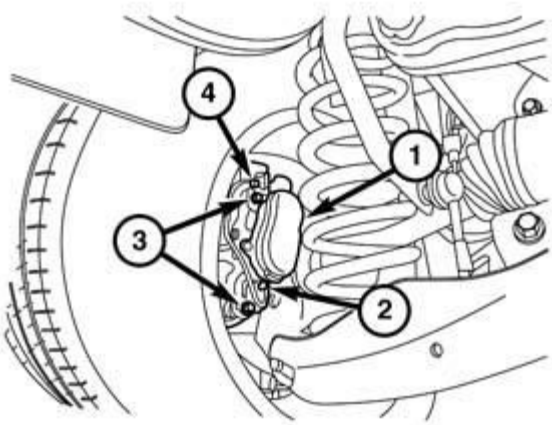

1715005819

Fig. 43: Fuel Module Access Covers & Wire Harness Connectors
Courtesy of CHRYSLER GROUP, LLC

4. Remove screws and lift up on the fuel pump module access cover (3, 4) and disconnect the wire harness connector (2, 6).

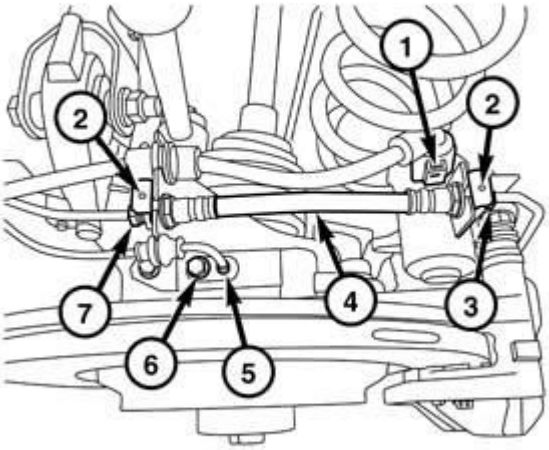

1715005817

Fig. 44: Fuel Supply, Return & Vapor Lines
Courtesy of CHRYSLER GROUP, LLC

WARNING: Risk of injury to eyes and skin from contact with fuel. Wear protective clothing and eye protection. Risk of poisoning from inhaling and swallowing fuel. Pour fuel only into appropriately marked and approved containers. Failure to follow these instructions may result in possible serious or fatal injury.

5. Disconnect the fuel tank vapor line (1, 3) from fuel pump module. Refer to **STANDARD PROCEDURE - QUICK-CONNECT FITTINGS** .
6. Disconnect the supply line quick connect fitting (2) from fuel pump module. Refer to **STANDARD PROCEDURE - QUICK-CONNECT FITTINGS** .
7. Raise and support the vehicle. Refer to **HOISTING, STANDARD PROCEDURE** .
8. Remove the exhaust system. Refer to **REMOVAL** .
9. **AWD ONLY:**

   Remove the rear propeller shaft assembly

   Refer to **REMOVAL** .

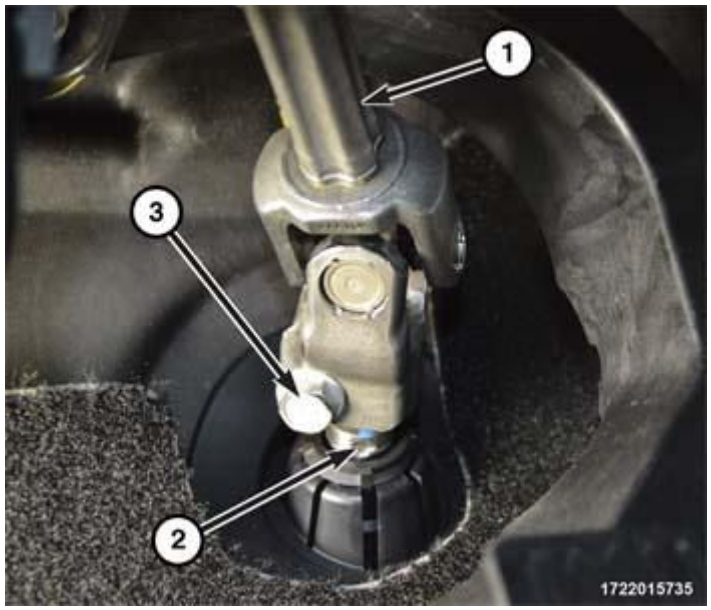

Fig. 45: Fuel Tank, Filler Tube & Hose Clamp
Courtesy of CHRYSLER GROUP, LLC

10. Loosen the hose clamp (2) and remove the fuel filler tube (3) from the fuel tank (1).

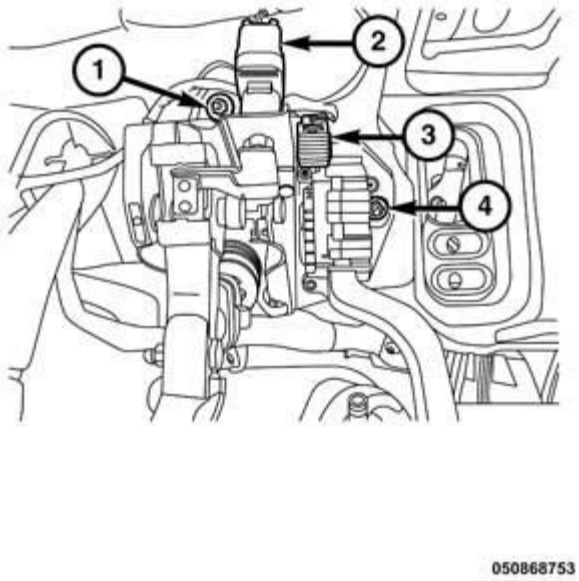

Fig. 46: Skid Plate
Courtesy of CHRYSLER GROUP, LLC

11. If equipped, remove the skid plates (3).

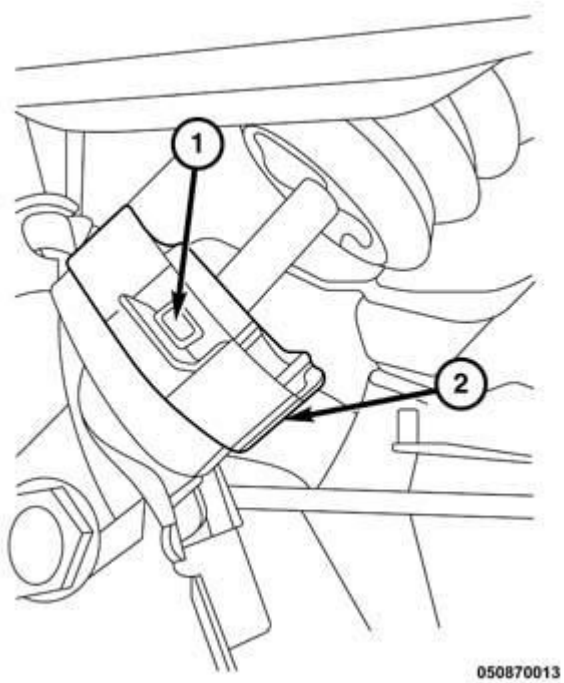

Fig. 47: Left Fuel Tank Strap Bolt
Courtesy of CHRYSLER GROUP, LLC

12. Use a transmission jack to support fuel tank.
13. Remove the left fuel tank strap bolt (1).

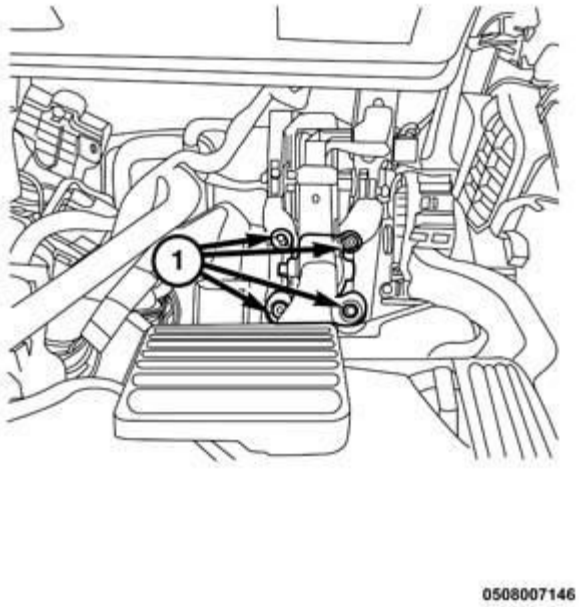

Fig. 48: Right Fuel Tank Strap Bolt
Courtesy of CHRYSLER GROUP, LLC

14. Remove the right fuel tank strap bolt (1).

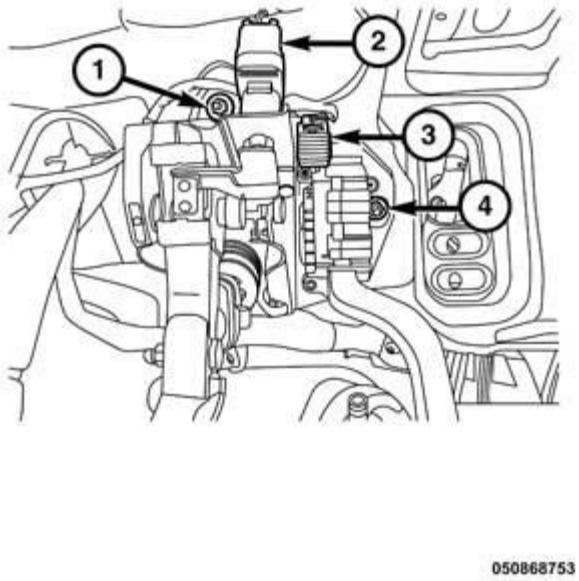

Fig. 49: Fuel Tank Straps & Bolts
Courtesy of CHRYSLER GROUP, LLC

15. Remove bolts (1) and the left fuel tank strap (3).
16. Remove bolts (1) and the right fuel tank strap (2).
17. Lower fuel tank from vehicle.
18. If fuel tank is to be replaced, remove heat shield from fuel tank.

INSTALLATION

INSTALLATION

1. If fuel tank was replaced, install heat shield to the fuel tank.

WARNING: **Support the fuel tank with a transmission jack or equivalent. Use straps to secure the fuel tank to the jack. Failure to properly support and secure the fuel tank during removal may cause fuel to spill or the fuel tank to fall from the jack.**

2. Position fuel tank onto a transmission jack or equivalent and raise the fuel tank into vehicle position.

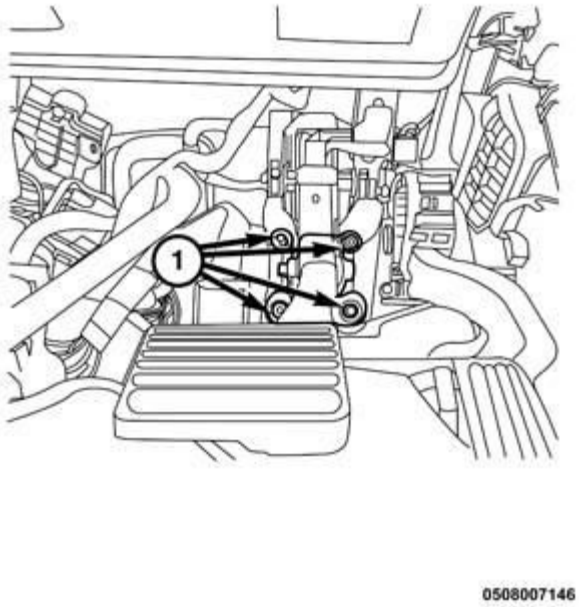

Fig. 50: Fuel Tank Straps & Bolts
Courtesy of CHRYSLER GROUP, LLC

3. Install the right fuel tank strap (2). Tighten the rear bolt (1) to the proper specification. Refer to **TORQUE SPECIFICATIONS** .
4. Install the left fuel tank strap (3). Tighten the rear bolt (1) to the proper specification. Refer to **TORQUE SPECIFICATIONS** .

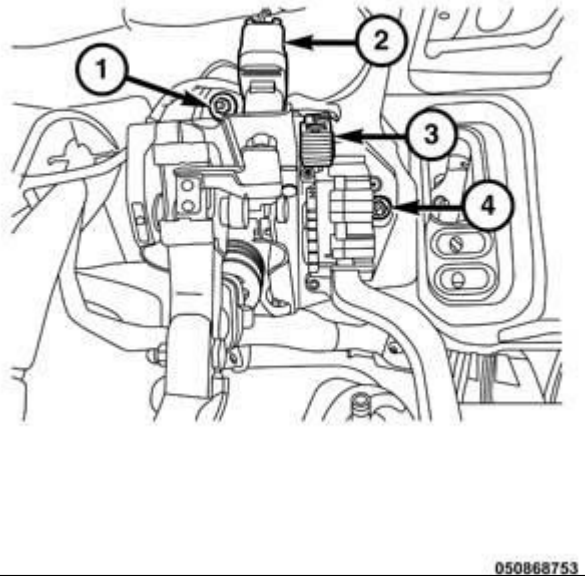

Fig. 51: Right Fuel Tank Strap Bolt
Courtesy of CHRYSLER GROUP, LLC

5. Install the right front fuel tank strap bolt (1) and tighten to the proper specification. Refer to **TORQUE SPECIFICATIONS** .

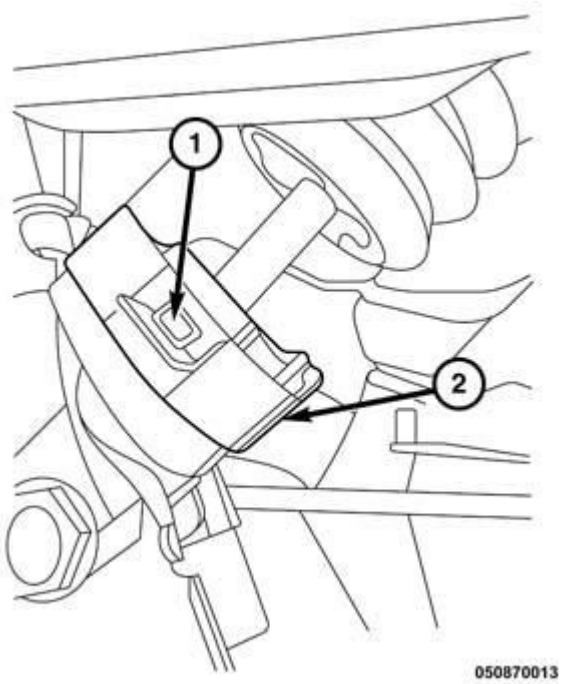

Fig. 52: Left Fuel Tank Strap Bolt
Courtesy of CHRYSLER GROUP, LLC

6. Install the left front fuel tank strap bolt (1) and tighten to the proper specification. Refer to **TORQUE SPECIFICATIONS** .
7. Remove the transmission jack.
8. Install the fuel line shield. Tighten nuts to the proper specification. Refer to **TORQUE SPECIFICATIONS** .

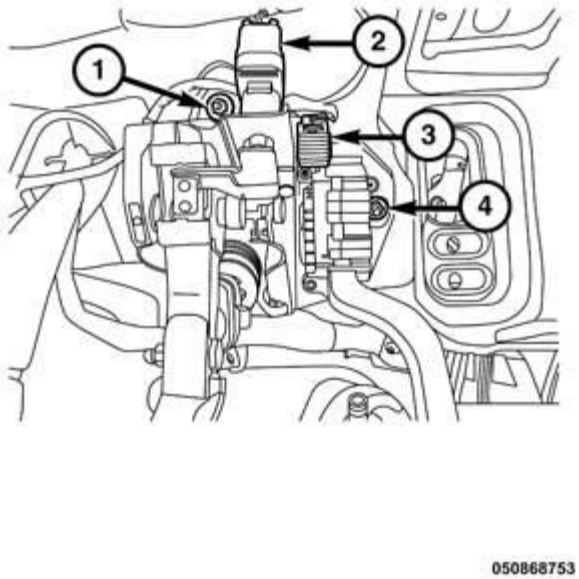

Fig. 53: Fuel Tank, Filler Tube & Hose Clamp
Courtesy of CHRYSLER GROUP, LLC

9. Install fuel filler tube (3) to the fuel tank (1). Hand tighten the clamp (2).
10. Install the exhaust system. Refer to **INSTALLATION** .
11. Lower the vehicle.

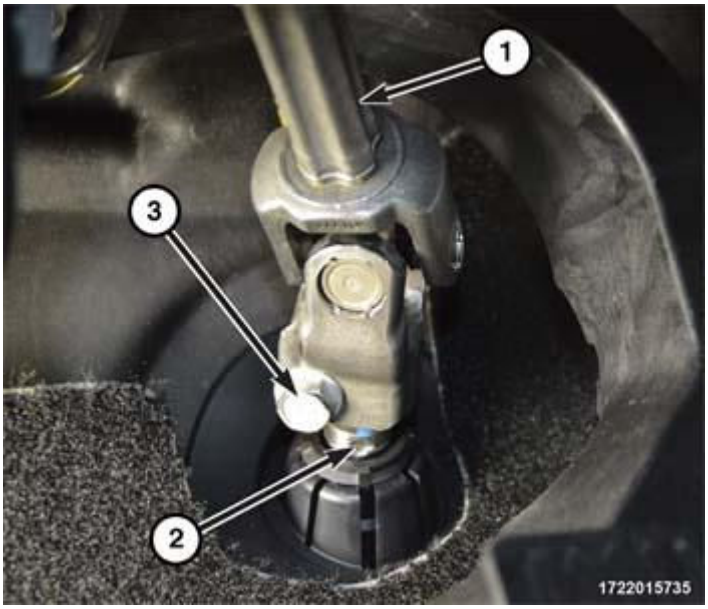

Fig. 54: Fuel Supply, Return & Vapor Lines
Courtesy of CHRYSLER GROUP, LLC

12. Connect the fuel supply line (2) to the fuel pump module.
13. Connect the fuel tank vapor line (1, 3) to the fuel pump module.
14. Connect fuel pump/module electrical connector (2).

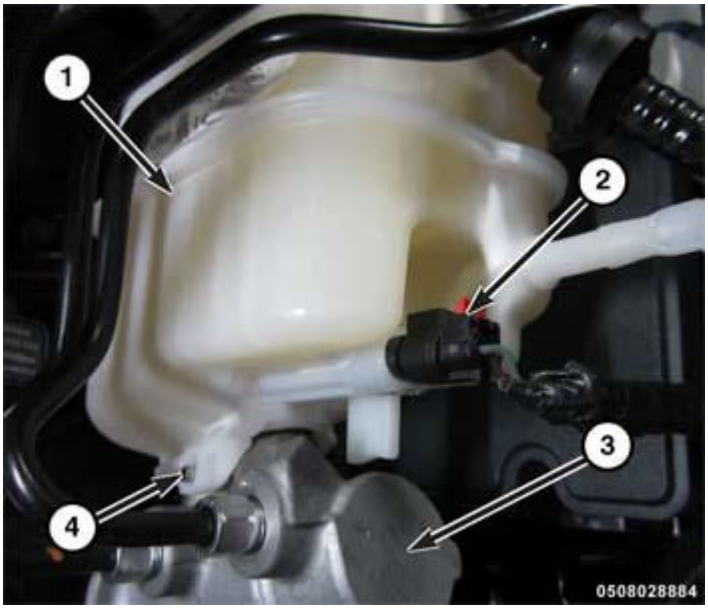

Fig. 55: Fuel Module Access Covers & Wire Harness Connectors
Courtesy of CHRYSLER GROUP, LLC

15. Connect the fuel pump module wire harness connector (2, 6). Install the access cover (3, 4) and hand tighten the bolts.
16. Install the rear seat assembly. Refer to **SEAT, REAR, INSTALLATION** .
17. Fill fuel tank and install fuel filler cap.
18. Connect the negative battery cable.
19. Use the scan tool to pressurize the fuel system. Check for leaks.

TUBE, FUEL TANK FILLER

REMOVAL

REMOVAL

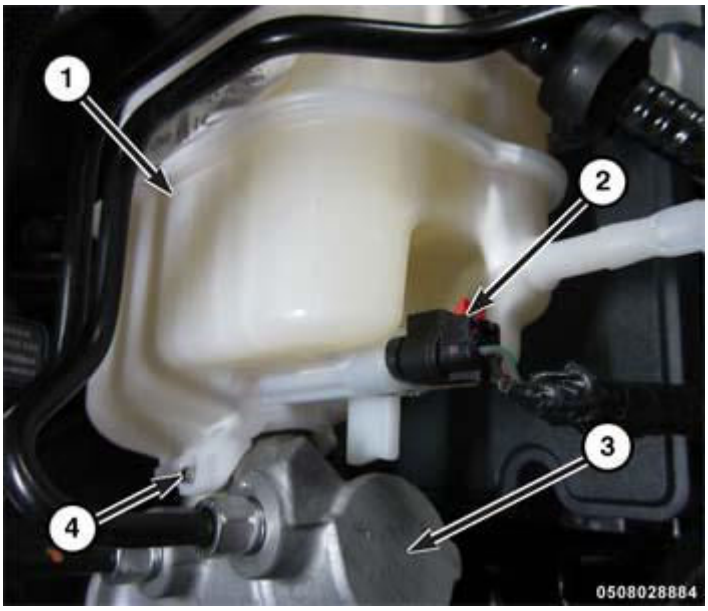

Fig. 56: Isolating Negative Battery Cable
Courtesy of CHRYSLER GROUP, LLC

1. Disconnect and isolate negative battery cable.
2. Remove fuel cap.
3. Remove the right rear wheel and tire assembly. Refer to **REMOVAL** .
4. Remove the inner splash shield. Refer to **SHIELD, SPLASH, FRONT WHEELHOUSE, REMOVAL** .

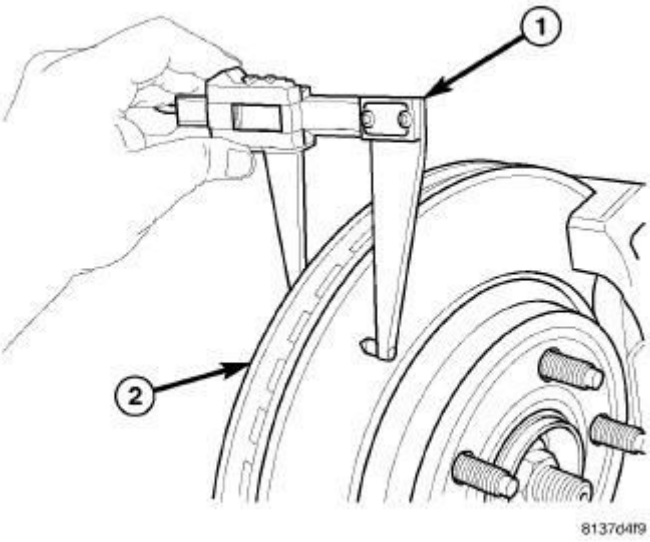

Fig. 57: Fuel Tube Vent Line & Retainer
Courtesy of CHRYSLER GROUP, LLC

5. Disconnect the fuel tube vent line (1) quick connect fitting and detach from retainer (2). Refer to

STANDARD PROCEDURE - QUICK-CONNECT FITTINGS .

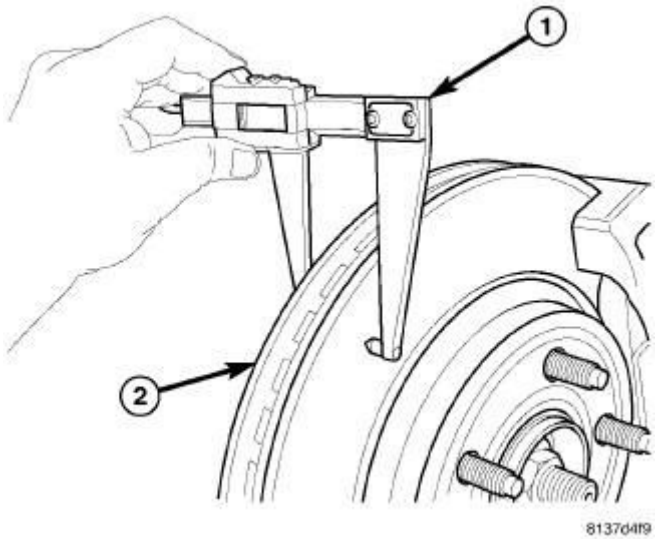

Fig. 58: Filler Tube Mounting Bracket Nut
Courtesy of CHRYSLER GROUP, LLC

Remove filler tube mounting bracket nut (2).

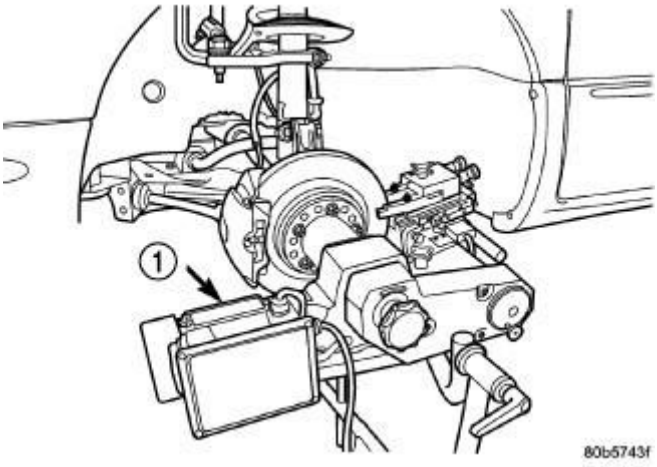

Fig. 59: Fuel Tank, Filler Tube & Hose Clamp
Courtesy of CHRYSLER GROUP, LLC

6. Loosen the hose clamp (3) and remove the fuel filler tube (4) from the fuel tank.

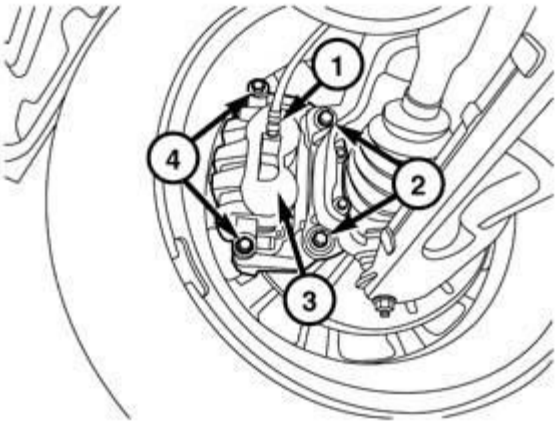

1715005815

Fig. 60: Fuel Door Housing Assembly & Fuel Filler Tube
Courtesy of CHRYSLER GROUP, LLC

7. Remove fuel filler tube (2) from the fuel door housing assembly (1).

INSTALLATION

INSTALLATION

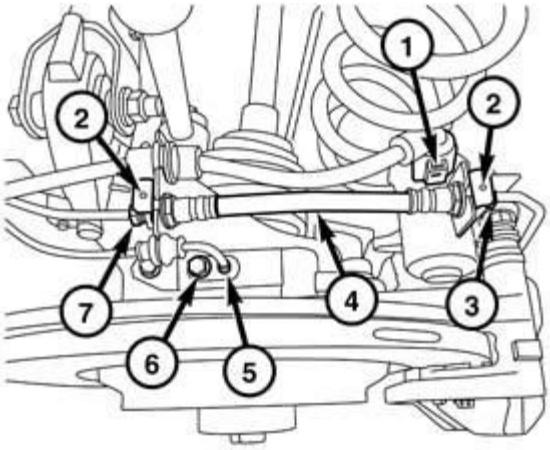

1715005817

Fig. 61: Fuel Door Housing Assembly & Fuel Filler Tube
Courtesy of CHRYSLER GROUP, LLC

1. Install fuel filler tube (2) to the fuel door housing assembly (1).

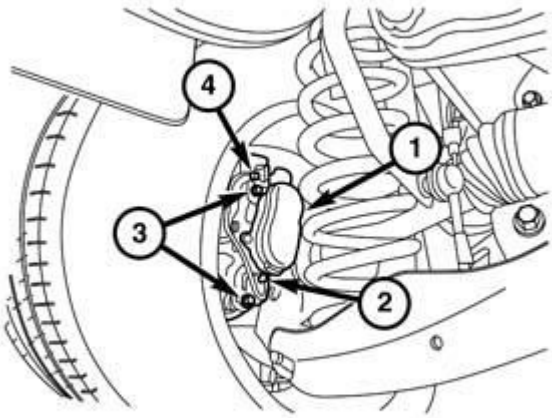

1715005819

Fig. 62: Fuel Tank, Filler Tube & Hose Clamp
Courtesy of CHRYSLER GROUP, LLC

2. Install fuel filler tube (4) to the fuel tank. Tighten the hose clamp (3) to the proper (Torque Specifications).

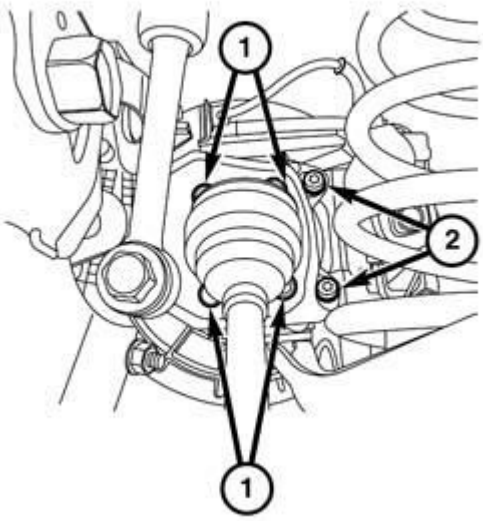

1715005821

Fig. 63: Filler Tube Mounting Bracket Nut
Courtesy of CHRYSLER GROUP, LLC

3. Install filler tube mounting bracket nut (2). Tighten to the proper (Torque Specifications).

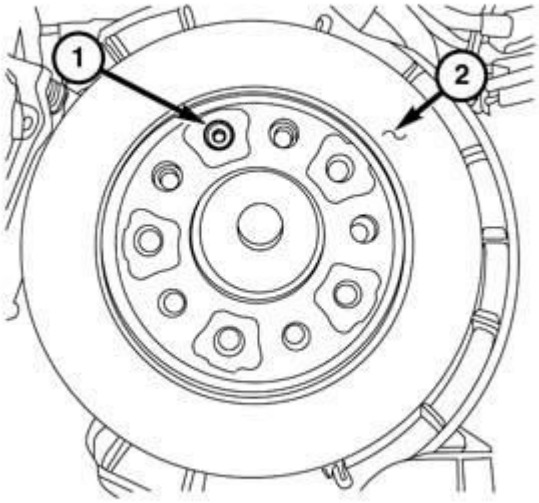

050870142

Fig. 64: Fuel Tube Vent Line & Retainer
Courtesy of CHRYSLER GROUP, LLC

4. Attach line to retainer (2) and connect the fuel tube vent line (1) quick connect fitting.
5. Install the inner splash shield. Refer to **SHIELD, SPLASH, FRONT WHEELHOUSE, INSTALLATION** .
6. Install the right rear wheel and tire assembly. Refer to **INSTALLATION** .
7. Install fuel cap.
8. Connect negative battery cable, tighten nut to the proper specification. Refer to **SPECIFICATIONS** .

FUEL INJECTION, GAS

OPERATION

FUEL ECONOMY AND MAINTENANCE

A vehicle that is not properly tuned and maintained cannot be expected to perform at its maximum efficiency and can have an adverse effect on fuel economy. The following recommendations will ensure that the vehicle is performing at its maximum efficiency:

- **Use the recommended motor oil grade.** Using the manufacturer's recommended grade of Mopar® motor oil can improve fuel mileage by 1-2%. Mopar® motor oil labeled "Energy Conserving" contains friction-reducing additives.
- **Check and replace air filters.** Replacing a clogged air filter with a new Mopar® air filter can improve fuel mileage by as much as 10%.
- **Keep the engine tuned.** Repairing a vehicle that is noticeably out of tune can improve fuel mileage by an average of 4%. Maintaining a vehicle and repairing problems, such as a faulty oxygen sensor, can improve mileage by as much as 40%.
- **Keep tires properly inflated.** Underinflated tires can lower fuel mileage by 0.4% for every 1 psi drop in pressure of all four tires.

SPECIFICATIONS

TORQUE SPECIFICATIONS

DESCRIPTION	N.m	Ft. Lbs.	In. Lbs.
Accelerator Pedal	6	-	53
Crankshaft Position Sensor Bolt	9	-	80
Oxygen Sensors	45	33	-
Throttle Body Bolts	8	-	71
Throttle Body Nut	8	-	-
Throttle Body Bracket Bolt	25	18	-

INJECTOR(S), FUEL

REMOVAL

3.2L

WARNING: The fuel system is under constant pressure even with engine off. Before servicing the fuel rail, fuel system pressure must be released.

1. Perform the fuel pressure release procedure. Refer to **FUEL SYSTEM PRESSURE RELEASE PROCEDURE** .

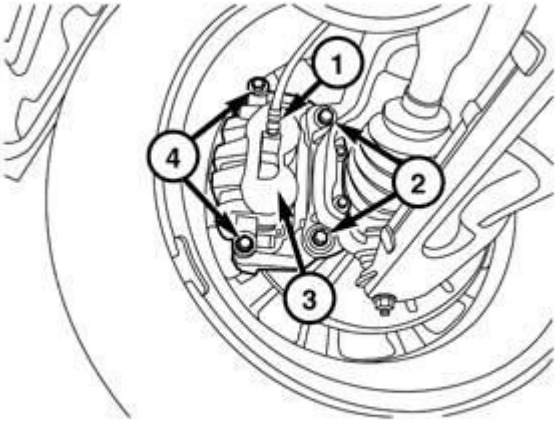

1715005815

Fig. 65: Battery & Cables
Courtesy of CHRYSLER GROUP, LLC

2. Disconnect and isolate the negative battery cable (3).

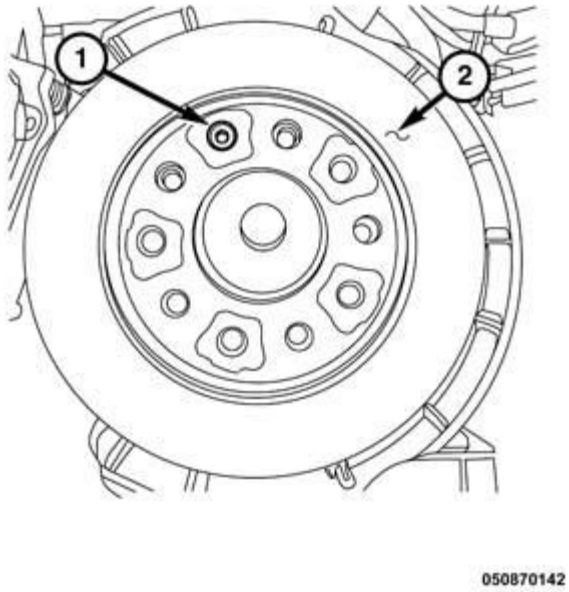

Fig. 66: Engine Cover & Ball Studs
Courtesy of CHRYSLER GROUP, LLC

3. Lift the engine cover retaining grommets off the ball studs and remove the engine cover (1).

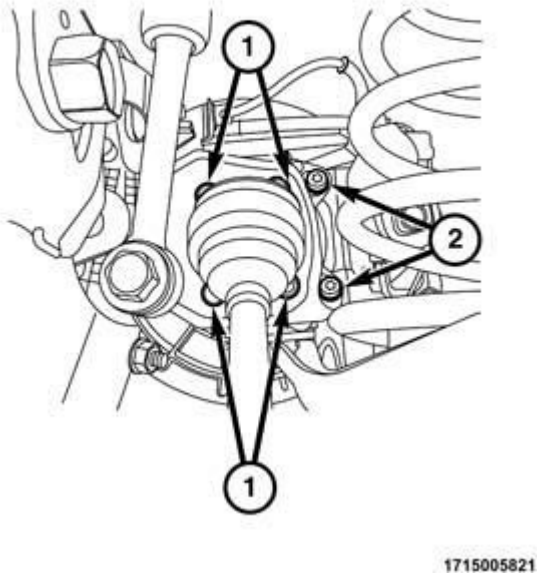

Fig. 67: IAT Sensor Connector, Throttle Body & Air Inlet Hose Housing
Courtesy of CHRYSLER GROUP, LLC

4. Disconnect the electrical connector (1) from the Inlet Air Temperature (IAT) sensor.
5. Loosen the clamp at the throttle body (3)
6. Loosen the clamp at the air cleaner housing.
7. Lift the air inlet hose assembly retaining grommet off the ball stud.
8. Remove the air inlet hose assembly (5).

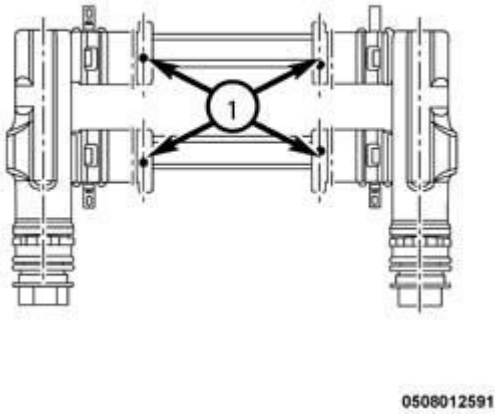

Fig. 68: Fuel Rail & Retaining Bolts
Courtesy of CHRYSLER GROUP, LLC

CAUTION: When removing the fuel rail from the lower intake manifold, one or more fuel injectors may remain in the intake manifold resulting in residual fuel spilling onto the engine from the fuel rail.

9. Remove the upper intake manifold.
10. Remove the fuel rail (2). Refer to **RAIL, FUEL, REMOVAL** .

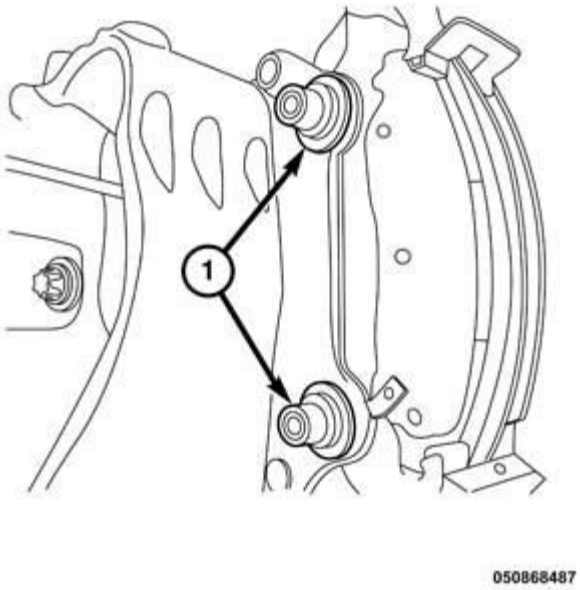

Fig. 69: Removing Fuel Injector From Fuel Rail
Courtesy of CHRYSLER GROUP, LLC

NOTE: Number 2 fuel injector removal shown in illustration, all other fuel injectors similar.

11. Remove the fuel injectors (1) from the fuel rail (2).

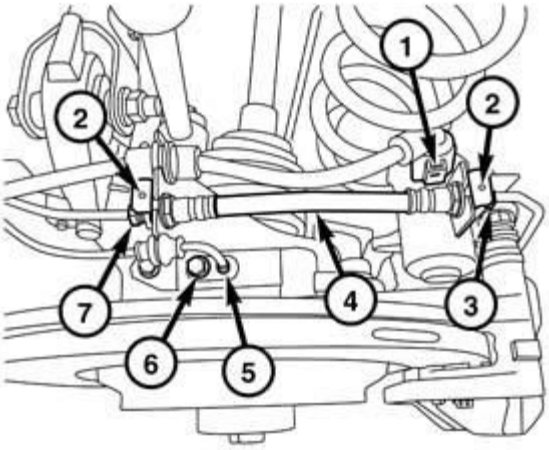

1715005817

Fig. 70: Removing Fuel Injector From Intake Manifold
Courtesy of CHRYSLER GROUP, LLC

NOTE: Number 2 fuel injector removal shown in illustration, all other fuel injectors similar.

12. Remove the fuel injectors (1) from the lower intake manifold.

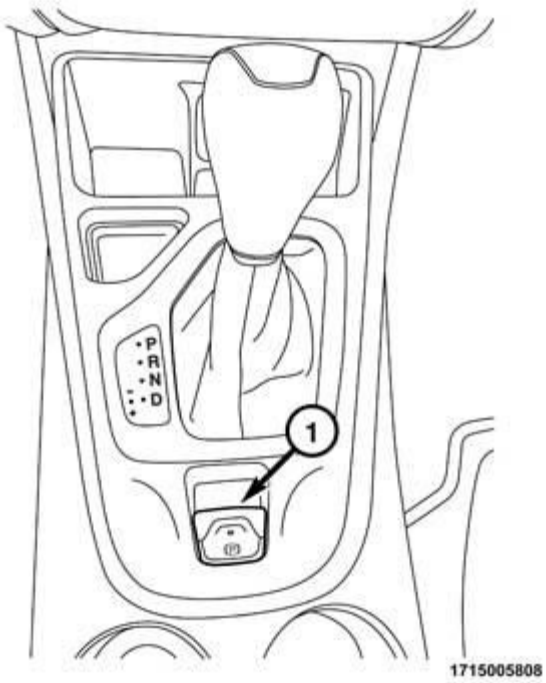

Fig. 71: O-Ring Seals
Courtesy of CHRYSLER GROUP, LLC

13. Remove and discard all fuel injector O-ring seals (1).

2.4L

WARNING: Risk of injury to eyes and skin from contact with fuel. Wear protective clothing and eye protection. Risk of poisoning from inhaling and swallowing fuel. Pour fuel only into appropriately marked and approved containers. Failure to follow these instructions may result in possible serious or fatal injury.

1. Release the fuel pressure, refer to the **FUEL SYSTEM PRESSURE RELEASE PROCEDURE**.
2. Disconnect the battery negative cable.
3. Remove the fuel rail. Refer to **RAIL, FUEL, REMOVAL** .

Fig. 72: Fuel Rail, Injector & Retaining Clip
Courtesy of CHRYSLER GROUP, LLC

4. Remove the fuel injector (3) retaining clip (2).
5. Remove the fuel injector (3) from fuel rail (1).

INSTALLATION

3.2L

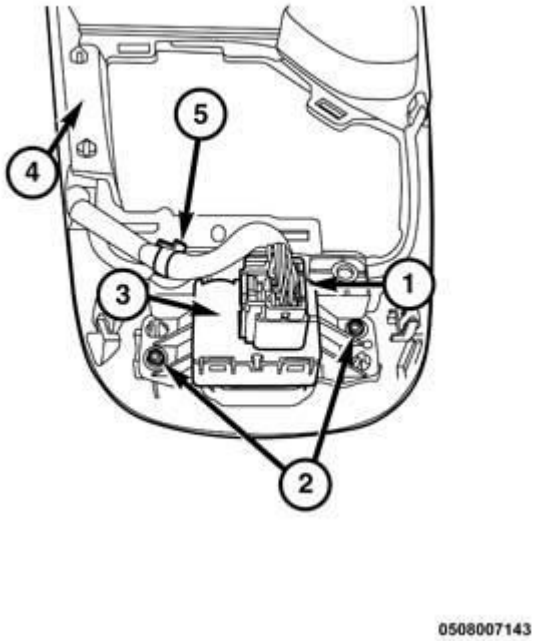

Fig. 73: O-Ring Seals
Courtesy of CHRYSLER GROUP, LLC

1. Lightly lubricate the new O-ring seals (1) with clean engine oil and position the seals onto the fuel injector (2).

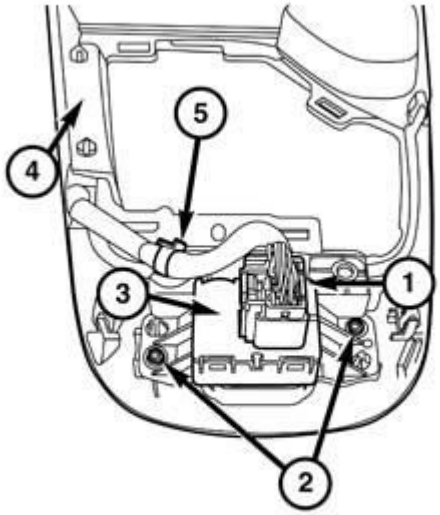

0508007143

Fig. 74: O-Ring Seals & Fuel Injector
Courtesy of CHRYSLER GROUP, LLC

NOTE: Number 2 fuel injector installation shown in illustration, all other fuel injectors similar.

2. Install the fuel injectors (1) into the fuel rail (2).

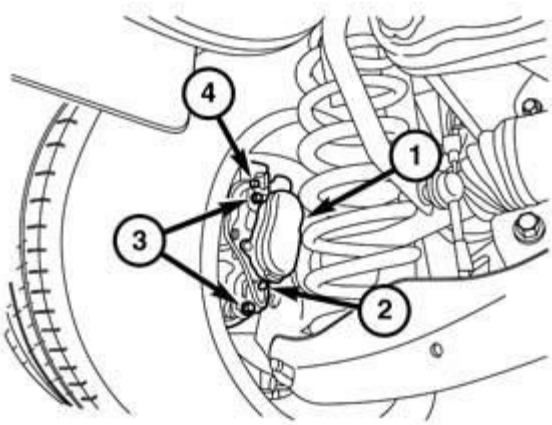

1715005819

Fig. 75: Fuel Rail Bolt Tightening Sequence
Courtesy of CHRYSLER GROUP, LLC

3. Install the fuel rail. Refer to **RAIL, FUEL, INSTALLATION** .
4. Install the upper intake manifold.

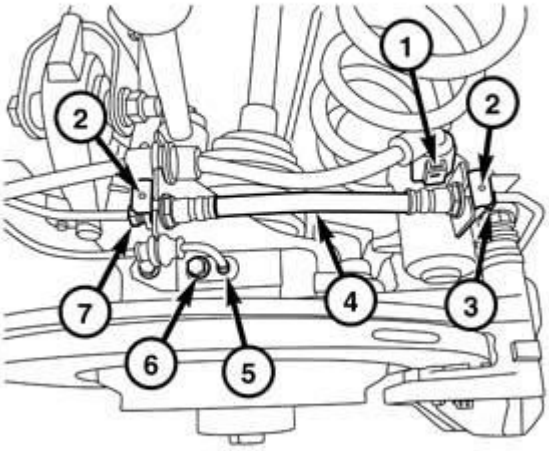

1715005817

Fig. 76: IAT Sensor Connector, Throttle Body & Air Inlet Hose Housing

Courtesy of CHRYSLER GROUP, LLC

5. Position the air inlet assembly (5) onto the air cleaner housing.
6. Secure the air inlet resonator (6) retaining grommet onto the ball stud.
7. Install the air intake resonator support bolt (2). Tighten the bolt to 8 N.m (71 in. lbs.).
8. Tighten the clamp at the air cleaner housing to 5 N.m (44 in. lbs.).
9. Tighten the clamp at the throttle body (3) to 5 N.m (44 in. lbs.).
10. Connect the Inlet Air Temperature (IAT) sensor electrical connector (1).

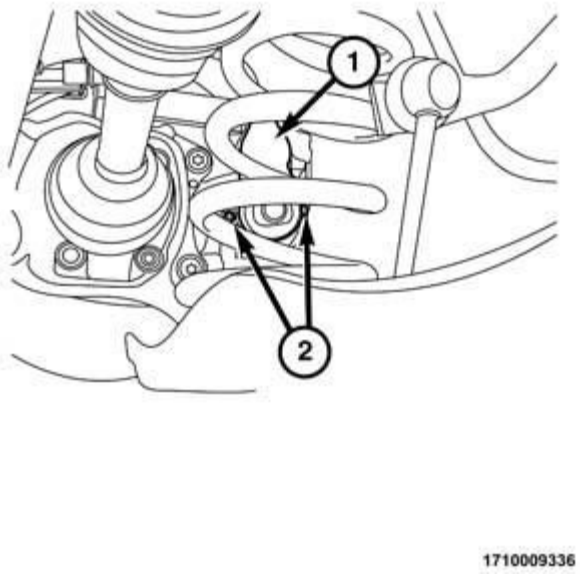

Fig. 77: Engine Cover & Ball Studs
Courtesy of CHRYSLER GROUP, LLC

11. Install the engine cover (1).

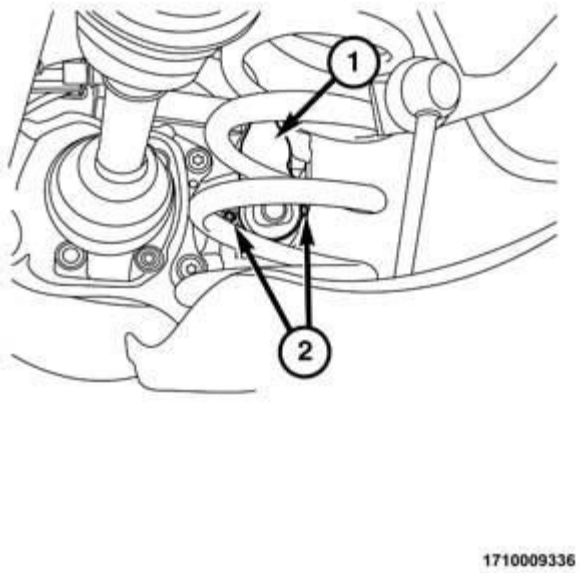

Fig. 78: Battery & Cables
Courtesy of CHRYSLER GROUP, LLC

12. Connect the negative battery cable (3) and tighten nut to 5 N.m (45 in. lbs.).
13. Start the engine and check for leaks.

2.0L

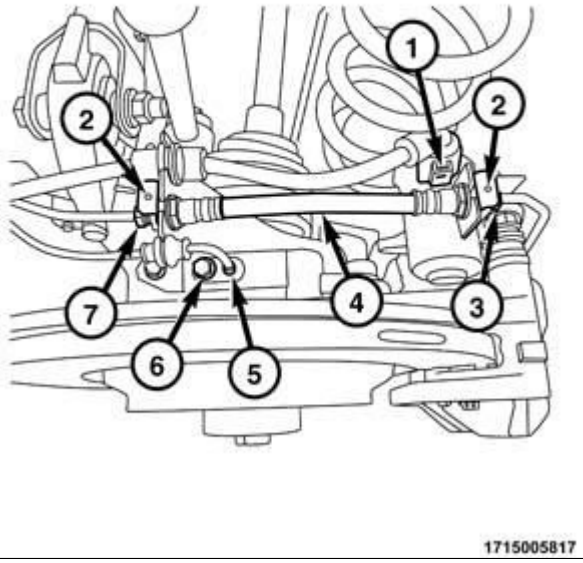

Fig. 79: Fuel Rail, Injector & Retaining Clip
Courtesy of CHRYSLER GROUP, LLC

1. Apply a light coating of clean engine oil to the upper O-ring.
2. Install the fuel injector (3) into fuel rail (1).
3. Install the fuel injector retaining clip (2).
4. Install the fuel rail. Refer to **RAIL, FUEL, INSTALLATION** .
5. Connect the negative battery cable.
6. Use the scan tool to pressurize the fuel system. Check for leaks.

PEDAL, ACCELERATOR

REMOVAL

REMOVAL

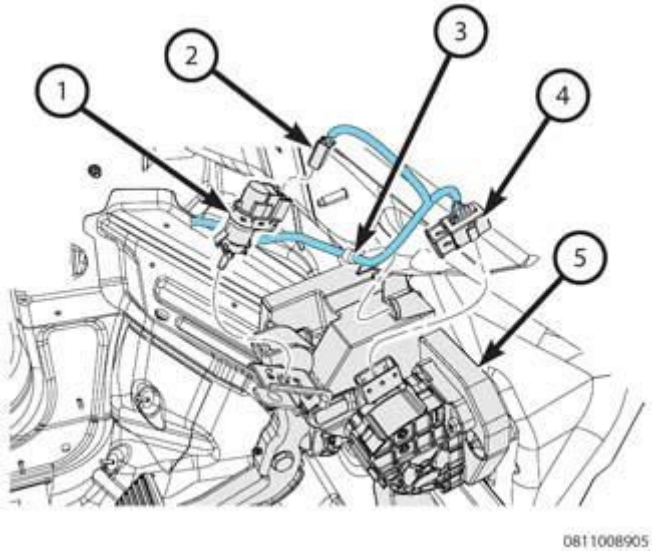

Fig. 80: Wiring Loom & Connectors
Courtesy of CHRYSLER GROUP, LLC

1. Disconnect and isolate the negative battery cable.
2. Separate the wiring harness loom (3) from the accelerator housing (5).
3. Disconnect the accelerator pedal connector (4).

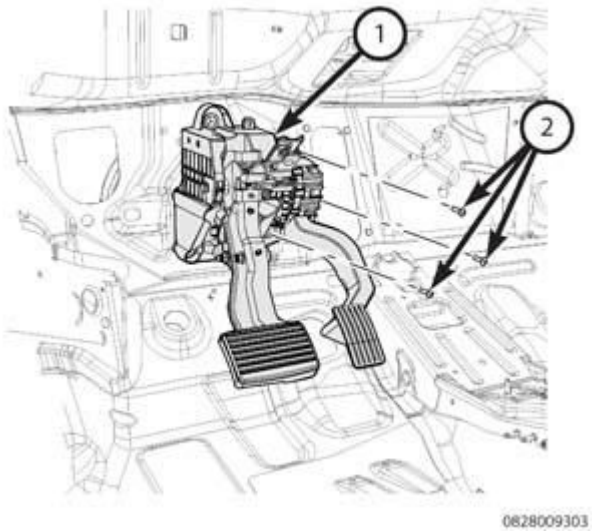

Fig. 81: Accelerator Pedal & Brake Pedal Assembly
Courtesy of CHRYSLER GROUP, LLC

4. Remove the screws (2) that secure the accelerator pedal to the brake pedal assembly.

INSTALLATION

INSTALLATION

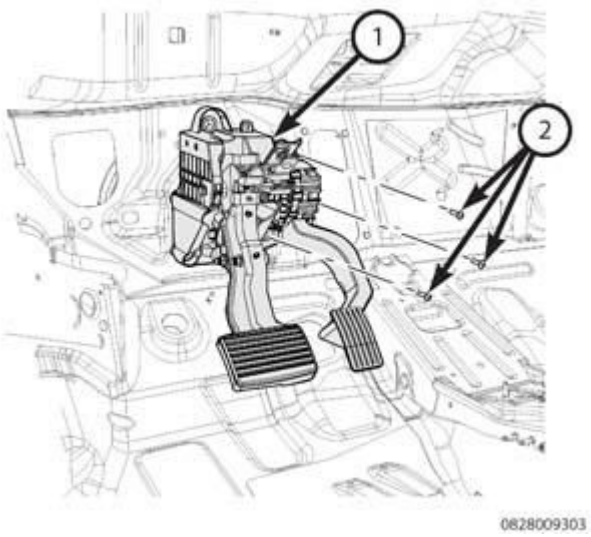

Fig. 82: Accelerator Pedal & Brake Pedal Assembly
Courtesy of CHRYSLER GROUP, LLC

CAUTION: The accelerator pedal and mounting nuts need to be torque in a mandatory torque sequence or damage could result to the pedal assembly.

1. Install the accelerator pedal (2). Tighten the screws to the proper specification. Refer to **TORQUE SPECIFICATIONS** .

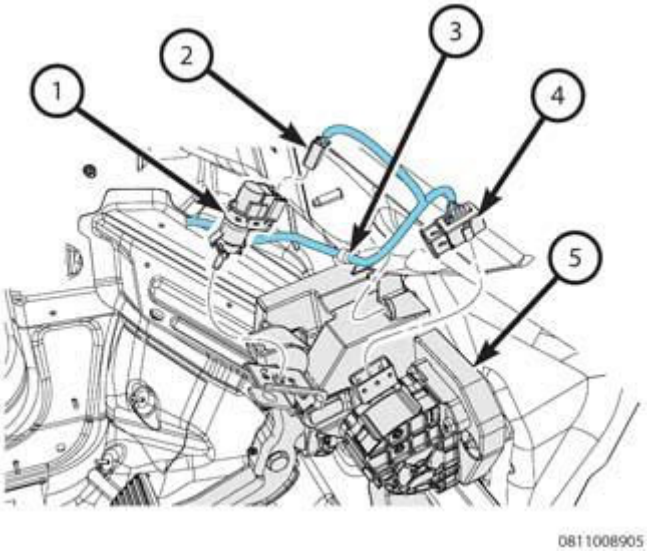

Fig. 83: Wiring Loom & Connectors
Courtesy of CHRYSLER GROUP, LLC

2. Connect the accelerator pedal (5) wire harness connector (4).
3. Connect negative battery cable, tighten the nut to the proper specification. Refer to **SPECIFICATIONS** .
4. Use a scan tool and perform the APPS RELEARN function.

SENSOR, AIR TEMPERATURE, INLET

REMOVAL

REMOVAL

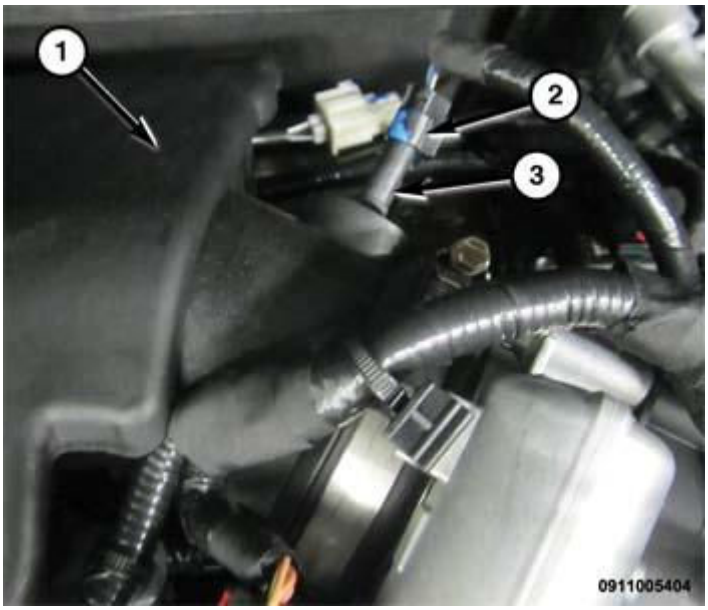

Fig. 84: Air Cleaner Resonator & IAT Sensor
Courtesy of CHRYSLER GROUP, LLC

1. Disconnect the negative battery cable.
2. Remove the air cleaner resonator (1). Refer to **RESONATOR, AIR CLEANER, REMOVAL** for 2.4L or **RESONATOR, AIR CLEANER, REMOVAL** for 3.2L.
3. Rotate the Inlet Air Temperature (IAT) sensor (3) 1/4 turn counter clockwise and remove sensor.

INSTALLATION

INSTALLATION

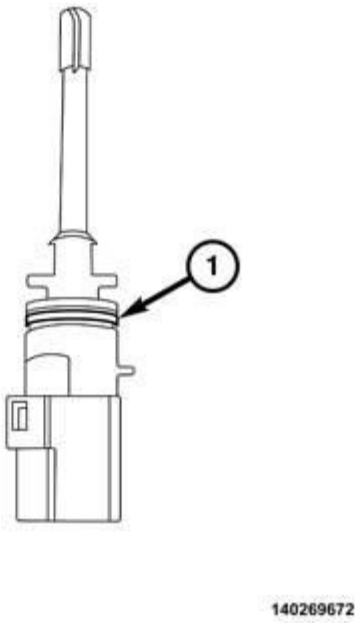

Fig. 85: IAT Sensor O-Ring Seal
Courtesy of CHRYSLER GROUP, LLC

1. If necessary, inspect and replace the O-ring seal (1).

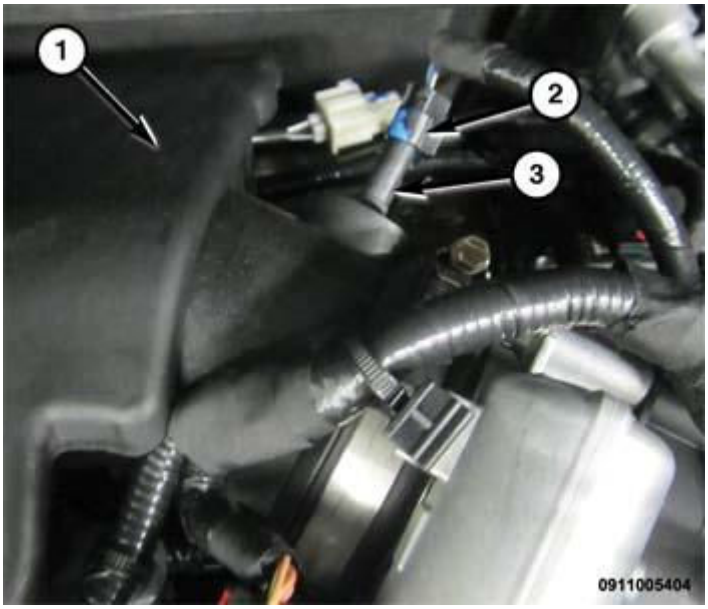

Fig. 86: Air Cleaner Resonator & IAT Sensor
Courtesy of CHRYSLER GROUP, LLC

2. Install the Inlet Air Temperature (IAT) sensor (3) and rotate 1/4 turn to lock in place.
3. Install the air cleaner resonator (1). Refer to **RESONATOR, AIR CLEANER, INSTALLATION** for

2.4L or **RESONATOR, AIR CLEANER, INSTALLATION** for 3.2L.

4. Connect the negative battery cable.

SENSOR, CRANKSHAFT POSITION

DESCRIPTION

DESCRIPTION

The Crankshaft Position (CKP) sensor is located on the front engine block, left side. It is positioned and bolted into a machined hole.

OPERATION

OPERATION

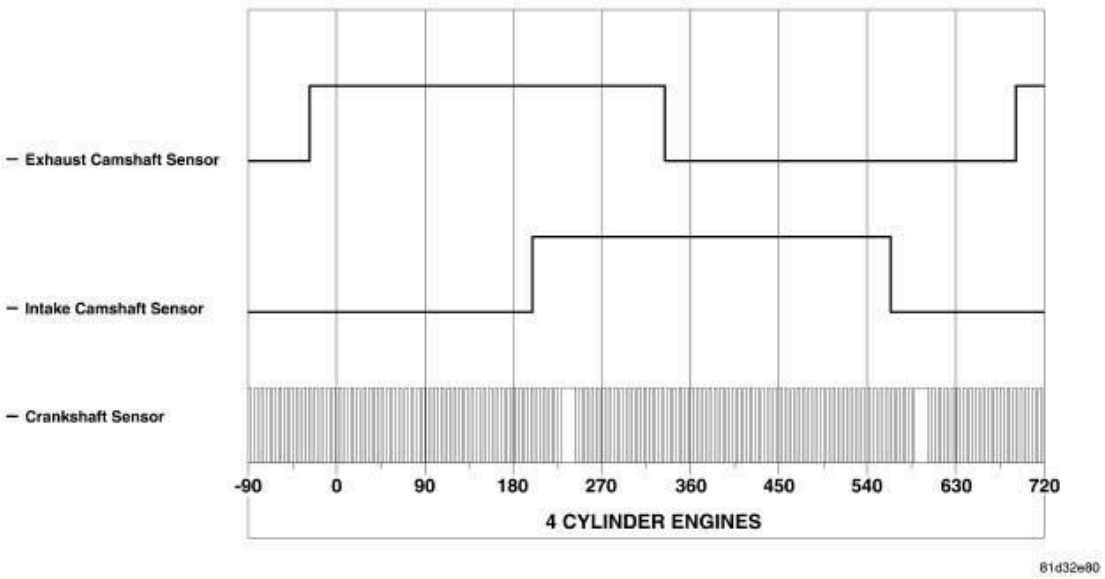

Fig. 87: 4 Cylinder Cam & Crank Signals
Courtesy of CHRYSLER GROUP, LLC

NOTE: The graphic represents the relationship between camshaft and crankshaft sensors edges with camshafts in "lock pin" position (cam shafts are not "phasing"). This is normally seen during idle.

Depiction of good camshaft and crankshaft square wave signals for 4 cylinder engines.

REMOVAL

REMOVAL

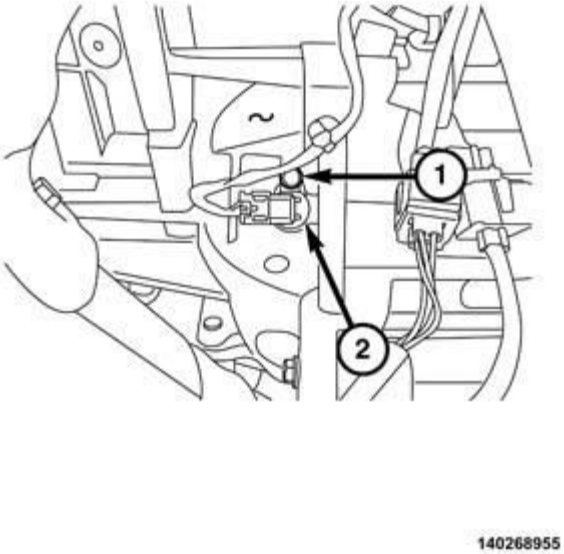

Fig. 88: Crankshaft Position Sensor & Bolt
Courtesy of CHRYSLER GROUP, LLC

1. Disconnect and isolate the negative battery cable.
2. Disconnect the Crankshaft Position (CKP) sensor wire harness connector.
3. Remove bolt (1) and the CKP sensor (2).

3.2L

The crankshaft position (CKP) sensor is mounted into the right rear side of the cylinder block.

1. Disconnect and isolate the negative battery cable.
2. Raise and support the vehicle. Refer to **HOISTING, STANDARD PROCEDURE** .
3. If equipped with AWD, remove the PTU (1). Refer to **REMOVAL** .

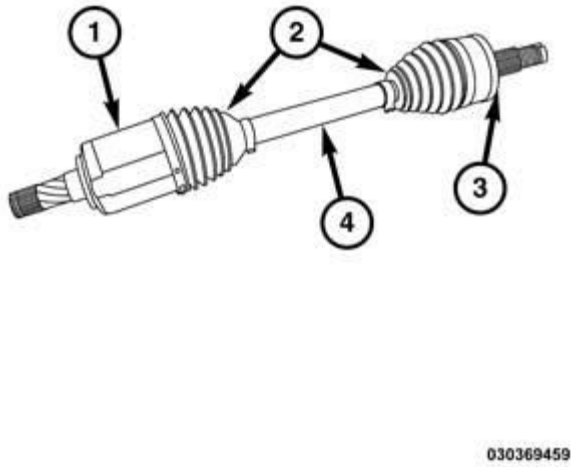

Fig. 89: Crankshaft Position Sensor Electrical Connector
Courtesy of CHRYSLER GROUP, LLC

4. Disconnect the electrical connector (1) from the crankshaft position (CKP) sensor.

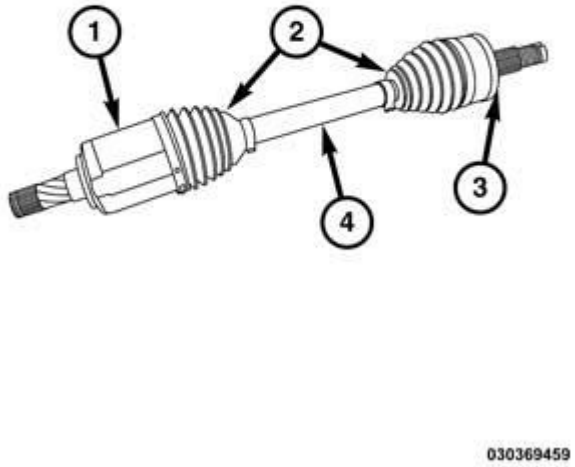

Fig. 90: Sensor Mounting Bolt & Sensor
Courtesy of CHRYSLER GROUP, LLC

5. Remove the sensor mounting bolt (2).
6. Carefully twist the sensor (1) from the cylinder block.

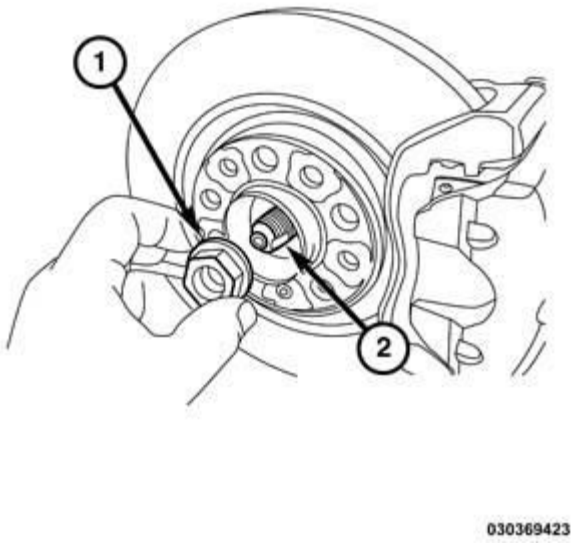

Fig. 91: O-Ring
Courtesy of CHRYSLER GROUP, LLC

7. The CKP sensor O-ring (1) can be reused if not damaged.

INSTALLATION

INSTALLATION

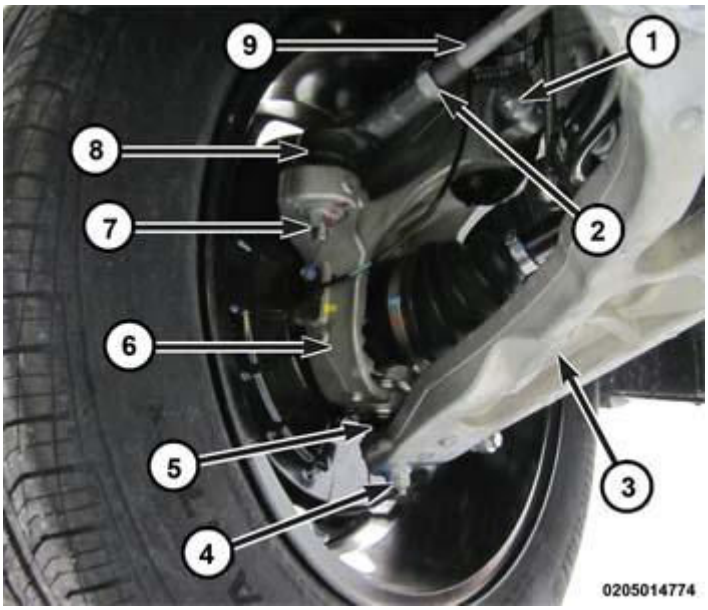

Fig. 92: Crankshaft Position Sensor & Bolt
Courtesy of CHRYSLER GROUP, LLC

1. Insert the Crankshaft Position (CKP) sensor (2). Tighten the bolt (1) to the proper specification. Refer to **TORQUE SPECIFICATIONS** .
2. Connect the CKP sensor wire harness connector.
3. Connect the battery negative cable.

3.2L

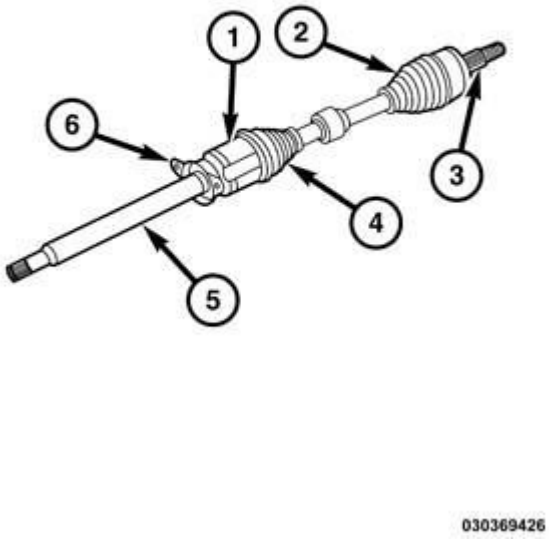

Fig. 93: O-Ring
Courtesy of CHRYSLER GROUP, LLC

1. The crankshaft position (CKP) sensor O-ring (1) can be reused if not damaged.
2. Apply a small amount of engine oil to the sensor O-ring (1).

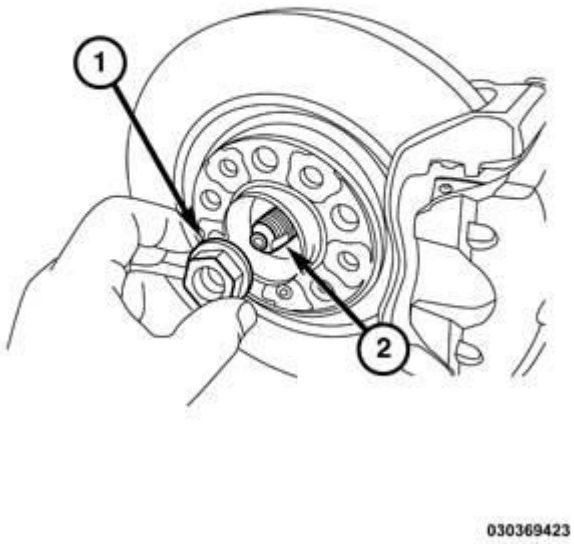

Fig. 94: Sensor Mounting Bolt & Sensor
Courtesy of CHRYSLER GROUP, LLC

3. Clean out the CKP sensor mounting bolt hole in the engine block.
4. Install the sensor (1) into the engine block with a slight rocking and twisting action.

CAUTION: Before tightening the CKP sensor mounting bolt, be sure the sensor is completely flush to the cylinder block. If the CKP sensor is not flush, damage to the sensor mounting tang may result.

5. Install the mounting bolt (2) and tighten to 12 N.m (106 in. lbs.).

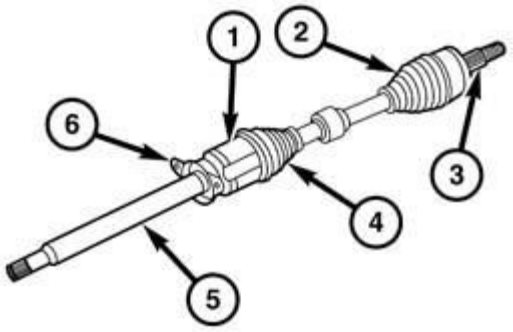

030369426

Fig. 95: Crankshaft Position Sensor Electrical Connector
Courtesy of CHRYSLER GROUP, LLC

6. Connect the electrical connector (1) to the sensor.
7. If equipped with AWD, install the PTU (1). Refer to **INSTALLATION** .
8. Lower the vehicle.
9. Connect the negative battery cable and tighten nut to 5 N.m (45 in. lbs.).

NOTE: **The Cam/Crank Variation Relearn procedure must be performed using the scan tool anytime there has been a repair/replacement made to a powertrain system, for example: flywheel, valvetrain, camshaft and/or crankshaft sensors or components.**

SENSOR, MANIFOLD AIR PRESSURE (MAP)

REMOVAL

2.4L

1. Disconnect the negative battery cable.
2. Remove the belly pan. Refer to **BELLY PAN, REMOVAL** .

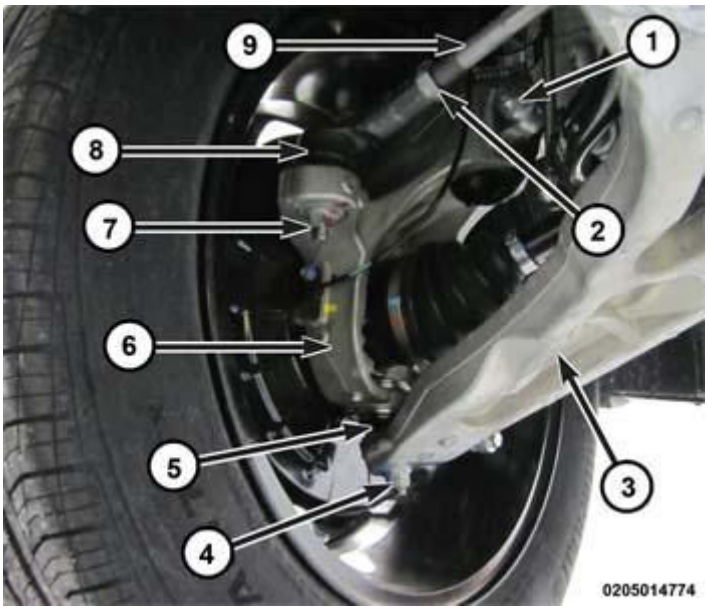

Fig. 96: MAP Sensor & Connector
Courtesy of CHRYSLER GROUP, LLC

3. Disconnect the Manifold Absolute Pressure (MAP) sensor wire harness connector (2).
4. Rotate the MAP sensor 90° counter clockwise and remove sensor (1).

3.2L

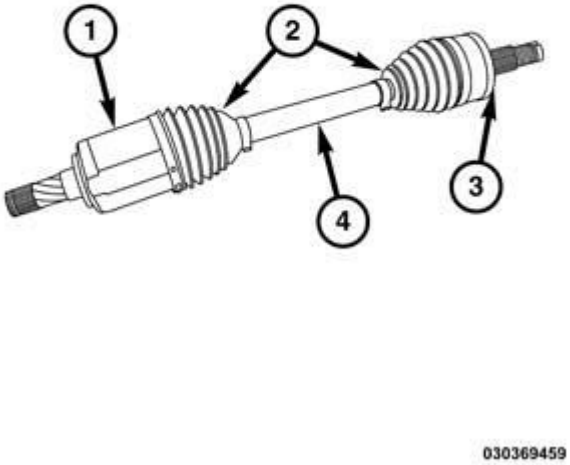

Fig. 97: MAP Sensor Electrical Connector
Courtesy of CHRYSLER GROUP, LLC

1. Disconnect and isolate the negative battery cable.
2. Unlock and disconnect the electrical connector (1) from the MAP sensor.

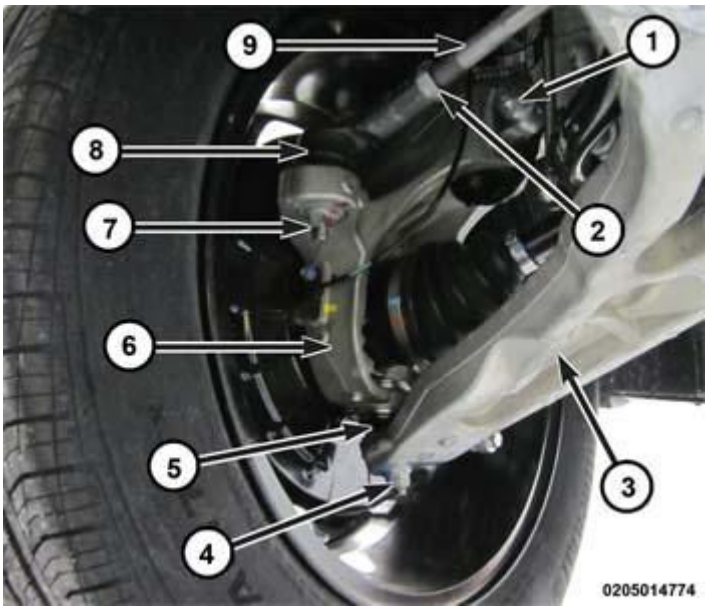

Fig. 98: Rotating MAP Sensor 1/4 Turn Counterclockwise
Courtesy of CHRYSLER GROUP, LLC

3. Rotate the MAP sensor 1/4 turn counterclockwise and pull the sensor straight up and out of the upper intake manifold.

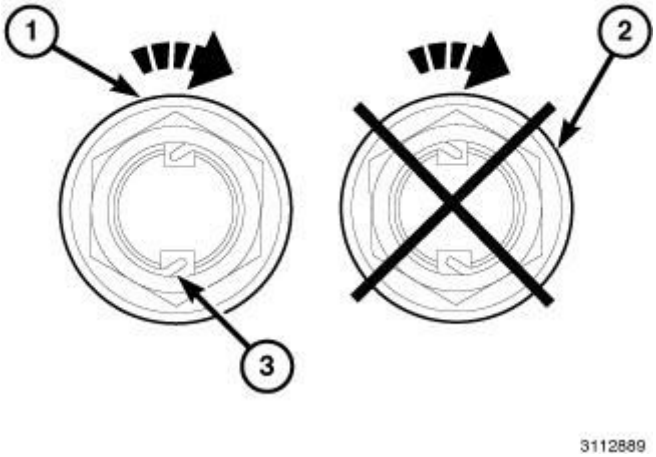

Fig. 99: O-Ring
Courtesy of CHRYSLER GROUP, LLC

4. The MAP sensor O-ring (1) can be reused if not damaged.

INSTALLATION

2.4L

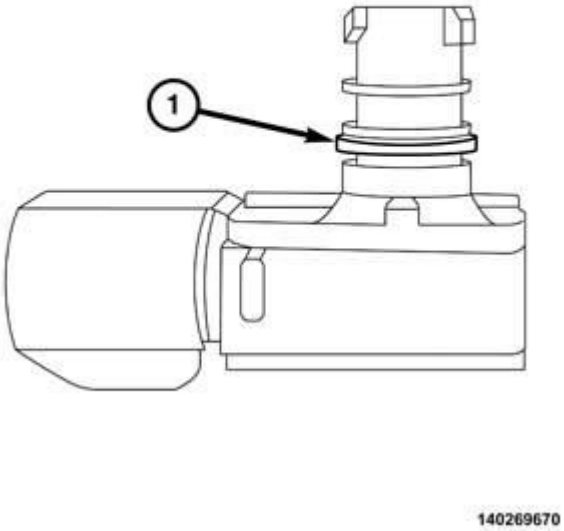

Fig. 100: MAP Sensor O-Ring Seal
Courtesy of CHRYSLER GROUP, LLC

1. Inspect and replace the O-ring seal (1) as necessary.

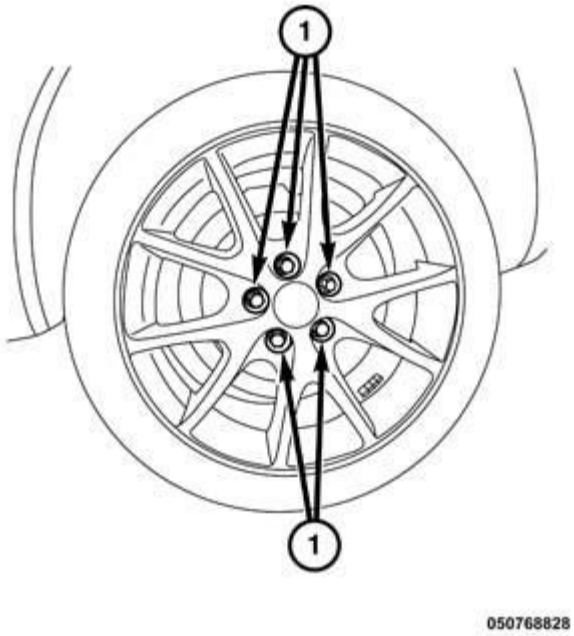

Fig. 101: MAP Sensor & Connector
Courtesy of CHRYSLER GROUP, LLC

2. Install Manifold Absolute Pressure (MAP) sensor (1) and rotate 90° clockwise to lock in place.
3. Connect the MAP sensor wire harness connector (2).
4. Install the belly pan. Refer to **BELLY PAN, INSTALLATION** .
5. Connect the negative battery cable.

3.2L

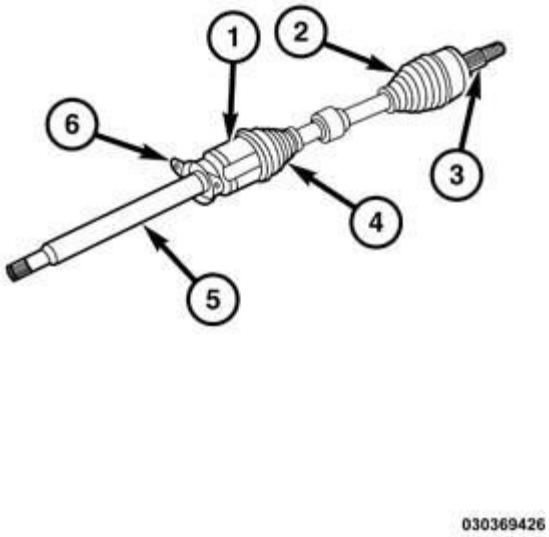

Fig. 102: O-Ring
Courtesy of CHRYSLER GROUP, LLC

1. The manifold air pressure (MAP) sensor O-ring (1) can be reused if not damaged.
2. Apply a small amount of engine oil to the sensor O-ring (1).

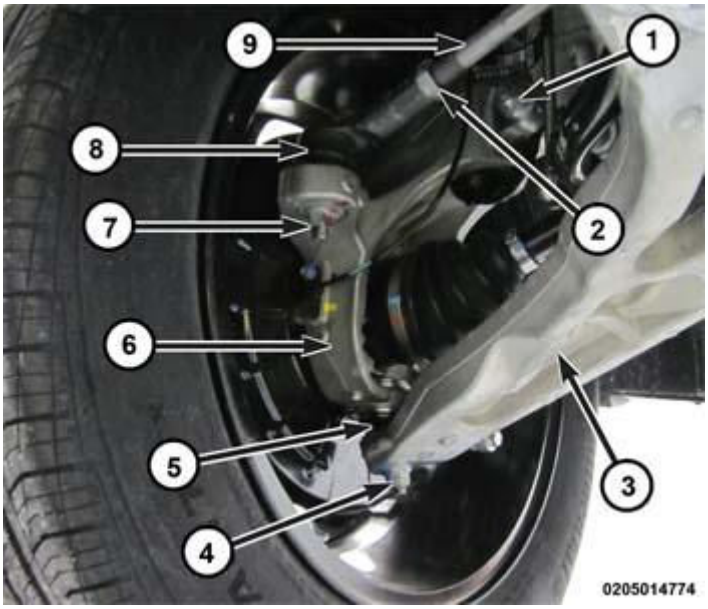

Fig. 103: Rotating MAP Sensor Rotate 1/4 Turn Clockwise
Courtesy of CHRYSLER GROUP, LLC

3. Install the MAP sensor (1) into the upper intake manifold and rotate 1/4 turn clockwise.

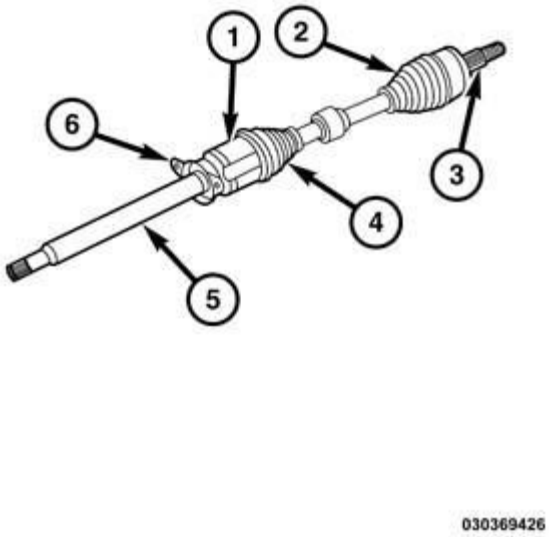

Fig. 104: MAP Sensor Electrical Connector
Courtesy of CHRYSLER GROUP, LLC

4. Connect and lock the electrical connector (1) to the sensor.
5. Connect the negative battery cable and tighten nut to 5 N.m (45 in. lbs.).

SENSOR, OXYGEN

REMOVAL

2.4L/3.2L

UPSTREAM OXYGEN SENSOR (1/1)

WARNING: The exhaust manifold, exhaust pipes and catalytic converter(s) become very hot during engine operation. Allow engine to cool before removing oxygen sensor. Failure to allow engine to cool before removal may result in personal injury caused by burns.

CAUTION: When disconnecting sensor electrical connector, do not pull directly on wires going into oxygen sensor (O2S). Damage to the oxygen sensor may occur.

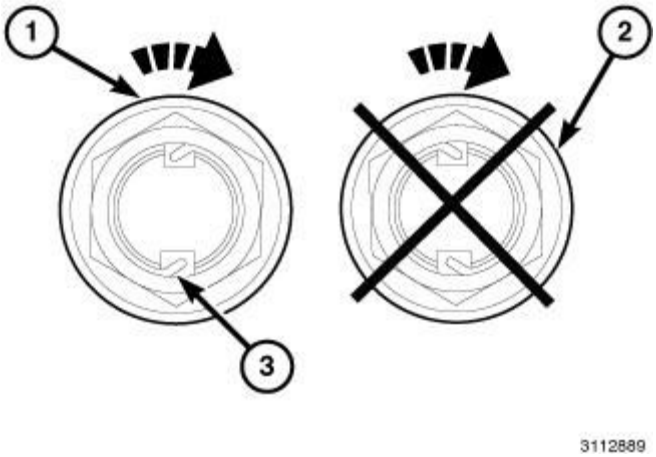

Fig. 105: Harness Connectors & Retainer
Courtesy of CHRYSLER GROUP, LLC

1. Disconnect and isolate the negative battery cable.
2. Disconnect O2S wire harness from retainer (3).
3. Disconnect O2S sensor wire harness connector (2).

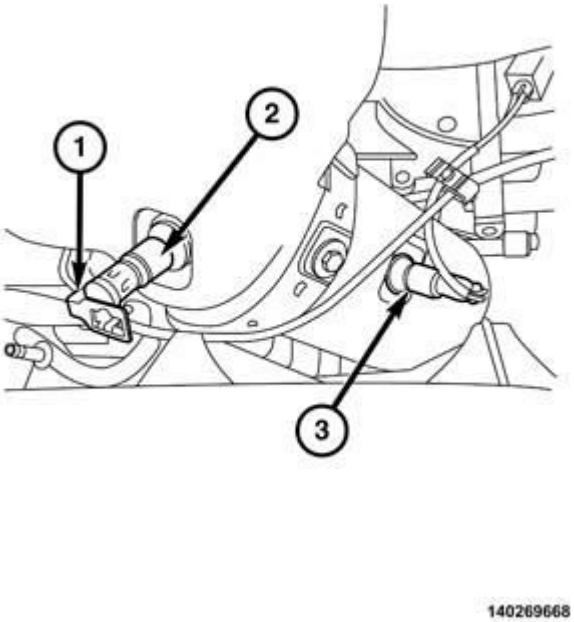

Fig. 106: O2 Sensors & Wire Harness Protector
Courtesy of CHRYSLER GROUP, LLC

4. Remove the wire harness protector (1).

5. Remove the O2S (2) sensor.

DOWNSTREAM OXYGEN SENSOR (1/2)

WARNING: The exhaust manifold, exhaust pipes and catalytic converter(s) become very hot during engine operation. Allow engine to cool before removing oxygen sensor. Failure to allow engine to cool before removal may result in personal injury caused by burns.

CAUTION: When disconnecting sensor electrical connector, do not pull directly on wires going into oxygen sensor (O2S). Damage to the oxygen sensor may occur.

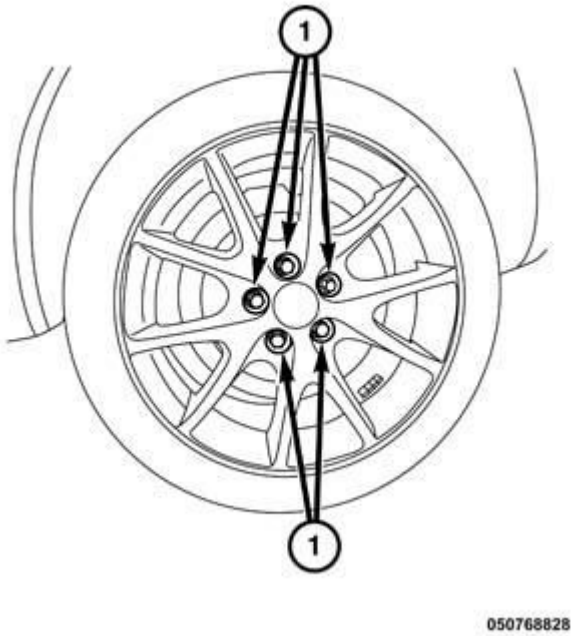

Fig. 107: Harness Connectors & Retainer
Courtesy of CHRYSLER GROUP, LLC

1. Disconnect and isolate the negative battery cable.
2. Disconnect O2S wire harness from retainer (3).
3. Disconnect O2S sensor wire harness connector (1).

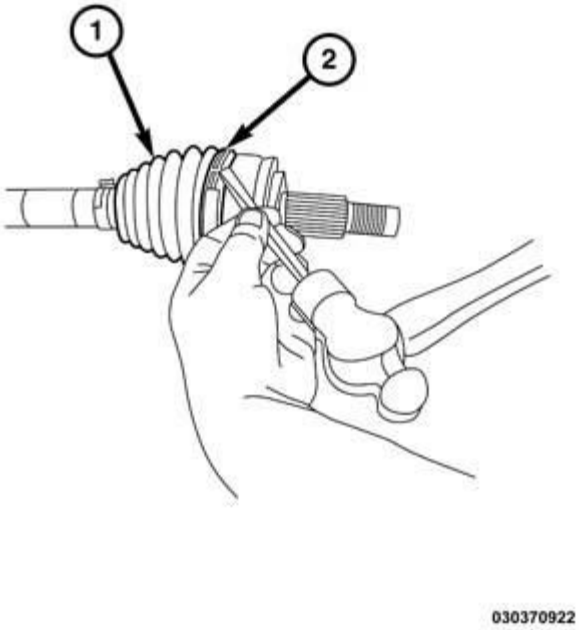

Fig. 108: O2 Sensors & Wire Harness Protector
Courtesy of CHRYSLER GROUP, LLC

4. Remove the O2S (3) sensor.

FRONT

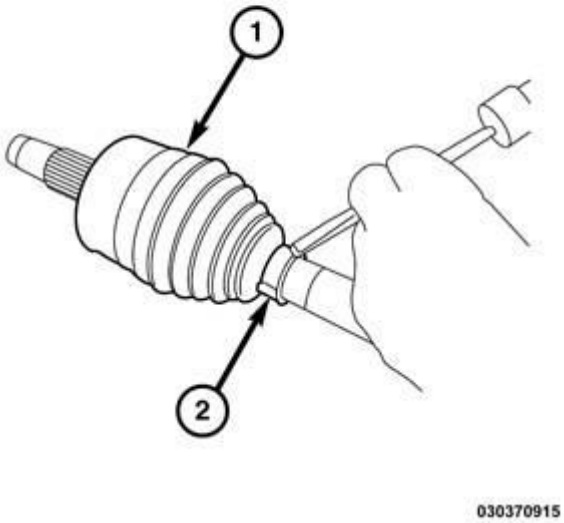

Fig. 109: Up Stream Oxygen Sensor & Electrical Connectors

Courtesy of CHRYSLER GROUP, LLC

The engine is equipped with four heated oxygen sensors:

WARNING: The exhaust pipes and catalytic converter become very hot during engine operation. Allow the engine to cool before removing the oxygen sensor.

1. Disconnect and isolate the negative battery cable.

CAUTION: When disconnecting the oxygen sensor electrical connector, do not pull directly on the wire going into the sensor. The sensor wiring can be damaged resulting in sensor failure.

2. Disconnect the heated oxygen sensor electrical connectors (1).
3. Remove the up stream oxygen sensor (2).
4. Raise the vehicle.

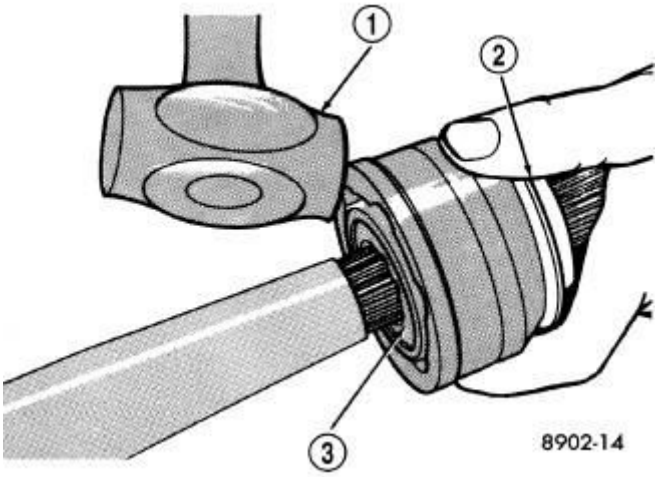

Fig. 110: Removing/Installing Belly Pans
Courtesy of CHRYSLER GROUP, LLC

5. Remove the belly pan (1).

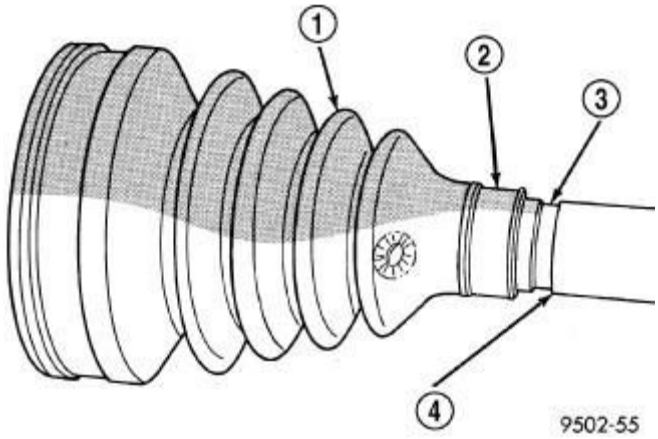

Fig. 111: Oxygen Sensors, Harness Connectors & Catalytic Converter
Courtesy of CHRYSLER GROUP, LLC

6. Disconnect the heated oxygen sensor electrical connector (3).
7. Remove the down stream O2 sensor (3).
8. Clean the exhaust pipe threads using an appropriate tap.

REAR

The engine is equipped with four heated oxygen sensors:

WARNING: The exhaust pipes and catalytic converter become very hot during engine operation. Allow the engine to cool before removing the oxygen sensor.

1. Disconnect and isolate the negative battery cable.

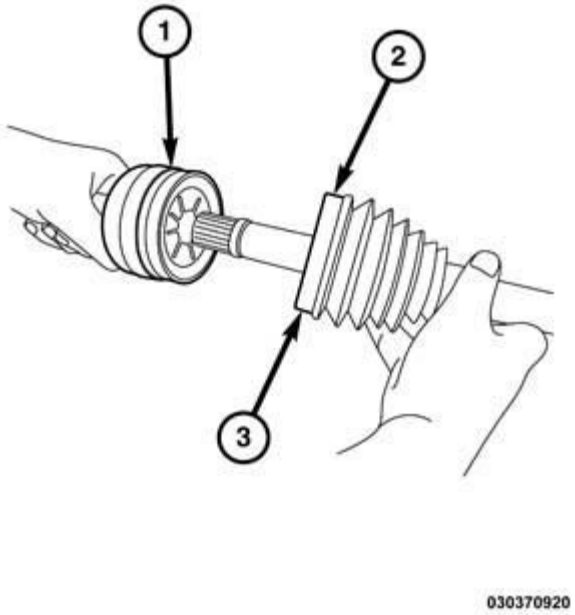

Fig. 112: Intake Resonator
Courtesy of CHRYSLER GROUP, LLC

2. Remove the resonator (1)

   Refer to **RESONATOR, AIR CLEANER, REMOVAL** for 2.4L or **RESONATOR, AIR CLEANER, REMOVAL** for 3.2L.

CAUTION: When disconnecting the oxygen sensor electrical connector, do not pull directly on the wire going into the sensor. The sensor wiring can be damaged resulting in sensor failure.

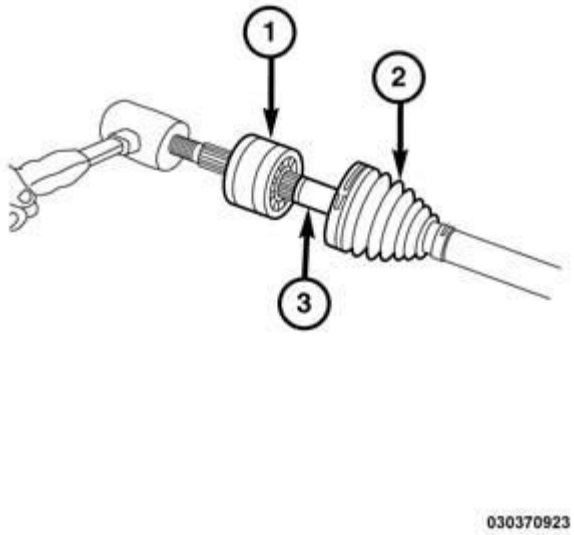

Fig. 113: Oxygen Sensor Harness Connectors
Courtesy of CHRYSLER GROUP, LLC

3. Disconnect the heated oxygen sensor electrical connectors (1, 2).

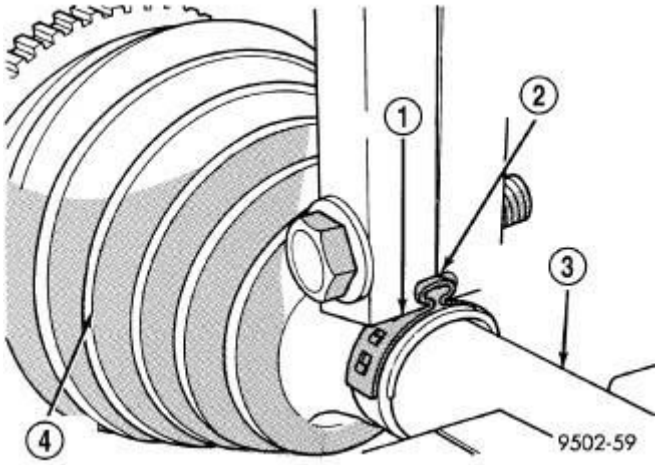

Fig. 114: Removing/Installing Oxygen Sensors
Courtesy of CHRYSLER GROUP, LLC

4. Remove the oxygen sensors (3, 5).
5. Clean the exhaust pipe threads using an appropriate tap.

INSTALLATION

2.4L/3.2L

UPSTREAM OXYGEN SENSOR (1/1)

WARNING: The exhaust manifold, exhaust pipes and catalytic converter(s) become very hot during engine operation. Allow engine to cool before removing oxygen sensor. Failure to allow engine to cool before removal may result in personal injury caused by burns.

CAUTION: When Equipped: The oxygen sensor (O2S) pigtail harness must be clipped and/or bolted back to their original positions on engine or body to prevent mechanical damage to wiring.

Threads of new oxygen sensors are factory coated with anti-seize compound to aid in removal.**DO NOT add any additional anti-seize compound to threads of a new O2S.**

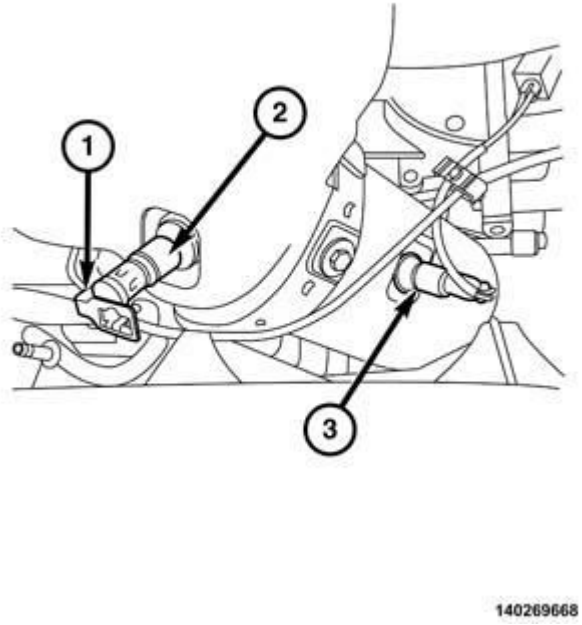

Fig. 115: O2 Sensors & Wire Harness Protector
Courtesy of CHRYSLER GROUP, LLC

1. Install the O2S (2) sensor. Tighten to the proper specification. Refer to **TORQUE SPECIFICATIONS** .
2. Install the wire harness protector (1).

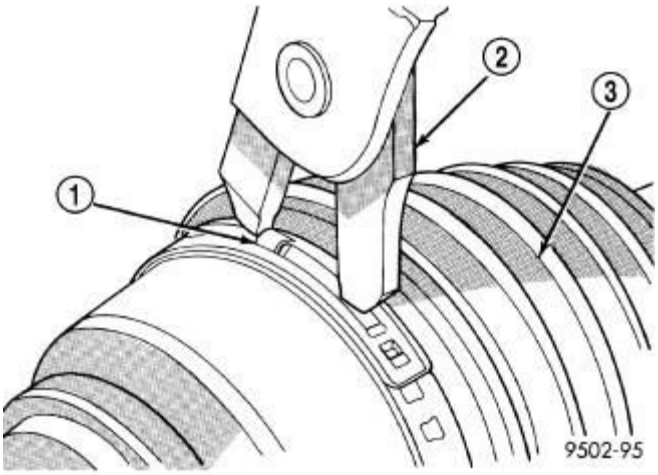

Fig. 116: Harness Connectors & Retainer
Courtesy of CHRYSLER GROUP, LLC

3. Connect O2S sensor wire harness connector (2).
4. Connect O2S sensor wire harness to retainer (3).
5. Connect the negative battery cable.

DOWNSTREAM OXYGEN SENSOR (1/2)

WARNING: The exhaust manifold, exhaust pipes and catalytic converter(s) become very hot during engine operation. Allow engine to cool before removing oxygen sensor. Failure to allow engine to cool before removal may result in personal injury caused by burns.

CAUTION: When Equipped: The oxygen sensor (O2S) pigtail harness must be clipped and/or bolted back to their original positions on engine or body to prevent mechanical damage to wiring.

Threads of new oxygen sensors are factory coated with anti-seize compound to aid in removal.**DO NOT add any additional anti-seize compound to threads of a new O2S.**

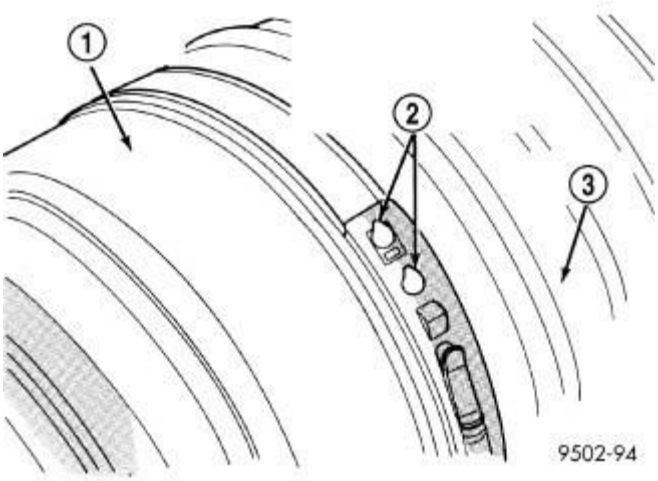

Fig. 117: O2 Sensors & Wire Harness Protector
Courtesy of CHRYSLER GROUP, LLC

1. Install the O2S (3) sensor. Tighten to the proper specification. Refer to **TORQUE SPECIFICATIONS** .

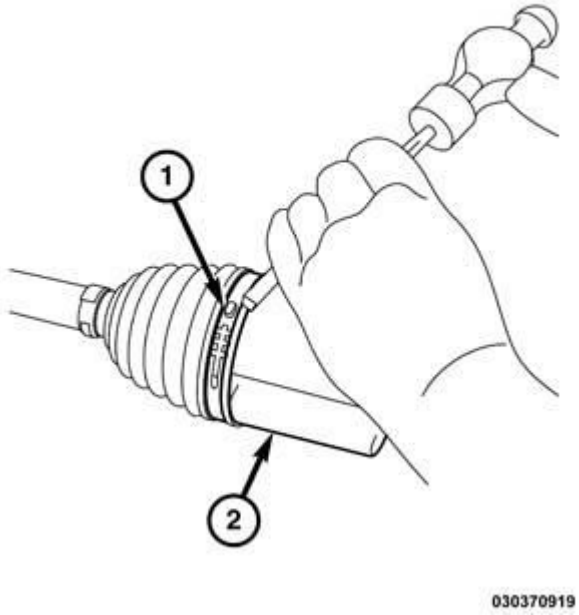

Fig. 118: Harness Connectors & Retainer
Courtesy of CHRYSLER GROUP, LLC

2. Connect O2S sensor wire harness connector (1).
3. Connect O2S sensor wire harness to retainer (3).
4. Connect the negative battery cable.

REAR

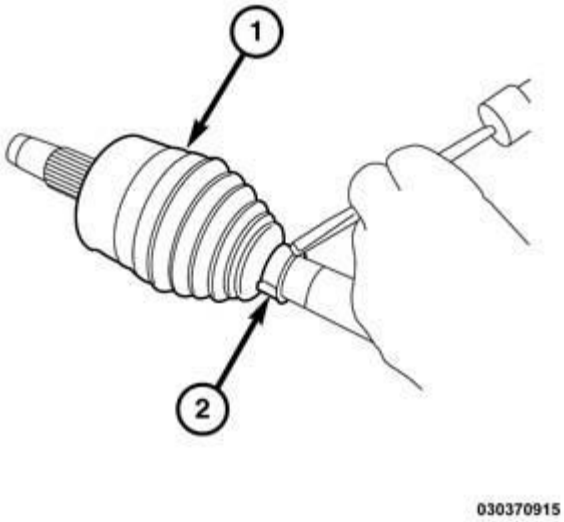

Fig. 119: Oxygen Sensors, Harness Connectors & Catalytic Converter
Courtesy of CHRYSLER GROUP, LLC

1. If reinstalling the original oxygen sensor, coat the sensor threads with an anti-seize compound such as Loctite 771- 64 or equivalent. New sensors have compound on the threads and do not require an additional coating. **Do Not add any additional anti-seize compound to the threads of a new oxygen sensor.**

CAUTION: Never apply any type of grease to the oxygen sensor electrical connector, or attempt any repair of the sensor wiring harness.

2. Install the oxygen sensor (3). Tighten to 43 N.m (32 ft. lbs.).
3. Connect the electrical connector (2).

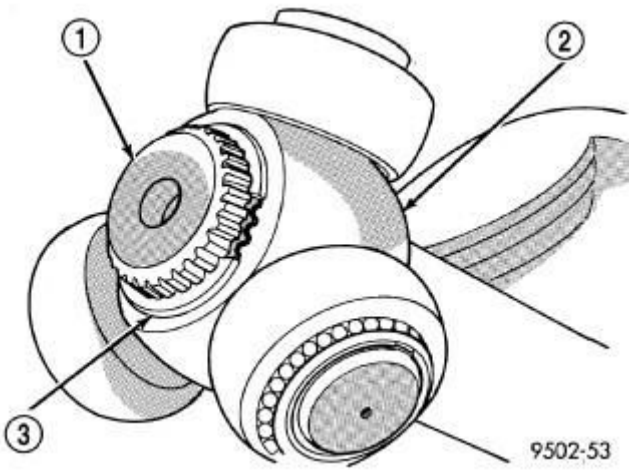

Fig. 120: Removing/Installing Belly Pans
Courtesy of CHRYSLER GROUP, LLC

4. Install the belly pan.
5. Lower the vehicle.

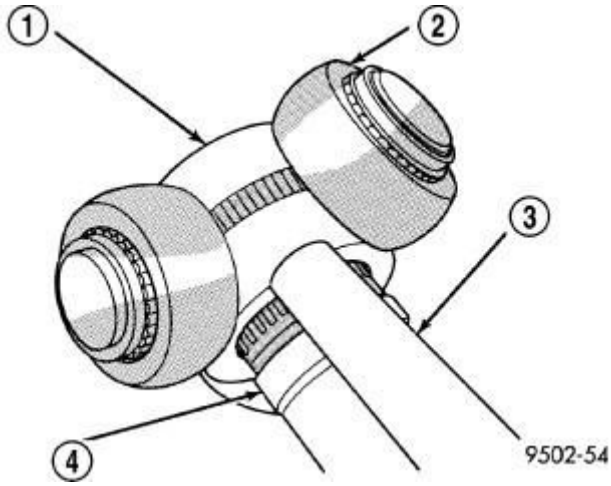

Fig. 121: Up Stream Oxygen Sensor & Electrical Connectors
Courtesy of CHRYSLER GROUP, LLC

6. Install the upper O2 sensor (2). Tighten to 43 N.m (32 ft. lbs.).
7. Connect the electrical connector (1).
8. Connect the negative battery cable and tighten nut to 5 N.m (45 in. lbs.).

REAR

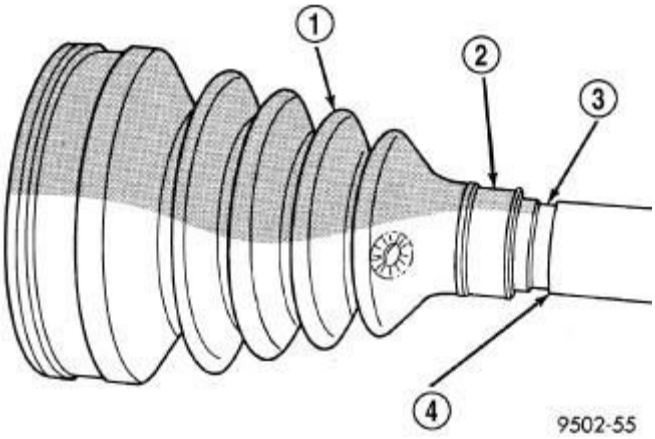

Fig. 122: Removing/Installing Oxygen Sensors
Courtesy of CHRYSLER GROUP, LLC

1. If reinstalling the original oxygen sensor, coat the sensor threads with an anti-seize compound such as Loctite 771- 64 or equivalent. New sensors have compound on the threads and do not require an additional coating. **Do Not add any additional anti-seize compound to the threads of a new oxygen sensor.**
2. Install the oxygen sensor and tighten to:
   - Rear upstream oxygen sensor (3), 43 N.m (32 ft. lbs.).
   - Rear downstream oxygen sensor (2), 45 N.m (33 ft. lbs.).

CAUTION: Never apply any type of grease to the oxygen sensor electrical connector, or attempt any repair of the sensor wiring harness.

3. Connect the heated oxygen sensor electrical connector (1, 2).

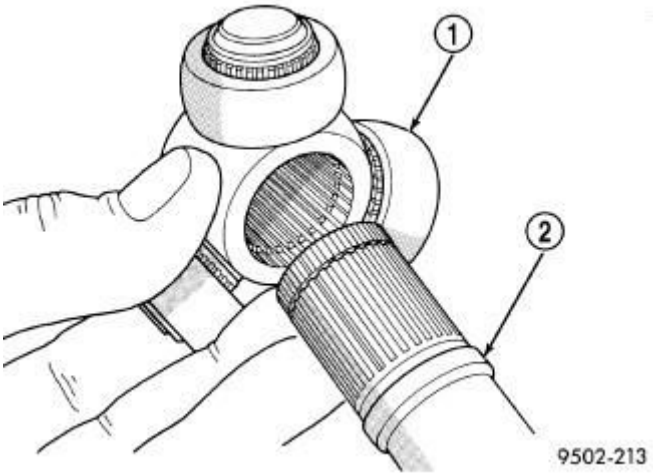

Fig. 123: IAT Sensor Connector, Throttle Body & Air Inlet Hose Housing
Courtesy of CHRYSLER GROUP, LLC

4. Install the air intake resonator (6). Refer to **RESONATOR, AIR CLEANER, INSTALLATION** for 2.4L or **RESONATOR, AIR CLEANER, INSTALLATION** for 3.2L.
5. Connect the negative battery cable and tighten nut to 5 N.m (45 in. lbs.).

THROTTLE BODY

REMOVAL

3.2L

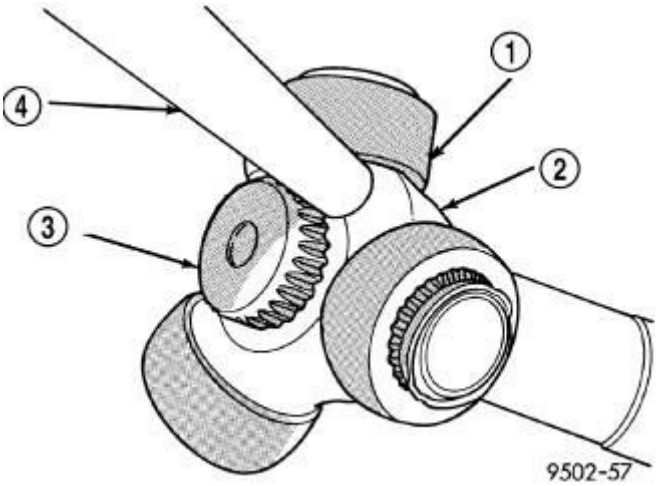

Fig. 124: Battery & Cables
Courtesy of CHRYSLER GROUP, LLC

1. Disconnect and isolate the negative battery cable (3).

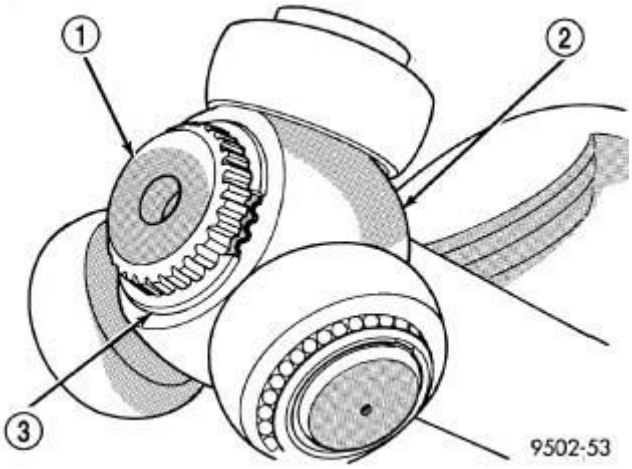

Fig. 125: Engine Cover & Ball Studs
Courtesy of CHRYSLER GROUP, LLC

2. Lift the engine cover retaining grommets off the ball studs and remove the engine cover (1).

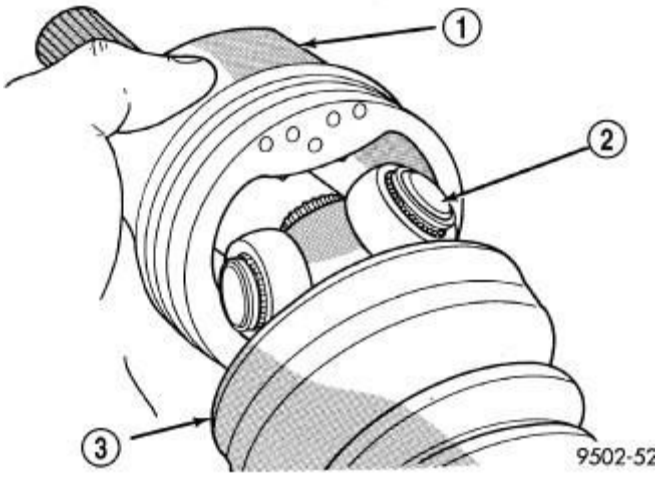

Fig. 126: IAT Sensor Connector, Throttle Body & Air Inlet Hose Housing
Courtesy of CHRYSLER GROUP, LLC

3. Disconnect the electrical connector (1) from the Inlet Air Temperature (IAT) sensor.
4. Loosen the clamp at the throttle body (3).
5. Loosen the clamp at the air cleaner housing.
6. Lift the air inlet resonator assembly (6) off the ball stud.

CAUTION: Never have the ignition key in the ON position when checking the throttle body shaft for a binding condition. This may set DTC's.

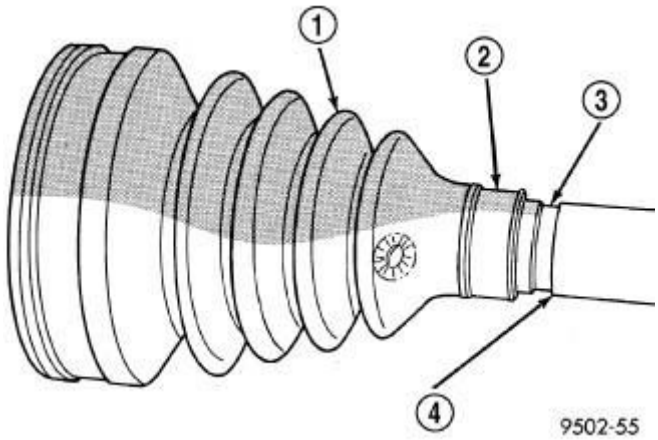

Fig. 127: Electrical Connector, Electronic Throttle Control (ETC), Clip & Mounting Bolts
Courtesy of CHRYSLER GROUP, LLC

7. Disconnect the electrical connector (1) from the Electronic Throttle Control (ETC) (2) and unfasten the ETC harness from the clip (4) on the throttle body.
8. Remove four throttle body mounting bolts (3).
9. Remove the throttle body from the upper intake manifold.

10. Check the condition of the throttle body-to-intake manifold seal. The seal can be reused if not damaged.

2.4L

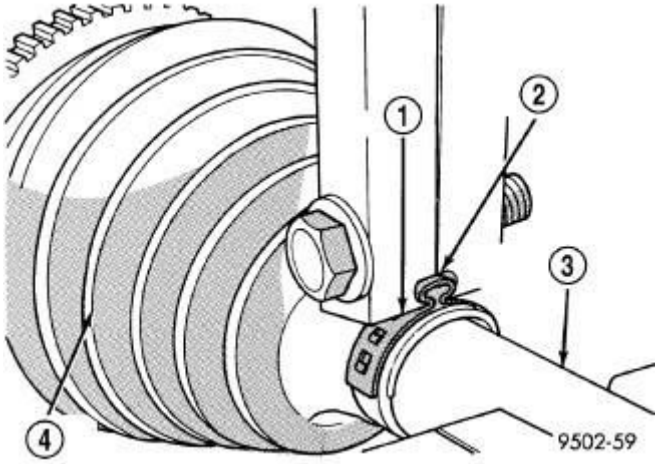

Fig. 128: Throttle Body, Retainer & Connector
Courtesy of CHRYSLER GROUP, LLC

WARNING: DO NOT place fingers in or around the throttle body plate. If the throttle body is energized, the throttle plate could move causing personal injury. Always disconnect the negative battery cable prior to servicing the throttle body.

CAUTION: DO NOT move the throttle plate while power is connected to the throttle body. This may cause fault codes to set.

1. Disconnect and isolate negative battery cable.
2. Remove the air cleaner resonator assembly. Refer to **RESONATOR, AIR CLEANER, REMOVAL** .
3. Disconnect throttle body wire harness connector (1) and detach wire harness retainer (3) from throttle body (2).

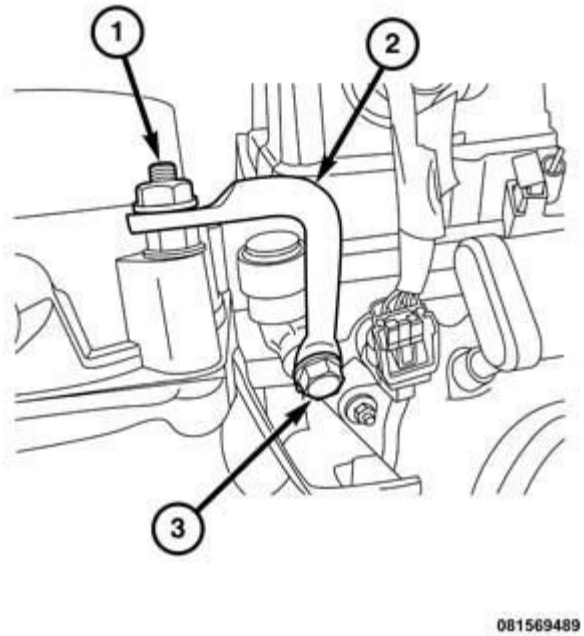

Fig. 129: Throttle Body Support Bracket, Nut & Bolt
Courtesy of CHRYSLER GROUP, LLC

4. Remove nut (1), bolt (3) and the throttle body support bracket (2).

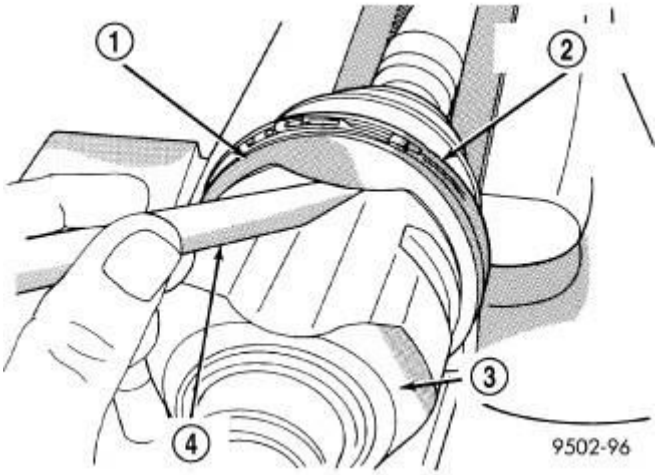

Fig. 130: Throttle Body, Gasket & Bolts
Courtesy of CHRYSLER GROUP, LLC

5. Remove four bolts (1, 2) and throttle body (3) from the intake manifold.
6. Inspect intake manifold to throttle body gasket (2) for damage, remove if necessary.

INSTALLATION

3.2L

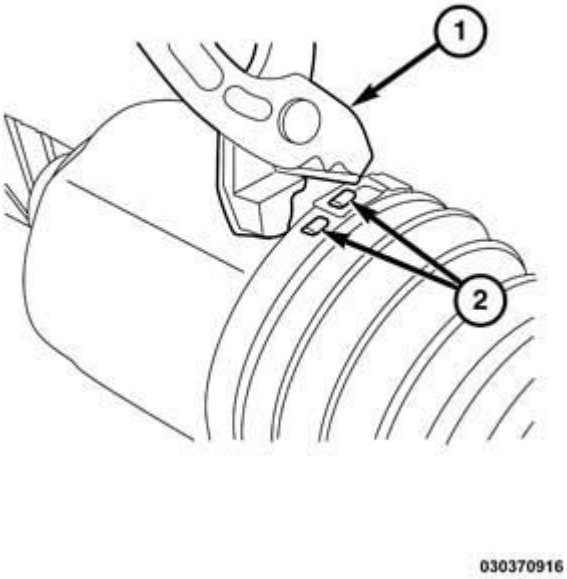

Fig. 131: Throttle Body-To-Intake Manifold Seal
Courtesy of CHRYSLER GROUP, LLC

1. Check the condition of the throttle body-to-intake manifold seal (1). The seal can be reused if not damaged.
2. Clean the mating surfaces of the throttle body and intake manifold.

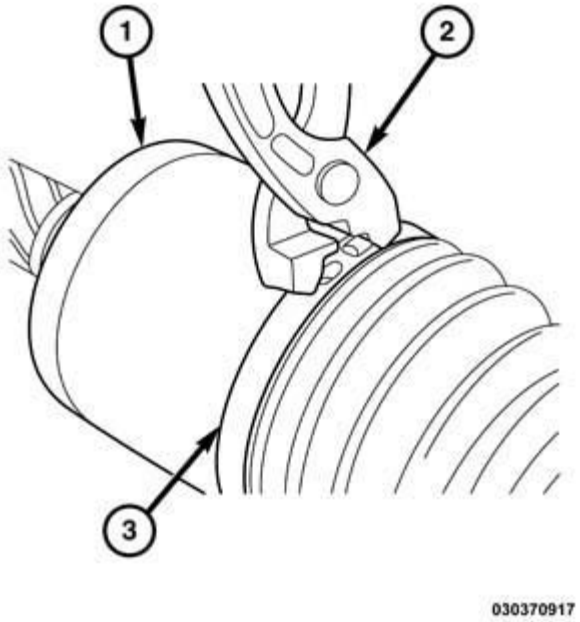

Fig. 132: Electrical Connector, Electronic Throttle Control (ETC), Clip & Mounting Bolts
Courtesy of CHRYSLER GROUP, LLC

3. Position the throttle body (2) to the intake manifold.
4. Install the throttle body mounting bolts (3) and tighten in a crisscross pattern sequence to the proper specification. Refer to **RESONATOR, AIR CLEANER, REMOVAL** .
5. Connect the electrical connector (1) to the Electronic Throttle Control (ETC) (2) and secure the ETC harness to the clip (4) on the throttle body.

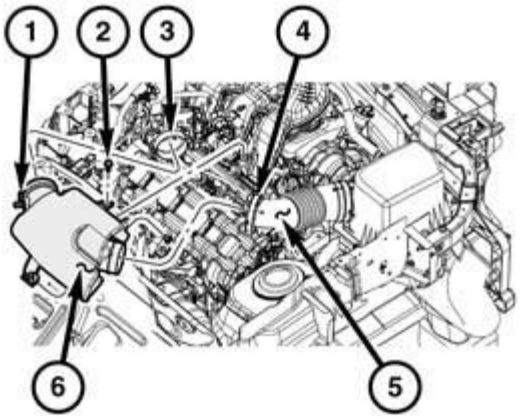

0909005845

Fig. 133: IAT Sensor Connector, Throttle Body & Air Inlet Hose Housing
Courtesy of CHRYSLER GROUP, LLC

6. Position the air inlet hose (5) onto the resonator housing (6). Hand tighten the clamp (4).
7. Secure the air inlet hose assembly retaining grommet onto the ball stud.
8. Hand tighten the clamp (3) at the throttle body.
9. Connect the Inlet Air Temperature (IAT) sensor electrical connector (1).

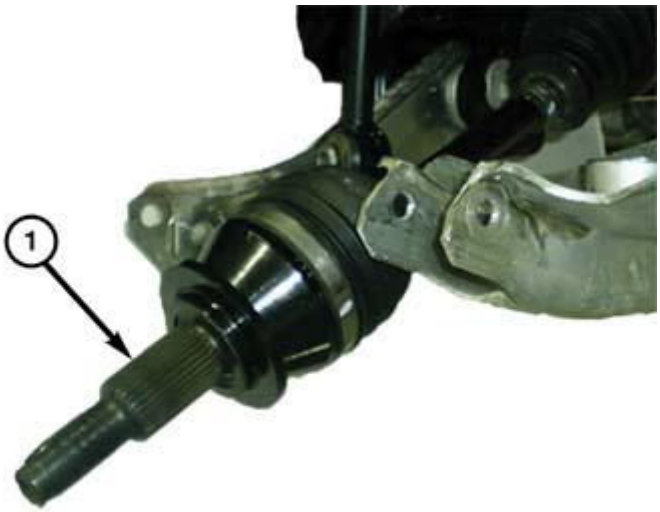

0306005204

Fig. 134: Engine Cover & Ball Studs
Courtesy of CHRYSLER GROUP, LLC

10. Position the engine cover (1) and secure the retaining grommets onto the ball studs.

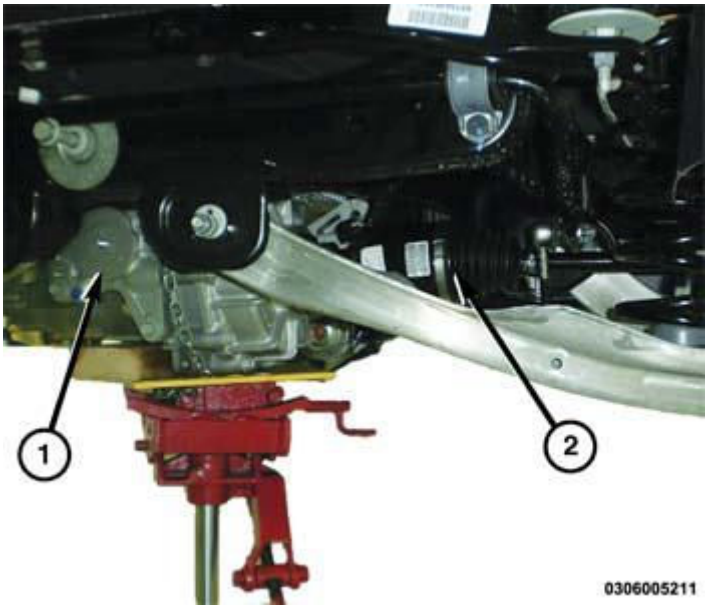

Fig. 135: Battery & Cables
Courtesy of CHRYSLER GROUP, LLC

11. Connect the negative battery cable (3). Tighten the nut to the proper specification. Refer to **SPECIFICATIONS** .

2.4L

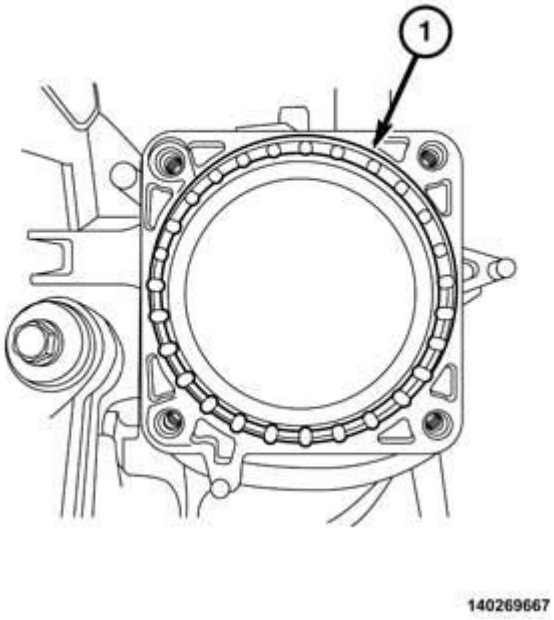

Fig. 136: New Throttle-To-Intake Manifold Gasket
Courtesy of CHRYSLER GROUP, LLC

1. If necessary, Install a new throttle-to-intake manifold gasket (1).

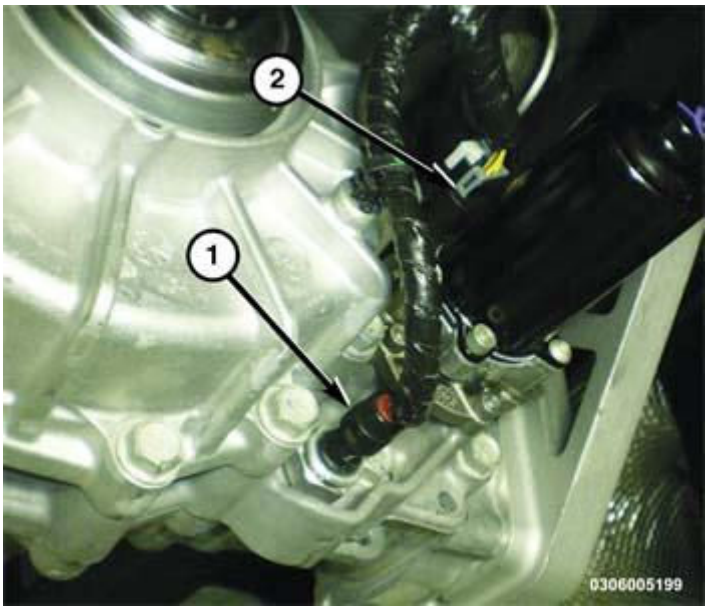

Fig. 137: Throttle Body, Gasket & Bolts
Courtesy of CHRYSLER GROUP, LLC

CAUTION: DO NOT OVER TORQUE. Over tightening can cause damage to the throttle body, gaskets, bolts and/or the intake manifold.

2. Install throttle body (3). Tighten four bolts (1, 2) finger tighten.

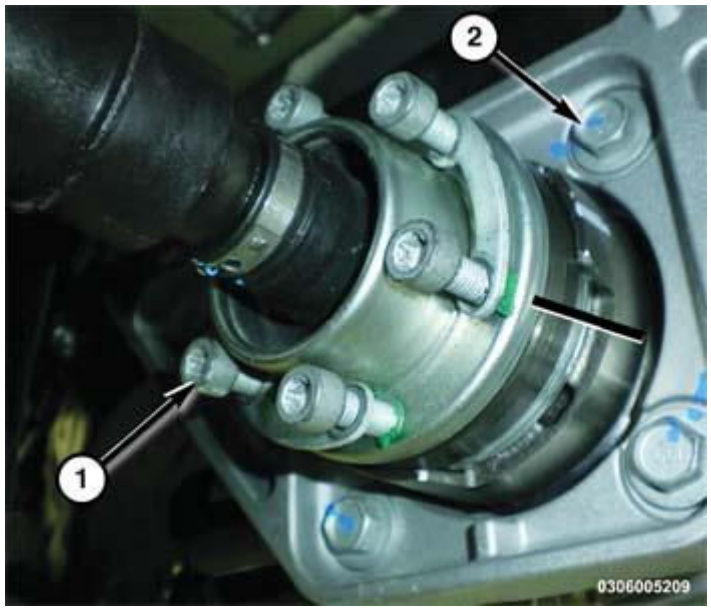

Fig. 138: Throttle Body Tightening Sequence
Courtesy of CHRYSLER GROUP, LLC

CAUTION: The throttle body must be torqued in a mandatory torque sequence. Tighten in a criss - cross pattern to specification.

3. Tighten the bolts in criss cross pattern to 8 N.m (71 in. lbs.).

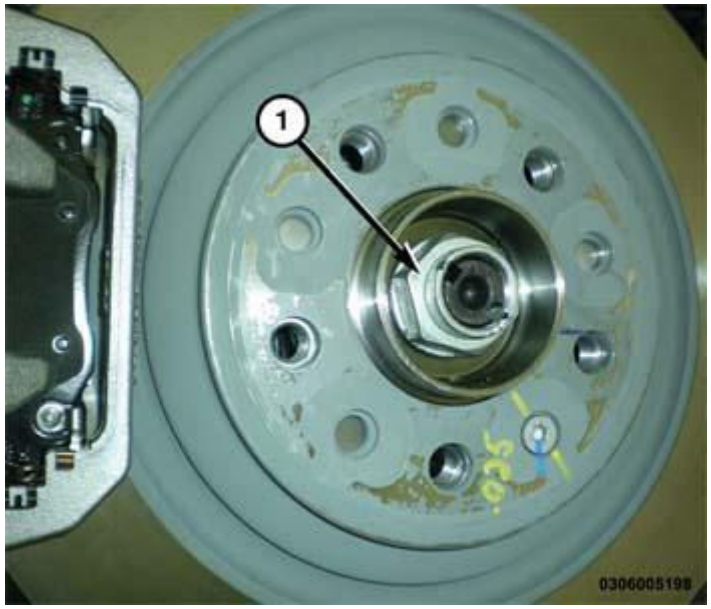

Fig. 139: Throttle Body Support Bracket, Nut & Bolt
Courtesy of CHRYSLER GROUP, LLC

4. Install throttle body support bracket (2), bolt (3) and nut (1). Tighten fasteners to:

- Tighten the bracket nut (1) to 8 N.m (71 in. lbs.).
- Tighten the bracket bolt (3) to 25 N.m (18 ft. lbs.).

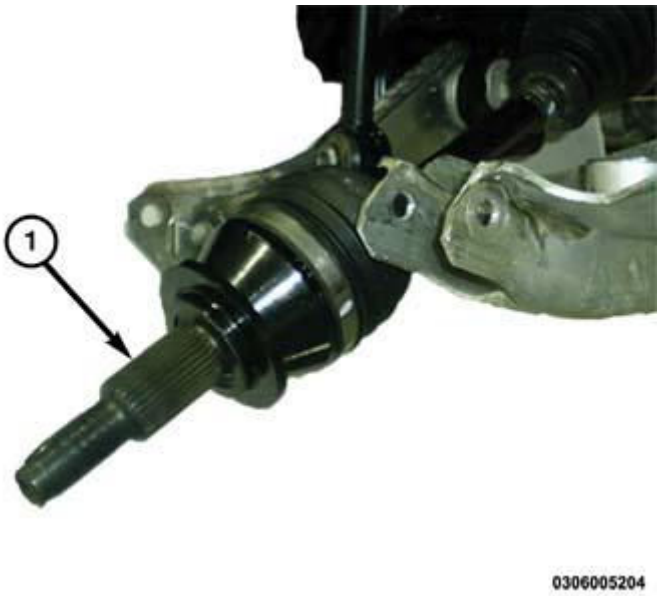

Fig. 140: Throttle Body, Retainer & Connector
Courtesy of CHRYSLER GROUP, LLC

5. Install wire harness retainer (3) to throttle body (2) and connect the throttle body wire harness connector (1).
6. Install the air cleaner resonator assembly. Refer to **RESONATOR, AIR CLEANER, INSTALLATION** .
7. Connect the negative battery cable. Tighten nut to 5 N.m (44 in. lbs.).
8. Use a scan tool and clear all fault codes then perform the ETC RELEARN function.

FUEL DELIVERY, DIESEL

WARNING

WARNING

WARNING: Under no circumstances should gasoline be mixed with diesel fuel (not even during winter). The high pressure pump is lubricated by diesel fuel. Immediate fuel system damage may occur causing replacement and flushing of the complete diesel fuel system. High pressure pump seizure will cause metal particles to spread through out the fuel circuit. All CDI fuel system components connected to the fuel circuit will have to be exchanged and the lines flushed.

HIGH FUEL SYSTEM PRESSURE

WARNING: High pressure fuel lines deliver fuel under extreme pressure from the injection pump to the injectors. This maybe as high as 1600 bar (23, 206 psi). Use extreme caution when inspecting for high pressure fuel leaks. Fuel under this amount of pressure can penetrate skin causing personal injury or death. Inspect high pressure fuel leaks with a sheet of cardboard. Wear safety goggles and adequate protective clothing when servicing fuel system.

HIGH PRESSURE FUEL PUMP DELIVERY

RPM	PRESSURE
400	550 BAR (7977 PSI)
500	650 BAR (9427 PSI)
800	885 BAR (12836 PSI)
1000	1038 BAR (15055 PSI)
1173	1134 BAR (16447 PSI)
1340	1231 BAR (17854 PSI)
1750	1514 BAR (21959 PSI)
1860	1600 BAR (23206 PSI)
3200	1600 BAR (23206 PSI)
3700	770 BAR (11168 PSI)
4000	400 BAR (5802 PSI)
4200	400 BAR (5802 PSI)
4400	100 BAR (1450 PSI)

DIAGNOSIS AND TESTING

FUEL DELIVERY SYSTEM

WARNING: High-pressure fuel lines deliver fuel under extreme pressure from the injection pump to the injectors. This maybe as high as 1600 bar (23, 206 psi). Use extreme caution when inspecting for high-pressure fuel leaks. Fuel under this amount of pressure can penetrate skin causing serious or fatal injury. Inspect high-pressure fuel leaks with a sheet of cardboard. Wear safety goggles and adequate protective clothing when servicing fuel system.

CONDITION	POSSIBLE CAUSES	CORRECTION
	1. Contaminated Fuel	1. Drain, Flush and Refill Fuel System
	2. Low Fuel Pressure Supply to Fuel Filter	2. Perform the Low Pressure Fuel Pump Test to check the fuel pump pressure of the in-tank electric fuel pump. Refer to **FUEL**

		DELIVERY - STANDARD PROCEDURE .
No Start/Hard Start/Start and Stall	3. High Pressure Fuel Injection Pump	3. Perform the Fuel Injection Pump Pressure Test / Replace necessary fuel line(s)
	4. Restricted Fuel Filter	4. Replace Fuel Filter
	5. Fuel Heater Inoperative	5. Test Fuel Heater and circuitry
	6. Restricted or Leaking Fuel Lines	6. Inspect / Replace necessary fuel line(s)
	7. Stored Diagnostic Trouble Codes	7. Refer to the **2.0L DIESEL - DIAGNOSTIC CODE INDEX**
Stalls Under Aggressive Maneuvers/Loss Of Fuel Pressure	1. Restricted or Damaged Fuel Pump Lower Filter	1. Test Fuel Pump Pressure
	2. Contaminated Fuel	2. Drain, Flush and Refill Fuel System
	3. Damaged Fuel Tank	3. Replace Fuel Tank
	4. Restricted Fuel Filter	4. Replace Fuel Filter
Cannot Refill Fuel Tank/Excessive Pressure in Fuel Tank When Cap Is Removed	1. Sticking or Damaged Fuel Tank Fill/Vent Valve	1. Replace Fuel Tank
	2. Restricted or Damaged Fuel Tank Fill/Vent Valve Filter or Hose	2. Replace Fuel Tank Vent Filter

AIR IN FUEL SYSTEM

Air will enter the fuel system whenever fuel supply lines, separator filters, injection pump, high-pressure lines or injectors are removed or disconnected. Air trapped in the fuel system can result in hard starting, a rough running engine, engine misfire, low power, excessive smoke and fuel knock.

Inspect the fuel system from the fuel tank to the injectors for loose connections. Refer to **FUEL DELIVERY, DIESEL, WARNING**. Leaking fuel is an indicator of loose connections or defective seals. Air can also enter the fuel system between the fuel tank and the fuel pump. Inspect the fuel tank module and fuel lines for damage that might allow air into the system.

With the scan tool connected to the vehicle, select Engine and the select Sensor Display. Page down to view Fuel Pressure Set Point and Actual Fuel Pressure. Start the engine and observe the Fuel Pressure Set Point and the Actual Fuel Pressure. If the Actual Fuel Pressure Oscillates above and below the Fuel Pressure Set Point in a regular cycle, inspect the fuel system for air intrusion.

If the Actual Fuel Pressure gradually drops below the Fuel Pressure Set Point then spikes well above the Fuel Pressure Set Point, replace the fuel pressure control valve and recheck.

HIGH PRESSURE FUEL LINES

WARNING: **High-pressure fuel lines deliver fuel under extreme pressure from the injection pump to the injectors. This maybe as high as 1600 bar (23, 206**

psi). Use extreme caution when inspecting for high-pressure fuel leaks. Fuel under this amount of pressure can penetrate skin causing personal injury or death. Inspect for high-pressure fuel leaks with a sheet of cardboard placed in the suspected area while the engine is not running. Start the vehicle and allow the engine to run for a short period. Turn the engine off and inspect the piece of cardboard. Wear safety goggles and adequate protective clothing when servicing fuel system.

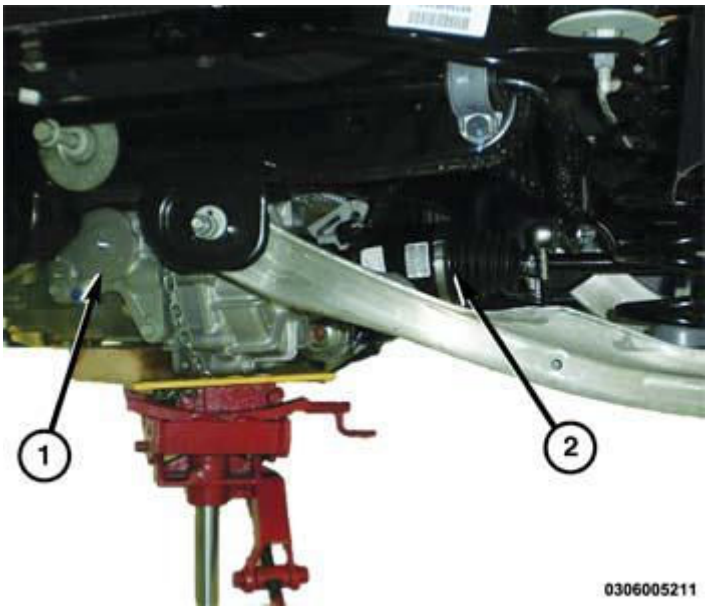

Fig. 141: Checking For Fuel Leaks
Courtesy of CHRYSLER GROUP, LLC

1 - HIGH-PRESSURE LINE
2 - CARDBOARD
3 - FITTING

High-pressure fuel line (1) leaks can cause starting problems and poor engine performance.

- Turn the engine off.
- Place a piece for cardboard (2) in the suspected area.
- Start the engine and allow to run for a short period.
- Turn the engine off.
- Inspect the cardboard.

If a high-pressure line connection is leaking, counterhold and tighten the connection to specification then perform this procedure again. Replace any damaged, restricted or leaking high-pressure fuel lines with the correct replacement line.

CAUTION: The high-pressure fuel lines cannot contact each other or other

components. Do not attempt to weld high-pressure fuel lines or to repair lines that are damaged. Only use the recommended lines when replacement of high-pressure fuel line is necessary.

STANDARD PROCEDURE

CLEANING FUEL SYSTEM COMPONENTS

CAUTION: Cleanliness cannot be overemphasized when handling or replacing diesel fuel system components. This especially includes the fuel injectors, high-pressure fuel lines, fuel rail, and fuel injection pump. Very tight tolerances are used with these parts. Dirt contamination could cause rapid part wear and possible plugging of fuel injector nozzle tip holes. This in turn could lead to possible engine misfire. Always wash/clean any fuel system component thoroughly before disassembly and then air dry. DO NOT wire brush injector nozzles when cleaning. Cap or cover any open part after disassembly. Before assembly, examine each part for dirt, grease or other contaminants and clean if necessary. When installing new parts, lubricate them with clean engine oil or clean diesel fuel only.

DRAINING FUEL TANK

CONVENTIONAL PROCEDURE

WARNING: The fuel system is under constant high pressure even with engine off. Until the fuel pressure has been properly released from the system, do not attempt to open the fuel system. Do not smoke or use open flames/sparks when servicing the fuel system. Wear protective clothing and eye protection. Make sure the area in which the vehicle is being serviced is in a well ventilated area and free of flames/sparks. Failure to comply may result in serious or fatal injury.

WARNING: No sparks, open flames or smoking. Risk of poisoning from inhaling and swallowing fuel. Pour fuel only into appropriately marked OSHA approved containers. Wear protective clothing. Risk of injury to eyes and skin from contact with fuel.

Due to a one-way check valve installed into the fuel fill fitting at the tank, the tank cannot be drained at the fuel fill cap.

1. Disconnect the fuel supply line at the quick-connect fitting (2) at the fuel rail. Refer to **FITTING, QUICK CONNECT** .
2. Install the appropriate Fuel Line Adapters / Fitting from the (special tool #8978A, Decay Tool, Fuel). Route the opposite end of this hose to an diesel fuel draining station.

NOTE: Activation of the fuel pump module may time out and need to be restarted several times to completely drain the fuel tank.

3. Using a diagnostic scan tool, activate the fuel pump module until the fuel tank has been evacuated.

ALTERNATIVE PROCEDURE

NOTE: If the electric fuel pump is not operating, the fuel tank must be removed and drained through the fuel pump module opening of the fuel tank.

1. Disconnect the negative battery cable.
2. Raise and support the vehicle. Refer to **HOISTING, STANDARD PROCEDURE** .
3. Remove the fuel tank. Refer to **TANK, FUEL, REMOVAL**.

CAUTION: Do not allow the float arm of the fuel pump module to come in contact with any part of the fuel tank during removal or installation, damage to the float arm and fuel level sending card may result.

4. Remove the fuel pump module. Refer to **MODULE, FUEL PUMP, REMOVAL**.
5. Position a hose into the fuel pump module opening of the fuel tank.
6. Attach the opposite end of this hose to approved diesel fuel caddy.
7. Using the diesel caddy, evacuate the fuel tank.

DIESEL FUEL SYSTEM CONTAMINATION

NOTE: Fuel system damage that was caused by incorrect or contaminated fuel that was introduced into the fuel system by the customer is not covered under warranty.

IF THE ENGINE WAS NOT STARTED AFTER INCORRECT OR CONTAMINATED FUEL WAS USED DURING REFUELING

If the fuel system has been contaminated (with gasoline, water, etc.) AND the engine WAS NOT STARTED, the following procedure must be followed:

1. Drain the fuel from the fuel tank. Refer to **FUEL DELIVERY - STANDARD PROCEDURE** . Use an appropriate fuel container. Dispose of the contaminated fuel using the proper procedures.

CAUTION: Dispose of petroleum based products in a manner consistent with all applicable Local, State, Federal, and Provincial regulations.

2. Remove the fuel tank. Refer to **TANK, FUEL, REMOVAL**.
3. Ensure the swirl pot indentation below the in the fuel tank electric fuel pump inlet is completely drained of any contaminated fuel.

4. Completely drain the low pressure fuel lines, and install a new fuel filter.
5. Install the fuel tank, and fill with clean diesel fuel.
6. Road test the vehicle to verify normal operation.

IF THE ENGINE WAS STARTED AFTER INCORRECT OR CONTAMINATED FUEL WAS USED DURING REFUELING

If the fuel system has been contaminated (with gasoline, water, etc.) AND the engine WAS STARTED, the following procedure must be followed:

1. Remove all fuel from the fuel tank. Refer to **FUEL DELIVERY - STANDARD PROCEDURE** . Use an appropriate fuel container. Dispose of the contaminated fuel using the proper procedures.

CAUTION: Dispose of petroleum based products in a manner consistent with all applicable Local, State, Federal, and Provincial regulations.

2. Remove the fuel tank. Refer to **TANK, FUEL, REMOVAL**.
3. Ensure the swirl pot indentation below the in the fuel tank electric fuel pump inlet is completely drained of any contaminated fuel.
4. Completely drain the low pressure fuel lines, and install a new fuel filter.
5. Install the fuel tank, and fill with clean diesel fuel.
6. Lift up on locking retaining tab to unlock the lock the fuel injector return line from injector
7. Disconnect the low pressure fuel injector return line T-Fitting from fuel injector.
8. Connect a clean hose to the T-Fitting orifice, and place the other end in a suitable clean container.
9. Turn the ignition ON, and collect the fuel escaping from the T-Fitting orifice in a clean container. Check the fuel sample for metal chips, dirt, or other foreign matter.
10. If any dirt or metal chips are present in the fuel sample, completely clean the high pressure side of the fuel injection system, then install new the fuel injectors, and the high pressure fuel pump.
11. If there are no metal chips or dirt present in the fuel sample, the fuel system is OK. Reconnect the T-Fitting orifice, and road test the vehicle to verify normal operation.

SPECIFICATIONS

TORQUE SPECIFICATIONS - FUEL DELIVERY

DESCRIPTION	N.m	Ft. Lbs.	In. Lbs.
Fuel Filter/Water Separator Bracket Bolt	25	18	-
Fuel Filter Cover	20	-	177
Fuel Heater/Temperature Sensor	10	-	89
Fuel Injection Pump Nuts	25	18	-
Fuel Injection Pump Sprocket Nut	50	37	-
Fuel Pressure Sensor	72	53	-

Fuel Rail-to-Cylinder Head Bolt	25	18	-
Fuel Tank Bolts	22	16	-
Fuel Tube to Fuel Rail Union Nut	20	-	177
Fuel Tube to Fuel Injection Pump Union Nut	24	18	-

SPECIFICATIONS

RADIAL JET PUMP

DESCRIPTION	SPECIFICATION
TYPE	RADIAL JET WITH RADIAL PUMPING ELEMENTS
NUMBER OF PUMPING ELEMENTS	3
TOTAL CAPACITY	0.697 CUBIC CENTIMETERS (0.0425 CUBIC INCHES) PER REVOLUTION
VOLUMETRIC OUTPUT	LESS THAN 80 PERCENT AT 1600 BAR (23, 206 PSI) AT 2000 PUMP RPM WITH DIESEL FUEL AT 40°C (104°F)
MAXIMUM OPERATING PRESSURE	1600 BAR (23, 206 PSI)
POWER USE	1.6 KILOWATT (2.145 HORSEPOWER) AT 1600 BAR (23, 206 PSI), 3450 ENGINE RPM
FUEL SUPPLY (INPUT)	DIESEL FUEL AT A PRESSURE OF 3.5 BAR (50.76 PSI) WITH A MINIMUM FLOW RATE OF 160 LITERS (42.27 GALLONS) PER HOUR
LUBRICANT	DIESEL FUEL
COOLANT	DIESEL FUEL

HIGH PRESSURE FUEL PUMP DELIVERY

RPM	PRESSURE
400	550 BAR (7977 PSI)
500	650 BAR (9427 PSI)
800	885 BAR (12836 PSI)
1000	1038 BAR (15055 PSI)
1173	1134 BAR (16447 PSI)
1340	1231 BAR (17854 PSI)
1750	1514 BAR (21959 PSI)
1860	1600 BAR (23206 PSI)
3200	1600 BAR (23206 PSI)
3700	770 BAR (11168 PSI)
4000	400 BAR (5802 PSI)
4200	400 BAR (5802 PSI)
4400	100 BAR (1450 PSI)

SPECIAL TOOLS

SPECIAL TOOLS

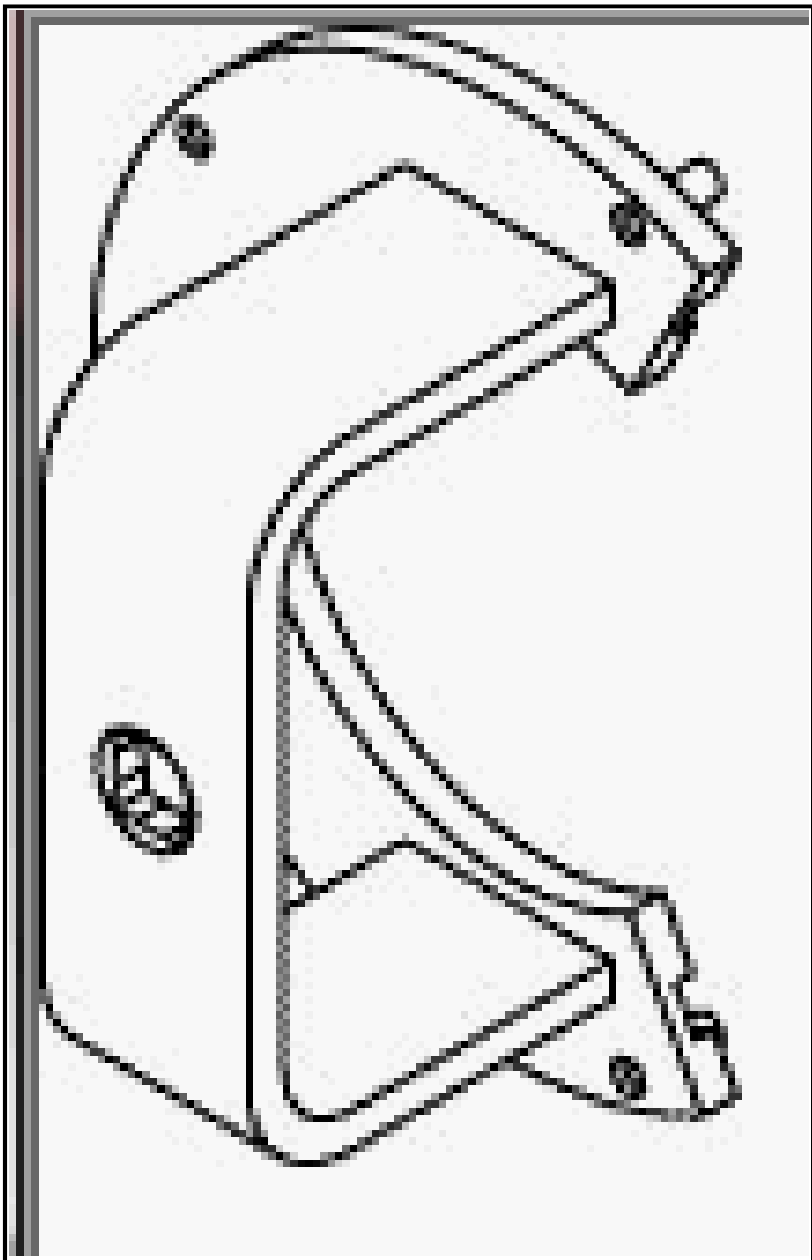	10189 - Wrench, DEF Module Lock Ring (Originally Shipped In Kit Number(s) 10189, 9896.)

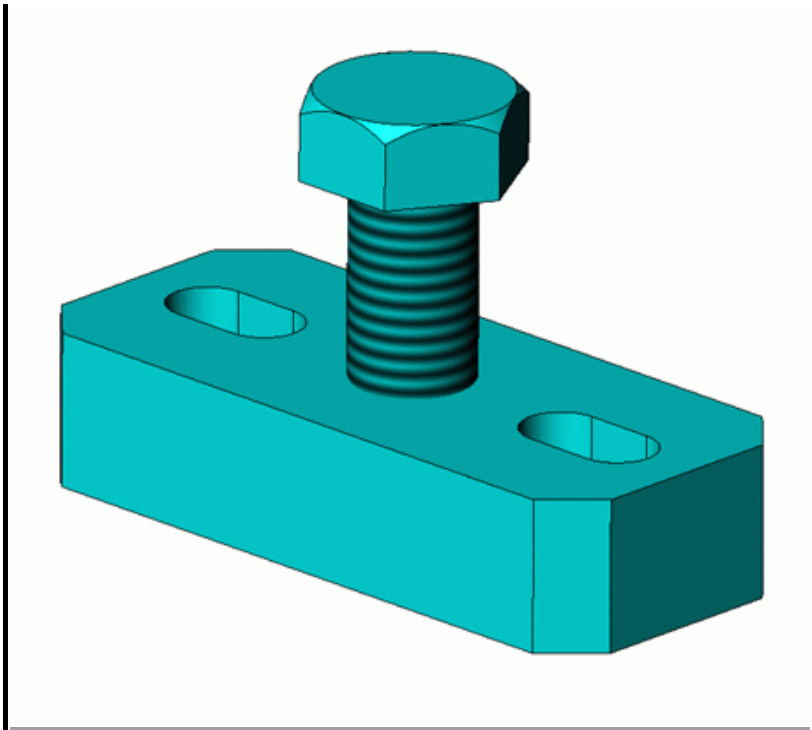	20114 - Tool, High Pressure Fuel Pump Pulley Removal
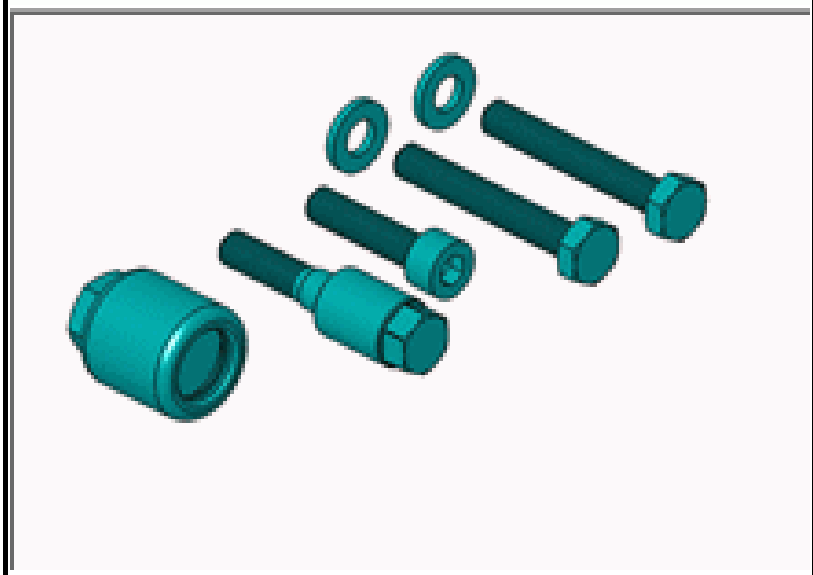	20150 - Remover/Installer, High Pressure Fuel Pump
	8978A - Decay Tool, Fuel

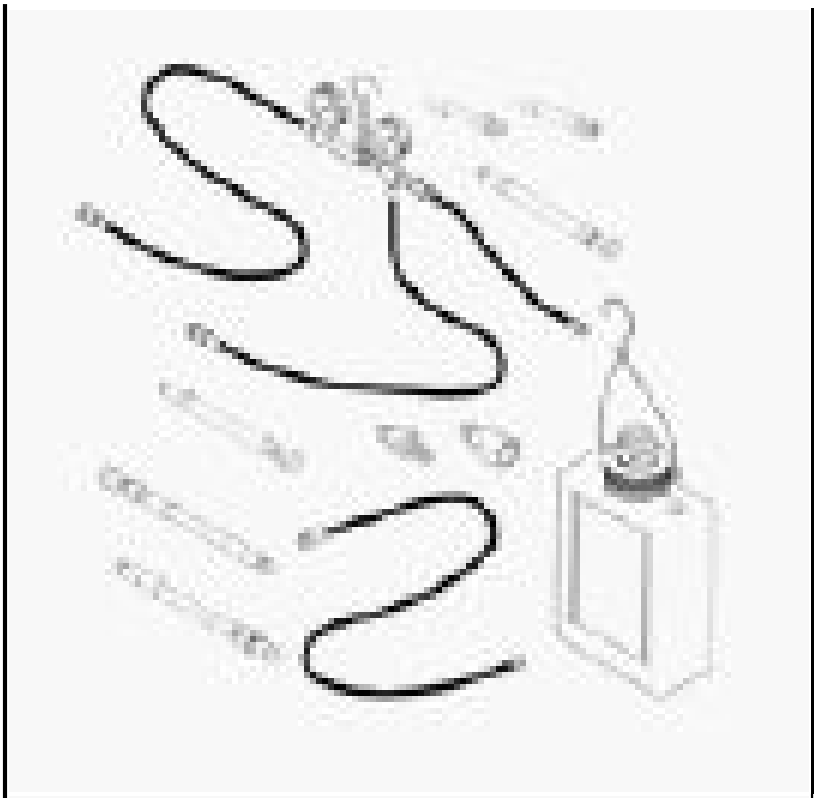

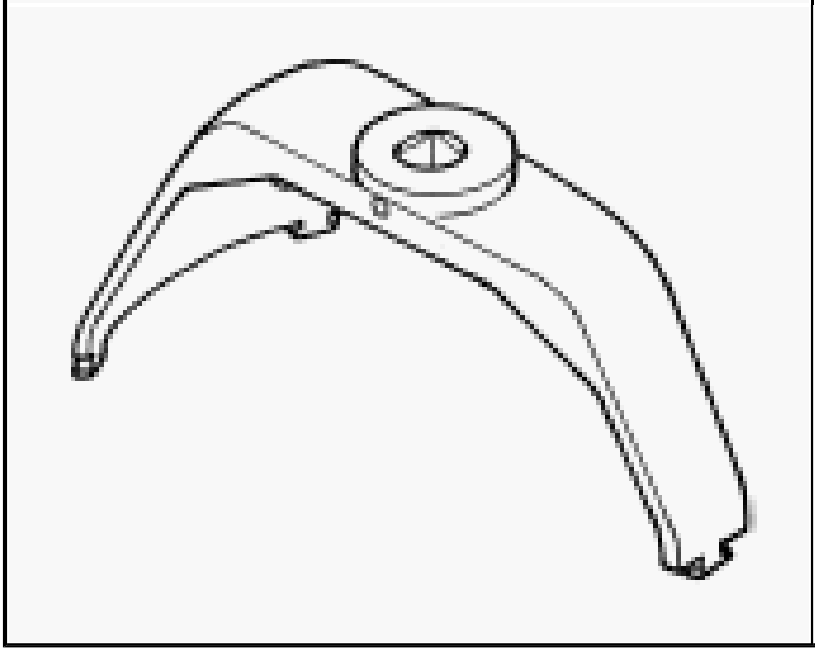

9340 - SAE Fuel Pump Lock Ring Wrench
(Originally Shipped In Kit Number(s) 9327, 9327CC, 9397, 9575.)

FITTING, QUICK CONNECT

DESCRIPTION

DESCRIPTION

Different types of quick-connect fittings are used to attach the various fuel system components, lines and tubes. Some are equipped with safety latch clips. Some may require the use of a special tool for disconnection and removal.

These are the different type quick-connect fittings:

- Redundant Latch Single Button Type Fitting
- Single Button Type Fitting
- Pinch Type Fitting
- Single Tab Type Fitting
- Two Tab Type Fitting
- Plastic Retainer Ring Type Fitting
- Latch Clip Type 1 Fitting
- Latch Clip Type 2 Fitting
- Wing Type Fitting

STANDARD PROCEDURE

STANDARD PROCEDURE

DISCONNECTING

WARNING: On vehicles equipped with gasoline engines, the fuel system is under a constant pressure (even with engine off). Before servicing any fuel system hose, fitting or line, fuel system pressure must be released.

CAUTION: Before separating a Quick-Connect fitting, pay attention to what type of fitting is being used. This will prevent unnecessary fitting or fitting latch breakage.

CAUTION: The interior components (O-rings, clips) of quick-connect fittings are not serviced separately, but new plastic spacers and latches are available for some types. If service parts are not available, do not attempt to repair the damaged fitting or fuel line (tube). If repair is necessary, replace the complete fuel line (tube) assembly.

REDUNDANT LATCH SINGLE BUTTON TYPE FITTING:

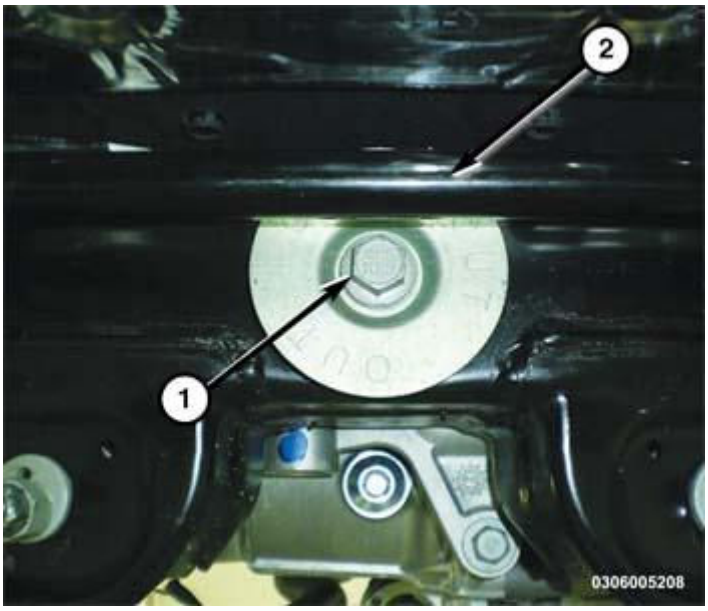

Fig. 142: Redundant Latch & Push Button
Courtesy of CHRYSLER GROUP, LLC

This type of quick-connect fitting is equipped with a redundant latch (2) and a single push button (1) that releases two internal latches located in the quick-connect fitting. Special tools are not required for removal.

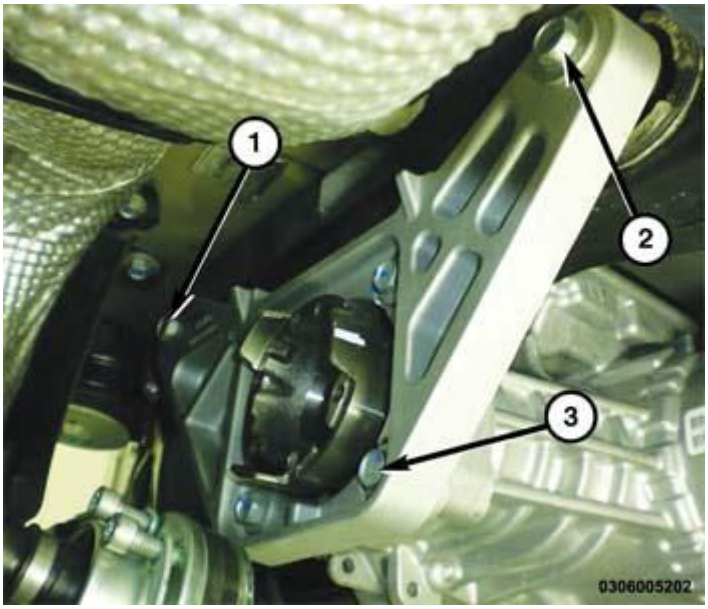

Fig. 143: Redundant Latch & Internal Latches
Courtesy of CHRYSLER GROUP, LLC

CAUTION: Do not pry or pull up on the push button as damage to the latches of the quick-connect fitting will occur.

1. Pull the redundant latch (2) out away from the quick-connect fitting.
2. Press on the push button with your thumb, release the internal latches (1) and remove the quick-connect fitting from the fuel system component.

SINGLE BUTTON TYPE FITTING

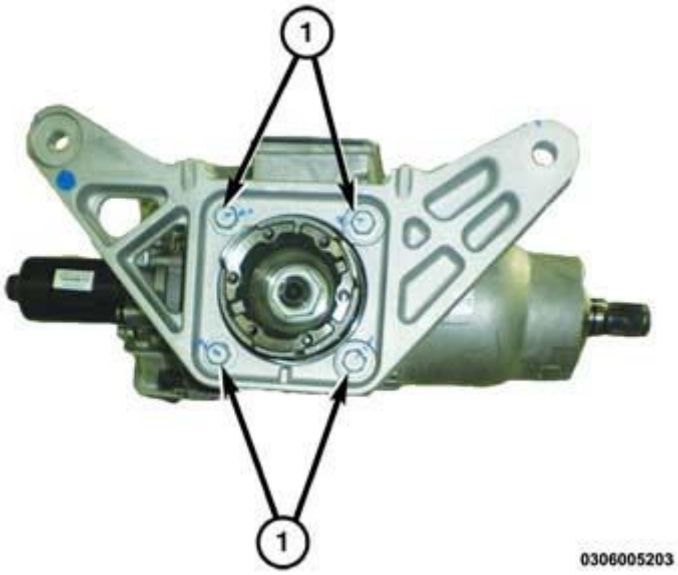

Fig. 144: Single Button Quick-Connect Fitting
Courtesy of CHRYSLER GROUP, LLC

1 - QUICK-CONNECT FITTING
2 - SINGLE PUSH-BUTTON

1. This type of fitting is equipped with a single push-button (2) located on the quick-connect fitting.

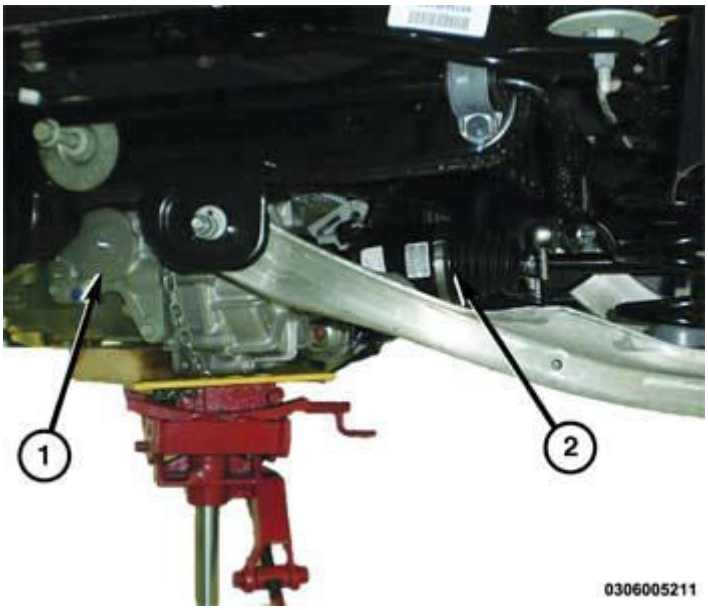

Fig. 145: Fitting Latches
Courtesy of CHRYSLER GROUP, LLC

1 - LATCHES
2 - QUICK-CONNECT FITTING

2. The push-button is attached to two internal latches (1). To disconnect, press on push-button with your thumb and unlatch fitting from fuel line. Tools are not required for disconnection. **DO NOT ATTEMPT TO PRY OR PULL UP ON PUSH BUTTON. LATCHES WILL BE BROKEN.**

TWO BUTTON TYPE FITTING

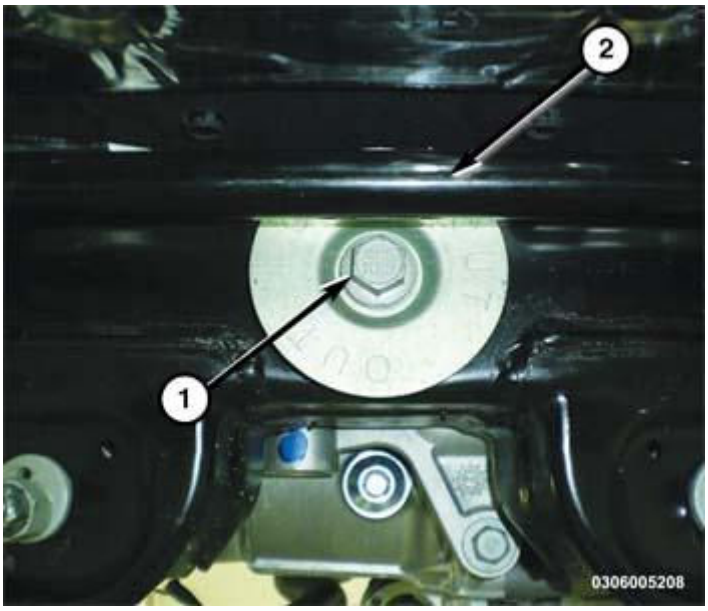

Fig. 146: 2-Button Type Fitting

Courtesy of CHRYSLER GROUP, LLC

1 - QUICK-CONNECT FITTING 2 - PUSH-BUTTONS (2)

1. This type of fitting (1) is equipped with a push-button located on each side of quick-connect fitting (2). Press on both buttons simultaneously for removal. Tools are not required for disconnection.
2. Press on both push buttons with your thumb, release the internal latches.
3. While holding the two push buttons simultaneously, remove the quick-connect fitting from the fuel system component.

PINCH TYPE FITTING

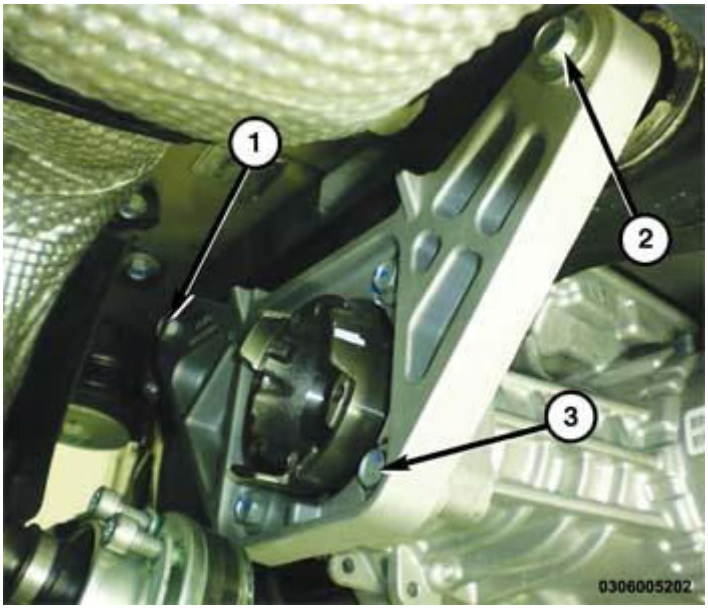

Fig. 147: Pinch Type Quick-Connect Fitting
Courtesy of CHRYSLER GROUP, LLC

1 - QUICK-CONNECT FITTINGS 2 - PINCH TABS

1. This fitting (1) is equipped with two finger tabs (2). Pinch both tabs together while removing fitting. Tools are not required for disconnection.

SINGLE TAB TYPE FITTING

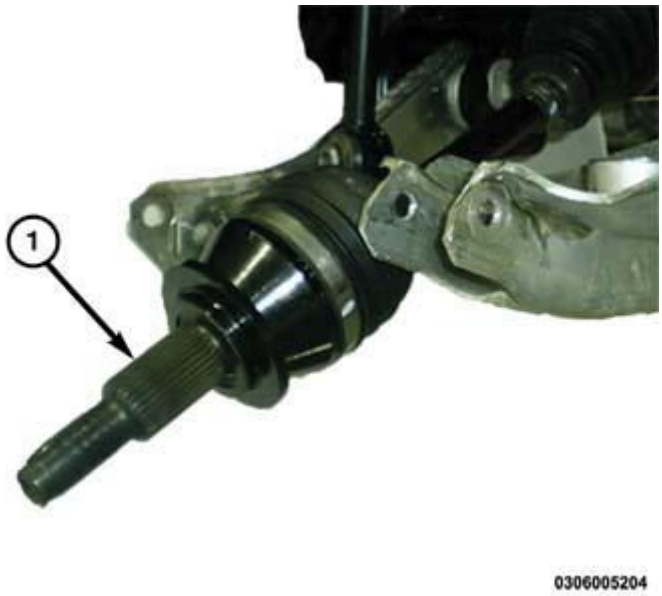

Fig. 148: Single-Tab Type Fitting
Courtesy of CHRYSLER GROUP, LLC

1 - PULL TAB
2 - QUICK-CONNECT FITTING
3 - PRESS HERE TO REMOVE PULL TAB
4 - INSERTED TUBE END

1. This type of fitting (2) is equipped with a single pull tab (1). The tab is removable. After tab is removed, quick-connect fitting can be separated from fuel system component. Tools are not required for disconnection.

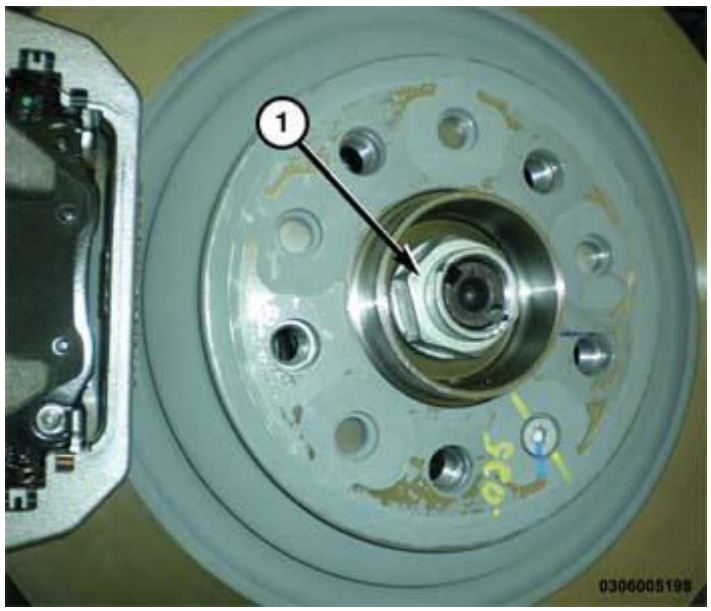

Fig. 149: Disconnecting Single-Tab Type Fitting
Courtesy of CHRYSLER GROUP, LLC

1 - PULL TAB
2 - SCREWDRIVER
3 - QUICK-CONNECT FITTING

2. Press release tab on side of fitting to release pull tab (1). **If release tab is not pressed prior to releasing pull tab, pull tab will be damaged.**
3. While pressing release tab on side of fitting, use screwdriver (2) to pry up pull tab.
4. Raise pull tab until it separates from quick-connect fitting.

TWO TAB TYPE FITTING

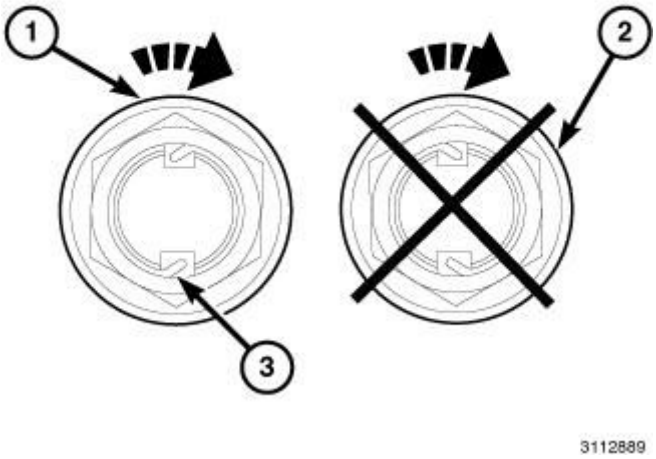

Fig. 150: Two-Tab Type Fitting
Courtesy of CHRYSLER GROUP, LLC

1 - TAB(S)
2 - QUICK-CONNECT FITTING

1. This type of fitting (2) is equipped with tabs located on both sides of fitting (1). The tabs are supplied for disconnecting quick-connect fitting from component being serviced.
   a. To disconnect quick-connect fitting, squeeze plastic retainer tabs (1) against sides of quick-connect fitting with your fingers. Tool use is not required for removal and may damage plastic retainer.
   b. Pull fitting from fuel system component being serviced.
   c. The plastic retainer will remain on component being serviced after fitting is disconnected. The O-rings and spacer will remain in quick-connect fitting connector body.

PLASTIC RETAINER RING TYPE FITTING

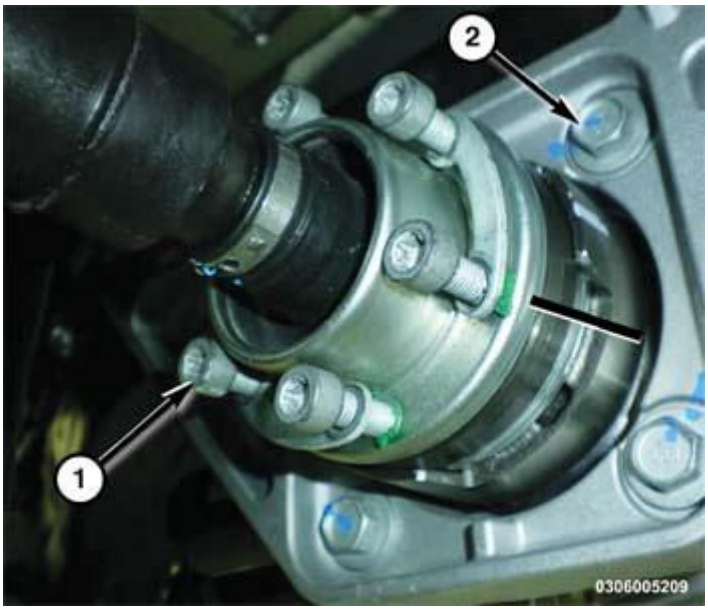

Fig. 151: Plastic Retainer Ring Type Fitting
Courtesy of CHRYSLER GROUP, LLC

1 - FUEL TUBE
2 - QUICK CONNECT FITTING
3 - PUSH
4 - PLASTIC RETAINER
5 - PUSH
6 - PUSH
7 - PUSH
8 - PUSH

1. This type of fitting can be identified by the use of a full-round plastic retainer ring (4) usually black in color.
    a. To release fuel system component from quick-connect fitting, firmly push fitting towards component being serviced while firmly pushing plastic retainer ring into fitting (6). With plastic ring depressed, pull fitting from component. **The plastic retainer ring must be pressed squarely into fitting body. If this retainer is cocked during removal, it may be difficult to disconnect fitting. Use an open-end wrench on shoulder of plastic retainer ring to aid in disconnection.**
    b. After disconnection, plastic retainer ring will remain with quick-connect fitting connector body.
    c. Inspect fitting connector body, plastic retainer ring and fuel system component for damage. Replace as necessary.

LATCH CLIPS - TYPE 1

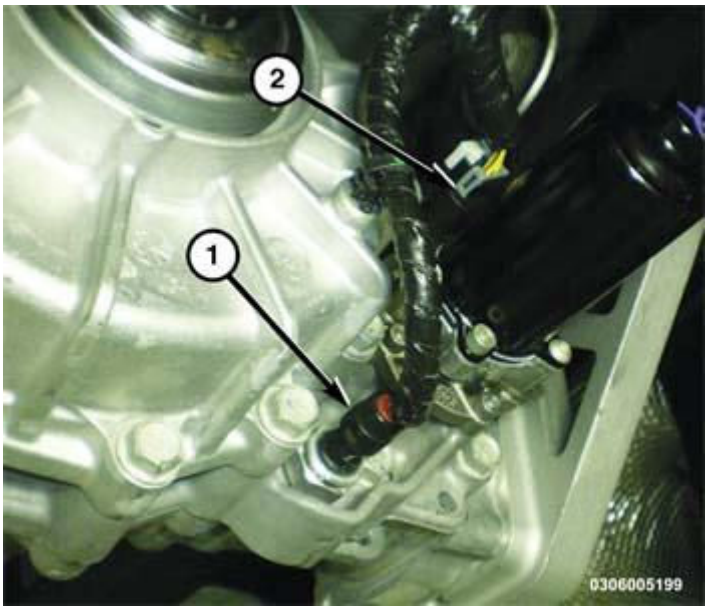

Fig. 152: Latch Clip-Type 1
Courtesy of CHRYSLER GROUP, LLC

1 - TETHER STRAP
2 - FUEL LINE
3 - SCREWDRIVER
4 - LATCH CLIP
5 - FUEL RAIL

1. Depending on vehicle model and engine, three different types of safety latch clips are used. Types 1 and 3 (4) are tethered to fuel line and type 2 is not. A special tool will be necessary to disconnect fuel line after latch clip is removed. The latch clip may be used on certain fuel line/fuel rail connection, or to join fuel lines together.
2. Pry up on latch clip with a screwdriver (3).
3. Slide latch clip toward fuel rail while lifting with screwdriver.

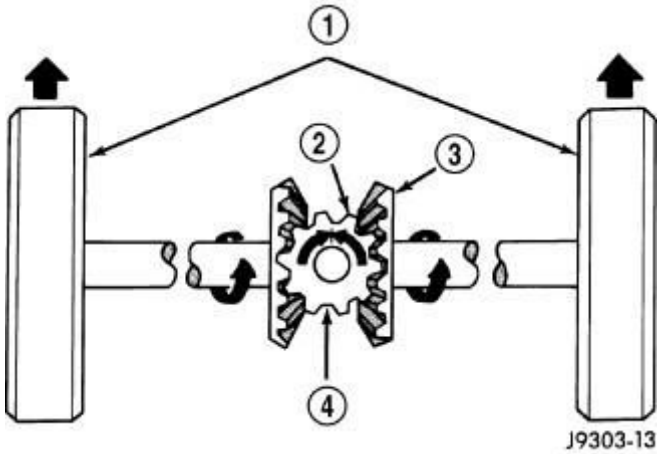

Fig. 153: Fuel Line Disconnection Using Special Tool
Courtesy of CHRYSLER GROUP, LLC

1 - SPECIAL FUEL LINE TOOL 2 - FUEL LINE 3 - FUEL RAIL

4. Insert the appropriate fuel line removal tool (1) into the quick-connect fitting and release the internal latches.

NOTE: After disconnection, locking fingers will remain within quick-connect fitting at end of fuel line.

5. With the special tool still inserted, remove quick-connect fitting from fuel system component being serviced.

LATCH CLIPS - TYPE 2

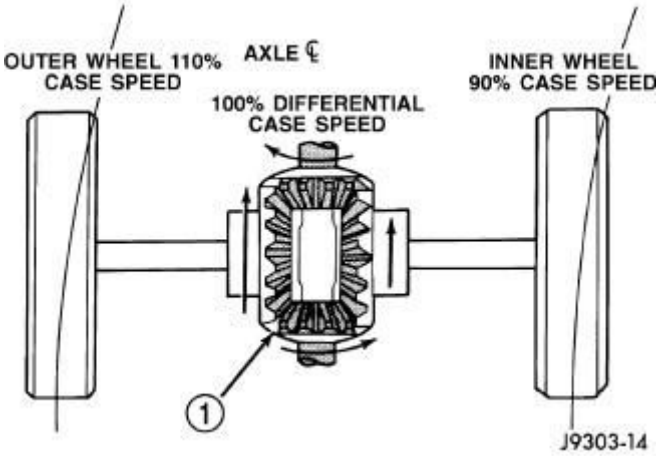

Fig. 154: Latch Clip - Type 2
Courtesy of CHRYSLER GROUP, LLC

1 - LATCH CLIP

1. Depending on vehicle model and engine, 2 different types of safety latch clips are used. Type 1 is tethered to fuel line and type 2 is not. A special tool will be necessary to disconnect fuel line after latch clip is removed. The latch clip may be used on certain fuel line/fuel rail connection, or to join fuel lines together.
2. Type 2: Separate and unlatch 2 small arms (1) on end of clip and swing away from fuel line.
3. Slide latch clip toward fuel rail while lifting with screwdriver.

Fig. 155: Fuel Line Disconnection Using Special Tool
Courtesy of CHRYSLER GROUP, LLC

1 - SPECIAL FUEL LINE TOOL
2 - FUEL LINE
3 - FUEL RAIL

4. Insert the appropriate fuel line removal tool (1) into the quick-connect fitting and release the internal latches.

NOTE: After disconnection, locking fingers will remain within quick-connect fitting at end of fuel line.

5. With the special tool still inserted, remove quick-connect fitting from fuel system component being serviced.

LATCH CLIPS - TYPE 3

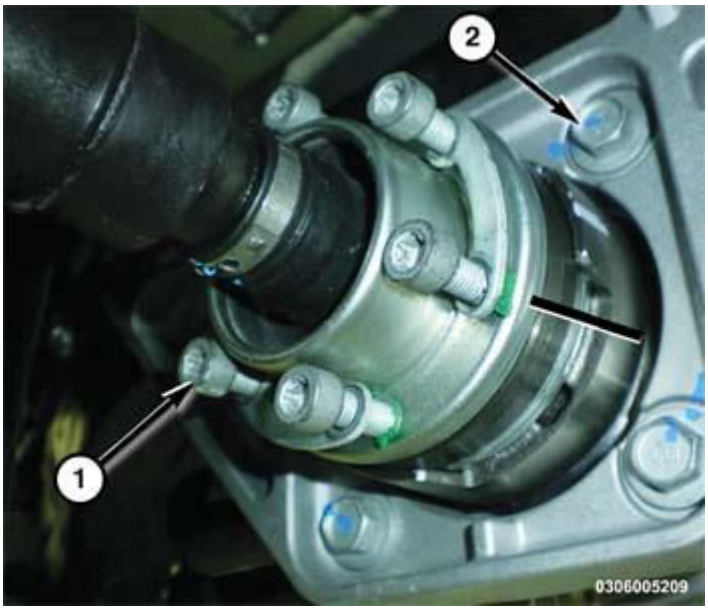

Fig. 156: Latch Clips - Type 3
Courtesy of CHRYSLER GROUP, LLC

1. A special tool is not necessary to disconnect fuel line after latch clip is removed. The latch clip is used to join fuel lines together.
2. Type 3: Separate and unlatch 2 small arms on the end of clip and swing away from the fuel line.

CONNECTING

1. Inspect quick-connect fitting body and fuel system component for damage. Replace as necessary.
2. Prior to connecting quick-connect fitting to component being serviced, check condition of fitting and component. Clean parts with a lint-free cloth. Lubricate with clean engine oil.
3. Insert quick-connect fitting into fuel tube or fuel system component until built-on stop on fuel tube or component rests against back of fitting.
4. Continue pushing until a click is felt.
5. Redundant Latch Single Button Type Fitting: Push redundant latch until it locks into position in the quick-connect fitting.
6. Single-tab type fitting: Push new tab down until it locks into place in quick-connect fitting.
7. Latch Clip Equipped: Install latch clip (snaps into position). **If latch clip will not fit, this indicates fuel line is not properly installed to fuel rail (or other fuel line). Recheck fuel line connection.**
8. Verify a locked condition by firmly pulling on the quick-connect fitting connection of the fuel system component.

HEATER, FUEL

DESCRIPTION

DESCRIPTION

The Fuel Heater is located in the fuel filter/water separator housing assembly and is located on the left-rear side of the engine compartment. The fuel heater is not a serviceable component. If diagnosis has lead you to replace the fuel heater then the whole fuel filter/water separator housing must be replaced.

REMOVAL

REMOVAL

1. Disconnect the negative battery cable.
2. Raise and support the vehicle. Refer to **HOISTING, STANDARD PROCEDURE** .
3. Disconnect the fuel heater/temperature sensor wire harness connector.

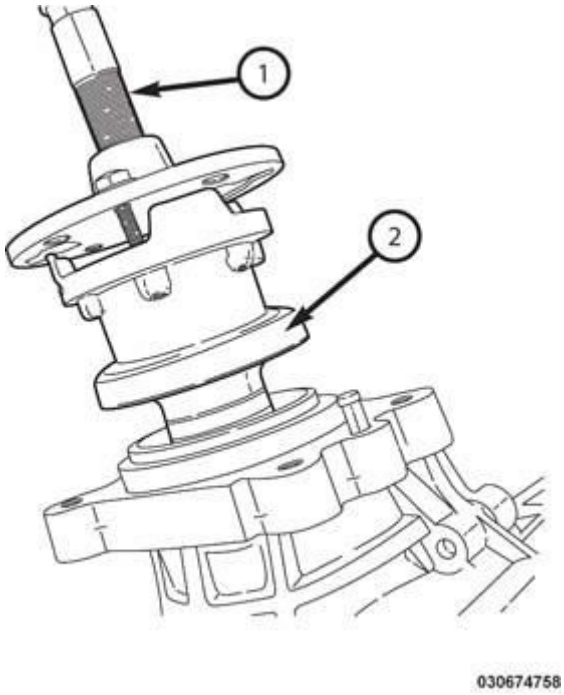

Fig. 157: Bolts & Fuel Heater/Temperature Sensor
Courtesy of CHRYSLER GROUP, LLC

4. Remove bolts (2), and the fuel heater/temperature sensor (1).
5. Remove and discard O-ring seal.

INSTALLATION

INSTALLATION

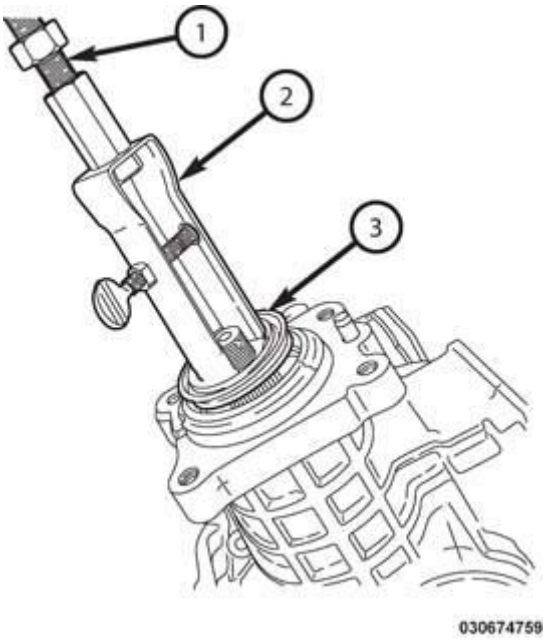

Fig. 158: Bolts & Fuel Heater/Temperature Sensor
Courtesy of CHRYSLER GROUP, LLC

1. Clean the O-ring surface sealing area.

NOTE: Lubricate the O-ring seal with clean diesel fluid.

2. Using a new O-ring seal, install the fuel heater/temperature sensor (1). Tighten bolts (2) to 10 N.m (89 in. lbs.).
3. Connect the fuel heater/temperature sensor wire harness connector.
4. Lower the vehicle.
5. Connect the negative battery cable.

MODULE, FUEL PUMP

DESCRIPTION

DESCRIPTION

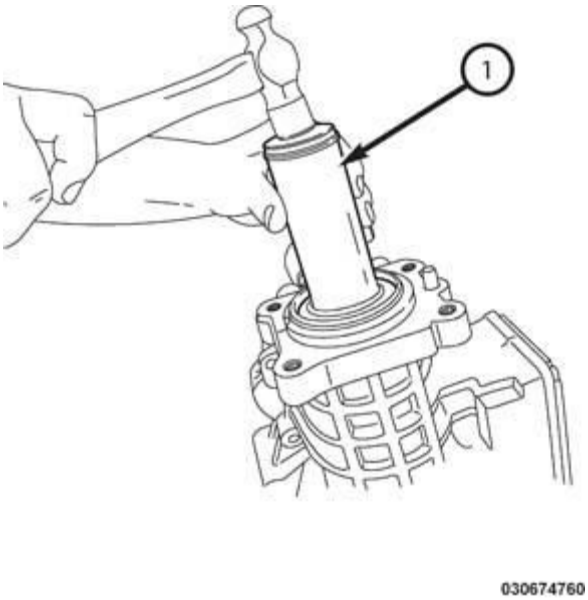

Fig. 159: Fuel Pump Module
Courtesy of CHRYSLER GROUP, LLC

The diesel fuel pump module contains a submersible permanent magnet electric fuel pump, fuel pump reservoir, fuel level sending unit, fuel pressure regulator and a fuel filter. The entire module except for the mounting flange is concealed within the fuel tank. The module is connected to the vehicle electrical system through a dedicated take out and connector of the underbody wire harness.

The fuel level sending unit is available for separate service replacement. Refer to **SENDING UNIT AND SENSOR, FUEL LEVEL, REMOVAL**. The remainder of the module is serviced only as a complete unit.

OPERATION

OPERATION

When the Powertrain Control Module (PCM) senses the ignition status is ON or START it provides an output to energize the Auto Shut Down (ASD) relay and the fuel pump relay in the underhood Power Distribution Center (PDC). The PCM will also ground the fuel pump relay driver at this time, closing the fuel pump relay contacts, completing the fuel pump circuit to chassis ground. If the PCM senses the ignition in the ON position, without a engine crank signal for more than about 30 seconds, it will open the fuel pump driver circuit, shutting down the fuel pump.

The diesel fuel pump module draws fuel through a internal filter and pushes it through the motor to an outlet pipe. The fuel pump module contains two check valves. One valve relieves internal fuel pump pressure and regulates maximum pump output. The second valve, located within the pump outlet, maintains residual pressure during engine OFF conditions. The pressure regulated fuel pump will maintain constant fuel pressure to the fuel injection pump. The fuel pump pressure regulator contains a calibrated spring which forces a diaphragm against the fuel filter return port. When pressure exceeds the calibrated value, the diaphragm retracts, allowing excess fuel pressure in the fuel pump module to purge back into the fuel tank.

REMOVAL

REMOVAL

Vehicles equipped with a saddle style fuel tank system require two fuel pump modules due to the saddle-like design of the fuel tank, which is necessary to provide clearance for the rear axle drive shaft. The main fuel pump module is located in the left half of the fuel tank and the auxiliary fuel pump module is located in the right half.

REMOVAL

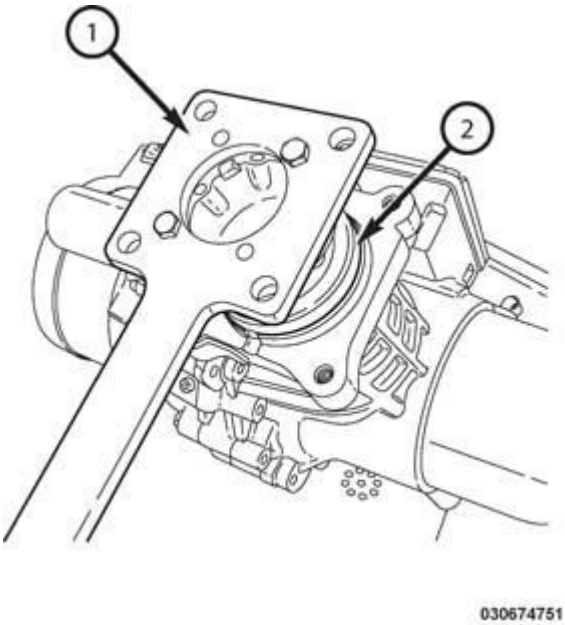

Fig. 160: Removing/Installing Rear Seat
Courtesy of CHRYSLER GROUP, LLC

WARNING: Risk of injury to eyes and skin from contact with fuel. Wear protective clothing and eye protection. Risk of poisoning from inhaling and swallowing fuel. Pour fuel only into appropriately marked and approved containers. Failure to follow these instructions may result in possible serious or fatal injury.

WARNING: The fuel system is under constant high pressure even with engine OFF. Until the fuel pressure has been properly released from the system, do not attempt to open the fuel system. Do not smoke or use open flames/sparks when servicing the fuel system. Make sure the area in which the vehicle is being serviced is in a well ventilated area. Failure to comply may result in serious or fatal injury.

1. Perform the fuel system pressure release procedure. Refer to **FUEL DELIVERY - STANDARD PROCEDURE** .

NOTE: The fuel pump module has to be properly located in the fuel tank for the

fuel level gauge to work properly.

2. Disconnect and isolate the negative battery cable.
3. Remove the rear seat assembly. Refer to **SEAT, REAR, REMOVAL** .

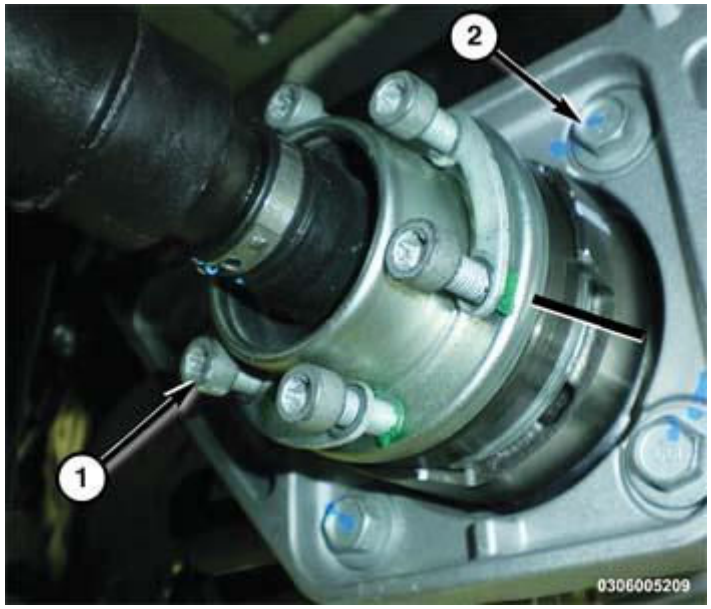

Fig. 161: Carpeting, Screws & Fuel Module Cover
Courtesy of CHRYSLER GROUP, LLC

NOTE: Right side shown in illustration, left side similar.

4. Cut along the perforated lines in the carpeting and position aside (1).
5. Remove the screws (2) that secure the fuel module cover (3) to the floor.

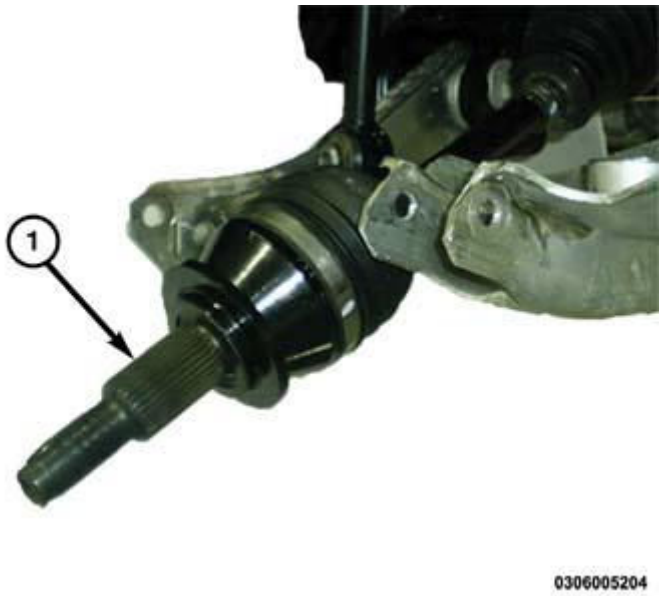

Fig. 162: Fuel Module Access Covers & Wire Harness Connectors
Courtesy of CHRYSLER GROUP, LLC

6. Lift up on the fuel pump module access cover (3, 4) and disconnect the wire harness connectors (2, 6).
7. Use a marker and place a mark across the position of the fuel pump module lock-ring, fuel pump module and the fuel tank prior to removal.

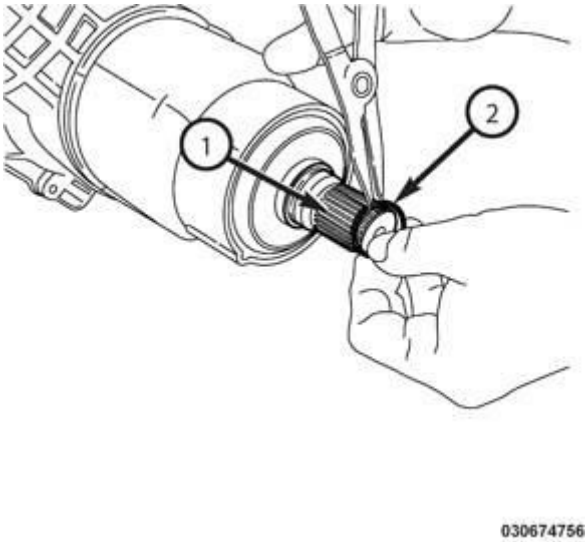

Fig. 163: Fuel Supply, Return & Vapor Lines
Courtesy of CHRYSLER GROUP, LLC

8. Disconnect the fuel tank vapor line (1, 3) from fuel pump module.
9. Disconnect the fuel lines (2) from the fuel pump module.

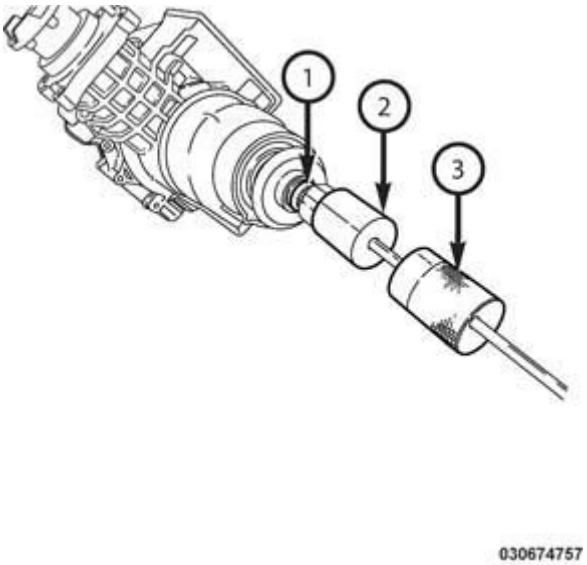

Fig. 164: Fuel Pump Module, Locking Ring & Lock Ring Wrench
Courtesy of CHRYSLER GROUP, LLC

NOTE: Prior to removing the fuel pump module, use compressed air to remove any accumulated dirt and debris from around fuel tank opening.

10. Position the lock-ring remover/installer (2) (special tool #9340, SAE Fuel Pump Lock Ring Wrench) or into the notches on the outside edge of the lock-ring (3).
11. Install a 1/2 inch drive breaker bar into the lock-ring remover/installer (special tool #9340, SAE Fuel Pump Lock Ring Wrench).
12. Rotate the breaker bar (1) counterclockwise and remove the lock-ring (3).

WARNING: The fuel pump module reservoir does not empty out when the tank is drained. The fuel in the reservoir will spill out when the module is removed.

NOTE: Do not spill fuel into the interior of the vehicle.

13. Lift up and removed the fuel pump module out of the fuel tank using caution not spill fuel inside the vehicle or bend the float arm.
14. Tip the fuel pump module on its side and drain all fuel from the reservoir.

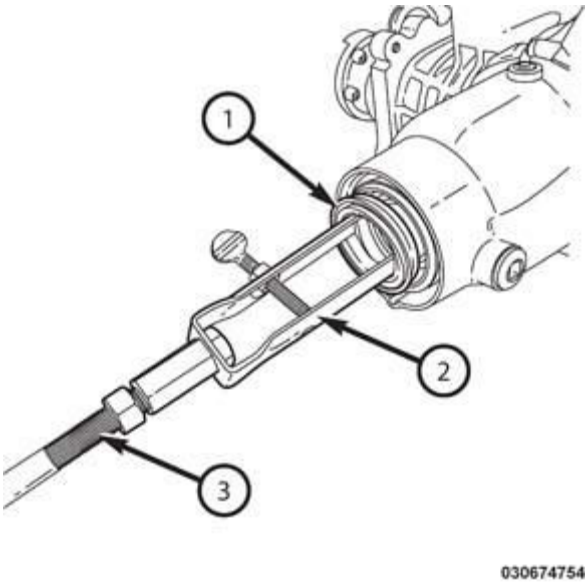

Fig. 165: Fuel Pump Module Seal
Courtesy of CHRYSLER GROUP, LLC

15. Remove and discard the rubber O-ring seal.

AUXILIARY

WARNING: Risk of injury to eyes and skin from contact with fuel. Wear protective clothing and eye protection. Risk of poisoning from inhaling and swallowing fuel. Pour fuel only into appropriately marked and approved containers. Failure to follow these instructions may result in possible serious or fatal injury.

WARNING: The fuel system is under constant high pressure even with engine OFF. Until the fuel pressure has been properly released from the system, do not attempt to open the fuel system. Do not smoke or use open flames/sparks when servicing the fuel system. Make sure the area in which the vehicle is being serviced is in a well ventilated area. Failure to comply may result in serious or fatal injury.

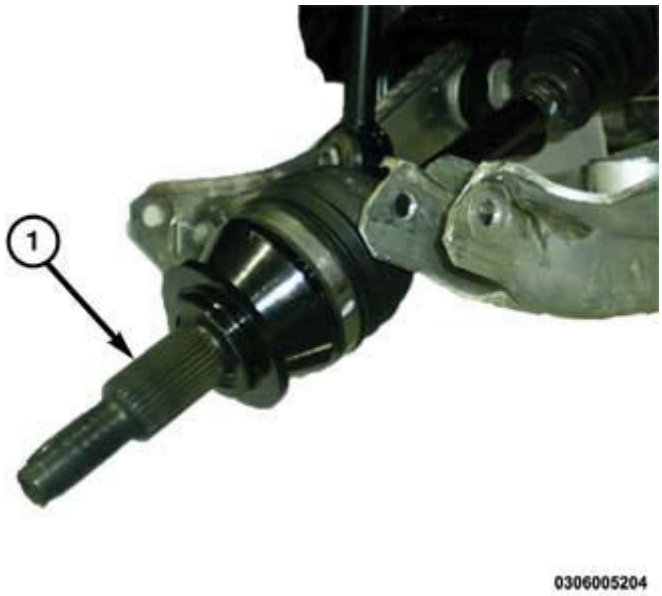

Fig. 166: Removing/Installing Rear Seat
Courtesy of CHRYSLER GROUP, LLC

1. Perform the fuel system pressure release procedure. Refer to **FUEL DELIVERY - STANDARD PROCEDURE** .

   NOTE: Prior to removing the fuel pump module, use compressed air to remove any accumulated dirt and debris from around fuel tank opening.

   NOTE: The fuel pump module has to be properly located in the fuel tank for the fuel level gauge to work properly.

2. Disconnect and isolate the negative battery cable.
3. Remove the rear seat assembly. Refer to **SEAT, REAR, REMOVAL** .

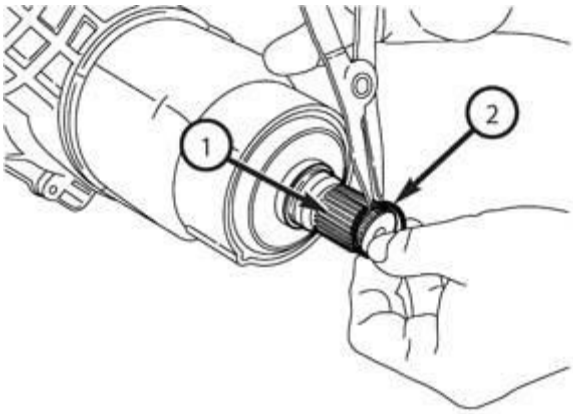

030674756

Fig. 167: Carpeting, Screws & Fuel Module Cover
Courtesy of CHRYSLER GROUP, LLC

NOTE: Right side shown in illustration, left side similar.

4. Cut along the perforated lines in the carpeting and position aside (1).
5. Remove the screws (2) that secure the fuel module cover (3) to the floor.

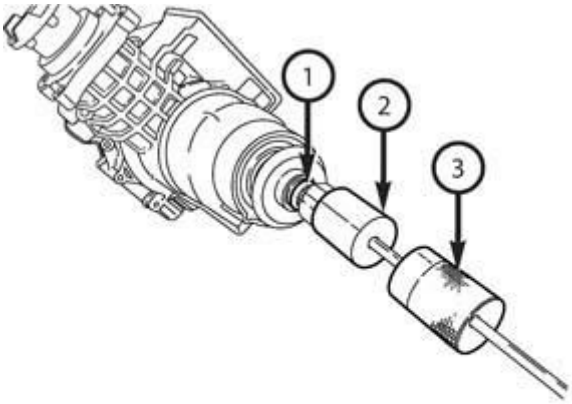

030674757

Fig. 168: Fuel Module Access Covers & Wire Harness Connectors
Courtesy of CHRYSLER GROUP, LLC

6. Lift up on the fuel pump module access cover (3, 4) and disconnect the wire harness connectors (2, 6).
7. Carefully note or mark the fuel pump module flange and the edge of the opening in the fuel tank to indicate proper module orientation.

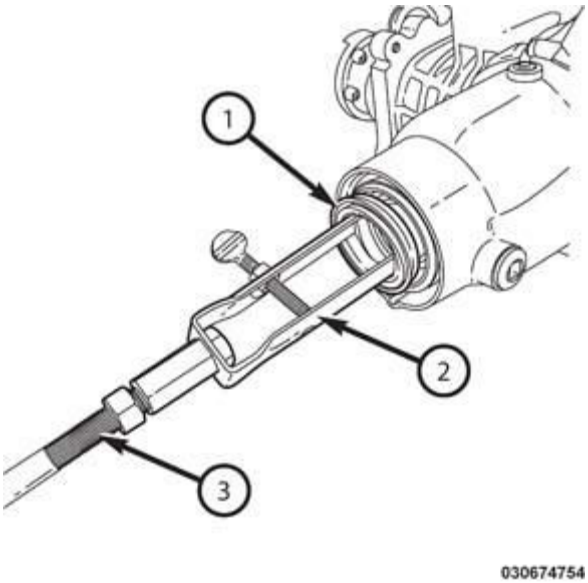

Fig. 169: Small Module Lock Ring
Courtesy of CHRYSLER GROUP, LLC

8. Position the (special tool #10521, Wrench, Fuel Pump Lock Ring) into the notches on the outside edge of the lock ring (1).
9. Install a 1/2 inch drive breaker bar into the (special tool #10521, Wrench, Fuel Pump Lock Ring).
10. Rotate the breaker bar counterclockwise and remove the lock ring.

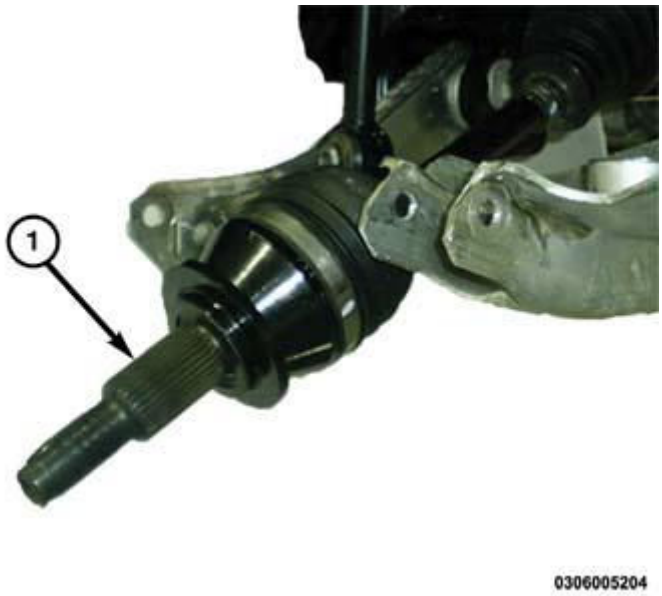

Fig. 170: Auxiliary Fuel Pump Module Internal Fuel Line
Courtesy of CHRYSLER GROUP, LLC

11. Lift the auxiliary fuel pump module out of the fuel tank far enough to access the internal auxiliary pump fuel line.

12. Disconnect the internal fuel line from the auxiliary fuel pump module.
13. Remove the auxiliary fuel pump module from the fuel tank using caution not to bend the float arm.

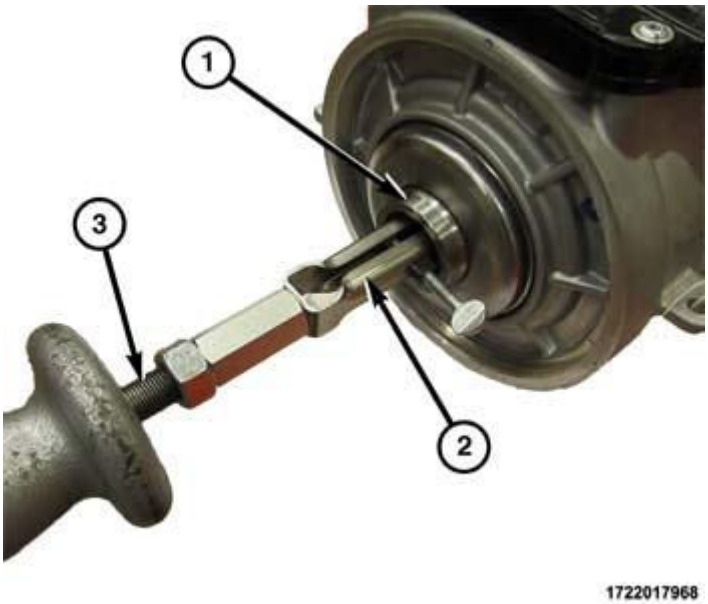

Fig. 171: Fuel Pump Module Seal
Courtesy of CHRYSLER GROUP, LLC

14. Remove and discard the rubber O-ring seal.

INSTALLATION

INSTALLATION

Vehicles equipped with saddle style fuel tank system require two fuel pump modules due to the saddle-like design of the fuel tank, which is necessary to provide clearance for the rear axle drive shaft. The main fuel pump module is located in the left half of the fuel tank and the auxiliary fuel pump module is located in the right half.

INSTALLATION

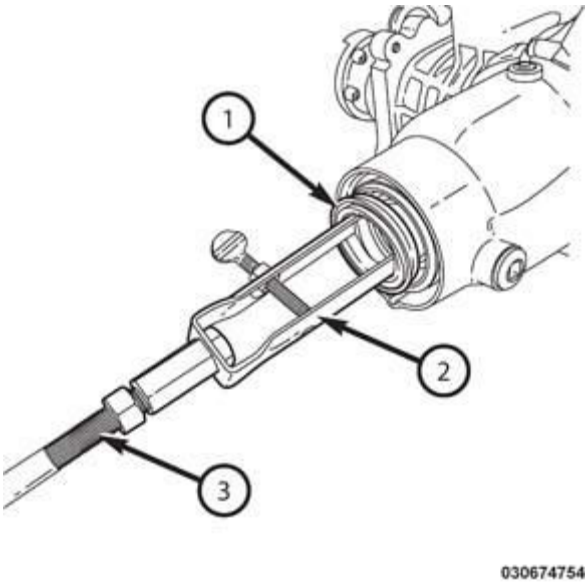

Fig. 172: Fuel Pump Module Seal
Courtesy of CHRYSLER GROUP, LLC

WARNING: Risk of injury to eyes and skin from contact with fuel. Wear protective clothing and eye protection. Risk of poisoning from inhaling and swallowing fuel. Pour fuel only into appropriately marked and approved containers. Failure to follow these instructions may result in possible serious or fatal injury.

CAUTION: Whenever the fuel pump module is serviced, the rubber O-ring seal must be replaced.

1. Clean the rubber O-ring seal area of the fuel tank and install a new rubber O-ring seal.
2. Lower the fuel pump module into the fuel tank using caution not to bend the float arm.

NOTE: The fuel pump module must be properly located in the fuel tank for the fuel level gauge to work properly.

3. Align the rubber O-ring seal and rotate the fuel pump module to the orientation marks noted during removal. This step must be performed for the fuel level gauge to work properly.

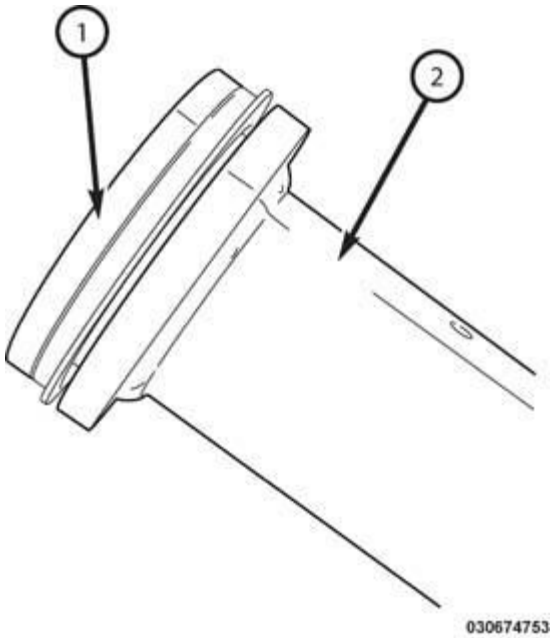

Fig. 173: Fuel Pump Module, Locking Ring & Lock Ring Wrench
Courtesy of CHRYSLER GROUP, LLC

4. Position the lock-ring (3) over top of the fuel pump module (4).
5. Position the lock-ring remover/installer (2) (special tool #9340, SAE Fuel Pump Lock Ring Wrench) into the notches on the outside edge of the lock-ring (3).
6. Install a 1/2 inch drive breaker bar (1) into the lock-ring remover/installer (2) (special tool #9340, SAE Fuel Pump Lock Ring Wrench).
7. Rotate the breaker bar (1) clockwise until all seven notches of the lock-ring (3) have engaged.

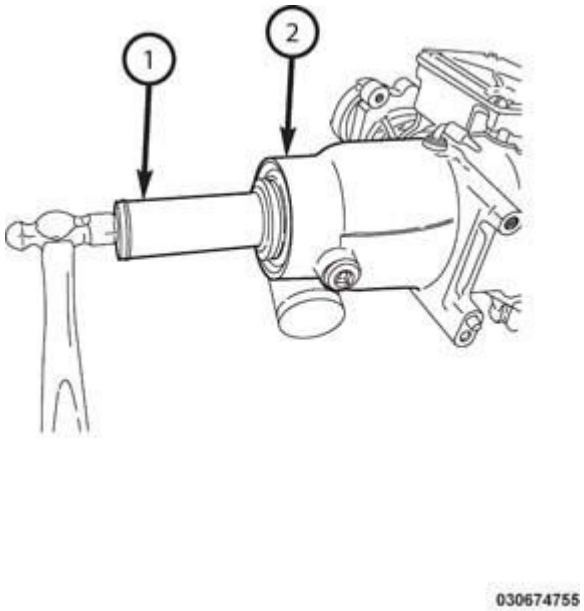

Fig. 174: Fuel Supply, Return & Vapor Lines

Courtesy of CHRYSLER GROUP, LLC

8. Connect the fuel lines (1, 2) to the fuel pump module.
9. Connect the fuel tank vapor line (3) to the fuel pump module.

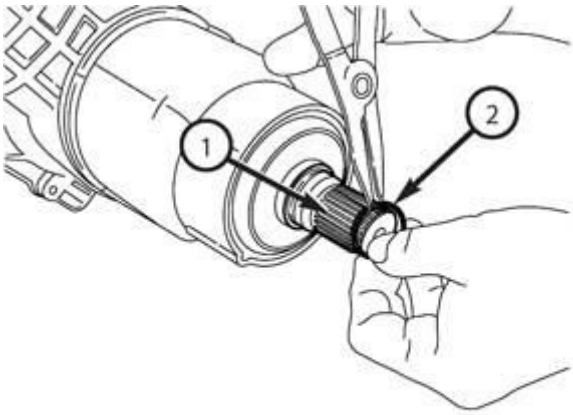

030674756

Fig. 175: Fuel Module Access Covers & Wire Harness Connectors
Courtesy of CHRYSLER GROUP, LLC

10. Connect the fuel pump module wire harness connector (2, 6).

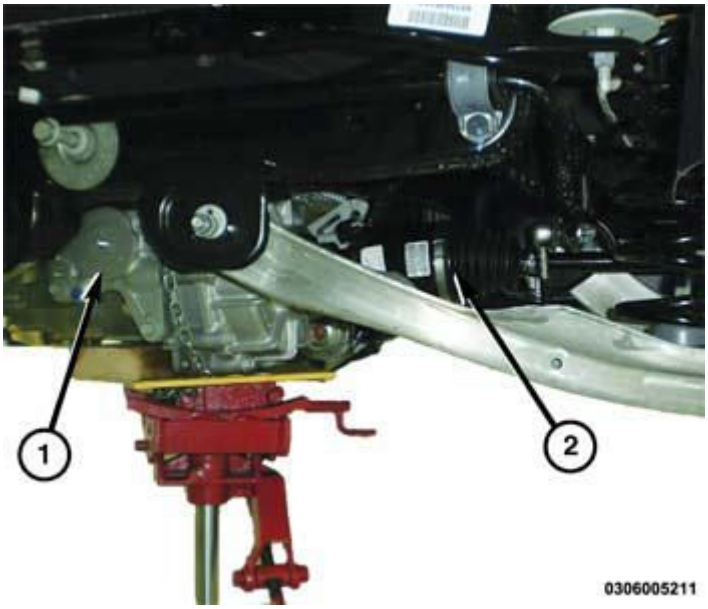

0306005211

Fig. 176: Carpeting, Screws & Fuel Module Cover
Courtesy of CHRYSLER GROUP, LLC

NOTE: Right side shown in illustration, left side similar.

11. Install the access cover (3) and securely tighten the screws (2).
12. Position back the carpet access cover (1).

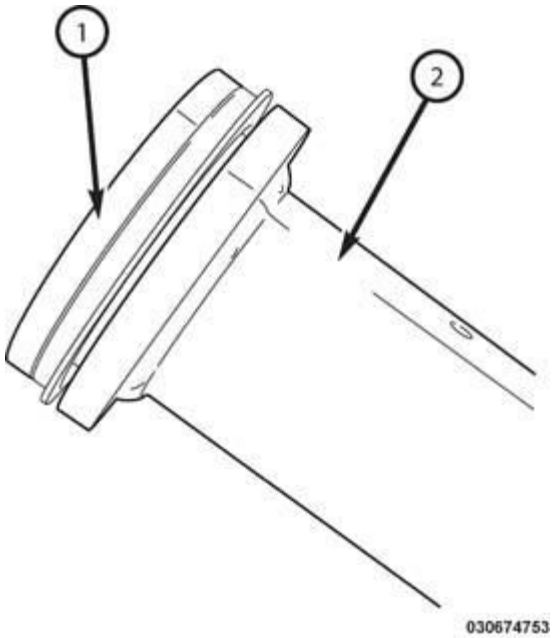

Fig. 177: Removing/Installing Rear Seat
Courtesy of CHRYSLER GROUP, LLC

13. Install the rear seat. Refer to **SEAT, REAR, INSTALLATION** .
14. Connect the negative battery cable.
15. Use the Scan Tool to pressurize the system and check for leaks.

AUXILIARY

WARNING: Risk of injury to eyes and skin from contact with fuel. Wear protective clothing and eye protection. Risk of poisoning from inhaling and swallowing fuel. Pour fuel only into appropriately marked and approved containers. Failure to follow these instructions may result in possible serious or fatal injury.

WARNING: The fuel system is under constant high pressure even with engine OFF. Until the fuel pressure has been properly released from the system, do not attempt to open the fuel system. Do not smoke or use open flames/sparks when servicing the fuel system. Make sure the area in which the vehicle is being serviced is in a well ventilated area. Failure to comply may result in serious or fatal injury.

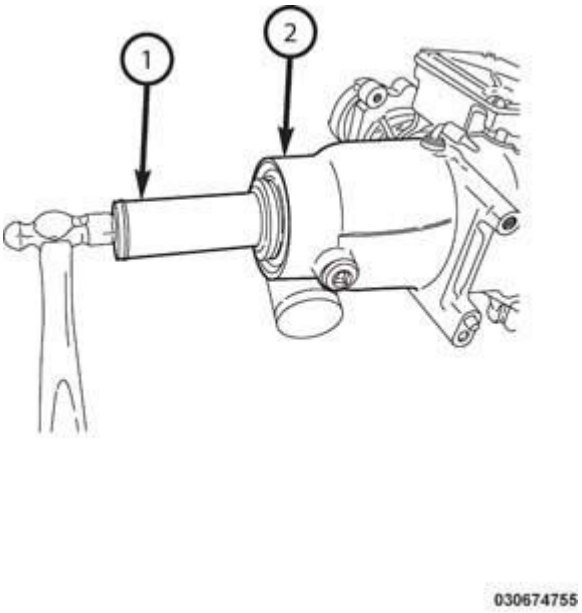

Fig. 178: Fuel Pump Module Seal
Courtesy of CHRYSLER GROUP, LLC

CAUTION: Whenever the fuel pump module is serviced, the rubber O-ring seal must be replaced.

1. Clean the rubber O-ring seal area of the fuel tank module opening and install a new rubber O-ring seal.

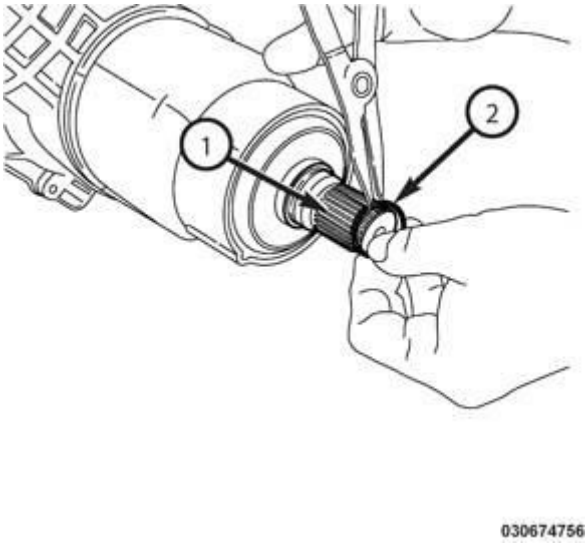

Fig. 179: Auxiliary Fuel Pump Module Internal Fuel Line
Courtesy of CHRYSLER GROUP, LLC

2. Reconnect the internal fuel line to the auxiliary fuel pump module.
3. Lower the auxiliary fuel pump module into the fuel tank using caution not to bend the float arm.

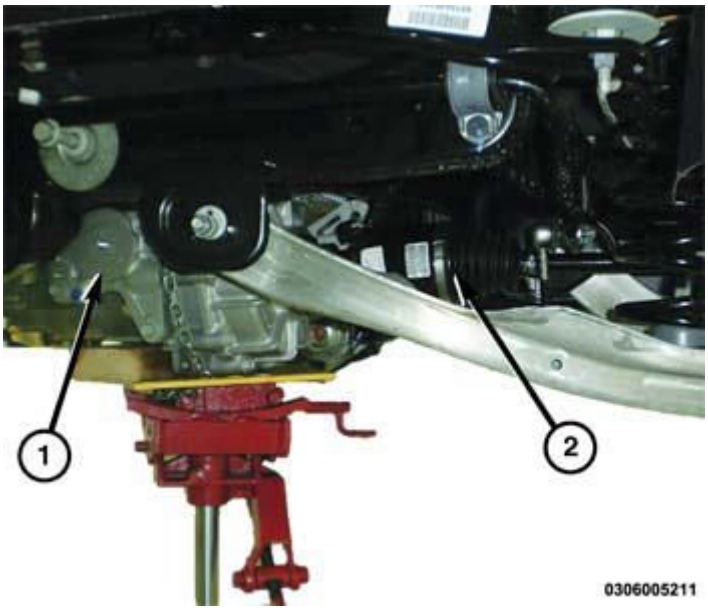

Fig. 180: Auxiliary Fuel Pump Module Tab
Courtesy of CHRYSLER GROUP, LLC

NOTE: The fuel pump module must be properly located in the fuel tank for the fuel level gauge to work properly.

4. Align the rubber O-ring seal and rotate the auxiliary fuel pump module to the orientation noted or marked during removal. This step must be performed for the fuel level gauge to work properly.

Fig. 181: Small Module Lock Ring
Courtesy of CHRYSLER GROUP, LLC

5. Position the lock ring (1) over the top of the fuel pump module flange.

6. Position the (special tool #10521, Wrench, Fuel Pump Lock Ring) into the notches on the outside edge of the lock ring.
7. Install a 1/2 inch drive breaker bar into the (special tool #10521, Wrench, Fuel Pump Lock Ring).
8. Rotate the breaker bar clockwise until all seven notches of the lock ring have engaged.

   Remove the screws (2) that secure the fuel module cover (3) to the floor.

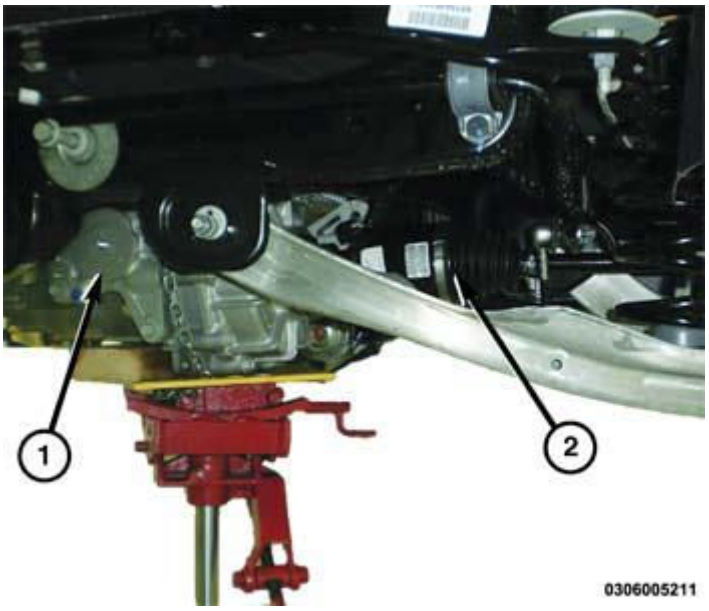

Fig. 182: Fuel Module Access Covers & Wire Harness Connectors
Courtesy of CHRYSLER GROUP, LLC

9. Connect the fuel pump module wire harness connector (2, 6).

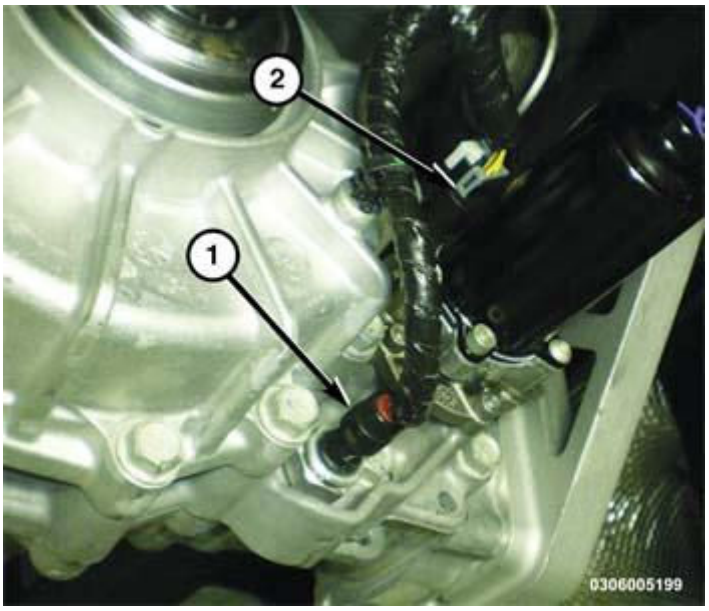

Fig. 183: Carpeting, Screws & Fuel Module Cover
Courtesy of CHRYSLER GROUP, LLC

NOTE: Right side shown in illustration, left side similar.

10. Install the access cover (3) and securely tighten the screws (2).
11. Position back the carpet access cover (1).

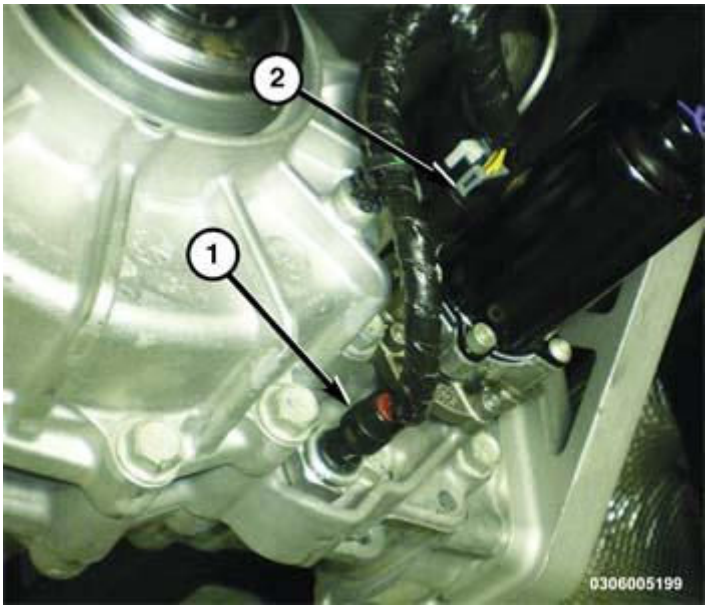

Fig. 184: Removing/Installing Rear Seat
Courtesy of CHRYSLER GROUP, LLC

12. Install the rear seat. Refer to **SEAT, REAR, INSTALLATION** .
13. Connect the negative battery cable.
14. Use the Scan Tool to pressurize the system and check for leaks.

PUMP, FUEL INJECTION, HIGH PRESSURE

DESCRIPTION

DESCRIPTION

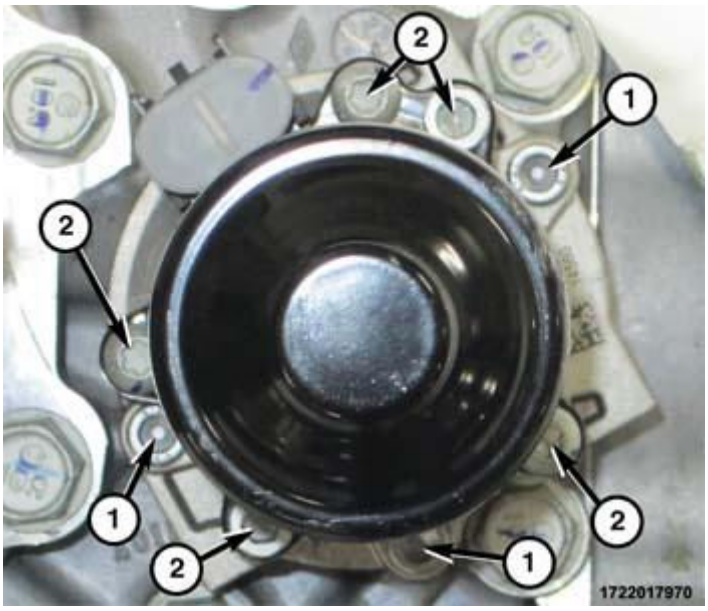

Fig. 185: Fuel Injection Pressure Pump
Courtesy of CHRYSLER GROUP, LLC

The fuel injection pressure pump (1) is secured to a special cast support (3) that is attached to the front of the cylinder head and hangs out over the intake side of the engine. The support also serves as part of the timing belt cover. A molded rubber fuel return hose (2) is connected to a port near the front of the pump, while the fuel supply is secured to a port (4) near the back of the pump using a quick-connect fitting. The high pressure port (5) and the fuel pressure regulator are located on the rear of the pump.

The pressure pump shaft is equipped with a toothed drive sprocket that is driven and timed along with the camshafts by the timing belt on the crankshaft. The timing belt includes yellow reference marks for correct timing of the pressure pump and the camshafts to crankshaft rotation. The pump for this common rail injection system is known as a radial jet pump because pressure is achieved using three pistons arranged at equal 120 degree intervals in a radial orientation around the pump shaft rotation axis.

Most components of the fuel injection pressure pump are not serviceable. If any part of the pump is damaged or ineffective, the entire pump unit must be replaced. The pump support and the pump drive sprocket are available for separate service replacement.

OPERATION

OPERATION

The timed fuel injection pressure pump is driven by the crankshaft through a toothed belt and sprocket arrangement. The pump must be supplied fuel through the low pressure circuit with a minimum pressure of 3.5 bar and a minimum flow rate of 160 liters per hour to ensure correct operation. This supply is achieved by means of the low pressure electric fuel pump integral to the fuel pump module submersed within the fuel tank.

The three pump pistons are operated by the rotation of a triangular-shaped cam integrated with the pump input shaft. This cam causes the movement of the three pistons in succession, through the movement of a mechanical

interface (tappet) between the cam and the base of the piston. The contact between the cam and each individual tappet is maintained by means of a spring.

Each pumping unit is equipped with a plate type intake valve and a ball type supply valve. All three delivery valves of the pumping elements are united inside the pump and deliver the pressurized fuel to the common rail (manifold) through a single high pressure tube. A feature of this pump is that it is lubricated and cooled at the same time by the diesel fuel circulating inside it, via special ports.

The fuel quantity solenoid on the pump adjusts the supply pressure at the pump intake as needed to compress only the amount of diesel fuel needed to reach the pressure targeted by the Powertrain Control Module (PCM).

The pump is driven by the engine at a rotation speed equal to 2/3 (4v) and 25/43 (2v) of that of the actual engine, by means of a toothed belt transmission. The timing and injection duration are, in this injection system, tasks ofthe electronic control system; this pump only carries out the task of permanently maintaining the fuel containedin the manifold at the requested pressure level.

REMOVAL

REMOVAL

WARNING: Observe the following precautions when working on fuel systems: No sparks, open flames or smoking. Avoid inhaling and swallowing fuel. Avoid eye and skin contact with fuel. Pour fuels only into suitable and appropriately marked containers. Wear protective clothing. Failure to observe these precautions may result in fire, explosion, property damage, and serious or fatal injury.

WARNING: High pressure fuel lines deliver fuel under extreme pressure from the injection pump to the injectors. This maybe as high as 1600 bar (23, 206 psi). Use extreme caution when inspecting for high pressure fuel leaks. Fuel under this amount of pressure can penetrate skin causing personal injury or death. Inspect high pressure fuel leaks with a sheet of cardboard. Wear safety goggles and adequate protective clothing when servicing fuel system.

CAUTION: Cranking the engine for an extended time without a fuel supply may damage the fuel injection pressure pump.

NOTE: The fuel injection pressure pump must not be disassembled or opened. The only serviceable components are the sprocket and the support.

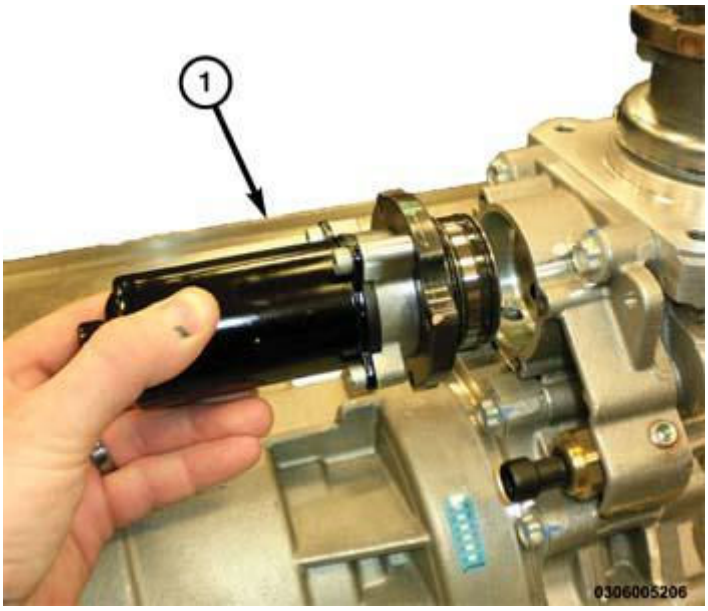

Fig. 186: Engine Cover
Courtesy of CHRYSLER GROUP, LLC

1. Disconnect the negative battery cable.
2. Remove the engine cover (1).
3. Raise and support the vehicle. Refer to **HOISTING, STANDARD PROCEDURE** .
4. Remove the belly pan. Refer to **BELLY PAN, REMOVAL** .
5. Remove the right front wheel and tire.
6. Remove the right front wheelhouse splash shield. Refer to **SHIELD, SPLASH, FRONT WHEELHOUSE, REMOVAL** .
7. Drain cooling system. Refer to **STANDARD PROCEDURE** .
8. Lower the vehicle.

Fig. 187: Fuel Quantity Solenoid Wire Harness Connector
Courtesy of CHRYSLER GROUP, LLC

9. Disconnect the boost pressure wire harness connector (1).

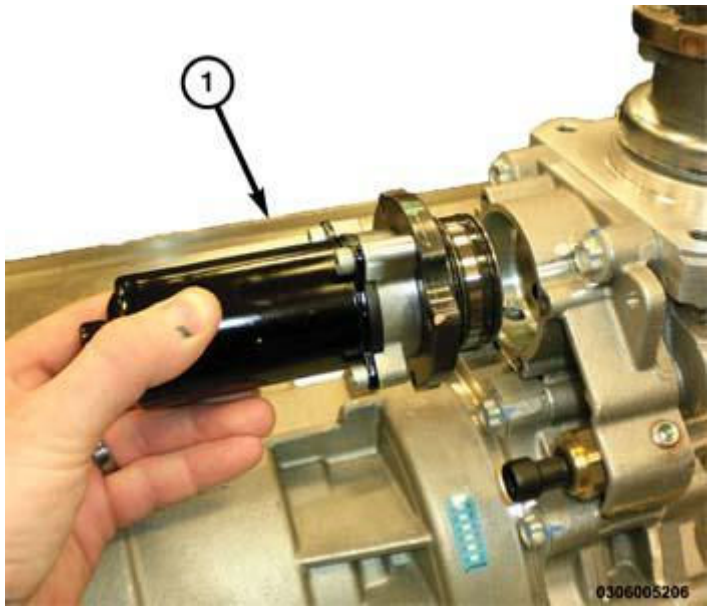

Fig. 188: Fuel Quantity Solenoid Connector
Courtesy of CHRYSLER GROUP, LLC

10. Disconnect the fuel quantity solenoid wire harness connector (2).
11. Detach the wire harness retainer at upper timing cover and position aside the engine wire harness.
12. Remove the upper timing cover. Refer to **COVER(S), ENGINE TIMING, REMOVAL** .

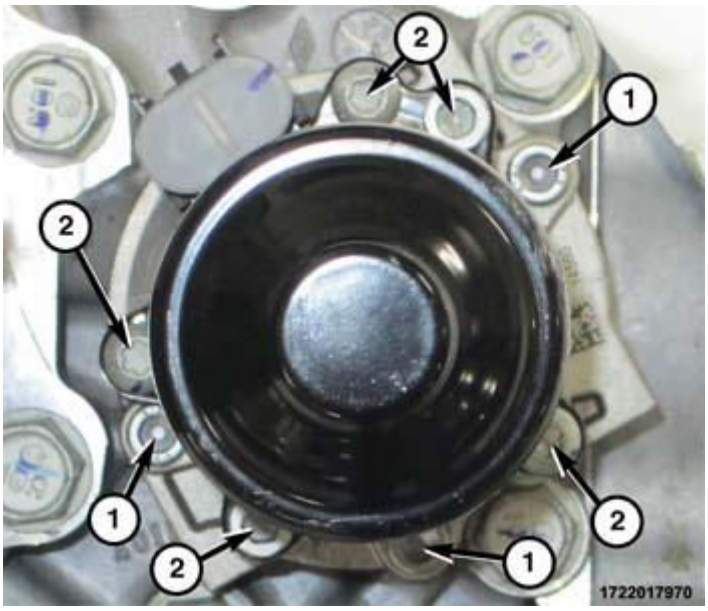

Fig. 189: Fuel Tube, Fuel Injection Pump & Fuel Rail
Courtesy of CHRYSLER GROUP, LLC

CAUTION: Do not crimp or bend fuel lines. Capture all fluids that flow out of connections.

NOTE: Fuel return manifold removed for clarity.

13. Remove the fuel tube (2) between the fuel injection pump (3) and the fuel rail (1).

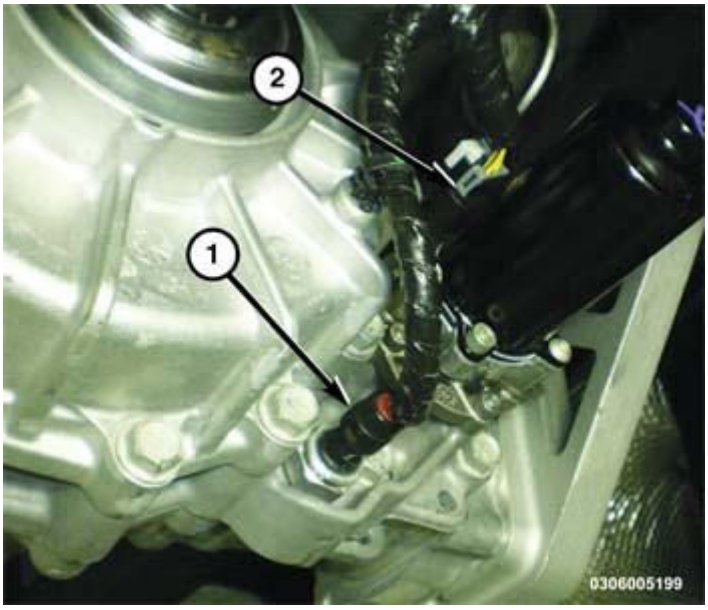

Fig. 190: Fuel Supply & Return Line Quick-Connect Fittings
Courtesy of CHRYSLER GROUP, LLC

14. Disconnect the fuel supply (2) line and return line (1) quick-connect fittings at fuel injection pump. Refer to **FITTING, QUICK CONNECT** .

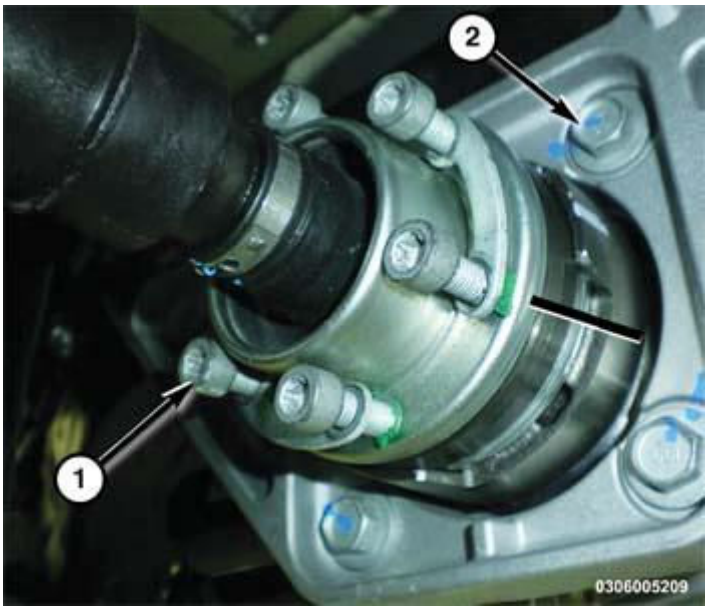

Fig. 191: Fuel Injection Pump Guard
Courtesy of CHRYSLER GROUP, LLC

15. Detach the fuel supply line from the retainer clip.
16. Remove bolts (1) and the fuel injection pump guard (2).

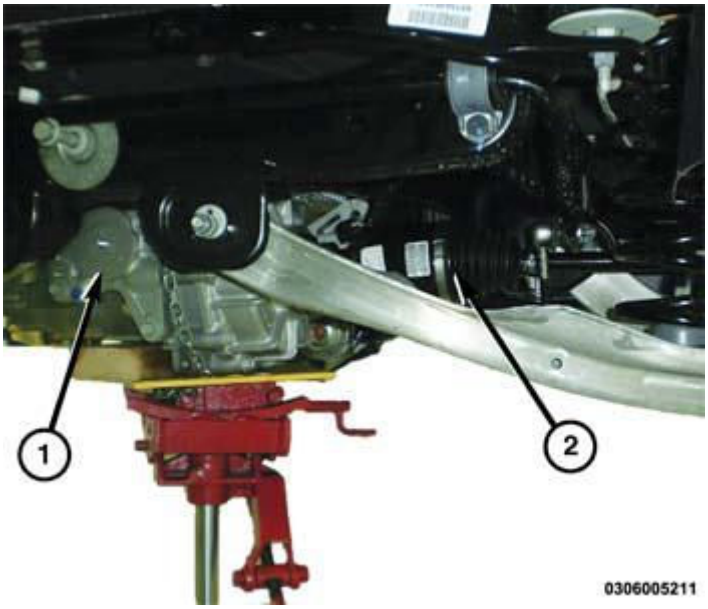

Fig. 192: Fuel Return Manifold
Courtesy of CHRYSLER GROUP, LLC

17. Disconnect the fuel injector return line at the fuel return manifold (1).

18. Loosen the clamp and disconnect the fuel return hose (3) from the fuel injection pump.
19. Remove bolts (2) and position aside the fuel return manifold (1).

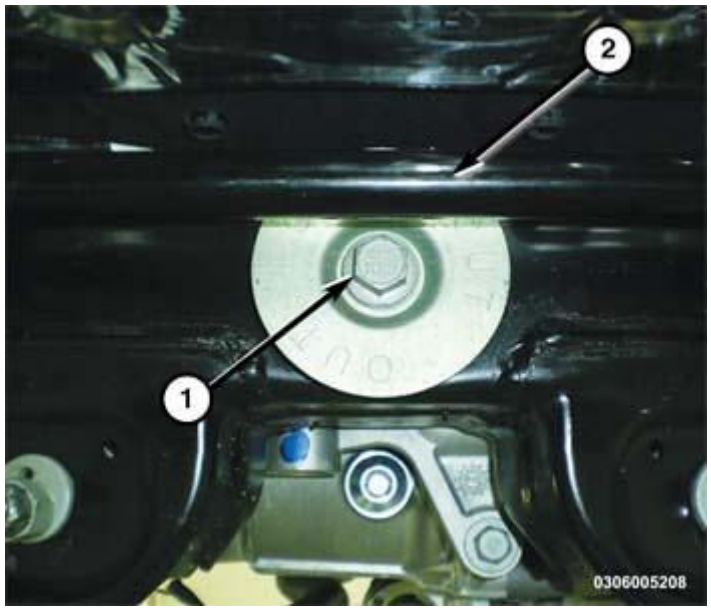

Fig. 193: Coolant Manifold
Courtesy of CHRYSLER GROUP, LLC

20. Remove the coolant manifold (1) at intake manifold.

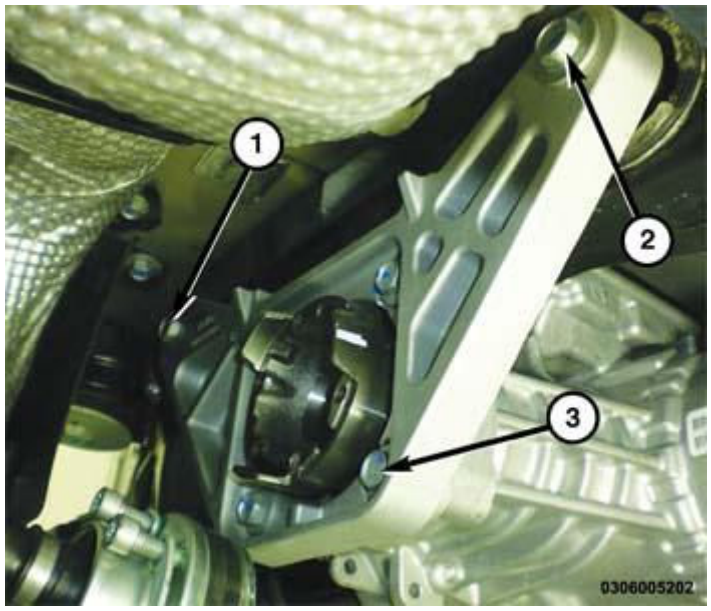

Fig. 194: Special Tool On Fuel Injection Pump Sprocket & Nut
Courtesy of CHRYSLER GROUP, LLC

21. Rotate the crankshaft far enough to align the threaded holes in the pressure pump sprocket with the corresponding holes in the pressure pump support.

22. Install and tighten the (special tool #20150, Remover/Installer, High Pressure Fuel Pump) (2) to secure the fuel injection pump sprocket.
23. Remove the nut (1) securing the sprocket to the fuel injection pump shaft.

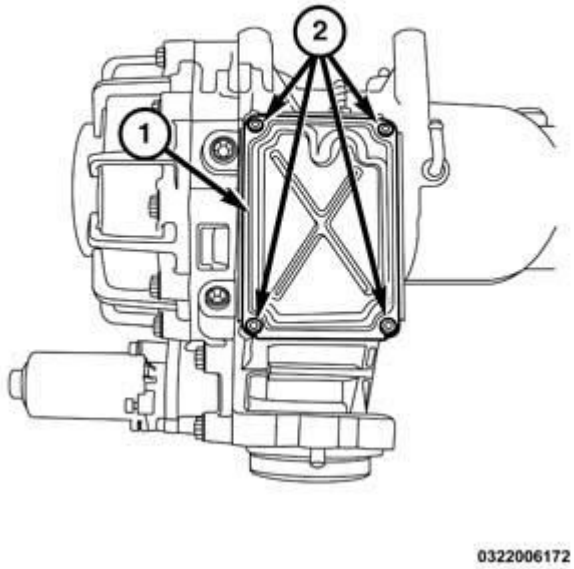

Fig. 195: Fuel Injection Pump & Nuts
Courtesy of CHRYSLER GROUP, LLC

24. Remove the three nuts (1) securing the fuel injection pump (2).

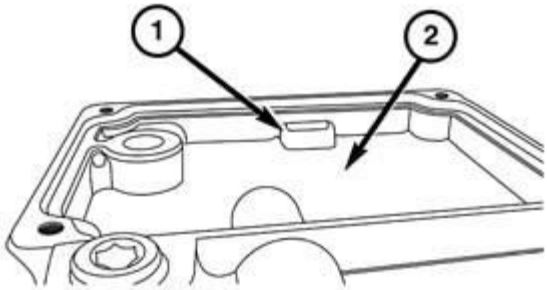

0322006171

Fig. 196: Special Tool, Bolts & Fuel Injection Pump Sprocket
Courtesy of CHRYSLER GROUP, LLC

25. Install the (special tool #10499, Remover, Pulley) (2) and the (special tool #20150, Remover/Installer, High Pressure Fuel Pump) bolts (1) onto fuel injection pump sprocket (3).
26. Using the extractor, separate the fuel injection pump from sprocket (2) and remove the fuel injection pump.
27. Remove the (special tool #20150, Remover/Installer, High Pressure Fuel Pump) bolts (3) and the Remover, Pump Pulley 10499 (1) from the fuel injection sprocket (2).

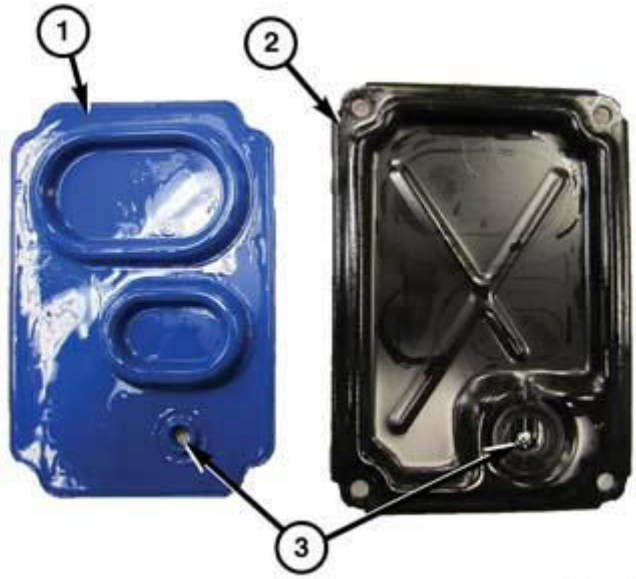

1722017967

Fig. 197: Fuel Quantity Solenoid
Courtesy of CHRYSLER GROUP, LLC

28. If necessary, remove fasteners (2) and the fuel quantity solenoid (1).

INSTALLATION

INSTALLATION

WARNING: Observe the following precautions when working on fuel systems: No sparks, open flames or smoking. Avoid inhaling and swallowing fuel. Avoid eye and skin contact with fuel. Pour fuels only into suitable and appropriately marked containers. Wear protective clothing. Failure to observe these precautions may result in fire, explosion, property damage, and serious or fatal injury.

WARNING: High pressure fuel lines deliver fuel under extreme pressure from the injection pump to the injectors. This maybe as high as 1600 bar (23, 206 psi). Use extreme caution when inspecting for high pressure fuel leaks. Fuel under this amount of pressure can penetrate skin causing personal injury or death. Inspect high pressure fuel leaks with a sheet of cardboard. Wear safety goggles and adequate protective clothing when servicing fuel system.

CAUTION: Cranking the engine for an extended time without a fuel supply may damage the fuel injection pressure pump.

NOTE: The fuel injection pressure pump must not be disassembled or opened. The only serviceable components are the sprocket and the fuel quantity solenoid.

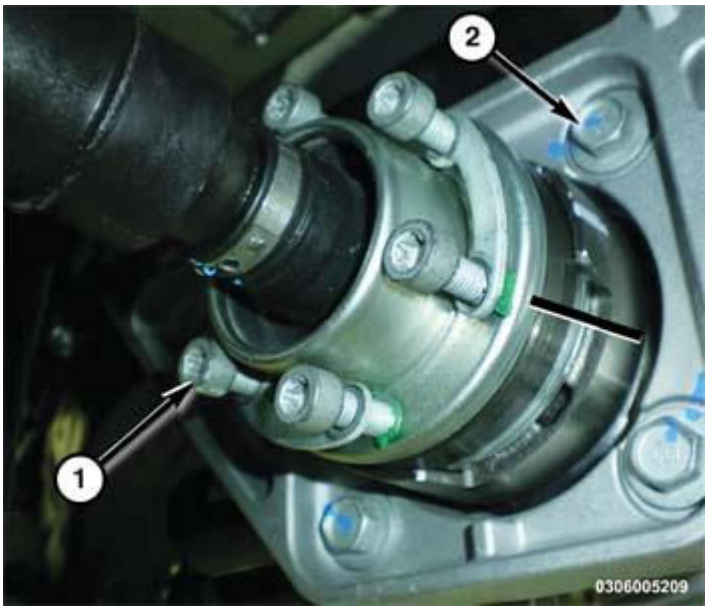

Fig. 198: Fuel Quantity Solenoid
Courtesy of CHRYSLER GROUP, LLC

1. If removed, clean sealing surfaces and Install new O-ring seals onto the fuel quantity solenoid (1).
2. If removed, install the fuel quantity solenoid (1) and securely tighten fasteners (2).

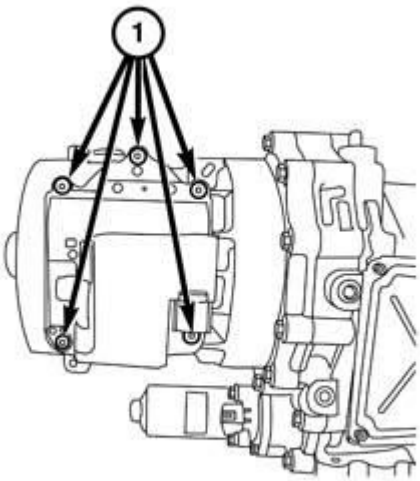

Fig. 199: Pump Rotation Special Tool On Pump Shaft
Courtesy of CHRYSLER GROUP, LLC

3. Position the fuel injection pump to the back of the support with the pump shaft inserted through the drive

sprocket and the pump housing engaged over the mounting studs on the support.

4. Install the (Pump Rotation) (special tool #20150, Remover/Installer, High Pressure Fuel Pump) Tool (1) onto the threaded end of the pump shaft enough to align the pin in the pump shaft with the keyway in the hub of the drive sprocket and tighten finger tight.

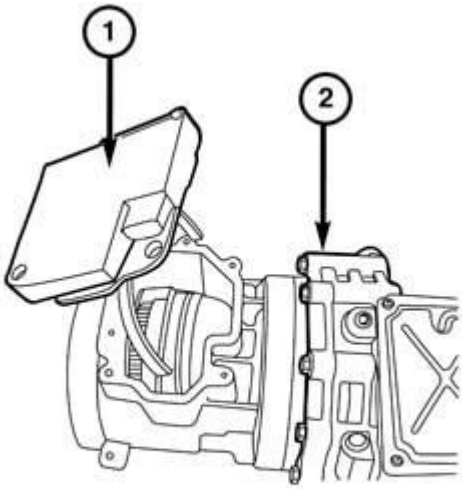

0322008596

Fig. 200: Fuel Injection Pump & Nuts
Courtesy of CHRYSLER GROUP, LLC

5. Install the three nuts (1) securing the fuel injection pump (2) and tighten to 25 N.m (18 ft. lbs.).

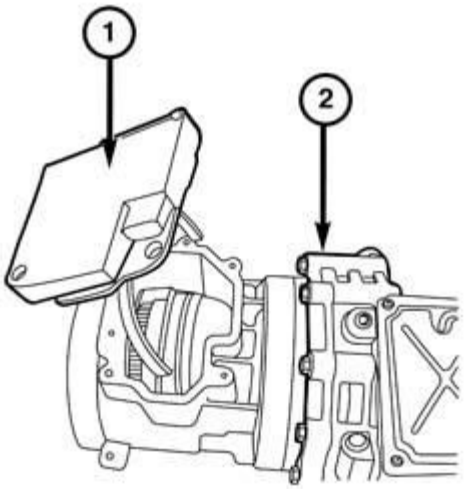

0322008596

Fig. 201: Pump Rotation Special Tool On Pump Shaft
Courtesy of CHRYSLER GROUP, LLC

6. Remove the (Pump Rotation) (special tool #20150, Remover/Installer, High Pressure Fuel Pump) Tool (1) from the threaded end of the pump shaft.

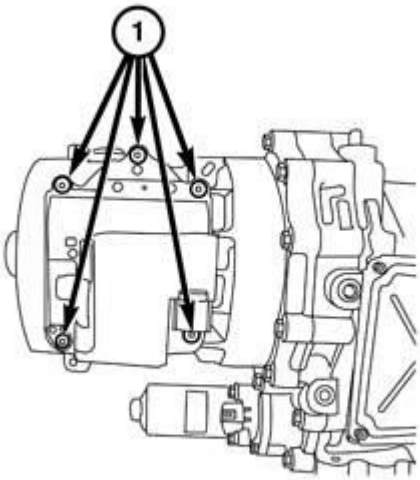

0322008595

Fig. 202: Special Tool On Fuel Injection Pump Sprocket & Nut
Courtesy of CHRYSLER GROUP, LLC

7. Install the nut (1) securing the sprocket to the fuel injection pump and tighten to 50 N.m (37 ft. lbs.).
8. Remove the (special tool #20150, Remover/Installer, High Pressure Fuel Pump) (2).

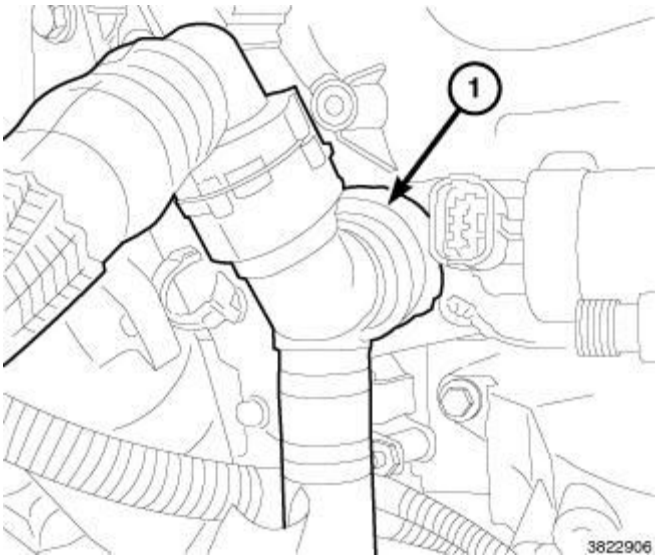

Fig. 203: Coolant Manifold
Courtesy of CHRYSLER GROUP, LLC

9. Install the coolant manifold (1) at intake manifold.

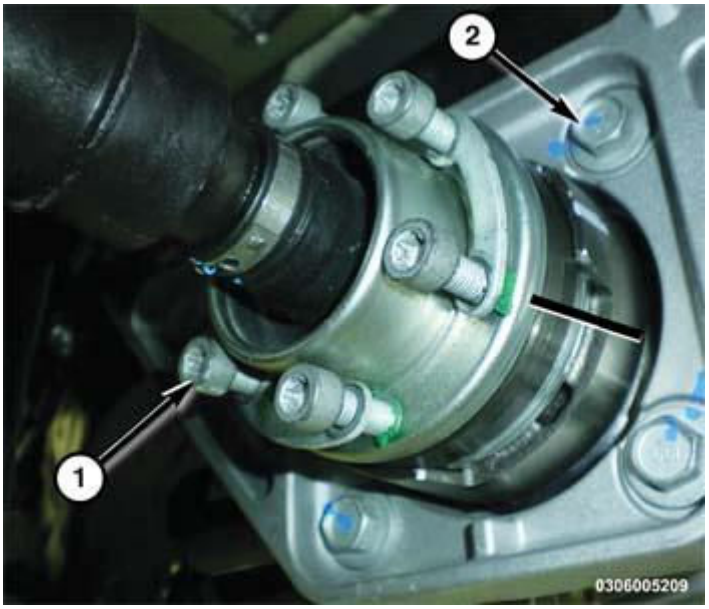

Fig. 204: Fuel Return Manifold
Courtesy of CHRYSLER GROUP, LLC

10. Install the fuel return manifold (1) and securely tighten bolts (2).
11. Connect the fuel return hose (3) to the fuel injection pump and tighten clamp.

12. Connect the fuel injector return line to the fuel return manifold (1).

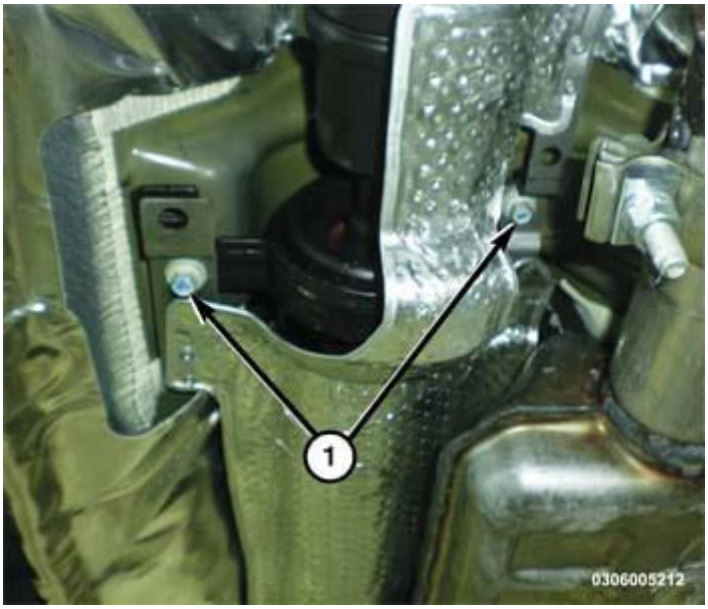

Fig. 205: Fuel Injection Pump Guard
Courtesy of CHRYSLER GROUP, LLC

13. Install the fuel injection pump guard (2) and securely tighten bolts (1).
14. Attach the fuel supply line to the retainer clip.

Fig. 206: Fuel Supply & Return Line Quick-Connect Fittings
Courtesy of CHRYSLER GROUP, LLC

15. Connect the fuel supply line (2) and fuel return line (1) quick-connect fitting.

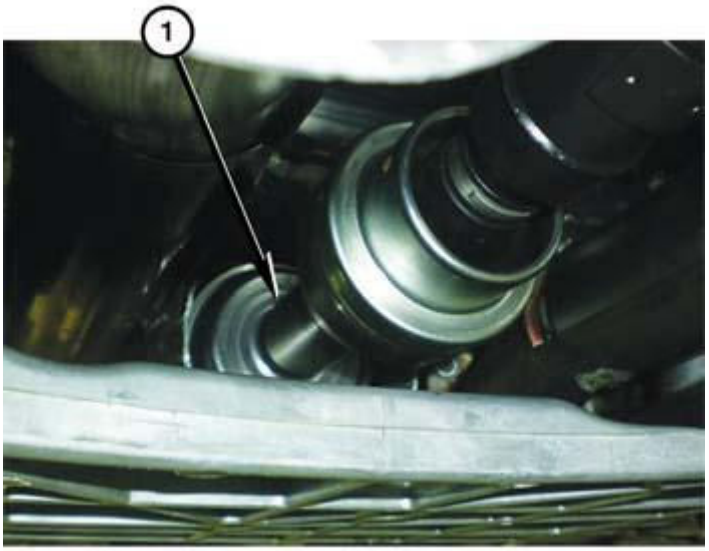

0306005213

Fig. 207: Fuel Tube, Fuel Injection Pump & Fuel Rail
Courtesy of CHRYSLER GROUP, LLC

NOTE: **High pressure fuel tubes from the fuel injection pressure pump to the fuel rail or from the fuel rail to the fuel injector must be replaced with new units if removed.**

16. Install new fuel tube (2) between the fuel injection pump (3) and the fuel rail (1). Tighten the union nuts to:
    - Step 1 Tighten the union nut (1) at fuel rail to 20 N.m (177 in. lbs.).
    - Step 2 Using a wrench to counter hold fitting, tighten union nut (3) at the fuel injection pump to 24 N.m (18 ft. lbs.).
17. Install the upper timing cover. Refer to **COVER(S), ENGINE TIMING, INSTALLATION** .
18. Position the engine wire harness and attach the wire harness retainer to the upper timing cover.

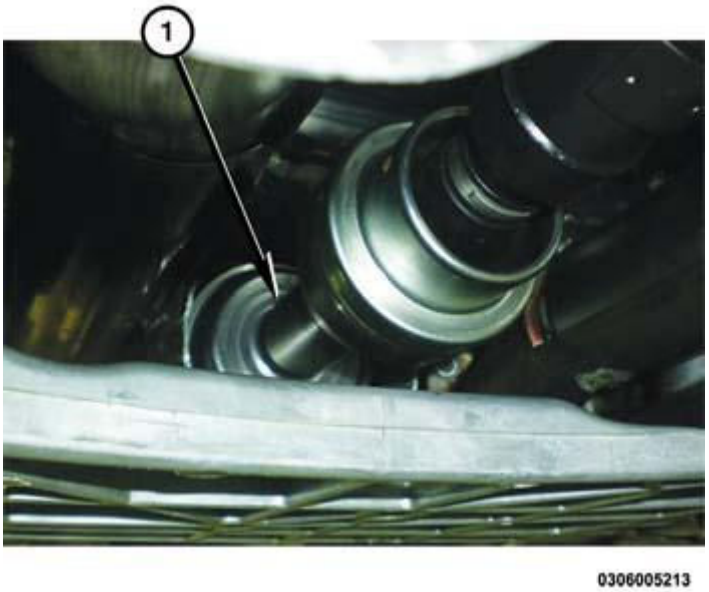

Fig. 208: Fuel Quantity Solenoid Connector
Courtesy of CHRYSLER GROUP, LLC

19. Connect the fuel quantity solenoid wire harness connector (2).

Fig. 209: Fuel Quantity Solenoid Wire Harness Connector
Courtesy of CHRYSLER GROUP, LLC

20. Connect the boost pressure wire harness connector.
21. Raise and support the vehicle. Refer to **HOISTING, STANDARD PROCEDURE** .
22. Install the right front wheelhouse splash shield. Refer to **SHIELD, SPLASH, FRONT WHEELHOUSE, INSTALLATION** .

23. Install the right front wheel and tire.
24. Install the belly pan. Refer to **BELLY PAN, INSTALLATION** .
25. Lower the vehicle.

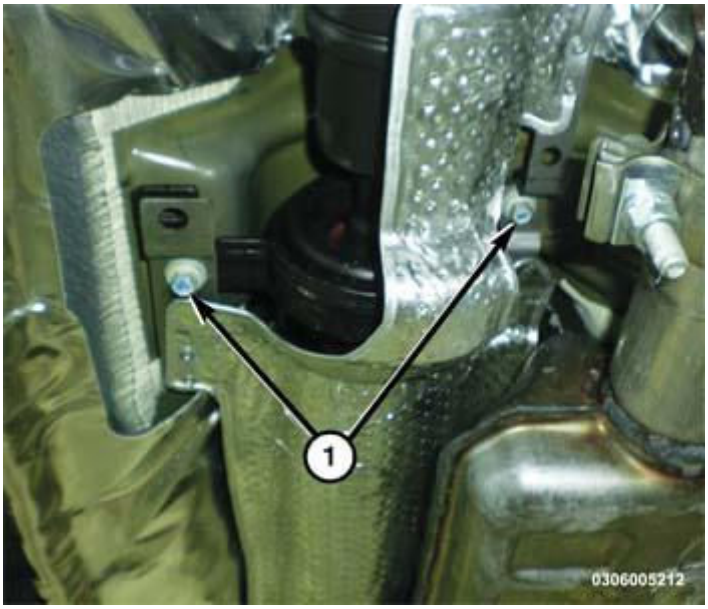

Fig. 210: Engine Cover
Courtesy of CHRYSLER GROUP, LLC

26. Fill the cooling system. Refer to **STANDARD PROCEDURE** .
27. Connect the negative battery cable.
28. Start the engine and inspect the fuel connections for leaks.
29. Install the engine cover (1).

RAIL, FUEL

DESCRIPTION

DESCRIPTION

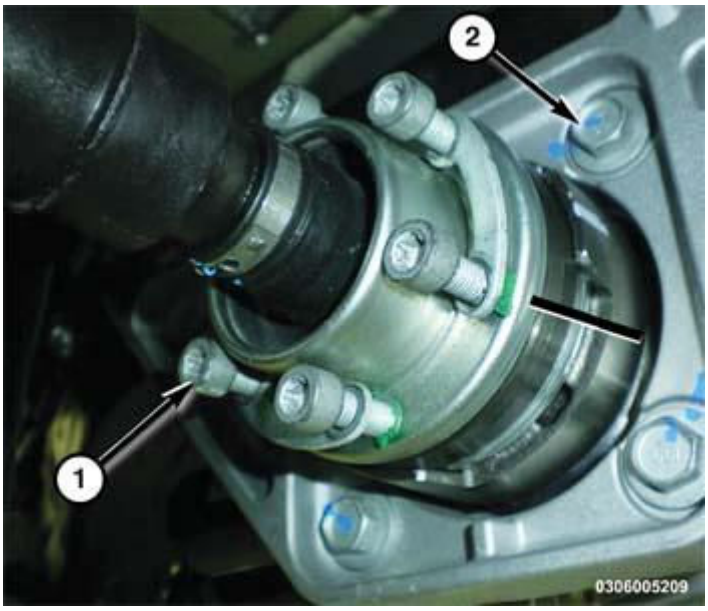

Fig. 211: Fuel Rail
Courtesy of CHRYSLER GROUP, LLC

A common fuel rail (1) (also known as a manifold) is secured by two screws to the camshaft housing on the intake side of the cylinder head. The fuel rail is a metal casting with six machined ports. A supply port connects the fuel rail to the high pressure fuel circuit through a single tube and fitting (4) from the outlet side of the fuel injection pump. An outlet port connects to each of the fuel injectors through a high pressure fuel tube and fitting (2). The fuel rail also has a threaded port on one end into which the fuel pressure sensor (3) is installed. The fuel rail cannot be adjusted or repaired. If damaged or ineffective, it must be replaced.

OPERATION

OPERATION

The stored volume of high pressure fuel inside the fuel rail helps to stabilize and equalize pressure fluctuations which result because of pulsations in the supply from the injector pump as well as due to the brief and repetitive extractions of fuel injector firing. The rail primarily influences the atomization of fuel at the injector nozzle, and the accuracy of the injected fuel quantity during injection.

REMOVAL

REMOVAL

WARNING: **Observe the following precautions when working on fuel systems: No sparks, open flames or smoking. Avoid inhaling and swallowing fuel. Avoid eye and skin contact with fuel. Pour fuels only into suitable and appropriately marked containers. Wear protective clothing. Failure to observe these precautions may result in fire, explosion, property damage, and serious or fatal injury.**

WARNING: High pressure fuel lines deliver diesel fuel under extreme pressure from the injection pump to the fuel rail and from the fuel rail to the fuel injectors. This pressure may be as high as 1600 bar (23, 206 psi). Use extreme caution when inspecting for high pressure fuel leaks. Fuel under this amount of pressure can penetrate skin causing personal injury or death. Inspect for high pressure fuel leaks with a sheet of cardboard. Wear safety goggles and adequate protective clothing when servicing the high pressure circuits of the fuel system.

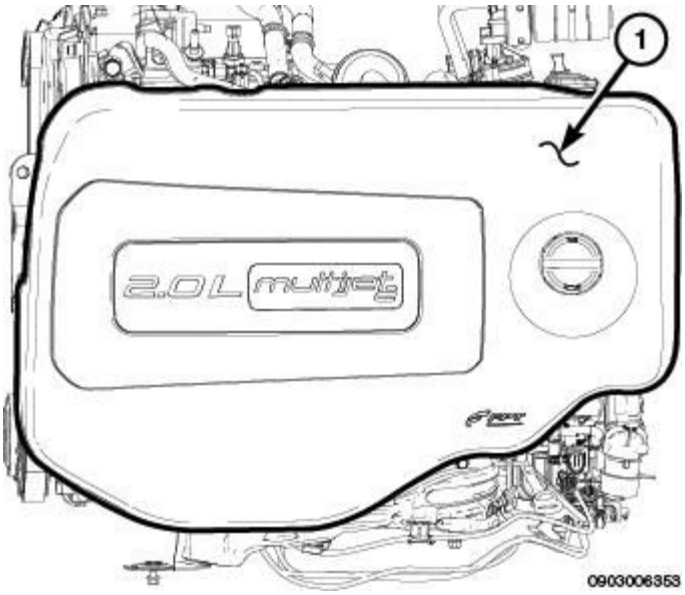

Fig. 212: Engine Cover
Courtesy of CHRYSLER GROUP, LLC

1. Disconnect the negative battery cable.
2. Remove the engine cover (1).

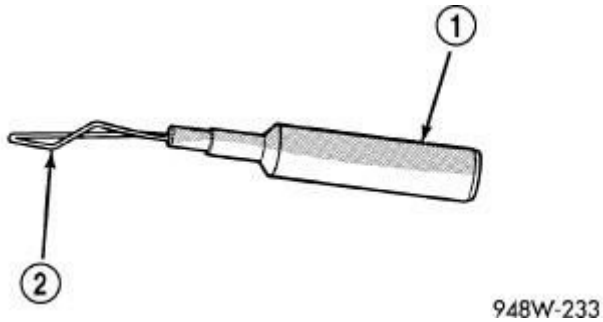

Fig. 213: Fuel Pressure Sensor Wire Harness Connector
Courtesy of CHRYSLER GROUP, LLC

3. Disconnect the fuel pressure sensor wire harness connector (1).

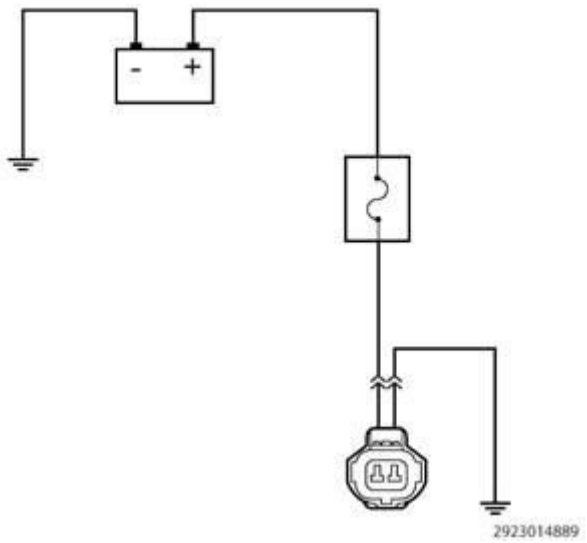

Fig. 214: Fuel Rail & Fasteners
Courtesy of CHRYSLER GROUP, LLC

4. Remove the high pressure fuel tubes. Refer to **TUBE(S), FUEL, HIGH PRESSURE, REMOVAL**.
5. Remove bolts (3) and the fuel rail (1).

INSTALLATION

INSTALLATION

WARNING: Observe the following precautions when working on fuel systems: No sparks, open flames or smoking. Avoid inhaling and swallowing fuel. Avoid eye and skin contact with fuel. Pour fuels only into suitable and appropriately marked containers. Wear protective clothing. Failure to observe these precautions may result in fire, explosion, property damage, and serious or fatal injury.

WARNING: High pressure fuel lines deliver diesel fuel under extreme pressure from the injection pump to the fuel rail and from the fuel rail to the fuel injectors. This pressure may be as high as 1600 bar (23, 206 psi). Use extreme caution when inspecting for high pressure fuel leaks. Fuel under this amount of pressure can penetrate skin causing personal injury or death. Inspect for high pressure fuel leaks with a sheet of cardboard. Wear safety goggles and adequate protective clothing when servicing the high pressure circuits of the fuel system.

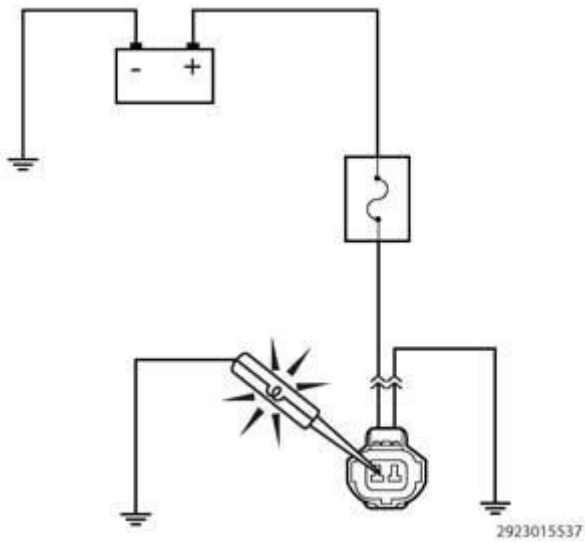

Fig. 215: Fuel Rail & Fasteners
Courtesy of CHRYSLER GROUP, LLC

1. If a new fuel rail is being installed, transfer the fuel pressure sensor from the old fuel rail. Refer to **SENSOR, FUEL PRESSURE, INSTALLATION**.
2. Install the fuel rail (1). Tighten bolts (3) to 25 N.m (18 ft. lbs.).
3. Install new high pressure fuel tubes. Refer to **TUBE(S), FUEL, HIGH PRESSURE, INSTALLATION**.

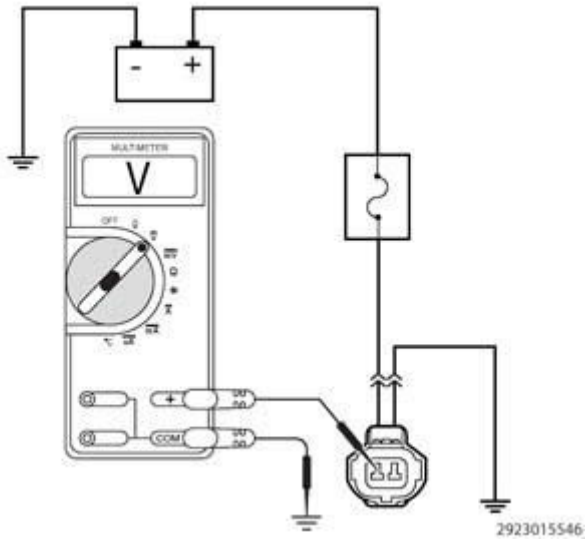

Fig. 216: Fuel Pressure Sensor Wire Harness Connector
Courtesy of CHRYSLER GROUP, LLC

4. Connect the fuel pressure sensor wire harness connector (1).

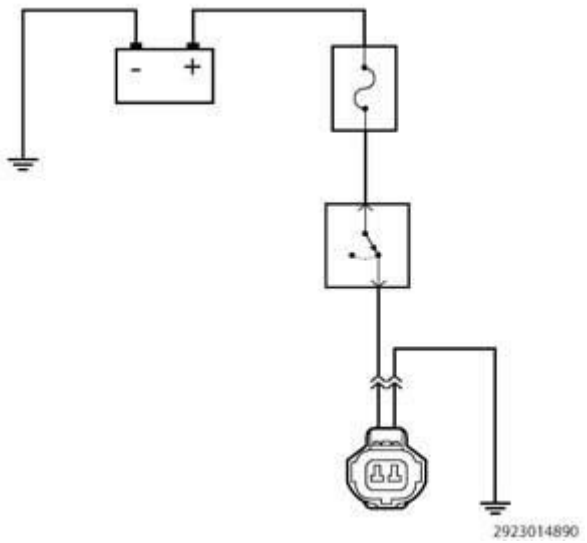

Fig. 217: Engine Cover
Courtesy of CHRYSLER GROUP, LLC

5. Connect the negative battery cable.
6. Start the engine and inspect all of the fuel rail connections for leaks.
7. Install the engine cover (1).

SENDING UNIT AND SENSOR, FUEL LEVEL

DESCRIPTION

DESCRIPTION

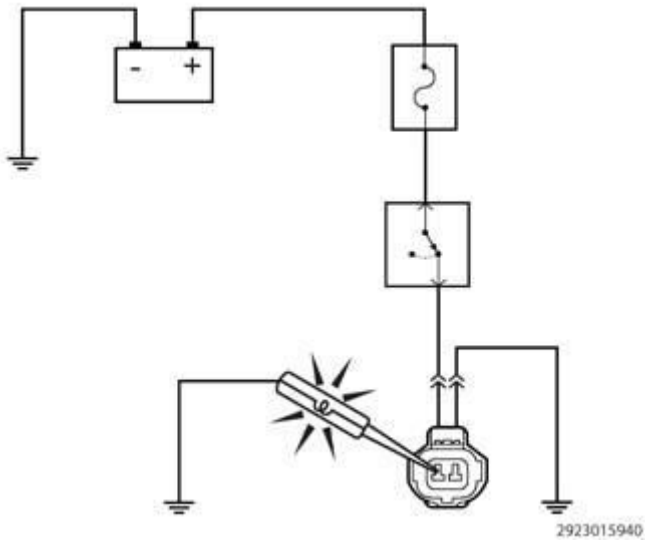

Fig. 218: Main Fuel Pump Module & Auxiliary Fuel Pump Module
Courtesy of CHRYSLER GROUP, LLC

Diesel vehicles are equipped with a saddle fuel tank configurations which have a main (1) and auxiliary (2) fuel level sending units.

The main fuel level sending unit located on the main fuel pump reservoir (1) and is serviceable.

The auxiliary fuel level sending unit (2) is integrated with the auxiliary fuel pump module. The auxiliary fuel pump module and the fuel level sending unit is serviced as an assembly.

OPERATION

OPERATION

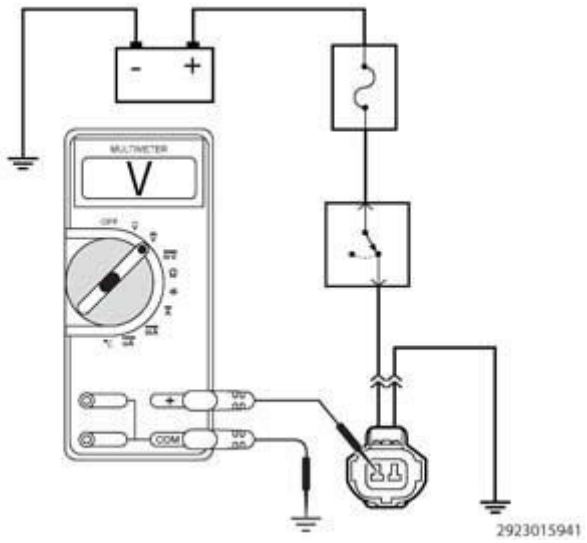

Fig. 219: Main Fuel Pump Module & Auxiliary Fuel Pump Module
Courtesy of CHRYSLER GROUP, LLC

Operation of the main fuel pump module along with the addition of a auxiliary fuel pump module with a auxiliary fuel level sending unit and draws fuel from the base of the auxiliary fuel pump module (2) through an internal tube.

The auxiliary fuel pump module flow rate is greater than the vehicle fuel consumption rate so that the auxiliary side of the tank is emptied before fuel is depleted from the primary side.

REMOVAL

REMOVAL

WARNING: **Risk of injury to eyes and skin from contact with fuel. Wear protective clothing and eye protection. Risk of poisoning from inhaling and swallowing fuel. Pour fuel only into appropriately marked and approved containers. Failure to follow these instructions may result in possible serious or fatal injury.**

WARNING: The fuel system is under constant high pressure even with engine OFF. Until the fuel pressure has been properly released from the system, do not attempt to open the fuel system. Do not smoke or use open flames/sparks when servicing the fuel system. Make sure the area in which the vehicle is being serviced is in a well ventilated area. Failure to comply may result in serious or fatal injury.

1. Remove the fuel pump module from the fuel tank. Refer to **MODULE, FUEL PUMP, REMOVAL**.

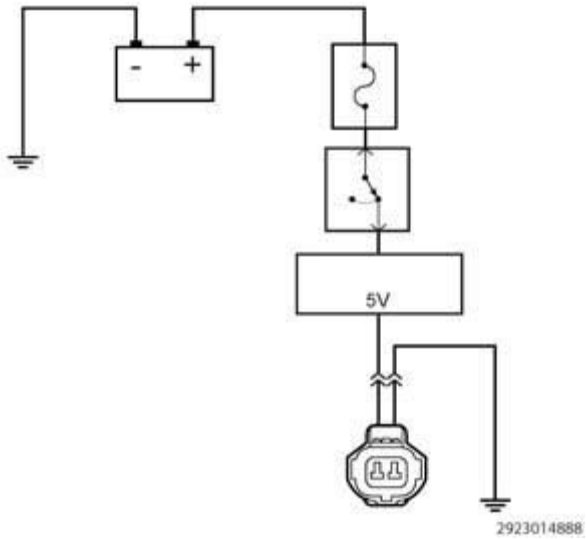

Fig. 220: Fuel Level Sending Unit Electrical Connector
Courtesy of CHRYSLER GROUP, LLC

2. Disconnect the fuel level sending unit and sensor pigtail wire connector (1) from the connector receptacle integral to the underside of the fuel pump module mounting flange.

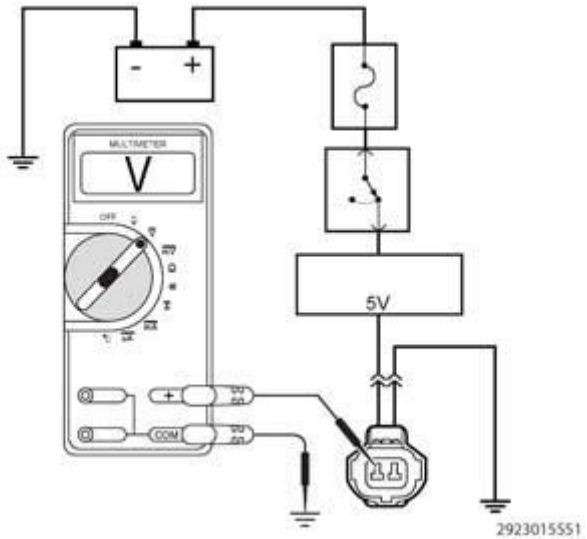

Fig. 221: Pressing Fuel Level Sending Unit Snap Tab To Left
Courtesy of CHRYSLER GROUP, LLC

CAUTION: Do not touch the terminals or the resistor card.

CAUTION: Do not pull the fuel level sending unit by the wires or the float arm.

3. Using your finger, press the fuel level sending unit snap tab to the left while gently pushing up on the bottom of the sending unit and sensor.
4. Remove the sending unit and sensor from the fuel pump module reservoir.

INSTALLATION

INSTALLATION

WARNING: Risk of injury to eyes and skin from contact with fuel. Wear protective clothing and eye protection. Risk of poisoning from inhaling and swallowing fuel. Pour fuel only into appropriately marked and approved containers. Failure to follow these instructions may result in possible serious or fatal injury.

WARNING: The fuel system is under constant high pressure even with engine OFF. Until the fuel pressure has been properly released from the system, do not attempt to open the fuel system. Do not smoke or use open flames/sparks when servicing the fuel system. Make sure the area in which the vehicle is being serviced is in a well ventilated area. Failure to comply may result in serious or fatal injury.

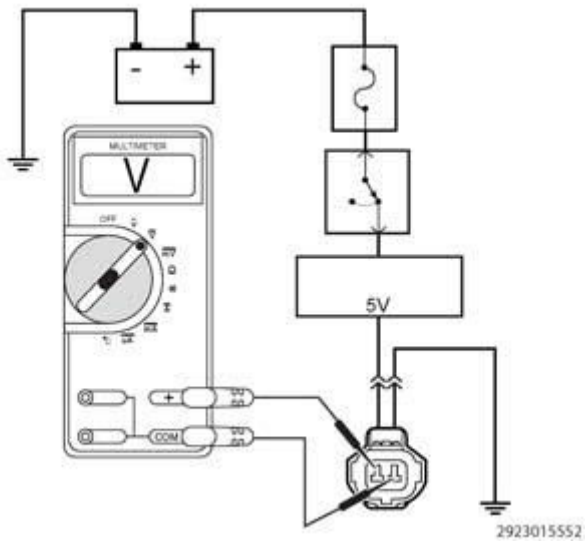

Fig. 222: Resistor Card
Courtesy of CHRYSLER GROUP, LLC

CAUTION: Do not touch the terminals or the resistor card.

CAUTION: Do not handle the new fuel level sending unit by the float arm.

1. Position the new fuel level sending unit and sensor to the mount integral to the fuel pump module reservoir.

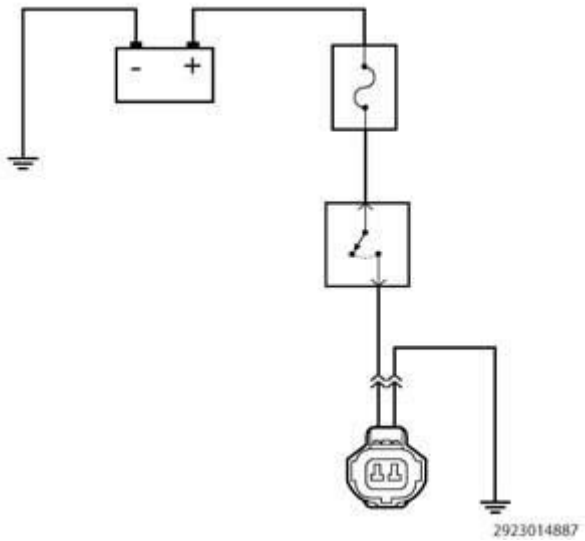

Fig. 223: Pushing Fuel Level Sending Unit Down Until Snap Tab Engages
Courtesy of CHRYSLER GROUP, LLC

2. Gently push the sending unit down until the latch tab engages.

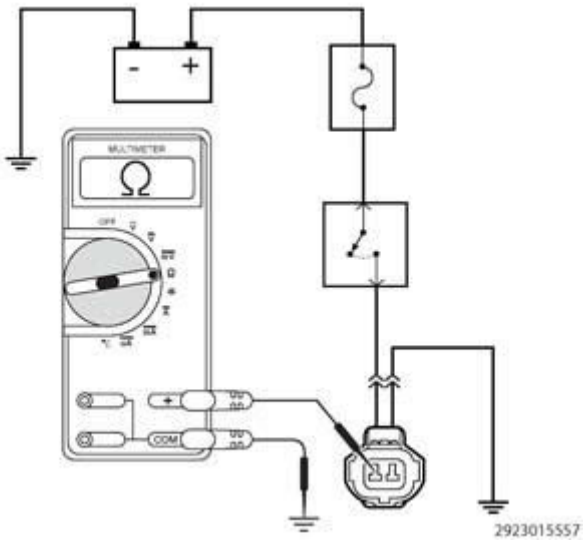

Fig. 224: Fuel Level Sending Unit Electrical Connector
Courtesy of CHRYSLER GROUP, LLC

CAUTION: Ensure the fuel level sending unit wires are routed so they do not get pinched between the coils of the spring when the module is completely compressed.

3. Reconnect the sending unit pigtail wire connector (1) to the connector receptacle integral to the underside of the fuel pump module mounting flange.
4. Reinstall the fuel pump module into the fuel tank. Refer to **MODULE, FUEL PUMP, INSTALLATION**.

SENSOR, FUEL PRESSURE

DESCRIPTION

DESCRIPTION

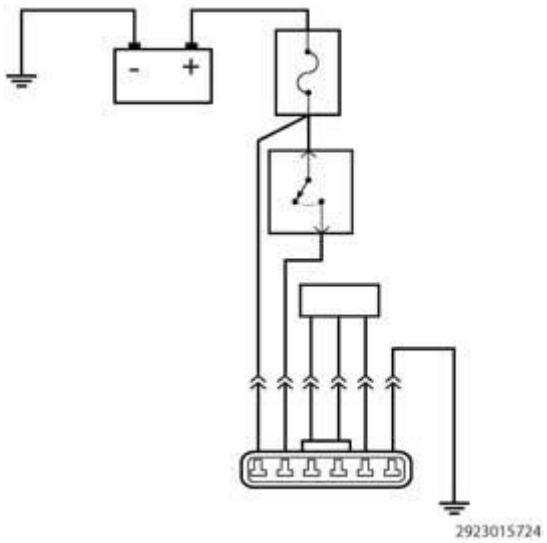

Fig. 225: Fuel Pressure Sensor
Courtesy of CHRYSLER GROUP, LLC

The fuel pressure sensor is fitted at the end of the common rail and its function is to provide the injection control unit with a feedback signal to enable it to modulate injection pressure and regulate fuel injection duration.

The fuel pressure sensor cannot be adjusted or repaired. If damaged or ineffective, the sensor must be replaced.

OPERATION

OPERATION

The fuel pressure sensor receives voltage and ground from the Powertrain Control Module (PCM), then provides a return input to the PCM through a separate signal circuit. This input along with internal programming and numerous inputs from other sensors allows the PCM to modulate fuel injection pressure and regulate fuel injector pulse duration as appropriate.

The fuel pressure sensor control and signal circuits are continuously monitored by the PCM. If the PCM detects a problem in any monitored circuit, it will store a Diagnostic Trouble Code (DTC) in its memory circuits. Such a DTC can be retrieved from the PCM through the Controller Area Network (CAN) data bus using a diagnostic scan tool connected to the Data Link Connector (DLC).

The fuel pressure sensor and the hard wired circuits between the sensor and the PCM may be diagnosed using conventional diagnostic tools and procedures. Refer to the appropriate wiring information. However, conventional diagnostic methods will not prove conclusive in the diagnosis of the fuel pressure sensor or the electronic controls or communication between other modules and devices that provide some features of the fuel injection system. The most reliable, efficient, and accurate means to diagnose the fuel pressure sensor or the electronic controls and communication related to fuel injection system operation requires the use of a diagnostic scan tool. Refer to the appropriate diagnostic information.

REMOVAL

REMOVAL

WARNING: Observe the following precautions when working on fuel systems: No sparks, open flames or smoking. Avoid inhaling and swallowing fuel. Avoid eye and skin contact with fuel. Pour fuels only into suitable and appropriately marked containers. Wear protective clothing. Failure to observe these precautions may result in fire, explosion, property damage, and serious or fatal injury.

WARNING: High pressure fuel lines deliver diesel fuel under extreme pressure from the injection pump to the fuel rail and from the fuel rail to the fuel injectors. This pressure may be as high as 1600 bar (23, 206 psi). Use extreme caution when inspecting for high pressure fuel leaks. Fuel under this amount of pressure can penetrate skin causing personal injury or death. Inspect for high pressure fuel leaks with a sheet of cardboard. Wear safety goggles and adequate protective clothing when servicing the high pressure circuits of the fuel system.

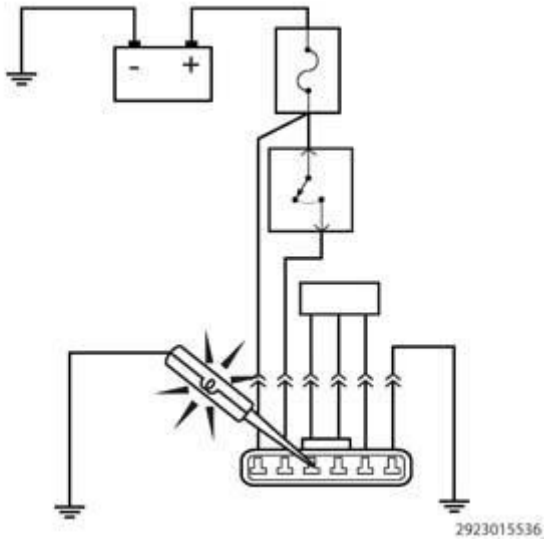

Fig. 226: Engine Cover
Courtesy of CHRYSLER GROUP, LLC

1. Disconnect the negative battery cable.
2. Remove the engine cover (1).

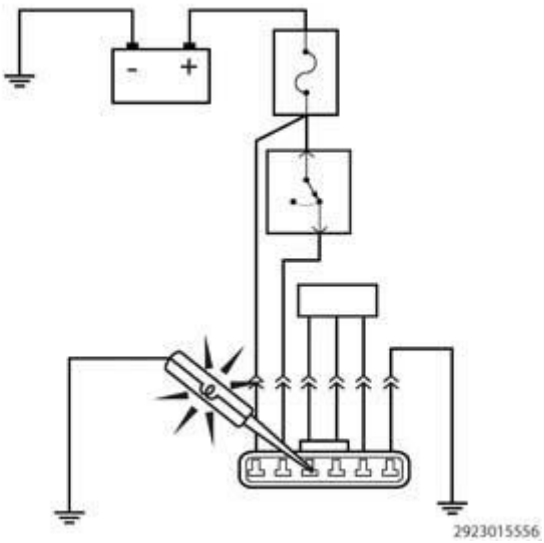

Fig. 227: Fuel Pressure Sensor Wire Harness Connector
Courtesy of CHRYSLER GROUP, LLC

3. Disconnect the fuel pressure wire harness connector (1).
4. Unscrew the fuel pressure sensor (2) from fuel rail.

INSTALLATION

INSTALLATION

WARNING: Observe the following precautions when working on fuel systems: No sparks, open flames or smoking. Avoid inhaling and swallowing fuel. Avoid eye and skin contact with fuel. Pour fuels only into suitable and appropriately marked containers. Wear protective clothing. Failure to observe these precautions may result in fire, explosion, property damage, and serious or fatal injury.

WARNING: High pressure fuel lines deliver diesel fuel under extreme pressure from the injection pump to the fuel rail and from the fuel rail to the fuel injectors. This pressure may be as high as 1600 bar (23, 206 psi). Use extreme caution when inspecting for high pressure fuel leaks. Fuel under this amount of pressure can penetrate skin causing personal injury or death. Inspect for high pressure fuel leaks with a sheet of cardboard. Wear safety goggles and adequate protective clothing when servicing the high pressure circuits of the fuel system.

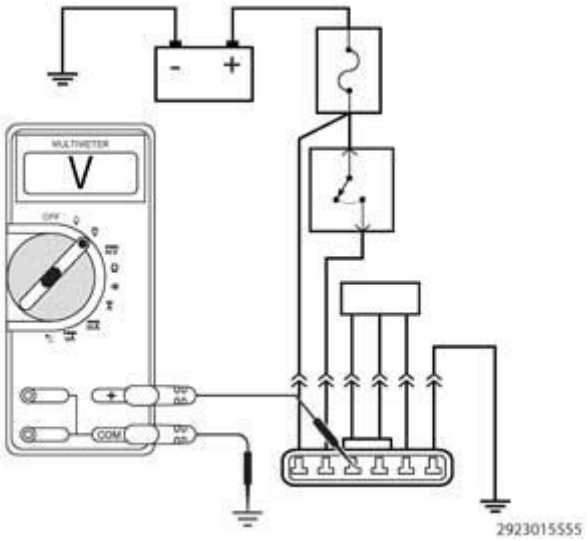

Fig. 228: Fuel Pressure Sensor Wire Harness Connector
Courtesy of CHRYSLER GROUP, LLC

1. Install the fuel pressure sensor (2) into the fuel rail. Tighten the sensor to 70 N.m (52 ft. lbs.).
2. Connect the fuel pressure wire harness connector (1).

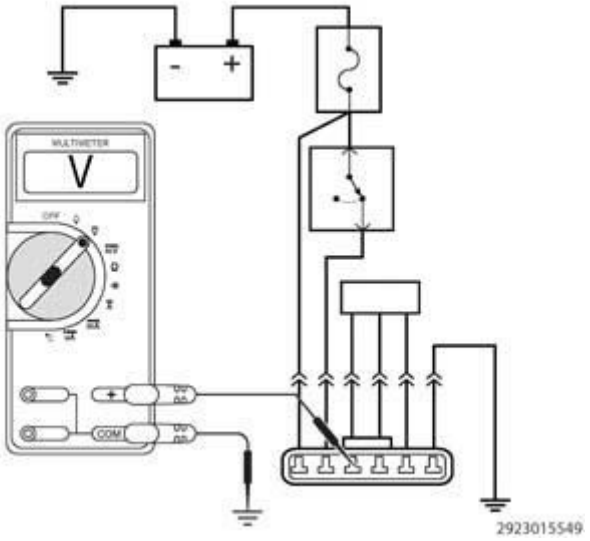

Fig. 229: Engine Cover
Courtesy of CHRYSLER GROUP, LLC

3. Connect the negative battery cable.
4. Start the engine and allow it to warm. Turn the engine OFF and inspect the fuel pressure sensor to fuel rail connection for leaks.
5. Install the engine cover (1).

SENSOR, FUEL TEMPERATURE

DESCRIPTION

DESCRIPTION

The Fuel Temperature Sensor is located in the fuel filter/water separator housing assembly and is located on the left-rear side of the engine compartment. The fuel temperature sensor is not a serviceable component. If diagnosis has lead you to replace the fuel temperature sensor then the whole fuel filter/water separator housing must be replaced.

REMOVAL

REMOVAL

1. The fuel temperature sensor is a combination fuel heater/temperature sensor which is a serviceable component. Refer to **HEATER, FUEL, REMOVAL**.

INSTALLATION

INSTALLATION

1. The fuel temperature sensor is a combination fuel heater/temperature sensor which is a serviceable component. Refer to **SEPARATOR AND FILTER, FUEL AND WATER, INSTALLATION**.

SENSOR, WATER IN FUEL

DESCRIPTION

DESCRIPTION

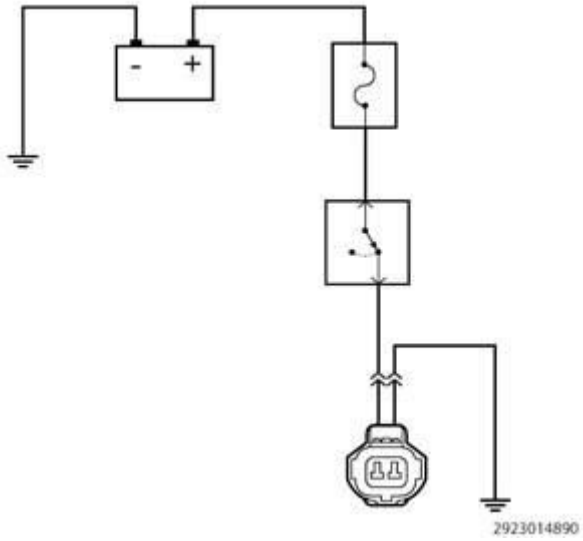

Fig. 230: Fuel (WIF) Sensor
Courtesy of CHRYSLER GROUP, LLC

The Water In Fuel (WIF) sensor (1) is located in the fuel filter housing. The WIF sensor (1) detects the presence of water in the fuel. If water is present in the fuel, a signal is sent to the Powertrain Control Module (PCM) and the PCM signals the instrument cluster, over the CAN bus, to illuminate the water in fuel warning.

OPERATION

OPERATION

The non-dielectric properties of the water allow the sensors probes to close the electronic circuit when water is present in the system. When diesel fuel is present in the system, its dielectric (does not conduct electricity well) properties do not allow any electrical contact between the probes. A 12V power signal is always present in order to illuminate the indicator on the instrument cluster.

REMOVAL

REMOVAL

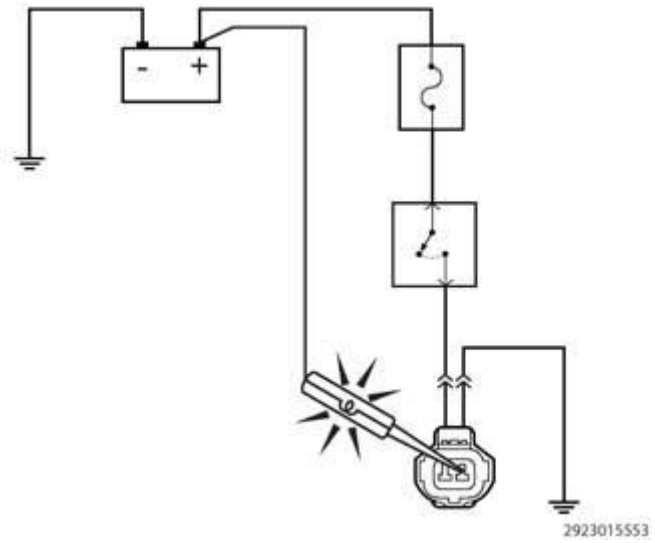

Fig. 231: Drain Plugs
Courtesy of CHRYSLER GROUP, LLC

NOTE: Remove any dirt and debris around the fuel filter assembly using a suitable solvent or compressed air. Area around the fuel filter assembly must be clean and dry.

1. Disconnect the negative battery cable.
2. Raise and support the vehicle. Refer to **HOISTING, STANDARD PROCEDURE** .
3. Loosen drain plug (1) and drain fuel filter/water separator into a suitable container.
4. Securely tighten drain plug (2).

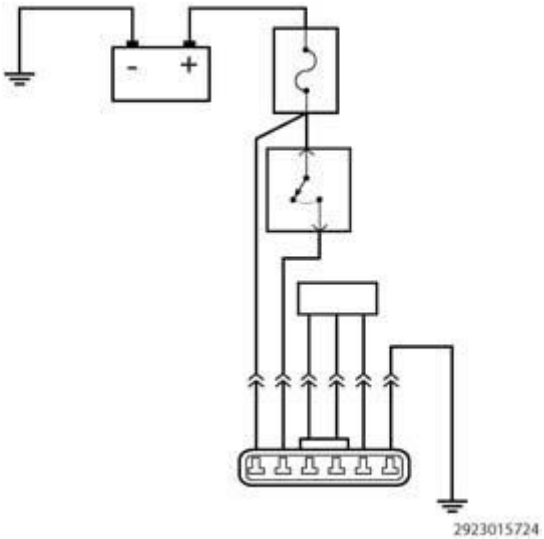

Fig. 232: WIF Sensor Wire Harness Connector
Courtesy of CHRYSLER GROUP, LLC

5. Disconnect the Water In Fuel (WIF) sensor wire harness connector (4).

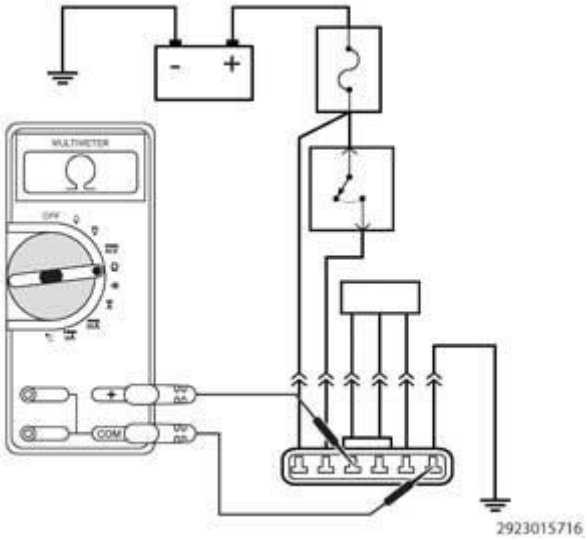

Fig. 233: Fuel (WIF) Sensor
Courtesy of CHRYSLER GROUP, LLC

6. Remove the water in fuel sensor (1).
7. Remove and discard O-ring seal.

INSTALLATION

INSTALLATION

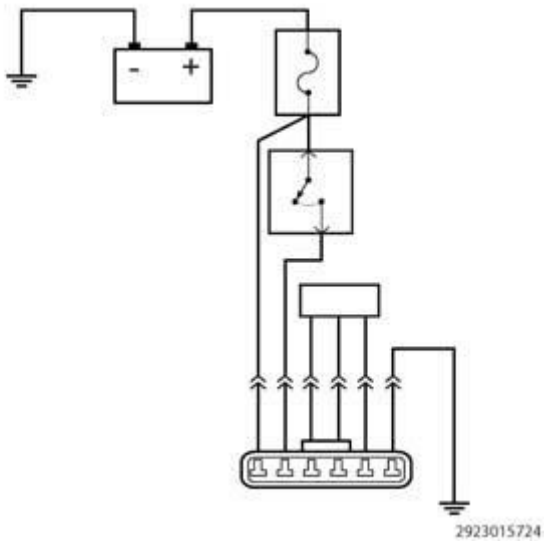

Fig. 234: O-Ring Seal & Water In Fuel Sensor
Courtesy of CHRYSLER GROUP, LLC

1. Clean the O-ring sealing area of housing.

NOTE: Lubricate the O-ring seal with clean diesel fluid.

2. Install a new O-ring seal (1) onto Water in Fuel (WIF) sensor (2).

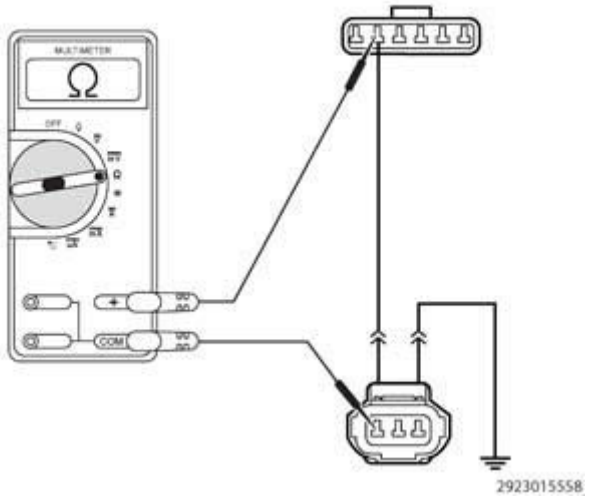

Fig. 235: Fuel (WIF) Sensor
Courtesy of CHRYSLER GROUP, LLC

3. Install the WIF sensor (1) and securely tighten sensor.

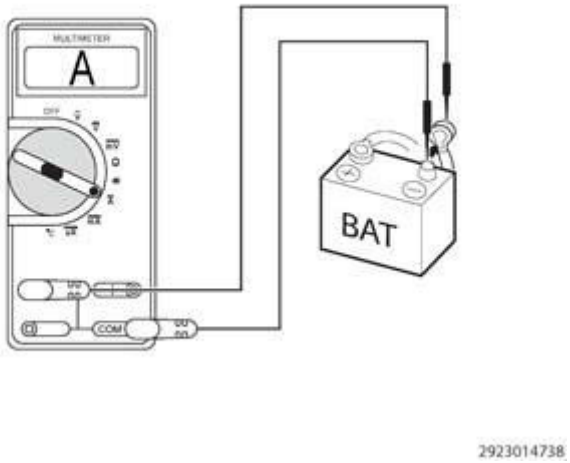

Fig. 236: WIF Sensor Wire Harness Connector
Courtesy of CHRYSLER GROUP, LLC

4. Connect the Water In Fuel (WIF) sensor wire harness connector (4).
5. Lower the vehicle.
6. Connect the negative battery cable.

SEPARATOR AND FILTER, FUEL AND WATER

DESCRIPTION

DESCRIPTION

The fuel filter/water separator housing is located on the left side of the vehicle in front of the fuel tank. The filter has the task of cleaning the fuel before it is fed to the high-pressure system and ultimately to the injector nozzles.

1. The fuel filter/water separator housing incorporates the following components:
    - Two 5 micron fuel filter element.
    - Water separator
    - Drain plug
    - Water In Fuel sensor (WIF)
    - Fuel heater/temperature sensor

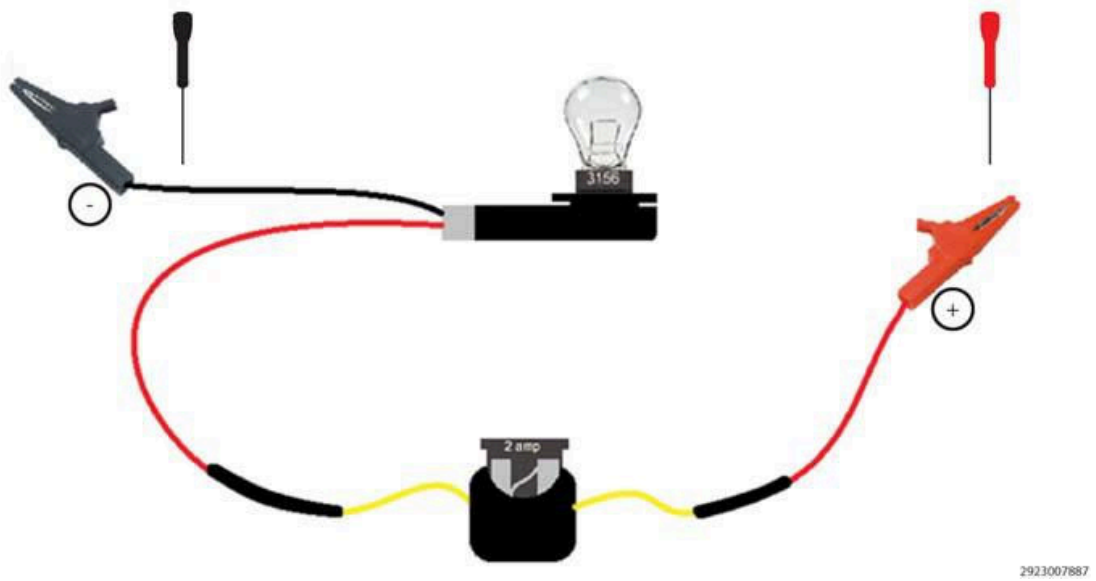

Fig. 237: Drain Plugs
Courtesy of CHRYSLER GROUP, LLC

Fuel filtering is critical in common-rail systems. Small amounts of impurities may damage the precision mechanical components over time. Water entering the injection system can also lead to damage. Servicing the fuel filters (2) is done from the bottom of the fuel filter/water separator housing.

A water reservoir is located at the bottom of the filter to collect any water contained in the fuel. A drain plug (1) is located on the bottom of the filter housing. The filter housing should be drained if a Water-in-Fuel message is displayed in the instrument cluster. Water is drained by removing the drain plug.

OPERATION

OPERATION

The fuel filter/water separator protects the fuel injection pump by removing contamination from the fuel being supplied to the pump.

DIAGNOSIS AND TESTING

DIAGNOSIS AND TESTING - FUEL FILTER

This diagnostic will test for a restricted fuel filter.

1. **CHECK THE LOW SIDE FUEL SYSTEM PRESSURE**
    1. Turn the ignition off.

WARNING: No sparks, open flames or smoking. Risk of poisoning from inhaling and swallowing fuel. Risk of injury to eyes and skin from contact with fuel. Pour fuels only into suitable and

appropriately marked containers. Wear protective clothing.

2. Disconnect the quick connect fitting between the Fuel Filter outlet and the High Pressure Fuel Pump and connect a fuel pressure gauge in-line.
3. Crank the engine or start the engine and observe the reading on the fuel pressure gauge.

   Does the fuel pressure read between 4.0 bar (58 psi) and 5.5 (79.7 psi)?

   No, pressure reading is below specification:

   - Go To 2

2. **CHECK THE FUEL SUPPLY PRESSURE AT FUEL FILTER INLET**
   1. Turn the ignition off.
   2. Remove the fuel pressure gauge from between the Fuel Filter outlet and the High Pressure Fuel Pump. Reconnect the fuel line.
   3. Disconnect the fuel supply line quick connect at the Fuel Filter inlet.
   4. Connect the fuel pressure gauge in-line between the fuel supply line and the Fuel Filter inlet fitting.
   5. Crank the engine or start the engine and observe the reading on the fuel pressure gauge.

      Does the fuel pressure read 4.0 bar (58 psi) or above?

      Yes

      - Replace the Fuel Filter in accordance with the service information.
      - Perform the PCM VERIFICATION TEST - 2.0L DIESEL. Refer to **PCM VERIFICATION TEST - 2.0L DIESEL** .

      No

      - Perform the CHECKING THE FUEL DELIVERY SYSTEM test procedure. Refer to **DIAGNOSIS AND TESTING** .

REMOVAL

REMOVAL

WARNING: **No sparks, open flames or smoking. Risk of poisoning from inhaling and swallowing fuel. Risk of injury to eyes and skin from contact with fuel. Pour fuels only into suitable and appropriately marked containers. Wear protective clothing.**

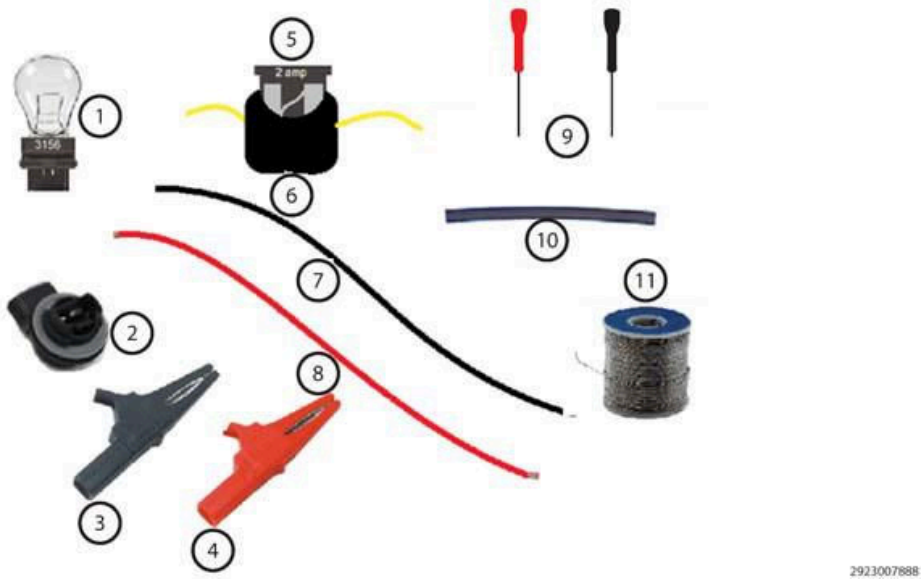

Fig. 238: Drain Plugs
Courtesy of CHRYSLER GROUP, LLC

1. Disconnect negative battery cable.
2. Raise and support the vehicle. Refer to **HOISTING, STANDARD PROCEDURE** .
3. Loosen drain plug (1) and drain fuel filter/water separator into a suitable container.
4. Securely tighten drain plug (1).

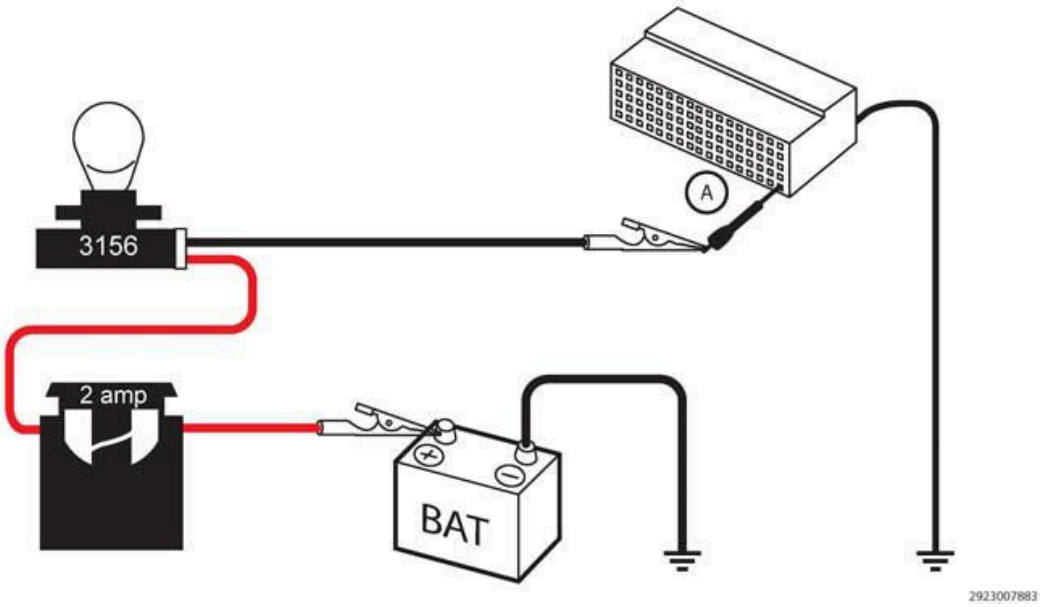

Fig. 239: WIF Sensor Wire Harness Connector
Courtesy of CHRYSLER GROUP, LLC

5. Disconnect the fuel filter/water separator outlet fuel line (1). Refer to **FITTING, QUICK CONNECT** .

6. Disconnect the fuel filter/water separator inlet fuel line (2). Refer to **FITTING, QUICK CONNECT** .
7. Disconnect the Water In Fuel (WIF) sensor harness connector (4).
8. Disconnect the combination fuel heater/temperature sensor wire harness connector (3).

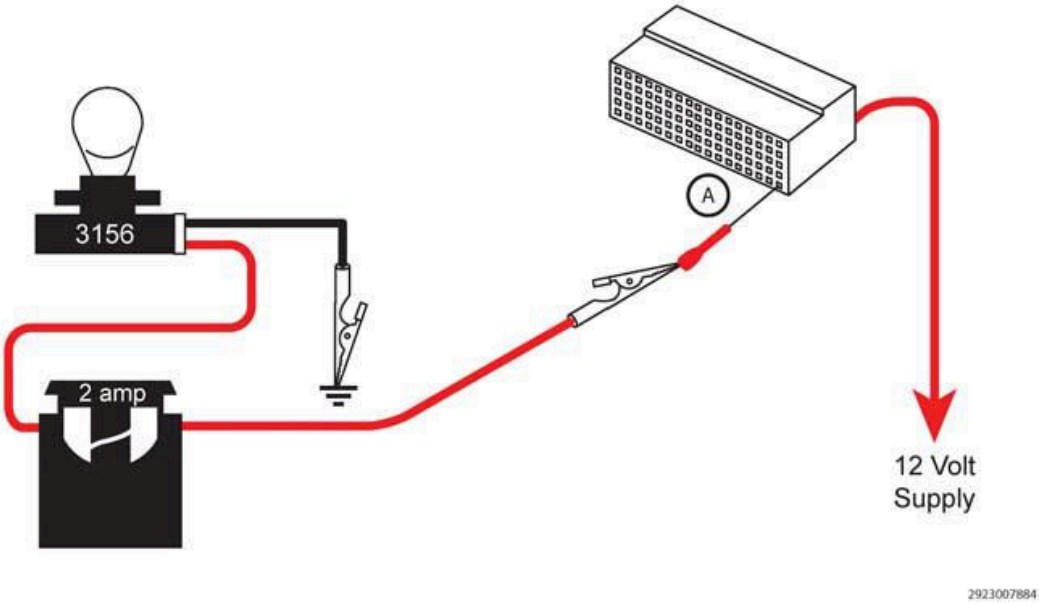

Fig. 240: WIF Sensor Assembly & Bolt
Courtesy of CHRYSLER GROUP, LLC

9. Remove bolts (2) and the fuel filter/water separator assembly (1).

INSTALLATION

INSTALLATION

WARNING: No sparks, open flames or smoking. Risk of poisoning from inhaling and swallowing fuel. Risk of injury to eyes and skin from contact with fuel. Pour fuels only into suitable and appropriately marked containers. Wear protective clothing.

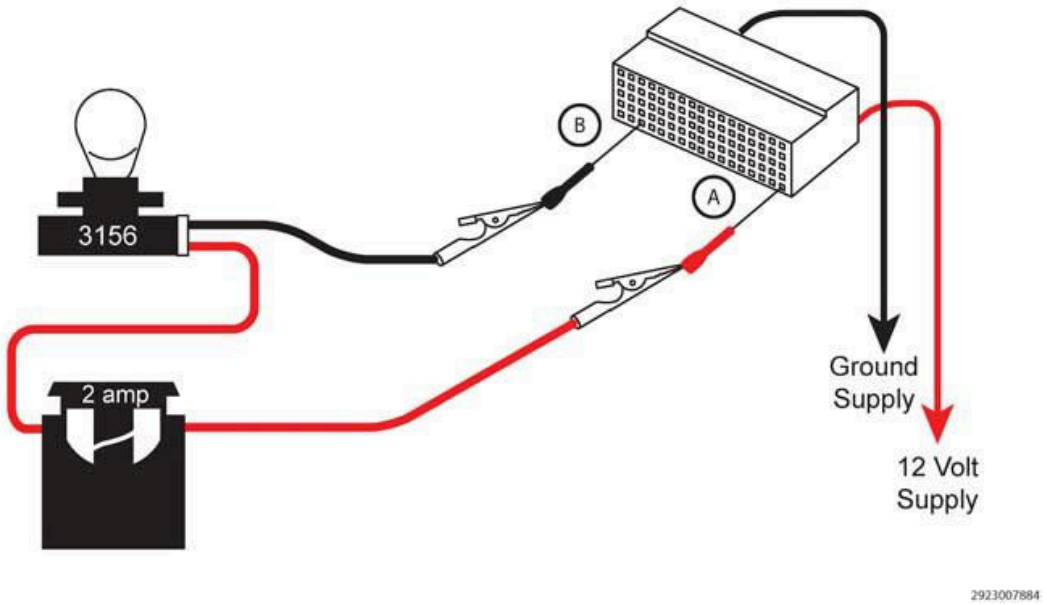

Fig. 241: WIF Sensor Assembly & Bolt
Courtesy of CHRYSLER GROUP, LLC

1. Install the fuel filter/water separator assembly (1). Tighten bolts (2) to 55 N.m (41 ft. lbs.).

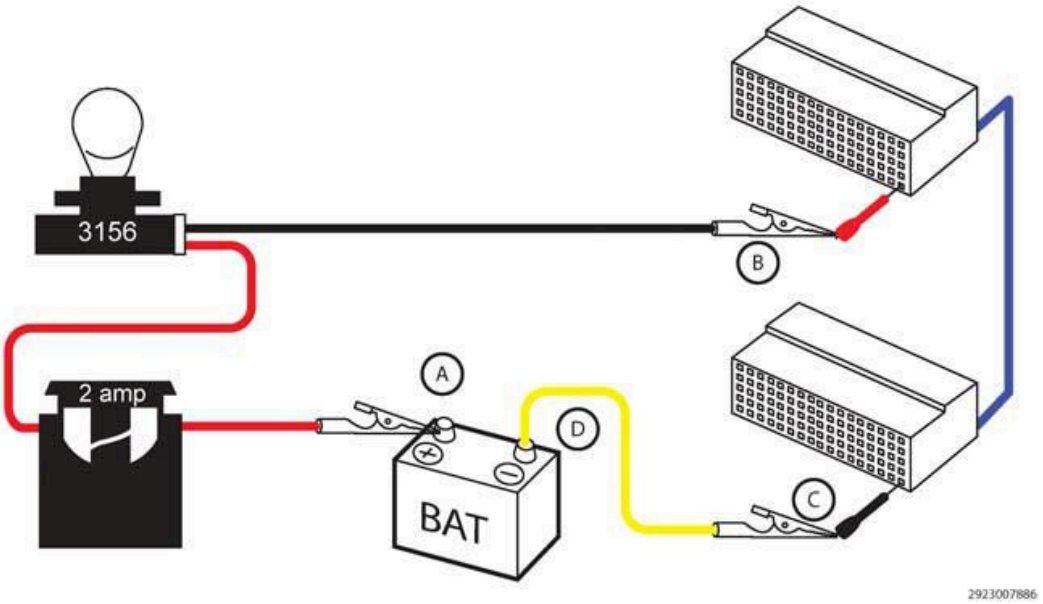

Fig. 242: WIF Sensor Wire Harness Connector
Courtesy of CHRYSLER GROUP, LLC

2. Connect the combination fuel heater/temperature sensor wire harness connector (3).
3. Connect the Water In Fuel (WIF) sensor wire harness connector (4).
4. Connect the fuel filter/water separator inlet fuel line (2).
5. Connect the fuel filter/water separator outlet fuel line (1).

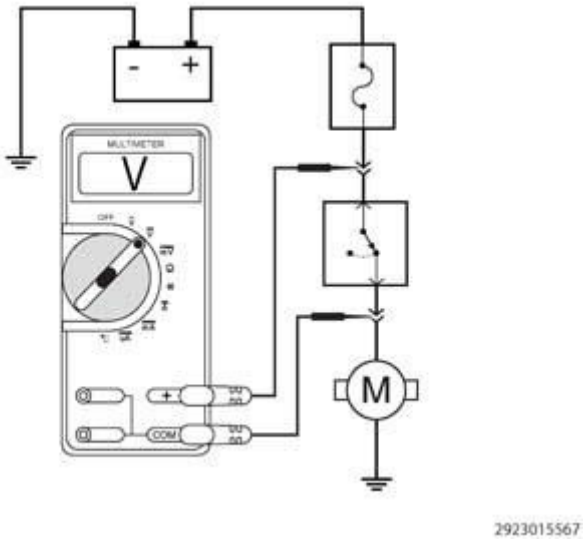

Fig. 243: Drain Plugs
Courtesy of CHRYSLER GROUP, LLC

6. Make sure fuel filter drain port (2) is closed.
7. Lower the vehicle.
8. Connect the negative battery cable.
9. Start the engine and inspect for leaks.

SOLENOID, FUEL QUANTITY

DESCRIPTION

DESCRIPTION

Fig. 244: Fuel Quantity Solenoid, Connector & High Pressure Fuel Injection Pump
Courtesy of CHRYSLER GROUP, LLC

The Fuel Quantity Solenoid (FQS) (1) is mounted to the back of the High Pressure Fuel Injection Pump (HPFIP) (3). The FQS controls the quantity of fuel entering the HPFIP internal pumping chambers.

OPERATION

OPERATION

The Fuel Quantity Solenoid (FQS) controls the quantity of fuel entering the High Pressure Fuel Injection Pump (HPFIP) internal pumping chambers. The PCM determines the fuel pressure needs of the fuel injection system based upon internal programming and numerous sensor inputs. The PCM then controls the FQS as needed to maintain the appropriate injection system operating pressure by directing fuel pressurized by the pump into either the high pressure fuel circuit or the fuel return circuit.

The FQS and control circuits are continuously monitored by the PCM. If the PCM detects a problem in any monitored circuit, it will store a Diagnostic Trouble Code (DTC) in its memory circuits. Such a DTC can be retrieved from the PCM through the Controller Area Network (CAN) data bus using a diagnostic scan tool connected to the Data Link Connector (DLC).

The FQS and the hard wired circuits between the solenoid and the PCM may be diagnosed using conventional diagnostic tools and procedures. Refer to the appropriate wiring information. However, conventional diagnostic methods will not prove conclusive in the diagnosis of the fuel quantity solenoid or the electronic controls or communication between other modules and devices that provide some features of the fuel injection system. The most reliable, efficient, and accurate means to diagnose the fuel quantity solenoid or the electronic controls and communication related to fuel injection system operation requires the use of a diagnostic scan tool. Refer to the appropriate diagnostic information.

REMOVAL

REMOVAL

WARNING: **No sparks, open flames or smoking. Risk of poisoning from inhaling and swallowing fuel. Risk of injury to eyes and skin from contact with fuel. Pour fuels only into suitable and appropriately marked containers. Wear protective clothing.**

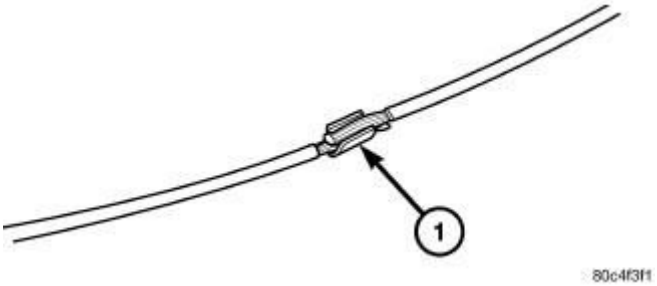

Fig. 245: Engine Cover
Courtesy of CHRYSLER GROUP, LLC

1. Disconnect the negative battery cable.
2. Remove the engine cover (1).

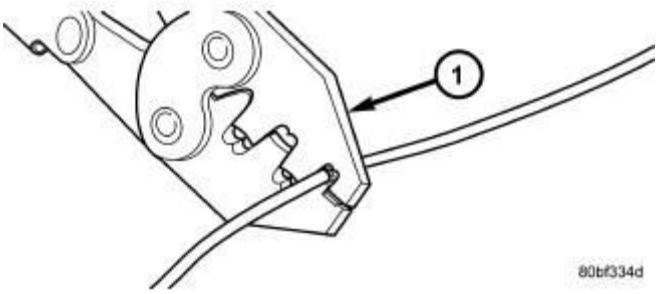

Fig. 246: Fuel Quantity Solenoid, Connector & High Pressure Fuel Injection Pump
Courtesy of CHRYSLER GROUP, LLC

3. Disconnect the fuel quantity solenoid wire harness connector (2).

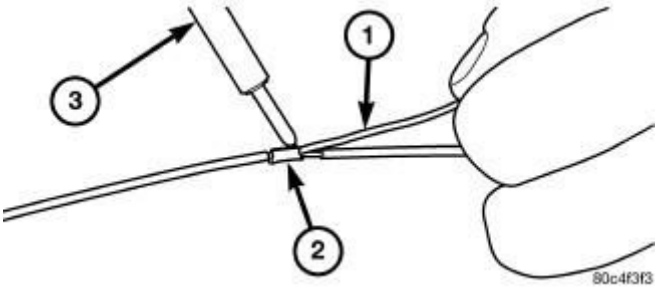

Fig. 247: Fuel Tube, Fuel Injection Pump & Fuel Rail
Courtesy of CHRYSLER GROUP, LLC

CAUTION: Counter hold union connections with a wrench and DO NOT EXCEED the recommended tightening torque in order to avoid also loosening the threaded connection between the union and the fuel injection pump.

4. Unscrew union nuts (1) at the fuel rail.
5. Using a wrench to counter hold fitting, unscrew the union nut (3) from the fuel injection pump outlet port and discard the fuel tube (2).

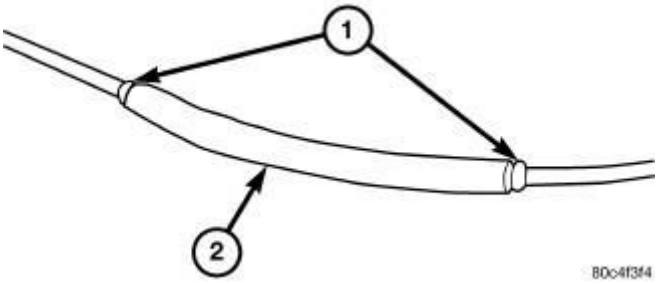

Fig. 248: Fuel Quantity Solenoid
Courtesy of CHRYSLER GROUP, LLC

6. Remove fasteners (2) and the fuel quantity solenoid (1).

INSTALLATION

INSTALLATION

WARNING: No sparks, open flames or smoking. Risk of poisoning from inhaling and swallowing fuel. Risk of injury to eyes and skin from contact with fuel. Pour fuels only into suitable and appropriately marked containers. Wear protective clothing.

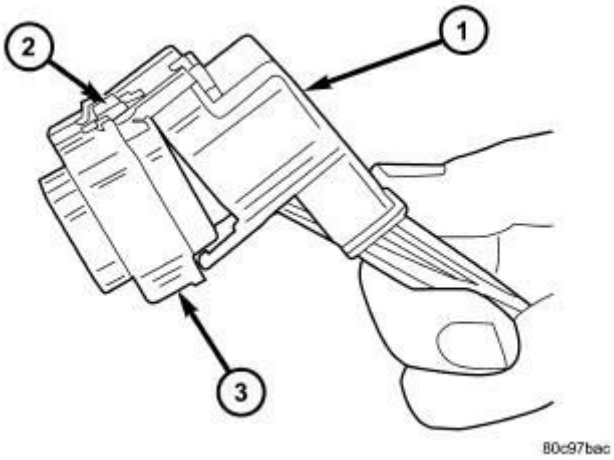

Fig. 249: Fuel Quantity Solenoid
Courtesy of CHRYSLER GROUP, LLC

1. Clean sealing surfaces.
2. Install new O-ring seals onto the fuel quantity solenoid (1).
3. Install the fuel quantity solenoid (1) and securely tighten fasteners (2).

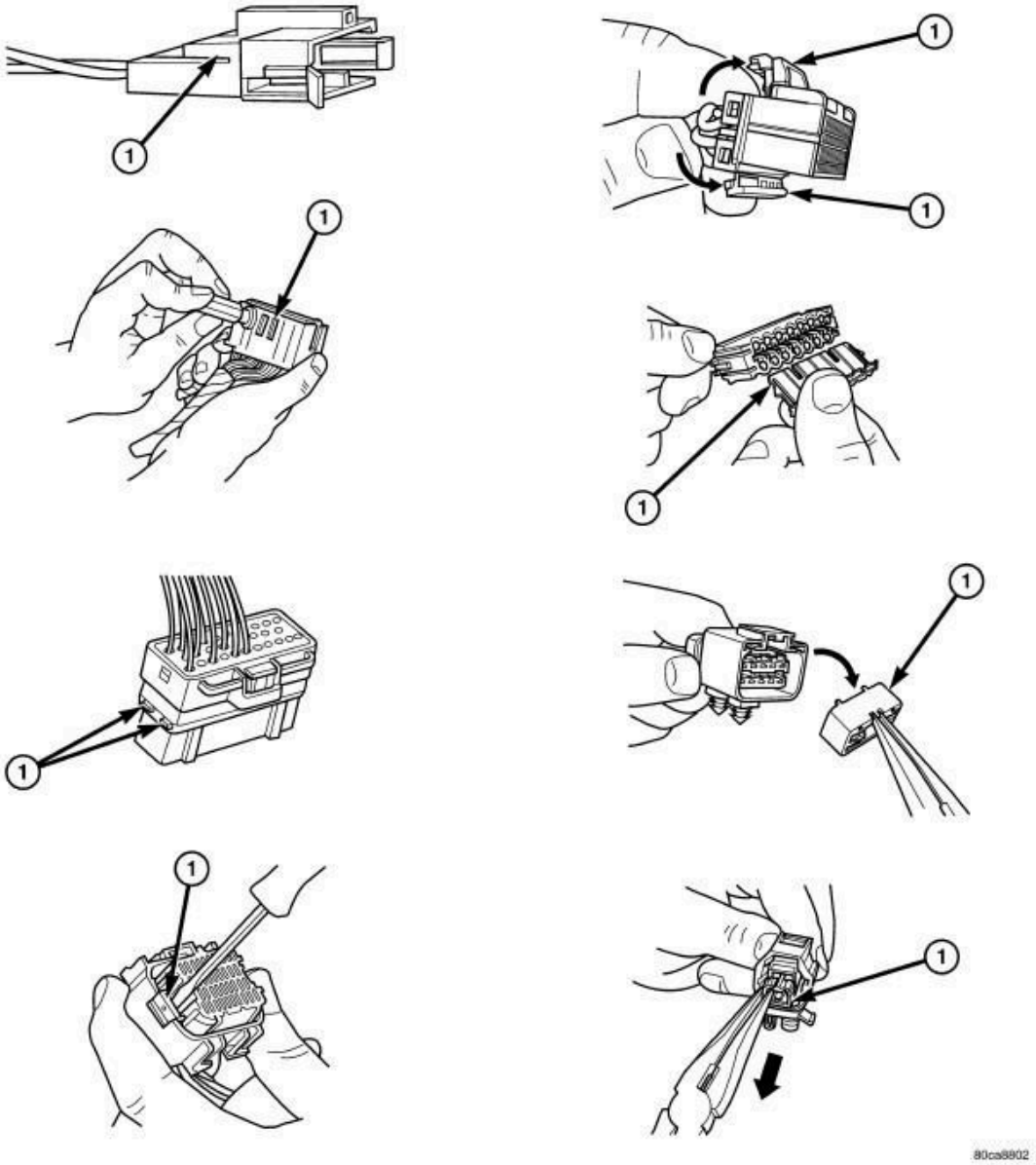

Fig. 250: Fuel Tube, Fuel Injection Pump & Fuel Rail
Courtesy of CHRYSLER GROUP, LLC

CAUTION: Counter hold union connections with a wrench and DO NOT EXCEED the recommended tightening torque in order to avoid also loosening the threaded connection between the union and the fuel injection pump.

CAUTION: DO NOT crimp or bend the high pressure fuel tubes.

NOTE: **High pressure fuel tubes from the fuel injection pressure pump to the fuel rail or from the fuel rail to the fuel injector must be replaced with new units if removed.**

4. Install new fuel tube (2) between the fuel injection pump (3) and the fuel rail (1). Tighten the union nuts to:
   - Step 1 Tighten the union nut (1) at fuel rail to 20 N.m (177 in. lbs.).
   - Step 2 Using a wrench to counter hold fitting, tighten union nut (3) at the fuel injection pump to 24 N.m (18 ft. lbs.).

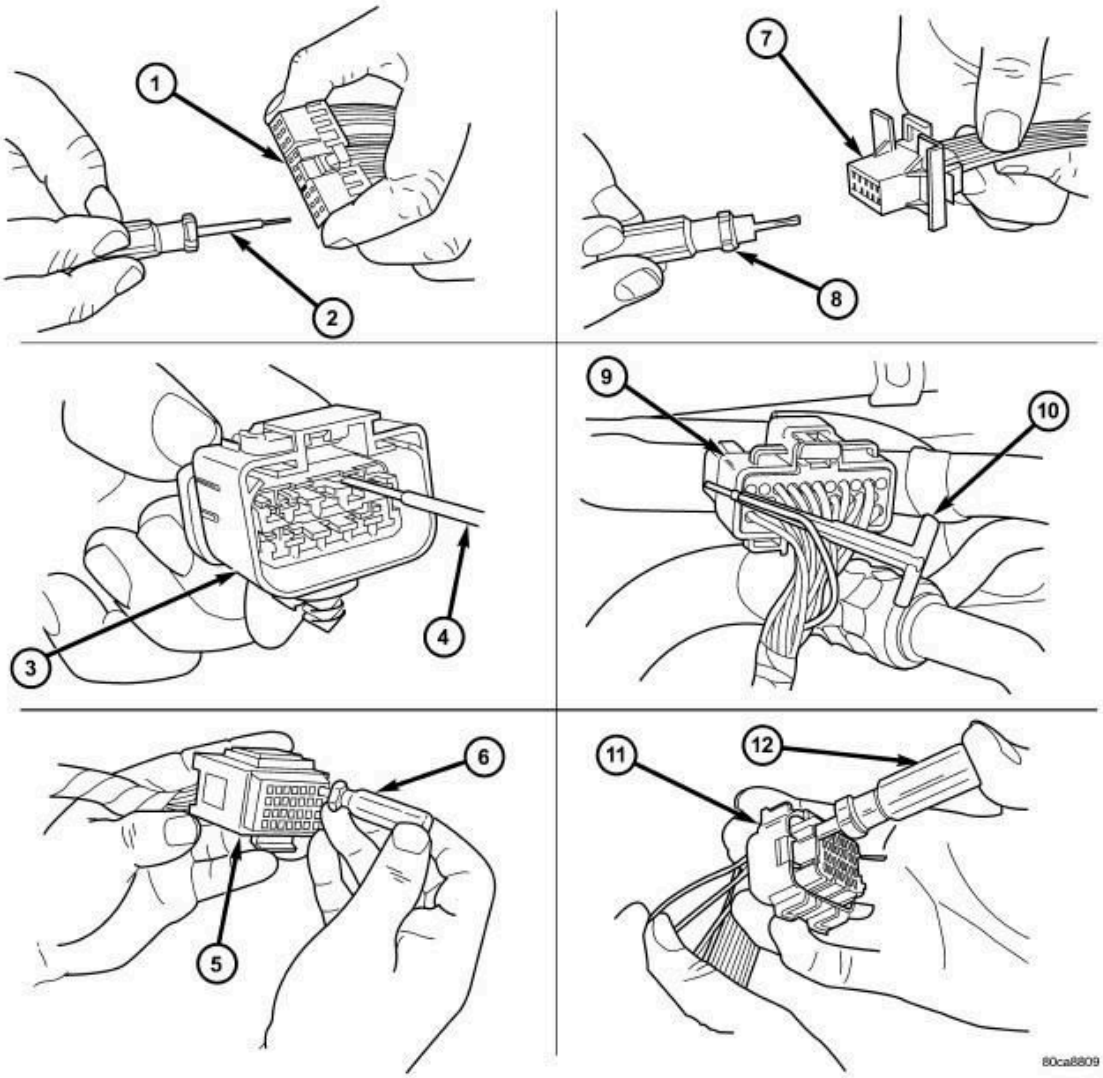

Fig. 251: Fuel Quantity Solenoid, Connector & High Pressure Fuel Injection Pump
Courtesy of CHRYSLER GROUP, LLC

5. Connect the fuel quantity solenoid wiring harness connector (2).

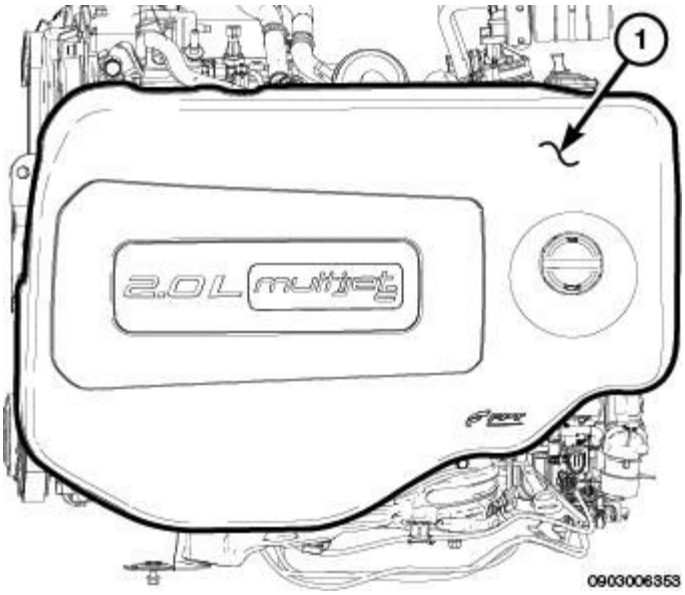

Fig. 252: Engine Cover
Courtesy of CHRYSLER GROUP, LLC

6. Connect the negative battery cable.
7. Start the engine and inspect for leaks.
8. Install the engine cover (1).

TANK, FUEL

REMOVAL

REMOVAL

WARNING: The fuel system is under constant pressure even with engine OFF. Until the fuel pressure has been properly relieved from the system, do not attempt to open the fuel system.

Fig. 253: Removing/Installing Rear Seat
Courtesy of CHRYSLER GROUP, LLC

1. Drain the fuel from the fuel tank. Refer to **FUEL DELIVERY - STANDARD PROCEDURE** .
2. Disconnect and isolate the battery negative cable.
3. Remove the rear seat. Refer to **SEAT, REAR, REMOVAL** .

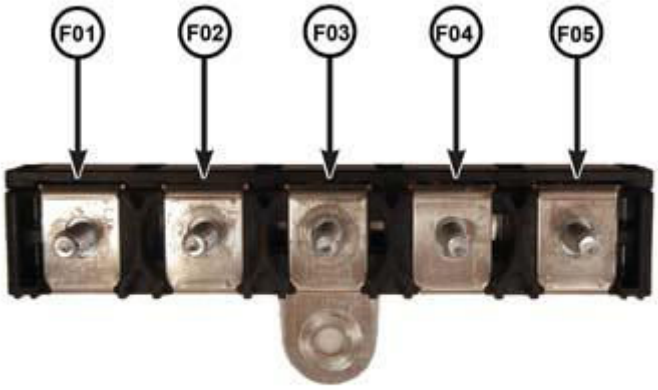

0822027501

Fig. 254: Fuel Module Access Covers & Wire Harness Connectors
Courtesy of CHRYSLER GROUP, LLC

4. Remove the carpet piece covering the access covers for fuel pumps.
5. Remove screws and lift up on the fuel pump module access cover (3, 4) and disconnect the wire harness

connector (2, 6).

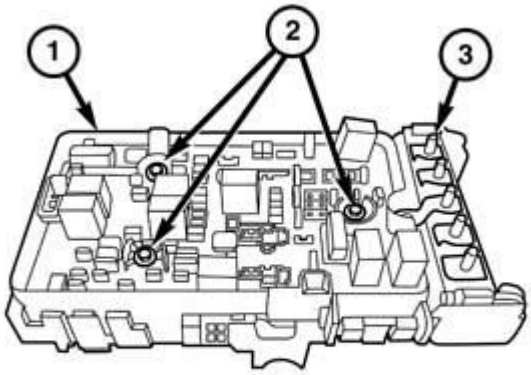

0822008650

Fig. 255: Fuel Supply, Return & Vapor Lines
Courtesy of CHRYSLER GROUP, LLC

6. Disconnect vapor line (1, 3) and the fuel line (2) quick connect fittings. Refer to **FITTING, QUICK CONNECT** .
7. Remove the exhaust pipes from the vehicle. Refer to **PIPE, EXHAUST, REMOVAL** .
8. If equipped with All-Wheel Drive (AWD), remove the rear propeller shaft.

Fig. 256: Skid Plate
Courtesy of CHRYSLER GROUP, LLC

NOTE: Right side shown in illustration in illustration, left side similar.

9. If equipped AWD, remove bolts (2) and the right and left fuel tank shields (3).
10. Remove the right and left underbody shield.

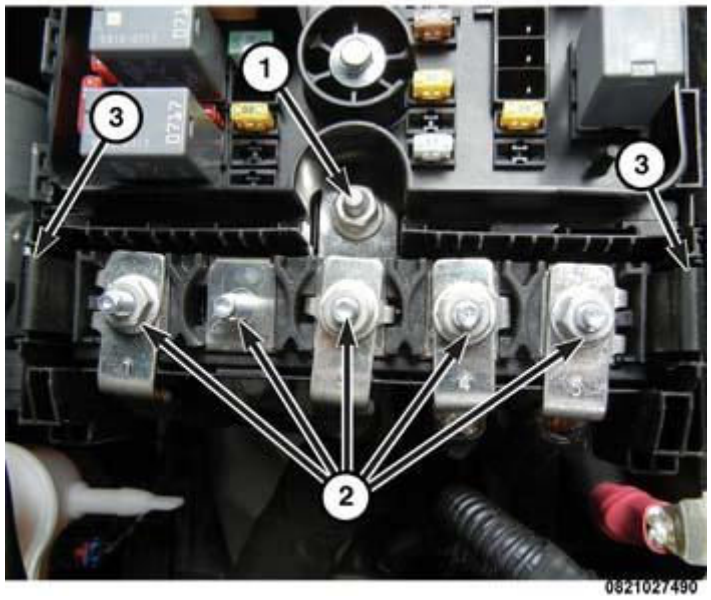

Fig. 257: Fuel Tank, Filler Tube & Hose Clamp
Courtesy of CHRYSLER GROUP, LLC

11. Loosen clamp (3) and disconnect the fuel filler tube (3) from fuel tank (1).
12. Disconnect the fuel filler tube vent line (2) and the fuel tank recirculation line (3) quick connect fittings. Refer to **FITTING, QUICK CONNECT** .
13. Use a transmission jack to support the fuel tank (1).

Fig. 258: Left Fuel Tank Strap Bolt
Courtesy of CHRYSLER GROUP, LLC

14. Remove the left fuel tank strap bolt (1).

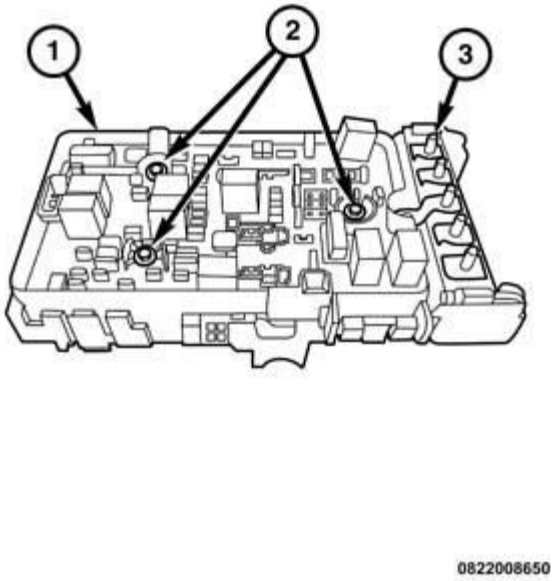

Fig. 259: Right Fuel Tank Strap Bolt
Courtesy of CHRYSLER GROUP, LLC

15. Remove the right fuel tank strap bolt (1).

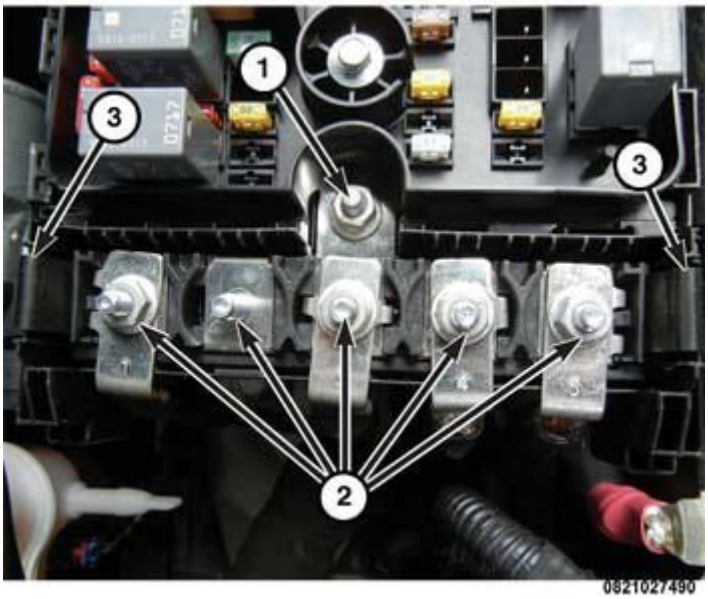

Fig. 260: Fuel Tank Straps & Bolts
Courtesy of CHRYSLER GROUP, LLC

16. Remove bolt (1) and the left fuel tank strap (3).
17. Remove bolt (1) and the right fuel tank strap (2).

18. Lower the fuel tank far enough to access and disconnect the underbody wire harness connector from the fuel pump module.
19. Continue lowering the fuel tank for removal.
20. If the fuel tank is being replaced, remove the main and auxiliary fuel pump modules from the fuel tank for transfer to the new tank. Refer to **MODULE, FUEL PUMP, REMOVAL**.
21. If fuel tank is being replaced, remove the shield (1) from the fuel tank (2) for transfer to the new tank.

INSTALLATION

INSTALLATION

1. If a new fuel tank is being installed, transfer the shield (1) to the fuel tank (2) from the removed tank.
2. If a new fuel tank is being installed, install the fuel pump module (Front-Wheel Drive/FWD) or the main and auxiliary fuel pump modules (All-Wheel Drive/AWD) into the new fuel tank from the removed tank. Refer to **MODULE, FUEL PUMP, INSTALLATION**.
3. Position the fuel tank onto a transmission jack.
4. Raise the fuel tank close enough to the vehicle underbody to connect the fuel pump module harness connector.

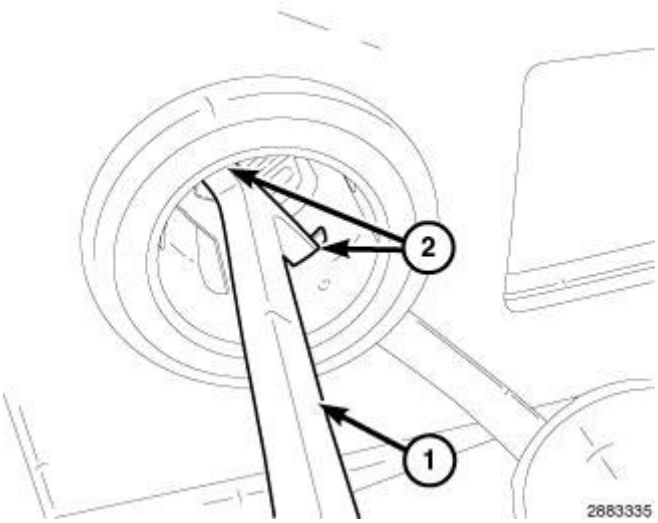

Fig. 261: Fuel Tank Straps & Bolts
Courtesy of CHRYSLER GROUP, LLC

5. Complete raising the fuel tank (1) into position against the vehicle underbody.
6. Install the right fuel tank strap (3). Tighten rear bolt (1) to 22 N.m (16 ft. lbs.).
7. Install the left fuel tank strap (2). Tighten rear bolt (1) to 22 N.m (16 ft. lbs.).

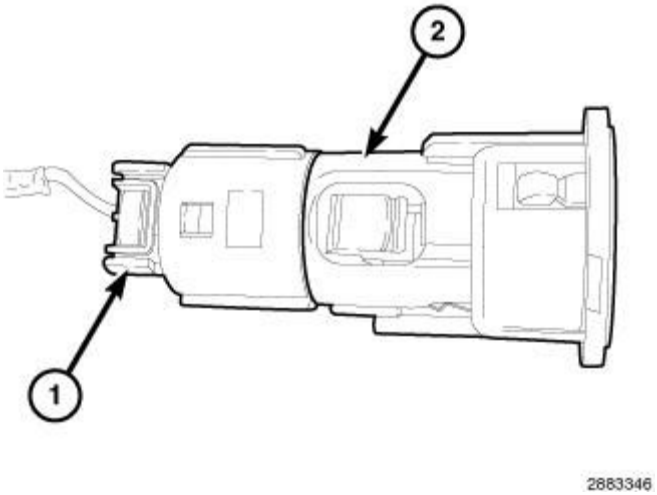

Fig. 262: Right Fuel Tank Strap Bolt
Courtesy of CHRYSLER GROUP, LLC

8. Install the right fuel tank strap bolt (1) and tighten to 22 N.m (16 ft. lbs.).

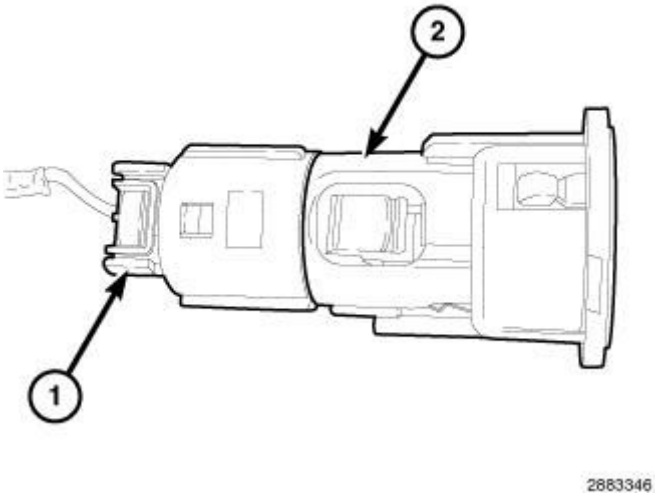

Fig. 263: Left Fuel Tank Strap Bolt
Courtesy of CHRYSLER GROUP, LLC

9. Install the left fuel tank strap bolt (1) and tighten to 22 N.m (16 ft. lbs.).
10. Remove the transmission jack.

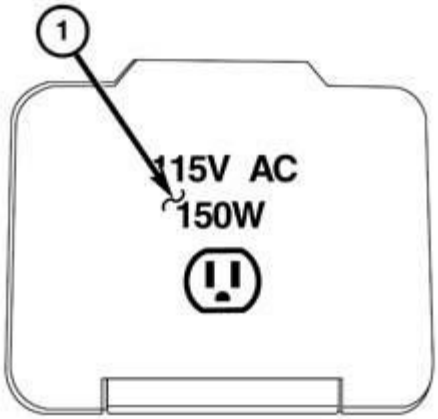

0811003271

Fig. 264: Fuel Tank, Filler Tube & Hose Clamp
Courtesy of CHRYSLER GROUP, LLC

11. Connect the fuel filler tube vent line and the fuel tank recirculation line quick connect fittings.
12. Connect the fuel filler tube (3) to the fuel tank (1). Tighten clamp to 3 N.m (27 in. lbs.).
13. Install the left and right underbody shield.

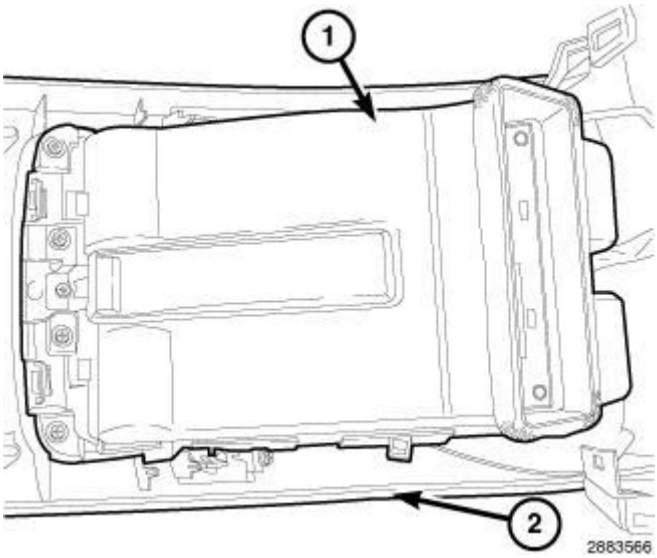

Fig. 265: Skid Plate
Courtesy of CHRYSLER GROUP, LLC

NOTE: Right side shown in illustration, left side similar.

14. If equipped, Install the right and left fuel tank shields (3). Tighten bolts (2) to 55 N.m 41 ft. lbs.).
15. If equipped with All-Wheel Drive (AWD), reinstall the rear propeller shaft.
16. Install the exhaust pipes to the vehicle. Refer to **PIPE, EXHAUST, INSTALLATION** .

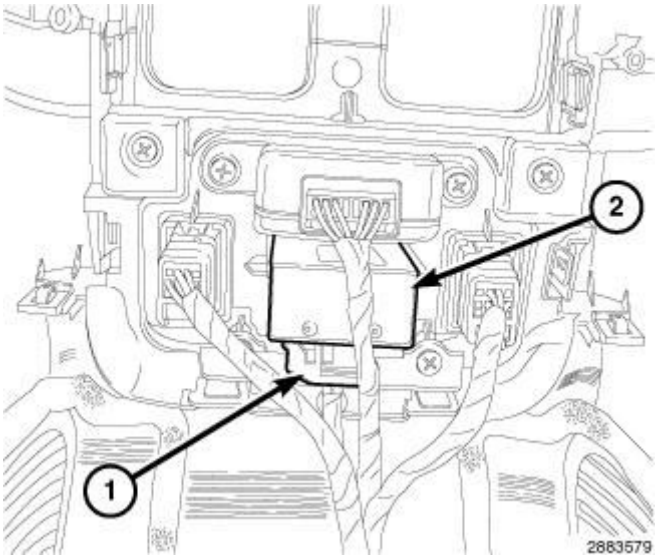

Fig. 266: Fuel Supply, Return & Vapor Lines
Courtesy of CHRYSLER GROUP, LLC

17. Connect the fuel line (2) and vapor line (1, 2) quick connect fittings.

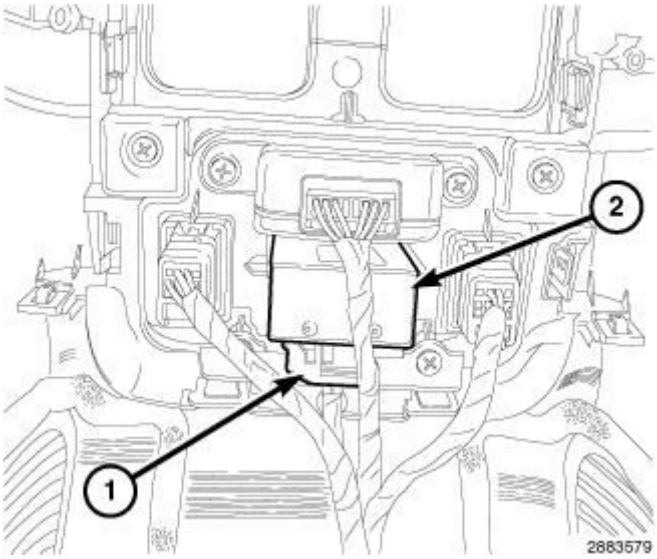

Fig. 267: Fuel Module Access Covers & Wire Harness Connectors
Courtesy of CHRYSLER GROUP, LLC

18. Connect the fuel pump module wire harness connector (2, 6). Install the access cover (3, 4) and securely tighten the screws.
19. Install the carpet piece covering the access covers for fuel pumps.

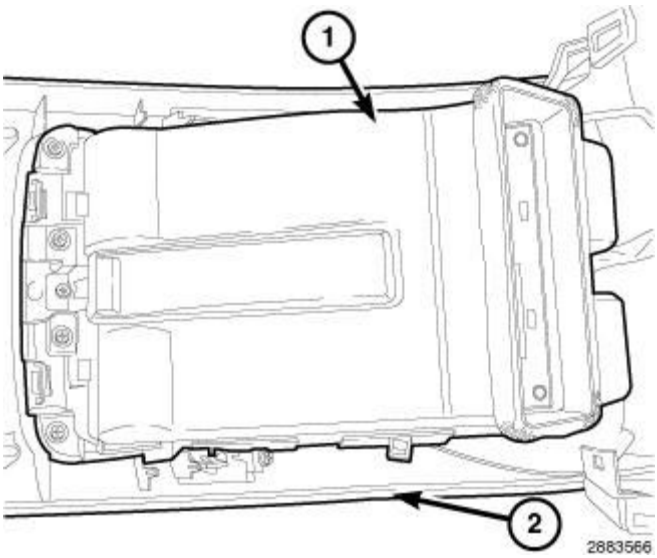

Fig. 268: Removing/Installing Rear Seat
Courtesy of CHRYSLER GROUP, LLC

20. Install the rear seat. Refer to **SEAT, REAR, INSTALLATION** .
21. Fill the fuel tank.
22. Connect the battery negative cable.
23. Use a diagnostic scan tool to pressurize the fuel system.
24. Check the fuel system carefully for leaks.

TUBE(S), FUEL, HIGH PRESSURE

REMOVAL

REMOVAL

WARNING: Observe the following precautions when working on fuel systems: No sparks, open flames or smoking. Avoid inhaling and swallowing fuel. Avoid eye and skin contact with fuel. Pour fuels only into suitable and appropriately marked containers. Wear protective clothing. Failure to observe these precautions may result in fire, explosion, property damage, and serious or fatal injury.

WARNING: High pressure fuel lines deliver diesel fuel under extreme pressure from the injection pump to the fuel rail and from the fuel rail to the fuel injectors. This pressure may be as high as 1600 bar (23, 206 psi). Use extreme caution when inspecting for high pressure fuel leaks. Fuel under this amount of pressure can penetrate skin causing personal injury or death. Inspect for high pressure fuel leaks with a sheet of cardboard. Wear safety goggles and adequate protective clothing when servicing the high pressure circuits of the fuel system.

NOTE: **High pressure fuel tubes from the fuel injection pressure pump to the fuel rail or from the fuel rail to the fuel injector must be replaced with new units if removed.**

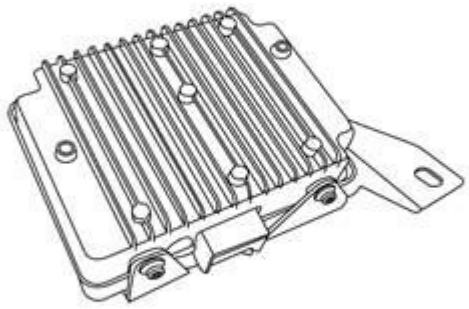

0821006695

Fig. 269: Engine Cover
Courtesy of CHRYSLER GROUP, LLC

1. Disconnect the negative battery cable.
2. Remove the engine cover (1).

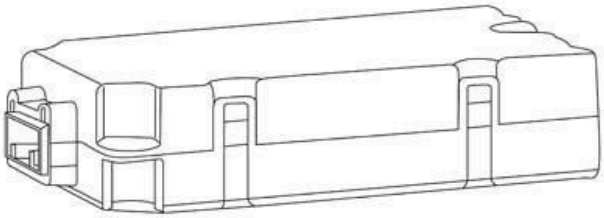

0821008033

Fig. 270: High Pressure Fuel Tubes
Courtesy of CHRYSLER GROUP, LLC

CAUTION: Counter hold union connections with a wrench at the fuel injectors. DO NOT EXCEED the recommended tightening torque in order to avoid also loosening the threaded connection between the union and the fuel injector.

CAUTION: DO NOT crimp or bend the high pressure fuel tubes.

NOTE: After removing high pressure fuel tubes from the fuel system, be certain to seal the connections to maintain and ensure system cleanliness.

3. Unscrew union nuts (1 and 3) and the discard high pressure fuel tubes (2).

0821020289

Fig. 271: Fuel Tube, Fuel Injection Pump & Fuel Rail
Courtesy of CHRYSLER GROUP, LLC

CAUTION: Counter hold union connections with a wrench and DO NOT EXCEED the recommended tightening torque in order to avoid also loosening the threaded connection between the union and the fuel injection pump.

4. Unscrew union nuts (1) at the fuel rail.
5. Using a wrench to counter hold fitting, unscrew the union nut (3) from the fuel injection pump outlet port and discard the fuel tube (2).

INSTALLATION

INSTALLATION

WARNING: Observe the following precautions when working on fuel systems: No sparks, open flames or smoking. Avoid inhaling and swallowing fuel. Avoid eye and skin contact with fuel. Pour fuels only into suitable and appropriately marked containers. Wear protective clothing. Failure to observe these precautions may result in fire, explosion, property damage, and serious or fatal injury.

WARNING: High pressure fuel lines deliver diesel fuel under extreme pressure from the injection pump to the fuel rail and from the fuel rail to the fuel injectors. This pressure may be as high as 1600 bar (23, 200 psi). Use extreme caution when inspecting for high pressure fuel leaks. Fuel under this amount of pressure can penetrate skin causing personal injury or death. Inspect for high pressure fuel leaks with a sheet of cardboard. Wear safety goggles and adequate protective clothing when servicing the high pressure circuits of the fuel system.

Fig. 272: Fuel Tube, Fuel Injection Pump & Fuel Rail
Courtesy of CHRYSLER GROUP, LLC

CAUTION: Counter hold union connections with a wrench and DO NOT EXCEED the recommended tightening torque in order to avoid also loosening the threaded connection between the union and the fuel injection pump.

CAUTION: DO NOT crimp or bend the high pressure fuel tubes.

NOTE: High pressure fuel tubes from the fuel injection pressure pump to the fuel rail or from the fuel rail to the fuel injector must be replaced with new units if removed.

1. Loosen the fuel rail mounting screws to ease the positioning of the new high pressure fuel tube.
2. Position the new fuel tube between the fuel injection pressure pump and the fuel rail. Tighten the union nuts to:
   - Step 1 Tighten the union nut (1) at fuel rail to 20 N.m (177 in. lbs.).
   - Step 2 Using a wrench to counter hold fitting, tighten union nut (3) at the high pressure pump to 24 N.m (18 ft. lbs.).

0821020291

Fig. 273: High Pressure Fuel Tubes
Courtesy of CHRYSLER GROUP, LLC

CAUTION: Counter hold union connections with a wrench at the fuel injectors. DO NOT EXCEED the recommended tightening torque in order to avoid also loosening the threaded connection between the union and the fuel injector.

3. Position the new fuel tubes (2) between the fuel injectors and the fuel rail. Tighten the union nuts to:
   - Step 1 Tighten the union nut at fuel rail (1) to 20 N.m (177 in. lbs.).
   - Step 2 Tighten the union nut at fuel injector (3) to 24 N.m (18 ft. lbs.).
4. Tighten the fuel rail mounting screws to 25 N.m (18 ft. lbs.).

Fig. 274: Engine Cover
Courtesy of CHRYSLER GROUP, LLC

5. Connect the negative battery cable.
6. Start the engine and inspect all of the high pressure fuel tube connections for leaks.
7. Install the engine cover (1).

TUBE, FUEL TANK FILLER

REMOVAL

REMOVAL

Fig. 275: Fuel Cap
Courtesy of CHRYSLER GROUP, LLC

1. Disconnect and isolate the negative battery cable.
2. Remove the fuel cap (1).

0821020297

Fig. 276: Fuel Tank, Filler Tube & Hose Clamp
Courtesy of CHRYSLER GROUP, LLC

3. Remove the right rear wheelhouse splash shield. Refer to **SHIELD, SPLASH, REAR WHEELHOUSE, REMOVAL** .
4. Loosen the hose clamp (2) and remove the fuel filler tube (3) from the fuel tank (1).

0821020298

Fig. 277: Fuel Door Housing Assembly & Mounting Bracket Nut
Courtesy of CHRYSLER GROUP, LLC

5. Remove filler tube mounting bracket nut (2).
6. Remove the fuel filler tube from fuel door housing assembly (1).

INSTALLATION

INSTALLATION

Fig. 278: Fuel Door Housing Assembly & Mounting Bracket Nut
Courtesy of CHRYSLER GROUP, LLC

1. Install fuel filler tube (1) to the fuel door housing assembly.
2. Install filler tube mounting bracket nut (2). Tighten bolt to 8 N.m (71 in. lbs.).

0821020300

Fig. 279: Fuel Tank, Filler Tube & Hose Clamp
Courtesy of CHRYSLER GROUP, LLC

3. Install fuel filler tube (1) to the fuel tank (3). Tighten hose clamp (4) to 3 N.m (27 in. lbs.).
4. Install the right rear wheelhouse splash shield. Refer to **SHIELD, SPLASH, REAR WHEELHOUSE, INSTALLATION** .

0821020303

Fig. 280: Fuel Cap
Courtesy of CHRYSLER GROUP, LLC

5. Install the fuel cap (1).
6. Connect the negative battery cable.

FUEL INJECTION, DIESEL

OPERATION

OPERATION

A vehicle that is not properly tuned and maintained cannot be expected to perform at its maximum efficiency and can have an adverse effect on fuel economy. The following recommendations will ensure that the vehicle is performing at its maximum efficiency:

- **Use the recommended motor oil grade.** Using the manufacturer's recommended grade of Mopar® motor oil can improve fuel mileage by 1-2%. Mopar® motor oil labeled "Energy Conserving" contains friction-reducing additives.
- **Check and replace air filters.** Replacing a clogged air filter with a new Mopar® air filter can improve fuel mileage by as much as 10%.
- **Keep the engine tuned.** Repairing a vehicle that is noticeably out of tune can improve fuel mileage by an average of 4%. Maintaining a vehicle and repairing problems, such as a faulty oxygen sensor, can improve mileage by as much as 40%.
- **Keep tires properly inflated.** Under inflated tires can lower fuel mileage by 0.4% for every 1 psi drop in pressure of all four tires.

SPECIFICATIONS

TORQUE - FUEL INJECTION

DESCRIPTION	N.m	Ft. Lbs.	In. Lbs.
Accelerator Pedal Position Sensor Nuts	18	-	159
Crankshaft Position Sensor Bolt	9	-	80
Fuel Injector Tensioning Claw Nut	28	21	-
High Pressure Fuel Tube at Fuel Injector Union Nut	24	18	-
High Pressure Tube at Fuel Rail Union Nut	20	-	177
Oxygen Sensor	45	33	-

SPECIAL TOOLS

SPECIAL TOOLS

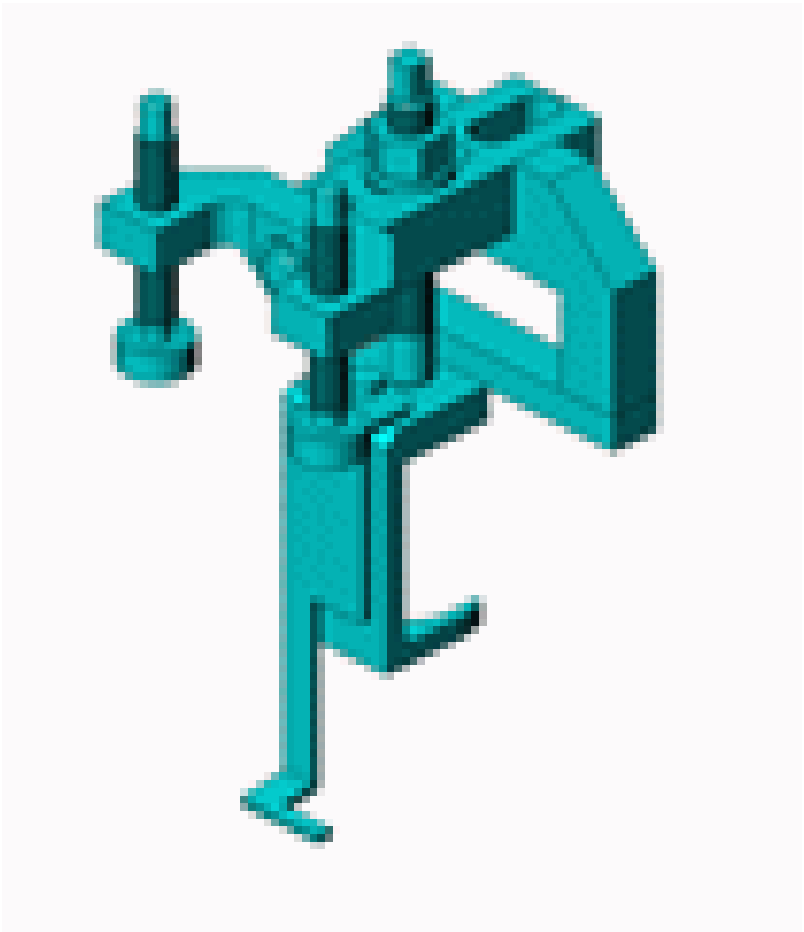	20125 - Tool, Flywheel Injector Removal
	20134 - Tool, Fuel Injector Remover

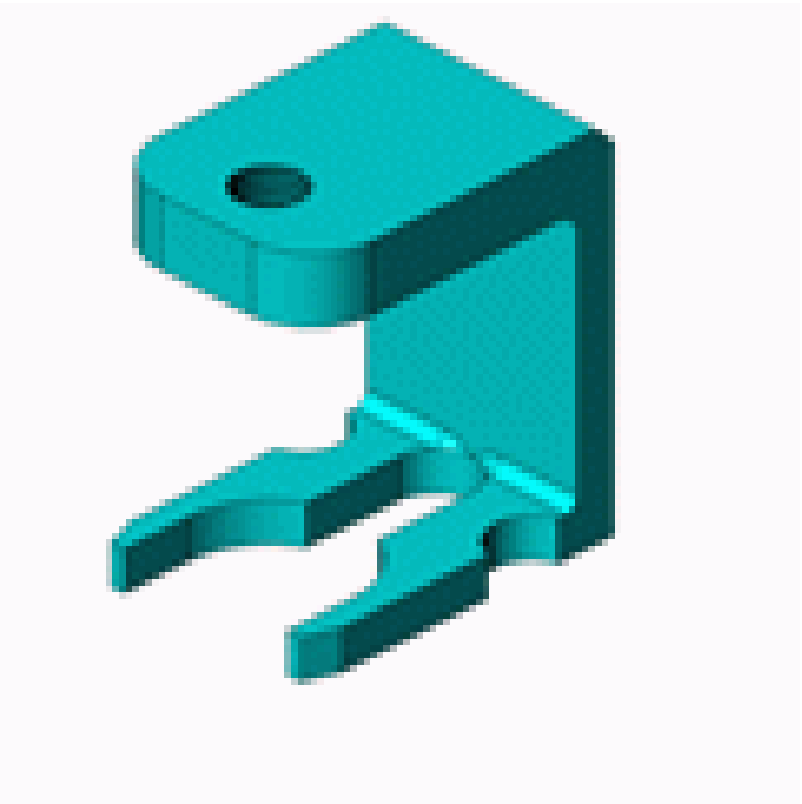	
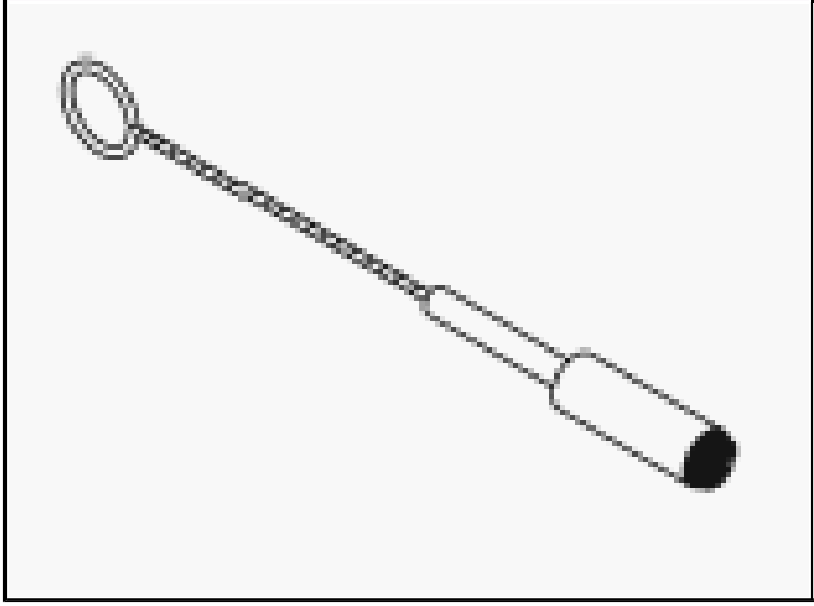	9717 - Brush, Injector Bore (Originally Shipped In Kit Number(s) 9910.)

INJECTOR(S), FUEL

DESCRIPTION

DESCRIPTION

Fig. 281: Fuel Injectors
Courtesy of CHRYSLER GROUP, LLC

There are four individual fuel injectors (1) for all four cylinders. These fuel injectors (1) are used to deliver atomized fuel into the combustion chamber. They also pressurize the fuel and meter the fuel.

OPERATION

OPERATION

The Common Rail system makes it possible to carry out a pre-injection (pilot injection) before T.D.C. This has the advantage of reducing the pressure shift in the combustion chamber, thus reducing the combustion noise typical of direct injection engines. The control unit controls the quantity of fuel injected, regulating the line pressure and injection times.

The control unit processes the following information in order to control the quantity of fuel to inject:

- Engine RPM;
- Coolant Temperature;
- Turbocharging Pressure;
- Air Temperature;
- Aspirated Air Quantity;
- Battery Voltage;
- Diesel Pressure;
- Accelerator Pedal Position.

STANDARD PROCEDURE

STANDARD PROCEDURE - CLEANING FUEL INJECTORS

NOTE: Before cleaning the injector recesses, seal the injector holes in the injector recesses with the appropriate pin to prevent debris from falling into the recesses and entering the motor.

1. Seal the injector holes inside the cylinder head recesses.

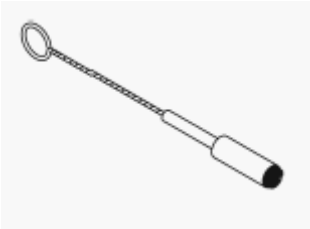

Fig. 282: Special Tool #9717 Injector Bore Brush
Courtesy of CHRYSLER GROUP, LLC

2. Clean the bottom of the cylinder recess with the Injector Bore Brush (special tool #9717, Brush, Injector Bore).
3. Blow out the recess and clean again with a non-woven cloth and cover over.
4. Perform these steps for each injector recess.

NOTE: DO NOT clean the tip of the injector with a wire brush. Use a non - woven cloth.

5. Clean injector body with a wire brush.
6. Clean injector tips with a non-woven cloth.

NOTE: Do Not apply antiseize lubricant to the injector nozzle area.

7. Grease injector body with anti seize lubricant.

NOTE: Always replace the seals that seal off the injectors at the cylinder head to the combustion chamber and replace the retaining screws.

REMOVAL

REMOVAL

CAUTION: PAY CLOSE ATTENTION TO THE FOLLOWING POINTS WHEN REMOVING FUEL INJECTORS:

- **Injectors MUST be removed only using the special tools provided for this purpose.**
- **Injectors MUST NOT be disassembled.**

- **Before cleaning injector recesses, seal all injector holes in the injector recesses with a pin.**
- **Clean all injector recesses in the cylinder head with a non-woven cloth and then a cylinder brush.**
- **Carefully clean sealing surfaces of injector recesses with the round brush. DO NOT us a power brush.**

Fig. 283: Engine Cover
Courtesy of CHRYSLER GROUP, LLC

1. Disconnect the negative battery cable.
2. Remove the engine cover (1).

Fig. 284: Fuel Return Lines & Injectors
Courtesy of CHRYSLER GROUP, LLC

3. Remove the retaining clips and the fuel return lines (1) from the fuel injectors (2) and position aside.

Fig. 285: High Pressure Fuel Tubes
Courtesy of CHRYSLER GROUP, LLC

NOTE: The fuel rail to fuel injector fuel tubes must be replaced if remove.

4. Unscrew union nuts (1 and 3) and the discard high pressure fuel tubes (2).

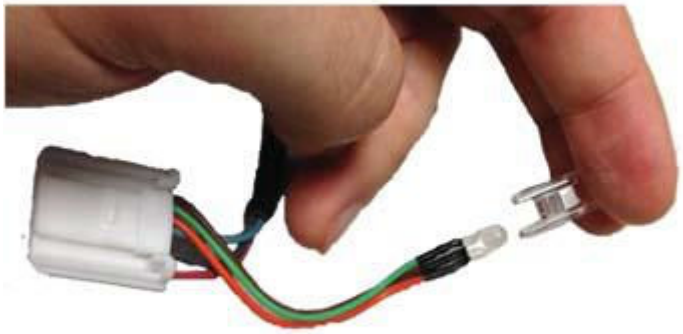

0821020308

Fig. 286: Oxygen Sensor Wire Harness Connector
Courtesy of CHRYSLER GROUP, LLC

5. Disconnect the oxygen sensor wire harness connector (1) and detach the harness connector (2) from bracket (3).

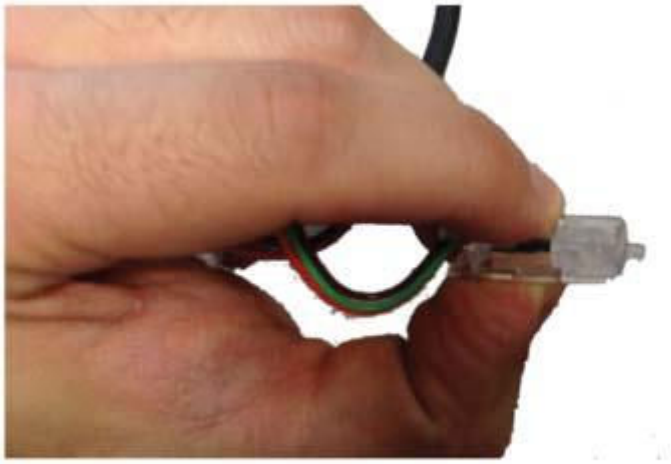

0821020309

Fig. 287: Upper Turbocharger Heat Shield & Mid Upper Turbocharger Heat Shield
Courtesy of CHRYSLER GROUP, LLC

6. Remove bolts (2) and the upper turbocharger heat shield (1).

0821020310

Fig. 288: Turbocharger Heat Shield & Fasteners
Courtesy of CHRYSLER GROUP, LLC

7. Detach the exhaust manifold exhaust temperature sensor ire harness from the lower turbocharger heat shield.
8. Remove bolts (1), nut (3), and the lower turbocharger heat shield (2).

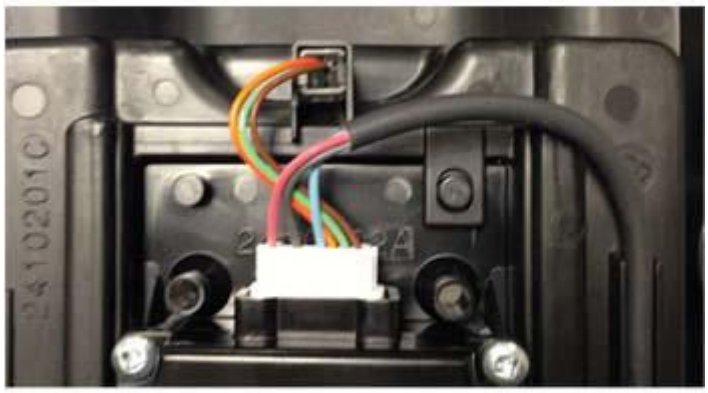

0821020311

Fig. 289: Fuel Injector Wire Harness Connectors
Courtesy of CHRYSLER GROUP, LLC

9. Disconnect the Camshaft Position Sensor (CMP) wire harness connector.
10. Remove the seven bolts (2) securing the engine wire harness.

11. Disconnect the fuel injectors wire harness connectors (1) and position harness aside.

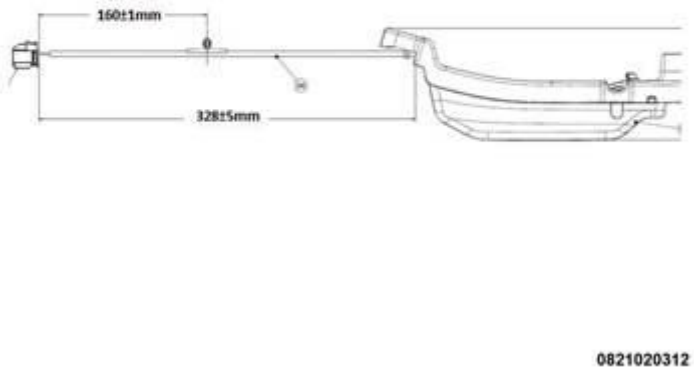

Fig. 290: Fuel Injector & Retaining Clamp
Courtesy of CHRYSLER GROUP, LLC

CAUTION: Prior to removing the fuel injectors, use compressed air to remove any accumulated dirt and debris. If dirt and debris enter the engine, internal engine damage may result.

12. Using compressed air, remove any accumulated dirt and debris from around the fuel injectors.

NOTE: Record the location of each fuel injector removed so it can be installed in its original location.

13. Remove nut (1) the fuel injector retaining clamp (2) and remove the fuel injector (3).

Fig. 291: Removing Fuel Injector
Courtesy of CHRYSLER GROUP, LLC

14. If the fuel injector can't be removed by hand then use the (special tool #10495, Remover, Fuel Injector) (2) with slide hammer C-3752 and install it on the fuel injector (1) and remove the fuel injector.

INSTALLATION

INSTALLATION

CAUTION: Pay close attention to the following points when installing fuel injectors.

- **Blow out injector recesses, clean again with a non-woven cloth and then cover over. Fiber residues from woven cloths ARE NOT permissible.**
- **Carefully carry out a visual inspection of the sealing surfaces of the injector recesses.**
- **The length of the round brush can be adjusted and should be approximately 3 mm for cleaning the seal seat. Optimal cleaning is achieved only if a brush with a flat surface is used. If necessary the surface of the brush can be ground flat on a grinding stone.**
- **ALWAYS replace the seals which seal off the injectors at the cylinder head to the combustion chamber. It is important that no grease gets onto the seal. Any impurities on the seal, on the sealing surfaces at the injector and cylinder head as a result of combustion residue or similar are absolutely not permissible.**
- **The nuts attaching the injectors must always be replaced.**
- **The tip of the injector nozzle MUST NOT be cleaned with a wire brush. Use a non-woven cloth.**

- **Clean entire injector with a non-woven cloth.**
- **Fiber residues from a woven cloths are not permissible.**

Fig. 292: Fuel Injector & Retaining Clamp
Courtesy of CHRYSLER GROUP, LLC

NOTE: **If a new fuel injector is being installed, there is a nine digit alphanumeric code on the injector that needs to be entered into the PCM using the scan tool.**

1. Clean injectors and recesses. Refer to **INJECTOR(S), FUEL, STANDARD PROCEDURE**.
2. Coat injector body with clean diesel fuel and install new sealing washers.
3. Install the fuel injector (3) and retaining claw (2) to its original location as noted during the removal process and apply downward pressure to seat it. Install nut (1) and tighten to 28 N.m (21 ft. lbs.).

0821020290

Fig. 293: Fuel Injector Wire Harness Connectors
Courtesy of CHRYSLER GROUP, LLC

4. Connect the Camshaft Position Sensor (CMP) wire harness connector.
5. Position the engine wire harness and connect all four fuel injector wire harness connectors (1).
6. Install and securely tighten the seven bolts (2) securing the engine wire harness.

0821020314

Fig. 294: Turbocharger Heat Shield & Fasteners
Courtesy of CHRYSLER GROUP, LLC

7. Install the lower turbocharger heat shield (2).
    - Tighten bolts (1) to 12 N.m (106 in. lbs.).

- Tighten nut (3) to 8 N.m (71 in. lbs.).

8. Attach the exhaust manifold exhaust temperature sensor wire harness to the lower turbocharger heat shield.

0821020315

Fig. 295: Upper Turbocharger Heat Shield & Mid Upper Turbocharger Heat Shield
Courtesy of CHRYSLER GROUP, LLC

9. Install the upper turbocharger heat shield (2). Tighten the bolts (1) to 12 N.m (106 in. lbs.).

0821020316

Fig. 296: Oxygen Sensor Wire Harness Connector
Courtesy of CHRYSLER GROUP, LLC

10. Attach the oxygen sensor wire harness connector (2) to the bracket (3) and connect the oxygen sensor

wire harness connector (1).

Fig. 297: High Pressure Fuel Tubes
Courtesy of CHRYSLER GROUP, LLC

11. Install new fuel tubes (2). Refer to **TUBE(S), FUEL, HIGH PRESSURE, INSTALLATION**.

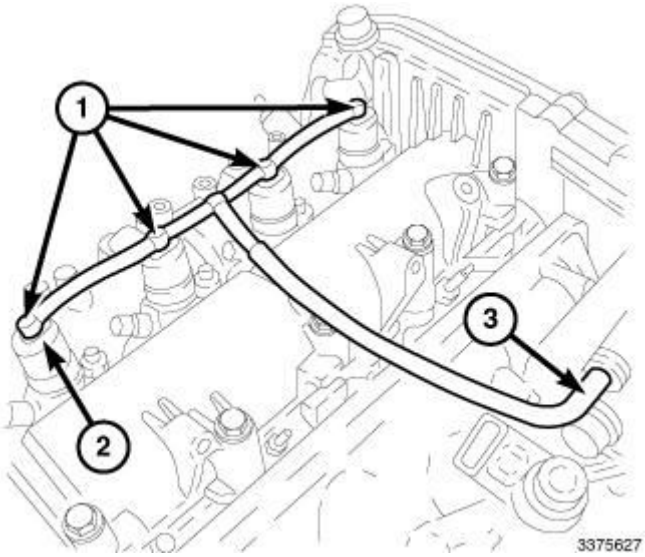

Fig. 298: Fuel Return Lines & Injectors
Courtesy of CHRYSLER GROUP, LLC

12. Install the fuel return lines (1) to the fuel injectors (2) and install the retaining clips.

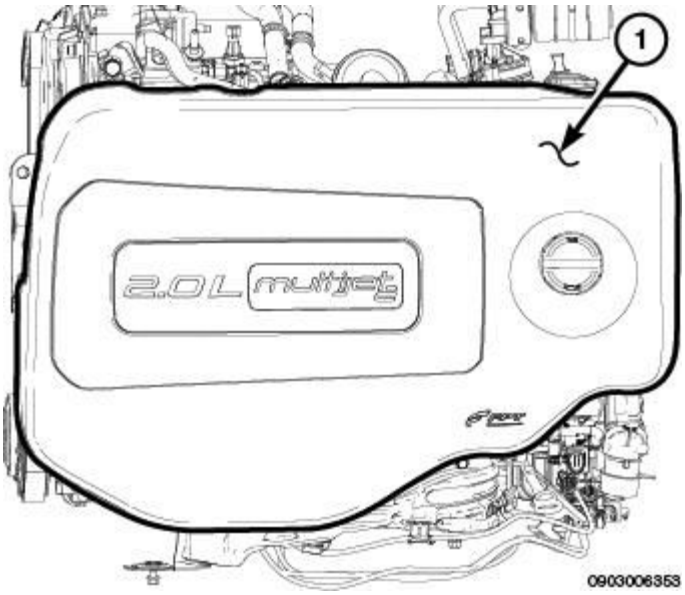

Fig. 299: Engine Cover
Courtesy of CHRYSLER GROUP, LLC

13. Connect the negative battery cable.
14. Using a diagnostic scan tool, entered the fuel injector nine digit alphanumeric code into the PCM.
15. Start the engine and check for leaks.
16. Install the engine cover (1).

SENSOR, ACCELERATOR PEDAL POSITION

DESCRIPTION

DESCRIPTION

The Accelerator Pedal Position Sensor (APPS) is a variable resistor that provides the Powertrain Control Module (PCM) with an input signal (voltage). The signal represents throttle blade position. As the position of the accelerator pedal changes, the resistance of the APPS changes.

REMOVAL

REMOVAL

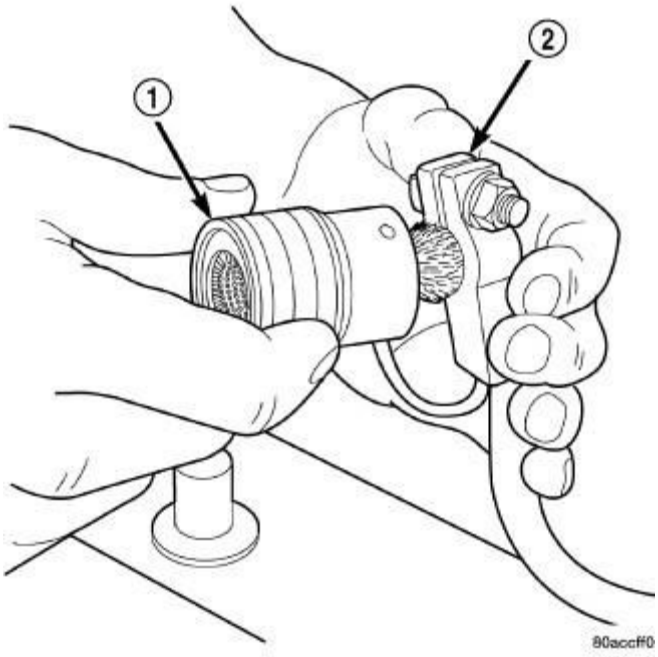

Fig. 300: Wiring Loom & Connectors
Courtesy of CHRYSLER GROUP, LLC

1. Disconnect and isolate negative battery cable at battery.
2. Separate the wiring harness loom (3) from the accelerator housing (5).
3. Disconnect the accelerator pedal wire harness connector (4).
4. Disconnect the brake switch wire connector (2).

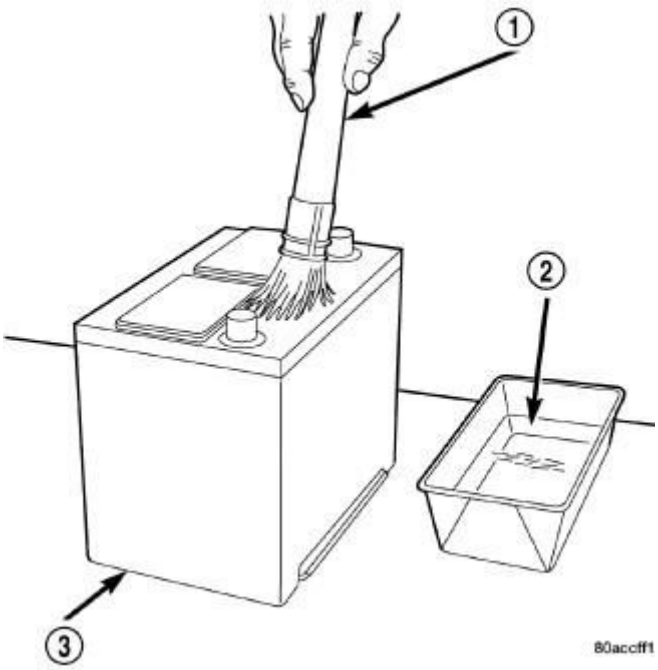

Fig. 301: Accelerator/Brake Pedal Assembly & Nuts
Courtesy of CHRYSLER GROUP, LLC

5. Remove mounting nuts (1) and the accelerator/brake pedal assembly (2).

INSTALLATION

INSTALLATION

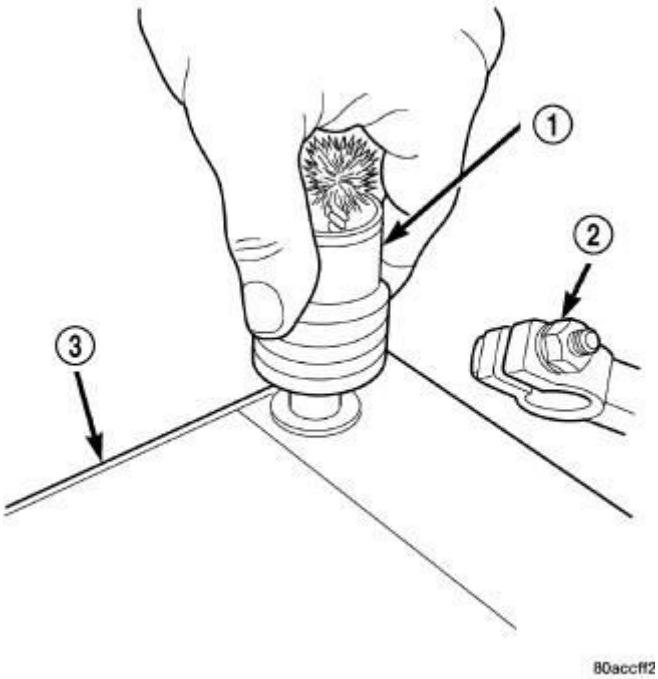

Fig. 302: Accelerator/Brake Pedal Assembly & Nuts
Courtesy of CHRYSLER GROUP, LLC

CAUTION: The accelerator pedal and mounting nuts need to be torque in a mandatory torque sequence or damage could result to the pedal assembly.

1. Install the accelerator/brake pedal (2). Tighten nuts (1) to 18 N.m (159 in. lbs.).

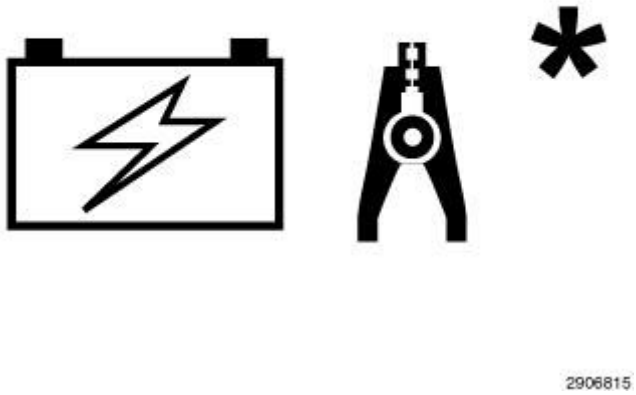

Fig. 303: Wiring Loom & Connectors
Courtesy of CHRYSLER GROUP, LLC

2. Connect the brake switch wire harness connector (2).
3. Connect the accelerator pedal wire harness connector (4).
4. Attach the wiring harness loom (3) from the accelerator housing (5).
5. Connect negative battery cable, tighten nut to 5 N.m (45 in. lbs.).
6. Use a scan tool and perform the APPS RELEARN function.

SENSOR, AIR TEMPERATURE, INTAKE

DESCRIPTION

DESCRIPTION

2907015

Fig. 304: Fuel Quantity Solenoid Wire Harness Connector
Courtesy of CHRYSLER GROUP, LLC

The intake air temperature (IAT) sensor is integrated with the boost pressure sensor, which is located in the back side of the intake manifold. The IAT is used to monitor the intake air temperature. Refer to **SENSOR, BOOST PRESSURE, REMOVAL** and **SENSOR, BOOST PRESSURE, INSTALLATION** for removal and installation procedures.

OPERATION

OPERATION

The intake air temperature sensor is a negative temperature coefficient (NTC) thermistor (resistance varies with temperature). This means at cold air temperature its resistance is high, so the voltage signal will be high. As intake air temperature increases, sensor resistance decreases and the signal voltage will be low. This allows the sensor to provide an analog voltage signal (0.2-4.8 volts) to the Powertrain Control Module (PCM).

SENSOR, BOOST PRESSURE

DESCRIPTION

DESCRIPTION

2906976

Fig. 305: Fuel Quantity Solenoid Wire Harness Connector
Courtesy of CHRYSLER GROUP, LLC

The boost pressure sensor (2) is integrated with the intake air temperature sensor, and mounted in the intake manifold. The sensor allows the PCM to monitor air pressure within the intake manifold.

OPERATION

OPERATION

When the intake manifold pressure is low (high vacuum) sensor voltage output is 0.25-1.8 volts at the Powertrain Control Module (PCM). When the intake manifold pressure is high due to turbo boost, sensor voltage output is 2.0-4.7 volts. The sensor receives a 5-volt reference from the PCM. Sensor ground is also provides by the PCM. The PCM uses boost pressure combined with intake air temperature to determine the volume of air entering the engine. regulate the pressure of the variable geometry turbine in order to ensure optimum engine performance in all operating conditions. The boost pressure sensor is regulate the pressure of the variable geometry turbine in order to ensure optimum engine performance in all operating conditions and to regulate fuel injection duration.

DIAGNOSIS AND TESTING

DIAGNOSIS AND TESTING - BOOST PRESSURE SENSOR

If the boost pressure sensor fails, the PCM records a DTC into memory and continues to operate the engine in one of the three limp-in modes. When the PCM is operating in this mode, a loss of power will be present, as if the turbocharger was not operating. The best method for diagnosing faults with the boost pressure sensor is with a scan tool. Refer to the appropriate Diesel ELECTRICAL DIAGNOSTICS information for more information.

Refer to On-Board Diagnostics in Emissions Control System for a list of Diagnostic Trouble Codes (DTCs) for certain fuel system components. Refer to **2.0L DIESEL - DIAGNOSTIC CODE INDEX** .

REMOVAL

REMOVAL

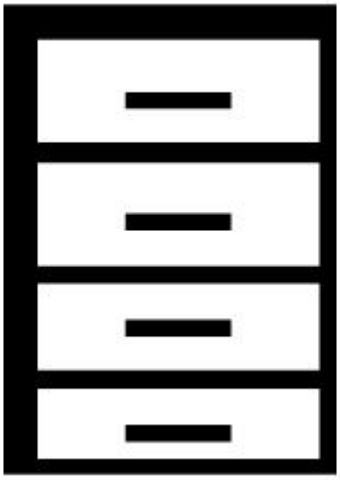

2906894

Fig. 306: Engine Cover
Courtesy of CHRYSLER GROUP, LLC

1. Disconnect the negative battery cable.
2. Remove the engine cover (1).

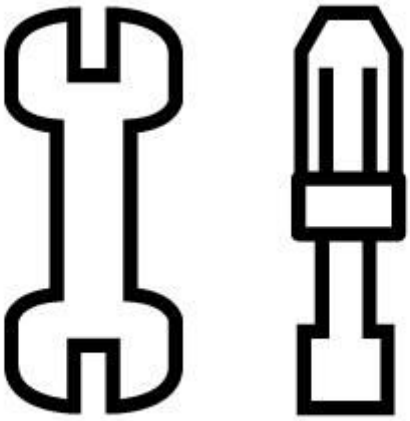

2907001

Fig. 307: Fuel Quantity Solenoid Wire Harness Connector
Courtesy of CHRYSLER GROUP, LLC

3. Disconnect the boost pressure sensor (2) wire harness connector (1).
4. Remove bolt (3) and the boost pressure sensor (2) from the intake manifold.

INSTALLATION

INSTALLATION

2906883

Fig. 308: Fuel Quantity Solenoid Wire Harness Connector
Courtesy of CHRYSLER GROUP, LLC

1. Install the boost pressure sensor (2) securely tighten bolt (3).
2. Connect the boost pressure sensor (2) wire harness connector (1).

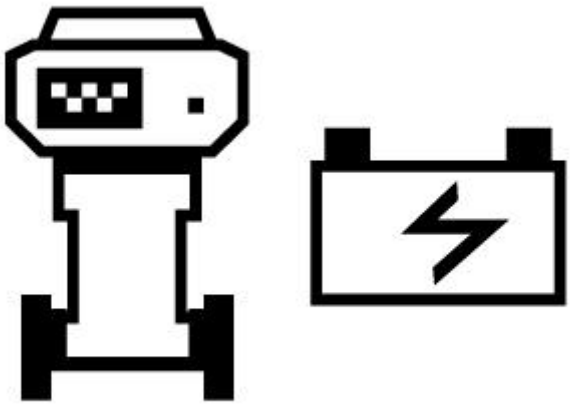

2906844

Fig. 309: Engine Cover
Courtesy of CHRYSLER GROUP, LLC

3. Install the engine cover (1).
4. Connect the negative battery cable.

SENSOR, CRANKSHAFT POSITION

DESCRIPTION

DESCRIPTION

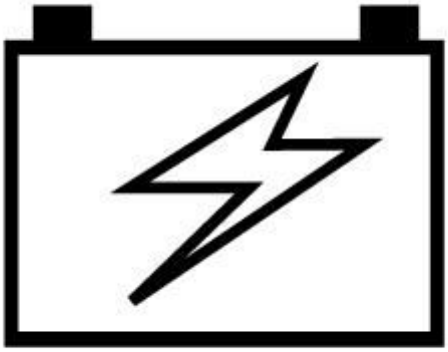

2906961

Fig. 310: Crankshaft Position Sensor, Connector & Bolt
Courtesy of CHRYSLER GROUP, LLC

The Crankshaft Position Sensor (CKP) (1) is located near the rear main oil seal assembly. This sensor is used to generate a signal that corresponds to engine RPM. The Powertrain Control Module (PCM) also uses the CKP to detect when the engine is at TDC. The CKP is located on the backside of the engine near the starter.

OPERATION

OPERATION

The crankshaft position and engine speed are sensed with a contactless hall effect signal generated by the crankshaft position sensor. The distance between the crankshaft position sensor and the tone wheel inside the rear main seal assembly is fixed by the installation position.

When the crankshaft rotates, a pulse width modulated (ON/OFF) voltage signal is generated in the crankshaft position sensor by the tone wheel inside the rear main seal assembly.

REMOVAL

REMOVAL

1. Disconnect the negative battery cable.
2. Raise and support the vehicle. Refer to **HOISTING, STANDARD PROCEDURE** .
3. Remove the belly pan. Refer to **BELLY PAN, REMOVAL** .

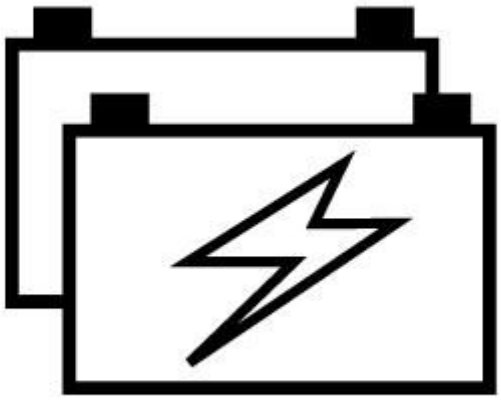

2906860

Fig. 311: Crankshaft Position Sensor, Connector & Bolt
Courtesy of CHRYSLER GROUP, LLC

4. Disconnect the Crankshaft Position Sensor (CKP) wire harness connector (3).
5. Remove bolt (2) the CKP sensor (1).

INSTALLATION

INSTALLATION

2906906

Fig. 312: Crankshaft Position Sensor, Connector & Bolt

Courtesy of CHRYSLER GROUP, LLC

1. Install the Crankshaft Position Sensor (CKP) (1). Tighten bolt (2) 9 N.m (80 in. lbs.).
2. Connect the CKP wire harness connector (3).
3. Install the belly pan. Refer to **BELLY PAN, INSTALLATION** .
4. Lower the vehicle.
5. Connect the negative battery cable.

SENSOR, MASS AIRFLOW (MAF)

DESCRIPTION

DESCRIPTION

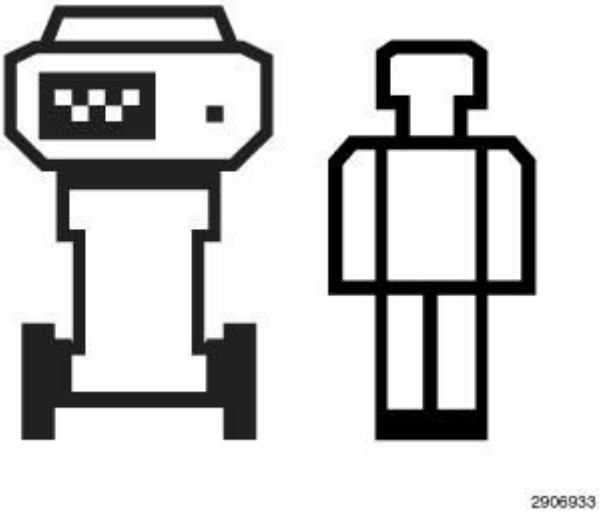

Fig. 313: MAF Sensor & Fasteners
Courtesy of CHRYSLER GROUP, LLC

The miromechanical Mass Air Flow (MAF) sensor (2) is a hot film thermal flowmeter with an integrated temperature sensor which detects the intake air temperature. The sensor is designed for recording load on combustion engines with diesel fuel injection and has a cylinder size in accordance with the required air flow rate. The MAF Sensor is mounted inline in the air intake between the air filter and the Charge Air Cooler (CAC).

OPERATION

OPERATION

The Mass Air Flow (MAF) sensor sensing element consists or two temperature sensors symmetrical to a heating area sitting on a thin membrane. Up and down stream sensors see the same temperature when there is no air flowing through the sensor. With incoming flow, the upstream heating area is cooled down due to heat transfer, while the downstream area retains it's temperature because the air has been heated up after it flows through the

heating area. The characteristic of temperature change in relation to airflow at the upstream area is utilized to determine the mass airflow passing through the sensor. This signal voltage variation is used by the Powertrain Control Module (PCM) along with internal calibrations to coordinate the total mass air flow.

To reduce contamination during sensing, a partial air flow is directed at an angle with respect to the main flow in the measuring channel for the fact that moisture and other particles tend not to react in the same manner that air does after they hit the channel wall. The Diesel Power Relay supplies battery power the to MAF sensor, ground is provided by the PCM. The MAF sensor signal is provided by the PCM.

REMOVAL

REMOVAL

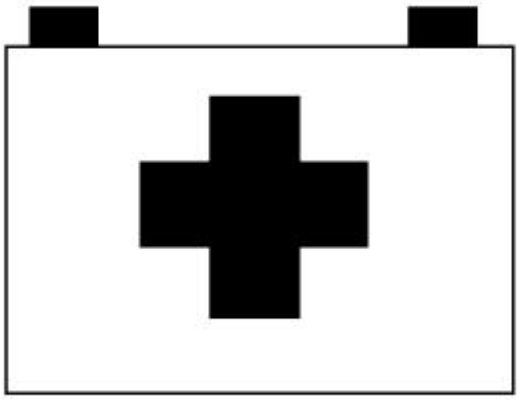

Fig. 314: Engine Cover
Courtesy of CHRYSLER GROUP, LLC

1. Disconnect the negative battery cable.
2. Remove the engine cover (1).

2906871

Fig. 315: MAF Sensor Harness Connector
Courtesy of CHRYSLER GROUP, LLC

3. Disconnect Mass Air Flow (MAF) sensor wire harness connector (1).

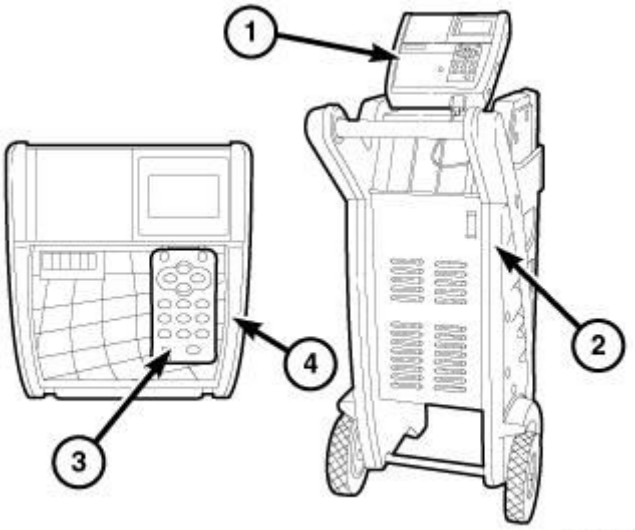

2906919

Fig. 316: Turbocharger Inlet Hose & Clamp
Courtesy of CHRYSLER GROUP, LLC

4. Loosen clamps (4, 6) and disconnect the turbocharger air inlet tube (5).

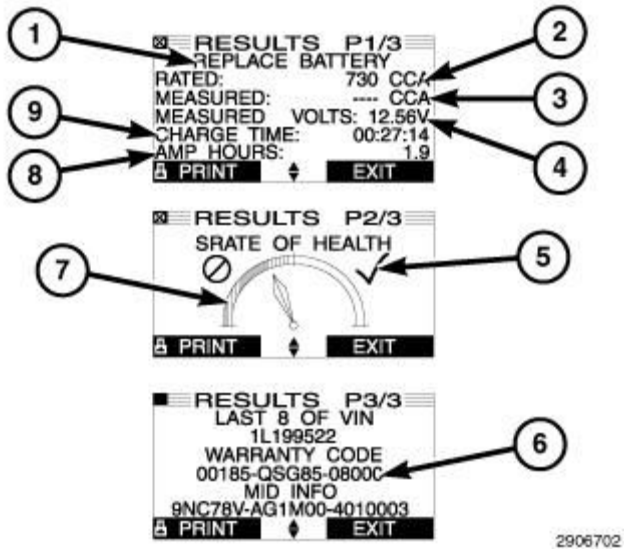

Fig. 317: MAF Sensor & Fasteners
Courtesy of CHRYSLER GROUP, LLC

5. Remove screws (2) and the MAF sensor (1) from air cleaner body.

INSTALLATION

INSTALLATION

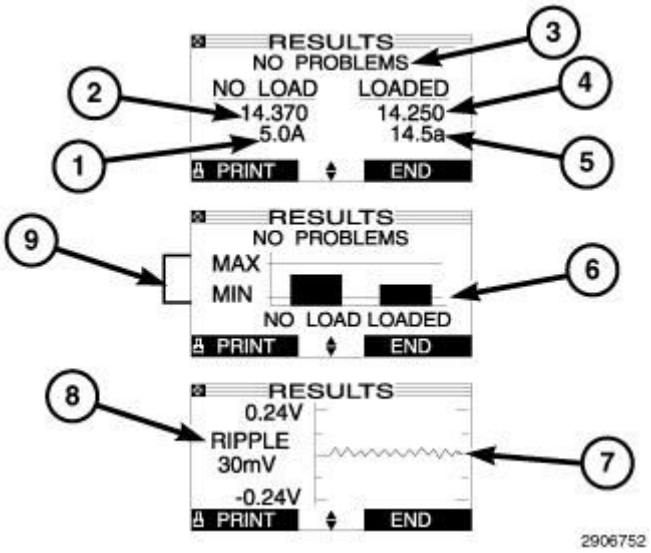

Fig. 318: MAF Sensor & Fasteners
Courtesy of CHRYSLER GROUP, LLC

1. Install the Mass Air Flow (MAF) sensor (1) into air cleaner body and securely tighten screws (2).

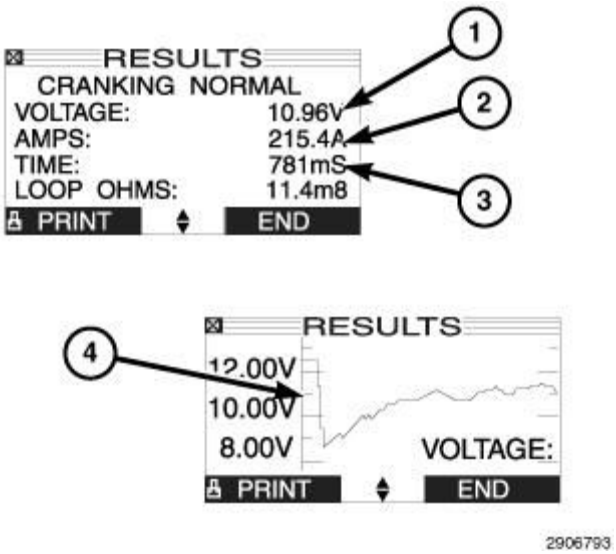

Fig. 319: Turbocharger Inlet Hose & Clamp
Courtesy of CHRYSLER GROUP, LLC

2. Connect the turbocharger air inlet tube (5) and securely tighten clamp (4, 6).

Fig. 320: MAF Sensor Harness Connector
Courtesy of CHRYSLER GROUP, LLC

3. Connect MAF sensor wire harness connector (1).

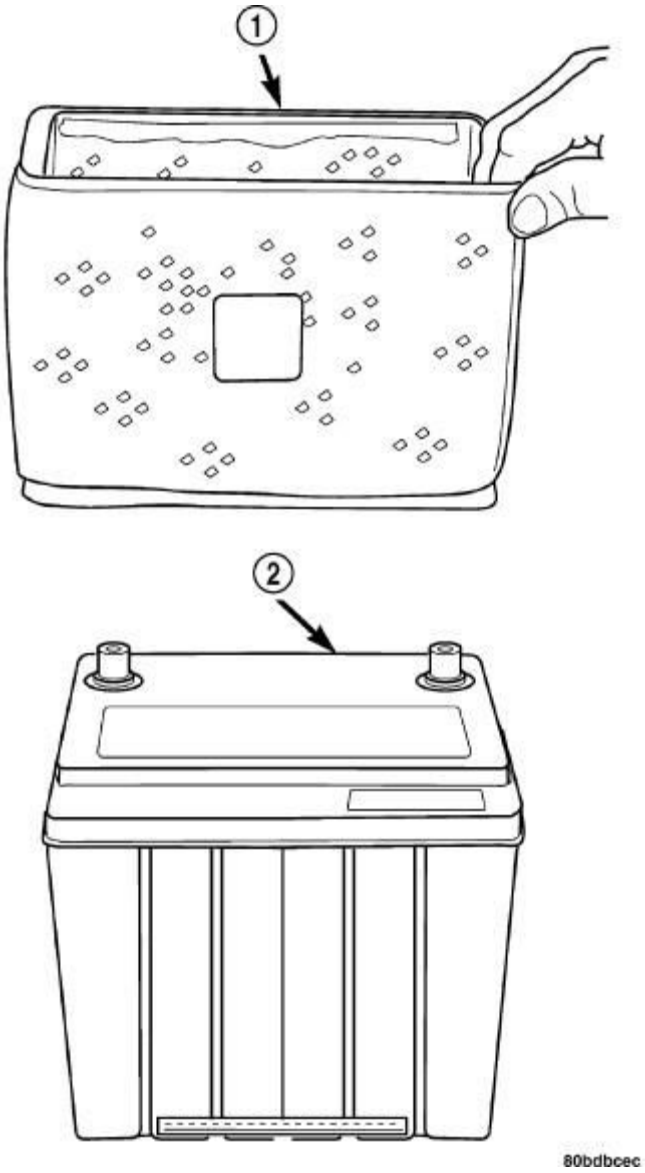

Fig. 321: Engine Cover
Courtesy of CHRYSLER GROUP, LLC

4. Install the engine cover (1).
5. Connect the negative battery cable.

SENSOR, OXYGEN

DESCRIPTION

DESCRIPTION

This sensor is used to measure the oxygen content and the Lambda value (ratio between quantity of intake air and theoretical quantity of air required for complete combustion of fuel injected) in automotive engine exhaust

gases. When the mass of oxygen present coincides with the amount required to burn all the fuel, the mixture is known as stoichiometric and the ratio is 14.6. In this case the Lambda is at the unit value. The Lambda can be expressed as the ratio between the quantity of intake air and the quantity of air required for the combustion of the fuel injected. The Lambda sensor is located in the front of the engine in the diesel particulate filter.

REMOVAL

REMOVAL

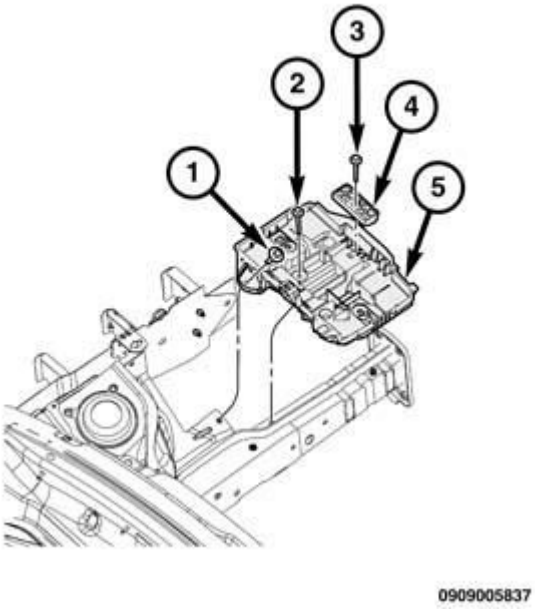

Fig. 322: Engine Cover
Courtesy of CHRYSLER GROUP, LLC

1. Disconnect the negative battery cable.
2. Remove the engine cover (1).

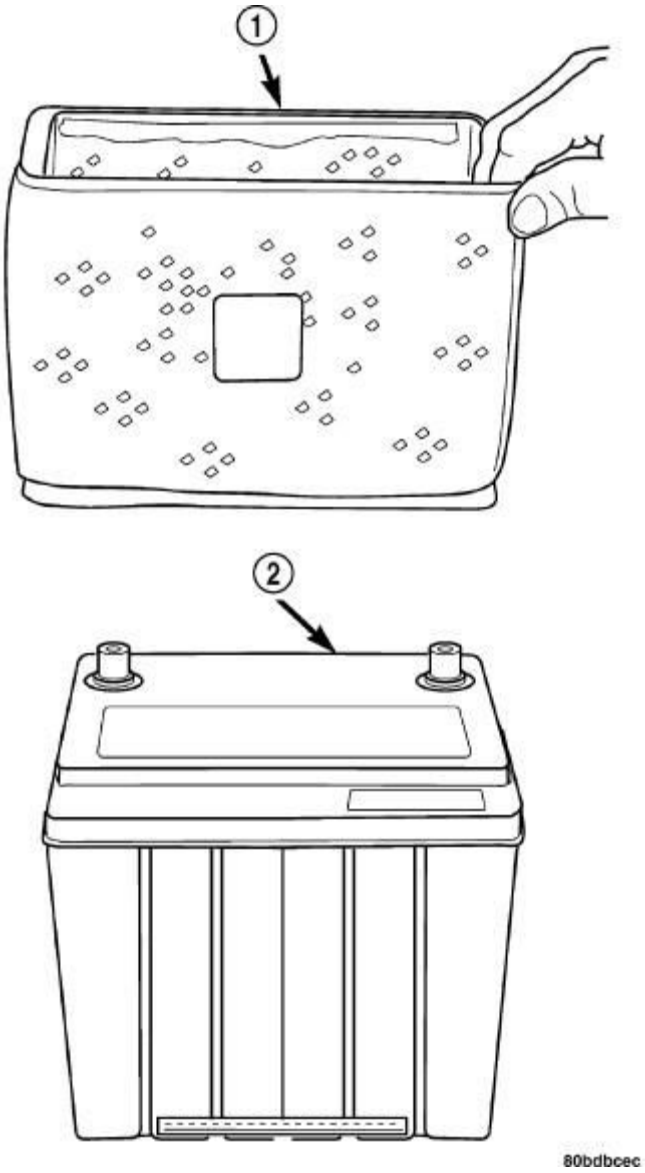

Fig. 323: Upper Turbocharger Heat Shield & Mid Upper Turbocharger Heat Shield
Courtesy of CHRYSLER GROUP, LLC

3. Remove bolts (2) and the upper turbocharger heat shield (1).

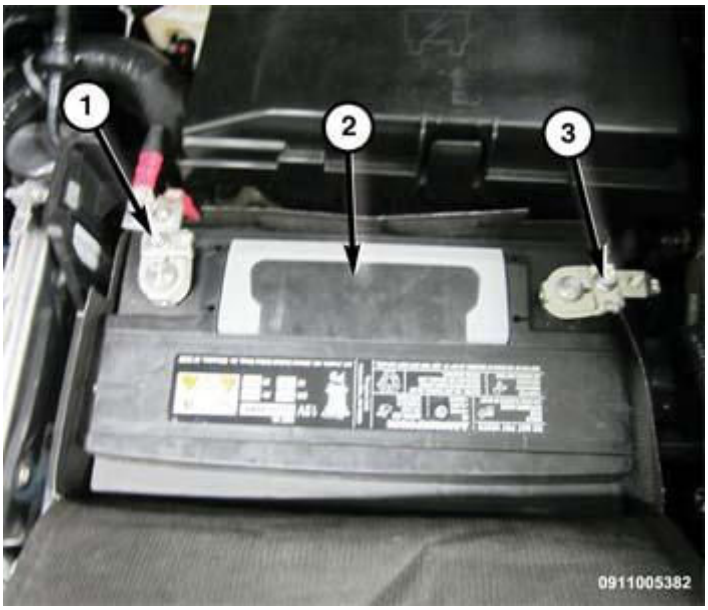

Fig. 324: Oxygen Sensor Wire Harness Connector
Courtesy of CHRYSLER GROUP, LLC

4. Disconnect the oxygen sensor wire harness connector (1) and remove the wire harness connector pick-tail (2) from support bracket (3).

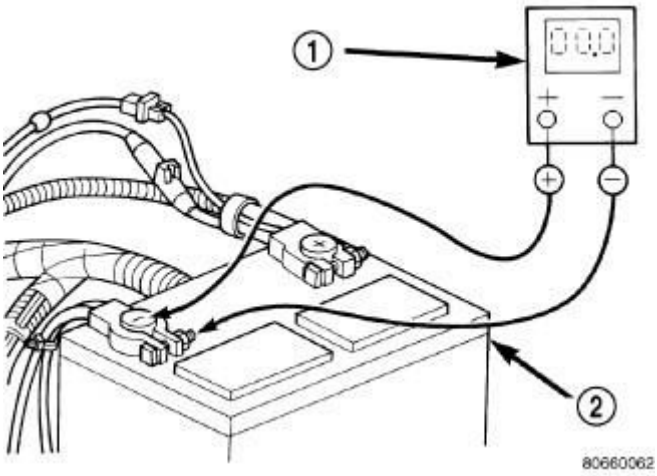

Fig. 325: Turbocharger Heat Shield & Fasteners
Courtesy of CHRYSLER GROUP, LLC

5. Remove the exhaust temperature sensor wire from lower heat shield (1).
6. Remove the three bolts (1), one nut (4) and the mid upper turbocharger heat shield (1).

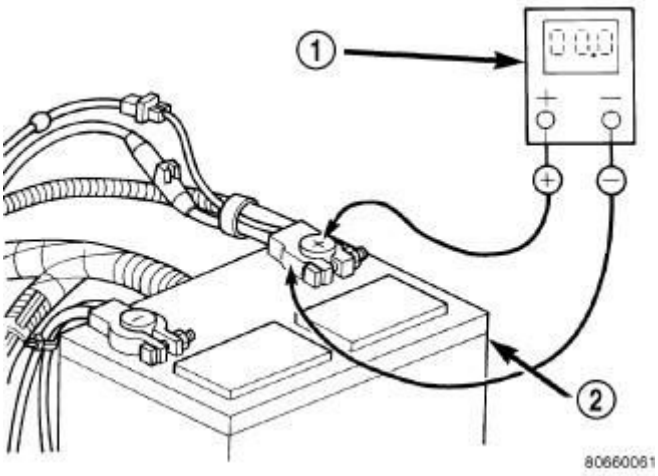

Fig. 326: Oxygen Sensor
Courtesy of CHRYSLER GROUP, LLC

7. Remove the oxygen sensor (1).

INSTALLATION

INSTALLATION

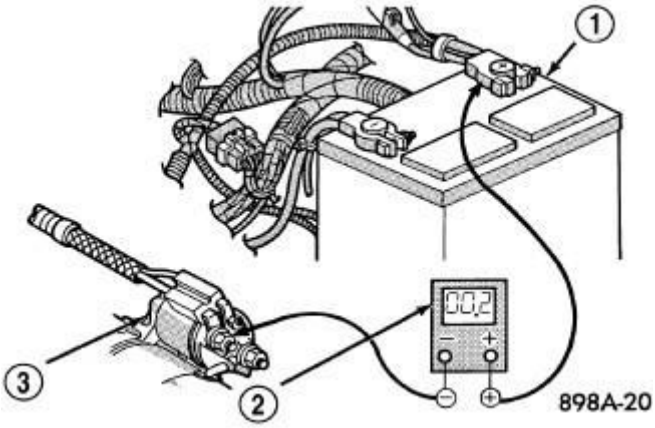

Fig. 327: Oxygen Sensor
Courtesy of CHRYSLER GROUP, LLC

1. Install the oxygen sensor (1). Tighten to 45 N.m (33 ft. lbs.).

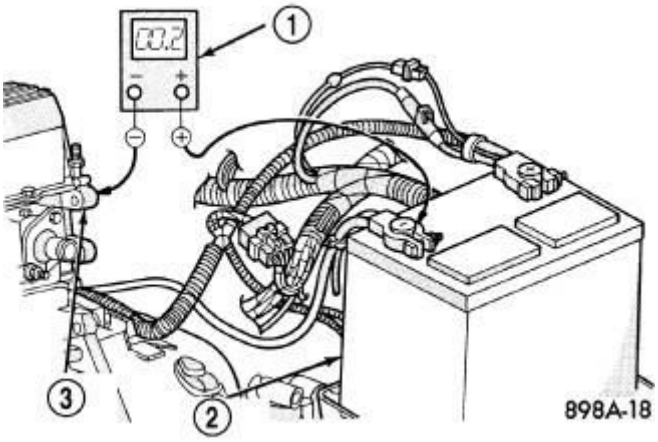

Fig. 328: Mid Upper Turbocharger Heat Shield
Courtesy of CHRYSLER GROUP, LLC

2. Install the mid upper turbocharger heat shield (1):
   - Tighten the bolts (2) to 12 N.m (106 in. lbs.).
   - Tighten the nut (4) to 8 N.m (71 in. lbs.).
3. Install the exhaust temperature sensor wire (3) to the lower heat shield (1).

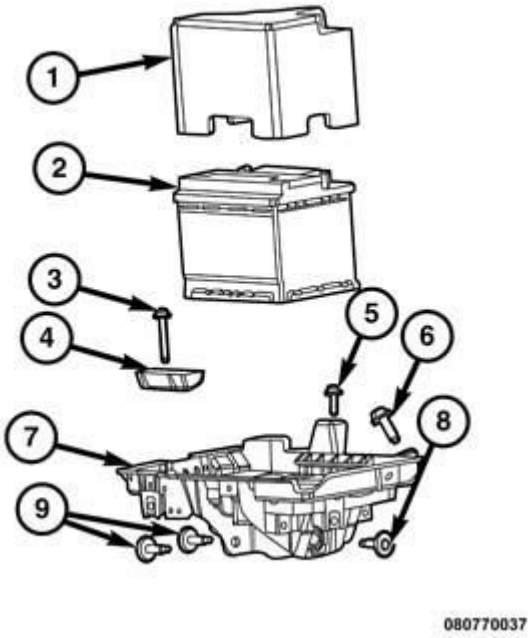

Fig. 329: Oxygen Sensor Wire Harness Connector
Courtesy of CHRYSLER GROUP, LLC

4. Install the oxygen sensor wire harness connector pick-tail (2) to support bracket (3) and connect the oxygen sensor wire harness connector (1).

Fig. 330: Upper Turbocharger Heat Shield
Courtesy of CHRYSLER GROUP, LLC

5. Install the upper turbocharger heat shield (2). Tighten the bolts (1) to 12 N.m (106 in. lbs.).

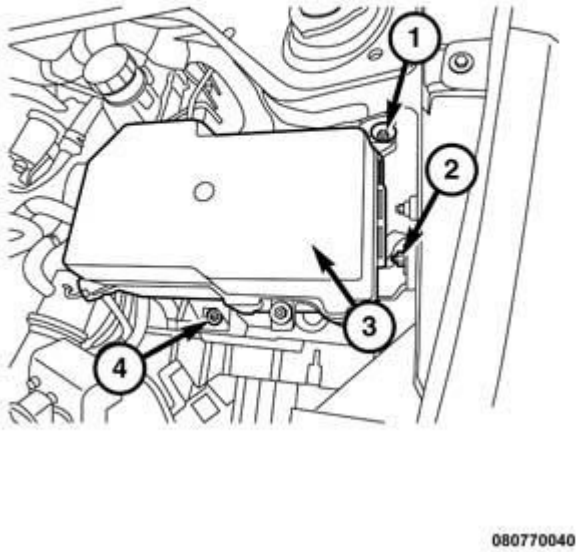

Fig. 331: Engine Cover
Courtesy of CHRYSLER GROUP, LLC

6. Install the engine cover (1).
7. Connect the negative battery cable.

2014 ENGINE

Ignition System - Service Information - Cherokee

DESCRIPTION

DESCRIPTION

NOTE: All engines use a fixed ignition timing system. Basic ignition timing is not adjustable. All spark advance is determined by the Powertrain Control Module (PCM).

The ignition system used on these engines is referred to as coil on plug. The system's four main components are the coils, crankshaft position sensor, spark plugs, and camshaft position sensors. The coil on plug ignition system utilizes an ignition coil for every cylinder. The ignition coils are mounted directly over the each spark plug.

OPERATION

OPERATION

The crankshaft position sensor and camshaft position sensor are hall effect devices. The camshaft position sensor and crankshaft position sensor generate square wave pulses that are inputs to the PCM. The PCM determines engine position from these sensors. The PCM calculates injector sequence and ignition timing from crankshaft AND camshaft position.

SPECIFICATIONS

SPARK PLUG

Engine	Spark Plug	Electrode Gap
2.4L	REC10WMPB4	1.2mm (0.047 in.)
3.2L	RER8ZWYCB4	1.1mm (0.043 in.)

FIRING ORDER

2.4L

0821020297

Fig. 1: Transverse 4 Cyl. Firing Order
Courtesy of CHRYSLER GROUP, LLC

The firing order is 1-3-4-2.

3.2L V6

Firing Order: 1-2-3-4-5-6

0821020298

Fig. 2: Firing Order: 1 - 2 - 3 - 4 - 5 - 6
Courtesy of CHRYSLER GROUP, LLC

IGNITION RESISTANCE

IGNITION COIL RESISTANCE

Engine	Primary Resistance at 21°C-27°C (70°F-80°F)	Secondary Resistance at 21°C-27° C (70°F-80°F)
2.4L	0.468 to 0.572 Ohms	5.287 to 7.153 K Ohms
3.2L	0.6 - 0.9 Ohms	6, 000 - 9, 000 Ohms

TORQUE SPECIFICATION

DESCRIPTION	N.m	Ft. Lbs.	In. Lbs.
Camshaft Position Sensor Bolt	9	-	80
Ignition Coil Mounting Bolts	8	-	71
Spark Plugs	27	20	-
Knock Sensor	20	15	-
Ignition Coil Capacitor Bolt	10	-	89
Transmission mounting bolt	61	45	-
* Do not apply any sealant, thread-locker or adhesive to bolts. Poor sensor performance may result.			

CAPACITOR, IGNITION

REMOVAL

2.4L

Fig. 3: Connector, Ignition Capacitor & Mounting Bolt
Courtesy of CHRYSLER GROUP, LLC

1. Disconnect and isolate negative battery cable.

2. Remove electrical connector (1).
3. Remove mounting bolt (3) and ignition capacitor (1) from the front of the cylinder head.

3.2L

0821020300

Fig. 4: Electrical Connector, Mounting Bolt & Ignition Capacitor
Courtesy of CHRYSLER GROUP, LLC

1. Disconnect and isolate the negative battery cable.
2. Separate the engine harness connector retainers from the intake manifold and Position the main engine wiring harness aside.
3. Remove the electrical connector (1).
4. Remove the mounting bolt (3) and the ignition capacitor (2).

INSTALLATION

2.4L

Fig. 5: Connector, Ignition Capacitor & Mounting Bolt
Courtesy of CHRYSLER GROUP, LLC

1. Install ignition capacitor to the front of the cylinder head (2) and bolt (3), tighten bolt to the proper specification. Refer to **SPECIFICATIONS**.
2. Connect electrical connector (1).
3. Connect the negative battery cable, tighten the nut to the proper specification. Refer to **SPECIFICATIONS** .

3.2L

Fig. 6: Electrical Connector, Mounting Bolt & Ignition Capacitor
Courtesy of CHRYSLER GROUP, LLC

1. Position capacitor (2) to the rear of the cylinder head.
2. Tighten nut (3) to 7 N.m (60 in. lbs.).
3. Connect electrical connector (1) to coil capacitor.
4. Install the main engine harness retainers onto the intake manifold.
5. Connect the battery negative cable.

COIL, IGNITION

REMOVAL

2.4L

Fig. 7: Ignition Coils
Courtesy of CHRYSLER GROUP, LLC

NOTE: **View typical**

NOTE: **Prior to removing coil, spray compressed air around coil top to make sure no dirt drops into the spark plug tube.**

The electronic ignition coil attaches directly to the valve cover.

1. Remove the negative battery cable.
2. Disconnect electrical connector from ignition coil.

0821020305

Fig. 8: Ignition Coil Bolt
Courtesy of CHRYSLER GROUP, LLC

3. Remove ignition coil mounting bolts.

0821020306

Fig. 9: Removing/Installing Ignition Coil
Courtesy of CHRYSLER GROUP, LLC

4. Remove ignition coil.

3.2L

0821020307

Fig. 10: Engine Cover & Ball Studs
Courtesy of CHRYSLER GROUP, LLC

1. Disconnect and isolate the negative battery cable.
2. Lift the engine cover from the retaining grommets off of the ball studs (2) and remove the engine cover (1).
3. If removing the ignition coils from cylinders 1, 3 or 5 on the right side of the engine. Remove the air intake resonator. Refer to **RESONATOR, AIR CLEANER, REMOVAL** .
4. If removing the ignition coils from cylinders 2, 4 or 6 on the left side of the engine. Remove the upper intake manifold and insulator. Refer to **MANIFOLD, INTAKE, REMOVAL** .

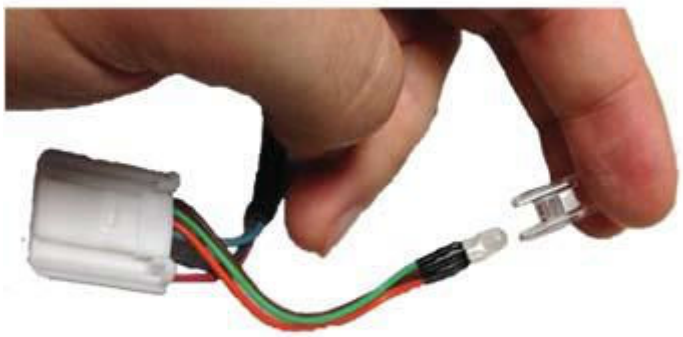

0821020308

Fig. 11: Electrical Connector, Ignition Coils & Ignition Coil Retaining Bolts

Courtesy of CHRYSLER GROUP, LLC

NOTE: The left side ignition coils are shown in illustration, the right side ignition coils are similar.

5. Disconnect the harness connector (1) from the ignition coil (2).
6. Remove the ignition coil retaining bolt (3).
7. Pull the ignition coil (2) from cylinder head cover opening with a slight twisting action.

INSTALLATION

2.4L

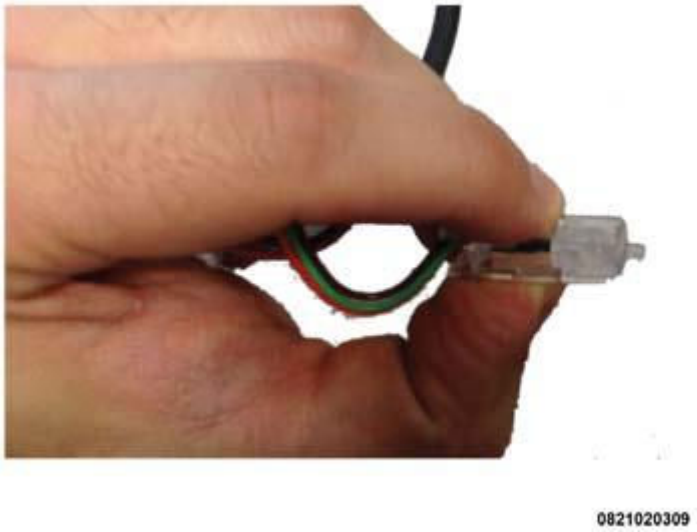

Fig. 12: Removing/Installing Ignition Coil
Courtesy of CHRYSLER GROUP, LLC

NOTE: View typical

1. Install ignition coil.

0821020310

Fig. 13: Ignition Coil Bolt
Courtesy of CHRYSLER GROUP, LLC

2. Tighten bolt to 9 N.m (79.5 in. lbs.).
3. Connect electrical connectors and lock.
4. Install the negative battery cable.

3.2L

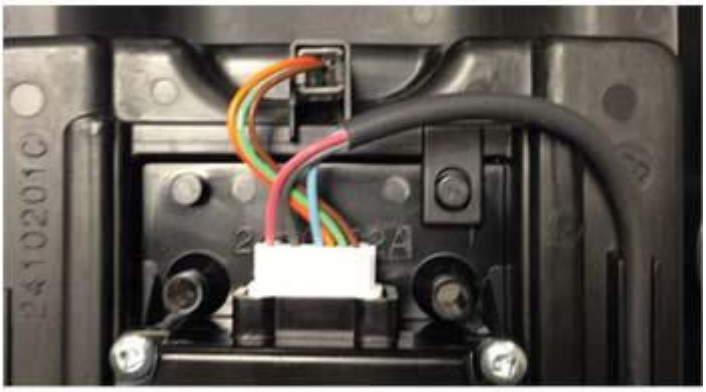

0821020311

Fig. 14: Ignition Coil Rubber Boot & Opening Of The Boot
Courtesy of CHRYSLER GROUP, LLC

1. Using compressed air, blow out any dirt or contaminants from around the top of spark plug.

2. Check the condition of the ignition coil rubber boot (1). Inspect the opening of the boot (2) for any debris, tears or rips. Carefully remove any debris with a lint free cloth.

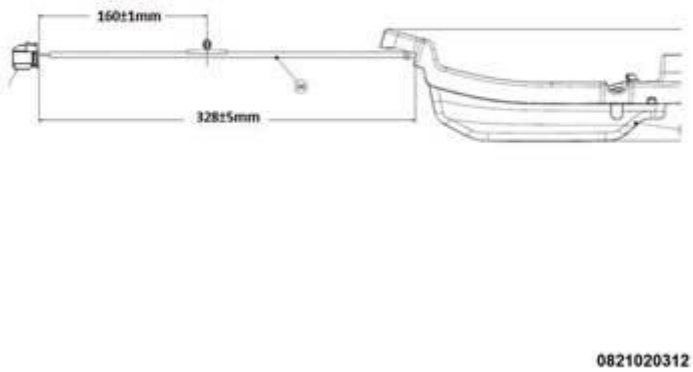

Fig. 15: Fluostar 2LF Lubricant
Courtesy of CHRYSLER GROUP, LLC

CAUTION: Do not apply a silicone based grease such as Mopar® Dielectric Grease to the ignition coil rubber boot. The silicone based grease will absorb into the boot causing it to stick and tear.

3. Place a small, 360° bead of **Uniflor 8172** lubricant (1) along the inside opening of the coil boot approximately 1 to 2 mm from the chamfer edge but not on the chamfered surface.

Fig. 16: Electrical Connector, Ignition Coils & Ignition Coil Retaining Bolts
Courtesy of CHRYSLER GROUP, LLC

NOTE: The LH ignition coils are shown in illustration, the RH ignition coils are similar.

4. Position the ignition coil (2) into the cylinder head cover opening. Using a twisting action, push the ignition coil onto the spark plug.
5. Install the ignition coil mounting bolt (3) and tighten to the proper specification. Refer to **SPECIFICATIONS**.
6. Connect the harness connector (1) to the ignition coil (2).
7. If removed, install the insulator and upper intake manifold. Refer to **MANIFOLD, INTAKE, INSTALLATION** .

Fig. 17: Engine Cover & Ball Studs
Courtesy of CHRYSLER GROUP, LLC

8. Install the engine cover.
9. Connect the negative battery cable and tighten nut to the proper specification. Refer to **SPECIFICATIONS** .

PLUG, GLOW

DESCRIPTION

DESCRIPTION

Fig. 18: Glow Plug
Courtesy of CHRYSLER GROUP, LLC

Glow plugs are used to help start a cold or cool engine. The glow plugs will heat up and glow to heat the combustion chamber of each cylinder. An individual glow plug is used for each cylinder. Each glow plug is threaded into the cylinder head below the cylinder head cover.

OPERATION

OPERATION

The glow plugs are used to preheat the combustion chambers in order to achieve the ignition temperature required for the fuel-air mixture.

The heating element is integrated in the glow rod. It consists of a heating winding and a control winding connected in series.

The glow plug system is a quick start type. This allows for immediate start in practically all weather conditions without long periods of pre-glowing; this works in conjunction with the injectors.

REMOVAL

REMOVAL

0821020314

Fig. 19: Engine Cover
Courtesy of CHRYSLER GROUP, LLC

1. Disconnect the negative battery cable.
2. Remove the engine cover (1).

0821020315

Fig. 20: Glow Plug Harness Connector
Courtesy of CHRYSLER GROUP, LLC

3. Clean glow plug bay area.
4. Disconnect glow plug harness connector (1).

0821020316

Fig. 21: Glow Plug
Courtesy of CHRYSLER GROUP, LLC

5. Remove glow plug (1) from cylinder head.

INSTALLATION

INSTALLATION

0821020324

Fig. 22: Glow Plug
Courtesy of CHRYSLER GROUP, LLC

1. Install glow plugs (1). Tighten glow plugs to 11 N.m (97 in. lbs.).

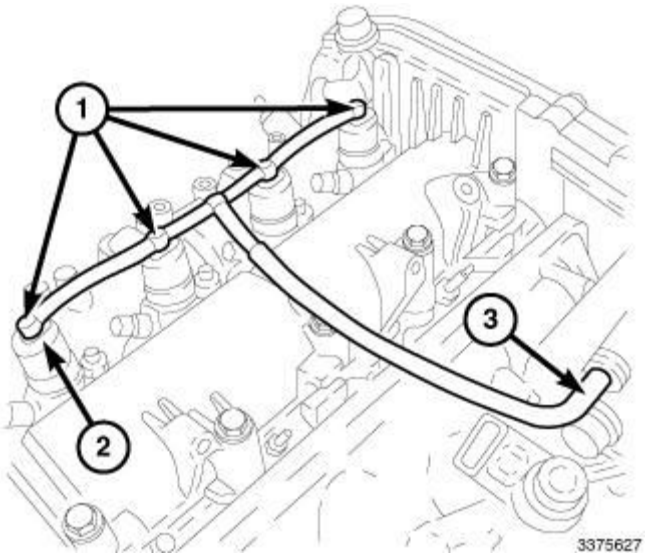

Fig. 23: Glow Plug Harness Connector
Courtesy of CHRYSLER GROUP, LLC

2. Connect glow plug harness connector (1).

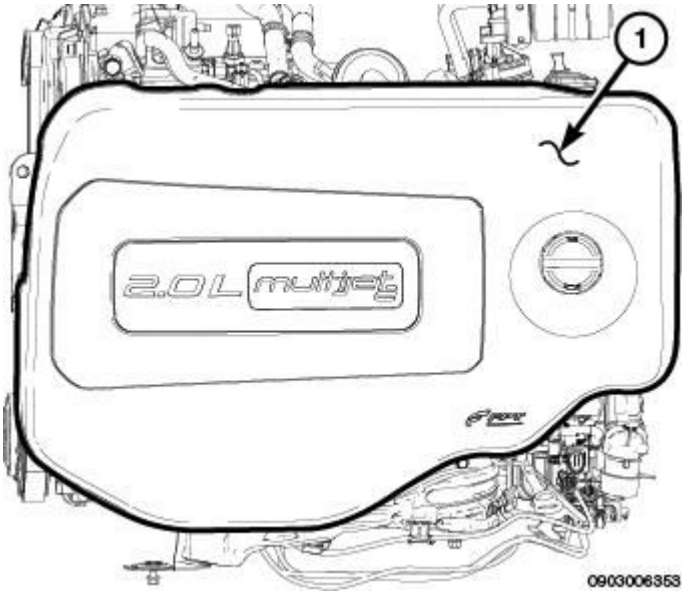

Fig. 24: Engine Cover
Courtesy of CHRYSLER GROUP, LLC

3. Install engine cover (1).
4. Connect the negative battery cable.

RELAY, AUTO SHUT DOWN

DESCRIPTION

DESCRIPTION

The 5-pin, 12-volt, Automatic Shutdown (ASD) relay is located in the Power Distribution Center (PDC). Always refer to the label on the power distribution center cover for relay location.

OPERATION

OPERATION

The ground circuit for the coil within the Automatic Shutdown (ASD) relay is controlled by the Powertrain Control Module (PCM). The PCM operates the ASD relay by switching its ground circuit on and off.

The ASD relay powers a number of critical circuits through the Power Distribution Center (PDC). These circuits include:

- Four ASD feed circuits to the PCM
- Fuel Injectors
- Ignition Coils
- Upstream O2 Sensor Heater
- Downstream O2 Sensor Heater
- EVAP Purge (Control) Solenoid

One of the ASD feed circuits is used as an ASD sense so that the PCM can determine if the ASD circuit is powered or not.

REMOVAL

REMOVAL

The Automatic Shutdown (ASD) relay is located in the engine compartment within the Power Distribution Center (PDC). Always refer to the label on the power distribution center cover for relay location.

1. Remove the power distribution center cover.
2. Remove the relay from the power distribution center.
3. Check the condition of the relay terminals and power distribution center connector terminals for damage or corrosion. Repair if necessary before installing the relay.
4. Check for pin height (pin height should be the same for all terminals within the power distribution center connector). Repair if necessary before installing the relay.

INSTALLATION

INSTALLATION

The Automatic Shutdown (ASD) relay is located in the engine compartment within the Power Distribution Center (PDC). Always refer to the label on the power distribution center cover for relay location.

1. Install the relay to the power distribution center.
2. Install the cover to the power distribution center.

SENSOR, CAMSHAFT POSITION, 2.0L DIESEL

DESCRIPTION

2.0L-DIESEL

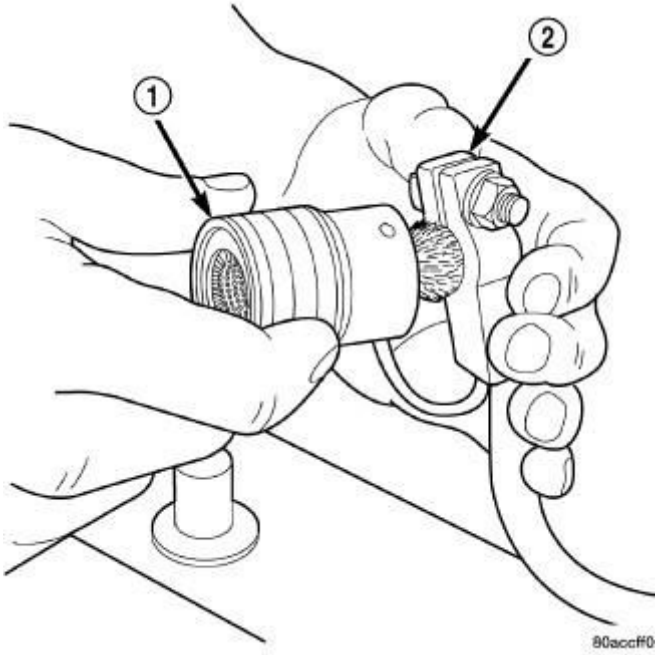

Fig. 25: Camshaft Position Sensor, Connector & Bolt
Courtesy of CHRYSLER GROUP, LLC

The camshaft position sensor (3) is mounted to the cylinder head cover. The hall effect sensor generates a signal that corresponds to the camshaft position of rotation. The Powertrain Control Module (PCM) uses the camshaft position sensor signal to detect the TDC position of cylinder 1. The PCM controls Injection timing and the duration of time each injector delivers fuel during an injection cycle based on the camshaft signal and the crankshaft signals.

OPERATION

2.0L-DIESEL

The signal circuit of the camshaft sensor has a voltage of approximately 5V. If the segment machined into the exhaust camshaft sprocket is positioned opposite the camshaft sensor, the camshaft signal is approximately 0V. This 0V to 5V signal is used by the Powertrain Control Module (PCM) for detecting ignition TDC of cylinder 1 as the engine rotates. If no signal is supplied by the camshaft position sensor, the vehicle will not start.

REMOVAL

DIESEL

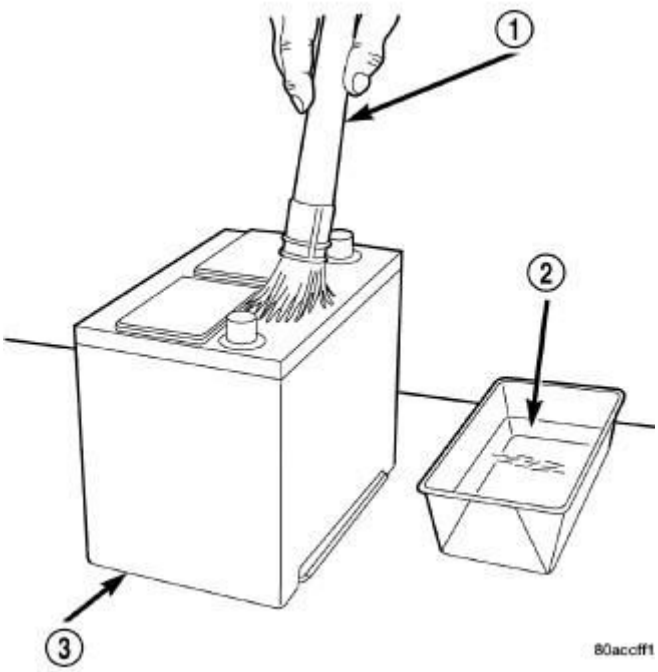

Fig. 26: Engine Cover
Courtesy of CHRYSLER GROUP, LLC

1. Disconnect the negative battery cable.
2. Remove the engine cover (1).

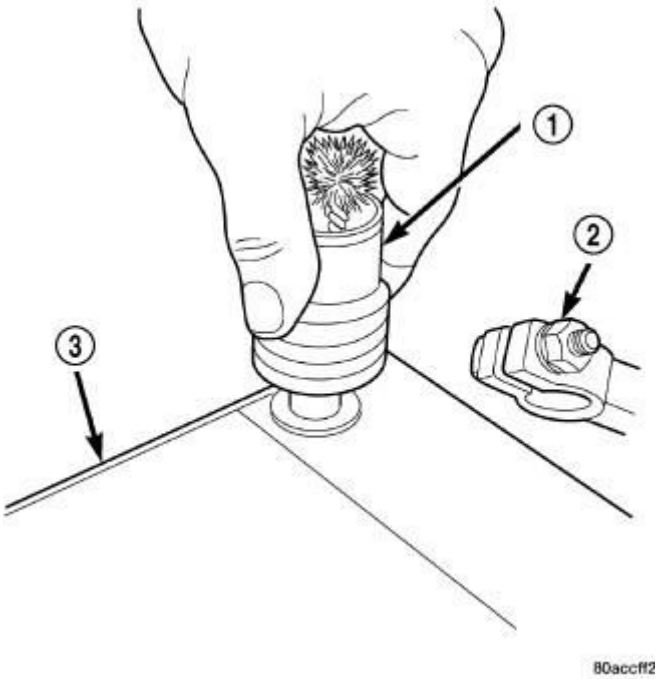

Fig. 27: Camshaft Position Sensor, Connector & Bolt
Courtesy of CHRYSLER GROUP, LLC

3. Disconnect Camshaft Position Sensor (CMP) wire harness connector (1).
4. Remove bolt (2) and the CMP sensor (3).

INSTALLATION

DIESEL

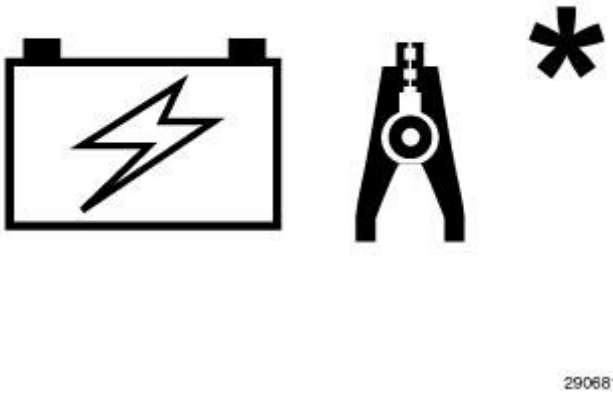

Fig. 28: Camshaft Position Sensor, Connector & Bolt
Courtesy of CHRYSLER GROUP, LLC

1. Install the Camshaft Position Sensor (CMP) (3). Tighten bolt (2) to 9 N.m (80 in. lbs.).
2. Connect the CMP wire harness connector (1).

2907015

Fig. 29: Engine Cover
Courtesy of CHRYSLER GROUP, LLC

3. Install the engine cover (1).
4. Connect the negative battery cable.

SENSOR, CAMSHAFT POSITION

DESCRIPTION

DESCRIPTION

2906976

Fig. 30: Camshaft Position (CMP) Sensor
Courtesy of CHRYSLER GROUP, LLC

The Camshaft Position (CMP) sensor is a Hall effect type sensor and is used by the Powertrain Control Module (PCM) in conjunction with the Crankshaft Position (CKP) sensor and TDC signal to recognize the position of the cylinders and determine the injection and ignition point. The CMP sensor is located on the camshaft bearing housing and faces the camshaft.

OPERATION

OPERATION

A current-carrying semiconductor layer immersed in a normal magnetic field (force lines at right angles to current direction) generates a potential difference known as a Hall voltage at its terminals. If current intensity remains constant, the generated voltage depends on magnetic field intensity alone. Periodic changes in magnetic field intensity are sufficient to generate a modulated electrical signal with frequency proportional to the speed of magnetic field change. The distance between the sensor and the surface of the timing wheel on the cam axis is altered to produce this change.

REMOVAL

2.4L

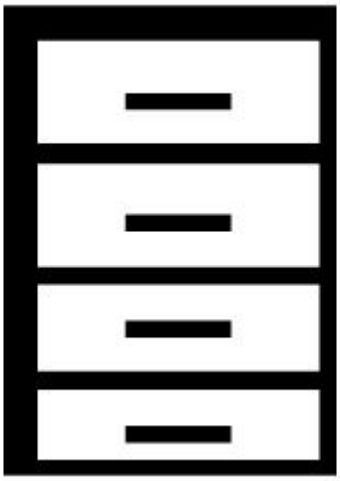

2906894

Fig. 31: Connector, Mounting Bolt & Camshaft Position Sensor
Courtesy of CHRYSLER GROUP, LLC

1. Disconnect negative battery cable.
2. Disconnect electrical connector at sensor (1).
3. Remove mounting bolt (2).

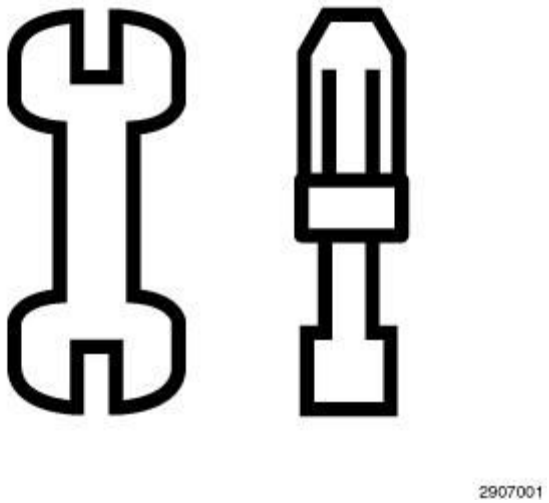

Fig. 32: Cam Sensor
Courtesy of CHRYSLER GROUP, LLC

4. Remove the exhaust cam sensor (3).

3.2L

Fig. 33: Magnetic Timing Wheels
Courtesy of CHRYSLER GROUP, LLC

CAUTION: The magnetic timing wheels (1) must not come in contact with magnets (pickup tools, trays, etc.) or any other strong magnetic field. This will destroy the timing wheels ability to correctly relay camshaft position to the camshaft position sensor.

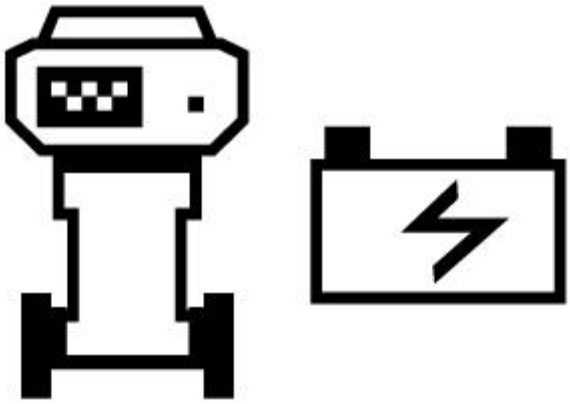

2906844

Fig. 34: Upper Intake Manifold & Bolts
Courtesy of CHRYSLER GROUP, LLC

The Camshaft Position (CMP) sensors are located at the rear of the cylinder head covers and are bolted to the cylinder head.

1. Disconnect and isolate the negative battery cable.
2. Remove the air cleaner resonator.
3. If removing the LH CMP sensor, first remove the upper intake manifold (2). Refer to **MANIFOLD, INTAKE, REMOVAL** .

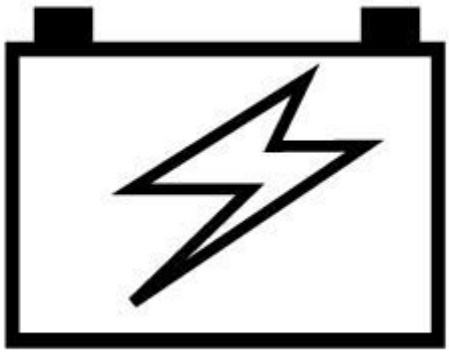

2906961

Fig. 35: CMP Sensor & Bolt
Courtesy of CHRYSLER GROUP, LLC

NOTE: The RH CMP sensor is shown in illustration, the LH CMP sensor is similar.

If removing both RH and LH CMP sensors, mark the sensors so they can be installed in their original locations.

4. Disconnect the electrical connector (1) from the CMP sensor.
5. Loosen the sensor mounting bolt (2).

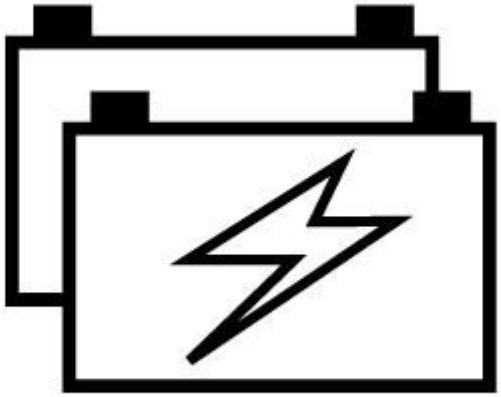

2906860

Fig. 36: O-Ring Seal
Courtesy of CHRYSLER GROUP, LLC

6. Pull the sensor and mounting bolt from the cylinder head cover.
7. The O-ring seal (1) can be reused if not damaged.

INSTALLATION

2.4L

2906906

Fig. 37: Cam Sensor
Courtesy of CHRYSLER GROUP, LLC

CAUTION: Install camshaft position (CMP) sensor utilizing twisting motion. Make sure CMP sensor is fully seated. Do not drive CMP sensor into the bore with mounting screw. This may cause CMP sensor to be incorrectly seated causing a faulty signal or no signal at all.

1. Lubricate sensor O-ring.
2. Install the exhaust cam sensor (3) and mounting bolt (2) and tighten to the proper specification. Refer to **SPECIFICATIONS**.

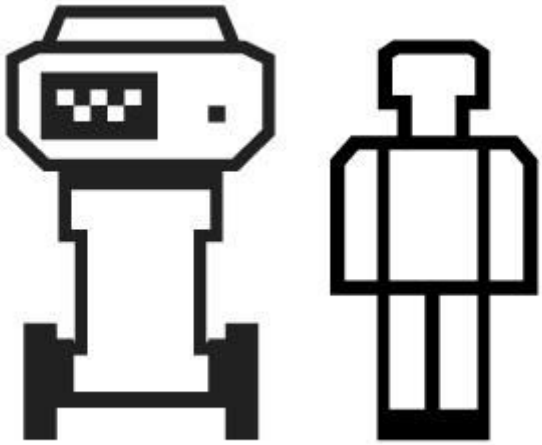

2906933

Fig. 38: Connector, Mounting Bolt & Camshaft Position Sensor
Courtesy of CHRYSLER GROUP, LLC

3. Connect electrical connector (1) to the camshaft position sensor.
4. Connect negative battery cable. Tighten the nut to the proper specification. Refer to **SPECIFICATIONS** .

3.2L

CAUTION: The magnetic timing wheels (1) must not come in contact with magnets (pickup tools, trays, etc.) or any other strong magnetic field. This will destroy the timing wheels ability to correctly relay camshaft position to the camshaft position sensor.

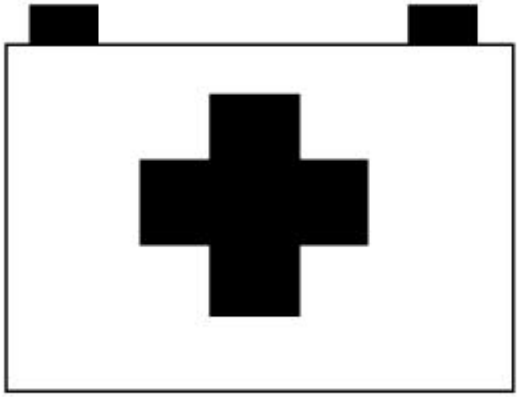

2906991

Fig. 39: Magnetic Timing Wheels
Courtesy of CHRYSLER GROUP, LLC

2906871

Fig. 40: CMP Sensor Seal & Mounting Bolt Hole

Courtesy of CHRYSLER GROUP, LLC

1. Clean out the camshaft position (CMP) sensor mounting bolt hole (2) in cylinder head.
2. The CMP sensor seal (1) can be reused if not damaged.

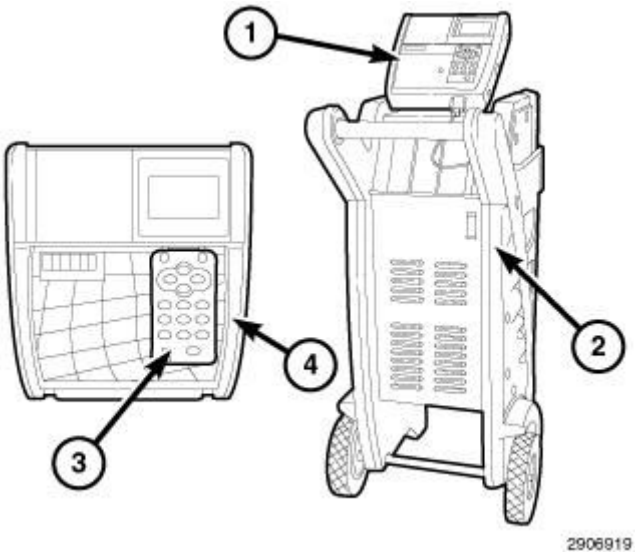

Fig. 41: Installing CMP Sensor Seal
Courtesy of CHRYSLER GROUP, LLC

3. If required, install a new CMP sensor seal (2) in the cylinder head cover:
   - Lubricate the CMP sensor seal inner and outer diameters with clean engine oil.
   - Place the CMP sensor seal (2) on the Cam Sensor/Spark Plug Tube Seal Installer (special tool #10256, Installer, Cam Installer, Cam Sensor/Spark Plug Tube Seal) (1).
   - Push the seal into the cylinder head cover until the base of the seal is seated.
   - Remove the tool.

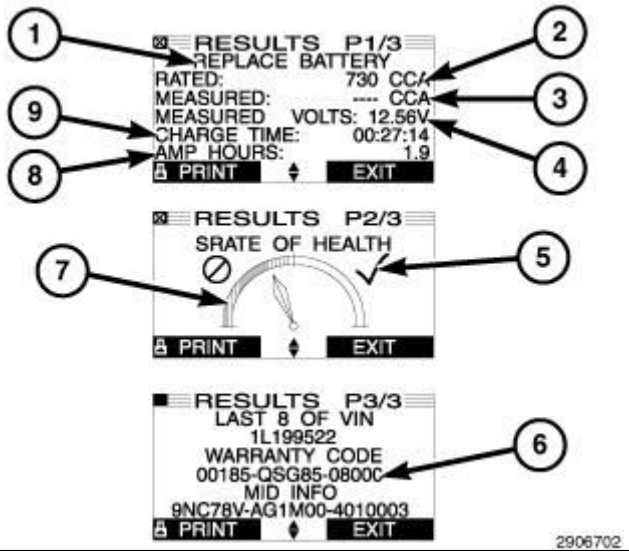

Fig. 42: Gap & CMP Sensor Seal
Courtesy of CHRYSLER GROUP, LLC

NOTE: **A properly installed CMP sensor seal (1) will have a 1.5 - 2.0 mm (0.06 - 0.08 in.) gap (2) between the cylinder head cover and the seal upper flange.**

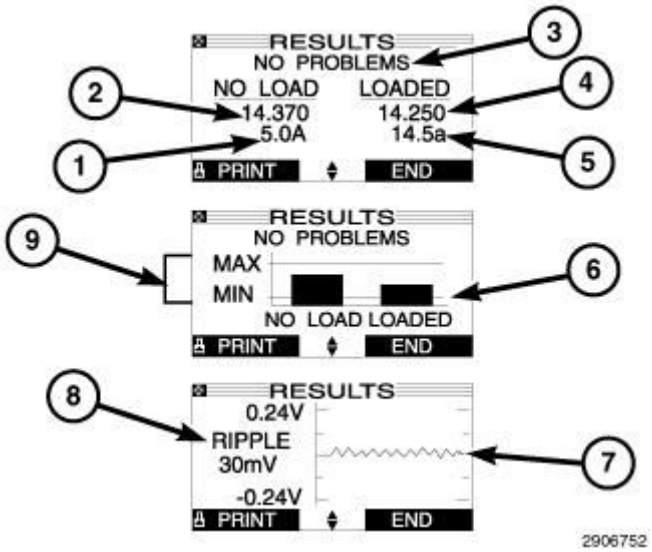

Fig. 43: O-Ring Seal
Courtesy of CHRYSLER GROUP, LLC

4. The sensor mounting bolt O-ring (1) can be reused if not damaged.
5. Apply a small amount of engine oil to the sensor mounting bolt O-ring (1).

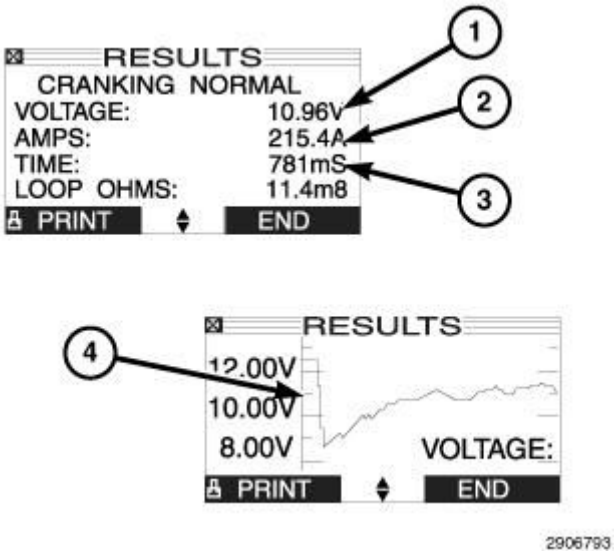

Fig. 44: CMP Sensor & Bolt
Courtesy of CHRYSLER GROUP, LLC

NOTE: **The right CMP sensor is shown in illustration, the left CMP sensor is similar. If both right and left CMP sensors where removed, install them into their original locations.**

6. Install the CMP sensor to the cylinder head. Tighten the mounting bolt (2) to 9 N.m (80 in. lbs.).
7. Connect the electrical connector (1) to the sensor.

Fig. 45: Upper Intake Manifold Bolt Tightening Sequence
Courtesy of CHRYSLER GROUP, LLC

8. If required, install the upper intake manifold (1) and air inlet hose. Refer to **MANIFOLD, INTAKE, INSTALLATION** .
9. Connect the negative battery cable and tighten nut to 5 N.m (45 in. lbs.).

NOTE: **The Cam/Crank Variation Relearn procedure must be performed using the scan tool anytime there has been a repair/replacement made to a powertrain system, for example: flywheel, valvetrain, camshaft and/or crankshaft sensors or components.**

SENSOR, KNOCK

DESCRIPTION

DESCRIPTION

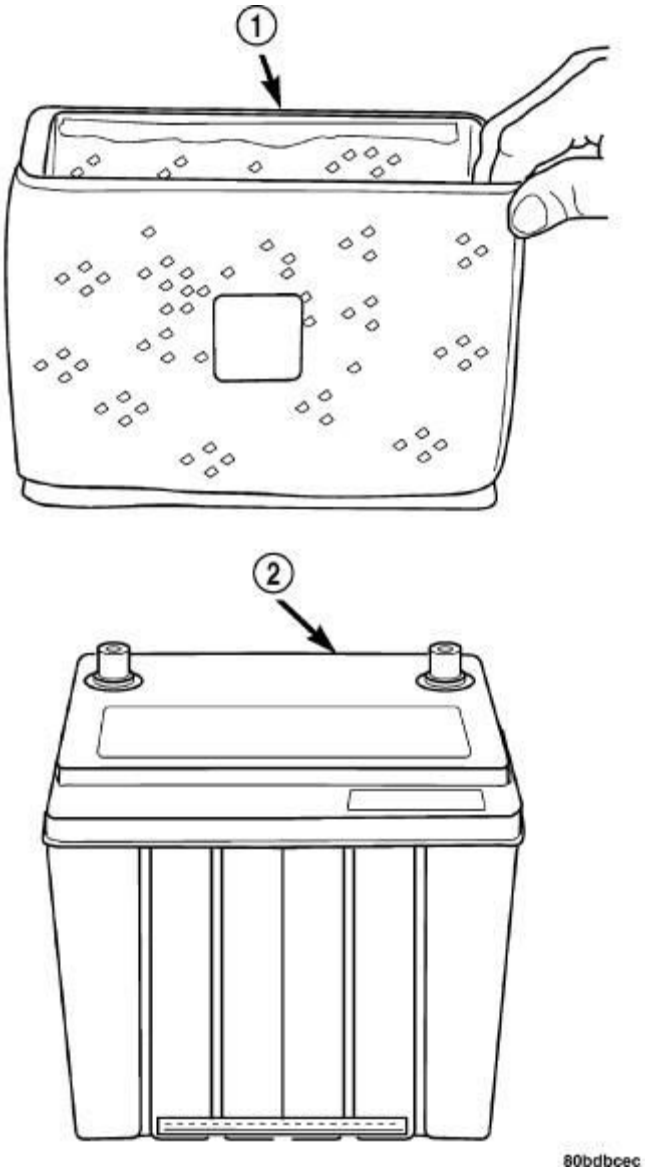

Fig. 46: Knock Sensor
Courtesy of CHRYSLER GROUP, LLC

The knock sensor is the piezoelectric type and is fitted on the crankcase to detect the intensity of the vibrations caused by detonation in the combustion chambers. The phenomenon produces a mechanical repercussion on a piezoelectric crystal that sends a signal to the powertrain control module (PCM) and, on the basis of this signal, the PCM reduces the ignition advance until the phenomenon disappears. Later on, the advance is gradually restored to the basic value.

OPERATION

OPERATION

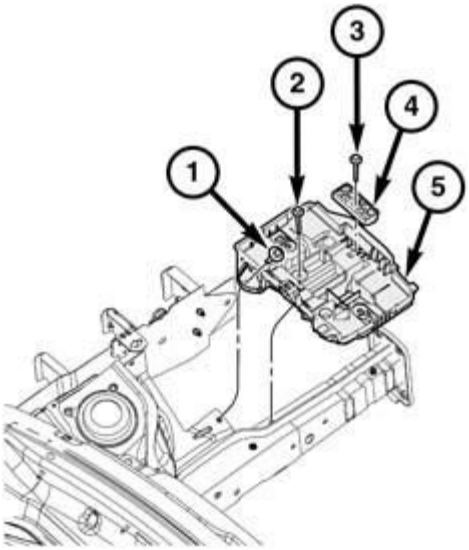

0909005837

Fig. 47: Electrical Polarization Operation
Courtesy of CHRYSLER GROUP, LLC

The molecules of a quartz crystal are affected by electrical polarization. In rest conditions (A) the molecules are not arranged in a particular way. When the crystal is subjected to pressure or to an impact (B), the higher the pressure, the more marked their arrangement. This arrangement produces a voltage at the ends of the crystal.

REMOVAL

2.4L

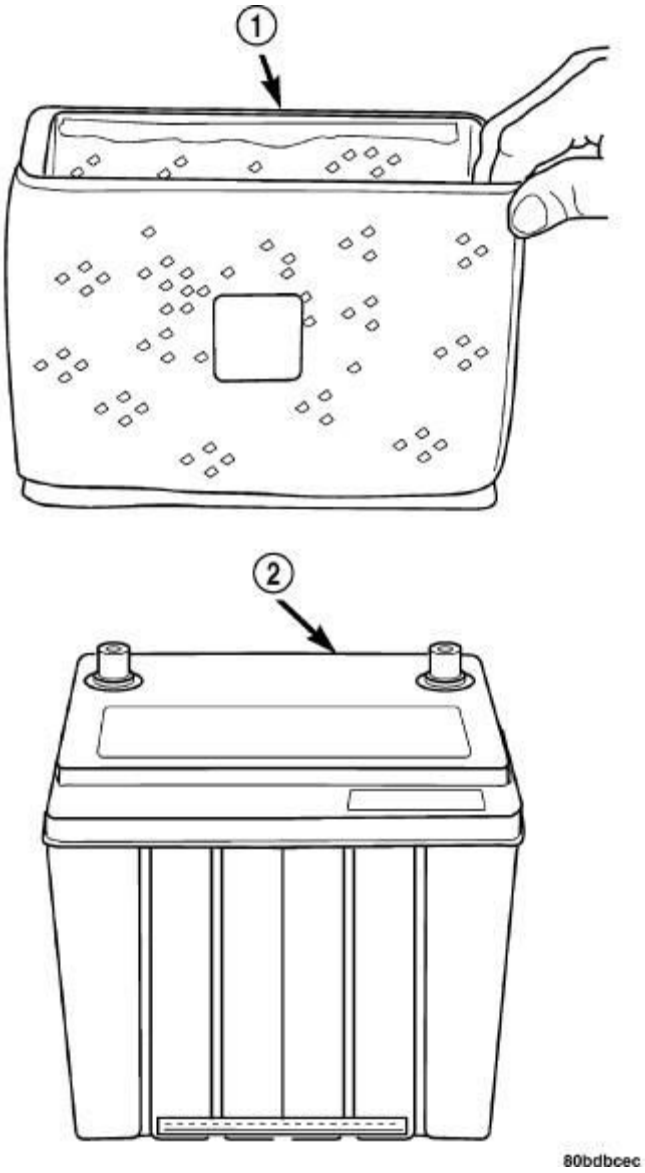

Fig. 48: Knock Sensor Mounting Bolt
Courtesy of CHRYSLER GROUP, LLC

1. Disconnect and isolate the negative battery cable.
2. Raise and support the vehicle. Refer to **HOISTING, STANDARD PROCEDURE** .
3. Remove the Intake manifold. Refer to **MANIFOLD, INTAKE, REMOVAL** .
4. Remove the knock sensor electrical connector.
5. Remove the mounting bolt (1) and knock sensor.

3.2L

Fig. 49: Knock Sensor 1 & Knock Sensor 2
Courtesy of CHRYSLER GROUP, LLC

NOTE: The forward sensor (1) is known to the powertrain control module (PCM) as knock sensor 1. The rear sensor (3) is known to the PCM as knock sensor 2.

1. Perform the fuel pressure release procedure. Refer to **FUEL SYSTEM PRESSURE RELEASE PROCEDURE** .
2. Disconnect and isolate the negative battery cable.
3. Drain the cooling system. Refer to **STANDARD PROCEDURE** .
4. Remove the air cleaner housing assembly, upper and lower intake manifolds and the oil filter housing. Refer to **HOUSING, OIL FILTER, REMOVAL** .
5. Remove the electrical connector (4).

NOTE: There may be a foam strip on the bolt threads. This foam is used only to retain the bolts to the sensors for plant assembly. It is not used as a sealant. Do not apply any adhesive, sealant or thread locking compound to these bolts.

6. Remove the mounting bolt (2) and knock sensor 1 (1) or knock sensor 2 (3).

INSTALLATION

2.4L

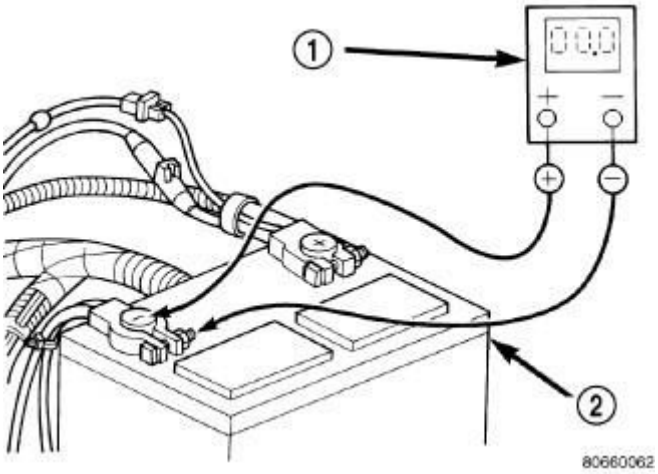

Fig. 50: Knock Sensor Mounting Bolt
Courtesy of CHRYSLER GROUP, LLC

1. Thoroughly clean the knock sensor mounting hole.

CAUTION: Over or under tightening the knock sensor mounting bolt will affect knock sensor performance, possibly causing improper spark control. Always use the specified torque when installing the knock sensor. Do not apply any adhesive, sealant or thread locking compound to the bolt.

2. Install the knock sensor with mounting bolt (1). Tighten the mounting bolt to the proper specification. Refer to **SPECIFICATIONS**.
3. Connect the electrical connector.
4. Install the Intake manifold. Refer to **MANIFOLD, INTAKE, INSTALLATION** .
5. Lower the vehicle.
6. Connect the negative battery cable and tighten nut to the proper specification. Refer to **SPECIFICATIONS** .

3.2L

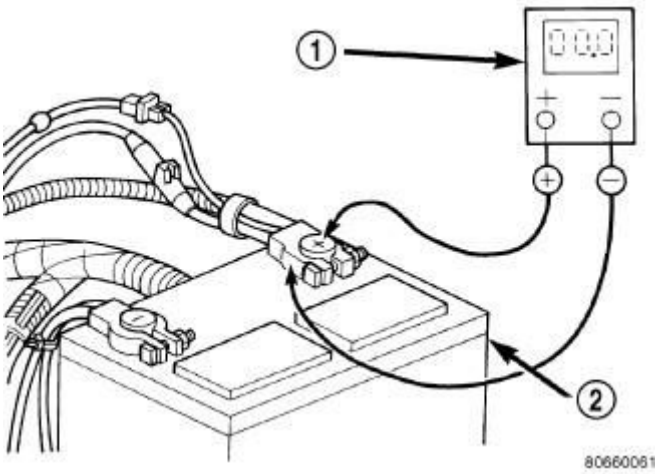

Fig. 51: Knock Sensor 1 & Knock Sensor 2
Courtesy of CHRYSLER GROUP, LLC

NOTE: The forward sensor (1) is known to the powertrain control module (PCM) as knock sensor 1. The rear sensor (3) is known to the PCM as knock sensor 2.

1. Thoroughly clean the knock sensor mounting holes.

NOTE: Over or under tightening the sensor mounting bolts will affect knock sensor performance, possibly causing improper spark control. Always use the specified torque when installing the knock sensors. The torque specification for the knock sensor bolt is less than the typical 8 mm bolt.

NOTE: There may be a foam strip on the bolt threads. This foam is used only to retain the bolts to the sensors for plant assembly. It is not used as a sealant. Do not apply any adhesive, sealant or thread locking compound to these bolts.

2. Install knock sensor 1 (1) or knock sensor 2 (3) with mounting bolt (2). Tighten the mounting bolt to 20 N.m (15 ft. lbs.).
3. Connect the electrical connector (4).
4. Install the oil filter housing, upper and lower intake manifolds and air cleaner housing assembly. Refer to **HOUSING, OIL FILTER, INSTALLATION** .
5. If removed, install the oil filter and fill the engine crankcase with the proper oil to the correct level. Refer to **OIL - STANDARD PROCEDURE** .
6. Connect the negative battery cable and tighten nut to 5 N.m (45 in. lbs.).
7. Fill the cooling system. Refer to **STANDARD PROCEDURE** .
8. Operate the engine until it reaches normal operating temperature. Check cooling system for correct fluid level. Refer to **STANDARD PROCEDURE** .

SOLENOID, VARIABLE VALVE TIMING

DESCRIPTION

DESCRIPTION

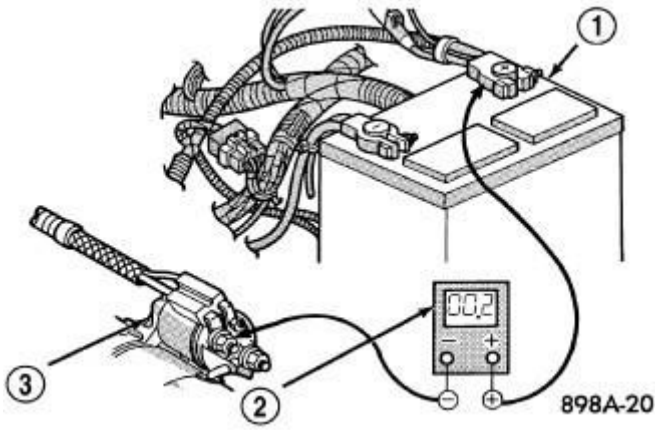

Fig. 52: Variable Valve Timing Solenoid
Courtesy of CHRYSLER GROUP, LLC

The 3.6L engine is equipped with Variable Valve Timing (VVT). This system adjusts the timing of all four camshafts independently using solenoids and oil control valves to direct oil pressure into the camshaft phaser assemblies. The camshaft phaser assembly advances and/or retards camshaft timing to improve engine performance, mid-range torque, idle quality, fuel economy, and reduce emissions. The four VVT solenoids are located on the front of the cylinder head covers. The pintle should move freely within the solenoid body. Do not attempt to disassemble the solenoids, they are not serviceable. The solenoids are identical but should be installed in the same location as removed.

OPERATION

OPERATION

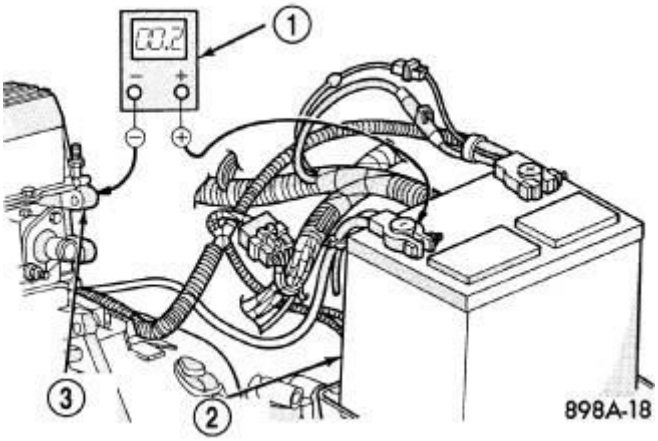

Fig. 53: Oil Control Valve (OCV), VVT Solenoid, Solenoid Pintle & Internal Spool Valve
Courtesy of CHRYSLER GROUP, LLC

Camshaft phaser position is adjusted using regulated oil pressure through an Oil Control Valve (OCV) (3). To begin Phaser movement, the Powertrain Control Module (PCM) applies a pulse-width modulated voltage signal to the VVT solenoid (1) to extend or retract the solenoid pintle (4). The pintle pushes against an internal spool valve (2) within the OCV moving the valve forwards and backwards to direct oil flow. The position of the spool inside the OCV determines which ports and chambers inside the phaser are being fed, either to advance the timing of the phaser sprocket relative to the camshaft, retard it, or hold a desired position. Refer to **ASSEMBLY, VARIABLE VALVE TIMING, PHASER/OIL CONTROL VALVE, OPERATION** .

The Camshaft Position (CMP) sensor monitors the position of the camshaft with respect to the crankshaft and provides feedback to the PCM.

The debris crush mode will only occur with the key on and the engine off (KOEO). If the ignition is cycled to the start position without a momentary pause (immediate crank), the debris crush mode will not occur. In this instance the procedure will be performed at the next key off cycle.

REMOVAL

LEFT

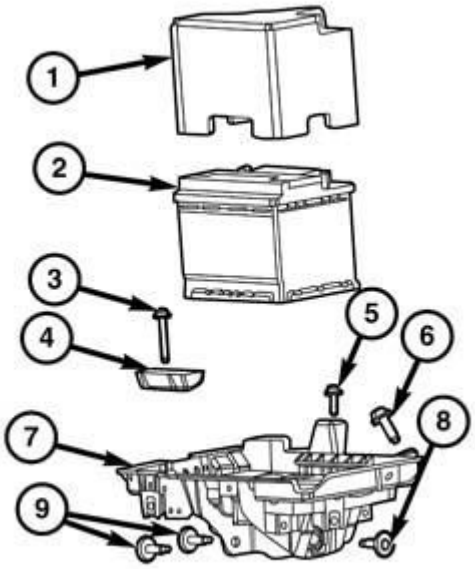

080770037

Fig. 54: Variable Valve Timing Solenoids, Connectors & Bolts
Courtesy of CHRYSLER GROUP, LLC

1. Disconnect and isolate the negative battery cable.

NOTE: Mark the variable valve timing solenoid connectors (1) with a paint pen or equivalent so that they may be reinstalled in their original locations.

2. Mark the intake variable valve timing solenoid (4) and the exhaust variable valve timing solenoid (2) with a paint pen or equivalent so that they may be reinstalled in their original locations.
3. Disconnect the electrical connector (1) from the variable valve timing solenoid.
4. Remove the variable valve timing solenoid mounting bolts (3).

Fig. 55: VVT Seal
Courtesy of CHRYSLER GROUP, LLC

5. Pull the variable valve timing solenoid from the cylinder head cover.
6. The seal (1) can be reused if not damaged.

RIGHT

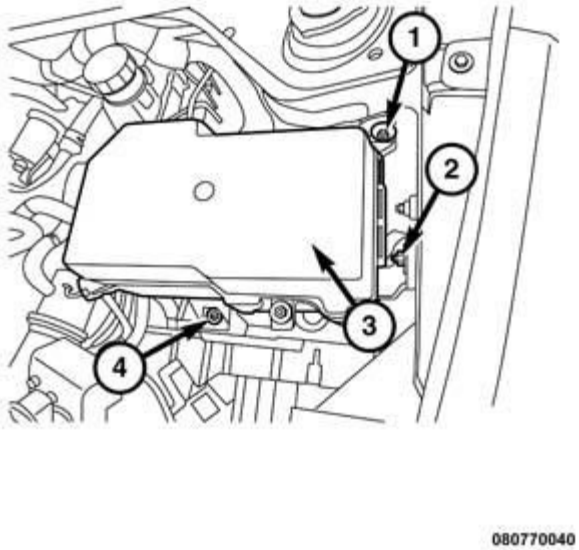

Fig. 56: Liquid And Suction Line Assembly
Courtesy of CHRYSLER GROUP, LLC

1. Disconnect and isolate the negative battery cable.
2. Recover the refrigerant from the refrigerant system. Refer to **PLUMBING, STANDARD PROCEDURE** .
3. Remove the resonator. Refer to **RESONATOR, AIR CLEANER, REMOVAL** for 2.4L or **RESONATOR, AIR CLEANER, REMOVAL** for 3.2L.
4. Remove the upper A/C liquid and suction line assembly (1). Refer to **LINE, A/C SUCTION, REMOVAL** .

Fig. 57: Variable Valve Timing Solenoids, Connectors & Bolts
Courtesy of CHRYSLER GROUP, LLC

NOTE: Mark the variable valve timing solenoid connectors (1) with a paint pen or equivalent so that they may be reinstalled in their original locations.

5. Mark the intake variable valve timing solenoid (2) and the exhaust variable valve timing solenoid (4) with a paint pen or equivalent so that they may be reinstalled in their original locations.
6. Disconnect the electrical connector (1) from the variable valve timing solenoid.
7. Remove the variable valve timing solenoid mounting bolts (3).

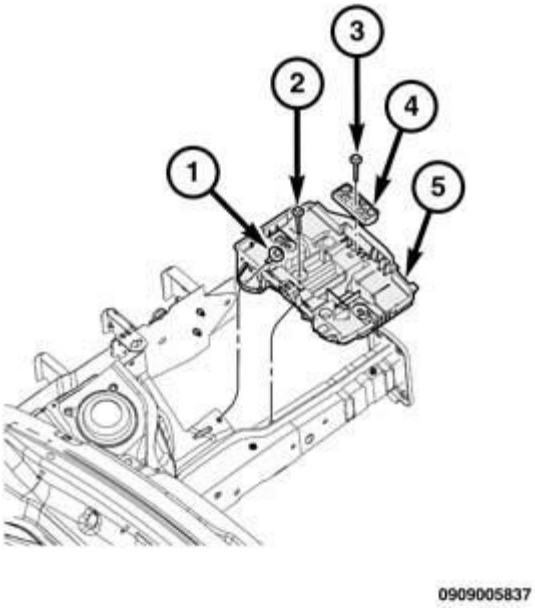

Fig. 58: VVT Seal
Courtesy of CHRYSLER GROUP, LLC

8. Pull the variable valve timing solenoid from the cylinder head cover.
9. The seal (1) can be reused if not damaged.

INSTALLATION

LEFT

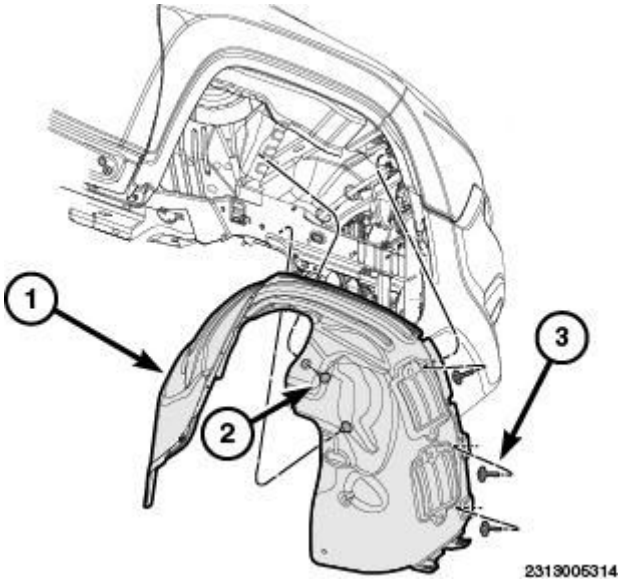

Fig. 59: VVT Seal

Courtesy of CHRYSLER GROUP, LLC

1. Install the variable valve timing solenoid seals (1). The seals can be reused if not damaged.

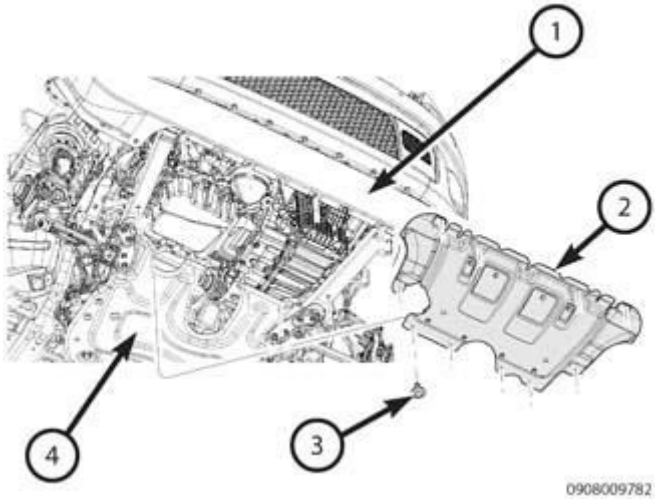

Fig. 60: Variable Valve Timing Solenoids, Connectors & Bolts
Courtesy of CHRYSLER GROUP, LLC

2. Refer to the markings made at disassembly and install the intake variable valve timing solenoid (4) and the exhaust variable valve timing solenoid (2) in their original locations.
3. Install the variable valve timing solenoid mounting bolts (3) and hand tighten.
4. Connect the electrical connector (1) to the variable valve timing solenoid.
5. Connect the negative battery cable and tighten the nut to the proper specification. Refer to **SPECIFICATIONS** .

NOTE: **The Cam/Crank Variation Relearn procedure must be performed using the scan tool anytime there has been a repair/replacement made to a powertrain system, for example: flywheel, valvetrain, camshaft and/or crankshaft sensors or components.**

RIGHT

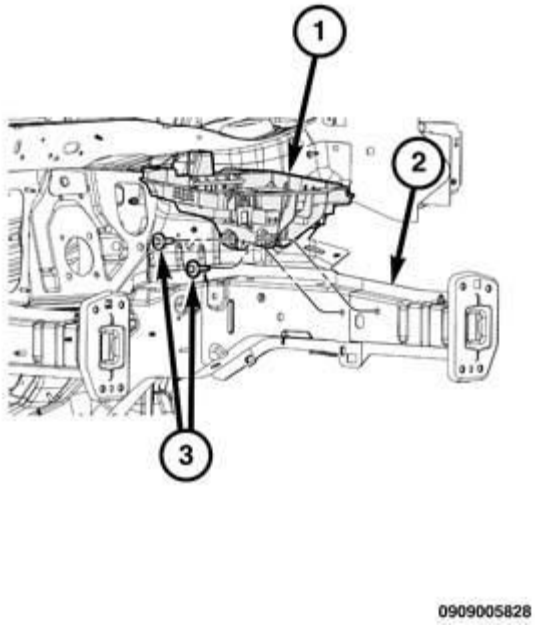

Fig. 61: VVT Seal
Courtesy of CHRYSLER GROUP, LLC

1. Install the variable valve timing solenoid seals (1). The seals can be reused if not damaged.

Fig. 62: Variable Valve Timing Solenoids, Connectors & Bolts
Courtesy of CHRYSLER GROUP, LLC

2. Refer to the markings made at disassembly and install the intake variable valve timing solenoid (2) and the exhaust variable valve timing solenoid (4) in their original locations.

3. Install the variable valve timing solenoid mounting bolts (3) and hand tighten.
4. Connect the electrical connector (1) to the variable valve timing solenoid.

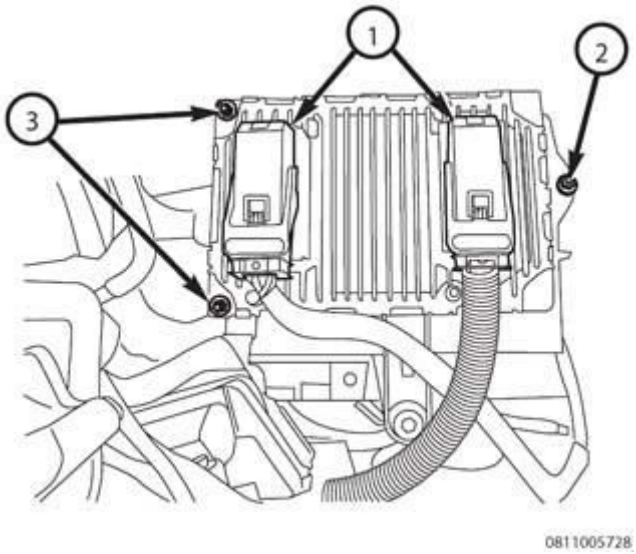

Fig. 63: Liquid And Suction Line Assembly
Courtesy of CHRYSLER GROUP, LLC

5. Install the upper A/C liquid and suction line assembly (1). Refer to **LINE, A/C SUCTION, INSTALLATION** .
6. Install the resonator. Refer to **RESONATOR, AIR CLEANER, INSTALLATION** for 2.4L or **RESONATOR, AIR CLEANER, INSTALLATION** for 3.2L.
7. Connect the negative battery cable and tighten nut to the proper specification. Refer to **SPECIFICATIONS** .

NOTE: The Cam/Crank Variation Relearn procedure must be performed using the scan tool anytime there has been a repair/replacement made to a powertrain system, for example: flywheel, valvetrain, camshaft and/or crankshaft sensors or components.

SPARK PLUG

REMOVAL

2.4L

CAUTION: Handle the spark plugs with care. Do not drop or force the spark plugs into the wells, damage to the electrodes and/or porcelain body may occur. Always start each spark plug by hand in order to avoid cross-threading the spark plug in the cylinder head.

Always tighten spark plugs to the specified torque. Too much or not enough torque will cause damage to the cylinder head and/or spark plug and may lead to poor engine performance.

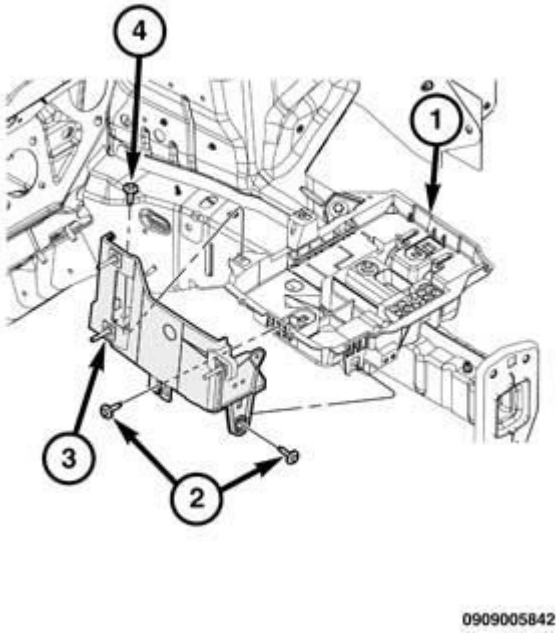

Fig. 64: Spark Plug Removed
Courtesy of CHRYSLER GROUP, LLC

NOTE: Typical

1. Install each spark plug to the cylinder head. Tighten spark plugs to 27 N.m (20 ft. lbs.).

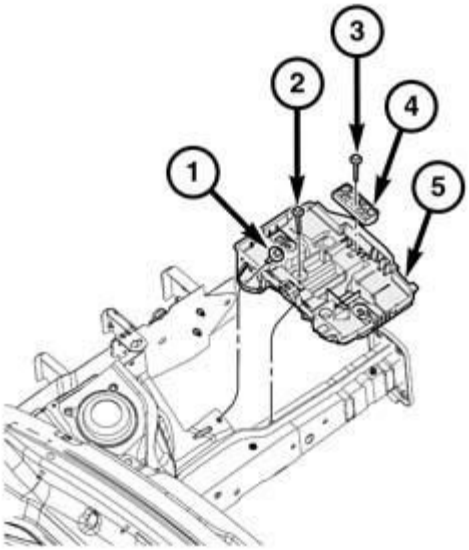

0909005837

Fig. 65: Removing/Installing Ignition Coil
Courtesy of CHRYSLER GROUP, LLC

2. Install ignition coil onto spark plug.

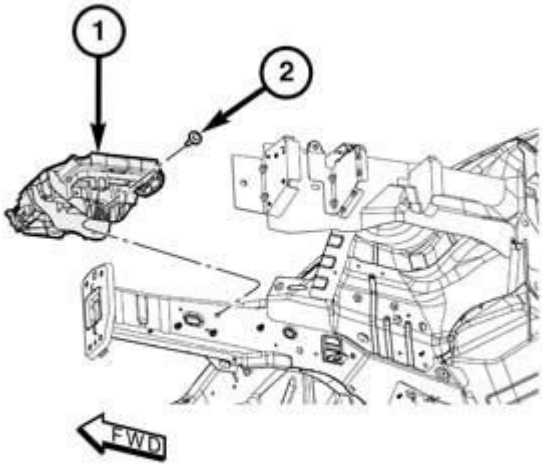

0909005827

Fig. 66: Ignition Coil Bolt
Courtesy of CHRYSLER GROUP, LLC

3. Install ignition coil mounting bolt. Tighten to 9 N.m (79.5 in. lbs.).
4. Connect ignition coil electrical connectors.
5. Connect the negative battery cable.

3.2L

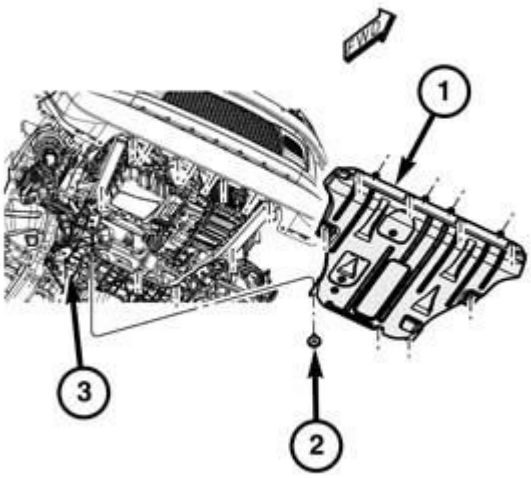

0909005829

Fig. 67: Electrical Connector, Ignition Coils & Ignition Coil Retaining Bolts
Courtesy of CHRYSLER GROUP, LLC

NOTE: The left side ignition coils are shown in illustration, the right side ignition coils are similar.

1. Remove the ignition coil (2). Refer to **COIL, IGNITION, REMOVAL**.

CAUTION: The spark plug tubes (1) are a thin wall design. Avoid damaging the spark plug tubes. Damage to the spark plug tube can result in oil leaks.

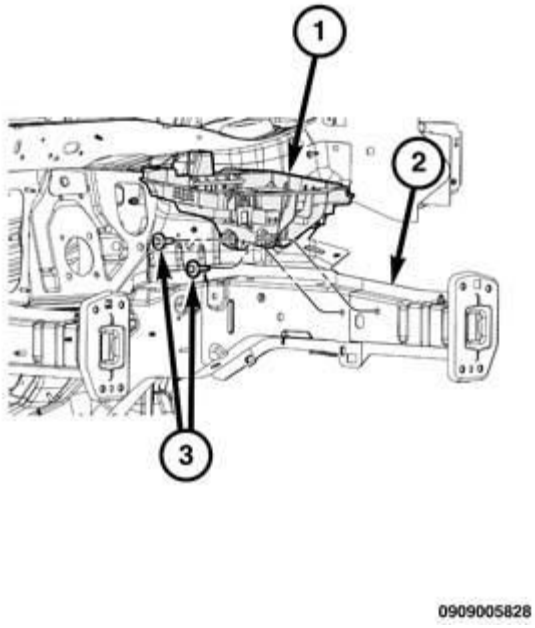

Fig. 68: Spark Plug Tubes
Courtesy of CHRYSLER GROUP, LLC

2. Prior to removing the spark plug, spray compressed air into the cylinder head opening. This will help prevent foreign material from entering combustion chamber.
3. Remove the spark plug from the cylinder head using a quality thin wall socket with a rubber or foam insert.
4. Inspect the spark plug condition.

INSTALLATION

2.4L

CAUTION: Handle the spark plugs with care. Do not drop or force the spark plugs into the wells, damage to the electrodes and/or porcelain body may occur. Always start each spark plug by hand in order to avoid cross-threading the spark plug in the cylinder head.

Always tighten spark plugs to the specified torque. Too much or not enough torque will cause damage to the cylinder head and/or spark plug and may lead to poor engine performance.

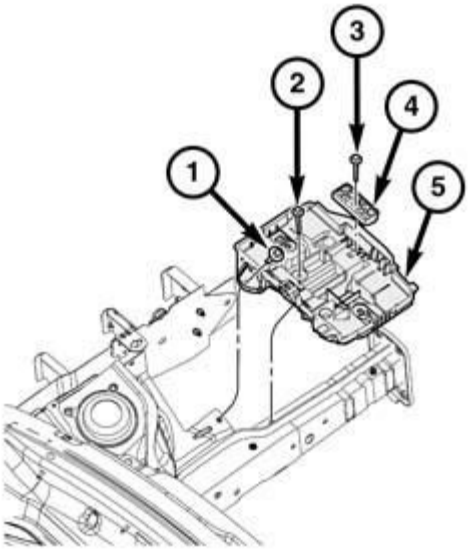

0909005837

Fig. 69: Spark Plug Removed
Courtesy of CHRYSLER GROUP, LLC

NOTE: Typical

1. Install each spark plug to the cylinder head. Tighten spark plugs to 27 N.m (20 ft. lbs.).

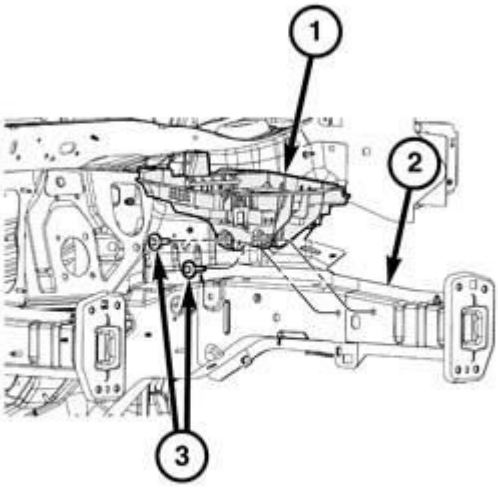

0909005828

Fig. 70: Removing/Installing Ignition Coil
Courtesy of CHRYSLER GROUP, LLC

2. Install ignition coil onto spark plug.

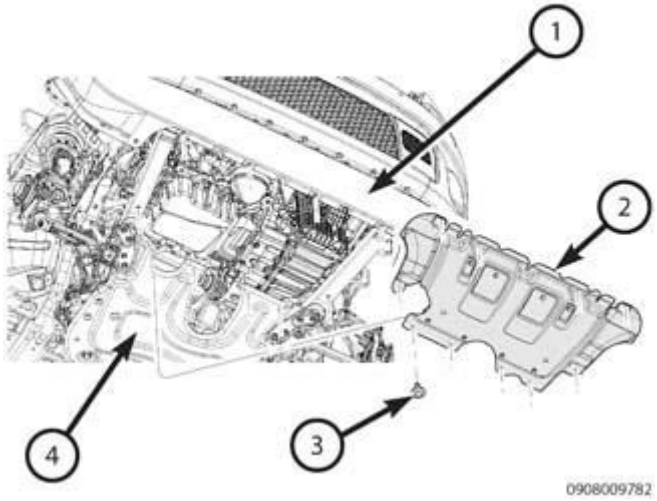

Fig. 71: Ignition Coil Bolt
Courtesy of CHRYSLER GROUP, LLC

3. Install ignition coil mounting bolt. Tighten to 9 N.m (79.5 in. lbs.).
4. Connect ignition coil electrical connectors.
5. Connect the negative battery cable.

3.2L

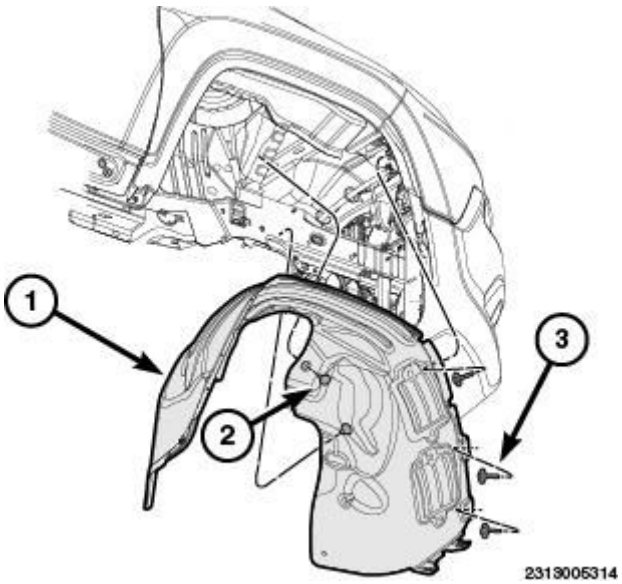

Fig. 72: Gap Gauging Tool

Courtesy of CHRYSLER GROUP, LLC

1. Check and adjust the spark plug gap with a gap gauging tool (1). Refer to **SPECIFICATIONS**.

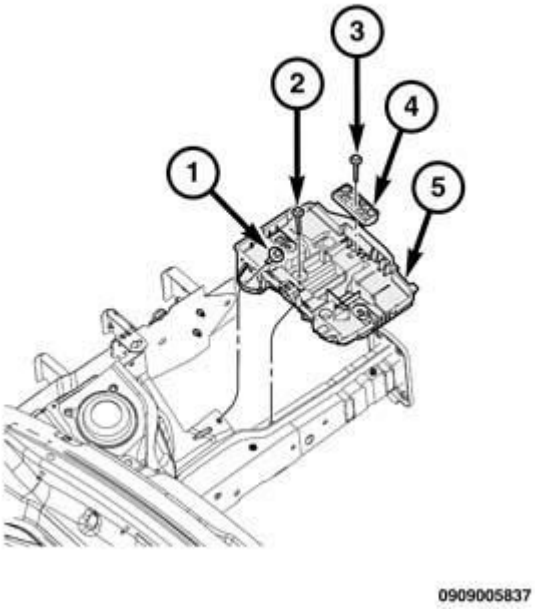

Fig. 73: Spark Plug Tubes
Courtesy of CHRYSLER GROUP, LLC

CAUTION: Special care should be taken when installing spark plugs into the cylinder head spark plug wells. Be sure the plugs do not drop into the plug wells as electrodes can be damaged.

CAUTION: The spark plug tubes (1) are a thin wall design. Avoid damaging the spark plug tubes. Damage to the spark plug tube can result in oil leaks.

2. Start the spark plug into the cylinder head by hand to avoid cross threading.

CAUTION: Spark plug torque is critical and must not exceed the specified value. Overtightening stretches the spark plug shell reducing its heat transfer capability resulting in possible catastrophic engine failure.

3. Tighten the spark plugs to 17.5 N.m (13 ft. lbs.).

Fig. 74: Electrical Connector, Ignition Coils & Ignition Coil Retaining Bolts
Courtesy of CHRYSLER GROUP, LLC

NOTE: The left side ignition coils are shown in illustration, the right side ignition coils are similar.

4. Install the ignition coil (2). Refer to **COIL, IGNITION, INSTALLATION**.

SWITCH, IGNITION

DESCRIPTION

DESCRIPTION

The ignition switch is located on the steering column. It is used as the main on/off switching device for most electrical components. The mechanical key cylinder is used to engage/disengage the electrical ignition switch.

OPERATION

OPERATION

Vehicles equipped with an automatic transmission and a steering column mounted shifter: an interlock device is located within the shift cable. This interlock device is used to lock the transmission shifter in the PARK position when the key cylinder is in any position and the brake pedal is not depressed.

REMOVAL

REMOVAL

1. Disconnect the and isolate the negative battery cable.
2. Remove the dash end cap. Refer to **CAP, INSTRUMENT PANEL END, REMOVAL** .
3. Remove the steering column opening cover.
4. Remove the HVAC control head. Refer to **CONTROL, A/C AND HEATER, REMOVAL** .
5. Remove the instrument cluster bezel. Refer to **BEZEL, INSTRUMENT CLUSTER, REMOVAL** .
6. Disconnect the wire harness connector from the Ignition Node Module.

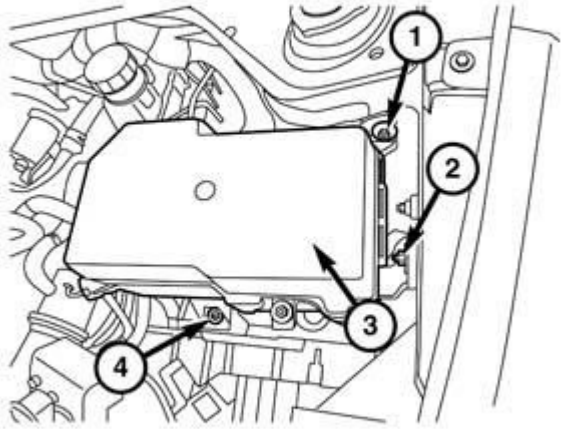

080770040

Fig. 75: Removing/Installing Switch Mounting Screws
Courtesy of CHRYSLER GROUP, LLC

7. Remove 4 screws from the I/P holding the Ignition Node Module in place.
8. Remove the Ignition Node Module from the backside of the I/P.

INSTALLATION

INSTALLATION

1. Install the Ignition Node Module into the Instrument Panel from the backside.
2. Pull the Ignition Node Module into place.

Fig. 76: Removing/Installing Switch Mounting Screws
Courtesy of CHRYSLER GROUP, LLC

3. Install 4 screws through the instrument Panel into the Ignition Node Module and tighten.
4. Connect Electrical harness connector into Ignition Node Module.
5. Install the Instrument Panel bezel and connect wire harness connectors. Refer to **BEZEL, INSTRUMENT CLUSTER, INSTALLATION** .
6. Install the HVAC control head and connect wire harness connectors. Refer to **CONTROL, A/C AND HEATER, INSTALLATION** .
7. Install the steering column opening cover and connect the wire harness connectors.
8. Install dash end cap. Refer to **CAP, INSTRUMENT PANEL END, INSTALLATION** .
9. Connect negative battery cable.
10. If Ignition Node Module is being replaced, program the module. Refer to **STANDARD PROCEDURE** . **This procedure will require you to log into DealerCONNECT and enter a PIN when requested. The PIN is temporary and will be active for 12 hours. After 12 hours, a new PIN will need to be obtained from DealerCONNECT.**

2014 ENGINE

Ignition System - Service Information - Cherokee

DESCRIPTION

DESCRIPTION

NOTE: All engines use a fixed ignition timing system. Basic ignition timing is not adjustable. All spark advance is determined by the Powertrain Control Module (PCM).

The ignition system used on these engines is referred to as coil on plug. The system's four main components are the coils, crankshaft position sensor, spark plugs, and camshaft position sensors. The coil on plug ignition system utilizes an ignition coil for every cylinder. The ignition coils are mounted directly over the each spark plug.

OPERATION

OPERATION

The crankshaft position sensor and camshaft position sensor are hall effect devices. The camshaft position sensor and crankshaft position sensor generate square wave pulses that are inputs to the PCM. The PCM determines engine position from these sensors. The PCM calculates injector sequence and ignition timing from crankshaft AND camshaft position.

SPECIFICATIONS

SPARK PLUG

Engine	Spark Plug	Electrode Gap
2.4L	REC10WMPB4	1.2mm (0.047 in.)
3.2L	RER8ZWYCB4	1.1mm (0.043 in.)

FIRING ORDER

2.4L

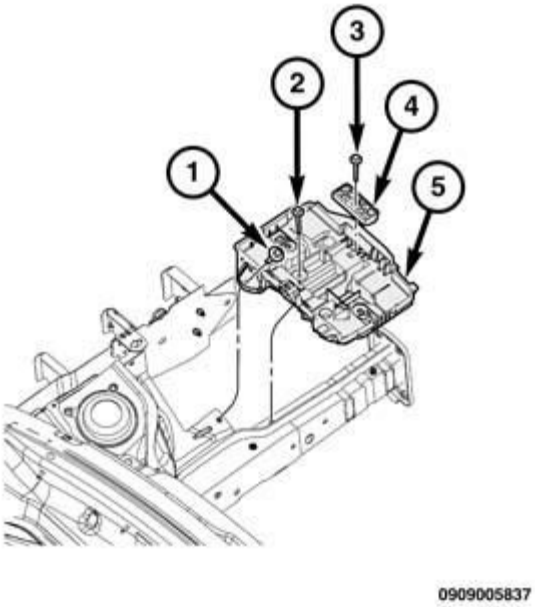

Fig. 1: Transverse 4 Cyl. Firing Order
Courtesy of CHRYSLER GROUP, LLC

The firing order is 1-3-4-2.

3.2L V6

Firing Order: 1-2-3-4-5-6

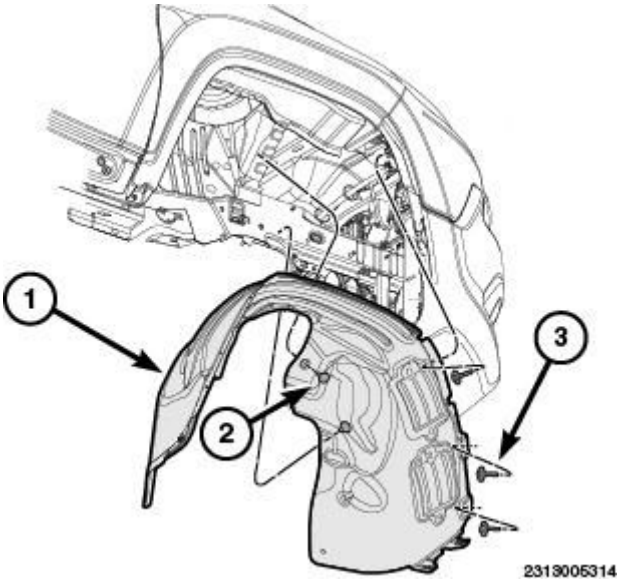

Fig. 2: Firing Order: 1 - 2 - 3 - 4 - 5 - 6
Courtesy of CHRYSLER GROUP, LLC

IGNITION RESISTANCE

IGNITION COIL RESISTANCE

Engine	Primary Resistance at 21°C-27°C (70°F-80°F)	Secondary Resistance at 21°C-27° C (70°F-80°F)
2.4L	0.468 to 0.572 Ohms	5.287 to 7.153 K Ohms
3.2L	0.6 - 0.9 Ohms	6, 000 - 9, 000 Ohms

TORQUE SPECIFICATION

DESCRIPTION	N.m	Ft. Lbs.	In. Lbs.
Camshaft Position Sensor Bolt	9	-	80
Ignition Coil Mounting Bolts	8	-	71
Spark Plugs	27	20	-
Knock Sensor	20	15	-
Ignition Coil Capacitor Bolt	10	-	89
Transmission mounting bolt	61	45	-
* Do not apply any sealant, thread-locker or adhesive to bolts. Poor sensor performance may result.			

CAPACITOR, IGNITION

REMOVAL

2.4L

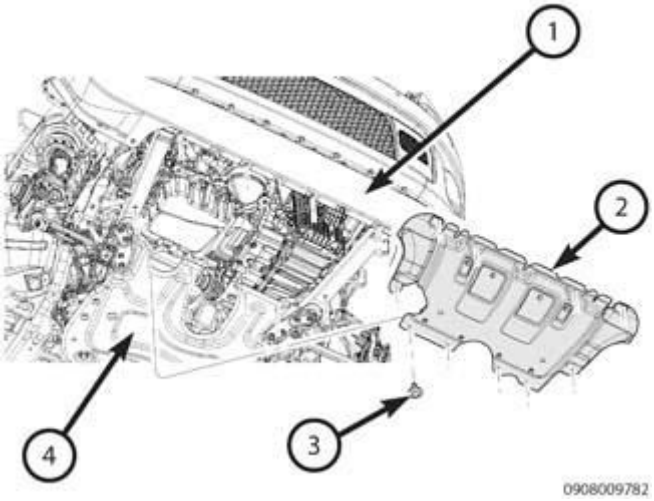

Fig. 3: Connector, Ignition Capacitor & Mounting Bolt
Courtesy of CHRYSLER GROUP, LLC

1. Disconnect and isolate negative battery cable.
2. Remove electrical connector (1).
3. Remove mounting bolt (3) and ignition capacitor (1) from the front of the cylinder head.

3.2L

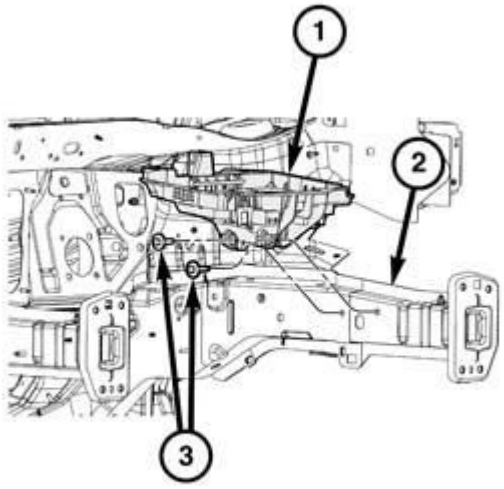

0909005828

Fig. 4: Electrical Connector, Mounting Bolt & Ignition Capacitor
Courtesy of CHRYSLER GROUP, LLC

1. Disconnect and isolate the negative battery cable.
2. Separate the engine harness connector retainers from the intake manifold and Position the main engine wiring harness aside.
3. Remove the electrical connector (1).
4. Remove the mounting bolt (3) and the ignition capacitor (2).

INSTALLATION

2.4L

Fig. 5: Connector, Ignition Capacitor & Mounting Bolt
Courtesy of CHRYSLER GROUP, LLC

1. Install ignition capacitor to the front of the cylinder head (2) and bolt (3), tighten bolt to the proper specification. Refer to **SPECIFICATIONS**.
2. Connect electrical connector (1).
3. Connect the negative battery cable, tighten the nut to the proper specification. Refer to **SPECIFICATIONS** .

3.2L

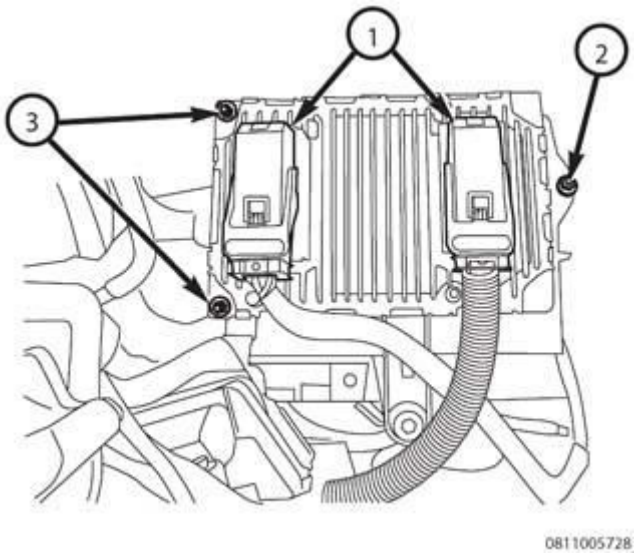

Fig. 6: Electrical Connector, Mounting Bolt & Ignition Capacitor
Courtesy of CHRYSLER GROUP, LLC

1. Position capacitor (2) to the rear of the cylinder head.
2. Tighten nut (3) to 7 N.m (60 in. lbs.).
3. Connect electrical connector (1) to coil capacitor.
4. Install the main engine harness retainers onto the intake manifold.
5. Connect the battery negative cable.

COIL, IGNITION

REMOVAL

2.4L

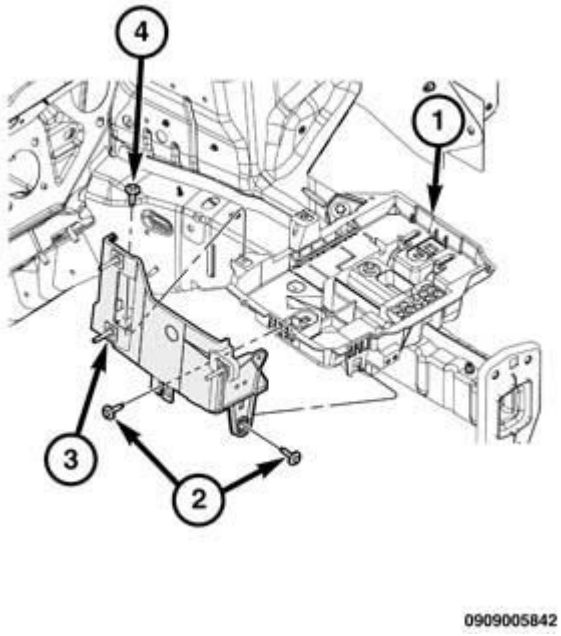

Fig. 7: Ignition Coils
Courtesy of CHRYSLER GROUP, LLC

NOTE: **View typical**

NOTE: **Prior to removing coil, spray compressed air around coil top to make sure no dirt drops into the spark plug tube.**

The electronic ignition coil attaches directly to the valve cover.

1. Remove the negative battery cable.
2. Disconnect electrical connector from ignition coil.

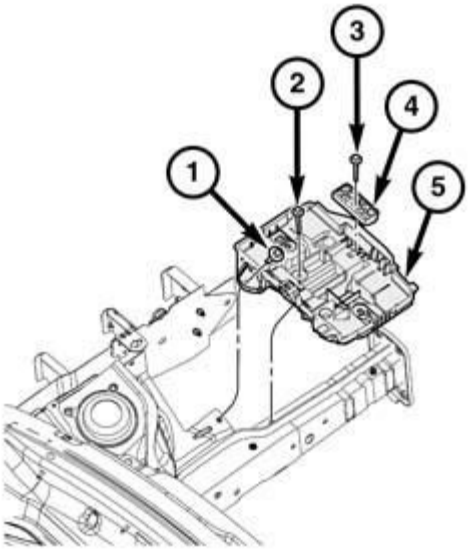

0909005837

Fig. 8: Ignition Coil Bolt
Courtesy of CHRYSLER GROUP, LLC

3. Remove ignition coil mounting bolts.

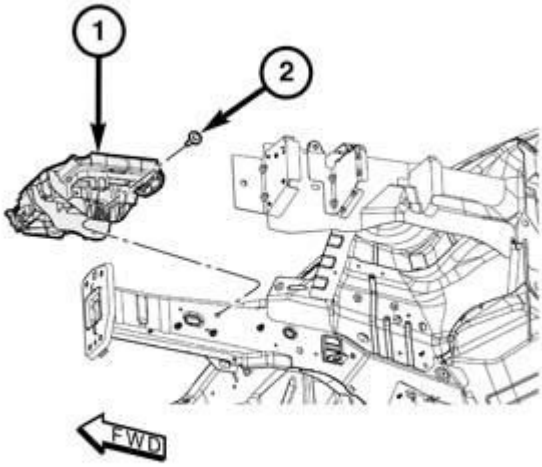

0909005827

Fig. 9: Removing/Installing Ignition Coil
Courtesy of CHRYSLER GROUP, LLC

4. Remove ignition coil.

3.2L

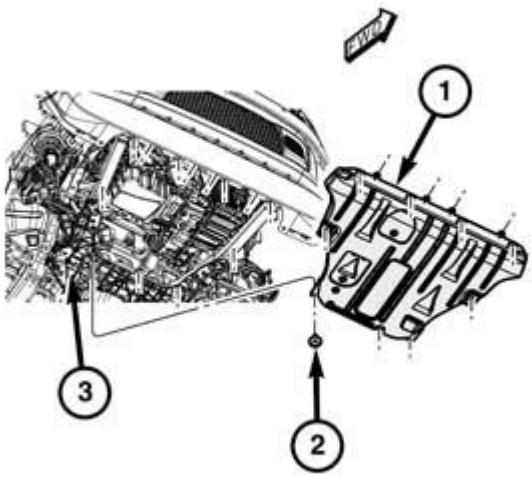

0909005829

Fig. 10: Engine Cover & Ball Studs
Courtesy of CHRYSLER GROUP, LLC

1. Disconnect and isolate the negative battery cable.
2. Lift the engine cover from the retaining grommets off of the ball studs (2) and remove the engine cover (1).
3. If removing the ignition coils from cylinders 1, 3 or 5 on the right side of the engine. Remove the air intake resonator. Refer to **RESONATOR, AIR CLEANER, REMOVAL** .
4. If removing the ignition coils from cylinders 2, 4 or 6 on the left side of the engine. Remove the upper intake manifold and insulator. Refer to **MANIFOLD, INTAKE, REMOVAL** .

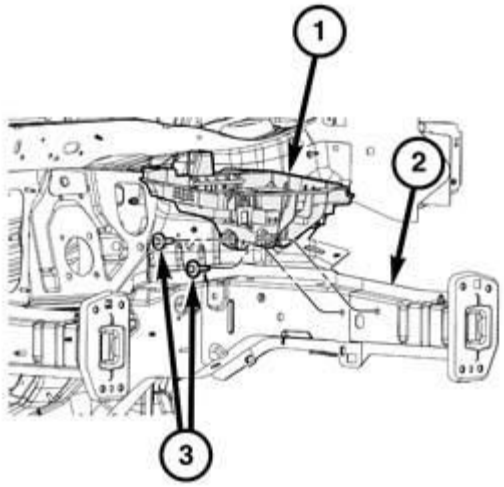

0909005828

Fig. 11: Electrical Connector, Ignition Coils & Ignition Coil Retaining Bolts
Courtesy of CHRYSLER GROUP, LLC

NOTE: The left side ignition coils are shown in illustration, the right side ignition coils are similar.

5. Disconnect the harness connector (1) from the ignition coil (2).
6. Remove the ignition coil retaining bolt (3).
7. Pull the ignition coil (2) from cylinder head cover opening with a slight twisting action.

INSTALLATION

2.4L

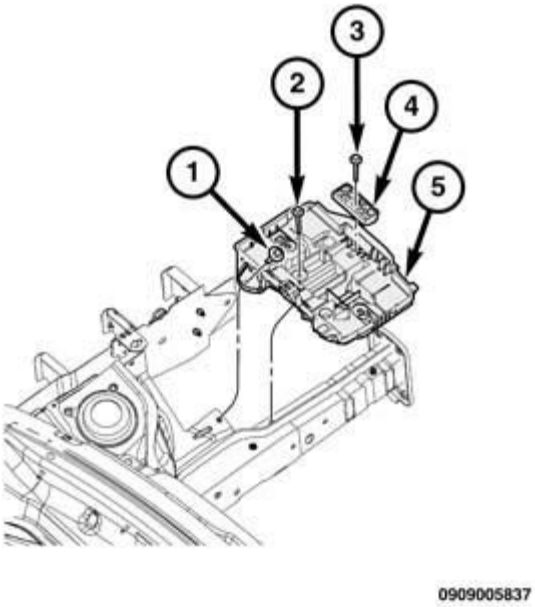

Fig. 12: Removing/Installing Ignition Coil
Courtesy of CHRYSLER GROUP, LLC

NOTE: View typical

1. Install ignition coil.

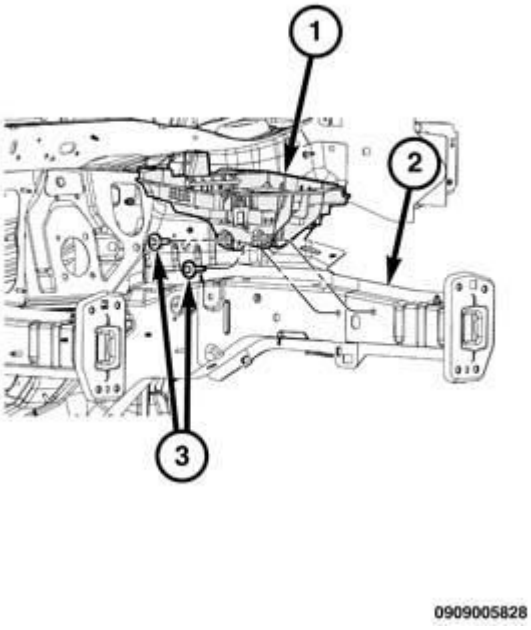

Fig. 13: Ignition Coil Bolt
Courtesy of CHRYSLER GROUP, LLC

2. Tighten bolt to 9 N.m (79.5 in. lbs.).
3. Connect electrical connectors and lock.
4. Install the negative battery cable.

3.2L

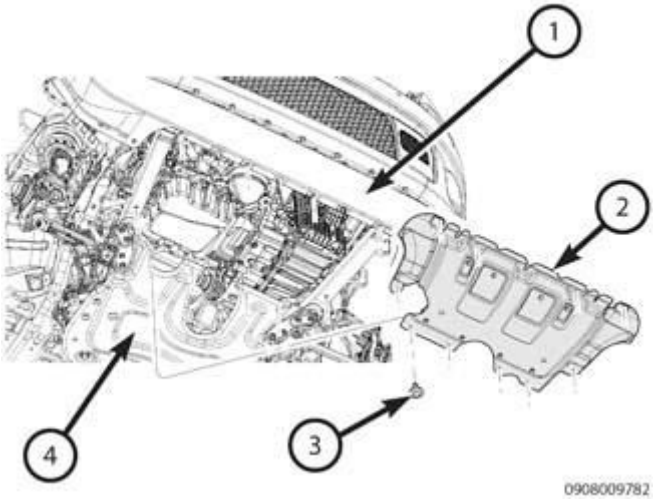

Fig. 14: Ignition Coil Rubber Boot & Opening Of The Boot
Courtesy of CHRYSLER GROUP, LLC

1. Using compressed air, blow out any dirt or contaminants from around the top of spark plug.
2. Check the condition of the ignition coil rubber boot (1). Inspect the opening of the boot (2) for any debris, tears or rips. Carefully remove any debris with a lint free cloth.

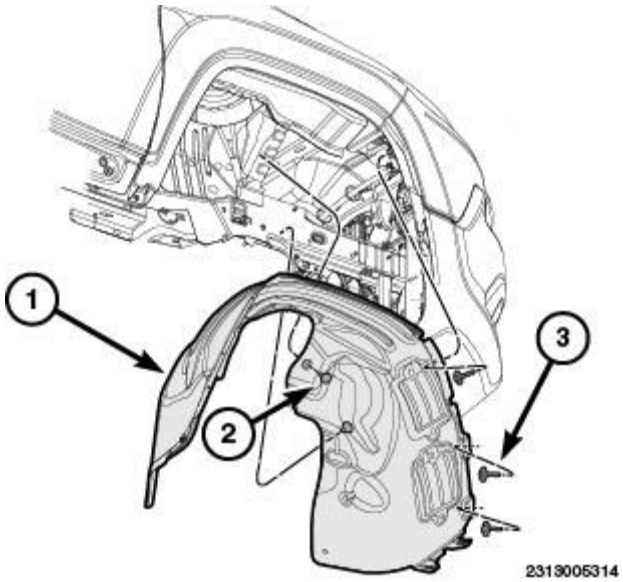

Fig. 15: Fluostar 2LF Lubricant
Courtesy of CHRYSLER GROUP, LLC

CAUTION: Do not apply a silicone based grease such as Mopar® Dielectric Grease to the ignition coil rubber boot. The silicone based grease will absorb into the boot causing it to stick and tear.

3. Place a small, 360° bead of **Uniflor 8172** lubricant (1) along the inside opening of the coil boot approximately 1 to 2 mm from the chamfer edge but not on the chamfered surface.

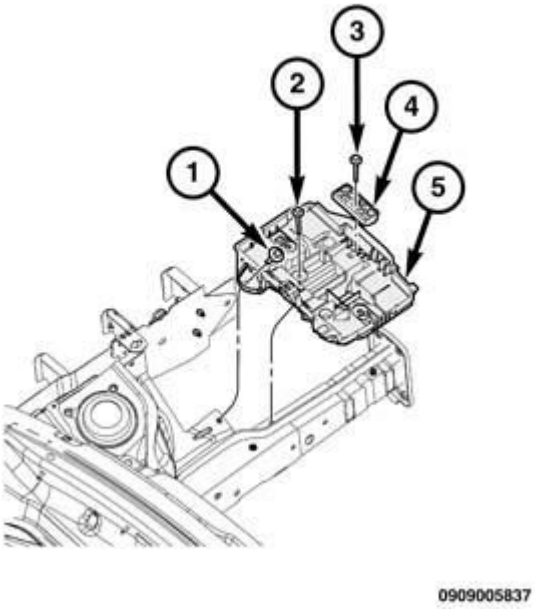

Fig. 16: Electrical Connector, Ignition Coils & Ignition Coil Retaining Bolts

Courtesy of CHRYSLER GROUP, LLC

NOTE: The LH ignition coils are shown in illustration, the RH ignition coils are similar.

4. Position the ignition coil (2) into the cylinder head cover opening. Using a twisting action, push the ignition coil onto the spark plug.
5. Install the ignition coil mounting bolt (3) and tighten to the proper specification. Refer to **SPECIFICATIONS**.
6. Connect the harness connector (1) to the ignition coil (2).
7. If removed, install the insulator and upper intake manifold. Refer to **MANIFOLD, INTAKE, INSTALLATION** .

Fig. 17: Engine Cover & Ball Studs
Courtesy of CHRYSLER GROUP, LLC

8. Install the engine cover.
9. Connect the negative battery cable and tighten nut to the proper specification. Refer to **SPECIFICATIONS** .

PLUG, GLOW

DESCRIPTION

DESCRIPTION

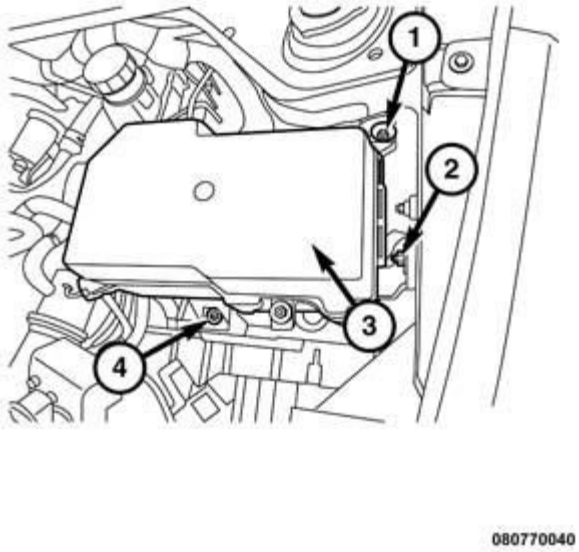

Fig. 18: Glow Plug
Courtesy of CHRYSLER GROUP, LLC

Glow plugs are used to help start a cold or cool engine. The glow plugs will heat up and glow to heat the combustion chamber of each cylinder. An individual glow plug is used for each cylinder. Each glow plug is threaded into the cylinder head below the cylinder head cover.

OPERATION

OPERATION

The glow plugs are used to preheat the combustion chambers in order to achieve the ignition temperature required for the fuel-air mixture.

The heating element is integrated in the glow rod. It consists of a heating winding and a control winding connected in series.

The glow plug system is a quick start type. This allows for immediate start in practically all weather conditions without long periods of pre-glowing; this works in conjunction with the injectors.

REMOVAL

REMOVAL

Fig. 19: Engine Cover
Courtesy of CHRYSLER GROUP, LLC

1. Disconnect the negative battery cable.
2. Remove the engine cover (1).

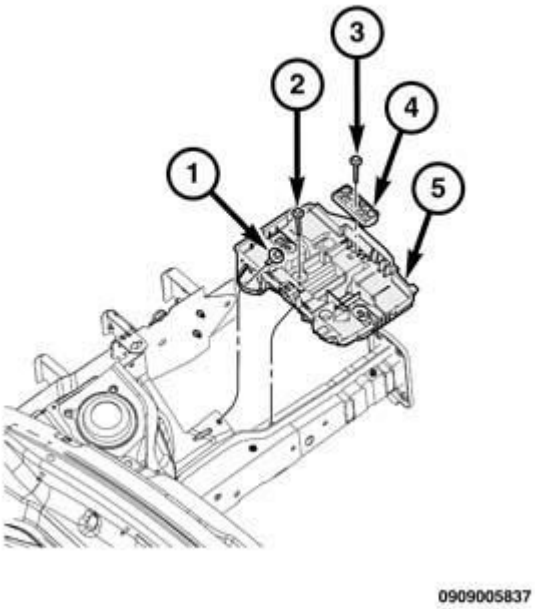

Fig. 20: Glow Plug Harness Connector
Courtesy of CHRYSLER GROUP, LLC

3. Clean glow plug bay area.

4. Disconnect glow plug harness connector (1).

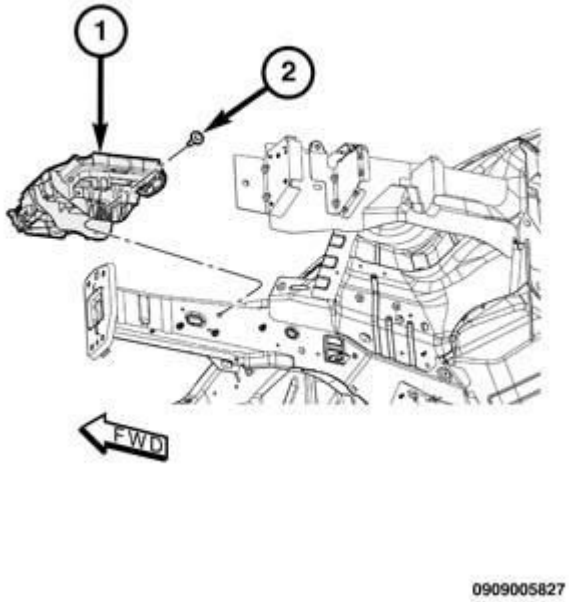

Fig. 21: Glow Plug
Courtesy of CHRYSLER GROUP, LLC

5. Remove glow plug (1) from cylinder head.

INSTALLATION

INSTALLATION

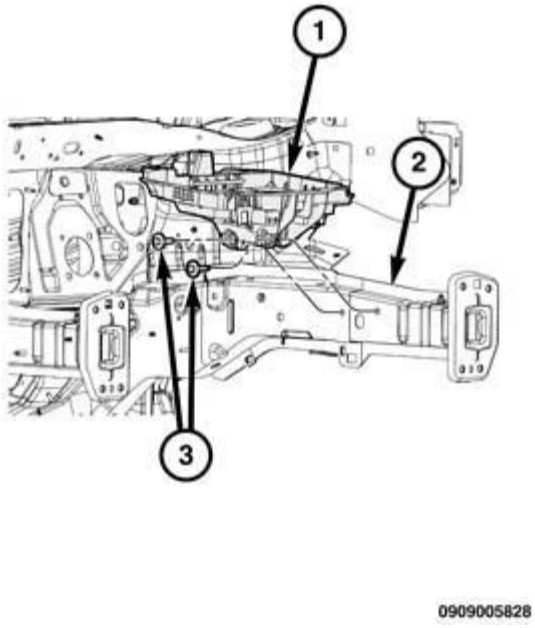

Fig. 22: Glow Plug
Courtesy of CHRYSLER GROUP, LLC

1. Install glow plugs (1). Tighten glow plugs to 11 N.m (97 in. lbs.).

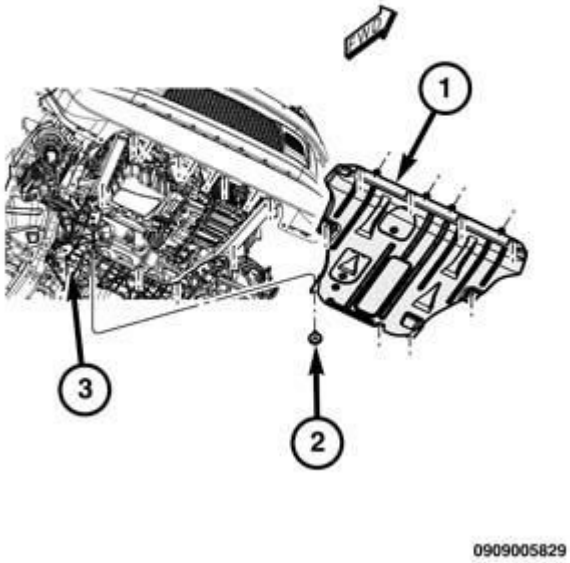

Fig. 23: Glow Plug Harness Connector
Courtesy of CHRYSLER GROUP, LLC

2. Connect glow plug harness connector (1).

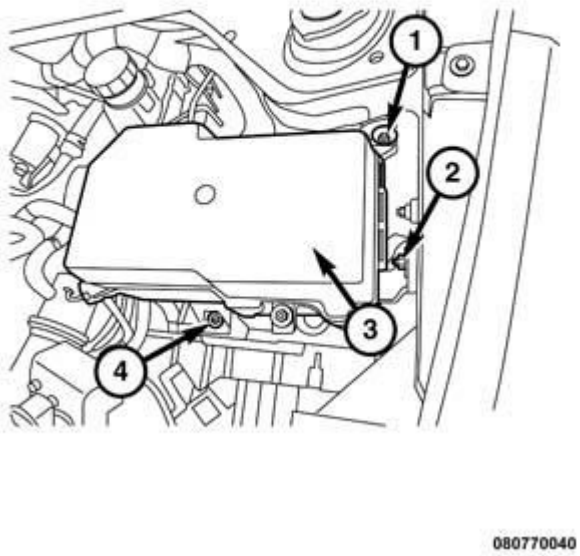

Fig. 24: Engine Cover
Courtesy of CHRYSLER GROUP, LLC

3. Install engine cover (1).
4. Connect the negative battery cable.

RELAY, AUTO SHUT DOWN

DESCRIPTION

DESCRIPTION

The 5-pin, 12-volt, Automatic Shutdown (ASD) relay is located in the Power Distribution Center (PDC). Always refer to the label on the power distribution center cover for relay location.

OPERATION

OPERATION

The ground circuit for the coil within the Automatic Shutdown (ASD) relay is controlled by the Powertrain Control Module (PCM). The PCM operates the ASD relay by switching its ground circuit on and off.

The ASD relay powers a number of critical circuits through the Power Distribution Center (PDC). These circuits include:

- Four ASD feed circuits to the PCM
- Fuel Injectors
- Ignition Coils
- Upstream O2 Sensor Heater
- Downstream O2 Sensor Heater
- EVAP Purge (Control) Solenoid

One of the ASD feed circuits is used as an ASD sense so that the PCM can determine if the ASD circuit is powered or not.

REMOVAL

REMOVAL

The Automatic Shutdown (ASD) relay is located in the engine compartment within the Power Distribution Center (PDC). Always refer to the label on the power distribution center cover for relay location.

1. Remove the power distribution center cover.
2. Remove the relay from the power distribution center.
3. Check the condition of the relay terminals and power distribution center connector terminals for damage or corrosion. Repair if necessary before installing the relay.
4. Check for pin height (pin height should be the same for all terminals within the power distribution center connector). Repair if necessary before installing the relay.

INSTALLATION

INSTALLATION

The Automatic Shutdown (ASD) relay is located in the engine compartment within the Power Distribution Center (PDC). Always refer to the label on the power distribution center cover for relay location.

1. Install the relay to the power distribution center.
2. Install the cover to the power distribution center.

SENSOR, CAMSHAFT POSITION, 2.0L DIESEL

DESCRIPTION

2.0L-DIESEL

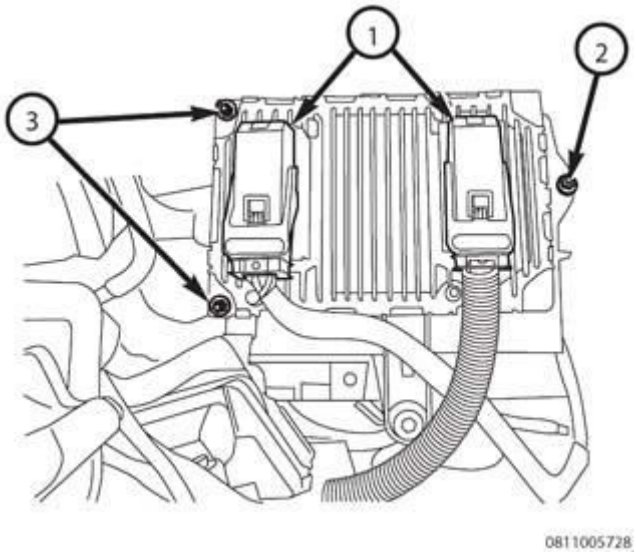

Fig. 25: Camshaft Position Sensor, Connector & Bolt
Courtesy of CHRYSLER GROUP, LLC

The camshaft position sensor (3) is mounted to the cylinder head cover. The hall effect sensor generates a signal that corresponds to the camshaft position of rotation. The Powertrain Control Module (PCM) uses the camshaft position sensor signal to detect the TDC position of cylinder 1. The PCM controls Injection timing and the duration of time each injector delivers fuel during an injection cycle based on the camshaft signal and the crankshaft signals.

OPERATION

2.0L-DIESEL

The signal circuit of the camshaft sensor has a voltage of approximately 5V. If the segment machined into the exhaust camshaft sprocket is positioned opposite the camshaft sensor, the camshaft signal is approximately 0V. This 0V to 5V signal is used by the Powertrain Control Module (PCM) for detecting ignition TDC of cylinder 1 as the engine rotates. If no signal is supplied by the camshaft position sensor, the vehicle will not start.

REMOVAL

DIESEL

Fig. 26: Engine Cover
Courtesy of CHRYSLER GROUP, LLC

1. Disconnect the negative battery cable.
2. Remove the engine cover (1).

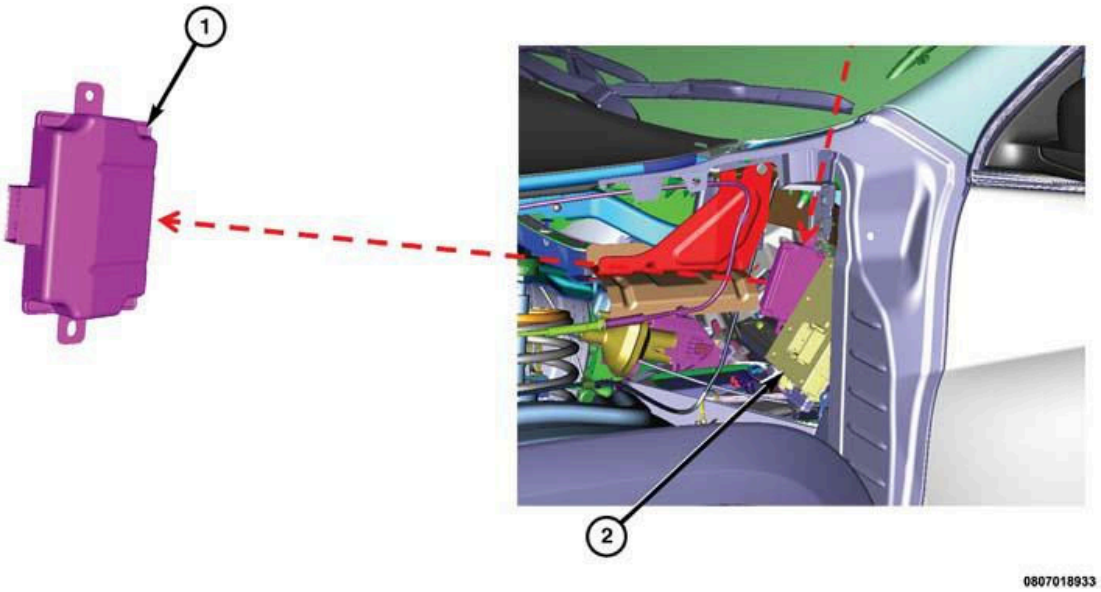

Fig. 27: Camshaft Position Sensor, Connector & Bolt
Courtesy of CHRYSLER GROUP, LLC

3. Disconnect Camshaft Position Sensor (CMP) wire harness connector (1).
4. Remove bolt (2) and the CMP sensor (3).

INSTALLATION

DIESEL

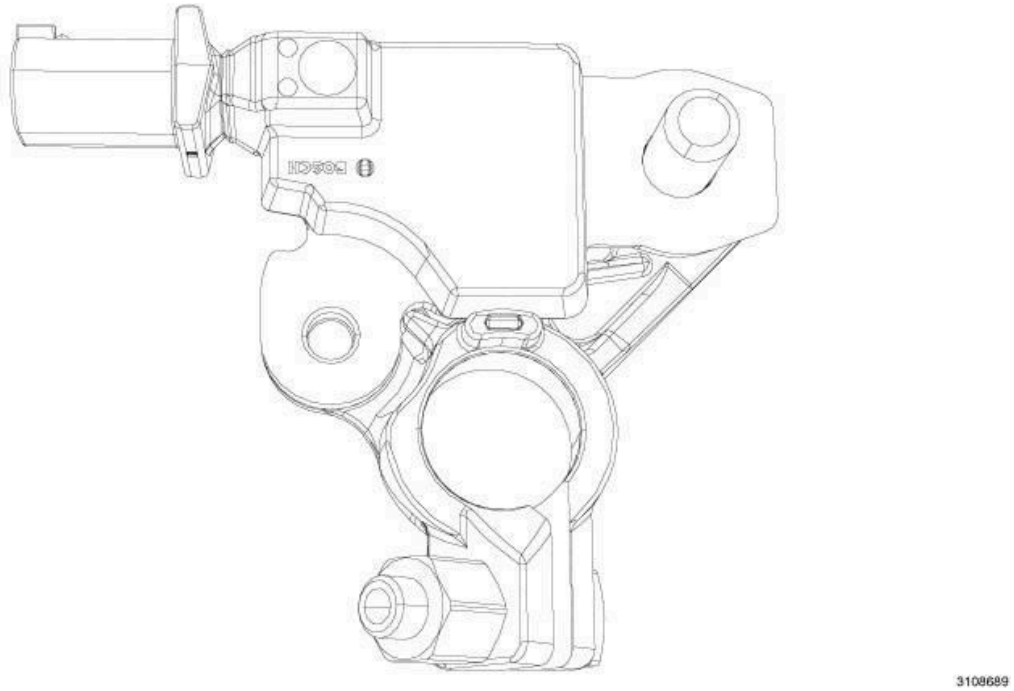

Fig. 28: Camshaft Position Sensor, Connector & Bolt
Courtesy of CHRYSLER GROUP, LLC

1. Install the Camshaft Position Sensor (CMP) (3). Tighten bolt (2) to 9 N.m (80 in. lbs.).
2. Connect the CMP wire harness connector (1).

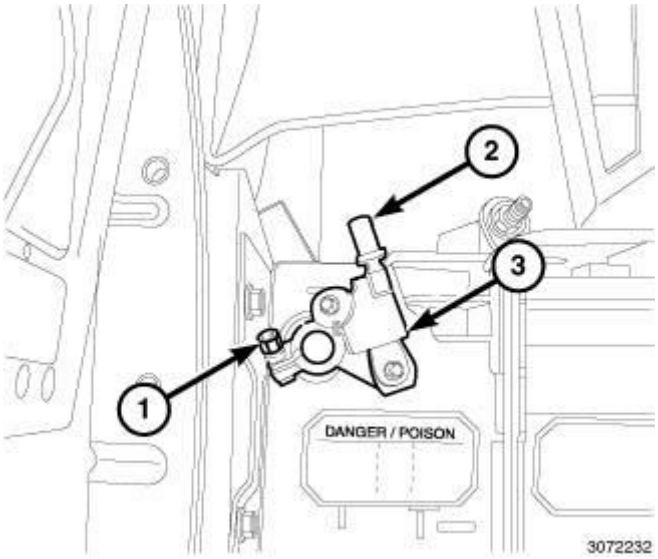

Fig. 29: Engine Cover
Courtesy of CHRYSLER GROUP, LLC

3. Install the engine cover (1).
4. Connect the negative battery cable.

SENSOR, CAMSHAFT POSITION

DESCRIPTION

DESCRIPTION

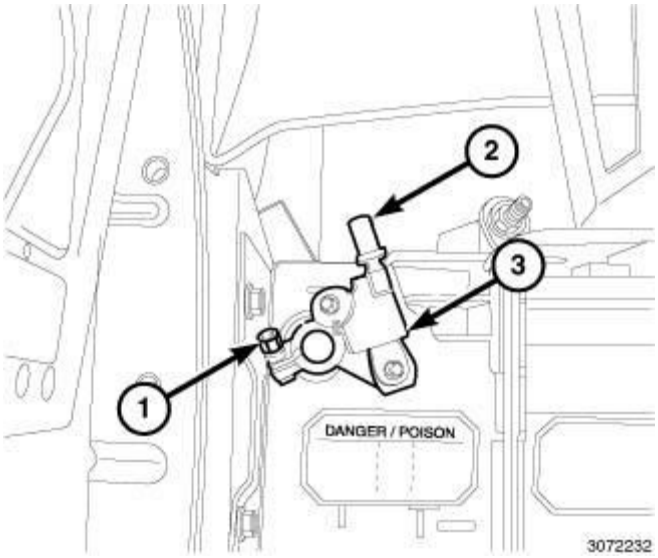

Fig. 30: Camshaft Position (CMP) Sensor
Courtesy of CHRYSLER GROUP, LLC

The Camshaft Position (CMP) sensor is a Hall effect type sensor and is used by the Powertrain Control Module (PCM) in conjunction with the Crankshaft Position (CKP) sensor and TDC signal to recognize the position of the cylinders and determine the injection and ignition point. The CMP sensor is located on the camshaft bearing housing and faces the camshaft.

OPERATION

OPERATION

A current-carrying semiconductor layer immersed in a normal magnetic field (force lines at right angles to current direction) generates a potential difference known as a Hall voltage at its terminals. If current intensity remains constant, the generated voltage depends on magnetic field intensity alone. Periodic changes in magnetic field intensity are sufficient to generate a modulated electrical signal with frequency proportional to the speed of magnetic field change. The distance between the sensor and the surface of the timing wheel on the cam axis is altered to produce this change.

REMOVAL

2.4L

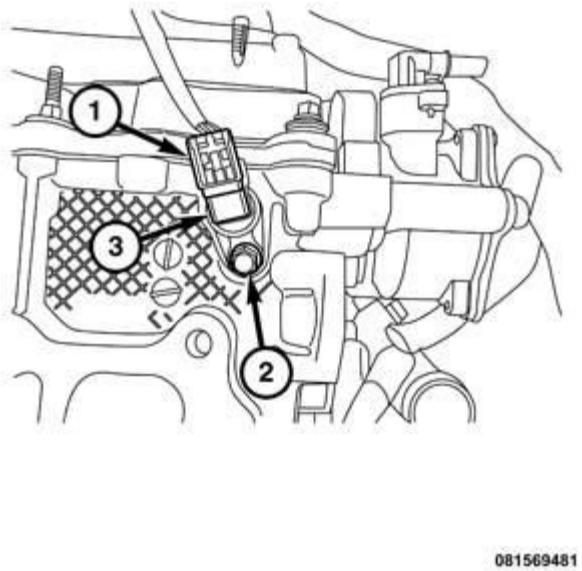

Fig. 31: Connector, Mounting Bolt & Camshaft Position Sensor
Courtesy of CHRYSLER GROUP, LLC

1. Disconnect negative battery cable.
2. Disconnect electrical connector at sensor (1).
3. Remove mounting bolt (2).

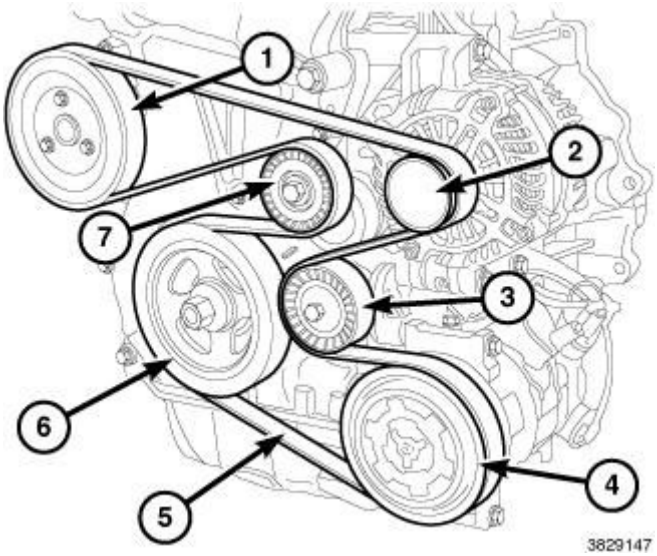

Fig. 32: Cam Sensor
Courtesy of CHRYSLER GROUP, LLC

4. Remove the exhaust cam sensor (3).

3.2L

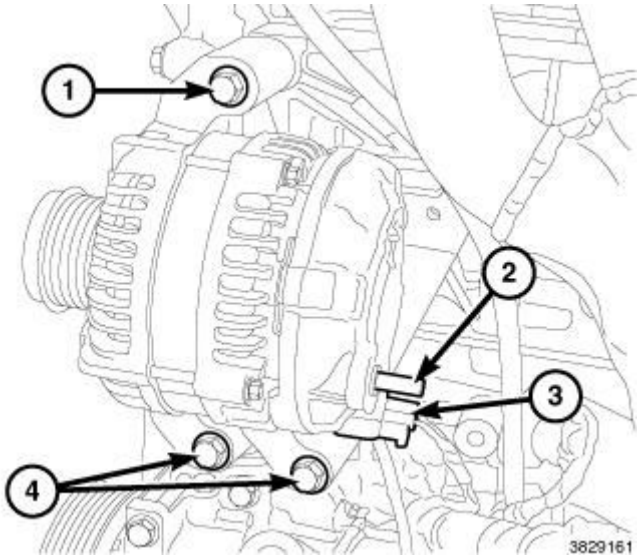

Fig. 33: Magnetic Timing Wheels
Courtesy of CHRYSLER GROUP, LLC

CAUTION: The magnetic timing wheels (1) must not come in contact with magnets (pickup tools, trays, etc.) or any other strong magnetic field. This will destroy the timing wheels ability to correctly relay camshaft position to the camshaft position sensor.

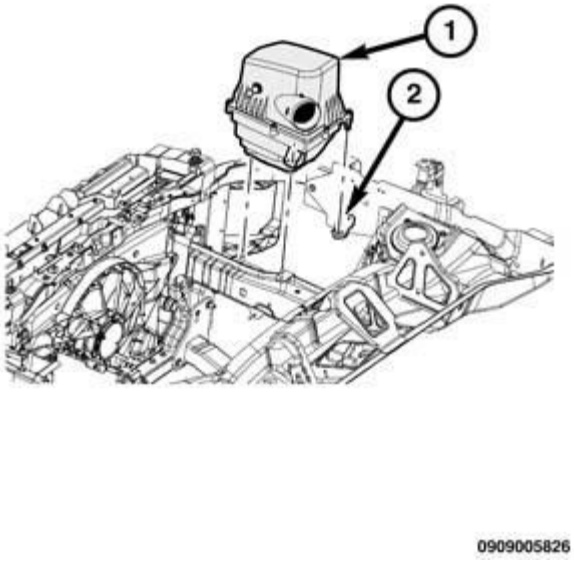

Fig. 34: Upper Intake Manifold & Bolts
Courtesy of CHRYSLER GROUP, LLC

The Camshaft Position (CMP) sensors are located at the rear of the cylinder head covers and are bolted to the cylinder head.

1. Disconnect and isolate the negative battery cable.
2. Remove the air cleaner resonator.
3. If removing the LH CMP sensor, first remove the upper intake manifold (2). Refer to **MANIFOLD, INTAKE, REMOVAL** .

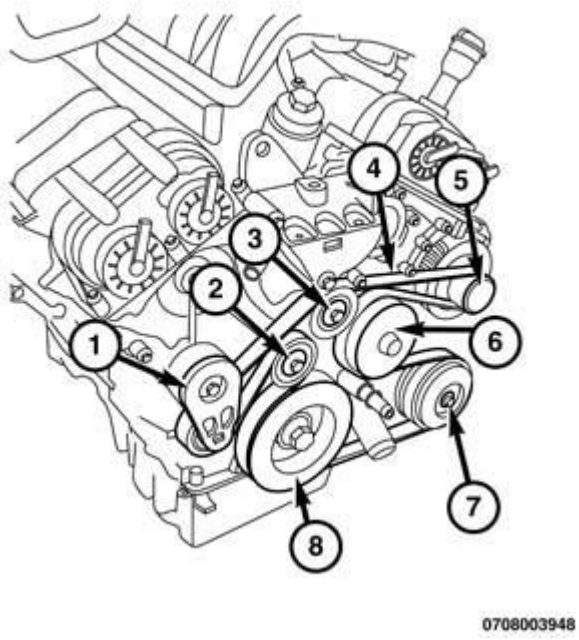

Fig. 35: CMP Sensor & Bolt
Courtesy of CHRYSLER GROUP, LLC

NOTE: **The RH CMP sensor is shown in illustration, the LH CMP sensor is similar. If removing both RH and LH CMP sensors, mark the sensors so they can be installed in their original locations.**

4. Disconnect the electrical connector (1) from the CMP sensor.
5. Loosen the sensor mounting bolt (2).

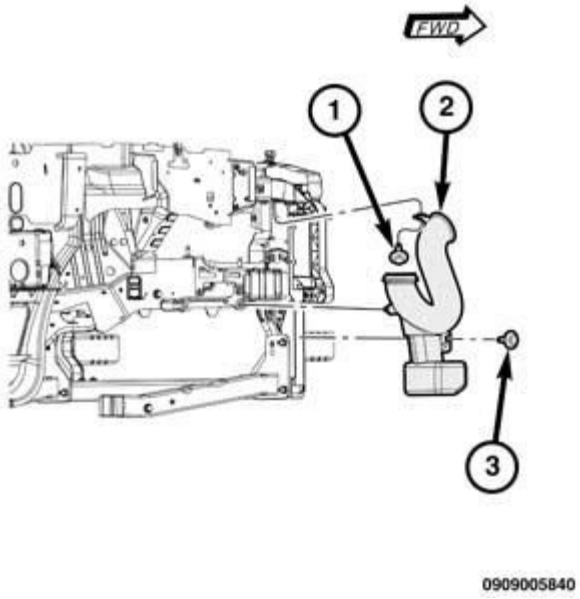

Fig. 36: O-Ring Seal
Courtesy of CHRYSLER GROUP, LLC

6. Pull the sensor and mounting bolt from the cylinder head cover.
7. The O-ring seal (1) can be reused if not damaged.

INSTALLATION

2.4L

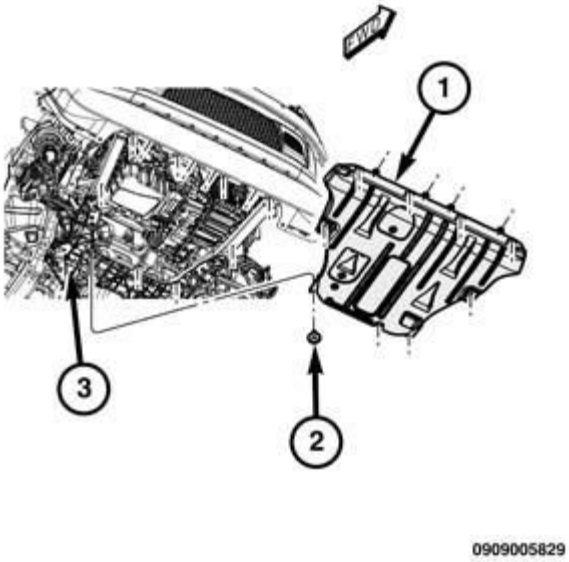

Fig. 37: Cam Sensor
Courtesy of CHRYSLER GROUP, LLC

CAUTION: Install camshaft position (CMP) sensor utilizing twisting motion. Make sure CMP sensor is fully seated. Do not drive CMP sensor into the bore with mounting screw. This may cause CMP sensor to be incorrectly seated causing a faulty signal or no signal at all.

1. Lubricate sensor O-ring.
2. Install the exhaust cam sensor (3) and mounting bolt (2) and tighten to the proper specification. Refer to **SPECIFICATIONS**.

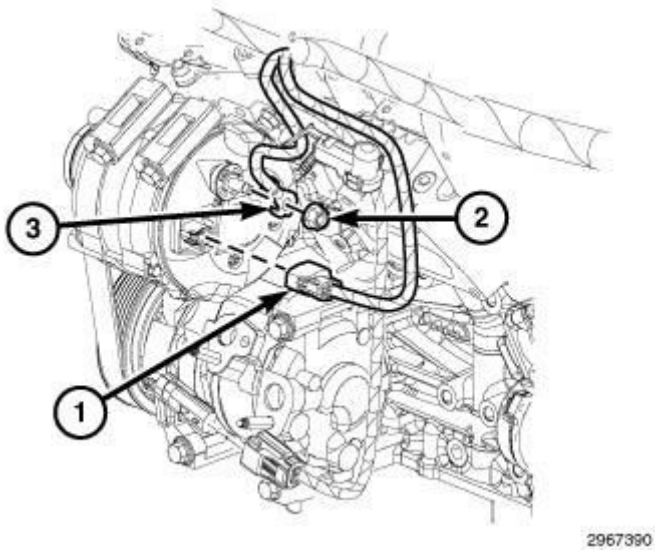

Fig. 38: Connector, Mounting Bolt & Camshaft Position Sensor
Courtesy of CHRYSLER GROUP, LLC

3. Connect electrical connector (1) to the camshaft position sensor.
4. Connect negative battery cable. Tighten the nut to the proper specification. Refer to **SPECIFICATIONS** .

3.2L

CAUTION: The magnetic timing wheels (1) must not come in contact with magnets (pickup tools, trays, etc.) or any other strong magnetic field. This will destroy the timing wheels ability to correctly relay camshaft position to the camshaft position sensor.

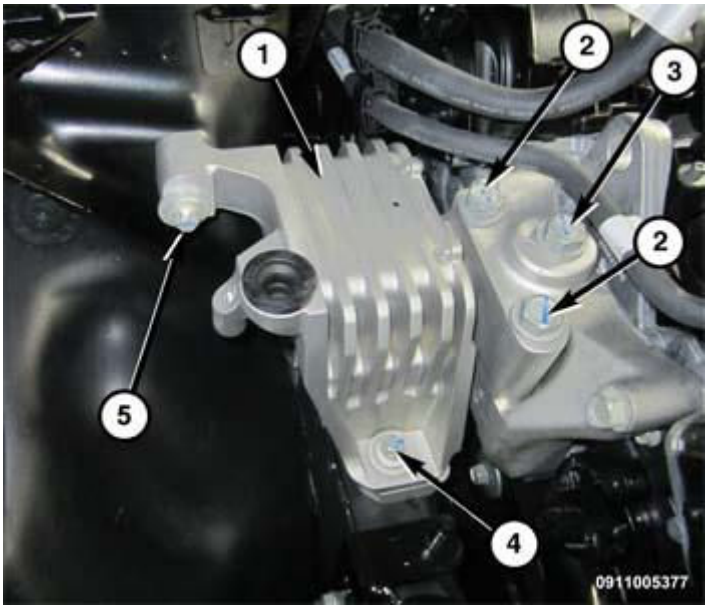

Fig. 39: Magnetic Timing Wheels
Courtesy of CHRYSLER GROUP, LLC

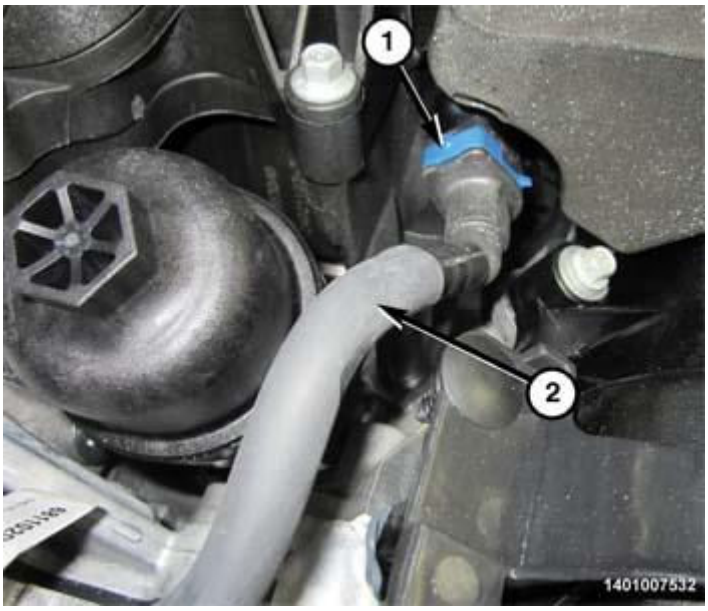

Fig. 40: CMP Sensor Seal & Mounting Bolt Hole
Courtesy of CHRYSLER GROUP, LLC

1. Clean out the camshaft position (CMP) sensor mounting bolt hole (2) in cylinder head.
2. The CMP sensor seal (1) can be reused if not damaged.

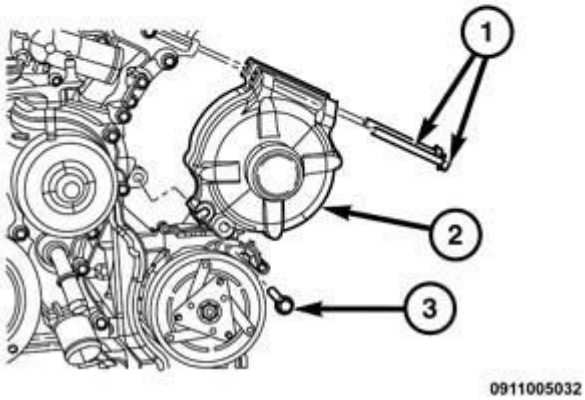

Fig. 41: Installing CMP Sensor Seal

Courtesy of CHRYSLER GROUP, LLC

3. If required, install a new CMP sensor seal (2) in the cylinder head cover:
   - Lubricate the CMP sensor seal inner and outer diameters with clean engine oil.
   - Place the CMP sensor seal (2) on the Cam Sensor/Spark Plug Tube Seal Installer (special tool #10256, Installer, Cam Installer, Cam Sensor/Spark Plug Tube Seal) (1).
   - Push the seal into the cylinder head cover until the base of the seal is seated.
   - Remove the tool.

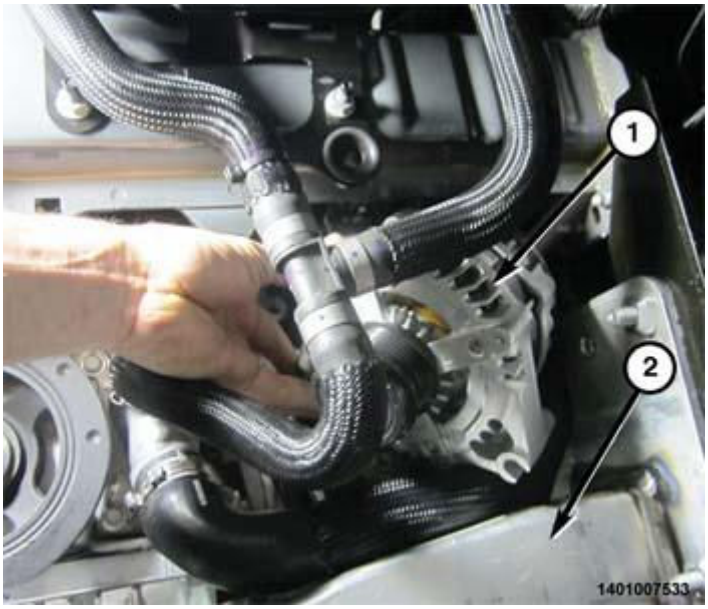

Fig. 42: Gap & CMP Sensor Seal
Courtesy of CHRYSLER GROUP, LLC

NOTE: **A properly installed CMP sensor seal (1) will have a 1.5 - 2.0 mm (0.06 - 0.08 in.) gap (2) between the cylinder head cover and the seal upper flange.**

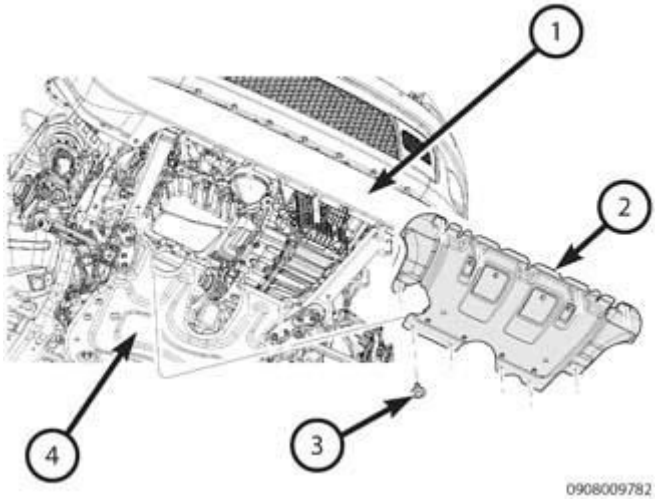

Fig. 43: O-Ring Seal
Courtesy of CHRYSLER GROUP, LLC

4. The sensor mounting bolt O-ring (1) can be reused if not damaged.
5. Apply a small amount of engine oil to the sensor mounting bolt O-ring (1).

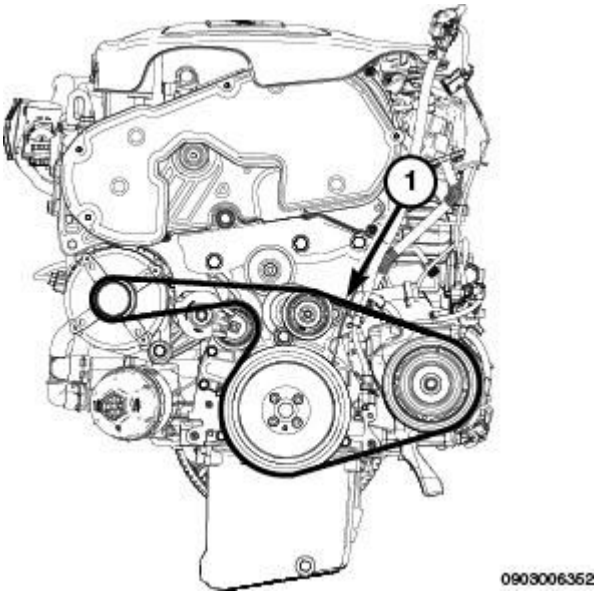

Fig. 44: CMP Sensor & Bolt
Courtesy of CHRYSLER GROUP, LLC

NOTE: **The right CMP sensor is shown in illustration, the left CMP sensor is similar. If both right and left CMP sensors where removed, install them into their original locations.**

6. Install the CMP sensor to the cylinder head. Tighten the mounting bolt (2) to 9 N.m (80 in. lbs.).

7. Connect the electrical connector (1) to the sensor.

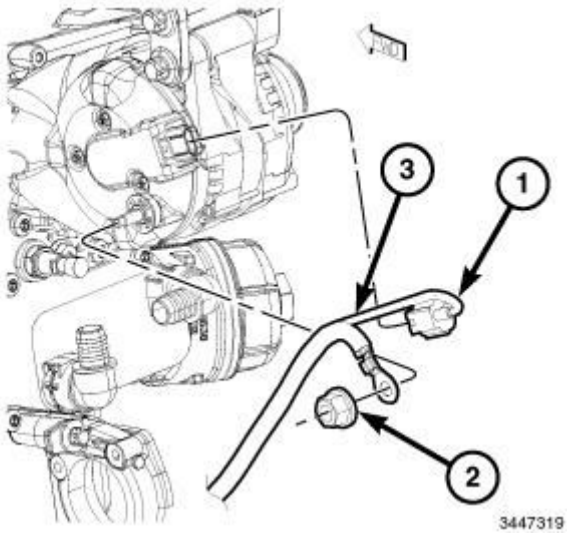

Fig. 45: Upper Intake Manifold Bolt Tightening Sequence
Courtesy of CHRYSLER GROUP, LLC

8. If required, install the upper intake manifold (1) and air inlet hose. Refer to **MANIFOLD, INTAKE, INSTALLATION** .
9. Connect the negative battery cable and tighten nut to 5 N.m (45 in. lbs.).

NOTE: **The Cam/Crank Variation Relearn procedure must be performed using the scan tool anytime there has been a repair/replacement made to a powertrain system, for example: flywheel, valvetrain, camshaft and/or crankshaft sensors or components.**

SENSOR, KNOCK

DESCRIPTION

DESCRIPTION

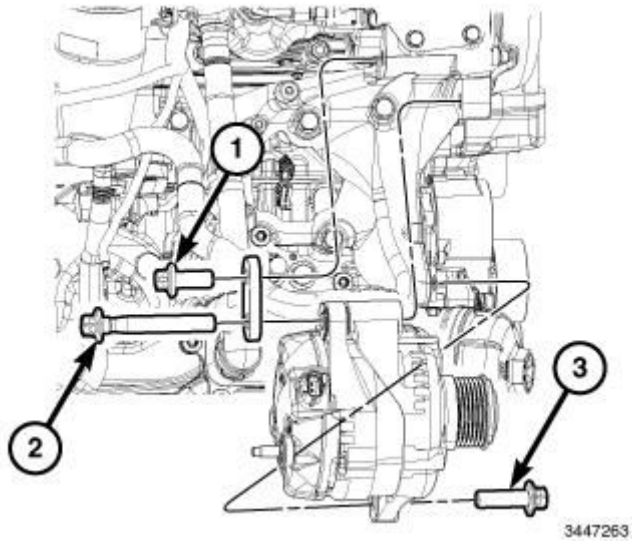

Fig. 46: Knock Sensor
Courtesy of CHRYSLER GROUP, LLC

The knock sensor is the piezoelectric type and is fitted on the crankcase to detect the intensity of the vibrations caused by detonation in the combustion chambers. The phenomenon produces a mechanical repercussion on a piezoelectric crystal that sends a signal to the powertrain control module (PCM) and, on the basis of this signal, the PCM reduces the ignition advance until the phenomenon disappears. Later on, the advance is gradually restored to the basic value.

OPERATION

OPERATION

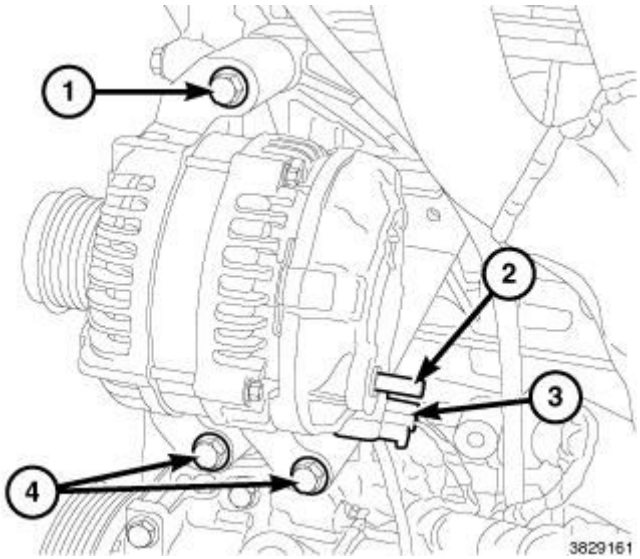

Fig. 47: Electrical Polarization Operation
Courtesy of CHRYSLER GROUP, LLC

The molecules of a quartz crystal are affected by electrical polarization. In rest conditions (A) the molecules are not arranged in a particular way. When the crystal is subjected to pressure or to an impact (B), the higher the pressure, the more marked their arrangement. This arrangement produces a voltage at the ends of the crystal.

REMOVAL

2.4L

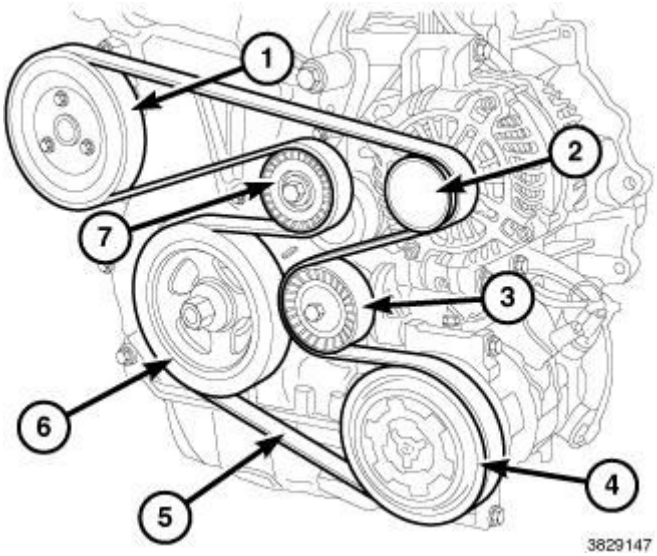

Fig. 48: Knock Sensor Mounting Bolt
Courtesy of CHRYSLER GROUP, LLC

1. Disconnect and isolate the negative battery cable.
2. Raise and support the vehicle. Refer to **HOISTING, STANDARD PROCEDURE** .
3. Remove the Intake manifold. Refer to **MANIFOLD, INTAKE, REMOVAL** .
4. Remove the knock sensor electrical connector.
5. Remove the mounting bolt (1) and knock sensor.

3.2L

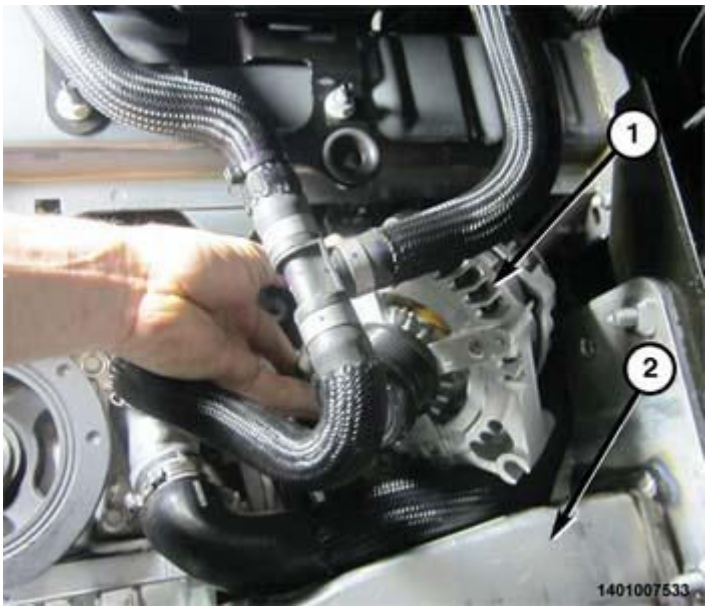

Fig. 49: Knock Sensor 1 & Knock Sensor 2
Courtesy of CHRYSLER GROUP, LLC

NOTE: The forward sensor (1) is known to the powertrain control module (PCM) as knock sensor 1. The rear sensor (3) is known to the PCM as knock sensor 2.

1. Perform the fuel pressure release procedure. Refer to **FUEL SYSTEM PRESSURE RELEASE PROCEDURE** .
2. Disconnect and isolate the negative battery cable.
3. Drain the cooling system. Refer to **STANDARD PROCEDURE** .
4. Remove the air cleaner housing assembly, upper and lower intake manifolds and the oil filter housing. Refer to **HOUSING, OIL FILTER, REMOVAL** .
5. Remove the electrical connector (4).

NOTE: There may be a foam strip on the bolt threads. This foam is used only to retain the bolts to the sensors for plant assembly. It is not used as a sealant. Do not apply any adhesive, sealant or thread locking compound to these bolts.

6. Remove the mounting bolt (2) and knock sensor 1 (1) or knock sensor 2 (3).

INSTALLATION

2.4L

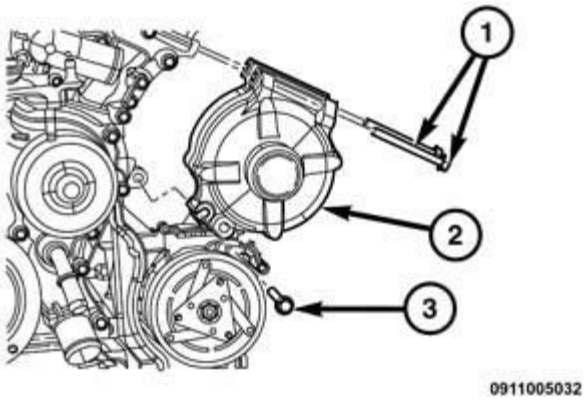

Fig. 50: Knock Sensor Mounting Bolt
Courtesy of CHRYSLER GROUP, LLC

1. Thoroughly clean the knock sensor mounting hole.

CAUTION: Over or under tightening the knock sensor mounting bolt will affect knock sensor performance, possibly causing improper spark control. Always use the specified torque when installing the knock sensor. Do not apply any adhesive, sealant or thread locking compound to the bolt.

2. Install the knock sensor with mounting bolt (1). Tighten the mounting bolt to the proper specification. Refer to **SPECIFICATIONS**.
3. Connect the electrical connector.
4. Install the Intake manifold. Refer to **MANIFOLD, INTAKE, INSTALLATION** .
5. Lower the vehicle.
6. Connect the negative battery cable and tighten nut to the proper specification. Refer to **SPECIFICATIONS** .

3.2L

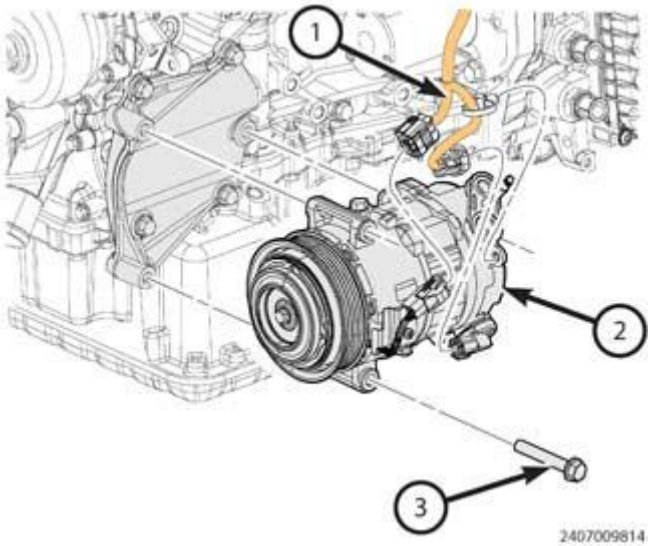

Fig. 51: Knock Sensor 1 & Knock Sensor 2
Courtesy of CHRYSLER GROUP, LLC

NOTE: The forward sensor (1) is known to the powertrain control module (PCM) as knock sensor 1. The rear sensor (3) is known to the PCM as knock sensor 2.

1. Thoroughly clean the knock sensor mounting holes.

NOTE: Over or under tightening the sensor mounting bolts will affect knock sensor performance, possibly causing improper spark control. Always use the specified torque when installing the knock sensors. The torque specification for the knock sensor bolt is less than the typical 8 mm bolt.

NOTE: There may be a foam strip on the bolt threads. This foam is used only to retain the bolts to the sensors for plant assembly. It is not used as a sealant. Do not apply any adhesive, sealant or thread locking compound to these bolts.

2. Install knock sensor 1 (1) or knock sensor 2 (3) with mounting bolt (2). Tighten the mounting bolt to 20 N.m (15 ft. lbs.).
3. Connect the electrical connector (4).
4. Install the oil filter housing, upper and lower intake manifolds and air cleaner housing assembly. Refer to **HOUSING, OIL FILTER, INSTALLATION** .
5. If removed, install the oil filter and fill the engine crankcase with the proper oil to the correct level. Refer to **OIL - STANDARD PROCEDURE** .
6. Connect the negative battery cable and tighten nut to 5 N.m (45 in. lbs.).
7. Fill the cooling system. Refer to **STANDARD PROCEDURE** .
8. Operate the engine until it reaches normal operating temperature. Check cooling system for correct fluid level. Refer to **STANDARD PROCEDURE** .

SOLENOID, VARIABLE VALVE TIMING

DESCRIPTION

DESCRIPTION

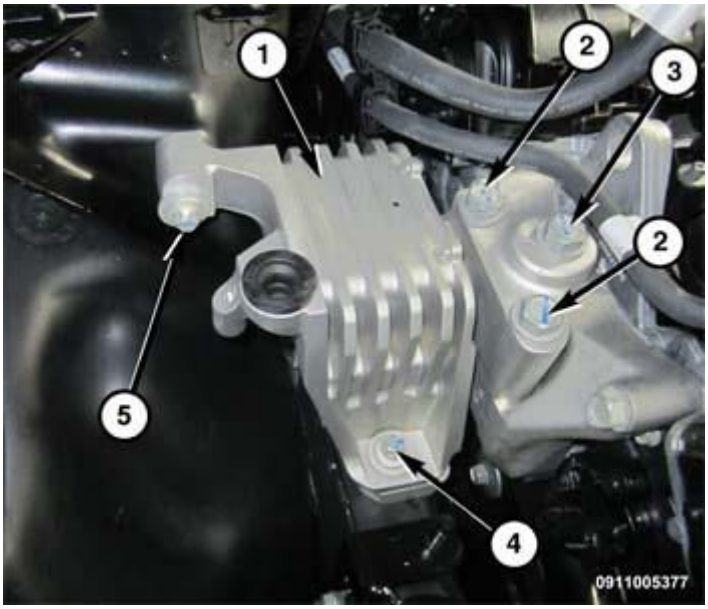

Fig. 52: Variable Valve Timing Solenoid
Courtesy of CHRYSLER GROUP, LLC

The 3.6L engine is equipped with Variable Valve Timing (VVT). This system adjusts the timing of all four camshafts independently using solenoids and oil control valves to direct oil pressure into the camshaft phaser assemblies. The camshaft phaser assembly advances and/or retards camshaft timing to improve engine performance, mid-range torque, idle quality, fuel economy, and reduce emissions. The four VVT solenoids are located on the front of the cylinder head covers. The pintle should move freely within the solenoid body. Do not attempt to disassemble the solenoids, they are not serviceable. The solenoids are identical but should be installed in the same location as removed.

OPERATION

OPERATION

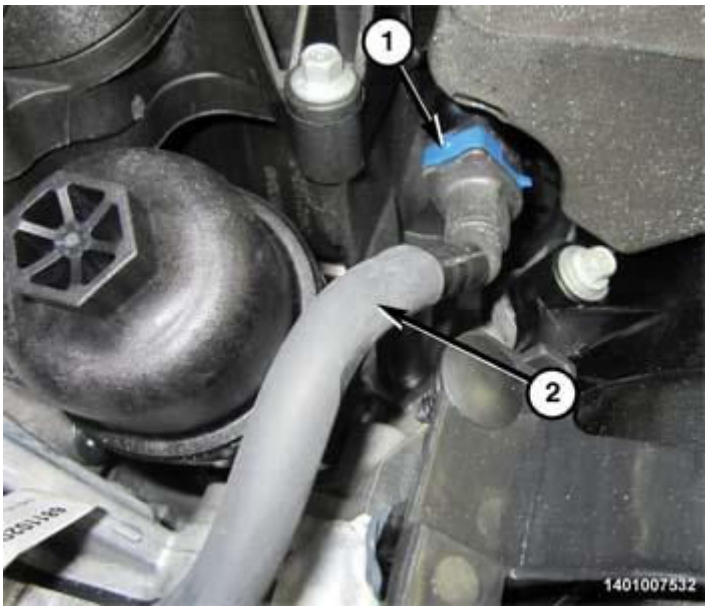

Fig. 53: Oil Control Valve (OCV), VVT Solenoid, Solenoid Pintle & Internal Spool Valve
Courtesy of CHRYSLER GROUP, LLC

Camshaft phaser position is adjusted using regulated oil pressure through an Oil Control Valve (OCV) (3). To begin Phaser movement, the Powertrain Control Module (PCM) applies a pulse-width modulated voltage signal to the VVT solenoid (1) to extend or retract the solenoid pintle (4). The pintle pushes against an internal spool valve (2) within the OCV moving the valve forwards and backwards to direct oil flow. The position of the spool inside the OCV determines which ports and chambers inside the phaser are being fed, either to advance the timing of the phaser sprocket relative to the camshaft, retard it, or hold a desired position. Refer to **ASSEMBLY, VARIABLE VALVE TIMING, PHASER/OIL CONTROL VALVE, OPERATION** .

The Camshaft Position (CMP) sensor monitors the position of the camshaft with respect to the crankshaft and provides feedback to the PCM.

The debris crush mode will only occur with the key on and the engine off (KOEO). If the ignition is cycled to the start position without a momentary pause (immediate crank), the debris crush mode will not occur. In this instance the procedure will be performed at the next key off cycle.

REMOVAL

LEFT

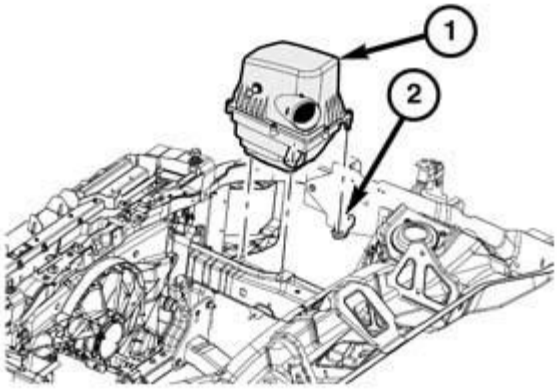

0909005826

Fig. 54: Variable Valve Timing Solenoids, Connectors & Bolts
Courtesy of CHRYSLER GROUP, LLC

1. Disconnect and isolate the negative battery cable.

NOTE: **Mark the variable valve timing solenoid connectors (1) with a paint pen or equivalent so that they may be reinstalled in their original locations.**

2. Mark the intake variable valve timing solenoid (4) and the exhaust variable valve timing solenoid (2) with a paint pen or equivalent so that they may be reinstalled in their original locations.
3. Disconnect the electrical connector (1) from the variable valve timing solenoid.
4. Remove the variable valve timing solenoid mounting bolts (3).

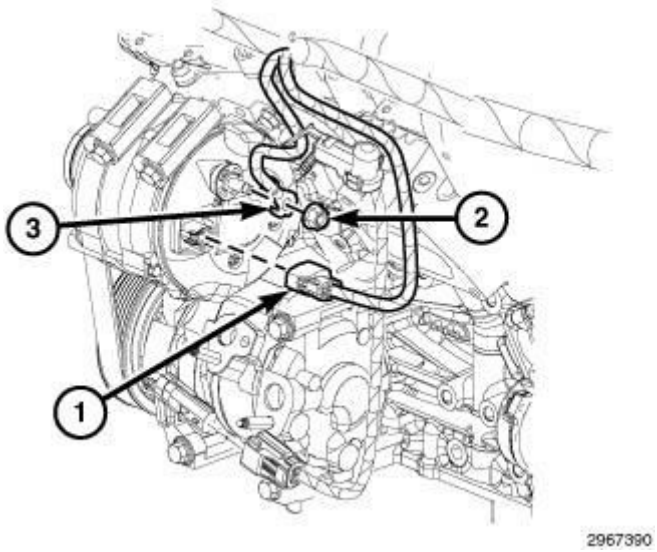

Fig. 55: VVT Seal
Courtesy of CHRYSLER GROUP, LLC

5. Pull the variable valve timing solenoid from the cylinder head cover.
6. The seal (1) can be reused if not damaged.

RIGHT

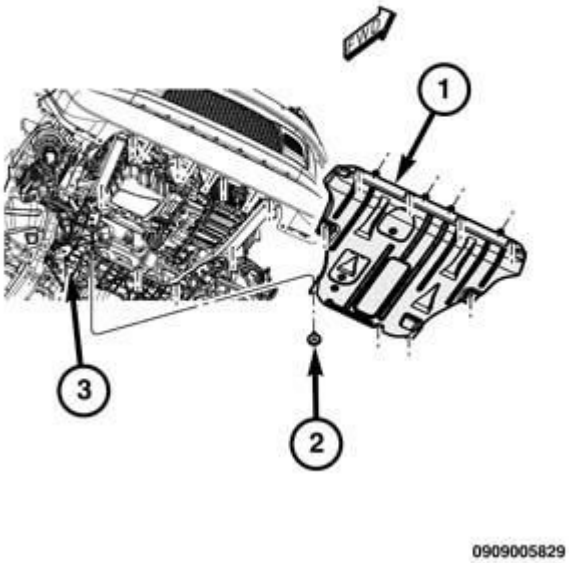

Fig. 56: Liquid And Suction Line Assembly
Courtesy of CHRYSLER GROUP, LLC

1. Disconnect and isolate the negative battery cable.
2. Recover the refrigerant from the refrigerant system. Refer to **PLUMBING, STANDARD PROCEDURE** .
3. Remove the resonator. Refer to **RESONATOR, AIR CLEANER, REMOVAL** for 2.4L or **RESONATOR, AIR CLEANER, REMOVAL** for 3.2L.
4. Remove the upper A/C liquid and suction line assembly (1). Refer to **LINE, A/C SUCTION, REMOVAL** .

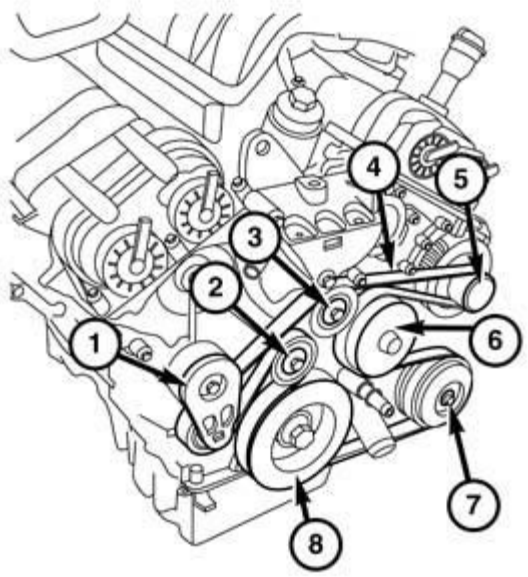

0708003948

Fig. 57: Variable Valve Timing Solenoids, Connectors & Bolts
Courtesy of CHRYSLER GROUP, LLC

NOTE: Mark the variable valve timing solenoid connectors (1) with a paint pen or equivalent so that they may be reinstalled in their original locations.

5. Mark the intake variable valve timing solenoid (2) and the exhaust variable valve timing solenoid (4) with a paint pen or equivalent so that they may be reinstalled in their original locations.
6. Disconnect the electrical connector (1) from the variable valve timing solenoid.
7. Remove the variable valve timing solenoid mounting bolts (3).

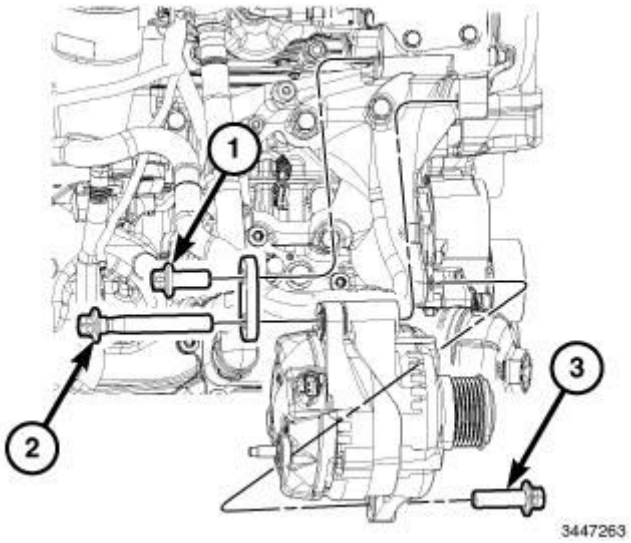

Fig. 58: VVT Seal
Courtesy of CHRYSLER GROUP, LLC

8. Pull the variable valve timing solenoid from the cylinder head cover.
9. The seal (1) can be reused if not damaged.

INSTALLATION

LEFT

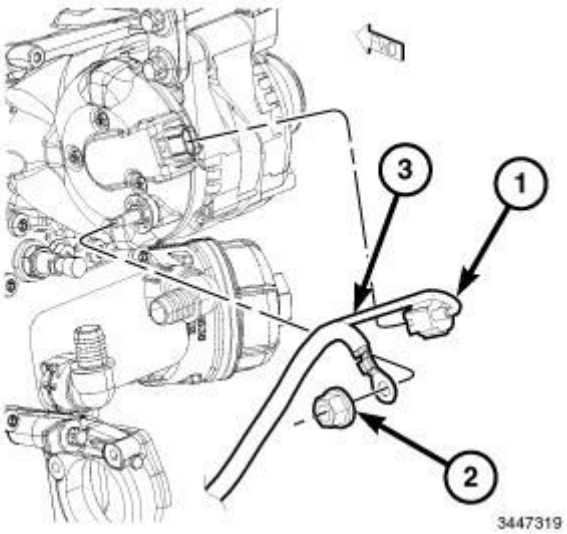

Fig. 59: VVT Seal
Courtesy of CHRYSLER GROUP, LLC

1. Install the variable valve timing solenoid seals (1). The seals can be reused if not damaged.

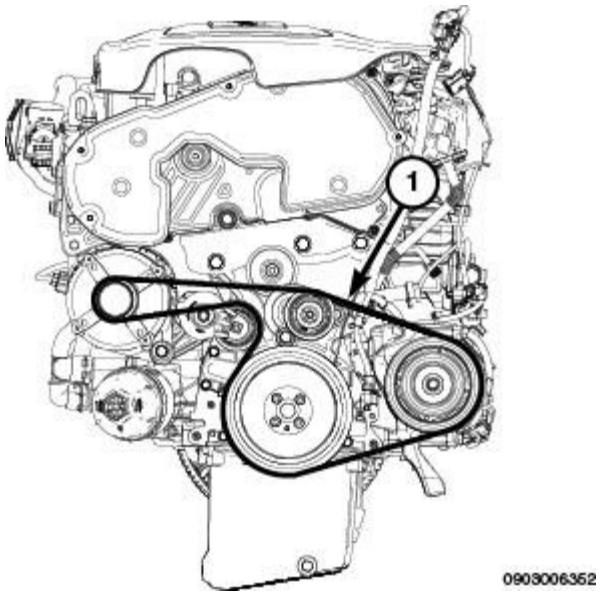

Fig. 60: Variable Valve Timing Solenoids, Connectors & Bolts
Courtesy of CHRYSLER GROUP, LLC

2. Refer to the markings made at disassembly and install the intake variable valve timing solenoid (4) and the exhaust variable valve timing solenoid (2) in their original locations.
3. Install the variable valve timing solenoid mounting bolts (3) and hand tighten.
4. Connect the electrical connector (1) to the variable valve timing solenoid.
5. Connect the negative battery cable and tighten the nut to the proper specification. Refer to **SPECIFICATIONS** .

NOTE: **The Cam/Crank Variation Relearn procedure must be performed using the scan tool anytime there has been a repair/replacement made to a powertrain system, for example: flywheel, valvetrain, camshaft and/or crankshaft sensors or components.**

RIGHT

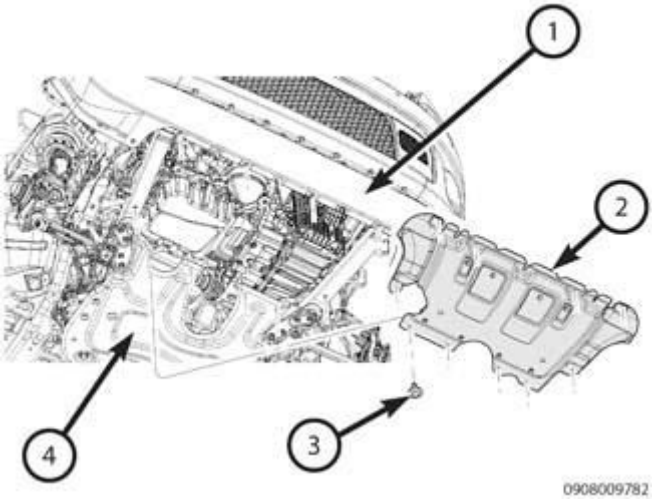

Fig. 61: VVT Seal
Courtesy of CHRYSLER GROUP, LLC

1. Install the variable valve timing solenoid seals (1). The seals can be reused if not damaged.

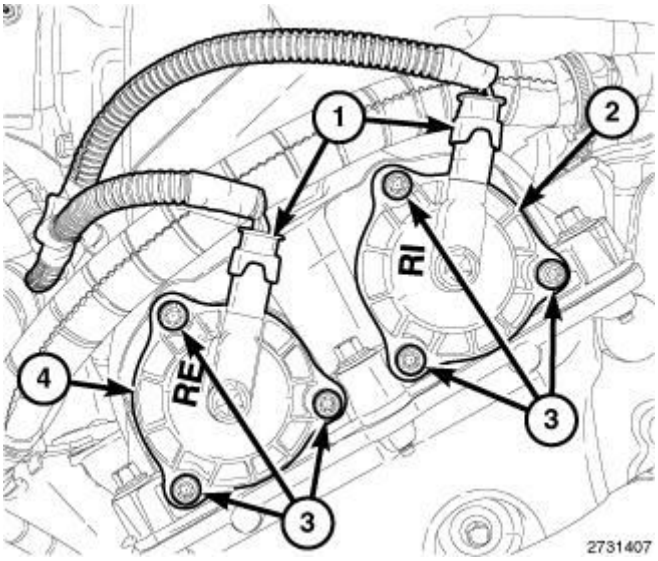

Fig. 62: Variable Valve Timing Solenoids, Connectors & Bolts
Courtesy of CHRYSLER GROUP, LLC

2. Refer to the markings made at disassembly and install the intake variable valve timing solenoid (2) and the exhaust variable valve timing solenoid (4) in their original locations.
3. Install the variable valve timing solenoid mounting bolts (3) and hand tighten.
4. Connect the electrical connector (1) to the variable valve timing solenoid.

9400-9

Fig. 63: Liquid And Suction Line Assembly
Courtesy of CHRYSLER GROUP, LLC

5. Install the upper A/C liquid and suction line assembly (1). Refer to **LINE, A/C SUCTION, INSTALLATION** .
6. Install the resonator. Refer to **RESONATOR, AIR CLEANER, INSTALLATION** for 2.4L or **RESONATOR, AIR CLEANER, INSTALLATION** for 3.2L.
7. Connect the negative battery cable and tighten nut to the proper specification. Refer to **SPECIFICATIONS** .

NOTE: The Cam/Crank Variation Relearn procedure must be performed using the scan tool anytime there has been a repair/replacement made to a powertrain system, for example: flywheel, valvetrain, camshaft and/or crankshaft sensors or components.

SPARK PLUG

REMOVAL

2.4L

CAUTION: Handle the spark plugs with care. Do not drop or force the spark plugs into the wells, damage to the electrodes and/or porcelain body may occur. Always start each spark plug by hand in order to avoid cross-threading the spark plug in the cylinder head.

Always tighten spark plugs to the specified torque. Too much or not enough torque will cause damage to the cylinder head and/or spark plug and may lead to poor engine performance.

9400-9

Fig. 64: Spark Plug Removed
Courtesy of CHRYSLER GROUP, LLC

NOTE: Typical

1. Install each spark plug to the cylinder head. Tighten spark plugs to 27 N.m (20 ft. lbs.).

9400-9

Fig. 65: Removing/Installing Ignition Coil
Courtesy of CHRYSLER GROUP, LLC

2. Install ignition coil onto spark plug.

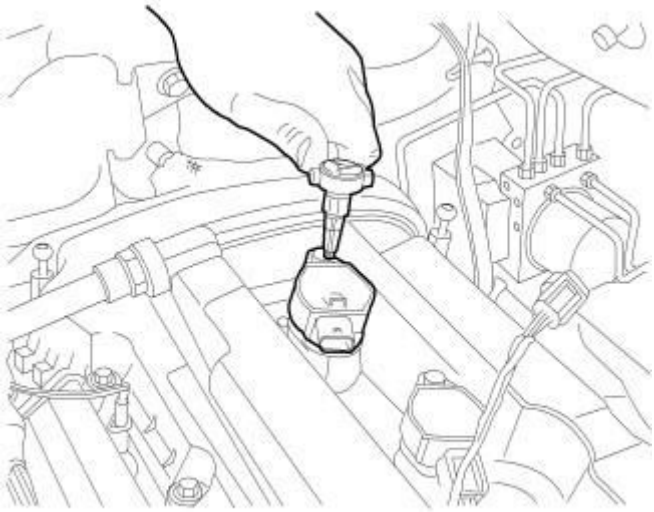

8181d713

Fig. 66: Ignition Coil Bolt
Courtesy of CHRYSLER GROUP, LLC

3. Install ignition coil mounting bolt. Tighten to 9 N.m (79.5 in. lbs.).
4. Connect ignition coil electrical connectors.
5. Connect the negative battery cable.

3.2L

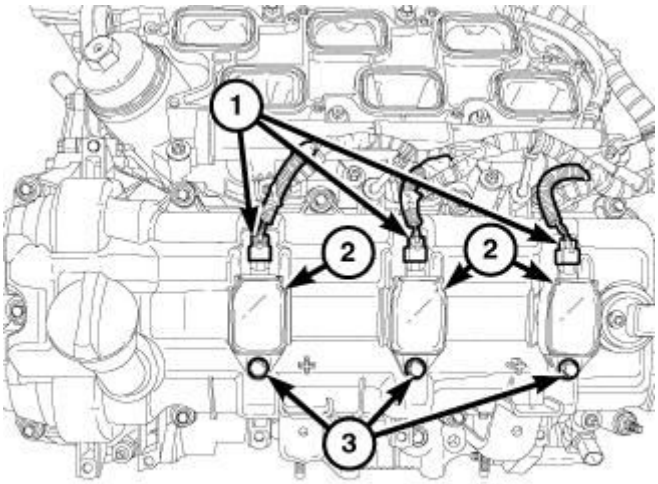

2726572

Fig. 67: Electrical Connector, Ignition Coils & Ignition Coil Retaining Bolts
Courtesy of CHRYSLER GROUP, LLC

NOTE: The left side ignition coils are shown in illustration, the right side ignition coils are similar.

1. Remove the ignition coil (2). Refer to **COIL, IGNITION, REMOVAL**.

CAUTION: The spark plug tubes (1) are a thin wall design. Avoid damaging the spark plug tubes. Damage to the spark plug tube can result in oil leaks.

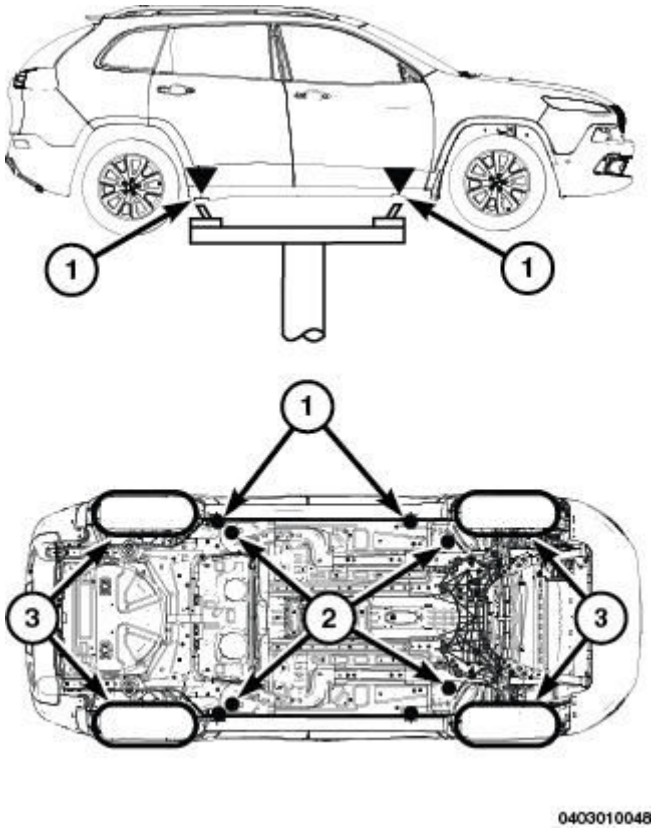

Fig. 68: Spark Plug Tubes
Courtesy of CHRYSLER GROUP, LLC

2. Prior to removing the spark plug, spray compressed air into the cylinder head opening. This will help prevent foreign material from entering combustion chamber.
3. Remove the spark plug from the cylinder head using a quality thin wall socket with a rubber or foam insert.
4. Inspect the spark plug condition.

INSTALLATION

2.4L

CAUTION: Handle the spark plugs with care. Do not drop or force the spark plugs into the wells, damage to the electrodes and/or porcelain body may occur. Always start each spark plug by hand in order to avoid cross-threading the spark plug in the cylinder head.

Always tighten spark plugs to the specified torque. Too much or not enough torque will cause damage to the cylinder head and/or spark plug and may lead to poor engine performance.

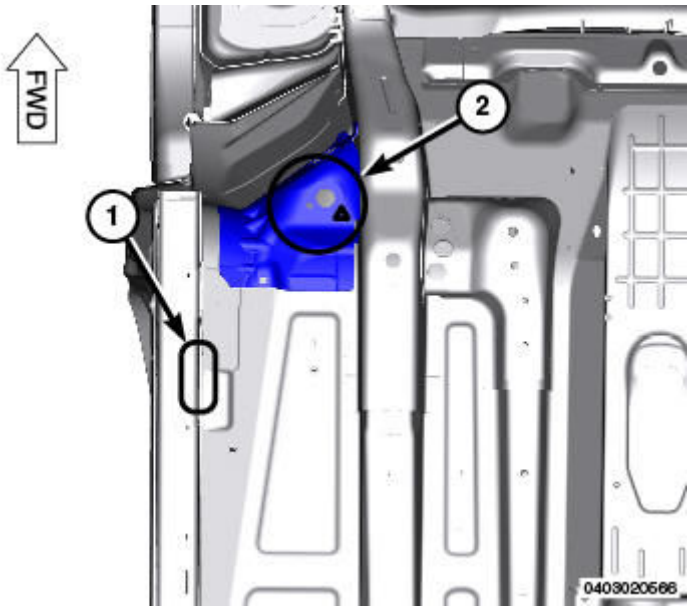

Fig. 69: Spark Plug Removed
Courtesy of CHRYSLER GROUP, LLC

NOTE: Typical

1. Install each spark plug to the cylinder head. Tighten spark plugs to 27 N.m (20 ft. lbs.).

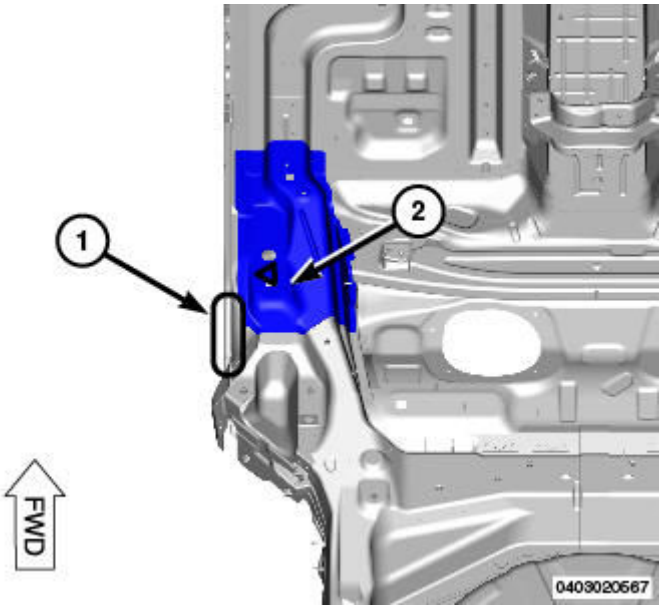

Fig. 70: Removing/Installing Ignition Coil
Courtesy of CHRYSLER GROUP, LLC

2. Install ignition coil onto spark plug.

Fig. 71: Ignition Coil Bolt
Courtesy of CHRYSLER GROUP, LLC

3. Install ignition coil mounting bolt. Tighten to 9 N.m (79.5 in. lbs.).
4. Connect ignition coil electrical connectors.
5. Connect the negative battery cable.

3.2L

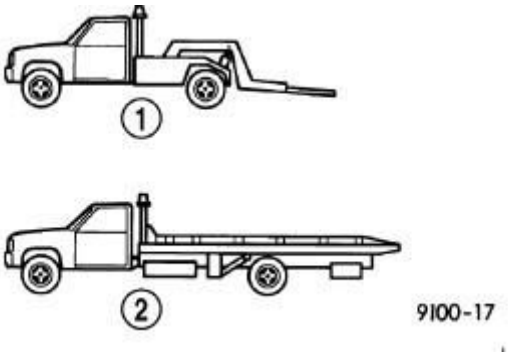

Fig. 72: Gap Gauging Tool
Courtesy of CHRYSLER GROUP, LLC

1. Check and adjust the spark plug gap with a gap gauging tool (1). Refer to **SPECIFICATIONS**.

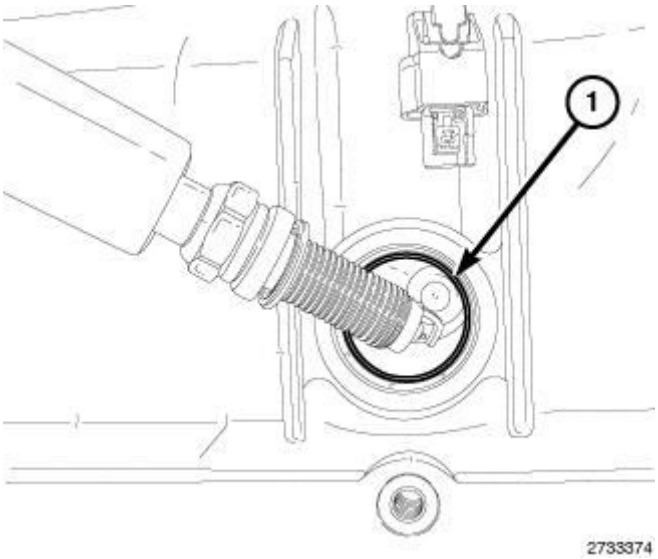

Fig. 73: Spark Plug Tubes
Courtesy of CHRYSLER GROUP, LLC

CAUTION: Special care should be taken when installing spark plugs into the cylinder head spark plug wells. Be sure the plugs do not drop into the plug wells as electrodes can be damaged.

CAUTION: The spark plug tubes (1) are a thin wall design. Avoid damaging the spark plug tubes. Damage to the spark plug tube can result in oil leaks.

2. Start the spark plug into the cylinder head by hand to avoid cross threading.

CAUTION: Spark plug torque is critical and must not exceed the specified value. Overtightening stretches the spark plug shell reducing its heat transfer capability resulting in possible catastrophic engine failure.

3. Tighten the spark plugs to 17.5 N.m (13 ft. lbs.).

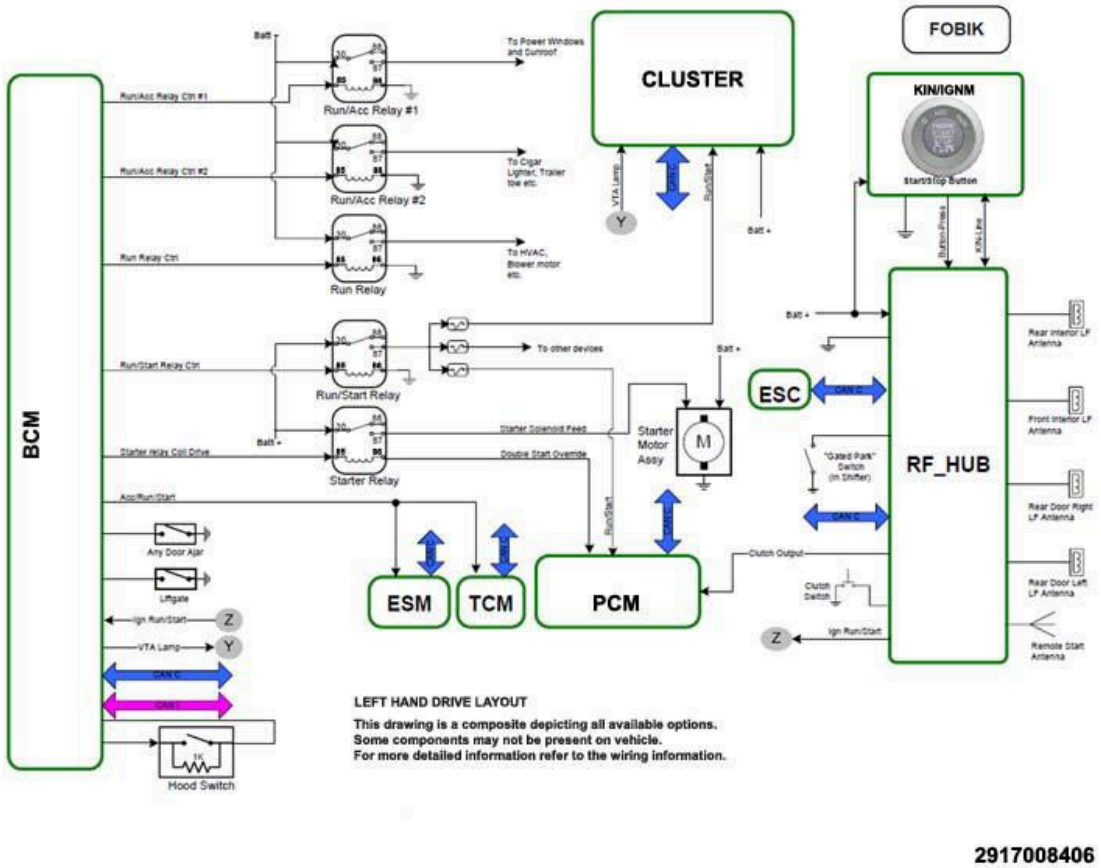

Fig. 74: Electrical Connector, Ignition Coils & Ignition Coil Retaining Bolts
Courtesy of CHRYSLER GROUP, LLC

NOTE: The left side ignition coils are shown in illustration, the right side ignition coils are similar.

4. Install the ignition coil (2). Refer to **COIL, IGNITION, INSTALLATION**.

SWITCH, IGNITION

DESCRIPTION

DESCRIPTION

The ignition switch is located on the steering column. It is used as the main on/off switching device for most electrical components. The mechanical key cylinder is used to engage/disengage the electrical ignition switch.

OPERATION

OPERATION

Vehicles equipped with an automatic transmission and a steering column mounted shifter: an interlock device is located within the shift cable. This interlock device is used to lock the transmission shifter in the PARK position when the key cylinder is in any position and the brake pedal is not depressed.

REMOVAL

REMOVAL

1. Disconnect the and isolate the negative battery cable.
2. Remove the dash end cap. Refer to **CAP, INSTRUMENT PANEL END, REMOVAL** .
3. Remove the steering column opening cover.
4. Remove the HVAC control head. Refer to **CONTROL, A/C AND HEATER, REMOVAL** .
5. Remove the instrument cluster bezel. Refer to **BEZEL, INSTRUMENT CLUSTER, REMOVAL** .
6. Disconnect the wire harness connector from the Ignition Node Module.

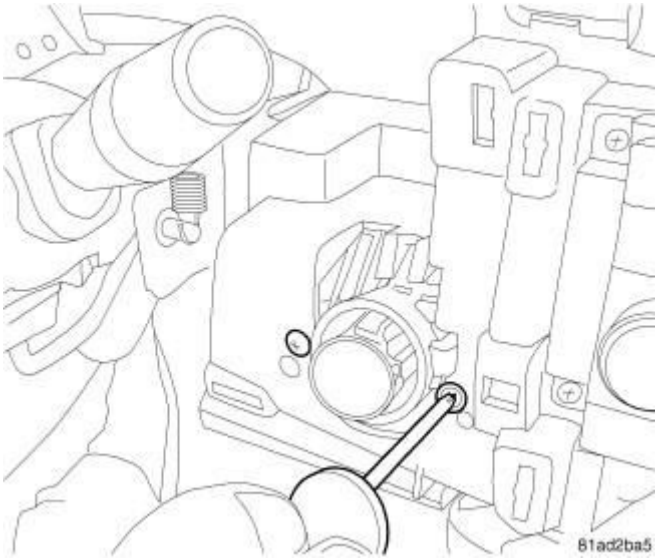

Fig. 75: Removing/Installing Switch Mounting Screws
Courtesy of CHRYSLER GROUP, LLC

7. Remove 4 screws from the I/P holding the Ignition Node Module in place.
8. Remove the Ignition Node Module from the backside of the I/P.

INSTALLATION

INSTALLATION

1. Install the Ignition Node Module into the Instrument Panel from the backside.
2. Pull the Ignition Node Module into place.

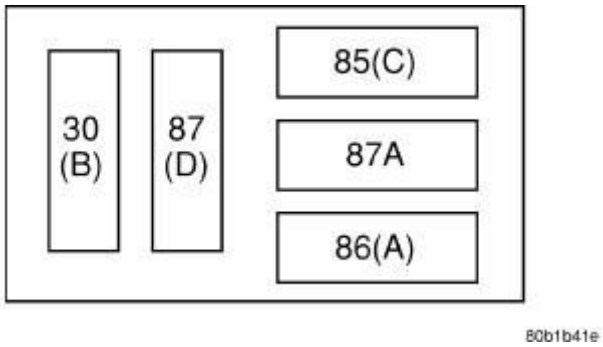

Fig. 76: Removing/Installing Switch Mounting Screws
Courtesy of CHRYSLER GROUP, LLC

3. Install 4 screws through the instrument Panel into the Ignition Node Module and tighten.
4. Connect Electrical harness connector into Ignition Node Module.
5. Install the Instrument Panel bezel and connect wire harness connectors. Refer to **BEZEL, INSTRUMENT CLUSTER, INSTALLATION** .
6. Install the HVAC control head and connect wire harness connectors. Refer to **CONTROL, A/C AND HEATER, INSTALLATION** .
7. Install the steering column opening cover and connect the wire harness connectors.
8. Install dash end cap. Refer to **CAP, INSTRUMENT PANEL END, INSTALLATION** .
9. Connect negative battery cable.
10. If Ignition Node Module is being replaced, program the module. Refer to **STANDARD PROCEDURE** . **This procedure will require you to log into DealerCONNECT and enter a PIN when requested. The PIN is temporary and will be active for 12 hours. After 12 hours, a new PIN will need to be obtained from DealerCONNECT.**

2014 ENGINE PERFORMANCE

Driveability - Diesel - Non-DTC Based Diagnostics - Cherokee

DIAGNOSIS AND TESTING

ENGINE CRANKS BUT WILL NOT START

For a complete wiring diagram, **refer to appropriate SYSTEM WIRING DIAGRAMS article** .

POSSIBLE CAUSES

Possible Causes
SKIM CODES PRESENT
INTAKE SYSTEM RESTRICTION
ENGINE COOLANT TEMPERATURE (ECT) SENSOR
FUEL SUPPLY CONTAMINATION
GLOW PLUG SYSTEM FAILURE
FUEL DELIVERY SYSTEM FAILURE
ENGINE DRIVE CHAIN/BELT
POWERTRAIN CONTROL MODULE (PCM)

DIAGNOSTIC TEST

1. **PCM CODES PRESENT**
    1. With the scan tool, read the PCM DTCs.

       Does the scan tool display any PCM DTCs?

       Yes

       - Perform the appropriate PCM DTC procedure.
       - Perform the PCM VERIFICATION TEST - 2.0L DIESEL. Refer to **PCM VERIFICATION TEST - 2.0L DIESEL** .

       No

       - Go To 3
2. **SKIM CODES PRESENT**
    1. With the scan tool, read the SKIM DTCs.

       Does the scan tool display any SKIM DTCs?

       Yes

- Refer to **DIAGNOSIS AND TESTING** and perform the appropriate SKIM DTC procedure.
- Perform the PCM VERIFICATION TEST - 2.0L DIESEL. Refer to **PCM VERIFICATION TEST - 2.0L DIESEL** .

No

- Go To 3

3. **CHECK FOR INTAKE SYSTEM RESTRICTIONS**
   1. Turn the ignition off.
   2. Ensure vehicle has adequate fuel supply in fuel tank.
   3. Inspect all air intake and Turbocharger related hoses/tubes and connections.
   4. Inspect the air filter for excessive dirt, soiling or other problems that may cause restricted air flow.

   Were any problems found?

   Yes

   - Repair or replace as necessary.
   - Perform the PCM VERIFICATION TEST - 2.0L DIESEL. Refer to **PCM VERIFICATION TEST - 2.0L DIESEL** .

   No

   - Go To 4

4. **ECT SENSOR**
   1. Using a temperature probe, check the vehicle temperature near the ECT Sensor.
   2. Turn the ignition on.
   3. With the scan tool in sensors, read the ECT Sensor temperature.
   4. Compare the temperature probe reading with the scan tool reading.

   Are the two readings within 10°C of each other?

   Yes

   - Go To 5

   No

   - Repair as necessary.
   - Perform the PCM VERIFICATION TEST - 2.0L DIESEL. Refer to **PCM VERIFICATION TEST - 2.0L DIESEL** .

5. **GLOW PLUGS**

1. Check the glow plugs for proper operation.

   Are the glow plugs operating properly?

   Yes

   - Go To 6

   No

   - Repair as necessary.
   - Perform the PCM VERIFICATION TEST - 2.0L DIESEL. Refer to **PCM VERIFICATION TEST - 2.0L DIESEL** .

6. **CHECK THE FUEL DELIVERY SYSTEM**
   1. Perform the CHECKING THE FUEL DELIVERY SYSTEM diagnostic procedure. Refer to **CHECKING THE FUEL DELIVERY SYSTEM** .

      Is the fuel delivery system operating properly?

      Yes

      - Repair as necessary.
      - Perform the PCM VERIFICATION TEST - 2.0L DIESEL. Refer to **PCM VERIFICATION TEST - 2.0L DIESEL** .

      No

      - Go To 7

7. **ENGINE DRIVE CHAINS**
   1. Make sure the Engine Drive Chains are installed correctly and the camshaft and crankshaft gears are timed correctly.

      Were any problems found?

      Yes

      - Repair as necessary.
      - Perform the PCM VERIFICATION TEST - 2.0L DIESEL. Refer to **PCM VERIFICATION TEST - 2.0L DIESEL** .

      No

      - Replace and program the Powertrain Control Module in accordance with the service information. Refer to **REMOVAL** .

- Perform the PCM VERIFICATION TEST - 2.0L DIESEL. Refer to **PCM VERIFICATION TEST - 2.0L DIESEL** .

LACK OF ENGINE POWER

For a complete wiring diagram, **refer to appropriate SYSTEM WIRING DIAGRAMS article** .

POSSIBLE CAUSES

Possible Causes
INJECTOR QUANTITY ADJUSTMENT
BRAKE SWITCH PROBLEM
EGR SYSTEM PROBLEM
AIR LEAKS IN THE INTAKE SYSTEM (INCLUDING INTERCOOLER)
BOOST PRESSURE PROBLEM
LOW ENGINE COMPRESSION
FUEL DELIVERY SYSTEM FAILURE
ENGINE DRIVE BELT/CHAIN
FUEL INJECTOR(S)
FUEL INJECTION PUMP
TURBOCHARGER

DIAGNOSTIC TEST

1. **CHECKING ENGINE OIL LEVEL**
   1. Check that the engine oil level is correct.

      Is the oil at the correct level?

      Yes

      - Go To 2

      No

      - Correct the engine oil to the proper level.
      - Perform the PCM VERIFICATION TEST - 2.0L DIESEL. Refer to **PCM VERIFICATION TEST - 2.0L DIESEL** .
2. **CHECKING FOR PCM DTCS**

   WARNING: **High Pressure fuel lines deliver diesel fuel under extreme pressure from the injection pump to the fuel injectors. This may be as high as 23, 200 PSI (1600 BAR). Use extreme caution when inspecting for**

high pressure fuel leaks. Failure to follow these instructions may result in possible serious or fatal injury.

WARNING: **Fuel under this amount of pressure can penetrate skin causing possible serious or fatal injury. Inspect for high pressure fuel leaks with a sheet of cardboard. Wear safety goggles and adequate protective clothing when servicing fuel system. Failure to follow these instructions may result in possible serious or fatal injury.**

1. Turn the ignition on.
2. With the scan tool, read the PCM DTCs.

   Are there any DTCs present?

   Yes

   - Diagnose and repair the PCM DTCs before proceeding.
   - Perform the PCM VERIFICATION TEST - 2.0L DIESEL. Refer to **PCM VERIFICATION TEST - 2.0L DIESEL** .

   No

   - Go To 3

3. **CHECKING THE BRAKE SWITCH ADJUSTMENT**
   1. Check for proper Brake Switch adjustment.

      Is the Brake Switch adjusted correctly?

      Yes

      - Go To 4

      No

      - Adjust or replace the Brake Switch as necessary.
      - Perform the PCM VERIFICATION TEST - 2.0L DIESEL. Refer to **PCM VERIFICATION TEST - 2.0L DIESEL** .

4. **ENGINE COMPRESSION**
   1. Start and idle the engine.
   2. With the scan tool, perform the Cylinder Compression Test.

      Does the Cylinder Compression Test indicate low compression in any of the cylinders?

      Yes

- Using the service information, repair the engine as necessary to regain proper cylinder compression.
- Perform the PCM VERIFICATION TEST - 2.0L DIESEL. Refer to **PCM VERIFICATION TEST - 2.0L DIESEL** .

No

- Go To 5

5. **CHECK THE INTAKE SYSTEM**
   1. Inspect the entire Intake System, including the Intercooler for signs of a leak.

      Were any problems found with the Intake System?

      Yes

      - Repair or replace as necessary.
      - Perform the PCM VERIFICATION TEST - 2.0L DIESEL. Refer to **PCM VERIFICATION TEST - 2.0L DIESEL** .

      No

      - Go To 6

6. **CHECK THE EGR SYSTEM**
   1. Inspect the entire EGR System for signs of a leak.

      NOTE: Soot streaking around the EGR Valve or system components is an indication of a leak in the EGR System.

      Were any problems found with the EGR System?

      Yes

      - Repair or replace as necessary.
      - Perform the PCM VERIFICATION TEST - 2.0L DIESEL. Refer to **PCM VERIFICATION TEST - 2.0L DIESEL** .

      No

      - Go To 7

7. **CHECK THE EXHAUST SYSTEM FOR RESTRICTIONS**
   1. Visually inspect the exhaust system for signs of damage which could cause restrictions.

      Were any problems found with the exhaust system?

Yes

- Repair as necessary.
- Perform the PCM VERIFICATION TEST - 2.0L DIESEL. Refer to **PCM VERIFICATION TEST - 2.0L DIESEL** .

No

- Go To 8

8. **COMPARE THE FUEL PRESSURE ACTUAL READING AGAINST FUEL PRESSURE SET POINT**

NOTE: This test requires two people. One person to test drive the vehicle while a technician observes the scan tool readings.

1. With the scan tool, select add the fuel rail pressure to a graph.
2. With the scan tool, select add the fuel rail pressure setpoint to a graph.
3. Select merge graphs.
4. With the scan tool, compare the Fuel Pressure Actual reading with the Fuel Pressure Setpoint on the graph, while cranking the engine on a no start, or while test driving the vehicle under various load conditions such as idle, hard acceleration, cruise and deceleration.

NOTE: The Fuel Pressure reading should closely follow the Fuel Pressure Setpoint reading.

Does the Actual Fuel Pressure reading follow the Fuel Pressure Desired/Setpoint reading?

Yes

- Go To 9

No

- Perform the CHECKING THE FUEL DELIVERY SYSTEM diagnostic procedure. Refer to **CHECKING THE FUEL DELIVERY SYSTEM** .
- Perform the PCM VERIFICATION TEST - 2.0L DIESEL. Refer to **PCM VERIFICATION TEST - 2.0L DIESEL** .

9. **FUEL INJECTOR**

NOTE: An injector that sticks open can cause this symptom. A sticking injector will cause the engine to misfire and emit excessive black smoke from the exhaust system.

1. Start and idle the engine.

2. With the scan tool, perform the Cylinder Fuel Quantity Correction Test.

NOTE: A problem injector will be indicated by a significant change in correction quantity as compared to the rest of the injectors.

Are any of the injectors displaying a significant amount of injection quantity correction?

Yes

- Using the service information, remove and inspect the Fuel Injectors for signs of damage or debris that may cause the injector to stick. Sticking injectors may cause the combustion chamber to become black and oil soaked. Replace Injector(s) as necessary.
- Perform the PCM VERIFICATION TEST - 2.0L DIESEL. Refer to **PCM VERIFICATION TEST - 2.0L DIESEL** .

No

- Go To 10

10. **CHECKING BOOST PRESSURE**
    1. Turn the ignition on.

NOTE: This test requires two people. One person to test drive the vehicle while a technician observes the scan tool readings.

2. With the scan tool in Sensors, read and compare the Boost Pressure (PSI) with the Boost Pressure Desired/Setpoint (PSI) while test driving the vehicle under various load conditions such as idle, hard acceleration, and cruise.

NOTE: The Boost Pressure reading should directionally follow (trail) the Boost Pressure Desired/Setpoint reading.

Does the Boost Pressure reading follow the Boost Pressure Desired/Setpoint reading?

Yes

- Go To 11

No

- Check the vacuum supply lines and Turbocharger Actuator operation. If any problems are found, repair as necessary. If no problems are found, replace the Turbocharger.
- Perform the PCM VERIFICATION TEST - 2.0L DIESEL. Refer to **PCM VERIFICATION TEST - 2.0L DIESEL** .

11. **ENGINE DRIVE BELT/CHAIN**

1. Use the service information to ensure the Engine Drive Belt/Chain is installed correctly and the camshaft and crankshaft gears are timed correctly.

   Were any problems found?

   Yes

   - Repair as necessary.
   - Perform the PCM VERIFICATION TEST - 2.0L DIESEL. Refer to **PCM VERIFICATION TEST - 2.0L DIESEL** .

   No

   - Test Complete.

CHECKING THE EXHAUST SYSTEM FOR LEAKS

DIAGNOSTIC TEST

CHECKING THE EXHAUST SYSTEM FOR LEAKS

1. Turn the ignition off.
2. Raise the vehicle in accordance with the service information.

   WARNING: The normal operating temperature of the exhaust system is very high. Never work around or attempt to service any part of the exhaust system until it has cooled. Special care should be taken when working near the catalytic converter. The temperature of the converter rises to a high level after a short period of engine operating time.

3. Connect Exhaust Cone (special tool #8404-ECT, Exhaust Cone, Truck) to Air Pressure Regulator (with hose) W-18-MIL-1146AS.

   CAUTION: The air pressure must not exceed 27.6 kPa (4 psi), otherwise engine damage can occur.

4. Attach shop air to the air pressure regulator.
5. Adjust the Air Pressure Regulator to 27.6 kPa (4 psi)
6. Insert the exhaust cone into the vehicle tail pipe.
7. If the vehicle is equipped with dual exhaust. Use the (special tool #8404-ECT, Exhaust Cone, Truck) with equipped attached plug, plug one side of the dual exhaust pipe. Pressurize the other as described above.
8. Apply Mopar® Air Leak Detector PN 05191804AA (or an equivalent leak finder liquid) to the following areas:

- All welded joints from the exhaust manifold to 45.72 cm (18 inches) behind the downstream O2 Sensor
- O2 Sensor seal points
- O2 Sensor boss welds
- Flange/joint connection(s)
- Exhaust manifold to cylinder head connection(s)
- EGR solenoid gasket base and tube seal points (if equipped)

9. Watch for the Mopar® Air Leak Detector PN 05191804AA (or the equivalent leak finder liquid) to bubble.
10. Use the following definitions to help determine if system or component repair/replacement is necessary:
    - **Type 1 Leak** is defined as a leak where very small foam like bubbles 1 mm (0.04 of an inch) or less appear. Any Type 1 or greater leaks found in welded joints, O2 sensor seal points or O2 sensor boss welds must be repaired or the component must be replaced.
    - **Type 2 Leak** is defined as a leak where larger bubbles pea size, 8 mm (0.3 of an inch) or greater appear. Any Type 2 or greater leaks found in flange or joint connections, exhaust manifold to cylinder head connections, or EGR gasket and tube seal points must be repaired or the components must be replaced.

Leak Location	Repair required if results at 27.6 kPa (4 psi) reveal bubble size:
Welded joints	Type 1, 1 mm (0.04 of an inch) or greater
O2 Sensor seal points	Type 1, 1 mm (0.04 of an inch) or greater
O2 Sensor boss welds	Type 1, 1 mm (0.04 of an inch) or greater
Flange/joint connections	Type 2, 8 mm (0.3 of an inch) or greater
Exhaust Manifold to cylinder head connections	Type 2, 8 mm (0.3 of an inch) or greater
EGR gasket and tube seal points	Type 2, 8 mm (0.3 of an inch) or greater

11. If a leak is found that matches the above definition, repair or replace the component as necessary.
12. Once the repair is complete, repeat the procedure to verify that all leaks have been repaired.

Were any exhaust leaks found?

Yes

- Repair or replace the leaking exhaust parts as necessary.
- Perform the POWERTRAIN VERIFICATION TEST. Refer to **PCM VERIFICATION TEST - 2.0L DIESEL** .

No

- Test complete.

CHECKING THE ENGINE MECHANICAL SYSTEMS

For a complete wiring diagram, **refer to appropriate SYSTEM WIRING DIAGRAMS article** .

POSSIBLE CAUSES

Possible Causes
CHECKING ENGINE MECHANICAL SYSTEMS

DIAGNOSTIC TEST

CHECKING ENGINE MECHANICAL

WARNING: Do not attempt to remove or separate high pressure fuel lines. Failure to follow these instructions may result in possible serious or fatal injury.

NOTE: The following items should be checked as a possible cause of a Driveability or No-Start problem:

- Engine Valve Timing - must be within specification.
- Engine Compression - must be within specifications.
- Camshaft Lobes - check for abnormal wear.
- Camshaft Position Sensor - check the camshaft position sensor tooth for debris and deterioration.
- Crankshaft Position Sensor - check the crankshaft tone wheel for debris and deterioration.
- Engine Exhaust System - must be free of any restriction.
- Engine Drive Chains and Sprockets - must be properly positioned.
- Vacuum System - must operate properly and be free of any vacuum leaks.
- Fuel - must have adequate supply and must be free of contamination (debris, water and gasoline).
- Fuel Injectors - must not be plugged or restricted.
- Fuel Lift Pump - must operate properly (where applicable).
- Fuel Injection Pump - must be producing the correct output volume and pressure.
- Inspect the Fuel Lines, Fuel Filter and Fuel Pressure Relief Valve for signs of restriction and leaks.

NOTE: Check for any Technical Service Bulletins that may relate to the problem.

Are there any problems evident?

Yes

- Repair as necessary.
- Perform the PCM VERIFICATION TEST - 2.0L DIESEL. Refer to **PCM VERIFICATION TEST -**

2.0L DIESEL .

No

- Test Complete.

CHECKING THE PCM POWER AND GROUND CIRCUITS

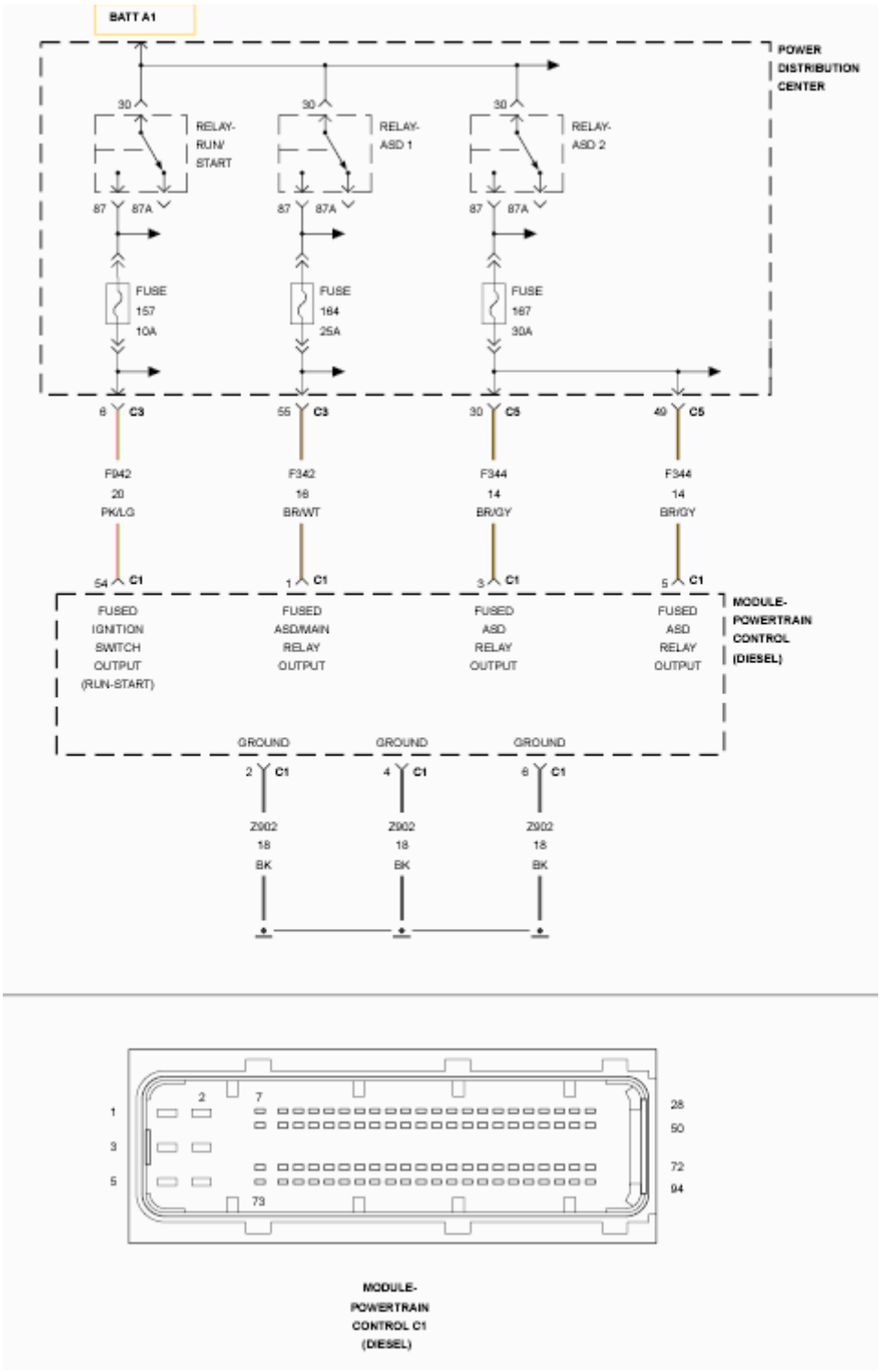

Fig. 1: Powertrain Control Module Circuit Diagram
Courtesy of CHRYSLER GROUP, LLC

For a complete wiring diagram, **refer to appropriate SYSTEM WIRING DIAGRAMS article** .

POSSIBLE CAUSES

Possible Causes
FUSED ASD RELAY BATTERY SUPPLY CIRCUIT OPEN
(F942) FUSED IGNITION SWITCH OUTPUT (START/RUN) CIRCUIT OPEN
(F942) FUSED IGNITION SWITCH OUTPUT (START/RUN) CIRCUIT SHORTED TO GROUND
(K51) ASD RELAY CONTROL CIRCUIT OPEN/HIGH RESISTANCE
ASD RELAY OUTPUT CIRCUIT(S) OPEN/HIGH RESISTANCE
ASD RELAY OUTPUT CIRCUIT(S) SHORTED TO GROUND
PCM GROUND CIRCUIT(S) OPEN/HIGH RESISTANCE
ASD RELAY

DIAGNOSTIC TEST

1. **PCM GROUND CIRCUIT(S) OPEN**
    1. Turn the ignition off.
    2. Disconnect the PCM C1 harness connector.
    3. Using a 12-volt test light connected to 12 volts, probe each of the PCM ground circuits at the PCM C1 harness connector, cavities 2, 4 and 6.

       Did the test light illuminate for each cavity?

       Yes

       - Go To 2

       No

       - Repair the PCM Ground circuit(s) for an open.
       - Perform the PCM VERIFICATION TEST - 2.0L DIESEL. Refer to **PCM VERIFICATION TEST - 2.0L DIESEL** .
2. **(F942) FUSED IGNITION SWITCH OUTPUT (START/RUN) CIRCUIT OPEN**
    1. Turn the ignition to the Run position.
    2. Using a 12-volt test light connected to ground, check the Fused Ignition Switch Start/Run Output circuit at the PCM C1 harness connector, cavity 54.
    3. Turn the ignition to the Start position.
    4. Using a 12-volt test light connected to ground, check the Fused Ignition Switch Start/Run Output circuit at the PCM C1 harness connector, cavity 54.

       Is the test light on for both ignition switch positions?

       Yes

- Go To 3

No

- Repair the Fused Ignition Switch Start/Run Output circuit for an open.
- Perform the PCM VERIFICATION TEST - 2.0L DIESEL. Refer to **PCM VERIFICATION TEST - 2.0L DIESEL** .

3. **CHECKING THE MAIN RELAY SYSTEM**
   1. Turn the ignition off.
   2. Connect a jumper wire between ground and the (K51) ASD Relay Control circuit at the PCM C1 harness connector, cavity 29.
   3. Turn the ignition on.
   4. Using a 12-volt test light connected to ground, check the Fused ASD Relay Output circuits at the PCM C1 harness connector, cavities 1, 3 and 5.

      Does the test light illuminate brightly for each circuit?

      Yes

      - Test Complete.

      No

      - Go To 4
4. **FUSED ASD RELAY BATTERY SUPPLY CIRCUIT OPEN**
   1. Turn the ignition off.
   2. Remove the ASD Relay.
   3. Turn the ignition on.
   4. Using a 12-volt test light connected to ground, check both Fused ASD Relay Battery Supply circuits (terminal 30) at both ASD Relay connectors.

      Is the test light illuminated and bright?

      Yes

      - Go To 5

      No

      - Repair the Fused Main Relay Battery Supply circuit(s) for an open.
      - Perform the PCM VERIFICATION TEST - 2.0L DIESEL. Refer to **PCM VERIFICATION TEST - 2.0L DIESEL** .
5. **ASD RELAY OUTPUT CIRCUITS OPEN**

1. Connect a jumper wire between cavity 30 and cavity 87 at the ASD Relay connector.
2. Using a 12-volt test light connected to ground, check the ASD Relay Output circuit in PCM C1 harness connector, cavities 1, 3 and 5.

   Did the test light illuminate for each circuit?

   Yes

   - Go To 6

   No

   - Repair the Main Relay Output circuit(s) for an open.
   - Perform the PCM VERIFICATION TEST - 2.0L DIESEL. Refer to **PCM VERIFICATION TEST - 2.0L DIESEL** .

6. **ASD RELAY**
   1. Turn the ignition off.
   2. Install a known good relay in place of the ASD Relay.
   3. Connect a jumper wire between ground and the ASD Relay Control circuit in PCM C1 harness connector cavity 28.
   4. Turn the ignition on.
   5. Using a 12-volt test light connected to ground, check the Fused ASD Relay Output circuits at the PCM C1 harness connector, cavities 1, 3 and 5.

      Did the test light illuminate brightly for each circuit?

      Yes

      - Replace the ASD Relay.
      - Perform the PCM VERIFICATION TEST - 2.0L DIESEL. Refer to **PCM VERIFICATION TEST - 2.0L DIESEL** .

      No

      - Repair the ASD Relay Control circuit for an open.
      - Perform the PCM VERIFICATION TEST - 2.0L DIESEL. Refer to **PCM VERIFICATION TEST - 2.0L DIESEL** .

CHECKING THE FUEL DELIVERY SYSTEM

For a complete wiring diagram, **refer to appropriate SYSTEM WIRING DIAGRAMS article** .

THEORY OF OPERATION

There are two sides to the 2.0L fuel system. A low pressure and high pressure side. The low pressure side components are the Fuel Lift Pump; the Fuel Filter; Cascade Valve; and the Fuel Quantity Solenoid (FQS). The Fuel Lift Pump, mounted inside the tank, delivers the fuel from the tank to the High Pressure Delivery Pump (HPDP). The Fuel Filter, mounted at the bulk head on the drivers side, removes water and debris from the fuel and helps to prevent damage to the HPDP and Fuel Injectors. The Cascade Valve, located inside the HPDP, regulates the low side pressure between approximately 4.0 bar (58 psi) and 5.5 (79.7psi). The Fuel Quantity Solenoid, mounted to the HPDP, controls the quantity of fuel entering the HPDP internal pumping chambers. Excess fuel is returned back to the tank via a return line from the HPDP. The high pressure side components include the High Pressure Delivery Pump; the Fuel Rail; and the Fuel Injectors. The HPDP raises the fuel pressure entering the Fuel Rail using two internal pumping chambers. The Fuel Rail holds the high pressure fuel for use by the Fuel Injectors and helps to dampen pressure spikes caused by the HPDP and the opening and closing of the injectors. The solenoid actuated Fuel Injectors deliver high pressure fuel directly into the engine cylinders. During injector operation, a small amount of fuel leaks into the injector return hoses. The injector return hoses connect a fuel return line which leads back to the Fuel Tank. During engine cranking, the FQS allows maximum fuel flow to allow pressure to build quickly. After the engine starts, the PCM controls the high side pressure by regulating the FQS.

Possible Causes
FUEL SYSTEM LEAK
FUEL CONTAMINATION
FUEL LINE RESTRICTIONS
FUEL FILTER
EXCESSIVE FUEL INJECTOR BACK FLOW LEAKAGE
FUEL QUANTITY SOLENOID
FUEL LIFT PUMP WIRING
FUEL LIFT PUMP
HIGH PRESSURE FUEL PUMP

DIAGNOSTIC TEST

1. **VISUAL INSPECTION**

NOTE: **For best results, perform Fuel Delivery System test with vehicle at room temperature. Extreme cold temperatures can cause inaccurate results.**

NOTE: **Make sure that the vehicle has at least 1/8 of a tank of fuel before proceeding with this test.**

1. Perform a visual inspection of the fuel system for any signs of a fuel leak.

   Were any visual signs of a leak detected?

   Yes

   - Repair as necessary

- Perform the PCM VERIFICATION TEST - 2.0L DIESEL. Refer to **PCM VERIFICATION TEST - 2.0L DIESEL** .

No

- Go To 2

2. **CHECKING SENSOR VALUES WITH THE SCAN TOOL**

NOTE: **If there are any DTCs present for the Fuel Quantity Solenoid, Fuel Injectors, Crank/Cam Sensors or Fuel Pump Control Circuit or relay, repair those DTCs before continuing with the Fuel Delivery System test.**

1. Turn the ignition on, engine not running.
2. With the scan tool, perform the following checks:
   - Check and compare the values of the Ambient Air Temperature Sensor, Coolant Temperature Sensor and Fuel Temperature Sensor with the key on. The values should read approximately the same as each other on a cold engine.
   - Check and compare the values of the Air Inlet Pressure Sensor, Boost Pressure Sensor and Exhaust Differential Pressure Sensor. The sensors should read approximately the same.
   - Check the plausibility of the Accelerator Pedal Position sensors.
3. If possible, start the engine and check the following:
   - Check the cam/crank synchronization during cranking.
   - Check and compare the MAF Sensor actual reading against the MAF Sensor setpoint.
   - Check the plausibility of the temperature and pressure sensors.

Are the cam and crank synchronized and the sensors reading normal?

Yes

- Go To 3

No

- Repair as necessary.
- Perform the PCM VERIFICATION TEST - 2.0L DIESEL. Refer to **PCM VERIFICATION TEST - 2.0L DIESEL** .

3. **SCAN TOOL TEST**
   1. Perform the following tests with the scan tool:
      - Injector Quantity Correction for each injector. Look for an injector that is reading noticeably different than the others indicating a faulty injector.
      - Compression Test. The RPM drop in each cylinder should be approximately equal.
      - Injector Kill Test. The RPM drop in each cylinder should be approximately equal.

Do any of the cylinders or injectors indicate a problem as compared to the others during the scan tool tests?

Yes

- Evaluate the results of the scan tool tests. If any of the cylinders are found to be performing poorly as compared to the others, check for engine mechanical issues on the suspect cylinder and repair as necessary.
- If no mechanical issues are found with the engine, Go To 4

No

- Go To 5

4. **CHECK THE FUEL INJECTOR SUPPLY**
   1. Turn the ignition off.
   2. Remove and check the High Pressure Supply Line to the Fuel Injector of the cylinder that indicated a problem for a restriction.

   Is the Fuel Injector supply line restricted?

   Yes

   - Clean or replace the Fuel Injector supply line and perform the scan tool test again.
   - Perform the PCM VERIFICATION TEST - 2.0L DIESEL. Refer to **PCM VERIFICATION TEST - 2.0L DIESEL** .

   No

   - Using the wiring diagram as a guide, check the resistance of the Fuel Injector circuits between the injector and the PCM. If the resistance is above 2.0 Ohms, repair the circuit for high resistance and perform the scan tool test again. If the resistance was below 2.0 Ohms for both circuits, replace the Fuel Injector in accordance with the service information.
   - Perform the PCM VERIFICATION TEST - 2.0L DIESEL. Refer to **PCM VERIFICATION TEST - 2.0L DIESEL** .

5. **COMPARE THE FUEL PRESSURE ACTUAL READING AGAINST FUEL PRESSURE SET POINT**

   NOTE: This test requires two people. One person to test drive the vehicle while a technician observes the scan tool readings.

   1. With the scan tool, select add the Fuel Pressure Actual to a graph.
   2. With the scan tool, select add the Fuel Pressure Setpoint to a graph.
   3. Select merge graphs.
   4. With the scan tool, compare the Fuel Pressure Actual reading with the Fuel Pressure Setpoint on

the graph, while cranking the engine on a no start, or while test driving the vehicle under various load conditions such as idle, hard acceleration, cruise and deceleration.

NOTE: The Fuel Pressure reading should closely follow the Fuel Pressure Setpoint reading.

Select the conclusion that best matches the result of the test:

The Fuel Pressure reading follows closely to the Fuel Pressure Setpoint reading.

- Go To 6

The Fuel Pressure reading is too low.

- If the vehicle is a no start, Go To 9
- If the vehicle starts and runs, Go To 10

The Fuel Pressure reading is too high.

- Go To 7

The Fuel Pressure reading is oscillating excessively above and below the Fuel Pressure Setpoint reading.

- Using a clear tube connected in-line on the low pressure side of the system, check for signs of air bubbles in the fuel supply system. If air bubbles are present, repair the cause of the air bubbles getting into the supply side system. If no air bubbles are present, replace the High Pressure Delivery Pump in accordance with the service information.
- Perform the PCM VERIFICATION TEST - 2.0L DIESEL. Refer to **PCM VERIFICATION TEST - 2.0L DIESEL** .

6. **CHECKING FUEL QUALITY/CONTAMINATION**
   1. Collect a fuel sample from the vehicle in a clean see through container.
   2. Collect a fuel sample of fresh clean fuel in a clean, transparent container for reference.
   3. Check the vehicle's fuel sample for the following:
      - Check the color of the fuel. Diesel fuel will generally be a yellow color.
      - Allow the fuel to settle and look for cloudiness indicating contamination.
      - Check the volatility of the fuel.
      - Look for a parting line in the fuel sample indicating another type of liquid mixed with the fuel.
      - Look for any signs of debris in the fuel sample.

   Were any problems found?

Yes

- Refer to the service information to replace the fuel in the entire fuel system.
- Perform the PCM VERIFICATION TEST - 2.0L DIESEL. Refer to **PCM VERIFICATION TEST - 2.0L DIESEL** .

No

- The fuel system is operating normally. Check for any Service Bulletins that may apply.
- Perform the PCM VERIFICATION TEST - 2.0L DIESEL. Refer to **PCM VERIFICATION TEST - 2.0L DIESEL** .

7. **CHECKING FOR A RESTRICTION IN THE FUEL RETURN**
   1. Disconnect the fuel return hose at the fuel return block.
   2. Connect the (special tool #8978A, Decay Tool, Fuel) in-line.
   3. While observing the gauge, start the engine and allow it to come to idle.

   NOTE: The return pressure should be below 1.0 bar (14.5 psi) if there are no restrictions.

   Is the return pressure above 1.0 bar (14.5 psi) ?

   Yes

   - Go To 8

   No

   - Check the operation of the Fuel Quantity Solenoid and High Pressure Delivery Pump and repair as necessary.
   - Perform the PCM VERIFICATION TEST - 2.0L DIESEL. Refer to **PCM VERIFICATION TEST - 2.0L DIESEL** .

8. **CHECKING FUEL RETURN LINE FOR A RESTRICTION**
   1. Remove the (special tool #8978A, Decay Tool, Fuel).
   2. Disconnect the fuel return line at the Fuel Lift Pump.
   3. Blow regulated shop air through the return line and check for a restriction.

   Was the return line restricted?

   Yes

   - Repair the restriction in the fuel return line.
   - Perform the PCM VERIFICATION TEST - 2.0L DIESEL. Refer to **PCM VERIFICATION TEST - 2.0L DIESEL** .

No

- Check the Fuel Lift Pump for a restriction on the return circuit and repair as necessary.
- Perform the PCM VERIFICATION TEST - 2.0L DIESEL. Refer to **PCM VERIFICATION TEST - 2.0L DIESEL** .

9. **CHECK THE FUEL RAIL PRESSURE SENSOR**
   1. Disconnect the Fuel Rail Pressure Sensor harness connector.
   2. Attempt to start the engine.

   Does the engine start and run?

   Yes

   - Using the wiring diagram as a guide, check the resistance of the Fuel Rail Pressure Sensor circuits between the Fuel Rail Pressure Sensor and the PCM. If the resistance is above 2.0 Ohms on any circuit, repair the circuit for high resistance. If the circuits measure below 2.0 Ohms, replace the Fuel Rail Pressure Sensor in accordance with the service information.
   - Perform the PCM VERIFICATION TEST - 2.0L DIESEL. Refer to **PCM VERIFICATION TEST - 2.0L DIESEL** .

   No

   - Go To 10

10. **CHECK THE LOW SIDE FUEL SYSTEM PRESSURE**
    1. Turn the ignition off.
    2. Disconnect the quick connect fitting between the Fuel Filter outlet and the High Pressure Fuel Pump and connect the (special tool #8978A, Decay Tool, Fuel) in-line.
    3. Crank the engine or start the engine and observe the reading on the fuel pressure gauge.

    Does the fuel pressure read between 4.0 bar (58 psi) and 5.5 (79.7psi)?

    Yes, and vehicle starts and runs:

    - Go To 16

    Yes, and vehicle is a no start:

    - Go To 15

    No, pressure reading is below specification:

    - Go To 11

    No, pressure reading is above specification:

- If the pressure reading 116 psi (8 bar) or below, check for a restriction in the line between the quick connect fitting and the HPDP. If no restriction is found, replace the High Pressure Delivery Pump and retest the system.
- If the pressure is reading above 116 psi (8 bar), replace the Fuel Lift Pump and repair the restriction in the line between the quick connect fitting and the HPDP or replace the High Pressure Delivery Pump if no restriction is found and retest the system.
- Perform the PCM VERIFICATION TEST - 2.0L DIESEL. Refer to **PCM VERIFICATION TEST - 2.0L DIESEL** .

11. **CHECK THE FUEL SUPPLY PRESSURE AT FUEL FILTER INLET**
    1. Turn the ignition off.
    2. Remove the (special tool #8978A, Decay Tool, Fuel) from between the Fuel Filter outlet and the High Pressure Fuel Pump. Reconnect the fuel line.
    3. Disconnect the fuel supply line quick connect at the Fuel Filter inlet.
    4. Connect the (special tool #8978A, Decay Tool, Fuel) in-line between the fuel supply line and the Fuel Filter inlet fitting.
    5. Crank the engine or start the engine and observe the reading on the fuel pressure gauge.

    Does the fuel pressure read 4.0 bar (58 psi) or above?

    Yes

    - Replace the Fuel Filter in accordance with the service information.
    - Perform the PCM VERIFICATION TEST - 2.0L DIESEL. Refer to **PCM VERIFICATION TEST - 2.0L DIESEL** .

    No

    - Go To 12

12. **CHECK THE FUEL LIFT PUMP MAXIMUM OUTPUT**
    1. While the engine is cranking or running, close the valve after the gauge and observe the pressure gauge reading.

    NOTE: **Do not block the line for more than a few seconds or damage to the Fuel Lift Pump can occur. The pressure should spike up and then stabilize at approximately 116 psi (8 bar) in two or three seconds.**

    Does the fuel pressure rise to approximately 116 psi (8 bar)?

    Yes

    - Replace the High Pressure Delivery Pump in accordance with the service information.
    - Perform the PCM VERIFICATION TEST - 2.0L DIESEL. Refer to **PCM VERIFICATION TEST - 2.0L DIESEL** .

No

- Go To 13

13. **CHECK THE VOLTAGE DROP OF THE FUEL PUMP MOTOR CIRCUITS**
    1. Turn the engine off.
    2. Reconnect the fuel lines.

    NOTE: The Fuel Lift Pump Module harness connector should remain connected to the pump during this test step in order to accurately measure the voltage drop.

    3. Using a voltmeter, back probe the Fuel Pump Motor Feed circuit with the positive lead of the meter at the Fuel Lift Pump Module harness connector.
    4. Back probe the Fuel Lift Pump Ground circuit with the negative lead of the meter at the Fuel Lift Pump Module harness connector.

    CAUTION: Use only approved connector back probe tools when back probing a connector so as not to cause damage to the terminals or insulation of the connector. Damage to the terminals can cause poor terminal contact or retention. Damage to the insulation can introduce corrosion due to water infiltration.

    5. Turn the ignition on.
    6. With a scan tool, actuate the Fuel Lift Pump control to ON (100%).

    NOTE: The voltage should read the same as battery voltage if there is no resistance in the circuit.

    Is the voltage reading the same as battery voltage +/- 0.2 Volts?

    Yes

    - Check the supply line between the Fuel Lift Pump and the Fuel Filter for a restriction. If the line is not restricted, replace the Fuel Lift Pump in accordance with the service information.
    - Perform the PCM VERIFICATION TEST - 2.0L DIESEL. Refer to **PCM VERIFICATION TEST - 2.0L DIESEL** .

    No

    - Go To 14

14. **CHECK THE VOLTAGE DROP IN THE FUEL PUMP MOTOR FEED CIRCUIT**
    1. Turn the engine off.
    2. Remove the negative lead of the meter from the Fuel Lift Pump harness connector and connect the

lead to a good battery ground.

NOTE: The Fuel Lift Pump Module harness connector should remain connected.

3. Turn the ignition on.
4. With a scan tool, actuate the Fuel Lift Pump control to ON (100%).
5. Measure the voltage of the Fuel Pump Motor Feed circuit at the Fuel Lift Pump harness connector.

Is the voltage reading the same as battery voltage +/- 0.2 Volts?

Yes

- Repair the Fuel Lift Pump Ground circuit for an open circuit or high resistance.
- Perform the PCM VERIFICATION TEST - 2.0L DIESEL. Refer to **PCM VERIFICATION TEST - 2.0L DIESEL** .

No

- Repair the Fuel Pump Motor Feed circuit for an open circuit or high resistance.
- Perform the PCM VERIFICATION TEST - 2.0L DIESEL. Refer to **PCM VERIFICATION TEST - 2.0L DIESEL** .

15. **STATIC FUEL INJECTOR LEAK BACK CHECK**
    1. Turn the ignition off.
    2. Disconnect the fuel return hose fittings from the top of the Fuel Injectors.
    3. Install (special tool #9545, Test Vials, Fuel) to each Fuel Injector.
    4. Crank the engine for at least 10 seconds.

NOTE: It may be necessary to do this two or three times to collect a good sample for comparison.

5. Turn the ignition off.
6. Compare the quantity of fuel collected in each vial.

NOTE: There should be very minimal difference in the amount of fuel collected for each injector.

Is the quantity of fuel collected for each Fuel Injector approximately the same?

Yes

- Replace the High Pressure Delivery Pump in accordance with the service information. Re-run the test to confirm the repair.

- Perform the PCM VERIFICATION TEST - 2.0L DIESEL. Refer to **PCM VERIFICATION TEST - 2.0L DIESEL** .

No

- Replace any Fuel Injector that had noticeably more fuel leakage than the others. Re-run the test to confirm the repair.
- Perform the PCM VERIFICATION TEST - 2.0L DIESEL. Refer to **PCM VERIFICATION TEST - 2.0L DIESEL** .

16. **DYNAMIC FUEL LEAK BACK CHECK**
    1. Turn the ignition off.
    2. Disconnect the fuel return hose fittings from the top of the Fuel Injectors.
    3. Install (special tool #9545, Test Vials, Fuel) to each Fuel Injector.
    4. Start the engine and allow it to idle for up to 30 seconds to collect a good sample.
    5. Stop the engine.
    6. Measure the quantity of fuel collected in each measuring bottle.

NOTE: **There should be very minimal difference in the amount of fuel collected for each injector.**

Is the quantity of fuel collected for each Fuel Injector approximately the same?

Yes

- Using the wiring diagram as a guide, check the resistance of the Fuel Quantity Solenoid circuits between the Fuel Quantity Solenoid and the PCM. Replace the High Pressure Delivery Pump in accordance with the service information. Re-run the test to confirm the repair.
- Perform the PCM VERIFICATION TEST - 2.0L DIESEL. Refer to **PCM VERIFICATION TEST - 2.0L DIESEL** .

No

- Replace any Fuel Injector that had noticeably more fuel leakage than the others. Re-run the test to confirm the repair.
- Perform the PCM VERIFICATION TEST - 2.0L DIESEL. Refer to **PCM VERIFICATION TEST - 2.0L DIESEL** .

2014 ENGINE PERFORMANCE

Driveability - Gas - Non-DTC Based Diagnostics - Cherokee

DIAGNOSIS AND TESTING

CHECKING THE CHARGING SYSTEM OPERATION

For a complete wiring diagram, **refer to appropriate SYSTEM WIRING DIAGRAMS article** .

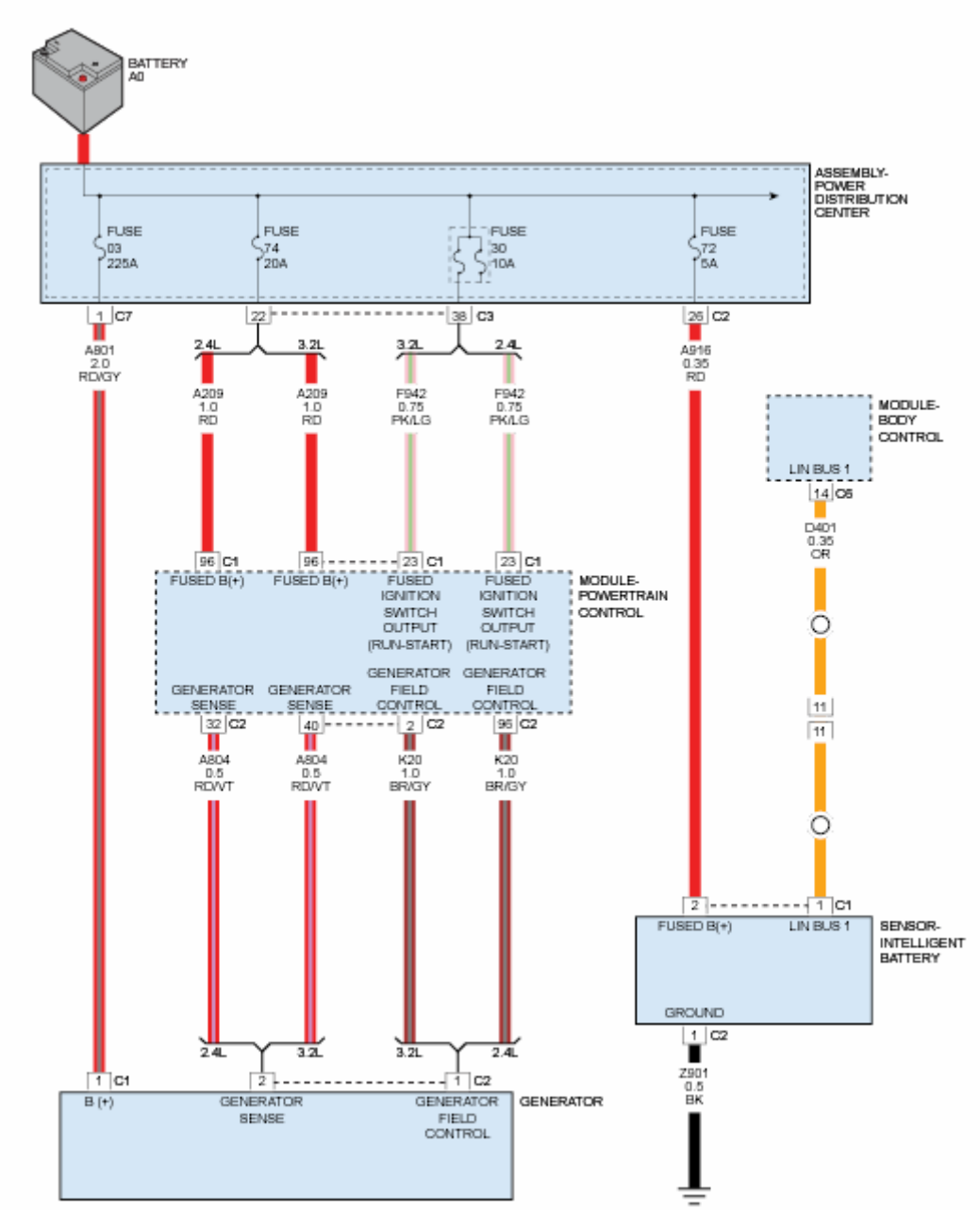

Fig. 1: Generator/Battery Circuit Diagram
Courtesy of CHRYSLER GROUP, LLC

DIAGNOSTIC TEST

1. **GENERATOR FULL FIELD TEST**

NOTE: Diagnose and repair any generator sense or field control circuit DTCs before proceeding with this test.

1. Start the engine and allow it to reach operating temperature.

WARNING: When the engine is operating, do not stand in direct line with the fan. Do not put your hands near the pulleys, belts or fan. Do not wear loose clothing. Failure to follow these instructions may result in possible serious or fatal injury.

2. With the scan tool, perform the Generator Full Field test. Follow the instructions displayed on the scan tool.
3. Monitor the system (battery) voltage and the generator sense voltage on the scan tool while performing the test.

NOTE: With the engine running, the difference between the system (battery) voltage and the generator sense voltage should be below 2 Volts.

NOTE: With the generator field fully actuated, the system (battery) voltage should be above 14.0 volts.

NOTE: With the generator field actuated off, the system (battery) voltage should be below 13.0 volts, and eventually drop as battery load is increased.

Did the system voltage change as described above during the Generator Full Field test?

Yes

- Test complete.

No

- Go To 2

2. **CHARGING SYSTEM INSPECTION**
   1. Inspect and test the battery in accordance with the Service Information.
   2. Inspect the generator drive belt for proper alignment and adjustment.

3. Inspect the vehicle for aftermarket accessories that may exceed the generator system output.
4. Inspect the fuses in the PDC. If an open fuse is found, use the wire diagram/schematics as a guide and inspect the wiring and connectors for a damaged or shorted circuit.

   Were any problems found?

   Yes

   - Repair as necessary.

   No

   - Go To 3

3. **BATTERY POSITIVE (+) CIRCUIT HIGH RESISTANCE**

NOTE: **Make sure all testing equipment and cables are clear of any engine parts before starting the engine.**

1. Start the engine.

   WARNING: **When the engine is operating, do not stand in direct line with the fan. Do not put your hands near the pulleys, belts or fan. Do not wear loose clothing. Failure to follow these instructions may result in possible serious or fatal injury.**

2. Measure the voltage between the B (+) Terminal at the Generator and the Battery Positive (+) Post.

   Is the voltage below 0.25 volt?

   Yes

   - Go To 4

   No

   - Repair the battery positive (+) circuit between the generator and battery for high resistance.
   - Perform the POWERTRAIN VERIFICATION TEST. Refer to the appropriate Diagnosis & Testing article in Engine Performance .

4. **GENERATOR CASE GROUND HIGH RESISTANCE**

NOTE: **Make sure all testing equipment and cables are clear of any engine parts before starting the engine.**

1. Start the engine.

2. Measure the voltage between the Generator case and the Battery Negative (-) post.

   Is the voltage below 0.25 volt?

   Yes

   - Go To 5

   No

   - Repair the Generator Case ground for high resistance.
   - Perform the POWERTRAIN VERIFICATION TEST. Refer to the appropriate Diagnosis & Testing article in Engine Performance .

5. **(A209) FUSED B(+) CIRCUIT HIGH RESISTANCE**
   1. Turn the ignition off.

      CAUTION: Do not probe the PCM harness connectors. Probing the PCM harness connectors will damage the PCM terminals resulting in poor terminal to pin connection. Install the GPEC Diagnostic Adaptor to perform the diagnosis.

   2. Disconnect the PCM C1 harness connector and connect the (special tool #10436, Adapter, GPEC Diagnostic).
   3. Using a voltmeter, perform a voltage drop test by probing the battery positive (+) terminal and the PCM C1 harness connector. Make sure the voltmeter leads are connected so that positive polarity is displayed on the voltmeter.
   4. Start the engine.

      Is the voltage below 0.25 volt?

      Yes

      - Go To 6

      No

      - Repair the (A209) Fused B(+) circuit(s) for high resistance.
      - Perform the POWERTRAIN VERIFICATION TEST. Refer to the appropriate Diagnosis & Testing article in Engine Performance .

6. **(A804) GENERATOR SENSE CIRCUIT HIGH RESISTANCE**
   1. Turn the ignition off.

      CAUTION: Do not probe the PCM harness connectors. Probing the PCM

harness connectors will damage the PCM terminals resulting in poor terminal to pin connection. Install the GPEC Diagnostic Adaptor to perform the diagnosis.

2. Disconnect the PCM C2 harness connector and connect the (special tool #10436, Adapter, GPEC Diagnostic).
3. Using a voltmeter, perform a voltage drop test by probing the (A804) Generator Sense circuit at the Generator harness connector and the PCM C2 harness connector. Make sure the voltmeter leads are connected so that positive polarity is displayed on the voltmeter.
4. Start the engine.

   Is the voltage below 0.25 volt?

   Yes

   - Go To 7

   No

   - Repair the (A804) Generator Sense circuit for high resistance.
   - Perform the POWERTRAIN VERIFICATION TEST. Refer to the appropriate Diagnosis & Testing article in Engine Performance .

7. **GENERATOR**
   1. Turn the ignition off.
   2. Connect a 12 volt test light between ground and the (K20) Generator Field Control circuit in the C2 Generator harness connector.
   3. Turn the ignition on.
   4. With the scan tool, actuate the Alternator Field Control State to toggle.

   NOTE: The test light should toggle on and off with the actuation.

   NOTE: If a DTC is active, the actuation test may not be allowed by the PCM. If may be necessary to clear DTCs before starting the actuation.

   Does the test light illuminate on and off with the actuation?

   Yes

   - Replace the Generator in accordance with the service information.
   - Perform the POWERTRAIN VERIFICATION TEST. Refer to the appropriate Diagnosis & Testing article in Engine Performance .

   No

- Go To 8

8. **CHECK THE (K20) GENERATOR FIELD CONTROL CIRCUIT FOR A SHORT TO VOLTAGE**
   1. Turn the ignition on.
   2. Measure the voltage of the (K20) Generator Field Control circuit in the C2 Generator harness connector.

      Is there any voltage present?

      Yes

      - Repair the (K20) Gen Field Control circuit for a short to voltage.
      - Perform the POWERTRAIN VERIFICATION TEST. Refer to the appropriate Diagnosis & Testing article in Engine Performance .

      No

      - Go To 9
9. **CHECK THE (K20) GENERATOR FIELD CONTROL CIRCUIT FOR A SHORT TO GROUND**
   1. Turn the ignition off.
   2. Measure the resistance between ground and the (K20) Generator Field Control circuit in the C2 Generator harness connector.

      Is the resistance above 10k Ohms?

      Yes

      - Go To 10

      No

      - Repair the (K20) Gen Field Control circuit for a short to ground.
      - Perform the POWERTRAIN VERIFICATION TEST. Refer to the appropriate Diagnosis & Testing article in Engine Performance .
10. **CHECK THE (K20) GENERATOR FIELD CONTROL CIRCUIT FOR AN OPEN OR HIGH RESISTANCE**
    1. Measure the resistance of the (K20) Generator Field Control circuit between the C2 Generator harness connector and the C2 PCM harness connector.

       Is the resistance below 5.0 Ohms?

       Yes

       - Go To 11

No

- Repair the (K20) Generator Field Control circuit for an open or high resistance.
- Perform the POWERTRAIN VERIFICATION TEST. Refer to the appropriate Diagnosis & Testing article in Engine Performance .

11. **CHECK THE PCM POWER AND GROUND CIRCUITS**
    1. Inspect the PCM power and ground circuits.

    Were any problems found?

    Yes

    - Repair the PCM power and ground circuit(s) as necessary.
    - Perform the POWERTRAIN VERIFICATION TEST. Refer to the appropriate Diagnosis & Testing article in Engine Performance .

    No

    - Go To 12

12. **POWERTRAIN CONTROL MODULE (PCM)**
    1. Using the wiring diagram/schematic as a guide, inspect the wiring and connectors between the Generator and the Powertrain Control Module (PCM).
    2. Look for any chafed, pierced, pinched, or partially broken wires.
    3. Look for broken, bent, pushed out or corroded terminals.
    4. Perform any Technical Service Bulletins that may apply.

    Were any problems found?

    Yes

    - Repair as necessary.
    - Perform the POWERTRAIN VERIFICATION TEST. Refer to the appropriate Diagnosis & Testing article in Engine Performance .

    No

    - Replace and program the Powertrain Control Module (PCM) in accordance with the service information. Refer to **MODULE, POWERTRAIN CONTROL, REMOVAL** .
    - Perform the POWERTRAIN VERIFICATION TEST. Refer to the appropriate Diagnosis & Testing article in Engine Performance .

CHECKING THE ENGINE MECHANICAL SYSTEM

For a complete wiring diagram, **refer to appropriate SYSTEM WIRING DIAGRAMS article** .

DIAGNOSTIC TEST

CHECKING THE ENGINE MECHANICAL SYSTEM

1. Turn the ignition off.
2. Check for any of the following conditions/mechanical problems:
   - ENGINE VACUUM - must be at least 13 inches in neutral
   - ENGINE VALVE TIMING - must be within specifications
   - ENGINE COMPRESSION - must be within specifications
   - CYLINDER LEAKAGE TEST - must be within specifications
   - ENGINE EXHAUST SYSTEM - must be free of any restrictions or leaks
   - ENGINE PCV SYSTEM - must flow freely
   - TORQUE CONVERTER STALL SPEED - must be within specifications
   - POWER BRAKE BOOSTER - no internal vacuum leaks
   - FUEL - must be free of contamination
   - VALVE SPRINGS - cannot be weak or broken
   - CAM LOBES - must not be worn excessively
   - CAM SHAFTS - must not be worn or have excessive end play

   Are there any engine mechanical problems?

   Yes

   - Repair as necessary in accordance with the Service Information.
   - Perform the POWERTRAIN VERIFICATION TEST. Refer to the appropriate Diagnosis & Testing article in Engine Performance .

   No

   - Test Complete.

CHECKING THE EXHAUST SYSTEM FOR LEAKS

CHECKING THE EXHAUST SYSTEM FOR LEAKS

YouTube	A multimedia supplement to the instructions contained in this article is available. To view the multimedia example of the condition described go to; **http://www.youtube.com/user/Mitchell1Tips** **then type "A00641515.vid1" into the "Search Channel" box.**

DIAGNOSTIC TEST

CHECKING THE EXHAUST SYSTEM FOR LEAKS

1. Turn the ignition off.
2. Raise the vehicle in accordance with the service information.

WARNING: The normal operating temperature of the exhaust system is very high. Never work around or attempt to service any part of the exhaust system until it has cooled. Special care should be taken when working near the catalytic converter. The temperature of the converter rises to a high level after a short period of engine operating time.

3. Connect Exhaust Cone (special tool #8404-ECT, Exhaust Cone, Truck) to Air Pressure Regulator (with hose) W-18-MIL-1146AS.

CAUTION: The air pressure must not exceed 27.6 kPa (4 psi), otherwise engine damage can occur.

4. Attach shop air to the air pressure regulator.
5. Adjust the Air Pressure Regulator to 27.6 kPa (4 psi)
6. Insert the exhaust cone into the vehicle tail pipe.
7. If the vehicle is equipped with dual exhaust. Use the (special tool #8404-ECT, Exhaust Cone, Truck) with equipped attached plug, plug one side of the dual exhaust pipe. Pressurize the other as described above.
8. Apply Mopar® Air Leak Detector PN 05191804AA (or an equivalent leak finder liquid) to the following areas:
   - All welded joints from the exhaust manifold to 45.72 cm (18 inches) behind the downstream O2 Sensor
   - O2 Sensor seal points
   - O2 Sensor boss welds
   - Flange/joint connection(s)
   - Exhaust manifold to cylinder head connection(s)
   - EGR solenoid gasket base and tube seal points (if equipped)
9. Watch for the Mopar® Air Leak Detector PN 05191804AA (or the equivalent leak finder liquid) to bubble.
10. Use the following definitions to help determine if system or component repair/replacement is necessary:
    - **Type 1 Leak** is defined as a leak where very small foam like bubbles 1 mm (0.04 of an inch) or less appear. Any Type 1 or greater leaks found in welded joints, O2 sensor seal points or O2 sensor boss welds must be repaired or the component must be replaced.
    - **Type 2 Leak** is defined as a leak where larger bubbles pea size, 8 mm (0.3 of an inch) or greater appear. Any Type 2 or greater leaks found in flange or joint connections, exhaust manifold to cylinder head connections, or EGR gasket and tube seal points must be repaired or the components must be replaced.

Leak Location	Repair required if results at 27.6 kPa (4 psi) reveal bubble size:
Welded joints	Type 1, 1 mm (0.04 of an inch) or greater
O2 Sensor seal points	Type 1, 1 mm (0.04 of an inch) or greater
O2 Sensor boss welds	Type 1, 1 mm (0.04 of an inch) or greater
Flange/joint connections	Type 2, 8 mm (0.3 of an inch) or greater
Exhaust Manifold to cylinder head connections	Type 2, 8 mm (0.3 of an inch) or greater
EGR gasket and tube seal points	Type 2, 8 mm (0.3 of an inch) or greater

11. If a leak is found that matches the above definition, repair or replace the component as necessary.
12. Once the repair is complete, repeat the procedure to verify that all leaks have been repaired.

Were any exhaust leaks found?

Yes

- Repair or replace the leaking exhaust parts as necessary.
- Perform the POWERTRAIN VERIFICATION TEST. Refer to the appropriate Diagnosis & Testing article in Engine Performance .

No

- Test complete.

CHECKING THE FUEL DELIVERY SYSTEM (HARD START)

For a complete wiring diagram, **refer to appropriate SYSTEM WIRING DIAGRAMS article** .

POSSIBLE CAUSES

Possible Causes
FUEL DELIVERY SYSTEM LEAKING OR DAMAGED
RESTRICTED FUEL SUPPLY LINE
FUEL PUMP INLET STRAINER PLUGGED
FUEL PUMP CONTROL OUTPUT CIRCUIT OPEN
FUEL INJECTOR(S)
FUEL PUMP MODULE

WARNING: **Follow these safety precautions to reduce the risk of fire and possible serious or fatal injury when performing this test procedure.**

- **Fuel or fuel vapors are highly flammable. A fire could occur if an ignition source is present. Do not expose the fuel or the test equipment used in this procedure to open flames or sparks.**

- **Inhalation of fuel vapors could lead to disorientation and personal injury. Keep the service area well ventilated, or perform this test procedure in an area where there is a building exhaust removal system.**
- **Relieve fuel system pressure before servicing fuel system components.**
- **Use extreme caution when connecting and disconnecting fuel lines.**
- **Considerable fuel leakage may occur when servicing the fuel system. Wear protective eye wear and clothing to protect from fuel splash, and take suitable fuel containment measures.**
- **Wrap a shop towel around the fuel pressure gauge connection to absorb fuel leakage that occurs when connecting the test equipment. Place the towel in an approved container when complete.**
- **Never store fuel in an open container due to the possibility of fire or explosion. Have a dry chemical (Class B) fire extinguisher nearby.**

DIAGNOSTIC TEST

1. **CHECK THE FUEL DELIVERY SYSTEM FOR LEAKS AND DAMAGE**

   WARNING: **The fuel system is under a constant pressure (even with the engine off). Before testing or servicing any fuel system hose, fitting, or line, the fuel system pressure must be released. Failure to follow these instructions can result in possible serious or fatal injury.**

   1. Visually and physically inspect the fuel delivery system for external leaks and damage.

      Is the system leaking or damaged?

      Yes

      - Repair or replace as necessary.
      - Perform the PCM VERIFICATION TEST. Refer to the appropriate Diagnosis & Testing article in Engine Performance .

      No

      - Go To 2
2. **CHECK FUEL PUMP OPERATION**
   1. Ignition on, engine not running.
   2. With a scan tool, actuate the Fuel System test.

NOTE: It may be necessary to use a mechanics stethoscope in the next step.

3. Listen for fuel pump operation at the Fuel Tank.

   Does the Fuel Pump operate?

   Yes

   - Go To 3

   No

   - Check the power and ground circuits to the Fuel Pump Module assembly. If the circuits test good, replace the Fuel Pump Module assembly.
   - Perform the POWERTRAIN VERIFICATION TEST. Refer to the appropriate Diagnosis & Testing article in Engine Performance .

3. **INSTALL APPROPRIATE FUEL LINE ADAPTERS/FITTING FROM THE GAS AND DIESEL FUEL PRESSURE/DECAY TESTER 8978A**

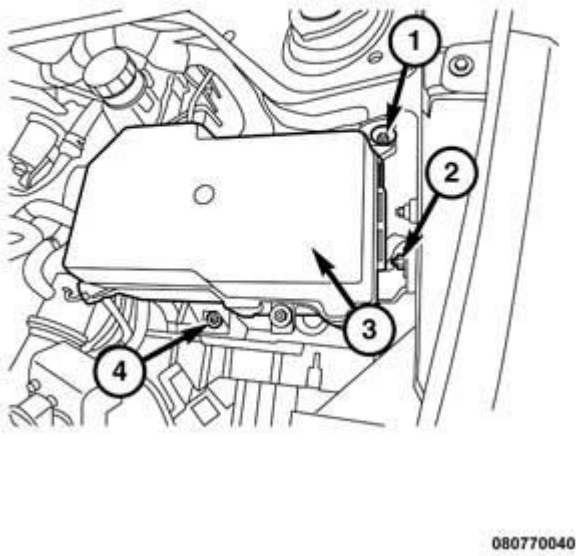

Fig. 2: Fuel Line Adapters/Fitting
Courtesy of CHRYSLER GROUP, LLC

1. Turn the ignition off.

WARNING: The fuel system is under a constant pressure (even with the engine off). Before testing or servicing any fuel system hose,

fitting, or line, the fuel system pressure must be released. Failure to follow these instructions can result in possible serious or fatal injury.

2. Release the fuel system pressure. Refer to **STANDARD PROCEDURE** .
3. Disconnect the rail fuel supply line connector between the fuel supply line and the fuel rail. Refer to **STANDARD PROCEDURE** .
4. Install the appropriate Fuel Line Adapters/Fitting from the Gas and Diesel Fuel Pressure/Decay Tester (special tool #8978A, Decay Tool, Fuel).

Proceed

- Go To 4

4. **INSTALL THE FUEL PRESSURE GAUGE ASSEMBLY**

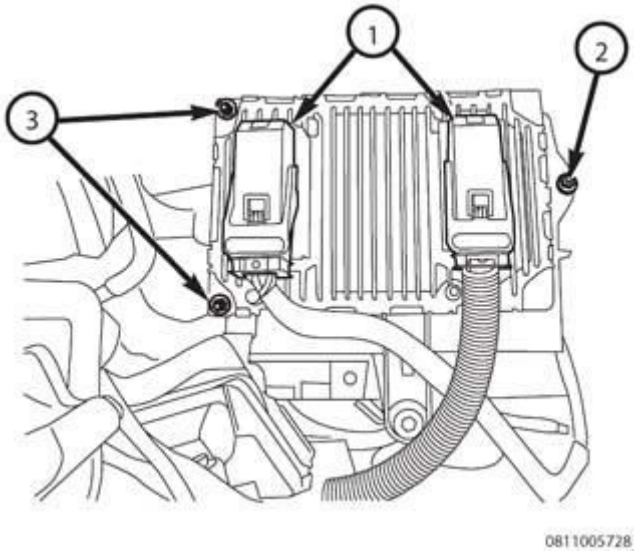

Fig. 3: Fuel Pressure Gauge Assembly
Courtesy of CHRYSLER GROUP, LLC

1. Connect the (special tool #8978A, Decay Tool, Fuel), with the Fuel Inlet Hose (1) toward the Fuel tank side and the Fuel Outlet Hose (2) toward the fuel rail side of the system using the Fuel Line Adapters/Fitting as needed.
2. Connect special tool Drain Extension Hose 535680 (3) to the Fuel Pressure Gauge Assembly Drain Hose (5).
3. Connect Reservoir Assembly 534960 (4) to Drain Extension Hose 535680 (3).

WARNING: **To reduce the risk of fire and possible serious or fatal injury, place Reservoir Assembly 534960 (4) on the floor and out of the way so that it is not a trip hazard.**

Proceed

- Go To 5

5. **CHECK THE FUEL PRESSURE**

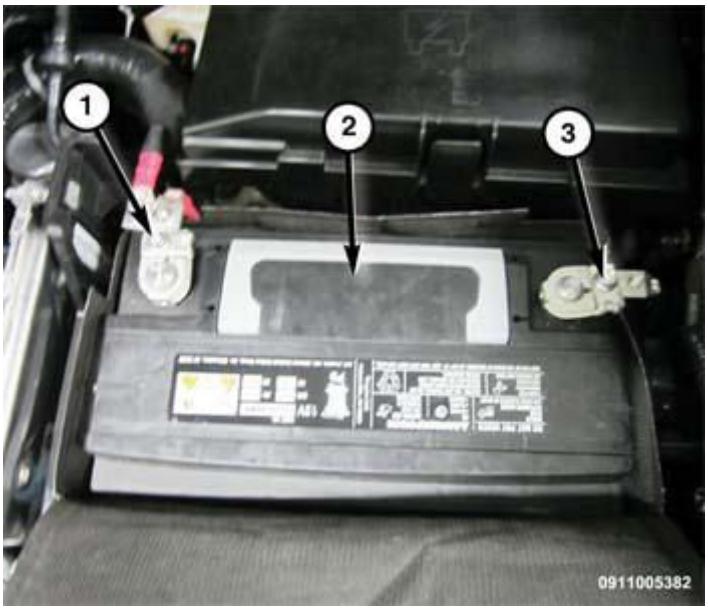

Fig. 4: Identifying Fuel System Isolation Valve & Flow Test Valves
Courtesy of CHRYSLER GROUP, LLC

1. Perform the following procedure to purge air from the system:
   - Open the Fuel System Isolation Valve (1).
   - Close the Flow Test Valve (2).
   - Ignition on, engine not running.
   - With the scan tool, actuate the Fuel Pump.
   - Open the Flow Test Valve (2) for 10 seconds, then close the Valve.
   - **CAUTION: Stop All Actuations.**
   - Turn the ignition off.
   - Disconnect, empty and then reconnect the Reservoir Assembly.
2. Turn the ignition on.
3. With the scan tool, actuate the Fuel Pump.

NOTE: On vehicles equipped with a PWM Fuel Pump, actuate the Fuel Pump at or above 60%.

4. Read the Fuel Pressure Gauge (3) and record the reading.

NOTE: The fuel pressure specification for all engines, including a Non SRT-4

is 407 kPa +/- 34 kPa (59 psi +/- 5 psi). SRT-4 fuel pressure specification is 552 kPa +/- 34 kPa (80 psi +/- 5 psi).

Choose a conclusion that best matches your fuel pressure reading.

Below Specification

- Go To 10

Within Specification

- Go To 6

Above Specification

- Replace the fuel filter/fuel pressure regulator.
- Perform the POWERTRAIN VERIFICATION TEST. Refer to the appropriate Diagnosis & Testing article in Engine Performance .

CAUTION: Stop all actuation tests before proceeding.

6. **CHECK THE FUEL DELIVERY SYSTEM OUTPUT**

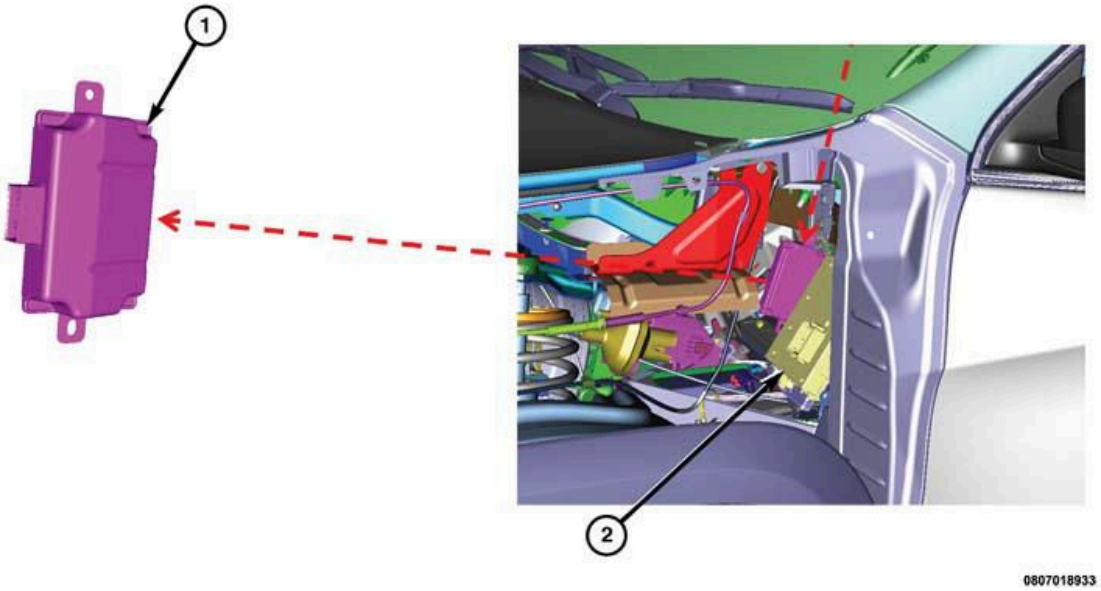

Fig. 5: Checking Fuel Delivery System Output
Courtesy of CHRYSLER GROUP, LLC

WARNING: The fuel system is under a constant pressure (even with the engine off). Before testing or servicing any fuel system hose, fitting, or line, the fuel system pressure must be released. Failure to follow these instructions can result in possible serious or fatal injury.

1. With the scan tool, continue to actuate the fuel pump.
2. Open the Flow Test Valve (1) for 20 seconds, then close the Valve.

CAUTION: Stop all actuation tests before proceeding.

3. Turn the ignition off.
4. Measure the amount of fuel in the Reservoir Assembly (2). The fuel output specification is ml/s X 20 seconds = fuel flow in ml.

FUEL FLOW		
ENGINE	**ml/s**	**ml per 20 Seconds**
4 Cylinder and 6 Cylinder	20.8333	417
8 Cylinder	38.88889	778
SRT-4	50	1000
10 cylinder	55.5	1110

Does the amount of fuel in the reservoir meet or exceed the specification?

Yes

- Go To 7

No

- Go To 8

7. **CHECK THE FUEL DELIVERY SYSTEM FOR LEAK DOWN**

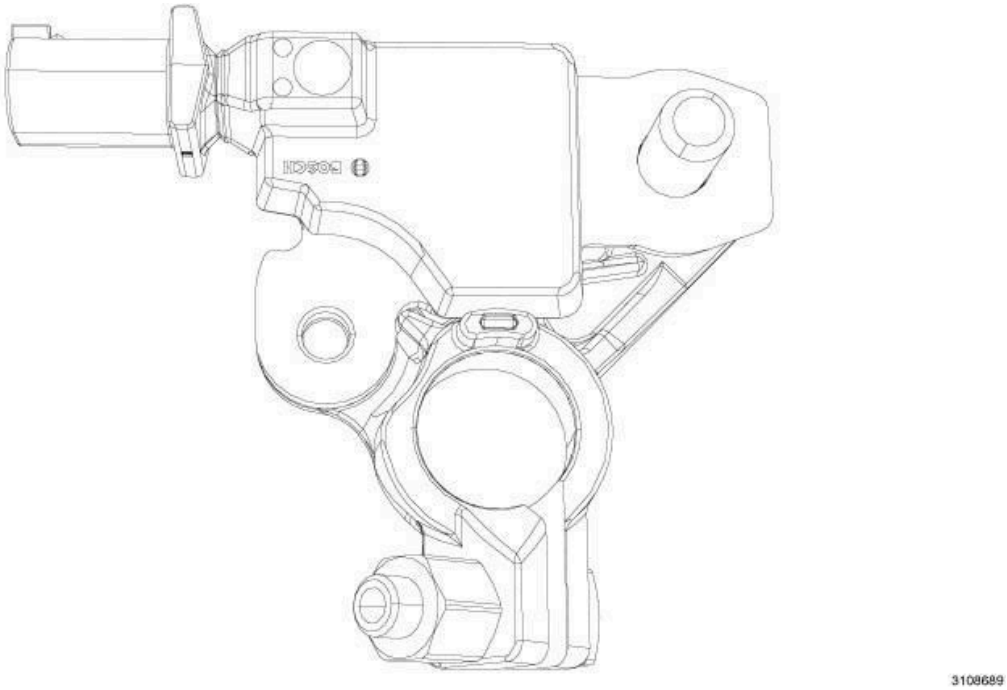

Fig. 6: Fuel Inlet And Fuel Outlet Pressure Gauges
Courtesy of CHRYSLER GROUP, LLC

WARNING: The fuel system is under a constant pressure (even with the engine off). Before testing or servicing any fuel system hose, fitting, or line, the fuel system pressure must be released. Failure to follow these instructions can result in possible serious or fatal injury.

1. Ignition on, engine not running.
2. With the scan tool, actuate the fuel pump.
3. Close the Fuel System Isolation Valve (1).

CAUTION: Stop all actuation tests before proceeding.

4. Turn the ignition off and then wait five minutes before proceeding.
5. Read the Fuel Inlet (2) and Fuel Outlet (3) Pressure Gauges. The pressure should not drop more than 10 psi on either gauge.

   Does the fuel pressure drop more than 10 psi?

   Yes - On Fuel Inlet Gauge (2)

   - Replace the Fuel Pump Module.
   - Perform the PCM VERIFICATION TEST. Refer to the appropriate Diagnosis & Testing

article in Engine Performance .

Yes - On Fuel Outlet Gauge (3)

- Replace the leaking Fuel Injector(s).
- Perform the PCM VERIFICATION TEST. Refer to the appropriate Diagnosis & Testing article in Engine Performance .

No

- If directed here by another test, return to that test. Otherwise, test complete.

8. **CHECK FOR RESTRICTED FUEL SUPPLY LINE**

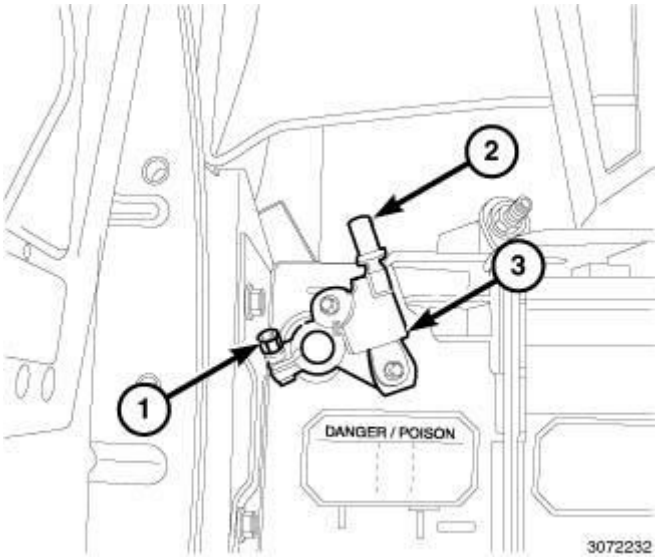

Fig. 7: Checking Fuel Delivery System Output
Courtesy of CHRYSLER GROUP, LLC

WARNING: **The fuel system is under a constant pressure even with the engine off. Before testing or servicing any fuel system hose, fitting or line, the fuel system pressure must be released.**

1. Turn the ignition off.
2. Disconnect the Fuel Pressure Decay Tester.
3. Raise the vehicle on a hoist, and disconnect the fuel pressure line at the Fuel Pump Module.
4. Install the Fuel Pressure Decay Tester between the fuel supply line and the Fuel Pump Module.
5. Again, purge air from the system.
6. Ignition on, engine not running.
7. With the scan tool, actuate the Fuel Pump.
8. Open the Flow Test Valve (1) for 20 seconds, then close the Valve.

CAUTION: Stop all actuation tests before proceeding.

9. Turn the ignition off.
10. Measure the amount of fuel in the Reservoir Assembly (2). The fuel output specification is ml/s X 20 seconds = fuel flow in ml.

FUEL FLOW		
ENGINE	**ml/s**	**ml per 20 Seconds**
4 Cylinder and 6 Cylinder	20.8333	417
8 Cylinder	38.88889	778
SRT-4	50	1000
10 cylinder	55.5	1110

Does the amount of fuel in the reservoir meet or exceed the specification?

Yes

- Repair/replace fuel supply line as necessary.
- Perform the POWERTRAIN VERIFICATION TEST. Refer to the appropriate Diagnosis & Testing article in Engine Performance .

No

- Go To 9

CAUTION: Stop all actuation tests before proceeding.

9. **CHECKING THE FUEL INLET STRAINER**

WARNING: The fuel system is under a constant pressure (even with the engine off). Before testing or servicing any fuel system hose, fitting or line, the fuel system pressure must be released. Failure to follow these instructions can result in possible serious or fatal injury.

1. Turn the ignition off.
2. Remove the Fuel Pump Module and inspect the Fuel Inlet Strainer.

Is the Fuel Inlet Strainer plugged?

Yes

- Replace the Fuel Pump Inlet Strainer.
- Perform the POWERTRAIN VERIFICATION TEST. Refer to the appropriate Diagnosis & Testing article in Engine Performance .

No

- Replace the Fuel Pump Module.
- Perform the POWERTRAIN VERIFICATION TEST. Refer to the appropriate Diagnosis & Testing article in Engine Performance .

10. **CHECK FOR RESTRICTED FUEL SUPPLY LINE**

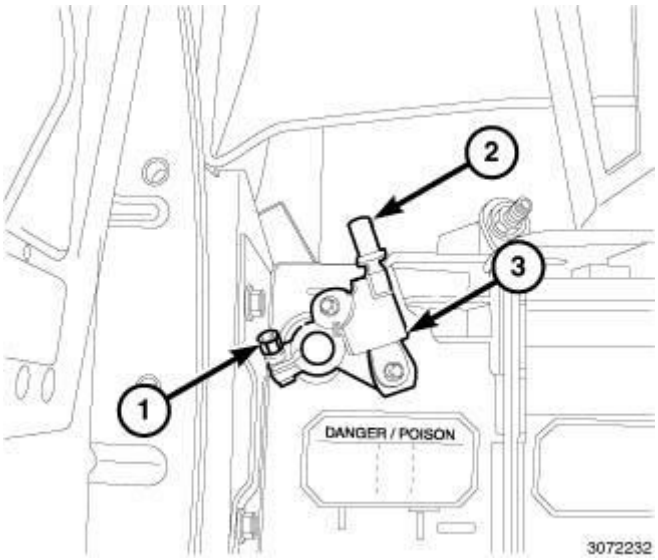

Fig. 8: Identifying Fuel System Isolation Valve & Flow Test Valves
Courtesy of CHRYSLER GROUP, LLC

WARNING: The fuel system is under a constant pressure even with the engine off. Before testing or servicing any fuel system hose, fitting or line, the fuel system pressure must be released.

1. Turn the ignition off.
2. Disconnect the Fuel Pressure Decay Tool.
3. Raise the vehicle on a hoist, and disconnect the fuel pressure line at the fuel pump module.
4. Install the Fuel Pressure Decay Tool between the fuel supply line and the fuel pump module.
5. Again, purge air from the system.
6. Turn the ignition on.
7. With the scan tool, actuate the Fuel Pump.

NOTE: On vehicles equipped with a PWM Fuel Pump, actuate the Fuel Pump at or above 60%.

8. Read the Fuel Pressure Gauge (3) and record the reading.

NOTE: The fuel pressure specification for all engines, including a Non SRT-4 is 407 kPa +/- 34 kPa (59 psi +/- 5 psi). SRT-4 fuel pressure specification is 552 kPa +/- 34 kPa (80 psi +/- 5 psi).

Is the fuel pressure now within specification?

Yes

- Repair/replace fuel supply line as necessary.
- Perform the POWERTRAIN VERIFICATION TEST. Refer to the appropriate Diagnosis & Testing article in Engine Performance .

No

- Go To 11

CAUTION: Stop all actuation tests before proceeding.

11. **CHECKING FUEL INLET STRAINER**

WARNING: The fuel system is under a constant pressure (even with the engine off). Before testing or servicing any fuel system hose, fitting or line, the fuel system pressure must be released. Failure to follow these instructions can result in possible serious or fatal injury.

1. Turn the ignition off.
2. Remove the Fuel Pump Module and inspect the Fuel Inlet Strainer.

Is the Fuel Inlet Strainer plugged?

Yes

- Replace the Fuel Pump Inlet Strainer.
- Perform the POWERTRAIN VERIFICATION TEST. Refer to the appropriate Diagnosis & Testing article in Engine Performance .

No

- Replace the Fuel Pump Module.
- Perform the POWERTRAIN VERIFICATION TEST. Refer to the appropriate Diagnosis & Testing article in Engine Performance .

CHECKING THE MAP SENSOR OPERATION

For a complete wiring diagram, **refer to appropriate SYSTEM WIRING DIAGRAMS article** .

DIAGNOSTIC TEST

1. **MAP SENSOR WIRING OR CONNECTORS**

   NOTE: Diagnose and repair any MAP Sensor circuit DTCs before proceeding with this test.

   NOTE: Diagnose and repair any sensor supply or system voltage DTCs before proceeding with this test.

   1. Turn the ignition off.
   2. Using the wiring diagram/schematic as a guide, inspect the wiring and connectors between the MAP Sensor and the PCM.
   3. Look for any chafed, pierced, pinched, or partially broken wires.
   4. Look for broken, bent, pushed out or corroded terminals.
   5. Turn the ignition on.
   6. Monitor the scan tool data relative to the sensor and wiggle test the wiring and connectors.
   7. Look for the data to change or for a DTC to set during the wiggle test. If necessary, check each sensor circuit for high resistance or a shorted condition.

   Were any problems found?

   Yes

   - Repair as necessary in accordance with the Service Information.
   - Perform the POWERTRAIN VERIFICATION TEST. Refer to the appropriate Diagnosis & Testing article in Engine Performance .

   No

   - Go To 2

2. **MAP VACUUM/BAROMETRIC PRESSURE**
   1. With a scan tool, read the Barometric Pressure.

   NOTE: The Barometric Pressure should be approximately equal to the actual barometric pressure. If necessary, compare the Barometric Pressure value of the tested vehicle to the value of a known good vehicle of a similar make and model.

2. Connect a vacuum gauge to a manifold vacuum source.
3. Start the engine.

NOTE: **If the engine will not idle, maintain a constant RPM above idle.**

WARNING: **When the engine is operating, do not stand in direct line with the fan. Do not put your hands near the pulleys, belts, or fan. Do not wear loose clothing. Failure to follow these instructions can result in possible serious or fatal injury.**

4. With the scan tool, read the MAP Sensor value.

NOTE: **The scan tool reading for MAP vacuum should be within 1" of the vacuum gauge reading.**

Were any problems found?

Yes

- Go To 4

No

- Go To 3

3. **CHECK THE MAP SENSOR VOLTAGE**
   1. With the scan tool, monitor the MAP Sensor signal voltage.
   2. With the engine idling in neutral or park, snap the throttle.

NOTE: **The MAP Sensor signal voltage should change from below 2.0 volts at idle to above 3.5 volts at wide open throttle.**

Were any problems found?

Yes

- Go To 4

No

- Test complete.

4. **CHECK THE 5-VOLT SUPPLY CIRCUIT FOR HIGH RESISTANCE**
   1. Turn the ignition off.
   2. Using a voltmeter, perform a voltage drop test on the MAP Sensor 5-Volt Supply circuit between

the MAP Sensor harness connector and the PCM harness connector. Make sure the voltmeter leads are connected so that positive polarity is displayed on the voltmeter.

WARNING: When the engine is operating, do not stand in direct line with the fan. Do not put your hands near the pulleys, belts, or fan. Do not wear loose clothing. Failure to follow these instructions can result in possible serious or fatal injury.

3. Start the engine.

   Is the voltage reading below 0.1 volt?

   Yes

   - Go To 5

   No

   - Repair the 5-Volt Supply circuit for excessive resistance.
   - Perform the POWERTRAIN VERIFICATION TEST. Refer to the appropriate Diagnosis & Testing article in Engine Performance .

5. **CHECK THE MAP SENSOR SIGNAL CIRCUIT FOR HIGH RESISTANCE**
   1. Turn the ignition off.
   2. Using a voltmeter, perform a voltage drop test on the MAP Sensor Signal circuit between the MAP Sensor harness connector and the PCM harness connector. Make sure the voltmeter leads are connected so that positive polarity is displayed on the voltmeter.

      WARNING: When the engine is operating, do not stand in direct line with the fan. Do not put your hands near the pulleys, belts, or fan. Do not wear loose clothing. Failure to follow these instructions can result in possible serious or fatal injury.

   3. Start the engine.

      Is the voltage reading below 0.1 volt?

      Yes

      - Go To 6

      No

      - Repair the MAP Sensor Signal circuit for excessive resistance.
      - Perform the POWERTRAIN VERIFICATION TEST. Refer to the appropriate Diagnosis & Testing article in Engine Performance .

6. **CHECK THE MAP SENSOR GROUND CIRCUIT FOR HIGH RESISTANCE**
   1. Turn the ignition off.
   2. Using a voltmeter, perform a voltage drop test on the MAP Sensor Ground circuit between the MAP Sensor harness connector and the PCM harness connector. Make sure the voltmeter leads are connected so that positive polarity is displayed on the voltmeter.

      WARNING: **When the engine is operating, do not stand in direct line with the fan. Do not put your hands near the pulleys, belts, or fan. Do not wear loose clothing. Failure to follow these instructions can result in possible serious or fatal injury.**

   3. Start the engine.

      Is the voltage below 0.1 volt?

      Yes

      - Go To 7

      No

      - Repair the MAP Sensor Ground circuit for excessive resistance.
      - Perform the POWERTRAIN VERIFICATION TEST. Refer to the appropriate Diagnosis & Testing article in Engine Performance .

7. **MAP SENSOR**
   1. Using the wiring diagram/schematic as a guide, inspect the wiring and connectors between the MAP Sensor and the Powertrain Control Module (PCM).
   2. Look for any chafed, pierced, pinched, or partially broken wires.
   3. Look for broken, bent, pushed out or corroded terminals.
   4. Perform any Technical Service Bulletins that may apply.

      Were any problems found?

      Yes

      - Repair as necessary.
      - Perform the POWERTRAIN VERIFICATION TEST. Refer to the appropriate Diagnosis & Testing article in Engine Performance .

      No

      - Replace the MAP Sensor in accordance with the service information. Refer to **SENSOR, MANIFOLD AIR PRESSURE (MAP), REMOVAL** .

- Perform the POWERTRAIN VERIFICATION TEST. Refer to the appropriate Diagnosis & Testing article in Engine Performance .

CHECKING THE PCM POWER AND GROUND CIRCUITS

For a complete wiring diagram, **refer to appropriate SYSTEM WIRING DIAGRAMS article** .

DIAGNOSTIC TEST

1. **PCM WIRING OR CONNECTORS**
   1. Turn the ignition off.
   2. Using the wiring diagram/schematic as a guide, inspect the wiring and each connector at the PCM.
   3. Look for any chafed, pierced, pinched or partially broken wires.
   4. Look for broken, bent, pushed out or corroded terminals.

   Were any problems found?

   Yes

   - Repair as necessary.
   - Perform the POWERTRAIN VERIFICATION TEST. Refer to the appropriate Diagnosis & Testing article in Engine Performance .

   No

   - Go To 2
2. **CHECK THE PCM GROUND CIRCUITS**
   1. Turn the ignition off.
   2. Using a 12 volt test light connected to 12 volts, probe the PCM ground circuits.
   3. Wiggle test the wiring during the test to check for an intermittent open in the circuit.

   NOTE: The test light should be illuminated and bright. Compare the brightness to that of a direct connection to the battery.

   Is the test light illuminated and bright?

   Yes

   - Go To 3

   No

   - Repair the PCM ground circuit(s) for an open or high resistance.

- Perform the POWERTRAIN VERIFICATION TEST. Refer to the appropriate Diagnosis & Testing article in Engine Performance .

3. **CHECK THE PCM FUSED B+ CIRCUIT**
   1. Using a 12 volt test light connected to ground, probe the PCM Fused B+ circuit.
   2. Wiggle test the wiring during the test to check for an intermittent open in the circuit.

   NOTE: The test light should be illuminated and bright. Compare the brightness to that of a direct connection to the battery.

   Is the test light illuminated and bright?

   Yes

   - Go To 4

   No

   - Repair the PCM Fused B+ circuit for an open or high resistance.
   - Perform the POWERTRAIN VERIFICATION TEST. Refer to the appropriate Diagnosis & Testing article in Engine Performance .

4. **CHECK THE PCM FUSED IGNITION SWITCH CIRCUITS**
   1. Turn the ignition on.
   2. Using a 12 volt test light connected to ground, probe the PCM Fused Ignition Switch circuit.
   3. Check the circuit with the ignition off, ignition on/engine not running position and during cranking.
   4. Wiggle test the wiring during the test to check for an intermittent open in the circuit.

   NOTE: The test light should be illuminated and bright with the ignition on and during cranking. The test light should not be illuminated with the ignition off. Compare the brightness to that of a direct connection to the battery.

   Is the test light illuminated as described above?

   Yes

   - Test complete.

   No

   - Repair the PCM Fused Ignition Switch circuit for as necessary.
   - Perform the POWERTRAIN VERIFICATION TEST. Refer to the appropriate Diagnosis & Testing article in Engine Performance .

ENGINE CRANKS BUT DOES NOT START

For a complete wiring diagram, **refer to appropriate SYSTEM WIRING DIAGRAMS article** .

POSSIBLE CAUSES

Possible Causes
5-VOLT SUPPLY CIRCUIT OPEN OR SHORTED
UNDERCHARGED BATTERY
POWERTRAIN POWER AND GROUND CIRCUIT(S) OPEN OR HIGH RESISTANCE
POWERTRAIN FUSES OPEN
FUEL DELIVERY SYSTEM
FUEL CONTAMINATION
INADEQUATE SPARK
ENGINE MECHANICAL PROBLEM

Always perform the Pre-Diagnostic Troubleshooting procedure before proceeding. Refer to the appropriate Diagnosis & Testing article in Engine Performance.

DIAGNOSTIC TEST

1. **UNDERCHARGED BATTERY**

   NOTE: Diagnose any 5-Volt Supply DTCs before continuing.

   1. Test the Battery in accordance with the service information.

      Were any problems found?

      Yes

      - Charge or replace the Battery as necessary and retest.
      - Perform the POWERTRAIN VERIFICATION TEST. Refer to the appropriate Diagnosis & Testing article in Engine Performance .

      No

      - Go To 2

2. **PCM POWER OR GROUND CIRCUIT OPEN OR HIGH RESISTANCE**
   1. Turn the ignition off.
   2. Disconnect the PCM harness connector(s).
   3. Using a 12-volt test light, check all of the PCM B+, ignition feed and ground circuits.

NOTE: The test light must be illuminated and bright. Compare the brightness to that of a direct connection to the battery.

Is the test light illuminated and bright when checking each of the PCM power and ground circuits?

Yes

- Repair the PCM power or ground circuit for an open or high resistance.
- Perform the POWERTRAIN VERIFICATION TEST. Refer to the appropriate Diagnosis & Testing article in Engine Performance .

No

- Go To 3

3. **OPEN FUSE(S)**
   1. Inspect all fuses. If any open fuses are found, check the related circuit(s) for a short to ground or high resistance.

      Were any problems found?

      Yes

      - Repair as necessary.
      - Perform the POWERTRAIN VERIFICATION TEST. Refer to the appropriate Diagnosis & Testing article in Engine Performance .

      No

      - Go To 4

4. **CHECKING THE FUEL DELIVERY SYSTEM**

NOTE: Verify that the fuel tank is not empty before continuing.

   1. Perform the CHECKING THE FUEL DELIVERY SYSTEM test procedure. Refer to **CHECKING THE FUEL DELIVERY SYSTEM (HARD START)** .

      Were any problems found?

      Yes

      - Repair as necessary in accordance with the service information.
      - Perform the POWERTRAIN VERIFICATION TEST. Refer to the appropriate Diagnosis & Testing article in Engine Performance .

No

- Go To 5

5. **FUEL CONTAMINATION**
   1. Check the fuel system for contamination in accordance with the service information. .

      Was any evidence of fuel contamination found?

      Yes

      - Clean and repair the fuel system as necessary in accordance with the service information.
      - Perform the POWERTRAIN VERIFICATION TEST. Refer to the appropriate Diagnosis & Testing article in Engine Performance .

      No

      - Go To 6

6. **CHECKING THE IGNITION COIL OPERATION**
   1. Verify that the ignition system is operating properly.

      Were any problems found?

      Yes

      - Repair as necessary in accordance with the service information.
      - Perform the POWERTRAIN VERIFICATION TEST. Refer to the appropriate Diagnosis & Testing article in Engine Performance .

      No

      - Go To 7

7. **CHECKING THE ENGINE MECHANICAL SYSTEM**
   1. Perform the diagnostic procedure for CHECKING THE ENGINE MECHANICAL SYSTEM. Refer to **CHECKING THE ENGINE MECHANICAL SYSTEM** .

      Were any problems found?

      Yes

      - Repair as necessary in accordance with the service information.
      - Perform the POWERTRAIN VERIFICATION TEST. Refer to the appropriate Diagnosis & Testing article in Engine Performance .

      No

- Test complete. Perform any Technical Service Bulletins that may apply.

2014 ENGINE PERFORMANCE

Emissions Control - Cherokee

DESCRIPTION

VEHICLE EMISSION CONTROL INFORMATION LABEL

All models have a Vehicle Emission Control Information (VECI) Label. Chrysler permanently attaches the label in the engine compartment. It cannot be removed without defacing information and destroying the label.

The label contains the vehicle's model year and what regulations the vehicle conforms to also if the vehicle is OBD II compliant.

TRIP DEFINITION

A "Trip" means vehicle operation (following an engine-off period) of duration and driving mode such that all components and systems are monitored at least once by the diagnostic system. The monitors must successfully pass before the PCM can verify that a previously malfunctioning component is meeting the normal operating conditions of that component. For misfire or fuel system malfunction, the MIL may be extinguished if the fault does not recur when monitored during three subsequent sequential driving cycles in which conditions are similar to those under which the malfunction was first determined.

Anytime the MIL is illuminated, a DTC is stored. The DTC can self erase only after the MIL has been extinguished. Once the MIL is extinguished, the PCM must pass the diagnostic test for the most recent DTC for 40 warm-up cycles (80 warm-up cycles for the Fuel System Monitor and the Misfire Monitor). A warm-up cycle can best be described by the following:

- The engine must be running
- A rise of 4.4° C (40°F) in engine temperature must occur from the time when the engine was started
- Engine coolant temperature must crossover 71° C (160°F)
- A "driving cycle" that consists of engine start up and engine shut off.

Once the above conditions occur, the PCM is considered to have passed a warm-up cycle. Due to the conditions required to extinguish the MIL and erase the DTC, it is most important that after a repair has been made, all DTC's be erased and the repair verified by running 1-good trip.

NON-MONITORED CIRCUITS

FUEL-PRESSURE

The PCM does not monitor all circuits, systems and conditions that could have malfunctions causing driveability problems. However, problems with these systems may cause the PCM to store diagnostic trouble codes for other systems or components. For example, a fuel pressure problem will not register a fault directly, but could cause a rich/lean condition or misfire. This could cause the PCM to store an oxygen sensor or misfire diagnostic trouble code.

The major non-monitored circuits are listed below along with examples of failures modes that do not directly cause the PCM to set a DTC, but for a system that is monitored.

FUEL PRESSURE

The fuel pressure regulator controls fuel system pressure. The PCM cannot detect a clogged fuel pump inlet filter or a pinched fuel supply. However, these could result in a rich or lean condition causing the PCM to store an oxygen sensor, fuel system, or misfire diagnostic trouble code.

SECONDARY IGNITION CIRCUIT

The PCM cannot detect an inoperative ignition coil, fouled or worn spark plugs, ignition cross firing, or open spark plug cables. The misfire will however, increase the oxygen content in the exhaust, deceiving the PCM in to thinking the fuel system is too lean. Also see misfire detection. There are DTC's that can detect misfire and Ionization shorts in the secondary ignition circuit, refer to the appropriate Powertrain Diagnosis and Testing article for more information.

CYLINDER COMPRESSION

The PCM cannot detect uneven, low, or high engine cylinder compression. Low compression lowers O2 content in the exhaust. Leading to fuel system, oxygen sensor, or misfire detection fault.

EXHAUST SYSTEM

The PCM cannot detect a plugged, restricted or leaking exhaust system. It may set a EGR (if equipped) or Fuel system or O2S fault.

FUEL INJECTOR MECHANICAL MALFUNCTIONS

The PCM cannot determine if a fuel injector is clogged, the needle is sticking or if the wrong injector is installed. However, these could result in a rich or lean condition causing the PCM to store a diagnostic trouble code for either misfire, an oxygen sensor, or the fuel system.

EXCESSIVE OIL CONSUMPTION

Although the PCM monitors engine exhaust oxygen content when the system is in closed loop, it cannot determine excessive oil consumption.

THROTTLE BODY AIR FLOW

The PCM cannot detect a clogged or restricted air cleaner inlet or filter element.

VACUUM ASSIST

The PCM cannot detect leaks or restrictions in the vacuum circuits of vacuum assisted engine control system devices. However, these could cause the PCM to store a MAP sensor diagnostic trouble code and cause a high idle condition.

PCM SYSTEM GROUND

The PCM cannot determine a poor system ground. However, one or more diagnostic trouble codes may be generated as a result of this condition. The module should be mounted to the body at all times, including when diagnostics are performed.

PCM CONNECTOR ENGAGEMENT

The PCM may not be able to determine spread or damaged connector pins. However, it might store diagnostic trouble codes as a result of spread connector pins.

MONITORED SYSTEMS

There are new electronic circuit monitors that check fuel, emission, engine and ignition performance. These monitors use information from various sensor circuits to indicate the overall operation of the fuel, engine, ignition and emission systems and thus the emissions performance of the vehicle.

The fuel, engine, ignition and emission systems monitors do not indicate a specific component problem. They do indicate that there is an implied problem within one of the systems and that a specific problem must be diagnosed.

If any of these monitors detect a problem affecting vehicle emissions, the Malfunction Indicator (Check Engine) Lamp will be illuminated. These monitors generate Diagnostic Trouble Codes that can be displayed with the a scan tool.

The following is a list of the system monitors:

- EGR Monitor (if equipped)
- Misfire Monitor
- Fuel System Monitor
- Oxygen Sensor Monitor
- Oxygen Sensor Heater Monitor
- Catalyst Monitor
- Evaporative System Leak Detection Monitor (if equipped)

Following is a description of each system monitor, and its DTC.

Refer to the appropriate Powertrain Diagnosis and Testing article for diagnostic procedures.

OXYGEN SENSOR (O2S) MONITOR

Effective control of exhaust emissions is achieved by an oxygen feedback system. The most important element of the feedback system is the O2S. The O2S is located in the exhaust path. Once it reaches operating temperatures of 300° to 350°C (572° to 662°F), the sensor generates a voltage that is inversely proportional to the amount of oxygen in the exhaust. The information obtained by the sensor is used to calculate the fuel injector pulse width. The PCM is programmed to maintain the optimum air/fuel ratio. At this mixture ratio, the

catalyst works best to remove hydrocarbons (HC), carbon monoxide (CO) and nitrous oxide (NOx) from the exhaust.

The O2S is also the main sensing element for the EGR (if equipped), Catalyst and Fuel Monitors.

The O2S may fail in any or all of the following manners:

- Slow response rate
- Reduced output voltage
- Dynamic shift
- Shorted or open circuits

Response rate is the time required for the sensor to switch from lean to rich once it is exposed to a richer than optimum A/F mixture or vice versa. As the sensor starts malfunctioning, it could take longer to detect the changes in the oxygen content of the exhaust gas.

The output voltage of the O2S ranges from 0 to 1 volt (voltages are offset by 2.5 volts on NGC vehicles). A good sensor can easily generate any output voltage in this range as it is exposed to different concentrations of oxygen. To detect a shift in the A/F mixture (lean or rich), the output voltage has to change beyond a threshold value. A malfunctioning sensor could have difficulty changing beyond the threshold value.

OXYGEN SENSOR HEATER MONITOR

If there is an oxygen sensor (O2S) DTC as well as a O2S heater DTC, the O2S heater fault MUST be repaired first. After the O2S fault is repaired, verify that the heater circuit is operating correctly.

Effective control of exhaust emissions is achieved by an oxygen feedback system. The most important element of the feedback system is the O2S. The O2S is located in the exhaust path. Once it reaches operating temperatures of 300° to 350°C (572 ° to 662°F), the sensor generates a voltage that is inversely proportional to the amount of oxygen in the exhaust. The information obtained by the sensor is used to calculate the fuel injector pulse width. This maintains a 14.7 to 1 Air Fuel (A/F) ratio. At this mixture ratio, the catalyst works best to remove hydrocarbons (HC), carbon monoxide (CO) and nitrogen oxide (NOx) from the exhaust.

The voltage readings taken from the O2S are very temperature sensitive. The readings are not accurate below 300°C (572 °F) Heating of the O2S is done to allow the engine controller to shift to closed loop control as soon as possible. The heating element used to heat the O2S must be tested to ensure that it is heating the sensor properly.

The O2S circuit is monitored for a drop in voltage. The sensor output is used to test the heater by isolating the effect of the heater element on the O2S output voltage from the other effects.

EGR MONITOR (IF EQUIPPED)

The Powertrain Control Module (PCM) performs an on-board diagnostic check of the EGR system.

The EGR monitor is used to test whether the EGR system is operating within specifications. The diagnostic

check activates only during selected engine/driving conditions. When the conditions are met, the EGR is turned off (solenoid energized) and the O2S compensation control is monitored. Turning off the EGR shifts the air fuel (A/F) ratio in the lean direction. The O2S data should indicate an increase in the O2 concentration in the combustion chamber when the exhaust gases are no longer recirculated. While this test does not directly measure the operation of the EGR system, it can be inferred from the shift in the O2S data whether the EGR system is operating correctly. Because the O2S is being used, the O2S test must pass its test before the EGR test. Also looks at EGR linear potentiometer for feedback.

MISFIRE MONITOR

Excessive engine misfire results in increased catalyst temperature and causes an increase in HC emissions. Severe misfires could cause catalyst damage. To prevent catalytic convertor damage, the PCM monitors engine misfire.

The Powertrain Control Module (PCM) monitors for misfire during most engine operating conditions (positive torque) by looking at changes in the crankshaft speed. If a misfire occurs the speed of the crankshaft will vary more than normal.

FUEL SYSTEM MONITOR

To comply with clean air regulations, vehicles are equipped with catalytic converters. These converters reduce the emission of hydrocarbons, oxides of nitrogen and carbon monoxide. The catalyst works best when the air fuel (A/F) ratio is at or near the optimum of 14.7 to 1.

The PCM is programmed to maintain the optimum air/fuel ratio. This is done by making short term corrections in the fuel injector pulse width based on the O2S output. The programmed memory acts as a self calibration tool that the engine controller uses to compensate for variations in engine specifications, sensor tolerances and engine fatigue over the life span of the engine. By monitoring the actual air-fuel ratio with the O2S (short term) and multiplying that with the program long-term (adaptive) memory and comparing that to the limit, it can be determined whether it will pass an emissions test. If a malfunction occurs such that the PCM cannot maintain the optimum A/F ratio, then the MIL will be illuminated.

CATALYST MONITOR

To comply with clean air regulations, vehicles are equipped with catalytic converters. These converters reduce the emission of hydrocarbons, oxides of nitrogen and carbon monoxide.

Normal vehicle miles or engine misfire can cause a catalyst to decay. A meltdown of the ceramic core can cause a reduction of the exhaust passage. This can increase vehicle emissions and deteriorate engine performance, driveability and fuel economy.

The catalyst monitor uses dual oxygen sensors (O2S's) to monitor the efficiency of the converter. The dual O2S's strategy is based on the fact that as a catalyst deteriorates, its oxygen storage capacity and its efficiency are both reduced. By monitoring the oxygen storage capacity of a catalyst, its efficiency can be indirectly calculated. The upstream O2S is used to detect the amount of oxygen in the exhaust gas before the gas enters the catalytic converter. The PCM calculates the A/F mixture from the output of the O2S. A low voltage indicates high oxygen content (lean mixture). A high voltage indicates a low content of oxygen (rich mixture).

When the upstream O2S detects a lean condition, there is an abundance of oxygen in the exhaust gas. A functioning converter would store this oxygen so it can use it for the oxidation of HC and CO. As the converter absorbs the oxygen, there will be a lack of oxygen downstream of the converter. The output of the downstream O2S will indicate limited activity in this condition.

As the converter loses the ability to store oxygen, the condition can be detected from the behavior of the downstream O2S. When the efficiency drops, no chemical reaction takes place. This means the concentration of oxygen will be the same downstream as upstream. The output voltage of the downstream O2S copies the voltage of the upstream sensor. The only difference is a time lag (seen by the PCM) between the switching of the O2S's.

To monitor the system, the number of lean-to-rich switches of upstream and downstream O2S's is counted. The ratio of downstream switches to upstream switches is used to determine whether the catalyst is operating properly. An effective catalyst will have fewer downstream switches than it has upstream switches i.e., a ratio closer to zero. For a totally ineffective catalyst, this ratio will be one-to-one, indicating that no oxidation occurs in the device.

The system must be monitored so that when catalyst efficiency deteriorates and exhaust emissions increase to over the legal limit, the MIL (Check Engine lamp) will be illuminated.

OPERATION

SYSTEM

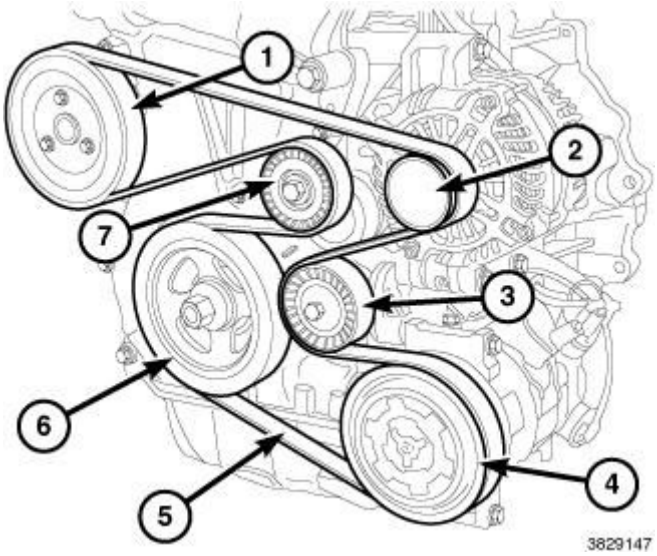

Fig. 1: Data Link Connector
Courtesy of CHRYSLER GROUP, LLC

The Powertrain Control Module (PCM) monitors many different circuits in the fuel injection, ignition, emission and engine systems. If the PCM senses a problem with a monitored circuit and the fault occurs multiple times enough to indicate an actual problem, it stores a Diagnostic Trouble Code (DTC) in the PCM's memory. If the code applies to a non-emissions related component or system, and the problem is repaired or ceases to exist, the

PCM cancels the code after 40 warmup cycles. Diagnostic trouble codes that affect vehicle emissions will illuminate the Malfunction Indicator Lamp (MIL).

Certain criteria must be met before the PCM stores a DTC in memory. The criteria may be a specific range of engine RPM, engine temperature, and/or input voltage to the PCM.

The PCM might not store a DTC for a monitored circuit even though a malfunction has occurred. This may happen because one of the DTC criteria for the circuit has not been met. **For example** , assume the diagnostic trouble code criteria requires the PCM to monitor the circuit only when the engine operates between 750 and 2000 RPM. Suppose the sensor's output circuit shorts to ground when engine operates above 2400 RPM (resulting in 0 volt input to the PCM). Because the condition happens at an engine speed above the maximum threshold (2000 RPM), the PCM will not store a DTC.

For information on obtaining DTC information, refer to **CONNECTOR, DATA LINK** .

Various diagnostic procedures may actually cause a diagnostic monitor to set a DTC. For instance, pulling a spark plug wire to perform a spark test may set a misfire code. When a repair is completed and verified, use the scan tool to erase all DTC's and extinguish the MIL.

There are several operating conditions for which the PCM monitors and sets DTC's. Refer to **MONITORED SYSTEMS** and **NON-MONITORED CIRCUITS**.

SCAN TOOL STATE DISPLAY TEST MODE

OPERATION

The switch inputs to the Powertrain Control Module (PCM) have two recognized states; HIGH and LOW. For this reason, the PCM cannot recognize the difference between a selected switch position versus an open circuit, a short circuit, or a defective switch. If the State Display screen shows the change from HIGH to LOW or LOW to HIGH, assume the entire switch circuit to the PCM functions properly. From the state display screen, access either State Display Inputs and Outputs or State Display Sensors.

ON-BOARD DIAGNOSTICS

DESCRIPTION

DESCRIPTION

Acronym	Description
ACC	Adaptive Cruise Control
AHBM	Automatic High Beam Module
AHLM	Automatic Headlamp Leveling Module
AGS	Active Grill Shutter
AMP	Amplifier
ASBM	Auxiliary Switch Bank Module

APPS	Accelerator Pedal Position Sensor
AAT	Ambient Air Temperature
ABS	Anti-Lock Brake System
ASBS	Auto Sway Bar System
ASCM	Air Suspension Control Module
ASD	Auto Shut Down
BARO	Barometric
BCM	Body Control Module
CGW	Central Gateway
CKP	Crankshaft Position Sensor
CMP	Camshaft Position Sensor
CMTC	Compass/Mini-Trip Computer
COM	Compass Module
CRVMM	Combined Rear View Mirror Module
CSWM	Comfort Seat Wheel Module
CTM	Convergence Telematics Module
DCHA	Diesel Cabin Heater Assist
DDM	Drivers Door Module
DLC	Data Link Connector
DSBM	Drivers Switch Bank Module
DTC	Diagnostic Trouble Code
DTCM	Drivetrain Control Module
EATX	Electronic Automatic Transaxle
ECT	Engine Coolant Temperature
ECM	Engine Control Module
ECMM	EC Mirror/AHBM
EDM	External Disk Module
EGR	Exhaust Gas Recirculation
EPB	Electronic Park Brake
ETC	Electronic Throttle Control
EPS	Electronic Power Steering
ESL	Electronic Steering Lock
ESM	Electronic Shift Module
ETM	Radio
ETM	Entertainment Telematic Module (2014 BF Only)
FFCM	Forward Facing Camera Module
FCTP	CTP Chrysler Telematic Module
GEN	Generator
GPEC	Global Powertrain Engine Controller
FCM	Front Control Module
FDCM	Final Drive Control Module

FOBIK	Key Fob
FSM	Folding Seat Module
GPM	Glow Plug Module
HID	High Intensity Discharge
HSW	Heated Steering Wheel
HVAC	Heating, Ventilation and Cooling
IAT	Intake/Inlet Air Temperature
IAC	Idle Air Control
IBS	Intelligent Battery Sensor
ICS	Integrated Center Stack
IGNM	Ignition Node Module
IOD	Ignition Off-Draw
IPC	Instrument Panel Cluster
IPM	Integrated Power Module
ITM	Intrusion Theft Module
JTEC	Jeep Truck Engine Controller
KS	Knock Sensor
KIN	Keyless Ignition Node
LBSS	Left Blind Spot Sensor
LDP	Leak Detection Pump
LRSM	Light Rain Sensor Module
MAP	Manifold Air Pressure
MDS	Multi Displacement System
MGU	Motor Generating Unit
MIC	Mechanical Instrument Cluster
MIL	Malfunction Indicator Lamp
MSM	Memory Seat Module
MTV	Manifold Tuning Valve
NGC	Next Generation Controller
NVLD	Natural Vacuum Leak Detection
O2S	Oxygen Sensor
OCM	Occupant Classification Module
OBD	On Board Diagnostic
ORC	Occupant Restraint Controller
PAM	Parking Assist Module
PDC	Power Distribution Center
PCI	Programmable Communication Interface
PCM	Powertrain Control Module
PCV	Positive Crankcase Ventilation
PDM	Passenger Door Module
PEP	Peripheral Expansion Port

PLGM	Power Liftgate Module
PMU	Power Module Unit
RBSS	Right Blind Spot Sensor
RFHM	Radio Frequency Hub Module
RRM	Radio Receiver Module
RVCM	Rear Camera
SBEC	Single Board Engine Controller
SCM	Steering Control Module
S/C	Speed Control
SDAR	Satellite Digital Audio receiver
SKIM	Sentry Key Immobilizer Module
SKREEM	Sentry Key Remote Entry Module
SOL	Solenoid
SRV	Short Runner Valve
SWS	Steering Wheel Switch
TCM	Transmission Control Module
TCC	Torque Converter Clutch
TIP	Throttle Inlet Pressure
TIPM	Totally Integrated Power Module
TP	Throttle Position
TPMS	Tire Pressure Monitor System
TRS	Transmission Range Sensor
TSBM	Terrain Switch Bank Module
UAM	Ultrasonic & Anti-Tilt Module
UGDO	Universal Garage Door Opener
VSM	Voltage Stability Module
VSM2	Voltage Stability Module 2
VSS	Vehicle Speed Sensor/Signal
WCPM	Wireless Charging Pad Module
WCU	Wiper
WWSM	Windshield Wiper Smart Motor
WIN	Wireless Ignition Node

OPERATION

OPERATION

The following procedure has been established to assist technicians in the field with enabling and running OBD II Monitors. The order listed in the following procedure is intended to allow the technician to effectively complete each monitor and to set the CARB Readiness Status in the least time possible.

NOTE: Once the monitor run process has begun, do not turn off the ignition. By

turning the ignition key off, monitor enabling conditions will be lost. EVAP Monitor runs after key off. By performing a Battery Disconnect, or Selecting Erase DTCs, the CARB Readiness and all additional OBD II information will be cleared.

MONITOR PRELIMINARY CHECKS:

1. Plug a scan tool into the vehicle's Data Link Connector (DLC).
2. Turn the ignition, KEY ON - ENGINE OFF. Watch for the MIL lamp illumination during the bulb check. MIL lamp must illuminate, if not, repair MIL lamp.
3. Using a scan tool check for Powertrain related DTCs.

- Verify that No Emissions Related DTCs are Present. If an Emissions DTC is Present, the OBD II Monitors may not run and the CARB Readiness will not update.
- The Emissions related DTC, will need to be repaired, then cleared. By clearing DTCs, the OBD Monitors will need to be run and completed to set the CARB Readiness Status.

Using the scan tool check the CARB Readiness Status.

Do all the CARB Readiness Status Locations read YES?

- YES - all monitors have been completed and this vehicle is ready to be I/M or Emission Tested.
- NO - then the following procedure needs to be followed to run/complete all available monitors.

NOTE: **Only the monitors, which are not YES in the CARB Readiness Status, need to be completed. Specific criteria need to be met for each monitor. The most efficient order to run the monitors has been outlined below, including suggestions to aid the process.**

EVAPORATIVE EMISSION SYSTEM LEAK DETECTION WITH PURGE MONITOR

This monitor requires a cool down cycle, usually an overnight soak for at least 8 hours without the engine running. The ambient temperature must decrease overnight - parking the vehicle outside is advised. To run this test the fuel level must be between 15-85% full. Criteria for EVAP monitor:

- Engine off time greater than one hour.
- Fuel Level between 15% and 85%.
- Start Up ECT and IAT within 10°C (18°F).
- Vehicle started and run until Purge Monitor reports a result.

NOTE: **If the vehicle does not report a result and the conditions where correct. It may take up to two weeks to fail the small leak monitor. DO NOT use this test to attempt to determine a fault. Use the appropriate service information procedure for finding a small leak. If there are no faults and the conditions are correct this**

test will run and report a pass. Note the Small leak test can find leaks less than 10 thousands of an inch. If a small leak is present it takes approximately one week of normal driving to report a failure.

CATALYST/O2 MONITOR

The Catalyst and O2 Monitor information are acquired and processed at the same time. Most vehicles will need to be driven at highway speed (less than 50 mph) (73km/h) for a few minutes. Some vehicles run the monitor at idle in drive. If the vehicle is equipped with a manual transmission, using 4th gear may assist in meeting the monitor running criteria.

- Engine RPM between 1200 to 3000.
- Engine temperature greater than 70°C (158°F)
- Engine run time greater than 92 seconds
- MAP between 10 - 20 kPa (7.5 - 15 Hg)
- Vehicle speed between 20 - 70 mph (29-103 km/h)

EGR MONITOR

After the vehicle has reached the below conditions and during a throttle decel the EGR monitor will run.

- Engine RPM between 1375 - 2500
- Engine temperature greater than 70°C (158°F)
- Engine run time greater than 125 seconds
- Vehicle speed between 25 - 70 mph (37-103 km/h)

O2 SENSOR HEATER MONITOR

This monitor is now continuously running once the heaters are energized. Pass information will be processed at power down.

MIS-FIRE MONITOR

The Misfire Monitor is a continuous two-trip monitor. The monitor uses two different tests/counters:

NOTE: **The Adaptive Numerator must be learned before the PCM will run the Mis-Fire Monitor. The PCM updates the Adaptive Numerator at every key-ON, and is relearned after battery disconnect. The Misfire Monitor will not run until the Adaptive Numerator has updated since the last battery disconnect. If the Adaptive Numerator is equal to the default value then the PCM knows that the Adaptive Numerator has not been learned and does not permit the Misfire Monitor to run. If the Adaptive Numerator exceeds a calibrated percentage, the PCM sets a DTC for CKP NOT LEARNED and illuminates the MIL.**

- 200 Revolution Counter - Looks for misfire that can cause immediate catalyst damage.

- 1000 Revolution Counter - Looks for misfire that can cause emissions to increase 1.5 times the Federal Test Procedure (FTP) standards. This test must also identify misfire percentages that might cause a "durability demonstration vehicle" to fail an Inspection and Maintenance Program tailpipe emissions test.

EVAPORATIVE EMISSIONS

DESCRIPTION

DESCRIPTION

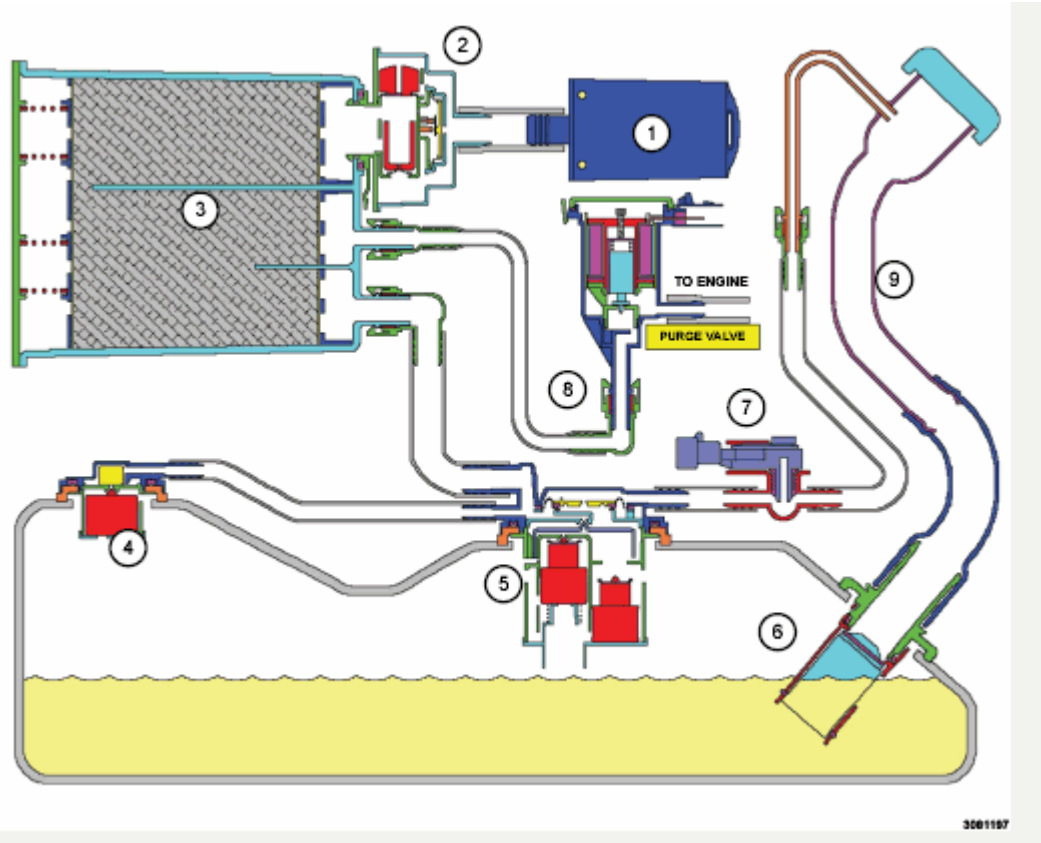

Fig. 2: EVAP System Components
Courtesy of CHRYSLER GROUP, LLC

CALL OUT	DESCRIPTION
1	Fresh Air Filter
2	Evaporative System Integrity Monitor (ESIM)
3	Evaporative Charcoal Canister
4	Fuel Tank Vent (Check Valve)
5	Control Valve
6	Inlet Check Valve
7	Fuel Tank Pressure Sensor

8	To Engine Purge Solenoid and Intake Manifold
9	Fuel Fill Tube

The evaporative emissions system is designed to control the release of fuel vapors into the atmosphere. The fuel tank check valve (4) and control valve (5) are used to reduce emissions due to the venting of vapor expansion within the fuel tank. When fuel evaporates from the fuel tank, vapors pass through a vent hose to the evaporative charcoal canister (3) where they are temporarily held. When the engine is running, the vapors are drawn into the intake manifold (8). In addition, fuel vapors produced during vehicle refueling are allowed to pass through the vent hose to the evaporative charcoal canister (3) for temporary storage (prior to being drawn into the intake manifold). The fuel tank check valve (4) and control valve (5) are non-serviceable components of the fuel tank assembly. The system is equipped with self-diagnosing capability using an Evaporative System Integrity Monitor (2). Refer to **SWITCH, EVAPORATIVE EMISSIONS SYSTEM MONITOR, OPERATION**.

The fuel tank pressure sensor (7) provides the PCM with information on vapor pressure inside the fuel tank. Excessive fuel tank pressure could cause fuel vapors to vent out the fuel filler cap or damage system components while insufficient fuel tank pressure (vacuum) caused by lack of fresh air entering the tank (1) to take the place of consumed fuel could lead to collapsed tank, lines or loss of fuel pressure.

The inlet check valve (6) prevents fuel from splashing back on the customer during vehicle refueling. This valve is also a non-serviceable component of the fuel tank assembly.

SPECIFICATIONS

TORQUE SPECIFICATIONS

CANISTER & PCV TORQUE SPECIFICATIONS

DESCRIPTION	N.m	Ft. Lbs.	In. Lbs.
Vapor Canister to Vehicle - Nuts	9	-	80
PCV Valve	2.5	-	22

CANISTER, VAPOR

REMOVAL

REMOVAL

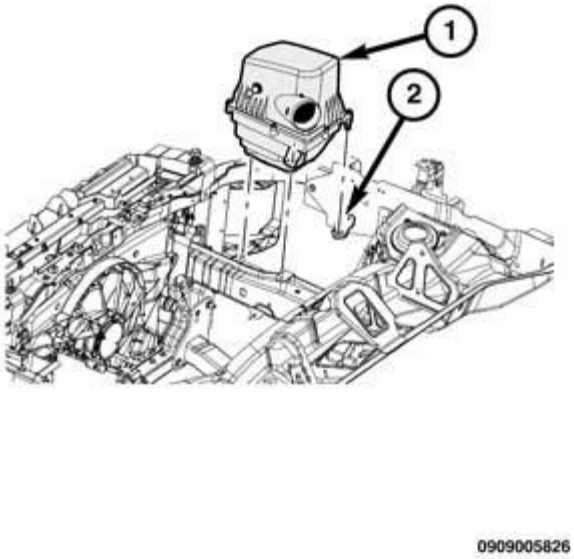

Fig. 3: EVAP Canister & Mounting Fasteners
Courtesy of CHRYSLER GROUP, LLC

1. Disconnect the negative battery cable.
2. Partially raise the vehicle.
3. Remove the right rear wheel.
4. Remove the inner wheel splash shield.
5. Disconnect electrical connector to the ESIM (Evaporative System Integrity Monitor).
6. Disconnect the lines from the EVAP canister (2) side.
7. Remove the mounting fasteners (1).
8. Remove EVAP canister assembly.

INSTALLATION

INSTALLATION

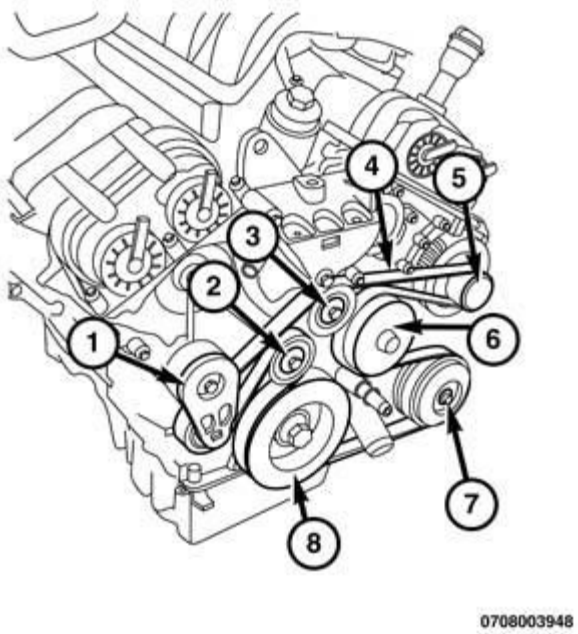

Fig. 4: EVAP Canister & Mounting Fasteners
Courtesy of CHRYSLER GROUP, LLC

1. Install EVAP canister (2) mounting nuts. Tighten the nuts (1) to 5 N.m (44 in. lbs.).
2. Connect the filter lines to canister.
3. Connect the ESIM electrical connector.
4. Install the rear inner splash shield.
5. Install the right rear wheel.
6. Lower the vehicle.
7. Connect negative battery cable.

CAP, FUEL FILLER

DESCRIPTION

DESCRIPTION

The plastic fuel fill cap is a threaded/quarter turn onto the end of the fuel filler tube. Its purpose is to retain vapors and fuel in the fuel tank.

OPERATION

OPERATION

The loss of any fuel vapor out of fuel filler tube is prevented by the use of pressure-vacuum fuel fill cap. Relief valves inside the cap will release fuel tank pressure at predetermined pressures. Fuel tank vacuum will also be

released at predetermined values. This cap must be replaced by a similar unit if replacement is necessary. This is in order for the system to remain effective.

CAUTION: Remove the fill cap before servicing any fuel system component to relieve fuel tank pressure. If the cap is left off or loose, a Diagnostic Trouble Code (DTC) may be set.

REMOVAL

REMOVAL

If replacement of the 1/4 turn fuel tank filler tube cap is necessary, it must be replaced with an identical cap to be sure of correct system operation.

CAUTION: Remove the fuel tank filler tube cap to relieve fuel tank pressure. The cap must be removed prior to disconnecting any fuel system component or before draining the fuel tank.

ONBOARD REFUEL VAPOR RECOVERY (ORVR)

DESCRIPTION

DESCRIPTION

The ORVR (On-Board Refueling Vapor Recovery) system consists of a unique fuel tank, vapor control valve, one-way check valve and vapor canister.

OPERATION

OPERATION

The ORVR (On-Board Refueling Vapor Recovery) system is used to store and prevent the release into the atmosphere of the fuel tank vapors. This is done while the vehicle is being refueled.

Fuel flowing into the fuel filler tube (approx. 1" I.D.) creates an aspiration effect drawing air into the fuel fill tube. During refueling, the fuel tank is vented to the EVAP canister to capture escaping vapors. With air flowing into the filler tube, there are no fuel vapors escaping to the atmosphere. Once the refueling vapors are captured by the EVAP canister, the vehicle's computer controlled purge system draws vapor out of the canister for the engine to burn. The vapor flow is metered by the purge solenoid so that there is no, or minimal impact on driveability or tailpipe emissions.

As fuel starts to flow through the fuel fill tube, it opens the normally closed check valve and enters the fuel tank. Vapor or air is expelled from the tank through the control valve and on to the vapor canister. Vapor is absorbed in the EVAP canister until vapor flow in the lines stops. This stoppage occurs following fuel shut-off, or by having the fuel level in the tank rise high enough to close the control valve. This control valve contains a float that rises to seal the large diameter vent path to the EVAP canister. At this point in the refueling process, fuel tank pressure increases, the check valve closes (preventing liquid fuel from spiting back at the operator),

and fuel then rises up the fuel filler tube to shut off the dispensing nozzle.

SENSOR, FUEL TANK PRESSURE

DESCRIPTION

DESCRIPTION

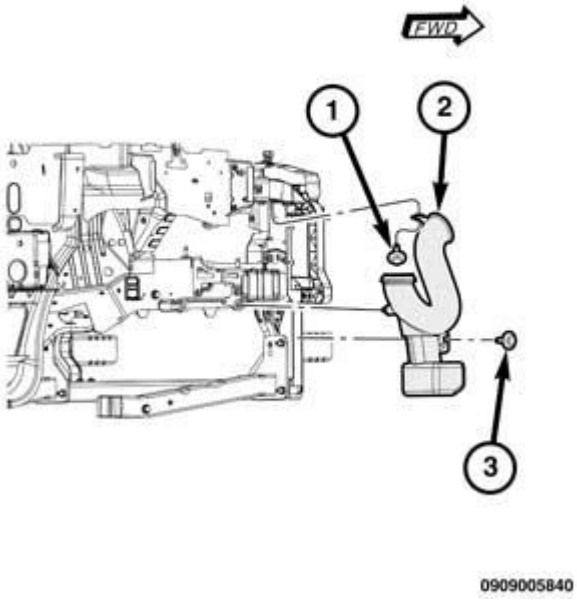

Fig. 5: Fuel Tank Pressure Sensor
Courtesy of CHRYSLER GROUP, LLC

The fuel tank pressure sensor provides the PCM with information on vapor pressure inside the fuel tank. The sensor is a diaphragm-type pressure sensor and varies its voltage output depending on fuel tank pressure. When the fuel tank isolation valve is activated (closed), preventing fuel vapors from leaving the tank, the PCM will monitor the fuel tank pressure sensor to prevent pressure from increasing or decreasing to an unsafe level.

Excessive fuel tank pressure could cause fuel vapors to vent out the fuel filler cap or damage system components while insufficient fuel tank pressure (vacuum) caused by lack of air entering the tank to take the place of consumed fuel could lead to collapsed tank, lines or loss of fuel pressure.

REMOVAL

REMOVAL

1. Disconnect and isolate the negative battery cable.
2. Remove the fuel filler cap to relieve tank pressure.
3. Partially raise the vehicle.

4. Remove the right rear wheel house splash shield. Refer to **SHIELD, SPLASH, REAR WHEELHOUSE, REMOVAL** .

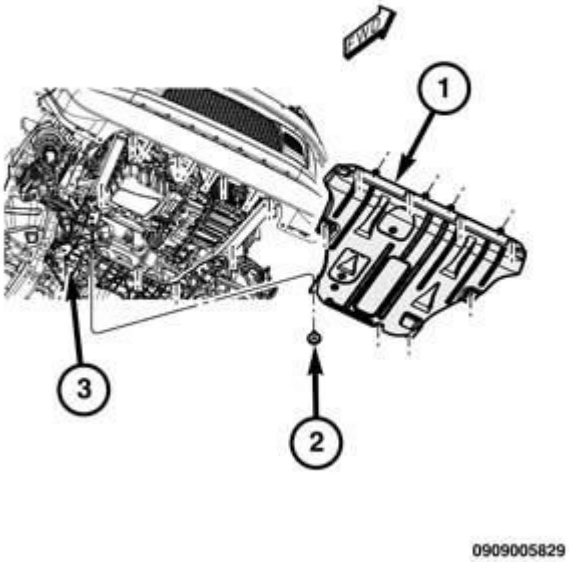

Fig. 6: Fuel Tank Pressure Sensor Electrical Connector
Courtesy of CHRYSLER GROUP, LLC

5. Disconnect the fuel tank pressure sensor harness connector (1).

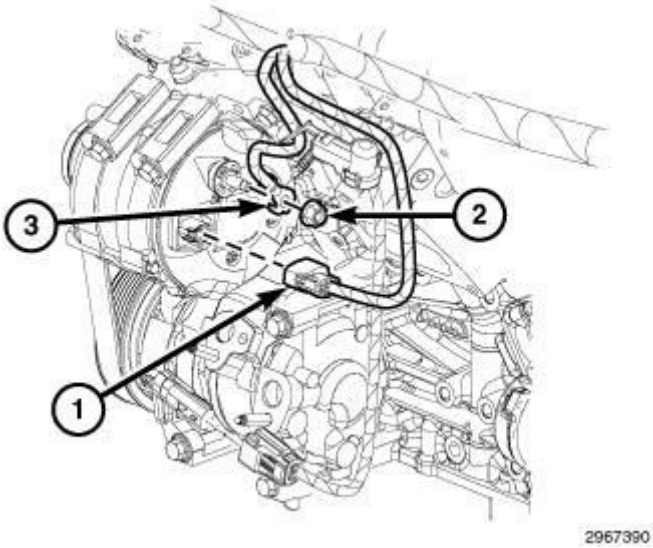

Fig. 7: Removing Fuel Tank Pressure Sensor
Courtesy of CHRYSLER GROUP, LLC

6. Carefully raise the retaining tab (2), rotate and remove the fuel tank pressure sensor (1) from the fuel tank vent tube.

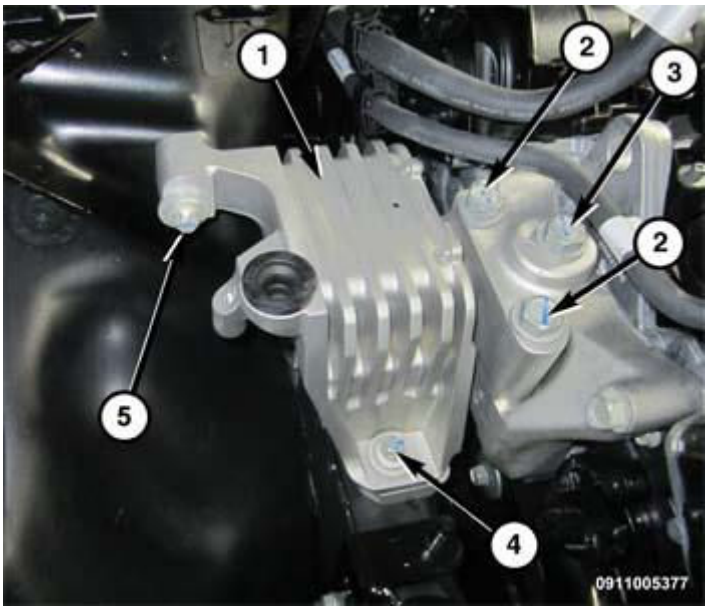

Fig. 8: Fuel Tank Pressure Sensor Seal
Courtesy of CHRYSLER GROUP, LLC

7. The fuel tank pressure sensor seal (1) can be reused if not damaged.

INSTALLATION

INSTALLATION

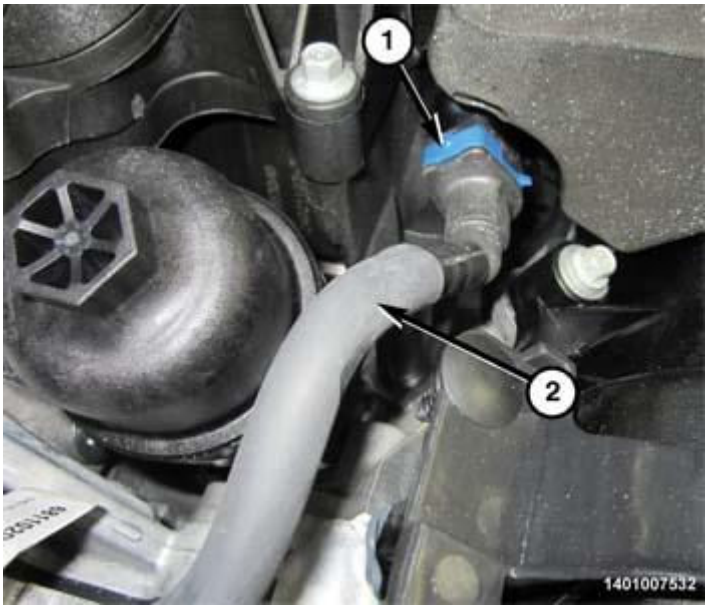

Fig. 9: Fuel Tank Pressure Sensor Seal

Courtesy of CHRYSLER GROUP, LLC

1. The fuel tank pressure sensor seal (1) can be reused if not damaged.

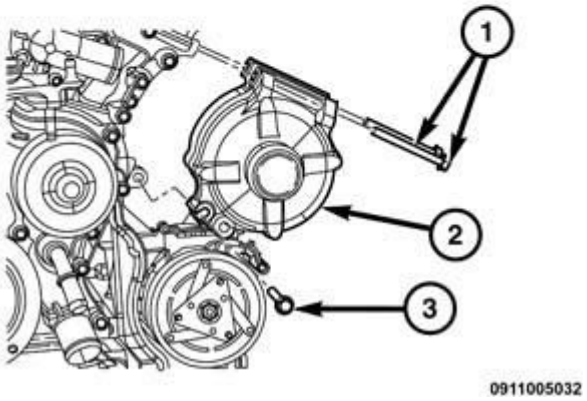

Fig. 10: Installing Fuel Tank Pressure Sensor
Courtesy of CHRYSLER GROUP, LLC

2. Install the fuel tank pressure sensor (1) into the fuel tank vent tube and rotate into position.

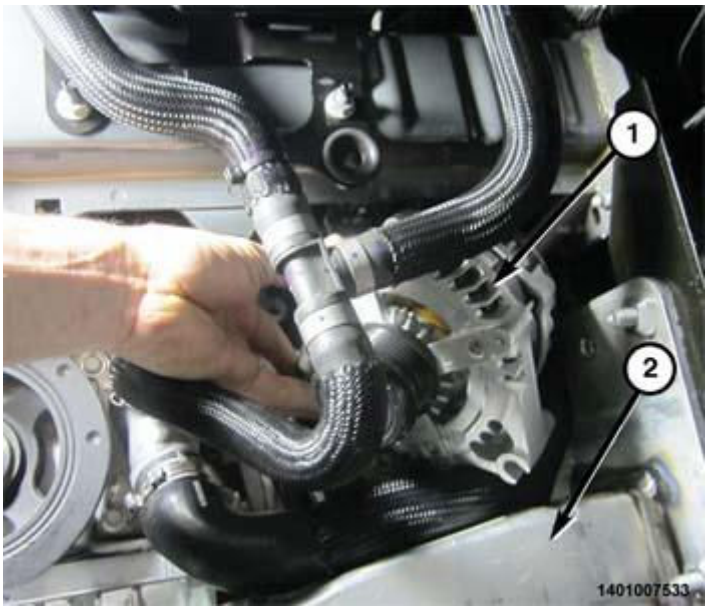

Fig. 11: Fuel Tank Pressure Sensor Electrical Connector

Courtesy of CHRYSLER GROUP, LLC

3. Connect the fuel tank pressure sensor electrical connector (1).
4. Install the right rear wheel splash shield. Refer to **SHIELD, SPLASH, REAR WHEELHOUSE, INSTALLATION** .
5. Lower the vehicle.
6. Install the fuel filler cap.
7. Connect the negative battery cable.

VALVE, PURGE CONTROL

REMOVAL

2.4L

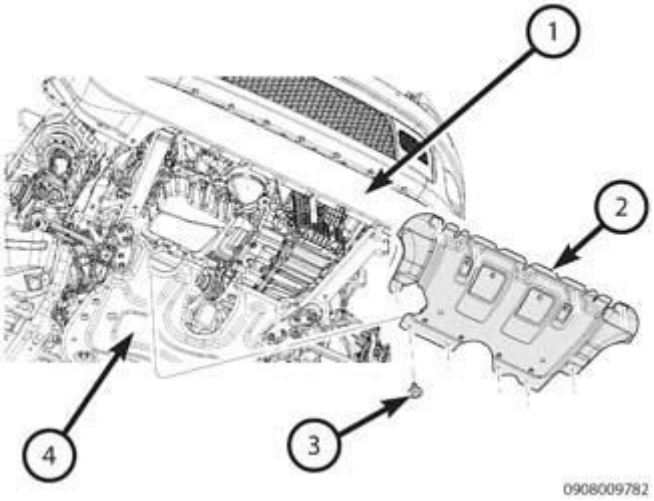

Fig. 12: Engine Cover & Pins
Courtesy of CHRYSLER GROUP, LLC

1. Remove the engine cover (1).

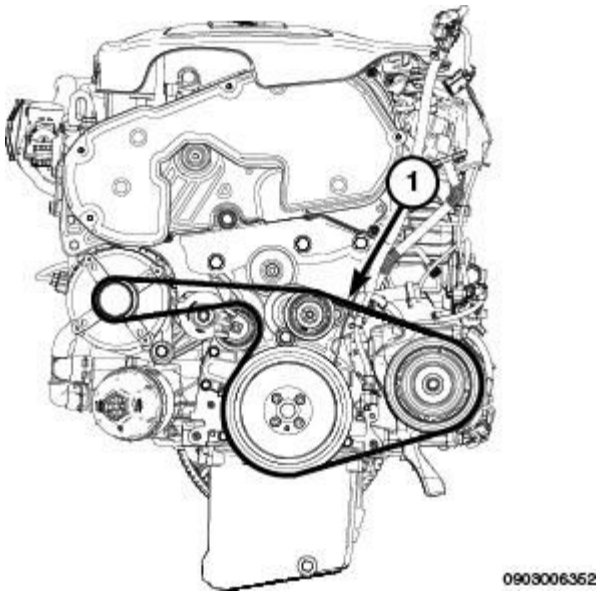

Fig. 13: Resonator, Clamp & Connector
Courtesy of CHRYSLER GROUP, LLC

2. Disconnect the IAT sensor connector (3).
3. Loosen the snorkel to throttle body clamp (2).

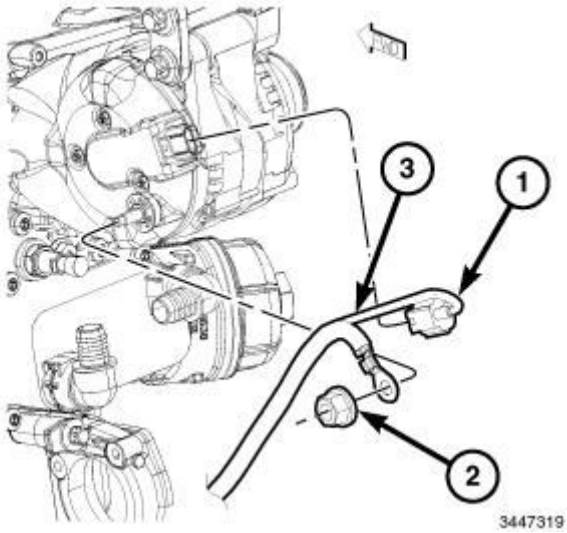

Fig. 14: Resonator, Bolt & Clamp
Courtesy of CHRYSLER GROUP, LLC

4. Remove the snorkel bolt (2).
5. Loosen the snorkel inlet clamp (1).
6. Remove the snorkel.

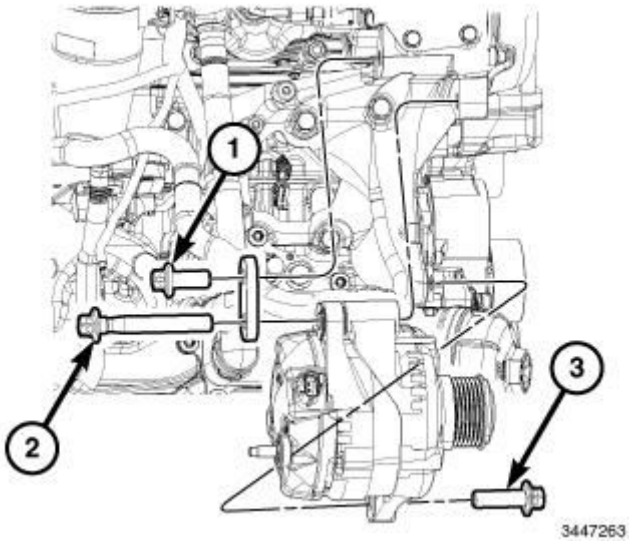

Fig. 15: Evaporator Purge Valve, Foam Isolator & Fuel Tank Hoses
Courtesy of CHRYSLER GROUP, LLC

7. Remove the quick connect fuel tank hose (4) from the duty cycle purge valve.
8. Using care, roll the foam isolator (2) away from the duty cycle purge valve.

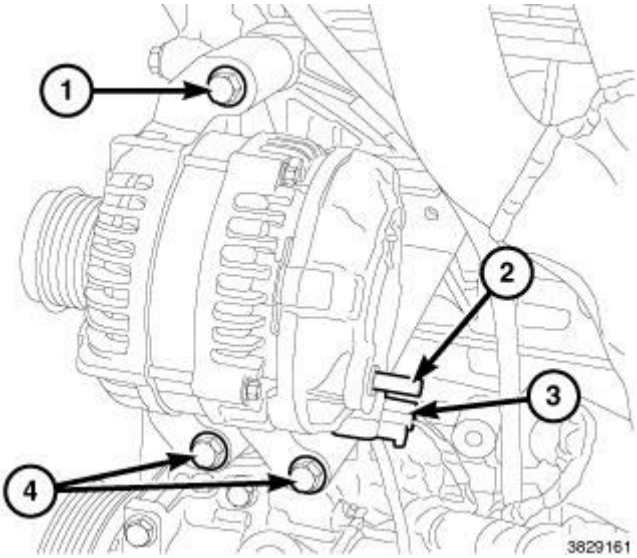

Fig. 16: Evaporator Purge Valve & Connector
Courtesy of CHRYSLER GROUP, LLC

9. Disconnect electrical connector (1) from duty cycle purge valve (2).

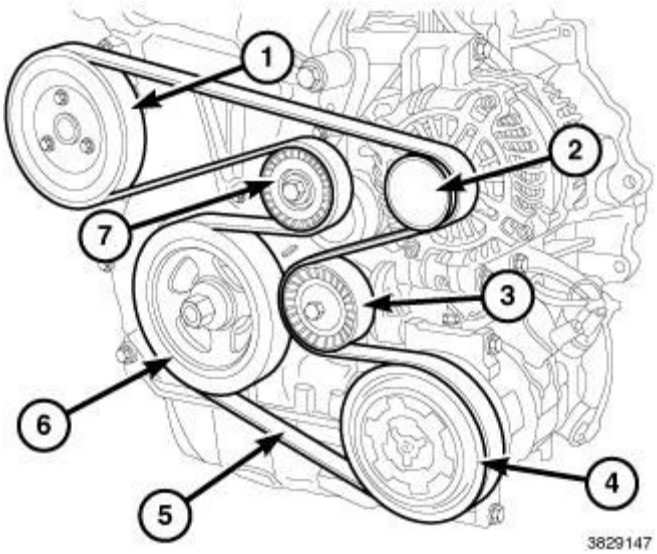

Fig. 17: Evaporator Purge Valve, Bracket, Hose & Connector
Courtesy of CHRYSLER GROUP, LLC

10. Remove purge hose (3) from duty cycle purge valve (2).
11. Remove the duty cycle purge valve from the bracket (4).

3.2L

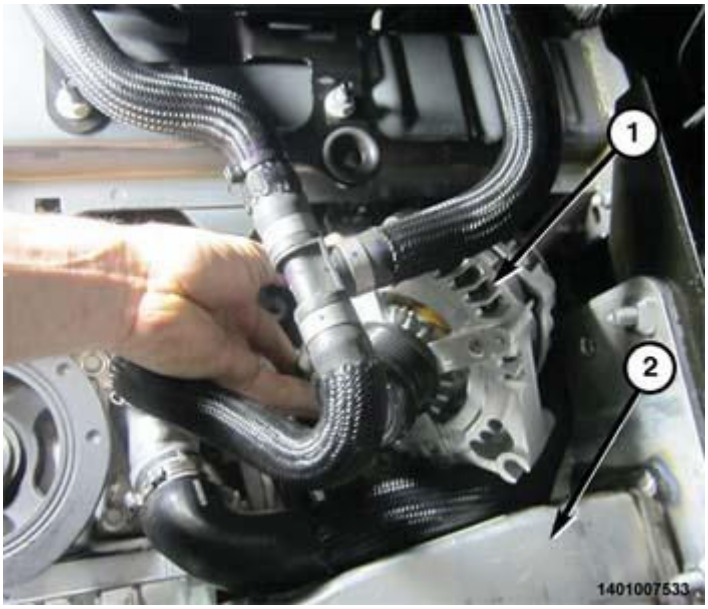

Fig. 18: Purge Solenoid, Vapor Line, Quick-Connect Fitting & Connector
Courtesy of CHRYSLER GROUP, LLC

The duty cycle purge solenoid (2) is located in the engine compartment mounted on the intake manifold.

1. Carefully pull the solenoid assembly straight up from the tongue-type bracket without bending the two

vapor lines.
2. Disconnect electrical wiring connector (4) at solenoid.
3. Disconnect vapor line quick-connect fitting (5) at solenoid.
4. Disconnect vapor line (1) at the at the throttle body.

INSTALLATION

2.4L

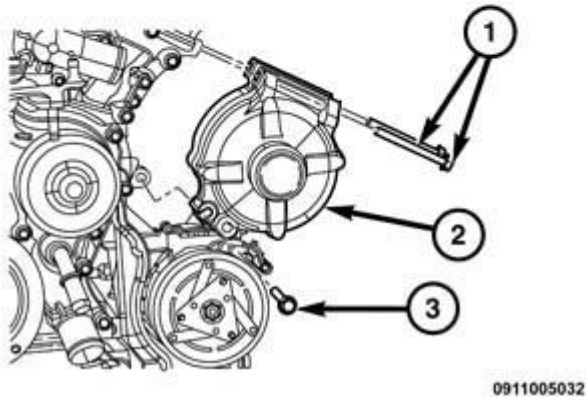

Fig. 19: Evaporator Purge Valve, Bracket, Hose & Connector
Courtesy of CHRYSLER GROUP, LLC

1. Install the duty cycle purge valve (2) to bracket (4).
2. Install purge hose (3) to the duty cycle purge valve.
3. Connect electrical connector (1) to the duty cycle purge valve.
4. Using care, position the foam isolator back into position onto the duty cycle purge valve and the intake manifold.

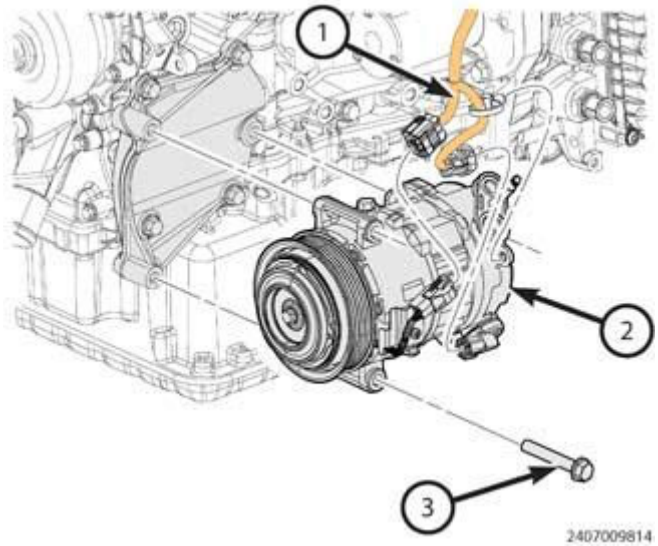

Fig. 20: Evaporator Purge Valve, Foam Isolator & Fuel Tank Hoses
Courtesy of CHRYSLER GROUP, LLC

5. Install quick connect fuel tank hose (3) to duty cycle purge valve (1).

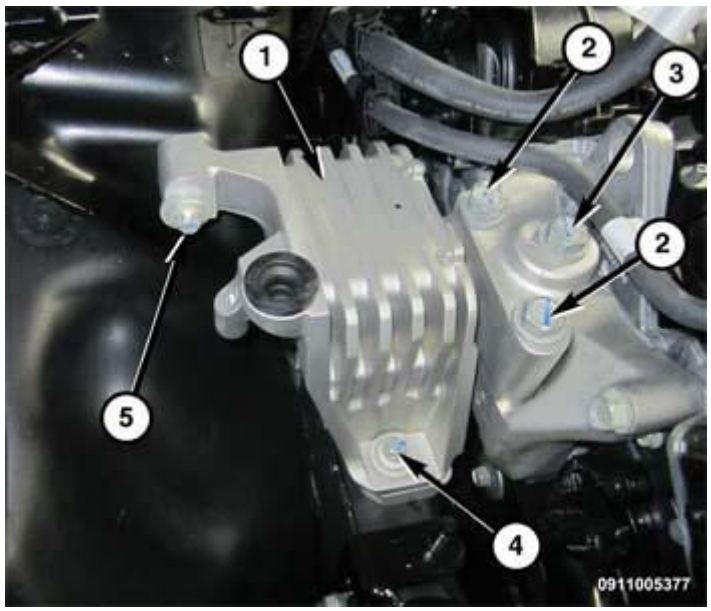

Fig. 21: Resonator, Bolt & Clamp
Courtesy of CHRYSLER GROUP, LLC

6. Position the snorkel (3) between the forward edge of the cowl and the cylinder head cover. Align the openings with the throttle body intake and the air cleaner flex hose.
7. Install the bolt (2). Tighten the bolt to 9 N.m (81 in. lbs.).
8. Tighten the hose clamp (1).

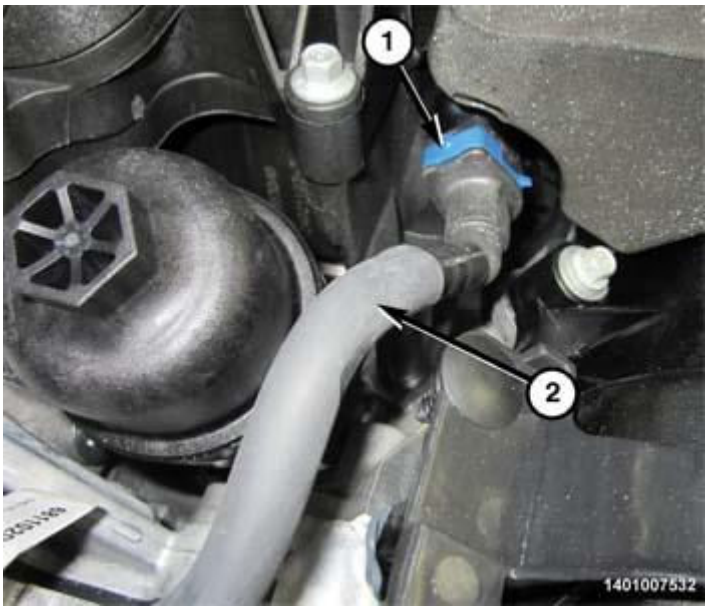

Fig. 22: Resonator, Clamp & Connector
Courtesy of CHRYSLER GROUP, LLC

9. Tighten the throttle body clamp (2) to 4 N.m (35 in. lbs.).
10. Connect the electrical connector (3) to the Inlet Air Temperature (IAT) sensor.

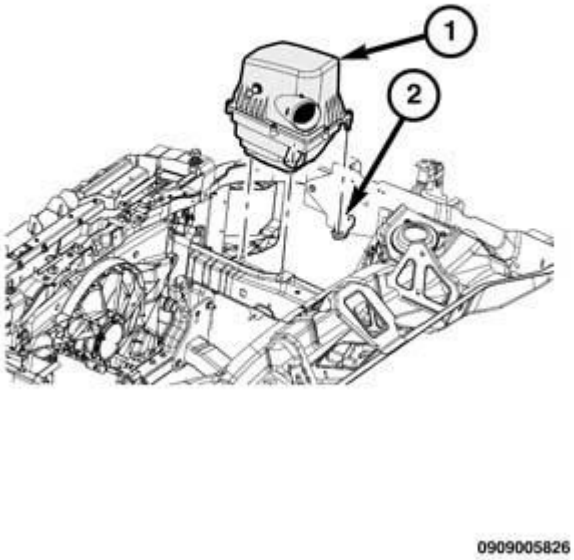

Fig. 23: Engine Cover & Pins
Courtesy of CHRYSLER GROUP, LLC

11. Install the engine cover (1).

3.2L

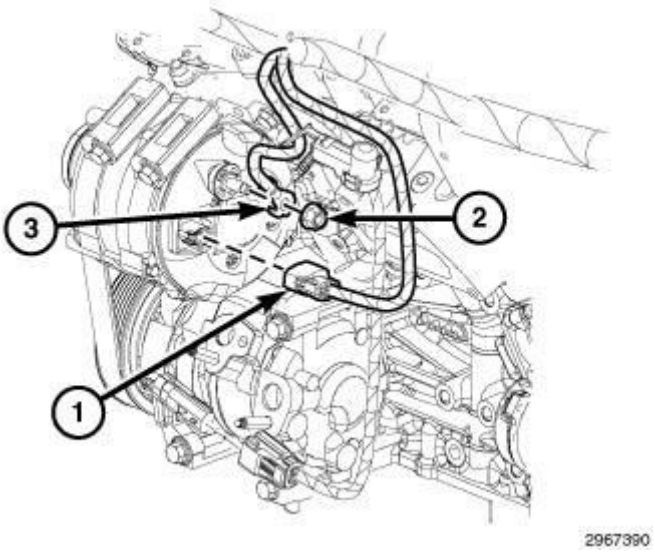

Fig. 24: Purge Solenoid, Vapor Line, Quick-Connect Fitting & Connector
Courtesy of CHRYSLER GROUP, LLC

1. Connect vapor line quick-connect fitting (5) to solenoid.
2. Connect vapor line (1) to the throttle body.
3. Connect electrical wiring connector (4) to solenoid.
4. Carefully push the solenoid assembly (2) straight down onto the tongue-type bracket (3) without bending the vapor lines.

SWITCH, EVAPORATIVE EMISSIONS SYSTEM MONITOR

OPERATION

OPERATION

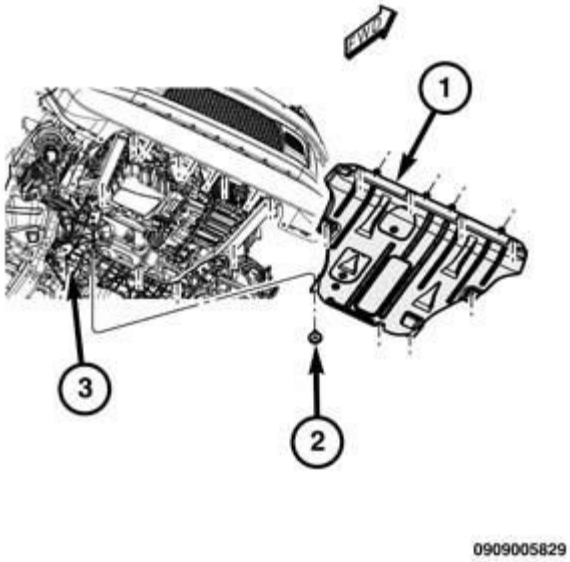

Fig. 25: Evaporative Emissions System Monitor Components
Courtesy of CHRYSLER GROUP, LLC

1 - Intake Manifold
2 - Throttle Body
3 - Purge Solenoid
4 - Filter
5 - ESIM
6 - Vapor Canister
7 - Control Valve
8 - Fuel Tank
9 - Gas Cap

The ESIM (Evaporative System Integrity Monitor) is very similar to the NVLD. However, the design of the ESIM has been simplified and unlike the NVLD the ESIM does not require a solenoid. The ESIM mounts directly to the canister, eliminating the need for a mounting bracket. It is critical that the ESIM is mounted vertically. On vehicles where the canister is mounted on an angle, the ESIM requires an adaptor to maintain a vertical position. When the ESIM is installed vertically, the electrical connector is in the 3 o'clock position.

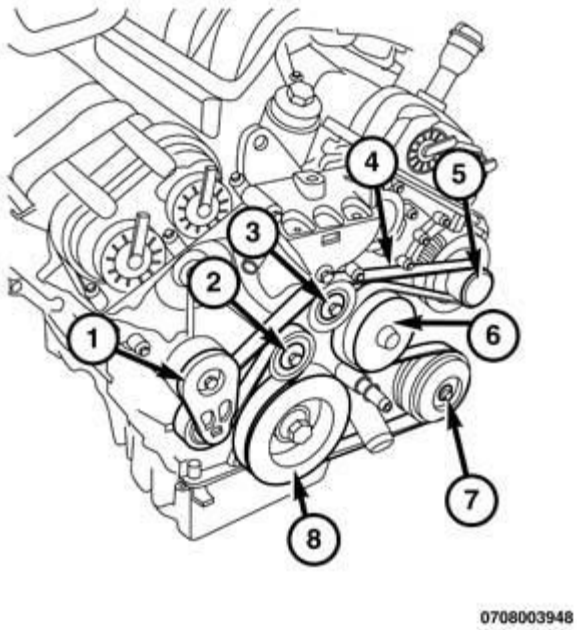

Fig. 26: Exploded View Of ESIM
Courtesy of CHRYSLER GROUP, LLC

1 - ESIM Housing
2 - Diaphragm
3 - Switch
4 - Cover
5 - Small Check Valve
6 - Large Check Valve

The ESIM assembly consists of a housing, a small weight and a large weight that serve as check valves, a diaphragm, a switch and a cover. There is one large weight and one small weight check valve in the ESIM assembly. A seal is attached at the end of each weighted check valve. The large weight check valve seals for pressure. The small weight check valve seals for vacuum. The weighted check valves are contained within the ESIM housing.

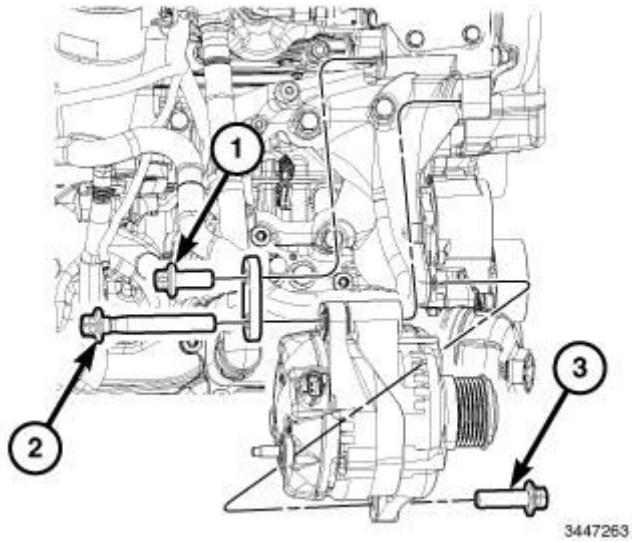

Fig. 27: Cut Away View Of ESIM
Courtesy of CHRYSLER GROUP, LLC

1 - Large Check Valve
2 - Fresh Air Inlet
3 - Diagram
4 - Small Check Valve
5 - Vapor Canister

The ESIM (Evaporative System Integrity Monitor), while physically different than the NVLD system, performs the same basic function as the NVLD does - controlling evaporative emissions. The ESIM has been simplified because the solenoid used on the NVLD is not used on the ESIM.

The ESIM consists of housing, two check valves (sometimes referred to as weights), a diaphragm, a switch and a cover. The larger check valve seals for pressure and the smaller one seals for vacuum.

During refueling, pressure is built up in the evaporative system. When pressure reaches approximately 0.5 inches of water, the large check valve unseats and pressure vents to the fresh air filter.

Conversely, when the system cools and the resulting vacuum lifts the small check valve from its seat and allows fresh air to enter the system and relieve the vacuum condition. When a calibrated amount of vacuum is achieved in the evaporative system, the diaphragm is pulled inward, pushing on the spring and closing the contacts.

The ESIM conducts test on the evaporative system as follows: An engine off, non-intrusive test for small leaks and an engine running, intrusive test for medium/large leaks.

The ESIM weights seal the EVAP. system during engine off conditions. If the EVAP. system is sealed, it will be pulled into a vacuum, either due to the cool down from operating temperature or diurnal ambient temperature cycling. When the vacuum in the system exceeds about 1" H20, the vacuum switch closes. The switch closure sends a signal to the GPEC1. In order to pass the non-intrusive small leak test, the ESIM switch must close within a calculated amount of time and within a specified amount of key-off events.

If the ESIM switch does not close as specified, the test is considered inconclusive and the intrusive engine running test will be run during the next key-on cycle. This intrusive test will run on the next cold engine running condition.

Conditions for running the intrusive test are:

- After the vehicle is started, the engine coolant temperature must be within 10° C (50°F) of ambient to indicate a cold start.
- The fuel level must be between 12% and 88%.
- The engine must be in closed loop.
- Manifold vacuum must be greater than a minimum specified value.
- Ambient temperature must be between 4° C and 37° C (39° F and 98° F) and the elevation level must be below 8500 feet.

The test is accomplished by the GPEC1 activating the purge solenoid to create a vacuum in the evaporative system. The GPEC1 then measures the amount of time it takes for the vacuum to dissipate. This is known as the vacuum decay method. If the switch opens quickly a large leak is recorded. If the switch opens after a predetermined amount of time, then the small leak matures. If the switch does not close, then a general evaporative failure is recorded. The purge monitor tests the integrity of the hose attached between the purge valve and throttle body/intake. The purge monitor is a two stage test and it runs only after the evaporative system passes the small leak test.

Even when all of the thresholds are met, a small leak won't be recorded until after the medium/large leak monitor has been run. This is accomplished by the GPEC1 activating the purge solenoid to create a vacuum in the evaporative system. The GPEC1 then measures the amount of time it takes for the vacuum to dissipate. This is known as the vacuum decay method. If the switch opens quickly a large leak is recorded. If the switch opens after a predetermined amount of time, then the small leak matures. If the medium/large leak test runs and the ESIM switch doesn't close, a general evaporative test is run. The purge solenoid is activated for approximately 10 seconds, increasing the amount of vacuum in the system. IF the ESIM switch closes after the extended purge activation, a large leak fault is generated. If the switch doesn't close, a general evaporative system fault is generated.

The purge monitor tests the integrity of the hose attached between the purge valve and throttle body/intake. The purge monitor is a two stage test and it runs only after the evaporative system passes the small leak test.

Stage one of the purge monitor is non-intrusive. GPEC1 monitors the purge vapor ratio. If the ratio is above a calibrated specification, the monitor passes. Stage two is an intrusive test and it runs only if stage one fails. During the stage two test, the GPEC commands the purge solenoid to flow at a specified rate to force the purge vapor ratio to update. The vapor ratio is compared to a calibrated specification and if it is less than specified, a one-trip failure is recorded.

The ESIM switch stuck closed monitor checks to see if the switch is stuck closed. This is a power down test that runs at key-off; when the GPEC1 sees 0 rpm's, the purge solenoid is energized for a maximum of 30 seconds, venting any vacuum trapped in the evaporative system. If the switch opens or was open before the test began, the monitor passes. If the switch doesn't open, the monitor fails. This is a two-trip MIL. The star scan tool can be used to force the ESIM switch stick closed monitor to run.

The GPEC1 also uses the ESIM to detect a loose or missing gas cap. The GPEC1 controller looks for a change in the fuel level (25% minimum) and then gas cap is loose or missing. If a medium/large leak is detected, a loose gas cap light illuminates and a pending one-trip fault code is set. On the GPEC1, this is a three-trip fault before the code matures

VALVE, POSITIVE CRANKCASE VENTILATION (PCV)

OPERATION

OPERATION

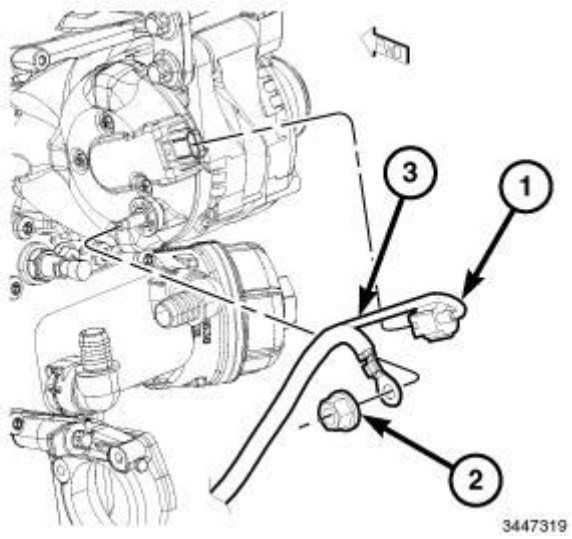

Fig. 28: Engine Off Or Engine Backfire No Vapor Flow
Courtesy of CHRYSLER GROUP, LLC

When the engine is not operating or during an engine backfire, the spring forces the plunger back against the seat. This prevents vapors from flowing through the valve.

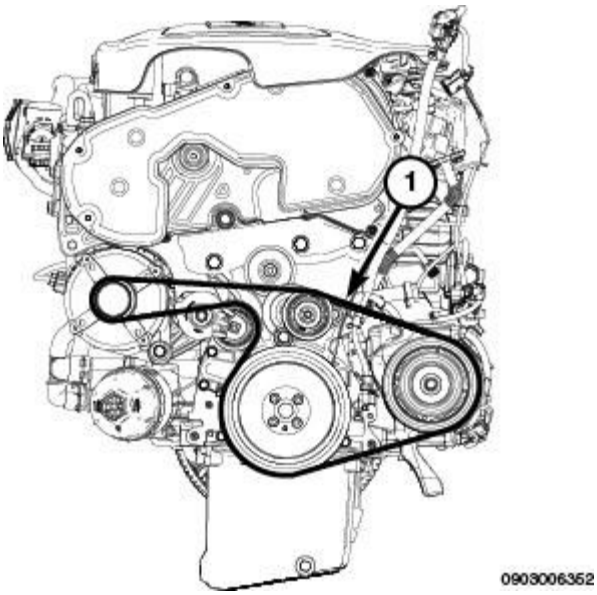

Fig. 29: High Intake Manifold Vacuum Minimal Vapor Flow
Courtesy of CHRYSLER GROUP, LLC

When the engine is at idle or cruising, high manifold vacuum is present. At these times manifold vacuum is able to completely compress the spring and pull the plunger to the top of the valve. In this position there is minimal vapor flow through the valve.

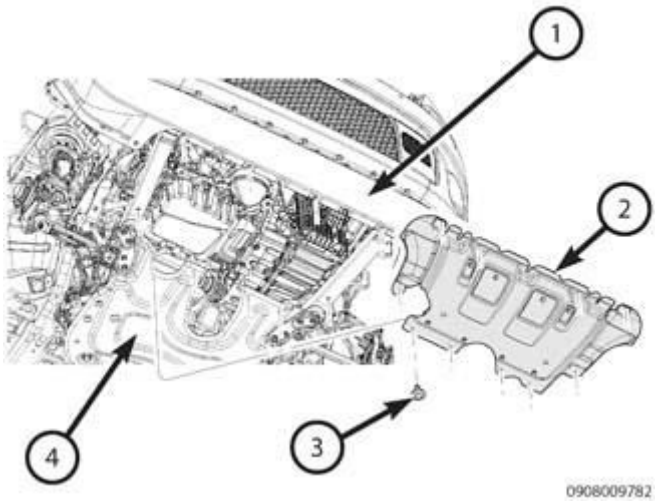

Fig. 30: Moderate Intake Manifold Vacuum Maximum Vapor Flow
Courtesy of CHRYSLER GROUP, LLC

During periods of moderate intake manifold vacuum the plunger is only pulled part way back from the inlet. This results in maximum vapor flow through the valve.

DIAGNOSIS AND TESTING

DIAGNOSIS AND TESTING - PCV SYSTEM

WARNING: Apply parking brake and/or block wheels before performing any test or adjustment with the engine operating.

1. With engine idling, remove the hose from the PCV valve. If the valve is not plugged, a hissing noise will be heard as air passes through the valve. A strong vacuum should also be felt when a finger is placed over the valve inlet.
2. Install hose on PCV valve. Remove the make-up air hose from the air plenum at the rear of the engine. Hold a piece of stiff paper (parts tag) loosely over the end of the make-up air hose.
3. After allowing approximately one minute for crankcase pressure to reduce, the paper should draw up against the hose with noticeable force. If the engine does not draw the paper against the grommet after installing a new valve, replace the PCV valve hose.
4. Turn the engine off. Remove the PCV valve from intake manifold. The valve should rattle when shaken.
5. Replace the PCV valve and retest the system if it does not operate as described in the preceding tests. **Do not attempt to clean the old PCV valve.**

REMOVAL

2.4L

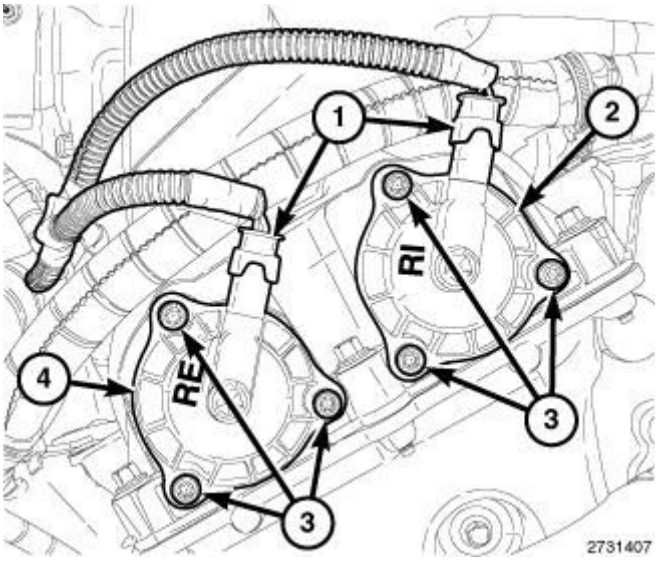

Fig. 31: Removing/Installing Hose
Courtesy of CHRYSLER GROUP, LLC

1. Remove the engine cover.
2. Remove the hose from the PCV valve.

Fig. 32: PCV Removed
Courtesy of CHRYSLER GROUP, LLC

3. Unscrew the PCV valve.

3.2L

Fig. 33: PCV Valve & Hose
Courtesy of CHRYSLER GROUP, LLC

1. Remove the hose (1) from the PCV valve (2).

Fig. 34: PCV Valve & Screws

Courtesy of CHRYSLER GROUP, LLC

2. Remove the three screws (2) and the PCV valve (1) from the right cylinder head cover.

INSTALLATION

2.4L

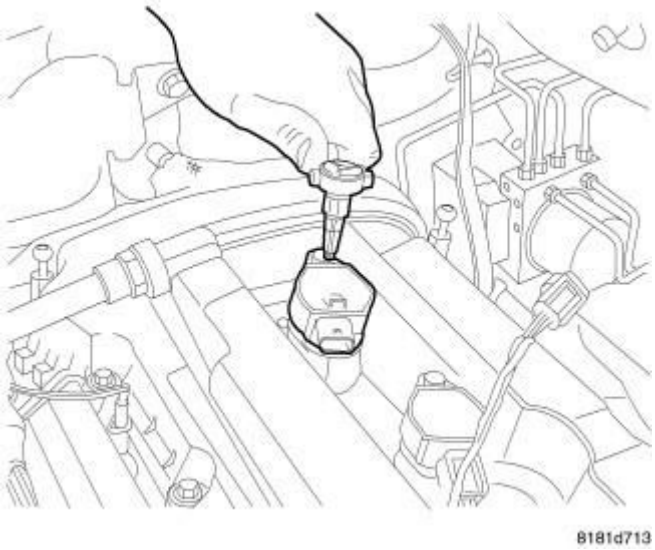

Fig. 35: PCV Removed
Courtesy of CHRYSLER GROUP, LLC

1. Lubricate the O-ring on the valve.
2. Install the PCV valve and tighten the valve to 8.1 N.m (72 in. lbs.).

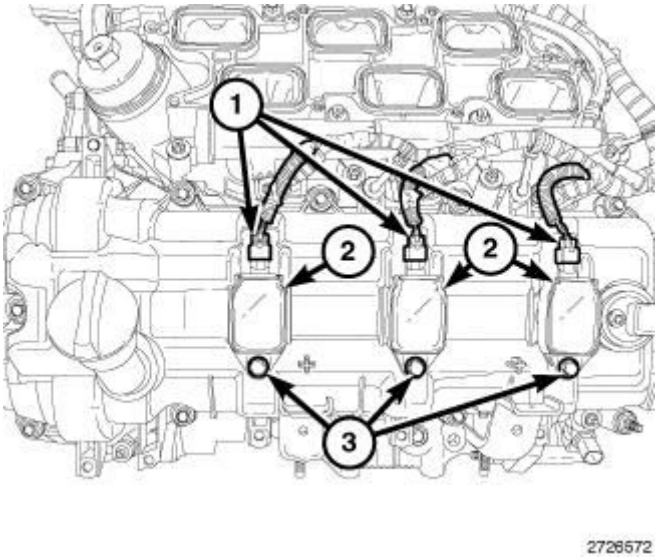

Fig. 36: Removing/Installing Hose
Courtesy of CHRYSLER GROUP, LLC

3. Install the hose.
4. Install engine cover.

3.2L

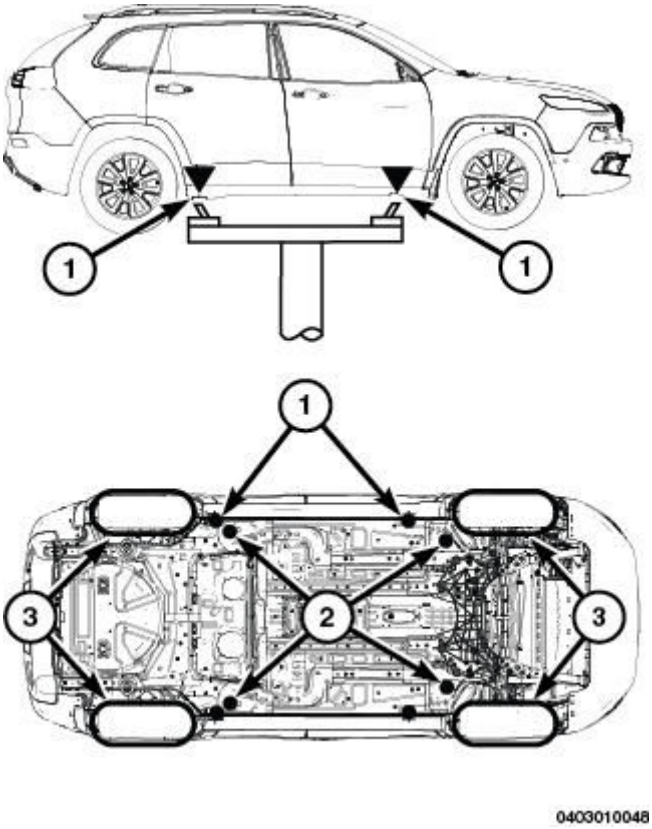

Fig. 37: PCV Valve & Screws
Courtesy of CHRYSLER GROUP, LLC

1. Clean and inspect the sealing surfaces of the PCV valve and cylinder head cover. The seal can be reused provided it is free of cuts or tears.
2. Install the PCV valve seal in the cylinder head cover.
3. Install the PCV valve (1) with three screws (2). Tighten the screws to 4 N.m (35 in. lbs.).

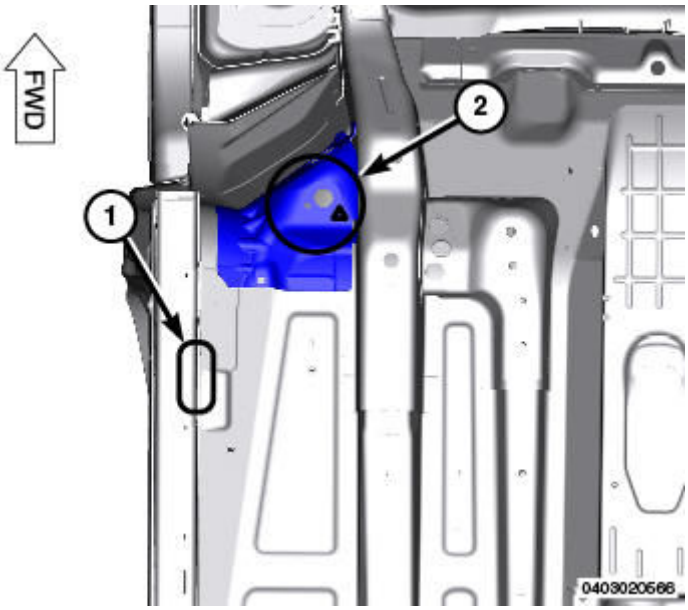

Fig. 38: PCV Valve & Hose
Courtesy of CHRYSLER GROUP, LLC

4. Install the PCV hose (1) between the upper intake manifold and the PCV valve (2).

EXHAUST GAS RECIRCULATION, DIESEL

DESCRIPTION

DESCRIPTION

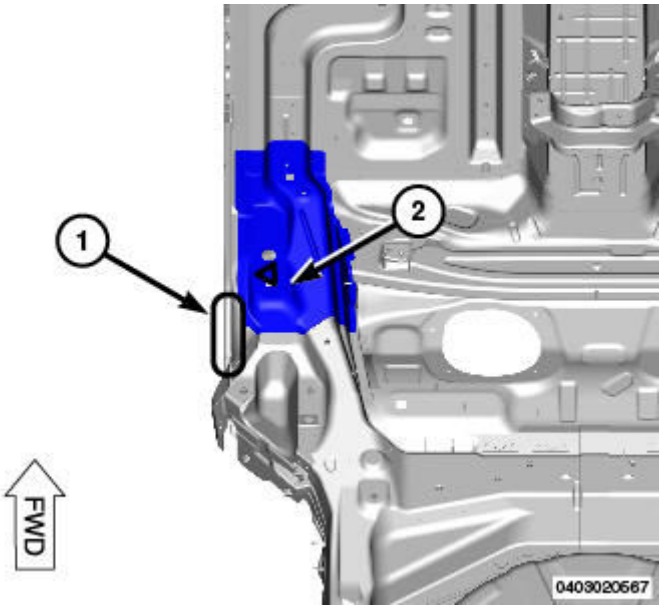

Fig. 39: Exhaust Gas Recirculation (EGR) system
Courtesy of CHRYSLER GROUP, LLC

The Exhaust Gas Recirculation (EGR) system (1) reduces Oxides of Nitrogen (NOx) in the engine exhaust. This is accomplished by allowing a predetermined amount of hot exhaust gases to recirculate and dilute the incoming fuel and air mixture.

The Exhaust Gas Recirculation (EGR) system consists of the following components:

- EGR cooler
- EGR cooler manifold
- EGR vacuum valve solenoid
- EGR valve
- EGR wastegate vacuum solenoid
- EGR wastegate valve solenoid
- Powertrain Control Module (PCM)
- Vacuum pump
- Vacuum reservoir, lines and hoses

A malfunctioning EGR system can cause engine stumble, hesitation, rough idle, engine stalling and poor driveability.

OPERATION

OPERATION

When the Powertrain Control Module (PCM) supplies a variable ground signal to the Exhaust Gas Recirculation (EGR) vacuum valve solenoid, EGR operation begins. The PCM monitors and determines when to supply and remove the variable ground signal. This will depend on inputs from the engine coolant temperature, throttle position and engine speed sensors.

When the variable ground signal is supplied to the EGR vacuum valve solenoid, vacuum from the vacuum pump will be allowed to pass through the solenoid and on to the EGR system, by a connecting hose.

Exhaust gas recirculation will begin in this order when:

- The engine is running.
- The PCM determines that EGR system operation is necessary.
- A variable ground signal is supplied to the EGR vacuum valve solenoid.
- Variable vacuum passes through the EGR vacuum valve solenoid to the EGR system.
- The inlet seat (poppet valve) in the EGR valve opens to dilute and recirculate exhaust gas back into the EGR cooler manifold.
- Coolant flow through the EGR cooler is controlled by the EGR wastegate valve solenoid.

The EGR system will be shut down by the PCM after 60 seconds of continuous engine idling to improve idle quality.

SPECIFICATIONS

TORQUE SPECIFICATIONS

EGR TORQUE SPECIFICATIONS - DIESEL

DESCRIPTION	N.m	Ft. Lbs.	In. Lbs.
Charge Air Cooler Tube Bolts	9	-	80
EGR Airflow Control Valve	9	-	80
EGR Tube Bolts	3	-	27

SOLENOID, EXHAUST GAS RECIRCULATION (EGR), 2.0L DIESEL

REMOVAL

REMOVAL

Fig. 40: Engine Cover
Courtesy of CHRYSLER GROUP, LLC

1. Disconnect the negative battery cable.
2. Remove the engine cover (1).

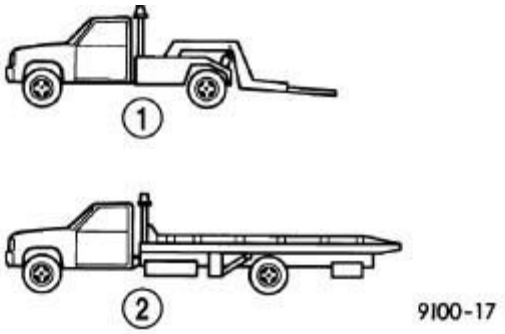

Fig. 41: Wire Harness Connector, Two Vacuum Hoses & Two Retaining Nuts
Courtesy of CHRYSLER GROUP, LLC

3. Disconnect the wire harness connector (3) and the two vacuum hoses (2) from the Exhaust Gas Recirculation (EGR) vacuum valve solenoid (4), located on the right side of the engine fan shroud.
4. Remove the two retaining nuts (1) and the EGR vacuum valve solenoid.

INSTALLATION

INSTALLATION

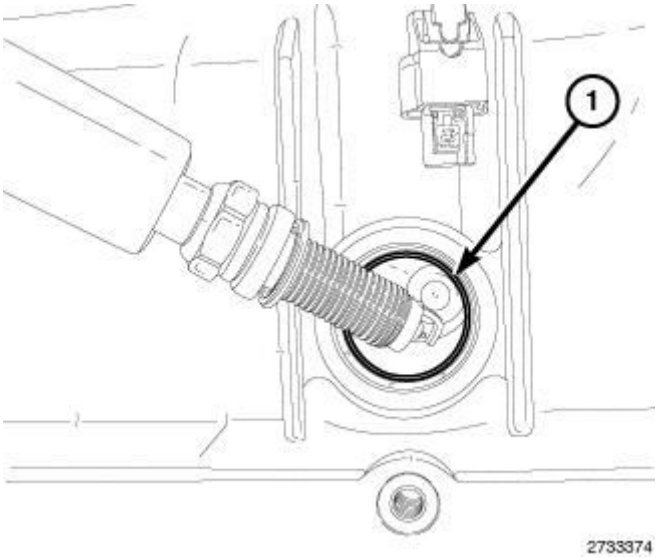

Fig. 42: Wire Harness Connector, Two Vacuum Hoses & Two Retaining Nuts
Courtesy of CHRYSLER GROUP, LLC

1. Position the Exhaust Gas Recirculation (EGR) vacuum valve solenoid (4) and install the two retaining nuts (1). Tighten the nuts securely.
2. Connect the two vacuum hoses (2) and the wire harness connector (3) to the EGR vacuum valve solenoid.

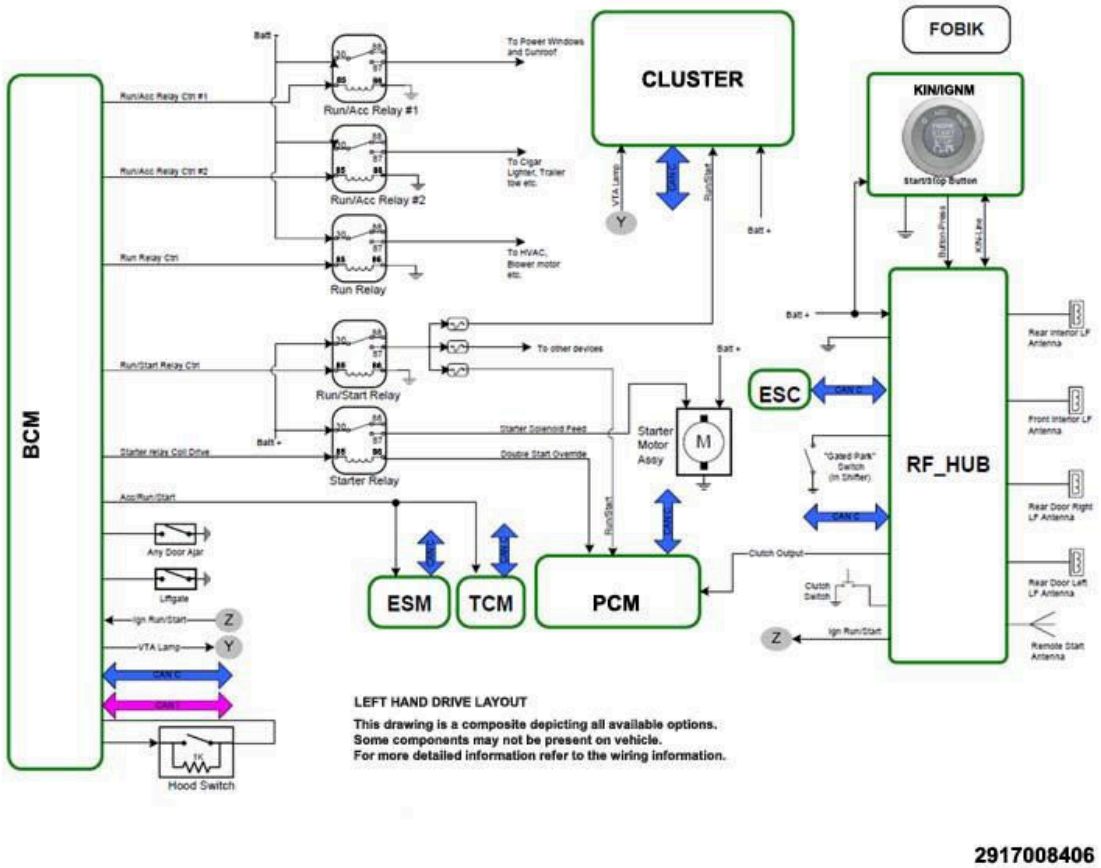

Fig. 43: Engine Cover
Courtesy of CHRYSLER GROUP, LLC

3. Install the engine cover (1).
4. Connect the negative battery cable.

TUBE, EXHAUST GAS RECIRCULATION (EGR)

REMOVAL

REMOVAL

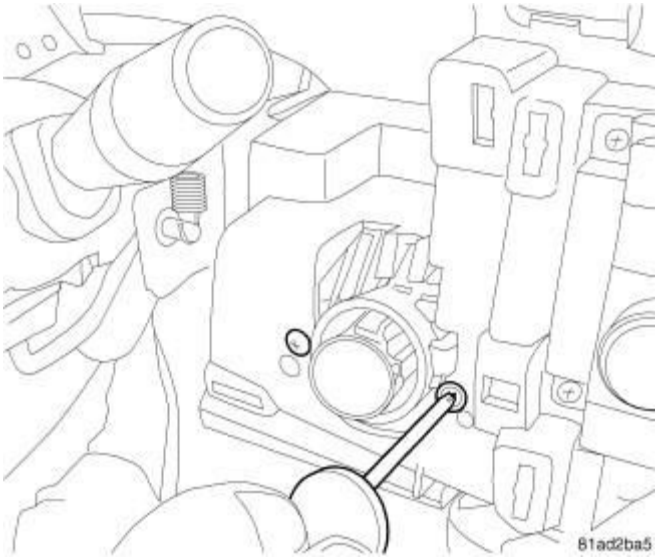

Fig. 44: Engine Cover
Courtesy of CHRYSLER GROUP, LLC

1. Disconnect the negative battery cable.
2. Remove the engine cover (1).

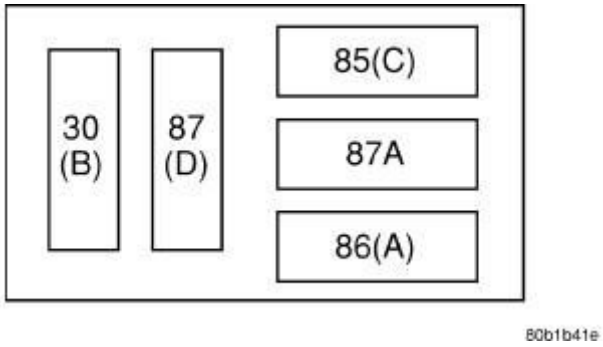

Fig. 45: Bolts & EGR Tube
Courtesy of CHRYSLER GROUP, LLC

3. Remove the three bolts (1) that secure the EGR tube (2) to the intake manifold.
4. Disconnect the EGR tube from the intake manifold and remove the EGR tube gasket.

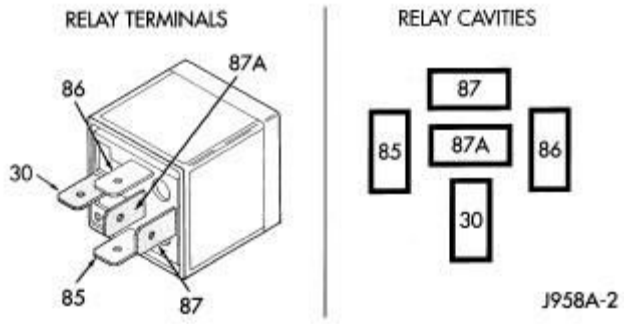

Fig. 46: Wiring Harness Connector
Courtesy of CHRYSLER GROUP, LLC

5. Disconnect the wiring harness connector (1) from the EGR valve.

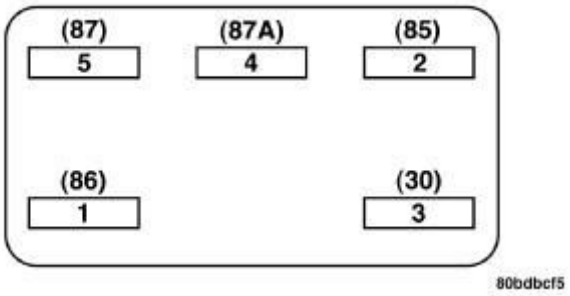

Fig. 47: Two Bolts & EGR Tube
Courtesy of CHRYSLER GROUP, LLC

6. Remove the two bolts (2) that secure the EGR tube (1) to the EGR cooler manifold.
7. Disconnect the EGR tube from the EGR cooler manifold and remove the gasket.

INSTALLATION

INSTALLATION

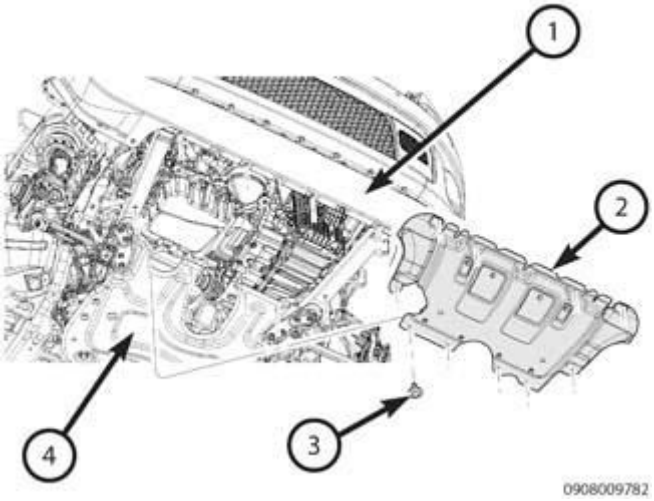

Fig. 48: Two Bolts & EGR Tube
Courtesy of CHRYSLER GROUP, LLC

1. Position the EGR tube (1) and a new gasket onto the EGR cooler manifold.
2. Install the two bolts (2) that secure the EGR tube to the EGR cooler manifold. Tighten the bolts to 3 N.m (27 in. lbs.).

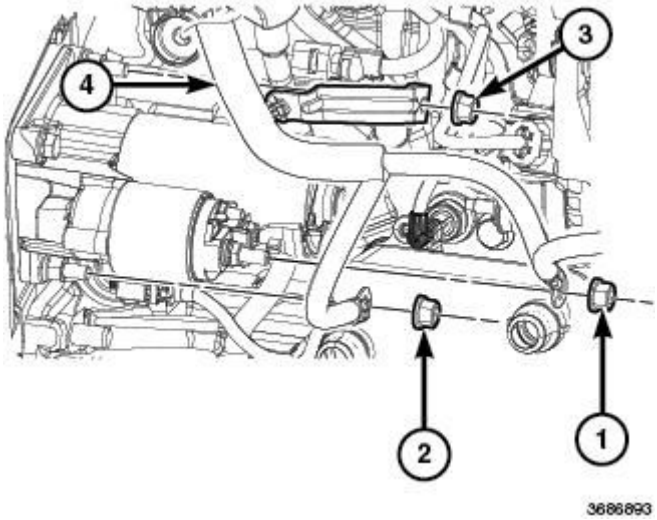

Fig. 49: Wiring Harness Connector
Courtesy of CHRYSLER GROUP, LLC

3. Connect the wiring harness connector (1) to the EGR valve.

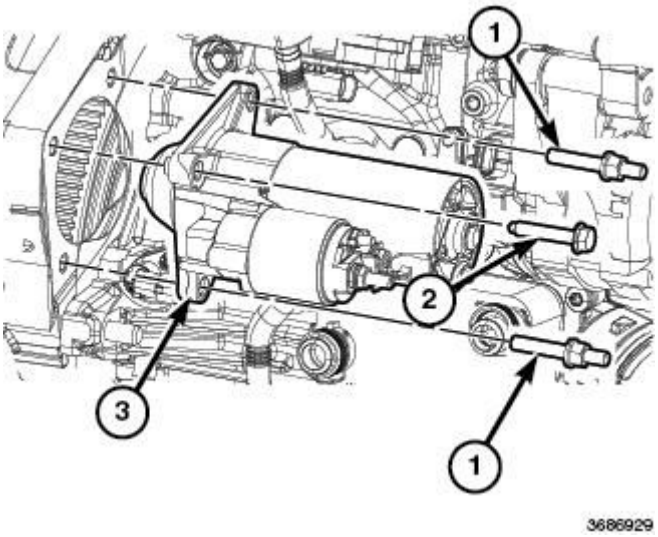

Fig. 50: Bolts & EGR Tube
Courtesy of CHRYSLER GROUP, LLC

4. Position the EGR tube (2) and a O-ring gasket onto the intake manifold.
5. Install the two bolts (1) that secure the EGR tube to the intake manifold. Tighten the bolts to 3 N.m (27 in. lbs.).

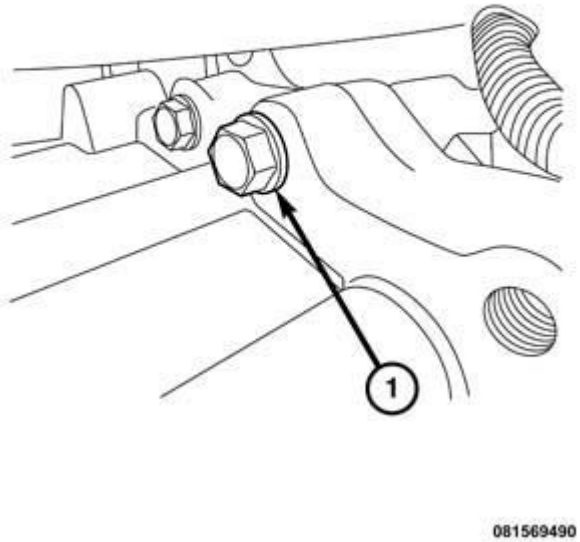

Fig. 51: Engine Cover
Courtesy of CHRYSLER GROUP, LLC

6. Install the engine cover (1).

7. Connect the negative battery cable.

VALVE, EXHAUST GAS RECIRCULATION (EGR)

REMOVAL

REMOVAL

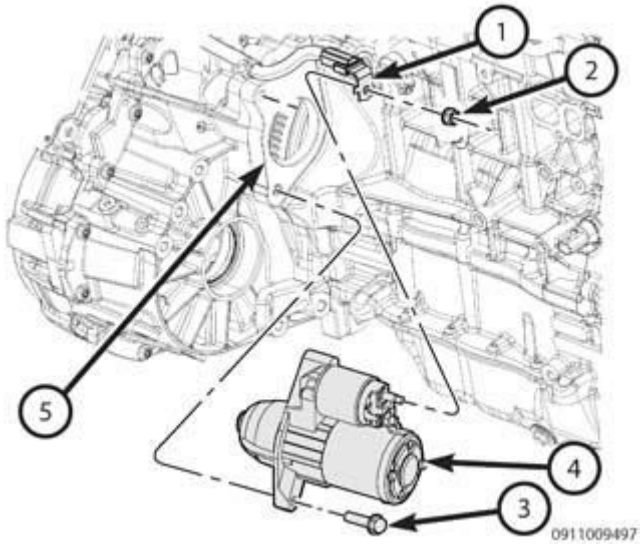

Fig. 52: Exhaust Gas Recirculation (EGR) system
Courtesy of CHRYSLER GROUP, LLC

1. Disconnect the negative battery cable.
2. Remove the Exhaust Gas Recirculation (EGR) cooler manifold (1) and place it on a workbench. Refer to **COOLER, EGR, REMOVAL** .

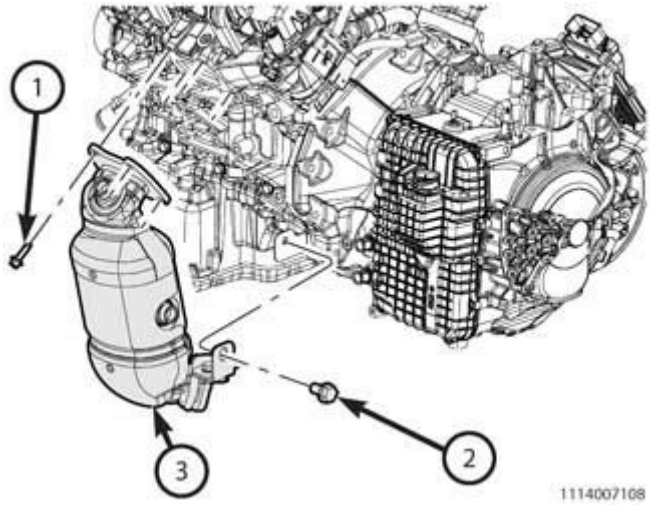

Fig. 53: Bolts, EGR Valve & EGR Cooler Manifold
Courtesy of CHRYSLER GROUP, LLC

3. Remove bolts (1 and 3) and the EGR valve (4) from the EGR cooler manifold (2).
4. Remove the EGR valve gasket and discard.

INSTALLATION

INSTALLATION

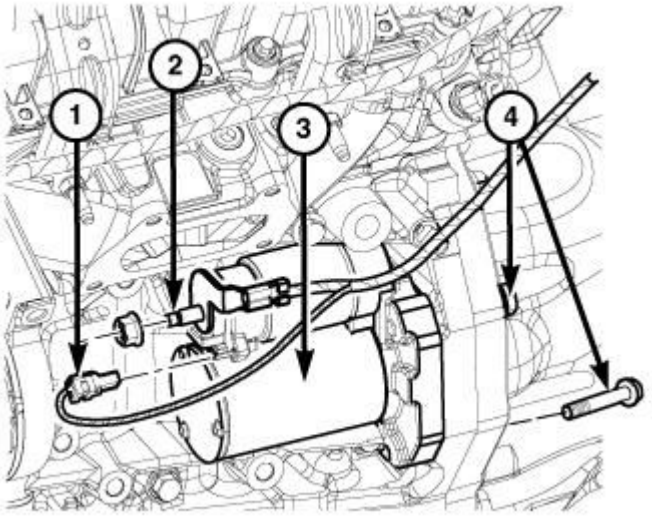

3074731

Fig. 54: Bolts, EGR Valve & EGR Cooler Manifold
Courtesy of CHRYSLER GROUP, LLC

1. Clean the gasket sealing surface.
2. Position the Exhaust Gas Recirculation (EGR) valve (4) and a new gasket onto the EGR cooler manifold (2). Tighten bolts (1 and 3) to 2 N.m (18 in. lbs.).

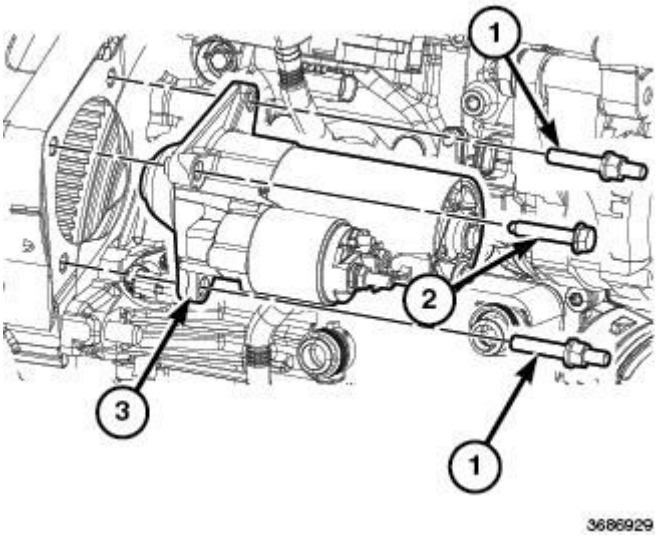

Fig. 55: Exhaust Gas Recirculation (EGR) system
Courtesy of CHRYSLER GROUP, LLC

3. Install the EGR cooler manifold (1). Refer to **COOLER, EGR, INSTALLATION** .
4. Connect the negative battery cable.

VALVE, EXHAUST GAS RECIRCULATION (EGR) AIRFLOW CONTROL

DESCRIPTION

DESCRIPTION

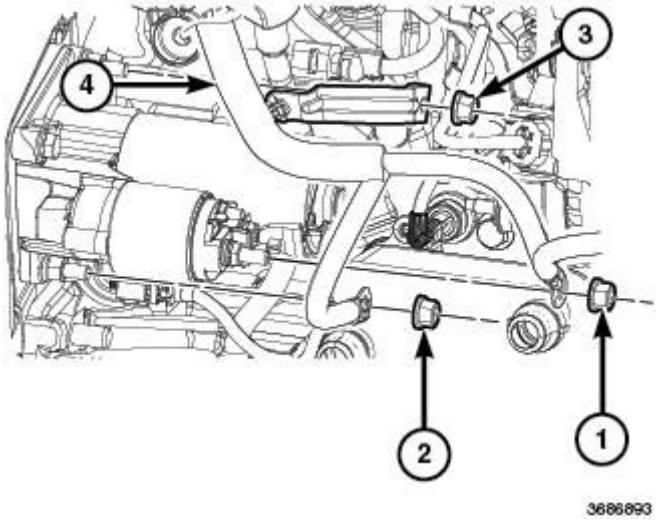

Fig. 56: Exhaust Gas Recirculation (EGR) Air Flow Control Valve & Bolts
Courtesy of CHRYSLER GROUP, LLC

The Exhaust Gas Recirculation (EGR) Air Flow Control Valve (2) is attached to the intake manifold. The EGR

Air Flow Control Valve is controlled by the Powertrain Control Module (PCM). Refer to the appropriate engine diagnosis and testing procedures for DTC's related to the EGR Airflow Control Valve.

REMOVAL

REMOVAL

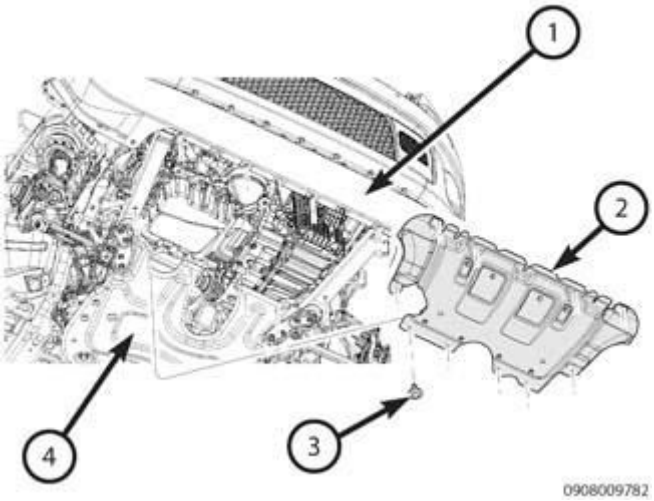

Fig. 57: Engine Cover
Courtesy of CHRYSLER GROUP, LLC

1. Disconnect the negative battery cable.
2. Remove the engine cover (1).

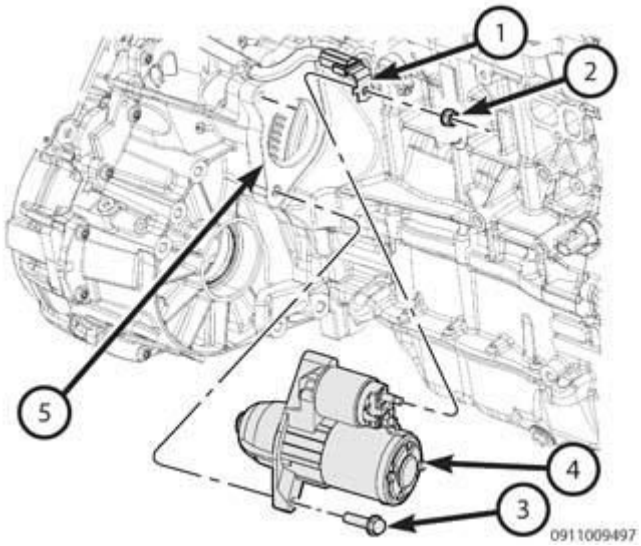

Fig. 58: CAC Air Tube & Nut
Courtesy of CHRYSLER GROUP, LLC

3. Remove nut (1) securing the CAC air tube (2) to transmission.

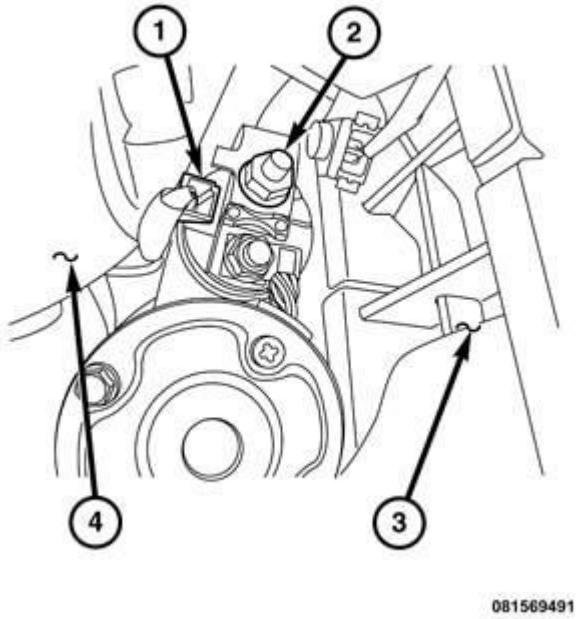

Fig. 59: CAC Air Tube & Clip
Courtesy of CHRYSLER GROUP, LLC

4. Release clip (2) and disconnect the lower portion of CAC air tube (3).

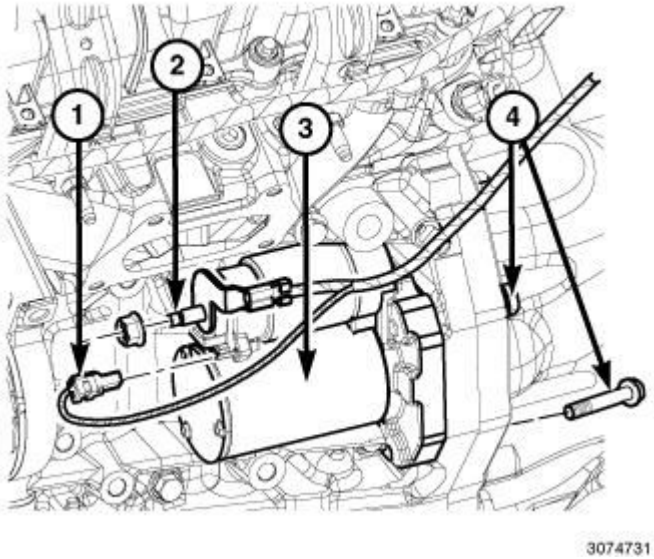

Fig. 60: Bolts & Charge Air Cooler (CAC) Air Tube
Courtesy of CHRYSLER GROUP, LLC

5. Remove bolts (1) and the Charge Air Cooler (CAC) air tube (2).

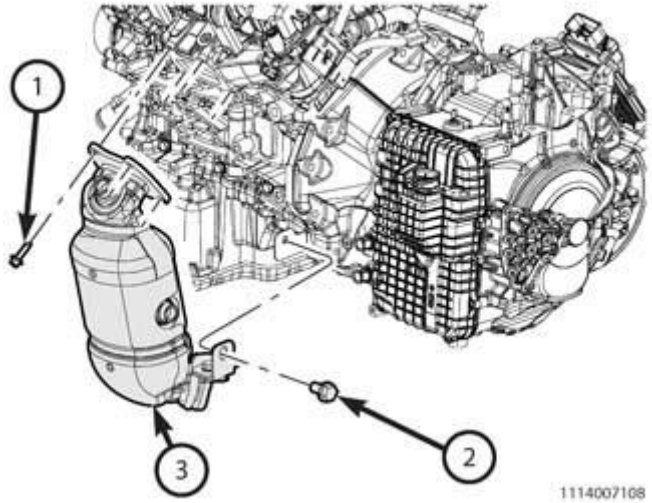

Fig. 61: Exhaust Gas Recirculation (EGR) Air Flow Control Valve & Bolts
Courtesy of CHRYSLER GROUP, LLC

6. Remove bolts (1) and position the EGR airflow control valve (2) to gain access to harness connector.

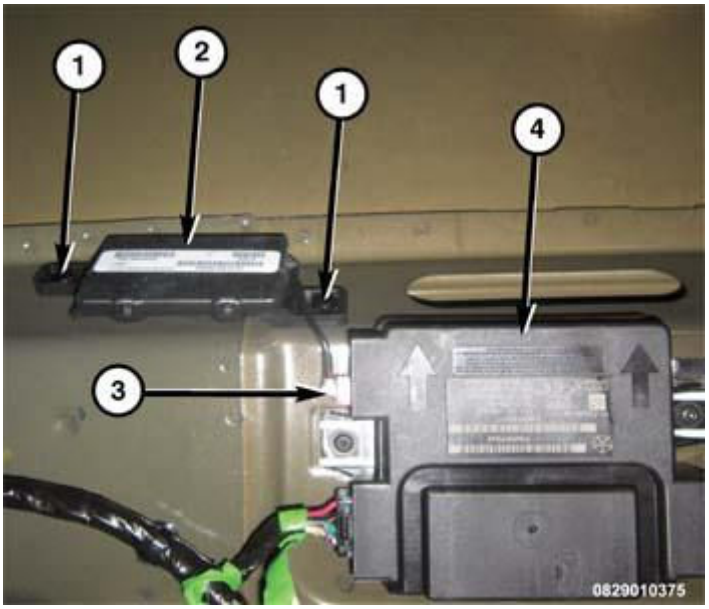

Fig. 62: EGR Airflow Control Valve Wire Harness Connector
Courtesy of CHRYSLER GROUP, LLC

7. Disconnect the EGR airflow control valve wire harness connector (1).

INSTALLATION

INSTALLATION

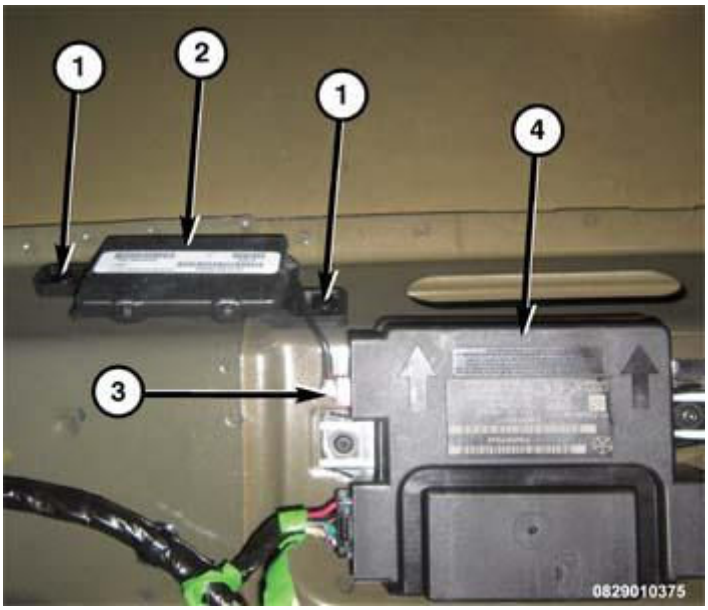

Fig. 63: O-Ring Seal
Courtesy of CHRYSLER GROUP, LLC

1. Clean all gasket sealing surfaces.
2. Install a new O-ring seal (1) onto the intake manifold.

Fig. 64: EGR Airflow Control Valve Wire Harness Connector
Courtesy of CHRYSLER GROUP, LLC

3. Connect the EGR airflow control valve wire harness connector (1).

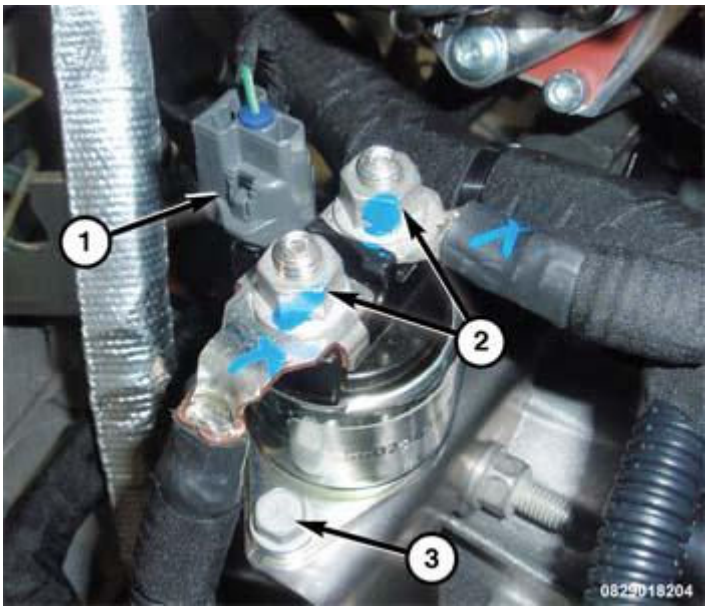

Fig. 65: Exhaust Gas Recirculation (EGR) Air Flow Control Valve & Bolts
Courtesy of CHRYSLER GROUP, LLC

4. Install the EGR airflow control valve (2). Tighten bolts (1) to 9 N.m (80 in. lbs.).

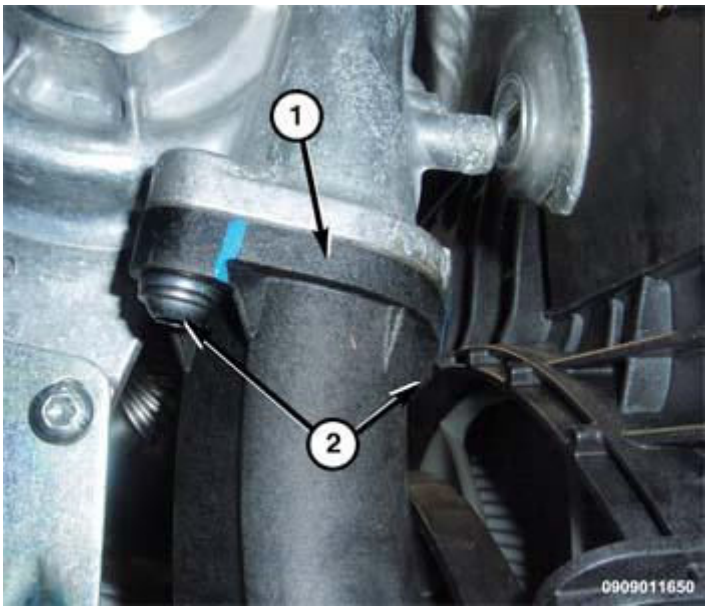

Fig. 66: Charge Air Cooler Air Tube & O-Ring Seal
Courtesy of CHRYSLER GROUP, LLC

5. Inspect the Charge Air Cooler (CAC) air tube (1) O-ring seal (2) and replace as necessary.

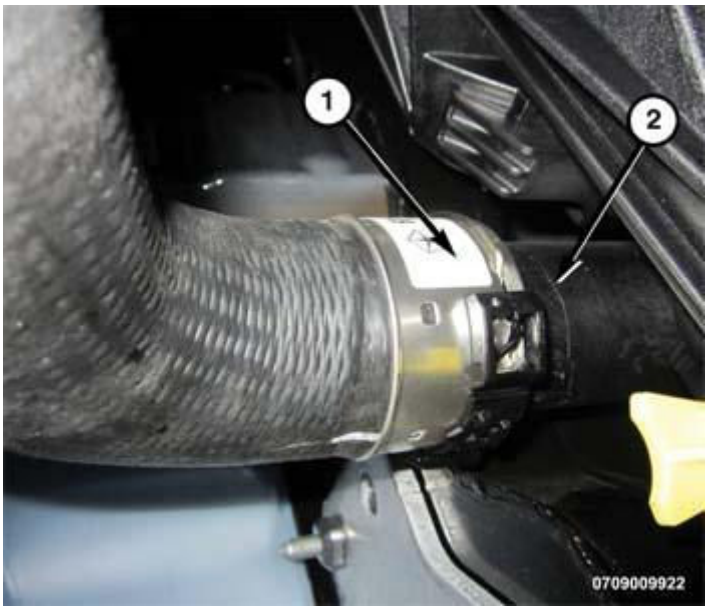

Fig. 67: Bolts & Charge Air Cooler (CAC) Air Tube
Courtesy of CHRYSLER GROUP, LLC

6. Install the CAC air tube (2) to the EGR air flow control valve. Tighten bolts (1) to 9 N.m (80 in. lbs.).

Fig. 68: CAC Air Tube & O-Ring Seal
Courtesy of CHRYSLER GROUP, LLC

7. Inspect the CAC air tube (1) O-ring seal (2) and replace as necessary.

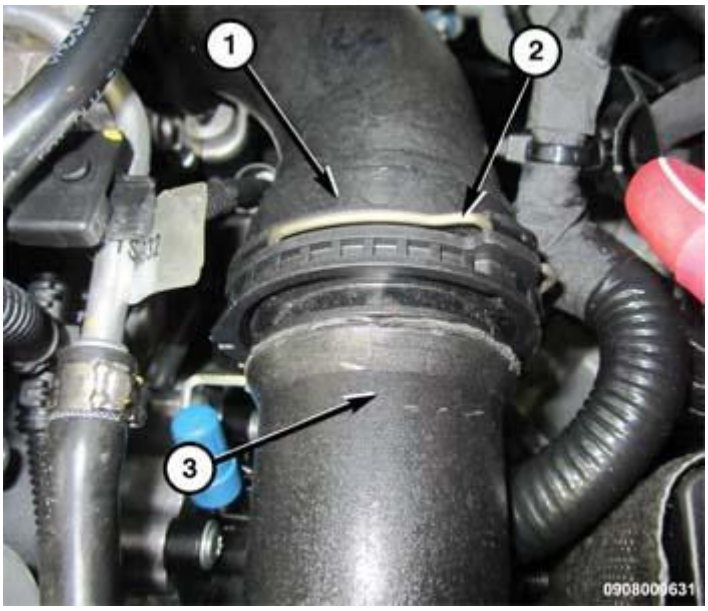

Fig. 69: CAC Air Tube & Clip
Courtesy of CHRYSLER GROUP, LLC

8. Install the CAC air tube (3) and install clip (2).

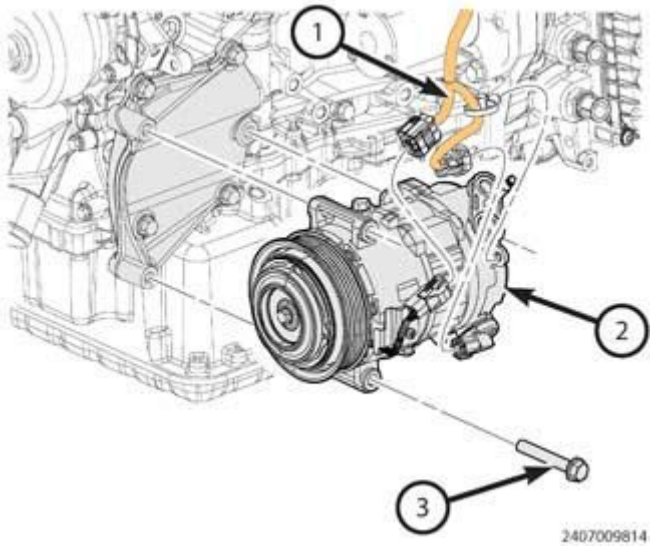

Fig. 70: CAC Air Tube & Nut
Courtesy of CHRYSLER GROUP, LLC

9. Install the CAC air tube nut (1) and tighten to 9 N.m (80 in. lbs.).

Fig. 71: Engine Cover
Courtesy of CHRYSLER GROUP, LLC

10. Install the engine cover (1).
11. Connect the negative battery cable.

VALVE, EXHAUST GAS RECIRCULATION (EGR) COOLER BYPASS

DESCRIPTION

DESCRIPTION

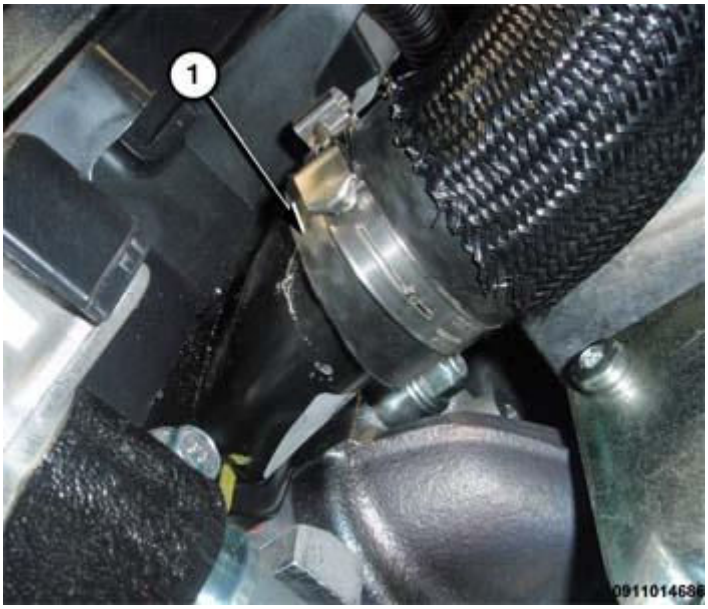

Fig. 72: Vacuum Hose, Exhaust Gas Recirculation (EGR) Wastegate Valve Solenoid, Two Bolts &

Wastegate Lever
Courtesy of CHRYSLER GROUP, LLC

The Exhaust Gas Recirculation (EGR) Vacuum Bypass Valve (2) is not a serviceable. If diagnosis has lead you to replace the EGR vacuum bypass valve then the EGR Valve/Cooler Manifold assembly has to be replaced. Refer to **COOLER, EGR, REMOVAL** .

EVAPORATIVE EMISSIONS, DIESEL

BREATHER, CLOSED CRANKCASE VENTILATION (CCV)

REMOVAL

REMOVAL

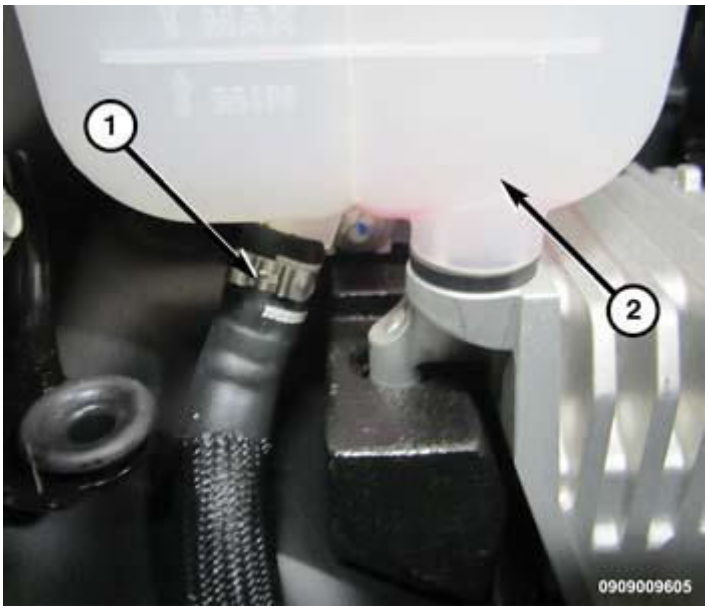

Fig. 73: Engine Cover
Courtesy of CHRYSLER GROUP, LLC

1. Disconnect the negative battery cable.
2. Remove the engine cover (1).
3. Remove the right front half shaft. Refer to **REMOVAL** .

Fig. 74: Crankshaft Position Sensor Harness Connector & CCV Tube Bolt
Courtesy of CHRYSLER GROUP, LLC

4. Disconnect the Crankshaft Position Sensor harness connector (1).
5. Remove the lover CCV tube bolt (2).

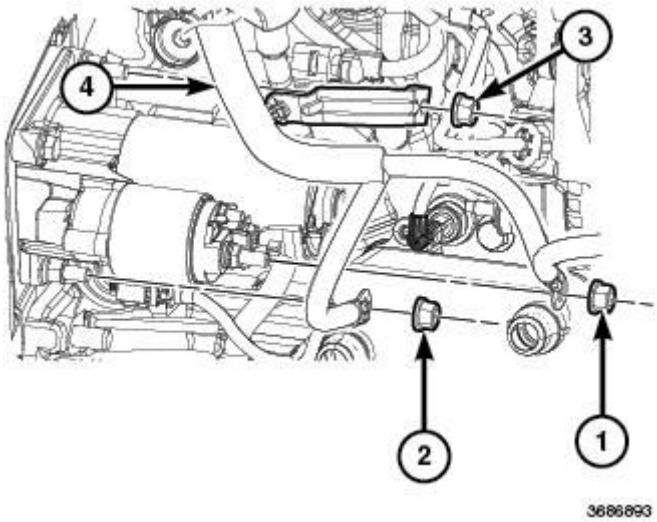

Fig. 75: CCV Housing Lower Bolt & Starter
Courtesy of CHRYSLER GROUP, LLC

6. Remove the CCV housing lower bolt (1).
7. Remove the starter (2). Refer to **STARTER, REMOVAL** .

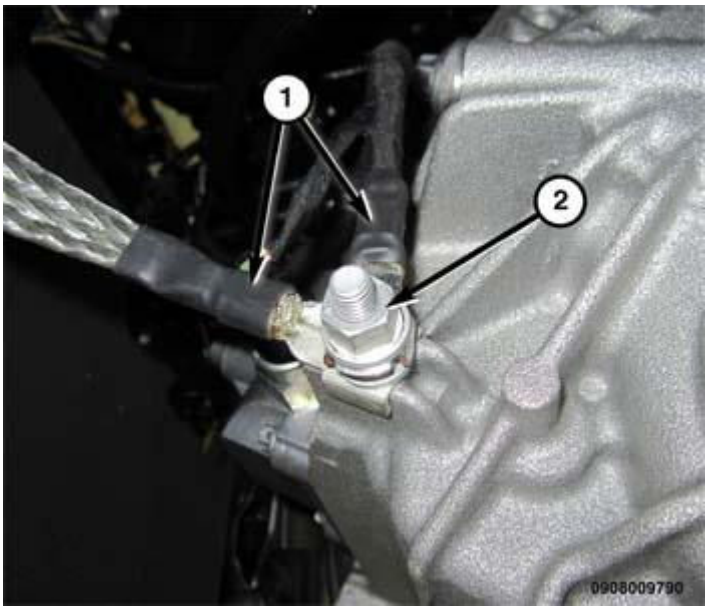

Fig. 76: Pliers, Hose Clamp, CCV Hose, Housing & Bolt
Courtesy of CHRYSLER GROUP, LLC

8. Using (special tool #10288, Pliers, Hose Clamp) (1), remove clamp and disconnect the CCV hose (2) from the CCV housing (4).
9. Remove bolt (3) the CCV housing from engine block.
10. Carefully pull up on lower tube and remove from oil pan.

INSTALLATION

INSTALLATION

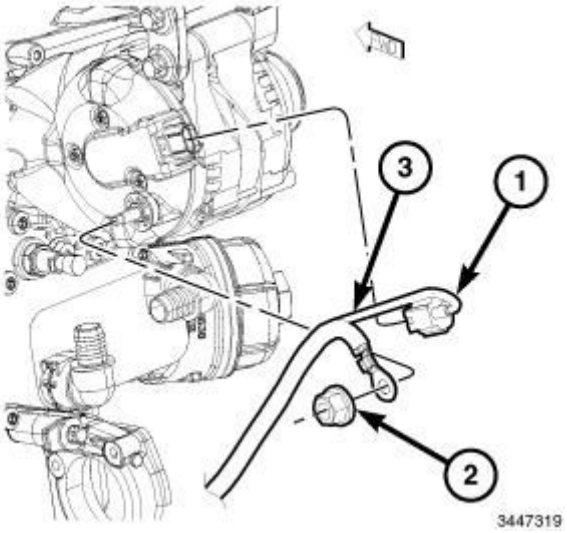

Fig. 77: CCV O-Ring Seal
Courtesy of CHRYSLER GROUP, LLC

1. Lubricate and install a new CCV O-ring seal (1).

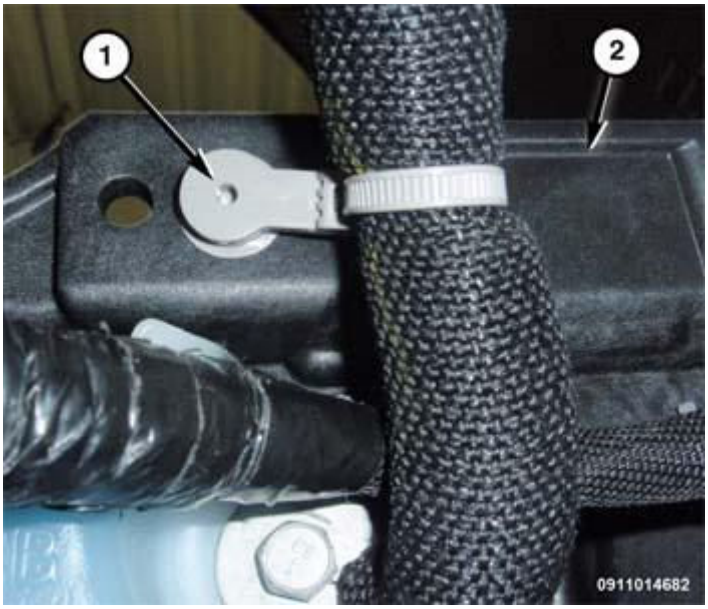

Fig. 78: O-Ring Seals & Lower CCV Tube
Courtesy of CHRYSLER GROUP, LLC

2. Lubricate and install new O-ring seals (2) onto lower CCV tube (1).
3. Install the lower CCV tube into the oil pan and tighten bolt finger tight.

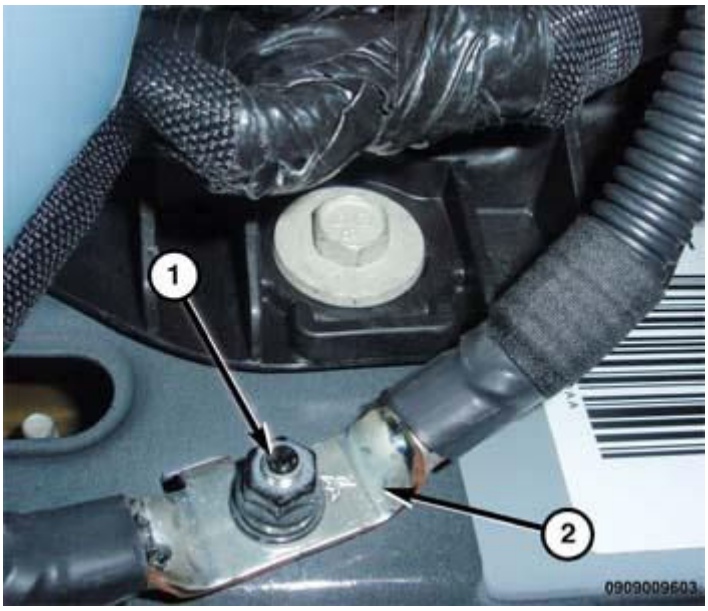

Fig. 79: CCV Housing Lower Bolt & Starter
Courtesy of CHRYSLER GROUP, LLC

4. Install the CCV housing into engine block. Tighten bolt to 9 N.m (80 in. lbs.).

5. Install the starter (2). Refer to **STARTER, INSTALLATION** .

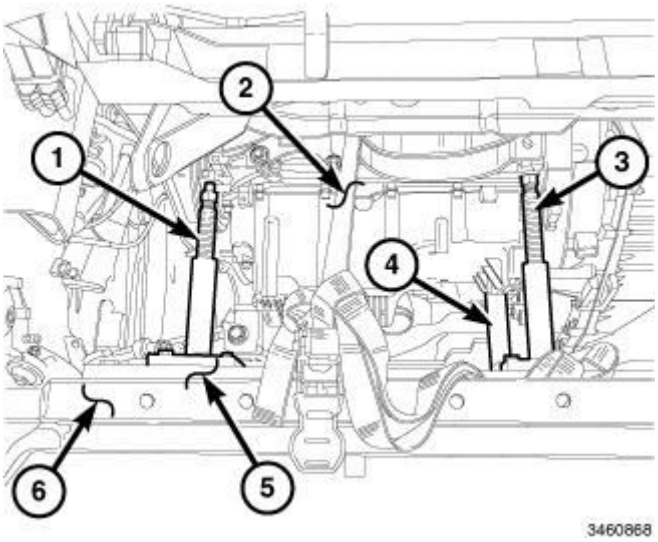

Fig. 80: Crankshaft Position Sensor Harness Connector & CCV Tube Bolt
Courtesy of CHRYSLER GROUP, LLC

6. Tighten the lower CCV tube bolt to 9 N.m (80 in. lbs.).
7. Connect the Crankshaft Position Sensor (CKP) wire harness connector (1).

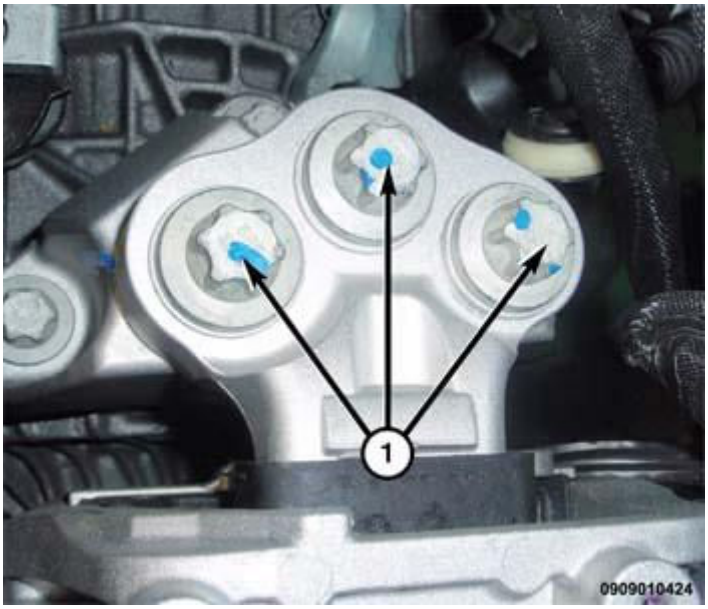

Fig. 81: Pliers, Hose Clamp, CCV Hose, Housing & Bolt
Courtesy of CHRYSLER GROUP, LLC

8. Connect the CCV hose (2) to the CCV housing (4). Using the (special tool #10288, Pliers, Hose Clamp) (1), install the clamp.

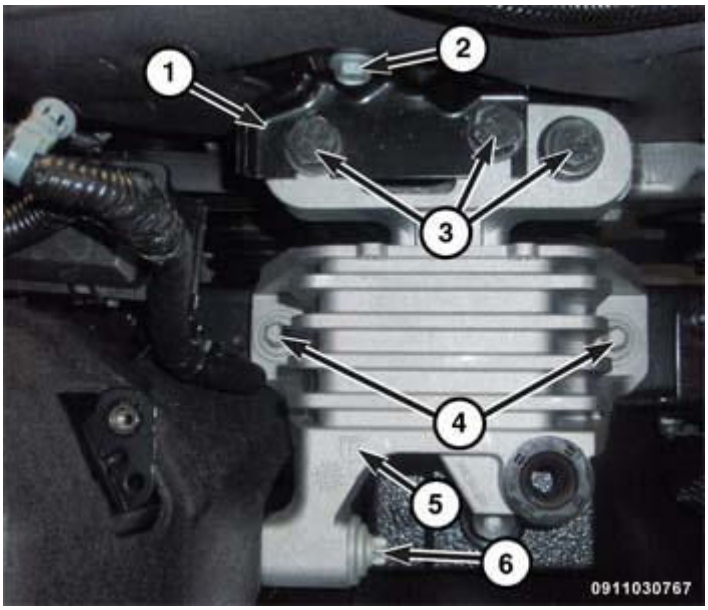

Fig. 82: Engine Cover
Courtesy of CHRYSLER GROUP, LLC

9. Install the right front half shaft. Refer to **INSTALLATION** .
10. Install the engine cover (1).
11. Connect the negative battery cable.

HEATER, CLOSED CRANKCASE VENTILATION (CCV)

REMOVAL

REMOVAL

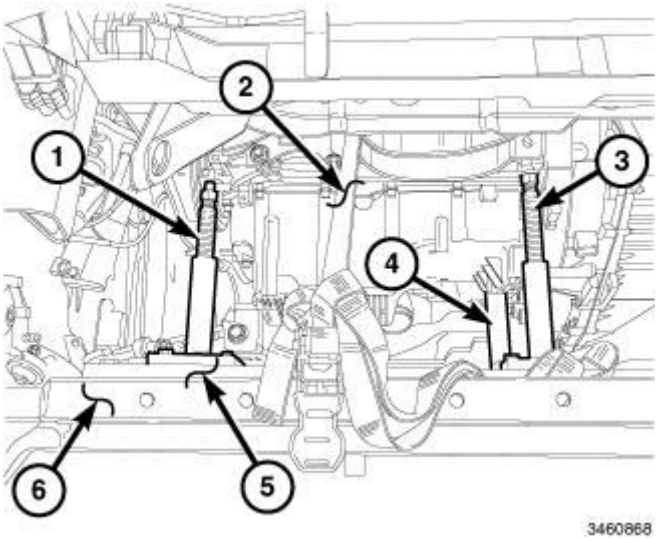

Fig. 83: Engine Cover

Courtesy of CHRYSLER GROUP, LLC

1. Remove the negative battery cable.
2. Remove the engine cover (1).

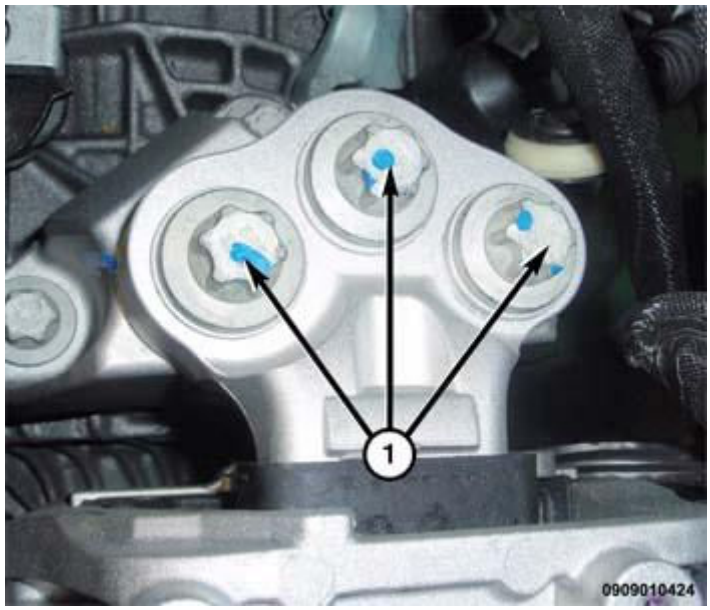

Fig. 84: Clamps, Vent Heater Connector & MAF Sensor Connector
Courtesy of CHRYSLER GROUP, LLC

3. Remove clamp (2) and the crankcase breather hose.
4. Disconnect the crankcase vent heater wire harness connector (4).
5. Remove Clamps (3) and carefully pull up on crankcase vent heater from turbocharger air inlet hose and breather hose.

INSTALLATION

INSTALLATION

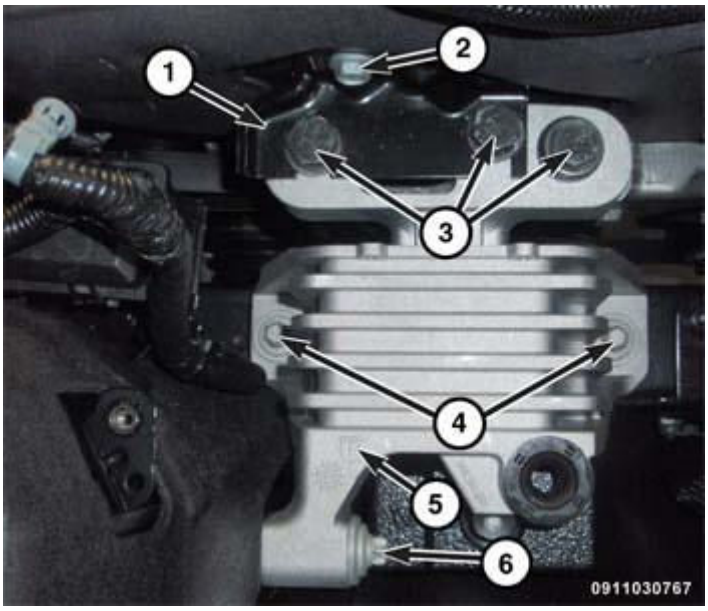

Fig. 85: Clamps, Vent Heater Connector & MAF Sensor Connector
Courtesy of CHRYSLER GROUP, LLC

1. Install the crankcase vent heater into turbocharger air inlet hose and breather hose. Tighten clamps (3).
2. Connect the crankcase vent heater wire harness connector (4).
3. Install the crankcase breather hose and install clamp (2).

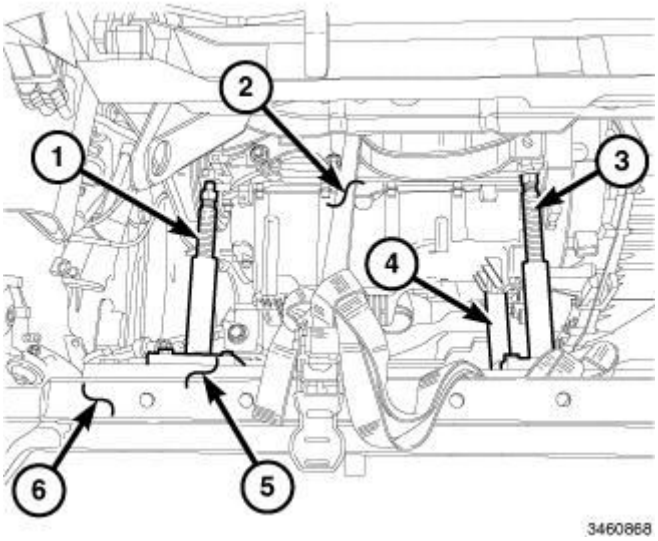

Fig. 86: Engine Cover
Courtesy of CHRYSLER GROUP, LLC

4. Install the engine cover (1).
5. Connect the negative battery cable.

2014 ENGINE

Starting - Non-DTC Based Diagnostics - Cherokee

DIAGNOSIS AND TESTING

NO CRANK (BCM EQUIPPED)

For a complete wiring diagram, **refer to SYSTEM WIRING DIAGRAMS article** .

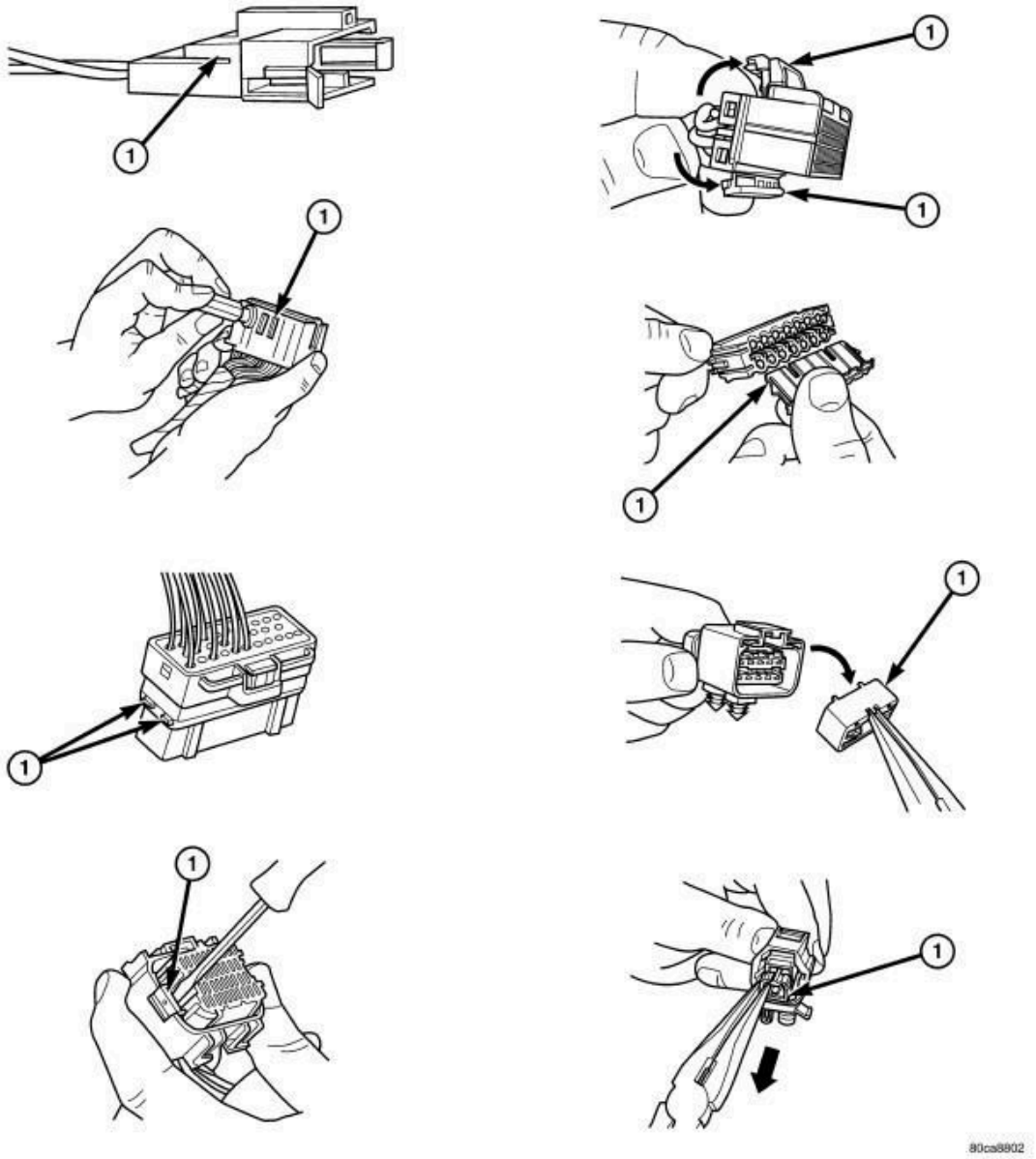

Fig. 1: Options Layout (LHD)
Courtesy of CHRYSLER GROUP, LLC

THEORY OF OPERATION

This vehicle will come equipped with one of two types of ignitions, the IGNM (IGnition Node Module) or a KIN (Keyless Ignition Node). The KIN uses a Keyless Go Start/Stop push button for cycling the ignition on/off. The IGNM does not use a Keyless Go Start/Stop push button, instead providing a visible slot for the FOBIK to fit into for cycling the ignition on/off.

When the operator presses the Start/Stop Button on a KIN or cycles the FOBIK in a IGNM type ignition, the FOBIK is validated wirelessly by the RF Hub (Radio Frequency Hub Module). If the FOBIK is recognized as belonging to the vehicle and is inside the vehicle, the system allows the ignition state of the vehicle to be changed by the operator between the LOCK, ACCESSORY, RUN, and START ignition states.

LED Operation

The LEDs in the IGNM and Start/Stop Button provide visual indication of the ignition system and button use to aid the driver. The Logic for LED control is implemented in the IGNM and RF HUB. The IGNM and Start/Stop Button contain four LEDs:

- OFF Indication
- ACC Indication (Accessory)
- ON Indication (On or Run)
- Ignition Switch Indicator (button backlight)

The LEDs indicate the vehicle ignition position and are driven by the CAN bus signals related to the ignition position. The Center LED (Ignition Switch Indicator) will blink if there is a related concern.

The RF HUB will log a DTC indicating an incorrect Ignition status value is present; in this state the ignition status is unknown. This will continue until the correct signal is received by the RF Hub.

EVIC Operation

The Keyless Go feature requires the vehicle to be equipped with an EVIC display for prompts and status information. The display messages are:

- Service Keyless System
- FOB Not Detected
- FOB Left Vehicle
- Not in Park
- Push Brake Pedal and Push Button to Start
- Push Clutch Pedal and Push Button to Start
- Vehicle not in Park Warning

BCM/RF Hub Module Interaction

There are a few things that must take place before the starter relay can apply voltage to the starter. Below are some key points to check when diagnosing a no crank condition.

The BCM requires two signals from the RF HUB to verify the ignition is in the run or start position. The voltage on the F20 circuit is one of these signals. It can be monitored in both the RF HUB and BCM data display screens as the Ignition Run/Start under the "Sensor" value. The run or start position voltage on this circuit should be at or close to battery voltage.

Simultaneously the RF HUB busses the Ignition Run/Start status to the BCM. The BCM monitors the bussed input information as the secondary verification on the Ignition Run/Start status. The bussed messages can be monitored with the scan tool in both the RF HUB and BCM data display screens.

The F20 circuit voltage and the bussed ignition run/start status message received by the BCM must agree to enable starting. Once the vehicle is started, the loss of only one ignition signal will not cause the vehicle to cycle off as long as the other feed still indicates a "run status".

The RF HUB also requires an input from the Gated park switch (hardwired) and the OK to start CAN Bus message from the TCM (Crank Enable).

Diagnostic Aids

NOTE: The No Crank Diagnostic serves as an aid in diagnosing the concern and is intended to be used as a general guide, since each no crank condition can be unique.

The No Crank Diagnostic Test assumes all of the following to be true:

- The condition is currently present.
- The TCM, PCM, RF HUB, and BCM are at the latest calibration (part number) levels.
- There are no active DTCs.
- There are no applicable Recalls.
- There are no applicable TSBs.
- There are no PCM inhibits (i.e. RPM, Trans Range, Clutch).
- The FOBIKs complete function and operation is correct.
- All battery cables and connections are clean and tight.
- There are no open fuses.
- The battery is fully charged and can pass a load test from the GR8 tester.
- The engine rotates freely.
- Any aftermarket equipment/wiring that has been installed is operating correctly.

Starter Relay Operation

In a no crank condition the Starter Relay can be missing power at pin 85, feed at pin 30, controlled ground at

pin 86 or output at pin 87. Further explanation of how a relay operates is listed below:

- Pin 85 receives power from the BCM once the parameters for the Ignition Switch position and status, and all inhibit monitors (i.e. clutch switch, RPM, etc.) are satisfied.
- Pin 30 is a constant B+ feed.
- Pin 86 is a controlled ground by a module (i.e. PCM or BCM). Once power is sent from the BCM to the pin 85 of the relay it passes through a coil and leaves the relay through pin 86 to the control module.
- Pin 87 is an output circuit to the Starter solenoid. Once the circuit on pin 86 is grounded by the control module, the coil winding in the relay magnetically pulls the internal switch closed. When the internal switch is closed the power at pin 30 is sent to pin 87 of the relay.

DIAGNOSTIC TEST

1. **STARTER RELAY CHECK**
    1. When attempting to start the vehicle, listen and if needed feel for a click at the starter relay in the PDC.

        NOTE: Some starter relays are internal to a module and may not be accessible, making it more difficult to hear, or feel the clicking response. It is possible for a poor ground or the Trans Range Sensor position to be lost causing the starter to click once.

        Did you hear an audible click at the relay or starter?

        Yes

        - Go To 9

        No

        - Go To 2
2. **STARTER RELAY INPUT CHECK**
    1. Use a 12 volt test light/DVOM to check for power at pin 85 of the starter relay.

        Is there Power/12 volts at pin 85?

        Yes

        - Go To 8

        No

        - Go To 3
3. **RF HUB OPERATION**

1. Using the scan tool, confirm the ignition switch status changes in the RF HUB under the data display screen for the "Sensor" values.

   Does the ignition switch status on the data screen match the physical position of the KIN/IGNM?

   Yes

   - Go To 5

   No

   - Go To 4

4. **REMOTE START ANTENNA**

   NOTE: If the vehicle is not equipped with Remote Start, proceed to the next test step.

   1. Cycle the ignition off.
   2. Disconnect the Remote Start Antenna from the RF HUB.
   3. Using one FOBIK and sitting in the driver's seat, attempt to start the vehicle.

   Did the vehicle start?

   Yes

   - Replace the Remote Start Antenna in accordance with the Service Information.
   - Perform the BODY VERIFICATION TEST. Refer to **BODY VERIFICATION TEST** .

   No

   - Go To 5

5. **BCM IGNITION STATUS**
   1. Using the scan tool, confirm the ignition switch status changes in the BCM under the data display screen for the "Bussed Input" and "Sensor" values.

   NOTE: The change of status in the BCM for the "Sensor" value validates the voltage activity (with very low amperage) of the F20 circuit.

   In the BCM, do both values for the ignition switch status match; and do they match those in the RF HUB?

   Yes

   - Go To 6

No

- If the status of the Ignition Switch position is not changing under the "Sensor" value, check the F20 circuit at the BCM for battery voltage with a DVOM (not a test light).
- If there is Battery voltage **at the BCM on the F20 circuit** verify all power, ground and bus circuits are ok for the BCM. If no problem found replace the BCM in accordance with Service Information. Refer to **MODULE, BODY CONTROL, REMOVAL** .
- If there is **NO** Battery voltage **at the BCM** on the F20 circuit, then check for voltage on the F20 circuit at the RF HUB.
- If there is Battery voltage **coming out of the RF HUB on the F20 circuit** , check the F20 circuit between the RF HUB and BCM for a short, open condition or high resistance.
- If there is **NO** Battery voltage **coming out of the RF HUB on the F20 circuit** verify all power, ground & communication circuits, & connections to the RF HUB prior to replacing. Refer to **MODULE, RADIO FREQUENCY (RF HUB), REMOVAL** .
- In the data screen, if the status of the Ignition Switch was not changing under the "Bussed Input" value, further diagnosis is needed between the RF HUB, (bus circuits, connections) and the BCM.

6. **PCM IGNITION, TRANS RANGE/CLUTCH SWITCH STATUS VERIFICATION**
   1. Using the scan tool confirm there are no inhibits that have been triggered in the PCM (i.e. Ignition Switch, Trans Range or Clutch Switch) and any switch inputs (filtered states) relating to the starting system function and operate correctly under the data display screen.

      Does the PCM show any inhibits (**not DTCs**) for starting (**not remote starting**)?

      Yes

      - Correct the inhibit reason listed.
      - If no problem can be found, then verify all power, ground and bus circuits to the PCM and replace the PCM in accordance with the Service Information. Refer to **MODULE, POWERTRAIN CONTROL, REMOVAL** .

      No

      - Go To 7

7. **BCM TO STARTER RELAY POWER INPUT CHECK**
   1. At this time if all the correct inputs for the ignition switch status are correct in the RF HUB, BCM and PCM, verify both power feeds are present (pin 30 and 85) to the Starter Relay while in the crank position.

      Are both power feeds present at the relay when the ignition is in the crank position?

      Yes

      - Go To 8

No

- If, there is no power to pin 30 or 85, no DTCs, TSBs, Recalls, or Inhibits replace the BCM in accordance with Service Information. Refer to **MODULE, BODY CONTROL, REMOVAL** .

8. **STARTER RELAY CONTROL CIRCUIT CHECK**
   1. Using a test light/DVOM determine if the Starter Control circuit at pin 86 of the relay is missing ground (at the relay if equipped with a removable relay or wiring to the internal relay) when the ignition is in the crank position.

      Was the Starter Control circuit for pin 86 being grounded when the ignition was in the crank position?

      Yes

      - Go To 10

      No

      - Verify the Starter Relay Control circuit from pin 86, has no shorts, opens or high resistance on the wiring going from the Starter Relay in the BCM (or PDC) to the PCM.
      - Verify the cables do not have excessive resistance by performing a voltage drop on the battery cables.

9. **STARTER RELAY OUTPUT CIRCUIT CHECK**

   NOTE: At this point in the test, when the key is in the crank position power has been verified at Pin 30 & 85, along with the control circuit being grounded for pin 86.

   1. Remove the Starter Relay Output circuit connector from the Starter solenoid.
   2. Using a test light/DVOM and ignition in the crank position check for power at pin 87 (If equipped with a removable relay or wiring to the internal relay) of the relay and at the connection to the starter.

      Was there power at pin 87 for the output circuit?

      Yes

      - Go To 10

      No

      - If power is missing to pin 30 of the starter relay the BCM is suspect. Verify all power, ground, communication circuits and connections to the BCM before replacing in accordance with service information.

- If power is missing at pin 87 of the starter relay and the relay is replaceable, change out the relay and recheck the concern. If a known good relay causes no change, check the Starter Output circuit from pin 87 of the relay to the starter for an open, short, excessive resistance, or poor connections to the solenoid or starter.
- Verify and Inspect the Starter to ensure it is free of corrosion, oil, and there is no damage, or binding conditions.
- Verify that all wiring, cables and connections are clean and tight.

10. **STARTER RELAY OUTPUT CIRCUIT LOAD TEST**
    1. Load test the Starter Relay output circuit going from the BCM to the Starter.

       Does the starter relay output circuit pass the load test?

       Yes

       - Verify that all connections are clean, tight and there is no damage to starter when fully inspected. If no problem found then replace the Starter in accordance with Service Information. Refer to **STARTER, REMOVAL** .

       No

       - Adjust the shift cable in accordance with the Service Information. Perform the POWERTRAIN VERIFICATION TEST. Refer to appropriate ELECTRICAL DIAGNOSTICS article.

REMOTE START INOPERATIVE (BCM - RF HUB EQUIPPED)

For a complete wiring diagram, **refer to SYSTEM WIRING DIAGRAMS article** .

THEORY OF OPERATION

The customer may notice that the signal range of the Remote Keyless Entry (RKE) system is reduced. This condition may be due to the RKE antenna where the RKE key fob may need to be closer than 3 meters (10 feet) before the functions available on the key fob will operate. The diagnostic test is provided as a diagnostic aid for the dealer technician.

It is necessary to confirm the correct sales code(s) are present in the Standard and Optional Equipment sections of DealerCONNECT to determine if a factory or a Mopar® Accessory Remote Start kit was installed. If the vehicle has a Mopar® Accessory Remote Start kit, verify that at least 20 minutes has elapsed since the sales codes were added to DealerCONNECT. Once it has been confirmed that the proper sales codes have been added and the allotted time has passed, verify the vehicle has been configured properly using the scan tool. Also, make sure that the system shows as enabled in the BCM and that the temporary remote start override is set to disabled.

For any further assistance on diagnosing the installed Mopar® Accessory kit contact the Mopar® Accessories group at 800-84-MOPAR (66787).

DIAGNOSTIC TEST

1. **REMOTE START FUNCTION**

   NOTE: In some cases the vehicle will start then stall, indicating a fuel level concern (less than a quarter of a tank). Before proceeding verify there is enough fuel in the tank for the vehicle to start and run.

   1. Attempt to start the vehicle with the FOBIK.

      Does the vehicle start when using the FOBIK?

      Yes

      - At this time the Remote Start is functioning properly.
      - Using the scan tool, check for any related Starting, Communication, or Ignition related DTCs that may inhibit the Remote Starting feature. Check the BCM for any previous Remote Start Inhibits and mileage that were stored. Inhibits may be found under the system tests or miscellaneous functions tab.

      No

      - Go To 2

2. **REMOTE START VISUAL CHECK**

   1. While pressing the remote start button on the FOBIK, observe the exterior lights and the horn operation.

      Does the horn sound and the exterior parking lights flash?

      Yes

      - Go To 3

      No

      - Go To 4

3. **CHECKING BCM INHIBITS**

   NOTE: Since the horn sounds and the parking lights flash, this verifies the BCM is receiving the CAN BUS message from the RF HUB. It also verifies the RF signal for Remote Start from the FOBIK to the RF HUB is operating correctly.

   1. Using the scan tool, check the Remote Start inhibits of the BCM or any ACTIVE DTCs listed in all modules.

NOTE: Inhibits may be found under the system tests or miscellaneous functions tab. The fuel level may not be a listed inhibit.

Are there any Remote Start inhibits or any ACTIVE DTCs listed in the entire vehicle?

Yes

- For any inhibits for a complete list of Remote Start inhibits. Refer to **DIAGNOSIS AND TESTING** .
- For any ACTIVE DTCs, perform the appropriate diagnostic procedure in **DTC INDEX** article.

No

- Check for any related TSBs prior to replacing the BCM. If no related TSBs are found, then replace the BCM in accordance with the Service Information. Refer to **MODULE, BODY CONTROL, REMOVAL** .

4. **RKE FUNCTION SHORT RANGE**
   1. While standing next to the Driver door and using the FOBIK, attempt to lock and unlock the doors.

      Does the RKE function properly?

      Yes

      - Go To 5

      No

      - Go To 7
5. **RKE FUNCTION MID RANGE**
   1. While standing 20 feet from the vehicle and using the FOBIK, attempt to lock and unlock the doors.

      Does the RKE function properly at 20 feet?

      Yes

      - Go To 6

      No

      - Go To 7
6. **RKE FUNCTION LONG RANGE**
   1. While standing 100 feet from the vehicle and using the FOBIK, attempt to lock and unlock the

doors.

Does the RKE function properly at 100 feet?

Yes

- Go To 9

No

- Go To 7

7. **FOBIK SIGNAL STRENGTH**
   1. Use the RF Tester 9001 to check the signal strength of the FOBIK.

      Does the FOBIK pass?

      Yes

      - Go To 10

      No

      - Go To 8

8. **CHECKING THE FOBIK**
   1. Replace the battery in the FOBIK with a known good battery and recheck the signal from the FOBIK with the RF Tester 9001.

      Does the FOBIK pass?

      Yes

      - Go To 9

      No

      - Check for any related TSBs prior to replacing the FOBIK. If no related TSBs are found, then replace the FOBIK in accordance with the Service Information. Refer to **TRANSMITTER, INTEGRATED KEY FOB, STANDARD PROCEDURE** .

9. **CHECKING FOR ACTIVE DTCs**

   NOTE: The RKE portion of the FOBIK is operational, this verifies that the RF HUB is capable of receiving signals and communicating to operate the locks.

   1. Use the scan tool to check for ACTIVE DTCs.

Did the scan tool show any ACTIVE DTCs in the entire vehicle?

Yes

- Diagnose the DTCs in accordance with the Service Information before proceeding with the Remote Start Inoperative concern.

No

- Go To 10

10. **CHECKING THE RF HUB**

NOTE: **Even though the RKE function of the system may work with no concern, the BCM is either not receiving a message or is receiving a corrupt message from the RF HUB for remote start operation.**

1. While sitting in the driver seat and using the scan tool, monitor the RF HUB on the data display screen for changes when the Remote Start button of the FOBIK is pressed.

   Did the status change when the Remote Start button of the FOBIK was pressed?

   Yes

   - Go To 11

   No

   - Go To 12

11. **CHECKING BCM INHIBITS**

NOTE: **The parking lights flash and the horn are inoperative when using the FOBIK, this indicates a faulty BCM or "Inhibit" that may be preventing the start request from occurring.**

1. Use the scan tool to check for any Remote Start inhibits listed in the BCM. This may be found under the system tests or miscellaneous functions tab.

   Were there any Remote Start inhibits listed in the BCM?

   Yes

   - Perform the REMOTE START SYSTEM Diagnosing and Testing. Refer to **DIAGNOSIS AND TESTING** .

   No

- If this has had a Mopar® Accessory kit installed verify the correct Sales Code for Remote Start has been added to Dealer Connect and a Restore Vehicle Configuration has been performed.
- Confirm the system is enabled; and the temporary Remote Start override is set to disabled in the BCM and contact the Mopar® Accessories group (800-84-Mopar) for further details before proceeding.
- If this has a factory installed Remote Start, check for any related TSBs prior to replacing the BCM. If no related TSBs are found, then replace the BCM in accordance with the Service Information.

12. **CHECKING THE REMOTE START ANTENNA**
    1. Cycle the ignition off
    2. Disconnect the Remote Start antenna from the RF Hub.
    3. Using one FOBIK and sitting in the driver's seat, attempt to start the vehicle.

    Did the vehicle start?

    Yes

    - Replace the Remote Start Antenna in accordance with the Service Information.
    - Perform the BODY VERIFICATION TEST. Refer to **BODY VERIFICATION TEST** .

    No

    - Verify all power, ground, communication circuits, & connections to the RF HUB prior to replacing. Refer to **MODULE, RADIO FREQUENCY (RF HUB), REMOVAL** .

2014 ENGINE

Starting - Non-DTC Based Diagnostics - Cherokee

DIAGNOSIS AND TESTING

NO CRANK (BCM EQUIPPED)

For a complete wiring diagram, **refer to SYSTEM WIRING DIAGRAMS article** .

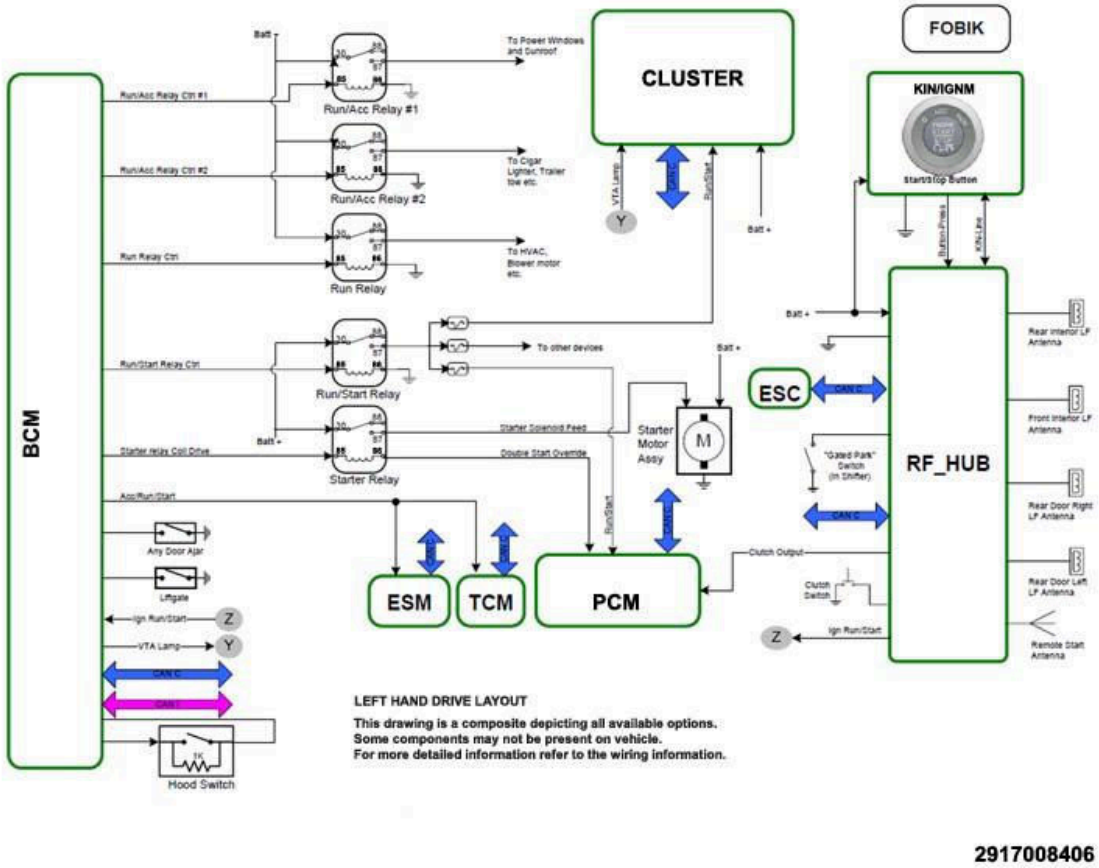

Fig. 1: Options Layout (LHD)
Courtesy of CHRYSLER GROUP, LLC

THEORY OF OPERATION

This vehicle will come equipped with one of two types of ignitions, the IGNM (IGnition Node Module) or a KIN (Keyless Ignition Node). The KIN uses a Keyless Go Start/Stop push button for cycling the ignition on/off. The IGNM does not use a Keyless Go Start/Stop push button, instead providing a visible slot for the FOBIK to fit into for cycling the ignition on/off.

When the operator presses the Start/Stop Button on a KIN or cycles the FOBIK in a IGNM type ignition, the FOBIK is validated wirelessly by the RF Hub (Radio Frequency Hub Module). If the FOBIK is recognized as belonging to the vehicle and is inside the vehicle, the system allows the ignition state of the vehicle to be changed by the operator between the LOCK, ACCESSORY, RUN, and START ignition states.

LED Operation

The LEDs in the IGNM and Start/Stop Button provide visual indication of the ignition system and button use to aid the driver. The Logic for LED control is implemented in the IGNM and RF HUB. The IGNM and Start/Stop Button contain four LEDs:

- OFF Indication
- ACC Indication (Accessory)
- ON Indication (On or Run)
- Ignition Switch Indicator (button backlight)

The LEDs indicate the vehicle ignition position and are driven by the CAN bus signals related to the ignition position. The Center LED (Ignition Switch Indicator) will blink if there is a related concern.

The RF HUB will log a DTC indicating an incorrect Ignition status value is present; in this state the ignition status is unknown. This will continue until the correct signal is received by the RF Hub.

EVIC Operation

The Keyless Go feature requires the vehicle to be equipped with an EVIC display for prompts and status information. The display messages are:

- Service Keyless System
- FOB Not Detected
- FOB Left Vehicle
- Not in Park
- Push Brake Pedal and Push Button to Start
- Push Clutch Pedal and Push Button to Start
- Vehicle not in Park Warning

BCM/RF Hub Module Interaction

There are a few things that must take place before the starter relay can apply voltage to the starter. Below are some key points to check when diagnosing a no crank condition.

The BCM requires two signals from the RF HUB to verify the ignition is in the run or start position. The voltage on the F20 circuit is one of these signals. It can be monitored in both the RF HUB and BCM data display screens as the Ignition Run/Start under the "Sensor" value. The run or start position voltage on this circuit should be at or close to battery voltage.

Simultaneously the RF HUB busses the Ignition Run/Start status to the BCM. The BCM monitors the bussed input information as the secondary verification on the Ignition Run/Start status. The bussed messages can be monitored with the scan tool in both the RF HUB and BCM data display screens.

The F20 circuit voltage and the bussed ignition run/start status message received by the BCM must agree to enable starting. Once the vehicle is started, the loss of only one ignition signal will not cause the vehicle to cycle off as long as the other feed still indicates a "run status".

The RF HUB also requires an input from the Gated park switch (hardwired) and the OK to start CAN Bus message from the TCM (Crank Enable).

Diagnostic Aids

NOTE: The No Crank Diagnostic serves as an aid in diagnosing the concern and is intended to be used as a general guide, since each no crank condition can be unique.

The No Crank Diagnostic Test assumes all of the following to be true:

- The condition is currently present.
- The TCM, PCM, RF HUB, and BCM are at the latest calibration (part number) levels.
- There are no active DTCs.
- There are no applicable Recalls.
- There are no applicable TSBs.
- There are no PCM inhibits (i.e. RPM, Trans Range, Clutch).
- The FOBIKs complete function and operation is correct.
- All battery cables and connections are clean and tight.
- There are no open fuses.
- The battery is fully charged and can pass a load test from the GR8 tester.
- The engine rotates freely.
- Any aftermarket equipment/wiring that has been installed is operating correctly.

Starter Relay Operation

In a no crank condition the Starter Relay can be missing power at pin 85, feed at pin 30, controlled ground at pin 86 or output at pin 87. Further explanation of how a relay operates is listed below:

- Pin 85 receives power from the BCM once the parameters for the Ignition Switch position and status, and all inhibit monitors (i.e. clutch switch, RPM, etc.) are satisfied.
- Pin 30 is a constant B+ feed.
- Pin 86 is a controlled ground by a module (i.e. PCM or BCM). Once power is sent from the BCM to the pin 85 of the relay it passes through a coil and leaves the relay through pin 86 to the control module.
- Pin 87 is an output circuit to the Starter solenoid. Once the circuit on pin 86 is grounded by the control

module, the coil winding in the relay magnetically pulls the internal switch closed. When the internal switch is closed the power at pin 30 is sent to pin 87 of the relay.

DIAGNOSTIC TEST

1. **STARTER RELAY CHECK**
   1. When attempting to start the vehicle, listen and if needed feel for a click at the starter relay in the PDC.

      NOTE: Some starter relays are internal to a module and may not be accessible, making it more difficult to hear, or feel the clicking response. It is possible for a poor ground or the Trans Range Sensor position to be lost causing the starter to click once.

      Did you hear an audible click at the relay or starter?

      Yes

      - Go To 9

      No

      - Go To 2
2. **STARTER RELAY INPUT CHECK**
   1. Use a 12 volt test light/DVOM to check for power at pin 85 of the starter relay.

      Is there Power/12 volts at pin 85?

      Yes

      - Go To 8

      No

      - Go To 3
3. **RF HUB OPERATION**
   1. Using the scan tool, confirm the ignition switch status changes in the RF HUB under the data display screen for the "Sensor" values.

      Does the ignition switch status on the data screen match the physical position of the KIN/IGNM?

      Yes

      - Go To 5

No

- Go To 4

4. **REMOTE START ANTENNA**

NOTE: If the vehicle is not equipped with Remote Start, proceed to the next test step.

1. Cycle the ignition off.
2. Disconnect the Remote Start Antenna from the RF HUB.
3. Using one FOBIK and sitting in the driver's seat, attempt to start the vehicle.

Did the vehicle start?

Yes

- Replace the Remote Start Antenna in accordance with the Service Information.
- Perform the BODY VERIFICATION TEST. Refer to **BODY VERIFICATION TEST** .

No

- Go To 5

5. **BCM IGNITION STATUS**

1. Using the scan tool, confirm the ignition switch status changes in the BCM under the data display screen for the "Bussed Input" and "Sensor" values.

NOTE: The change of status in the BCM for the "Sensor" value validates the voltage activity (with very low amperage) of the F20 circuit.

In the BCM, do both values for the ignition switch status match; and do they match those in the RF HUB?

Yes

- Go To 6

No

- If the status of the Ignition Switch position is not changing under the "Sensor" value, check the F20 circuit at the BCM for battery voltage with a DVOM (not a test light).
- If there is Battery voltage **at the BCM on the F20 circuit** verify all power, ground and bus circuits are ok for the BCM. If no problem found replace the BCM in accordance with Service Information. Refer to **MODULE, BODY CONTROL, REMOVAL** .
- If there is **NO** Battery voltage **at the BCM** on the F20 circuit, then check for voltage on the

F20 circuit at the RF HUB.

- If there is Battery voltage **coming out of the RF HUB on the F20 circuit** , check the F20 circuit between the RF HUB and BCM for a short, open condition or high resistance.
- If there is **NO** Battery voltage **coming out of the RF HUB on the F20 circuit** verify all power, ground & communication circuits, & connections to the RF HUB prior to replacing. Refer to **MODULE, RADIO FREQUENCY (RF HUB), REMOVAL** .
- In the data screen, if the status of the Ignition Switch was not changing under the "Bussed Input" value, further diagnosis is needed between the RF HUB, (bus circuits, connections) and the BCM.

6. **PCM IGNITION, TRANS RANGE/CLUTCH SWITCH STATUS VERIFICATION**
   1. Using the scan tool confirm there are no inhibits that have been triggered in the PCM (i.e. Ignition Switch, Trans Range or Clutch Switch) and any switch inputs (filtered states) relating to the starting system function and operate correctly under the data display screen.

      Does the PCM show any inhibits (**not DTCs**) for starting (**not remote starting**)?

      Yes

      - Correct the inhibit reason listed.
      - If no problem can be found, then verify all power, ground and bus circuits to the PCM and replace the PCM in accordance with the Service Information. Refer to **MODULE, POWERTRAIN CONTROL, REMOVAL** .

      No

      - Go To 7
7. **BCM TO STARTER RELAY POWER INPUT CHECK**
   1. At this time if all the correct inputs for the ignition switch status are correct in the RF HUB, BCM and PCM, verify both power feeds are present (pin 30 and 85) to the Starter Relay while in the crank position.

      Are both power feeds present at the relay when the ignition is in the crank position?

      Yes

      - Go To 8

      No

      - If, there is no power to pin 30 or 85, no DTCs, TSBs, Recalls, or Inhibits replace the BCM in accordance with Service Information. Refer to **MODULE, BODY CONTROL, REMOVAL** .
8. **STARTER RELAY CONTROL CIRCUIT CHECK**
   1. Using a test light/DVOM determine if the Starter Control circuit at pin 86 of the relay is missing

ground (at the relay if equipped with a removable relay or wiring to the internal relay) when the ignition is in the crank position.

Was the Starter Control circuit for pin 86 being grounded when the ignition was in the crank position?

Yes

- Go To 10

No

- Verify the Starter Relay Control circuit from pin 86, has no shorts, opens or high resistance on the wiring going from the Starter Relay in the BCM (or PDC) to the PCM.
- Verify the cables do not have excessive resistance by performing a voltage drop on the battery cables.

9. **STARTER RELAY OUTPUT CIRCUIT CHECK**

NOTE: At this point in the test, when the key is in the crank position power has been verified at Pin 30 & 85, along with the control circuit being grounded for pin 86.

1. Remove the Starter Relay Output circuit connector from the Starter solenoid.
2. Using a test light/DVOM and ignition in the crank position check for power at pin 87 (If equipped with a removable relay or wiring to the internal relay) of the relay and at the connection to the starter.

Was there power at pin 87 for the output circuit?

Yes

- Go To 10

No

- If power is missing to pin 30 of the starter relay the BCM is suspect. Verify all power, ground, communication circuits and connections to the BCM before replacing in accordance with service information.
- If power is missing at pin 87 of the starter relay and the relay is replaceable, change out the relay and recheck the concern. If a known good relay causes no change, check the Starter Output circuit from pin 87 of the relay to the starter for an open, short, excessive resistance, or poor connections to the solenoid or starter.
- Verify and Inspect the Starter to ensure it is free of corrosion, oil, and there is no damage, or binding conditions.
- Verify that all wiring, cables and connections are clean and tight.

10. **STARTER RELAY OUTPUT CIRCUIT LOAD TEST**
    1. Load test the Starter Relay output circuit going from the BCM to the Starter.

       Does the starter relay output circuit pass the load test?

       Yes

       - Verify that all connections are clean, tight and there is no damage to starter when fully inspected. If no problem found then replace the Starter in accordance with Service Information. Refer to **STARTER, REMOVAL** .

       No

       - Adjust the shift cable in accordance with the Service Information. Perform the POWERTRAIN VERIFICATION TEST. Refer to appropriate ELECTRICAL DIAGNOSTICS article.

REMOTE START INOPERATIVE (BCM - RF HUB EQUIPPED)

For a complete wiring diagram, **refer to SYSTEM WIRING DIAGRAMS article** .

THEORY OF OPERATION

The customer may notice that the signal range of the Remote Keyless Entry (RKE) system is reduced. This condition may be due to the RKE antenna where the RKE key fob may need to be closer than 3 meters (10 feet) before the functions available on the key fob will operate. The diagnostic test is provided as a diagnostic aid for the dealer technician.

It is necessary to confirm the correct sales code(s) are present in the Standard and Optional Equipment sections of DealerCONNECT to determine if a factory or a Mopar® Accessory Remote Start kit was installed. If the vehicle has a Mopar® Accessory Remote Start kit, verify that at least 20 minutes has elapsed since the sales codes were added to DealerCONNECT. Once it has been confirmed that the proper sales codes have been added and the allotted time has passed, verify the vehicle has been configured properly using the scan tool. Also, make sure that the system shows as enabled in the BCM and that the temporary remote start override is set to disabled.

For any further assistance on diagnosing the installed Mopar® Accessory kit contact the Mopar® Accessories group at 800-84-MOPAR (66787).

DIAGNOSTIC TEST

1. **REMOTE START FUNCTION**

NOTE: **In some cases the vehicle will start then stall, indicating a fuel level concern (less than a quarter of a tank). Before proceeding verify there is enough fuel in the tank for the vehicle to start and run.**

1. Attempt to start the vehicle with the FOBIK.

   Does the vehicle start when using the FOBIK?

   Yes

   - At this time the Remote Start is functioning properly.
   - Using the scan tool, check for any related Starting, Communication, or Ignition related DTCs that may inhibit the Remote Starting feature. Check the BCM for any previous Remote Start Inhibits and mileage that were stored. Inhibits may be found under the system tests or miscellaneous functions tab.

   No

   - Go To 2

2. **REMOTE START VISUAL CHECK**
   1. While pressing the remote start button on the FOBIK, observe the exterior lights and the horn operation.

      Does the horn sound and the exterior parking lights flash?

      Yes

      - Go To 3

      No

      - Go To 4

3. **CHECKING BCM INHIBITS**

   NOTE: Since the horn sounds and the parking lights flash, this verifies the BCM is receiving the CAN BUS message from the RF HUB. It also verifies the RF signal for Remote Start from the FOBIK to the RF HUB is operating correctly.

   1. Using the scan tool, check the Remote Start inhibits of the BCM or any ACTIVE DTCs listed in all modules.

      NOTE: Inhibits may be found under the system tests or miscellaneous functions tab. The fuel level may not be a listed inhibit.

      Are there any Remote Start inhibits or any ACTIVE DTCs listed in the entire vehicle?

      Yes

- For any inhibits for a complete list of Remote Start inhibits. Refer to **DIAGNOSIS AND TESTING** .
- For any ACTIVE DTCs, perform the appropriate diagnostic procedure in **DTC INDEX** article.

No

- Check for any related TSBs prior to replacing the BCM. If no related TSBs are found, then replace the BCM in accordance with the Service Information. Refer to **MODULE, BODY CONTROL, REMOVAL** .

4. **RKE FUNCTION SHORT RANGE**
   1. While standing next to the Driver door and using the FOBIK, attempt to lock and unlock the doors.

      Does the RKE function properly?

      Yes

      - Go To 5

      No

      - Go To 7
5. **RKE FUNCTION MID RANGE**
   1. While standing 20 feet from the vehicle and using the FOBIK, attempt to lock and unlock the doors.

      Does the RKE function properly at 20 feet?

      Yes

      - Go To 6

      No

      - Go To 7
6. **RKE FUNCTION LONG RANGE**
   1. While standing 100 feet from the vehicle and using the FOBIK, attempt to lock and unlock the doors.

      Does the RKE function properly at 100 feet?

      Yes

      - Go To 9

No

- Go To 7

7. **FOBIK SIGNAL STRENGTH**
   1. Use the RF Tester 9001 to check the signal strength of the FOBIK.

      Does the FOBIK pass?

      Yes

      - Go To 10

      No

      - Go To 8

8. **CHECKING THE FOBIK**
   1. Replace the battery in the FOBIK with a known good battery and recheck the signal from the FOBIK with the RF Tester 9001.

      Does the FOBIK pass?

      Yes

      - Go To 9

      No

      - Check for any related TSBs prior to replacing the FOBIK. If no related TSBs are found, then replace the FOBIK in accordance with the Service Information. Refer to **TRANSMITTER, INTEGRATED KEY FOB, STANDARD PROCEDURE** .

9. **CHECKING FOR ACTIVE DTCs**

   NOTE: The RKE portion of the FOBIK is operational, this verifies that the RF HUB is capable of receiving signals and communicating to operate the locks.

   1. Use the scan tool to check for ACTIVE DTCs.

      Did the scan tool show any ACTIVE DTCs in the entire vehicle?

      Yes

      - Diagnose the DTCs in accordance with the Service Information before proceeding with the Remote Start Inoperative concern.

      No

- Go To 10

10. **CHECKING THE RF HUB**

NOTE: Even though the RKE function of the system may work with no concern, the BCM is either not receiving a message or is receiving a corrupt message from the RF HUB for remote start operation.

1. While sitting in the driver seat and using the scan tool, monitor the RF HUB on the data display screen for changes when the Remote Start button of the FOBIK is pressed.

   Did the status change when the Remote Start button of the FOBIK was pressed?

   Yes

   - Go To 11

   No

   - Go To 12

11. **CHECKING BCM INHIBITS**

NOTE: The parking lights flash and the horn are inoperative when using the FOBIK, this indicates a faulty BCM or "Inhibit" that may be preventing the start request from occurring.

1. Use the scan tool to check for any Remote Start inhibits listed in the BCM. This may be found under the system tests or miscellaneous functions tab.

   Were there any Remote Start inhibits listed in the BCM?

   Yes

   - Perform the REMOTE START SYSTEM Diagnosing and Testing. Refer to **DIAGNOSIS AND TESTING** .

   No

   - If this has had a Mopar® Accessory kit installed verify the correct Sales Code for Remote Start has been added to Dealer Connect and a Restore Vehicle Configuration has been performed.
   - Confirm the system is enabled; and the temporary Remote Start override is set to disabled in the BCM and contact the Mopar® Accessories group (800-84-Mopar) for further details before proceeding.
   - If this has a factory installed Remote Start, check for any related TSBs prior to replacing the BCM. If no related TSBs are found, then replace the BCM in accordance with the Service

Information.

12. **CHECKING THE REMOTE START ANTENNA**
    1. Cycle the ignition off
    2. Disconnect the Remote Start antenna from the RF Hub.
    3. Using one FOBIK and sitting in the driver's seat, attempt to start the vehicle.

    Did the vehicle start?

    Yes

    - Replace the Remote Start Antenna in accordance with the Service Information.
    - Perform the BODY VERIFICATION TEST. Refer to **BODY VERIFICATION TEST** .

    No

    - Verify all power, ground, communication circuits, & connections to the RF HUB prior to replacing. Refer to **MODULE, RADIO FREQUENCY (RF HUB), REMOVAL** .

2014 ENGINE

Starting - Service Information - Cherokee

DESCRIPTION

STANDARD STARTING SYSTEM

The starting system consists of:

- Starter relay
- Starter motor (including an integral starter solenoid)

Other components to be considered as part of starting system are:

- Battery
- Battery cables
- Ignition switch and key lock cylinder
- Clutch pedal position switch (manual transmission)
- Park/neutral position switch (automatic transmission)
- Neutral Position Sensor (manual transmission with Stop/Start system integrated)
- Wire harnesses and connections.

The Battery, Starting, and Charging systems operate in conjunction with one another, and must be tested as a complete system. For correct operation of starting/charging systems, all components used in these 3 systems must perform within specifications. When attempting to diagnose any of these systems, it is important that you keep their interdependency in mind.

The diagnostic procedures used in this Service Information include the most basic conventional diagnostic methods, to the more sophisticated On-Board Diagnostics (OBD) built into the Powertrain Control Module (PCM). Use of an induction-type milliampere ammeter, volt/ohmmeter, battery charger, carbon pile rheostat (load tester), and 12-volt test lamp may be required.

OPERATION

STANDARD STARTING SYSTEM

When you press the Keyless Go button (KIN Button), a request is sent to RFHM via the private LIN. Once the RFHM receives the request from the KIN it then looks for the valid key via the Passive Entry Module (PEM) antennas. If the RFHM detects a valid key and if the brake is engaged, then the RFHM sets the ignition position to START/CRANK. The BCM then turns the Ignition status to START/CRANK. Then the BCM sends command to turn the vehicle to the CRANK. For an IGNM (Ignition Node Module) vehicle, when the customer turns the key to Start position the RFHM sets the ignition to START/CRANK. The brake pedal status is not required to start the IGNM vehicle but can be started with brake pedal engaged. The BCM then turns the

Ignition status to START/CRANK. Then the BCM sends command to turn the vehicle to the CRANK. The functionality is the same except it is not wirelessly detected. If conditions are correct to start the ECM turn on the high side of the ECM starter relay and turns the Crank Hold Signal to True. If the BCM is still in crank and the Crank Hold is true then the BCM turns on the Low side of the BCM Starter relay and the engine will start cranking. Once the engine started the ECM deactivates the double start over ride. The BCM will then deactivate the starter either when the engine starts or the maximum time has been reach for the tip start (10 sec for Gas and 25 sec for diesel). The RFHM changes the ignition position to RUN if the start type is TIP start or the 5 second time expires or the engine controller indicates the vehicle is not in park or neutral The engine can be manually shut down by the driver with speeds over 5 MPH in any gear.

DIAGNOSIS AND TESTING

DIAGNOSIS AND TESTING - STANDARD STARTING SYSTEM

NOTE: **Note: All voltage measurements are with respect to Ground unless otherwise specified. All relay coils checking (between 85 and 86) must be conducted with the respective relays removed.**

No start trouble shooting:

1. Check battery voltage.
2. Check Fuel followed by Fuel pump fuse F21.
3. Turn the ignition to start and complete the following procedures within 10 seconds (TIP start will disable after 10 seconds). Hook up the MM before turning the ignition to start.
4.
    1. Measure the voltage at pin 87 of the ECM relay.
    2. If not measured, remove the BCM and ECM relay. Connect test lamp between PIN 86 of BCM starter relay, PIN 85 of the ECM starter relay and start the car. Confirm the bulb lit up for 10 seconds. If the bulb is lit, the issue is either in starter motor, the starter solenoid, the wiring, loose connection or engine itself. If issue exists go to step 6.
    3. If the measured voltage equals Battery voltage then the Starting relays, BCM and ECM modules are working as designed, if there is no security key violation (The SKIM light will start flashing if there is security key mismatch and a DTC will be set by RFHM.
    4. Quick Check: Turn the radio on and turn the ignition to the start position, if the radio mutes and the car still doesn't start, then assume the issue is with the engine controller, or the engine itself.
5. If the above conditions are true, then issue is either in the starter motor, the starter solenoid, the wiring or can be a loose connection. Follow the procedure 6 to check the wiring from PIN 87 of the ECM relay and the starter solenoid. Go to step 6, If not go to step 11.
6. Connect a multi meter between the starter solenoid terminals and confirm the MM is measuring battery voltage.
7. If the voltage is equal to battery voltage, then the issue must either be in the solenoid, starter or the engine itself. If the issue cannot be identified go to step 8.
8.

   1. Turn the ignition to OFF.
   2. Check the voltage at terminal 30 of the RUN/START relay (T09). If not check for loose battery connection, wiring or the fuse feed to 30.
   3. Turn the ignition to RUN and check the battery voltage at 87 of the T09 relay. If not measured go to step 9.
9. Check the BCM starter relay fuse feed and confirm it is intact.
10. Check BCM relay connections/feed.
11. Turn the ignition to start and complete the following procedures within 10 seconds (TIP start will disable after 10 seconds). Hook up the test lamp before turning the ignition to start.
12. Connect a 12V test lamp between 86 and 85 of the BCM start relay and confirm the blub lights up for 10 seconds. The MM may give a false reading because it is driven by a low side driver.
13. If the 12v test lamp does **not** stay lit for 10 seconds, turn the ignition to the start position and using a DVOM, measure between battery voltage (+) and PIN 86 (-) of the BCM relay. Should read equal to battery voltage.
14. Check ECM relay connections/feed.
15. Turn the ignition to start and complete the following procedures within 10 seconds (TIP start will disable after 10 seconds). Hook up the test lamp before turning the ignition to start.
16. Connect a 12V test lamp between 86 and 85 of the ECM start relay and confirm the blub lights up for 10 seconds.
17. If not start the car and measure them individually.
18. Measure the resistance between the ground and pin 85 of the ECM start relay.

Additional diagnostic checks

1. Check the Ignition sense start line from RFHM to BCM. The vehicle will not start if this line is not intact.
2. The RFHM must detect brake input (Normally Open) to start the KIN (Keyless Ignition Node) car in case of auto trans vehicle.
3. The RFHM must detect clutch input (Normally Open) to start the manual trans vehicle. Check also the clutch output from RFHM to ECM.
4. The RFHM must detect gated park switch to start the car.

CONTROL CIRCUIT TEST

The starter control circuit has:

- Starter motor with integral solenoid
- Starter relay
- Transmission range sensor, or Park/Neutral Position switch with automatic transmissions
- Ignition switch
- Battery
- All related wiring and connections

- Powertrain Control Module (PCM)

CAUTION: Before performing any starter tests, the ignition and fuel systems must be disabled.

- Disable ignition and fuel systems.

STARTER SOLENOID

WARNING: Check to ensure that the transmission is in the park position with the parking brake applied. This may result in personal injury or death.

1. Verify battery condition. Battery must be in good condition with a full charge before performing any starter tests. Refer to Battery Tests. Refer to **DIAGNOSIS AND TESTING - BATTERY SYSTEM** .
2. Perform Starter Solenoid test BEFORE performing the starter **RELAY TEST**.
3. Perform a visual inspection of the starter/starter solenoid for corrosion, loose connections or faulty wiring.
4. Locate and remove the starter relay.
5. Connect a remote starter switch or a jumper wire between the remote battery positive post and terminal 87 of the starter relay connector.
   a. If engine cranks, starter/starter solenoid is good. Go to the Starter **RELAY TEST**.
   b. If engine does not crank or solenoid chatters, check wiring and connectors from starter relay to starter solenoid and from the battery positive terminal to starter post for loose or corroded connections. Particularly at starter terminals.
   c. Repeat test. If engine still fails to crank properly, trouble is within starter or starter mounted solenoid, and replace starter. Inspect the ring gear teeth.

STARTER RELAY

WARNING: Check to ensure that the transmission is in the park/neutral position with the parking brake applied. This may result in personal injury or death.

RELAY TEST

Remove the starter relay as described in this Service Information to perform the following tests:

1. A relay in the de-energized position should have continuity between terminals 87A and 30, and no continuity between terminals 87 and 30. If OK, go to 2. If not OK, replace the faulty relay.
2. Resistance between terminals 85 and 86 (electromagnet) should be 75 ±5 ohms. If OK, go to 3. If not OK, replace the faulty relay.
3. Connect a battery B+ lead to terminals 85 and a ground lead to terminal 86 to energize the relay. The relay should click. Also test for continuity between terminals 30 and 87, and no continuity between

terminals 87A and 30. If OK, refer to Relay Circuit Test procedure. If not OK, replace the faulty relay.

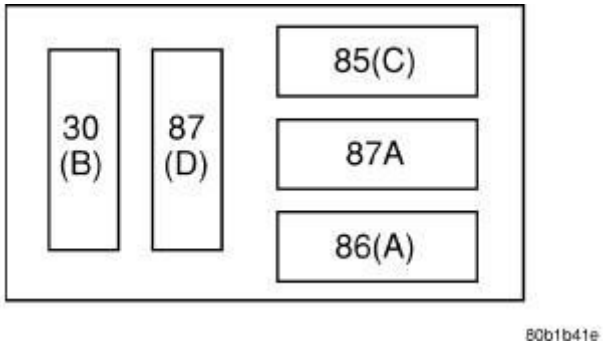

Fig. 1: Starter Relay Pinout
Courtesy of CHRYSLER GROUP, LLC

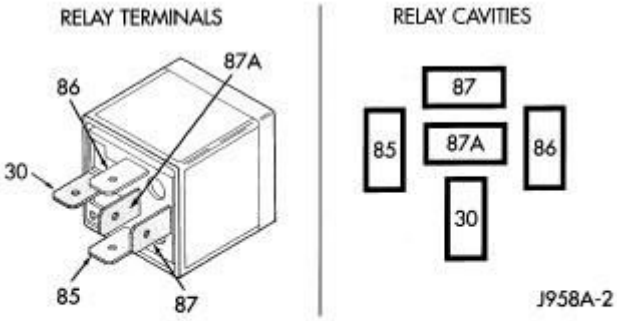

Fig. 2: Starter Relay Pinout
Courtesy of CHRYSLER GROUP, LLC

30 COMMON FEED 85 COIL GROUND 86 COIL BATTERY 87 NORMALLY OPEN 87A NORMALLY CLOSED

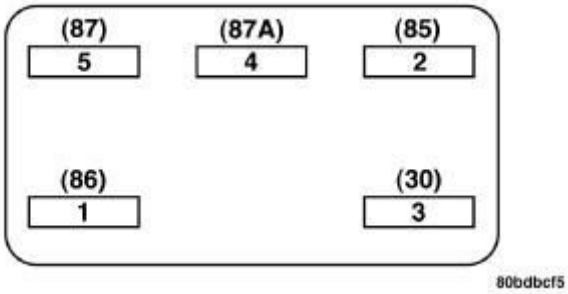

Fig. 3: Starter Relay Pinout
Courtesy of CHRYSLER GROUP, LLC

CAV	FUNCTION
30	B (+)
85	IGNITION SWITCH OUTPUT
86	PCM-CONTROLLED GROUND
87	STARTER RELAY OUTPUT
87A	NO CONNECT

RELAY CIRCUIT TEST

1. The relay common feed terminal cavity (30) is connected to battery voltage and should be hot at all times. If OK, go to 2. If not OK, repair the open circuit to the PDC fuse as required.
2. The relay normally closed terminal (87A) is connected to terminal 30 in the de-energized position, but is not used for this application. Go to 3.
3. The relay normally open terminal (87) is connected to the common feed terminal (30) in the energized position. This terminal supplies battery voltage to the starter solenoid field coils. There should be continuity between the cavity for relay terminal 87 and the starter solenoid terminal at all times. If OK, go to 4. If not OK, repair the open circuit to the starter solenoid as required.
4. The coil battery terminal (85) is connected to the electromagnet in the relay. It is energized when the ignition switch is held in the Start position and the clutch pedal is depressed (manual trans). Check for battery voltage at the cavity for relay terminal 86 with the ignition switch in the Start position and the clutch pedal is depressed (manual trans), and no voltage when the ignition switch is released to the On position. If OK, go to 5. If not OK, check for an open or short circuit to the ignition switch and repair, if required. If the circuit to the ignition switch is OK, see the **IGNITION SWITCH**.
5. The coil ground terminal (86) is connected to the electromagnet in the relay. It is grounded by the PCM if the conditions are right to start the car. For automatic transmission cars, the PCM must see Park Neutral switch low and near zero engine speed (RPM). For manual transmission cars, the PCM only needs to see near zero engine speed (RPM) and low clutch interlock input and see near zero engine speed (RPM). To diagnose the Park Neutral switch of the transmission range sensor refer to the **C635 MANUAL TRANSMISSION - SERVICE INFORMATION** . Check for continuity to ground while the ignition switch is in the start position and if equipped the clutch pedal depressed. If not OK and the vehicle has an automatic transmission verify Park Neutral switch operation. If that checks OK check for continuity between PCM and the terminal 86. Repair open circuit as required. Also check the clutch interlock switch

operation if equipped with a manual transmission. If OK, the PCM may be defective.

SAFETY SWITCHES

For diagnostics of the Transmission Range Sensor, refer to the appropriate Transmission article for more information.

If equipped with Clutch Interlock/Upstop Switch, refer to **DIAGNOSIS AND TESTING** in the Clutch System article.

IGNITION SWITCH

After testing starter solenoid and relay, test ignition switch and wiring. Refer to the **IGNITION SYSTEM - SERVICE INFORMATION** or **SYSTEM WIRING DIAGRAMS** article for more information. Check all wiring for opens or shorts, and all connectors for being loose or corroded.

BATTERY

For battery diagnosis and testing, refer to **DIAGNOSIS AND TESTING - BATTERY SYSTEM** for procedures.

ALL RELATED WIRING AND CONNECTORS

Refer to **SYSTEM WIRING DIAGRAMS** article for more information.

FEED CIRCUIT RESISTANCE TEST

Before proceeding with this operation, review Diagnostic Preparation and Starter Feed Circuit Tests. The following operation will require a voltmeter, accurate to 1/10 of a volt.

CAUTION: Ignition and Fuel systems must be disabled to prevent engine start while performing the following tests.

1. To disable the Ignition and Fuel systems, disconnect the Automatic Shutdown Relay (ASD).
2. Gain access to battery terminals.
3. With all wiring harnesses and components properly connected, perform the following:
   a. Connect the negative lead of the voltmeter to the battery negative post, and positive lead to the battery negative cable clamp. Rotate and hold the ignition switch in the START position. Observe the voltmeter. If voltage is detected, correct poor contact between cable clamp and post.
   b. Connect positive lead of the voltmeter to the battery positive post, and negative lead to the battery positive cable clamp. Rotate and hold the ignition switch key in the START position. Observe the voltmeter. If voltage is detected, correct poor contact between the cable clamp and post.
   c. Connect negative lead of voltmeter to battery negative terminal, and positive lead to engine block near the battery cable attaching point. Rotate and hold the ignition switch in the START position. If voltage reads above 0.2 volt, correct poor contact at ground cable attaching point. If voltage reading

is still above 0.2 volt after correcting poor contacts, replace ground cable.

d. Connect positive voltmeter lead to the starter motor housing and the negative lead to the battery negative terminal. Hold the ignition switch key in the START position. If voltage reads above 0.2 volt, correct poor starter to engine ground.

e. Connect the positive voltmeter lead to the battery positive terminal, and negative lead to battery cable terminal on starter solenoid. Rotate and hold the ignition switch in the START position. If voltage reads above 0.2 volt, correct poor contact at battery cable to solenoid connection. If reading is still above 0.2 volt after correcting poor contacts, replace battery positive cable.

f. If resistance tests do not detect feed circuit failures, replace the starter motor.

STARTING SYSTEM TEST

For circuit descriptions and diagrams, refer to the **SYSTEM WIRING DIAGRAMS** article .

WARNING: On vehicles equipped with airbags, refer to the RESTRAINTS - SERVICE INFORMATION article before attempting steering wheel, steering column, or instrument panel component diagnosis or service. Failure to take the proper precautions could result in accidental airbag deployment and possible personal injury.

STARTING SYSTEM DIAGNOSIS

CONDITION	POSSIBLE CAUSE	CORRECTION
STARTER FAILS TO ENGAGE.	1. Battery discharged or faulty.	1. Refer to **DIAGNOSIS AND TESTING - BATTERY SYSTEM** for more information. Charge or replace battery, if required.
	2. Starting circuit wiring faulty.	2. Refer to **FEED CIRCUIT RESISTANCE TEST** .
	3. Starter relay faulty.	3. Refer to **RELAY TEST**. Replace relay, if necessary.
	4. Ignition switch faulty.	4. Refer to ignition switch test, in the **IGNITION SYSTEM - SERVICE INFORMATION** or **SYSTEM WIRING DIAGRAMS** article. Replace switch, if necessary.
	5. Park/neutral position switch (auto trans) faulty or mis-adjusted.	5. Refer to **948TE AUTOMATIC TRANSMISSION - SERVICE INFORMATION** for more information. Replace switch, if necessary.
	6. Clutch interlock switch (man trans) faulty.	6. Refer to **DIAGNOSIS AND TESTING - CLUTCH PEDAL POSITION SWITCH** . Replace switch, if necessary.
	7. Starter solenoid faulty.	7. Refer to **STARTER SOLENOID** . Replace starter assembly, if necessary.
	8. Starter assembly faulty.	8. If all other starting system components and circuits check ok, replace starter assembly.
	9. Faulty teeth on ring gear.	9. Rotate flywheel 360°, and inspect teeth and ring gear replaced if damaged.

	10. PCM double start override output failure.	10. Refer to **CHECKING THE PCM POWER AND GROUND CIRCUITS** . Check for continuity between PCM and terminal 85. Repair open circuit as required. If ok, PCM may be defective.
STARTER ENGAGES, FAILS TO TURN ENGINE.	1. Battery discharged or faulty.	1. Refer to the **BATTERY SYSTEM - SERVICE INFORMATION** for more information. Charge or replace battery as necessary.
	2. Starting circuit wiring faulty.	2. Refer to the **FEED CIRCUIT RESISTANCE TEST** . Repair as necessary.
	3. Starter assembly faulty.	3. If all other starting system components and circuits check ok, replace starter assembly.
	4. Engine seized.	4. Refer to the appropriate Engine Service Information article for diagnostic and service procedures.
	5. Loose connection at battery, PDC (Diesel Only), TIPM, starter, or engine ground.	5. Inspect for loose connections.
	6. Faulty teeth on ring gear.	6. Rotate flywheel 360°, and inspect teeth and ring gear replaced if damaged.
STARTER ENGAGES, SPINS OUT BEFORE ENGINE STARTS.	1. Broken teeth on starter ring gear.	1. Remove starter. Inspect ring gear and replace if necessary.
	2. Starter assembly faulty.	2. If all other starting system components and circuits check ok, replace starter assembly.
STARTER DOES NOT DISENGAGE.	1. Starter improperly installed.	1. Install starter. Tighten starter mounting hardware to correct torque specifications.
	2. Starter relay faulty.	2. Refer to **RELAY TEST**. Replace relay, if necessary.
	3. Ignition switch faulty.	3. Refer to **IGNITION SYSTEM - SERVICE INFORMATION** . Replace switch, if necessary.
	4. Starter assembly faulty.	4. If all other starting system components and circuits check ok, replace starter assembly.
	5. Faulty teeth on ring gear.	5. Rotate flywheel 360°, and inspect teeth and ring gear replaced if damaged.

INSPECTION

Before removing any unit from the starting system for repair or diagnosis, perform the following inspections:

- **Battery** - Visually inspect the battery for indications of physical damage and loose or corroded cable connections. Determine the state-of-charge and cranking capacity of the battery. Charge or replace the battery, if required. Refer to the **BATTERY SYSTEM - SERVICE INFORMATION** for more information.
- **Ignition Switch** - Visually inspect the ignition switch for indications of physical damage and loose or corroded wire harness connections.

- **Transmission Range Sensor or Park/Neutral Switch** - Visually inspect the transmission range sensor for indications of physical damage and loose or corroded wire harness connections.
- **Starter Relay** - Visually inspect the starter relay for indications of physical damage and loose or corroded wire harness connections.
- **Starter Motor** - Visually inspect the starter motor for indications of physical damage and loose or corroded wire harness connections.
- **Starter Solenoid** - Visually inspect the starter solenoid for indications of physical damage and loose or corroded wire harness connections.
- **Wiring** - Visually inspect the wire harness for damage. Repair or replace any faulty wiring, as required. Check for loose or corroded wire harness connections at main engine ground and remote jump post.

SPECIFICATIONS

TORQUE-DIESEL

DESCRIPTION	N.m	Ft. Lbs.	In. Lbs.
Battery Cable Nut	9	-	80
Starter B+ Nut	10	-	89
Starter Mounting Bolts	24	18	-

TORQUE

DESCRIPTION	N.m	Ft. Lbs.	In. Lbs.
Engine Anti-roll to Fore/Aft Crossmember Bolt	47	35	-
Engine Anti-roll Mount Bolts	50	37	-
Engine Anti-roll Mount Thru Bolt	47	35	-
Fore/Aft Crossmember front Bolts	55	40.5	-
Fore/Aft Crossmember Rear Bolts	50	37	-
Negative Battery Cable Nut	5	-	45
Remote Start Antenna Mounting Screws	2.5	-	22
Starter Mounting Bolts	54	40	-
Starter Solenoid Battery Nut	10	-	90
Torque Reaction Bracket Bolts	54	40	-

STARTER

REMOVAL

2.0L DIESEL

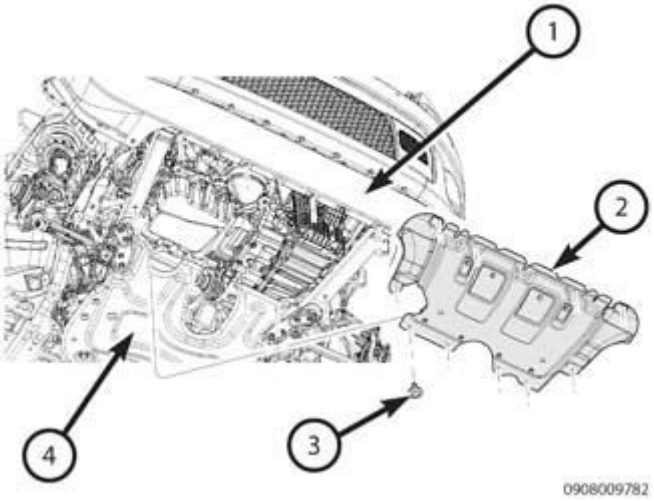

Fig. 4: Removing/Installing Starter
Courtesy of CHRYSLER GROUP, LLC

1. Disconnect and isolate the negative battery cable.
2. Raise and support the vehicle.
3. Remove bolts (3) and the belly pan (2).

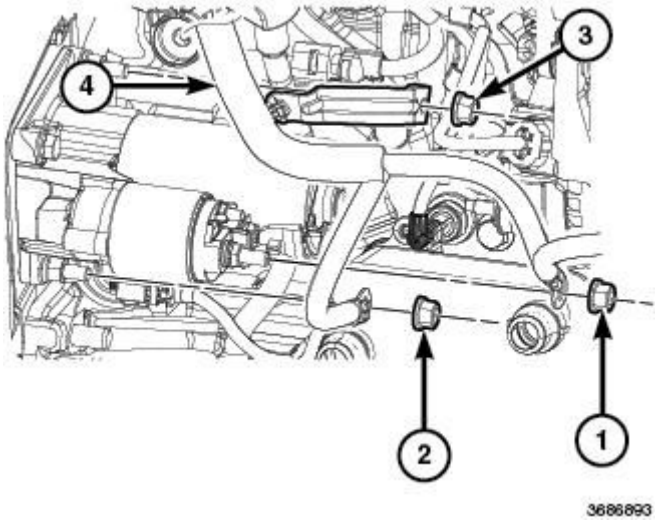

Fig. 5: B+ Cable Retainer
Courtesy of CHRYSLER GROUP, LLC

4. Remove the nut (1) from the B+ cable.
5. Disconnect the solenoid wire connector from the starter.
6. Remove the upper starter cable bracket mounting nut (3).

7. Remove nut (2) and the starter ground cable from stud.
8. Position the starter cable assembly aside (4).

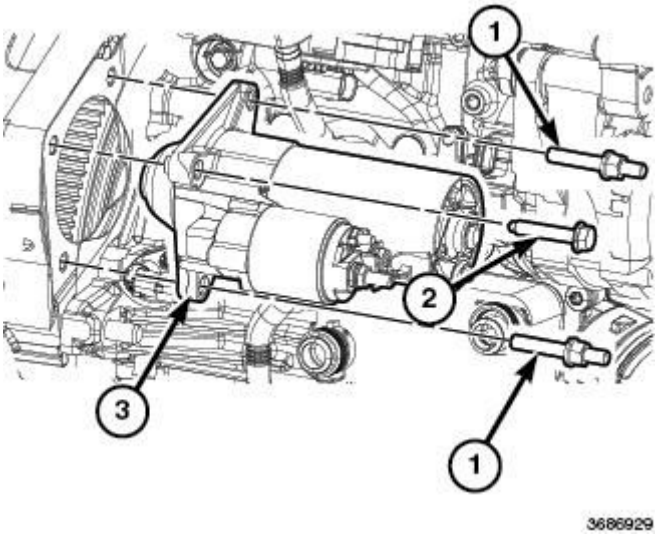

Fig. 6: Lower Starter Mounting Stud Bolt, Center Starter Mounting Bolt & Starter
Courtesy of CHRYSLER GROUP, LLC

9. Remove bolt (1, 2) and the starter motor (3)

2.4L

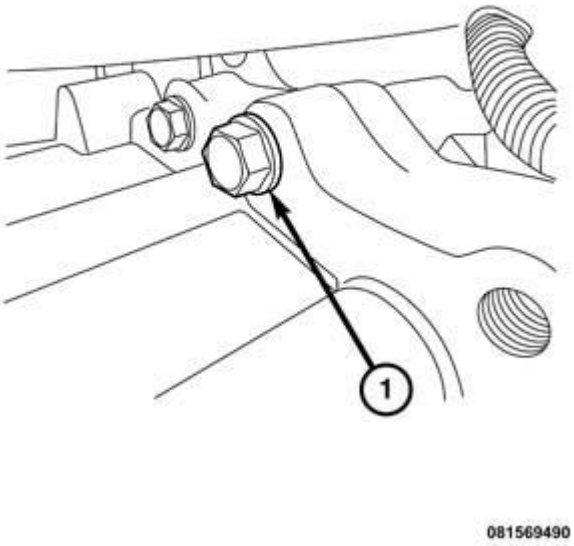

Fig. 7: Upper Starter Bolt

Courtesy of CHRYSLER GROUP, LLC

1. Disconnect the battery negative cable.
2. Loosen the upper starter bolt (1).

NOTE: The bolt will not be able to be removed due to lack of clearance.

3. Remove the intake manifold assembly Refer to **MANIFOLD, INTAKE, REMOVAL** .

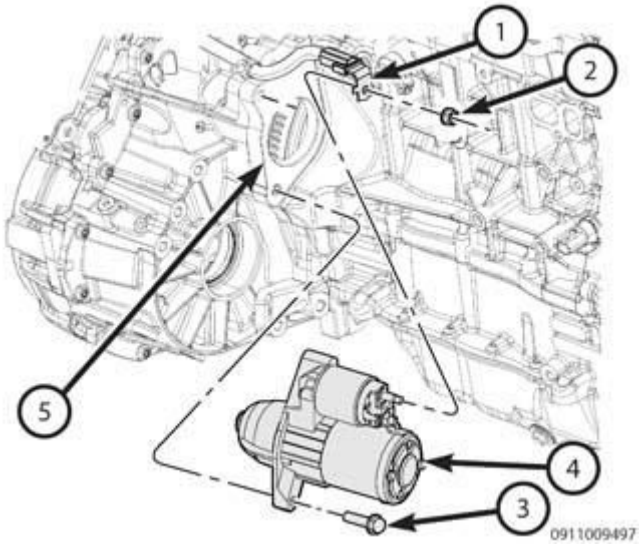

Fig. 8: Removing/Installing Starter
Courtesy of CHRYSLER GROUP, LLC

4. Remove the 12 volt feed cable (1).
5. Disconnect the ignition feed connector.
6. Remove the lower starter bolt (3).
7. Remove the starter (4) from the block (5).

3.2L

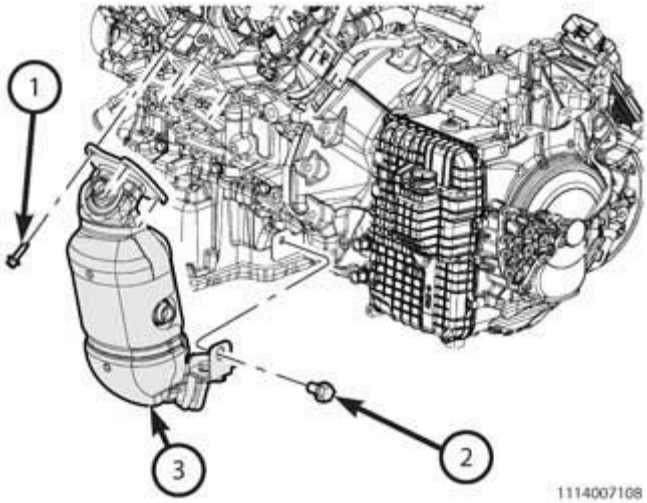

Fig. 9: Removing/Installing Catalytic Converter
Courtesy of CHRYSLER GROUP, LLC

1. Disconnect and isolate the negative battery cable.
2. Raise and support the vehicle.
3. Remove the catalytic converter (3). Refer to **CONVERTER, CATALYTIC , REMOVAL** .

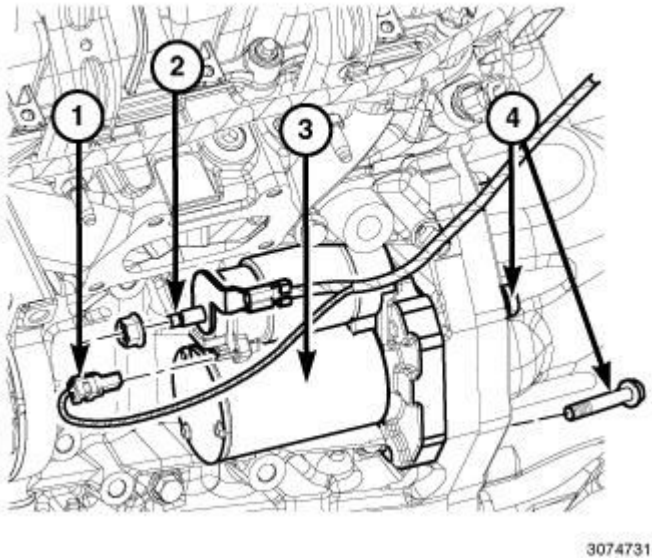

Fig. 10: Starter Solenoid Electrical Connector, Solenoid Stud, Starter Mounting Bolts & Starter Assembly
Courtesy of CHRYSLER GROUP, LLC

4. Disconnect the starter solenoid electrical connector (1) from the starter solenoid terminal.
5. Remove the battery cable nut and battery cable from the solenoid stud (2).

6. Remove the starter mounting bolts (4).
7. Remove the starter assembly (3) from the transmission.

INSTALLATION

2.0L DIESEL

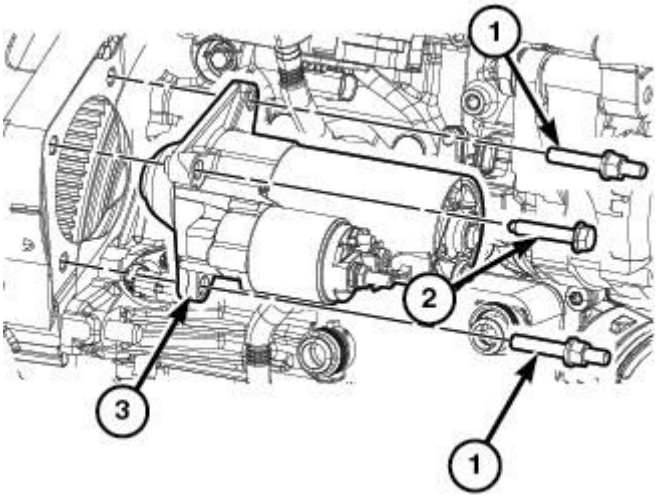

Fig. 11: Lower Starter Mounting Stud Bolt, Center Starter Mounting Bolt & Starter
Courtesy of CHRYSLER GROUP, LLC

1. Install the starter (3). Tighten bolts (1, 2) to 24 N.m (18 ft. lbs.).

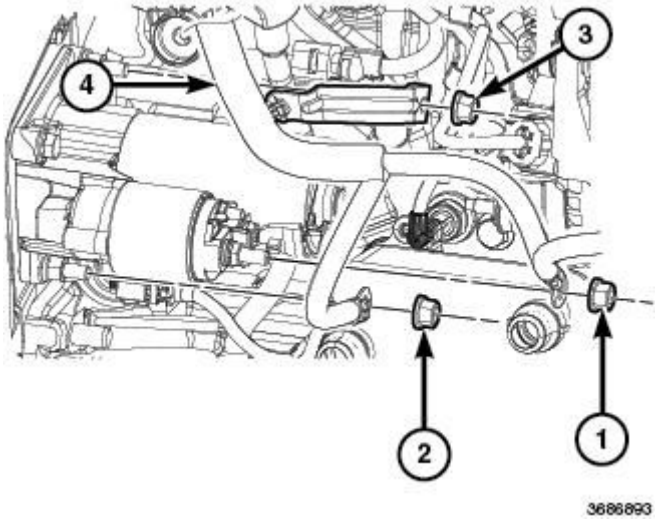

Fig. 12: B+ Cable Retainer
Courtesy of CHRYSLER GROUP, LLC

2. Install the B+ on the starter solenoid stud. Tighten Nut (1) to 10 N.m (89 in. lbs.).
3. Install the ground cable onto bottom stud. Tighten nut (2) to 10 N.m (89 in. lbs.).
4. Install the cable bracket on upper stud. Tighten nut (3) to 10 N.m (89 in. lbs.).
5. Connect the solenoid connector to the starter.

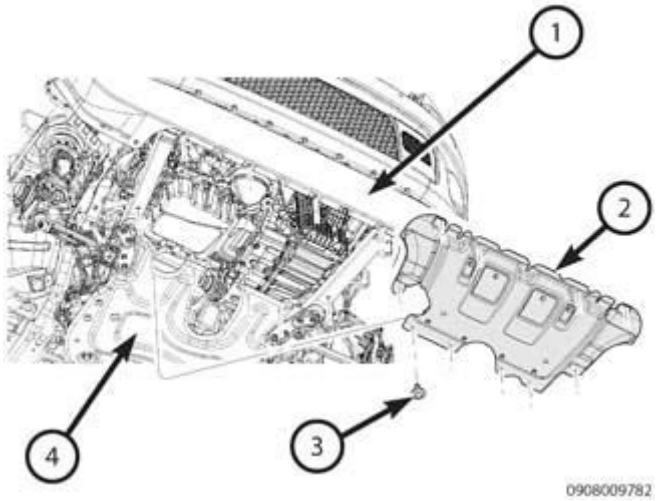

Fig. 13: Removing/Installing Starter
Courtesy of CHRYSLER GROUP, LLC

6. Install the belly pan (2) and securely tighten bolts (3).
7. Lower the vehicle.
8. Connect the negative battery cable.

2.4L

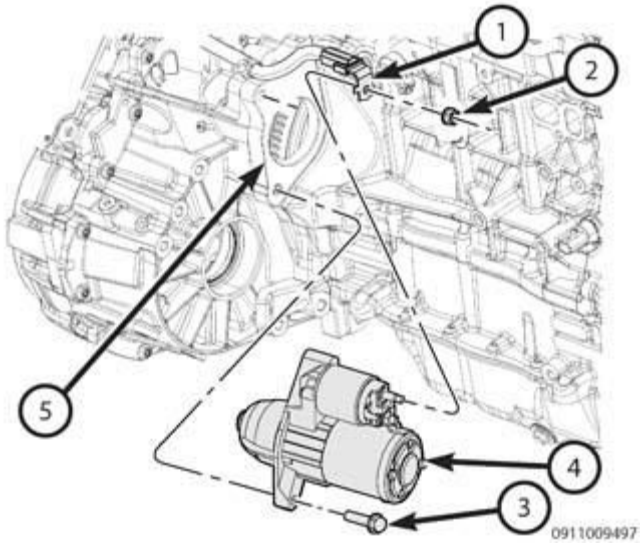

Fig. 14: Removing/Installing Starter
Courtesy of CHRYSLER GROUP, LLC

1. Install the starter into position.
2. Start the upper bolt by hand.
3. Start the lower bolt by hand.
4. Tighten the upper and lower bolts to 54 N.m (40 ft. lbs.).

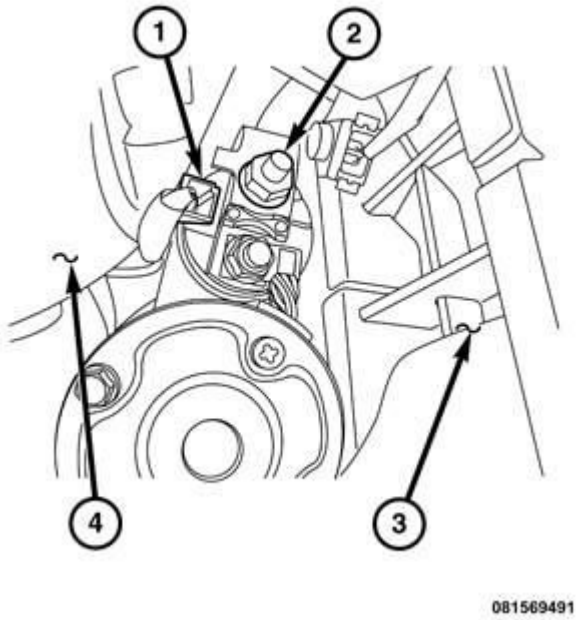

Fig. 15: Electrical Connector, Battery Positive Cable Nut & Engine
Courtesy of CHRYSLER GROUP, LLC

5. Install the battery cable (2) onto the starter and install the nut. Torque the nut to 10 N.m (90 in. lbs.).
6. Reconnect the starter electrical connector (1).
7. Install the intake manifold assembly Refer to **MANIFOLD, INTAKE, INSTALLATION** .

   .

8. Reconnect the negative battery cable.

3.2L

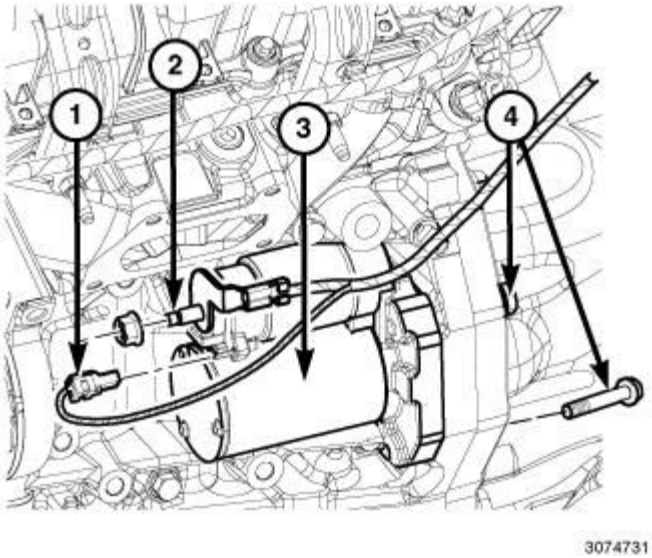

Fig. 16: Starter Solenoid Electrical Connector, Solenoid Stud, Starter Mounting Bolts & Starter Assembly
Courtesy of CHRYSLER GROUP, LLC

1. Position the starter (3) inside the transmission.
2. Install the starter mounting bolts (4) and tighten to 55 N.m (41 ft. lbs.).
3. Connect the starter solenoid electrical connector (1) to starter solenoid terminal.
4. Install the battery cable and nut to the solenoid stud (2). Tighten the nut to 10 N.m (86 in. lbs.).

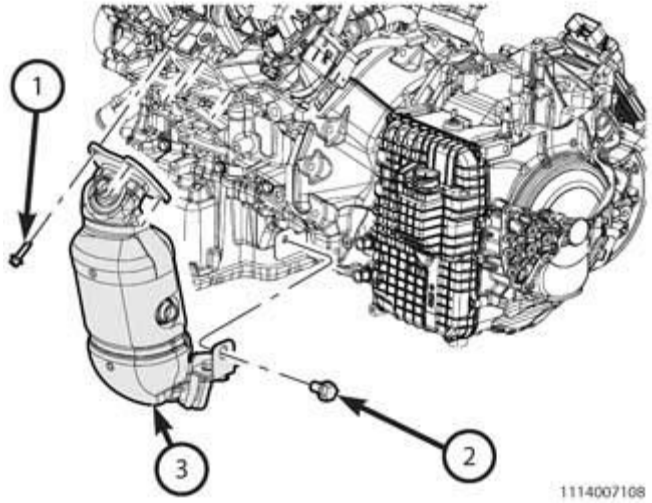

Fig. 17: Removing/Installing Catalytic Converter
Courtesy of CHRYSLER GROUP, LLC

5. Install the catalytic converter (3). Refer to **CONVERTER, CATALYTIC , INSTALLATION** .

6. Lower the vehicle.
7. Connect the negative battery cable and tighten nut to 5 N.m (4.5 in. lbs.).

ANTENNA, REMOTE START

DESCRIPTION

DESCRIPTION

The Remote Start Antenna Module Assembly consists of an electrical connection to the Radio Frequency Hub (RF Hub), a short length of coaxial cable with a connection to the RF HUB, two mounting clips, and the control module/antenna. The antenna is located in the rear cargo area next to the RF HUB assembly concealed by the headliner. The antenna which is printed on a circuit board in an enclosed plastic housing that is fed regulated 5v DC (+/-5%) via the attached coaxial cable pigtail. The Remote Start Antenna captures radiated RF signals that are transmitted from the Key FOB transmitter throughout the intended broadcast bands. The RF signal captured is then amplified and sent to the desired receiver/tuner.

OPERATION

OPERATION

The Remote Start Antenna is used for receive the signal from the remote key. The antenna captures radiated RF signals that are transmitted from the Key FOB transmitter throughout the intended broadcast bands. The RF signal captured is then amplified and sent to the Remote Frequency Hub Module (RFHUB).

REMOVAL

REMOVAL

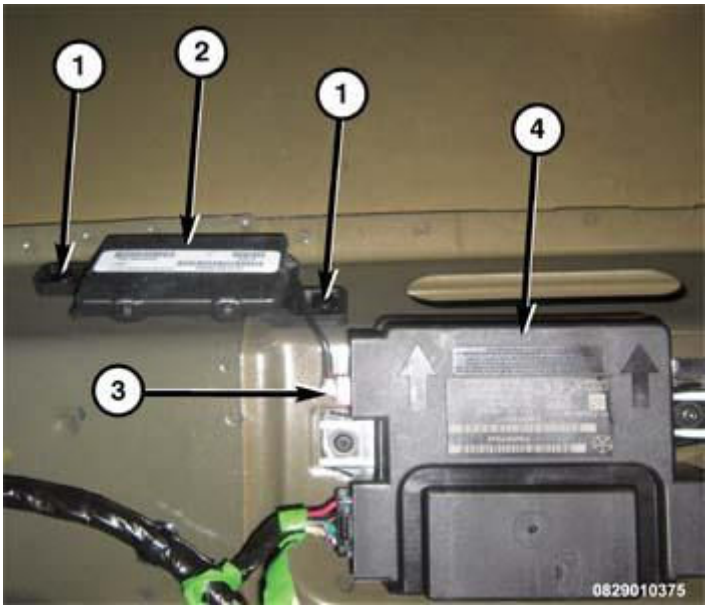

Fig. 18: Removing/Installing Remote Start Antenna
Courtesy of CHRYSLER GROUP, LLC

1. Disconnect and isolate the negative battery cable.
2. Lower the rear of the headliner. Refer to **HEADLINER, REMOVAL** .
3. Disconnect the remote start antenna connector (3) from the Radio Frequency Hub (RF Hub) (4).
4. Remove the two fasteners (1) securing the remote start antenna (2) to the roof.

INSTALLATION

INSTALLATION

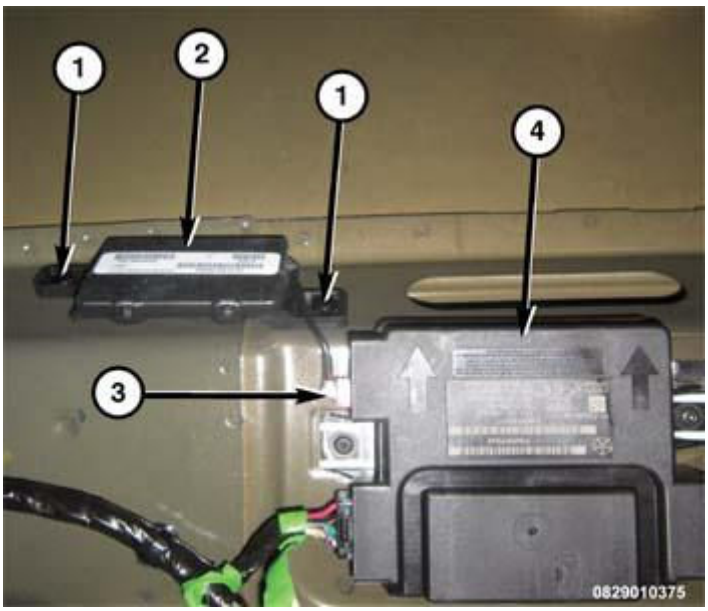

Fig. 19: Removing/Installing Remote Start Antenna
Courtesy of CHRYSLER GROUP, LLC

1. Position the remote start antenna (2) to its mounting surface and secure the antenna using two fasteners (1).
2. Connect the remote start connector (3) to the RF Hub (4).
3. Install the headliner. Refer to **HEADLINER, INSTALLATION** .
4. Connect the negative battery cable.
5. Perform the BODY VERIFICATION TEST. Refer to **STANDARD PROCEDURE** .

NOTE: **If this Electronic Control Unit (ECU) is being replaced with a new unit, a diagnostic scan tool MUST be used to align the PROXI configuration data into the new ECU. Follow the routine outlined in the diagnostic scan tool for PROXI Configuration Alignment under Body Control Module (BCM) Miscellaneous Functions menu.**

SYSTEM, START STOP

DESCRIPTION

STOP START SYSTEM

The Stop-Start system automatically stops and starts the engine when certain conditions are met to improve fuel economy and lower CO2 emissions.

The primary input for manual transmission vehicles to an autostop is zero vehicle speed with the transmission in neutral and the clutch pedal released, while the primary input to autostarting is depression of the clutch pedal. The primary input for an automatic transmission vehicle to gain an autostop is zero vehicle speed with the brake pedal depressed, while the primary input to autostarting is release of the brake pedal. Many secondary inputs determine if it is acceptable to autostop and autostart. A number of devices on the vehicle are added or improved to support the Stop-Start function.

- **Voltage Stabilization Module (VSM)**

  - This component is required to maintain system voltage during Start events. This also provides a buffer for the vehicles ECU's when battery power is being sent to the starter for cranking.

- **InRush Current Relay (ICR)** - This component works in conjunction with the VSM in order to prevent voltage dips.
- **High Durability Starter** - This is a modified starter used for the Stop Start system. Changes are hardened gears with lead in chamfer, a spring pinion (Diesel), reinforced castings, a higher power motor, long-life brushes, precision bearings and motor shaft.
- **Advanced Glass Mat (AGM) Battery with High Durability Battery Cables** - The AGM type battery and the high durability cables are capable of withstanding the increased cycling that a stop/start vehicle will experience.
- **Generator** - A 220a generator that is up-sized specifically for use with the stop/start system.
- **Intelligent Battery Sensor (IBS)** - The IBS is responsible for measuring the state-of-charge. It will also predict voltage and capacity (ah) for future crank events. The IBS is also responsible for measuring battery temperature and alternator voltage current.
- **Transmission Neutral Sensor (MTX Only)** - This is located on the transmission selector cable.
- **Powertrain Control Module (PCM)** - The PCM monitors conditions for STOP/START.

The Battery, Starting, and Charging systems operate in conjunction with one another, and must be tested as a complete system. For correct operation of starting/charging systems, all components used in these 3 systems must perform within specifications. When attempting to diagnose any of these systems, it is important that you keep their interdependency in mind.

The diagnostic procedures used in this Service Information include the most basic conventional diagnostic methods, to the more sophisticated On-Board Diagnostics (OBD) built into the Powertrain Control Module (PCM). Use of an induction-type milliampere ammeter, volt/ohmmeter, battery charger, carbon pile rheostat (load tester), and 12-volt test lamp may be required.

Certain starting system components are monitored by the PCM and may produce a Diagnostic Trouble Code (DTC).

OPERATION

OPERATION

Primary Autostop Enablers - Brake pedal depressed (automatic transmission). Shifter/transmission in neutral and clutch pedal released (manual transmissions).

Secondary Autostop Enablers - Vehicle speed, coolant temperature, hood closed, doors closed, driver's seat belt latched, interior climate and settings, battery state and energy demand, steering wheel angle, steering wheel torque, ambient temperature, time and speed since last autostop, transfer case position, and ESC status, No stop-start related faults present.

Autostop Events

- Autostop state broadcast on CAN Buss
- Cluster telltale illuminates.
- EVIC displays message indicating autostop.
- Engine shutdown begins.

As the engine slows it passes through three phases:

- Fuel and spark restart permissible.
- Restart prohibited.
- Restart permitted, based on start system employed.

Autostart requests are evaluated throughout the autostop event.

When in autostop:

- Instrument cluster stop/start telltale remains illuminated.
- EVIC displays the autostop state message.
- Body controller starter relay is energized providing the engine controller with direct starter control.

Vehicle Function:

- Consumer electronics continue to function in a normal manner.
- HVAC fan speed and other setting adjusted to maximize cabin comfort and autostop duration (based on climate control settings and conditions).
- Electric Power Steering (EPS) maintained during autostop, possibly with reduced maximum assist.

System Requested Autostarts:

- Battery State
- Brake Vacuum
- Climate control stress
- Vehicle speed
- Steering wheel angle or torque
- Transmission selector position.

Stop-Start Disable (while autostopped)

- Vehicle systems monitored that may disable stop-start (requiring a key restart if in autostop) include: hood opened, occupant sensing indicating driver not present, unsafe gear shift position for autostart and critical system faults.

Autostart Decision:

- All autostart enablers present
- Brake pedal released or shifter place in reverse (automatic transmissions)
- Clutch pedal depressed past the up-stop position (manual transmission)
- Throttle pedal depressed

Autostart Events:

- Autostart state broadcasted on the CAN Bus
- instrument cluster stop/start telltale illumination cancelled
- EVIC display changed to previous EVIC message (outside temp and compass, etc.)
- VSMs are placed in voltage conditioning mode
- Hill Assist requested
- Starter relay commanded to initiate cranking
- Engine achieves idle speed

Launch Events:

- Automatic transmission clutches engaged
- Hill assist released
- Climate control returned to pre-autostop conditions
- Stop-Start Ready state broadcast on the CAN Bus
- Embedded EVIC stop-start message indicating "Stop/Start Ready"

Planned Autostart (Engine On) Enable Conditions:
1. Valid target gear and brake switch pressure condition
2. Completed initial engine key start

3. Occupant sensing allow engine start condition met
4. OBD allow engine start condition met
5. Vehicle hood not Ajar

Potential Autostop (Engine Off) Enable Conditions:
1. Tow Haul mode not active
2. Steering wheel angle within defined range
3. Steering wheel angle gradient within defined range
4. Steering column torque within defined range
5. Battery health state of function greater than threshold

Planned Autostop (Engine Off) Enable Conditions:
1. Valid target gear and brake switch pressure state combination
2. Threshold vehicle speed exceeded or timed-out since last shift out of reverse
3. Transmission ready
4. 4WD Low mode not active
5. Starter cool down condition met after reaching max allowable consecutive restarts
6. Ambient temperature within defined range
7. Engine coolant temperature within defined range
8. Catalyst temperature within defined range
9. Battery temperature within defined range
10. Barometric pressure greater than threshold
11. Brake booster delta pressure less than threshold
12. Fuel level greater than threshold
13. Vehicle hood not Ajar
14. No throttle request
15. No engine stop inhibit request by HVAC
16. Battery state of charge greater than threshold
17. Battery voltage state of function greater than threshold
18. Engine speed less than threshold
19. Vehicle speed less than threshold
20. Threshold vehicle speed exceeded since last engine start
21. Occupant sensing allow engine stop condition met
22. OBD allow engine stop condition met
23. Engine runtime greater than threshold
24. Stop-Start "Off" switch not activated
25. Flex fuel learn mode not active
26. ABS brake event not present

EVIC Pop Up Messages Displayed on the EVIC

- EVIC message states Stop/Start Autostop Active

- No Chime
- Normal Use
- Pop-up maintained for 5 seconds
- Displays with green hard telltale

Stop/Start To Restart Press

- Single Chime
- Driver put gear shift in gear without using Clutch; customer needs to return to Neutral or fully depress clutch pedal
- Pop up maintained for 5 seconds

Stop/Start Restart Required Fault Detected

- Single Chime
- MIL or ESS system fault preventing safe state confirmation during autostop.

EVIC Pop Up Messages Displayed within EVIC "Ring" menu

Stop/Start Ready

- Stop-Start conditions met to enable engine stop.

Stop/Start Off

- Stop-Start turned off by the customer at the switch

Stop/Start Not Ready

- Stop-Start conditions are not met to enable engine stop (ex: HVAC settings, engine temperature, etc.)

Stop/Start Not Ready Steering Wheel Turned

- Stop-Start condition not met with steering wheel turned past calibratable angle

DIAGNOSIS AND TESTING

STOP START SYSTEM DIAGNOSIS

For diagnostics of the starting system, refer to **DIAGNOSIS AND TESTING**.

For diagnostics of the Stop Start system, the scan tool can be used to review the inhibitor menu to help root cause a potential Stop Start concern.

Possible Reasons The Engine Does Not AUTO STOP

Prior to engine shut down, the system will check many safety and comfort conditions to see if they are fulfilled. In following situations the engine will not stop:

- Driver's seat belt is not buckled
- Outside temperature is less than 1°F (-17°C) or greater than 104°F (40°C)
- Actual cabin temperature is significantly different than temperature set on Auto HVAC
- HVAC is set to full defrost mode
- Engine has not reached normal operating temperature
- Battery discharged
- When driving in REVERSE
- Hood is open
- Vehicle is in 4LO transfer case mode

It may be possible for the vehicle to be driven several times without the STOP/START system going into a STOP/START READY state under more extreme conditions of the items listed above.

For a more technical and detailed explanation of AutoStop, review the following inhibitors.

When it comes to Stop Start, we allow AutoStop event if:

- Accelerator pedal is in the rest position.
- HVAC Control allows an auto stop event. The AC load can not be in a high demand mode of operation
- Battery state (charge 65%, function 8 volts, health 40 ampere hour) is within an acceptable range.
- Current master cylinder brake pressure exceeds the required HSA brake pressure and is sufficient to hold the vehicle on a grade.
- Electronic Stability Control (ECS) is not requesting control.
- Fuel level is greater than the minimum fuel level threshold.
- Both hood switches indicate the hood is closed.
- Predefined OBD faults are not present.
- Vehicle occupants are not attempting a vehicle exit maneuver.
- Absolute Barometric Pressure is within range. Barometric pressure is greater then a minimum of 605 kPa.
- Brake Booster is sufficient to maintain master cylinder pressure with current applied pedal force. Minimum 205 kPa
- Starter motor engagement has not exceeded prescribed frequency use.
- Vehicle speed is 0
- Steering angle has not exceeded the prescribed range.
- Steering torque is less than the prescribed value.
- Ambient Air Temperature is within the prescribed range (-10F - 110F).

- Catalyst temperature is within the prescribed range (150F - 950F)
- Coolant temperature is within the prescribed range.
- Engine oil temperature is within the prescribed range (40C - 110C).
- Anti-lock brake system is not active.
- Transfer case is not in 4WDLO
- Vehicle is not in tow haul mode.
- Vehicle is in valid target gear and brake switch combination.
- Threshold vehicle speed exceeded or timeout since last shift out of reverse.
- Transmission ready.
- Battery temperature is within the prescribed range (-256F - 256F).
- Engine speed is below a set threshold of 1000 RPM.
- Engine runtime is greater then threshold of 3 seconds.
- Start Stop disable switch is not active.
- Flex fuel learn mode is not active.
- Vehicle is not on a grade.
- Threshold vehicle speed exceeded since last engine start is 8 mph.

Conditions that will cause the engine to start automatically while in STOP/START AUTO STOP ACTIVE mode:

- Actual cabin temperature is significantly different than temperature set in Auto HVAC.
- HVAC is set to full defrost mode.
- STOP/START AUTO STOP TIME ACTIVE exceeds 5 minutes.
- Battery Voltage drops too low.
- Low brake vacuum e.g. after several brake pedal applications.
- Vehicle is moving faster then 3 mph (5 km/h)
- STOP/START OFF switch is pressed.
- 4WD is put into 4LO mode.

We allow Stop Start AutoStarts to occur when any of the conditions are made active:

- Accelerator pedal is in the "rest" position.
- HVAC Control is allows an Auto Stop event.
- Battery State (charge, function, health) is within acceptable range.
- Current master cylinder brake pressure exceeds the required HSA brake pressure and is sufficient to hold the vehicle on a grade.
- Electronic Stability Control system is not requesting control.
- Fuel Level is greater than the minimum fuel level threshold.
- Both hood switches indicate hood is closed.

- Predefined OBD faults are not present.
- Vehicle occupants are not attempting a vehicle exit maneuver.
- Absolute Barometric Pressure is within range.
- Brake Booster Pressure is sufficient to maintain master cylinder pressure with current applied pedal force.
- Starter motor engagement has not exceeded prescribed frequency of use.
- Vehicle speed is 0.
- Steering Angle has not exceeded the prescribed range.
- Steering Torque is less than the prescribed value.
- Ambient Air Temperature is within the prescribed range.
- Catalyst Temperature is within the prescribed range.
- Coolant Temperature is within the prescribed range.
- Engine Oil Temperature is within the prescribed range.
- Anti-Lock Brake System is not active.
- Transfer Case Mode is not in 4WDLO.
- Vehicle is not in TOW-HAUL mode.
- Vehicle is in valid target gear and brake switch state combination
- Threshold vehicle speed exceeded or timeout since last shift out of reverse
- Transmission ready
- Battery temperature is within the prescribed range
- Engine speed is below a set threshold
- Threshold vehicle speed exceeded since last engine start
- Engine runtime greater than threshold
- Stop-Start disable switch is not Active
- Flex fuel learn mode not active
- Vehicle is not on a grade.

We allow Stop Start AutoStarts to occur when any of the conditions are made active:

- Accelerator pedal is not in the "rest" position.
- HVAC Control is active.
- Battery State (charge, function, health) is out of range.
- Current master cylinder brake pressure does not have enough HSA brake pressure.
- Electronic Stability Control system is requesting control.
- Fuel Level is lower than the minimum fuel level threshold.
- One or both hood switches indicate hood is open.
- Predefined OBD faults are present.
- Absolute Barometric Pressure is out of range.
- Brake Booster Pressure is insufficient to maintain master cylinder pressure with current applied pedal

force.
- Starter motor engagement has exceeded prescribed frequency of use.
- Vehicle speed is above 0.
- Steering Angle has exceeded the prescribed range.
- Steering Torque is more than the prescribed value.
- Ambient Air Temperature is outside the prescribed range.
- Catalyst Temperature is outside the prescribed range.
- Coolant Temperature is outside the prescribed range.
- Engine Oil Temperature is outside the prescribed range.
- Anti-Lock Brake System is active.
- Transfer Case Mode is in 4WDLO.
- Vehicle is in TOW-HAUL mode.
- Transmission not ready
- Battery temperature is out of the prescribed range
- Stop-Start disable switch is Active
- Flex fuel learn mode is active

The above conditions can restart the vehicle as long as:

1. Completed initial engine key start.
2. Occupant sensing allow engine start condition met.
3. OBD allow engine start condition met.
4. Vehicle hood closed.

System Malfunction:

If there is a malfunction in the STOP/START system, the system will not shut down the engine. A SERVICE STOP/START SYSTEM message will appear in the EVIC.

SENSOR, NEUTRAL POSITION

DESCRIPTION

DESCRIPTION

Fig. 20: Neutral Position Sensor
Courtesy of CHRYSLER GROUP, LLC

The Neutral Position Sensor (NPS) (1) is a component of the automatic stop/start feature on KL platform vehicles with manual transmissions. It is located on the transmission shift cable and it is only serviced by replacing the shift cable assembly.

OPERATION

OPERATION

The purpose of the Neutral Position Sensor (NPS) is to provide an output from the sensor to a controller concerning gear range position. On vehicles equipped with a manual transmission, the shift cable position is interpreted by the controller from the NPS to determine if the transmission is in neutral or in some gear range, for the purpose of determining when the stop/start system can safely restart the vehicle without the clutch pedal being depressed. The switch outputs a PWM signal whose percentage of duty cycle corresponds to the ranged denoted in Neutral, in a gear range, or as a fault value. The NPS is attached to shift cable such that it is nominally outputting 50% duty cycle at or when the vehicle is shifted to Neutral. Higher or lower duty cycle outputs are denoted as the magnet on the shift cable moves with respect to the NPS when the vehicle is shifted to gear range positions.

The NPS receives an Input of 5 volts excitation, has a common ground and outputs Pulse-width modulated signal to the controller.

Outputs reading less than 5% or more than 95% of duty cycle will trigger diagnostic trouble codes. Outputs reading between 5-25% or 75-95% represent in-gear positions and outputs readings between 25-75% represent Neutral position. Check that the sensor is attached properly to shift cable (inside the center console, at the shifter) and that wiring lead is attached to wiring harness coming up from rearward in vehicle from shifter. Check that the shift cable is properly attached to shifter and transmission ends to levers and load reaction points. With a jumper, voltages from the sensor input and output can be read with a voltmeter and compared with

expected values. As an example, 90% of 5 volts is 4.5 Volts, so if you read 4.5 volts, the transmission has been shifted into a gear range.

This NPS is not available to order as a standalone component. To obtain the NPS, the Shift Cable assembly will need to be ordered.

REMOVAL

REMOVAL

The Neutral Position Sensor (NPS) can only be replaced by replacing the gear shift control cable. (Refer to **CABLE, GEARSHIFT CONTROL - REMOVAL**).

INSTALLATION

INSTALLATION

The Neutral Position Sensor (NPS) is installed as an assembly with the gear shift control cable. (Refer to **CABLE, GEARSHIFT CONTROL - INSTALLATION**).

RELAY, IN-RUSH CURRENT REDUCTION

DESCRIPTION

DESCRIPTION

In-rush Current Reduction Relay

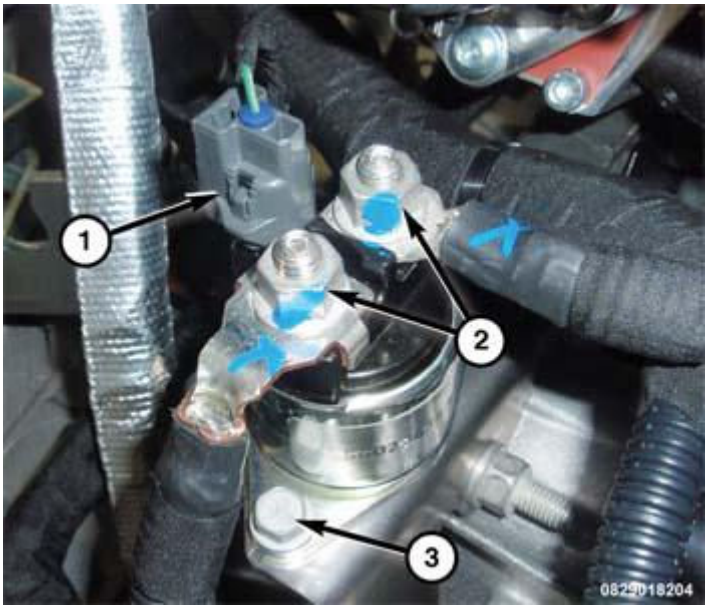

Fig. 21: In-Rush Current Reduction (ICR) Relay Module
Courtesy of CHRYSLER GROUP, LLC

The In-rush Current Reduction (ICR) Relay Module is intended to reduce the in-rush current drawn by the starter motor during the initial stage of the crank sequence, thus maintaining an adequate voltage level and allowing critical electrical/electronic systems to function without interruption, or reset. At the same time, the relay will allow sufficient current and voltage to reach the starter motor, to allow cranking the engine at an adequate speed, so that the engine can generate the air-fuel mixture necessary for self-sustained operation, even under adverse conditions.

This component is mounted to a bracket that mounts to the top of the starter assembly. The relay is serviceable and is shipped along with a bracket that secures the ICR.

OPERATION

OPERATION

In-Rush Current Reduction Relay.

Within the ICR relay, prior to the starter motor solenoid's contact closure, the shorting bar opens contacts, thus routing the starter motor current through a resistor bar (10 mOhm for V6 Pentastar). The increase in series resistance reduces/eliminates the initial current spike (or, inrush current) and reduces the consequent voltage drop. After a set time (185 msec), the power to the ICR relay is cut, the shorting bar closes the contacts, removing the resistor bar from the circuit and restoring full power to the starter motor. At this point, there is a rebound of the current surge and subsequent drop in voltage; however, neither is as intense as they would be would be without initial jump in resistance.

2014 ENGINE

Starting - Service Information - Cherokee

DESCRIPTION

STANDARD STARTING SYSTEM

The starting system consists of:

- Starter relay
- Starter motor (including an integral starter solenoid)

Other components to be considered as part of starting system are:

- Battery
- Battery cables
- Ignition switch and key lock cylinder
- Clutch pedal position switch (manual transmission)
- Park/neutral position switch (automatic transmission)
- Neutral Position Sensor (manual transmission with Stop/Start system integrated)
- Wire harnesses and connections.

The Battery, Starting, and Charging systems operate in conjunction with one another, and must be tested as a complete system. For correct operation of starting/charging systems, all components used in these 3 systems must perform within specifications. When attempting to diagnose any of these systems, it is important that you keep their interdependency in mind.

The diagnostic procedures used in this Service Information include the most basic conventional diagnostic methods, to the more sophisticated On-Board Diagnostics (OBD) built into the Powertrain Control Module (PCM). Use of an induction-type milliampere ammeter, volt/ohmmeter, battery charger, carbon pile rheostat (load tester), and 12-volt test lamp may be required.

OPERATION

STANDARD STARTING SYSTEM

When you press the Keyless Go button (KIN Button), a request is sent to RFHM via the private LIN. Once the RFHM receives the request from the KIN it then looks for the valid key via the Passive Entry Module (PEM) antennas. If the RFHM detects a valid key and if the brake is engaged, then the RFHM sets the ignition position to START/CRANK. The BCM then turns the Ignition status to START/CRANK. Then the BCM sends command to turn the vehicle to the CRANK. For an IGNM (Ignition Node Module) vehicle, when the customer turns the key to Start position the RFHM sets the ignition to START/CRANK. The brake pedal status is not required to start the IGNM vehicle but can be started with brake pedal engaged. The BCM then turns the

Ignition status to START/CRANK. Then the BCM sends command to turn the vehicle to the CRANK. The functionality is the same except it is not wirelessly detected. If conditions are correct to start the ECM turn on the high side of the ECM starter relay and turns the Crank Hold Signal to True. If the BCM is still in crank and the Crank Hold is true then the BCM turns on the Low side of the BCM Starter relay and the engine will start cranking. Once the engine started the ECM deactivates the double start over ride. The BCM will then deactivate the starter either when the engine starts or the maximum time has been reach for the tip start (10 sec for Gas and 25 sec for diesel). The RFHM changes the ignition position to RUN if the start type is TIP start or the 5 second time expires or the engine controller indicates the vehicle is not in park or neutral The engine can be manually shut down by the driver with speeds over 5 MPH in any gear.

DIAGNOSIS AND TESTING

DIAGNOSIS AND TESTING - STANDARD STARTING SYSTEM

NOTE: **Note: All voltage measurements are with respect to Ground unless otherwise specified. All relay coils checking (between 85 and 86) must be conducted with the respective relays removed.**

No start trouble shooting:

1. Check battery voltage.
2. Check Fuel followed by Fuel pump fuse F21.
3. Turn the ignition to start and complete the following procedures within 10 seconds (TIP start will disable after 10 seconds). Hook up the MM before turning the ignition to start.
4.
    1. Measure the voltage at pin 87 of the ECM relay.
    2. If not measured, remove the BCM and ECM relay. Connect test lamp between PIN 86 of BCM starter relay, PIN 85 of the ECM starter relay and start the car. Confirm the bulb lit up for 10 seconds. If the bulb is lit, the issue is either in starter motor, the starter solenoid, the wiring, loose connection or engine itself. If issue exists go to step 6.
    3. If the measured voltage equals Battery voltage then the Starting relays, BCM and ECM modules are working as designed, if there is no security key violation (The SKIM light will start flashing if there is security key mismatch and a DTC will be set by RFHM.
    4. Quick Check: Turn the radio on and turn the ignition to the start position, if the radio mutes and the car still doesn't start, then assume the issue is with the engine controller, or the engine itself.
5. If the above conditions are true, then issue is either in the starter motor, the starter solenoid, the wiring or can be a loose connection. Follow the procedure 6 to check the wiring from PIN 87 of the ECM relay and the starter solenoid. Go to step 6, If not go to step 11.
6. Connect a multi meter between the starter solenoid terminals and confirm the MM is measuring battery voltage.
7. If the voltage is equal to battery voltage, then the issue must either be in the solenoid, starter or the engine itself. If the issue cannot be identified go to step 8.
8.

   1. Turn the ignition to OFF.
   2. Check the voltage at terminal 30 of the RUN/START relay (T09). If not check for loose battery connection, wiring or the fuse feed to 30.
   3. Turn the ignition to RUN and check the battery voltage at 87 of the T09 relay. If not measured go to step 9.
9. Check the BCM starter relay fuse feed and confirm it is intact.
10. Check BCM relay connections/feed.
11. Turn the ignition to start and complete the following procedures within 10 seconds (TIP start will disable after 10 seconds). Hook up the test lamp before turning the ignition to start.
12. Connect a 12V test lamp between 86 and 85 of the BCM start relay and confirm the blub lights up for 10 seconds. The MM may give a false reading because it is driven by a low side driver.
13. If the 12v test lamp does **not** stay lit for 10 seconds, turn the ignition to the start position and using a DVOM, measure between battery voltage (+) and PIN 86 (-) of the BCM relay. Should read equal to battery voltage.
14. Check ECM relay connections/feed.
15. Turn the ignition to start and complete the following procedures within 10 seconds (TIP start will disable after 10 seconds). Hook up the test lamp before turning the ignition to start.
16. Connect a 12V test lamp between 86 and 85 of the ECM start relay and confirm the blub lights up for 10 seconds.
17. If not start the car and measure them individually.
18. Measure the resistance between the ground and pin 85 of the ECM start relay.

Additional diagnostic checks

1. Check the Ignition sense start line from RFHM to BCM. The vehicle will not start if this line is not intact.
2. The RFHM must detect brake input (Normally Open) to start the KIN (Keyless Ignition Node) car in case of auto trans vehicle.
3. The RFHM must detect clutch input (Normally Open) to start the manual trans vehicle. Check also the clutch output from RFHM to ECM.
4. The RFHM must detect gated park switch to start the car.

CONTROL CIRCUIT TEST

The starter control circuit has:

- Starter motor with integral solenoid
- Starter relay
- Transmission range sensor, or Park/Neutral Position switch with automatic transmissions
- Ignition switch
- Battery
- All related wiring and connections

- Powertrain Control Module (PCM)

CAUTION: Before performing any starter tests, the ignition and fuel systems must be disabled.

- Disable ignition and fuel systems.

STARTER SOLENOID

WARNING: Check to ensure that the transmission is in the park position with the parking brake applied. This may result in personal injury or death.

1. Verify battery condition. Battery must be in good condition with a full charge before performing any starter tests. Refer to Battery Tests. Refer to **DIAGNOSIS AND TESTING - BATTERY SYSTEM** .
2. Perform Starter Solenoid test BEFORE performing the starter **RELAY TEST**.
3. Perform a visual inspection of the starter/starter solenoid for corrosion, loose connections or faulty wiring.
4. Locate and remove the starter relay.
5. Connect a remote starter switch or a jumper wire between the remote battery positive post and terminal 87 of the starter relay connector.
   a. If engine cranks, starter/starter solenoid is good. Go to the Starter **RELAY TEST**.
   b. If engine does not crank or solenoid chatters, check wiring and connectors from starter relay to starter solenoid and from the battery positive terminal to starter post for loose or corroded connections. Particularly at starter terminals.
   c. Repeat test. If engine still fails to crank properly, trouble is within starter or starter mounted solenoid, and replace starter. Inspect the ring gear teeth.

STARTER RELAY

WARNING: Check to ensure that the transmission is in the park/neutral position with the parking brake applied. This may result in personal injury or death.

RELAY TEST

Remove the starter relay as described in this Service Information to perform the following tests:

1. A relay in the de-energized position should have continuity between terminals 87A and 30, and no continuity between terminals 87 and 30. If OK, go to 2. If not OK, replace the faulty relay.
2. Resistance between terminals 85 and 86 (electromagnet) should be 75 ±5 ohms. If OK, go to 3. If not OK, replace the faulty relay.
3. Connect a battery B+ lead to terminals 85 and a ground lead to terminal 86 to energize the relay. The relay should click. Also test for continuity between terminals 30 and 87, and no continuity between

terminals 87A and 30. If OK, refer to Relay Circuit Test procedure. If not OK, replace the faulty relay.

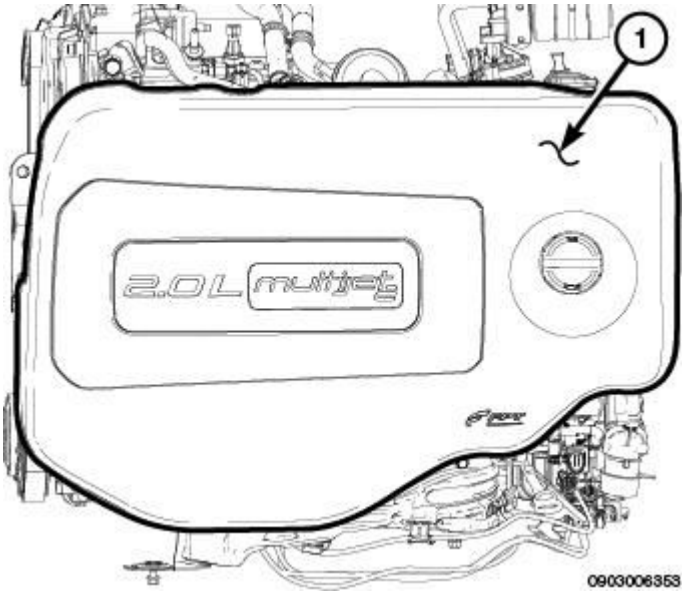

Fig. 1: Starter Relay Pinout
Courtesy of CHRYSLER GROUP, LLC

Fig. 2: Starter Relay Pinout
Courtesy of CHRYSLER GROUP, LLC

30 COMMON FEED 85 COIL GROUND 86

COIL BATTERY 87 NORMALLY OPEN 87A NORMALLY CLOSED

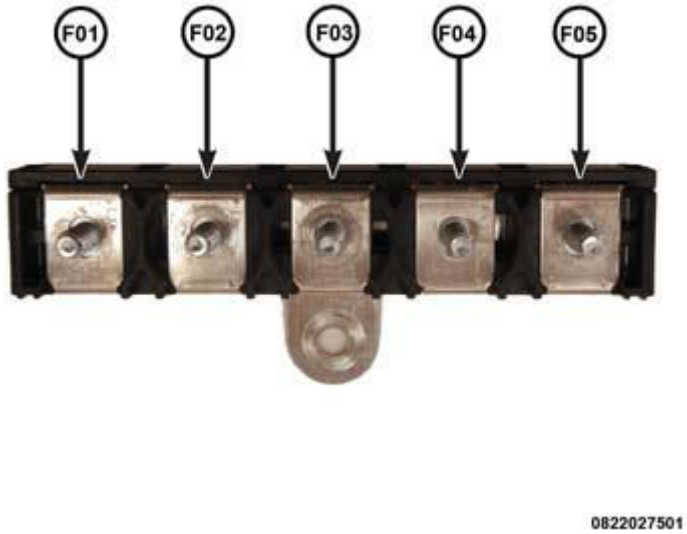

Fig. 3: Starter Relay Pinout
Courtesy of CHRYSLER GROUP, LLC

CAV	FUNCTION
30	B (+)
85	IGNITION SWITCH OUTPUT
86	PCM-CONTROLLED GROUND
87	STARTER RELAY OUTPUT
87A	NO CONNECT

RELAY CIRCUIT TEST

1. The relay common feed terminal cavity (30) is connected to battery voltage and should be hot at all times. If OK, go to 2. If not OK, repair the open circuit to the PDC fuse as required.
2. The relay normally closed terminal (87A) is connected to terminal 30 in the de-energized position, but is not used for this application. Go to 3.
3. The relay normally open terminal (87) is connected to the common feed terminal (30) in the energized position. This terminal supplies battery voltage to the starter solenoid field coils. There should be continuity between the cavity for relay terminal 87 and the starter solenoid terminal at all times. If OK, go to 4. If not OK, repair the open circuit to the starter solenoid as required.
4. The coil battery terminal (85) is connected to the electromagnet in the relay. It is energized when the ignition switch is held in the Start position and the clutch pedal is depressed (manual trans). Check for

battery voltage at the cavity for relay terminal 86 with the ignition switch in the Start position and the clutch pedal is depressed (manual trans), and no voltage when the ignition switch is released to the On position. If OK, go to 5. If not OK, check for an open or short circuit to the ignition switch and repair, if required. If the circuit to the ignition switch is OK, see the **IGNITION SWITCH**.

5. The coil ground terminal (86) is connected to the electromagnet in the relay. It is grounded by the PCM if the conditions are right to start the car. For automatic transmission cars, the PCM must see Park Neutral switch low and near zero engine speed (RPM). For manual transmission cars, the PCM only needs to see near zero engine speed (RPM) and low clutch interlock input and see near zero engine speed (RPM). To diagnose the Park Neutral switch of the transmission range sensor refer to the **C635 MANUAL TRANSMISSION - SERVICE INFORMATION** . Check for continuity to ground while the ignition switch is in the start position and if equipped the clutch pedal depressed. If not OK and the vehicle has an automatic transmission verify Park Neutral switch operation. If that checks OK check for continuity between PCM and the terminal 86. Repair open circuit as required. Also check the clutch interlock switch operation if equipped with a manual transmission. If OK, the PCM may be defective.

SAFETY SWITCHES

For diagnostics of the Transmission Range Sensor, refer to the appropriate Transmission article for more information.

If equipped with Clutch Interlock/Upstop Switch, refer to **DIAGNOSIS AND TESTING** in the Clutch System article.

IGNITION SWITCH

After testing starter solenoid and relay, test ignition switch and wiring. Refer to the **IGNITION SYSTEM - SERVICE INFORMATION** or **SYSTEM WIRING DIAGRAMS** article for more information. Check all wiring for opens or shorts, and all connectors for being loose or corroded.

BATTERY

For battery diagnosis and testing, refer to **DIAGNOSIS AND TESTING - BATTERY SYSTEM** for procedures.

ALL RELATED WIRING AND CONNECTORS

Refer to **SYSTEM WIRING DIAGRAMS** article for more information.

FEED CIRCUIT RESISTANCE TEST

Before proceeding with this operation, review Diagnostic Preparation and Starter Feed Circuit Tests. The following operation will require a voltmeter, accurate to 1/10 of a volt.

CAUTION: Ignition and Fuel systems must be disabled to prevent engine start while performing the following tests.

1. To disable the Ignition and Fuel systems, disconnect the Automatic Shutdown Relay (ASD).
2. Gain access to battery terminals.
3. With all wiring harnesses and components properly connected, perform the following:
   a. Connect the negative lead of the voltmeter to the battery negative post, and positive lead to the battery negative cable clamp. Rotate and hold the ignition switch in the START position. Observe the voltmeter. If voltage is detected, correct poor contact between cable clamp and post.
   b. Connect positive lead of the voltmeter to the battery positive post, and negative lead to the battery positive cable clamp. Rotate and hold the ignition switch key in the START position. Observe the voltmeter. If voltage is detected, correct poor contact between the cable clamp and post.
   c. Connect negative lead of voltmeter to battery negative terminal, and positive lead to engine block near the battery cable attaching point. Rotate and hold the ignition switch in the START position. If voltage reads above 0.2 volt, correct poor contact at ground cable attaching point. If voltage reading is still above 0.2 volt after correcting poor contacts, replace ground cable.
   d. Connect positive voltmeter lead to the starter motor housing and the negative lead to the battery negative terminal. Hold the ignition switch key in the START position. If voltage reads above 0.2 volt, correct poor starter to engine ground.
   e. Connect the positive voltmeter lead to the battery positive terminal, and negative lead to battery cable terminal on starter solenoid. Rotate and hold the ignition switch in the START position. If voltage reads above 0.2 volt, correct poor contact at battery cable to solenoid connection. If reading is still above 0.2 volt after correcting poor contacts, replace battery positive cable.
   f. If resistance tests do not detect feed circuit failures, replace the starter motor.

STARTING SYSTEM TEST

For circuit descriptions and diagrams, refer to the **SYSTEM WIRING DIAGRAMS** article .

WARNING: **On vehicles equipped with airbags, refer to the RESTRAINTS - SERVICE INFORMATION article before attempting steering wheel, steering column, or instrument panel component diagnosis or service. Failure to take the proper precautions could result in accidental airbag deployment and possible personal injury.**

STARTING SYSTEM DIAGNOSIS

CONDITION	POSSIBLE CAUSE	CORRECTION
STARTER FAILS TO ENGAGE.	1. Battery discharged or faulty.	1. Refer to **DIAGNOSIS AND TESTING - BATTERY SYSTEM** for more information. Charge or replace battery, if required.
	2. Starting circuit wiring faulty.	2. Refer to **FEED CIRCUIT RESISTANCE TEST** .
	3. Starter relay faulty.	3. Refer to **RELAY TEST**. Replace relay, if necessary.
	4. Ignition switch faulty.	4. Refer to ignition switch test, in the **IGNITION SYSTEM - SERVICE INFORMATION** or **SYSTEM WIRING DIAGRAMS** article. Replace switch, if

		necessary.
	5. Park/neutral position switch (auto trans) faulty or mis-adjusted.	5. Refer to **948TE AUTOMATIC TRANSMISSION - SERVICE INFORMATION** for more information. Replace switch, if necessary.
	6. Clutch interlock switch (man trans) faulty.	6. Refer to **DIAGNOSIS AND TESTING - CLUTCH PEDAL POSITION SWITCH** . Replace switch, if necessary.
	7. Starter solenoid faulty.	7. Refer to **STARTER SOLENOID** . Replace starter assembly, if necessary.
	8. Starter assembly faulty.	8. If all other starting system components and circuits check ok, replace starter assembly.
	9. Faulty teeth on ring gear.	9. Rotate flywheel 360°, and inspect teeth and ring gear replaced if damaged.
	10. PCM double start override output failure.	10. Refer to **CHECKING THE PCM POWER AND GROUND CIRCUITS** . Check for continuity between PCM and terminal 85. Repair open circuit as required. If ok, PCM may be defective.
STARTER ENGAGES, FAILS TO TURN ENGINE.	1. Battery discharged or faulty.	1. Refer to the **BATTERY SYSTEM - SERVICE INFORMATION** for more information. Charge or replace battery as necessary.
	2. Starting circuit wiring faulty.	2. Refer to the **FEED CIRCUIT RESISTANCE TEST** . Repair as necessary.
	3. Starter assembly faulty.	3. If all other starting system components and circuits check ok, replace starter assembly.
	4. Engine seized.	4. Refer to the appropriate Engine Service Information article for diagnostic and service procedures.
	5. Loose connection at battery, PDC (Diesel Only), TIPM, starter, or engine ground.	5. Inspect for loose connections.
	6. Faulty teeth on ring gear.	6. Rotate flywheel 360°, and inspect teeth and ring gear replaced if damaged.
STARTER ENGAGES, SPINS OUT BEFORE ENGINE STARTS.	1. Broken teeth on starter ring gear.	1. Remove starter. Inspect ring gear and replace if necessary.
	2. Starter assembly faulty.	2. If all other starting system components and circuits check ok, replace starter assembly.
STARTER DOES NOT DISENGAGE.	1. Starter improperly installed.	1. Install starter. Tighten starter mounting hardware to correct torque specifications.
	2. Starter relay faulty.	2. Refer to **RELAY TEST**. Replace relay, if necessary.
	3. Ignition switch faulty.	3. Refer to **IGNITION SYSTEM - SERVICE INFORMATION** . Replace switch, if necessary.
	4. Starter assembly	4. If all other starting system components and circuits

	faulty.	check ok, replace starter assembly.
	5. Faulty teeth on ring gear.	5. Rotate flywheel 360°, and inspect teeth and ring gear replaced if damaged.

INSPECTION

Before removing any unit from the starting system for repair or diagnosis, perform the following inspections:

- **Battery** - Visually inspect the battery for indications of physical damage and loose or corroded cable connections. Determine the state-of-charge and cranking capacity of the battery. Charge or replace the battery, if required. Refer to the **BATTERY SYSTEM - SERVICE INFORMATION** for more information.
- **Ignition Switch** - Visually inspect the ignition switch for indications of physical damage and loose or corroded wire harness connections.
- **Transmission Range Sensor or Park/Neutral Switch** - Visually inspect the transmission range sensor for indications of physical damage and loose or corroded wire harness connections.
- **Starter Relay** - Visually inspect the starter relay for indications of physical damage and loose or corroded wire harness connections.
- **Starter Motor** - Visually inspect the starter motor for indications of physical damage and loose or corroded wire harness connections.
- **Starter Solenoid** - Visually inspect the starter solenoid for indications of physical damage and loose or corroded wire harness connections.
- **Wiring** - Visually inspect the wire harness for damage. Repair or replace any faulty wiring, as required. Check for loose or corroded wire harness connections at main engine ground and remote jump post.

SPECIFICATIONS

TORQUE-DIESEL

DESCRIPTION	N.m	Ft. Lbs.	In. Lbs.
Battery Cable Nut	9	-	80
Starter B+ Nut	10	-	89
Starter Mounting Bolts	24	18	-

TORQUE

DESCRIPTION	N.m	Ft. Lbs.	In. Lbs.
Engine Anti-roll to Fore/Aft Crossmember Bolt	47	35	-
Engine Anti-roll Mount Bolts	50	37	-
Engine Anti-roll Mount Thru Bolt	47	35	-
Fore/Aft Crossmember front			

Bolts	55	40.5	-
Fore/Aft Crossmember Rear Bolts	50	37	-
Negative Battery Cable Nut	5	-	45
Remote Start Antenna Mounting Screws	2.5	-	22
Starter Mounting Bolts	54	40	-
Starter Solenoid Battery Nut	10	-	90
Torque Reaction Bracket Bolts	54	40	-

STARTER

REMOVAL

2.0L DIESEL

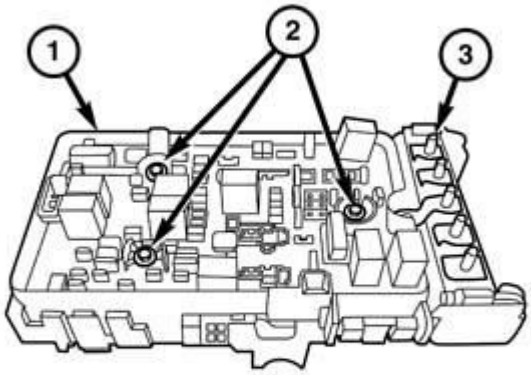

0822008650

Fig. 4: Removing/Installing Starter
Courtesy of CHRYSLER GROUP, LLC

1. Disconnect and isolate the negative battery cable.
2. Raise and support the vehicle.
3. Remove bolts (3) and the belly pan (2).

Fig. 5: B+ Cable Retainer
Courtesy of CHRYSLER GROUP, LLC

4. Remove the nut (1) from the B+ cable.
5. Disconnect the solenoid wire connector from the starter.
6. Remove the upper starter cable bracket mounting nut (3).
7. Remove nut (2) and the starter ground cable from stud.
8. Position the starter cable assembly aside (4).

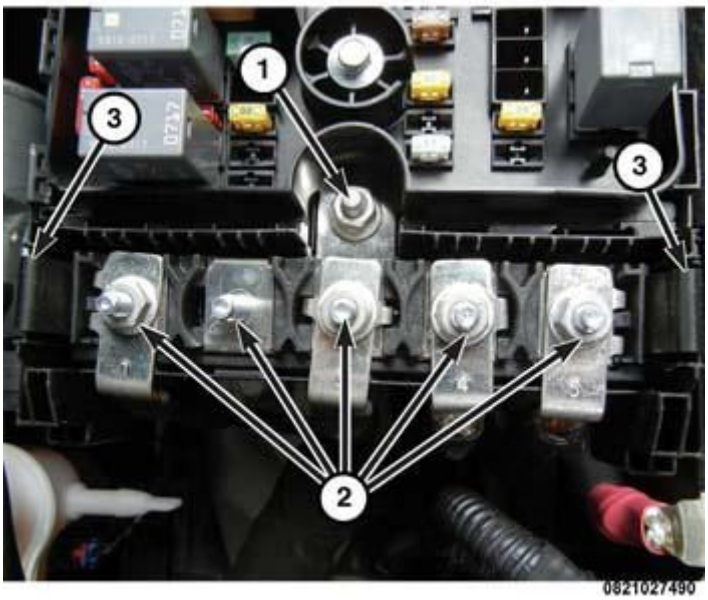

Fig. 6: Lower Starter Mounting Stud Bolt, Center Starter Mounting Bolt & Starter
Courtesy of CHRYSLER GROUP, LLC

9. Remove bolt (1, 2) and the starter motor (3)

2.4L

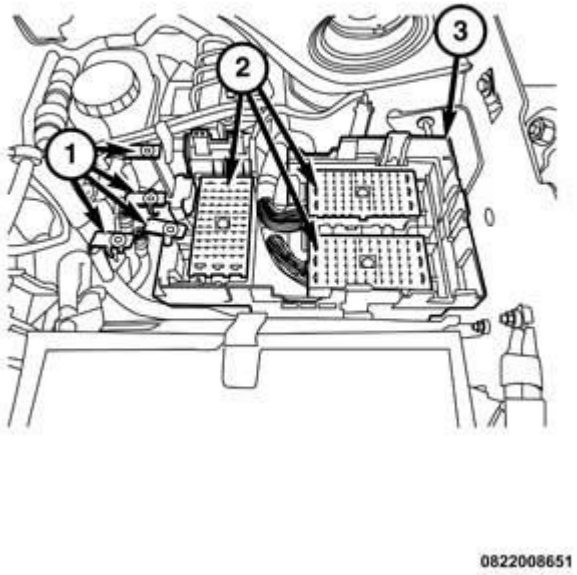

Fig. 7: Upper Starter Bolt
Courtesy of CHRYSLER GROUP, LLC

1. Disconnect the battery negative cable.
2. Loosen the upper starter bolt (1).

NOTE: The bolt will not be able to be removed due to lack of clearance.

3. Remove the intake manifold assembly Refer to **MANIFOLD, INTAKE, REMOVAL** .

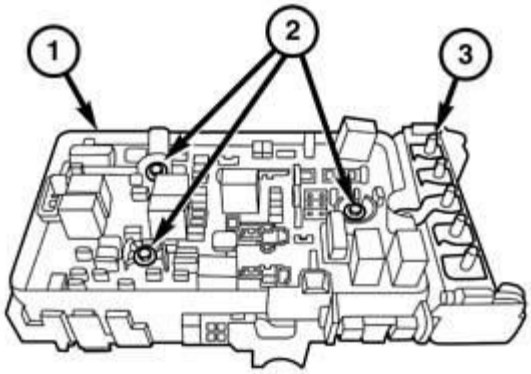

0822008650

Fig. 8: Removing/Installing Starter
Courtesy of CHRYSLER GROUP, LLC

4. Remove the 12 volt feed cable (1).
5. Disconnect the ignition feed connector.
6. Remove the lower starter bolt (3).
7. Remove the starter (4) from the block (5).

3.2L

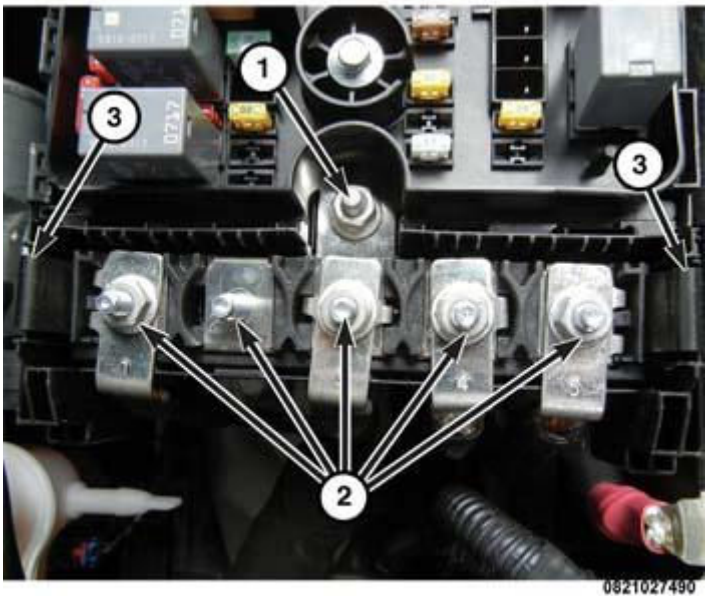

0821027490

Fig. 9: Removing/Installing Catalytic Converter
Courtesy of CHRYSLER GROUP, LLC

1. Disconnect and isolate the negative battery cable.
2. Raise and support the vehicle.
3. Remove the catalytic converter (3). Refer to **CONVERTER, CATALYTIC , REMOVAL** .

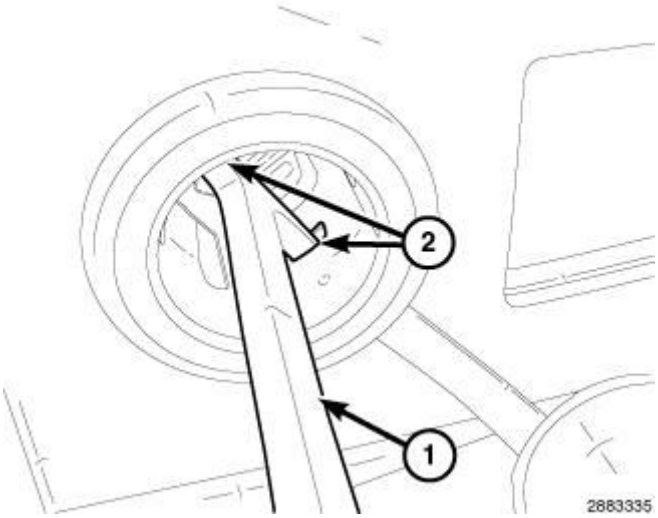

Fig. 10: Starter Solenoid Electrical Connector, Solenoid Stud, Starter Mounting Bolts & Starter Assembly
Courtesy of CHRYSLER GROUP, LLC

4. Disconnect the starter solenoid electrical connector (1) from the starter solenoid terminal.
5. Remove the battery cable nut and battery cable from the solenoid stud (2).
6. Remove the starter mounting bolts (4).
7. Remove the starter assembly (3) from the transmission.

INSTALLATION

2.0L DIESEL

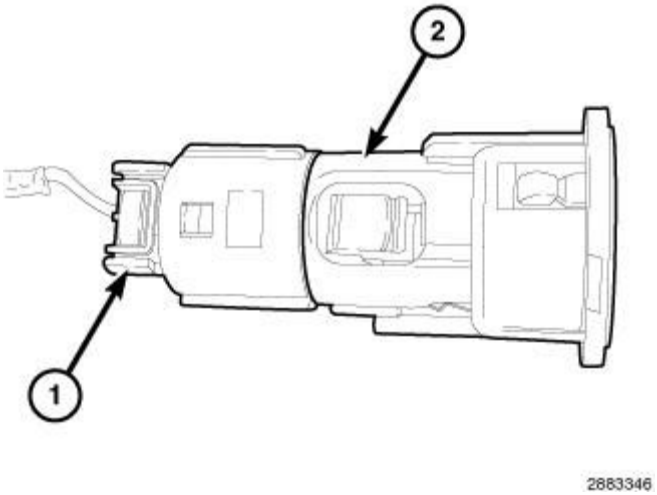

Fig. 11: Lower Starter Mounting Stud Bolt, Center Starter Mounting Bolt & Starter
Courtesy of CHRYSLER GROUP, LLC

1. Install the starter (3). Tighten bolts (1, 2) to 24 N.m (18 ft. lbs.).

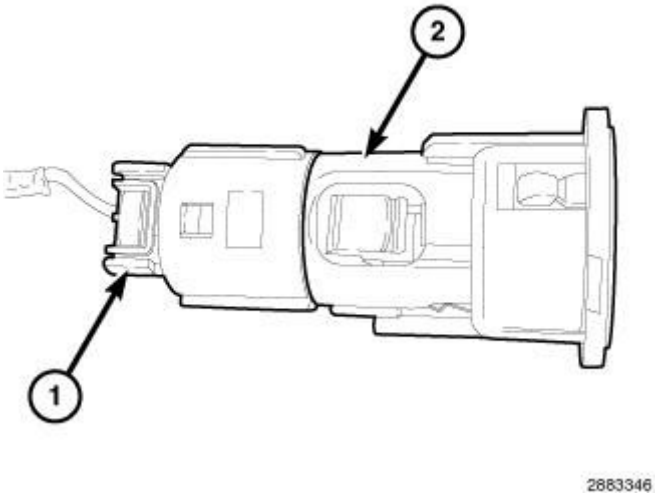

Fig. 12: B+ Cable Retainer
Courtesy of CHRYSLER GROUP, LLC

2. Install the B+ on the starter solenoid stud. Tighten Nut (1) to 10 N.m (89 in. lbs.).
3. Install the ground cable onto bottom stud. Tighten nut (2) to 10 N.m (89 in. lbs.).
4. Install the cable bracket on upper stud. Tighten nut (3) to 10 N.m (89 in. lbs.).
5. Connect the solenoid connector to the starter.

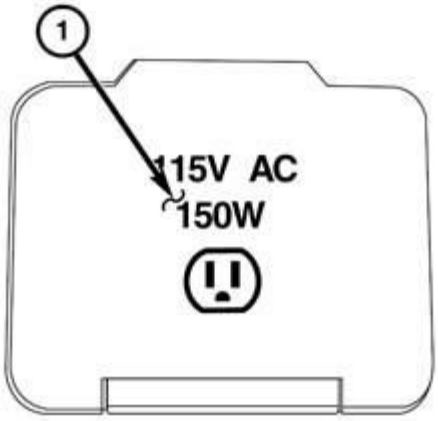

0811003271

Fig. 13: Removing/Installing Starter
Courtesy of CHRYSLER GROUP, LLC

6. Install the belly pan (2) and securely tighten bolts (3).
7. Lower the vehicle.
8. Connect the negative battery cable.

2.4L

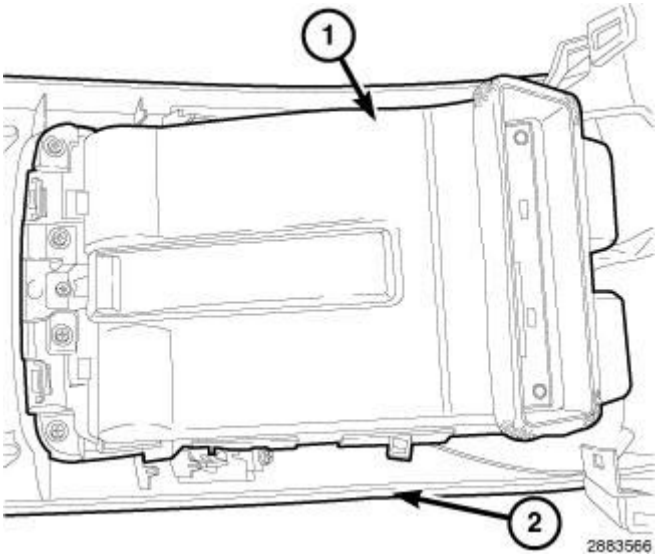

Fig. 14: Removing/Installing Starter
Courtesy of CHRYSLER GROUP, LLC

1. Install the starter into position.
2. Start the upper bolt by hand.
3. Start the lower bolt by hand.
4. Tighten the upper and lower bolts to 54 N.m (40 ft. lbs.).

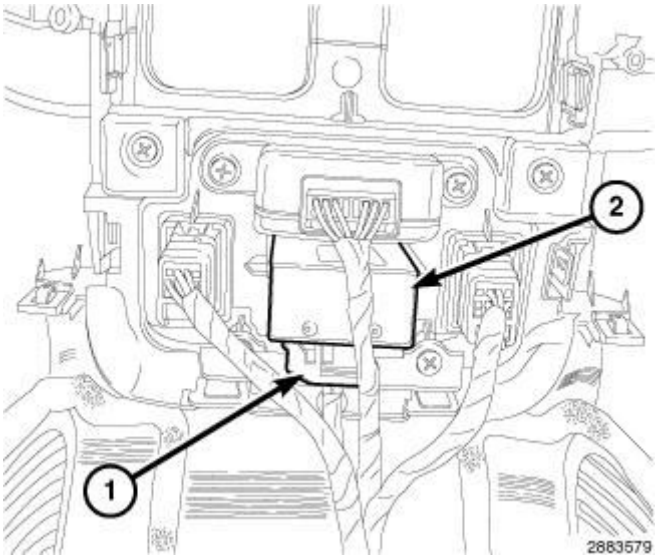

Fig. 15: Electrical Connector, Battery Positive Cable Nut & Engine
Courtesy of CHRYSLER GROUP, LLC

5. Install the battery cable (2) onto the starter and install the nut. Torque the nut to 10 N.m (90 in. lbs.).
6. Reconnect the starter electrical connector (1).
7. Install the intake manifold assembly Refer to **MANIFOLD, INTAKE, INSTALLATION** .

   .

8. Reconnect the negative battery cable.

3.2L

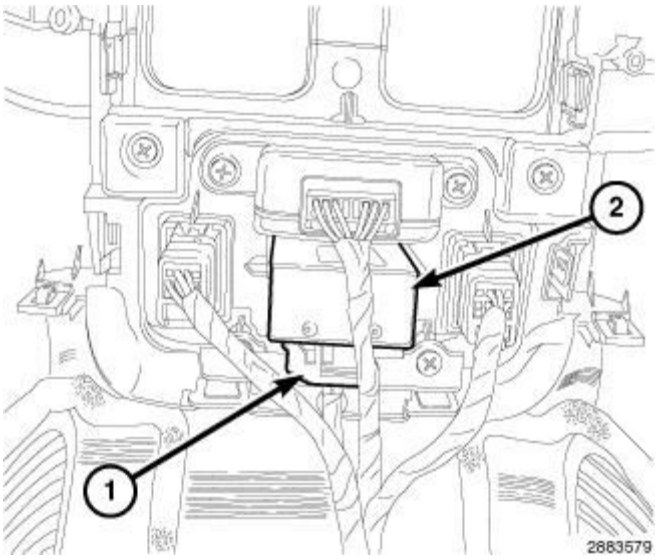

Fig. 16: Starter Solenoid Electrical Connector, Solenoid Stud, Starter Mounting Bolts & Starter Assembly
Courtesy of CHRYSLER GROUP, LLC

1. Position the starter (3) inside the transmission.
2. Install the starter mounting bolts (4) and tighten to 55 N.m (41 ft. lbs.).
3. Connect the starter solenoid electrical connector (1) to starter solenoid terminal.
4. Install the battery cable and nut to the solenoid stud (2). Tighten the nut to 10 N.m (86 in. lbs.).

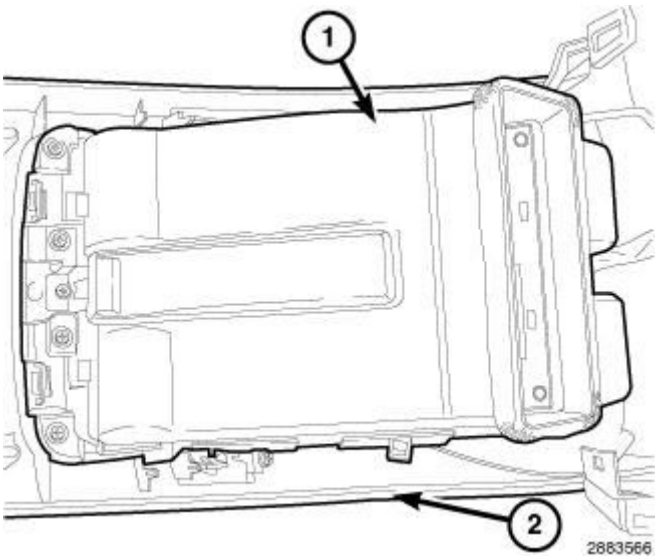

Fig. 17: Removing/Installing Catalytic Converter
Courtesy of CHRYSLER GROUP, LLC

5. Install the catalytic converter (3). Refer to **CONVERTER, CATALYTIC , INSTALLATION** .
6. Lower the vehicle.
7. Connect the negative battery cable and tighten nut to 5 N.m (4.5 in. lbs.).

ANTENNA, REMOTE START

DESCRIPTION

DESCRIPTION

The Remote Start Antenna Module Assembly consists of an electrical connection to the Radio Frequency Hub (RF Hub), a short length of coaxial cable with a connection to the RF HUB, two mounting clips, and the control module/antenna. The antenna is located in the rear cargo area next to the RF HUB assembly concealed by the headliner. The antenna which is printed on a circuit board in an enclosed plastic housing that is fed regulated 5v DC (+/-5%) via the attached coaxial cable pigtail. The Remote Start Antenna captures radiated RF signals that are transmitted from the Key FOB transmitter throughout the intended broadcast bands. The RF signal captured is then amplified and sent to the desired receiver/tuner.

OPERATION

OPERATION

The Remote Start Antenna is used for receive the signal from the remote key. The antenna captures radiated RF signals that are transmitted from the Key FOB transmitter throughout the intended broadcast bands. The RF signal captured is then amplified and sent to the Remote Frequency Hub Module (RFHUB).

REMOVAL

REMOVAL

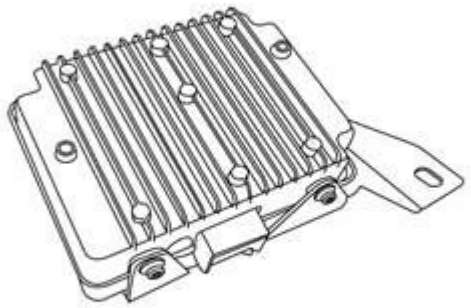

0821006695

Fig. 18: Removing/Installing Remote Start Antenna

Courtesy of CHRYSLER GROUP, LLC

1. Disconnect and isolate the negative battery cable.
2. Lower the rear of the headliner. Refer to **HEADLINER, REMOVAL** .
3. Disconnect the remote start antenna connector (3) from the Radio Frequency Hub (RF Hub) (4).
4. Remove the two fasteners (1) securing the remote start antenna (2) to the roof.

INSTALLATION

INSTALLATION

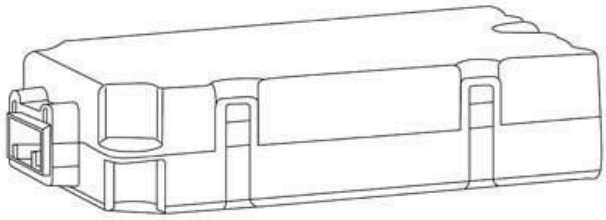

0821008033

Fig. 19: Removing/Installing Remote Start Antenna
Courtesy of CHRYSLER GROUP, LLC

1. Position the remote start antenna (2) to its mounting surface and secure the antenna using two fasteners (1).
2. Connect the remote start connector (3) to the RF Hub (4).
3. Install the headliner. Refer to **HEADLINER, INSTALLATION** .
4. Connect the negative battery cable.
5. Perform the BODY VERIFICATION TEST. Refer to **STANDARD PROCEDURE** .

NOTE: **If this Electronic Control Unit (ECU) is being replaced with a new unit, a diagnostic scan tool MUST be used to align the PROXI configuration data into the new ECU. Follow the routine outlined in the diagnostic scan tool for PROXI Configuration Alignment under Body Control Module (BCM) Miscellaneous Functions menu.**

SYSTEM, START STOP

DESCRIPTION

STOP START SYSTEM

The Stop-Start system automatically stops and starts the engine when certain conditions are met to improve fuel economy and lower CO2 emissions.

The primary input for manual transmission vehicles to an autostop is zero vehicle speed with the transmission in neutral and the clutch pedal released, while the primary input to autostarting is depression of the clutch pedal. The primary input for an automatic transmission vehicle to gain an autostop is zero vehicle speed with the brake pedal depressed, while the primary input to autostarting is release of the brake pedal. Many secondary inputs determine if it is acceptable to autostop and autostart. A number of devices on the vehicle are added or improved to support the Stop-Start function.

- **Voltage Stabilization Module (VSM)**

  - This component is required to maintain system voltage during Start events. This also provides a buffer for the vehicles ECU's when battery power is being sent to the starter for cranking.

- **InRush Current Relay (ICR)** - This component works in conjunction with the VSM in order to prevent voltage dips.
- **High Durability Starter** - This is a modified starter used for the Stop Start system. Changes are hardened gears with lead in chamfer, a spring pinion (Diesel), reinforced castings, a higher power motor, long-life brushes, precision bearings and motor shaft.
- **Advanced Glass Mat (AGM) Battery with High Durability Battery Cables** - The AGM type battery and the high durability cables are capable of withstanding the increased cycling that a stop/start vehicle will experience.
- **Generator** - A 220a generator that is up-sized specifically for use with the stop/start system.
- **Intelligent Battery Sensor (IBS)** - The IBS is responsible for measuring the state-of-charge. It will also predict voltage and capacity (ah) for future crank events. The IBS is also responsible for measuring battery temperature and alternator voltage current.
- **Transmission Neutral Sensor (MTX Only)** - This is located on the transmission selector cable.
- **Powertrain Control Module (PCM)** - The PCM monitors conditions for STOP/START.

The Battery, Starting, and Charging systems operate in conjunction with one another, and must be tested as a complete system. For correct operation of starting/charging systems, all components used in these 3 systems must perform within specifications. When attempting to diagnose any of these systems, it is important that you keep their interdependency in mind.

The diagnostic procedures used in this Service Information include the most basic conventional diagnostic methods, to the more sophisticated On-Board Diagnostics (OBD) built into the Powertrain Control Module (PCM). Use of an induction-type milliampere ammeter, volt/ohmmeter, battery charger, carbon pile rheostat (load tester), and 12-volt test lamp may be required.

Certain starting system components are monitored by the PCM and may produce a Diagnostic Trouble Code (DTC).

OPERATION

OPERATION

Primary Autostop Enablers - Brake pedal depressed (automatic transmission). Shifter/transmission in neutral and clutch pedal released (manual transmissions).

Secondary Autostop Enablers - Vehicle speed, coolant temperature, hood closed, doors closed, driver's seat belt latched, interior climate and settings, battery state and energy demand, steering wheel angle, steering wheel torque, ambient temperature, time and speed since last autostop, transfer case position, and ESC status, No stop-start related faults present.

Autostop Events

- Autostop state broadcast on CAN Buss
- Cluster telltale illuminates.
- EVIC displays message indicating autostop.
- Engine shutdown begins.

As the engine slows it passes through three phases:

- Fuel and spark restart permissible.
- Restart prohibited.
- Restart permitted, based on start system employed.

Autostart requests are evaluated throughout the autostop event.

When in autostop:

- Instrument cluster stop/start telltale remains illuminated.
- EVIC displays the autostop state message.
- Body controller starter relay is energized providing the engine controller with direct starter control.

Vehicle Function:

- Consumer electronics continue to function in a normal manner.
- HVAC fan speed and other setting adjusted to maximize cabin comfort and autostop duration (based on climate control settings and conditions).
- Electric Power Steering (EPS) maintained during autostop, possibly with reduced maximum assist.

System Requested Autostarts:

- Battery State
- Brake Vacuum
- Climate control stress
- Vehicle speed
- Steering wheel angle or torque
- Transmission selector position.

Stop-Start Disable (while autostopped)

- Vehicle systems monitored that may disable stop-start (requiring a key restart if in autostop) include: hood opened, occupant sensing indicating driver not present, unsafe gear shift position for autostart and critical system faults.

Autostart Decision:

- All autostart enablers present
- Brake pedal released or shifter place in reverse (automatic transmissions)
- Clutch pedal depressed past the up-stop position (manual transmission)
- Throttle pedal depressed

Autostart Events:

- Autostart state broadcasted on the CAN Bus
- instrument cluster stop/start telltale illumination cancelled
- EVIC display changed to previous EVIC message (outside temp and compass, etc.)
- VSMs are placed in voltage conditioning mode
- Hill Assist requested
- Starter relay commanded to initiate cranking
- Engine achieves idle speed

Launch Events:

- Automatic transmission clutches engaged
- Hill assist released
- Climate control returned to pre-autostop conditions
- Stop-Start Ready state broadcast on the CAN Bus
- Embedded EVIC stop-start message indicating "Stop/Start Ready"

Planned Autostart (Engine On) Enable Conditions:
1. Valid target gear and brake switch pressure condition
2. Completed initial engine key start

3. Occupant sensing allow engine start condition met
4. OBD allow engine start condition met
5. Vehicle hood not Ajar

Potential Autostop (Engine Off) Enable Conditions:
1. Tow Haul mode not active
2. Steering wheel angle within defined range
3. Steering wheel angle gradient within defined range
4. Steering column torque within defined range
5. Battery health state of function greater than threshold

Planned Autostop (Engine Off) Enable Conditions:
1. Valid target gear and brake switch pressure state combination
2. Threshold vehicle speed exceeded or timed-out since last shift out of reverse
3. Transmission ready
4. 4WD Low mode not active
5. Starter cool down condition met after reaching max allowable consecutive restarts
6. Ambient temperature within defined range
7. Engine coolant temperature within defined range
8. Catalyst temperature within defined range
9. Battery temperature within defined range
10. Barometric pressure greater than threshold
11. Brake booster delta pressure less than threshold
12. Fuel level greater than threshold
13. Vehicle hood not Ajar
14. No throttle request
15. No engine stop inhibit request by HVAC
16. Battery state of charge greater than threshold
17. Battery voltage state of function greater than threshold
18. Engine speed less than threshold
19. Vehicle speed less than threshold
20. Threshold vehicle speed exceeded since last engine start
21. Occupant sensing allow engine stop condition met
22. OBD allow engine stop condition met
23. Engine runtime greater than threshold
24. Stop-Start "Off" switch not activated
25. Flex fuel learn mode not active
26. ABS brake event not present

EVIC Pop Up Messages Displayed on the EVIC

- EVIC message states Stop/Start Autostop Active

- No Chime
- Normal Use
- Pop-up maintained for 5 seconds
- Displays with green hard telltale

Stop/Start To Restart Press

- Single Chime
- Driver put gear shift in gear without using Clutch; customer needs to return to Neutral or fully depress clutch pedal
- Pop up maintained for 5 seconds

Stop/Start Restart Required Fault Detected

- Single Chime
- MIL or ESS system fault preventing safe state confirmation during autostop.

EVIC Pop Up Messages Displayed within EVIC "Ring" menu

Stop/Start Ready

- Stop-Start conditions met to enable engine stop.

Stop/Start Off

- Stop-Start turned off by the customer at the switch

Stop/Start Not Ready

- Stop-Start conditions are not met to enable engine stop (ex: HVAC settings, engine temperature, etc.)

Stop/Start Not Ready Steering Wheel Turned

- Stop-Start condition not met with steering wheel turned past calibratable angle

DIAGNOSIS AND TESTING

STOP START SYSTEM DIAGNOSIS

For diagnostics of the starting system, refer to **DIAGNOSIS AND TESTING**.

For diagnostics of the Stop Start system, the scan tool can be used to review the inhibitor menu to help root cause a potential Stop Start concern.

Possible Reasons The Engine Does Not AUTO STOP

Prior to engine shut down, the system will check many safety and comfort conditions to see if they are fulfilled. In following situations the engine will not stop:

- Driver's seat belt is not buckled
- Outside temperature is less than 1°F (-17°C) or greater than 104°F (40°C)
- Actual cabin temperature is significantly different than temperature set on Auto HVAC
- HVAC is set to full defrost mode
- Engine has not reached normal operating temperature
- Battery discharged
- When driving in REVERSE
- Hood is open
- Vehicle is in 4LO transfer case mode

It may be possible for the vehicle to be driven several times without the STOP/START system going into a STOP/START READY state under more extreme conditions of the items listed above.

For a more technical and detailed explanation of AutoStop, review the following inhibitors.

When it comes to Stop Start, we allow AutoStop event if:

- Accelerator pedal is in the rest position.
- HVAC Control allows an auto stop event. The AC load can not be in a high demand mode of operation
- Battery state (charge 65%, function 8 volts, health 40 ampere hour) is within an acceptable range.
- Current master cylinder brake pressure exceeds the required HSA brake pressure and is sufficient to hold the vehicle on a grade.
- Electronic Stability Control (ECS) is not requesting control.
- Fuel level is greater than the minimum fuel level threshold.
- Both hood switches indicate the hood is closed.
- Predefined OBD faults are not present.
- Vehicle occupants are not attempting a vehicle exit maneuver.
- Absolute Barometric Pressure is within range. Barometric pressure is greater then a minimum of 605 kPa.
- Brake Booster is sufficient to maintain master cylinder pressure with current applied pedal force. Minimum 205 kPa
- Starter motor engagement has not exceeded prescribed frequency use.
- Vehicle speed is 0
- Steering angle has not exceeded the prescribed range.
- Steering torque is less than the prescribed value.
- Ambient Air Temperature is within the prescribed range (-10F - 110F).

- Catalyst temperature is within the prescribed range (150F - 950F)
- Coolant temperature is within the prescribed range.
- Engine oil temperature is within the prescribed range (40C - 110C).
- Anti-lock brake system is not active.
- Transfer case is not in 4WDLO
- Vehicle is not in tow haul mode.
- Vehicle is in valid target gear and brake switch combination.
- Threshold vehicle speed exceeded or timeout since last shift out of reverse.
- Transmission ready.
- Battery temperature is within the prescribed range (-256F - 256F).
- Engine speed is below a set threshold of 1000 RPM.
- Engine runtime is greater then threshold of 3 seconds.
- Start Stop disable switch is not active.
- Flex fuel learn mode is not active.
- Vehicle is not on a grade.
- Threshold vehicle speed exceeded since last engine start is 8 mph.

Conditions that will cause the engine to start automatically while in STOP/START AUTO STOP ACTIVE mode:

- Actual cabin temperature is significantly different than temperature set in Auto HVAC.
- HVAC is set to full defrost mode.
- STOP/START AUTO STOP TIME ACTIVE exceeds 5 minutes.
- Battery Voltage drops too low.
- Low brake vacuum e.g. after several brake pedal applications.
- Vehicle is moving faster then 3 mph (5 km/h)
- STOP/START OFF switch is pressed.
- 4WD is put into 4LO mode.

We allow Stop Start AutoStarts to occur when any of the conditions are made active:

- Accelerator pedal is in the "rest" position.
- HVAC Control is allows an Auto Stop event.
- Battery State (charge, function, health) is within acceptable range.
- Current master cylinder brake pressure exceeds the required HSA brake pressure and is sufficient to hold the vehicle on a grade.
- Electronic Stability Control system is not requesting control.
- Fuel Level is greater than the minimum fuel level threshold.
- Both hood switches indicate hood is closed.

- Predefined OBD faults are not present.
- Vehicle occupants are not attempting a vehicle exit maneuver.
- Absolute Barometric Pressure is within range.
- Brake Booster Pressure is sufficient to maintain master cylinder pressure with current applied pedal force.
- Starter motor engagement has not exceeded prescribed frequency of use.
- Vehicle speed is 0.
- Steering Angle has not exceeded the prescribed range.
- Steering Torque is less than the prescribed value.
- Ambient Air Temperature is within the prescribed range.
- Catalyst Temperature is within the prescribed range.
- Coolant Temperature is within the prescribed range.
- Engine Oil Temperature is within the prescribed range.
- Anti-Lock Brake System is not active.
- Transfer Case Mode is not in 4WDLO.
- Vehicle is not in TOW-HAUL mode.
- Vehicle is in valid target gear and brake switch state combination
- Threshold vehicle speed exceeded or timeout since last shift out of reverse
- Transmission ready
- Battery temperature is within the prescribed range
- Engine speed is below a set threshold
- Threshold vehicle speed exceeded since last engine start
- Engine runtime greater than threshold
- Stop-Start disable switch is not Active
- Flex fuel learn mode not active
- Vehicle is not on a grade.

We allow Stop Start AutoStarts to occur when any of the conditions are made active:

- Accelerator pedal is not in the "rest" position.
- HVAC Control is active.
- Battery State (charge, function, health) is out of range.
- Current master cylinder brake pressure does not have enough HSA brake pressure.
- Electronic Stability Control system is requesting control.
- Fuel Level is lower than the minimum fuel level threshold.
- One or both hood switches indicate hood is open.
- Predefined OBD faults are present.
- Absolute Barometric Pressure is out of range.
- Brake Booster Pressure is insufficient to maintain master cylinder pressure with current applied pedal

force.
- Starter motor engagement has exceeded prescribed frequency of use.
- Vehicle speed is above 0.
- Steering Angle has exceeded the prescribed range.
- Steering Torque is more than the prescribed value.
- Ambient Air Temperature is outside the prescribed range.
- Catalyst Temperature is outside the prescribed range.
- Coolant Temperature is outside the prescribed range.
- Engine Oil Temperature is outside the prescribed range.
- Anti-Lock Brake System is active.
- Transfer Case Mode is in 4WDLO.
- Vehicle is in TOW-HAUL mode.
- Transmission not ready
- Battery temperature is out of the prescribed range
- Stop-Start disable switch is Active
- Flex fuel learn mode is active

The above conditions can restart the vehicle as long as:

1. Completed initial engine key start.
2. Occupant sensing allow engine start condition met.
3. OBD allow engine start condition met.
4. Vehicle hood closed.

System Malfunction:

If there is a malfunction in the STOP/START system, the system will not shut down the engine. A SERVICE STOP/START SYSTEM message will appear in the EVIC.

SENSOR, NEUTRAL POSITION

DESCRIPTION

DESCRIPTION

Fig. 20: Neutral Position Sensor
Courtesy of CHRYSLER GROUP, LLC

The Neutral Position Sensor (NPS) (1) is a component of the automatic stop/start feature on KL platform vehicles with manual transmissions. It is located on the transmission shift cable and it is only serviced by replacing the shift cable assembly.

OPERATION

OPERATION

The purpose of the Neutral Position Sensor (NPS) is to provide an output from the sensor to a controller concerning gear range position. On vehicles equipped with a manual transmission, the shift cable position is interpreted by the controller from the NPS to determine if the transmission is in neutral or in some gear range, for the purpose of determining when the stop/start system can safely restart the vehicle without the clutch pedal being depressed. The switch outputs a PWM signal whose percentage of duty cycle corresponds to the ranged denoted in Neutral, in a gear range, or as a fault value. The NPS is attached to shift cable such that it is nominally outputting 50% duty cycle at or when the vehicle is shifted to Neutral. Higher or lower duty cycle outputs are denoted as the magnet on the shift cable moves with respect to the NPS when the vehicle is shifted to gear range positions.

The NPS receives an Input of 5 volts excitation, has a common ground and outputs Pulse-width modulated signal to the controller.

Outputs reading less than 5% or more than 95% of duty cycle will trigger diagnostic trouble codes. Outputs reading between 5-25% or 75-95% represent in-gear positions and outputs readings between 25-75% represent Neutral position. Check that the sensor is attached properly to shift cable (inside the center console, at the shifter) and that wiring lead is attached to wiring harness coming up from rearward in vehicle from shifter. Check that the shift cable is properly attached to shifter and transmission ends to levers and load reaction points. With a jumper, voltages from the sensor input and output can be read with a voltmeter and compared with

expected values. As an example, 90% of 5 volts is 4.5 Volts, so if you read 4.5 volts, the transmission has been shifted into a gear range.

This NPS is not available to order as a standalone component. To obtain the NPS, the Shift Cable assembly will need to be ordered.

REMOVAL

REMOVAL

The Neutral Position Sensor (NPS) can only be replaced by replacing the gear shift control cable. (Refer to **CABLE, GEARSHIFT CONTROL - REMOVAL**).

INSTALLATION

INSTALLATION

The Neutral Position Sensor (NPS) is installed as an assembly with the gear shift control cable. (Refer to **CABLE, GEARSHIFT CONTROL - INSTALLATION**).

RELAY, IN-RUSH CURRENT REDUCTION

DESCRIPTION

DESCRIPTION

In-rush Current Reduction Relay

Fig. 21: In-Rush Current Reduction (ICR) Relay Module
Courtesy of CHRYSLER GROUP, LLC

The In-rush Current Reduction (ICR) Relay Module is intended to reduce the in-rush current drawn by the starter motor during the initial stage of the crank sequence, thus maintaining an adequate voltage level and allowing critical electrical/electronic systems to function without interruption, or reset. At the same time, the relay will allow sufficient current and voltage to reach the starter motor, to allow cranking the engine at an adequate speed, so that the engine can generate the air-fuel mixture necessary for self-sustained operation, even under adverse conditions.

This component is mounted to a bracket that mounts to the top of the starter assembly. The relay is serviceable and is shipped along with a bracket that secures the ICR.

OPERATION

OPERATION

In-Rush Current Reduction Relay.

Within the ICR relay, prior to the starter motor solenoid's contact closure, the shorting bar opens contacts, thus routing the starter motor current through a resistor bar (10 mOhm for V6 Pentastar). The increase in series resistance reduces/eliminates the initial current spike (or, inrush current) and reduces the consequent voltage drop. After a set time (185 msec), the power to the ICR relay is cut, the shorting bar closes the contacts, removing the resistor bar from the circuit and restoring full power to the starter motor. At this point, there is a rebound of the current surge and subsequent drop in voltage; however, neither is as intense as they would be would be without initial jump in resistance.

2014 GENERAL INFORMATION

Circuit Testing Procedures - Non-DTC-Based Diagnostics - Cherokee

WARNING

GENERAL WARNINGS

WARNINGS provide information to prevent personal injury and vehicle damage. Below is a list of general warnings that should be followed any time a vehicle is being serviced.

WARNING: **Always wear safety glasses for eye protection.**

WARNING: **Use safety stands anytime a procedure requires being under a vehicle.**

WARNING: **Be sure that the ignition switch is always in the off position, unless the procedure requires it to be on.**

WARNING: **Set the parking brake when working on any vehicle. An automatic transmission should be in park. A manual transmission should be in neutral.**

WARNING: **Operate the engine only in a well-ventilated area.**

WARNING: **Keep away from moving parts when the engine is running, especially the fan and belts.**

WARNING: **To prevent serious burns, avoid contact with hot parts such as the radiator, exhaust manifold(s), tail pipe, catalytic converter and muffler.**

WARNING: **Do not allow flame or sparks near the battery. Gases are always present in and around the battery.**

WARNING: **Always remove rings, watches, loose hanging jewelry and avoid loose clothing.**

DESCRIPTION

CIRCUIT FUNCTIONS

All circuits in the wiring diagrams use an alpha/numeric code to identify the wire and its function. To identify which circuit code applies to a system, refer to the Circuit Identification Code Chart.

NOTE: This chart shows the main circuits only and does not show the secondary codes that may apply to some models.

CIRCUIT IDENTIFICATION CODE CHART

CIRCUIT CODE	FUNCTION
A	BATTERY FEED
B	BRAKE CONTROLS
C	CLIMATE CONTROLS
D	DIAGNOSTIC CIRCUITS
E	DIMMING ILLUMINATION CIRCUITS
F	FUSED CIRCUITS
G	MONITORING CIRCUITS (GAUGES)
H	MULTIPLE
I	NOT USED
J	OPEN
K	POWERTRAIN CONTROL MODULE
L	EXTERIOR LIGHTING
M	INTERIOR LIGHTING
N	MULTIPLE
O	NOT USED
P	POWER OPTION (BATTERY FEED)
Q	POWER OPTIONS (IGNITION FEED)
R	PASSIVE RESTRAINT
S	SUSPENSION/STEERING
T	TRANSMISSION/TRANSAXLE/ TRANSFER CASE
U	OPEN
V	SPEED CONTROL, WIPER/WASHER
W	WIPERS
X	AUDIO SYSTEMS
Y	TEMPORARY
Z	GROUNDS

CIRCUIT INFORMATION

Each wire shown in the wiring diagrams contains a code which identifies the main circuit, a specific portion of the main circuit, gauge of wire, and color.

As an example, circuit **A 2 18 LB/YL** is decoded in the following manner:

Circuit Type:	**A** (Battery Feed Circuit)
Circuit Level:	**2** (Level Two)
Wire Size:	**18** (Eighteen Gauge Wire)
Wire Color:	**LB/YL** (Light Blue with Yellow Tracer)

WIRE COLOR CODE CHART

COLOR CODE	COLOR
BL	BLUE
BK	BLACK
BR	BROWN
DB	DARK BLUE
DG	DARK GREEN
GY	GRAY
LB	LIGHT BLUE
LG	LIGHT GREEN
OR	ORANGE
PK	PINK
RD	RED
TN	TAN
VT	VIOLET
WT	WHITE
YL	YELLOW
*	WITH TRACER

DIAGNOSIS AND TESTING

WIRING HARNESS TESTING

TROUBLESHOOTING TOOLS

When diagnosing a problem in an electrical circuit there are several common tools necessary. These tools are listed and explained below:

Voltmeter

The voltmeter is used to measure the electrical pressure or the voltage difference between two points. A voltmeter reads available voltages such as battery voltage, generator output voltage, and voltage drop across a component or conductor. A high voltage drop may indicate a high resistance in the circuit. The voltmeter can be used to locate an open circuit and circuits with an unintentional ground. Observing polarity, always connect a voltmeter in parallel to the existing circuit. If the leads are reversed on a digital multimeter, a minus sign

appears in the display.

CAUTION: Most of the electrical components used in today's vehicles are Solid State. When checking voltages in these circuits, use a meter with a 10 - megohm or greater impedance rating.

Ohmmeter

The ohmmeter is used to measure the resistance of a component or the resistance between two points in a circuit in ohms, and to check a portion of the circuit for continuity. Some meters have a built-in tone to indicate that the circuit has continuity. No resistance indicates a short circuit or unintentional ground whereas resistance that is higher than specification indicates a high resistance in the circuit such as a loose, dirty or corroded connection, or a defective component. An "OL" reading means that the circuit or component had infinite resistance; an open circuit or defective component is indicated. Ohmmeters have an internal battery and must never be connected to a power circuit. Connecting an ohmmeter to a powered circuit causes the meter fuse to blow and can damage its dry cell battery. Ohmmeters can be connected into a circuit without regard to polarity, unless the circuit contains a diode. When using an ohmmeter, the component or portion of the circuit must be isolated from other components or branches to avoid false readings.

CAUTION: Most of the electrical components used in today's vehicles are Solid State. When checking resistance in these circuits use a meter with a 10 - megohm or greater impedance rating. In addition, make sure the power is disconnected from the circuit. Circuits that are powered up by the vehicle's electrical system can cause damage to the equipment and provide false readings.

Ammeter

Amperage or current is the measure of the rate of electron "flow" in a circuit. It is measured in the unit of the Ampere, simply called an Amp (A). In order to measure current in a circuit, the circuit must be broken or opened, and an ammeter must be inserted in series (in-line) with the circuit so that all the current that flows through the circuit will have to go through the meter. When measuring current in this manner, it requires the meter be made part of the circuit, this type of measurement is more difficult than measuring either voltage or resistance.

When an ammeter is placed in series with a circuit, it ideally drops no voltage as current goes through it. In other words, it acts very much like a piece of wire, with very little resistance from one test probe to the other. Consequently, an ammeter will act as a short circuit if placed in parallel (across the terminals of) a substantial source of voltage. If this is done, a surge in current will result, potentially damaging the meter. Ammeters are generally protected from excessive current by means of a small fuse located inside the meter housing. If the ammeter is accidently connected across a substantial voltage source, the resultant surge in current will "blow" the fuse and render the meter incapable of measuring current until the fuse is replaced.

Consult the owner's manual of the particular model of meter you own for details on measuring current.

CAUTION: Do not crank the engine or turn on any accessories that may draw more

than 10 Amps. You may open the protective fuse in the multimeter.

12-Volt Test Light

The 12-Volt test light when properly used, is one of the best and quickest pieces of test equipment available for troubleshooting 12-volt power systems. It's especially good for times when there are only two voltages, battery voltage and no voltage. For example, if you're checking to see if you have 12-volts on the Battery(+), the test light will immediately tell you if voltage is present or not.

With any test equipment, you should confirm that it's in good working order before you begin testing. For a test light, you have to have a voltage source. Connect the test light's ground clip to a good ground and touch it to a point where you believe that there is 12-volt supply. If the light doesn't light up, check the light by connecting it directly across the battery. Initially, make sure that you have the ground clip on the negative battery terminal. If you touch the probe to the positive terminal, the test light should light up. If it doesn't and the battery is not completely dead, the test light isn't working properly. The test light must be in proper working order before any circuit testing can occur.

Jumper Wire

The sole purpose of the jumper wire is to complete a circuit. It is nothing more than a suitable length of insulated wire with terminals or connectors on each end. Jumper wires may be bought or made with various sizes of wire and styles of terminals including alligator clips, spade lugs and pin plugs, and should include a fuse device of some type for circuit and component protection. A jumper wire is used to verify a faulty conductor by substituting a known good one. It is jumped across a suspicious conductor in the circuit. If the circuit works with the jumper, but not without, there is an open somewhere in the area being jumped. A jumper wire is ONLY used to bypass a faulty conductor (including switches and connectors). NEVER bypass a load device with a jumper wire. The circuit needs the resistance from the load device and shorting across it causes high current flow, which could damage other components.

WARNING: **Never use a jumper wire across a load, such as a motor, connected between a battery feed and ground.**

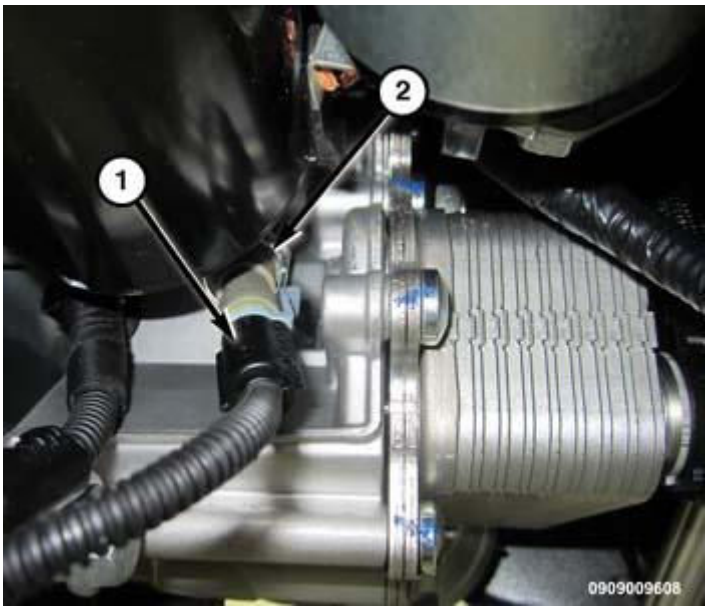

Fig. 1: Probing Tool
Courtesy of CHRYSLER GROUP, LLC

1 - SPECIAL TOOL 6801 2 - PROBING END

Probing Tools

These tools are used for probing terminals in connectors. Select the proper size tool from Special Tool Package (special tool #6807, Terminal Tools), and insert the probing end (2) into the terminal being tested. Use the other end of the tool (1) to insert the meter probe.

INTERMITTENT AND POOR CONNECTIONS

Most intermittent electrical problems are caused by faulty electrical connections or wiring. It is also possible for a sticking component or relay to cause a problem.

Before condemning a component or wiring assembly, check the following items:

- Connectors are fully seated
- Spread terminals, or terminal push out
- Terminals in the wiring assembly are fully seated into the connector/component and locked into position
- Dirt or corrosion on the terminals. Any amount of corrosion or dirt could cause an intermittent problem
- Damaged connector/component casing exposing the item to dirt or moisture

- Wire insulation that has rubbed through causing a short to ground
- Some or all of the wiring strands broken inside of the insulation
- Wiring broken inside of the insulation

TROUBLESHOOTING WIRING PROBLEMS

When troubleshooting wiring problems there are six steps which can aid in the procedure. The steps are listed and explained below. Always check for non-factory items added to the vehicle before doing any diagnosis. If the vehicle is equipped with these items, disconnect them to verify these add-on items are not the cause of the problem.

Perform the following Six Step Diagnosis Process:

1. Verify the problem.
2. Verify any related symptoms. Do this by performing operational checks on components that are in the same circuit. Refer to **SYSTEM WIRING DIAGRAMS** .
3. Analyze the symptoms. Use the wiring diagrams to determine what the circuit is doing, where the problem most likely is occurring and where the diagnosis will continue.
4. Isolate the problem area.
5. Repair the problem area.
6. Verify the proper operation. For this step, check for proper operation of all items on the repaired circuit. Refer to **SYSTEM WIRING DIAGRAMS** .

NOTE: **The Six Step Diagnosis Process used by Chrysler is a time proven process. The basic concepts of this process have been used by others for problem solving for many years. The successful application of this process requires a solid understanding of the conditions that affect each step, and when its time to advance to the next step. These conditions based on experience formulate what is known as "Best Practices".**

STANDARD PROCEDURE

CHECK A 12-VOLT FUSED BATTERY B(+) CIRCUIT FOR VOLTAGE

THEORY OF OPERATION

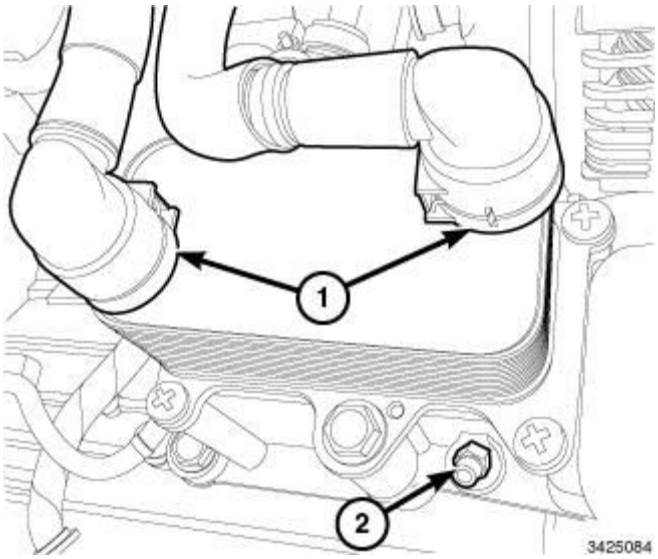

Fig. 2: Checking 12-Volt Fused Battery B(+) Circuit For Voltage
Courtesy of CHRYSLER GROUP, LLC

The purpose of the following procedure(s) is to demonstrate how to check the voltage of a 12-volt fused battery B(+) circuit with a test light or voltmeter.

NOTE: The circuit shown is an example, and is intended for demonstrational purpose only.

The following are circuit tests covered in this procedure:

- Testing 12-Volt Fused Battery B(+) Circuit Voltage With A Test Light
- Testing 12-Volt Fused Battery B(+) Circuit Voltage With A Voltmeter

NOTE: Perform the following test using a known good test light or functioning multimeter.

Below is a list of possible causes that could be related to a No Voltage condition.

Possible Causes
OPEN CIRCUIT (CHAFED, PIERCED, PINCHED OR BROKEN WIRES)
OPEN FUSE
OPEN IN-LINE CONNECTOR (BENT, PUSHED OUT OR CORRODED TERMINALS)

DIAGNOSTIC TEST

1. **TESTING 12-VOLT FUSED BATTERY B(+) CIRCUIT VOLTAGE WITH A TEST LIGHT**

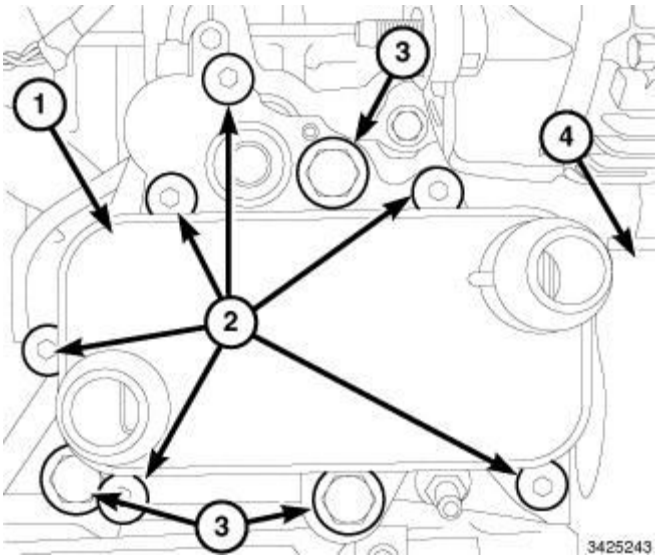

Fig. 3: Checking 12-Volt Fused Battery B(+) Circuit Voltage With A Test Light
Courtesy of CHRYSLER GROUP, LLC

NOTE: Before testing any circuits, first verify the 12-volt test light is operating properly. Connect the 12-volt test light to battery ground or to any other known good ground. Touch the lead of the test light to Battery(+). If the test light is operational, it should illuminate brightly.

1. Turn the ignition off.
2. Disconnect the wire harness connector from the component that is being tested.

NOTE: Check connectors - Clean/repair as necessary.

3. At this time, leave all in-line connectors connected.
4. Connect the 12-volt test light to a known good ground.
5. Use the test light lead to carefully probe the Battery or Ignition voltage circuit in the harness connector.
6. First check with the ignition off, next check with the ignition on, and lastly check while cranking the engine.

   Does the test light illuminate brightly?

   Yes

   - The circuit is not open at this time or the condition that originally caused the open may not be present at this time. Continue to monitor the test light and wiggle the wire harness and connectors to check for an intermittent open or excessive resistance condition.
   - Use the wiring diagram as a guide to trace the circuits and look for any in-line connectors where the open could occur intermittently.

- Look for any chafed, pierced, pinched, or partially broken wires.
- Look for broken, bent, pushed out or corroded terminals. Verify that there is good pin to terminal contact in the related wire harness connectors.
- Perform any Technical Service Bulletins (TSBs) that may apply.

No

- Repair the open in the circuit. Use the wiring diagram as a guide to trace the circuit and look for any in-line connectors where the open could occur.
- One method to help isolate the open is to disconnect any in-line connectors and measure the resistance from one side of the in-line connector to the matching component harness connector. If the open goes away, the open is on the other side of the in-line connector.
- If this is a fused circuit, make sure to inspect the fuse. If the fuse is open, check the circuit for a short to ground before installing a new fuse. The circuit may have a short to ground causing the fuse to open. This short to ground could be in the wire harness or in one of the components the circuit is supplying voltage to.

2. **TESTING 12-VOLT FUSED BATTERY B(+) CIRCUIT VOLTAGE WITH A VOLTMETER**

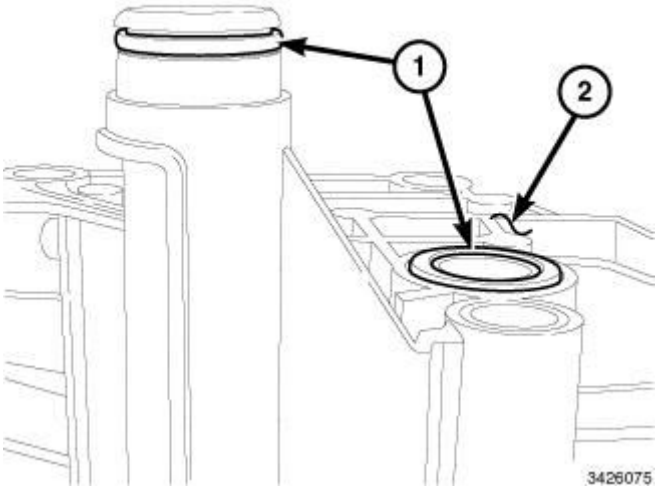

Fig. 4: Checking Testing 12-Volt Fused Battery B(+) Circuit Voltage With A Voltmeter
Courtesy of CHRYSLER GROUP, LLC

NOTE: The connector displayed in the graphics are only an example.

1. Turn the ignition off.
2. Disconnect the wire harness connector from the component that is being tested.

NOTE: Check connectors - Clean/repair as necessary.

3. At this time leave all in-line connectors connected.

4. Use a multimeter set to measure DC voltage.
5. Connect the ground lead of the meter to a known good ground.
6. Use the positive lead of the multimeter and probe the circuit that is being checked for voltage.
7. Ignition on, engine not running.

Is the voltage within specifications for this circuit?

Yes

- The circuit is functioning properly or the condition that originally caused the open or short may not be present at this time. Continue to measure the voltage and wiggle the wire harness and connectors while checking for an intermittent open or short.
- Use the wiring diagram as a guide to trace the circuits and look for any in-line connectors where the short could occur intermittently.
- Look for any chafed, pierced, pinched, or partially broken wires.
- Look for broken, bent, pushed out or corroded terminals. Verify that there is good pin to terminal contact in the related wire harness connectors.
- Perform any Technical Service Bulletins (TSBs) that may apply.

No

- Repair the open or short to ground in the circuit. Use the wiring diagram as a guide to trace the circuits and look for any in-line connectors where the short could occur.
- One method to help isolate the open or short is to disconnect any in-line connectors that the circuit being checked runs through and check for the voltage again. If the voltage is present, the open or short is on the other side of the in-line connector.

CHECK A 12-VOLT SWITCHED BATTERY B(+) CIRCUIT FOR VOLTAGE

THEORY OF OPERATION

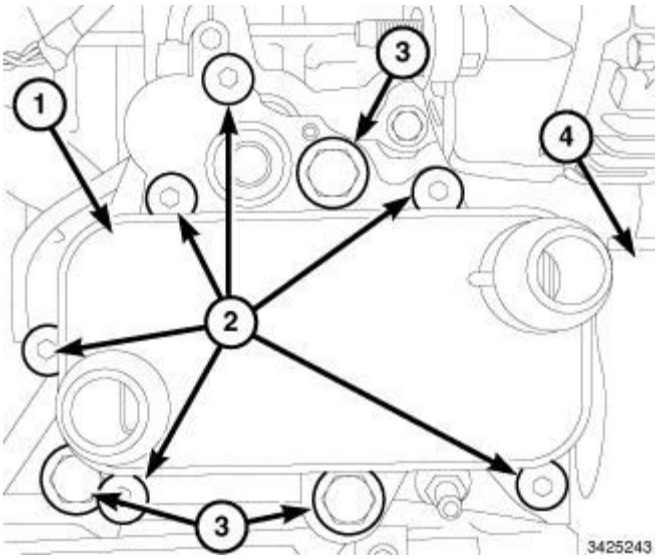

Fig. 5: Checking 12-Volt Switched Battery B(+) Circuit For Voltage
Courtesy of CHRYSLER GROUP, LLC

The purpose of the following procedure is to demonstrate how to check the voltage of a 12-Volt switched battery B(+) circuit with a test light or voltmeter.

NOTE: The circuit shown is an example, and is intended for demonstrational purpose only.

The following are circuit tests covered in this procedure:

- Testing 12-Volt Switched Battery B(+) Circuit Voltage With A Test Light
- Testing 12-Volt Switched Battery B(+) Circuit Voltage With A Voltmeter

NOTE: Perform the following test using a known good test light or functioning multimeter.

Below is a list of possible causes that could be related to a No Voltage condition.

Possible Causes
OPEN CIRCUIT (CHAFED, PIERCED, PINCHED OR BROKEN WIRES)
OPEN FUSE
OPEN IN-LINE CONNECTOR (BENT, PUSHED OUT OR CORRODED TERMINALS)

DIAGNOSTIC TEST

1. **TESTING 12-VOLT SWITCHED BATTERY B(+) CIRCUIT VOLTAGE WITH A TEST LIGHT**

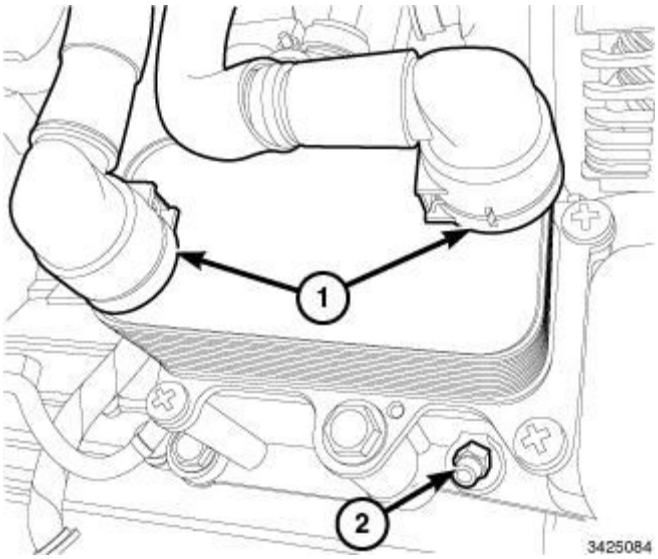

Fig. 6: Testing 12-Volt Switched Battery B(+) Circuit Voltage With A Test Light
Courtesy of CHRYSLER GROUP, LLC

NOTE: Before testing any circuits, first verify the 12-volt test light is operating properly. Connect the 12-volt test light to battery ground or to any other known good ground. Touch the lead of the test light to Battery(+). If the test light is operational, it should illuminate brightly.

1. Turn the ignition off.
2. Disconnect the wire harness connector from the component that is being tested.

NOTE: Check connectors - Clean/repair as necessary.

3. At this time, leave all in-line connectors connected.
4. Connect the 12-volt test light to a known good ground.
5. Use the test light lead to carefully probe the Battery or Ignition voltage circuit in the harness connector.
6. First check with the ignition off, next check with the ignition on, and lastly check while cranking the engine.

   Does the test light illuminate brightly?

   Yes

   - The circuit is not open at this time or the condition that originally caused the open may not be present at this time. Continue to monitor the test light and wiggle the wire harness and connectors to check for an intermittent open or excessive resistance condition.
   - Use the wiring diagram as a guide to trace the circuits and look for any in-line connectors where the open could occur intermittently.

- Look for any chafed, pierced, pinched, or partially broken wires.
- Look for broken, bent, pushed out or corroded terminals. Verify that there is good pin to terminal contact in the related wire harness connectors.
- Perform any Technical Service Bulletins (TSBs) that may apply.

No

- Repair the open in the circuit. Use the wiring diagram as a guide to trace the circuit and look for any in-line connectors where the open could occur.
- One method to help isolate the open is to disconnect any in-line connectors and measure the resistance from one side of the in-line connector to the matching component harness connector. If the open goes away, the open is on the other side of the in-line connector.
- If this is a fused circuit, make sure to inspect the fuse. If the fuse is open, check the circuit for a short to ground before installing a new fuse. The circuit may have a short to ground causing the fuse to open. This short to ground could be in the wire harness or in one of the components the circuit is supplying voltage to.

2. **TESTING 12-VOLT SWITCHED BATTERY B(+) CIRCUIT VOLTAGE WITH A VOLTMETER**

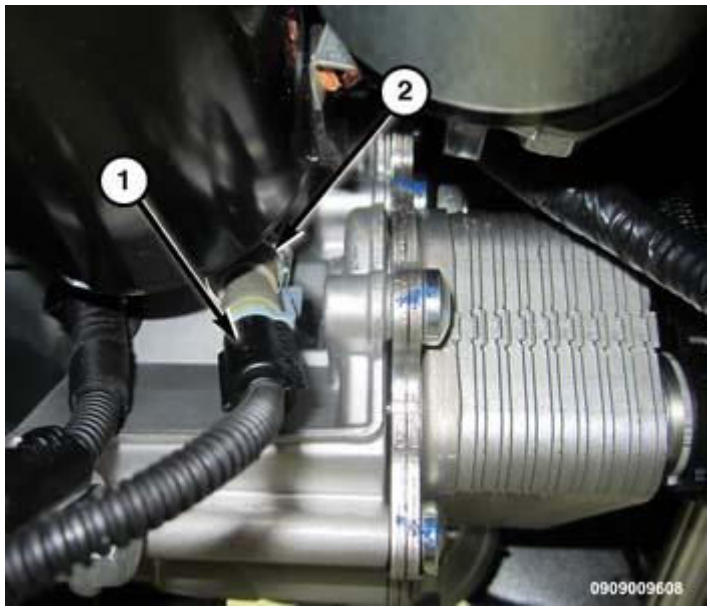

Fig. 7: Testing 12-Volt Switched Battery B(+) Circuit Voltage With A Voltmeter
Courtesy of CHRYSLER GROUP, LLC

NOTE: The connector displayed in the graphics are only an example.

1. Turn the ignition off.
2. Disconnect the wire harness connector from the component that is being tested.

NOTE: Check connectors - Clean/repair as necessary.

3. At this time leave all in-line connectors connected.
4. Use a multimeter set to measure DC voltage.
5. Connect the ground lead of the meter to a known good ground.
6. Use the positive lead of the multimeter and probe the circuit that is being checked for voltage.
7. Ignition on, engine not running.

Is the voltage within specifications for this circuit?

Yes

- The circuit is functioning properly or the condition that originally caused the open or short may not be present at this time. Continue to measure the voltage and wiggle the wire harness and connectors while checking for an intermittent open or short.
- Use the wiring diagram as a guide to trace the circuits and look for any in-line connectors where the short could occur intermittently.
- Look for any chafed, pierced, pinched, or partially broken wires.
- Look for broken, bent, pushed out or corroded terminals. Verify that there is good pin to terminal contact in the related wire harness connectors.
- Perform any Technical Service Bulletins (TSBs) that may apply.

No

- Repair the open or short to ground in the circuit. Use the wiring diagram as a guide to trace the circuits and look for any in-line connectors where the short could occur.
- One method to help isolate the open or short is to disconnect any in-line connectors that the circuit being checked runs through and check for the voltage again. If the voltage is present, the open or short is on the other side of the in-line connector.

CHECK A 5-VOLT SUPPLY CIRCUIT FOR VOLTAGE

THEORY OF OPERATION

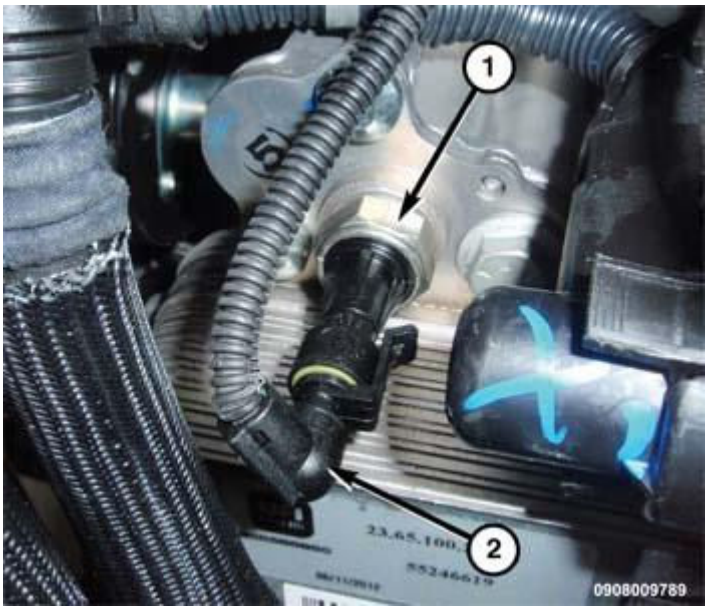

Fig. 8: Checking 5-Volt Supply Circuit For Voltage
Courtesy of CHRYSLER GROUP, LLC

The purpose of the following procedure is to demonstrate how to check the voltage of a 5-Volt supply circuit with a voltmeter.

NOTE: The circuit shown is an example, and is intended for demonstrational purpose only.

The following are circuit tests covered in this procedure:

- Testing A 5-Volt Supply Circuit For Voltage
- Testing A 5-Volt Supply Circuit And Sensor Ground Circuit

NOTE: Perform the following test using a known good multimeter.

Below is a list of possible causes that could be related to a No Voltage condition.

Possible Causes
OPEN CIRCUIT (CHAFED, PIERCED, PINCHED OR BROKEN WIRES)
OPEN IN-LINE CONNECTOR (BENT, PUSHED OUT OR CORRODED TERMINALS)
ELECTRONIC CONTROL MODULE (5-VOLT SUPPLY OUTPUT)

DIAGNOSTIC TEST

1. **TESTING A 5-VOLT SUPPLY CIRCUIT FOR VOLTAGE**

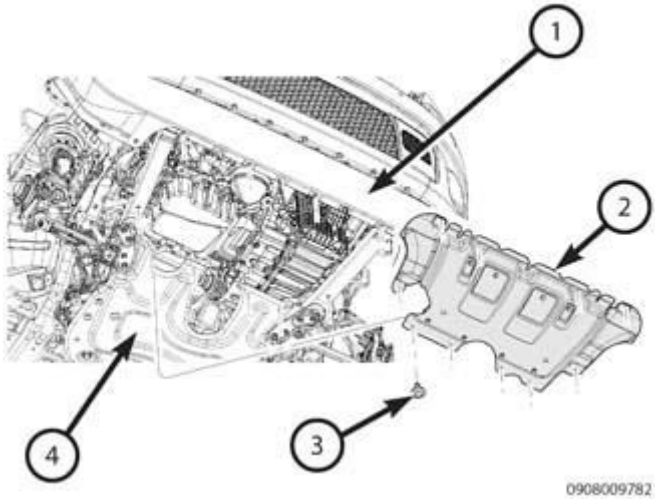

Fig. 9: Checking 5-Volt Supply Circuit For Voltage
Courtesy of CHRYSLER GROUP, LLC

1. Turn the ignition off.
2. Disconnect the sensor harness connector.

NOTE: Check connectors - Clean/repair as necessary.

3. Turn the ignition on.
4. Set the multimeter to measure DC voltage.
5. Connect the negative lead of the multimeter to a known good ground.
6. With the positive lead of the multimeter, carefully probe the 5-volt supply circuit.

Is the voltage between 4.7 and 5.2 volts?

Yes

- Go To 2

No

- Check the 5-volt supply circuit for an open or short to ground. For further assistance, perform the appropriate Sensor Reference Voltage DTC diagnostic procedure.

2. **TESTING A 5-VOLT SUPPLY CIRCUIT AND SENSOR GROUND CIRCUIT**

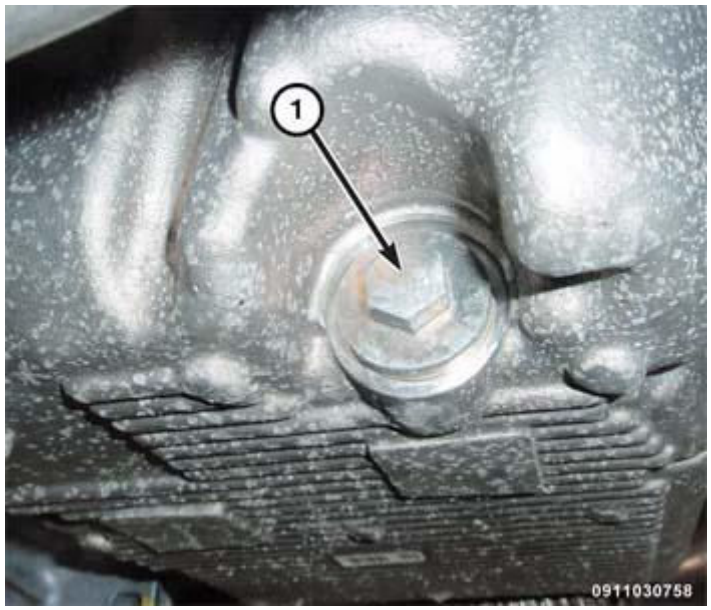

Fig. 10: Checking 5-Volt Supply Circuit And Sensor Ground Circuit
Courtesy of CHRYSLER GROUP, LLC

1. With the multimeter set to measure DC voltage.
2. Move the negative lead of the multimeter to carefully probe the sensor ground or sensor return circuit in the harness connector.
3. With the positive lead of the multimeter, carefully probe the 5-volt supply circuit.

   Is the voltage between 4.7 and 5.2 volts?

   Yes

   - At this time the 5-volt supply and sensor ground circuit are working properly. Continue to measure the voltage between the wires, wiggle the wire harness and connectors while checking for an intermittent condition.
   - Use the wiring diagram as a guide to trace the circuits and look for any in-line connectors where the open could occur intermittently.
   - Look for any chafed, pierced, pinched, or partially broken wires.
   - Look for broken, bent, pushed out or corroded terminals. Verify that there is good pin to terminal contact in the related wire harness connectors.
   - Perform any Technical Service Bulletins (TSBs) that may apply.

   No

   - Repair the open or excessive resistance in the Sensor Ground (Sensor Return) circuit.

CHECK A CIRCUIT FOR A SHORT TO GROUND

THEORY OF OPERATION

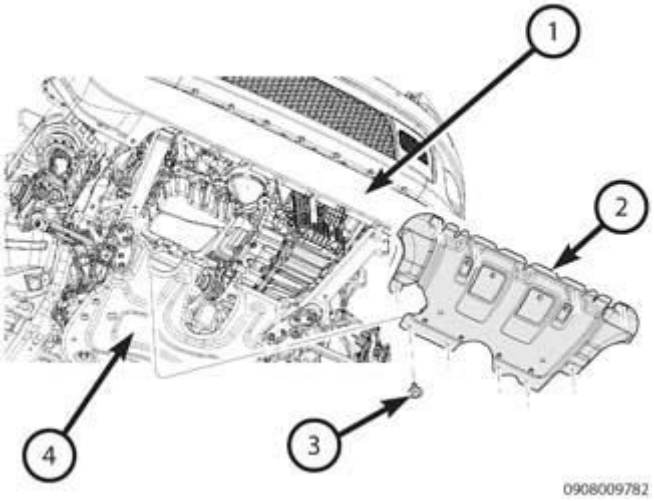

Fig. 11: Checking Circuit For A Short To Ground
Courtesy of CHRYSLER GROUP, LLC

The purpose of the following procedure is to demonstrate how to check a circuit for a Short to Ground.

NOTE: The circuit shown is an example, and is intended for demonstrational purpose only.

The following are circuit tests covered in this procedure:

- Testing For A Short To Ground Using An Ohmmeter

NOTE: Perform the following test using a known good multimeter.

Below is a list of possible causes that could be related to a Short to Ground condition.

Possible Causes
SHORTED CIRCUIT (CHAFED, PIERCED OR PINCHED WIRES)
SHORTED IN-LINE CONNECTOR (BENT, PUSHED OUT OR CORRODED TERMINALS)

DIAGNOSTIC TEST

TESTING FOR A SHORT TO GROUND USING AN OHMMETER

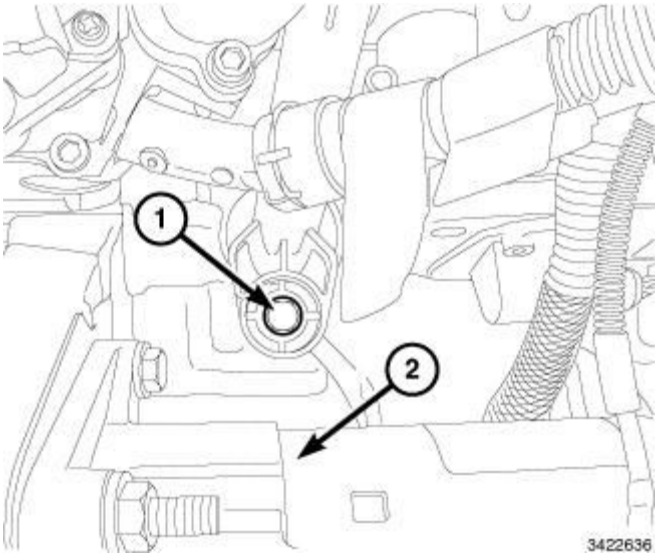

Fig. 12: Checking For A Short To Ground Using An Ohmmeter
Courtesy of CHRYSLER GROUP, LLC

NOTE: Before measuring the resistance of any circuit, first measure the resistance between the two leads of the multimeter. Take this value and subtract it from the value recorded when measuring the resistance of the circuit being checked (The meter leads can add 0.5 ohm or more of total resistance).

1. Turn the ignition off.
2. Disconnect the wire harness connectors from the module and component for the suspected circuit being shorted to ground.

NOTE: Check connectors - Clean/repair as necessary.

3. With the component wire harness connectors disconnected, use a meter set to measure Ohms (?), and measure the resistance between the circuit and a known good ground.
4. Use the negative lead of the meter and touch a known good ground.
5. Use the positive lead of the meter and carefully probe the circuit suspected of having the short.

Is the resistance to ground below 10k ohms ?

Yes

- Repair the short to ground. Use the wiring diagram as a guide to follow the path of the circuit.
- One method to help isolate the short is to disconnect any in-line connectors that the circuit being tested runs through and measure for the short again. If the short goes away, the short is on the other side of the in-line connector.

No

- The circuit is not shorted to ground or the condition that originally caused the short may not be present at this time. Continue to measure the resistance, wiggle the wire harness and connectors while checking for an intermittent short.
- Use the wiring diagram as a guide to trace the circuits and look for any in-line connectors where the short could occur intermittently.
- Look for any chafed, pierced, pinched, or partially broken wires.
- Look for broken, bent, pushed out or corroded terminals. Verify that there is good pin to terminal contact in the related wire harness connectors.
- Perform any Technical Service Bulletins (TSBs) that may apply.

CHECK A CIRCUIT FOR A SHORT TO VOLTAGE

THEORY OF OPERATION

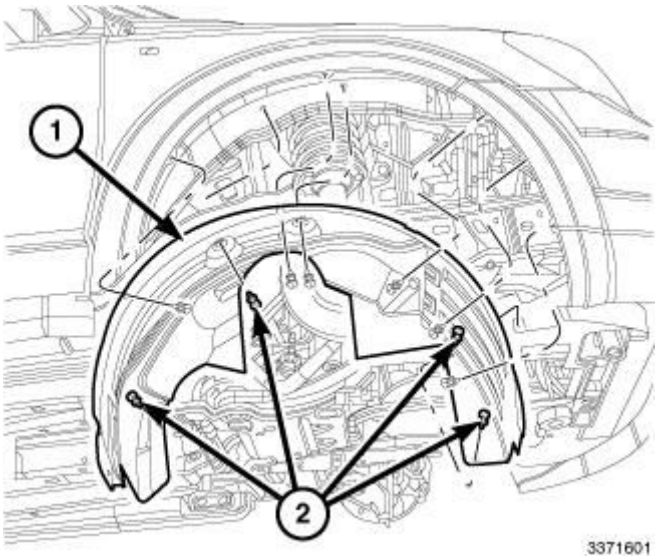

Fig. 13: Battery Circuit Diagram
Courtesy of CHRYSLER GROUP, LLC

The purpose of the following procedure is to demonstrate different methods of checking for a short to voltage in a circuit. When diagnosing a DTC it might be necessary to verify that proper voltage is on a circuit or that a circuit is not shorted high.

NOTE: The circuit shown is an example, and is intended for demonstrational purpose only.

The following are circuit tests covered in this procedure:

- Testing For A Short To Battery Voltage Using A Voltmeter
- Testing For A Short To Switched Battery Voltage Using A Voltmeter
- Testing For A Short To Battery Voltage Using A 12-Volt Test Light

- Testing For A Short To Switched Battery Voltage Using A 12-Volt Test Light

NOTE: Perform the following test using a known good test light or functioning multimeter.

Below is a list of possible causes that could be related to a Short To Voltage condition.

Possible Causes
SHORTED CIRCUIT (CHAFED, PIERCED OR PINCHED WIRES)
SHORTED IN-LINE CONNECTOR (BENT, PUSHED OUT OR CORRODED TERMINALS)

DIAGNOSTIC TEST

1. **TESTING FOR A SHORT TO BATTERY VOLTAGE USING A TEST LIGHT**

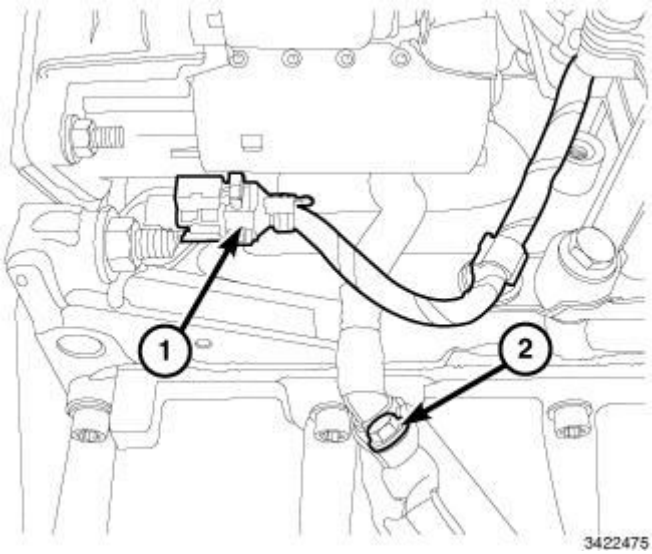

Fig. 14: Checking For A Short To Battery Voltage Using A Test Light
Courtesy of CHRYSLER GROUP, LLC

NOTE: Before testing any circuits, first verify the 12-volt test light is operating properly. Connect the 12-volt test light to battery ground or to any other known good ground. Touch the lead of the test light to Battery(+). If the test light is operational, it should illuminate brightly.

1. Turn the ignition off.
2. Disconnect the wire harness connectors of all components that contain the circuits that are suspected of having the short.

NOTE: Check connectors - Clean/repair as necessary.

3. At this time leave all in-line connectors connected.
4. Connect the 12-volt test light to a known good ground.
5. Use the lead of the test light and carefully probe the circuit suspected of having the short.

WARNING: When the engine is operating, do not stand in direct line with the fan. Do not put your hands near the pulleys, belts or fan. Do not wear loose clothing. Failure to follow these instructions may result in possible serious or fatal injury.

6. First, check with the ignition off, next with the ignition on, and lastly while cranking the engine.

   Does the test light illuminate brightly?

   Yes

   - Repair the short to voltage. Use the wiring diagram as a guide to trace the circuits and look for any in-line connectors where the short could occur.
   - One method to help isolate the short is to disconnect any in-line connectors that the circuit being checked runs through and check for the short again. If the short goes away, the short is on the other side of the in-line connector.

   No

   - The circuit is not shorted to voltage or the condition that originally caused the short may not be present at this time. Continue to measure the resistance and wiggle the wire harness to check for an intermittent short.

   NOTE: By disconnecting the wire harness connectors you may have eliminated the source of the voltage causing the short. Use the wiring diagram as a guide, check to see if there are any battery circuits in the same wire harness as the circuit you are testing. It is necessary to check for a short to those circuits using an ohmmeter. Refer to STANDARD PROCEDURE and perform the Check for a Short Between Multiple Circuits diagnostic procedure.

   - Use the wiring diagram as a guide to trace the circuits and look for any in-line connectors where the short could occur intermittently.
   - Look for any chafed, pierced, pinched, or partially broken wires.
   - Look for broken, bent, pushed out or corroded terminals. Verify that there is good pin to terminal contact in the related component and wire harness connectors.
   - Perform any Technical Service Bulletins (TSBs) that may apply.

2. **TESTING FOR A SHORT TO SWITCHED IGNITION VOLTAGE USING A TEST LIGHT**

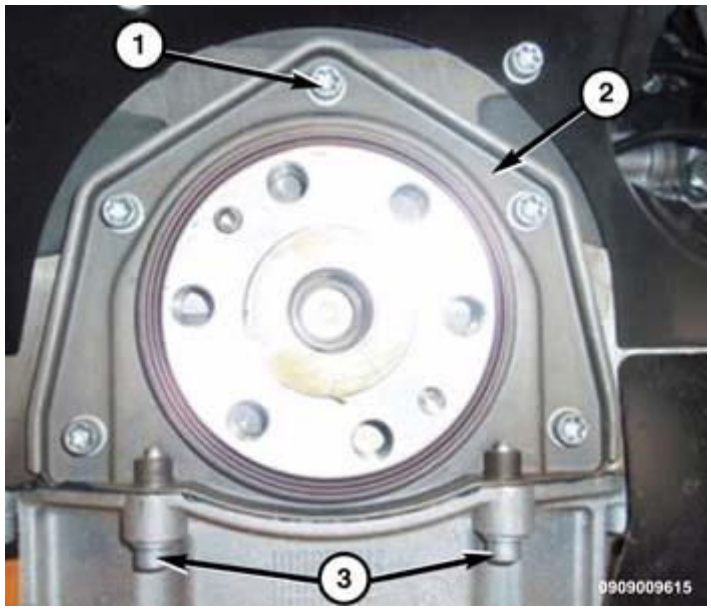

Fig. 15: Checking For A Short To Switched Ignition Voltage Using A Test Light
Courtesy of CHRYSLER GROUP, LLC

NOTE: Before testing any circuits, first verify the 12-volt test light is operating properly. Connect the 12-volt test light to battery ground or to any other known good ground. Touch the lead of the test light to Battery(+). If the test light is operational, it should illuminate brightly.

1. Turn the ignition off.
2. Disconnect the wire harness connectors of all components that contain the circuits that are suspected of having the short.

NOTE: Check connectors - Clean/repair as necessary.

3. At this time leave all in-line connectors connected.
4. Connect the 12-volt test light to a known good ground.
5. Use the lead of the test light and carefully probe the circuit suspected of having the short.

WARNING: When the engine is operating, do not stand in direct line with the fan. Do not put your hands near the pulleys, belts or fan. Do not wear loose clothing. Failure to follow these instructions may result in possible serious or fatal injury.

6. First, check with the ignition off, next with the ignition on, and lastly while cranking the engine.

   Does the test light illuminate brightly?

   Yes

- Repair the short to voltage. Use the wiring diagram as a guide to trace the circuits and look for any in-line connectors where the short could occur.
- One method to help isolate the short is to disconnect any in-line connectors that the circuit being checked runs through and check for the short again. If the short goes away, the short is on the other side of the in-line connector.

No

- The circuit is not shorted to voltage or the condition that originally caused the short may not be present at this time. Continue to measure the resistance and wiggle the wire harness to check for an intermittent short.

NOTE: **By disconnecting the wire harness connectors you may have eliminated the source of the voltage causing the short. Use the wiring diagram as a guide, check to see if there are any battery circuits in the same wire harness as the circuit you are testing. It is necessary to check for a short to those circuits using an ohmmeter. Refer to STANDARD PROCEDURE and perform the Check for a Short Between Multiple Circuits diagnostic procedure.**

- Use the wiring diagram as a guide to trace the circuits and look for any in-line connectors where the short could occur intermittently.
- Look for any chafed, pierced, pinched, or partially broken wires.
- Look for broken, bent, pushed out or corroded terminals. Verify that there is good pin to terminal contact in the related component and wire harness connectors.
- Perform any Technical Service Bulletins (TSBs) that may apply.

3. **TESTING FOR A SHORT TO BATTERY VOLTAGE USING A VOLTMETER**

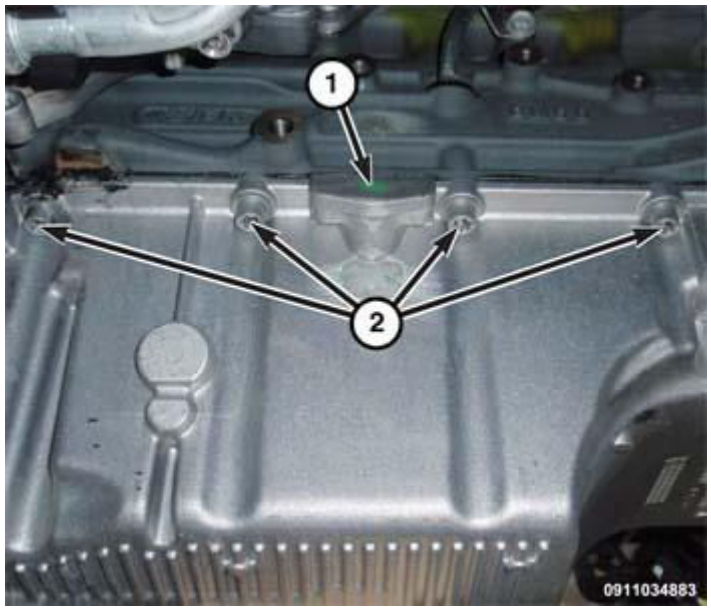

Fig. 16: Checking For A Short To Battery Voltage Using A Voltmeter
Courtesy of CHRYSLER GROUP, LLC

1. Turn the ignition off.
2. Disconnect the wire harness connectors of the components that contain the circuit that is suspected as having a short.

NOTE: Check connectors - Clean/repair as necessary.

3. At this time leave all in-line connectors connected.
4. With all the component wire harness connectors disconnected, use a multimeter set to measure DC voltage.
5. Connect the ground lead of the meter to a known good ground.
6. Use the positive lead of the multimeter and probe the circuit that is being checked for a short.

Is there any voltage present?

Yes

- Repair the short to battery voltage. Use the wiring diagram as a guide to trace the circuits and look for any in-line connectors where the short could occur.
- One method to help isolate the short is to disconnect any in-line connectors that the circuit being checked runs through and measure for the short again. If the short goes away, the short is on the other side of the in-line connector.

No

- The circuit is not shorted to voltage or the condition that originally caused the short may not

be present at this time. Continue to measure the voltage and wiggle the wire harness to check for an intermittent short.

NOTE: By disconnecting the wire harness connectors you may have eliminated the source of the voltage causing the short. Use the wiring diagram as a guide, check to see if there are any battery circuits in the same wire harness as the circuit you are testing. It is necessary to check for a short to those circuits using an ohmmeter. Refer to STANDARD PROCEDURE and perform the Check for a Short Between Multiple Circuits diagnostic procedure.

- Use the wiring diagram as a guide to trace the circuits and look for any in-line connectors where the short could occur intermittently.
- Look for any chafed, pierced, pinched, or partially broken wires.
- Look for broken, bent, pushed out or corroded terminals. Verify that there is good pin to terminal contact in the related wire harness connectors.
- Perform any Technical Service Bulletins (TSBs) that may apply.

4. **TESTING FOR A SHORT TO SWITCHED IGNITION VOLTAGE USING A VOLTMETER**

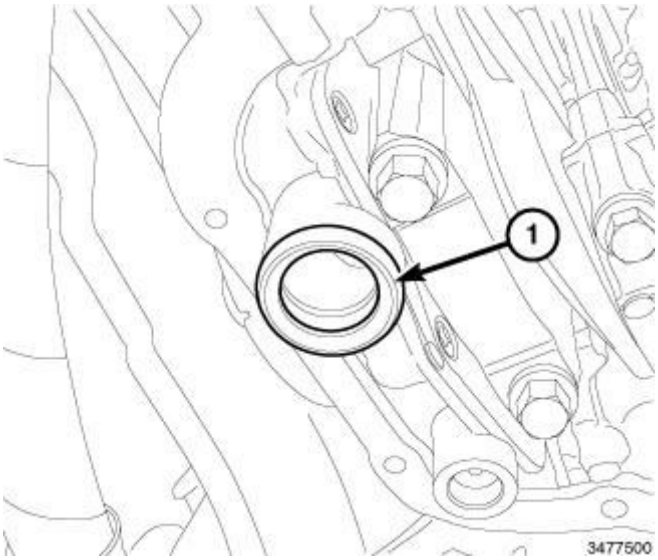

Fig. 17: Checking For A Short To Switched Ignition Voltage Using A Voltmeter
Courtesy of CHRYSLER GROUP, LLC

1. Turn the ignition off.
2. Disconnect the wire harness connectors of all components that contain the circuits that are suspected as being shorted.

NOTE: Check connectors - Clean/repair as necessary.

3. At this time leave all in-line connectors connected.
4. With all the component wire harness connectors disconnected, use a multimeter set to measure DC voltage.
5. Connect the ground lead of the meter to a known good ground.
6. Use the positive lead of the multimeter and probe the circuit suspected of having the short.
7. Ignition on, engine not running.

Is any voltage present?

Yes

- Repair the short to ignition voltage. Use the wiring diagram as a guide to trace the circuits and look for any in-line connectors where the short could occur.
- One method to help isolate the short is to disconnect any in-line connectors that the circuit being checked runs through and check for the short again. If the short goes away, the short is on the other side of the in-line connector.

No

- The circuit is not shorted to voltage or the condition that originally caused the short may not be present at this time. Continue to measure the voltage and wiggle the wire harness to check for an intermittent short.

NOTE: By disconnecting the wire harness connectors you may have eliminated the source of the voltage causing the short. Use the wiring diagram as a guide, check to see if there are any battery circuits in the same wire harness as the circuit you are testing. It is necessary to check for a short to those circuits using an ohmmeter. Refer to STANDARD PROCEDURE and perform the Check for a Short Between Multiple Circuits diagnostic procedure.

- Use the wiring diagram as a guide to trace the circuits and look for any in-line connectors where the short could occur intermittently.
- Look for any chafed, pierced, pinched, or partially broken wires.
- Look for broken, bent, pushed out or corroded terminals. Verify that there is good pin to terminal contact in the related wire harness connectors.
- Perform any Technical Service Bulletins (TSBs) that may apply.

CHECK FOR AN OPEN GROUND CIRCUIT

THEORY OF OPERATION

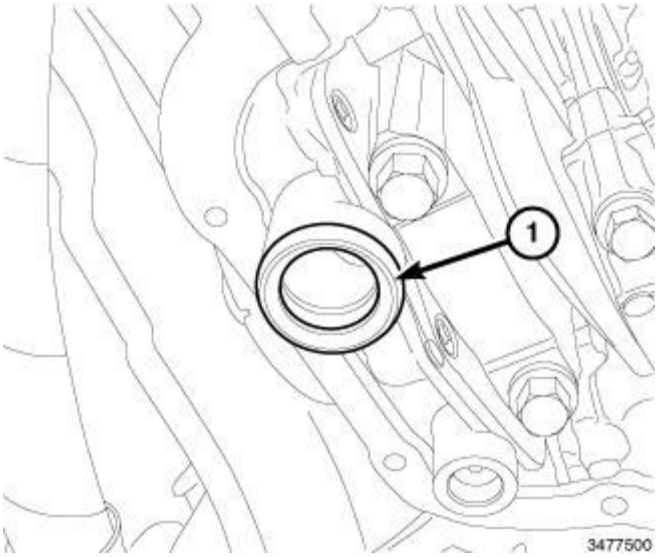

Fig. 18: Checking 12-Volt Switched Battery B(+) Circuit For Voltage
Courtesy of CHRYSLER GROUP, LLC

The purpose of the following procedure is to demonstrate how to check the operation of a generic ground circuit with a test light.

NOTE: The circuit shown is an example, and is intended for demonstrational purpose only.

The following are circuit tests covered in this procedure:

- Testing Ground Circuit With Test Light

NOTE: Perform the following test using a known good test light.

Possible Causes
OPEN GROUND CIRCUIT (CHAFED, PIERCED, PINCHED OR BROKEN WIRE)
OPEN IN-LINE CONNECTOR (BENT, PUSHED OUT OR CORRODED TERMINALS)

DIAGNOSTIC TEST

TESTING GROUND CIRCUIT WITH TEST LIGHT

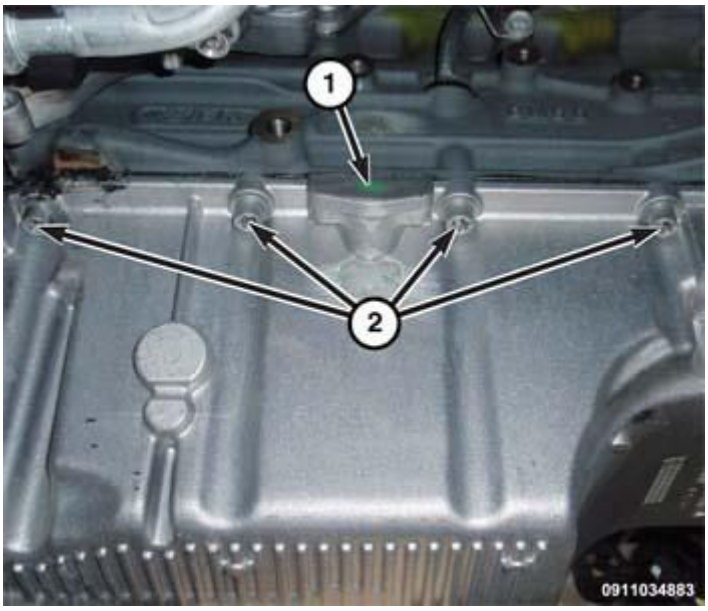

Fig. 19: Checking Ground Circuit With Test Light
Courtesy of CHRYSLER GROUP, LLC

NOTE: Before testing any circuits, first verify the 12-volt test light is operating properly. Connect the 12-volt test light to battery ground or to any other known good ground. Touch the lead of the test light to Battery(+). If the test light is operational, it should illuminate brightly.

1. Turn the ignition off.
2. Disconnect the wire harness connectors of the components that contain the ground circuit suspected of containing excessive resistance.

NOTE: Check connectors - Clean/repair as necessary.

3. At this time leave all in-line connectors connected.
4. With all the component wire harness connectors disconnected, connect the 12-volt test light to Battery(+).
5. Use the test light lead to lightly probe the ground circuit in the harness connector.

Does the test light illuminate brightly?

Yes

- The suspected ground circuit is not open or the condition that originally caused the open or excessive resistance is not present at this time. Another way to check for an open would be to use an ohmmeter and measure the resistance of the ground circuit. While continuing to measure the resistance of the circuit, wiggle the wire harness and connectors to check for an intermittent open or poor connection.
- Use the wiring diagram as a guide to trace the circuits and look for any in-line connectors where the

open could occur intermittently.

- Look for any chafed, pierced, pinched, or partially broken wires.
- Look for broken, bent, pushed out or corroded terminals. Verify that there is good pin to terminal contact in the related wire harness connectors.
- Perform any Technical Service Bulletins (TSBs) that may apply.

No

- Repair the open in the ground circuit. Use the wiring diagram as a guide to trace the circuit and look for any in-line connectors where the open could occur.
- One method to help isolate the open is to disconnect any in-line connectors and measure the resistance from one side of the in-line connector to the matching component harness connector. If the open goes away, the open is on the other side of the in-line connector.

CHECK FOR A SHORT BETWEEN MULTIPLE CIRCUITS

THEORY OF OPERATION

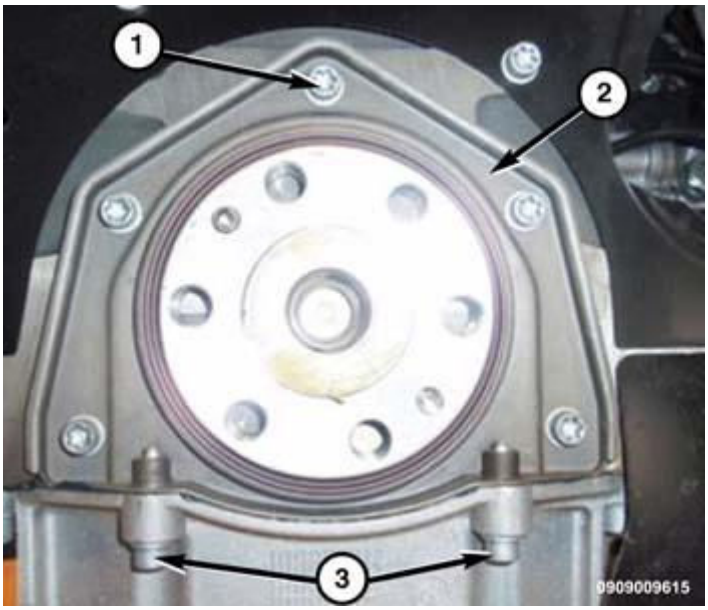

Fig. 20: Battery Circuit Diagram
Courtesy of CHRYSLER GROUP, LLC

The purpose of the following procedure is to demonstrate how to check for a short circuit between multiple circuits.

NOTE: The circuit shown is an example, and is intended for demonstrational purpose only.

The following are circuit tests covered in this procedure:

- Testing For A Short Between Multiple Circuits

NOTE: Perform the following test using a known good multimeter.

Below is a list of possible causes that could be related to a Multiple Short condition.

Possible Causes
SHORTED CIRCUIT (CHAFED, PIERCED OR PINCHED WIRES)
SHORTED IN-LINE CONNECTOR (BENT, PUSHED OUT OR CORRODED TERMINALS)

DIAGNOSTIC TEST

TESTING FOR A SHORT BETWEEN MULTIPLE CIRCUITS

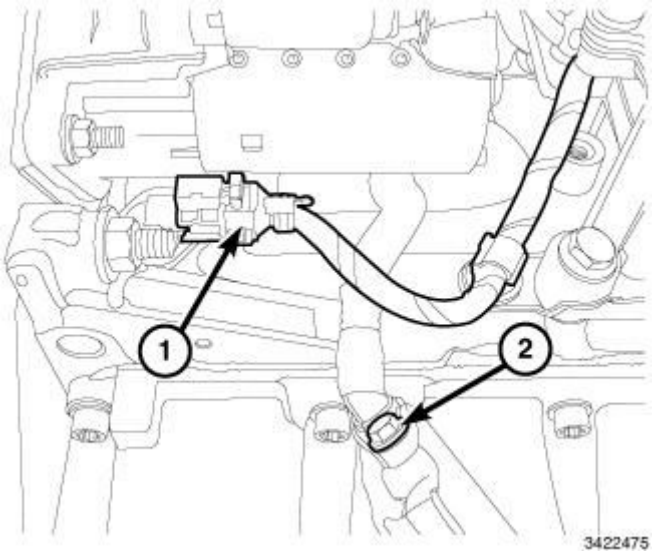

Fig. 21: Checking For A Short Between Multiple Circuits
Courtesy of CHRYSLER GROUP, LLC

NOTE: Before measuring the resistance of any circuit, first measure the resistance between the two leads of the multimeter. Take this value and subtract it from the value recorded when measuring the resistance of the circuit being checked (The meter leads can add 0.5 ohm or more of total resistance).

1. Turn the ignition off.
2. Disconnect the wire harness connectors of the components that contain the circuits that are suspected of being shorted together.

   NOTE: Check connectors - Clean/repair as necessary.

3. At this time leave all in-line connectors connected.

4. With all the component wire harness connectors disconnected, use a multimeter set to Ohms (?), and measure the resistance between the applicable circuits in one of the harness connectors.
5. Use one lead of the multimeter and carefully probe the circuit suspected of being shorted.
6. Use the other lead of the meter and one at a time, carefully probe the other circuits in the harness connector.

   Is the resistance below 10k ohms when probing any two circuits?

   Yes

   - Repair the short between the circuits. Use the wiring diagram as a guide to trace the circuits and look for any in-line connectors where the short could occur.
   - One method to help isolate the short is to disconnect any in-line connectors that the circuit being tested runs through and measure for the short again. If the short goes away, the short is on the other side of the in-line connector.

   No

   - The circuit is not shorted or the condition that originally caused the short may not be present at this time. Continue to measure the resistance and wiggle the wire harness and connectors while checking for an intermittent short.

   NOTE: By disconnecting the wire harness connectors you may have eliminated the source that was causing the short.

   - Use the wiring diagram as a guide to trace the circuits and look for any in-line connectors where the short could occur intermittently.
   - Look for any chafed, pierced, pinched, or partially broken wires.
   - Look for broken, bent, pushed out or corroded terminals. Verify that there is good pin to terminal contact in the related wire harness connectors.
   - Perform any Technical Service Bulletins (TSBs) that may apply.

CHECK THE RESISTANCE OF A CIRCUIT USING AN OHMMETER

THEORY OF OPERATION

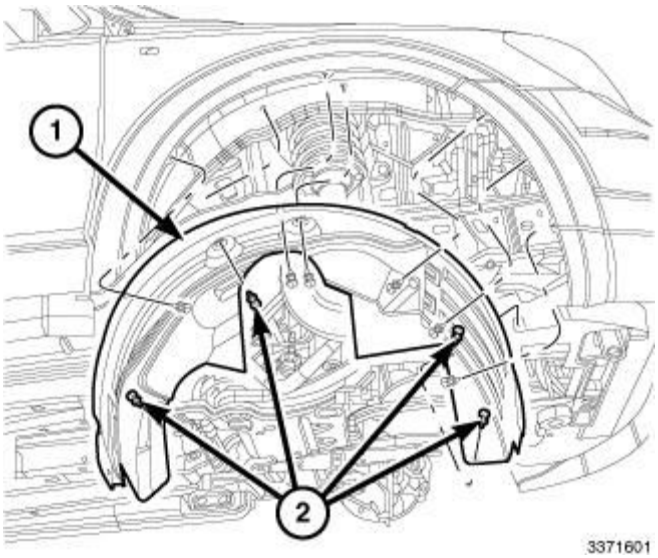

Fig. 22: Battery Circuit Diagram
Courtesy of CHRYSLER GROUP, LLC

The purpose of the following procedure is to demonstrate how to check the resistance of a circuit with an ohmmeter.

NOTE: The circuit shown is an example, and is intended for demonstrational purpose only.

The following are circuit tests covered in this procedure:

- Testing For An Open Circuit Using An Ohmmeter

NOTE: Perform the following test using a known good multimeter.

Below is a list of possible causes that could be related to an Open Circuit condition.

Possible Causes
OPEN CIRCUIT (CHAFED, PIERCED, PINCHED OR BROKEN WIRES)
OPEN IN-LINE CONNECTOR (BENT, PUSHED OUT OR CORRODED TERMINALS)

DIAGNOSTIC TEST

TESTING FOR AN OPEN CIRCUIT USING AN OHMMETER

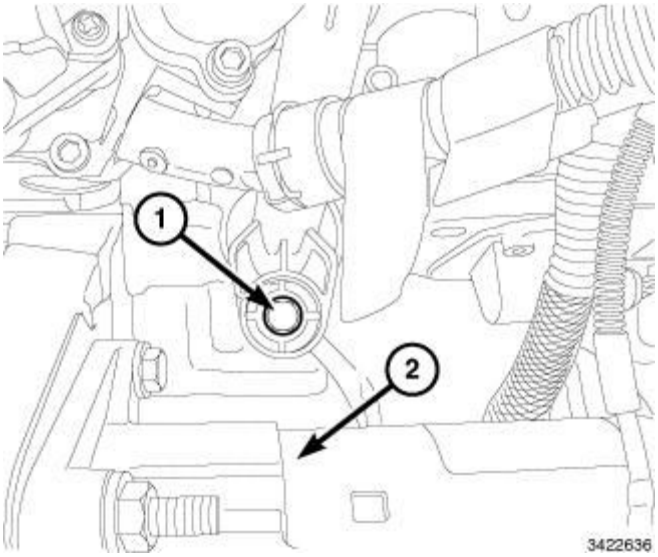

Fig. 23: Checking For An Open Circuit Using An Ohmmeter
Courtesy of CHRYSLER GROUP, LLC

NOTE: Before measuring the resistance of any circuit, first measure the resistance between the two leads of the multimeter. Take this value and subtract it from the value recorded when measuring the resistance of the circuit being checked (The meter leads can add 0.5 ohm or more of total resistance).

1. Turn the ignition off.
2. Disconnect the wire harness connectors of the components that contain the circuit suspected of being open.

NOTE: Check connectors - Clean/repair as necessary.

3. At this time leave all in-line connectors connected.
4. With the component wire harness connectors disconnected, use a multimeter set to Ohms (?), and measure the resistance of the circuit.
5. Use one lead of the meter and probe the circuit in one harness connector.
6. Use the other lead of the meter and probe the same circuit in the other harness connector.

Is the resistance in the circuit below 10k ohms?

Yes

- The circuit does not contain any excessive resistance or the condition that originally caused the excessive resistance may not be present at this time. Continue to measure the resistance of the circuit, wiggle the wire harness and connectors to check for an intermittent open or poor connection.
- Use the wiring diagram as a guide to trace the circuits and look for any in-line connectors where the

open could occur intermittently.
- Look for any chafed, pierced, pinched, or partially broken wires.
- Look for broken, bent, pushed out or corroded terminals. Verify that there is good pin to terminal contact in the related wire harness connectors.
- Perform any Technical Service Bulletins (TSBs) that may apply.

No

- Repair the excessive resistance in the circuit between the two wire harness connectors. Using the wiring diagram as a guide, trace the circuit and check for any in-line connectors where the open or excessive resistance could occur.
- One method to help isolate the open is to disconnect any in-line connectors and measure the resistance from one side of the in-line connector to the matching component harness connector. If the open or excessive resistance is not present, the open or excessive resistance is on the other side of the in-line connector.

CHECK FOR EXCESSIVE CURRENT DRAW

THEORY OF OPERATION

What is current draw?

Current draw, or parasitic draw is an electrical load that draws current from the battery when the ignition is turned off. Some are considered normal, some above normal. Normal draw comes from various electronic devices connected to battery positive at all times. Many vehicle modules draw a few mA (milliamps) as a means to "Keep Alive Memory". Whether it's the clock in the radio or the last known position of the memory mirrors, these tiny amounts of current typically will only add up to 20 or 30 mA. The vehicle can sit parked for days, even a few weeks without any problems of excessive battery drain that might prevent starting. As long as the vehicle is driven periodically in order for the alternator to recharge the battery there is no problem. A problem may occur, in situations such as new vehicles in dealer stock or long term airport parking situations.

Below are some examples of modules and components that require keep alive memory:

- Powertrain Control Module (PCM)
- Body Control Module (BCM)
- Memory Seat Module (MSM)
- Radio

What is excessive current draw?

Excessive current draw can be determined by an ammeter reading in excess of 50 mA. The typical "normal" current draw will not exceed 20 or 30 mA.

How to locate the problem?

Locating the problem involves a process of elimination. If the problem is not obvious, like the trunk light staying on, you will have to start troubleshooting:

- Start by removing one fuse at a time until you see the reading on the meter drop off (be careful to reinstall the fuses in their proper location).
- Once you've determined the high-draw circuit, there still may be a half-dozen loads, each individually drawing current from the battery.
- To zero in on that circuit or circuits, use the schematic diagram and disconnect each device on the circuit one-at-a-time and check the meter.
- When the milliamp reading drops off significantly, you've found the problem.

Perform the following test to determine where the cause of the draw is located.

Possible Causes
INSTALLED AFTERMARKET ACCESSORIES (AUDIO SYSTEMS, VEHICLE ALARMS, ETC.)
COURTESY LIGHTS REMAINING ON (INTERIOR, TRUNK, HOOD, ETC.)
BATTERY CHARGERS PLUGGED INTO THE CIGARETTE LIGHTER/POWER OUTLETS

DIAGNOSTIC TEST

TESTING FOR PARASITIC DRAW

NOTE: For a more accurate current draw reading, wait 20 minutes to make sure all modules have powered down before continuing. Some modules may stay powered up longer than others.

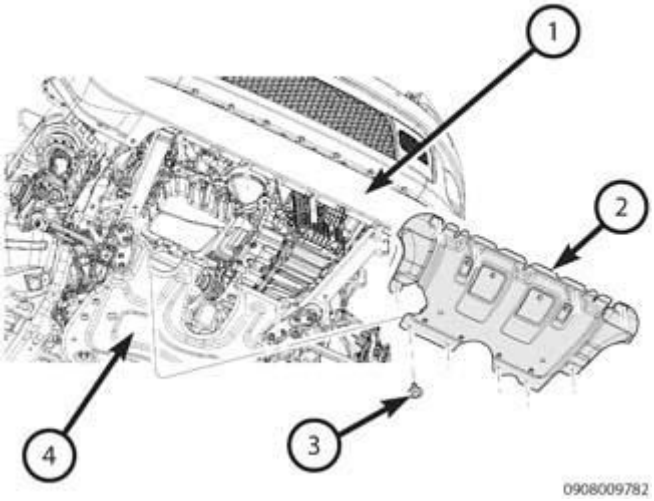

Fig. 24: Checking For Parasitic Draw Using Multimeter
Courtesy of CHRYSLER GROUP, LLC

Turn the ignition off.

1. Disconnect the Negative battery cable (ground).
2. Using a multimeter, set the multimeter leads up to properly measure Amperage.
3. Connect the ground lead that is plugged into the COM port of the multimeter to the Negative battery post/terminal.
4. Connect the other lead of the multimeter that is plugged into the Amp port of the multimeter to the Negative battery cable.

CAUTION: Do not crank the engine or turn on any accessories that may draw more than 10 Amps. You may open the protective fuse in the multimeter.

5. While monitoring the amperage reading on the multimeter, begin to remove fuses (one at a time) from each fuse location on the vehicle and see if the amperage drops.

NOTE:

- **Only remove one fuse at a time until the cause of the voltage draw is determined.**
- **Many vehicles have multiple fuse locations on the vehicle.**

6. If the amperage does not drop, install the fuse you just removed and remove the next fuse.

   Does the amperage drop to between 0.02 to 0.04 of an Amp when removing any fuses?

   Yes

   - Use the wiring diagram as a guide to help indicate what components or modules are powered by the fuse.
   - At this point you can install the fuse and begin disconnecting the components powered by the fuse.
     - When the amperage drops after disconnecting a component this will indicate which component is at fault.
     - It is important to know how long some modules are designed to remain awake.
     - You don't want to replace a component that is operating normally.
     - The condition that originally caused the draw may not be present at this time.

   No

   - The condition that originally caused the draw may not be present at this time.
   - Look for any chafed, pierced, pinched, or partially broken wires.
   - Look for broken, bent, pushed out or corroded ground terminals.
   - Perform any Technical Service Bulletins (TSBs) that may apply.

CIRCUIT LOAD TESTING PROCEDURE

THEORY OF OPERATION

A circuit load test can be performed to test the ability of a circuit to carry the current required to operate a connected device. A circuit load test should be performed after a circuit has passed a resistance test using a DVOM and the circuit is still suspected of a failure.

- A single copper wire strand will carry enough current to light a test light bulb, while showing very low resistance using a DVOM.
- Some test lights are insufficient for load testing because of the very low resistance bulb being used.
- The Load Test tool listed below will require higher current flow to power the bulb; and this will test the ability of the circuit to carry a load.
- This test will indicate if the circuit being tested can carry the current required to operate a connected device.

WARNING: To avoid possible serious or fatal injury, DO NOT load test any air bag/restraint system components or circuits using the procedures listed here. Refer to RESTRAINTS - SERVICE INFORMATION for proper air bag/restraint system testing procedures.

CAUTION: Do not load test any circuits with components still connected to the circuit.

NOTE: Depending upon the location of the circuit in question, this test may require jumper wires.

NOTE: Use the wiring diagrams as a guide to trace the circuits and look for any in-line connectors where the circuit failure could occur intermittently. Look for any chafed, pierced, pinched, or partially broken wires. Look for broken, bent, pushed out or corroded terminals - clean/repair as necessary. Verify that there is good pin to terminal contact in the related wire harness connectors.

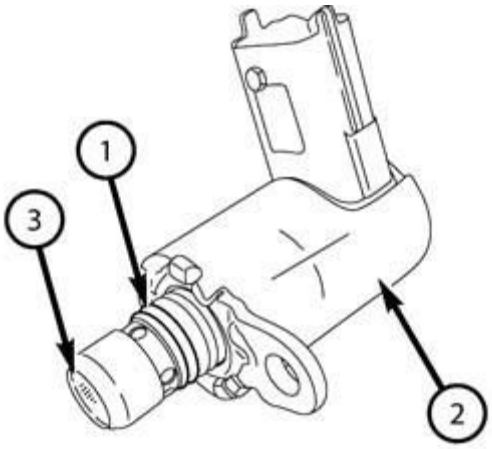

091174655

Fig. 25: Load Test Tool
Courtesy of CHRYSLER GROUP, LLC

Here is an example of a simple tool you can build to test a circuit`s ability to carry a load.

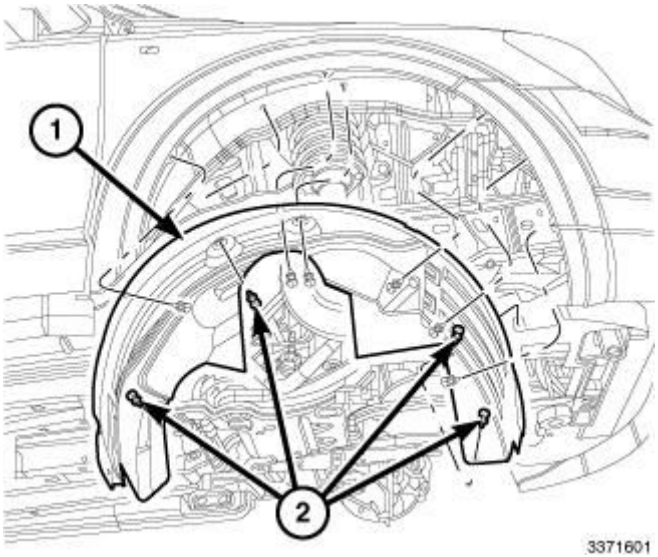

Fig. 26: Load Test Tool Components
Courtesy of CHRYSLER GROUP, LLC

The following is a list of components required to build a load test tool:

1. 3156 Bulb
2. 3156 Bulb socket
3. Negative alligator clip with covers
4. Positive alligator clip with covers

5. 2 Amp mini fuse
6. Mini fuse holder
7. 2' to 4' of Black 16ga wire
8. 2' to 4' of Red 16ga wire
9. Approved back probe tool
10. Shrink tubing
11. Solder

LOAD TESTING A GROUND CIRCUIT

DIAGNOSTIC LOAD TEST (GROUND CIRCUIT)

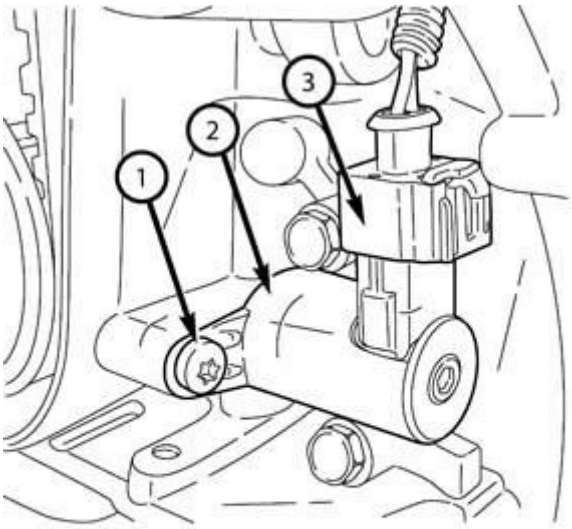

091174654

Fig. 27: Performing Diagnostic Load Test (Ground Circuit)
Courtesy of CHRYSLER GROUP, LLC

1. Disconnect the connector from the device(s) to gain access and isolate the terminal for the circuit being tested.
2. Connect the positive lead of the load test tool to the positive side of the battery.
3. Using an approved connector back probe tool, connect the negative lead of the load test tool to the circuit being tested at point (A).

CAUTION: Use only approved connector back probe tools when back probing a connector so as not to cause damage to the terminals or insulation of the connector. Damage to the terminals can cause poor terminal contact or retention. Damage to the insulation can introduce

corrosion due to water infiltration.

Does the bulb light bright, when compared to a direct battery connection?

Yes

- The circuit being tested can carry a load, check other circuits, connectors and terminals for concerns.

No

- Repair the circuit, connector or terminal that has an open or excessive resistance.
- Perform any related Recalls or Technical Service Bulletins (TSBs) that may apply.

LOAD TESTING A BATTERY OR IGNITION FEED CIRCUIT

DIAGNOSTIC LOAD TEST (BATTERY/IGNITION FEED CIRCUIT)

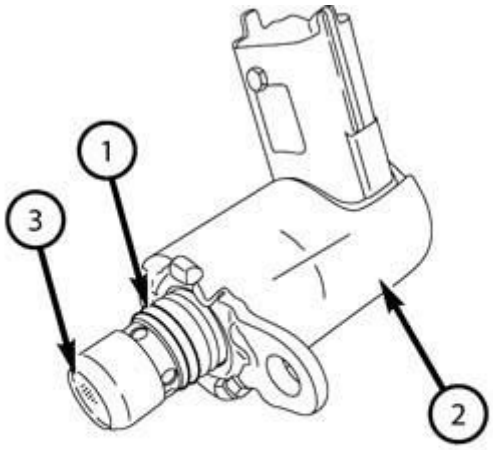

091174655

Fig. 28: Performing Diagnostic Load Test (Battery/Ignition Feed Circuit)
Courtesy of CHRYSLER GROUP, LLC

1. Disconnect the connector from the device(s) to gain access and isolate the terminal for the circuit being tested.
2. Using an approved connector back probe tool, connect the positive lead of the load test tool to the circuit being tested at point (A).
3. Connect the negative lead of the load test tool to the negative side of the battery or ground.

CAUTION: Use only approved connector back probe tools when back probing a connector so as not to cause damage to the terminals or insulation

of the connector. Damage to the terminals can cause poor terminal contact or retention. Damage to the insulation can introduce corrosion due to water infiltration.

Does the bulb light bright, when compared to a direct battery connection?

Yes

- The circuit being tested can carry a load, check other circuits, connectors and terminals for concerns.

No

- Repair the circuit, connector or terminal that has an open or excessive resistance.
- Perform any related Recalls or Technical Service Bulletins (TSBs) that may apply.

LOAD TESTING A BATTERY OR IGNITION FEED CIRCUIT AND GROUND CIRCUIT

DIAGNOSTIC LOAD TEST (BATTERY FEED & GROUND CIRCUIT)

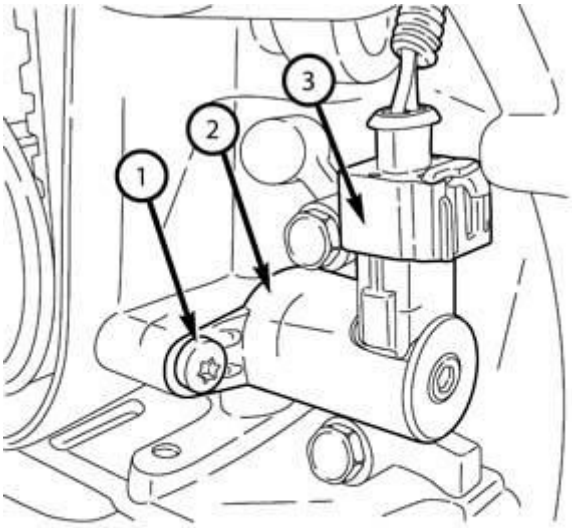

091174654

Fig. 29: Performing Diagnostic Load Test (Battery Feed & Ground Circuit)
Courtesy of CHRYSLER GROUP, LLC

1. Disconnect the connector from the device(s) to gain access and isolate the terminal for the circuit being tested.
2. Using an approved connector back probe tool, connect the positive lead of the load test tool to the circuit being tested at point (A).

3. Using an approved connector back probe tool, connect the negative lead of the load test tool to the circuit being tested at point (B).

CAUTION: Use only approved connector back probe tools when back probing a connector so as not to cause damage to the terminals or insulation of the connector. Damage to the terminals can cause poor terminal contact or retention. Damage to the insulation can introduce corrosion due to water infiltration.

Does the bulb light bright, when compared to a direct battery connection?

Yes

- The circuit being tested can carry a load, check other circuits, connectors and terminals for concerns.

No

- Test the circuits individually to determine which circuit is the cause of the test failure.
- Repair the circuit, connector or terminal that has an open or excessive resistance.
- Perform any related Recalls or Technical Service Bulletins (TSBs) that may apply.

LOAD TESTING A CIRCUIT FOR AN OPEN OR HIGH RESISTANCE

DIAGNOSTIC LOAD TEST (OPEN/HIGH RESISTANCE CIRCUIT)

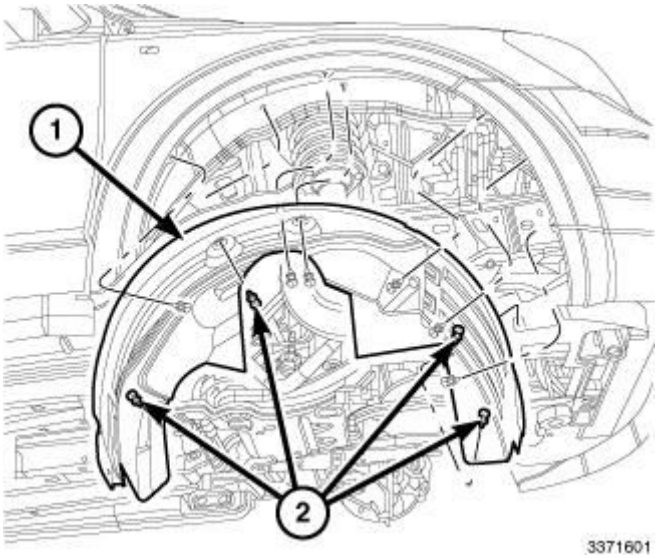

Fig. 30: Performing Diagnostic Load Test (Open/High Resistance Circuit)
Courtesy of CHRYSLER GROUP, LLC

1. Disconnect all components from the circuit being tested.

2. Connect the positive lead of the load test tool to the positive side of the battery (A).
3. Using an approved connector back probe tool, connect the negative lead of the load test tool to the circuit being tested at point (B).
4. Using an approved connector back probe tool, connect a jumper wire to the circuit being tested at point (C).
5. Then connect the other end of the jumper wire to the negative side of the battery or ground (D).

CAUTION: Use only approved connector back probe tools when back probing a connector so as not to cause damage to the terminals or insulation of the connector. Damage to the terminals can cause poor terminal contact or retention. Damage to the insulation can introduce corrosion due to water infiltration.

Does the bulb light bright, when compared to a direct battery connection?

Yes

- The circuit being tested can carry a load, check other circuits, connectors and terminals for concerns.

No

- Repair the circuit, connector or terminal that has an open or excessive resistance.
- Perform any related Recalls or Technical Service Bulletins (TSBs) that may apply.

VOLTAGE DROP TEST PROCEDURE

THEORY OF OPERATION

Voltage drop is the reduction in voltage in an electrical circuit between the voltage source and load components. The wires and connectors of a circuit should contain almost no resistance and **all** the voltage should be consumed through the load. The "load" is the component using the power, such as a light, starter, or blower motor. If a circuit has excessive resistance, it prevents the wire from carrying sufficient current under high load conditions. A voltage drop test is an effective way to locate excessive resistance in connections and circuits.

To perform a voltage drop test, a Digital Volt Ohm Meter (DVOM) is used to measure the voltage drop across a live circuit or connection while it is under the load. If the circuit or connection being tested has excessive resistance, the DVOM will measure the voltage that the resistance is using. **Little or no voltage drop should be read, ideally less than 0.2 of a volt** , anything greater indicates excessive resistance and the circuit or connection should be inspected for cleaning or repair.

Possible Causes
EXCESSIVE CIRCUIT RESISTANCE (CHAFED, PIERCED OR CORRODED WIRES)
HIGH RESISTANCE WITH IN-LINE CONNECTOR (BENT, PUSHED OUT OR CORRODED TERMINALS)

DIAGNOSTIC TEST

TESTING FOR VOLTAGE DROP

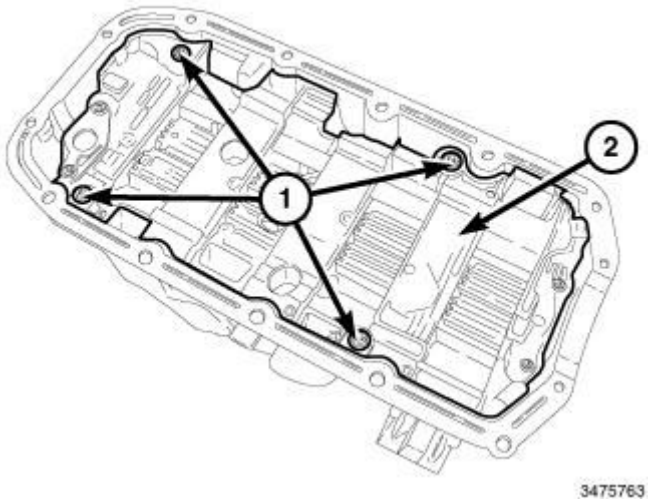

Fig. 31: Testing for Voltage Drop
Courtesy of CHRYSLER GROUP, LLC

1. Turn the ignition off.
2. Use the wiring diagram as a guide, trace the circuit being tested and locate the components related to the circuit.
3. Set the multimeter to measure DC voltage.
4. Carefully back probe the two component harness connectors of the circuit being tested.

WARNING: When the engine is operating, do not stand in direct line with the fan. Do not put your hands near the pulleys, belts or fan. Do not wear loose clothing. Failure to follow these instructions may result in possible serious or fatal injury.

NOTE: If you are testing the starting circuit, disable the engine so the engine does not start.

5. Crank the engine for five seconds if you are testing the starting circuit and monitor the multimeter voltage reading.
6. For circuits that don't require the engine running, turn the ignition on.
7. For circuits that require the engine running, start the engine.

NOTE: If the circuit you are checking needs to be operating, such as the Blower Motor or a Lamp, do so now.

8. Monitor the voltage reading.
9. The voltmeter will show the difference in voltage between the two points.

   Is the voltage less than 0.2 of a Volt?

   Yes

   - At this time the circuit is functioning properly. Continue to measure the voltage between the components and wiggle the wire harness and connectors while checking for an intermittent condition.
   - Use the wiring diagram as a guide to trace the circuits and look for any in-line connectors where the excessive resistance could occur intermittently.
   - Look for any chafed, pierced, pinched, or partially broken wires.
   - Look for broken, bent, pushed out or corroded terminals. Verify that there is good pin to terminal contact in the related wire harness connectors.
   - Perform any Technical Service Bulletins (TSBs) that may apply.

   No

   - Repair the excessive resistance in the circuit.
   - Use the wiring diagram as a guide to trace the circuit and look for any in-line connectors where the excessive resistance may occur.
   - Look for any chafed, pierced, pinched, or partially broken wires.
   - Look for broken, bent, pushed out or corroded terminals. Verify that there is good pin to terminal contact in the related wire harness connectors.
   - Perform any Technical Service Bulletins (TSBs) that may apply.

ELECTROSTATIC DISCHARGE (ESD) SENSITIVE DEVICES

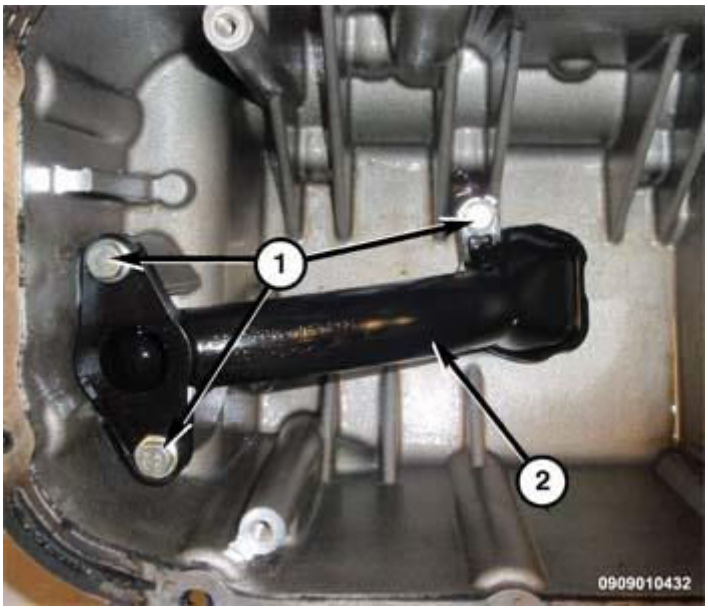

Fig. 32: Electrostatic Discharge Symbol
Courtesy of CHRYSLER GROUP, LLC

All ESD sensitive components are solid state and a symbol is used to indicate this. When handling any component with this symbol, comply with the following procedures to reduce the possibility of electrostatic charge build up on the body and inadvertent discharge into the component. If it is not known whether the component is ESD sensitive, assume that it is.

Perform the following procedure when handling ESD sensitive components:

1. Always touch a known good ground before handling the component. This should be repeated while handling the component and more frequently after sliding across a seat, sitting down from a standing position, or walking a distance.
2. Avoid touching electrical terminals of the component, unless instructed to do so by a written procedure.
3. When using a voltmeter, be sure to connect the ground lead first.
4. Do not remove the component from its protective packing until it is time to install the component.
5. Before removing the component from its package, ground the package to a known good ground on the vehicle.

WIRE SPLICING

YouTube	A multimedia supplement to the instructions contained in this article is available. To view the multimedia example of the condition described go to; **http://www.youtube.com/user/Mitchell1Tips** **then type "A00641526.vid1" into the "Search Channel" box.**

CAUTION: If additional wire is needed when making a splice repair to any wire, it is

important that the same or next larger size wire gauge be used. Refer to SYSTEM WIRING DIAGRAMS for the original wire gauge size.

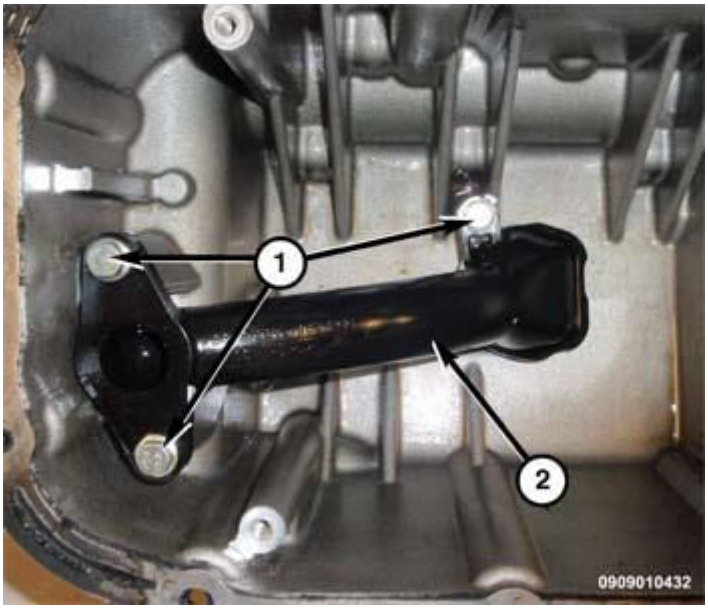

Fig. 33: Splice Band
Courtesy of CHRYSLER GROUP, LLC

1. Remove 13 millimeters (0.50 inch) of insulation from each wire that needs to be spliced.
2. Place a piece of adhesive sealant-lined heat shrink tubing (Part Number 04778570 or equivalent) over the wire on one side of the splice. Be certain the length of tubing will be sufficient to cover and seal the entire repair area.
3. Place the strands of the wires being spliced so that they are overlapping each other within the splice band (1).

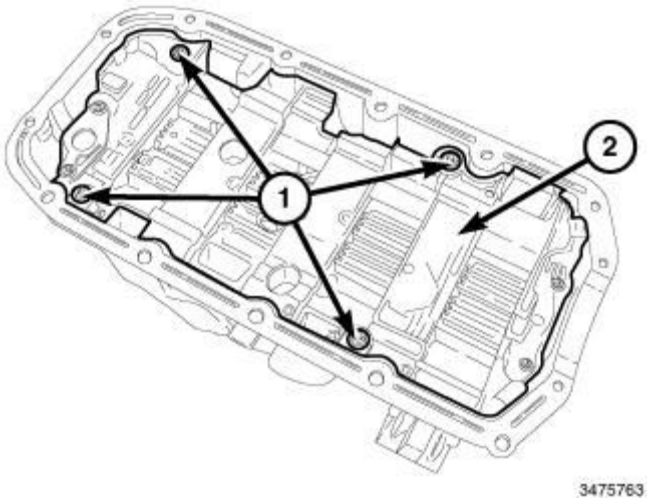

Fig. 34: Crimping Tool

Courtesy of CHRYSLER GROUP, LLC

4. Using a crimping tool (1) (MOPAR Part Number 05019912AA, Miller Special Tool Number (special tool #10042, Crimper, Wire/Terminal) or equivalent) crimp the splice band and wires together securely.

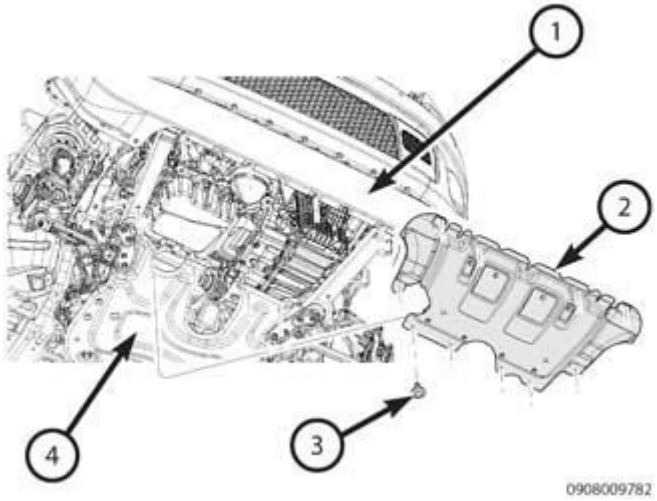

Fig. 35: Solder Splice
Courtesy of CHRYSLER GROUP, LLC

CAUTION: Never use acid core solder for electrical wiring repairs.

5. Using Rosin Core type solder (1) only and a suitable soldering iron (3), solder the wire and splice band connection (2) together.

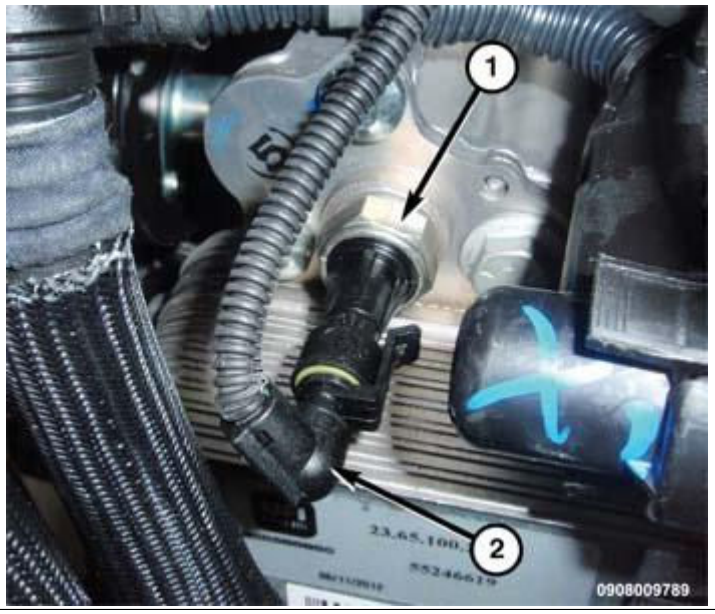

Fig. 36: Heat Shrink Tube
Courtesy of CHRYSLER GROUP, LLC

6. Center the heat shrink tubing (2) over the splice joint repair and heat using a suitable heat gun. Heat the joint until the tubing is tightly sealed and sealant (1) begins to ooze out of both ends of the tubing.

REMOVAL

CONNECTOR TERMINAL REMOVAL

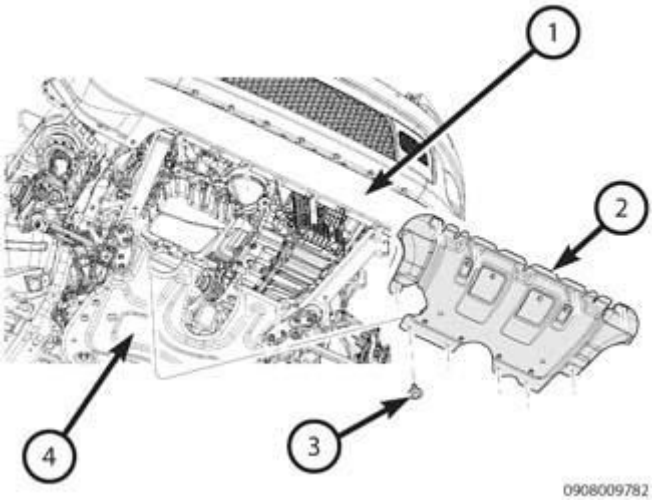

Fig. 37: Removal Of Dress Cover
Courtesy of CHRYSLER GROUP, LLC

1 - DRESS COVER
2 - CONNECTOR LOCK
3 - CONNECTOR

1. Disconnect battery.
2. Release Connector Lock (2).
3. Disconnect the connector (3) being repaired from its mating half/component.
4. Remove the dress cover (if applicable) (1).

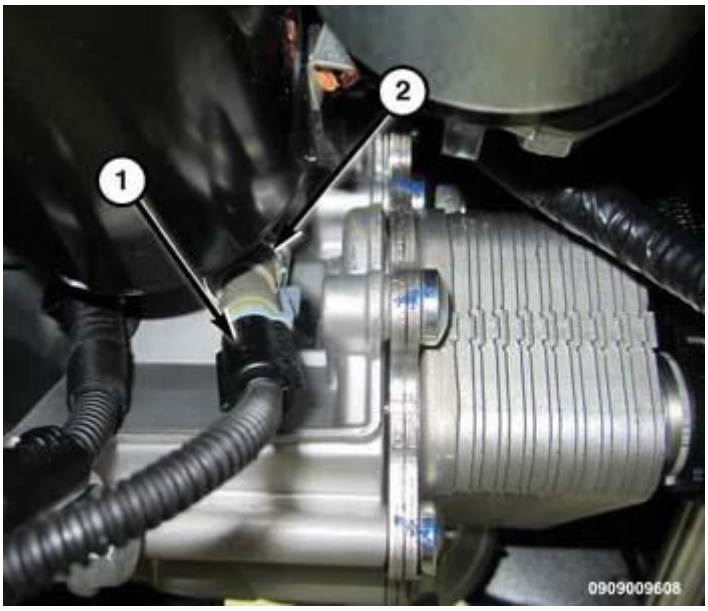

Fig. 38: Connector Secondary Terminal Lock
Courtesy of CHRYSLER GROUP, LLC

1 - Secondary Terminal Lock

5. Release the Secondary Terminal Lock, if required (1).

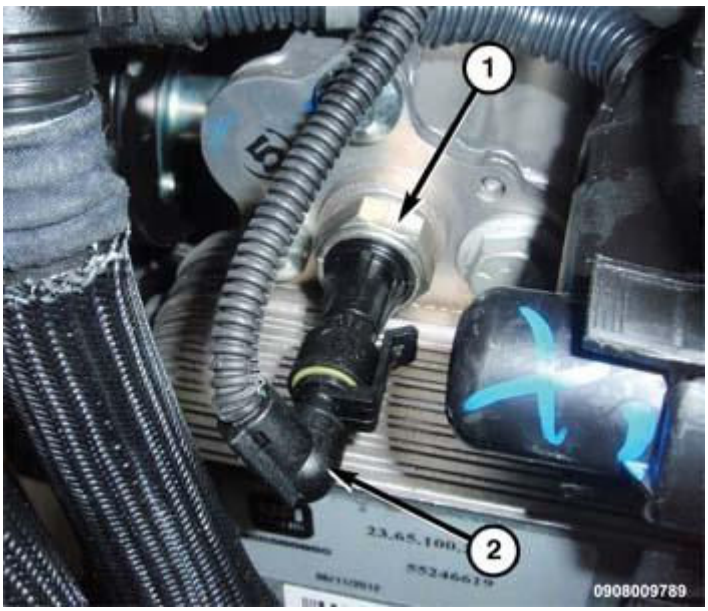

Fig. 39: Terminal Removal
Courtesy of CHRYSLER GROUP, LLC

1 - TYPICAL CONNECTOR 2 - PICK FROM TERMINAL REMOVER KIT 10300

3 - APEX CONNECTOR
4 - PICK FROM TERMINAL REMOVER KIT 10300
5 - AUGAT CONNECTOR
6 - ELECTRICAL TERMINAL REMOVAL TOOL
7 - MOLEX CONNECTOR
8 - PICK FROM TERMINAL REMOVER KIT 10300
9 - THOMAS AND BETTS CONNECTOR
10 - TERMINAL REMOVER
11 - CONNECTOR
12 - ELECTRICAL TERMINAL REMOVER

6. Position the connector locking finger away from the terminal using the proper special tool. Pull on the wire to remove the terminal from the connector.

INSTALLATION

CONNECTOR TERMINAL INSTALLATION

1. Select a wire from the terminal repair kit that best matches the color and gauge of the wire being repaired.
2. Cut the repair wire to the proper length and remove one-half (1/2) inch of insulation.
3. Splice the repair wire to the wire harness (see Wire Splicing procedure). Refer to **STANDARD PROCEDURE**.
4. Insert the repaired wire into the connector.
5. Install the connector locking wedge, if required, and reconnect the connector to its mating half/component.
6. Re-tape the wire harness starting at 1-1/2 inches behind the connector and 2 inches past the repair.
7. Connect battery and test all affected systems.

2014 GENERAL INFORMATION

Circuit Testing Procedures - Non-DTC-Based Diagnostics - Cherokee

WARNING

GENERAL WARNINGS

WARNINGS provide information to prevent personal injury and vehicle damage. Below is a list of general warnings that should be followed any time a vehicle is being serviced.

WARNING: **Always wear safety glasses for eye protection.**

WARNING: **Use safety stands anytime a procedure requires being under a vehicle.**

WARNING: **Be sure that the ignition switch is always in the off position, unless the procedure requires it to be on.**

WARNING: **Set the parking brake when working on any vehicle. An automatic transmission should be in park. A manual transmission should be in neutral.**

WARNING: **Operate the engine only in a well-ventilated area.**

WARNING: **Keep away from moving parts when the engine is running, especially the fan and belts.**

WARNING: **To prevent serious burns, avoid contact with hot parts such as the radiator, exhaust manifold(s), tail pipe, catalytic converter and muffler.**

WARNING: **Do not allow flame or sparks near the battery. Gases are always present in and around the battery.**

WARNING: **Always remove rings, watches, loose hanging jewelry and avoid loose clothing.**

DESCRIPTION

CIRCUIT FUNCTIONS

All circuits in the wiring diagrams use an alpha/numeric code to identify the wire and its function. To identify which circuit code applies to a system, refer to the Circuit Identification Code Chart.

NOTE: This chart shows the main circuits only and does not show the secondary codes that may apply to some models.

CIRCUIT IDENTIFICATION CODE CHART

CIRCUIT CODE	FUNCTION
A	BATTERY FEED
B	BRAKE CONTROLS
C	CLIMATE CONTROLS
D	DIAGNOSTIC CIRCUITS
E	DIMMING ILLUMINATION CIRCUITS
F	FUSED CIRCUITS
G	MONITORING CIRCUITS (GAUGES)
H	MULTIPLE
I	NOT USED
J	OPEN
K	POWERTRAIN CONTROL MODULE
L	EXTERIOR LIGHTING
M	INTERIOR LIGHTING
N	MULTIPLE
O	NOT USED
P	POWER OPTION (BATTERY FEED)
Q	POWER OPTIONS (IGNITION FEED)
R	PASSIVE RESTRAINT
S	SUSPENSION/STEERING
T	TRANSMISSION/TRANSAXLE/ TRANSFER CASE
U	OPEN
V	SPEED CONTROL, WIPER/WASHER
W	WIPERS
X	AUDIO SYSTEMS
Y	TEMPORARY
Z	GROUNDS

CIRCUIT INFORMATION

Each wire shown in the wiring diagrams contains a code which identifies the main circuit, a specific portion of the main circuit, gauge of wire, and color.

As an example, circuit **A 2 18 LB/YL** is decoded in the following manner:

Circuit Type:	**A** (Battery Feed Circuit)
Circuit Level:	**2** (Level Two)
Wire Size:	**18** (Eighteen Gauge Wire)
Wire Color:	**LB/YL** (Light Blue with Yellow Tracer)

WIRE COLOR CODE CHART

COLOR CODE	COLOR
BL	BLUE
BK	BLACK
BR	BROWN
DB	DARK BLUE
DG	DARK GREEN
GY	GRAY
LB	LIGHT BLUE
LG	LIGHT GREEN
OR	ORANGE
PK	PINK
RD	RED
TN	TAN
VT	VIOLET
WT	WHITE
YL	YELLOW
*	WITH TRACER

DIAGNOSIS AND TESTING

WIRING HARNESS TESTING

TROUBLESHOOTING TOOLS

When diagnosing a problem in an electrical circuit there are several common tools necessary. These tools are listed and explained below:

Voltmeter

The voltmeter is used to measure the electrical pressure or the voltage difference between two points. A voltmeter reads available voltages such as battery voltage, generator output voltage, and voltage drop across a component or conductor. A high voltage drop may indicate a high resistance in the circuit. The voltmeter can be used to locate an open circuit and circuits with an unintentional ground. Observing polarity, always connect a voltmeter in parallel to the existing circuit. If the leads are reversed on a digital multimeter, a minus sign

appears in the display.

CAUTION: Most of the electrical components used in today's vehicles are Solid State. When checking voltages in these circuits, use a meter with a 10 - megohm or greater impedance rating.

Ohmmeter

The ohmmeter is used to measure the resistance of a component or the resistance between two points in a circuit in ohms, and to check a portion of the circuit for continuity. Some meters have a built-in tone to indicate that the circuit has continuity. No resistance indicates a short circuit or unintentional ground whereas resistance that is higher than specification indicates a high resistance in the circuit such as a loose, dirty or corroded connection, or a defective component. An "OL" reading means that the circuit or component had infinite resistance; an open circuit or defective component is indicated. Ohmmeters have an internal battery and must never be connected to a power circuit. Connecting an ohmmeter to a powered circuit causes the meter fuse to blow and can damage its dry cell battery. Ohmmeters can be connected into a circuit without regard to polarity, unless the circuit contains a diode. When using an ohmmeter, the component or portion of the circuit must be isolated from other components or branches to avoid false readings.

CAUTION: Most of the electrical components used in today's vehicles are Solid State. When checking resistance in these circuits use a meter with a 10 - megohm or greater impedance rating. In addition, make sure the power is disconnected from the circuit. Circuits that are powered up by the vehicle's electrical system can cause damage to the equipment and provide false readings.

Ammeter

Amperage or current is the measure of the rate of electron "flow" in a circuit. It is measured in the unit of the Ampere, simply called an Amp (A). In order to measure current in a circuit, the circuit must be broken or opened, and an ammeter must be inserted in series (in-line) with the circuit so that all the current that flows through the circuit will have to go through the meter. When measuring current in this manner, it requires the meter be made part of the circuit, this type of measurement is more difficult than measuring either voltage or resistance.

When an ammeter is placed in series with a circuit, it ideally drops no voltage as current goes through it. In other words, it acts very much like a piece of wire, with very little resistance from one test probe to the other. Consequently, an ammeter will act as a short circuit if placed in parallel (across the terminals of) a substantial source of voltage. If this is done, a surge in current will result, potentially damaging the meter. Ammeters are generally protected from excessive current by means of a small fuse located inside the meter housing. If the ammeter is accidently connected across a substantial voltage source, the resultant surge in current will "blow" the fuse and render the meter incapable of measuring current until the fuse is replaced.

Consult the owner's manual of the particular model of meter you own for details on measuring current.

CAUTION: Do not crank the engine or turn on any accessories that may draw more

than 10 Amps. You may open the protective fuse in the multimeter.

12-Volt Test Light

The 12-Volt test light when properly used, is one of the best and quickest pieces of test equipment available for troubleshooting 12-volt power systems. It's especially good for times when there are only two voltages, battery voltage and no voltage. For example, if you're checking to see if you have 12-volts on the Battery(+), the test light will immediately tell you if voltage is present or not.

With any test equipment, you should confirm that it's in good working order before you begin testing. For a test light, you have to have a voltage source. Connect the test light's ground clip to a good ground and touch it to a point where you believe that there is 12-volt supply. If the light doesn't light up, check the light by connecting it directly across the battery. Initially, make sure that you have the ground clip on the negative battery terminal. If you touch the probe to the positive terminal, the test light should light up. If it doesn't and the battery is not completely dead, the test light isn't working properly. The test light must be in proper working order before any circuit testing can occur.

Jumper Wire

The sole purpose of the jumper wire is to complete a circuit. It is nothing more than a suitable length of insulated wire with terminals or connectors on each end. Jumper wires may be bought or made with various sizes of wire and styles of terminals including alligator clips, spade lugs and pin plugs, and should include a fuse device of some type for circuit and component protection. A jumper wire is used to verify a faulty conductor by substituting a known good one. It is jumped across a suspicious conductor in the circuit. If the circuit works with the jumper, but not without, there is an open somewhere in the area being jumped. A jumper wire is ONLY used to bypass a faulty conductor (including switches and connectors). NEVER bypass a load device with a jumper wire. The circuit needs the resistance from the load device and shorting across it causes high current flow, which could damage other components.

WARNING: **Never use a jumper wire across a load, such as a motor, connected between a battery feed and ground.**

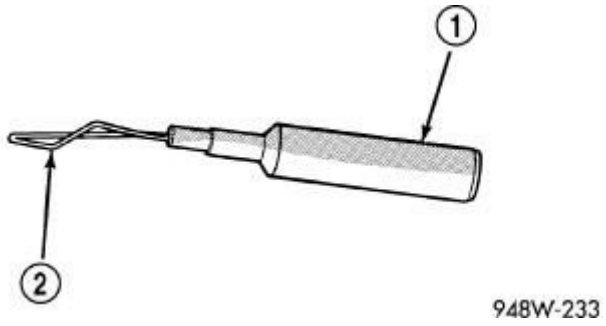

Fig. 1: Probing Tool
Courtesy of CHRYSLER GROUP, LLC

1 - SPECIAL TOOL 6801
2 - PROBING END

Probing Tools

These tools are used for probing terminals in connectors. Select the proper size tool from Special Tool Package (special tool #6807, Terminal Tools), and insert the probing end (2) into the terminal being tested. Use the other end of the tool (1) to insert the meter probe.

INTERMITTENT AND POOR CONNECTIONS

Most intermittent electrical problems are caused by faulty electrical connections or wiring. It is also possible for a sticking component or relay to cause a problem.

Before condemning a component or wiring assembly, check the following items:

- Connectors are fully seated
- Spread terminals, or terminal push out
- Terminals in the wiring assembly are fully seated into the connector/component and locked into position
- Dirt or corrosion on the terminals. Any amount of corrosion or dirt could cause an intermittent problem
- Damaged connector/component casing exposing the item to dirt or moisture
- Wire insulation that has rubbed through causing a short to ground
- Some or all of the wiring strands broken inside of the insulation
- Wiring broken inside of the insulation

TROUBLESHOOTING WIRING PROBLEMS

When troubleshooting wiring problems there are six steps which can aid in the procedure. The steps are listed and explained below. Always check for non-factory items added to the vehicle before doing any diagnosis. If the vehicle is equipped with these items, disconnect them to verify these add-on items are not the cause of the problem.

Perform the following Six Step Diagnosis Process:

1. Verify the problem.
2. Verify any related symptoms. Do this by performing operational checks on components that are in the same circuit. Refer to **SYSTEM WIRING DIAGRAMS** .
3. Analyze the symptoms. Use the wiring diagrams to determine what the circuit is doing, where the problem most likely is occurring and where the diagnosis will continue.
4. Isolate the problem area.
5. Repair the problem area.

6. Verify the proper operation. For this step, check for proper operation of all items on the repaired circuit. Refer to **SYSTEM WIRING DIAGRAMS** .

NOTE: **The Six Step Diagnosis Process used by Chrysler is a time proven process. The basic concepts of this process have been used by others for problem solving for many years. The successful application of this process requires a solid understanding of the conditions that affect each step, and when its time to advance to the next step. These conditions based on experience formulate what is known as "Best Practices".**

STANDARD PROCEDURE

CHECK A 12-VOLT FUSED BATTERY B(+) CIRCUIT FOR VOLTAGE

THEORY OF OPERATION

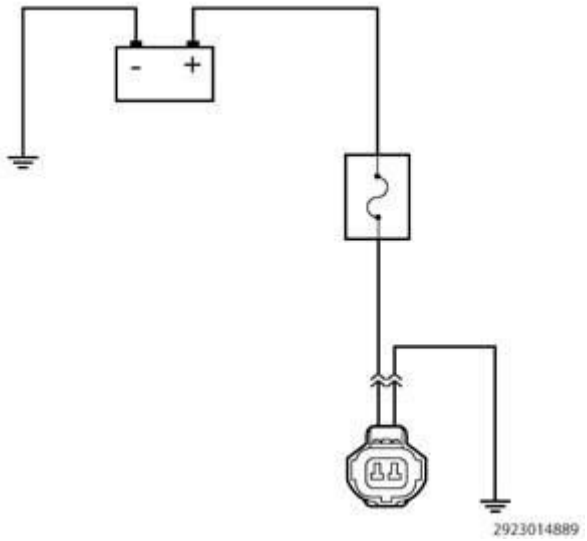

Fig. 2: Checking 12-Volt Fused Battery B(+) Circuit For Voltage
Courtesy of CHRYSLER GROUP, LLC

The purpose of the following procedure(s) is to demonstrate how to check the voltage of a 12-volt fused battery B(+) circuit with a test light or voltmeter.

NOTE: **The circuit shown is an example, and is intended for demonstrational purpose only.**

The following are circuit tests covered in this procedure:

- Testing 12-Volt Fused Battery B(+) Circuit Voltage With A Test Light
- Testing 12-Volt Fused Battery B(+) Circuit Voltage With A Voltmeter

NOTE: Perform the following test using a known good test light or functioning multimeter.

Below is a list of possible causes that could be related to a No Voltage condition.

Possible Causes
OPEN CIRCUIT (CHAFED, PIERCED, PINCHED OR BROKEN WIRES)
OPEN FUSE
OPEN IN-LINE CONNECTOR (BENT, PUSHED OUT OR CORRODED TERMINALS)

DIAGNOSTIC TEST

1. **TESTING 12-VOLT FUSED BATTERY B(+) CIRCUIT VOLTAGE WITH A TEST LIGHT**

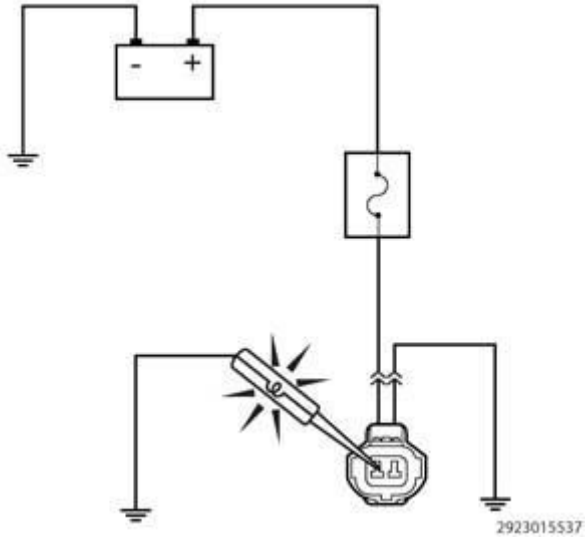

Fig. 3: Checking 12-Volt Fused Battery B(+) Circuit Voltage With A Test Light
Courtesy of CHRYSLER GROUP, LLC

NOTE: Before testing any circuits, first verify the 12-volt test light is operating properly. Connect the 12-volt test light to battery ground or to any other known good ground. Touch the lead of the test light to Battery(+). If the test light is operational, it should illuminate brightly.

1. Turn the ignition off.
2. Disconnect the wire harness connector from the component that is being tested.

NOTE: Check connectors - Clean/repair as necessary.

3. At this time, leave all in-line connectors connected.
4. Connect the 12-volt test light to a known good ground.

5. Use the test light lead to carefully probe the Battery or Ignition voltage circuit in the harness connector.
6. First check with the ignition off, next check with the ignition on, and lastly check while cranking the engine.

   Does the test light illuminate brightly?

   Yes

   - The circuit is not open at this time or the condition that originally caused the open may not be present at this time. Continue to monitor the test light and wiggle the wire harness and connectors to check for an intermittent open or excessive resistance condition.
   - Use the wiring diagram as a guide to trace the circuits and look for any in-line connectors where the open could occur intermittently.
   - Look for any chafed, pierced, pinched, or partially broken wires.
   - Look for broken, bent, pushed out or corroded terminals. Verify that there is good pin to terminal contact in the related wire harness connectors.
   - Perform any Technical Service Bulletins (TSBs) that may apply.

   No

   - Repair the open in the circuit. Use the wiring diagram as a guide to trace the circuit and look for any in-line connectors where the open could occur.
   - One method to help isolate the open is to disconnect any in-line connectors and measure the resistance from one side of the in-line connector to the matching component harness connector. If the open goes away, the open is on the other side of the in-line connector.
   - If this is a fused circuit, make sure to inspect the fuse. If the fuse is open, check the circuit for a short to ground before installing a new fuse. The circuit may have a short to ground causing the fuse to open. This short to ground could be in the wire harness or in one of the components the circuit is supplying voltage to.

2. **TESTING 12-VOLT FUSED BATTERY B(+) CIRCUIT VOLTAGE WITH A VOLTMETER**

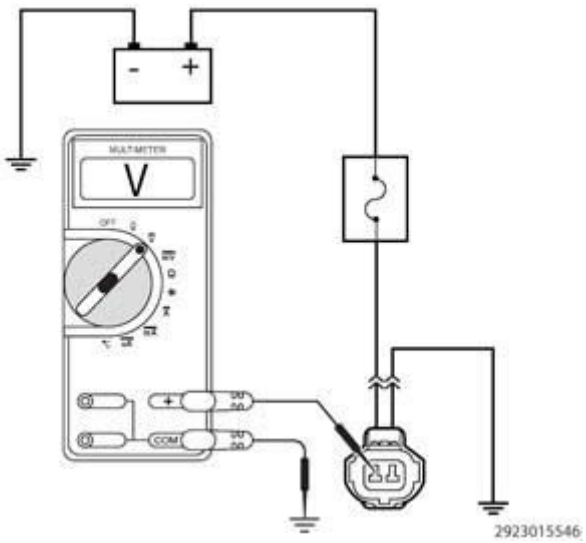

Fig. 4: Checking Testing 12-Volt Fused Battery B(+) Circuit Voltage With A Voltmeter
Courtesy of CHRYSLER GROUP, LLC

NOTE: The connector displayed in the graphics are only an example.

1. Turn the ignition off.
2. Disconnect the wire harness connector from the component that is being tested.

NOTE: Check connectors - Clean/repair as necessary.

3. At this time leave all in-line connectors connected.
4. Use a multimeter set to measure DC voltage.
5. Connect the ground lead of the meter to a known good ground.
6. Use the positive lead of the multimeter and probe the circuit that is being checked for voltage.
7. Ignition on, engine not running.

Is the voltage within specifications for this circuit?

Yes

- The circuit is functioning properly or the condition that originally caused the open or short may not be present at this time. Continue to measure the voltage and wiggle the wire harness and connectors while checking for an intermittent open or short.
- Use the wiring diagram as a guide to trace the circuits and look for any in-line connectors where the short could occur intermittently.
- Look for any chafed, pierced, pinched, or partially broken wires.
- Look for broken, bent, pushed out or corroded terminals. Verify that there is good pin to terminal contact in the related wire harness connectors.

- Perform any Technical Service Bulletins (TSBs) that may apply.

No

- Repair the open or short to ground in the circuit. Use the wiring diagram as a guide to trace the circuits and look for any in-line connectors where the short could occur.
- One method to help isolate the open or short is to disconnect any in-line connectors that the circuit being checked runs through and check for the voltage again. If the voltage is present, the open or short is on the other side of the in-line connector.

CHECK A 12-VOLT SWITCHED BATTERY B(+) CIRCUIT FOR VOLTAGE

THEORY OF OPERATION

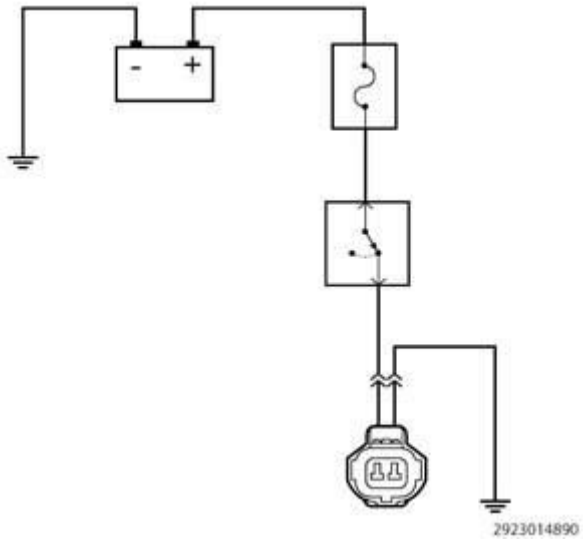

Fig. 5: Checking 12-Volt Switched Battery B(+) Circuit For Voltage
Courtesy of CHRYSLER GROUP, LLC

The purpose of the following procedure is to demonstrate how to check the voltage of a 12-Volt switched battery B(+) circuit with a test light or voltmeter.

NOTE: The circuit shown is an example, and is intended for demonstrational purpose only.

The following are circuit tests covered in this procedure:

- Testing 12-Volt Switched Battery B(+) Circuit Voltage With A Test Light
- Testing 12-Volt Switched Battery B(+) Circuit Voltage With A Voltmeter

NOTE: Perform the following test using a known good test light or functioning multimeter.

Below is a list of possible causes that could be related to a No Voltage condition.

Possible Causes
OPEN CIRCUIT (CHAFED, PIERCED, PINCHED OR BROKEN WIRES)
OPEN FUSE
OPEN IN-LINE CONNECTOR (BENT, PUSHED OUT OR CORRODED TERMINALS)

DIAGNOSTIC TEST

1. **TESTING 12-VOLT SWITCHED BATTERY B(+) CIRCUIT VOLTAGE WITH A TEST LIGHT**

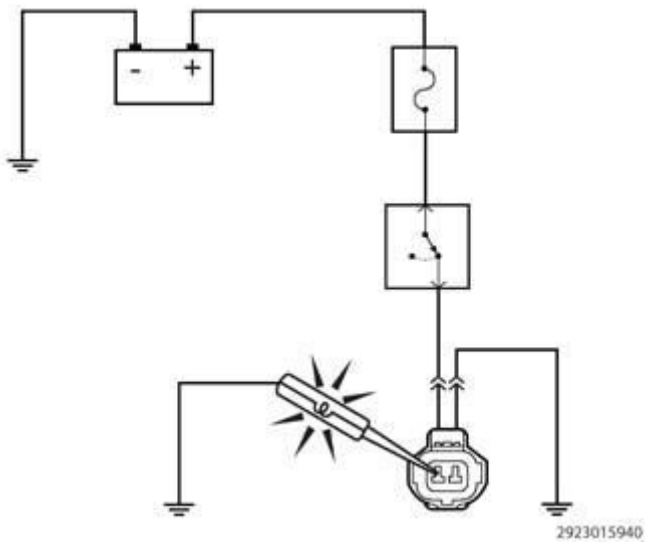

Fig. 6: Testing 12-Volt Switched Battery B(+) Circuit Voltage With A Test Light
Courtesy of CHRYSLER GROUP, LLC

NOTE: Before testing any circuits, first verify the 12-volt test light is operating properly. Connect the 12-volt test light to battery ground or to any other known good ground. Touch the lead of the test light to Battery(+). If the test light is operational, it should illuminate brightly.

1. Turn the ignition off.
2. Disconnect the wire harness connector from the component that is being tested.

NOTE: Check connectors - Clean/repair as necessary.

3. At this time, leave all in-line connectors connected.
4. Connect the 12-volt test light to a known good ground.
5. Use the test light lead to carefully probe the Battery or Ignition voltage circuit in the harness connector.
6. First check with the ignition off, next check with the ignition on, and lastly check while cranking

the engine.

Does the test light illuminate brightly?

Yes

- The circuit is not open at this time or the condition that originally caused the open may not be present at this time. Continue to monitor the test light and wiggle the wire harness and connectors to check for an intermittent open or excessive resistance condition.
- Use the wiring diagram as a guide to trace the circuits and look for any in-line connectors where the open could occur intermittently.
- Look for any chafed, pierced, pinched, or partially broken wires.
- Look for broken, bent, pushed out or corroded terminals. Verify that there is good pin to terminal contact in the related wire harness connectors.
- Perform any Technical Service Bulletins (TSBs) that may apply.

No

- Repair the open in the circuit. Use the wiring diagram as a guide to trace the circuit and look for any in-line connectors where the open could occur.
- One method to help isolate the open is to disconnect any in-line connectors and measure the resistance from one side of the in-line connector to the matching component harness connector. If the open goes away, the open is on the other side of the in-line connector.
- If this is a fused circuit, make sure to inspect the fuse. If the fuse is open, check the circuit for a short to ground before installing a new fuse. The circuit may have a short to ground causing the fuse to open. This short to ground could be in the wire harness or in one of the components the circuit is supplying voltage to.

2. **TESTING 12-VOLT SWITCHED BATTERY B(+) CIRCUIT VOLTAGE WITH A VOLTMETER**

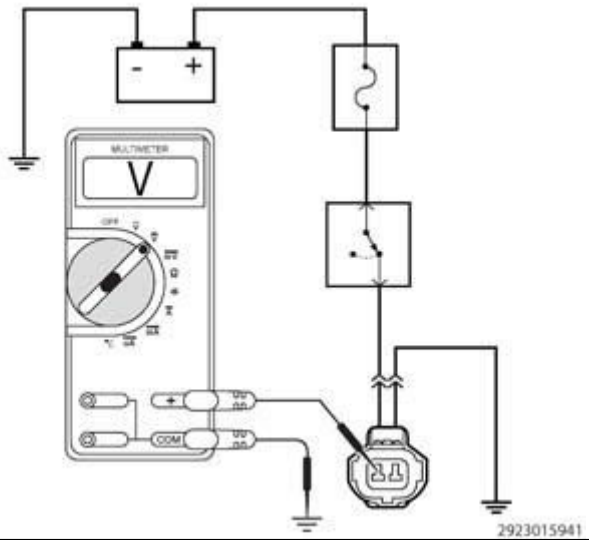

Fig. 7: Testing 12-Volt Switched Battery B(+) Circuit Voltage With A Voltmeter
Courtesy of CHRYSLER GROUP, LLC

NOTE: The connector displayed in the graphics are only an example.

1. Turn the ignition off.
2. Disconnect the wire harness connector from the component that is being tested.

NOTE: Check connectors - Clean/repair as necessary.

3. At this time leave all in-line connectors connected.
4. Use a multimeter set to measure DC voltage.
5. Connect the ground lead of the meter to a known good ground.
6. Use the positive lead of the multimeter and probe the circuit that is being checked for voltage.
7. Ignition on, engine not running.

Is the voltage within specifications for this circuit?

Yes

- The circuit is functioning properly or the condition that originally caused the open or short may not be present at this time. Continue to measure the voltage and wiggle the wire harness and connectors while checking for an intermittent open or short.
- Use the wiring diagram as a guide to trace the circuits and look for any in-line connectors where the short could occur intermittently.
- Look for any chafed, pierced, pinched, or partially broken wires.
- Look for broken, bent, pushed out or corroded terminals. Verify that there is good pin to terminal contact in the related wire harness connectors.
- Perform any Technical Service Bulletins (TSBs) that may apply.

No

- Repair the open or short to ground in the circuit. Use the wiring diagram as a guide to trace the circuits and look for any in-line connectors where the short could occur.
- One method to help isolate the open or short is to disconnect any in-line connectors that the circuit being checked runs through and check for the voltage again. If the voltage is present, the open or short is on the other side of the in-line connector.

CHECK A 5-VOLT SUPPLY CIRCUIT FOR VOLTAGE

THEORY OF OPERATION

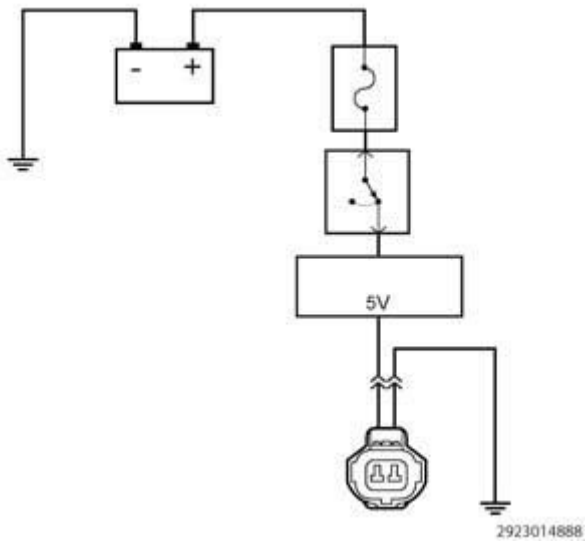

Fig. 8: Checking 5-Volt Supply Circuit For Voltage
Courtesy of CHRYSLER GROUP, LLC

The purpose of the following procedure is to demonstrate how to check the voltage of a 5-Volt supply circuit with a voltmeter.

NOTE: The circuit shown is an example, and is intended for demonstrational purpose only.

The following are circuit tests covered in this procedure:

- Testing A 5-Volt Supply Circuit For Voltage
- Testing A 5-Volt Supply Circuit And Sensor Ground Circuit

NOTE: Perform the following test using a known good multimeter.

Below is a list of possible causes that could be related to a No Voltage condition.

Possible Causes
OPEN CIRCUIT (CHAFED, PIERCED, PINCHED OR BROKEN WIRES)
OPEN IN-LINE CONNECTOR (BENT, PUSHED OUT OR CORRODED TERMINALS)
ELECTRONIC CONTROL MODULE (5-VOLT SUPPLY OUTPUT)

DIAGNOSTIC TEST

1. **TESTING A 5-VOLT SUPPLY CIRCUIT FOR VOLTAGE**

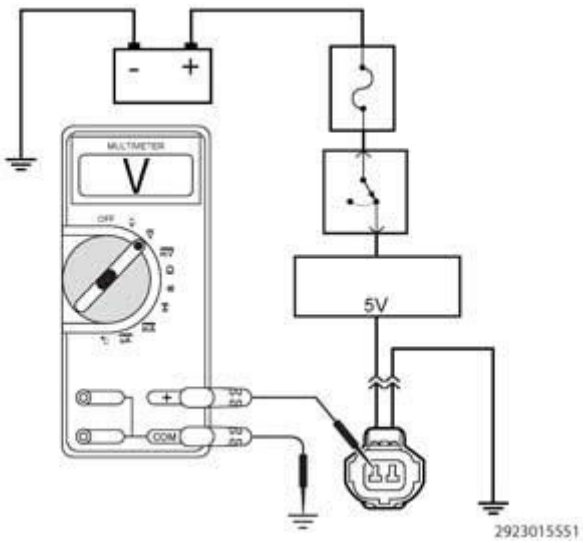

Fig. 9: Checking 5-Volt Supply Circuit For Voltage
Courtesy of CHRYSLER GROUP, LLC

1. Turn the ignition off.
2. Disconnect the sensor harness connector.

NOTE: Check connectors - Clean/repair as necessary.

3. Turn the ignition on.
4. Set the multimeter to measure DC voltage.
5. Connect the negative lead of the multimeter to a known good ground.
6. With the positive lead of the multimeter, carefully probe the 5-volt supply circuit.

Is the voltage between 4.7 and 5.2 volts?

Yes

- Go To 2

No

- Check the 5-volt supply circuit for an open or short to ground. For further assistance, perform the appropriate Sensor Reference Voltage DTC diagnostic procedure.

2. **TESTING A 5-VOLT SUPPLY CIRCUIT AND SENSOR GROUND CIRCUIT**

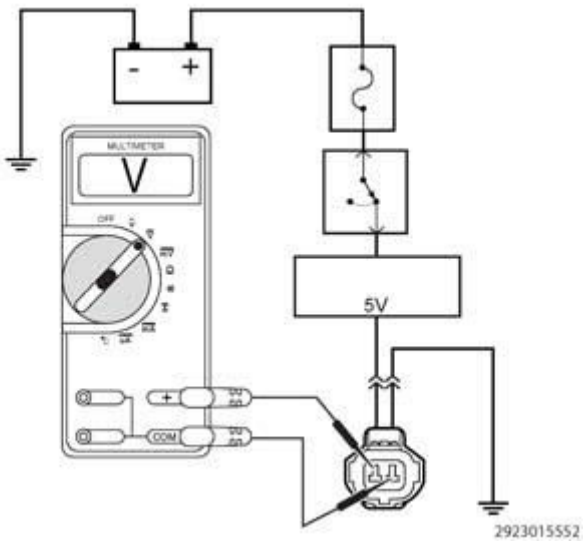

Fig. 10: Checking 5-Volt Supply Circuit And Sensor Ground Circuit
Courtesy of CHRYSLER GROUP, LLC

1. With the multimeter set to measure DC voltage.
2. Move the negative lead of the multimeter to carefully probe the sensor ground or sensor return circuit in the harness connector.
3. With the positive lead of the multimeter, carefully probe the 5-volt supply circuit.

   Is the voltage between 4.7 and 5.2 volts?

   Yes

   - At this time the 5-volt supply and sensor ground circuit are working properly. Continue to measure the voltage between the wires, wiggle the wire harness and connectors while checking for an intermittent condition.
   - Use the wiring diagram as a guide to trace the circuits and look for any in-line connectors where the open could occur intermittently.
   - Look for any chafed, pierced, pinched, or partially broken wires.
   - Look for broken, bent, pushed out or corroded terminals. Verify that there is good pin to terminal contact in the related wire harness connectors.
   - Perform any Technical Service Bulletins (TSBs) that may apply.

   No

   - Repair the open or excessive resistance in the Sensor Ground (Sensor Return) circuit.

CHECK A CIRCUIT FOR A SHORT TO GROUND

THEORY OF OPERATION

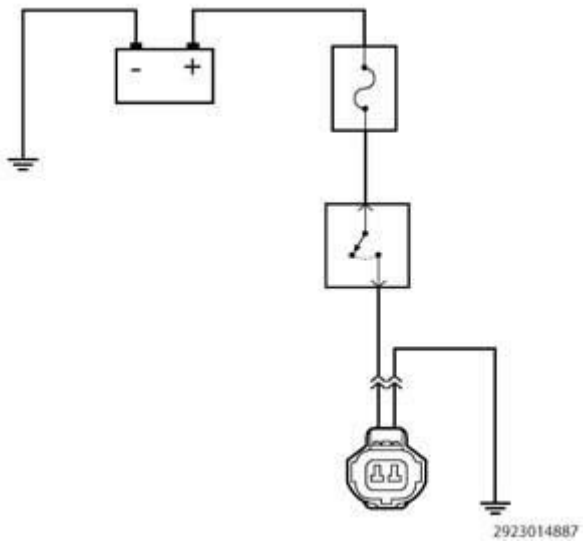

Fig. 11: Checking Circuit For A Short To Ground
Courtesy of CHRYSLER GROUP, LLC

The purpose of the following procedure is to demonstrate how to check a circuit for a Short to Ground.

NOTE: The circuit shown is an example, and is intended for demonstrational purpose only.

The following are circuit tests covered in this procedure:

- Testing For A Short To Ground Using An Ohmmeter

NOTE: Perform the following test using a known good multimeter.

Below is a list of possible causes that could be related to a Short to Ground condition.

Possible Causes
SHORTED CIRCUIT (CHAFED, PIERCED OR PINCHED WIRES)
SHORTED IN-LINE CONNECTOR (BENT, PUSHED OUT OR CORRODED TERMINALS)

DIAGNOSTIC TEST

TESTING FOR A SHORT TO GROUND USING AN OHMMETER

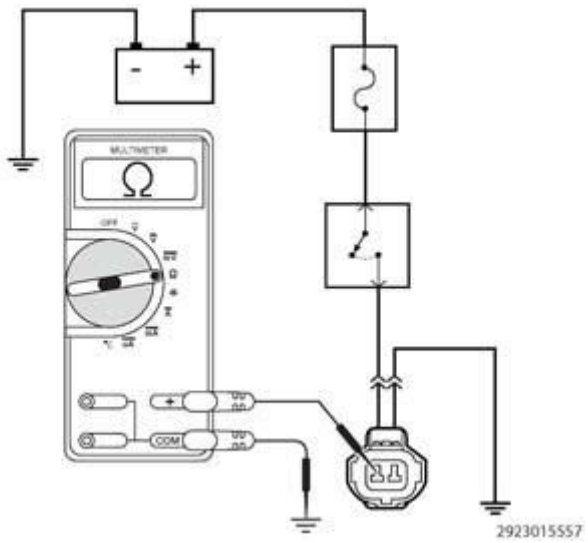

Fig. 12: Checking For A Short To Ground Using An Ohmmeter
Courtesy of CHRYSLER GROUP, LLC

NOTE: Before measuring the resistance of any circuit, first measure the resistance between the two leads of the multimeter. Take this value and subtract it from the value recorded when measuring the resistance of the circuit being checked (The meter leads can add 0.5 ohm or more of total resistance).

1. Turn the ignition off.
2. Disconnect the wire harness connectors from the module and component for the suspected circuit being shorted to ground.

NOTE: Check connectors - Clean/repair as necessary.

3. With the component wire harness connectors disconnected, use a meter set to measure Ohms (?), and measure the resistance between the circuit and a known good ground.
4. Use the negative lead of the meter and touch a known good ground.
5. Use the positive lead of the meter and carefully probe the circuit suspected of having the short.

Is the resistance to ground below 10k ohms ?

Yes

- Repair the short to ground. Use the wiring diagram as a guide to follow the path of the circuit.
- One method to help isolate the short is to disconnect any in-line connectors that the circuit being tested runs through and measure for the short again. If the short goes away, the short is on the other side of the in-line connector.

No

- The circuit is not shorted to ground or the condition that originally caused the short may not be present at this time. Continue to measure the resistance, wiggle the wire harness and connectors while checking for an intermittent short.
- Use the wiring diagram as a guide to trace the circuits and look for any in-line connectors where the short could occur intermittently.
- Look for any chafed, pierced, pinched, or partially broken wires.
- Look for broken, bent, pushed out or corroded terminals. Verify that there is good pin to terminal contact in the related wire harness connectors.
- Perform any Technical Service Bulletins (TSBs) that may apply.

CHECK A CIRCUIT FOR A SHORT TO VOLTAGE

THEORY OF OPERATION

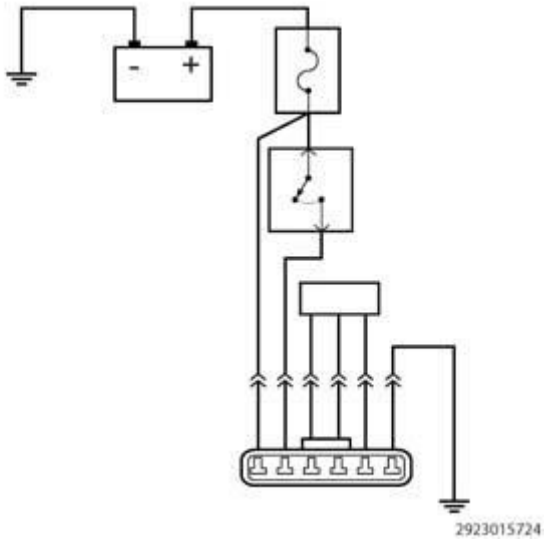

Fig. 13: Battery Circuit Diagram
Courtesy of CHRYSLER GROUP, LLC

The purpose of the following procedure is to demonstrate different methods of checking for a short to voltage in a circuit. When diagnosing a DTC it might be necessary to verify that proper voltage is on a circuit or that a circuit is not shorted high.

NOTE: The circuit shown is an example, and is intended for demonstrational purpose only.

The following are circuit tests covered in this procedure:

- Testing For A Short To Battery Voltage Using A Voltmeter
- Testing For A Short To Switched Battery Voltage Using A Voltmeter
- Testing For A Short To Battery Voltage Using A 12-Volt Test Light

- Testing For A Short To Switched Battery Voltage Using A 12-Volt Test Light

NOTE: Perform the following test using a known good test light or functioning multimeter.

Below is a list of possible causes that could be related to a Short To Voltage condition.

Possible Causes
SHORTED CIRCUIT (CHAFED, PIERCED OR PINCHED WIRES)
SHORTED IN-LINE CONNECTOR (BENT, PUSHED OUT OR CORRODED TERMINALS)

DIAGNOSTIC TEST

1. **TESTING FOR A SHORT TO BATTERY VOLTAGE USING A TEST LIGHT**

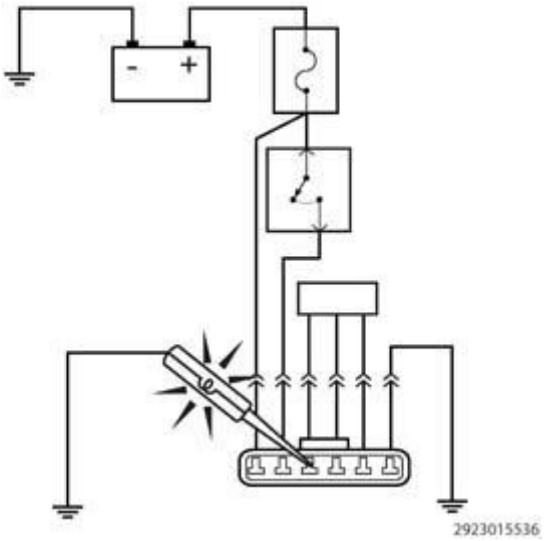

Fig. 14: Checking For A Short To Battery Voltage Using A Test Light
Courtesy of CHRYSLER GROUP, LLC

NOTE: Before testing any circuits, first verify the 12-volt test light is operating properly. Connect the 12-volt test light to battery ground or to any other known good ground. Touch the lead of the test light to Battery(+). If the test light is operational, it should illuminate brightly.

1. Turn the ignition off.
2. Disconnect the wire harness connectors of all components that contain the circuits that are suspected of having the short.

NOTE: Check connectors - Clean/repair as necessary.

3. At this time leave all in-line connectors connected.
4. Connect the 12-volt test light to a known good ground.
5. Use the lead of the test light and carefully probe the circuit suspected of having the short.

WARNING: When the engine is operating, do not stand in direct line with the fan. Do not put your hands near the pulleys, belts or fan. Do not wear loose clothing. Failure to follow these instructions may result in possible serious or fatal injury.

6. First, check with the ignition off, next with the ignition on, and lastly while cranking the engine.

   Does the test light illuminate brightly?

   Yes

   - Repair the short to voltage. Use the wiring diagram as a guide to trace the circuits and look for any in-line connectors where the short could occur.
   - One method to help isolate the short is to disconnect any in-line connectors that the circuit being checked runs through and check for the short again. If the short goes away, the short is on the other side of the in-line connector.

   No

   - The circuit is not shorted to voltage or the condition that originally caused the short may not be present at this time. Continue to measure the resistance and wiggle the wire harness to check for an intermittent short.

NOTE: By disconnecting the wire harness connectors you may have eliminated the source of the voltage causing the short. Use the wiring diagram as a guide, check to see if there are any battery circuits in the same wire harness as the circuit you are testing. It is necessary to check for a short to those circuits using an ohmmeter. Refer to STANDARD PROCEDURE and perform the Check for a Short Between Multiple Circuits diagnostic procedure.

   - Use the wiring diagram as a guide to trace the circuits and look for any in-line connectors where the short could occur intermittently.
   - Look for any chafed, pierced, pinched, or partially broken wires.
   - Look for broken, bent, pushed out or corroded terminals. Verify that there is good pin to terminal contact in the related component and wire harness connectors.
   - Perform any Technical Service Bulletins (TSBs) that may apply.

2. **TESTING FOR A SHORT TO SWITCHED IGNITION VOLTAGE USING A TEST LIGHT**

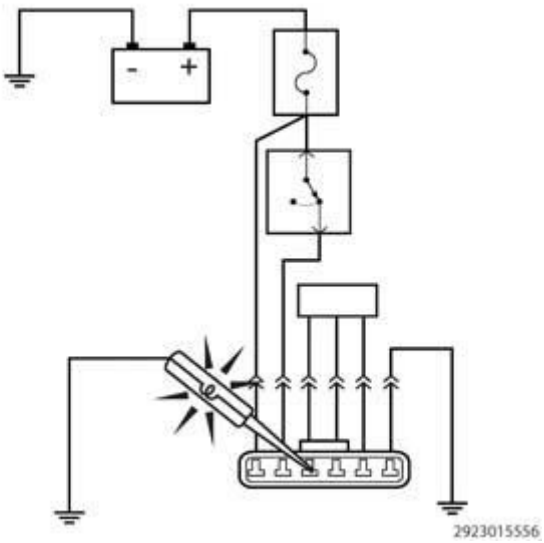

Fig. 15: Checking For A Short To Switched Ignition Voltage Using A Test Light
Courtesy of CHRYSLER GROUP, LLC

NOTE: Before testing any circuits, first verify the 12-volt test light is operating properly. Connect the 12-volt test light to battery ground or to any other known good ground. Touch the lead of the test light to Battery(+). If the test light is operational, it should illuminate brightly.

1. Turn the ignition off.
2. Disconnect the wire harness connectors of all components that contain the circuits that are suspected of having the short.

NOTE: Check connectors - Clean/repair as necessary.

3. At this time leave all in-line connectors connected.
4. Connect the 12-volt test light to a known good ground.
5. Use the lead of the test light and carefully probe the circuit suspected of having the short.

WARNING: When the engine is operating, do not stand in direct line with the fan. Do not put your hands near the pulleys, belts or fan. Do not wear loose clothing. Failure to follow these instructions may result in possible serious or fatal injury.

6. First, check with the ignition off, next with the ignition on, and lastly while cranking the engine.

   Does the test light illuminate brightly?

   Yes

- Repair the short to voltage. Use the wiring diagram as a guide to trace the circuits and look for any in-line connectors where the short could occur.
- One method to help isolate the short is to disconnect any in-line connectors that the circuit being checked runs through and check for the short again. If the short goes away, the short is on the other side of the in-line connector.

No

- The circuit is not shorted to voltage or the condition that originally caused the short may not be present at this time. Continue to measure the resistance and wiggle the wire harness to check for an intermittent short.

NOTE: **By disconnecting the wire harness connectors you may have eliminated the source of the voltage causing the short. Use the wiring diagram as a guide, check to see if there are any battery circuits in the same wire harness as the circuit you are testing. It is necessary to check for a short to those circuits using an ohmmeter. Refer to STANDARD PROCEDURE and perform the Check for a Short Between Multiple Circuits diagnostic procedure.**

- Use the wiring diagram as a guide to trace the circuits and look for any in-line connectors where the short could occur intermittently.
- Look for any chafed, pierced, pinched, or partially broken wires.
- Look for broken, bent, pushed out or corroded terminals. Verify that there is good pin to terminal contact in the related component and wire harness connectors.
- Perform any Technical Service Bulletins (TSBs) that may apply.

3. **TESTING FOR A SHORT TO BATTERY VOLTAGE USING A VOLTMETER**

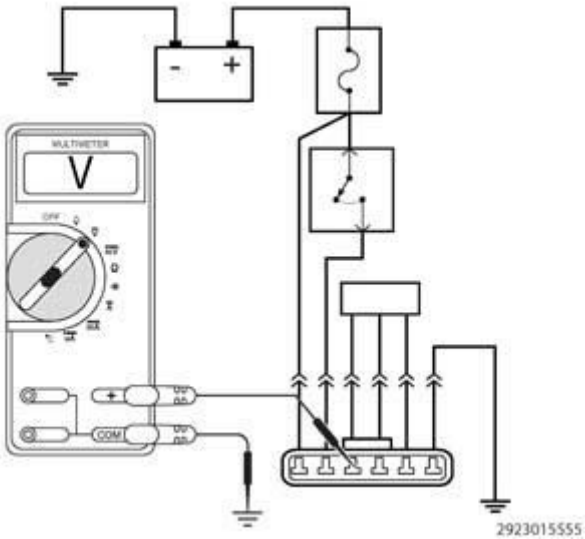

Fig. 16: Checking For A Short To Battery Voltage Using A Voltmeter
Courtesy of CHRYSLER GROUP, LLC

1. Turn the ignition off.
2. Disconnect the wire harness connectors of the components that contain the circuit that is suspected as having a short.

NOTE: Check connectors - Clean/repair as necessary.

3. At this time leave all in-line connectors connected.
4. With all the component wire harness connectors disconnected, use a multimeter set to measure DC voltage.
5. Connect the ground lead of the meter to a known good ground.
6. Use the positive lead of the multimeter and probe the circuit that is being checked for a short.

Is there any voltage present?

Yes

- Repair the short to battery voltage. Use the wiring diagram as a guide to trace the circuits and look for any in-line connectors where the short could occur.
- One method to help isolate the short is to disconnect any in-line connectors that the circuit being checked runs through and measure for the short again. If the short goes away, the short is on the other side of the in-line connector.

No

- The circuit is not shorted to voltage or the condition that originally caused the short may not be present at this time. Continue to measure the voltage and wiggle the wire harness to check for an intermittent short.

NOTE: By disconnecting the wire harness connectors you may have eliminated the source of the voltage causing the short. Use the wiring diagram as a guide, check to see if there are any battery circuits in the same wire harness as the circuit you are testing. It is necessary to check for a short to those circuits using an ohmmeter. Refer to STANDARD PROCEDURE and perform the Check for a Short Between Multiple Circuits diagnostic procedure.

- Use the wiring diagram as a guide to trace the circuits and look for any in-line connectors where the short could occur intermittently.
- Look for any chafed, pierced, pinched, or partially broken wires.
- Look for broken, bent, pushed out or corroded terminals. Verify that there is good pin to

terminal contact in the related wire harness connectors.

- Perform any Technical Service Bulletins (TSBs) that may apply.

4. **TESTING FOR A SHORT TO SWITCHED IGNITION VOLTAGE USING A VOLTMETER**

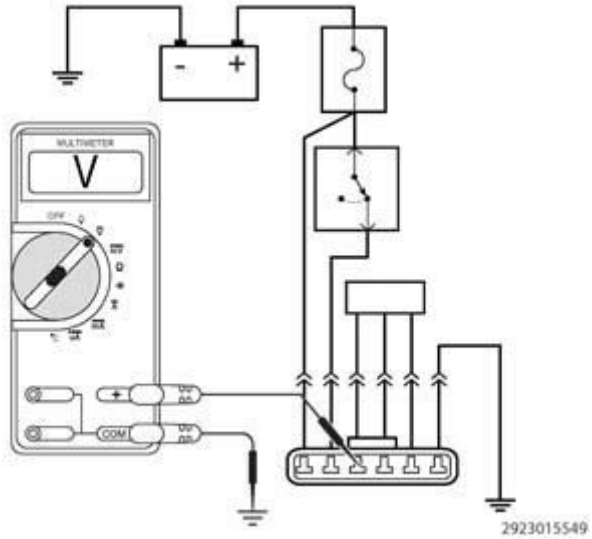

Fig. 17: Checking For A Short To Switched Ignition Voltage Using A Voltmeter
Courtesy of CHRYSLER GROUP, LLC

1. Turn the ignition off.
2. Disconnect the wire harness connectors of all components that contain the circuits that are suspected as being shorted.

NOTE: Check connectors - Clean/repair as necessary.

3. At this time leave all in-line connectors connected.
4. With all the component wire harness connectors disconnected, use a multimeter set to measure DC voltage.
5. Connect the ground lead of the meter to a known good ground.
6. Use the positive lead of the multimeter and probe the circuit suspected of having the short.
7. Ignition on, engine not running.

Is any voltage present?

Yes

- Repair the short to ignition voltage. Use the wiring diagram as a guide to trace the circuits and look for any in-line connectors where the short could occur.
- One method to help isolate the short is to disconnect any in-line connectors that the circuit being checked runs through and check for the short again. If the short goes away, the short is on the other side of the in-line connector.

No

- The circuit is not shorted to voltage or the condition that originally caused the short may not be present at this time. Continue to measure the voltage and wiggle the wire harness to check for an intermittent short.

NOTE: **By disconnecting the wire harness connectors you may have eliminated the source of the voltage causing the short. Use the wiring diagram as a guide, check to see if there are any battery circuits in the same wire harness as the circuit you are testing. It is necessary to check for a short to those circuits using an ohmmeter. Refer to STANDARD PROCEDURE and perform the Check for a Short Between Multiple Circuits diagnostic procedure.**

- Use the wiring diagram as a guide to trace the circuits and look for any in-line connectors where the short could occur intermittently.
- Look for any chafed, pierced, pinched, or partially broken wires.
- Look for broken, bent, pushed out or corroded terminals. Verify that there is good pin to terminal contact in the related wire harness connectors.
- Perform any Technical Service Bulletins (TSBs) that may apply.

CHECK FOR AN OPEN GROUND CIRCUIT

THEORY OF OPERATION

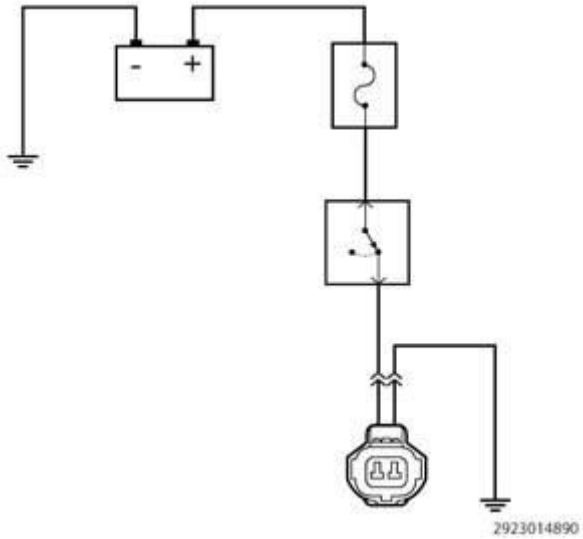

Fig. 18: Checking 12-Volt Switched Battery B(+) Circuit For Voltage
Courtesy of CHRYSLER GROUP, LLC

The purpose of the following procedure is to demonstrate how to check the operation of a generic ground circuit

with a test light.

NOTE: The circuit shown is an example, and is intended for demonstrational purpose only.

The following are circuit tests covered in this procedure:

- Testing Ground Circuit With Test Light

NOTE: Perform the following test using a known good test light.

Possible Causes
OPEN GROUND CIRCUIT (CHAFED, PIERCED, PINCHED OR BROKEN WIRE)
OPEN IN-LINE CONNECTOR (BENT, PUSHED OUT OR CORRODED TERMINALS)

DIAGNOSTIC TEST

TESTING GROUND CIRCUIT WITH TEST LIGHT

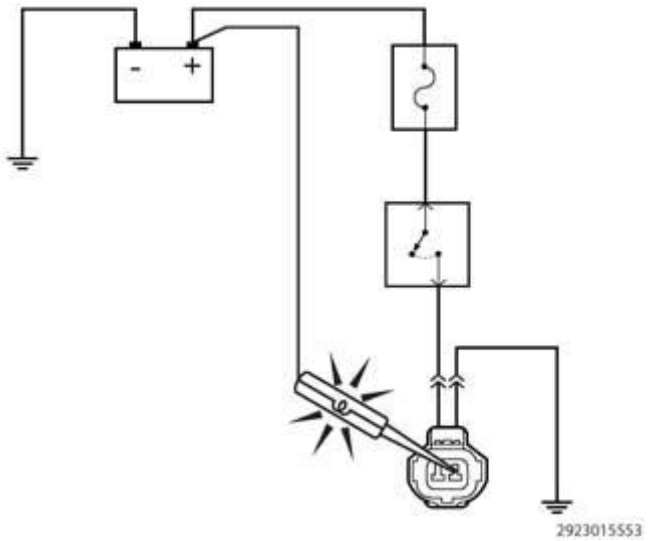

Fig. 19: Checking Ground Circuit With Test Light
Courtesy of CHRYSLER GROUP, LLC

NOTE: Before testing any circuits, first verify the 12-volt test light is operating properly. Connect the 12-volt test light to battery ground or to any other known good ground. Touch the lead of the test light to Battery(+). If the test light is operational, it should illuminate brightly.

1. Turn the ignition off.
2. Disconnect the wire harness connectors of the components that contain the ground circuit suspected of

containing excessive resistance.

NOTE: Check connectors - Clean/repair as necessary.

3. At this time leave all in-line connectors connected.
4. With all the component wire harness connectors disconnected, connect the 12-volt test light to Battery(+).
5. Use the test light lead to lightly probe the ground circuit in the harness connector.

Does the test light illuminate brightly?

Yes

- The suspected ground circuit is not open or the condition that originally caused the open or excessive resistance is not present at this time. Another way to check for an open would be to use an ohmmeter and measure the resistance of the ground circuit. While continuing to measure the resistance of the circuit, wiggle the wire harness and connectors to check for an intermittent open or poor connection.
- Use the wiring diagram as a guide to trace the circuits and look for any in-line connectors where the open could occur intermittently.
- Look for any chafed, pierced, pinched, or partially broken wires.
- Look for broken, bent, pushed out or corroded terminals. Verify that there is good pin to terminal contact in the related wire harness connectors.
- Perform any Technical Service Bulletins (TSBs) that may apply.

No

- Repair the open in the ground circuit. Use the wiring diagram as a guide to trace the circuit and look for any in-line connectors where the open could occur.
- One method to help isolate the open is to disconnect any in-line connectors and measure the resistance from one side of the in-line connector to the matching component harness connector. If the open goes away, the open is on the other side of the in-line connector.

CHECK FOR A SHORT BETWEEN MULTIPLE CIRCUITS

THEORY OF OPERATION

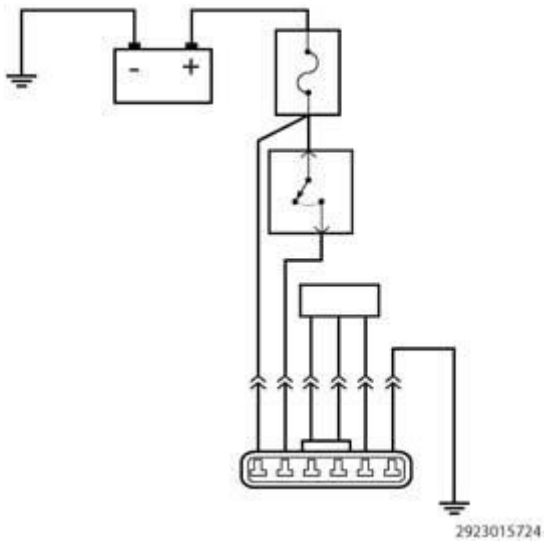

Fig. 20: Battery Circuit Diagram
Courtesy of CHRYSLER GROUP, LLC

The purpose of the following procedure is to demonstrate how to check for a short circuit between multiple circuits.

NOTE: The circuit shown is an example, and is intended for demonstrational purpose only.

The following are circuit tests covered in this procedure:

- Testing For A Short Between Multiple Circuits

NOTE: Perform the following test using a known good multimeter.

Below is a list of possible causes that could be related to a Multiple Short condition.

Possible Causes
SHORTED CIRCUIT (CHAFED, PIERCED OR PINCHED WIRES)
SHORTED IN-LINE CONNECTOR (BENT, PUSHED OUT OR CORRODED TERMINALS)

DIAGNOSTIC TEST

TESTING FOR A SHORT BETWEEN MULTIPLE CIRCUITS

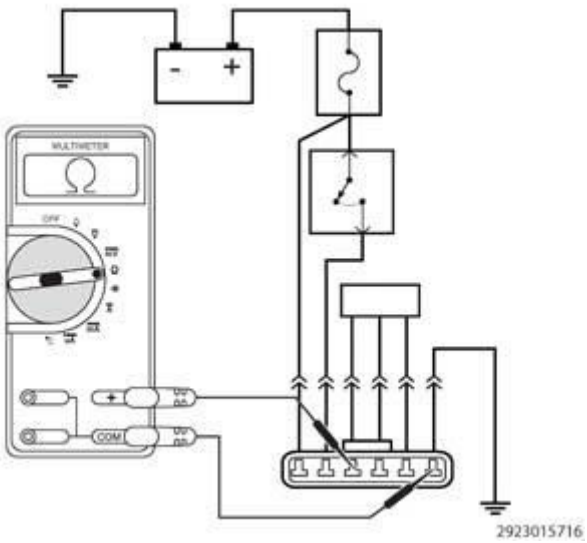

Fig. 21: Checking For A Short Between Multiple Circuits
Courtesy of CHRYSLER GROUP, LLC

NOTE: Before measuring the resistance of any circuit, first measure the resistance between the two leads of the multimeter. Take this value and subtract it from the value recorded when measuring the resistance of the circuit being checked (The meter leads can add 0.5 ohm or more of total resistance).

1. Turn the ignition off.
2. Disconnect the wire harness connectors of the components that contain the circuits that are suspected of being shorted together.

   NOTE: Check connectors - Clean/repair as necessary.

3. At this time leave all in-line connectors connected.
4. With all the component wire harness connectors disconnected, use a multimeter set to Ohms (?), and measure the resistance between the applicable circuits in one of the harness connectors.
5. Use one lead of the multimeter and carefully probe the circuit suspected of being shorted.
6. Use the other lead of the meter and one at a time, carefully probe the other circuits in the harness connector.

   Is the resistance below 10k ohms when probing any two circuits?

   Yes

   - Repair the short between the circuits. Use the wiring diagram as a guide to trace the circuits and look for any in-line connectors where the short could occur.
   - One method to help isolate the short is to disconnect any in-line connectors that the circuit being tested runs through and measure for the short again. If the short goes away, the short is on the other

side of the in-line connector.

No

- The circuit is not shorted or the condition that originally caused the short may not be present at this time. Continue to measure the resistance and wiggle the wire harness and connectors while checking for an intermittent short.

NOTE: By disconnecting the wire harness connectors you may have eliminated the source that was causing the short.

- Use the wiring diagram as a guide to trace the circuits and look for any in-line connectors where the short could occur intermittently.
- Look for any chafed, pierced, pinched, or partially broken wires.
- Look for broken, bent, pushed out or corroded terminals. Verify that there is good pin to terminal contact in the related wire harness connectors.
- Perform any Technical Service Bulletins (TSBs) that may apply.

CHECK THE RESISTANCE OF A CIRCUIT USING AN OHMMETER

THEORY OF OPERATION

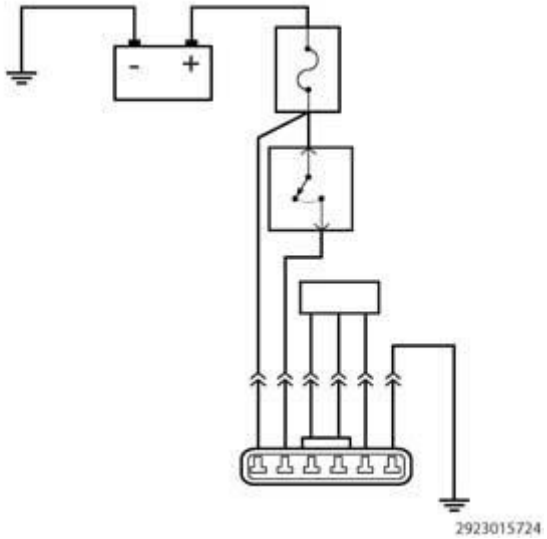

Fig. 22: Battery Circuit Diagram
Courtesy of CHRYSLER GROUP, LLC

The purpose of the following procedure is to demonstrate how to check the resistance of a circuit with an ohmmeter.

NOTE: The circuit shown is an example, and is intended for demonstrational purpose only.

The following are circuit tests covered in this procedure:

- Testing For An Open Circuit Using An Ohmmeter

NOTE: Perform the following test using a known good multimeter.

Below is a list of possible causes that could be related to an Open Circuit condition.

Possible Causes
OPEN CIRCUIT (CHAFED, PIERCED, PINCHED OR BROKEN WIRES)
OPEN IN-LINE CONNECTOR (BENT, PUSHED OUT OR CORRODED TERMINALS)

DIAGNOSTIC TEST

TESTING FOR AN OPEN CIRCUIT USING AN OHMMETER

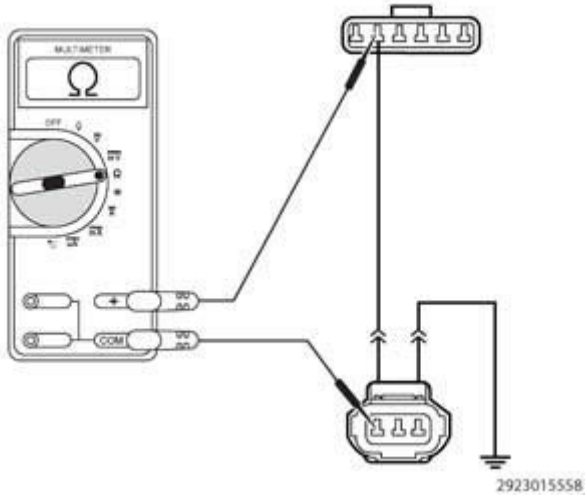

Fig. 23: Checking For An Open Circuit Using An Ohmmeter
Courtesy of CHRYSLER GROUP, LLC

NOTE: Before measuring the resistance of any circuit, first measure the resistance between the two leads of the multimeter. Take this value and subtract it from the value recorded when measuring the resistance of the circuit being checked (The meter leads can add 0.5 ohm or more of total resistance).

1. Turn the ignition off.
2. Disconnect the wire harness connectors of the components that contain the circuit suspected of being open.

NOTE: Check connectors - Clean/repair as necessary.

3. At this time leave all in-line connectors connected.
4. With the component wire harness connectors disconnected, use a multimeter set to Ohms (?), and measure the resistance of the circuit.
5. Use one lead of the meter and probe the circuit in one harness connector.
6. Use the other lead of the meter and probe the same circuit in the other harness connector.

   Is the resistance in the circuit below 10k ohms?

   Yes

   - The circuit does not contain any excessive resistance or the condition that originally caused the excessive resistance may not be present at this time. Continue to measure the resistance of the circuit, wiggle the wire harness and connectors to check for an intermittent open or poor connection.
   - Use the wiring diagram as a guide to trace the circuits and look for any in-line connectors where the open could occur intermittently.
   - Look for any chafed, pierced, pinched, or partially broken wires.
   - Look for broken, bent, pushed out or corroded terminals. Verify that there is good pin to terminal contact in the related wire harness connectors.
   - Perform any Technical Service Bulletins (TSBs) that may apply.

   No

   - Repair the excessive resistance in the circuit between the two wire harness connectors. Using the wiring diagram as a guide, trace the circuit and check for any in-line connectors where the open or excessive resistance could occur.
   - One method to help isolate the open is to disconnect any in-line connectors and measure the resistance from one side of the in-line connector to the matching component harness connector. If the open or excessive resistance is not present, the open or excessive resistance is on the other side of the in-line connector.

CHECK FOR EXCESSIVE CURRENT DRAW

THEORY OF OPERATION

What is current draw?

Current draw, or parasitic draw is an electrical load that draws current from the battery when the ignition is turned off. Some are considered normal, some above normal. Normal draw comes from various electronic devices connected to battery positive at all times. Many vehicle modules draw a few mA (milliamps) as a means to "Keep Alive Memory". Whether it's the clock in the radio or the last known position of the memory mirrors, these tiny amounts of current typically will only add up to 20 or 30 mA. The vehicle can sit parked for days, even a few weeks without any problems of excessive battery drain that might prevent starting. As long as the vehicle is driven periodically in order for the alternator to recharge the battery there is no problem. A problem may occur, in situations such as new vehicles in dealer stock or long term airport parking situations.

Below are some examples of modules and components that require keep alive memory:

- Powertrain Control Module (PCM)
- Body Control Module (BCM)
- Memory Seat Module (MSM)
- Radio

What is excessive current draw?

Excessive current draw can be determined by an ammeter reading in excess of 50 mA. The typical "normal" current draw will not exceed 20 or 30 mA.

How to locate the problem?

Locating the problem involves a process of elimination. If the problem is not obvious, like the trunk light staying on, you will have to start troubleshooting:

- Start by removing one fuse at a time until you see the reading on the meter drop off (be careful to reinstall the fuses in their proper location).
- Once you've determined the high-draw circuit, there still may be a half-dozen loads, each individually drawing current from the battery.
- To zero in on that circuit or circuits, use the schematic diagram and disconnect each device on the circuit one-at-a-time and check the meter.
- When the milliamp reading drops off significantly, you've found the problem.

Perform the following test to determine where the cause of the draw is located.

Possible Causes
INSTALLED AFTERMARKET ACCESSORIES (AUDIO SYSTEMS, VEHICLE ALARMS, ETC.)
COURTESY LIGHTS REMAINING ON (INTERIOR, TRUNK, HOOD, ETC.)
BATTERY CHARGERS PLUGGED INTO THE CIGARETTE LIGHTER/POWER OUTLETS

DIAGNOSTIC TEST

TESTING FOR PARASITIC DRAW

NOTE: **For a more accurate current draw reading, wait 20 minutes to make sure all modules have powered down before continuing. Some modules may stay powered up longer than others.**

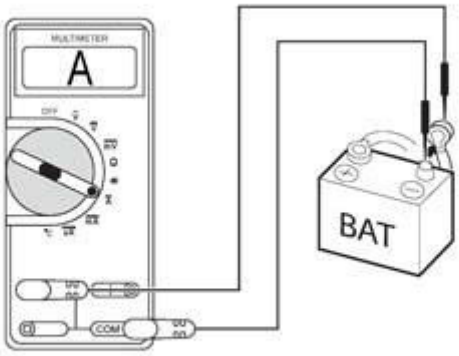

2923014738

Fig. 24: Checking For Parasitic Draw Using Multimeter
Courtesy of CHRYSLER GROUP, LLC

Turn the ignition off.

1. Disconnect the Negative battery cable (ground).
2. Using a multimeter, set the multimeter leads up to properly measure Amperage.
3. Connect the ground lead that is plugged into the COM port of the multimeter to the Negative battery post/terminal.
4. Connect the other lead of the multimeter that is plugged into the Amp port of the multimeter to the Negative battery cable.

CAUTION: Do not crank the engine or turn on any accessories that may draw more than 10 Amps. You may open the protective fuse in the multimeter.

5. While monitoring the amperage reading on the multimeter, begin to remove fuses (one at a time) from each fuse location on the vehicle and see if the amperage drops.

NOTE:

- **Only remove one fuse at a time until the cause of the voltage draw is determined.**
- **Many vehicles have multiple fuse locations on the vehicle.**

6. If the amperage does not drop, install the fuse you just removed and remove the next fuse.

   Does the amperage drop to between 0.02 to 0.04 of an Amp when removing any fuses?

   Yes

- Use the wiring diagram as a guide to help indicate what components or modules are powered by the fuse.
- At this point you can install the fuse and begin disconnecting the components powered by the fuse.
  - When the amperage drops after disconnecting a component this will indicate which component is at fault.
  - It is important to know how long some modules are designed to remain awake.
  - You don't want to replace a component that is operating normally.
  - The condition that originally caused the draw may not be present at this time.

No

- The condition that originally caused the draw may not be present at this time.
- Look for any chafed, pierced, pinched, or partially broken wires.
- Look for broken, bent, pushed out or corroded ground terminals.
- Perform any Technical Service Bulletins (TSBs) that may apply.

CIRCUIT LOAD TESTING PROCEDURE

THEORY OF OPERATION

A circuit load test can be performed to test the ability of a circuit to carry the current required to operate a connected device. A circuit load test should be performed after a circuit has passed a resistance test using a DVOM and the circuit is still suspected of a failure.

- A single copper wire strand will carry enough current to light a test light bulb, while showing very low resistance using a DVOM.
- Some test lights are insufficient for load testing because of the very low resistance bulb being used.
- The Load Test tool listed below will require higher current flow to power the bulb; and this will test the ability of the circuit to carry a load.
- This test will indicate if the circuit being tested can carry the current required to operate a connected device.

WARNING: To avoid possible serious or fatal injury, DO NOT load test any air bag/restraint system components or circuits using the procedures listed here. Refer to RESTRAINTS - SERVICE INFORMATION for proper air bag/restraint system testing procedures.

CAUTION: Do not load test any circuits with components still connected to the circuit.

NOTE: Depending upon the location of the circuit in question, this test may require jumper wires.

NOTE: **Use the wiring diagrams as a guide to trace the circuits and look for any in-line connectors where the circuit failure could occur intermittently. Look for any chafed, pierced, pinched, or partially broken wires. Look for broken, bent, pushed out or corroded terminals - clean/repair as necessary. Verify that there is good pin to terminal contact in the related wire harness connectors.**

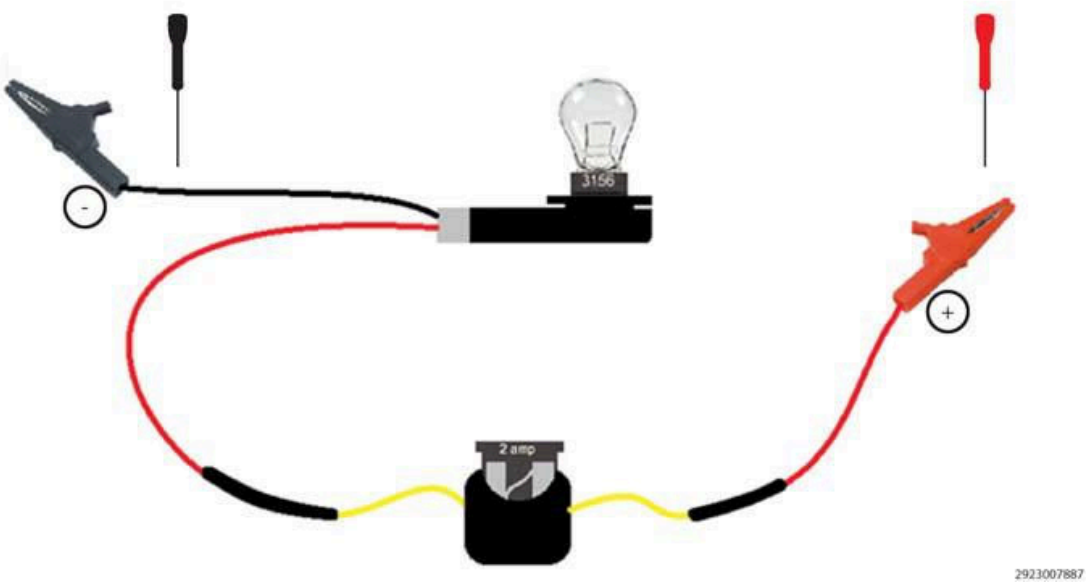

Fig. 25: Load Test Tool
Courtesy of CHRYSLER GROUP, LLC

Here is an example of a simple tool you can build to test a circuit`s ability to carry a load.

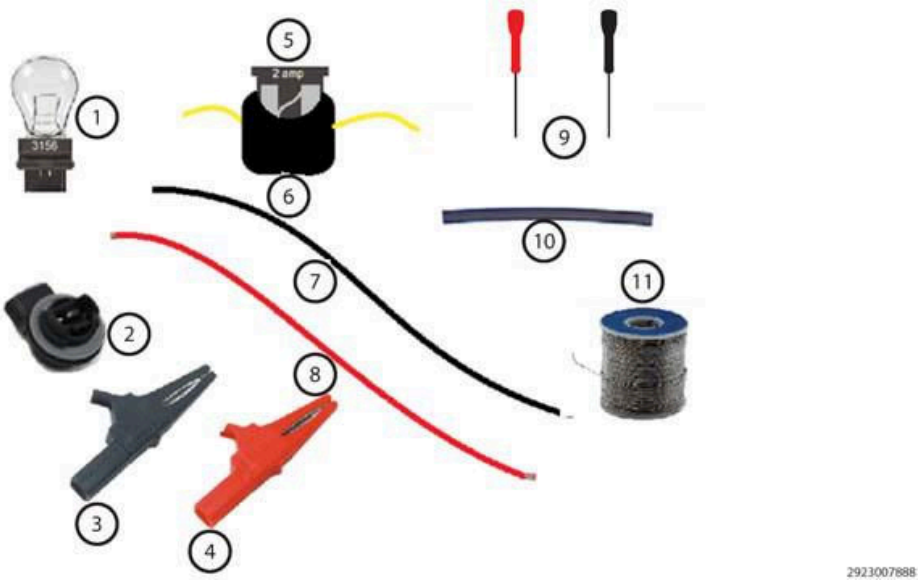

Fig. 26: Load Test Tool Components

Courtesy of CHRYSLER GROUP, LLC

The following is a list of components required to build a load test tool:

1. 3156 Bulb
2. 3156 Bulb socket
3. Negative alligator clip with covers
4. Positive alligator clip with covers
5. 2 Amp mini fuse
6. Mini fuse holder
7. 2' to 4' of Black 16ga wire
8. 2' to 4' of Red 16ga wire
9. Approved back probe tool
10. Shrink tubing
11. Solder

LOAD TESTING A GROUND CIRCUIT

DIAGNOSTIC LOAD TEST (GROUND CIRCUIT)

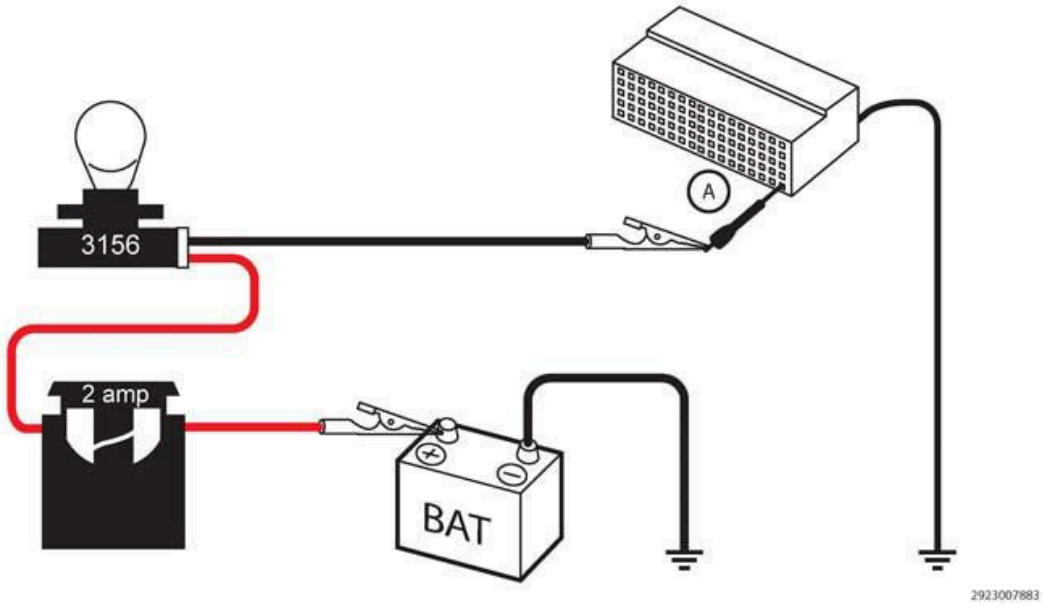

Fig. 27: Performing Diagnostic Load Test (Ground Circuit)
Courtesy of CHRYSLER GROUP, LLC

1. Disconnect the connector from the device(s) to gain access and isolate the terminal for the circuit being tested.
2. Connect the positive lead of the load test tool to the positive side of the battery.
3. Using an approved connector back probe tool, connect the negative lead of the load test tool to the circuit

being tested at point (A).

CAUTION: Use only approved connector back probe tools when back probing a connector so as not to cause damage to the terminals or insulation of the connector. Damage to the terminals can cause poor terminal contact or retention. Damage to the insulation can introduce corrosion due to water infiltration.

Does the bulb light bright, when compared to a direct battery connection?

Yes

- The circuit being tested can carry a load, check other circuits, connectors and terminals for concerns.

No

- Repair the circuit, connector or terminal that has an open or excessive resistance.
- Perform any related Recalls or Technical Service Bulletins (TSBs) that may apply.

LOAD TESTING A BATTERY OR IGNITION FEED CIRCUIT

DIAGNOSTIC LOAD TEST (BATTERY/IGNITION FEED CIRCUIT)

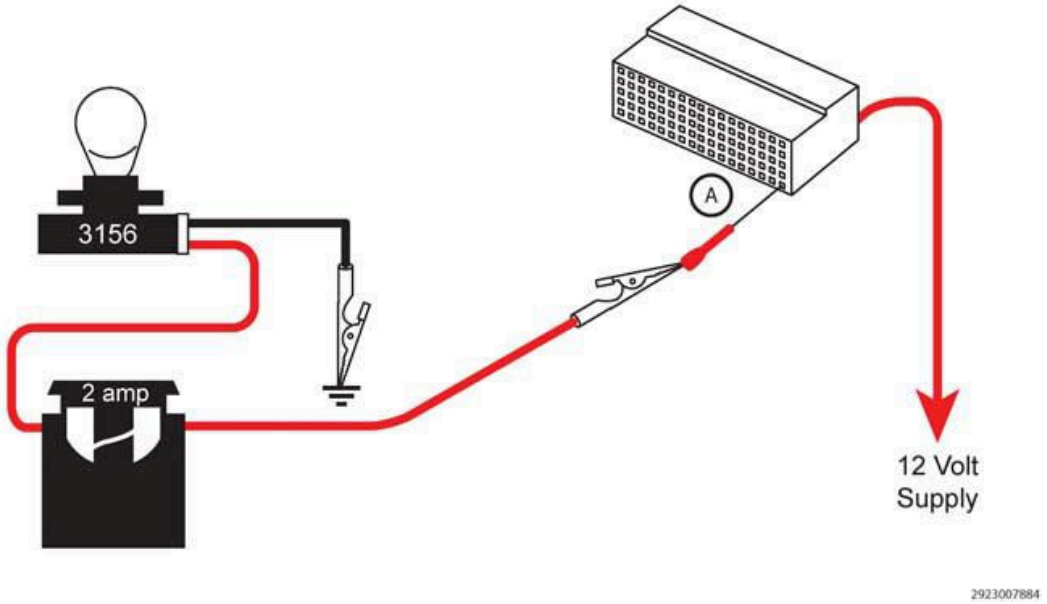

Fig. 28: Performing Diagnostic Load Test (Battery/Ignition Feed Circuit)
Courtesy of CHRYSLER GROUP, LLC

1. Disconnect the connector from the device(s) to gain access and isolate the terminal for the circuit being tested.

2. Using an approved connector back probe tool, connect the positive lead of the load test tool to the circuit being tested at point (A).
3. Connect the negative lead of the load test tool to the negative side of the battery or ground.

CAUTION: Use only approved connector back probe tools when back probing a connector so as not to cause damage to the terminals or insulation of the connector. Damage to the terminals can cause poor terminal contact or retention. Damage to the insulation can introduce corrosion due to water infiltration.

Does the bulb light bright, when compared to a direct battery connection?

Yes

- The circuit being tested can carry a load, check other circuits, connectors and terminals for concerns.

No

- Repair the circuit, connector or terminal that has an open or excessive resistance.
- Perform any related Recalls or Technical Service Bulletins (TSBs) that may apply.

LOAD TESTING A BATTERY OR IGNITION FEED CIRCUIT AND GROUND CIRCUIT

DIAGNOSTIC LOAD TEST (BATTERY FEED & GROUND CIRCUIT)

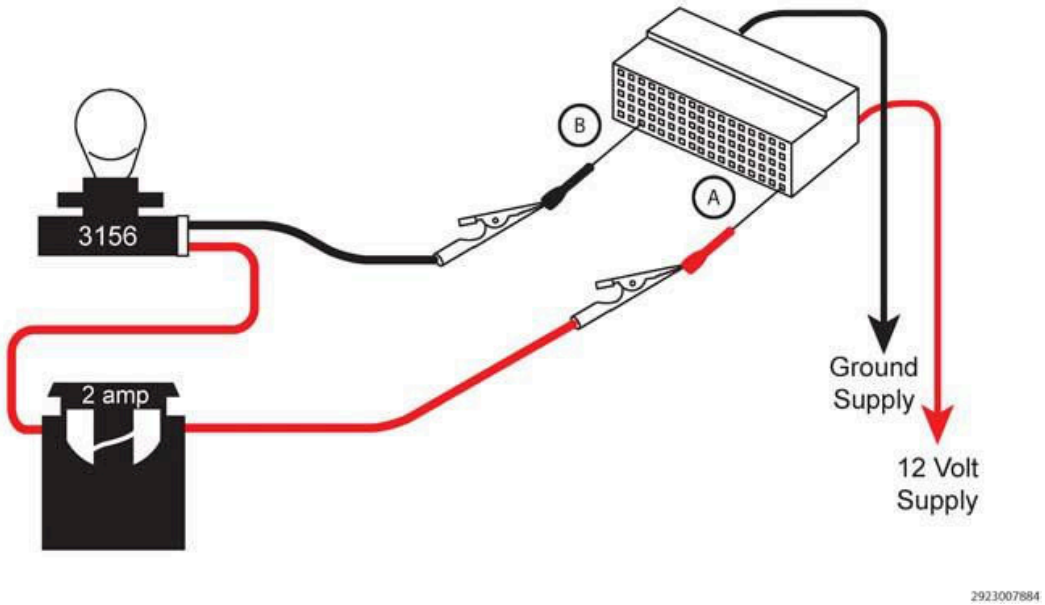

Fig. 29: Performing Diagnostic Load Test (Battery Feed & Ground Circuit)
Courtesy of CHRYSLER GROUP, LLC

1. Disconnect the connector from the device(s) to gain access and isolate the terminal for the circuit being tested.
2. Using an approved connector back probe tool, connect the positive lead of the load test tool to the circuit being tested at point (A).
3. Using an approved connector back probe tool, connect the negative lead of the load test tool to the circuit being tested at point (B).

CAUTION: Use only approved connector back probe tools when back probing a connector so as not to cause damage to the terminals or insulation of the connector. Damage to the terminals can cause poor terminal contact or retention. Damage to the insulation can introduce corrosion due to water infiltration.

Does the bulb light bright, when compared to a direct battery connection?

Yes

- The circuit being tested can carry a load, check other circuits, connectors and terminals for concerns.

No

- Test the circuits individually to determine which circuit is the cause of the test failure.
- Repair the circuit, connector or terminal that has an open or excessive resistance.
- Perform any related Recalls or Technical Service Bulletins (TSBs) that may apply.

LOAD TESTING A CIRCUIT FOR AN OPEN OR HIGH RESISTANCE

DIAGNOSTIC LOAD TEST (OPEN/HIGH RESISTANCE CIRCUIT)

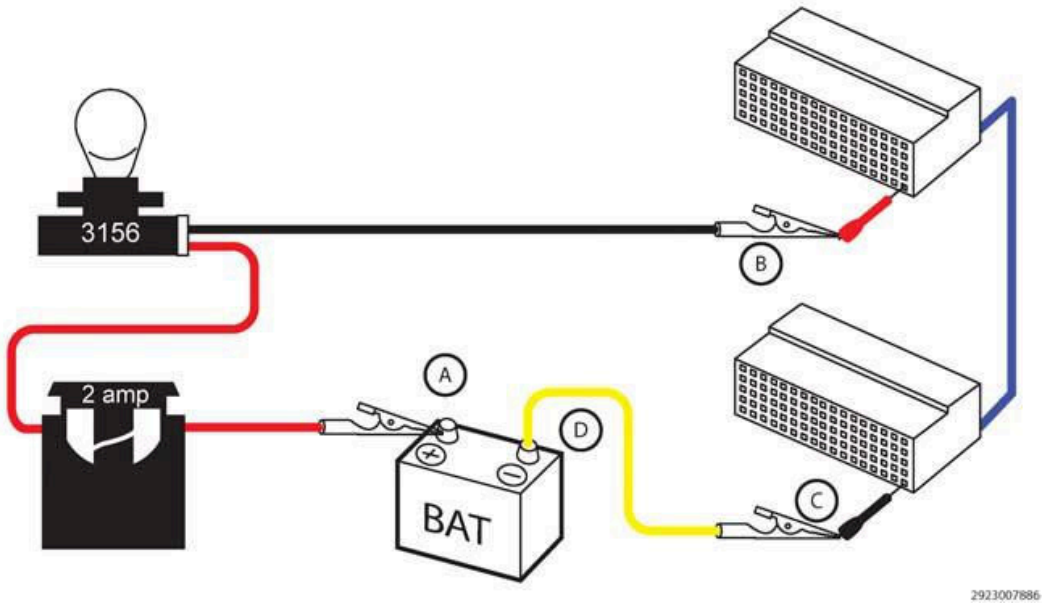

Fig. 30: Performing Diagnostic Load Test (Open/High Resistance Circuit)
Courtesy of CHRYSLER GROUP, LLC

1. Disconnect all components from the circuit being tested.
2. Connect the positive lead of the load test tool to the positive side of the battery (A).
3. Using an approved connector back probe tool, connect the negative lead of the load test tool to the circuit being tested at point (B).
4. Using an approved connector back probe tool, connect a jumper wire to the circuit being tested at point (C).
5. Then connect the other end of the jumper wire to the negative side of the battery or ground (D).

CAUTION: Use only approved connector back probe tools when back probing a connector so as not to cause damage to the terminals or insulation of the connector. Damage to the terminals can cause poor terminal contact or retention. Damage to the insulation can introduce corrosion due to water infiltration.

Does the bulb light bright, when compared to a direct battery connection?

Yes

- The circuit being tested can carry a load, check other circuits, connectors and terminals for concerns.

No

- Repair the circuit, connector or terminal that has an open or excessive resistance.
- Perform any related Recalls or Technical Service Bulletins (TSBs) that may apply.

VOLTAGE DROP TEST PROCEDURE

THEORY OF OPERATION

Voltage drop is the reduction in voltage in an electrical circuit between the voltage source and load components. The wires and connectors of a circuit should contain almost no resistance and **all** the voltage should be consumed through the load. The "load" is the component using the power, such as a light, starter, or blower motor. If a circuit has excessive resistance, it prevents the wire from carrying sufficient current under high load conditions. A voltage drop test is an effective way to locate excessive resistance in connections and circuits.

To perform a voltage drop test, a Digital Volt Ohm Meter (DVOM) is used to measure the voltage drop across a live circuit or connection while it is under the load. If the circuit or connection being tested has excessive resistance, the DVOM will measure the voltage that the resistance is using. **Little or no voltage drop should be read, ideally less than 0.2 of a volt** , anything greater indicates excessive resistance and the circuit or connection should be inspected for cleaning or repair.

Possible Causes
EXCESSIVE CIRCUIT RESISTANCE (CHAFED, PIERCED OR CORRODED WIRES)
HIGH RESISTANCE WITH IN-LINE CONNECTOR (BENT, PUSHED OUT OR CORRODED TERMINALS)

DIAGNOSTIC TEST

TESTING FOR VOLTAGE DROP

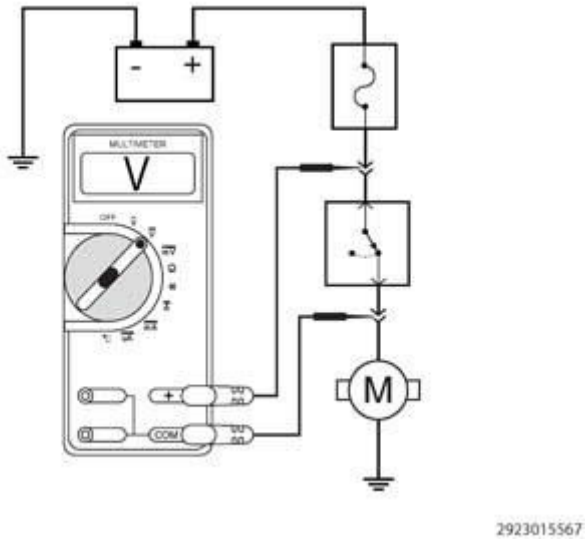

Fig. 31: Testing for Voltage Drop
Courtesy of CHRYSLER GROUP, LLC

1. Turn the ignition off.
2. Use the wiring diagram as a guide, trace the circuit being tested and locate the components related to the circuit.

3. Set the multimeter to measure DC voltage.
4. Carefully back probe the two component harness connectors of the circuit being tested.

WARNING: When the engine is operating, do not stand in direct line with the fan. Do not put your hands near the pulleys, belts or fan. Do not wear loose clothing. Failure to follow these instructions may result in possible serious or fatal injury.

NOTE: If you are testing the starting circuit, disable the engine so the engine does not start.

5. Crank the engine for five seconds if you are testing the starting circuit and monitor the multimeter voltage reading.
6. For circuits that don't require the engine running, turn the ignition on.
7. For circuits that require the engine running, start the engine.

NOTE: If the circuit you are checking needs to be operating, such as the Blower Motor or a Lamp, do so now.

8. Monitor the voltage reading.
9. The voltmeter will show the difference in voltage between the two points.

Is the voltage less than 0.2 of a Volt?

Yes

- At this time the circuit is functioning properly. Continue to measure the voltage between the components and wiggle the wire harness and connectors while checking for an intermittent condition.
- Use the wiring diagram as a guide to trace the circuits and look for any in-line connectors where the excessive resistance could occur intermittently.
- Look for any chafed, pierced, pinched, or partially broken wires.
- Look for broken, bent, pushed out or corroded terminals. Verify that there is good pin to terminal contact in the related wire harness connectors.
- Perform any Technical Service Bulletins (TSBs) that may apply.

No

- Repair the excessive resistance in the circuit.
- Use the wiring diagram as a guide to trace the circuit and look for any in-line connectors where the excessive resistance may occur.
- Look for any chafed, pierced, pinched, or partially broken wires.

- Look for broken, bent, pushed out or corroded terminals. Verify that there is good pin to terminal contact in the related wire harness connectors.
- Perform any Technical Service Bulletins (TSBs) that may apply.

ELECTROSTATIC DISCHARGE (ESD) SENSITIVE DEVICES

Fig. 32: Electrostatic Discharge Symbol
Courtesy of CHRYSLER GROUP, LLC

All ESD sensitive components are solid state and a symbol is used to indicate this. When handling any component with this symbol, comply with the following procedures to reduce the possibility of electrostatic charge build up on the body and inadvertent discharge into the component. If it is not known whether the component is ESD sensitive, assume that it is.

Perform the following procedure when handling ESD sensitive components:

1. Always touch a known good ground before handling the component. This should be repeated while handling the component and more frequently after sliding across a seat, sitting down from a standing position, or walking a distance.
2. Avoid touching electrical terminals of the component, unless instructed to do so by a written procedure.
3. When using a voltmeter, be sure to connect the ground lead first.
4. Do not remove the component from its protective packing until it is time to install the component.
5. Before removing the component from its package, ground the package to a known good ground on the vehicle.

WIRE SPLICING

YouTube	A multimedia supplement to the instructions contained in this article is available. To view the multimedia example of the condition described go to; **http://www.youtube.com/user/Mitchell1Tips** **then type "A00641526.vid1" into the "Search Channel" box.**

CAUTION: If additional wire is needed when making a splice repair to any wire, it is important that the same or next larger size wire gauge be used. Refer to SYSTEM WIRING DIAGRAMS for the original wire gauge size.

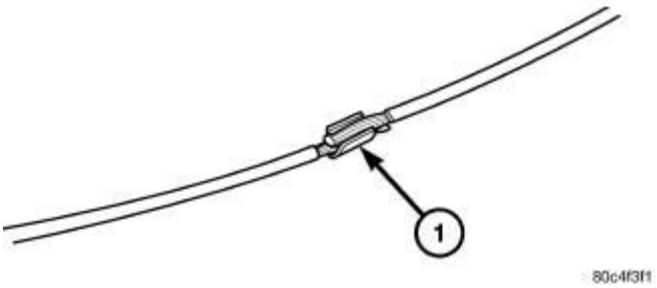

Fig. 33: Splice Band
Courtesy of CHRYSLER GROUP, LLC

1. Remove 13 millimeters (0.50 inch) of insulation from each wire that needs to be spliced.
2. Place a piece of adhesive sealant-lined heat shrink tubing (Part Number 04778570 or equivalent) over the wire on one side of the splice. Be certain the length of tubing will be sufficient to cover and seal the entire repair area.
3. Place the strands of the wires being spliced so that they are overlapping each other within the splice band (1).

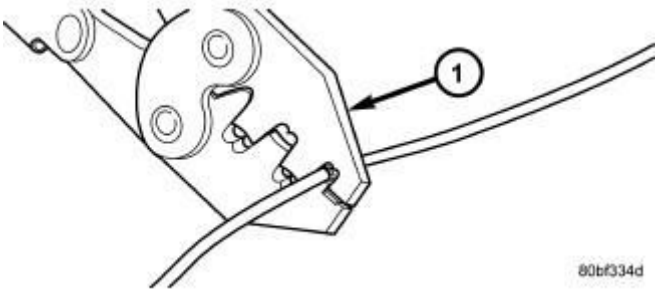

Fig. 34: Crimping Tool
Courtesy of CHRYSLER GROUP, LLC

4. Using a crimping tool (1) (MOPAR Part Number 05019912AA, Miller Special Tool Number (special tool #10042, Crimper, Wire/Terminal) or equivalent) crimp the splice band and wires together securely.

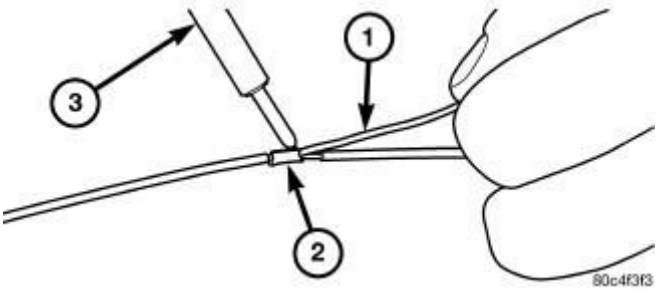

Fig. 35: Solder Splice
Courtesy of CHRYSLER GROUP, LLC

CAUTION: Never use acid core solder for electrical wiring repairs.

5. Using Rosin Core type solder (1) only and a suitable soldering iron (3), solder the wire and splice band connection (2) together.

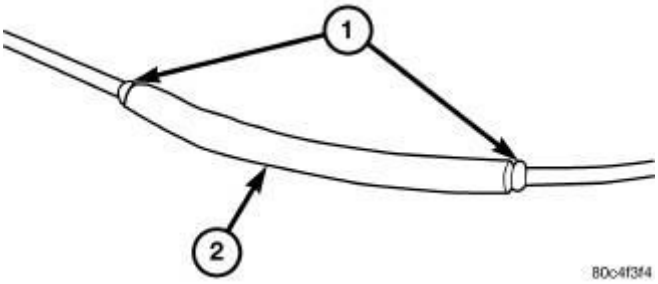

Fig. 36: Heat Shrink Tube
Courtesy of CHRYSLER GROUP, LLC

6. Center the heat shrink tubing (2) over the splice joint repair and heat using a suitable heat gun. Heat the joint until the tubing is tightly sealed and sealant (1) begins to ooze out of both ends of the tubing.

REMOVAL

CONNECTOR TERMINAL REMOVAL

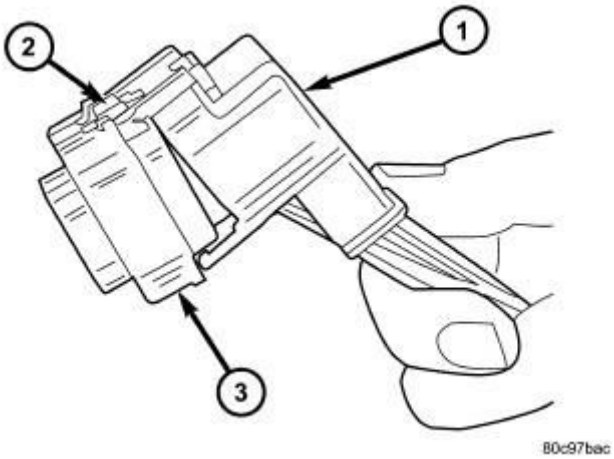

Fig. 37: Removal Of Dress Cover
Courtesy of CHRYSLER GROUP, LLC

1 - DRESS COVER
2 - CONNECTOR LOCK
3 - CONNECTOR

1. Disconnect battery.

2. Release Connector Lock (2).
3. Disconnect the connector (3) being repaired from its mating half/component.
4. Remove the dress cover (if applicable) (1).

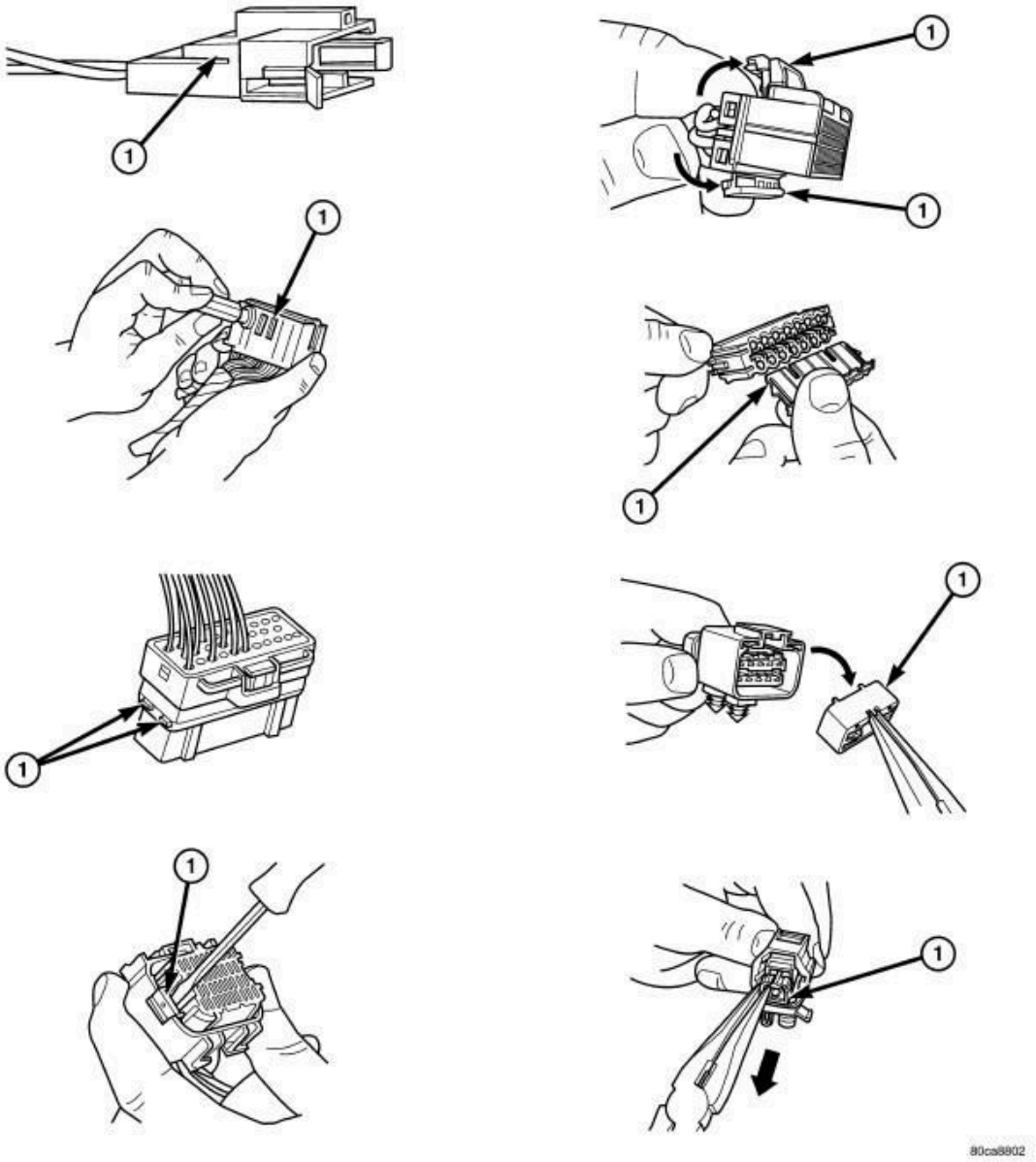

Fig. 38: Connector Secondary Terminal Lock
Courtesy of CHRYSLER GROUP, LLC

1 - Secondary Terminal Lock

5. Release the Secondary Terminal Lock, if required (1).

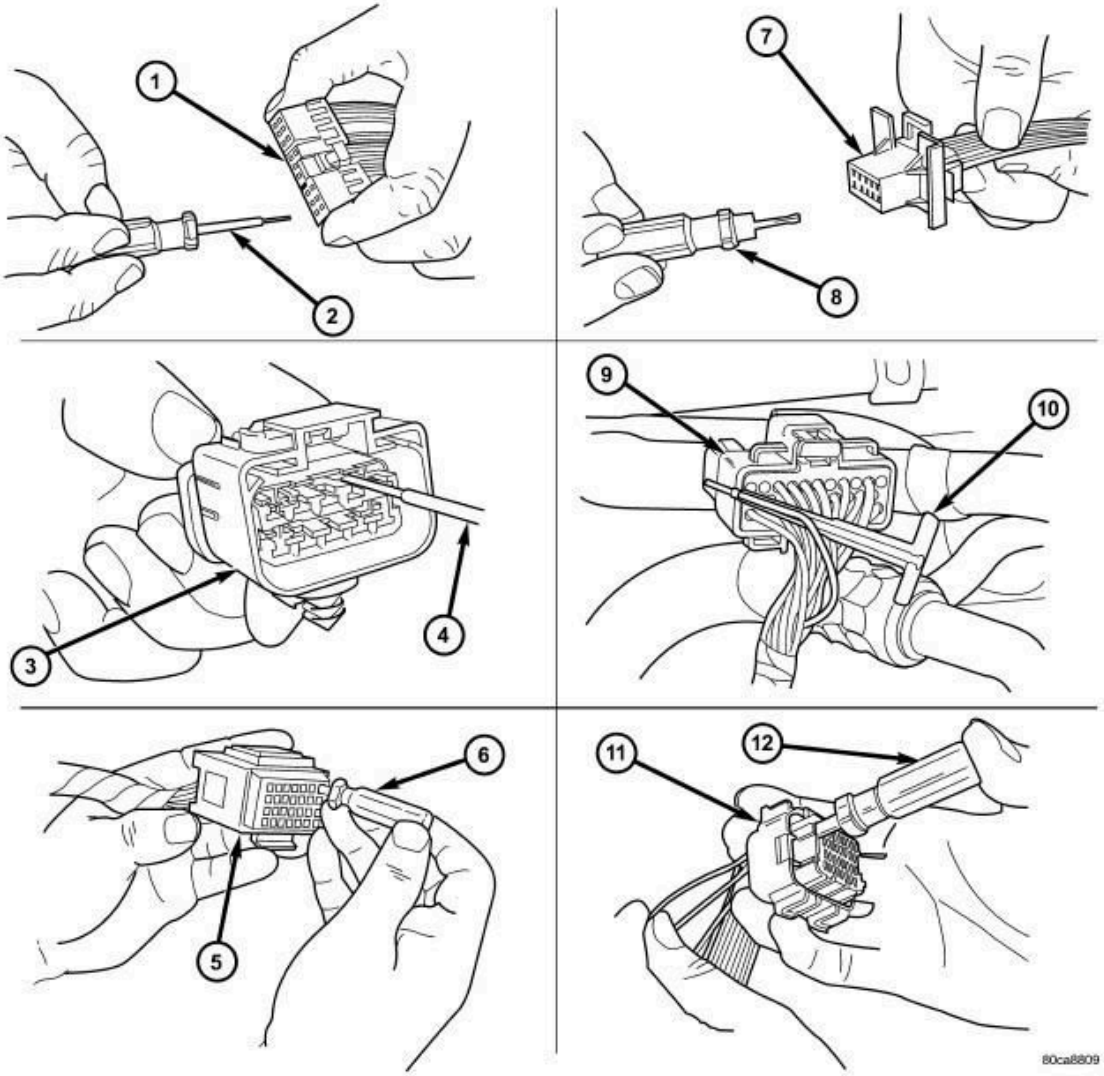

Fig. 39: Terminal Removal
Courtesy of CHRYSLER GROUP, LLC

1 - TYPICAL CONNECTOR
2 - PICK FROM TERMINAL REMOVER KIT 10300
3 - APEX CONNECTOR
4 - PICK FROM TERMINAL REMOVER KIT 10300
5 - AUGAT CONNECTOR
6 - ELECTRICAL TERMINAL REMOVAL TOOL
7 - MOLEX CONNECTOR
8 - PICK FROM TERMINAL REMOVER KIT 10300
9 - THOMAS AND BETTS CONNECTOR
10 - TERMINAL REMOVER
11 - CONNECTOR
12 - ELECTRICAL TERMINAL REMOVER

6. Position the connector locking finger away from the terminal using the proper special tool. Pull on the wire to remove the terminal from the connector.

INSTALLATION

CONNECTOR TERMINAL INSTALLATION

1. Select a wire from the terminal repair kit that best matches the color and gauge of the wire being repaired.
2. Cut the repair wire to the proper length and remove one-half (1/2) inch of insulation.
3. Splice the repair wire to the wire harness (see Wire Splicing procedure). Refer to **STANDARD PROCEDURE**.
4. Insert the repaired wire into the connector.
5. Install the connector locking wedge, if required, and reconnect the connector to its mating half/component.
6. Re-tape the wire harness starting at 1-1/2 inches behind the connector and 2 inches past the repair.
7. Connect battery and test all affected systems.

2014 GENERAL INFORMATION

Vehicle Data - Cherokee

VEHICLE INFORMATION

INTERNATIONAL VEHICLE CONTROL AND DISPLAY SYMBOLS

DESCRIPTION

DESCRIPTION

Chrysler LLC uses international symbols to identify various systems on the vehicle.

The graphic symbols illustrated are used to identify various instrument controls, vehicle controls and service information references. The symbols correspond to the controls and displays that are located on the instrument panel and throughout the vehicle.

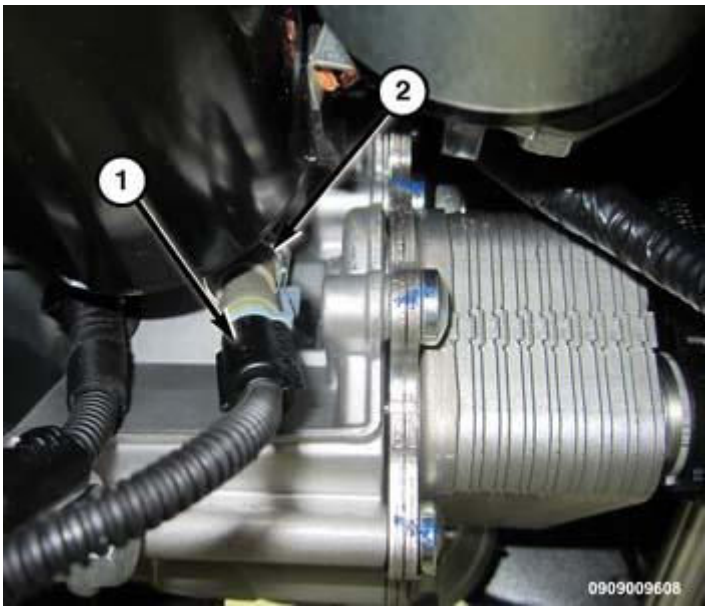

Fig. 1: Information Symbols
Courtesy of CHRYSLER GROUP, LLC

INTERNATIONAL INFORMATION SYMBOL IDENTIFICATION

SYMBOL	DESCRIPTION	SYMBOL	DESCRIPTION
1	115-Volt Power Inverter	11	Side Airbag
2	USB Connector	12	Seat Belt
3	Lighter	13	Airbag
4	Fuel Fill Side	14	Supplemental Restraint System
5	Spare Tire Winch	15	Power Steering Fluid
6	Fuse	16	See Owner's Manual

7	Key Activate (Power Outlet)	17	See Appropriate Service Information
8	Warning	18	Emergency Release Handle
9	Child Seat Tether Anchor	19	Jack/Jack Tools Location
10	Lower Anchors and Tether for Children (latch)		

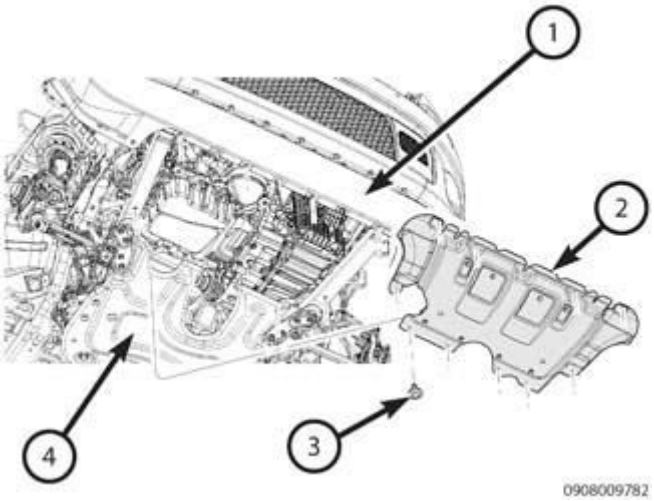

Fig. 2: Indicator Symbols
Courtesy of CHRYSLER GROUP, LLC

INTERNATIONAL INDICATOR SYMBOL IDENTIFICATION

SYMBOL	DESCRIPTION	SYMBOL	DESCRIPTION
1	Electronic Speed Control	30	Door Ajar
2	Hill Descent Control	31	Liftgate Open
3	Traction Control	32	Brake System Warning Parking Brake
4	Electronic Stability Program/Brake System Assist System	33	All Wheel Drive
5	Security Indicator	34	Four Wheel Drive
6	Turn Signals	35	Four Wheel Drive Low
7	Water In Fuel	36	Tow/Haul
8	Low Fuel	37	Service Four Wheel Drive
9	Side Airbag	38	Service Four Wheel Drive
10	Seat Belt Reminder	39	Cruise Indicator
11	Airbag Warning Light	40	Brake System Warning Parking Brake
12	Passenger Airbag Off	41	Tire Pressure Monitor

13	Failure Of Anti-Lock Braking System	42	Sway Bar Disconnect Indicator
14	HEV Brake Regenerative Light	43	Front Axle Lock
15	Electronic Throttle Control	44	Rear Axle Lock
16	HEV Service Light	45	Park Asist Indicator
17	Engine Oil	46	Park Brake Indicator
18	Battery Charging	47	Electronic Stability Control/Traction Control Off
19	Glow Plug/Intake Air Heated	48	Trailer Brake System Off
20	Power Steering Fluid	49	Diesel Exhaust Fluid
21	Engine Coolant Temperature	50	Coolant Level
22	Malfunction Indicator Light	51	Fuel Cap
23	Transmission Oil Temperature Light	52	EPS (Electric Power Steering)
24	Diesel Exhaust Brake	53	Icy Road Condition
25	High Beam	54	Electric Vehicle Plug In State
26	Front Fog Light	55	Vehicle Theft Alarm
27	Rear Fog Light	56	Stored Warnings
28	Cargo Lamp	57	Service ETC
29	Exterior Bulb Failure	58	Electric Vehicle System Service

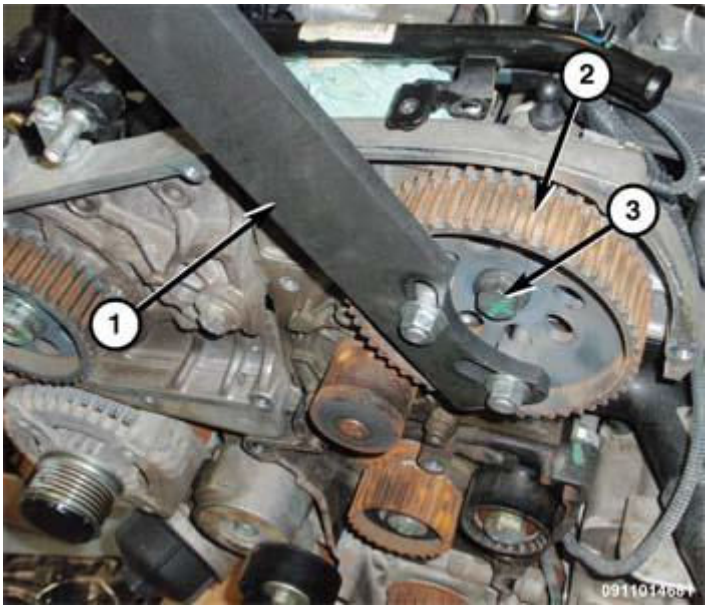

Fig. 3: Control Symbols
Courtesy of CHRYSLER GROUP, LLC

INTERNATIONAL CONTROL SYMBOL IDENTIFICATION

SYMBOL	DESCRIPTION	SYMBOL	DESCRIPTION	SYMBOL	DESCRIPTION

1	Rear Window Wiper	26	Passenger Air Bag Off	51	Door Ajar
2	Rear Window Intermittent Wiper	27	Electronic Speed Control	52	Liftgate Release
3	Rear Window Washer	28	Cruise Indicator	53	Sliding Door
4	Rear Window Defrost	29	Hill Descent Control	54	Sliding Door
5	Heated Mirror	30	Park Assist Off	55	Convertible Top Down
6	Turn Signals	31	Electronic Stability Program/Brake System Assist System	56	Convertible Top Up
7	Adjustable Pedals	32	Park Brake Release	57	Door Lock
8	Horn	33	Adjustable Headlights	58	Window Lift
9	Windshield Wiper Intermittent	34	Low Beam	59	Convertible 4 Window Down
10	Windshield Washer	35	Front Fog Light	60	Window Lock
11	Windshield Washer Fluid Level	36	Rear Fog Light	61	Power Rear Window
12	Windshield Electrically Heated	37	Cargo Lamp	62	Voice Recognition Button
13	Windshield Defrost	38	Hazard Lights	63	Uconnect™ Button
14	Windshield Wiper And Washer	39	115-Volt Power Inverter	64	SwayBar Disconnect
15	Ventilating Fan	40	Key Activate (Power Outlet)	65	All Wheel Drive
16	Air Conditioning	41	Exterior Bulb Failure	66	Four Wheel Drive
17	Upper Air Outlet	42	Master Lighting Switch	67	Two Wheel Drive
18	Upper And Lower Air Outlet	43	Dome Light	68	Four Wheel Drive Low
19	Lower Air Outlet	44	Park Lights	69	Four Wheel Drive Lock
20	Defrost And Lower Air Outlet	45	Instrument Panel Illumination	70	Four Wheel Drive Auto
21	Heated Seat Low	46	Electronic Stability Program Off	71	Front Axle Lock
22	Heated Seat High	47	Diesel Exhaust Brake	72	Rear Axle Lock
23	Ventilated Seat	48	Overdrive Off	73	EVIC Menu
24	Recirculation	49	Hood Release	74	Navigation Button

25	Heated Steering Wheel	50	Trunk/Deck Release	75	Step
76	Reset	77	Axle Lock Button	78	Traction Control Off
79	Electronic Stability Control Off	80	Trailer Brakes		

ENGINE COMPARTMENT

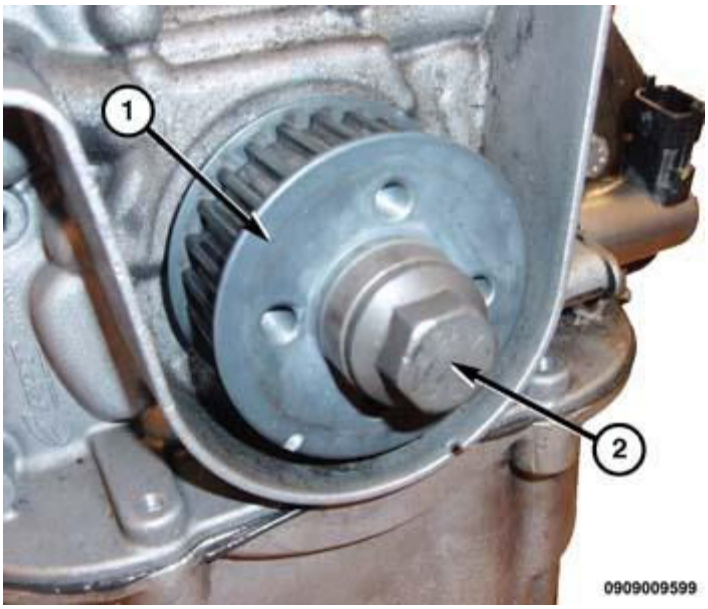

Fig. 4: International Symbols
Courtesy of CHRYSLER GROUP, LLC

The graphic symbols illustrated are used to identify engine compartment lubricant and fluid inspection and fill locations. The symbols correspond to the caps located within the engine compartment.

LABEL, VEHICLE EMISSION CERTIFICATION INFORMATION (VECI)

DESCRIPTION

DESCRIPTION

NOTE: **The Vehicle Emission Control Information (VECI) label(s) must be in place for the life of the vehicle. When replacing the component in which the VECI label is adhered, a new VECI label must also be adhered to the new component.**

All models have a VECI Label. Chrysler permanently attaches the label in the engine compartment. It cannot be removed without defacing information and destroying the label.

The label contains the vehicle's emission specifications and vacuum hose routings. All hoses must be connected and routed according to the label.

VEHICLE CERTIFICATION LABEL

DESCRIPTION

DESCRIPTION

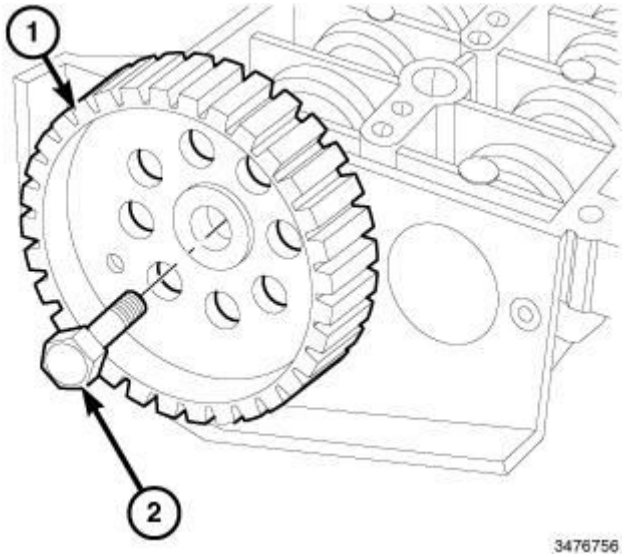

Fig. 5: Vehicle Certification Label - Typical
Courtesy of CHRYSLER GROUP, LLC

A vehicle certification label is attached to every Chrysler LLC vehicle. The label certifies that the vehicle conforms to all applicable Federal Motor Vehicle Standards. The label also lists:

- Month and year of vehicle manufacture.
- Gross Vehicle Weight Rating (GVWR). The gross front and rear axle weight ratings (GAWR's) are based on a minimum rim size and maximum cold tire inflation pressure.
- Vehicle Identification Number (VIN).
- Type of vehicle.
- Type of rear wheels.
- Bar code.
- Month, Day and Hour (MDH) of final assembly.
- Paint and Trim codes.
- Country of origin.

The label is located on the driver-side door shut-face.

VEHICLE IDENTIFICATION NUMBER

DESCRIPTION

DESCRIPTION

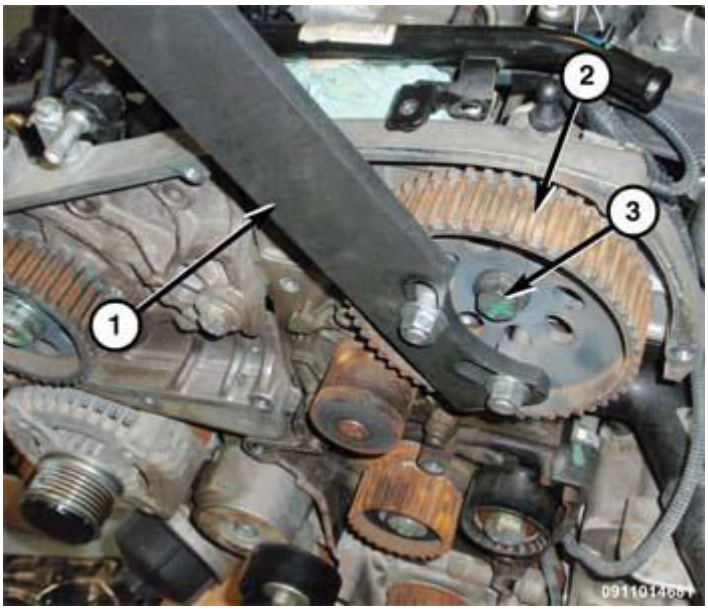

Fig. 6: Vehicle Identification Number (VIN) Label
Courtesy of CHRYSLER GROUP, LLC

The Vehicle Identification Number (VIN) label (1) can be viewed through the windshield at the upper left corner of the instrument panel, near the left windshield pillar. The VIN consists of 17 characters in a combination of letters and numbers that provide specific information about the vehicle. Refer to the charts below for decoding information.

To protect the consumer from theft and possible fraud the manufacturer is required to include a Check Digit at the ninth position of the vehicle identification number. The check digit is used by the manufacturer and government agencies to verify the authenticity of the vehicle and official documentation. The formula to use the check digit is not released to the general public.

POSITIONS 1 - 3: WORLD MANUFACTURER IDENTIFIER

1	2	3	MANUFACTURER	VEHICLE TYPE
1	C	4	Chrysler Group LLC (USA)	MPV

POSITION 4: RESTRAINT SYSTEM

Brake System	GVWR Range		Active Belts, Air Bags	Active Belts, Air Bags, Side Bags-Front Row	Active Belts, Air Bags, Side Bags-All Rows	Active Belts, No Air Bags	Active Belts, GVWR > 10, 000 lbs.
	Pounds	Kilograms					
Hydraulic	4001-5000	(1815-2267 kg)	-	-	N	-	-
Hydraulic	5001-6000	(2268 - 2721 kg)	-	-	P	-	-

POSITIONS 5 - 7

Define the following: brand, marketing name, price series, drive position, drive type and body type

FWD			4WD			BODY TYPE	POSITION	SERIES
J	L	A	J	M	A	Sport Utility 4 Door	Left Hand Drive	Sport
-	-	-	J	M	B			Trailhawk
J	L	C	J	M	C			Latitude
J	L	D	J	M	D			Limited
J	L	E	J	M	E		Right Hand Drive	Sport
-	-	-	J	M	F			Trailhawk
J	L	G	J	M	G			Latitude
J	L	H	J	M	H			Limited

POSITION 8: ENGINE

CODE	DISPLACEMENT	CYLINDERS	FUEL	TURBO	SALES CODES
Y	2.0 Liter	4	Diesel	Yes	EBT
B	2.4 Liter	4	Gasoline	No	ED6
S	3.2 Liter	6	Gasoline	No	EHB

POSITION 9: CHECK DIGIT

0 through 9 or X

POSITION 10: MODEL YEAR

E = 2014

POSITION 11: ASSEMBLY PLANT

CODE	PLANT
W	Toledo North Assembly

POSITION 12 - 17: PLANT SEQUENCE NUMBER

A six digit number assigned by assembly plant.

2014 GENERAL INFORMATION

Vehicle Quick Reference - Cherokee

CAPACITIES AND RECOMMENDED FLUIDS

DESCRIPTION

FLUID TYPES

When service is required, Chrysler Group LLC recommends that only Mopar® brand parts, lubricants and chemicals be used. Mopar® provides the best engineered products for servicing Chrysler Group LLC vehicles.

Only lubricants bearing designations defined by the following organization should be used to service a Chrysler Group LLC vehicle:

- Society of Automotive Engineers (SAE)
- American Petroleum Institute (API)
- National Lubricating Grease Institute (NLGI)
- European Automobile Manufacturers Association (ACEA)

API QUALITY CLASSIFICATION

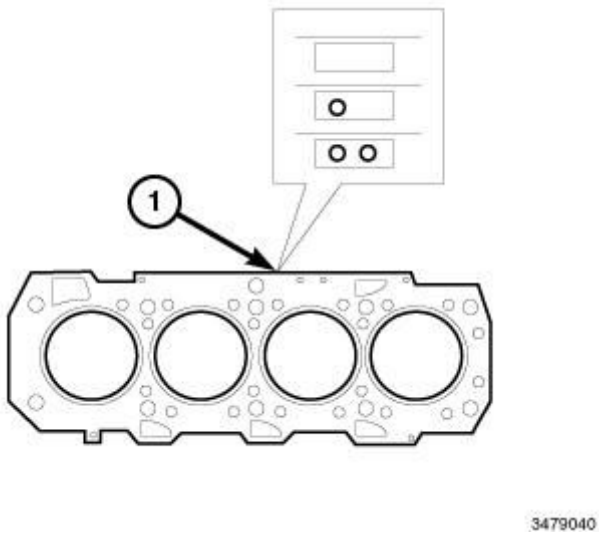

Fig. 1: API Symbol
Courtesy of CHRYSLER GROUP, LLC

This symbol on the front of an oil container means that the oil has been certified by the American Petroleum Institute (API) to meet all the lubrication requirements specified by Chrysler Group LLC.

GEAR LUBRICANTS

SAE ratings also apply to multigrade gear lubricants. In addition, API classification defines the lubricant's usage, such as API GL-5 and SAE 75W-90.

LUBRICANT RECOMMENDATIONS

CHASSIS

COMPONENT	FLUID, LUBRICANT, OR GENUINE PART
Steering Gear AND Linkage, Ball Joints, Prop Shafts AND Yokes, Wheel Bearings	Mopar® Multi-Purpose Lubricant NLGI Grade 2 EP, GC-LB

BODY

COMPONENT	FLUID, LUBRICANT, AND GENUINE PART
Hinges:	
Door AND Hood	Mopar® Engine Oil
Swing Gate	Mopar® Multi-Purpose Lube NLGI Grade 2 EP, GC-LB
Latches: Door, Hood/Safety Catch, Swing Gate	Mopar® Multi-Purpose Lube NLGI Grade 2 EP, GC-LB
Seat Regulator AND Track	Mopar® Multi-Purpose Lube NLGI Grade 2 EP, GC-LB
Lock Cylinders	Mopar® Lock Cylinder Lube

ENGINE OIL

WARNING: **New or used engine oil can be irritating to the skin. Avoid prolonged or repeated skin contact with engine oil. Contaminants in used engine oil, caused by internal combustion, can be hazardous to your health. Thoroughly wash exposed skin with soap and water. Do not wash skin with gasoline, diesel fuel, thinner, or solvents, health problems can result. Do not pollute, dispose of used engine oil properly. Contact your government agency for location of collection center in your area.**

When service is required, Chrysler Corporation recommends that only Mopar® brand parts, lubricants and chemicals be used. Mopar® provides the best engineered products for servicing Chrysler Corporation vehicles.

Only lubricants bearing designations defined by the following organization should be used:

- Society of Automotive Engineers (SAE)
- American Petroleum Institute (API)
- National Lubricating Grease Institute (NLGI)
- Association des Constructeurs Europ e ens d' Automobiles (European Automobile Manufacturers Association) (ACEA)

API CERTIFICATION AND LICENSE SYMBOL

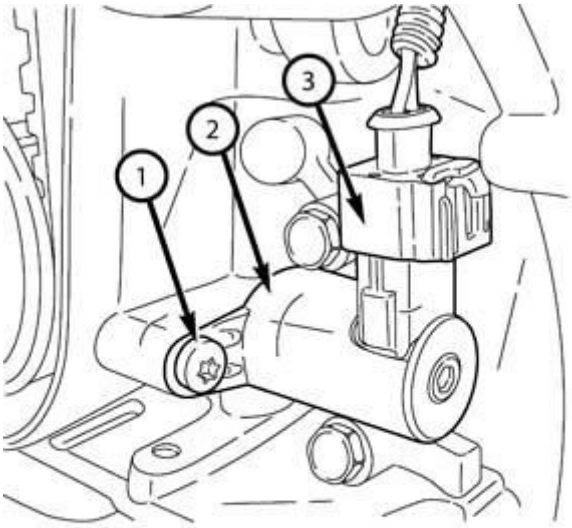

091174654

Fig. 2: API Certification Mark
Courtesy of CHRYSLER GROUP, LLC

Use an engine oil that is API Certified and Licensed to display the certification mark. MOPAR® provides engine oils that meet or exceed, Material Standard MS-6395 requirement.

SAE VISCOSITY

These engine oils are designed to improve low temperature starting and vehicle fuel economy. Refer to the engine oil filler cap for the preferred engine oil viscosity grade for each vehicle. The viscosity grade is also listed in the vehicle quick reference specifications. Refer to **CAPACITIES AND RECOMMENDED FLUIDS, SPECIFICATIONS**. SAE viscosity grades are used to specify the correct viscosity oil for an engine. Use only Multi-Viscosity oils. These are specified with a dual SAE viscosity grade which indicates the cold to hot temperature performance range of the oil.

CONTAINER IDENTIFICATION

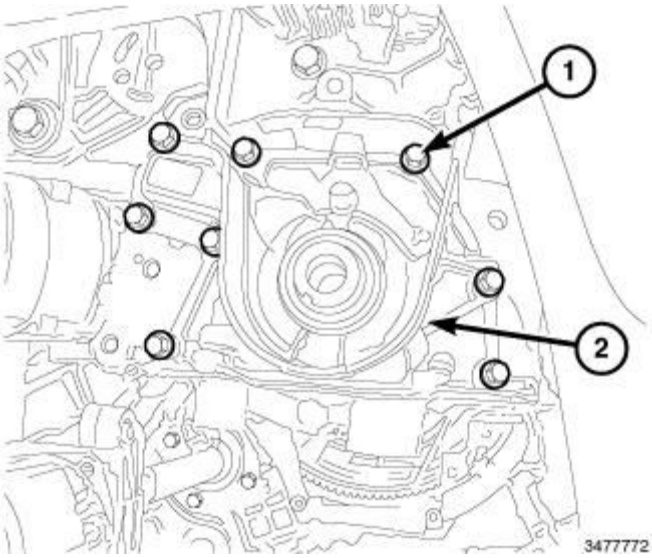

Fig. 3: API Certification Mark
Courtesy of CHRYSLER GROUP, LLC

The Engine Oil Certification Mark was developed and trademarked by the API to refer customers to those engine oils preferred by the automobile manufacturers. This symbol means that the oil has been certified and licensed by the American Petroleum Institute (API). This certification mark will only be found on the front of the oil containers. Those oils that do not display the "Mark" on the front of the container should not be used.

Chrysler only recommends API Certified engine oils that meet the requirements of Material Standard MS-6395. Use Mopar or an equivalent oil meeting the specification MS-6395.

SYNTHETIC ENGINE OILS

There are a number of engine oils being promoted as either synthetic or semi-synthetic. If you choose to use such a product, use **only** those oils that are certified by the American Petroleum Institute (API) to display the "Certification Mark" and show SAE viscosity grade recommended for each vehicle. Follow the service schedule that describes your driving type.

ENGINE OIL ADDITIVES/SUPPLEMENTS

The manufacturer **does not recommend** the addition of any engine oil additives/supplements to the specified engine oil. Engine oil additives/supplements should not be used to enhance engine oil performance. Engine oil additives/supplements should not be used to extend engine oil change intervals. No additive is known to be safe for engine durability and can degrade emission components. Additives can contain undesirable materials that harm the long term durability of engines and emission systems by:

- Increasing the level of Phosphorus and Sulfur in the engine oil. The API Certified Engine Oils control the Phosphorus and Sulfur contents of the oil to levels that reduce the contamination effect on the vehicle's emission control system.
- Altering the viscosity characteristics of the engine oil so that it no longer meets the requirements of the specified viscosity grade.

- Creating potential for an undesirable additive compatibility interaction in the engine crankcase. The engine oils contain a performance additive system carefully developed to optimize the oil's performance in the engine. The addition of supplements may cause the oil to thicken prematurely, cause excessive deposit build-up and potentially shorten engine life.

ENGINE COOLANT

WARNING: Antifreeze is an ethylene-glycol base coolant and is harmful if swallowed or inhaled. If swallowed, drink two glasses of water and induce vomiting. If inhaled, move to fresh air area. Seek medical attention immediately. Do not store in open or unmarked containers. Wash skin and clothing thoroughly after coming in contact with ethylene-glycol. Keep out of reach of children. Dispose of glycol base coolant properly, contact your dealer or government agency for location of collection center in your area. Do not open a cooling system when the engine is at operating temperature or hot under pressure, personal injury can result. Avoid radiator cooling fan when engine compartment related service is performed, personal injury can result.

CAUTION: Mixing of engine coolant (antifreeze) other than specified Organic Additive Technology (OAT) engine coolant (antifreeze), may result in engine damage and may decrease corrosion protection. Organic Additive Technology (OAT) engine coolant is different and should not be mixed with Hybrid Organic Additive Technology (HOAT) engine coolant (antifreeze). If a non-OAT engine coolant (antifreeze) is introduced into the cooling system in an emergency, it should be replaced with the specified engine coolant (antifreeze) as soon as possible.

YouTube	A multimedia supplement to the instructions contained in this article is available. To view the multimedia example of the condition described go to; **http://www.youtube.com/user/Mitchell1Tips** **then type, "A00641391.vid1" into the "Search Channel" box.**

The cooling system is designed around the coolant. The coolant must accept heat from engine metal, in the cylinder head area near the exhaust valves and engine block. Then coolant carries the heat to the radiator where the tube/fin radiator can transfer the heat to the air.

The use of aluminum cylinder blocks, cylinder heads, and water pumps requires special corrosion protection. Mopar® Antifreeze/Coolant, or the equivalent ethylene-glycol base coolant with organic corrosion inhibitors (called OAT, for Organic Additive Technology) is recommended. This coolant offers the best engine cooling without corrosion when mixed with 50% ethylene-glycol and 50% distilled water to obtain a freeze point of -37°C (-35°F). If it loses color or becomes contaminated, drain, flush, and replace with fresh properly mixed coolant solution.

COOLANT PERFORMANCE

The required ethylene-glycol and water mixture depends upon climate and vehicle operating conditions. The coolant performance of various mixtures follows:

Pure Water- Water can absorb more heat than a mixture of water and ethylene-glycol. This is for purpose of heat transfer only. Water also freezes at a higher temperature and allows corrosion.

100 percent Ethylene-Glycol - The corrosion inhibiting additives in ethylene-glycol need the presence of water to dissolve. Without water, additives form deposits in system. These act as insulation causing temperature to rise to as high as 149°C (300°F). This temperature is hot enough to melt plastic. The increased temperature can result in sever engine damage. In addition, 100 percent ethylene-glycol freezes at -22°C (-8°F).

50/50 Ethylene-Glycol and Water - Is the recommended mixture, it provides protection against freezing to -37°C (-34°F). The antifreeze concentration **must always** be a minimum of 44 percent, year-round in all climates. If percentage is lower, engine parts may be eroded by cavitation. Maximum protection against freezing is provided with a 68 percent antifreeze concentration, which prevents freezing down to -67.7°C (-90° F). A higher percentage will freeze at a warmer temperature. Also, a higher percentage of antifreeze can cause the engine to overheat because specific heat of antifreeze is lower than that of water.

OAT coolant is purple in color. It cannot be mixed with other types of coolant including Chrysler's existing HOAT coolant and only should only be mixed with approved OAT coolant of the same color. Maintenance of the cooling system is not required unless a repair has been made with loss of coolant or the coolant has been contaminated.

CAUTION: Richer antifreeze mixtures cannot be measured with normal field equipment and can cause problems associated with 100 percent ethylene-glycol.

COOLANT SELECTION AND ADDITIVES

The use of aluminum cylinder blocks, cylinder heads and water pumps requires special corrosion protection. Only Mopar® Antifreeze/Coolant (glycol base coolant with corrosion inhibitors called OAT, for Organic Additive Technology) is recommended. This coolant offers the best engine cooling without corrosion when mixed with 50% distilled water to obtain to obtain a freeze point of -37°C (-35°F). If it loses color or becomes contaminated, drain, flush, and replace with fresh properly mixed coolant solution.

CAUTION: Do not use coolant additives that are claimed to improve engine cooling.

FLEXIBLE FUEL VEHICLES

The following information is for Flexible Fuel Vehicles (FFV) only. These vehicles can be identified by the unique Fuel Filler Door Label that states **Ethanol (E-85) or Unleaded Gasoline Only.** This Service Information only covers those subjects that are unique to these vehicles. Please refer to appropriate Service Information for information on features that are common between Flexible Fuel and gasoline only powered vehicles.

CAUTION: Only vehicles with the E-85 fuel filler door label can operate on E-85.

ETHANOL FUEL (E-85)

E-85 is a mixture of approximately 85% fuel ethanol and 15% unleaded gasoline.

WARNING: Ethanol vapors are extremely flammable and could cause serious personal injury. Never have any smoking materials lit in or near the vehicle when removing the fuel filler tube cap (gas cap) or filling the tank. Do not use E-85 as a cleaning agent and never use it near an open flame.

FUEL REQUIREMENTS

The vehicle will operate on both unleaded gasoline with an octane rating of 87, or E-85 fuel, or any mixture of these two.

For best results, a refueling pattern that alternates between E-85 and unleaded gasoline should be avoided. When you do switch fuels, it is recommended that

- you do not switch when the fuel gauge indicates less than 1/4 full
- you do not add less than 5 gallons when refueling
- you operate the vehicle immediately after refueling for a period of at least 5 minutes

Observing these precautions will avoid possible hard starting and/or significant deterioration in driveability during warm up.

NOTE: When the ambient temperature is above 90°F (32C), you may experience hard starting and rough idle following start up even if the above recommendations are followed.

ENGINE OIL SELECTION FOR OPERATING ON E-85

If vehicle operates on E-85 fuel either full or part-time, use only Mopar® Flexible Fuel 5W-30 engine oil or an equivalent that meets Chrysler Standard MS-9214. Equivalent commercial Flexible Fuel engine oils may be labeled as Multi-Fuel, Variable Fuel, Flexible Fuel, etc. These engine oils may be satisfactory if they meet the Chrysler Standard.

SAE 5W-30 engine oil is preferred for use in Flexible Fuel engines.

CAUTION: If Flexible Fuel engine oil is not used when using E-85 fuel, engine wear or damage may result.

ENGINE OIL SELECTION FOR OPERATING ON GASOLINE

If you operate the vehicle on regular unleaded gasoline **ONLY,** use Mopar® oil or an equivalent that meets certified API (American Petroleum Institute) quality.

STARTING

The characteristics of E-85 fuel make it unsuitable for use when ambient temperatures fall below 0°F (-17°C). In the range of 0°F (-17°C) to 32°F (0°C), you may experience an increase in the time it takes for your engine to start, and a deterioration in driveability (sags and/or hesitations) until the engine is fully warmed up.

CRUISING RANGE

Because E-85 fuel contains less energy per gallon than gasoline, you will experience an increase in fuel consumption. You can expect your MPG and your driving range to decrease by about 30% compared to gasoline operation.

REPLACEMENT PARTS

Many components in your Flexible Fuel Vehicle (FFV) are designed to be compatible with ethanol. Always be sure that your vehicle is serviced with correct ethanol compatible parts.

CAUTION: Replacing fuel system components with non-ethanol compatible components can damage your vehicle and may void the warranty.

MAINTENANCE

If you operate the vehicle using E-85 fuel, follow Schedule "B".

AUTOMATIC TRANSAXLE FLUID

MOPAR® ZF 8&9 Speed ATF™ Automatic Transmission Fluid, Shell L12108 Transmission Fluid, or equivalent is required in the transmission. Failure to use the correct fluid may affect the function or performance of the transmission.

FLUID ADDITIVES

Chrysler strongly recommends against the addition of any fluids to the transmission, other than those automatic transmission fluids listed above. Exceptions to this policy are the use of special dyes to aid in detecting fluid leaks.

Various "special" additives and supplements exist that claim to improve shift feel and/or quality. These additives and others also claim to improve converter clutch operation and inhibit overheating, oxidation, varnish, and sludge. These claims have not been supported to the satisfaction of Chrysler and these additives **must not be used.** The use of transmission "sealers" should also be avoided, since they may adversely affect the integrity of transmission seals.

FUEL REQUIREMENTS

Your engine is designed to meet all emissions regulations and provide excellent fuel economy and performance when using high quality unleaded gasoline having an octane rating of 87. The use of premium gasoline is not recommended. The use of premium gasoline will provide no benefit over high quality regular gasoline, and in some circumstances may result in poorer performance.

Light spark knock at low engine speeds is not harmful to your engine. However, continued heavy spark knock at high speeds can cause damage and immediate service is required. Engine damage resulting from operation with a heavy spark knock may not be covered by the new vehicle warranty.

Poor quality gasoline can cause problems such as hard starting, stalling and hesitations. If you experience these symptoms, try another brand of gasoline before considering service for the vehicle.

Over 40 auto manufacturers world-wide have issued and endorsed consistent gasoline specifications (the Worldwide Fuel Charter, WWFC) to define fuel properties necessary to deliver enhanced emissions, performance and durability for your vehicle. Chrysler recommends the use of gasolines that meet the WWFC specifications if they are available.

REFORMULATED GASOLINE

Many areas of the country require the use of cleaner burning gasoline referred to as "reformulated" gasoline. Reformulated gasoline contain oxygenates, and are specifically blended to reduce vehicle emissions and improve air quality.

Chrysler strongly supports the use of reformulated gasoline. Properly blended reformulated gasoline will provide excellent performance and durability for the engine and fuel system components.

GASOLINE/OXYGENATE BLENDS

Some fuel suppliers blend unleaded gasoline with oxygenates such as 10% ethanol, MTBE, and ETBE. Oxygenates are required in some areas of the country during the winter months to reduce carbon monoxide emissions. Fuels blended with these oxygenates may be used in your vehicle.

CAUTION: DO NOT use gasoline containing METHANOL. Gasoline containing methanol may damage critical fuel system components.

MMT IN GASOLINE

MMT is a manganese-containing metallic additive that is blended into some gasoline to increase octane. Gasoline blended with MMT provide no performance advantage beyond gasoline of the same octane number without MMT. Gasoline blended with MMT reduce spark plug life and reduce emission system performance in some vehicles. Chrysler recommends that gasoline free of MMT be used in your vehicle. The MMT content of gasoline may not be indicated on the gasoline pump; therefore, you should ask your gasoline retailer whether or not his/her gasoline contains MMT.

It is even more important to look for gasoline without MMT in Canada because MMT can be used at levels higher than allowed in the United States. MMT is prohibited in Federal and California reformulated gasoline.

SULFUR IN GASOLINE

If you live in the northeast United States, your vehicle may have been designed to meet California low emission standards with Cleaner-Burning California reformulated gasoline with low sulfur. If such fuels are not available in states adopting California emission standards, your vehicles will operate satisfactorily on fuels meeting federal specifications, but emission control system performance may be adversely affected. Gasoline sold outside of California is permitted to have higher sulfur levels which may affect the performance of the vehicle's catalytic converter. This may cause the Malfunction Indicator Lamp (MIL), Check Engine or Service Engine Soon light to illuminate. Chrysler recommends that you try a different brand of unleaded gasoline having lower sulfur to determine if the problem is fuel related prior to returning your vehicle to an authorized dealer for service.

CAUTION: If the Malfunction Indicator Lamp (MIL), Check Engine or Service Engine Soon light is flashing, immediate service is required; see appropriate ELECTRICAL DIAGNOSTICS article.

MATERIALS ADDED TO FUEL

All gasoline sold in the United States and Canada are required to contain effective detergent additives. Use of additional detergents or other additives is not needed under normal conditions.

FUEL SYSTEM CAUTIONS

CAUTION: Follow these guidelines to maintain your vehicle's performance:

- The use of leaded gas is prohibited by Federal law. Using leaded gasoline can impair engine performance, damage the emission control system, and could result in loss of warranty coverage.
- An out-of-tune engine, or certain fuel or ignition malfunctions, can cause the catalytic converter to overheat. If you notice a pungent burning odor or some light smoke, your engine may be out of tune or malfunctioning and may require immediate service.
- When pulling a heavy load or driving a fully loaded vehicle when the humidity is low and the temperature is high, use a premium unleaded fuel to help prevent spark knock. If spark knock persists, lighten the load, or engine piston damage may result.
- The use of fuel additives which are now being sold as octane enhancers is not recommended. Most of these products contain high concentrations of methanol. Fuel system damage or vehicle performance problems resulting from the use of such fuels or additives is not the responsibility of Chrysler Corporation and may not be covered under the new vehicle warranty.

NOTE: Intentional tampering with emissions control systems can result in civil penalties being assessed against you.

BRAKE FLUID

The brake fluid used in this vehicle must conform to DOT 3 specifications and SAE J1703 standards. No other

type of brake fluid is recommended or approved for usage in the vehicle brake system. Use only Mopar® Brake Fluid or equivalent from a tightly sealed container.

CAUTION: Never use reclaimed brake fluid or fluid from a container which has been left open. An open container of brake fluid will absorb moisture from the air and contaminate the fluid.

CAUTION: Never use any type of a petroleum-based fluid in the brake hydraulic system. Use of such type fluids will result in seal damage of the vehicle brake hydraulic system causing a failure of the vehicle brake system. Petroleum based fluids would be items such as engine oil, transmission fluid, power steering fluid, etc.

A/C REFRIGERANT

The refrigerant used in this air conditioning system is a R-1234yf.

The A/C refrigerant system is filled-for-life at the factory and requires no regular maintenance. Although not required at specific intervals, the charge level should be checked if system performance deteriorates or if a noise or leak is suspected. Refer to **DIAGNOSIS AND TESTING** .

SPECIFICATIONS

SPECIFICATIONS

ENGINE

Description	Type	Part Number	Capacities	
			U.S.	Metric
Cooling System				
? Engine Coolant (2.4L Engine)	MOPAR® Antifreeze/Coolant 10 Year/150, 000 Mile Formula OAT (Organic Additive Technology) meeting the requirements of Chrysler Material Standard MS-12106	1 Gallon - 68163848AA (concentrate) 68163849AA (50/50)	7.0 Quarts	6.6 Liters
? Engine Coolant (3.2L Engine)	MOPAR® Antifreeze/Coolant 10 Year/150, 000 Mile Formula OAT (Organic Additive Technology) meeting the requirements of Chrysler Material Standard MS-12106	1 Gallon - 68163848AA (concentrate) 68163849AA (50/50)	9.7 Quarts	9.2 Liters

? Engine Coolant (2.0L Diesel Engine)	MOPAR® Antifreeze/Coolant 10 Year/150, 000 Mile Formula OAT (Organic Additive Technology) meeting the requirements of Chrysler Material Standard MS-12106	1 Gallon - 68163848AA (concentrate) 68163849AA (50/50)	7.2 Quarts	6.8 Liters
Engine Oil with Filter				
?? Engine Oil - Non ACEA Categories (2.4L Engine)	We recommend you use SAE 0W-20 API Certified Engine Oil, meeting the requirements of Chrysler Material Standard MS-6395 or Fiat 9.55535-CR1. Refer to your engine oil filler cap for correct SAE grade.	68152004PA	5.5 Quarts	5.2 Liters
?? Engine Oil - ACEA Categories (2.4L Engine)	For countries that use ACEA European Oil Categories for Service Fill Oils, we recommend you use 0W-20 engine oils meeting the requirements of ACEA C3, and approved to Chrysler MS-6395 or Fiat 9.55535-CR1.	68152004PA	5.5 Quarts	5.2 Liters
??? Engine Oil - Non ACEA Categories (3.2L Engine)	We recommend you use SAE 5W-20 API Certified Engine Oil, meeting the requirements of Chrysler Material Standard MS-6395 or Fiat 9.55535-CR1. Refer to your engine oil filler cap for correct SAE grade.	1 Quart - 4761872MB	6.0 Quarts	5.6 Liters
??? Engine Oil - ACEA Categories (3.2L Engine)	For countries that use ACEA European Oil Categories for Service Fill Oils, we recommend you use 5W-20 engine oils meeting the requirements of ACEA C3, and approved to Chrysler MS-6395 or Fiat 9.55535-	1 Quart - 4761872MB	6.0 Quarts	5.6 Liters

	CR1.			
Engine Oil (2.0L Diesel Engine)	SAE Grade 5W-30 fully synthetic engine oil that meets Fiat classification 9.55535-S1	1 Quart -	4.5 Quarts	4.3 Liters
Engine Oil Filter (2.4L Engine)	MOPAR® Engine Oil Filter	68197769AA	N/A	N/A
Engine Oil Filter (3.2L Engine)	MOPAR® Engine Oil Filter	68191349AA	N/A	N/A
Fuel (approximate)				
Fuel Selection (2.4L Engine)	87 Octane Unleaded (R+M/2) 91 Research Octane Number (RON)	N/A	15.8 Gallons	60.0 Liters
Fuel Selection (3.2L Engines)	87-89 Octane Unleaded (R+M/2) 91-93 Research Octane Number (RON)	N/A	15.8 Gallons	60.0 Liters
Fuel Selection (2.0L Diesel Engines)	50 Cetane or higher (Less than 15 ppm Sulfur)	N/A	15.8 Gallons	60.0 Liters
A/C Refrigerant System				
Refrigerant	R-1234yf	-	1.125 Pounds	0.510 Kilograms
Refrigerant	R-134a	-	1.19 Pounds	.539 Kilograms
? System fill capacity includes heater and coolant recovery bottle filled to MAX level.				
?? SAE 5W-20 engine oil approved to MS-6395 or Fiat 9.55535-CR1 may be used when SAE 0W-20 engine oil is not available. Please ensure that you switch back to 0W-20 for the next oil change, as indicated by your vehicles automatic oil change indicator.				
??? SAE 5W-30 engine oil approved to MS-6395 or Fiat 9.55535-CR1 may be used when SAE 5W-20 engine oil is not available.				
CAUTION: **Nominal refill capacities are shown in this table. A variation may be observed from vehicle to vehicle due to manufacturing tolerance and refill procedure.**				

SPARK PLUGS

Description	Part Number	Gap	
		U.S.	Metric
Spark Plugs (2.4L Engine)	SP148183AB	0.047 in	1.20 mm
Spark Plugs (3.2L Engine)	SP149125AD	0.043 in	1.10 mm

TRANSAXLE

Description	Type	Part Number	Capacity
	Use only MOPAR® ZF 8&9 Speed ATF™		

948TE Automatic Transaxle	Automatic Transmission Fluid, or equivalent. Failure to use the correct fluid may affect the function or performance of your transmission.	Refer to **Star Parts** for the part number.	6.0 L (6.35 Quarts)
C635 Manual Transaxle	We recommend you use MOPAR® C635 DDCT/MTX Transmission Fluid.	Refer to **Star Parts** for the part number.	1.7 Liter (1.8 Quarts)

CHASSIS

Description	Type	Part Number	Capacities	
			U.S.	Metric
? Brake Master Cylinder	MOPAR® Brake Fluid DOT 3, SAE J1703.	12 oz. Bottle - 04318080AB	N/A	N/A
		32 oz. Bottle - 04318081AB		
Rear Differential	AAM Fluid 70W-80, meeting MS-2395	68227765AA	One Speed - 0.94 Quarts Two Speed - 1.22 Quarts Two-Speed With Locker - 1.3 Quarts	One Speed - 0.89 Liters Two Speed - 1.15 Liters Two-Speed With Locker - 1.23 Liters
	AAM Hydraulic Fluid, meeting MS-2155	68227766AA	0.46 Quarts	0.439 Liters
One Speed PTU	75W-90 Gear Lube	5102232AA	0.74 Quarts	0.70 Liters
Two Speed PTU	75W-90 Gear Lube	5102232AA	1.06 Quarts	01.20 Liters
? If MOPAR® Brake Fluid DOT 3 is not available, then MOPAR® Brake and Clutch Fluid DOT 4 is acceptable.				

FUSE - RELAY LOCATIONS AND TYPES

SPECIFICATIONS

SPECIFICATIONS

FUSES

A primary power distribution center is located on the left side of the engine compartment, near the battery.

The ID number of the electrical component corresponding to each fuse can be found on the back of the cover.

UNDERHOOD FUSES

Cavity	Blade Fuse	Cartridge Fuse	Description
F06	-	-	Not Used
F07	15 Amp Blue	-	Powertrain Control Module - PCM
F08	25 Amp Clear	-	Engine Control Module (ECM)
F09	-	-	Not Used
F10	20 Amp Yellow	-	Power Takeoff Unit (PTU)
F11	-	-	Not Used
F12	20 Amp Yellow	-	Brake Vacuum Pump - If Equipped
F13	10 Amp Red	-	Engine Control Module (ECM)
F14	10 Amp Red	-	Drivetrain Control Module (DTCM) / Power Take-Off Unit (PTU) - If Equipped / Brake System Module (BSM)
F15	-	-	Not Used
F16	20 Amp Yellow	-	Powertrain
F17	-	-	Not Used
F18	-	-	Not Used
F19	-	40 Amp Green	Starter Solenoid
F20	10 Amp Red	-	A/C Compressor Clutch
F21	-	-	Not Used
F22	5 Amp Tan	-	Radiator Fan
F23	70 Amp Tan	-	Body Controller Module (BCM) - Feed 1
F24	-	-	Not Used
F25	-	-	Not Used
F26	-	30 Amp Pink	Fuel Heater - Diesel Only
F27	-	-	Not Used
F28	15 Amp Blue	-	Transmission Control Module (TCM)
F29	-	-	Not Used
F30	10 Amp Red	-	Engine Control Module (ECM)
F31	-	-	Not Used
F32	-	-	Not Used
F33	-	30 Amp Pink	Driver Door Module (DDM) - If Equipped
F34	-	30 Amp Pink	Body Controller Module (BCM) - Feed 3
F35	-	-	Not Used
F36	-	-	Not Used
F37	-	50 Amp Red	Voltage Stabilization Module (VSM) - If Equipped With Stop/Start Engine Option
F38	-	60 Amp Yellow	Glow Plugs - Diesel Only - If Equipped
F39	-	40 Amp Green	HVAC Blower Motor
F40	-	20 Amp Blue	Trailer Tow Park Light - If Equipped
F41	-	60 Amp Yellow	Body Controller Module (BCM) - Feed 2

F42	-	30 Amp Pink	Electric Park Brake (EPB) - Left
F43	20 Amp Yellow	-	Trailer Tow Left Stop/Turn Light - If Equipped
F44	-	30 Amp Pink	Trailer Tow / 7-Way Connector - If Equipped
F45	-	30 Amp Pink	Passenger Door Module (PDM) - If Equipped
F46	-	25 Amp Clear	Sunroof / Skyslider - If Equipped
F47	-	30 Amp Pink	Drivetrain Control Module (DTCM)
F48	-	-	Not Used
F49	-	30 Amp Pink	Power Inverter (115V A/C) - If Equipped
F50	-	30 Amp Pink	Power Liftgate - If Equipped
F51	-	-	Not Used
F52	-	-	Not Used
F53	-	30 Amp Pink	BSM-ECU & Valves
F54	-	30 Amp Pink	Urea Heater Control Unit - If Equipped With Diesel Engine
F55	10 Amp Red	-	Blind Spot Sensors / Compass / Rearview Camera If Equipped / Rear Seat Heater Switches / Trunk Lamp W/ Flashlamp Charger
F56	15 Amp Blue	-	Ignition Node Module (IGNM)/KIN/RF Hub/Electric Steering Column Lock (ESL)
F57	20 Amp Yellow	-	Fuel Pump Motor
F58	10 Amp Red	-	Occupant Classification Module
F59	-	-	Not Used
F60	20 Amp Yellow	-	Power Outlet - Center Console
F61	-	-	Not Used
F62	10 Amp Red	-	Heated Mirrors - If Equipped
F63	25 Amp Clear	-	Front Heated Seats - If Equipped
F64	25 Amp Clear	-	Heated Steering Wheel / Rear Heated Seats - If Equipped
F65	15 Amp Blue	-	HVAC (ECC) / Instrument Panel Cluster (IPC)
F66	10 Amp Red	-	In Car Temperature Sensor / Humidity Sensor / Driver Assist System Module (DASM) / Park Assist (PAM)
F67	-	-	Not Used
F68	-	-	Not Used
F69	10 Amp Red	-	Transfer Case Switch (TSBM) / Active Grill Shutter (AGS) - If Equipped
F70	-	-	Not Used

F71	20 Amp Yellow	-	Windshield De-Icer - If Equipped
F72	5 Amp Tan	-	Intelligent Battery Sensor (IBS) If Equipped With Stop/Start Engine Option
F72	20 Amp Yellow	-	Trailer Tow RT Stop / Turn Lights - If Equipped
F73	-	30 Amp Pink	Rear Defroster / Defogger
F74	-	20 Amp Blue	Engine Control Module (ECM) Gasoline Engine - If Equipped
F75	20 Amp Yellow	-	Cigar Lighter
F76	20 Amp Yellow	-	Rear Differential Module (RDM) - If Equipped
F77	10 Amp Red	-	Fuel Door Release/Brake Pedal Switch
F78	10 Amp Red	-	Diagnostic Port / Steering Column Control Module (SCCM) / Digital TV - If Equipped
F79	10 Amp Red	-	Integrated Center Stack (ICS) / HVAC / Aux Switch Bank Module (ASBM) / Instrument Panel Cluster (IPC)
F80	20 Amp Yellow	-	Radio / CD - If Equipped
F81	-	-	Not Used
F82	-	-	Not Used
F83	-	30 Amp Pink	Headlamp Washer Pump - If Equipped
F84	-	40 Amp Green	Brake System Module (BSM) - Pump Motor If Equipped With Diesel Engine
F84	-	20 Amp Blue	Trailer Tow Backup Lights - If Equipped With Gasoline Engine
F85	-	-	Not Used
F86	-	-	Not Used
F87	-	-	Not Used
F88	15 Amp Blue	-	Collision Mitigation Module (CMM) / Electrochromatic Mirror / Smart Camera Module - If Equipped
F89	10 Amp Red	-	Headlamp Leveling - If Equipped
F90	-	-	Not Used
F91	-	-	Not Used
F92	20 Amp Yellow	-	Rear Power Outlet
F93	-	40 Amp Green	Brake System Module (BSM) - Pump Motor - If Equipped With Gasoline Engine
F94	-	30 Amp Pink	Electric Park Brake (EPB) - Right
F95	10 Amp Red	-	Electrochromatic Mirror / Rain Sensor / Sunroof - If Equipped
F96	10 Amp Red	-	Occupant Restraint Controller (ORC)
F97	10 Amp Red	-	Occupant Restraint Controller (ORC)

F98	25 Amp Clear	-	Audio Amplifier - If Equipped
F99	-	30 Amp Pink	Trailer Tow Module - If Equipped With Gasoline Engine
F100	-	-	Not Used

The interior fuse panel is located in the passenger compartment on the left side dash panel under the instrument panel.

INTERIOR FUSES

Cavity	Blade Fuse	Description
F13	15 Amp Blue	Low Beam Left
F32	10 Amp Red	Interior Lighting
F36	10 Amp Red	Intrusion Module/Siren - If Equipped
F38	20 Amp Yellow	Deadbolt All Unlock
F43	20 Amp Yellow	Washer Pump Front
F48	25 Amp Clear	Fog Lamp Rear Left/Right - If Equipped
F49	7.5 Amp Brown	Lumbar Support
F50	7.5 Amp Brown	Wireless Charging Pad If Equipped
F51	10 Amp Red	Driver Window Switch/Power Mirrors - If Equipped
F53	7.5 Amp Brown	UCI Port (USB & AUX)
F89	10 Amp Red	Door Locks - Driver Unlock
F91	7.5 Amp Brown	Fog Lamp Front Left
F92	7.5 Amp Brown	Fog Lamp Front Right
F93	10 Amp Red	Low Beam Right

ELECTRICAL HARNESS/COMPONENTS TOPOLOGY

SCHEMATICS AND DIAGRAMS

MODULES - INLINE CONNECTORS - GROUND LOCATIONS

For a complete wiring diagram, **refer to SYSTEM WIRING DIAGRAMS article** .

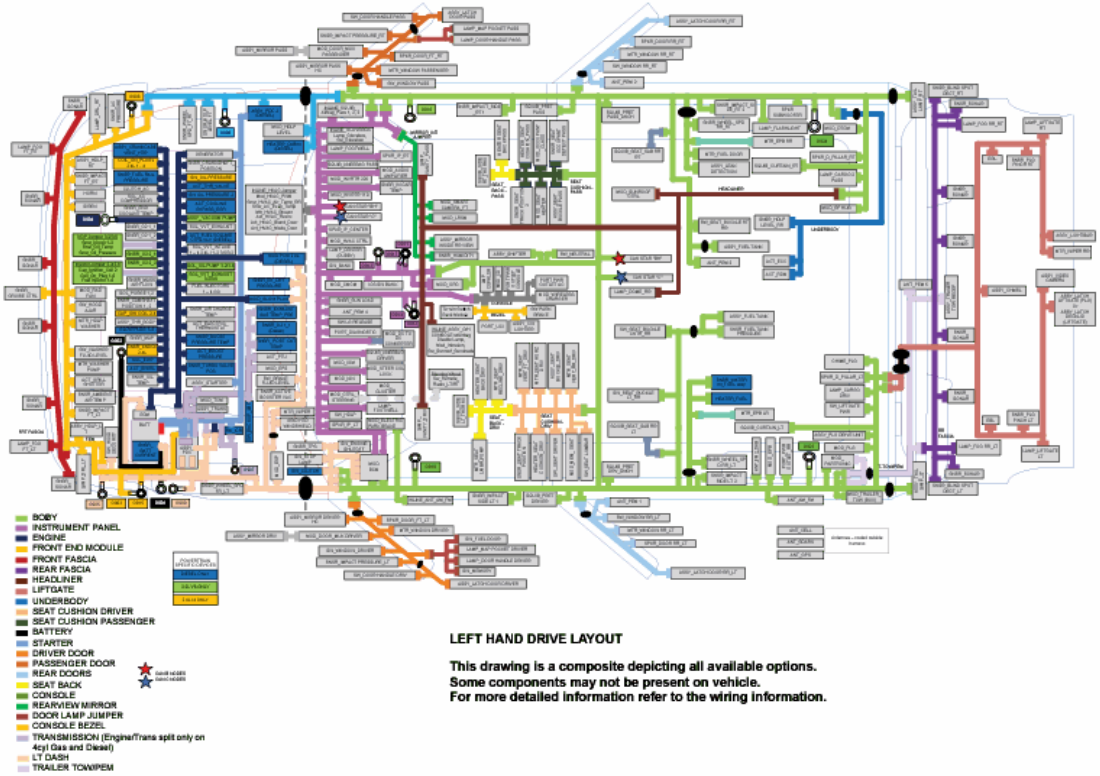

Fig. 4: Electrical Harness/Components Topology (Modules - Inline Connectors - Ground Locations)
Courtesy of CHRYSLER GROUP, LLC

INLINE CONNECTORS AND GROUND LOCATIONS

For a complete wiring diagram, **refer to SYSTEM WIRING DIAGRAMS article** .

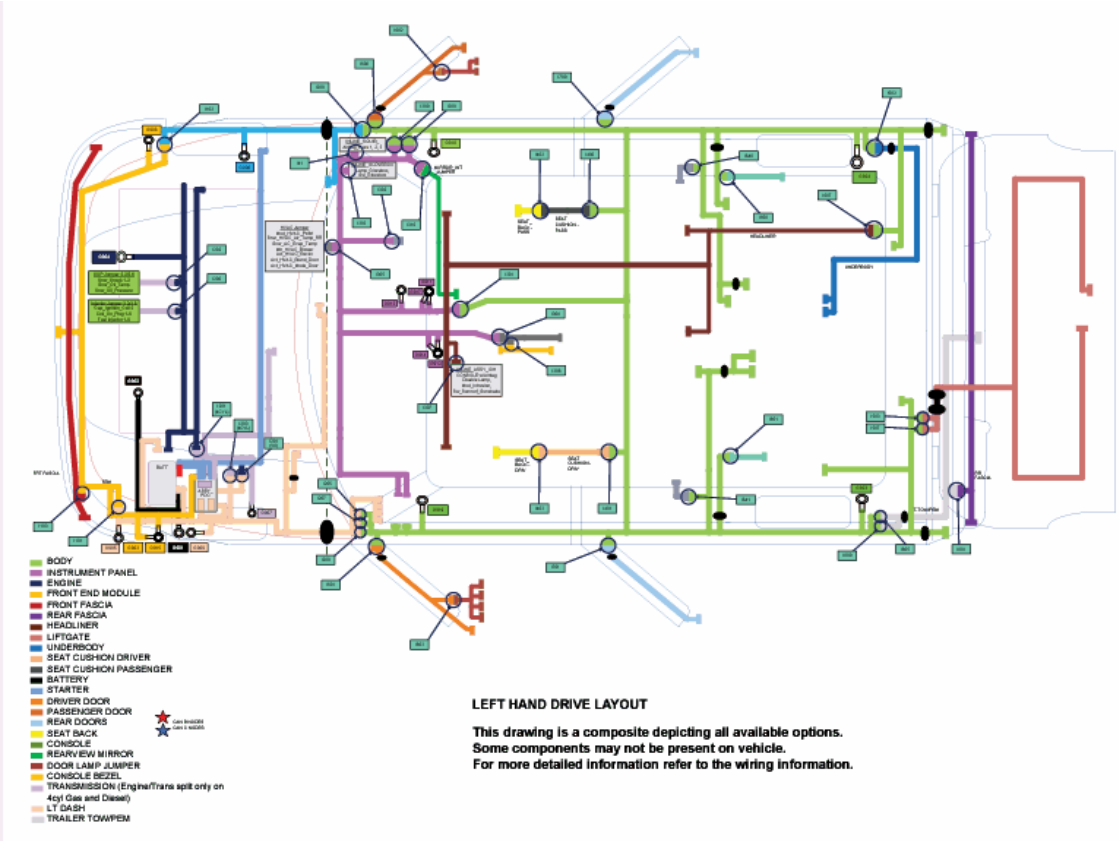

Fig. 5: Electrical Harness/Components Topology Inline Connectors & Ground Locations)
Courtesy of CHRYSLER GROUP, LLC

HOISTING

STANDARD PROCEDURE

STANDARD PROCEDURE - HOISTING

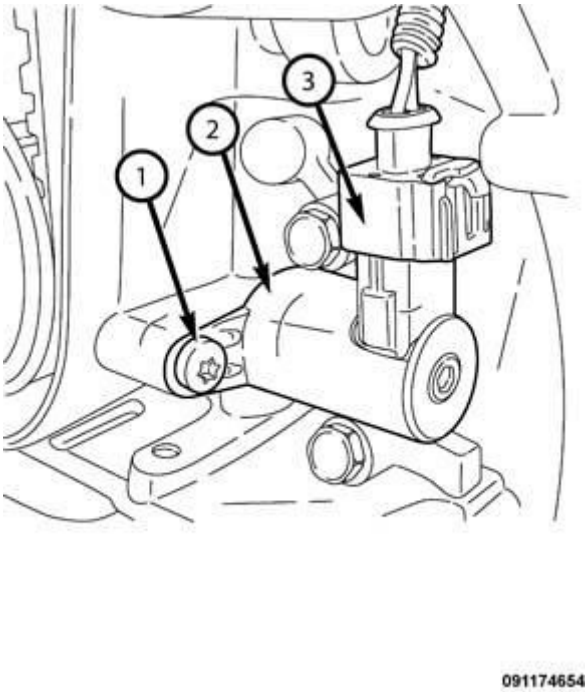

Fig. 6: Jeep Cherokee Lifting Points
Courtesy of CHRYSLER GROUP, LLC

1 - FRAME CONTACT LIFT (SINGLE POST)
1 - CHASSIS LIFT (DUAL LIFT)
1 - OUTBOARD LIFT (DUAL LIFT)
2 - ALTERNATE LIFTING LOCATIONS
2 - FLOOR JACK
3 - DRIVE ON HOIST

WARNING: The hoisting and jack lifting points provided are for a complete vehicle. When the engine or rear suspension is removed from a vehicle, the center of gravity is altered making some hoisting conditions unstable. Properly support or secure vehicle to hoisting device when these conditions exist. Failure to follow these instructions may result in serious or fatal injury.

CAUTION: Do not position hoisting device on any suspension component, including the front or rear suspension crossmembers. Do not hoist on the front and rear bumpers, the lower radiator crossmember, or the front engine mount.

Do not attempt to raise one entire side of the vehicle by placing a floor jack midway between the front and rear wheels. This practice may result in permanent damage to the body.

CAUTION: Due to variations in hoist design it may be necessary to use the secondary lift points to avoid damage to the body or trim parts.

Refer to Owner's Manual provided with vehicle for proper emergency jacking procedures.

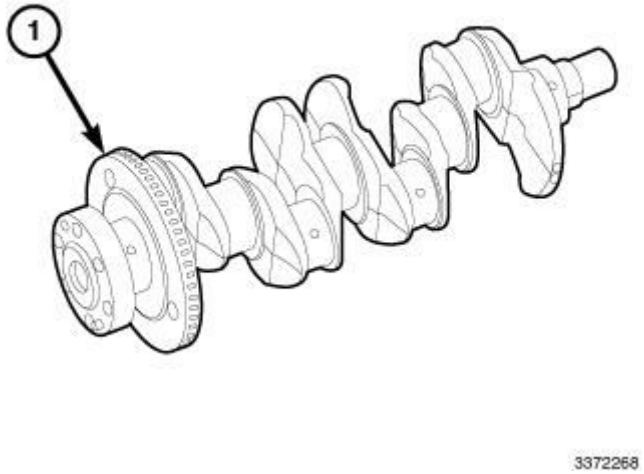

Fig. 7: Front Lifting Locations
Courtesy of CHRYSLER GROUP, LLC

NOTE: **The following highlighted locations are provided to identify safe and effective lifting areas for the KL. In the event that the standard SAE lift pads and/or appropriate lift arm lengths are not available to meet the sill molding openings for flange lifting (1), the alternate lift point locations shown in illustration (2) should be utilized.**

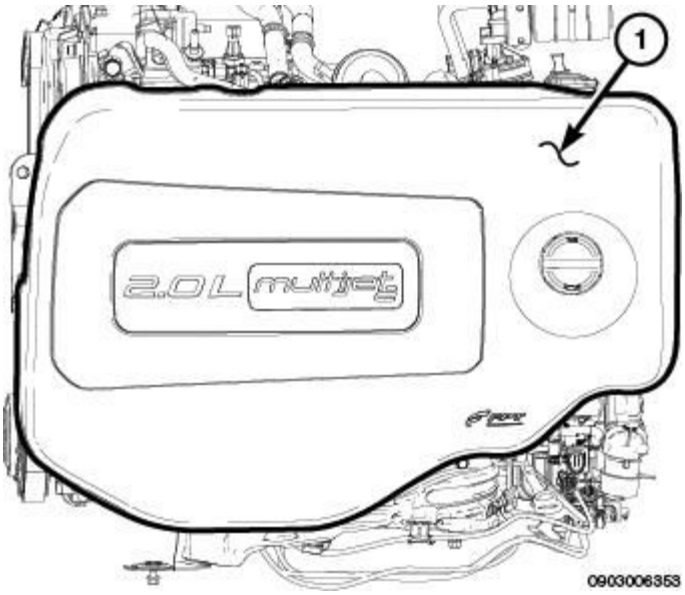

Fig. 8: Rear Lifting Locations
Courtesy of CHRYSLER GROUP, LLC

A hoist with asymmetrical hoist arms can not be adjusted to a position which will allow the hoist adapters to engage the service hoisting locations on the down standing weld flange on the sill at both the rear and the front of the vehicle. Therefore, the secondary service hoisting location will need to be used at the front of the vehicle. The secondary front service hoisting location is the front torque box.

When properly positioned, a floor jack can be used to lift the vehicle and support the raised vehicle with jack stands.

A floor jack or any lifting device must never be used on any part of the underbody other than the described areas.

There are SAE approved triangles in the body indicating where the lifting points are for the vehicle.

JUMP STARTING

STANDARD PROCEDURE

STANDARD PROCEDURE - JUMP STARTING

WARNING: REVIEW ALL SAFETY PRECAUTIONS AND WARNINGS.

WARNING: DO NOT JUMP START A FROZEN BATTERY, PERSONAL INJURY CAN RESULT.

WARNING: DO NOT JUMP START WHEN MAINTENANCE FREE BATTERY INDICATOR DOT IS BRIGHT COLOR.

WARNING: DO NOT ALLOW JUMPER CABLE CLAMPS TO TOUCH EACH OTHER WHEN CONNECTED TO A BOOSTER SOURCE.

WARNING: DO NOT USE OPEN FLAME NEAR BATTERY

WARNING: REMOVE METALLIC JEWELRY WORN ON HANDS OR WRISTS TO AVOID INJURY BY ACCIDENTAL ARCING OF BATTERY CURRENT.

WARNING: WHEN USING A HIGH OUTPUT BOOSTING DEVICE, DO NOT ALLOW BATTERY VOLTAGE TO EXCEED 16 VOLTS.

WARNING: REFER TO INSTRUCTIONS PROVIDED WITH DEVICE BEING USED.

CAUTION: DO NOT ATTEMPT TO PUSH OR TOW THE VEHICLE TO START IT. THE VEHICLE CANNOT BE STARTED THIS WAY. PUSHING WITH ANOTHER VEHICLE MAY DAMAGE THE TRANSAXLE OR THE REAR OF THE VEHICLE.

TO JUMP START A DISABLED VEHICLE:

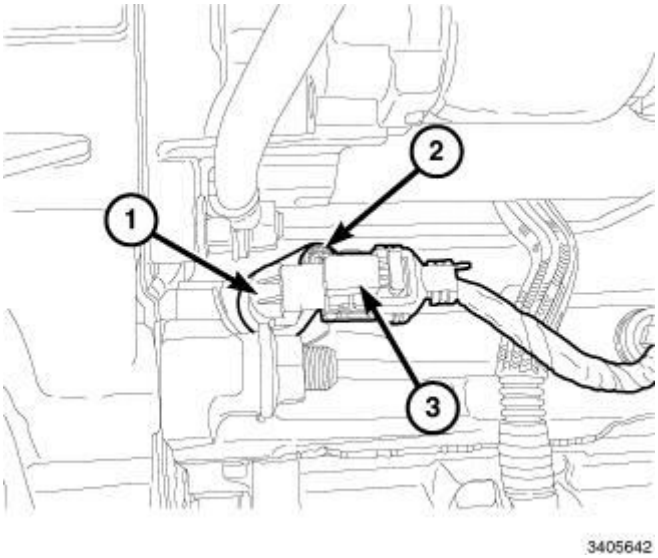

Fig. 9: Jumper Cable RED clamp & Battery Positive Terminal
Courtesy of CHRYSLER GROUP, LLC

1.
   - Inspect the battery cable terminal clamps for damage. Replace any battery cable that has a damaged or deformed terminal clamp.
   - Inspect the battery tray and battery hold down hardware for damage. Replace any damaged parts.
   - Slide the thermal guard off of the battery case, if equipped. Inspect the battery case for cracks or other damage that could result in electrolyte leaks. Also, check the battery terminal posts for looseness. Batteries with damaged cases or loose terminal posts must be replaced.
   - Inspect the battery thermal guard for tears, cracks, deformation or other damage. Replace any battery thermal guard that has been damaged.
   - Inspect the battery built-in test indicator sight glass (if equipped) for an indication of the battery condition. If the battery is discharged, charge as required. Refer to **BATTERY, STANDARD PROCEDURE** .
2. Raise hood on disabled vehicle and visually inspect engine compartment for:
   - Generator drive belt condition and tension.

CAUTION: If the cause of starting problem on disabled vehicle is severe, damage to booster vehicle charging system can result.

3. When using another vehicle as a booster source, park the booster vehicle within cable reach. Turn off all accessories, set the parking brake, place the automatic transmission in PARK or the manual transmission in NEUTRAL and turn the ignition OFF.
4. On disabled vehicle, place gear selector in park or neutral and set park brake. Turn off all accessories.
5. Connect jumper cables to booster battery. RED clamp to positive terminal (+). BLACK clamp to negative terminal (-). DO NOT allow clamps at opposite end of cables to touch, electrical arc will result. Review all warnings in this procedure.
6. On disabled vehicle, connect RED jumper cable clamp (1) to positive (+) terminal (2). Connect BLACK jumper cable clamp to engine ground.
7. Start the engine in the vehicle which has the booster battery, let the engine idle a few minutes, then start the engine in the vehicle with the discharged battery.

CAUTION: Do not crank starter motor on disabled vehicle for more than 15 seconds, starter will overheat and could fail.

8. Allow battery in disabled vehicle to charge to at least 12.4 volts (75% charge) before attempting to start engine. If engine does not start within 15 seconds, stop cranking engine and allow starter to cool (15 min.), before cranking again.

DISCONNECT CABLE CLAMPS AS FOLLOWS:

- Disconnect BLACK cable clamp from engine ground on disabled vehicle.
- When using a Booster vehicle, disconnect BLACK cable clamp from battery negative terminal. Disconnect RED cable clamp from battery positive terminal.
- Disconnect RED cable clamp from battery positive terminal on disabled vehicle.

MAINTENANCE SCHEDULES

DESCRIPTION

NAFTA AND PUERTO RICO

OIL CHANGE INDICATOR SYSTEM

The Scheduled Maintenance services listed in this Service Information must be done at the times or mileages specified to protect your vehicle warranty and ensure the best vehicle performance and reliability. More frequent maintenance may be needed for vehicles in severe operating conditions, such as dusty areas and very short trip driving. Inspection and service should also be done anytime a malfunction is suspected.

The vehicle is equipped with an automatic oil change indicator system. The oil change indicator system will remind you that it is time to take your vehicle in for scheduled maintenance.

Based on engine operation conditions, the oil change indicator message will illuminate. This means that service

is required for your vehicle. Operating conditions such as frequent short-trips, trailer tow, extremely hot or cold ambient temperatures, and E85 fuel usage will influence when the "Change Oil" or "Oil Change Required" message is displayed. Severe Operating Conditions can cause the change oil message to illuminate as early as 3, 500 miles (5, 600 km) since last reset. Have your vehicle serviced as soon as possible, within the next 500 miles (805 km).

On Electronic Vehicle Information Center (EVIC) equipped vehicles, "Oil Change Required" will be displayed in the EVIC and a single chime will sound, indicating that an oil change is necessary.

On Non-EVIC equipped vehicles, "Change Oil" will flash in the instrument cluster odometer and a single chime will sound, indicating that an oil change is necessary.

NOTE: Under no circumstances should oil change intervals exceed 10, 000 miles (16, 000 km) or twelve months, whichever comes first.

OIL CHANGE INDICATOR - RESET

The vehicle is equipped with an engine oil change indicator system. The "Oil Change Required" message flashes in the EVIC display for approximately ten seconds after a single chime has sounded, to indicate the next scheduled oil change interval. The engine oil change indicator system is duty cycle based, which means the engine oil change interval may fluctuate depending upon your personal driving style.

Unless reset, this message continues to display each time you turn the ignition switch to the ON/RUN position. To turn off the message temporarily, press and release the Menu button. To reset the oil change indicator system (after performing the scheduled maintenance) perform the following procedure:

1. Turn the ignition switch to the "ON" position. Do not start the engine.
2. Fully press the accelerator pedal slowly three times within ten seconds.
3. Turn the ignition switch to the "LOCK" position.

NOTE: If the indicator message illuminates when you start the vehicle, the oil change indicator system did not reset. If necessary, repeat this procedure.

ONCE A MONTH OR BEFORE A LONG TRIP

- Check engine oil level
- Check windshield washer fluid level
- Check tire pressure and look for unusual wear or damage.
- Check the fluid levels of coolant reservoir and brake master cylinder, fill as needed.
- Check function of all interior and exterior lights

CAUTION: Failure to perform the required maintenance items may result in damage to the vehicle.

REQUIRED MAINTENANCE INTERVALS

At Every Oil Change Interval As Indicated By Oil Change Indicator System:
Change oil and filter
Rotate the tires. **Rotate at the first sign of irregular wear, even if it occurs before the oil indicator system turns on.**
Inspect battery and clean and tighten terminals as required
Inspect brake pads, shoes, rotors, drums, hoses and park brake
Inspect engine cooling system protection and hoses
Inspect exhaust system
Inspect engine air cleaner if using in dusty or off-road conditions

Maintenance Chart

Mileage or time passed (whichever comes first)	20, 000	30, 000	40, 000	50, 000	60, 000	70, 000	80, 000	90, 000	100, 000	110, 000	120, 000	130, 000	140, 000	150, 000
Or Years:	2	3	4	5	6	7	8	9	10	11	12	13	14	15
Or Kilometers:	32, 000	48, 000	64, 000	80, 000	96, 000	112, 000	128, 000	144, 000	160, 000	176, 000	192, 000	208, 000	224, 000	240, 000
Additional Inspections														
Inspect the CV boots.	X		X		X		X		X		X		X	
Inspect front suspension, tie rod ends, and replace if necessary.	X		X		X		X		X		X		X	
Inspect the brake linings, parking brake function.	X		X		X		X		X		X		X	
Additional Maintenance														
Replace engine air filter.		X			X			X			X			X
Replace cabin/air conditioning filter.	X		X		X		X		X		X		X	
Replace spark plugs (2.4L Engine). **									X					
Replace spark plugs (3.2L Engine). **									X					
Flush and replace the engine coolant at 10 years or 150, 000 miles (240, 000 km) whichever comes									X					X

first.														
Inspect and replace PCV valve if necessary									X					

** The spark plug change interval is mileage based only, monthly intervals do not apply.

WARNING:

- **You can be badly injured working on or around a motor vehicle. Do only service work for which you have the knowledge and the right equipment. If you have any doubt about your ability to perform a service job, take your vehicle to a competent mechanic.**
- **Failure to properly inspect and maintain your vehicle could result in a component malfunction and effect vehicle handling and performance. This could cause an accident**

Failure to follow these instructions may result in possible serious or fatal injury.

EUROPE/UK - GAS ENGINE

OIL CHANGE INDICATOR SYSTEM

The Scheduled Maintenance services listed in this Service Information must be done at the times or mileages specified to protect your vehicle warranty and ensure the best vehicle performance and reliability. More frequent maintenance may be needed for vehicles in severe operating conditions, such as dusty areas and very short trip driving. Inspection and service should also be done anytime a malfunction is suspected.

The oil change indicator system will remind you that it is time to take your vehicle in for scheduled maintenance.

On Electronic Vehicle Information Center (EVIC) equipped vehicles "Oil Change Required" will be displayed in the EVIC and a single chime will sound, indicating that an oil change is necessary.

The oil change indicator message will illuminate approximately 7, 000 miles (11, 200 km) after the most recent oil change was performed. Have your vehicle serviced as soon as possible, within 500 miles (800 km).

NOTE:

- **The oil change indicator message will not monitor the time since the last oil change. Change the vehicle oil if it has been twelve months since your last oil change even if the oil change indicator message is NOT illuminated.**
- **Change your engine oil more often if you drive your vehicle off-road for an extended period of time.**
- **Under no circumstances should oil change intervals exceed 7, 500 miles (12 000 km) or 12 months, whichever comes first.**

OIL CHANGE INDICATOR - RESET

The vehicle is equipped with an engine oil change indicator system. The "Oil Change Required" message flashes in the EVIC display for approximately ten seconds after a single chime has sounded, to indicate the next scheduled oil change interval.

Unless reset, this message continues to display each time you turn the ignition switch to the ON/RUN position. To turn off the message temporarily, press and release the Menu button. To reset the oil change indicator system (after performing the scheduled maintenance) perform the following procedure:

1. Turn the ignition switch to the "ON" position. Do not start the engine.
2. Fully press the accelerator pedal slowly three times within ten seconds.
3. Turn the ignition switch to the "LOCK" position.

NOTE: If the indicator message illuminates when you start the vehicle, the oil change indicator system did not reset. If necessary, repeat this procedure.

REQUIRED MAINTENANCE INTERVALS

At Each Stop for Fuel

- Check the engine oil level about 5 minutes after a fully warmed engine is shut off. Checking the oil level while the vehicle is on level ground will improve the accuracy of the oil level reading. Add oil only when the level is at or below the ADD or MIN mark.
- Check the windshield washer solvent and add if required.

Once a Month

- Check tire pressure and look for unusual wear or damage.
- Inspect the battery and clean and tighten the terminals as required.
- Check the fluid levels of the coolant reservoir, brake master cylinder, and add fluid as needed.
- Check all lights and other electrical items for correct operation.

At Each Oil Change

- Change the engine oil filter.
- Inspect the brake hoses and lines.

WARNING:

- **You can be badly injured working on or around a motor vehicle. Do only service work for which you have the knowledge and the right equipment. If you have any doubt about your ability to perform a service job, take your vehicle to a competent mechanic.**
- **Failure to properly inspect and maintain your vehicle could result in a component malfunction and effect vehicle handling and**

performance. This could cause an accident

Failure to follow these instructions may result in possible serious or fatal injury.

Perform Maintenance Every (Where time and mileage are listed, follow the interval that occurs first.)			Maintenance Items
Miles	Kilometers	Months	
7500	12000	12	• Change the engine oil and engine oil filter. • Rotate tires. • Inspect the CV joints. • Inspect the front suspension, tie rod ends and boot seals; replace if necessary. • Inspect the brake linings, replace if necessary. • Inspect parking brake function. • Replace the air conditioning/cabin air filter.
15000	24000	24	• Change the engine oil and engine oil filter. • Rotate tires.
22500	36000	36	• Change the engine oil and engine oil filter. • Rotate tires. • Inspect the CV joints. • Inspect the front suspension, tie rod ends and boot seals; replace if necessary. • Inspect the brake linings, replace if necessary. • Inspect parking brake function. • Replace the air conditioning/cabin air filter.
30000	48000	48	• Change the engine oil and engine oil filter. • Rotate tires. • Replace the engine air cleaner filter.
37500	60000	60	• Change the engine oil and engine oil filter. • Rotate tires. • Inspect the CV joints. • Inspect the front suspension, tie rod ends and boot seals; replace if necessary. • Inspect the brake linings, replace if necessary. • Inspect parking brake function. • Replace the air conditioning/cabin air filter.

45000	72000	72	• Change the engine oil and engine oil filter. • Rotate tires.
52500	84000	84	• Change the engine oil and engine oil filter. • Rotate tires. • Inspect the CV joints. • Inspect the front suspension, tie rod ends and boot seals; replace if necessary. • Inspect the brake linings, replace if necessary. • Inspect parking brake function. • Replace the air conditioning/cabin air filter.
60000	96000	96	• Change the engine oil and engine oil filter. • Rotate tires. • Replace the engine air cleaner filter.
67500	108000	108	• Change the engine oil and engine oil filter. • Rotate tires. • Inspect the CV joints. • Inspect the front suspension, tie rod ends and boot seals; replace if necessary. • Inspect the brake linings, replace if necessary. • Inspect parking brake function. • Replace the air conditioning/cabin air filter. • Replace the spark plugs (2.4L & 3.2L Engines).* * The spark plug change interval is mileage based only, monthly intervals do not apply.
75000	120000	120	• Change the engine oil and engine oil filter. • Rotate tires. • Flush and replace the engine coolant at 120 months or 150, 000 miles (240, 000 km) whichever comes first.
82500	132000	132	• Change the engine oil and engine oil filter. • Rotate tires. • Inspect the CV joints. • Inspect the front suspension, tie rod ends and boot seals; replace if necessary. • Inspect the brake linings, replace if necessary. • Inspect parking brake function. • Replace the air conditioning/cabin air filter.

90000	144000	144	• Change the engine oil and engine oil filter. • Rotate tires. • Replace the engine air cleaner filter.
97500	156000	156	• Change the engine oil and engine oil filter. • Rotate tires. • Inspect the CV joints. • Inspect the front suspension, tie rod ends and boot seals; replace if necessary. • Inspect the brake linings, replace if necessary. • Inspect parking brake function. • Replace the air conditioning/cabin air filter. • Inspect and replace PCV valve if necessary.
105000	168000	168	• Change the engine oil and engine oil filter. • Rotate tires.
112500	180000	180	• Change the engine oil and engine oil filter. • Rotate tires. • Inspect the CV joints. • Inspect the front suspension, tie rod ends and boot seals; replace if necessary. • Inspect the brake linings, replace if necessary. • Inspect parking brake function. • Replace the air conditioning/cabin air filter.
120000	192000	192	• Change the engine oil and engine oil filter. • Rotate tires. • Replace the engine air cleaner filter.
127500	204000	204	• Change the engine oil and engine oil filter. • Rotate tires. • Inspect the CV joints. • Inspect the front suspension, tie rod ends and boot seals; replace if necessary. • Inspect the brake linings, replace if necessary. • Inspect parking brake function. • Replace the air conditioning/cabin air filter.
135000	216000	216	• Change the engine oil and engine oil filter. • Rotate tires. • Replace the spark plugs (2.4L & 3.2L Engines).*

			* The spark plug change interval is mileage based only, monthly intervals do not apply.
142500	228000	228	• Change the engine oil and engine oil filter. • Rotate tires. • Inspect the CV joints. • Inspect the front suspension, tie rod ends and boot seals; replace if necessary. • Inspect the brake linings, replace if necessary. • Inspect parking brake function. • Replace the air conditioning/cabin air filter.
150000	240000	240	• Change the engine oil and engine oil filter. • Rotate tires. • Replace the engine air cleaner filter. • Flush and replace the engine coolant at 120 months or 150, 000 miles (240, 000 km) whichever comes first.

EUROPE/UK - DIESEL ENGINE

The maintenance intervals shown in chart below should be performed as indicated in this Service Information.

NOTE:

- **Under no circumstances should oil change intervals exceed 12, 500 miles (20 000 km) or 12 months, whichever comes first.**
- **Flush and replace the engine coolant at 120 months or 150, 000 miles (240, 000 km) whichever comes first.**

At Each Stop for Fuel

- Check the engine oil level about 15 minutes after a fully warmed engine is shut off. Checking the oil level while the vehicle is on level ground will improve the accuracy of the oil level reading. Add oil only when the level is at or below the ADD or MIN mark.
- Check the windshield washer solvent and add if required.

Once a Month

- Check tire pressure and look for unusual wear or damage.
- Inspect the battery and clean and tighten the terminals as required.
- Check the fluid levels of the coolant reservoir, brake master cylinder, and add fluid as needed.
- Check all lights and other electrical items for correct operation.

At Each Oil Change

- Change the engine oil filter.
- Inspect the brake hoses and lines.
- Inspect for the presence of water in the fuel filter/water separator unit.

Perform Maintenance Every (Where time and mileage are listed, follow the interval that occurs first.)			Maintenance Items
Miles	Kilometers	Months	
12500	20000	12	• Change the engine oil and engine oil filter. • Rotate tires. • Inspect the CV joints. • Inspect the front suspension, tie rod ends and boot seals; replace if necessary. • Inspect the brake linings, replace if necessary. • Inspect parking brake function. • Replace the air conditioning/cabin air filter.
25000	40000	24	• Change the engine oil and engine oil filter. • Replace the engine air cleaner filter. • Rotate tires. • Replace the engine fuel filter.
37500	60000	36	• Change the engine oil and engine oil filter. • Rotate tires. • Inspect the CV joints. • Inspect the front suspension, tie rod ends and boot seals; replace if necessary. • Inspect the brake linings, replace if necessary. • Inspect parking brake function. • Replace the air conditioning/cabin air filter.
50000	80000	48	• Change the engine oil and engine oil filter. • Replace the engine air cleaner filter. • Rotate tires. • Replace the engine fuel filter. • Change the manual transmission fluid if using your vehicle for any of the following: trailer towing, heavy loading, taxi, police, delivery service (commercial service), off-road, desert operation or more than 50% of your driving is at sustained speeds during hot weather, above 90°F (32°C).
62500	100000	60	

			• Change the engine oil and engine oil filter. • Rotate tires. • Inspect the CV joints. • Inspect the front suspension, tie rod ends and boot seals; replace if necessary. • Inspect the brake linings, replace if necessary. • Inspect parking brake function. • Replace the air conditioning/cabin air filter.
75000	120000	72	• Change the engine oil and engine oil filter. • Replace the engine air cleaner filter. • Rotate tires. • Replace the engine fuel filter.
87500	140000	84	• Change the engine oil and engine oil filter. • Rotate tires. • Inspect the CV joints. • Inspect the front suspension, tie rod ends and boot seals; replace if necessary. • Inspect the brake linings, replace if necessary. • Inspect parking brake function. • Replace the air conditioning/cabin air filter.
100000	160000	96	• Change the engine oil and engine oil filter. • Replace the engine air cleaner filter. • Rotate tires. • Replace the engine fuel filter. • Change the manual transmission fluid if using your vehicle for any of the following: trailer towing, heavy loading, taxi, police, delivery service (commercial service), off-road, desert operation or more than 50% of your driving is at sustained speeds during hot weather, above 90°F (32°C).

LATIN AMERICA - GAS ENGINE

OIL CHANGE INDICATOR SYSTEM

The Scheduled Maintenance services listed in this Service Information must be done at the times or mileages specified to protect your vehicle warranty and ensure the best vehicle performance and reliability. More frequent maintenance may be needed for vehicles in severe operating conditions, such as dusty areas and very short trip driving. Inspection and service should also be done anytime a malfunction is suspected.

The oil change indicator system will remind you that it is time to take your vehicle in for scheduled maintenance.

On Electronic Vehicle Information Center (EVIC) equipped vehicles "Oil Change Required" will be displayed in the EVIC and a single chime will sound, indicating that an oil change is necessary.

The oil change indicator message will illuminate approximately 7, 000 miles (11, 200 km) after the most recent oil change was performed. Have your vehicle serviced as soon as possible, within 500 miles (800 km).

NOTE:

- **The oil change indicator message will not monitor the time since the last oil change. Change the vehicle oil if it has been 6 months since your last oil change even if the oil change indicator message is NOT illuminated.**
- **Change your engine oil more often if you drive your vehicle off-road for an extended period of time.**
- **Under no circumstances should oil change intervals exceed 7, 500 miles (12 000 km) or 6 months, whichever comes first.**

OIL CHANGE INDICATOR - RESET

The vehicle is equipped with an engine oil change indicator system. The "Oil Change Required" message flashes in the EVIC display for approximately ten seconds after a single chime has sounded, to indicate the next scheduled oil change interval.

Unless reset, this message continues to display each time you turn the ignition switch to the ON/RUN position. To turn off the message temporarily, press and release the Menu button. To reset the oil change indicator system (after performing the scheduled maintenance) perform the following procedure:

1. Turn the ignition switch to the "ON" position. Do not start the engine.
2. Fully press the accelerator pedal slowly three times within ten seconds.
3. Turn the ignition switch to the "LOCK" position.

NOTE: **If the indicator message illuminates when you start the vehicle, the oil change indicator system did not reset. If necessary, repeat this procedure.**

REQUIRED MAINTENANCE INTERVALS

At Each Stop for Fuel

- Check the engine oil level about 5 minutes after a fully warmed engine is shut off. Checking the oil level while the vehicle is on level ground will improve the accuracy of the oil level reading. Add oil only when the level is at or below the ADD or MIN mark.
- Check the windshield washer solvent and add if required.

Once a Month

- Check tire pressure and look for unusual wear or damage.
- Inspect the battery and clean and tighten the terminals as required.
- Check the fluid levels of the coolant reservoir, brake master cylinder, and add fluid as needed.
- Check all lights and other electrical items for correct operation.

At Each Oil Change

- Change the engine oil filter.
- Inspect the brake hoses and lines.

WARNING:

- **You can be badly injured working on or around a motor vehicle. Do only service work for which you have the knowledge and the right equipment. If you have any doubt about your ability to perform a service job, take your vehicle to a competent mechanic.**
- **Failure to properly inspect and maintain your vehicle could result in a component malfunction and effect vehicle handling and performance. This could cause an accident**

Failure to follow these instructions may result in possible serious or fatal injury.

Perform Maintenance Every (Where time and mileage are listed, follow the interval that occurs first.)			Maintenance Items
Miles	Kilometers	Months	
7500	12000	6	• Change the engine oil and engine oil filter. • Rotate tires. • Inspect the CV joints. • Inspect the front suspension, tie rod ends and boot seals; replace if necessary. • Inspect the brake linings, replace if necessary. • Inspect parking brake function. • Replace the air conditioning/cabin air filter.
15000	24000	12	• Change the engine oil and engine oil filter. • Rotate tires.
22500	36000	18	• Change the engine oil and engine oil filter. • Rotate tires. • Inspect the CV joints. • Inspect the front suspension, tie rod ends and boot seals; replace if necessary.

			• Inspect the brake linings, replace if necessary. • Inspect parking brake function. • Replace the air conditioning/cabin air filter.
30000	48000	24	• Change the engine oil and engine oil filter. • Rotate tires. • Replace the engine air cleaner filter.
37500	60000	30	• Change the engine oil and engine oil filter. • Rotate tires. • Inspect the CV joints. • Inspect the front suspension, tie rod ends and boot seals; replace if necessary. • Inspect the brake linings, replace if necessary. • Inspect parking brake function. • Replace the air conditioning/cabin air filter.
45000	72000	36	• Change the engine oil and engine oil filter. • Rotate tires.
52500	84000	42	• Change the engine oil and engine oil filter. • Rotate tires. • Inspect the CV joints. • Inspect the front suspension, tie rod ends and boot seals; replace if necessary. • Inspect the brake linings, replace if necessary. • Inspect parking brake function. • Replace the air conditioning/cabin air filter.
60000	96000	48	• Change the engine oil and engine oil filter. • Rotate tires. • Replace the engine air cleaner filter.
67500	108000	54	• Change the engine oil and engine oil filter. • Rotate tires. • Inspect the CV joints. • Inspect the front suspension, tie rod ends and boot seals; replace if necessary. • Inspect the brake linings, replace if necessary. • Inspect parking brake function. • Replace the air conditioning/cabin air filter. • Replace the spark plugs (2.4L & 3.2L Engines).*

			* The spark plug change interval is mileage based only, monthly intervals do not apply.
75000	120000	60	• Change the engine oil and engine oil filter. • Rotate tires. • Flush and replace the engine coolant at 120 months or 150, 000 miles (240, 000 km) whichever comes first.
82500	132000	66	• Change the engine oil and engine oil filter. • Rotate tires. • Inspect the CV joints. • Inspect the front suspension, tie rod ends and boot seals; replace if necessary. • Inspect the brake linings, replace if necessary. • Inspect parking brake function. • Replace the air conditioning/cabin air filter.
90000	144000	72	• Change the engine oil and engine oil filter. • Rotate tires. • Replace the engine air cleaner filter.
97500	156000	78	• Change the engine oil and engine oil filter. • Rotate tires. • Inspect the CV joints. • Inspect the front suspension, tie rod ends and boot seals; replace if necessary. • Inspect the brake linings, replace if necessary. • Inspect parking brake function. • Replace the air conditioning/cabin air filter. • Inspect and replace PCV valve if necessary.
105000	168000	84	• Change the engine oil and engine oil filter. • Rotate tires.
112500	180000	90	• Change the engine oil and engine oil filter. • Rotate tires. • Inspect the CV joints. • Inspect the front suspension, tie rod ends and boot seals; replace if necessary. • Inspect the brake linings, replace if necessary. • Inspect parking brake function. • Replace the air conditioning/cabin air filter.
120000	192000	96	

			• Change the engine oil and engine oil filter. • Rotate tires. • Replace the engine air cleaner filter.
127500	204000	102	• Change the engine oil and engine oil filter. • Rotate tires. • Inspect the CV joints. • Inspect the front suspension, tie rod ends and boot seals; replace if necessary. • Inspect the brake linings, replace if necessary. • Inspect parking brake function. • Replace the air conditioning/cabin air filter.
135000	216000	108	• Change the engine oil and engine oil filter. • Rotate tires. • Replace the spark plugs (2.4L & 3.2L Engines).* * The spark plug change interval is mileage based only, monthly intervals do not apply.
142500	228000	114	• Change the engine oil and engine oil filter. • Rotate tires. • Inspect the CV joints. • Inspect the front suspension, tie rod ends and boot seals; replace if necessary. • Inspect the brake linings, replace if necessary. • Inspect parking brake function. • Replace the air conditioning/cabin air filter.
150000	240000	120	• Change the engine oil and engine oil filter. • Rotate tires. • Replace the engine air cleaner filter. • Flush and replace the engine coolant at 120 months or 150, 000 miles (240, 000 km) whichever comes first.

LATIN AMERICA - DIESEL ENGINE

The maintenance intervals shown in chart below should be performed as indicated in this Service Information.

NOTE:

- **Under no circumstances should oil change intervals exceed 12, 500 miles (20 000 km) or 12 months, whichever comes first.**
- **Flush and replace the engine coolant at 120 months or 150, 000 miles (240,**

000 km) whichever comes first.

At Each Stop for Fuel

- Check the engine oil level about 15 minutes after a fully warmed engine is shut off. Checking the oil level while the vehicle is on level ground will improve the accuracy of the oil level reading. Add oil only when the level is at or below the ADD or MIN mark.
- Check the windshield washer solvent and add if required.

Once a Month

- Check tire pressure and look for unusual wear or damage.
- Inspect the battery and clean and tighten the terminals as required.
- Check the fluid levels of the coolant reservoir, brake master cylinder, and add fluid as needed.
- Check all lights and other electrical items for correct operation.

At Each Oil Change

- Change the engine oil filter.
- Inspect the brake hoses and lines.
- Inspect for the presence of water in the fuel filter/water separator unit.

Perform Maintenance Every (Where time and mileage are listed, follow the interval that occurs first.)			Maintenance Items
Miles	Kilometers	Months	
12500	20000	12	• Change the engine oil and engine oil filter. • Rotate tires. • Inspect the CV joints. • Inspect the front suspension, tie rod ends and boot seals; replace if necessary. • Inspect the brake linings, replace if necessary. • Inspect parking brake function. • Replace the air conditioning/cabin air filter.
25000	40000	24	• Change the engine oil and engine oil filter. • Replace the engine air cleaner filter. • Rotate tires. • Replace the engine fuel filter.
37500	60000	36	• Change the engine oil and engine oil filter. • Rotate tires.

			• Inspect the CV joints. • Inspect the front suspension, tie rod ends and boot seals; replace if necessary. • Inspect the brake linings, replace if necessary. • Inspect parking brake function. • Replace the air conditioning/cabin air filter.
50000	80000	48	• Change the engine oil and engine oil filter. • Replace the engine air cleaner filter. • Rotate tires. • Replace the engine fuel filter. • Change the manual transmission fluid if using your vehicle for any of the following: trailer towing, heavy loading, taxi, police, delivery service (commercial service), off-road, desert operation or more than 50% of your driving is at sustained speeds during hot weather, above 90°F (32°C).
62500	100000	60	• Change the engine oil and engine oil filter. • Rotate tires. • Inspect the CV joints. • Inspect the front suspension, tie rod ends and boot seals; replace if necessary. • Inspect the brake linings, replace if necessary. • Inspect parking brake function. • Replace the air conditioning/cabin air filter.
75000	120000	72	• Change the engine oil and engine oil filter. • Replace the engine air cleaner filter. • Rotate tires. • Replace the engine fuel filter.
87500	140000	84	• Change the engine oil and engine oil filter. • Rotate tires. • Inspect the CV joints. • Inspect the front suspension, tie rod ends and boot seals; replace if necessary. • Inspect the brake linings, replace if necessary. • Inspect parking brake function. • Replace the air conditioning/cabin air filter.
100000	160000	96	• Change the engine oil and engine oil filter. • Replace the engine air cleaner filter.

			• Rotate tires. • Replace the engine fuel filter. • Change the manual transmission fluid if using your vehicle for any of the following: trailer towing, heavy loading, taxi, police, delivery service (commercial service), off-road, desert operation or more than 50% of your driving is at sustained speeds during hot weather, above 90°F (32°C).

CHINA

OIL CHANGE INDICATOR SYSTEM

The Scheduled Maintenance services listed in this Service Information must be done at the times or mileages specified to protect your vehicle warranty and ensure the best vehicle performance and reliability. More frequent maintenance may be needed for vehicles in severe operating conditions, such as dusty areas and very short trip driving. Inspection and service should also be done anytime a malfunction is suspected.

The oil change indicator system will remind you that it is time to take your vehicle in for scheduled maintenance.

On Electronic Vehicle Information Center (EVIC) equipped vehicles "Oil Change Required" will be displayed in the EVIC and a single chime will sound, indicating that an oil change is necessary.

The oil change indicator message will illuminate approximately 11, 200 km after the most recent oil change was performed. Have your vehicle serviced as soon as possible, within 800 km.

NOTE:

- **The oil change indicator message will not monitor the time since the last oil change. Change the vehicle oil if it has been 6 months since your last oil change even if the oil change indicator message is NOT illuminated.**
- **Change your engine oil more often if you drive your vehicle off-road for an extended period of time.**
- **Under no circumstances should oil change intervals exceed 12 000 km or 6 months, whichever comes first.**

OIL CHANGE INDICATOR - RESET

The vehicle is equipped with an engine oil change indicator system. The "Oil Change Required" message flashes in the EVIC display for approximately ten seconds after a single chime has sounded, to indicate the next scheduled oil change interval.

Unless reset, this message continues to display each time you turn the ignition switch to the ON/RUN position. To turn off the message temporarily, press and release the Menu button. To reset the oil change indicator system (after performing the scheduled maintenance) perform the following procedure:

1. Turn the ignition switch to the "ON" position. Do not start the engine.
2. Fully press the accelerator pedal slowly three times within ten seconds.
3. Turn the ignition switch to the "LOCK" position.

NOTE: **If the indicator message illuminates when you start the vehicle, the oil change indicator system did not reset. If necessary, repeat this procedure.**

REQUIRED MAINTENANCE INTERVALS

Perform Maintenance Every (Where time and mileage are listed, follow the interval that occurs first.)			Maintenance Items
Miles	Kilometers	Months	
7500	12000	6	• Change the engine oil and engine oil filter. • Rotate tires. • Inspect the CV joints. • Inspect the front suspension, tie rod ends and boot seals; replace if necessary. • Inspect the brake linings, replace if necessary. • Inspect parking brake function. • Replace the air conditioning/cabin air filter.
15000	24000	12	• Change the engine oil and engine oil filter. • Rotate tires.
22500	36000	18	• Change the engine oil and engine oil filter. • Rotate tires. • Inspect the CV joints. • Inspect the front suspension, tie rod ends and boot seals; replace if necessary. • Inspect the brake linings, replace if necessary. • Inspect parking brake function. • Replace the air conditioning/cabin air filter.
30000	48000	24	• Change the engine oil and engine oil filter. • Rotate tires. • Replace the engine air cleaner filter.
37500	60000	30	• Change the engine oil and engine oil filter. • Rotate tires. • Inspect the CV joints. • Inspect the front suspension, tie rod ends and boot

			seals; replace if necessary. • Inspect the brake linings, replace if necessary. • Inspect parking brake function. • Replace the air conditioning/cabin air filter.
45000	72000	36	• Change the engine oil and engine oil filter. • Rotate tires.
52500	84000	42	• Change the engine oil and engine oil filter. • Rotate tires. • Inspect the CV joints. • Inspect the front suspension, tie rod ends and boot seals; replace if necessary. • Inspect the brake linings, replace if necessary. • Inspect parking brake function. • Replace the air conditioning/cabin air filter.
60000	96000	48	• Change the engine oil and engine oil filter. • Rotate tires. • Replace the engine air cleaner filter.
67500	108000	54	• Change the engine oil and engine oil filter. • Rotate tires. • Inspect the CV joints. • Inspect the front suspension, tie rod ends and boot seals; replace if necessary. • Inspect the brake linings, replace if necessary. • Inspect parking brake function. • Replace the air conditioning/cabin air filter. • Replace the spark plugs (2.4L & 3.2L Engines).* * The spark plug change interval is mileage based only, monthly intervals do not apply.
75000	120000	60	• Change the engine oil and engine oil filter. • Rotate tires.
82500	132000	66	• Change the engine oil and engine oil filter. • Rotate tires. • Inspect the CV joints. • Inspect the front suspension, tie rod ends and boot seals; replace if necessary. • Inspect the brake linings, replace if necessary. • Inspect parking brake function.

			• Replace the air conditioning/cabin air filter.
90000	144000	72	• Change the engine oil and engine oil filter. • Rotate tires. • Replace the engine air cleaner filter.
97500	156000	78	• Change the engine oil and engine oil filter. • Rotate tires. • Inspect the CV joints. • Inspect the front suspension, tie rod ends and boot seals; replace if necessary. • Inspect the brake linings, replace if necessary. • Inspect parking brake function. • Replace the air conditioning/cabin air filter. • Inspect and replace PCV valve if necessary.
105000	168000	84	• Change the engine oil and engine oil filter. • Rotate tires.
112500	180000	90	• Change the engine oil and engine oil filter. • Rotate tires. • Inspect the CV joints. • Inspect the front suspension, tie rod ends and boot seals; replace if necessary. • Inspect the brake linings, replace if necessary. • Inspect parking brake function. • Replace the air conditioning/cabin air filter.
120000	192000	96	• Change the engine oil and engine oil filter. • Rotate tires. • Replace the engine air cleaner filter.
127500	204000	102	• Change the engine oil and engine oil filter. • Rotate tires. • Inspect the CV joints. • Inspect the front suspension, tie rod ends and boot seals; replace if necessary. • Inspect the brake linings, replace if necessary. • Inspect parking brake function. • Replace the air conditioning/cabin air filter.
135000	216000	108	• Change the engine oil and engine oil filter. • Rotate tires. • Replace the spark plugs (2.4L & 3.2L Engines).*

			* The spark plug change interval is mileage based only, monthly intervals do not apply.
142500	228000	114	• Change the engine oil and engine oil filter. • Rotate tires. • Inspect the CV joints. • Inspect the front suspension, tie rod ends and boot seals; replace if necessary. • Inspect the brake linings, replace if necessary. • Inspect parking brake function. • Replace the air conditioning/cabin air filter.
150000	240000	120	• Change the engine oil and engine oil filter. • Rotate tires. • Replace the engine air cleaner filter. • Flush and replace the engine coolant at 120 months or 150, 000 miles (240, 000 km) whichever comes first.

INSPECTION

INSPECTION

The following steps outline the dealer inspection procedure required every 5 years for vehicles covered under the terms of the Lifetime Powertrain Warranty. Refer to the appropriate warranty information for additional terms and coverages applicable to the Lifetime Powertrain Warranty.

1. Lift the vehicle on a suitable hoist.
2. Check all Powertrain components for leaks or physical damage. Note any concerns.
3. Lower the vehicle and check the level and condition of the engine oil.
4. Connect a diagnostic scan tool and check for any active Powertrain Diagnostic Trouble Codes (DTC).

NEW VEHICLE PREPARATION INSTRUCTIONS

STANDARD PROCEDURE

STANDARD PROCEDURE - NEW VEHICLE PREPARATION

NEW VEHICLE PREP INSTRUCTIONS - VEHICLE READINESS

DESCRIPTION	ACTION
Keep All Protective Transit Film and Wheel Covers & Films on vehicle until sold, or up to 180 Days	Keep All Protective Transit Film and Wheel Covers & Films on vehicle until sold, or up to 180 Days.

Install Ignition Off Draw (IOD) Fuse	Locate and install/connect Ignition Off Draw fuse or connector.
Place vehicle into Customer Mode (if no IOD fuse)	With the key in the on position, turn on the hazard lamps, then press and hold the up arrow on the steering wheel for 5 seconds. The EVIC display will update once the vehicle goes into customer mode. Once the mode has been changed, turn off the hazard lamps.
Inflate tire pressure to maximum side wall pressure (except heavy duty trucks)	Increase the tire pressure to maximum sidewall pressure if vehicle is going into lot storage.
Install all "Shipped Loose" items	Install all "Shipped Loose" items
Install Front License Plate Bracket (if required)	Install Front License Plate Bracket
Install Roof Rack	Install Roof Rack
Install Antenna	Install Antenna
Install Wheel Center Caps	Install Wheel Center Caps
Reset Tire Pressure Light Load Switch (if equipped)	If vehicle is going into storage and tire pressure is being set to maximum, switch the tire pressure light load setting to "maximum load" using the button on the instrument panel.

NEW VEHICLE PREP INSTRUCTIONS - UNDERHOOD

DESCRIPTION	ACTION
Hood Latch and Safety Catch - Adjust as Needed	Verify the operation of the hood release system including the inside hood release lever and the outside hood secondary safety catch. Adjust if necessary. The safety catch prevents the hood from going to the full open position until it is manually released. To test the safety catch, unlatch the hood with the interior hood release lever and attempt to raise the hood without operating the safety catch.
Battery State-of-Charge - document voltage	Check the battery state of charge by connecting a digital voltmeter at the jump-start locations. The battery voltage should be at least 12.4 volts. If charging is necessary, follow the Service Information procedures and recharge the battery. Record voltage on New Vehicle Prep (NVP) form.
Loose Attachments, Routing and Clearance	Inspect the following for routing, loose attachments, connections, and clearance. Reroute and tighten as required: Brake Lines, Fuel Lines, Power Steering Hoses, Vacuum Hoses, Clutch Lines, Refrigerant Lines, Wiring, Belts.
All Fluid Levels	Refer to the Owner's Manual or service information for proper fluid level inspection locations.

No Fluid Leaks present	Visually inspect the underhood area to make sure absence of fluid leaks. Check clamps for tightness an full engagement.

NEW VEHICLE PREP INSTRUCTIONS - UNDER VEHICLE

DESCRIPTION	ACTION
No Fluid Leaks present	Raise the vehicle on an appropriate hoist and check the following: Loose Attachments, Routing Clearance and Damage, Absence of Fluid Leaks. Refer to Service Information for proper lift points. Check clamps for tightness and full engagement.
Loose Attachments, Routing, Clearance, Damage	Raise the vehicle on an appropriate hoist and check the following: Loose Attachments, Routing Clearance and Damage, Absence of Fluid Leaks. Refer to Service Information for proper lift points. Check clamps for tightness and full engagement.

NEW VEHICLE PREP INSTRUCTIONS - ROAD TEST

DESCRIPTION	ACTION
Perform Road Test, Mileage: Before _____ After _____	Record mileage before and after road test.
Engine Starts with All Keys	Start vehicle with all sets of keys.
All Warning Lights and Gauges / No DTCs	Verify all warning lights and gauges are operating properly, and no fault codes exist.
Keyless Go	Make sure vehicle starts with push button, when key is inside vehicle.
Engine Starts Only in Park & Neutral	Verify engine will only start while automatic transmission is in park or neutral.
Engine Starts Only with Clutch Depressed	Verify engine will only start when clutch is depressed on manual transmission vehicles.
Service and Parking Brakes	Apply the service brakes while the car is in motion. Be sure the brake operation is smooth and positive. Make sure the vehicle stops in a straight line and without pulling to one side. Make sure there is no shudder or vibration when braking. Make sure that the parking brake is easy to operate. Make sure the parking brake does not drag.
Brake Transmission Shift Interlock	Make sure that the vehicle will only start when the brake is depressed on vehicles with automatic transmission.
Clutch / Manual Transmission Shifting	Check for smooth shifting. Make sure shift lever operates easily and smoothly. Check for proper synchronization. The gears should not grind.
	Make sure that the park lock mechanism holds the

Automatic Transmission Shifting	vehicle. With the vehicle on a grade, put the automatic transmission in park and slowly release the service brake to check the operation of the park mechanism. Make sure the shift lever operates easily and smoothly. Check for smooth shifting. Check for proper upshifting and downshifting.
Autostick	Verify that Autostick feature allows proper shifting through the gears.

NEW VEHICLE PREP INSTRUCTIONS - ROAD TEST

DESCRIPTION	ACTION
Engine Performance - Cold	The engine should: start properly, idle smoothly and at proper speed, be free from stumbling or hesitation, produce sufficient power, be free of unusual noises, operate within the proper temperature range, and stop when the ignition key is shut off or stop button is depressed.
Engine Performance - Warm	The engine should: start properly, idle smoothly and at proper speed, be free from stumbling or hesitation, produce sufficient power, be free of unusual noises, operate within the proper temperature range, and stop when the ignition key is shut off or stop button is depressed.
Steering and Handling	Check that the power assist works properly. Make sure that the steering wheel does not vibrate abnormally at idle or road speed. Make sure that the steering wheel is centered when traveling in a straight line. Check that the vehicle does not drift to either side on flat road surfaces. Make sure that the vehicle does not vibrate or shake abnormally.
Noise, Vibration, Squeaks, or Rattles	Check that the vehicle is free of noise, vibrations, squeaks, or rattles. Tighten any loose fasteners.
Heater / Defrost - Front	Check the heater operation after the vehicle has reached operating temperature. Operate blower motor at all speeds. Operate the system in all modes. Check for hot air at all appropriate outlets. Check for temperature control operation.
Air Conditioning	Make sure that the A/C system cools properly. Operate blower motor at all speeds. Check for cool air at all temperature outlets. Operate the system in all modes.
Rear Heater and Air Conditioning	Check the rear heater and A/C for proper operation.
Defrost - Rear	Make sure that the electric heated rear defroster operates correctly. Turn on and feel for warmth.
	While on road test, verify that the visual warning

Blindspot Monitoring System (if equipped)	indicators located on the side view mirrors are operating properly when an object is within the detection zone.
Cruise Control (if equipped)	Check the "on/off" switch. Check the "set" operation. Check the "resume" function. Check the "accelerate" and "decelerate" function. Check the "cancel" button. Check the brake/clutch release function. If equipped, verify operation of Adaptive Cruise Control function.
Set Compass Variance / Calculation (if equipped)	Refer to the service information on TechCONNECT for information regarding compass setting procedures.

NEW VEHICLE PREP INSTRUCTIONS - ROAD TEST

DESCRIPTION	ACTION
Electronic Sway Bar Disconnect (if equipped)	With vehicle in four wheel drive, press the sway bar switch to activate the system. Verify that the "Sway Bar Indicator Light" is illuminated. **WARNING:** **Do not exceed 18 MPH / 29 KPH while the front sway bar is disconnected. Failure to follow these instructions may result in possible serious or fatal injury.**
Transfer Case (if equipped)	Shift the transfer case through all ranges to make sure all shifting is smooth and operates properly.
Load Leveling Air Suspension (if equipped)	Use the terrain select switch to change the ride height during normal driving conditions. Cycle through each selection and verify proper operation of the air suspension system.
Tire Pressure Monitoring System	Verify that Tire Pressure Monitoring Indicator Light is not illuminated when tires are above minimum inflation recommendations. Make sure that indicator lamp is not flashing/chiming.
Park Assist (if equipped)	Put vehicle in reverse and slowly back up toward an object. Verify that Park Assist warning icon, lights and chimes operate properly as object is approached.
Back-Up Camera (if equipped)	Put vehicle in reverse, verify that screen provides a clear and visible image from rear of vehicle.

NEW VEHICLE PREP INSTRUCTIONS - INTERIOR

DESCRIPTION	ACTION
	From the interior of the vehicle, open and close all doors to make sure ease of operation. Fully open

Visually Inspect Interior Parts for Damage, Fit, etc.	and close the glove box to make sure proper operation. Fully open and close the console door to make sure proper operation. Check interior panels for proper fit and free from damage.
All Interior Lamps and Horn	Operate and visually inspect all interior lights and switches, including: Dome/Map lamps, and if equipped the following: vanity mirror lamps, glove box lamps, ash tray lamp, cigar lighter lamp, radio lamps, door mounted lamps, illuminated entry system. Make sure that the horn operates properly.
Rear View Mirror	Check that the rearview mirror's day/night function Is operating properly.
Front and Rear Wipers and Washers	Activate front windshield wipers, and if equipped, rear window wipers and check for proper operation at all speeds. Activate the front and if equipped, the rear washer. Check the spray pattern for proper operation and aim. Check the intermittent wipe feature for proper operation.
All interior Door Locks including Child Locks	Check all interior door locks for proper operation, including rear child safety door locks if equipped. Place in the unlocked position.

NEW VEHICLE PREP INSTRUCTIONS - INTERIOR

DESCRIPTION	ACTION
Steering Wheel Mounted Controls	Check all steering wheel controls for proper operation.
Memory Mirror / Seat	Verify the proper operation of the memory mirror and seat system.
Cigar Lighter	Check cigar lighter for proper operation.
Power Windows and Window Lock Switch	Fully open and close all power windows to make sure proper operation and sealing. Make sure that the windows operate properly at each door. Verify that window lock button is operating properly.
Power Adjustable Pedals (if equipped)	Check the adjustable pedals for proper operation by pressing the switch on the steering column.
Outside Power Mirrors	Check power mirrors for proper operation.
Heated Mirrors (if equipped)	Check power heated mirrors for proper operation.
Power Folding Mirrors (if equipped)	Check power folding mirrors for proper operation.
Seats and Seat Belts - All Adjustments	Check for correct installation and operation of seat and shoulder belts, and retractors. Check that the restraint system safety labels regarding the use of seatbelts and airbags are in place. Fully cycle the seats for proper adjustments and verify that each seat is securely mounted. Fold down and latch the

	rear seats. Pull forward to check that the latches operate correctly. Check for proper head restraint operation.
Convertible Top (If equipped)	Cycle the convertible top. Check and adjust alignment as required. In cold weather, allow the top to reach room temperature before cycling.
FIAT Cabrio Top (if equipped)	Cycle the convertible top. Check and adjust alignment as required. In cold weather, allow the top to reach room temperature before cycling.
Skyslider (if equipped)	Cycle the Skyslider roof. Check and adjust alignment as required.
Power Sunroof (if equipped)	Cycle sunroof. Make sure that the sunroof opens and closes easily. Verify proper operation of one touch open/close feature if equipped.
Set Clock(s)	Set all clocks to correct time. Refer to Owner's Manual for information regarding clock setting procedures.
Audio System	Turn the radio on and check reception in both AM and FM modes. Check that the CD player operates properly. Check for good sound quality from all speakers.
Satellite Radio (if equipped)	Turn on satellite radio and verify reception.
Disable Front Seat Video (if equipped)	Use the scan tool to disable front seat video while vehicle not in park.
Video System (if equipped)	Test the DVD player to make sure that a DVD will load properly and display on the screen.
Satellite Streaming Video (if equipped)	Satellite Streaming Video.
Wireless Headphones / Video Remote (if equipped)	Check for proper operation of the Wireless Headphones / Video Remote.

NEW VEHICLE PREP INSTRUCTIONS - INTERIOR

DESCRIPTION	ACTION
Heated Steering Wheel (if equipped)	Verify that heated steering wheel is functioning properly.
Rear Sliding Window (if equipped)	Check for proper operation of the manual or power rear sliding window.
Power Outlet(s)	Check all power outlets for proper operation.
Integrated Child Seat / Belt	Check the child restraints and child seats for proper operation.
Place tire changing instruction sheet in left rear quarter panel storage compartment (RT only)	Place tire changing instruction sheet in left rear quarter panel storage compartment (RT only).
Storage bins properly seated around the spare tire (WK only)	Verify that storage bins are properly seated.
	Verify proper operation of power folding third row

Power folding Headrests (if equipped)	head restraints by pressing the power folding switch located on the instrument panel switch bank.
Heated Seats (if equipped)	Check for proper operation of heated seats on all power levels, on all equipped seats.
Power Cooled Seats (if equipped)	Check for proper operation of ventilated seats on all power levels, on all equipped seats.
Heated / Cooled Cup Holders (if equipped)	Check for proper operation of the heated and cooled and cooled cupholders.
Cargo Compartment Cover (if equipped)	Check the rear cargo compartment cover is operating properly.
Vinyl Floor Covering (if equipped)	Verify properly equipped.

NEW VEHICLE PREP INSTRUCTIONS - EXTERIOR

DESCRIPTION	ACTION
Inspect Body and Paint for Damage and Fit/ Finish	Inspect the body exterior for damage, loose or missing items. During the inspection, make sure that no vehicle damage occurred from the time the vehicle was received and the beginning of the New Vehicle Preparation.
Exterior Lamps - Headlamps, Turn Signals, Hazards, Park/Tail/License Plate, Trunk Lights, etc.	Operate and visually inspect the following: Headlamps (High/Low Beams), turn signals, hazard warning flashers, parking/tail/license plate lamps, reverse/back up lamps, fog lamps, stop lamps including center mounted stop lamp, daytime running lamps (if equipped), clearance lamps, cargo bed lamps, any other lamps.
Lock and Unlock all doors with all mechanical keys	Verify all doors lock and unlock with all mechanical keys.
Doors, Liftgate and Tailgate - Adjust Strikers as Needed	Open each door/liftgate/tailgate from the outside to check outside door handle operation. Check the door detent. Partially close all doors to check the open-door detent. Close all doors/liftgates/tailgates to check the operation of latches and strikers. Adjust strikers as required. Verify liftgate/tailgate ease of operation.
Power Liftgate - Inspect for fit and operation (if equipped)	Verify all modes of operation of the power liftgate, including operating the liftgate using the inside switches and the Remote Keyless Entry transmitter.
Power Sliding Door - Inspect for Fit and Operation (if equipped)	Verify all modes of operation of the power sliding door, including operating the sliding door using the inside switches and the Remote Keyless Entry transmitter.
Security Alarm Test (if equipped)	Lock doors using the Remote Keyless Entry Transmitter. Verify the operation of the Vehicle

	Security System warning lamp.
Passive Entry (if equipped)	Verify that the Keyless Enter-N-Go feature is operating properly, by grabbing the door handle of the locked vehicle, while the Remote Keyless Entry transmitter key is within 5 feet of the vehicle. The door should unlock automatically.
Remote Keyless Entry (if equipped)	Verify that doors unlock properly using all key FOBS.
Remote Start (if equipped)	Verify that engine starts with all keys when using Remote Keyless Entry Transmitter.
Top (Wrangler)	For Wrangler equipped with soft top, verify opening and closing operation. For Hard/Soft Top, verify top fits and is seated properly.

NEW VEHICLE PREP INSTRUCTIONS - VEHICLE STORAGE

DESCRIPTION	ACTION
Keep all protective transit film, wheel covers and films on vehicle until sold	Keep all protective transit film, wheel covers and films on vehicle until sold.
Inflate tire pressure to maximum side wall pressure	Inflate tire pressure to maximum side wall pressure (except heavy duty trucks.)
Put Vehicle into Ship Mode (if no IOD fuse)	Simultaneously press the "Front Defrost" and "List/Enter" buttons and hold for five (5) seconds. The EVIC display will update once the vehicle goes into ship mode.
Remove ignition off draw (IOD) Fuse	Remove fuse before storing vehicle to conserve battery.

NEW VEHICLE PREP INSTRUCTIONS - FINAL DETAIL & INSPECTION

DESCRIPTION	ACTION
Perform all incomplete recalls and RRTs	Perform all incomplete recalls and RRTs.
Remove interior and exterior Transportation Protective Covers	Remove exterior protective coatings/coverings from vehicle, remove interior protective covers, grease markings on door jambs, unnecessary labels, etc.
Inspect paint and body, touch up as needed	Make sure that the body is free from paint chips or scratches. Touch up any chips/scratches using thin layers of paint. Make sure that the body is free from dings and dents.
Install IOD Fuse or put vehicle into Customer Mode	Install fuse or place vehicle into customer mode prior to delivery.
Test and record battery state of charge	Check the battery state of charge by connecting a digital voltmeter at the jump-start locations. The battery voltage should be at least 12.4 volts. If charging is necessary, follow the service manual procedures and recharge the battery. Record voltage

	on New Vehicle Prep (NVP) form.
Adjust tire pressures including spare to door placard	Adjust tire pressures including spare to door placard.
Reset Tire Pressure Light Load Switch (if equipped)	Reset the Tire Pressure Light Load Switch back to the "Light Load" setting using the switch on the instrument panel.
Top off Diesel Exhaust Fluid reservoir	Fill the Diesel Exhaust Fluid Reservoir located behind the cab on the driver's side of truck (clearly marked in blue) with Mopar Diesel Exhaust Fluid prior to customer delivery.
Wash and clean vehicle exterior	Wash the entire vehicle. Clean the tire sidewalls and wheel/wheel covers (use non - acidic wheel cleaner). Clean exterior/interior glass surfaces.
Clean vehicle interior	Inspect the interior trim, seats, carpeting, and moldings. Clean as necessary.
Fill Fuel Tank with specified grade	Fill fuel tank with the specified grade of fuel. Refer to Owner's Manual or information tag behind the fuel filler.

TOWING

STANDARD PROCEDURE

STANDARD PROCEDURE - VEHICLE TOWING

WARNINGS AND PRECAUTIONS

WARNING: Do not allow towing attachment devices to contact the fuel tank or lines, fuel leakage can result. Do not lift or tow vehicle by front or rear bumper, or bumper energy absorber units. Do not venture under a lifted vehicle if not supported properly on safety stands. Do not allow passengers to ride in a towed vehicle. Use a safety chain that is independent from the towing attachment device. Failure to follow these instructions may result in personal injury or death.

CAUTION: Do not damage brake lines, exhaust system, shock absorbers, sway bars, or any other under vehicle components when attaching towing device to vehicle. Do not attach towing device to front or rear suspension components. Do not secure vehicle to towing device by the use of front or rear suspension or steering components. Remove or secure loose or protruding objects from a damaged vehicle before towing. Refer to state and local rules and regulations before towing a vehicle. Do not allow weight of towed vehicle to bear on lower fascia, air dams, or spoilers.

CAUTION: Do not flat tow any vehicle equipped with an automatic transmission.

Damage to the drivetrain will result. If these vehicles require towing, make sure all drive wheels are off the ground.

CAUTION: Towing this vehicle in violation of the above requirements can cause severe transmission damage. Damage from improper towing is not covered under the New Vehicle Limited Warranty.

RECOMMENDED TOWING EQUIPMENT

To avoid damage to bumper fascia and air dams use of a flat bed towing device or wheel lift is recommended. When using a wheel lift towing device, be sure the unlifted end of disabled vehicle has at least 100 mm (4 in.) ground clearance. If minimum ground clearance cannot be reached, use a towing dolly. If a flat bed device is used, the approach angle should not exceed 15 degrees.

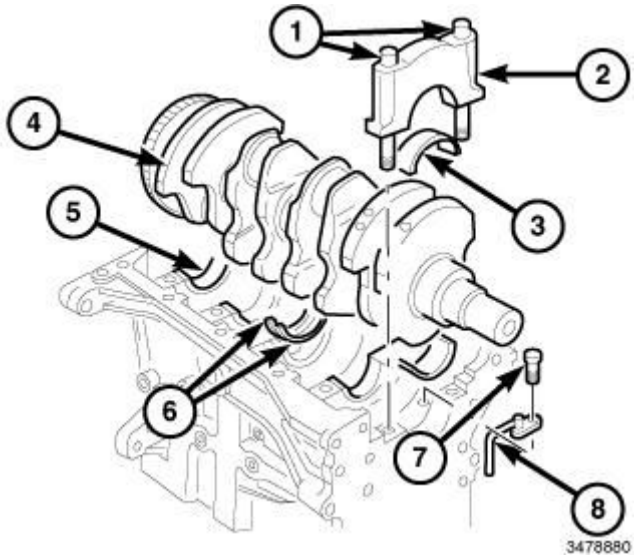

Fig. 10: Recommended Towing Equipment
Courtesy of CHRYSLER GROUP, LLC

1 - WHEEL LIFT 2 - FLAT BED

GROUND CLEARANCE

CAUTION: If vehicle is towed with wheels removed, install lug nuts to retain brake drums or rotors.

A towed vehicle should be raised until the lifted wheels are a minimum 100 mm (4 in.) from the ground. Be sure there is at least 100 mm (4 in.) clearance between the tail pipe and the ground. If necessary, remove the wheels from the lifted end of the vehicle and lower the vehicle closer to the ground, to increase the ground clearance at the rear of the vehicle. Install lug nuts on wheel attaching studs to retain brake drums or rotors.

LOCKED VEHICLE TOWING

If a locked vehicle must be towed, a flat bed hauler is the only recommended method.

FLAT TOWING WITH TOW BAR

- Vehicles equipped with manual transmissions may be flat towed at any legal highway speed, for any distance, if the manual transmission is in NEUTRAL and the ignition switch is in the ACC position.
- Flat towing vehicles equipped with automatic transmissions is

  NOT ALLOWED

  .

  CAUTION: Do not flat tow any vehicle equipped with an automatic transmission. Damage to the drivetrain will result. If these vehicles require towing, make sure all drive wheels are off the ground.

FLAT BED TOWING TIE DOWNS

CAUTION: Do not tie vehicle down by attaching chains or cables to suspension components or engine mounts, damage to vehicle can result.

KL vehicles can be tied to a flat bed device using the reinforced loops located under the front and rear bumpers on the drivers side of the vehicle. There are also four reinforced elongated holes for T or R hooks located on the bottom of the front frame rail torque boxes behind the front wheels and forward of the rear wheels inboard of the rocker panel weld seam.

TOWING - FRONT WHEEL LIFT

Chrysler Corporation recommends that a vehicle be towed with the front end lifted, whenever possible. A 90 cm (36 in.) length of 4x4 wood beam can be placed between the wheel lift device and the bottom of the fascia to prevent damage to vehicle during the lifting operation. The beam can removed after lifting the front of the vehicle.

TOWING - REAR WHEEL LIFT

Towing a KL vehicle with the rear wheels lifted is **NOT ALLOWED** .

2014 GENERAL INFORMATION

Vehicle Quick Reference - Cherokee

CAPACITIES AND RECOMMENDED FLUIDS

DESCRIPTION

FLUID TYPES

When service is required, Chrysler Group LLC recommends that only Mopar® brand parts, lubricants and chemicals be used. Mopar® provides the best engineered products for servicing Chrysler Group LLC vehicles.

Only lubricants bearing designations defined by the following organization should be used to service a Chrysler Group LLC vehicle:

- Society of Automotive Engineers (SAE)
- American Petroleum Institute (API)
- National Lubricating Grease Institute (NLGI)
- European Automobile Manufacturers Association (ACEA)

API QUALITY CLASSIFICATION

9400-9

Fig. 1: API Symbol
Courtesy of CHRYSLER GROUP, LLC

This symbol on the front of an oil container means that the oil has been certified by the American Petroleum Institute (API) to meet all the lubrication requirements specified by Chrysler Group LLC.

GEAR LUBRICANTS

SAE ratings also apply to multigrade gear lubricants. In addition, API classification defines the lubricant's usage, such as API GL-5 and SAE 75W-90.

LUBRICANT RECOMMENDATIONS

CHASSIS

COMPONENT	FLUID, LUBRICANT, OR GENUINE PART
Steering Gear AND Linkage, Ball Joints, Prop Shafts AND Yokes, Wheel Bearings	Mopar® Multi-Purpose Lubricant NLGI Grade 2 EP, GC-LB

BODY

COMPONENT	FLUID, LUBRICANT, AND GENUINE PART
Hinges:	
Door AND Hood	Mopar® Engine Oil
Swing Gate	Mopar® Multi-Purpose Lube NLGI Grade 2 EP, GC-LB
Latches: Door, Hood/Safety Catch, Swing Gate	Mopar® Multi-Purpose Lube NLGI Grade 2 EP, GC-LB
Seat Regulator AND Track	Mopar® Multi-Purpose Lube NLGI Grade 2 EP, GC-LB
Lock Cylinders	Mopar® Lock Cylinder Lube

ENGINE OIL

WARNING: New or used engine oil can be irritating to the skin. Avoid prolonged or repeated skin contact with engine oil. Contaminants in used engine oil, caused by internal combustion, can be hazardous to your health. Thoroughly wash exposed skin with soap and water. Do not wash skin with gasoline, diesel fuel, thinner, or solvents, health problems can result. Do not pollute, dispose of used engine oil properly. Contact your government agency for location of collection center in your area.

When service is required, Chrysler Corporation recommends that only Mopar® brand parts, lubricants and chemicals be used. Mopar® provides the best engineered products for servicing Chrysler Corporation vehicles.

Only lubricants bearing designations defined by the following organization should be used:

- Society of Automotive Engineers (SAE)
- American Petroleum Institute (API)
- National Lubricating Grease Institute (NLGI)
- Association des Constructeurs Europ e ens d' Automobiles (European Automobile Manufacturers Association) (ACEA)

API CERTIFICATION AND LICENSE SYMBOL

9400-9

Fig. 2: API Certification Mark
Courtesy of CHRYSLER GROUP, LLC

Use an engine oil that is API Certified and Licensed to display the certification mark. MOPAR® provides engine oils that meet or exceed, Material Standard MS-6395 requirement.

SAE VISCOSITY

These engine oils are designed to improve low temperature starting and vehicle fuel economy. Refer to the engine oil filler cap for the preferred engine oil viscosity grade for each vehicle. The viscosity grade is also listed in the vehicle quick reference specifications. Refer to **CAPACITIES AND RECOMMENDED FLUIDS, SPECIFICATIONS**. SAE viscosity grades are used to specify the correct viscosity oil for an engine. Use only Multi-Viscosity oils. These are specified with a dual SAE viscosity grade which indicates the cold to hot temperature performance range of the oil.

CONTAINER IDENTIFICATION

9400-9

Fig. 3: API Certification Mark
Courtesy of CHRYSLER GROUP, LLC

The Engine Oil Certification Mark was developed and trademarked by the API to refer customers to those engine oils preferred by the automobile manufacturers. This symbol means that the oil has been certified and licensed by the American Petroleum Institute (API). This certification mark will only be found on the front of the oil containers. Those oils that do not display the "Mark" on the front of the container should not be used.

Chrysler only recommends API Certified engine oils that meet the requirements of Material Standard MS-6395. Use Mopar or an equivalent oil meeting the specification MS-6395.

SYNTHETIC ENGINE OILS

There are a number of engine oils being promoted as either synthetic or semi-synthetic. If you choose to use such a product, use **only** those oils that are certified by the American Petroleum Institute (API) to display the "Certification Mark" and show SAE viscosity grade recommended for each vehicle. Follow the service schedule that describes your driving type.

ENGINE OIL ADDITIVES/SUPPLEMENTS

The manufacturer **does not recommend** the addition of any engine oil additives/supplements to the specified engine oil. Engine oil additives/supplements should not be used to enhance engine oil performance. Engine oil additives/supplements should not be used to extend engine oil change intervals. No additive is known to be safe for engine durability and can degrade emission components. Additives can contain undesirable materials that harm the long term durability of engines and emission systems by:

- Increasing the level of Phosphorus and Sulfur in the engine oil. The API Certified Engine Oils control the Phosphorus and Sulfur contents of the oil to levels that reduce the contamination effect on the vehicle's emission control system.
- Altering the viscosity characteristics of the engine oil so that it no longer meets the requirements of the specified viscosity grade.
- Creating potential for an undesirable additive compatibility interaction in the engine crankcase. The engine oils contain a performance additive system carefully developed to optimize the oil's performance in the engine. The addition of supplements may cause the oil to thicken prematurely, cause excessive deposit build-up and potentially shorten engine life.

ENGINE COOLANT

WARNING: Antifreeze is an ethylene-glycol base coolant and is harmful if swallowed or inhaled. If swallowed, drink two glasses of water and induce vomiting. If inhaled, move to fresh air area. Seek medical attention immediately. Do not store in open or unmarked containers. Wash skin and clothing thoroughly after coming in contact with ethylene-glycol. Keep out of reach of children. Dispose of glycol base coolant properly, contact your dealer or government agency for location of collection center in your area. Do not open a cooling system when the engine is at operating temperature or hot under pressure, personal injury can result. Avoid radiator cooling fan when engine compartment related service is performed, personal injury can result.

CAUTION: Mixing of engine coolant (antifreeze) other than specified Organic Additive Technology (OAT) engine coolant (antifreeze), may result in engine damage and may decrease corrosion protection. Organic Additive Technology (OAT) engine coolant is different and should not be mixed with Hybrid Organic Additive Technology (HOAT) engine coolant (antifreeze). If a non-OAT engine coolant (antifreeze) is introduced into the cooling system in an emergency, it should be replaced with the specified engine coolant (antifreeze) as soon as possible.

YouTube	A multimedia supplement to the instructions contained in this article is available. To view the multimedia example of the condition described go to; **http://www.youtube.com/user/Mitchell1Tips** **then type, "A00641391.vid1" into the "Search Channel" box.**

The cooling system is designed around the coolant. The coolant must accept heat from engine metal, in the cylinder head area near the exhaust valves and engine block. Then coolant carries the heat to the radiator where the tube/fin radiator can transfer the heat to the air.

The use of aluminum cylinder blocks, cylinder heads, and water pumps requires special corrosion protection. Mopar® Antifreeze/Coolant, or the equivalent ethylene-glycol base coolant with organic corrosion inhibitors (called OAT, for Organic Additive Technology) is recommended. This coolant offers the best engine cooling without corrosion when mixed with 50% ethylene-glycol and 50% distilled water to obtain a freeze point of -37°C (-35°F). If it loses color or becomes contaminated, drain, flush, and replace with fresh properly mixed coolant solution.

COOLANT PERFORMANCE

The required ethylene-glycol and water mixture depends upon climate and vehicle operating conditions. The coolant performance of various mixtures follows:

Pure Water- Water can absorb more heat than a mixture of water and ethylene-glycol. This is for purpose of heat transfer only. Water also freezes at a higher temperature and allows corrosion.

100 percent Ethylene-Glycol - The corrosion inhibiting additives in ethylene-glycol need the presence of water to dissolve. Without water, additives form deposits in system. These act as insulation causing temperature to rise to as high as 149°C (300°F). This temperature is hot enough to melt plastic. The increased temperature can result in sever engine damage. In addition, 100 percent ethylene-glycol freezes at -22°C (-8°F).

50/50 Ethylene-Glycol and Water - Is the recommended mixture, it provides protection against freezing to -37°C (-34°F). The antifreeze concentration **must always** be a minimum of 44 percent, year-round in all climates. If percentage is lower, engine parts may be eroded by cavitation. Maximum protection against freezing is provided with a 68 percent antifreeze concentration, which prevents freezing down to -67.7°C (-90° F). A higher percentage will freeze at a warmer temperature. Also, a higher percentage of antifreeze can cause the engine to overheat because specific heat of antifreeze is lower than that of water.

OAT coolant is purple in color. It cannot be mixed with other types of coolant including Chrysler's existing HOAT coolant and only should only be mixed with approved OAT coolant of the same color. Maintenance of the cooling system is not required unless a repair has been made with loss of coolant or the coolant has been contaminated.

CAUTION: Richer antifreeze mixtures cannot be measured with normal field equipment and can cause problems associated with 100 percent ethylene-glycol.

COOLANT SELECTION AND ADDITIVES

The use of aluminum cylinder blocks, cylinder heads and water pumps requires special corrosion protection. Only Mopar® Antifreeze/Coolant (glycol base coolant with corrosion inhibitors called OAT, for Organic Additive Technology) is recommended. This coolant offers the best engine cooling without corrosion when mixed with 50% distilled water to obtain to obtain a freeze point of -37°C (-35°F). If it loses color or becomes contaminated, drain, flush, and replace with fresh properly mixed coolant solution.

CAUTION: Do not use coolant additives that are claimed to improve engine cooling.

FLEXIBLE FUEL VEHICLES

The following information is for Flexible Fuel Vehicles (FFV) only. These vehicles can be identified by the unique Fuel Filler Door Label that states **Ethanol (E-85) or Unleaded Gasoline Only.** This Service Information only covers those subjects that are unique to these vehicles. Please refer to appropriate Service Information for information on features that are common between Flexible Fuel and gasoline only powered vehicles.

CAUTION: Only vehicles with the E-85 fuel filler door label can operate on E-85.

ETHANOL FUEL (E-85)

E-85 is a mixture of approximately 85% fuel ethanol and 15% unleaded gasoline.

WARNING: Ethanol vapors are extremely flammable and could cause serious personal injury. Never have any smoking materials lit in or near the vehicle when removing the fuel filler tube cap (gas cap) or filling the tank. Do not use E-85 as a cleaning agent and never use it near an open flame.

FUEL REQUIREMENTS

The vehicle will operate on both unleaded gasoline with an octane rating of 87, or E-85 fuel, or any mixture of these two.

For best results, a refueling pattern that alternates between E-85 and unleaded gasoline should be avoided. When you do switch fuels, it is recommended that

- you do not switch when the fuel gauge indicates less than 1/4 full
- you do not add less than 5 gallons when refueling
- you operate the vehicle immediately after refueling for a period of at least 5 minutes

Observing these precautions will avoid possible hard starting and/or significant deterioration in driveability during warm up.

NOTE: When the ambient temperature is above 90°F (32C), you may experience hard starting and rough idle following start up even if the above recommendations are followed.

ENGINE OIL SELECTION FOR OPERATING ON E-85

If vehicle operates on E-85 fuel either full or part-time, use only Mopar® Flexible Fuel 5W-30 engine oil or an equivalent that meets Chrysler Standard MS-9214. Equivalent commercial Flexible Fuel engine oils may be labeled as Multi-Fuel, Variable Fuel, Flexible Fuel, etc. These engine oils may be satisfactory if they meet the Chrysler Standard.

SAE 5W-30 engine oil is preferred for use in Flexible Fuel engines.

CAUTION: If Flexible Fuel engine oil is not used when using E-85 fuel, engine wear or damage may result.

ENGINE OIL SELECTION FOR OPERATING ON GASOLINE

If you operate the vehicle on regular unleaded gasoline **ONLY,** use Mopar® oil or an equivalent that meets certified API (American Petroleum Institute) quality.

STARTING

The characteristics of E-85 fuel make it unsuitable for use when ambient temperatures fall below 0°F (-17°C). In the range of 0°F (-17°C) to 32°F (0°C), you may experience an increase in the time it takes for your engine to start, and a deterioration in driveability (sags and/or hesitations) until the engine is fully warmed up.

CRUISING RANGE

Because E-85 fuel contains less energy per gallon than gasoline, you will experience an increase in fuel consumption. You can expect your MPG and your driving range to decrease by about 30% compared to gasoline operation.

REPLACEMENT PARTS

Many components in your Flexible Fuel Vehicle (FFV) are designed to be compatible with ethanol. Always be sure that your vehicle is serviced with correct ethanol compatible parts.

CAUTION: Replacing fuel system components with non-ethanol compatible components can damage your vehicle and may void the warranty.

MAINTENANCE

If you operate the vehicle using E-85 fuel, follow Schedule "B".

AUTOMATIC TRANSAXLE FLUID

MOPAR® ZF 8&9 Speed ATF™ Automatic Transmission Fluid, Shell L12108 Transmission Fluid, or equivalent is required in the transmission. Failure to use the correct fluid may affect the function or performance of the transmission.

FLUID ADDITIVES

Chrysler strongly recommends against the addition of any fluids to the transmission, other than those automatic transmission fluids listed above. Exceptions to this policy are the use of special dyes to aid in detecting fluid leaks.

Various "special" additives and supplements exist that claim to improve shift feel and/or quality. These additives and others also claim to improve converter clutch operation and inhibit overheating, oxidation, varnish, and sludge. These claims have not been supported to the satisfaction of Chrysler and these additives **must not be used.** The use of transmission "sealers" should also be avoided, since they may adversely affect the integrity of transmission seals.

FUEL REQUIREMENTS

Your engine is designed to meet all emissions regulations and provide excellent fuel economy and performance when using high quality unleaded gasoline having an octane rating of 87. The use of premium gasoline is not recommended. The use of premium gasoline will provide no benefit over high quality regular gasoline, and in some circumstances may result in poorer performance.

Light spark knock at low engine speeds is not harmful to your engine. However, continued heavy spark knock at high speeds can cause damage and immediate service is required. Engine damage resulting from operation with a heavy spark knock may not be covered by the new vehicle warranty.

Poor quality gasoline can cause problems such as hard starting, stalling and hesitations. If you experience these symptoms, try another brand of gasoline before considering service for the vehicle.

Over 40 auto manufacturers world-wide have issued and endorsed consistent gasoline specifications (the Worldwide Fuel Charter, WWFC) to define fuel properties necessary to deliver enhanced emissions, performance and durability for your vehicle. Chrysler recommends the use of gasolines that meet the WWFC specifications if they are available.

REFORMULATED GASOLINE

Many areas of the country require the use of cleaner burning gasoline referred to as "reformulated" gasoline. Reformulated gasoline contain oxygenates, and are specifically blended to reduce vehicle emissions and improve air quality.

Chrysler strongly supports the use of reformulated gasoline. Properly blended reformulated gasoline will provide excellent performance and durability for the engine and fuel system components.

GASOLINE/OXYGENATE BLENDS

Some fuel suppliers blend unleaded gasoline with oxygenates such as 10% ethanol, MTBE, and ETBE.

Oxygenates are required in some areas of the country during the winter months to reduce carbon monoxide emissions. Fuels blended with these oxygenates may be used in your vehicle.

CAUTION: DO NOT use gasoline containing METHANOL. Gasoline containing methanol may damage critical fuel system components.

MMT IN GASOLINE

MMT is a manganese-containing metallic additive that is blended into some gasoline to increase octane. Gasoline blended with MMT provide no performance advantage beyond gasoline of the same octane number without MMT. Gasoline blended with MMT reduce spark plug life and reduce emission system performance in some vehicles. Chrysler recommends that gasoline free of MMT be used in your vehicle. The MMT content of gasoline may not be indicated on the gasoline pump; therefore, you should ask your gasoline retailer whether or not his/her gasoline contains MMT.

It is even more important to look for gasoline without MMT in Canada because MMT can be used at levels higher than allowed in the United States. MMT is prohibited in Federal and California reformulated gasoline.

SULFUR IN GASOLINE

If you live in the northeast United States, your vehicle may have been designed to meet California low emission standards with Cleaner-Burning California reformulated gasoline with low sulfur. If such fuels are not available in states adopting California emission standards, your vehicles will operate satisfactorily on fuels meeting federal specifications, but emission control system performance may be adversely affected. Gasoline sold outside of California is permitted to have higher sulfur levels which may affect the performance of the vehicle's catalytic converter. This may cause the Malfunction Indicator Lamp (MIL), Check Engine or Service Engine Soon light to illuminate. Chrysler recommends that you try a different brand of unleaded gasoline having lower sulfur to determine if the problem is fuel related prior to returning your vehicle to an authorized dealer for service.

CAUTION: If the Malfunction Indicator Lamp (MIL), Check Engine or Service Engine Soon light is flashing, immediate service is required; see appropriate ELECTRICAL DIAGNOSTICS article.

MATERIALS ADDED TO FUEL

All gasoline sold in the United States and Canada are required to contain effective detergent additives. Use of additional detergents or other additives is not needed under normal conditions.

FUEL SYSTEM CAUTIONS

CAUTION: Follow these guidelines to maintain your vehicle's performance:

- The use of leaded gas is prohibited by Federal law. Using leaded gasoline can impair engine performance, damage the emission control system, and could result in loss of warranty coverage.

- An out-of-tune engine, or certain fuel or ignition malfunctions, can cause the catalytic converter to overheat. If you notice a pungent burning odor or some light smoke, your engine may be out of tune or malfunctioning and may require immediate service.
- When pulling a heavy load or driving a fully loaded vehicle when the humidity is low and the temperature is high, use a premium unleaded fuel to help prevent spark knock. If spark knock persists, lighten the load, or engine piston damage may result.
- The use of fuel additives which are now being sold as octane enhancers is not recommended. Most of these products contain high concentrations of methanol. Fuel system damage or vehicle performance problems resulting from the use of such fuels or additives is not the responsibility of Chrysler Corporation and may not be covered under the new vehicle warranty.

NOTE: Intentional tampering with emissions control systems can result in civil penalties being assessed against you.

BRAKE FLUID

The brake fluid used in this vehicle must conform to DOT 3 specifications and SAE J1703 standards. No other type of brake fluid is recommended or approved for usage in the vehicle brake system. Use only Mopar® Brake Fluid or equivalent from a tightly sealed container.

CAUTION: Never use reclaimed brake fluid or fluid from a container which has been left open. An open container of brake fluid will absorb moisture from the air and contaminate the fluid.

CAUTION: Never use any type of a petroleum-based fluid in the brake hydraulic system. Use of such type fluids will result in seal damage of the vehicle brake hydraulic system causing a failure of the vehicle brake system. Petroleum based fluids would be items such as engine oil, transmission fluid, power steering fluid, etc.

A/C REFRIGERANT

The refrigerant used in this air conditioning system is a R-1234yf.

The A/C refrigerant system is filled-for-life at the factory and requires no regular maintenance. Although not required at specific intervals, the charge level should be checked if system performance deteriorates or if a noise or leak is suspected. Refer to **DIAGNOSIS AND TESTING** .

SPECIFICATIONS

SPECIFICATIONS

ENGINE

Description	Type	Part Number	Capacities	
			U.S.	Metric

Cooling System				
? Engine Coolant (2.4L Engine)	MOPAR® Antifreeze/Coolant 10 Year/150, 000 Mile Formula OAT (Organic Additive Technology) meeting the requirements of Chrysler Material Standard MS-12106	1 Gallon - 68163848AA (concentrate) 68163849AA (50/50)	7.0 Quarts	6.6 Liters
? Engine Coolant (3.2L Engine)	MOPAR® Antifreeze/Coolant 10 Year/150, 000 Mile Formula OAT (Organic Additive Technology) meeting the requirements of Chrysler Material Standard MS-12106	1 Gallon - 68163848AA (concentrate) 68163849AA (50/50)	9.7 Quarts	9.2 Liters
? Engine Coolant (2.0L Diesel Engine)	MOPAR® Antifreeze/Coolant 10 Year/150, 000 Mile Formula OAT (Organic Additive Technology) meeting the requirements of Chrysler Material Standard MS-12106	1 Gallon - 68163848AA (concentrate) 68163849AA (50/50)	7.2 Quarts	6.8 Liters
Engine Oil with Filter				
?? Engine Oil - Non ACEA Categories (2.4L Engine)	We recommend you use SAE 0W-20 API Certified Engine Oil, meeting the requirements of Chrysler Material Standard MS-6395 or Fiat 9.55535-CR1. Refer to your engine oil filler cap for correct SAE grade.	68152004PA	5.5 Quarts	5.2 Liters
?? Engine Oil - ACEA Categories (2.4L Engine)	For countries that use ACEA European Oil Categories for Service Fill Oils, we recommend you use 0W-20 engine oils meeting the requirements of ACEA C3, and approved to Chrysler MS-6395 or Fiat 9.55535-CR1.	68152004PA	5.5 Quarts	5.2 Liters
	We recommend you use			

??? Engine Oil - Non ACEA Categories (3.2L Engine)	SAE 5W-20 API Certified Engine Oil, meeting the requirements of Chrysler Material Standard MS-6395 or Fiat 9.55535-CR1. Refer to your engine oil filler cap for correct SAE grade.	1 Quart - 4761872MB	6.0 Quarts	5.6 Liters
??? Engine Oil - ACEA Categories (3.2L Engine)	For countries that use ACEA European Oil Categories for Service Fill Oils, we recommend you use 5W-20 engine oils meeting the requirements of ACEA C3, and approved to Chrysler MS-6395 or Fiat 9.55535-CR1.	1 Quart - 4761872MB	6.0 Quarts	5.6 Liters
Engine Oil (2.0L Diesel Engine)	SAE Grade 5W-30 fully synthetic engine oil that meets Fiat classification 9.55535-S1	1 Quart -	4.5 Quarts	4.3 Liters
Engine Oil Filter (2.4L Engine)	MOPAR® Engine Oil Filter	68197769AA	N/A	N/A
Engine Oil Filter (3.2L Engine)	MOPAR® Engine Oil Filter	68191349AA	N/A	N/A
Fuel (approximate)				
Fuel Selection (2.4L Engine)	87 Octane Unleaded (R+M/2) 91 Research Octane Number (RON)	N/A	15.8 Gallons	60.0 Liters
Fuel Selection (3.2L Engines)	87-89 Octane Unleaded (R+M/2) 91-93 Research Octane Number (RON)	N/A	15.8 Gallons	60.0 Liters
Fuel Selection (2.0L Diesel Engines)	50 Cetane or higher (Less than 15 ppm Sulfur)	N/A	15.8 Gallons	60.0 Liters
A/C Refrigerant System				
Refrigerant	R-1234yf	-	1.125 Pounds	0.510 Kilograms
Refrigerant	R-134a	-	1.19 Pounds	.539 Kilograms
? System fill capacity includes heater and coolant recovery bottle filled to MAX level.				
?? SAE 5W-20 engine oil approved to MS-6395 or Fiat 9.55535-CR1 may be used when SAE 0W-20 engine oil is not available. Please ensure that you switch back to 0W-20 for the next oil change, as indicated by your vehicles automatic oil change indicator.				
??? SAE 5W-30 engine oil approved to MS-6395 or Fiat 9.55535-CR1 may be used when SAE 5W-20				

engine oil is not available.

CAUTION:

Nominal refill capacities are shown in this table. A variation may be observed from vehicle to vehicle due to manufacturing tolerance and refill procedure.

SPARK PLUGS

Description	Part Number	Gap	
		U.S.	Metric
Spark Plugs (2.4L Engine)	SP148183AB	0.047 in	1.20 mm
Spark Plugs (3.2L Engine)	SP149125AD	0.043 in	1.10 mm

TRANSAXLE

Description	Type	Part Number	Capacity
948TE Automatic Transaxle	Use only MOPAR® ZF 8&9 Speed ATF™ Automatic Transmission Fluid, or equivalent. Failure to use the correct fluid may affect the function or performance of your transmission.	Refer to **Star Parts** for the part number.	6.0 L (6.35 Quarts)
C635 Manual Transaxle	We recommend you use MOPAR® C635 DDCT/MTX Transmission Fluid.	Refer to **Star Parts** for the part number.	1.7 Liter (1.8 Quarts)

CHASSIS

Description	Type	Part Number	Capacities	
			U.S.	Metric
? Brake Master Cylinder	MOPAR® Brake Fluid DOT 3, SAE J1703.	12 oz. Bottle - 04318080AB	N/A	N/A
		32 oz. Bottle - 04318081AB		
Rear Differential	AAM Fluid 70W-80, meeting MS-2395	68227765AA	One Speed - 0.94 Quarts Two Speed - 1.22 Quarts Two-Speed With Locker - 1.3 Quarts	One Speed - 0.89 Liters Two Speed - 1.15 Liters Two-Speed With Locker - 1.23 Liters
	AAM Hydraulic Fluid, meeting MS-2155	68227766AA	0.46 Quarts	0.439 Liters
One Speed PTU	75W-90 Gear Lube	5102232AA	0.74 Quarts	0.70 Liters

Two Speed PTU	75W-90 Gear Lube	5102232AA	1.06 Quarts	01.20 Liters
? If MOPAR® Brake Fluid DOT 3 is not available, then MOPAR® Brake and Clutch Fluid DOT 4 is acceptable.				

FUSE - RELAY LOCATIONS AND TYPES

SPECIFICATIONS

SPECIFICATIONS

FUSES

A primary power distribution center is located on the left side of the engine compartment, near the battery.

The ID number of the electrical component corresponding to each fuse can be found on the back of the cover.

UNDERHOOD FUSES

Cavity	Blade Fuse	Cartridge Fuse	Description
F06	-	-	Not Used
F07	15 Amp Blue	-	Powertrain Control Module - PCM
F08	25 Amp Clear	-	Engine Control Module (ECM)
F09	-	-	Not Used
F10	20 Amp Yellow	-	Power Takeoff Unit (PTU)
F11	-	-	Not Used
F12	20 Amp Yellow	-	Brake Vacuum Pump - If Equipped
F13	10 Amp Red	-	Engine Control Module (ECM)
F14	10 Amp Red	-	Drivetrain Control Module (DTCM) / Power Take-Off Unit (PTU) - If Equipped / Brake System Module (BSM)
F15	-	-	Not Used
F16	20 Amp Yellow	-	Powertrain
F17	-	-	Not Used
F18	-	-	Not Used
F19	-	40 Amp Green	Starter Solenoid
F20	10 Amp Red	-	A/C Compressor Clutch
F21	-	-	Not Used
F22	5 Amp Tan	-	Radiator Fan
F23	70 Amp Tan	-	Body Controller Module (BCM) - Feed 1
F24	-	-	Not Used
F25	-	-	Not Used
F26	-	30 Amp Pink	Fuel Heater - Diesel Only
F27	-	-	Not Used

F28	15 Amp Blue	-	Transmission Control Module (TCM)
F29	-	-	Not Used
F30	10 Amp Red	-	Engine Control Module (ECM)
F31	-	-	Not Used
F32	-	-	Not Used
F33	-	30 Amp Pink	Driver Door Module (DDM) - If Equipped
F34	-	30 Amp Pink	Body Controller Module (BCM) - Feed 3
F35	-	-	Not Used
F36	-	-	Not Used
F37	-	50 Amp Red	Voltage Stabilization Module (VSM) - If Equipped With Stop/Start Engine Option
F38	-	60 Amp Yellow	Glow Plugs - Diesel Only - If Equipped
F39	-	40 Amp Green	HVAC Blower Motor
F40	-	20 Amp Blue	Trailer Tow Park Light - If Equipped
F41	-	60 Amp Yellow	Body Controller Module (BCM) - Feed 2
F42	-	30 Amp Pink	Electric Park Brake (EPB) - Left
F43	20 Amp Yellow	-	Trailer Tow Left Stop/Turn Light - If Equipped
F44	-	30 Amp Pink	Trailer Tow / 7-Way Connector - If Equipped
F45	-	30 Amp Pink	Passenger Door Module (PDM) - If Equipped
F46	-	25 Amp Clear	Sunroof / Skyslider - If Equipped
F47	-	30 Amp Pink	Drivetrain Control Module (DTCM)
F48	-	-	Not Used
F49	-	30 Amp Pink	Power Inverter (115V A/C) - If Equipped
F50	-	30 Amp Pink	Power Liftgate - If Equipped
F51	-	-	Not Used
F52	-	-	Not Used
F53	-	30 Amp Pink	BSM-ECU & Valves
F54	-	30 Amp Pink	Urea Heater Control Unit - If Equipped With Diesel Engine
F55	10 Amp Red	-	Blind Spot Sensors / Compass / Rearview Camera If Equipped / Rear Seat Heater Switches / Trunk Lamp W/ Flashlamp Charger
F56	15 Amp Blue	-	Ignition Node Module (IGNM)/KIN/RF Hub/Electric Steering Column Lock (ESL)
F57	20 Amp Yellow	-	Fuel Pump Motor
F58	10 Amp Red	-	Occupant Classification Module
F59	-	-	Not Used
F60	20 Amp Yellow	-	Power Outlet - Center Console

F61	-	-	Not Used
F62	10 Amp Red	-	Heated Mirrors - If Equipped
F63	25 Amp Clear	-	Front Heated Seats - If Equipped
F64	25 Amp Clear	-	Heated Steering Wheel / Rear Heated Seats - If Equipped
F65	15 Amp Blue	-	HVAC (ECC) / Instrument Panel Cluster (IPC)
F66	10 Amp Red	-	In Car Temperature Sensor / Humidity Sensor / Driver Assist System Module (DASM) / Park Assist (PAM)
F67	-	-	Not Used
F68	-	-	Not Used
F69	10 Amp Red	-	Transfer Case Switch (TSBM) / Active Grill Shutter (AGS) - If Equipped
F70	-	-	Not Used
F71	20 Amp Yellow	-	Windshield De-Icer - If Equipped
F72	5 Amp Tan	-	Intelligent Battery Sensor (IBS) If Equipped With Stop/Start Engine Option
F72	20 Amp Yellow	-	Trailer Tow RT Stop / Turn Lights - If Equipped
F73	-	30 Amp Pink	Rear Defroster / Defogger
F74	-	20 Amp Blue	Engine Control Module (ECM) Gasoline Engine - If Equipped
F75	20 Amp Yellow	-	Cigar Lighter
F76	20 Amp Yellow	-	Rear Differential Module (RDM) - If Equipped
F77	10 Amp Red	-	Fuel Door Release/Brake Pedal Switch
F78	10 Amp Red	-	Diagnostic Port / Steering Column Control Module (SCCM) / Digital TV - If Equipped
F79	10 Amp Red	-	Integrated Center Stack (ICS) / HVAC / Aux Switch Bank Module (ASBM) / Instrument Panel Cluster (IPC)
F80	20 Amp Yellow	-	Radio / CD - If Equipped
F81	-	-	Not Used
F82	-	-	Not Used
F83	-	30 Amp Pink	Headlamp Washer Pump - If Equipped
F84	-	40 Amp Green	Brake System Module (BSM) - Pump Motor If Equipped With Diesel Engine
F84	-	20 Amp Blue	Trailer Tow Backup Lights - If Equipped With Gasoline Engine
F85	-	-	Not Used
F86	-	-	Not Used
F87	-	-	Not Used

F88	15 Amp Blue	-	Collision Mitigation Module (CMM) / Electrochromatic Mirror / Smart Camera Module - If Equipped
F89	10 Amp Red	-	Headlamp Leveling - If Equipped
F90	-	-	Not Used
F91	-	-	Not Used
F92	20 Amp Yellow	-	Rear Power Outlet
F93	-	40 Amp Green	Brake System Module (BSM) - Pump Motor - If Equipped With Gasoline Engine
F94	-	30 Amp Pink	Electric Park Brake (EPB) - Right
F95	10 Amp Red	-	Electrochromatic Mirror / Rain Sensor / Sunroof - If Equipped
F96	10 Amp Red	-	Occupant Restraint Controller (ORC)
F97	10 Amp Red	-	Occupant Restraint Controller (ORC)
F98	25 Amp Clear	-	Audio Amplifier - If Equipped
F99	-	30 Amp Pink	Trailer Tow Module - If Equipped With Gasoline Engine
F100	-	-	Not Used

The interior fuse panel is located in the passenger compartment on the left side dash panel under the instrument panel.

INTERIOR FUSES

Cavity	Blade Fuse	Description
F13	15 Amp Blue	Low Beam Left
F32	10 Amp Red	Interior Lighting
F36	10 Amp Red	Intrusion Module/Siren - If Equipped
F38	20 Amp Yellow	Deadbolt All Unlock
F43	20 Amp Yellow	Washer Pump Front
F48	25 Amp Clear	Fog Lamp Rear Left/Right - If Equipped
F49	7.5 Amp Brown	Lumbar Support
F50	7.5 Amp Brown	Wireless Charging Pad If Equipped
F51	10 Amp Red	Driver Window Switch/Power Mirrors - If Equipped
F53	7.5 Amp Brown	UCI Port (USB & AUX)
F89	10 Amp Red	Door Locks - Driver Unlock
F91	7.5 Amp Brown	Fog Lamp Front Left
F92	7.5 Amp Brown	Fog Lamp Front Right
F93	10 Amp Red	Low Beam Right

ELECTRICAL HARNESS/COMPONENTS TOPOLOGY

SCHEMATICS AND DIAGRAMS

MODULES - INLINE CONNECTORS - GROUND LOCATIONS

For a complete wiring diagram, **refer to SYSTEM WIRING DIAGRAMS article** .

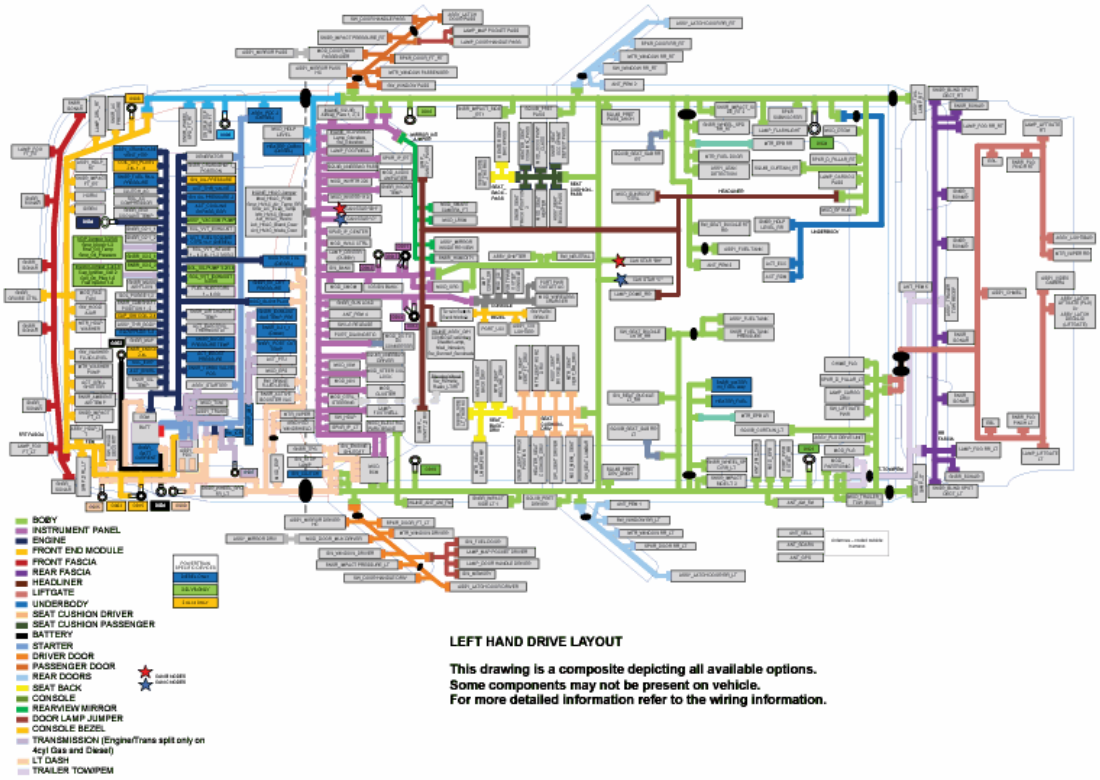

Fig. 4: Electrical Harness/Components Topology (Modules - Inline Connectors - Ground Locations)
Courtesy of CHRYSLER GROUP, LLC

INLINE CONNECTORS AND GROUND LOCATIONS

For a complete wiring diagram, **refer to SYSTEM WIRING DIAGRAMS article** .

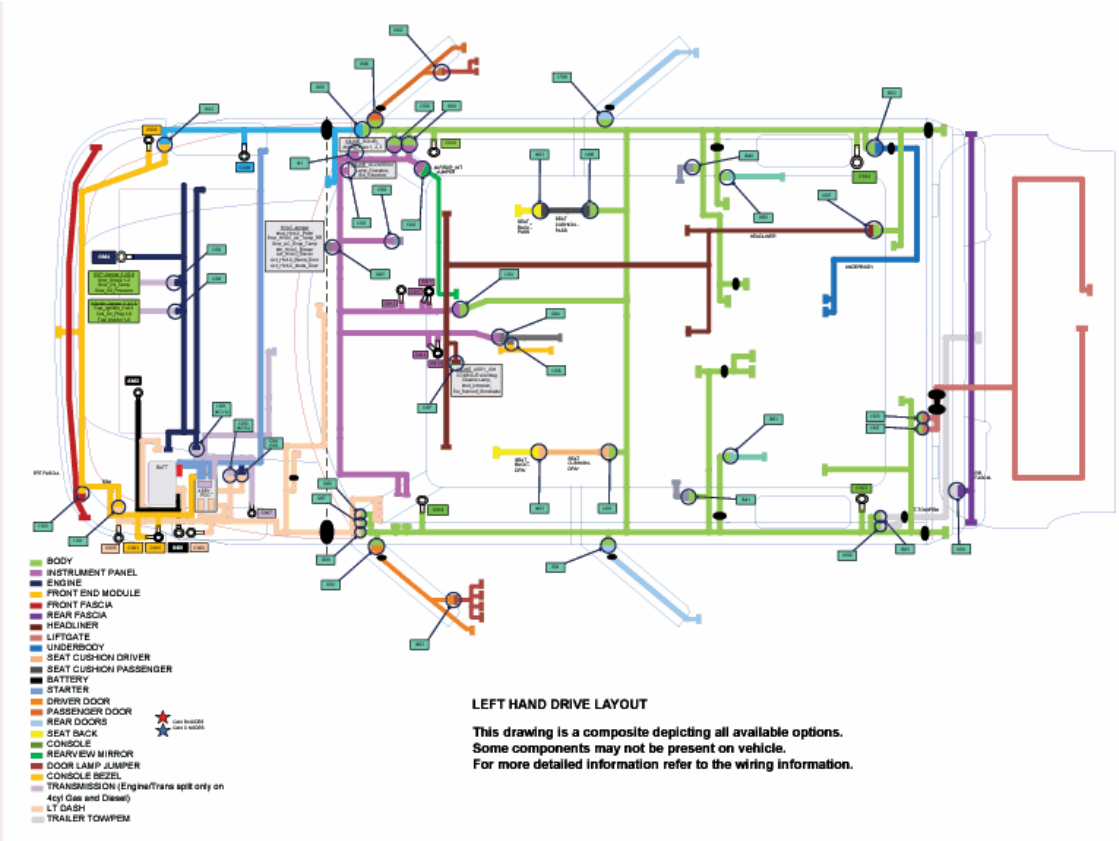

Fig. 5: Electrical Harness/Components Topology Inline Connectors & Ground Locations)
Courtesy of CHRYSLER GROUP, LLC

HOISTING

STANDARD PROCEDURE

STANDARD PROCEDURE - HOISTING

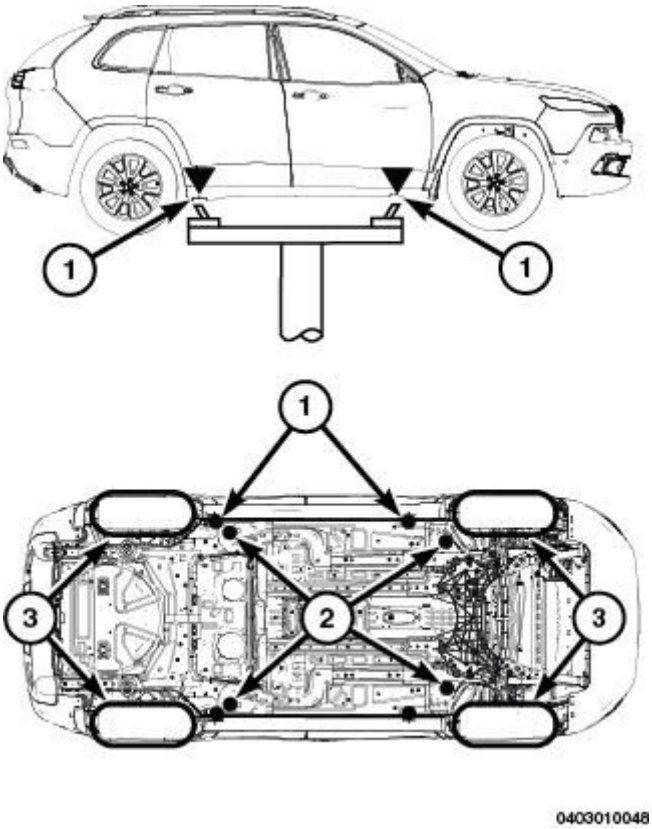

Fig. 6: Jeep Cherokee Lifting Points
Courtesy of CHRYSLER GROUP, LLC

1 - FRAME CONTACT LIFT (SINGLE POST)
1 - CHASSIS LIFT (DUAL LIFT)
1 - OUTBOARD LIFT (DUAL LIFT)
2 - ALTERNATE LIFTING LOCATIONS
2 - FLOOR JACK
3 - DRIVE ON HOIST

WARNING: The hoisting and jack lifting points provided are for a complete vehicle. When the engine or rear suspension is removed from a vehicle, the center of gravity is altered making some hoisting conditions unstable. Properly support or secure vehicle to hoisting device when these conditions exist. Failure to follow these instructions may result in serious or fatal injury.

CAUTION: Do not position hoisting device on any suspension component, including the front or rear suspension crossmembers. Do not hoist on the front and rear bumpers, the lower radiator crossmember, or the front engine mount.

Do not attempt to raise one entire side of the vehicle by placing a floor jack midway between the front and rear wheels. This practice may result in

permanent damage to the body.

CAUTION: Due to variations in hoist design it may be necessary to use the secondary lift points to avoid damage to the body or trim parts.

Refer to Owner's Manual provided with vehicle for proper emergency jacking procedures.

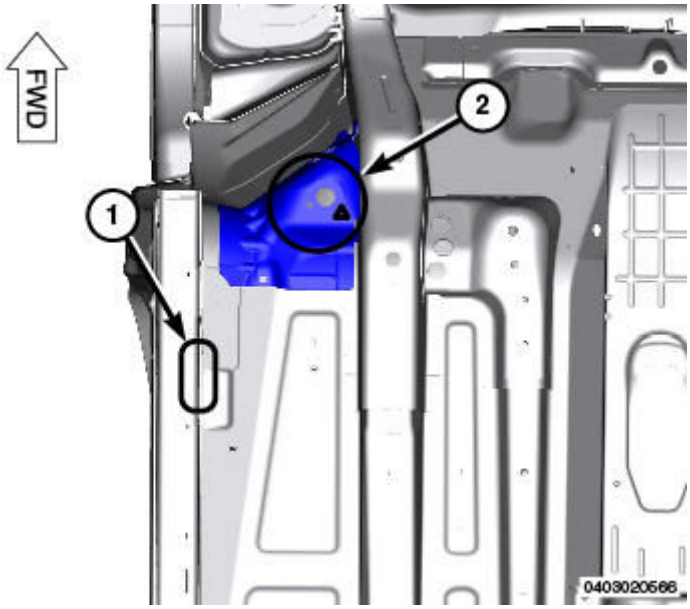

Fig. 7: Front Lifting Locations
Courtesy of CHRYSLER GROUP, LLC

NOTE: The following highlighted locations are provided to identify safe and effective lifting areas for the KL. In the event that the standard SAE lift pads and/or appropriate lift arm lengths are not available to meet the sill molding openings for flange lifting (1), the alternate lift point locations shown in illustration (2) should be utilized.

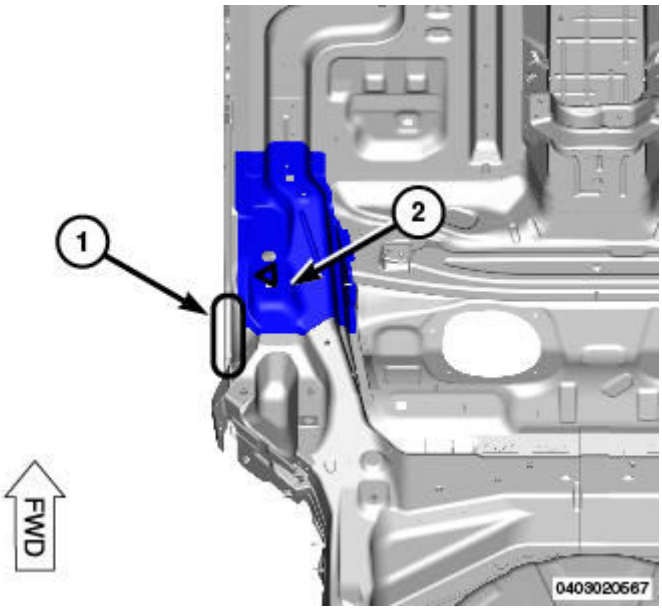

Fig. 8: Rear Lifting Locations
Courtesy of CHRYSLER GROUP, LLC

A hoist with asymmetrical hoist arms can not be adjusted to a position which will allow the hoist adapters to engage the service hoisting locations on the down standing weld flange on the sill at both the rear and the front of the vehicle. Therefore, the secondary service hoisting location will need to be used at the front of the vehicle. The secondary front service hoisting location is the front torque box.

When properly positioned, a floor jack can be used to lift the vehicle and support the raised vehicle with jack stands.

A floor jack or any lifting device must never be used on any part of the underbody other than the described areas.

There are SAE approved triangles in the body indicating where the lifting points are for the vehicle.

JUMP STARTING

STANDARD PROCEDURE

STANDARD PROCEDURE - JUMP STARTING

WARNING: REVIEW ALL SAFETY PRECAUTIONS AND WARNINGS.

WARNING: DO NOT JUMP START A FROZEN BATTERY, PERSONAL INJURY CAN RESULT.

WARNING: DO NOT JUMP START WHEN MAINTENANCE FREE BATTERY INDICATOR DOT IS BRIGHT COLOR.

WARNING: DO NOT ALLOW JUMPER CABLE CLAMPS TO TOUCH EACH OTHER WHEN CONNECTED TO A BOOSTER SOURCE.

WARNING: DO NOT USE OPEN FLAME NEAR BATTERY

WARNING: REMOVE METALLIC JEWELRY WORN ON HANDS OR WRISTS TO AVOID INJURY BY ACCIDENTAL ARCING OF BATTERY CURRENT.

WARNING: WHEN USING A HIGH OUTPUT BOOSTING DEVICE, DO NOT ALLOW BATTERY VOLTAGE TO EXCEED 16 VOLTS.

WARNING: REFER TO INSTRUCTIONS PROVIDED WITH DEVICE BEING USED.

CAUTION: DO NOT ATTEMPT TO PUSH OR TOW THE VEHICLE TO START IT. THE VEHICLE CANNOT BE STARTED THIS WAY. PUSHING WITH ANOTHER VEHICLE MAY DAMAGE THE TRANSAXLE OR THE REAR OF THE VEHICLE.

TO JUMP START A DISABLED VEHICLE:

Fig. 9: Jumper Cable RED clamp & Battery Positive Terminal

Courtesy of CHRYSLER GROUP, LLC

1.
    - Inspect the battery cable terminal clamps for damage. Replace any battery cable that has a damaged or deformed terminal clamp.
    - Inspect the battery tray and battery hold down hardware for damage. Replace any damaged parts.
    - Slide the thermal guard off of the battery case, if equipped. Inspect the battery case for cracks or other damage that could result in electrolyte leaks. Also, check the battery terminal posts for looseness. Batteries with damaged cases or loose terminal posts must be replaced.
    - Inspect the battery thermal guard for tears, cracks, deformation or other damage. Replace any battery thermal guard that has been damaged.
    - Inspect the battery built-in test indicator sight glass (if equipped) for an indication of the battery condition. If the battery is discharged, charge as required. Refer to **BATTERY, STANDARD PROCEDURE** .
2. Raise hood on disabled vehicle and visually inspect engine compartment for:
    - Generator drive belt condition and tension.

CAUTION: If the cause of starting problem on disabled vehicle is severe, damage to booster vehicle charging system can result.

3. When using another vehicle as a booster source, park the booster vehicle within cable reach. Turn off all accessories, set the parking brake, place the automatic transmission in PARK or the manual transmission in NEUTRAL and turn the ignition OFF.
4. On disabled vehicle, place gear selector in park or neutral and set park brake. Turn off all accessories.
5. Connect jumper cables to booster battery. RED clamp to positive terminal (+). BLACK clamp to negative terminal (-). DO NOT allow clamps at opposite end of cables to touch, electrical arc will result. Review all warnings in this procedure.
6. On disabled vehicle, connect RED jumper cable clamp (1) to positive (+) terminal (2). Connect BLACK jumper cable clamp to engine ground.
7. Start the engine in the vehicle which has the booster battery, let the engine idle a few minutes, then start the engine in the vehicle with the discharged battery.

CAUTION: Do not crank starter motor on disabled vehicle for more than 15 seconds, starter will overheat and could fail.

8. Allow battery in disabled vehicle to charge to at least 12.4 volts (75% charge) before attempting to start engine. If engine does not start within 15 seconds, stop cranking engine and allow starter to cool (15 min.), before cranking again.

DISCONNECT CABLE CLAMPS AS FOLLOWS:

- Disconnect BLACK cable clamp from engine ground on disabled vehicle.

- When using a Booster vehicle, disconnect BLACK cable clamp from battery negative terminal. Disconnect RED cable clamp from battery positive terminal.
- Disconnect RED cable clamp from battery positive terminal on disabled vehicle.

MAINTENANCE SCHEDULES

DESCRIPTION

NAFTA AND PUERTO RICO

OIL CHANGE INDICATOR SYSTEM

The Scheduled Maintenance services listed in this Service Information must be done at the times or mileages specified to protect your vehicle warranty and ensure the best vehicle performance and reliability. More frequent maintenance may be needed for vehicles in severe operating conditions, such as dusty areas and very short trip driving. Inspection and service should also be done anytime a malfunction is suspected.

The vehicle is equipped with an automatic oil change indicator system. The oil change indicator system will remind you that it is time to take your vehicle in for scheduled maintenance.

Based on engine operation conditions, the oil change indicator message will illuminate. This means that service is required for your vehicle. Operating conditions such as frequent short-trips, trailer tow, extremely hot or cold ambient temperatures, and E85 fuel usage will influence when the "Change Oil" or "Oil Change Required" message is displayed. Severe Operating Conditions can cause the change oil message to illuminate as early as 3, 500 miles (5, 600 km) since last reset. Have your vehicle serviced as soon as possible, within the next 500 miles (805 km).

On Electronic Vehicle Information Center (EVIC) equipped vehicles, "Oil Change Required" will be displayed in the EVIC and a single chime will sound, indicating that an oil change is necessary.

On Non-EVIC equipped vehicles, "Change Oil" will flash in the instrument cluster odometer and a single chime will sound, indicating that an oil change is necessary.

NOTE: Under no circumstances should oil change intervals exceed 10, 000 miles (16, 000 km) or twelve months, whichever comes first.

OIL CHANGE INDICATOR - RESET

The vehicle is equipped with an engine oil change indicator system. The "Oil Change Required" message flashes in the EVIC display for approximately ten seconds after a single chime has sounded, to indicate the next scheduled oil change interval. The engine oil change indicator system is duty cycle based, which means the engine oil change interval may fluctuate depending upon your personal driving style.

Unless reset, this message continues to display each time you turn the ignition switch to the ON/RUN position. To turn off the message temporarily, press and release the Menu button. To reset the oil change indicator system (after performing the scheduled maintenance) perform the following procedure:

1. Turn the ignition switch to the "ON" position. Do not start the engine.
2. Fully press the accelerator pedal slowly three times within ten seconds.
3. Turn the ignition switch to the "LOCK" position.

NOTE: If the indicator message illuminates when you start the vehicle, the oil change indicator system did not reset. If necessary, repeat this procedure.

ONCE A MONTH OR BEFORE A LONG TRIP

- Check engine oil level
- Check windshield washer fluid level
- Check tire pressure and look for unusual wear or damage.
- Check the fluid levels of coolant reservoir and brake master cylinder, fill as needed.
- Check function of all interior and exterior lights

CAUTION: Failure to perform the required maintenance items may result in damage to the vehicle.

REQUIRED MAINTENANCE INTERVALS

At Every Oil Change Interval As Indicated By Oil Change Indicator System:
Change oil and filter
Rotate the tires. **Rotate at the first sign of irregular wear, even if it occurs before the oil indicator system turns on.**
Inspect battery and clean and tighten terminals as required
Inspect brake pads, shoes, rotors, drums, hoses and park brake
Inspect engine cooling system protection and hoses
Inspect exhaust system
Inspect engine air cleaner if using in dusty or off-road conditions

Maintenance Chart

Mileage or time passed (whichever comes first)	20,000	30,000	40,000	50,000	60,000	70,000	80,000	90,000	100,000	110,000	120,000	130,000	140,000	150,000
Or Years:	2	3	4	5	6	7	8	9	10	11	12	13	14	15
Or Kilometers:	32,000	48,000	64,000	80,000	96,000	112,000	128,000	144,000	160,000	176,000	192,000	208,000	224,000	240,000
Additional Inspections														
Inspect the CV boots.	X		X		X		X		X		X		X	
Inspect front														

suspension, tie rod ends, and replace if necessary.	X		X		X		X		X		X		X	
Inspect the brake linings, parking brake function.	X		X		X		X		X		X		X	
Additional Maintenance														
Replace engine air filter.		X			X			X			X			X
Replace cabin/air conditioning filter.	X		X		X		X		X		X		X	
Replace spark plugs (2.4L Engine). **									X					
Replace spark plugs (3.2L Engine). **									X					
Flush and replace the engine coolant at 10 years or 150, 000 miles (240, 000 km) whichever comes first.									X					X
Inspect and replace PCV valve if necessary									X					

** The spark plug change interval is mileage based only, monthly intervals do not apply.

WARNING:

- **You can be badly injured working on or around a motor vehicle. Do only service work for which you have the knowledge and the right equipment. If you have any doubt about your ability to perform a service job, take your vehicle to a competent mechanic.**
- **Failure to properly inspect and maintain your vehicle could result in a component malfunction and effect vehicle handling and performance. This could cause an accident**

Failure to follow these instructions may result in possible serious or fatal injury.

EUROPE/UK - GAS ENGINE

OIL CHANGE INDICATOR SYSTEM

The Scheduled Maintenance services listed in this Service Information must be done at the times or mileages specified to protect your vehicle warranty and ensure the best vehicle performance and reliability. More frequent maintenance may be needed for vehicles in severe operating conditions, such as dusty areas and very

short trip driving. Inspection and service should also be done anytime a malfunction is suspected.

The oil change indicator system will remind you that it is time to take your vehicle in for scheduled maintenance.

On Electronic Vehicle Information Center (EVIC) equipped vehicles "Oil Change Required" will be displayed in the EVIC and a single chime will sound, indicating that an oil change is necessary.

The oil change indicator message will illuminate approximately 7, 000 miles (11, 200 km) after the most recent oil change was performed. Have your vehicle serviced as soon as possible, within 500 miles (800 km).

NOTE:

- **The oil change indicator message will not monitor the time since the last oil change. Change the vehicle oil if it has been twelve months since your last oil change even if the oil change indicator message is NOT illuminated.**
- **Change your engine oil more often if you drive your vehicle off-road for an extended period of time.**
- **Under no circumstances should oil change intervals exceed 7, 500 miles (12 000 km) or 12 months, whichever comes first.**

OIL CHANGE INDICATOR - RESET

The vehicle is equipped with an engine oil change indicator system. The "Oil Change Required" message flashes in the EVIC display for approximately ten seconds after a single chime has sounded, to indicate the next scheduled oil change interval.

Unless reset, this message continues to display each time you turn the ignition switch to the ON/RUN position. To turn off the message temporarily, press and release the Menu button. To reset the oil change indicator system (after performing the scheduled maintenance) perform the following procedure:

1. Turn the ignition switch to the "ON" position. Do not start the engine.
2. Fully press the accelerator pedal slowly three times within ten seconds.
3. Turn the ignition switch to the "LOCK" position.

NOTE: **If the indicator message illuminates when you start the vehicle, the oil change indicator system did not reset. If necessary, repeat this procedure.**

REQUIRED MAINTENANCE INTERVALS

At Each Stop for Fuel

- Check the engine oil level about 5 minutes after a fully warmed engine is shut off. Checking the oil level while the vehicle is on level ground will improve the accuracy of the oil level reading. Add oil only when the level is at or below the ADD or MIN mark.
- Check the windshield washer solvent and add if required.

Once a Month

- Check tire pressure and look for unusual wear or damage.
- Inspect the battery and clean and tighten the terminals as required.
- Check the fluid levels of the coolant reservoir, brake master cylinder, and add fluid as needed.
- Check all lights and other electrical items for correct operation.

At Each Oil Change

- Change the engine oil filter.
- Inspect the brake hoses and lines.

WARNING:

- **You can be badly injured working on or around a motor vehicle. Do only service work for which you have the knowledge and the right equipment. If you have any doubt about your ability to perform a service job, take your vehicle to a competent mechanic.**
- **Failure to properly inspect and maintain your vehicle could result in a component malfunction and effect vehicle handling and performance. This could cause an accident**

Failure to follow these instructions may result in possible serious or fatal injury.

Perform Maintenance Every (Where time and mileage are listed, follow the interval that occurs first.)			Maintenance Items
Miles	Kilometers	Months	
7500	12000	12	• Change the engine oil and engine oil filter. • Rotate tires. • Inspect the CV joints. • Inspect the front suspension, tie rod ends and boot seals; replace if necessary. • Inspect the brake linings, replace if necessary. • Inspect parking brake function. • Replace the air conditioning/cabin air filter.
15000	24000	24	• Change the engine oil and engine oil filter. • Rotate tires.
22500	36000	36	• Change the engine oil and engine oil filter. • Rotate tires. • Inspect the CV joints.

			• Inspect the front suspension, tie rod ends and boot seals; replace if necessary. • Inspect the brake linings, replace if necessary. • Inspect parking brake function. • Replace the air conditioning/cabin air filter.
30000	48000	48	• Change the engine oil and engine oil filter. • Rotate tires. • Replace the engine air cleaner filter.
37500	60000	60	• Change the engine oil and engine oil filter. • Rotate tires. • Inspect the CV joints. • Inspect the front suspension, tie rod ends and boot seals; replace if necessary. • Inspect the brake linings, replace if necessary. • Inspect parking brake function. • Replace the air conditioning/cabin air filter.
45000	72000	72	• Change the engine oil and engine oil filter. • Rotate tires.
52500	84000	84	• Change the engine oil and engine oil filter. • Rotate tires. • Inspect the CV joints. • Inspect the front suspension, tie rod ends and boot seals; replace if necessary. • Inspect the brake linings, replace if necessary. • Inspect parking brake function. • Replace the air conditioning/cabin air filter.
60000	96000	96	• Change the engine oil and engine oil filter. • Rotate tires. • Replace the engine air cleaner filter.
67500	108000	108	• Change the engine oil and engine oil filter. • Rotate tires. • Inspect the CV joints. • Inspect the front suspension, tie rod ends and boot seals; replace if necessary. • Inspect the brake linings, replace if necessary. • Inspect parking brake function. • Replace the air conditioning/cabin air filter.

			• Replace the spark plugs (2.4L & 3.2L Engines).* * The spark plug change interval is mileage based only, monthly intervals do not apply.
75000	120000	120	• Change the engine oil and engine oil filter. • Rotate tires. • Flush and replace the engine coolant at 120 months or 150, 000 miles (240, 000 km) whichever comes first.
82500	132000	132	• Change the engine oil and engine oil filter. • Rotate tires. • Inspect the CV joints. • Inspect the front suspension, tie rod ends and boot seals; replace if necessary. • Inspect the brake linings, replace if necessary. • Inspect parking brake function. • Replace the air conditioning/cabin air filter.
90000	144000	144	• Change the engine oil and engine oil filter. • Rotate tires. • Replace the engine air cleaner filter.
97500	156000	156	• Change the engine oil and engine oil filter. • Rotate tires. • Inspect the CV joints. • Inspect the front suspension, tie rod ends and boot seals; replace if necessary. • Inspect the brake linings, replace if necessary. • Inspect parking brake function. • Replace the air conditioning/cabin air filter. • Inspect and replace PCV valve if necessary.
105000	168000	168	• Change the engine oil and engine oil filter. • Rotate tires.
112500	180000	180	• Change the engine oil and engine oil filter. • Rotate tires. • Inspect the CV joints. • Inspect the front suspension, tie rod ends and boot seals; replace if necessary. • Inspect the brake linings, replace if necessary. • Inspect parking brake function.

			• Replace the air conditioning/cabin air filter.
120000	192000	192	• Change the engine oil and engine oil filter. • Rotate tires. • Replace the engine air cleaner filter.
127500	204000	204	• Change the engine oil and engine oil filter. • Rotate tires. • Inspect the CV joints. • Inspect the front suspension, tie rod ends and boot seals; replace if necessary. • Inspect the brake linings, replace if necessary. • Inspect parking brake function. • Replace the air conditioning/cabin air filter.
135000	216000	216	• Change the engine oil and engine oil filter. • Rotate tires. • Replace the spark plugs (2.4L & 3.2L Engines).* * The spark plug change interval is mileage based only, monthly intervals do not apply.
142500	228000	228	• Change the engine oil and engine oil filter. • Rotate tires. • Inspect the CV joints. • Inspect the front suspension, tie rod ends and boot seals; replace if necessary. • Inspect the brake linings, replace if necessary. • Inspect parking brake function. • Replace the air conditioning/cabin air filter.
150000	240000	240	• Change the engine oil and engine oil filter. • Rotate tires. • Replace the engine air cleaner filter. • Flush and replace the engine coolant at 120 months or 150, 000 miles (240, 000 km) whichever comes first.

EUROPE/UK - DIESEL ENGINE

The maintenance intervals shown in chart below should be performed as indicated in this Service Information.

NOTE:

- **Under no circumstances should oil change intervals exceed 12, 500 miles (20 000 km) or 12 months, whichever comes first.**

- **Flush and replace the engine coolant at 120 months or 150, 000 miles (240, 000 km) whichever comes first.**

At Each Stop for Fuel

- Check the engine oil level about 15 minutes after a fully warmed engine is shut off. Checking the oil level while the vehicle is on level ground will improve the accuracy of the oil level reading. Add oil only when the level is at or below the ADD or MIN mark.
- Check the windshield washer solvent and add if required.

Once a Month

- Check tire pressure and look for unusual wear or damage.
- Inspect the battery and clean and tighten the terminals as required.
- Check the fluid levels of the coolant reservoir, brake master cylinder, and add fluid as needed.
- Check all lights and other electrical items for correct operation.

At Each Oil Change

- Change the engine oil filter.
- Inspect the brake hoses and lines.
- Inspect for the presence of water in the fuel filter/water separator unit.

Perform Maintenance Every (Where time and mileage are listed, follow the interval that occurs first.)			Maintenance Items
Miles	Kilometers	Months	
12500	20000	12	• Change the engine oil and engine oil filter. • Rotate tires. • Inspect the CV joints. • Inspect the front suspension, tie rod ends and boot seals; replace if necessary. • Inspect the brake linings, replace if necessary. • Inspect parking brake function. • Replace the air conditioning/cabin air filter.
25000	40000	24	• Change the engine oil and engine oil filter. • Replace the engine air cleaner filter. • Rotate tires. • Replace the engine fuel filter.
37500	60000	36	• Change the engine oil and engine oil filter.

			• Rotate tires. • Inspect the CV joints. • Inspect the front suspension, tie rod ends and boot seals; replace if necessary. • Inspect the brake linings, replace if necessary. • Inspect parking brake function. • Replace the air conditioning/cabin air filter.
50000	80000	48	• Change the engine oil and engine oil filter. • Replace the engine air cleaner filter. • Rotate tires. • Replace the engine fuel filter. • Change the manual transmission fluid if using your vehicle for any of the following: trailer towing, heavy loading, taxi, police, delivery service (commercial service), off-road, desert operation or more than 50% of your driving is at sustained speeds during hot weather, above 90°F (32°C).
62500	100000	60	• Change the engine oil and engine oil filter. • Rotate tires. • Inspect the CV joints. • Inspect the front suspension, tie rod ends and boot seals; replace if necessary. • Inspect the brake linings, replace if necessary. • Inspect parking brake function. • Replace the air conditioning/cabin air filter.
75000	120000	72	• Change the engine oil and engine oil filter. • Replace the engine air cleaner filter. • Rotate tires. • Replace the engine fuel filter.
87500	140000	84	• Change the engine oil and engine oil filter. • Rotate tires. • Inspect the CV joints. • Inspect the front suspension, tie rod ends and boot seals; replace if necessary. • Inspect the brake linings, replace if necessary. • Inspect parking brake function. • Replace the air conditioning/cabin air filter.
100000	160000	96	• Change the engine oil and engine oil filter.

			• Replace the engine air cleaner filter. • Rotate tires. • Replace the engine fuel filter. • Change the manual transmission fluid if using your vehicle for any of the following: trailer towing, heavy loading, taxi, police, delivery service (commercial service), off-road, desert operation or more than 50% of your driving is at sustained speeds during hot weather, above 90°F (32°C).

LATIN AMERICA - GAS ENGINE

OIL CHANGE INDICATOR SYSTEM

The Scheduled Maintenance services listed in this Service Information must be done at the times or mileages specified to protect your vehicle warranty and ensure the best vehicle performance and reliability. More frequent maintenance may be needed for vehicles in severe operating conditions, such as dusty areas and very short trip driving. Inspection and service should also be done anytime a malfunction is suspected.

The oil change indicator system will remind you that it is time to take your vehicle in for scheduled maintenance.

On Electronic Vehicle Information Center (EVIC) equipped vehicles "Oil Change Required" will be displayed in the EVIC and a single chime will sound, indicating that an oil change is necessary.

The oil change indicator message will illuminate approximately 7, 000 miles (11, 200 km) after the most recent oil change was performed. Have your vehicle serviced as soon as possible, within 500 miles (800 km).

NOTE:

- **The oil change indicator message will not monitor the time since the last oil change. Change the vehicle oil if it has been 6 months since your last oil change even if the oil change indicator message is NOT illuminated.**
- **Change your engine oil more often if you drive your vehicle off-road for an extended period of time.**
- **Under no circumstances should oil change intervals exceed 7, 500 miles (12 000 km) or 6 months, whichever comes first.**

OIL CHANGE INDICATOR - RESET

The vehicle is equipped with an engine oil change indicator system. The "Oil Change Required" message flashes in the EVIC display for approximately ten seconds after a single chime has sounded, to indicate the next scheduled oil change interval.

Unless reset, this message continues to display each time you turn the ignition switch to the ON/RUN position. To turn off the message temporarily, press and release the Menu button. To reset the oil change indicator system (after performing the scheduled maintenance) perform the following procedure:

1. Turn the ignition switch to the "ON" position. Do not start the engine.
2. Fully press the accelerator pedal slowly three times within ten seconds.
3. Turn the ignition switch to the "LOCK" position.

NOTE: **If the indicator message illuminates when you start the vehicle, the oil change indicator system did not reset. If necessary, repeat this procedure.**

REQUIRED MAINTENANCE INTERVALS

At Each Stop for Fuel

- Check the engine oil level about 5 minutes after a fully warmed engine is shut off. Checking the oil level while the vehicle is on level ground will improve the accuracy of the oil level reading. Add oil only when the level is at or below the ADD or MIN mark.
- Check the windshield washer solvent and add if required.

Once a Month

- Check tire pressure and look for unusual wear or damage.
- Inspect the battery and clean and tighten the terminals as required.
- Check the fluid levels of the coolant reservoir, brake master cylinder, and add fluid as needed.
- Check all lights and other electrical items for correct operation.

At Each Oil Change

- Change the engine oil filter.
- Inspect the brake hoses and lines.

WARNING:

- **You can be badly injured working on or around a motor vehicle. Do only service work for which you have the knowledge and the right equipment. If you have any doubt about your ability to perform a service job, take your vehicle to a competent mechanic.**
- **Failure to properly inspect and maintain your vehicle could result in a component malfunction and effect vehicle handling and performance. This could cause an accident**

Failure to follow these instructions may result in possible serious or fatal injury.

Perform Maintenance Every (Where time and mileage are listed, follow the interval that occurs first.)			Maintenance Items
Miles	Kilometers	Months	

7500	12000	6	• Change the engine oil and engine oil filter. • Rotate tires. • Inspect the CV joints. • Inspect the front suspension, tie rod ends and boot seals; replace if necessary. • Inspect the brake linings, replace if necessary. • Inspect parking brake function. • Replace the air conditioning/cabin air filter.
15000	24000	12	• Change the engine oil and engine oil filter. • Rotate tires.
22500	36000	18	• Change the engine oil and engine oil filter. • Rotate tires. • Inspect the CV joints. • Inspect the front suspension, tie rod ends and boot seals; replace if necessary. • Inspect the brake linings, replace if necessary. • Inspect parking brake function. • Replace the air conditioning/cabin air filter.
30000	48000	24	• Change the engine oil and engine oil filter. • Rotate tires. • Replace the engine air cleaner filter.
37500	60000	30	• Change the engine oil and engine oil filter. • Rotate tires. • Inspect the CV joints. • Inspect the front suspension, tie rod ends and boot seals; replace if necessary. • Inspect the brake linings, replace if necessary. • Inspect parking brake function. • Replace the air conditioning/cabin air filter.
45000	72000	36	• Change the engine oil and engine oil filter. • Rotate tires.
52500	84000	42	• Change the engine oil and engine oil filter. • Rotate tires. • Inspect the CV joints. • Inspect the front suspension, tie rod ends and boot seals; replace if necessary. • Inspect the brake linings, replace if necessary.

			• Inspect parking brake function. • Replace the air conditioning/cabin air filter.
60000	96000	48	• Change the engine oil and engine oil filter. • Rotate tires. • Replace the engine air cleaner filter.
67500	108000	54	• Change the engine oil and engine oil filter. • Rotate tires. • Inspect the CV joints. • Inspect the front suspension, tie rod ends and boot seals; replace if necessary. • Inspect the brake linings, replace if necessary. • Inspect parking brake function. • Replace the air conditioning/cabin air filter. • Replace the spark plugs (2.4L & 3.2L Engines).* * The spark plug change interval is mileage based only, monthly intervals do not apply.
75000	120000	60	• Change the engine oil and engine oil filter. • Rotate tires. • Flush and replace the engine coolant at 120 months or 150, 000 miles (240, 000 km) whichever comes first.
82500	132000	66	• Change the engine oil and engine oil filter. • Rotate tires. • Inspect the CV joints. • Inspect the front suspension, tie rod ends and boot seals; replace if necessary. • Inspect the brake linings, replace if necessary. • Inspect parking brake function. • Replace the air conditioning/cabin air filter.
90000	144000	72	• Change the engine oil and engine oil filter. • Rotate tires. • Replace the engine air cleaner filter.
97500	156000	78	• Change the engine oil and engine oil filter. • Rotate tires. • Inspect the CV joints. • Inspect the front suspension, tie rod ends and boot seals; replace if necessary.

			• Inspect the brake linings, replace if necessary. • Inspect parking brake function. • Replace the air conditioning/cabin air filter. • Inspect and replace PCV valve if necessary.
105000	168000	84	• Change the engine oil and engine oil filter. • Rotate tires.
112500	180000	90	• Change the engine oil and engine oil filter. • Rotate tires. • Inspect the CV joints. • Inspect the front suspension, tie rod ends and boot seals; replace if necessary. • Inspect the brake linings, replace if necessary. • Inspect parking brake function. • Replace the air conditioning/cabin air filter.
120000	192000	96	• Change the engine oil and engine oil filter. • Rotate tires. • Replace the engine air cleaner filter.
127500	204000	102	• Change the engine oil and engine oil filter. • Rotate tires. • Inspect the CV joints. • Inspect the front suspension, tie rod ends and boot seals; replace if necessary. • Inspect the brake linings, replace if necessary. • Inspect parking brake function. • Replace the air conditioning/cabin air filter.
135000	216000	108	• Change the engine oil and engine oil filter. • Rotate tires. • Replace the spark plugs (2.4L & 3.2L Engines).* * The spark plug change interval is mileage based only, monthly intervals do not apply.
142500	228000	114	• Change the engine oil and engine oil filter. • Rotate tires. • Inspect the CV joints. • Inspect the front suspension, tie rod ends and boot seals; replace if necessary. • Inspect the brake linings, replace if necessary.

			• Inspect parking brake function. • Replace the air conditioning/cabin air filter.
150000	240000	120	• Change the engine oil and engine oil filter. • Rotate tires. • Replace the engine air cleaner filter. • Flush and replace the engine coolant at 120 months or 150, 000 miles (240, 000 km) whichever comes first.

LATIN AMERICA - DIESEL ENGINE

The maintenance intervals shown in chart below should be performed as indicated in this Service Information.

NOTE:

- **Under no circumstances should oil change intervals exceed 12, 500 miles (20 000 km) or 12 months, whichever comes first.**
- **Flush and replace the engine coolant at 120 months or 150, 000 miles (240, 000 km) whichever comes first.**

At Each Stop for Fuel

- Check the engine oil level about 15 minutes after a fully warmed engine is shut off. Checking the oil level while the vehicle is on level ground will improve the accuracy of the oil level reading. Add oil only when the level is at or below the ADD or MIN mark.
- Check the windshield washer solvent and add if required.

Once a Month

- Check tire pressure and look for unusual wear or damage.
- Inspect the battery and clean and tighten the terminals as required.
- Check the fluid levels of the coolant reservoir, brake master cylinder, and add fluid as needed.
- Check all lights and other electrical items for correct operation.

At Each Oil Change

- Change the engine oil filter.
- Inspect the brake hoses and lines.
- Inspect for the presence of water in the fuel filter/water separator unit.

Perform Maintenance Every (Where time and mileage are listed, follow the interval that occurs first.)			Maintenance Items
Miles	Kilometers	Months	

12500	20000	12	• Change the engine oil and engine oil filter. • Rotate tires. • Inspect the CV joints. • Inspect the front suspension, tie rod ends and boot seals; replace if necessary. • Inspect the brake linings, replace if necessary. • Inspect parking brake function. • Replace the air conditioning/cabin air filter.
25000	40000	24	• Change the engine oil and engine oil filter. • Replace the engine air cleaner filter. • Rotate tires. • Replace the engine fuel filter.
37500	60000	36	• Change the engine oil and engine oil filter. • Rotate tires. • Inspect the CV joints. • Inspect the front suspension, tie rod ends and boot seals; replace if necessary. • Inspect the brake linings, replace if necessary. • Inspect parking brake function. • Replace the air conditioning/cabin air filter.
50000	80000	48	• Change the engine oil and engine oil filter. • Replace the engine air cleaner filter. • Rotate tires. • Replace the engine fuel filter. • Change the manual transmission fluid if using your vehicle for any of the following: trailer towing, heavy loading, taxi, police, delivery service (commercial service), off-road, desert operation or more than 50% of your driving is at sustained speeds during hot weather, above 90°F (32°C).
62500	100000	60	• Change the engine oil and engine oil filter. • Rotate tires. • Inspect the CV joints. • Inspect the front suspension, tie rod ends and boot seals; replace if necessary. • Inspect the brake linings, replace if necessary. • Inspect parking brake function. • Replace the air conditioning/cabin air filter.

75000	120000	72	• Change the engine oil and engine oil filter. • Replace the engine air cleaner filter. • Rotate tires. • Replace the engine fuel filter.
87500	140000	84	• Change the engine oil and engine oil filter. • Rotate tires. • Inspect the CV joints. • Inspect the front suspension, tie rod ends and boot seals; replace if necessary. • Inspect the brake linings, replace if necessary. • Inspect parking brake function. • Replace the air conditioning/cabin air filter.
100000	160000	96	• Change the engine oil and engine oil filter. • Replace the engine air cleaner filter. • Rotate tires. • Replace the engine fuel filter. • Change the manual transmission fluid if using your vehicle for any of the following: trailer towing, heavy loading, taxi, police, delivery service (commercial service), off-road, desert operation or more than 50% of your driving is at sustained speeds during hot weather, above 90°F (32°C).

CHINA

OIL CHANGE INDICATOR SYSTEM

The Scheduled Maintenance services listed in this Service Information must be done at the times or mileages specified to protect your vehicle warranty and ensure the best vehicle performance and reliability. More frequent maintenance may be needed for vehicles in severe operating conditions, such as dusty areas and very short trip driving. Inspection and service should also be done anytime a malfunction is suspected.

The oil change indicator system will remind you that it is time to take your vehicle in for scheduled maintenance.

On Electronic Vehicle Information Center (EVIC) equipped vehicles "Oil Change Required" will be displayed in the EVIC and a single chime will sound, indicating that an oil change is necessary.

The oil change indicator message will illuminate approximately 11, 200 km after the most recent oil change was performed. Have your vehicle serviced as soon as possible, within 800 km.

NOTE:

- **The oil change indicator message will not monitor the time since the last**

oil change. Change the vehicle oil if it has been 6 months since your last oil change even if the oil change indicator message is NOT illuminated.

- **Change your engine oil more often if you drive your vehicle off-road for an extended period of time.**
- **Under no circumstances should oil change intervals exceed 12 000 km or 6 months, whichever comes first.**

OIL CHANGE INDICATOR - RESET

The vehicle is equipped with an engine oil change indicator system. The "Oil Change Required" message flashes in the EVIC display for approximately ten seconds after a single chime has sounded, to indicate the next scheduled oil change interval.

Unless reset, this message continues to display each time you turn the ignition switch to the ON/RUN position. To turn off the message temporarily, press and release the Menu button. To reset the oil change indicator system (after performing the scheduled maintenance) perform the following procedure:

1. Turn the ignition switch to the "ON" position. Do not start the engine.
2. Fully press the accelerator pedal slowly three times within ten seconds.
3. Turn the ignition switch to the "LOCK" position.

NOTE: **If the indicator message illuminates when you start the vehicle, the oil change indicator system did not reset. If necessary, repeat this procedure.**

REQUIRED MAINTENANCE INTERVALS

Perform Maintenance Every (Where time and mileage are listed, follow the interval that occurs first.)			Maintenance Items
Miles	Kilometers	Months	
7500	12000	6	• Change the engine oil and engine oil filter. • Rotate tires. • Inspect the CV joints. • Inspect the front suspension, tie rod ends and boot seals; replace if necessary. • Inspect the brake linings, replace if necessary. • Inspect parking brake function. • Replace the air conditioning/cabin air filter.
15000	24000	12	• Change the engine oil and engine oil filter. • Rotate tires.
22500	36000	18	• Change the engine oil and engine oil filter.

			• Rotate tires. • Inspect the CV joints. • Inspect the front suspension, tie rod ends and boot seals; replace if necessary. • Inspect the brake linings, replace if necessary. • Inspect parking brake function. • Replace the air conditioning/cabin air filter.
30000	48000	24	• Change the engine oil and engine oil filter. • Rotate tires. • Replace the engine air cleaner filter.
37500	60000	30	• Change the engine oil and engine oil filter. • Rotate tires. • Inspect the CV joints. • Inspect the front suspension, tie rod ends and boot seals; replace if necessary. • Inspect the brake linings, replace if necessary. • Inspect parking brake function. • Replace the air conditioning/cabin air filter.
45000	72000	36	• Change the engine oil and engine oil filter. • Rotate tires.
52500	84000	42	• Change the engine oil and engine oil filter. • Rotate tires. • Inspect the CV joints. • Inspect the front suspension, tie rod ends and boot seals; replace if necessary. • Inspect the brake linings, replace if necessary. • Inspect parking brake function. • Replace the air conditioning/cabin air filter.
60000	96000	48	• Change the engine oil and engine oil filter. • Rotate tires. • Replace the engine air cleaner filter.
67500	108000	54	• Change the engine oil and engine oil filter. • Rotate tires. • Inspect the CV joints. • Inspect the front suspension, tie rod ends and boot seals; replace if necessary. • Inspect the brake linings, replace if necessary.

			• Inspect parking brake function. • Replace the air conditioning/cabin air filter. • Replace the spark plugs (2.4L & 3.2L Engines).* * The spark plug change interval is mileage based only, monthly intervals do not apply.
75000	120000	60	• Change the engine oil and engine oil filter. • Rotate tires.
82500	132000	66	• Change the engine oil and engine oil filter. • Rotate tires. • Inspect the CV joints. • Inspect the front suspension, tie rod ends and boot seals; replace if necessary. • Inspect the brake linings, replace if necessary. • Inspect parking brake function. • Replace the air conditioning/cabin air filter.
90000	144000	72	• Change the engine oil and engine oil filter. • Rotate tires. • Replace the engine air cleaner filter.
97500	156000	78	• Change the engine oil and engine oil filter. • Rotate tires. • Inspect the CV joints. • Inspect the front suspension, tie rod ends and boot seals; replace if necessary. • Inspect the brake linings, replace if necessary. • Inspect parking brake function. • Replace the air conditioning/cabin air filter. • Inspect and replace PCV valve if necessary.
105000	168000	84	• Change the engine oil and engine oil filter. • Rotate tires.
112500	180000	90	• Change the engine oil and engine oil filter. • Rotate tires. • Inspect the CV joints. • Inspect the front suspension, tie rod ends and boot seals; replace if necessary. • Inspect the brake linings, replace if necessary. • Inspect parking brake function.

			• Replace the air conditioning/cabin air filter.
120000	192000	96	• Change the engine oil and engine oil filter. • Rotate tires. • Replace the engine air cleaner filter.
127500	204000	102	• Change the engine oil and engine oil filter. • Rotate tires. • Inspect the CV joints. • Inspect the front suspension, tie rod ends and boot seals; replace if necessary. • Inspect the brake linings, replace if necessary. • Inspect parking brake function. • Replace the air conditioning/cabin air filter.
135000	216000	108	• Change the engine oil and engine oil filter. • Rotate tires. • Replace the spark plugs (2.4L & 3.2L Engines).* * The spark plug change interval is mileage based only, monthly intervals do not apply.
142500	228000	114	• Change the engine oil and engine oil filter. • Rotate tires. • Inspect the CV joints. • Inspect the front suspension, tie rod ends and boot seals; replace if necessary. • Inspect the brake linings, replace if necessary. • Inspect parking brake function. • Replace the air conditioning/cabin air filter.
150000	240000	120	• Change the engine oil and engine oil filter. • Rotate tires. • Replace the engine air cleaner filter. • Flush and replace the engine coolant at 120 months or 150, 000 miles (240, 000 km) whichever comes first.

INSPECTION

INSPECTION

The following steps outline the dealer inspection procedure required every 5 years for vehicles covered under the terms of the Lifetime Powertrain Warranty. Refer to the appropriate warranty information for additional

terms and coverages applicable to the Lifetime Powertrain Warranty.

1. Lift the vehicle on a suitable hoist.
2. Check all Powertrain components for leaks or physical damage. Note any concerns.
3. Lower the vehicle and check the level and condition of the engine oil.
4. Connect a diagnostic scan tool and check for any active Powertrain Diagnostic Trouble Codes (DTC).

NEW VEHICLE PREPARATION INSTRUCTIONS

STANDARD PROCEDURE

STANDARD PROCEDURE - NEW VEHICLE PREPARATION

NEW VEHICLE PREP INSTRUCTIONS - VEHICLE READINESS

DESCRIPTION	ACTION
Keep All Protective Transit Film and Wheel Covers & Films on vehicle until sold, or up to 180 Days	Keep All Protective Transit Film and Wheel Covers & Films on vehicle until sold, or up to 180 Days.
Install Ignition Off Draw (IOD) Fuse	Locate and install/connect Ignition Off Draw fuse or connector.
Place vehicle into Customer Mode (if no IOD fuse)	With the key in the on position, turn on the hazard lamps, then press and hold the up arrow on the steering wheel for 5 seconds. The EVIC display will update once the vehicle goes into customer mode. Once the mode has been changed, turn off the hazard lamps.
Inflate tire pressure to maximum side wall pressure (except heavy duty trucks)	Increase the tire pressure to maximum sidewall pressure if vehicle is going into lot storage.
Install all "Shipped Loose" items	Install all "Shipped Loose" items
Install Front License Plate Bracket (if required)	Install Front License Plate Bracket
Install Roof Rack	Install Roof Rack
Install Antenna	Install Antenna
Install Wheel Center Caps	Install Wheel Center Caps
Reset Tire Pressure Light Load Switch (if equipped)	If vehicle is going into storage and tire pressure is being set to maximum, switch the tire pressure light load setting to "maximum load" using the button on the instrument panel.

NEW VEHICLE PREP INSTRUCTIONS - UNDERHOOD

DESCRIPTION	ACTION
	Verify the operation of the hood release system including the inside hood release lever and the outside hood secondary safety catch. Adjust if necessary. The safety catch prevents the hood

Hood Latch and Safety Catch - Adjust as Needed	from going to the full open position until it is manually released. To test the safety catch, unlatch the hood with the interior hood release lever and attempt to raise the hood without operating the safety catch.
Battery State-of-Charge - document voltage	Check the battery state of charge by connecting a digital voltmeter at the jump-start locations. The battery voltage should be at least 12.4 volts. If charging is necessary, follow the Service Information procedures and recharge the battery. Record voltage on New Vehicle Prep (NVP) form.
Loose Attachments, Routing and Clearance	Inspect the following for routing, loose attachments, connections, and clearance. Reroute and tighten as required: Brake Lines, Fuel Lines, Power Steering Hoses, Vacuum Hoses, Clutch Lines, Refrigerant Lines, Wiring, Belts.
All Fluid Levels	Refer to the Owner's Manual or service information for proper fluid level inspection locations.
No Fluid Leaks present	Visually inspect the underhood area to make sure absence of fluid leaks. Check clamps for tightness an full engagement.

NEW VEHICLE PREP INSTRUCTIONS - UNDER VEHICLE

DESCRIPTION	ACTION
No Fluid Leaks present	Raise the vehicle on an appropriate hoist and check the following: Loose Attachments, Routing Clearance and Damage, Absence of Fluid Leaks. Refer to Service Information for proper lift points. Check clamps for tightness and full engagement.
Loose Attachments, Routing, Clearance, Damage	Raise the vehicle on an appropriate hoist and check the following: Loose Attachments, Routing Clearance and Damage, Absence of Fluid Leaks. Refer to Service Information for proper lift points. Check clamps for tightness and full engagement.

NEW VEHICLE PREP INSTRUCTIONS - ROAD TEST

DESCRIPTION	ACTION
Perform Road Test, Mileage: Before _____ After _____	Record mileage before and after road test.
Engine Starts with All Keys	Start vehicle with all sets of keys.
All Warning Lights and Gauges / No DTCs	Verify all warning lights and gauges are operating properly, and no fault codes exist.
Keyless Go	Make sure vehicle starts with push button, when key is inside vehicle.

Engine Starts Only in Park & Neutral	Verify engine will only start while automatic transmission is in park or neutral.
Engine Starts Only with Clutch Depressed	Verify engine will only start when clutch is depressed on manual transmission vehicles.
Service and Parking Brakes	Apply the service brakes while the car is in motion. Be sure the brake operation is smooth and positive. Make sure the vehicle stops in a straight line and without pulling to one side. Make sure there is no shudder or vibration when braking. Make sure that the parking brake is easy to operate. Make sure the parking brake does not drag.
Brake Transmission Shift Interlock	Make sure that the vehicle will only start when the brake is depressed on vehicles with automatic transmission.
Clutch / Manual Transmission Shifting	Check for smooth shifting. Make sure shift lever operates easily and smoothly. Check for proper synchronization. The gears should not grind.
Automatic Transmission Shifting	Make sure that the park lock mechanism holds the vehicle. With the vehicle on a grade, put the automatic transmission in park and slowly release the service brake to check the operation of the park mechanism. Make sure the shift lever operates easily and smoothly. Check for smooth shifting. Check for proper upshifting and downshifting.
Autostick	Verify that Autostick feature allows proper shifting through the gears.

NEW VEHICLE PREP INSTRUCTIONS - ROAD TEST

DESCRIPTION	ACTION
Engine Performance - Cold	The engine should: start properly, idle smoothly and at proper speed, be free from stumbling or hesitation, produce sufficient power, be free of unusual noises, operate within the proper temperature range, and stop when the ignition key is shut off or stop button is depressed.
Engine Performance - Warm	The engine should: start properly, idle smoothly and at proper speed, be free from stumbling or hesitation, produce sufficient power, be free of unusual noises, operate within the proper temperature range, and stop when the ignition key is shut off or stop button is depressed.
Steering and Handling	Check that the power assist works properly. Make sure that the steering wheel does not vibrate abnormally at idle or road speed. Make sure that the steering wheel is centered when traveling in a

	straight line. Check that the vehicle does not drift to either side on flat road surfaces. Make sure that the vehicle does not vibrate or shake abnormally.
Noise, Vibration, Squeaks, or Rattles	Check that the vehicle is free of noise, vibrations, squeaks, or rattles. Tighten any loose fasteners.
Heater / Defrost - Front	Check the heater operation after the vehicle has reached operating temperature. Operate blower motor at all speeds. Operate the system in all modes. Check for hot air at all appropriate outlets. Check for temperature control operation.
Air Conditioning	Make sure that the A/C system cools properly. Operate blower motor at all speeds. Check for cool air at all temperature outlets. Operate the system in all modes.
Rear Heater and Air Conditioning	Check the rear heater and A/C for proper operation.
Defrost - Rear	Make sure that the electric heated rear defroster operates correctly. Turn on and feel for warmth.
Blindspot Monitoring System (if equipped)	While on road test, verify that the visual warning indicators located on the side view mirrors are operating properly when an object is within the detection zone.
Cruise Control (if equipped)	Check the "on/off" switch. Check the "set" operation. Check the "resume" function. Check the "accelerate" and "decelerate" function. Check the "cancel" button. Check the brake/clutch release function. If equipped, verify operation of Adaptive Cruise Control function.
Set Compass Variance / Calculation (if equipped)	Refer to the service information on TechCONNECT for information regarding compass setting procedures.

NEW VEHICLE PREP INSTRUCTIONS - ROAD TEST

DESCRIPTION	ACTION
Electronic Sway Bar Disconnect (if equipped)	With vehicle in four wheel drive, press the sway bar switch to activate the system. Verify that the "Sway Bar Indicator Light" is illuminated. **WARNING:** **Do not exceed 18 MPH / 29 KPH while the front sway bar is disconnected. Failure to follow these instructions may result in possible serious or fatal injury.**
Transfer Case (if equipped)	Shift the transfer case through all ranges to make sure all shifting is smooth and operates properly.
	Use the terrain select switch to change the ride

Load Leveling Air Suspension (if equipped)	height during normal driving conditions. Cycle through each selection and verify proper operation of the air suspension system.
Tire Pressure Monitoring System	Verify that Tire Pressure Monitoring Indicator Light is not illuminated when tires are above minimum inflation recommendations. Make sure that indicator lamp is not flashing/chiming.
Park Assist (if equipped)	Put vehicle in reverse and slowly back up toward an object. Verify that Park Assist warning icon, lights and chimes operate properly as object is approached.
Back-Up Camera (if equipped)	Put vehicle in reverse, verify that screen provides a clear and visible image from rear of vehicle.

NEW VEHICLE PREP INSTRUCTIONS - INTERIOR

DESCRIPTION	ACTION
Visually Inspect Interior Parts for Damage, Fit, etc.	From the interior of the vehicle, open and close all doors to make sure ease of operation. Fully open and close the glove box to make sure proper operation. Fully open and close the console door to make sure proper operation. Check interior panels for proper fit and free from damage.
All Interior Lamps and Horn	Operate and visually inspect all interior lights and switches, including: Dome/Map lamps, and if equipped the following: vanity mirror lamps, glove box lamps, ash tray lamp, cigar lighter lamp, radio lamps, door mounted lamps, illuminated entry system. Make sure that the horn operates properly.
Rear View Mirror	Check that the rearview mirror's day/night function Is operating properly.
Front and Rear Wipers and Washers	Activate front windshield wipers, and if equipped, rear window wipers and check for proper operation at all speeds. Activate the front and if equipped, the rear washer. Check the spray pattern for proper operation and aim. Check the intermittent wipe feature for proper operation.
All interior Door Locks including Child Locks	Check all interior door locks for proper operation, including rear child safety door locks if equipped. Place in the unlocked position.

NEW VEHICLE PREP INSTRUCTIONS - INTERIOR

DESCRIPTION	ACTION
Steering Wheel Mounted Controls	Check all steering wheel controls for proper operation.

Memory Mirror / Seat	Verify the proper operation of the memory mirror and seat system.
Cigar Lighter	Check cigar lighter for proper operation.
Power Windows and Window Lock Switch	Fully open and close all power windows to make sure proper operation and sealing. Make sure that the windows operate properly at each door. Verify that window lock button is operating properly.
Power Adjustable Pedals (if equipped)	Check the adjustable pedals for proper operation by pressing the switch on the steering column.
Outside Power Mirrors	Check power mirrors for proper operation.
Heated Mirrors (if equipped)	Check power heated mirrors for proper operation.
Power Folding Mirrors (if equipped)	Check power folding mirrors for proper operation.
Seats and Seat Belts - All Adjustments	Check for correct installation and operation of seat and shoulder belts, and retractors. Check that the restraint system safety labels regarding the use of seatbelts and airbags are in place. Fully cycle the seats for proper adjustments and verify that each seat is securely mounted. Fold down and latch the rear seats. Pull forward to check that the latches operate correctly. Check for proper head restraint operation.
Convertible Top (If equipped)	Cycle the convertible top. Check and adjust alignment as required. In cold weather, allow the top to reach room temperature before cycling.
FIAT Cabrio Top (if equipped)	Cycle the convertible top. Check and adjust alignment as required. In cold weather, allow the top to reach room temperature before cycling.
Skyslider (if equipped)	Cycle the Skyslider roof. Check and adjust alignment as required.
Power Sunroof (if equipped)	Cycle sunroof. Make sure that the sunroof opens and closes easily. Verify proper operation of one touch open/close feature if equipped.
Set Clock(s)	Set all clocks to correct time. Refer to Owner's Manual for information regarding clock setting procedures.
Audio System	Turn the radio on and check reception in both AM and FM modes. Check that the CD player operates properly. Check for good sound quality from all speakers.
Satellite Radio (if equipped)	Turn on satellite radio and verify reception.
Disable Front Seat Video (if equipped)	Use the scan tool to disable front seat video while vehicle not in park.
Video System (if equipped)	Test the DVD player to make sure that a DVD will load properly and display on the screen.

Satellite Streaming Video (if equipped)	Satellite Streaming Video.
Wireless Headphones / Video Remote (if equipped)	Check for proper operation of the Wireless Headphones / Video Remote.

NEW VEHICLE PREP INSTRUCTIONS - INTERIOR

DESCRIPTION	ACTION
Heated Steering Wheel (if equipped)	Verify that heated steering wheel is functioning properly.
Rear Sliding Window (if equipped)	Check for proper operation of the manual or power rear sliding window.
Power Outlet(s)	Check all power outlets for proper operation.
Integrated Child Seat / Belt	Check the child restraints and child seats for proper operation.
Place tire changing instruction sheet in left rear quarter panel storage compartment (RT only)	Place tire changing instruction sheet in left rear quarter panel storage compartment (RT only).
Storage bins properly seated around the spare tire (WK only)	Verify that storage bins are properly seated.
Power folding Headrests (if equipped)	Verify proper operation of power folding third row head restraints by pressing the power folding switch located on the instrument panel switch bank.
Heated Seats (if equipped)	Check for proper operation of heated seats on all power levels, on all equipped seats.
Power Cooled Seats (if equipped)	Check for proper operation of ventilated seats on all power levels, on all equipped seats.
Heated / Cooled Cup Holders (if equipped)	Check for proper operation of the heated and cooled and cooled cupholders.
Cargo Compartment Cover (if equipped)	Check the rear cargo compartment cover is operating properly.
Vinyl Floor Covering (if equipped)	Verify properly equipped.

NEW VEHICLE PREP INSTRUCTIONS - EXTERIOR

DESCRIPTION	ACTION
Inspect Body and Paint for Damage and Fit/ Finish	Inspect the body exterior for damage, loose or missing items. During the inspection, make sure that no vehicle damage occurred from the time the vehicle was received and the beginning of the New Vehicle Preparation.
Exterior Lamps - Headlamps, Turn Signals, Hazards, Park/Tail/License Plate, Trunk Lights, etc.	Operate and visually inspect the following: Headlamps (High/Low Beams), turn signals, hazard warning flashers, parking/tail/license plate lamps, reverse/back up lamps, fog lamps, stop lamps including center mounted stop lamp, daytime running lamps (if equipped), clearance lamps, cargo bed

	lamps, any other lamps.
Lock and Unlock all doors with all mechanical keys	Verify all doors lock and unlock with all mechanical keys.
Doors, Liftgate and Tailgate - Adjust Strikers as Needed	Open each door/liftgate/tailgate from the outside to check outside door handle operation. Check the door detent. Partially close all doors to check the open-door detent. Close all doors/liftgates/tailgates to check the operation of latches and strikers. Adjust strikers as required. Verify liftgate/tailgate ease of operation.
Power Liftgate - Inspect for fit and operation (if equipped)	Verify all modes of operation of the power liftgate, including operating the liftgate using the inside switches and the Remote Keyless Entry transmitter.
Power Sliding Door - Inspect for Fit and Operation (if equipped)	Verify all modes of operation of the power sliding door, including operating the sliding door using the inside switches and the Remote Keyless Entry transmitter.
Security Alarm Test (if equipped)	Lock doors using the Remote Keyless Entry Transmitter. Verify the operation of the Vehicle Security System warning lamp.
Passive Entry (if equipped)	Verify that the Keyless Enter-N-Go feature is operating properly, by grabbing the door handle of the locked vehicle, while the Remote Keyless Entry transmitter key is within 5 feet of the vehicle. The door should unlock automatically.
Remote Keyless Entry (if equipped)	Verify that doors unlock properly using all key FOBS.
Remote Start (if equipped)	Verify that engine starts with all keys when using Remote Keyless Entry Transmitter.
Top (Wrangler)	For Wrangler equipped with soft top, verify opening and closing operation. For Hard/Soft Top, verify top fits and is seated properly.

NEW VEHICLE PREP INSTRUCTIONS - VEHICLE STORAGE

DESCRIPTION	ACTION
Keep all protective transit film, wheel covers and films on vehicle until sold	Keep all protective transit film, wheel covers and films on vehicle until sold.
Inflate tire pressure to maximum side wall pressure	Inflate tire pressure to maximum side wall pressure (except heavy duty trucks.)
Put Vehicle into Ship Mode (if no IOD fuse)	Simultaneously press the "Front Defrost" and "List/Enter" buttons and hold for five (5) seconds. The EVIC display will update once the vehicle goes into ship mode.
Remove ignition off draw (IOD) Fuse	Remove fuse before storing vehicle to conserve battery.

NEW VEHICLE PREP INSTRUCTIONS - FINAL DETAIL & INSPECTION

DESCRIPTION	ACTION
Perform all incomplete recalls and RRTs	Perform all incomplete recalls and RRTs.
Remove interior and exterior Transportation Protective Covers	Remove exterior protective coatings/coverings from vehicle, remove interior protective covers, grease markings on door jambs, unnecessary labels, etc.
Inspect paint and body, touch up as needed	Make sure that the body is free from paint chips or scratches. Touch up any chips/scratches using thin layers of paint. Make sure that the body is free from dings and dents.
Install IOD Fuse or put vehicle into Customer Mode	Install fuse or place vehicle into customer mode prior to delivery.
Test and record battery state of charge	Check the battery state of charge by connecting a digital voltmeter at the jump-start locations. The battery voltage should be at least 12.4 volts. If charging is necessary, follow the service manual procedures and recharge the battery. Record voltage on New Vehicle Prep (NVP) form.
Adjust tire pressures including spare to door placard	Adjust tire pressures including spare to door placard.
Reset Tire Pressure Light Load Switch (if equipped)	Reset the Tire Pressure Light Load Switch back to the "Light Load" setting using the switch on the instrument panel.
Top off Diesel Exhaust Fluid reservoir	Fill the Diesel Exhaust Fluid Reservoir located behind the cab on the driver's side of truck (clearly marked in blue) with Mopar Diesel Exhaust Fluid prior to customer delivery.
Wash and clean vehicle exterior	Wash the entire vehicle. Clean the tire sidewalls and wheel/wheel covers (use non - acidic wheel cleaner). Clean exterior/interior glass surfaces.
Clean vehicle interior	Inspect the interior trim, seats, carpeting, and moldings. Clean as necessary.
Fill Fuel Tank with specified grade	Fill fuel tank with the specified grade of fuel. Refer to Owner's Manual or information tag behind the fuel filler.

TOWING

STANDARD PROCEDURE

STANDARD PROCEDURE - VEHICLE TOWING

WARNINGS AND PRECAUTIONS

WARNING: Do not allow towing attachment devices to contact the fuel tank or lines,

fuel leakage can result. Do not lift or tow vehicle by front or rear bumper, or bumper energy absorber units. Do not venture under a lifted vehicle if not supported properly on safety stands. Do not allow passengers to ride in a towed vehicle. Use a safety chain that is independent from the towing attachment device. Failure to follow these instructions may result in personal injury or death.

CAUTION: Do not damage brake lines, exhaust system, shock absorbers, sway bars, or any other under vehicle components when attaching towing device to vehicle. Do not attach towing device to front or rear suspension components. Do not secure vehicle to towing device by the use of front or rear suspension or steering components. Remove or secure loose or protruding objects from a damaged vehicle before towing. Refer to state and local rules and regulations before towing a vehicle. Do not allow weight of towed vehicle to bear on lower fascia, air dams, or spoilers.

CAUTION: Do not flat tow any vehicle equipped with an automatic transmission. Damage to the drivetrain will result. If these vehicles require towing, make sure all drive wheels are off the ground.

CAUTION: Towing this vehicle in violation of the above requirements can cause severe transmission damage. Damage from improper towing is not covered under the New Vehicle Limited Warranty.

RECOMMENDED TOWING EQUIPMENT

To avoid damage to bumper fascia and air dams use of a flat bed towing device or wheel lift is recommended. When using a wheel lift towing device, be sure the unlifted end of disabled vehicle has at least 100 mm (4 in.) ground clearance. If minimum ground clearance cannot be reached, use a towing dolly. If a flat bed device is used, the approach angle should not exceed 15 degrees.

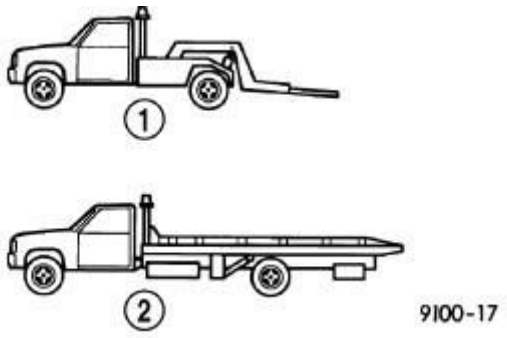

Fig. 10: Recommended Towing Equipment
Courtesy of CHRYSLER GROUP, LLC

1 - WHEEL LIFT

2 - FLAT BED

GROUND CLEARANCE

CAUTION: If vehicle is towed with wheels removed, install lug nuts to retain brake drums or rotors.

A towed vehicle should be raised until the lifted wheels are a minimum 100 mm (4 in.) from the ground. Be sure there is at least 100 mm (4 in.) clearance between the tail pipe and the ground. If necessary, remove the wheels from the lifted end of the vehicle and lower the vehicle closer to the ground, to increase the ground clearance at the rear of the vehicle. Install lug nuts on wheel attaching studs to retain brake drums or rotors.

LOCKED VEHICLE TOWING

If a locked vehicle must be towed, a flat bed hauler is the only recommended method.

FLAT TOWING WITH TOW BAR

- Vehicles equipped with manual transmissions may be flat towed at any legal highway speed, for any distance, if the manual transmission is in NEUTRAL and the ignition switch is in the ACC position.
- Flat towing vehicles equipped with automatic transmissions is

  NOT ALLOWED

  .

CAUTION: Do not flat tow any vehicle equipped with an automatic transmission. Damage to the drivetrain will result. If these vehicles require towing, make sure all drive wheels are off the ground.

FLAT BED TOWING TIE DOWNS

CAUTION: Do not tie vehicle down by attaching chains or cables to suspension components or engine mounts, damage to vehicle can result.

KL vehicles can be tied to a flat bed device using the reinforced loops located under the front and rear bumpers on the drivers side of the vehicle. There are also four reinforced elongated holes for T or R hooks located on the bottom of the front frame rail torque boxes behind the front wheels and forward of the rear wheels inboard of the rocker panel weld seam.

TOWING - FRONT WHEEL LIFT

Chrysler Corporation recommends that a vehicle be towed with the front end lifted, whenever possible. A 90 cm (36 in.) length of 4x4 wood beam can be placed between the wheel lift device and the bottom of the fascia to prevent damage to vehicle during the lifting operation. The beam can removed after lifting the front of the

vehicle.

TOWING - REAR WHEEL LIFT

Towing a KL vehicle with the rear wheels lifted is **NOT ALLOWED** .

2014 HVAC

Heating & Air Conditioning (ATC) - Electrical Diagnostics - Cherokee

DIAGNOSTIC CODE INDEX

DIAGNOSTIC CODE INDEX

DTC	Description
B1000-92	A/C SWITCH REQUEST INPUT - PERFORMANCE OR INCORRECT OPERATION
B1009-92	RECIRCULATION SWITCH REQUEST INPUT - PERFORMANCE OR INCORRECT OPERATION
B1015-92	EBL REAR DEFROST SWITCH REQUEST INPUT - PERFORMANCE OR INCORRECT OPERATION
B1030-11	EVAPORATOR TEMPERATURE SENSOR - CIRCUIT SHORT TO GROUND
B1030-15	EVAPORATOR TEMPERATURE SENSOR - CIRCUIT SHORT TO BATTERY OR OPEN
B1058-11	RECIRCULATION DOOR CONTROL - CIRCUIT SHORT TO GROUND
B1058-12	RECIRCULATION DOOR CONTROL-CIRCUIT SHORT TO BATTERY
B1058-13	RECIRCULATION DOOR CONTROL-CIRCUIT OPEN
B1058-92	RECIRCULATION DOOR CONTROL - PERFORMANCE OR INCORRECT OPERATION
B105C-00	RECIRCULATION DOOR-TRAVEL RANGE TOO SMALL
B105D-00	RECIRCULATION DOOR TRAVEL - RANGE TOO LARGE
B10B2-00	A/C COOL - DOWN TEST PERFORMANCE
B10B3-11	CABIN HEATER 1 CONTROL - CIRCUIT SHORT TO GROUND
B10B3-13	CABIN HEATER 1 CONTROL - CIRCUIT OPEN
B10B7-11	CABIN HEATER 2 CONTROL - CIRCUIT SHORT TO GROUND
B10B7-13	CABIN HEATER 2 CONTROL - CIRCUIT OPEN
B10E8-11	BLOWER MOTOR CONTROL - CIRCUIT SHORT TO GROUND
B10E8-12	BLOWER MOTOR CONTROL - CIRCUIT SHORT TO BATTERY
B10E8-16	BLOWER MOTOR CONTROL - CIRCUIT VOLTAGE BELOW THRESHOLD
B10E8-17	BLOWER MOTOR CONTROL - CIRCUIT VOLTAGE ABOVE THRESHOLD
B1107-11	CABIN TEMPERATURE SENSOR 1 - CIRCUIT SHORT TO GROUND
B1107-15	CABIN TEMPERATURE SENSOR 1 - CIRCUIT SHORT TO BATTERY OR OPEN
B1137-11	CABIN HEATER 3 CONTROL - CIRCUIT SHORT TO GROUND
B1137-13	CABIN HEATER 3 CONTROL - CIRCUIT OPEN
B11C2-11	FRONT MODE DOOR 1 CONTROL - CIRCUIT SHORTED TO GROUND
B11C2-12	FRONT MODE DOOR 1 CONTROL - CIRCUIT SHORT TO BATTERY
B11C2-13	FRONT MODE DOOR 1 CONTROL - CIRCUIT OPEN
B11C2-92	FRONT MODE DOOR 1 CONTROL-PERFORMANCE OR INCORECT

	OPERATION
B11C3-00	FRONT MODE DOOR 1 TRAVEL - RANGE TOO SMALL
B11C4-00	FRONT MODE DOOR 1 TRAVEL - RANGE TOO LARGE
B11C8-11	RIGHT TEMPERATURE DOOR CONTROL - CIRCUIT SHORT TO GROUND
B11C8-12	RIGHT TEMPERATURE DOOR CONTROL-CIRCUIT SHORT TO BATTERY
B11C8-13	RIGHT TEMPERATURE DOOR CONTROL - CIRCUIT OPEN
B11C8-92	RIGHT TEMPERATURE DOOR CONTROL - PERFORMANCE OR INCORECT OPERATION
B11C9-00	RIGHT TEMPERATURE DOOR - TRAVEL TOO SMALL
B11CA-00	RIGHT TEMPERATURE DOOR - TRAVEL TOO LARGE
B11CB-11	MAIN/LEFT TEMPERATURE DOOR CONTROL - CIRCUIT SHORT TO GROUND
B11CB-12	MAIN/LEFT TEMPERATURE DOOR 1 CONTROL - CIRCUIT SHORT TO BATTERY
B11CB-13	MAIN/LEFT TEMPERATURE DOOR 1 CONTROL - CIRCUIT OPEN
B11CB-92	MAIN/LEFT TEMPERATURE DOOR 1 CONTROL - PERFORMANCE OR INCORRECT OPERATION
B11CC-00	MAIN/LEFT TEMPERATURE DOOR 1 - TRAVEL TOO SMALL
B11CD-00	MAIN/LEFT TEMPERATURE DOOR 1 - TRAVEL TOO LARGE
B11D3-00	A/C COOL DOWN TEST PERFORMANCE - COMPRESSOR CLUTCH NOT ENGAGED
B11D5-00	A/C COOL DOWN TEST PERFORMANCE - EVAP TEMP SENSOR ERROR
B11D9-92	BLOWER SPEED KNOB REQUEST INPUT - PERFORMANCE OR INCORRECT OPERATION
B11DB-92	MODE SWITCH REQUEST INPUT - PERFORMANCE OR INCORRECT OPERATION
B11E9-92	LEFT TEMPERATURE KNOB REQUEST INPUT - PERFORMANCE OR INCORRECT OPERATION
B11F0-11	LEFT FLOOR DUCT TEMPERATURE SENSOR - CIRCUIT SHORT TO GROUND
B11F0-15	LEFT FLOOR DUCT TEMPERATURE SENSOR - CIRCUIT SHORT TO BATTERY OR OPEN
B11F1-11	RIGHT FLOOR DUCT TEMPERATURE SENSOR-CIRCUIT SHORT TO GROUND
B11F1-15	RIGHT FLOOR DUCT TEMPERATURE SENSOR - CIRCUIT SHORT TO BATTERY OR OPEN
B11F2-11	LEFT PANEL DUCT TEMPERATURE SENSOR - CIRCUIT SHORT TO GROUND
B11F2-15	LEFT PANEL DUCT TEMPERATURE SENSOR - CIRCUIT SHORT TO BATTERY OR OPEN
B11F3-11	RIGHT PANEL DUCT TEMPERATURE SENSOR - CIRCUIT SHORT TO GROUND
B11F3-15	RIGHT PANEL DUCT TEMPERATURE SENSOR - CIRCUIT SHORT TO

	BATTERY OR OPEN
B11F4-11	MODE/TEMPERATURE DOOR FEEDBACK VOLTAGE REFERENCE - CIRCUIT SHORT TO GROUND
B11F4-12	MODE/TEMPERATURE DOOR FEEDBACK VOLTAGE REFERENCE - CIRCUIT SHORT TO BATTERY
B11FE-11	VARIABLE A/C COMPRESSOR CONTROL - CIRCUIT SHORT TO GROUND
B11FE-12	VARIABLE A/C COMPRESSOR CONTROL - CIRCUIT SHORT TO BATTERY
B11FE-13	VARIABLE A/C COMPRESSOR CONTROL - CIRCUIT OPEN
B1600-11	LEFT SOLAR SENSOR-CIRCUIT SHORT TO GROUND
B1600-12	LEFT SOLAR SENSOR - CIRCUIT SHORT TO BATTERY
B1603-11	RIGHT SOLAR SENSOR - CIRCUIT SHORT TO GROUND
B1603-12	RIGHT SOLAR SENSOR - CIRCUIT SHORT TO BATTERY
B160F-11	TWILIGHT/AMBIENT LIGHT SENSOR INPUT - CIRCUIT SHORT TO GROUND
B160F-12	TWILIGHT/AMBIENT LIGHT SENSOR INPUT - CIRCUIT SHORT TO BATTERY
B210D-84	BATTERY VOLTAGE LOW - SIGNAL BELOW ALLOWABLE RANGE
B210E-85	BATTERY VOLTAGE HIGH - SIGNAL ABOVE ALLOWABLE RANGE
B2214-00	HVAC CLIMATE CONTROL - INTERNAL ERROR
B222A-00	VEHICLE LINE MISMATCH
U0010-00	CAN INTERIOR BUS
U0011-00	CAN INTERIOR BUS OFF PERFORMANCE
U0140-00	LOST COMMUNICATION WITH BODY CONTROL MODULE
U0155-00	LOST COMMUNICATION WITH CLUSTER/CCN
U0184-00	LOST COMMUNICATION WITH RADIO
U0401-00	IMPLAUSIBLE DATA RECEIVED FROM ECM/PCM
U0422-00	IMPLAUSIBLE DATA RECEIVED FROM BODY CONTROL MODULE
U0423-00	IMPLAUSIBLE DATA RECEIVED FROM THE CLUSTER/CCN
U11B8-00	LOST COMMUNICATION WITH THE INTEGRATED CENTER STACK ICS

DIAGNOSIS AND TESTING

B1000-92-A/C SWITCH REQUEST INPUT - PERFORMANCE OR INCORRECT OPERATION

For a complete wiring diagram, **refer to appropriate SYSTEM WIRING DIAGRAMS article** .

THEORY OF OPERATION

The HVAC A/C Heater Control contains various switches and knobs that are used to change the systems operation. There are currently three types of switches used depending on the configuration of the system. Push button momentary switches which are normally open or in the Off position. Multifunction or rotary switches which have several distinct positions and potentiometers which are a rotary variable resistor that is used for a more precise control. An active Diagnostic Trouble Code (DTC) indicates that either a control switch or

potentiometer is stuck in an On position or out of a calibrated range. A stored DTC indicates that control switch or potentiometer was stuck On or out of calibration but has since returned to its normal state. For further information. Refer to **CONTROL, A/C AND HEATER, DESCRIPTION** .

WHEN MONITORED

With the ignition on.

SET CONDITION

If the A/C On/Off Control Switch is stuck in an On position for more than 30 seconds. This DTC has a de-maturing time of one second. If the DTCs status changes from active to stored, the DTC will stay in memory for 100 ignition cycles.

POSSIBLE CAUSES

Possible Causes
OBJECT HOLDING SWITCH IN AN ON POSITION A/C HEATER CONTROL

Always perform the HVAC Pre-Diagnostic Troubleshooting procedure before proceeding. Refer to STANDARD PROCEDURE.

DIAGNOSTIC TEST

1. **INSPECT FOR OBJECT HOLDING SWITCH IN AN ON POSITION**
    1. Inspect the A/C Heater Control for an object or debris holding the A/C On/Off Control Switch in an On position.

    NOTE: Using the scan tool you can read the On/Off status of the control switch.

    Is the A/C On/Off Control Switch being held in or stuck On?

    Yes

    - The A/C Heater control cannot be repaired or adjusted and must be replaced if inoperative or damaged but it might be cleanable if external debris is inhibiting the proper operation of the control switch or knob. If you are unable to clean the control to where it can function properly, replace and program the A/C Heater Control in accordance with the Service Information. Refer to **MODULE, HVAC, REMOVAL** .
    - Perform the HVAC VERIFICATION TEST. Refer to **STANDARD PROCEDURE**.

    No

    - Go To 2

2. **A/C HEATER CONTROL**
    1. Turn the ignition on.
    2. Using the scan tool, erase HVAC DTCs.
    3. Turn the ignition off for 10 seconds, and then turn the ignition on and wait a minimum of 30 seconds.
    4. Using the scan tool, read HVAC DTCs.

    Does the scan tool display this DTC as Active or is the status of the switch reading On?

    Yes

    - Replace and program the A/C Heater Control in accordance with the Service Information. Refer to **MODULE, HVAC, REMOVAL** .
    - Perform the HVAC VERIFICATION TEST. Refer to **STANDARD PROCEDURE**.

    No

    - Test complete.
    - Perform the HVAC VERIFICATION TEST. Refer to **STANDARD PROCEDURE**.

B1009-92-RECIRCULATION SWITCH REQUEST INPUT - PERFORMANCE OR INCORRECT OPERATION

For a complete wiring diagram, **refer to appropriate SYSTEM WIRING DIAGRAMS article** .

THEORY OF OPERATION

The HVAC A/C Heater Control contains various switches and knobs that are used to change the systems operation. There are currently three types of switches used depending on the configuration of the system. Push button momentary switches which are normally open or in the Off position. Multifunction or rotary switches which have several distinct positions and potentiometers which are a rotary variable resistor that is used for a more precise control. An active Diagnostic Trouble Code (DTC) indicates that either a control switch or potentiometer is stuck in an On position or out of a calibrated range. A stored DTC indicates that control switch or potentiometer was stuck On or out of calibration but has since returned to its normal state. For further information. Refer to **CONTROL, A/C AND HEATER, DESCRIPTION** .

WHEN MONITORED

With the ignition on.

SET CONDITION

If the Recirculation Mode Switch is stuck in a On position for more than 30 seconds. This DTC has a de-maturing time of one second. If the DTCs status changes from active to stored, the DTC will stay in memory for 100 ignition cycles.

POSSIBLE CAUSES

Possible Causes
OBJECT HOLDING SWITCH IN AN ON POSITION A/C HEATER CONTROL

Always perform the HVAC Pre-Diagnostic Troubleshooting procedure before proceeding. Refer to STANDARD PROCEDURE.

DIAGNOSTIC TEST

1. **INSPECT FOR OBJECT HOLDING SWITCH IN AN ON POSITION**
   1. Inspect the A/C Heater Control for an object or debris holding the Recirculation Mode Switch in an On position.

      NOTE: Using the scan tool you can read the On/Off status of the control switch.

      Is the Recirculation Mode Switch being held in or stuck On?

      Yes

      - The A/C Heater control cannot be repaired or adjusted and must be replaced if inoperative or damaged but it might be cleanable if external debris is inhibiting the proper operation of the control switch or knob. If you are unable to clean the control to where it can function properly, replace and program the A/C Heater Control in accordance with the Service Information. Refer to **MODULE, HVAC, REMOVAL** .
      - Perform the HVAC VERIFICATION TEST. Refer to **STANDARD PROCEDURE**.

      No

      - Go To 2
2. **A/C HEATER CONTROL**
   1. Turn the ignition on.
   2. Using the scan tool, erase HVAC DTCs.
   3. Turn the ignition off for 10 seconds, and then turn the ignition on and wait a minimum of 30 seconds.
   4. Using the scan tool, read HVAC DTCs.

      Does the scan tool display this DTC as Active or is the status of the switch reading On?

      Yes

      - Replace and program the A/C Heater Control in accordance with the Service Information.

Refer to **MODULE, HVAC, REMOVAL** .

- Perform the HVAC VERIFICATION TEST. Refer to **STANDARD PROCEDURE**.

No

- Test complete.
- Perform the HVAC VERIFICATION TEST. Refer to **STANDARD PROCEDURE**.

B1015-92-EBL REAR DEFROST SWITCH REQUEST INPUT - PERFORMANCE OR INCORRECT OPERATION

For a complete wiring diagram, **refer to appropriate SYSTEM WIRING DIAGRAMS article** .

THEORY OF OPERATION

The HVAC A/C Heater Control contains various switches and knobs that are used to change the systems operation. There are currently three types of switches used depending on the configuration of the system. Push button momentary switches which are normally open or in the Off position. Multifunction or rotary switches which have several distinct positions and potentiometers which are a rotary variable resistor that is used for a more precise control. An active Diagnostic Trouble Code (DTC) indicates that either a control switch or potentiometer is stuck in an On position or out of a calibrated range. A stored DTC indicates that control switch or potentiometer was stuck On or out of calibration but has since returned to its normal state. For further information. Refer to **CONTROL, A/C AND HEATER, DESCRIPTION** .

WHEN MONITORED

With the ignition on.

SET CONDITION

If the Electric Back light (EBL) Electronic Rear Defrost Switch is stuck in an On position for more than 30 seconds. This DTC has a de-maturing time of one second. If the DTCs status changes from active to stored, the DTC will stay in memory for 100 ignition cycles.

POSSIBLE CAUSES

Possible Causes
OBJECT HOLDING SWITCH IN AN ON POSITION A/C HEATER CONTROL

Always perform the HVAC Pre-Diagnostic Troubleshooting procedure before proceeding. Refer to STANDARD PROCEDURE.

DIAGNOSTIC TEST

1. **INSPECT FOR OBJECT HOLDING SWITCH IN AN ON POSITION**

1. Inspect the A/C Heater Control for an object or debris holding the (EBL) Electronic Rear Defrost Switch in an On position.

   NOTE: Using the scan tool you can read the On/Off status of the control switch.

   Is the (EBL) Electronic Rear Defrost Switch being held in or stuck in an On?

   Yes

   - The A/C Heater control cannot be repaired or adjusted and must be replaced if inoperative or damaged but it might be cleanable if external debris is inhibiting the proper operation of the control switch or knob. If you are unable to clean the control to where it can function properly, replace and program the A/C Heater Control in accordance with the Service Information. Refer to **MODULE, HVAC, REMOVAL** .
   - Perform the HVAC VERIFICATION TEST. Refer to **STANDARD PROCEDURE**.

   No

   - Go To 2

2. **A/C HEATER CONTROL**
   1. Turn the ignition on.
   2. Using the scan tool, erase HVAC DTCs.
   3. Turn the ignition off for 10 seconds, and then turn the ignition on and wait a minimum of 30 seconds.
   4. Using the scan tool, read HVAC DTCs.

   Does the scan tool display this DTC as Active or is the status of the switch reading On?

   Yes

   - Replace and program the A/C Heater Control in accordance with the Service Information. Refer to **MODULE, HVAC, REMOVAL** .
   - Perform the HVAC VERIFICATION TEST. Refer to **STANDARD PROCEDURE**.

   No

   - Test complete.
   - Perform the HVAC VERIFICATION TEST. Refer to **STANDARD PROCEDURE**.

B1030-11-EVAPORATOR TEMPERATURE SENSOR - CIRCUIT SHORT TO GROUND

For a complete wiring diagram, **refer to appropriate SYSTEM WIRING DIAGRAMS article** .

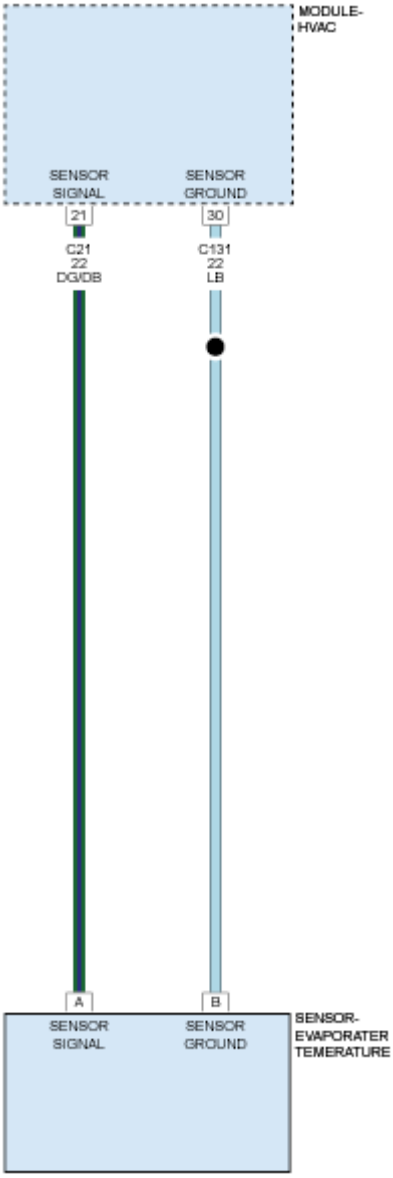

Fig. 1: A/C Evaporator Temperature Wiring Diagram
Courtesy of CHRYSLER GROUP, LLC

THEORY OF OPERATION

The HVAC A/C heater control uses a variety of sensors to adjust HVAC operation to obtain optimal performance. These sensors are continuously monitored by the A/C heater control to assure that they are in range. An active Diagnostic trouble Code (DTC) indicates that a sensor is out of range. A stored DTC indicates that the sensor was out of range but is currently within range.

The evaporator temperature sensor monitors the surface temperature of the A/C evaporator and supplies an input signal to the A/C heater control. The input signal value is used to optimize the A/C system performance and to protect the A/C evaporator from freezing. The evaporator temperature sensor resistance value will

change in response to the surface temperature of A/C evaporator. The resistance value is electronically transferred to the A/C heater control using a sensor ground circuit and a 5-volt reference signal circuit. Normal operation of the sensor the resistive value decreases when the A/C evaporator temperature decreases and the sensor resistive value increases when the A/C evaporator temperature increases.

WHEN MONITORED

With the ignition on.

SET CONDITION

The A/C Heater Control detects a short to ground on the Evaporator Temperature Sensor Signal voltage input to the controller. If the A/C Heater Control detects a valid voltage, the DTC will change from active to stored and will stay stored for 100 ignition cycles.

POSSIBLE CAUSES

Possible Causes
EVAPORATOR TEMPERATURE SENSOR SIGNAL CIRCUIT SHORTED TO GROUND
EVAPORATOR TEMPERATURE SENSOR SIGNAL CIRCUIT SHORTED TO THE SENSOR GROUND CIRCUIT
EVAPORATOR TEMPERATURE SENSOR
A/C HEATER CONTROL

Always perform the HVAC Pre-Diagnostic Troubleshooting procedure before proceeding. Refer to STANDARD PROCEDURE.

DIAGNOSTIC TEST

1. **CHECK IF THE DTC IS ACTIVE**
    1. Ignition on, engine not running.
    2. Using the scan tool, read HVAC DTCs.

    Is this DTC active?

    Yes

    - Go To 2

    No

    - Go To 5
2. **CHECK (C21) EVAPORATOR TEMPERATURE SENSOR SIGNAL CIRCUIT FOR A SHORT TO GROUND**
    1. Turn the ignition off to the lock position.

2. Disconnect the A/C Heater Control C1 harness connector.
3. Disconnect the Evaporator Temperature Sensor harness connector.
4. Measure the resistance between ground and the (C21) Evaporator Temperature Sensor Signal circuit.

   Is the resistance below 100k Ohms?

   Yes

   - Repair the (C21) Evaporator Temperature Sensor Signal circuit for a short to ground.
   - Perform the HVAC VERIFICATION TEST. Refer to **STANDARD PROCEDURE**.

   No

   - Go To 3

3. **CHECK (C21) EVAPORATOR TEMPERATURE SENSOR SIGNAL CIRCUIT FOR A SHORT TO THE (C131) SENSOR GROUND CIRCUIT**
   1. Measure the resistance between the (C21) Evaporator Temperature Sensor Signal circuit and the (C131) Sensor Ground circuit.

      Is the resistance below 100k Ohms?

      Yes

      - Repair the (C21) Evaporator Temperature Sensor Signal circuit for a short to the (C131) Sensor Ground circuit.
      - Perform the HVAC VERIFICATION TEST. Refer to **STANDARD PROCEDURE**.

      No

      - Go To 4

4. **CHECK THE EVAPORATOR TEMPERATURE SENSOR**
   1. Replace the Evaporator Temperature Sensor in Accordance with the Service Information. Refer to **SENSOR, EVAPORATOR TEMPERATURE, REMOVAL** .
   2. Cycle the ignition off for 30 seconds then back on.
   3. With the scan tool, read HVAC DTCs.

      Does this DTC reset?

      Yes

      - Replace and program the A/C Heater Control in accordance with the Service Information. Refer to **MODULE, HVAC, REMOVAL** .

- Perform the HVAC VERIFICATION TEST. Refer to **STANDARD PROCEDURE**.

No

- Test complete.
- Perform the HVAC VERIFICATION TEST. Refer to **STANDARD PROCEDURE**.

5. **CHECK THE WIRING AND CONNECTORS**
   1. The conditions necessary to set the DTC are not present at this time.
   2. Using the scan tool, check the Environmental Data to help identify the conditions in which the DTC was set.
   3. Using the wiring diagrams as a guide, check all related splices and connectors for signs of water intrusion, corrosion, pushed out or bent terminals, and correct pin tension.
   4. Wiggle the wiring and connectors while checking for shorted and open circuits.

   Were there any problems found?

   Yes

   - Repair as necessary.
   - Perform the HVAC VERIFICATION TEST. Refer to **STANDARD PROCEDURE**.

   No

   - Test complete.

B1030-15-EVAPORATOR TEMPERATURE SENSOR - CIRCUIT SHORT TO BATTERY OR OPEN

For a complete wiring diagram, **refer to appropriate SYSTEM WIRING DIAGRAMS article** .

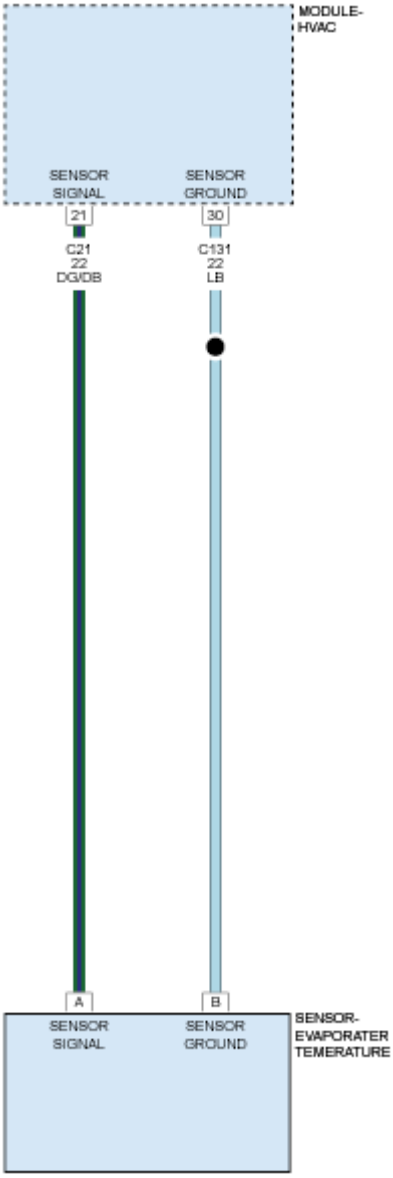

Fig. 2: A/C Evaporator Temperature Wiring Diagram
Courtesy of CHRYSLER GROUP, LLC

THEORY OF OPERATION

The HVAC A/C heater control uses a variety of sensors to adjust HVAC operation to obtain optimal performance. These sensors are continuously monitored by the A/C heater control to assure that they are in range. An active Diagnostic trouble Code (DTC) indicates that a sensor is out of range. A stored DTC indicates that the sensor was out of range but is currently within range.

The evaporator temperature sensor monitors the surface temperature of the A/C evaporator and supplies an input signal to the A/C heater control. The input signal value is used to optimize the A/C system performance and to protect the A/C evaporator from freezing. The evaporator temperature sensor resistance value will

change in response to the surface temperature of A/C evaporator. The resistance value is electronically transferred to the A/C heater control using a sensor ground circuit and a 5-volt reference signal circuit. Normal operation of the sensor the resistive value decreases when the A/C evaporator temperature decreases and the sensor resistive value increases when the A/C evaporator temperature increases.

WHEN MONITORED

With the ignition on.

SET CONDITION

The A/C Heater Module detects greater than 4.8 volts on the Evaporator Temperature Sensor Signal circuit for a period of two seconds or more. If the A/C Heater Module detects a valid voltage, the DTC will change from active to stored and will stay stored for 100 ignition cycles.

POSSIBLE CAUSES

Possible Causes
EVAPORATOR TEMPERATURE SENSOR SIGNAL CIRCUIT SHORTED TO VOLTAGE
EVAPORATOR TEMPERATURE SENSOR
A/C HEATER MODULE

Always perform the HVAC Pre-Diagnostic Troubleshooting procedure before proceeding. Refer to STANDARD PROCEDURE.

DIAGNOSTIC TEST

1. **CHECK IF DTC IS ACTIVE**
    1. Ignition on, engine not running.
    2. With the scan tool, read HVAC DTCs.

    Is this DTC active?

    Yes

    - Go To 2

    No

    - Go To 6
2. **CHECK (C21) EVAPORATOR TEMPERATURE SENSOR SIGNAL CIRCUIT VOLTAGE**
    1. Turn the ignition off to the lock position.
    2. Disconnect the Evaporator Temperature Sensor harness connector.

NOTE: Due to the small terminal and pin size of the Evaporator Temperature Sensor and harness connector, make sure to not damage the terminals in this process.

3. Connect a jumper wire between the (C21) Evaporator Temperature Sensor Signal circuit and the (C131) Sensor Ground circuit in the Evaporator Temperature Sensor harness connector.
4. Ignition on, engine not running.
5. With the scan tool, read the Evaporator Temperature Sensor voltage.

   Is the voltage below 0.2 of a volt?

   Yes

   - Replace the Evaporator Temperature Sensor in accordance with the Service Information. Refer to **SENSOR, EVAPORATOR TEMPERATURE, REMOVAL** .
   - Perform the HVAC VERIFICATION TEST. Refer to **STANDARD PROCEDURE**.

   No

   - Go To 3

3. **CHECK THE (C21) EVAPORATOR TEMPERATURE SENSOR SIGNAL CIRCUIT FOR A SHORT TO VOLTAGE**
   1. Turn the ignition off to the lock position.
   2. Disconnect the jumper wire from the previous step.
   3. Disconnect the A/C Heater Module C1 harness connector.
   4. Ignition on, engine not running.
   5. Measure the voltage of the (C21) Evaporator Temperature Sensor Signal circuit.

      Is voltage above 0.2 of a volt?

      Yes

      - Repair the (C21) Evaporator Temperature Sensor Signal circuit for a short to voltage.
      - Perform the HVAC VERIFICATION TEST. Refer to **STANDARD PROCEDURE**.

      No

      - Go To 4

4. **CHECK THE (C21) EVAPORATOR TEMPERATURE SENSOR SIGNAL CIRCUIT FOR AN OPEN**
   1. Turn the ignition off to the lock position.
   2. Measure the resistance of the (C21) Evaporator Temperature Sensor Signal circuit between the A/C Heater Module C1 harness connector and the Evaporator Temperature Sensor harness connector.

Is the resistance above 1.0 Ohm?

Yes

- Repair the (C21) Evaporator Temperature Sensor Signal circuit for an open.
- Perform the HVAC VERIFICATION TEST. Refer to **STANDARD PROCEDURE**.

No

- Go To 5

5. **CHECK THE (C131) SENSOR GROUND CIRCUIT FOR AN OPEN**
   1. Measure the resistance of the (C131) Sensor Ground circuit between the A/C Heater Module C1 harness connector and the Evaporator Temperature Sensor harness connector.

      Is the resistance above 1.0 Ohm?

      Yes

      - Repair the (C131) Sensor Ground circuit for an open.
      - Perform the HVAC VERIFICATION TEST. Refer to **STANDARD PROCEDURE**.

      No

      - Replace and program the A/C Heater Module in accordance with the Service Information. Refer to **MODULE, HVAC, REMOVAL** .
      - Perform the HVAC VERIFICATION TEST. Refer to **STANDARD PROCEDURE**.

6. **CHECK THE WIRING AND CONNECTORS**
   1. The conditions necessary to set the DTC are not present at this time.
   2. With the scan tool, check the Environmental Data to help identify the conditions in which the DTC was set.
   3. Using the wiring diagrams as a guide, check all related splices and connectors for signs of water intrusion, corrosion, pushed out or bent terminals, and correct pin tension.
   4. Wiggle the wiring and connectors while checking for shorted and open circuits.

      Were there any problems found?

      Yes

      - Repair as necessary.
      - Perform the HVAC VERIFICATION TEST. Refer to **STANDARD PROCEDURE**.

      No

      - Test complete.

B1058-11-RECIRCULATION DOOR CONTROL - CIRCUIT SHORT TO GROUND

For a complete wiring diagram, **refer to appropriate SYSTEM WIRING DIAGRAMS article** .

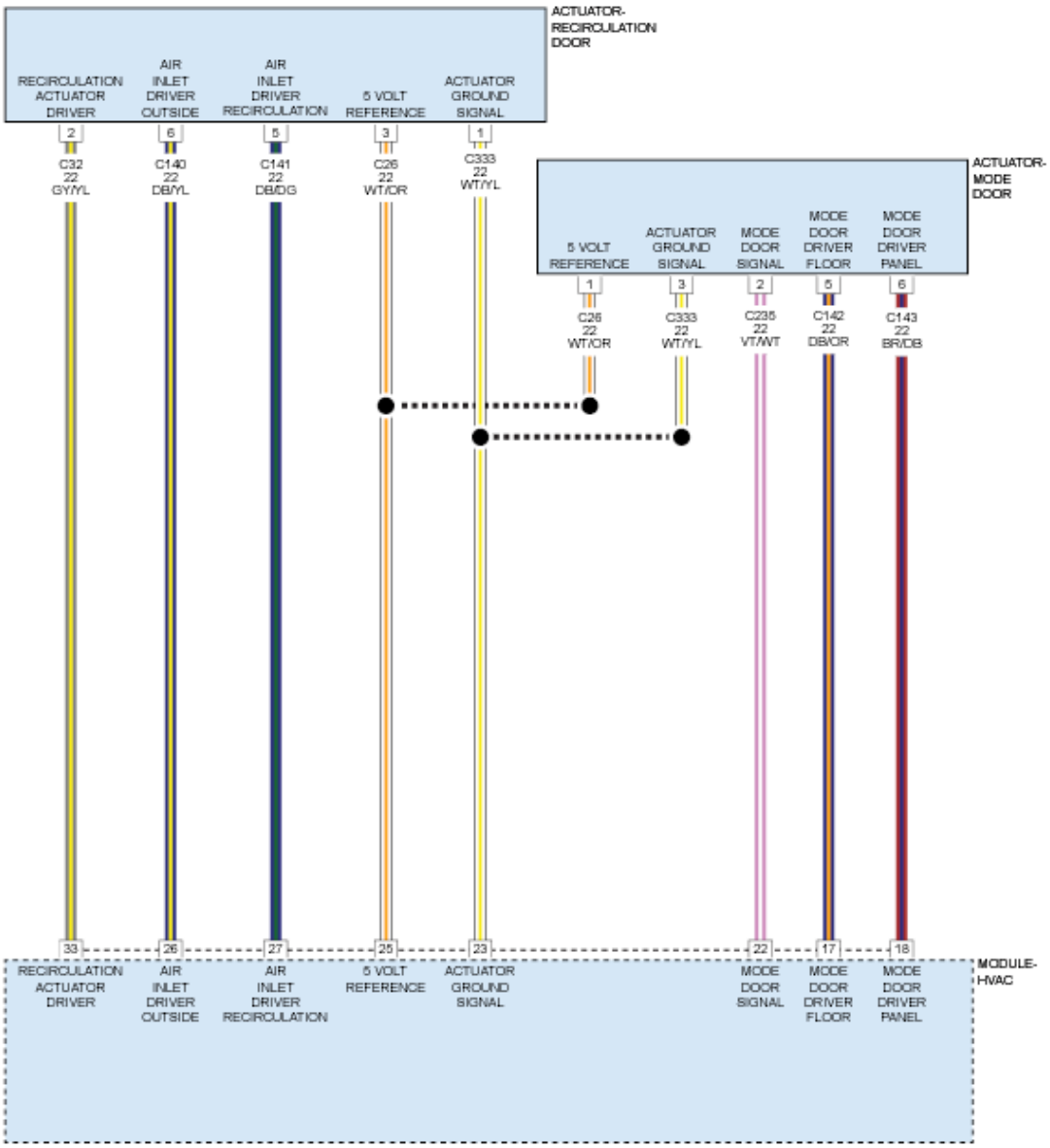

Fig. 3: Actuator Blend/Mode Doors Wiring Diagram
Courtesy of CHRYSLER GROUP, LLC

THEORY OF OPERATION

After the initial installation of the A/C Heater Control, the controller is calibrated to each individual blend/mode door actuator. These calibrations are stored as in the number of pulses it takes to move the door from one stop to another. The A/C Heater Control drives the Door Actuators by the use of Door Driver circuit and a Common

Door Driver circuit and monitors all door actuator pulses to detect door movement in both directions. Most of the door actuators share a common door driver circuit but each door actuator has its own unique driver circuit. Due to shared circuitry, similar Diagnostic Trouble Codes (DTCs) can set at the same time for multiple actuators depending upon the type of circuit malfunction, its location, and the direction the actuator is moving when the malfunction is present. For further information. Refer to **DESCRIPTION** .

WHEN MONITORED

Continuously with the ignition on.

SET CONDITION

The A/C Heater Control detects a short to ground on the Recirculation Door Driver circuit. If the A/C Heater Control detects a valid current draw, the DTC will change from Active to Stored and will stay in the controllers memory for 100 ignition cycles.

POSSIBLE CAUSES

Possible Causes
RECIRCULATION DOOR DRIVER CIRCUIT SHORTED TO GROUND
COMMON DOOR DRIVER CIRCUIT SHORTED TO GROUND
RECIRCULATION DOOR ACTUATOR
A/C HEATER CONTROL

Always perform the HVAC Pre-Diagnostic Troubleshooting procedure before proceeding. Refer to STANDARD PROCEDURE.

DIAGNOSTIC TEST

1. **CHECK IF DTC IS ACTIVE**
    1. Ignition on, engine not running.
    2. With the scan tool, read HVAC DTCs.

    Is this DTC active?

    Yes

    - Go To 3

    No

    - Go To 2
2. **PERFORM HVAC ACTUATOR CALIBRATION TEST**
    1. With the scan tool, perform the HVAC Actuator Calibration Test.

Did this DTC change from Stored to Active while performing the HVAC Actuator Calibration Test?

Yes

- Go To 3

No

- Go To 6

3. **CHECK THE (C32) RECIRCULATION DOOR SIGNAL CIRCUIT FOR A SHORT TO GROUND**
   1. Turn the ignition off to the lock position.
   2. Disconnect the A/C Heater Control C1 harness connector.
   3. Disconnect the Recirculation Door Actuator harness connector.
   4. Measure the resistance between ground and the (C32) Recirculation Door Signal circuit.

   Is the resistance below 100k Ohms?

   Yes

   - Repair the (C32) Recirculation Door Signal circuit for a short to ground.
   - Perform the HVAC VERIFICATION TEST. Refer to **STANDARD PROCEDURE**.

   No

   - Go To 4
4. **CHECK THE REFERENCE VOLTAGE CIRCUIT (C26) FOR A SHORT TO GROUND**
   1. Measure the resistance between ground and the Reference Voltage circuit (C26).

   Is the resistance below 100k Ohms?

   Yes

   - Repair the Reference Voltage circuit (C26) for a short to ground.
   - Perform the HVAC VERIFICATION TEST. Refer to **STANDARD PROCEDURE**.

   No

   - Go To 5
5. **CHECK THE RECIRCULATION DOOR ACTUATOR**
   1. Replace the Recirculation Door Actuator in accordance with the Service Information. Refer to **ACTUATOR, RECIRCULATION DOOR, REMOVAL** .

2. With the scan tool, erase HVAC DTCs and perform the HVAC Actuator Calibration Test.

   Did this DTC reset?

   Yes

   - Replace and program the A/C Heater Control in accordance with the Service Information. Refer to **MODULE, HVAC, REMOVAL** .
   - Perform the HVAC VERIFICATION TEST. Refer to **STANDARD PROCEDURE**.

   No

   - Test complete.
   - Perform the HVAC VERIFICATION TEST. Refer to **STANDARD PROCEDURE**.

6. **CHECK THE WIRING AND CONNECTORS**
   1. The conditions necessary to set the DTC are not present at this time.
   2. With the scan tool, check the Environmental Data to help identify the conditions in which the DTC was set.
   3. Using the wiring diagrams as a guide, check all related splices and connectors for signs of water intrusion, corrosion, pushed out or bent terminals, and correct pin tension.
   4. Wiggle the wiring and connectors while checking for shorted and open circuits.

      Were there any problems found?

      Yes

      - Repair as necessary.
      - Perform the HVAC VERIFICATION TEST. Refer to **STANDARD PROCEDURE**.

      No

      - Test complete.

B1058-12-RECIRCULATION DOOR CONTROL-CIRCUIT SHORT TO BATTERY

For a complete wiring diagram, **refer to appropriate SYSTEM WIRING DIAGRAMS article** .

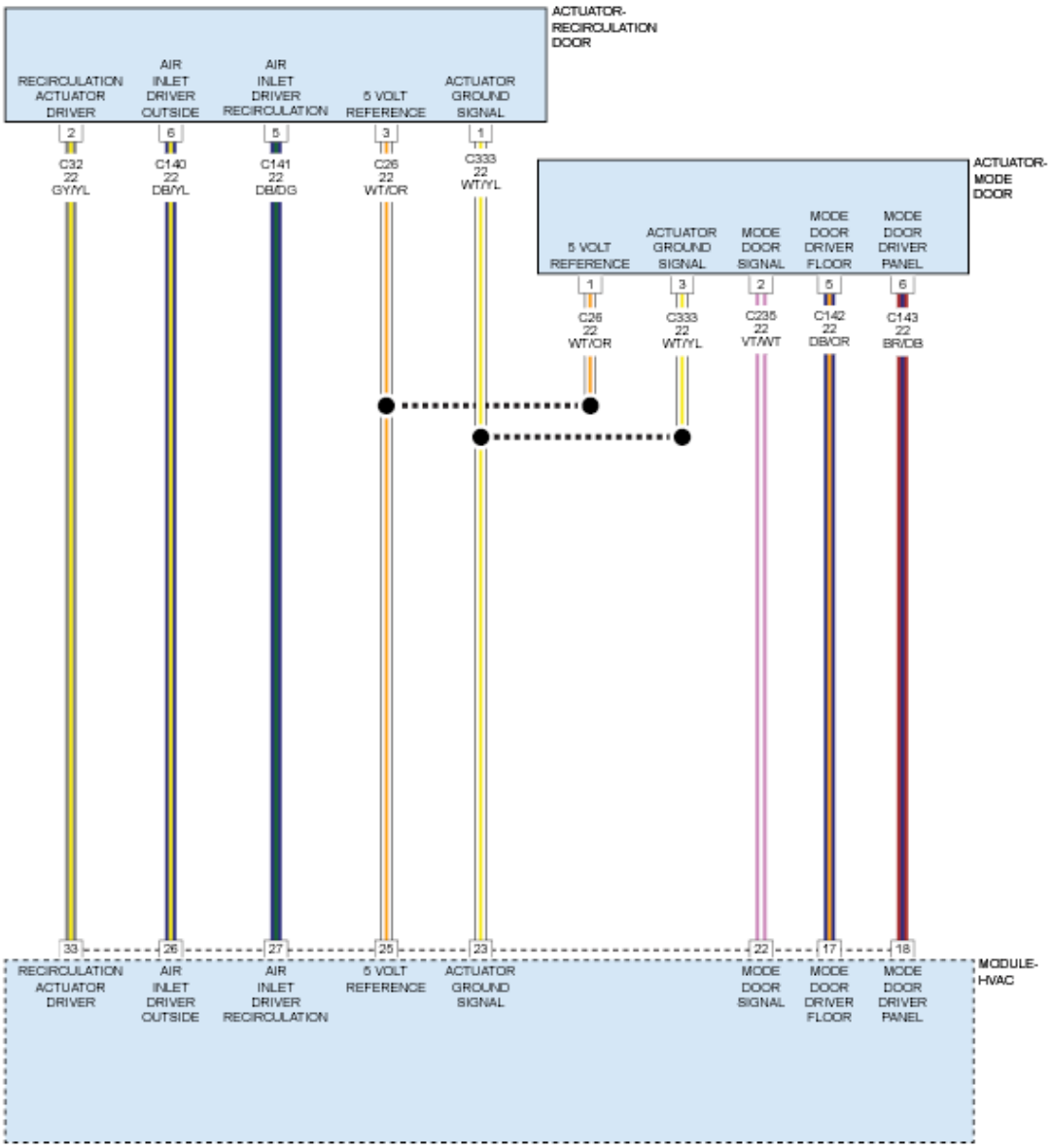

Fig. 4: Actuator Blend/Mode Doors Wiring Diagram
Courtesy of CHRYSLER GROUP, LLC

THEORY OF OPERATION

After the initial installation of the A/C Heater Control, the controller is calibrated to each individual blend/mode door actuator. These calibrations are stored as in the number of pulses it takes to move the door from one stop to another. The A/C Heater Control drives the Door Actuators by the use of Door Driver circuit and a Common Door Driver circuit and monitors all door actuator pulses to detect door movement in both directions. Most of the door actuators share a common door driver circuit but each door actuator has its own unique driver circuit. Due to shared circuitry, similar Diagnostic Trouble Codes (DTCs) can set at the same time for multiple actuators depending upon the type of circuit malfunction, its location, and the direction the actuator is moving

when the malfunction is present. For further information. Refer to **DESCRIPTION** .

WHEN MONITORED

Continuously with the ignition on.

SET CONDITION

The A/C Heater Control detects a short voltage on the Recirculation Door control circuit. If the A/C Heater Control detects a valid voltage, the DTC will change from Active to Stored and will stay in the controllers memory for 100 ignition cycles.

POSSIBLE CAUSES

Possible Causes
RECIRCULATION DOOR DRIVER CIRCUIT SHORTED TO VOLTAGE
COMMON DOOR DRIVER CIRCUIT SHORTED TO VOLTAGE
RECIRCULATION DOOR ACTUATOR
A/C HEATER CONTROL

Always perform the HVAC Pre-Diagnostic Troubleshooting procedure before proceeding. Refer to STANDARD PROCEDURE.

DIAGNOSTIC TEST

1. **CHECK IF DTC IS ACTIVE**
    1. Ignition on, engine not running.
    2. With the scan tool, read HVAC DTCs.

    Is this DTC active?

    Yes

    - Go To 3

    No

    - Go To 2
2. **PERFORM HVAC ACTUATOR CALIBRATION TEST**
    1. With the scan tool, perform the HVAC Actuator Calibration Test.

    Did this DTC change from Stored to Active while performing the HVAC Actuator Calibration Test?

    Yes

- Go To 3

No

- Go To 6

3. **CHECK THE (C32) RECIRCULATION DOOR DRIVER CIRCUIT FOR A SHORT TO VOLTAGE**
   1. Turn the ignition off to the lock position.
   2. Disconnect the A/C Heater Control C1 harness connector.
   3. Disconnect the Recirculation Door Actuator harness connector.
   4. Ignition on, engine not running.
   5. Measure the voltage of the (C32) Recirculation Door Driver circuit.

   Is there any voltage present?

   Yes

   - Repair the (C32) Recirculation Door Driver circuit for a short to voltage.
   - Perform the HVAC VERIFICATION TEST. Refer to **STANDARD PROCEDURE**.

   No

   - Go To 4

4. **CHECK THE REFERENCE VOLTAGE CIRCUIT (C26) FOR A SHORT TO VOLTAGE**
   1. Measure the voltage of the Reference Voltage circuit (C26).

   Is there any voltage present?

   Yes

   - Repair the Reference Voltage circuit (C26) for a short to voltage.
   - Perform the HVAC VERIFICATION TEST. Refer to **STANDARD PROCEDURE**.

   No

   - Go To 5

5. **CHECK THE RECIRCULATION DOOR ACTUATOR**
   1. Turn the ignition off to the lock position.
   2. Replace the Recirculation Door Actuator in accordance with the Service Information. Refer to **ACTUATOR, RECIRCULATION DOOR, REMOVAL** .
   3. With the scan tool, erase HVAC DTCs and perform the HVAC Actuator Calibration Test.

   Did this DTC reset?

Yes

- Replace and program the A/C Heater Control in accordance with the Service Information. Refer to **MODULE, HVAC, REMOVAL** .
- Perform the HVAC VERIFICATION TEST. Refer to **STANDARD PROCEDURE**.

No

- Test complete.
- Perform the HVAC VERIFICATION TEST. Refer to **STANDARD PROCEDURE**.

6. **CHECK THE WIRING AND CONNECTORS**
   1. The conditions necessary to set the DTC are not present at this time.
   2. With the scan tool, check the Environmental Data to help identify the conditions in which the DTC was set.
   3. Using the wiring diagrams as a guide, check all related splices and connectors for signs of water intrusion, corrosion, pushed out or bent terminals, and correct pin tension.
   4. Wiggle the wiring and connectors while checking for shorted and open circuits.

   Were there any problems found?

   Yes

   - Repair as necessary.
   - Perform the HVAC VERIFICATION TEST. Refer to **STANDARD PROCEDURE**.

   No

   - Test complete.

B1058-13-RECIRCULATION DOOR CONTROL-CIRCUIT OPEN

For a complete wiring diagram, **refer to appropriate SYSTEM WIRING DIAGRAMS article** .

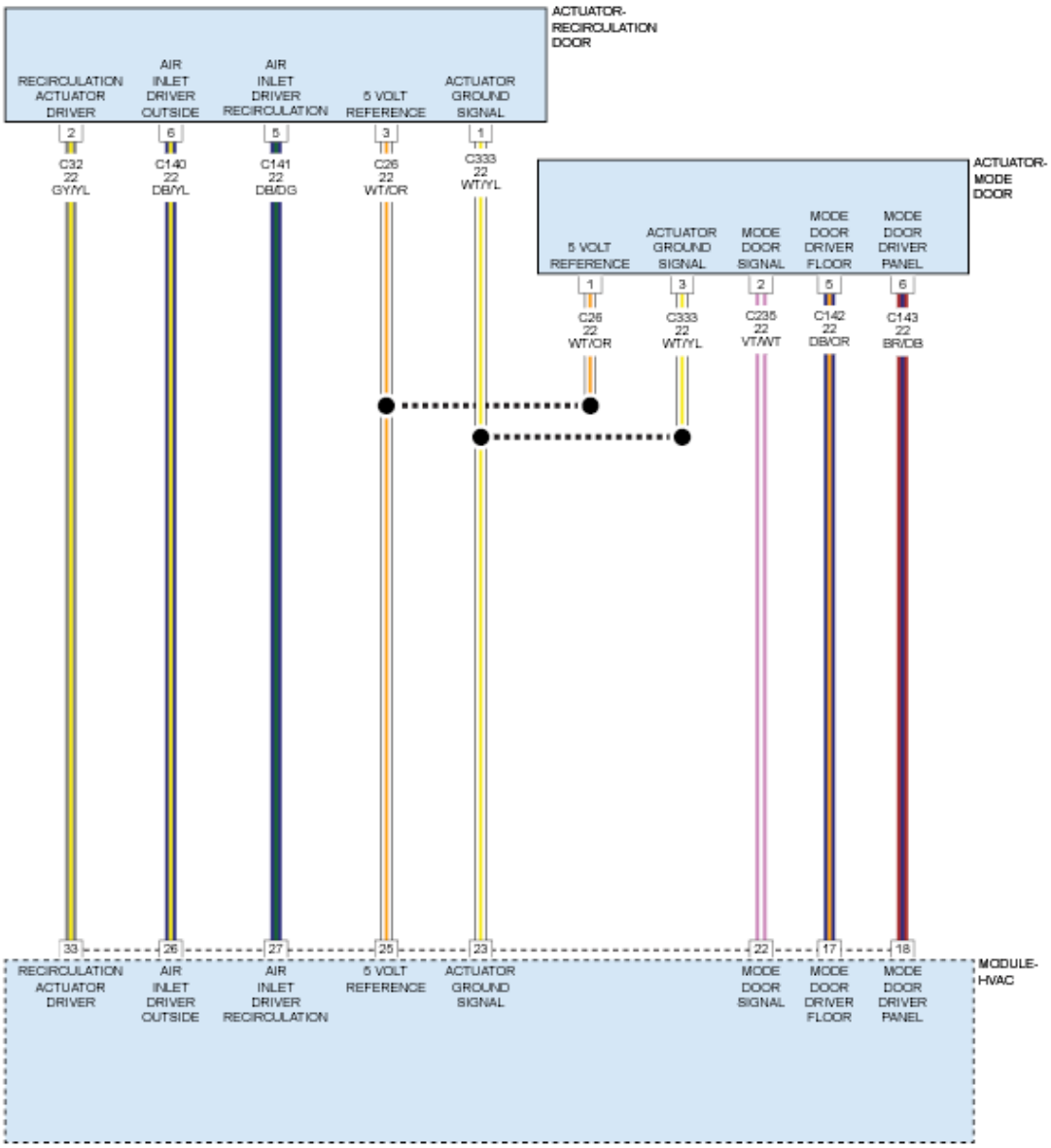

Fig. 5: Actuator Blend/Mode Doors Wiring Diagram
Courtesy of CHRYSLER GROUP, LLC

THEORY OF OPERATION

After the initial installation of the A/C Heater Control, the controller is calibrated to each individual blend/mode door actuator. These calibrations are stored as in the number of pulses it takes to move the door from one stop to another. The A/C Heater Control drives the Door Actuators by the use of Door Driver circuit and a Common Door Driver circuit and monitors all door actuator pulses to detect door movement in both directions. Most of the door actuators share a common door driver circuit but each door actuator has its own unique driver circuit. Due to shared circuitry, similar Diagnostic Trouble Codes (DTCs) can set at the same time for multiple actuators depending upon the type of circuit malfunction, its location, and the direction the actuator is moving

when the malfunction is present. For further information. Refer to **DESCRIPTION** .

WHEN MONITORED

Continuously with the ignition on.

SET CONDITION

The A/C Heater Control detects an open in the Recirculation Door control circuit. If the A/C Heater Control detects a valid current draw, the DTC will change from Active to Stored and will stay in the controllers memory for 100 ignition cycles.

POSSIBLE CAUSES

Possible Causes
RECIRCULATION DOOR DRIVER CIRCUIT OPEN
COMMON DOOR DRIVER CIRCUIT OPEN
RECIRCULATION DOOR ACTUATOR
A/C HEATER CONTROL

Always perform the HVAC Pre-Diagnostic Troubleshooting procedure before proceeding. Refer to STANDARD PROCEDURE.

DIAGNOSTIC TEST

1. **CHECK IF DTC IS ACTIVE**
    1. Ignition on, engine not running.
    2. With the scan tool, read HVAC DTCs.

    Is this DTC active?

    Yes

    - Go To 3

    No

    - Go To 2
2. **PERFORM HVAC ACTUATOR CALIBRATION TEST**
    1. With the scan tool, perform the HVAC Actuator Calibration Test.

    Did this DTC change from Stored to Active while performing the HVAC Actuator Calibration Test?

    Yes

- Go To 3

No

- Go To 6

3. **CHECK THE RECIRCULATION DOOR SIGNAL CIRCUIT (C32) FOR AN OPEN**
   1. Turn the ignition off to the lock position.
   2. Disconnect the Recirculation Door Actuator harness connector.
   3. Measure the resistance of the Recirculation Door Signal circuit (C32) between the A/C Heater Module C1 harness connector and the Recirculation Door Actuator harness connector.

      Is the resistance above 1.0 Ohm?

      Yes

      - Repair the Recirculation Door Signal circuit (C32) for an open or high resistance.
      - Perform the HVAC VERIFICATION TEST. Refer to **STANDARD PROCEDURE**.

      No

      - Go To 4

4. **CHECK THE REFERENCE VOLTAGE CIRCUIT (C26) FOR AN OPEN**
   1. Measure the resistance of the Reference Voltage circuit (C26) between the A/C Heater Module C1 harness connector and the Recirculation Door Actuator harness connector.

      Is the resistance above 1.0 Ohm?

      Yes

      - Repair the Reference Voltage circuit (C26) circuit for an open or high resistance.
      - Perform the HVAC VERIFICATION TEST. Refer to **STANDARD PROCEDURE**.

      No

      - Go To 5

5. **CHECK THE RECIRCULATION DOOR ACTUATOR**
   1. Replace the Recirculation Door Actuator in accordance with the Service Information. Refer to **ACTUATOR, RECIRCULATION DOOR, REMOVAL** .
   2. With the scan tool, erase HVAC DTCs and perform the HVAC Actuator Calibration Test.

      Did this DTC reset?

      Yes

- Replace and program the A/C Heater Control in accordance with the Service Information. Refer to **MODULE, HVAC, REMOVAL** .
- Perform the HVAC VERIFICATION TEST. Refer to **STANDARD PROCEDURE**.

No

- Test complete.
- Perform the HVAC VERIFICATION TEST. Refer to **STANDARD PROCEDURE**.

6. **CHECK THE WIRING AND CONNECTORS**
   1. The conditions necessary to set the DTC are not present at this time.
   2. With the scan tool, check the Environmental Data to help identify the conditions in which the DTC was set.
   3. Using the wiring diagrams as a guide, check all related splices and connectors for signs of water intrusion, corrosion, pushed out or bent terminals, and correct pin tension.
   4. Wiggle the wiring and connectors while checking for shorted and open circuits.

   Were there any problems found?

   Yes

   - Repair as necessary.
   - Perform the HVAC VERIFICATION TEST. Refer to **STANDARD PROCEDURE**.

   No

   - Test complete.

B1058-92-RECIRCULATION DOOR CONTROL - PERFORMANCE OR INCORECT OPERATION

For a complete wiring diagram, **refer to appropriate SYSTEM WIRING DIAGRAMS article** .

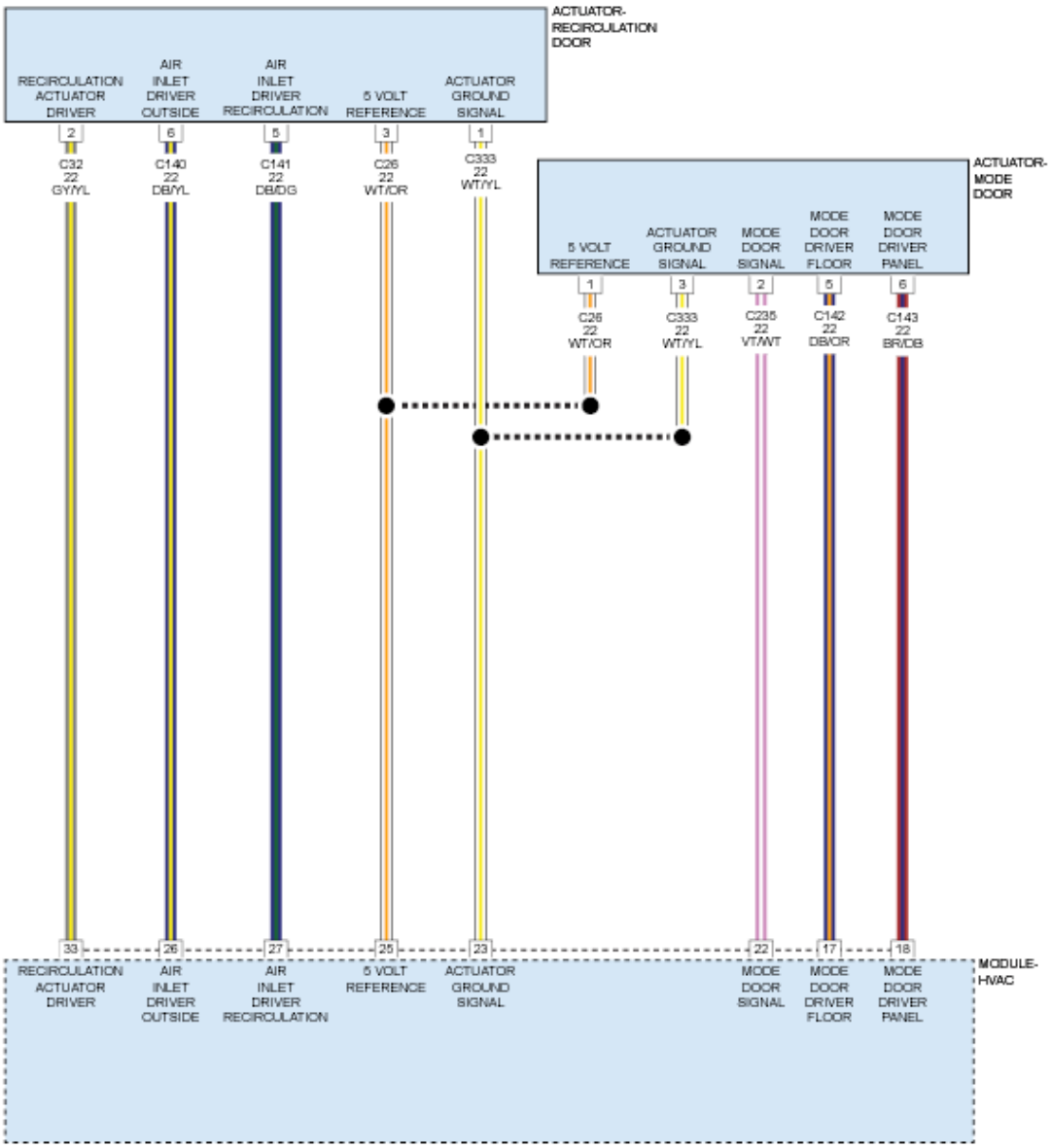

Fig. 6: Actuator Blend/Mode Doors Wiring Diagram
Courtesy of CHRYSLER GROUP, LLC

THEORY OF OPERATION

After the initial installation of the A/C Heater Control, the controller is calibrated to each individual blend/mode door actuator. These calibrations are stored as in the number of pulses it takes to move the door from one stop to another. The A/C Heater Control drives the Door Actuators by the use of Door Driver circuit and a Common Door Driver circuit and monitors all door actuator pulses to detect door movement in both directions. Most of the door actuators share a common door driver circuit but each door actuator has its own unique driver circuit. Due to shared circuitry, similar Diagnostic Trouble Codes (DTCs) can set at the same time for multiple actuators depending upon the type of circuit malfunction, its location, and the direction the actuator is moving

when the malfunction is present. For further information. Refer to **DESCRIPTION** .

WHEN MONITORED

Continuously with the ignition on.

SET CONDITION

If the A/C Heater Control detects a overheat condition of the Integrated Circuit (IC) that controls the Recirculation Door Driver circuit. If the A/C Heater Control detects a valid temperature the DTC will change from Active to Stored and will stay in the controllers memory for 100 ignition cycles.

POSSIBLE CAUSES

Possible Causes
A/C HEATER CONTROL

Always perform the HVAC Pre-Diagnostic Troubleshooting procedure before proceeding. Refer to STANDARD PROCEDURE.

DIAGNOSTIC TEST

1. **CHECK IF DTC IS ACTIVE**
    1. Ignition on, engine not running.
    2. Using the scan tool, read HVAC DTCs.

    Is this DTC active?

    Yes

    - Allow the A/C Heater Control to cool down for five minutes then Go To 2

    No

    - Go To 3
2. **PERFORM HVAC ACTUATOR CALIBRATION TEST**
    1. Using the scan tool, perform the HVAC Actuator Calibration Test.

    Did this DTC reset?

    Yes

    - Replace and program the A/C Heater Control in accordance with the Service Information. Refer to **MODULE, HVAC, REMOVAL** .
    - Perform the HVAC VERIFICATION TEST. Refer to **STANDARD PROCEDURE**.

No

- Go To 3

3. **CHECK THE WIRING AND CONNECTORS**
   1. The conditions necessary to set the DTC are not present at this time.
   2. Using the scan tool, check the Environmental Data to help identify the conditions in which the DTC was set.
   3. Using the wiring diagrams as a guide, check all related splices and connectors for signs of water intrusion, corrosion, pushed out or bent terminals, and correct pin tension.
   4. Wiggle the wiring and connectors while checking for shorted and open circuits.

   Were there any problems found?

   Yes

   - Repair as necessary.
   - Perform the HVAC VERIFICATION TEST. Refer to **STANDARD PROCEDURE**.

   No

   - Test complete.

B105C-00-RECIRCULATION DOOR-TRAVEL RANGE TOO SMALL

For a complete wiring diagram, **refer to appropriate SYSTEM WIRING DIAGRAMS article** .

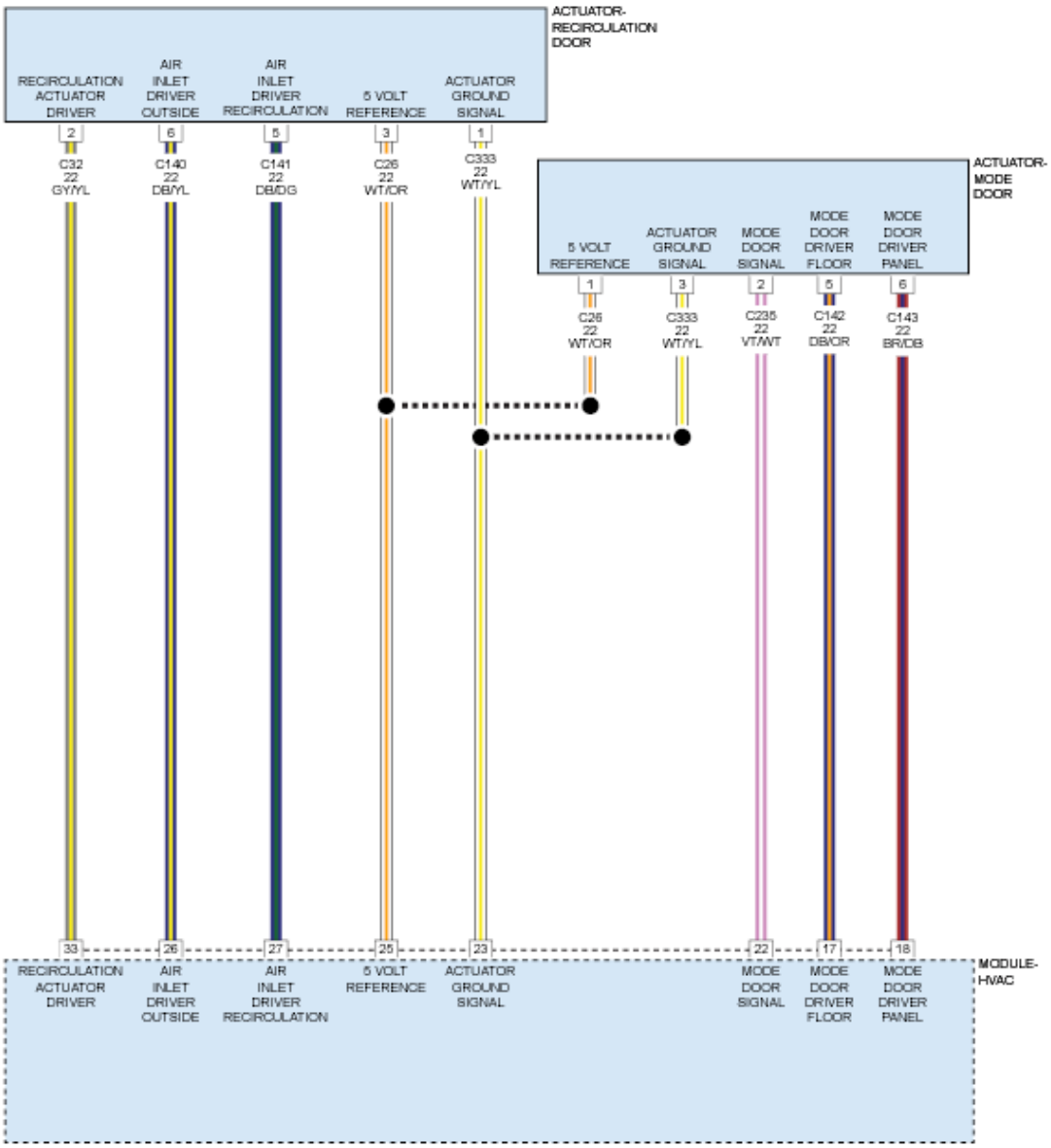

Fig. 7: Actuator Blend/Mode Doors Wiring Diagram
Courtesy of CHRYSLER GROUP, LLC

THEORY OF OPERATION

After the initial installation of the A/C Heater Control, the controller is calibrated to each individual blend/mode door actuator. These calibrations are stored as in the number of pulses it takes to move the door from one stop to another. The A/C Heater Control drives the Door Actuators by the use of Door Driver circuit and a Common Door Driver circuit and monitors all door actuator pulses to detect door movement in both directions. Most of the door actuators share a common door driver circuit but each door actuator has its own unique driver circuit. Due to shared circuitry, similar Diagnostic Trouble Codes (DTCs) can set at the same time for multiple actuators depending upon the type of circuit malfunction, its location, and the direction the actuator is moving

when the malfunction is present. For further information. Refer to **DESCRIPTION** .

WHEN MONITORED

When ever an Actuator Calibration Test is performed.

SET CONDITION

The A/C Heater Control uses a pulse feedback to the controller to detect the total door movement range. If the amount of pulses required to move the door completely in both directions is less than what the controller has stored in its memory, this DTC will set. If an Actuator Calibration Test is performed and the A/C Heater Control detects a valid range of the door movement span in both directions, the DTC will change from Active to Stored and will stay in the controllers memory for 100 ignition cycles.

POSSIBLE CAUSES

Possible Causes
RELATED DTCS PRESENT
RECIRCULATION DOOR BINDING
RECIRCULATION DOOR ACTUATOR
A/C HEATER CONTROL

Always perform the HVAC Pre-Diagnostic Troubleshooting procedure before proceeding. Refer to STANDARD PROCEDURE.

DIAGNOSTIC TEST

1. **CHECK FOR RELATED DTCS**
    1. Ignition on, engine not running.
    2. Using the scan tool, read HVAC DTCs.

    Are there any Door Control Circuit Open, Performance, or Short to Ground, Voltage, or Together DTCs present?

    Yes

    - Refer to **DIAGNOSIS AND TESTING** and perform the appropriate diagnostic procedure.

    No

    - Go To 2
2. **CHECK IF DTC IS ACTIVE**
    1. Ignition on, engine not running.
    2. Using the scan tool, read HVAC DTCs.

Is this DTC active?

Yes

- Go To 4

No

- Go To 3

3. **PERFORM HVAC ACTUATOR CALIBRATION TEST**
   1. Using the scan tool, perform the HVAC Actuator Calibration Test.

      Did this DTC change from Stored to Active while performing the HVAC Actuator Calibration Test?

      Yes

      - Go To 4

      No

      - Go To 6
4. **CHECK THE RECIRCULATION DOOR**
   1. Remove the Recirculation Door Actuator and check the Recirculation Door for binding and full travel. Refer to **ACTUATOR, RECIRCULATION DOOR, REMOVAL** .

      Were there any problems found?

      Yes

      - Repair or replace the Recirculation Door as necessary in accordance with the Service Information. Refer to **HOUSING, HVAC, REMOVAL** .
      - Perform the HVAC VERIFICATION TEST. Refer to **STANDARD PROCEDURE**.

      No

      - Go To 5
5. **CHECK THE RECIRCULATION DOOR ACTUATOR**
   1. Replace the Recirculation Door Actuator in accordance with the Service Information. Refer to **ACTUATOR, RECIRCULATION DOOR, REMOVAL** .
   2. Using the scan tool, erase HVAC DTCs.
   3. Using the scan tool, perform the HVAC Actuator Calibration Test.

      Did this DTC reset during HVAC Actuator Calibration Test?

Yes

- Replace and program the A/C Heater Control in accordance with the Service Information. Refer to **MODULE, HVAC, REMOVAL** .
- Perform the HVAC VERIFICATION TEST. Refer to **STANDARD PROCEDURE**.

No

- Test complete.
- Perform the HVAC VERIFICATION TEST. Refer to **STANDARD PROCEDURE**.

6. **CHECK THE WIRING AND CONNECTORS**
   1. The conditions necessary to set the DTC are not present at this time.
   2. Using the scan tool, check the Environmental Data to help identify the conditions in which the DTC was set.
   3. Using the wiring diagrams as a guide, check all related splices and connectors for signs of water intrusion, corrosion, pushed out or bent terminals, and correct pin tension.
   4. Wiggle the wiring and connectors while checking for shorted and open circuits.

   Were there any problems found?

   Yes

   - Repair as necessary.
   - Perform the HVAC VERIFICATION TEST. Refer to **STANDARD PROCEDURE**.

   No

   - Test complete.

B105D-00-RECIRCULATION DOOR TRAVEL - RANGE TOO LARGE

For a complete wiring diagram, **refer to appropriate SYSTEM WIRING DIAGRAMS article** .

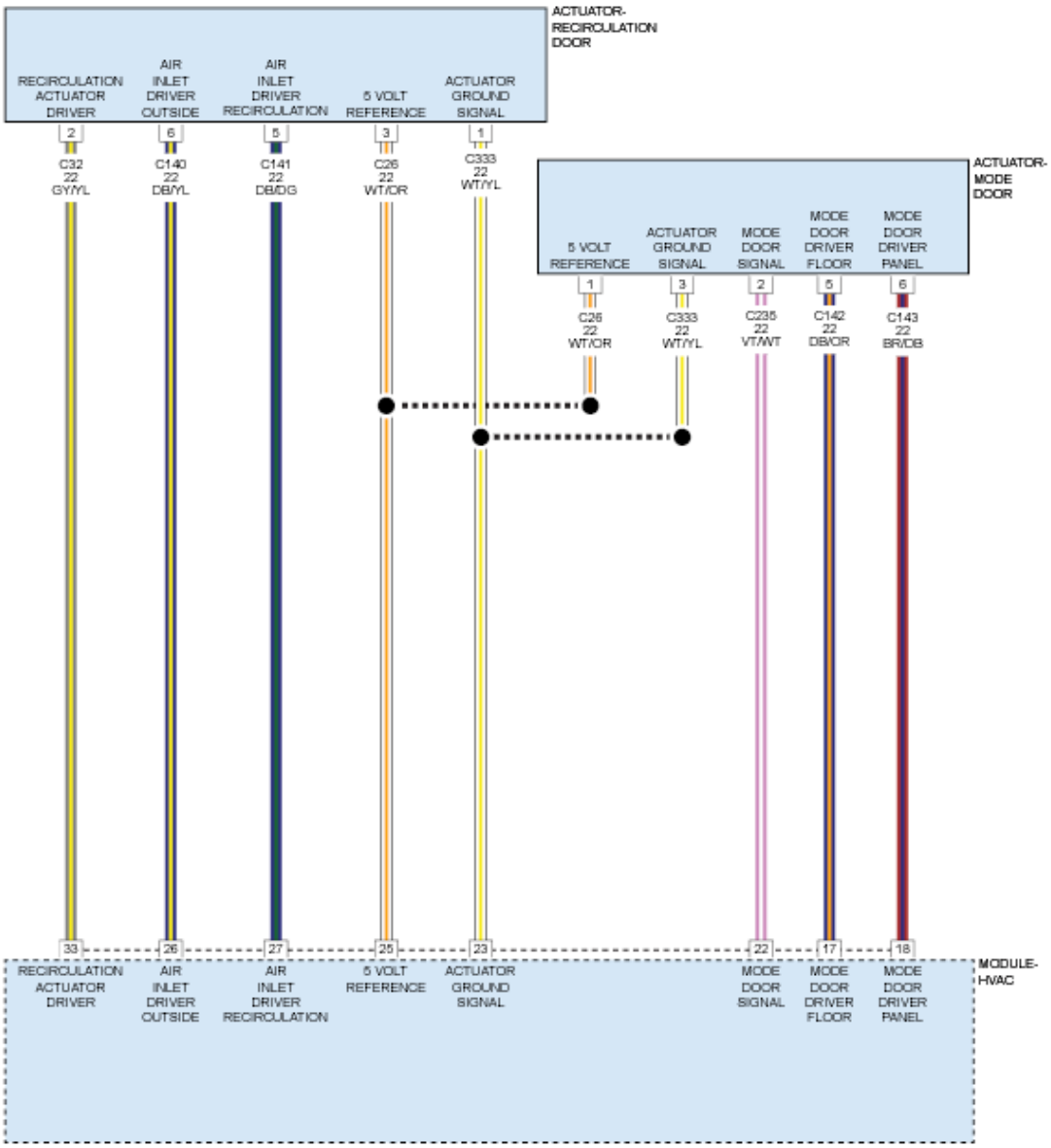

Fig. 8: Actuator Blend/Mode Doors Wiring Diagram
Courtesy of CHRYSLER GROUP, LLC

THEORY OF OPERATION

After the initial installation of the A/C Heater Control, the controller is calibrated to each individual blend/mode door actuator. These calibrations are stored as in the number of pulses it takes to move the door from one stop to another. The A/C Heater Control drives the Door Actuators by the use of Door Driver circuit and a Common Door Driver circuit and monitors all door actuator pulses to detect door movement in both directions. Most of the door actuators share a common door driver circuit but each door actuator has its own unique driver circuit. Due to shared circuitry, similar Diagnostic Trouble Codes (DTCs) can set at the same time for multiple actuators depending upon the type of circuit malfunction, its location, and the direction the actuator is moving

when the malfunction is present. For further information. Refer to **DESCRIPTION** .

WHEN MONITORED

When ever an Actuator Calibration Test is performed.

SET CONDITION

The A/C Heater Control uses a pulse feedback to the controller to detect the total door movement range. If the amount of pulses required to move the door completely in both directions is greater than what the controller has stored in its memory, this DTC will set. If an Actuator Calibration Test is performed or during normal operation and the A/C Heater Control detects a valid range of the door movement span in both directions, the DTC will change from Active to Stored and will stay in the controllers memory for 100 ignition cycles.

POSSIBLE CAUSES

Possible Causes
RELATED DTCS PRESENT
RECIRCULATION DOOR STOPS
RECIRCULATION DOOR
RECIRCULATION DOOR ACTUATOR
A/C HEATER CONTROL

Always perform the HVAC Pre-Diagnostic Troubleshooting procedure before proceeding. Refer to STANDARD PROCEDURE.

DIAGNOSTIC TEST

1. **CHECK FOR RELATED DTCS**
    1. Ignition on, engine not running.
    2. With the scan tool, read HVAC DTCs.

    Are there any Door Control Circuit Short to Voltage, Short to Ground or Open DTCs present?

    Yes

    - Refer to **DIAGNOSIS AND TESTING** and perform the appropriate diagnostic procedure.

    No

    - Go To 2
2. **CHECK IF DTC IS ACTIVE**
    1. Ignition on, engine not running.
    2. With the scan tool, read HVAC DTCs.

Is this DTC active?

Yes

- Go To 4

No

- Go To 3

3. **PERFORM HVAC ACTUATOR CALIBRATION TEST**
   1. With the scan tool, perform the HVAC Actuator Calibration Test.

      Did this DTC change from Stored to Active while performing the HVAC Actuator Calibration Test?

      Yes

      - Go To 4

      No

      - Go To 6
4. **CHECK THE RECIRCULATION DOOR**
   1. Remove the Recirculation Door Actuator and check the Recirculation Door stops, linkage (stripped or cracked) and door. Refer to **ACTUATOR, RECIRCULATION DOOR, REMOVAL** .

      Were there any problems found?

      Yes

      - Repair or replace the Recirculation Door as necessary in accordance with the Service Information. Refer to **HOUSING, HVAC, REMOVAL** .
      - Perform the HVAC VERIFICATION TEST. Refer to **STANDARD PROCEDURE**.

      No

      - Go To 5
5. **CHECK THE RECIRCULATION DOOR ACTUATOR**
   1. Replace the Recirculation Door Actuator in accordance with the Service Information. Refer to **ACTUATOR, RECIRCULATION DOOR, REMOVAL** .
   2. With the scan tool, erase HVAC DTCs and perform the HVAC Actuator Calibration Test.

      Did this DTC reset?

Yes

- Replace and program the A/C Heater Control in accordance with the Service Information. Refer to **MODULE, HVAC, REMOVAL** .
- Perform the HVAC VERIFICATION TEST. Refer to **STANDARD PROCEDURE**.

No

- Test complete.
- Perform the HVAC VERIFICATION TEST. Refer to **STANDARD PROCEDURE**.

6. **CHECK THE WIRING AND CONNECTORS**
   1. The conditions necessary to set the DTC are not present at this time.
   2. With the scan tool, check the Environmental Data to help identify the conditions in which the DTC was set.
   3. Using the wiring diagrams as a guide, check all related splices and connectors for signs of water intrusion, corrosion, pushed out or bent terminals, and correct pin tension.
   4. Wiggle the wiring and connectors while checking for shorted and open circuits.

   Were there any problems found?

   Yes

   - Repair as necessary.
   - Perform the HVAC VERIFICATION TEST. Refer to **STANDARD PROCEDURE**.

   No

   - Test complete.

B10B2-00-A/C COOL - DOWN TEST PERFORMANCE

For a complete wiring diagram, **refer to appropriate SYSTEM WIRING DIAGRAMS article** .

THEORY OF OPERATION

The A/C Heater Controller has software to enable it to perform an A/C Cool Down Test by a command using a scan tool. This test checks for evaporator temperature drop over a predetermined time. If the test fails, this DTC will set. However, certain test conditions are required to perform this test. Failure to run this test within those parameters can result in failure of the test.

WHEN MONITORED

With ever an A/C Cooldown Test is performed.

SET CONDITION

This DTC is set whenever the A/C Cooldown Test is performed and the desired temperature drop is not achieved by the system. The DTC will go to stored after a successful A/C Cooldown Test.

POSSIBLE CAUSES

Possible Causes
A/C SYSTEM WORKING IMPROPERLY

Always perform the HVAC Pre-Diagnostic Troubleshooting procedure before proceeding. Refer to STANDARD PROCEDURE.

DIAGNOSTIC TEST

CONDITIONS FOR A/C COOLDOWN TEST

1. The following condition must be met before running the A/C Cooldown test.
   - No Powertrain Control Module (PCM) DTCs present.
   - No Communication DTCs present.
   - Condenser cooling fan working properly.
   - No active HVAC evaporator temperature sensor, sun sensor, recirculation, mode, or blend door actuator DTCs present.
   - The refrigerant system must be fully charged.
   - The blower motor must operate correctly in all speeds.
   - The evaporator temperature must be above 12.7° C (55° F).
   - The A/C compressor must be turned off.
   - Blower must be on high.

   Are all of the above conditions met before running the A/C Cooldown Test?

   Yes

   - Go to the Service Information for additional Cooldown Test related diagnostic information and testing procedures and repair as necessary. Refer to **HVAC SYSTEM TESTDIAGNOSIS AND TESTING** .

     NOTE: Run the Cooldown Test again after any repairs are performed.

   - If the Cooldown Test passes, testing is complete.

   No

   - Run the A/C Cooldown test again with the above test conditions.

B10B3-11-CABIN HEATER 1 CONTROL - CIRCUIT SHORT TO GROUND

For a complete wiring diagram, **refer to appropriate SYSTEM WIRING DIAGRAMS article** .

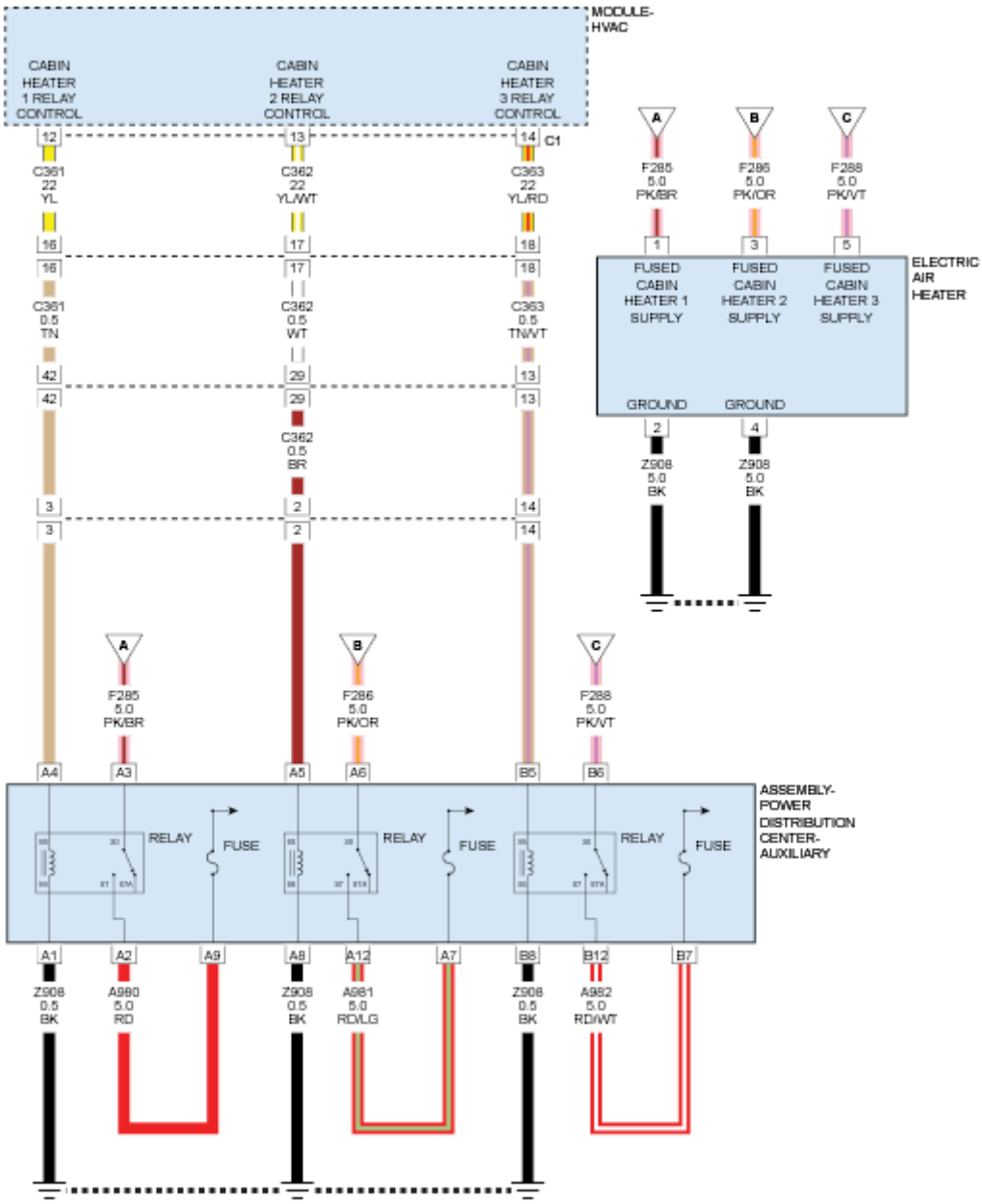

Fig. 9: Cabin Heater Wiring Diagram
Courtesy of CHRYSLER GROUP, LLC

WHEN MONITORED

With the ignition on, the Cabin Heater Relay 1 commanded on.

SET CONDITION

If the A/C Heater Control Module detects the Cabin Heater Relay 1 Control circuit is shorted to ground.

POSSIBLE CAUSES

Possible Causes
CABIN HEATER RELAY 1 CONTROL CIRCUIT SHORTED TO GROUND
CABIN HEATER 1 RELAY
A/C HEATER CONTROL MODULE

DIAGNOSTIC TEST

1. **VERIFY THAT THE DTC IS ACTIVE**
    1. Turn the ignition on.
    2. With the scan tool, erase DTCs.
    3. With the scan tool, actuate the Cabin Heater 1 Relay.
    4. Monitor the scan tool for at least two minutes.
    5. With the scan tool, read DTCs.

    Is this DTC active?

    Yes

    - Go To 2

    No

    - The condition that caused this symptom is currently not present. Check for an intermittent condition by inspecting the related wiring harness for chafed, pierced, pinched, and partially broken wires. Also, inspect the related connectors for broken, bent, pushed out, spread, corroded, or contaminated terminals. Repair as necessary.
    - Perform the HVAC VERIFICATION TEST. Refer to **STANDARD PROCEDURE**.
2. **CHECK CABIN HEATER RELAY 1 OUTPUT CIRCUIT FOR SHORT TO GROUND**
    1. Turn the ignition off.
    2. Disconnect the A/C Heater Control C1 harness connector.
    3. Remove the Cabin Heater Relay 1.
    4. Using an ohm meter measure the resistance between the Cabin Heater Relay 1 Output circuit and ground.

    Does the ohm meter read open circuit?

    Yes

    - Go To 3

No

- Repair the Cabin Heater Relay 1 Output circuit for a short to ground.
- Perform the HVAC VERIFICATION TEST. Refer to **STANDARD PROCEDURE**.

3. **A/C HEATER CONTROL MODULE**
   1. Turn the ignition on.
   2. With the scan tool, erase DTCs.
   3. With the scan tool, actuate the Cabin Heater 1 Relay.
   4. Monitor the scan tool for at least two minutes.
   5. With the scan tool, read DTCs.

   Does the scan tool display active: B10B3-11-CABIN HEATER 1 CONTROL CIRCUIT SHORT TO GROUND?

   Yes

   - Replace the A/C Heater Control Module in accordance with the Service Information. Refer to **MODULE, HVAC, REMOVAL** .
   - Perform the HVAC VERIFICATION TEST. Refer to **STANDARD PROCEDURE**.

   No

   - Replace the Cabin Heater Relay 1 in accordance with the Service Information.
   - Perform the HVAC VERIFICATION TEST. Refer to **STANDARD PROCEDURE**.

B10B3-13-CABIN HEATER 1 CONTROL - CIRCUIT OPEN

For a complete wiring diagram, **refer to appropriate SYSTEM WIRING DIAGRAMS article** .

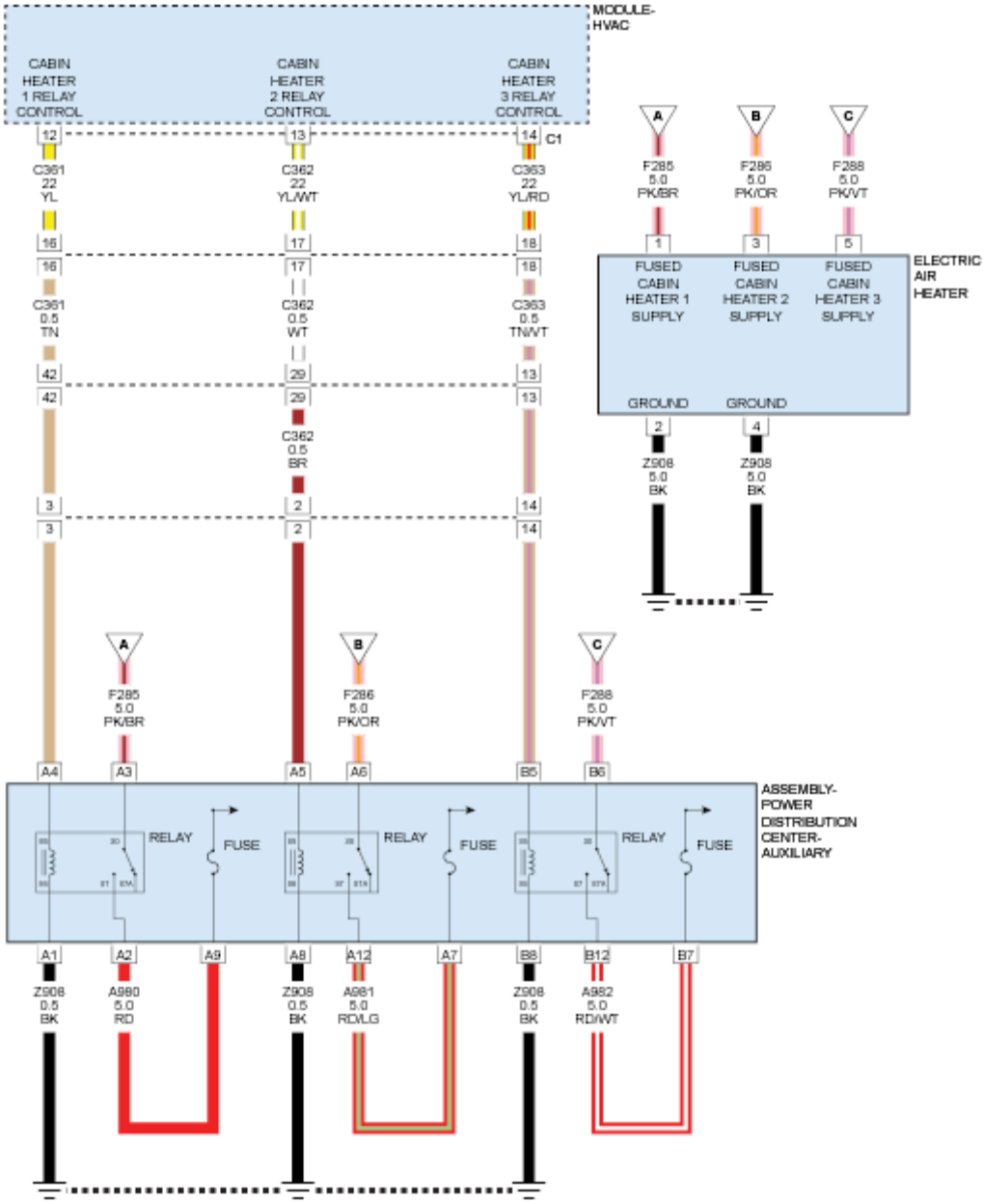

Fig. 10: Cabin Heater Wiring Diagram
Courtesy of CHRYSLER GROUP, LLC

WHEN MONITORED

With the ignition on, the Cabin Heater Relay 1 commanded on.

SET CONDITION

If the A/C Heater Control Module detects the Cabin Heater Relay 1 Control circuit is Open.

POSSIBLE CAUSES

Possible Causes
CABIN HEATER RELAY 1 CONTROL CIRCUIT OPEN
A/C HEATER CONTROL MODULE

DIAGNOSTIC TEST

1. **VERIFY THAT THE DTC IS ACTIVE**
    1. Turn the ignition on.
    2. With the scan tool, erase DTCs.
    3. With the scan tool, actuate the Cabin Heater 1 Relay.
    4. Monitor the scan tool for at least two minutes.
    5. With the scan tool, read DTCs.

    Is this DTC active?

    Yes

    - Go To 2

    No

    - The condition that caused this symptom is currently not present. Check for an intermittent condition by inspecting the related wiring harness for chafed, pierced, pinched, and partially broken wires. Also, inspect the related connectors for broken, bent, pushed out, spread, corroded, or contaminated terminals. Repair as necessary.
    - Perform the HVAC VERIFICATION TEST. Refer to **STANDARD PROCEDURE**.
2. **CHECK THE CABIN HEATER RELAY 1 CONTROL CIRCUIT FOR AN OPEN**
    1. Turn the ignition off.
    2. Disconnect the A/C Heater Control Module C1 harness connector.
    3. Remove the Cabin Heater Relay 1 from the Power Distribution Center.
    4. Turn the ignition on.
    5. Measure the resistance of the Cabin Heater Relay 1 Control circuit between the A/C Heater Control C1 harness connector and the Power Distribution Center.

    Is the resistance above 1.0 Ohm?

    Yes

    - Repair the open on the Cabin Heater Relay 1 Control circuit.
    - Perform the HVAC VERIFICATION TEST. Refer to **STANDARD PROCEDURE**.

No

- Go To3

3. **A/C HEATER CONTROL MODULE**
    1. Turn the ignition on.
    2. With the scan tool, erase DTCs.
    3. With the scan tool, actuate the Cabin Heater 1 Relay.
    4. Monitor the scan tool for at least two minutes.
    5. With the scan tool, read DTCs.

    Does the scan tool display active: B10B3-13-CABIN HEATER 1 CONTROL CIRCUIT OPEN?

    Yes

    - Replace the A/C Heater Control Module in accordance with the Service Information. Refer to **MODULE, HVAC, REMOVAL** .
    - Perform the HVAC VERIFICATION TEST. Refer to **STANDARD PROCEDURE**.

    No

    - Replace the Cabin Heater Relay 1 in accordance with the Service Information.
    - Perform the HVAC VERIFICATION TEST. Refer to **STANDARD PROCEDURE**.

B10B7-11-CABIN HEATER 2 CONTROL - CIRCUIT SHORT TO GROUND

For a complete wiring diagram, **refer to appropriate SYSTEM WIRING DIAGRAMS article** .

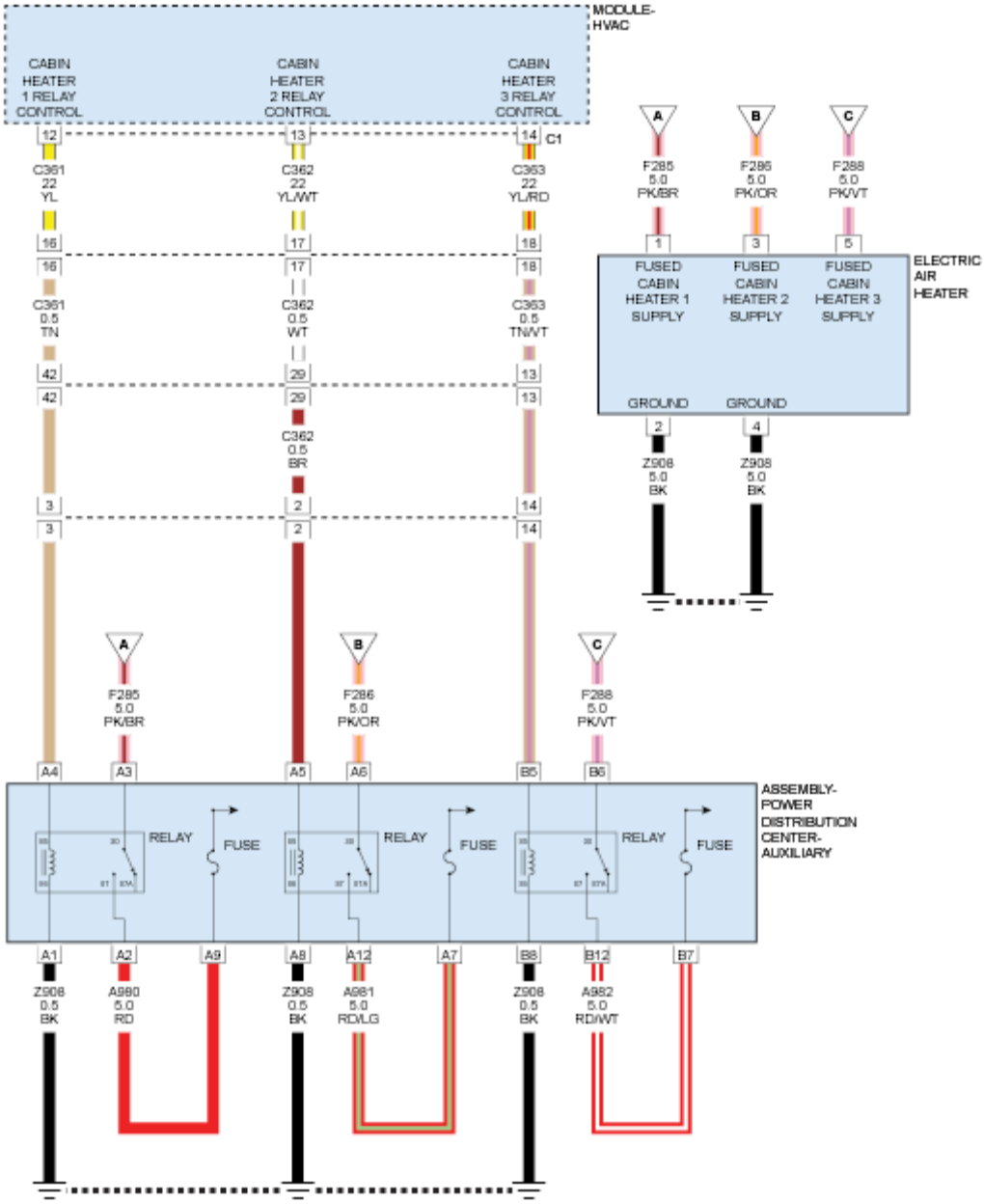

Fig. 11: Cabin Heater Wiring Diagram
Courtesy of CHRYSLER GROUP, LLC

WHEN MONITORED

With the ignition on, the Cabin Heater Relay 2 commanded on.

SET CONDITION

If the A/C Heater Control Module detects the Cabin Heater Relay 2 Control circuit is shorted to ground.

POSSIBLE CAUSES

Possible Causes
CABIN HEATER RELAY 2 CONTROL CIRCUIT SHORTED TO GROUND
CABIN HEATER 2 RELAY
A/C HEATER CONTROL MODULE

DIAGNOSTIC TEST

1. **VERIFY THAT THE DTC IS ACTIVE**
    1. Turn the ignition on.
    2. With the scan tool, erase DTCs.
    3. With the scan tool, actuate the Cabin Heater 2 Relay.
    4. Monitor the scan tool for at least two minutes.
    5. With the scan tool, read DTCs.

    Is this DTC active?

    Yes

    - Go To 2

    No

    - The condition that caused this symptom is currently not present. Check for an intermittent condition by inspecting the related wiring harness for chafed, pierced, pinched, and partially broken wires. Also, inspect the related connectors for broken, bent, pushed out, spread, corroded, or contaminated terminals. Repair as necessary.
    - Perform the HVAC VERIFICATION TEST. Refer to **STANDARD PROCEDURE**.
2. **CHECK CABIN HEATER RELAY 2 OUTPUT CIRCUIT FOR SHORT TO GROUND**
    1. Turn the ignition off.
    2. Disconnect the A/C Heater Control C1 harness connector.
    3. Remove the Cabin Heater Relay 2.
    4. Using an ohm meter measure the resistance between the Cabin Heater Relay 2 Output circuit and ground.

    Does the ohm meter read open circuit?

    Yes

    - Go To 3

    No

- Repair the Cabin Heater Relay 2 Output circuit for a short to ground.
- Perform the HVAC VERIFICATION TEST. Refer to **STANDARD PROCEDURE**.

3. **A/C HEATER CONTROL MODULE**
   1. Turn the ignition on.
   2. With the scan tool, erase DTCs.
   3. With the scan tool, actuate the Cabin Heater 2 Relay.
   4. Monitor the scan tool for at least two minutes.
   5. With the scan tool, read DTCs.

   Does the scan tool display active: B10B7-11-CABIN HEATER 2 CONTROL CIRCUIT SHORT TO GROUND?

   Yes

   - Replace the A/C Heater Control Module in accordance with the Service Information. Refer to **MODULE, HVAC, REMOVAL** .
   - Perform the HVAC VERIFICATION TEST. Refer to **STANDARD PROCEDURE**.

   No

   - Replace the Cabin Heater Relay 2 in accordance with the Service Information.
   - Perform the HVAC VERIFICATION TEST. Refer to **STANDARD PROCEDURE**.

B10B7-13-CABIN HEATER 2 CONTROL - CIRCUIT OPEN

For a complete wiring diagram, **refer to appropriate SYSTEM WIRING DIAGRAMS article** .

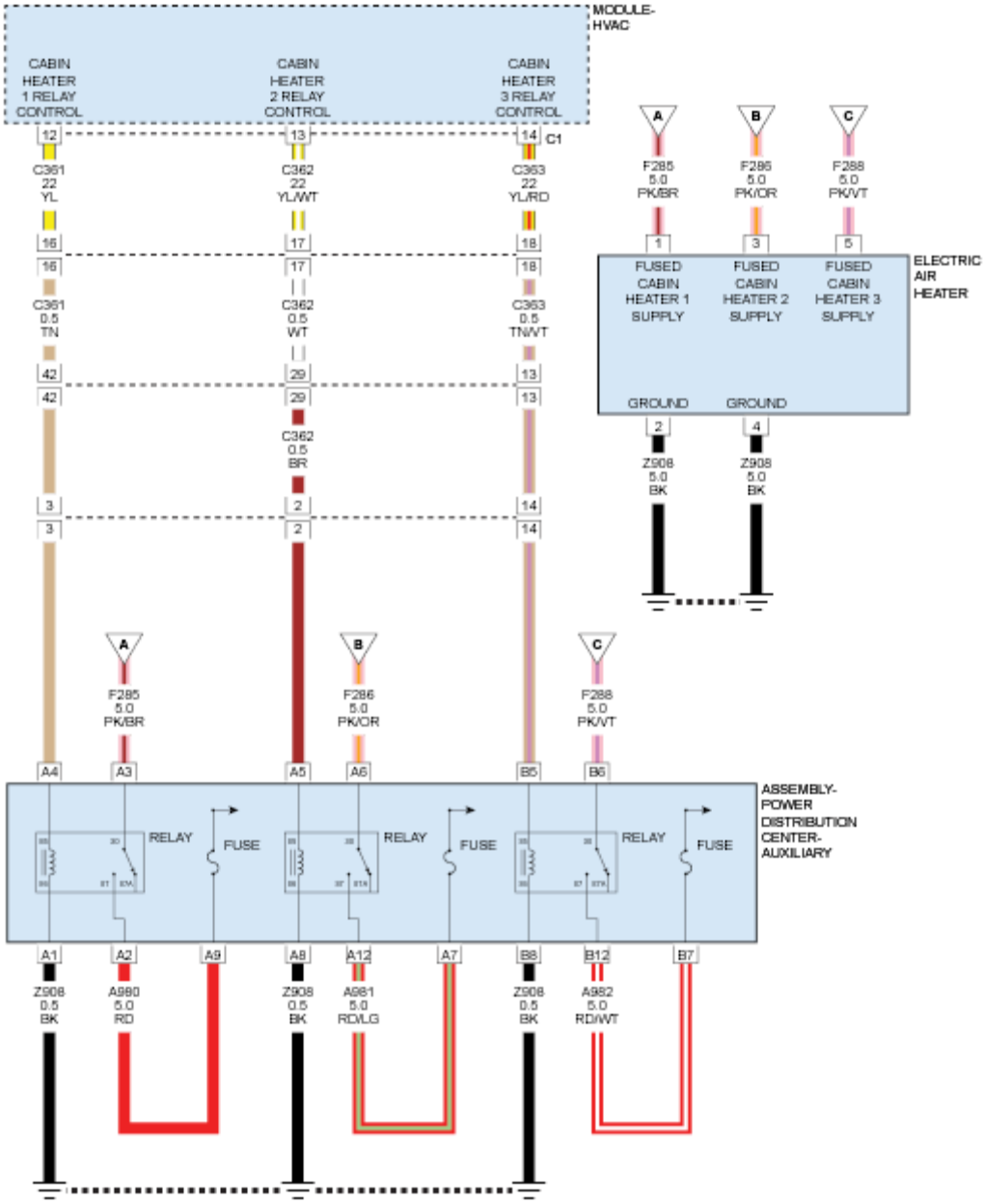

Fig. 12: Cabin Heater Wiring Diagram
Courtesy of CHRYSLER GROUP, LLC

WHEN MONITORED

With the ignition on, the Cabin Heater Relay 2 commanded on.

SET CONDITION

If the A/C Heater Control Module detects the Cabin Heater Relay 2 Control circuit is Open.

POSSIBLE CAUSES

Possible Causes
CABIN HEATER RELAY 2 CONTROL CIRCUIT OPEN
A/C HEATER CONTROL MODULE

DIAGNOSTIC TEST

1. **VERIFY THAT THE DTC IS ACTIVE**
    1. Turn the ignition on.
    2. With the scan tool, erase DTCs.
    3. With the scan tool, actuate the Cabin Heater 2 Relay.
    4. Monitor the scan tool for at least two minutes.
    5. With the scan tool, read DTCs.

    Is this DTC active?

    Yes

    - Go To 2

    No

    - The condition that caused this symptom is currently not present. Check for an intermittent condition by inspecting the related wiring harness for chafed, pierced, pinched, and partially broken wires. Also, inspect the related connectors for broken, bent, pushed out, spread, corroded, or contaminated terminals. Repair as necessary.
    - Perform the HVAC VERIFICATION TEST. Refer to **STANDARD PROCEDURE**.
2. **CHECK THE CABIN HEATER RELAY 2 CONTROL CIRCUIT FOR AN OPEN**
    1. Turn the ignition off.
    2. Disconnect the A/C Heater Control Module C1 harness connector.
    3. Remove the Cabin Heater Relay 2 from the Power Distribution Center.
    4. Turn the ignition on.
    5. Measure the resistance of the Cabin Heater Relay 2 Control circuit between the A/C Heater Control C1 harness connector and the Power Distribution Center.

    Is the resistance above 1.0 Ohm?

    Yes

    - Repair the open on the Cabin Heater Relay 2 Control circuit.
    - Perform the HVAC VERIFICATION TEST. Refer to **STANDARD PROCEDURE**.

No

- Go To3

3. **A/C HEATER CONTROL MODULE**
   1. Turn the ignition on.
   2. With the scan tool, erase DTCs.
   3. With the scan tool, actuate the Cabin Heater 2 Relay.
   4. Monitor the scan tool for at least two minutes.
   5. With the scan tool, read DTCs.

   Does the scan tool display active: B10B7-13-CABIN HEATER 2 CONTROL CIRCUIT OPEN?

   Yes

   - Replace the A/C Heater Control Module in accordance with the Service Information. Refer to **MODULE, HVAC, REMOVAL** .
   - Perform the HVAC VERIFICATION TEST. Refer to **STANDARD PROCEDURE**.

   No

   - Replace the Cabin Heater Relay 2 in accordance with the Service Information.
   - Perform the HVAC VERIFICATION TEST. Refer to **STANDARD PROCEDURE**.

B10E8-11-BLOWER MOTOR CONTROL - CIRCUIT SHORT TO GROUND

For a complete wiring diagram, **refer to appropriate SYSTEM WIRING DIAGRAMS article** .

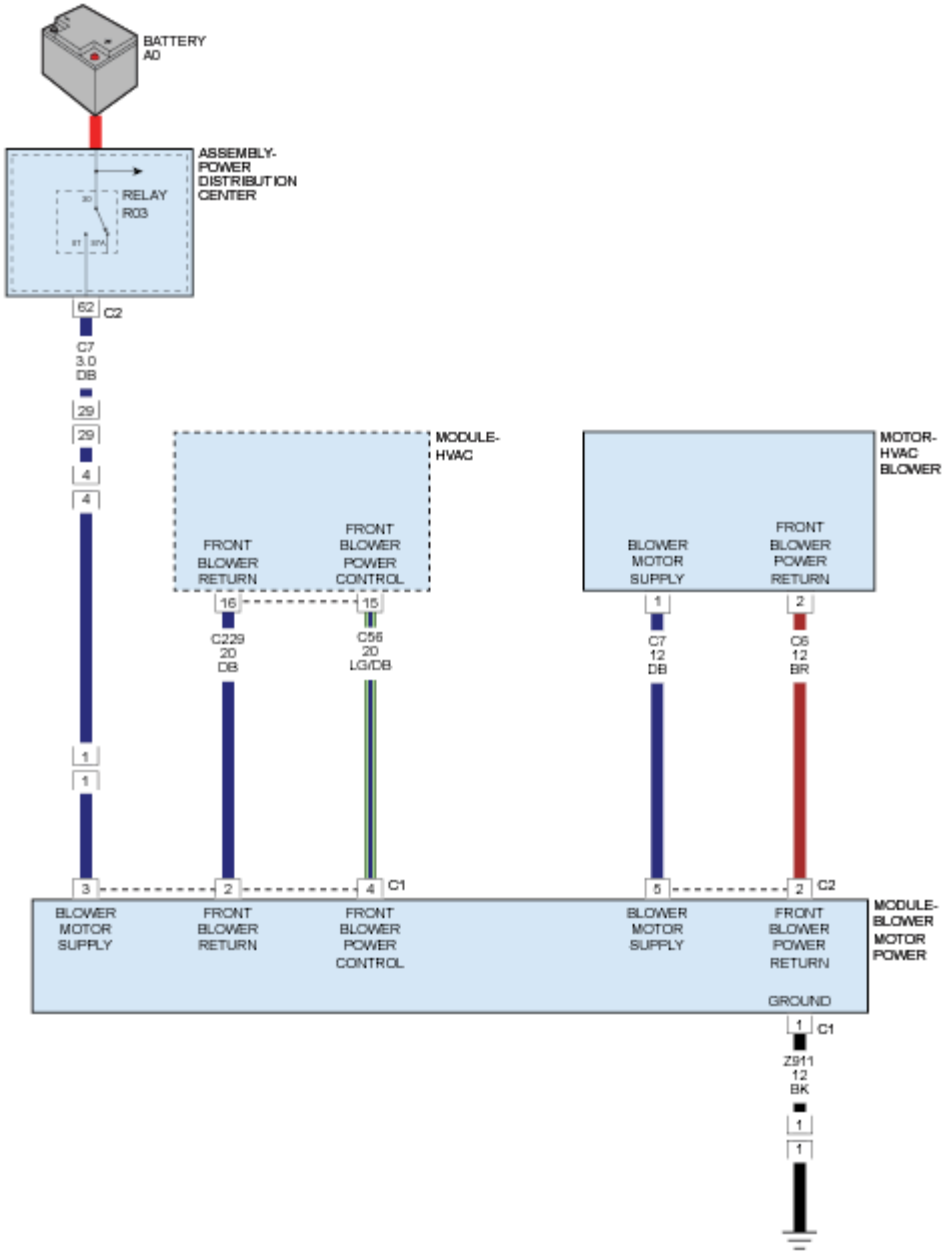

Fig. 13: Blower Motor Control Wiring Diagram
Courtesy of CHRYSLER GROUP, LLC

THEORY OF OPERATION

A Blower Motor Power Module allows the microprocessor-based A/C Heater Control to calculate and provide infinitely variable blower motor speeds based upon either manual blower switch input or the ATC programming. The ATC blower motor control system uses a Pulse Width Modulated (PWM) circuit strategy. PWM voltage is applied to a comparator circuit which compares the PWM signal voltage to the blower motor feedback voltage. The resulting output drives the power module circuitry, which provides a linear output voltage to change or maintain the desired blower speed.

WHEN MONITORED

With the ignition on.

SET CONDITION

If the A/C Heater Control detects a short to ground on the Blower Motor Control circuit. If a valid voltage is detected the DTC will change from active to stored and stay in the controllers memory for 100 consecutive ignition cycles.

POSSIBLE CAUSES

Possible Causes
BLOWER MOTOR SUPPLY CIRCUIT SHORTED TO GROUND
BLOWER MOTOR GROUND CIRCUIT SHORTED TO GROUND
BLOWER MOTOR POWER MODULE
A/C HEATER CONTROL

Always perform the HVAC Pre-Diagnostic Troubleshooting procedure before proceeding. Refer to STANDARD PROCEDURE.

DIAGNOSTIC TEST

1. **VERIFY THE DTC IS ACTIVE**
    1. Ignition on, engine not running.
    2. With the scan tool, read HVAC DTCs.

    Does the scan tool display this DTC as active?

    Yes

    - Go To 2

    No

    - Go To 5
2. **CHECK THE (C7) BLOWER MOTOR SUPPLY CIRCUIT FOR A SHORT TO GROUND**
    1. Turn the ignition off to the lock position.
    2. Disconnect the A/C Heater Control harness connector.
    3. Disconnect the Blower Motor Power Module C1 harness connector.
    4. Measure the resistance between ground and the (C7) Blower Motor Supply circuit.

    Is the resistance below 100k Ohms?

Yes

- Repair the (C7) Blower Motor Supply circuit for a short to ground.
- Perform the HVAC VERIFICATION TEST. Refer to **STANDARD PROCEDURE**.

No

- Go To 3

3. **CHECK THE BLOWER MOTOR GROUND SIGNAL CIRCUIT FOR A SHORT TO GROUND**
   1. Measure the resistance between ground and the Blower Motor Ground Signal circuit.

      Is the resistance below 100k Ohms?

      Yes

      - Repair the Blower Motor Ground Signal circuit for a short to ground.
      - Perform the HVAC VERIFICATION TEST. Refer to **STANDARD PROCEDURE**.

      No

      - Go To 4

4. **CHECK THE BLOWER MOTOR POWER MODULE**
   1. Turn the ignition off to the lock position.
   2. Replace the Blower Motor Power Module in accordance to the Service Information. Refer to **MODULE, POWER, BLOWER MOTOR, REMOVAL** .
   3. Perform the HVAC VERIFICATION TEST. Refer to **STANDARD PROCEDURE**.

      Did this DTC reset performing the HVAC Verification Test?

      Yes

      - Replace and program the A/C Heater Control in accordance with the Service Information. Refer to **MODULE, HVAC, REMOVAL** .
      - Perform the HVAC VERIFICATION TEST. Refer to **STANDARD PROCEDURE**.

      No

      - Test complete.

5. **CHECK THE WIRING AND CONNECTORS**
   1. The conditions necessary to set the DTC are not present at this time.
   2. With the scan tool, check the Environmental Data to help identify the conditions in which the DTC was set.
   3. Using the wiring diagrams as a guide, check all related splices and connectors for signs of water

intrusion, corrosion, pushed out or bent terminals, and correct pin tension.

4. Wiggle the wiring and connectors while checking for shorted and open circuits.

   Were there any problems found?

   Yes

   - Repair as necessary.
   - Perform the HVAC VERIFICATION TEST. Refer to **STANDARD PROCEDURE**.

   No

   - Test complete.

B10E8-12-BLOWER MOTOR CONTROL - CIRCUIT SHORT TO BATTERY

For a complete wiring diagram, **refer to appropriate SYSTEM WIRING DIAGRAMS article** .

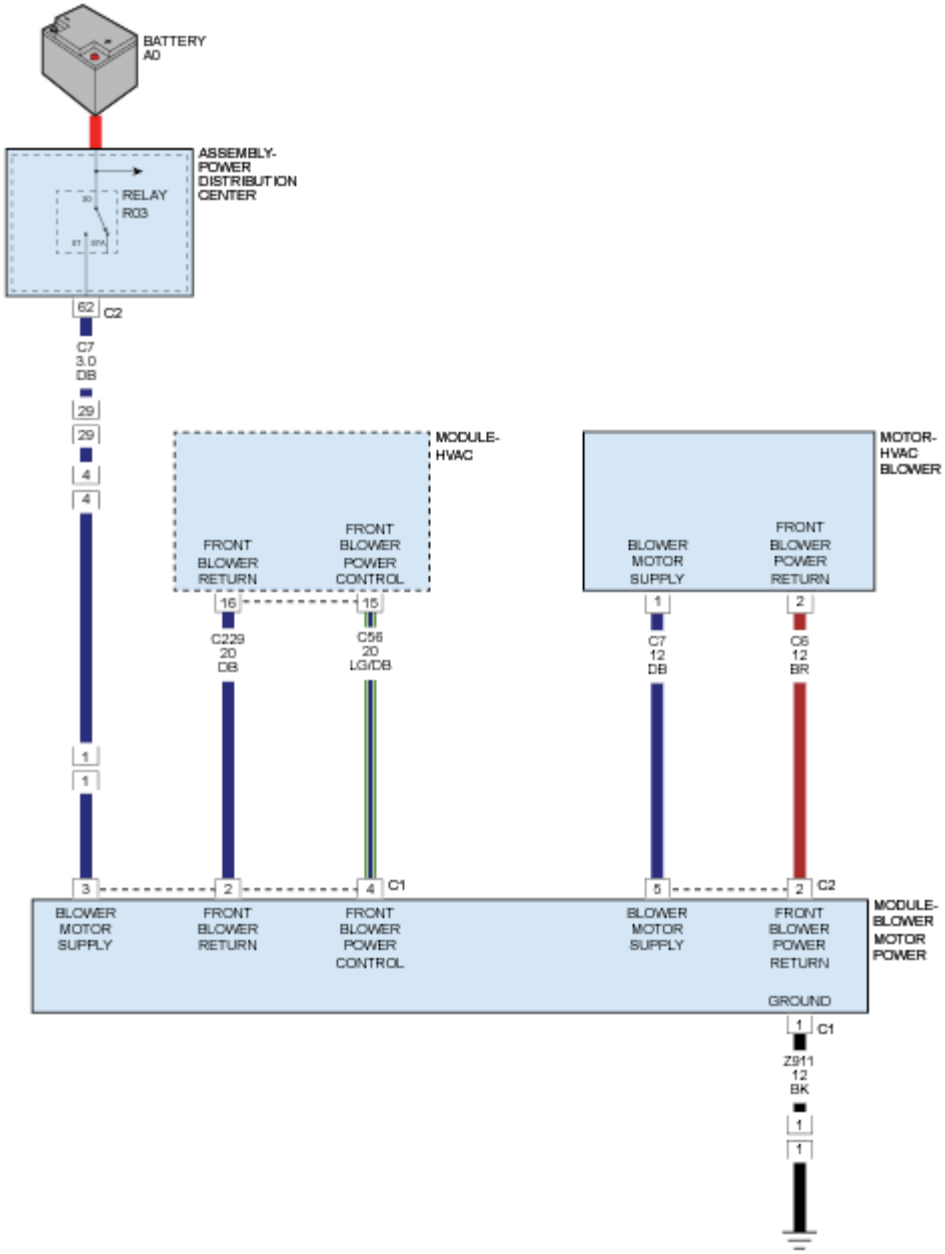

Fig. 14: Blower Motor Control Wiring Diagram
Courtesy of CHRYSLER GROUP, LLC

THEORY OF OPERATION

A Blower Motor Power Module allows the microprocessor-based A/C Heater Control to calculate and provide infinitely variable blower motor speeds based upon either manual blower switch input or the ATC programming. The ATC blower motor control system uses a Pulse Width Modulated (PWM) circuit strategy. PWM voltage is applied to a comparator circuit which compares the PWM signal voltage to the blower motor feedback voltage. The resulting output drives the power module circuitry, which provides a linear output voltage to change or maintain the desired blower speed.

WHEN MONITORED

With the ignition on.

SET CONDITION

If the A/C Heater Control detects a short to voltage or open on the Blower Motor Control circuit. If a valid voltage is detected the DTC will change from active to stored and stay in the controllers memory for 100 consecutive ignition cycles.

POSSIBLE CAUSES

Possible Causes
BLOWER MOTOR POWER MODULE SUPPLY SIGNAL CIRCUIT SHORTED TO VOLTAGE
BLOWER MOTOR POWER MODULE SUPPLY CIRCUIT OPEN
BLOWER MOTOR GROUND CIRCUIT OPEN
BLOWER MOTOR POWER MODULE
A/C HEATER CONTROL

Always perform the HVAC Pre-Diagnostic Troubleshooting procedure before proceeding. Refer to STANDARD PROCEDURE.

DIAGNOSTIC TEST

1. **CHECK IF DTC IS ACTIVE**
    1. Ignition on, engine not running.
    2. With the scan tool, read HVAC DTCs.

    Is this DTC active?

    Yes

    - Go To 2

    No

    - Go To 6
2. **CHECK THE (C56) BLOWER MOTOR POWER MODULE SUPPLY CIRCUIT FOR A SHORT TO VOLTAGE**
    1. Turn the ignition off to the lock position.
    2. Disconnect the Blower Motor Power Module harness connector.
    3. Disconnect the A/C Heater Control harness connector.

NOTE: Check connectors - Clean/repair as necessary.

4. Ignition on, engine not running.
5. Check the voltage of the (C56) Blower Motor Power Module Supply Signal circuit.

   Is there any voltage present?

   Yes

   - Repair the (C56) Blower Motor Power Module Supply Signal circuit for an short to voltage.
   - Perform the HVAC VERIFICATION TEST. Refer to **STANDARD PROCEDURE**.

   No

   - Go To 3

3. **CHECK THE (C56) BLOWER MOTOR POWER MODULE SUPPLY CIRCUIT FOR AN OPEN**
   1. Turn the ignition off to the lock position.
   2. Measure the resistance of the (C56) Blower Motor Power Module Supply Signal circuit between the A/C Heater Control harness connector and the Blower Motor Power Module harness connector.

      Is the resistance above 1.0 Ohm?

      Yes

      - Repair the (C56) Blower Motor Power Module Supply Signal circuit for an open.
      - Perform the HVAC VERIFICATION TEST. Refer to **STANDARD PROCEDURE**.

      No

      - Go To 4

4. **CHECK THE BLOWER MOTOR GROUND SIGNAL CIRCUIT FOR AN OPEN**
   1. Measure the resistance of the Blower Motor Ground Signal circuit between the A/C Heater Control harness connector and the Blower Motor Power Module harness connector.

      Is the resistance above 1.0 Ohm?

      Yes

      - Repair the Blower Motor Ground Signal circuit for an open.
      - Perform the HVAC VERIFICATION TEST. Refer to **STANDARD PROCEDURE**.

      No

      - Go To 5

5. **CHECK THE BLOWER MOTOR POWER MODULE**

1. Turn the ignition off to the lock position.
2. Replace the Blower Motor Power Module in accordance to the Service Information. Refer to **MODULE, POWER, BLOWER MOTOR, REMOVAL** .
3. Perform the HVAC VERIFICATION TEST. Refer to **STANDARD PROCEDURE**.

   Did the DTC reset during or after the HVAC Verification Test?

   Yes

   - Replace and program the A/C Heater Control in accordance with the Service Information. Refer to **MODULE, HVAC, REMOVAL** .
   - Perform the HVAC VERIFICATION TEST. Refer to **STANDARD PROCEDURE**.

   No

   - Test complete.

6. **CHECK THE WIRING AND CONNECTORS**
   1. The conditions necessary to set the DTC are not present at this time.
   2. With the scan tool, check the Environmental Data to help identify the conditions in which the DTC was set.
   3. Using the wiring diagrams as a guide, check all related splices and connectors for signs of water intrusion, corrosion, pushed out or bent terminals, and correct pin tension.
   4. Wiggle the wiring and connectors while checking for shorted and open circuits.

      Were there any problems found?

      Yes

      - Repair as necessary.
      - Perform the HVAC VERIFICATION TEST. Refer to **STANDARD PROCEDURE**.

      No

      - Test complete.

B10E8-16-BLOWER MOTOR CONTROL - CIRCUIT VOLTAGE BELOW THRESHOLD

For a complete wiring diagram, **refer to appropriate SYSTEM WIRING DIAGRAMS article** .

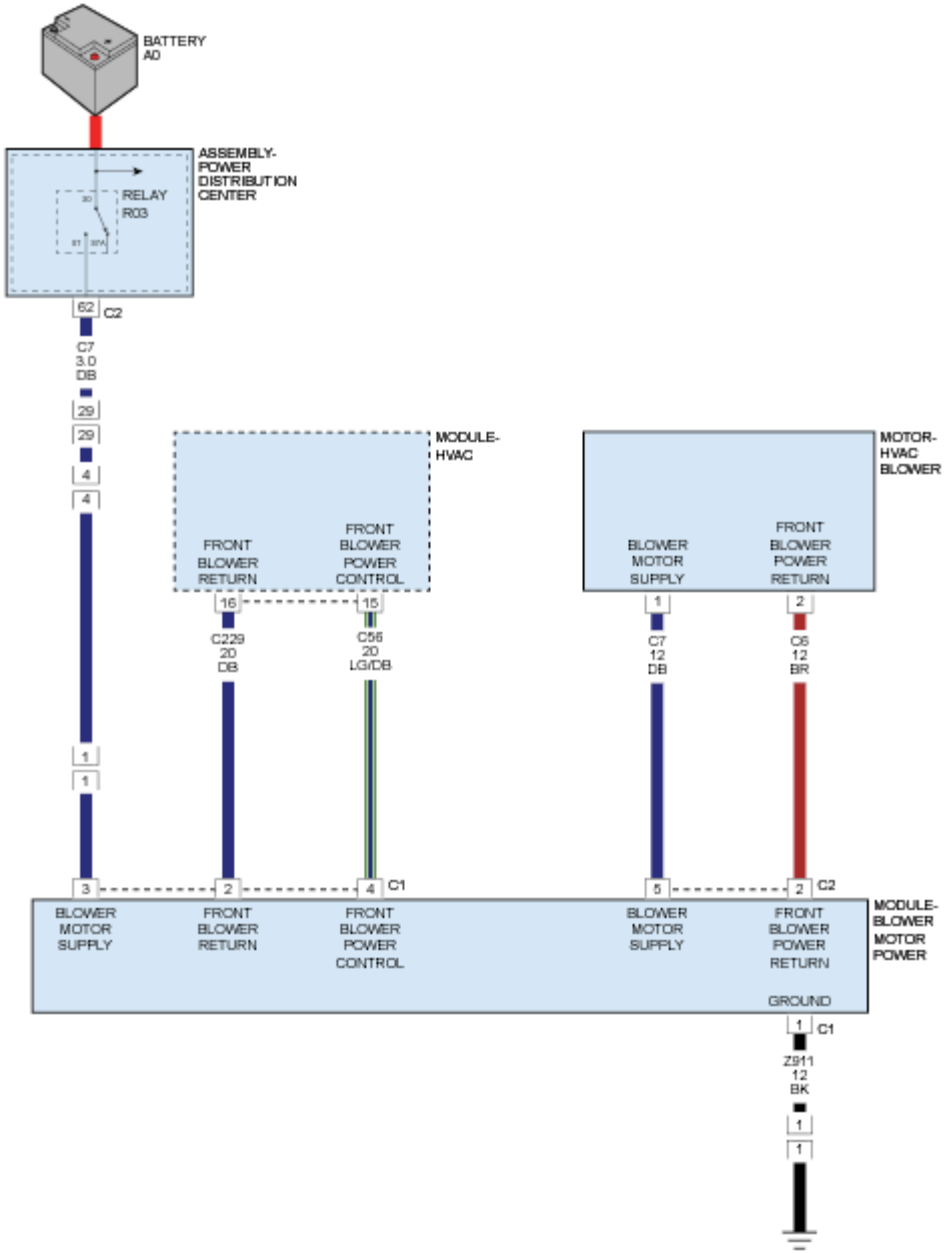

Fig. 15: Blower Motor Control Wiring Diagram
Courtesy of CHRYSLER GROUP, LLC

THEORY OF OPERATION

A Blower Motor Power Module allows the microprocessor-based A/C Heater Control to calculate and provide infinitely variable blower motor speeds based upon either manual blower switch input or the ATC programming. The ATC blower motor control system uses a Pulse Width Modulated (PWM) circuit strategy. PWM voltage is applied to a comparator circuit which compares the PWM signal voltage to the blower motor feedback voltage. The resulting output drives the power module circuitry, which provides a linear output voltage to change or maintain the desired blower speed.

WHEN MONITORED

With the ignition on.

SET CONDITION

If the A/C Heater Control detects a short to ground on the Blower Motor Control circuit. If a valid voltage is detected the DTC will change from active to stored and stay in the controllers memory for 100 consecutive ignition cycles.

POSSIBLE CAUSES

Possible Causes
BLOWER MOTOR POWER MODULE SUPPLY CIRCUIT SHORTED TO GROUND
BLOWER MOTOR GROUND CIRCUIT SHORTED TO GROUND
BLOWER MOTOR POWER MODULE
A/C HEATER CONTROL

Always perform the HVAC Pre-Diagnostic Troubleshooting procedure before proceeding. Refer to STANDARD PROCEDURE.

DIAGNOSTIC TEST

1. **VERIFY THE DTC IS ACTIVE**
   1. Ignition on, engine not running.
   2. With the scan tool, read HVAC DTCs.

      Does the scan tool display this DTC as active?

      Yes

      - Go To 2

      No

      - Go To 5
2. **CHECK THE (C56) BLOWER MOTOR POWER MODULE SUPPLY SIGNAL CIRCUIT FOR A SHORT TO GROUND**
   1. Turn the ignition off to the lock position.
   2. Disconnect the A/C Heater Control harness connector.
   3. Disconnect the Blower Motor Power Module C1 harness connector.
   4. Measure the resistance between ground and the (C56) Blower Motor Power Module Supply Signal circuit.

Is the resistance below 100k Ohms?

Yes

- Repair the (C56) Blower Motor Power Module Supply Signal circuit for a short to ground.
- Perform the HVAC VERIFICATION TEST. Refer to **STANDARD PROCEDURE**.

No

- Go To 3

3. **CHECK THE BLOWER MOTOR GROUND CIRCUIT FOR A SHORT TO GROUND**
   1. Measure the resistance between ground and the Blower Motor Ground circuit.

   Is the resistance below 100k Ohms?

   Yes

   - Repair the Blower Motor Ground circuit for a short to ground.
   - Perform the HVAC VERIFICATION TEST. Refer to **STANDARD PROCEDURE**.

   No

   - Go To 4

4. **CHECK THE BLOWER MOTOR POWER MODULE**
   1. Turn the ignition off to the lock position.
   2. Replace the Blower Motor Power Module in accordance to the Service Information. Refer to **MODULE, POWER, BLOWER MOTOR, REMOVAL** .
   3. Perform the HVAC VERIFICATION TEST. Refer to **STANDARD PROCEDURE**.

   Did this DTC reset performing the HVAC Verification Test?

   Yes

   - Replace and program the A/C Heater Control in accordance with the Service Information. Refer to **MODULE, HVAC, REMOVAL** .
   - Perform the HVAC VERIFICATION TEST. Refer to **STANDARD PROCEDURE**.

   No

   - Test complete.

5. **CHECK THE WIRING AND CONNECTORS**
   1. The conditions necessary to set the DTC are not present at this time.
   2. With the scan tool, check the Environmental Data to help identify the conditions in which the DTC

was set.

3. Using the wiring diagrams as a guide, check all related splices and connectors for signs of water intrusion, corrosion, pushed out or bent terminals, and correct pin tension.
4. Wiggle the wiring and connectors while checking for shorted and open circuits.

   Were there any problems found?

   Yes

   - Repair as necessary.
   - Perform the HVAC VERIFICATION TEST. Refer to **STANDARD PROCEDURE**.

   No

   - Test complete.

B10E8-17-BLOWER MOTOR CONTROL - CIRCUIT VOLTAGE ABOVE THRESHOLD

For a complete wiring diagram, **refer to appropriate SYSTEM WIRING DIAGRAMS article** .

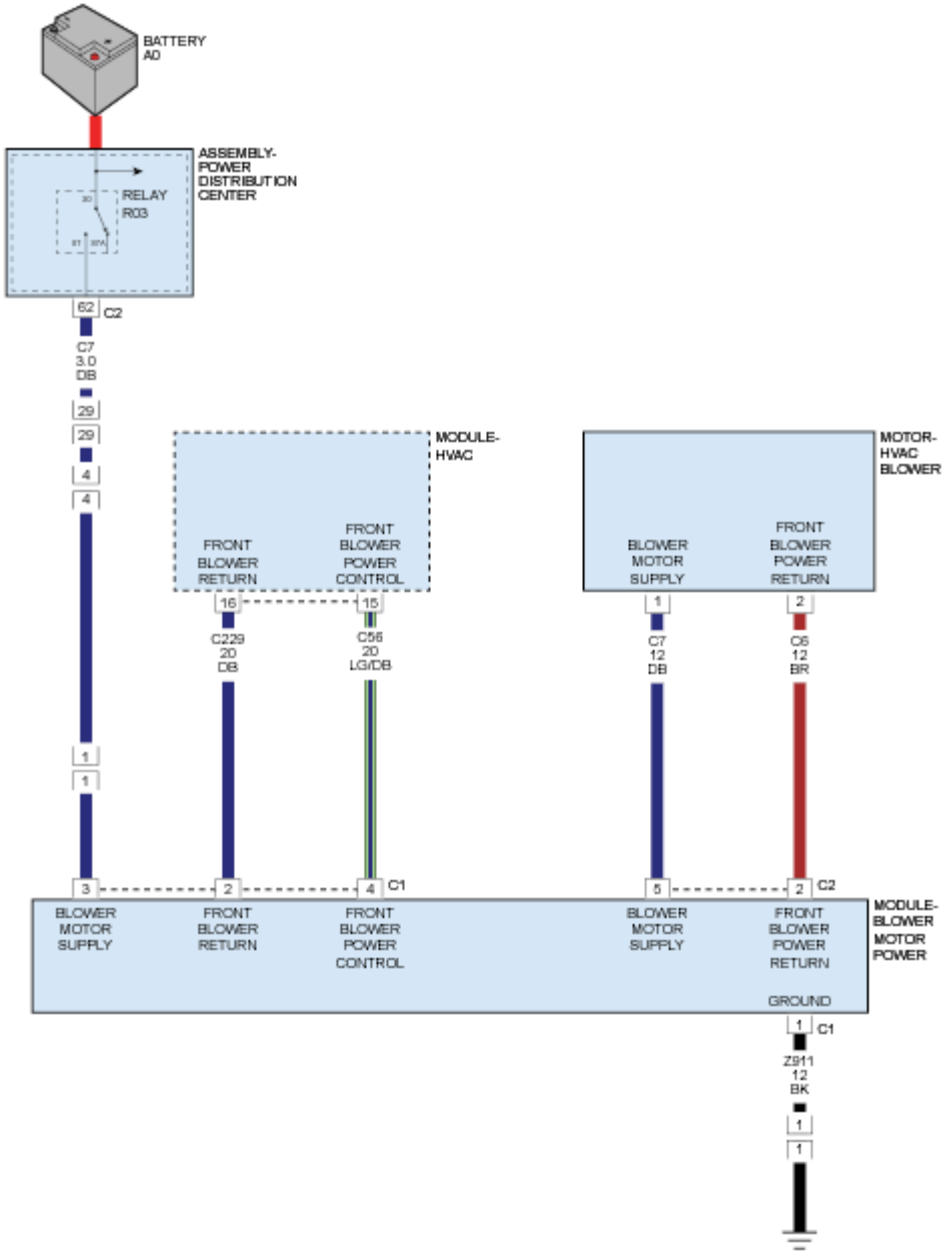

Fig. 16: Blower Motor Control Wiring Diagram
Courtesy of CHRYSLER GROUP, LLC

THEORY OF OPERATION

A Blower Motor Power Module allows the microprocessor-based A/C Heater Control to calculate and provide infinitely variable blower motor speeds based upon either manual blower switch input or the ATC programming. The ATC blower motor control system uses a Pulse Width Modulated (PWM) circuit strategy. PWM voltage is applied to a comparator circuit which compares the PWM signal voltage to the blower motor feedback voltage. The resulting output drives the power module circuitry, which provides a linear output voltage to change or maintain the desired blower speed.

WHEN MONITORED

With the ignition on.

SET CONDITION

If the A/C Heater Control detects a short to voltage or open on the Blower Motor Control circuit. If a valid voltage is detected the DTC will change from active to stored and stay in the controllers memory for 100 consecutive ignition cycles.

POSSIBLE CAUSES

Possible Causes
BLOWER MOTOR POWER MODULE SUPPLY SIGNAL CIRCUIT SHORTED TO VOLTAGE
BLOWER MOTOR POWER MODULE SUPPLY SIGNAL CIRCUIT OPEN
BLOWER MOTOR GROUND CIRCUIT OPEN
BLOWER MOTOR POWER MODULE
A/C HEATER CONTROL

Always perform the HVAC Pre-Diagnostic Troubleshooting procedure before proceeding. Refer to STANDARD PROCEDURE.

DIAGNOSTIC TEST

1. **CHECK IF DTC IS ACTIVE**
    1. Ignition on, engine not running.
    2. With the scan tool, read HVAC DTCs.

    Is this DTC active?

    Yes

    - Go To 2

    No

    - Go To 6
2. **CHECK THE (C56) BLOWER MOTOR CONTROL CIRCUIT FOR A SHORT TO VOLTAGE**
    1. Turn the ignition off to the lock position.
    2. Disconnect the Blower Motor Power Module harness connector.
    3. Disconnect the A/C Heater Control harness connector.

    NOTE: Check connectors - Clean/repair as necessary.

4. Ignition on, engine not running.
5. Check the voltage of the (C56) Blower Motor Control circuit.

   Is there any voltage present?

   Yes

   - Repair the (C56) Blower Motor Control circuit for an short to voltage.
   - Perform the HVAC VERIFICATION TEST. Refer to **STANDARD PROCEDURE**.

   No

   - Go To 3

3. **CHECK THE (C56) BLOWER MOTOR CONTROL CIRCUIT FOR AN OPEN**
   1. Turn the ignition off to the lock position.
   2. Measure the resistance of the (C56) Blower Motor Control circuit between the A/C Heater Control harness connector and the Blower Motor Power Module harness connector.

      Is the resistance above 1.0 Ohm?

      Yes

      - Repair the (C56) Blower Motor Control circuit for an open.
      - Perform the HVAC VERIFICATION TEST. Refer to **STANDARD PROCEDURE**.

      No

      - Go To 4

4. **CHECK THE BLOWER MOTOR GROUND CIRCUIT FOR AN OPEN**
   1. Measure the resistance of the Blower Motor Ground circuit between the A/C Heater Control harness connector and the Blower Motor Power Module harness connector.

      Is the resistance above 1.0 Ohm?

      Yes

      - Repair the Blower Motor Ground circuit for an open.
      - Perform the HVAC VERIFICATION TEST. Refer to **STANDARD PROCEDURE**.

      No

      - Go To 5

5. **CHECK THE BLOWER MOTOR POWER MODULE**

1. Turn the ignition off to the lock position.
2. Replace the Blower Motor Power Module in accordance to the Service Information. Refer to **MODULE, POWER, BLOWER MOTOR, REMOVAL** .
3. Perform the HVAC VERIFICATION TEST. Refer to **STANDARD PROCEDURE**.

   Did the DTC reset during or after the HVAC Verification Test?

   Yes

   - Replace and program the A/C Heater Control in accordance with the Service Information. Refer to **MODULE, HVAC, REMOVAL** .
   - Perform the HVAC VERIFICATION TEST. Refer to **STANDARD PROCEDURE**.

   No

   - Test complete.

6. **CHECK THE WIRING AND CONNECTORS**
   1. The conditions necessary to set the DTC are not present at this time.
   2. With the scan tool, check the Environmental Data to help identify the conditions in which the DTC was set.
   3. Using the wiring diagrams as a guide, check all related splices and connectors for signs of water intrusion, corrosion, pushed out or bent terminals, and correct pin tension.
   4. Wiggle the wiring and connectors while checking for shorted and open circuits.

      Were there any problems found?

      Yes

      - Repair as necessary.
      - Perform the HVAC VERIFICATION TEST. Refer to **STANDARD PROCEDURE**.

      No

      - Test complete.

B1107-11-CABIN TEMPERATURE SENSOR 1-CIRCUIT SHORT TO GROUND

For a complete wiring diagram, **refer to appropriate SYSTEM WIRING DIAGRAMS article** .

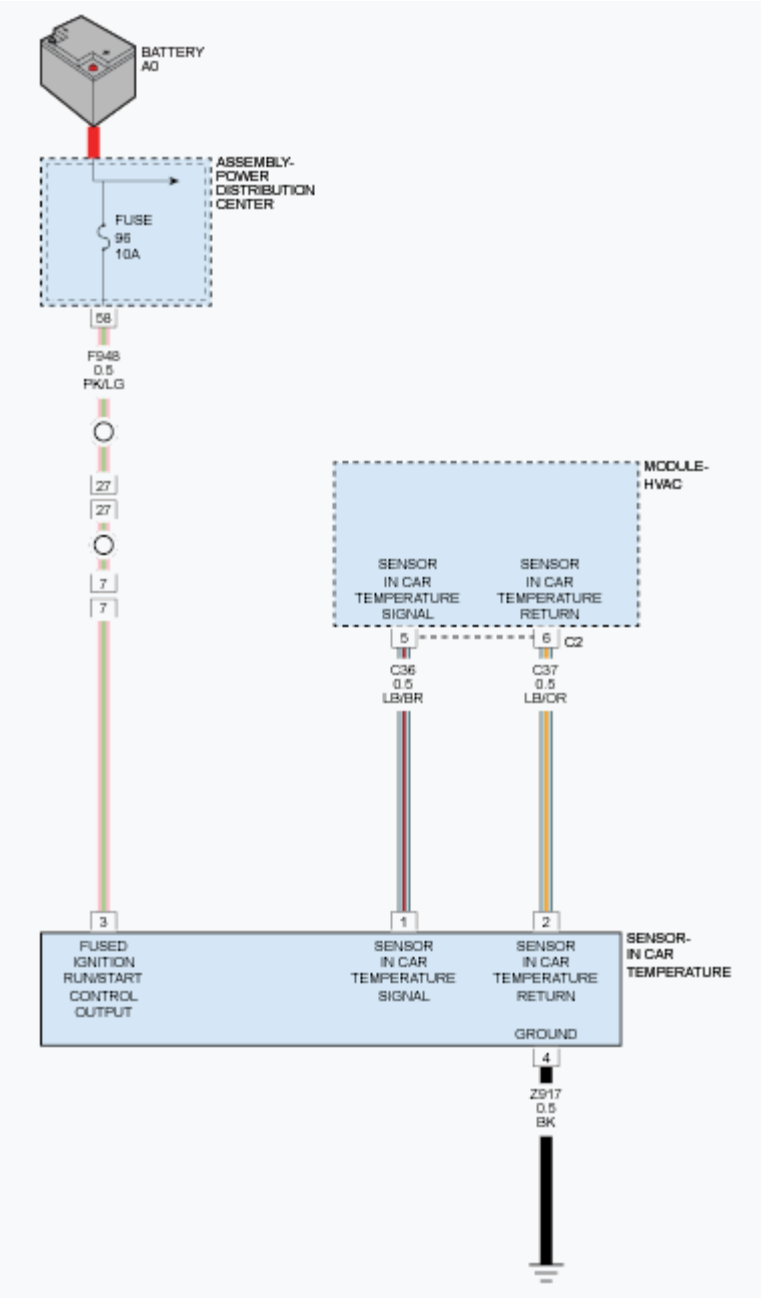

Fig. 17: Cabin Temperature Sensor Wiring Diagram
Courtesy of CHRYSLER GROUP, LLC

THEORY OF OPERATION

The HVAC A/C Heater Module uses a variety of sensors to adjust HVAC operation to obtain optimal performance. These sensors are continuously monitored by the A/C Heater Module to assure that they are in range. An active Diagnostic trouble Code (DTC) indicates that a sensor is out of range. A stored DTC indicates that the sensor was out of range but is currently within range.

The In-Car Temperature Sensor uses a temperature thermistor which changes in its resistive value with

differences in air temperature of the interior cabin. Air is drawn from the passenger compartment by an aspirator (small fan driven by a 12-volt electric motor) which circulates air over the temperature thermistor. The A/C Heater Module receives the resistance value over a two wire circuit that is used to calculate the temperature and make any adjustments to maintain the optimum passenger compartment comfort. The In-Car Temperature Sensor cannot be adjusted or repaired and must be replaced if inoperative or damaged.

WHEN MONITORED

With the ignition on.

SET CONDITION

When the In-Car Temperature Sensor signal to the A/C Heater Module is less than 0.5 volt for a continuous period of 1200 msec. or more. If the A/C Heater Module detects a valid signal, the DTC will change from active to stored and will stay stored for 100 ignition cycles.

POSSIBLE CAUSES

Possible Causes
IN-CAR TEMPERATURE SENSOR SIGNAL CIRCUIT SHORTED TO GROUND
IN-CAR TEMPERATURE SENSOR
A/C HEATER MODULE

Always perform the HVAC Pre-Diagnostic Troubleshooting procedure before proceeding. Refer to STANDARD PROCEDURE.

DIAGNOSTIC TEST

1. **CHECK IF DTC IS ACTIVE**
    1. Ignition on, engine not running.
    2. With the scan tool, read HVAC DTCs.

    Is this DTC active?

    Yes

    - Go To 2

    No

    - Go To 5
2. **CHECK IF THE IN-CAR TEMPERATURE SENSOR IS PROPERLY CONNECTED**
    1. Turn the ignition off to the lock position.
    2. Check the connector to In-Car Temperature Sensor for proper connection and the terminals for damage or corrosion.

Is the In-Car Temperature Sensor connector properly connected and terminals undamaged or corroded?

Yes

- Go To 3

No

- Repair connector and terminals as necessary.
- Perform the HVAC VERIFICATION TEST. Refer to **STANDARD PROCEDURE**.

3. **CHECK THE (C36) IN-CAR TEMPERATURE SENSOR SIGNAL CIRCUIT FOR A SHORT TO GROUND**
   1. Turn the ignition off to the lock position.
   2. Disconnect the A/C Heater Module harness connector.
   3. Disconnect the In-Car Temperature Sensor harness connector.
   4. Measure the resistance between ground and the (C36) In-Car Temperature Sensor Signal circuit.

   Is the resistance less than 100k Ohms?

   Yes

   - Repair the (C36) In-Car Temperature Sensor Signal circuit for a short to ground.
   - Perform the HVAC VERIFICATION TEST. Refer to **STANDARD PROCEDURE**.

   No

   - Go To 4
4. **CHECK THE IN-CAR TEMPERATURE SENSOR**
   1. Remove the In-Car Temperature Sensor.
   2. Measure the resistance of the In-Car Temperature Sensor and compare the resistance to the In-Car Temperature Sensor Resistance Chart in the Service Information.

   Is the In-Car Temperature Sensor within the specified limits of In-Car Temperature Sensor Resistance Chart?

   Yes

   - Replace and program the A/C Heater Module in accordance with the Service Information. Refer to **MODULE, HVAC, REMOVAL** .
   - Perform the HVAC VERIFICATION TEST. Refer to **STANDARD PROCEDURE**.

   No

- Replace the In-Car Temperature Sensor in accordance to the Service Information.
- Perform the HVAC VERIFICATION TEST. Refer to **STANDARD PROCEDURE**.

5. **CHECK THE WIRING AND CONNECTORS**
   1. The conditions necessary to set the DTC are not present at this time.
   2. With the scan tool, check the Environmental Data to help identify the conditions in which the DTC was set.
   3. Using the wiring diagrams as a guide, check all related splices and connectors for signs of water intrusion, corrosion, pushed out or bent terminals, and correct pin tension.
   4. Wiggle the wiring and connectors while checking for shorted and open circuits.

   Were there any problems found?

   Yes

   - Repair as necessary.
   - Perform the HVAC VERIFICATION TEST. Refer to **STANDARD PROCEDURE**.

   No

   - Test complete.

B1107-15-CABIN TEMPERATURE SENSOR 1CIRCUIT SHORT TO BATTERY OR OPEN

For a complete wiring diagram, **refer to appropriate SYSTEM WIRING DIAGRAMS article** .

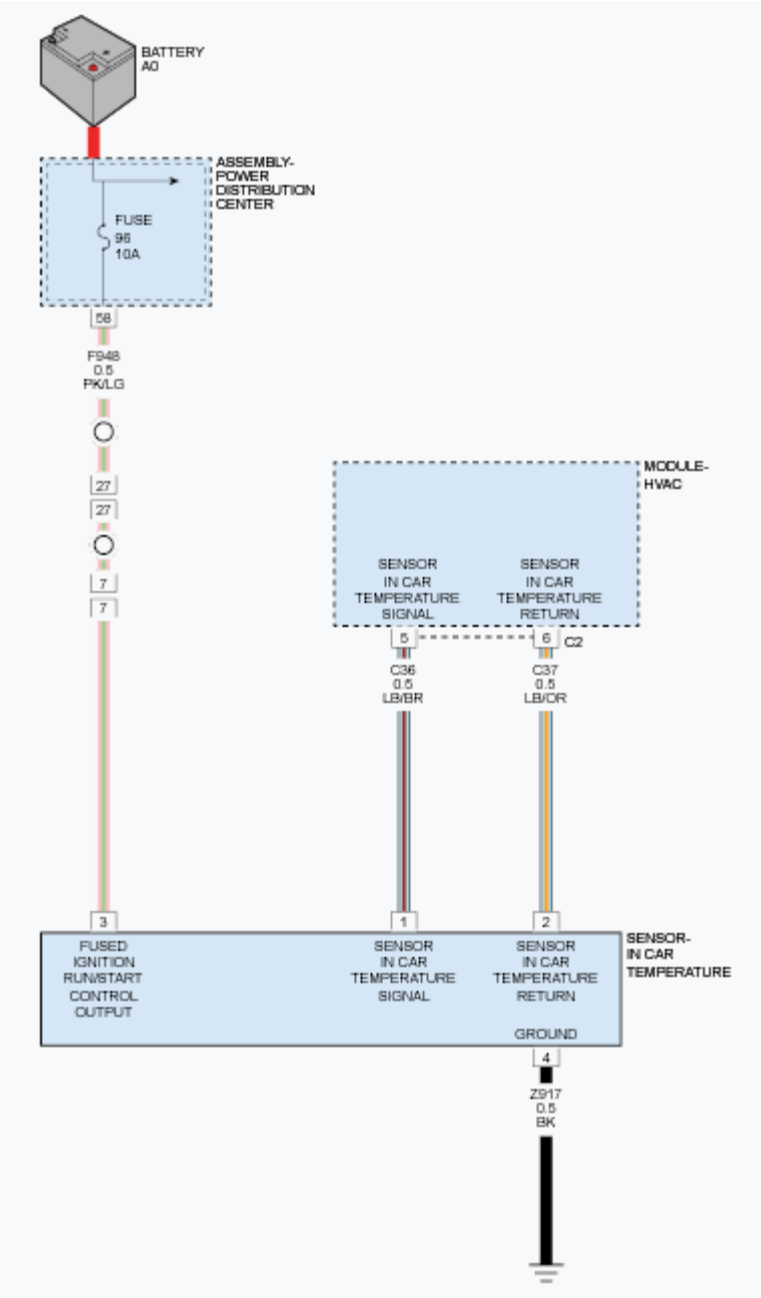

Fig. 18: Cabin Temperature Sensor Wiring Diagram
Courtesy of CHRYSLER GROUP, LLC

THEORY OF OPERATION

The HVAC A/C Heater Module uses a variety of sensors to adjust HVAC operation to obtain optimal performance. These sensors are continuously monitored by the A/C Heater Module to assure that they are in range. An active Diagnostic trouble Code (DTC) indicates that a sensor is out of range. A stored DTC indicates that the sensor was out of range but is currently within range.

The In-Car Temperature Sensor uses a temperature thermistor which changes in its resistive value with

differences in air temperature of the interior cabin. Air is drawn from the passenger compartment by an aspirator (small fan driven by a 12-volt electric motor) which circulates air over the temperature thermistor. The A/C Heater Module receives the resistance value over a two wire circuit that is used to calculate the temperature and make any adjustments to maintain the optimum passenger compartment comfort. The In-Car Temperature Sensor cannot be adjusted or repaired and must be replaced if inoperative or damaged.

WHEN MONITORED

With the ignition on.

SET CONDITION

When the In-Car Temperature Sensor signal to the A/C Heater Module is greater than 4.9 volts for a continuous period of 1200 msec. or more. If the A/C Heater Module detects a valid signal, the DTC will change from active to stored and will stay stored for 100 ignition cycles.

POSSIBLE CAUSES

Possible Causes
IN-CAR TEMPERATURE SENSOR SIGNAL CIRCUIT SHORTED TO VOLTAGE
IN-CAR TEMPERATURE SENSOR
A/C HEATER MODULE

Always perform the HVAC Pre-Diagnostic Troubleshooting procedure before proceeding. Refer to STANDARD PROCEDURE.

DIAGNOSTIC TEST

1. **CHECK IF DTC IS ACTIVE**
    1. Ignition on, engine not running.
    2. With the scan tool, read HVAC DTCs.

    Is this DTC active?

    Yes

    - Go To 2

    No

    - Go To 6
2. **CHECK IF THE IN-CAR TEMPERATURE SENSOR IS PROPERLY CONNECTED**
    1. Turn the ignition off to the lock position.
    2. Check the connector to In-Car Temperature Sensor for proper connection and the terminals for damage or corrosion.

Is the In-Car Temperature Sensor connector properly connected and terminals undamaged or corroded?

Yes

- Go To 3

No

- Repair connector and terminals as necessary.
- Perform the HVAC VERIFICATION TEST. Refer to **STANDARD PROCEDURE**.

3. **CHECK THE (C36) IN-CAR TEMPERATURE SENSOR SIGNAL CIRCUIT FOR A SHORT TO VOLTAGE**
   1. Turn the ignition off to the lock position.
   2. Disconnect the A/C Heater Module C1 harness connector.
   3. Disconnect the In-Car Temperature Sensor harness connector.
   4. Ignition on, engine not running.
   5. Measure the voltage of the (C36) In-Car Temperature Sensor Signal circuit.

   Is there any voltage present?

   Yes

   - Repair the (C36) In-Car Temperature Sensor Signal circuit for a short to voltage.
   - Perform the HVAC VERIFICATION TEST. Refer to **STANDARD PROCEDURE**.

   No

   - Go To4
4. **CHECK THE (C36) IN-CAR TEMPERATURE SENSOR SIGNAL CIRCUIT FOR AN OPEN**
   1. Turn the ignition off to the lock position.
   2. Measure the resistance of the (C36) In-Car Temperature Sensor Signal circuit between the A/C Heater Module C1 harness connector and the In-Car Temperature Sensor harness connector.

   Is the resistance above 1.0 Ohm?

   Yes

   - Repair the (C36) In-Car Temperature Sensor Signal circuit for an open or high resistance.
   - Perform the HVAC VERIFICATION TEST. Refer to **STANDARD PROCEDURE**.

   No

- Go To5

5. **CHECK THE IN-CAR TEMPERATURE SENSOR**
   1. Remove the In-Car Temperature Sensor.
   2. Measure the resistance of the In-Car Temperature Sensor and compare the resistance to the In-Car Temperature Sensor Resistance Chart in the Service Information.

      Is the In-Car Temperature Sensor within the specified limits of In-Car Temperature Sensor Resistance Chart?

      Yes

      - Replace and program the A/C Heater Module in accordance with the Service Information. Refer to **MODULE, HVAC, REMOVAL** .
      - Perform the HVAC VERIFICATION TEST. Refer to **STANDARD PROCEDURE**.

      No

      - Replace the In-Car Temperature Sensor in accordance to the Service Information.
      - Perform the HVAC VERIFICATION TEST. Refer to **STANDARD PROCEDURE**.
6. **CHECK THE WIRING AND CONNECTORS**
   1. The conditions necessary to set the DTC are not present at this time.
   2. With the scan tool, check the Environmental Data to help identify the conditions in which the DTC was set.
   3. Using the wiring diagrams as a guide, check all related splices and connectors for signs of water intrusion, corrosion, pushed out or bent terminals, and correct pin tension.
   4. Wiggle the wiring and connectors while checking for shorted and open circuits.

      Were there any problems found?

      Yes

      - Repair as necessary.
      - Perform the HVAC VERIFICATION TEST. Refer to **STANDARD PROCEDURE**.

      No

      - Test complete.

B1137-11-CABIN HEATER 3 CONTROL - CIRCUIT SHORT TO GROUND

For a complete wiring diagram, **refer to appropriate SYSTEM WIRING DIAGRAMS article** .

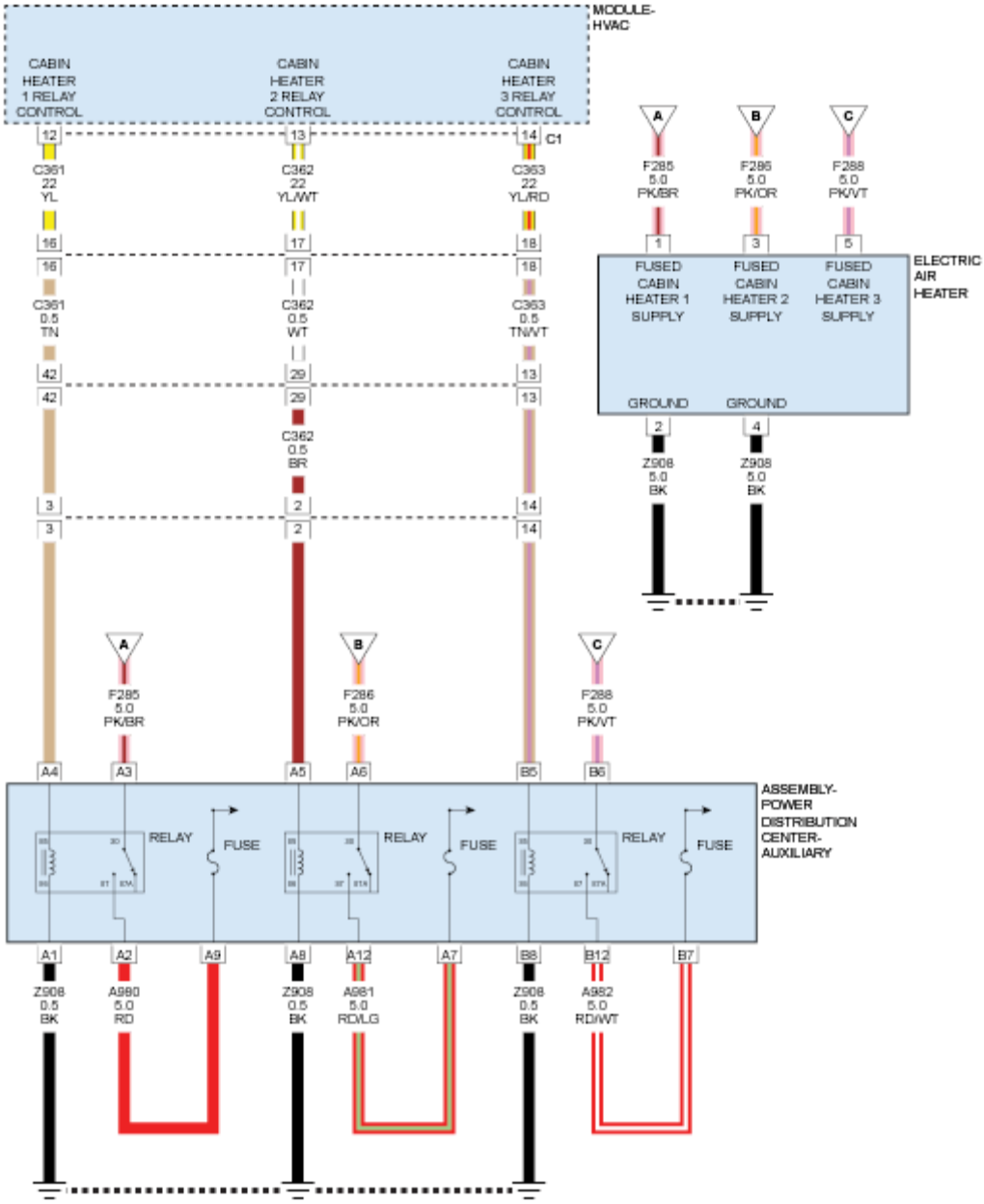

Fig. 19: Cabin Heater Wiring Diagram
Courtesy of CHRYSLER GROUP, LLC

WHEN MONITORED

With the ignition on, the Cabin Heater Relay 3 commanded on.

SET CONDITION

If the A/C Heater Control Module detects the Cabin Heater Relay 3 Control circuit is shorted to ground.

POSSIBLE CAUSES

Possible Causes
CABIN HEATER RELAY 3 CONTROL CIRCUIT SHORTED TO GROUND
CABIN HEATER 3 RELAY
A/C HEATER CONTROL MODULE

DIAGNOSTIC TEST

1. **VERIFY THAT THE DTC IS ACTIVE**
    1. Turn the ignition on.
    2. With the scan tool, erase DTCs.
    3. With the scan tool, actuate the Cabin Heater 3 Relay.
    4. Monitor the scan tool for at least two minutes.
    5. With the scan tool, read DTCs.

    Is this DTC active?

    Yes

    - Go To 2

    No

    - The condition that caused this symptom is currently not present. Check for an intermittent condition by inspecting the related wiring harness for chafed, pierced, pinched, and partially broken wires. Also, inspect the related connectors for broken, bent, pushed out, spread, corroded, or contaminated terminals. Repair as necessary.
    - Perform the HVAC VERIFICATION TEST. Refer to **STANDARD PROCEDURE**.
2. **CHECK CABIN HEATER RELAY 3 OUTPUT CIRCUIT FOR SHORT TO GROUND**
    1. Turn the ignition off.
    2. Disconnect the A/C Heater Control C1 harness connector.
    3. Remove the Cabin Heater Relay 3.
    4. Using an ohm meter measure the resistance between the Cabin Heater Relay 3 Output circuit and ground.

    Does the ohm meter read open circuit?

    Yes

    - Go To 3

    No

- Repair the Cabin Heater Relay 3 Output circuit for a short to ground.
- Perform the HVAC VERIFICATION TEST. Refer to **STANDARD PROCEDURE**.

3. **A/C HEATER CONTROL MODULE**
   1. Turn the ignition on.
   2. With the scan tool, erase DTCs.
   3. With the scan tool, actuate the Cabin Heater 3 Relay.
   4. Monitor the scan tool for at least two minutes.
   5. With the scan tool, read DTCs.

   Does the scan tool display active: B1137-11-CABIN HEATER 3 CONTROL CIRCUIT SHORT TO GROUND?

   Yes

   - Replace the A/C Heater Control Module in accordance with the Service Information. Refer to **MODULE, HVAC, REMOVAL** .
   - Perform the HVAC VERIFICATION TEST. Refer to **STANDARD PROCEDURE**.

   No

   - Replace the Cabin Heater Relay 3 in accordance with the Service Information.
   - Perform the HVAC VERIFICATION TEST. Refer to **STANDARD PROCEDURE**.

B1137-13-CABIN HEATER 3 CONTROL - CIRCUIT OPEN

For a complete wiring diagram, **refer to appropriate SYSTEM WIRING DIAGRAMS article** .

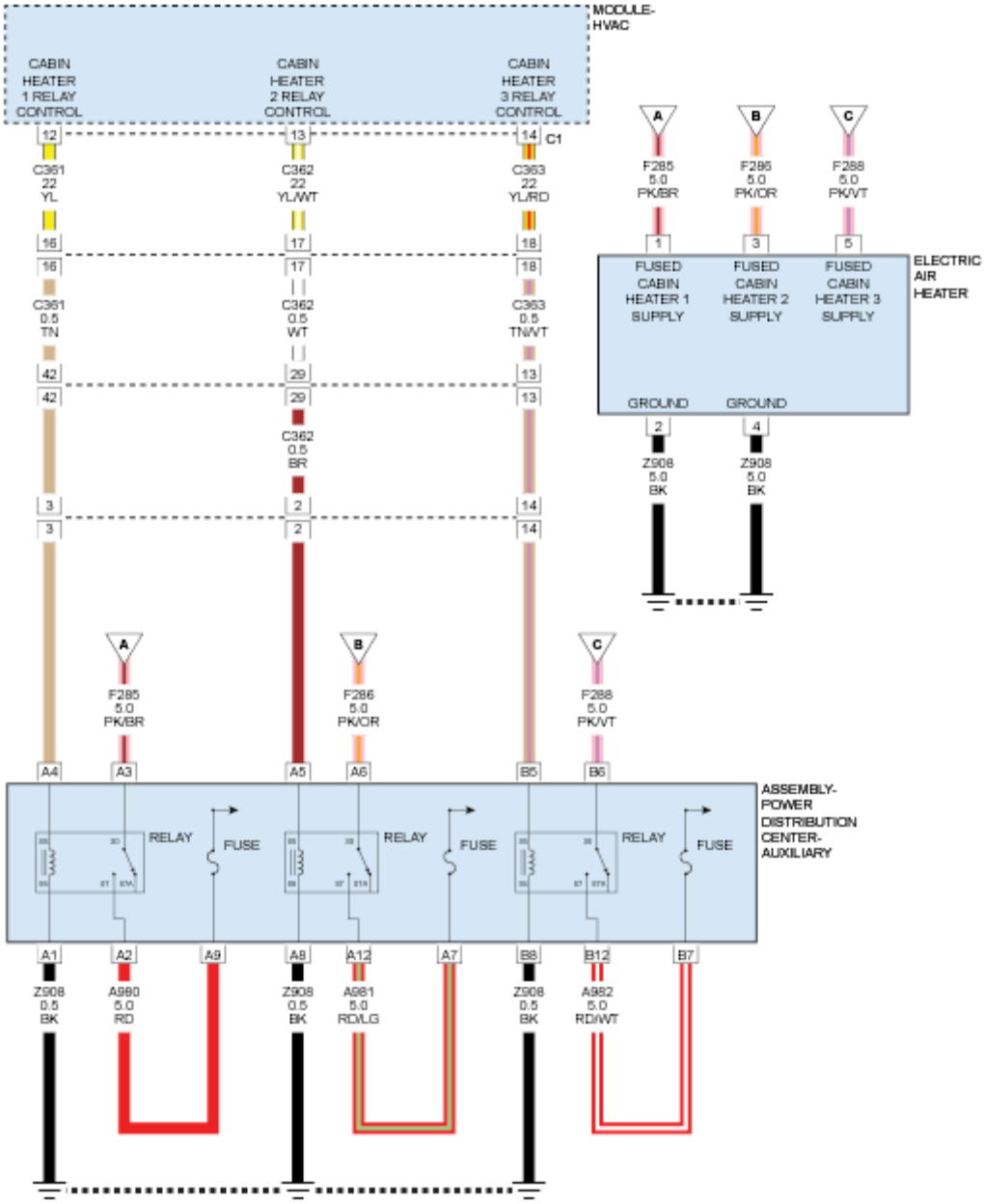

Fig. 20: Cabin Heater Wiring Diagram
Courtesy of CHRYSLER GROUP, LLC

WHEN MONITORED

With the ignition on, the Cabin Heater Relay 3 commanded on.

SET CONDITION

If the A/C Heater Control Module detects the Cabin Heater Relay 3 Control circuit is Open.

POSSIBLE CAUSES

Possible Causes
CABIN HEATER RELAY 3 CONTROL CIRCUIT OPEN
A/C HEATER CONTROL MODULE

DIAGNOSTIC TEST

1. **VERIFY THAT THE DTC IS ACTIVE**
    1. Turn the ignition on.
    2. With the scan tool, erase DTCs.
    3. With the scan tool, actuate the Cabin Heater 3 Relay.
    4. Monitor the scan tool for at least two minutes.
    5. With the scan tool, read DTCs.

    Is this DTC active?

    Yes

    - Go To 2

    No

    - The condition that caused this symptom is currently not present. Check for an intermittent condition by inspecting the related wiring harness for chafed, pierced, pinched, and partially broken wires. Also, inspect the related connectors for broken, bent, pushed out, spread, corroded, or contaminated terminals. Repair as necessary.
    - Perform the HVAC VERIFICATION TEST. Refer to **STANDARD PROCEDURE**.
2. **CHECK THE CABIN HEATER RELAY 3 CONTROL CIRCUIT FOR AN OPEN**
    1. Turn the ignition off.
    2. Disconnect the A/C Heater Control Module C1 harness connector.
    3. Remove the Cabin Heater Relay 3 from the Power Distribution Center.
    4. Turn the ignition on.
    5. Measure the resistance of the Cabin Heater Relay 3 Control circuit between the A/C Heater Control C1 harness connector and the Power Distribution Center.

    Is the resistance above 1.0 Ohm?

    Yes

    - Repair the open on the Cabin Heater Relay 3 Control circuit.
    - Perform the HVAC VERIFICATION TEST. Refer to **STANDARD PROCEDURE**.

No

- Go To3

3. **A/C HEATER CONTROL MODULE**
   1. Turn the ignition on.
   2. With the scan tool, erase DTCs.
   3. With the scan tool, actuate the Cabin Heater 3 Relay.
   4. Monitor the scan tool for at least two minutes.
   5. With the scan tool, read DTCs.

   Does the scan tool display active: B1137-13-CABIN HEATER 3 CONTROL CIRCUIT OPEN?

   Yes

   - Replace the A/C Heater Control Module in accordance with the Service Information. Refer to **MODULE, HVAC, REMOVAL** .
   - Perform the HVAC VERIFICATION TEST. Refer to **STANDARD PROCEDURE**.

   No

   - Replace the Cabin Heater Relay 3 in accordance with the Service Information.
   - Perform the HVAC VERIFICATION TEST. Refer to **STANDARD PROCEDURE**.

B11C2-11-FRONT MODE DOOR 1 CONTROL - CIRCUIT SHORTED TO GROUND

For a complete wiring diagram, **refer to appropriate SYSTEM WIRING DIAGRAMS article** .

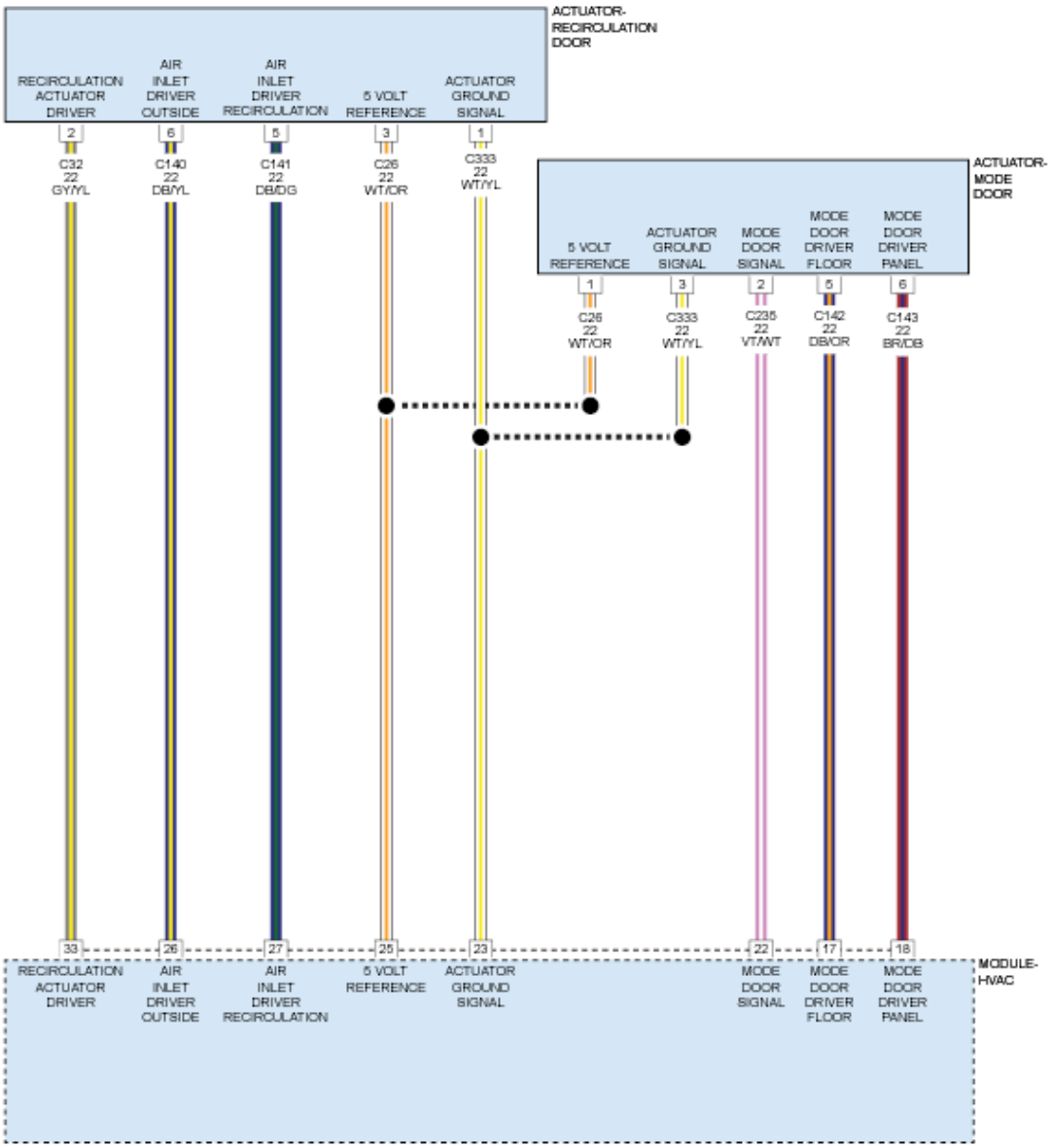

Fig. 21: Actuator Blend/Mode Doors Wiring Diagram
Courtesy of CHRYSLER GROUP, LLC

THEORY OF OPERATION

After the initial installation of the A/C Heater Control, the controller is calibrated to each individual blend/mode door actuator. These calibrations are stored as in the number of pulses it takes to move the door from one stop to another. The A/C Heater Control drives the Door Actuators by the use of Door Driver circuit and a Common Door Driver circuit and monitors all door actuator pulses to detect door movement in both directions. Most of the door actuators share a common door driver circuit but each door actuator has its own unique driver circuit. Due to shared circuitry, similar Diagnostic Trouble Codes (DTCs) can set at the same time for multiple actuators depending upon the type of circuit malfunction, its location, and the direction the actuator is moving

when the malfunction is present. For further information. Refer to **DESCRIPTION** .

WHEN MONITORED

Continuously with the ignition on.

SET CONDITION

The A/C Heater Control detects a short to ground on the Mode Door control circuit. If the A/C Heater Control detects a valid current draw, the DTC will change from Active to Stored and will stay in the controllers memory for 100 ignition cycles.

POSSIBLE CAUSES

Possible Causes
MODE DOOR DRIVER CIRCUIT SHORTED TO GROUND
COMMON DOOR DRIVER 2 CIRCUIT SHORTED TO GROUND
MODE DOOR ACTUATOR
A/C HEATER CONTROL

Always perform the HVAC Pre-Diagnostic Troubleshooting procedure before proceeding. Refer to STANDARD PROCEDURE.

DIAGNOSTIC TEST

1. **CHECK IF DTC IS ACTIVE**
    1. Ignition on, engine not running.
    2. With the scan tool, read HVAC DTCs.

    Is this DTC active?

    Yes

    - Go To 3

    No

    - Go To 2
2. **PERFORM HVAC ACTUATOR CALIBRATION TEST**
    1. With the scan tool, perform the HVAC Actuator Calibration Test.

    Did this DTC change from Stored to Active while performing the HVAC Actuator Calibration Test?

    Yes

- Go To 3

No

- Go To 6

3. **CHECK THE (C235) MODE DOOR SIGNAL CIRCUIT FOR A SHORT TO GROUND**
   1. Turn the ignition off to the lock position.
   2. Disconnect the A/C Heater Control C1 harness connector.
   3. Disconnect the Mode Door Actuator harness connector.
   4. Measure the resistance between ground and the (C235) Mode Door Signal circuit.

   Is the resistance below 100k Ohms?

   Yes

   - Repair the (C235) Mode Door Signal circuit for a short to ground.
   - Perform the HVAC VERIFICATION TEST. Refer to **STANDARD PROCEDURE**.

   No

   - Go To 4

4. **CHECK THE REFERENCE VOLTAGE CIRCUIT (C26) FOR A SHORT TO GROUND**
   1. Measure the resistance between ground and the Reference Voltage circuit (C26).

   Is the resistance below 100k Ohms?

   Yes

   - Repair the Reference Voltage circuit (C26) for a short to ground.
   - Perform the HVAC VERIFICATION TEST. Refer to **STANDARD PROCEDURE**.

   No

   - Go To 5

5. **CHECK THE MODE DOOR ACTUATOR**
   1. Replace the Mode Door Actuator in accordance with the Service Information. Refer to **ACTUATOR, MODE DOOR, REMOVAL** .
   2. With the scan tool, erase HVAC DTCs and perform the HVAC Actuator Calibration Test.

   Did this DTC reset?

   Yes

- Replace and program the A/C Heater Control in accordance with the Service Information. Refer to **MODULE, HVAC, REMOVAL** .
- Perform the HVAC VERIFICATION TEST. Refer to **STANDARD PROCEDURE**.

No

- Test complete.
- Perform the HVAC VERIFICATION TEST. Refer to **STANDARD PROCEDURE**.

6. **CHECK THE WIRING AND CONNECTORS**
   1. The conditions necessary to set the DTC are not present at this time.
   2. With the scan tool, check the Environmental Data to help identify the conditions in which the DTC was set.
   3. Using the wiring diagrams as a guide, check all related splices and connectors for signs of water intrusion, corrosion, pushed out or bent terminals, and correct pin tension.
   4. Wiggle the wiring and connectors while checking for shorted and open circuits.

   Were there any problems found?

   Yes

   - Repair as necessary.
   - Perform the HVAC VERIFICATION TEST. Refer to **STANDARD PROCEDURE**.

   No

   - Test complete.

B11C2-12-FRONT MODE DOOR 1 CONTROL - CIRCUIT SHORT TO BATTERY

For a complete wiring diagram, **refer to appropriate SYSTEM WIRING DIAGRAMS article** .

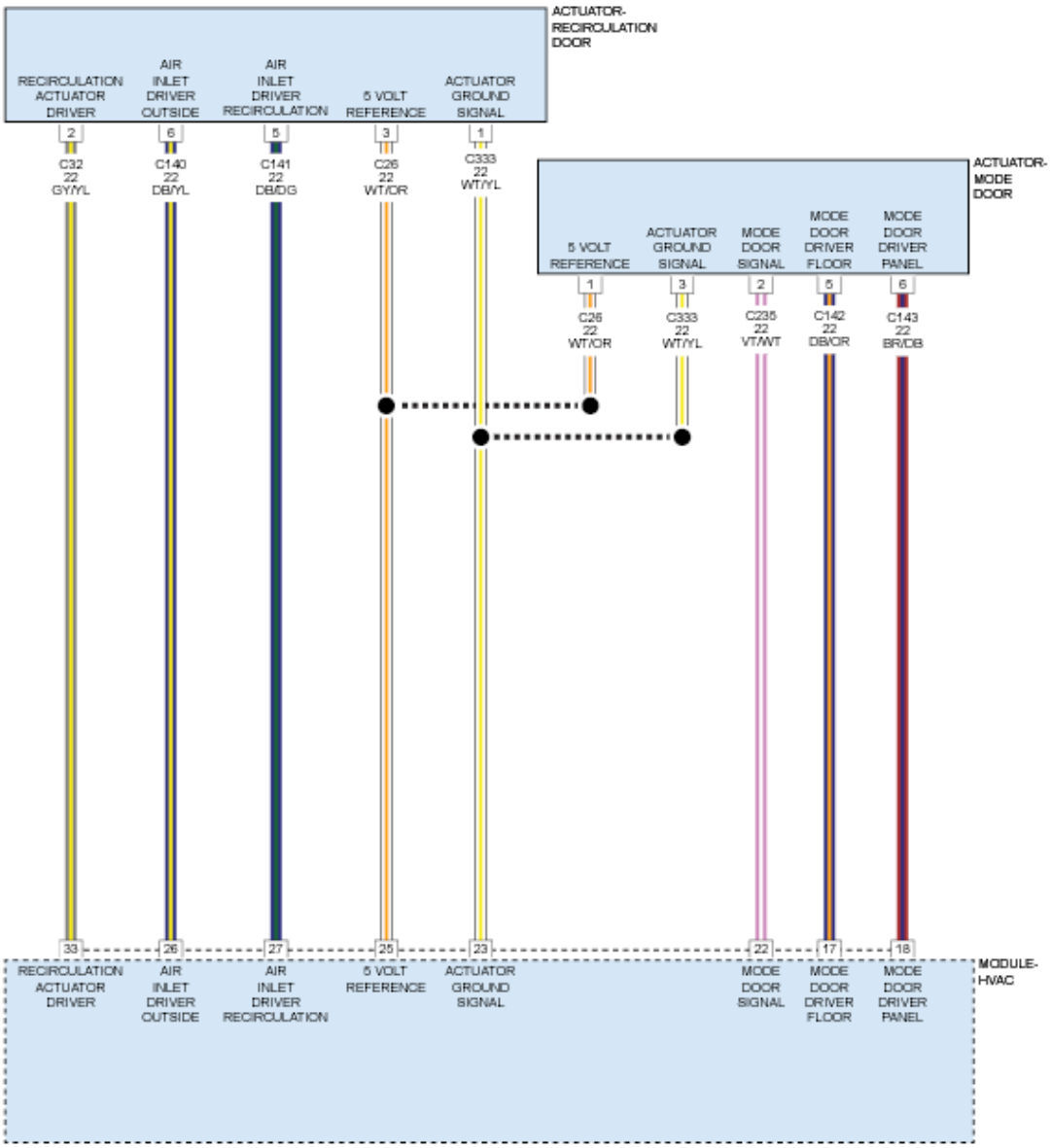

Fig. 22: Actuator Blend/Mode Doors Wiring Diagram
Courtesy of CHRYSLER GROUP, LLC

THEORY OF OPERATION

After the initial installation of the A/C Heater Control, the controller is calibrated to each individual blend/mode door actuator. These calibrations are stored as in the number of pulses it takes to move the door from one stop to another. The A/C Heater Control drives the Door Actuators by the use of Door Driver circuit and a Common Door Driver circuit and monitors all door actuator pulses to detect door movement in both directions. Most of the door actuators share a common door driver circuit but each door actuator has its own unique driver circuit. Due to shared circuitry, similar Diagnostic Trouble Codes (DTCs) can set at the same time for multiple actuators depending upon the type of circuit malfunction, its location, and the direction the actuator is moving

when the malfunction is present. For further information. Refer to **DESCRIPTION** .

WHEN MONITORED

Continuously with the ignition on.

SET CONDITION

The A/C Heater Control detects a short voltage on the Mode Door control circuit. If the A/C Heater Control detects a valid voltage, the DTC will change from Active to Stored and will stay in the controllers memory for 100 ignition cycles.

POSSIBLE CAUSES

Possible Causes
MODE DOOR DRIVER CIRCUIT SHORTED TO VOLTAGE
COMMON DOOR DRIVER 2 CIRCUIT SHORTED TO VOLTAGE
MODE DOOR ACTUATOR
A/C HEATER CONTROL

Always perform the HVAC Pre-Diagnostic Troubleshooting procedure before proceeding. Refer to STANDARD PROCEDURE.

DIAGNOSTIC TEST

1. **CHECK IF DTC IS ACTIVE**
    1. Ignition on, engine not running.
    2. With the scan tool, read HVAC DTCs.

    Is this DTC active?

    Yes

    - Go To 3

    No

    - Go To 2
2. **PERFORM HVAC ACTUATOR CALIBRATION TEST**
    1. With the scan tool, perform the HVAC Actuator Calibration Test.

    Did this DTC change from Stored to Active while performing the HVAC Actuator Calibration Test?

    Yes

- Go To 3

No

- Go To 6

3. **CHECK THE (C235) MODE DOOR SIGNAL CIRCUIT FOR A SHORT TO VOLTAGE**
   1. Turn the ignition off to the lock position.
   2. Disconnect the A/C Heater Control C1 harness connector.
   3. Disconnect the Mode Door Actuator harness connector.
   4. Ignition on, engine not running.
   5. Measure the voltage of the (C235) Mode Door Signal circuit.

   Is there any voltage present?

   Yes

   - Repair the (C235) Mode Door Signal circuit for a short to voltage.
   - Perform the HVAC VERIFICATION TEST. Refer to **STANDARD PROCEDURE**.

   No

   - Go To 4

4. **CHECK THE REFERENCE VOLTAGE CIRCUIT (C26) FOR A SHORT TO VOLTAGE**
   1. Measure the voltage of the Reference Voltage circuit (C26).

   Is there any voltage present?

   Yes

   - Repair the Reference Voltage circuit (C26) for a short to voltage.
   - Perform the HVAC VERIFICATION TEST. Refer to **STANDARD PROCEDURE**.

   No

   - Go To 5

5. **CHECK THE MODE DOOR ACTUATOR**
   1. Turn the ignition off to the lock position.
   2. Replace the Mode Door Actuator in accordance with the Service Information. Refer to **ACTUATOR, MODE DOOR, REMOVAL** .
   3. With the scan tool, erase HVAC DTCs and perform the HVAC Actuator Calibration Test.

   Did this DTC reset?

Yes

- Replace and program the A/C Heater Control in accordance with the Service Information. Refer to **MODULE, HVAC, REMOVAL** .
- Perform the HVAC VERIFICATION TEST. Refer to **STANDARD PROCEDURE**.

No

- Test complete.
- Perform the HVAC VERIFICATION TEST. Refer to **STANDARD PROCEDURE**.

6. **CHECK THE WIRING AND CONNECTORS**
   1. The conditions necessary to set the DTC are not present at this time.
   2. With the scan tool, check the Environmental Data to help identify the conditions in which the DTC was set.
   3. Using the wiring diagrams as a guide, check all related splices and connectors for signs of water intrusion, corrosion, pushed out or bent terminals, and correct pin tension.
   4. Wiggle the wiring and connectors while checking for shorted and open circuits.

   Were there any problems found?

   Yes

   - Repair as necessary.
   - Perform the HVAC VERIFICATION TEST. Refer to **STANDARD PROCEDURE**.

   No

   - Test complete.

B11C2-13-FRONT MODE DOOR 1 CONTROL - CIRCUIT OPEN

For a complete wiring diagram, **refer to appropriate SYSTEM WIRING DIAGRAMS article** .

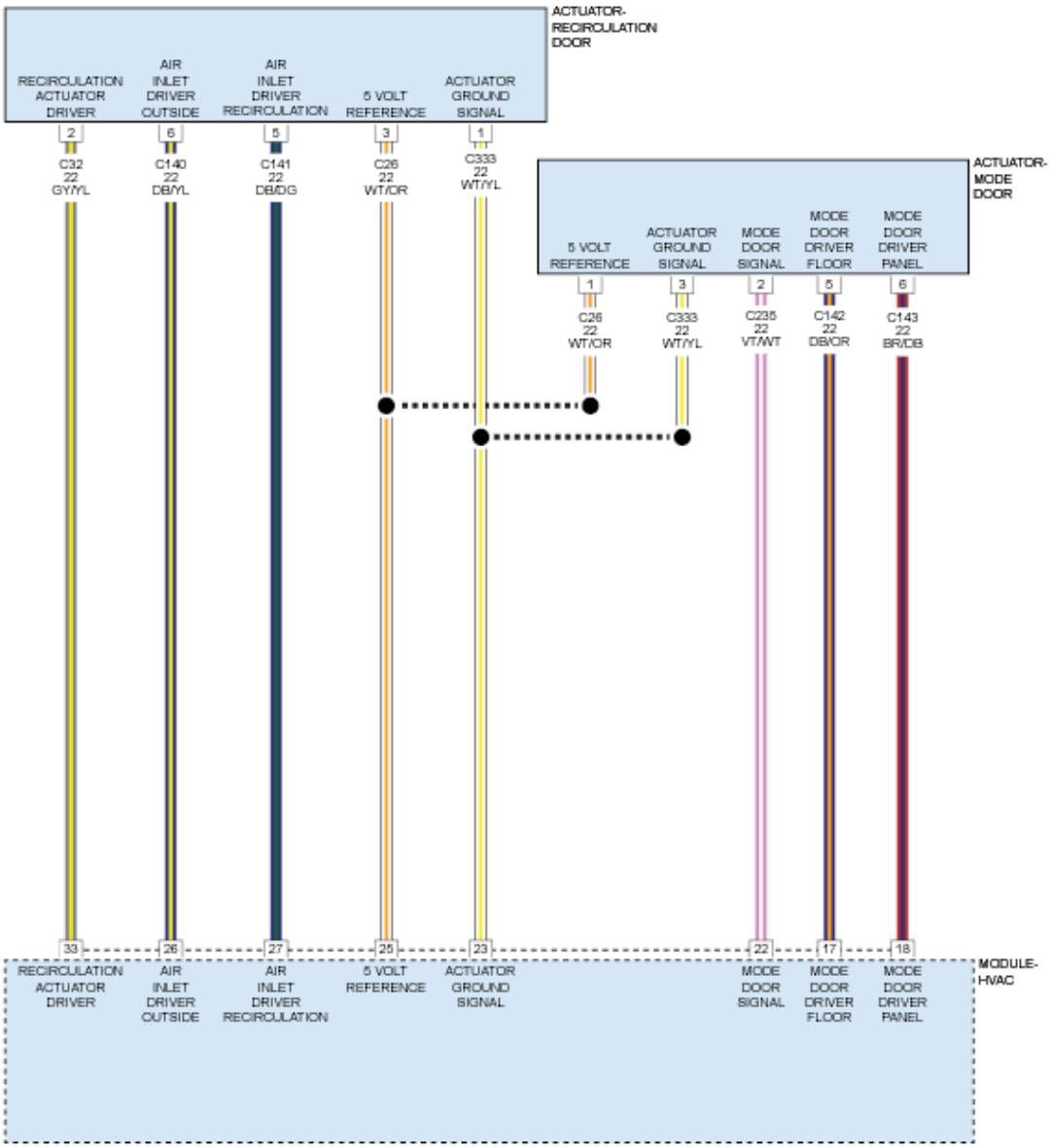

Fig. 23: Actuator Blend/Mode Doors Wiring Diagram
Courtesy of CHRYSLER GROUP, LLC

THEORY OF OPERATION

After the initial installation of the A/C Heater Control, the controller is calibrated to each individual blend/mode door actuator. These calibrations are stored as in the number of pulses it takes to move the door from one stop to another. The A/C Heater Control drives the Door Actuators by the use of Door Driver circuit and a Common Door Driver circuit and monitors all door actuator pulses to detect door movement in both directions. Most of the door actuators share a common door driver circuit but each door actuator has its own unique driver circuit. Due to shared circuitry, similar Diagnostic Trouble Codes (DTCs) can set at the same time for multiple actuators depending upon the type of circuit malfunction, its location, and the direction the actuator is moving

when the malfunction is present. For further information. Refer to **DESCRIPTION** .

WHEN MONITORED

Continuously with the ignition on.

SET CONDITION

The A/C Heater Control detects an open in the Mode Door control circuit. If the A/C Heater Control detects a valid current draw, the DTC will change from Active to Stored and will stay in the controllers memory for 100 ignition cycles.

POSSIBLE CAUSES

Possible Causes
MODE DOOR DRIVER CIRCUIT OPEN
COMMON DOOR DRIVER CIRCUIT OPEN
MODE DOOR ACTUATOR
A/C HEATER CONTROL

Always perform the HVAC Pre-Diagnostic Troubleshooting procedure before proceeding. Refer to STANDARD PROCEDURE.

DIAGNOSTIC TEST

1. **CHECK IF DTC IS ACTIVE**
    1. Ignition on, engine not running.
    2. With the scan tool, read HVAC DTCs.

    Is this DTC active?

    Yes

    - Go To 3

    No

    - Go To 2
2. **PERFORM HVAC ACTUATOR CALIBRATION TEST**
    1. With the scan tool, perform the HVAC Actuator Calibration Test.

    Did this DTC change from Stored to Active while performing the HVAC Actuator Calibration Test?

    Yes

- Go To 3

No

- Go To 6

3. **CHECK THE (C235) MODE DOOR SIGNAL CIRCUIT FOR AN OPEN**
   1. Turn the ignition off to the lock position.
   2. Disconnect the A/C Heater Control C1 harness connector.
   3. Disconnect the Mode Door Actuator harness connector.
   4. Measure the resistance of the (C235) Mode Door Signal circuit between the A/C Heater Control C1 harness connector and the Mode Door Actuator harness connector.

      Is the resistance above 1.0 Ohm?

      Yes

      - Repair the (C235) Mode Door Signal circuit for an open or high resistance.
      - Perform the HVAC VERIFICATION TEST. Refer to **STANDARD PROCEDURE**.

      No

      - Go To 4

4. **CHECK THE REFERENCE VOLTAGE CIRCUIT (C26) FOR AN OPEN**
   1. Measure the resistance of the Reference Voltage circuit (C26) between the A/C Heater Module C2 harness connector and the Mode Door Actuator harness connector.

      Is the resistance above 1.0 Ohm?

      Yes

      - Repair the Reference Voltage circuit (C26) for an open or high resistance.
      - Perform the HVAC VERIFICATION TEST. Refer to **STANDARD PROCEDURE**.

      No

      - Go To 5

5. **CHECK THE MODE DOOR ACTUATOR**
   1. Replace the Mode Door Actuator in accordance with the Service Information. Refer to **ACTUATOR, MODE DOOR, REMOVAL** .
   2. With the scan tool, erase HVAC DTCs and perform the HVAC Actuator Calibration Test.

      Did this DTC reset?

Yes

- Replace and program the A/C Heater Control in accordance with the Service Information. Refer to **MODULE, HVAC, REMOVAL** .
- Perform the HVAC VERIFICATION TEST. Refer to **STANDARD PROCEDURE**.

No

- Test complete.
- Perform the HVAC VERIFICATION TEST. Refer to **STANDARD PROCEDURE**.

6. **CHECK THE WIRING AND CONNECTORS**
   1. The conditions necessary to set the DTC are not present at this time.
   2. With the scan tool, check the Environmental Data to help identify the conditions in which the DTC was set.
   3. Using the wiring diagrams as a guide, check all related splices and connectors for signs of water intrusion, corrosion, pushed out or bent terminals, and correct pin tension.
   4. Wiggle the wiring and connectors while checking for shorted and open circuits.

   Were there any problems found?

   Yes

   - Repair as necessary.
   - Perform the HVAC VERIFICATION TEST. Refer to **STANDARD PROCEDURE**.

   No

   - Test complete.

B11C2-92-FRONT MODE DOOR 1 CONTROL-PERFORMANCE OR INCORECT OPERATION

For a complete wiring diagram, **refer to appropriate SYSTEM WIRING DIAGRAMS article** .

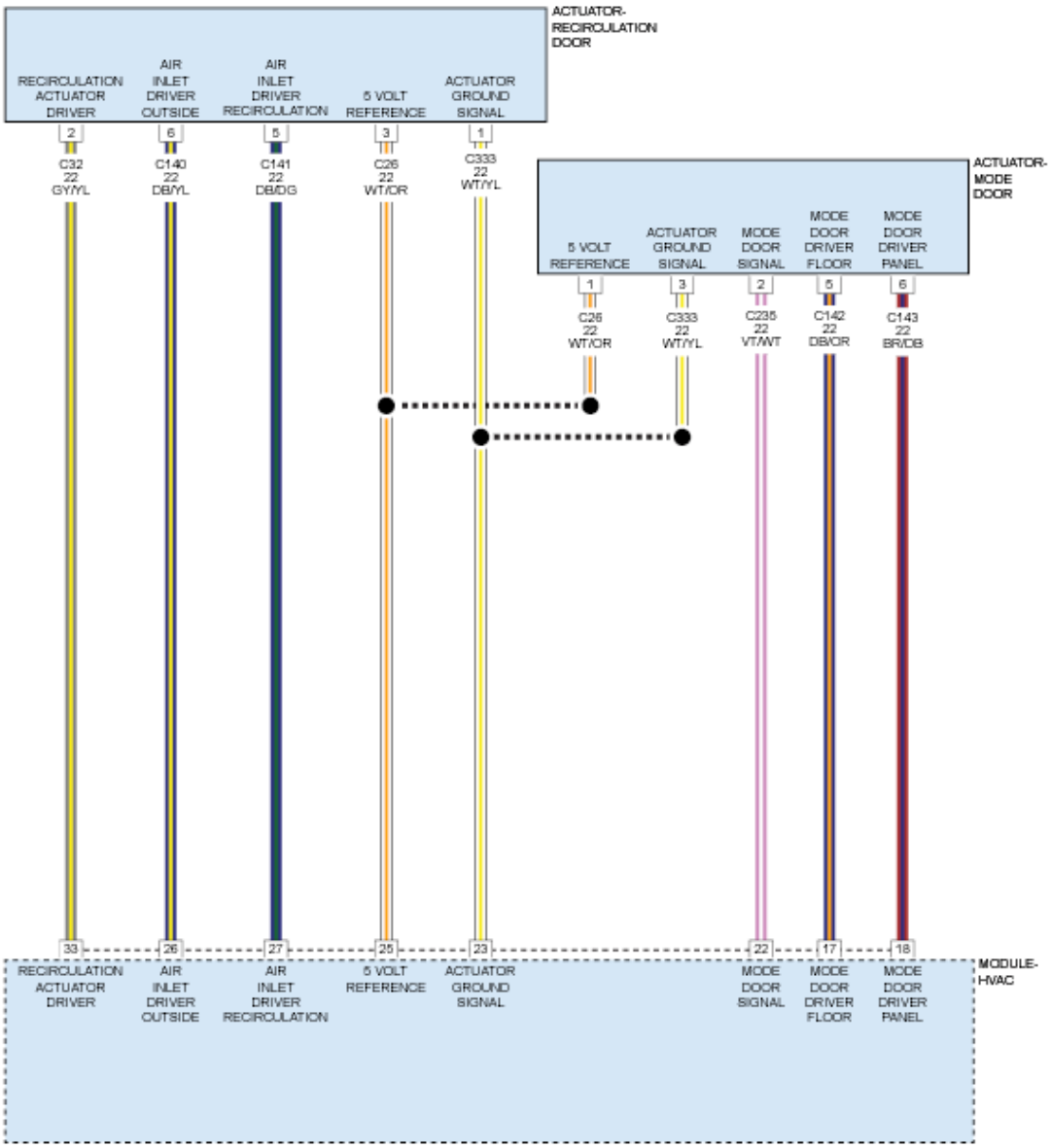

Fig. 24: Actuator Blend/Mode Doors Wiring Diagram
Courtesy of CHRYSLER GROUP, LLC

THEORY OF OPERATION

After the initial installation of the A/C Heater Control, the controller is calibrated to each individual blend/mode door actuator. These calibrations are stored as in the number of pulses it takes to move the door from one stop to another. The A/C Heater Control drives the Door Actuators by the use of Door Driver circuit and a Common Door Driver circuit and monitors all door actuator pulses to detect door movement in both directions. Most of the door actuators share a common door driver circuit but each door actuator has its own unique driver circuit. Due to shared circuitry, similar Diagnostic Trouble Codes (DTCs) can set at the same time for multiple actuators depending upon the type of circuit malfunction, its location, and the direction the actuator is moving

when the malfunction is present. For further information. Refer to **DESCRIPTION** .

WHEN MONITORED

Continuously with the ignition on.

SET CONDITION

If the A/C Heater Control detects a overheat condition of the Integrated Circuit (IC) that controls the Mode Door Driver circuit. If the A/C Heater Control detects a valid temperature the DTC will change from Active to Stored and will stay in the controllers memory for 100 ignition cycles.

POSSIBLE CAUSES

Possible Causes
A/C HEATER CONTROL

Always perform the HVAC Pre-Diagnostic Troubleshooting procedure before proceeding. Refer to STANDARD PROCEDURE.

DIAGNOSTIC TEST

1. **CHECK IF DTC IS ACTIVE**
    1. Ignition on, engine not running.
    2. Using the scan tool, read HVAC DTCs.

    Is this DTC active?

    Yes

    - Allow the A/C Heater Control to cool down for five minutes then Go To 2

    No

    - Go To 9
2. **PERFORM HVAC ACTUATOR CALIBRATION TEST**
    1. Using the scan tool, perform the HVAC Actuator Calibration Test.

    Did this DTC reset?

    Yes

    - Replace and program the A/C Heater Control in accordance with the Service Information. Refer to **MODULE, HVAC, REMOVAL** .
    - Perform the HVAC VERIFICATION TEST. Refer to **STANDARD PROCEDURE**.

No

- Go To 3

3. **CHECK THE MODE DOOR DRIVER CIRCUIT FOR A SHORT TO VOLTAGE**
   1. Turn the ignition off to the lock position.
   2. Disconnect the A/C Heater Module C2 harness connector.
   3. Disconnect the Mode Door Actuator harness connector.
   4. Ignition on, engine not running.
   5. Measure the voltage of the Mode Door Signal circuit (C235).

   Is there any voltage present?

   Yes

   - Repair the Mode Door Signal circuit (C235) for a short to voltage.
   - Perform the HVAC VERIFICATION TEST. Refer to **STANDARD PROCEDURE**.

   No

   - Go To 4

4. **CHECK THE REFERENCE VOLTAGE CIRCUIT (C26) FOR A SHORT TO VOLTAGE**
   1. Measure the voltage of the Reference Voltage circuit (C26).

   Is there any voltage present?

   Yes

   - Repair the Reference Voltage circuit (C26) circuit for a short to voltage.
   - Perform the HVAC VERIFICATION TEST. Refer to **STANDARD PROCEDURE**.

   No

   - Go To 5

5. **CHECK THE MODE DOOR SIGNAL CIRCUIT (C235) FOR A SHORT TO GROUND**
   1. Turn the ignition off to the lock position.
   2. Measure the resistance between ground and the Mode Door Signal circuit (C235).

   Is the resistance below 100k Ohms?

   Yes

   - Repair the Mode Door Signal circuit (C235) for a short to ground.
   - Perform the HVAC VERIFICATION TEST. Refer to **STANDARD PROCEDURE**.

No

- Go To 6

6. **CHECK THE REFERENCE VOLTAGE CIRCUIT (C26) FOR A SHORT TO GROUND**
   1. Measure the resistance between ground and the Reference Voltage circuit (C26).

      Is the resistance below 100k Ohms?

      Yes

      - Repair the Reference Voltage circuit (C26) for a short to ground.
      - Perform the HVAC VERIFICATION TEST. Refer to **STANDARD PROCEDURE**.

      No

      - Go To 7

7. **CHECK THE MODE DOOR**
   1. Remove the Mode Door Actuator and check the Mode Door for binding and full travel. Refer to **ACTUATOR, MODE DOOR, REMOVAL** .

      Were there any problems found?

      Yes

      - Repair or replace the Mode Door as necessary in accordance with the Service Information. Refer to **HOUSING, HVAC, REMOVAL** .
      - Perform the HVAC VERIFICATION TEST. Refer to **STANDARD PROCEDURE**.

      No

      - Go To 8

8. **CHECK THE MODE DOOR ACTUATOR**
   1. Replace the Mode Door Actuator in accordance with the Service Information. Refer to **ACTUATOR, MODE DOOR, REMOVAL** .
   2. Using the scan tool, erase HVAC DTCs and perform the HVAC Actuator Calibration Test.

      Did this DTC reset?

      Yes

      - Replace and program the A/C Heater Module in accordance with the Service Information. Refer to **MODULE, HVAC, REMOVAL** .
      - Perform the HVAC VERIFICATION TEST. Refer to **STANDARD PROCEDURE**.

No

- Test complete.
- Perform the HVAC VERIFICATION TEST. Refer to **STANDARD PROCEDURE**.

9. **CHECK THE WIRING AND CONNECTORS**
   1. The conditions necessary to set the DTC are not present at this time.
   2. Using the scan tool, check the Environmental Data to help identify the conditions in which the DTC was set.
   3. Using the wiring diagrams as a guide, check all related splices and connectors for signs of water intrusion, corrosion, pushed out or bent terminals, and correct pin tension.
   4. Wiggle the wiring and connectors while checking for shorted and open circuits.

   Were there any problems found?

   Yes

   - Repair as necessary.
   - Perform the HVAC VERIFICATION TEST. Refer to **STANDARD PROCEDURE**.

   No

   - Test complete.

B11C3-00-FRONT MODE DOOR 1 TRAVEL - RANGE TOO SMALL

For a complete wiring diagram, **refer to appropriate SYSTEM WIRING DIAGRAMS article** .

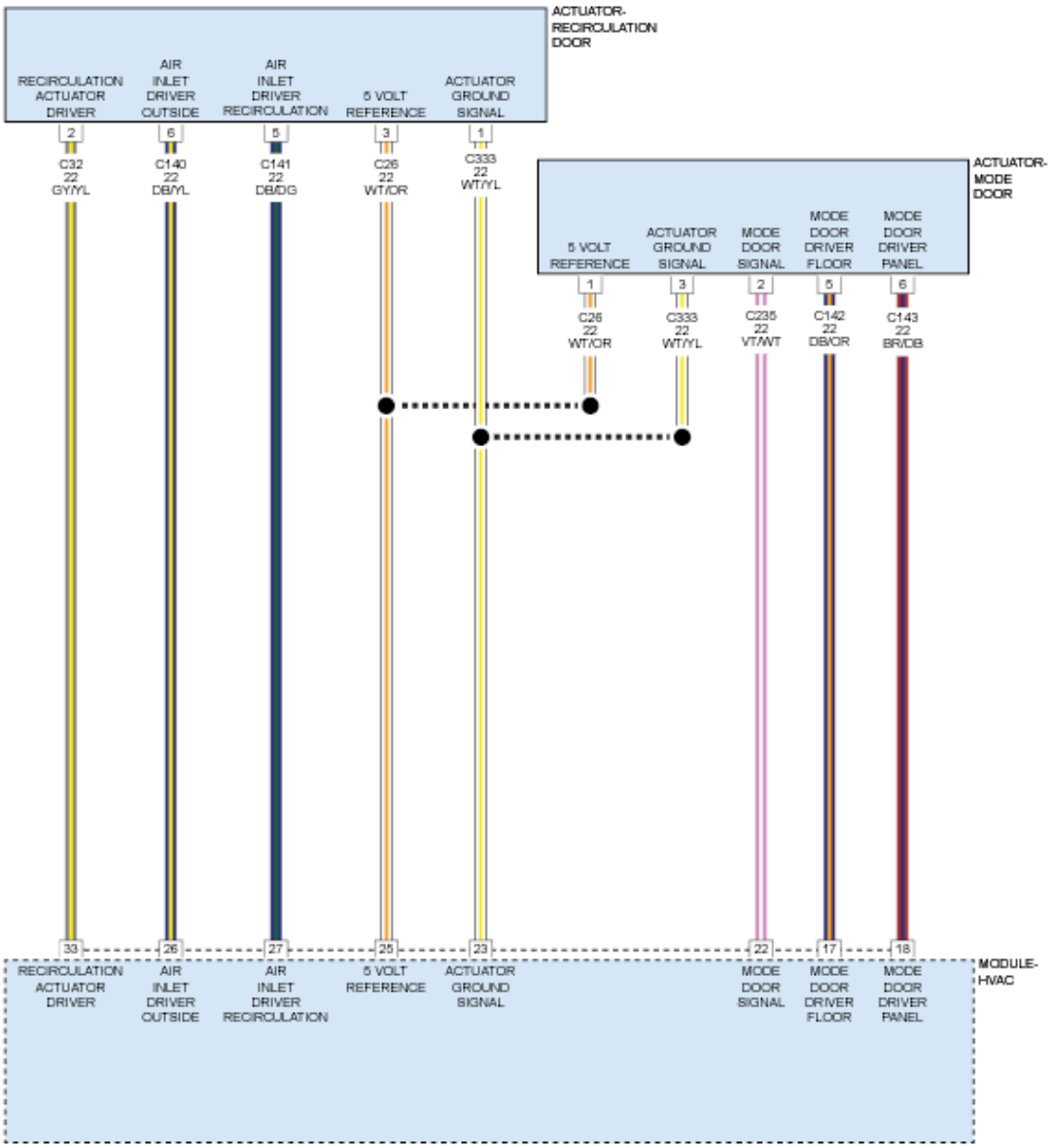

Fig. 25: Actuator Blend/Mode Doors Wiring Diagram
Courtesy of CHRYSLER GROUP, LLC

THEORY OF OPERATION

After the initial installation of the A/C Heater Control, the controller is calibrated to each individual blend/mode door actuator. These calibrations are stored as in the number of pulses it takes to move the door from one stop to another. The A/C Heater Control drives the Door Actuators by the use of Door Driver circuit and a Common Door Driver circuit and monitors all door actuator pulses to detect door movement in both directions. Most of the door actuators share a common door driver circuit but each door actuator has its own unique driver circuit. Due to shared circuitry, similar Diagnostic Trouble Codes (DTCs) can set at the same time for multiple actuators depending upon the type of circuit malfunction, its location, and the direction the actuator is moving

when the malfunction is present. For further information. Refer to **DESCRIPTION** .

WHEN MONITORED

When ever an Actuator Calibration Test is performed.

SET CONDITION

The A/C Heater Control uses a pulse feedback to the controller to detect the total door movement range. If the amount of pulses required to move the door completely in both directions is less than what the controller has stored in its memory, this DTC will set. If an Actuator Calibration Test is performed and the A/C Heater Control detects a valid range of the door movement span in both directions, the DTC will change from Active to Stored and will stay in the controllers memory for 100 ignition cycles.

POSSIBLE CAUSES

Possible Causes
RELATED DTCS PRESENT
MODE DOOR BINDING
MODE DOOR ACTUATOR
A/C HEATER CONTROL

Always perform the HVAC Pre-Diagnostic Troubleshooting procedure before proceeding. Refer to STANDARD PROCEDURE.

DIAGNOSTIC TEST

1. **CHECK FOR RELATED DTCS**
    1. Ignition on, engine not running.
    2. Using the scan tool, read HVAC DTCs.

    Are there any Door Control Circuit Open, Performance, or Short to Ground, Voltage, or Together DTCs present?

    Yes

    - Refer to **DIAGNOSIS AND TESTING** and perform the appropriate diagnostic procedure.

    No

    - Go To 2
2. **CHECK IF DTC IS ACTIVE**
    1. Ignition on, engine not running.
    2. Using the scan tool, read HVAC DTCs.

Is this DTC active?

Yes

- Go To 4

No

- Go To 3

3. **PERFORM HVAC ACTUATOR CALIBRATION TEST**
   1. Using the scan tool, perform the HVAC Actuator Calibration Test.

      Did this DTC change from Stored to Active while performing the HVAC Actuator Calibration Test?

      Yes

      - Go To 4

      No

      - Go To 6
4. **CHECK THE MODE DOOR**
   1. Remove the Mode Door Actuator and check the Mode Door for binding and full travel. Refer to **ACTUATOR, MODE DOOR, REMOVAL** .

      Were there any problems found?

      Yes

      - Repair or replace the Mode Door as necessary in accordance with the Service Information.
      - Perform the HVAC VERIFICATION TEST. Refer to **STANDARD PROCEDURE**.

      No

      - Go To 5
5. **CHECK THE MODE DOOR ACTUATOR**
   1. Replace the Mode Door Actuator in accordance with the Service Information. Refer to **ACTUATOR, MODE DOOR, REMOVAL** .
   2. Using the scan tool, erase HVAC DTCs.
   3. Using the scan tool, perform the HVAC Actuator Calibration Test.

      Did this DTC reset during HVAC Actuator Calibration Test?

Yes

- Replace and program the A/C Heater Control in accordance with the Service Information. Refer to **MODULE, HVAC, REMOVAL** .
- Perform the HVAC VERIFICATION TEST. Refer to **STANDARD PROCEDURE**.

No

- Test complete.

6. **CHECK THE WIRING AND CONNECTORS**
   1. The conditions necessary to set the DTC are not present at this time.
   2. Using the scan tool, check the Environmental Data to help identify the conditions in which the DTC was set.
   3. Using the wiring diagrams as a guide, check all related splices and connectors for signs of water intrusion, corrosion, pushed out or bent terminals, and correct pin tension.
   4. Wiggle the wiring and connectors while checking for shorted and open circuits.

   Were there any problems found?

   Yes

   - Repair as necessary.
   - Perform the HVAC VERIFICATION TEST. Refer to **STANDARD PROCEDURE**.

   No

   - Test complete.

B11C4-00-FRONT MODE DOOR 1 TRAVEL - RANGE TOO LARGE

For a complete wiring diagram, **refer to appropriate SYSTEM WIRING DIAGRAMS article** .

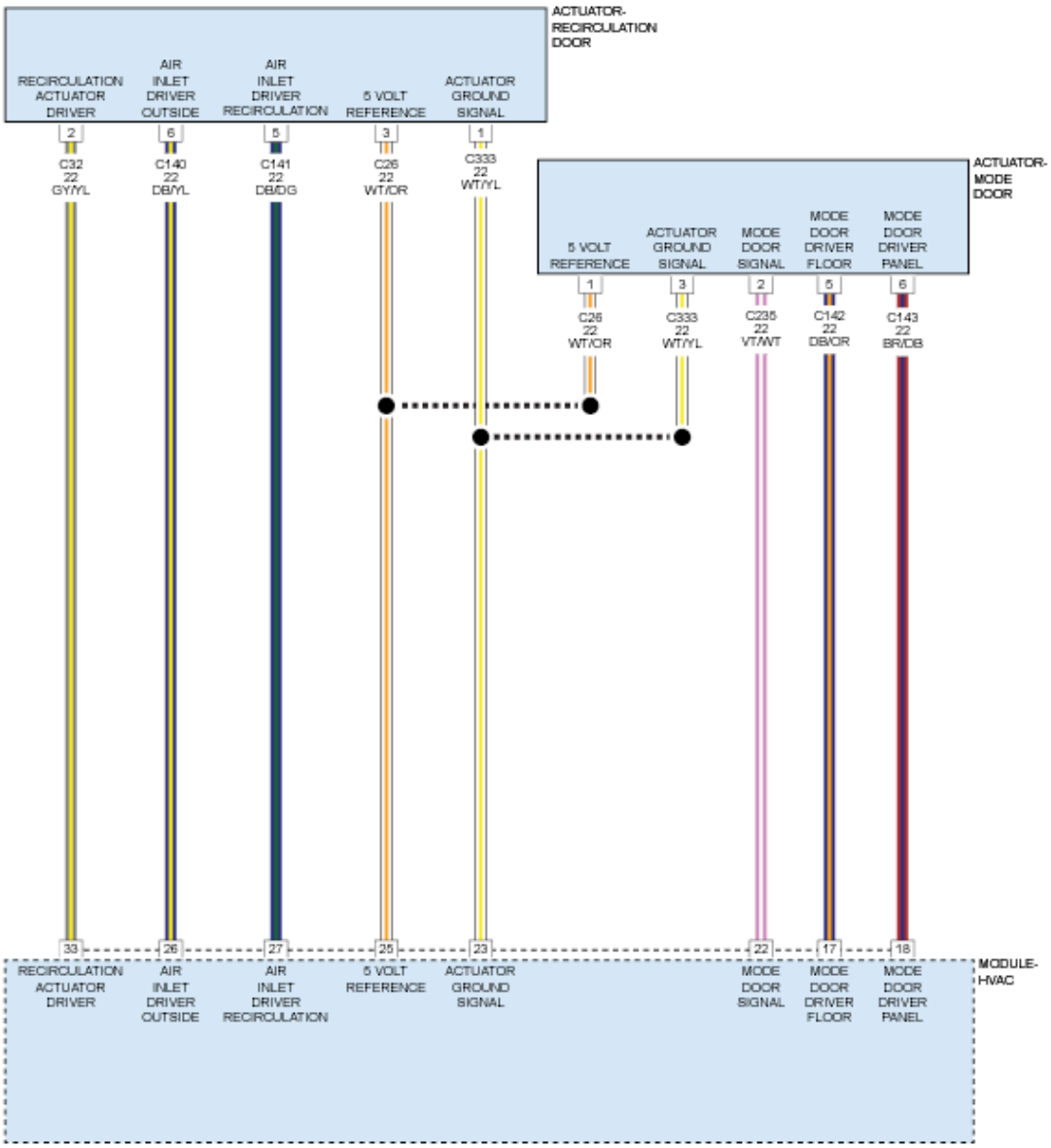

Fig. 26: Actuator Blend/Mode Doors Wiring Diagram
Courtesy of CHRYSLER GROUP, LLC

THEORY OF OPERATION

After the initial installation of the A/C Heater Control, the controller is calibrated to each individual blend/mode door actuator. These calibrations are stored as in the number of pulses it takes to move the door from one stop to another. The A/C Heater Control drives the Door Actuators by the use of Door Driver circuit and a Common Door Driver circuit and monitors all door actuator pulses to detect door movement in both directions. Most of the door actuators share a common door driver circuit but each door actuator has its own unique driver circuit. Due to shared circuitry, similar Diagnostic Trouble Codes (DTCs) can set at the same time for multiple actuators depending upon the type of circuit malfunction, its location, and the direction the actuator is moving

when the malfunction is present. For further information. Refer to **DESCRIPTION** .

WHEN MONITORED

When ever an Actuator Calibration Test is performed.

SET CONDITION

The A/C Heater Control uses a pulse feedback to the controller to detect the total door movement range. If the amount of pulses required to move the door completely in both directions is greater than what the controller has stored in its memory, this DTC will set. If an Actuator Calibration Test is performed or during normal operation and the A/C Heater Control detects a valid range of the door movement span in both directions, the DTC will change from Active to Stored and will stay in the controllers memory for 100 ignition cycles.

POSSIBLE CAUSES

Possible Causes
RELATED DTCS PRESENT
MODE DOOR STOPS
MODE DOOR
MODE DOOR ACTUATOR
A/C HEATER CONTROL

Always perform the HVAC Pre-Diagnostic Troubleshooting procedure before proceeding. Refer to STANDARD PROCEDURE.

DIAGNOSTIC TEST

1. **CHECK FOR RELATED DTCS**
    1. Ignition on, engine not running.
    2. With the scan tool, read HVAC DTCs.

    Are there any Door Control Circuit Open, Performance, or Short to Ground, Voltage, or Together DTCs present?

    Yes

    - Refer to **DIAGNOSIS AND TESTING** and perform the appropriate diagnostic procedure.

    No

    - Go To 2
2. **CHECK IF DTC IS ACTIVE**
    1. Ignition on, engine not running.
    2. With the scan tool, read HVAC DTCs.

Is this DTC active?

Yes

- Go To 4

No

- Go To 3

3. **PERFORM HVAC ACTUATOR CALIBRATION TEST**
   1. With the scan tool, perform the HVAC Actuator Calibration Test.

      Did this DTC change from Stored to Active while performing the HVAC System Test?

      Yes

      - Go To 4

      No

      - Go To 6

4. **CHECK THE MODE DOOR**
   1. Remove the Mode Door Actuator and check the Mode Door stops, linkage (stripped or cracked) and door.

      Were there any problems found?

      Yes

      - Repair or replace the Mode Door as necessary in accordance with the Service Information.
      - Perform the HVAC VERIFICATION TEST. Refer to **STANDARD PROCEDURE**.

      No

      - Go To 5

5. **CHECK THE MODE DOOR ACTUATOR**
   1. Replace the Mode Door Actuator in accordance with the Service Information. Refer to **ACTUATOR, MODE DOOR, REMOVAL** .
   2. With the scan tool, erase HVAC DTCs and perform the HVAC Actuator Calibration Test.

      Did this DTC reset?

      Yes

- Replace and program the A/C Heater Control in accordance with the Service Information. Refer to **MODULE, HVAC, REMOVAL** .
- Perform the HVAC VERIFICATION TEST. Refer to **STANDARD PROCEDURE**.

No

- Test complete.
- Perform the HVAC VERIFICATION TEST. Refer to **STANDARD PROCEDURE**.

6. **CHECK THE WIRING AND CONNECTORS**
   1. The conditions necessary to set the DTC are not present at this time.
   2. With the scan tool, check the Environmental Data to help identify the conditions in which the DTC was set.
   3. Using the wiring diagrams as a guide, check all related splices and connectors for signs of water intrusion, corrosion, pushed out or bent terminals, and correct pin tension.
   4. Wiggle the wiring and connectors while checking for shorted and open circuits.

   Were there any problems found?

   Yes

   - Repair as necessary.
   - Perform the HVAC VERIFICATION TEST. Refer to **STANDARD PROCEDURE**.

   No

   - Test complete.

B11C8-11-RIGHT TEMPERATURE DOOR CONTROL - CIRCUIT SHORT TO GROUND

For a complete wiring diagram, **refer to appropriate SYSTEM WIRING DIAGRAMS article** .

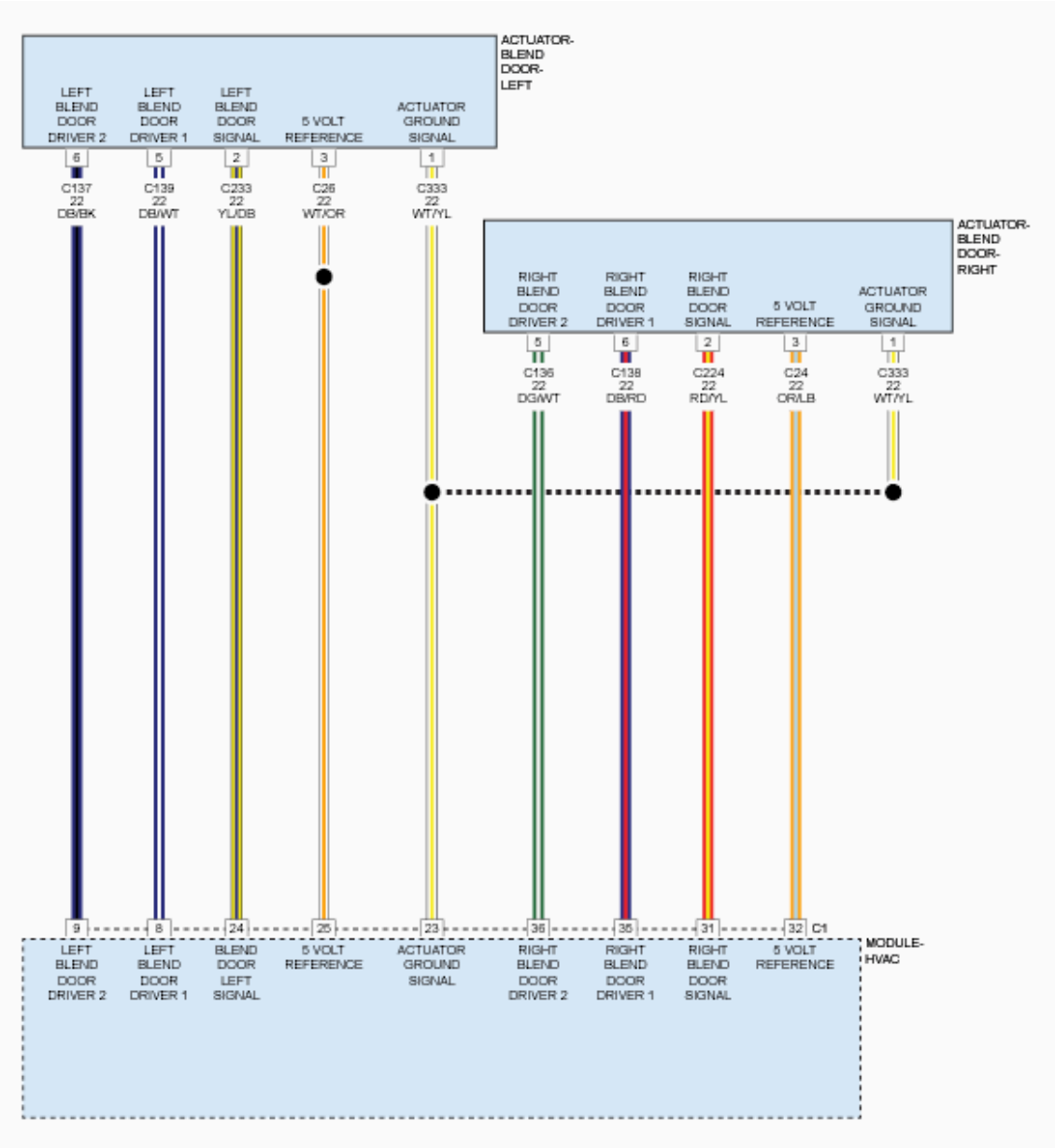

Fig. 27: Actuator Blend Door Wiring Diagram
Courtesy of CHRYSLER GROUP, LLC

THEORY OF OPERATION

After the initial installation of the A/C Heater Control, the controller is calibrated to each individual blend/mode door actuator. These calibrations are stored as in the number of pulses it takes to move the door from one stop to another. The A/C Heater Control drives the Door Actuators by the use of Door Driver circuit and a Common Door Driver circuit and monitors all door actuator pulses to detect door movement in both directions. Most of the door actuators share a common door driver circuit but each door actuator has its own unique driver circuit. Due to shared circuitry, similar Diagnostic Trouble Codes (DTCs) can set at the same time for multiple actuators depending upon the type of circuit malfunction, its location, and the direction the actuator is moving when the malfunction is present. For further information. Refer to **DESCRIPTION** .

WHEN MONITORED

Continuously with the ignition on.

SET CONDITION

The A/C Heater Control detects a short to ground on the Passenger Blend Door control circuit. If the A/C Heater Control detects a valid current draw, the DTC will change from Active to Stored and will stay in the controllers memory for 100 ignition cycles.

POSSIBLE CAUSES

Possible Causes
PASSENGER BLEND DOOR SIGNAL CIRCUIT SHORTED TO GROUND
COMMON DOOR DRIVER CIRCUITS SHORTED TO GROUND
PASSENGER BLEND DOOR ACTUATOR
A/C HEATER CONTROL

Always perform the HVAC Pre-Diagnostic Troubleshooting procedure before proceeding. Refer to STANDARD PROCEDURE.

DIAGNOSTIC TEST

1. **CHECK IF DTC IS ACTIVE**
    1. Ignition on, engine not running.
    2. Using the scan tool, read HVAC DTCs.

    Is this DTC active?

    Yes

    - Go To 3

    No

    - Go To 2
2. **PERFORM HVAC ACTUATOR CALIBRATION TEST**
    1. Using the scan tool, perform the HVAC Actuator Calibration Test.

    Did this DTC change from Stored to Active while performing the HVAC Actuator Calibration Test?

    Yes

    - Go To 3

No

- Go To 6

3. **CHECK THE PASSENGER BLEND DOOR SIGNAL CIRCUIT (C224) FOR A SHORT TO GROUND**
   1. Turn the ignition off to the lock position.
   2. Disconnect the A/C Heater Module C1 harness connector.
   3. Disconnect the Passenger Blend Door Actuator harness connector.
   4. Measure the resistance between ground and the Passenger Blend Door Signal circuit (C224)

   Is the resistance below 100k Ohms?

   Yes

   - Repair the Passenger Blend Door Signal circuit (C224) for a short to ground.
   - Perform the HVAC VERIFICATION TEST. Refer to **STANDARD PROCEDURE**.

   No

   - Go To 4

4. **CHECK THE BLEND DOOR DRIVER CIRCUIT (C136, C138) FOR A SHORT TO GROUND**
   1. Measure the resistance between ground and the Blend Door Driver circuit (C136, C138).

   Is the resistance below 100k Ohms?

   Yes

   - Repair the Blend Door Driver circuit (C136, C138) for a short to ground.
   - Perform the HVAC VERIFICATION TEST. Refer to **STANDARD PROCEDURE**.

   No

   - Go To 5

5. **CHECK THE PASSENGER BLEND DOOR ACTUATOR**
   1. Replace the Passenger Blend Door Actuator in accordance with the Service Information. Refer to **ACTUATOR, MODE DOOR, REMOVAL** .
   2. Using the scan tool, erase HVAC DTCs and perform the HVAC Actuator Calibration Test.

   Did this DTC reset?

   Yes

   - Replace and program the A/C Heater Control in accordance with the Service Information.

Refer to **MODULE, HVAC, REMOVAL** .

- Perform the HVAC VERIFICATION TEST. Refer to **STANDARD PROCEDURE**.

No

- Test complete.
- Perform the HVAC VERIFICATION TEST. Refer to **STANDARD PROCEDURE**.

6. **CHECK THE WIRING AND CONNECTORS**
   1. The conditions necessary to set the DTC are not present at this time.
   2. Using the scan tool, check the Environmental Data to help identify the conditions in which the DTC was set.
   3. Using the wiring diagrams as a guide, check all related splices and connectors for signs of water intrusion, corrosion, pushed out or bent terminals, and correct pin tension.
   4. Wiggle the wiring and connectors while checking for shorted and open circuits.

   Were there any problems found?

   Yes

   - Repair as necessary.
   - Perform the HVAC VERIFICATION TEST. Refer to **STANDARD PROCEDURE**.

   No

   - Test complete.

B11C8-12-RIGHT TEMPERATURE DOOR CONTROL-CIRCUIT SHORT TO BATTERY

For a complete wiring diagram, **refer to appropriate SYSTEM WIRING DIAGRAMS article** .

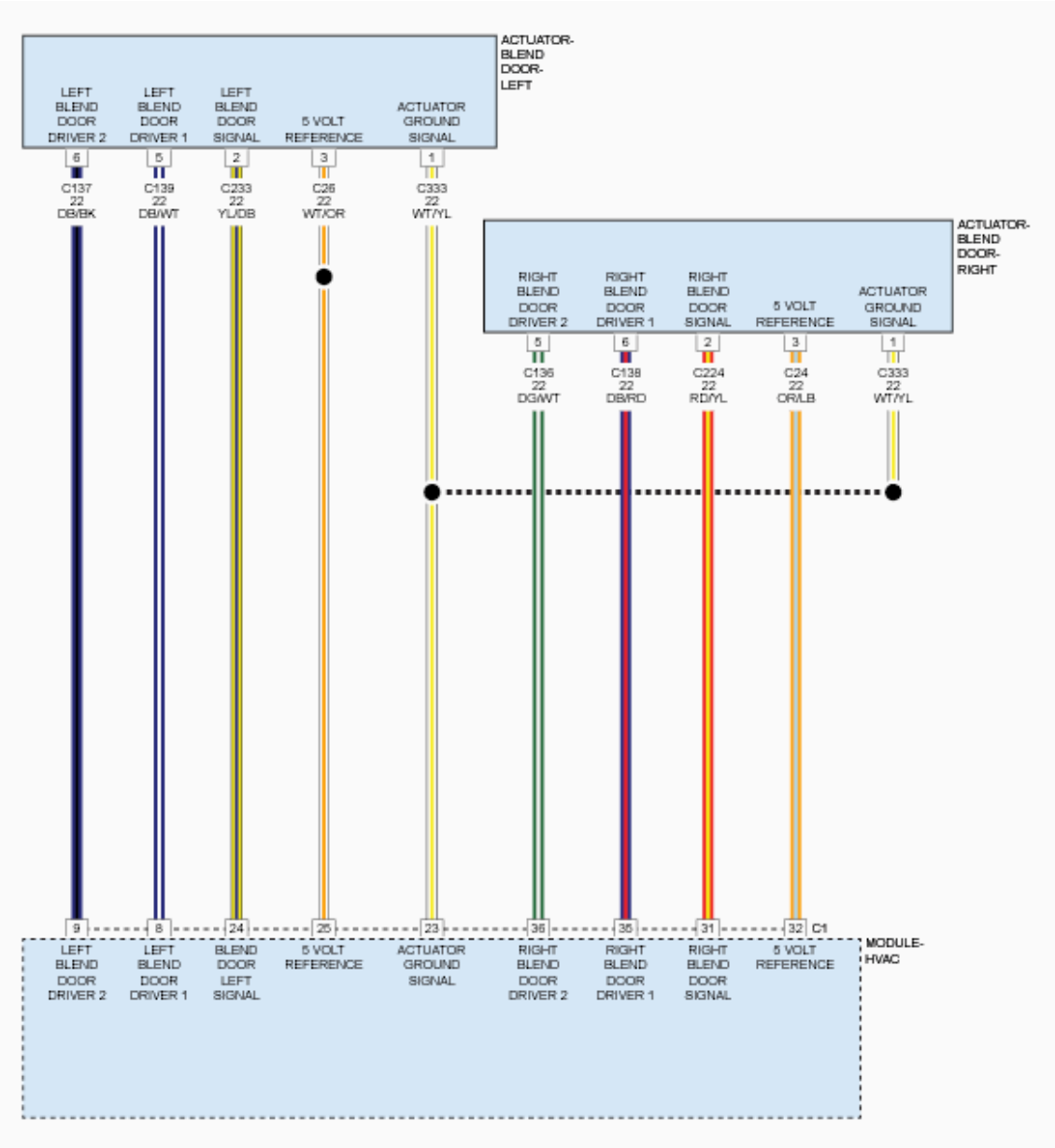

Fig. 28: Actuator Blend Door Wiring Diagram
Courtesy of CHRYSLER GROUP, LLC

THEORY OF OPERATION

After the initial installation of the A/C Heater Control, the controller is calibrated to each individual blend/mode door actuator. These calibrations are stored as in the number of pulses it takes to move the door from one stop to another. The A/C Heater Control drives the Door Actuators by the use of Door Driver circuit and a Common Door Driver circuit and monitors all door actuator pulses to detect door movement in both directions. Most of the door actuators share a common door driver circuit but each door actuator has its own unique driver circuit. Due to shared circuitry, similar Diagnostic Trouble Codes (DTCs) can set at the same time for multiple actuators depending upon the type of circuit malfunction, its location, and the direction the actuator is moving when the malfunction is present. For further information. Refer to **DESCRIPTION** .

WHEN MONITORED

Continuously with the ignition on.

SET CONDITION

The A/C Heater Control detects a short voltage on the Passenger Blend Door control circuit. If the A/C Heater Control detects a valid voltage, the DTC will change from Active to Stored and will stay in the controllers memory for 100 ignition cycles.

POSSIBLE CAUSES

Possible Causes
PASSENGER BLEND DOOR DRIVER CIRCUIT SHORTED TO VOLTAGE
COMMON DOOR DRIVER 2 CIRCUIT SHORTED TO VOLTAGE
PASSENGER BLEND DOOR ACTUATOR
A/C HEATER CONTROL

Always perform the HVAC Pre-Diagnostic Troubleshooting procedure before proceeding. Refer to STANDARD PROCEDURE.

DIAGNOSTIC TEST

1. **CHECK IF DTC IS ACTIVE**
    1. Ignition on, engine not running.
    2. Using the scan tool, read HVAC DTCs.

       Is this DTC active?

       Yes

       - Go To 3

       No

       - Go To 2
2. **PERFORM HVAC ACTUATOR CALIBRATION TEST**
    1. Using the scan tool, perform the HVAC Actuator Calibration Test.

       Did this DTC change from Stored to Active while performing the HVAC Actuator Calibration Test?

       Yes

       - Go To 3

No

- Go To 6

3. **CHECK THE PASSENGER BLEND DOOR SIGNAL CIRCUIT (C224) FOR A SHORT TO VOLTAGE**
   1. Turn the ignition off to the lock position.
   2. Disconnect the A/C Heater Module C1 harness connector.
   3. Disconnect the Passenger Blend Door Actuator harness connector.
   4. Ignition on, engine not running.
   5. Measure the voltage of the Passenger Blend Door Signal circuit (C224)

   Is there any voltage present?

   Yes

   - Repair the Passenger Blend Door Signal circuit (C224) for a short to voltage.
   - Perform the HVAC VERIFICATION TEST. Refer to **STANDARD PROCEDURE**.

   No

   - Go To 4

4. **CHECK THE BLEND DOOR DRIVER CIRCUIT (C136, C138) FOR A SHORT TO VOLTAGE**
   1. Measure the voltage of the Blend Door Driver circuit (C136, C138).

   Is there any voltage present?

   Yes

   - Repair the Blend Door Driver circuit (C136, C138) for a short to voltage.
   - Perform the HVAC VERIFICATION TEST. Refer to **STANDARD PROCEDURE**.

   No

   - Go To 5

5. **CHECK THE PASSENGER BLEND DOOR ACTUATOR**
   1. Replace the Passenger Blend Door Actuator in accordance with the Service Information. Refer to **ACTUATOR, MODE DOOR, REMOVAL** .
   2. With the scan tool, erase HVAC DTCs and perform the HVAC Actuator Calibration Test.

   Did this DTC reset?

   Yes

- Replace and program the A/C Heater Control in accordance with the Service Information. Refer to **MODULE, HVAC, REMOVAL** .
- Perform the HVAC VERIFICATION TEST. Refer to **STANDARD PROCEDURE**.

No

- Test complete.
- Perform the HVAC VERIFICATION TEST. Refer to **STANDARD PROCEDURE**.

6. **CHECK THE WIRING AND CONNECTORS**
   1. The conditions necessary to set the DTC are not present at this time.
   2. With the scan tool, check the Environmental Data to help identify the conditions in which the DTC was set.
   3. Using the wiring diagrams as a guide, check all related splices and connectors for signs of water intrusion, corrosion, pushed out or bent terminals, and correct pin tension.
   4. Wiggle the wiring and connectors while checking for shorted and open circuits.

   Were there any problems found?

   Yes

   - Repair as necessary.
   - Perform the HVAC VERIFICATION TEST. Refer to **STANDARD PROCEDURE**.

   No

   - Test complete.

B11C8-13-RIGHT TEMPERATURE DOOR CONTROL - CIRCUIT OPEN

For a complete wiring diagram, **refer to appropriate SYSTEM WIRING DIAGRAMS article** .

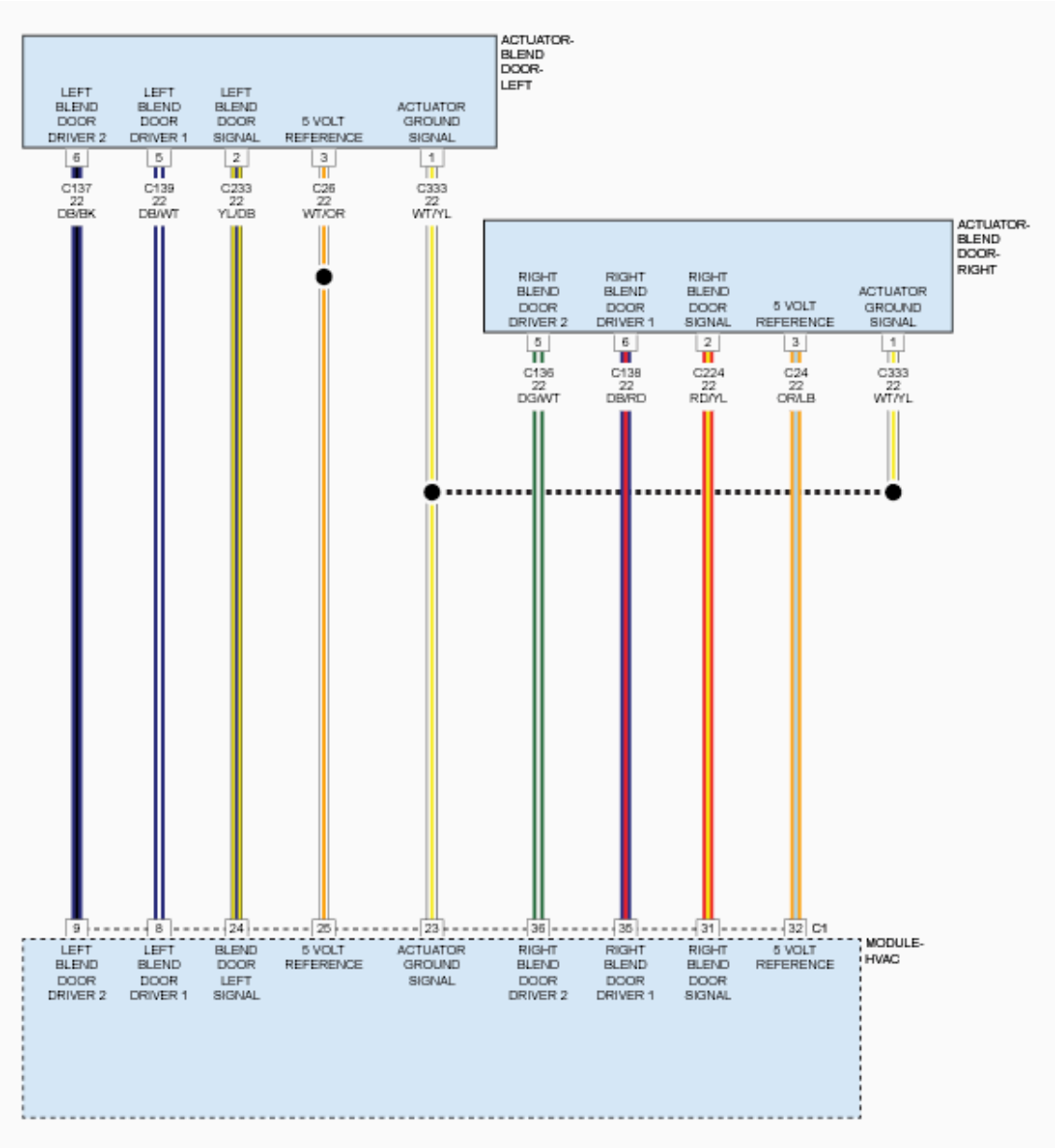

Fig. 29: Actuator Blend Door Wiring Diagram
Courtesy of CHRYSLER GROUP, LLC

THEORY OF OPERATION

After the initial installation of the A/C Heater Control, the controller is calibrated to each individual blend/mode door actuator. These calibrations are stored as in the number of pulses it takes to move the door from one stop to another. The A/C Heater Control drives the Door Actuators by the use of Door Driver circuit and a Common Door Driver circuit and monitors all door actuator pulses to detect door movement in both directions. Most of the door actuators share a common door driver circuit but each door actuator has its own unique driver circuit. Due to shared circuitry, similar Diagnostic Trouble Codes (DTCs) can set at the same time for multiple actuators depending upon the type of circuit malfunction, its location, and the direction the actuator is moving when the malfunction is present. For further information. Refer to **DESCRIPTION** .

WHEN MONITORED

Continuously with the ignition on.

SET CONDITION

The A/C Heater Control detects an open in the Passenger Blend Door control circuit. If the A/C Heater Control detects a valid current draw, the DTC will change from Active to Stored and will stay in the controllers memory for 100 ignition cycles.

POSSIBLE CAUSES

Possible Causes
PASSENGER BLEND DOOR DRIVER CIRCUIT OPEN
COMMON DOOR DRIVER 2 CIRCUIT OPEN
PASSENGER BLEND DOOR ACTUATOR
A/C HEATER CONTROL

Always perform the HVAC Pre-Diagnostic Troubleshooting procedure before proceeding. Refer to STANDARD PROCEDURE.

DIAGNOSTIC TEST

1. **CHECK IF DTC IS ACTIVE**
    1. Ignition on, engine not running.
    2. Using the scan tool, read HVAC DTCs.

    Is this DTC active?

    Yes

    - Go To 3

    No

    - Go To 2
2. **PERFORM HVAC ACTUATOR CALIBRATION TEST**
    1. Using the scan tool, perform the HVAC Actuator Calibration Test.

    Did this DTC change from Stored to Active while performing the HVAC Actuator Calibration Test?

    Yes

    - Go To 3

No

- Go To 6

3. **CHECK THE PASSENGER BLEND DOOR SIGNAL CIRCUIT (C224) FOR AN OPEN**
   1. Turn the ignition off to the lock position.
   2. Disconnect the A/C Heater Module C1 harness connector.
   3. Disconnect the Passenger Blend Door Actuator harness connector.
   4. Measure the resistance of the Passenger Blend Door Signal circuit (C224) between the A/C Heater Module C1 harness connector and the Passenger Blend Door Actuator harness connector.

   Is the resistance above 1.0 Ohm?

   Yes

   - Repair the Passenger Blend Door Signal circuit (C224) for an open or high resistance.
   - Perform the HVAC VERIFICATION TEST. Refer to **STANDARD PROCEDURE**.

   No

   - Go To 4

4. **CHECK THE BLEND DOOR DRIVER CIRCUIT (C136, C138) FOR AN OPEN**
   1. Measure the resistance of the Blend Door Driver circuit (C136, C138) between the A/C Heater Module C1 harness connector and the Passenger Blend Door Actuator harness connector.

   Is the resistance above 1.0 Ohm?

   Yes

   - Repair the Blend Door Driver circuit (C136, C138) for an open or high resistance.
   - Perform the HVAC VERIFICATION TEST. Refer to **STANDARD PROCEDURE**.

   No

   - Go To 5

5. **CHECK THE PASSENGER BLEND DOOR ACTUATOR**
   1. Replace the Passenger Blend Door Actuator in accordance with the Service Information. Refer to **ACTUATOR, MODE DOOR, REMOVAL** .
   2. With the scan tool, erase HVAC DTCs and perform the HVAC Actuator Calibration Test.

   Did this DTC reset?

   Yes

- Replace and program the A/C Heater Control in accordance with the Service Information. Refer to **MODULE, HVAC, REMOVAL** .
- Perform the HVAC VERIFICATION TEST. Refer to **STANDARD PROCEDURE**.

No

- Test complete.
- Perform the HVAC VERIFICATION TEST. Refer to **STANDARD PROCEDURE**.

6. **CHECK THE WIRING AND CONNECTORS**
   1. The conditions necessary to set the DTC are not present at this time.
   2. Using the scan tool, check the Environmental Data to help identify the conditions in which the DTC was set.
   3. Using the wiring diagrams as a guide, check all related splices and connectors for signs of water intrusion, corrosion, pushed out or bent terminals, and correct pin tension.
   4. Wiggle the wiring and connectors while checking for shorted and open circuits.

   Were there any problems found?

   Yes

   - Repair as necessary.
   - Perform the HVAC VERIFICATION TEST. Refer to **STANDARD PROCEDURE**.

   No

   - Test complete.

B11C8-92-RIGHT TEMPERATURE DOOR CONTROL - PERFORMANCE OR INCORECT OPERATION

For a complete wiring diagram, **refer to appropriate SYSTEM WIRING DIAGRAMS article** .

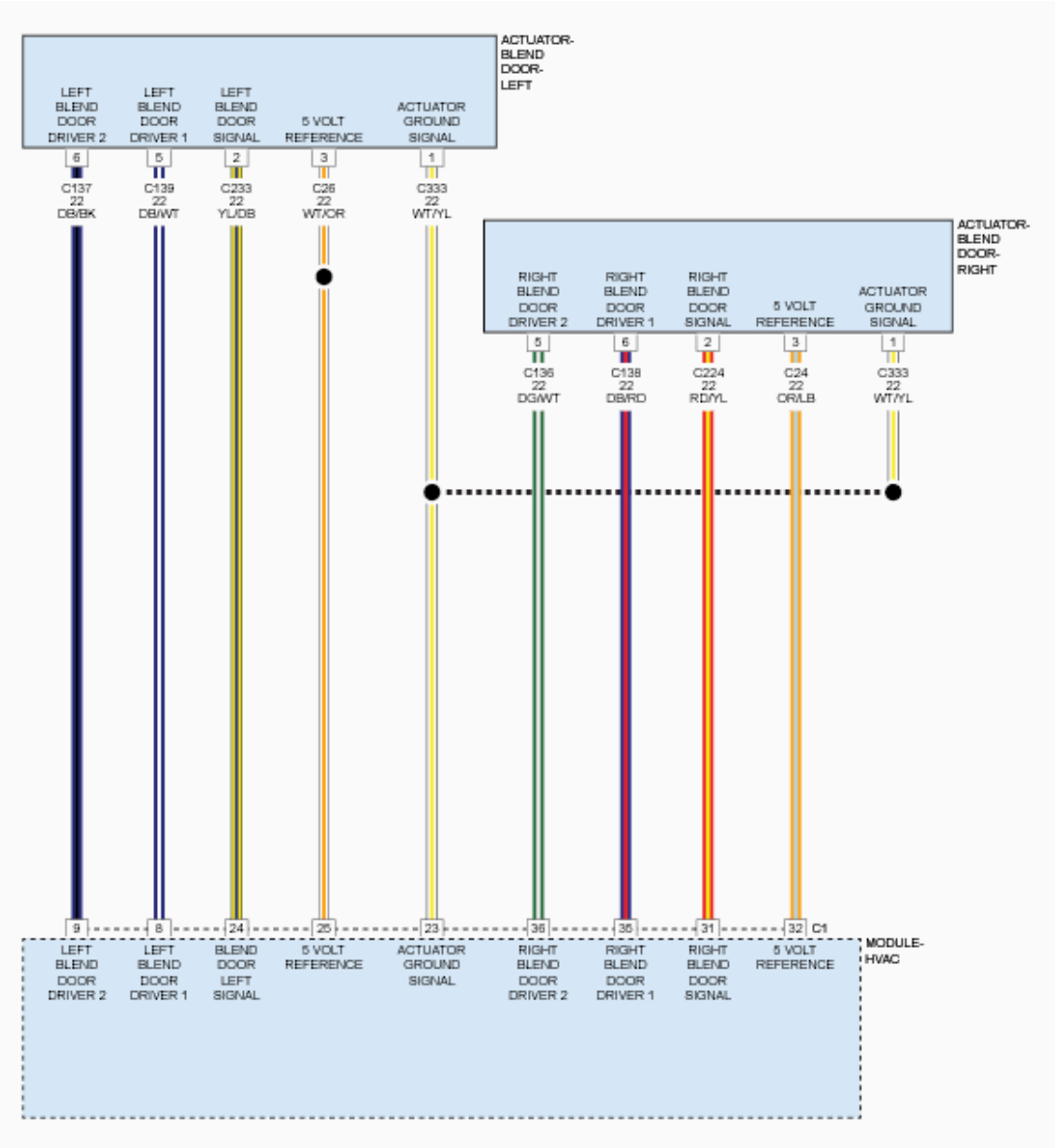

Fig. 30: Actuator Blend Door Wiring Diagram
Courtesy of CHRYSLER GROUP, LLC

THEORY OF OPERATION

After the initial installation of the A/C Heater Control, the controller is calibrated to each individual blend/mode door actuator. These calibrations are stored as in the number of pulses it takes to move the door from one stop to another. The A/C Heater Control drives the Door Actuators by the use of Door Driver circuit and a Common Door Driver circuit and monitors all door actuator pulses to detect door movement in both directions. Most of the door actuators share a common door driver circuit but each door actuator has its own unique driver circuit. Due to shared circuitry, similar Diagnostic Trouble Codes (DTCs) can set at the same time for multiple actuators depending upon the type of circuit malfunction, its location, and the direction the actuator is moving when the malfunction is present. For further information. Refer to **DESCRIPTION** .

WHEN MONITORED

Continuously with the ignition on.

SET CONDITION

If the A/C Heater Control detects a overheat condition of the Integrated Circuit (IC) that controls the Passenger Blend Door Driver circuit. If the A/C Heater Control detects a valid temperature the DTC will change from Active to Stored and will stay in the controllers memory for 100 ignition cycles.

POSSIBLE CAUSES

Possible Causes
A/C HEATER CONTROL

Always perform the HVAC Pre-Diagnostic Troubleshooting procedure before proceeding. Refer to STANDARD PROCEDURE.

DIAGNOSTIC TEST

1. **CHECK IF DTC IS ACTIVE**
    1. Ignition on, engine not running.
    2. Using the scan tool, read HVAC DTCs.

    Is this DTC active?

    Yes

    - Allow the A/C Heater Control to cool down for five minutes then Go To 2

    No

    - Go To 3
2. **PERFORM HVAC ACTUATOR CALIBRATION TEST**
    1. Using the scan tool, perform the HVAC Actuator Calibration Test.

    Did this DTC reset?

    Yes

    - Replace and program the A/C Heater Control in accordance with the Service Information. Refer to **MODULE, HVAC, REMOVAL** .
    - Perform the HVAC VERIFICATION TEST. Refer to **STANDARD PROCEDURE**.

    No

- Go To 3

3. **CHECK THE WIRING AND CONNECTORS**
   1. The conditions necessary to set the DTC are not present at this time.
   2. Using the scan tool, check the Environmental Data to help identify the conditions in which the DTC was set.
   3. Using the wiring diagrams as a guide, check all related splices and connectors for signs of water intrusion, corrosion, pushed out or bent terminals, and correct pin tension.
   4. Wiggle the wiring and connectors while checking for shorted and open circuits.

   Were there any problems found?

   Yes

   - Repair as necessary.
   - Perform the HVAC VERIFICATION TEST. Refer to **STANDARD PROCEDURE**.

   No

   - Test complete.

B11C9-00-RIGHT TEMPERATURE DOOR - TRAVEL TOO SMALL

For a complete wiring diagram, **refer to appropriate SYSTEM WIRING DIAGRAMS article** .

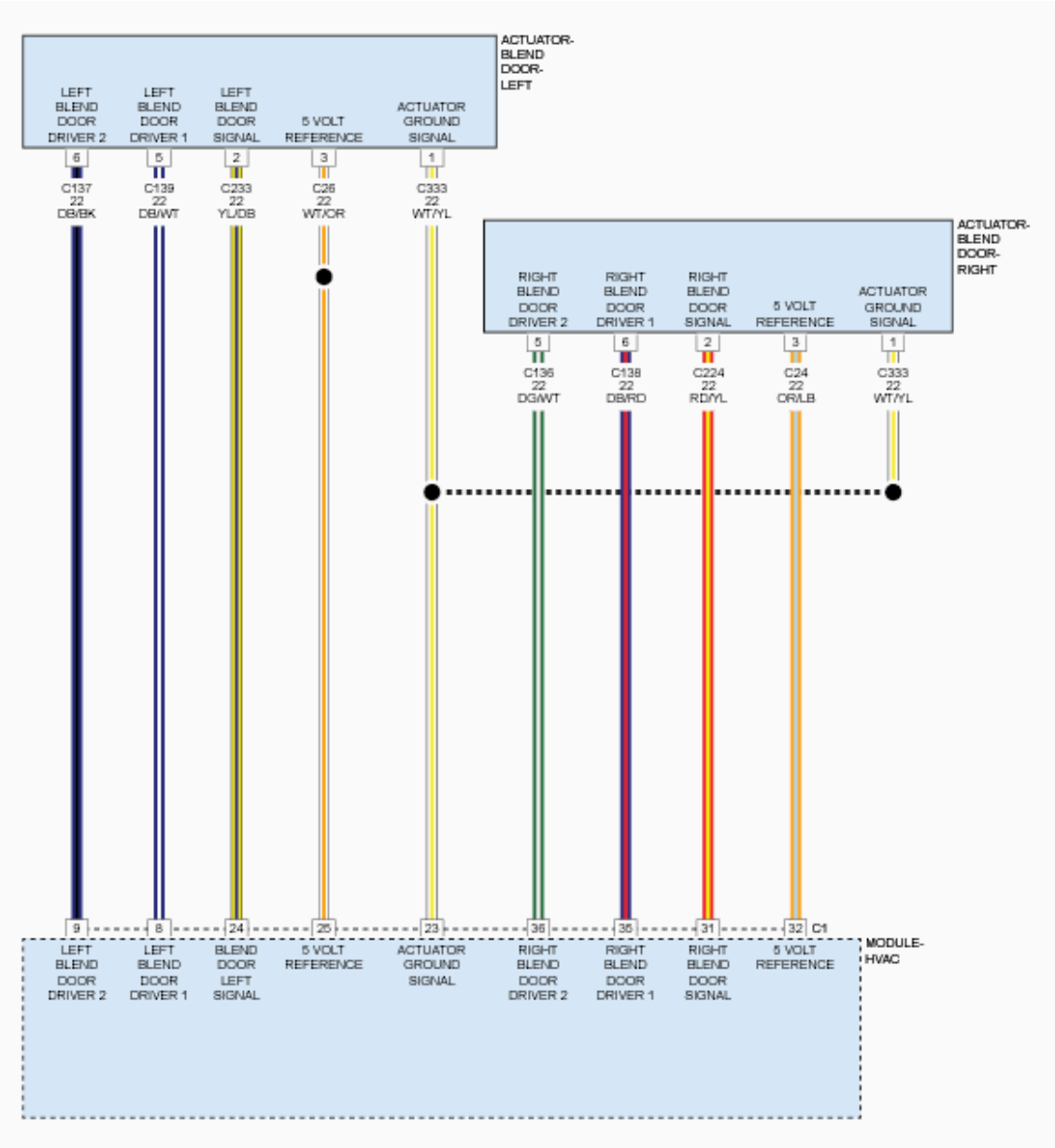

Fig. 31: Actuator Blend Door Wiring Diagram
Courtesy of CHRYSLER GROUP, LLC

THEORY OF OPERATION

After the initial installation of the A/C Heater Control, the controller is calibrated to each individual blend/mode door actuator. These calibrations are stored as in the number of pulses it takes to move the door from one stop to another. The A/C Heater Control drives the Door Actuators by the use of Door Driver circuit and a Common Door Driver circuit and monitors all door actuator pulses to detect door movement in both directions. Most of the door actuators share a common door driver circuit but each door actuator has its own unique driver circuit. Due to shared circuitry, similar Diagnostic Trouble Codes (DTCs) can set at the same time for multiple actuators depending upon the type of circuit malfunction, its location, and the direction the actuator is moving when the malfunction is present. For further information. Refer to **DESCRIPTION** .

WHEN MONITORED

When ever an Actuator Calibration Test is performed.

SET CONDITION

The A/C Heater Control uses a pulse feedback to the controller to detect the total door movement range. If the amount of pulses required to move the door completely in both directions is less than what the controller has stored in its memory, this DTC will set. If an Actuator Calibration Test is performed and the A/C Heater Control detects a valid range of the door movement span in both directions, the DTC will change from Active to Stored and will stay in the controllers memory for 100 ignition cycles.

POSSIBLE CAUSES

Possible Causes
RELATED DTCS PRESENT
PASSENGER BLEND DOOR BINDING
PASSENGER BLEND DOOR ACTUATOR
A/C HEATER CONTROL

Always perform the HVAC Pre-Diagnostic Troubleshooting procedure before proceeding. Refer to STANDARD PROCEDURE.

DIAGNOSTIC TEST

1. **CHECK FOR RELATED DTCS**
    1. Ignition on, engine not running.
    2. With the scan tool, read HVAC DTCs.

    Are there any Door Control Circuit Open, Performance, or Short to Ground, Voltage, or Together DTCs present?

    Yes

    - Refer to **DIAGNOSIS AND TESTING** and perform the appropriate diagnostic procedure.

    No

    - Go To 2
2. **CHECK IF DTC IS ACTIVE**
    1. Ignition on, engine not running.
    2. With the scan tool, read HVAC DTCs.

    Is this DTC active?

Yes

- Go To 4

No

- Go To 3

3. **PERFORM HVAC ACTUATOR CALIBRATION TEST**
   1. With the scan tool, perform the HVAC Actuator Calibration Test.

      Did this DTC change from Stored to Active while performing the HVAC Actuator Calibration Test?

      Yes

      - Go To 4

      No

      - Go To 6
4. **CHECK THE PASSENGER BLEND DOOR**
   1. Remove the Passenger Blend Door Actuator and check the Passenger Blend Door for binding and full travel. Refer to **ACTUATOR, BLEND DOOR, REMOVAL** .

      Were there any problems found?

      Yes

      - Repair or replace the Passenger Blend Door as necessary in accordance with the Service Information. Refer to **HOUSING, HVAC, REMOVAL** .
      - Perform the HVAC VERIFICATION TEST. Refer to **STANDARD PROCEDURE**.

      No

      - Go To 5
5. **CHECK THE PASSENGER BLEND DOOR ACTUATOR**
   1. Replace the Passenger Blend Door Actuator in accordance with the Service Information. Refer to **ACTUATOR, BLEND DOOR, REMOVAL** .
   2. With the scan tool, erase HVAC DTCs.
   3. With the scan tool, perform the HVAC Actuator Calibration Test.

      Did this DTC reset during HVAC Actuator Calibration Test?

      Yes

- Replace and program the A/C Heater Control in accordance with the Service Information. Refer to **MODULE, HVAC, REMOVAL** .
- Perform the HVAC VERIFICATION TEST. Refer to **STANDARD PROCEDURE**.

No

- Test complete.
- Perform the HVAC VERIFICATION TEST. Refer to **STANDARD PROCEDURE**.

6. **CHECK THE WIRING AND CONNECTORS**
   1. The conditions necessary to set the DTC are not present at this time.
   2. With the scan tool, check the Environmental Data to help identify the conditions in which the DTC was set.
   3. Using the wiring diagrams as a guide, check all related splices and connectors for signs of water intrusion, corrosion, pushed out or bent terminals, and correct pin tension.
   4. Wiggle the wiring and connectors while checking for shorted and open circuits.

   Were there any problems found?

   Yes

   - Repair as necessary.
   - Perform the HVAC VERIFICATION TEST. Refer to **STANDARD PROCEDURE**.

   No

   - Test complete.

B11CA-00-RIGHT TEMPERATURE DOOR - TRAVEL TOO LARGE

For a complete wiring diagram, **refer to appropriate SYSTEM WIRING DIAGRAMS article** .

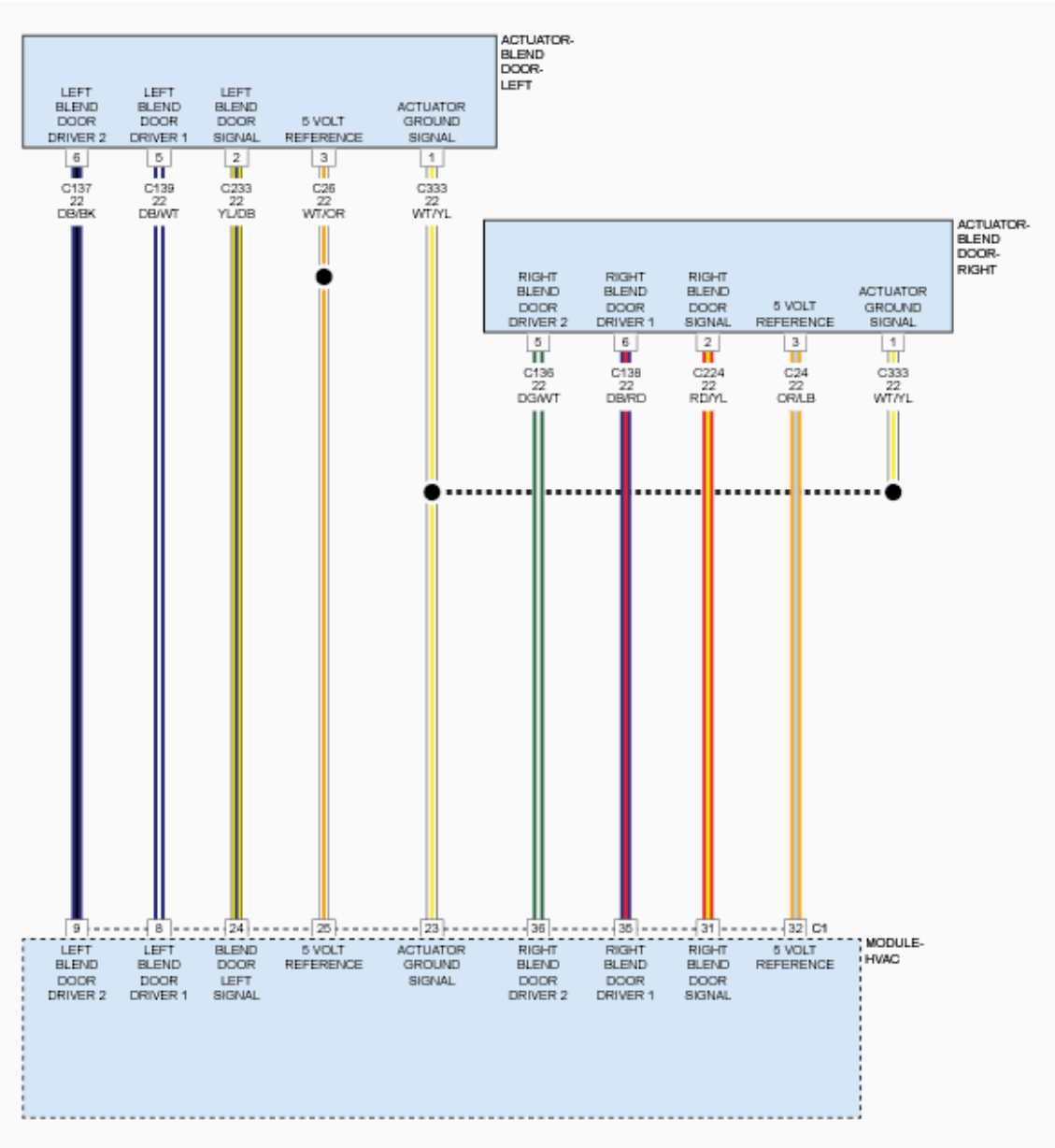

Fig. 32: Actuator Blend Door Wiring Diagram
Courtesy of CHRYSLER GROUP, LLC

THEORY OF OPERATION

After the initial installation of the A/C Heater Control, the controller is calibrated to each individual blend/mode door actuator. These calibrations are stored as in the number of pulses it takes to move the door from one stop to another. The A/C Heater Control drives the Door Actuators by the use of Door Driver circuit and a Common Door Driver circuit and monitors all door actuator pulses to detect door movement in both directions. Most of the door actuators share a common door driver circuit but each door actuator has its own unique driver circuit. Due to shared circuitry, similar Diagnostic Trouble Codes (DTCs) can set at the same time for multiple actuators depending upon the type of circuit malfunction, its location, and the direction the actuator is moving when the malfunction is present. For further information. Refer to **DESCRIPTION** .

WHEN MONITORED

When ever an Actuator Calibration Test is performed.

SET CONDITION

The A/C Heater Control uses a pulse feedback to the controller to detect the total door movement range. If the amount of pulses required to move the door completely in both directions is greater than what the controller has stored in its memory, this DTC will set. If an Actuator Calibration Test is performed or during normal operation and the A/C Heater Control detects a valid range of the door movement span in both directions, the DTC will change from Active to Stored and will stay in the controllers memory for 100 ignition cycles.

POSSIBLE CAUSES

Possible Causes
RELATED DTCS PRESENT
PASSENGER BLEND DOOR STOPS
PASSENGER BLEND DOOR
PASSENGER BLEND DOOR ACTUATOR
A/C HEATER CONTROL

Always perform the HVAC Pre-Diagnostic Troubleshooting procedure before proceeding. Refer to STANDARD PROCEDURE.

DIAGNOSTIC TEST

1. **CHECK FOR RELATED DTCS**
    1. Ignition on, engine not running.
    2. With the scan tool, read HVAC DTCs.

    Are there any Door Control Circuit Open, Performance, or Short to Ground, Voltage, or Together DTCs present?

    Yes

    - Refer to **DIAGNOSIS AND TESTING** and perform the appropriate diagnostic procedure.

    No

    - Go To 2
2. **CHECK IF DTC IS ACTIVE**
    1. Ignition on, engine not running.
    2. With the scan tool, read HVAC DTCs.

    Is this DTC active?

Yes

- Go To 4

No

- Go To 3

3. **PERFORM HVAC ACTUATOR CALIBRATION TEST**
   1. With the scan tool, perform the HVAC Actuator Calibration Test.

      Did this DTC change from Stored to Active while performing the HVAC System Test?

      Yes

      - Go To 4

      No

      - Go To 6

4. **CHECK THE PASSENGER BLEND DOOR**
   1. Remove the Passenger Blend Door Actuator and check the Passenger Blend Door stops, linkage (stripped or cracked) and door. Refer to **ACTUATOR, BLEND DOOR, REMOVAL** .

      Were there any problems found?

      Yes

      - Repair or replace the Passenger Blend Door as necessary in accordance with the Service Information. Refer to **HOUSING, HVAC, REMOVAL** .
      - Perform the HVAC VERIFICATION TEST. Refer to **STANDARD PROCEDURE**.

      No

      - Go To 5

5. **CHECK THE PASSENGER BLEND DOOR ACTUATOR**
   1. Replace the Passenger Blend Door Actuator in accordance with the Service Information. Refer to **ACTUATOR, BLEND DOOR, REMOVAL** .
   2. With the scan tool, erase HVAC DTCs and perform the HVAC Actuator Calibration Test.

      Did this DTC reset?

      Yes

      - Replace and program the A/C Heater Control in accordance with the Service Information.

Refer to **MODULE, HVAC, REMOVAL** .

- Perform the HVAC VERIFICATION TEST. Refer to **STANDARD PROCEDURE**.

No

- Test complete.
- Perform the HVAC VERIFICATION TEST. Refer to **STANDARD PROCEDURE**.

6. **CHECK THE WIRING AND CONNECTORS**
   1. The conditions necessary to set the DTC are not present at this time.
   2. With the scan tool, check the Environmental Data to help identify the conditions in which the DTC was set.
   3. Using the wiring diagrams as a guide, check all related splices and connectors for signs of water intrusion, corrosion, pushed out or bent terminals, and correct pin tension.
   4. Wiggle the wiring and connectors while checking for shorted and open circuits.

   Were there any problems found?

   Yes

   - Repair as necessary.
   - Perform the HVAC VERIFICATION TEST. Refer to **STANDARD PROCEDURE**.

   No

   - Test complete.

B11CB-11-MAIN/LEFT TEMPERATURE DOOR CONTROL - CIRCUIT SHORT TO GROUND

For a complete wiring diagram, **refer to appropriate SYSTEM WIRING DIAGRAMS article** .

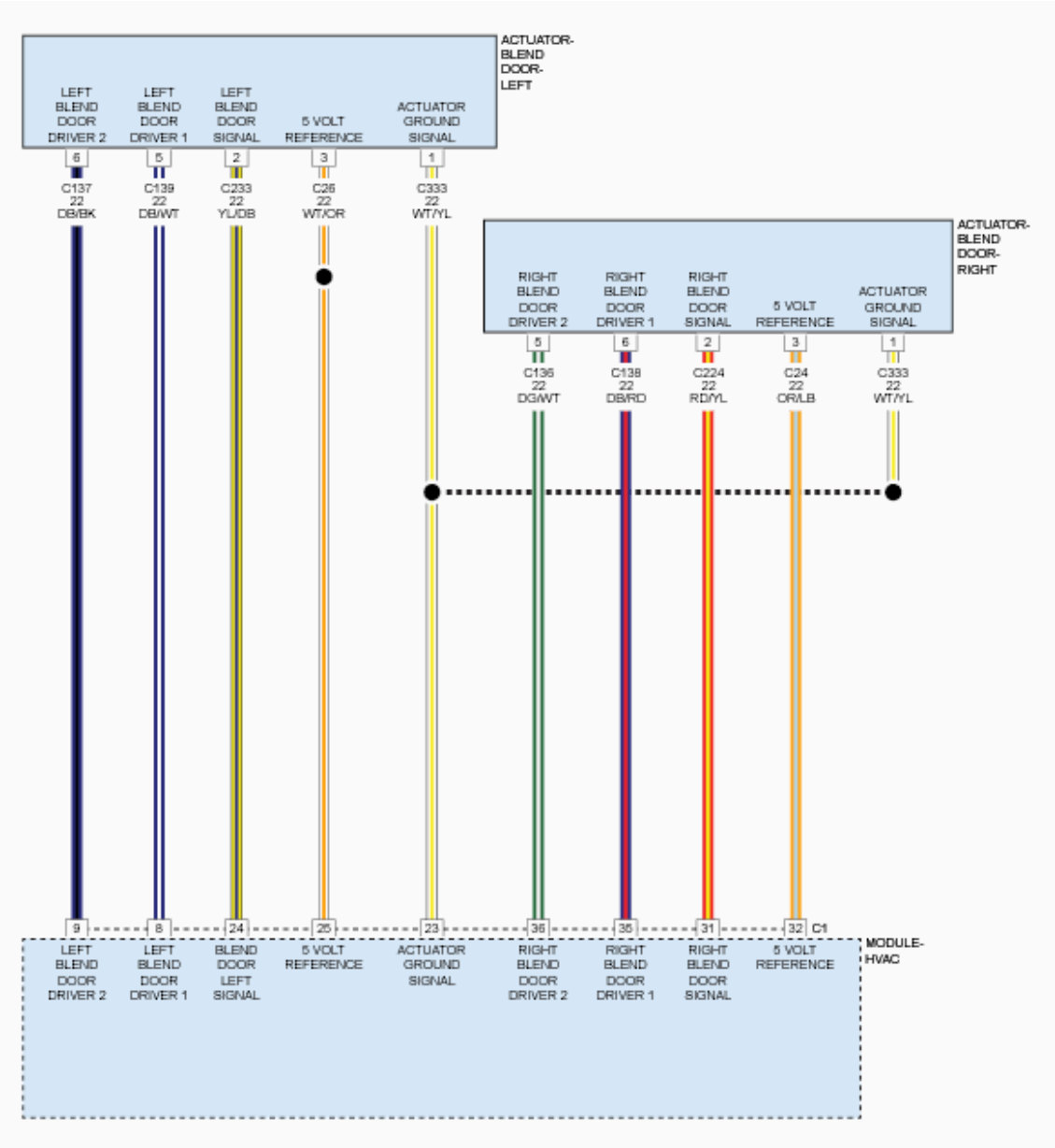

Fig. 33: Actuator Blend Door Wiring Diagram
Courtesy of CHRYSLER GROUP, LLC

THEORY OF OPERATION

After the initial installation of the A/C Heater Control, the controller is calibrated to each individual blend/mode door actuator. These calibrations are stored as in the number of pulses it takes to move the door from one stop to another. The A/C Heater Control drives the Door Actuators by the use of Door Driver circuit and a Common Door Driver circuit and monitors all door actuator pulses to detect door movement in both directions. Most of the door actuators share a common door driver circuit but each door actuator has its own unique driver circuit. Due to shared circuitry, similar Diagnostic Trouble Codes (DTCs) can set at the same time for multiple actuators depending upon the type of circuit malfunction, its location, and the direction the actuator is moving when the malfunction is present. For further information. Refer to **DESCRIPTION** .

WHEN MONITORED

Continuously with the ignition on.

SET CONDITION

The A/C Heater Control detects a short to ground on the Left Blend Door control circuit. If the A/C Heater Control detects valid current draw, the DTC will change from Active to Stored and will stay in the controllers memory for 100 ignition cycles.

POSSIBLE CAUSES

Possible Causes
LEFT BLEND DOOR DRIVER CIRCUIT SHORTED TO GROUND
5 VOLT REFERENCE CIRCUIT SHORTED TO GROUND
LEFT BLEND DOOR ACTUATOR
A/C HEATER CONTROL

Always perform the HVAC Pre-Diagnostic Troubleshooting procedure before proceeding. Refer to STANDARD PROCEDURE.

DIAGNOSTIC TEST

1. **CHECK IF DTC IS ACTIVE**
    1. Ignition on, engine not running.
    2. Using the scan tool, read HVAC DTCs.

    Is this DTC active?

    Yes

    - Go To 3

    No

    - Go To 2
2. **PERFORM HVAC ACTUATOR CALIBRATION TEST**
    1. Using the scan tool, perform the HVAC Actuator Calibration Test.

    Did this DTC change from Stored to Active while performing the HVAC Actuator Calibration Test?

    Yes

    - Go To 3

No

- Go To 6

3. **CHECK THE DRIVER BLEND DOOR SIGNAL CIRCUIT (C233) FOR A SHORT TO GROUND**
   1. Turn the ignition off to the lock position.
   2. Disconnect the A/C Heater Module C1 harness connector.
   3. Disconnect the Driver Blend Door Actuator harness connector.
   4. Measure the resistance between ground and the Driver Blend Door Signal circuit (C233).

   Is the resistance below 100k Ohms?

   Yes

   - Repair the Driver Blend Door Signal circuit (C233) for a short to ground.
   - Perform the HVAC VERIFICATION TEST. Refer to **STANDARD PROCEDURE**.

   No

   - Go To 5

4. **CHECK THE BLEND DOOR DRIVER CIRCUIT (C137, C139) FOR A SHORT TO GROUND**
   1. Measure the resistance between ground and the Blend Door Driver circuit (C137, C139).

   Is the resistance below 100k Ohms?

   Yes

   - Repair the Blend Door Driver circuit (C137, C139) for a short to ground.
   - Perform the HVAC VERIFICATION TEST. Refer to **STANDARD PROCEDURE**.

   No

   - Go To 5

5. **CHECK THE LEFT BLEND DOOR ACTUATOR**
   1. Replace the Left Blend Door Actuator in accordance with the Service Information. Refer to **ACTUATOR, MODE DOOR, REMOVAL** .
   2. Using the scan tool, erase HVAC DTCs and perform the HVAC Actuator Calibration Test.

   Did this DTC reset?

   Yes

   - Replace and program the A/C Heater Control in accordance with the Service Information. Refer to **MODULE, HVAC, REMOVAL** .

- Perform the HVAC VERIFICATION TEST. Refer to **STANDARD PROCEDURE**.

No

- Test complete.
- Perform the HVAC VERIFICATION TEST. Refer to **STANDARD PROCEDURE**.

6. **CHECK THE WIRING AND CONNECTORS**
   1. The conditions necessary to set the DTC are not present at this time.
   2. Using the scan tool, check the Environmental Data to help identify the conditions in which the DTC was set.
   3. Using the wiring diagrams as a guide, check all related splices and connectors for signs of water intrusion, corrosion, pushed out or bent terminals, and correct pin tension.
   4. Wiggle the wiring and connectors while checking for shorted and open circuits.

   Were there any problems found?

   Yes

   - Repair as necessary.
   - Perform the HVAC VERIFICATION TEST. Refer to **STANDARD PROCEDURE**.

   No

   - Test complete.

B11CB-12-MAIN/LEFT TEMPERATURE DOOR 1 CONTROL - CIRCUIT SHORT TO BATTERY

For a complete wiring diagram, **refer to appropriate SYSTEM WIRING DIAGRAMS article** .

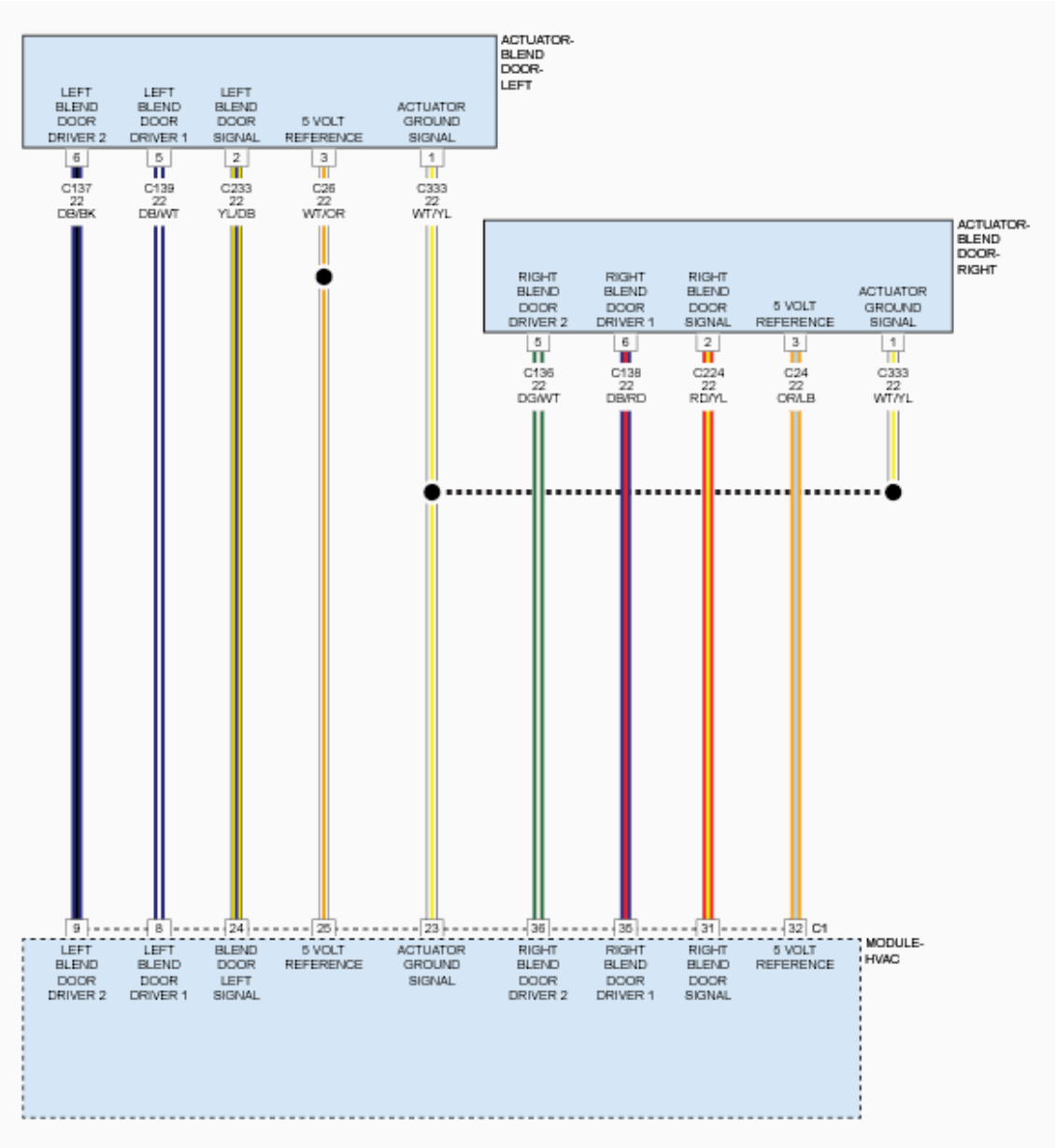

Fig. 34: Actuator Blend Door Wiring Diagram
Courtesy of CHRYSLER GROUP, LLC

THEORY OF OPERATION

After the initial installation of the A/C Heater Control, the controller is calibrated to each individual blend/mode door actuator. These calibrations are stored as in the number of pulses it takes to move the door from one stop to another. The A/C Heater Control drives the Door Actuators by the use of Door Driver circuit and a Common Door Driver circuit and monitors all door actuator pulses to detect door movement in both directions. Most of the door actuators share a common door driver circuit but each door actuator has its own unique driver circuit. Due to shared circuitry, similar Diagnostic Trouble Codes (DTCs) can set at the same time for multiple actuators depending upon the type of circuit malfunction, its location, and the direction the actuator is moving when the malfunction is present. For further information. Refer to **DESCRIPTION** .

WHEN MONITORED

Continuously with the ignition on.

SET CONDITION

The A/C Heater Control detects a short voltage on the Driver Blend Door control circuit. If the A/C Heater Control detects a valid voltage, the DTC will change from Active to Stored and will stay in the controllers memory for 100 ignition cycles.

POSSIBLE CAUSES

Possible Causes
LEFT BLEND DOOR DRIVER CIRCUIT SHORTED TO VOLTAGE
5 VOLT REFERENCE CIRCUIT SHORTED TO VOLTAGE
LEFT BLEND DOOR ACTUATOR
A/C HEATER CONTROL

Always perform the HVAC Pre-Diagnostic Troubleshooting procedure before proceeding. Refer to STANDARD PROCEDURE.

DIAGNOSTIC TEST

1. **CHECK IF DTC IS ACTIVE**
    1. Ignition on, engine not running.
    2. Using the scan tool, read HVAC DTCs.

    Is this DTC active?

    Yes

    - Go To 3

    No

    - Go To 2
2. **PERFORM HVAC ACTUATOR CALIBRATION TEST**
    1. Using the scan tool, perform the HVAC Actuator Calibration Test.

    Did this DTC change from Stored to Active while performing the HVAC Actuator Calibration Test?

    Yes

    - Go To 3

No

- Go To 6

3. **CHECK THE DRIVER BLEND DOOR SIGNAL CIRCUIT (C233) FOR A SHORT TO VOLTAGE**
   1. Turn the ignition off to the lock position.
   2. Disconnect the A/C Heater Module C1 harness connector.
   3. Disconnect the Driver Blend Door Actuator harness connector.
   4. Ignition on, engine not running.
   5. Measure the voltage of the Driver Blend Door Signal circuit (C233).

   Is there any voltage present?

   Yes

   - Repair the Driver Blend Door Signal circuit (C233) for a short to voltage.
   - Perform the HVAC VERIFICATION TEST. Refer to **STANDARD PROCEDURE**.

   No

   - Go To 4

4. **CHECK THE BLEND DOOR DRIVER CIRCUIT (C137, C139) FOR A SHORT TO VOLTAGE**
   1. Measure the voltage of the Blend Door Driver circuit (C137, C139).

   Is there any voltage present?

   Yes

   - Repair the Blend Door Driver circuit (C137, C139) for a short to voltage.
   - Perform the HVAC VERIFICATION TEST. Refer to **STANDARD PROCEDURE**.

   No

   - Go To 5

5. **CHECK THE LEFT BLEND DOOR ACTUATOR**
   1. Replace the Left Blend Door Actuator in accordance with the Service Information. Refer to **ACTUATOR, MODE DOOR, REMOVAL** .
   2. With the scan tool, erase HVAC DTCs and perform the HVAC Actuator Calibration Test.

   Did this DTC reset?

   Yes

- Replace and program the A/C Heater Control in accordance with the Service Information. Refer to **MODULE, HVAC, REMOVAL** .
- Perform the HVAC VERIFICATION TEST. Refer to **STANDARD PROCEDURE**.

No

- Test complete.
- Perform the HVAC VERIFICATION TEST. Refer to **STANDARD PROCEDURE**.

6. **CHECK THE WIRING AND CONNECTORS**
   1. The conditions necessary to set the DTC are not present at this time.
   2. With the scan tool, check the Environmental Data to help identify the conditions in which the DTC was set.
   3. Using the wiring diagrams as a guide, check all related splices and connectors for signs of water intrusion, corrosion, pushed out or bent terminals, and correct pin tension.
   4. Wiggle the wiring and connectors while checking for shorted and open circuits.

   Were there any problems found?

   Yes

   - Repair as necessary.
   - Perform the HVAC VERIFICATION TEST. Refer to **STANDARD PROCEDURE**.

   No

   - Test complete.

B11CB-13-MAIN/LEFT TEMPERATURE DOOR 1 CONTROL - CIRCUIT OPEN

For a complete wiring diagram, **refer to appropriate SYSTEM WIRING DIAGRAMS article** .

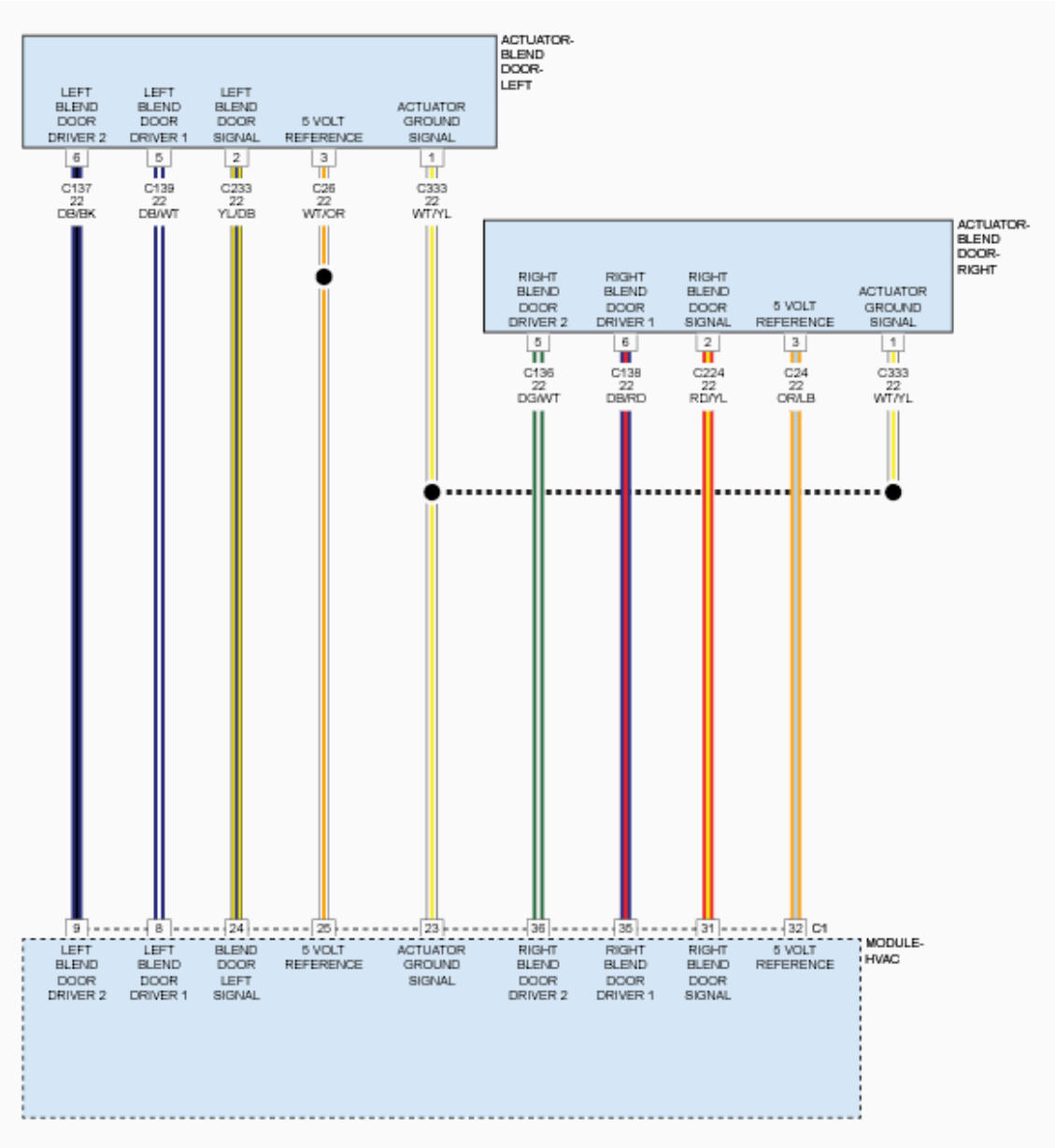

Fig. 35: Actuator Blend Door Wiring Diagram
Courtesy of CHRYSLER GROUP, LLC

THEORY OF OPERATION

After the initial installation of the A/C Heater Control, the controller is calibrated to each individual blend/mode door actuator. These calibrations are stored as in the number of pulses it takes to move the door from one stop to another. The A/C Heater Control drives the Door Actuators by the use of Door Driver circuit and a Common Door Driver circuit and monitors all door actuator pulses to detect door movement in both directions. Most of the door actuators share a common door driver circuit but each door actuator has its own unique driver circuit. Due to shared circuitry, similar Diagnostic Trouble Codes (DTCs) can set at the same time for multiple actuators depending upon the type of circuit malfunction, its location, and the direction the actuator is moving when the malfunction is present. For further information. Refer to **DESCRIPTION** .

WHEN MONITORED

Continuously with the ignition on.

SET CONDITION

The A/C Heater Control detects an open in the Driver Blend Door control circuit. If the A/C Heater Control detects a valid current draw, the DTC will change from Active to Stored and will stay in the controllers memory for 100 ignition cycles.

POSSIBLE CAUSES

Possible Causes
LEFT BLEND DOOR DRIVER CIRCUIT OPEN
5 VOLT REFERENCE CIRCUIT OPEN
LEFT BLEND DOOR ACTUATOR
A/C HEATER CONTROL

Always perform the HVAC Pre-Diagnostic Troubleshooting procedure before proceeding. Refer to STANDARD PROCEDURE.

DIAGNOSTIC TEST

1. **CHECK IF DTC IS ACTIVE**
    1. Ignition on, engine not running.
    2. Using the scan tool, read HVAC DTCs.

       Is this DTC active?

       Yes

       - Go To 3

       No

       - Go To 2
2. **PERFORM HVAC ACTUATOR CALIBRATION TEST**
    1. Using the scan tool, perform the HVAC Actuator Calibration Test.

       Did this DTC change from Stored to Active while performing the HVAC Actuator Calibration Test?

       Yes

       - Go To 3

No

- Go To 6

3. **CHECK THE DRIVER BLEND DOOR SIGNAL CIRCUIT (C233) FOR AN OPEN**
   1. Turn the ignition off to the lock position.
   2. Disconnect the A/C Heater Module C1 harness connector.
   3. Disconnect the Driver Blend Door Actuator harness connector.
   4. Measure the resistance of the Driver Blend Door Signal circuit (C233) between the A/C Heater Module C1 harness connector and the Driver Blend Door Actuator harness connector.

   Is the resistance above 1.0 Ohm?

   Yes

   - Repair the Driver Blend Door Signal circuit (C233) for an open or high resistance.
   - Perform the HVAC VERIFICATION TEST. Refer to **STANDARD PROCEDURE**.

   No

   - Go To 4

4. **CHECK THE BLEND DOOR DRIVER CIRCUIT (C137, C139) FOR AN OPEN**
   1. Measure the resistance of the Blend Door Driver circuit (C137, C139) between the A/C Heater Module C1 harness connector and the Driver Blend Door Actuator harness connector.

   Is the resistance above 1.0 Ohm?

   Yes

   - Repair the Blend Door Driver circuit (C137, C139) for an open or high resistance.
   - Perform the HVAC VERIFICATION TEST. Refer to **STANDARD PROCEDURE**.

   No

   - Go To 5

5. **CHECK THE LEFT BLEND DOOR ACTUATOR**
   1. Replace the Left Blend Door Actuator in accordance with the Service Information. Refer to **ACTUATOR, MODE DOOR, REMOVAL** .
   2. Using the scan tool, erase HVAC DTCs and perform the HVAC Actuator Calibration Test.

   Did this DTC reset?

   Yes

- Replace and program the A/C Heater Control in accordance with the Service Information. Refer to **MODULE, HVAC, REMOVAL** .
- Perform the HVAC VERIFICATION TEST. Refer to **STANDARD PROCEDURE**.

No

- Test complete.
- Perform the HVAC VERIFICATION TEST. Refer to **STANDARD PROCEDURE**.

6. **CHECK THE WIRING AND CONNECTORS**
   1. The conditions necessary to set the DTC are not present at this time.
   2. Using the scan tool, check the Environmental Data to help identify the conditions in which the DTC was set.
   3. Using the wiring diagrams as a guide, check all related splices and connectors for signs of water intrusion, corrosion, pushed out or bent terminals, and correct pin tension.
   4. Wiggle the wiring and connectors while checking for shorted and open circuits.

   Were there any problems found?

   Yes

   - Repair as necessary.
   - Perform the HVAC VERIFICATION TEST. Refer to **STANDARD PROCEDURE**.

   No

   - Test complete.

B11CB-92-MAIN/LEFT TEMPERATURE DOOR1 CONTROL - PERFORMANCE OR INCORRECT OPERATION

For a complete wiring diagram, **refer to appropriate SYSTEM WIRING DIAGRAMS article** .

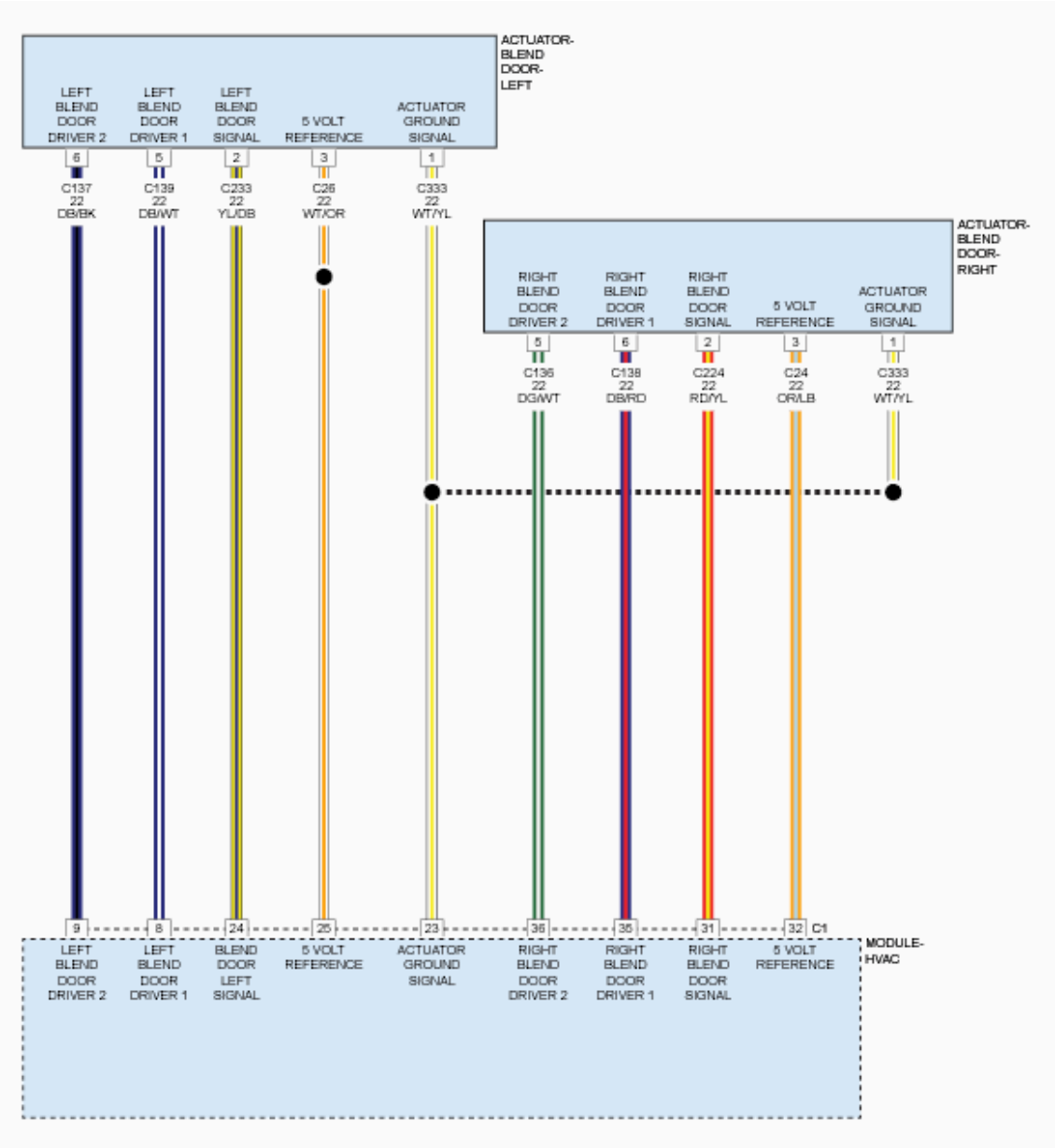

Fig. 36: Actuator Blend Door Wiring Diagram
Courtesy of CHRYSLER GROUP, LLC

THEORY OF OPERATION

After the initial installation of the A/C Heater Control, the controller is calibrated to each individual blend/mode door actuator. These calibrations are stored as in the number of pulses it takes to move the door from one stop to another. The A/C Heater Control drives the Door Actuators by the use of Door Driver circuit and a Common Door Driver circuit and monitors all door actuator pulses to detect door movement in both directions. Most of the door actuators share a common door driver circuit but each door actuator has its own unique driver circuit. Due to shared circuitry, similar Diagnostic Trouble Codes (DTCs) can set at the same time for multiple actuators depending upon the type of circuit malfunction, its location, and the direction the actuator is moving when the malfunction is present. For further information. Refer to **DESCRIPTION** .

WHEN MONITORED

Continuously with the ignition on.

SET CONDITION

If the A/C Heater Control detects a overheat condition of the Integrated Circuit (IC) that controls the Left Blend Door Driver circuit. If the A/C Heater Control detects a valid temperature the DTC will change from Active to Stored and will stay in the controllers memory for 100 ignition cycles.

POSSIBLE CAUSES

Possible Causes
A/C HEATER CONTROL

Always perform the HVAC Pre-Diagnostic Troubleshooting procedure before proceeding. Refer to STANDARD PROCEDURE.

DIAGNOSTIC TEST

1. **CHECK IF DTC IS ACTIVE**
    1. Ignition on, engine not running.
    2. Using the scan tool, read HVAC DTCs.

    Is this DTC active?

    Yes

    - Allow the A/C Heater Control to cool down for five minutes then Go To 2

    No

    - Go To 3
2. **PERFORM HVAC ACTUATOR CALIBRATION TEST**
    1. Using the scan tool, perform the HVAC Actuator Calibration Test.

    Did this DTC reset?

    Yes

    - Replace and program the A/C Heater Control in accordance with the Service Information. Refer to **MODULE, HVAC, REMOVAL** .
    - Perform the HVAC VERIFICATION TEST. Refer to **STANDARD PROCEDURE**.

    No

- Go To 3

3. **CHECK THE WIRING AND CONNECTORS**
   1. The conditions necessary to set the DTC are not present at this time.
   2. Using the scan tool, check the Environmental Data to help identify the conditions in which the DTC was set.
   3. Using the wiring diagrams as a guide, check all related splices and connectors for signs of water intrusion, corrosion, pushed out or bent terminals, and correct pin tension.
   4. Wiggle the wiring and connectors while checking for shorted and open circuits.

   Were there any problems found?

   Yes

   - Repair as necessary.
   - Perform the HVAC VERIFICATION TEST. Refer to **STANDARD PROCEDURE**.

   No

   - Test complete.

B11CC-00-MAIN/LEFT TEMPERATURE DOOR 1 - TRAVEL TOO SMALL

For a complete wiring diagram, **refer to appropriate SYSTEM WIRING DIAGRAMS article** .

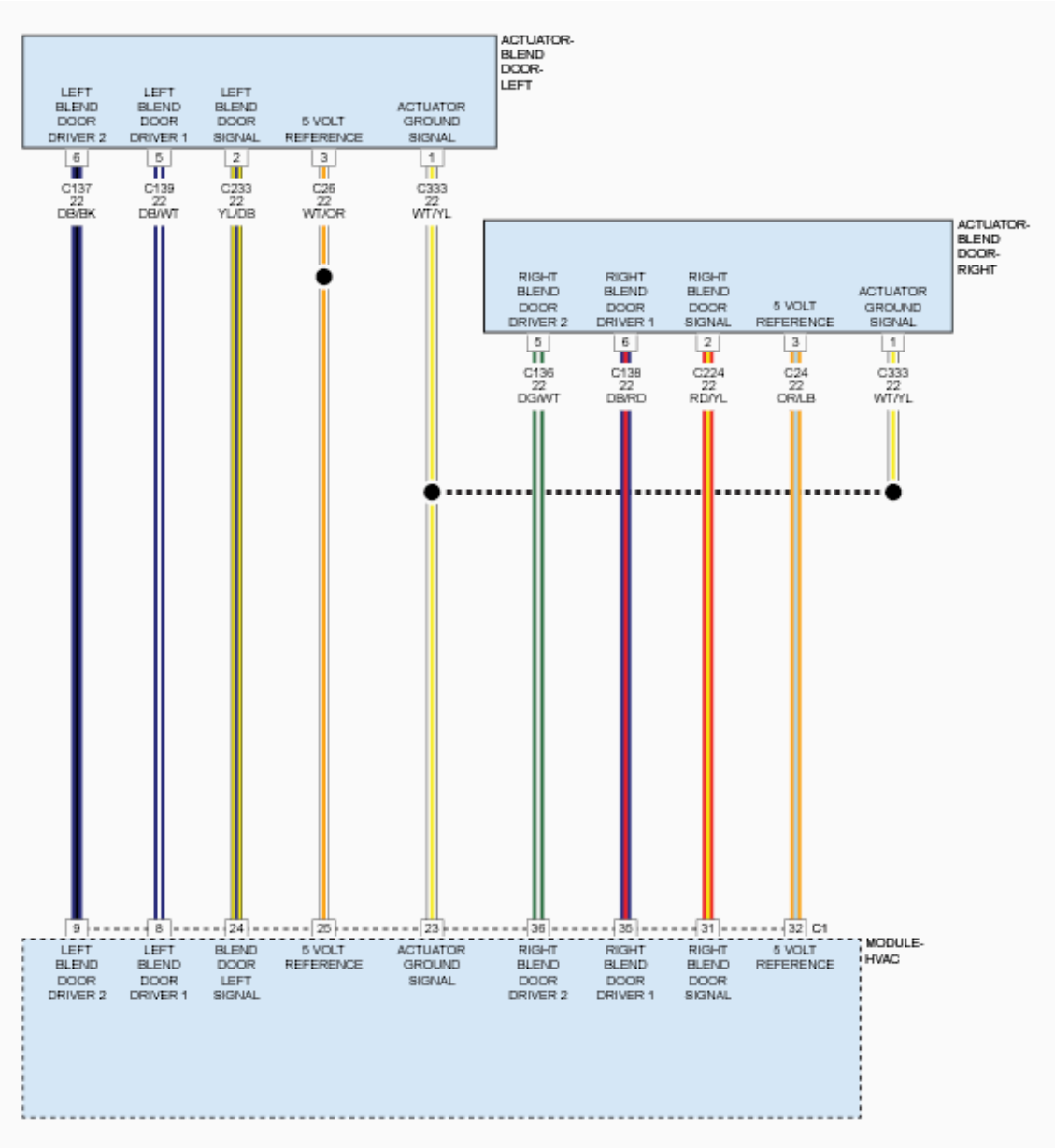

Fig. 37: Actuator Blend Door Wiring Diagram
Courtesy of CHRYSLER GROUP, LLC

THEORY OF OPERATION

After the initial installation of the A/C Heater Control, the controller is calibrated to each individual blend/mode door actuator. These calibrations are stored as in the number of pulses it takes to move the door from one stop to another. The A/C Heater Control drives the Door Actuators by the use of Door Driver circuit and a Common Door Driver circuit and monitors all door actuator pulses to detect door movement in both directions. Most of the door actuators share a common door driver circuit but each door actuator has its own unique driver circuit. Due to shared circuitry, similar Diagnostic Trouble Codes (DTCs) can set at the same time for multiple actuators depending upon the type of circuit malfunction, its location, and the direction the actuator is moving when the malfunction is present. For further information. Refer to **DESCRIPTION** .

WHEN MONITORED

When ever an Actuator Calibration Test is performed.

SET CONDITION

The A/C Heater Control uses a pulse feedback to the controller to detect the total door movement range. If the amount of pulses required to move the door completely in both directions is less than what the controller has stored in its memory, this DTC will set. If an Actuator Calibration Test is performed and the A/C Heater Control detects a valid range of the door movement span in both directions, the DTC will change from Active to Stored and will stay in the controllers memory for 100 ignition cycles.

POSSIBLE CAUSES

Possible Causes
RELATED DTCS PRESENT
LEFT BLEND DOOR BINDING
LEFT BLEND DOOR ACTUATOR
A/C HEATER CONTROL

Always perform the HVAC Pre-Diagnostic Troubleshooting procedure before proceeding. Refer to STANDARD PROCEDURE.

DIAGNOSTIC TEST

1. **CHECK FOR RELATED DTCS**
    1. Ignition on, engine not running.
    2. With the scan tool, read HVAC DTCs.

    Are there any Door Control Circuit Open, Performance, or Short to Ground, Voltage, or Together DTCs present?

    Yes

    - Refer to **DIAGNOSIS AND TESTING** and perform the appropriate diagnostic procedure.

    No

    - Go To 2
2. **CHECK IF DTC IS ACTIVE**
    1. Ignition on, engine not running.
    2. With the scan tool, read HVAC DTCs.

    Is this DTC active?

Yes

- Go To 4

No

- Go To 3

3. **PERFORM HVAC ACTUATOR CALIBRATION TEST**
   1. With the scan tool, perform the HVAC Actuator Calibration Test.

      Did this DTC change from Stored to Active while performing the HVAC Actuator Calibration Test?

      Yes

      - Go To 4

      No

      - Go To 6
4. **CHECK THE LEFT BLEND DOOR**
   1. Remove the Left Blend Door Actuator and check the Driver Blend Door for binding and full travel. Refer to **ACTUATOR, BLEND DOOR, REMOVAL** .

      Were there any problems found?

      Yes

      - Repair or replace the Left Blend Door as necessary in accordance with the Service Information. Refer to **HOUSING, HVAC, REMOVAL** .
      - Perform the HVAC VERIFICATION TEST. Refer to **STANDARD PROCEDURE**.

      No

      - Go To 5
5. **CHECK THE LEFT BLEND DOOR ACTUATOR**
   1. Replace the Left Blend Door Actuator in accordance with the Service Information. Refer to **ACTUATOR, BLEND DOOR, REMOVAL** .
   2. With the scan tool, erase HVAC DTCs.
   3. With the scan tool, perform the HVAC Actuator Calibration Test.

      Did this DTC reset during HVAC Actuator Calibration Test?

      Yes

- Replace and program the A/C Heater Control in accordance with the Service Information. Refer to **MODULE, HVAC, REMOVAL** .
- Perform the HVAC VERIFICATION TEST. Refer to **STANDARD PROCEDURE**.

No

- Test complete.
- Perform the HVAC VERIFICATION TEST. Refer to **STANDARD PROCEDURE**.

6. **CHECK THE WIRING AND CONNECTORS**
   1. The conditions necessary to set the DTC are not present at this time.
   2. With the scan tool, check the Environmental Data to help identify the conditions in which the DTC was set.
   3. Using the wiring diagrams as a guide, check all related splices and connectors for signs of water intrusion, corrosion, pushed out or bent terminals, and correct pin tension.
   4. Wiggle the wiring and connectors while checking for shorted and open circuits.

   Were there any problems found?

   Yes

   - Repair as necessary.
   - Perform the HVAC VERIFICATION TEST. Refer to **STANDARD PROCEDURE**.

   No

   - Test complete.

B11CD-00-MAIN/LEFT TEMPERATURE DOOR 1-TRAVEL TOO LARGE

For a complete wiring diagram, **refer to appropriate SYSTEM WIRING DIAGRAMS article** .

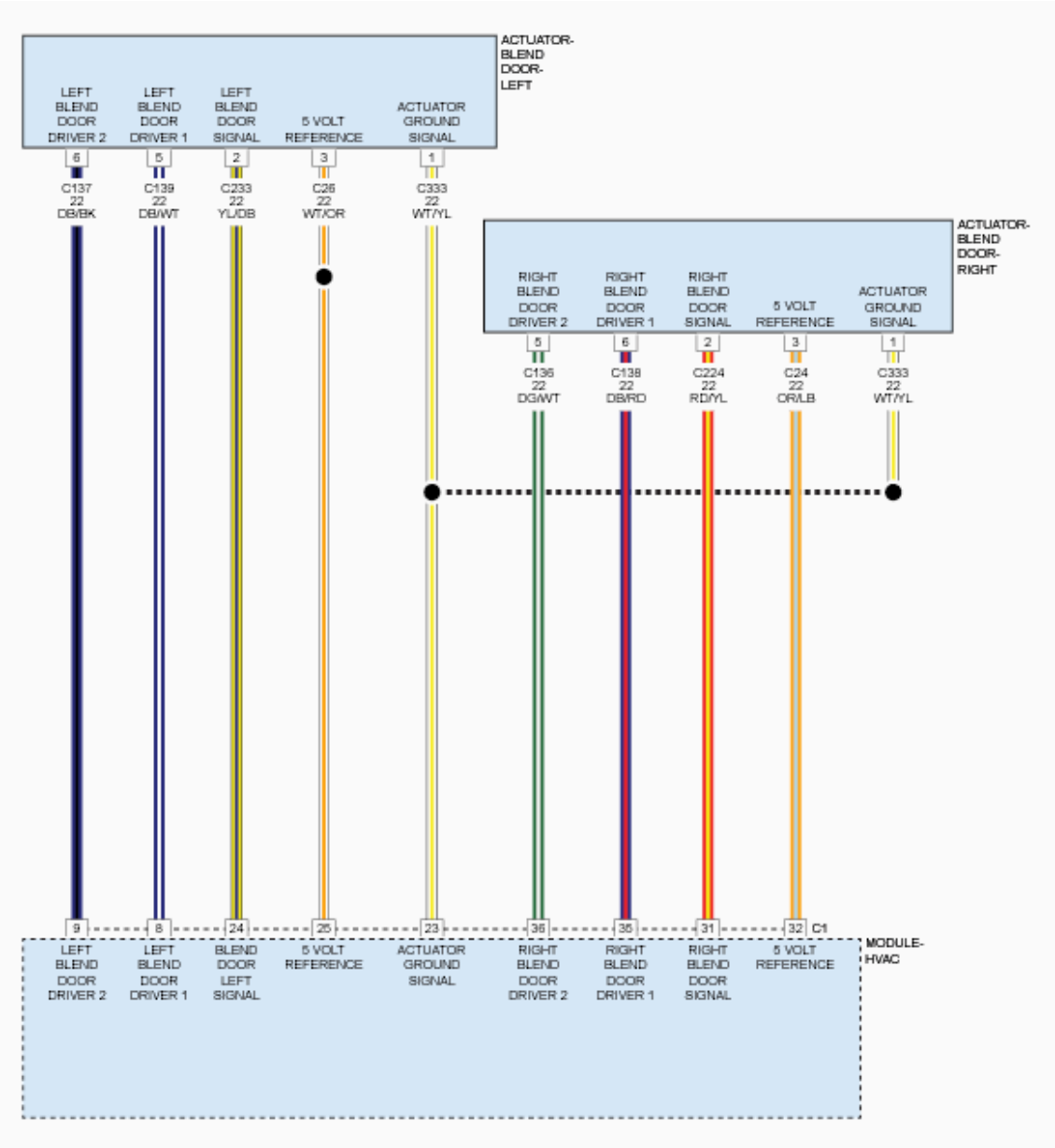

Fig. 38: Actuator Blend Door Wiring Diagram
Courtesy of CHRYSLER GROUP, LLC

THEORY OF OPERATION

After the initial installation of the A/C Heater Control, the controller is calibrated to each individual blend/mode door actuator. These calibrations are stored as in the number of pulses it takes to move the door from one stop to another. The A/C Heater Control drives the Door Actuators by the use of Door Driver circuit and a Common Door Driver circuit and monitors all door actuator pulses to detect door movement in both directions. Most of the door actuators share a common door driver circuit but each door actuator has its own unique driver circuit. Due to shared circuitry, similar Diagnostic Trouble Codes (DTCs) can set at the same time for multiple actuators depending upon the type of circuit malfunction, its location, and the direction the actuator is moving when the malfunction is present. For further information. Refer to **DESCRIPTION** .

WHEN MONITORED

When ever an Actuator Calibration Test is performed.

SET CONDITION

The A/C Heater Control uses a pulse feedback to the controller to detect the total door movement range. If the amount of pulses required to move the door completely in both directions is greater than what the controller has stored in its memory, this DTC will set. If an Actuator Calibration Test is performed or during normal operation and the A/C Heater Control detects a valid range of the door movement span in both directions, the DTC will change from Active to Stored and will stay in the controllers memory for 100 ignition cycles.

POSSIBLE CAUSES

Possible Causes
RELATED DTCS PRESENT
LEFT BLEND DOOR STOPS
LEFT BLEND DOOR
LEFT BLEND DOOR ACTUATOR
A/C HEATER CONTROL

Always perform the HVAC Pre-Diagnostic Troubleshooting procedure before proceeding. Refer to STANDARD PROCEDURE.

DIAGNOSTIC TEST

1. **CHECK FOR RELATED DTCS**
    1. Ignition on, engine not running.
    2. With the scan tool, read HVAC DTCs.

    Are there any Door Control Circuit Open, Performance, or Short to Ground, Voltage, or Together DTCs present?

    Yes

    - Refer to **DIAGNOSIS AND TESTING** and perform the appropriate diagnostic procedure.

    No

    - Go To 2
2. **CHECK IF DTC IS ACTIVE**
    1. Ignition on, engine not running.
    2. With the scan tool, read HVAC DTCs.

    Is this DTC active?

Yes

- Go To 4

No

- Go To 3

3. **PERFORM HVAC ACTUATOR CALIBRATION TEST**
   1. With the scan tool, perform the HVAC Actuator Calibration Test.

      Did this DTC change from Stored to Active while performing the HVAC System Test?

      Yes

      - Go To 4

      No

      - Go To 6

4. **CHECK THE LEFT BLEND DOOR**
   1. Remove the Left Blend Door Actuator and check the Left Blend Door stops, linkage (stripped or cracked) and door. Refer to **ACTUATOR, BLEND DOOR, REMOVAL** .

      Were there any problems found?

      Yes

      - Repair or replace the Left Blend Door as necessary in accordance with the Service Information. Refer to **HOUSING, HVAC, REMOVAL** .
      - Perform the HVAC VERIFICATION TEST. Refer to **STANDARD PROCEDURE**.

      No

      - Go To 5

5. **CHECK THE LEFT BLEND DOOR ACTUATOR**
   1. Replace the Left Blend Door Actuator in accordance with the Service Information. Refer to **ACTUATOR, BLEND DOOR, REMOVAL** .
   2. With the scan tool, erase HVAC DTCs and perform the HVAC Actuator Calibration Test.

      Did this DTC reset?

      Yes

      - Replace and program the A/C Heater Control in accordance with the Service Information.

Refer to **MODULE, HVAC, REMOVAL** .
- Perform the HVAC VERIFICATION TEST. Refer to **STANDARD PROCEDURE**.

No

- Test complete.
- Perform the HVAC VERIFICATION TEST. Refer to **STANDARD PROCEDURE**.

6. **CHECK THE WIRING AND CONNECTORS**
   1. The conditions necessary to set the DTC are not present at this time.
   2. With the scan tool, check the Environmental Data to help identify the conditions in which the DTC was set.
   3. Using the wiring diagrams as a guide, check all related splices and connectors for signs of water intrusion, corrosion, pushed out or bent terminals, and correct pin tension.
   4. Wiggle the wiring and connectors while checking for shorted and open circuits.

   Were there any problems found?

   Yes

   - Repair as necessary.
   - Perform the HVAC VERIFICATION TEST. Refer to **STANDARD PROCEDURE**.

   No

   - Test complete.

B11D3-00-A/C COOL DOWN TEST PERFORMANCE - COMPRESSOR CLUTCH NOT ENGAGED

For a complete wiring diagram, **refer to appropriate SYSTEM WIRING DIAGRAMS article** .

WHEN MONITORED

Whenever a Cooldown Test is performed.

SET CONDITION

The A/C Heater Control receives a BUS message from the Powertrain Control Module (PCM) that the compressor is not engaged when it is requested.

POSSIBLE CAUSES

Possible Causes
LOSS OF COMMUNICATION WITH THE PCM OR MULTIPLE BUS PROBLEMS
A/C HEATER CONTROL

Always perform the HVAC Pre-Diagnostic Troubleshooting procedure before proceeding. Refer to STANDARD PROCEDURE.

DIAGNOSTIC TEST

1. **CHECK FOR ACTIVE BUS COMMUNICATION DTCS**

   NOTE: Make sure the IOD fuse is installed and the battery is fully charged before proceeding.

   1. Ignition on, engine not running.
   2. Using the scan tool, read DTCs.

   Are there any Active BUS Communication DTCs present?

   Yes

   - Refer to **BODY CONTROL MODULE (BCM) - DIAGNOSTIC CODE INDEX** and perform the appropriate diagnostic procedure.

   No

   - Go To 2
2. **CHECK FOR STORED BUS COMMUNICATION DTCS**
   1. Ignition on, engine not running.
   2. Using the scan tool, read DTCs.

   Are there any inactive or stored BUS Communication DTCs present?

   Yes

   - Refer to **DIAGNOSIS AND TESTING** and perform the Stored Lost Communication DTCs diagnostic procedure.

   No

   - Go To 3
3. **CHECK FOR PCM A/C COMPRESSOR DTCS**
   1. Ignition on, engine not running.
   2. Using the scan tool, read PCM DTCs.

   Are there any PCM A/C Compressor DTCs present?

   Yes

- Refer to the **DTC INDEX** article and perform the appropriate diagnostic procedure.
- Perform the HVAC VERIFICATION TEST. Refer to **STANDARD PROCEDURE**.

No

- Go To 4

4. **CHECK FOR BODY CONTROL MODULE (BCM) DTCS**
   1. Using the scan tool, read BCM DTCs.

      Are there any BCM DTCs present?

      Yes

      - Refer to the **DIAGNOSIS AND TESTING** and perform the appropriate diagnostic procedure.

      No

      - Go To 5

5. **CHECK THE A/C COMPRESSOR**
   1. Ignition on, engine running.
   2. Using the A/C heater Control, request A/C maximum cool.

      Does the A/C Compressor Clutch engage?

      Yes

      - Go To 6

      No

      - Refer to **COMPRESSOR, A/C, DIAGNOSIS AND TESTING** .

6. **CHECK IF THE DTC RESETS**
   1. Turn the ignition off to the lock position.
   2. Ignition on, engine not running.
   3. Using the scan tool, erase HVAC DTCs.
   4. Turn the ignition off to the lock position.
   5. Ignition on, engine not running.
   6. Using the scan tool, perform the A/C Cooldown Test. Follow the instructions on the scan tool.
   7. Using the scan tool, read HVAC DTCs.

      Does this DTC reset?

Yes

- Replace and program the A/C Heater Control in accordance with the Service Information. Refer to **MODULE, HVAC, REMOVAL** .
- Perform the HVAC VERIFICATION TEST. Refer to **STANDARD PROCEDURE**.

No

- Refer to 7.

7. **CHECK THE WIRING AND CONNECTORS**
   1. The conditions necessary to set the DTC are not present at this time.
   2. Using the scan tool, check the Environmental Data to help identify the conditions in which the DTC was set.
   3. Using the wiring diagrams as a guide, check all related splices and connectors for signs of water intrusion, corrosion, pushed out or bent terminals, and correct pin tension.
   4. Wiggle the wiring and connectors while checking for shorted and open circuits.

   Were there any problems found?

   Yes

   - Repair as necessary.
   - Perform the HVAC VERIFICATION TEST. Refer to **STANDARD PROCEDURE**.

   No

   - Test complete.

B11D5-00-A/C COOL DOWN TEST PERFORMANCE - EVAP TEMP SENSOR ERROR

For a complete wiring diagram, **refer to appropriate SYSTEM WIRING DIAGRAMS article** .

WHEN MONITORED

Whenever a Cool down Test is performed.

SET CONDITION

The A/C Heater Control detects a circuit malfunction with the Evaporator Temperature Sensor during a Cool down Test.

POSSIBLE CAUSES

Possible Causes

EVAPORATOR TEMPERATURE SENSOR DTC PRESENT
EVAPORATOR TEMPERATURE SENSOR
A/C HEATER CONTROL

Always perform the HVAC Pre-Diagnostic Troubleshooting procedure before proceeding. Refer to STANDARD PROCEDURE.

DIAGNOSTIC TEST

1. **CHECK IF DTC IS ACTIVE**
    1. Ignition on, engine not running.
    2. Using the scan tool, perform an A/C Cooldown Test.
    3. Using the scan tool, read HVAC DTCs.

    Is this DTC active?

    Yes

    - Go To 2

    No

    - Go To 4
2. **PERFORM HVAC ACTUATOR CALIBRATION TEST**
    1. Using the scan tool, perform the HVAC Actuator Calibration Test.

    Did any other HVAC DTCs set while performing the Actuator Calibration Test?

    Yes

    - Refer to **DIAGNOSIS AND TESTING** and perform the appropriate diagnostic procedure.

    No

    - Go To3
3. **CHECK THE EVAPORATOR TEMPERATURE SENSOR**
    1. Replace the Evaporator Temperature Sensor in Accordance with the Service Information. Refer to **SENSOR, EVAPORATOR TEMPERATURE, REMOVAL** .
    2. Using the scan tool, erase HVAC DTCs.
    3. Cycle the ignition off for 30 seconds then back on.
    4. Using the scan tool, perform an A/C Cooldown Test.
    5. With the scan tool, read HVAC DTCs.

Does this DTC reset?

Yes

- Replace and program the HVAC Module in accordance with the Service Information. Refer to **MODULE, HVAC, REMOVAL** .
- Perform the HVAC VERIFICATION TEST. Refer to **STANDARD PROCEDURE**.

No

- Test complete.
- Perform the HVAC VERIFICATION TEST. Refer to **STANDARD PROCEDURE**.

4. **CHECK THE WIRING AND CONNECTORS**
   1. The conditions necessary to set the DTC are not present at this time.
   2. Using the scan tool, check the Environmental Data to help identify the conditions in which the DTC was set.
   3. Using the wiring diagrams as a guide, check all related splices and connectors for signs of water intrusion, corrosion, pushed out or bent terminals, and correct pin tension.
   4. Wiggle the wiring and connectors while checking for shorted and open circuits.

   Were there any problems found?

   Yes

   - Repair as necessary.
   - Perform the HVAC VERIFICATION TEST. Refer to **STANDARD PROCEDURE**.

   No

   - Test complete.

B11D9-92-BLOWER SPEED KNOB REQUEST INPUT - PERFORMANCE OR INCORRECT OPERATION

For a complete wiring diagram, **refer to appropriate SYSTEM WIRING DIAGRAMS article** .

THEORY OF OPERATION

The HVAC A/C Heater Control contains various switches and knobs that are used to change the systems operation. There are currently three types of switches used depending on the configuration of the system. Push button momentary switches which are normally open or in the Off position. Multifunction or rotary switches which have several distinct positions and potentiometers which are a rotary variable resistor that is used for a more precise control. An active Diagnostic Trouble Code (DTC) indicates that either a control switch or potentiometer is stuck in an On position or out of a calibrated range. A stored DTC indicates that control switch or potentiometer was stuck On or out of calibration but has since returned to its normal state. For further

information. Refer to **CONTROL, A/C AND HEATER, DESCRIPTION** .

WHEN MONITORED

With the ignition on.

SET CONDITION

If the Blower Motor Control has a mechanical or electrical failure for more than 30 seconds. This DTC has a de-maturing time of one second. If the DTCs status changes from active to stored, the DTC will stay in memory for 100 ignition cycles.

POSSIBLE CAUSES

Possible Causes
A/C HEATER CONTROL

Always perform the HVAC Pre-Diagnostic Troubleshooting procedure before proceeding. Refer to STANDARD PROCEDURE.

DIAGNOSTIC TEST

1. **CHECK THE A/C HEATER CONTROL**
    1. Turn the ignition on.
    2. Using the scan tool, erase HVAC DTCs.
    3. Turn the ignition off for 10 seconds, and then turn the ignition on.
    4. Slowly Turn the Blower Speed Control knob from Low to High multiple times for a minimum of 30 seconds.
    5. Using the scan tool, read HVAC DTCs.

    Did this DTC reset?

    Yes

    - Replace and program the HVAC Module in accordance with the Service Information. Refer to **MODULE, HVAC, REMOVAL** .
    - Perform the HVAC VERIFICATION TEST. Refer to **STANDARD PROCEDURE**.

    No

    - Go To 2
2. **CHECK THE WIRING AND CONNECTORS**
    1. The conditions necessary to set the DTC are not present at this time.
    2. Using the scan tool, check the Environmental Data to help identify the conditions in which the

DTC was set.

3. Using the wiring diagrams as a guide, check all related splices and connectors for signs of water intrusion, corrosion, pushed out or bent terminals, and correct pin tension.
4. Wiggle the wiring and connectors while checking for shorted and open circuits.

   Were there any problems found?

   Yes

   - Repair as necessary.
   - Perform the HVAC VERIFICATION TEST. Refer to **STANDARD PROCEDURE**.

   No

   - Test complete.

B11DB-92-MODE SWITCH REQUEST INPUT - PERFORMANCE OR INCORRECT OPERATION

For a complete wiring diagram, **refer to appropriate SYSTEM WIRING DIAGRAMS article** .

THEORY OF OPERATION

The HVAC A/C Heater Control contains various switches and knobs that are used to change the systems operation. There are currently three types of switches used depending on the configuration of the system. Push button momentary switches which are normally open or in the Off position. Multifunction or rotary switches which have several distinct positions and potentiometers which are a rotary variable resistor that is used for a more precise control. An active Diagnostic Trouble Code (DTC) indicates that either a control switch or potentiometer is stuck in an On position or out of a calibrated range. A stored DTC indicates that control switch or potentiometer was stuck On or out of calibration but has since returned to its normal state. For further information. Refer to **CONTROL, A/C AND HEATER, DESCRIPTION** .

WHEN MONITORED

With the ignition on.

SET CONDITION

If the Mode Switch Control has a mechanical or electrical failure for more than 30 seconds. This DTC has a de-maturing time of one second. If the DTCs status changes from active to stored, the DTC will stay in memory for 100 ignition cycles.

POSSIBLE CAUSES

Possible Causes
OBJECT HOLDING SWITCH IN AN ON POSITION A/C HEATER CONTROL

Always perform the HVAC Pre-Diagnostic Troubleshooting procedure before proceeding. Refer to STANDARD PROCEDURE.

DIAGNOSTIC TEST

1. **INSPECT FOR OBJECT HOLDING SWITCH IN AN ON POSITION**
   1. Inspect the A/C Heater Control for an object or debris holding the Mode Switch in an On position.

      NOTE: Using the scan tool you can read the On/Off status of the control switch.

      Is the Mode Switch being held in or stuck On?

      Yes

      - The A/C Heater control cannot be repaired or adjusted and must be replaced if inoperative or damaged but it might be cleanable if external debris is inhibiting the proper operation of the control switch or knob. If you are unable to clean the control to where it can function properly, replace and program the HVAC Module in accordance with the Service Information. Refer to **MODULE, HVAC, REMOVAL** .
      - Perform the HVAC VERIFICATION TEST. Refer to **STANDARD PROCEDURE**.

      No

      - Go To 2
2. **A/C HEATER CONTROL**
   1. Turn the ignition on.
   2. Using the scan tool, erase HVAC DTCs.
   3. Turn the ignition off for 10 seconds, and then turn the ignition on and wait a minimum of 30 seconds.
   4. Using the scan tool, read HVAC DTCs.

      Does the scan tool display this DTC as Active or is the status of the switch reading On?

      Yes

      - Replace and program the HVAC Module in accordance with the Service Information. Refer to **MODULE, HVAC, REMOVAL** .
      - Perform the HVAC VERIFICATION TEST. Refer to **STANDARD PROCEDURE**.

      No

      - Test complete.
      - Perform the HVAC VERIFICATION TEST. Refer to **STANDARD PROCEDURE**.

B11E9-92-LEFT TEMPERATURE KNOB REQUEST INPUT-PERFORMANCE OR INCORRECT OPERATION

For a complete wiring diagram, **refer to appropriate SYSTEM WIRING DIAGRAMS article** .

THEORY OF OPERATION

The HVAC A/C Heater Control contains various switches and knobs that are used to change the systems operation. There are currently three types of switches used depending on the configuration of the system. Push button momentary switches which are normally open or in the Off position. Multifunction or rotary switches which have several distinct positions and potentiometers which are a rotary variable resistor that is used for a more precise control. An active Diagnostic Trouble Code (DTC) indicates that either a control switch or potentiometer is stuck in an On position or out of a calibrated range. A stored DTC indicates that control switch or potentiometer was stuck On or out of calibration but has since returned to its normal state. For further information. Refer to **CONTROL, A/C AND HEATER, DESCRIPTION** .

WHEN MONITORED

With the ignition on.

SET CONDITION

If the Left Temperature Control has a mechanical or electrical failure for more than 30 seconds. This DTC has a de-maturing time of one second. If the DTCs status changes from active to stored, the DTC will stay in memory for 100 ignition cycles.

POSSIBLE CAUSES

Possible Causes
A/C HEATER CONTROL

Always perform the HVAC Pre-Diagnostic Troubleshooting procedure before proceeding. Refer to STANDARD PROCEDURE.

DIAGNOSTIC TEST

1. **A/C HEATER CONTROL**
    1. Turn the ignition on.
    2. Using the scan tool, erase HVAC DTCs.
    3. Turn the ignition off for 10 seconds, and then turn the ignition on.
    4. Slowly Turn the Left Temperature Control from full cold to full hot several times for a minimum of 30 seconds.
    5. Using the scan tool, read HVAC DTCs.

    Did this DTC reset?

Yes

- Replace and program the HVAC Module in accordance with the Service Information. Refer to **MODULE, HVAC, REMOVAL** .
- Perform the HVAC VERIFICATION TEST. Refer to **STANDARD PROCEDURE**.

No

- Go To 2

2. **CHECK THE WIRING AND CONNECTORS**
   1. The conditions necessary to set the DTC are not present at this time.
   2. Using the scan tool, check the Environmental Data to help identify the conditions in which the DTC was set.
   3. Using the wiring diagrams as a guide, check all related splices and connectors for signs of water intrusion, corrosion, pushed out or bent terminals, and correct pin tension.
   4. Wiggle the wiring and connectors while checking for shorted and open circuits.

   Were there any problems found?

   Yes

   - Repair as necessary.
   - Perform the HVAC VERIFICATION TEST. Refer to **STANDARD PROCEDURE**.

   No

   - Test complete.

B11F0-11-LEFT FLOOR DUCT TEMPERATURE SENSOR-CIRCUIT SHORT TO GROUND

For a complete wiring diagram, **refer to appropriate SYSTEM WIRING DIAGRAMS article** .

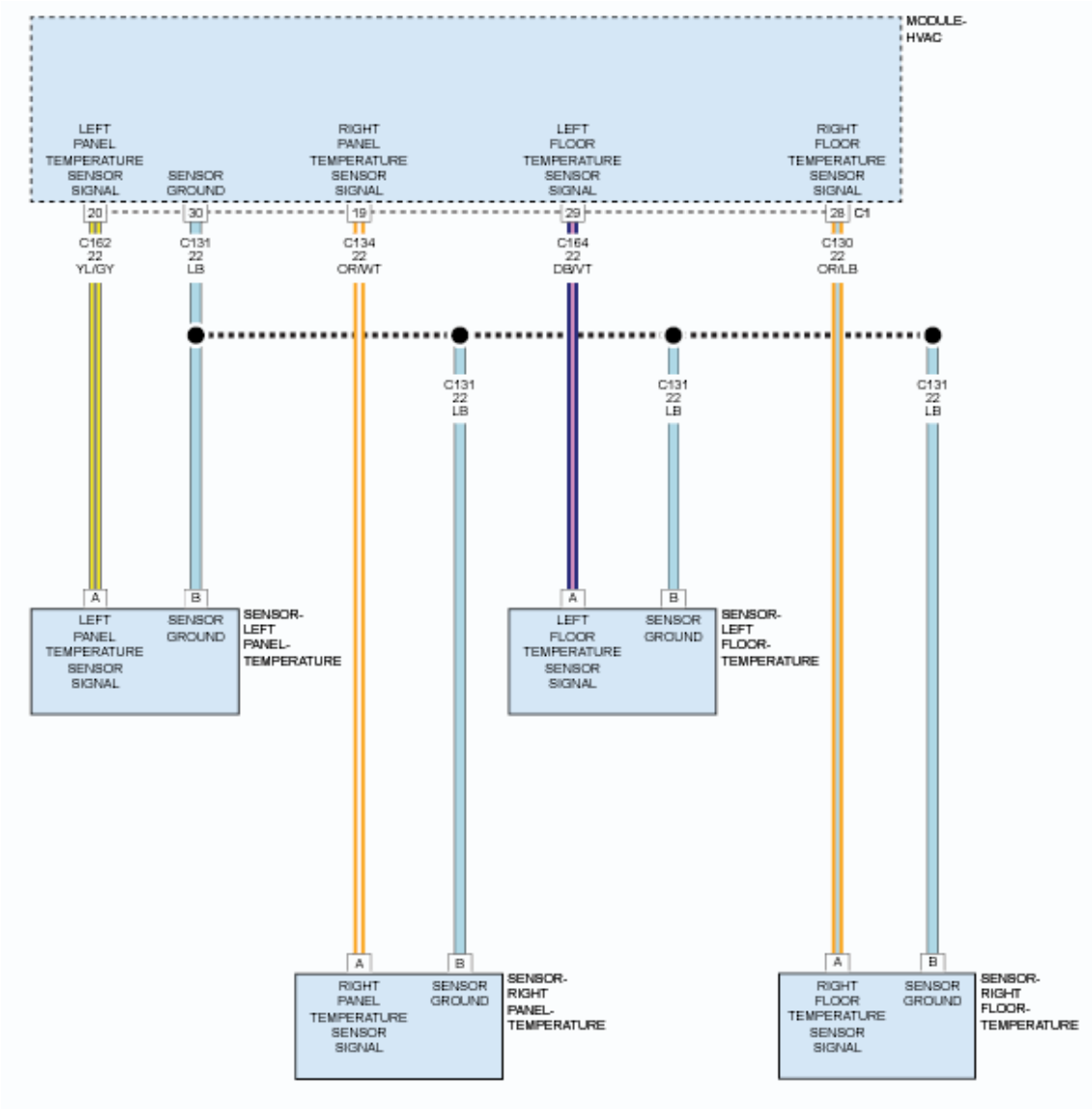

Fig. 39: Panel & Floor Duct Temperature Sensor Wiring Diagram
Courtesy of CHRYSLER GROUP, LLC

THEORY OF OPERATION

The HVAC A/C heater control (HVAC Module) uses a variety of sensors to adjust HVAC operation to obtain optimal performance. These sensors are continuously monitored by the A/C heater control to assure that they are in range. An active Diagnostic trouble Code (DTC) indicates that a sensor is out of range. A stored DTC indicates that the sensor was out of range but is currently within range.

The Duct temperature sensors monitor the air temperature of the A/C air distribution duct work and supplies an input signal to the A/C heater control. The input signal value is used to optimize the A/C system performance. The Duct temperature sensor resistance value will change in response to the air temperature output of the air distribution duct work. The resistance value is electronically transferred to the A/C heater control using a sensor ground circuit and a 5-volt reference signal circuit. Normal operation of the sensor: the resistive value decreases

when the duct work air temperature decreases and the sensor resistive value increases when the duct work air temperature increases.

WHEN MONITORED

With the ignition on.

SET CONDITION

The A/C Heater Module detects less than 0.09 volts on the Left Floor Duct Temperature Sensor Signal circuit for a period of three seconds or more. If the A/C Heater Module detects a valid voltage, the DTC will change from active to stored and will stay stored for 100 ignition cycles.

POSSIBLE CAUSES

Possible Causes
LEFT FLOOR DUCT TEMPERATURE SENSOR SIGNAL CIRCUIT SHORTED TO GROUND
LEFT FLOOR DUCT TEMPERATURE SENSOR
A/C HEATER MODULE

Always perform the HVAC Pre-Diagnostic Troubleshooting procedure before proceeding. Refer to STANDARD PROCEDURE.

DIAGNOSTIC TEST

1. **CHECK IF THE DTC IS ACTIVE**
    1. Ignition on, engine not running.
    2. Using the scan tool, read HVAC DTCs.

    Is this DTC active?

    Yes

    - Go To 2

    No

    - Go To 5
2. **CHECK (C164) LEFT FLOOR DUCT TEMPERATURE SENSOR SIGNAL CIRCUIT FOR A SHORT TO GROUND**
    1. Turn the ignition off to the lock position.
    2. Disconnect the A/C Heater Module C1 harness connector.
    3. Disconnect the Left Floor Duct Temperature Sensor harness connector.
    4. Measure the resistance between ground and the (C164) Left Floor Duct Temperature Sensor Signal

circuit.

Is the resistance below 100k Ohms?

Yes

- Repair the(C164) Left Floor Duct Temperature Sensor Signal circuit for a short to ground.
- Perform the HVAC VERIFICATION TEST. Refer to **STANDARD PROCEDURE**.

No

- Go To 3

3. **CHECK (C164) LEFT FLOOR DUCT TEMPERATURE SENSOR SIGNAL CIRCUIT FOR A SHORT TO THE SENSOR GROUND CIRCUIT**
   1. Measure the resistance between the (C164) Left Floor Duct Temperature Sensor Signal circuit and the Sensor Ground circuit.

   Is the resistance below 100k Ohms?

   Yes

   - Repair the (C164) Left Floor Duct Temperature Sensor Signal circuit and the Sensor Ground circuit.
   - Perform the HVAC VERIFICATION TEST. Refer to **STANDARD PROCEDURE**.

   No

   - Go To 4

4. **CHECK THE LEFT FLOOR DUCT TEMPERATURE SENSOR**
   1. Replace the Left Floor Duct Temperature Sensor in Accordance with the Service Information. Refer to **SENSOR, EVAPORATOR TEMPERATURE, REMOVAL** .
   2. Cycle the ignition off for 30 seconds then back on.
   3. With the scan tool, read HVAC DTCs.

   Does this DTC reset?

   Yes

   - Replace and program the HVAC Module in accordance with the Service Information. Refer to **MODULE, HVAC, REMOVAL** .
   - Perform the HVAC VERIFICATION TEST. Refer to **STANDARD PROCEDURE**.

   No

- Test complete.
- Perform the HVAC VERIFICATION TEST. Refer to **STANDARD PROCEDURE**.

5. **CHECK THE WIRING AND CONNECTORS**
   1. The conditions necessary to set the DTC are not present at this time.
   2. Using the scan tool, check the Environmental Data to help identify the conditions in which the DTC was set.
   3. Using the wiring diagrams as a guide, check all related splices and connectors for signs of water intrusion, corrosion, pushed out or bent terminals, and correct pin tension.
   4. Wiggle the wiring and connectors while checking for shorted and open circuits.

      Were there any problems found?

      Yes

      - Repair as necessary.
      - Perform the HVAC VERIFICATION TEST. Refer to **STANDARD PROCEDURE**.

      No

      - Test complete.

B11F0-15-LEFT FLOOR DUCT TEMPERATURE SENSOR - CIRCUIT SHORT TO BATTERY OR OPEN

For a complete wiring diagram, **refer to appropriate SYSTEM WIRING DIAGRAMS article** .

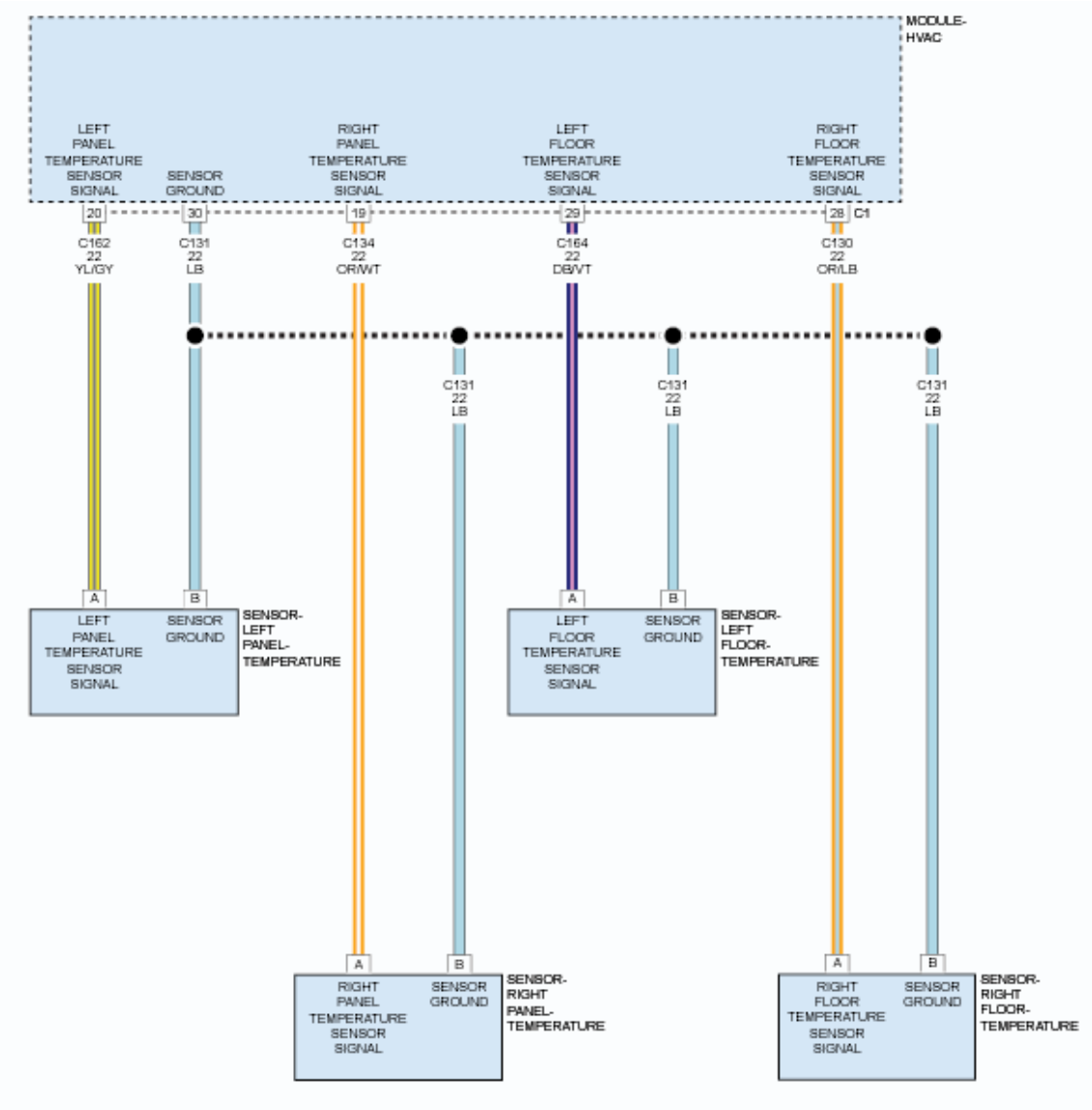

Fig. 40: Panel & Floor Duct Temperature Sensor Wiring Diagram
Courtesy of CHRYSLER GROUP, LLC

THEORY OF OPERATION

The HVAC A/C heater control (HVAC Module) uses a variety of sensors to adjust HVAC operation to obtain optimal performance. These sensors are continuously monitored by the A/C heater control to assure that they are in range. An active Diagnostic trouble Code (DTC) indicates that a sensor is out of range. A stored DTC indicates that the sensor was out of range but is currently within range.

The Duct temperature sensors monitor the air temperature of the A/C air distribution duct work and supplies an input signal to the A/C heater control. The input signal value is used to optimize the A/C system performance. The Duct temperature sensor resistance value will change in response to the air temperature output of the air distribution duct work. The resistance value is electronically transferred to the A/C heater control using a sensor ground circuit and a 5-volt reference signal circuit. Normal operation of the sensor: the resistive value decreases

when the duct work air temperature decreases and the sensor resistive value increases when the duct work air temperature increases.

WHEN MONITORED

With the ignition on.

SET CONDITION

The A/C Heater Module detects greater than 4.8 volts on the Left Floor Duct Temperature Sensor Signal circuit for a period of three seconds or more. If the A/C Heater Module detects a valid voltage, the DTC will change from active to stored and will stay stored for 100 ignition cycles.

POSSIBLE CAUSES

Possible Causes
LEFT FLOOR DUCT TEMPERATURE SENSOR SIGNAL CIRCUIT SHORTED TO VOLTAGE
LEFT FLOOR DUCT TEMPERATURE SENSOR SIGNAL CIRCUIT OPEN
SENSOR GROUND CIRCUIT OPEN
LEFT FLOOR DUCT TEMPERATURE SENSOR
A/C HEATER MODULE

Always perform the HVAC Pre-Diagnostic Troubleshooting procedure before proceeding. Refer to STANDARD PROCEDURE.

DIAGNOSTIC TEST

1. **CHECK IF DTC IS ACTIVE**
    1. Ignition on, engine not running.
    2. With the scan tool, read HVAC DTCs.

    Is this DTC active?

    Yes

    - Go To 2

    No

    - Go To 6
2. **CHECK THE LEFT FLOOR DUCT TEMPERATURE SENSOR**
    1. Turn the ignition off to the lock position.
    2. Disconnect the Left Floor Duct Temperature Sensor harness connector.

NOTE: Due to the small terminal and pin size of the Left Floor Duct Temperature Sensor and harness connector, make sure to not damage the terminals in this process.

3. Connect a jumper wire between the Left Floor Duct Temperature Sensor Signal circuit and the Sensor Ground circuit in the Left Floor Duct Temperature Sensor harness connector.
4. Ignition on, engine not running.
5. With the scan tool, read the Left Floor Duct Temperature Sensor voltage.

   Is the voltage below 0.2 of a volt?

   Yes

   - Replace the Left Floor Duct Temperature Sensor in accordance with the Service Information.
   - Perform the HVAC VERIFICATION TEST. Refer to **STANDARD PROCEDURE**.

   No

   - Go To 3

3. **CHECK THE (C164) LEFT FLOOR DUCT TEMPERATURE SENSOR SIGNAL CIRCUIT FOR A SHORT TO VOLTAGE**
   1. Turn the ignition off to the lock position.
   2. Disconnect the jumper wire from the previous step.
   3. Disconnect the A/C Heater Module C1 harness connector.
   4. Ignition on, engine not running.
   5. Measure the voltage of the (C164) Left Floor Duct Temperature Sensor Signal circuit.

      Is voltage above 0.2 of a volt?

      Yes

      - Repair the (C164) Left Floor Duct Temperature Sensor Signal circuit for a short to voltage.
      - Perform the HVAC VERIFICATION TEST. Refer to **STANDARD PROCEDURE**.

      No

      - Go To 4

4. **CHECK THE (C164) LEFT FLOOR DUCT TEMPERATURE SENSOR SIGNAL CIRCUIT FOR AN OPEN**
   1. Turn the ignition off to the lock position.
   2. Measure the resistance of the (C164) Left Floor Duct Temperature Sensor Signal circuit between the A/C Heater Module C1 harness connector and the Left Floor Duct Temperature Sensor harness connector.

Is the resistance above 1.0 Ohm?

Yes

- Repair the (C164) Left Floor Duct Temperature Sensor Signal circuit for an open.
- Perform the HVAC VERIFICATION TEST. Refer to **STANDARD PROCEDURE**.

No

- Go To 5

5. **CHECK THE (C131) SENSOR GROUND CIRCUIT FOR AN OPEN**
   1. Measure the resistance of the (C131) Sensor Ground circuit between the A/C Heater Module C1 harness connector and the Left Floor Duct Temperature Sensor harness connector.

   Is the resistance above 1.0 Ohm?

   Yes

   - Repair the (C131) Sensor Ground circuit for an open.
   - Perform the HVAC VERIFICATION TEST. Refer to **STANDARD PROCEDURE**.

   No

   - Replace and program the HVAC Module in accordance with the Service Information. Refer to **MODULE, HVAC, REMOVAL** .
   - Perform the HVAC VERIFICATION TEST. Refer to **STANDARD PROCEDURE**.

6. **CHECK THE WIRING AND CONNECTORS**
   1. The conditions necessary to set the DTC are not present at this time.
   2. With the scan tool, check the Environmental Data to help identify the conditions in which the DTC was set.
   3. Using the wiring diagrams as a guide, check all related splices and connectors for signs of water intrusion, corrosion, pushed out or bent terminals, and correct pin tension.
   4. Wiggle the wiring and connectors while checking for shorted and open circuits.

   Were there any problems found?

   Yes

   - Repair as necessary.
   - Perform the HVAC VERIFICATION TEST. Refer to **STANDARD PROCEDURE**.

   No

   - Test complete.

B11F1-11-RIGHT FLOOR DUCT TEMPERATURE SENSOR-CIRCUIT SHORT TO GROUND

For a complete wiring diagram, **refer to appropriate SYSTEM WIRING DIAGRAMS article** .

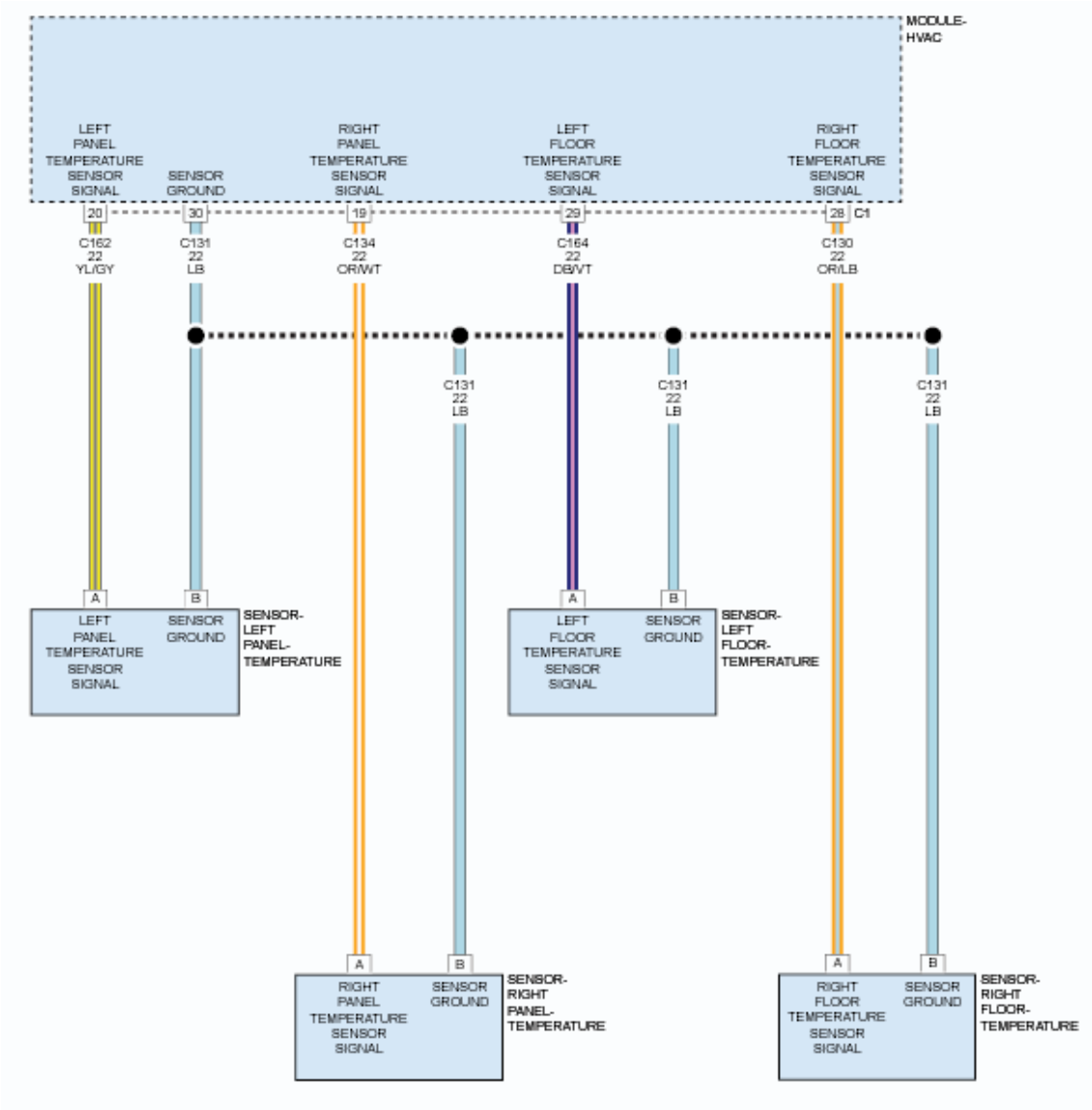

Fig. 41: Panel & Floor Duct Temperature Sensor Wiring Diagram
Courtesy of CHRYSLER GROUP, LLC

THEORY OF OPERATION

The HVAC A/C heater control (HVAC Module) uses a variety of sensors to adjust HVAC operation to obtain optimal performance. These sensors are continuously monitored by the A/C heater control to assure that they are in range. An active Diagnostic trouble Code (DTC) indicates that a sensor is out of range. A stored DTC indicates that the sensor was out of range but is currently within range.

The Duct temperature sensors monitor the air temperature of the A/C air distribution duct work and supplies an

input signal to the A/C heater control. The input signal value is used to optimize the A/C system performance. The Duct temperature sensor resistance value will change in response to the air temperature output of the air distribution duct work. The resistance value is electronically transferred to the A/C heater control using a sensor ground circuit and a 5-volt reference signal circuit. Normal operation of the sensor: the resistive value decreases when the duct work air temperature decreases and the sensor resistive value increases when the duct work air temperature increases.

WHEN MONITORED

With the ignition on.

SET CONDITION

The A/C Heater Module detects less than 0.09 volts on the Right Floor Duct Temperature Sensor Signal circuit for a period of three seconds or more. If the A/C Heater Module detects a valid voltage, the DTC will change from active to stored and will stay stored for 100 ignition cycles.

POSSIBLE CAUSES

Possible Causes
RIGHT FLOOR DUCT TEMPERATURE SENSOR SIGNAL CIRCUIT SHORTED TO GROUND
RIGHT FLOOR DUCT TEMPERATURE SENSOR
A/C HEATER MODULE

Always perform the HVAC Pre-Diagnostic Troubleshooting procedure before proceeding. Refer to STANDARD PROCEDURE.

DIAGNOSTIC TEST

1. **CHECK IF THE DTC IS ACTIVE**
    1. Ignition on, engine not running.
    2. Using the scan tool, read HVAC DTCs.

    Is this DTC active?

    Yes

    - Go To 2

    No

    - Go To 5
2. **CHECK (C130) RIGHT FLOOR DUCT TEMPERATURE SENSOR SIGNAL CIRCUIT FOR A SHORT TO GROUND**
    1. Turn the ignition off to the lock position.

2. Disconnect the A/C Heater Module C1 harness connector.
3. Disconnect the Right Floor Duct Temperature Sensor harness connector.
4. Measure the resistance between ground and the (C130) Right Floor Duct Temperature Sensor Signal circuit.

   Is the resistance below 100k Ohms?

   Yes

   - Repair the (C130) Right Floor Duct Temperature Sensor Signal circuit for a short to ground.
   - Perform the HVAC VERIFICATION TEST. Refer to **STANDARD PROCEDURE**.

   No

   - Go To 3

3. **CHECK (C130) RIGHT FLOOR DUCT TEMPERATURE SENSOR SIGNAL CIRCUIT FOR A SHORT TO THE SENSOR GROUND CIRCUIT**
   1. Measure the resistance between the (C130) Right Floor Duct Temperature Sensor Signal circuit and the (C131) Sensor Ground circuit.

      Is the resistance below 100k Ohms?

      Yes

      - Repair the (C130) Right Floor Duct Temperature Sensor Signal circuit for a short to the (C131) Sensor Ground circuit.
      - Perform the HVAC VERIFICATION TEST. Refer to **STANDARD PROCEDURE**.

      No

      - Go To 4

4. **CHECK THE RIGHT FLOOR DUCT TEMPERATURE SENSOR**
   1. Replace the Right Floor Duct Temperature Sensor in Accordance with the Service Information.
   2. Cycle the ignition off for 30 seconds then back on.
   3. With the scan tool, read HVAC DTCs.

      Does this DTC reset?

      Yes

      - Replace and program the HVAC Module in accordance with the Service Information. Refer to **MODULE, HVAC, REMOVAL** .
      - Perform the HVAC VERIFICATION TEST. Refer to **STANDARD PROCEDURE**.

No

- Test complete.
- Perform the HVAC VERIFICATION TEST. Refer to **STANDARD PROCEDURE**.

5. **CHECK THE WIRING AND CONNECTORS**
   1. The conditions necessary to set the DTC are not present at this time.
   2. Using the scan tool, check the Environmental Data to help identify the conditions in which the DTC was set.
   3. Using the wiring diagrams as a guide, check all related splices and connectors for signs of water intrusion, corrosion, pushed out or bent terminals, and correct pin tension.
   4. Wiggle the wiring and connectors while checking for shorted and open circuits.

   Were there any problems found?

   Yes

   - Repair as necessary.
   - Perform the HVAC VERIFICATION TEST. Refer to **STANDARD PROCEDURE**.

   No

   - Test complete.

B11F1-15-RIGHT FLOOR DUCT TEMPERATURE SENSOR - CIRCUIT SHORT TO BATTERY OR OPEN

For a complete wiring diagram, **refer to appropriate SYSTEM WIRING DIAGRAMS article** .

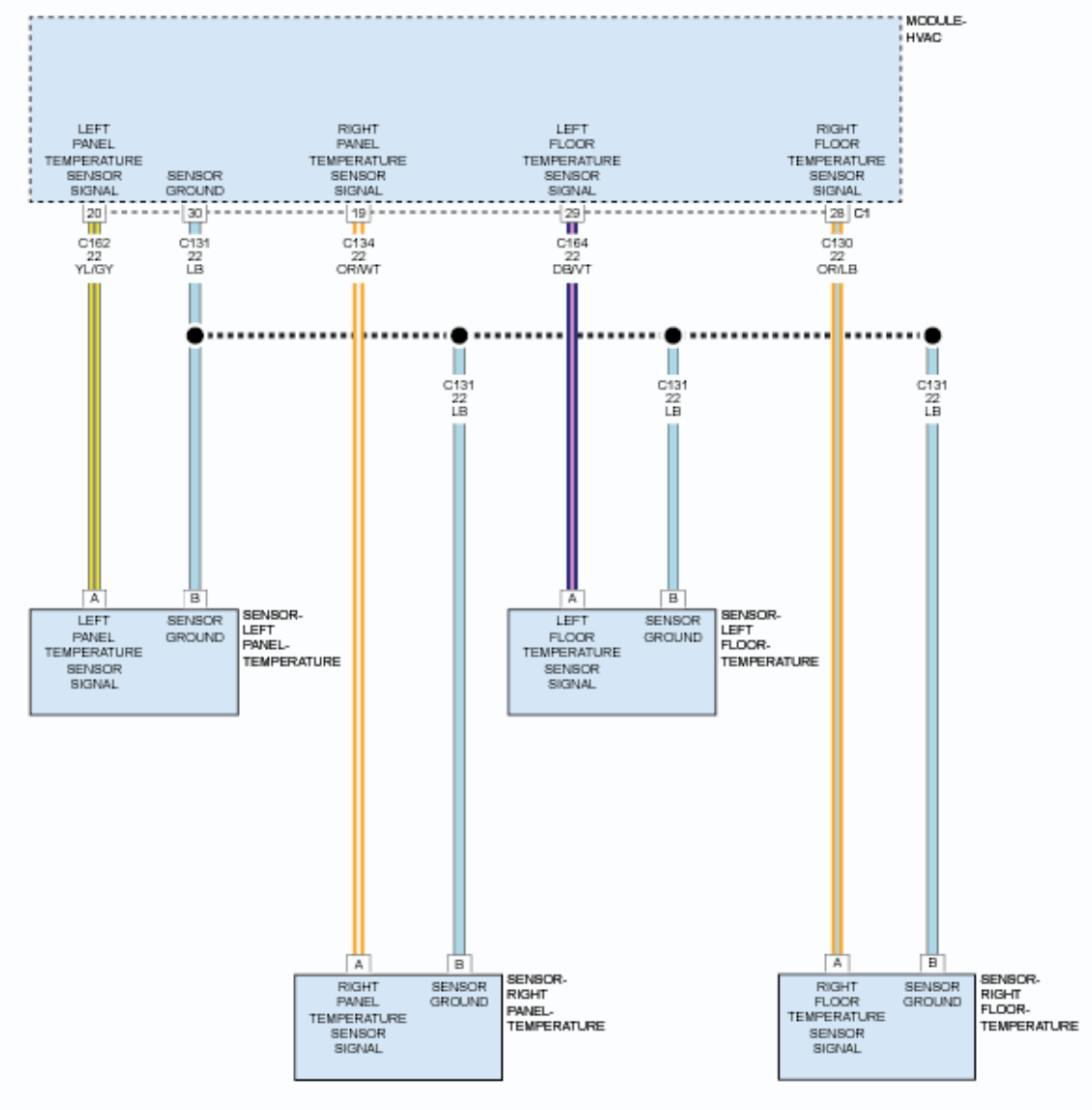

Fig. 42: Panel & Floor Duct Temperature Sensor Wiring Diagram
Courtesy of CHRYSLER GROUP, LLC

THEORY OF OPERATION

The HVAC A/C heater control (HVAC Module) uses a variety of sensors to adjust HVAC operation to obtain optimal performance. These sensors are continuously monitored by the A/C heater control to assure that they are in range. An active Diagnostic trouble Code (DTC) indicates that a sensor is out of range. A stored DTC indicates that the sensor was out of range but is currently within range.

The Duct temperature sensors monitor the air temperature of the A/C air distribution duct work and supplies an input signal to the A/C heater control. The input signal value is used to optimize the A/C system performance. The Duct temperature sensor resistance value will change in response to the air temperature output of the air distribution duct work. The resistance value is electronically transferred to the A/C heater control using a sensor ground circuit and a 5-volt reference signal circuit. Normal operation of the sensor: the resistive value decreases

when the duct work air temperature decreases and the sensor resistive value increases when the duct work air temperature increases.

WHEN MONITORED

With the ignition on.

SET CONDITION

The A/C Heater Module detects greater than 4.8 volts on the Right Floor Duct Temperature Sensor Signal circuit for a period of three seconds or more. If the A/C Heater Module detects a valid voltage, the DTC will change from active to stored and will stay stored for 100 ignition cycles.

POSSIBLE CAUSES

Possible Causes
RIGHT FLOOR DUCT TEMPERATURE SENSOR SIGNAL CIRCUIT SHORTED TO VOLTAGE
RIGHT FLOOR DUCT TEMPERATURE SENSOR SIGNAL CIRCUIT OPEN
SENSOR GROUND CIRCUIT OPEN
RIGHT FLOOR DUCT TEMPERATURE SENSOR
A/C HEATER MODULE

Always perform the HVAC Pre-Diagnostic Troubleshooting procedure before proceeding. Refer to STANDARD PROCEDURE.

DIAGNOSTIC TEST

1. **CHECK IF THE DTC IS ACTIVE**
    1. Ignition on, engine not running.
    2. With the scan tool, read HVAC DTCs.

    Is this DTC active?

    Yes

    - Go To 2

    No

    - Go To 6
2. **CHECK THE RIGHT FLOOR DUCT TEMPERATURE SENSOR**
    1. Turn the ignition off to the lock position.
    2. Disconnect the Right Floor Duct Temperature Sensor harness connector.

NOTE: Due to the small terminal and pin size of the Right Floor Duct Temperature Sensor and harness connector, make sure to not damage the terminals in this process.

3. Connect a jumper wire between the (C130) Right Floor Duct Temperature Sensor Signal circuit and the (C131) Sensor Ground circuit in the Right Floor Duct Temperature Sensor harness connector.
4. Ignition on, engine not running.
5. With the scan tool, read the (C130) Right Floor Duct Temperature Sensor voltage.

   Is the voltage below 0.2 of a volt?

   Yes

   - Replace the Right Floor Duct Temperature Sensor in accordance with the Service Information.
   - Perform the HVAC VERIFICATION TEST. Refer to **STANDARD PROCEDURE**.

   No

   - Go To 3

3. **CHECK THE (C130) RIGHT FLOOR DUCT TEMPERATURE SENSOR SIGNAL CIRCUIT FOR A SHORT TO VOLTAGE**
   1. Turn the ignition off to the lock position.
   2. Disconnect the jumper wire from the previous step.
   3. Disconnect the A/C Heater Module C1 harness connector.
   4. Ignition on, engine not running.
   5. Measure the voltage of the (C130) Right Floor Duct Temperature Sensor Signal circuit.

      Is voltage above 0.2 of a volt?

      Yes

      - Repair the (C130) Right Floor Duct Temperature Sensor Signal circuit for a short to voltage.
      - Perform the HVAC VERIFICATION TEST. Refer to **STANDARD PROCEDURE**.

      No

      - Go To 4

4. **CHECK THE (C130) RIGHT FLOOR DUCT TEMPERATURE SENSOR SIGNAL CIRCUIT FOR AN OPEN**
   1. Turn the ignition off to the lock position.
   2. Measure the resistance of the (C130) Right Floor Duct Temperature Sensor Signal circuit between the A/C Heater Module C1 harness connector and the Right Floor Duct Temperature Sensor

harness connector.

Is the resistance above 1.0 Ohm?

Yes

- Repair the (C130) Right Floor Duct Temperature Sensor Signal circuit for an open.
- Perform the HVAC VERIFICATION TEST. Refer to **STANDARD PROCEDURE**.

No

- Go To 5

5. **CHECK THE (C131) SENSOR GROUND CIRCUIT FOR AN OPEN**
   1. Measure the resistance of the (C131) Sensor Ground circuit between the A/C Heater Module C1 harness connector and the Right Floor Duct Temperature Sensor harness connector.

      Is the resistance above 1.0 Ohm?

      Yes

      - Repair the (C131) Sensor Ground circuit for an open.
      - Perform the HVAC VERIFICATION TEST. Refer to **STANDARD PROCEDURE**.

      No

      - Replace and program the HVAC Module in accordance with the Service Information. Refer to **MODULE, HVAC, REMOVAL** .
      - Perform the HVAC VERIFICATION TEST. Refer to **STANDARD PROCEDURE**.

6. **CHECK THE WIRING AND CONNECTORS**
   1. The conditions necessary to set the DTC are not present at this time.
   2. With the scan tool, check the Environmental Data to help identify the conditions in which the DTC was set.
   3. Using the wiring diagrams as a guide, check all related splices and connectors for signs of water intrusion, corrosion, pushed out or bent terminals, and correct pin tension.
   4. Wiggle the wiring and connectors while checking for shorted and open circuits.

      Were there any problems found?

      Yes

      - Repair as necessary.
      - Perform the HVAC VERIFICATION TEST. Refer to **STANDARD PROCEDURE**.

      No

- Test complete.

B11F2-11-LEFT PANEL DUCT TEMPERATURE SENSOR - CIRCUIT SHORT TO GROUND

For a complete wiring diagram, **refer to appropriate SYSTEM WIRING DIAGRAMS article** .

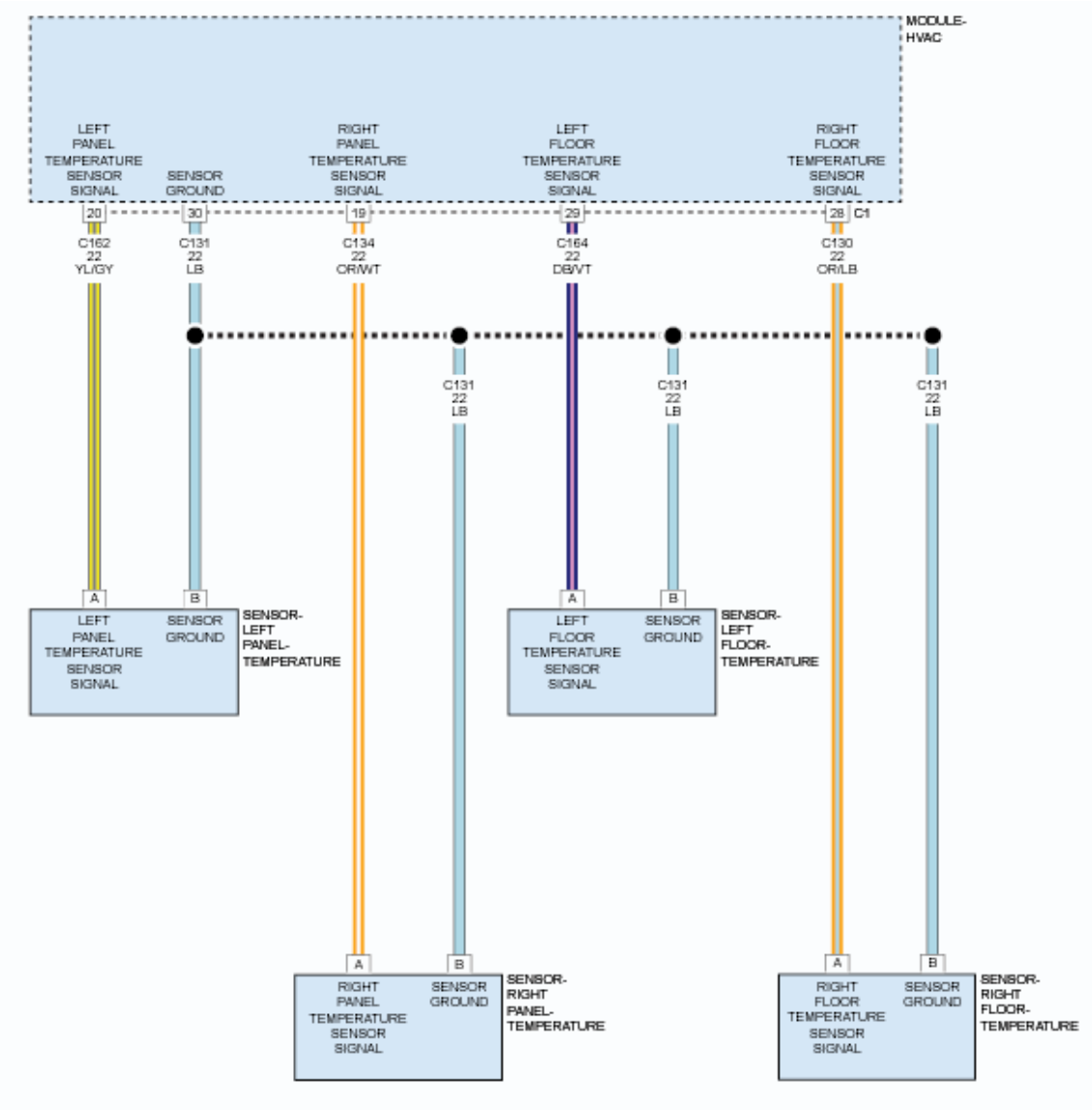

Fig. 43: Panel & Floor Duct Temperature Sensor Wiring Diagram
Courtesy of CHRYSLER GROUP, LLC

THEORY OF OPERATION

The HVAC A/C heater control (HVAC Module) uses a variety of sensors to adjust HVAC operation to obtain optimal performance. These sensors are continuously monitored by the A/C heater control to assure that they are in range. An active Diagnostic trouble Code (DTC) indicates that a sensor is out of range. A stored DTC indicates that the sensor was out of range but is currently within range.

The Duct temperature sensors monitor the air temperature of the A/C air distribution duct work and supplies an input signal to the A/C heater control. The input signal value is used to optimize the A/C system performance. The Duct temperature sensor resistance value will change in response to the air temperature output of the air distribution duct work. The resistance value is electronically transferred to the A/C heater control using a sensor ground circuit and a 5-volt reference signal circuit. Normal operation of the sensor: the resistive value decreases when the duct work air temperature decreases and the sensor resistive value increases when the duct work air temperature increases.

WHEN MONITORED

With the ignition on.

SET CONDITION

The A/C Heater Module detects less than 0.09 volts on the Left Panel Duct Temperature Sensor Signal circuit for a period of three seconds or more. If the A/C Heater Module detects a valid voltage, the DTC will change from active to stored and will stay stored for 100 ignition cycles.

POSSIBLE CAUSES

Possible Causes
LEFT PANEL DUCT TEMPERATURE SENSOR SIGNAL CIRCUIT SHORTED TO GROUND
LEFT PANEL DUCT TEMPERATURE SENSOR
A/C HEATER MODULE

Always perform the HVAC Pre-Diagnostic Troubleshooting procedure before proceeding. Refer to STANDARD PROCEDURE.

DIAGNOSTIC TEST

1. **CHECK IF THE DTC IS ACTIVE**
    1. Ignition on, engine not running.
    2. Using the scan tool, read HVAC DTCs.

    Is this DTC active?

    Yes

    - Go To 2

    No

    - Go To 5
2. **CHECK (C162) LEFT PANEL DUCT TEMPERATURE SENSOR SIGNAL CIRCUIT FOR A SHORT TO GROUND**

1. Turn the ignition off to the lock position.
2. Disconnect the A/C Heater Module C1 harness connector.
3. Disconnect the Left Panel Duct Temperature Sensor harness connector.
4. Measure the resistance between ground and the (C162) Left Panel Duct Temperature Sensor Signal circuit.

   Is the resistance below 100k Ohms?

   Yes

   - Repair the (C162) Left Panel Duct Temperature Sensor Signal circuit for a short to ground.
   - Perform the HVAC VERIFICATION TEST. Refer to **STANDARD PROCEDURE**.

   No

   - Go To 3

3. **CHECK (C162) LEFT PANEL DUCT TEMPERATURE SENSOR SIGNAL CIRCUIT FOR A SHORT TO THE (C131) SENSOR GROUND CIRCUIT**
   1. Measure the resistance between the (C162) Left Panel Duct Temperature Sensor Signal circuit and the (C131) Sensor Ground circuit.

      Is the resistance below 100k Ohms?

      Yes

      - Repair the (C162) Left Panel Duct Temperature Sensor Signal circuit for a short to the (C131) Sensor Ground circuit.
      - Perform the HVAC VERIFICATION TEST. Refer to **STANDARD PROCEDURE**.

      No

      - Go To 4

4. **CHECK THE LEFT PANEL DUCT TEMPERATURE SENSOR**
   1. Replace the Left Panel Duct Temperature Sensor in Accordance with the Service Information. Refer to **SENSOR, EVAPORATOR TEMPERATURE, REMOVAL** .
   2. Cycle the ignition off for 30 seconds then back on.
   3. With the scan tool, read HVAC DTCs.

      Does this DTC reset?

      Yes

      - Replace and program the HVAC Module in accordance with the Service Information. Refer

to **MODULE, HVAC, REMOVAL** .
- Perform the HVAC VERIFICATION TEST. Refer to **STANDARD PROCEDURE**.

No

- Test complete.
- Perform the HVAC VERIFICATION TEST. Refer to **STANDARD PROCEDURE**.

5. **CHECK THE WIRING AND CONNECTORS**
   1. The conditions necessary to set the DTC are not present at this time.
   2. Using the scan tool, check the Environmental Data to help identify the conditions in which the DTC was set.
   3. Using the wiring diagrams as a guide, check all related splices and connectors for signs of water intrusion, corrosion, pushed out or bent terminals, and correct pin tension.
   4. Wiggle the wiring and connectors while checking for shorted and open circuits.

   Were there any problems found?

   Yes

   - Repair as necessary.
   - Perform the HVAC VERIFICATION TEST. Refer to **STANDARD PROCEDURE**.

   No

   - Test complete.

B11F2-15-LEFT PANEL DUCT TEMPERATURE SENSOR - CIRCUIT SHORT TO BATTERY OR OPEN

For a complete wiring diagram, **refer to appropriate SYSTEM WIRING DIAGRAMS article** .

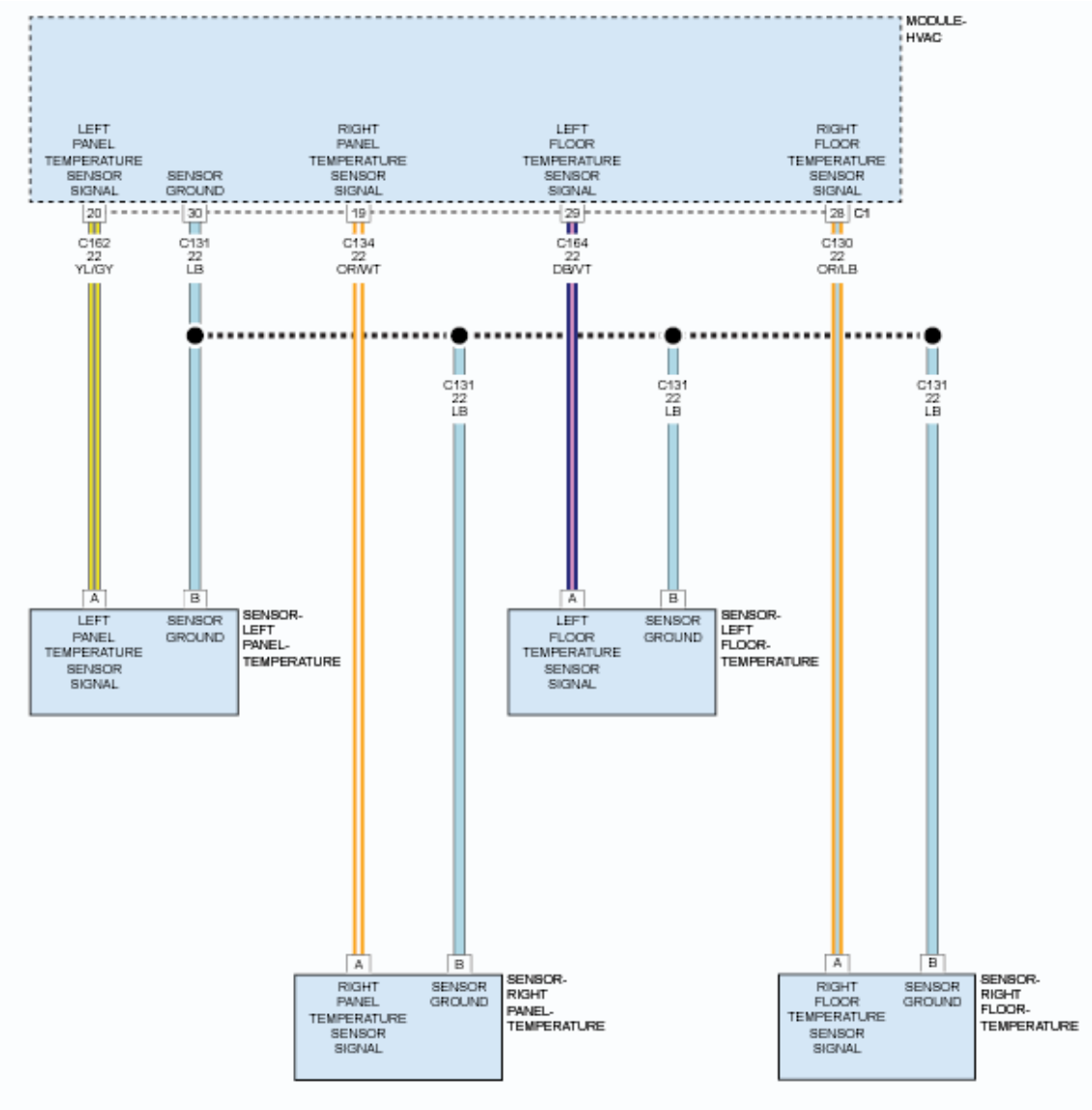

Fig. 44: Panel & Floor Duct Temperature Sensor Wiring Diagram
Courtesy of CHRYSLER GROUP, LLC

THEORY OF OPERATION

The HVAC A/C heater control (HVAC Module) uses a variety of sensors to adjust HVAC operation to obtain optimal performance. These sensors are continuously monitored by the A/C heater control to assure that they are in range. An active Diagnostic trouble Code (DTC) indicates that a sensor is out of range. A stored DTC indicates that the sensor was out of range but is currently within range.

The Duct temperature sensors monitor the air temperature of the A/C air distribution duct work and supplies an input signal to the A/C heater control. The input signal value is used to optimize the A/C system performance. The Duct temperature sensor resistance value will change in response to the air temperature output of the air distribution duct work. The resistance value is electronically transferred to the A/C heater control using a sensor ground circuit and a 5-volt reference signal circuit. Normal operation of the sensor: the resistive value decreases

when the duct work air temperature decreases and the sensor resistive value increases when the duct work air temperature increases.

WHEN MONITORED

With the ignition on.

SET CONDITION

The A/C Heater Module detects greater than 4.8 volts on the Left Panel Duct Temperature Sensor Signal circuit for a period of three seconds or more. If the A/C Heater Module detects a valid voltage, the DTC will change from active to stored and will stay stored for 100 ignition cycles.

POSSIBLE CAUSES

Possible Causes
LEFT PANEL DUCT TEMPERATURE SENSOR SIGNAL CIRCUIT SHORTED TO VOLTAGE
LEFT PANEL DUCT TEMPERATURE SENSOR SIGNAL CIRCUIT OPEN
SENSOR GROUND CIRCUIT OPEN
LEFT PANEL DUCT TEMPERATURE SENSOR
A/C HEATER MODULE

Always perform the HVAC Pre-Diagnostic Troubleshooting procedure before proceeding. Refer to STANDARD PROCEDURE.

DIAGNOSTIC TEST

1. **CHECK IF THE DTC IS ACTIVE**
    1. Ignition on, engine not running.
    2. With the scan tool, read HVAC DTCs.

    Is this DTC active?

    Yes

    - Go To 2

    No

    - Go To 6
2. **CHECK THE LEFT PANEL DUCT TEMPERATURE SENSOR**
    1. Turn the ignition off to the lock position.
    2. Disconnect the Left Panel Duct Temperature Sensor harness connector.

NOTE: Due to the small terminal and pin size of the Left Panel Duct Temperature Sensor and harness connector, make sure to not damage the terminals in this process.

3. Connect a jumper wire between the (C162) Left Panel Duct Temperature Sensor Signal circuit and the (C131) Sensor Ground circuit in the Left Panel Duct Temperature Sensor harness connector.
4. Ignition on, engine not running.
5. With the scan tool, read the Left Panel Duct Temperature Sensor voltage.

   Is the voltage below 0.2 of a volt?

   Yes

   - Replace the Left Panel Duct Temperature Sensor in accordance with the Service Information.
   - Perform the HVAC VERIFICATION TEST. Refer to **STANDARD PROCEDURE**.

   No

   - Go To 3

3. **CHECK THE (C162) LEFT PANEL DUCT TEMPERATURE SENSOR SIGNAL CIRCUIT FOR A SHORT TO VOLTAGE**
   1. Turn the ignition off to the lock position.
   2. Disconnect the jumper wire from the previous step.
   3. Disconnect the A/C Heater Module C1 harness connector.
   4. Ignition on, engine not running.
   5. Measure the voltage of the (C162) Left Panel Duct Temperature Sensor Signal circuit.

   Is voltage above 0.2 of a volt?

   Yes

   - Repair the (C162) Left Panel Duct Temperature Sensor Signal circuit for a short to voltage.
   - Perform the HVAC VERIFICATION TEST. Refer to **STANDARD PROCEDURE**.

   No

   - Go To 4

4. **CHECK THE (C162) LEFT PANEL DUCT TEMPERATURE SENSOR SIGNAL CIRCUIT FOR AN OPEN**
   1. Turn the ignition off to the lock position.
   2. Measure the resistance of the (C162) Left Panel Duct Temperature Sensor Signal circuit between the A/C Heater Module C1 harness connector and the Left Panel Duct Temperature Sensor harness connector.

Is the resistance above 1.0 Ohm?

Yes

- Repair the (C162) Left Panel Duct Temperature Sensor Signal circuit for an open.
- Perform the HVAC VERIFICATION TEST. Refer to **STANDARD PROCEDURE**.

No

- Go To 5

5. **CHECK THE SENSOR GROUND CIRCUIT FOR AN OPEN**
   1. Measure the resistance of the (C131) Sensor Ground circuit between the A/C Heater Module C1 harness connector and the (C162) Left Panel Duct Temperature Sensor harness connector.

      Is the resistance above 1.0 Ohm?

      Yes

      - Repair the (C131) Sensor Ground circuit for an open.
      - Perform the HVAC VERIFICATION TEST. Refer to **STANDARD PROCEDURE**.

      No

      - Replace and program the HVAC Module in accordance with the Service Information. Refer to **MODULE, HVAC, REMOVAL** .
      - Perform the HVAC VERIFICATION TEST. Refer to **STANDARD PROCEDURE**.

6. **CHECK THE WIRING AND CONNECTORS**
   1. The conditions necessary to set the DTC are not present at this time.
   2. With the scan tool, check the Environmental Data to help identify the conditions in which the DTC was set.
   3. Using the wiring diagrams as a guide, check all related splices and connectors for signs of water intrusion, corrosion, pushed out or bent terminals, and correct pin tension.
   4. Wiggle the wiring and connectors while checking for shorted and open circuits.

      Were there any problems found?

      Yes

      - Repair as necessary.
      - Perform the HVAC VERIFICATION TEST. Refer to **STANDARD PROCEDURE**.

      No

      - Test complete.

B11F3-11-RIGHT PANEL DUCT TEMPERATURE SENSOR-CIRCUIT SHORT TO GROUND

For a complete wiring diagram, **refer to appropriate SYSTEM WIRING DIAGRAMS article** .

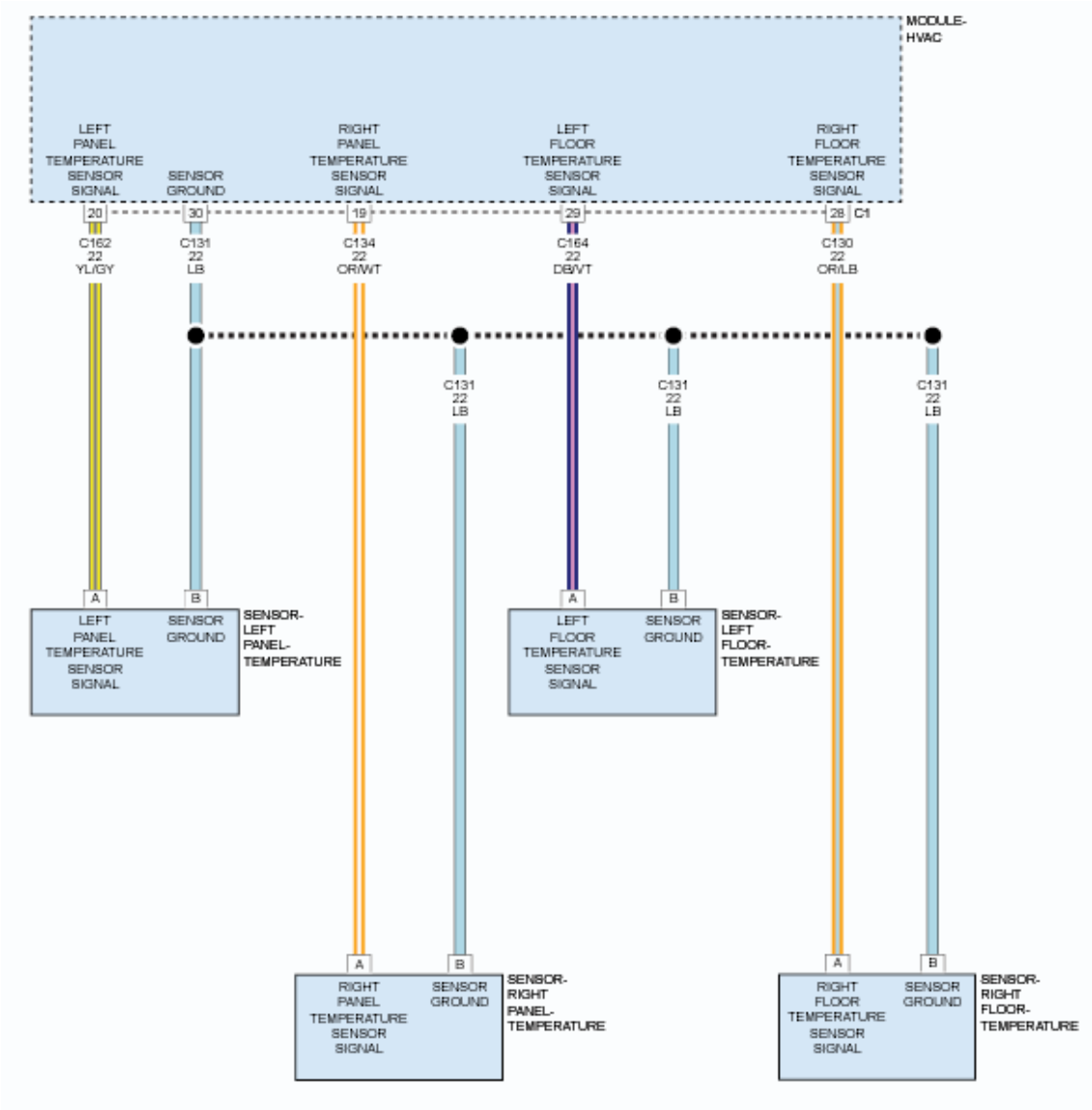

Fig. 45: Panel & Floor Duct Temperature Sensor Wiring Diagram
Courtesy of CHRYSLER GROUP, LLC

THEORY OF OPERATION

The HVAC A/C heater control (HVAC Module) uses a variety of sensors to adjust HVAC operation to obtain optimal performance. These sensors are continuously monitored by the A/C heater control to assure that they are in range. An active Diagnostic trouble Code (DTC) indicates that a sensor is out of range. A stored DTC indicates that the sensor was out of range but is currently within range.

The Duct temperature sensors monitor the air temperature of the A/C air distribution duct work and supplies an

input signal to the A/C heater control. The input signal value is used to optimize the A/C system performance. The Duct temperature sensor resistance value will change in response to the air temperature output of the air distribution duct work. The resistance value is electronically transferred to the A/C heater control using a sensor ground circuit and a 5-volt reference signal circuit. Normal operation of the sensor: the resistive value decreases when the duct work air temperature decreases and the sensor resistive value increases when the duct work air temperature increases.

WHEN MONITORED

With the ignition on.

SET CONDITION

The A/C Heater Module detects less than 0.09 volts on the Right Panel Duct Temperature Sensor Signal circuit for a period of three seconds or more. If the A/C Heater Module detects a valid voltage, the DTC will change from active to stored and will stay stored for 100 ignition cycles.

POSSIBLE CAUSES

Possible Causes
RIGHT PANEL DUCT TEMPERATURE SENSOR SIGNAL CIRCUIT SHORTED TO GROUND
RIGHT PANEL DUCT TEMPERATURE SENSOR
A/C HEATER MODULE

Always perform the HVAC Pre-Diagnostic Troubleshooting procedure before proceeding. Refer to STANDARD PROCEDURE.

DIAGNOSTIC TEST

1. **CHECK IF THE DTC IS ACTIVE**
    1. Ignition on, engine not running.
    2. Using the scan tool, read HVAC DTCs.

    Is this DTC active?

    Yes

    - Go To 2

    No

    - Go To 5
2. **CHECK (C134) RIGHT PANEL DUCT TEMPERATURE SENSOR SIGNAL CIRCUIT FOR A SHORT TO GROUND**
    1. Turn the ignition off to the lock position.

2. Disconnect the A/C Heater Module C1 harness connector.
3. Disconnect the Right Panel Duct Temperature Sensor harness connector.
4. Measure the resistance between ground and the (C134) Right Panel Duct Temperature Sensor Signal circuit.

   Is the resistance below 100k Ohms?

   Yes

   - Repair the (C134) Right Panel Duct Temperature Sensor Signal circuit for a short to ground.
   - Perform the HVAC VERIFICATION TEST. Refer to **STANDARD PROCEDURE**.

   No

   - Go To 3

3. **CHECK (C134) RIGHT PANEL DUCT TEMPERATURE SENSOR SIGNAL CIRCUIT FOR A SHORT TO THE (C131) SENSOR GROUND CIRCUIT**
   1. Measure the resistance between the (C134) Right Panel Duct Temperature Sensor Signal circuit and the (C131) Sensor Ground circuit.

      Is the resistance below 100k Ohms?

      Yes

      - Repair the (C134) Right Panel Duct Temperature Sensor Signal circuit for a short to the (C131) Sensor Ground circuit.
      - Perform the HVAC VERIFICATION TEST. Refer to **STANDARD PROCEDURE**.

      No

      - Go To 4

4. **CHECK THE RIGHT PANEL DUCT TEMPERATURE SENSOR**
   1. Replace the Right Panel Duct Temperature Sensor in Accordance with the Service Information.
   2. Cycle the ignition off for 30 seconds then back on.
   3. With the scan tool, read HVAC DTCs.

      Does this DTC reset?

      Yes

      - Replace and program the HVAC Module in accordance with the Service Information. Refer to **MODULE, HVAC, REMOVAL** .
      - Perform the HVAC VERIFICATION TEST. Refer to **STANDARD PROCEDURE**.

No

- Test complete.
- Perform the HVAC VERIFICATION TEST. Refer to **STANDARD PROCEDURE**.

5. **CHECK THE WIRING AND CONNECTORS**
   1. The conditions necessary to set the DTC are not present at this time.
   2. Using the scan tool, check the Environmental Data to help identify the conditions in which the DTC was set.
   3. Using the wiring diagrams as a guide, check all related splices and connectors for signs of water intrusion, corrosion, pushed out or bent terminals, and correct pin tension.
   4. Wiggle the wiring and connectors while checking for shorted and open circuits.

   Were there any problems found?

   Yes

   - Repair as necessary.
   - Perform the HVAC VERIFICATION TEST. Refer to **STANDARD PROCEDURE**.

   No

   - Test complete.

B11F3-15-RIGHT PANEL DUCT TEMPERATURE SENSOR - CIRCUIT SHORT TO BATTERY OR OPEN

For a complete wiring diagram, **refer to appropriate SYSTEM WIRING DIAGRAMS article** .

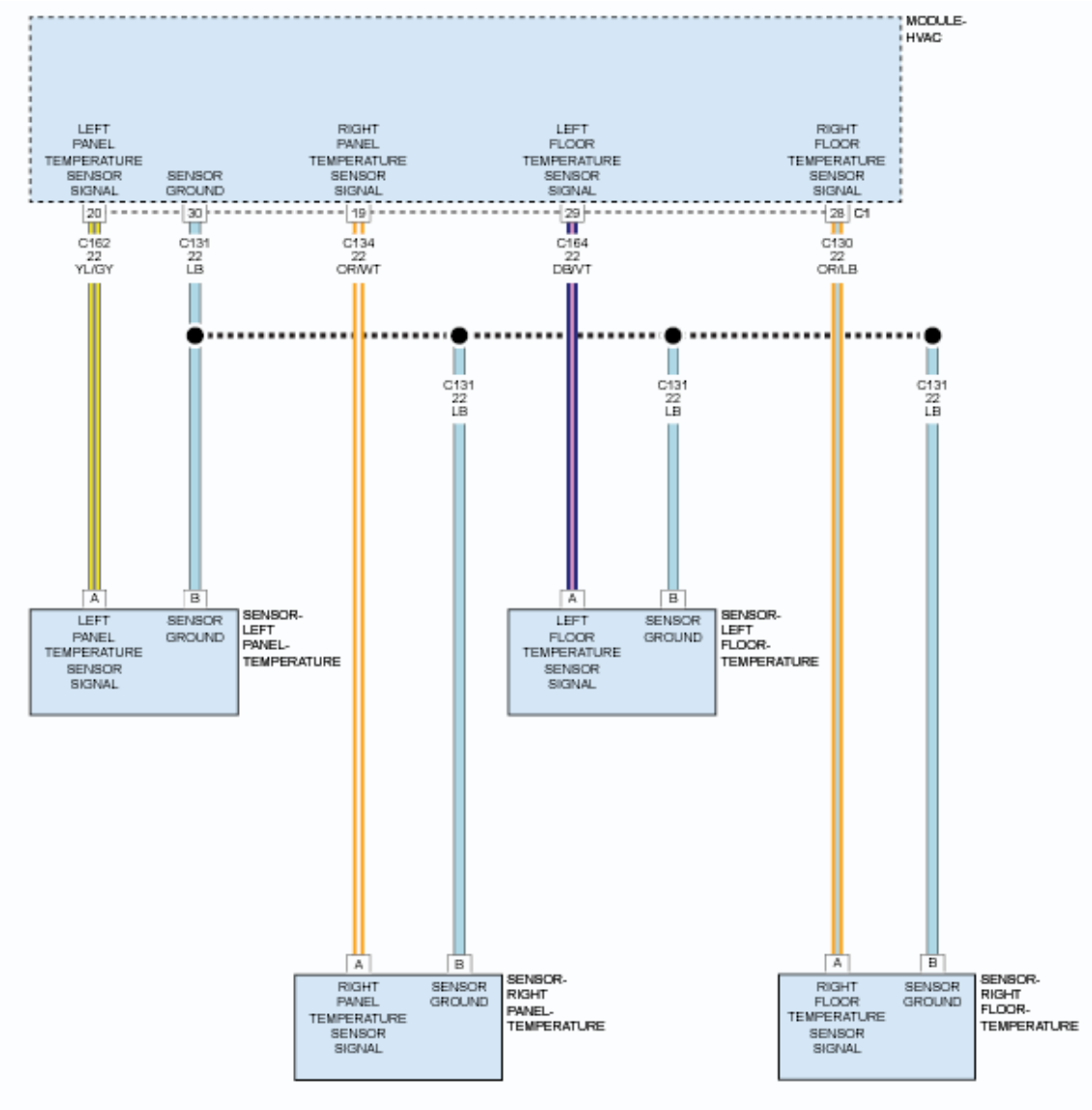

Fig. 46: Panel & Floor Duct Temperature Sensor Wiring Diagram
Courtesy of CHRYSLER GROUP, LLC

THEORY OF OPERATION

The HVAC A/C heater control (HVAC Module) uses a variety of sensors to adjust HVAC operation to obtain optimal performance. These sensors are continuously monitored by the A/C heater control to assure that they are in range. An active Diagnostic trouble Code (DTC) indicates that a sensor is out of range. A stored DTC indicates that the sensor was out of range but is currently within range.

The Duct temperature sensors monitor the air temperature of the A/C air distribution duct work and supplies an input signal to the A/C heater control. The input signal value is used to optimize the A/C system performance. The Duct temperature sensor resistance value will change in response to the air temperature output of the air distribution duct work. The resistance value is electronically transferred to the A/C heater control using a sensor ground circuit and a 5-volt reference signal circuit. Normal operation of the sensor: the resistive value decreases

when the duct work air temperature decreases and the sensor resistive value increases when the duct work air temperature increases.

WHEN MONITORED

With the ignition on.

SET CONDITION

The A/C Heater Module detects greater than 4.8 volts on the Right Panel Duct Temperature Sensor Signal circuit for a period of three seconds or more. If the A/C Heater Module detects a valid voltage, the DTC will change from active to stored and will stay stored for 100 ignition cycles.

POSSIBLE CAUSES

Possible Causes
RIGHT PANEL DUCT TEMPERATURE SENSOR SIGNAL CIRCUIT SHORTED TO VOLTAGE
RIGHT PANEL DUCT TEMPERATURE SENSOR SIGNAL CIRCUIT OPEN
SENSOR GROUND CIRCUIT OPEN
RIGHT PANEL DUCT TEMPERATURE SENSOR
A/C HEATER MODULE

Always perform the HVAC Pre-Diagnostic Troubleshooting procedure before proceeding. Refer to STANDARD PROCEDURE.

DIAGNOSTIC TEST

1. **CHECK IF THE DTC IS ACTIVE**
    1. Ignition on, engine not running.
    2. With the scan tool, read HVAC DTCs.

    Is this DTC active?

    Yes

    - Go To 2

    No

    - Go To 6
2. **CHECK THE RIGHT PANEL DUCT TEMPERATURE SENSOR**
    1. Turn the ignition off to the lock position.
    2. Disconnect the Right Panel Duct Temperature Sensor harness connector.

NOTE: Due to the small terminal and pin size of the Right Panel Duct Temperature Sensor and harness connector, make sure to not damage the terminals in this process.

3. Connect a jumper wire between the (C134) Right Panel Duct Temperature Sensor Signal circuit and the (C131) Sensor Ground circuit in the Right Panel Duct Temperature Sensor harness connector.
4. Ignition on, engine not running.
5. With the scan tool, read the Right Panel Duct Temperature Sensor voltage.

   Is the voltage below 0.2 of a volt?

   Yes

   - Replace the Right Panel Duct Temperature Sensor in accordance with the Service Information.
   - Perform the HVAC VERIFICATION TEST. Refer to **STANDARD PROCEDURE**.

   No

   - Go To 3

3. **CHECK THE (C134) RIGHT PANEL DUCT TEMPERATURE SENSOR SIGNAL CIRCUIT FOR A SHORT TO VOLTAGE**
   1. Turn the ignition off to the lock position.
   2. Disconnect the jumper wire from the previous step.
   3. Disconnect the A/C Heater Module C1 harness connector.
   4. Ignition on, engine not running.
   5. Measure the voltage of the (C134) Right Panel Duct Temperature Sensor Signal circuit.

      Is voltage above 0.2 of a volt?

      Yes

      - Repair the (C134) Right Panel Duct Temperature Sensor Signal circuit for a short to voltage.
      - Perform the HVAC VERIFICATION TEST. Refer to **STANDARD PROCEDURE**.

      No

      - Go To 4

4. **CHECK THE (C134) RIGHT PANEL DUCT TEMPERATURE SENSOR SIGNAL CIRCUIT FOR AN OPEN**
   1. Turn the ignition off to the lock position.
   2. Measure the resistance of the (C134) Right Panel Duct Temperature Sensor Signal circuit between

the A/C Heater Module C1 harness connector and the Right Panel Duct Temperature Sensor harness connector.

Is the resistance above 1.0 Ohm?

Yes

- Repair the (C134) Right Panel Duct Temperature Sensor Signal circuit for an open.
- Perform the HVAC VERIFICATION TEST. Refer to **STANDARD PROCEDURE**.

No

- Go To 5

5. **CHECK THE (C131) SENSOR GROUND CIRCUIT FOR AN OPEN**
   1. Measure the resistance of the (C131) Sensor Ground circuit between the A/C Heater Module C1 harness connector and the Right Panel Duct Temperature Sensor harness connector.

      Is the resistance above 1.0 Ohm?

      Yes

      - Repair the (C131) Sensor Ground circuit for an open.
      - Perform the HVAC VERIFICATION TEST. Refer to **STANDARD PROCEDURE**.

      No

      - Replace and program the HVAC Module in accordance with the Service Information. Refer to **MODULE, HVAC, REMOVAL** .
      - Perform the HVAC VERIFICATION TEST. Refer to **STANDARD PROCEDURE**.

6. **CHECK THE WIRING AND CONNECTORS**
   1. The conditions necessary to set the DTC are not present at this time.
   2. With the scan tool, check the Environmental Data to help identify the conditions in which the DTC was set.
   3. Using the wiring diagrams as a guide, check all related splices and connectors for signs of water intrusion, corrosion, pushed out or bent terminals, and correct pin tension.
   4. Wiggle the wiring and connectors while checking for shorted and open circuits.

      Were there any problems found?

      Yes

      - Repair as necessary.
      - Perform the HVAC VERIFICATION TEST. Refer to **STANDARD PROCEDURE**.

No

- Test complete.

B11F4-11-MODE/TEMPERATURE DOOR FEEDBACK VOLTAGE REFERENCE - CIRCUIT SHORT TO GROUND

For a complete wiring diagram, **refer to appropriate SYSTEM WIRING DIAGRAMS article** .

WHEN MONITORED

Continuously with the ignition on.

SET CONDITION

The A/C Heater Module detects a short to ground on the 5 Volt Supply circuit. If the A/C Heater Module detects a valid current draw, the DTC will change from Active to Stored and will stay in the controllers memory for 100 ignition cycles.

POSSIBLE CAUSES

Possible Causes
REFERENCE VOLTAGE CIRCUIT SHORTED TO GROUND
A/C HEATER MODULE

Always perform the HVAC Pre-Diagnostic Troubleshooting procedure before proceeding. Refer to STANDARD PROCEDURE.

DIAGNOSTIC TEST

1. **CHECK IF DTC IS ACTIVE**
    1. Ignition on, engine not running.
    2. With the scan tool, read HVAC DTCs.

    Is this DTC active?

    Yes

    - Go To 2

    No

    - Go To 3
2. **CHECK THE (C26) REFERENCE VOLTAGE CIRCUIT FOR A SHORT TO GROUND**
    1. Turn the ignition off to the lock position.

2. Disconnect the A/C Heater Control C1 harness connector.
3. Disconnect the Mode and Blend Door Actuator harness connectors.
4. Measure the resistance between ground and the (C26) Reference Voltage circuit.

   Is the resistance below 100k Ohms?

   Yes

   - Repair the (C26) Reference Voltage circuit for a short to ground.
   - Perform the HVAC VERIFICATION TEST. Refer to **STANDARD PROCEDURE**.

   No

   - Replace and program the HVAC Module in accordance with the Service Information. Refer to **MODULE, HVAC, REMOVAL** .
   - Perform the HVAC VERIFICATION TEST. Refer to **STANDARD PROCEDURE**.

3. **CHECK THE WIRING AND CONNECTORS**
   1. The conditions necessary to set the DTC are not present at this time.
   2. With the scan tool, check the Environmental Data to help identify the conditions in which the DTC was set.
   3. Using the wiring diagrams as a guide, check all related splices and connectors for signs of water intrusion, corrosion, pushed out or bent terminals, and correct pin tension.
   4. Wiggle the wiring and connectors while checking for shorted and open circuits.

      Were there any problems found?

      Yes

      - Repair as necessary.
      - Perform the HVAC VERIFICATION TEST. Refer to **STANDARD PROCEDURE**.

      No

      - Test complete.

B11F4-12-MODE/TEMPERATURE DOOR FEEDBACK VOLTAGE REFERENCE - CIRCUIT SHORT TO BATTERY

For a complete wiring diagram, **refer to appropriate SYSTEM WIRING DIAGRAMS article** .

WHEN MONITORED

Continuously with the ignition on.

SET CONDITION

The A/C Heater Control detects a short to voltage on the 5 Volt Supply circuit. If the A/C Heater Control detects a valid voltage, the DTC will change from Active to Stored and will stay in the controllers memory for 100 ignition cycles.

POSSIBLE CAUSES

Possible Causes
REFERENCE VOLTAGE CIRCUIT SHORTED TO VOLTAGE
A/C HEATER CONTROL

Always perform the HVAC Pre-Diagnostic Troubleshooting procedure before proceeding. Refer to STANDARD PROCEDURE.

DIAGNOSTIC TEST

1. **CHECK IF DTC IS ACTIVE**
    1. Ignition on, engine not running.
    2. With the scan tool, read HVAC DTCs.

    Is this DTC active?

    Yes

    - Go To 2

    No

    - Go To 3
2. **CHECK THE (C26) REFERENCE VOLTAGE CIRCUIT FOR A SHORT TO VOLTAGE**
    1. Turn the ignition off to the lock position.
    2. Disconnect the A/C Heater Control harness connector.
    3. Disconnect the Mode Door and Blend Door Actuator harness connectors.
    4. Ignition on, engine not running.
    5. Measure the voltage of the (C26) Reference Voltage circuit.

    Is there any voltage present?

    Yes

    - Repair the (C26) Reference Voltage circuit for a short to voltage.
    - Perform the HVAC VERIFICATION TEST. Refer to **STANDARD PROCEDURE**.

No

- Replace and program the HVAC Module in accordance with the Service Information. Refer to **MODULE, HVAC, REMOVAL** .
- Perform the HVAC VERIFICATION TEST. Refer to **STANDARD PROCEDURE**.

3. **CHECK THE WIRING AND CONNECTORS**
   1. The conditions necessary to set the DTC are not present at this time.
   2. With the scan tool, check the Environmental Data to help identify the conditions in which the DTC was set.
   3. Using the wiring diagrams as a guide, check all related splices and connectors for signs of water intrusion, corrosion, pushed out or bent terminals, and correct pin tension.
   4. Wiggle the wiring and connectors while checking for shorted and open circuits.

   Were there any problems found?

   Yes

   - Repair as necessary.
   - Perform the HVAC VERIFICATION TEST. Refer to **STANDARD PROCEDURE**.

   No

   - Test complete.

B11FE-11-VARIABLE A/C COMPRESSOR CONTROL - CIRCUIT SHORT TO GROUND

For a complete wiring diagram, **refer to appropriate SYSTEM WIRING DIAGRAMS article** .

WHEN MONITORED

Ignition on and HVAC activated.

SET CONDITION

The HVAC Module detects a short to ground on the Variable A/C compressor control circuit. If the A/C Heater Module detects a valid current draw, the DTC will change from Active to Stored and will stay in the controllers memory for 100 ignition cycles.

POSSIBLE CAUSES

Possible Causes
VARIABLE A/C COMPRESSOR CONTROL CIRCUIT SHORTED TO GROUND
VARIABLE A/C COMPRESSOR
A/C HEATER MODULE

Always perform the HVAC Pre-Diagnostic Troubleshooting procedure before proceeding. Refer to STANDARD PROCEDURE.

DIAGNOSTIC TEST

1. **CHECK IF DTC IS ACTIVE**
    1. Ignition on, engine not running.
    2. Using the scan tool, read HVAC DTCs.

    Is this DTC active?

    Yes

    - Go To 3

    No

    - Go To 2
2. **PERFORM HVAC ACTUATOR CALIBRATION TEST**
    1. Using the scan tool, perform the HVAC Actuator Calibration Test.

    Did this DTC change from Stored to Active while performing the HVAC Actuator Calibration Test?

    Yes

    - Go To 3

    No

    - Go To 5
3. **CHECK THE (C27) VARIABLE A/C CONTROL CIRCUIT FOR A SHORT TO GROUND**
    1. Turn the ignition off to the lock position.
    2. Disconnect the A/C Heater Module C1 harness connector.
    3. Disconnect the Variable A/C Compressor harness connector.
    4. Measure the resistance between ground and the (C27) Variable A/C Compressor control circuit.

    Is the resistance below 10k Ohms?

    Yes

    - Repair the (C27) Variable A/C Compressor control circuit for a short to ground.
    - Perform the HVAC VERIFICATION TEST. Refer to **STANDARD PROCEDURE**.

No

- Go To 4

4. **CHECK THE VARIABLE A/C COMPRESSOR**
   1. Diagnose the Variable A/C Compressor in accordance with the Service Information. Refer to **DIAGNOSIS AND TESTING** .
   2. Using the scan tool, erase HVAC DTCs and perform the HVAC Actuator Calibration Test.

      Did this DTC reset?

      Yes

      - Replace and program the A/C Heater Module in accordance with the Service Information. (Refer to 08 - Electrical/8E - Electronic Control Modules/MODULE, A/C and Heater/Installation).
      - Perform the HVAC VERIFICATION TEST. Refer to **STANDARD PROCEDURE**.

      No

      - Test complete.
      - Perform the HVAC VERIFICATION TEST. Refer to **STANDARD PROCEDURE**.
5. **CHECK THE WIRING AND CONNECTORS**
   1. The conditions necessary to set the DTC are not present at this time.
   2. Using the scan tool, check the Environmental Data to help identify the conditions in which the DTC was set.
   3. Using the wiring diagrams as a guide, check all related splices and connectors for signs of water intrusion, corrosion, pushed out or bent terminals, and correct pin tension.
   4. Wiggle the wiring and connectors while checking for shorted and open circuits.

      Were there any problems found?

      Yes

      - Repair as necessary.
      - Perform the HVAC VERIFICATION TEST. Refer to **STANDARD PROCEDURE**.

      No

      - Test complete.

B11FE-12-VARIABLE A/C COMPRESSOR CONTROL - CIRCUIT SHORT TO BATTERY

For a complete wiring diagram, **refer to appropriate SYSTEM WIRING DIAGRAMS article** .

WHEN MONITORED

With the ignition on and the HVAC on.

SET CONDITION

The HVAC Module detects a short voltage on the Variable A/C Compressor control circuit. If the A/C Heater Module detects a valid voltage, the DTC will change from Active to Stored and will stay in the controllers memory for 100 ignition cycles.

POSSIBLE CAUSES

Possible Causes
VARIABLE A/C COMPRESSOR CONTROL CIRCUIT SHORTED TO VOLTAGE
VARIABLE A/C COMPRESSOR
A/C HEATER MODULE

Always perform the HVAC Pre-Diagnostic Troubleshooting procedure before proceeding. Refer to STANDARD PROCEDURE.

DIAGNOSTIC TEST

1. **CHECK IF DTC IS ACTIVE**
    1. Ignition on, engine not running.
    2. Using the scan tool, read HVAC DTCs.

    Is this DTC active?

    Yes

    - Go To 3

    No

    - Go To 2
2. **PERFORM HVAC ACTUATOR CALIBRATION TEST**
    1. Using the scan tool, perform the HVAC Actuator Calibration Test.

    Did this DTC change from Stored to Active while performing the HVAC Actuator Calibration Test?

    Yes

    - Go To 3

No

- Go To 5

3. **CHECK THE (C27) VARIABLE A/C COMPRESSOR CONTROL CIRCUIT FOR A SHORT TO VOLTAGE**
   1. Turn the ignition off to the lock position.
   2. Disconnect the A/C Heater Module C1 harness connector.
   3. Disconnect the Variable A/C Compressor harness connector.
   4. Ignition on, engine not running.
   5. Measure the voltage of the (C27) Variable A/C Compressor control circuit.

   Is there any voltage present?

   Yes

   - Repair the (C27) Variable A/C Compressor control circuit for a short to voltage.
   - Perform the HVAC VERIFICATION TEST. Refer to **STANDARD PROCEDURE**.

   No

   - Go To 4

4. **CHECK THE VARIABLE A/C COMPRESSOR**
   1. Diagnose the Variable A/C Compressor in accordance with the Service Information. Refer to **DIAGNOSIS AND TESTING** .
   2. With the scan tool, erase HVAC DTCs and perform the HVAC Actuator Calibration Test.

   Did this DTC reset?

   Yes

   - Replace and program the A/C Heater Module in accordance with the Service Information. (Refer to 08 - Electrical/8E - Electronic Control Modules/MODULE, A/C and Heater/Installation).
   - Perform the HVAC VERIFICATION TEST. Refer to **STANDARD PROCEDURE**.

   No

   - Test complete.
   - Perform the HVAC VERIFICATION TEST. Refer to **STANDARD PROCEDURE**.

5. **CHECK THE WIRING AND CONNECTORS**
   1. The conditions necessary to set the DTC are not present at this time.
   2. With the scan tool, check the Environmental Data to help identify the conditions in which the DTC was set.

3. Using the wiring diagrams as a guide, check all related splices and connectors for signs of water intrusion, corrosion, pushed out or bent terminals, and correct pin tension.
4. Wiggle the wiring and connectors while checking for shorted and open circuits.

   Were there any problems found?

   Yes

   - Repair as necessary.
   - Perform the HVAC VERIFICATION TEST. Refer to **STANDARD PROCEDURE**.

   No

   - Test complete.

B11FE-13-VARIABLE A/C COMPRESSOR CONTROL - CIRCUIT OPEN

For a complete wiring diagram, **refer to appropriate SYSTEM WIRING DIAGRAMS article** .

WHEN MONITORED

With the ignition on and the HVAC off.

SET CONDITION

The A/C Heater Module detects an open in the Variable A/C Compressor control circuit. If the A/C Heater Module detects a valid current draw, the DTC will change from Active to Stored and will stay in the controllers memory for 100 ignition cycles.

POSSIBLE CAUSES

Possible Causes
VARIABLE A/C COMPRESSOR CONTROL CIRCUIT OPEN
VARIABLE A/C COMPRESSOR
A/C HEATER MODULE

Always perform the HVAC Pre-Diagnostic Troubleshooting procedure before proceeding. Refer to STANDARD PROCEDURE.

DIAGNOSTIC TEST

1. **CHECK IF DTC IS ACTIVE**
   1. Ignition on, engine not running.
   2. Using the scan tool, read HVAC DTCs.

Is this DTC active?

Yes

- Go To 3

No

- Go To 2

2. **PERFORM HVAC ACTUATOR CALIBRATION TEST**
   1. Using the scan tool, perform the HVAC Actuator Calibration Test.

      Did this DTC change from Stored to Active while performing the HVAC Actuator Calibration Test?

      Yes

      - Go To 3

      No

      - Go To 5

3. **CHECK THE (C27) VARIABLE A/C COMPRESSOR CONTROL CIRCUIT FOR AN OPEN**
   1. Turn the ignition off to the lock position.
   2. Disconnect the A/C Heater Module C1 harness connector.
   3. Disconnect the Variable A/C Compressor harness connector.
   4. Measure the resistance of the (C27) Variable A/C Compressor control circuit between the A/C Heater Module C1 harness connector and the Variable A/C Compressor harness connector.

      Is the resistance above 1.0 Ohm?

      Yes

      - Repair the (C27) Variable A/C Compressor control circuit for an open or high resistance.
      - Perform the HVAC VERIFICATION TEST. Refer to **STANDARD PROCEDURE**.

      No

      - Go To 4

4. **CHECK THE VARIABLE A/C COMPRESSOR**
   1. Diagnose the Variable A/C Compressor in accordance with the Service Information. Refer to **DIAGNOSIS AND TESTING** .
   2. With the scan tool, erase HVAC DTCs and perform the HVAC Actuator Calibration Test.

Did this DTC reset?

Yes

- Replace and program the A/C Heater Module in accordance with the Service Information. (Refer to 08 - Electrical/8E - Electronic Control Modules/MODULE, A/C and Heater/Installation).
- Perform the HVAC VERIFICATION TEST. Refer to **STANDARD PROCEDURE**.

No

- Test complete.
- Perform the HVAC VERIFICATION TEST. Refer to **STANDARD PROCEDURE**.

5. **CHECK THE WIRING AND CONNECTORS**
   1. The conditions necessary to set the DTC are not present at this time.
   2. Using the scan tool, check the Environmental Data to help identify the conditions in which the DTC was set.
   3. Using the wiring diagrams as a guide, check all related splices and connectors for signs of water intrusion, corrosion, pushed out or bent terminals, and correct pin tension.
   4. Wiggle the wiring and connectors while checking for shorted and open circuits.

   Were there any problems found?

   Yes

   - Repair as necessary.
   - Perform the HVAC VERIFICATION TEST. Refer to **STANDARD PROCEDURE**.

   No

   - Test complete.

B1600-11-LEFT SOLAR SENSOR-CIRCUIT SHORT TO GROUND

For a complete wiring diagram, **refer to appropriate SYSTEM WIRING DIAGRAMS article** .

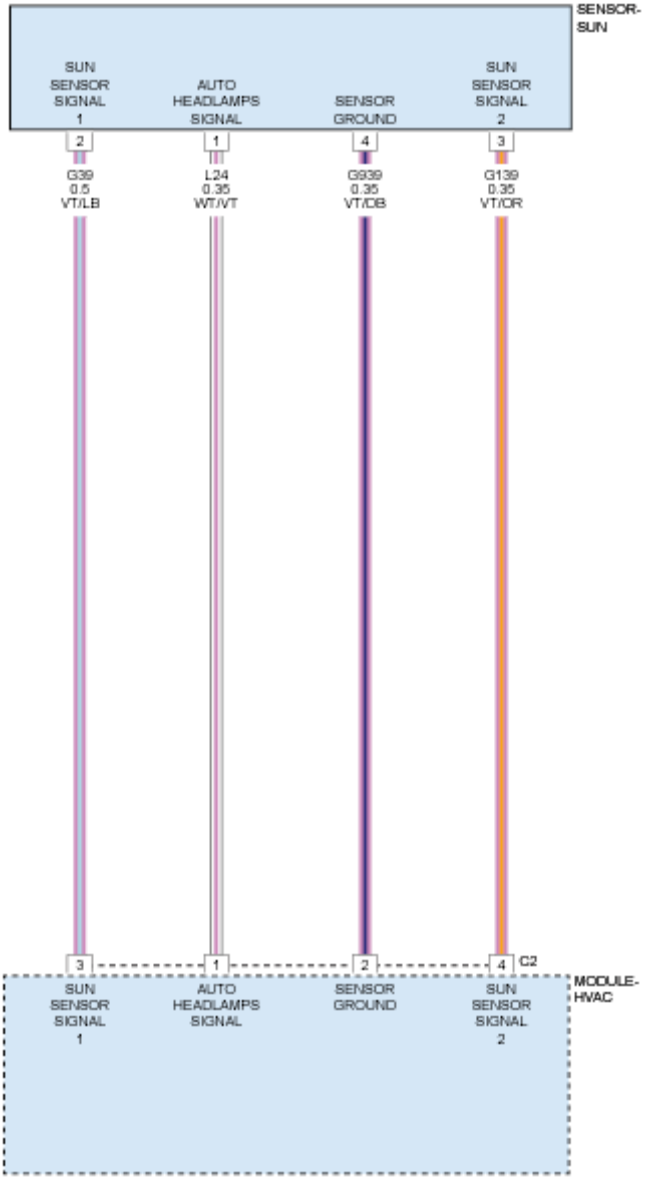

Fig. 47: Sun Sensor Wiring Diagram
Courtesy of CHRYSLER GROUP, LLC

THEORY OF OPERATION

The HVAC A/C Heater Module uses a variety of sensors to adjust HVAC operation to obtain optimal performance. These sensors are continuously monitored by the A/C Heater Module to assure that they are in range. If those sensors fall out of predetermined ranges a Diagnostic Trouble Code (DTC) will set. For further information. Refer to **SENSOR, SUN, OPERATION** .

WHEN MONITORED

Continuously with the ignition on.

SET CONDITION

If the A/C Heater Control detects a short to ground on Sun Sensor Signal 1 circuit.

POSSIBLE CAUSES

Possible Causes
SUN SENSOR 1 SIGNAL CIRCUIT SHORTED TO GROUND
SUN SENSOR
A/C HEATER CONTROL

Always perform the HVAC Pre-Diagnostic Troubleshooting procedure before proceeding. Refer to STANDARD PROCEDURE.

DIAGNOSTIC TEST

1. **CHECK IF THE DTC IS ACTIVE**
    1. Ignition on, engine not running.
    2. With the scan tool, read HVAC DTCs.

    Is this DTC active?

    Yes

    - Go To 2

    No

    - Go To 4
2. **CHECK (G39) SUN SENSOR SIGNAL 1 CIRCUIT FOR A SHORT TO GROUND**
    1. Turn the ignition off to the lock position.
    2. Disconnect the A/C Heater Control C1 harness connector.
    3. Measure the resistance between ground and the (G39) Sun Sensor Signal 1 circuit.

    Is the resistance below 100k Ohms?

    Yes

    - Repair the (G39) Sun Sensor 1 Signal circuit for a short to ground.
    - Perform the HVAC VERIFICATION TEST. Refer to **STANDARD PROCEDURE**.

    No

- Go To 3

3. **CHECK THE SUN SENSOR AND A/C HEATER CONTROL**
   1. Replace the Sun Sensor in accordance with the Service Information. Refer to **SENSOR, SUN, REMOVAL** .
   2. Perform the HVAC VERIFICATION TEST. Refer to **STANDARD PROCEDURE**.

      Did this DTC reset while performing the HVAC Verification Test?

      Yes

      - Replace and program the HVAC Module in accordance with the Service Information. Refer to **MODULE, HVAC, REMOVAL** .
      - Perform the HVAC VERIFICATION TEST. Refer to **STANDARD PROCEDURE**.

      No

      - Test complete.
4. **CHECK THE WIRING AND CONNECTORS**
   1. The conditions necessary to set the DTC are not present at this time.
   2. Using the scan tool, check the Environmental Data to help identify the conditions in which the DTC was set.
   3. Using the wiring diagrams as a guide, check all related splices and connectors for signs of water intrusion, corrosion, pushed out or bent terminals, and correct pin tension.
   4. Wiggle the wiring and connectors while checking for shorted and open circuits.

      Were there any problems found?

      Yes

      - Repair as necessary.
      - Perform the HVAC VERIFICATION TEST. Refer to **STANDARD PROCEDURE**.

      No

      - Test complete.

B1600-12-LEFT SOLAR SENSOR - CIRCUIT SHORT TO BATTERY

For a complete wiring diagram, **refer to appropriate SYSTEM WIRING DIAGRAMS article** .

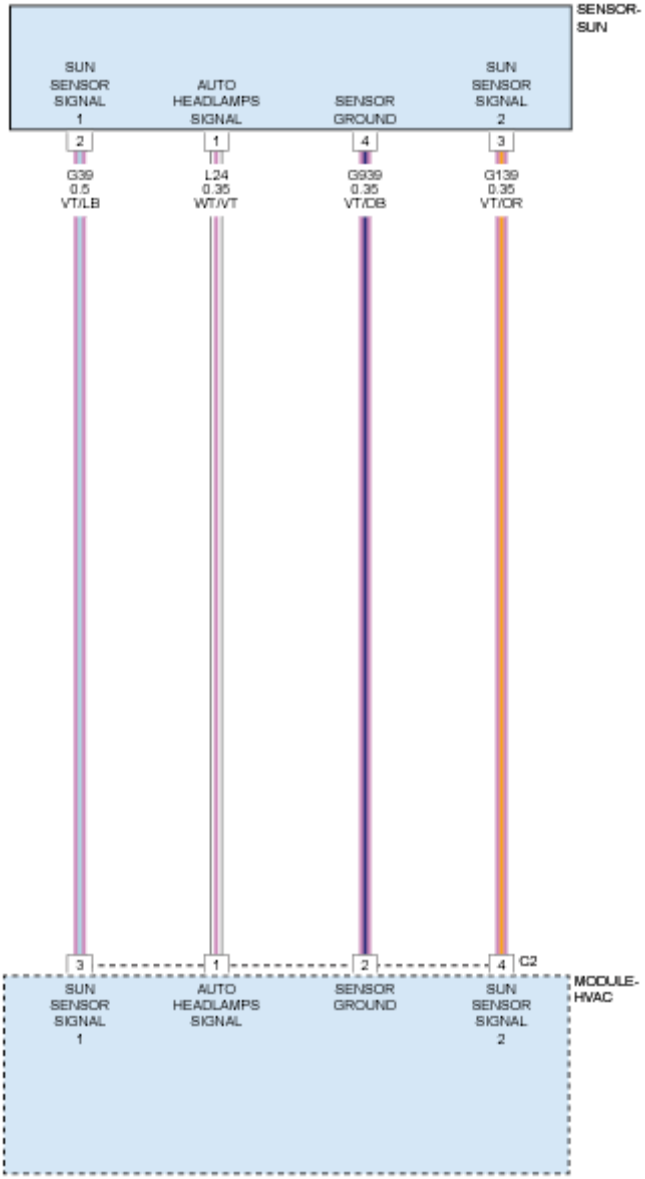

Fig. 48: Sun Sensor Wiring Diagram
Courtesy of CHRYSLER GROUP, LLC

THEORY OF OPERATION

The HVAC A/C Heater Module uses a variety of sensors to adjust HVAC operation to obtain optimal performance. These sensors are continuously monitored by the A/C Heater Module to assure that they are in range. If those sensors fall out of predetermined ranges a Diagnostic Trouble Code (DTC) will set. For further information. Refer to **SENSOR, SUN, OPERATION** .

WHEN MONITORED

With the ignition on.

SET CONDITION

If the A/C Heater Control detects a short to voltage on Sun Sensor Signal 1 circuit.

POSSIBLE CAUSES

Possible Causes
SUN SENSOR SIGNAL 1 CIRCUIT SHORTED TO VOLTAGE
SUN SENSOR SIGNAL 1 CIRCUIT OPEN
SUN SENSOR RETURN CIRCUIT OPEN
SUN SENSOR
A/C HEATER CONTROL

Always perform the HVAC Pre-Diagnostic Troubleshooting procedure before proceeding. Refer to STANDARD PROCEDURE.

DIAGNOSTIC TEST

1. **CHECK IF DTC IS ACTIVE**
    1. Ignition on, engine not running.
    2. With the scan tool, read HVAC DTCs.

    Is this DTC active?

    Yes

    - Go To 2

    No

    - Go To 6
2. **CHECK THE (G39) SUN SENSOR SIGNAL 1 CIRCUIT FOR A SHORT TO VOLTAGE**
    1. Turn the ignition off to the lock position.
    2. Disconnect the Sun Sensor harness connector.
    3. Disconnect the A/C Heater Control harness connector.

    NOTE: Check connectors - Clean/repair as necessary.

    4. Ignition on, engine not running.
    5. Check the voltage of the (G39) Sun Sensor Signal 1 circuit.

Is there any voltage present?

Yes

- Repair the (G39) Sun Sensor Signal 1 circuit for an short to voltage.
- Perform the HVAC VERIFICATION TEST. Refer to **STANDARD PROCEDURE**.

No

- Go To 3

3. **CHECK THE (G39) SUN SENSOR SIGNAL 1 CIRCUIT FOR AN OPEN**
   1. Turn the ignition off to the lock position.
   2. Measure the resistance of the (G39) Sun Sensor Signal 1 circuit between the A/C Heater Control harness connector and the Sun Sensor harness connector.

   Is the resistance above 5.0 Ohms?

   Yes

   - Repair the (G39) Sun Sensor Signal 1 circuit for an open.
   - Perform the HVAC VERIFICATION TEST. Refer to **STANDARD PROCEDURE**.

   No

   - Go To 4

4. **CHECK THE (G939) SUN SENSOR RETURN CIRCUIT FOR AN OPEN**
   1. Measure the resistance of the (G939) Sun Sensor Return circuit between the A/C Heater Control C1 harness connector and the Sun Sensor harness connector.

   Is the resistance above 5.0 Ohms?

   Yes

   - Repair the (G939) Sun Sensor Return circuit for an open.
   - Perform the HVAC VERIFICATION TEST. Refer to **STANDARD PROCEDURE**.

   No

   - Go To 5

5. **CHECK THE SUN SENSOR AND A/C HEATER CONTROL**
   1. Turn the ignition off to the lock position.
   2. Replace the Sun Sensor in accordance with the Service Information. Refer to **SENSOR, SUN, REMOVAL** .

3. Perform the HVAC VERIFICATION TEST. Refer to **STANDARD PROCEDURE**.

   Did the DTC reset during or after the HVAC Verification Test?

   Yes

   - Replace and program the HVAC Module in accordance with the Service Information. Refer to **MODULE, HVAC, REMOVAL** .
   - Perform the HVAC VERIFICATION TEST. Refer to **STANDARD PROCEDURE**.

   No

   - Test complete.

6. **CHECK THE WIRING AND CONNECTORS**
   1. The conditions necessary to set the DTC are not present at this time.
   2. Using the scan tool, check the Environmental Data to help identify the conditions in which the DTC was set.
   3. Using the wiring diagrams as a guide, check all related splices and connectors for signs of water intrusion, corrosion, pushed out or bent terminals, and correct pin tension.
   4. Wiggle the wiring and connectors while checking for shorted and open circuits.

   Were there any problems found?

   Yes

   - Repair as necessary.
   - Perform the HVAC VERIFICATION TEST. Refer to **STANDARD PROCEDURE**.

   No

   - Test complete.

B1603-11-RIGHT SOLAR SENSOR - CIRCUIT SHORT TO GROUND

For a complete wiring diagram, **refer to appropriate SYSTEM WIRING DIAGRAMS article** .

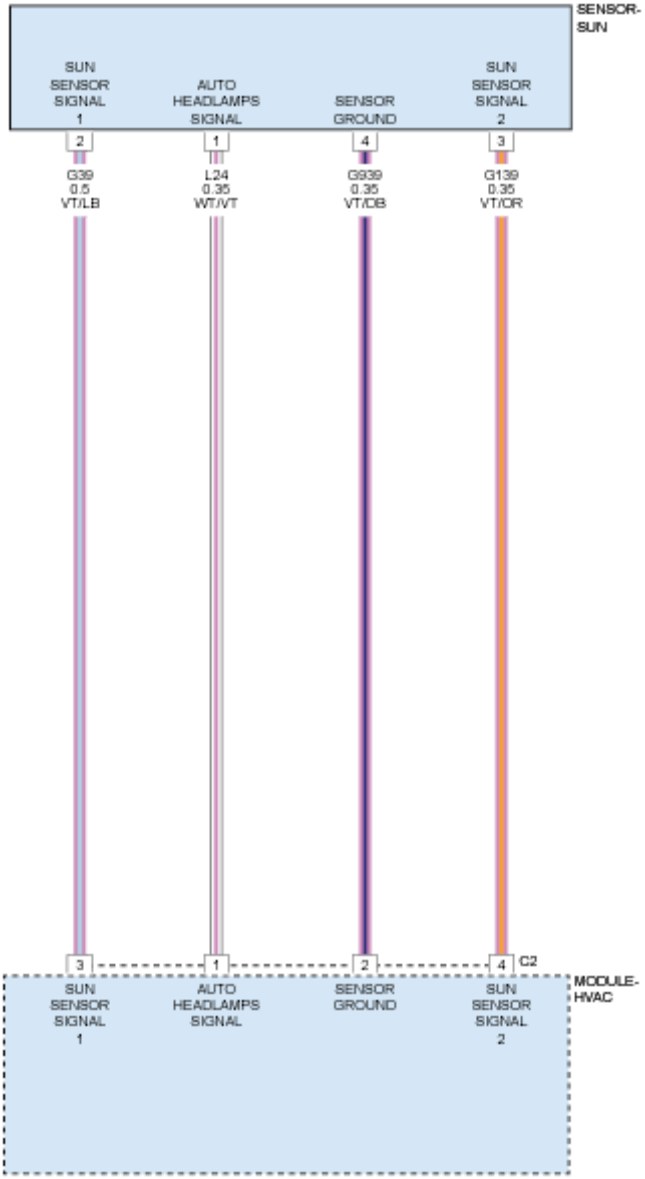

Fig. 49: Sun Sensor Wiring Diagram
Courtesy of CHRYSLER GROUP, LLC

THEORY OF OPERATION

The HVAC A/C Heater Module uses a variety of sensors to adjust HVAC operation to obtain optimal performance. These sensors are continuously monitored by the A/C Heater Module to assure that they are in range. If those sensors fall out of predetermined ranges a Diagnostic Trouble Code (DTC) will set. For further information. Refer to **SENSOR, SUN, OPERATION** .

WHEN MONITORED

With the ignition on.

SET CONDITION

If the A/C Heater Control detects a short to ground on Sun Sensor Signal 2 circuit.

POSSIBLE CAUSES

Possible Causes
SUN SENSOR SIGNAL 2 CIRCUIT SHORTED TO GROUND
SUN SENSOR
A/C HEATER CONTROL

Always perform the HVAC Pre-Diagnostic Troubleshooting procedure before proceeding. Refer to STANDARD PROCEDURE.

DIAGNOSTIC TEST

1. **CHECK IF THE DTC IS ACTIVE**
    1. Ignition on, engine not running.
    2. With the scan tool, read HVAC DTCs.

    Is this DTC active?

    Yes

    - Go To 2

    No

    - Go To 4
2. **CHECK (G139) SUN SENSOR SIGNAL 2 CIRCUIT FOR A SHORT TO GROUND**
    1. Turn the ignition off to the lock position.
    2. Disconnect the A/C Heater Control C1 harness connector.
    3. Disconnect the Sun Sensor harness connector.
    4. Measure the resistance between ground and the (G139) Sun Sensor Signal 2 circuit.

    Is the resistance below 100k Ohms?

    Yes

    - Repair the (G139) Sun Sensor Signal 2 circuit for a short to ground.
    - Perform the HVAC VERIFICATION TEST. Refer to **STANDARD PROCEDURE**.

No

- Go To 3

3. **CHECK THE SUN SENSOR AND A/C HEATER CONTROL**
   1. Replace the Sun Sensor in accordance with the Service Information. Refer to **SENSOR, SUN, REMOVAL** .
   2. Perform the HVAC VERIFICATION TEST. Refer to **STANDARD PROCEDURE**.

   Did this DTC reset while performing the HVAC Verification Test?

   Yes

   - Replace and program the HVAC Module in accordance with the Service Information. Refer to **MODULE, HVAC, REMOVAL** .
   - Perform the HVAC VERIFICATION TEST. Refer to **STANDARD PROCEDURE**.

   No

   - Test complete.

4. **CHECK THE WIRING AND CONNECTORS**
   1. The conditions necessary to set the DTC are not present at this time.
   2. Using the scan tool, check the Environmental Data to help identify the conditions in which the DTC was set.
   3. Using the wiring diagrams as a guide, check all related splices and connectors for signs of water intrusion, corrosion, pushed out or bent terminals, and correct pin tension.
   4. Wiggle the wiring and connectors while checking for shorted and open circuits.

   Were there any problems found?

   Yes

   - Repair as necessary.
   - Perform the HVAC VERIFICATION TEST. Refer to **STANDARD PROCEDURE**.

   No

   - Test complete.

B1603-12-RIGHT SOLAR SENSOR - CIRCUIT SHORT TO BATTERY

For a complete wiring diagram, **refer to appropriate SYSTEM WIRING DIAGRAMS article** .

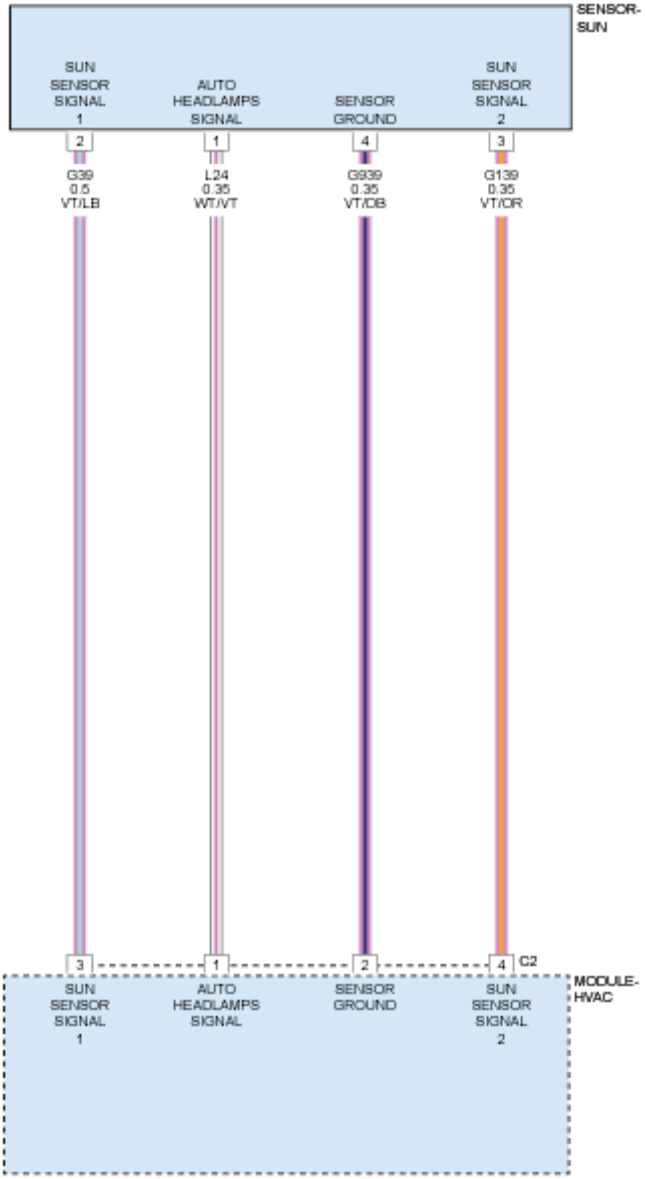

Fig. 50: Sun Sensor Wiring Diagram
Courtesy of CHRYSLER GROUP, LLC

THEORY OF OPERATION

The HVAC A/C Heater Module uses a variety of sensors to adjust HVAC operation to obtain optimal performance. These sensors are continuously monitored by the A/C Heater Module to assure that they are in range. If those sensors fall out of predetermined ranges a Diagnostic Trouble Code (DTC) will set. For further information. Refer to **SENSOR, SUN, OPERATION** .

WHEN MONITORED

With the ignition on.

SET CONDITION

If the A/C Heater Control detects a short to voltage on Sun Sensor Signal 2 circuit.

POSSIBLE CAUSES

Possible Causes
SUN SENSOR SIGNAL 2 CIRCUIT SHORTED TO VOLTAGE
SUN SENSOR SIGNAL 2 CIRCUIT OPEN
SUN SENSOR RETURN CIRCUIT OPEN
SUN SENSOR
A/C HEATER CONTROL

Always perform the HVAC Pre-Diagnostic Troubleshooting procedure before proceeding. Refer to STANDARD PROCEDURE.

DIAGNOSTIC TEST

1. **CHECK IF DTC IS ACTIVE**
    1. Ignition on, engine not running.
    2. With the scan tool, read HVAC DTCs.

    Is this DTC active?

    Yes

    - Go To 2

    No

    - Go To 6
2. **CHECK THE (G139) SUN SENSOR 2 SIGNAL CIRCUIT FOR A SHORT TO VOLTAGE**
    1. Turn the ignition off to the lock position.
    2. Disconnect the Sun Sensor harness connector.
    3. Disconnect the A/C Heater Control harness connector.

    NOTE: Check connectors - Clean/repair as necessary.

    4. Ignition on, engine not running.
    5. Check the voltage of the (G139) Sun Sensor 2 Signal circuit.

Is there any voltage present?

Yes

- Repair the (G139) Sun Sensor 2 Signal circuit for an short to voltage.
- Perform the HVAC VERIFICATION TEST. Refer to **STANDARD PROCEDURE**.

No

- Go To 3

3. **CHECK THE (G139) SUN SENSOR 2 SIGNAL CIRCUIT FOR AN OPEN**
   1. Turn the ignition off to the lock position.
   2. Measure the resistance of the (G139) Sun Sensor 2 Signal circuit between the A/C Heater Control harness connector and the Sun Sensor harness connector.

   Is the resistance above 5.0 Ohms?

   Yes

   - Repair the (G139) Sun Sensor 2 Signal circuit for an open.
   - Perform the HVAC VERIFICATION TEST. Refer to **STANDARD PROCEDURE**.

   No

   - Go To 4

4. **CHECK THE (G939) SUN SENSOR RETURN CIRCUIT FOR AN OPEN**
   1. Measure the resistance of the (G939) Sun Sensor Return circuit between the A/C Heater Control C1 harness connector and the Sun Sensor harness connector.

   Is the resistance above 5.0 Ohms?

   Yes

   - Repair the (G939) Sun Sensor Return circuit for an open.
   - Perform the HVAC VERIFICATION TEST. Refer to **STANDARD PROCEDURE**.

   No

   - Go To 5

5. **CHECK THE SUN SENSOR AND A/C HEATER CONTROL**
   1. Turn the ignition off to the lock position.
   2. Replace the Sun Sensor in accordance with the Service Information. Refer to **SENSOR, SUN, REMOVAL** .

3. Perform the HVAC VERIFICATION TEST. Refer to **STANDARD PROCEDURE**.

   Did the DTC reset during or after the HVAC Verification Test?

   Yes

   - Replace and program the HVAC Module in accordance with the Service Information. Refer to **MODULE, HVAC, REMOVAL** .
   - Perform the HVAC VERIFICATION TEST. Refer to **STANDARD PROCEDURE**.

   No

   - Test complete.

6. **CHECK THE WIRING AND CONNECTORS**
   1. The conditions necessary to set the DTC are not present at this time.
   2. Using the scan tool, check the Environmental Data to help identify the conditions in which the DTC was set.
   3. Using the wiring diagrams as a guide, check all related splices and connectors for signs of water intrusion, corrosion, pushed out or bent terminals, and correct pin tension.
   4. Wiggle the wiring and connectors while checking for shorted and open circuits.

   Were there any problems found?

   Yes

   - Repair as necessary.
   - Perform the HVAC VERIFICATION TEST. Refer to **STANDARD PROCEDURE**.

   No

   - Test complete.

B160F-11-TWILIGHT/AMBIENT LIGHT SENSOR INPUT - CIRCUIT SHORT TO GROUND

For a complete wiring diagram, **refer to appropriate SYSTEM WIRING DIAGRAMS article** .

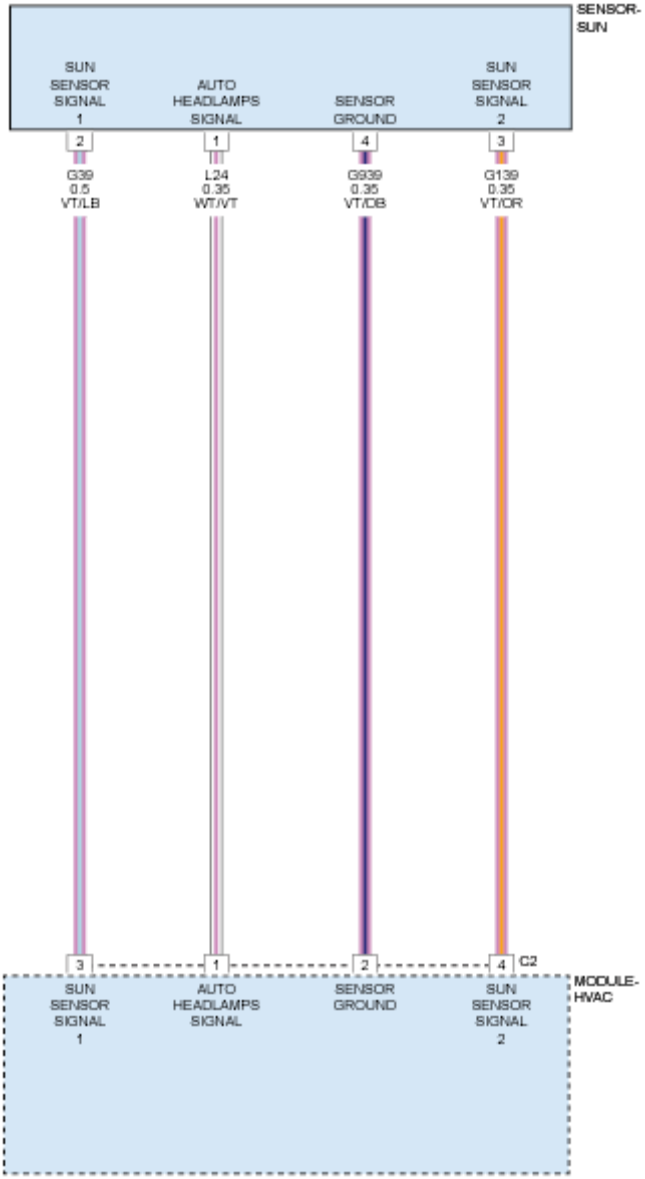

Fig. 51: Sun Sensor Wiring Diagram
Courtesy of CHRYSLER GROUP, LLC

THEORY OF OPERATION

The HVAC A/C Heater Module uses a variety of sensors to adjust HVAC operation to obtain optimal performance. These sensors are continuously monitored by the A/C Heater Module to assure that they are in range. If those sensors fall out of predetermined ranges a Diagnostic Trouble Code (DTC) will set. For further information. Refer to **SENSOR, SUN, OPERATION** .

WHEN MONITORED

With the ignition on.

SET CONDITION

If the Twilight or Ambient Light Sensor input voltage is less than 1.05 volts for period of 1.2 seconds.

POSSIBLE CAUSES

Possible Causes
AUTO HEADLAMPS SIGNAL CIRCUIT SHORTED TO GROUND
SUN SENSOR
A/C HEATER CONTROL

Always perform the HVAC Pre-Diagnostic Troubleshooting procedure before proceeding. Refer to STANDARD PROCEDURE.

DIAGNOSTIC TEST

1. **CHECK IF THE DTC IS ACTIVE**
   1. Ignition on, engine not running.
   2. With the scan tool, read HVAC DTCs.

      Is this DTC active?

      Yes

      - Go To 2

      No

      - Go To 4
2. **CHECK (L24) AUTO HEADLAMPS SIGNAL CIRCUIT FOR A SHORT TO GROUND**
   1. Turn the ignition off to the lock position.
   2. Disconnect the A/C Heater Control C1 harness connector.
   3. Disconnect the Sun Sensor harness connector.
   4. Measure the resistance between ground and the (L24) Auto Headlamps Signal circuit.

      Is the resistance below 100k Ohms?

      Yes

      - Repair the (L24) Auto Headlamps Signal circuit for a short to ground.
      - Perform the HVAC VERIFICATION TEST. Refer to **STANDARD PROCEDURE**.

No

- Go To 3

3. **CHECK THE SUN SENSOR AND A/C HEATER CONTROL**
   1. Replace the Sun Sensor in accordance with the Service Information. Refer to **SENSOR, SUN, REMOVAL** .
   2. Perform the HVAC VERIFICATION TEST. Refer to **STANDARD PROCEDURE**.

   Did this DTC reset while performing the HVAC Verification Test?

   Yes

   - Replace and program the HVAC Module in accordance with the Service Information. Refer to **MODULE, HVAC, REMOVAL** .
   - Perform the HVAC VERIFICATION TEST. Refer to **STANDARD PROCEDURE**.

   No

   - Test complete.

4. **CHECK THE WIRING AND CONNECTORS**
   1. The conditions necessary to set the DTC are not present at this time.
   2. With the scan tool, check the Environmental Data to help identify the conditions in which the DTC was set.
   3. Using the wiring diagrams as a guide, check all related splices and connectors for signs of water intrusion, corrosion, pushed out or bent terminals, and correct pin tension.
   4. Wiggle the wiring and connectors while checking for shorted and open circuits.

   Were there any problems found?

   Yes

   - Repair as necessary.
   - Perform the HVAC VERIFICATION TEST. Refer to **STANDARD PROCEDURE**.

   No

   - Test complete.

B160F-12-TWILIGHT/AMBIENT LIGHT SENSOR INPUT-CIRCUIT SHORT TO BATTERY

For a complete wiring diagram, **refer to appropriate SYSTEM WIRING DIAGRAMS article** .

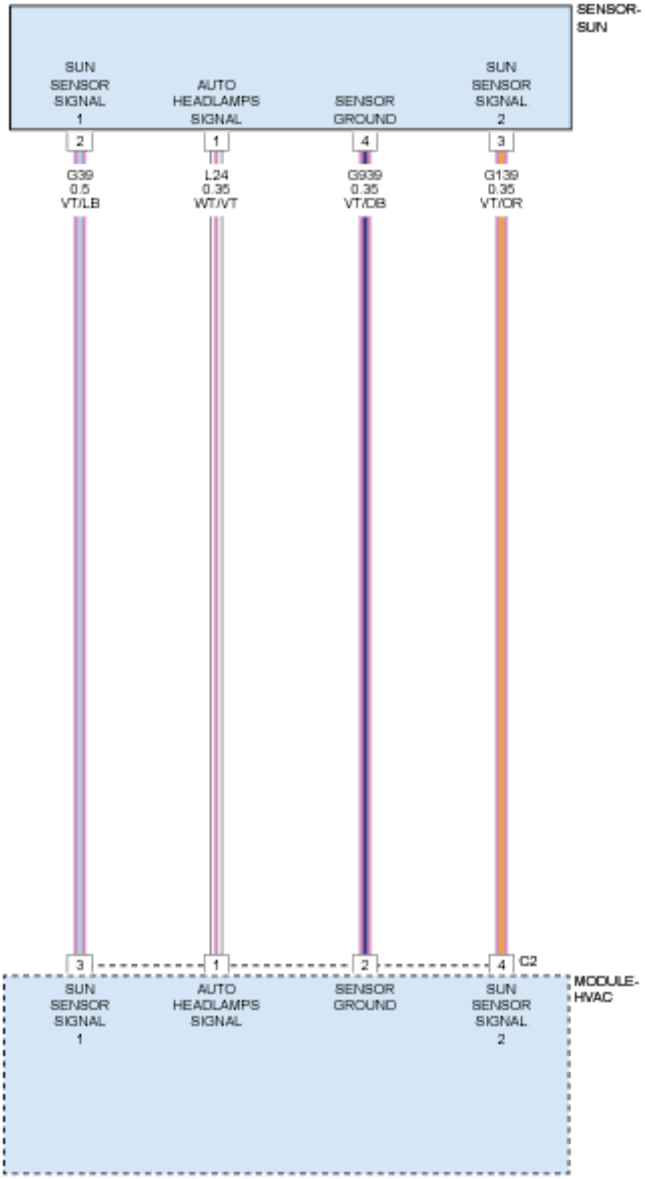

Fig. 52: Sun Sensor Wiring Diagram
Courtesy of CHRYSLER GROUP, LLC

THEORY OF OPERATION

The HVAC A/C Heater Module uses a variety of sensors to adjust HVAC operation to obtain optimal performance. These sensors are continuously monitored by the A/C Heater Module to assure that they are in range. If those sensors fall out of predetermined ranges a Diagnostic Trouble Code (DTC) will set. For further information. Refer to **SENSOR, SUN, OPERATION** .

WHEN MONITORED

With the ignition on.

SET CONDITION

If the Twilight or Ambient Light Sensor input voltage is greater than 4.83 volts for period of 1.2 seconds.

POSSIBLE CAUSES

Possible Causes
AUTO HEADLAMPS SIGNAL CIRCUIT SHORTED TO VOLTAGE
AUTO HEADLAMPS SIGNAL CIRCUIT OPEN
SUN SENSOR RETURN CIRCUIT OPEN
SUN SENSOR
A/C HEATER CONTROL

Always perform the HVAC Pre-Diagnostic Troubleshooting procedure before proceeding. Refer to STANDARD PROCEDURE.

DIAGNOSTIC TEST

1. **CHECK IF THE DTC IS ACTIVE**
    1. Ignition on, engine not running.
    2. With the scan tool, read HVAC DTCs.

    Is this DTC active?

    Yes

    - Go To 2

    No

    - Go To 6
2. **CHECK THE (L24) AUTO HEADLAMPS SIGNAL CIRCUIT FOR A SHORT TO VOLTAGE**
    1. Turn the ignition off.
    2. Disconnect the A/C Heater Control C1 harness connector.
    3. Ignition on, engine not running.
    4. Measure the voltage of the (L24) Auto Headlamps Signal circuit.

    Is there any voltage present?

    Yes

    - Repair the (L24) Auto Headlamps Signal circuit for a short to voltage.

- Perform the HVAC VERIFICATION TEST. Refer to **STANDARD PROCEDURE**.

No

- Go To 3

3. **CHECK THE (L24) AUTO HEADLAMPS SIGNAL CIRCUIT FOR AN OPEN**
   1. Turn the ignition off to the lock position.
   2. Disconnect the Sun Sensor harness connector.
   3. Measure the resistance of the (L24) Auto Headlamps Signal circuit between the A/C Heater Control C1 harness connector and the Sun Sensor harness connector.

      Is the resistance below 5.0 Ohms?

      Yes

      - Go To 4

      No

      - Repair the (L24) Auto Headlamps Signal circuit for an open.
      - Perform the HVAC VERIFICATION TEST. Refer to **STANDARD PROCEDURE**.
4. **CHECK THE (G939) SUN SENSOR RETURN CIRCUIT FOR AN OPEN**
   1. Measure the resistance of the (G939) Sun Sensor Return circuit between the A/C Heater Control C1 harness connector and the Sun Sensor harness connector.

      Is the resistance below 5.0 Ohms?

      Yes

      - Go To 5

      No

      - Repair the (G939) Sun Sensor Return circuit for an open.
      - Perform the HVAC VERIFICATION TEST. Refer to **STANDARD PROCEDURE**.
5. **CHECK THE SUN SENSOR AND A/C HEATER CONTROL**
   1. Replace the Sun Sensor in accordance with the Service Information. Refer to **SENSOR, SUN, REMOVAL** .
   2. Perform the HVAC VERIFICATION TEST. Refer to **STANDARD PROCEDURE**.

      Did this DTC reset while performing the HVAC Verification Test?

      Yes

- Replace and program the HVAC Module in accordance with the Service Information. Refer to **MODULE, HVAC, REMOVAL** .
- Perform the HVAC VERIFICATION TEST. Refer to **STANDARD PROCEDURE**.

No

- Test complete.

6. **CHECK THE WIRING AND CONNECTORS**
   1. The conditions necessary to set the DTC are not present at this time.
   2. Using the scan tool, check the Environmental Data to help identify the conditions in which the DTC was set.
   3. Using the wiring diagrams as a guide, check all related splices and connectors for signs of water intrusion, corrosion, pushed out or bent terminals, and correct pin tension.
   4. Wiggle the wiring and connectors while checking for shorted and open circuits.

   Were there any problems found?

   Yes

   - Repair as necessary.
   - Perform the HVAC VERIFICATION TEST. Refer to **STANDARD PROCEDURE**.

   No

   - Test complete.

B210D-84-BATTERY VOLTAGE LOW - SIGNAL BELOW ALLOWABLE RANGE

For a complete wiring diagram, **refer to appropriate SYSTEM WIRING DIAGRAMS article** .

THEORY OF OPERATION

The A/C Heater Control constantly monitors battery and ignition voltage as well as battery voltage derived from BUS communication to ensure proper operation. If the voltage to the controller is out of range, it could cause damage to the controller or its respective components. If the voltage of either circuit drops below or rises above a predetermined calibration a Diagnostic Trouble Code (DTC) will set.

WHEN MONITORED

With the ignition on.

SET CONDITION

If the controller battery voltage is less than or equal to 10.0 volts for period of five seconds.

POSSIBLE CAUSES

Possible Causes
RELATED CHARGING SYSTEM DTCS PRESENT
FUSED IGNITION SWITCH OUTPUT CIRCUIT OPEN
FUSED B(+) CIRCUIT OPEN
GROUND CIRCUIT OPEN
A/C HEATER CONTROL

Always perform the HVAC Pre-Diagnostic Troubleshooting procedure before proceeding. Refer to STANDARD PROCEDURE.

DIAGNOSTIC TEST

1. **CHECK FOR CHARGING SYSTEM DTCS**
    1. Using the scan tool, read PCM DTCs.

       Are there any charging system DTCs present in the Powertrain Control Module (PCM)?

       Yes

       - Refer to the **DTC INDEX** article and perform the appropriate diagnostic procedure.

       No

       - Go To 2
2. **CHECK FOR BODY CONTROL MODULE DTCS**
    1. Using the scan tool, read BCM DTCs.

       Are there any BCM DTCS present?

       Yes

       - Refer to the **DIAGNOSIS AND TESTING** and perform the appropriate diagnostic procedure.

       No

       - Go To 3
3. **CHECK IF THE DTC IS ACTIVE**
    1. Using the scan tool, read HVAC DTCs.

       Is this DTC active?

Yes

- Go To 4

No

- Go To 7

4. **CHECK THE (F949) FUSED IGNITION SWITCH OUTPUT CIRCUIT FOR AN OPEN**
   1. Ignition on, engine not running.
   2. While back probing, measure the voltage of the (F949) Fused Ignition Switch Output circuit in the A/C Heater Control C1 harness connector.

   Is the voltage 10.0 volts or below?

   Yes

   - Repair the (F949) Fused Ignition Switch Output circuit for an open or high resistance.

     NOTE: If the fuse is open, make sure to check for a short to ground on the (F949) Fused Ignition Switch Output circuit.

   - Perform the HVAC VERIFICATION TEST. Refer to **STANDARD PROCEDURE**.

   No

   - Go To 5

5. **CHECK THE (A937) FUSED B(+) CIRCUIT FOR AN OPEN**
   1. Ignition on, engine not running.
   2. While back probing, measure the voltage of the (A937) Fused B (+) circuit in the A/C Heater Control C1 harness connector.

   Is the voltage 10.0 volts or below?

   Yes

   - Repair the (A937) Fused B (+) circuit for an open or high resistance.

     NOTE: Make sure to check if the IOD fuse is installed. If the fuse is open, make sure to check for a short to ground.

   - Perform the HVAC VERIFICATION TEST. Refer to **STANDARD PROCEDURE**.

   No

- Go To 6

6. **CHECK THE (Z912) GROUND CIRCUIT FOR AN OPEN**
   1. Turn the ignition off to the lock position.
   2. Disconnect the A/C Heater Control C1 harness connector.
   3. Using a 12-volt test light connected to 12-volts, check the (Z912) Ground circuit.

   NOTE: The test light must illuminate brightly. Compare the brightness to that of a direct connection to the battery.

   Does the test light illuminate brightly?

   Yes

   - Replace and program the HVAC Module in accordance with the Service Information. Refer to **MODULE, HVAC, REMOVAL** .
   - Perform the HVAC VERIFICATION TEST. Refer to **STANDARD PROCEDURE**.

   No

   - Repair the (Z912) Ground circuit for an open.
   - Perform the HVAC VERIFICATION TEST. Refer to **STANDARD PROCEDURE**.

7. **CHECK THE WIRING AND CONNECTORS**
   1. The conditions necessary to set the DTC are not present at this time.
   2. Using the scan tool, check the Environmental Data to help identify the conditions in which the DTC was set.
   3. Using the wiring diagrams as a guide, check all related splices and connectors for signs of water intrusion, corrosion, pushed out or bent terminals, and correct pin tension.
   4. Wiggle the wiring and connectors while checking for shorted and open circuits.

   Were there any problems found?

   Yes

   - Repair as necessary.
   - Perform the HVAC VERIFICATION TEST. Refer to **STANDARD PROCEDURE**.

   No

   - Test complete.

B210E-85-BATTERY VOLTAGE HIGH - SIGNAL ABOVE ALLOWABLE RANGE

For a complete wiring diagram, **refer to appropriate SYSTEM WIRING DIAGRAMS article** .

THEORY OF OPERATION

The A/C Heater Control constantly monitors battery and ignition voltage as well as battery voltage derived from BUS communication to ensure proper operation. If the voltage to the controller is out of range, it could cause damage to the controller or its respective components. If the voltage of either circuit drops below or rises above a predetermined calibration a Diagnostic Trouble Code (DTC) will set.

WHEN MONITORED

With the ignition on.

SET CONDITION

If the controller battery voltage is higher than 16.0 volts for period of one second.

POSSIBLE CAUSES

Possible Causes
RELATED CHARGING SYSTEM DTCS PRESENT
A/C HEATER CONTROL

Always perform the HVAC Pre-Diagnostic Troubleshooting procedure before proceeding. Refer to STANDARD PROCEDURE.

DIAGNOSTIC TEST

1. **CHECK FOR CHARGING SYSTEM DTCS**
    1. Using the scan tool, read PCM DTCs.

       Are there any charging system DTCs present in the Powertrain Control Module (PCM)?

       Yes

       - Refer to the **DTC INDEX** article and perform the appropriate diagnostic procedure.

       No

       - Go To 2
2. **CHECK FOR BODY CONTROL MODULE (BCM) DTCS**
    1. Using the scan tool, read BCM DTCs.

       Are there any BCM DTCs present?

       Yes

- Refer to the **DIAGNOSIS AND TESTING** and perform the appropriate diagnostic procedure.

  .

No

- Go To 3

3. **CHECK IF THE DTC IS ACTIVE**
   1. Using the scan tool, read HVAC DTCs.

      Is this DTC active?

      Yes

      - Go To 4

      No

      - Go To 5

4. **CHECK IF OTHER CONTROLLER ARE REPORTING AN OVER VOLTAGE CONDITION**
   1. Ignition on, engine not running.
   2. With the scan tool read DTCs.

      Are any other controllers reporting an over voltage condition?

      Yes

      - Go to DTC Based Diagnostics and perform the appropriate diagnostic procedure.

      No

      - Replace and program the HVAC Module in accordance with the Service Information. Refer to **MODULE, HVAC, REMOVAL** .
      - Perform the HVAC VERIFICATION TEST. Refer to **STANDARD PROCEDURE**.

5. **CHECK THE WIRING AND CONNECTORS**
   1. The conditions necessary to set the DTC are not present at this time.
   2. Using the scan tool, check the Environmental Data to help identify the conditions in which the DTC was set.
   3. Using the wiring diagrams as a guide, check all related splices and connectors for signs of water intrusion, corrosion, pushed out or bent terminals, and correct pin tension.
   4. Wiggle the wiring and connectors while checking for shorted and open circuits.

Were there any problems found?

Yes

- Repair as necessary.
- Perform the HVAC VERIFICATION TEST. Refer to **STANDARD PROCEDURE**.

No

- Test complete.

B2214-00-HVAC CLIMATE CONTROL - INTERNAL ERROR

For a complete wiring diagram, **refer to appropriate SYSTEM WIRING DIAGRAMS article** .

WHEN MONITORED

With the ignition on.

SET CONDITION

If the A/C Heater Control has an internal fault. This Diagnostic Trouble Code (DTC) has a maturing time of five seconds and a de-maturing time of 10 seconds. If the DTCs status changes from active to stored it will stay in memory for 100 ignition cycles.

POSSIBLE CAUSES

Possible Causes
A/C HEATER CONTROL

Always perform the HVAC Pre-Diagnostic Troubleshooting procedure before proceeding. Refer to STANDARD PROCEDURE.

DIAGNOSTIC TEST

CHECK THE A/C HEATER CONTROL

Repair

- Check for any controller software updates if applicable. If an update is available, reprogram the controller with the latest software. If no software updates are available, replace and program the A/C Heater Control in accordance with the Service Information. Refer to **MODULE, HVAC, REMOVAL** .
- Perform the HVAC VERIFICATION TEST. Refer to **STANDARD PROCEDURE**.

B222A-00-VEHICLE LINE MISMATCH

For a complete wiring diagram, **refer to appropriate SYSTEM WIRING DIAGRAMS article** .

THEORY OF OPERATION

The A/C Heater Controller checks for vehicle configuration using communication over the BUS. If the stored configuration does not match the configuration stored in the controller this DTC will set.

WHEN MONITORED

With the ignition on.

SET CONDITION

If the stored configuration does not match the configuration stored in the controller.

POSSIBLE CAUSES

Possible Causes
VEHICLE CONFIGURATION NOT STORED IN THE BODY CONTROL MODULE (BCM)
CONTROL MODULE INSTALLED IN INCORRECT VEHICLE
A/C HEATER CONTROL

Always perform the HVAC Pre-Diagnostic Troubleshooting procedure before proceeding. Refer to STANDARD PROCEDURE.

DIAGNOSTIC TEST

CHECK THE VEHICLE CONFIGURATION

NOTE: The DTC must be active and no BUS communication DTCs present before performing this test. If BUS communication DTCs are present, perform there respective test first. If the DTC is stored, erase the DTC and cycle the ignition. If the DTC resets and changes to active, then proceed.

1. With the scan tool, check the vehicle configuration stored in the Body Control Module (BCM).
2. With the scan tool, check the vehicle configuration stored in the A/C Heater Control (HVAC).

   Pick the answer that best describes your findings:

   BCM has wrong or no vehicle configuration

   - With the scan tool, program the proper vehicle configuration in the BCM.
   - Perform the HVAC VERIFICATION TEST. Refer to **STANDARD PROCEDURE**.

   HVAC has wrong vehicle configuration but BCM has correct configuration.

- Replace and program the A/C Heater Control in accordance with the Service Information. Refer to **MODULE, HVAC, REMOVAL** .
- Perform the HVAC VERIFICATION TEST. Refer to **STANDARD PROCEDURE**.

HVAC and BCM have proper calibration and the DTC is active in the HVAC.

- Check if other modules such as the Powertrain Control Module (PCM) have the wrong configuration stored in the controller and reprogram or replace as necessary. If all other modules show the proper configuration, replace the A/C Heater Control in accordance with the Service Information. Refer to **MODULE, HVAC, REMOVAL** .
- Perform the HVAC VERIFICATION TEST. Refer to **STANDARD PROCEDURE**.

U0010-00-CAN INTERIOR BUS

Perform the COMMUNICATION PRE-DIAGNOSTIC PROCEDURE. Refer to **STANDARD PROCEDURE** .

U0011-00-CAN INTERIOR BUS OFF PERFORMANCE

Perform the COMMUNICATION PRE-DIAGNOSTIC PROCEDURE. Refer to **STANDARD PROCEDURE** .

U0140-00-LOST COMMUNICATION WITH BODY CONTROL MODULE

Perform the COMMUNICATION PRE-DIAGNOSTIC PROCEDURE. Refer to **STANDARD PROCEDURE** .

U0155-00-LOST COMMUNICATION WITH CLUSTER/CCN

For a complete wiring diagram, **refer to appropriate SYSTEM WIRING DIAGRAMS article** .

WHEN MONITORED

Continuously when the ignition is on.

Battery voltage between 10 and 16 volts.

Ignition Off Draw (IOD) fuse installed.

Body Control Module (BCM) is configured correctly.

SET CONDITION

Bus messages not received from the Instrument Cluster (CCN) for approximately two to five seconds.

POSSIBLE CAUSES

Possible Causes
CAN INTERIOR BUS (+) CIRCUIT SHORTED TO VOLTAGE
CAN INTERIOR BUS (-) CIRCUIT SHORTED TO GROUND
INSTRUMENT CLUSTER POWER AND GROUND
BCM NOT CONFIGURED CORRECTLY
INSTRUMENT CLUSTER (CCN)
MODULE THAT SET THIS DTC

DIAGNOSTIC TEST

VERIFY DTC IS ACTIVE

NOTE: Make sure the IOD fuse is installed and the battery is fully charged before proceeding.

1. Turn the ignition on.
2. With the scan tool, read active DTCs.

   Is this DTC active?

   Yes

   - Refer to **DIAGNOSIS AND TESTING** and perform the U0155-Lost Communication with Cluster/CCN - Missing Message diagnostic procedure.

   No

   - Refer to **DIAGNOSIS AND TESTING** and perform the Stored Lost Communication DTCs diagnostic procedure.

U0184-00-LOST COMMUNICATION WITH RADIO

For a complete wiring diagram, **refer to appropriate SYSTEM WIRING DIAGRAMS article** .

WHEN MONITORED

Continuously when the ignition is on.

Battery voltage between 10 and 16 volts.

Body Control Module (BCM) is configured correctly.

SET CONDITION

Bus messages not received from the Radio for approximately two to five seconds.

POSSIBLE CAUSES

Possible Causes
CAN IHS BUS (125K) (+) CIRCUIT SHORTED TO VOLTAGE
CAN IHS BUS (125K) (-) CIRCUIT SHORTED TO GROUND
RADIO POWER AND GROUND
BCM NOT CONFIGURED CORRECTLY
RADIO
MODULE THAT SET THIS DTC

DIAGNOSTIC TEST

VERIFY DTC IS ACTIVE

NOTE: Make sure the battery is fully charged before proceeding.

1. Turn the ignition on.
2. With the scan tool, read the active DTCs.

   Does the scan tool display: U0184-00-LOST COMMUNICATION WITH RADIO?

   Yes

   - Refer to **DIAGNOSIS AND TESTING** and perform the U0184-87-Lost Communication with Radio diagnostic procedure.

   No

   - Refer to **DIAGNOSIS AND TESTING** and perform the Stored Lost Communication DTCs diagnostic procedure.

U0401-00-IMPLAUSABLE DATA RECIEVED FROM ECM/PCM

For a complete wiring diagram, **refer to appropriate SYSTEM WIRING DIAGRAMS article** .

WHEN MONITORED

During any Keyless Go, Passive Entry or Engine Starting operations.

SET CONDITION

Incorrect data received from Powertrain Control Module (PCM).

POSSIBLE CAUSES

Possible Causes
NO COMMUNICATION WITH POWERTRAIN CONTROL MODULE (PCM)
ACTIVE DTCS IN THE PCM
ACTIVE COMMUNICATION DTCS IN THE BCM
POWERTRAIN CONTROL MODULE
MODULE THAT SET THIS DTC

DIAGNOSTIC TEST

1. **CHECK FOR AN ACTIVE DIAGNOSTIC TROUBLE CODE (DTC)**

   NOTE: In this test, do not erase any DTCs until instructed to do so.

   1. Turn the ignition on.
   2. With the scan tool, read the active DTCs.

      Does the scan tool display this DTC as active?

      Yes

      - Go To 2

      No

      - Go To 6
2. **VERIFY PCM IS ACTIVE ON THE CAN BUS**
   1. With the scan tool, select ECU View.
   2. Verify that the PCM is active on the bus.

      Is the PCM active on the bus?

      Yes

      - Go To 3

      No

      - Refer to **DIAGNOSIS AND TESTING** and perform the NO RESPONSE FROM PCM diagnostic procedure.
3. **VERIFY IF THIS DTC SET IN OTHER MODULES**
   1. With the scan tool, read all active DTCs from all modules.

      Are any other modules on the CAN BUS reporting; U0401-00-IMPLAUSIBLE DATA RECEIVED FROM ECM/PCM?

Yes

- Replace and PROXI the Powertrain Control Module (PCM) in accordance with the Service Information. Refer to **MODULE, POWERTRAIN CONTROL, REMOVAL** .
- Perform the PCM VERIFICATION TEST. Refer to appropriate VERIFICATION TEST in appropriate Testing & Diagnostics article under Engine Performance .

No

- Go To 4

4. **CHECK FOR ANY OF THE FOLLOWING ACTIVE DTCS**
   1. With the scan tool, read all active DTCs from all modules.

      NOTE: Check for any PROXI, CAN hardware electrical, VIN Missing/Mismatch, battery or ignition related DTCs.

      Does the scan tool display any active DTCs to the conditions listed above?

      Yes

      - Go to and perform the appropriate diagnostic procedure(s).

      No

      - Go To 5

5. **DTCS ACTIVE IN THE PCM**
   1. With the scan tool, read ACTIVE PCM DTCs.

      Are any DTCs active in the PCM?

      Yes

      - Refer to the **DTC INDEX** article and perform the appropriate diagnostic procedure.

      No

      - Replace the Radio Frequency Hub in accordance with the Service Information. Refer to **MODULE, RADIO FREQUENCY (RF HUB), REMOVAL** .
      - Perform the RADIO FREQUENCY HUB (RF-HUB) VERIFICATION TEST. Refer to **STANDARD PROCEDURE** .

6. **CHECK THE WIRING AND CONNECTORS**
   1. The conditions necessary to set the DTC are not present at this time.
   2. With the scan tool, check the Environmental Data to help identify the conditions in which the DTC was set.

3. Using the wiring diagrams as a guide, check all related splices and connectors for signs of water intrusion, corrosion, pushed out or bent terminals, and correct pin tension.
4. Wiggle the wiring and connectors while checking for shorted and open circuits.

   Were there any problems found?

   Yes

   - Repair as necessary.
   - Perform the BODY VERIFICATION TEST. Refer to **STANDARD PROCEDURE** .

   No

   - Go To 7

7. **CHECK VEHICLE HISTORY.**
   1. Check the repair history of this vehicle to see if this DTC was recorded previously in this module.

      Was this DTC present in this vehicle at a previous visit?

      Yes

      - Replace and PROXI the module that set this DTC in accordance with the Service Information. Perform its respective verification test.

      No

      - Record this information on the service order. Test complete.
      - Perform the BODY VERIFICATION TEST. Refer to **STANDARD PROCEDURE** .

U0422-00-IMPLAUSABLE DATA RECIEVED FROM BODY CONTROL MODULE

For a complete wiring diagram, **refer to appropriate SYSTEM WIRING DIAGRAMS article** .

WHEN MONITORED

At all times with Ignition in Run/Start.

SET CONDITION

Incorrect data received from the Body Control Module (BCM).

POSSIBLE CAUSES

Possible Causes
NO COMMUNICATION WITH THE BODY CONTROL MODULE (BCM)

DTCS STORED OR ACTIVE IN THE BCM
RADIO (RRM)

DIAGNOSTIC TEST

1. **CHECK FOR AN ACTIVE DIAGNOSTIC TROUBLE CODE (DTC)**
    1. Turn the ignition on.
    2. With the scan tool, read the active DTCs.

    Does the scan tool display this DTC as active?

    Yes

    - Go To 2

    No

    - The condition that caused this code to set is not present at this time. Check for an intermittent condition by inspecting the related wiring harness for chafed, pierced, pinched, and partially broken wires. Also inspect the related connectors for broken, bent, pushed out, spread, corroded, or contaminated terminals.
    - Perform the BODY VERIFICATION TEST. Refer to **STANDARD PROCEDURE** .
2. **VERIFY THE BCM IS ACTIVE ON THE CAN BUS**
    1. With the scan tool, select ECU View.
    2. Verify that the BCM is active on the bus.

    Is the BCM active on the bus?

    Yes

    - Replace the Radio (RRM) in accordance with the Service Information. Refer to **RADIO, REMOVAL** .
    - Perform the BODY VERIFICATION TEST. Refer to **STANDARD PROCEDURE** .

    No

    - Refer to **DIAGNOSIS AND TESTING** and perform the NO RESPONSE FROM BCM diagnostic procedure.
    - Perform the BODY VERIFICATION TEST. Refer to **STANDARD PROCEDURE** .

U0423-00-IMPLAUSABLE DATA RECIEVED FROM THE CLUSTER/CCN

For a complete wiring diagram, **refer to appropriate SYSTEM WIRING DIAGRAMS article** .

WHEN MONITORED

With the ignition on.

SET CONDITION

Incorrect data received from the Instrument Panel Cluster (IPC).

POSSIBLE CAUSES

Possible Causes
NO COMMUNICATION WITH THE INSTRUMENT PANEL CLUSTER (IPC)
DTCS STORED OR ACTIVE IN THE IPC
INSTRUMENT PANEL CLUSTER (IPC)

DIAGNOSTIC TEST

1. **CHECK FOR AN ACTIVE DIAGNOSTIC TROUBLE CODE (DTC)**

   NOTE: Diagnose and repair any Instrument Cluster DTCs before proceeding with this diagnostic procedure.

   1. Turn the ignition on.
   2. With the scan tool, read active DTCs.

      Does the scan tool display this DTC as active?

      Yes

      - Go To 2

      No

      - The condition that caused this code to set is not present at this time. Check for an intermittent condition by inspecting the related wiring harness for chafed, pierced, pinched, and partially broken wires. Also inspect the related connectors for broken, bent, pushed out, spread, corroded, or contaminated terminals.
      - Perform the BODY VERIFICATION TEST. Refer to **STANDARD PROCEDURE** .

2. **VERIFY THE IPC IS ACTIVE ON THE CAN BUS**
   1. With the scan tool, verify that the IPC is active on the bus.

      Is the IPC active on the bus?

      Yes

- Replace and program the Blind Spot Sensor in accordance with the Service Information. Refer to **SENSOR, BLIND SPOT, REMOVAL** .
- Perform the BODY VERIFICATION TEST. Refer to **STANDARD PROCEDURE** .

No

- Refer to **DIAGNOSIS AND TESTING** and perform the NO RESPONSE FROM IPC diagnostic procedure.
- Perform the BODY VERIFICATION TEST. Refer to **STANDARD PROCEDURE** .

U11B8-00-LOST COMMUNICATION WITH THE INTEGRATED CENTER STACK ICS

For a complete wiring diagram, **refer to appropriate SYSTEM WIRING DIAGRAMS article** .

WHEN MONITORED

Continuously when the ignition is on.

The battery voltage is between 10 and 16 volts.

SET CONDITION

Bus messages not received from the Integrated Center Stack (ICS) for approximately ten seconds.

POSSIBLE CAUSES

Possible Causes
INTEGRATED CENTER STACK POWER AND GROUND
INTEGRATED CENTER STACK
CAN IHS BUS (+) CIRCUIT OPEN
CAN IHS BUS (-) CIRCUIT OPEN

DIAGNOSTIC TEST

VERIFY THE DTC IS ACTIVE

1. Turn the ignition on.
2. With the scan tool, read active DTCs.

   Is this DTC active?

   Yes

   - Refer to **DIAGNOSIS AND TESTING** and perform the NO RESPONSE FROM ICS (INTEGRATED CENTER STACK) diagnostic procedure.

No

- Refer to **DIAGNOSIS AND TESTING** and perform the Stored Lost Communication DTCs diagnostic procedure.

STANDARD PROCEDURE

HVAC PRE-DIAGNOSTIC TROUBLESHOOTING PROCEDURE

For a complete wiring diagram, **refer to appropriate SYSTEM WIRING DIAGRAMS article** .

Perform the following steps prior to any diagnostic procedure(s).

- Testing should only be performed with the battery fully charged to avoid false diagnosis.
- With the scan tool, read Powertrain Control Module (PCM) Diagnostic Trouble Codes (DTCs). If PCM DTCs are present, and perform the appropriate diagnostic procedure(s) before proceeding. Refer to the **DTC INDEX** article. .
- Depending on the vehicle configuration, with the scan tool, read Totally Integrated Power Module (TIPM) DTCs. If TIPM DTCs are present, Or read Body Control Module (BCM) DTCs. If BCM DTCs are present, and perform the appropriate diagnostic procedure(s) before proceeding.
- With the scan tool, read HVAC DTCs. Record all Stored, Active, and Pending DTC information.
- With the scan tool, read the Environmental Data. Use this data to help identify the conditions in which the DTC was set.
- Refer to the When Monitored and Set Conditions for this DTC. DTCs can set at ignition on, at start up, or operating under specific conditions.
- Using the wiring diagram as a guide, inspect the wiring and connectors related to this circuit and clean/repair as necessary.
- Check for controller software updates if applicable. Some conditions can be corrected by upgrading the controller software.

NOTE: If the controller is updated with new software, with the scan tool, perform a HVAC Actuator Calibration Test.

- Check for Service Information Tune-ups or Service Bulletins for any possible causes that may apply.

Did any of the above procedures repair the vehicle?

Yes

- Testing is complete.
- Perform the HVAC VERIFICATION TEST. Refer to **STANDARD PROCEDURE**.

No

- Refer to **DIAGNOSIS AND TESTING** and perform the appropriate diagnostic procedure.

HVAC SYSTEM TEST

For a complete wiring diagram, **refer to appropriate SYSTEM WIRING DIAGRAMS article** .

THEORY OF OPERATION

The HVAC System Test provides a starting point in the diagnostic process by identifying the appropriate diagnostic procedure or system test to perform when diagnosing a given symptom, condition, or Diagnostic Trouble Code (DTC). It also provides a means for testing the entire HVAC system by utilizing the A/C Heater Control's On-Board System Tests. The HVAC System Tests can also assist in diagnosing stored DTCs.

DIAGNOSTIC TEST

1. **HVAC SYSTEM TEST**

   NOTE: Diagnose and repair all active DTCs before diagnosing and repairing stored DTCs. If active DTCs are present, see the DTC INDEX article and perform the appropriate diagnostic procedure.

   Make a selection based on the symptom, condition, or DTC that you want to diagnose.

   scan tool Indicates HVAC Not Active On Bus

   - Refer to **DIAGNOSIS AND TESTING** and perform the NO RESPONSE FROM HVAC diagnostic procedure.

   Blower Motor Inoperative

   - Refer to **MOTOR, BLOWER, DIAGNOSIS AND TESTING** for Blower Motor diagnostic procedures.

   Actuator Calibration Test

   - Go To 4

   A/C System Performance (Cooldown) Test

   - Go To 2
2. **A/C COOLDOWN TEST**
   1. **The following are prerequisites of the A/C Cooldown Test. Verify that the:**
      - Refrigerant system has an adequate charge. Check and repair as necessary before proceeding in accordance with the Service Information. Refer to **DIAGNOSIS AND TESTING** .
      - Blower motor operates correctly in all speeds. Diagnose and repair all blower related faults

before proceeding.

- Work area ambient temperature is above 16° C (60° F) before proceeding. Move the vehicle to a warmer work area if necessary.
- Evaporator temperature is above 13° C (55° F) before proceeding.
- A/C compressor is not running. If the compressor is running, turn the A/C off and allow the evaporator to warm up before proceeding.

NOTE: Running the AC Cooldown test will cause the A/C status indicator to flash. One or more status messages will display on the scan tool after running the Cooldown Test. These messages will clear after paging back out of this test function. Therefore, it is important to note all messages before doing so.

2. Start the engine.
3. Turn the Blower control to the high speed position.
4. With the scan tool in HVAC, select System Tests and then select Cooldown test. Allow the test to run to completion.

   Does the scan tool display a status message that indicates a fault has occurred?

   Yes

   - See the **DIAGNOSTIC CODE INDEX** and perform the appropriate diagnostic procedure based on vehicle HVAC system.

   No

   - Go To 3

3. **MODE SWITCH AND DOOR ACTUATOR CIRCUIT TEST**

NOTE: If at anytime a DTC becomes active during this test, proceed to the conclusion question. If multiple DTCs are active, diagnose those that relate to a short circuit first.

1. Start the engine and turn the Blower control to the low speed position.
2. Set the Blend control (single-zone) or Driver and Passenger Blend control (dual-zone) to the full cold position.
3. Monitor the scan tool for active HVAC DTCs while performing the following test steps.
   - If equipped, press the A/C mode switch on, wait 30 seconds, and then press it off.
   - On Dual-Zone systems, press the Recirculation mode switch on, wait 30 seconds, and then press it off.
   - If equipped, press the EBL mode switch on, wait 30 seconds, and then press it off.
   - Move the Blend control (single-zone) or Driver Blend control (dual-zone) from full cold to

full hot, wait 30 seconds, and then move it back to full cold.
- If equipped, move the Passenger Blend control from full cold to full hot, wait 30 seconds, and then moved it back to full cold.
- Turn the Mode select control to the defrost position, wait 30 seconds, and then turn it to the panel position (dual-zone) or panel / recirculation position (single-zone). Wait 30 seconds before proceeding.

Does the scan tool display any active DTCs?

Yes

- See the **DIAGNOSTIC CODE INDEX** and perform the appropriate diagnostic procedure based on vehicle HVAC system.

No

- Go To 4

4. **ACTUATOR CALIBRATION TEST**
   1. Ignition on, engine not running.
   2. Using the scan tool, select Actuator Calibration Test. When the test is complete, read HVAC DTCs.

   Does the scan tool display any DTCs?

   Yes

   - See the **DIAGNOSTIC CODE INDEX** and perform the appropriate diagnostic procedure based on vehicle HVAC system.

   No

   - Test Complete.

HVAC VERIFICATION TEST

Perform the following procedures to verify that the repair(s) are valid.

1. Make sure that all accessories are turned off.
2. Make sure that the battery is fully charged.
3. Turn the ignition off to the lock position.
4. Disconnect all jumper wires and reconnect all previously disconnected components and connectors.
5. With the scan tool, record and erase all Diagnostic Trouble Codes (DTCs) from ALL modules.
6. Turn the ignition off, remove the scan tool from the DLC (Data Link Connector). Open the door and close the door. Wait a minimum 30 seconds, then turn the ignition on. Reconnect the scan tool.

NOTE: Disconnecting the scan tool and opening and closing the door will allow the controller to enter into sleep mode.

7. With the scan tool perform the HVAC Actuator Calibration Test.
8. Start and run the engine for two minutes while operating all functions of the system that caused the original concern.
9. With the scan tool, check for DTCs in all modules.

Is the original condition still present or are there any other HVAC DTCs present?

Yes

- Refer to **DIAGNOSIS AND TESTING** and perform the appropriate diagnostic procedure.

No

- Repair is complete.

2014 HVAC

Heating & Air Conditioning - Service Information - Cherokee

DESCRIPTION

DESCRIPTION

The HVAC housing is mounted longitudinally in the vehicle, which means it doesn't follow the line of the bulkhead, but protrudes into the passenger compartment. The assembly is available in a single or dual zone configuration, and has a cabin compartment filter on all applications. See the Controls information for more information.

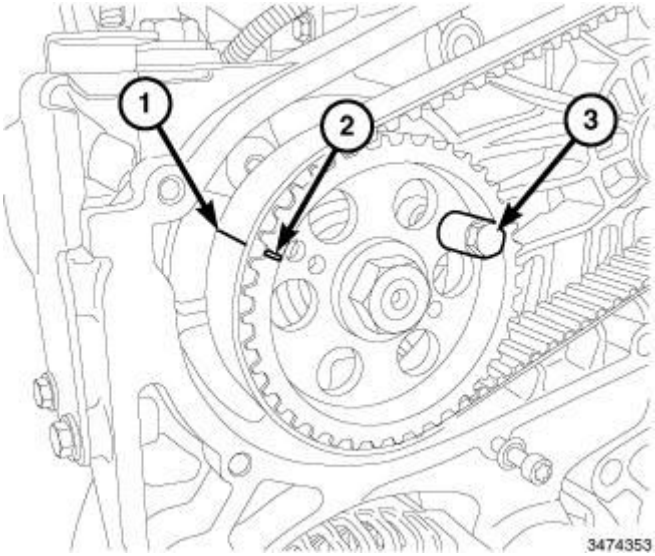

Fig. 1: HVAC Housing Assembly
Courtesy of CHRYSLER GROUP, LLC

All vehicles use an HVAC housing (4) that combines heating, ventilating and A/C capabilities into a single housing. Based upon the mode selected, conditioned air can exit the HVAC housing through one, or a combination of, the panel (2), defrost (1) and floor (5 and 3) outlets. Once the conditioned air exits the HVAC housing, it is further directed through molded plastic ducts to the air outlets within the vehicle interior. See the Distribution information for more information.

The A/C system uses a variable displacement compressor, and an A/C expansion valve to meter the flow of refrigerant to the A/C evaporator. See the Plumbing information for more information.

To maintain the performance level of the HVAC system, the engine cooling system must be properly maintained. The use of a bug screen is not recommended. Any obstructions in front of the radiator or A/C condenser will reduce the performance of the A/C and engine cooling systems. The engine cooling system includes the radiator, thermostat, radiator hoses and the engine coolant pump. See **ENGINE COOLING SYSTEM** for more information.

OPERATION

OPERATION

NOTE: Typical blend-air type HVAC system shown in illustration.

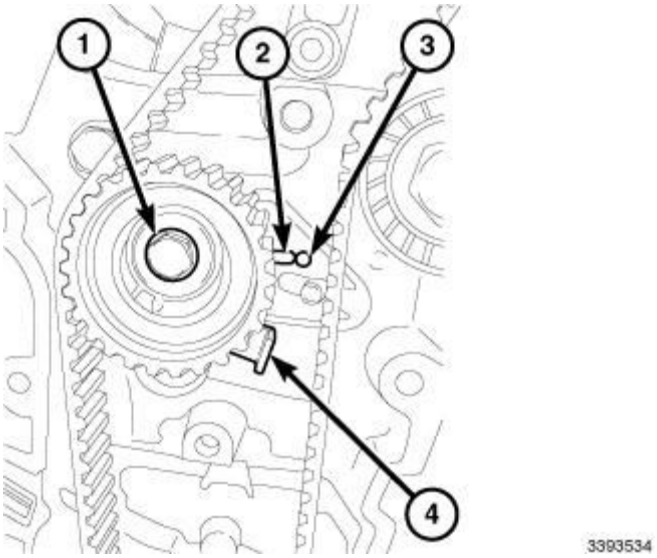

Fig. 2: Blend Air System Schematic
Courtesy of CHRYSLER GROUP, LLC

The heating and A/C systems used in this vehicle are a single zone, blend-air type system. In this blend-air heating and A/C system, two blend-air doors (3) control the amount of conditioned air that is allowed to flow through, or around the heater core (2).

The system pulls outside (ambient) air through the fresh air intake (4) located at the cowl panel at the right side base of the windshield and into the air inlet housing, inside the passenger compartment. From there, the ambient air passes through the A/C evaporator (7) and is then directed either through or around the heater core. This is done by adjusting the position of the blend-air doors with the temperature control located on the A/C heater control in the instrument panel. Air flow is then directed out the floor outlets (8), instrument panel outlets (10) or the defroster outlets (1) in various combinations by adjusting the position of the mode-air doors (9 and 11) using the mode control located on the A/C heater control. The Automatic Temperature Control (ATC) system uses electric actuators to operate the blend and mode air doors. The Manual Temperature Control (MTC) system uses cables to operate the blend and mode air doors.

The velocity of the air flow out of the outlets can be adjusted with the blower speed control located on the A/C heater control.

The fresh air intake can be shut off by the Recirculation control, located on the A/C heater control. This will operate the electrically actuated recirculation-air door (5), which closes off the fresh air intake. With the fresh air intake closed, the conditioned air within the vehicle is pulled back into the HVAC housing through the recirculation air intake (6), located within the passenger compartment.

NOTE: **It is important to keep the fresh air intake opening clear of debris. Leaf particles and other debris that is small enough to pass through the cowl opening screen can accumulate within the HVAC housing. The closed, warm, damp and dark environment created within the housing is ideal for the growth of certain molds, mildews and other fungi. Any accumulation of decaying plant matter that enters the housing with the fresh ambient air provides an additional food source for the fungal spores. If the air intake opening is not kept clear of debris, objectionable odors created by growing fungi and decaying plant matter, as well as excess debris, can be discharged into the passenger compartment during heater and A/C operation.**

The A/C compressor can be engaged by pressing A/C (snowflake) button on the A/C heater control. When equipped, the A/C compressor will automatically engage when the mode control is set in any Mix to Defrost position. This will remove heat and humidity from the air before it is directed through or around the heater core.

DIAGNOSIS AND TESTING

A/C PERFORMANCE

The A/C system is designed to provide the passenger compartment with low temperature and low humidity air. The A/C evaporator, located in the HVAC housing is cooled to temperatures near the freezing point. As warm damp air passes over the fins of the A/C evaporator, the air transfers its heat to the refrigerant in the evaporator coils and the moisture in the air condenses on the evaporator fins. During periods of high heat and humidity, an A/C system will be more effective in the Recirculation mode (max-A/C). With the system in the Recirculation mode, only air from the passenger compartment passes through the A/C evaporator. As the passenger compartment air dehumidifies, the A/C system performance levels rise.

Humidity has an important bearing on the temperature of the air delivered to the interior of the vehicle. It is important to understand the effect that humidity has on the performance of the A/C system. When humidity is high, the A/C evaporator has to perform a double duty. It must lower the air temperature, and it must lower the temperature of the moisture in the air that condenses on the evaporator fins. Condensing the moisture in the air transfers heat energy into the evaporator fins and coils. This reduces the amount of heat the A/C evaporator can absorb from the air. High humidity greatly reduces the ability of the A/C evaporator to lower the temperature of the air.

However, evaporator capacity used to reduce the amount of moisture in the air is not wasted. Wringing some of the moisture out of the air entering the vehicle adds to the comfort of the passengers. Although, an owner may expect too much from their A/C system on humid days. A performance test is the best way to determine whether the system is performing up to design standards. This test also provides valuable clues as to the possible cause of trouble with the A/C system.

A/C PERFORMANCE TEST

WARNING: **Review the warnings and cautions for this system before performing the procedure. Failure to follow these instructions may result in serious injury or death.**

1. Make sure the following conditions are met in the area where this test is to be performed:
   - Maximum ambient temperature: 43.3°C (110°F)
   - Minimum ambient temperature: 15.5°C (60°F)
   - Maximum relative humidity: 90%
   - Minimum relative humidity: 20%
2. Using a scan tool, check for Diagnostic Trouble Codes (DTCs) related to the Controller Area Network (CAN) data bus, HVAC module, Body Control Module (BCM) and Powertrain Control Module (PCM). If no DTCs are found, go to Step 3. If any DTCs are found, repair as required, then proceed to **Step 3** .
3. Operate the heating and A/C system under the following conditions.
   - Engine at normal operating temperature
   - Engine at normal idle speed
   - No sun-load in the cabin of the vehicle
   - Vehicle doors and windows closed
   - Transmission in Park or Neutral with the park brake On.
   - A/C heater controls set to Recirculation mode, full cool, panel mode, high blower and with A/C compressor engaged. If the A/C compressor does not engage, see the **A/C SYSTEM DIAGNOSIS** .
   - All panel outlet vanes open and positioned straight rearward

NOTE: **If the following step is not performed, the results of this test will not be accurate.**

4. Using a scan tool, operate the engine cooling fans at high speed from the PCM View>Actuators.
5. Insert a thermometer in the driver side center panel air outlet and operate the A/C system until the thermometer temperature stabilizes or a minimum of five minutes.

NOTE: **This procedure requires you to know what the temperature and relative humidity is in your location at the time of the test.**

6. With the A/C clutch engaged, compare the observed panel outlet air temperature along with the ambient temperature of the work area and the relative humidity to the Maximum Panel Outlet Temperature chart.
7. If the air outlet temperature fails to meet the specifications shown in the Maximum Panel Outlet Temperature chart (see **Fig. 3**), refer to the A/C System Diagnosis table below.

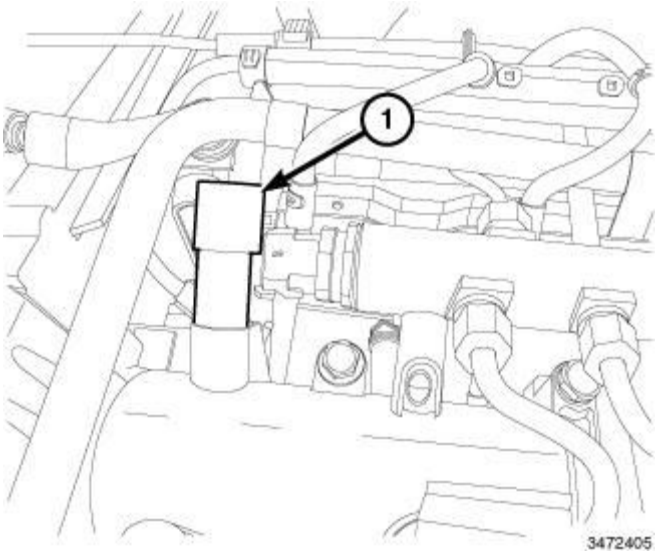

Fig. 3: Maximum Panel Outlet Temperature
Courtesy of CHRYSLER GROUP, LLC

A/C SYSTEM DIAGNOSIS

Condition	Possible Causes	Correction
Rapid A/C clutch cycling (ten or more cycles per minute).	1. Low refrigerant system charge.	1. See Refrigerant System Leaks. Refer to **PLUMBING, DIAGNOSIS AND TESTING**. Test the refrigerant system for leaks. Repair, evacuate and charge the refrigerant system, if required.
Equal pressures, but the A/C clutch does not engage.	1. No refrigerant in the refrigerant system.	1. See Refrigerant System Leaks. Refer to **PLUMBING, DIAGNOSIS AND TESTING**. Test the refrigerant system for leaks. Repair, evacuate and charge the refrigerant system, if required.
	2. Open fuse.	2. See appropriate Wiring Information. Check the fuses in the Power Distribution Center (PDC). Repair the shorted circuit or component and replace the fuse(s), if required.
	3. Inoperative A/C clutch.	3. See **COMPRESSOR, A/C** . Test the A/C clutch and coil and replace, if required.
	4. Improperly installed or inoperative evaporator temperature sensor.	4. See **SENSOR, EVAPORATOR TEMPERATURE** . Test the sensor and replace, if required.
	5. Inoperative A/C pressure transducer.	5. See **TRANSDUCER, A/C PRESSURE** . Test the sensor and replace, if required.
	6. Inoperative control module, CAN bus or wiring.	6. See the appropriate Electrical Diagnostic Procedures for testing of the modules and CAN bus, and see Wiring Information for

		compressor control circuit repair, if required.
Normal pressures, but A/C Performance Test air temperatures at center panel outlet are too high.	1. Excessive refrigerant oil in system.	1. See **OIL, REFRIGERANT, STANDARD PROCEDURE** . Recover the refrigerant from the refrigerant system and inspect the refrigerant oil content. Restore the refrigerant oil to the proper level, if required.
	2. Blend door actuator(s) improperly installed or inoperative.	2. See **ACTUATOR, BLEND DOOR** . Inspect the actuator(s) for proper operation and replace, if required.
	3. Blend-air door(s) inoperative or sealing improperly.	3. See **HOUSING, HVAC** . Inspect the blend-air door(s) for proper operation and sealing. Repair if required.
The low side pressure is normal or slightly low, and the high side pressure is too low.	1. Low refrigerant system charge.	1. See Refrigerant System Leaks. Refer to **PLUMBING, DIAGNOSIS AND TESTING**. Test the refrigerant system for leaks. Repair, evacuate and charge the refrigerant system, if required.
	2. Refrigerant flow through the A/C evaporator is restricted.	2. See **EVAPORATOR, A/C** . Replace the restricted A/C evaporator, if required.
	3. Inoperative A/C compressor.	3. See **COMPRESSOR, A/C** . Replace the A/C compressor, if required.
The low side pressure is normal or slightly high, and the high side pressure is too high.	1. A/C condenser air flow restricted.	1. See **CONDENSER, A/C** . Check the A/C condenser for damaged fins, foreign objects obstructing air flow through the condenser fins, and missing or improperly installed air seals. Clean, repair, or replace components as required.
	2. Refrigerant flow through the A/C receiver/drier is restricted.	2. See **DRIER, A/C RECEIVER** . Replace the restricted A/C receiver/drier, if required.
	3. Inoperative radiator cooling fan.	3. See **ENGINE COOLING SYSTEM** . Test the radiator cooling fan and replace, if required.
	4. Refrigerant system overcharged.	4. See **R-134A REFRIGERANT SYSTEM CHARGE** . Recover the refrigerant from the refrigerant system. Charge the refrigerant system to the proper level, if required.
	5. Air in the refrigerant system.	5. See Refrigerant System Leaks. Refer to **PLUMBING, DIAGNOSIS AND TESTING**. Test the refrigerant system for leaks. Repair, evacuate and charge the refrigerant system, if required.
	6. Engine overheating.	6. See **ENGINE COOLING SYSTEM** .

		Test the engine cooling system and repair, if required.
The low side pressure is too high, and the high side pressure is too low.	1. Accessory drive belt slipping.	1. See **ENGINE COOLING SYSTEM** . Inspect the accessory drive belt condition and tension. Repair as required.
	2. Inoperative A/C expansion valve.	2. See **VALVE, A/C EXPANSION** . Replace the valve, if required.
	3. Inoperative A/C compressor.	3. See **COMPRESSOR, A/C** . Replace the A/C compressor, if required.
The low side pressure is too low, and the high side pressure is too high.	1. Restricted refrigerant flow through the refrigerant lines.	1. See Liquid Line, Suction Line and Discharge Line. Refer to appropriate procedure in **STANDARD PROCEDURE** . Inspect the refrigerant lines for kinks, tight bends or improper routing. Correct the routing or replace the refrigerant line, if required.
	2. Restricted refrigerant flow through the A/C expansion valve.	2. See **VALVE, A/C EXPANSION** . Replace the valve, if required.
	3. Restricted refrigerant flow through the A/C condenser.	3. See **CONDENSER, A/C** . Replace the restricted A/C condenser, if required.

HEATER PERFORMANCE

Before performing the following tests, refer to **ENGINE COOLING SYSTEM** for the procedures to check the engine coolant level and flow, engine coolant reserve/recovery system operation, accessory drive belt condition and tension, radiator air flow and the fan drive operation.

WARNING: **Do not remove radiator cap when engine is hot. Failure to follow this instruction may result in serious injury.**

If vehicle has been run recently, wait 15 minutes before removing the radiator cap. Place a rag over the cap and turn it to the first safety stop. Allow pressure to escape through the overflow tube. When the system pressure stabilizes, remove the cap completely.

MAXIMUM HEATER OUTPUT

Engine coolant is delivered to and from the heater core through two heater hoses. With the engine idling at normal operating temperature, set the temperature control to the full hot position, the mode control to the floor position, and the blower motor control to the highest speed position. Using a test thermometer, check the temperature of the air being discharged at the front floor outlets. Compare the test thermometer reading to the Heater Temperature Reference chart.

HEATER TEMPERATURE REFERENCE

Ambient Temperature	Minimum Floor Outlet Temperature

Celsius	Fahrenheit	Celsius	Fahrenheit
16°	60°	54°	130°
21°	70°	56°	132°
26°	80°	57°	134°
32°	90°	58°	136°

If the heater outlet air temperature is below the minimum specification, refer to Group 7 - Cooling. Both of the heater hoses should be hot to the touch. The coolant return heater hose should be slightly cooler than the coolant supply heater hose. If the return hose is much cooler than the supply hose, locate and repair the engine coolant flow obstruction in the cooling system. Refer to Group 7 - Cooling for more information.

OBSTRUCTED COOLANT FLOW

Possible locations or causes of obstructed coolant flow are as follows:

- Low coolant level
- Inoperative water pump
- Inoperative thermostat
- Pinched or kinked heater hoses
- Improper heater hose routing
- Plugged heater hoses or supply and return ports at the cooling system connections
- Plugged heater core

If proper coolant flow through the cooling system is verified, and heater outlet air temperature is low, a mechanical problem may exist.

MECHANICAL PROBLEMS

Possible causes of insufficient heat due to mechanical problems are as follows:

- Restricted cabin air filter
- Obstructed cowl air intake
- Obstructed heater system outlets
- Inoperative engine thermostat
- Inoperative blower motor system
- Inoperative A/C-heater control
- Inoperative blend door actuator
- Inoperative, obstructed or improperly installed blend-air door

TEMPERATURE CONTROL

If the heater outlet air temperature cannot be adjusted with the temperature control on the A/C-heater control, the following could require service:

- Inoperative A/C-heater control
- Inoperative blend door actuator
- Inoperative, obstructed or improperly installed blend-air door
- Improper engine coolant temperature

STANDARD PROCEDURE

STANDARD PROCEDURE - A/C EVAPORATOR CLEANING

Some vehicle operators may experience a musty odor from the A/C system, primarily at start up in hot and humid climates. This odor may be the result of microbial growth on the cooling coil. During normal A/C system operation, condensation forms in and around the A/C cooling coil. When airborne pollutants mix with this condensation, bacteria and fungi growth begins and odor may result.

If the vehicle operator experiences a musty odor when operating the A/C system, perform the following procedure.

> WARNING: **Always use eye protection, rubber gloves and protective clothing when performing the following procedure. Avoid continuous breathing of vapors from evaporator coil cleaning and sealing fluids. Avoid contact with skin and eyes. Failure to follow these instruction may result in possible serious or fatal injury.**

1. On models equipped with a cabin air filter, remove the filter and inspect for dirt and debris. Refer to **FILTER, CABIN AIR, REMOVAL**. Discard the used cabin filter if required.
2. Remove the cowl panel cover. Refer to **COVER, COWL PANEL** for more information.
3. Clean any dirt and debris that may be present at the HVAC fresh air inlet screen and at the top of the cowl panel.
4. Install the cowl panel cover.
5. Raise and support the vehicle.
6. Inspect the evaporator drain hose or tube (depending on application) for foreign material that may be blocking the drain and repair as necessary.
7. Once drain operation has been verified;
   - when equipped with a rubber drain hose, temporarily pinch the drain hose closed using an appropriate pair of heater hose pliers.
   - when equipped with a solid plastic drain tube, obtain an appropriate size rubber or plastic cap or plug and temporarily cap or plug the drain tube.
8. Lower the vehicle.
9. Place a protective cover over the front passenger side floor and seat area.
10. Remove the blower motor. Refer to **MOTOR, BLOWER, REMOVAL**.
11. Remove the blower motor power module. Refer to **MODULE, POWER, BLOWER MOTOR, REMOVAL**.

12. Clean any dirt and debris that may be present inside the HVAC blower motor housing and all readily accessible areas inside the HVAC housing. If necessary, use a vacuum with a small flexible hose, and take caution not to damage the evaporator core fins.
13. Using PSE Flex Spray Delivery Tool 534-62637 or equivalent, completely coat the entire surface of A/C evaporator with three bottles of Mopar® Cooling Coil Cleaner through the blower motor and power module or resistor openings. Be sure to use all of the coil cleaner in each container.
14. Allow the vehicle to sit for 30 minutes.
15. Raise and support the vehicle.

WARNING: **Excess cooling coil cleaner will drain from the evaporator housing when the clamp, cap or plug is removed from the evaporator drain hose or tube. Always use eye protection, rubber gloves and protective clothing. Avoid continuous breathing of vapors from evaporator coil cleaning fluid. Avoid contact with skin and eyes. Failure to follow these instruction may result in possible serious or fatal injury.**

16. Remove the previously installed clamp, cap or plug from the evaporator drain hose or tube and allow excess coil cleaner to drain from the HVAC housing.
17. Lower the vehicle.
18. Refill the three empty coil cleaner bottles with clean tap water.
19. Using PSE Flex Spray Delivery Tool 534-62637 or equivalent, completely rinse the entire surface of A/C evaporator with the three bottles of clean tap water through the blower motor and power module or resistor openings. Be sure to use all of the water in each container.
20. Install the blower motor. Refer to **MOTOR, BLOWER, INSTALLATION**.
21. Install the blower motor power module. Refer to **MODULE, POWER, BLOWER MOTOR, INSTALLATION**.
22. Disconnect the wire harness connector from the A/C compressor to disable compressor operation. Refer to **COMPRESSOR, A/C, REMOVAL**.
23. Start the engine
24. Adjust all the windows so they are open approximately 8 mm (0.5 in.).
25. Set the A/C-heater controls to the following:
    - air distribution to Panel and Recirculation mode
    - temperature to full heat
26. Allow the vehicle to run for 20 minutes.
27. Turn the engine off.
28. Raise and support the vehicle.
29. Inspect the evaporator drain hose or tube (depending on application) for foreign material that may have blocked the drain during evaporator coil cleaning and repair as necessary.
30. Once drain operation has been verified;
    - when equipped with a rubber drain hose, temporarily pinch the drain hose closed using an

appropriate pair of heater hose pliers.
- when equipped with a solid plastic drain tube, obtain an appropriate size rubber or plastic cap or plug and temporarily cap or plug the drain tube.

31. Lower the vehicle.
32. Remove the blower motor. Refer to **MOTOR, BLOWER, REMOVAL**.
33. Remove the blower motor power module. Refer to **MODULE, POWER, BLOWER MOTOR, REMOVAL**.
34. Using PSE Flex Spray Delivery Tool 534-62637 or equivalent, completely coat the entire surface of A/C evaporator with one bottle of Mopar® Cooling Coil Coating through the blower motor and power module or resistor openings. Be sure to use all of the coil coating in the container.

NOTE: Be sure to thoroughly clean out the spray delivery tool with warm water once coil coating is complete to prevent damage to the tool.

35. Refill the empty bottles with clean warm tap water and completely rinse out the PSE Flex Spray Delivery Tool 534-62637, or equivalent.
36. Allow the vehicle to sit for 30 minutes.
37. Install the blower motor. Refer to **MOTOR, BLOWER, INSTALLATION**.
38. Install the blower motor power module. Refer to **MODULE, POWER, BLOWER MOTOR, INSTALLATION**.
39. Raise and support the vehicle.

WARNING: Excess cooling coil coating will drain from the evaporator housing when the clamp, cap or plug is removed from the evaporator drain hose or tube. Always use eye protection, rubber gloves and protective clothing. Avoid continuous breathing of vapors from evaporator coil sealing fluid. Avoid contact with skin and eyes. Failure to follow these instruction may result in possible serious or fatal injury.

40. Remove the previously installed clamp, cap or plug from the evaporator drain hose or tube and allow excess coil coating to drain from the HVAC housing.
41. Lower the vehicle.
42. Start the engine
43. Adjust all the windows so they are open approximately 8 mm (0.5 in.).
44. Set the A/C-heater controls to the following:
    - air distribution to Panel and Recirculation mode
    - temperature to full heat
45. Allow the vehicle to run for 20 minutes.
46. Turn vehicle off.
47. Remove protective cover from front passenger side floor and seat area.

48. On models equipped with a cabin air filter, install the filter. Refer to **FILTER, CABIN AIR, INSTALLATION**.
49. Connect the wire harness connector to the A/C compressor. Refer to **COMPRESSOR, A/C, INSTALLATION**.
50. Verify proper A/C-heater system operation.

SPECIFICATIONS

A/C SYSTEM SPECIFICATIONS

A/C SYSTEM SPECIFICATIONS

Item	Description	Notes
A/C Clutch Air Gap	0.35 - 0.60 mm (0.014 - 0.024 in.)	
A/C Clutch Coil Draw	3.2 - 3.3 amps	@ 12V ± 0.5V @ 21° C (70° F)
A/C Clutch Coil Resistance	3.6 ± 0.2 ohms	When measured across coil lead connector
Freeze-up Control	Evaporator Temperature Sensor	HVAC housing mounted
High psi Control	A/C pressure transducer	A/C discharge line mounted
R-1234YF Refrigerant Charge Capacity	2.0L/2.4L/3.2L engines - 510g (1.125lb)	Use only ND-12 PAG oil
R-134A Refrigerant Charge Capacity	2.0L/2.4L/3.2L engines - 539g (1.19lb)	See A/C Underhood Specification Label located in the engine compartment

NOTE: **Always use the type of PAG oil listed for the model being serviced. See A/C Underhood Specification Label located in the engine compartment. Do not mix different types of PAG oils.**

TORQUE SPECIFICATIONS

TORQUE SPECIFICATIONS

Description	N.m	Ft. Lbs.	In. Lbs.
A/C Compressor to Engine	28	21	-
A/C Expansion Valve to Evaporator Bolts	11	-	97
Air Distribution Housing Halves Screws	2.2	-	20
Air Distribution Housing to HVAC Housing Screws	2.2	-	20
Air Inlet Housing to HVAC Housing Screws	2.2	-	20
A/C Pressure Transducer	5.1	-	45
Blower Motor Screws	2.2	-	20

Compressor Shaft Bolt	19	-	168
Heater Core Bracket Screw	2.2	-	20
HVAC Housing Halves Screws	2.2	-	20
HVAC Housing to Instrument Panel Bolts	4	-	40
HVAC Housing to Instrument Panel Nuts	4	-	40
In Car Temperature Sensor	1	-	9
Refrigerant Lines to A/C Compressor Nut	20	15	-
Refrigerant Lines to A/C Condenser Nut	25	18	-
Refrigerant Lines to A/C Expansion Valve Nut	20	15	-
Refrigerant Line to Refrigerant Line Nut	20	15	-

SPECIAL TOOLS

SPECIAL TOOLS

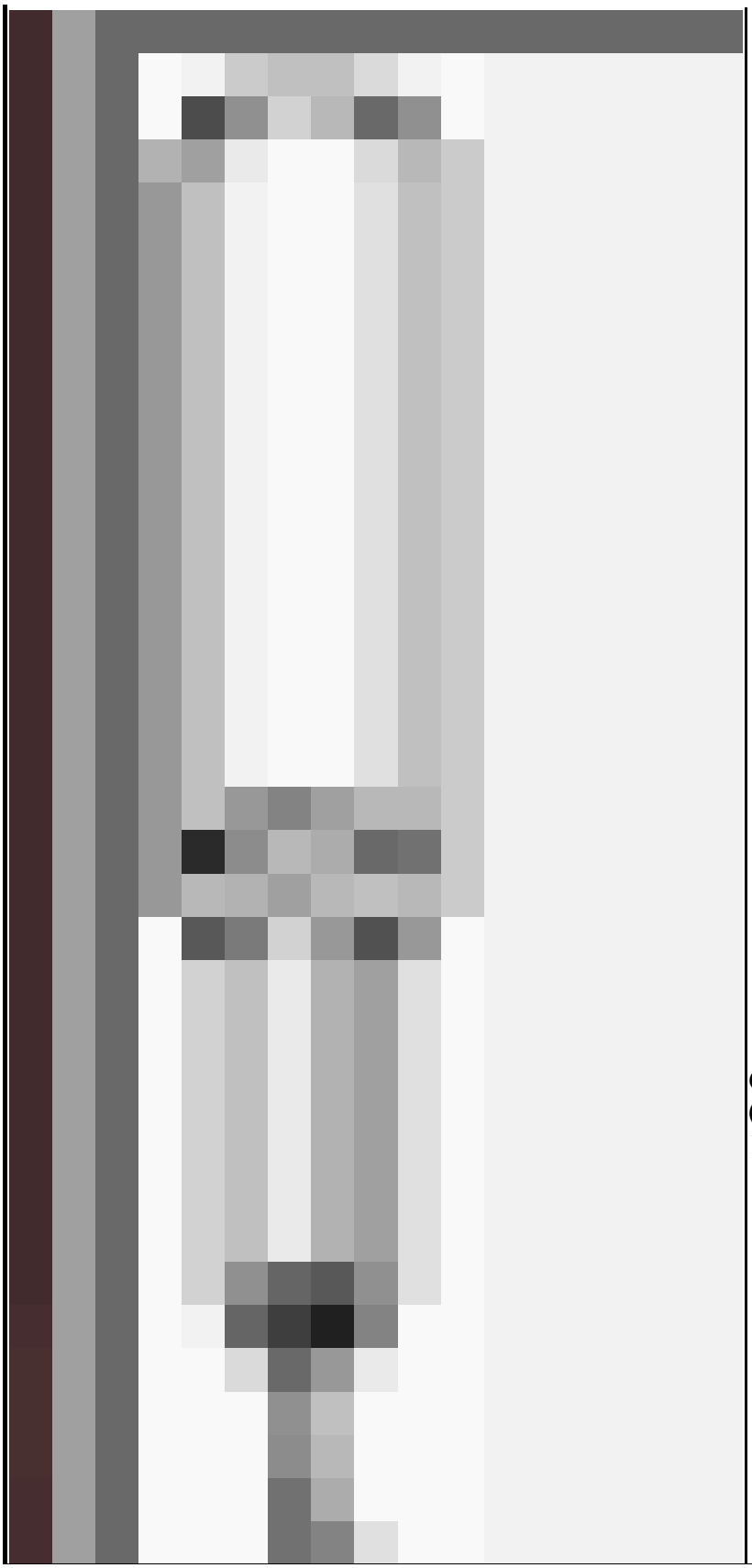

6801 - Terminal Probe
(Originally Shipped In Kit Number(s) 10190.)

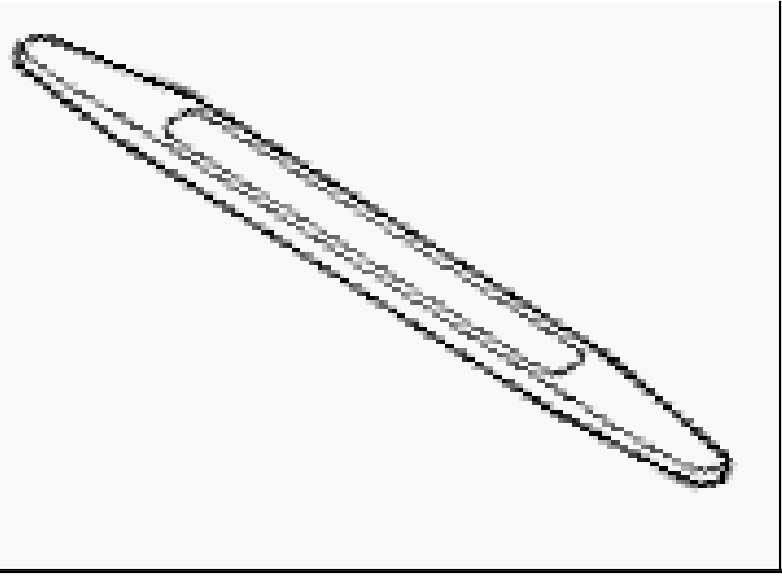	C-4755 - Trim Stick (Originally Shipped In Kit Number(s) 9299, 9299CC, 9299CC, 9300A-CAN.)

CONTROLS

ACTUATOR, BLEND DOOR

DESCRIPTION

DESCRIPTION

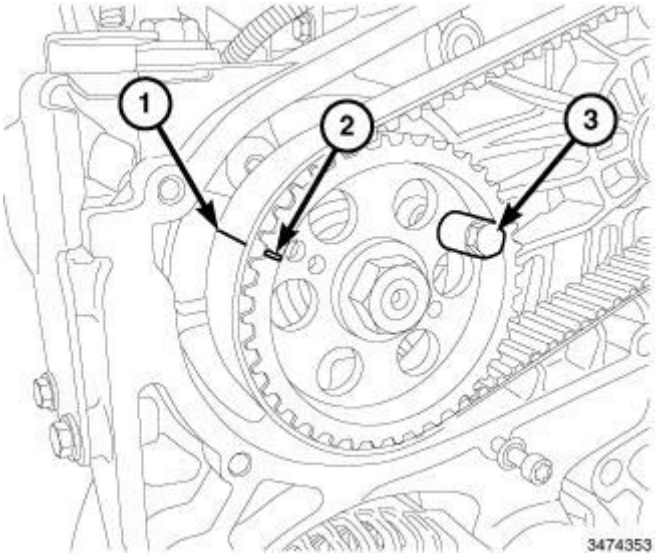

Fig. 4: Connector, Blend Door Actuator, Mounting Tabs & Gears
Courtesy of CHRYSLER GROUP, LLC

The blend door actuator (2) used in the Automatic Temperature Control (ATC) heating and A/C system, is a reversible, 12 volt Direct Current (DC) servo motor, that is mechanically connected to the two blend-air doors. There is a blend door actuator located on both sides of the HVAC housing.

The blend door actuator is contained within a black molded plastic housing with an integral wire connector receptacle (1). An output shaft with gears (4) connect it to the blend door linkage and integral mounting tabs (3) allow the actuator to be secured to the HVAC housing. The blend door actuator requires mechanical indexing to the blend door linkage and is electronically calibrated by the A/C heater control.

The A/C heater control must be recalibrated each time an actuator motor is replaced. Refer to **STANDARD PROCEDURE** .

OPERATION

OPERATION

The blend door actuator used in the Automatic Temperature Control (ATC) heating and A/C system is connected to the A/C heater control by a dedicated five-wire lead and connector of the HVAC wire harness. The blend door actuator can move the blend-air doors in two directions. When the A/C heater control pulls the voltage on one side of the motor connection high and the other connection low, the blend door actuator will move in one direction. When the A/C heater control reverses the polarity of the voltage to the motor, the blend door actuator moves in the opposite direction. Once the A/C heater control makes the voltage to both connections high or both connections low, the blend door actuator stops and will not move.

The blend door actuator contains a potentiometer, which the ATC A/C heater control uses to monitor the relative position of the blend-air doors. The A/C heater control learns the blend-air door stop positions during the calibration procedure and will store a diagnostic trouble code (DTC) for any problems it detects in the blend door actuator circuits. Refer to **DIAGNOSIS AND TESTING** .

The blend door actuator cannot be adjusted or repaired and must be replaced if inoperative or damaged.

REMOVAL

REMOVAL

WARNING: Disable the airbag system before attempting any steering wheel, steering column, or instrument panel component diagnosis or service. Disconnect and isolate the negative battery (ground) cable, then wait two minutes for the airbag system capacitor to discharge before performing further diagnosis or service. This is the only sure way to disable the airbag system. Failure to take the proper precautions may result in accidental airbag deployment and possible serious or fatal injury.

NOTE: The Dual Zone heating and A/C system has two blend door actuators, one for the driver side and one for the passenger side.

LEFT SIDE

1. Disconnect and isolate the negative battery cable.
2. Remove the left side instrument panel silencer. Refer to **PANEL, SILENCER, LOWER, REMOVAL** .

3. Remove the left side center console closeout. Refer to **CONSOLE, FLOOR, REMOVAL** .

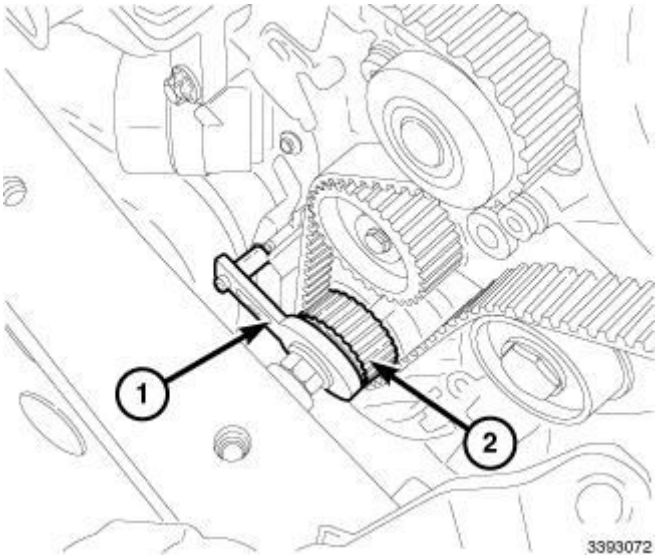

Fig. 5: Blend Door Actuator - Left Side
Courtesy of CHRYSLER GROUP, LLC

4. Disconnect the electrical connector (2) from the blend door actuator.
5. Remove the two screws (1) that secure the blend door actuator to the left side of the HVAC housing.
6. Remove the blend door actuator from the HVAC housing.

RIGHT SIDE

1. Disconnect and isolate the negative battery cable.
2. Remove the right side instrument panel silencer. Refer to **PANEL, SILENCER, LOWER, REMOVAL** .
3. Remove the right side center console closeout. Refer to **CONSOLE, FLOOR, REMOVAL** .

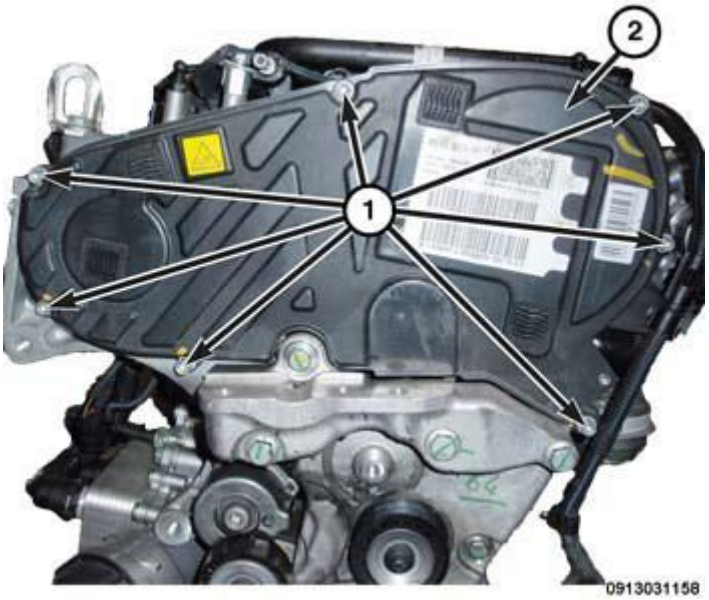

Fig. 6: Blend Door Actuator - Right Side
Courtesy of CHRYSLER GROUP, LLC

4. Remove the two screws (1) that secure the blend door actuator to the right side of the HVAC housing.
5. Disconnect the HVAC wire harness connector (2) form the blend door actuator.
6. Remove the blend door actuator from the HVAC housing.

INSTALLATION

INSTALLATION

NOTE: The Dual Zone heating and A/C system has two blend door actuators, one for the driver side and one for the passenger side.

LEFT SIDE

Fig. 7: Blend Door Actuator - Left Side
Courtesy of CHRYSLER GROUP, LLC

1. Install the blend door actuator onto the left side of the HVAC housing. If necessary, rotate the actuator slightly to align the teeth on the actuator output shaft with those on the blend door cam.
2. Install the two screws (1) that secure the blend door actuator to the HVAC housing and tighten to the proper. Refer to **SPECIFICATIONS**.
3. Connect the HVAC wire harness connector (2) to the blend door actuator.
4. Install the left side center console closeout. Refer to **CONSOLE, FLOOR, INSTALLATION** .
5. Install the left side instrument panel silencer. Refer to **PANEL, SILENCER, LOWER, INSTALLATION** .
6. Connect the negative battery cable.
7. Initiate the Actuator Calibration function using a scan tool. Refer to **STANDARD PROCEDURE** .

RIGHT SIDE

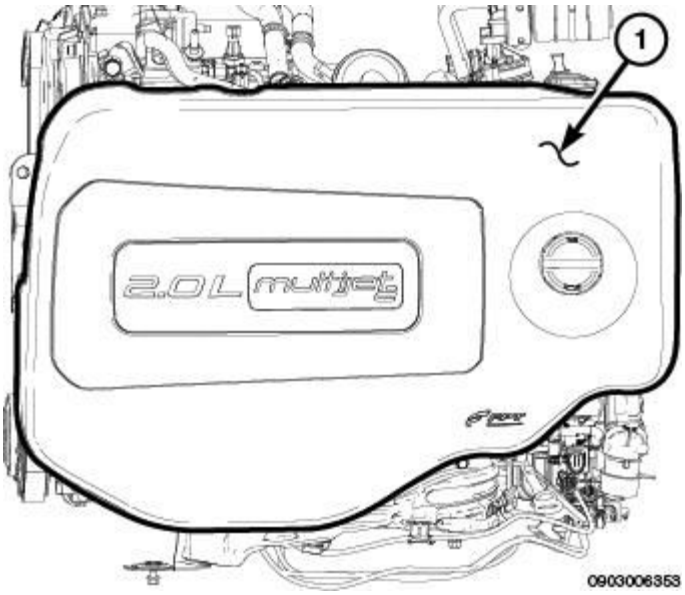

Fig. 8: Blend Door Actuator - Right Side
Courtesy of CHRYSLER GROUP, LLC

1. Install the blend door actuator onto the right side of the HVAC housing. If necessary, rotate the actuator slightly to align the teeth on the actuator output shaft with those on the blend door cam.

   Install the two screws (1) that secure the blend door actuator to the HVAC housing and tighten to the proper. Refer to **SPECIFICATIONS**.

2. Connect the HVAC wire harness connector (2) to the blend door actuator.
3. Install the center console closeout. Refer to **CONSOLE, FLOOR, INSTALLATION** .
4. Install the right side instrument panel silencer. Refer to **PANEL, SILENCER, LOWER, INSTALLATION** .
5. Connect the negative battery cable.
6. Initiate the Actuator Calibration function using a scan tool. Refer to **STANDARD PROCEDURE** .

ACTUATOR, MODE DOOR

DESCRIPTION

DESCRIPTION

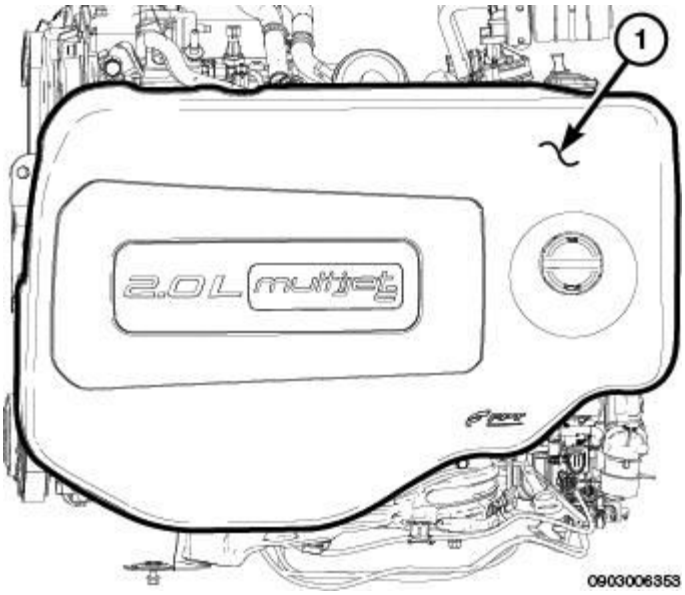

Fig. 9: Actuator Components
Courtesy of CHRYSLER GROUP, LLC

The mode door actuator (1) used in the Automatic Temperature Control (ATC) heating and A/C system, is a reversible, 12 volt Direct Current (DC) servo motor, that is mechanically connected to the three mode-air doors. The mode door actuator is located on the upper left side of the HVAC housing.

The mode door actuator is contained within a black molded plastic housing with an integral wire connector receptacle (3). An output shaft (2) with splines connect it to the mode door linkage and integral mounting tabs (3) allow the actuator to be secured to the HVAC housing. The mode door actuator requires mechanical indexing to the mode door linkage and is electronically calibrated by the HVAC module.

The HVAC module must be calibrated each time an actuator motor is replaced. Refer to **STANDARD PROCEDURE** .

The mode door actuator is interchangeable with the actuator for the blend-air doors.

OPERATION

OPERATION

The mode door actuator used in the Automatic Temperature Control (ATC) heating and A/C system is connected to the A/C heater control by a dedicated five-wire lead and connector of the HVAC wire harness. The mode door actuator can move the mode-air doors in two directions. When the A/C heater control pulls the voltage on one side of the motor connection high and the other connection low, the mode door actuator will move in one direction. When the A/C heater control reverses the polarity of the voltage to the motor, the mode door actuator moves in the opposite direction. Once the A/C heater control makes the voltage to both connections high or both connections low, the mode door actuator stops and will not move.

The mode door actuator contains a potentiometer, which the ATC A/C heater control uses to monitor the relative position of the mode-air doors. The A/C heater control learns the mode-air door stop positions during

the calibration procedure and will store a diagnostic trouble code (DTC) for any problems it detects in the mode door actuator circuits. Refer to **DIAGNOSIS AND TESTING** .

The mode door actuator cannot be adjusted or repaired and must be replaced if inoperative or damaged.

REMOVAL

REMOVAL

WARNING: Disable the airbag system before attempting any steering wheel, steering column or instrument panel component diagnosis or service. Disconnect and isolate the negative battery (ground) cable, then wait two minutes for the airbag system capacitor to discharge before performing further diagnosis or service. This is the only sure way to disable the airbag system. Failure to follow these instructions may result in accidental airbag deployment and possible serious or fatal injury.

NOTE: Illustration shown with instrument panel cut away for clarity.

1. Disconnect and isolate the negative battery cable.
2. Remove the power inverter module. Refer to **MODULE, POWER INVERTER, REMOVAL** .

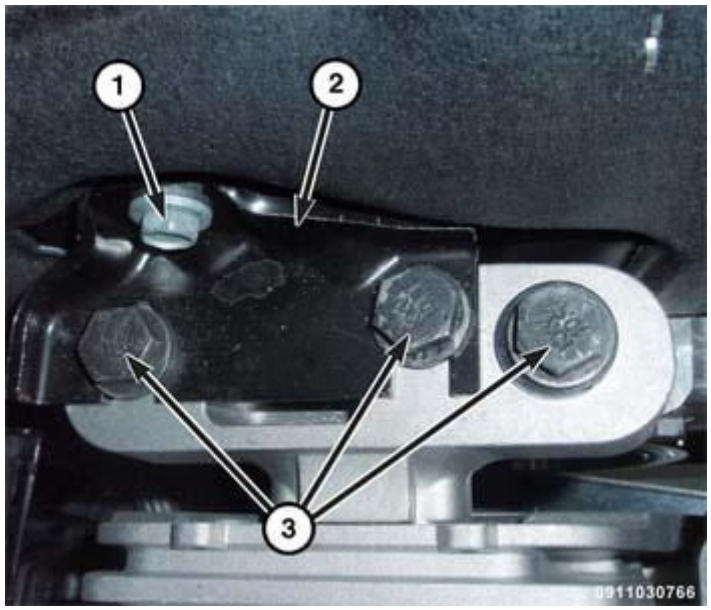

Fig. 10: View Of Mode Door Actuator At Air Distribution Housing
Courtesy of CHRYSLER GROUP, LLC

3. Disconnect the wire harness connector (2) from the mode door actuator.
4. Remove the two screws (1) that secure the mode door actuator to the air distribution housing.
5. Remove the mode door actuator from the air distribution housing.

INSTALLATION

INSTALLATION

NOTE: Illustrations shown with instrument panel removed for clarity.

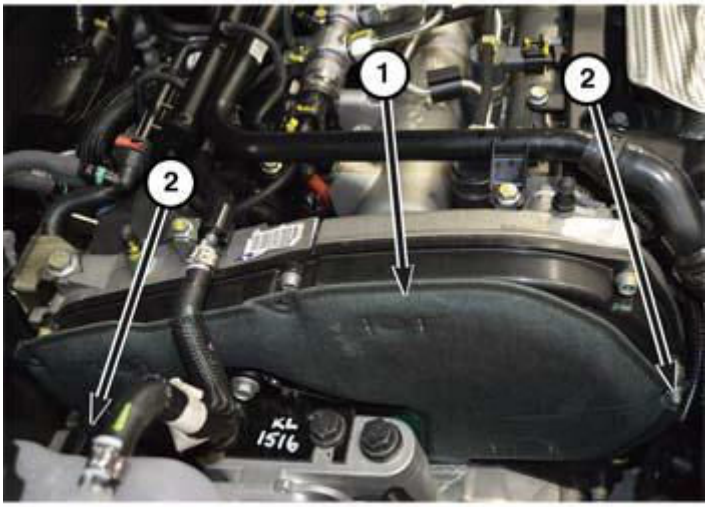

0911034888

Fig. 11: View Of Mode Door Actuator At Air Distribution Housing
Courtesy of CHRYSLER GROUP, LLC

1. Position the mode door actuator to the left side of the air distribution housing.
2. Install the two screws (1) that secure the mode door actuator to the air distribution housing. Tighten the screws to 0.8 N.m (7 in. lbs.).
3. Connect the wire harness connector (2) to the mode door actuator.
4. Install the power inverter module. Refer to **MODULE, POWER INVERTER, INSTALLATION** .
5. Connect the negative battery cable.
6. Initiate the Actuator Calibration function using a scan tool. Refer to **STANDARD PROCEDURE** .

ACTUATOR, RECIRCULATION DOOR

DESCRIPTION

DESCRIPTION

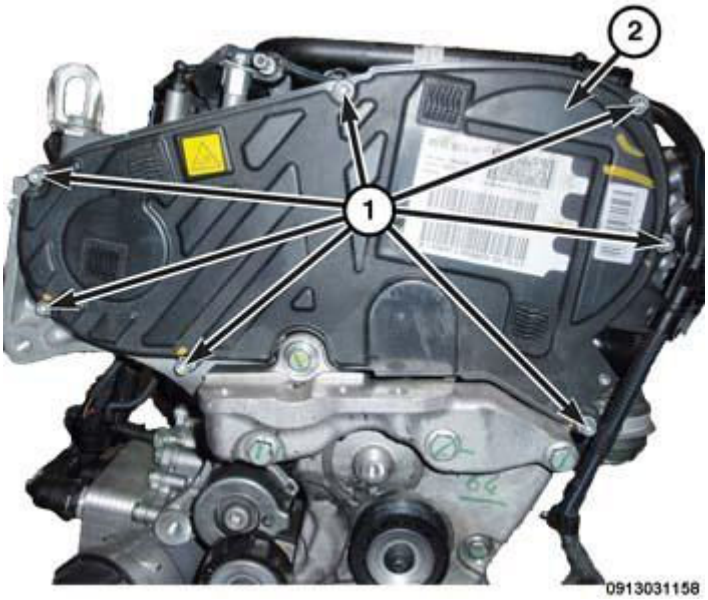

Fig. 12: Actuator Components
Courtesy of CHRYSLER GROUP, LLC

The recirculation door actuator (1) is a reversible 12 volt Direct Current (DC) servo motor. The recirculation door actuator is located on the bottom of the HVAC air inlet housing, behind the instrument panel.

The recirculation door actuator is contained within a black molded plastic housing with an integral wire connector receptacle (4). Three mounting tabs (3) allow the actuator to be secured to the housing and output shaft (2) connects it to the recirculation air door.

The recirculation door actuator requires mechanical indexing to the recirculation air door.

OPERATION

OPERATION

The recirculation door actuator is connected to the A/C heater control or module (depending on heating and A/C system application) by a dedicated two-wire lead and connector of the HVAC wire harness. The recirculation door actuator can move the recirculation air door in two directions. When the A/C heater control or module pulls the voltage on one side of the motor connection high and the other connection low, the recirculation air door will move in one direction. When the A/C heater control or module reverses the voltage, the recirculation air door will move in the other direction. When the recirculation air door reaches its travel limit, the A/C heater control or module turns the voltage off.

The recirculation door actuator is diagnosed using a scan tool. Refer to **DIAGNOSIS AND TESTING** .

The recirculation door actuator cannot be adjusted or repaired and must be replaced if inoperative or damaged.

REMOVAL

REMOVAL

WARNING: Disable the airbag system before attempting any steering wheel, steering column, or instrument panel component diagnosis or service. Disconnect and isolate the battery negative (ground) cable, then wait two minutes for the airbag system capacitor to discharge before performing further diagnosis or service. This is the only sure way to disable the airbag system. Failure to follow these instructions may result in accidental airbag deployment and possible serious or fatal injury.

1. Disconnect and isolate the negative battery cable.
2. Remove the steering column. Refer to **COLUMN, REMOVAL** .
3. Remove the pedal assembly. Refer to **PEDAL(S), BRAKE AND/OR ACCELERATOR, REMOVAL** .

NOTE: Illustration shown with instrument panel removed for clarity

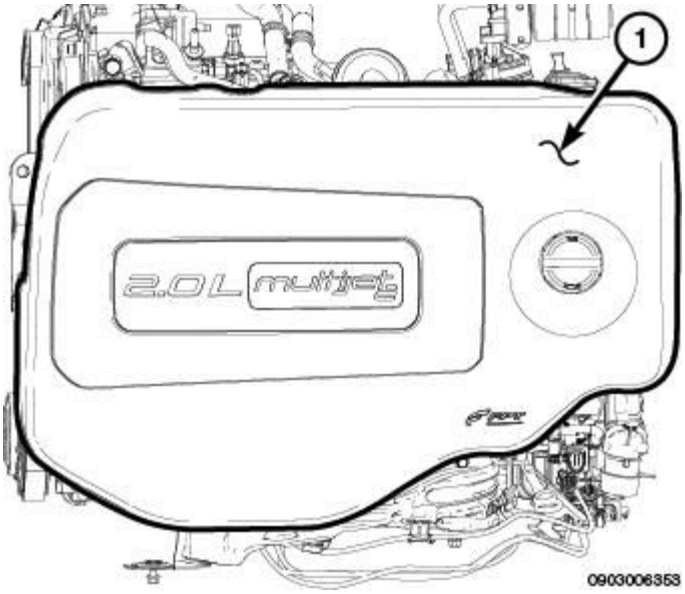

Fig. 13: View Of Recirculation Door Actuator At Air Inlet Housing
Courtesy of CHRYSLER GROUP, LLC

4. Disconnect the HVAC wiring harness connector and position to the side to gain additional clearance.
5. Disconnect the wire harness connector (1) from the recirculation door actuator.
6. Remove the screw (2) that secures the recirculation door actuator to the air inlet housing.
7. Rotate the recirculation door actuator to disengage it from the retaining clip (3) on the air inlet housing.
8. Separate the recirculation door actuator from the linkage.

INSTALLATION

INSTALLATION

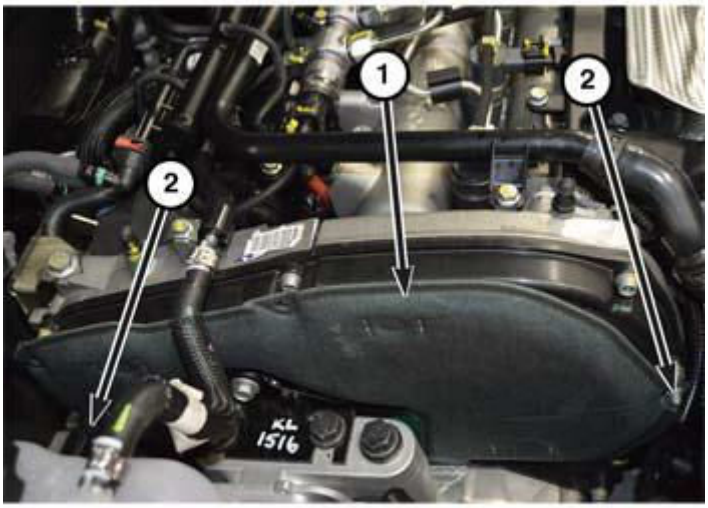

0911034888

Fig. 14: View Of Recirculation Door Actuator At Air Inlet Housing
Courtesy of CHRYSLER GROUP, LLC

1. Position the recirculation door actuator to the air inlet housing and align the actuator output shaft with the splines of the recirculation door linkage.
2. Rotate the recirculation door actuator to engage the retaining clip (3) on the air inlet housing.
3. Install the recirculation door actuator retaining screw (2) and tighten to the proper. Refer to **SPECIFICATIONS**.
4. Connect the wire harness connector to the recirculation door actuator (1).
5. Connect the HVAC wiring harness connector.
6. Install the pedal assembly. Refer to **PEDAL(S), BRAKE AND/OR ACCELERATOR, INSTALLATION** .
7. Install the steering column. Refer to **COLUMN, INSTALLATION** .
8. Connect the negative battery cable.
9. Initiate the Actuator Calibration function using a scan tool. Refer to **STANDARD PROCEDURE** .

CONTROL, A/C AND HEATER

DESCRIPTION

AUTOMATIC TEMPERATURE CONTROL (ATC)

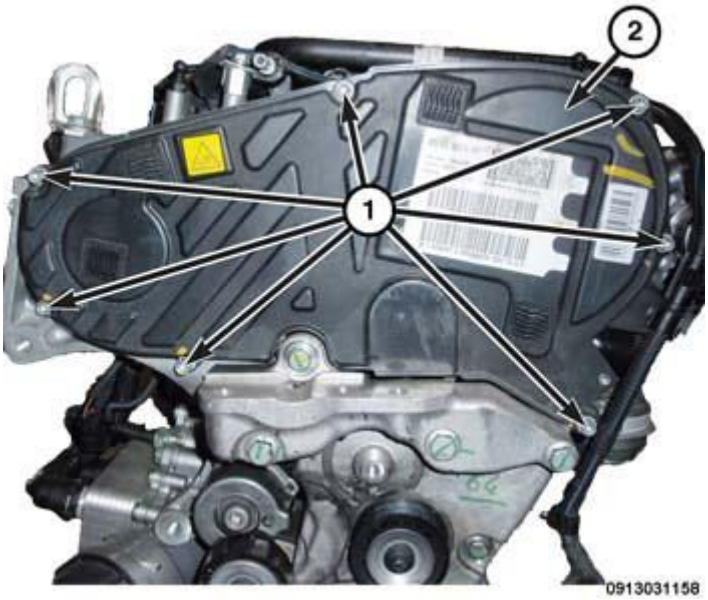

Fig. 15: Automatic Temperature Control (ATC) Panel
Courtesy of CHRYSLER GROUP, LLC

The Automatic Temperature Control (ATC) heating and A/C system maintains the interior comfort level desired by the vehicle operator. This is accomplished by use of air duct temperature sensors, located in the HVAC housing, that measure the temperature of the conditioned air leaving the HVAC housing and an in-car temperature sensor, that measures the temperature of the conditioned air within the vehicle. Based on the sensors inputs, the ATC system automatically adjusts the air temperature, airflow volume, airflow distribution and amount of inside air recirculation to maintain occupant comfort, even under changing outside weather conditions. All controls are identified by International Standards Organization (ISO) graphic symbols.

The ATC heating and A/C system uses electrically operated controls. These controls provide the vehicle operator with a number of setting options to help control the climate and comfort within the vehicle and offers several manual override features such as fan speed and airflow distribution. When the outside air contains smoke, odors, high humidity, or if rapid cooling is desired, the interior conditioned air can be recirculated within the vehicle.

Prior to replacing the A/C heater control, check for any Diagnostic Trouble Codes (DTCs) related to the heating and A/C system, and run the Actuator Calibration function using a scan tool to verify that the concern is not an air door calibration issue. Refer to **STANDARD PROCEDURE** .

The A/C heater control cannot be adjusted or repaired and must be replaced if inoperative or damaged.

MANUAL TEMPERATURE CONTROL (MTC)

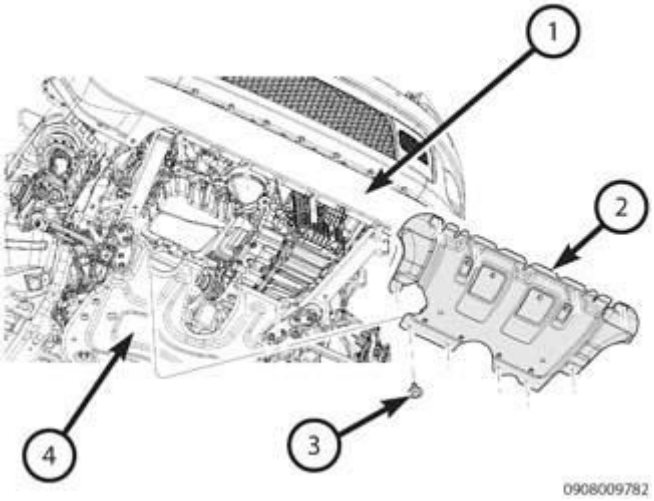

Fig. 16: Manual Temperature Control (MTC) Panel
Courtesy of CHRYSLER GROUP, LLC

The A/C heater control for the Manual Temperature Control (MTC) heating and A/C system allows one temperature setting for the entire vehicle. The MTC heating and A/C system uses electronically operated controls to provide the vehicle operator with a number of setting options to help control the climate and comfort within the vehicle. All controls are identified by International Standards Organization (ISO) graphic symbols.

The MTC A/C heater control is located in center of the instrument panel.

The A/C heater control cannot be adjusted or repaired and must be replaced if inoperative or damaged.

REMOVAL

REMOVAL

WARNING: **Disable the airbag system before attempting any steering wheel, steering column or instrument panel component diagnosis or service. Disconnect and isolate the negative battery (ground) cable, then wait two minutes for the airbag system capacitor to discharge before performing further diagnosis or service. This is the only sure way to disable the airbag system. Failure to follow these instructions may result in accidental airbag deployment and possible serious or fatal injury.**

1. Disconnect and isolate the negative battery cable.

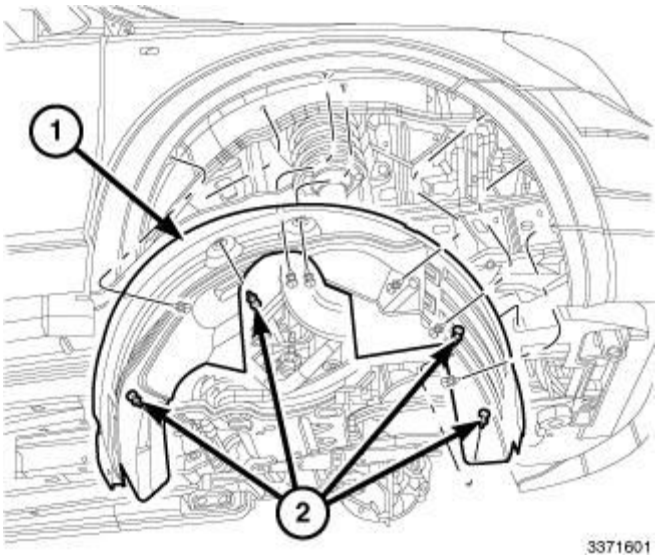

Fig. 17: Connector, Retaining Tabs, A/C Heater Control & Instrument Panel
Courtesy of CHRYSLER GROUP, LLC

2. Using Trim Stick (special tool #C-4755, Trim Stick) or equivalent, disengage the retaining tabs (2) that secure the A/C heater control (3) and remove the A/C heater control from the instrument panel (4).
3. Disconnect the HVAC wire harness connector (2) from the A/C heater control and remove the control.

INSTALLATION

INSTALLATION

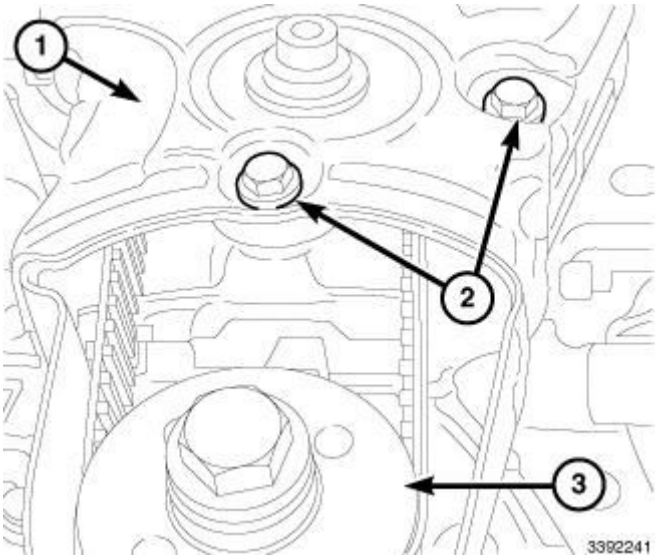

Fig. 18: Connector, Retaining Tabs, A/C Heater Control & Instrument Panel
Courtesy of CHRYSLER GROUP, LLC

1. Position the A/C heater control (3) to the instrument panel (4) and connect the HVAC wire harness connector (1).

2. Position the A/C heater control to the instrument panel and engage the retaining tabs (2). Make sure the retaining tabs are fully engaged into the instrument panel.
3. Reconnect the negative battery cable.
4. Initiate the Actuator Calibration function using a scan tool. Refer to **STANDARD PROCEDURE** .

MODULE, POWER, BLOWER MOTOR

DESCRIPTION

DESCRIPTION

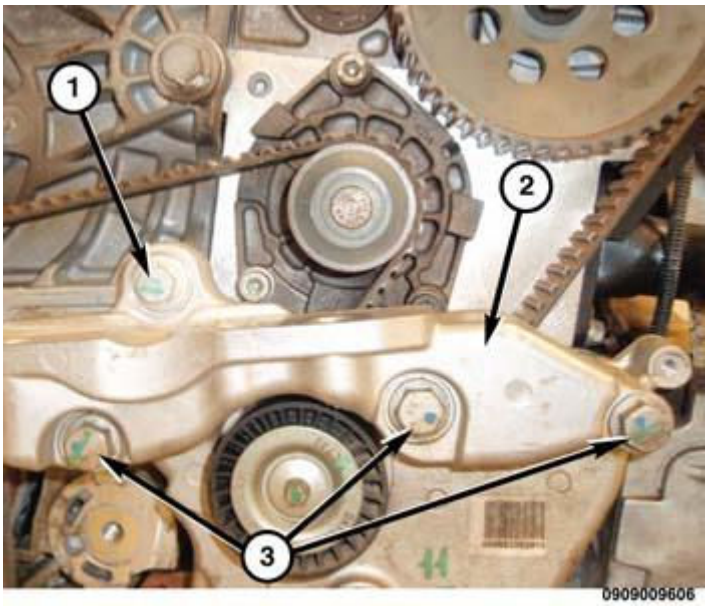

Fig. 19: Blower Motor Power Module
Courtesy of CHRYSLER GROUP, LLC

The blower motor power module consists of a molded plastic housing with integral wire connector receptacles (2) and mounting provisions. Concealed behind the housing is the power module electronic circuitry and a finned aluminum heat sink (1). The blower motor power module is located on the passenger side of the HVAC housing and is serviceable without removal of the HVAC housing.

OPERATION

OPERATION

A blower motor power module is used on the Automatic Temperature Control (ATC) system, and allows the microprocessor-based A/C heater control to calculate and provide infinitely variable blower motor speeds based upon either manual blower switch input or the ATC programming.

The ATC blower motor control system uses a Pulse Width Modulated (PWM) circuit strategy. PWM voltage is applied to a comparator circuit which compares the PWM signal voltage to the blower motor feedback voltage. The resulting output drives the power module circuitry, which provides a linear output voltage to change or

maintain the desired blower speed.

The blower motor power module is diagnosed using a scan tool. Refer to **DIAGNOSIS AND TESTING** .

The blower motor power module cannot be adjusted or repaired must be replaced if inoperative or damaged.

REMOVAL

REMOVAL

WARNING: Disable the airbag system before attempting any steering wheel, steering column or instrument panel component diagnosis or service. Disconnect and isolate the negative battery (ground) cable. Wait two minutes for the airbag system capacitor to discharge before performing further diagnosis or service. This is the only sure way to disable the airbag system. Failure to follow these instructions may result in possible serious or fatal injury.

WARNING: The blower motor power module may get very hot during normal operation. If the blower motor was turned on prior to servicing the power module, wait at least five minutes to allow the module heat sink to cool before performing diagnosis or service. Failure to take this precaution may result in possible serious injury.

1. Disconnect and isolate the negative battery cable.
2. Remove the passenger side silencer panel. Refer to **PANEL, SILENCER, LOWER, REMOVAL** .
3. Remove the passenger side console closeout.

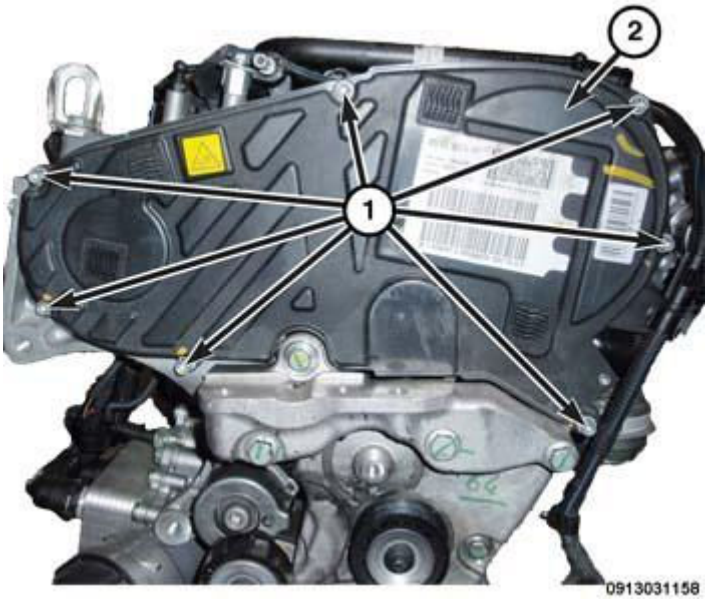

Fig. 20: Blower Motor Power Module And Blower Motor Wiring Harness Connectors
Courtesy of CHRYSLER GROUP, LLC

4. Disconnect the wire harness connectors (1) from the blower motor power module and blower motor.

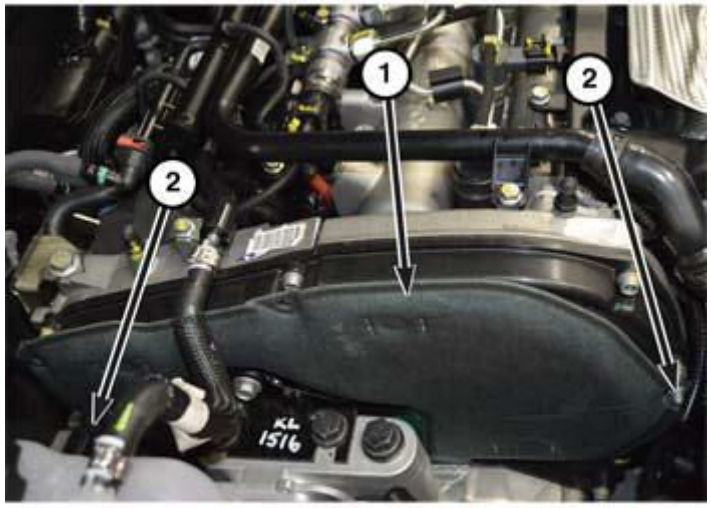

0911034888

Fig. 21: Blower Motor Power Module & Fasteners
Courtesy of CHRYSLER GROUP, LLC

5. Remove the screws (1) that secures the blower motor power module to the blower motor and remove the power module.

INSTALLATION

INSTALLATION

1. Install the blower motor power module to the blower motor and install the retaining screws. Tighten the screw to 0.8 N.m (7 in. lbs.).
2. Connect the wire harness connectors to the blower motor power module.
3. Install the passenger side console closeout cover.
4. Install the passenger side silencer panel. Refer to **PANEL, SILENCER, LOWER, INSTALLATION** .
5. Connect the negative battery cable.

SENSOR, AMBIENT TEMPERATURE

DESCRIPTION

DESCRIPTION

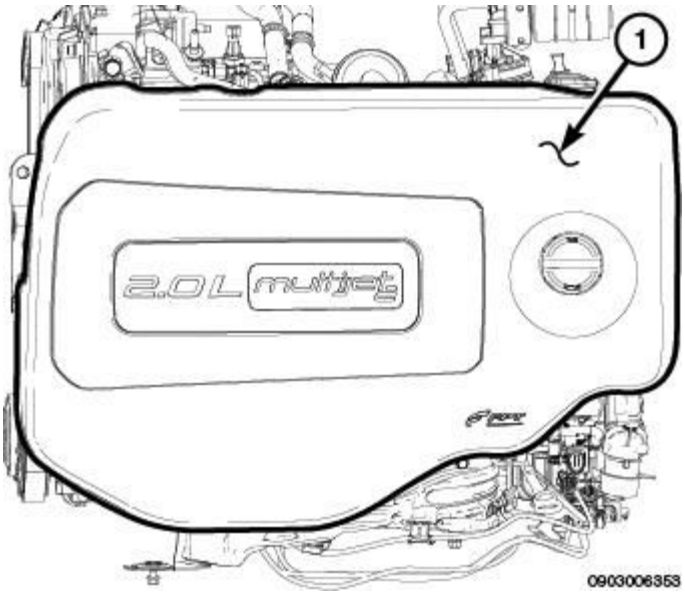

Fig. 22: Identifying Ambient Air Temperature Sensor
Courtesy of CHRYSLER GROUP, LLC

The ambient air temperature sensor is a variable resistor that monitors the air temperature outside of the vehicle. The Automatic Temperature Control (ATC) heating and A/C system uses the ambient air temperature sensor data to help maintain optimum passenger compartment temperature levels. The ambient air temperature sensor is mounted behind the grille on the left side.

OPERATION

OPERATION

The ambient air temperature sensor is a variable resistor that operates on a 5 volt Direct Current (DC) reference signal sent by the Body Control Module (BCM). The ambient air temperature sensor is connected to the BCM through a two-wire lead and connector of the vehicle wire harness. The ambient air temperature sensor changes its internal resistance in response to changes in the outside air temperature, which either increases or decreases the reference signal voltage read by the BCM. The BCM converts and broadcasts the sensor data over the Controller Area Network (CAN) data bus, where it is read by the Automatic Temperature Control (ATC) A/C heater module and other vehicle control modules.

The ambient air temperature sensor is diagnosed using a scan tool. Refer to **DIAGNOSIS AND TESTING** .

The ambient air temperature sensor cannot be adjusted or repaired and must be replaced if inoperative or damaged.

REMOVAL

REMOVAL

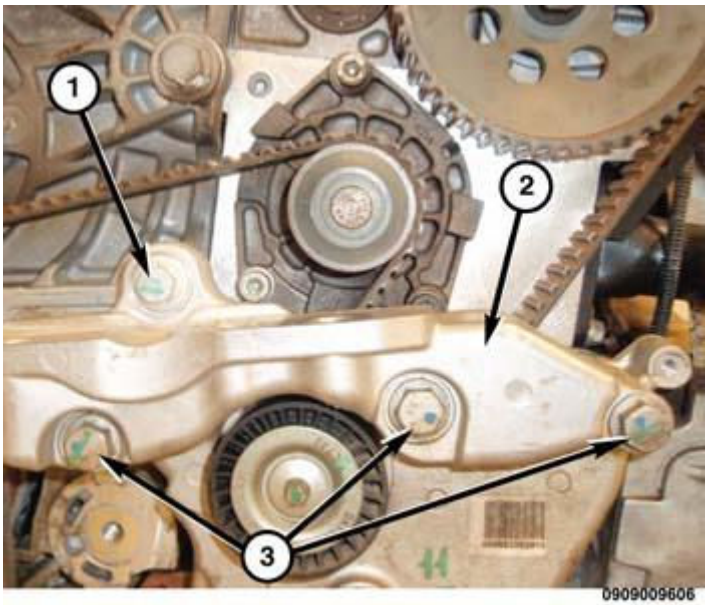

Fig. 23: Ambient Temperature Sensor, Connector & Push Pin
Courtesy of CHRYSLER GROUP, LLC

1. Disconnect and isolate the negative battery cable.
2. Disconnect the wire harness connector (3) from the ambient air temperature sensor (2).
3. Remove the push pin (1) that secures the ambient air temperature sensor and remove the sensor.

INSTALLATION

INSTALLATION

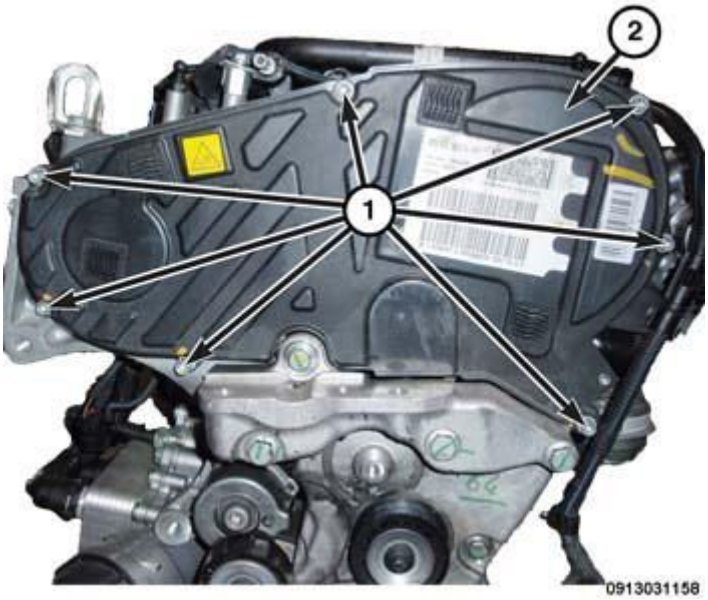

Fig. 24: Ambient Temperature Sensor, Connector & Push Pin
Courtesy of CHRYSLER GROUP, LLC

1. Install the push pin (1) that secures the ambient air temperature sensor to the vehicle.
2. Connect the wire harness connector (3) to the ambient air temperature sensor (2).
3. Connect the negative battery cable.

SENSOR, EVAPORATOR TEMPERATURE

DESCRIPTION

DESCRIPTION

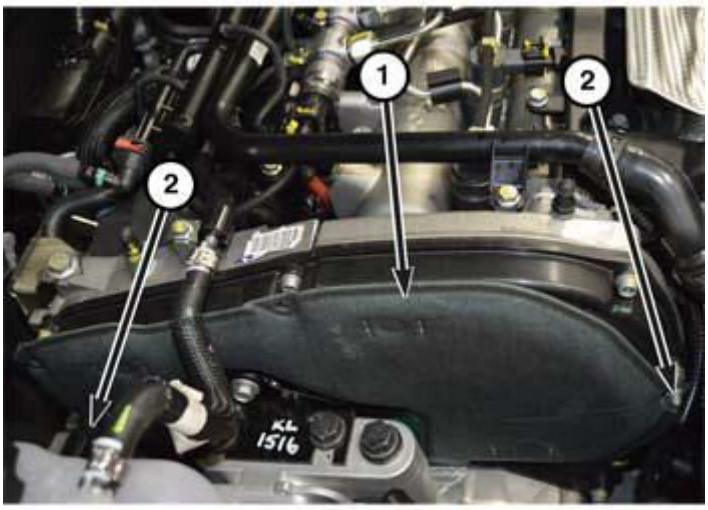

0911034888

Fig. 25: Connector, Bracket & Electrical Thermistor
Courtesy of CHRYSLER GROUP, LLC

The evaporator temperature sensor measures the temperature of the conditioned air downstream of the A/C evaporator. The evaporator temperature sensor is an electrical thermistor (3) mounted on a molded plastic bracket (2) that is inserted into the A/C evaporator, near its coldest point. The evaporator temperature sensor is connected to the vehicle electrical system by use of a two wire lead and connector (1).

OPERATION

OPERATION

The evaporator temperature sensor monitors the surface temperature of A/C evaporator and supplies an input signal to the A/C heater module. The A/C heater module uses the evaporator temperature sensor input signal to optimize A/C system performance and to protect the A/C system from evaporator freezing. The evaporator temperature sensor will change its internal resistance in response to the temperatures it monitors and is connected to the A/C heater module through a sensor ground circuit and a 5 volt Direct Current (DC) reference signal circuit. As the temperature of the A/C evaporator decreases, the internal resistance of the evaporator temperature sensor decreases.

The A/C heater module uses the monitored voltage reading as an indication of evaporator temperature. The A/C heater module is programmed to respond to this input by requesting the Powertrain Control Module (PCM) to cycle the A/C clutch as necessary to optimize A/C system performance and to protect the A/C system from evaporator freezing.

When equipped with Automatic Temperature Control (ATC), the evaporator temperature sensor is diagnosed using a scan tool. Refer to the **DIAGNOSTIC CODE INDEX** .

When equipped with Manual Temperature Control System (MTC), the evaporator temperature sensor is diagnosed using a scan tool. Refer to appropriate DIAGNOSIS AND TESTING.

The evaporator temperature sensor cannot be adjusted or repaired and must be replaced if inoperative or damaged.

REMOVAL

REMOVAL

WARNING: **Disable the airbag system before attempting any steering wheel, steering column, or instrument panel component diagnosis or service. Disconnect and isolate the negative battery (ground) cable, then wait two minutes for the airbag system capacitor to discharge before performing further diagnosis or service. This is the only sure way to disable the airbag system. Failure to take the proper precautions could result in accidental airbag deployment and possible serious or fatal injury.**

1. Disconnect and isolate the negative battery cable.
2. Remove the right side silencer panel. Refer to **PANEL, SILENCER, LOWER, REMOVAL** .
3. Remove the right side console closeout cover.

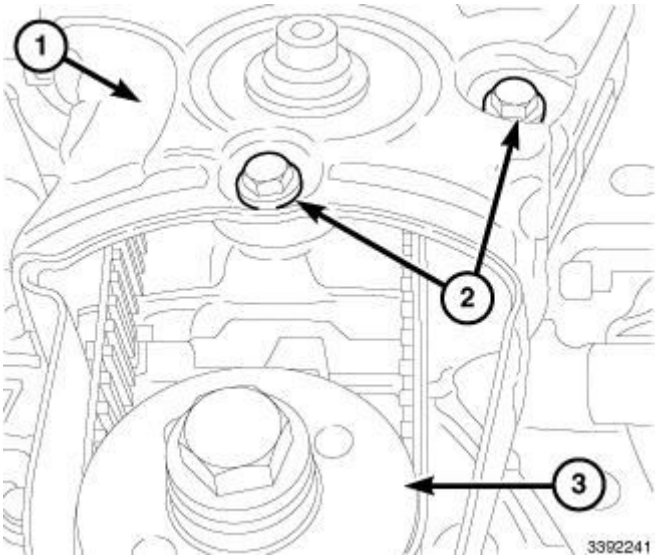

Fig. 26: Evaporator Temperature Sensor Location

Courtesy of CHRYSLER GROUP, LLC

4. Rotate the evaporator temperature sensor (1) forty five degrees to disengage from the HVAC housing.

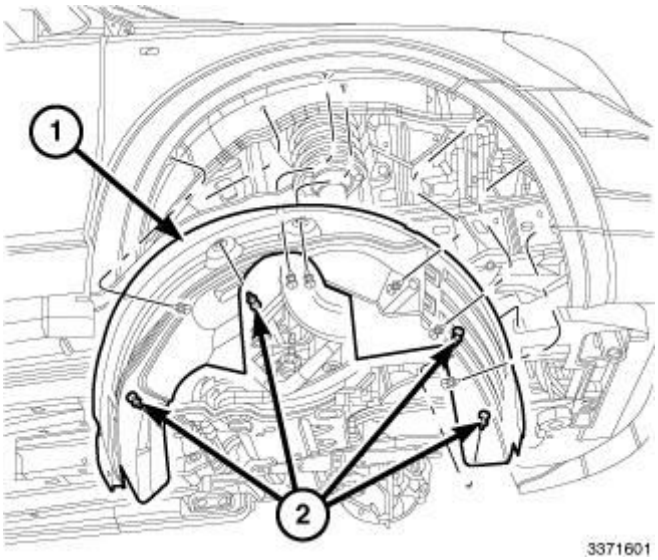

Fig. 27: View Of Evaporator Temperature Sensor
Courtesy of CHRYSLER GROUP, LLC

5. Remove the evaporator temperature sensor (3) from the HVAC housing (1).
6. Disconnect the wire harness connector (2) from the evaporator temperature sensor.

INSTALLATION

INSTALLATION

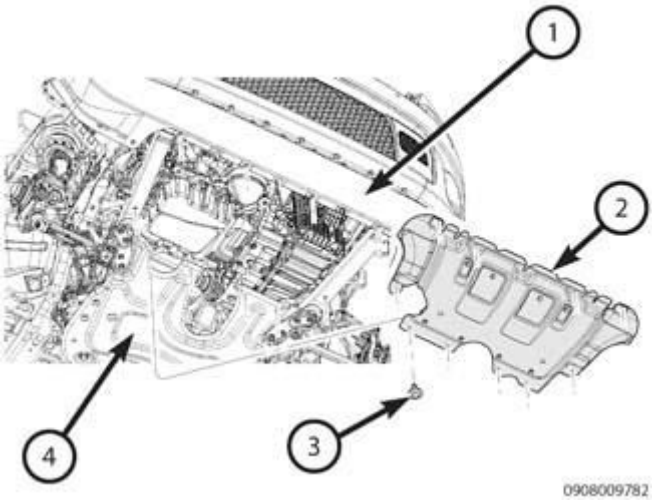

Fig. 28: View Of Evaporator Temperature Sensor
Courtesy of CHRYSLER GROUP, LLC

1. Connect the wire harness connector (2) to the evaporator temperature sensor (3).
2. Position the evaporator temperature sensor into the HVAC housing (1).

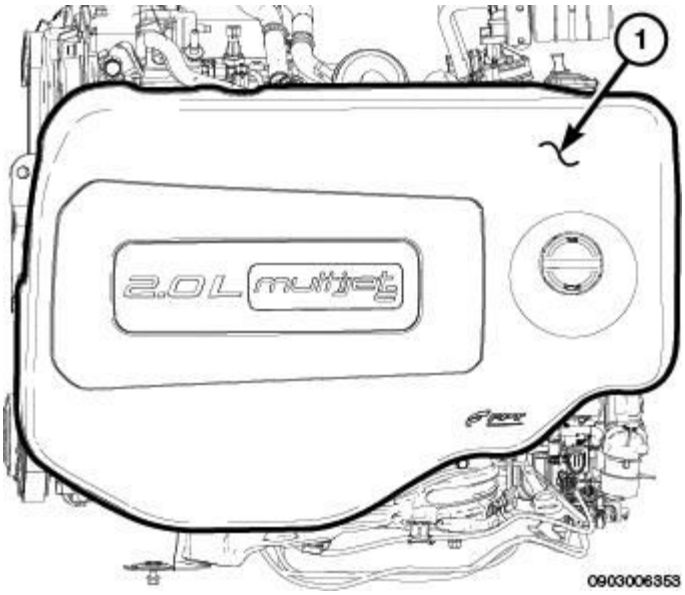

Fig. 29: Evaporator Temperature Sensor Location
Courtesy of CHRYSLER GROUP, LLC

3. Rotate the evaporator temperature sensor forty five degrees to engage the locking tab (1) to the HVAC housing.
4. Position the right side console closeout cover, and engage the retaining tabs.
5. Install the right side silencer panel. Refer to **PANEL, SILENCER, LOWER, INSTALLATION** .
6. Connect the negative battery cable.

SENSOR, HUMIDITY

DESCRIPTION

DESCRIPTION

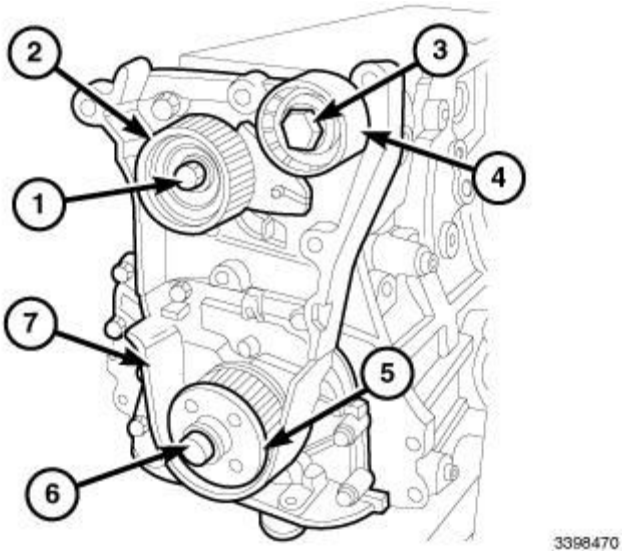

Fig. 30: Humidity Sensor, Bracket, Retaining Clip & Plastic Tabs
Courtesy of CHRYSLER GROUP, LLC

A humidity sensor (1) is used on Automatic Temperature Control (ATC) models to detect humidity levels inside the vehicle to optimize the dehumidifying effect of the A/C system. The humidity sensor is attached to a plastic bracket (3) by a metal retaining clip (2). The sensor bracket is attached to the inside of the windshield by an adhesive. A cover is attached to the sensor bracket by four plastic tabs (4). The humidity sensor is connected to the Body Control Module (BCM) by a dedicated three wire lead and connector that protrudes out from under the front of the headliner.

CAUTION: Use care when servicing the humidity sensor. The humidity sensor bracket cannot be serviced separately from the windshield. If the sensor bracket becomes damaged, the windshield will need to be replaced.

The humidity sensor can be serviced without the use of any special tools.

OPERATION

OPERATION

The humidity sensor detects humidity, dew point and windshield glass temperature, and sends this information to the Body Control Module (BCM) over a Local Interconnect Network (LIN) data bus connection. The BCM then broadcasts the message over the Controller Area Network (CAN) data bus to the A/C heater module. The A/C heater module automatically adjusts A/C clutch operation, amount of recirculated air, blower motor speeds and outlet modes to prevent fogging on the inside of the windshield glass. If the humidity sensor message is not received by the A/C heater module, a Diagnostic Trouble Code (DTC) will set. The information the A/C heater module receives from the humidity sensor can be viewed using a scan tool.

The humidity sensor is diagnosed using a scan tool. Refer to **DIAGNOSIS AND TESTING** .

The humidity sensor cannot be adjusted or repaired and must be replaced if inoperative or damaged.

REMOVAL

REMOVAL

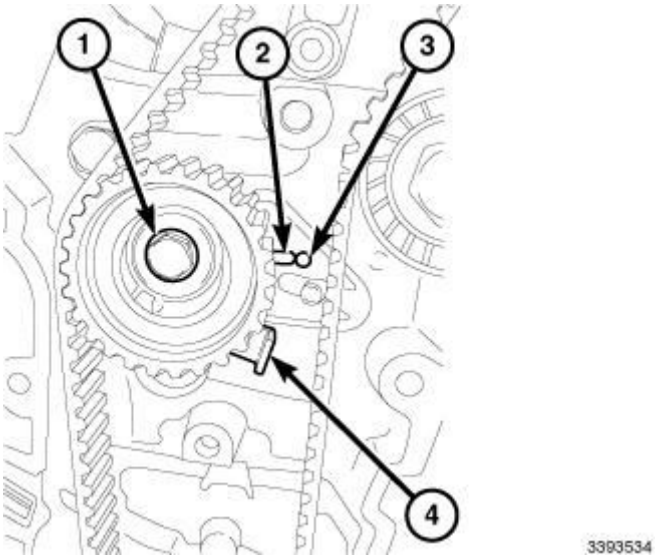

Fig. 31: Humidity Sensor Cover, Sensor Bracket & Retaining Tabs
Courtesy of CHRYSLER GROUP, LLC

1. Disconnect and isolate the negative battery cable

CAUTION: Use care when removing the humidity sensor cover. The humidity sensor bracket cannot be serviced separately from the windshield. If the sensor bracket becomes damaged, the windshield will need to be replaced.

2. Carefully disengage the four retaining tabs (2 and 4) that secure the cover (3) to the humidity sensor bracket (1) by pressing in on the right side of the cover, while rocking the left side of the cover off the bracket.

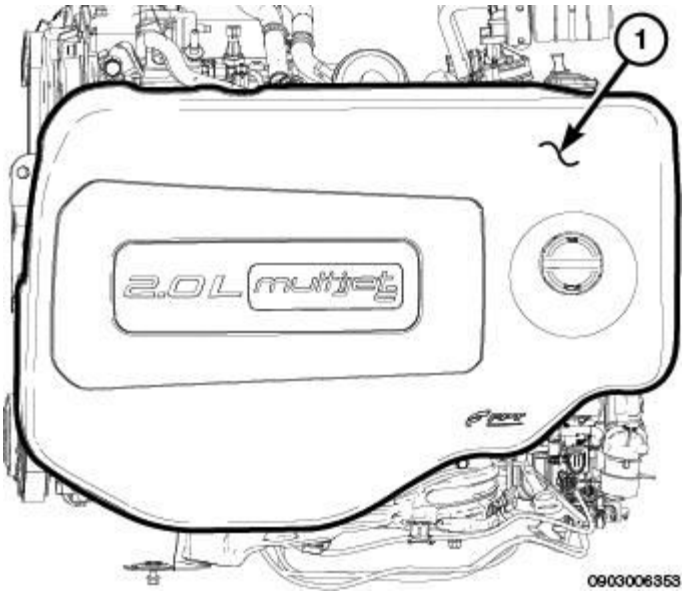

Fig. 32: Wire Harness Connector, Humidity Sensor, Bracket & Clip
Courtesy of CHRYSLER GROUP, LLC

CAUTION: Use care when removing the humidity sensor. The humidity sensor bracket cannot be serviced separately from the windshield. If the sensor bracket becomes damaged, the windshield will need to be replaced.

3. Using a small screwdriver or similar tool, carefully disengage the metal retaining clip (3) from the sensor bracket (2) and remove the humidity sensor (4) and the clip as an assembly.
4. Disconnect the wire harness connector (1) from the humidity sensor.
5. If the humidity sensor bracket is damaged and cannot be reused, replace the windshield. Refer to **WINDSHIELD, REMOVAL** .

INSTALLATION

INSTALLATION

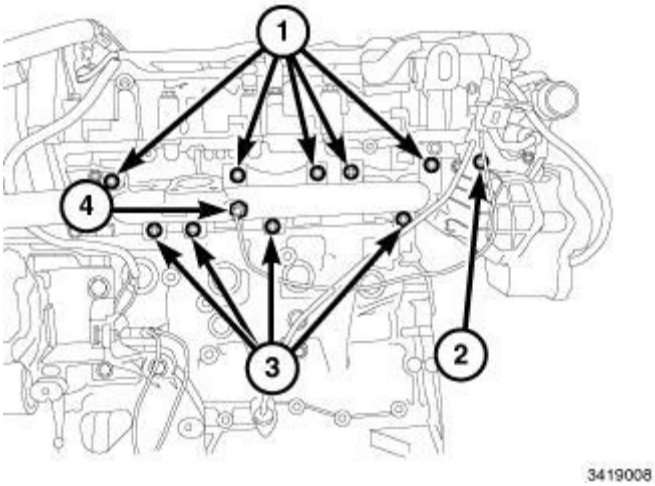

Fig. 33: Wire Harness Connector, Humidity Sensor, Bracket & Clip
Courtesy of CHRYSLER GROUP, LLC

1. If the humidity sensor bracket (1) is damaged and cannot be reused, install a new windshield. Refer to **WINDSHIELD, INSTALLATION** .
2. Connect the wire harness connector (1) to the humidity sensor (4).

CAUTION: Use care when installing the humidity sensor. The humidity sensor bracket cannot be serviced separately from the windshield. If the sensor bracket becomes damaged, the windshield will need to be replaced.

3. Position the humidity sensor to the sensor bracket (2) and engage the metal retaining clip (3) to the bracket. Make sure both sides of the retaining clip are fully engaged to the bracket.

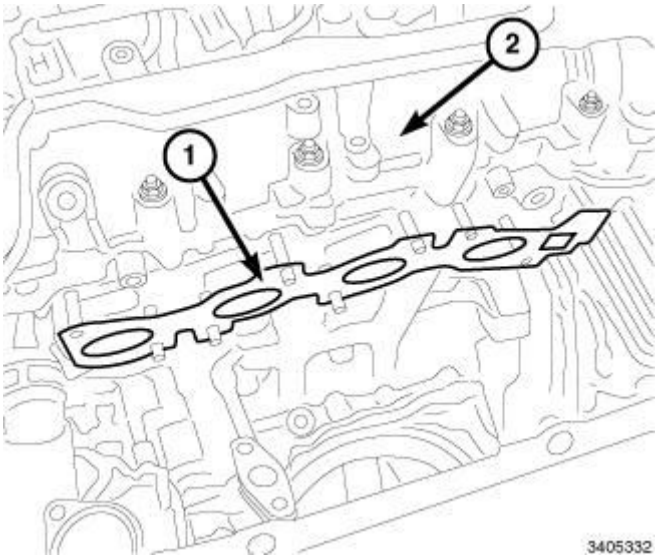

Fig. 34: Humidity Sensor Cover, Sensor Bracket & Retaining Tabs
Courtesy of CHRYSLER GROUP, LLC

CAUTION: Use care when install the humidity sensor cover. The humidity sensor bracket cannot be serviced separately from the windshield. If the sensor bracket becomes damaged, the windshield will need to be replaced.

4. Carefully install the humidity sensor cover (3) onto the sensor bracket (1). Make sure the four retaining tabs (2 and 4) are fully engaged to the bracket
5. Reconnect the negative battery cable.

SENSOR, SUN

DESCRIPTION

DESCRIPTION

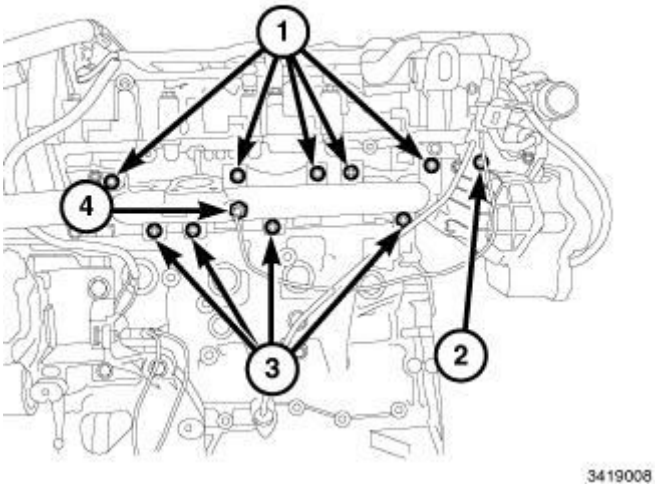

Fig. 35: Sun Sensor
Courtesy of CHRYSLER GROUP, LLC

NOTE: Typical sun sensor assembly shown in illustration.

The Automatic Temperature Control (ATC) heating and A/C system uses a sun sensor assembly (1) to measure sun light intensity. The sun sensor assembly incorporates three sun sensors (2) within a molded plastic case with a clear lens (3), that protrudes through the center of the defroster grille. The wire harness receptacle (4) connects the sun sensors to the vehicle electrical system through a wire lead and connector of the instrument panel wire harness.

OPERATION

OPERATION

The Automatic Temperature Control (ATC) Dual Zone heating and A/C system uses two sun sensors to balance the system in response to side-to-side variations of sun light intensity. Passengers in sun and shadow require different functional settings because they experience very different temperatures. The sun sensor assembly provides data to the A/C heater module to help determine proper mode and blend-air door positions and blower motor speeds. The sun sensors are not thermistor type sensors, but rather photo diodes. For this reason the sun sensors responds to sun light intensity rather than temperature. The sun sensor assembly is also used to sense day and night conditions for automatic headlight control, if equipped.

The sun sensor is diagnosed using a scan tool. Refer to **DIAGNOSIS AND TESTING** .

The sun sensor assembly cannot be adjusted or repaired and must be replaced if inoperative or damaged.

DIAGNOSIS AND TESTING

DIAGNOSIS AND TESTING - SUN SENSOR

WARNING: **Disable the airbag system before attempting any steering wheel, steering column, or instrument panel component diagnosis or service. Disconnect and isolate the negative battery (ground) cable. Wait two minutes for the airbag system capacitor to discharge before performing further diagnosis or service. This is the only sure way to disable the airbag system. Failure to follow these instructions may result in possible serious or fatal injury.**

The sun sensor assembly is located so that the sun rays will hit the sensors in the same way that it will hit the driver and the passenger. It is important that the area in front of the sun sensor assembly be unobstructed. If the vehicle exhibits a lack of passenger comfort in sunny weather such as in the early afternoon, check for the following:

- Any items laying on top of the instrument panel are not covering the sun sensor.
- Any stickers on the windshield are not directly in front of the sun sensor.
- Confirm that the windshield wipers are properly adjusted.
- Confirm that the sun sensor is properly installed. Refer to **SENSOR, SUN, INSTALLATION**.
- Confirm that the defroster grille is properly installed. Refer to **GRILLE, DEFROSTER, INSTALLATION** .

The A/C heater module continually monitors the sun sensor circuits and will store Diagnostic Trouble Codes (DTCs) for any problem it detects. The sun sensor can be tested in the vehicle with a scan tool. Refer to **DIAGNOSIS AND TESTING** .

REMOVAL

REMOVAL

WARNING: **Disable the airbag system before attempting any steering wheel, steering**

column, or instrument panel component diagnosis or service. Disconnect and isolate the negative battery (ground) cable. Wait two minutes for the airbag system capacitor to discharge before performing further diagnosis or service. This is the only sure way to disable the airbag system. Failure to follow these instructions may result in possible serious or fatal injury.

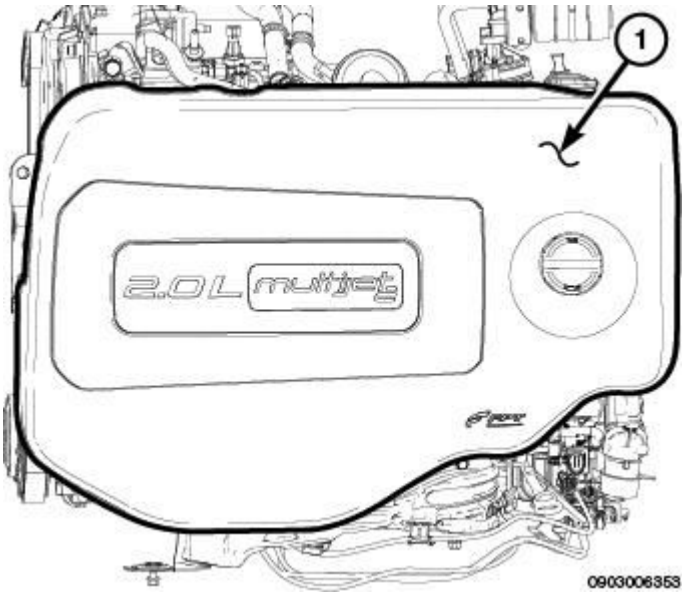

Fig. 36: Sun Sensor & Defroster Grille
Courtesy of CHRYSLER GROUP, LLC

1. Disconnect and isolate the negative battery cable.
2. Using Trim Stick (special tool #C-4755, Trim Stick) or equivalent, remove the sun sensor (1) from the defroster grille (2).

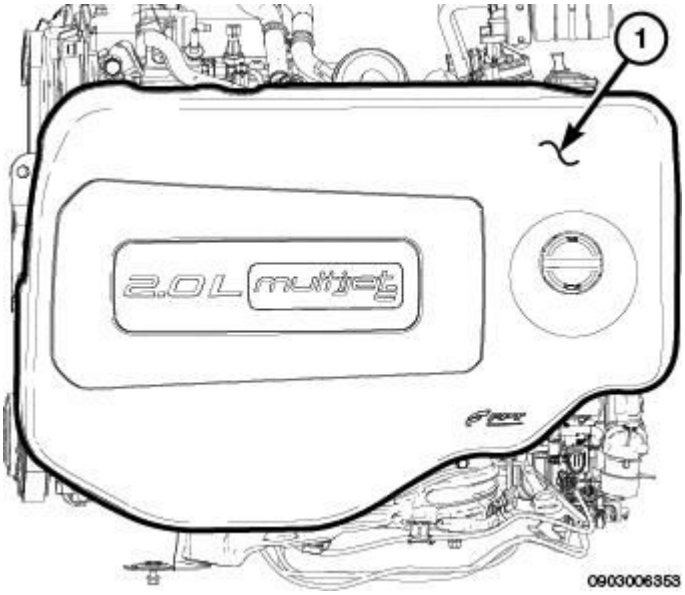

Fig. 37: Sun Sensor & Wire Harness Connector
Courtesy of CHRYSLER GROUP, LLC

3. Disconnect the wire harness connector (2) from the sun sensor (1) and remove the sensor.

INSTALLATION

INSTALLATION

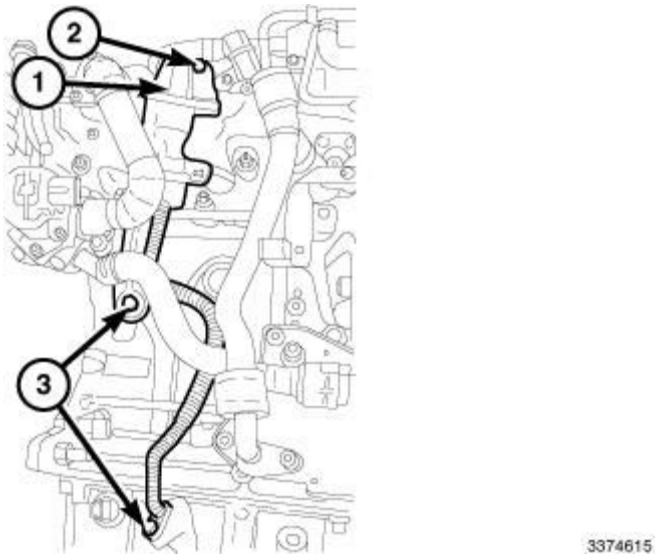

Fig. 38: Sun Sensor & Wire Harness Connector
Courtesy of CHRYSLER GROUP, LLC

1. Position the sun sensor (1) to the top of the instrument panel and connect the wire harness connector (2) to the sensor.

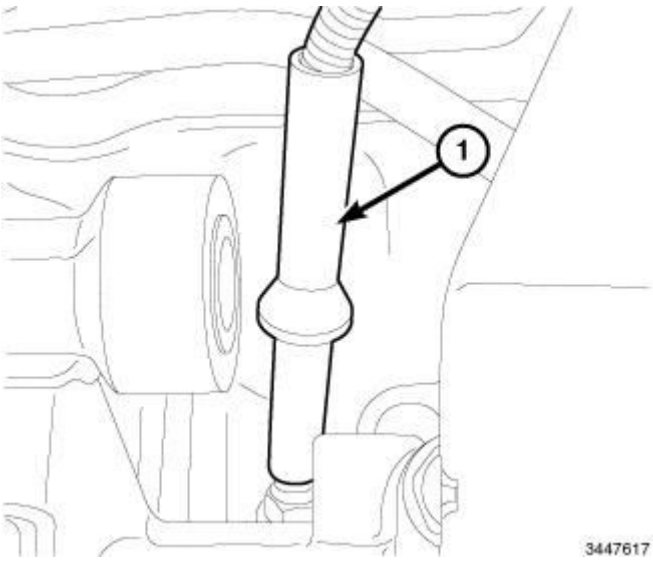

Fig. 39: Sun Sensor & Defroster Grille

Courtesy of CHRYSLER GROUP, LLC

2. Align the tab on the sun sensor (1) with the slot in the opening in the defroster grille (2) and install the sensor onto the grille. Make sure that the sensor is fully engaged to the defroster grille.
3. Reconnect the negative battery cable.

SENSOR, TEMPERATURE, AIR OUTLET

DESCRIPTION

DESCRIPTION

Four air outlet temperature sensors are used in the Automatic Temperature Control (ATC) heating and A/C system to measure the temperature of the conditioned air leaving the HVAC housing. Each air outlet temperature sensor is an electrical thermistor located within a molded plastic case.

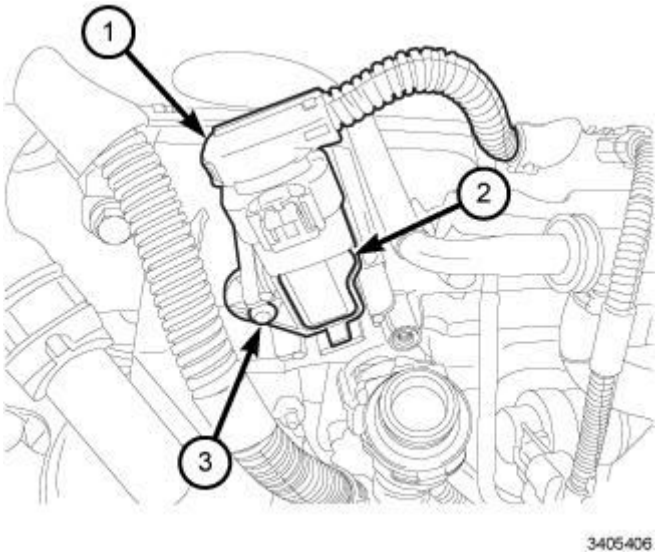

Fig. 40: Mode Case & Air Outlet Temperature Sensor
Courtesy of CHRYSLER GROUP, LLC

Each air outlet temperature sensor (2) is inserted into the mode case (1) near the top of the HVAC housing.

Each air outlet temperature sensor is connected to the vehicle electrical system through a separate wire lead and connector of the HVAC wire harness. The external location of the air outlet temperature sensors allow them to be removed or installed without removing the HVAC housing from the vehicle.

OPERATION

OPERATION

The air duct temperature sensors monitor the temperature of the conditioned air leaving the HVAC housing and supplies an input signal to the A/C heater control, when equipped with the Automatic Temperature Control (ATC) heating and A/C system. The air duct temperature sensors change their internal resistance in response to

the temperatures they monitor. The air duct temperature sensors are connected to the ATC A/C heater control through a sensor ground circuit and a 5 volt Direct Current (DC) reference signal circuit. As the temperature of the conditioned air leaving the HVAC housing decreases, the internal resistance of the temperature sensor increases. As the temperature of the conditioned air leaving the HVAC housing increases, the internal resistance of the temperature sensor decreases.

The ATC A/C heater control uses the monitored voltage readings as an indication of air outlet temperature. The A/C heater control is programmed to respond to this and other inputs by adjusting the blend and the mode air door positions, and by cycling the A/C clutch on and off as necessary in order to automatically adjust the heating and A/C system to the operator temperature preference setting.

The air duct temperature sensors are diagnosed using a scan tool. Refer to **DIAGNOSIS AND TESTING** .

The air duct temperature sensors cannot be adjusted or repaired and must be replaced if inoperative or damaged.

REMOVAL

REMOVAL

WARNING: Disable the airbag system before attempting any steering wheel, steering column or instrument panel component diagnosis or service. Disconnect and isolate the negative battery (ground) cable, then wait two minutes for the airbag system capacitor to discharge before performing further diagnosis or service. This is the only sure way to disable the airbag system. Failure to follow these instructions may result in accidental airbag deployment and possible serious or fatal injury.

NOTE: The Automatic Temperature Control (ATC) heating and A/C system uses four air outlet temperature sensors, that are mounted on both sides and on top of the air distribution housing. Two are for the instrument panel outlets and the other two for the floor outlets.

1. Disconnect and isolate the negative battery cable.
2. Remove the radio. Refer to **RADIO, REMOVAL** .

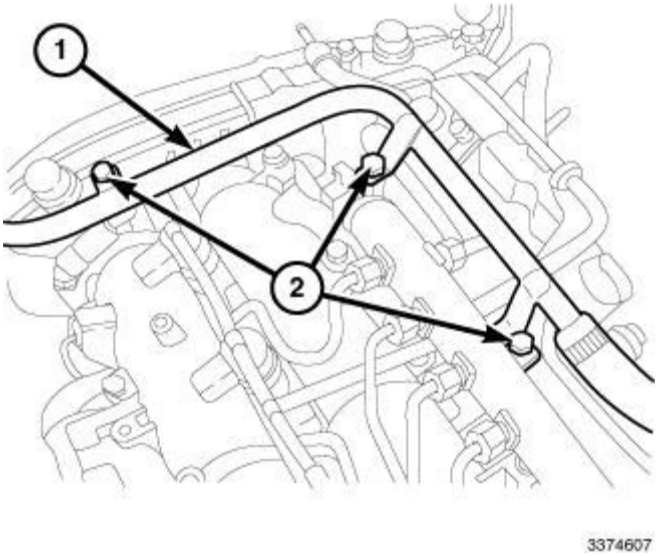

Fig. 41: Connector, Air Outlet Temperature Sensor & HVAC Housing
Courtesy of CHRYSLER GROUP, LLC

3. Disconnect the HVAC wire harness (1) from the air outlet temperature sensor (2).

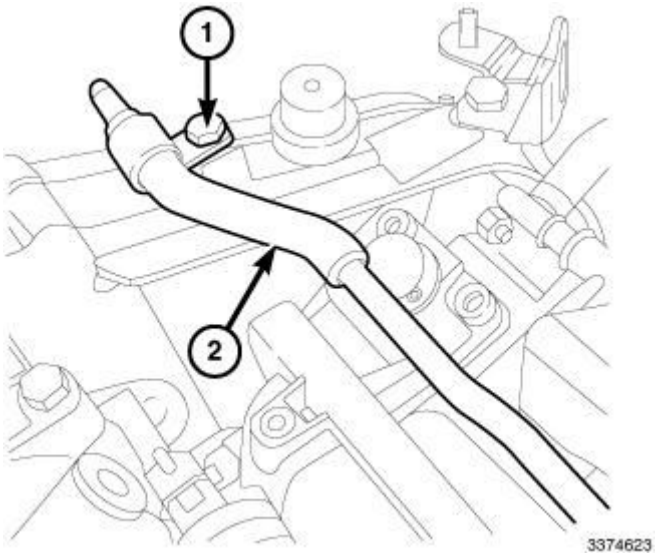

Fig. 42: Air Outlet Temperature Sensor & HVAC Housing
Courtesy of CHRYSLER GROUP, LLC

4. Rotate the air outlet temperature sensor (1) counterclockwise and remove from the HVAC housing (2).

INSTALLATION

INSTALLATION

NOTE: **The Automatic Temperature Control (ATC) heating and A/C system uses four air outlet temperature sensors, that are mounted on both sides and on top of the**

air distribution housing. Two are for the instrument panel outlets and the other two are for the floor outlets.

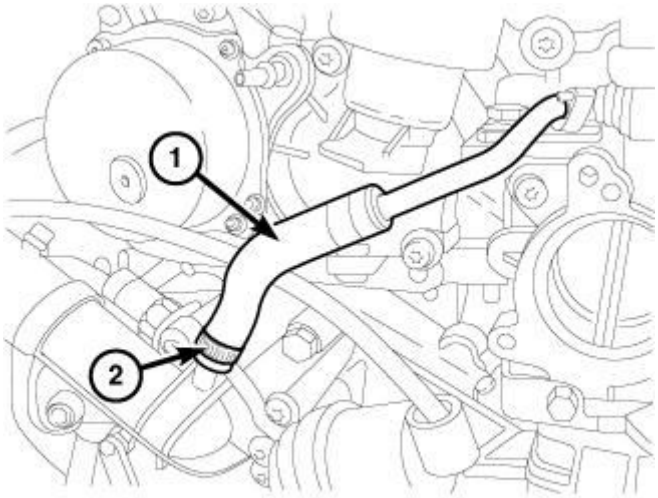

Fig. 43: Air Outlet Temperature Sensor & HVAC Housing
Courtesy of CHRYSLER GROUP, LLC

1. Install the air duct temperature sensor (1) into the air distribution housing (2). Turn the air duct temperature sensor clockwise to engage the sensor into the air distribution housing.

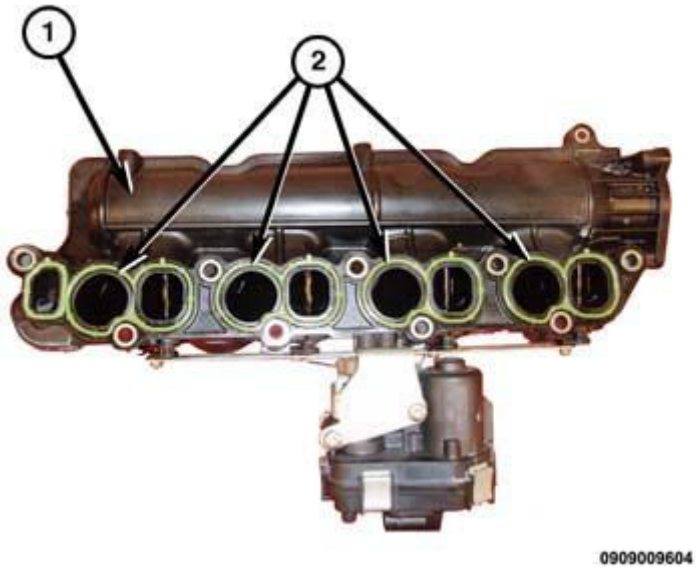

Fig. 44: Connector, Air Outlet Temperature Sensor & HVAC Housing
Courtesy of CHRYSLER GROUP, LLC

2. Connect the HVAC wire harness (1) to the air duct temperature sensor (2).
3. Install the radio. Refer to **RADIO, INSTALLATION** .

4. Connect the negative battery cable.

SENSOR, TEMPERATURE, IN-CAR

DESCRIPTION

DESCRIPTION

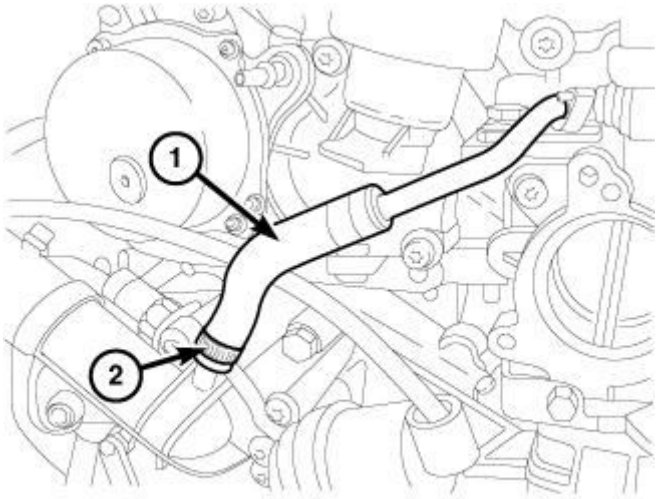

Fig. 45: In-Car Temperature Sensor, Aspirator Motor & Thermistor
Courtesy of CHRYSLER GROUP, LLC

The in-car temperature sensor (1) is used in the Automatic Temperature Control (ATC) heating and A/C system only. The in-car temperature sensor consists of an aspirator motor (2) and a temperature thermistor (3). The in-car temperature sensor sends a resistance signal to the ATC A/C heater module and is attached to the instrument panel, below the steering column.

OPERATION

OPERATION

Air is drawn from the passenger compartment by the aspirator motor and flows over the temperature thermistor. The thermistor changes resistance with air temperature. The Automatic Temperature Control (ATC) A/C-heater control receives the resistance signal over hard-wired circuits and calculates the temperature of the air in the passenger compartment. The ATC system then automatically makes adjustments to maintain the optimum passenger compartment comfort.

The in-car temperature sensor cannot be adjusted or repaired and must be replaced if inoperative or damaged.

DIAGNOSIS AND TESTING

DIAGNOSIS AND TESTING - IN-CAR TEMPERATURE SENSOR

NOTE: **For complete circuit diagrams, see Wiring Information. Wiring Information includes wiring diagrams, connector pin-out and location views, details of wire harness routing and retention, splice and ground locations and proper wire and connector repair procedures.**

Using a scan tool, check for Diagnostic Trouble Codes (DTCs) related to the in-car temperature sensor and the A/C-heater control. If any DTCs are found, repair as necessary. Refer to **DIAGNOSIS AND TESTING** . If no DTCs are found, perform the two following tests. Replace the in-car temperature sensor if the sensor fails either test.

ASPIRATOR MOTOR TEST

The in-car temperature sensor uses an aspirator motor to draw air from the passenger compartment and flow the air over the temperature thermistor. Test the motor as follows.

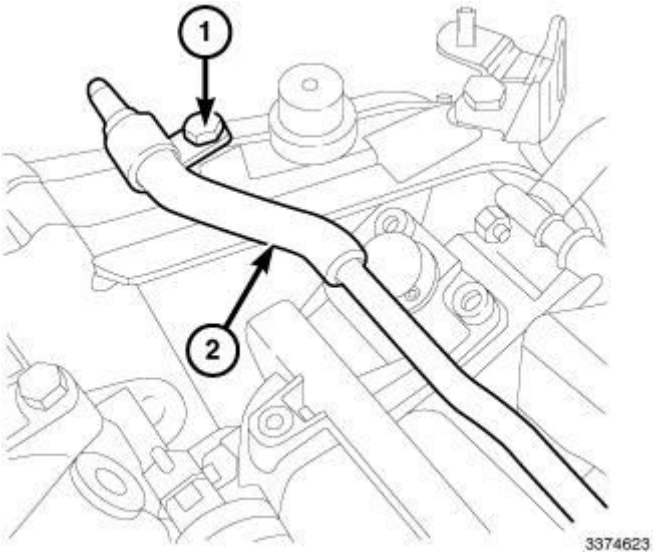

Fig. 46: Opening Grille & Opening Cover
Courtesy of CHRYSLER GROUP, LLC

1. Place the ignition in the Run position.
2. Place a small piece of newspaper in front of the aspirator motor opening grille (1), located on the steering column opening cover (2). If the paper sticks to the grille, the aspirator motor is operating properly. The piece of paper should be only large enough to cover the opening.
3. If the paper does not stick to the grille, check the in-car temperature sensor electrical connections and wiring. If connections and wiring are OK, replace the in-car temperature sensor.

TEMPERATURE THERMISTOR TEST

The in-car temperature sensor uses a temperature thermistor to provide resistance values that correlate with temperature change. Test the thermistor as follows.

1. Remove the in-car temperature sensor and place it on a workbench. Refer to **SENSOR,**

TEMPERATURE, IN-CAR, REMOVAL.

2. Note the current ambient air temperature of the work area.
3. Use an ohm meter and check the resistance between pins 1 and 2 of the in-car temperature sensor. Compare the temperature of the work area to the found resistance value. The resistance should be within specifications as listed in the **Resistance and Temperature** chart below. If not OK, replace the in-car temperature sensor.

RESISTANCE AND TEMPERATURE

Air Temperature Range	Low Resistance Range (kohm)	High Resistance Range (kohm)
-21° to -15°C (-5° to 5°F)	292 ± 1.0	223 ± 0.9
-14° to -9°C (6° to 15°F)	198 ± 0.9	161 ± 0.8
-8° to -4°C (16° to 25°F)	144 ± 0.8	123 ± 0.8
-3° to 1°C (26° to 35°F)	111 ± 0.7	95 ± 0.7
2 to 7°C (36° to 45°F)	86 ± 0.7	70 ± 0.6
8 to 12°C (46° to 55°F)	64 ± 0.6	55 ± 0.5
13° to 18°C (56° to 65°F)	51 ± 0.5	42 ± 0.4
19° to 23°C (66° to 75°F)	39 ± 0.4	33 ± 0.3
24° to 29°C (76° to 85°F)	31 ± 0.3	26 ± 0.3
30° to 35°C (86° to 95°F)	24 ± 0.3	20 ± 0.3
36° to 40°C (96° to 105°F)	18 ± 0.3	16 ± 0.3
41° to 46°C (106° to 115°F)	15 ± 0.3	13 ± 0.3

REMOVAL

REMOVAL

WARNING: Disable the airbag system before attempting any steering wheel, steering column or instrument panel component diagnosis or service. Disconnect and isolate the negative battery (ground) cable, then wait two minutes for the airbag system capacitor to discharge before performing further diagnosis or service. This is the only sure way to disable the airbag system. Failure to follow these instructions may result in accidental airbag deployment and possible serious or fatal injury.

NOTE: Take the proper precautions to protect the face of the steering column opening cover from cosmetic damage while performing this procedure.

1. Disconnect and isolate the negative battery cable.
2. Remove the steering column opening cover. Refer to **COVER, STEERING COLUMN OPENING, REMOVAL** .

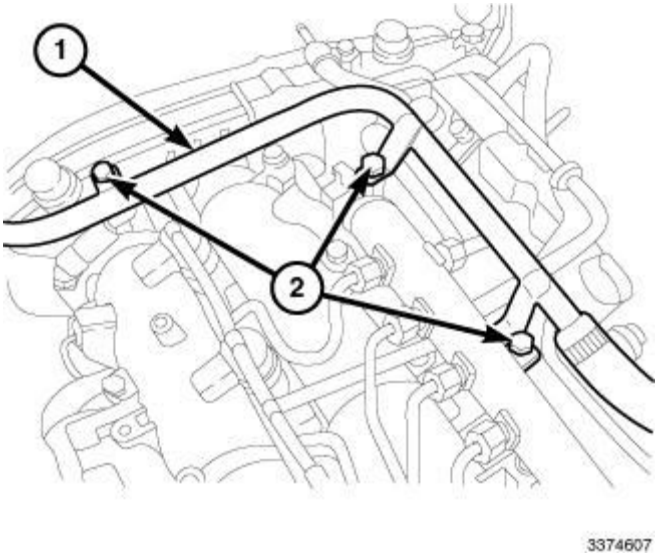

Fig. 47: In-Car Temperature Sensor & Fasteners
Courtesy of CHRYSLER GROUP, LLC

3. Remove the two screws (2) that secure the in-car temperature sensor (1) to the steering column opening cover and remove the sensor.

INSTALLATION

INSTALLATION

NOTE: Take the proper precautions to protect the face of the steering column opening cover from cosmetic damage while performing this procedure.

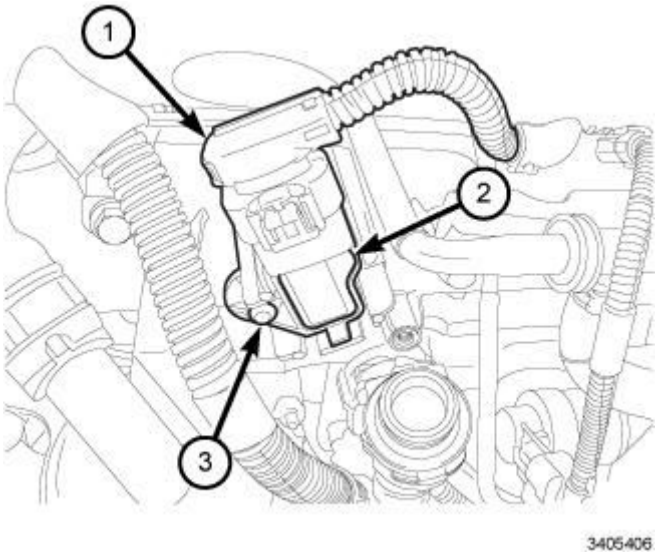

Fig. 48: In-Car Temperature Sensor & Fasteners
Courtesy of CHRYSLER GROUP, LLC

1. Position the in-car temperature sensor (1) onto the steering column opening cover.
2. Install the two screws (2) that secure the in-car temperature sensor to the steering column opening cover. Tighten the screws securely.
3. Install the steering column opening cover. Refer to **COVER, STEERING COLUMN OPENING, INSTALLATION** .
4. Connect the negative battery cable.

TRANSDUCER, A/C PRESSURE

DESCRIPTION

DESCRIPTION

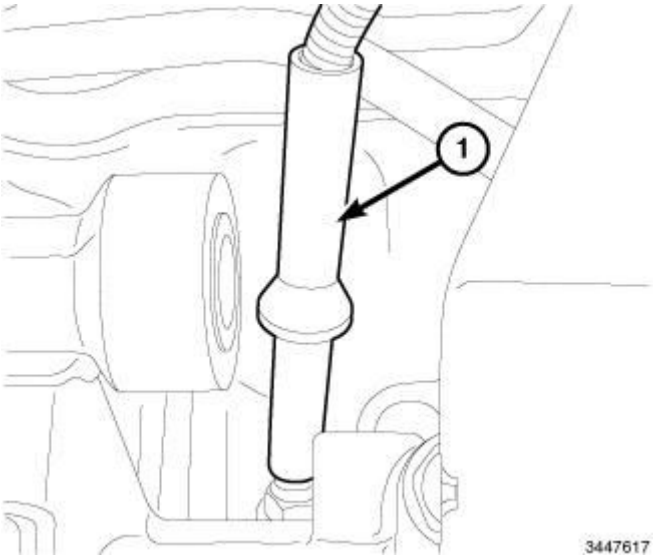

Fig. 49: A/C Pressure Transducer
Courtesy of CHRYSLER GROUP, LLC

The A/C pressure transducer (1) is a switch that is installed on a fitting located on the A/C liquid line. The A/C liquid line fitting has an external O-ring seal and uses a Schrader-type valve that allows the A/C pressure transducer to be removed without recovering the refrigerant system. The A/C pressure transducer is connected to the vehicle electrical system by a molded plastic connector with three terminals.

OPERATION

OPERATION

The internal resistance in the A/C pressure transducer changes in response to the pressures in the high side of the A/C refrigerant system. The Powertrain Control Module (PCM) provides a five volt reference signal and a sensor ground to the A/C pressure transducer, and uses the output voltage of the transducer to determine refrigerant high-side pressure. The PCM is programmed to respond to this and other sensor inputs by controlling the operation of the A/C clutch and the radiator cooling fan to help optimize A/C system performance and to protect refrigerant system components from damage.

The A/C pressure transducer is diagnosed using a scan tool. Refer to the **DTC INDEX** article .

The A/C pressure transducer cannot be adjusted or repaired and must be replaced if inoperative or damaged.

REMOVAL

REMOVAL

NOTE: It is not necessary to discharge the refrigerant system to replace the A/C pressure transducer.

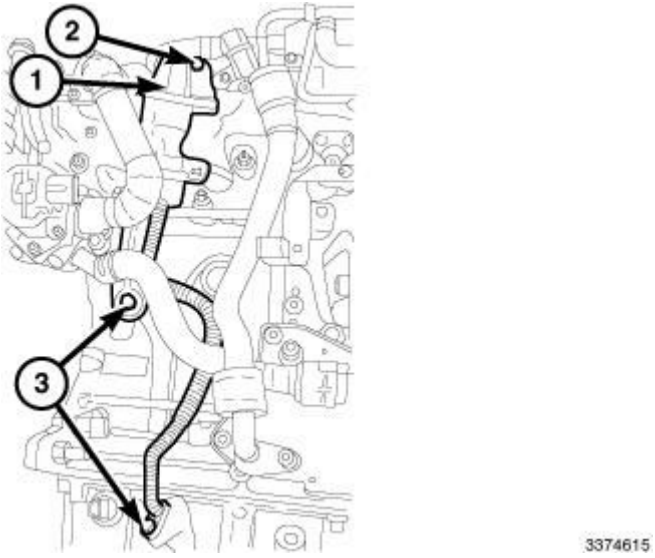

Fig. 50: Removing/Installing A/C Pressure Transducer
Courtesy of CHRYSLER GROUP, LLC

NOTE: Typical A/C pressure transducer shown in illustration.

1. Disconnect and isolate the negative battery cable.
2. Disconnect the wire harness connector (1) from the A/C pressure transducer (2) on the A/C discharge line (3).
3. Remove the A/C pressure transducer from the A/C discharge line and remove and discard the O-ring seal (4).

INSTALLATION

INSTALLATION

NOTE: Use only the specified O-ring as it is made of special material for R-134a. Use only refrigerant oil of the type required for the A/C compressor.

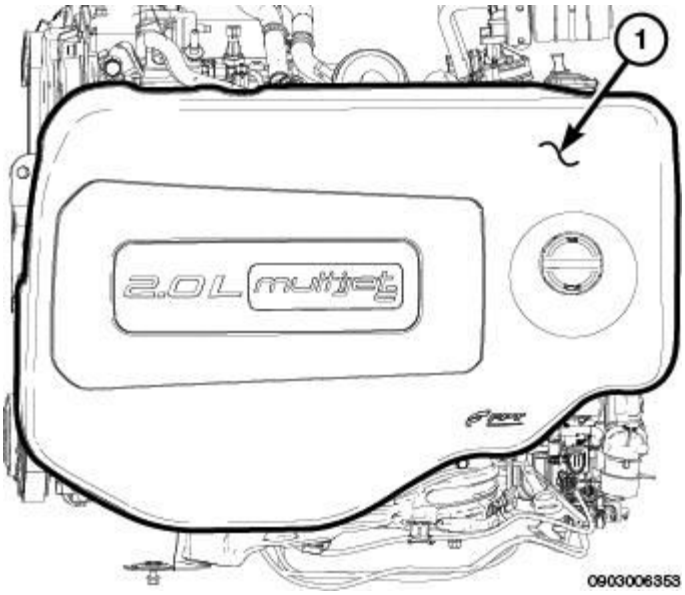

Fig. 51: Removing/Installing A/C Pressure Transducer
Courtesy of CHRYSLER GROUP, LLC

NOTE: Typical A/C pressure transducer shown in illustration.

1. Lubricate a new rubber O-ring seal (4) with clean refrigerant oil and install it onto the A/C discharge line (3).
2. Install the A/C pressure transducer (2) onto the A/C discharge line. Tighten the A/C pressure transducer securely.
3. Connect the wire harness connector (1) to the A/C pressure transducer.
4. Reconnect the negative battery cable.

DISTRIBUTION

DUCT, DEFROSTER

DESCRIPTION

DESCRIPTION

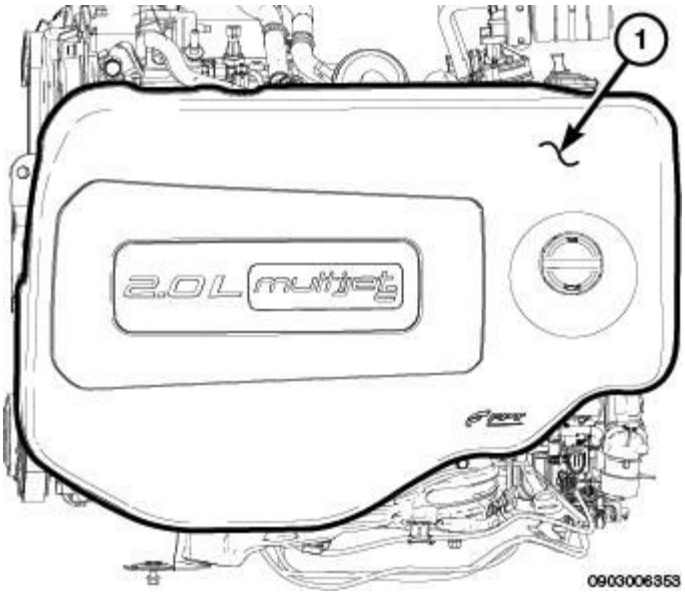

Fig. 52: Defroster Duct
Courtesy of CHRYSLER GROUP, LLC

The defroster outlets receive airflow from the HVAC housing through a molded plastic defroster duct (1) that is attached to the underside of the instrument panel cover.

The defroster duct is integral to the instrument panel cover and is not serviced separately.

DUCT, FLOOR DISTRIBUTION

REMOVAL

REMOVAL

WARNING: Disable the airbag system before attempting any steering wheel, steering column or instrument panel component diagnosis or service. Disconnect and isolate the negative battery (ground) cable. Wait two minutes for the airbag system capacitor to discharge before performing further diagnosis or service. This is the only sure way to disable the airbag system. Failure to follow these instructions may result in possible serious or fatal injury.

NOTE: Driver side shown in illustration, passenger side typical.

1. Remove the front and rear floor carpet. Refer to **CARPET, FLOOR, REMOVAL** .

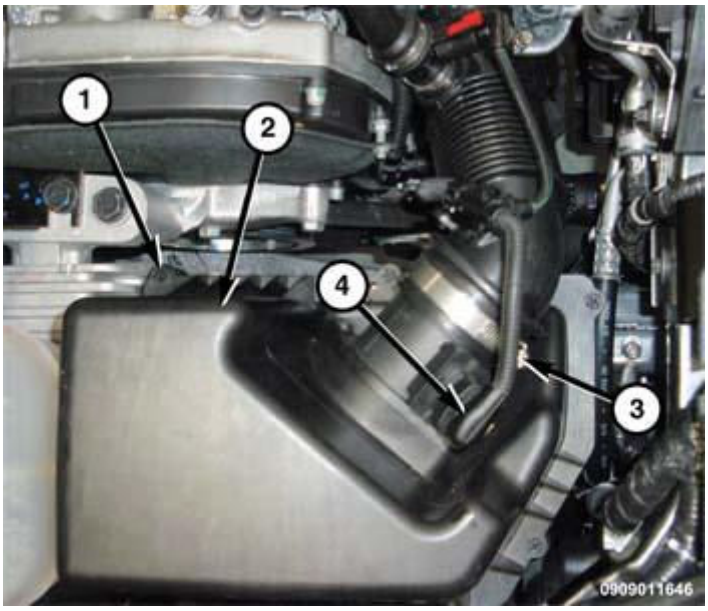

Fig. 53: Floor Duct Retaining Tabs
Courtesy of CHRYSLER GROUP, LLC

2. Using a small Flathead screwdriver or equivalent, disengage the retaining tabs securing the floor duct (1) at the HVAC housing.

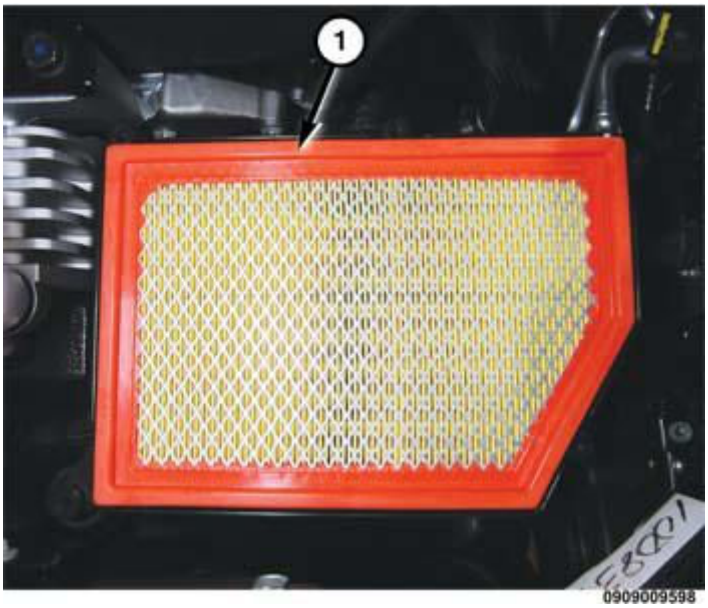

Fig. 54: Floor Duct
Courtesy of CHRYSLER GROUP, LLC

3. Detach/remove the floor duct retainer from the stud in the floorpan.
4. Remove the floor duct (1).

INSTALLATION

INSTALLATION

NOTE: Driver side shown in illustration, passenger side typical.

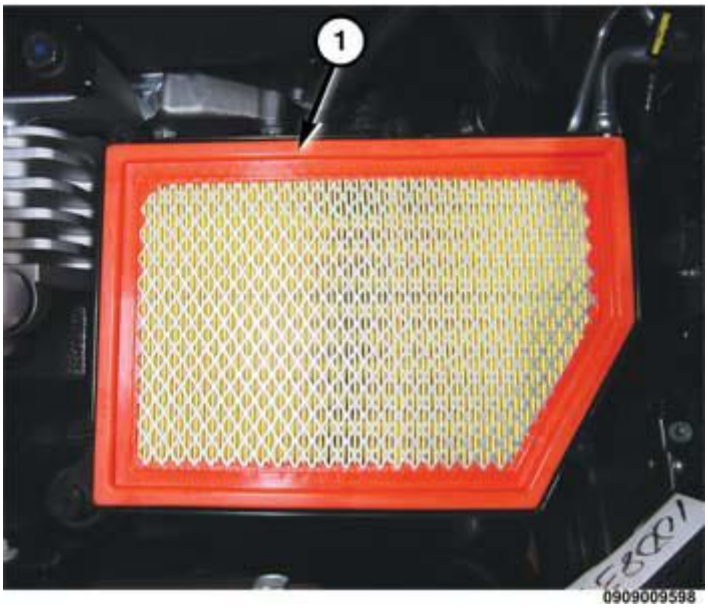

Fig. 55: Floor Duct
Courtesy of CHRYSLER GROUP, LLC

1. Position the floor duct (1) into the vehicle.
2. Attach/install the floor duct retainer to the stud in the floorpan.

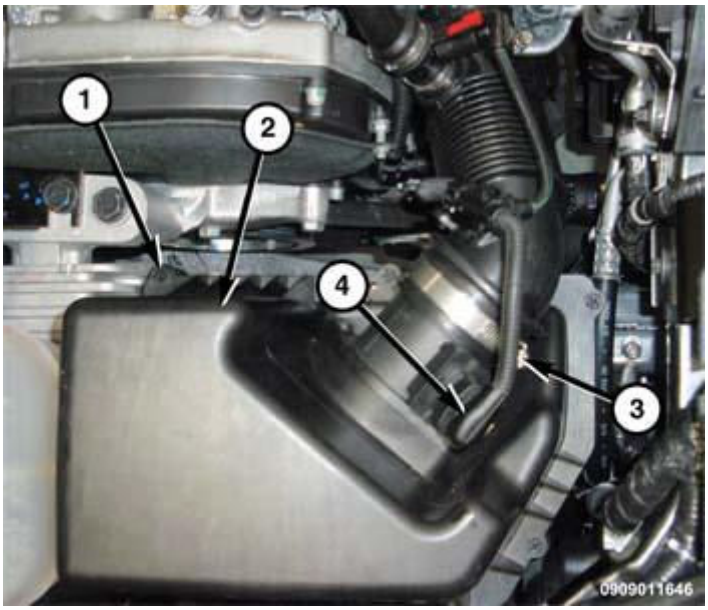

Fig. 56: Floor Duct Retaining Tabs
Courtesy of CHRYSLER GROUP, LLC

3. Push the duct up to engage the retaining tabs securing the floor duct (1) at the HVAC housing.
4. Install the front and rear floor carpet. Refer to **CARPET, FLOOR, INSTALLATION** .

OUTLET, AIR

REMOVAL

FRONT OUTER AIR OUTLETS

WARNING: Disable the airbag system before attempting any steering wheel, steering column or instrument panel component diagnosis or service. Disconnect and isolate the negative battery (ground) cable and wait two minutes for the airbag system capacitor to discharge before performing further diagnosis or service. This is the only sure way to disable the airbag system. Failure to follow these instructions may result in accidental airbag deployment and possible serious or fatal injury.

1. Remove the Instrument Panel End Cap. Refer to **CAP, INSTRUMENT PANEL END, REMOVAL** .
2. Remove the lower trim panel in order to access the retaining screw.
3. Using trim stick or equivalent, carefully disengage the retaining tabs that secure the air outlet to the instrument panel.
4. After the retaining tabs have been disengaged, gently pull the top of the air outlet first and remove the air outlet from the instrument panel.

FRONT CENTER AIR OUTLETS

WARNING: Disable the airbag system before attempting any steering wheel, steering column or instrument panel component diagnosis or service. Disconnect and isolate the negative battery (ground) cable and wait two minutes for the airbag system capacitor to discharge before performing further diagnosis or service. This is the only sure way to disable the airbag system. Failure to follow these instructions may result in accidental airbag deployment and possible serious or fatal injury.

NOTE: Take the proper precautions to protect the front face of the center bezel from cosmetic damage during this procedure.

1. Disconnect and isolate the negative battery cable.
2. Remove the center bezel (1) from the instrument panel and place it on a workbench. Refer to **INSTRUMENT PANEL** for information.

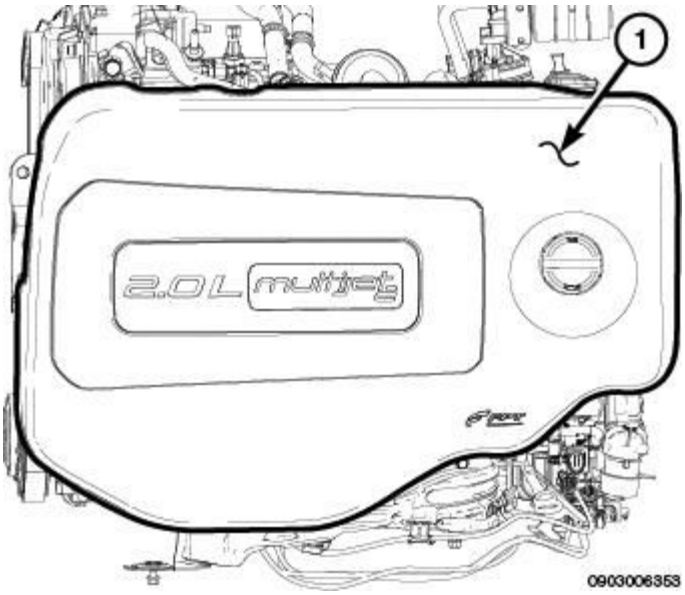

Fig. 57: Center Bezel & Front Center Air Outlets
Courtesy of CHRYSLER GROUP, LLC

3. Using Trim Stick (special tool #C-4755, Trim Stick) or equivalent, carefully disengage the plastic retaining clips (1) that secure each air outlet to the center bezel.

INSTALLATION

FRONT OUTER AIR OUTLETS

1. Position the air outlet to the opening in the instrument panel and align the outlet to the instrument panel duct.
2. Engage the retaining tabs that secure each air outlet to the instrument panel. Make sure the retaining tabs are fully engaged.
3. Install the retaining screw.
4. Install the lower trim panel.
5. Install the Instrument Panel End Cap. Refer to **CAP, INSTRUMENT PANEL END, INSTALLATION** .

FRONT CENTER AIR OUTLETS

NOTE: Take the proper precautions to protect the front face of the center bezel from cosmetic damage during this procedure.

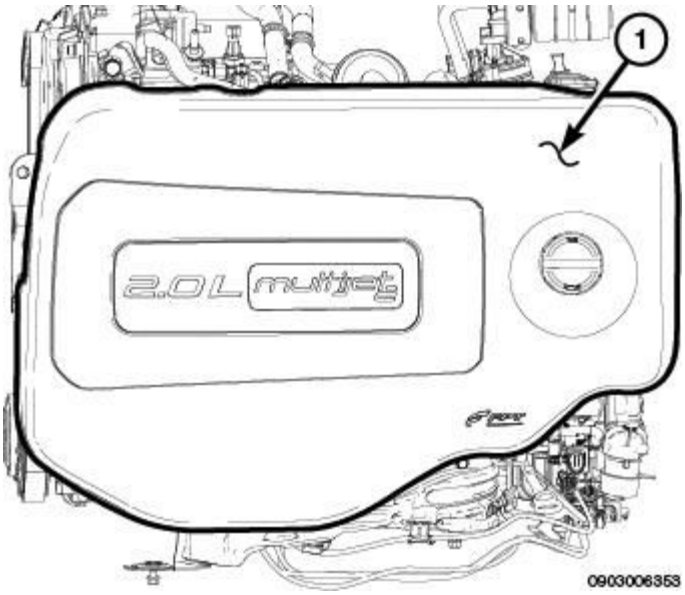

Fig. 58: Center Bezel & Front Center Air Outlets
Courtesy of CHRYSLER GROUP, LLC

1. Position the center air oultet(s) to the back of the instrument panel center bezel and engage the outlet to the center bezel.
2. Carefully engage the plastic retaining clips (1) that secure each air outlet to the center bezel. Make sure the retaining clips are fully engaged.
3. Install the instrument panel center bezel. Refer to **INSTRUMENT PANEL** for information.
4. Connect the negative battery cable.

FILTER, CABIN AIR

DESCRIPTION

DESCRIPTION

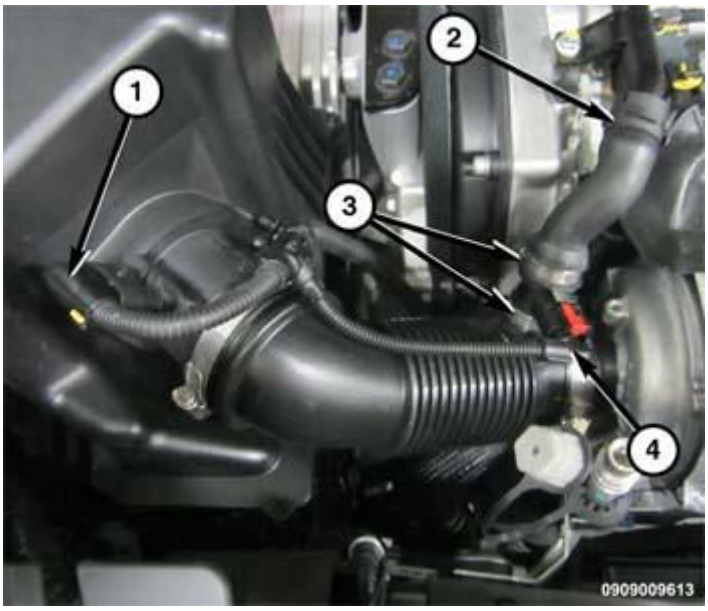

Fig. 59: Label & Cabin Air Filter
Courtesy of CHRYSLER GROUP, LLC

All models are equipped with a cabin air filter (2) that helps purify the outside air entering the HVAC housing. The filter is mounted in the passenger compartment, on the right side of the HVAC housing.

The filter should be replaced at least once a year or every 24, 000 km (15, 000 miles) and checked if heating or A/C system performance seems lower than expected. The cabin air filter is labeled (1) to indicate the proper installation position.

REMOVAL

REMOVAL

WARNING: Disable the airbag system before attempting any steering wheel, steering column or instrument panel component diagnosis or service. Disconnect and isolate the negative battery (ground) cable, then wait two minutes for the airbag system capacitor to discharge before performing further diagnosis or service. This is the only sure way to disable the airbag system. Failure to follow these instructions may result in accidental airbag deployment and possible serious or fatal injury.

1. Disconnect and isolate the negative battery cable.
2. Remove the passenger side silencer panel. Refer to **PANEL, SILENCER, LOWER, REMOVAL** .
3. Remove the passenger side console closeout.

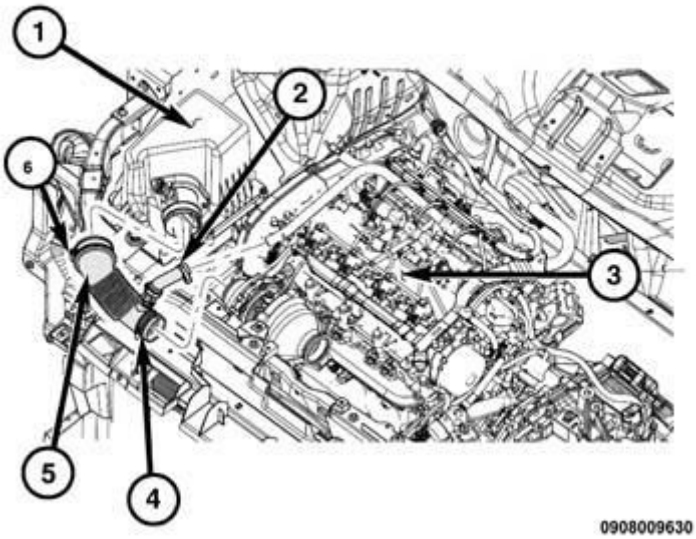

Fig. 60: Filter Cover & Retaining Tab
Courtesy of CHRYSLER GROUP, LLC

4. Disengage the retaining tab (2) and remove the filter cover (1).

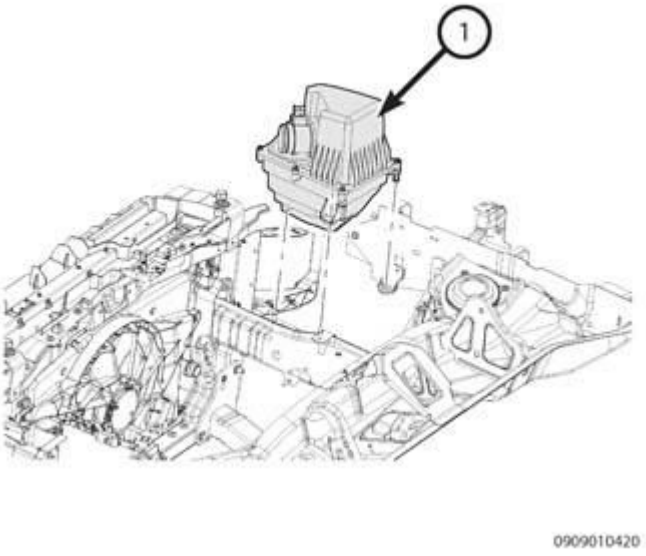

Fig. 61: Air Filter Position Indicators, Cabin Air Filter & HVAC Housing
Courtesy of CHRYSLER GROUP, LLC

5. Remove the cabin air filter (2) from the right side of the HVAC housing (3) by pulling the filter element straight out of the housing. Take note of the air filter position indicators (1).

INSTALLATION

INSTALLATION

NOTE: **The cabin air filter is labeled with an arrow to indicate proper filter position. Make sure to properly install the cabin air filter. Failure to properly install the filter will result in the need to replace the filter sooner than required by design.**

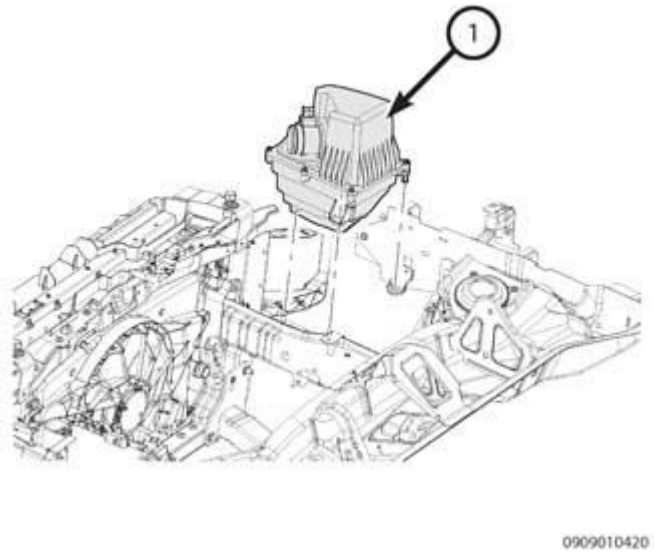

Fig. 62: Air Filter Position Indicators, Cabin Air Filter & HVAC Housing
Courtesy of CHRYSLER GROUP, LLC

1. Install the cabin air filter (2) into the right side of the HVAC housing (3). Make note of the air filter position indicators (1).

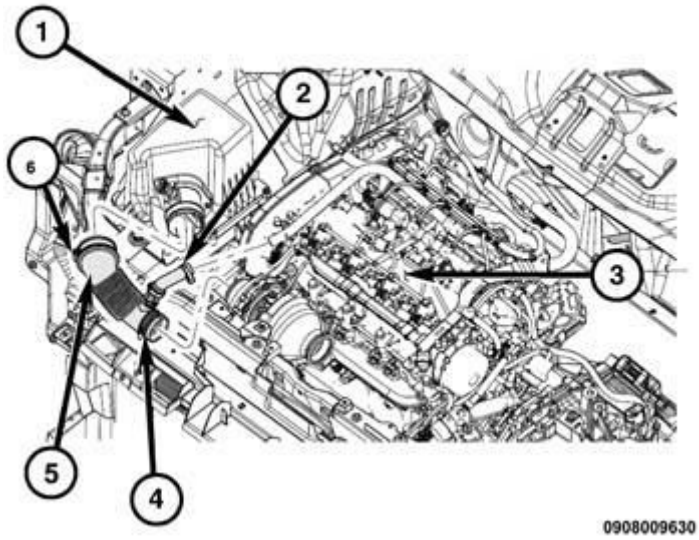

Fig. 63: Filter Cover & Retaining Tab
Courtesy of CHRYSLER GROUP, LLC

2. Install the cabin air filter cover (1) onto the right side of the HVAC housing.
3. Engage the retaining tab (2) into the HVAC housing.
4. Install the passenger side console closeout.
5. Install the passenger side silencer panel. Refer to **PANEL, SILENCER, LOWER, INSTALLATION** .
6. Connect the negative battery cable.

HOUSING, HVAC

REMOVAL

HOUSING-AIR DISTRIBUTION

WARNING: Disable the airbag system before attempting any steering wheel, steering column or instrument panel component diagnosis or service. Disconnect and isolate the negative battery (ground) cable, then wait two minutes for the airbag system capacitor to discharge before performing further diagnosis or service. This is the only sure way to disable the airbag system. Failure to follow these instructions may result in accidental airbag deployment and possible serious or fatal injury.

WARNING: Review the warnings and cautions for this system before performing the procedure. Failure to follow these instructions may result in serious injury or death.

NOTE: The air distribution housing must be removed from the HVAC housing and disassembled for service of the blend-air and mode-air doors.

1. Remove the HVAC housing assembly and place it on a workbench. Refer to **HOUSING, HVAC, REMOVAL**.

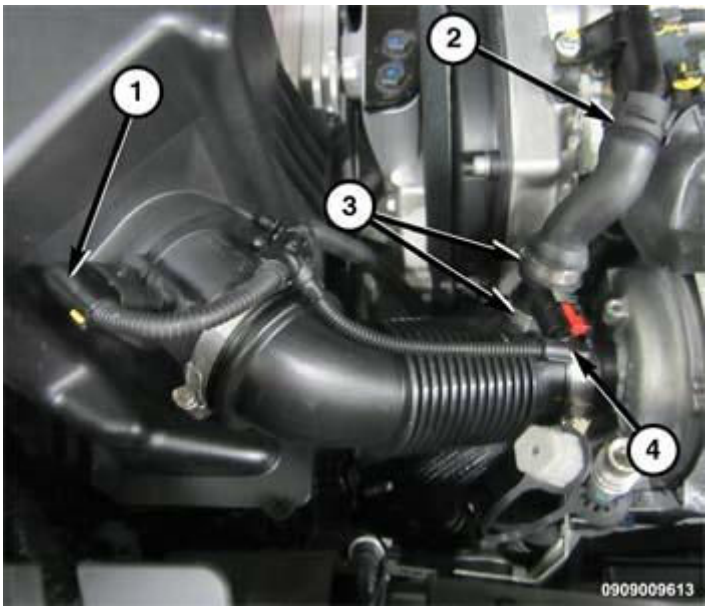

Fig. 64: Screws, Air Distribution Housing & HVAC Housing
Courtesy of CHRYSLER GROUP, LLC

2. Remove the seven screws (1) that secure the air distribution housing to the top of the HVAC housing (3).
3. Disconnect wiring harness connectors.

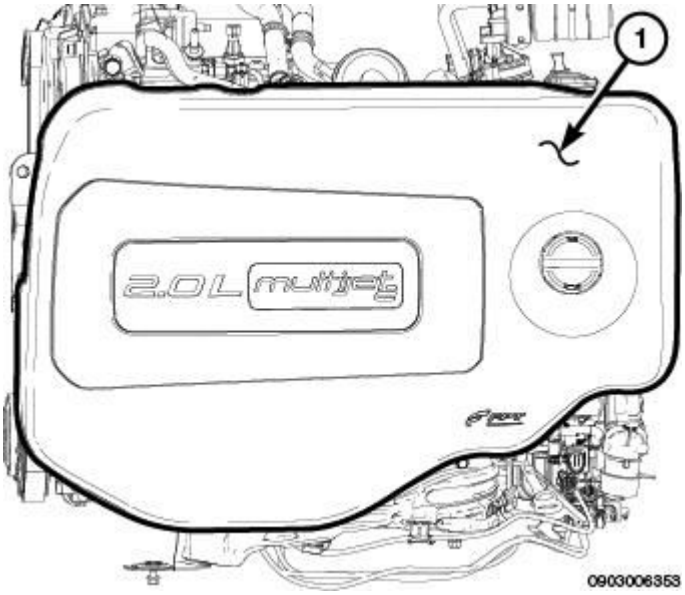

Fig. 65: Retaining Clips & Air Distribution Housing
Courtesy of CHRYSLER GROUP, LLC

4. Release the two retaining clips (1) that secure the bottom of air distribution housing (2) to the HVAC housing.
5. Remove the air distribution housing from the top of the HVAC housing.
6. If required, disassemble the air distribution housing. Refer to **HOUSING, HVAC, DISASSEMBLY**.

HOUSING-AIR INLET

WARNING: Review the warnings and cautions for this system before performing the procedure. Failure to follow these instructions may result in serious injury or death.

WARNING: Disable the airbag system before attempting any steering wheel, steering column or instrument panel component diagnosis or service. Disconnect and isolate the negative battery (ground) cable, then wait two minutes for the airbag system capacitor to discharge before performing further diagnosis or service. This is the only sure way to disable the airbag system. Failure to follow these instructions may result in accidental airbag deployment and possible serious or fatal injury.

NOTE: The air inlet housing must be removed from HVAC housing and disassembled for service of the recirculation-air door.

1. Remove the HVAC housing assembly and place it on a workbench. Refer to **HOUSING, HVAC, REMOVAL**.

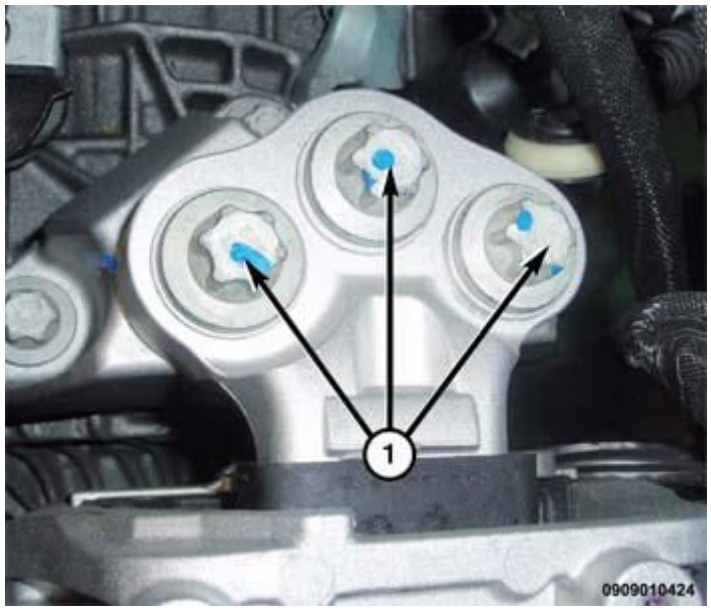

Fig. 66: Screws, Inlet Housing, Recirculation Door Actuator & HVAC Housing
Courtesy of CHRYSLER GROUP, LLC

2. Disconnect the wire harness connector from the recirculation door actuator (3).
3. Remove the three screws (1) that secure the air inlet housing (2) to HVAC housing (4).
4. Remove the inlet housing from the HVAC housing.
5. If required, disassemble the air inlet housing. Refer to **HOUSING, HVAC, DISASSEMBLY**.

HOUSING-HVAC

WARNING: Disable the airbag system before attempting any steering wheel, steering column or instrument panel component diagnosis or service. Disconnect and isolate the negative battery (ground) cable. Wait two minutes for the airbag system capacitor to discharge before performing further diagnosis or service. This is the only sure way to disable the airbag system. Failure to follow these instructions may result in possible serious or fatal injury.

WARNING: Review the warnings and cautions for this system before performing the procedure. Failure to follow these instructions may result in serious injury or death.

NOTE: The HVAC housing and instrument panel must be removed from the vehicle as an assembly.

NOTE: The HVAC housing must be removed from the instrument panel and disassembled for service of the A/C evaporator, air intake housing, and the heater core.

1. Remove the instrument panel and place it on a workbench. Refer to **PANEL, INSTRUMENT, REMOVAL** .

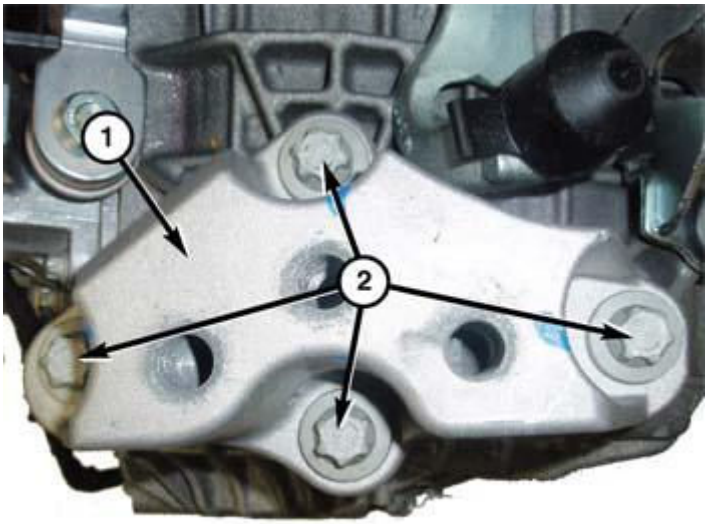

0909010425

Fig. 67: Nuts, Bolts, Instrument Panel Support & HVAC Housing Assembly
Courtesy of CHRYSLER GROUP, LLC

2. Disconnect the instrument panel wire harness connectors from the HVAC wiring harness.
3. Remove the 2 nuts (1) and the 2 bolts (4) that secure the HVAC housing assembly (3) to the center of the

instrument panel support (2) and remove the housing from the support.

SCREEN-AIR INLET

NOTE: LHD model shown in illustration. RHD model similar.

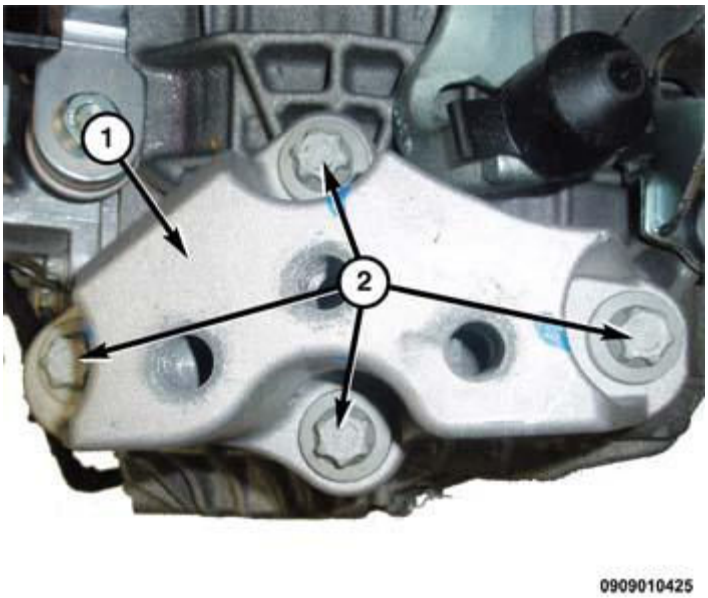

Fig. 68: View Of HVAC Housing Air Inlet Screen
Courtesy of CHRYSLER GROUP, LLC

1. Remove the cowl grille screen. Refer to **COVER, COWL PANEL, REMOVAL** .
2. Disengage the three push-in retainers (1) that secure the HVAC housing air inlet screen (2) to the cowl panel (3) and remove the screen.

DISASSEMBLY

HOUSING-AIR DISTRIBUTION

1. Remove the air distribution housing assembly and place it on a workbench. Refer to **HOUSING, HVAC, REMOVAL**.

   Remove the air temperature sensors. Refer to **SENSOR, TEMPERATURE, AIR OUTLET, REMOVAL**.

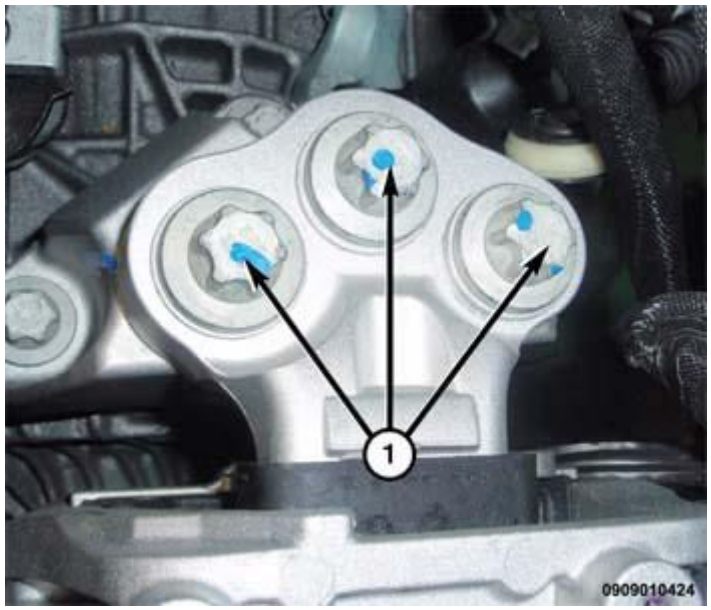

Fig. 69: Screws, Connector, Air Distribution Housing & Mode Door Actuator
Courtesy of CHRYSLER GROUP, LLC

2. Disconnect the wiring harness connector (2) from the mode door actuator.
3. Remove the two retaining screws (1).
4. Remove the mode door actuator (4) from the air distribution housing (3).

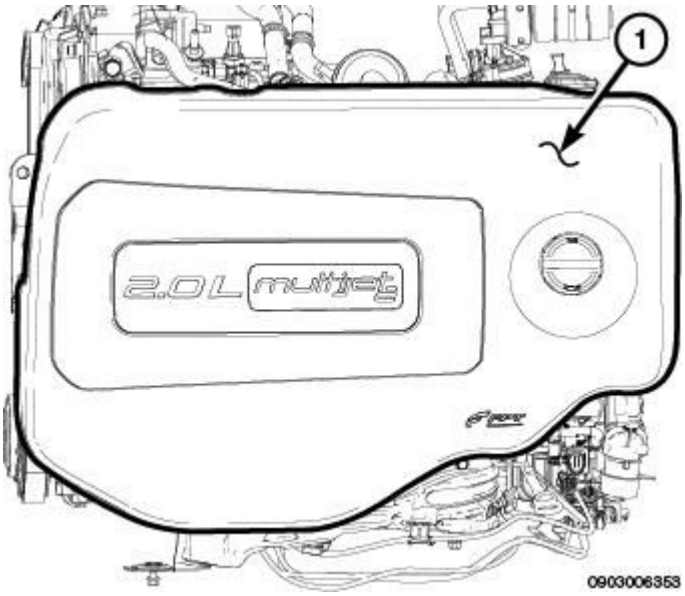

Fig. 70: Cam, Lever & Heater Link
Courtesy of CHRYSLER GROUP, LLC

5. Disconnect heater link (3) from the cam (1) and lever (2).

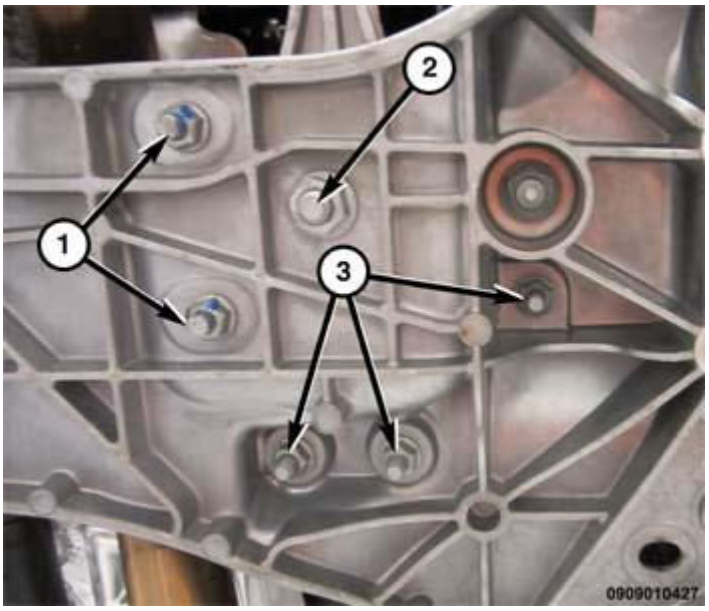

Fig. 71: Mounting Bracket, Screws & Air Distribution Housing
Courtesy of CHRYSLER GROUP, LLC

6. Remove the three screws (2) from the mounting bracket (1).
7. Remove the mounting bracket from the air distribution housing (3).

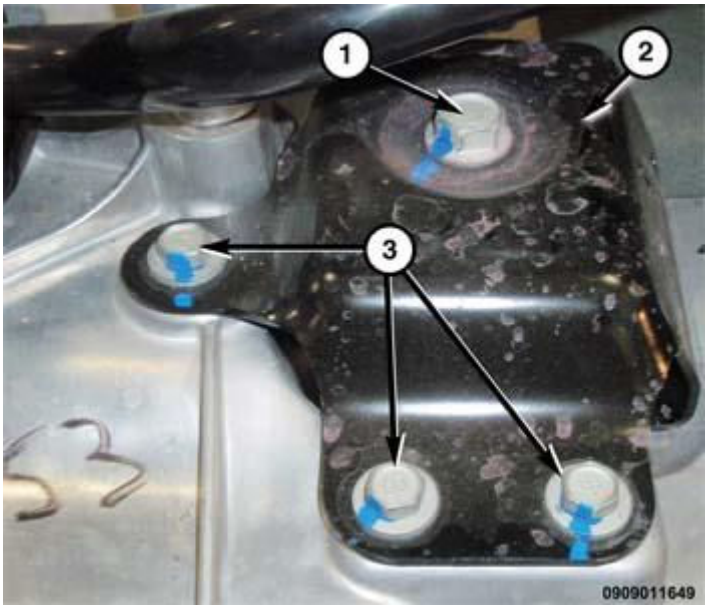

Fig. 72: Mode Cam & Air Distribution Housing
Courtesy of CHRYSLER GROUP, LLC

8. Remove mode cam (1) from the air distribution housing (3).

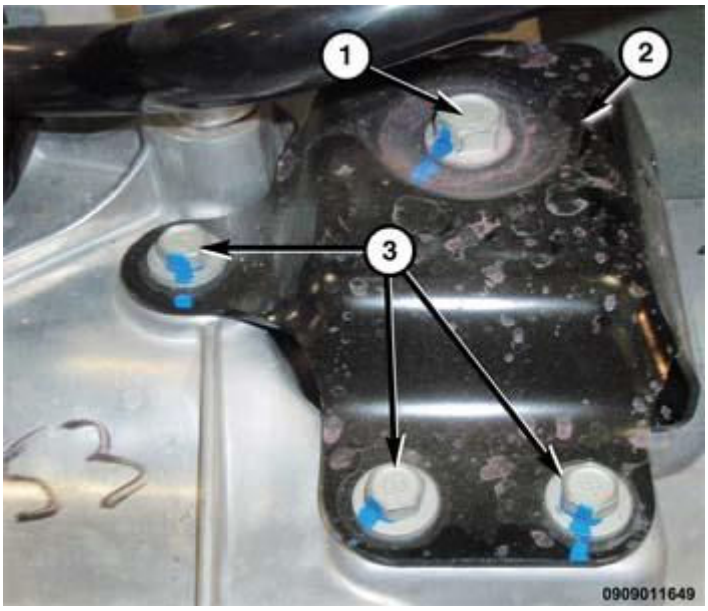

Fig. 73: Levers & Retaining Tabs
Courtesy of CHRYSLER GROUP, LLC

9. Disengage the plastic retaining tabs (2) and remove the levers (1) from the air distribution housing.

HOUSING-AIR INLET

1. Remove the air inlet housing from the HVAC housing. Refer to **HOUSING, HVAC, REMOVAL**.

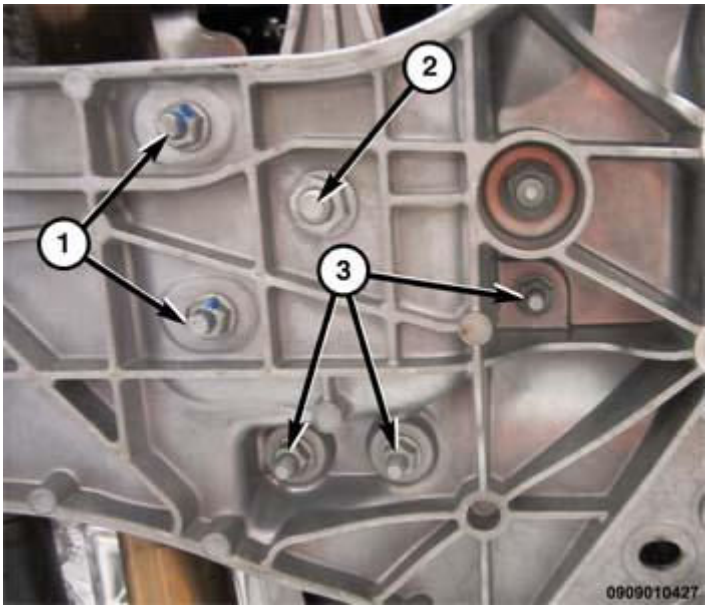

Fig. 74: Air Inlet Housing, Foam Seal, Recirculation Air Door, Recirculation Door Actuator & Air Inlet Screen
Courtesy of CHRYSLER GROUP, LLC

2. Remove the screw that secures the recirculation door actuator (4) to the air inlet housing (1) and remove the actuator.
3. Remove air inlet screen (5) from air inlet housing.
4. The recirculation air door (3) is serviced as an assembly with the air inlet housing.

NOTE: If the foam seal (2) on the air inlet housing is deformed or damaged, the seal must be replaced.

HOUSING-HVAC

NOTE: The HVAC housing must be removed from the vehicle and disassembled for service of the A/C evaporator and heater core.

1. Remove the HVAC housing assembly and place it on a workbench. Refer to **HOUSING, HVAC, REMOVAL**.
2. Remove the blower motor power module. Refer to **MODULE, POWER, BLOWER MOTOR, REMOVAL**.
3. Remove the evaporator temperature sensor. Refer to **SENSOR, EVAPORATOR TEMPERATURE, REMOVAL**.
4. Remove the HVAC wiring harness (1).
5. Remove the A/C evaporator. Refer to **EVAPORATOR, A/C, REMOVAL**.

ASSEMBLY

HOUSING-AIR DISTRIBUTION

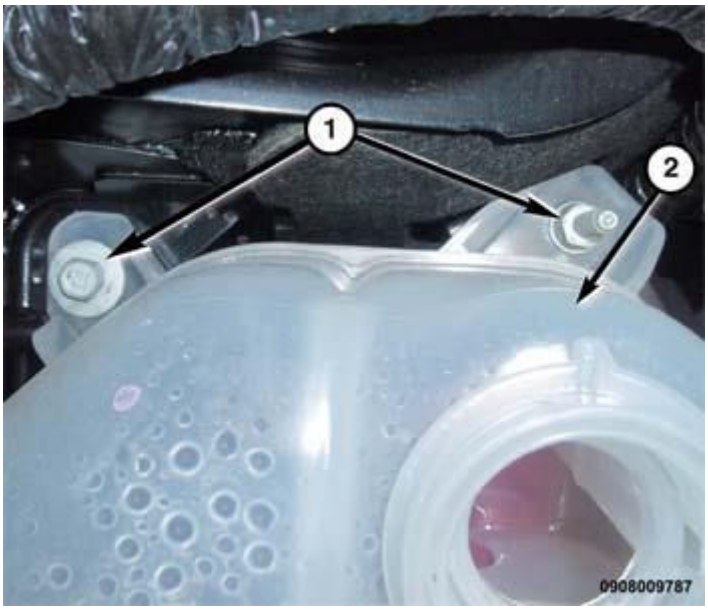

Fig. 75: Levers & Retaining Tabs
Courtesy of CHRYSLER GROUP, LLC

1. Install the two mode door levers (1) onto the air distribution housing. Make sure the lever retaining tabs (2) are fully engaged.

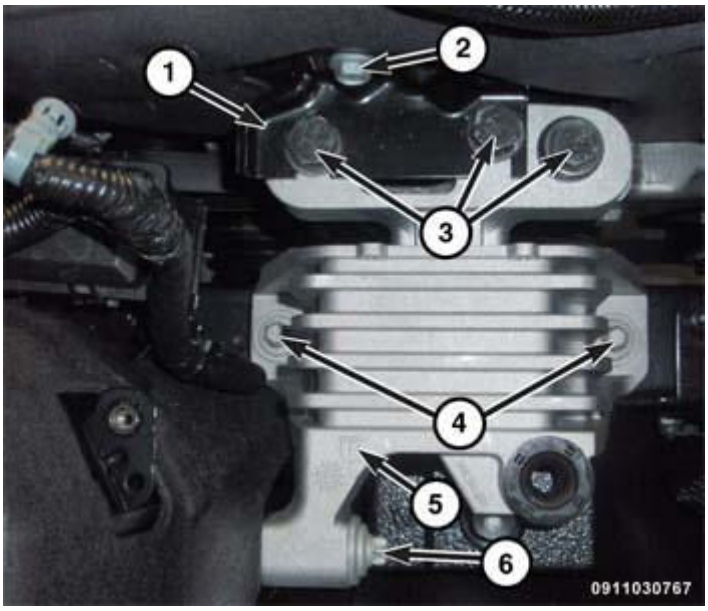

Fig. 76: Left & Right Mode Door Levers
Courtesy of CHRYSLER GROUP, LLC

2. Align the two mode door levers, the left lever (1) must be fully rotated clockwise and the right lever (2) must be fully rotated counterclockwise, gravity will allow them to stay in this position.

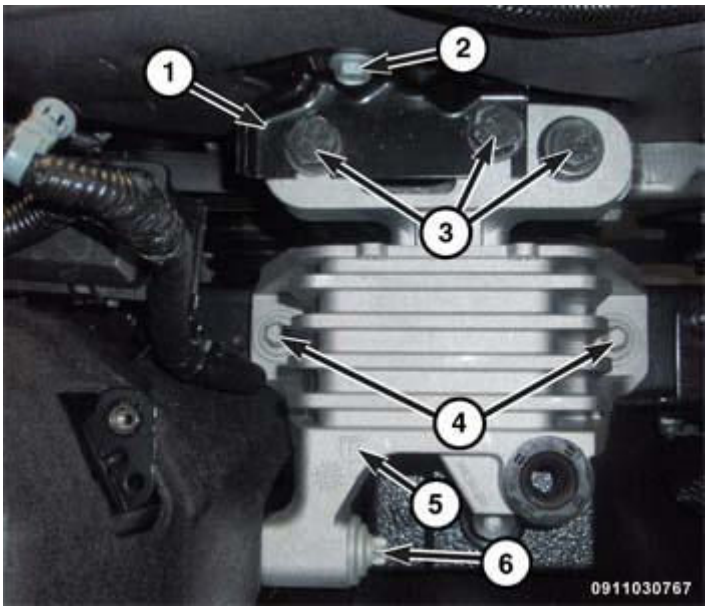

Fig. 77: Cam Lobe, Windows & Rib On Shaft
Courtesy of CHRYSLER GROUP, LLC

3. With the levers in position, the cam should be oriented with the lobe up (1), rib on shaft pointing to seven

O'clock (3), then pressed into place. There are windows (2) in the cam to help see the pins on the levers.

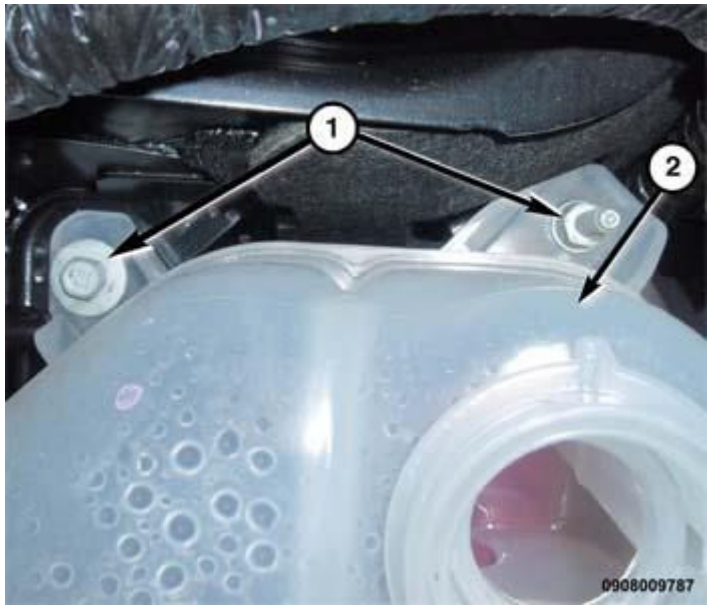

Fig. 78: Cam & Heater Link
Courtesy of CHRYSLER GROUP, LLC

4. To place the bracket on the top of the cam (1), push heater link (2) all the way to the left, move the lever counter clockwise and assembly to the heater link (3), press bracket onto cam.

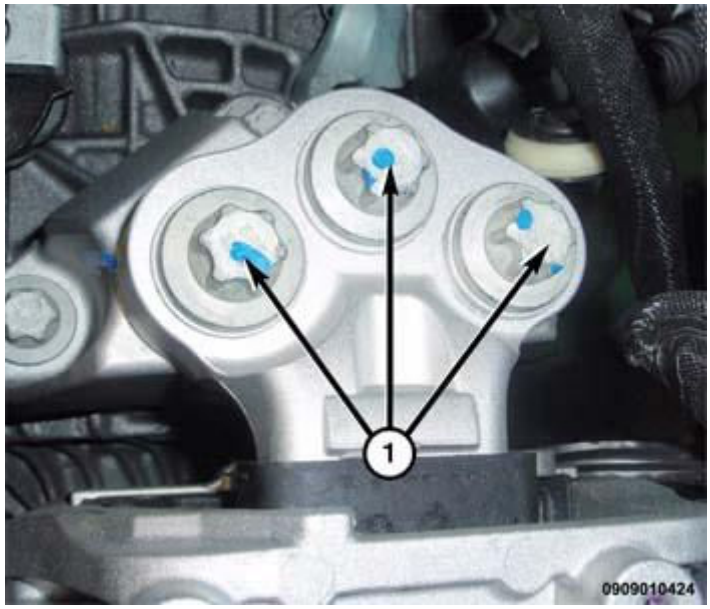

Fig. 79: Mounting Bracket, Screws & Air Distribution Housing
Courtesy of CHRYSLER GROUP, LLC

5. Install the three screws (2) that secure the mounting bracket (1) to the air distribution housing (3). Tighten the screws to 2 N.m (17 in. lbs.).

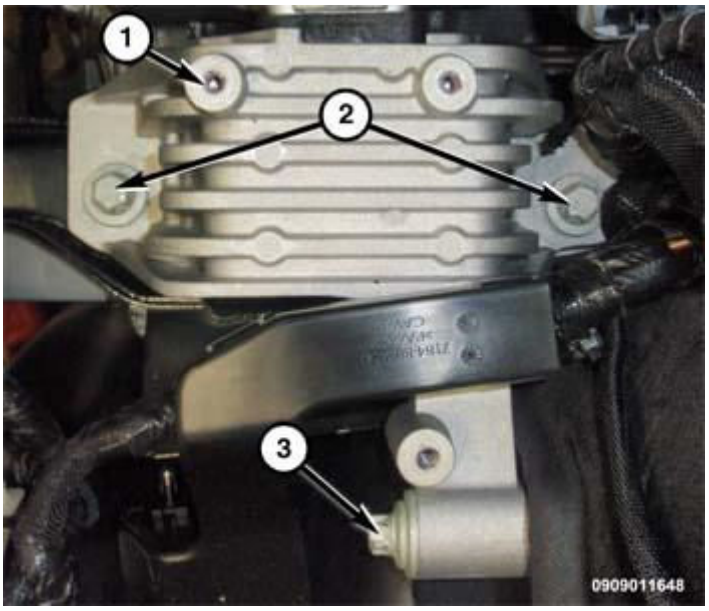

Fig. 80: Screws, Connector, Air Distribution Housing & Mode Door Actuator
Courtesy of CHRYSLER GROUP, LLC

6. Position the blend door actuator (4) onto the air distribution housing (3).
7. Install the two screws (1) securing the mode door actuator. Tighten the screws to 2 N.m (17 in. lbs.).
8. Connect the wiring harness connector (3) to the blend door actuator.
9. Install the air temperature sensors. Refer to **SENSOR, TEMPERATURE, AIR OUTLET, INSTALLATION**.
10. Install the air distribution housing onto the HVAC housing (1). Refer to **HOUSING, HVAC, INSTALLATION**.
11. Install the HVAC housing assembly. Refer to **HOUSING, HVAC, INSTALLATION**.

HOUSING-AIR INLET

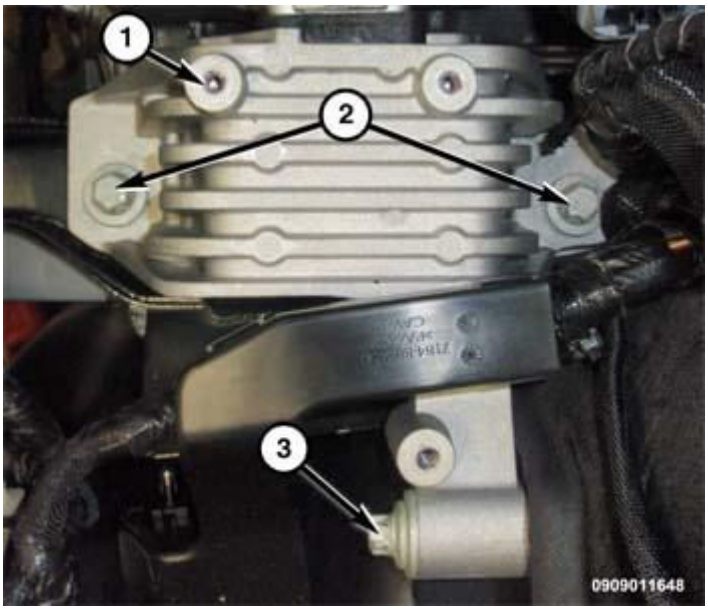

Fig. 81: Air Inlet Housing, Foam Seal, Recirculation Air Door, Recirculation Door Actuator & Air Inlet Screen
Courtesy of CHRYSLER GROUP, LLC

1. Install the recirculation door actuator (4) onto the air inlet housing. If necessary, rotate the actuator slightly to align the splines of the actuator output shaft with those on the recirculation door pivot shaft adapter.
2. Install the retaining screw securing the recirculation door actuator to the housing. Tighten the screw to 2 N.m (17 in. lbs.).
3. Install the air inlet screen (5) onto the air inlet housing.
4. Install the air inlet housing onto the HVAC housing. Refer to **HOUSING, HVAC, INSTALLATION**.

NOTE: If the foam seal (2) on the air inlet housing is deformed or damaged, the seal must be replaced.

HOUSING-HVAC

CAUTION: Be certain to adjust the refrigerant oil level when servicing the A/C refrigerant system. Failure to properly adjust the refrigerant oil level will prevent the A/C system from operating as designed and can cause serious A/C compressor damage.

NOTE: When replacing multiple A/C system components, see the Refrigerant Oil Capacities chart to determine how much oil should be added to the refrigerant system. Refer to OIL, REFRIGERANT, STANDARD PROCEDURE.

1. Install the A/C evaporator. Refer to **EVAPORATOR, A/C, INSTALLATION**.
2. Install the HVAC wiring harness. Make sure the harness is routed through all wiring retainers.

3. Install the evaporator temperature sensor. Refer to **SENSOR, EVAPORATOR TEMPERATURE, INSTALLATION**.
4. Install the blower motor power module. Refer to **MODULE, POWER, BLOWER MOTOR, INSTALLATION**.
5. Install the HVAC housing assembly. Refer to **HOUSING, HVAC, INSTALLATION**.

INSTALLATION

HOUSING-AIR DISTRIBUTION

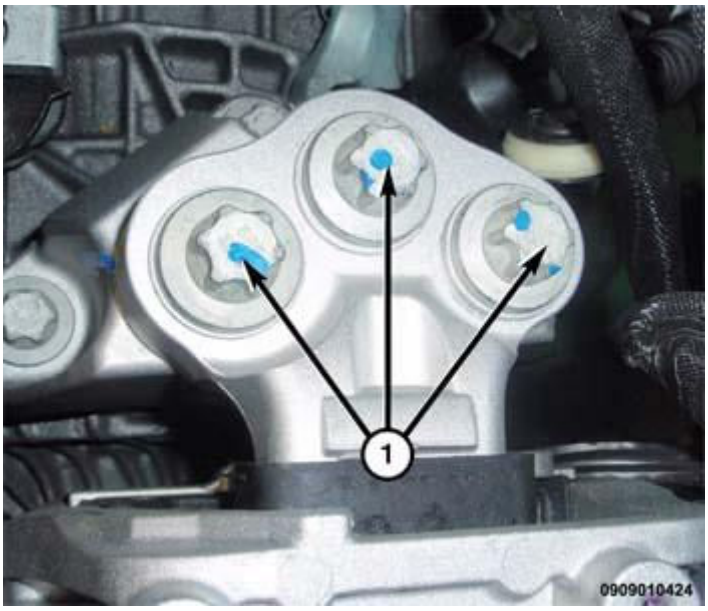

Fig. 82: Retaining Clips & Air Distribution Housing
Courtesy of CHRYSLER GROUP, LLC

1. Position the air distribution housing (2) onto the top of the top of HVAC housing.
2. Fasten the retaining clips (1) that secure the bottom of the air distribution housing to the HVAC housing.
3. Fasten the wiring harness connectors.

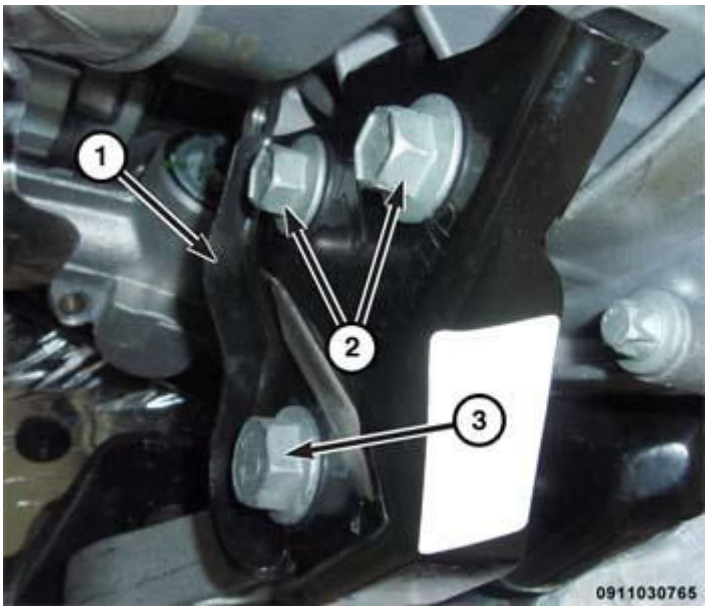

Fig. 83: Screws, Air Distribution Housing & HVAC Housing
Courtesy of CHRYSLER GROUP, LLC

4. Install the seven screws (1) that secure the air distribution housing (2) to the HVAC housing (3). Tighten the screws to 1.2 N.m (10 in. lbs.).
5. Install the HVAC housing assembly. Refer to **HOUSING, HVAC, INSTALLATION**.

HOUSING-AIR INLET

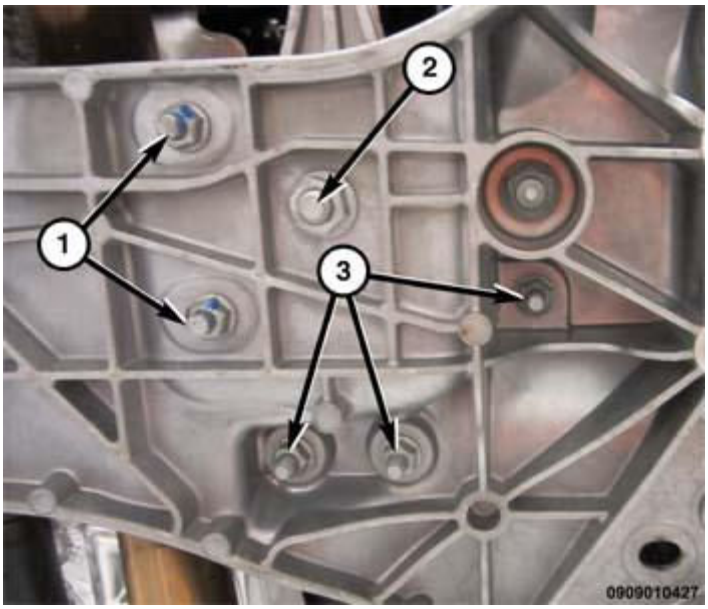

Fig. 84: Screws, Inlet Housing, Recirculation Door Actuator & HVAC Housing
Courtesy of CHRYSLER GROUP, LLC

1. Position the air inlet housing (1) to the left side of the HVAC housing (4).

2. Install the 3 screws (1) that secure the air inlet housing to the HVAC housing. Tighten the screws to 2.2 N.m (20 in. lbs.).
3. Connect the wire harness connector to the recirculation door actuator (3).
4. Install the HVAC housing assembly. Refer to **HOUSING, HVAC, INSTALLATION**.

HOUSING-HVAC

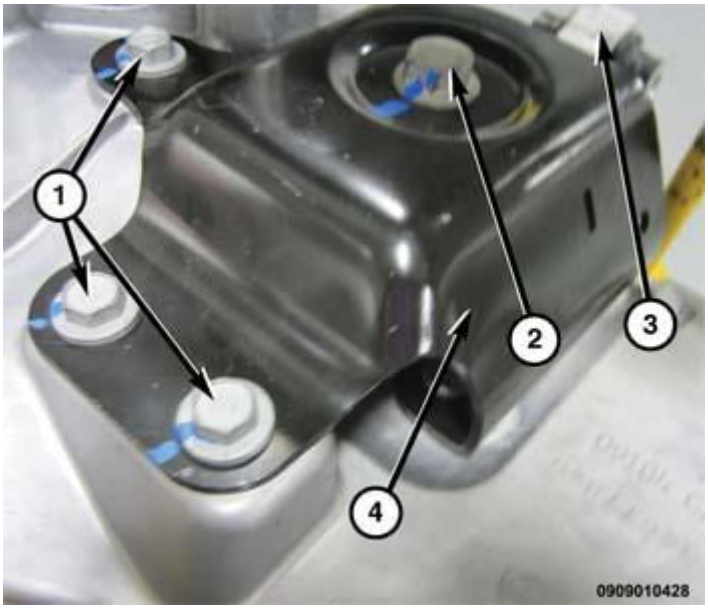

Fig. 85: Nuts, Bolts, Instrument Panel Support & HVAC Housing Assembly
Courtesy of CHRYSLER GROUP, LLC

1. Position the HVAC housing assembly (3) into the instrument panel support (1).
2. Install the 2 nuts (1) and the 2 bolts (4) that secure the HVAC housing assembly to the center of instrument panel support. Tighten to 4 N.m (35 in. lbs.).
3. Connect the instrument panel wire harness connectors to the HVAC wiring harness.

NOTE: If the foam seal on the top of the HVAC housing is deformed or damaged, the seal must be replaced.

4. Install the instrument panel. Refer to **PANEL, INSTRUMENT, INSTALLATION** .

SCREEN-AIR INLET

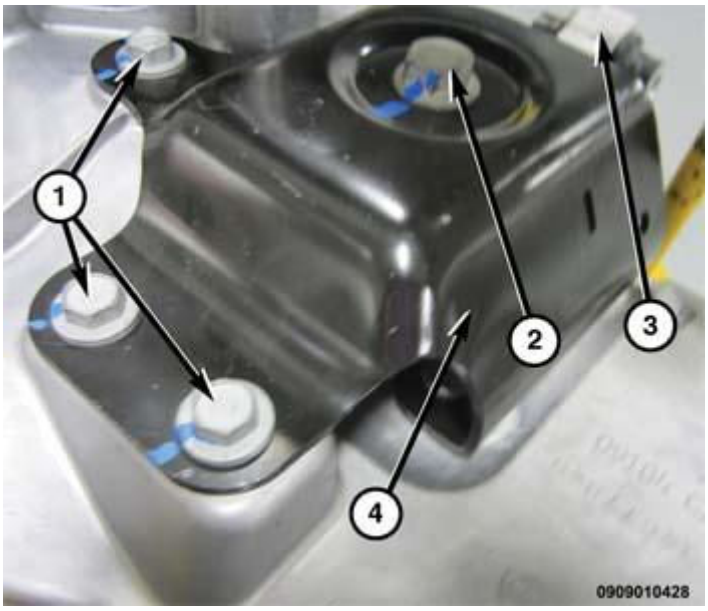

Fig. 86: Air Inlet Screen & Plastic Nuts
Courtesy of CHRYSLER GROUP, LLC

1. Position the air inlet screen (1) to the cowl panel (3).
2. Install the two plastic nuts (2 and 4) that secure the air inlet screen to the cowl panel. Tighten the nuts securely.
3. Install the cowl panel cover. Refer to **COVER, COWL PANEL, INSTALLATION** .

MOTOR, BLOWER

DESCRIPTION

DESCRIPTION

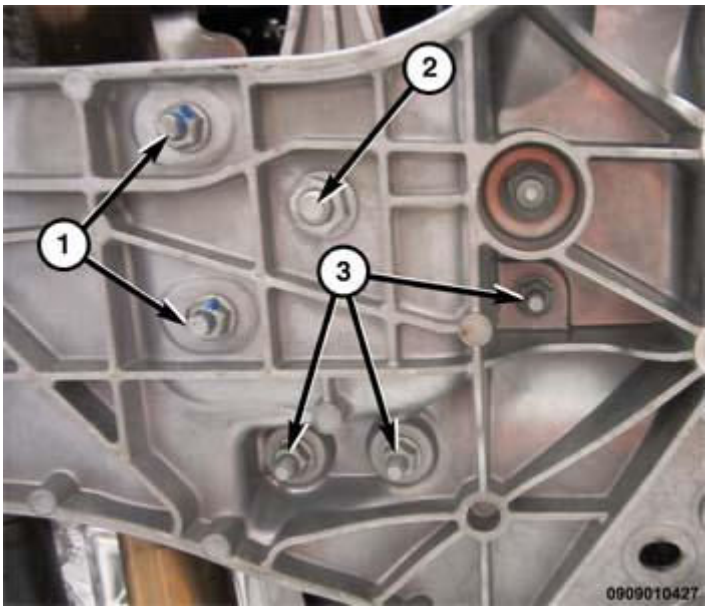

Fig. 87: Blower Motor
Courtesy of CHRYSLER GROUP, LLC

The blower motor (4) is used to control the velocity of air moving through the HVAC housing by spinning the blower wheel (1) within the HVAC air inlet housing at the selected speed.

The blower motor is a 12-volt, direct current (DC) motor mounted within a plastic housing with an integral wire harness connector (3) and three mounting tabs (2). The squirrel cage-type blower wheel is secured to the blower motor shaft and is positioned within the air inlet housing on the passenger side of the HVAC housing.

OPERATION

OPERATION

The blower motor controls the velocity of air moving through the HVAC housing by spinning the blower wheel within the HVAC air inlet housing at the selected speed.

Both the Manual Temperature Control (MTC) heating-A/C system and the Automatic Temperature Control (ATC) heating-A/C system have an electronic blower motor power module to control blower motor speed. The power module uses a Pulse Width Modulated (PWM) input from the A/C-heater control and a feedback signal from the blower motor to regulate the blower motor ground path. On both systems, the blower motor receives battery current through the Power Distribution Center (PDC) whenever the ignition switch is in the Run position, and the blower motor control is in any position except Off.

The blower motor control system is diagnosed using a scan tool. Refer to **STANDARD PROCEDURE** .

The blower motor and blower motor wheel are factory balanced as an assembly and cannot be adjusted or repaired and must be replaced if inoperative or damaged.

DIAGNOSIS AND TESTING

DIAGNOSIS AND TESTING - BLOWER MOTOR

WARNING: Disable the airbag system before attempting any steering wheel, steering column or instrument panel component diagnosis or service. Disconnect and isolate the negative battery (ground) cable and wait two minutes for the airbag system capacitor to discharge before performing further diagnosis or service. This is the only sure way to disable the airbag system. Failure to follow these instructions may result in accidental airbag deployment and possible serious or fatal injury.

To determine if an open condition exists within the blower motor circuit wiring, it is necessary to disconnect the negative battery cable and check for continuity within the blower motor circuits using an ohmmeter. See Wiring Information for circuit descriptions and diagrams.

REMOVAL

REMOVAL

1. Disconnect and isolate the negative battery cable.
2. Remove the passenger side silencer panel. Refer to **PANEL, SILENCER, LOWER, REMOVAL** .
3. Remove the passenger side center console close out.
4. Remove the blower motor power module

   Refer to **MODULE, POWER, BLOWER MOTOR, REMOVAL**.

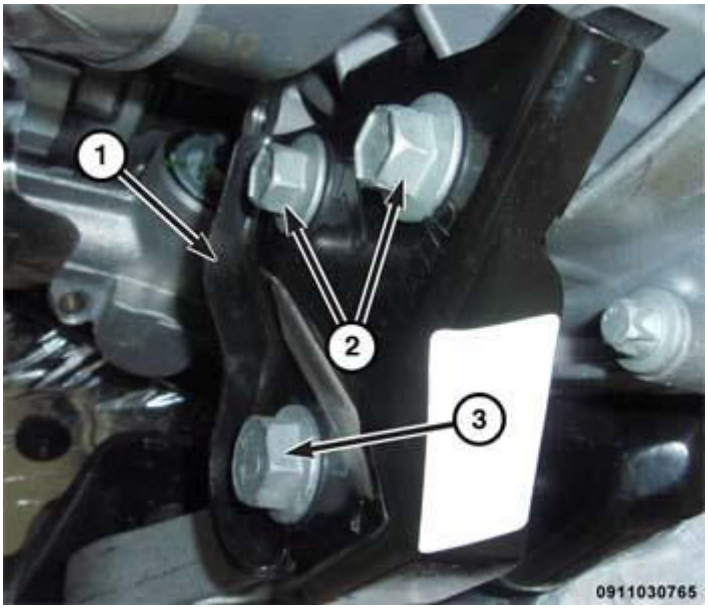

Fig. 88: Blower Motor To HVAC Housing & Fasteners
Courtesy of CHRYSLER GROUP, LLC

5. Remove the three screws (1) that secure the blower motor.

6. Remove the blower motor from the passenger side of the HVAC housing.

INSTALLATION

INSTALLATION

1. Position the blower motor into the passenger side of the HVAC housing.
2. Install the three screws that secure the blower motor. Tighten the screws to 1.2 N.m (10 in. lbs.).
3. Connect the wire harness connector.
4. Install the blower motor power module

   Refer to **MODULE, POWER, BLOWER MOTOR, INSTALLATION**.

5. Install the center console close out.
6. Install the passenger side silencer panel. Refer to **PANEL, SILENCER, LOWER, INSTALLATION** .
7. Connect the negative battery cable.

PLUMBING

WARNING

WARNING

WARNING: **The A/C system contains refrigerant under high pressure. Repairs should only be performed by qualified service personnel. Serious or fatal injury may result from improper service procedures.**

WARNING: **Avoid breathing the refrigerant and refrigerant oil vapor or mist. Exposure may irritate the eyes, nose, and/or throat. Wear eye protection when servicing the A/C refrigerant system. Serious eye injury can result from direct contact with the refrigerant. If eye contact occurs, seek medical attention immediately.**

WARNING: **Do not expose the refrigerant to open flame. Poisonous gas is created when refrigerant is burned. An electronic leak detector is recommended. Serious or fatal injury may result from improper service procedures.**

WARNING: **If accidental A/C system discharge occurs, ventilate the work area before resuming service. Large amounts of refrigerant released in a closed work area will displace the oxygen and cause suffocation and serious or fatal injury.**

WARNING: **The engine cooling system is designed to develop internal pressures up**

to 145 kPa (21 psi). Do not remove or loosen the coolant pressure cap, cylinder block drain plugs, radiator drain, radiator hoses, heater hoses, or hose clamps while the engine cooling system is hot and under pressure. Allow the vehicle to cool for a minimum of 15 minutes before opening the cooling system for service. Failure to observe this warning can result in serious burns from the heated engine coolant.

CAUTION

CAUTION

CAUTION: The use of A/C system sealers may result in damage to A/C refrigerant recovery/evacuation/recharging equipment and/or A/C system. Many federal, state/provincial and local regulations prohibit the recharge of A/C systems with known leaks. Chrysler LLC recommends the detection of A/C system leaks through the use of approved leak detectors and fluorescent leak detection dyes. Vehicles found with A/C system sealers should be treated as contaminated and replacement of the entire A/C refrigerant system is recommended. A/C systems found to be contaminated with A/C system sealers, A/C stop-leak products or seal conditioners voids the warranty for the A/C system.

CAUTION: Recover the refrigerant before opening any fitting or connection. Open the fittings with caution, even after the system has been discharged. Never open or loosen a connection before recovering the refrigerant.

CAUTION: If equipped, do not remove the secondary retention clip from any spring-lock coupler connection while the refrigerant system is under pressure. Recover the refrigerant before removing the secondary retention clip. Open the fittings with caution, even after the system has been discharged. Never open or loosen a connection before recovering the refrigerant.

CAUTION: The internal parts of the A/C system will remain stable as long as moisture-free refrigerant and refrigerant oil is used. Abnormal amounts of dirt, moisture or air can upset the chemical stability. This may cause operational troubles or even serious damage if present in more than very small quantities. Before disconnecting a component, clean the outside of the fittings thoroughly to prevent contamination from entering the refrigerant system. Keep service tools and the work area clean. Do not open the refrigerant system or uncap a replacement component until you are ready to service the system. Immediately after disconnecting a component from the refrigerant system, seal the open fittings with a cap or plug. This will prevent contamination from entering the A/C system.

CAUTION: Refrigerant oil will absorb moisture from the atmosphere if left uncapped.

Do not open a container of refrigerant oil until you are ready to use it. Replace the cap on the oil container immediately after using. Store refrigerant oil only in a clean, airtight, and moisture-free container.

CAUTION: Do not overcharge the refrigerant system. Overcharging will cause excessive compressor head pressure and can cause compressor noise and A/C system failure.

DIAGNOSIS AND TESTING

DIAGNOSIS AND TESTING - REFRIGERANT SYSTEM LEAKS

WARNING: Review the safety precautions and warnings in this information before performing this procedure. Failure to follow these instructions may result in serious injury or death.

WARNING: Do not expose the refrigerant to open flame. Poisonous gas is created when refrigerant is burned. An electronic leak detector is recommended. Serious or fatal injury may result from improper service procedures.

WARNING: Use extreme care when working around a running engine. Keep hands and fingers clear of the radiator fan, accessory drive belt and all other moving components. Keep away when wearing loose clothing, jewelry or long hair that is not properly secured. Underhood components may become hot to the touch. Be careful not to come into contact with hot engine, A/C and engine cooling system components. Failure to follow these instructions may result in serious or fatal injury.

NOTE: Always conduct the A/C Performance Test as outlined in this group prior to searching for an A/C refrigerant leak. Refer to DIAGNOSIS AND TESTING.

NOTE: The A/C system in this vehicle comes equipped from the factory with fluorescent refrigerant leak detection dye installed in the refrigerant system.

When searching for a refrigerant leak in the A/C system, use an Ultra Violet (UV) light and an electronic leak detector that is designed for refrigerant used on this vehicle. It is important to use only high-quality refrigerant leak detection equipment to properly locate refrigerant system leaks, such as the equipment listed in the team PSE Service Equipment Catalog. When the use of additional leak detection dye is required, use only Chrysler LLC approved refrigerant leak detection dye, available through Mopar®.

LEAK TEST

1. Begin searching for refrigerant leaks using a high quality UV light to detect the fluorescent refrigerant leak detection dye.

- Inspect all connections, plumbing fittings, brazed joints, hoses, hose crimps, service ports, compressor housing, pressure relief valve and A/C condenser for dye
- Inspect the evaporator drain tube and condensate for presence of dye, which indicates a leak from the A/C evaporator
- If equipped with rear A/C, inspect the underbody refrigerant lines, fittings, rear evaporator drain tube and condensate for presence of dye, which indicates a leak from the rear evaporator
- If no leaks are found using a UV light, proceed to **step #2** .

2. If a leak is not found with the leak detection dye, operate the heating and A/C system with the engine at idle under the following conditions for at least 15 minutes, then proceed to **step #3** .
   - Doors or windows open
   - Transmission in Park or Neutral with the parking brake set (depending on transmission application)
   - A/C and heater controls set to outside air, full cool, panel mode, high blower and A/C compressor engaged (If the A/C compressor does not engage, go to **LOW OR EMPTY REFRIGERANT SYSTEM**.
   - If equipped with rear A/C, set rear controls to full cool and high blower
3. Shut the vehicle off and wait at least 5 minutes.
4. Insert the leak detector into the evaporator drain tube and the instrument panel air outlets, to check for evaporator leaks. Check the evaporator tubes at the A/C expansion valve, for leaks not visible behind the expansion valve. Check around the front of the A/C compressor, for compressor shaft seal leaks. Check between the A/C condenser and radiator for condenser leaks not previously visible.
5. If equipped with rear A/C, insert the leak detector into the rear evaporator drain tube and rear air outlets. Check the underbody A/C lines and fittings, evaporator tubes and rear A/C expansion valve.

LOW OR EMPTY REFRIGERANT SYSTEM

NOTE: This procedure should only be done after an A/C Performance Test has been conducted and a refrigerant system leak has NOT been found using the factory installed leak detection dye.

Do the following if the A/C compressor will not engage and a refrigerant leak in the A/C system is suspected. but cannot be found using the factory installed leak detection dye.

1. Recover, evacuate and recharge the refrigerant system. Refer to **PLUMBING, STANDARD PROCEDURE**.
2. Operate the heating and A/C system with the engine at idle under the following conditions for at least 15 minutes.
   - Doors or windows open
   - Transmission in Park or Neutral with the parking brake set (depending on transmission application)
   - A/C and heater controls set to outside air, full cool, panel mode, high blower and A/C compressor engaged
   - If equipped with rear A/C, set rear controls to full cool and high blower
3. Shut the vehicle off and return to. Refer to **LEAK TEST**.

STANDARD PROCEDURE

R-134A REFRIGERANT SYSTEM RECOVERY

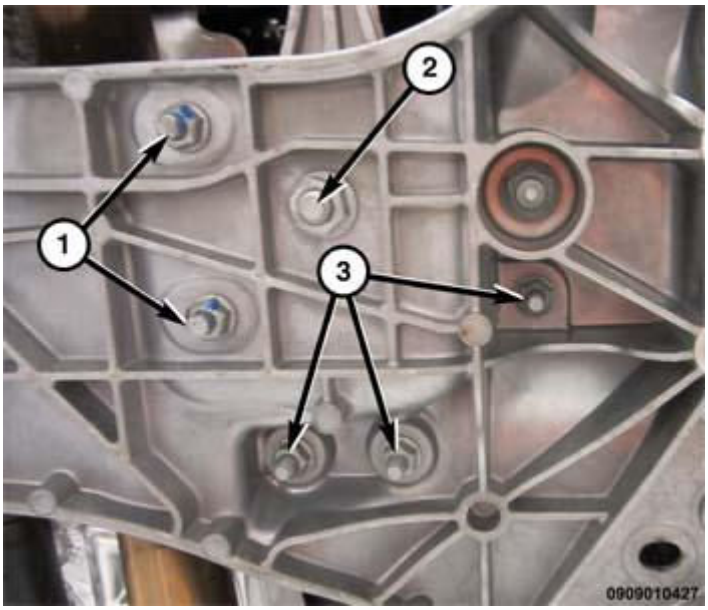

Fig. 89: Identifying R-134a Refrigerant Recovery/Recycling/Charging Station
Courtesy of CHRYSLER GROUP, LLC

The R-134a refrigerant must be recovered from the A/C system prior to performing any repairs that require disconnection of an A/C refrigerant line.

When recovering the A/C refrigerant system, use an R-134a refrigerant recovery/recycling/charging station (1) that meets SAE standard J2788. Per SAE standard J2788, refrigerant recovery stations must recover 95% of the refrigerant system within 30 minutes at 21.1° C (70° F) and be able to measure the amount of refrigerant removed from the system to an accuracy of 28 grams (1 oz.). See the operating instructions supplied by the equipment manufacturer for proper care and use of this equipment.

NOTE: **A/C system should be tested prior to refrigerant recovery if the use of A/C system sealants are suspected. These sealants have the potential to clog refrigerant recovery equipment and cause vehicle A/C component damage. Various tool manufacturers make tool kits that detect A/C system sealants. See the operating instructions supplied by the equipment manufacturer for proper care and use of this equipment.**

If sealants are detected in an A/C system, the system should be treated as contaminated and replacement of the entire A/C refrigerant system is recommended. A/C systems found to be contaminated with A/C system sealers, A/C stop-leak products or seal conditioners void the warranty for the A/C system.

RECOVERY PROCEDURE

WARNING: Review the safety precautions and warnings in this information before

performing this procedure. Failure to follow these instructions may result in serious injury or death.

CAUTION: Various aftermarket manufacturers produce A/C system sealants that are designed to stop A/C refrigerant system leaks. The use of A/C system sealants may result in damage to A/C refrigerant recovery/evacuation/recharging equipment and/or the vehicle A/C system and are not recommended for use by Chrysler LLC.

CAUTION: A small amount of refrigerant oil is removed from the A/C system each time the refrigerant system is recovered and evacuated. Before charging the A/C system, you MUST replenish any oil lost during the recovery process. See the equipment manufacturer instructions for more information.

1. If use of aftermarket A/C system sealant is suspected, the A/C system should be tested for sealant prior to refrigerant system recovery. See the operating instructions supplied by the equipment manufacturer for proper use and care of this equipment.
2. Connect an R-134a refrigerant recovery/recycling/charging station that meets SAE standard J2788 to the refrigerant system.
3. Recover the A/C refrigerant system following the operating instructions supplied by the recovery/recycling/charging station manufacturer.
4. Disconnect the refrigerant recovery/recycling/charging station from the refrigerant system service ports.
5. Reinstall the caps onto the refrigerant system service ports.

R-1234YF REFRIGERANT SYSTEM RECOVERY

WARNING: Review the safety precautions and warnings in this information before performing this procedure. Failure to follow these instructions may result in serious injury or death.

CAUTION: Various aftermarket manufacturers produce A/C system sealants that are designed to stop A/C refrigerant system leaks. The use of A/C system sealants may result in damage to A/C refrigerant recovery/evacuation/recharging equipment and/or the vehicle A/C system and are not recommended for use by Chrysler LLC.

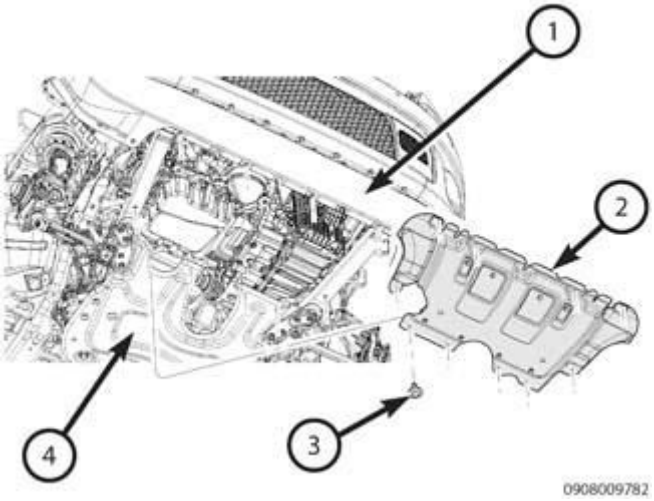

Fig. 90: R-1234YF Refrigerant Recovery/Recycling/Charging Station
Courtesy of CHRYSLER GROUP, LLC

When servicing the A/C system, an R-1234YF refrigerant recovery/recycling/charging station that meets SAE standard must be used. Per SAE standard, refrigerant recovery stations must recover 95% of the refrigerant system within 30 minutes at 21.1° C (70° F) and be able to measure the amount of refrigerant removed from the system to an accuracy of 28 grams (1 oz.). See the operating instructions supplied by the equipment manufacturer for proper care and use of this equipment.

NOTE: **A/C system should be tested prior to refrigerant recovery if the use of A/C system sealants are suspected. These sealants have the potential to clog refrigerant recovery equipment and cause vehicle A/C component damage. Various tool manufacturers make tool kits that detect A/C system sealants. See the operating instructions supplied by the equipment manufacturer for proper care and use of this equipment.**

If sealants are detected in an A/C system, the system should be treated as contaminated and replacement of the entire A/C refrigerant system is recommended. A/C systems found to be contaminated with A/C system sealers, A/C stop-leak products or seal conditioners void the warranty for the A/C system.

RECOVERY PROCEDURE

WARNING: **Review the safety precautions and warnings in this information before performing this procedure. Failure to follow these instructions may result in serious injury or death.**

CAUTION: **Various aftermarket manufacturers produce A/C system sealants that are designed to stop A/C refrigerant system leaks. The use of A/C system sealants may result in damage to A/C refrigerant recovery/evacuation/recharging equipment and/or the vehicle A/C system and are not recommended for use by Chrysler LLC.**

CAUTION: A small amount of refrigerant oil is removed from the A/C system each time the refrigerant system is recovered and evacuated. Before charging the A/C system, you MUST replenish any oil lost during the recovery process. See the equipment manufacturer instructions for more information.

1. If use of aftermarket A/C system sealant is suspected, the A/C system should be tested for sealant prior to refrigerant system recovery. See the operating instructions supplied by the equipment manufacturer for proper use and care of this equipment.
2. Connect an R-1234YF refrigerant recovery/recycling/charging station that meets SAE standard to the refrigerant system.
3. Recover the A/C refrigerant system following the operating instructions supplied by the recovery/recycling/charging station manufacturer.
4. Disconnect the refrigerant recovery/recycling/charging station from the refrigerant system service ports.
5. Reinstall the caps onto the refrigerant system service ports.

R-134A REFRIGERANT SYSTEM EVACUATE

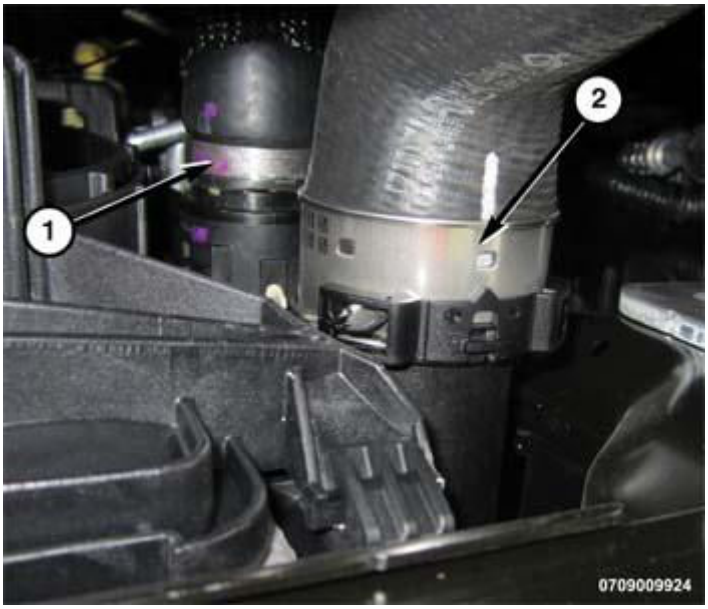

Fig. 91: Identifying R-134a Refrigerant Recovery/Recycling/Charging Station
Courtesy of CHRYSLER GROUP, LLC

If the A/C refrigerant system has been open to the atmosphere, it must be evacuated before the A/C system can be recharged with R-134a refrigerant.

NOTE: Special effort must be used to prevent moisture from entering the A/C system oil. Moisture in the oil is very difficult to remove and will cause a reliability problem with the A/C compressor.

Moisture and air in the A/C refrigerant system will raise the compressor head pressure above acceptable operating levels. This will reduce the performance of the A/C system and damage the A/C compressor. Moisture will boil at near room temperature when exposed to vacuum. Always use an R-134a refrigerant recovery/recycling/charging station with a vacuum pump (1) that meets SAE standard J2788, or an R-134a compatible manifold gauge set and a stand-alone vacuum pump.

If an A/C compressor is left open to the atmosphere for an extended period of time, it is recommended that the refrigerant oil in the compressor be drained and replaced with new refrigerant oil to reduce the possibility of contaminating the refrigerant system. Refer to **OIL, REFRIGERANT, STANDARD PROCEDURE**.

R-134A EVACUATION PROCEDURE

WARNING: Review the safety precautions and warnings in this information before performing this procedure. Failure to follow these instructions may result in serious injury or death.

CAUTION: A small amount of refrigerant oil is removed from the A/C system each time the refrigerant system is recovered and evacuated. Before charging the A/C system, you MUST replenish any oil lost during the recovery process. See the equipment manufacturer instructions for more information.

1. Recover the refrigerant system. Refer to **PLUMBING, STANDARD PROCEDURE**.

NOTE: When connecting service equipment couplers to refrigerant line service ports, verify that the valve of each coupler is fully closed prior to connecting. This will reduce the amount of effort required to make the connections.

2. Connect an R-134a refrigerant recovery/recycling/charging station with a vacuum pump that meets SAE standard J2788 to the refrigerant system, or an R-134a compatible manifold gauge set and a stand-alone vacuum pump (depending on available equipment).
3. Open the refrigerant recovery/recycling/charging station or manifold gauge set valves and start the vacuum pump. The vacuum pump should run a minimum of 45 minutes prior to recharge to eliminate all moisture in system. When the low-side gauge reads to the lowest degree of vacuum possible (approximately -88 kPa (-26 in. Hg) or greater) for 30 minutes, close all valves and turn off vacuum pump. If the refrigerant system fails to reach specified vacuum, the refrigerant system likely has a leak that must be corrected. If the refrigerant system maintains specified vacuum for at least 30 minutes, start the vacuum pump, open the valves and allow the refrigerant system to evacuate an additional 10 minutes.
4. Close the refrigerant recovery/recycling/charging station or manifold gauge set valves. Turn off and disconnect the vacuum pump.
5. Disconnect the refrigerant recovery/recycling/charging station or manifold gauge set from the refrigerant system service ports.
6. Install the caps onto the refrigerant system service ports.

R-1234YF REFRIGERANT SYSTEM EVACUATE

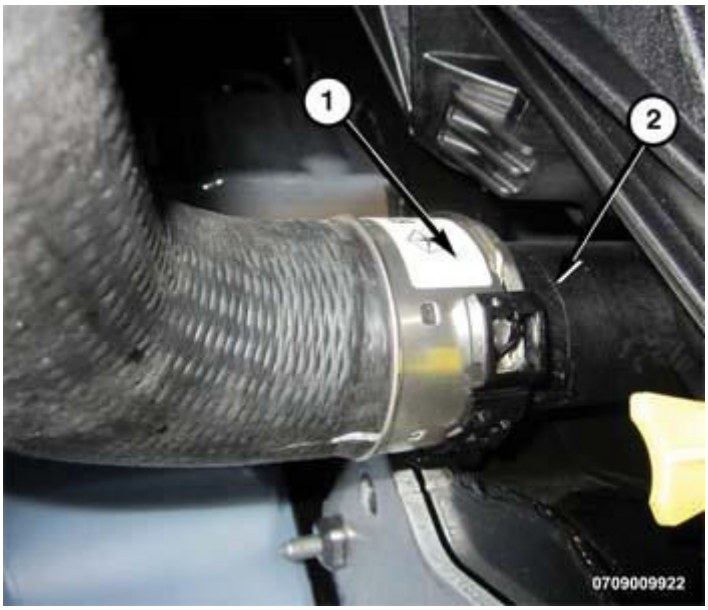

Fig. 92: R-1234YF Refrigerant Recovery/Recycling/Charging Station
Courtesy of CHRYSLER GROUP, LLC

If the A/C refrigerant system has been open to the atmosphere, it must be evacuated before the A/C system can be recharged with R-1234YF refrigerant.

NOTE: Special effort must be used to prevent moisture from entering the A/C system oil. Moisture in the oil is very difficult to remove and will cause a reliability problem with the A/C compressor.

Moisture and air in the A/C refrigerant system will raise the compressor head pressure above acceptable operating levels. This will reduce the performance of the A/C system and damage the A/C compressor. Moisture will boil at near room temperature when exposed to vacuum. Always use an R-1234YF refrigerant recovery/recycling/charging station with a vacuum pump that meets SAE standard, or an R-1234YF compatible manifold gauge set and a stand-alone vacuum pump.

If an A/C compressor is left open to the atmosphere for an extended period of time, it is recommended that the refrigerant oil in the compressor be drained and replaced with new refrigerant oil to reduce the possibility of contaminating the refrigerant system. Refer to **OIL, REFRIGERANT, STANDARD PROCEDURE**.

EVACUATION PROCEDURE

WARNING: Review the safety precautions and warnings in this information before performing this procedure. Failure to follow these instructions may result in serious injury or death.

CAUTION: A small amount of refrigerant oil is removed from the A/C system each

time the refrigerant system is recovered and evacuated. Before charging the A/C system, you MUST replenish any oil lost during the recovery process. See the equipment manufacturer instructions for more information.

1. Recover the refrigerant system. Refer to **PLUMBING, STANDARD PROCEDURE**.

NOTE: **When connecting service equipment couplers to refrigerant line service ports, verify that the valve of each coupler is fully closed prior to connecting. This will reduce the amount of effort required to make the connections.**

2. Connect an R-1234YF refrigerant recovery/recycling/charging station with a vacuum pump that meets SAE standard to the refrigerant system, or an R-1234YF compatible manifold gauge set and a stand-alone vacuum pump (depending on available equipment).
3. Open the refrigerant recovery/recycling/charging station or manifold gauge set valves and start the vacuum pump. The vacuum pump should run a minimum of 45 minutes prior to recharge to eliminate all moisture in system. When the low-side gauge reads to the lowest degree of vacuum possible (approximately -88 kPa (-26 in. Hg) or greater) for 30 minutes, close all valves and turn off vacuum pump. If the refrigerant system fails to reach specified vacuum, the refrigerant system likely has a leak that must be corrected. If the refrigerant system maintains specified vacuum for at least 30 minutes, start the vacuum pump, open the valves and allow the refrigerant system to evacuate an additional 10 minutes.
4. Close the refrigerant recovery/recycling/charging station or manifold gauge set valves. Turn off and disconnect the vacuum pump.
5. Disconnect the refrigerant recovery/recycling/charging station or manifold gauge set from the refrigerant system service ports.
6. Install the caps onto the refrigerant system service ports.

R-134A REFRIGERANT SYSTEM CHARGE

Fig. 93: Identifying R-134a Refrigerant Recovery/Recycling/Charging Station
Courtesy of CHRYSLER GROUP, LLC

After all A/C refrigerant system repairs have been completed and the refrigerant system has been evacuated, the A/C system can be recharged with R-134a refrigerant.

When charging the A/C system, use an R-134a refrigerant recovery/recycling/charging station (1) that meets SAE standard J2788. Per SAE standard J2788, refrigerant recovery stations must charge the system to an accuracy of 14 grams (0.5 oz.). See the operating instructions supplied by the equipment manufacturer for proper care and use of this equipment.

R-134A CHARGING PROCEDURE

WARNING: Review the safety precautions and warnings in this information before performing this procedure. Failure to follow these instructions may result in serious injury or death.

CAUTION: A small amount of refrigerant oil is removed from the A/C system each time the refrigerant system is recovered and evacuated. Before charging the A/C system, you MUST replenish any oil lost during the recovery process. See the equipment manufacturer instructions for more information.

1. Recover and evacuate the refrigerant system. Refer to **PLUMBING, STANDARD PROCEDURE**.
2. Connect an R-134a refrigerant recovery/recycling/charging station that meets SAE standard J2788 to the refrigerant system.
3. When required, adjust the refrigerant oil level. Refer to **OIL, REFRIGERANT, STANDARD PROCEDURE**.

NOTE: A/C system refrigerant capacity can be found on the HVAC Specification Label, located in the engine compartment.

4. Measure the proper amount of refrigerant and heat it to 52° C (125° F) with the charging station. Refer to **REFRIGERANT, SPECIFICATIONS**. See the operating instructions supplied by the equipment manufacturer for proper use of this equipment.
5. Open both the low and high side valves, then open the charge valve to allow the heated refrigerant to flow into the refrigerant system.
6. When the transfer of refrigerant has stopped, close the valves.

WARNING: Take care not to open the high side (high pressure) valve while performing Step 7. Failure to follow these instructions may result in possible serious or fatal injury.

7. Perform the following if all of the refrigerant charge did not transfer from the dispensing device.
   - Open all of the windows in the vehicle.
   - Set the heating and A/C system so that the A/C compressor is operating and the blower motor is operating at its lowest speed setting.
   - Run the engine at a steady high idle (about 1400 RPM).
   - If the A/C compressor does not operate, test the compressor control circuits and repair as required.
   - Open the low side valve and the charge valve to allow the remaining refrigerant to flow into the refrigerant system.
   - When the transfer of refrigerant has stopped, close the valves.
8. Disconnect the refrigerant recovery/recycling/charging station from the refrigerant system service ports.
9. Reinstall the caps onto the refrigerant system service ports.

R-1234YF REFRIGERANT SYSTEM CHARGE

WARNING: Review the warnings and cautions for this system before performing the procedure. Failure to follow these instructions may result in serious injury or death.

NOTE: The Underhood HVAC Specification Label contains the refrigerant fill specification of the vehicle being serviced.

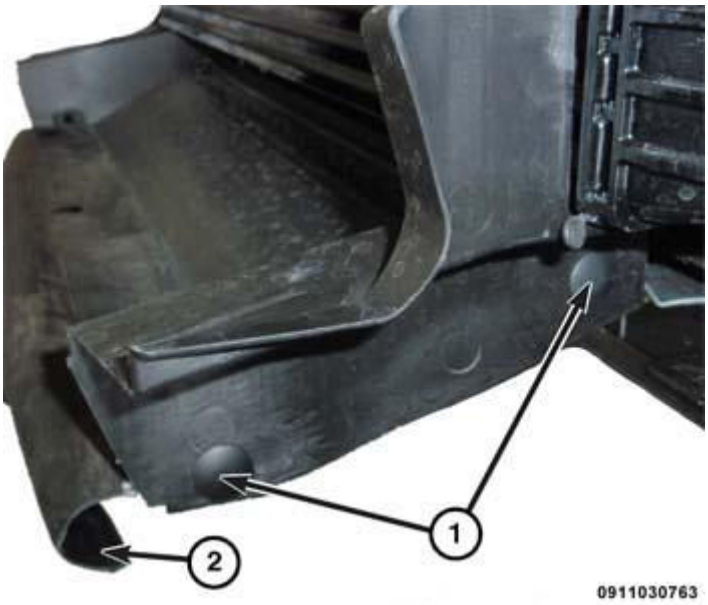

Fig. 94: R-1234YF Refrigerant Recovery/Recycling/Charging Station
Courtesy of CHRYSLER GROUP, LLC

After all refrigerant system leaks have been repaired and the refrigerant system has been evacuated, a refrigerant charge can be injected into the system. Refer to **PLUMBING, STANDARD PROCEDURE**.

When charging the A/C system, use an R-1234YF refrigerant recovery/recycling/charging station that meets SAE standard. Per SAE standard, refrigerant recovery stations must charge the system to an accuracy of 14 grams (0.5 oz.). See the operating instructions supplied by the equipment manufacturer for proper care and use of this equipment.

CHARGING PROCEDURE

WARNING: Review the safety precautions and warnings in this information before performing this procedure. Failure to follow these instructions may result in serious injury or death.

CAUTION: A small amount of refrigerant oil is removed from the A/C system each time the refrigerant system is recovered and evacuated. Before charging the A/C system, you MUST replenish any oil lost during the recovery process. See the equipment manufacturer instructions for more information.

1. Recover and evacuate the refrigerant system. Refer to **PLUMBING, STANDARD PROCEDURE**.
2. Connect an R-1234YF refrigerant recovery/recycling/charging station that meets SAE standard to the refrigerant system.
3. When required, adjust the refrigerant oil level. Refer to **OIL, REFRIGERANT, STANDARD PROCEDURE**.

NOTE: A/C system refrigerant capacity can be found on the HVAC Specification Label, located in the engine compartment.

4. Open both the low and high side valves, then open the charge valve to allow the refrigerant to flow into the refrigerant system.
5. When the transfer of refrigerant has stopped, close the valves.

WARNING: Take care not to open the high side (high pressure) valve while performing Step 7. Failure to follow these instructions may result in possible serious or fatal injury.

6. Perform the following if all of the refrigerant charge did not transfer from the dispensing device.
   - Open all of the windows in the vehicle.
   - Set the heating and A/C system so that the A/C compressor is operating and the blower motor is operating at its lowest speed setting.
   - Run the engine at a steady high idle (about 1400 RPM).
   - If the A/C compressor does not operate, test the compressor control circuits and repair as required.
   - Open the low side valve and the charge valve to allow the remaining refrigerant to flow into the refrigerant system.
   - When the transfer of refrigerant has stopped, close the valves.
7. Disconnect the refrigerant recovery/recycling/charging station from the refrigerant system service ports.
8. Install the caps onto the refrigerant system service ports.

DRIER, A/C RECEIVER

DESCRIPTION

DESCRIPTION

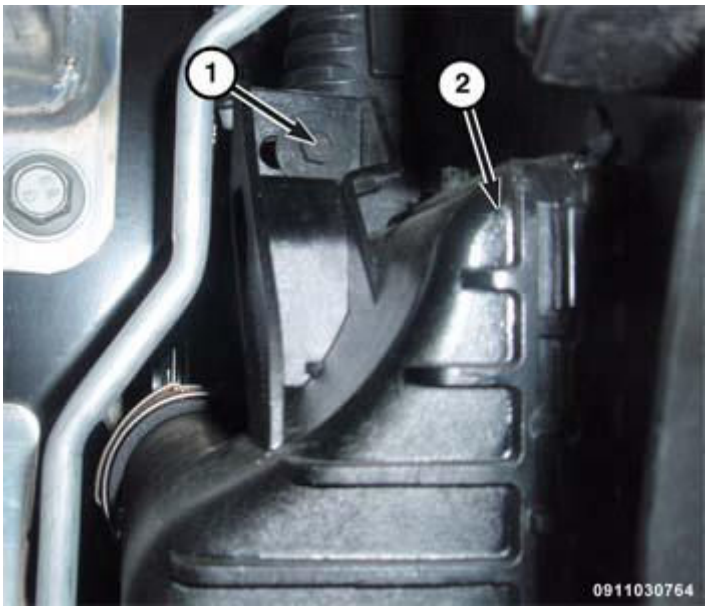

Fig. 95: A/C Condenser & A/C Receiver/Drier
Courtesy of CHRYSLER GROUP, LLC

The A/C receiver/drier (3) is mounted to the left side of the A/C condenser (2) and is on the high-side of the A/C system. The A/C receiver/drier helps remove moisture from the refrigerant, filters the refrigerant, stores any unnecessary refrigerant and retains any refrigerant vapor that may leave the A/C condenser, until it becomes a liquid.

The A/C receiver/drier is integral to the A/C condenser and must be replaced with the condenser as an assembly.

OPERATION

OPERATION

The A/C receiver/drier performs a filtering action to prevent foreign material that may be in the refrigerant from contaminating the A/C expansion valve and the A/C compressor. Refrigerant enters the A/C receiver/drier as a high-pressure, low temperature liquid. Desiccant inside the A/C receiver/drier absorbs any moisture which may have entered and become trapped within the refrigerant system. In addition, during periods of high demand operation of the A/C system, the A/C receiver/drier acts as a reservoir to store surplus refrigerant.

The A/C receiver/drier is integral to the A/C condenser and has no serviceable parts.

CAUTION: The A/C condenser and receiver/drier must be replaced as an assembly if an internal failure of the A/C compressor has occurred. Failure to replace the A/C condenser and receiver/drier can cause serious damage to the replacement A/C compressor.

The A/C receiver/drier cannot be repaired and the A/C condenser and receiver/drier must be replaced as an assembly, if the receiver/drier is leaking or damaged, or if an internal failure of the A/C compressor has

occurred.

COMPRESSOR, A/C

DESCRIPTION

VARIABLE DISPLACEMENT A/C COMPRESSOR

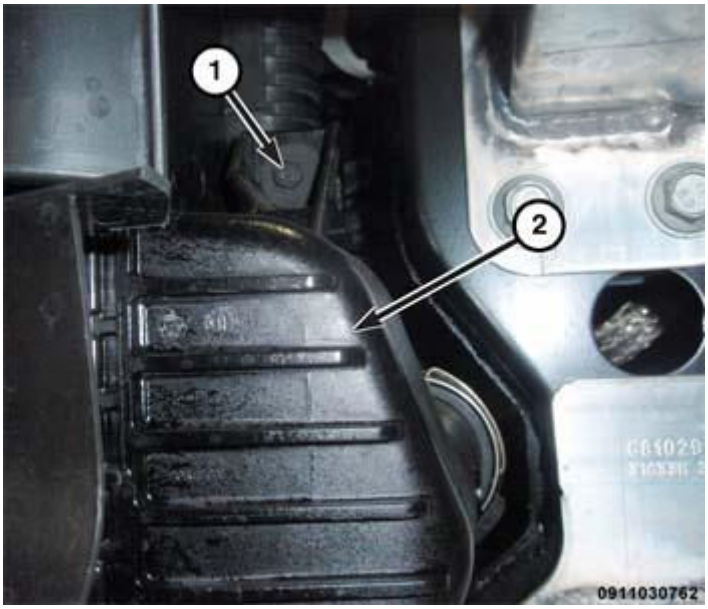

Fig. 96: A/C Compressor, Control Valve & High Pressure Relief Valve
Courtesy of CHRYSLER GROUP, LLC

This A/C compressor has a total displacement of 170 cubic centimeters (10.37 cubic inches) and a control valve (2) and a high pressure relief valve (3) located on the back cover. The A/C compressor is secured to the engine with three bolts.

A label identifying the type of refrigerant and oil is located on the A/C compressor.

OPERATION

A/C CLUTCH

The A/C compressor clutch components provide the means to engage and disengage the A/C compressor from the engine accessory drive belt. When the electromagnetic A/C clutch coil is energized, it magnetically draws the clutch plate into contact with the clutch pulley and drives the compressor shaft. When the coil is not energized, the pulley freewheels on the clutch hub bearing, which is part of the pulley assembly.

A/C compressor clutch engagement is controlled by the Powertrain Control Module (PCM). Refer to the **DTC INDEX** article .

VARIABLE DISPLACEMENT A/C COMPRESSOR

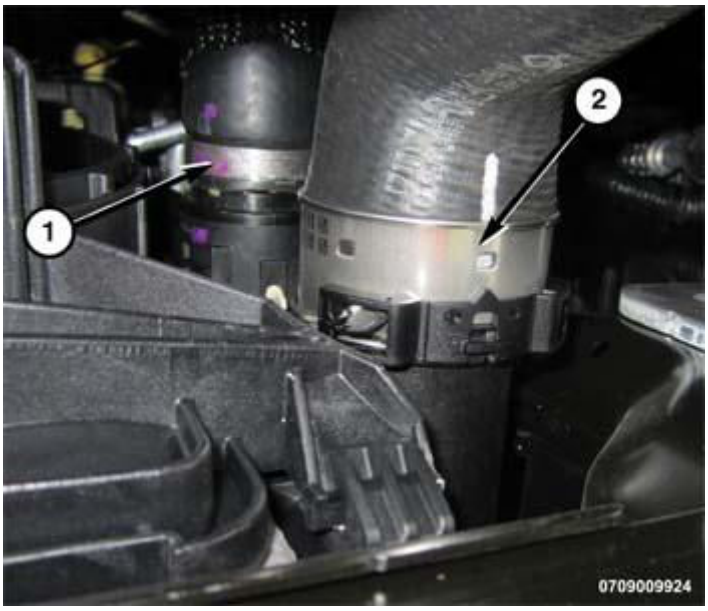

Fig. 97: Cutaway View Of Variable Displacement A/C Compressor (Typical)
Courtesy of CHRYSLER GROUP, LLC

NOTE: Typical variable displacement A/C compressor shown in illustration.

The Denso 7SBH17C A/C compressor is a Variable Displacement Compressor (VDC) which is driven by the engine through a LE40 Clutch (1) and pulley (2). This compressor uses an integral control solenoid (3) to reduce or increase the stroke of the pistons (4) within the compressor by automatically adjusting the angle of the swashplate (5).

The A/C compressor draws in low-pressure refrigerant vapor from the A/C evaporator through its suction port. It then compresses the refrigerant into a high-pressure, high-temperature refrigerant vapor, which is then pumped to the A/C condenser through the compressor discharge port. The A/C compressor is lubricated by refrigerant oil that is circulated throughout the refrigerant system with the refrigerant. Refer to **OIL, REFRIGERANT, STANDARD PROCEDURE**.

The A/C compressor is controlled by the HVAC module. The HVAC module calculates compressor displacement required by A/C system load and demand by monitoring vehicle speed, A/C high side pressure, engine speed, evaporator temperature, accelerator pedal position, ambient temperature and A/C-heater request signals. The HVAC module then sends a Pulse Width Modulated (PWM) signal to the A/C compressor control solenoid to increase or decrease refrigerant flow. The amount of refrigerant allowed to pass through the compressor determines the head pressure which controls the angle of the swashplate, which in turn, determines the amount of compressor displacement. When there is no demand for A/C, the swashplate is adjusted to nearly a zero degree angle, which removes compressor torque drag from the engine.

This A/C compressor will reduce the displacement of the compressor based on ambient air temperature. For example; as the outside temperature falls from 27° C (80° F) to 19° C (66° F), the amount of refrigerant flow required through the A/C orifice tube to keep the A/C evaporator cool becomes less, and the swashplate is adjusted to a lower angle, which reduces compressor displacement. However, due to the lower outside air temperature, panel air outlet temperature will not noticeably change.

The A/C compressor control system is diagnosed using a scan tool. Refer to **DIAGNOSIS AND TESTING**.

CAUTION: Do NOT run the engine with a vacuum pump in operation or with a vacuum present within the A/C system when equipped with a variable displacement A/C compressor. Failure to follow this caution will result in serious A/C compressor damage.

CAUTION: Be certain to adjust the refrigerant system oil level when replacing an A/C compressor. Failure to properly adjust the refrigerant oil level can prevent the A/C system from operating as designed and can cause serious A/C compressor damage.

DIAGNOSIS AND TESTING

A/C CLUTCH COIL

The A/C clutch coil electrical circuit is controlled by the Powertrain Control Module (PCM), through the Power Distribution Center (PDC). See Wiring Information for complete HVAC wiring diagrams. Begin testing of a suspected A/C clutch coil problem by performing the preliminary checks.

PRELIMINARY CHECKS

1. Using a scan tool, check for any Diagnostic Trouble Codes (DTCs). If no DTCs are found, go to Step 2. If any DTCs are found, repair as required.
2. If the A/C clutch still will not engage, verify the refrigerant charge level by conducting the A/C Performance test. Refer to **DIAGNOSIS AND TESTING**. If the refrigerant charge level is OK, go to **COIL RESISTANCE TEST** and **COIL CURRENT DRAW TEST**. If the refrigerant charge level is not OK, adjust the refrigerant charge as required.

COIL RESISTANCE TEST

1. Disconnect and isolate the negative battery cable.
2. Disconnect the wire harness connector from the A/C clutch coil connector.
3. Use an ohm meter and Back Probe Tool (special tool #6801, Terminal Probe) and measure the resistance of the A/C clutch coil at the coil connector terminals.
4. See A/C Clutch Coil Specifications table for acceptable A/C clutch coil resistance. Specifications apply for a work area temperature of 21° C (70° F).
   a. If the A/C clutch coil reading is below specifications, the coil is shorted and must be replaced.
   b. If the A/C clutch coil reading is above specifications, the coil is open and must be replaced.

COIL CURRENT DRAW TEST

1. Verify the battery state of charge. Refer to **BATTERY, DIAGNOSIS AND TESTING** .
2. Connect an ammeter (0 to 10 ampere scale selected) in series with the A/C clutch coil feed terminal using Back Probe Tool (special tool #6801, Terminal Probe). Connect a voltmeter (0 to 20 volt scale selected)

to measure voltage across the battery and the A/C clutch coil.

3. With the A/C heater control in the A/C mode and the blower motor at low speed, start the engine and allow it to run at a normal idle speed.
4. The A/C clutch should engage immediately and the clutch coil supply voltage should be within two volts of the battery voltage. If the clutch coil supply voltage is OK, go to 5. If the coil supply voltage is not within two volts of battery voltage, test the clutch coil feed circuit for excessive voltage drop and repair as necessary.
5. See **A/C CLUTCH COIL SPECIFICATIONS** for acceptable A/C clutch coil current draw. Specifications apply for a work area temperature of 21° C (70° F). If voltage is more than 12.5 volts, add electrical loads by turning on electrical accessories until voltage reads below 12.5 volts.
   a. If the A/C clutch coil current reading is zero, the coil is open and must be replaced.
   b. If the A/C clutch coil current reading is above specifications, the coil is shorted and must be replaced.

PRELIMINARY-CHECKS

A/C CLUTCH COIL SPECIFICATIONS

Coil Resistance	Coil Current Draw
4.0 ± 0.2 ohms	2.0 amps Max @ 12V ± 0.5V @ 21° C (70° F)

A/C SYSTEM NOISE

CAUTION: The A/C condenser and receiver/drier must be replaced as an assembly if an internal failure of the A/C compressor has occurred. Failure to replace the A/C condenser and receiver/drier can cause serious damage to the replacement A/C compressor.

When investigating an A/C system related noise, you must first know the conditions under which the noise occurs. These conditions include: weather, vehicle speed, transmission in gear or neutral, engine speed, engine temperature, and any other special conditions. Noises that develop during A/C operation can often be misleading. For example: What sounds like a failed front engine bearing or connecting rod, may be caused by loose bolts, nuts, mounting brackets or a loose compressor clutch assembly.

Drive belts are speed sensitive. At different engine speeds and depending upon drive belt tension, drive belts can develop noises that are mistaken for an A/C compressor noise. Improper drive belt tension can cause a misleading noise when the compressor clutch is engaged, which may not occur when the compressor clutch is disengaged. Check the accessory drive belt condition and tension as described in Cooling before beginning this procedure.

1. Select a quiet area for testing. Duplicate the complaint conditions as much as possible. Turn the A/C compressor On and Off several times to clearly identify the compressor noise.
2. Loosen all of the compressor mounting hardware and retighten. Check the A/C clutch. Be certain that the clutch coil, clutch plate and pulley are mounted securely to the A/C compressor, and that the clutch plate and pulley are properly aligned and have the correct air gap.
3. To duplicate high-ambient temperature conditions (high head pressure), restrict the air flow through the

A/C condenser. Install a manifold gauge set or a scan tool to be certain that the high side pressure does not exceed 3.53 Mpa (512 psi).

4. Check the refrigerant system plumbing for incorrect routing, rubbing or interference, which can cause unusual noises. Also check the refrigerant lines and hoses for kinks or sharp bends that will restrict refrigerant flow, which can cause noises.
5. Listen to the A/C compressor while the clutch is engaged and disengaged. Probe the A/C compressor with an engine stethoscope or a long screwdriver with the handle held to your ear to better localize the source of the noise. If the noise is from the A/C compressor, conduct the A/C Performance test and verify refrigerant charge level. Refer to **DIAGNOSIS AND TESTING**.
6. If the A/C clutch and refrigerant charge level is OK, but the noise persists, replace the A/C compressor. Refer to **COMPRESSOR, A/C, REMOVAL**.

STANDARD PROCEDURE

STANDARD PROCEDURE - A/C CLUTCH INSPECTION

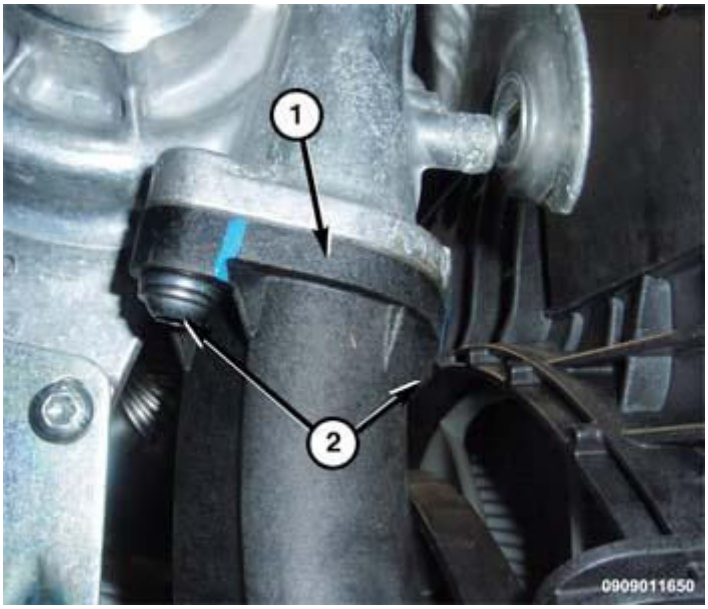

Fig. 98: Identifying Compressor Shaft, Clutch Plate & Shim
Courtesy of CHRYSLER GROUP, LLC

Examine the friction surfaces of the pulley and clutch plate (2) for wear. The pulley and clutch plate should be replaced if excessive wear or scoring is found.

If the friction surfaces are oily, inspect the shaft and nose area of the A/C compressor (1) for refrigerant oil. If refrigerant oil is found, the compressor shaft seal is leaking and the A/C compressor must be replaced.

Check the pulley bearing for roughness or excessive leakage of grease. Replace the pulley and bearing assembly, if required.

REMOVAL

2.0L, 2.4L ENGINE

WARNING: Review the warnings and cautions for this system before performing the procedure. Failure to follow these instructions may result in serious injury or death.

CAUTION: The A/C condenser and receiver/drier must be replaced as an assembly if an internal failure of the A/C compressor has occurred. Failure to replace the A/C condenser and receiver/drier can cause serious damage to the replacement A/C compressor.

NOTE: The A/C compressor may be removed and repositioned without disconnecting the refrigerant lines or discharging the refrigerant system. Discharging is not necessary if servicing the A/C clutch, clutch coil or engine.

1. Disconnect and isolate the negative battery cable.
2. Recover the refrigerant from the refrigerant system. Refer to **PLUMBING, STANDARD PROCEDURE**.
3. Remove the accessory drive belt. Refer to **BELT, SERPENTINE, REMOVAL** .

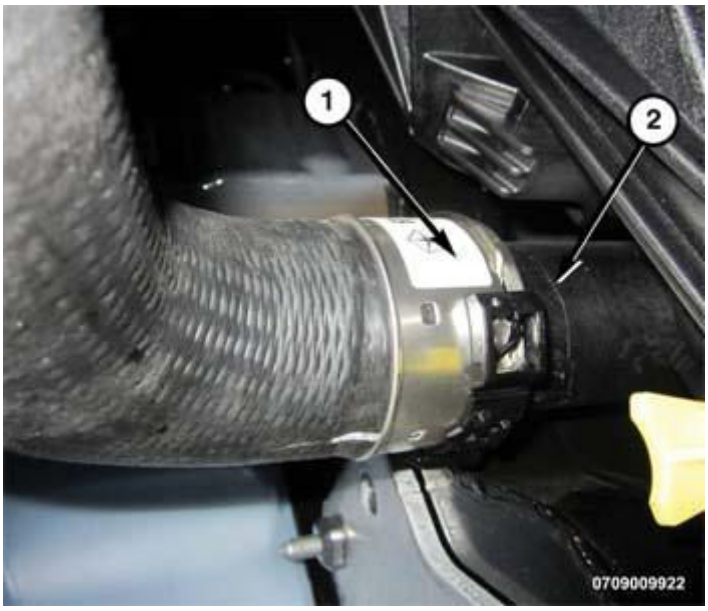

Fig. 99: A/C Discharge Line/Suction Line Manifold & Nut
Courtesy of CHRYSLER GROUP, LLC

4. Remove nut (2) and the A/C discharge line/suction line manifold (1) from the A/C compressor.
5. Remove and discard the O-ring seals.
6. Install tape or plugs into the opened refrigerant line fittings and the compressor ports.

Fig. 100: A/C Compressor High Pressure Switch Wire Harness Connector
Courtesy of CHRYSLER GROUP, LLC

7. Disconnect the A/C compressor high pressure switch wire harness connector (1).

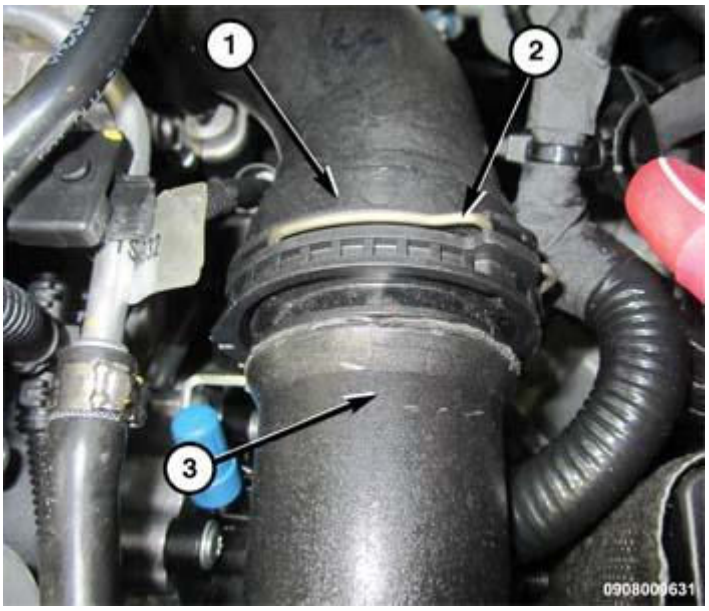

Fig. 101: A/C Compressor Clutch Wire Harness Connector
Courtesy of CHRYSLER GROUP, LLC

8. Disconnect the A/C compressor clutch wire harness connector (1) and detach the wire harness from the A/C compressor.

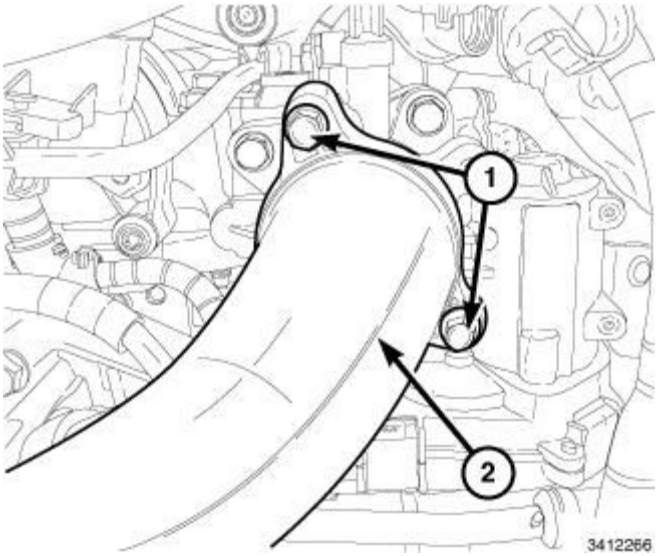

Fig. 102: Bolts & A/C Compressor
Courtesy of CHRYSLER GROUP, LLC

9. Remove the bolts (1) and the A/C compressor (2).

3.2L ENGINE

WARNING: Review the warnings and cautions for this system before performing the procedure. Failure to follow these instructions may result in serious injury or death.

NOTE: The A/C condenser must be replaced if an internal failure of the A/C compressor has occurred. Refer to CONDENSER, A/C, REMOVAL.

NOTE: The A/C compressor may be removed and repositioned without disconnecting the refrigerant lines or discharging the refrigerant system. Discharging is not necessary if servicing the A/C clutch, clutch coil or engine.

1. Recover the refrigerant from the refrigerant system. Refer to **PLUMBING, STANDARD PROCEDURE**.
2. Disconnect and isolate the negative battery cable.
3. Remove the accessory drive belt. Refer to **BELT, SERPENTINE, REMOVAL** .

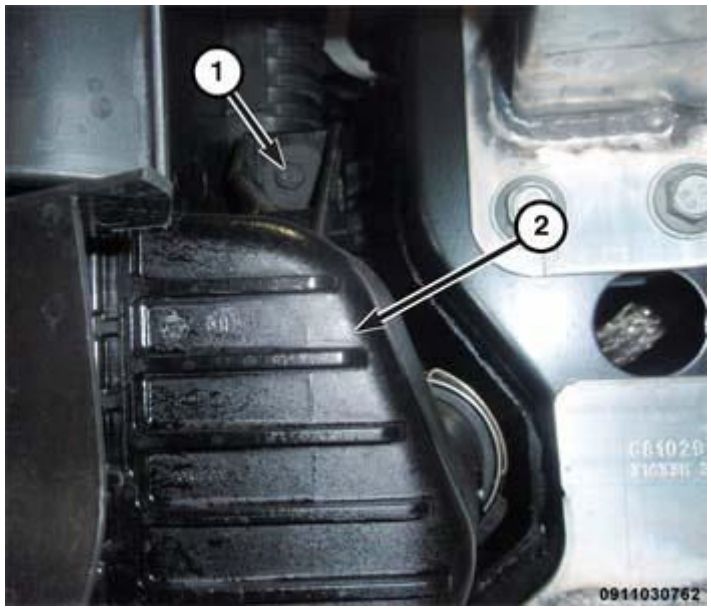

Fig. 103: A/C Compressor, IHX Manifold Line & Fasteners
Courtesy of CHRYSLER GROUP, LLC

4. Remove the bolt (1) that secures the A/C suction line and A/C discharge lines (2) to the A/C compressor (3).
5. Disconnect the refrigerant lines from the A/C compressor and remove and discard the seals.
6. Install plugs in, or tape over all of the opened refrigerant line fittings and the compressor ports.

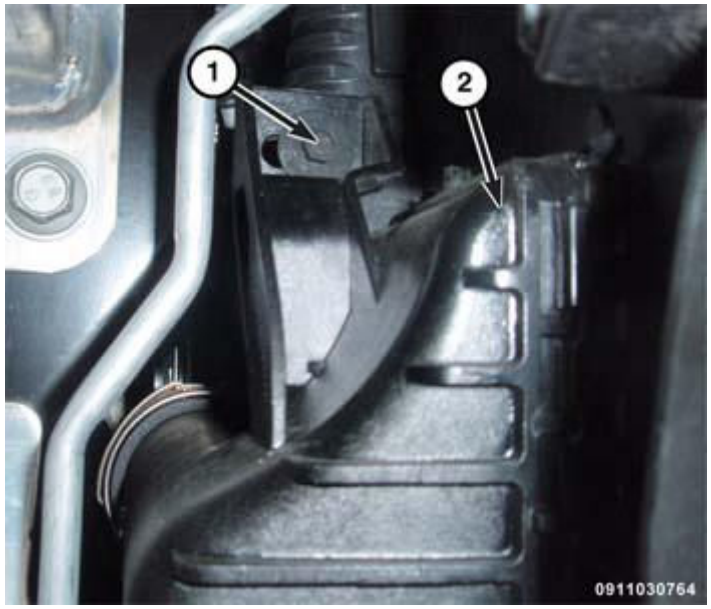

Fig. 104: Removing/Installing A/C compressor
Courtesy of CHRYSLER GROUP, LLC

7. Disconnect the engine wire harness (1) from the A/C compressor (2).

8. Support the A/C compressor and remove the three bolts (3).
9. Remove the A/C compressor from the engine compartment.

A/C CLUTCH

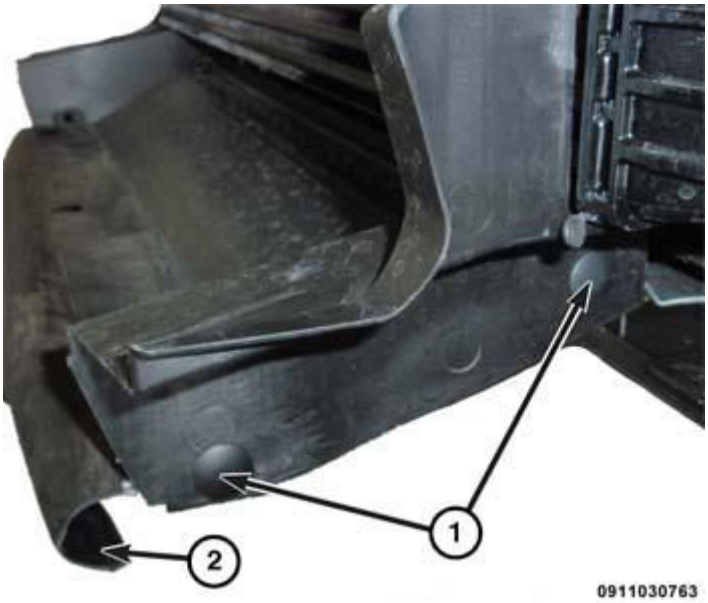

Fig. 105: Compressor Shaft Bolt, Clutch Plate & A/C Compressor
Courtesy of CHRYSLER GROUP, LLC

1. Remove the A/C compressor (3) and place it on a workbench. Refer to **COMPRESSOR, A/C, REMOVAL**.
2. Remove the compressor shaft bolt (1). A band-type oil filter wrench or a strap wrench may be used to hold the clutch plate (2) from rotating during bolt removal.

Fig. 106: Identifying Compressor Shaft, Clutch Plate & Shim
Courtesy of CHRYSLER GROUP, LLC

CAUTION: Do not pry between the clutch plate and the pulley and bearing assembly to remove the clutch plate from the compressor shaft as this may damage the clutch plate.

NOTE: Use care not to misplace any clutch shim(s) during removal of the clutch plate, as they may be reused during the clutch plate installation process.

3. Tap the clutch plate (2) lightly with a plastic mallet to release it from the splines on the compressor shaft (1) and remove the clutch plate and shim(s) (3).

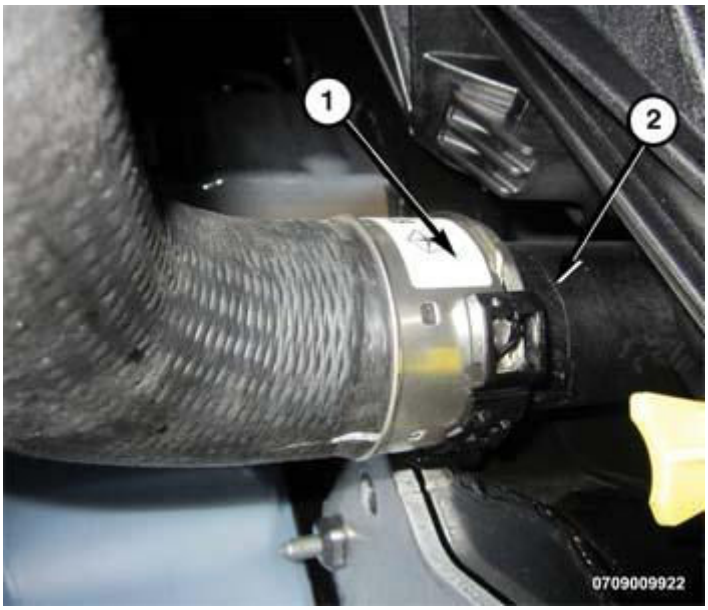

Fig. 107: Compressor Pulley Snap Ring, Pulley And Bearing Assembly & A/C Compressor
Courtesy of CHRYSLER GROUP, LLC

4. Using snap ring pliers, remove the snap ring (1) that secures the pulley and bearing assembly (2) to the A/C compressor (3) and remove the pulley and bearing assembly.

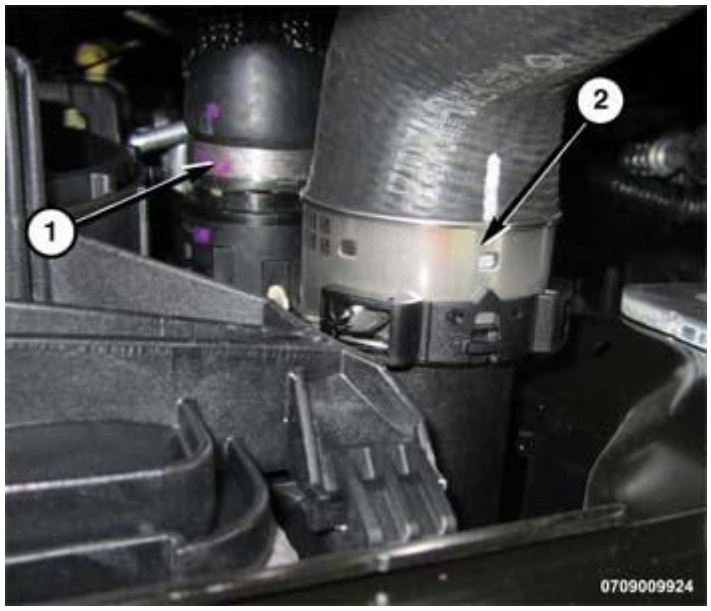

Fig. 108: Compressor Clutch Coil Snap Ring, A/C Clutch Coil & A/C Compressor
Courtesy of CHRYSLER GROUP, LLC

5. Using snap ring pliers, remove the snap ring (1) that secures the A/C clutch coil (2) to the A/C compressor (3) and remove the coil.

INSTALLATION

2.0L, 2.4L ENGINE

CAUTION: If the A/C compressor is being replaced, be certain to adjust the refrigerant system oil level. Failure to properly adjust the refrigerant oil level will prevent the A/C system from operating as designed and can cause serious A/C compressor damage.

CAUTION: The A/C condenser and receiver/drier must be replaced as an assembly if an internal failure of the A/C compressor has occurred. Failure to replace the A/C condenser and receiver/drier can cause serious damage to the replacement A/C compressor.

CAUTION: The A/C condenser and receiver/drier must be replaced as an assembly if an internal failure of the A/C compressor has occurred. Failure to replace the A/C condenser and receiver/drier can cause serious damage to the replacement A/C compressor.

Fig. 109: Bolts & A/C Compressor
Courtesy of CHRYSLER GROUP, LLC

NOTE: **When replacing multiple A/C system components, see the Refrigerant Oil Capacities chart to determine how much oil should be removed from the new A/C compressor. Refer to OIL, REFRIGERANT, STANDARD PROCEDURE.**

NOTE: **Replacement of the refrigerant line O-ring seals is required anytime a refrigerant line is disconnected from the A/C compressor. Failure to replace the rubber O-ring seals may result in a refrigerant system leak.**

1. If the A/C compressor (1) is being replaced, the refrigerant oil in the old compressor must be first drained and measured. Then the oil in the new A/C compressor must be drained. Finally, the new compressor must be refilled with the same amount of new refrigerant oil that was drained out of the old compressor. When replacing multiple A/C system components, see the Refrigerant Oil Capacities chart to determine how much oil should be added to the refrigerant system. Refer to **OIL, REFRIGERANT, STANDARD PROCEDURE**. Use only refrigerant oil of the type recommended for the A/C compressor in the vehicle.
2. Install the A/C compressor (2) and tighten the bolts (1) to the proper. Refer to **SPECIFICATIONS**.

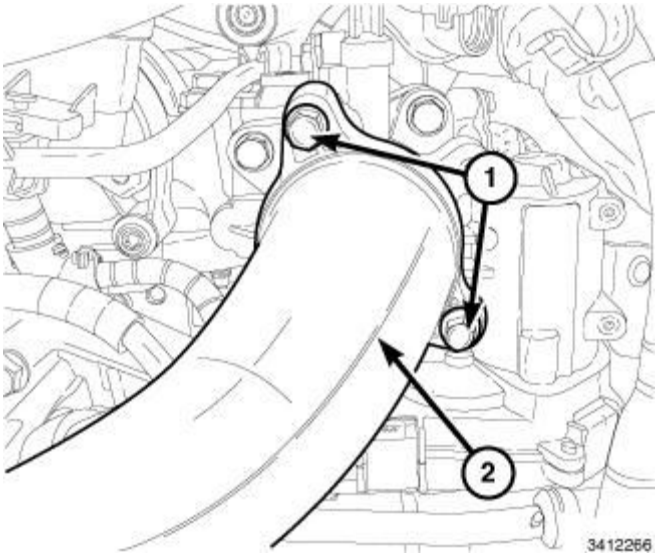

Fig. 110: A/C Compressor Clutch Wire Harness Connector
Courtesy of CHRYSLER GROUP, LLC

3. Attach the A/C wire harness to the compressor and connect the A/C compressor clutch wire harness connector (1).

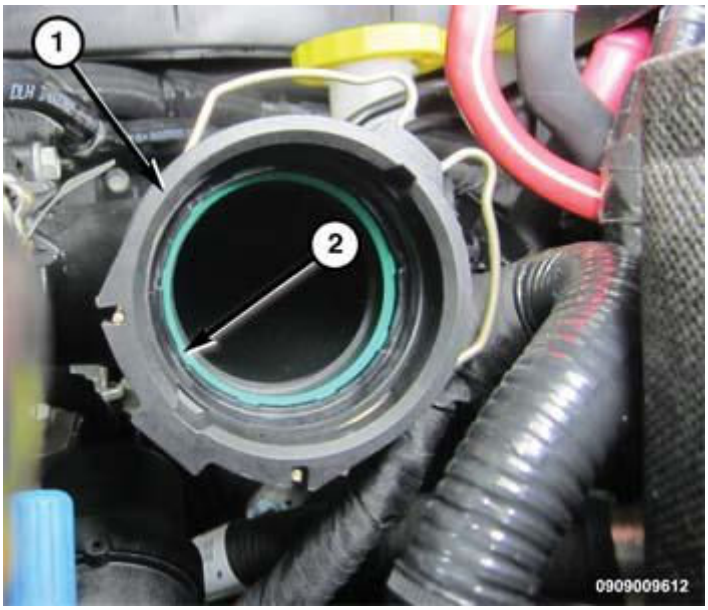

Fig. 111: A/C Compressor High Pressure Switch Wire Harness Connector
Courtesy of CHRYSLER GROUP, LLC

4. Connect the A/C compressor high pressure switch wire harness connector (1).

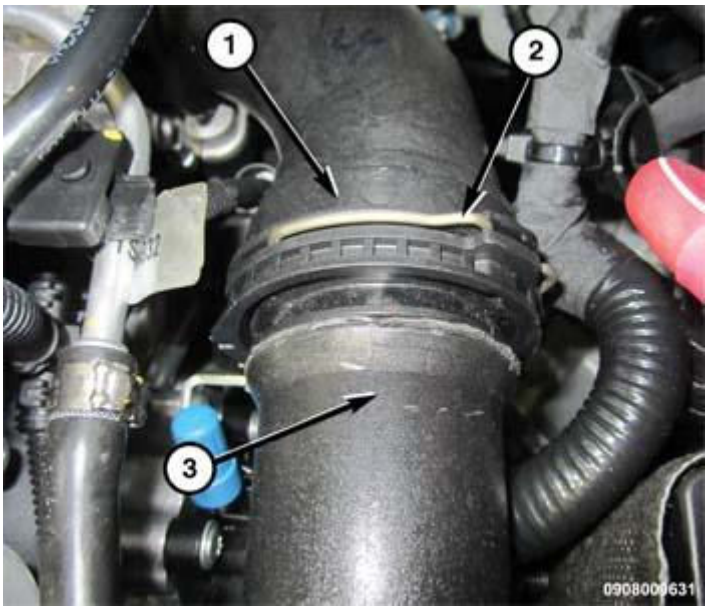

Fig. 112: A/C Discharge Line/Suction Line Manifold & Nut
Courtesy of CHRYSLER GROUP, LLC

5. Remove the tape or plugs from the opened refrigerant line fittings and the compressor ports.
6. Lubricate new O-ring seals with clean refrigerant oil and install them onto the refrigerant line fittings. Use only the specified O-ring seals as they are made of a special material for the system. Use only refrigerant oil of the type recommended for the A/C compressor in the vehicle.
7. Install the A/C discharge line/suction line manifold (1) to the A/C compressor (3) and tighten the nut (1) to the proper. Refer to **SPECIFICATIONS**.
8. Install the accessory drive belt. Refer to **BELT, SERPENTINE, INSTALLATION** .
9. Evacuate and charge the refrigerant system. Refer to **PLUMBING, STANDARD PROCEDURE**.
10. Install the air cleaner resonator. Refer to **RESONATOR, AIR CLEANER, INSTALLATION** **RESONATOR, AIR CLEANER, INSTALLATION** .
11. Install the air cleaner body. Refer to **BODY, AIR CLEANER, INSTALLATION** **BODY, AIR CLEANER, INSTALLATION** **BODY, AIR CLEANER, INSTALLATION** .
12. Connect the negative battery cable.

3.2L ENGINE

CAUTION: If the A/C compressor is being replaced, be certain to adjust the refrigerant system oil level. Failure to properly adjust the refrigerant oil level will prevent the A/C system from operating as designed and can cause serious A/C compressor damage.

NOTE: The A/C condenser must be replaced if an internal failure of the A/C compressor has occurred. Refer to CONDENSER, A/C, REMOVAL.

NOTE: **When replacing multiple A/C system components, see the Refrigerant Oil Capacities chart to determine how much oil should be removed from the new A/C compressor. Refer to OIL, REFRIGERANT, STANDARD PROCEDURE.**

NOTE: **Replacement of the refrigerant line O-ring seals and gaskets is required anytime a refrigerant line is disconnected. Failure to replace the rubber O-ring seals and metal gaskets may result in a refrigerant system leak.**

1. If the A/C compressor (2) is being replaced, the refrigerant oil in the old compressor must be first drained and measured. Then the oil in the new A/C compressor must be drained. Finally, the new compressor must be refilled with the same amount of new refrigerant oil that was drained out of the old compressor. When replacing multiple A/C system components, see the Refrigerant Oil Capacities chart to determine how much oil should be added to the refrigerant system. Refer to **OIL, REFRIGERANT, STANDARD PROCEDURE**. Use only refrigerant oil of the type recommended for the A/C compressor in the vehicle.

Fig. 113: Removing/Installing A/C compressor
Courtesy of CHRYSLER GROUP, LLC

2. Position the A/C compressor (2) to the engine and loosely install the three bolts (3) that secure the A/C compressor to the engine.
3. Tighten the A/C compressor retaining bolts to the proper. Refer to **SPECIFICATIONS**.
4. Connect the engine wire harness (1) to the A/C compressor.

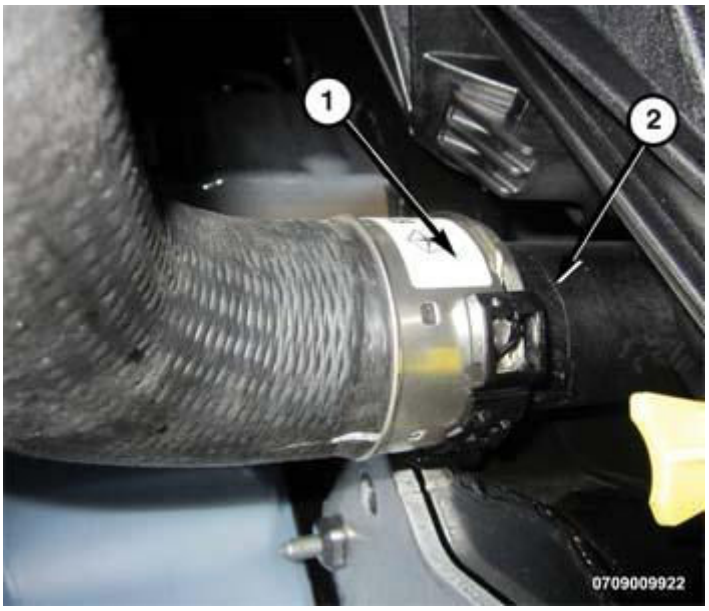

Fig. 114: A/C Compressor, IHX Manifold Line & Fasteners
Courtesy of CHRYSLER GROUP, LLC

5. Remove the tape or plugs from the opened refrigerant line fittings and the A/C compressor ports.
6. Lubricate new seals with clean refrigerant oil and install them onto the refrigerant line fittings. Use only the specified seals as they are made of a special material for the system. Use only refrigerant oil of the type recommended for the A/C compressor in the vehicle.
7. Install the A/C suction line and the A/C discharge line (2) onto the A/C compressor (3).
8. Install the bolt (1) that secures the refrigerant lines to the A/C compressor and tighten the bolt to the proper. Refer to **SPECIFICATIONS**.
9. Install the accessory drive belt. Refer to **BELT, SERPENTINE, INSTALLATION** .

NOTE: The A/C condenser must be replaced if an internal failure of the A/C compressor has occurred. Refer to CONDENSER, A/C, REMOVAL.

10. Connect the negative battery cable.
11. Evacuate and charge the refrigerant system. Refer to **PLUMBING, STANDARD PROCEDURE**.

A/C CLUTCH

Fig. 115: Compressor Clutch Coil Snap Ring, A/C Clutch Coil & A/C Compressor
Courtesy of CHRYSLER GROUP, LLC

1. Align the dowel pin on the back of the A/C clutch coil (2) with the hole in the front of the A/C compressor (3) and install the coil onto the compressor.

CAUTION: The snap ring must be fully and properly seated in the groove or it may vibrate out, resulting in a clutch failure and severe damage to the A/C compressor.

2. Using snap ring pliers, install the snap ring (1) that secures the A/C clutch coil (2) to the A/C compressor (3). Be certain that the snap ring is fully and properly seated in the groove.

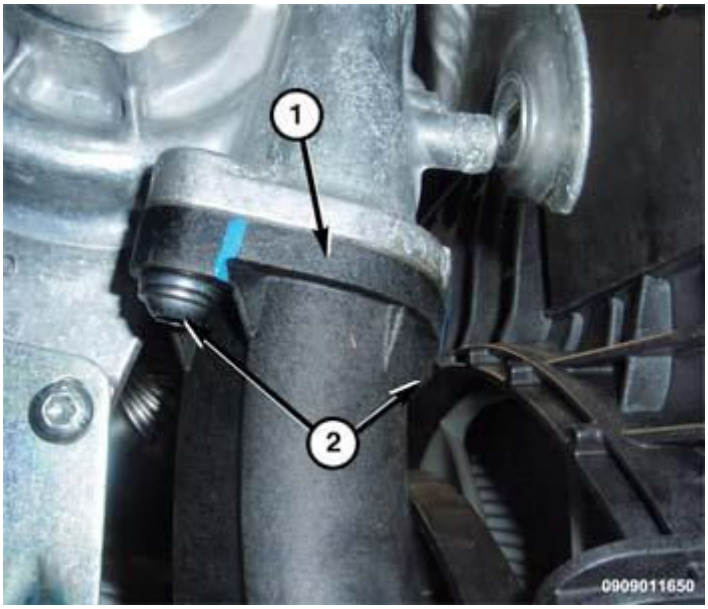

Fig. 116: Compressor Pulley Snap Ring, Pulley And Bearing Assembly & A/C Compressor
Courtesy of CHRYSLER GROUP, LLC

CAUTION: When installing the pulley and bearing assembly, DO NOT mar the friction surfaces of the pulley or premature failure of the A/C clutch may result.

3. Install the pulley and bearing assembly (2) onto the A/C compressor (3). If necessary, gently tap the pulley onto the compressor using a block of wood placed on the pulley friction surface.
4. Using snap ring pliers, install the snap ring (1) that secures the pulley and bearing assembly to the A/C compressor. Be certain that the snap ring is fully and properly seated in the groove.

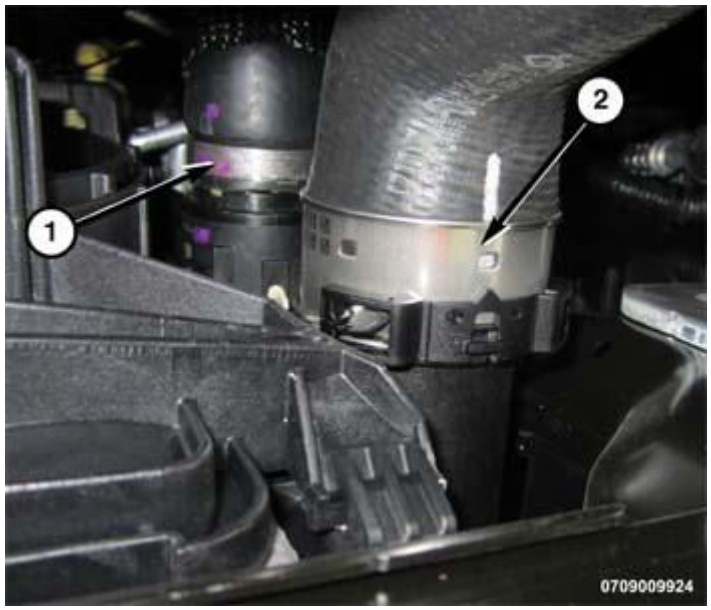

Fig. 117: Identifying Compressor Shaft, Clutch Plate & Shim
Courtesy of CHRYSLER GROUP, LLC

5. If the original clutch plate (2) and pulley and bearing assembly are to be reused, reinstall the original shim (s) (3) onto the compressor shaft (1). If a new clutch plate and pulley and bearing assembly are being used, install a trial stack of shims 2.54 mm (0.010 in.) thick onto the compressor shaft.

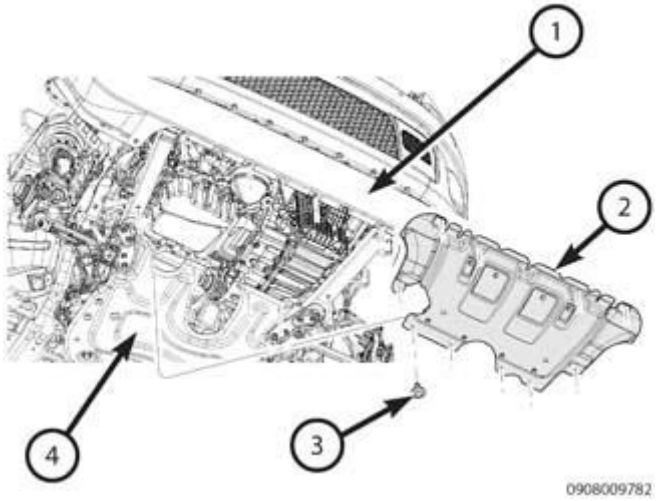

Fig. 118: Compressor Shaft Bolt, Clutch Plate & A/C Compressor
Courtesy of CHRYSLER GROUP, LLC

6. Install the clutch plate (2) onto the A/C compressor (3).
7. Install the compressor shaft bolt (1) and tighten to the proper. Refer to **SPECIFICATIONS**.

NOTE: **The shims may compress after tightening the shaft bolt. Check the air gap in four or more places to verify the air gap is correct. Spin the pulley before performing a final check of the air gap.**

8. With the clutch plate assembled tight against the shim(s), measure the air gap between the clutch plate and the pulley and bearing assembly. If the air gap is not within, add or subtract shims as needed until the correct air gap is obtained. Refer to **SPECIFICATIONS**.
9. Install the A/C compressor. Refer to **COMPRESSOR, A/C, INSTALLATION**.

CONDENSER, A/C

DESCRIPTION

DESCRIPTION

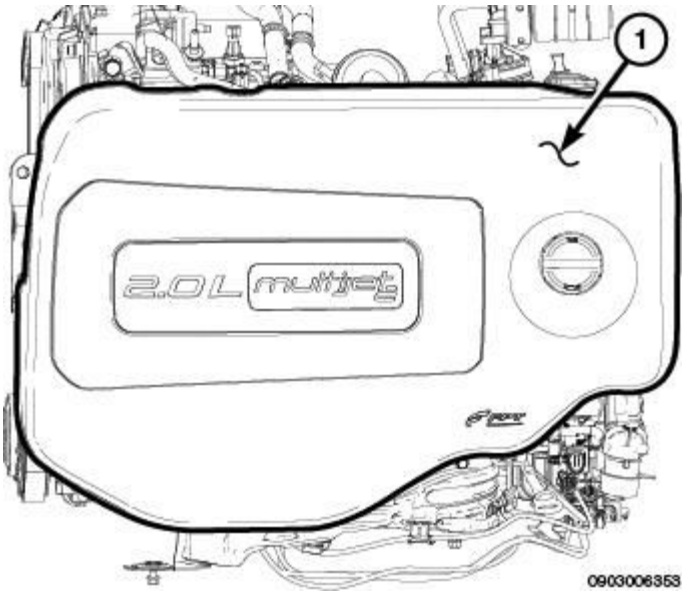

Fig. 119: A/C Condenser & A/C Receiver/Drier
Courtesy of CHRYSLER GROUP, LLC

The A/C condenser is located in the front of the engine compartment behind the front fascia. The A/C condenser is a heat exchanger that allows the high-pressure refrigerant gas being discharged by the A/C compressor to give up its heat to the air passing over the condenser fins (2), which causes the refrigerant to cool and change to a liquid state.

The A/C condenser is equipped with tapping blocks for the A/C refrigerant lines (1). The A/C condenser has an integral A/C receiver/drier (3).

OPERATION

OPERATION

When air passes through the fins of the A/C condenser, the high-pressure refrigerant gas within the A/C condenser gives up its heat. The refrigerant then condenses as it leaves the A/C condenser and becomes a high-pressure liquid. The volume of air flowing over the condenser fins is critical to the proper cooling performance of the A/C system. Therefore, it is important that there are no objects placed in front of the radiator grille openings at the front of the vehicle or foreign material on the condenser fins that might obstruct proper air flow. Also, any factory-installed air seals or shrouds must be properly reinstalled following radiator or A/C condenser service.

NOTE: Replacement of the refrigerant line O-ring seals and gaskets is required anytime a refrigerant line is disconnected. Failure to replace the rubber O-ring seals and metal gaskets could result in a refrigerant system leak.

The A/C condenser has no serviceable parts except for the O-ring seals and gaskets. The O-ring seals used on the connections are made from a special type of rubber not affected by R-1234YF refrigerant. The O-ring seals and gaskets must be replaced whenever a refrigerant line is disconnected from the A/C condenser.

The A/C condenser cannot be repaired and must be replaced if leaking or damaged.

REMOVAL

REMOVAL

WARNING: Review the warnings and cautions for this system before performing the procedure. Failure to follow these instructions may result in serious injury or death.

CAUTION: Before removing the A/C condenser, note the location of each of the radiator/condenser air seals. These air seals are used to direct air through the A/C condenser and radiator. The air seals must be reinstalled in their proper locations in order for the A/C and engine cooling systems to perform as designed.

1. Recover the refrigerant from the refrigerant system. Refer to **PLUMBING, STANDARD PROCEDURE**.
2. Disconnect and isolate the negative battery cable.
3. Partially remove the radiator. Refer to **RADIATOR, ENGINE COOLING, REMOVAL** .

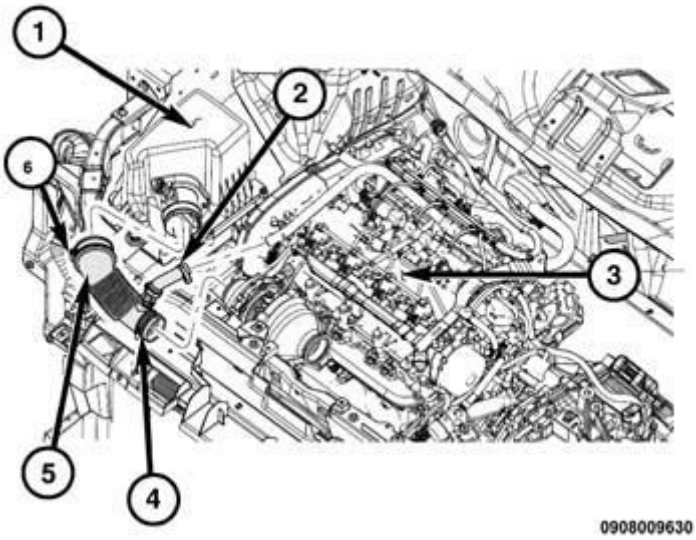

Fig. 120: Transmission Oil Cooler
Courtesy of CHRYSLER GROUP, LLC

4. Unbolt the transmission oil cooler (2) if equipped and move to the side. Refer to **COOLER, TRANSMISSION OIL, REMOVAL** .

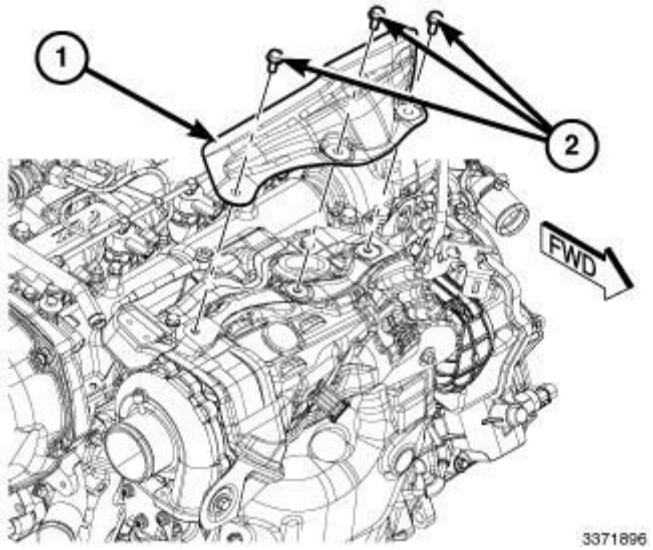

Fig. 121: A/C Condenser, Liquid Line, Discharge Line & Fasteners
Courtesy of CHRYSLER GROUP, LLC

5. Disconnect the liquid line (3) and the discharge line (2) from the condenser.
6. Remove and discard the O-ring seals and gasket and install plugs in, or tape over the opened refrigerant line fittings and ports.
7. Remove the condenser from the vehicle.

INSTALLATION

INSTALLATION

CAUTION: Be certain to adjust the refrigerant oil level when servicing the A/C refrigerant system. Failure to properly adjust the refrigerant oil level will prevent the A/C system from operating as designed and can cause serious A/C compressor damage.

NOTE: When replacing multiple A/C system components, see the Refrigerant Oil Capacities chart to determine how much oil should be added to the refrigerant system. Refer to OIL, REFRIGERANT, STANDARD PROCEDURE.

NOTE: If only the A/C condenser is being replaced, add 20 milliliters (0.7 fluid ounce) of refrigerant oil to the refrigerant system. Use only refrigerant oil of the type recommended for the A/C compressor in the vehicle.

NOTE: Replacement of the refrigerant line O-ring seals and gaskets is required anytime a refrigerant line is disconnected. Failure to replace the rubber O-ring seals and metal gaskets could result in a refrigerant system leak.

1. Position the condenser in the vehicle.

2. Install the radiator. Refer to **RADIATOR, ENGINE COOLING, INSTALLATION** .

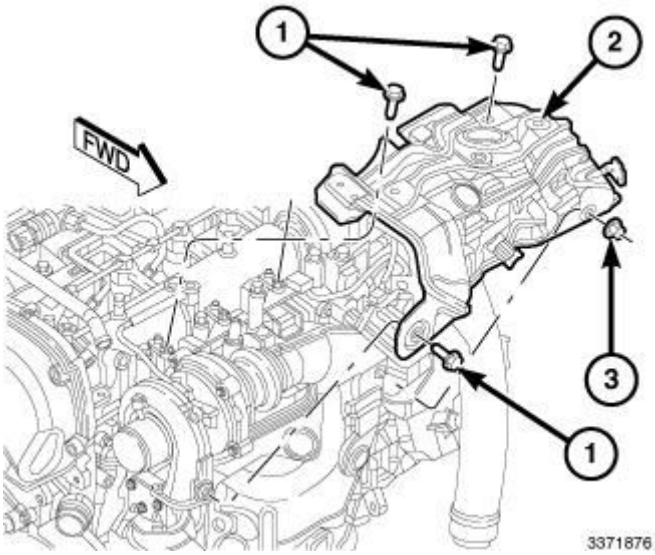

Fig. 122: A/C Condenser, Liquid Line, Discharge Line & Fasteners
Courtesy of CHRYSLER GROUP, LLC

3. Remove the tape or plugs from the opened refrigerant line fittings and ports.
4. Connect the liquid line (3) and discharge line (2) to the condenser and tighten the bolts to the proper. Refer to **SPECIFICATIONS**.

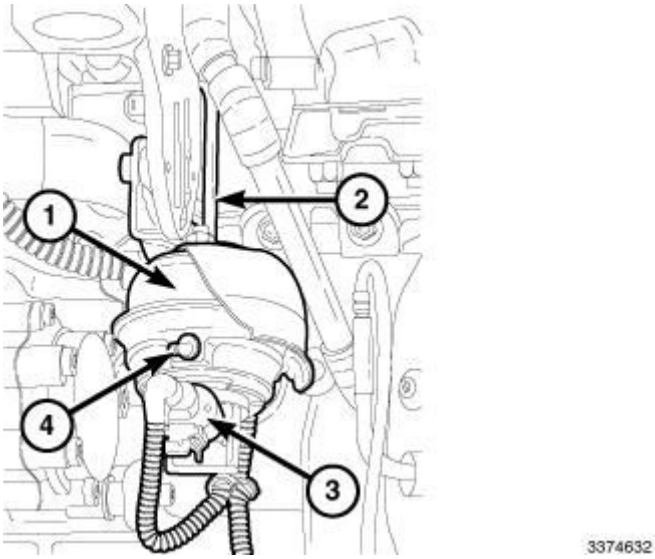

Fig. 123: Transmission Oil Cooler
Courtesy of CHRYSLER GROUP, LLC

5. Install the transmission oil cooler (2) if equipped. Refer to **COOLER, TRANSMISSION OIL, INSTALLATION** .
6. Connect the negative battery cable.

7. Evacuate the refrigerant system. Refer to **PLUMBING, STANDARD PROCEDURE**.
8. If the condenser is being replaced, add 20 milliliters (0.7 fluid once) of refrigerant oil to the refrigerant system. When replacing multiple components, see the Refrigerant Oil Capacities chart to determine how much oil should be added to the refrigerant system. Refer to **OIL, REFRIGERANT, STANDARD PROCEDURE**.
9. Charge the refrigerant system. Refer to **PLUMBING, STANDARD PROCEDURE**.

CORE, HEATER

DESCRIPTION

DESCRIPTION

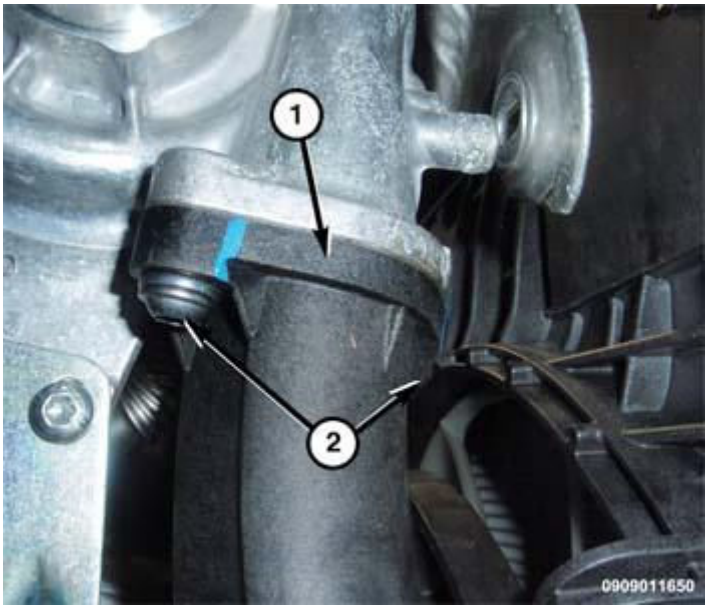

Fig. 124: Heater Core
Courtesy of CHRYSLER GROUP, LLC

The heater core is mounted in the HVAC housing, which is located behind the instrument panel. The heater core is a heat exchanger made of rows of aluminum tubes and fins (1). The heater core is positioned within the HVAC housing so that only the selected amount of air entering the housing passes through the heater core, before being distributed through the heating and A/C system ducts and outlets. One end of the heater core is fitted with a tank that includes the fittings for the heater core tubes (2).

The HVAC housing must be removed from the vehicle for service of the heater core.

OPERATION

OPERATION

Engine coolant is circulated through the heater hoses to the heater core at all times. As the coolant flows through the heater core, heat is removed from the engine and is transferred to the heater core tubes and fins. Air

directed through the heater core picks up the heat from the heater core fins. The blend-air door allows control of the heater output air temperature by regulating the amount of air flowing through the heater core. The blower motor speed controls the volume of air flowing through the HVAC housing.

The heater core cannot be repaired and it must be replaced if inoperative, leaking or damaged.

REMOVAL

REMOVAL

NOTE: The HVAC housing assembly must be removed from vehicle for service of the heater core.

1. Remove the HVAC housing assembly and place it on a workbench. Refer to **HOUSING, HVAC, REMOVAL**.

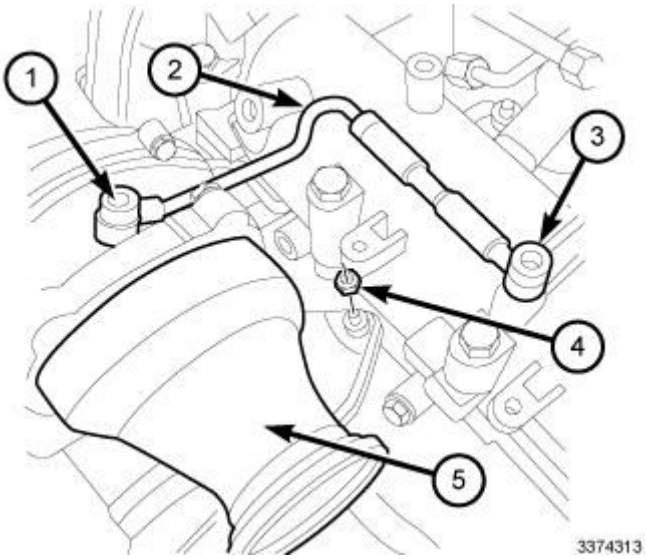

Fig. 125: Removing/Installing Heater Core Tubing Cover
Courtesy of CHRYSLER GROUP, LLC

2. Remove the wire harness from the retaining clips (2) on the heater core cover.
3. Remove the retaining screws (1) from the heater core tubing cover and remove the heater core tubing cover from the left side of HVAC housing.

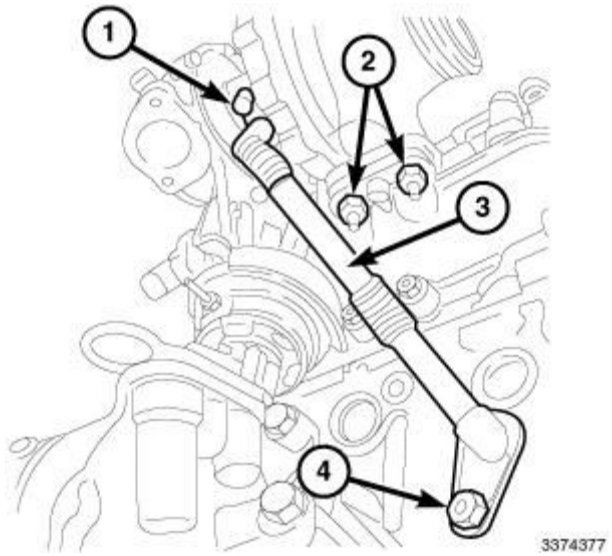

Fig. 126: Removing/Installing Heater Core
Courtesy of CHRYSLER GROUP, LLC

4. Remove heater core (1) from the left side of HVAC housing (2).

INSTALLATION

INSTALLATION

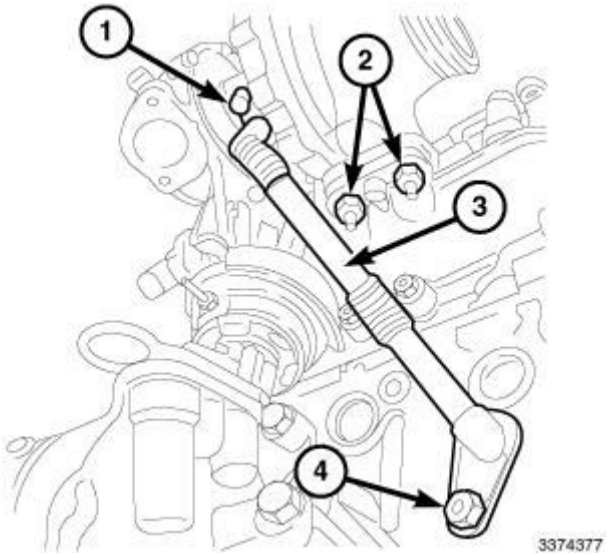

Fig. 127: Removing/Installing Heater Core
Courtesy of CHRYSLER GROUP, LLC

1. Install heater core (1) into the left side of the HVAC housing (2).

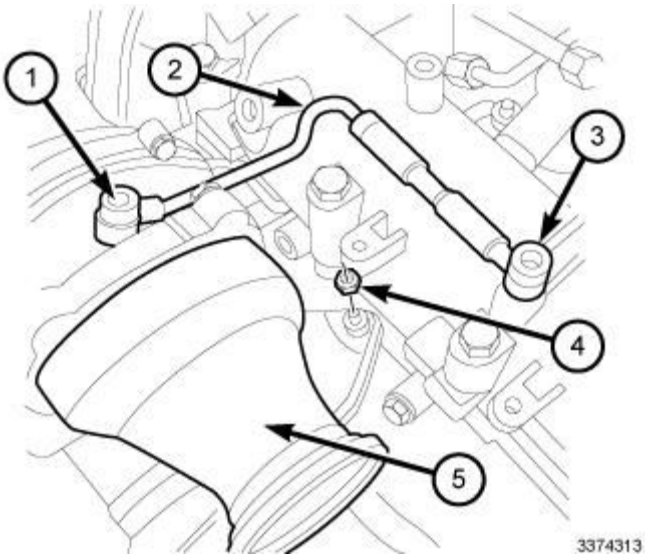

Fig. 128: Removing/Installing Heater Core Tubing Cover
Courtesy of CHRYSLER GROUP, LLC

2. Position the heater core tubing cover onto the left side of the HVAC housing and tighten the screws (1) to the proper. Refer to **SPECIFICATIONS**.
3. Fasten the wire harness into the retaining clips (2) on the tubing cover.
4. Install the HVAC housing assembly. Refer to **HOUSING, HVAC, INSTALLATION**.

CORE, SERVICE PORT VALVE

DESCRIPTION

DESCRIPTION

Refrigerant system service ports are used to recover, recycle, evacuate, charge and test the A/C refrigerant system. Unique sizes are used on the two service ports depending on the type of refrigerant system used to ensure the system is not accidentally contaminated with the wrong refrigerant or by service equipment used for another refrigerant.

- On the 2.0L and 2.4L engine, the high side service port is located on the A/C suction/distribution line in front of the engine by the A/C compressor.
- On the 2.0L and 2.4L engine, the low side service port is located on the Internal Heat Exchanger (IHX).
- On the 3.2L engine, the high side service port is located on the A/C suction line.
- On the 3.2L engine, the low side service port is located on the IHX.

Both the high side and low side A/C service port valve cores are serviceable.

NOTE: The protective cap aids in service port sealing and helps protect the refrigerant system from contamination. Remember to always reinstall the protective cap onto the service port when refrigerant system service is complete.

Each of the service ports has a threaded plastic protective cap installed over it from the factory. The service port caps are serviceable items.

REMOVAL

REMOVAL

WARNING: Review the warnings and cautions for this system before performing the procedure. Failure to follow these instructions may result in serious injury or death.

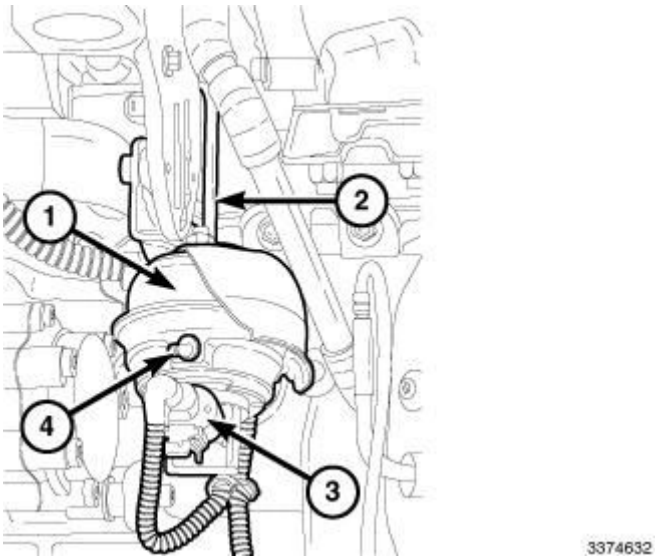

Fig. 129: Identifying A/C Service Port Components
Courtesy of CHRYSLER GROUP, LLC

NOTE: Typical A/C service port shown in illustration.

1. Remove the protective cap (1) from the service port (2).
2. Recover the refrigerant from the refrigerant system. Refer to **PLUMBING, STANDARD PROCEDURE**.
3. Using a Schrader-type valve core tool, remove the valve core (3) from the service port.
4. Install a plug in, or tape over the opened service port(s).

INSTALLATION

INSTALLATION

Fig. 130: Identifying A/C Service Port Components
Courtesy of CHRYSLER GROUP, LLC

NOTE: Typical A/C service port shown in illustration.

1. Lubricate the valve core (3) with clean refrigerant oil prior to installation. Use only refrigerant oil of the type recommended for the A/C compressor in the vehicle.
2. Remove the tape or plug from the service port (2).

CAUTION: A valve core that is not fully seated in the A/C service port can result in damage to the valve during refrigerant system evacuation and charge. Such damage may result in a loss of system refrigerant while uncoupling the charge adapters.

3. Using a Schrader-type valve core tool, install and tighten the valve core into the service port(s).

CAUTION: Do NOT run the engine with a vacuum pump in operation or with a vacuum present within the A/C system. Failure to follow this caution will result in serious A/C compressor damage.

4. Evacuate the refrigerant system. Refer to **PLUMBING, STANDARD PROCEDURE**.
5. Charge the refrigerant system. Refer to **PLUMBING, STANDARD PROCEDURE**.

NOTE: The protective cap helps aid in service port sealing and helps protect the refrigerant system from contamination. Remember to always reinstall the protective cap onto the service port when refrigerant system service is complete.

6. Install the protective cap (1) onto the service port.

EVAPORATOR, A/C

DESCRIPTION

DESCRIPTION

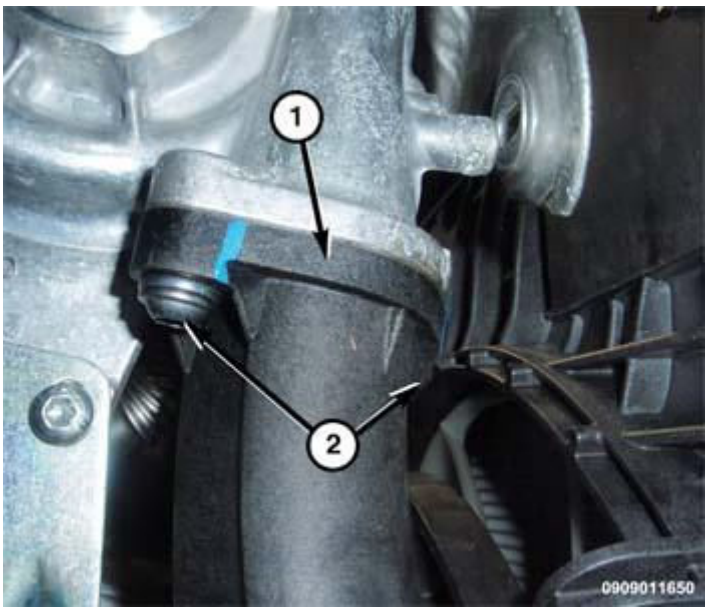

Fig. 131: Tapping Block, Evaporator Fins, A/C Evaporator & A/C Evaporator Tubes
Courtesy of CHRYSLER GROUP, LLC

The A/C evaporator (3) for the heating-A/C system is mounted in the HVAC housing, which is located behind the instrument panel. The A/C evaporator and its insulator are positioned within the HVAC housing so that all air entering the housing must pass over the evaporator fins (2) before it is distributed through the heating-A/C system ducts and outlets.

A tapping block (1) and O-ring seals are used to connect and seal the A/C evaporator tubes (4) to the underhood refrigerant lines.

The A/C evaporator can only be serviced by removing and disassembling the HVAC housing assembly.

OPERATION

OPERATION

Refrigerant enters the A/C evaporator from the A/C expansion valve as a low-temperature, low-pressure mixture of liquid and gas. As air flows over the fins of the A/C evaporator, the humidity in the air condenses on the fins, and the heat from the air is absorbed by the refrigerant. Heat absorption causes the refrigerant to boil and vaporize. The refrigerant becomes a low-pressure gas when it leaves the A/C evaporator.

NOTE: Replacement of the refrigerant line O-ring seals and gaskets is required anytime a refrigerant line is disconnected. Failure to replace the rubber O-ring seals and metal gaskets could result in a refrigerant system leak.

The A/C evaporator has no serviceable parts except for the O-ring seals. The O-ring seals used on the connections are made from a special type of rubber not affected by R-1234YF refrigerant.

The A/C evaporator cannot be repaired and must be replaced if leaking or damaged.

REMOVAL

REMOVAL

NOTE: The HVAC housing assembly must be removed from vehicle and disassembled for service of the A/C evaporator.

1. Remove the HVAC housing and place it on a workbench. Refer to **HOUSING, HVAC, REMOVAL**.
2. Remove the air inlet housing. Refer to **HOUSING, HVAC, REMOVAL**.
3. Remove the heater core. Refer to **CORE, HEATER, REMOVAL**.
4. Remove the blower motor. Refer to **MOTOR, BLOWER, REMOVAL**.
5. Remove the air distribution housing. Refer to **HOUSING, HVAC, REMOVAL**.
6. Remove the HVAC wiring harness.

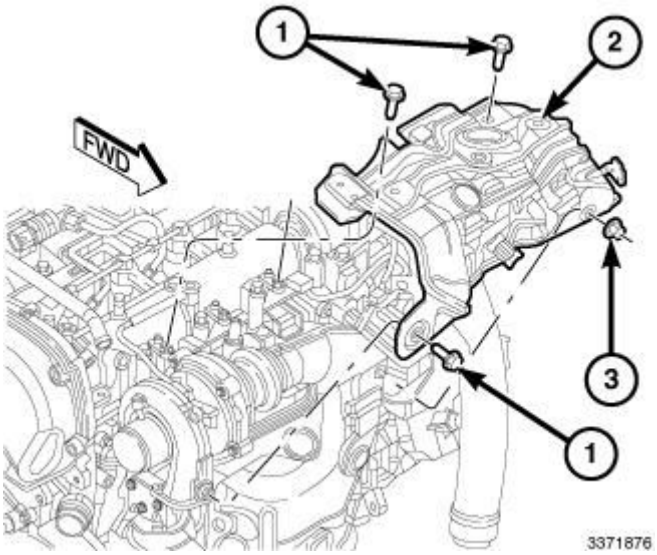

Fig. 132: HVAC Housing & Fasteners
Courtesy of CHRYSLER GROUP, LLC

7. Remove the eight screws (1 and 3) that secure the left side of the HVAC housing to the right side of the HVAC housing (2) and remove the right side of the housing.

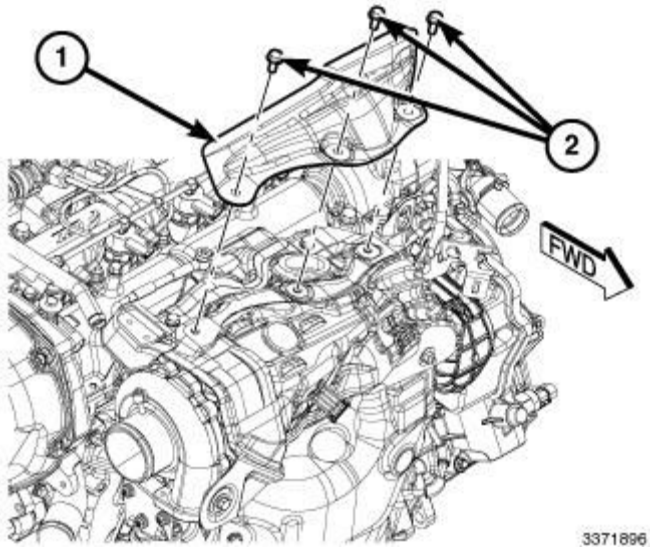

Fig. 133: HVAC Housing & Case Separator
Courtesy of CHRYSLER GROUP, LLC

8. Remove the case separator (1) from the HVAC housing (2).

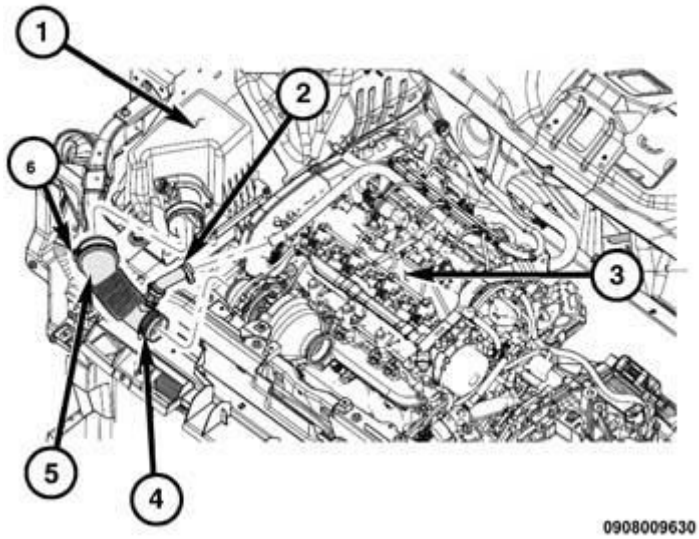

Fig. 134: A/C Evaporator, HVAC Housing & Tubing Cover
Courtesy of CHRYSLER GROUP, LLC

9. Remove the tubing cover (3) from the A/C evaporator tubing.
10. Carefully lift the A/C evaporator (1) out of the left side of the HVAC housing (2).

INSTALLATION

INSTALLATION

CAUTION: Be certain to adjust the refrigerant oil level when servicing the A/C refrigerant system. Failure to properly adjust the refrigerant oil level will prevent the A/C system from operating as designed and can cause serious A/C compressor damage.

NOTE: When replacing multiple A/C system components, see the Refrigerant Oil Capacities chart to determine how much oil should be added to the refrigerant system. Refer to OIL, REFRIGERANT, STANDARD PROCEDURE.

NOTE: Replacement of the refrigerant line O-ring seals and gaskets is required anytime a refrigerant line is disconnected. Failure to replace the rubber O-ring seals and metal gaskets could result in a refrigerant system leak.

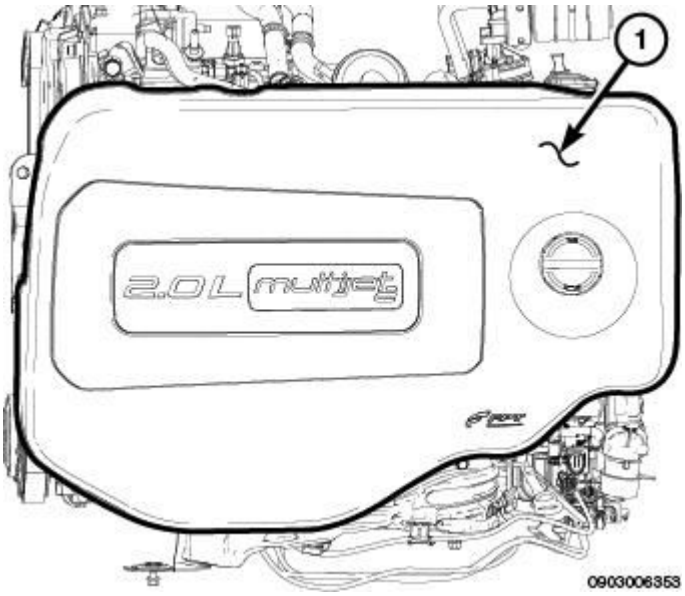

Fig. 135: A/C Evaporator, HVAC Housing & Tubing Cover
Courtesy of CHRYSLER GROUP, LLC

1. Install the A/C evaporator (1) into the left side of the HVAC housing (2). Make sure that the evaporator drain within the HVAC housing is clean and unrestricted and that the insulator around the A/C evaporator is properly installed.
2. Install the cover (3) onto the A/C evaporator tubing.

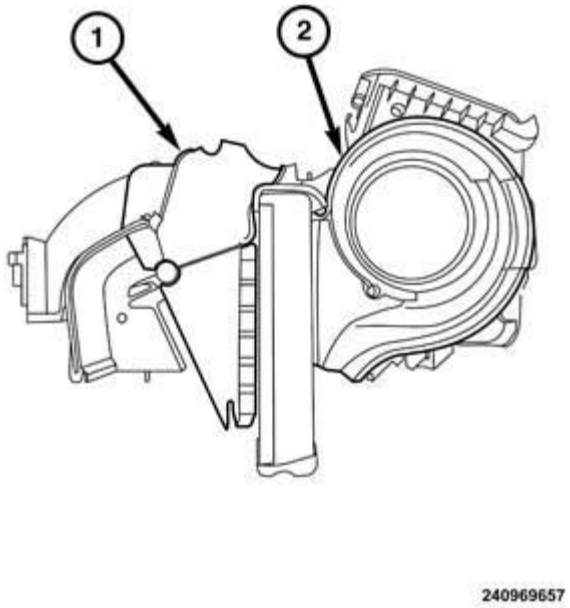

Fig. 136: HVAC Housing & Case Separator
Courtesy of CHRYSLER GROUP, LLC

3. Install the case separator (1) into the HVAC housing (2).

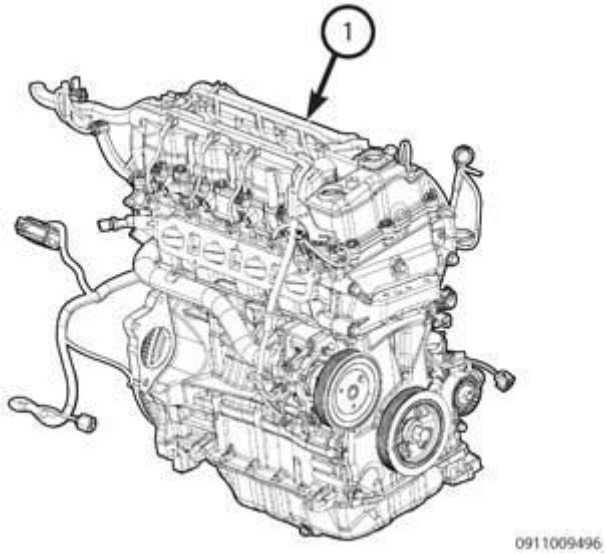

Fig. 137: HVAC Housing & Fasteners
Courtesy of CHRYSLER GROUP, LLC

4. Position the right side of the HVAC housing (2) onto the left side of the HVAC housing and install the eight screws (1 and 3) that secure the left and the right side of the HVAC housing together. Tighten the screws to 2.2 N.m (20 in lbs.).

5. Install the HVAC wiring harness. Make sure the harness is routed through all wiring retainers.
6. Install the air distribution housing. Refer to **HOUSING, HVAC, INSTALLATION**.
7. Install the blower motor. Refer to **MOTOR, BLOWER, INSTALLATION**.
8. Install the heater core. Refer to **CORE, HEATER, INSTALLATION**.
9. Install the cabin air filter. Refer to **FILTER, CABIN AIR, INSTALLATION**.
10. Install the air inlet housing. Refer to **HOUSING, HVAC, INSTALLATION**.
11. Install the HVAC housing. Refer to **HOUSING, HVAC, INSTALLATION**.
12. If the A/C evaporator is being replaced, add 20 milliliters (0.7 fluid ounce) of refrigerant oil to the refrigerant system. When replacing multiple A/C system components, see the Refrigerant Oil Capacities chart to determine how much oil should be added to the refrigerant system. Refer to **OIL, REFRIGERANT, STANDARD PROCEDURE**. Use only refrigerant oil of the type recommended for the A/C compressor in the vehicle.

LINE, A/C DISCHARGE

REMOVAL

2.0L, 2.4L ENGINE

WARNING: Review the safety precautions and warnings in this information before performing this procedure. Failure to follow these instructions may result in serious injury or death.

NOTE: The lower portion of the A/C suction line is only serviced as an assembly with the A/C discharge line.

1. Disconnect and isolate the negative battery cable.
2. Remove the air cleaner body. Refer to **BODY, AIR CLEANER, REMOVAL** **BODY, AIR CLEANER, REMOVAL** **BODY, AIR CLEANER, REMOVAL** .
3. Remove the air cleaner resonator. Refer to **RESONATOR, AIR CLEANER, REMOVAL** **RESONATOR, AIR CLEANER, REMOVAL** .
4. Recover the refrigerant from the refrigerant system. Refer to **PLUMBING, STANDARD PROCEDURE**.

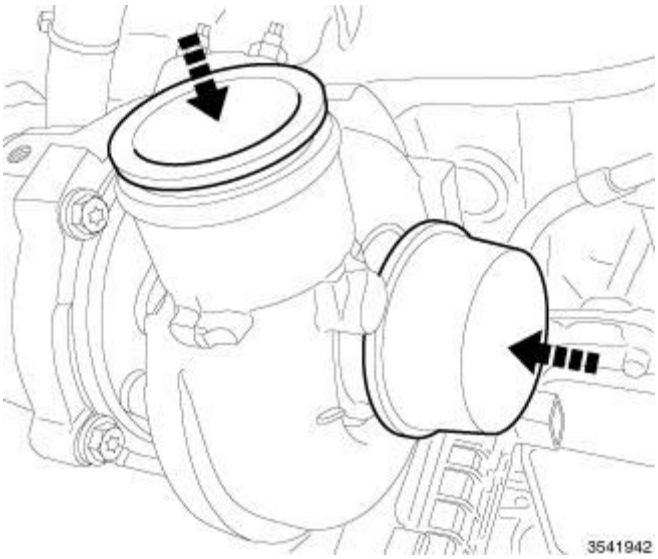

Fig. 138: A/C Suction/Liquid Line Manifold & Nut
Courtesy of CHRYSLER GROUP, LLC

5. Remove nut (3) and the A/C suction/liquid line manifold (2) from the A/C condenser.

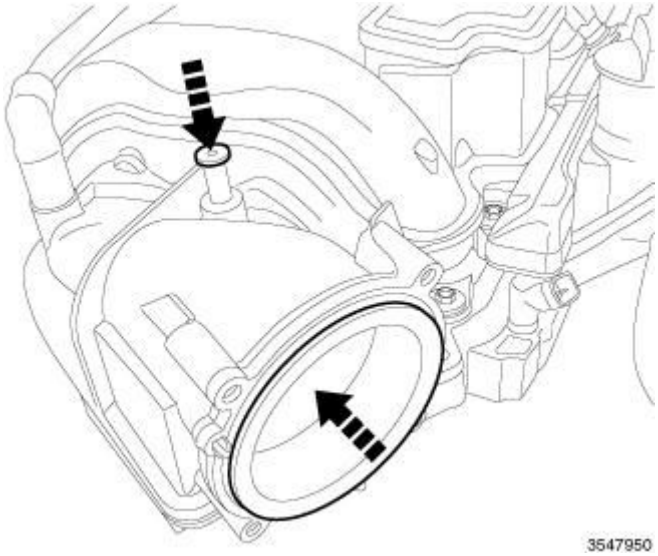

Fig. 139: Seal, Discharge Line & Manifold
Courtesy of CHRYSLER GROUP, LLC

6. Detach the suction line (2) from manifold (3). Remove and discard the seals (1).
7. Install plugs in, or tape over the opened refrigerant line fittings and the condenser and suction line ports.
8. Remove the splash shield from the right side frame rail. Refer to **SHIELD, SPLASH, FRONT WHEELHOUSE, REMOVAL** **SHIELD, SPLASH, REAR WHEELHOUSE, REMOVAL** .
9. Remove nut (3) and disconnect the lower suction line (4). Remove and discard the seal (1).
10. Install plugs in, or tape over the opened refrigerant line fittings and the condenser and suction line ports.

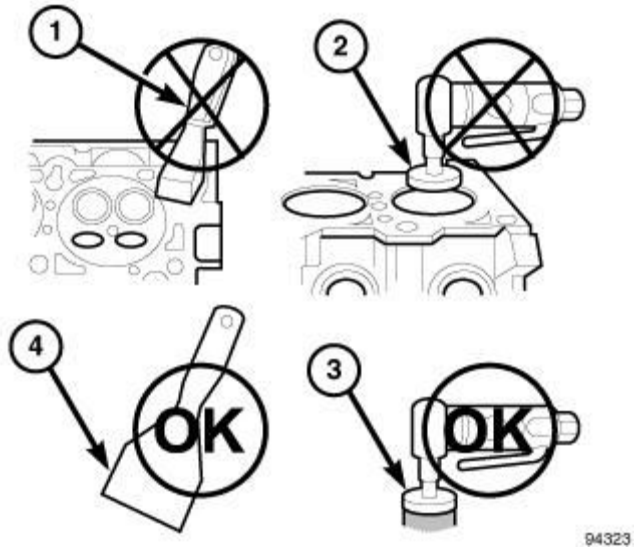

Fig. 140: A/C Discharge Line/Suction Line Manifold & Nut
Courtesy of CHRYSLER GROUP, LLC

11. Remove the nut (2) and the A/C suction and discharge line (2) from the A/C compressor. Discard the O-ring seal and gasket.
12. Install plugs in, or tape over the opened discharge line fitting and the compressor port.

3.2L ENGINE

WARNING: Review the safety precautions and warnings in this information before performing this procedure. Failure to follow these instructions may result in serious injury or death.

1. Disconnect and isolate the negative battery cable.
2. Remove the air cleaner body. Refer to **BODY, AIR CLEANER, REMOVAL** **BODY, AIR CLEANER, REMOVAL** **BODY, AIR CLEANER, REMOVAL** .
3. Recover the refrigerant from the refrigerant system. Refer to **PLUMBING, STANDARD PROCEDURE**.

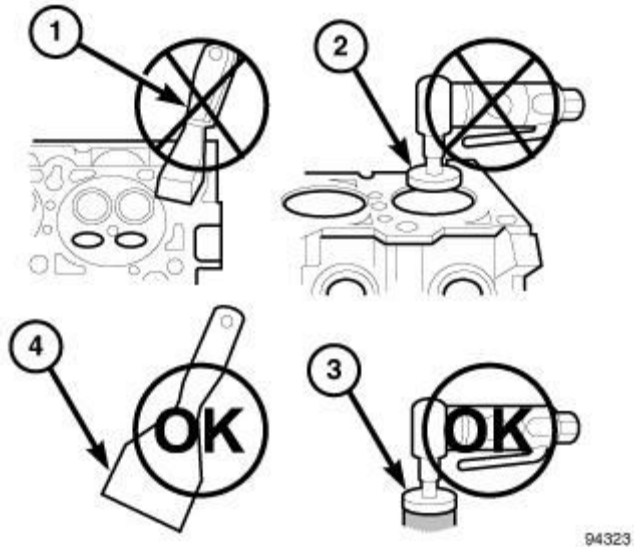

Fig. 141: View Of Discharge Line, Liquid Line & Fasteners
Courtesy of CHRYSLER GROUP, LLC

4. Remove nuts (3) and separate the A/C discharge (1) and liquid line (2) manifolds from the Internal Heat Exchanger (IHX).
5. Remove and discard the seals.
6. Install plugs in, or tape over the opened refrigerant line fittings.
7. Remove the engine belly pan.
8. Remove the upper radiator close out panel.
9. Remove the right side radiator air deflector.

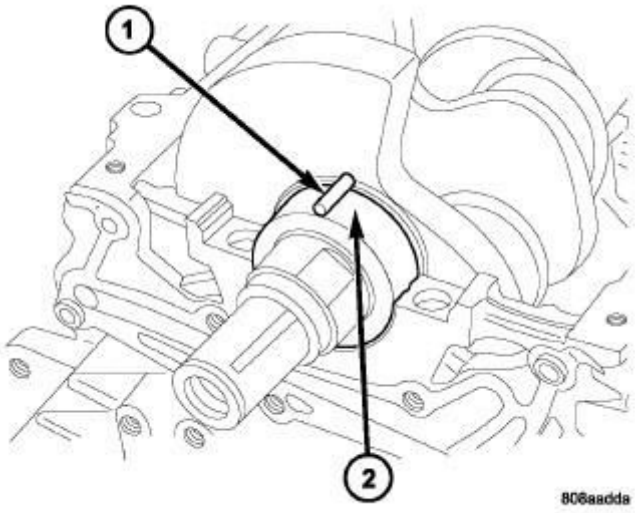

Fig. 142: A/C Condenser, Liquid Line, Discharge Line & Fasteners
Courtesy of CHRYSLER GROUP, LLC

10. Remove the line bracket bolt (1) from the radiator.
11. Remove the bolt (3) and disconnect the liquid line.
12. Remove the bolt (2) and disconnect the discharge line.
13. Remove and discard the seals.
14. Install plugs in, or tape over the opened refrigerant line fittings and ports.

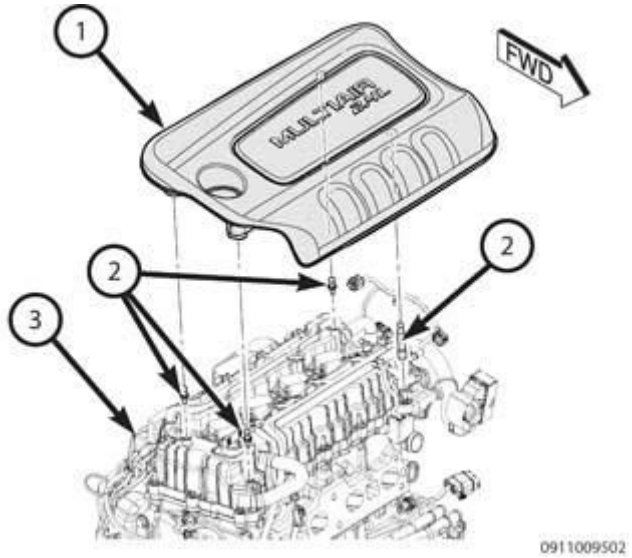

Fig. 143: A/C Service Port & Bracket
Courtesy of CHRYSLER GROUP, LLC

15. Remove the bolt (2) that secures the service port (1).
16. Disconnect the electrical connector (3) from the pressure switch.
17. Remove the discharge/liquid line assembly from the engine compartment.

INSTALLATION

2.0L, 2.4L ENGINE

CAUTION: Be certain to adjust the refrigerant oil level when servicing the A/C refrigerant system. Failure to properly adjust the refrigerant oil level will prevent the A/C system from operating as designed and can cause serious A/C compressor damage.

NOTE: When replacing multiple A/C system components, refer to the Refrigerant Oil Capacities chart to determine how much oil should be added to the refrigerant system. Refer to OIL, REFRIGERANT, STANDARD PROCEDURE.

NOTE: Replacement of the refrigerant line O-ring seals and gaskets is required anytime a refrigerant line is opened. Failure to replace the rubber O-ring seals and metal gaskets could result in a refrigerant system leak.

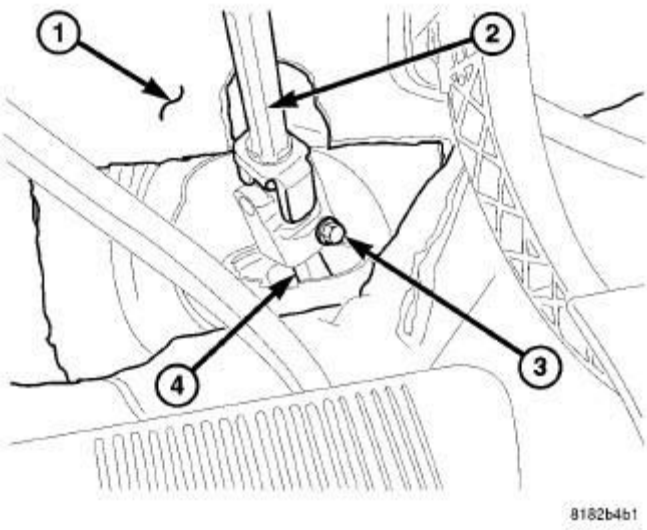

Fig. 144: A/C Discharge Line/Suction Line Manifold & Nut
Courtesy of CHRYSLER GROUP, LLC

1. Remove the tape or plugs from the line fittings and the compressor ports.
2. Lubricate a new rubber seal with clean refrigerant oil and install it and a new seal onto the discharge line fitting. Use only the specified seals as it is made of a special material for the system. Use only refrigerant oil of the type recommended for the A/C compressor in the vehicle.
3. Install the A/C suction and discharge line (1) to the A/C compressor and tighten the nut (2) to the proper. Refer to **SPECIFICATIONS**.
4. Remove the tape or plugs from the refrigerant line fittings.
5. Lubricate a new rubber seal with clean refrigerant oil and install it and a new seal onto the suction line fitting. Use only the specified seals as it is made of a special material for the system. Use only refrigerant oil of the type recommended for the A/C compressor in the vehicle.
6. Connect the lower suction line and tighten the nut to the proper. Refer to **SPECIFICATIONS**.
7. Install the splash shield onto the right side frame rail. Refer to **SHIELD, SPLASH, FRONT WHEELHOUSE, INSTALLATION** **SHIELD, SPLASH, REAR WHEELHOUSE, INSTALLATION** .

Fig. 145: Seal, Discharge Line & Manifold
Courtesy of CHRYSLER GROUP, LLC

8. Remove the tape or plugs from the refrigerant line fittings and the condenser ports.
9. Lubricate a new seal (1) with clean refrigerant oil and install it and a new seals onto the discharge line fitting. Use only the specified seals as it is made of a special material for the system. Use only refrigerant oil of the type recommended for the A/C compressor in the vehicle.
10. Attach the discharge line (2) to the liquid line manifold (3).

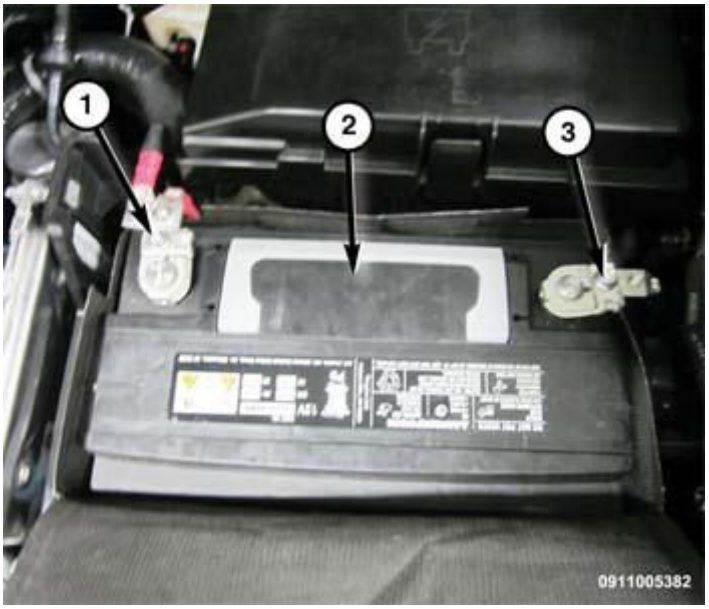

Fig. 146: A/C Suction/Liquid Line Manifold & Nut
Courtesy of CHRYSLER GROUP, LLC

11. Install the A/C discharge/liquid line manifold (2) to the A/C condenser and tighten the nut (3) to the

proper. Refer to **SPECIFICATIONS**.

12. Connect the negative battery cable.

CAUTION: Do NOT run the engine with a vacuum pump in operation or with a vacuum present within the A/C system. Failure to follow this caution will result in serious A/C compressor damage.

13. Evacuate the refrigerant system. Refer to **PLUMBING, STANDARD PROCEDURE**.
14. Adjust the refrigerant oil level. Refer to **OIL, REFRIGERANT, STANDARD PROCEDURE**.
15. Charge the refrigerant system. Refer to **PLUMBING, STANDARD PROCEDURE**.

3.2L ENGINE

CAUTION: Be certain to adjust the refrigerant oil level when servicing the A/C refrigerant system. Failure to properly adjust the refrigerant oil level will prevent the A/C system from operating as designed and can cause serious A/C compressor damage.

NOTE: When replacing multiple A/C system components, refer to the Refrigerant Oil Capacities chart to determine how much oil should be added to the refrigerant system. Refer to OIL, REFRIGERANT, STANDARD PROCEDURE.

NOTE: Replacement of the refrigerant line O-ring seals and gaskets is required anytime a refrigerant line is opened. Failure to replace the rubber O-ring seals and metal gaskets could result in a refrigerant system leak.

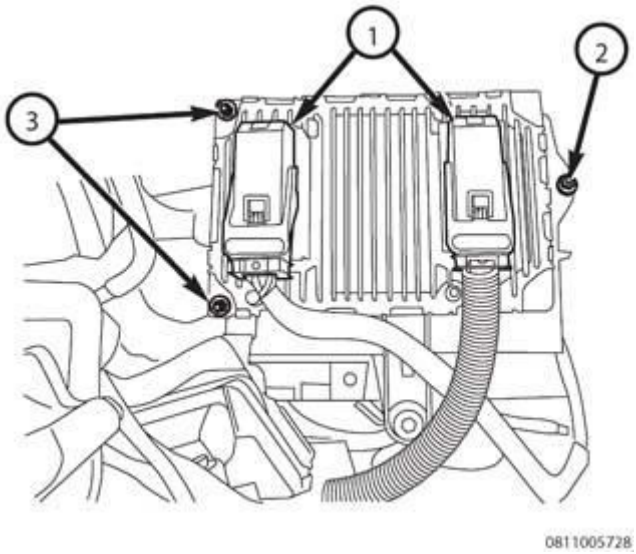

Fig. 147: A/C Service Port & Bracket
Courtesy of CHRYSLER GROUP, LLC

1. Position the discharge/liquid line assembly into the engine compartment.
2. Install the bolt (2) securing the service port (1) and tighten to the proper. Refer to **SPECIFICATIONS**.
3. Connect the electrical connector (3) to the pressure switch.

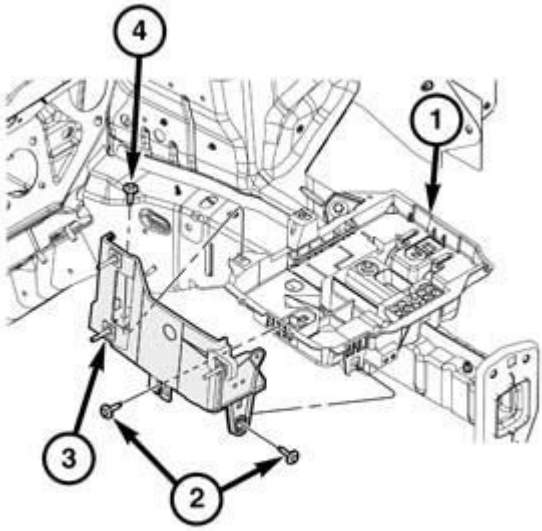

0909005842

Fig. 148: A/C Condenser, Liquid Line, Discharge Line & Fasteners
Courtesy of CHRYSLER GROUP, LLC

4. Remove the tape or plugs from the line fittings and ports.
5. Lubricate a new rubber seal with clean refrigerant oil and install. Use only the specified seals as it is made of a special material for the system. Use only refrigerant oil of the type recommended for the vehicle.
6. Install the bolt (2) securing the discharge line to the A/C condenser and tighten the bolt to the proper. Refer to **SPECIFICATIONS**.
7. Install the bolt (3) securing the liquid line to the A/C condenser and tighten the bolt to the proper. Refer to **SPECIFICATIONS**.
8. Install the line bracket bolt (1) and tighten the bolt to the proper. Refer to **SPECIFICATIONS**.
9. Install the right side radiator air deflector.
10. Install the upper radiator close out panel.
11. Install the engine belly pan.

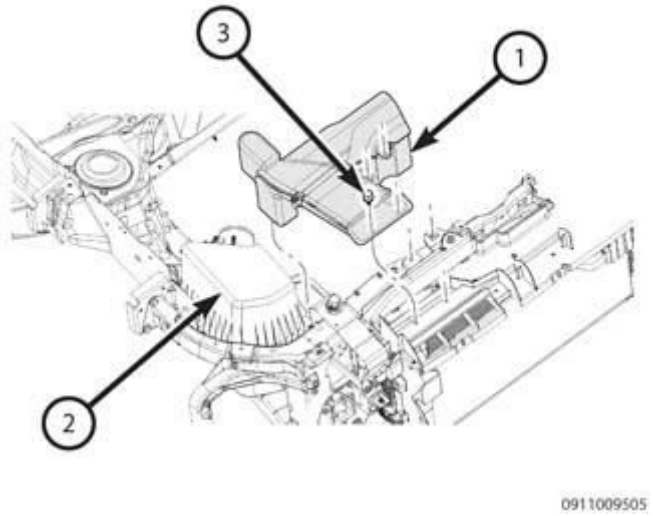

Fig. 149: View Of Discharge Line, Liquid Line & Fasteners
Courtesy of CHRYSLER GROUP, LLC

12. Attach the discharge line (1) and liquid line (2) to the Internal Heat Exchanger (IHX) and tighten nuts (3) to the proper. Refer to **SPECIFICATIONS**.
13. Connect the negative battery cable.

CAUTION: Do NOT run the engine with a vacuum pump in operation or with a vacuum present within the A/C system. Failure to follow this caution will result in serious A/C compressor damage.

14. Evacuate the refrigerant system. Refer to **PLUMBING, STANDARD PROCEDURE**.
15. Adjust the refrigerant oil level. Refer to **OIL, REFRIGERANT, STANDARD PROCEDURE**.
16. Charge the refrigerant system. Refer to **PLUMBING, STANDARD PROCEDURE**.

LINE, A/C LIQUID

REMOVAL

2.0L, 2.4L ENGINE

WARNING: Review the safety precautions and warnings in this information before performing this procedure. Failure to follow these instructions may result in serious injury or death.

1. Disconnect and isolate the negative battery cable.
2. Remove the air cleaner body. Refer to **BODY, AIR CLEANER, REMOVAL** **BODY, AIR CLEANER, REMOVAL** **BODY, AIR CLEANER, REMOVAL** .
3. Remove the air cleaner resonator. Refer to **RESONATOR, AIR CLEANER, REMOVAL**

RESONATOR, AIR CLEANER, REMOVAL .

4. Recover the refrigerant from the refrigerant system. Refer to **PLUMBING, STANDARD PROCEDURE**.

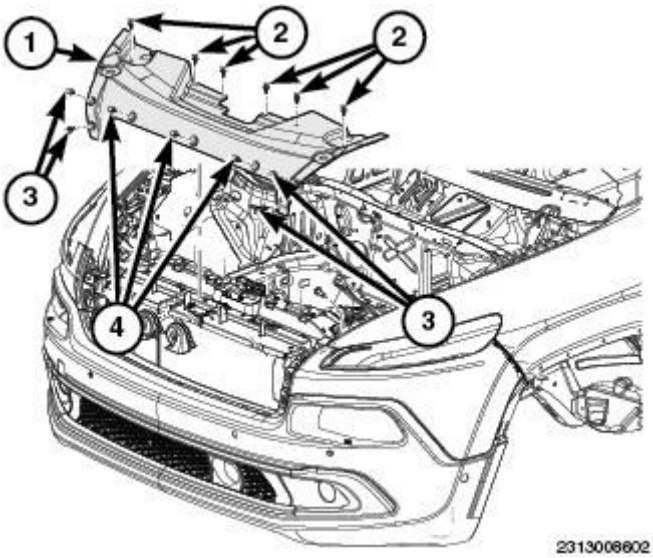

Fig. 150: A/C Suction/Liquid Line Manifold & Nut
Courtesy of CHRYSLER GROUP, LLC

5. Remove nut (3) and the A/C discharge/liquid line manifold (2) from the A/C condenser.

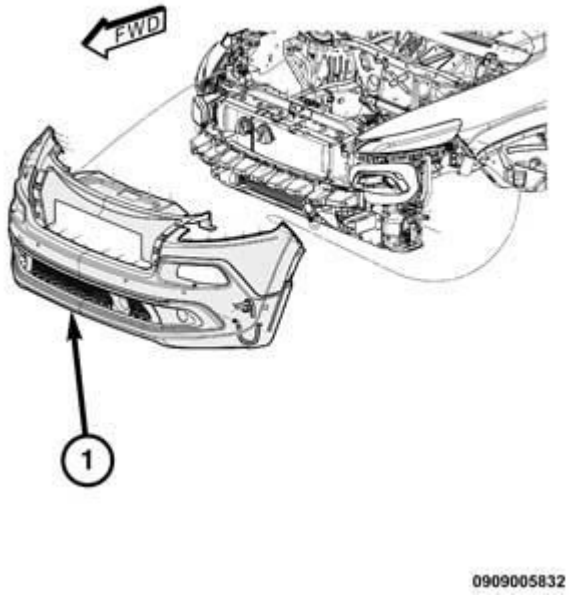

Fig. 151: Seal, Discharge Line & Manifold
Courtesy of CHRYSLER GROUP, LLC

6. Detach the suction line (2) from manifold (3). Remove and discard the O-ring seal and gasket (1).
7. Install plugs in, or tape over the opened refrigerant line fittings and the condenser and suction line ports.

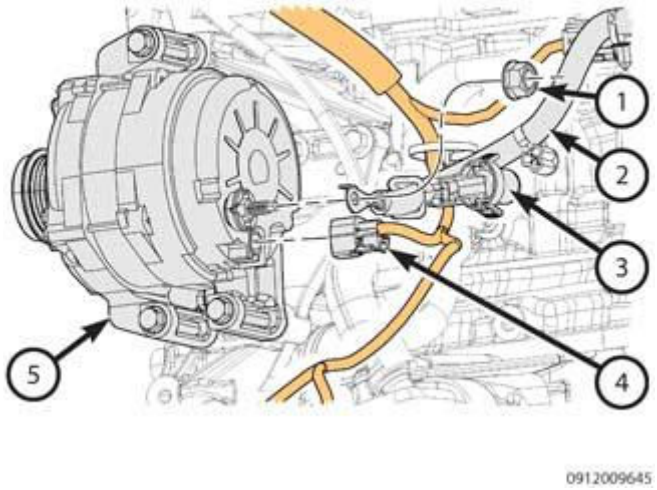

Fig. 152: Nut & Liquid Line
Courtesy of CHRYSLER GROUP, LLC

8. Remove nut (2) securing the front liquid line (1) and bracket to frame rail.

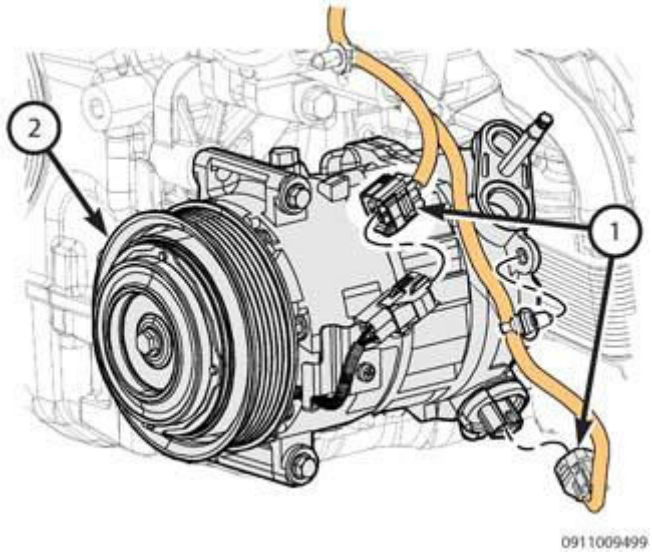

Fig. 153: Nut, Upper & Lower Suction Lines
Courtesy of CHRYSLER GROUP, LLC

9. Remove nut (3) and disconnect the lower suction line (4) from upper suction line (2).
10. Install plugs in, or tape over the opened refrigerant line fittings.
11. Remove nut (1) securing the liquid and upper suction line bracket.

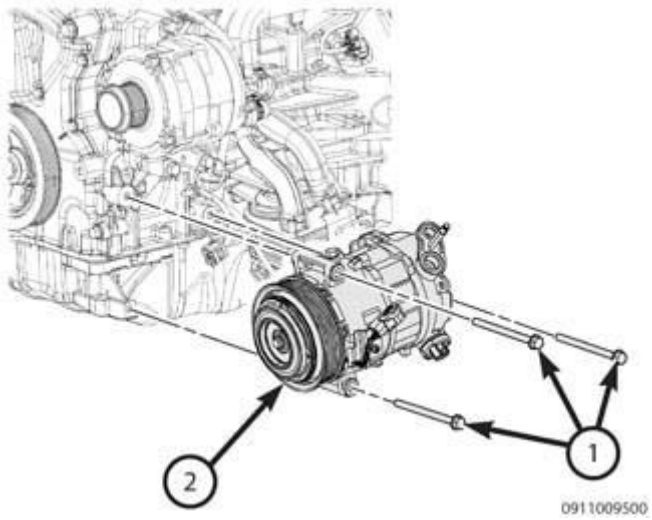

Fig. 154: Pressure Transducer & Connector
Courtesy of CHRYSLER GROUP, LLC

12. Disconnect the pressure transducer wire harness connector (1).
13. If necessary, remove the pressure transducer (2).

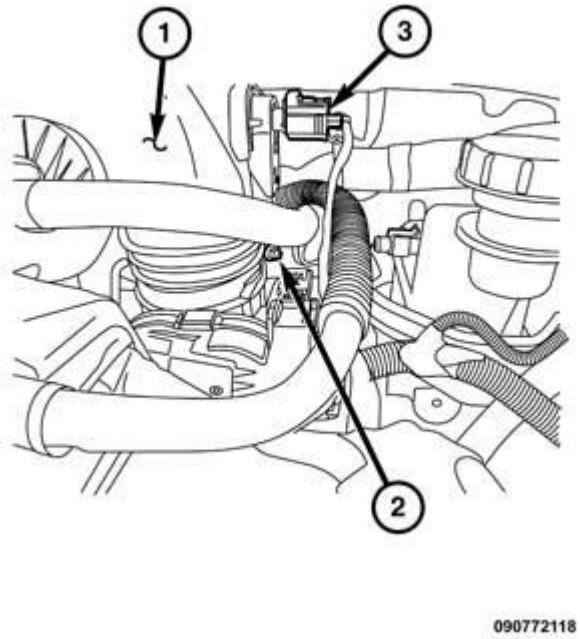

Fig. 155: Nut, Liquid & Suction Line Bracket
Courtesy of CHRYSLER GROUP, LLC

14. Remove nut (1) securing the liquid and suction line bracket (2).

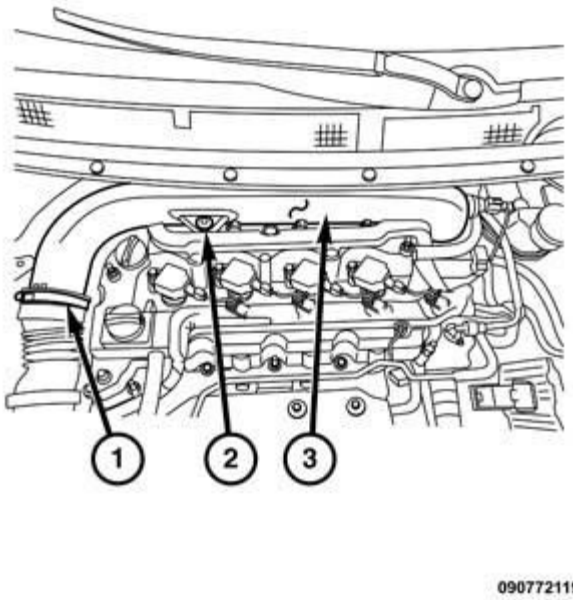

Fig. 156: Refrigerant Lines, Heater Core Hoses & Fastener
Courtesy of CHRYSLER GROUP, LLC

15. Remove nut (4) and detach the A/C liquid (1) and suction line manifold (5) from the A/C evaporator. Remove and discard the seals.
16. Remove the A/C liquid (1) and suction line (5) assembly from the engine compartment.
17. Install plugs in, or tape over the opened refrigerant line fittings and the evaporator ports.

3.2L ENGINE

WARNING: Review the safety precautions and warnings in this information before performing this procedure. Failure to follow these instructions may result in serious injury or death.

1. Disconnect and isolate the negative battery cable.
2. Remove the engine cover.
3. Recover the refrigerant from the refrigerant system. Refer to **PLUMBING, STANDARD PROCEDURE**.

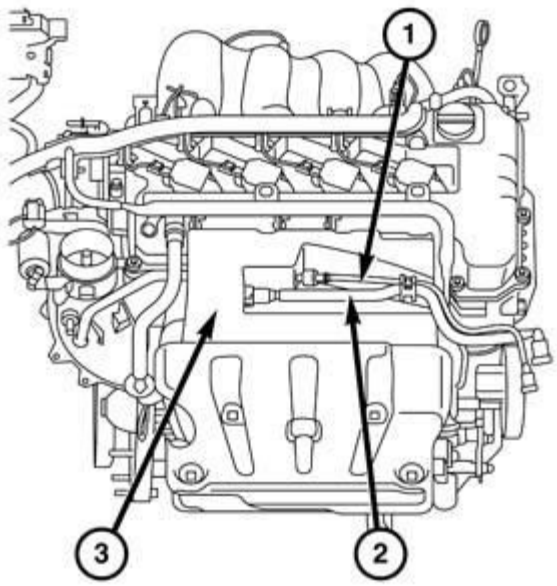

081569483

Fig. 157: Suction/Liquid Line Manifold & Internal Heat Exchanger (IHX)
Courtesy of CHRYSLER GROUP, LLC

4. Remove the nut (2) and separate the suction/liquid line manifold (1) from the Internal Heat Exchanger (IHX).
5. Remove and discard the seals.
6. Install plugs in, or tape over the opened refrigerant line fittings.

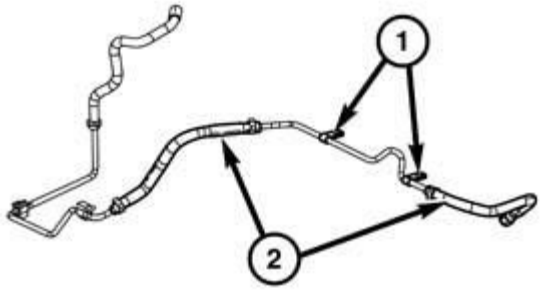

090974919

Fig. 158: Suction/Liquid Line Manifold & Expansion Valve
Courtesy of CHRYSLER GROUP, LLC

7. Remove the nut (1) and separate the suction/liquid line manifold (3) from the expansion valve (2).
8. Remove and discard the seals.
9. Install plugs in, or tape over the opened refrigerant line fittings.
10. Remove the suction/liquid line assembly from the engine compartment.

INSTALLATION

2.0L, 2.4L ENGINE

CAUTION: Be certain to adjust the refrigerant oil level when servicing the A/C refrigerant system. Failure to properly adjust the refrigerant oil level will prevent the A/C system from operating as designed and can cause serious A/C compressor damage.

CAUTION: The A/C liquid line must be replaced if an internal failure of the A/C compressor has occurred. Failure to replace the A/C liquid line can prevent the A/C system from operating as designed and can cause serious A/C compressor damage.

NOTE: When replacing multiple A/C system components, refer to the Refrigerant Oil Capacities chart to determine how much oil should be added to the refrigerant system. Refer to OIL, REFRIGERANT, STANDARD PROCEDURE.

NOTE: **Replacement of the refrigerant line O-ring seals and gaskets is required anytime a refrigerant line is opened. Failure to replace the rubber O-ring seals and metal gaskets could result in a refrigerant system leak.**

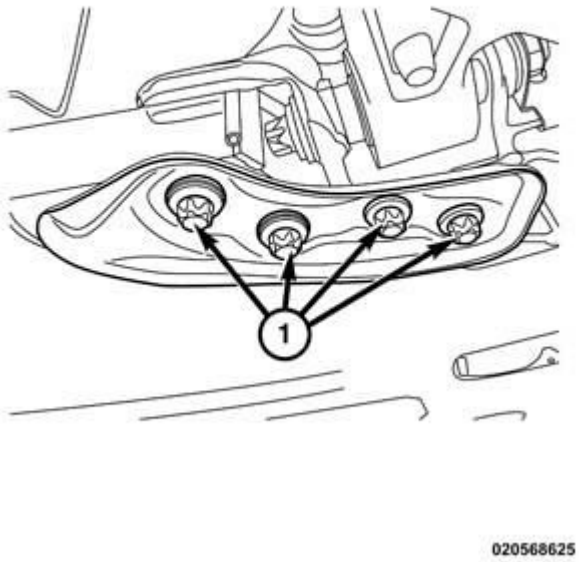

Fig. 159: Refrigerant Lines, Heater Core Hoses & Fastener
Courtesy of CHRYSLER GROUP, LLC

1. Remove the tape or plugs from the refrigerant line fittings and the evaporator ports.
2. Lubricate the new seals with clean refrigerant oil and install the seals onto the liquid (1) and suction line (5) fittings. Use only the specified seals as they are made of special materials compatible to the system. Use only refrigerant oil of the type recommended for the A/C compressor in the vehicle.
3. Position the A/C liquid (1) and suction line (5) assembly into the engine compartment.
4. Attach the A/C liquid and suction line assembly to the A/C evaporator (6) and tighten the nut (4) to the proper. Refer to **SPECIFICATIONS**.

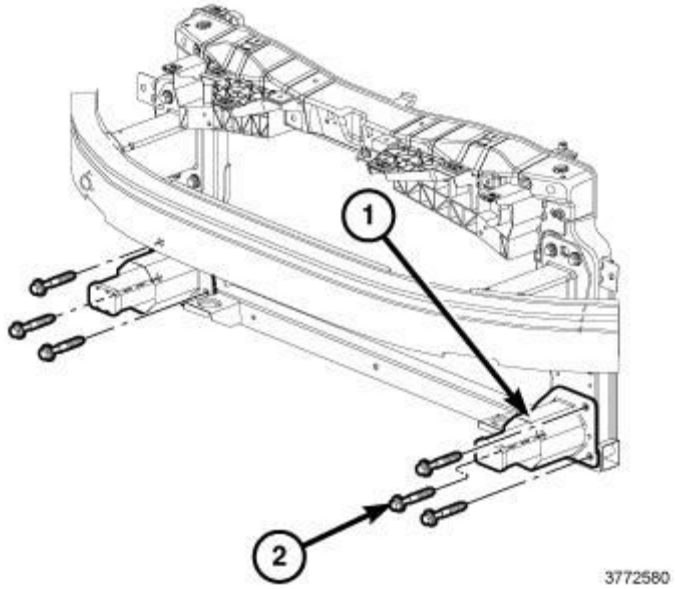

Fig. 160: Nut, Liquid & Suction Line Bracket
Courtesy of CHRYSLER GROUP, LLC

5. Install the nut securing the liquid and suction line bracket (2) and tighten nut to the proper. Refer to **SPECIFICATIONS**.

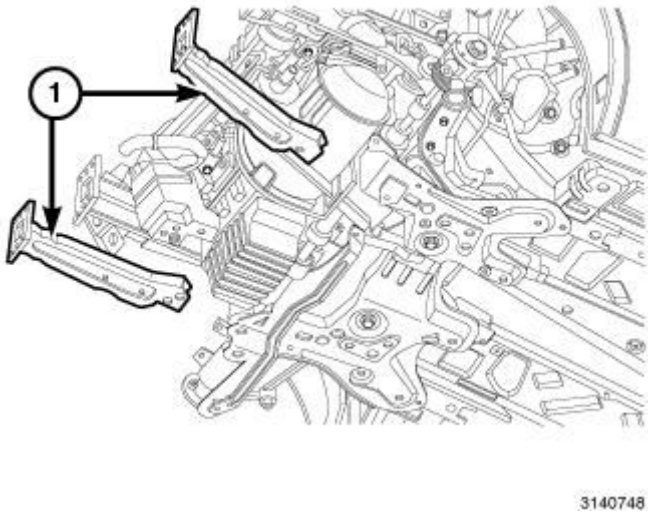

Fig. 161: Pressure Transducer & Connector
Courtesy of CHRYSLER GROUP, LLC

6. If removed, inspect the O-ring seal and install the pressure transducer and securely tighten.
7. Connect the pressure transducer wire harness connector.

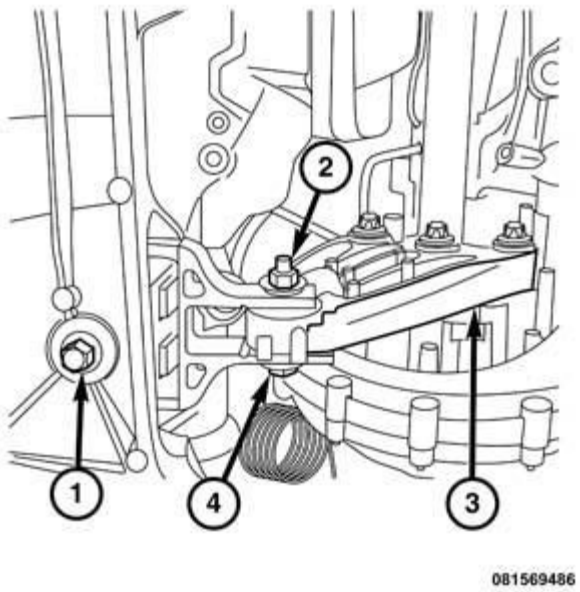

Fig. 162: Nut, Upper & Lower Suction Lines
Courtesy of CHRYSLER GROUP, LLC

8. Remove the tape or plugs from the refrigerant line fittings and the evaporator ports.
9. Lubricate the new seals with clean refrigerant oil and install the seals onto the suction line fitting. Use only the specified seals as they are made of special materials compatible to the R-134a system. Use only refrigerant oil of the type recommended for the A/C compressor in the vehicle.
10. Install the liquid and suction line bracket and tighten the nut (1) to the proper. Refer to **SPECIFICATIONS**.
11. Connect the lower suction line (4) to the upper suction line (2) assembly and install nut (3) and tighten the nut to the proper. Refer to **SPECIFICATIONS**.

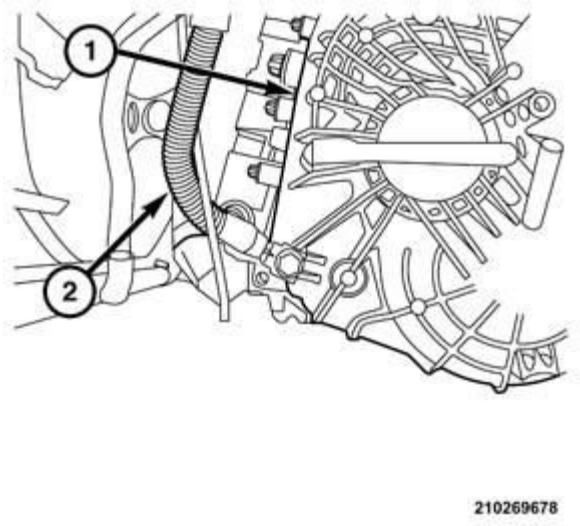

Fig. 163: Nut & Liquid Line
Courtesy of CHRYSLER GROUP, LLC

12. Install the front liquid line (1) support bracket and tighten the nut to the proper. Refer to **SPECIFICATIONS**.

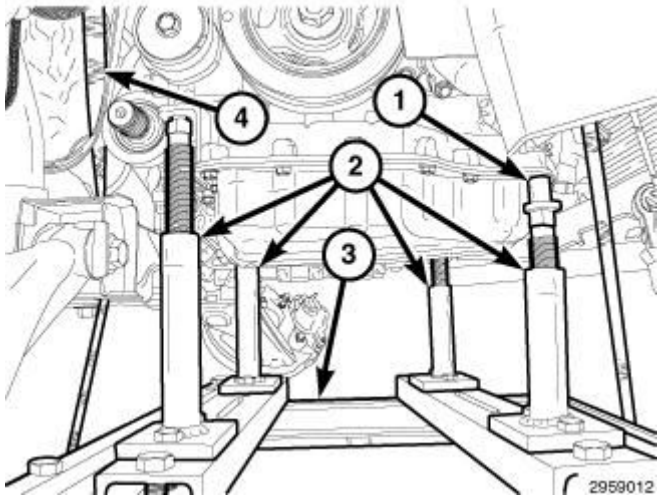

Fig. 164: Seal, Discharge Line & Manifold
Courtesy of CHRYSLER GROUP, LLC

13. Remove the tape or plugs from the suction and liquid line fitting and the condenser port.
14. Lubricate the new seals (1) with clean refrigerant oil and install it onto the suction and liquid line fitting.

Use only the specified O-ring as it is made of a special material for the system. Use only refrigerant oil of the type recommended for the A/C compressor in the vehicle.

15. Attach the suction line (2) to the liquid manifold (3).

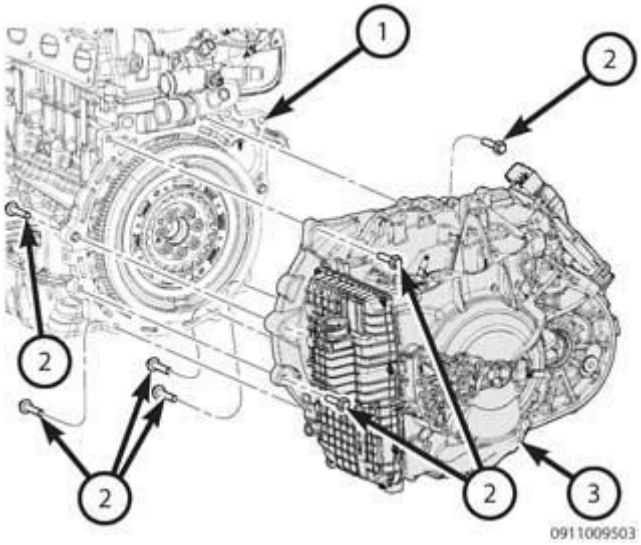

Fig. 165: A/C Suction/Liquid Line Manifold & Nut
Courtesy of CHRYSLER GROUP, LLC

16. Install the A/C suction (1) and liquid line manifold (2) to the A/C condenser and tighten the nut to the proper. Refer to **SPECIFICATIONS**.
17. Connect the negative battery cable.

CAUTION: Do NOT run the engine with a vacuum pump in operation or with a vacuum present within the A/C system. Failure to follow this caution will result in serious A/C compressor damage.

18. Evacuate the refrigerant system Refer to **PLUMBING, STANDARD PROCEDURE**.
19. Adjust the refrigerant oil level. Refer to **OIL, REFRIGERANT, STANDARD PROCEDURE**.
20. Charge the A/C system. Refer to **PLUMBING, STANDARD PROCEDURE**.
21. Install the air cleaner resonator. Refer to **RESONATOR, AIR CLEANER, INSTALLATION** .
22. Install the air cleaner body. Refer to **BODY, AIR CLEANER, INSTALLATION** and **BODY, AIR CLEANER, INSTALLATION** .

3.2L ENGINE

CAUTION: Be certain to adjust the refrigerant oil level when servicing the A/C refrigerant system. Failure to properly adjust the refrigerant oil level will prevent the A/C system from operating as designed and can cause serious A/C compressor damage.

CAUTION: The A/C liquid line must be replaced if an internal failure of the A/C compressor has occurred. Failure to replace the A/C liquid line can prevent the A/C system from operating as designed and can cause serious A/C compressor damage.

NOTE: When replacing multiple A/C system components, refer to the Refrigerant Oil Capacities chart to determine how much oil should be added to the refrigerant system. Refer to OIL, REFRIGERANT, STANDARD PROCEDURE.

NOTE: Replacement of the refrigerant line O-ring seals and gaskets is required anytime a refrigerant line is opened. Failure to replace the rubber O-ring seals and metal gaskets could result in a refrigerant system leak.

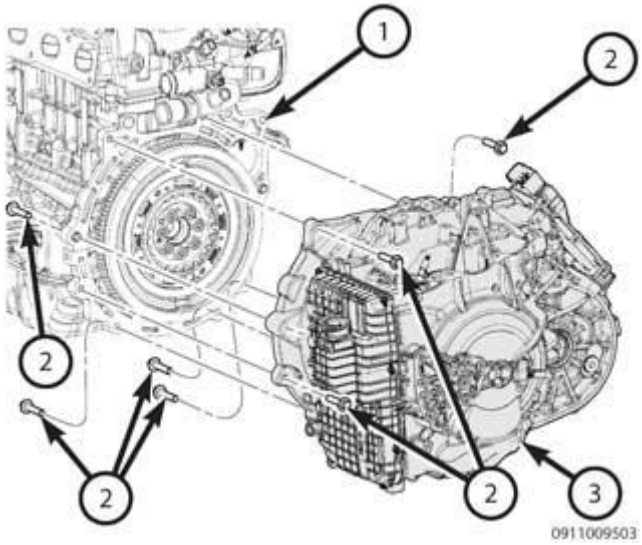

Fig. 166: Suction/Liquid Line Manifold & Expansion Valve
Courtesy of CHRYSLER GROUP, LLC

1. Remove the tape or plugs from the refrigerant line fittings and the expansion valve ports.
2. Lubricate the new seals with clean refrigerant oil and install the seals onto the liquid and suction line fittings. Use only the specified seals as they are made of special materials compatible to the system. Use only refrigerant oil of the type recommended for the vehicle.
3. Position the suction/liquid line assembly into the engine compartment.
4. Attach the suction/liquid line manifold (3) to the expansion valve (2) and tighten the nut (1) to the proper. Refer to **SPECIFICATIONS**.

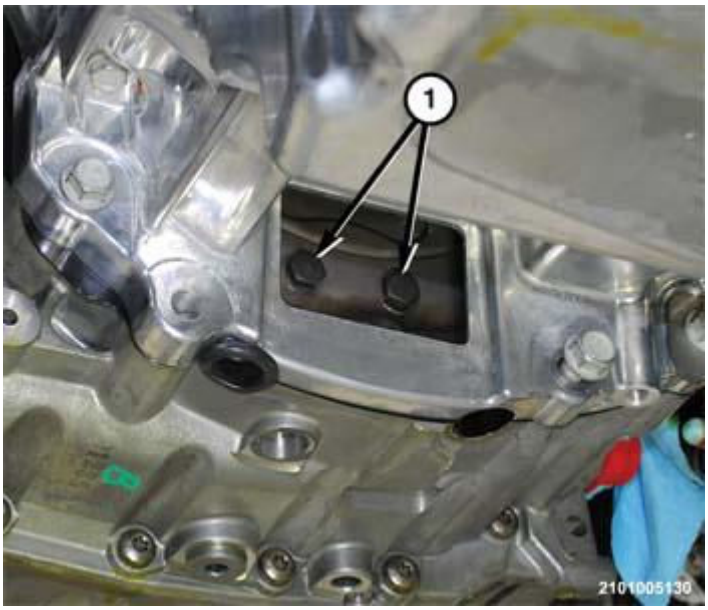

Fig. 167: Suction/Liquid Line Manifold & Internal Heat Exchanger (IHX)
Courtesy of CHRYSLER GROUP, LLC

5. Remove the tape or plugs from the refrigerant line fittings.
6. Lubricate the new seals with clean refrigerant oil and install the seals onto the suction/liquid line fitting.
7. Connect the suction/liquid line manifold (1) to the Internal Heat Exchanger (IHX) and tighten the nut (2) to the proper. Refer to **SPECIFICATIONS**.
8. Connect the negative battery cable.
9. Evacuate the refrigerant system Refer to **PLUMBING, STANDARD PROCEDURE**.
10. Adjust the refrigerant oil level. Refer to **OIL, REFRIGERANT, STANDARD PROCEDURE**.
11. Charge the A/C system. Refer to **PLUMBING, STANDARD PROCEDURE**.
12. Install the engine cover.

LINE, A/C SUCTION

REMOVAL

2.0L, 2.4L ENGINE

1. Disconnect and isolate the negative battery cable.
2. Remove the air cleaner body. Refer to **BODY, AIR CLEANER, REMOVAL** **BODY, AIR CLEANER, REMOVAL** **BODY, AIR CLEANER, REMOVAL** .
3. Remove the air cleaner resonator. Refer to **RESONATOR, AIR CLEANER, REMOVAL** **RESONATOR, AIR CLEANER, REMOVAL** .
4. Recover the refrigerant from the refrigerant system. Refer to **PLUMBING, STANDARD PROCEDURE**.

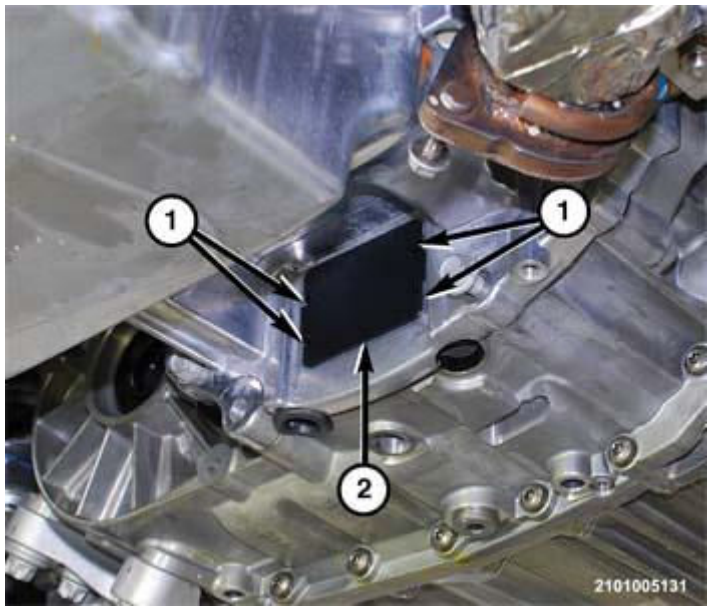

Fig. 168: A/C Suction/Liquid Line Manifold & Nut
Courtesy of CHRYSLER GROUP, LLC

5. Remove nut (3) and the A/C discharge/liquid line manifold (2) from the A/C condenser.

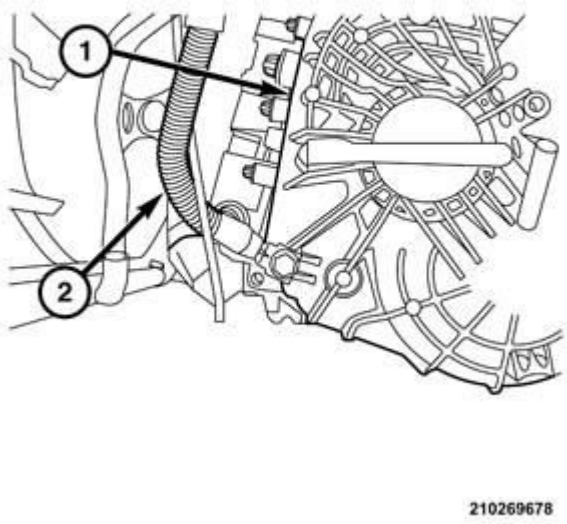

Fig. 169: Seal, Discharge Line & Manifold
Courtesy of CHRYSLER GROUP, LLC

6. Detach the suction line (2) from liquid line manifold (3). Remove and discard the O-ring seal and gasket (1).

7. Install plugs in, or tape over the opened refrigerant line fittings and the condenser and suction line ports.

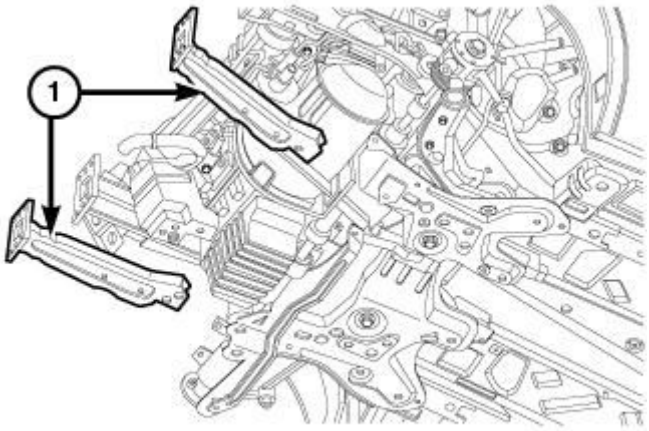

Fig. 170: Nut, Upper & Lower Suction Lines
Courtesy of CHRYSLER GROUP, LLC

8. Remove the nut (2) that secures the lower A/C suction (4) line (3) to the upper A/C suction line (2).
9. Disconnect the lower A/C suction line from the A/C upper A/C suction line. Remove and discard the seal.
10. Install plugs in, or tape over the opened suction line fitting.

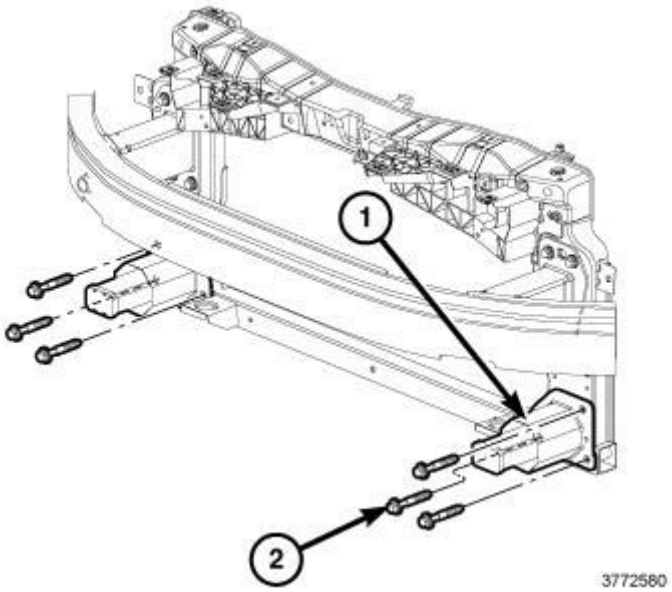

Fig. 171: A/C Discharge Line/Suction Line Manifold & Nut
Courtesy of CHRYSLER GROUP, LLC

11. Remove nut (2) and the lower A/C suction/discharge manifold (1) from the A/C compressor and discard the seals.

12. Install plugs in, or tape over the opened suction line fitting and the compressor port.

3.2L ENGINE

1. Remove the engine cover.
2. Recover the refrigerant from the refrigerant system. Refer to **PLUMBING, STANDARD PROCEDURE**.
3. Remove the powertrain control module. Refer to **MODULE, POWERTRAIN CONTROL, REMOVAL** .

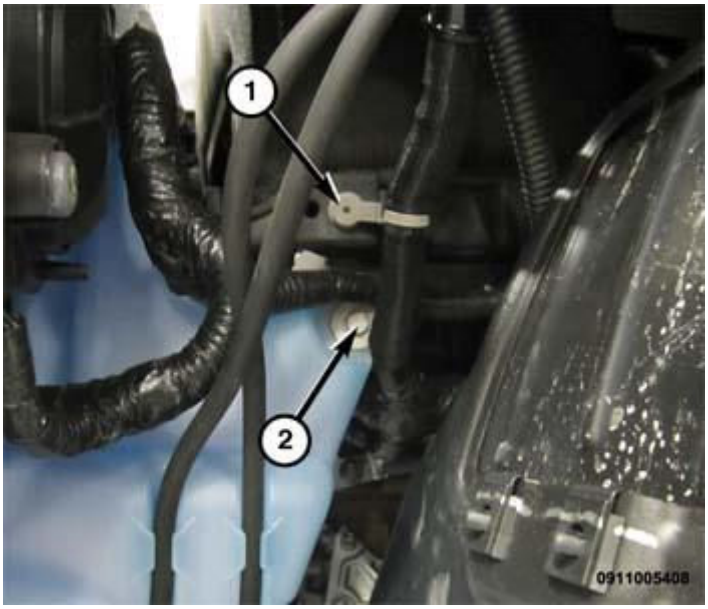

Fig. 172: View Of IHX Manifold Bracket At Engine
Courtesy of CHRYSLER GROUP, LLC

4. Remove the nut that secures the suction/discharge line to the Internal Heat Exchanger (IHX) (2).
5. Remove and discard the O-ring seal and gasket.
6. Install plugs in, or tape over the opened refrigerant line fittings and ports.
7. Remove the bolt (1) that secures the IHX mounting bracket to the engine.

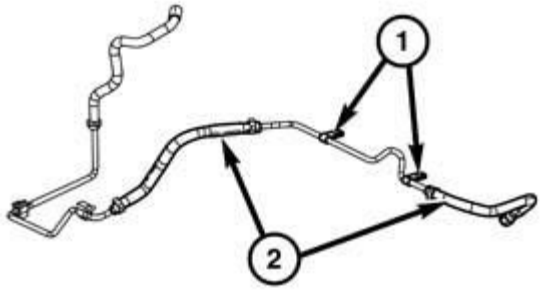

090974919

Fig. 173: View Of Discharge Line, Liquid Line & Fasteners
Courtesy of CHRYSLER GROUP, LLC

8. Remove the nuts (3) and disconnect the discharge line (1) and liquid line (2) from the IHX.
9. Remove and discard the O-ring seal and gasket.
10. Install plugs in, or tape over the opened refrigerant line fittings and ports.

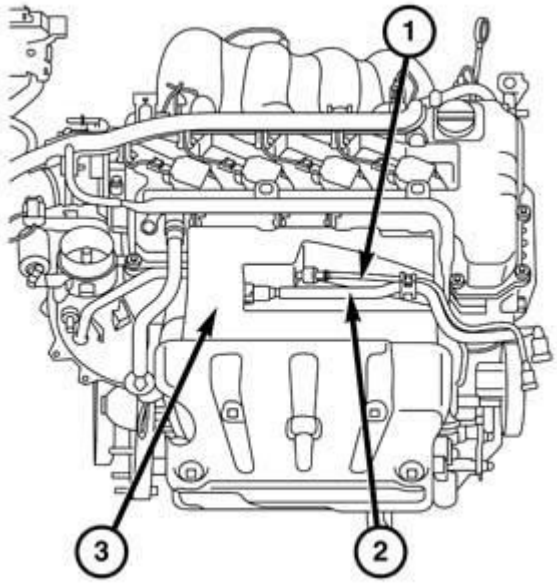

081569483

Fig. 174: Coolant Tube & Fasteners
Courtesy of CHRYSLER GROUP, LLC

11. Remove the nuts (1) securing the coolant tube (2) and reposition the tube to gain clearance.

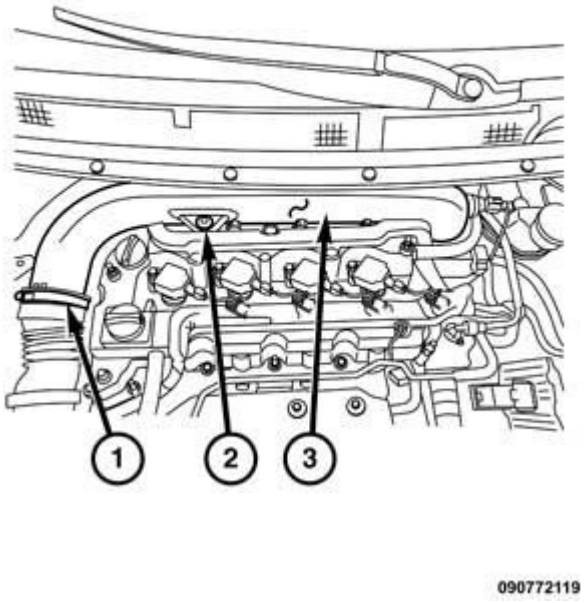

Fig. 175: View Of IHX Line Bracket
Courtesy of CHRYSLER GROUP, LLC

12. Remove bolt (1) securing the IHX manifold (2) to the bracket.
13. Remove the Catalytic Converter. Refer to **CONVERTER, CATALYTIC [EHB], REMOVAL** .

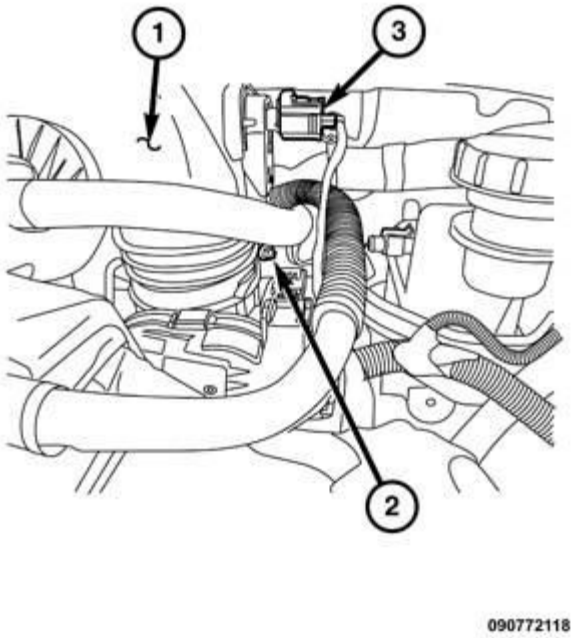

Fig. 176: IHX Line Bracket & Fasteners
Courtesy of CHRYSLER GROUP, LLC

14. Remove the nut (1) securing the IHX bracket (2).

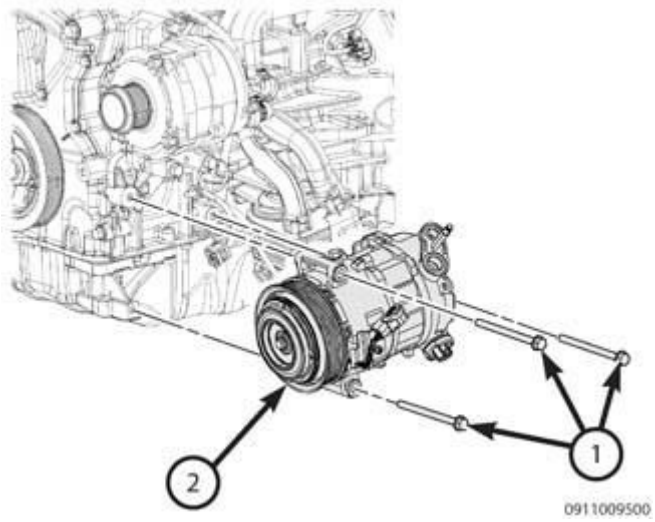

Fig. 177: A/C Compressor, IHX Manifold Line & Fasteners
Courtesy of CHRYSLER GROUP, LLC

15. Remove the fastener (1) securing the IHX manifold (2) to the A/C compressor (3) and detach the manifold from the compressor.
16. Remove and discard the seals and install plugs in, or tape over the opened line fittings and ports.

17. Remove the IHX from the engine compartment.

INSTALLATION

2.0L, 2.4L ENGINE

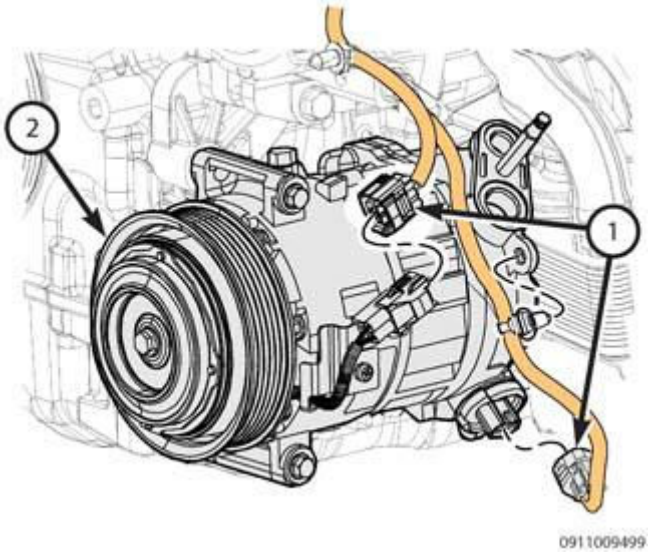

Fig. 178: A/C Discharge Line/Suction Line Manifold & Nut
Courtesy of CHRYSLER GROUP, LLC

1. Remove the tape or plugs from the suction line fitting and the compressor port.
2. Lubricate a new seal with clean refrigerant oil and install it and new seals onto the suction/discharge manifold. Use only the specified seals as it is made of a special material for the system. Use only refrigerant oil of the type recommended for the A/C compressor in the vehicle.
3. Install the lower A/C suction/discharge manifold (1) to the A/C compressor and tighten the nut to the proper. Refer to **SPECIFICATIONS**.

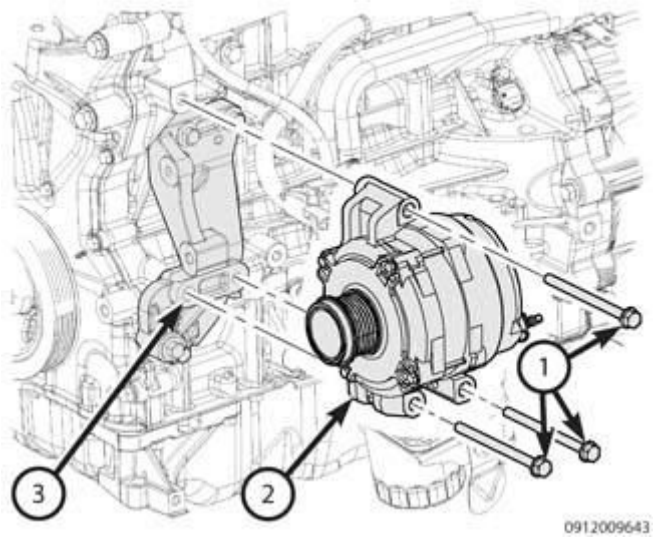

Fig. 179: Nut, Upper & Lower Suction Lines
Courtesy of CHRYSLER GROUP, LLC

4. Remove the tape or plugs from the upper suction line fitting.
5. Lubricate a new seal with clean refrigerant oil and install it and new seal onto the suction line fitting. Use only the specified seal as it is made of a special material for the system. Use only refrigerant oil of the type recommended for the A/C compressor in the vehicle.
6. Install the lower A/C lower suction line (4) to the upper A/C suction line (2) and tighten the nut (3) to the proper. Refer to **SPECIFICATIONS**.

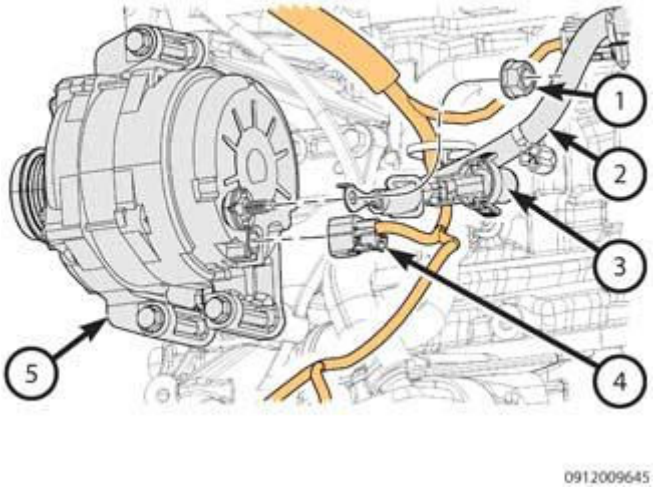

Fig. 180: Seal, Discharge Line & Manifold
Courtesy of CHRYSLER GROUP, LLC

7. Remove the tape or plugs from the upper suction line fitting.
8. Lubricate a new seal with clean refrigerant oil and install it and new seal onto the suction line fitting. Use

only the specified seal as it is made of a special material for the system. Use only refrigerant oil of the type recommended for the A/C compressor in the vehicle.

9. Attach the suction line (2) to the liquid line manifold (3).

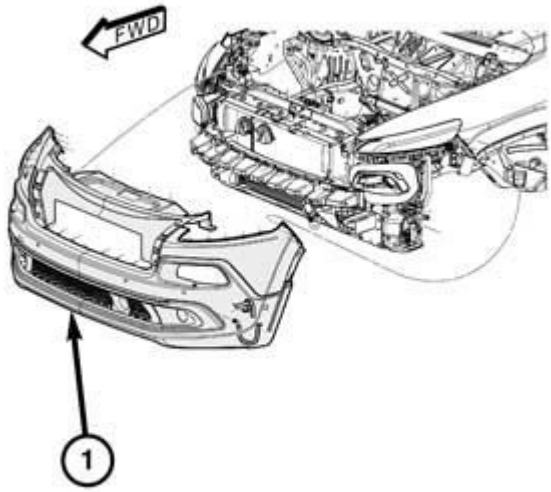

0909005832

Fig. 181: A/C Suction/Liquid Line Manifold & Nut
Courtesy of CHRYSLER GROUP, LLC

10. Install the A/C discharge/liquid line manifold (2) from the A/C condenser and tighten the nut (3) to the proper. Refer to **SPECIFICATIONS**.
11. Connect the negative battery cable.

CAUTION: Do NOT run the engine with a vacuum pump in operation or with a vacuum present within the A/C system. Failure to follow this caution will result in serious A/C compressor damage.

12. Evacuate the refrigerant system. Refer to **PLUMBING, STANDARD PROCEDURE**.
13. Adjust the refrigerant oil level. Refer to **OIL, REFRIGERANT, STANDARD PROCEDURE**.
14. Charge the A/C system. Refer to **PLUMBING, STANDARD PROCEDURE**.

3.2L ENGINE

1. Remove the tape or plugs from the Internal Heat Exchanger line fittings and ports.
2. Lubricate a new seal with clean refrigerant oil and install it and new seals onto the suction/discharge manifold. Use only the specified seals as it is made of a special material for the system. Use only refrigerant oil of the type recommended for the vehicle.

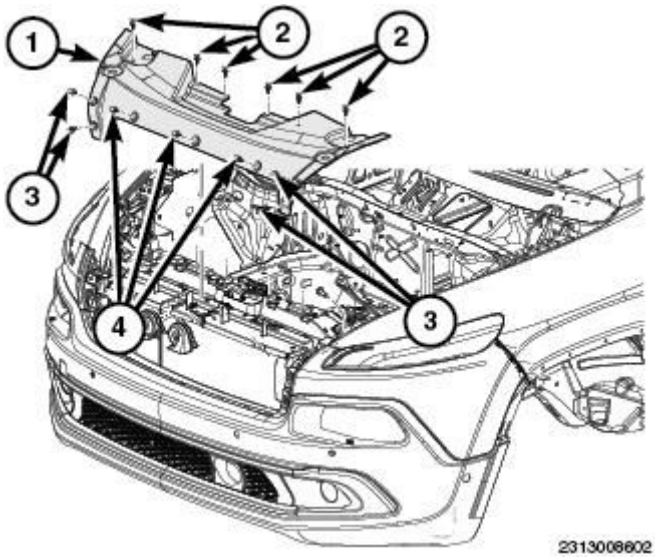

Fig. 182: A/C Compressor, IHX Manifold Line & Fasteners
Courtesy of CHRYSLER GROUP, LLC

3. Position the IHX in the engine compartment.
4. Install the IHX manifold (1) to the A/C compressor (3) and tighten the fastener (1) to the proper. Refer to **SPECIFICATIONS**.

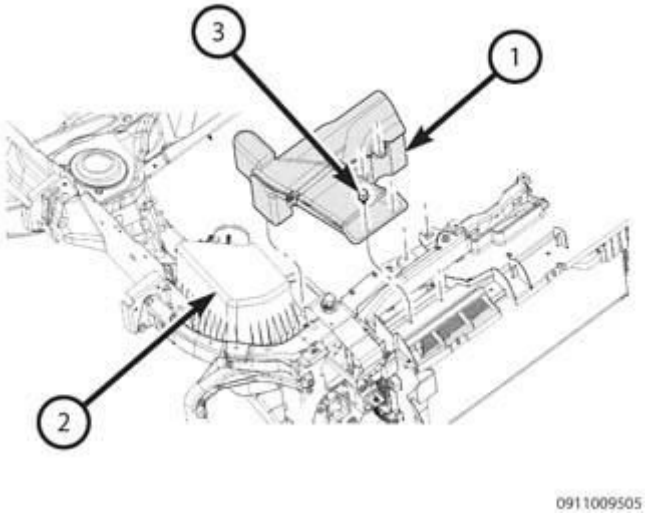

Fig. 183: IHX Line Bracket & Fasteners
Courtesy of CHRYSLER GROUP, LLC

5. Position the IHX bracket (2) on the mounting stud and securely tighten the nut (1).
6. Install the catalytic converter. Refer to **CONVERTER, CATALYTIC [EHB], INSTALLATION** .

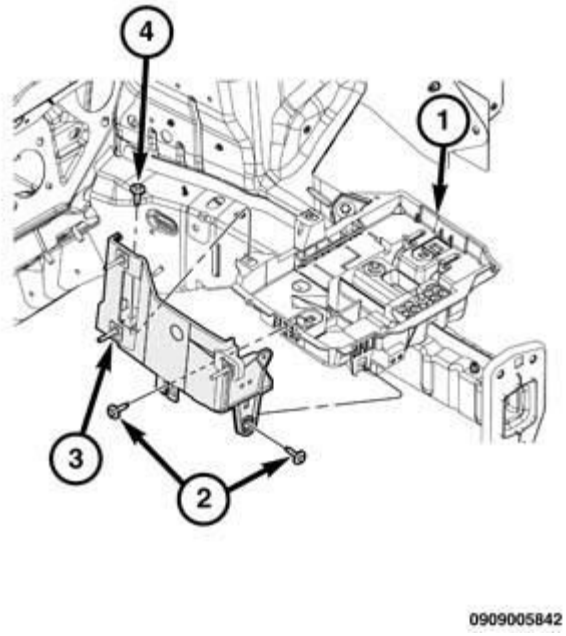

Fig. 184: View Of IHX Line Bracket
Courtesy of CHRYSLER GROUP, LLC

7. Install the bolt (1) securing the IHX manifold (2) to the bracket.

Fig. 185: Coolant Tube & Fasteners
Courtesy of CHRYSLER GROUP, LLC

8. Position the coolant tube (2) on the mounting studs and securely tighten the nuts (1).

Fig. 186: View Of Discharge Line, Liquid Line & Fasteners
Courtesy of CHRYSLER GROUP, LLC

9. Remove the tape or plugs from the line fittings and ports.
10. Lubricate a new seal with clean refrigerant oil and install it and new seal onto the suction line fitting. Use only the specified seal as it is made of a special material for the system. Use only refrigerant oil of the type recommended for the vehicle.
11. Install the discharge line (1) and liquid line (2) to the IHX and tighten the nuts (3) to the proper. Refer to **SPECIFICATIONS**.

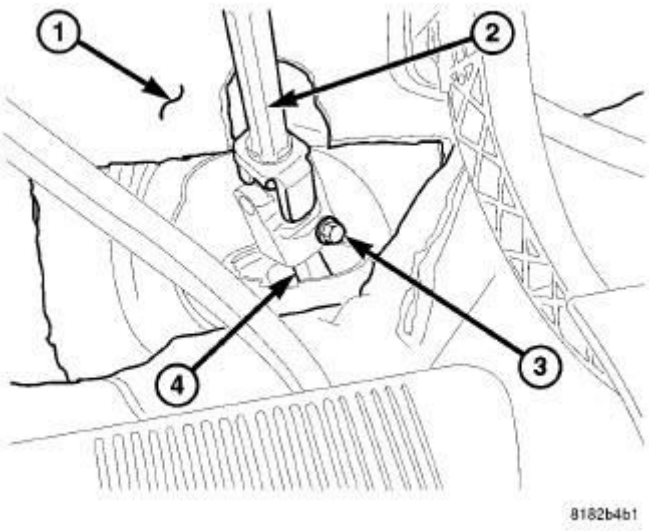

Fig. 187: View Of IHX Manifold Bracket At Engine
Courtesy of CHRYSLER GROUP, LLC

12. Remove the tape or plugs from the upper suction line fitting.
13. Lubricate a new seal with clean refrigerant oil and install it and new seal onto the suction line fitting. Use only the specified seal as it is made of a special material for the system. Use only refrigerant oil of the type recommended for the A/C compressor in the vehicle.
14. Install the bolt (1) securing the IHX manifold (2) bracket to the engine and securely tighten.
15. Attach the suction/discharge line to the IHX manifold (2) and tighten the nut to the proper. Refer to **SPECIFICATIONS**.
16. Install the powertrain control module. Refer to **MODULE, POWERTRAIN CONTROL, INSTALLATION** .
17. Evacuate the refrigerant system. Refer to **PLUMBING, STANDARD PROCEDURE**.
18. Adjust the refrigerant oil level. Refer to **OIL, REFRIGERANT, STANDARD PROCEDURE**.
19. Charge the A/C system. Refer to **PLUMBING, STANDARD PROCEDURE**.
20. Install the engine cover.

OIL, REFRIGERANT

STANDARD PROCEDURE

STANDARD PROCEDURE - REFRIGERANT OIL LEVEL

When an A/C system is assembled at the factory, all components except the A/C compressor are refrigerant oil free. After the refrigerant system has been charged and operated, the refrigerant oil in the A/C compressor is dispersed throughout the refrigerant system. The A/C receiver/drier, A/C evaporator, A/C condenser and the A/C compressor will each retain a significant amount of the needed refrigerant oil.

It is important to have the correct amount of refrigerant oil in the A/C system. This ensures proper lubrication of the A/C compressor. Too little oil will result in damage to the A/C compressor, while too much oil will reduce the cooling capacity of the A/C system and consequently result in higher discharge air temperatures.

CAUTION: Be certain to adjust the refrigerant system oil level when replacing an A/C compressor. Drain the refrigerant oil from the A/C compressor using the procedures described below. Failure to properly drain the refrigerant oil from the A/C compressor can prevent the A/C system from operating as designed and cause serious compressor damage.

NOTE: Most reclaim/recycling equipment will measure the amount of refrigerant oil being removed during the recovery process. This amount of refrigerant oil should always be added back into the refrigerant system. Refer to the reclaim/recycling equipment manufacturers instructions.

It will not be necessary to check the oil level within the A/C refrigerant system or to add oil, unless there has been an oil loss. A refrigerant oil loss may occur due to component replacement or a rupture or leak from a refrigerant line, connector fitting, component or component seal. If a leak does occurs, add 30 milliliters (1 fluid ounce) of the recommended refrigerant oil to the refrigerant system after the repair has been made. Refrigerant

oil loss will be evident at the leak point by the presence of a wet, shiny surface around the leak.

Refrigerant oil must be added when an A/C accumulator, A/C evaporator or A/C condenser is replaced. See Refrigerant Oil Capacities charts below.

The refrigerant oil level in a new A/C compressor must first be adjusted prior to compressor installation. See COMPRESSOR OIL DRAIN PROCEDURES.

REFRIGERANT OIL CAPACITIES

Component	ml.	oz.
A/C Receiver/Dryer	30	1.0
A/C Condenser	30	1.0
A/C Evaporator	45	1.5
A/C Compressor - Denso 7SBH17C	130	4.6
	(See COMPRESSOR OIL DRAIN PROCEDURE -VARIABLE DISPLACEMENT)	

COMPRESSOR OIL DRAIN PROCEDURE

CAUTION: Be certain to adjust the refrigerant system oil level when replacing an A/C compressor. Failure to properly drain and measure the refrigerant oil from the A/C compressor can prevent the A/C system from operating as designed and cause serious compressor damage.

The A/C compressor is filled with refrigerant oil from the factory. Use the following procedure to drain and measure refrigerant oil from the A/C compressor.

1. Drain all of the refrigerant oil from the old A/C compressor into a clean measured container.
2. Drain all of the refrigerant oil from the new A/C compressor into a clean measured container.
3. Refill the new A/C compressor with the same amount of refrigerant oil that was drained out of the old compressor. Use only clean refrigerant oil of the type specified for the A/C compressor in the vehicle.
4. Install the new A/C compressor onto the engine. Refer to **COMPRESSOR, A/C, INSTALLATION**.

REFRIGERANT

SPECIFICATIONS

SPECIFICATIONS

REFRIGERANT CHARGE CAPACITY

Application	Capacity
R-1234yf	1.125 lbs. (510g)
R-134a	1.19 lbs (539g)

VALVE, A/C EXPANSION

DESCRIPTION

DESCRIPTION

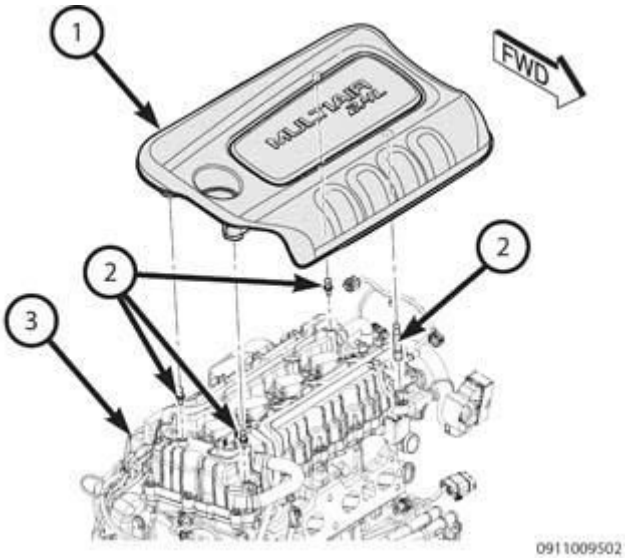

Fig. 188: H-Valve Type Body & Thermal Sensor
Courtesy of CHRYSLER GROUP, LLC

The A/C expansion valve controls the amount of refrigerant entering the A/C evaporator. The A/C expansion valve is of a thermostatic expansion valve (TXV) design and consists of an aluminum H-valve type body (1), with an integral thermal sensor (2). The A/C expansion valve is located at the dash panel between the A/C refrigerant lines and the A/C evaporator.

OPERATION

OPERATION

The A/C expansion valve controls the high-pressure, low temperature liquid refrigerant and converts it into a low-pressure, low-temperature mixture of liquid and gas, before it enters the A/C evaporator. A mechanical sensor in the A/C expansion valve monitors the temperature and pressure of the refrigerant leaving the A/C evaporator through the A/C suction line, and adjusts the orifice size at the liquid line port to let the proper amount of refrigerant into the evaporator to meet the vehicle A/C cooling requirements. Controlling the refrigerant flow through the A/C evaporator ensures that none of the refrigerant leaving the A/C evaporator is still in a liquid state, which could damage the A/C compressor.

NOTE: Replacement of the refrigerant line O-ring seals is required anytime a refrigerant line or A/C expansion valve is disconnected. Failure to replace the rubber O-ring seals may result in a refrigerant system leak.

The A/C expansion valve is factory calibrated and cannot be adjusted or repaired and must be replaced if inoperative or damaged.

DIAGNOSIS AND TESTING

DIAGNOSIS AND TESTING - A/C EXPANSION VALVE

WARNING: Review the warnings and cautions for this system before performing the procedure. Failure to follow these instructions may result in serious injury or death.

NOTE: The A/C expansion valve should only be tested after performing the A/C performance test. Refer to DIAGNOSIS AND TESTING.

NOTE: Liquid CO^2 is required to test the A/C expansion valve. This material is available from most welding supply facilities. Liquid CO^2 is also available from companies which service and sell fire extinguishers.

When testing the A/C expansion valve, the work area and the vehicle temperature must be 21° to 27° C (70° to 85° F). To test the expansion valve:

1. Connect a charging station or manifold gauge set to the refrigerant system service ports.
2. Close all doors, windows and vents to the passenger compartment.
3. Set the A/C heater controls so that the A/C compressor is operating, the temperature control is in the highest temperature position, the mode air door is directing air output to the floor and the blower motor operating is operating at the highest speed.
4. Start the engine and allow it to idle. After the engine has reached normal operating temperature, allow the passenger compartment to heat up. This will create the need for maximum refrigerant flow into the A/C evaporator.
5. If the refrigerant charge is sufficient, the discharge (high pressure) gauge should read 827 kPa to 1655 kPa (120 psi to 240 psi). The suction (low pressure) gauge should read 207 kPa to 345 kPa (30 psi to 50 psi). If OK, go to 6. If not OK, replace the inoperative A/C expansion valve.

WARNING: Protect the skin and eyes from exposure to liquid CO^2 or personal injury can result.

6. If the suction (low pressure) gauge reads within the specified range, freeze the A/C expansion valve for 30 seconds using liquid CO^2 or another suitable super-cold material.**Do not spray refrigerant on the A/C expansion valve for this test.** The suction (low pressure) gauge reading should drop by 69 kPa (10 psi). If OK, go to 7. If not OK, replace the inoperative A/C expansion valve.
7. Allow the expansion valve control head to thaw. The suction (low pressure) gauge reading should stabilize at 207 kPa to 345 kPa (30 psi to 50 psi). If not OK, replace the inoperative A/C expansion valve.

REMOVAL

REMOVAL

WARNING: Review the warnings and cautions for this system before performing the procedure. Failure to follow these instructions may result in serious injury or death.

1. Disconnect and isolate the negative battery cable.
2. Remove the air cleaner resonator. Refer to **RESONATOR, AIR CLEANER, REMOVAL RESONATOR, AIR CLEANER, REMOVAL** .
3. Recover the refrigerant from the refrigerant system. Refer to **PLUMBING, STANDARD PROCEDURE**.

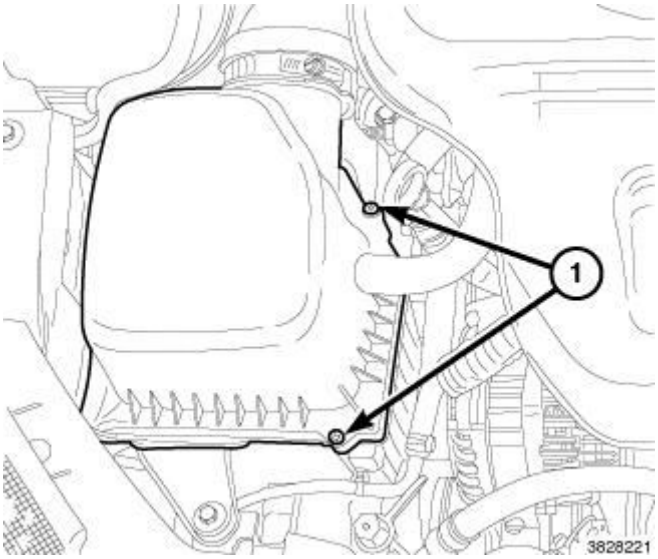

Fig. 189: Refrigerant Lines, Heater Core Hoses & Fastener
Courtesy of CHRYSLER GROUP, LLC

4. Remove the nut (4) and the A/C liquid line (1) and A/C suction line (5) manifold from the A/C expansion valve.
5. Remove and discard the seals.

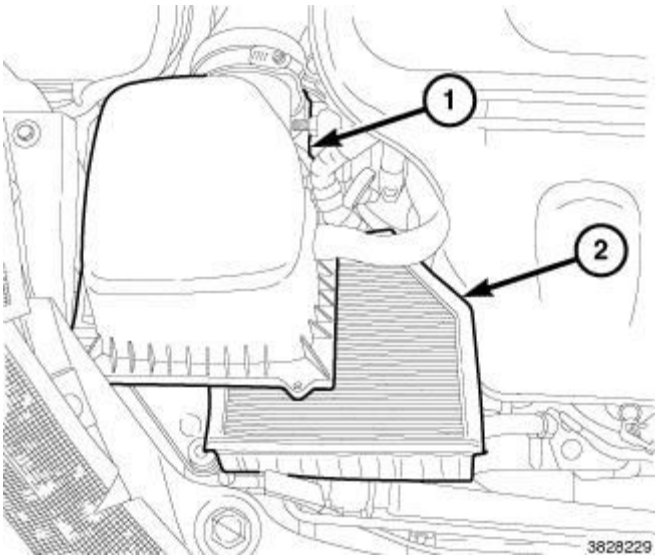

Fig. 190: Bolts & A/C Expansion Valve
Courtesy of CHRYSLER GROUP, LLC

6. Remove the two bolts (1) and the A/C expansion valve (2) from the evaporator.
7. Remove and discard the O-ring seals.
8. Install plugs in, or tape over, the opened refrigerant line fittings and evaporator ports.

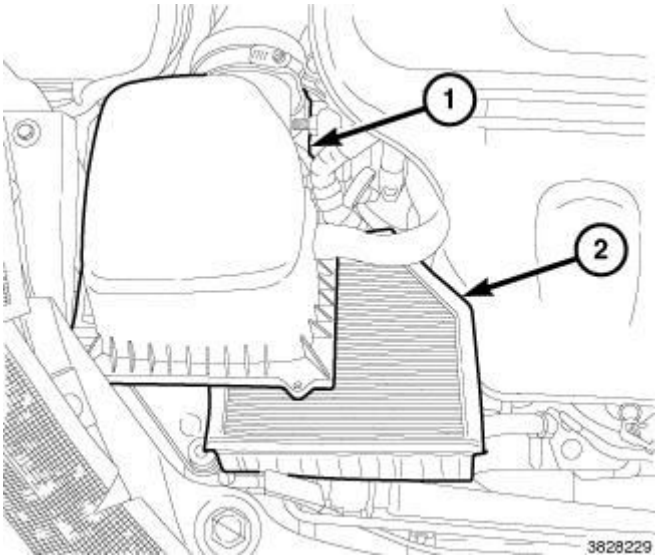

Fig. 191: Expansion Valve & Insulating Foam
Courtesy of CHRYSLER GROUP, LLC

9. If necessary, remove the insulating foam (2) from the expansion valve (1).

INSTALLATION

INSTALLATION

CAUTION: Be certain to adjust the refrigerant oil level when servicing the A/C refrigerant system. Failure to properly adjust the refrigerant oil level will prevent the A/C system from operating as designed and can cause serious A/C compressor damage.

NOTE: When replacing multiple A/C system components, see the Refrigerant Oil Capacities chart to determine how much oil should be added to the refrigerant system. Refer to OIL, REFRIGERANT, STANDARD PROCEDURE.

NOTE: Replacement of the O-ring seals is required anytime a refrigerant line or A/C expansion valve is disconnected. Failure to replace the O-ring seals may result in a refrigerant system leak.

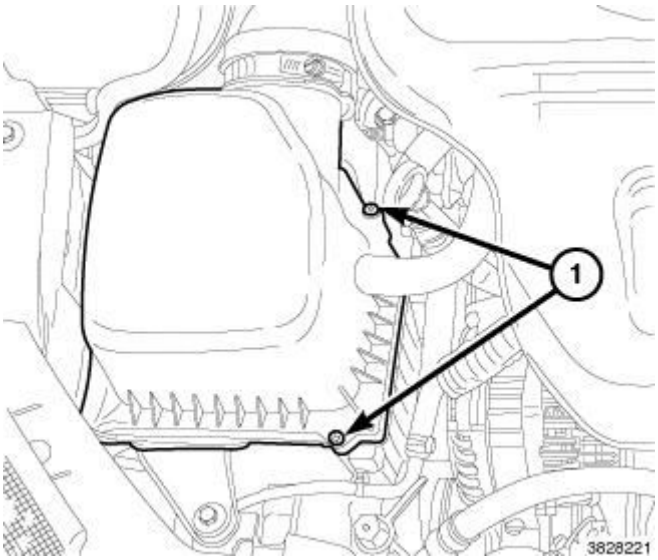

Fig. 192: O-Ring Seals
Courtesy of CHRYSLER GROUP, LLC

1. Remove the tape or plugs from all the opened refrigerant line fittings and evaporator ports.
2. Lubricate new O-ring seals (1) with clean refrigerant oil and install them onto the evaporator tube fittings. Use only the specified O-ring seals as they are made of a special material for the system. Use only refrigerant oil of the type recommended for the A/C compressor in the vehicle.

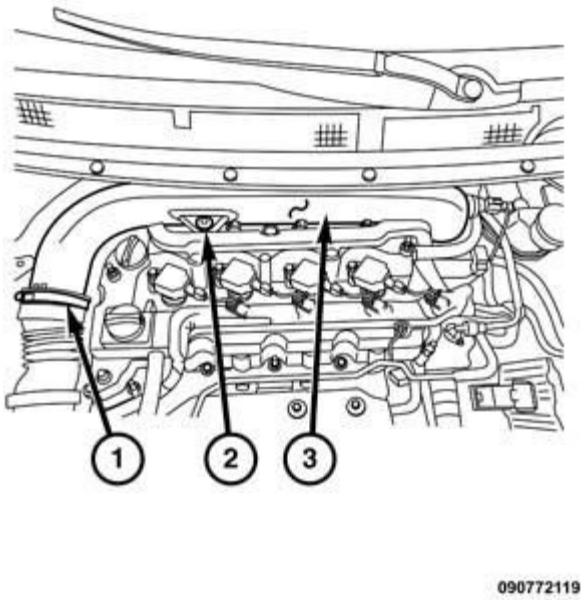

Fig. 193: Bolts & A/C Expansion Valve
Courtesy of CHRYSLER GROUP, LLC

3. Install the A/C expansion valve (2) onto the evaporator and tighten the bolts to the proper. Refer to **SPECIFICATIONS**.

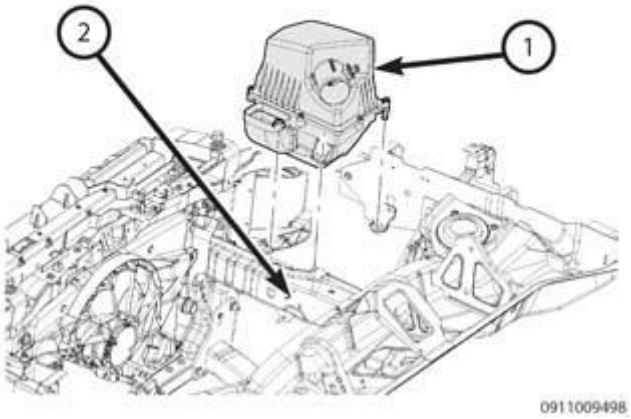

Fig. 194: Refrigerant Lines, Heater Core Hoses & Fastener
Courtesy of CHRYSLER GROUP, LLC

4. Lubricate new O-ring seals with clean refrigerant oil and install them onto the refrigerant line fittings. Use only the specified seals as they are made of a special material for the system. Use only refrigerant oil of the type recommended for the A/C compressor in the vehicle.

5. Install the A/C liquid line (1) and the A/C suction line manifold (5) to the A/C expansion and tighten the nut to the proper. Refer to **SPECIFICATIONS**.
6. Evacuate the refrigerant system. Refer to **PLUMBING, STANDARD PROCEDURE**.
7. Adjust the refrigerant oil level. Refer to **OIL, REFRIGERANT, STANDARD PROCEDURE**.
8. Charge the refrigerant system. Refer to **OIL, REFRIGERANT, STANDARD PROCEDURE**.
9. Install the air cleaner resonator. Refer to **RESONATOR, AIR CLEANER, INSTALLATION** or **RESONATOR, AIR CLEANER, INSTALLATION** .
10. Connect the negative battery cable.

TUBE, CONDENSATION DRAIN

REMOVAL

REMOVAL

WARNING: Disable the airbag system before attempting any steering wheel, steering column or instrument panel component diagnosis or service. Disconnect and isolate the negative battery (ground) cable, then wait two minutes for the airbag system capacitor to discharge before performing further diagnosis or service. This is the only sure way to disable the airbag system. Failure to follow these instructions may result in accidental airbag deployment and possible serious or fatal injury.

1. Disconnect and isolate the negative battery cable.
2. Remove the right side center console closeout from the center console.

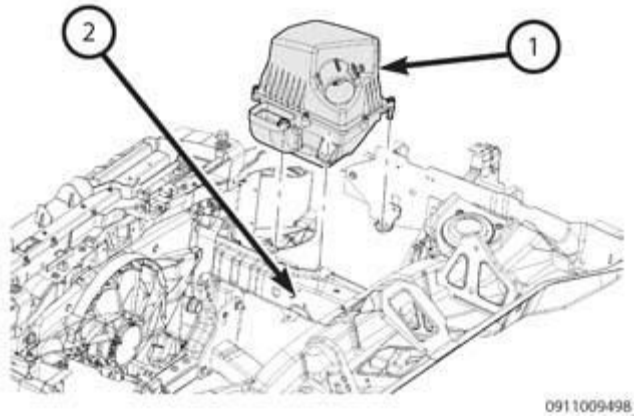

Fig. 195: HVAC Housing, Condensation Drain Tube, Floor Panel & Clamp
Courtesy of CHRYSLER GROUP, LLC

3. Disconnect clamp (4) and remove the condensation drain tube (2) from the HVAC housing (1).
4. Remove the condensation drain tube from the floor panel (3).

INSTALLATION

INSTALLATION

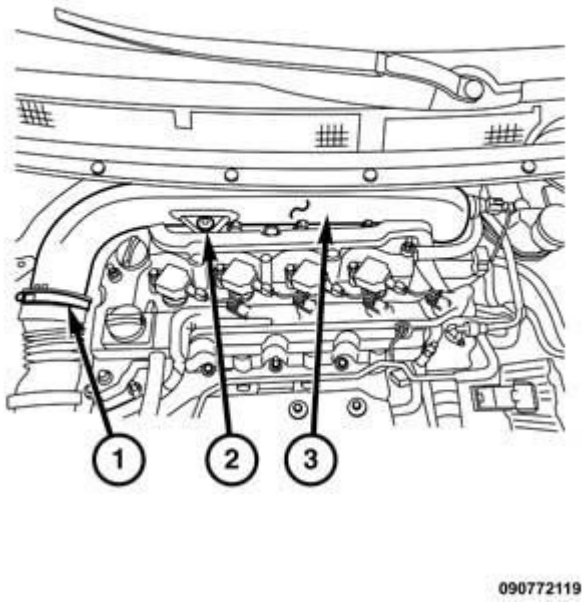

Fig. 196: HVAC Housing, Condensation Drain Tube, Floor Panel & Clamp
Courtesy of CHRYSLER GROUP, LLC

1. Install the condensation drain tube (2) into the floor panel (3).
2. Connect the condensation drain tube with clamp (4) to the HVAC housing (1).
3. Install the passenger side center console closeout.
4. Connect the negative battery cable.

2014 MANUAL TRANSMISSION

C635 - Service Information - Cherokee

DIAGNOSIS AND TESTING

COMMON PROBLEM CAUSES

NEUTRAL GEAR RATTLE: Neutral gear rattle is not an indication of an internal transaxle fault. Neutral gear rattle is caused by the clutch disc springs loading and unloading under the weight of the geartrain in the transaxle. Usually, after releasing the clutch with the engine at idle, the geartrain will rotate quietly. When the engine operating system makes an idle alteration the transaxle geartrain will bounce causing the clutch springs to compress. Afterward, the spring release flinging the geartrain faster then the engine idle. When the engine idle catches up with the geartrain and the spring compress and the process repeats over and over causing the geartrain to rattle. Neutral gear rattle is most audible in enclosed areas, such as a garage or between other parked vehicles.

PRE-DIAGNOSTIC INSPECTION:

- Verify that the transaxle fluid level is at the proper cold fill level.
- Inspect the exterior of the transaxle for evidence of fluid leaks.
- Inspect the exterior of the transaxle for mechanical issues, such as improper shift cable routing or loose mounting bolts.

NOTE: **If a fluid with anti-friction additive is used in a C-365 transaxle the synchronizers will fail, requiring synchronizer replacement.**

SYMPTOM	POSSIBLE CAUSE	REPAIR
Neutral gear rattle.	Weak clutch disc springs.	No trans repair required. If rattle is excessive when vehicle is in an open area replace the clutch disc.
Tip in tip out clunk. No gear whine.	1. Excessively strong clutch disc springs. 2. Loose front hub nuts	1. If the condition is excessive replace the clutch disc. 2. Replace hub nut and tighten to proper torque specification. Refer to **FRONT, SPECIFICATIONS** .
Bearing whine.	1. Low fluid level. 2. Improper fluid.	1. Repair cause of fluid loss and fill transaxle to cold fill level. 2. If doubt exists, replace the transaxle fluid. Refer to **CAPACITIES AND**

	3. Bearings in transaxle assembled to tight.	**RECOMMENDED FLUIDS, DESCRIPTION** . 3. Verify the turning torque of transaxle bearings with NEW bearings installed.
Growl in neutral.	1. Low fluid level. 2. Improper fluid. 3. Bearings in transaxle assembled to loose.	1. Repair cause of fluid loss and fill transaxle to cold fill level. 2. If doubt exists, replace the transaxle fluid. Refer to **CAPACITIES AND RECOMMENDED FLUIDS, DESCRIPTION** . 3. Verify the turning torque of transaxle bearings with NEW bearings installed.
Gear noise when driving in any gear range	1. Low fluid level. 2. Improper fluid. 3. Bearings in transaxle assembled to loose.	1. Repair cause of fluid loss and fill transaxle to cold fill level. 2. If doubt exists, replace the transaxle fluid. Refer to **CAPACITIES AND RECOMMENDED FLUIDS, DESCRIPTION** . 3. Verify the turning torque of transaxle bearings with NEW bearings installed.
Gear clash going into 1st or reverse from neutral with clutch depressed for 3+ seconds.	1. Improper fluid or additives in fluid. 2. Faulty synchronizers.	1. If doubt exists, replace the transaxle fluid. Refer to **CAPACITIES AND RECOMMENDED FLUIDS, DESCRIPTION** . 2. Disassemble transaxle to inspect. Replace synchronizers.
Fluid expelled from vent.	Transaxle is overfilled.	Adjust transaxle cold fill level.

HARD SHIFTING

Hard shifting may be caused by:

- Misadjusted crossover cable.
- If hard shifting is accompanied by gear clash, synchronizer drum, clutch stop rings or gear teeth may be worn or damaged.
- Mis-assembled synchronizer components also cause shifting problems.
- Incorrectly installed synchronizer sleeves, struts, or springs can cause shift problems.
- Worn, damaged, mis-assembled or leaking hydraulic clutch release system/components can also cause difficult shifting or gear clash.

NOISY OPERATION

Transaxle noise is most often a result of :

- Worn or damaged internal components.
- Chipped, broken gear or synchronizer teeth, and brinnelled, spalled bearings.
- Insufficient lubricant.
- Aftermarket additives can damage synchronizers.

SLIPS OUT OF GEAR

Transaxle disengagement may be caused by:

- Mis-aligned or damaged shift components.
- Worn teeth on the drive gears or synchronizer components.
- Incorrectly assembled geartrain.

LOW LUBRICANT LEVEL

Insufficient transaxle lubricant is usually the result of:

- Fluid leaks.
- Inaccurate fluid level check or refill method.
- Porosity in the transaxle castings.

NOTE: For leaks that are difficult to pinpoint, tracer dye can be added to the lubricant to aid in detecting the origin of the leak. Tracer dye becomes luminous under black light.

CLUTCH PROBLEMS

NEUTRAL GEAR RATTLE: Neutral gear rattle is not an indication of an internal transaxle fault. Neutral gear rattle is caused by the clutch disc springs loading and unloading under the weight of the geartrain in the transaxle. Usually, after releasing the clutch with the engine at idle, the geartrain will rotate quietly. When the engine operating system makes an idle alteration the transaxle geartrain will bounce causing the clutch springs to compress. Afterward, the spring release flinging the geartrain faster then the engine idle. When the engine

idle catches up with the geartrain and the spring compress and the process repeats over and over causing the geartrain to rattle. Neutral gear rattle is most audible in enclosed areas, such as a garage or between other parked vehicles.

SYMPTOM	POSSIBLE CAUSE	REPAIR
Gear clash shifting to reverse or neutral after clutch is depressed 3+ seconds.	Clutch disc hub spline seized to the transaxle input shaft.	Replace clutch disc and clean corrosion from input shaft.

ADJUSTMENTS

BEARING PRELOAD ADJUSTMENT

It is not necessary to reestablish preload shim thickness when new bearings are installed. It is only necessary to establish preload shim thickness when a transaxle housing component, gear shaft, or differential is replaced. This procedure is used to measure zero end play of the gear shafts and differential in the C635 (Manual or DDCT) Transaxle and establish the proper thickness of the select shims placed behind the bearing races in the transaxle housing to apply specific bearing preload to prevent bearing failure and gear rattle.

Transaxle Preparation

1. Clean the transaxle with suitable solvent.
2. Install new bearings on the gear shafts and the differential.

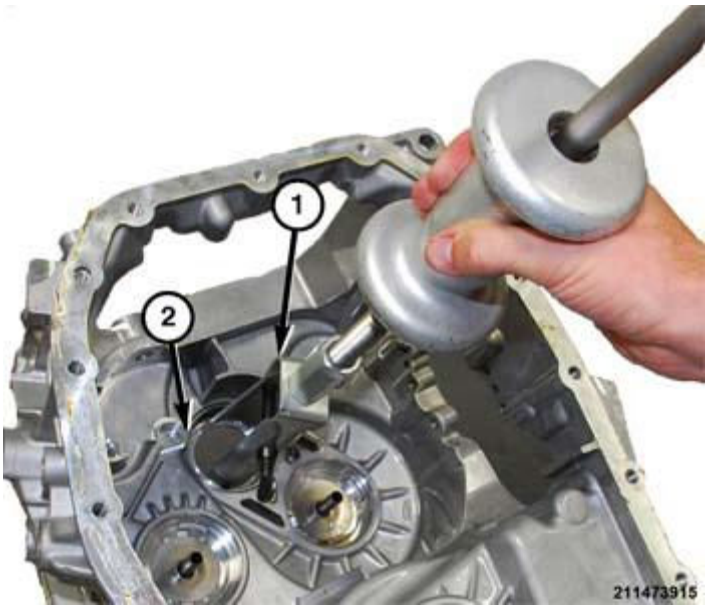

Fig. 1: Removing Preload Bearing Races
Courtesy of CHRYSLER GROUP, LLC

3. Remove the bearing races (2) from the transaxle housing using tools 9664 Remover (1) (special tool #9664, Remover, Bearing Cup) and C-637 Slide Hammer (special tool #C-637, Slide Hammer,

Universal).

4. Remove the factory installed select shims from the transaxle housing. Mark the shims to identify the bore that they were removed from.
5. From the circumference of the original bearing races, grind 0.18 mm (0.007 in) material from the races to allow them to slip-fit into the transaxle housing.

NOTE: To ensure a flat uniform surface on the outside diameter (OD) of the bearing races, chuck them on a suitable (brake) lathe and remove material from the OD with a suitable die grinder.

6. Insert the, reduced OD, differential bearing race into the transaxle housing.

NOTE: No select shim is required to measure the differential zero end play.

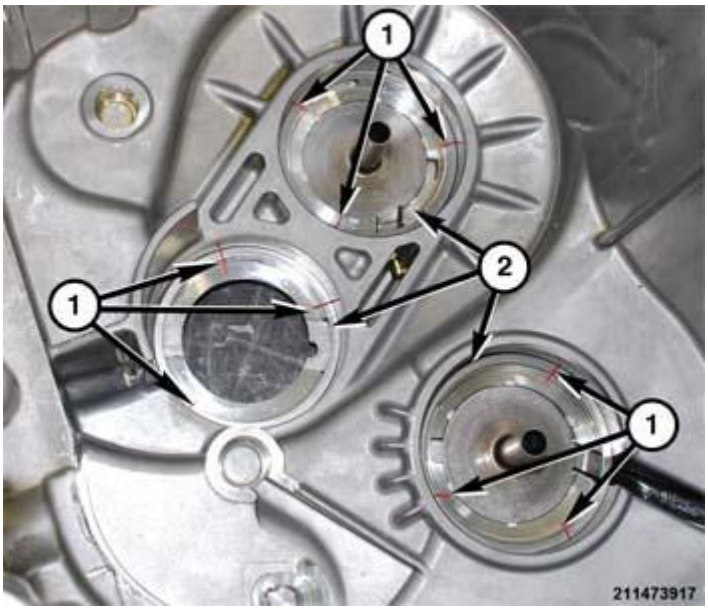

Fig. 2: Starter Shims & Plastigauge®
Courtesy of CHRYSLER GROUP, LLC

7. Insert an 0.80 mm (0.031 in), or suitable thickness, starter shims (2) in each gear shaft bearing race bore in the transaxle housing. This will create measurable gear shaft end play after the transaxle cases are assembled.

NOTE: If the original shims are greater than 1.32 mm (0.052 in) thick, use a 1 mm starter shim.

8. Use RED Plastigauge®, cut in 6 mm (1/4 in.) lengths (1), placed 120 degrees apart around the side surface of the select shims.

NOTE: If the gear shaft end play is less than the RED Plastigauge® can accurately

measure, use GREEN Plastigauge®.

9. Install the reduced diameter bearing races in the bores in the transaxle to capture the Plastigauge®.

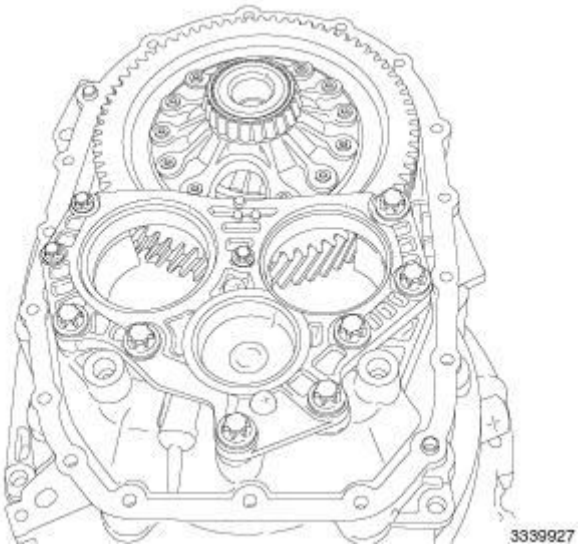

Fig. 3: Differential Assembly In Bellhousing
Courtesy of CHRYSLER GROUP, LLC

10. Install the differential assembly in the bellhousing half of the transaxle housing.
11. Place the bearing race plate in position on the bellhousing half of the transaxle housing.
12. Install the bolts to hold the bearing race plate to the bellhousing. Tighten the bolts to torque specification.

Fig. 4: Three Gear Shafts In Bellhousing
Courtesy of CHRYSLER GROUP, LLC

13. Install the three gear shafts in the bellhousing half of the transaxle housing.

14. Install the transaxle housing onto the bellhousing.

NOTE: **If the reduced diameter bearing races slip out of the bearing bores, Door Ease® wax can be applied to the circumference of the race to adhere it to the bore.**

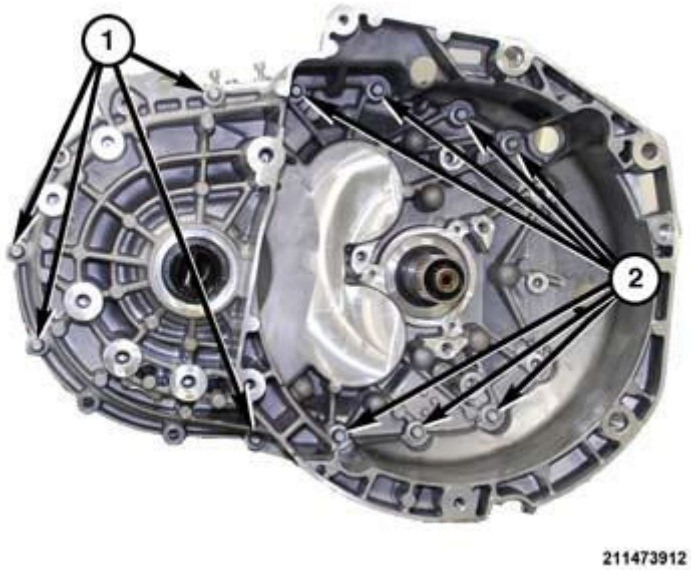

Fig. 5: Transaxle Housing To Bellhousing Bolts
Courtesy of CHRYSLER GROUP, LLC

15. Install four bolts (1) to hold the transaxle housing to the bellhousing around the differential side of the transaxle. Tighten the bolts to 50% of the torque specification.
16. Turn the transaxle on its side to gain access to the inside of the bellhousing.
17. Install seven bolts (2), four above and three below the gear shafts, to hold the transaxle case halves together, Tighten the bolts to 50% of the torque specification.
18. Turn transaxle, bellhousing downward, on the work surface.

Measuring Differential End Play

1. Install (special tool #C-4995A, Tool, Differential Bearing Torque) (1) into the differential side gear (2).

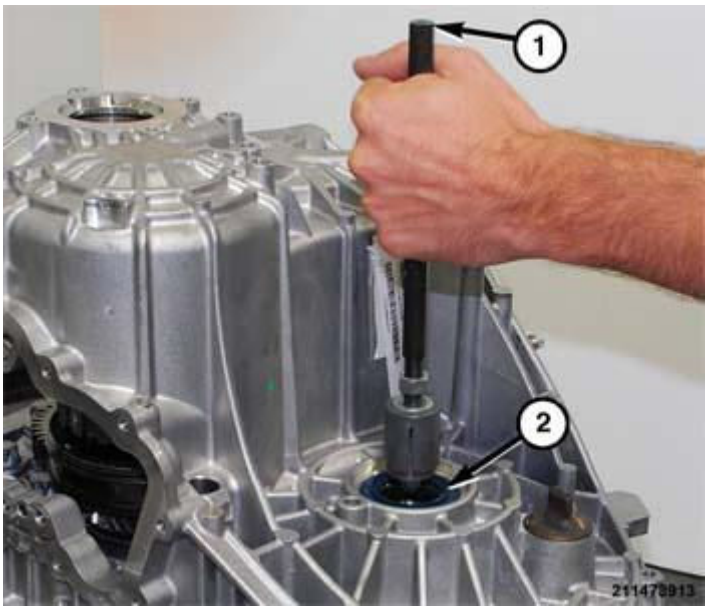

Fig. 6: Installing Special Tool To Differential Side Gear
Courtesy of CHRYSLER GROUP, LLC

2. Clamp a typical vise grip pliers (4) on tool C-4995A (2).
3. Attach dial indicator C-3339A (1) (special tool #C-3339A, Set, Dial Indicator) to transaxle housing with the plunger placed on the end of tool C-4995A (2).

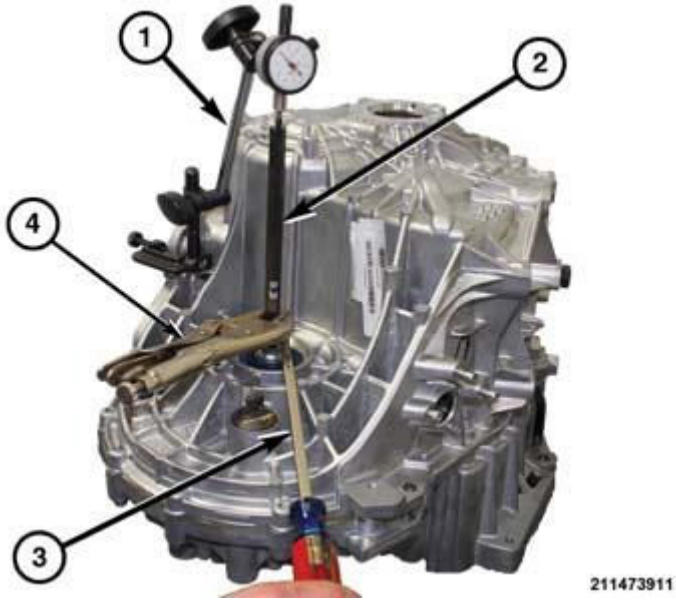

Fig. 7: Measuring Differential End Play
Courtesy of CHRYSLER GROUP, LLC

4. Zero the indicator dial (1).
5. Use a large screw driver (3) to pry upward on tool C-4995A (2) to take up the bearing free play.

6. While holding tool C-4995A (2) upward read the dial indicator (1).
7. Add 0.15 mm (0.006 in.) to the dial indicator reading.
8. The sum is the proper thickness of the differential preload shim.

Measuring Gear Shaft End Play

1. Turn the transaxle on its side to gain access to the inside of the bellhousing.

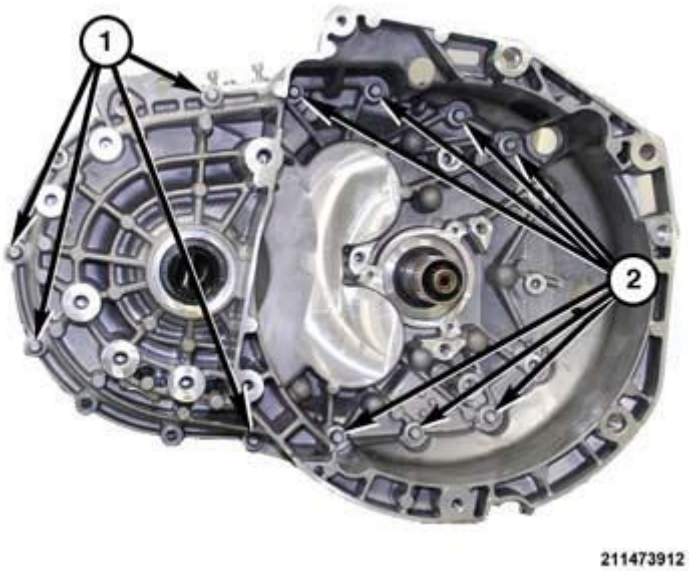

Fig. 8: Transaxle Housing To Bellhousing Bolts
Courtesy of CHRYSLER GROUP, LLC

2. Remove the bolts (2) holding the bellhousing to the transaxle housing.
3. Turn transaxle, bellhousing downward, on the work surface.
4. Remove the remaining bolts (1) holding the bellhousing to the transaxle housing.
5. Place the transaxle housing on the work surface inside up.

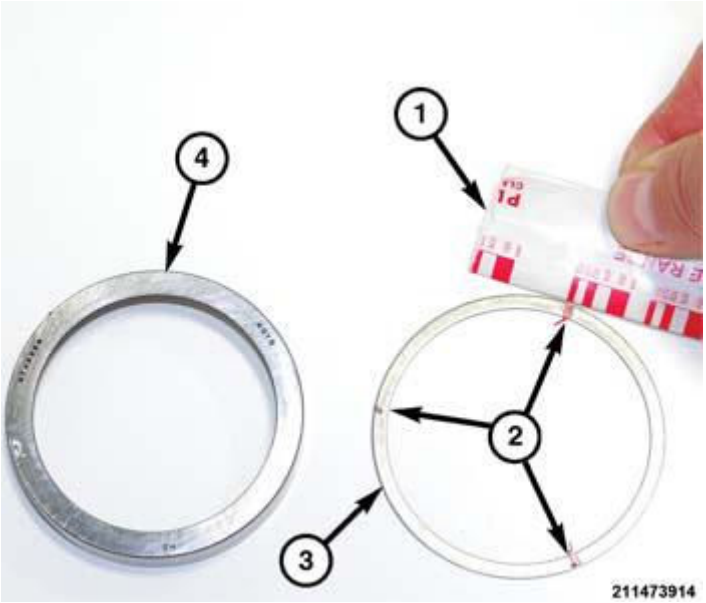

Fig. 9: Bearing Race, Shim & Plastigauge®
Courtesy of CHRYSLER GROUP, LLC

6. Using a hook tool, remove the reduced size bearing races (4). Be careful not to damage the Plastigauge® (2).
7. Compare the thickness of the Plastigauge® (2) to the RANGE template on the Plastigauge® packaging (1).
8. Add the Plastigauge® RANGE thickness, plus 0.15 mm (0.006 in.) to the thickness of the starter shim used to create gear shaft end play.
9. The sum is the proper thickness to preload for each of the gear shaft bearings.
10. Install the closest thickness shims from the list provided by Mopar® Parts.

NOTE: **If the measured thickness falls between the shim thicknesses provided by Mopar® Parts, install the shim that is slightly thicker.**

After proper bearing preload is established, finish assembling the transaxle.

SPECIFICATIONS

SPECIFICATIONS

TORQUE SPECIFICATIONS

DESCRIPTION	N.m	Ft. Lbs.	In. Lbs.
Bolts, Slave Cylinder-to-Bell Housing	10	-	88
Bolt, Differential Ring Gear-to-Carrier	83	61	-
Bolt, Transmission Case-to-Bell			

Housing	32	24	-
Plug, Transaxle Drain/Fill	25	18	-
Switch, Backup Lamp	38	28	-
Bolts, Flywheel-to-Crankshaft	160	118	-
Bolts, Clutch cover-to-Flywheel	25	18	-
Bolt, Transaxle-to-engine Lower	40	30	-
Bolts, Transaxle-to-engine Upper	50	37	-
Bolts, Rear Transmission Mount Bracket-Lower	20	15	-
Bolts, Rear Transmission Mount Bracket-Through	110	81	-
Bolts, Lower Mount Bracket-to-Transmission	105	77	-
Bolt, Pivot Bracket-to-Transmission	147	108	-
Bolt, Input Shaft Rear Bearing Retention	56	41	-
Bolt, Gear Shaft Rear Bearing Retention	110	81	-
Bolts, Small Race Plate	25	18	-
Bolts, Large Race Plate-First Pass	20	15	-
Bolts, Large Race Plate-Second Pass	80	59	-
Nut, Transaxle to Engine Stud	60	44	-
Bolt, Reverse Idler Gear	10		89
Bolts, Shift Lever Assembly-to-Case	20	15	-
Bolts, Shift Cable Bracket-to-case	20	15	-
Bolts, Shift Cable Bracket-to-case	20	15	-
Nuts, Shifter Assembly Mounting	7	-	61
Switch, Backup Lamp	38	28	-

REMOVAL

REMOVAL

1. Position the vehicle on a suitable hoist with the transmission in neutral. Refer to **HOISTING, STANDARD PROCEDURE** .
2. Release the hood latch and open the hood.

3. Support the hood on the provided prop-rod.
4. Remove the engine cover.
5. Remove the upper radiator closeout panel.
6. Disengage the clips holding the wire harness to the battery tray.
7. Remove the battery and battery tray. Refer to **TRAY, BATTERY, REMOVAL** .
8. Remove the pinch bolt holding the steering column to the steering gear.
9. Raise the vehicle to gain access to the front wheels.
10. Remove the front wheels. Refer to **REMOVAL** .
11. Raise the vehicle to gain access to the belly pan.
12. Remove the belly pan. Refer to **BELLY PAN, REMOVAL** .
13. Release the clamp from the charge air outlet hose on the left side of the radiator support panel.
14. Remove the bolt holding the charge air hose to the side of the transmission.
15. Remove the left front fender splash shield. Refer to **SHIELD, SPLASH, FRONT WHEELHOUSE, REMOVAL** .
16. Remove the right front fender splash shield. Refer to **SHIELD, SPLASH, FRONT WHEELHOUSE, REMOVAL** .
17. Disconnect wire harness connector at the left side of the front fascia.
18. Release the retainer holding the wire harness to the front fascia.
19. Lower the vehicle to mid level.
20. Remove the front fascia. Refer to **FASCIA, FRONT, REMOVAL** .
21. Disconnect the charge air tube from the throttle body adapter.
22. Separate the charge air tube from the vehicle.
23. Raise the vehicle to gain access to the halfshafts.
24. Using a suitable punch tool, pry out the lock staking on the front hub nuts.
25. Install the front wheel bolts in the front brake rotor hub.
26. While holding a pry bar across the wheel bolts to prevent the wheel hub from rotating, remove the front wheel hub nuts.
27. Remove the front halfshafts. Refer to **REMOVAL** .
28. If equipped, remove the rear propeller shaft.
29. Remove the exhaust crossunder pipe.
30. Place a suitable drain pan under the transmission.
31. Remove the drain plug to allow the fluid to drain into the drain pan.
32. If equipped, remove the power transfer unit (PTU).
33. Lower vehicle to gain access to the shift cables.

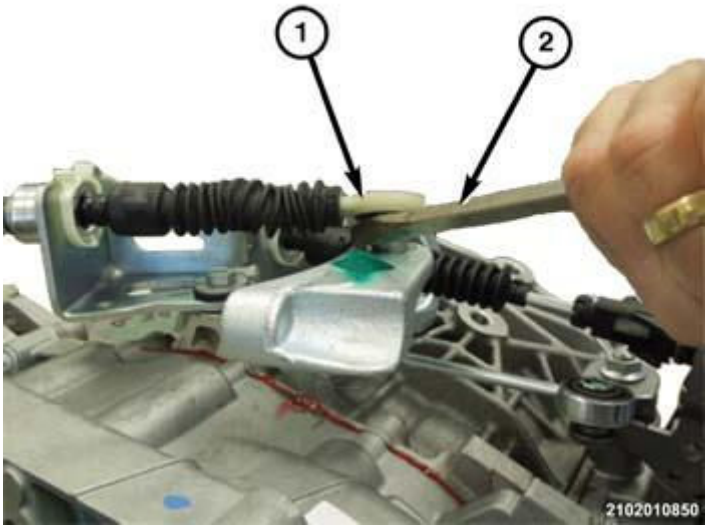

Fig. 10: Prying Shift Cable End From Lever Ball Stud On Transmission
Courtesy of CHRYSLER GROUP, LLC

34. Using a suitable prying tool, pry the shift cable end from the lever ball stud on the transmission.

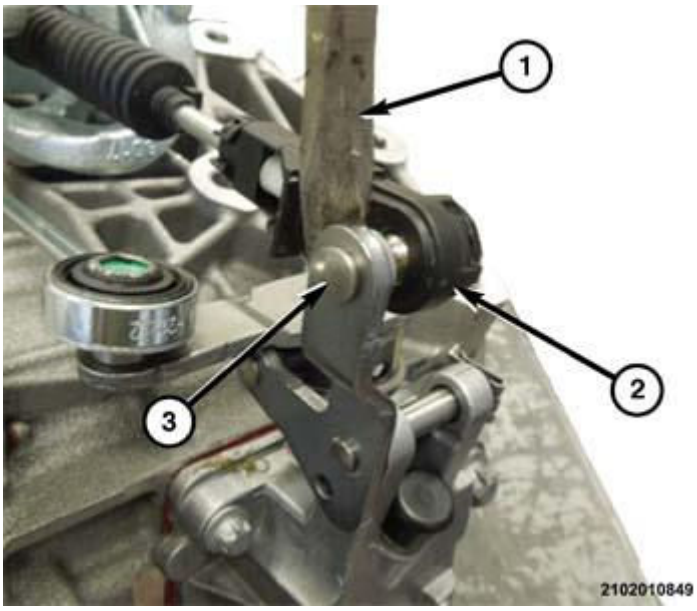

Fig. 11: Prying Select Cable End From Select Lever Ball Stud On Transmission
Courtesy of CHRYSLER GROUP, LLC

35. Using a suitable prying tool, pry the select cable end from the select lever ball stud on the transmission.
36. Release the clips holding the shift cables housing ends to the bracket on the transmission.
37. Remove the exhaust heat shield from the exhaust manifold.
38. Disconnect the wire connector from the exhaust temperature sensor.

39. Disconnect the wire connector from the oxygen sensor.
40. Remove the oxygen sensor. Refer to **SENSOR, OXYGEN, REMOVAL** .
41. Remove the exhaust clamp holding the turbo charger to the catalytic converter.

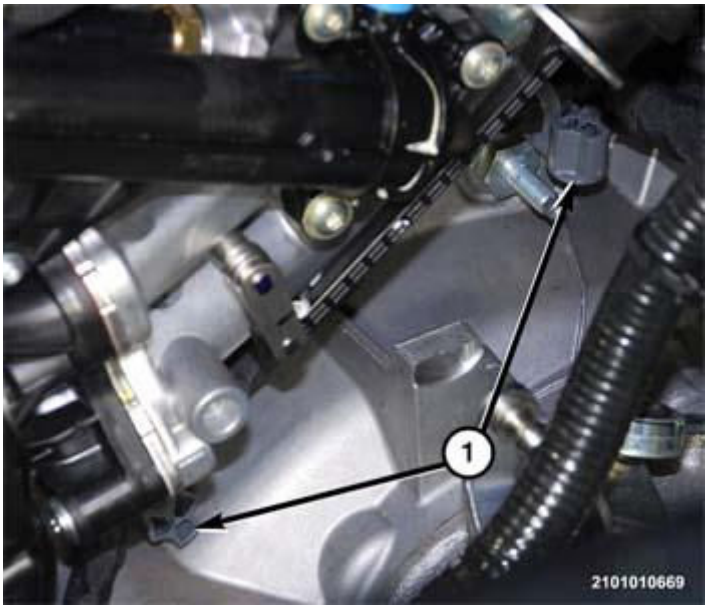

Fig. 12: Wire Harness Retainers
Courtesy of CHRYSLER GROUP, LLC

42. Disengage the wire harness retainers (1) along the top of the bellhousing.
43. Position the wire harness out of the way.

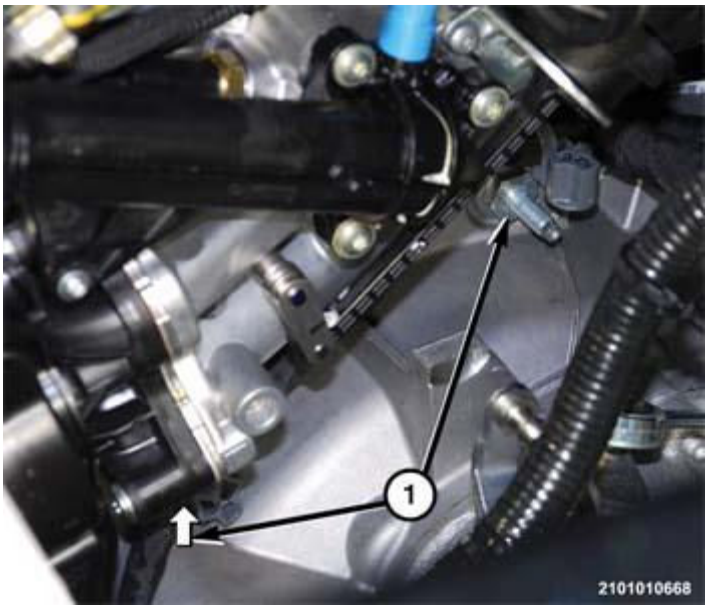

Fig. 13: Locating Bolts Holding Upper Bellhousing To Engine Block
Courtesy of CHRYSLER GROUP, LLC

44. Remove the bolts (1) holding the upper bellhousing to the engine block.
45. Position a floor jack under the transmission and lift the transmission enough to take tension off the upper transmission mount.

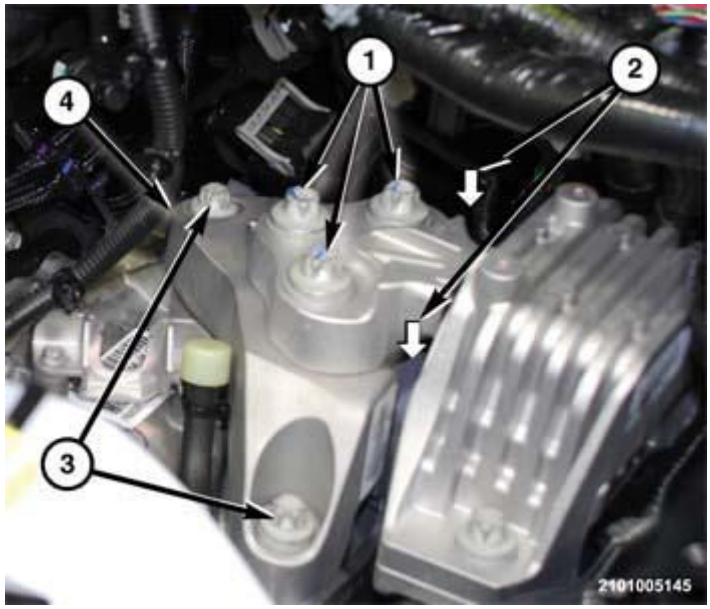

Fig. 14: Locating Bolts Holding Upper Mount To Adapter Spacer & Adapter Spacer To Transmission
Courtesy of CHRYSLER GROUP, LLC

46. Remove the bolts (1) holding the upper transmission mount to the transmission mount adapter spacer (4).
47. Remove the bolts (3), (2= hidden) holding the transmission mount adapter spacer (4) to the transmission.

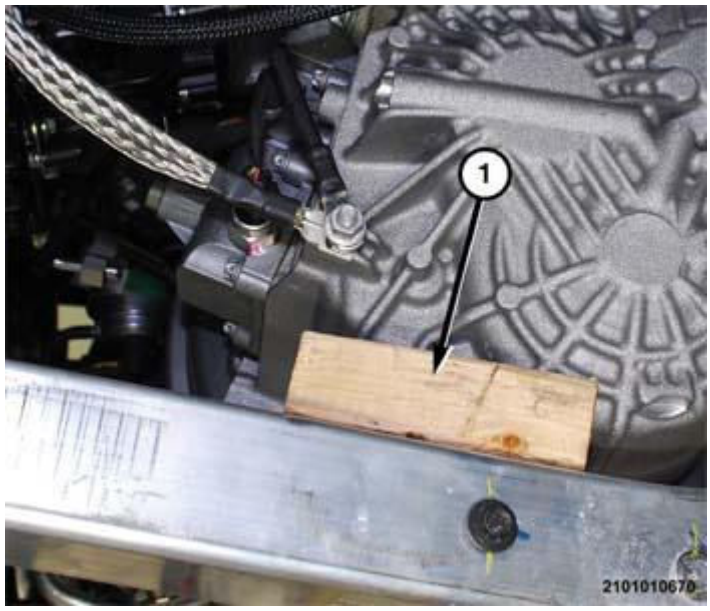

Fig. 15: Installing Block Of Wood Between Transmission & Left Load Beam

Courtesy of CHRYSLER GROUP, LLC

48. While holding a wood block (1) between the transmission and the left load beam, lower the transmission.
49. Remove the floor jack from under the vehicle.
50. Remove transmission mount spacer from the vehicle.
51. Raise the vehicle to gain access to the front suspension cradle.

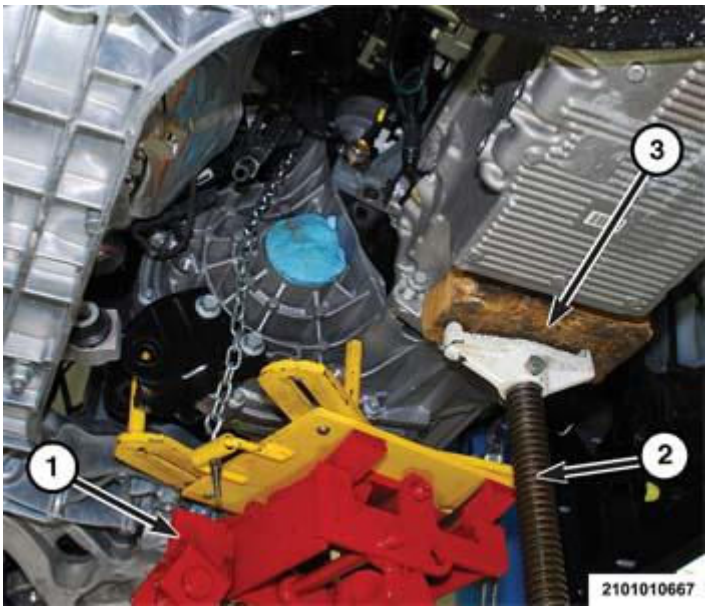

Fig. 16: Positioning Transmission Jack, High Stand & Wood Block
Courtesy of CHRYSLER GROUP, LLC

52. Position a suitable transmission jack (1) under the transmission in a stable fashion and secure the transmission to the transmission jack cradle with a safety chain or strap.
53. Position a high stand (2) under the engine oil pan, use a wood block (3) to protect the oil pan.

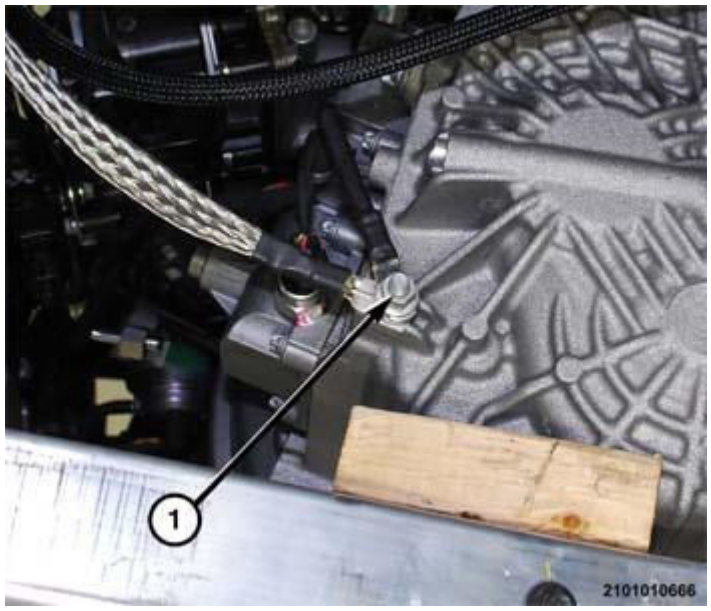

Fig. 17: Locating Nut Holding Ground Cable To Transmission
Courtesy of CHRYSLER GROUP, LLC

54. Remove the nut (1) holding the ground cable to the transmission from above the left load beam.
55. Separate the ground cable from the transmission.

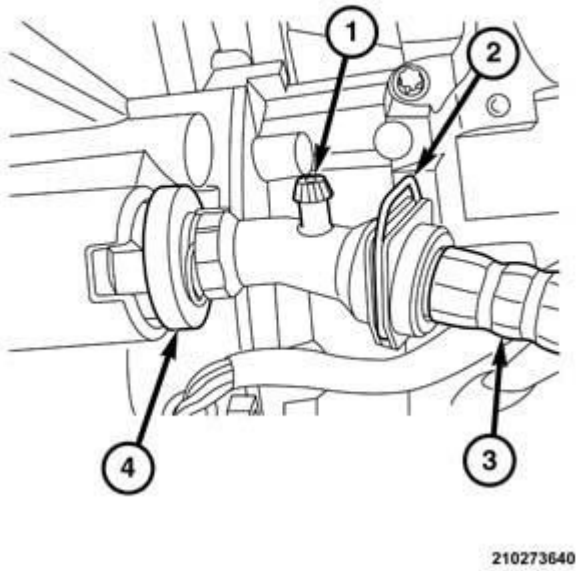

Fig. 18: Clutch Slave Cylinder Union & Nipple
Courtesy of CHRYSLER GROUP, LLC

56. Disengage the clutch hydraulic coupling (4) from the slave cylinder on the transmission.

57. Using a suitable cap-plug, seal the end of the hydraulic line to avoid loosing hydraulic fluid.
58. Remove the catalytic converter from the engine. Refer to **CONVERTER, CATALYTIC, REMOVAL** .
59. Remove the starter motor. Refer to **STARTER, REMOVAL** .
60. Remove the front suspension cradle and load beams.

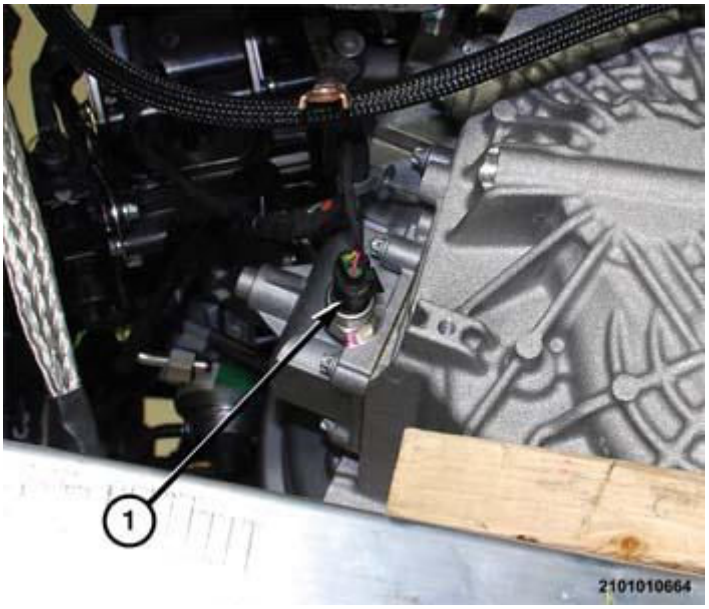

Fig. 19: Backup Lamp Switch Wire Harness Connector
Courtesy of CHRYSLER GROUP, LLC

61. Disconnect the wire harness connector (1) from the backup lamp switch.

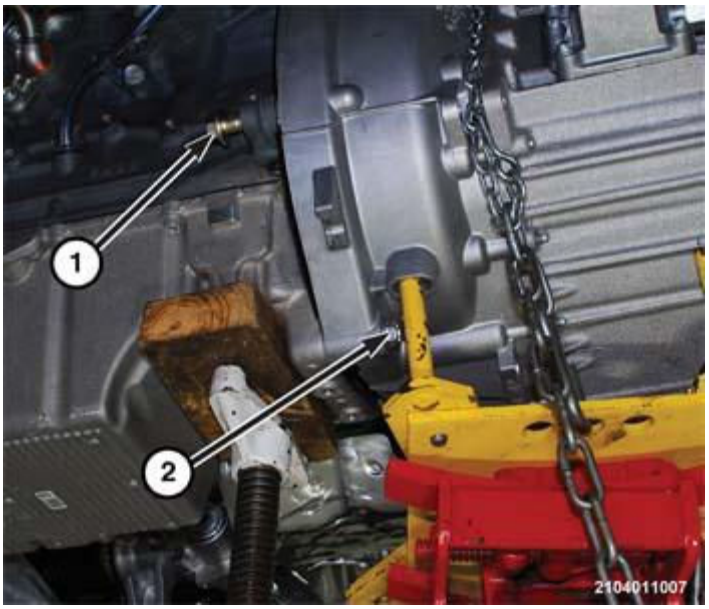

Fig. 20: Locating Bolts Holding Engine To Bellhousing & Bellhousing To Oil Pan
Courtesy of CHRYSLER GROUP, LLC

62. On the backside of the engine, remove the bolt (1) holding engine to the bellhousing and the bolt (2) holding the bellhousing to the oil pan.

Fig. 21: Locating Bolts Holding Engine Block To Transmission Bellhousing & Bellhousing To Oil Pan
Courtesy of CHRYSLER GROUP, LLC

63. On the front of the engine, remove the bolts (1) holding the engine block to the transmission bellhousing and the bellhousing to the oil pan.

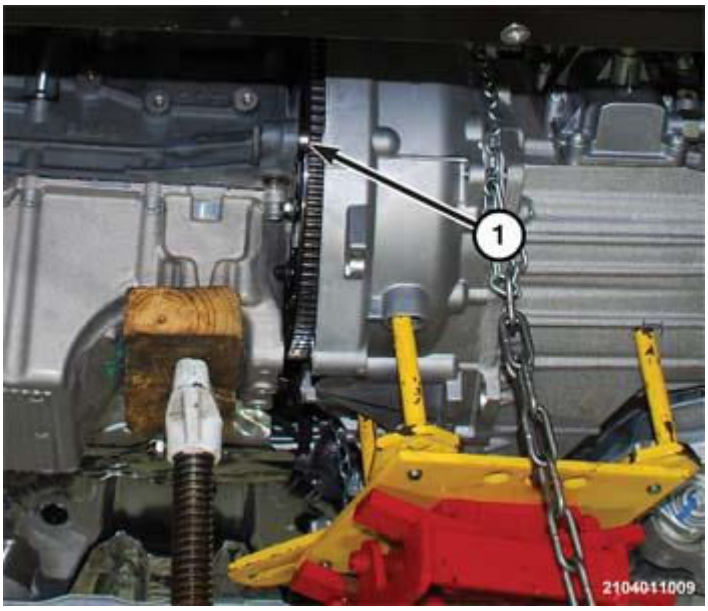

Fig. 22: Removing/Installing Transmission
Courtesy of CHRYSLER GROUP, LLC

64. Using a suitable pry bar, separate the transmission from the engine far enough for the clutch to clear the bellhousing (1).
65. Lower the transmission while avoiding obstacles and separate the transmission from the vehicle.

DISASSEMBLY

DISASSEMBLY

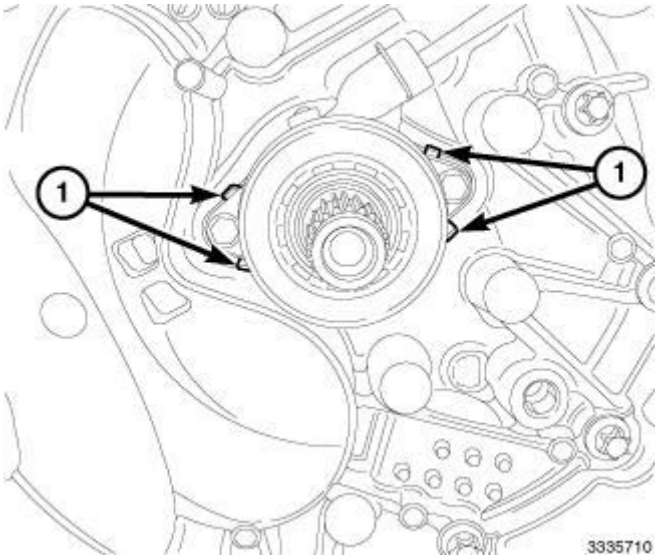

Fig. 23: Concentric Slave Cylinder Retention Tabs
Courtesy of CHRYSLER GROUP, LLC

1. Release the retention tabs from the Concentric Slave Cylinder (CSC) (1).

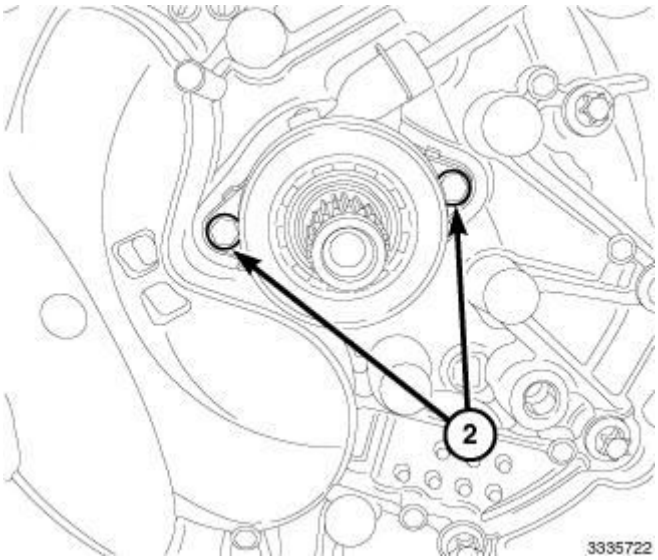

Fig. 24: CSC Bolts
Courtesy of CHRYSLER GROUP, LLC

2. Remove the CSC bolts (2).

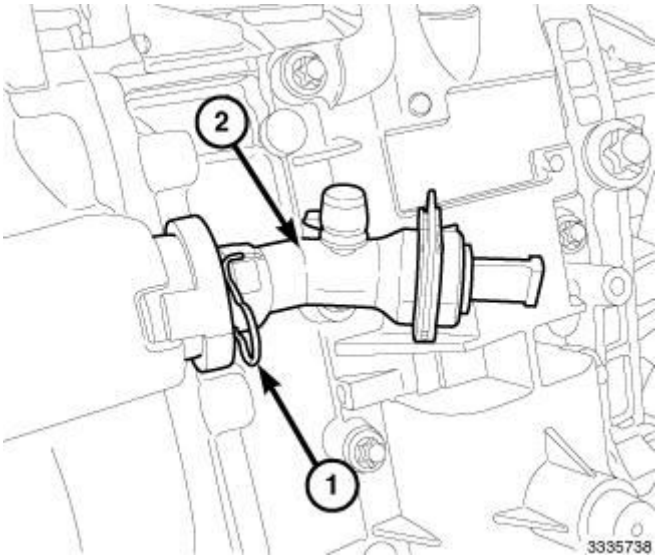

Fig. 25: Retention Clip & Connection
Courtesy of CHRYSLER GROUP, LLC

3. Disconnect the hydraulic connection at the case. Release the retention clip (1) then separate the connection (2).

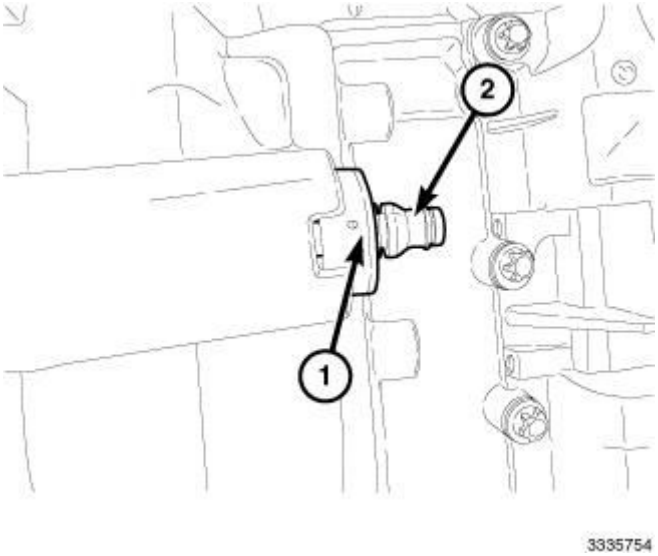

Fig. 26: Hydraulic Fitting & Plastic Retainer
Courtesy of CHRYSLER GROUP, LLC

4. Disconnect the hydraulic fitting (2) from the plastic retainer (1).
5. Remove the CSC.

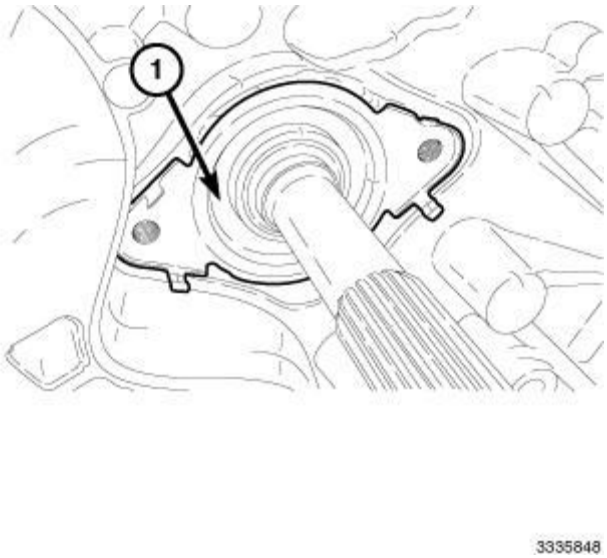

Fig. 27: Mainshaft Oil Seal Plate
Courtesy of CHRYSLER GROUP, LLC

6. Remove the mainshaft oil seal plate (1).

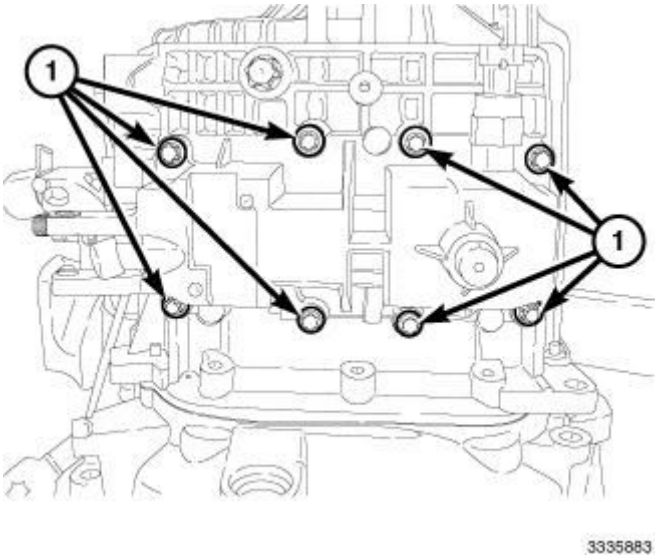

Fig. 28: Gear Selector Assembly Bolts
Courtesy of CHRYSLER GROUP, LLC

7. Remove the gear selector assembly bolts (1).
8. Use a plastic hammer or the equivalent to loosen the assembly and remove from the case.

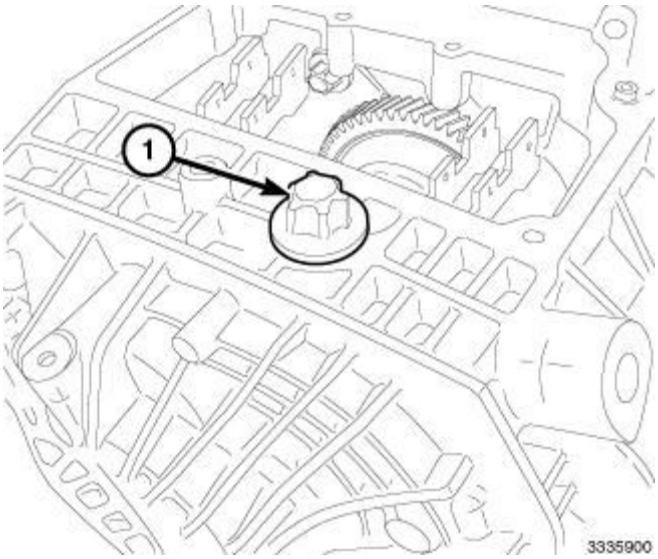

Fig. 29: Reverse Idler Gear Assembly Retaining Bolt
Courtesy of CHRYSLER GROUP, LLC

9. Remove the reverse idler gear assembly retaining bolt.
10. Remove the axle seals. Refer to **SEAL, AXLE DRIVE SHAFT, REMOVAL**.

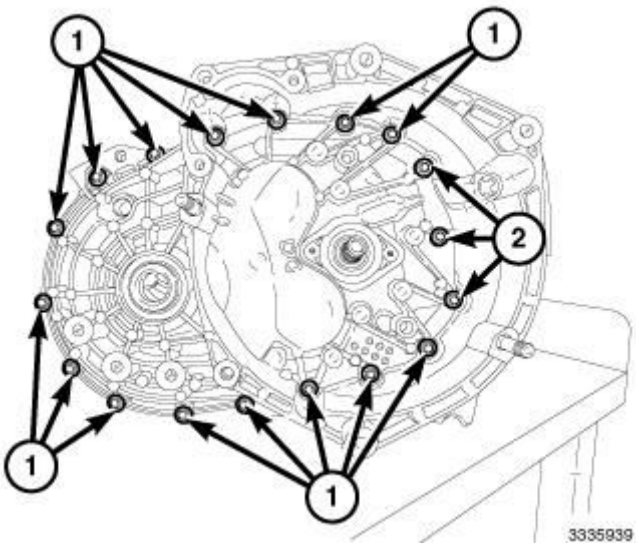

Fig. 30: Long Case Bolts & Short Case Bolts
Courtesy of CHRYSLER GROUP, LLC

11. Remove the long case bolts (1) and the short case bolts (2).

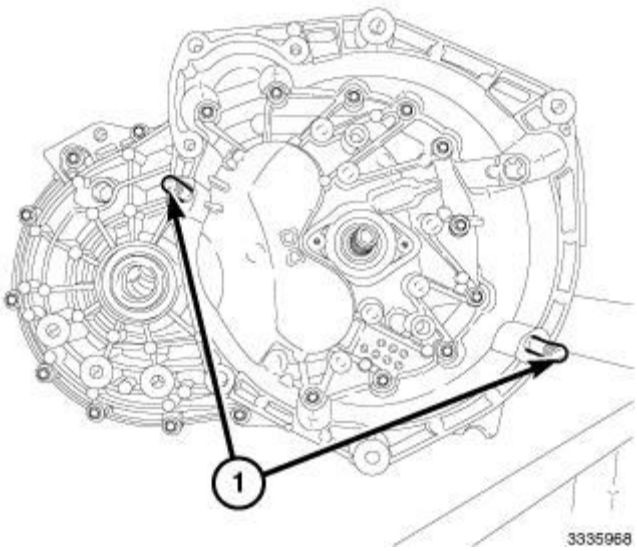

Fig. 31: Studs
Courtesy of CHRYSLER GROUP, LLC

12. Remove the studs (1).

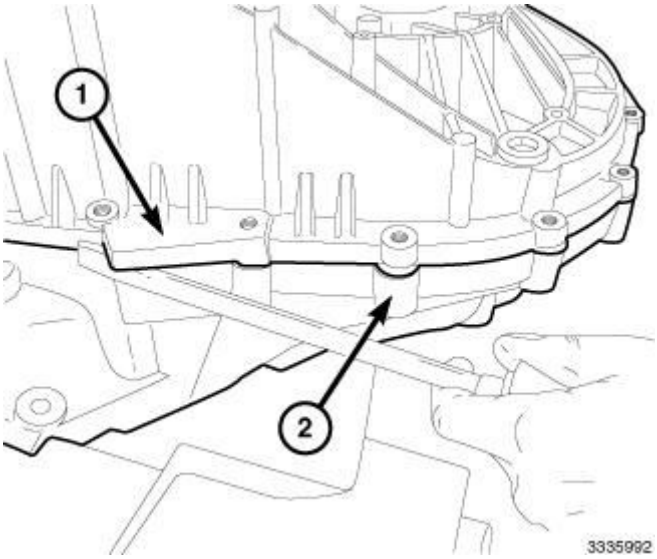

Fig. 32: Gear Side Half & Bell Housing Side Half
Courtesy of CHRYSLER GROUP, LLC

13. Separate the case halves by carefully prying on the gear side half (1) and the bell housing side half (2).

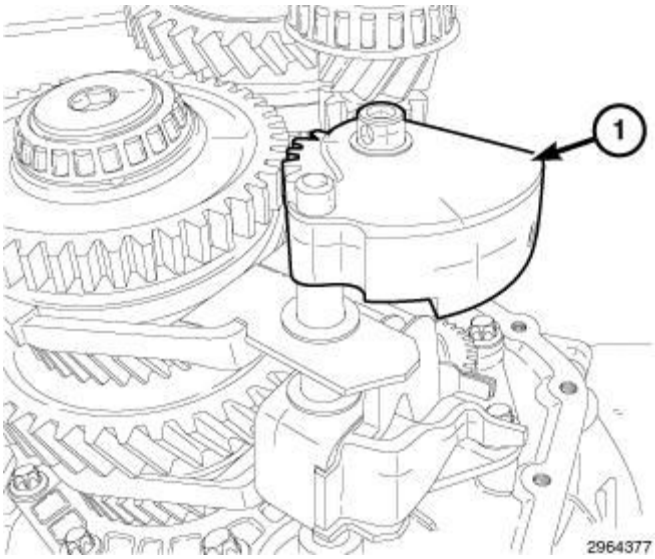

Fig. 33: Reverse Idler Gear Assembly
Courtesy of CHRYSLER GROUP, LLC

14. Remove the reverse idler gear assembly (1).
15. Using a hydraulic press, remove the pin from the reverse gear mounting bracket.
16. Separate the reverse idler gear and the needle bearing.

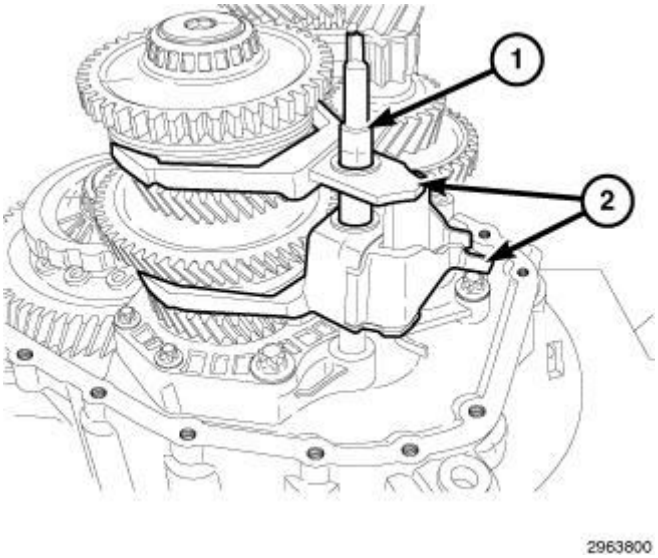

Fig. 34: Shifter Fork Pivot Pin
Courtesy of CHRYSLER GROUP, LLC

17. Remove the shifter fork pivot pin (1).
18. Remove the 3-4-reverse gear shifter fork assembly (2).

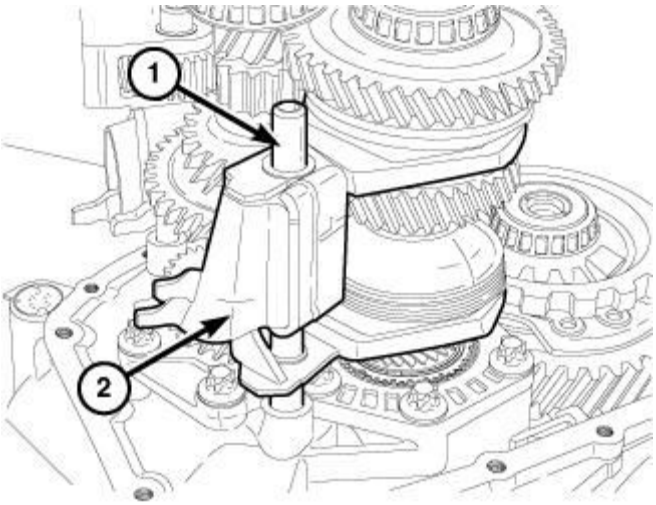

Fig. 35: Shifter Fork Pivot Pin & 1-2-5-6 Gear Shifter Fork Assembly
Courtesy of CHRYSLER GROUP, LLC

19. Remove the shifter fork pivot pin (1).
20. Remove the 1-2-5-6 gear shifter fork assembly (2).

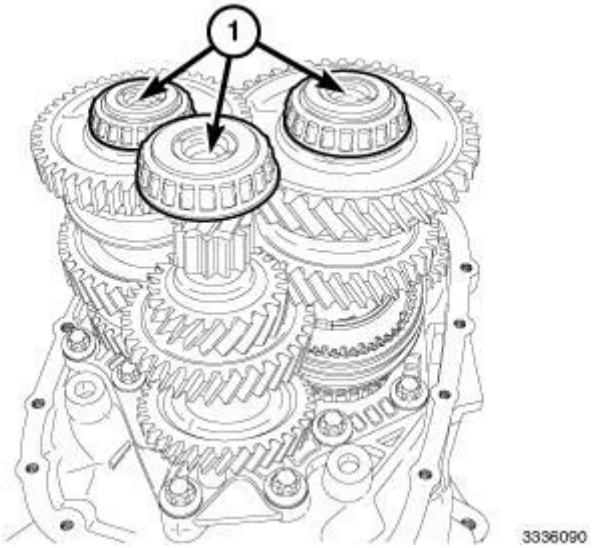

Fig. 36: Output And Main Shafts
Courtesy of CHRYSLER GROUP, LLC

21. Remove the output and main shafts (1) as a group.

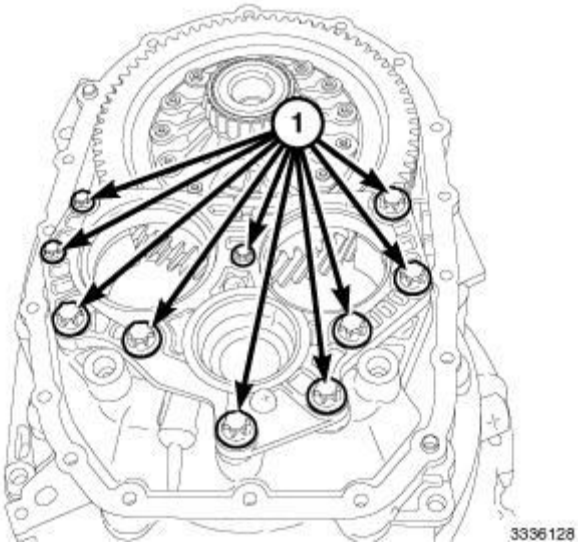

Fig. 37: Bearing Race Plate Bolts
Courtesy of CHRYSLER GROUP, LLC

22. Remove the bearing race plate bolts.

NOTE: **Use a screw drive or equivalent as an aid in releasing the plate from the locating bushings.**

Fig. 38: Bearing Race Plate
Courtesy of CHRYSLER GROUP, LLC

23. Remove the bearing race plate.

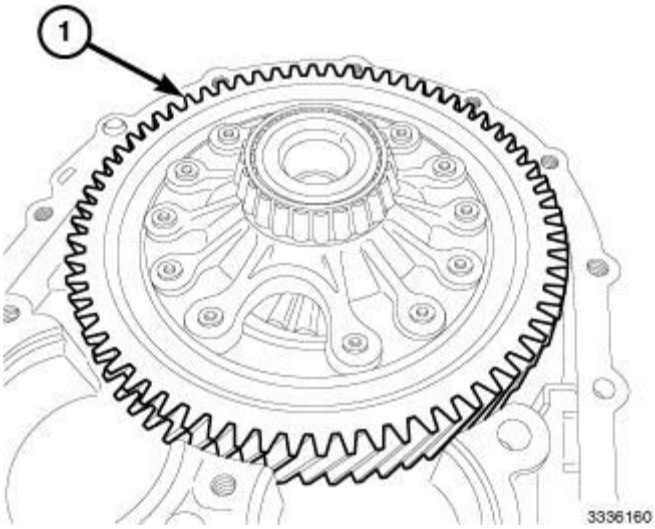

Fig. 39: Differential Assembly
Courtesy of CHRYSLER GROUP, LLC

24. Remove the differential assembly (1).
25. Remove the axle seals Refer to **SEAL, AXLE DRIVE SHAFT, REMOVAL**.

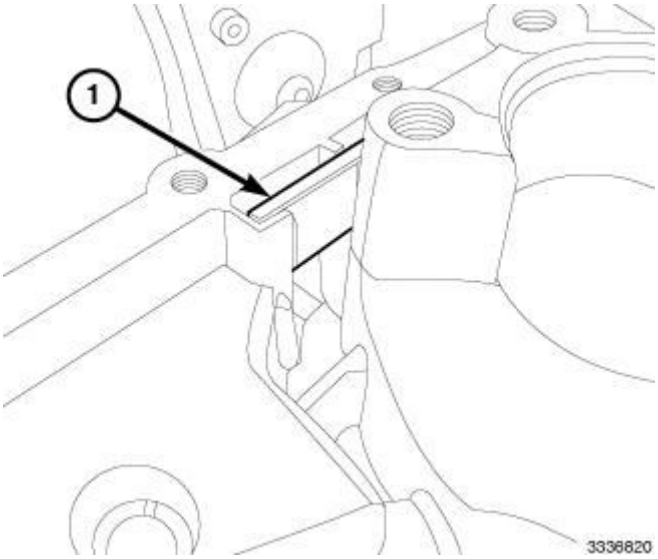

Fig. 40: Magnet
Courtesy of CHRYSLER GROUP, LLC

26. Remove the magnet.

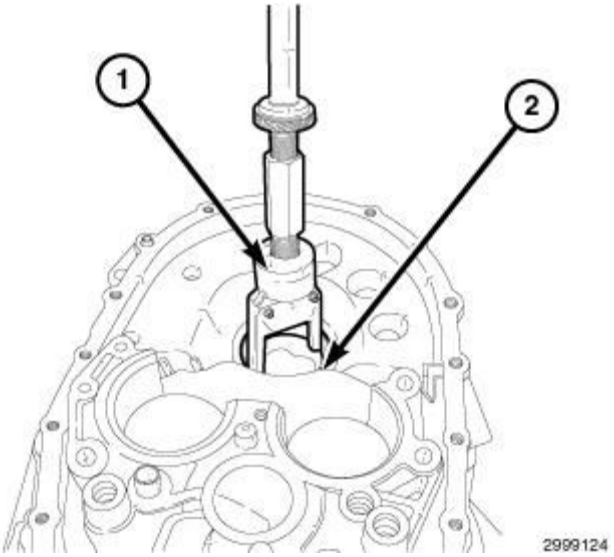

Fig. 41: Removing Bell Housing Side Differential Bearing Race
Courtesy of CHRYSLER GROUP, LLC

27. Remove the bell housing side differential bearing race using (special tool #C-637, Slide Hammer, Universal) and (special tool #9664, Remover, Bearing Cup).

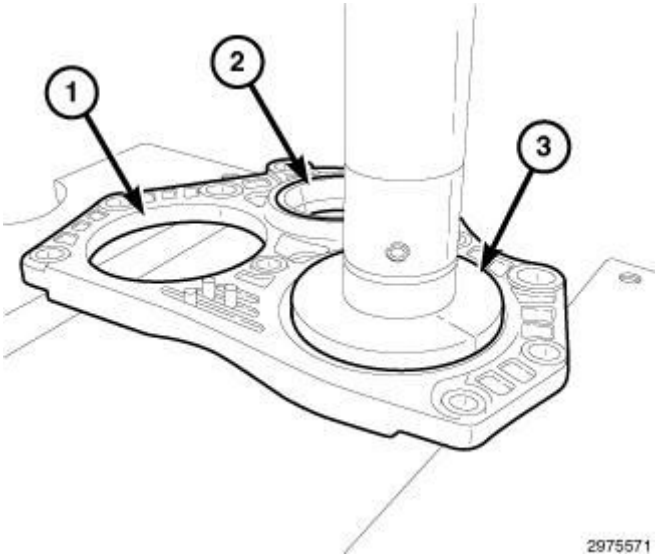

Fig. 42: Input Shaft Bearing Cup
Courtesy of CHRYSLER GROUP, LLC

28. Remove shaft bearing cup (2) using a press and (special tool #10302, Installer, Bearing Cup).
29. Remove the input shaft bearing cup (2) using (special tool #C-637, Slide Hammer, Universal) (special tool #9664, Remover, Bearing Cup).
30. Remove the output shaft bearing cup from the race mounting plate using a press and tools (special tool #D-111, Installer, Bearing Cup) (3), 10302.

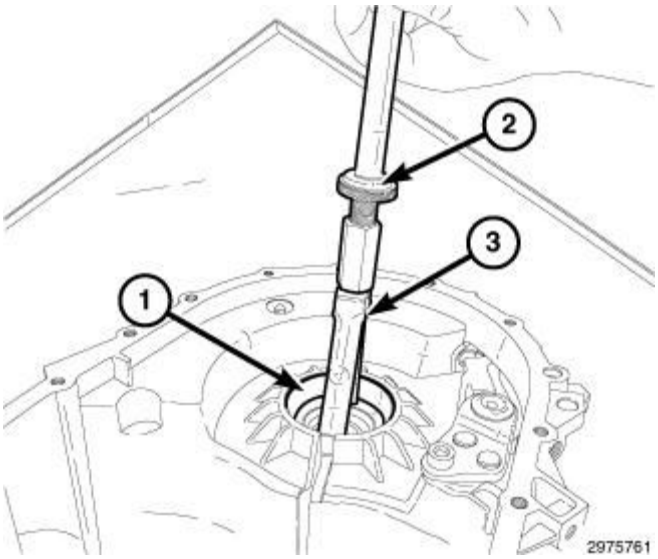

Fig. 43: Removing Differential Bearing Race Cups & Shims
Courtesy of CHRYSLER GROUP, LLC

NOTE: Do not discard the shim as it will be utilized as the starting point for the bearing preload adjustment process.

31. Remove the case side differential bearing race cups and shims (1) using (special tool #C-637, Slide Hammer, Universal) (special tool #9664, Remover, Bearing Cup) (3).

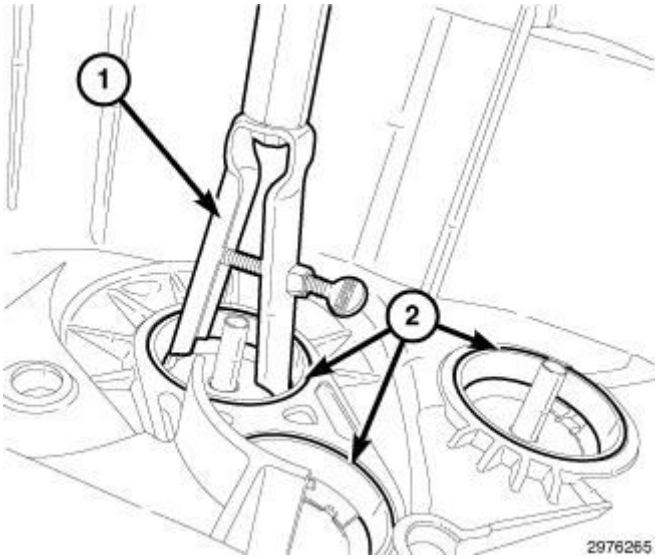

Fig. 44: Removing Case Side Gear Shaft Bearing Race Cups & Shims
Courtesy of CHRYSLER GROUP, LLC

NOTE: Document the location of each shim as they will be utilized as the starting point for the bearing preload adjustment process.

32. Remove the case side gear shaft bearing race cups and shims (2) using a Slide Hammer (special tool #C-637, Slide Hammer, Universal) (special tool #9664, Remover, Bearing Cup) (1).

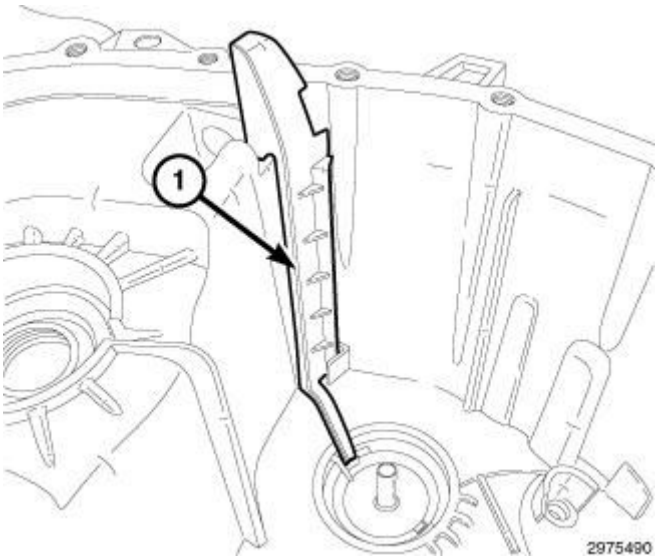

Fig. 45: Lubricating Duct
Courtesy of CHRYSLER GROUP, LLC

33. Remove the lubricating duct by pulling upward.

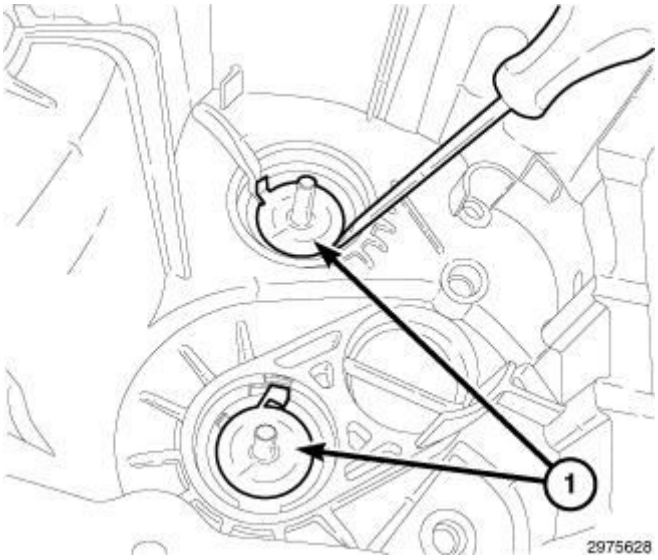

Fig. 46: Shaft Oil Ducts
Courtesy of CHRYSLER GROUP, LLC

NOTE: The oil ducts are staked to the case and may require some grinding before removal.

34. Remove the shaft oil ducts (1) from the case using a screwdriver or the equivalent.

CLEANING

CLEANING

Clean the gears, bearings, shafts, synchronizers, thrust washers, oil feeder, shift mechanism, gear case, and bellhousing. Do not use solvent to clean sealed bearings. Dry all parts except the bearings with compressed air. Allow the bearings to either air dry or wipe them dry with clean shop towels.

ASSEMBLY

ASSEMBLY

NOTE: It is not necessary to reestablish preload shim thickness when new bearings are installed. It is only necessary to establish preload shim thickness when a transaxle housing component, gear shaft, or differential is replaced. Refer to ADJUSTMENTS.

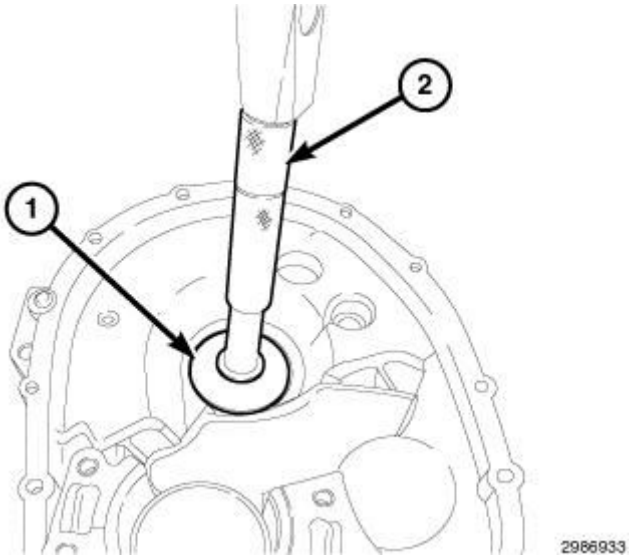

Fig. 47: Right And Left Side Differential Bearing Races And Universal Driver Handle
Courtesy of CHRYSLER GROUP, LLC

1. Install the right and left side differential bearing races using (special tool #8866, Installer, Bearing Cup) and (special tool #C-4171, Driver Handle, Universal).

Fig. 48: Special Tool #8866
Courtesy of CHRYSLER GROUP, LLC

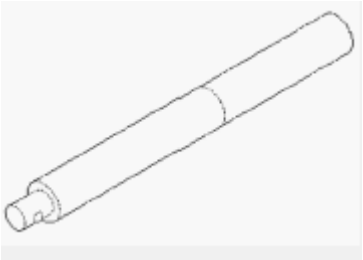

Fig. 49: Special Tool #C-4171
Courtesy of CHRYSLER GROUP, LLC

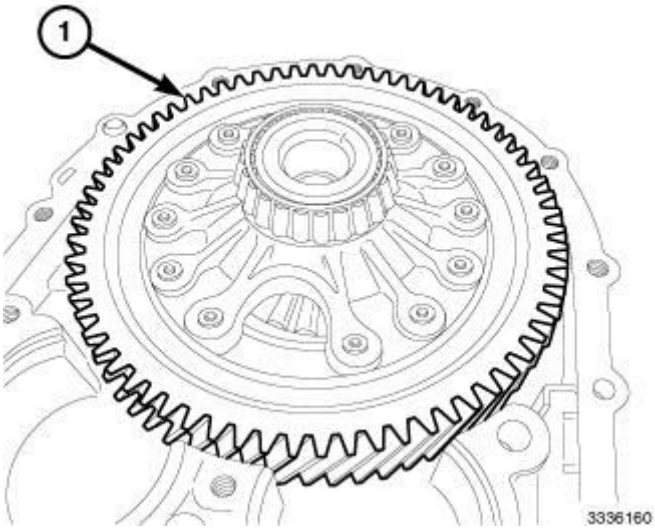

Fig. 50: Differential Assembly
Courtesy of CHRYSLER GROUP, LLC

2. Install the differential.

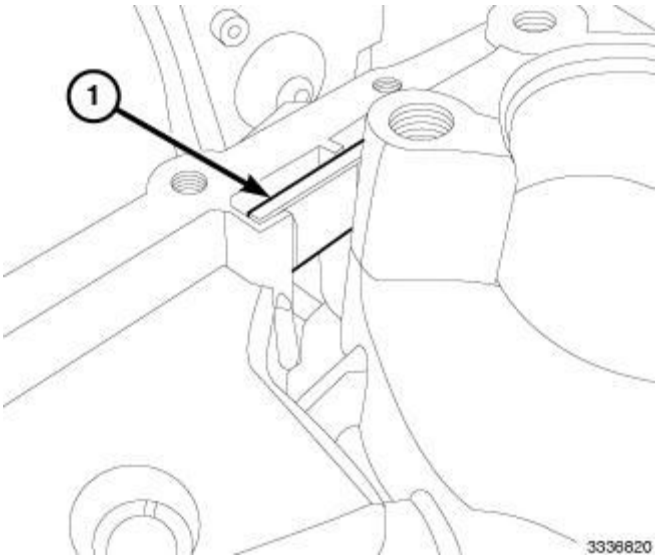

Fig. 51: Magnet
Courtesy of CHRYSLER GROUP, LLC

3. Install the magnet.

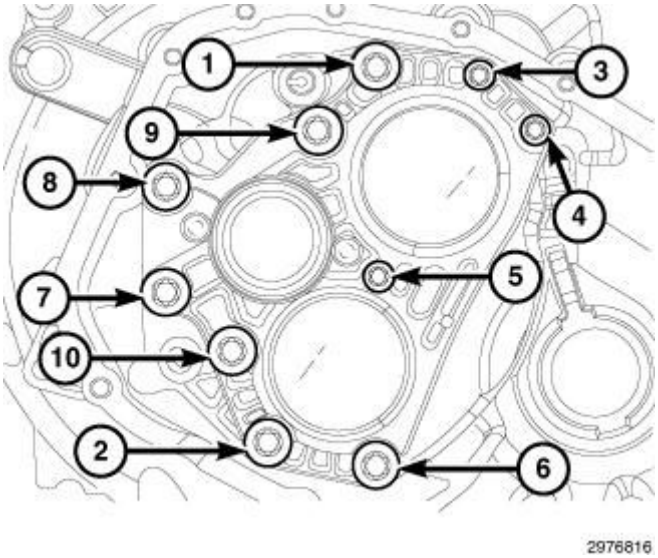

Fig. 52: Bearing Race Plate Tightening Sequence
Courtesy of CHRYSLER GROUP, LLC

4. Install the bearing race plate and tighten the bolts in four steps using the sequence shown in illustration:
   - Step 1 - Tighten bolts 9-10-6-8-1 to 20 N.m (15 ft. lbs.) in order.
   - Step 2 - Tighten bolts 3-5-4 to 25 N.m (18 ft. lbs.) in order.
   - Step 3 - Tighten bolts 2-7 to 80 N.m (59 ft. lbs.) in order.
   - Step 4 - Tighten bolts 9-10-6-8-1 to 80 N.m (59 ft. lbs.) in order.

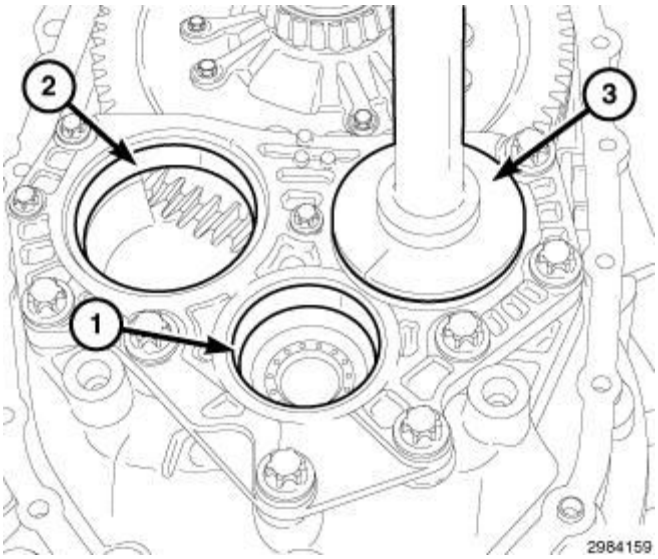

Fig. 53: Bearing Cup
Courtesy of CHRYSLER GROUP, LLC

NOTE: The following tools are to be used in conjunction with (special tool #C-4171, Driver Handle, Universal).

5. Install the new bearing races to the race plate using the following tools:
   - For the shaft bearing race use (special tool #10302, Installer, Bearing Cup) (2).
   - For the shaft bearing race use (special tool #D-111, Installer, Bearing Cup) (3).
   - For the main shaft bearing race use (special tool #C-4198, Installer, Axle Bearing) (1).

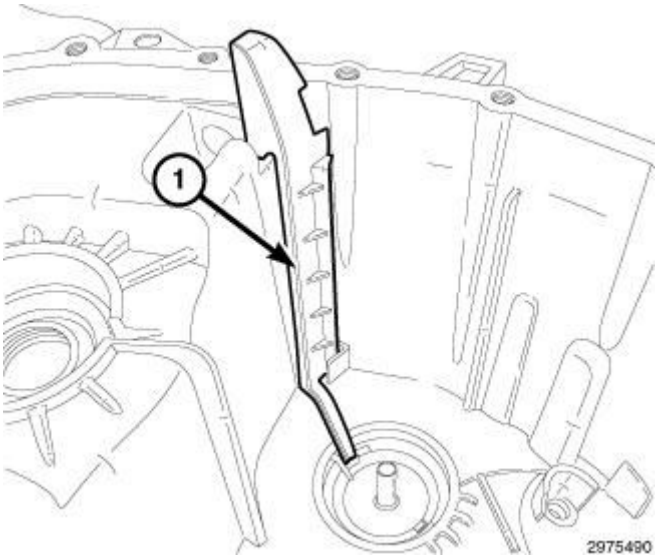

Fig. 54: Lubricating Duct
Courtesy of CHRYSLER GROUP, LLC

6. Install the lubricating duct (1).

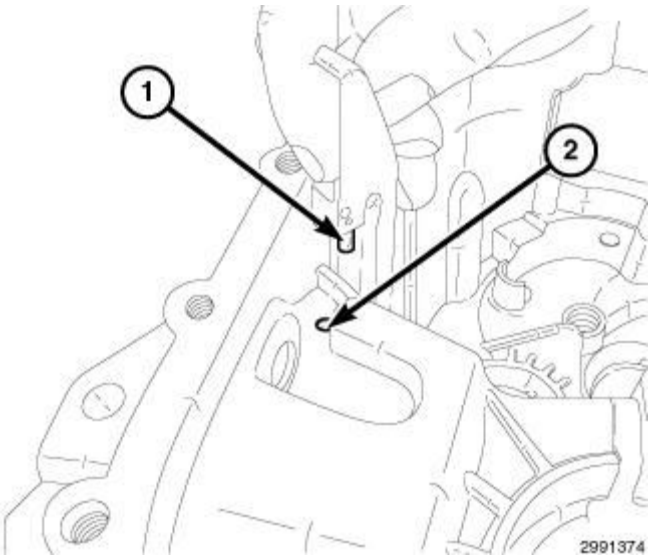

Fig. 55: Oil Duct Locating Pin & Locating Hole
Courtesy of CHRYSLER GROUP, LLC

7. Ensure that the oil duct locating pin (1) is in the locating hole (2).

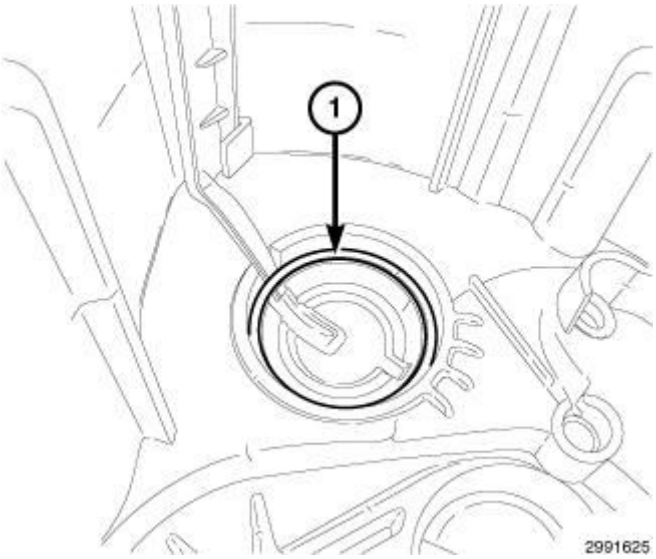

Fig. 56: Correct Shim
Courtesy of CHRYSLER GROUP, LLC

8. Install the correct shim (1) to the case.

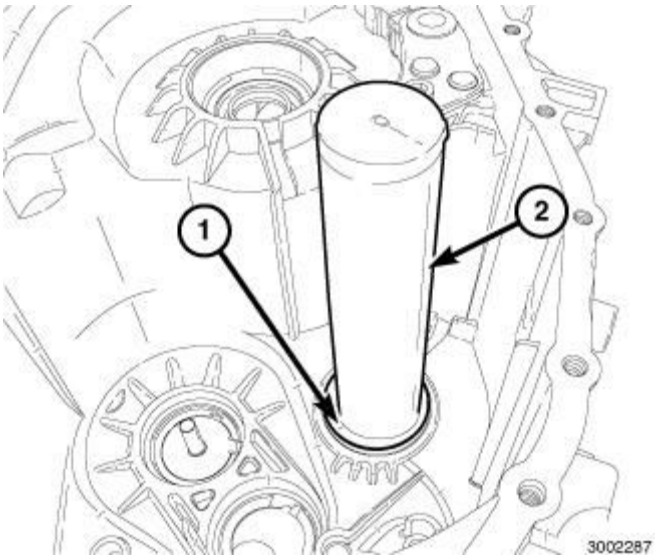

Fig. 57: Output Shaft The Bearing Races To The Case Using Bearing Cup Installer
Courtesy of CHRYSLER GROUP, LLC

9. Install output shaft the bearing races to the case using (special tool #L-4520, Installer, Seal/Cup) and (special tool #6446, Installer, Bearing).

Fig. 58: Special Tool #L-4520
Courtesy of CHRYSLER GROUP, LLC

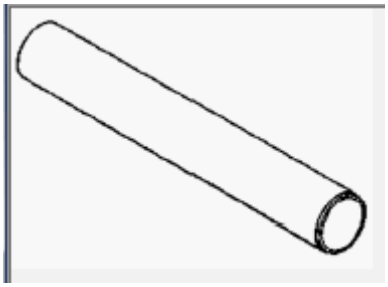

Fig. 59: Special Tool #6446
Courtesy of CHRYSLER GROUP, LLC

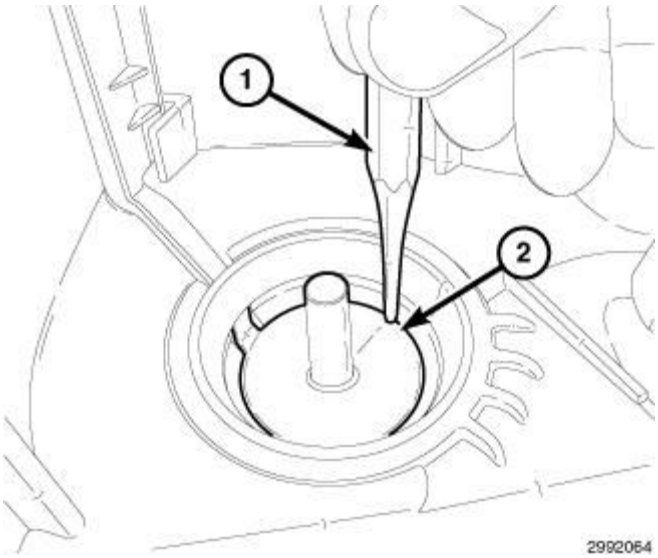

Fig. 60: Re-Staking Ducts To Case
Courtesy of CHRYSLER GROUP, LLC

10. Install the gear shaft oil ducts. Using an appropriate drift (1) re-stake the ducts (2) to the case.
11. Install the input shaft bearing race using (special tool #C-4171, Driver Handle, Universal) and (special tool #10305, Installer, Differential Bearing Cup).
12. Install the gear side differential bearing race using (special tool #C-4171, Driver Handle, Universal) and (special tool #8866, Installer, Bearing Cup).

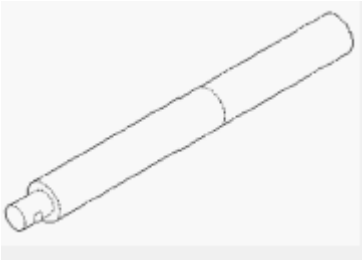

Fig. 61: Special Tool #C-4171
Courtesy of CHRYSLER GROUP, LLC

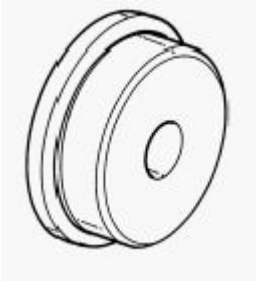

Fig. 62: Special Tool #8866
Courtesy of CHRYSLER GROUP, LLC

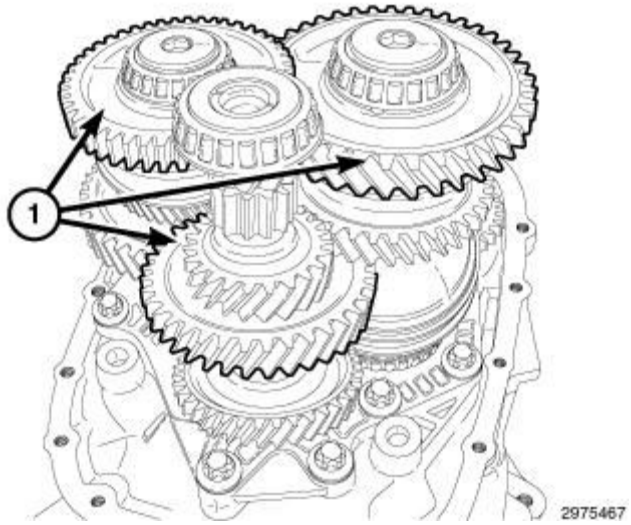

Fig. 63: Output And Main Shafts
Courtesy of CHRYSLER GROUP, LLC

13. Install the output and main shafts (1) as a group.

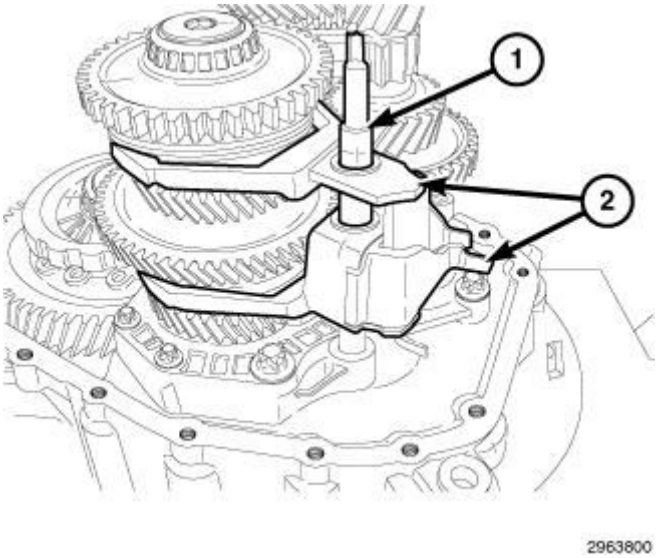

Fig. 64: Shifter Fork Pivot Pin
Courtesy of CHRYSLER GROUP, LLC

14. Install the 3-4-R gear shifter fork assembly.

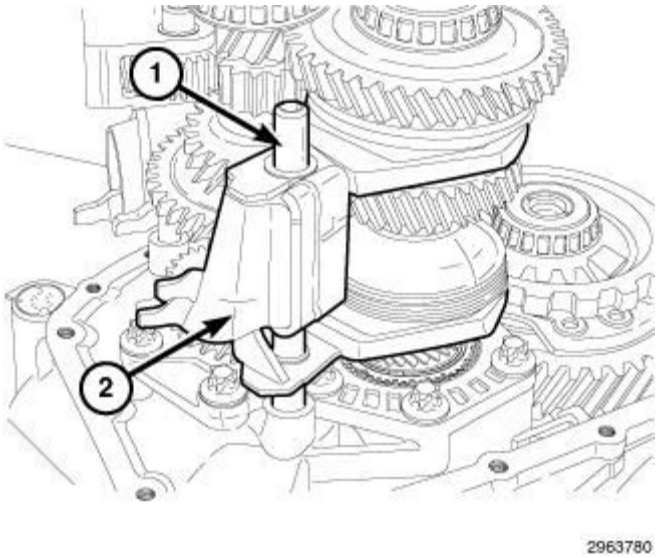

Fig. 65: Shifter Fork Pivot Pin & 1-2-5-6 Gear Shifter Fork Assembly
Courtesy of CHRYSLER GROUP, LLC

15. Install the 1-2-5-6 gear shifter fork assembly.

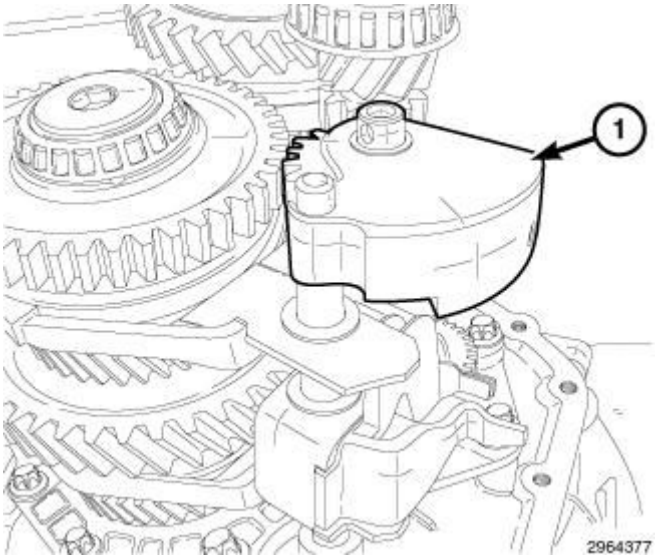

Fig. 66: Reverse Idler Gear Assembly
Courtesy of CHRYSLER GROUP, LLC

16. Install the reverse idler gear and the needle bearing.
17. Using a hydraulic press, install the pin to the reverse gear mounting bracket.
18. Install the reverse idler gear assembly (1).

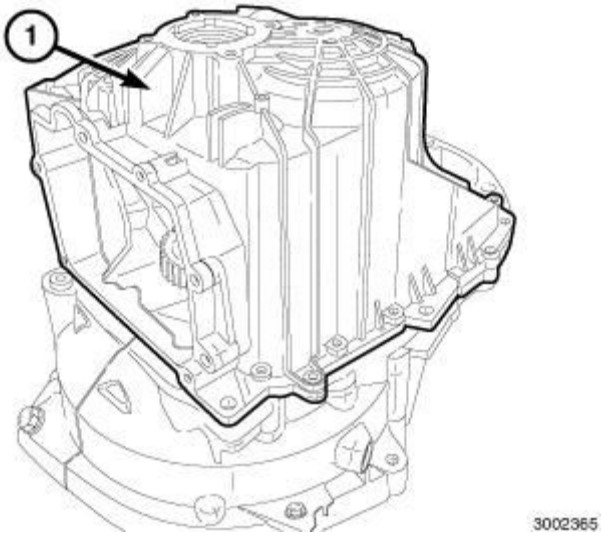

Fig. 67: Gear Side Case Half
Courtesy of CHRYSLER GROUP, LLC

NOTE: **The case halves must be assembled within 15 minutes after the application of the anaerobic sealant. Do not allow transmission oil or any other lubricants to come in contact with the sealant for at least one hour after the case halves have been assembled.**

19. Apply a uniform bead of LOCTITE®509™ Sealer or equivalent to the sealing surface of the case.
20. Install the gear side case half (1) to the bellhousing case half (2).

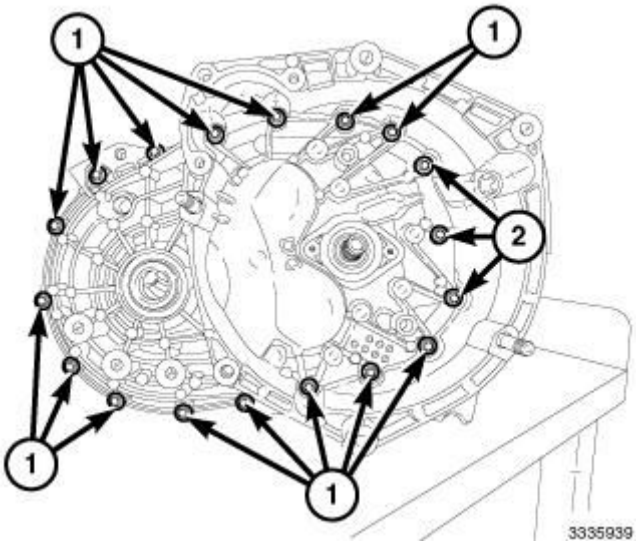

Fig. 68: Long Case Bolts & Short Case Bolts
Courtesy of CHRYSLER GROUP, LLC

21. Install the long case bolts (1) and the short case bolts (2) and tighten to 25 N.m (18 ft. lbs.) using a cross

sequence.

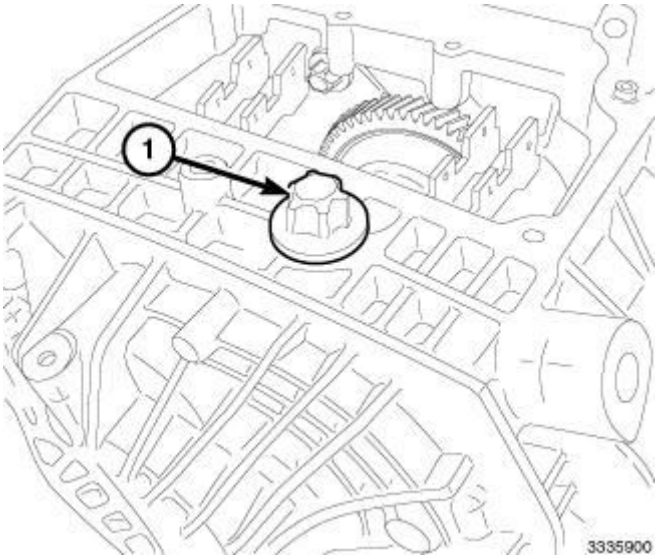

Fig. 69: Reverse Idler Gear Assembly Retaining Bolt
Courtesy of CHRYSLER GROUP, LLC

22. Patch and install the reverse gear idler retaining bolt using the following process. Tighten to 10 N.m (89 in. lbs.).
    - Remove the remaining traces of the original locking patch with a wire brush or the equivalent.
    - Clean the threads with denatured alcohol and allow to dry.
    - Apply the locking patch using Mopar thread locker.

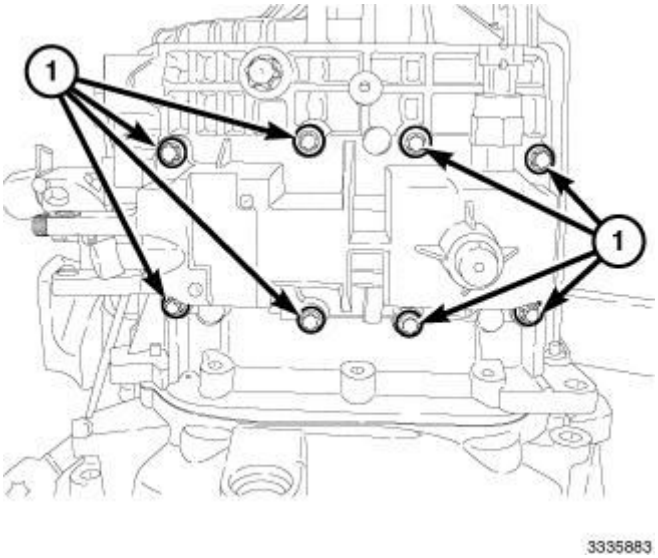

Fig. 70: Gear Selector Assembly Bolts
Courtesy of CHRYSLER GROUP, LLC

23. Apply a uniform bead of LOCTITE®509™ Sealer or equivalent to the sealing surface of the case.

24. Install the gear selector assembly, tighten the bolts to 20 N.m (15 ft. lbs.).

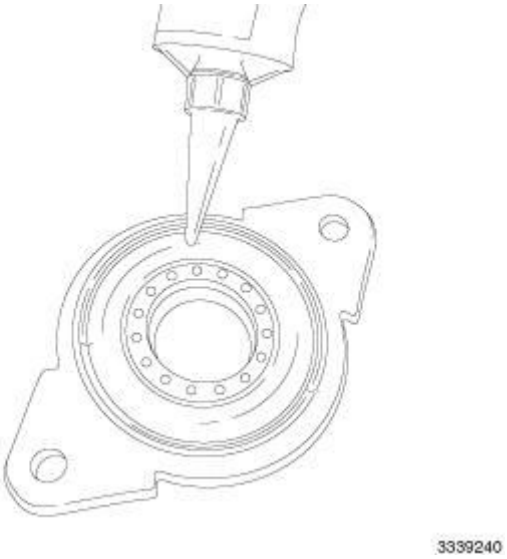

Fig. 71: Uniform Bead Of Mopar® RTV Sealer
Courtesy of CHRYSLER GROUP, LLC

25. Apply a uniform bead of Mopar® Threebond RTV Sealer or equivalent to the sealing surface of the **new** input shaft sealing ring.

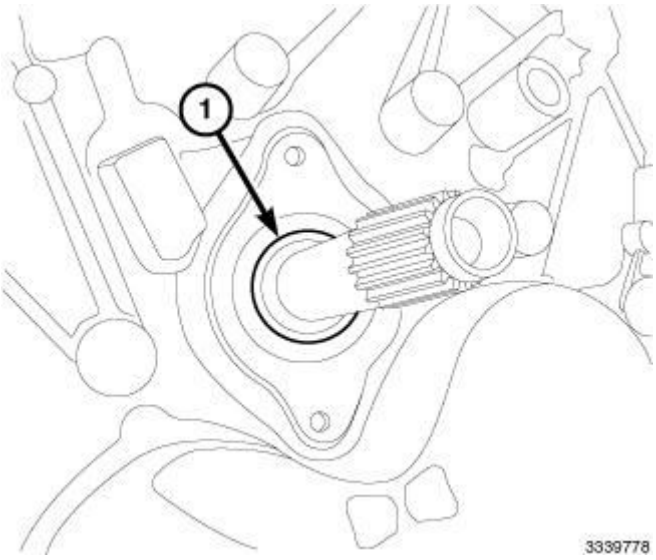

Fig. 72: Sealing Ring To The Transmission
Courtesy of CHRYSLER GROUP, LLC

26. Install the sealing ring to the transmission.

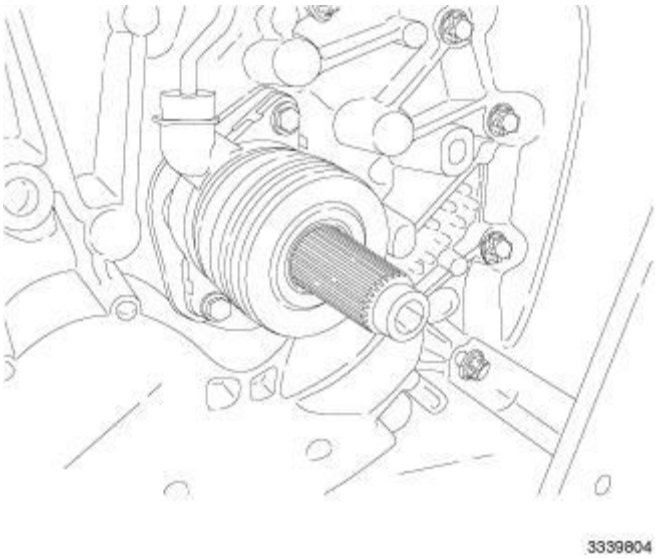

Fig. 73: Concentric Slave Cylinder (CSC) and Bolts
Courtesy of CHRYSLER GROUP, LLC

27. Install the Concentric Slave Cylinder (CSC) and bolt to the transmission. Tighten the bolts to 10 N.m (89 in. lbs.) and engage the retention tabs.

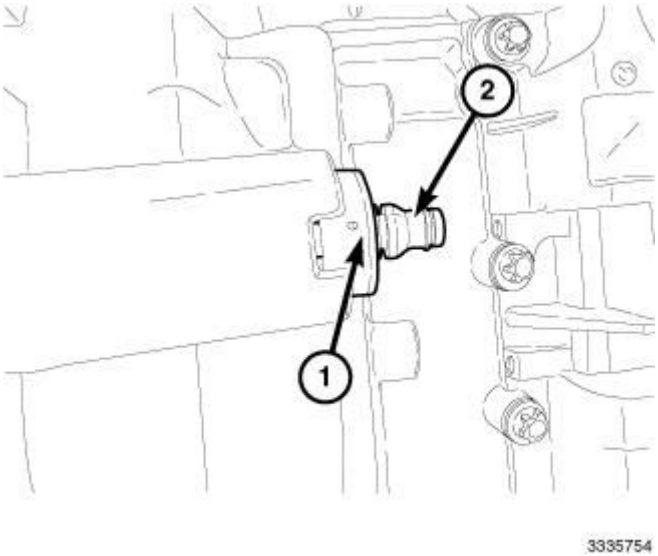

Fig. 74: Hydraulic Fitting & Plastic Retainer
Courtesy of CHRYSLER GROUP, LLC

28. Connect the hydraulic fitting (2) to the plastic retainer (1).

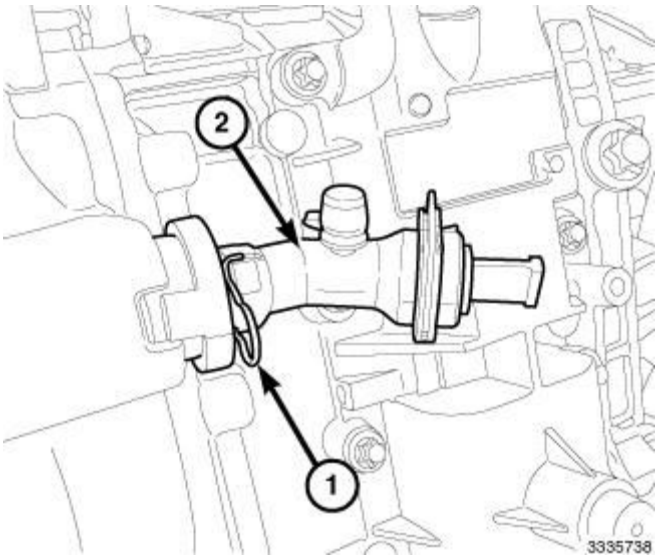

Fig. 75: Retention Clip & Connection
Courtesy of CHRYSLER GROUP, LLC

29. Connect the hydraulic connection at the case.
30. Install the axle seals.

    Refer to **SEAL, AXLE DRIVE SHAFT, INSTALLATION**.

INSTALLATION

INSTALLATION

1. Raise the transmission while avoiding obstacles and until the transmission is in line with the engine.

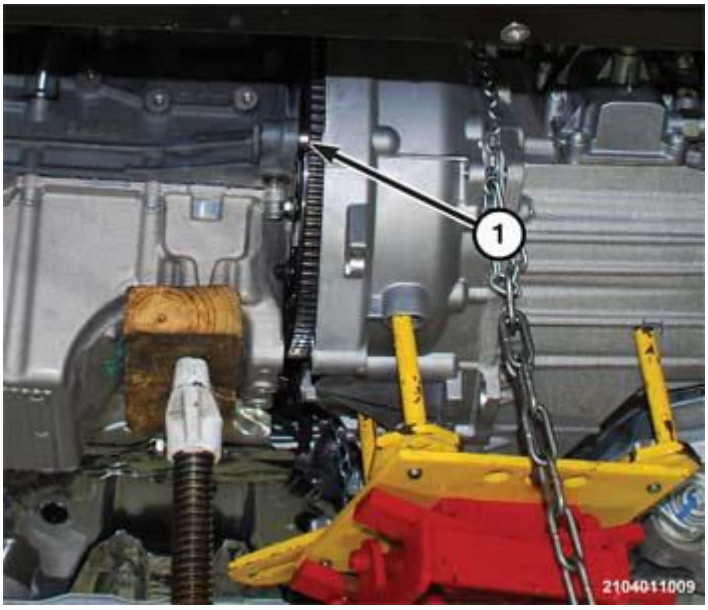

Fig. 76: Removing/Installing Transmission
Courtesy of CHRYSLER GROUP, LLC

2. Push the transmission toward the engine far enough for the input shaft to engage the clutch.

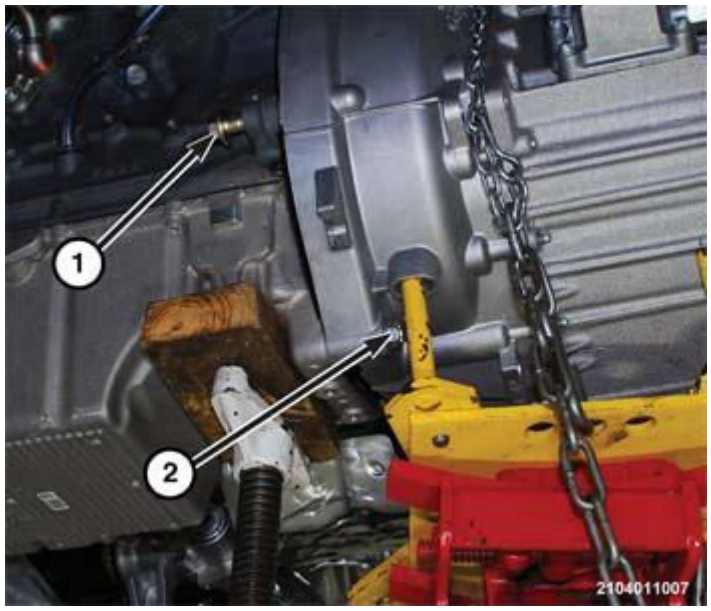

Fig. 77: Locating Bolts Holding Engine To Bellhousing & Bellhousing To Oil Pan
Courtesy of CHRYSLER GROUP, LLC

3. On the backside of the engine, Install the bolt (1) to hold engine to the bellhousing and the bolt (2) to hold the bellhousing to the oil pan. Refer to **SPECIFICATIONS**.

Fig. 78: Locating Bolts Holding Engine Block To Transmission Bellhousing & Bellhousing To Oil Pan

Courtesy of CHRYSLER GROUP, LLC

4. On the front of the engine, remove the bolts (1) to hold the engine block to the transmission bellhousing and the bellhousing to the oil pan. Refer to **SPECIFICATIONS**.

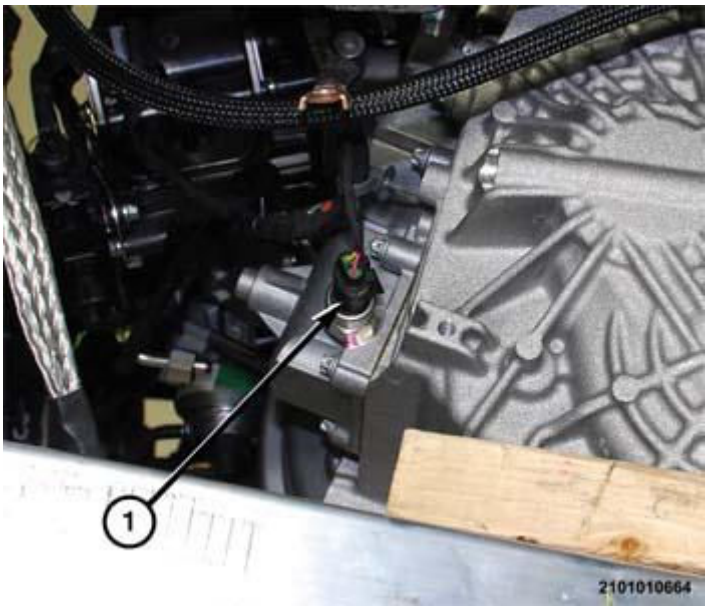

Fig. 79: Backup Lamp Switch Wire Harness Connector
Courtesy of CHRYSLER GROUP, LLC

5. Connect the wire harness connector (1) to the backup lamp switch.
6. Install the front suspension cradle and load beams.
7. Install the starter motor. Refer to **STARTER, INSTALLATION** .
8. Install the catalytic converter on the engine. Refer to **PIPE, EXHAUST CROSSUNDER, INSTALLATION** .

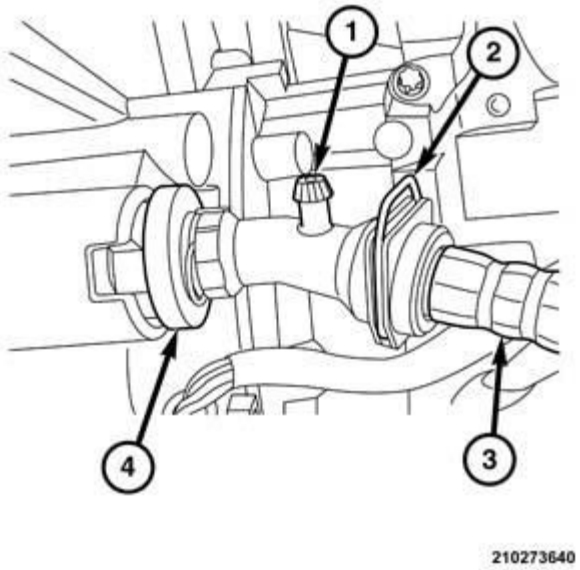

Fig. 80: Clutch Slave Cylinder Union & Nipple
Courtesy of CHRYSLER GROUP, LLC

9. If Used, remove the cap-plug sealing the end of the hydraulic line used to avoid loosing hydraulic fluid.
10. Engage the clutch hydraulic coupling (4) onto the slave cylinder on the transmission.

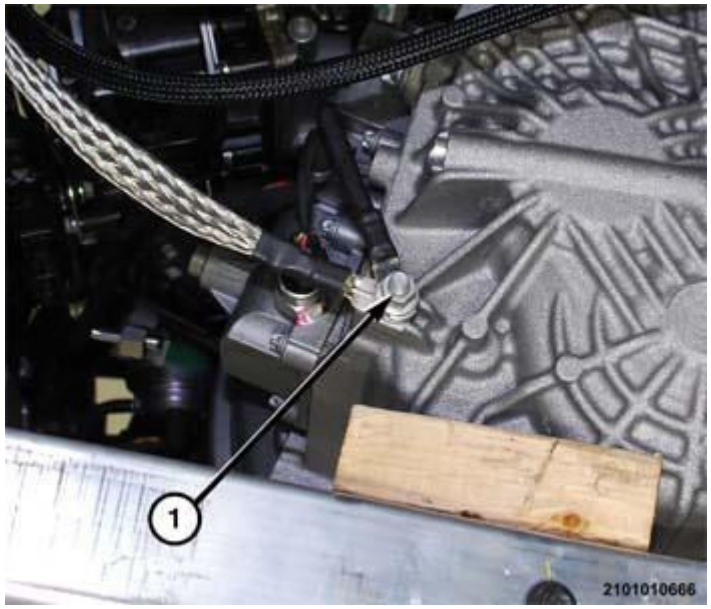

Fig. 81: Locating Nut Holding Ground Cable To Transmission
Courtesy of CHRYSLER GROUP, LLC

11. Place the ground cable in position on the transmission.

12. Install the nut (1) to hold the ground cable to the transmission. Refer to **SPECIFICATIONS**.

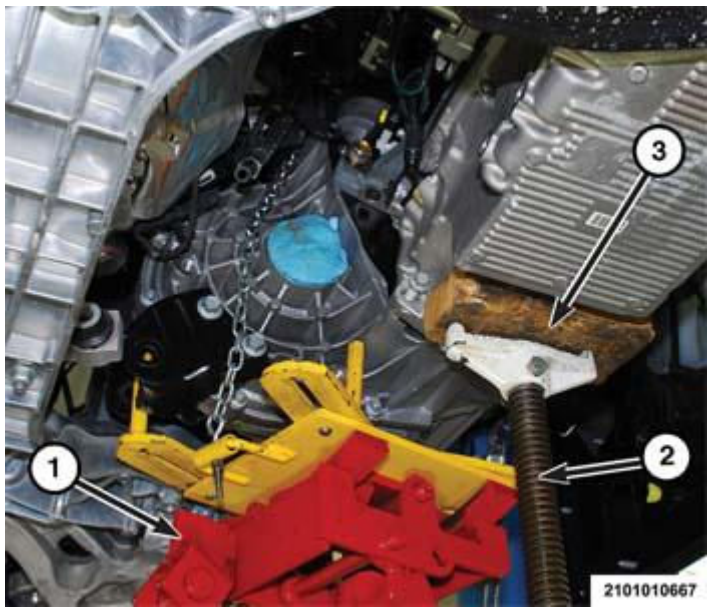

Fig. 82: Positioning Transmission Jack, High Stand & Wood Block
Courtesy of CHRYSLER GROUP, LLC

13. Remove the high stand (2) from under the engine oil pan.
14. Remove the safety chain or strap and lower transmission jack (1) from under the transmission.
15. Lower the vehicle.

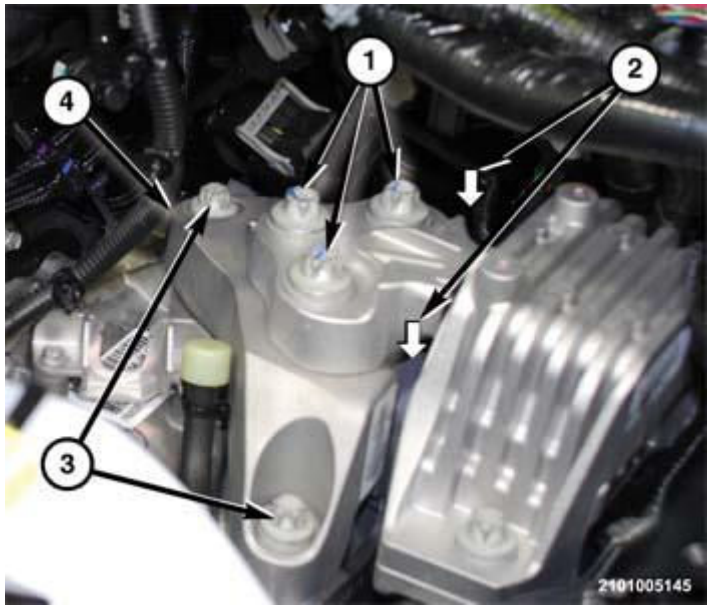

Fig. 83: Locating Bolts Holding Upper Mount To Adapter Spacer & Adapter Spacer To Transmission
Courtesy of CHRYSLER GROUP, LLC

16. Place transmission mount spacer in position on the transmission.
17. Install the bolts (3),(2= hidden) to hold the transmission mount adapter spacer (4) to the transmission. Refer to **SPECIFICATIONS**.
18. Position a floor jack under the transmission and lift the transmission enough to start the bolts in the upper transmission mount.
19. Install the bolts (1) to hold the upper transmission mount to the transmission mount adapter spacer (4). Refer to **SPECIFICATIONS**.

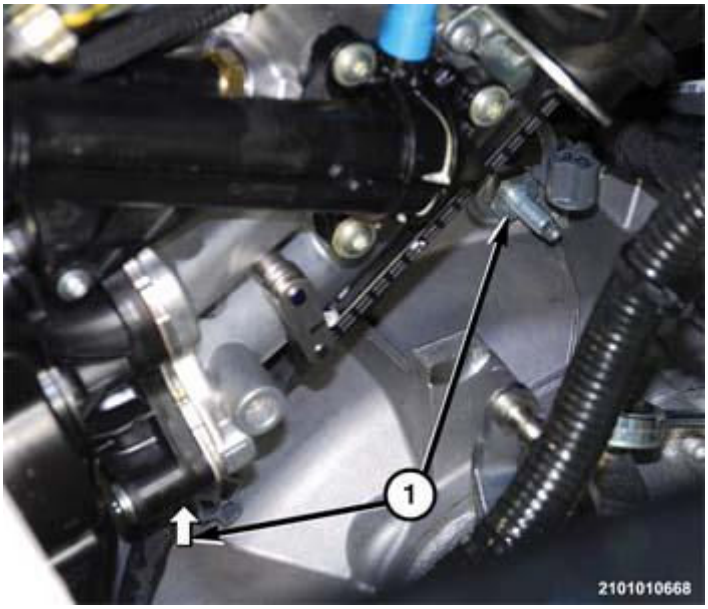

Fig. 84: Locating Bolts Holding Upper Bellhousing To Engine Block
Courtesy of CHRYSLER GROUP, LLC

20. Install the bolts (1) to hold the upper bellhousing to the engine block. Refer to **SPECIFICATIONS**.

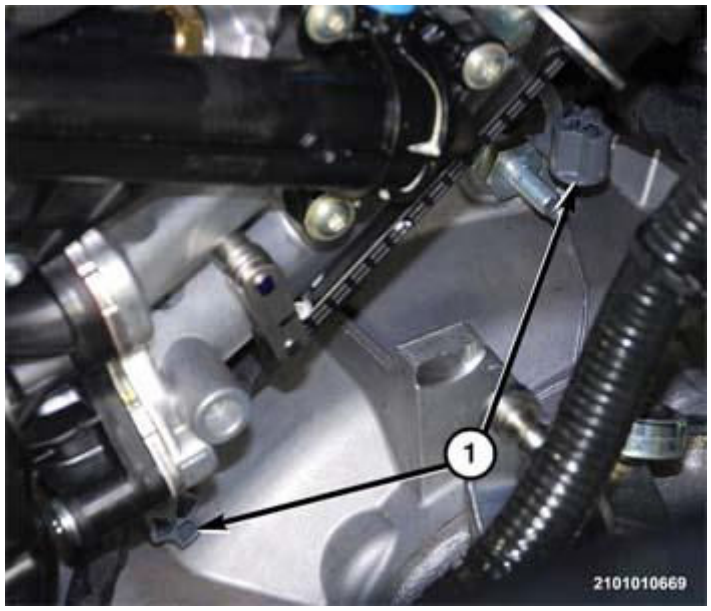

Fig. 85: Wire Harness Retainers
Courtesy of CHRYSLER GROUP, LLC

21. Route the wire harness in proper position.
22. Engage the wire harness retainers (1) onto the top of the bellhousing bolts.
23. Install the exhaust clamp to hold the turbo charger to the catalytic converter.
24. Install the oxygen sensor. Refer to **SENSOR, OXYGEN, INSTALLATION** .
25. Connect the wire connector onto the oxygen sensor.
26. Connect the wire connector onto the exhaust temperature sensor.
27. Install the exhaust heat shield in position on the exhaust manifold.
28. Engage the clips to hold the shift cables housing ends to the bracket on the transmission.
29. Snap the select cable end in position on the lever ball stud on the transmission.
30. Snap the shift cable end in position on the lever ball stud on the transmission.
31. Raise the vehicle to gain access to the power transfer unit (PTU).
32. If equipped, Install the PTU.
33. Remove the fill plug and fill the transmission with the proper quantity and type fluid. Refer to **CAPACITIES AND RECOMMENDED FLUIDS, SPECIFICATIONS** .
34. Install the fill plug.
35. Install the exhaust crossunder pipe. Refer to **PIPE, EXHAUST CROSSUNDER, INSTALLATION** .
36. If equipped, Install the rear propeller shaft. Refer to **INSTALLATION** .
37. Install the front halfshafts.
38. Install the front wheel bolts in the front brake rotor hub.
39. While holding a pry bar across the wheel bolts to prevent the wheel hub in position on rotating, Install the NEW front wheel hub nuts. Refer to **SPECIFICATIONS** .
40. Using tool (special tool #10287-1, Tool, Staking), stake the front hub nuts to lock them on the halfshaft

stub shaft.

41. Lower the vehicle to gain access engine compartment.
42. Place the charge air tube in position on the vehicle.
43. Connect the charge air tube to the throttle body adapter.
44. Install the front fascia. Refer to **FASCIA, FRONT, INSTALLATION** .
45. Engage the retainer to hold the wire harness to the front fascia.
46. Connect wire harness connector at the left side of the front fascia.
47. Install the right front fender splash shield. Refer to **SHIELD, SPLASH, FRONT WHEELHOUSE, INSTALLATION** .
48. Install the left front fender splash shield. Refer to **SHIELD, SPLASH, FRONT WHEELHOUSE, INSTALLATION** .
49. Install the bolt to hold the charge air hose to the side of the transmission.
50. Engage the clamp on the charge air outlet hose on the left side of the radiator support panel.
51. Install the belly pan. Refer to **BELLY PAN, INSTALLATION** .
52. Lower the vehicle to mid level.
53. Install the front wheels. Refer to **INSTALLATION** .
54. Lower the vehicle to gain access to the engine compartment.
55. Install the pinch bolt to hold the steering column to the steering gear.
56. Install the battery and battery tray. Refer to **INSTALLATION** .
57. Engage the clips to hold the wire harness to the battery tray.
58. Install the upper radiator closeout panel.
59. Install the engine cover.
60. Close and latch the hood.
61. Road test the vehicle to verify the repair.

SPECIAL TOOLS

SPECIAL TOOLS

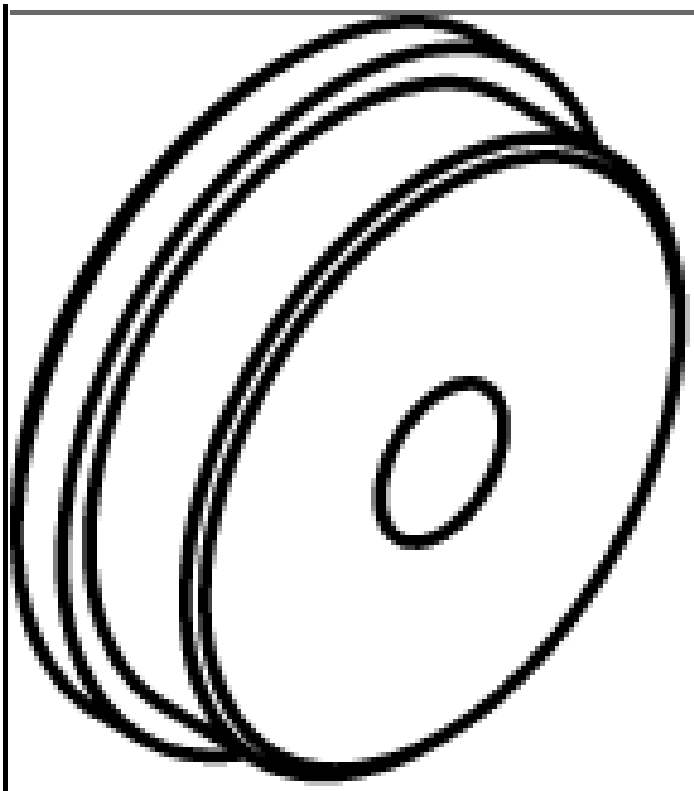	10302 - Installer, Bearing Cup
	10303 - Installer, Differential Oil Seal

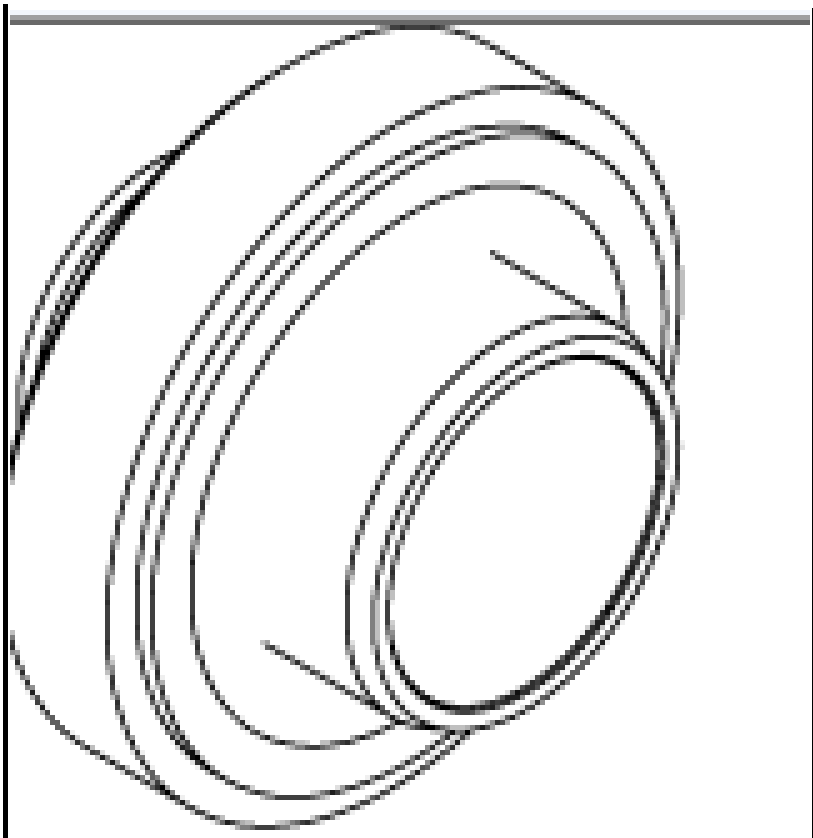	10305 - Installer, Differential Bearing Cup

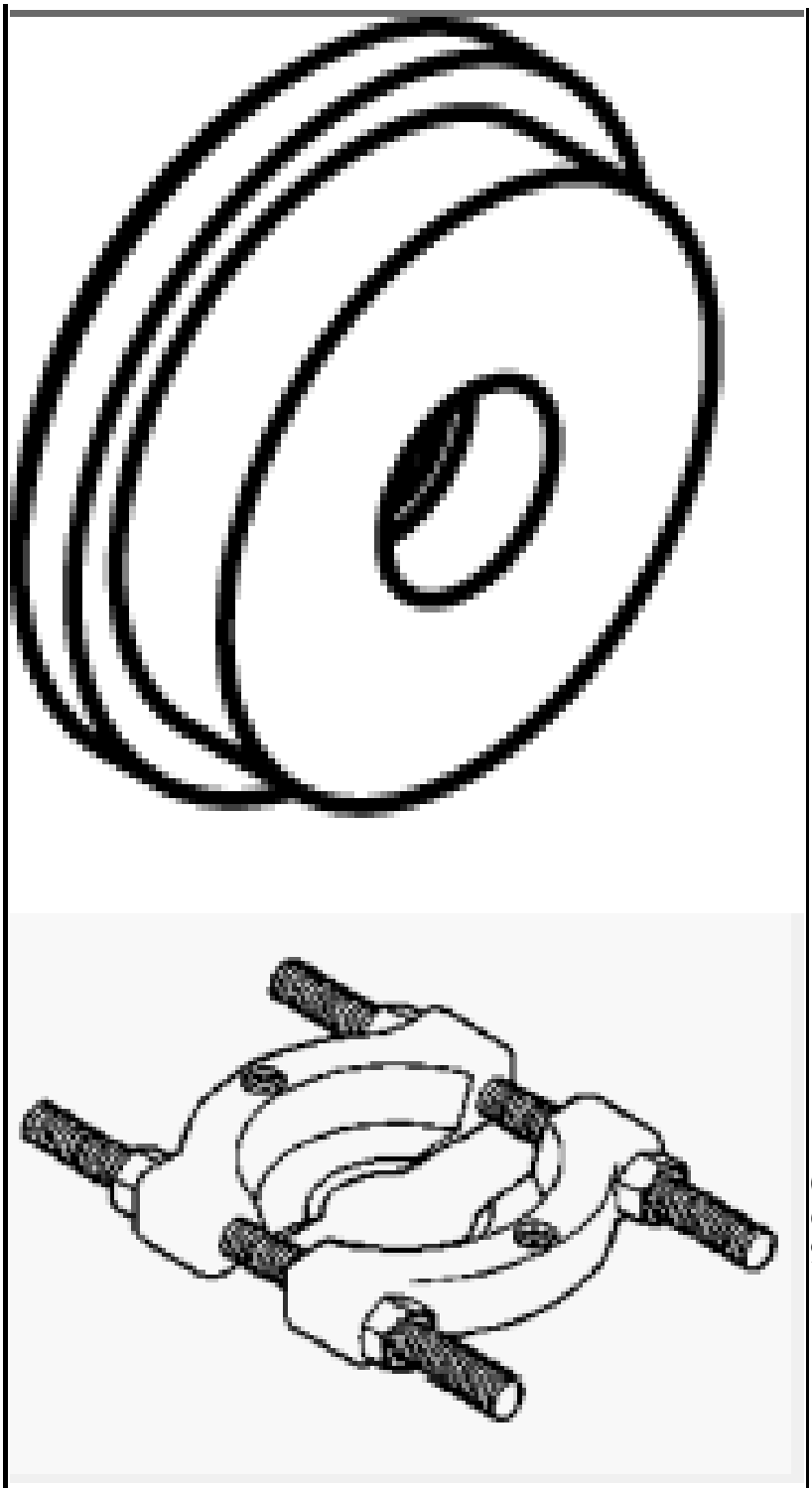

1130 - Splitter, Bearing/Gear (Originally Shipped In Kit Number(s) 6745, 6947, 6949, 9202, 9202A-CAN, 9202CC, 9299.)

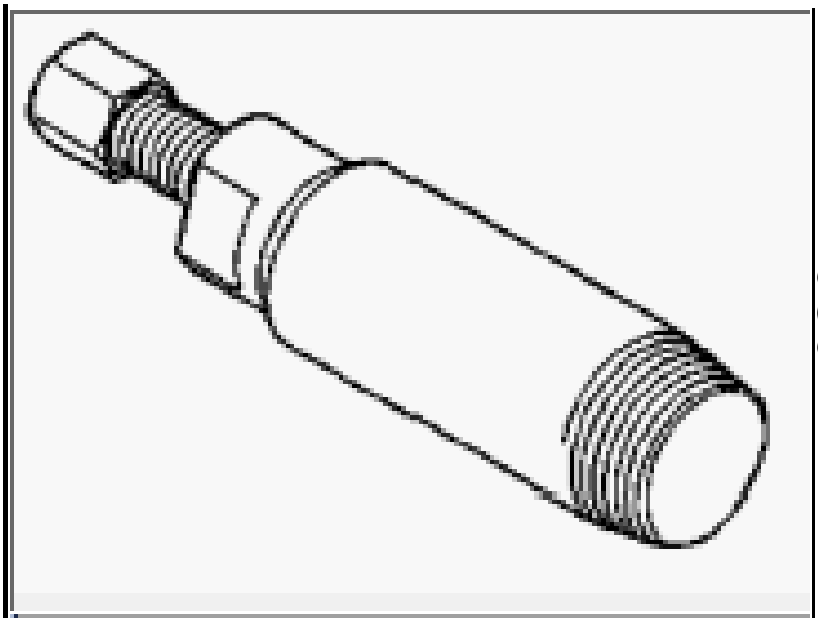

6341A - Remover, Seal
(Originally Shipped In Kit Number(s) 6671.)

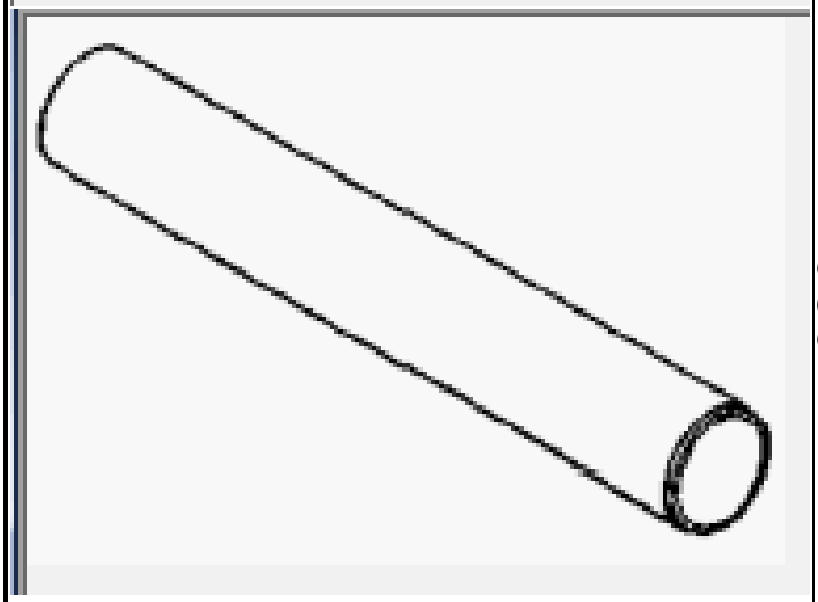

6446 - Installer, Bearing
(Originally Shipped In Kit Number(s) 6440.)

8254 - Installer, Grommet
(Originally Shipped In Kit Number(s) 8283, 8283CC, 8527, 8527CC, 8575, 8575CC, 9975.)

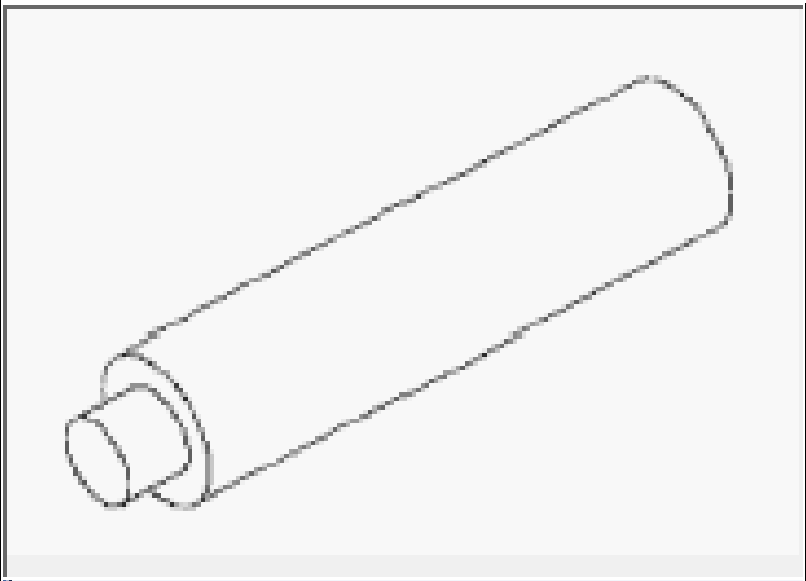

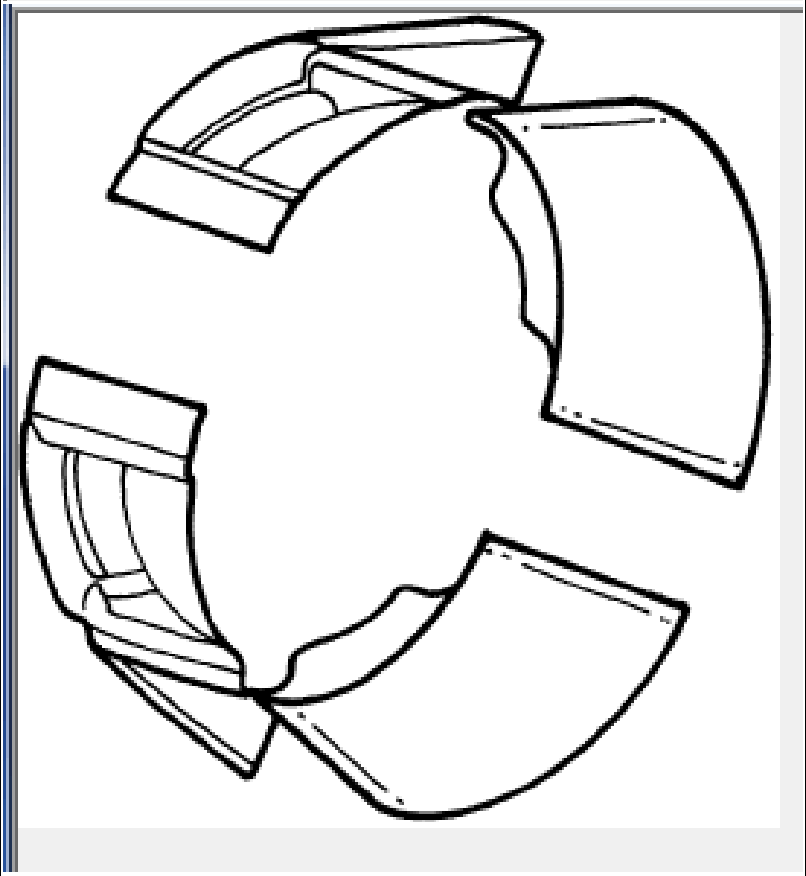

8353 - Blocks, Adapter
(Originally Shipped In Kit Number(s) 8283CC, 8527CC.)

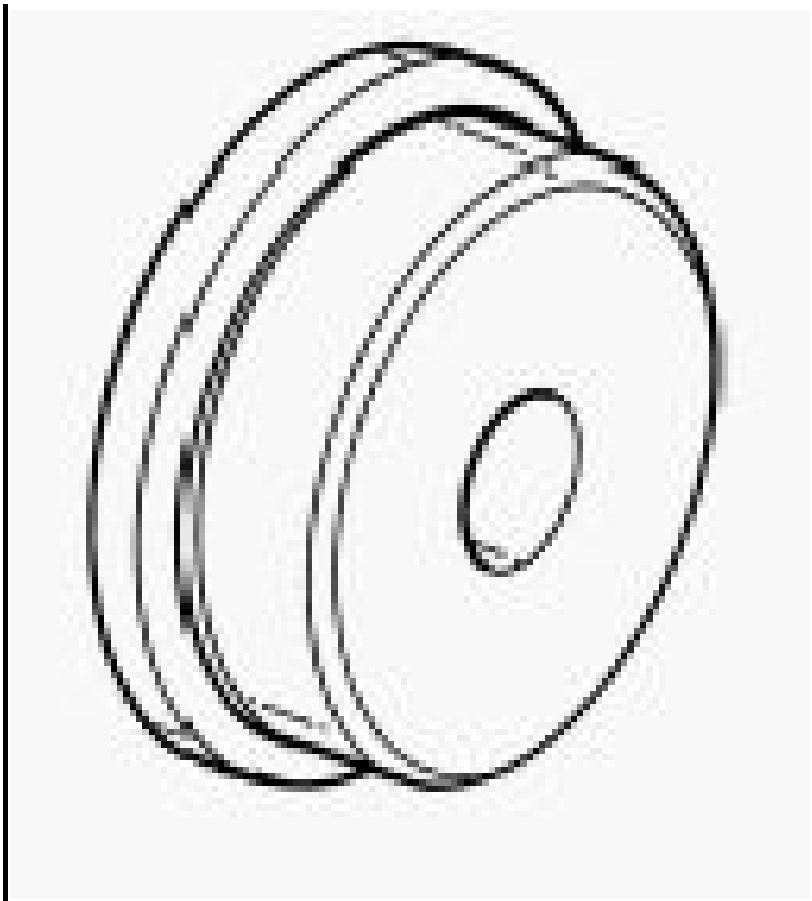	8866 - Installer, Bearing Cup (Originally Shipped In Kit Number(s) 8998, 8998CC.)
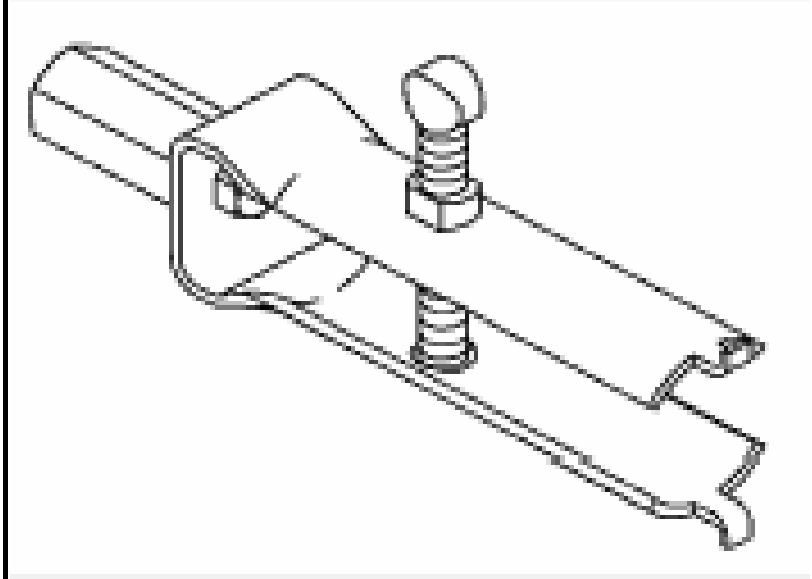	9664 - Remover, Bearing Cup (Originally Shipped In Kit Number(s) 9675, 9685, 9695.)

	9676 - Adapter Plug (Originally Shipped In Kit Number(s) 9675, 9685, 9695.)
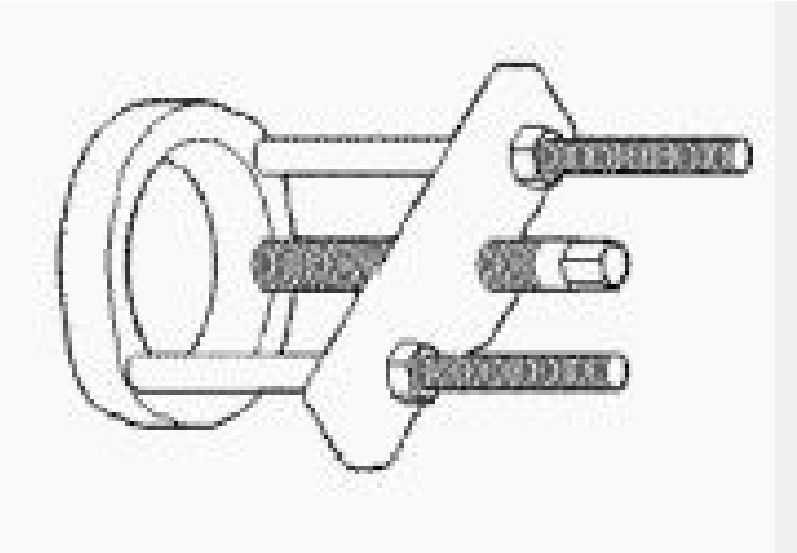	C-293-PA - Puller, Press (Originally Shipped In Kit Number(s) 8418, 8837, C-293-M.)
	C-3095-A - Installer, Bearing

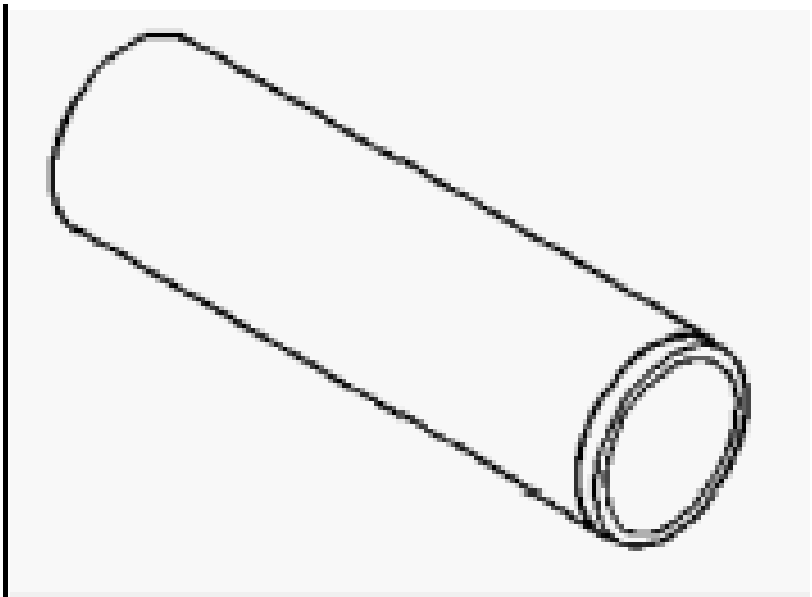

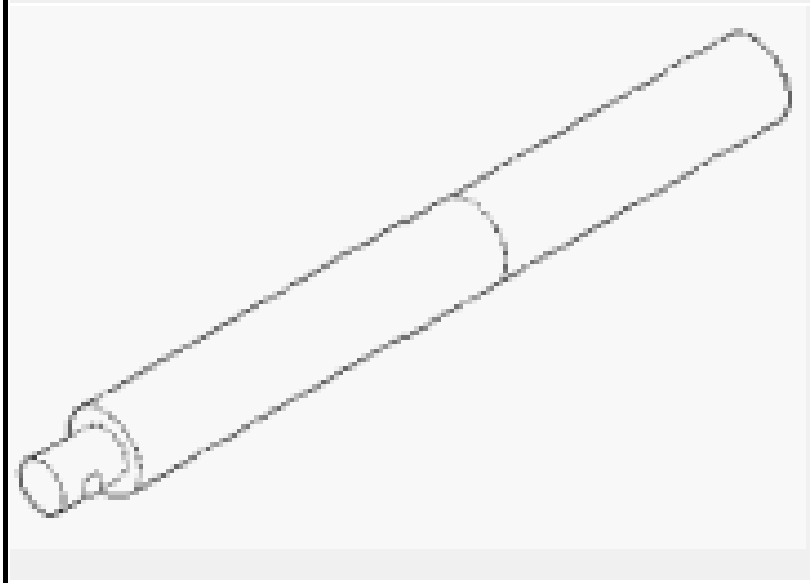

C-4171 - Driver Handle, Universal
(Originally Shipped In Kit Number(s) 9202, 9202A-CAN, 9202CC, 9299, 9299CC, 9299CC, 9300A-CAN.)

C-4193A - Installer, Seal
(Originally Shipped In Kit Number(s) 6671.)

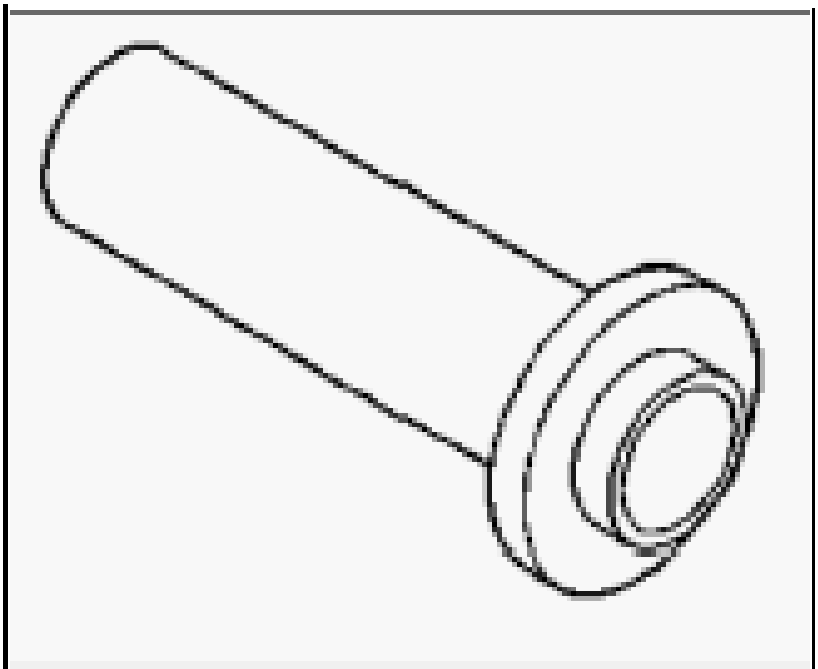

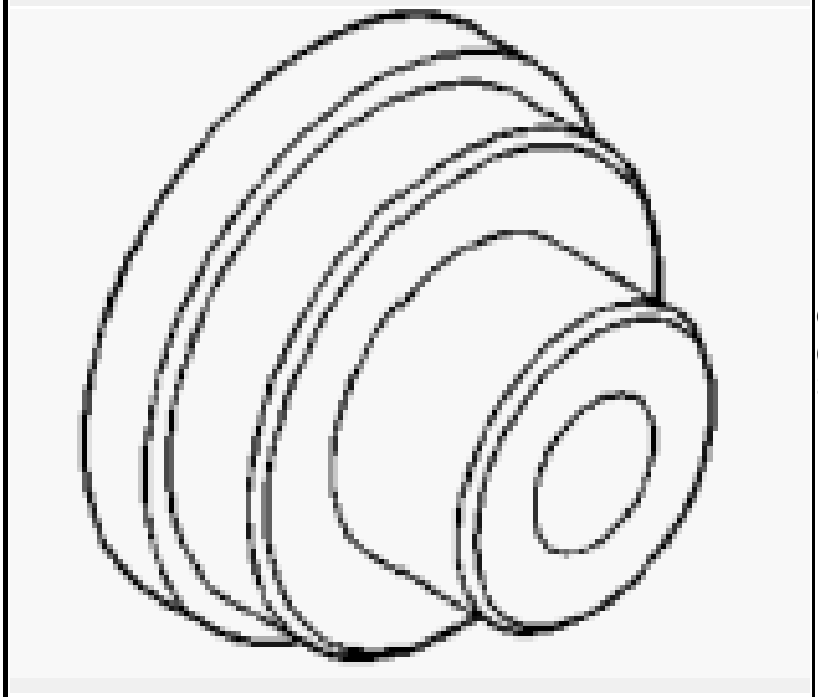

C-4198 - Installer, Axle Bearing (Originally Shipped In Kit Number(s) 8207.)

C-4340 - Installer, Bearing

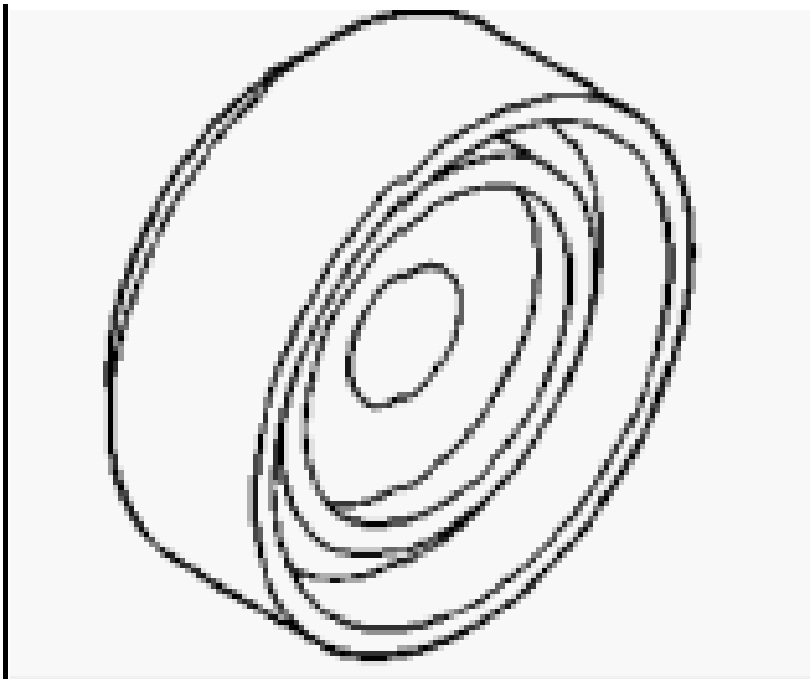	(Originally Shipped In Kit Number(s) 8418, 8659.)
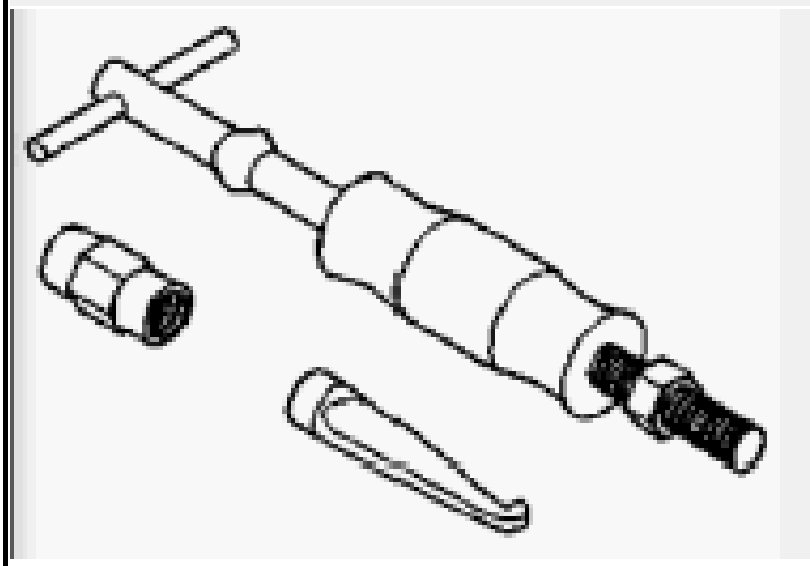	C-637 - Slide Hammer, Universal (Originally Shipped In Kit Number(s) 9202.)
	D-111 - Installer, Bearing Cup

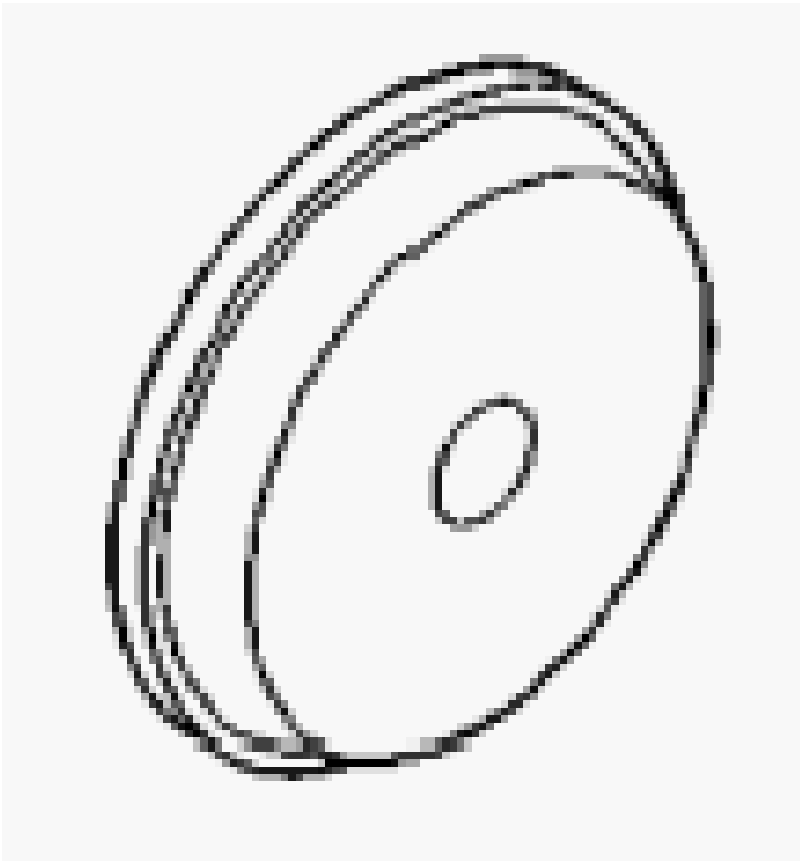	(Originally Shipped In Kit Number(s) 9925, 9926.)
	L-4520 - Installer, Seal/Cup (Originally Shipped In Kit Number(s) 6822.)

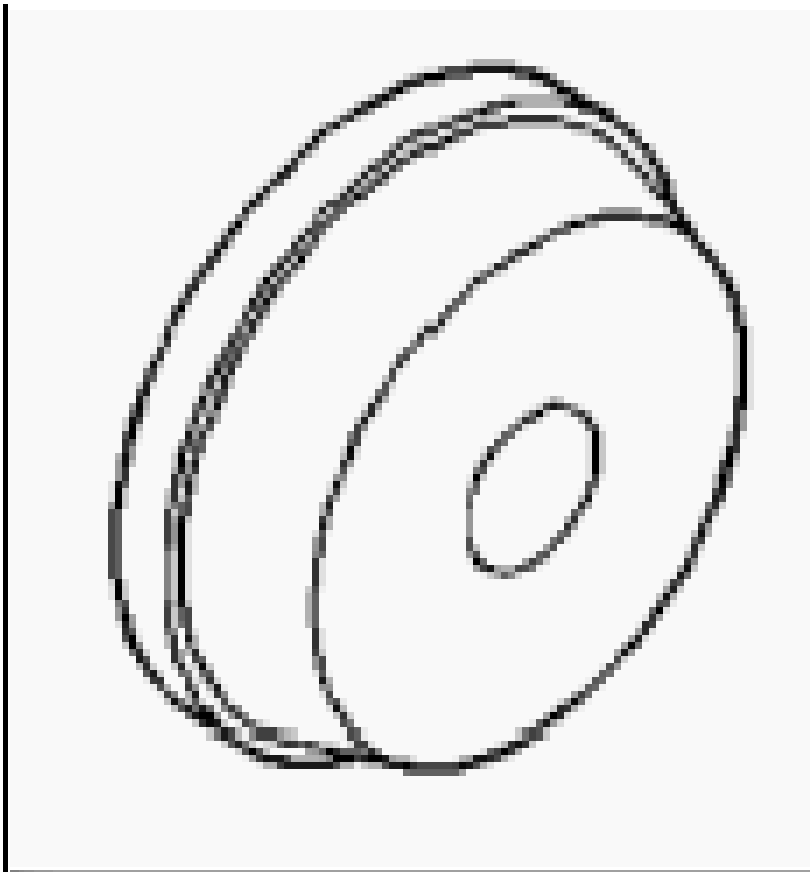	
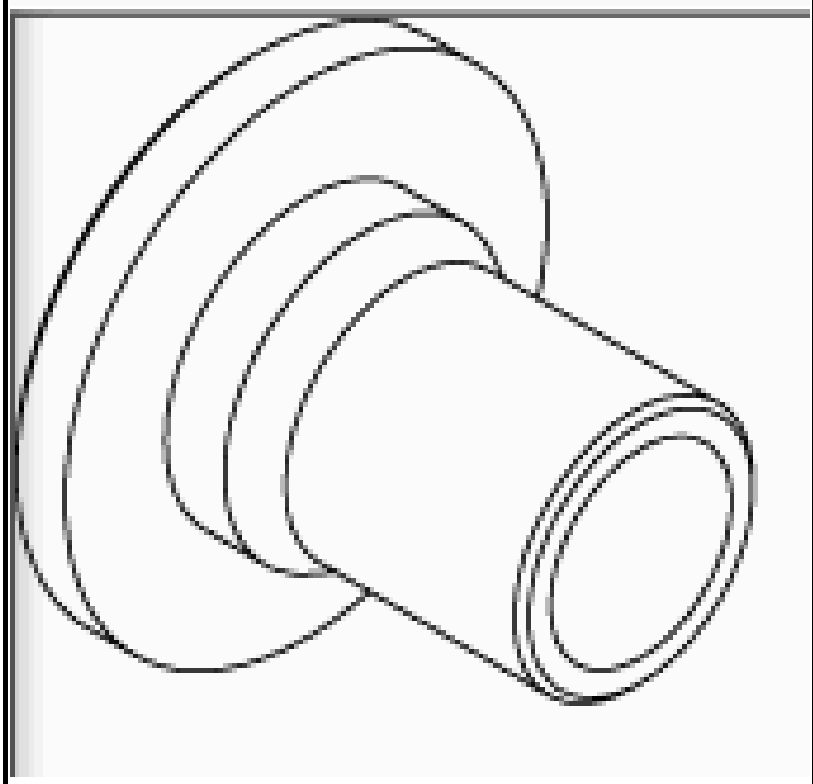	MD998200 - Installer, Seal

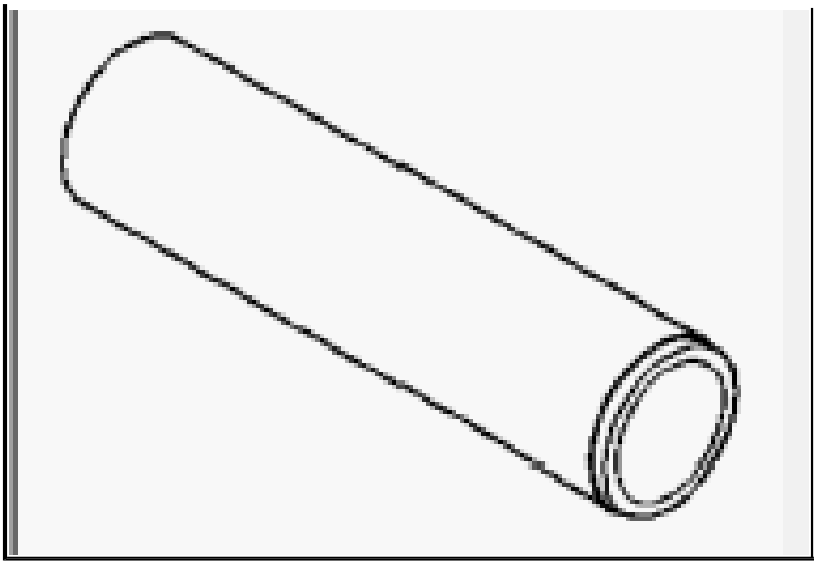	W-262 - Installer, Bearing (Originally Shipped In Kit Number(s) 8418.)

BOOT, GEARSHIFT

REMOVAL

REMOVAL

1. Remove the gear shift knob.
2. Disengage arrowhead fasteners holding lower shifter boot escutcheon to the floor console.
3. Pull boot upward to gain access to the reverse lockout cable.
4. Pull the reverse lock out cable housing upward and sideways to disengage the cable from the shifter base.
5. Disengage the cable end from the lockout lever.

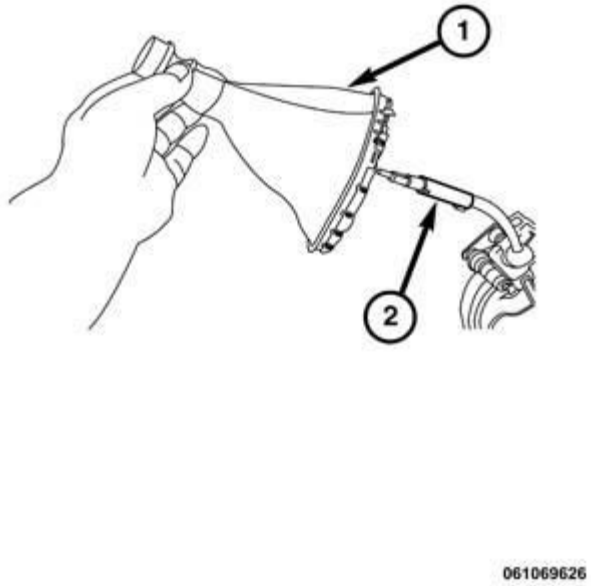

Fig. 86: Gear Shift Boot
Courtesy of CHRYSLER GROUP, LLC

6. Separate the shifter boot from the vehicle.

INSTALLATION

INSTALLATION

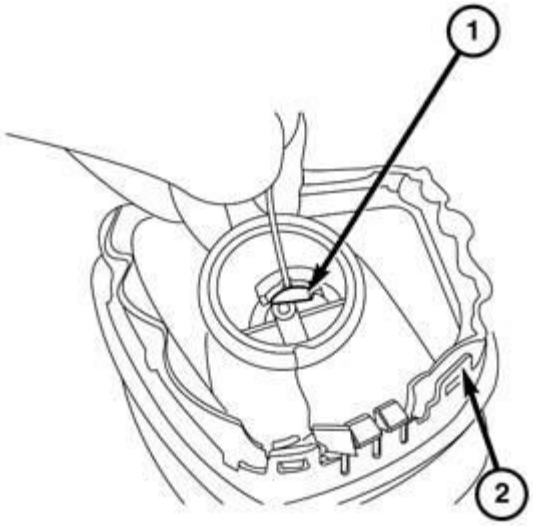

061069628

Fig. 87: Shift Boot & Reverse Lockout Cable End
Courtesy of CHRYSLER GROUP, LLC

1. Engage reverse lockout cable end (1) into the slot in the pass through opening under the shift boot (2).

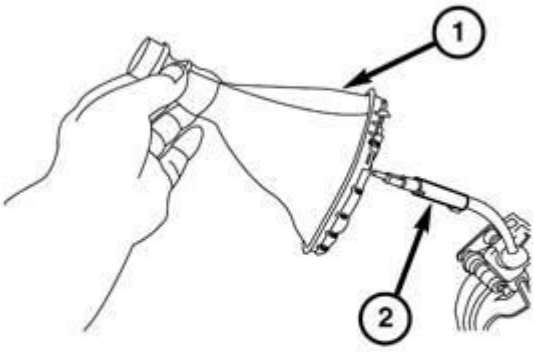

061069626

Fig. 88: Gear Shift Boot
Courtesy of CHRYSLER GROUP, LLC

2. Place the shifter boot in position over the shift lever.
3. While holding the reverse lockout cable end in place, align the flat guide in the pass through opening in the boot with the flat on the gear shift lever.
4. Push the boot downward until it seats on the gear shift lever.
5. Engage the lower lockout cable end into the lock lever on the shifter base.
6. Pull upward on the lockout cable housing while guiding the lockout cable core into the slot on the shifter base.
7. Insert the lockout cable housing into the retaining hole in the shifter base.
8. Engage arrowhead fasteners to hold lower shifter boot escutcheon to the floor console.
9. Install the gear shift knob.

KNOB, GEARSHIFT

REMOVAL

REMOVAL

NOTE: The upper hemisphere of the gearshift knob is fastened to the lower hemisphere with polyurethane adhesive. The upper hemisphere must be destroyed to remove it.

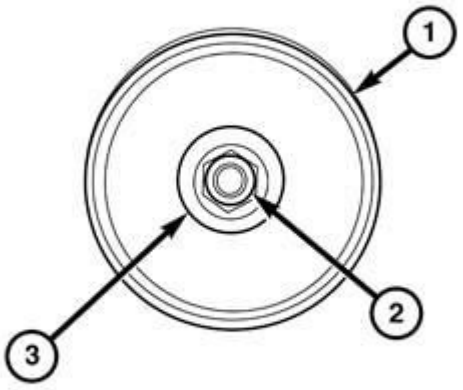

061069622

Fig. 89: Gear Shift Knob & Internal Nut
Courtesy of CHRYSLER GROUP, LLC

1. To remove the gearshift knob:

- Using a 15 mm (5/8 in.) hole saw or drill bit, drill a hole (3) in the crown of the upper hemisphere of the gear shift knob (1) to gain access to an internal nut (2).
- **Alternate method:**

  Using Channel-lock™ pliers, fracture the upper hemisphere and separate it from the gear shift knob lower hemisphere.

2. Using a suitable vacuum cleaner or regulated 3.4 kPa (50 psi) shop air, clean the access hole of debris.
3. Remove nut (2) holding the gear shift knob to the gear shift lever.
4. Separate the gear shift knob from the gear shift lever.

INSTALLATION

INSTALLATION

NOTE: The service replacement package should contain a small tube of adhesive.

1. Align the flat guide surface inside the center pass through hole in the lower hemisphere with the flat on the gearshift lever and push down until the gearshift knob seats.

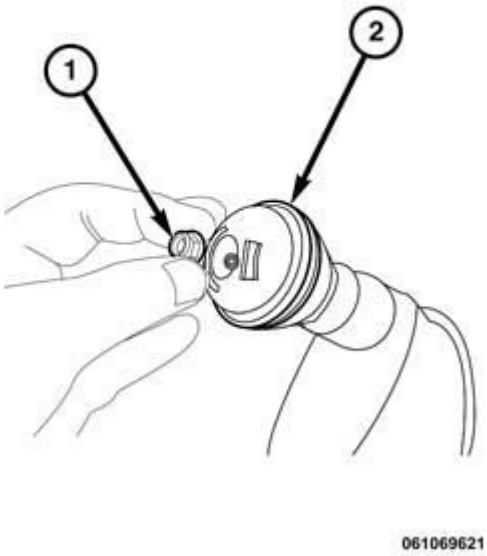

Fig. 90: Gear Shift Knob & Nut
Courtesy of CHRYSLER GROUP, LLC

2. Install the nut (1) to hold the gearshift knob (2) to the gearshift lever.

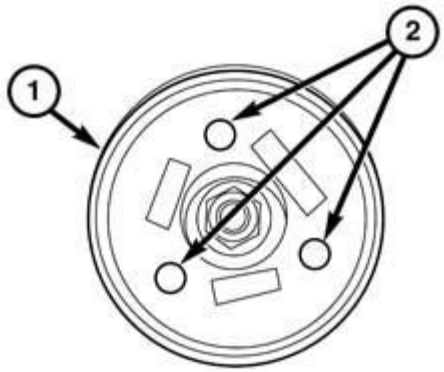

061069624

Fig. 91: Gear Shift Knob & Adhesive Locations
Courtesy of CHRYSLER GROUP, LLC

3. Apply 6 mm (1/4 in.) dabs of adhesive in three locations (2) next to the elongated slots on the lower gear shift knob (1).

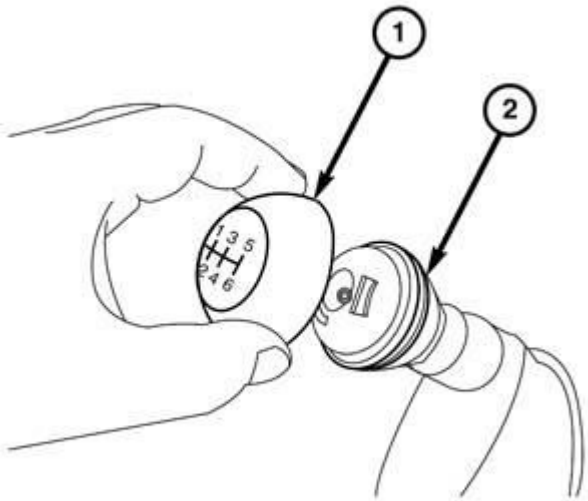

061069625

Fig. 92: Upper & Lower Hemisphere
Courtesy of CHRYSLER GROUP, LLC

4. Align the longest lock-tab on the upper hemisphere (1) to the longest slot on the lower hemisphere (2).
5. Push the upper hemisphere (1) downward until it locks in place.

CABLE, GEARSHIFT CONTROL

ADJUSTMENTS

ADJUSTMENT/SELECT CABLE

NOTE: The select cable adjustment device is located at the transaxle end of the select cable.

1. Release the hood latch and open the hood.
2. Support the hood on the provided prop-rod.
3. Remove the engine cover.
4. Remove the upper radiator closeout panel.
5. Disengage the clips holding the wire harness to the battery tray.
6. Remove the battery and battery tray. Refer to **TRAY, BATTERY, REMOVAL** .

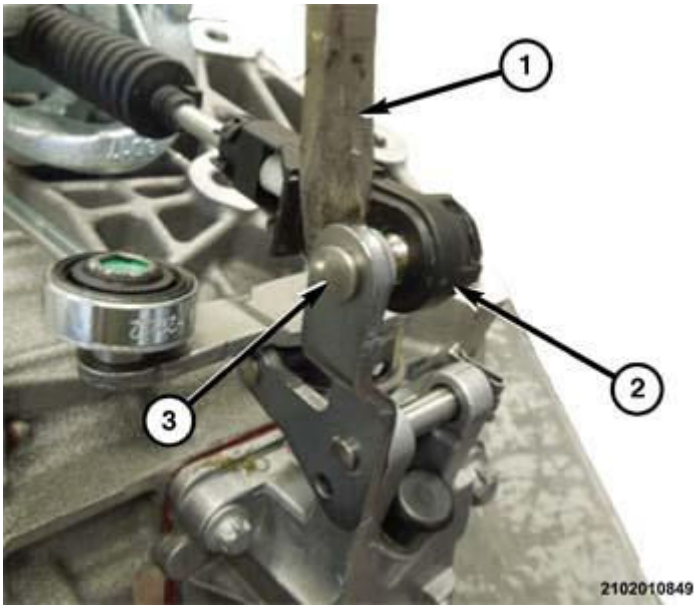

Fig. 93: Prying Select Cable End From Select Lever Ball Stud On Transmission
Courtesy of CHRYSLER GROUP, LLC

7. Using a suitable prying tool, pry the select cable end from the select lever ball stud on the transaxle.
8. Manually hold the select lever into neutral/reverse position.
9. Using a suitable elastic strap, Push the shift handle to the right and fix the shift handle in the reverse/neutral location.

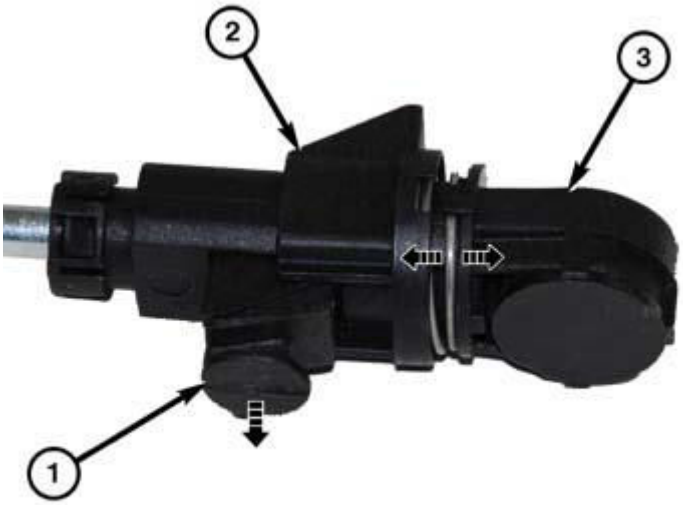

2102011231

Fig. 94: Disengaging Adjuster Slide Lock Button To Allow Select Cable End To Telescope
Courtesy of CHRYSLER GROUP, LLC

10. Disengage the adjuster slide (2) lock button (1) to allow the select cable end (3) to telescope.
11. Connect the select cable end on the select lever ball stud.

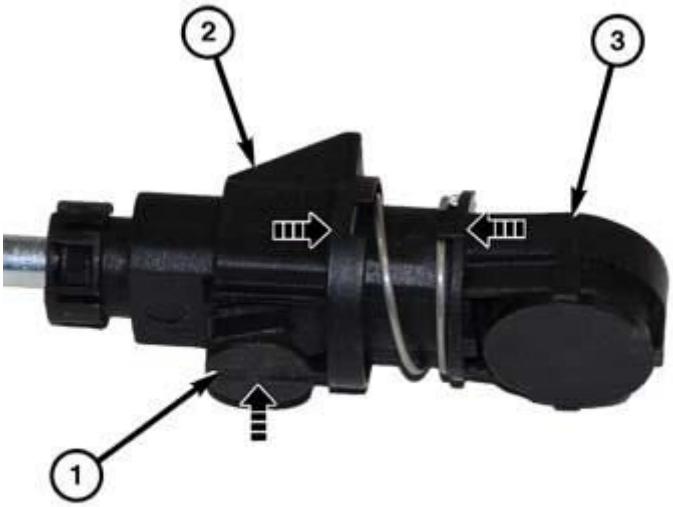

2102011232

Fig. 95: Engaging Adjuster Slide Lock Button To Set Select Cable End Length
Courtesy of CHRYSLER GROUP, LLC

12. Engage the adjuster slide (2) lock button (1) to set the select cable length.
13. Verify that the shifter operates properly.
14. Install the battery tray and battery.

15. Connect the wire harness retainers to the battery tray.
16. Install the upper radiator closeout panel.
17. Install the engine cover.
18. Close the hood.
19. Road test the vehicle to verify the repair.

REMOVAL

REMOVAL

NOTE: The transaxle shift cables are serviced as a set. The cable ends are too large to be drawn through the holes in the rubber floor plug.

1. Position the vehicle on a suitable hoist with the transaxle in neutral.
2. Remove the center console assembly. Refer to **CONSOLE, FLOOR, REMOVAL** .

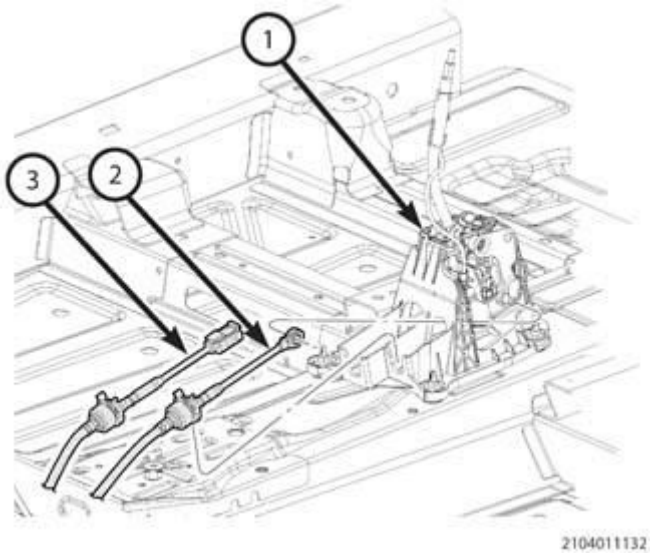

Fig. 96: Disengaging/Engaging Retainers Holding Cable Housings To Shifter Base
Courtesy of CHRYSLER GROUP, LLC

3. Disengage retainers holding cable housings to shifter base.
4. Pull the cable housing from the shifter base.

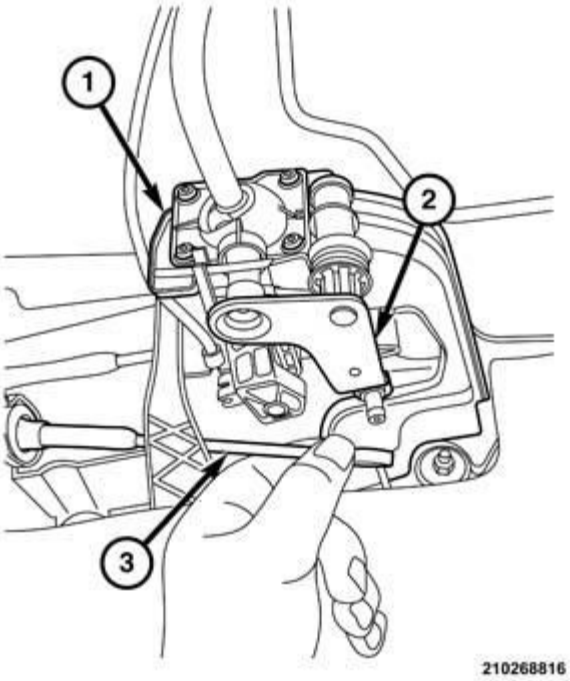

Fig. 97: Neutral Gate Cable End & Shifter Pin
Courtesy of CHRYSLER GROUP, LLC

5. Pry select cable (3) end to the left toward the driver's seat to disengage the cable end from the select lever (2) pin.

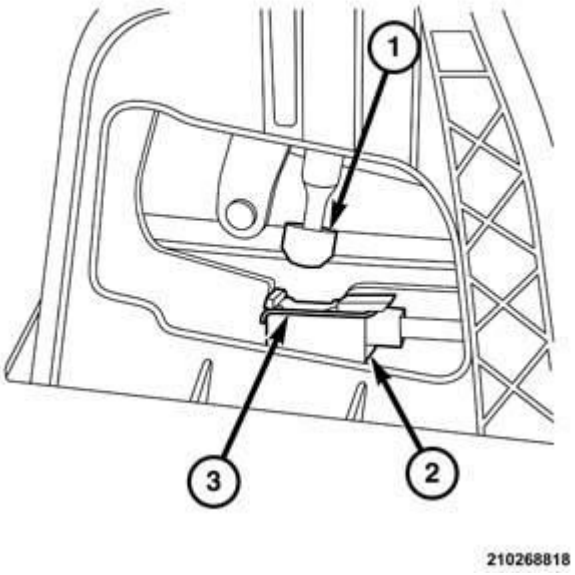

Fig. 98: Fulcrum Ball, Cable End & Spring-Clip
Courtesy of CHRYSLER GROUP, LLC

6. Release spring-clip (3) holding cable end (2) to fulcrum ball (1) under the shifter handle and push the cable end upward to engage it.
7. Release the lock on the neutral sensor wire connector.
8. Separate the wire harness connector from the neutral sensor.
9. Unhook the wire harness retainer and position the harness out of the way.
10. Remove the nuts holding the shifter to the floor.
11. Separate the shifter from the vehicle.
12. Open the hood and support it on the prop-rod.
13. Remove the engine cover/air cleaner assembly to gain access to the top of the transaxle. Refer to **BODY, AIR CLEANER, REMOVAL** .

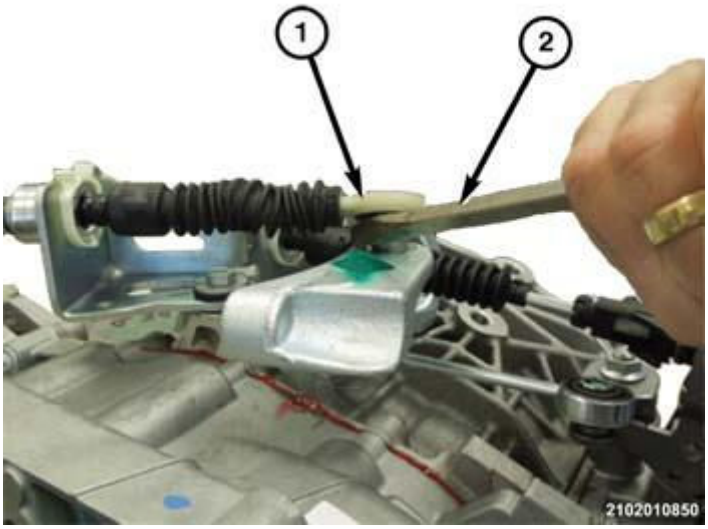

Fig. 99: Prying Shift Cable End From Lever Ball Stud On Transmission
Courtesy of CHRYSLER GROUP, LLC

14. Disengage retainer holding the shift cable to the transaxle bracket and lift the shift cable housing from the bracket.
15. Using a suitable pry bar (2), pry shift cable upward (1) to disengage it from the counterweighted gearshift lever ball stud.

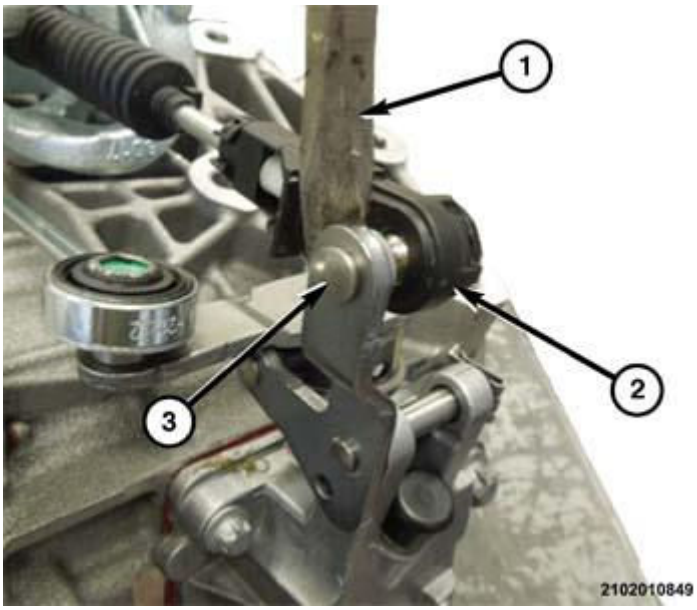

Fig. 100: Prying Select Cable End From Select Lever Ball Stud On Transmission
Courtesy of CHRYSLER GROUP, LLC

16. Disengage retainer holding the select cable to the transaxle bracket and lift the cable housing from the bracket.
17. Using a suitable pry bar (1), pry select cable (2) end to the left (driver side) to disengage the select cable end from the select lever ball stud.
18. Remove the locking retainers from the shift cable housing ends to avoid breaking them during removal.
19. Raise the vehicle to gain access to the underside of the vehicle.

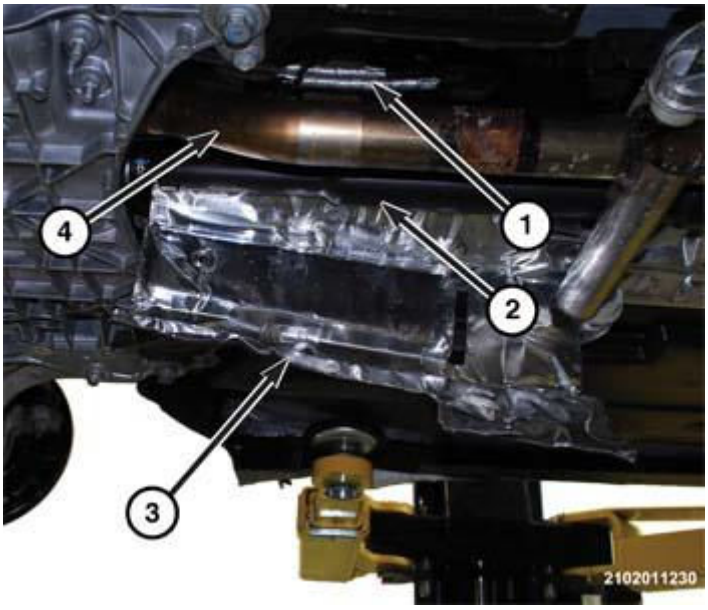

Fig. 101: Exhaust Heat Shield, Exhaust Pipe & Rear Drive Shaft
Courtesy of CHRYSLER GROUP, LLC

20. Remove the bolts holding the exhaust heat shield (3) to the floor above the exhaust pipe (4) and if equipped, the rear drive shaft (2).
21. Roll the heat shield (3) to the right (passenger side) of the vehicle and separate the heat shield (3) from the vehicle.

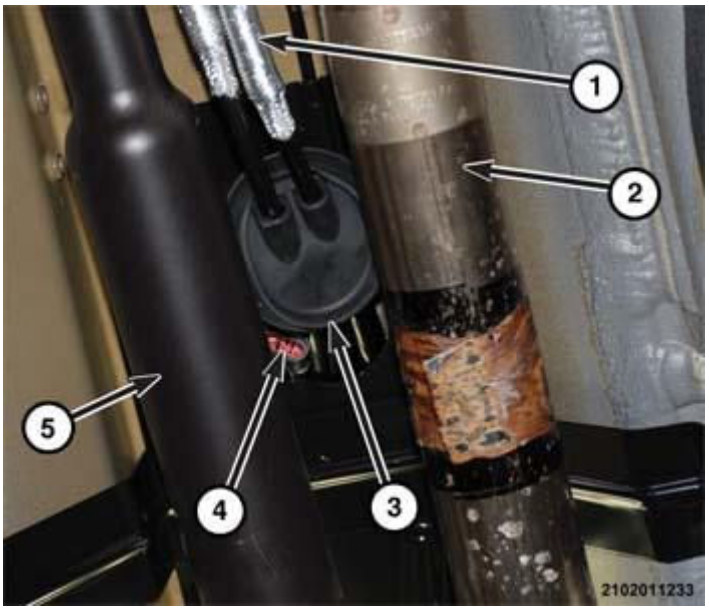

Fig. 102: Shift Cables, Rubber Floor Plug & Floor Opening
Courtesy of CHRYSLER GROUP, LLC

22. Using a suitable prying tool, pry the rubber floor plug (3) downward, taking care not to tear the plug.
23. Pull the shift cables (1) through the opening in the floor (4) and under the floor pan.

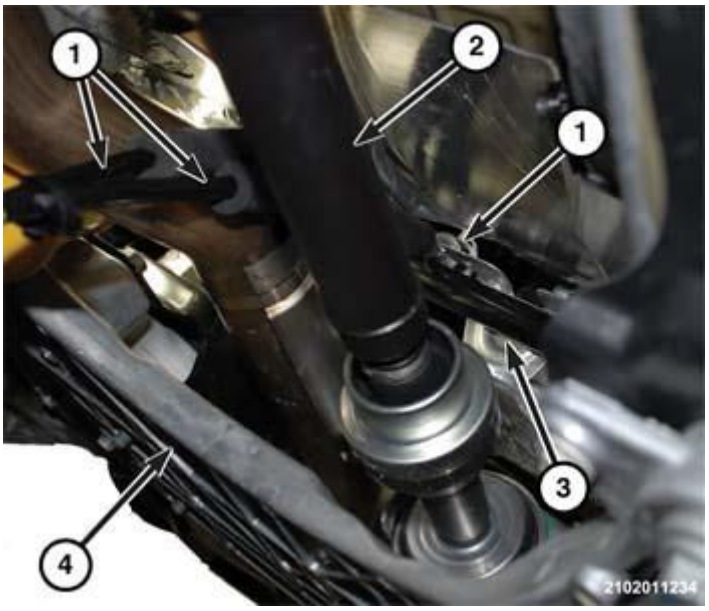

Fig. 103: Shift Cables, Rear Propeller Shaft & Front Stabilizer Bar

Courtesy of CHRYSLER GROUP, LLC

24. If equipped, guide the shift cables (1) over the top of the rear propeller shaft (2) to the left side of the vehicle.
25. Guide the cables (1) rearward until the upper cable ends (1) are visible above the front stabilizer bar (3).
26. One at a time, pull the cable ends (1) through the gap above the stabilizer bar (3).
27. Separate the cables from the vehicle.

INSTALLATION

INSTALLATION

NOTE: The transaxle shift cables are serviced as a set. The cable ends are to large to be drawn through the holes in the rubber floor plug.

1. Position the vehicle on a suitable hoist with the transaxle in neutral.
2. Raise the vehicle to gain access to the underside of the vehicle.

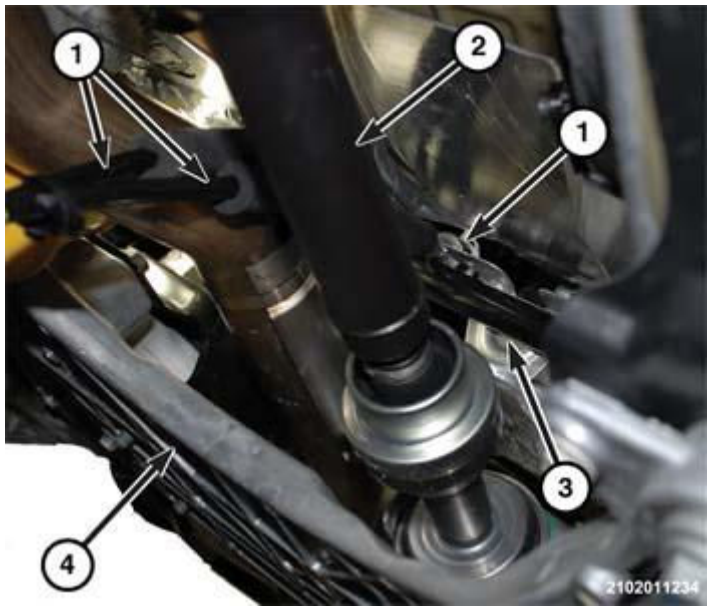

Fig. 104: Shift Cables, Rear Propeller Shaft & Front Stabilizer Bar
Courtesy of CHRYSLER GROUP, LLC

3. Place the cables in position on the vehicle.
4. One at a time, push the cable ends (1) through the gap above the stabilizer bar (3).
5. Guide the cables (1) forward until the upper cable ends (1) are in line with the retaining bracket on top of the transaxle.
6. If equipped, guide the shift cables (1) over the top of the rear propeller shaft (2) and in line with the opening in the floor.

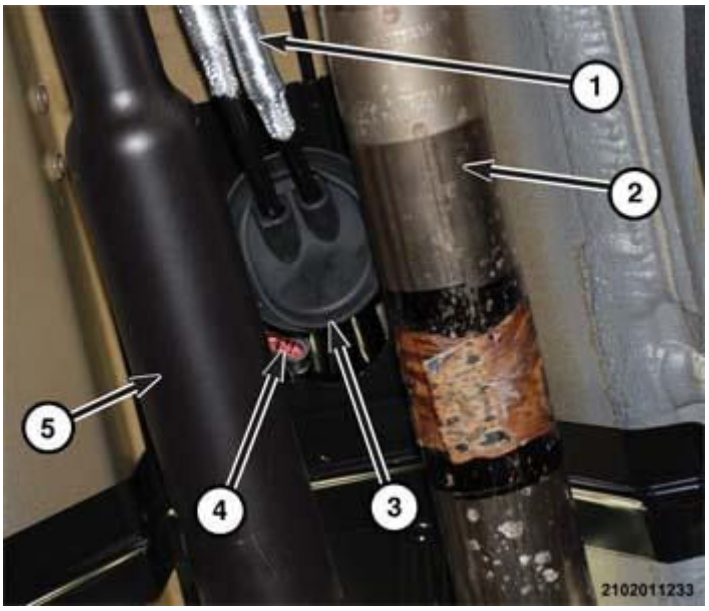

Fig. 105: Shift Cables, Rubber Floor Plug & Floor Opening
Courtesy of CHRYSLER GROUP, LLC

7. Push the shift cables (1) through the opening in the floor.
8. Insert the rubber floor plug (3) upward until it seats properly.

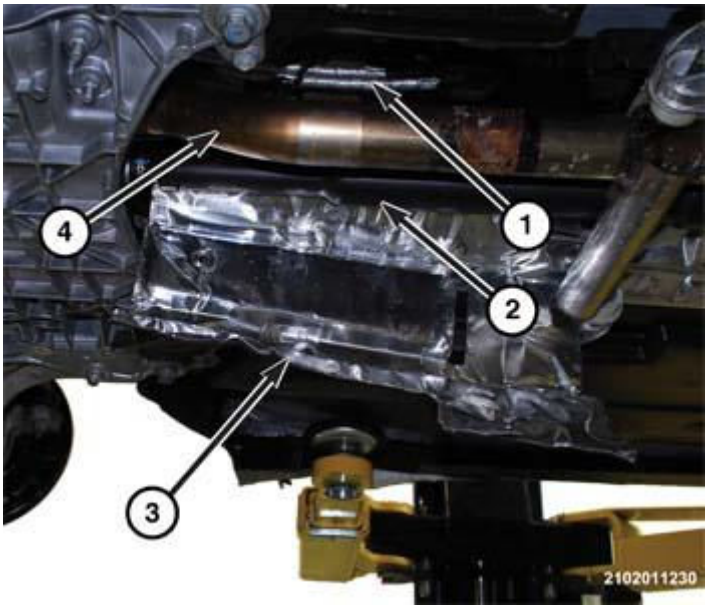

Fig. 106: Exhaust Heat Shield, Exhaust Pipe & Rear Drive Shaft
Courtesy of CHRYSLER GROUP, LLC

9. Roll the heat shield (3) to the left in proper position on the vehicle.
10. Install the bolts to hold the exhaust heat shield (3) to the floor above the exhaust pipe (4) and if equipped, the rear propeller shaft (2).

11. Lower the vehicle to gain access to the top side of the vehicle.
12. Install the locking rings onto the shift cable housing ends.

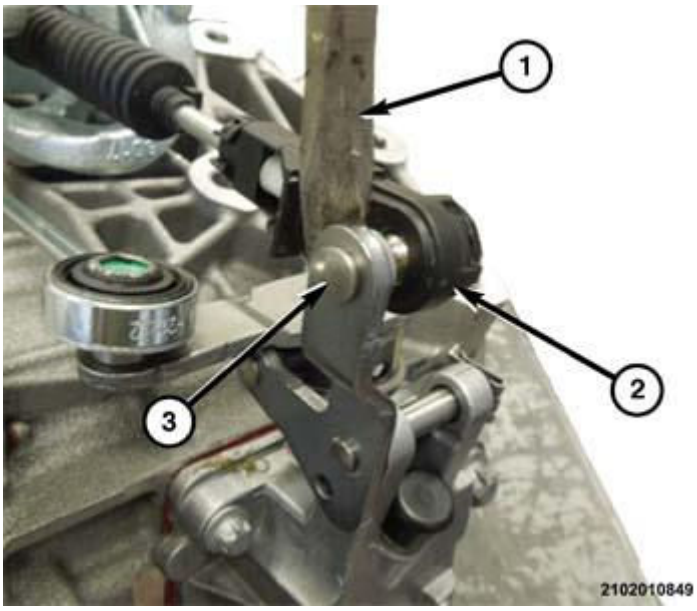

Fig. 107: Prying Select Cable End From Select Lever Ball Stud On Transmission
Courtesy of CHRYSLER GROUP, LLC

13. Place the select cable end on the select lever ball stud and snap the select cable (2) end onto the ball stud.
14. Place the cable housing in position on the bracket and engage the retainer to hold the select cable to the transaxle bracket.

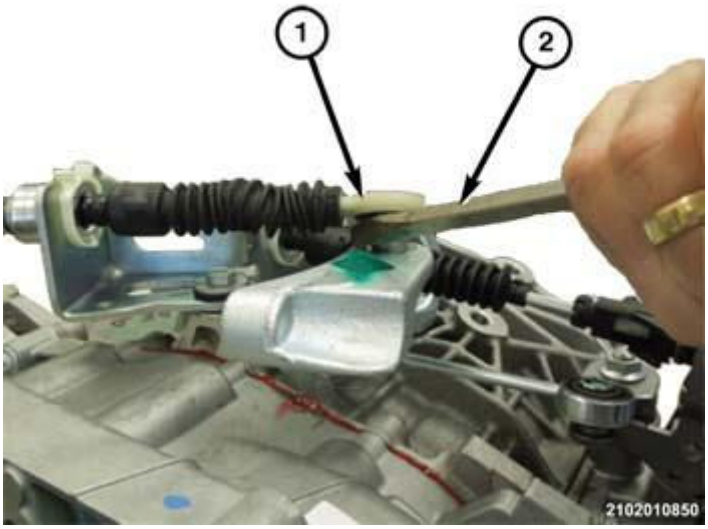

Fig. 108: Prying Shift Cable End From Lever Ball Stud On Transmission
Courtesy of CHRYSLER GROUP, LLC

15. Place the shift cable end on the shift lever ball stud and snap the shift cable (2) end onto the ball stud.
16. Place the cable housing in position on the bracket and engage the retainer to hold the select cable to the transaxle bracket.
17. Install the engine cover/air cleaner assembly. Refer to **BODY, AIR CLEANER, INSTALLATION** .
18. Place the shifter in position in the vehicle.
19. Install the nuts to hold the shifter to the floor.
20. Place the harness in proper position and hook the wire harness retainer to the shift mechanism.
21. Engage the wire harness connector into the neutral sensor lead connector.
22. Engage the lock on the neutral sensor wire connector.

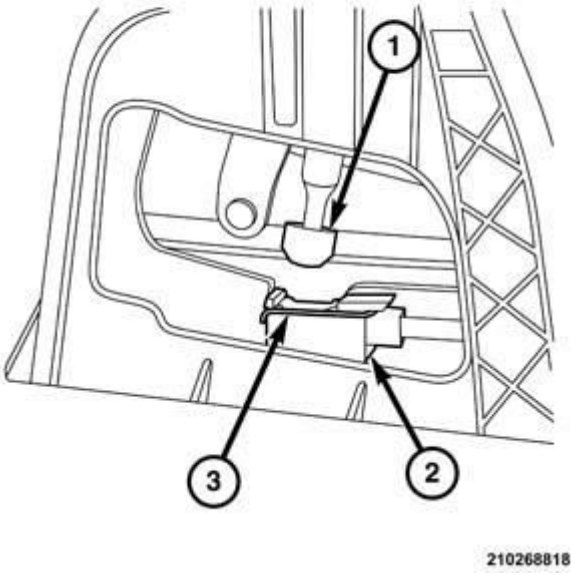

Fig. 109: Fulcrum Ball, Cable End & Spring-Clip
Courtesy of CHRYSLER GROUP, LLC

23. Engage spring-clip (3) to hold cable end (2) to fulcrum ball (1) under the shifter handle and push the cable end upward to disengage it.

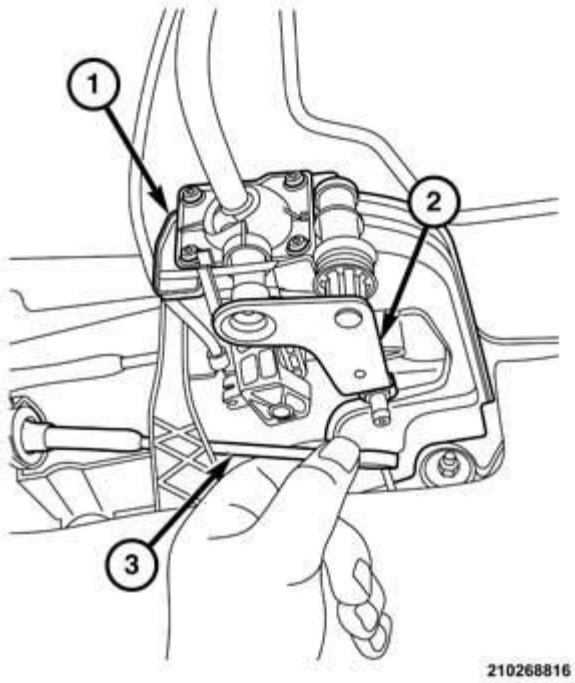

Fig. 110: Neutral Gate Cable End & Shifter Pin
Courtesy of CHRYSLER GROUP, LLC

24. Engage the cable (3) end onto the select lever (2) pin.

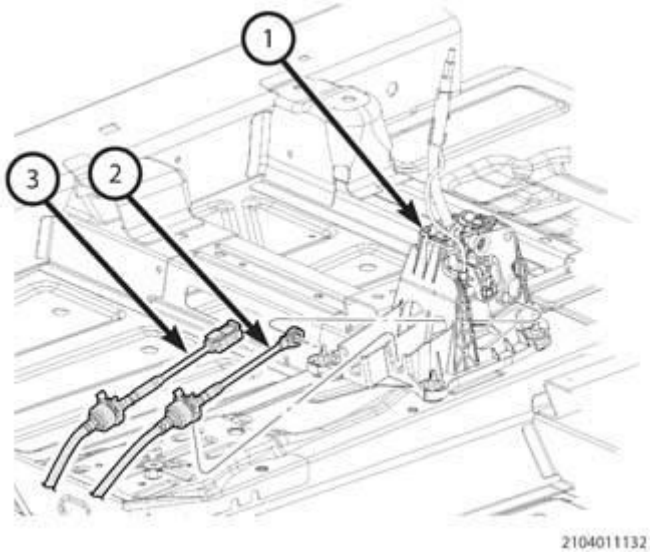

Fig. 111: Disengaging/Engaging Retainers Holding Cable Housings To Shifter Base
Courtesy of CHRYSLER GROUP, LLC

25. Engage retainers to hold the cable housings to shifter base (1).
26. If necessary, adjust the shift select cable.
27. Install the center console assembly.

28. Close the hood.
29. Road test the vehicle to verify the repair.

DIFFERENTIAL, TRANSAXLE

DISASSEMBLY

DISASSEMBLY

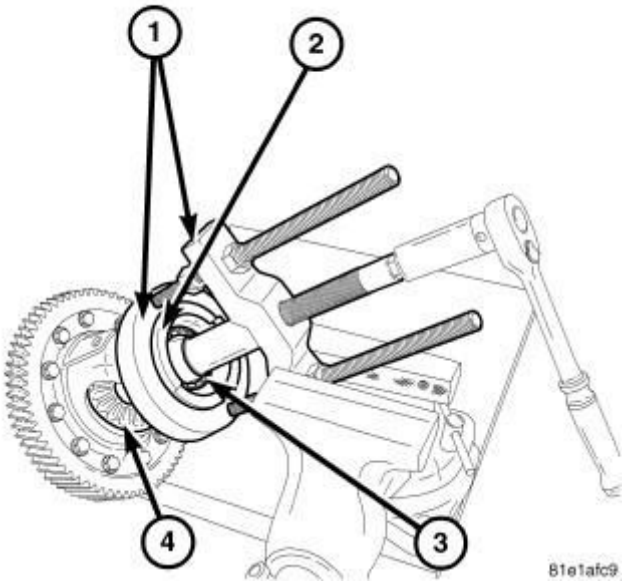

Fig. 112: Remove Pinion Side Bearing
Courtesy of CHRYSLER GROUP, LLC

NOTE: This procedure will require the removal of the bearing cage and rollers. New bearings must be used upon reassembly.

1. Using (special tool #C-293-PA, Puller, Press) (1), (special tool #8353, Blocks, Adapter) (2), and (special tool #9676, Adapter Plug) (3) remove the pinion side differential bearing.

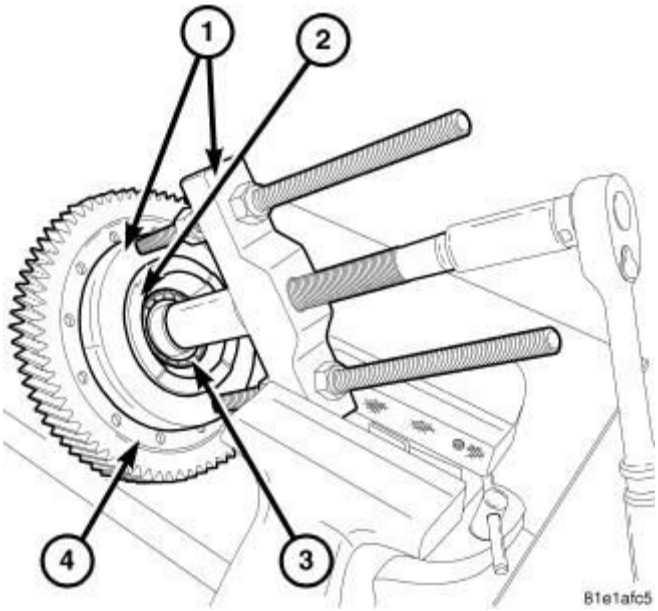

Fig. 113: Remove Ring Gear Side Bearing
Courtesy of CHRYSLER GROUP, LLC

2. Using (special tool #C-293-PA, Puller, Press) (1), (special tool #8353, Blocks, Adapter) (2), and (special tool #9676, Adapter Plug), remove the ring gear side differential bearing.
3. Remove the ring gear bolts.
4. Remove the ring gear.

ASSEMBLY

ASSEMBLY

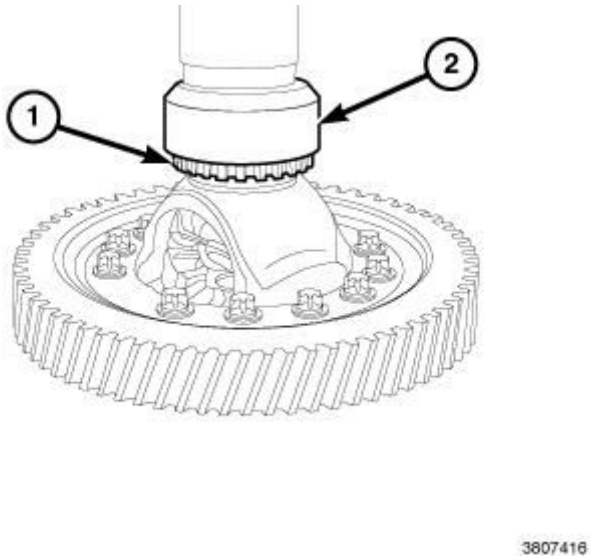

Fig. 114: Differential Bearing & Special Tool

Courtesy of CHRYSLER GROUP, LLC

1. Position the ring gear.
2. Install **new** ring gear bolts (1) and tighten to 83 N.m (61 ft. lbs.).
3. Install a **new** ring gear side differential bearing (1) using a suitable press and (special tool #C-4340, Installer, Bearing) (2).
4. Install a **new** Pinion gear side differential bearing using a suitable press and (special tool #C-4340, Installer, Bearing) (2).

FLUID

STANDARD PROCEDURE

FLUID DRAIN AND FILL

NOTE: It is acceptable to top-off fluid level in the case of fluid loss due to service of halfshaft, seal, etc.

- **Add fluid until it reaches the rolled lower edge of the sloped ramp 40 mm (1.5 in) inside the threshold of the fill hole next to the differential ring gear carrier. This surface is approximately 8 mm (0.3 in) below the bottom of the fill hole.**
- **The minimum acceptable fluid level is 23 mm (0.9 in) below the bottom of the fill hole.**

To fabricate a fluid level dipstick, cut a 15 mm (0.6 in) wide strip, length wise, from a common business card. At 30 mm (1.2 in) from one end, fold the strip to 90°. The short end of the strip is the dipstick and the long end is the handle. Insert the paper dipstick into the fill hole and press the handle end against the flattened threshold so the dipstick end turns downward into the sump near the differential carrier. Remove the paper dipstick and immediately measure the distance from the fold crease in the paper to the top of the fluid line. As time passes the paper will absorb the fluid and the witness mark the fluid left in the paper will become invalid. The distance from the fold to the fluid mark is the fluid level.

1. Raise vehicle on a suitable jack or hoist.
2. Remove the belly pan.
3. Place a suitable drain pan under transaxle.

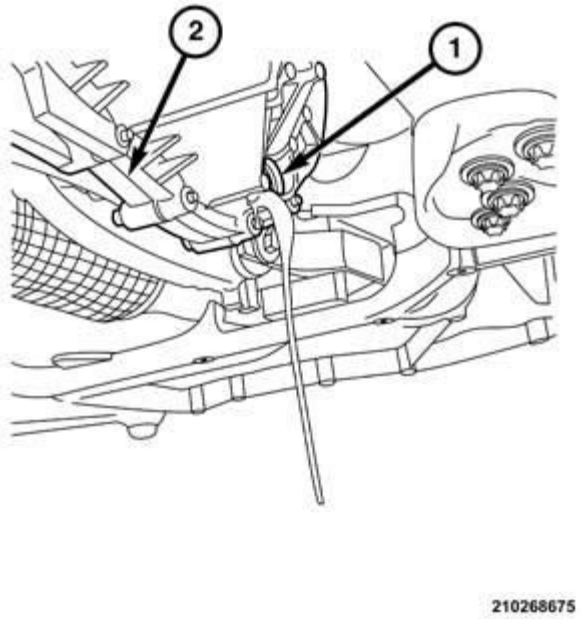

Fig. 115: Transaxle & Drain Plug Hole
Courtesy of CHRYSLER GROUP, LLC

4. Remove transaxle drain plug to allow the fluid to flow (1) into the drain pan until transaxle (2) is empty.
5. Install the drain plug and tighten to 25 N.m (18 lbs. ft.).

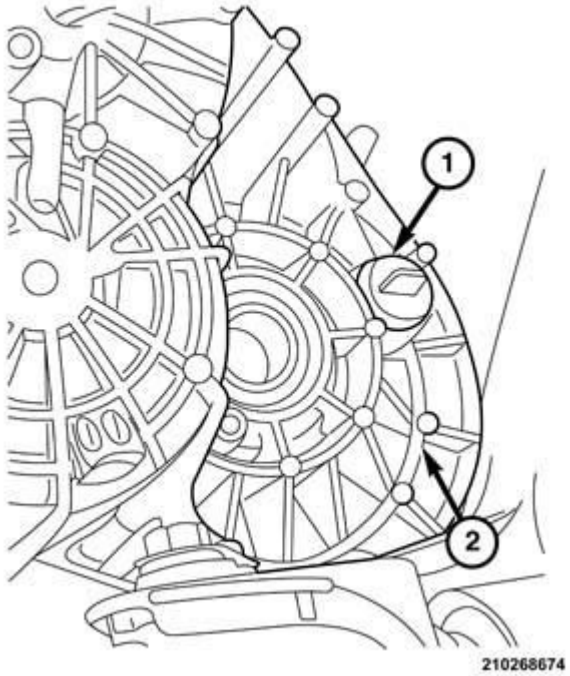

Fig. 116: Transaxle & Fill Plug

Courtesy of CHRYSLER GROUP, LLC

6. Using regulated 344 kPa (50 psi) compressed shop air or stiff bristle brush, clean the area around the fill plug to avoid contaminating the transaxle during the filling operation.
7. Remove the rubber fill plug (1) from the transaxle (2), located rearward and above the left halfshaft.
8. Fill the **COLD** transaxle with 1.7 l (1.8 qt.) of the proper fluid type. Refer to **CAPACITIES AND RECOMMENDED FLUIDS, SPECIFICATIONS** .
9. Install the fill plug.
10. Install the belly pan.

FLUID LEVEL INSPECTION

NOTE: The threshold of the fill hole opening extends 40 mm (1.5 in) into the transaxle before turning downward into the sump near the differential ring gear carrier.

NOTE: It is acceptable to top-off fluid level in the case of fluid loss due to service of halfshaft, seal, etc.

- **Add fluid until it reaches the rolled lower edge of the sloped ramp 40 mm (1.5 in) inside the threshold of the fill hole next to the differential ring gear carrier. This surface is approximately 8 mm (0.3 in) below the bottom of the fill hole.**
- **The minimum acceptable fluid level is 23 mm (0.9 in) below the bottom of the fill hole.**

To fabricate a fluid level dipstick, cut a 15 mm (0.6 in) wide strip, length wise, from a common business card. At 30 mm (1.2 in) from one end, fold the strip to 90°. The short end of the strip is the dipstick and the long end is the handle. Insert the paper dipstick into the fill hole and press the handle end against the flattened threshold so the dipstick end turns downward into the sump near the differential carrier. Remove the paper dipstick and immediately measure the distance from the fold crease in the paper to the top of the fluid line. As time passes the paper will absorb the fluid and the witness mark the fluid left in the paper will become invalid. The distance from the fold to the fluid mark is the fluid level.

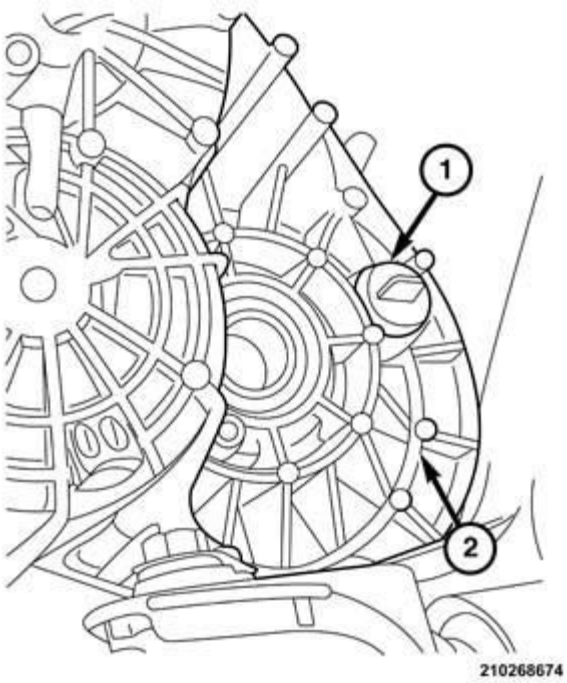

Fig. 117: Transaxle & Fill Plug
Courtesy of CHRYSLER GROUP, LLC

1. Hoist the vehicle on a suitable hoist so the vehicle stays in a level position.
2. Remove belly pan.
3. Using regulated 344 kPa (50 psi) compressed shop air or stiff bristle brush, clean the area around the fill plug to avoid contaminating the transaxle during the filling operation.
4. Remove the rubber fill plug (1) from the transaxle (2), located rearward and above the left halfshaft.
5. Fill the **COLD** transaxle to:
   - Add fluid until it reaches the rolled lower edge of the sloped ramp 40 mm (1.5 in) inside the threshold of the fill hole next to the differential ring gear carrier. This surface is approximately 8 mm (0.3 in) below the bottom of the fill hole. Refer to **CAPACITIES AND RECOMMENDED FLUIDS, SPECIFICATIONS** .
6. Install the fill plug.
7. Install the belly pan.

INPUT SHAFT, TRANSMISSION

DISASSEMBLY

DISASSEMBLY

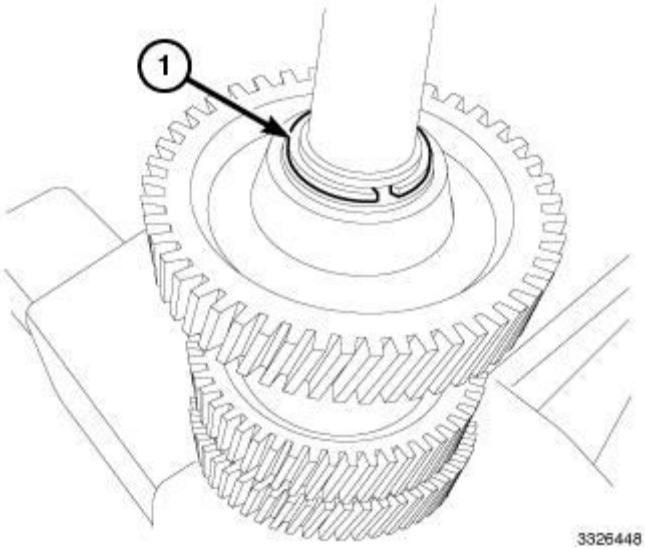

Fig. 118: Snap Ring
Courtesy of CHRYSLER GROUP, LLC

1. Remove the **right hand** thread rear bearing retention bolt and discard.
2. Remove the snap ring (1) from the input shaft.

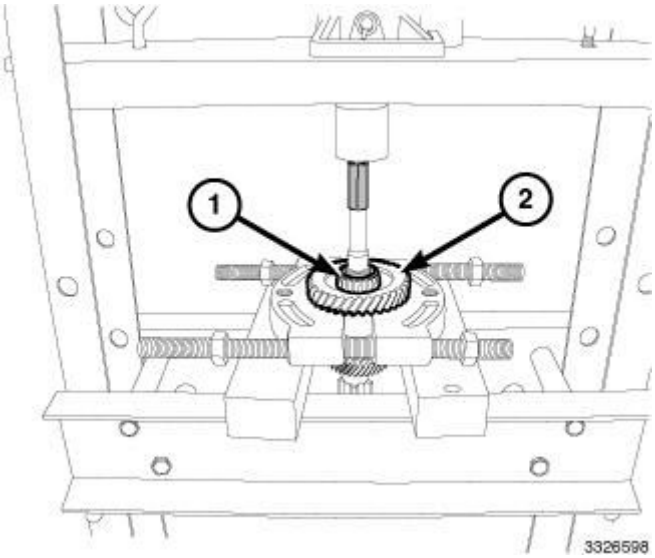

Fig. 119: Removing Front Bearing & Forth-Sixth Gear
Courtesy of CHRYSLER GROUP, LLC

3. Remove the front bearing (1) and the forth-sixth gear (2) using a press and (special tool #1130, Splitter, Bearing/Gear).

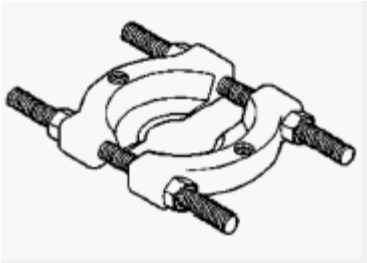

Fig. 120: Splitter, Bearing/Gear
Courtesy of CHRYSLER GROUP, LLC

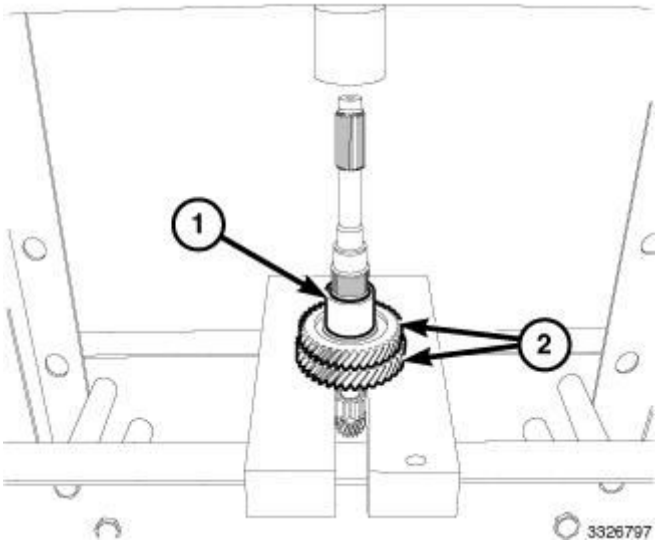

Fig. 121: Sleeve & Third-Fifth Gears
Courtesy of CHRYSLER GROUP, LLC

4. Remove the sleeve (1) and the third-fifth gears (2) using a press and plates.

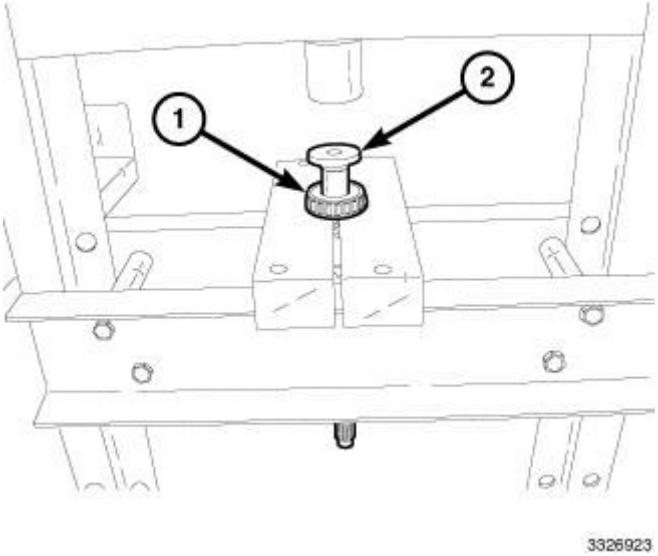

Fig. 122: Removing Rear Bearing
Courtesy of CHRYSLER GROUP, LLC

5. Remove the rear bearing (1) using (special tool #MD998200, Installer, Seal) and plates.

ASSEMBLY

ASSEMBLY

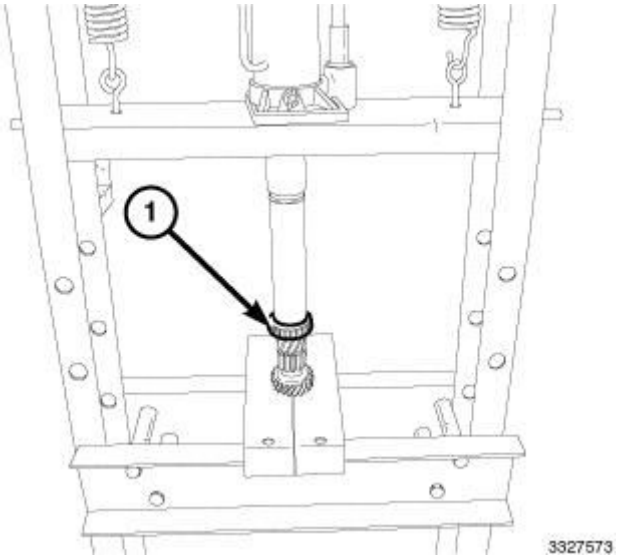

Fig. 123: Rear Bearing
Courtesy of CHRYSLER GROUP, LLC

1. Install the rear bearing (1) using (special tool #W-262, Installer, Bearing).

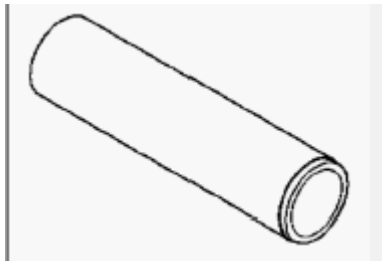

Fig. 124: Special Tool #W-262
Courtesy of CHRYSLER GROUP, LLC

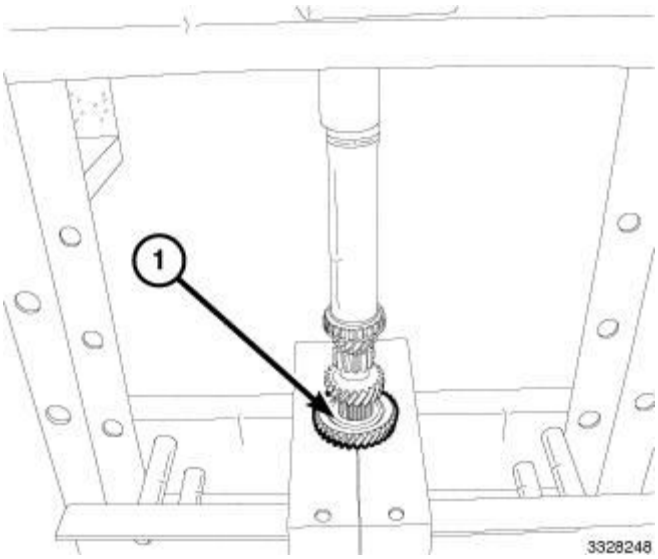

Fig. 125: Installing Fifth Gear
Courtesy of CHRYSLER GROUP, LLC

2. Install the fifth gear (1) using (special tool #W-262, Installer, Bearing).

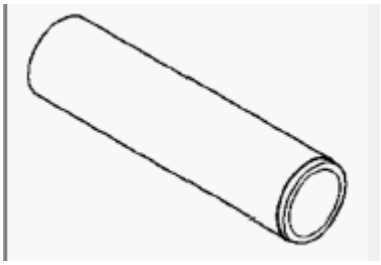

Fig. 126: Special Tool #W-262
Courtesy of CHRYSLER GROUP, LLC

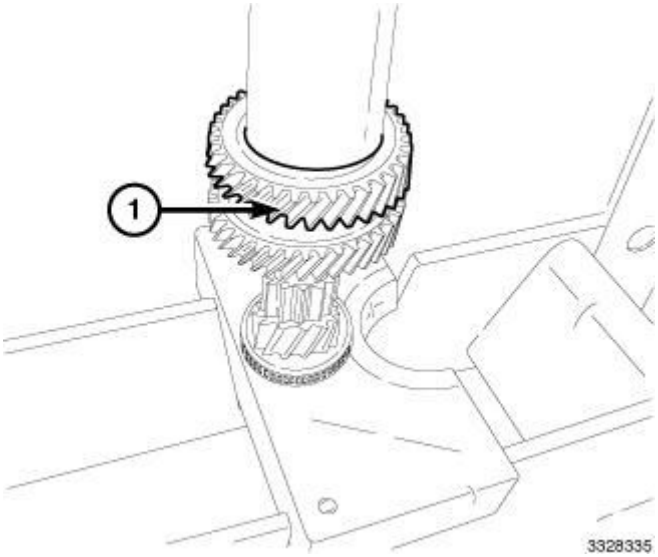

Fig. 127: Third Gear

Courtesy of CHRYSLER GROUP, LLC

3. Install the third gear (1) using (special tool #W-262, Installer, Bearing).

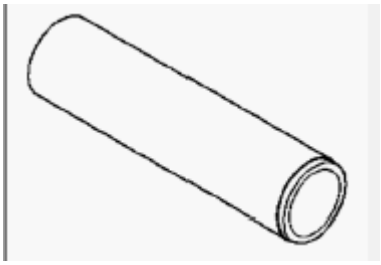

Fig. 128: Special Tool #W-262
Courtesy of CHRYSLER GROUP, LLC

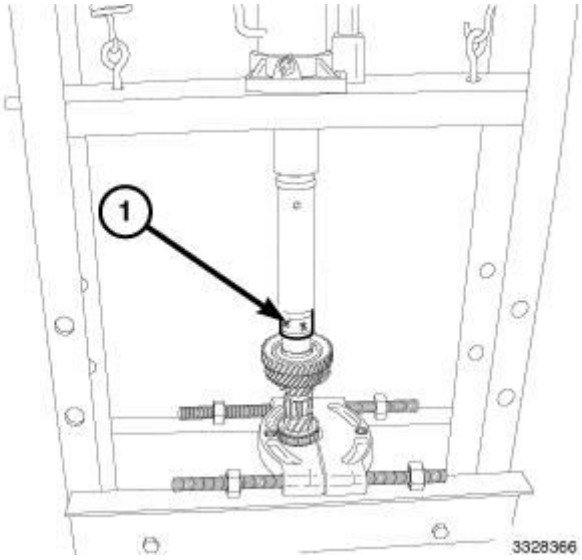

Fig. 129: Installing Collar
Courtesy of CHRYSLER GROUP, LLC

4. Install the collar (1) using (special tool #W-262, Installer, Bearing).

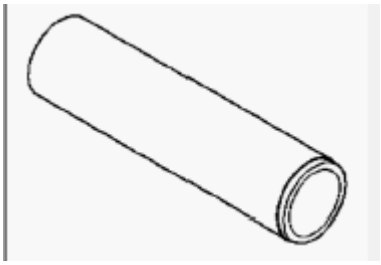

Fig. 130: Special Tool #W-262
Courtesy of CHRYSLER GROUP, LLC

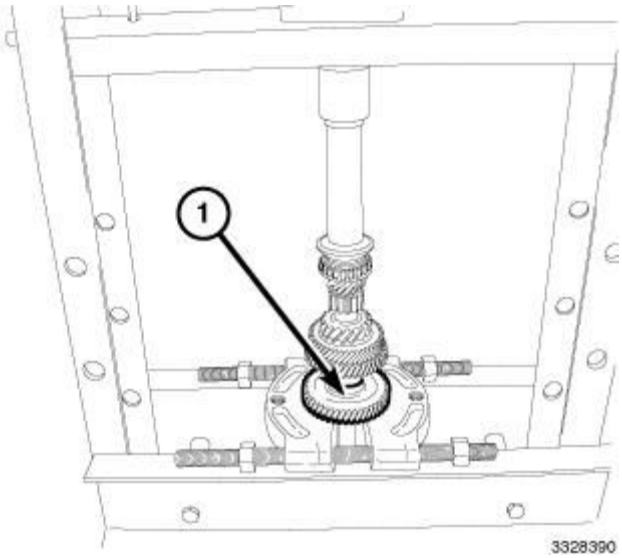

Fig. 131: Installing Forth-Sixth Gear
Courtesy of CHRYSLER GROUP, LLC

5. Install the forth-sixth gear (1) using (special tool #C-4193A, Installer, Seal).

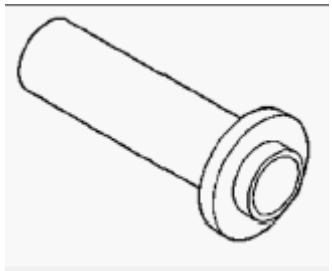

Fig. 132: Special Tool #C-4193A
Courtesy of CHRYSLER GROUP, LLC

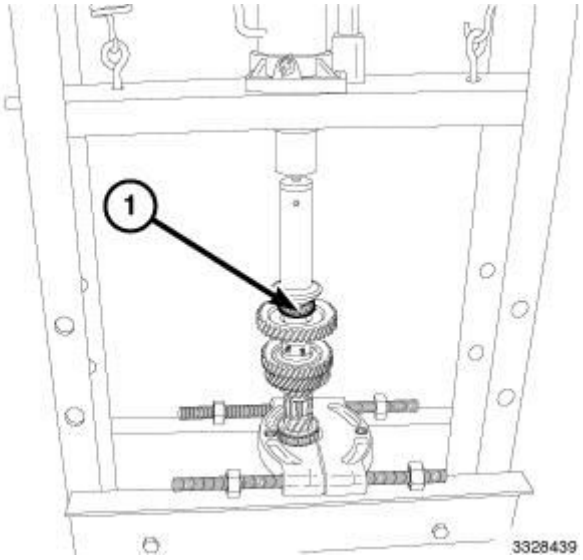

Fig. 133: Installing Front Bearing
Courtesy of CHRYSLER GROUP, LLC

6. Install the front bearing (1) using Seal Installer (special tool #C-4193A, Installer, Seal).

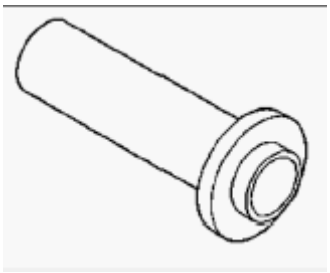

Fig. 134: Special Tool #C-4193A
Courtesy of CHRYSLER GROUP, LLC

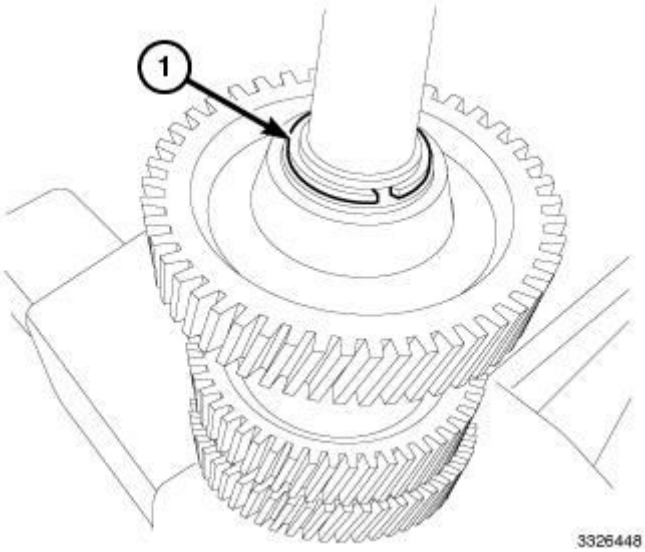

Fig. 135: Snap Ring
Courtesy of CHRYSLER GROUP, LLC

7. Install the snap ring (1).
8. Install a **new** rear bearing retention bolt, tighten to 56 N.m (41 ft. lbs.).

MECHANISM, GEARSHIFT

REMOVAL

REMOVAL

1. Remove the center console assembly.

   Refer to **CONSOLE, FLOOR, REMOVAL** .

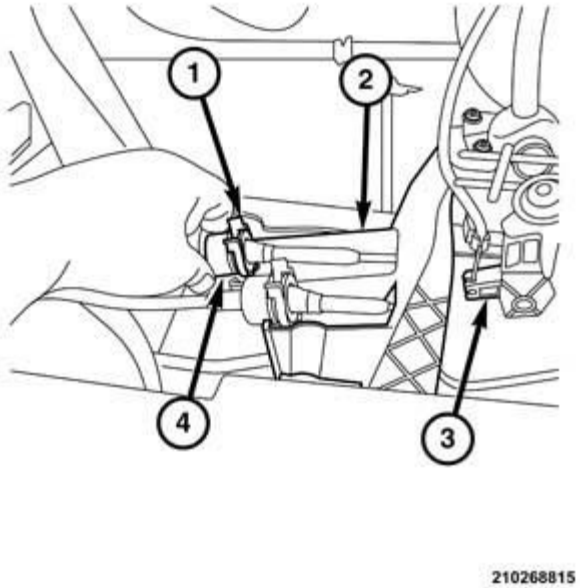

Fig. 136: Shifter Bracket, Cable Housing & Retainers
Courtesy of CHRYSLER GROUP, LLC

2. Disengage retainers (1) holding cable housings (4) to shifter base (2).
3. Pull the cable housing (4) from the shifter base (2).

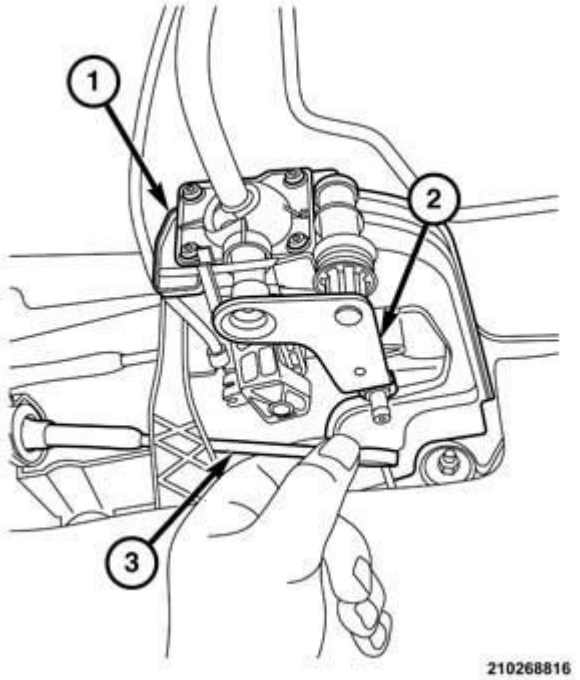

Fig. 137: Neutral Gate Cable End & Shifter Pin

Courtesy of CHRYSLER GROUP, LLC

4. Pry select cable end (3) to the left toward drive seat to disengage the cable end (3) from the select lever pin (2).

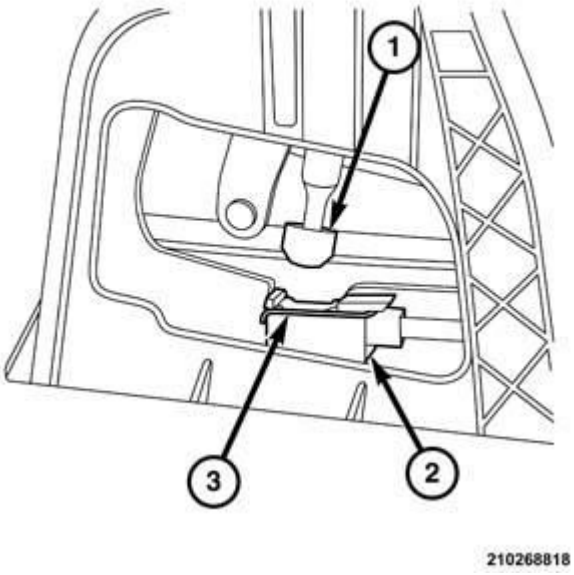

Fig. 138: Fulcrum Ball, Cable End & Spring-Clip
Courtesy of CHRYSLER GROUP, LLC

5. Release spring-clip (3) holding the cable end (2) to fulcrum ball (1) under the shifter handle and push the cable end downward to disengage it.
6. Remove nuts holding the shifter to the floor.
7. Separate the shifter from the vehicle.

INSTALLATION

INSTALLATION

1. Place the shifter in position on the floor pan.

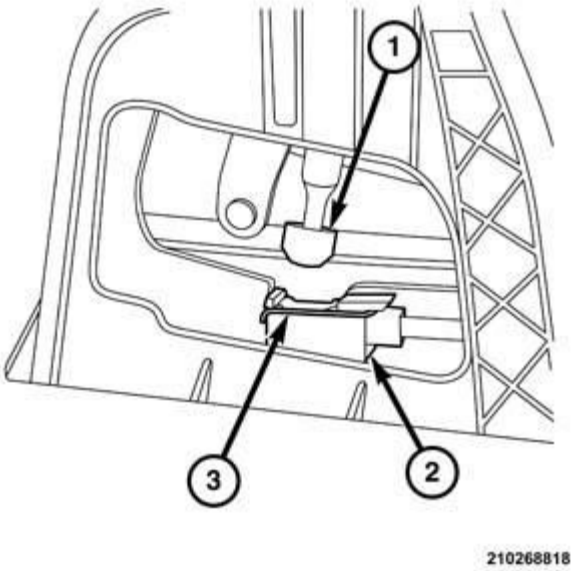

Fig. 139: Fulcrum Ball, Cable End & Spring-Clip
Courtesy of CHRYSLER GROUP, LLC

2. Align cable end (2) to fulcrum ball (1) under the shifter handle and push the cable end (2) upward to engage it.

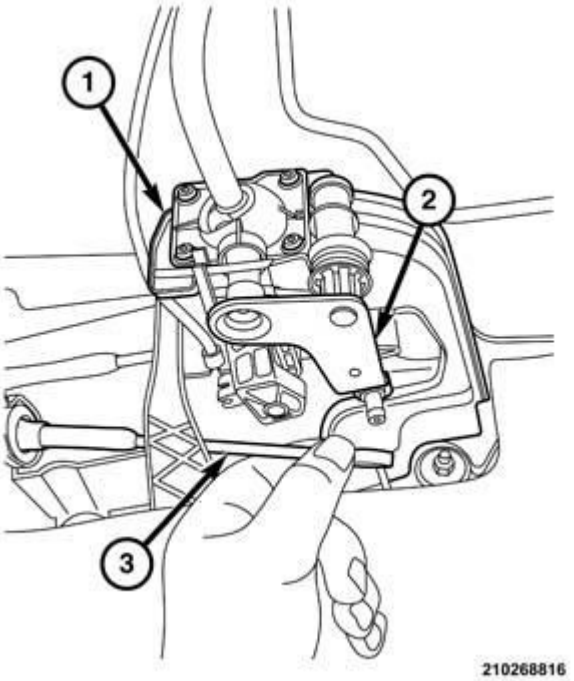

Fig. 140: Neutral Gate Cable End & Shifter Pin
Courtesy of CHRYSLER GROUP, LLC

3. Align select cable end (3) to the engage select lever pin (2).

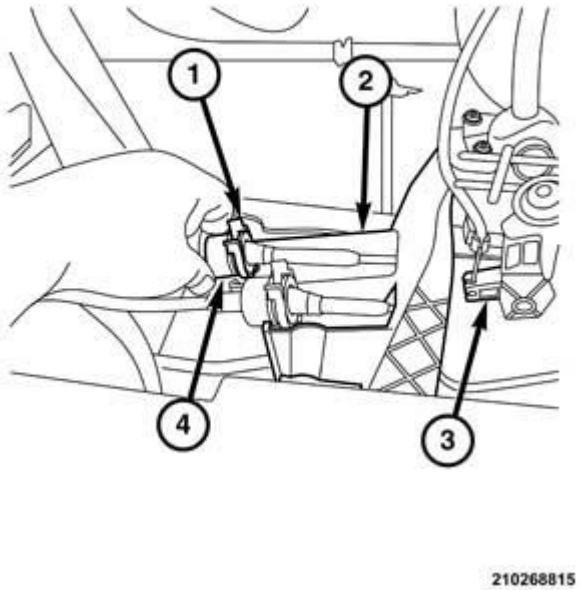

Fig. 141: Shifter Bracket, Cable Housing & Retainers
Courtesy of CHRYSLER GROUP, LLC

4. Insert the cable housing (4) into the shifter base (2) and push downward until the retainers (1) lock in position.
5. Install nuts to hold the shifter to the floor and tighten to 9 N.m (80 in lb.).
6. Install the center console assembly.

   Refer to **CONSOLE, FLOOR, REMOVAL** .

SEAL, AXLE DRIVE SHAFT

REMOVAL

REMOVAL

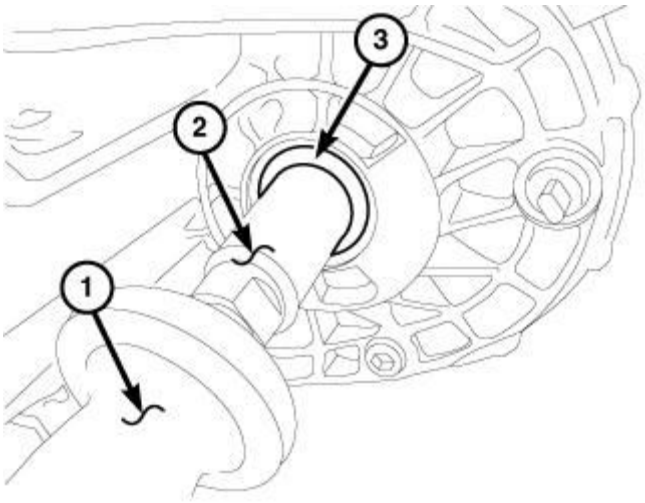

3375805

Fig. 142: Removing Axle Seal
Courtesy of CHRYSLER GROUP, LLC

NOTE: Left side is shown in illustration, right side is similar.

1. Remove the halfshaft. Refer to **REMOVAL** .
2. **For the left side** , remove the axle seal (3) using (special tool #6341A, Remover, Seal) (2) and (special tool #C-637, Slide Hammer, Universal)
3. **For the right side** , remove the axle seal (3) using (special tool #9664, Remover, Bearing Cup) (2) and (special tool #C-637, Slide Hammer, Universal)

INSTALLATION

INSTALLATION

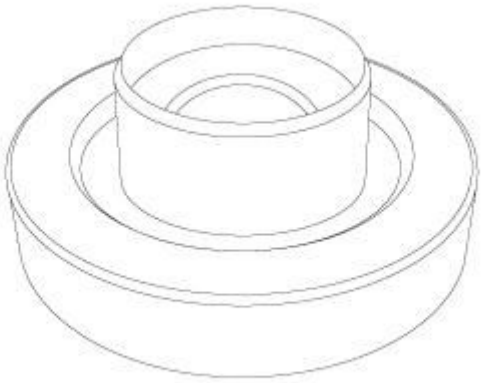

3375829

Fig. 143: Installer 10303
Courtesy of CHRYSLER GROUP, LLC

1. Using the **flat** side of (special tool #10303, Installer, Differential Oil Seal) to install the right side differential seal.

Fig. 144: Special Tool #10303
Courtesy of CHRYSLER GROUP, LLC

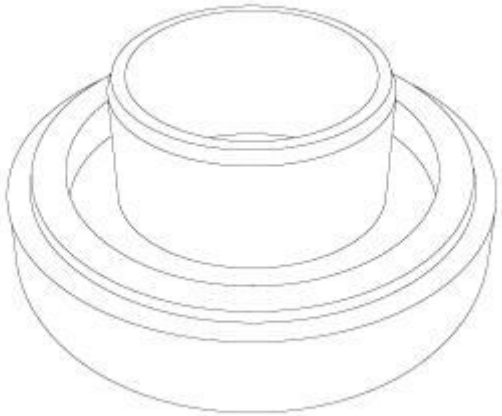

Fig. 145: Seal Installer 10303
Courtesy of CHRYSLER GROUP, LLC

2. Using the **raised** side of (special tool #10303, Installer, Differential Oil Seal) to install the left side differential seal.

Fig. 146: Special Tool #10303
Courtesy of CHRYSLER GROUP, LLC

NOTE: Left side is shown in illustration, right side is similar.

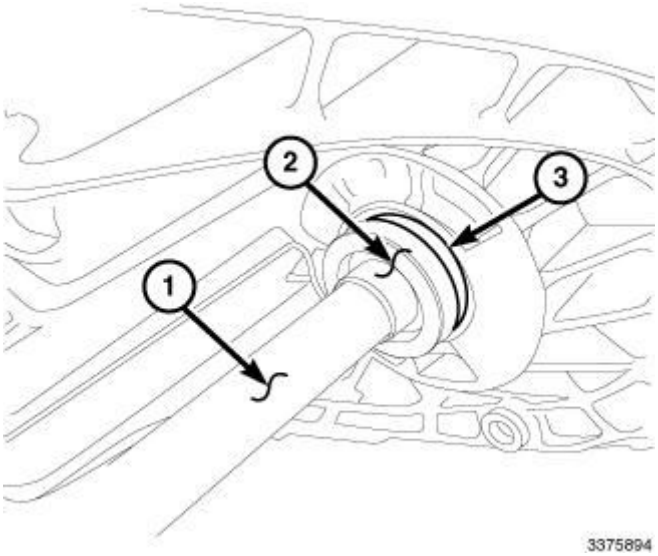

Fig. 147: Seal Installer And Handle
Courtesy of CHRYSLER GROUP, LLC

3. Using (special tool #10303, Installer, Differential Oil Seal) (2) and (special tool #C-4171, Driver Handle, Universal) (1) install the differential seal (3) to the bearing cover side of the differential housing.
4. Install the half shaft.

   Refer to **INSTALLATION** .

SHAFT, OUTPUT, 1ST, 2ND, 5TH AND 6TH

DISASSEMBLY

DISASSEMBLY

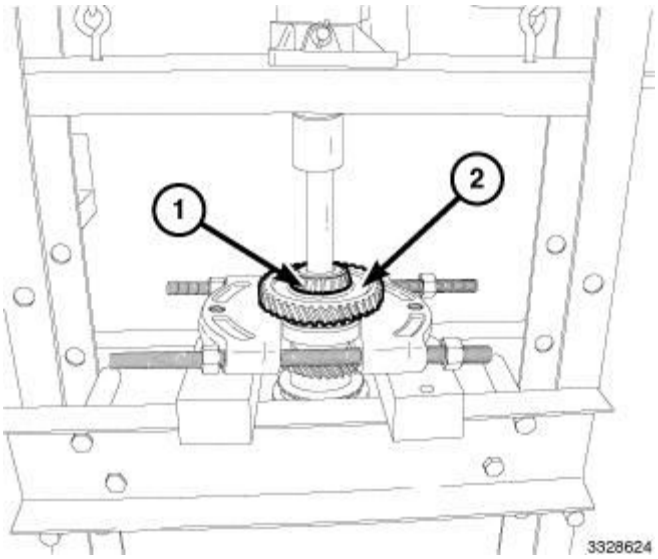

Fig. 148: Removing Rear Bearing & First Speed Gear
Courtesy of CHRYSLER GROUP, LLC

1. Remove the **left hand** thread rear bearing retention bolt and discard.
2. Remove the rear bearing (1) and the first speed gear (2) using (special tool #8254, Installer, Grommet) and (special tool #1130, Splitter, Bearing/Gear).

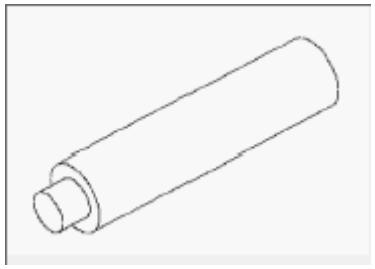

Fig. 149: Special Tool #8254
Courtesy of CHRYSLER GROUP, LLC

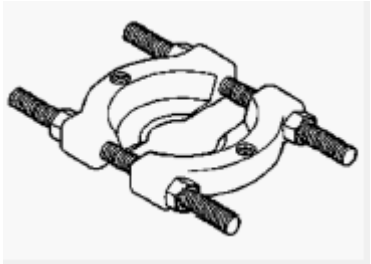

Fig. 150: Splitter, Bearing/Gear
Courtesy of CHRYSLER GROUP, LLC

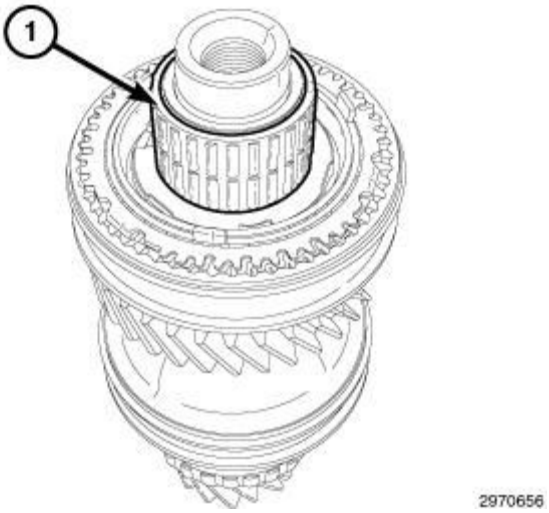

Fig. 151: Needle Bearing
Courtesy of CHRYSLER GROUP, LLC

3. Remove the needle bearing (1).

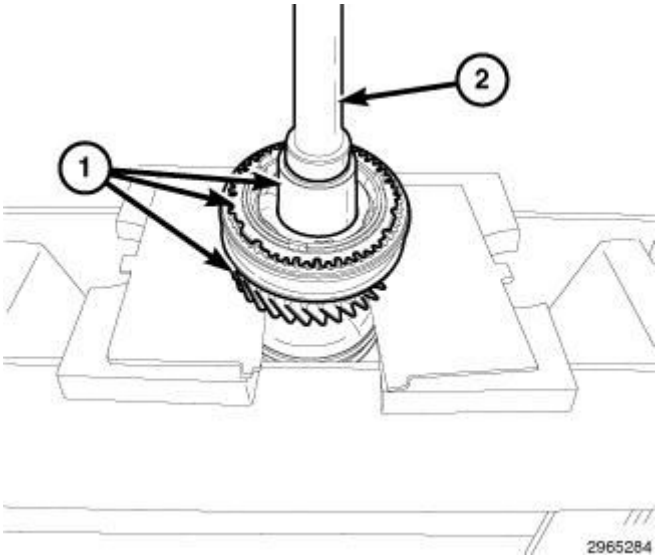

Fig. 152: Removing Third Gear, Synchronizer & Retainer
Courtesy of CHRYSLER GROUP, LLC

4. Remove the collar (1), the synchronizer (2) and the 2nd speed gear (3).
5. Remove the third gear, third gear synchronizer and retainer (1) from the shaft using (special tool #8254, Installer, Grommet) and (special tool #1130, Splitter, Bearing/Gear).

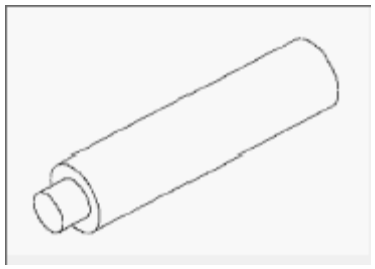

Fig. 153: Special Tool #8254
Courtesy of CHRYSLER GROUP, LLC

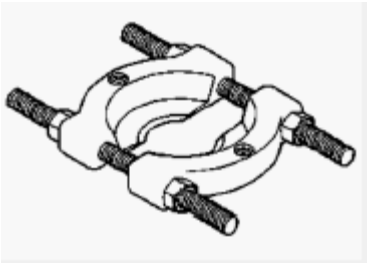

Fig. 154: Splitter, Bearing/Gear
Courtesy of CHRYSLER GROUP, LLC

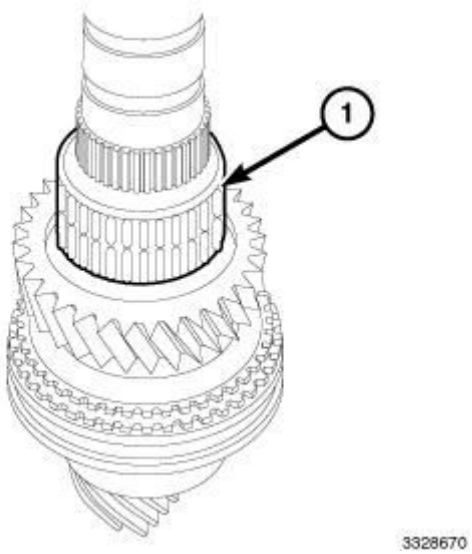

Fig. 155: Needle Bearing
Courtesy of CHRYSLER GROUP, LLC

6. Remove the needle bearing (1).

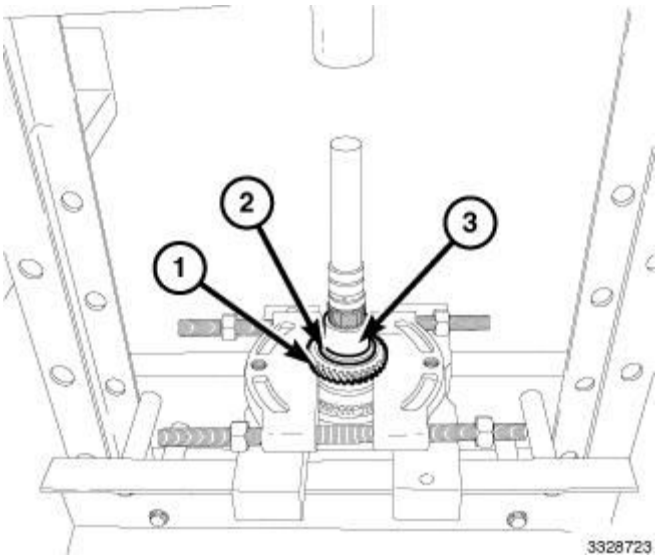

Fig. 156: Removing Collar, Spacer Ring & 5th Speed Gear
Courtesy of CHRYSLER GROUP, LLC

7. Remove the collar (3), the spacer ring (2) and the 5th speed gear (1) using (special tool #8254, Installer, Grommet) and (special tool #1130, Splitter, Bearing/Gear).

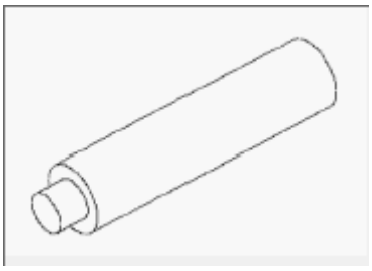

Fig. 157: Special Tool #8254
Courtesy of CHRYSLER GROUP, LLC

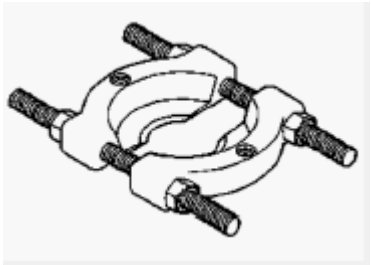

Fig. 158: Splitter, Bearing/Gear
Courtesy of CHRYSLER GROUP, LLC

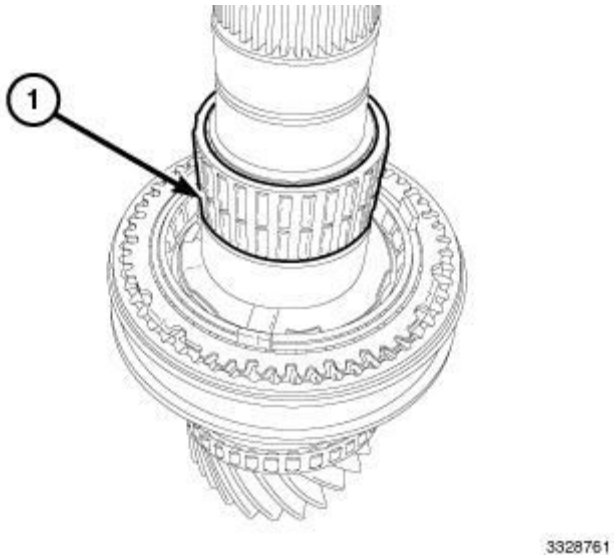

Fig. 159: Needle Bearing
Courtesy of CHRYSLER GROUP, LLC

8. Remove the needle bearing.

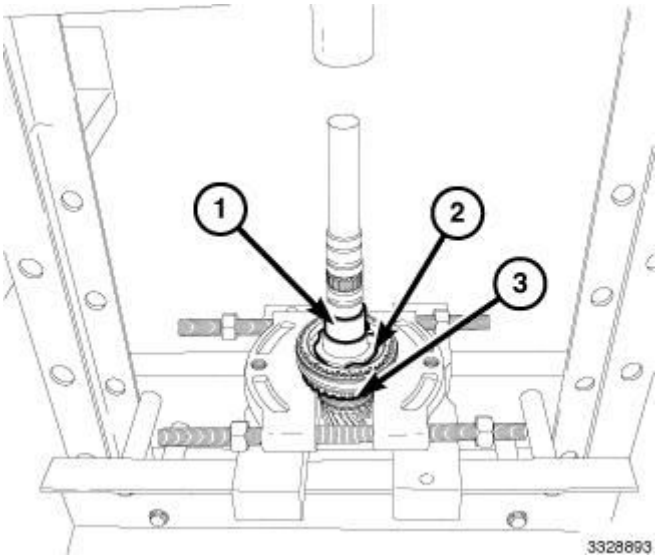

Fig. 160: Removing Collar, Synchronizer & 6th Speed Gear
Courtesy of CHRYSLER GROUP, LLC

9. Remove the collar (1), the synchronizer (2) and the 6th speed gear (3) using (special tool #8254, Installer, Grommet) and (special tool #1130, Splitter, Bearing/Gear).

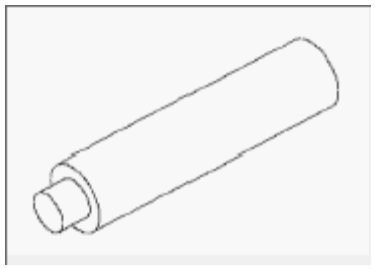

Fig. 161: Special Tool #8254
Courtesy of CHRYSLER GROUP, LLC

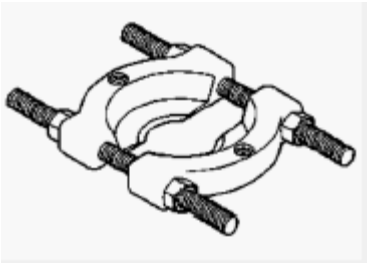

Fig. 162: Splitter, Bearing/Gear
Courtesy of CHRYSLER GROUP, LLC

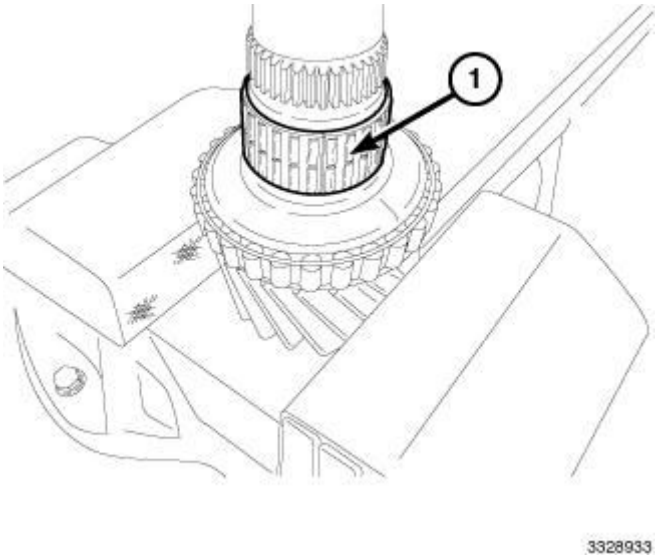

Fig. 163: Needle Bearing
Courtesy of CHRYSLER GROUP, LLC

10. Remove the needle bearing (1).

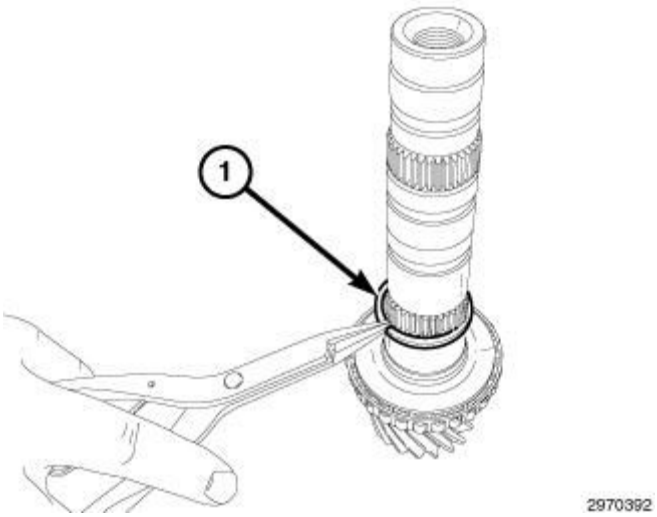

Fig. 164: Front Bearing Snap Ring
Courtesy of CHRYSLER GROUP, LLC

11. Remove the front bearing snap ring (2).

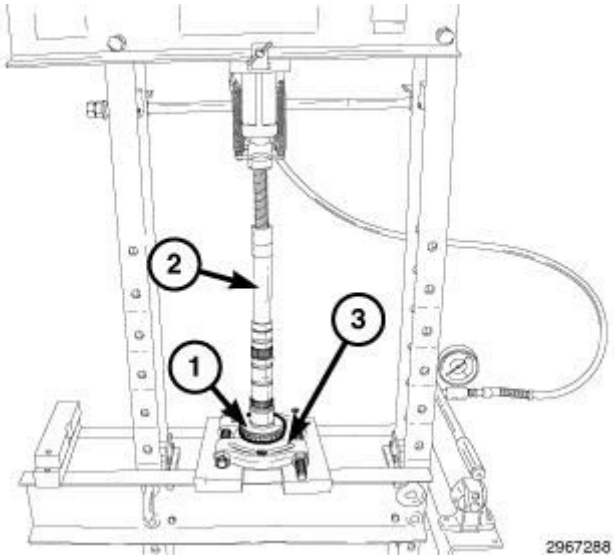

Fig. 165: Removing Front Bearing
Courtesy of CHRYSLER GROUP, LLC

12. Remove the front bearing (1) using (special tool #8254, Installer, Grommet) and (special tool #1130, Splitter, Bearing/Gear) (3).

ASSEMBLY

ASSEMBLY

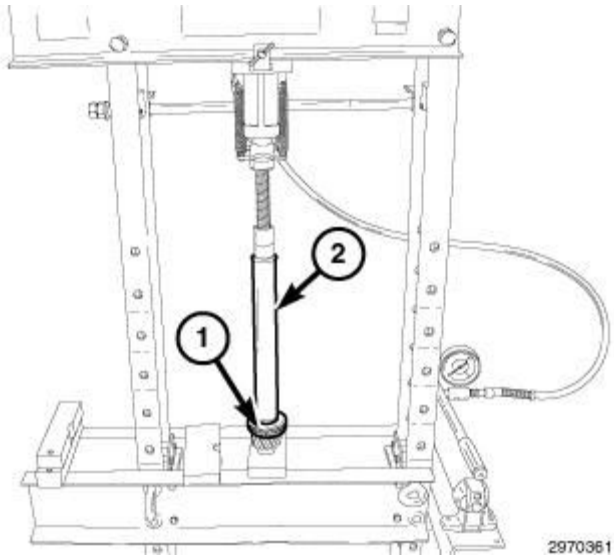

Fig. 166: Installing Front Bearing
Courtesy of CHRYSLER GROUP, LLC

1. Install the bearing (1) using (special tool #C-3095-A, Installer, Bearing) (2).

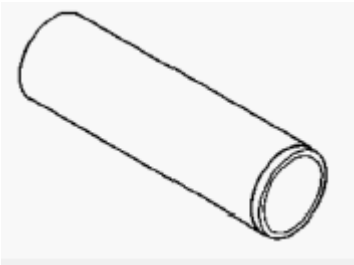

Fig. 167: Special Tool #C-3095-A
Courtesy of CHRYSLER GROUP, LLC

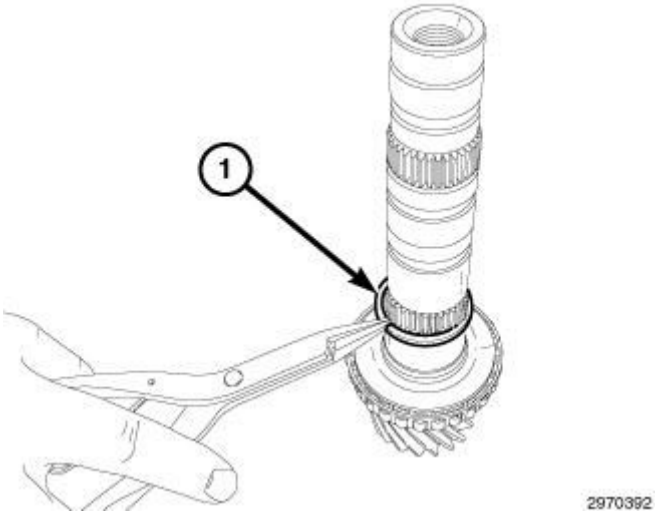

Fig. 168: Front Bearing Snap Ring
Courtesy of CHRYSLER GROUP, LLC

2. Install snap ring to the shaft (1).

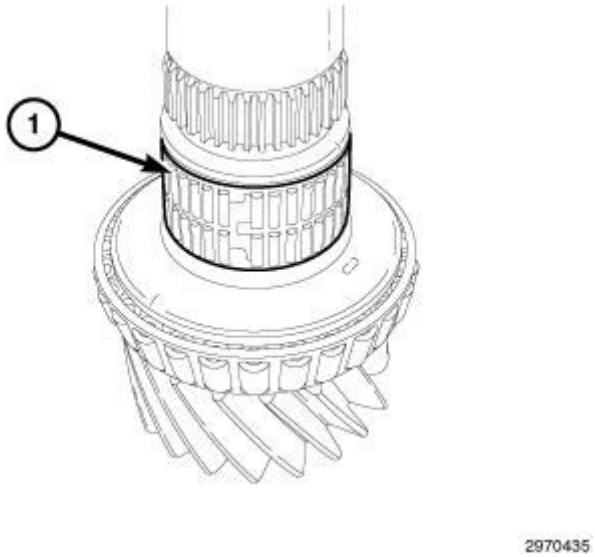

Fig. 169: Needle Bearing
Courtesy of CHRYSLER GROUP, LLC

3. Install the needle bearing (1).

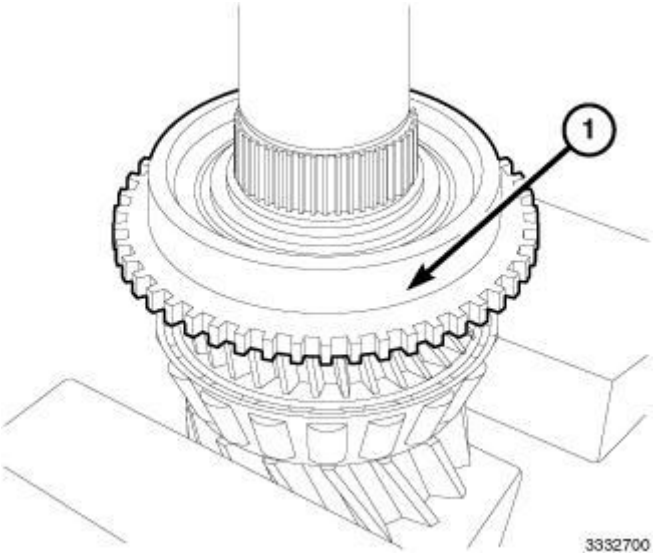

Fig. 170: Sixth Speed Gear
Courtesy of CHRYSLER GROUP, LLC

4. Install the sixth speed gear (1).

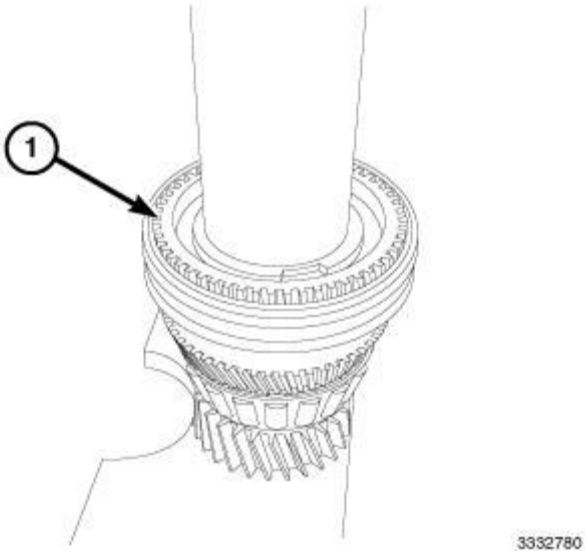

Fig. 171: Sixth Speed Synchronizer
Courtesy of CHRYSLER GROUP, LLC

5. Install the sixth speed synchronizer using (special tool #C-3095-A, Installer, Bearing).

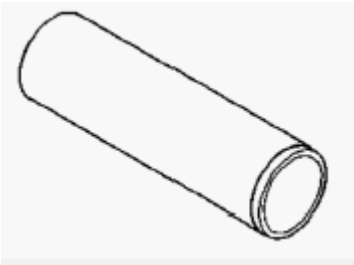

Fig. 172: Special Tool #C-3095-A
Courtesy of CHRYSLER GROUP, LLC

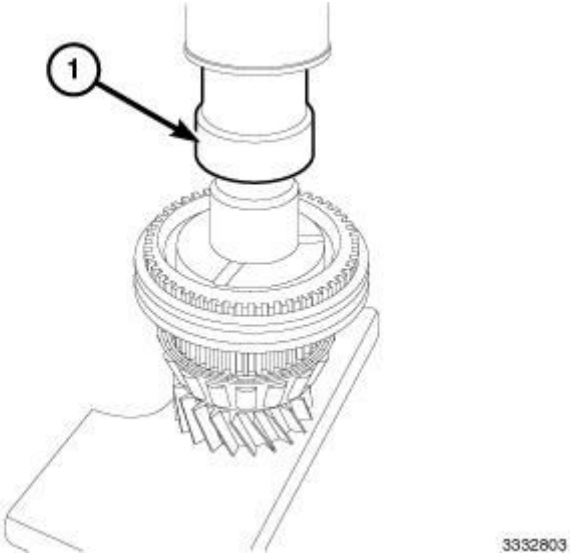

Fig. 173: Installing Fifth/Sixth Gear Spacer
Courtesy of CHRYSLER GROUP, LLC

6. Install the fifth/sixth gear spacer using (special tool #W-262, Installer, Bearing).

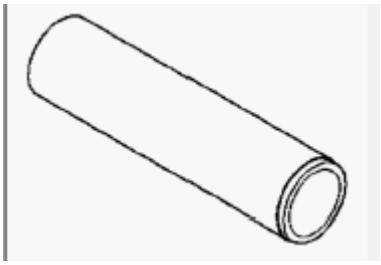

Fig. 174: Special Tool #W-262
Courtesy of CHRYSLER GROUP, LLC

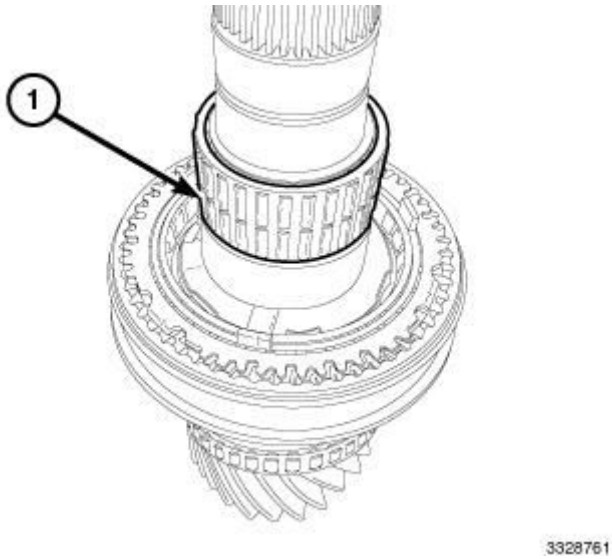

Fig. 175: Needle Bearing
Courtesy of CHRYSLER GROUP, LLC

7. Install the needle bearing (1).

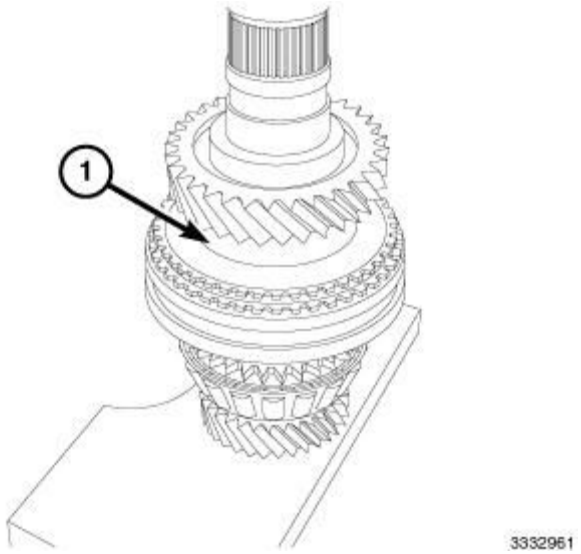

Fig. 176: Installing Fifth Speed Gear
Courtesy of CHRYSLER GROUP, LLC

8. Install the fifth speed gear (1).

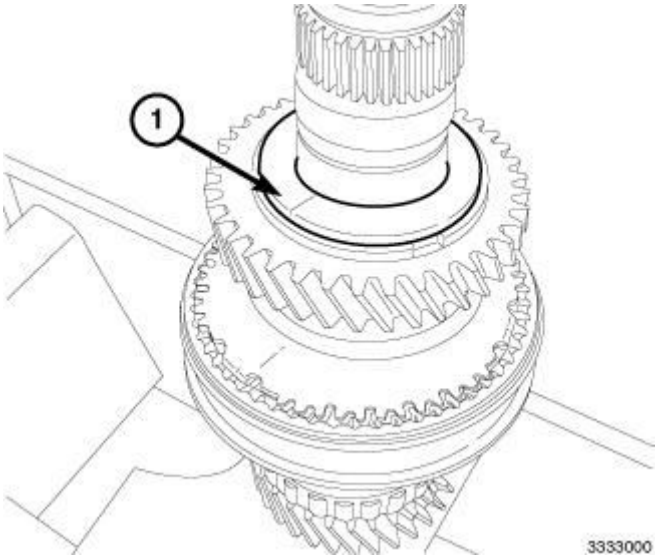

Fig. 177: Shim
Courtesy of CHRYSLER GROUP, LLC

9. Install the shim (1).

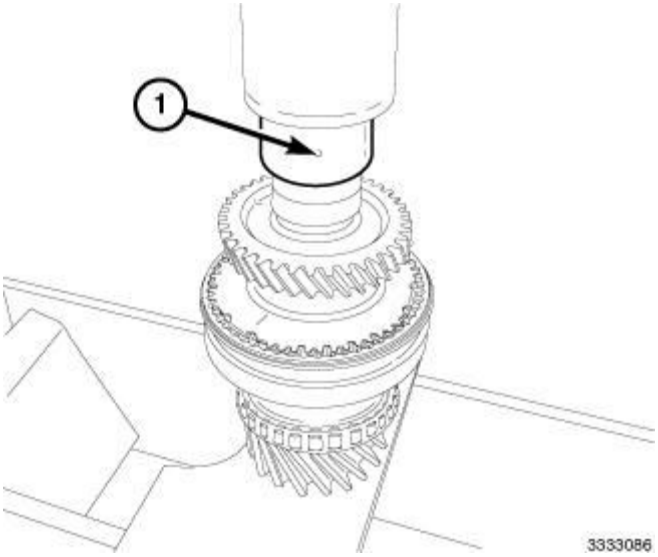

Fig. 178: Installing Collar/Spacer
Courtesy of CHRYSLER GROUP, LLC

10. Install the collar/spacer (1) using (special tool #W-262, Installer, Bearing).

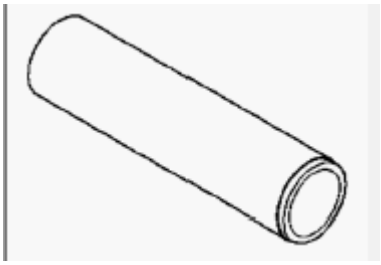

Fig. 179: Special Tool #W-262
Courtesy of CHRYSLER GROUP, LLC

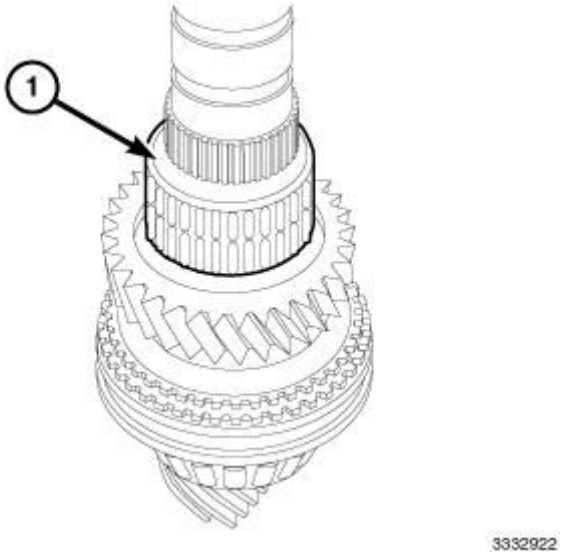

Fig. 180: Gear

Courtesy of CHRYSLER GROUP, LLC

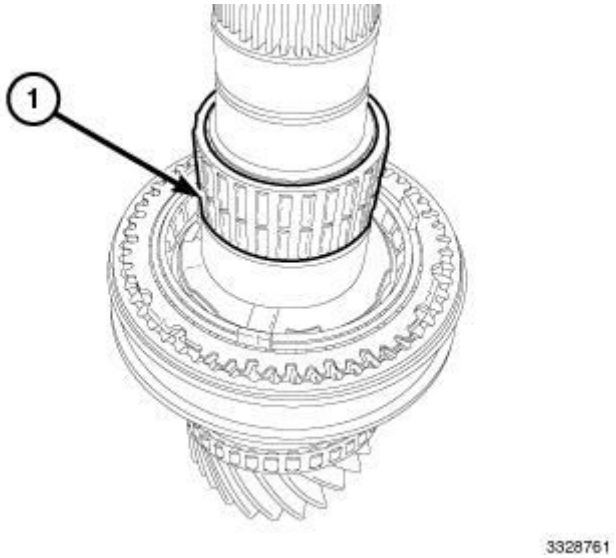

Fig. 181: Needle Bearing
Courtesy of CHRYSLER GROUP, LLC

11. Install the needle bearing (1).

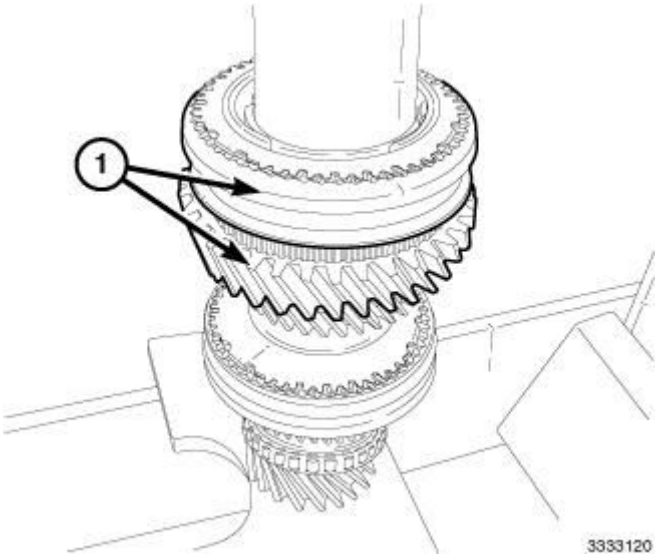

Fig. 182: Second Speed Gear
Courtesy of CHRYSLER GROUP, LLC

12. Install the synchronizer complete with second speed gear (1) using (special tool #W-262, Installer, Bearing).

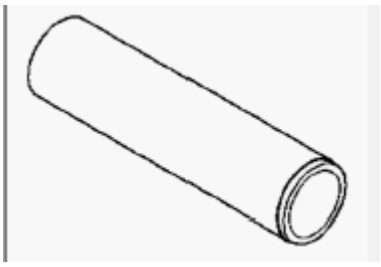

Fig. 183: Special Tool #W-262
Courtesy of CHRYSLER GROUP, LLC

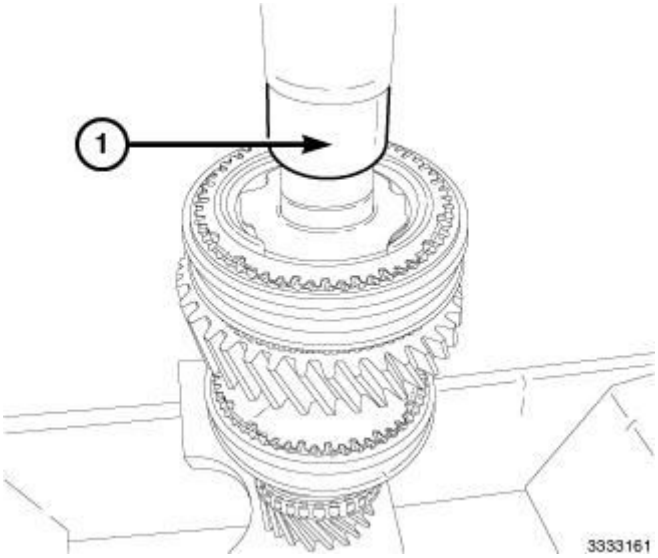

Fig. 184: Installing Collar/Spacer
Courtesy of CHRYSLER GROUP, LLC

13. Install the collar/spacer (1) using (special tool #W-262, Installer, Bearing).

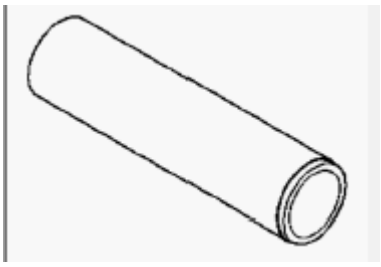

Fig. 185: Special Tool #W-262
Courtesy of CHRYSLER GROUP, LLC

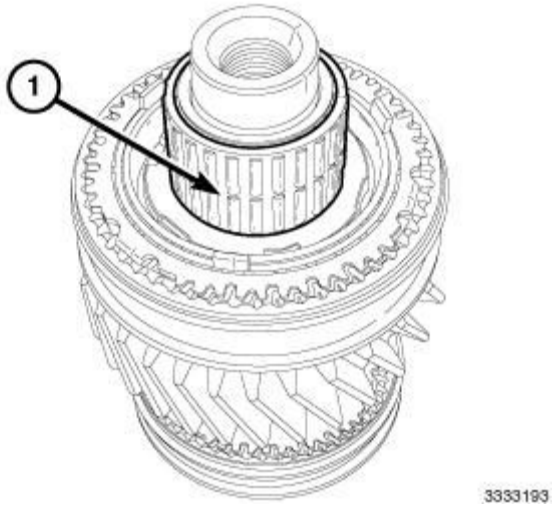

Fig. 186: Needle Bearing
Courtesy of CHRYSLER GROUP, LLC

14. Install the needle bearing (1).

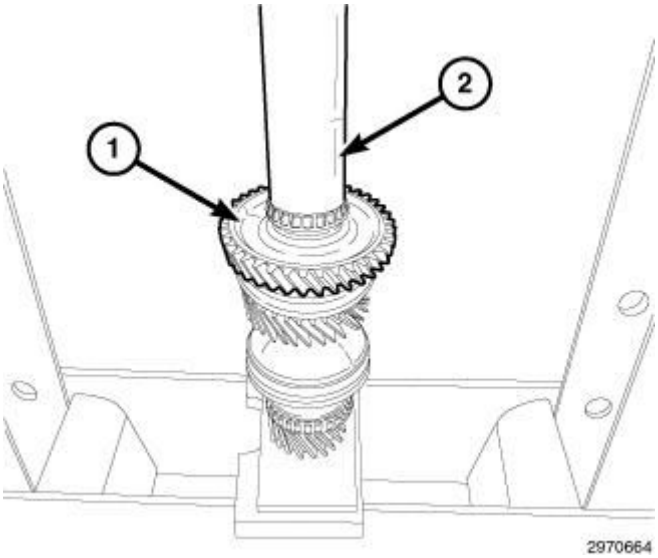

Fig. 187: Installing First Gear & Bearing
Courtesy of CHRYSLER GROUP, LLC

15. Install first gear and the bearing (1) using (special tool #W-262, Installer, Bearing) (2).
16. Install a **new** rear bearing retention bolt, tighten to 110 N.m (81 ft. lbs.).

SHAFT, OUTPUT REVERSE, 3RD AND 4TH

DISASSEMBLY

DISASSEMBLY

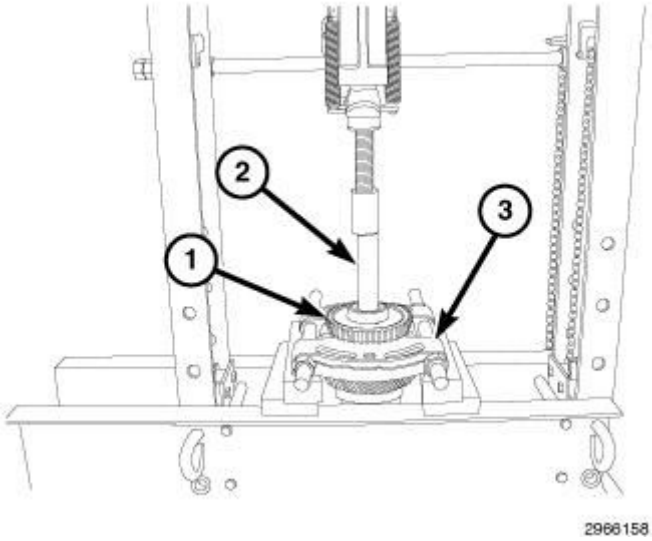

Fig. 188: Removing Rear Bearing & Reverse Gear
Courtesy of CHRYSLER GROUP, LLC

1. Remove the **left hand** thread rear bearing retention bolt and discard.
2. Remove the rear bearing and reverse gear (1) from the shaft using (special tool #8254, Installer, Grommet) (2) and (special tool #1130, Splitter, Bearing/Gear) (3).

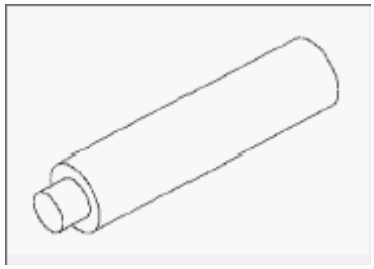

Fig. 189: Special Tool #8254
Courtesy of CHRYSLER GROUP, LLC

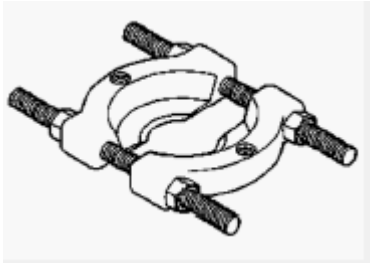

Fig. 190: Splitter, Bearing/Gear
Courtesy of CHRYSLER GROUP, LLC

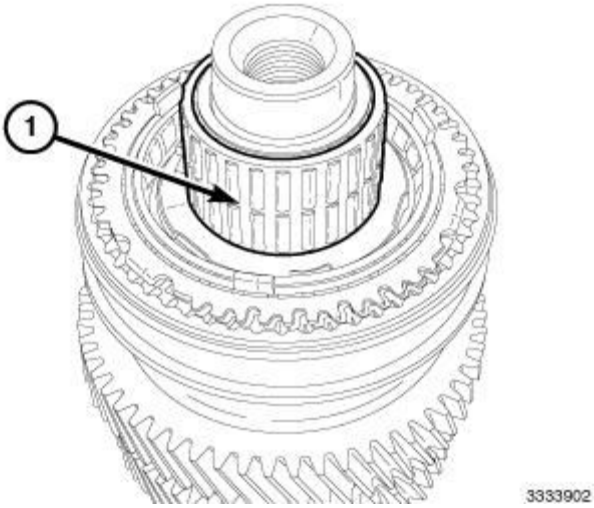

Fig. 191: Needle Bearing
Courtesy of CHRYSLER GROUP, LLC

3. Remove the needle bearing (1).

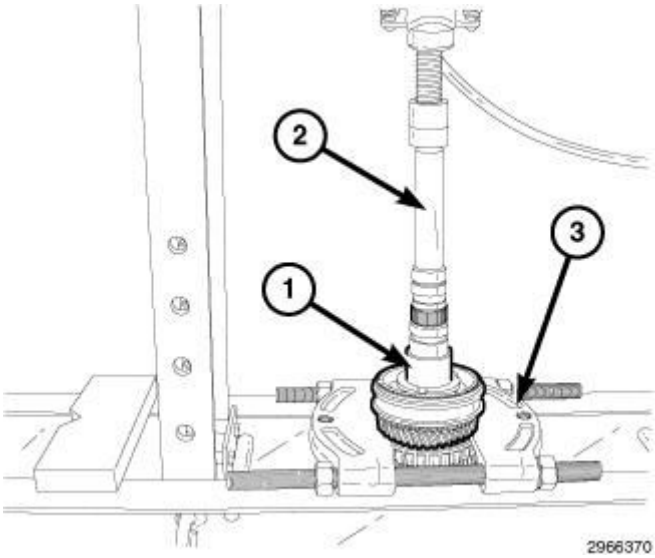

Fig. 192: Spacer, Grommet Installer And Bearing Splitter
Courtesy of CHRYSLER GROUP, LLC

4. Remove the spacer (1) and synchronizer hub using (special tool #8254, Installer, Grommet) and (special tool #1130, Splitter, Bearing/Gear) (3).
5. Remove the spacer, shim and third speed gear using a Grommet Installer.

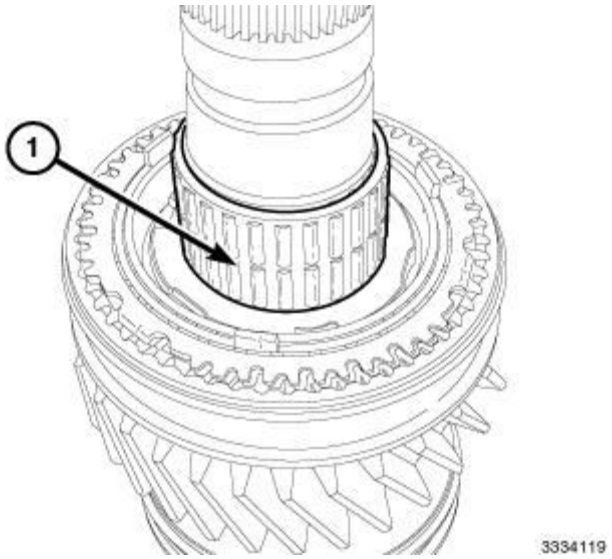

Fig. 193: Needle Bearing
Courtesy of CHRYSLER GROUP, LLC

6. Remove the needle bearing (1).

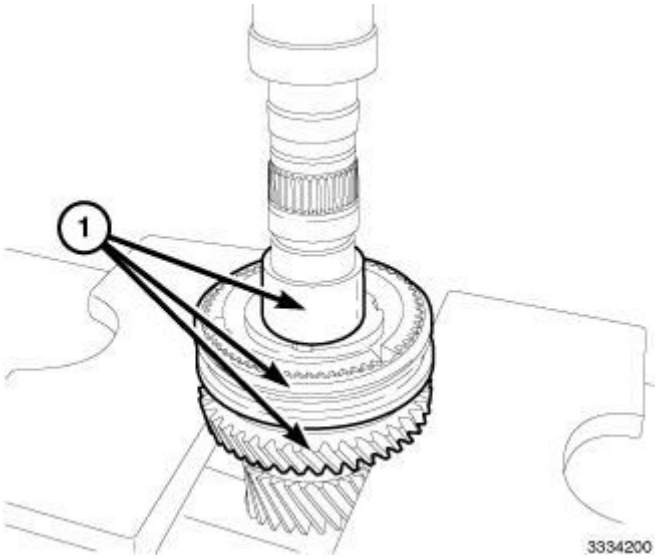

Fig. 194: Spacer, Synchronizer & Fourth Speed Gear
Courtesy of CHRYSLER GROUP, LLC

7. Remove the spacer (1), the synchronizer (2) and the fourth speed gear (3) using (special tool #8254, Installer, Grommet) and (special tool #1130, Splitter, Bearing/Gear)

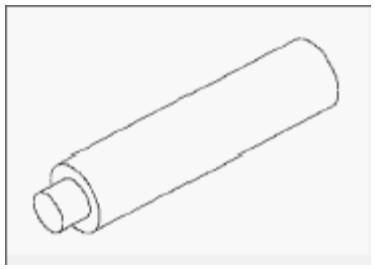

Fig. 195: Special Tool #8254
Courtesy of CHRYSLER GROUP, LLC

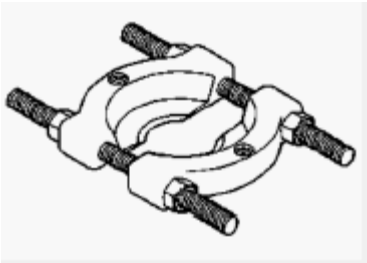

Fig. 196: Splitter, Bearing/Gear
Courtesy of CHRYSLER GROUP, LLC

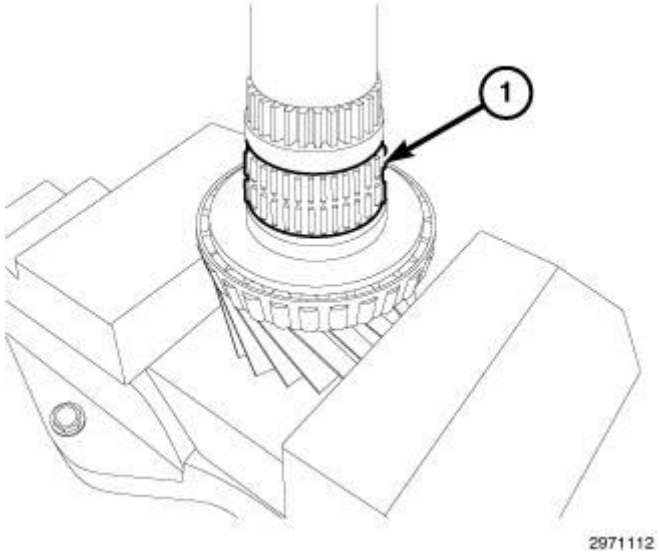

Fig. 197: Second/Forth Gear Needle Bearing
Courtesy of CHRYSLER GROUP, LLC

8. Remove the needle bearing (1).

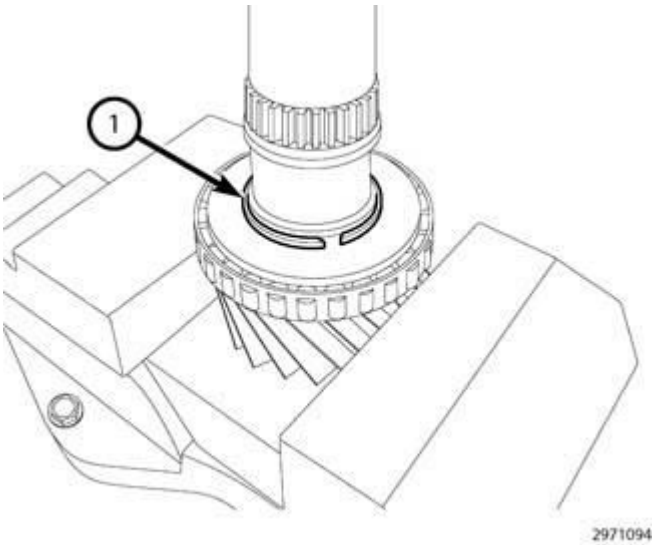

Fig. 198: Front Bearing Snap Ring
Courtesy of CHRYSLER GROUP, LLC

9. Remove the front bearing snap ring (1).

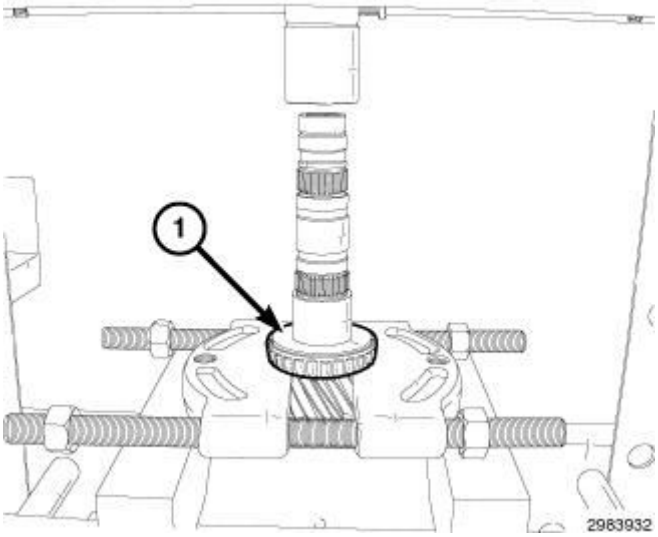

Fig. 199: Removing Front Bearing
Courtesy of CHRYSLER GROUP, LLC

10. Remove the front bearing (1) using (special tool #1130, Splitter, Bearing/Gear).

ASSEMBLY

ASSEMBLY

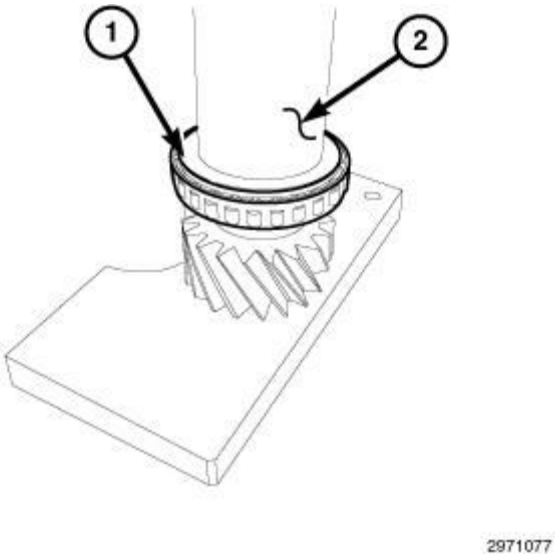

Fig. 200: Installing Front Bearing
Courtesy of CHRYSLER GROUP, LLC

1. Install the bearing (1) using (special tool #C-3095-A, Installer, Bearing) (2).

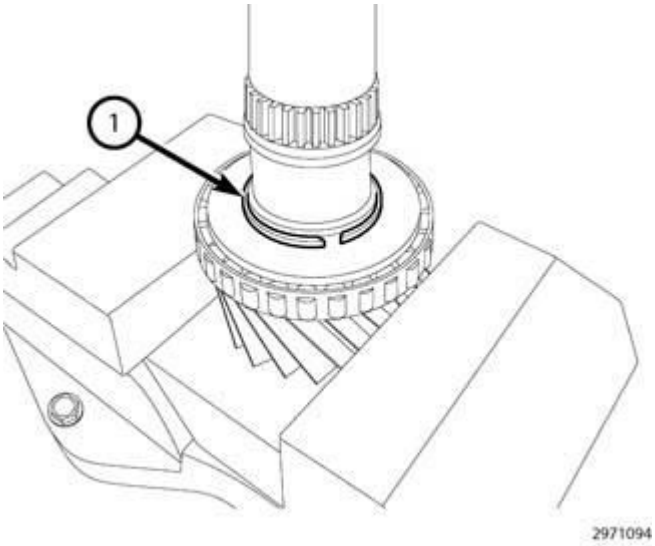

Fig. 201: Front Bearing Snap Ring
Courtesy of CHRYSLER GROUP, LLC

2. Install the bearing snap ring.

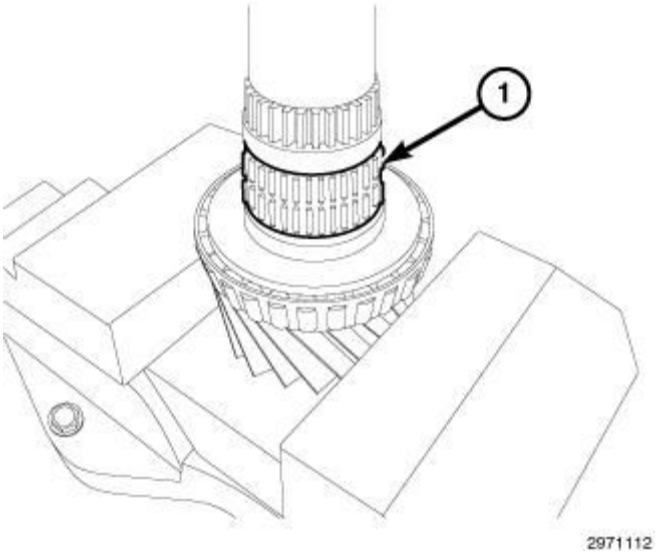

Fig. 202: Second/Forth Gear Needle Bearing
Courtesy of CHRYSLER GROUP, LLC

3. Install the needle bearing.

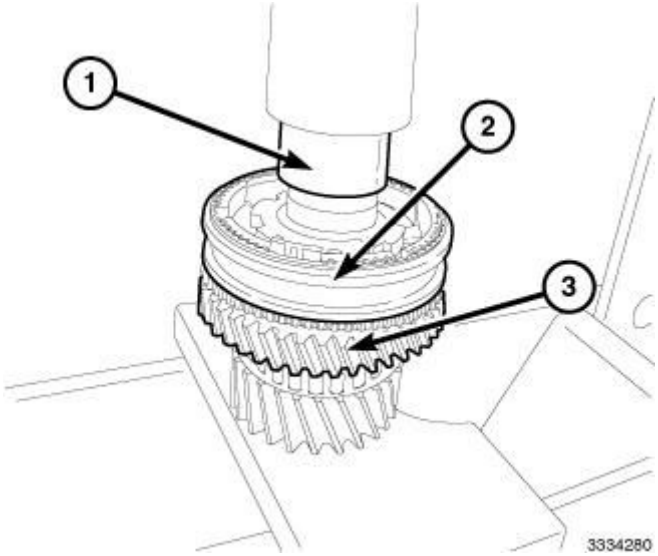

Fig. 203: Installing Fourth Speed Gear, Synchronizer & Spacer
Courtesy of CHRYSLER GROUP, LLC

4. Install the fourth speed gear (3), the synchronizer (2) and the spacer (1) using (special tool #W-262, Installer, Bearing).

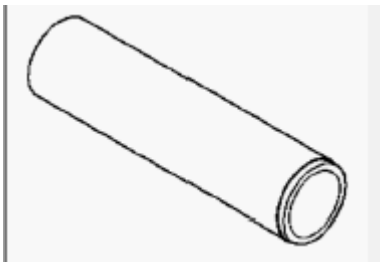

Fig. 204: Special Tool #W-262
Courtesy of CHRYSLER GROUP, LLC

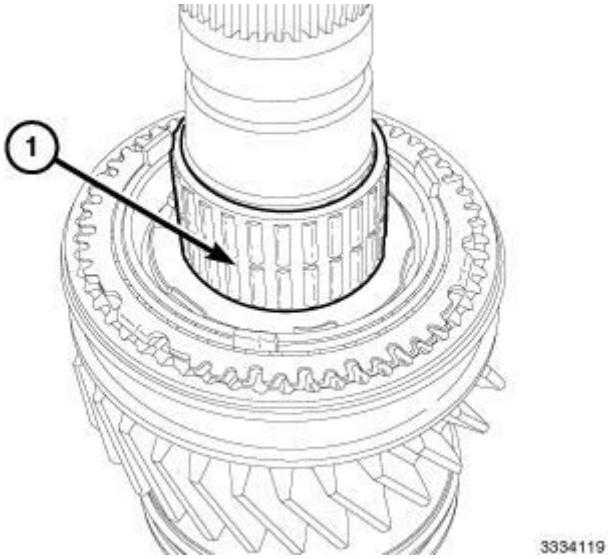

Fig. 205: Needle Bearing
Courtesy of CHRYSLER GROUP, LLC

5. Install the needle bearing.

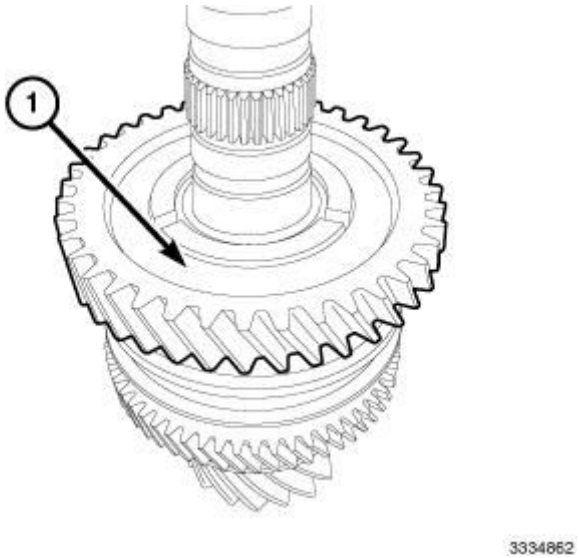

Fig. 206: Third Speed Gear

Courtesy of CHRYSLER GROUP, LLC

6. Install the third speed gear.

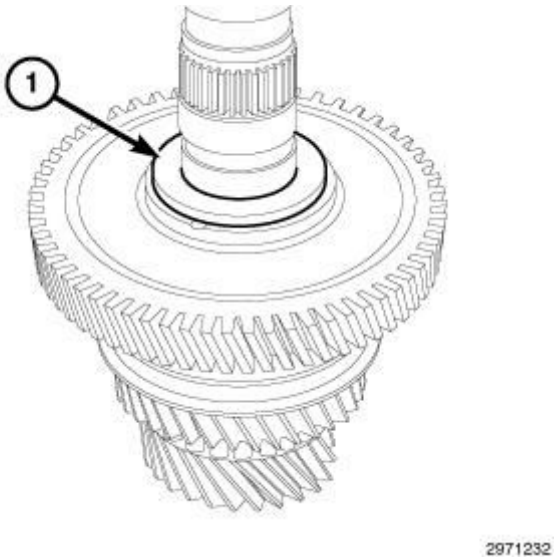

Fig. 207: Third Speed Gear Shim
Courtesy of CHRYSLER GROUP, LLC

7. Install the third speed gear shim.

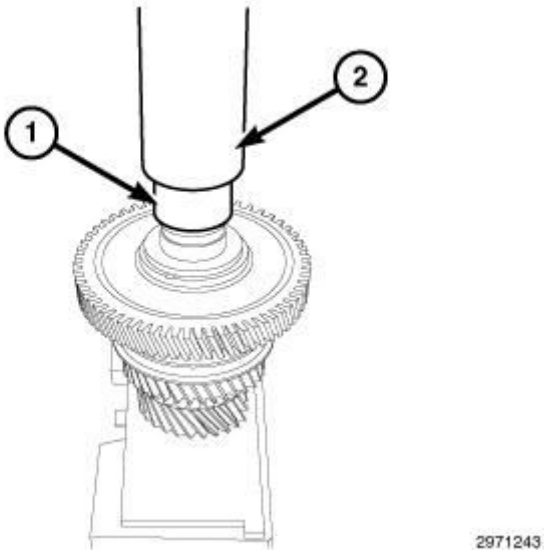

Fig. 208: Installing Fifth Gear Bushing
Courtesy of CHRYSLER GROUP, LLC

8. Install the collar to the shaft (1) using (special tool #W-262, Installer, Bearing).

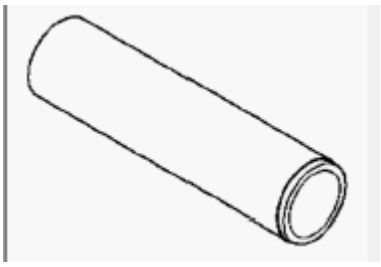

Fig. 209: Special Tool #W-262
Courtesy of CHRYSLER GROUP, LLC

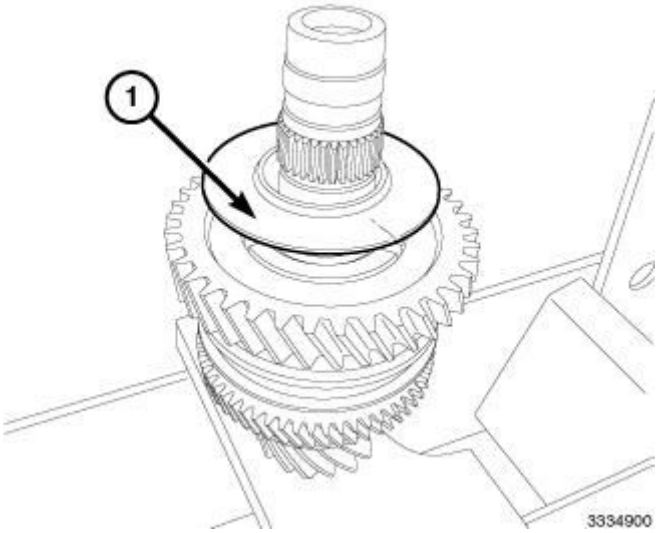

Fig. 210: Synchronizer Mounting Bushing
Courtesy of CHRYSLER GROUP, LLC

9. Install the synchronizer mounting bushing.

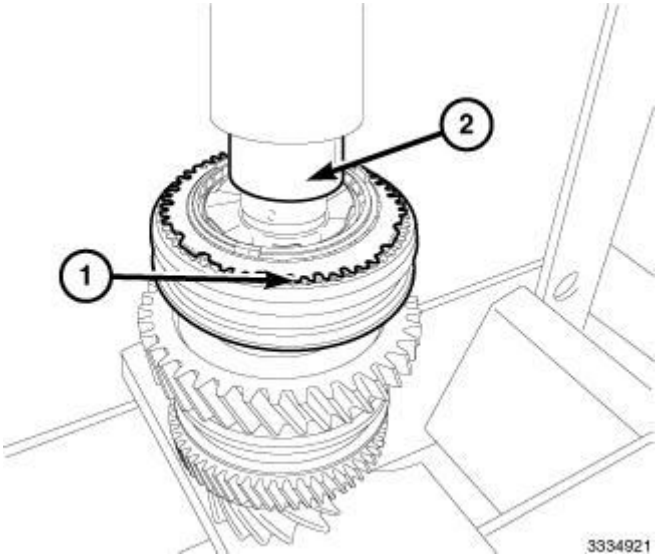

Fig. 211: Synchronizer & Spacer

Courtesy of CHRYSLER GROUP, LLC

10. Install the synchronizer (1) and the spacer (2) using (special tool #W-262, Installer, Bearing).

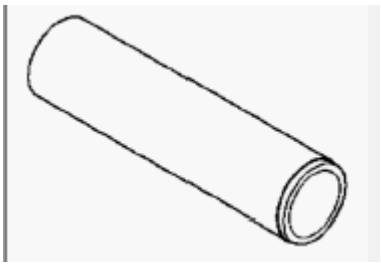

Fig. 212: Special Tool #W-262
Courtesy of CHRYSLER GROUP, LLC

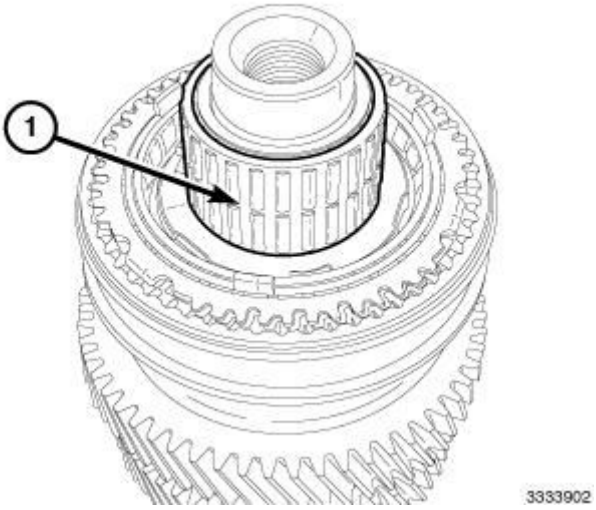

Fig. 213: Needle Bearing
Courtesy of CHRYSLER GROUP, LLC

11. Install the needle bearing.

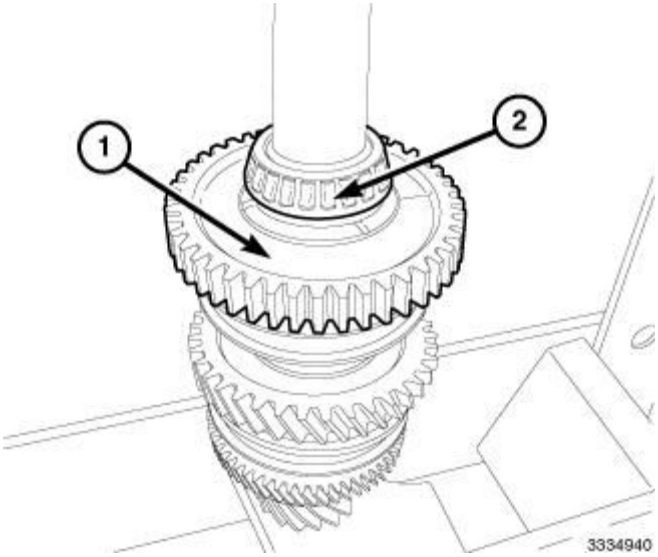

Fig. 214: Reverse Gear & Rear Bearing
Courtesy of CHRYSLER GROUP, LLC

12. Install the reverse gear (1) and the rear bearing (2) using (special tool #W-262, Installer, Bearing).
13. Install a **new** rear bearing retention bolt, tighten to 110 N.m (81 ft. lbs.).

SWITCH, BACKUP LAMP

REMOVAL

REMOVAL

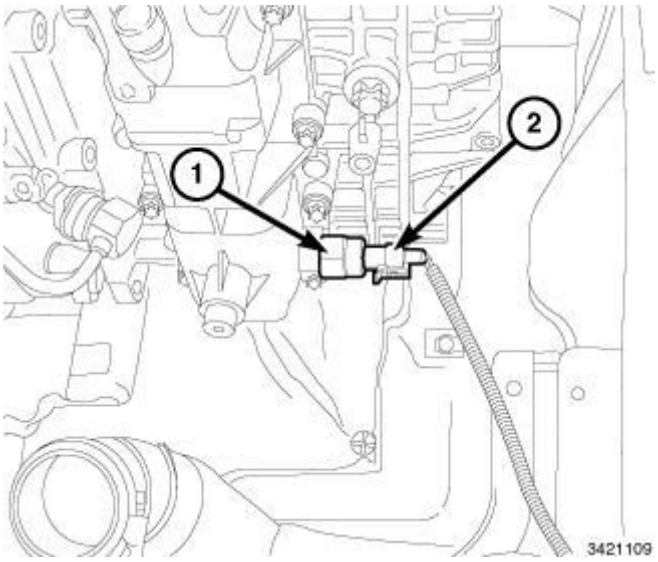

Fig. 215: Backup Lamp Switch Connector & Backup Lamp Switch
Courtesy of CHRYSLER GROUP, LLC

1. Disconnect battery negative cable.
2. Remove the air cleaner body. Refer to **BODY, AIR CLEANER, REMOVAL** .
3. Disconnect backup lamp switch connector (2).
4. Remove backup lamp switch (1).

INSTALLATION

INSTALLATION

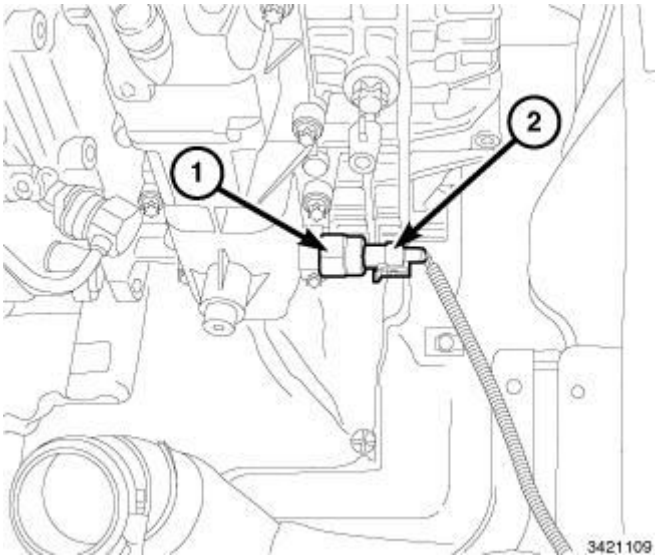

Fig. 216: Backup Lamp Switch Connector & Backup Lamp Switch
Courtesy of CHRYSLER GROUP, LLC

1. Install the backup lamp switch (1) and tighten to 38 N.m (28 lbs. ft.).
2. Connect backup lamp switch connector (2).
3. Install the air cleaner body. Refer to **BODY, AIR CLEANER, INSTALLATION**
4. Connect battery negative cable.

2014 RESTRAINTS

Occupant Restraint Controller (ORC) - Electrical Diagnostics - Cherokee

DIAGNOSIS AND TESTING

B0001-11-DRIVER FRONTAL SQUIB 1 CONTROL - CIRCUIT SHORT TO GROUND

For a complete wiring diagram, **refer to appropriate SYSTEM WIRING DIAGRAMS article** .

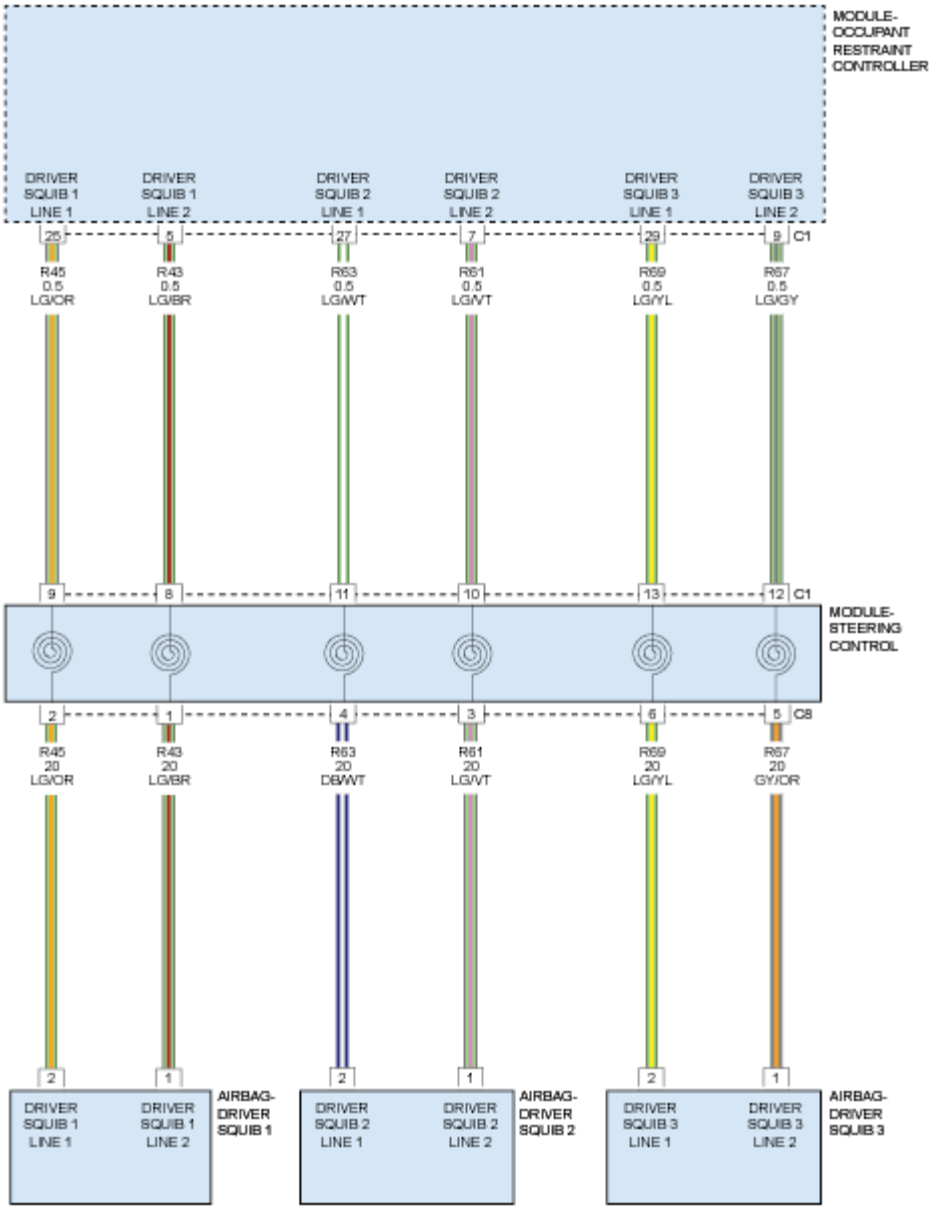

Fig. 1: Driver Frontal Squib Circuit Diagram
Courtesy of CHRYSLER GROUP, LLC

THEORY OF OPERATION

When powered, the Occupant Restraint Controller (ORC) sends a test current to the squibs to verify the integrity of the squib and wiring. These circuits are maintained in a "floating" configuration at the module (connected to neither power nor ground) as protection against inadvertent deployment. Use of the (special tool #8443A, SRS Load Tool) in the tests below substitutes a suspect squib with a known good component. The use of the (special tool #8443-57, Adapter, Supplemental Restraint System Load Tool) provides a test point as well as a method for opening the shorting bar connections within the harness connector.

WHEN MONITORED

The ORC Module sends out a 40 mA diagnostic current on each squib voltage supply circuit at power up, and every 500 ms thereafter while the ignition is on.

SET CONDITION

This Diagnostic Trouble Code (DTC) sets when the ORC detects a short to ground on the driver airbag squib circuit for more than 2.6 seconds. This DTC transitions from active to stored when the ORC sees a recovery from a short to ground for greater than 2.6 seconds. The Airbag Warning Lamp (AWL) will set in the instrument cluster.

POSSIBLE CAUSES

Possible Causes
(R43) DRIVER SQUIB 1 LINE 2 CIRCUIT SHORTED TO GROUND
(R45) DRIVER SQUIB 1 LINE 1 CIRCUIT SHORTED TO GROUND
CLOCKSPRING
DRIVER AIRBAG
OCCUPANT RESTRAINT CONTROLLER (ORC)

Always perform the Pre-Diagnostic Troubleshooting procedure before proceeding. Refer to STANDARD PROCEDURE .

DIAGNOSTIC TEST

1. **DETERMINE ACTIVE OR STORED DTC**

NOTE: **The use of a approved special tool or Digital Multimeter such as a Fluke Meter that will not apply more than 20 milliamperes to a circuit are the only measurement tools to be used.**

NOTE: **Make sure the battery is fully charged.**

NOTE: The scan tool, (special tool #8443A, SRS Load Tool), and DVOM are required to perform the following test.

1. Select Active or Stored DTC.

   Is the DTC active or stored?

   ORC - ACTIVE DTC

   - Go To 3

   ORC - STORED DTC

   - Perform the RESTRAINTS SYSTEM INTERMITTENT TEST. Refer to **STANDARD PROCEDURE** .

2. **CHECK FOR SHORTED SQUIB CIRCUITS IN DRIVER AIRBAG**

   WARNING: **Turn the ignition off disconnect the 12-volt battery and wait two minutes before proceeding. Failure to follow these instructions may result in possible serious or fatal injury.**

   1. Disconnect the Driver Airbag Squib harness connectors.

      WARNING: **Do not place an intact non-deployed airbag face down on a hard surface, the airbag propels into the air if accidentally deployed. Failure to follow these instructions may result in possible serious or fatal injury.**

      NOTE: Check the connectors - Clean and repair as necessary.

   2. Connect the (special tool #8443A, SRS Load Tool) and the (special tool #8443-8, Jumper, SRS Load) to the Driver Airbag Squib 1 and Squib 2 harness connectors.
   3. If equipped with the standard key ignition, use this ignition on warning.

      WARNING: **Turn the ignition on, then reconnect the 12-volt battery and wait two minutes before proceeding. Failure to follow these instructions may result in possible serious or fatal injury.**

   4. If equipped with the keyless ignition, use this ignition on warning.

      WARNING: **Disconnect the 12-volt battery wait two minutes before proceeding, remove the ORC fuses, connect the 12-volt battery, wait two minutes before proceeding. Cycle the ignition to the On position, then reconnect the ORC fuses. Wait two minutes**

before proceeding. Failure to follow these instructions may result in possible serious or fatal injury.

5. With the scan tool, read the active ORC DTCs.

   Does the scan tool display: B0001-11-DRIVER FRONTAL SQUIB 1 CONTROL - CIRCUIT SHORT TO GROUND?

   Yes

   - Go To 3

   No

   WARNING: **Turn the ignition off disconnect the 12-volt battery and wait two minutes before proceeding. Failure to follow these instructions may result in possible serious or fatal injury.**

   - Replace the Driver Airbag in accordance with the Service Information. Refer to **AIR BAG, DRIVER, REMOVAL** .

3. **CHECK CLOCKSPRING SQUIB CIRCUITS FOR A SHORT TO GROUND**

   WARNING: **Turn the ignition off disconnect the 12-volt battery and wait two minutes before proceeding. Failure to follow these instructions may result in possible serious or fatal injury.**

1. Disconnect the (special tool #8443A, SRS Load Tool) and the (special tool #8443-8, Jumper, SRS Load) from the Driver Airbag Squib harness connectors.
2. Disconnect the Steering Control Module C1 harness connector.

   NOTE: Check the connectors - Clean and repair as necessary.

3. If equipped with the standard key ignition, use this ignition on warning.

   WARNING: **Turn the ignition on, then reconnect the 12-volt battery and wait two minutes before proceeding. Failure to follow these instructions may result in possible serious or fatal injury.**

4. If equipped with the keyless ignition, use this ignition on warning.

   WARNING: **Disconnect the 12-volt battery wait two minutes before proceeding, remove the ORC fuses, connect the 12-volt battery, wait two minutes before proceeding. Cycle the ignition to the On position, then reconnect the ORC fuses. Wait two minutes**

before proceeding. Failure to follow these instructions may result in possible serious or fatal injury.

5. With the scan tool, read the active ORC DTCs.

   Does the scan tool display: B0001-11-DRIVER FRONTAL SQUIB 1 CONTROL - CIRCUIT SHORT TO GROUND?

   Yes

   - Go To 4

   No

   WARNING: **Turn the ignition off disconnect the 12-volt battery and wait two minutes before proceeding. Failure to follow these instructions may result in possible serious or fatal injury.**

   - Replace the clockspring in accordance with the Service Information. Refer to **CLOCKSPRING, REMOVAL** .
   - Perform the CLOCKSPRING CENTERING. Refer to **CLOCKSPRING, STANDARD PROCEDURE** . Perform the BODY VERIFICATION TEST. Refer to **STANDARD PROCEDURE** .
   - Perform the RESTRAINTS SYSTEM VERIFICATION TEST. Refer to **STANDARD PROCEDURE** .

4. **CHECK (R43) DRIVER SQUIB 1 LINE 2 CIRCUIT AND (R45) DRIVER SQUIB 1 LINE 1 CIRCUIT FOR A SHORT TO GROUND**

   WARNING: **Turn the ignition off disconnect the 12-volt battery and wait two minutes before proceeding. Failure to follow these instructions may result in possible serious or fatal injury.**

   1. Disconnect the ORC connectors.

      NOTE: Check the connectors - Clean and repair as necessary.

   2. Connect the (special tool #8443-57, Adapter, Supplemental Restraint System Load Tool) to the ORC C1 and ORC C2 harness connectors.
   3. Measure the resistance of the (R43) Driver Squib 1 Line 2 circuit between ground and the C1A cavity 5 of the (special tool #8443-57, Adapter, Supplemental Restraint System Load Tool).
   4. Measure the resistance of the (R45) Driver Squib 1 Line 1 circuit between ground and the C1A cavity 25 of the(special tool #8443-57, Adapter, Supplemental Restraint System Load Tool).

      Is the resistance below 10K Ohms for either measurement?

Yes

- Repair the Driver Squib 1 circuit(s) for a short to ground.
- Perform the RESTRAINTS SYSTEM VERIFICATION TEST. Refer to **STANDARD PROCEDURE** .

No

WARNING: **If the Occupant Restraint Controller (ORC) is dropped at any time, it must be replaced. Failure to take the proper precautions can result in accidental airbag deployment. Failure to follow these instructions may result in possible serious or fatal injury.**

- Replace the Occupant Restraint Controller Module in accordance with the Service Information. Refer to **MODULE, OCCUPANT RESTRAINT CONTROLLER, REMOVAL** .
- Perform the RESTRAINTS SYSTEM VERIFICATION TEST. Refer to **STANDARD PROCEDURE** .

B0001-12-DRIVER FRONTAL SQUIB 1 CONTROL - CIRCUIT SHORT TO BATTERY

For a complete wiring diagram, **refer to appropriate SYSTEM WIRING DIAGRAMS article** .

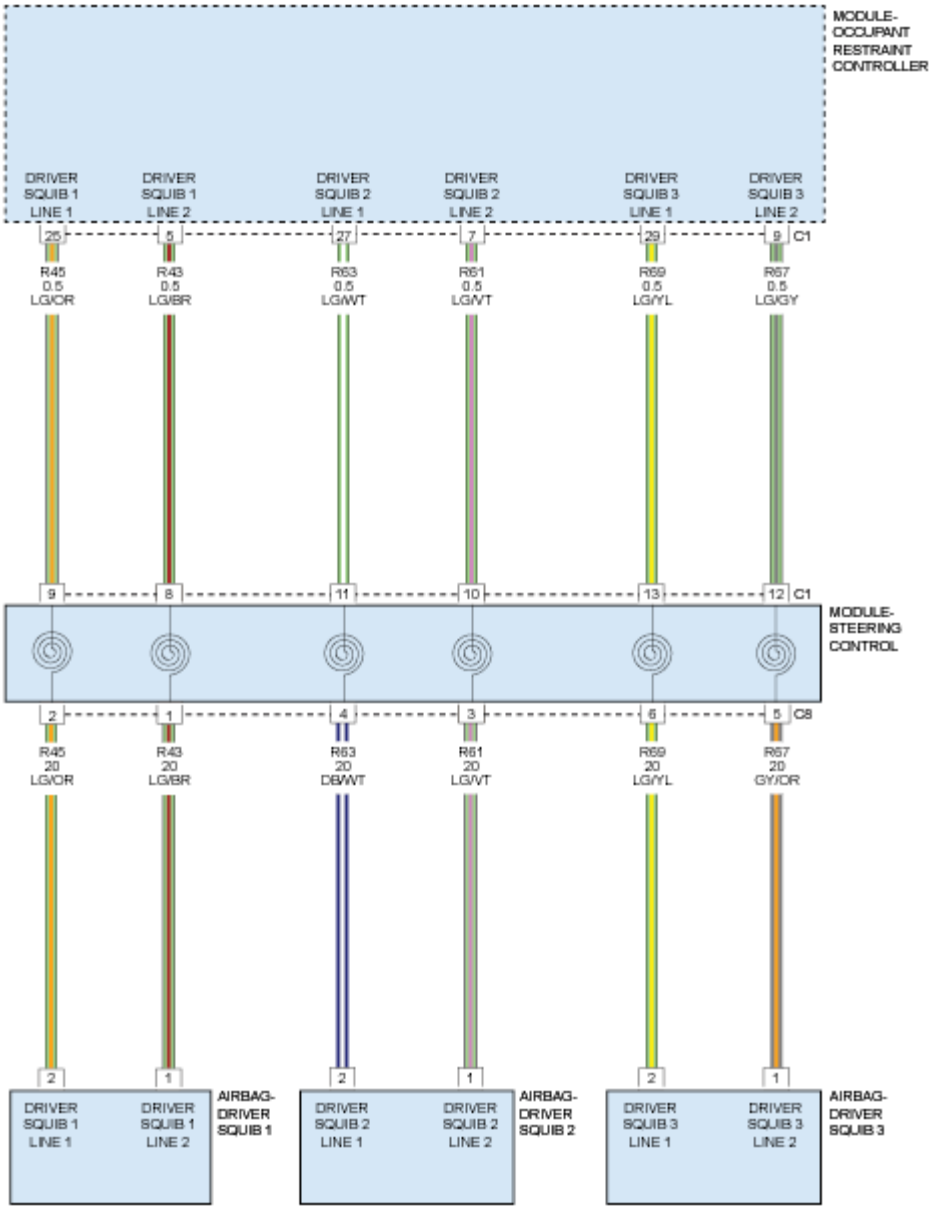

Fig. 2: Driver Frontal Squib Circuit Diagram
Courtesy of CHRYSLER GROUP, LLC

THEORY OF OPERATION

When powered, the Occupant Restraint Controller (ORC) sends a test current to the squibs to verify the integrity of the squib and wiring. These circuits are maintained in a "floating" configuration at the module (connected to neither power nor ground) as protection against inadvertent deployment. Use of the (special tool #8443A, SRS Load Tool) in the tests below substitutes a suspect squib with a known good component. The use of the (special tool #8443-57, Adapter, Supplemental Restraint System Load Tool) provides a test point as well as a method for opening the shorting bar connections within the harness connector.

WHEN MONITORED

The ORC sends out a 40 mA diagnostic current on each squib voltage supply circuit at power up and every 500 ms thereafter while the ignition is on.

SET CONDITION

This Diagnostic Trouble Code (DTC) sets when the ORC detects a short to voltage on the squib circuit for more than 2.6 seconds. This DTC transitions from active to stored when the ORC sees a recovery from a short to voltage for greater than 2.6 seconds. The Airbag Warning Lamp (AWL) will set in the instrument cluster.

POSSIBLE CAUSES

Possible Causes
(R43) DRIVER SQUIB 1 LINE 2 CIRCUIT SHORTED TO VOLTAGE
(R45) DRIVER SQUIB 1 LINE 1 CIRCUIT SHORTED TO VOLTAGE
CLOCKSPRING
DRIVER AIRBAG
OCCUPANT RESTRAINT CONTROLLER (ORC)

Always perform the Pre-Diagnostic Troubleshooting procedure before proceeding. Refer to STANDARD PROCEDURE .

DIAGNOSTIC TEST

1. **DETERMINE ACTIVE OR STORED DTC**

NOTE: **The use of a approved special tool or Digital Multimeter such as a Fluke Meter that will not apply more than 20 milliamperes to a circuit are the only measurement tools to be used.**

NOTE: **Make sure the battery is fully charged.**

NOTE: **The scan tool, (special tool #8443A, SRS Load Tool), and DVOM are required to perform the following test.**

1. Select Active or Stored DTC.

   Is the DTC active or stored?

   ORC - ACTIVE DTC

   - Go To 2

   ORC - STORED DTC

- Perform the RESTRAINTS SYSTEM INTERMITTENT TEST. Refer to **STANDARD PROCEDURE** .

2. **CHECK FOR SHORTED SQUIB CIRCUITS IN DRIVER AIRBAG**

WARNING: Turn the ignition off disconnect the 12-volt battery and wait two minutes before proceeding. Failure to follow these instructions may result in possible serious or fatal injury.

1. Disconnect the Driver Airbag Squib harness connectors.

WARNING: Do not place an intact non-deployed airbag face down on a hard surface, the airbag propels into the air if accidentally deployed. Failure to follow these instructions may result in possible serious or fatal injury.

NOTE: Check the connectors - Clean and repair as necessary.

2. Connect the (special tool #8443A, SRS Load Tool) and the (special tool #8443-8, Jumper, SRS Load) to the Driver Airbag Squib 1 and Squib 2 harness connectors.
3. If equipped with the standard key ignition, use this ignition on warning.

WARNING: Turn the ignition on, then reconnect the 12-volt battery and wait two minutes before proceeding. Failure to follow these instructions may result in possible serious or fatal injury.

4. If equipped with the keyless ignition, use this ignition on warning.

WARNING: Disconnect the 12-volt battery wait two minutes before proceeding, remove the ORC fuses, connect the 12-volt battery, wait two minutes before proceeding. Cycle the ignition to the On position, then reconnect the ORC fuses. Wait two minutes before proceeding. Failure to follow these instructions may result in possible serious or fatal injury.

5. With the scan tool, read the active ORC DTCs.

Does the scan tool display: B0001-12-DRIVER FRONTAL SQUIB 1 CONTROL - CIRCUIT SHORT TO BATTERY?

Yes

- Go To 3

No

- Replace the Driver Airbag in accordance with the Service Information. Refer to **AIR BAG, DRIVER, REMOVAL** .
- Perform the RESTRAINTS SYSTEM VERIFICATION TEST. Refer to **STANDARD PROCEDURE** .

3. **CHECK CLOCKSPRING SQUIB CIRCUITS FOR A SHORT TO VOLTAGE**

WARNING: Turn the ignition off disconnect the 12-volt battery and wait two minutes before proceeding. Failure to follow these instructions may result in possible serious or fatal injury.

1. Disconnect the (special tool #8443A, SRS Load Tool) and the (special tool #8443-8, Jumper, SRS Load) from the Driver Airbag Squib connectors.
2. Disconnect the SCM C1 harness connector.

NOTE: Check the connectors - Clean and repair as necessary.

3. If equipped with the standard key ignition, use this ignition on warning.

WARNING: Turn the ignition on, then reconnect the 12-volt battery and wait two minutes before proceeding. Failure to follow these instructions may result in possible serious or fatal injury.

4. If equipped with the keyless ignition, use this ignition on warning.

WARNING: Disconnect the 12-volt battery wait two minutes before proceeding, remove the ORC fuses, connect the 12-volt battery, wait two minutes before proceeding. Cycle the ignition to the On position, then reconnect the ORC fuses. Wait two minutes before proceeding. Failure to follow these instructions may result in possible serious or fatal injury.

5. With the scan tool, read the active ORC DTCs.

Does the scan tool display: B0001-12-DRIVER FRONTAL SQUIB 1 CONTROL - CIRCUIT SHORT TO BATTERY?

Yes

- Go To 4

No

WARNING: Turn the ignition off disconnect the 12-volt battery and wait two minutes before proceeding. Failure to follow these instructions

may result in possible serious or fatal injury.

- Replace the clockspring in accordance with the Service Information. Refer to **CLOCKSPRING, REMOVAL** .
- Perform the CLOCKSPRING CENTERING. Refer to **CLOCKSPRING, STANDARD PROCEDURE** . Perform the BODY VERIFICATION TEST. Refer to **STANDARD PROCEDURE** .
- Perform the RESTRAINTS SYSTEM VERIFICATION TEST. Refer to **STANDARD PROCEDURE** .

4. **CHECK (R43) DRIVER SQUIB 1 LINE 2 CIRCUIT AND (R45) DRIVER SQUIB 1 LINE 1 CIRCUIT FOR A SHORT TO VOLTAGE**

WARNING: Turn the ignition off disconnect the 12-volt battery and wait two minutes before proceeding. Failure to follow these instructions may result in possible serious or fatal injury.

1. Disconnect the ORC harness connectors.

NOTE: Check the connectors - Clean and repair as necessary.

2. Connect the (special tool #8443-57, Adapter, Supplemental Restraint System Load Tool) to the ORC C1 and ORC C2 harness connectors.
3. If equipped with the standard key ignition, use this ignition on warning.

WARNING: Turn the ignition on, then reconnect the 12-volt battery and wait two minutes before proceeding. Failure to follow these instructions may result in possible serious or fatal injury.

4. If equipped with the keyless ignition, use this ignition on warning.

WARNING: Disconnect the 12-volt battery wait two minutes before proceeding, remove the ORC fuses, connect the 12-volt battery, wait two minutes before proceeding. Cycle the ignition to the On position, then reconnect the ORC fuses. Wait two minutes before proceeding. Failure to follow these instructions may result in possible serious or fatal injury.

5. Measure the voltage of the (R43) Driver Squib 1 Line 2 circuit between ground and the C1A cavity 5 of the (special tool #8443-57, Adapter, Supplemental Restraint System Load Tool).
6. Measure the voltage of the (R45) Driver Squib 1 Line 1 circuit between ground and the C1A cavity 25 of the (special tool #8443-57, Adapter, Supplemental Restraint System Load Tool).

Is there any voltage present for either measurement?

Yes

- Repair the Driver Squib 1 circuit(s) for a short to voltage.
- Perform the RESTRAINTS SYSTEM VERIFICATION TEST. Refer to **STANDARD PROCEDURE** .

No

WARNING: **Turn the ignition off disconnect the 12-volt battery and wait two minutes before proceeding. Failure to follow these instructions may result in possible serious or fatal injury.**

WARNING: **If the Occupant Restraint Controller (ORC) is dropped at any time, it must be replaced. Failure to take the proper precautions can result in accidental airbag deployment. Failure to follow these instructions may result in possible serious or fatal injury.**

Repair

- Replace the ORC in accordance with the Service Information. Refer to **MODULE, OCCUPANT RESTRAINT CONTROLLER, REMOVAL** .
- Perform the RESTRAINTS SYSTEM VERIFICATION TEST. Refer to **STANDARD PROCEDURE** .

B0001-13-DRIVER FRONTAL SQUIB 1 CONTROL - CIRCUIT OPEN

For a complete wiring diagram, **refer to appropriate SYSTEM WIRING DIAGRAMS article** .

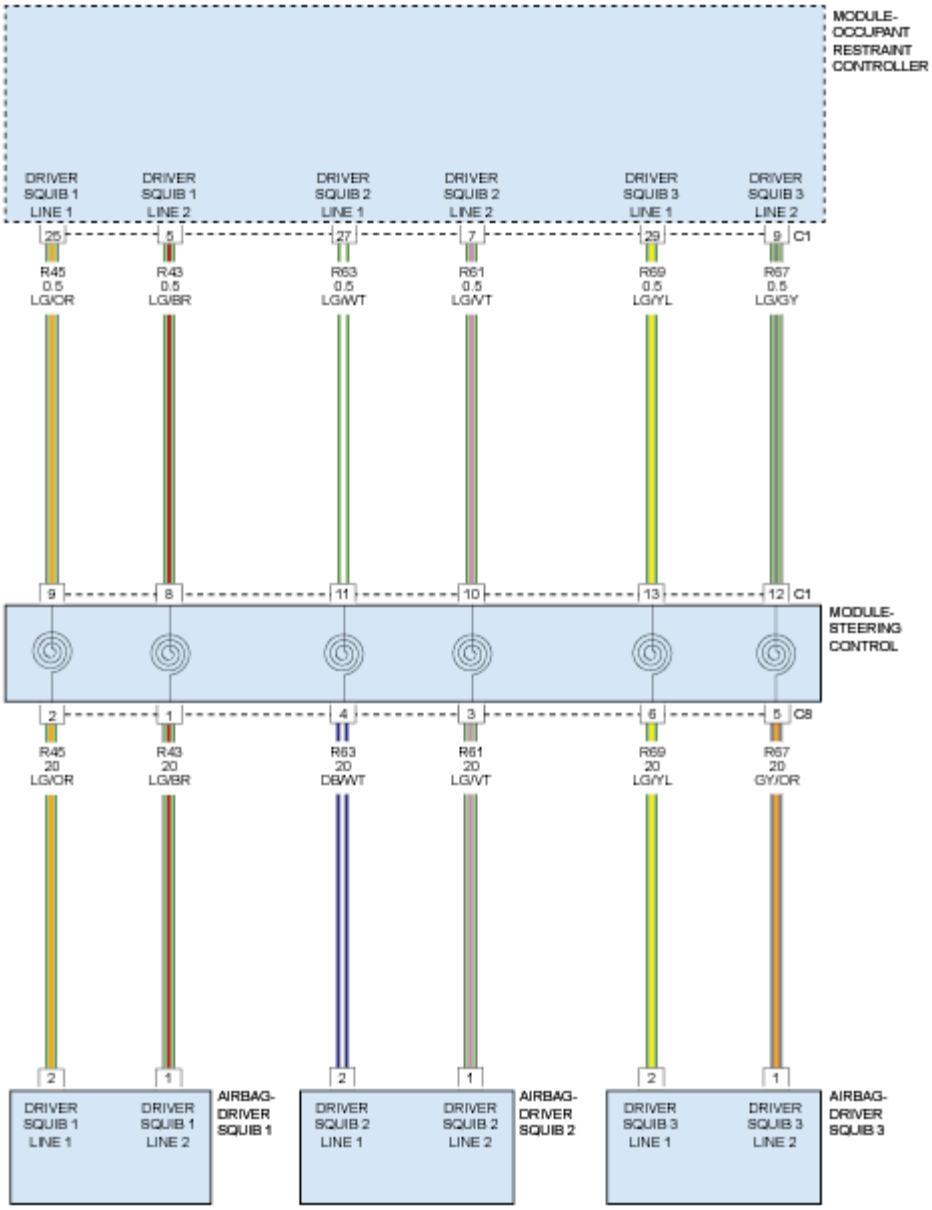

Fig. 3: Driver Frontal Squib Circuit Diagram
Courtesy of CHRYSLER GROUP, LLC

THEORY OF OPERATION

When powered, the Occupant Restraint Controller (ORC) sends a test current to the squibs to verify the integrity of the squib and wiring. These circuits are maintained in a "floating" configuration at the module (connected to neither power nor ground) as protection against inadvertent deployment. Use of the (special tool #8443A, SRS Load Tool) in the tests below substitutes a suspect squib with a known good component. The use of the (special tool #8443-57, Adapter, Supplemental Restraint System Load Tool) provides a test point as well as a method for opening the shorting bar connections within the harness connector.

WHEN MONITORED

With the ignition on.

SET CONDITION

The Occupant Restraint Controller (ORC) monitors the resistance of the Driver Squib circuits. The ORC will set this DTC if it detects an open or high resistance on the Driver Squib 1 circuits for greater than 2.6 seconds. This DTC transitions from active to stored when the ORC sees a recovery from a open for greater than 2.6 seconds. The Airbag Warning Lamp (AWL) will set in the instrument cluster.

POSSIBLE CAUSES

Possible Causes
(R43) DRIVER SQUIB 1 LINE 2 CIRCUIT OPEN
(R45) DRIVER SQUIB 1 LINE 1 CIRCUIT OPEN
CLOCKSPRING
DRIVER AIRBAG
OCCUPANT RESTRAINT CONTROLLER (ORC)

Always perform the Pre-Diagnostic Troubleshooting procedure before proceeding. Refer to STANDARD PROCEDURE .

DIAGNOSTIC TEST

1. **DETERMINE ACTIVE OR STORED DTC**

NOTE: **The use of a approved special tool or Digital Multimeter such as a Fluke Meter that will not apply more than 20 milliamperes to a circuit are the only measurement tools to be used.**

NOTE: **Make sure that the battery is fully charged.**

NOTE: **The scan tool, (special tool #8443A, SRS Load Tool) and DVOM are required to perform the following test.**

1. Turn the ignition on.

   Select ACTIVE or STORED DTC:

   ACTIVE DTC

   - Go To 2

   STORED DTC

- Perform the RESTRAINTS SYSTEM INTERMITTENT TEST. Refer to **STANDARD PROCEDURE** .

2. **CHECK FOR OPEN SQUIB CIRCUITS IN DRIVER AIRBAG**

WARNING: Turn the ignition off disconnect the 12-volt battery and wait two minutes before proceeding. Failure to follow these instructions may result in possible serious or fatal injury.

1. Disconnect the Driver Airbag Squib connectors.

WARNING: Do not place an intact non-deployed airbag face down on a hard surface, the airbag propels into the air if accidentally deployed. Failure to follow these instructions may result in possible serious or fatal injury.

NOTE: Check connectors - Clean and repair as necessary.

2. Connect the (special tool #8443A, SRS Load Tool) and the (special tool #8443-8, Jumper, SRS Load) to the Driver Airbag Squib 1 and Squib 2 connectors.
3. If equipped with the standard key ignition, use this ignition on warning.

WARNING: Turn the ignition on, then reconnect the 12-volt battery and wait two minutes before proceeding. Failure to follow these instructions may result in possible serious or fatal injury.

4. If equipped with the keyless ignition, use this ignition on warning.

WARNING: Disconnect the 12-volt battery wait two minutes before proceeding, remove the ORC fuses, connect the 12-volt battery, wait two minutes before proceeding. Cycle the ignition to the On position, then reconnect the ORC fuses. Wait two minutes before proceeding. Failure to follow these instructions may result in possible serious or fatal injury.

5. With the scan tool, read the active ORC DTCs.

Does the scan tool display: B0001-13-DRIVER FRONTAL SQUIB 1 CONTROL - CIRCUIT OPEN?

Yes

- Go To 3

No

- Replace the Driver Airbag in accordance with the Service Information. Refer to **AIR BAG, DRIVER, REMOVAL** .
- Perform the RESTRAINTS SYSTEM VERIFICATION TEST. Refer to **STANDARD PROCEDURE** .

3. **CHECK CLOCKSPRING SQUIB CIRCUITS FOR A SHORT TO VOLTAGE**

WARNING: Turn the ignition off disconnect the 12-volt battery and wait two minutes before proceeding. Failure to follow these instructions may result in possible serious or fatal injury.

1. Disconnect the (special tool #8443A, SRS Load Tool) and the (special tool #8443-8, Jumper, SRS Load) from the Driver Airbag Squib connectors.
2. Disconnect the SCM C1 harness connector.

NOTE: Check the connectors - Clean and repair as necessary.

3. If equipped with the standard key ignition, use this ignition on warning.

WARNING: Turn the ignition on, then reconnect the 12-volt battery and wait two minutes before proceeding. Failure to follow these instructions may result in possible serious or fatal injury.

4. If equipped with the keyless ignition, use this ignition on warning.

WARNING: Disconnect the 12-volt battery wait two minutes before proceeding, remove the ORC fuses, connect the 12-volt battery, wait two minutes before proceeding. Cycle the ignition to the On position, then reconnect the ORC fuses. Wait two minutes before proceeding. Failure to follow these instructions may result in possible serious or fatal injury.

5. Using a jumper wire connect terminals SCM C1 cavity 8 and SCM C1 cavity 9 but don't insert the jumper into the connector terminals.
6. While holding the jumper wire in place, with the scan tool, read the active ORC DTCs.

Does the scan tool display: B0001-13-DRIVER FRONTAL SQUIB 1 CONTROL - CIRCUIT OPEN?

Yes

- Go To 4

No

WARNING: Turn the ignition off disconnect the 12-volt battery and wait two minutes before proceeding. Failure to follow these instructions may result in possible serious or fatal injury.

- Replace the clockspring in accordance with the Service Information. Refer to **CLOCKSPRING, REMOVAL** .
- Perform the CLOCKSPRING CENTERING. Refer to **CLOCKSPRING, STANDARD PROCEDURE** . Perform the BODY VERIFICATION TEST. Refer to **STANDARD PROCEDURE** .
- Perform the RESTRAINTS SYSTEM VERIFICATION TEST. Refer to **STANDARD PROCEDURE** .

4. **CHECK (R43) DRIVER SQUIB 1 LINE 2 CIRCUIT FOR AN OPEN**

WARNING: Turn the ignition off disconnect the 12-volt battery and wait two minutes before proceeding. Failure to follow these instructions may result in possible serious or fatal injury.

1. Disconnect the ORC connectors.

NOTE: Check connectors - Clean and repair as necessary.

2. Connect the (special tool #8443-57, Adapter, Supplemental Restraint System Load Tool) to the ORC C1 and ORC C2 harness connectors.
3. Measure the resistance of the (R43) Driver Squib 1 Line 2 circuit between the SCM C1 connector cavity 8 and the (special tool #8443-57, Adapter, Supplemental Restraint System Load Tool) connector C1A cavity 5.

   Is the resistance below or within the range of 5.4 - 10.0 Ohm?

   Yes

   - Go To 5

   No

   - Repair the R43 Driver Squib 1 Line 2 circuit for an open.
   - Perform the RESTRAINTS SYSTEM VERIFICATION TEST. Refer to **STANDARD PROCEDURE** .

5. **CHECK (R45) DRIVER SQUIB 1 LINE 1 CIRCUIT FOR AN OPEN**
   1. Measure the resistance of the (R45) Driver Squib 1 Line 1 circuit between the SCM C1 connector cavity 9 and the (special tool #8443-57, Adapter, Supplemental Restraint System Load Tool) connector C1A cavity 25.

      Is the resistance below or within the range of 5.4 - 10.0 Ohm?

Yes

WARNING: Turn the ignition off disconnect the 12-volt battery and wait two minutes before proceeding. Failure to follow these instructions may result in possible serious or fatal injury.

WARNING: If the Occupant Restraint Controller (ORC) is dropped at any time, it must be replaced. Failure to take the proper precautions can result in accidental airbag deployment. Failure to follow these instructions may result in possible serious or fatal injury.

- Replace the ORC in accordance with Service Information. Refer to **MODULE, OCCUPANT RESTRAINT CONTROLLER, REMOVAL** .
- Perform the RESTRAINTS SYSTEM VERIFICATION TEST. Refer to **STANDARD PROCEDURE** .

No

- Repair the (R45) Driver Squib 1 Line 1 circuit for an open.
- Perform the RESTRAINTS SYSTEM VERIFICATION TEST. Refer to **STANDARD PROCEDURE** .

B0001-2B-DRIVER FRONTAL SQUIB 1 CONTROL - WIRES SHORTED TOGETHER

For a complete wiring diagram, **refer to appropriate SYSTEM WIRING DIAGRAMS article** .

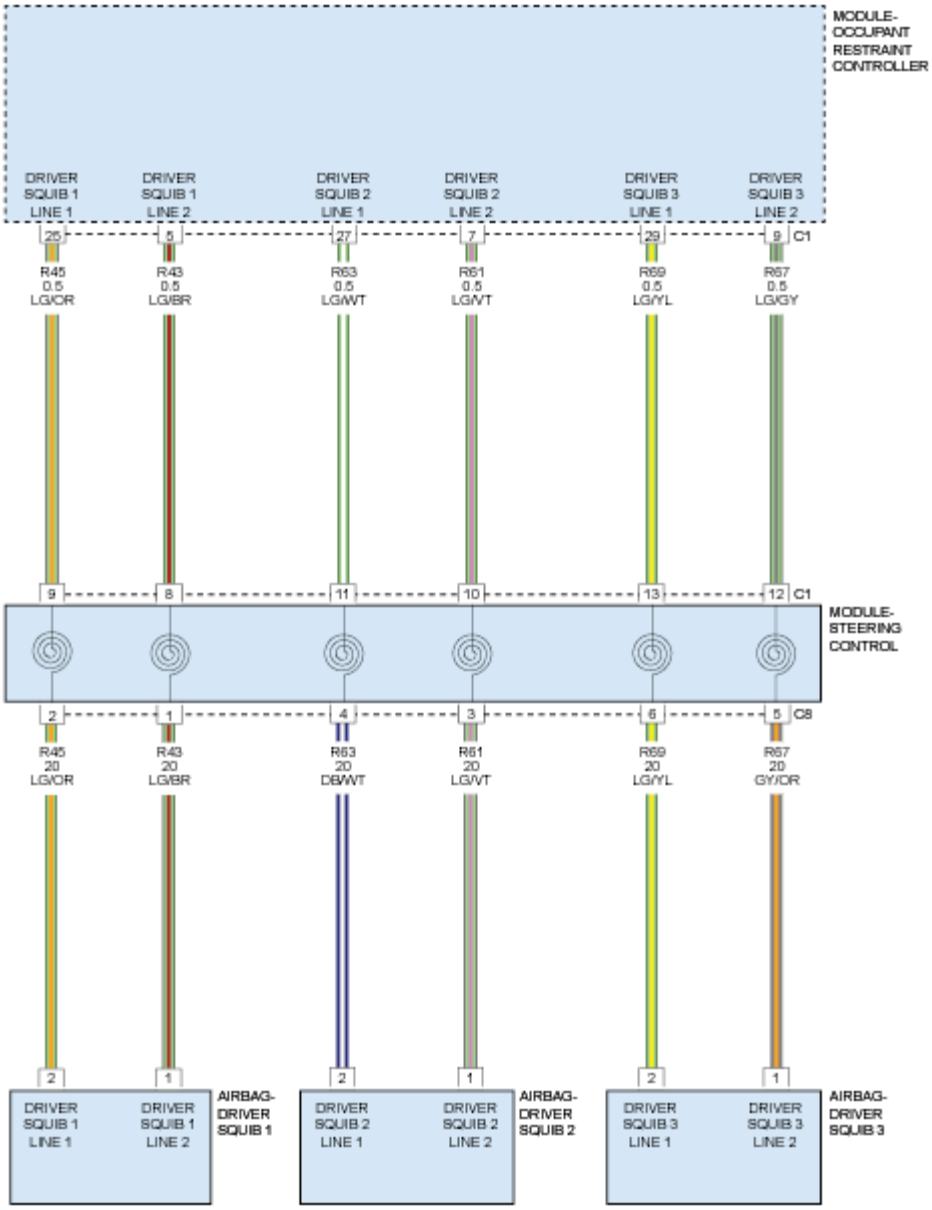

Fig. 4: Driver Frontal Squib Circuit Diagram
Courtesy of CHRYSLER GROUP, LLC

THEORY OF OPERATION

When powered, the Occupant Restraint Controller (ORC) sends a test current to the squibs to verify the integrity of the squib and wiring. These circuits are maintained in a "floating" configuration at the module (connected to neither power nor ground) as protection against inadvertent deployment. Use of the (special tool #8443A, SRS Load Tool) in the tests below substitutes a suspect squib with a known good component. To provide a test point and a method for opening the shorting bar connections within the harness connector, use the (special tool #8443-57, Adapter, Supplemental Restraint System Load Tool).

WHEN MONITORED

The ORC sends out a 40 mA diagnostic current on each squib voltage supply circuit at power up and every 500 ms thereafter while the ignition is on.

SET CONDITION

This Diagnostic Trouble Code (DTC) sets when the ORC detects both circuits of the same squib are shorted together for more than 2.6 seconds. This DTC transitions from active to stored when the ORC sees a recovery from a shorted together condition for greater than 2.6 seconds. The Airbag Warning Lamp (AWL) will set in the instrument cluster.

POSSIBLE CAUSES

Possible Causes
(R43) DRIVER SQUIB 1 LINE 2 CIRCUIT SHORTED TO THE (R45) DRIVER SQUIB 1 LINE 1 CIRCUIT
CLOCKSPRING
DRIVER AIRBAG
OCCUPANT RESTRAINT CONTROLLER (ORC)

Always perform the Pre-Diagnostic Troubleshooting procedure before proceeding. Refer to STANDARD PROCEDURE .

DIAGNOSTIC TEST

1. **DETERMINE ACTIVE OR STORED DTC**

NOTE: **The use of a approved special tool or Digital Multimeter such as a Fluke Meter that will not apply more than 20 milliamperes to a circuit are the only measurement tools to be used.**

NOTE: **Make sure the battery is fully charged.**

NOTE: **The scan tool, (special tool #8443A, SRS Load Tool), and DVOM are required to perform the following test.**

1. Select Active or Stored DTC.

   Select ACTIVE or STORED DTC:

   ACTIVE DTC

   - Go To 2

STORED DTC

- Perform the RESTRAINTS SYSTEM INTERMITTENT SYSTEM. Refer to **STANDARD PROCEDURE** .

2. **CHECK FOR SHORTED SQUIB CIRCUITS IN DRIVER AIRBAG**

WARNING: Turn the ignition off disconnect the 12-volt battery and wait two minutes before proceeding. Failure to follow these instructions may result in possible serious or fatal injury.

WARNING: Do not place an intact non-deployed airbag face down on a hard surface, the airbag propels into the air if accidentally deployed. Failure to follow these instructions may result in possible serious or fatal injury.

1. Disconnect the Driver Airbag Squib harness connectors.

NOTE: Check the connectors - Clean and repair as necessary.

2. Connect the (special tool #8443A, SRS Load Tool) and (special tool #8443-8, Jumper, SRS Load) to the Driver Airbag Squib 1 and Squib 2 harness connectors.
3. If equipped with the standard key ignition, use this ignition on warning.

WARNING: Turn the ignition on, then reconnect the 12-volt battery and wait two minutes before proceeding. Failure to follow these instructions may result in possible serious or fatal injury.

4. If equipped with the keyless ignition, use this ignition on warning.

WARNING: Disconnect the 12-volt battery wait two minutes before proceeding, remove the ORC fuses, connect the 12-volt battery, wait two minutes before proceeding. Cycle the ignition to the On position, then reconnect the ORC fuses. Wait two minutes before proceeding. Failure to follow these instructions may result in possible serious or fatal injury.

5. With the scan tool, read the active ORC DTCs.

Does the scan tool display: B0001-2B-DRIVER FRONTAL SQUIB 1 CONTROL - WIRES SHORTED TOGETHER?

Yes

- Go To 3

No

- Replace the Driver Airbag in accordance with the Service Information. Refer to **AIR BAG, DRIVER, REMOVAL** .
- Perform the RESTRAINTS SYSTEM VERIFICATION TEST. Refer to **STANDARD PROCEDURE** .

3. **CHECK CLOCKSPRING SQUIB CIRCUITS FOR A SHORT TOGETHER**

WARNING: Turn the ignition off disconnect the 12-volt battery and wait two minutes before proceeding. Failure to follow these instructions may result in possible serious or fatal injury.

1. Disconnect the (special tool #8443A, SRS Load Tool) and (special tool #8443-8, Jumper, SRS Load) from the Driver Airbag Squib harness connectors.
2. Disconnect the Steering Control Module (SCM) C1 harness connector.

NOTE: Check the connectors - Clean and repair as necessary.

3. If equipped with the standard key ignition, use this ignition on warning.

WARNING: Turn the ignition on, then reconnect the 12-volt battery and wait two minutes before proceeding. Failure to follow these instructions may result in possible serious or fatal injury.

4. If equipped with the keyless ignition, use this ignition on warning.

WARNING: Disconnect the 12-volt battery wait two minutes before proceeding, remove the ORC fuses, connect the 12-volt battery, wait two minutes before proceeding. Cycle the ignition to the On position, then reconnect the ORC fuses. Wait two minutes before proceeding. Failure to follow these instructions may result in possible serious or fatal injury.

5. With the scan tool, read the active ORC DTCs.

Does the scan tool display: B0001-2B-DRIVER FRONTAL SQUIB 1 CONTROL - WIRES SHORTED TOGETHER?

Yes

- Go To 4

No

WARNING: Turn the ignition off disconnect the 12-volt battery and wait two minutes before proceeding. Failure to follow these instructions may result in possible serious or fatal injury.

- Replace the clockspring in accordance with the Service Information. Refer to **CLOCKSPRING, REMOVAL** .
- Perform the CLOCKSPRING CENTERING. Refer to **CLOCKSPRING, STANDARD PROCEDURE** . Perform the BODY VERIFICATION TEST. Refer to **STANDARD PROCEDURE** .
- Perform the RESTRAINTS SYSTEM VERIFICATION TEST. Refer to **STANDARD PROCEDURE** .
- Perform the RESTRAINTS SYSTEM VERIFICATION TEST. Refer to **STANDARD PROCEDURE** .

4. **CHECK (R43) DRIVER SQUIB 1 LINE 2 CIRCUIT FOR A SHORT TO THE (R45) DRIVER SQUIB 1 LINE 1 CIRCUIT**

WARNING: Turn the ignition off disconnect the 12-volt battery and wait two minutes before proceeding. Failure to follow these instructions may result in possible serious or fatal injury.

1. Disconnect the ORC C1 and ORC C2 harness connectors.

NOTE: Check the connectors - Clean and repair as necessary.

2. Connect the (special tool #8443-57, Adapter, Supplemental Restraint System Load Tool) to the ORC C1 and ORC C2 harness connector.
3. Measure the resistance between the (R43) Driver Squib 1 Line 2 circuit ORC connector C1A cavity 5 and the (R45) Driver Squib 1 Line 1 circuit ORC connector C1A cavity 25 at the (special tool #8443-57, Adapter, Supplemental Restraint System Load Tool).

   Is the resistance below 10k Ohms Ohms?

   Yes

   - Repair the (R43) Driver Squib 1 Line 2 circuit for a short to the (R45) Driver Squib 1 Line 1 circuit.
   - Perform the RESTRAINTS SYSTEM VERIFICATION TEST. Refer to **STANDARD PROCEDURE** .

   No

WARNING: If the Occupant Restraint Controller (ORC) is dropped at any time, it must be replaced. Failure to take the proper precautions can result in accidental airbag deployment. Failure to follow

these instructions may result in possible serious or fatal injury.

- Replace the ORC in accordance with the Service Information. Refer to **MODULE, OCCUPANT RESTRAINT CONTROLLER, REMOVAL** .
- Perform the RESTRAINTS SYSTEM VERIFICATION TEST. Refer to **STANDARD PROCEDURE** .

B0002-11-DRIVER FRONTAL SQUIB 2 CONTROL CIRCUIT - SHORT TO GROUND

For a complete wiring diagram, **refer to appropriate SYSTEM WIRING DIAGRAMS article** .

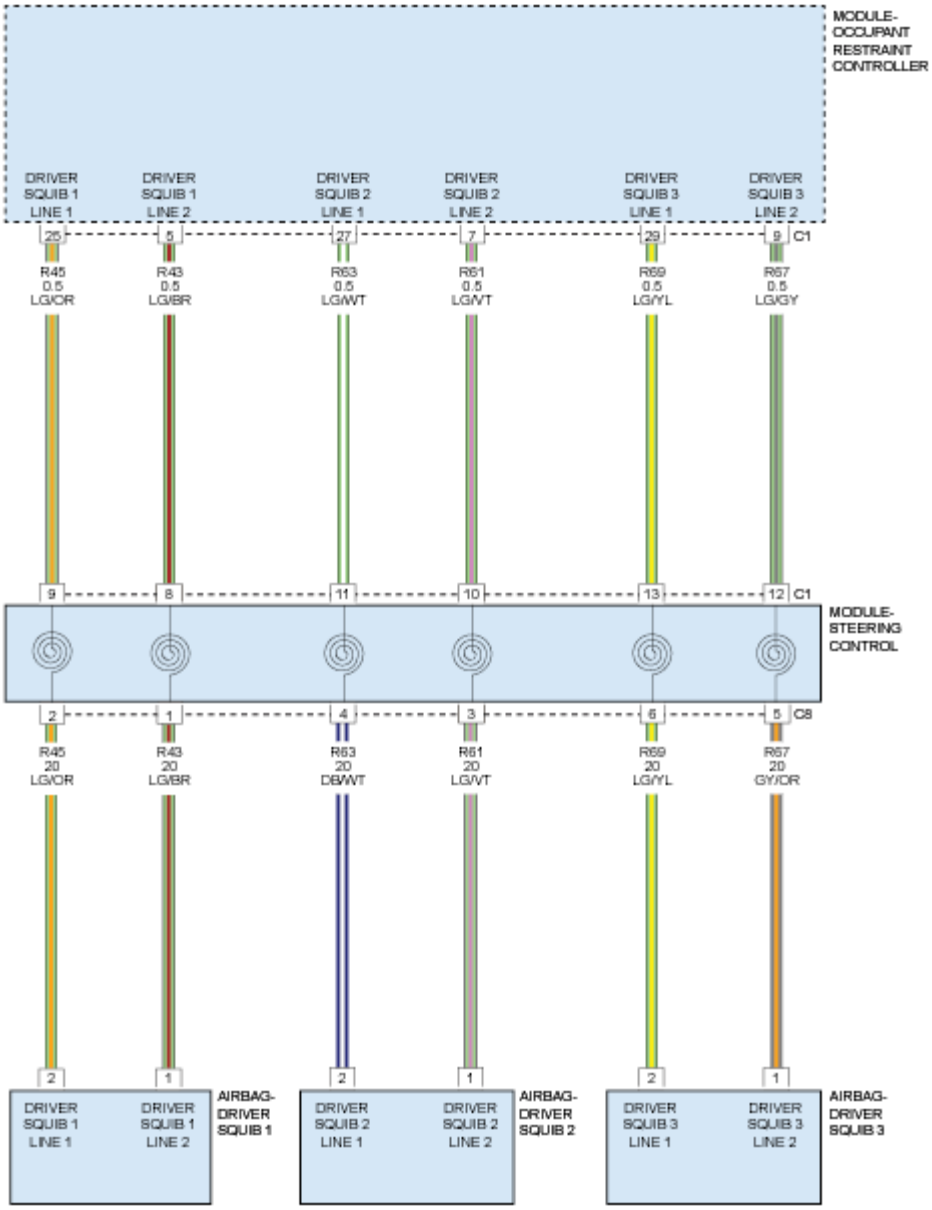

Fig. 5: Driver Frontal Squib Circuit Diagram
Courtesy of CHRYSLER GROUP, LLC

THEORY OF OPERATION

When powered, the Occupant Restraint Controller (ORC) sends a test current to the squibs to verify the integrity of the squib and wiring. These circuits are maintained in a "floating" configuration at the module (connected to neither power nor ground) as protection against inadvertent deployment. Use of the (special tool #8443A, SRS Load Tool) in the tests below substitutes a suspect squib with a known good component. The use of the (special tool #8443-57, Adapter, Supplemental Restraint System Load Tool) provides a test point as well as a method for opening the shorting bar connections within the harness connector.

WHEN MONITORED

The ORC Module sends out a 40 mA diagnostic current on each squib voltage supply circuit at power up, and every 500 ms thereafter while the ignition is on.

SET CONDITION

This Diagnostic Trouble Code (DTC) sets when the ORC detects a short to ground on the driver airbag squib circuit for more than 2.6 seconds. This DTC transitions from active to stored when the ORC sees a recovery from a short to ground for greater than 2.6 seconds. The Airbag Warning Lamp (AWL) will set in the instrument cluster.

POSSIBLE CAUSES

Possible Causes
(R63) DRIVER SQUIB 2 LINE 1 CIRCUIT OR THE (R61) DRIVER SQUIB 2 LINE 2 CIRCUIT SHORTED TO GROUND
CLOCKSPRING
DRIVER AIRBAG
OCCUPANT RESTRAINT CONTROLLER (ORC)

Always perform the Pre-Diagnostic Troubleshooting procedure before proceeding. Refer to STANDARD PROCEDURE .

DIAGNOSTIC TEST

1. **DETERMINE ACTIVE OR STORED DTC**

NOTE: **The use of a approved special tool or Digital Multimeter such as a Fluke Meter that will not apply more than 20 milliamperes to a circuit are the only measurement tools to be used.**

NOTE: **Make sure that the battery is fully charged.**

NOTE: **The scan tool, (special tool #8443A, SRS Load Tool) and DVOM are required to perform the following test.**

1. Turn the ignition on.

   Select ACTIVE or STORED DTC:

   ACTIVE DTC

   - Go To 2

STORED DTC

- Perform the RESTRAINTS SYSTEM INTERMITTENT TEST. Refer to **STANDARD PROCEDURE** .

2. **CHECK FOR SHORTED SQUIB CIRCUITS IN DRIVER AIRBAG**

WARNING: Turn the ignition off disconnect the 12-volt battery and wait two minutes before proceeding. Failure to follow these instructions may result in possible serious or fatal injury.

1. Disconnect the Driver Airbag Squib connectors.

WARNING: Do not place an intact non-deployed airbag face down on a hard surface, the airbag propels into the air if accidentally deployed. Failure to follow these instructions may result in possible serious or fatal injury.

NOTE: Check connectors - Clean and repair as necessary.

2. Connect the SRS Load Tool Kit (special tool #8443A, SRS Load Tool) and (special tool #8443-8, Jumper, SRS Load) to the Driver Airbag Squib 1 and Squib 2 connectors.
3. If equipped with the standard key ignition, use this ignition on warning.

WARNING: Turn the ignition on, then reconnect the 12-volt battery and wait two minutes before proceeding. Failure to follow these instructions may result in possible serious or fatal injury.

4. If equipped with the keyless ignition, use this ignition on warning.

WARNING: Disconnect the 12-volt battery wait two minutes before proceeding, remove the ORC fuses, connect the 12-volt battery, wait two minutes before proceeding. Cycle the ignition to the On position, then reconnect the ORC fuses. Wait two minutes before proceeding. Failure to follow these instructions may result in possible serious or fatal injury.

5. With the scan tool, read the active ORC DTCs.

Does the scan tool display: B0002-11-DRIVER FRONTAL SQUIB 2 CONTROL CIRCUIT - SHORT TO GROUND?

Yes

- Go To 3

No

- Replace the Driver Airbag in accordance with the Service Information. Refer to **AIR BAG, DRIVER, REMOVAL** .
- Perform the RESTRAINTS SYSTEM VERIFICATION TEST. Refer to **STANDARD PROCEDURE** .

3. **CHECK CLOCKSPRING SQUIB CIRCUITS FOR A SHORT TO GROUND**

WARNING: Turn the ignition off disconnect the 12-volt battery and wait two minutes before proceeding. Failure to follow these instructions may result in possible serious or fatal injury.

1. Disconnect the (special tool #8443A, SRS Load Tool) and (special tool #8443-8, Jumper, SRS Load) from the Driver Airbag Squib harness connectors.
2. Disconnect the Steering Control Module C1 harness connector.

NOTE: Check the connectors - Clean and repair as necessary.

3. If equipped with the standard key ignition, use this ignition on warning.

WARNING: Turn the ignition on, then reconnect the 12-volt battery and wait two minutes before proceeding. Failure to follow these instructions may result in possible serious or fatal injury.

4. If equipped with the keyless ignition, use this ignition on warning.

WARNING: Disconnect the 12-volt battery wait two minutes before proceeding, remove the ORC fuses, connect the 12-volt battery, wait two minutes before proceeding. Cycle the ignition to the On position, then reconnect the ORC fuses. Wait two minutes before proceeding. Failure to follow these instructions may result in possible serious or fatal injury.

5. With the scan tool, read the active ORC DTCs.

Does the scan tool display: B0002-11-DRIVER FRONTAL SQUIB 2 CONTROL CIRCUIT - SHORT TO GROUND?

Yes

- Go To 4

No

WARNING: Turn the ignition off disconnect the 12-volt battery and wait two minutes before proceeding. Failure to follow these instructions may result in possible serious or fatal injury.

- Replace the clockspring in accordance with the Service Information. Refer to **CLOCKSPRING, REMOVAL** .
- Perform the CLOCKSPRING CENTERING. Refer to **CLOCKSPRING, STANDARD PROCEDURE** . Perform the BODY VERIFICATION TEST. Refer to **STANDARD PROCEDURE** .
- Perform the RESTRAINTS SYSTEM VERIFICATION TEST. Refer to **STANDARD PROCEDURE** .

4. **CHECK (R61) DRIVER SQUIB 2 LINE 2 CIRCUIT AND (R63) DRIVER SQUIB 2 LINE 1 CIRCUIT FOR A SHORT TO GROUND**

WARNING: Turn the ignition off disconnect the 12-volt battery and wait two minutes before proceeding. Failure to follow these instructions may result in possible serious or fatal injury.

1. Disconnect the ORC C1 and ORC C2 harness connectors.

NOTE: Check the connectors - Clean and repair as necessary.

2. Connect the (special tool #8443-57, Adapter, Supplemental Restraint System Load Tool) to the ORC C1 and ORC C2 harness connectors.
3. Measure the resistance of the (R61) Driver Squib 2 Line 1 circuit between ground and the C1A cavity 7 of the (special tool #8443-57, Adapter, Supplemental Restraint System Load Tool).
4. Measure the resistance of the (R63) Driver Squib 2 Line 1 circuit between ground and the C1A cavity 27 of the (special tool #8443-57, Adapter, Supplemental Restraint System Load Tool).

Is the resistance below 10K Ohms for either measurement?

Yes

- Repair the Driver Squib 2 circuit(s) for a short to ground.
- Perform the RESTRAINTS SYSTEM VERIFICATION TEST. Refer to **STANDARD PROCEDURE** .

No

WARNING: If the Occupant Restraint Controller (ORC) is dropped at any time, it must be replaced. Failure to take the proper precautions can result in accidental airbag deployment. Failure to follow these instructions may result in possible serious or fatal injury.

Repair

- Replace the Occupant Restraint Controller Module in accordance with the Service Information. Refer to **MODULE, OCCUPANT RESTRAINT CONTROLLER, REMOVAL** .
- Perform the RESTRAINTS SYSTEM VERIFICATION TEST. Refer to **STANDARD PROCEDURE** .

B0002-12-DRIVER FRONTAL SQUIB 2 CONTROL CIRCUIT - SHORT TO BATTERY

For a complete wiring diagram, **refer to appropriate SYSTEM WIRING DIAGRAMS article** .

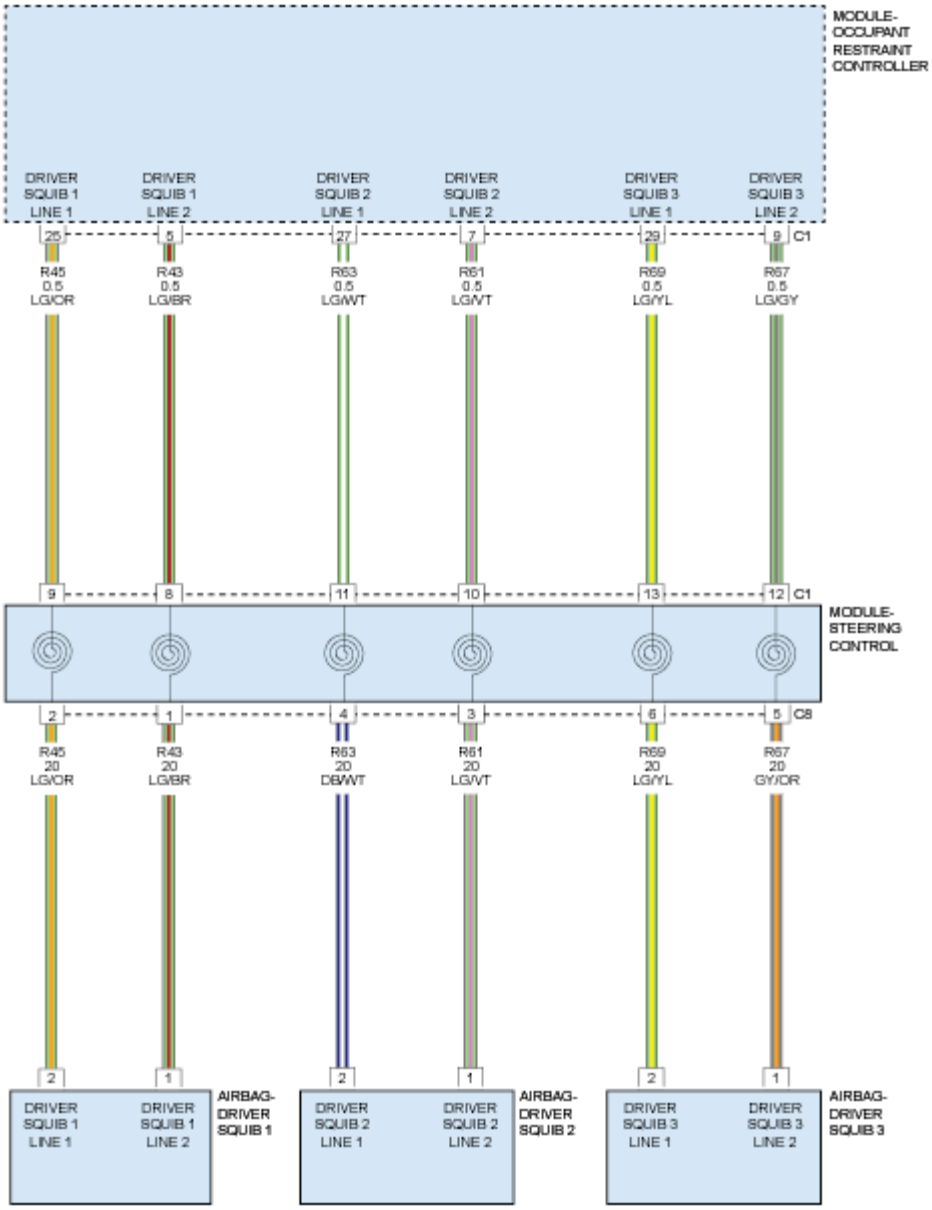

Fig. 6: Driver Frontal Squib Circuit Diagram
Courtesy of CHRYSLER GROUP, LLC

THEORY OF OPERATION

When powered, the Occupant Restraint Controller (ORC) sends a test current to the squibs to verify the integrity of the squib and wiring. These circuits are maintained in a "floating" configuration at the module (connected to neither power nor ground) as protection against inadvertent deployment. Use of the (special tool #8443A, SRS Load Tool) in the tests below substitutes a suspect squib with a known good component. The use of the (special tool #8443-57, Adapter, Supplemental Restraint System Load Tool) provides a test point as well as a method for opening the shorting bar connections within the harness connector.

WHEN MONITORED

The ORC sends out a 40 mA diagnostic current on each squib voltage supply circuit at power up and every 500 ms thereafter while the ignition is on.

SET CONDITION

This Diagnostic Trouble Code (DTC) sets when the ORC detects a short to voltage on the squib circuit for more than 2.6 seconds. This DTC transitions from active to stored when the ORC sees a recovery from a short to voltage for greater than 2.6 seconds. The Airbag Warning Lamp (AWL) will set in the instrument cluster.

POSSIBLE CAUSES

Possible Causes
(R63) DRIVER SQUIB 2 LINE 1 CIRCUIT SHORTED TO VOLTAGE
(R61) DRIVER SQUIB 2 LINE 2 CIRCUIT SHORTED TO VOLTAGE
CLOCKSPRING
DRIVER AIRBAG
OCCUPANT RESTRAINT CONTROLLER (ORC)

Always perform the Pre-Diagnostic Troubleshooting procedure before proceeding. Refer to STANDARD PROCEDURE .

DIAGNOSTIC TEST

1. **DETERMINE ACTIVE OR STORED DTC**

   NOTE: Make sure the battery is fully charged.

   NOTE: The scan tool, (special tool #8443A, SRS Load Tool), and DVOM are required to perform the following test.

   1. Select Active or Stored DTC.

      Is the DTC active or stored?

      ORC - ACTIVE DTC

      - Go To 2

      ORC - STORED DTC

      - Perform the RESTRAINTS SYSTEM INTERMITTENT TEST. Refer to **STANDARD PROCEDURE** .

2. **CHECK FOR SHORTED SQUIB CIRCUITS IN DRIVER AIRBAG**

WARNING: Turn the ignition off disconnect the 12-volt battery and wait two minutes before proceeding. Failure to follow these instructions may result in possible serious or fatal injury.

1. Disconnect the Driver Airbag Squib harness connectors.

WARNING: Do not place an intact non-deployed airbag face down on a hard surface, the airbag propels into the air if accidentally deployed. Failure to follow these instructions may result in possible serious or fatal injury.

NOTE: Check the connectors - Clean and repair as necessary.

2. Connect the (special tool #8443A, SRS Load Tool) and (special tool #8443-8, Jumper, SRS Load) to the Driver Airbag Squib 1 and Squib 2 harness connectors.
3. If equipped with the standard key ignition, use this ignition on warning.

WARNING: Turn the ignition on, then reconnect the 12-volt battery and wait two minutes before proceeding. Failure to follow these instructions may result in possible serious or fatal injury.

4. If equipped with the keyless ignition, use this ignition on warning.

WARNING: Disconnect the 12-volt battery wait two minutes before proceeding, remove the ORC fuses, connect the 12-volt battery, wait two minutes before proceeding. Cycle the ignition to the On position, then reconnect the ORC fuses. Wait two minutes before proceeding. Failure to follow these instructions may result in possible serious or fatal injury.

5. With the scan tool, read the active ORC DTCs.

   Does the scan tool display: B0002-12-DRIVER FRONTAL SQUIB 2 CONTROL CIRCUIT - SHORT TO BATTERY?

   Yes

   - Go To 3

   No

   - Replace the Driver Airbag in accordance with the Service Information. Refer to **AIR BAG, DRIVER, REMOVAL** .
   - Perform the RESTRAINTS SYSTEM VERIFICATION TEST. Refer to **STANDARD**

PROCEDURE .

3. **CHECK CLOCKSPRING SQUIB CIRCUITS FOR A SHORT TO VOLTAGE**

WARNING: Turn the ignition off disconnect the 12-volt battery and wait two minutes before proceeding. Failure to follow these instructions may result in possible serious or fatal injury.

1. Disconnect the (special tool #8443A, SRS Load Tool) and the (special tool #8443-8, Jumper, SRS Load) from the Driver Airbag Squib connectors.
2. Disconnect the SCM C1 harness connector.

NOTE: Check the connectors - Clean and repair as necessary.

3. If equipped with the standard key ignition, use this ignition on warning.

WARNING: Turn the ignition on, then reconnect the 12-volt battery and wait two minutes before proceeding. Failure to follow these instructions may result in possible serious or fatal injury.

4. If equipped with the keyless ignition, use this ignition on warning.

WARNING: Disconnect the 12-volt battery wait two minutes before proceeding, remove the ORC fuses, connect the 12-volt battery, wait two minutes before proceeding. Cycle the ignition to the On position, then reconnect the ORC fuses. Wait two minutes before proceeding. Failure to follow these instructions may result in possible serious or fatal injury.

5. With the scan tool, read the active ORC DTCs.

   Does the scan tool display: B0002-12-DRIVER FRONTAL SQUIB 2 CONTROL CIRCUIT - SHORT TO BATTERY?

   Yes

   - Go To 4

   No

WARNING: Turn the ignition off disconnect the 12-volt battery and wait two minutes before proceeding. Failure to follow these instructions may result in possible serious or fatal injury.

- Replace the clockspring in accordance with the Service Information. Refer to

CLOCKSPRING, REMOVAL .

- Perform the CLOCKSPRING CENTERING. Refer to **CLOCKSPRING, STANDARD PROCEDURE** . Perform the BODY VERIFICATION TEST. Refer to **STANDARD PROCEDURE** .
- Perform the RESTRAINTS SYSTEM VERIFICATION TEST. Refer to **STANDARD PROCEDURE** .

4. **CHECK (R63) DRIVER SQUIB 2 LINE 1 CIRCUIT AND (R61) DRIVER SQUIB 2 LINE 2 CIRCUIT FOR A SHORT TO VOLTAGE**

WARNING: Turn the ignition off disconnect the 12-volt battery and wait two minutes before proceeding. Failure to follow these instructions may result in possible serious or fatal injury.

1. Disconnect the ORC harness connectors.

NOTE: Check the connectors - Clean and repair as necessary.

2. Connect the (special tool #8443-57, Adapter, Supplemental Restraint System Load Tool) to the ORC C1 and C2 harness connectors.
3. If equipped with the standard key ignition, use this ignition on warning.

WARNING: Turn the ignition on, then reconnect the 12-volt battery and wait two minutes before proceeding. Failure to follow these instructions may result in possible serious or fatal injury.

4. If equipped with the keyless ignition, use this ignition on warning.

WARNING: Disconnect the 12-volt battery wait two minutes before proceeding, remove the ORC fuses, connect the 12-volt battery, wait two minutes before proceeding. Cycle the ignition to the On position, then reconnect the ORC fuses. Wait two minutes before proceeding. Failure to follow these instructions may result in possible serious or fatal injury.

5. Measure the voltage of the (R63) Driver Squib 2 Line 1 circuit between ground and the C1A cavity 27 of the (special tool #8443-57, Adapter, Supplemental Restraint System Load Tool).
6. Measure the voltage of the (R61) Driver Squib 2 Line 2 circuit between ground and the C1A cavity 7 of the (special tool #8443-57, Adapter, Supplemental Restraint System Load Tool)

Is there any voltage present for either measurement?

Yes

- Repair the Driver Squib 2 circuit(s) for a short to voltage.

- Perform the RESTRAINTS SYSTEM VERIFICATION TEST. Refer to **STANDARD PROCEDURE** .

No

WARNING: Turn the ignition off disconnect the 12-volt battery and wait two minutes before proceeding. Failure to follow these instructions may result in possible serious or fatal injury.

WARNING: If the Occupant Restraint Controller (ORC) is dropped at any time, it must be replaced. Failure to take the proper precautions can result in accidental airbag deployment. Failure to follow these instructions may result in possible serious or fatal injury.

Repair

- Replace the ORC in accordance with the Service Information. Refer to **MODULE, OCCUPANT RESTRAINT CONTROLLER, REMOVAL** .
- Perform the RESTRAINTS SYSTEM VERIFICATION TEST. Refer to **STANDARD PROCEDURE** .

B0002-13-DRIVER FRONTAL SQUIB 2 CONTROL - CIRCUIT OPEN

For a complete wiring diagram, **refer to appropriate SYSTEM WIRING DIAGRAMS article** .

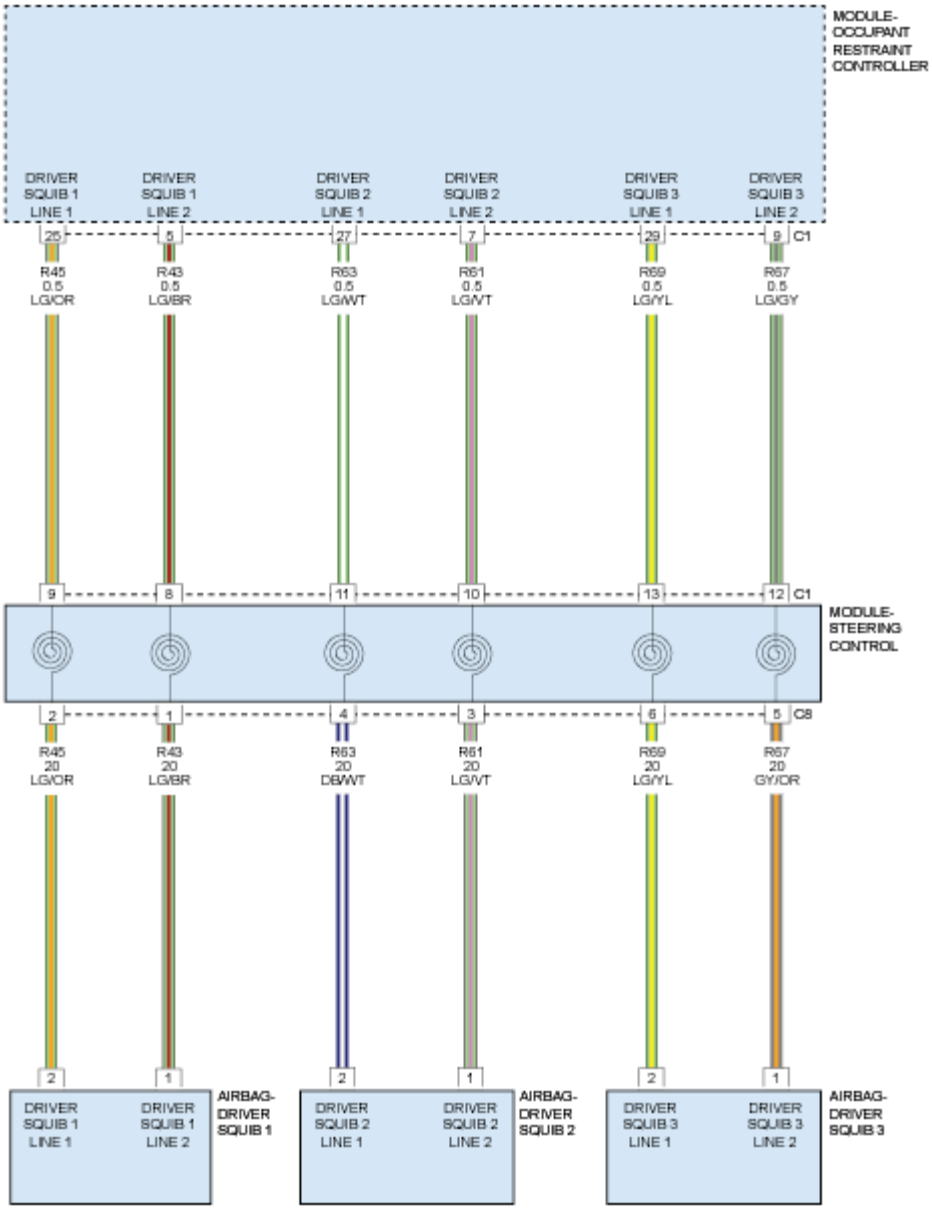

Fig. 7: Driver Frontal Squib Circuit Diagram
Courtesy of CHRYSLER GROUP, LLC

THEORY OF OPERATION

When powered, the Occupant Restraint Controller (ORC) sends a test current to the squibs to verify the integrity of the squib and wiring. These circuits are maintained in a "floating" configuration at the module (connected to neither power nor ground) as protection against inadvertent deployment. Use of the (special tool #8443A, SRS Load Tool) in the tests below substitutes a suspect squib with a known good component. The use of the (special tool #8443-57, Adapter, Supplemental Restraint System Load Tool) provides a test point as well as a method for opening the shorting bar connections within the harness connector.

WHEN MONITORED

With the ignition on.

SET CONDITION

The Occupant Restraint Controller (ORC) monitors the resistance of the Driver Squib circuits. The ORC will set this DTC if it detects an open or high resistance on the Driver Squib 1 circuits for greater than 2.6 seconds. This DTC transitions from active to stored when the ORC sees a recovery from a open for greater than 2.6 seconds. The Airbag Warning Lamp (AWL) will set in the instrument cluster.

POSSIBLE CAUSES

Possible Causes
(R63) DRIVER SQUIB 2 LINE 1 CIRCUIT OPEN
(R61) DRIVER SQUIB 2 LINE 2 CIRCUIT OPEN
CLOCKSPRING
DRIVER AIRBAG
OCCUPANT RESTRAINT CONTROLLER (ORC)

Always perform the Pre-Diagnostic Troubleshooting procedure before proceeding. Refer to STANDARD PROCEDURE .

DIAGNOSTIC TEST

1. **DETERMINE ACTIVE OR STORED DTC**

NOTE: The use of a approved special tool or Digital Multimeter such as a Fluke Meter that will not apply more than 20 milliamperes to a circuit are the only measurement tools to be used.

NOTE: Make sure the battery is fully charged.

NOTE: The scan tool, (special tool #8443A, SRS Load Tool), and DVOM are required to perform the following test.

1. Select Active or Stored DTC.

   Is the DTC active or stored?

   ORC - ACTIVE DTC

   - Go To 2

   ORC - STORED DTC

- Perform the RESTRAINTS SYSTEM INTERMITTENT TEST. Refer to **STANDARD PROCEDURE** .

2. **CHECK FOR OPEN SQUIB CIRCUITS IN DRIVER AIRBAG**

WARNING: Turn the ignition off disconnect the 12-volt battery and wait two minutes before proceeding. Failure to follow these instructions may result in possible serious or fatal injury.

1. Disconnect the Driver Airbag Squib harness connectors.

WARNING: Do not place an intact non-deployed airbag face down on a hard surface, the airbag propels into the air if accidentally deployed. Failure to follow these instructions may result in possible serious or fatal injury.

NOTE: Check the connectors - Clean and repair as necessary.

2. Connect the (special tool #8443A, SRS Load Tool) and the (special tool #8443-8, Jumper, SRS Load) to the Driver Airbag Squib 1 and Squib 2 harness connectors.
3. If equipped with the standard key ignition, use this ignition on warning.

WARNING: Turn the ignition on, then reconnect the 12-volt battery and wait two minutes before proceeding. Failure to follow these instructions may result in possible serious or fatal injury.

4. If equipped with the keyless ignition, use this ignition on warning.

WARNING: Disconnect the 12-volt battery wait two minutes before proceeding, remove the ORC fuses, connect the 12-volt battery, wait two minutes before proceeding. Cycle the ignition to the On position, then reconnect the ORC fuses. Wait two minutes before proceeding. Failure to follow these instructions may result in possible serious or fatal injury.

5. With the scan tool, read the active ORC DTCs.

   Does the scan tool display: B0002-13-DRIVER FRONTAL SQUIB 2 CONTROL - CIRCUIT OPEN?

   Yes

   - Go To 3

   No

- Replace the Driver Airbag in accordance with the Service Information. Refer to **AIR BAG, DRIVER, REMOVAL** .
- Perform the RESTRAINTS SYSTEM VERIFICATION TEST. Refer to **STANDARD PROCEDURE** .

3. **CHECK CLOCKSPRING SQUIB CIRCUITS FOR AN OPEN**

WARNING: Turn the ignition off disconnect the 12-volt battery and wait two minutes before proceeding. Failure to follow these instructions may result in possible serious or fatal injury.

1. Disconnect the (special tool #8443A, SRS Load Tool) and the (special tool #8443-8, Jumper, SRS Load) from the Driver Airbag Squib harness connectors.
2. Disconnect the Steering Control Module (SCM) C1 harness connector.

NOTE: Check the connectors - Clean and repair as necessary.

3. If equipped with the standard key ignition, use this ignition on warning.

WARNING: Turn the ignition on, then reconnect the 12-volt battery and wait two minutes before proceeding. Failure to follow these instructions may result in possible serious or fatal injury.

4. If equipped with the keyless ignition, use this ignition on warning.

WARNING: Disconnect the 12-volt battery wait two minutes before proceeding, remove the ORC fuses, connect the 12-volt battery, wait two minutes before proceeding. Cycle the ignition to the On position, then reconnect the ORC fuses. Wait two minutes before proceeding. Failure to follow these instructions may result in possible serious or fatal injury.

5. Using a jumper wire connect terminals SCM C1 cavity 10 and SCM C1 cavity 11 but don't insert the jumper into the connector terminals.
6. While holding the jumper wire in place, with the scan tool, read the active ORC DTCs.
7. With the scan tool, read the active ORC DTCs.

Does the scan tool display: B0002-13-DRIVER FRONTAL SQUIB 2 CONTROL - CIRCUIT OPEN?

Yes

- Go To 4

No

WARNING: Turn the ignition off disconnect the 12-volt battery and wait two minutes before proceeding. Failure to follow these instructions may result in possible serious or fatal injury.

- Replace the clockspring in accordance with the Service Information. Refer to **CLOCKSPRING, REMOVAL** .
- Perform the CLOCKSPRING CENTERING. Refer to **CLOCKSPRING, STANDARD PROCEDURE** .
- Perform the BODY VERIFICATION TEST. Refer to **STANDARD PROCEDURE** .

.

- Perform the RESTRAINTS SYSTEM VERIFICATION TEST. Refer to **STANDARD PROCEDURE** .

4. **CHECK (R63) DRIVER SQUIB 2 LINE 1 CIRCUIT AND (R61) DRIVER SQUIB 2 LINE 2 CIRCUIT FOR AN OPEN**

WARNING: Turn the ignition off disconnect the 12-volt battery and wait two minutes before proceeding. Failure to follow these instructions may result in possible serious or fatal injury.

1. Disconnect the ORC harness connectors.

NOTE: Check the connectors - Clean and repair as necessary.

2. Connect the (special tool #8443-57, Adapter, Supplemental Restraint System Load Tool) to the ORC C1 and C2 harness connector.
3. Measure the resistance of the (R63) Driver Squib 2 Line 1 circuit between the SCM C1 connector cavity 11 and the (special tool #8443-57, Adapter, Supplemental Restraint System Load Tool) connector C1A cavity 27.
4. Measure the resistance of the of the (R61) Driver Squib 2 Line 2 circuit between the SCM C1 connector cavity 10 and the (special tool #8443-57, Adapter, Supplemental Restraint System Load Tool) connector C1A cavity 7.

Is the resistance below or within the range of 5.4 - 10.0 Ohm for both circuits?

Yes

WARNING: If the Occupant Restraint Controller (ORC) is dropped at any time, it must be replaced. Failure to take the proper precautions can result in accidental airbag deployment. Failure to follow these instructions may result in possible serious or fatal injury.

- Replace the ORC in accordance with the Service Information. Refer to **MODULE,**

OCCUPANT RESTRAINT CONTROLLER, REMOVAL .

- Perform the RESTRAINTS SYSTEM VERIFICATION TEST. Refer to **STANDARD PROCEDURE** .

No

- Repair the (R63) Driver Squib 2 Line 1 circuit or (R61) Driver Squib 2 Line 2 circuit for an open.
- Perform the RESTRAINTS SYSTEM VERIFICATION TEST. Refer to **STANDARD PROCEDURE** .

B0002-2B-DRIVER FRONTAL SQUIB 2 CONTROL - WIRES SHORTED TOGETHER

For a complete wiring diagram, **refer to appropriate SYSTEM WIRING DIAGRAMS article** .

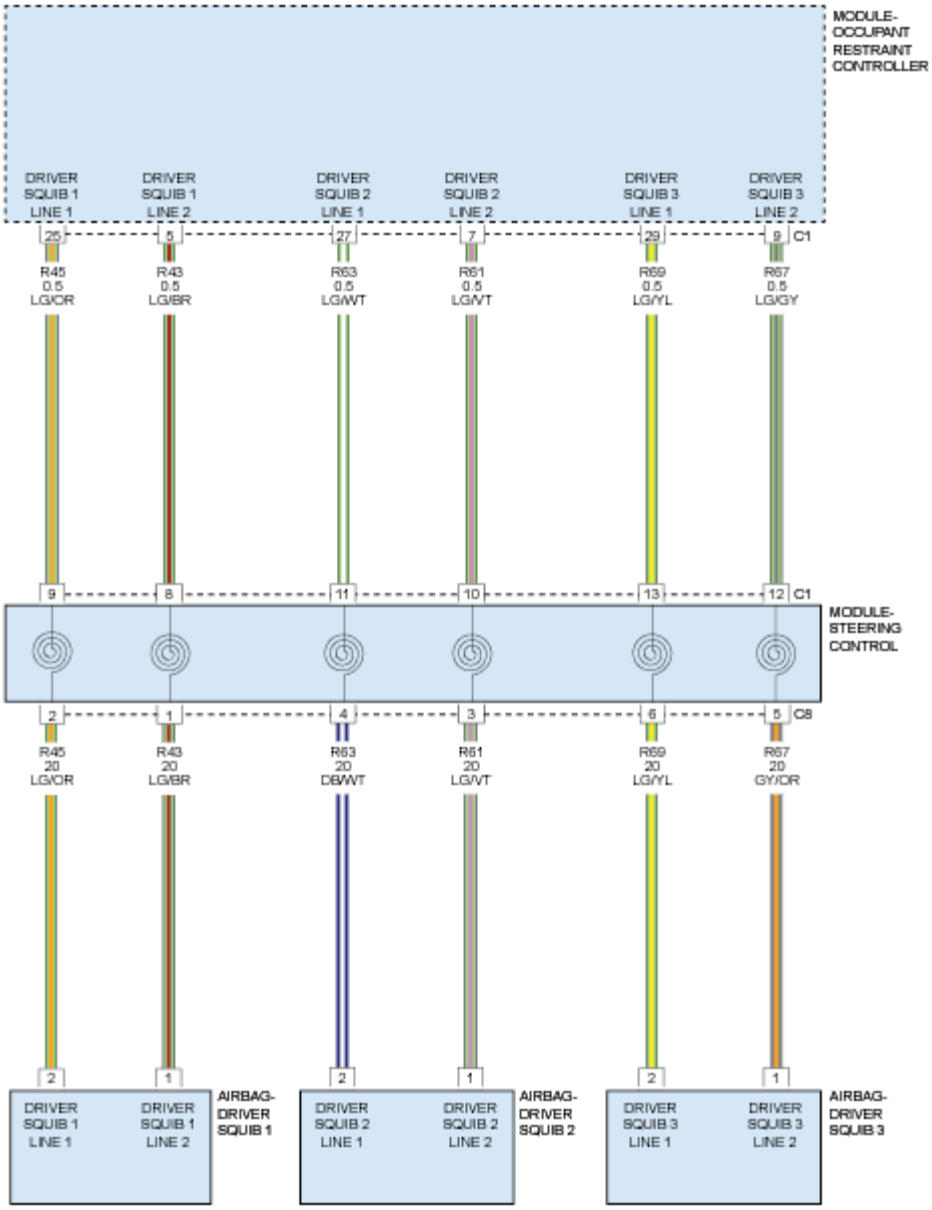

Fig. 8: Driver Frontal Squib Circuit Diagram
Courtesy of CHRYSLER GROUP, LLC

THEORY OF OPERATION

When powered, the Occupant Restraint Controller (ORC) sends a test current to the squibs to verify the integrity of the squib and wiring. These circuits are maintained in a "floating" configuration at the module (connected to neither power nor ground) as protection against inadvertent deployment. Use of the (special tool #8443A, SRS Load Tool) in the tests below substitutes a suspect squib with a known good component. The use of the (special tool #8443-57, Adapter, Supplemental Restraint System Load Tool) provides a test point as well as a method for opening the shorting bar connections within the harness connector.

WHEN MONITORED

The ORC sends out a 40 mA diagnostic current on each squib voltage supply circuit at power up and every 500 ms thereafter while the ignition is on.

SET CONDITION

This Diagnostic Trouble Code (DTC) sets when the ORC detects both circuits of the same squib are shorted together for more than 2.6 seconds. This DTC transitions from active to stored when the ORC sees a recovery from a shorted together condition for greater than 2.6 seconds. The Airbag Warning Lamp (AWL) will set in the instrument cluster.

POSSIBLE CAUSES

Possible Causes
(R63) DRIVER SQUIB 2 LINE 1 CIRCUIT SHORTED TO THE (R61) DRIVER SQUIB 2 LINE 2 CIRCUIT
CLOCKSPRING
DRIVER AIRBAG
OCCUPANT RESTRAINT CONTROLLER (ORC)

Always perform the Pre-Diagnostic Troubleshooting procedure before proceeding. Refer to STANDARD PROCEDURE .

DIAGNOSTIC TEST

1. **DETERMINE ACTIVE OR STORED DTC**

   NOTE: Make sure the battery is fully charged.

   NOTE: The scan tool, (special tool #8443A, SRS Load Tool) and DVOM are required to perform the following test.

   1. Select Active or Stored DTC.

      Is the DTC active or stored?

      ORC - ACTIVE DTC

      - Go To 2

      ORC - STORED DTC

      - Perform the RESTRAINTS SYSTEM INTERMITTENT TEST. Refer to **STANDARD PROCEDURE** .

2. **CHECK FOR SHORTED SQUIB CIRCUITS IN DRIVER AIRBAG**

WARNING: Turn the ignition off disconnect the 12-volt battery and wait two minutes before proceeding. Failure to follow these instructions may result in possible serious or fatal injury.

WARNING: Do not place an intact non-deployed airbag face down on a hard surface, the airbag propels into the air if accidentally deployed. Failure to follow these instructions may result in possible serious or fatal injury.

1. Disconnect the Driver Airbag Squib harness connectors.

NOTE: Check connectors - Clean and repair as necessary.

2. Connect the (special tool #8443A, SRS Load Tool) and the (special tool #8443-8, Jumper, SRS Load) to the Driver Airbag Squib 1 and Squib 2 harness connectors.
3. If equipped with the standard key ignition, use this ignition on warning.

WARNING: Turn the ignition on, then reconnect the 12-volt battery and wait two minutes before proceeding. Failure to follow these instructions may result in possible serious or fatal injury.

4. If equipped with the keyless ignition, use this ignition on warning.

WARNING: Disconnect the 12-volt battery wait two minutes before proceeding, remove the ORC fuses, connect the 12-volt battery, wait two minutes before proceeding. Cycle the ignition to the On position, then reconnect the ORC fuses. Wait two minutes before proceeding. Failure to follow these instructions may result in possible serious or fatal injury.

5. With the scan tool, read the active ORC DTCs.

Does the scan tool display: B0002-2B-DRIVER FRONTAL SQUIB 2 CONTROL - WIRES SHORTED TOGETHER?

Yes

- Go To 3

No

- Replace the Driver Airbag in accordance with the Service Information. Refer to **AIR BAG,**

DRIVER, REMOVAL .

- Perform the RESTRAINTS SYSTEM VERIFICATION TEST. Refer to **STANDARD PROCEDURE** .

3. **CHECK CLOCKSPRING SQUIB CIRCUITS FOR A SHORT TOGETHER**

WARNING: Turn the ignition off disconnect the 12-volt battery and wait two minutes before proceeding. Failure to follow these instructions may result in possible serious or fatal injury.

1. Disconnect the Steering Control Module (SCM) C1 harness connector.

NOTE: Check the connectors - Clean and repair as necessary.

2. If equipped with the standard key ignition, use this ignition on warning.

WARNING: Turn the ignition on, then reconnect the 12-volt battery and wait two minutes before proceeding. Failure to follow these instructions may result in possible serious or fatal injury.

3. If equipped with the keyless ignition, use this ignition on warning.

WARNING: Disconnect the 12-volt battery wait two minutes before proceeding, remove the ORC fuses, connect the 12-volt battery, wait two minutes before proceeding. Cycle the ignition to the On position, then reconnect the ORC fuses. Wait two minutes before proceeding. Failure to follow these instructions may result in possible serious or fatal injury.

4. With the scan tool, read the active ORC DTCs.

Does the scan tool display: B0002-2B-DRIVER FRONTAL SQUIB 2 CONTROL - WIRES SHORTED TOGETHER?

Yes

- Go To 4

No

WARNING: Turn the ignition off disconnect the 12-volt battery and wait two minutes before proceeding. Failure to follow these instructions may result in possible serious or fatal injury.

- Replace the clockspring in accordance with the Service Information. Refer to

CLOCKSPRING, REMOVAL .

- Perform the CLOCKSPRING CENTERING. Refer to **CLOCKSPRING, STANDARD PROCEDURE** . Perform the BODY VERIFICATION TEST. Refer to **STANDARD PROCEDURE** .
- Perform the RESTRAINTS SYSTEM VERIFICATION TEST. Refer to **STANDARD PROCEDURE** .

4. **CHECK (R63) DRIVER SQUIB 2 LINE 1 CIRCUIT FOR A SHORT TO THE (R61) DRIVER SQUIB 2 LINE 2 CIRCUIT**

WARNING: Turn the ignition off disconnect the 12-volt battery and wait two minutes before proceeding. Failure to follow these instructions may result in possible serious or fatal injury.

1. Disconnect the ORC harness connectors.

NOTE: Check the connectors - Clean and repair as necessary.

2. Connect the (special tool #8443-57, Adapter, Supplemental Restraint System Load Tool) to the ORC C1 and C2 harness connector.
3. Measure the resistance between the (R63) Driver Squib 2 Line 1 circuit and the (R61) Driver Squib 2 Line 2 circuit between the (special tool #8443-57, Adapter, Supplemental Restraint System Load Tool) C1A cavity 27 and C1A cavity 7.

Is the resistance below 10k Ohms?

Yes

- Repair the (R63) Driver Squib 2 Line 1 circuit for a short to the (R61) Driver Squib 2 Line 2 circuit.
- Perform the RESTRAINTS SYSTEM VERIFICATION TEST. Refer to **STANDARD PROCEDURE** .

No

WARNING: If the Occupant Restraint Controller (ORC) is dropped at any time, it must be replaced. Failure to take the proper precautions can result in accidental airbag deployment. Failure to follow these instructions may result in possible serious or fatal injury.

- Replace the ORC in accordance with the Service Information. Refer to **MODULE, OCCUPANT RESTRAINT CONTROLLER, REMOVAL** .
- Perform the RESTRAINTS SYSTEM VERIFICATION TEST. Refer to **STANDARD PROCEDURE** .

B0003-11-DRIVER FRONTAL SQUIB 3 CONTROL - CIRCUIT SHORT TO GROUND

For a complete wiring diagram, **refer to appropriate SYSTEM WIRING DIAGRAMS article** .

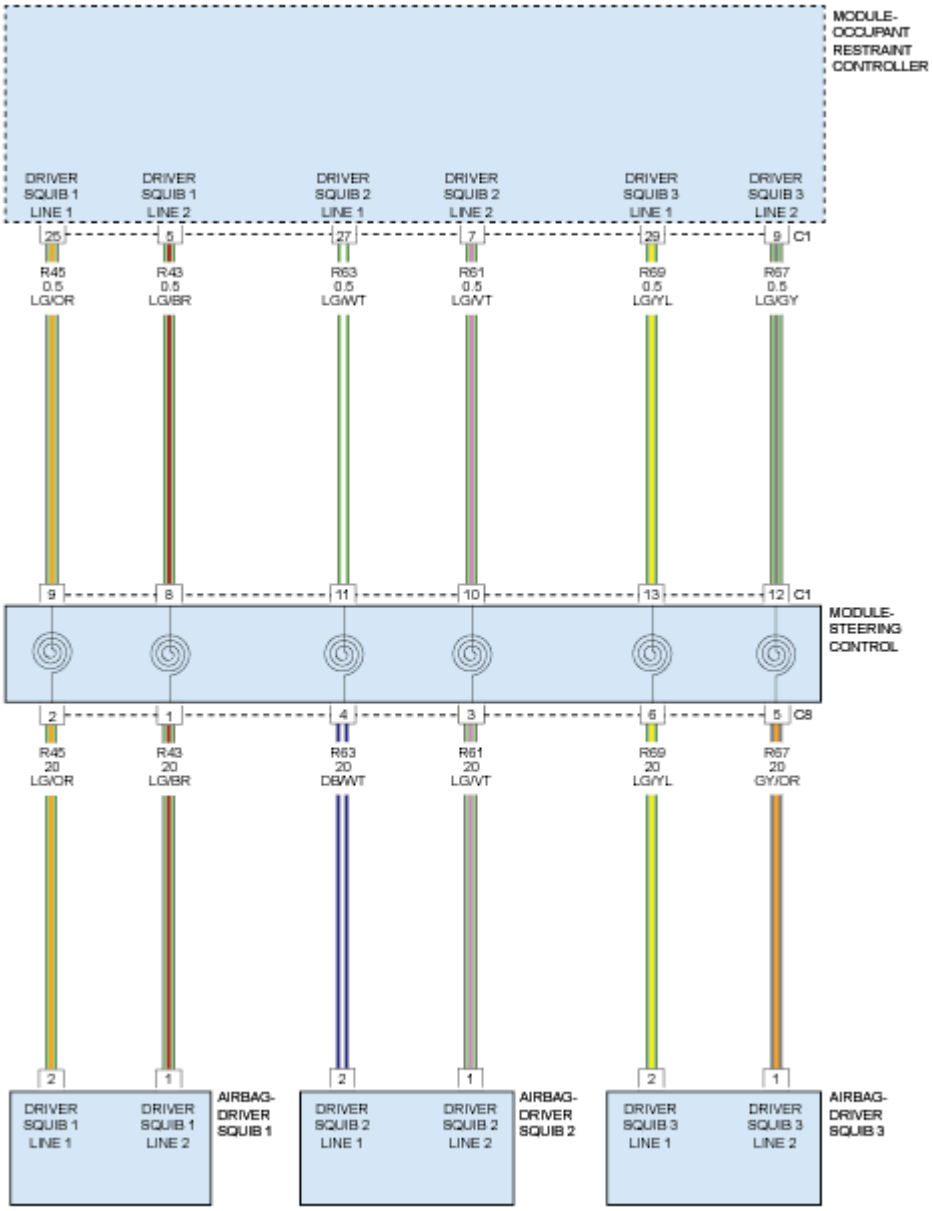

Fig. 9: Driver Frontal Squib Circuit Diagram
Courtesy of CHRYSLER GROUP, LLC

THEORY OF OPERATION

When powered, the Occupant Restraint Controller (ORC) sends a test current to the squibs to verify the integrity of the squib and the wiring. These circuits are maintained in a "floating" configuration at the module,

(connected to neither power nor ground), as protection against inadvertent deployment. Use of the(special tool #8443A, SRS Load Tool) in the tests below substitutes a suspect squib with a known good component. The use of the SRS Load Tool (special tool #8443-57, Adapter, Supplemental Restraint System Load Tool) provides a test point, as well as a method for opening the shorting bar connections within the harness connector. The Front Driver Airbag is a three stage device with three electrical connectors. The first stage is deployed immediately during impact that requires airbag deployment. The timing of the second stage determines the output force of the airbag. The third stage triggers a tether cutter initiator, which releases the tether when a softer airbag is necessary.

WHEN MONITORED

The ORC Module sends out a 40 mA diagnostic current on each squib voltage supply circuit at power up, and every 500 ms thereafter while the ignition is on.

SET CONDITION

This Diagnostic Trouble Code (DTC) sets when the ORC detects a short to ground on the driver airbag squib circuit for more than 2.6 seconds. This DTC transitions from active to stored when the ORC sees a recovery from a short to ground for greater than 2.6 seconds. The Airbag Warning Lamp (AWL) will set in the instrument cluster.

POSSIBLE CAUSES

Possible Causes
(R69) DRIVER SQUIB 3 LINE 1 CIRCUIT SHORTED TO GROUND
(R67) DRIVER SQUIB 3 LINE 2 CIRCUIT SHORTED TO GROUND
CLOCKSPRING
DRIVER AIRBAG
OCCUPANT RESTRAINT CONTROLLER (ORC)

Always perform the Pre-Diagnostic Troubleshooting procedure before proceeding. Refer to STANDARD PROCEDURE .

DIAGNOSTIC TEST

1. **DETERMINE ACTIVE OR STORED DTC**

NOTE: Make sure that the battery is fully charged.

NOTE: The scan tool, (special tool #8443A, SRS Load Tool), and DVOM are required to perform the following test.

1. Turn the ignition on.

Select ACTIVE or STORED DTC:

ACTIVE DTC

- Go To 2

STORED DTC

- Perform the RESTRAINTS SYSTEM INTERMITTENT TEST. Refer to **STANDARD PROCEDURE** .

2. **CHECK FOR SHORTED SQUIB CIRCUITS IN DRIVER AIRBAG**

WARNING: Turn the ignition off disconnect the 12-volt battery and wait two minutes before proceeding. Failure to follow these instructions may result in possible serious or fatal injury.

1. Disconnect the Driver Airbag Squib harness connectors.

WARNING: Do not place an intact non-deployed airbag face down on a hard surface, the airbag propels into the air if accidentally deployed. Failure to follow these instructions may result in possible serious or fatal injury.

NOTE: Check connectors - Clean and repair as necessary.

2. Connect the (special tool #8443A, SRS Load Tool) and the (special tool #8443-8, Jumper, SRS Load) to the Driver Airbag Squib 3 connector.
3. If equipped with the standard key ignition, use this ignition on warning.

WARNING: Turn the ignition on, then reconnect the 12-volt battery and wait two minutes before proceeding. Failure to follow these instructions may result in possible serious or fatal injury.

4. If equipped with the keyless ignition, use this ignition on warning.

WARNING: Disconnect the 12-volt battery wait two minutes before proceeding, remove the ORC fuses, connect the 12-volt battery, wait two minutes before proceeding. Cycle the ignition to the On position, then reconnect the ORC fuses. Wait two minutes before proceeding. Failure to follow these instructions may result in possible serious or fatal injury.

5. With the scan tool, read the active ORC DTCs.

Does the scan tool display: B0003-11-DRIVER FRONTAL SQUIB 3 CONTROL - CIRCUIT SHORT TO GROUND?

Yes

- Go To 3

No

- Replace the Driver Airbag in accordance with the Service Information. Refer to **AIR BAG, PASSENGER, REMOVAL** .
- Perform the RESTRAINTS SYSTEM VERIFICATION TEST. Refer to **STANDARD PROCEDURE** .

3. **CHECK CLOCKSPRING SQUIB CIRCUITS FOR A SHORT TO GROUND**

WARNING: Turn the ignition off disconnect the 12-volt battery and wait two minutes before proceeding. Failure to follow these instructions may result in possible serious or fatal injury.

1. Disconnect the Steering Control Module C1 harness connector.

NOTE: Check the connectors - Clean and repair as necessary.

2. If equipped with the standard key ignition, use this ignition on warning.

WARNING: Turn the ignition on, then reconnect the 12-volt battery and wait two minutes before proceeding. Failure to follow these instructions may result in possible serious or fatal injury.

3. If equipped with the keyless ignition, use this ignition on warning.

WARNING: Disconnect the 12-volt battery wait two minutes before proceeding, remove the ORC fuses, connect the 12-volt battery, wait two minutes before proceeding. Cycle the ignition to the On position, then reconnect the ORC fuses. Wait two minutes before proceeding. Failure to follow these instructions may result in possible serious or fatal injury.

4. With the scan tool, read the active ORC DTCs.

Does the scan tool display: B0003-11-DRIVER FRONTAL SQUIB 3 CONTROL CIRCUIT - SHORT TO GROUND?

Yes

- Go To 4

No

WARNING: Turn the ignition off disconnect the 12-volt battery and wait two minutes before proceeding. Failure to follow these instructions may result in possible serious or fatal injury.

- Replace the clockspring in accordance with the Service Information. Refer to **CLOCKSPRING, REMOVAL** .
- Perform the CLOCKSPRING CENTERING. Refer to **CLOCKSPRING, STANDARD PROCEDURE** . Perform the BODY VERIFICATION TEST. Refer to **STANDARD PROCEDURE** .
- Perform the RESTRAINTS SYSTEM VERIFICATION TEST. Refer to **STANDARD PROCEDURE** .

4. **CHECK THE (R69) DRIVER SQUIB 3 LINE 1 CIRCUIT AND THE (R67) DRIVER SQUIB 3 LINE 2 CIRCUIT FOR A SHORT TO GROUND**

WARNING: Turn the ignition off disconnect the 12-volt battery and wait two minutes before proceeding. Failure to follow these instructions may result in possible serious or fatal injury.

1. Disconnect the ORC harness connectors.

NOTE: Check connectors - Clean and repair as necessary.

2. Connect the (special tool #8443-57, Adapter, Supplemental Restraint System Load Tool) to the ORC C1 and C2 harness connectors.
3. Measure the resistance of the (R69) Driver Squib 3 Line 1 circuit between the(special tool #8443-57, Adapter, Supplemental Restraint System Load Tool) connector C1A cavity 29 and ground.
4. Measure the resistance of the (R67) Driver Squib 3 Line 2 circuit between the(special tool #8443-57, Adapter, Supplemental Restraint System Load Tool) connector C1A cavity 9 and ground.

Is the resistance below 10k Ohms on either circuit?

Yes

- Repair the Driver Squib 3 circuits with resistance below 10k Ohms for a short to ground.
- Perform the RESTRAINTS SYSTEM VERIFICATION TEST. Refer to **STANDARD PROCEDURE** .

No

WARNING: If the Occupant Restraint Controller (ORC) is dropped at any time, it must be replaced. Failure to take the proper precautions can result in accidental airbag deployment. Failure to follow these instructions may result in possible serious or fatal injury.

- Replace the ORC in accordance with Service Information. Refer to **MODULE, OCCUPANT RESTRAINT CONTROLLER, REMOVAL** .
- Perform the RESTRAINTS SYSTEM VERIFICATION TEST. Refer to **STANDARD PROCEDURE** .

B0003-12-DRIVER FRONTAL SQUIB 3 CONTROL - CIRCUIT SHORT TO BATTERY

For a complete wiring diagram, **refer to appropriate SYSTEM WIRING DIAGRAMS article** .

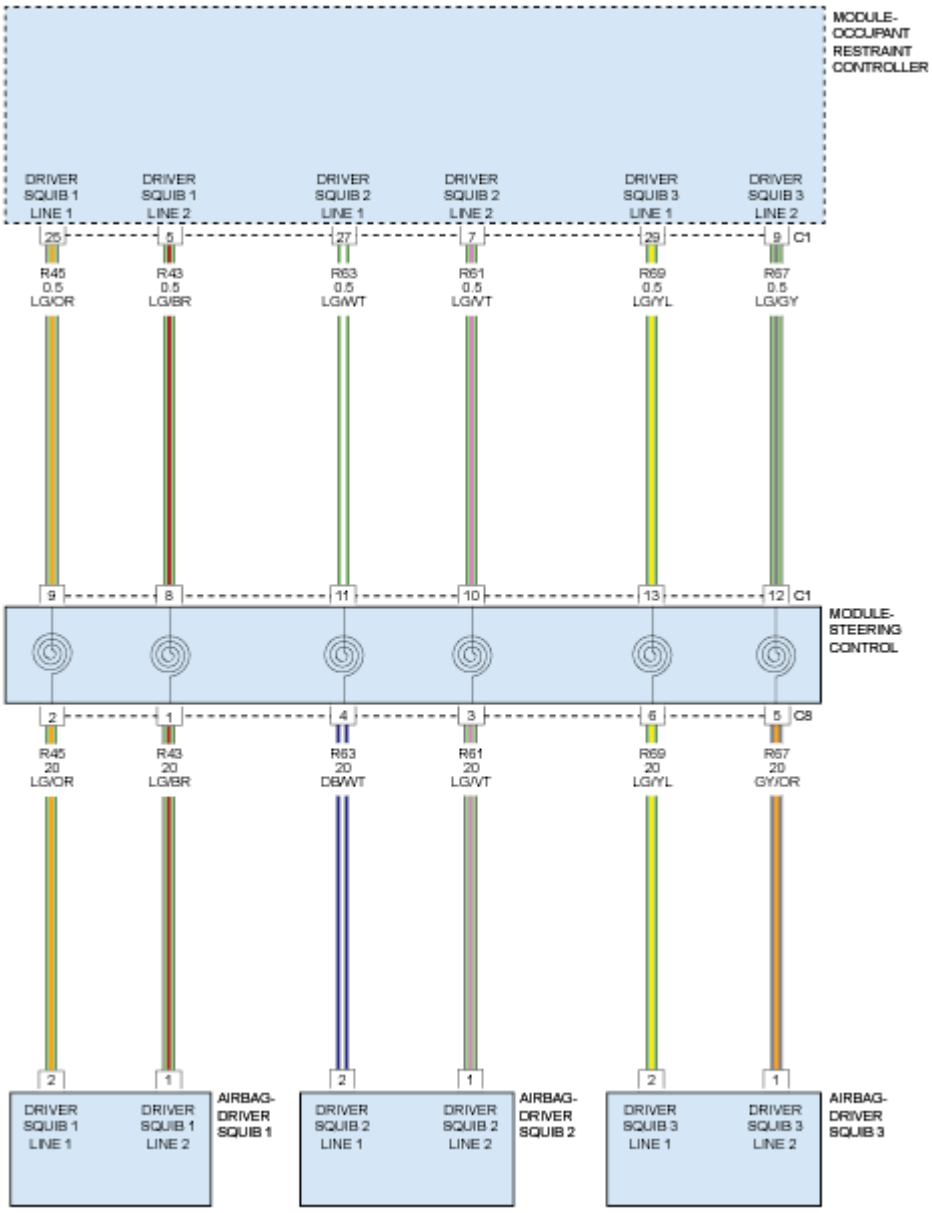

Fig. 10: Driver Frontal Squib Circuit Diagram

Courtesy of CHRYSLER GROUP, LLC

THEORY OF OPERATION

When powered, the Occupant Restraint Controller (ORC) sends a test current to the squibs to verify the integrity of the squib and the wiring. These circuits are maintained in a "floating" configuration at the module, (connected to neither power nor ground), as protection against inadvertent deployment. Use of the(special tool #8443A, SRS Load Tool) in the tests below substitutes a suspect squib with a known good component. The use of the (special tool #8443-57, Adapter, Supplemental Restraint System Load Tool) provides a test point, as well as a method for opening the shorting bar connections within the harness connector. The Front Driver Airbag is a three stage device with three electrical connectors. The first stage is deployed immediately during impact that requires airbag deployment. The timing of the second stage determines the output force of the airbag. The third stage triggers a tether cutter initiator, which releases the tether when a softer airbag is necessary.

WHEN MONITORED

With the ignition on.

SET CONDITION

This Diagnostic Trouble Code (DTC) sets when the ORC detects a short to battery on the driver airbag squib circuit for more than 2.6 seconds. This DTC transitions from active to stored when the ORC sees a recovery from a short to battery for greater than 2.6 seconds. The Airbag Warning Lamp (AWL) will set in the instrument cluster.

POSSIBLE CAUSES

Possible Causes
(R69) DRIVER SQUIB 3 LINE 1 CIRCUIT SHORTED TO BATTERY
(R67) DRIVER SQUIB 3 LINE 2 CIRCUIT SHORTED TO BATTERY
CLOCKSPRING
DRIVER AIRBAG
OCCUPANT RESTRAINT CONTROLLER (ORC)

Always perform the Pre-Diagnostic Troubleshooting procedure before proceeding. Refer to STANDARD PROCEDURE .

DIAGNOSTIC TEST

1. **DETERMINE ACTIVE OR STORED DTC**

NOTE: Make sure that the battery is fully charged.

NOTE: The scan tool, (special tool #8443A, SRS Load Tool), and DVOM are required to perform the following test.

1. Turn the ignition on.

   Select ACTIVE or STORED DTC:

   ACTIVE DTC

   - Go To 2

   STORED DTC

   - Perform the RESTRAINTS SYSTEM INTERMITTENT TEST. Refer to **STANDARD PROCEDURE** .

2. **CHECK FOR SHORTED SQUIB CIRCUITS IN DRIVER AIRBAG**

   WARNING: **Turn the ignition off disconnect the 12-volt battery and wait two minutes before proceeding. Failure to follow these instructions may result in possible serious or fatal injury.**

   1. Disconnect the Driver Airbag Squib harness connectors.

      WARNING: **Do not place an intact non-deployed airbag face down on a hard surface, the airbag propels into the air if accidentally deployed. Failure to follow these instructions may result in possible serious or fatal injury.**

      NOTE: **Check connectors - Clean and repair as necessary.**

   2. Connect the (special tool #8443A, SRS Load Tool) and the (special tool #8443-8, Jumper, SRS Load) to the Driver Airbag Squib 3 connector.
   3. If equipped with the standard key ignition, use this ignition on warning.

      WARNING: **Turn the ignition on, then reconnect the 12-volt battery and wait two minutes before proceeding. Failure to follow these instructions may result in possible serious or fatal injury.**

   4. If equipped with the keyless ignition, use this ignition on warning.

      WARNING: **Disconnect the 12-volt battery wait two minutes before proceeding, remove the ORC fuses, connect the 12-volt battery, wait two minutes before proceeding. Cycle the ignition to the On position, then reconnect the ORC fuses. Wait two minutes before proceeding. Failure to follow these instructions may result in possible serious or fatal injury.**

5. With the scan tool, read the active ORC DTCs.

   Does the scan tool display: B0003-12-DRIVER FRONTAL SQUIB 3 CONTROL - CIRCUIT SHORT TO BATTERY?

   Yes

   - Go To 3

   No

   - Replace the Driver Airbag in accordance with the Service Information. Refer to **AIR BAG, PASSENGER, REMOVAL** .
   - Perform the RESTRAINTS SYSTEM VERIFICATION TEST. Refer to **STANDARD PROCEDURE** .

3. **CHECK CLOCKSPRING SQUIB CIRCUITS FOR A SHORT TO BATTERY**

   WARNING: **Turn the ignition off disconnect the 12-volt battery and wait two minutes before proceeding. Failure to follow these instructions may result in possible serious or fatal injury.**

1. Disconnect the Steering Control Module C1 harness connector.

   NOTE: Check the connectors - Clean and repair as necessary.

2. If equipped with the standard key ignition, use this ignition on warning.

   WARNING: **Turn the ignition on, then reconnect the 12-volt battery and wait two minutes before proceeding. Failure to follow these instructions may result in possible serious or fatal injury.**

3. If equipped with the keyless ignition, use this ignition on warning.

   WARNING: **Disconnect the 12-volt battery wait two minutes before proceeding, remove the ORC fuses, connect the 12-volt battery, wait two minutes before proceeding. Cycle the ignition to the On position, then reconnect the ORC fuses. Wait two minutes before proceeding. Failure to follow these instructions may result in possible serious or fatal injury.**

4. With the scan tool, read the active ORC DTCs.

   Does the scan tool display: B0003-12-DRIVER FRONTAL SQUIB 3 CONTROL - CIRCUIT SHORT TO BATTERY?

Yes

- Go To 4

No

WARNING: Turn the ignition off disconnect the 12-volt battery and wait two minutes before proceeding. Failure to follow these instructions may result in possible serious or fatal injury.

- Replace the clockspring in accordance with the Service Information. Refer to **CLOCKSPRING, REMOVAL** .
- Perform the CLOCKSPRING CENTERING. Refer to **CLOCKSPRING, STANDARD PROCEDURE** . Perform the BODY VERIFICATION TEST. Refer to **STANDARD PROCEDURE** .
- Perform the RESTRAINTS SYSTEM VERIFICATION TEST. Refer to **STANDARD PROCEDURE** .

4. **CHECK THE (R69) DRIVER SQUIB 3 LINE 1 CIRCUIT AND THE (R67) DRIVER SQUIB 3 LINE 2 CIRCUIT FOR A SHORT TO BATTERY**

WARNING: Turn the ignition off disconnect the 12-volt battery and wait two minutes before proceeding. Failure to follow these instructions may result in possible serious or fatal injury.

1. Disconnect the ORC connectors.

NOTE: Check connectors - Clean and repair as necessary.

2. Connect the (special tool #8443-57, Adapter, Supplemental Restraint System Load Tool) to the ORC C1 and C2 harness connectors.
3. Measure the voltage of the (R69) Driver Squib 3 Line 1 circuit between the(special tool #8443-57, Adapter, Supplemental Restraint System Load Tool) connector C1A cavity 29 and ground.
4. Measure the voltage of the (R67) Passenger Squib 3 Line 2 circuit between the (special tool #8443-57, Adapter, Supplemental Restraint System Load Tool) connector C1A cavity 9 and ground.

Is there any voltage present on either circuit?

Yes

- Repair the Driver Squib 3 circuits with voltage present for a short to battery.
- Perform the RESTRAINTS SYSTEM VERIFICATION TEST. Refer to **STANDARD PROCEDURE** .

No

WARNING: If the Occupant Restraint Controller (ORC) is dropped at any time, it must be replaced. Failure to take the proper precautions can result in accidental airbag deployment. Failure to follow these instructions may result in possible serious or fatal injury.

WARNING: Turn the ignition off disconnect the 12-volt battery and wait two minutes before proceeding. Failure to follow these instructions may result in possible serious or fatal injury.

- Replace the ORC in accordance with Service Information. Refer to **MODULE, OCCUPANT RESTRAINT CONTROLLER, REMOVAL** .
- Perform the RESTRAINTS SYSTEM VERIFICATION TEST. Refer to **STANDARD PROCEDURE** .

B0003-13-DRIVER FRONTAL SQUIB 3 CONTROL - CIRCUIT OPEN

For a complete wiring diagram, **refer to appropriate SYSTEM WIRING DIAGRAMS article** .

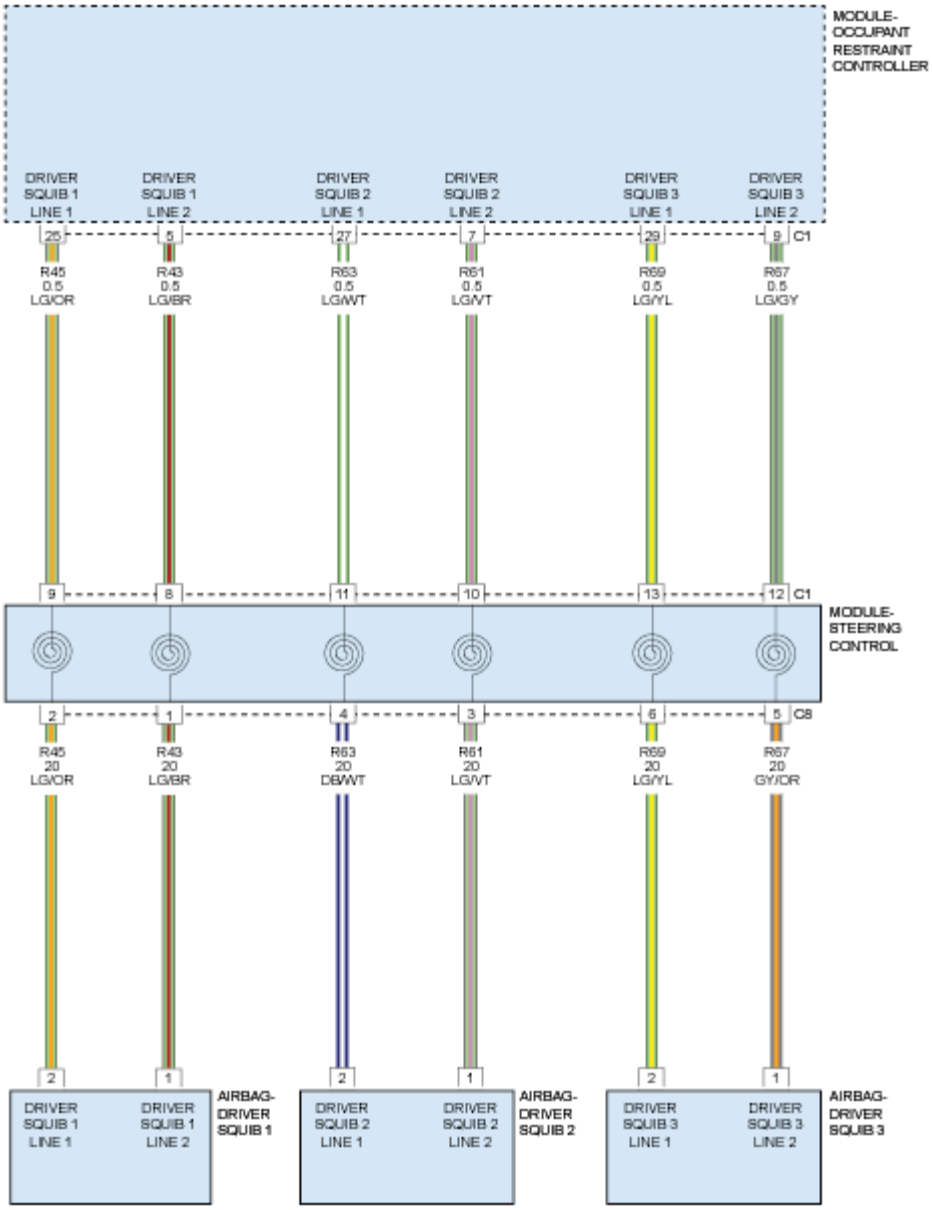

Fig. 11: Driver Frontal Squib Circuit Diagram
Courtesy of CHRYSLER GROUP, LLC

THEORY OF OPERATION

When powered, the Occupant Restraint Controller (ORC) sends a test current to the squibs to verify the integrity of the squib and the wiring. These circuits are maintained in a "floating" configuration at the module, (connected to neither power nor ground), as protection against inadvertent deployment. Use of the(special tool #8443A, SRS Load Tool) in the tests below substitutes a suspect squib with a known good component. The use of the (special tool #8443-57, Adapter, Supplemental Restraint System Load Tool) provides a test point, as well as a method for opening the shorting bar connections within the harness connector. The Front Driver Airbag is a

three stage device with three electrical connectors. The first stage is deployed immediately during impact that requires airbag deployment. The timing of the second stage determines the output force of the airbag. The third stage triggers a tether cutter initiator, which releases the tether when a softer airbag is necessary.

WHEN MONITORED

The ORC sends out a 40 mA diagnostic current on each squib voltage supply circuit at power up and every 500 ms thereafter while the ignition is on.

SET CONDITION

The Occupant Restraint Controller (ORC) monitors the resistance of the Driver Squib 3 circuits. The ORC will set this DTC if it detects an open or high resistance on the Driver Squib 3 circuits for greater than 2.6 seconds. This DTC transitions from active to stored when the ORC sees a recovery from a open for greater than 2.6 seconds. The Airbag Warning Lamp (AWL) will set in the instrument cluster.

POSSIBLE CAUSES

Possible Causes
(R69) DRIVER SQUIB 3 LINE 1 CIRCUIT OPEN
(R67) DRIVER SQUIB 3 LINE 2 CIRCUIT OPEN
CLOCKSPRING
DRIVER AIRBAG
OCCUPANT RESTRAINT CONTROLLER (ORC)

Always perform the Pre-Diagnostic Troubleshooting procedure before proceeding. Refer to STANDARD PROCEDURE .

DIAGNOSTIC TEST

1. **DETERMINE ACTIVE OR STORED DTC**

   NOTE: Make sure that the battery is fully charged.

   NOTE: The scan tool, (special tool #8443A, SRS Load Tool), and DVOM are required to perform the following test.

   1. Turn the ignition on.

      Select ACTIVE or STORED DTC:

      ACTIVE DTC

      - Go To 2

STORED DTC

- Perform the RESTRAINTS SYSTEM INTERMITTENT TEST. Refer to **STANDARD PROCEDURE** .

2. **CHECK FOR OPEN SQUIB CIRCUITS IN DRIVER AIRBAG**

WARNING: Turn the ignition off disconnect the 12-volt battery and wait two minutes before proceeding. Failure to follow these instructions may result in possible serious or fatal injury.

1. Disconnect the Driver Airbag Squib harness connectors.

WARNING: Do not place an intact non-deployed airbag face down on a hard surface, the airbag propels into the air if accidentally deployed. Failure to follow these instructions may result in possible serious or fatal injury.

NOTE: Check connectors - Clean and repair as necessary.

2. Connect the (special tool #8443A, SRS Load Tool) and the (special tool #8443-8, Jumper, SRS Load) to the Driver Airbag Squib 3 connector.
3. If equipped with the standard key ignition, use this ignition on warning.

WARNING: Turn the ignition on, then reconnect the 12-volt battery and wait two minutes before proceeding. Failure to follow these instructions may result in possible serious or fatal injury.

4. If equipped with the keyless ignition, use this ignition on warning.

WARNING: Disconnect the 12-volt battery wait two minutes before proceeding, remove the ORC fuses, connect the 12-volt battery, wait two minutes before proceeding. Cycle the ignition to the On position, then reconnect the ORC fuses. Wait two minutes before proceeding. Failure to follow these instructions may result in possible serious or fatal injury.

5. With the scan tool, read the active ORC DTCs.

Does the scan tool display: B0003-13-DRIVER FRONTAL SQUIB 3 CONTROL - CIRCUIT OPEN?

Yes

- Go To 3

No

- Replace the Driver Airbag in accordance with the Service Information. Refer to **AIR BAG, PASSENGER, REMOVAL** .
- Perform the RESTRAINTS SYSTEM VERIFICATION TEST. Refer to **STANDARD PROCEDURE** .

3. **CHECK CLOCKSPRING SQUIB CIRCUITS FOR AN OPEN**

WARNING: Turn the ignition off disconnect the 12-volt battery and wait two minutes before proceeding. Failure to follow these instructions may result in possible serious or fatal injury.

1. Disconnect the (special tool #8443A, SRS Load Tool) and the (special tool #8443-8, Jumper, SRS Load) from the Driver Airbag Squib harness connectors.
2. Disconnect the Steering Control Module (SCM) C1 harness connector.

NOTE: Check the connectors - Clean and repair as necessary.

3. If equipped with the standard key ignition, use this ignition on warning.

WARNING: Turn the ignition on, then reconnect the 12-volt battery and wait two minutes before proceeding. Failure to follow these instructions may result in possible serious or fatal injury.

4. If equipped with the keyless ignition, use this ignition on warning.

WARNING: Disconnect the 12-volt battery wait two minutes before proceeding, remove the ORC fuses, connect the 12-volt battery, wait two minutes before proceeding. Cycle the ignition to the On position, then reconnect the ORC fuses. Wait two minutes before proceeding. Failure to follow these instructions may result in possible serious or fatal injury.

5. Using a jumper wire connect terminals SCM C1 cavity 10 and SCM C1 cavity 11 but don't insert the jumper into the connector terminals.
6. While holding the jumper wire in place, with the scan tool, read the active ORC DTCs.
7. With the scan tool, read the active ORC DTCs.

Does the scan tool display: B0003-13-DRIVER FRONTAL SQUIB 3 CONTROL - CIRCUIT OPEN?

Yes

- Go To 4

No

WARNING: Turn the ignition off disconnect the 12-volt battery and wait two minutes before proceeding. Failure to follow these instructions may result in possible serious or fatal injury.

- Replace the clockspring in accordance with the Service Information. Refer to **CLOCKSPRING, REMOVAL** .
- Perform the CLOCKSPRING CENTERING. Refer to **CLOCKSPRING, STANDARD PROCEDURE** . Perform the BODY VERIFICATION TEST. Refer to **STANDARD PROCEDURE** .
- Perform the RESTRAINTS SYSTEM VERIFICATION TEST. Refer to **STANDARD PROCEDURE** .

4. **CHECK THE (R69) DRIVER SQUIB 3 LINE 1 CIRCUIT FOR AN OPEN**
   1. Disconnect the ORC harness connectors.

      NOTE: Check connectors - Clean and repair as necessary.

   2. Connect the (special tool #8443-57, Adapter, Supplemental Restraint System Load Tool) to the ORC C1 and C2 harness connectors.
   3. Measure the resistance of the (R69) Driver Squib 3 Line 1 circuit between the SCM C1 harness connector cavity 13 and the (special tool #8443-57, Adapter, Supplemental Restraint System Load Tool) connector C1A cavity 29.

      Is the resistance below 2.0 Ohm?

      Yes

      - Go To 5

      No

      - Repair the (R69) Driver Squib 3 Line 1 circuit for an open in accordance with the Service Information.
      - Perform the RESTRAINTS SYSTEM VERIFICATION TEST. Refer to **STANDARD PROCEDURE** .

5. **CHECK THE (R67) DRIVER SQUIB 3 LINE 2 CIRCUIT FOR AN OPEN**
   1. Measure the resistance of the (R67) Driver Squib 3 Line 2 circuit between the SCM C1 harness connector cavity 12 and the(special tool #8443-57, Adapter, Supplemental Restraint System Load Tool) connector C1A cavity 9.

      Is the resistance below 2.0 Ohm?

      Yes

WARNING: Turn the ignition off, disconnect the 12-volt battery and wait two minutes before proceeding. Failure to follow these instructions may result in possible serious or fatal injury.

- Replace the ORC in accordance with the Service Information. Refer to **MODULE, OCCUPANT RESTRAINT CONTROLLER, REMOVAL** .
- Perform the RESTRAINTS SYSTEM VERIFICATION TEST. Refer to **STANDARD PROCEDURE** .

No

- Repair the (R67) Driver Squib 3 Line 2 circuit for an open in accordance with the Service Information.
- Perform the RESTRAINTS SYSTEM VERIFICATION TEST. Refer to **STANDARD PROCEDURE** .

B0003-2B-DRIVER FRONTAL SQUIB 3 CONTROL - WIRES SHORTED TOGETHER

For a complete wiring diagram, **refer to appropriate SYSTEM WIRING DIAGRAMS article** .

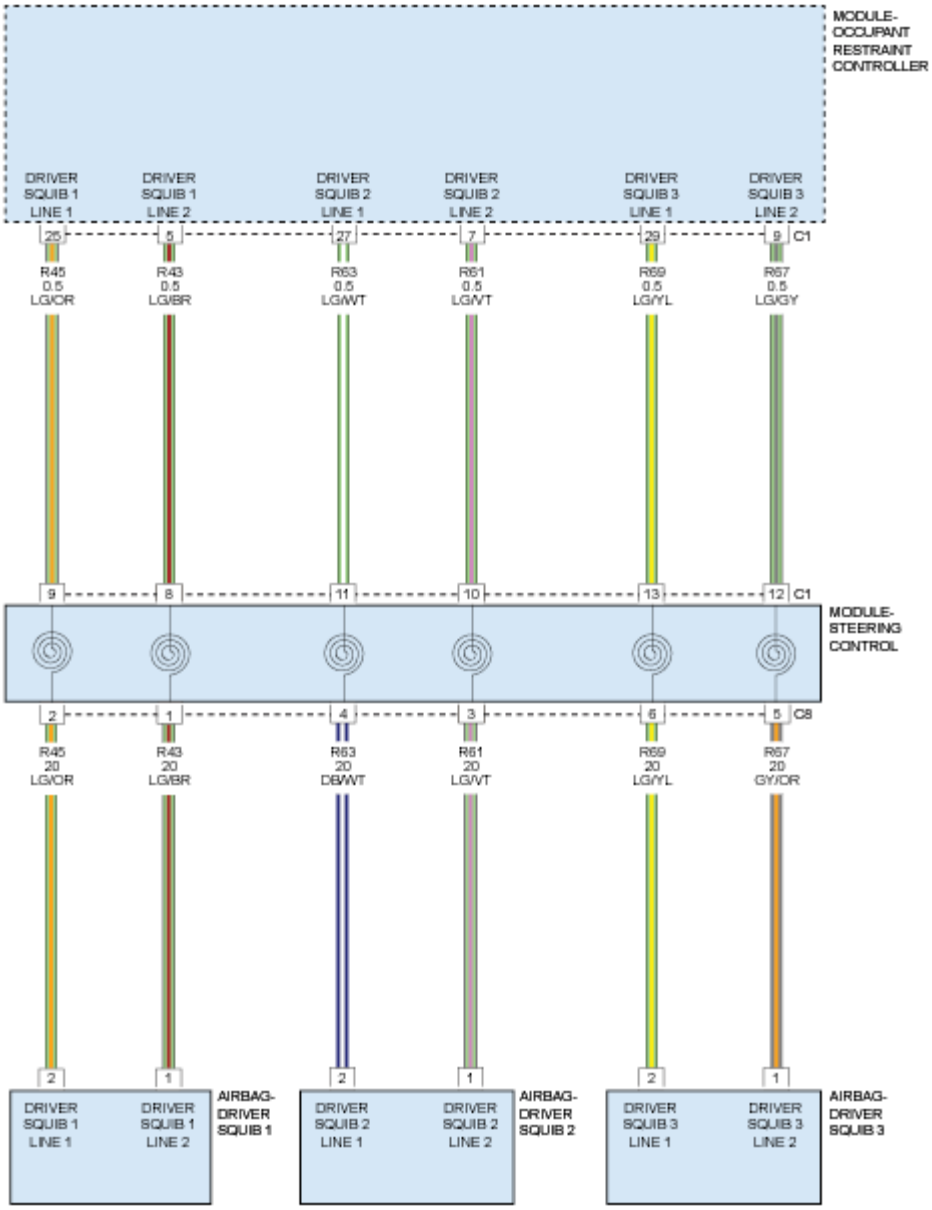

Fig. 12: Driver Frontal Squib Circuit Diagram
Courtesy of CHRYSLER GROUP, LLC

THEORY OF OPERATION

When powered, the Occupant Restraint Controller (ORC) sends a test current to the squibs to verify the integrity of the squib and wiring. These circuits are maintained in a "floating" configuration at the module (connected to neither power nor ground) as protection against inadvertent deployment. Use of the (special tool #8443A, SRS Load Tool) in the tests below substitutes a suspect squib with a known good component. The use of the (special tool #8443-57, Adapter, Supplemental Restraint System Load Tool) provides a test point as well as a method for opening the shorting bar connections within the harness connector. The Front Driver Airbag is a

three stage device with three electrical connectors. The first stage is deployed immediately during impact that requires airbag deployment. The timing of the second stage determines the output force of the airbag. The third stage triggers a tether cutter initiator, which releases the tether when a softer airbag is necessary.

WHEN MONITORED

The ORC sends out a 40 mA diagnostic current on each squib voltage supply circuit at power up and every 500 ms thereafter while the ignition is on.

SET CONDITION

This Diagnostic Trouble Code (DTC) sets when the ORC detects both circuits of the same squib are shorted together for more than 2.6 seconds. This DTC transitions from active to stored when the ORC sees a recovery from a shorted together condition for greater than 2.6 seconds. The Airbag Warning Lamp (AWL) will set in the instrument cluster.

POSSIBLE CAUSES

Possible Causes
(R69) PASSENGER SQUIB 3 LINE 1 CIRCUIT SHORTED TO (R67) PASSENGER SQUIB 3 LINE 2 CIRCUIT
CLOCKSPRING
DRIVER AIRBAG
OCCUPANT RESTRAINT CONTROLLER (ORC)

Always perform the Pre-Diagnostic Troubleshooting procedure before proceeding. Refer to STANDARD PROCEDURE .

DIAGNOSTIC TEST

1. **DETERMINE ACTIVE OR STORED DTC**

   NOTE: Make sure that the battery is fully charged.

   NOTE: The scan tool (special tool #8443A, SRS Load Tool), and DVOM are required to perform the following test.

   1. Turn the ignition on.

      Select ACTIVE or STORED DTC:

      ACTIVE DTC

      - Go To 2

STORED DTC

- Perform the RESTRAINTS SYSTEM INTERMITTENT TEST. Refer to **STANDARD PROCEDURE** .

2. **CHECK FOR SHORTED SQUIB CIRCUITS IN DRIVER AIRBAG**

WARNING: Turn the ignition off disconnect the 12-volt battery and wait two minutes before proceeding. Failure to follow these instructions may result in possible serious or fatal injury.

1. Disconnect the Driver Airbag Squib connectors.

WARNING: Do not place an intact non-deployed airbag face down on a hard surface, the airbag propels into the air if accidentally deployed. Failure to follow these instructions may result in possible serious or fatal injury.

NOTE: Check connectors - Clean and repair as necessary.

2. Connect the (special tool #8443A, SRS Load Tool) and (special tool #8443-8, Jumper, SRS Load) to the Driver Airbag Squib 3 connector.

WARNING: Turn the ignition on, then reconnect the 12-volt battery and wait two minutes before proceeding. Failure to follow these instructions may result in possible serious or fatal injury.

3. With the scan tool, read the active ORC DTCs.

Does the scan tool display: B0003-2B-DRIVER FRONTAL SQUIB 3 CONTROL - WIRES SHORTED TOGETHER?

Yes

- Go To 3

No

- Replace the Driver Airbag in accordance with the Service Information. Refer to **AIR BAG, PASSENGER, REMOVAL** .
- Perform the RESTRAINTS SYSTEM VERIFICATION TEST. Refer to **STANDARD PROCEDURE** .

3. **CHECK CLOCKSPRING SQUIB CIRCUITS FOR A SHORT TOGETHER**

WARNING: Turn the ignition off disconnect the 12-volt battery and wait two

minutes before proceeding. Failure to follow these instructions may result in possible serious or fatal injury.

1. Disconnect the (special tool #8443A, SRS Load Tool) and the (special tool #8443-8, Jumper, SRS Load) from the Driver Airbag Squib harness connectors.
2. Disconnect the Steering Control Module (SCM) C1 harness connector.

NOTE: Check the connectors - Clean and repair as necessary.

3. If equipped with the standard key ignition, use this ignition on warning.

WARNING: Turn the ignition on, then reconnect the 12-volt battery and wait two minutes before proceeding. Failure to follow these instructions may result in possible serious or fatal injury.

4. If equipped with the keyless ignition, use this ignition on warning.

WARNING: Disconnect the 12-volt battery wait two minutes before proceeding, remove the ORC fuses, connect the 12-volt battery, wait two minutes before proceeding. Cycle the ignition to the On position, then reconnect the ORC fuses. Wait two minutes before proceeding. Failure to follow these instructions may result in possible serious or fatal injury.

5. With the scan tool, read the active ORC DTCs.

Does the scan tool display: B0003-2B-DRIVER FRONTAL SQUIB 3 CONTROL - WIRES SHORTED TOGETHER?

Yes

- Go To 4

No

WARNING: Turn the ignition off disconnect the 12-volt battery and wait two minutes before proceeding. Failure to follow these instructions may result in possible serious or fatal injury.

- Replace the clockspring in accordance with the Service Information. Refer to **CLOCKSPRING, REMOVAL** .
- Perform the CLOCKSPRING CENTERING. Refer to **CLOCKSPRING, STANDARD PROCEDURE** . Perform the BODY VERIFICATION TEST. Refer to **STANDARD PROCEDURE** .

- Perform the RESTRAINTS SYSTEM VERIFICATION TEST. Refer to **STANDARD PROCEDURE** .

4. **CHECK (R69) DRIVER SQUIB 3 LINE 1 CIRCUIT FOR A SHORT TO THE (R67) DRIVER SQUIB 3 LINE 2 CIRCUIT**

WARNING: Turn the ignition off disconnect the 12-volt battery and wait two minutes before proceeding. Failure to follow these instructions may result in possible serious or fatal injury.

1. Disconnect the ORC harness connectors.

NOTE: Check the connectors - Clean and repair as necessary.

2. Connect the (special tool #8443-57, Adapter, Supplemental Restraint System Load Tool) to the ORC C1 and C2 harness connector.
3. Measure the resistance between the (R69) Driver Squib 3 Line 1 circuit and the (R67) Driver Squib 3 Line 2 circuit between the (special tool #8443-57, Adapter, Supplemental Restraint System Load Tool) connector C1A cavity 29 and C1A cavity 9.

Is the resistance below 10k Ohms?

Yes

- Repair the (R69) Driver Squib 3 Line 1 circuit for a short to the (R67) Driver Squib 3 Line 2 circuit in accordance with the Service Information.
- Perform the RESTRAINTS SYSTEM VERIFICATION TEST. Refer to **STANDARD PROCEDURE** .

No

WARNING: If the Occupant Restraint Controller (ORC) is dropped at any time, it must be replaced. Failure to take the proper precautions can result in accidental airbag deployment. Failure to follow these instructions may result in possible serious or fatal injury.

- Replace the ORC in accordance with the Service Information. Refer to **MODULE, OCCUPANT RESTRAINT CONTROLLER, REMOVAL** .
- Perform the RESTRAINTS SYSTEM VERIFICATION TEST. Refer to **STANDARD PROCEDURE** .

B0004-11-DRIVER KNEE BOLSTER SQUIB CONTROL - CIRCUIT SHORT TO GROUND

For a complete wiring diagram, **refer to appropriate SYSTEM WIRING DIAGRAMS article** .

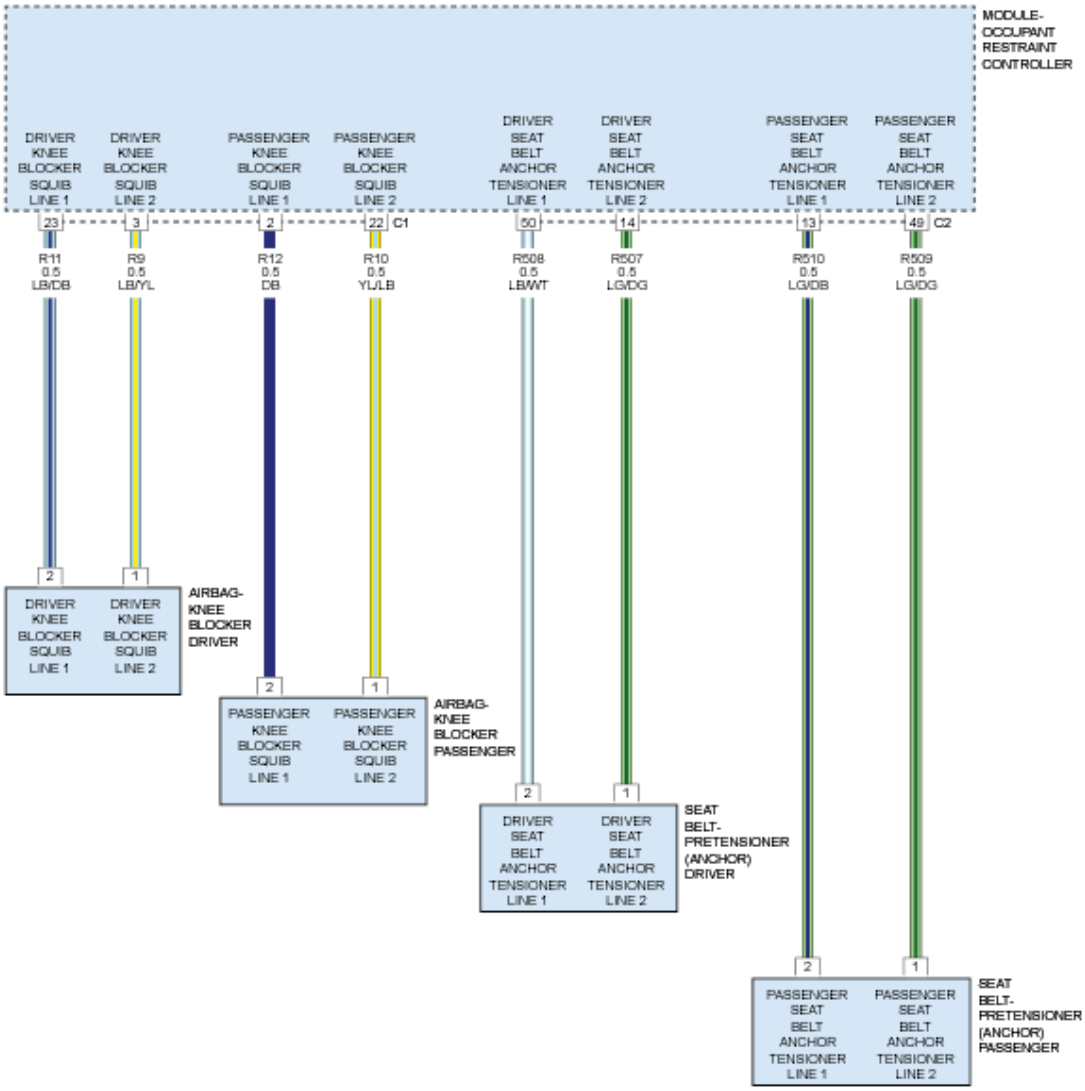

Fig. 13: Knee Blocker & Seat Belt Pretensioner Circuit Diagram
Courtesy of CHRYSLER GROUP, LLC

THEORY OF OPERATION

When powered, the Occupant Restraint Controller (ORC) sends a test current to the squibs to verify the integrity of the squib and wiring. These circuits are maintained in a "floating" configuration at the module (connected to neither power nor ground) as protection against inadvertent deployment. Use of the (special tool #8443A, SRS Load Tool) in the tests below substitutes a suspect squib with a known good component. The use of the (special tool #8443-57, Adapter, Supplemental Restraint System Load Tool) provides a test point as well as a method for opening the shorting bar connections within the harness connector. The knee blocker airbags are concealed below the lower edge of the instrument panel, just beneath the steering column opening cover on the driver side or just beneath the glove box door on the passenger side.

WHEN MONITORED

The ORC Module sends out a 40 mA diagnostic current on each squib voltage supply circuit at power up, and every 500 ms thereafter while the ignition is on.

SET CONDITION

This Diagnostic Trouble Code (DTC) sets when the ORC detects a short to ground on the driver knee bolster squib circuit for more than 2.6 seconds. This DTC transitions from active to stored when the ORC sees a recovery from a short to ground condition for greater than 2.6 seconds. The Airbag Warning Lamp (AWL) will set in the instrument cluster.

POSSIBLE CAUSES

Possible Causes
(R11) DRIVER KNEE BLOCKER SQUIB LINE 1 CIRCUIT SHORTED TO GROUND
(R9) DRIVER KNEE BLOCKER SQUIB LINE 2 CIRCUIT SHORTED TO GROUND
DRIVER KNEE BLOCKER AIRBAG
OCCUPANT RESTRAINT CONTROLLER (ORC)

Always perform the Pre-Diagnostic Troubleshooting procedure before proceeding. Refer to STANDARD PROCEDURE .

DIAGNOSTIC TEST

1. **DETERMINE ACTIVE OR STORED DTC**

   NOTE: Make sure that the battery is fully charged.

   NOTE: The scan tool, (special tool #8443A, SRS Load Tool), and DVOM are required to perform the following test.

   1. Turn the ignition on.

      Select ACTIVE or STORED DTC:

      ACTIVE DTC

      - Go To 2

      STORED DTC

      - Perform the RESTRAINTS SYSTEM INTERMITTENT TEST. Refer to **STANDARD PROCEDURE** .

2. **CHECK FOR SHORTED DRIVER KNEE BLOCKER AIRBAG CIRCUITS**

WARNING: Turn the ignition off disconnect the 12-volt battery and wait two minutes before proceeding. Failure to follow these instructions may result in possible serious or fatal injury.

1. Disconnect the Driver Knee Blocker Airbag harness connector.

WARNING: Do not place an intact non-deployed airbag face down on a hard surface, the airbag propels into the air if accidentally deployed. Failure to follow these instructions may result in possible serious or fatal injury.

NOTE: Check connectors - Clean and repair as necessary.

2. Connect the (special tool #8443A, SRS Load Tool) and the (special tool #8443-8, Jumper, SRS Load) to the Driver Knee Blocker Airbag harness connector.
3. If equipped with the standard key ignition, use this ignition on warning.

WARNING: Turn the ignition on, then reconnect the 12-volt battery and wait two minutes before proceeding. Failure to follow these instructions may result in possible serious or fatal injury.

4. If equipped with the keyless ignition, use this ignition on warning.

WARNING: Disconnect the 12-volt battery wait two minutes before proceeding, remove the ORC fuses, connect the 12-volt battery, wait two minutes before proceeding. Cycle the ignition to the On position, then reconnect the ORC fuses. Wait two minutes before proceeding. Failure to follow these instructions may result in possible serious or fatal injury.

5. With the scan tool, read the active ORC DTCs.

Does the scan tool display: B0004-11-DRIVER KNEE BOLSTER SQUIB CONTROL - CIRCUIT SHORT TO GROUND?

Yes

- Go To 3

No

- Replace the Driver Knee Blocker Airbag in accordance with the Service Information. Refer to **AIR BAG, KNEE BLOCKER, REMOVAL** .
- Perform the RESTRAINTS SYSTEM VERIFICATION TEST. Refer to **STANDARD**

PROCEDURE .

3. **CHECK (R11) DRIVER KNEE BLOCKER SQUIB LINE 1 CIRCUIT OR (R9) DRIVER KNEE BLOCKER SQUIB LINE 2 CIRCUIT FOR A SHORT TO GROUND**

WARNING: Turn the ignition off, disconnect the 12-volt battery and wait two minutes before proceeding. Failure to follow these instructions may result in possible serious or fatal injury.

1. Disconnect the (special tool #8443A, SRS Load Tool) and the (special tool #8443-8, Jumper, SRS Load) from the Driver Knee Blocker Airbag harness connector.
2. Disconnect the ORC harness connectors.

NOTE: Check connectors - Clean and repair as necessary.

3. Connect the (special tool #8443-57, Adapter, Supplemental Restraint System Load Tool) to the ORC C1 and C2 harness connectors.
4. Measure the resistance between ground and the (R11) Driver Knee Blocker Squib Line 1 circuit at connector C1A cavity 23 of the (special tool #8443-57, Adapter, Supplemental Restraint System Load Tool).
5. Measure the resistance between ground and the (R9) Driver Knee Blocker Squib Line 2 circuit at connector C1A cavity 3 of the (special tool #8443-57, Adapter, Supplemental Restraint System Load Tool).

Is the resistance below 10K Ohms on either circuit?

Yes

- Repair the (R11) Driver Knee Blocker Squib Line 1 or (R9) Driver Knee Blocker Squib Line 2 circuits for a short to ground in accordance with the Service Information.
- Perform the RESTRAINTS SYSTEM VERIFICATION TEST. Refer to **STANDARD PROCEDURE** .

No

WARNING: If the Occupant Restraint Controller (ORC) is dropped at any time, it must be replaced. Failure to take the proper precautions can result in accidental airbag deployment. Failure to follow these instructions may result in possible serious or fatal injury.

WARNING: Turn the ignition off, disconnect the 12-volt battery and wait two minutes before proceeding. Failure to follow these instructions may result in possible serious or fatal injury.

- Replace the ORC in accordance with Service Information. Refer to **MODULE,**

OCCUPANT RESTRAINT CONTROLLER, REMOVAL .

- Perform the RESTRAINTS SYSTEM VERIFICATION TEST. Refer to **STANDARD PROCEDURE** .

B0004-12-DRIVER KNEE BOLSTER SQUIB CONTROL - CIRCUIT SHORT TO BATTERY

For a complete wiring diagram, **refer to appropriate SYSTEM WIRING DIAGRAMS article** .

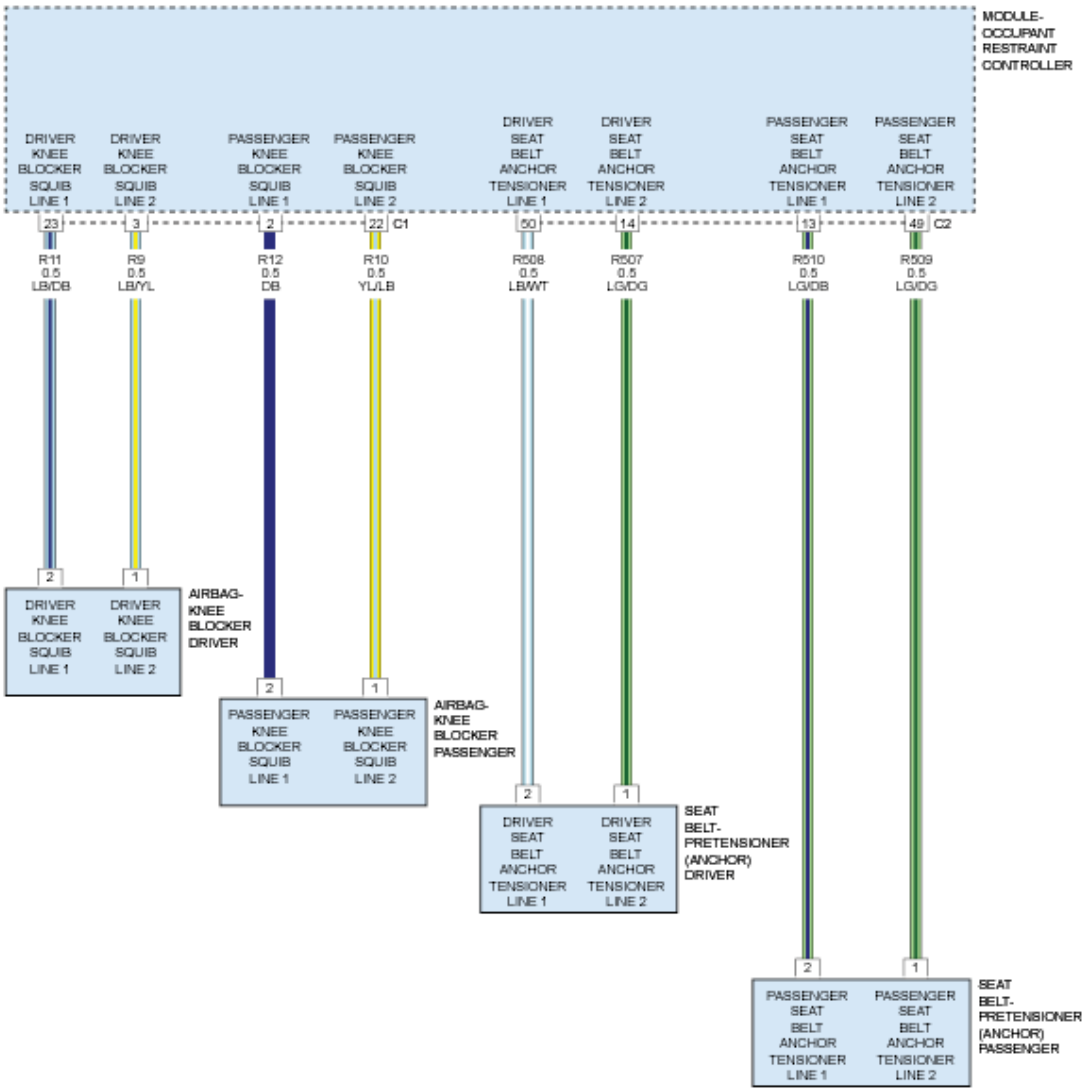

Fig. 14: Knee Blocker & Seat Belt Pretensioner Circuit Diagram
Courtesy of CHRYSLER GROUP, LLC

THEORY OF OPERATION

When powered, the Occupant Restraint Controller (ORC) sends a test current to the squibs to verify the

integrity of the squib and wiring. These circuits are maintained in a "floating" configuration at the module (connected to neither power nor ground) as protection against inadvertent deployment. Use of the (special tool #8443A, SRS Load Tool) in the tests below substitutes a suspect squib with a known good component. The use of the (special tool #8443-57, Adapter, Supplemental Restraint System Load Tool) provides a test point as well as a method for opening the shorting bar connections within the harness connector. The knee blocker airbags are concealed below the lower edge of the instrument panel, just beneath the steering column opening cover on the driver side or just beneath the glove box door on the passenger side.

WHEN MONITORED

The ORC Module sends out a 40 mA diagnostic current on each squib voltage supply circuit at power up, and every 500 ms thereafter while the ignition is on.

SET CONDITION

This Diagnostic Trouble Code (DTC) sets when the ORC detects a short to voltage on the driver knee bolster squib circuit for more than 2.6 seconds. This DTC transitions from active to stored when the ORC sees a recovery from a short to ground for greater than 2.6 seconds. The Airbag Warning Lamp (AWL) will set in the instrument cluster.

POSSIBLE CAUSES

Possible Causes
(R11) DRIVER KNEE BLOCKER SQUIB LINE 1 CIRCUIT SHORTED TO VOLTAGE
(R9) DRIVER KNEE BLOCKER SQUIB LINE 2 CIRCUIT SHORTED TO VOLTAGE
DRIVER KNEE BLOCKER AIRBAG
OCCUPANT RESTRAINT CONTROLLER (ORC)

Always perform the Pre-Diagnostic Troubleshooting procedure before proceeding. Refer to STANDARD PROCEDURE .

DIAGNOSTIC TEST

1. **DETERMINE ACTIVE OR STORED DTC**

   NOTE: Make sure that the battery is fully charged.

   NOTE: The scan tool, (special tool #8443A, SRS Load Tool), and DVOM are required to perform the following test.

   1. Turn the ignition on.

      Select ACTIVE or STORED DTC:

      ACTIVE DTC

- Go To 2

STORED DTC

- Perform the RESTRAINTS SYSTEM INTERMITTENT TEST. Refer to **STANDARD PROCEDURE** .

2. **CHECK FOR SHORTED DRIVER KNEE BLOCKER AIRBAG CIRCUITS**

WARNING: Turn the ignition off disconnect the 12-volt battery and wait two minutes before proceeding. Failure to follow these instructions may result in possible serious or fatal injury.

1. Disconnect the Driver Knee Blocker Airbag harness connector.

WARNING: Do not place an intact non-deployed airbag face down on a hard surface, the airbag propels into the air if accidentally deployed. Failure to follow these instructions may result in possible serious or fatal injury.

NOTE: Check connectors - Clean and repair as necessary.

2. Connect the (special tool #8443A, SRS Load Tool) and the (special tool #8443-8, Jumper, SRS Load) to the Driver Knee Blocker Airbag harness connector.
3. If equipped with the standard key ignition, use this ignition on warning.

WARNING: Turn the ignition on, then reconnect the 12-volt battery and wait two minutes before proceeding. Failure to follow these instructions may result in possible serious or fatal injury.

4. If equipped with the keyless ignition, use this ignition on warning.

WARNING: Disconnect the 12-volt battery wait two minutes before proceeding, remove the ORC fuses, connect the 12-volt battery, wait two minutes before proceeding. Cycle the ignition to the On position, then reconnect the ORC fuses. Wait two minutes before proceeding. Failure to follow these instructions may result in possible serious or fatal injury.

5. With the scan tool, read the active ORC DTCs.

Does the scan tool display: B0004-12-DRIVER KNEE BOLSTER SQUIB CONTROL - CIRCUIT SHORT TO BATTERY?

Yes

- Go To 3

No

- Replace the Driver Knee Blocker Airbag in accordance with the Service Information. Refer to **AIR BAG, KNEE BLOCKER, REMOVAL** .
- Perform the RESTRAINTS SYSTEM VERIFICATION TEST. Refer to **STANDARD PROCEDURE** .

3. **CHECK (R11) DRIVER KNEE BLOCKER SQUIB LINE 1 CIRCUIT OR (R9) DRIVER KNEE BLOCKER SQUIB LINE 2 CIRCUIT FOR A SHORT TO VOLTAGE**

WARNING: Turn the ignition off, disconnect the 12-volt battery and wait two minutes before proceeding. Failure to follow these instructions may result in possible serious or fatal injury.

1. Disconnect the (special tool #8443A, SRS Load Tool) from the (special tool #8443-8, Jumper, SRS Load) from the Driver Knee Blocker Airbag harness connector.
2. Disconnect the ORC harness connectors.

NOTE: Check connectors - Clean and repair as necessary.

3. Connect the (special tool #8443-57, Adapter, Supplemental Restraint System Load Tool) to the ORC C1 and C2 harness connector.
4. If equipped with the standard key ignition, use this ignition on warning.

WARNING: Turn the ignition on, then reconnect the 12-volt battery and wait two minutes before proceeding. Failure to follow these instructions may result in possible serious or fatal injury.

5. If equipped with the keyless ignition, use this ignition on warning.

WARNING: Disconnect the 12-volt battery wait two minutes before proceeding, remove the ORC fuses, connect the 12-volt battery, wait two minutes before proceeding. Cycle the ignition to the On position, then reconnect the ORC fuses. Wait two minutes before proceeding. Failure to follow these instructions may result in possible serious or fatal injury.

6. Measure the voltage of the (R11) Driver Knee Blocker Squib Line 1 circuit between connector C1A cavity 23 of the (special tool #8443-57, Adapter, Supplemental Restraint System Load Tool) and ground.
7. Measure the voltage of the (R9) Driver Knee Blocker Squib Line 2 circuit between connector C1A cavity 3 of the (special tool #8443-57, Adapter, Supplemental Restraint System Load Tool) and ground.

Is there any voltage present on either circuit?

Yes

- Repair the (R11) Driver Knee Blocker Squib Line 1 circuit or (R9) Driver Knee Blocker Squib Line 2 circuit with voltage present for a short to voltage in accordance with the Service Information.
- Perform the RESTRAINTS SYSTEM VERIFICATION TEST. Refer to **STANDARD PROCEDURE** .

No

WARNING: **If the Occupant Restraint Controller (ORC) is dropped at any time, it must be replaced. Failure to take the proper precautions can result in accidental airbag deployment. Failure to follow these instructions may result in possible serious or fatal injury.**

WARNING: **Turn the ignition off, disconnect the 12-volt battery and wait two minutes before proceeding. Failure to follow these instructions may result in possible serious or fatal injury.**

- Replace the ORC in accordance with Service Information. Refer to **MODULE, OCCUPANT RESTRAINT CONTROLLER, REMOVAL** .
- Perform the RESTRAINTS SYSTEM VERIFICATION TEST. Refer to **STANDARD PROCEDURE** .

B0004-13-DRIVER KNEE BOLSTER SQUIB CONTROL - CIRCUIT OPEN

For a complete wiring diagram, **refer to appropriate SYSTEM WIRING DIAGRAMS article** .

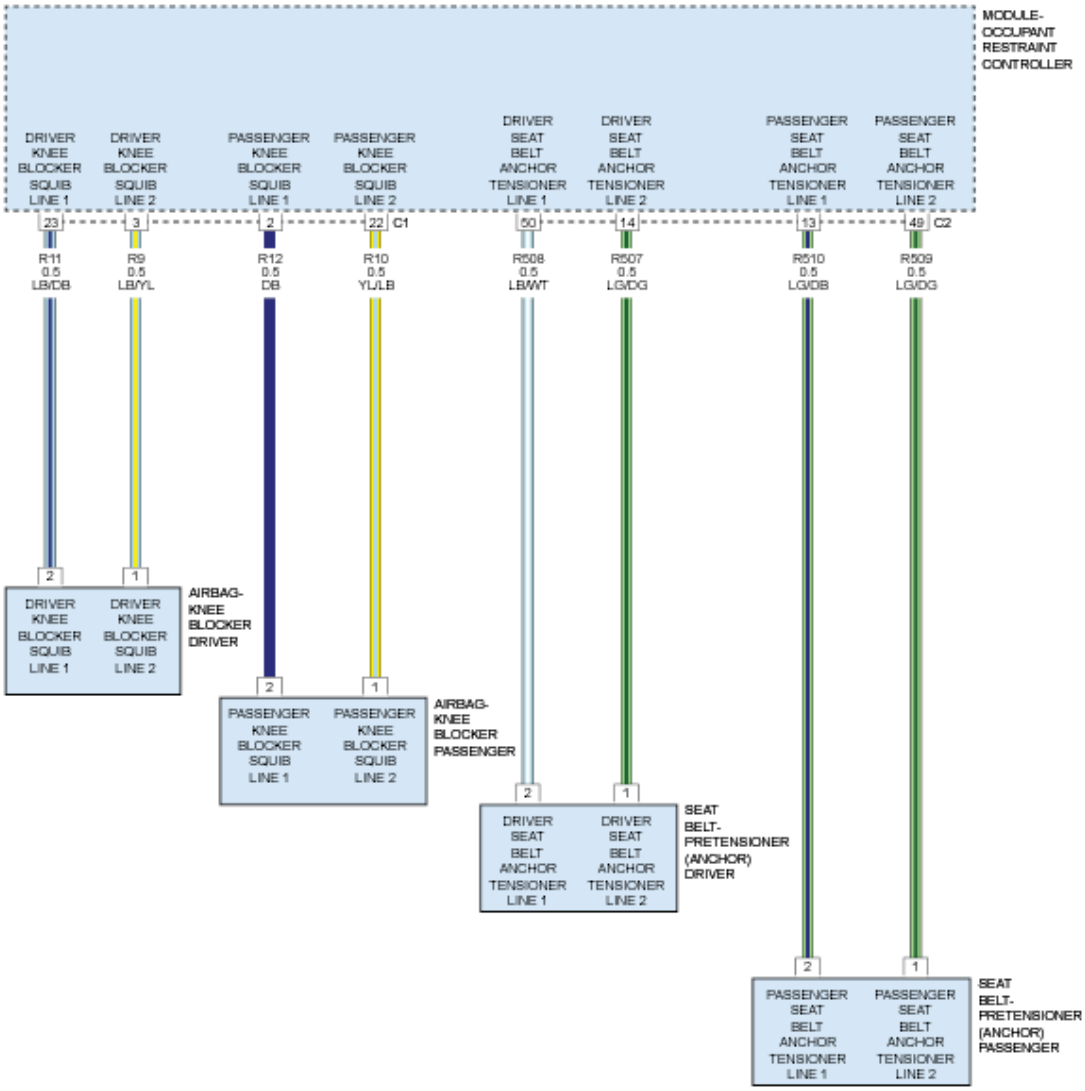

Fig. 15: Knee Blocker & Seat Belt Pretensioner Circuit Diagram
Courtesy of CHRYSLER GROUP, LLC

THEORY OF OPERATION

When powered, the Occupant Restraint Controller (ORC) sends a test current to the squibs to verify the integrity of the squib and wiring. These circuits are maintained in a "floating" configuration at the module (connected to neither power nor ground) as protection against inadvertent deployment. Use of the (special tool #8443A, SRS Load Tool) in the tests below substitutes a suspect squib with a known good component. The use of the (special tool #8443-57, Adapter, Supplemental Restraint System Load Tool) provides a test point as well as a method for opening the shorting bar connections within the harness connector. The knee blocker airbags are concealed below the lower edge of the instrument panel, just beneath the steering column opening cover on the driver side or just beneath the glove box door on the passenger side.

WHEN MONITORED

The ORC Module sends out a 40 mA diagnostic current on each squib voltage supply circuit at power up, and every 500 ms thereafter while the ignition is on.

SET CONDITION

This Diagnostic Trouble Code (DTC) sets when the ORC detects an open on the driver knee blocker squib circuit for more than 2.6 seconds. This DTC transitions from active to stored when the ORC sees a recovery from a open for greater than 2.6 seconds.

POSSIBLE CAUSES

Possible Causes
(R11) DRIVER KNEE BLOCKER SQUIB LINE 1 CIRCUIT OPEN
(R9) DRIVER KNEE BLOCKER SQUIB LINE 2 CIRCUIT OPEN
DRIVER KNEE BLOCKER AIRBAG
OCCUPANT RESTRAINT CONTROLLER (ORC)

Always perform the Pre-Diagnostic Troubleshooting procedure before proceeding. Refer to STANDARD PROCEDURE .

DIAGNOSTIC TEST

1. **DETERMINE ACTIVE OR STORED DTC**

   NOTE: Make sure that the battery is fully charged.

   NOTE: The scan tool, (special tool #8443A, SRS Load Tool), and DVOM are required to perform the following test.

   1. Turn the ignition on.

      Select ACTIVE or STORED DTC:

      ACTIVE DTC

      - Go To 2

      STORED DTC

      - Perform the RESTRAINTS SYSTEM INTERMITTENT TEST. Refer to **STANDARD PROCEDURE** .

2. **CHECK FOR OPEN DRIVER KNEE BLOCKER AIRBAG CIRCUITS**

WARNING: Turn the ignition off disconnect the 12-volt battery and wait two minutes before proceeding. Failure to follow these instructions may result in possible serious or fatal injury.

1. Disconnect the Driver Knee Blocker Airbag harness connector.

WARNING: Do not place an intact non-deployed airbag face down on a hard surface, the airbag propels into the air if accidentally deployed. Failure to follow these instructions may result in possible serious or fatal injury.

NOTE: Check connectors - Clean and repair as necessary.

2. Connect the (special tool #8443A, SRS Load Tool) and the (special tool #8443-8, Jumper, SRS Load) to the Driver Knee Blocker Airbag harness connector.
3. If equipped with the standard key ignition, use this ignition on warning.

WARNING: Turn the ignition on, then reconnect the 12-volt battery and wait two minutes before proceeding. Failure to follow these instructions may result in possible serious or fatal injury.

4. If equipped with the keyless ignition, use this ignition on warning.

WARNING: Disconnect the 12-volt battery wait two minutes before proceeding, remove the ORC fuses, connect the 12-volt battery, wait two minutes before proceeding. Cycle the ignition to the On position, then reconnect the ORC fuses. Wait two minutes before proceeding. Failure to follow these instructions may result in possible serious or fatal injury.

5. With the scan tool, read the active ORC DTCs.

   Does the scan tool display: B0004-13-DRIVER KNEE BOLSTER SQUIB CONTROL - CIRCUIT OPEN?

   Yes

   - Go To 3

   No

   - Replace the Driver Knee Blocker Airbag in accordance with the Service Information. Refer to **AIR BAG, KNEE BLOCKER, REMOVAL** .
   - Perform the RESTRAINTS SYSTEM VERIFICATION TEST. Refer to **STANDARD**

PROCEDURE .

3. **CHECK (R11) DRIVER KNEE BLOCKER SQUIB LINE 1 CIRCUIT FOR AN OPEN**

WARNING: Turn the ignition off, disconnect the 12-volt battery and wait two minutes before proceeding. Failure to follow these instructions may result in possible serious or fatal injury.

1. Disconnect the (special tool #8443A, SRS Load Tool) from the (special tool #8443-8, Jumper, SRS Load) from the Driver Knee Blocker Airbag harness connector.
2. Disconnect the ORC harness connectors.

NOTE: Check connectors - Clean and repair as necessary.

3. Connect the (special tool #8443-57, Adapter, Supplemental Restraint System Load Tool) to the ORC C1 and C2 harness connectors.
4. Measure the resistance of the (R11) Driver Knee Blocker Squib Line 1 circuit between the Driver Knee Blocker Airbag harness connector cavity 2 and the(special tool #8443-57, Adapter, Supplemental Restraint System Load Tool) terminal C1A cavity 23.

Is the resistance below or within the range of 5.4 - 10.0 Ohm?

Yes

- Go To 4

No

- Repair the (R11) Driver Knee Blocker Squib Line 1 circuit for an open in accordance with the Service Information.
- Perform the RESTRAINTS SYSTEM VERIFICATION TEST. Refer to **STANDARD PROCEDURE** .

4. **CHECK (R9) DRIVER KNEE BLOCKER SQUIB LINE 2 CIRCUIT FOR AN OPEN**

1. Measure the resistance of the (R9) Driver Knee Blocker Squib Line 2 circuit between the Driver Knee Blocker Airbag harness connector cavity 1 and the (special tool #8443-57, Adapter, Supplemental Restraint System Load Tool) connector C1A cavity 3.

Is the resistance below or within the range of 5.4 - 10.0 Ohm?

Yes

WARNING: If the Occupant Restraint Controller (ORC) is dropped at any time, it must be replaced. Failure to take the proper precautions can result in accidental airbag deployment. Failure to follow these instructions may result in possible serious or fatal injury.

- Replace the ORC in accordance with the Service Information. Refer to **MODULE, OCCUPANT RESTRAINT CONTROLLER, REMOVAL** .
- Perform the RESTRAINTS SYSTEM VERIFICATION TEST. Refer to **STANDARD PROCEDURE** .

No

- Repair the (R9) Driver Knee Blocker Squib Line 2 circuit for an open in accordance with the Service Information.
- Perform the RESTRAINTS SYSTEM VERIFICATION TEST. Refer to **STANDARD PROCEDURE** .

B0004-2B-DRIVER KNEE BOLSTER SQUIB CONTROL - WIRES SHORTED TOGETHER

For a complete wiring diagram, **refer to appropriate SYSTEM WIRING DIAGRAMS article** .

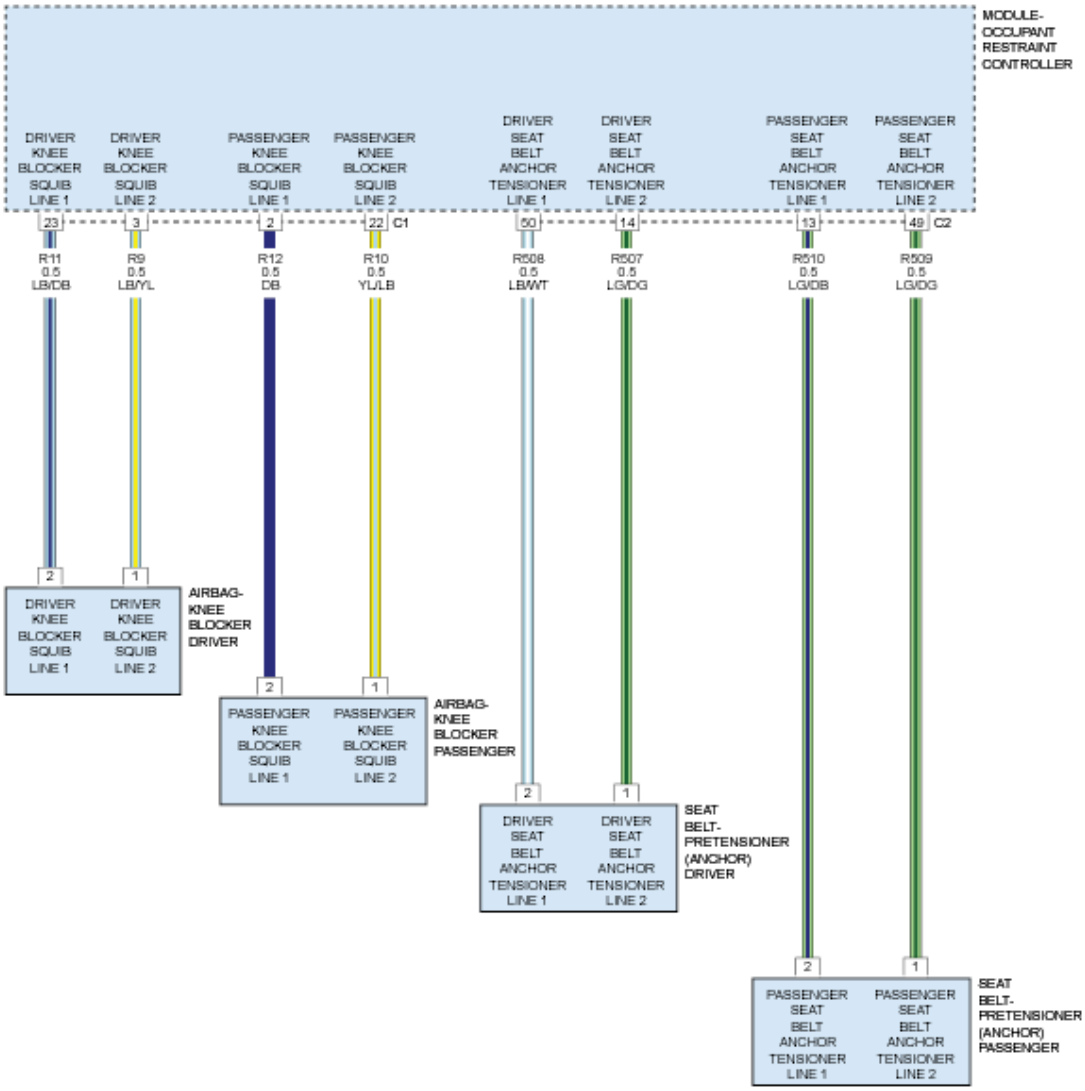

Fig. 16: Knee Blocker & Seat Belt Pretensioner Circuit Diagram
Courtesy of CHRYSLER GROUP, LLC

THEORY OF OPERATION

When powered, the Occupant Restraint Controller (ORC) sends a test current to the squibs to verify the integrity of the squib and wiring. These circuits are maintained in a "floating" configuration at the module (connected to neither power nor ground) as protection against inadvertent deployment. Use of the (special tool #8443A, SRS Load Tool) in the tests below substitutes a suspect squib with a known good component. The use of the (special tool #8443-57, Adapter, Supplemental Restraint System Load Tool) provides a test point as well as a method for opening the shorting bar connections within the harness connector. The knee blocker airbags are concealed below the lower edge of the instrument panel, just beneath the steering column opening cover on the driver side or just beneath the glove box door on the passenger side.

WHEN MONITORED

The ORC Module sends out a 40 mA diagnostic current on each squib voltage supply circuit at power up, and every 500 ms thereafter while the ignition is on.

SET CONDITION

This Diagnostic Trouble Code (DTC) sets when the ORC detects a shorted together of the driver knee bolster squib line 1 and line 2 circuits for more than 2.6 seconds. This DTC transitions from active to stored when the ORC sees a recovery from the squib shorted together condition for greater than 2.6 seconds.

POSSIBLE CAUSES

Possible Causes
(R11) DRIVER KNEE BLOCKER SQUIB LINE 1 CIRCUIT SHORTED TO THE (R9) DRIVER KNEE BLOCKER SQUIB LINE 2 CIRCUIT
DRIVER KNEE BLOCKER AIRBAG
OCCUPANT RESTRAINT CONTROLLER (ORC)

Always perform the Pre-Diagnostic Troubleshooting procedure before proceeding. Refer to STANDARD PROCEDURE .

DIAGNOSTIC TEST

1. **DETERMINE ACTIVE OR STORED DTC**

   NOTE: Make sure that the battery is fully charged.

   NOTE: The scan tool, (special tool #8443A, SRS Load Tool), and DVOM are required to perform the following test.

   1. Turn the ignition on.

      Select ACTIVE or STORED DTC:

      ACTIVE DTC

      - Go To 2

      STORED DTC

      - Perform the RESTRAINTS SYSTEM INTERMITTENT TEST. Refer to **STANDARD PROCEDURE** .

2. **CHECK FOR SHORTED DRIVER KNEE BLOCKER AIRBAG CIRCUITS**

WARNING: Turn the ignition off disconnect the 12-volt battery and wait two minutes before proceeding. Failure to follow these instructions may result in possible serious or fatal injury.

1. Disconnect the Driver Knee Blocker Airbag harness connector.

WARNING: Do not place an intact non-deployed airbag face down on a hard surface, the airbag propels into the air if accidentally deployed. Failure to follow these instructions may result in possible serious or fatal injury.

NOTE: Check connectors - Clean and repair as necessary.

2. Connect the (special tool #8443A, SRS Load Tool) and the (special tool #8443-8, Jumper, SRS Load) to the Driver Knee Blocker Airbag harness connector.
3. If equipped with the standard key ignition, use this ignition on warning.

WARNING: Turn the ignition on, then reconnect the 12-volt battery and wait two minutes before proceeding. Failure to follow these instructions may result in possible serious or fatal injury.

4. If equipped with the keyless ignition, use this ignition on warning.

WARNING: Disconnect the 12-volt battery wait two minutes before proceeding, remove the ORC fuses, connect the 12-volt battery, wait two minutes before proceeding. Cycle the ignition to the On position, then reconnect the ORC fuses. Wait two minutes before proceeding. Failure to follow these instructions may result in possible serious or fatal injury.

5. With the scan tool, read the active ORC DTCs.

   Does the scan tool display: B0004-2B-DRIVER KNEE BOLSTER SQUIB CONTROL - WIRES SHORTED TOGETHER?

   Yes

   - Go To 3

   No

   - Replace the Driver Knee Blocker Airbag in accordance with the Service Information. Refer to **AIR BAG, KNEE BLOCKER, REMOVAL** .
   - Perform the RESTRAINTS SYSTEM VERIFICATION TEST. Refer to **STANDARD**

PROCEDURE .

3. **CHECK (R11) DRIVER KNEE BLOCKER SQUIB LINE 1 CIRCUIT FOR A SHORT TO THE (R9) DRIVER KNEE BLOCKER SQUIB LINE 2 CIRCUIT**

WARNING: Turn the ignition off, disconnect the 12-volt battery and wait two minutes before proceeding. Failure to follow these instructions may result in possible serious or fatal injury.

1. Disconnect the (special tool #8443-8, Jumper, SRS Load) from the Driver Knee Bolster Airbag harness connector.
2. Disconnect the ORC harness connectors.

NOTE: Check connectors - Clean and repair as necessary.

3. Connect the (special tool #8443-57, Adapter, Supplemental Restraint System Load Tool) to the ORC C1 and C2 harness connector.
4. Measure the resistance between the (R11) Driver Knee Blocker Squib Line 1 circuit connector C1A cavity 23 and the (R9) Driver Knee Blocker Squib Line 2 circuit connector C1A cavity 3 of the (special tool #8443-57, Adapter, Supplemental Restraint System Load Tool).

Is the resistance below or within the range of 1.5 - 2.18 Ohms?

Yes

- Repair the (R11) Driver Knee Blocker Squib Line 1 circuit for a short to the (R9) Driver Knee Blocker Squib Line 2 circuit in accordance with the Service Information.
- Perform the RESTRAINTS SYSTEM VERIFICATION TEST. Refer to **STANDARD PROCEDURE** .

No

WARNING: If the Occupant Restraint Controller (ORC) is dropped at any time, it must be replaced. Failure to take the proper precautions can result in accidental airbag deployment. Failure to follow these instructions may result in possible serious or fatal injury.

WARNING: Turn the ignition off, disconnect the 12-volt battery and wait two minutes before proceeding. Failure to follow these instructions may result in possible serious or fatal injury.

- Replace the ORC in accordance with Service Information. Refer to **MODULE, OCCUPANT RESTRAINT CONTROLLER, REMOVAL** .
- Perform the RESTRAINTS SYSTEM VERIFICATION TEST. Refer to **STANDARD PROCEDURE** .

B0010-11-PASSENGER FRONTAL SQUIB 1 CONTROL - CIRCUIT SHORT TO GROUND

For a complete wiring diagram, **refer to appropriate SYSTEM WIRING DIAGRAMS article** .

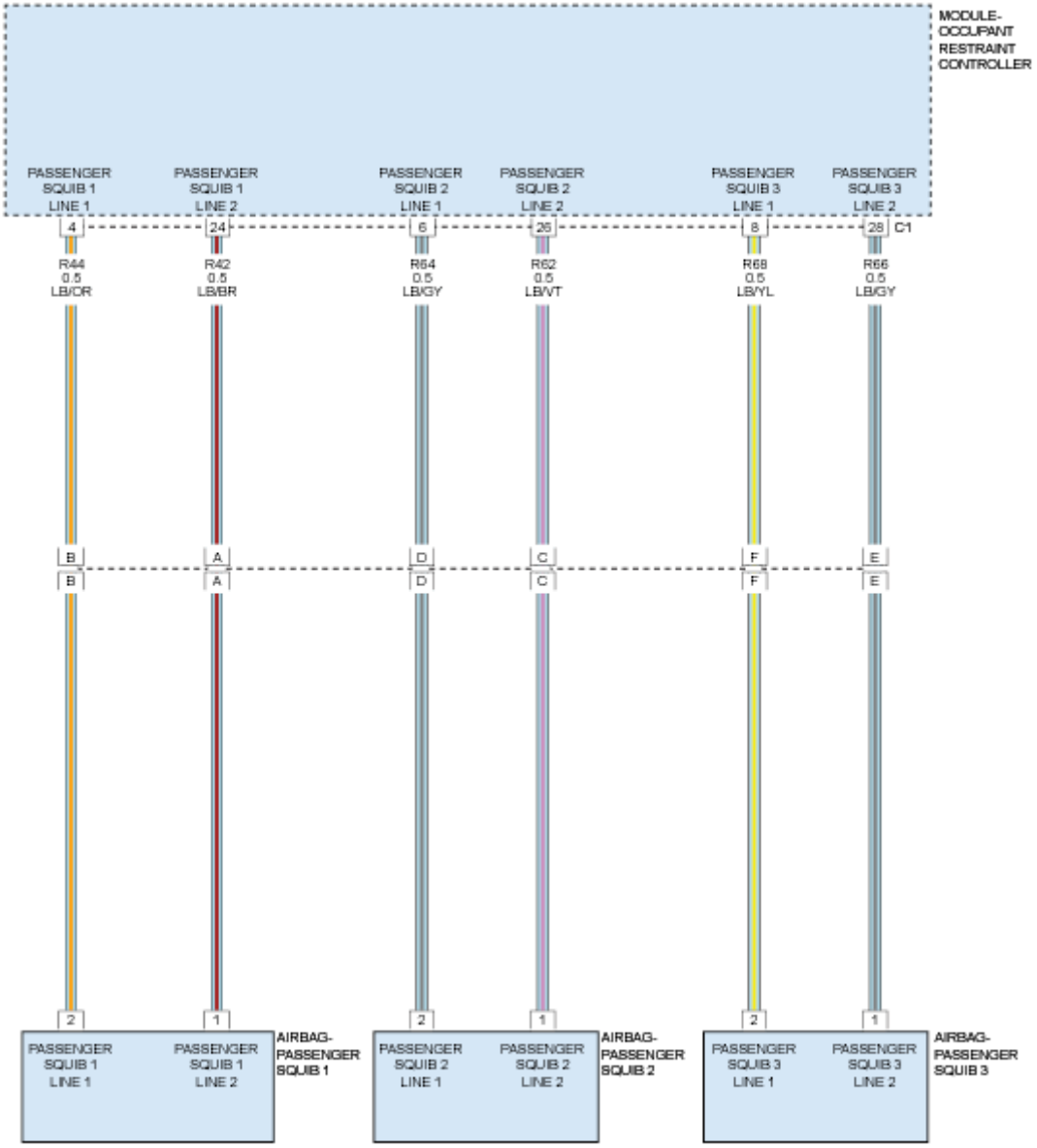

Fig. 17: Passenger Frontal Squib Circuit Diagram
Courtesy of CHRYSLER GROUP, LLC

THEORY OF OPERATION

When powered, the Occupant Restraint Controller (ORC) sends a test current to the squibs to verify the integrity of the squib and wiring. These circuits are maintained in a "floating" configuration at the module

(connected to neither power nor ground) as protection against inadvertent deployment. Use of the (special tool #8443A, SRS Load Tool) in the tests below substitutes a suspect squib with a known good component. The use of the (special tool #8443-57, Adapter, Supplemental Restraint System Load Tool) provides a test point as well as a method for opening the shorting bar connections within the harness connector.

WHEN MONITORED

The ORC sends out a 40 mA diagnostic current on each squib voltage supply circuit at power up and every 500 ms thereafter while the ignition is on.

SET CONDITION

This Diagnostic Trouble Code (DTC) sets when the ORC detects a short to ground on the passenger airbag squib circuit for more than 2.6 seconds. This DTC transitions from active to stored when the ORC sees a recovery from a short to ground for greater than 2.6 seconds. The Airbag Warning Lamp (AWL) will set in the instrument cluster.

POSSIBLE CAUSES

Possible Causes
(R42) PASSENGER SQUIB 1 LINE 2 CIRCUIT SHORTED TO GROUND
(R44) PASSENGER SQUIB 1 LINE 1 CIRCUIT SHORTED TO GROUND
PASSENGER AIRBAG
OCCUPANT RESTRAINT CONTROLLER (ORC)

Always perform the Pre-Diagnostic Troubleshooting procedure before proceeding. Refer to STANDARD PROCEDURE .

DIAGNOSTIC TEST

1. **DETERMINE ACTIVE OR STORED DTC**

   NOTE: Make sure the battery is fully charged.

   NOTE: The scan tool, (special tool #8443A, SRS Load Tool), and DVOM are required to perform the following test.

   1. Select Active or Stored DTC.

      Is the DTC active or stored?

      ORC - ACTIVE DTC

      - Go To 2

ORC - STORED DTC

- Perform the RESTRAINTS SYSTEM INTERMITTENT TEST. Refer to **STANDARD PROCEDURE** .

2. **CHECK FOR SHORTED SQUIB 1 CIRCUITS IN PASSENGER AIRBAG**

WARNING: Turn the ignition off disconnect the 12-volt battery and wait two minutes before proceeding. Failure to follow these instructions may result in possible serious or fatal injury.

1. Gain access to the Passenger Airbag harness connectors.
2. Disconnect the Passenger Airbag Squib harness connectors.

WARNING: Do not place an intact non-deployed airbag face down on a hard surface, the airbag propels into the air if accidentally deployed. Failure to follow these instructions may result in possible serious or fatal injury.

NOTE: Check connectors - Clean and repair as necessary.

3. Connect the (special tool #8443A, SRS Load Tool) and the (special tool #8443-8, Jumper, SRS Load) to the Passenger Airbag Squib 1 and Squib 2 harness connector.
4. If equipped with the standard key ignition, use this ignition on warning.

WARNING: Turn the ignition on, then reconnect the 12-volt battery and wait two minutes before proceeding. Failure to follow these instructions may result in possible serious or fatal injury.

5. If equipped with the keyless ignition, use this ignition on warning.

WARNING: Disconnect the 12-volt battery wait two minutes before proceeding, remove the ORC fuses, connect the 12-volt battery, wait two minutes before proceeding. Cycle the ignition to the On position, then reconnect the ORC fuses. Wait two minutes before proceeding. Failure to follow these instructions may result in possible serious or fatal injury.

6. With the scan tool, read the active ORC DTCs.

   Does the scan tool display: B0010-11-PASSENGER FRONTAL SQUIB 1 CONTROL - CIRCUIT SHORT TO GROUND?

   Yes

- Go To 3

No

- Replace the Passenger Airbag in accordance with the Service Information. Refer to **AIR BAG, PASSENGER, REMOVAL** .
- Perform the RESTRAINTS SYSTEM VERIFICATION TEST. Refer to **STANDARD PROCEDURE** .

3. **CHECK (R42) PASSENGER SQUIB 1 LINE 2 CIRCUIT AND (R44) PASSENGER SQUIB 1 LINE 1 CIRCUIT FOR A SHORT TO GROUND**

WARNING: Turn the ignition off disconnect the 12-volt battery and wait two minutes before proceeding. Failure to follow these instructions may result in possible serious or fatal injury.

1. Disconnect the (special tool #8443A, SRS Load Tool) and the (special tool #8443-8, Jumper, SRS Load) from the passenger airbag harness connectors.
2. Disconnect the ORC connectors.

NOTE: Check the connectors - Clean and repair as necessary.

3. Connect the (special tool #8443-57, Adapter, Supplemental Restraint System Load Tool) to the ORC C1 and C2 harness connectors.
4. Measure the resistance of the (R42) Passenger Squib 1 Line 2 circuit between ground and C1A cavity 24 of the (special tool #8443-57, Adapter, Supplemental Restraint System Load Tool).
5. Measure the resistance of the (R44) Passenger Squib 1 line 1 circuit between ground and C1A cavity 4 of the (special tool #8443-57, Adapter, Supplemental Restraint System Load Tool).

Is the resistance below 10K Ohms on either circuit?

Yes

- Repair the Passenger Squib 1 circuit(s) for a short to ground.
- Perform the RESTRAINTS SYSTEM VERIFICATION TEST. Refer to **STANDARD PROCEDURE** .

No

WARNING: If the Occupant Restraint Controller (ORC) is dropped at any time, it must be replaced. Failure to take the proper precautions can result in accidental airbag deployment. Failure to follow these instructions may result in possible serious or fatal injury.

Repair

- Replace the Occupant Restraint Controller Module in accordance with the Service Information. Refer to **MODULE, OCCUPANT RESTRAINT CONTROLLER, REMOVAL** .
- Perform the RESTRAINTS SYSTEM VERIFICATION TEST. Refer to **STANDARD PROCEDURE** .

B0010-12-PASSENGER FRONTAL SQUIB 1 CONTROL - CIRCUIT SHORT TO BATTERY

For a complete wiring diagram, **refer to appropriate SYSTEM WIRING DIAGRAMS article** .

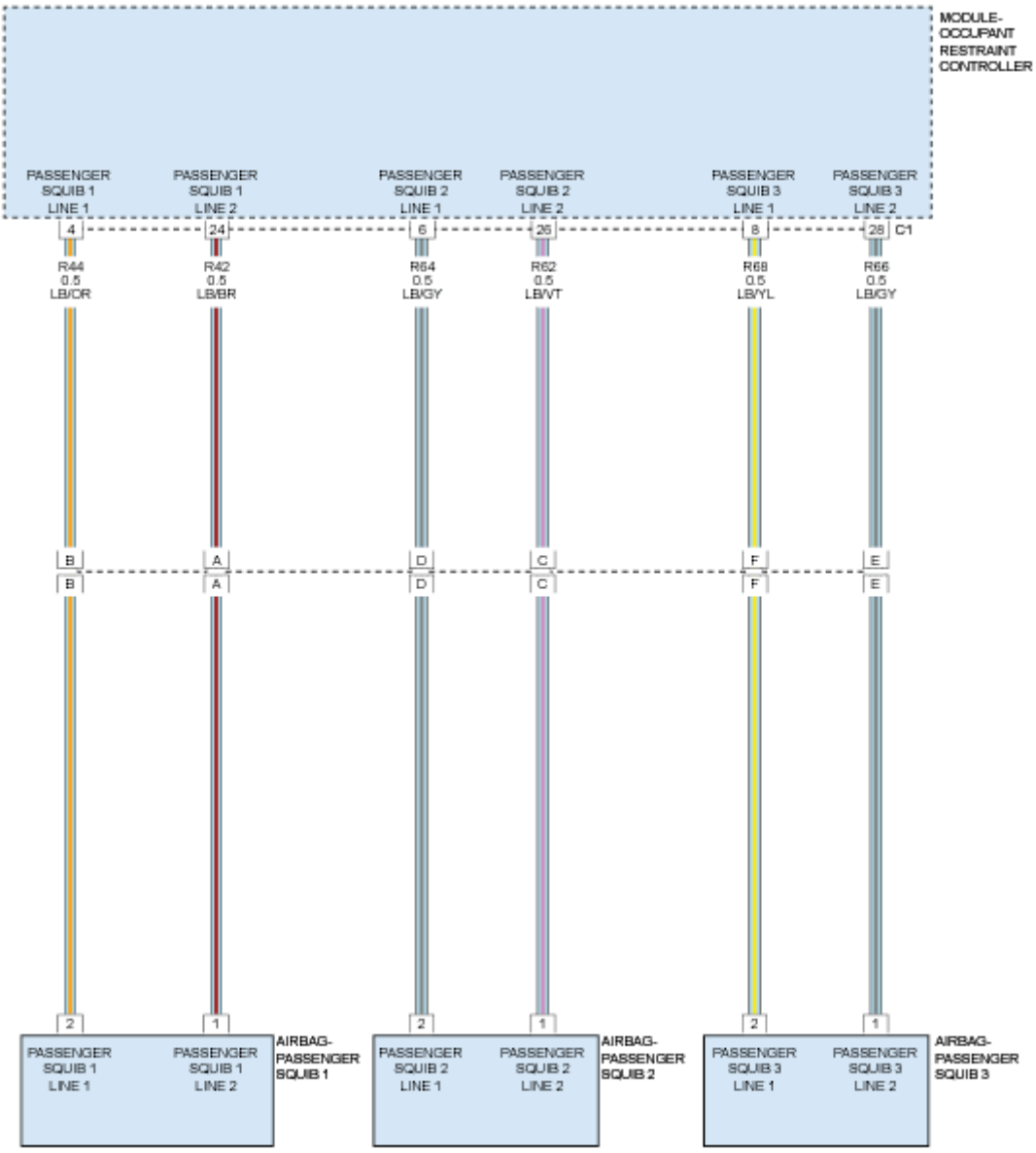

Fig. 18: Passenger Frontal Squib Circuit Diagram
Courtesy of CHRYSLER GROUP, LLC

THEORY OF OPERATION

When powered, the Occupant Restraint Controller (ORC) sends a test current to the squibs to verify the integrity of the squib and wiring. These circuits are maintained in a "floating" configuration at the module (connected to neither power nor ground) as protection against inadvertent deployment. Use of the (special tool #8443A, SRS Load Tool) in the tests below substitutes a suspect squib with a known good component. The use of the (special tool #8443-57, Adapter, Supplemental Restraint System Load Tool) provides a test point as well as a method for opening the shorting bar connections within the harness connector.

WHEN MONITORED

The ORC sends out a 40 mA diagnostic current on each squib voltage supply circuit at power up and every 500 ms thereafter while the ignition is on.

SET CONDITION

This Diagnostic Trouble Code (DTC) sets when the ORC detects a short to voltage on the squib circuit for more than 2.6 seconds. This DTC transitions from active to stored when the ORC sees a recovery from a short to voltage for greater than 2.6 seconds. The Airbag Warning Lamp (AWL) will set in the instrument cluster.

POSSIBLE CAUSES

Possible Causes
(R42) PASSENGER SQUIB 1 LINE 2 CIRCUIT SHORTED TO VOLTAGE
(R44) PASSENGER SQUIB 1 LINE 1 CIRCUIT SHORTED TO VOLTAGE
PASSENGER AIRBAG
OCCUPANT RESTRAINT CONTROLLER (ORC)

Always perform the Pre-Diagnostic Troubleshooting procedure before proceeding. Refer to STANDARD PROCEDURE .

DIAGNOSTIC TEST

1. **DETERMINE ACTIVE OR STORED DTC**

NOTE: Make sure the battery is fully charged.

NOTE: The scan tool, (special tool #8443A, SRS Load Tool), and DVOM are required to perform the following test.

1. Select Active or Stored DTC.

Is the DTC active or stored?

ORC - ACTIVE DTC

- Go To 2

ORC - STORED DTC

- Perform the RESTRAINTS SYSTEM INTERMITTENT TEST. Refer to **STANDARD PROCEDURE** .

2. **CHECK FOR SHORTED SQUIB CIRCUITS IN PASSENGER AIRBAG**

WARNING: Turn the ignition off disconnect the 12-volt battery and wait two minutes before proceeding. Failure to follow these instructions may result in possible serious or fatal injury.

1. Gain access to the Passenger Airbag Squib harness connectors.
2. Disconnect the Passenger Airbag Squib harness connectors.

WARNING: Do not place an intact non-deployed airbag face down on a hard surface, the airbag propels into the air if accidentally deployed. Failure to follow these instructions may result in possible serious or fatal injury.

NOTE: Check the connectors - Clean and repair as necessary.

3. Connect the (special tool #8443A, SRS Load Tool) and the (special tool #8443-8, Jumper, SRS Load) to the Passenger Airbag Squib 1 and Squib 2 harness connectors.
4. If equipped with the standard key ignition, use this ignition on warning.

WARNING: Turn the ignition on, then reconnect the 12-volt battery and wait two minutes before proceeding. Failure to follow these instructions may result in possible serious or fatal injury.

5. If equipped with the keyless ignition, use this ignition on warning.

WARNING: Disconnect the 12-volt battery wait two minutes before proceeding, remove the ORC fuses, connect the 12-volt battery, wait two minutes before proceeding. Cycle the ignition to the On position, then reconnect the ORC fuses. Wait two minutes before proceeding. Failure to follow these instructions may result in possible serious or fatal injury.

6. With the scan tool, read the active ORC DTCs.

Does the scan tool display: B0010-12-PASSENGER FRONTAL SQUIB 1 CONTROL - CIRCUIT

SHORT TO BATTERY?

Yes

- Go To 3

No

- Replace the Passenger Airbag in accordance with the Service Information. Refer to **AIR BAG, PASSENGER, REMOVAL** .
- Perform the RESTRAINTS SYSTEM VERIFICATION TEST. Refer to **STANDARD PROCEDURE** .

3. **CHECK (R44) PASSENGER SQUIB 2 LINE 1 CIRCUIT AND (R42) PASSENGER SQUIB 2 LINE 2 CIRCUIT FOR A SHORT TO VOLTAGE**

WARNING: Turn the ignition off disconnect the 12-volt battery and wait two minutes before proceeding. Failure to follow these instructions may result in possible serious or fatal injury.

1. Disconnect the (special tool #8443A, SRS Load Tool) and the (special tool #8443-8, Jumper, SRS Load) from the Passenger Airbag Squib harness connectors.
2. Disconnect the ORC harness connectors.

NOTE: Check the connectors - Clean and repair as necessary.

3. Connect the (special tool #8443-57, Adapter, Supplemental Restraint System Load Tool) to the ORC C1 and C2 harness connectors.
4. If equipped with the standard key ignition, use this ignition on warning.

WARNING: Turn the ignition on, then reconnect the 12-volt battery and wait two minutes before proceeding. Failure to follow these instructions may result in possible serious or fatal injury.

5. If equipped with the keyless ignition, use this ignition on warning.

WARNING: Disconnect the 12-volt battery wait two minutes before proceeding, remove the ORC fuses, connect the 12-volt battery, wait two minutes before proceeding. Cycle the ignition to the On position, then reconnect the ORC fuses. Wait two minutes before proceeding. Failure to follow these instructions may result in possible serious or fatal injury.

6. Measure the voltage of the (R44) Passenger Squib 1 Line 1 circuit between the connector C1A cavity 4 of the (special tool #8443-57, Adapter, Supplemental Restraint System Load Tool) and

ground.

7. Measure the voltage of the (R42) Passenger Squib 1 Line 2 circuit between the connector C1A cavity 24 of the (special tool #8443-57, Adapter, Supplemental Restraint System Load Tool) and ground.

   Is there any voltage present on either circuit?

   Yes

   - Repair the Passenger Squib 1 circuit(s) for a short to voltage in accordance with the Service Information.
   - Perform the RESTRAINTS SYSTEM VERIFICATION TEST. Refer to **STANDARD PROCEDURE** .

   No

   WARNING: **Turn the ignition off disconnect the 12-volt battery and wait two minutes before proceeding. Failure to follow these instructions may result in possible serious or fatal injury.**

   WARNING: **If the Occupant Restraint Controller (ORC) is dropped at any time, it must be replaced. Failure to take the proper precautions can result in accidental airbag deployment. Failure to follow these instructions may result in possible serious or fatal injury.**

   - Replace the ORC in accordance with the Service Information. Refer to **MODULE, OCCUPANT RESTRAINT CONTROLLER, REMOVAL** .
   - Perform the RESTRAINTS SYSTEM VERIFICATION TEST. Refer to **STANDARD PROCEDURE** .

B0010-13-PASSENGER FRONTAL SQUIB 1 CONTROL - CIRCUIT OPEN

For a complete wiring diagram, **refer to appropriate SYSTEM WIRING DIAGRAMS article** .

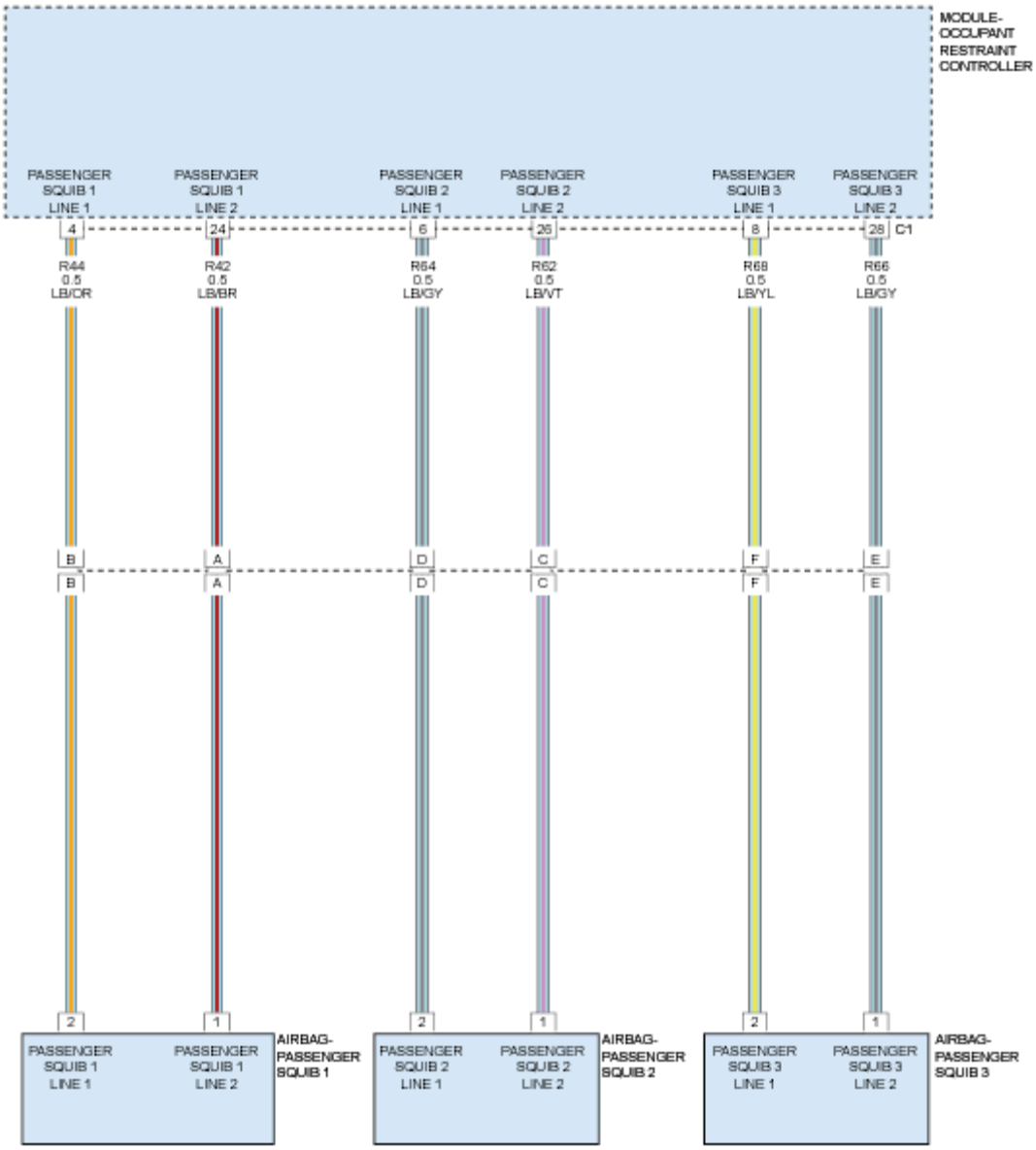

Fig. 19: Passenger Frontal Squib Circuit Diagram
Courtesy of CHRYSLER GROUP, LLC

THEORY OF OPERATION

When powered, the Occupant Restraint Controller (ORC) sends a test current to the squibs to verify the integrity of the squib and wiring. These circuits are maintained in a "floating" configuration at the module (connected to neither power nor ground) as protection against inadvertent deployment. Use of the (special tool #8443A, SRS Load Tool) in the tests below substitutes a suspect squib with a known good component. The use of the (special tool #8443-57, Adapter, Supplemental Restraint System Load Tool) provides a test point as well as a method for opening the shorting bar connections within the harness connector.

WHEN MONITORED

The ORC sends out a 40 mA diagnostic current on each squib voltage supply circuit at power up and every 500 ms thereafter while the ignition is on.

SET CONDITION

This Diagnostic Trouble Code (DTC) sets when the ORC detects a shorted together of the passenger frontal squib line 1 and line 2 circuits for more than 2.6 seconds. This DTC transitions from active to stored when the ORC sees a recovery from the squib shorted together condition for greater than 2.6 seconds.

POSSIBLE CAUSES

Possible Causes
(R42) PASSENGER SQUIB 1 LINE 2 CIRCUIT OPEN
(R44) PASSENGER SQUIB 1 LINE 1 CIRCUIT OPEN
PASSENGER AIRBAG
OCCUPANT RESTRAINT CONTROLLER (ORC)

Always perform the Pre-Diagnostic Troubleshooting procedure before proceeding. Refer to STANDARD PROCEDURE .

DIAGNOSTIC TEST

1. **DETERMINE ACTIVE OR STORED DTC**

   NOTE: Make sure the battery is fully charged.

   NOTE: The scan tool, (special tool #8443A, SRS Load Tool), and DVOM are required to perform the following test.

   1. Select Active or Stored DTC.

      Is the DTC active or stored?

      ORC - ACTIVE DTC

      - Go To 2

      ORC - STORED DTC

      - Perform the RESTRAINTS SYSTEM INTERMITTENT TEST. Refer to **STANDARD PROCEDURE** .

2. **CHECK FOR OPEN SQUIB CIRCUITS IN PASSENGER AIRBAG**

WARNING: Turn the ignition off disconnect the 12-volt battery and wait two minutes before proceeding. Failure to follow these instructions may result in possible serious or fatal injury.

1. Disconnect the Passenger Airbag Squib 1 harness connector.

NOTE: Check the connectors - Clean and repair as necessary.

2. Connect the (special tool #8443A, SRS Load Tool) and the (special tool #8443-8, Jumper, SRS Load) to the Passenger Airbag Squib harness connector.
3. If equipped with the standard key ignition, use this ignition on warning.

WARNING: Turn the ignition on, then reconnect the 12-volt battery and wait two minutes before proceeding. Failure to follow these instructions may result in possible serious or fatal injury.

4. If equipped with the keyless ignition, use this ignition on warning.

WARNING: Disconnect the 12-volt battery wait two minutes before proceeding, remove the ORC fuses, connect the 12-volt battery, wait two minutes before proceeding. Cycle the ignition to the On position, then reconnect the ORC fuses. Wait two minutes before proceeding. Failure to follow these instructions may result in possible serious or fatal injury.

5. With the scan tool, read the active ORC DTCs.

   Does the scan tool display: B0010-13-PASSENGER FRONTAL SQUIB 1 CONTROL - CIRCUIT OPEN?

   Yes

   - Go To 3

   No

   - Replace the Passenger Airbag Squib 1 in accordance with the Service Information. Refer to **AIR BAG, PASSENGER, REMOVAL** .
   - Perform the RESTRAINTS SYSTEM VERIFICATION TEST. Refer to **STANDARD PROCEDURE** .

3. **CHECK (R42) PASSENGER SQUIB 1 LINE 2 CIRCUIT AND (R44) PASSENGER SQUIB 1 LINE 1 CIRCUIT FOR AN OPEN**

WARNING: Turn the ignition off disconnect the 12-volt battery and wait two

minutes before proceeding. Failure to follow these instructions may result in possible serious or fatal injury.

1. Disconnect the (special tool #8443A, SRS Load Tool) and the (special tool #8443-8, Jumper, SRS Load) from the Passenger Airbag Squib harness connector.
2. Disconnect the ORC connectors.

NOTE: Check the connectors - Clean and repair as necessary.

3. Connect the (special tool #8443-57, Adapter, Supplemental Restraint System Load Tool) to the ORC harness connectors.
4. Measure the resistance of the (R42) Passenger Squib 1 Line 2 circuit between the Passenger Airbag Squib connector cavity 1 and connector C1A cavity 24 of the (special tool #8443-57, Adapter, Supplemental Restraint System Load Tool).
5. Measure the resistance of the (R44) Passenger Squib 1 Line 1 circuit between the Passenger Airbag Squib connector cavity 2 and connector C1A cavity 4 of the (special tool #8443-57, Adapter, Supplemental Restraint System Load Tool).

Is the resistance below or within the range of 5.4 - 10.0 Ohm for both circuits?

Yes

WARNING: **If the Occupant Restraint Controller (ORC) is dropped at any time, it must be replaced. Failure to take the proper precautions can result in accidental airbag deployment. Failure to follow these instructions may result in possible serious or fatal injury.**

- Replace the ORC in accordance with the Service Information. Refer to **MODULE, OCCUPANT RESTRAINT CONTROLLER, REMOVAL** .
- Perform the RESTRAINTS SYSTEM VERIFICATION TEST. Refer to **STANDARD PROCEDURE** .

No

- Repair the (R42) Passenger Squib 1 Line 2 circuit or (R44) Passenger Squib 1 Line 1 circuit for an open.
- Perform the RESTRAINTS SYSTEM VERIFICATION TEST. Refer to **STANDARD PROCEDURE** .

B0010-2B-PASSENGER FRONTAL SQUIB 1 CONTROL - WIRES SHORTED TOGETHER

For a complete wiring diagram, **refer to appropriate SYSTEM WIRING DIAGRAMS article** .

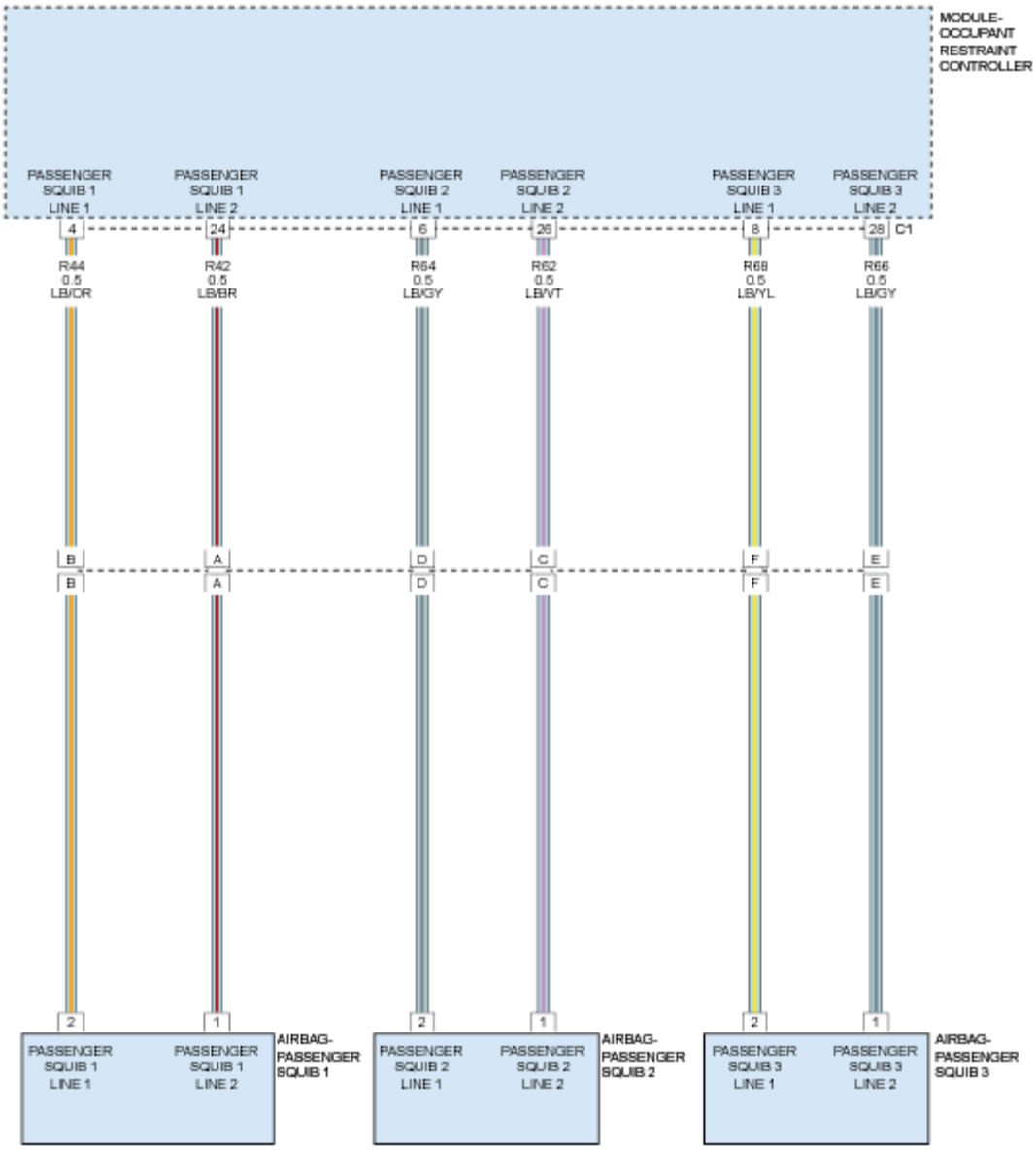

Fig. 20: Passenger Frontal Squib Circuit Diagram
Courtesy of CHRYSLER GROUP, LLC

THEORY OF OPERATION

When powered, the Occupant Restraint Controller (ORC) sends a test current to the squibs to verify the integrity of the squib and wiring. These circuits are maintained in a "floating" configuration at the module (connected to neither power nor ground) as protection against inadvertent deployment. Use of the (special tool #8443A, SRS Load Tool) in the tests below substitutes a suspect squib with a known good component. The use of the (special tool #8443-57, Adapter, Supplemental Restraint System Load Tool) provides a test point as well as a method for opening the shorting bar connections within the harness connector.

WHEN MONITORED

The ORC sends out a 40 mA diagnostic current on each squib voltage supply circuit at power up, and every 500 ms thereafter while the ignition is on.

SET CONDITION

This Diagnostic Trouble Code (DTC) sets when the ORC detects a shorted together of the passenger frontal squib line 1 and line 2 circuits for more than 2.6 seconds. This DTC transitions from active to stored when the ORC sees a recovery from the squib shorted together condition for greater than 2.6 seconds. The Airbag Warning Lamp (AWL) will set in the Instrument Cluster.

POSSIBLE CAUSES

Possible Causes
(R42) PASSENGER SQUIB 1 LINE 2 CIRCUIT SHORTED TO THE (R44) PASSENGER SQUIB 1 LINE 1 CIRCUIT
PASSENGER AIRBAG
OCCUPANT RESTRAINT CONTROLLER (ORC)

Always perform the Pre-Diagnostic Troubleshooting procedure before proceeding. Refer to STANDARD PROCEDURE .

DIAGNOSTIC TEST

1. **DETERMINE ACTIVE OR STORED DTC**

   NOTE: Make sure the battery is fully charged.

   NOTE: The scan tool, (special tool #8443A, SRS Load Tool), and DVOM are required to perform the following test.

   1. Select Active or Stored DTC.

      Is the DTC active or stored?

      ORC - ACTIVE DTC

      - Go To 2

      ORC - STORED DTC

      - Perform the RESTRAINTS SYSTEM INTERMITTENT TEST. Refer to **STANDARD PROCEDURE** .

2. **CHECK FOR SHORTED SQUIB CIRCUITS IN PASSENGER AIRBAG**

WARNING: Turn the ignition off disconnect the 12-volt battery and wait two minutes before proceeding. Failure to follow these instructions may result in possible serious or fatal injury.

1. Gain access to the Passenger Airbag Squib harness connectors.
2. Disconnect the Passenger Airbag Squib harness connectors.

NOTE: Check the connectors - Clean and repair as necessary.

3. Connect the (special tool #8443A, SRS Load Tool) and the (special tool #8443-8, Jumper, SRS Load) to the Passenger Airbag Squib 1 and Squib 2 harness connectors.
4. If equipped with the standard key ignition, use this ignition on warning.

WARNING: Turn the ignition on, then reconnect the 12-volt battery and wait two minutes before proceeding. Failure to follow these instructions may result in possible serious or fatal injury.

5. If equipped with the keyless ignition, use this ignition on warning.

WARNING: Disconnect the 12-volt battery wait two minutes before proceeding, remove the ORC fuses, connect the 12-volt battery, wait two minutes before proceeding. Cycle the ignition to the On position, then reconnect the ORC fuses. Wait two minutes before proceeding. Failure to follow these instructions may result in possible serious or fatal injury.

6. With the scan tool, read the active ORC DTCs.

   Does the scan tool display: B0010-2B-PASSENGER FRONTAL SQUIB 1 CONTROL - WIRES SHORTED TOGETHER?

   Yes

   - Go To 3

   No

   - Replace the Passenger Airbag in accordance with the Service Information. Refer to **AIR BAG, PASSENGER, REMOVAL** .
   - Perform the RESTRAINTS SYSTEM VERIFICATION TEST. Refer to **STANDARD PROCEDURE** .

3. **CHECK (R42) PASSENGER SQUIB 1 LINE 2 CIRCUIT FOR A SHORT TO THE (R44) PASSENGER SQUIB 1 LINE 1 CIRCUIT**

WARNING: Turn the ignition off disconnect the 12-volt battery and wait two minutes before proceeding. Failure to follow these instructions may result in possible serious or fatal injury.

1. Disconnect the (special tool #8443A, SRS Load Tool) and the (special tool #8443-8, Jumper, SRS Load) from the Passenger Airbag Squib harness connectors.
2. Disconnect the ORC harness connectors.

NOTE: Check the connectors - Clean and repair as necessary.

3. Connect the (special tool #8443-57, Adapter, Supplemental Restraint System Load Tool) to the ORC C1 and C2 harness connectors.
4. Measure the resistance between the (R42) Passenger Squib 1 Line 2 circuit connector C1A cavity 24 and the (R44) Passenger Squib 1 Line 1 circuit connector C1A cavity 4 of the (special tool #8443-57, Adapter, Supplemental Restraint System Load Tool).

   Is the resistance below 10K Ohm?

   Yes

   - Repair the (R42) Passenger Squib 1 Line 2 circuit for a short to the (R44) Passenger Squib 1 Line 1 circuit in accordance with the Service Information.
   - Perform the RESTRAINTS SYSTEM VERIFICATION TEST. Refer to **STANDARD PROCEDURE** .

   No

   WARNING: If the Occupant Restraint Controller (ORC) is dropped at any time, it must be replaced. Failure to take the proper precautions can result in accidental airbag deployment. Failure to follow these instructions may result in possible serious or fatal injury.

   - Replace the ORC in accordance with the Service Information. Refer to **MODULE, OCCUPANT RESTRAINT CONTROLLER, REMOVAL** .
   - Perform the RESTRAINTS SYSTEM VERIFICATION TEST. Refer to **STANDARD PROCEDURE** .

B0011-11-PASSENGER FRONTAL SQUIB 2 CONTROL - CIRCUIT SHORT TO GROUND

For a complete wiring diagram, **refer to appropriate SYSTEM WIRING DIAGRAMS article** .

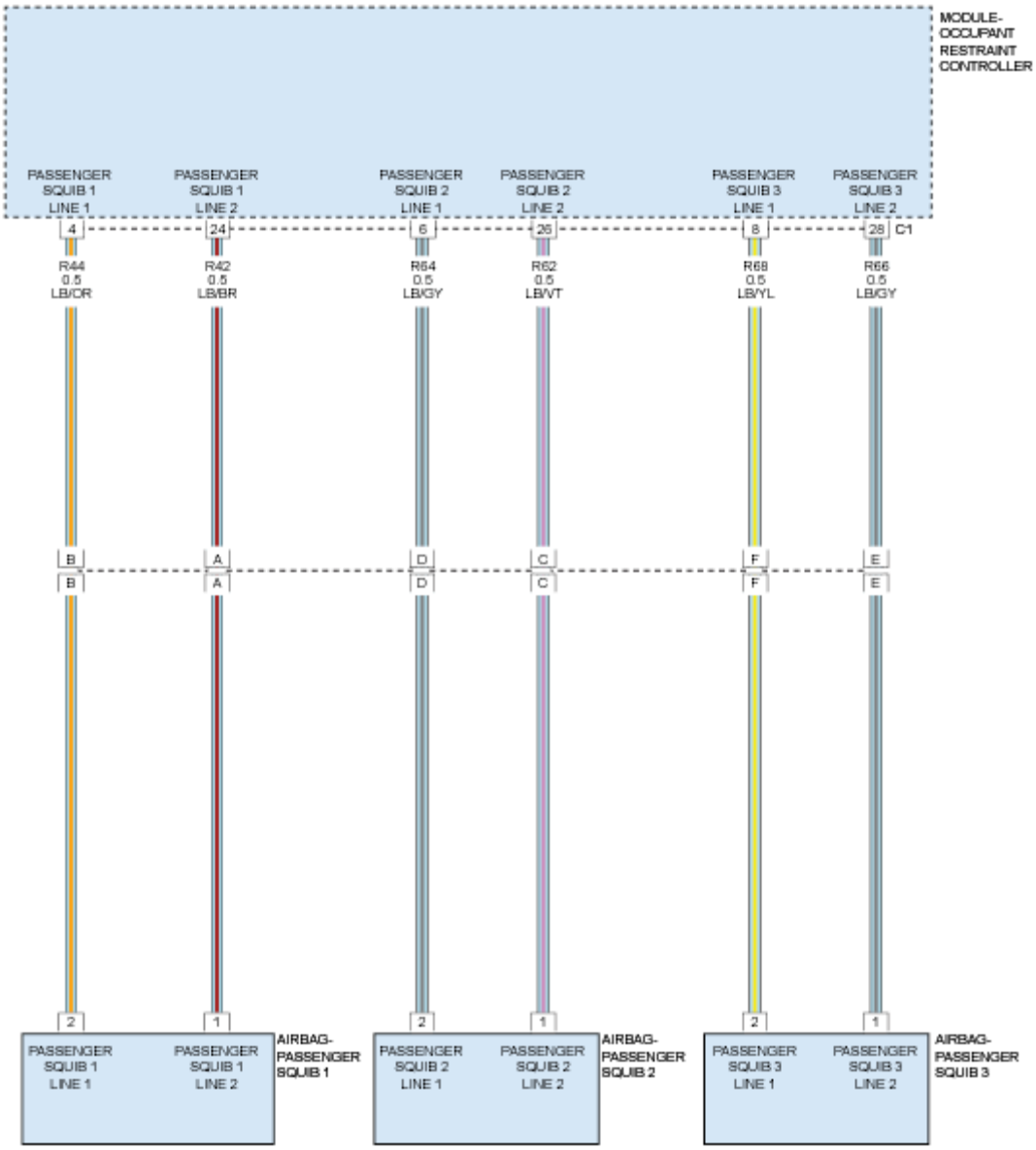

Fig. 21: Passenger Frontal Squib Circuit Diagram
Courtesy of CHRYSLER GROUP, LLC

THEORY OF OPERATION

When powered, the Occupant Restraint Controller (ORC) sends a test current to the squibs to verify the integrity of the squib and wiring. These circuits are maintained in a "floating" configuration at the module (connected to neither power nor ground) as protection against inadvertent deployment. Use of the (special tool #8443A, SRS Load Tool) in the tests below substitutes a suspect squib with a known good component. The use of the (special tool #8443-57, Adapter, Supplemental Restraint System Load Tool) provides a test point as well as a method for opening the shorting bar connections within the harness connector.

WHEN MONITORED

The ORC sends out a 40 mA diagnostic current on each squib voltage supply circuit at power up and every 500 ms thereafter while the ignition is on.

SET CONDITION

This Diagnostic Trouble Code (DTC) sets when the ORC detects a short to ground on the passenger airbag squib circuit for more than 2.6 seconds. This DTC transitions from active to stored when the ORC sees a recovery from a short to ground for greater than 2.6 seconds. The Airbag Warning Lamp (AWL) will set in the instrument cluster.

POSSIBLE CAUSES

Possible Causes
(R64) PASSENGER SQUIB 2 LINE 1 CIRCUIT SHORTED TO GROUND
(R62) PASSENGER SQUIB 2 LINE 2 CIRCUIT SHORTED TO GROUND
PASSENGER AIRBAG
OCCUPANT RESTRAINT CONTROLLER (ORC)

Always perform the Pre-Diagnostic Troubleshooting procedure before proceeding. Refer to STANDARD PROCEDURE .

DIAGNOSTIC TEST

1. **DETERMINE ACTIVE OR STORED DTC**

   NOTE: Make sure the battery is fully charged.

   NOTE: The scan tool, (special tool #8443A, SRS Load Tool), and DVOM are required to perform the following test.

   1. Select Active or Stored DTC.

      Is the DTC active or stored?

      ORC - ACTIVE DTC

      - Go To 2

      ORC - STORED DTC

      - Perform the RESTRAINTS SYSTEM INTERMITTENT TEST. Refer to **STANDARD PROCEDURE** .

2. **CHECK FOR SHORTED SQUIB CIRCUITS IN PASSENGER AIRBAG**

WARNING: Turn the ignition off disconnect the 12-volt battery and wait two minutes before proceeding. Failure to follow these instructions may result in possible serious or fatal injury.

1. Gain access to the Passenger Airbag Squib harness connectors.
2. Disconnect the Passenger Airbag Squib harness connectors.

WARNING: Do not place an intact non-deployed airbag face down on a hard surface, the airbag propels into the air if accidentally deployed. Failure to follow these instructions may result in possible serious or fatal injury.

NOTE: Check connectors - Clean and repair as necessary.

3. Connect the (special tool #8443A, SRS Load Tool) and the (special tool #8443-8, Jumper, SRS Load) to the Passenger Airbag Squib 1 and Squib 2 harness connector.
4. If equipped with the standard key ignition, use this ignition on warning.

WARNING: Turn the ignition on, then reconnect the 12-volt battery and wait two minutes before proceeding. Failure to follow these instructions may result in possible serious or fatal injury.

5. If equipped with the keyless ignition, use this ignition on warning.

WARNING: Disconnect the 12-volt battery wait two minutes before proceeding, remove the ORC fuses, connect the 12-volt battery, wait two minutes before proceeding. Cycle the ignition to the On position, then reconnect the ORC fuses. Wait two minutes before proceeding. Failure to follow these instructions may result in possible serious or fatal injury.

6. With the scan tool, read the active ORC DTCs.

   Does the scan tool display: B0011-11-PASSENGER FRONTAL SQUIB 2 CONTROL - CIRCUIT SHORT TO GROUND?

   Yes

   - Go To 3

   No

   - Replace the Passenger Airbag in accordance with the Service Information. Refer to **AIR BAG, PASSENGER, REMOVAL** .

- Perform the RESTRAINTS SYSTEM VERIFICATION TEST. Refer to **STANDARD PROCEDURE** .

3. **CHECK (R64) PASSENGER SQUIB 2 LINE 1 CIRCUIT AND (R62) PASSENGER SQUIB 2 LINE 2 CIRCUIT FOR A SHORT TO GROUND**

WARNING: Turn the ignition off disconnect the 12-volt battery and wait two minutes before proceeding. Failure to follow these instructions may result in possible serious or fatal injury.

1. Disconnect the (special tool #8443A, SRS Load Tool) and the (special tool #8443-8, Jumper, SRS Load) from the Passenger Airbag Squib harness connectors.
2. Disconnect the ORC harness connectors.

NOTE: Check the connectors - Clean and repair as necessary.

3. Connect the (special tool #8443-57, Adapter, Supplemental Restraint System Load Tool) to the ORC C1 and C2 harness connector.
4. Measure the resistance of the (R64) Passenger Squib 2 Line 1 circuit between ground and connector C1A cavity 6 of the (special tool #8443-57, Adapter, Supplemental Restraint System Load Tool).
5. Measure the resistance of the (R62) Passenger Squib 2 Line 2 circuit between ground and connector C1A cavity 26 of the (special tool #8443-57, Adapter, Supplemental Restraint System Load Tool).

Is the resistance below 10k Ohms on either circuit?

Yes

- Repair the Passenger Squib 2 circuit(s) for a short to ground in accordance with the Service Information.
- Perform the RESTRAINTS SYSTEM VERIFICATION TEST. Refer to **STANDARD PROCEDURE** .

No

WARNING: If the Occupant Restraint Controller (ORC) is dropped at any time, it must be replaced. Failure to take the proper precautions can result in accidental airbag deployment. Failure to follow these instructions may result in possible serious or fatal injury.

- Replace the ORC in accordance with the Service Information. Refer to **MODULE, OCCUPANT RESTRAINT CONTROLLER, REMOVAL** .
- Perform the RESTRAINTS SYSTEM VERIFICATION TEST. Refer to **STANDARD PROCEDURE** .

B0011-12-PASSENGER FRONTAL SQUIB 2 CONTROL - CIRCUIT SHORT TO BATTERY

For a complete wiring diagram, **refer to appropriate SYSTEM WIRING DIAGRAMS article** .

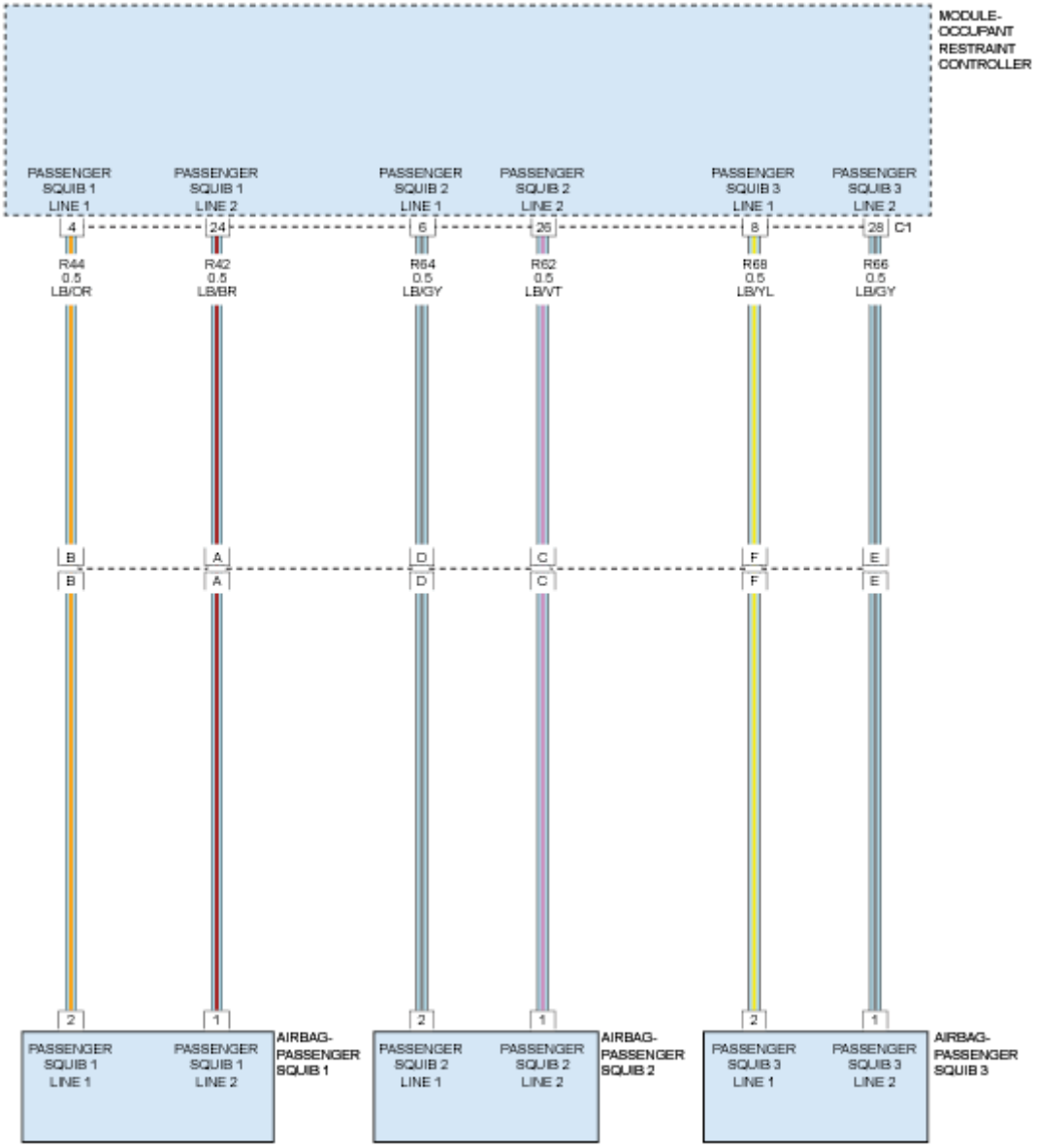

Fig. 22: Passenger Frontal Squib Circuit Diagram
Courtesy of CHRYSLER GROUP, LLC

THEORY OF OPERATION

When powered, the Occupant Restraint Controller (ORC) sends a test current to the squibs to verify the integrity of the squib and wiring. These circuits are maintained in a "floating" configuration at the module

(connected to neither power nor ground) as protection against inadvertent deployment. Use of the (special tool #8443A, SRS Load Tool) in the tests below substitutes a suspect squib with a known good component. The use of the (special tool #8443-57, Adapter, Supplemental Restraint System Load Tool) provides a test point as well as a method for opening the shorting bar connections within the harness connector.

WHEN MONITORED

The ORC sends out a 40 mA diagnostic current on each squib voltage supply circuit at power up and every 500 ms thereafter while the ignition is on.

SET CONDITION

This Diagnostic Trouble Code (DTC) sets when the ORC detects a short to voltage on the squib circuit for more than 2.6 seconds. This DTC transitions from active to stored when the ORC sees a recovery from a short to voltage for greater than 2.6 seconds. The Airbag Warning Lamp (AWL) will set in the instrument cluster.

POSSIBLE CAUSES

Possible Causes
(R64) PASSENGER SQUIB 2 LINE 1 CIRCUIT SHORTED TO VOLTAGE
(R62) PASSENGER SQUIB 2 LINE 2 CIRCUIT SHORTED TO VOLTAGE
PASSENGER AIRBAG
OCCUPANT RESTRAINT CONTROLLER (ORC)

Always perform the Pre-Diagnostic Troubleshooting procedure before proceeding. Refer to STANDARD PROCEDURE .

DIAGNOSTIC TEST

1. **DETERMINE ACTIVE OR STORED DTC**

   NOTE: Make sure the battery is fully charged.

   NOTE: The scan tool, (special tool #8443A, SRS Load Tool), and DVOM are required to perform the following test.

   1. Select Active or Stored DTC.

      Is the DTC active or stored?

      ORC - ACTIVE DTC

      - Go To 2

      ORC - STORED DTC

- Perform the RESTRAINTS SYSTEM INTERMITTENT TEST. Refer to **STANDARD PROCEDURE** .

2. **CHECK FOR SHORTED SQUIB CIRCUITS IN PASSENGER AIRBAG**

WARNING: Turn the ignition off disconnect the 12-volt battery and wait two minutes before proceeding. Failure to follow these instructions may result in possible serious or fatal injury.

1. Gain access to the Passenger Airbag Squib harness connectors.
2. Disconnect the Passenger Airbag Squib harness connectors.

WARNING: Do not place an intact non-deployed airbag face down on a hard surface, the airbag propels into the air if accidentally deployed. Failure to follow these instructions may result in possible serious or fatal injury.

NOTE: Check the connectors - Clean and repair as necessary.

3. Connect the (special tool #8443A, SRS Load Tool) and the (special tool #8443-8, Jumper, SRS Load) to the Passenger Airbag Squib 1 and Squib 2 harness connectors.
4. If equipped with the standard key ignition, use this ignition on warning.

WARNING: Turn the ignition on, then reconnect the 12-volt battery and wait two minutes before proceeding. Failure to follow these instructions may result in possible serious or fatal injury.

5. If equipped with the keyless ignition, use this ignition on warning.

WARNING: Disconnect the 12-volt battery wait two minutes before proceeding, remove the ORC fuses, connect the 12-volt battery, wait two minutes before proceeding. Cycle the ignition to the On position, then reconnect the ORC fuses. Wait two minutes before proceeding. Failure to follow these instructions may result in possible serious or fatal injury.

6. With the scan tool, read the active ORC DTCs.

   Does the scan tool display: B0011-12-PASSENGER FRONTAL SQUIB 2 CONTROL - CIRCUIT SHORT TO BATTERY?

   Yes

   - Go To 3

No

- Replace the Passenger Airbag in accordance with the Service Information. Refer to **AIR BAG, PASSENGER, REMOVAL** .
- Perform the RESTRAINTS SYSTEM VERIFICATION TEST. Refer to **STANDARD PROCEDURE** .

3. **CHECK (R64) PASSENGER SQUIB 2 LINE 1 CIRCUIT AND (R62) PASSENGER SQUIB 2 LINE 2 CIRCUIT FOR A SHORT TO VOLTAGE**

WARNING: Turn the ignition off disconnect the 12-volt battery and wait two minutes before proceeding. Failure to follow these instructions may result in possible serious or fatal injury.

1. Disconnect the (special tool #8443A, SRS Load Tool) from the (special tool #8443-8, Jumper, SRS Load) from the Passenger Airbag Squib harness connectors.
2. Disconnect the ORC harness connectors.

NOTE: Check the connectors - Clean and repair as necessary.

3. Connect the (special tool #8443-57, Adapter, Supplemental Restraint System Load Tool) to the ORC C1 and C2 harness connectors.
4. If equipped with the standard key ignition, use this ignition on warning.

WARNING: Turn the ignition on, then reconnect the 12-volt battery and wait two minutes before proceeding. Failure to follow these instructions may result in possible serious or fatal injury.

5. If equipped with the keyless ignition, use this ignition on warning.

WARNING: Disconnect the 12-volt battery wait two minutes before proceeding, remove the ORC fuses, connect the 12-volt battery, wait two minutes before proceeding. Cycle the ignition to the On position, then reconnect the ORC fuses. Wait two minutes before proceeding. Failure to follow these instructions may result in possible serious or fatal injury.

6. Measure the voltage of the (R64) Passenger Squib 2 Line 1 circuit between connector C1A cavity 6 of the (special tool #8443-57, Adapter, Supplemental Restraint System Load Tool) and ground.
7. Measure the voltage of the (R62) Passenger Squib 2 Line 2 circuit between connector C1A cavity 26 of the (special tool #8443-57, Adapter, Supplemental Restraint System Load Tool) and ground.

Is there any voltage present on either circuit?

Yes

- Repair the Passenger Squib 2 circuit(s) for a short to voltage.
- Perform the RESTRAINTS SYSTEM VERIFICATION TEST. Refer to **STANDARD PROCEDURE** .

No

WARNING: Turn the ignition off disconnect the 12-volt battery and wait two minutes before proceeding. Failure to follow these instructions may result in possible serious or fatal injury.

WARNING: If the Occupant Restraint Controller (ORC) is dropped at any time, it must be replaced. Failure to take the proper precautions can result in accidental airbag deployment. Failure to follow these instructions may result in possible serious or fatal injury.

- Replace the ORC in accordance with the Service Information. Refer to **MODULE, OCCUPANT RESTRAINT CONTROLLER, REMOVAL** .
- Perform the RESTRAINTS SYSTEM VERIFICATION TEST. Refer to **STANDARD PROCEDURE** .

B0011-13-PASSENGER FRONTAL SQUIB 2 CONTROL - CIRCUIT OPEN

For a complete wiring diagram, **refer to appropriate SYSTEM WIRING DIAGRAMS article** .

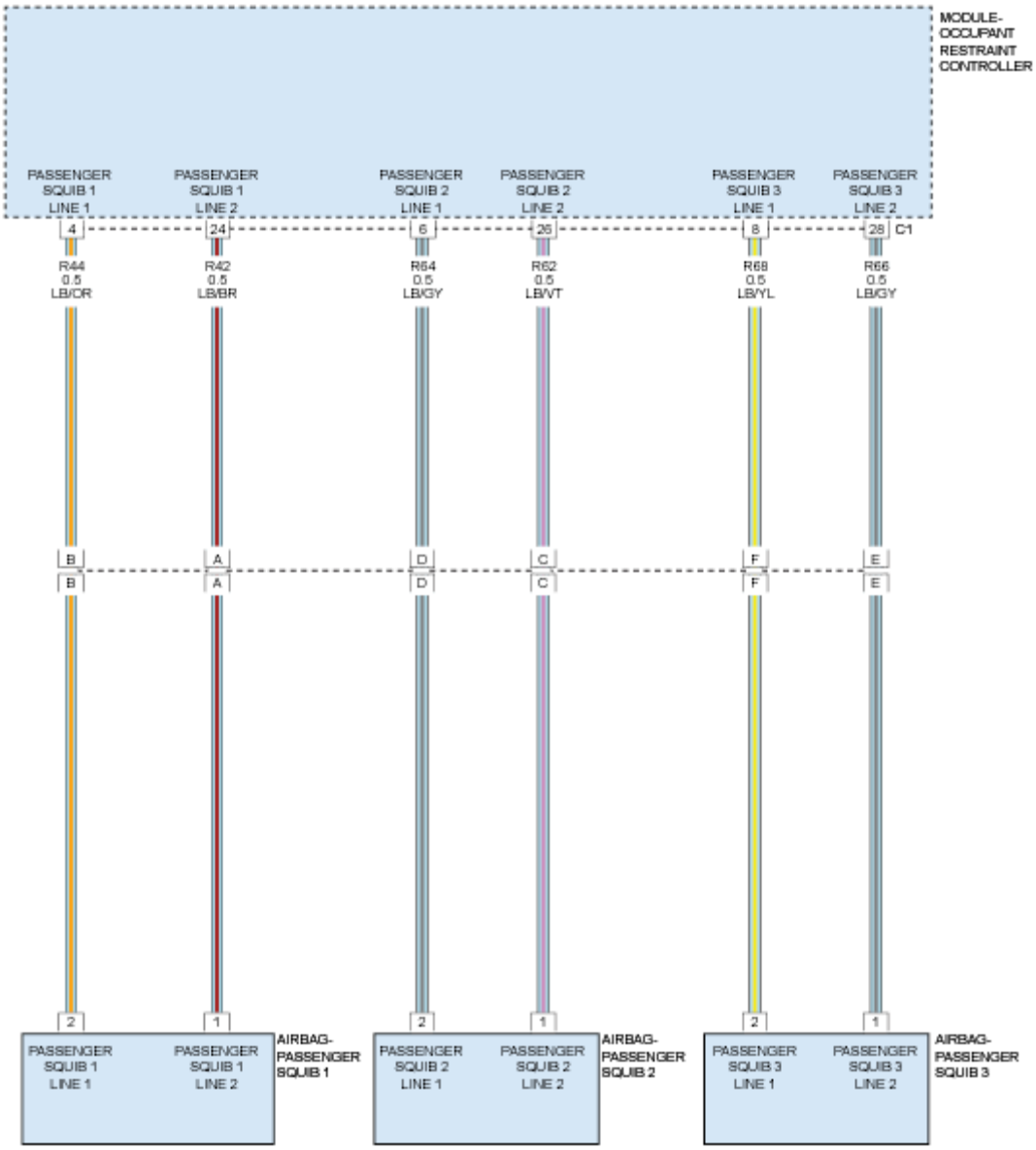

Fig. 23: Passenger Frontal Squib Circuit Diagram
Courtesy of CHRYSLER GROUP, LLC

THEORY OF OPERATION

When powered, the Occupant Restraint Controller (ORC) sends a test current to the squibs to verify the integrity of the squib and wiring. These circuits are maintained in a "floating" configuration at the module (connected to neither power nor ground) as protection against inadvertent deployment. Use of the (special tool #8443A, SRS Load Tool) in the tests below substitutes a suspect squib with a known good component. The use of the (special tool #8443-57, Adapter, Supplemental Restraint System Load Tool) provides a test point as well as a method for opening the shorting bar connections within the harness connector.

WHEN MONITORED

The ORC sends out a 40 mA diagnostic current on each squib voltage supply circuit at power up and every 500 ms thereafter while the ignition is on.

SET CONDITION

This Diagnostic Trouble Code (DTC) sets when the ORC detects an open on the passenger squib circuit for more than 2.6 seconds. This DTC transitions from active to stored when the ORC sees a recovery from a open for greater than 2.6 seconds.

POSSIBLE CAUSES

Possible Causes
(R64) PASSENGER SQUIB 2 LINE 1 CIRCUIT OPEN
(R62) PASSENGER SQUIB 2 LINE 2 CIRCUIT OPEN
PASSENGER AIRBAG
OCCUPANT RESTRAINT CONTROLLER (ORC)

Always perform the Pre-Diagnostic Troubleshooting procedure before proceeding. Refer to STANDARD PROCEDURE .

DIAGNOSTIC TEST

1. **DETERMINE ACTIVE OR STORED DTC**

   NOTE: Make sure the battery is fully charged.

   NOTE: The scan tool, (special tool #8443A, SRS Load Tool), and DVOM are required to perform the following test.

   1. Select Active or Stored DTC.

      Is the DTC active or stored?

      ORC - ACTIVE DTC

      - Go To 2

      ORC - STORED DTC

      - Perform the RESTRAINTS SYSTEM INTERMITTENT TEST. Refer to **STANDARD PROCEDURE** .

2. **CHECK FOR OPEN SQUIB CIRCUITS IN PASSENGER AIRBAG**

WARNING: Turn the ignition off disconnect the 12-volt battery and wait two minutes before proceeding. Failure to follow these instructions may result in possible serious or fatal injury.

1. Gain access to the Passenger Airbag Squib harness connectors.
2. Disconnect the Passenger Airbag Squib harness connectors.

WARNING: Do not place an intact non-deployed airbag face down on a hard surface, the airbag propels into the air if accidentally deployed. Failure to follow these instructions may result in possible serious or fatal injury.

NOTE: Check the connectors - Clean and repair as necessary.

3. Connect the (special tool #8443A, SRS Load Tool) and the (special tool #8443-8, Jumper, SRS Load) to the Passenger Airbag Squib 1 and Squib 2 harness connectors.
4. If equipped with the standard key ignition, use this ignition on warning.

WARNING: Turn the ignition on, then reconnect the 12-volt battery and wait two minutes before proceeding. Failure to follow these instructions may result in possible serious or fatal injury.

5. If equipped with the keyless ignition, use this ignition on warning.

WARNING: Disconnect the 12-volt battery wait two minutes before proceeding, remove the ORC fuses, connect the 12-volt battery, wait two minutes before proceeding. Cycle the ignition to the On position, then reconnect the ORC fuses. Wait two minutes before proceeding. Failure to follow these instructions may result in possible serious or fatal injury.

6. With the scan tool, read the active ORC DTCs.

   Does the scan tool display: B0011-13-PASSENGER FRONTAL SQUIB 2 CONTROL - CIRCUIT OPEN?

   Yes

   - Go To 3

   No

   - Replace the Passenger Airbag in accordance with the Service Information. Refer to **AIR BAG, PASSENGER, REMOVAL** .

- Perform the RESTRAINTS SYSTEM VERIFICATION TEST. Refer to **STANDARD PROCEDURE** .

3. **CHECK (R62) PASSENGER SQUIB 2 LINE 2 CIRCUIT AND (R64) PASSENGER SQUIB 2 LINE 1 CIRCUIT FOR AN OPEN**

WARNING: Turn the ignition off disconnect the 12-volt battery and wait two minutes before proceeding. Failure to follow these instructions may result in possible serious or fatal injury.

1. Disconnect the (special tool #8443A, SRS Load Tool) and the (special tool #8443-8, Jumper, SRS Load) from the Passenger Airbag Squib harness connectors.
2. Disconnect the ORC connectors.

NOTE: Check the connectors - Clean and repair as necessary.

3. Connect the (special tool #8443-57, Adapter, Supplemental Restraint System Load Tool) to the ORC C1 and C2 harness connectors.
4. Measure the resistance of the (R62) Passenger Squib 2 Line 2 circuit between the Passenger Airbag Squib connector cavity 1 and connector C1A cavity 26 of the (special tool #8443-57, Adapter, Supplemental Restraint System Load Tool).
5. Measure the resistance of the (R64) Passenger Squib 2 Line 1 circuit between the Passenger Airbag Squib connector cavity 2 and connector C1A cavity 6 of the (special tool #8443-57, Adapter, Supplemental Restraint System Load Tool).

Is the resistance below or within the range of 5.4 - 10.0 Ohm for both circuits?

Yes

WARNING: If the Occupant Restraint Controller (ORC) is dropped at any time, it must be replaced. Failure to take the proper precautions can result in accidental airbag deployment. Failure to follow these instructions may result in possible serious or fatal injury.

- Replace the ORC in accordance with the Service Information. Refer to **MODULE, OCCUPANT RESTRAINT CONTROLLER, REMOVAL** .
- Perform the RESTRAINTS SYSTEM VERIFICATION TEST. Refer to **STANDARD PROCEDURE** .

No

- Repair the (R62) Passenger Squib 2 Line 2 circuit or (R64) Passenger Squib 2 Line 1 circuit for an open.
- Perform the RESTRAINTS SYSTEM VERIFICATION TEST. Refer to **STANDARD PROCEDURE** .

B0011-2B-PASSENGER FRONTAL SQUIB 2 CONTROL - WIRES SHORTED TOGETHER

For a complete wiring diagram, **refer to appropriate SYSTEM WIRING DIAGRAMS article** .

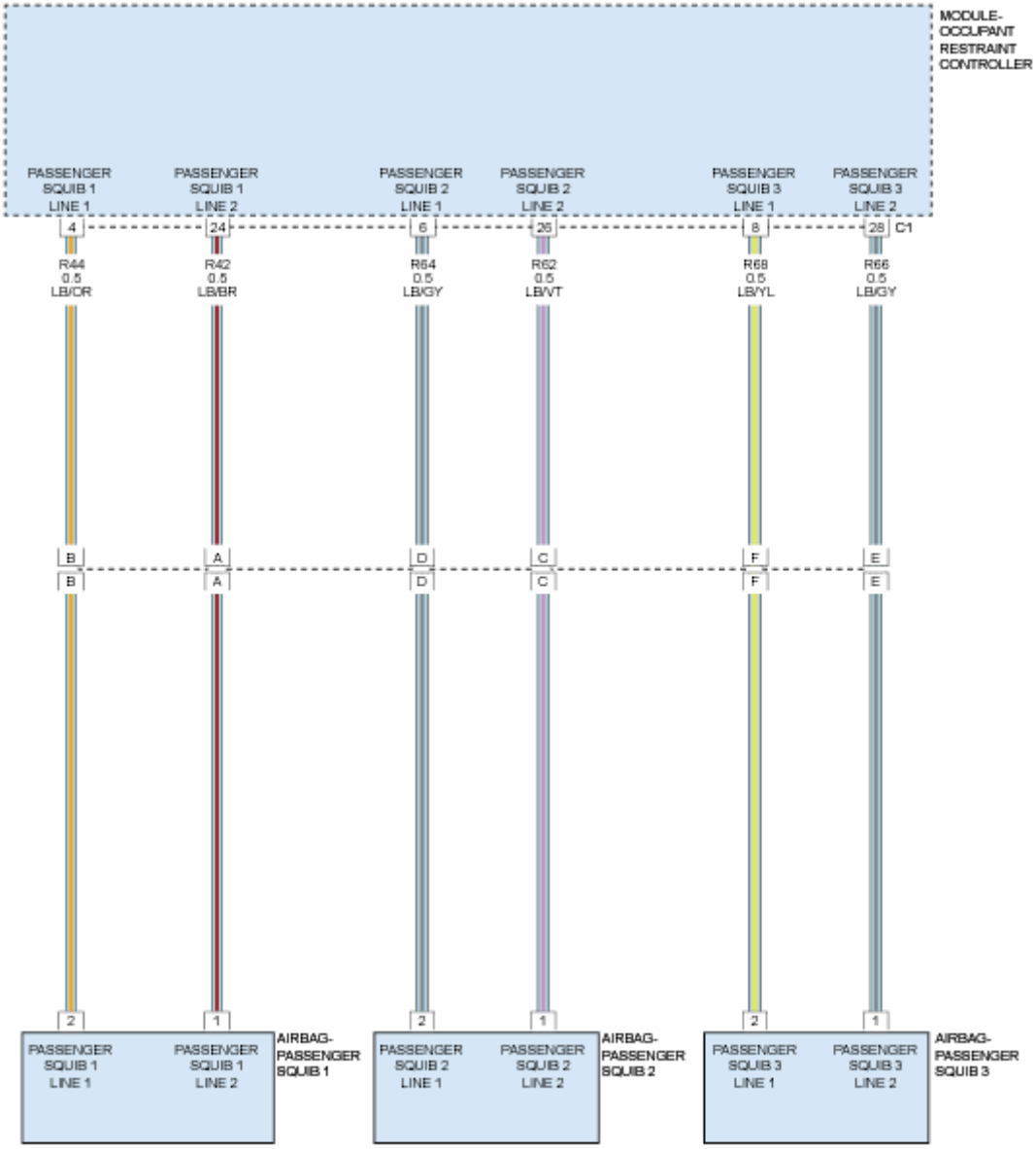

Fig. 24: Passenger Frontal Squib Circuit Diagram
Courtesy of CHRYSLER GROUP, LLC

THEORY OF OPERATION

When powered, the Occupant Restraint Controller (ORC) sends a test current to the squibs to verify the integrity of the squib and wiring. These circuits are maintained in a "floating" configuration at the module

(connected to neither power nor ground) as protection against inadvertent deployment. Use of the (special tool #8443A, SRS Load Tool) in the tests below substitutes a suspect squib with a known good component. The use of the (special tool #8443-57, Adapter, Supplemental Restraint System Load Tool) provides a test point as well as a method for opening the shorting bar connections within the harness connector.

WHEN MONITORED

The ORC sends out a 40 mA diagnostic current on each squib voltage supply circuit at power up, and every 500 ms thereafter while the ignition is on. circuits.

SET CONDITION

This Diagnostic Trouble Code (DTC) sets when the ORC detects a shorted together of the passenger frontal squib line 1 and line 2 circuits for more than 2.6 seconds. This DTC transitions from active to stored when the ORC sees a recovery from the squib shorted together condition for greater than 2.6 seconds. The Airbag Warning Lamp (AWL) will set in the Instrument Cluster.

POSSIBLE CAUSES

Possible Causes
(R64) PASSENGER SQUIB 2 LINE 1 CIRCUIT SHORTED TO THE (R62) PASSENGER SQUIB 2 LINE 2 CIRCUIT
PASSENGER AIRBAG
OCCUPANT RESTRAINT CONTROLLER (ORC)

Always perform the Pre-Diagnostic Troubleshooting procedure before proceeding. Refer to STANDARD PROCEDURE .

DIAGNOSTIC TEST

1. **DETERMINE ACTIVE OR STORED DTC**

   NOTE: Make sure the battery is fully charged.

   NOTE: The scan tool, (special tool #8443A, SRS Load Tool), and DVOM are required to perform the following test.

   1. Select Active or Stored DTC.

      Is the DTC active or stored?

      ORC - ACTIVE DTC

      - Go To 2

ORC - STORED DTC

- Perform the RESTRAINTS SYSTEM INTERMITTENT TEST. Refer to **STANDARD PROCEDURE** .

2. **CHECK FOR SHORTED SQUIB CIRCUITS IN PASSENGER AIRBAG**

WARNING: Turn the ignition off disconnect the 12-volt battery and wait two minutes before proceeding. Failure to follow these instructions may result in possible serious or fatal injury.

1. Gain access to the Passenger Airbag Squib harness connectors.
2. Disconnect the Passenger Airbag Squib harness connectors.

WARNING: Do not place an intact non-deployed airbag face down on a hard surface, the airbag propels into the air if accidentally deployed. Failure to follow these instructions may result in possible serious or fatal injury.

NOTE: Check the connectors - Clean and repair as necessary.

3. Connect the(special tool #8443A, SRS Load Tool) and (special tool #8443-8, Jumper, SRS Load) to the Passenger Airbag Squib 1 and Squib 2 harness connector.
4. If equipped with the standard key ignition, use this ignition on warning.

WARNING: Turn the ignition on, then reconnect the 12-volt battery and wait two minutes before proceeding. Failure to follow these instructions may result in possible serious or fatal injury.

5. If equipped with the keyless ignition, use this ignition on warning.

WARNING: Disconnect the 12-volt battery wait two minutes before proceeding, remove the ORC fuses, connect the 12-volt battery, wait two minutes before proceeding. Cycle the ignition to the On position, then reconnect the ORC fuses. Wait two minutes before proceeding. Failure to follow these instructions may result in possible serious or fatal injury.

6. With the scan tool, read the active ORC DTCs.

   Does the scan tool display: B0011-2B-PASSENGER FRONTAL SQUIB 2 CONTROL - WIRES SHORTED TOGETHER?

   Yes

- Go To 3

No

- Replace the Passenger Airbag in accordance with the Service Information. Refer to **AIR BAG, PASSENGER, REMOVAL** .
- Perform the RESTRAINTS SYSTEM VERIFICATION TEST. Refer to **STANDARD PROCEDURE** .

3. **CHECK (R64) PASSENGER SQUIB 2 LINE 1 CIRCUIT FOR A SHORT TO THE (R62) PASSENGER SQUIB 2 LINE 2 CIRCUIT**

WARNING: Turn the ignition off disconnect the 12-volt battery and wait two minutes before proceeding. Failure to follow these instructions may result in possible serious or fatal injury.

1. Disconnect the (special tool #8443A, SRS Load Tool) and (special tool #8443-8, Jumper, SRS Load) to the Passenger Airbag Squib harness connectors.
2. Disconnect the ORC harness connectors.

NOTE: Check the connectors - Clean and repair as necessary.

3. Connect the (special tool #8443-57, Adapter, Supplemental Restraint System Load Tool) to the ORC C1 and C2 harness connectors.
4. Measure the resistance between the (R64) Passenger Squib 2 Line 1 circuit connector C1A cavity 6 and the (R62) Passenger Squib 2 Line 2 circuit connector C1A cavity 26 of the (special tool #8443-57, Adapter, Supplemental Restraint System Load Tool).

Is the resistance below 10K Ohm ?

Yes

- Repair the (R64) Passenger Squib 2 Line 1 circuit for a short to the (R62) Passenger Squib 2 Line 2 circuit.
- Perform the RESTRAINTS SYSTEM VERIFICATION TEST. Refer to **STANDARD PROCEDURE** .

No

WARNING: If the Occupant Restraint Controller (ORC) is dropped at any time, it must be replaced. Failure to take the proper precautions can result in accidental airbag deployment. Failure to follow these instructions may result in possible serious or fatal injury.

- Replace the ORC in accordance with the Service Information. Refer to **MODULE,**

OCCUPANT RESTRAINT CONTROLLER, REMOVAL .

- Perform the RESTRAINTS SYSTEM VERIFICATION TEST. Refer to **STANDARD PROCEDURE** .

B0012-11-PASSENGER FRONTAL SQUIB 3 CONTROL - CIRCUIT SHORT TO GROUND

For a complete wiring diagram, **refer to appropriate SYSTEM WIRING DIAGRAMS article** .

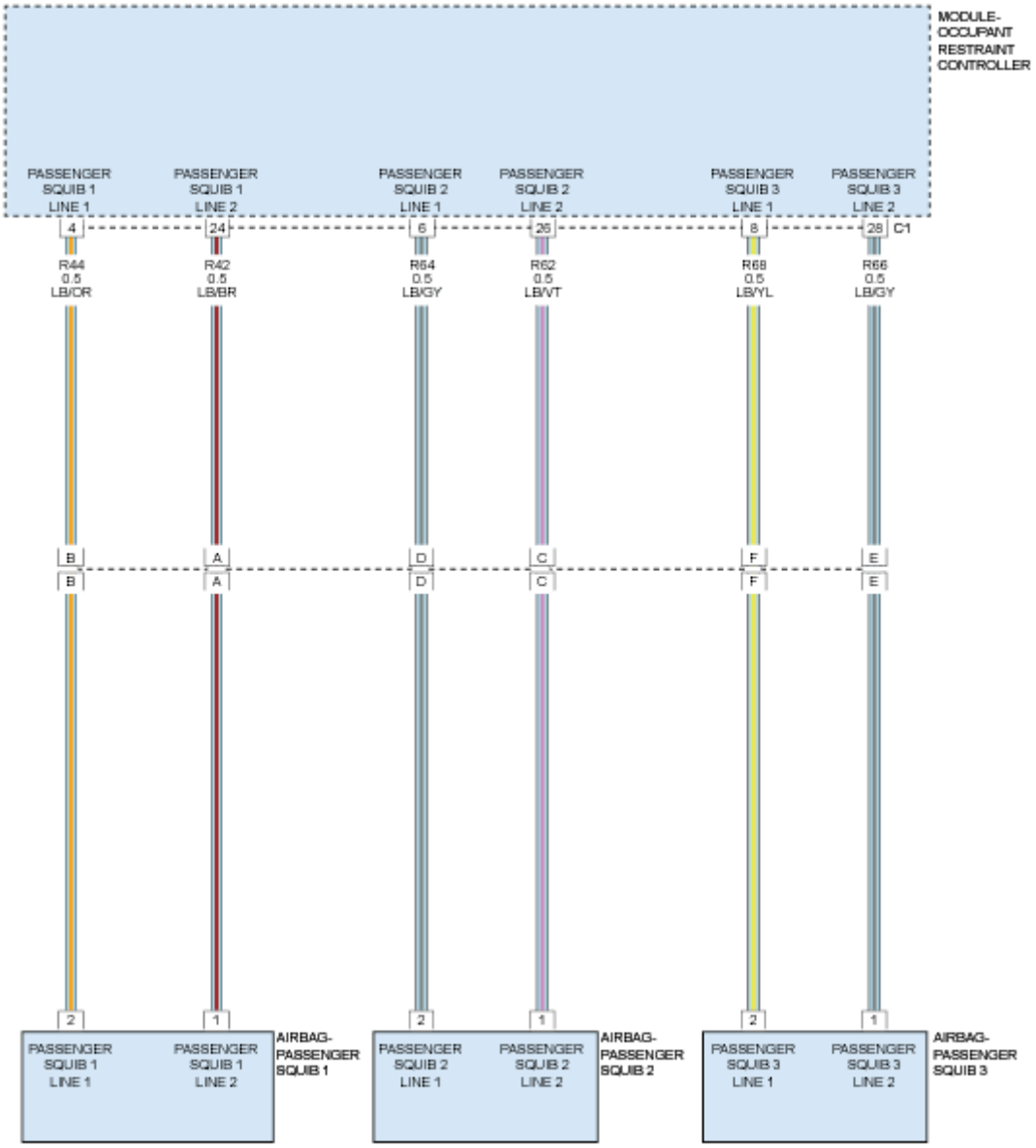

Fig. 25: Passenger Frontal Squib Circuit Diagram
Courtesy of CHRYSLER GROUP, LLC

THEORY OF OPERATION

When powered, the Occupant Restraint Controller (ORC) sends a test current to the squibs to verify the integrity of the squib and the wiring. These circuits are maintained in a "floating" configuration at the module, (connected to neither power nor ground), as protection against inadvertent deployment. Use of the(special tool #8443A, SRS Load Tool) in the tests below substitutes a suspect squib with a known good component. The use of the SRS Load Tool (special tool #8443-57, Adapter, Supplemental Restraint System Load Tool) provides a test point, as well as a method for opening the shorting bar connections within the harness connector. The Front Passenger Airbag is a three stage device with three electrical connectors. The first stage is deployed immediately during impact that requires airbag deployment. The timing of the second stage determines the output force of the airbag. The third stage triggers a tether clip initiator, which releases the tether when a softer airbag is necessary.

WHEN MONITORED

The ORC Module sends out a 40 mA diagnostic current on each squib voltage supply circuit at power up, and every 500 ms thereafter while the ignition is on.

SET CONDITION

This Diagnostic Trouble Code (DTC) sets when the ORC detects a short to ground on the passenger airbag squib circuit for more than 2.6 seconds. This DTC transitions from active to stored when the ORC sees a recovery from a short to ground for greater than 2.6 seconds. The Airbag Warning Lamp (AWL) will set in the instrument cluster.

POSSIBLE CAUSES

Possible Causes
(R68) PASSENGER SQUIB 3 LINE 1 CIRCUIT SHORTED TO GROUND
(R66) PASSENGER SQUIB 3 LINE 2 CIRCUIT SHORTED TO GROUND
PASSENGER AIRBAG
OCCUPANT RESTRAINT CONTROLLER (ORC)

Always perform the Pre-Diagnostic Troubleshooting procedure before proceeding. Refer to STANDARD PROCEDURE .

DIAGNOSTIC TEST

1. **DETERMINE ACTIVE OR STORED DTC**

NOTE: Make sure that the battery is fully charged.

NOTE: The scan tool, (special tool #8443A, SRS Load Tool), and DVOM are required to perform the following test.

1. Turn the ignition on.

Select ACTIVE or STORED DTC:

ACTIVE DTC

- Go To 2

STORED DTC

- Perform the RESTRAINTS SYSTEM INTERMITTENT TEST. Refer to **STANDARD PROCEDURE** .

2. **CHECK FOR SHORTED SQUIB CIRCUITS IN PASSENGER AIRBAG**

WARNING: Turn the ignition off disconnect the 12-volt battery and wait two minutes before proceeding. Failure to follow these instructions may result in possible serious or fatal injury.

1. Gain access to the Passenger Airbag Squib harness connectors.
2. Disconnect the Passenger Airbag Squib harness connectors.

WARNING: Do not place an intact non-deployed airbag face down on a hard surface, the airbag propels into the air if accidentally deployed. Failure to follow these instructions may result in possible serious or fatal injury.

NOTE: Check connectors - Clean and repair as necessary.

3. Connect the (special tool #8443A, SRS Load Tool) and the (special tool #8443-8, Jumper, SRS Load) to the Passenger Airbag Squib 3 connector.
4. If equipped with the standard key ignition, use this ignition on warning.

WARNING: Turn the ignition on, then reconnect the 12-volt battery and wait two minutes before proceeding. Failure to follow these instructions may result in possible serious or fatal injury.

5. If equipped with the keyless ignition, use this ignition on warning.

WARNING: Disconnect the 12-volt battery wait two minutes before proceeding, remove the ORC fuses, connect the 12-volt battery, wait two minutes before proceeding. Cycle the ignition to the On position, then reconnect the ORC fuses. Wait two minutes before proceeding. Failure to follow these instructions may result in possible serious or fatal injury.

6. With the scan tool, read the active ORC DTCs.

Does the scan tool display: B0012-11-PASSENGER FRONTAL SQUIB 3 CONTROL - CIRCUIT SHORTED TO GROUND?

Yes

- Go To 3

No

- Replace the Passenger Airbag in accordance with the Service Information. Refer to **AIR BAG, PASSENGER, REMOVAL** .
- Perform the RESTRAINTS SYSTEM VERIFICATION TEST. Refer to **STANDARD PROCEDURE** .

3. **CHECK THE (R68) PASSENGER SQUIB 3 LINE 1 CIRCUIT AND THE (R66) PASSENGER SQUIB 3 LINE 2 CIRCUIT FOR A SHORT TO GROUND**

WARNING: Turn the ignition off disconnect the 12-volt battery and wait two minutes before proceeding. Failure to follow these instructions may result in possible serious or fatal injury.

1. Disconnect the (special tool #8443A, SRS Load Tool) and the (special tool #8443-8, Jumper, SRS Load) from the Passenger Airbag Squib 3 harness connectors.
2. Disconnect the ORC harness connectors.

NOTE: Check connectors - Clean and repair as necessary.

3. Connect the (special tool #8443-57, Adapter, Supplemental Restraint System Load Tool) to the ORC C1 and C2 harness connectors.
4. Measure the resistance of the (R68) Passenger Squib 3 Line 1 circuit between the (special tool #8443-57, Adapter, Supplemental Restraint System Load Tool) connector C1A cavity 8 and ground.
5. Measure the resistance of the (R66) Passenger Squib 3 Line 2 circuit between (special tool #8443-57, Adapter, Supplemental Restraint System Load Tool) connector C1A cavity 28 and ground.

Is the resistance below 10k Ohms on either circuit?

Yes

- Repair the Passenger Squib 3 circuits with resistance below 10k Ohms for a short to ground.
- Perform the RESTRAINTS SYSTEM VERIFICATION TEST. Refer to **STANDARD PROCEDURE** .

No

WARNING: If the Occupant Restraint Controller (ORC) is dropped at any time, it must be replaced. Failure to take the proper precautions can result in accidental airbag deployment. Failure to follow these instructions may result in possible serious or fatal injury.

- Replace the ORC in accordance with Service Information. Refer to **MODULE, OCCUPANT RESTRAINT CONTROLLER, REMOVAL** .
- Perform the RESTRAINTS SYSTEM VERIFICATION TEST. Refer to **STANDARD PROCEDURE** .

B0012-12-PASSENGER FRONTAL SQUIB 3 CONTROL - CIRCUIT SHORT TO BATTERY

For a complete wiring diagram, **refer to appropriate SYSTEM WIRING DIAGRAMS article** .

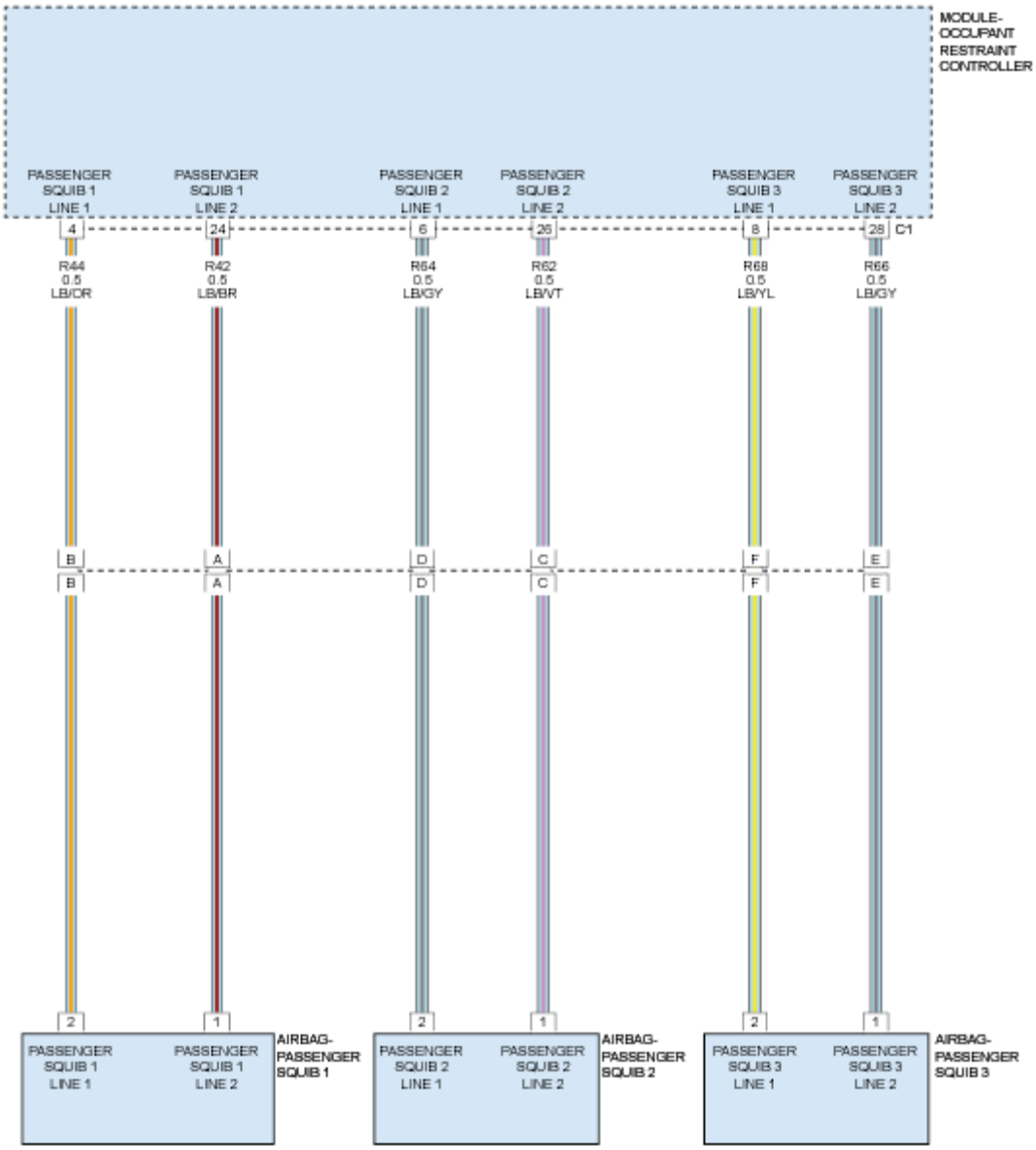

Fig. 26: Passenger Frontal Squib Circuit Diagram
Courtesy of CHRYSLER GROUP, LLC

THEORY OF OPERATION

When powered, the Occupant Restraint Controller (ORC) sends a test current to the squibs to verify the integrity of the squib and the wiring. These circuits are maintained in a "floating" configuration at the module, (connected to neither power nor ground), as protection against inadvertent deployment. Use of the(special tool #8443A, SRS Load Tool) in the tests below substitutes a suspect squib with a known good component. The use of the SRS Load Tool (special tool #8443-57, Adapter, Supplemental Restraint System Load Tool) provides a test point, as well as a method for opening the shorting bar connections within the harness connector. The 54

pin connector side of the 30/54 way ORC Module provides ground. The Front Passenger Airbag is a three stage device with three electrical connectors. The first stage is deployed immediately during impact that requires airbag deployment. The timing of the second stage determines the output force of the airbag. The third stage triggers a tether clip initiator, which releases the tether when a softer airbag is necessary.

WHEN MONITORED

The ORC Module sends out a 40 mA diagnostic current on each squib voltage supply circuit at power up, and every 500 ms thereafter while the ignition is on.

SET CONDITION

This Diagnostic Trouble Code (DTC) sets when the ORC detects a short to battery on the passenger airbag squib circuit for more than 2.6 seconds. This DTC transitions from active to stored when the ORC sees a recovery from a short to battery for greater than 2.6 seconds. The Airbag Warning Lamp (AWL) will set in the instrument cluster.

POSSIBLE CAUSES

Possible Causes
(R68) PASSENGER SQUIB 3 LINE 1 CIRCUIT SHORTED TO GROUND
(R66) PASSENGER SQUIB 3 LINE 2 CIRCUIT SHORTED TO GROUND
PASSENGER AIRBAG
OCCUPANT RESTRAINT CONTROLLER (ORC)

Always perform the Pre-Diagnostic Troubleshooting procedure before proceeding. Refer to STANDARD PROCEDURE .

DIAGNOSTIC TEST

1. **DETERMINE ACTIVE OR STORED DTC**

   NOTE: Make sure that the battery is fully charged.

   NOTE: The scan tool, (special tool #8443A, SRS Load Tool), and DVOM are required to perform the following test.

   1. Turn the ignition on.

      Select ACTIVE or STORED DTC:

      ACTIVE DTC

      - Go To 2

STORED DTC

- Perform the RESTRAINTS SYSTEM INTERMITTENT TEST. Refer to **STANDARD PROCEDURE** .

2. **CHECK FOR SHORTED SQUIB CIRCUITS IN PASSENGER AIRBAG**

WARNING: Turn the ignition off disconnect the 12-volt battery and wait two minutes before proceeding. Failure to follow these instructions may result in possible serious or fatal injury.

1. Gain access to the Passenger Airbag Squib connectors.
2. Disconnect the Passenger Airbag Squib connectors.

WARNING: Do not place an intact non-deployed airbag face down on a hard surface, the airbag propels into the air if accidentally deployed. Failure to follow these instructions may result in possible serious or fatal injury.

NOTE: Check connectors - Clean and repair as necessary.

3. Connect the(special tool #8443A, SRS Load Tool) and the (special tool #8443-8, Jumper, SRS Load) to the Passenger Airbag Squib 3 connector.
4. If equipped with the standard key ignition, use this ignition on warning.

WARNING: Turn the ignition on, then reconnect the 12-volt battery and wait two minutes before proceeding. Failure to follow these instructions may result in possible serious or fatal injury.

5. If equipped with the keyless ignition, use this ignition on warning.

WARNING: Disconnect the 12-volt battery wait two minutes before proceeding, remove the ORC fuses, connect the 12-volt battery, wait two minutes before proceeding. Cycle the ignition to the On position, then reconnect the ORC fuses. Wait two minutes before proceeding. Failure to follow these instructions may result in possible serious or fatal injury.

6. With the scan tool, read the active ORC DTCs.

   Does the scan tool display: B0012-12-PASSENGER FRONTAL SQUIB 3 CONTROL - CIRCUIT SHORT TO BATTERY?

   Yes

- Go To 3

No

- Replace the Passenger Airbag in accordance with the Service Information. Refer to **AIR BAG, PASSENGER, REMOVAL** .
- Perform the RESTRAINTS SYSTEM VERIFICATION TEST. Refer to **STANDARD PROCEDURE** .

3. **CHECK THE (R68) PASSENGER SQUIB 3 LINE 1 CIRCUIT AND THE (R66) PASSENGER SQUIB 3 LINE 2 CIRCUIT FOR A SHORT TO BATTERY**

WARNING: Turn the ignition off disconnect the 12-volt battery and wait two minutes before proceeding. Failure to follow these instructions may result in possible serious or fatal injury.

1. Disconnect the (special tool #8443A, SRS Load Tool) and the (special tool #8443-8, Jumper, SRS Load) from the Passenger Airbag Squib connectors.
2. Disconnect the ORC connectors.

NOTE: Check connectors - Clean and repair as necessary.

3. Connect the (special tool #8443-57, Adapter, Supplemental Restraint System Load Tool) to the ORC C1 and C2 harness connectors.
4. Measure the voltage of the (R68) Passenger Squib 3 Line 1 circuit between the (special tool #8443-57, Adapter, Supplemental Restraint System Load Tool) connector C1A cavity 8 and ground.
5. Measure the voltage of the (R66) Passenger Squib 3 Line 2 circuit between the (special tool #8443-57, Adapter, Supplemental Restraint System Load Tool) connector C1A cavity 28 and ground.

Is there any voltage present on either circuit?

Yes

- Repair the Passenger Squib 3 circuits with voltage present for a short to battery.
- Perform the RESTRAINTS SYSTEM VERIFICATION TEST. Refer to **STANDARD PROCEDURE** .

No

WARNING: If the Occupant Restraint Controller (ORC) is dropped at any time, it must be replaced. Failure to take the proper precautions can result in accidental airbag deployment. Failure to follow these instructions may result in possible serious or fatal injury.

WARNING: Turn the ignition off disconnect the 12-volt battery and wait two minutes before proceeding. Failure to follow these instructions may result in possible serious or fatal injury.

- Replace the ORC in accordance with Service Information. Refer to **MODULE, OCCUPANT RESTRAINT CONTROLLER, REMOVAL** .
- Perform the RESTRAINTS SYSTEM VERIFICATION TEST. Refer to **STANDARD PROCEDURE** .

B0012-13-PASSENGER FRONTAL SQUIB 3 CONTROL - CIRCUIT OPEN

For a complete wiring diagram, **refer to appropriate SYSTEM WIRING DIAGRAMS article** .

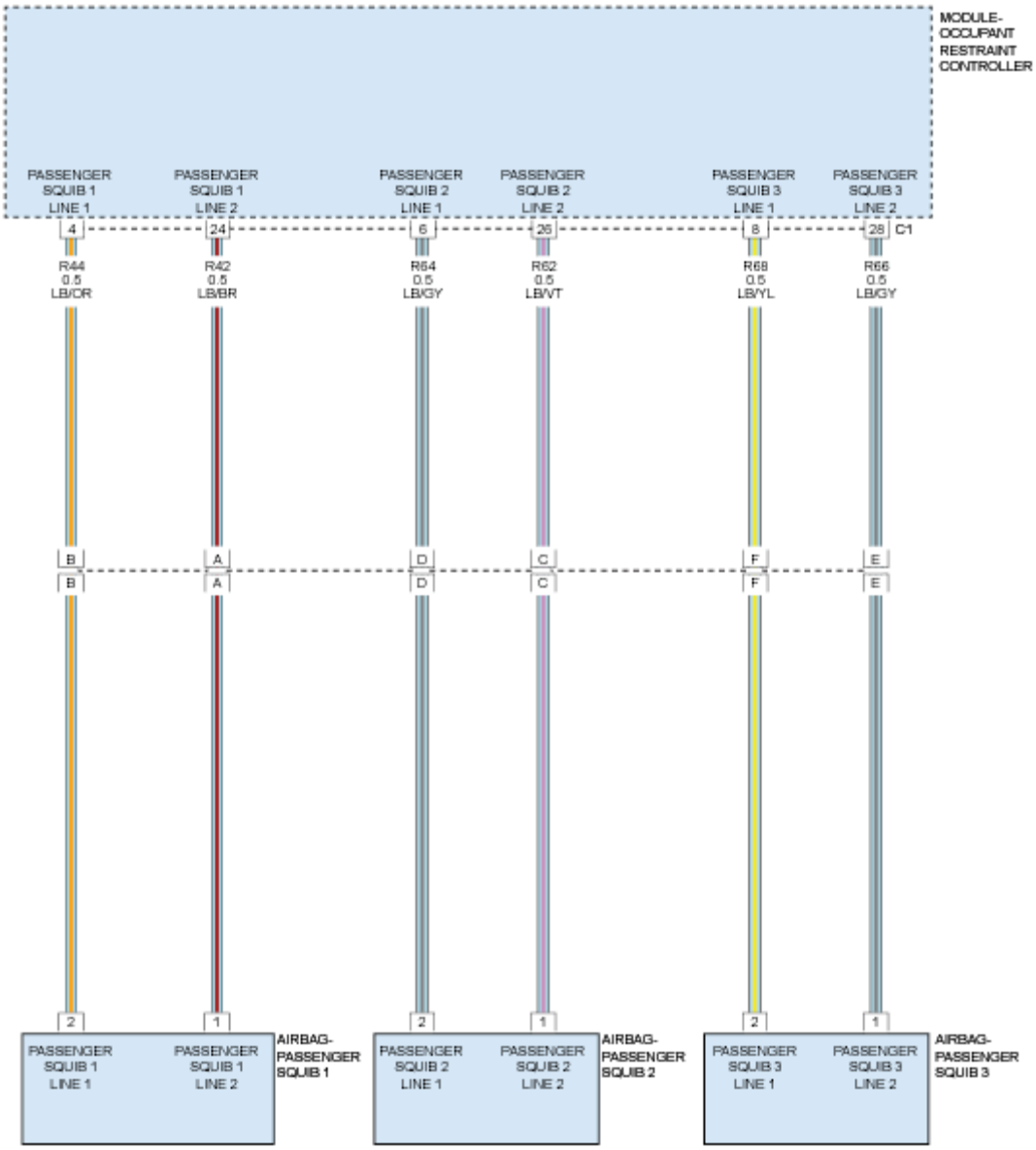

Fig. 27: Passenger Frontal Squib Circuit Diagram
Courtesy of CHRYSLER GROUP, LLC

THEORY OF OPERATION

When powered, the Occupant Restraint Controller (ORC) sends a test current to the squibs to verify the integrity of the squib and the wiring. These circuits are maintained in a "floating" configuration at the module, (connected to neither power nor ground), as protection against inadvertent deployment. Use of the(special tool #8443A, SRS Load Tool) in the tests below substitutes a suspect squib with a known good component. The use of the (special tool #8443-57, Adapter, Supplemental Restraint System Load Tool) provides a test point, as well as a method for opening the shorting bar connections within the harness connector. The Front Passenger Airbag

is a three stage device with three electrical connectors. The first stage is deployed immediately during impact that requires airbag deployment. The timing of the second stage determines the output force of the airbag. The third stage triggers a tether clip initiator, which releases the tether when a softer airbag is necessary.

WHEN MONITORED

The ORC Module sends out a 40 mA diagnostic current on each squib voltage supply circuit at power up, and every 500 ms thereafter while the ignition is on.

SET CONDITION

This Diagnostic Trouble Code (DTC) sets when the ORC detects a open on the passenger airbag squib circuit for more than 2.6 seconds. This DTC transitions from active to stored when the ORC sees a recovery from a open for greater than 2.6 seconds. The Airbag Warning Lamp (AWL) will set in the instrument cluster.

POSSIBLE CAUSES

Possible Causes
(R68) PASSENGER SQUIB 3 LINE 1 CIRCUIT OPEN
(R66) PASSENGER SQUIB 3 LINE 2 CIRCUIT OPEN
PASSENGER AIRBAG
OCCUPANT RESTRAINT CONTROLLER (ORC)

Always perform the Pre-Diagnostic Troubleshooting procedure before proceeding. Refer to STANDARD PROCEDURE .

DIAGNOSTIC TEST

1. **DETERMINE ACTIVE OR STORED DTC**

   NOTE: Make sure that the battery is fully charged.

   NOTE: The scan tool, (special tool #8443A, SRS Load Tool), and DVOM are required to perform the following test.

   1. Turn the ignition on.

      Select ACTIVE or STORED DTC:

      ACTIVE DTC

      - Go To 2

      STORED DTC

- Perform the RESTRAINTS SYSTEM INTERMITTENT TEST. Refer to **STANDARD PROCEDURE** .

2. **CHECK FOR OPEN SQUIB CIRCUITS IN PASSENGER AIRBAG**

WARNING: Turn the ignition off disconnect the 12-volt battery and wait two minutes before proceeding. Failure to follow these instructions may result in possible serious or fatal injury.

1. Gain access to the Passenger Airbag harness connectors.
2. Disconnect the Passenger Airbag harness connectors.

WARNING: Do not place an intact non-deployed airbag face down on a hard surface, the airbag propels into the air if accidentally deployed. Failure to follow these instructions may result in possible serious or fatal injury.

NOTE: Check connectors - Clean and repair as necessary.

3. Connect the (special tool #8443A, SRS Load Tool) and the (special tool #8443-8, Jumper, SRS Load) to the Passenger Airbag Squib 3 harness connector.
4. If equipped with the standard key ignition, use this ignition on warning.

WARNING: Turn the ignition on, then reconnect the 12-volt battery and wait two minutes before proceeding. Failure to follow these instructions may result in possible serious or fatal injury.

5. If equipped with the keyless ignition, use this ignition on warning.

WARNING: Disconnect the 12-volt battery wait two minutes before proceeding, remove the ORC fuses, connect the 12-volt battery, wait two minutes before proceeding. Cycle the ignition to the On position, then reconnect the ORC fuses. Wait two minutes before proceeding. Failure to follow these instructions may result in possible serious or fatal injury.

6. With the scan tool, read the active ORC DTCs.

   Does the scan tool display: B0012-13-PASSENGER FRONTAL SQUIB 3 CONTROL - CIRCUIT OPEN?

   Yes

   - Go To 3

No

- Replace the Passenger Airbag in accordance with the Service Information. Refer to **AIR BAG, PASSENGER, REMOVAL** .
- Perform the RESTRAINTS SYSTEM VERIFICATION TEST. Refer to **STANDARD PROCEDURE** .

3. **CHECK THE (R68) PASSENGER SQUIB 3 LINE 1 CIRCUIT FOR AN OPEN**

WARNING: Turn the ignition off disconnect the 12-volt battery and wait two minutes before proceeding. Failure to follow these instructions may result in possible serious or fatal injury.

1. Disconnect the (special tool #8443A, SRS Load Tool) and the (special tool #8443-8, Jumper, SRS Load) from the Passenger Airbag Squib 3 harness connector.
2. Disconnect the ORC harness connectors.

NOTE: Check connectors - Clean and repair as necessary.

3. Connect the (special tool #8443-57, Adapter, Supplemental Restraint System Load Tool) to the ORC C1 and 2 harness connectors.
4. Measure the resistance of the (R68) Passenger Squib 3 Line 1 circuit between the Passenger Airbag Squib 3 harness connector cavity 2 and the adaptor connector C1A cavity 8.

Is the resistance below 2.0 Ohm?

Yes

- Go To 4

No

- Repair the (R68) Passenger Squib 3 Line 1 circuit for an open.
- Perform the RESTRAINTS SYSTEM VERIFICATION TEST. Refer to **STANDARD PROCEDURE** .

4. **CHECK THE (R66) PASSENGER SQUIB 3 LINE 2 CIRCUIT FOR AN OPEN**

1. Measure the resistance of the (R66) Passenger Squib 3 Line 2 circuit between the Passenger Airbag Squib 3 harness connector cavity 1 and the (special tool #8443-57, Adapter, Supplemental Restraint System Load Tool) connector C1A cavity 28.

Is the resistance below 2.0 Ohm?

Yes

WARNING: If the Occupant Restraint Controller (ORC) is dropped at any

time, it must be replaced. Failure to take the proper precautions can result in accidental airbag deployment. Failure to follow these instructions may result in possible serious or fatal injury.

- Replace the ORC in accordance with the Service Information. Refer to **MODULE, OCCUPANT RESTRAINT CONTROLLER, REMOVAL** .
- Perform the RESTRAINTS SYSTEM VERIFICATION TEST. Refer to **STANDARD PROCEDURE** .

No

- Repair the (R66) Passenger Squib 3 Line 2 circuit for an open.
- Perform the RESTRAINTS SYSTEM VERIFICATION TEST. Refer to **STANDARD PROCEDURE** .

B0012-2B-PASSENGER FRONTAL SQUIB 3 CONTROL - WIRES SHORTED TOGETHER

For a complete wiring diagram, **refer to appropriate SYSTEM WIRING DIAGRAMS article** .

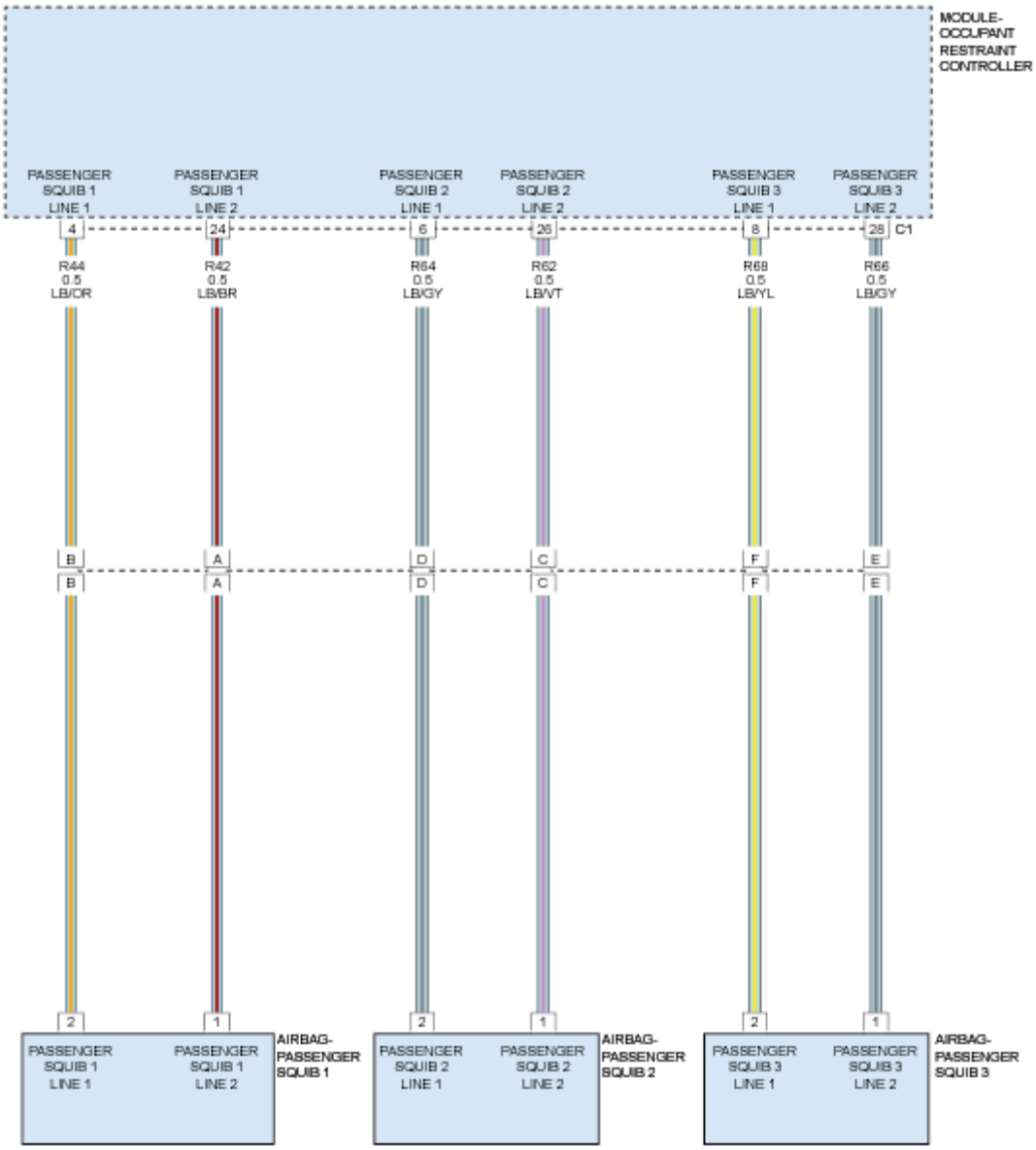

Fig. 28: Passenger Frontal Squib Circuit Diagram
Courtesy of CHRYSLER GROUP, LLC

THEORY OF OPERATION

When powered, the Occupant Restraint Controller (ORC) sends a test current to the squibs to verify the integrity of the squib and the wiring. These circuits are maintained in a "floating" configuration at the module, (connected to neither power nor ground), as protection against inadvertent deployment. Use of the(special tool #8443A, SRS Load Tool) in the tests below substitutes a suspect squib with a known good component. The use of the (special tool #8443-57, Adapter, Supplemental Restraint System Load Tool) provides a test point, as well as a method for opening the shorting bar connections within the harness connector. The Front Passenger Airbag

is a three stage device with three electrical connectors. The first stage is deployed immediately during impact that requires airbag deployment. The timing of the second stage determines the output force of the airbag. The third stage triggers a tether clip initiator, which releases the tether when a softer airbag is necessary.

WHEN MONITORED

The ORC Module sends out a 40 mA diagnostic current on each squib voltage supply circuit at power up, and every 500 ms thereafter while the ignition is on.

SET CONDITION

This Diagnostic Trouble Code (DTC) sets when the ORC detects both circuits of the same squib are shorted together for more than 2.6 seconds. This DTC transitions from active to stored when the ORC sees a recovery from a shorted together condition for greater than 2.6 seconds. The Airbag Warning Lamp (AWL) will set in the instrument cluster.

POSSIBLE CAUSES

Possible Causes
(R68) PASSENGER SQUIB 3 LINE 1 CIRCUIT SHORTED TO (R66) PASSENGER SQUIB 3 LINE 2 CIRCUIT
PASSENGER AIRBAG
OCCUPANT RESTRAINT CONTROLLER (ORC)

Always perform the Pre-Diagnostic Troubleshooting procedure before proceeding. Refer to STANDARD PROCEDURE .

DIAGNOSTIC TEST

1. **DETERMINE ACTIVE OR STORED DTC**

   NOTE: Make sure that the battery is fully charged.

   NOTE: The scan tool, SRS Load Tool Kit (special tool #8443A, SRS Load Tool), and DVOM are required to perform the following test.

   1. Turn the ignition on.

      Select ACTIVE or STORED DTC:

      ACTIVE DTC

      - Go To 2

      STORED DTC

- Perform the RESTRAINTS SYSTEM INTERMITTENT TEST. Refer to **STANDARD PROCEDURE** .

2. **CHECK FOR SHORTED SQUIB CIRCUITS IN PASSENGER AIRBAG**

WARNING: Turn the ignition off disconnect the 12-volt battery and wait two minutes before proceeding. Failure to follow these instructions may result in possible serious or fatal injury.

1. Gain access to the Passenger Airbag Squib connectors.
2. Disconnect the Passenger Airbag Squib connectors.

WARNING: Do not place an intact non-deployed airbag face down on a hard surface, the airbag propels into the air if accidentally deployed. Failure to follow these instructions may result in possible serious or fatal injury.

NOTE: Check connectors - Clean and repair as necessary.

3. Connect the (special tool #8443A, SRS Load Tool) and (special tool #8443-8, Jumper, SRS Load) to the Passenger Airbag Squib 3 connector.
4. If equipped with the standard key ignition, use this ignition on warning.

WARNING: Turn the ignition on, then reconnect the 12-volt battery and wait two minutes before proceeding. Failure to follow these instructions may result in possible serious or fatal injury.

5. If equipped with the keyless ignition, use this ignition on warning.

WARNING: Disconnect the 12-volt battery wait two minutes before proceeding, remove the ORC fuses, connect the 12-volt battery, wait two minutes before proceeding. Cycle the ignition to the On position, then reconnect the ORC fuses. Wait two minutes before proceeding. Failure to follow these instructions may result in possible serious or fatal injury.

6. With the scan tool, read the active ORC DTCs.

   Does the scan tool display: B0012-2B-PASSENGER FRONTAL SQUIB 3 CONTROL - WIRES SHORTED TOGETHER?

   Yes

   - Go To 3

No

- Replace the Passenger Airbag in accordance with the Service Information. Refer to **AIR BAG, PASSENGER, REMOVAL** .
- Perform the RESTRAINTS SYSTEM VERIFICATION TEST. Refer to **STANDARD PROCEDURE** .

3. **CHECK THE (R68) PASSENGER SQUIB 3 LINE 1 CIRCUIT FOR A SHORT TO (R66) PASSENGER SQUIB 3 LINE 2 CIRCUIT**

WARNING: Turn the ignition off disconnect the 12-volt battery and wait two minutes before proceeding. Failure to follow these instructions may result in possible serious or fatal injury.

1. Disconnect the (special tool #8443A, SRS Load Tool) and (special tool #8443-8, Jumper, SRS Load) from the Passenger Airbag Squib 3 connectors.
2. Disconnect the ORC connectors.

NOTE: Check connectors - Clean and repair as necessary.

3. Connect the (special tool #8443-57, Adapter, Supplemental Restraint System Load Tool) to the ORC C1 and C2 connectors.
4. Measure the resistance between the (R68) Passenger Squib 3 Line 1 circuit connector C1A cavity 8 and the (R66) Passenger Squib 3 Line 2 circuit connector C1A cavity 28 at the (special tool #8443-57, Adapter, Supplemental Restraint System Load Tool).

Is the resistance below 10K Ohm?

Yes

- Repair the (R68) Passenger Squib 3 Line 1 circuit for a short to the (R66) Passenger Squib 3 Line 2 circuit.
- Perform the RESTRAINTS SYSTEM VERIFICATION TEST. Refer to **STANDARD PROCEDURE** .

No

WARNING: If the Occupant Restraint Controller (ORC) is dropped at any time, it must be replaced. Failure to take the proper precautions can result in accidental airbag deployment. Failure to follow these instructions may result in possible serious or fatal injury.

- Replace the ORC in accordance with Service Information. Refer to **MODULE, OCCUPANT RESTRAINT CONTROLLER, REMOVAL** .
- Perform the RESTRAINTS SYSTEM VERIFICATION TEST. Refer to **STANDARD**

PROCEDURE .

B0013-11-PASSENGER KNEE BOLSTER SQUIB CONTROL - CIRCUIT SHORT TO GROUND

For a complete wiring diagram, **refer to appropriate SYSTEM WIRING DIAGRAMS article** .

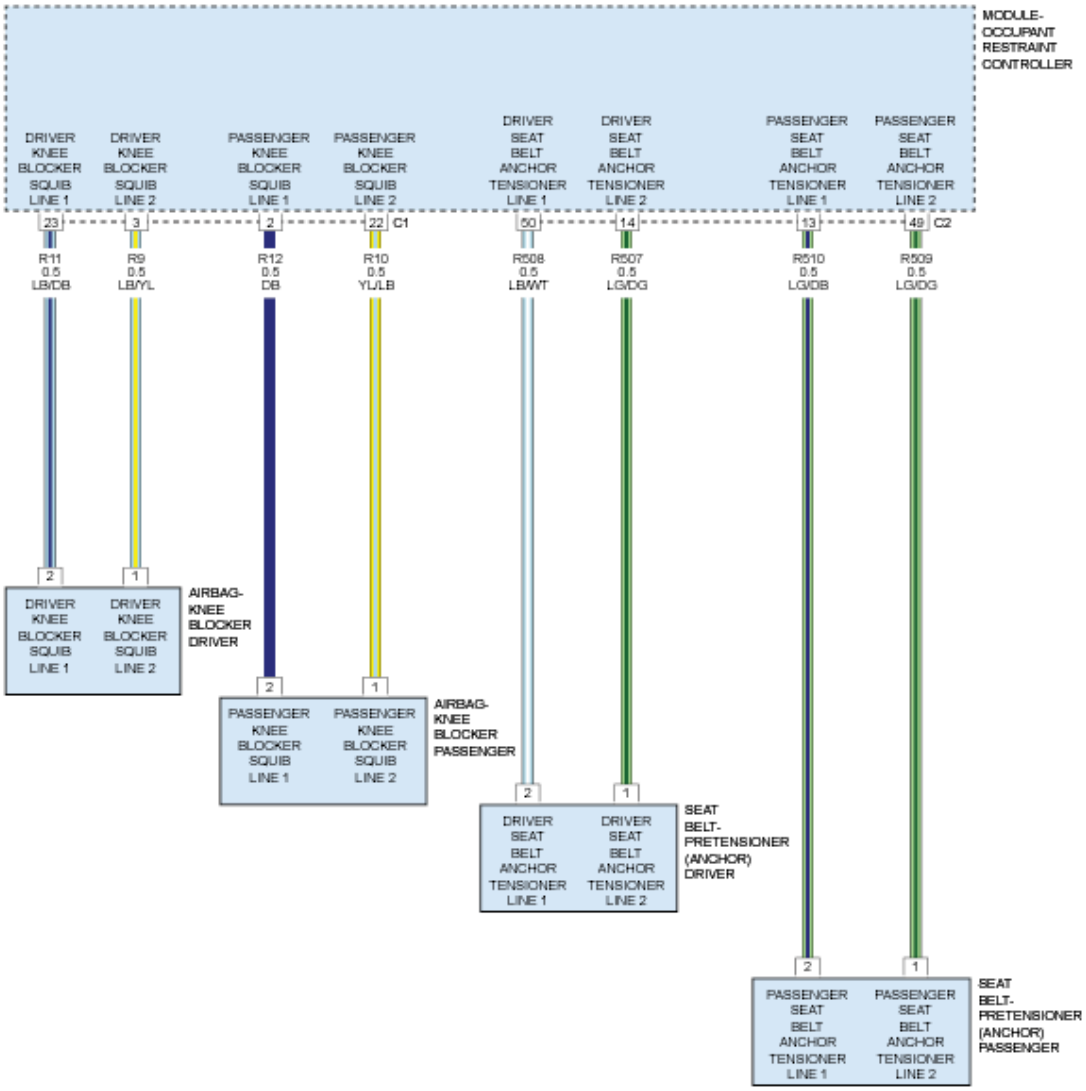

Fig. 29: Knee Blocker & Seat Belt Pretensioner Circuit Diagram
Courtesy of CHRYSLER GROUP, LLC

THEORY OF OPERATION

When powered, the Occupant Restraint Controller (ORC) sends a test current to the squibs to verify the integrity of the squib and wiring. These circuits are maintained in a "floating" configuration at the module (connected to neither power nor ground) as protection against inadvertent deployment. Use of the (special tool

#8443A, SRS Load Tool) in the tests below substitutes a suspect squib with a known good component. The use of the (special tool #8443-57, Adapter, Supplemental Restraint System Load Tool) provides a test point as well as a method for opening the shorting bar connections within the harness connector. The knee blocker airbags are concealed below the lower edge of the instrument panel, just beneath the steering column opening cover on the driver side or just beneath the glove box door on the passenger side.

WHEN MONITORED

The ORC Module sends out a 40 mA diagnostic current on each squib voltage supply circuit at power up, and every 500 ms thereafter while the ignition is on.

SET CONDITION

This Diagnostic Trouble Code (DTC) sets when the ORC detects a short to ground on the passenger knee bolster squib circuit for more than 2.6 seconds. This DTC transitions from active to stored when the ORC sees a recovery from a short to ground condition for greater than 2.6 seconds. The Airbag Warning Lamp (AWL) will set in the instrument cluster.

POSSIBLE CAUSES

Possible Causes
(R12) PASSENGER KNEE BLOCKER SQUIB LINE 1 CIRCUIT SHORTED TO GROUND
(R10) PASSENGER KNEE BLOCKER SQUIB LINE 2 CIRCUIT SHORTED TO GROUND
PASSENGER KNEE BOLSTER AIRBAG
OCCUPANT RESTRAINT CONTROLLER (ORC)

Always perform the Pre-Diagnostic Troubleshooting procedure before proceeding. Refer to STANDARD PROCEDURE .

DIAGNOSTIC TEST

1. **DETERMINE ACTIVE OR STORED DTC**

   NOTE: Make sure that the battery is fully charged.

   NOTE: The scan tool, (special tool #8443A, SRS Load Tool), and DVOM are required to perform the following test.

   1. Turn the ignition on.

      Select ACTIVE or STORED DTC:

      ACTIVE DTC

      - Go To 2

STORED DTC

- Perform the RESTRAINTS SYSTEM INTERMITTENT TEST. Refer to **STANDARD PROCEDURE** .

2. **CHECK FOR SHORTED PASSENGER KNEE BLOCKER AIRBAG CIRCUITS**

WARNING: Turn the ignition off disconnect the 12-volt battery and wait two minutes before proceeding. Failure to follow these instructions may result in possible serious or fatal injury.

1. Disconnect the Passenger Knee Blocker Airbag harness connector.

WARNING: Do not place an intact non-deployed airbag face down on a hard surface, the airbag propels into the air if accidentally deployed. Failure to follow these instructions may result in possible serious or fatal injury.

NOTE: Check connectors - Clean and repair as necessary.

2. Connect the (special tool #8443A, SRS Load Tool) and the(special tool #8443-8, Jumper, SRS Load) to the Passenger Knee Blocker Airbag harness connector.
3. If equipped with the standard key ignition, use this ignition on warning.

WARNING: Turn the ignition on, then reconnect the 12-volt battery and wait two minutes before proceeding. Failure to follow these instructions may result in possible serious or fatal injury.

4. If equipped with the keyless ignition, use this ignition on warning.

WARNING: Disconnect the 12-volt battery wait two minutes before proceeding, remove the ORC fuses, connect the 12-volt battery, wait two minutes before proceeding. Cycle the ignition to the On position, then reconnect the ORC fuses. Wait two minutes before proceeding. Failure to follow these instructions may result in possible serious or fatal injury.

5. With the scan tool, read the active ORC DTCs.

Does the scan tool display: B0013-11-FRONT PASSENGER KNEE BOLSTER SQUIB CONTROL - CIRCUIT SHORT TO GROUND?

Yes

- Go To 3

No

- Replace the Passenger Knee Blocker Airbag in accordance with the Service Information. Refer to **AIR BAG, KNEE BLOCKER, REMOVAL** .
- Perform the RESTRAINTS SYSTEM VERIFICATION TEST. Refer to **STANDARD PROCEDURE** .

3. **CHECK (R12) PASSENGER KNEE BLOCKER SQUIB LINE 1 CIRCUIT OR (R10) PASSENGER KNEE BLOCKER SQUIB LINE 2 CIRCUIT FOR A SHORT TO GROUND**

WARNING: Turn the ignition off, disconnect the 12-volt battery and wait two minutes before proceeding. Failure to follow these instructions may result in possible serious or fatal injury.

1. Disconnect the (special tool #8443A, SRS Load Tool) and the (special tool #8443-8, Jumper, SRS Load) from the Passenger Knee Blocker Airbag harness connector.
2. Disconnect the ORC harness connectors.

NOTE: Check connectors - Clean and repair as necessary.

3. Connect the (special tool #8443-57, Adapter, Supplemental Restraint System Load Tool) to the ORC C1 and C2 harness connector.
4. Measure the resistance between ground and the (R12) Passenger Knee Blocker Squib Line 1 circuit at the connector C1A cavity 2 of the (special tool #8443-57, Adapter, Supplemental Restraint System Load Tool).
5. Measure the resistance between ground and the (R10) Passenger Knee Blocker Squib Line 2 circuit at the connector C1A cavity 22 of the (special tool #8443-57, Adapter, Supplemental Restraint System Load Tool).

Is the resistance below 10K Ohms on either circuit?

Yes

- Repair the (R12) Passenger Knee Blocker Squib Line 1 or (R10) Passenger Knee Blocker Squib Line 2 circuits for a short to ground in accordance with the Service Information.
- Perform the RESTRAINTS SYSTEM VERIFICATION TEST. Refer to **STANDARD PROCEDURE** .

No

WARNING: If the Occupant Restraint Controller (ORC) is dropped at any time, it must be replaced. Failure to take the proper precautions can result in accidental airbag deployment. Failure to follow these instructions may result in possible serious or fatal injury.

WARNING: Turn the ignition off, disconnect the 12-volt battery and wait two minutes before proceeding. Failure to follow these instructions may result in possible serious or fatal injury.

- Replace the ORC in accordance with Service Information. Refer to **MODULE, OCCUPANT RESTRAINT CONTROLLER, REMOVAL** .
- Perform the RESTRAINTS SYSTEM VERIFICATION TEST. Refer to **STANDARD PROCEDURE** .

B0013-12-PASSENGER KNEE BOLSTER SQUIB CONTROL - CIRCUIT SHORT TO BATTERY

For a complete wiring diagram, **refer to appropriate SYSTEM WIRING DIAGRAMS article** .

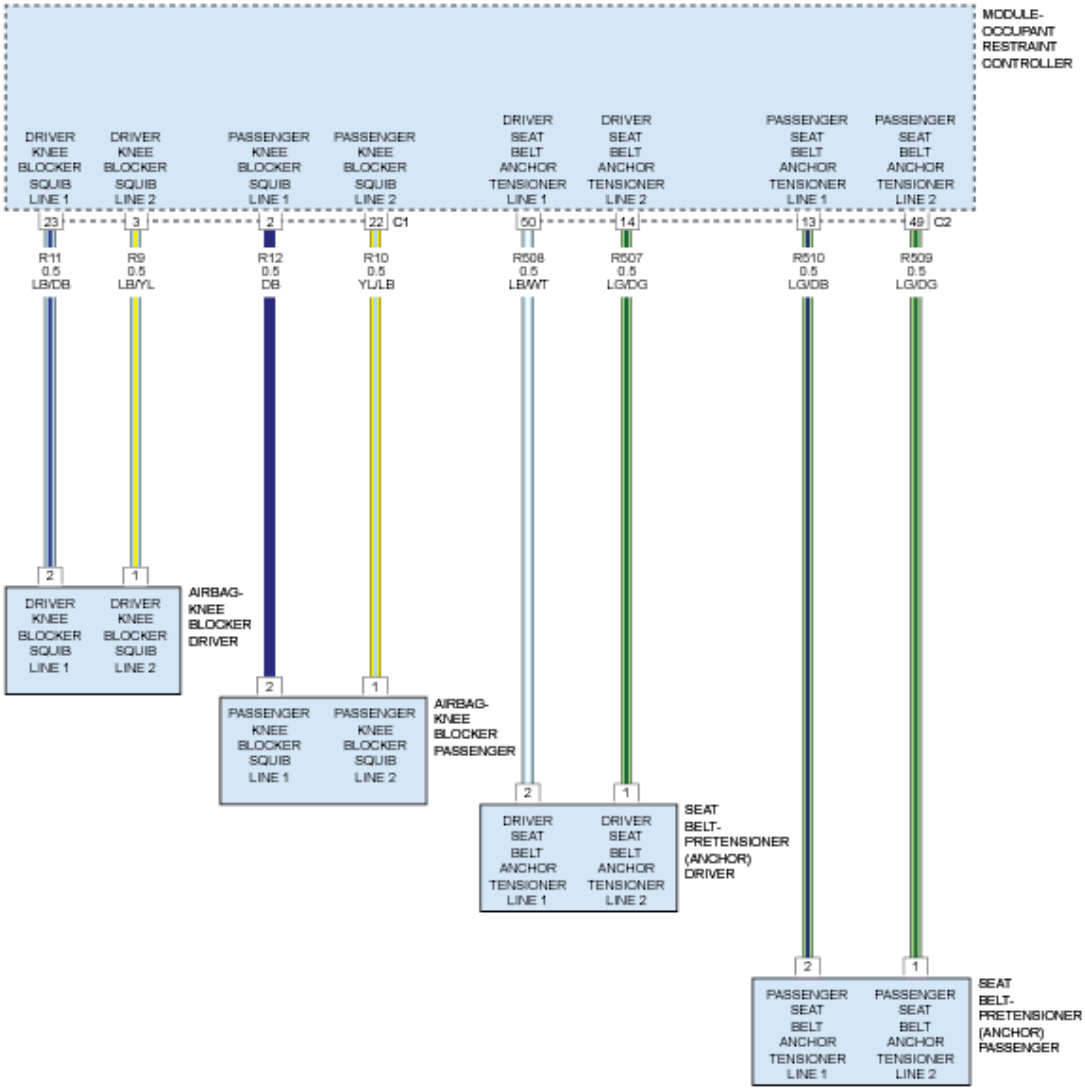

Fig. 30: Knee Blocker & Seat Belt Pretensioner Circuit Diagram
Courtesy of CHRYSLER GROUP, LLC

THEORY OF OPERATION

When powered, the Occupant Restraint Controller (ORC) sends a test current to the squibs to verify the integrity of the squib and wiring. These circuits are maintained in a "floating" configuration at the module (connected to neither power nor ground) as protection against inadvertent deployment. Use of the (special tool #8443A, SRS Load Tool) in the tests below substitutes a suspect squib with a known good component. The use of the (special tool #8443-57, Adapter, Supplemental Restraint System Load Tool) provides a test point as well as a method for opening the shorting bar connections within the harness connector. The knee blocker airbags are concealed below the lower edge of the instrument panel, just beneath the steering column opening cover on the driver side or just beneath the glove box door on the passenger side.

WHEN MONITORED

The ORC Module sends out a 40 mA diagnostic current on each squib voltage supply circuit at power up, and every 500 ms thereafter while the ignition is on.

SET CONDITION

This Diagnostic Trouble Code (DTC) sets when the ORC detects a short to voltage on the driver knee bolster squib circuit for more than 2.6 seconds. This DTC transitions from active to stored when the ORC sees a recovery from a short to ground for greater than 2.6 seconds. The Airbag Warning Lamp (AWL) will set in the instrument cluster.

POSSIBLE CAUSES

Possible Causes
(R12) PASSENGER KNEE BLOCKER SQUIB LINE 1 CIRCUIT SHORTED TO BATTERY
(R10) PASSENGER KNEE BLOCKER SQUIB LINE 2 CIRCUIT SHORTED TO BATTERY
PASSENGER KNEE BOLSTER AIRBAG
OCCUPANT RESTRAINT CONTROLLER (ORC)

Always perform the Pre-Diagnostic Troubleshooting procedure before proceeding. Refer to STANDARD PROCEDURE .

DIAGNOSTIC TEST

1. **DETERMINE ACTIVE OR STORED DTC**

NOTE: **Make sure that the battery is fully charged.**

NOTE: **The scan tool, (special tool #8443A, SRS Load Tool), and DVOM are required to perform the following test.**

1. Turn the ignition on.

   Select ACTIVE or STORED DTC:

   ACTIVE DTC

   - Go To 2

   STORED DTC

   - Perform the RESTRAINTS SYSTEM INTERMITTENT TEST. Refer to **STANDARD PROCEDURE** .

2. **CHECK FOR SHORTED PASSENGER KNEE BLOCKER AIRBAG CIRCUITS**

   WARNING: **Turn the ignition off disconnect the 12-volt battery and wait two minutes before proceeding. Failure to follow these instructions may result in possible serious or fatal injury.**

   1. Disconnect the Passenger Knee Blocker Airbag harness connector.

      WARNING: **Do not place an intact non-deployed airbag face down on a hard surface, the airbag propels into the air if accidentally deployed. Failure to follow these instructions may result in possible serious or fatal injury.**

      NOTE: Check connectors - Clean and repair as necessary.

   2. Connect the (special tool #8443A, SRS Load Tool) and the (special tool #8443-8, Jumper, SRS Load) to the Passenger Knee Blocker Airbag harness connector.
   3. If equipped with the standard key ignition, use this ignition on warning.

      WARNING: **Turn the ignition on, then reconnect the 12-volt battery and wait two minutes before proceeding. Failure to follow these instructions may result in possible serious or fatal injury.**

   4. If equipped with the keyless ignition, use this ignition on warning.

      WARNING: **Disconnect the 12-volt battery wait two minutes before proceeding, remove the ORC fuses, connect the 12-volt battery, wait two minutes before proceeding. Cycle the ignition to the On position, then reconnect the ORC fuses. Wait two minutes before proceeding. Failure to follow these instructions may result in possible serious or fatal injury.**

5. With the scan tool, read the active ORC DTCs.

   Does the scan tool display: B0013-12-PASSENGER KNEE BOLSTER SQUIB CONTROL - CIRCUIT SHORT TO BATTERY?

   Yes

   - Go To 3

   No

   - Replace the Passenger Knee Blocker Airbag in accordance with the Service Information. Refer to **AIR BAG, KNEE BLOCKER, REMOVAL** .
   - Perform the RESTRAINTS SYSTEM VERIFICATION TEST. Refer to **STANDARD PROCEDURE** .

3. **CHECK (R12) PASSENGER KNEE BLOCKER SQUIB LINE 1 CIRCUIT OR (R10) PASSENGER KNEE BLOCKER SQUIB LINE 2 CIRCUIT FOR A SHORT TO VOLTAGE**

   WARNING: **Turn the ignition off, disconnect the 12-volt battery and wait two minutes before proceeding. Failure to follow these instructions may result in possible serious or fatal injury.**

   1. Disconnect the (special tool #8443A, SRS Load Tool) and the (special tool #8443-8, Jumper, SRS Load) from the Passenger Knee Blocker Airbag harness connector.
   2. Disconnect the ORC harness connectors.

      NOTE: Check connectors - Clean and repair as necessary.

   3. Connect the (special tool #8443-57, Adapter, Supplemental Restraint System Load Tool) to the ORC C1 and C2 harness connector.
   4. Measure the voltage between ground and the (R12) Passenger Knee Blocker Squib Line 1 circuit at connector C1A cavity 2 of the (special tool #8443-57, Adapter, Supplemental Restraint System Load Tool).
   5. Measure the voltage between ground and the (R10) Passenger Knee Blocker Squib Line 2 circuit at connector C1A cavity 22 of the (special tool #8443-57, Adapter, Supplemental Restraint System Load Tool).

      Is there any voltage present on either circuit?

      Yes

      - Repair the (R12) Passenger Knee Blocker Squib Line 1 or (R10) Passenger Knee Blocker Squib Line 2 circuits for a short to voltage in accordance with the Service Information.
      - Perform the RESTRAINTS SYSTEM VERIFICATION TEST. Refer to **STANDARD**

PROCEDURE .

No

WARNING: If the Occupant Restraint Controller (ORC) is dropped at any time, it must be replaced. Failure to take the proper precautions can result in accidental airbag deployment. Failure to follow these instructions may result in possible serious or fatal injury.

WARNING: Turn the ignition off, disconnect the 12-volt battery and wait two minutes before proceeding. Failure to follow these instructions may result in possible serious or fatal injury.

- Replace the ORC in accordance with Service Information. Refer to **MODULE, OCCUPANT RESTRAINT CONTROLLER, REMOVAL** .
- Perform the RESTRAINTS SYSTEM VERIFICATION TEST. Refer to **STANDARD PROCEDURE** .

B0013-13-PASSENGER KNEE BOLSTER SQUIB CONTROL - CIRCUIT OPEN

For a complete wiring diagram, **refer to appropriate SYSTEM WIRING DIAGRAMS article** .

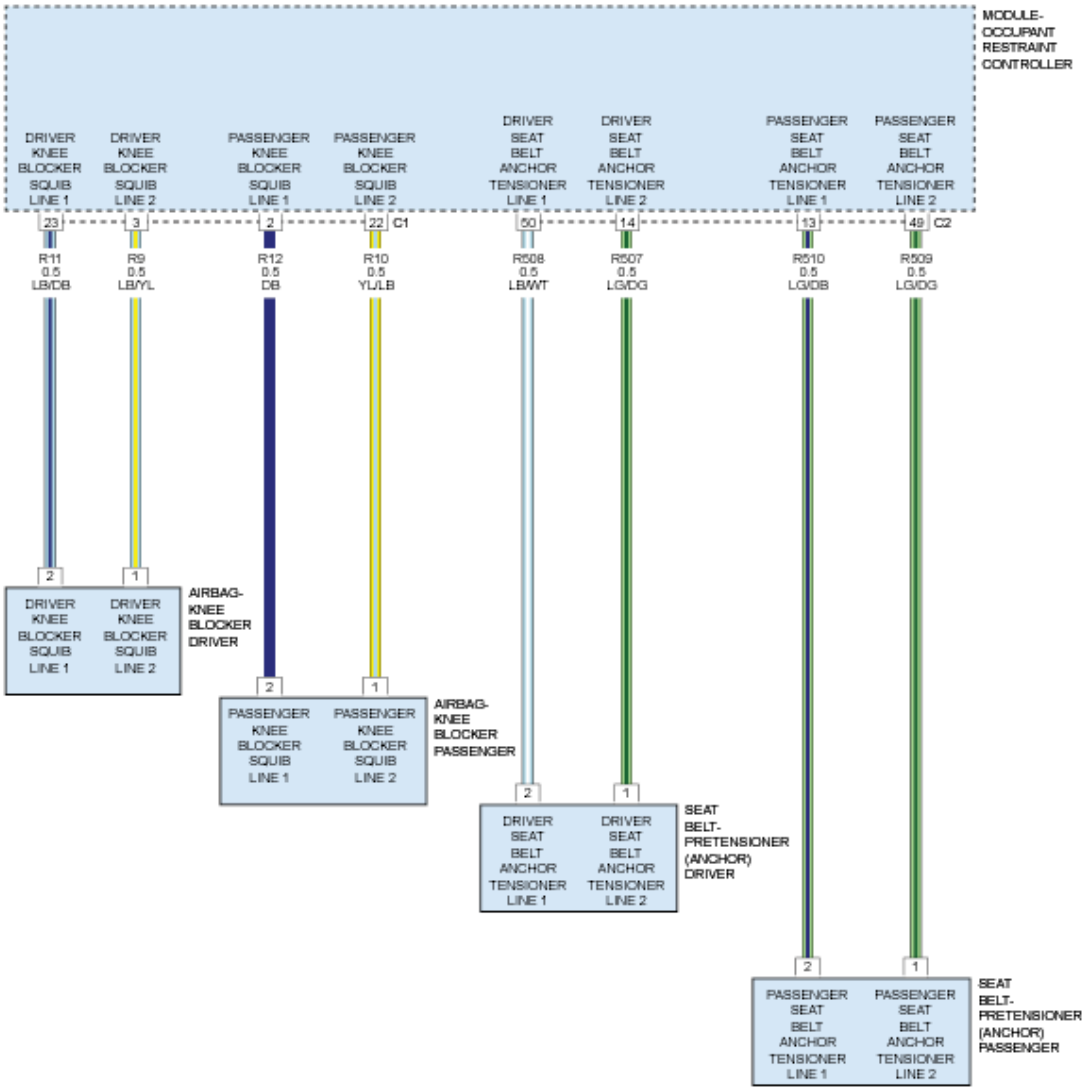

Fig. 31: Knee Blocker & Seat Belt Pretensioner Circuit Diagram
Courtesy of CHRYSLER GROUP, LLC

THEORY OF OPERATION

When powered, the Occupant Restraint Controller (ORC) sends a test current to the squibs to verify the integrity of the squib and wiring. These circuits are maintained in a "floating" configuration at the module (connected to neither power nor ground) as protection against inadvertent deployment. Use of the (special tool #8443A, SRS Load Tool) in the tests below substitutes a suspect squib with a known good component. The use of the (special tool #8443-57, Adapter, Supplemental Restraint System Load Tool) provides a test point as well as a method for opening the shorting bar connections within the harness connector. The knee blocker airbags are concealed below the lower edge of the instrument panel, just beneath the steering column opening cover on the driver side or just beneath the glove box door on the passenger side.

WHEN MONITORED

The ORC Module sends out a 40 mA diagnostic current on each squib voltage supply circuit at power up, and every 500 ms thereafter while the ignition is on.

SET CONDITION

This Diagnostic Trouble Code (DTC) sets when the ORC detects an open on the passenger knee bolster squib circuit for more than 2.6 seconds. This DTC transitions from active to stored when the ORC sees a recovery from a open for greater than 2.6 seconds. The Airbag Warning Lamp (AWL) will set in the instrument cluster.

POSSIBLE CAUSES

Possible Causes
(R12) PASSENGER KNEE BLOCKER SQUIB LINE 1 CIRCUIT OPEN
(R10) PASSENGER KNEE BLOCKER SQUIB LINE 2 CIRCUIT OPEN
PASSENGER KNEE BLOCKER AIRBAG
OCCUPANT RESTRAINT CONTROLLER (ORC)

Always perform the Pre-Diagnostic Troubleshooting procedure before proceeding. Refer to STANDARD PROCEDURE .

DIAGNOSTIC TEST

1. **DETERMINE ACTIVE OR STORED DTC**

   NOTE: Make sure that the battery is fully charged.

   NOTE: The scan tool, (special tool #8443A, SRS Load Tool), and DVOM are required to perform the following test.

   1. Turn the ignition on.

      Select ACTIVE or STORED DTC:

      ACTIVE DTC

      - Go To 2

      STORED DTC

      - Perform the RESTRAINTS SYSTEM INTERMITTENT TEST. Refer to **STANDARD PROCEDURE** .

2. **CHECK FOR OPEN PASSENGER KNEE BLOCKER AIRBAG CIRCUITS**

WARNING: Turn the ignition off disconnect the 12-volt battery and wait two minutes before proceeding. Failure to follow these instructions may result in possible serious or fatal injury.

1. Disconnect the Passenger Knee Blocker Airbag harness connector.

WARNING: Do not place an intact non-deployed airbag face down on a hard surface, the airbag propels into the air if accidentally deployed. Failure to follow these instructions may result in possible serious or fatal injury.

NOTE: Check connectors - Clean and repair as necessary.

2. Connect the (special tool #8443A, SRS Load Tool) and the (special tool #8443-8, Jumper, SRS Load) to the Passenger Knee Blocker Airbag harness connector.
3. If equipped with the standard key ignition, use this ignition on warning.

WARNING: Turn the ignition on, then reconnect the 12-volt battery and wait two minutes before proceeding. Failure to follow these instructions may result in possible serious or fatal injury.

4. If equipped with the keyless ignition, use this ignition on warning.

WARNING: Disconnect the 12-volt battery wait two minutes before proceeding, remove the ORC fuses, connect the 12-volt battery, wait two minutes before proceeding. Cycle the ignition to the On position, then reconnect the ORC fuses. Wait two minutes before proceeding. Failure to follow these instructions may result in possible serious or fatal injury.

5. With the scan tool, read the active ORC DTCs.

   Does the scan tool display: B0013-13-PASSENGER KNEE BOLSTER SQUIB CONTROL - CIRCUIT OPEN?

   Yes

   - Go To 3

   No

   - Replace the Passenger Knee Blocker Airbag in accordance with the Service Information. Refer to **AIR BAG, KNEE BLOCKER, REMOVAL** .
   - Perform the RESTRAINTS SYSTEM VERIFICATION TEST. Refer to **STANDARD**

PROCEDURE .

3. **CHECK (R12) PASSENGER KNEE BLOCKER SQUIB LINE 1 CIRCUIT OR (R10) PASSENGER KNEE BLOCKER SQUIB LINE 2 CIRCUIT FOR AN OPEN**

WARNING: Turn the ignition off, disconnect the 12-volt battery and wait two minutes before proceeding. Failure to follow these instructions may result in possible serious or fatal injury.

1. Disconnect the (special tool #8443A, SRS Load Tool) and the (special tool #8443-8, Jumper, SRS Load) from the Passenger Knee Blocker airbag harness connector.
2. Disconnect the ORC harness connectors.

NOTE: Check connectors - Clean and repair as necessary.

3. Connect the (special tool #8443-57, Adapter, Supplemental Restraint System Load Tool) to the ORC C1 and C2 harness connector.
4. Measure the resistance between the (R12) Passenger Knee Blocker Squib Line 1 circuit at Passenger Knee Blocker Airbag connector cavity 2 and the (special tool #8443-57, Adapter, Supplemental Restraint System Load Tool) C1A cavity 2.
5. Measure the resistance between the (R10) Passenger Knee Blocker Squib Line 2 circuit at connector Passenger Knee Blocker Airbag cavity 1 and the (special tool #8443-57, Adapter, Supplemental Restraint System Load Tool) C1A cavity 22.

Is the resistance above 2.0 Ohms on either circuit?

Yes

- Repair the (R12) Passenger Knee Blocker Squib Line 1 or (R10) Passenger Knee Blocker Squib Line 2 circuits for an open in accordance with the Service Information.
- Perform the RESTRAINTS SYSTEM VERIFICATION TEST. Refer to **STANDARD PROCEDURE** .

No

WARNING: If the Occupant Restraint Controller (ORC) is dropped at any time, it must be replaced. Failure to take the proper precautions can result in accidental airbag deployment. Failure to follow these instructions may result in possible serious or fatal injury.

WARNING: Turn the ignition off, disconnect the 12-volt battery and wait two minutes before proceeding. Failure to follow these instructions may result in possible serious or fatal injury.

- Replace the ORC in accordance with Service Information. Refer to **MODULE,**

OCCUPANT RESTRAINT CONTROLLER, REMOVAL .

- Perform the RESTRAINTS SYSTEM VERIFICATION TEST. Refer to **STANDARD PROCEDURE** .

B0013-2B-PASSENGER KNEE BOLSTER SQUIB CONTROL - WIRES SHORTED TOGETHER

For a complete wiring diagram, **refer to appropriate SYSTEM WIRING DIAGRAMS article** .

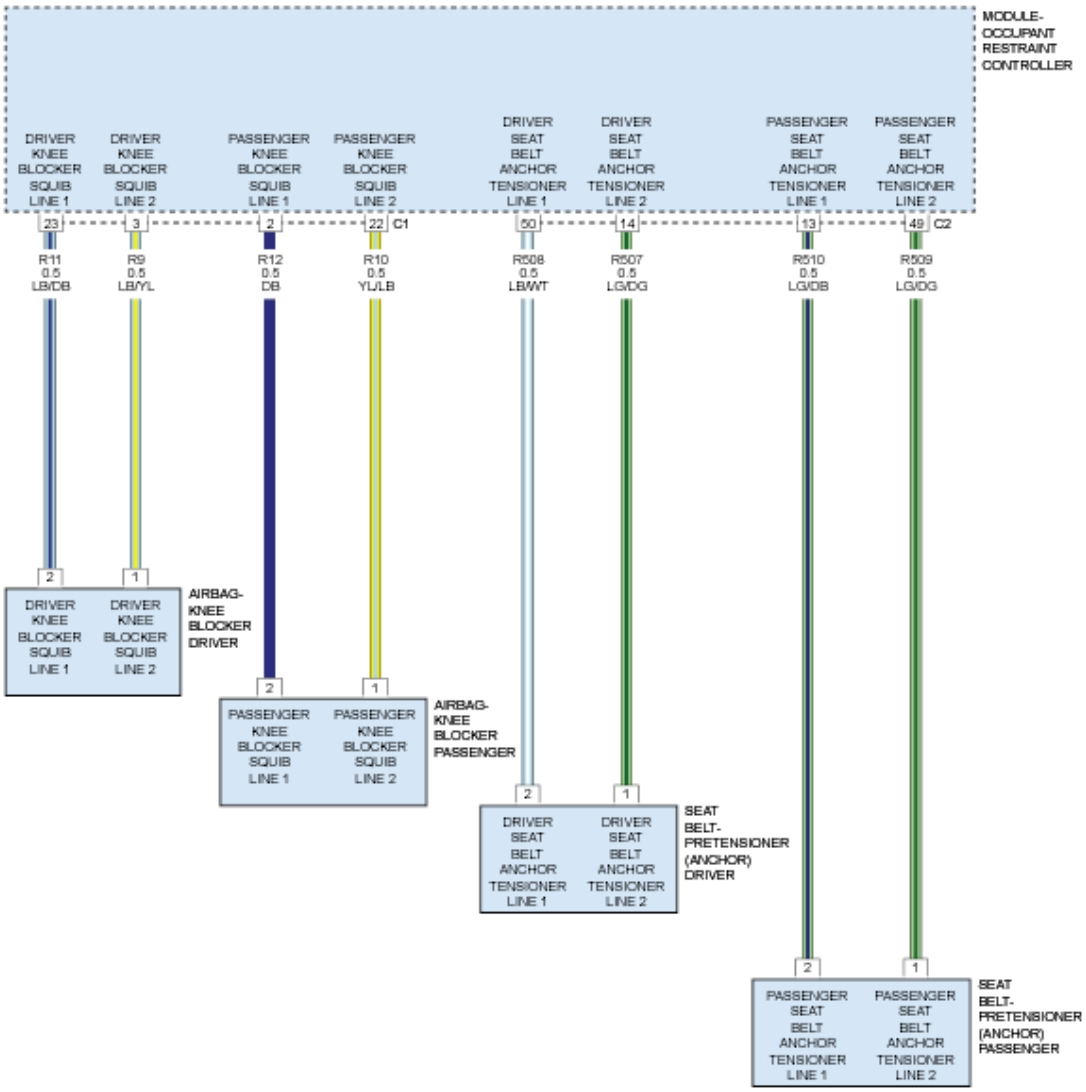

Fig. 32: Knee Blocker & Seat Belt Pretensioner Circuit Diagram
Courtesy of CHRYSLER GROUP, LLC

THEORY OF OPERATION

When powered, the Occupant Restraint Controller (ORC) sends a test current to the squibs to verify the

integrity of the squib and wiring. These circuits are maintained in a "floating" configuration at the module (connected to neither power nor ground) as protection against inadvertent deployment. Use of the (special tool #8443A, SRS Load Tool) in the tests below substitutes a suspect squib with a known good component. The use of the (special tool #8443-57, Adapter, Supplemental Restraint System Load Tool) provides a test point as well as a method for opening the shorting bar connections within the harness connector. The knee blocker airbags are concealed below the lower edge of the instrument panel, just beneath the steering column opening cover on the driver side or just beneath the glove box door on the passenger side.

WHEN MONITORED

The ORC Module sends out a 40 mA diagnostic current on each squib voltage supply circuit at power up, and every 500 ms thereafter while the ignition is on.

SET CONDITION

This Diagnostic Trouble Code (DTC) sets when the ORC detects a shorted together of the passenger knee bolster squib line 1 and line 2 circuits for more than 2.6 seconds. This DTC transitions from active to stored when the ORC sees a recovery from the squib shorted together condition for greater than 2.6 seconds. The Airbag Warning Lamp (AWL) will set in the instrument cluster.

POSSIBLE CAUSES

Possible Causes
(R12) PASSENGER KNEE BLOCKER SQUIB LINE 1 CIRCUIT SHORTED TO THE (R10) PASSENGER KNEE BLOCKER SQUIB LINE 2 CIRCUIT
PASSENGER KNEE BLOCKER AIRBAG
OCCUPANT RESTRAINT CONTROLLER (ORC)

Always perform the Pre-Diagnostic Troubleshooting procedure before proceeding. Refer to STANDARD PROCEDURE .

DIAGNOSTIC TEST

1. **DETERMINE ACTIVE OR STORED DTC**

NOTE: Make sure that the battery is fully charged.

NOTE: The scan tool, (special tool #8443A, SRS Load Tool), and DVOM are required to perform the following test.

1. Turn the ignition on.

   Select ACTIVE or STORED DTC:

   ACTIVE DTC

- Go To 2

STORED DTC

- Perform the RESTRAINTS SYSTEM INTERMITTENT TEST. Refer to **STANDARD PROCEDURE** .

2. **CHECK FOR SHORTED PASSENGER KNEE BLOCKER AIRBAG CIRCUITS**

WARNING: Turn the ignition off disconnect the 12-volt battery and wait two minutes before proceeding. Failure to follow these instructions may result in possible serious or fatal injury.

1. Disconnect the Passenger Knee Blocker Airbag harness connector.

WARNING: Do not place an intact non-deployed airbag face down on a hard surface, the airbag propels into the air if accidentally deployed. Failure to follow these instructions may result in possible serious or fatal injury.

NOTE: Check connectors - Clean and repair as necessary.

2. Connect the (special tool #8443A, SRS Load Tool) and the (special tool #8443-8, Jumper, SRS Load) to the Passenger Knee Blocker Airbag harness connector.
3. If equipped with the standard key ignition, use this ignition on warning.

WARNING: Turn the ignition on, then reconnect the 12-volt battery and wait two minutes before proceeding. Failure to follow these instructions may result in possible serious or fatal injury.

4. If equipped with the keyless ignition, use this ignition on warning.

WARNING: Disconnect the 12-volt battery wait two minutes before proceeding, remove the ORC fuses, connect the 12-volt battery, wait two minutes before proceeding. Cycle the ignition to the On position, then reconnect the ORC fuses. Wait two minutes before proceeding. Failure to follow these instructions may result in possible serious or fatal injury.

5. With the scan tool, read the active ORC DTCs.

Does the scan tool display: B0013-2B-PASSENGER KNEE BOLSTER SQUIB CONTROL - WIRES SHORTED TOGETHER?

Yes

- Go To 3

No

- Replace the Passenger Knee Blocker Airbag in accordance with the Service Information. Refer to **AIR BAG, KNEE BLOCKER, REMOVAL** .
- Perform the RESTRAINTS SYSTEM VERIFICATION TEST. Refer to **STANDARD PROCEDURE** .

3. **CHECK (R12) PASSENGER KNEE BLOCKER SQUIB LINE 1 CIRCUIT OR (R10) PASSENGER KNEE BLOCKER SQUIB LINE 2 CIRCUIT FOR A SHORT TO GROUND**

WARNING: Turn the ignition off, disconnect the 12-volt battery and wait two minutes before proceeding. Failure to follow these instructions may result in possible serious or fatal injury.

1. Disconnect the (special tool #8443A, SRS Load Tool) and the (special tool #8443-8, Jumper, SRS Load) from the Passenger Knee Blocker airbag harness connector.
2. Disconnect the ORC harness connectors.

NOTE: Check connectors - Clean and repair as necessary.

3. Connect the (special tool #8443-57, Adapter, Supplemental Restraint System Load Tool) to the ORC C1 and C2 harness connector.
4. Measure the resistance between the (R12) Passenger Knee Blocker Squib Line 1 circuit and the (R10) Passenger Knee Blocker Squib Line 2 circuit at the (special tool #8443-57, Adapter, Supplemental Restraint System Load Tool) connector C1A cavity 2 and C1A cavity 22.

Is the resistance above 2.0 Ohms?

Yes

- Repair the (R12) Passenger Knee Blocker Squib Line 1 or (R10) Passenger Knee Blocker Squib Line 2 circuits for a shorted together in accordance with the Service Information.
- Perform the RESTRAINTS SYSTEM VERIFICATION TEST. Refer to **STANDARD PROCEDURE** .

No

WARNING: If the Occupant Restraint Controller (ORC) is dropped at any time, it must be replaced. Failure to take the proper precautions can result in accidental airbag deployment. Failure to follow these instructions may result in possible serious or fatal injury.

WARNING: Turn the ignition off, disconnect the 12-volt battery and wait

two minutes before proceeding. Failure to follow these instructions may result in possible serious or fatal injury.

- Replace the ORC in accordance with Service Information. Refer to **MODULE, OCCUPANT RESTRAINT CONTROLLER, REMOVAL** .
- Perform the RESTRAINTS SYSTEM VERIFICATION TEST. Refer to **STANDARD PROCEDURE** .

B0020-11-LEFT SIDE SEAT DEPLOYMENT SQUIB 1 - CIRCUIT SHORT TO GROUND

For a complete wiring diagram, **refer to appropriate SYSTEM WIRING DIAGRAMS article** .

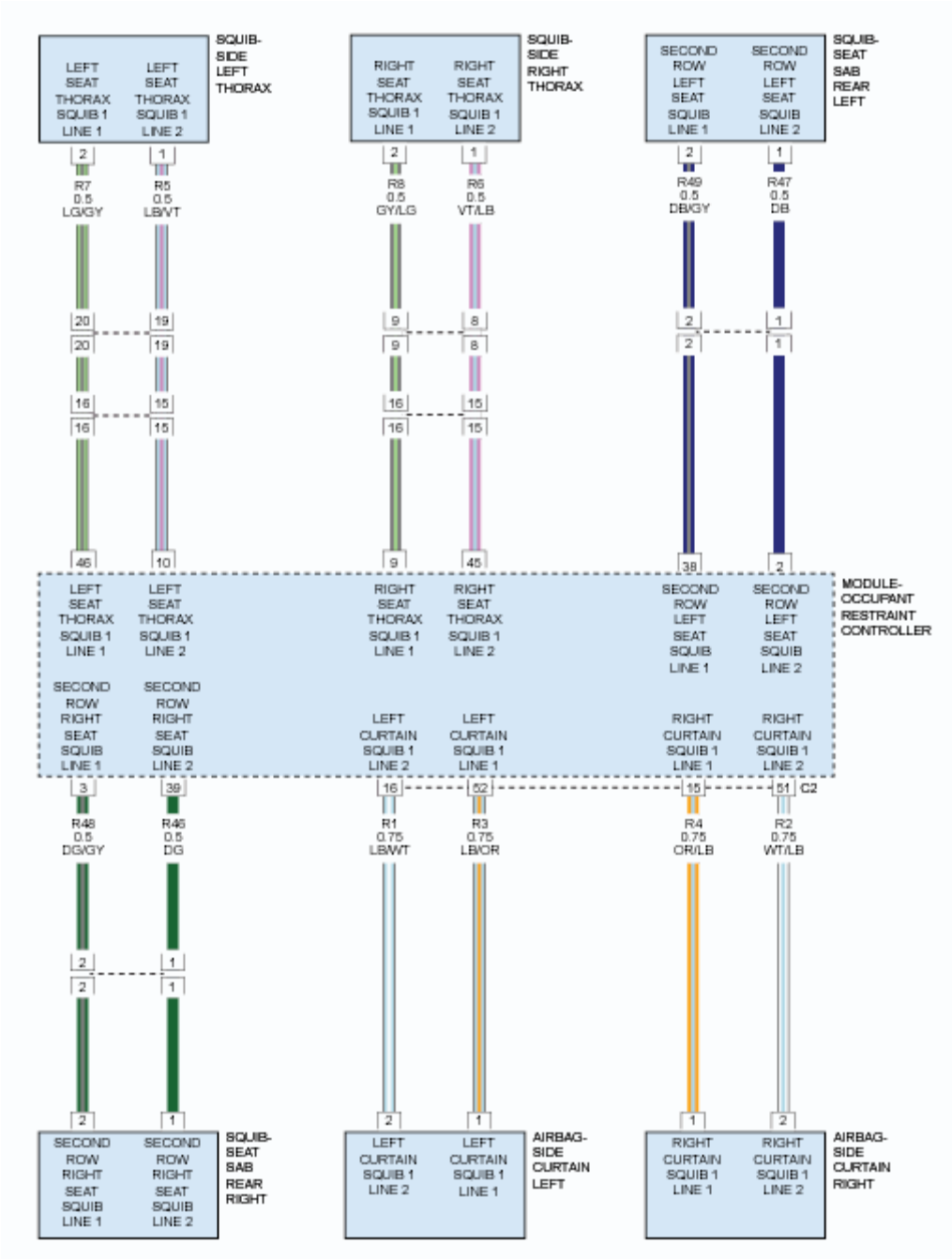

Fig. 33: Side, Thorax & Side Curtain Airbag Squib Circuit Diagram
Courtesy of CHRYSLER GROUP, LLC

THEORY OF OPERATION

When powered, the Occupant Restraint Controller (ORC) sends a test current to the squibs to verify the integrity of the squib and wiring. These circuits are maintained in a "floating" configuration at the module (connected to neither power nor ground) as protection against inadvertent deployment. Use of the (special tool #8443A, SRS Load Tool) in the tests below substitutes a suspect squib with a known good component. The use of the (special tool #8443-57, Adapter, Supplemental Restraint System Load Tool) provides a test point as well

as a method for opening the shorting bar connections within the harness connector. The thorax airbag is seat mounted on the outboard side of the seat back frame. The thorax airbag is a single stage device. The thorax side airbags and the side curtain airbags deploy together during an event separate of the front airbags.

WHEN MONITORED

With the ignition on.

SET CONDITION

The Occupant Restraint Controller (ORC) monitors the resistance of the Left Seat Airbag circuits. If low resistance is detected in the Left Seat Airbag circuits for 2.6 seconds or longer the ORC will set this DTC. The DTC will change from Active to Stored status if the fault condition is not detected for greater than 2.6 seconds. The Airbag Warning Lamp (AWL) will set in the instrument cluster.

POSSIBLE CAUSES

Possible Causes
(R5) LEFT SEAT THORAX SQUIB 1 LINE 2 CIRCUIT SHORTED TO GROUND
(R7) LEFT SEAT THORAX SQUIB 1 LINE 1 CIRCUIT SHORTED TO GROUND
LEFT SEAT THORAX AIRBAG
OCCUPANT RESTRAINT CONTROLLER (ORC)

Always perform the Pre-Diagnostic Troubleshooting procedure before proceeding. Refer to STANDARD PROCEDURE .

DIAGNOSTIC TEST

1. **DETERMINE ACTIVE OR STORED DTC**

   NOTE: Make sure that the battery is fully charged.

   NOTE: The scan tool, (special tool #8443A, SRS Load Tool), and DVOM are required to perform the following test.

   1. Turn the ignition on.
   2. With the scan tool, read the active ORC DTC.

      Select ACTIVE or STORED DTC:

      ACTIVE DTC

      - Go To 2

      STORED DTC

- Perform the RESTRAINTS SYSTEM INTERMITTENT TEST. Refer to **STANDARD PROCEDURE** .

2. **CHECK FOR SHORTED SQUIB CIRCUITS AT THE LEFT SEAT THORAX SQUIB AIRBAG**

WARNING: Turn the ignition off disconnect the 12-volt battery and wait two minutes before proceeding. Failure to follow these instructions may result in possible serious or fatal injury.

1. Disconnect the Left Seat Thorax Airbag harness connector.

WARNING: To avoid serious or fatal injury, do not place an intact non-deployed Left Seat Squib Airbag face down on a hard surface, the airbag will propel into the air if accidentally deployed.

NOTE: Check connectors - Clean and repair as necessary.

2. Connect the (special tool #8443A, SRS Load Tool) and the(special tool #8443-8, Jumper, SRS Load) to the Left Seat Thorax Airbag harness connector.
3. If equipped with the standard key ignition, use this ignition on warning.

WARNING: Turn the ignition on, then reconnect the 12-volt battery and wait two minutes before proceeding. Failure to follow these instructions may result in possible serious or fatal injury.

4. If equipped with the keyless ignition, use this ignition on warning.

WARNING: Disconnect the 12-volt battery wait two minutes before proceeding, remove the ORC fuses, connect the 12-volt battery, wait two minutes before proceeding. Cycle the ignition to the On position, then reconnect the ORC fuses. Wait two minutes before proceeding. Failure to follow these instructions may result in possible serious or fatal injury.

5. With the scan tool, read the active ORC DTC.

   Does the scan tool display: B0020-11-LEFT SIDE SEAT DEPLOYMENT SQUIB 1 - CIRCUIT SHORT TO GROUND?

   Yes

   - Go To 3

   No

WARNING: Turn the ignition off, disconnect the 12-volt battery and wait two minutes before proceeding. Failure to follow these instructions may result in possible serious or fatal injury.

- Replace the Left Side Thorax Airbag in accordance with the Service Information. Refer to **AIR BAG, SEAT, REMOVAL** .
- Perform the RESTRAINTS SYSTEM VERIFICATION TEST. Refer to **STANDARD PROCEDURE** .

3. **CHECK LEFT SEAT THORAX SQUIB CIRCUITS (R7) and (R5) FOR A SHORT TO GROUND**

WARNING: Turn the ignition off, disconnect the 12-volt battery and wait two minutes before proceeding. Failure to follow these instructions may result in possible serious or fatal injury.

1. Disconnect the (special tool #8443A, SRS Load Tool) and the (special tool #8443-8, Jumper, SRS Load) from the Left Seat Thorax Airbag harness connector.
2. Disconnect the ORC harness connectors.

NOTE: Check connectors - Clean and repair as necessary.

3. Connect the (special tool #8443-57, Adapter, Supplemental Restraint System Load Tool) to the ORC C1 and C2 harness connectors.
4. Measure the resistance of the (R5) Left Seat Thorax Squib 1 Line 2 circuit between the (special tool #8443-57, Adapter, Supplemental Restraint System Load Tool) connector C1B cavity 10 and ground.
5. Measure the resistance of the (R7) Left Seat Thorax Squib 1 Line 2 circuit between the (special tool #8443-57, Adapter, Supplemental Restraint System Load Tool) connector C1B cavity 46 and ground.

Is the resistance below 10k Ohms on either circuit?

Yes

- In accordance with Service Information repair or replace the Left Seat Thorax Squib 1 circuits shorted to ground.
- Perform the RESTRAINTS SYSTEM VERIFICATION TEST. Refer to **STANDARD PROCEDURE** .

No

WARNING: If the Occupant Restraint Controller (ORC) is dropped at any time, it must be replaced. Failure to follow these instructions may result in possible serious or fatal injury.

- Replace the ORC in accordance with Service Information. Refer to **MODULE, OCCUPANT RESTRAINT CONTROLLER, REMOVAL** .
- Perform the RESTRAINTS SYSTEM VERIFICATION TEST. Refer to **STANDARD PROCEDURE** .

B0020-12-LEFT SIDE SEAT DEPLOYMENT SQUIB 1 - CIRCUIT SHORT TO BATTERY

For a complete wiring diagram, **refer to appropriate SYSTEM WIRING DIAGRAMS article** .

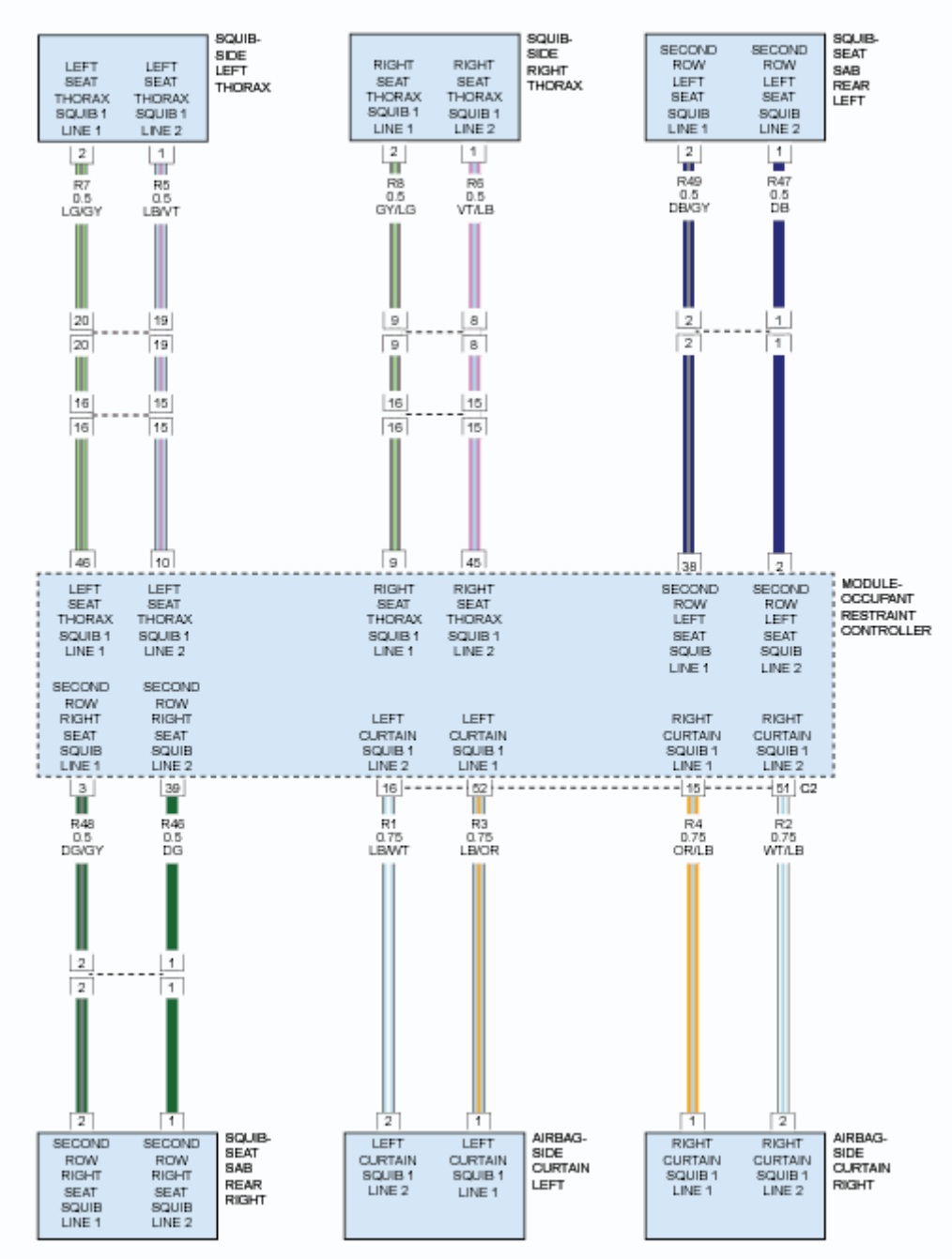

Fig. 34: Side, Thorax & Side Curtain Airbag Squib Circuit Diagram
Courtesy of CHRYSLER GROUP, LLC

THEORY OF OPERATION

When powered, the Occupant Restraint Controller (ORC) sends a test current to the squibs to verify the integrity of the squib and wiring. These circuits are maintained in a "floating" configuration at the module (connected to neither power nor ground) as protection against inadvertent deployment. Use of the (special tool #8443A, SRS Load Tool) in the tests below substitutes a suspect squib with a known good component. The use of the (special tool #8443-57, Adapter, Supplemental Restraint System Load Tool) provides a test point as well as a method for opening the shorting bar connections within the harness connector. The thorax airbag is seat mounted on the outboard side of the seat back frame. The thorax airbag is a single stage device. The thorax side airbags and the side curtain airbags deploy together during an event separate of the front airbags.

WHEN MONITORED

With the ignition on.

SET CONDITION

The Occupant Restraint Controller (ORC) monitors the voltage on the Left Seat Thorax Airbag circuits. If voltage is detected on the Left Seat Thorax Airbag circuits for greater than 2.6 seconds the ORC will set this DTC. The DTC will change from Active to Stored status when the fault condition is not detected for greater than 2.6 seconds. The Airbag Warning Lamp (AWL) will set in the instrument cluster.

POSSIBLE CAUSES

Possible Causes
(R5) LEFT SEAT THORAX SQUIB 1 LINE 2 CIRCUIT SHORTED TO BATTERY
(R7) LEFT SEAT THORAX SQUIB 1 LINE 1 CIRCUIT SHORTED TO BATTERY
LEFT SEAT THORAX AIRBAG
OCCUPANT RESTRAINT CONTROLLER (ORC)

Always perform the Pre-Diagnostic Troubleshooting procedure before proceeding. Refer to STANDARD PROCEDURE .

DIAGNOSTIC TEST

1. **DETERMINE ACTIVE OR STORED DTC**

NOTE: Make sure that the battery is fully charged.

NOTE: The scan tool, (special tool #8443A, SRS Load Tool), and DVOM are required to perform the following test.

1. Turn the ignition on.

Select ACTIVE or STORED DTC:

ACTIVE DTC

- Go To 2

STORED DTC

- Perform the RESTRAINTS SYSTEM INTERMITTENT TEST. Refer to **STANDARD PROCEDURE** .

2. **CHECK FOR SHORTED SQUIB CIRCUITS AT THE LEFT SEAT SQUIB AIRBAG**

WARNING: Turn the ignition off disconnect the 12-volt battery and wait two minutes before proceeding. Failure to follow these instructions may result in possible serious or fatal injury.

1. Disconnect the Left Seat Airbag harness connector.

WARNING: To avoid serious or fatal injury, do not place an intact non-deployed Left Seat Squib Airbag face down on a hard surface, the airbag will propel into the air if accidentally deployed.

NOTE: Check connectors - Clean and repair as necessary.

2. Connect the (special tool #8443A, SRS Load Tool) and the (special tool #8443-8, Jumper, SRS Load) to the Left Seat Thorax Airbag harness connector.
3. If equipped with the standard key ignition, use this ignition on warning.

WARNING: Turn the ignition on, then reconnect the 12-volt battery and wait two minutes before proceeding. Failure to follow these instructions may result in possible serious or fatal injury.

4. If equipped with the keyless ignition, use this ignition on warning.

WARNING: Disconnect the 12-volt battery wait two minutes before proceeding, remove the ORC fuses, connect the 12-volt battery, wait two minutes before proceeding. Cycle the ignition to the On position, then reconnect the ORC fuses. Wait two minutes before proceeding. Failure to follow these instructions may result in possible serious or fatal injury.

5. With the scan tool, read the active ORC DTC.

Does the scan tool display: B0020-12-LEFT SIDE SEAT DEPLOYMENT SQUIB 1 - CIRCUIT

SHORT TO BATTERY?

Yes

- Go To 3

No

WARNING: Turn the ignition off, disconnect the 12-volt battery and wait two minutes before proceeding. Failure to follow these instructions may result in possible serious or fatal injury.

- Replace the Left Seat Thorax Airbag in accordance with the Service Information. Refer to **AIR BAG, SEAT, REMOVAL** .
- Perform the RESTRAINTS SYSTEM VERIFICATION TEST. Refer to **STANDARD PROCEDURE** .

3. **CHECK FOR SHORTED LEFT SEAT AIRBAG SQUIB CIRCUITS**

WARNING: Turn the ignition off, disconnect the 12-volt battery and wait two minutes before proceeding. Failure to follow these instructions may result in possible serious or fatal injury.

1. Disconnect the (special tool #8443A, SRS Load Tool) and the (special tool #8443-8, Jumper, SRS Load) from the Left Seat Thorax Airbag harness connector.
2. Disconnect the ORC harness connectors.

NOTE: Check connectors - Clean and repair as necessary.

3. Connect the (special tool #8443-57, Adapter, Supplemental Restraint System Load Tool) to the ORC C1 and C2 harness connectors.
4. If equipped with the standard key ignition, use this ignition on warning.

WARNING: Turn the ignition on, then reconnect the 12-volt battery and wait two minutes before proceeding. Failure to follow these instructions may result in possible serious or fatal injury.

5. If equipped with the keyless ignition, use this ignition on warning.

WARNING: Disconnect the 12-volt battery wait two minutes before proceeding, remove the ORC fuses, connect the 12-volt battery, wait two minutes before proceeding. Cycle the ignition to the On position, then reconnect the ORC fuses. Wait two minutes before proceeding. Failure to follow these instructions may result in possible serious or fatal injury.

6. Measure the voltage of the (R5) Left Seat Thorax Squib 1 Line 2 circuit between the(special tool #8443-57, Adapter, Supplemental Restraint System Load Tool) connector C1B cavity 10 and ground.
7. Measure the voltage of the (R7) Left Seat Thorax Squib 1 Line 1 circuit between the(special tool #8443-57, Adapter, Supplemental Restraint System Load Tool) connector C1B cavity 46 and ground.

   Is there any voltage present on either circuit?

   Yes

   - In accordance with Service Information repair or replace the Left Seat Thorax Squib circuits.
   - Perform the RESTRAINTS SYSTEM VERIFICATION TEST. Refer to **STANDARD PROCEDURE** .

   No

   WARNING: **Turn the ignition off, disconnect the 12-volt battery and wait two minutes before proceeding. Failure to follow these instructions may result in possible serious or fatal injury.**

   WARNING: **If the Occupant Restraint Controller (ORC) is dropped at any time, it must be replaced. Failure to take the proper precautions can result in accidental airbag deployment. Failure to follow these instructions may result in possible serious or fatal injury.**

   - Replace the ORC in accordance with Service Information. Refer to **MODULE, OCCUPANT RESTRAINT CONTROLLER, REMOVAL** .
   - Perform the RESTRAINTS SYSTEM VERIFICATION TEST. Refer to **STANDARD PROCEDURE** .

B0020-13-LEFT SIDE SEAT DEPLOYMENT SQUIB 1 - CIRCUIT OPEN

For a complete wiring diagram, **refer to appropriate SYSTEM WIRING DIAGRAMS article** .

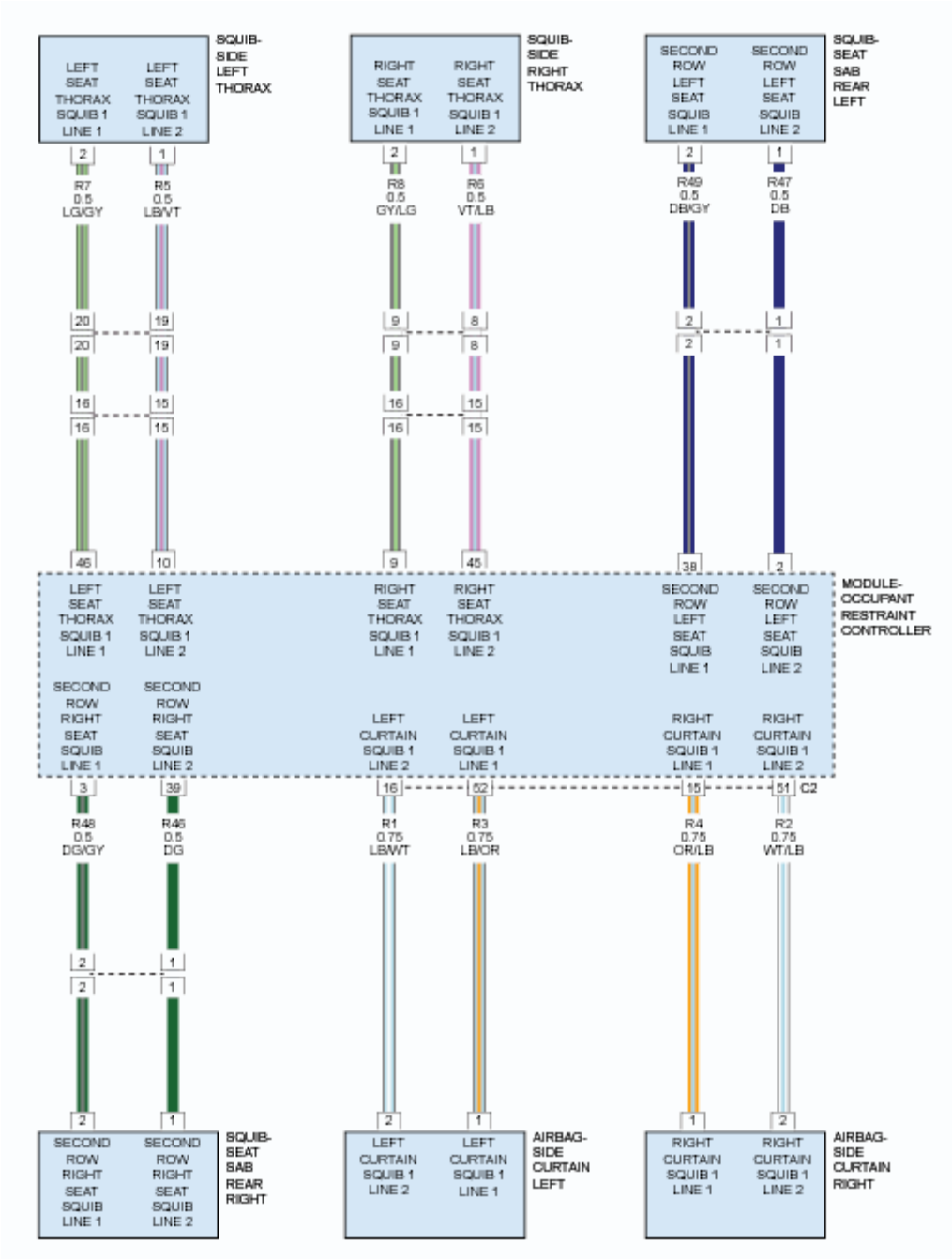

Fig. 35: Side, Thorax & Side Curtain Airbag Squib Circuit Diagram
Courtesy of CHRYSLER GROUP, LLC

THEORY OF OPERATION

When powered, the Occupant Restraint Controller (ORC) sends a test current to the squibs to verify the integrity of the squib and wiring. These circuits are maintained in a "floating" configuration at the module (connected to neither power nor ground) as protection against inadvertent deployment. Use of the (special tool #8443A, SRS Load Tool) in the tests below substitutes a suspect squib with a known good component. The use of the (special tool #8443-57, Adapter, Supplemental Restraint System Load Tool) provides a test point as well

as a method for opening the shorting bar connections within the harness connector. The thorax airbag is seat mounted on the outboard side of the seat back frame. The thorax airbag is a single stage device. The thorax side airbags and the side curtain airbags deploy together during an event separate of the front airbags.

WHEN MONITORED

With the ignition on.

SET CONDITION

The Occupant Restraint Controller (ORC) monitors the resistance of the Left Seat Thorax Airbag circuits. If high resistance is detected for greater than 2.6 seconds between the Left Seat Thorax Airbag circuits the ORC will set this DTC. The DTC will change from Active to Stored status if the fault condition is not detected for greater than 2.6 seconds. The Airbag Warning Lamp (AWL) will set in the instrument cluster.

POSSIBLE CAUSES

Possible Causes
(R5) LEFT SEAT THORAX SQUIB 1 LINE 2 CIRCUIT OPEN
(R7) LEFT SEAT THORAX SQUIB 1 LINE 1 CIRCUIT OPEN
LEFT SEAT THORAX AIRBAG
OCCUPANT RESTRAINT CONTROLLER (ORC)

Always perform the Pre-Diagnostic Troubleshooting procedure before proceeding. Refer to STANDARD PROCEDURE .

DIAGNOSTIC TEST

1. **DETERMINE ACTIVE OR STORED DTC**

   NOTE: Make sure that the battery is fully charged.

   NOTE: The scan tool, (special tool #8443A, SRS Load Tool), and DVOM are required to perform the following test.

   1. Turn the ignition on.

      Select ACTIVE or STORED DTC:

      ACTIVE DTC

      - Go To 2

      STORED DTC

- Perform the RESTRAINTS SYSTEM INTERMITTENT TEST. Refer to **STANDARD PROCEDURE** .

2. **CHECK FOR OPEN LEFT SEAT THORAX AIRBAG SQUIB**

WARNING: Turn the ignition off disconnect the 12-volt battery and wait two minutes before proceeding. Failure to follow these instructions may result in possible serious or fatal injury.

1. Disconnect the Left Seat Thorax Airbag harness connector.

WARNING: Do not place an intact non-deployed Seat Squib Airbag face down on a hard surface, the airbag will propel into the air if accidentally deployed. Failure to follow these instructions may result in possible serious or fatal injury.

NOTE: Check connectors - Clean and repair as necessary.

2. Connect the (special tool #8443A, SRS Load Tool) and the (special tool #8443-8, Jumper, SRS Load) to the Left Seat Thorax Airbag harness connector.

WARNING: Turn the ignition on, then reconnect the 12-volt battery and wait two minutes before proceeding. Failure to follow these instructions may result in possible serious or fatal injury.

3. With the scan tool, read the active ORC DTCs.

Does the scan tool display: B0020-13-LEFT SIDE SEAT DEPLOYMENT SQUIB 1 - CIRCUIT OPEN?

Yes

- Go To 3

No

WARNING: Turn the ignition off, disconnect the 12-volt battery and wait two minutes before proceeding. Failure to follow these instructions may result in possible serious or fatal injury.

- Replace the Left Seat Thorax Airbag in accordance with the Service Information. Refer to **AIR BAG, DRIVER, REMOVAL** .
- Perform the RESTRAINTS SYSTEM VERIFICATION TEST. Refer to **STANDARD PROCEDURE** .

3. **CHECK FOR OPEN (R5) LEFT SEAT SQUIB 1 LINE 2 CIRCUIT**

WARNING: Turn the ignition off, disconnect the 12-volt battery and wait two minutes before proceeding. Failure to follow these instructions may result in possible serious or fatal injury.

1. Disconnect the (special tool #8443A, SRS Load Tool) and the(special tool #8443-8, Jumper, SRS Load) from the Left Seat Thorax Airbag harness connector.
2. Disconnect the ORC harness connectors.

NOTE: Check connectors - Clean and repair as necessary.

3. Connect the (special tool #8443-57, Adapter, Supplemental Restraint System Load Tool) to the ORC C1 and C2 harness connectors.
4. Measure the resistance of the (R5) Left Seat Thorax Squib 1 Line 2 circuit between the Left Seat Thorax Airbag harness connector cavity 1 and the (special tool #8443-57, Adapter, Supplemental Restraint System Load Tool) connector C1B cavity 10.

   Is the resistance below 2.0 Ohm?

   Yes

   - Go To 4

   No

   - Repair or Replace the (R5) Left Seat Thorax Squib 1 Line 2 circuit for an open or high resistance in accordance with Service Information.
   - Perform the RESTRAINTS SYSTEM VERIFICATION TEST. Refer to **STANDARD PROCEDURE** .

4. **CHECK FOR AN OPEN (R7) LEFT SEAT THORAX SQUIB 1 LINE 1 CIRCUIT**
   1. Measure the resistance of the (R7) Left Seat Thorax Squib 1 Line 1 circuit between the Left Seat Thorax Airbag harness connector cavity 2 and the (special tool #8443-57, Adapter, Supplemental Restraint System Load Tool) connector C1B cavity 46.

      Is the resistance below 2.0 Ohm?

      Yes

      WARNING: If the Occupant Restraint Controller (ORC) is dropped at any time, it must be replaced. Failure to take the proper precautions can result in accidental airbag deployment. Failure to follow these instructions may result in possible serious or fatal injury.

      - Replace the ORC in accordance with Service Information. Refer to **MODULE, OCCUPANT RESTRAINT CONTROLLER, REMOVAL** .

- Perform the RESTRAINTS SYSTEM VERIFICATION TEST. Refer to **STANDARD PROCEDURE** .

No

- Repair or Replace the (R7) Left Seat Thorax Squib 1 Line 1 circuit for an open or high resistance in accordance with Service Information.
- Perform the RESTRAINTS SYSTEM VERIFICATION TEST. Refer to **STANDARD PROCEDURE** .

B0020-2B-LEFT SIDE SEAT DEPLOYMENT SQUIB 1 - WIRES SHORTED TOGETHER

For a complete wiring diagram, **refer to appropriate SYSTEM WIRING DIAGRAMS article** .

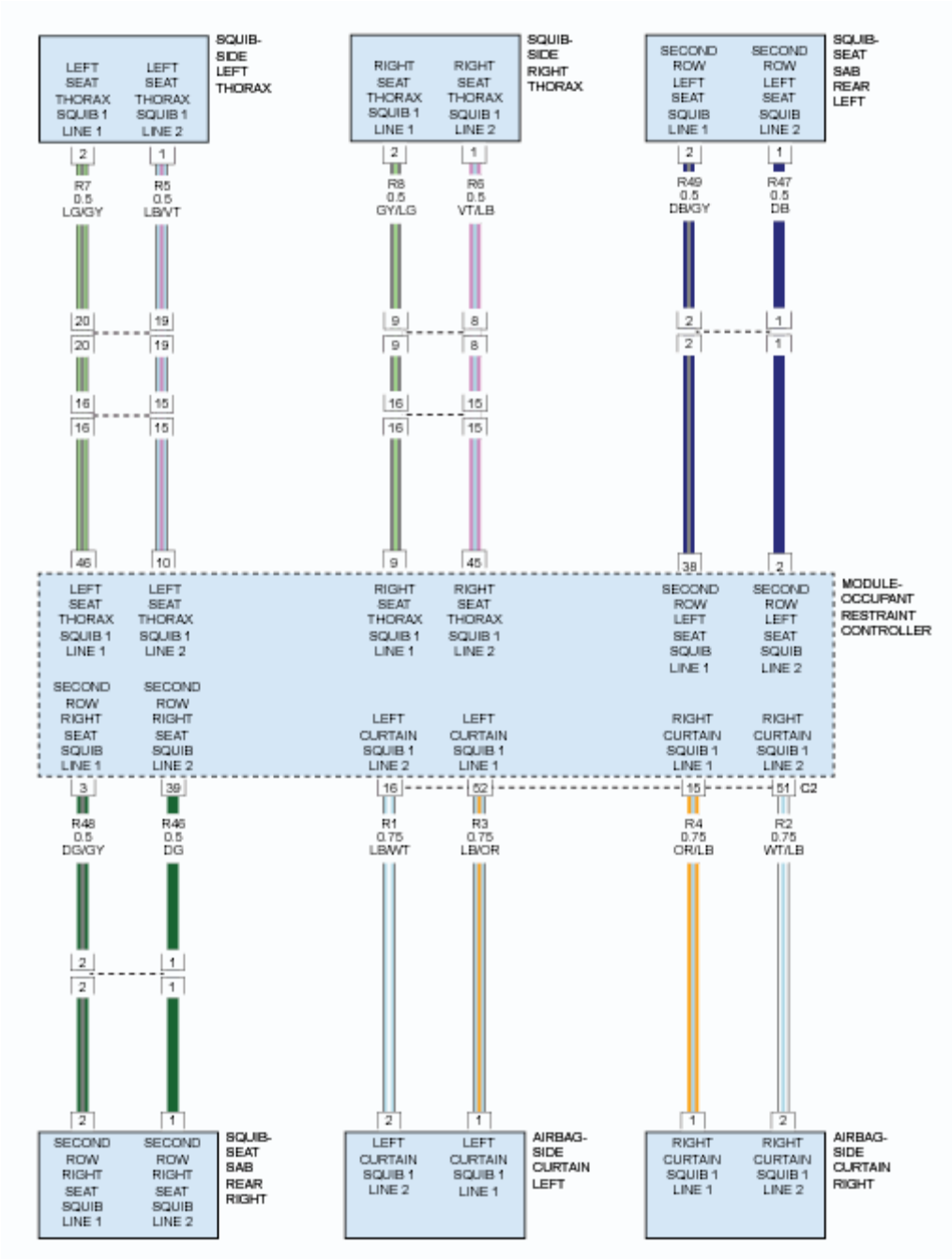

Fig. 36: Side, Thorax & Side Curtain Airbag Squib Circuit Diagram
Courtesy of CHRYSLER GROUP, LLC

THEORY OF OPERATION

When powered, the Occupant Restraint Controller (ORC) sends a test current to the squibs to verify the integrity of the squib and wiring. These circuits are maintained in a "floating" configuration at the module (connected to neither power nor ground) as protection against inadvertent deployment. Use of the (special tool #8443A, SRS Load Tool) in the tests below substitutes a suspect squib with a known good component. The use of the (special tool #8443-57, Adapter, Supplemental Restraint System Load Tool) provides a test point as well

as a method for opening the shorting bar connections within the harness connector. The thorax airbag is seat mounted on the outboard side of the seat back frame. The thorax airbag is a single stage device. The thorax side airbags and the side curtain airbags deploy together during an event separate of the front airbags.

WHEN MONITORED

With the ignition on.

SET CONDITION

The Occupant Restraint Controller (ORC) monitors the resistance of the Left Seat Thorax Airbag circuits. If low resistance is detected for greater than 2.6 seconds between the Left Seat Thorax Airbag circuits the ORC will set this DTC. The DTC will change from Active to Stored status if the fault condition is not detected for greater than 2.6 seconds. The Airbag Warning Lamp (AWL) will set in the instrument cluster.

POSSIBLE CAUSES

Possible Causes
(R5) LEFT SEAT THORAX SQUIB 1 LINE 2 CIRCUIT SHORTED TO THE (R7) LEFT SEAT THORAX SQUIB 1 LINE 1 CIRCUIT
LEFT SEAT THORAX AIRBAG
OCCUPANT RESTRAINT CONTROLLER (ORC)

Always perform the Pre-Diagnostic Troubleshooting procedure before proceeding. Refer to STANDARD PROCEDURE .

DIAGNOSTIC TEST

1. **DETERMINE ACTIVE OR STORED DTC**

   NOTE: Make sure that the battery is fully charged.

   NOTE: The scan tool, (special tool #8443A, SRS Load Tool), and DVOM are required to perform the following test.

   1. Turn the ignition on.

      Select ACTIVE or STORED DTC:

      ACTIVE DTC

      - Go To 2

      STORED DTC

- Perform the RESTRAINTS SYSTEM INTERMITTENT TEST. Refer to **STANDARD PROCEDURE** .

2. **CHECK FOR SHORTED SQUIB CIRCUITS IN THE LEFT SEAT AIRBAG**

WARNING: Turn the ignition off disconnect the 12-volt battery and wait two minutes before proceeding. Failure to follow these instructions may result in possible serious or fatal injury.

1. Disconnect the Left Seat Airbag harness connector.

WARNING: Do not place an intact non-deployed Seat Squib Airbag face down on a hard surface, the airbag will propel into the air if accidentally deployed. Failure to follow these instructions may result in possible serious or fatal injury.

NOTE: Check connectors - Clean and repair as necessary.

2. Connect the (special tool #8443A, SRS Load Tool) and the(special tool #8443-8, Jumper, SRS Load) to the Left Seat Airbag harness connector.
3. If equipped with the standard key ignition, use this ignition on warning.

WARNING: Turn the ignition on, then reconnect the 12-volt battery and wait two minutes before proceeding. Failure to follow these instructions may result in possible serious or fatal injury.

4. If equipped with the keyless ignition, use this ignition on warning.

WARNING: Disconnect the 12-volt battery wait two minutes before proceeding, remove the ORC fuses, connect the 12-volt battery, wait two minutes before proceeding. Cycle the ignition to the On position, then reconnect the ORC fuses. Wait two minutes before proceeding. Failure to follow these instructions may result in possible serious or fatal injury.

5. With the scan tool, read the active ORC DTC.

Does the scan tool display: B0020-2B-LEFT SIDE DEPLOYMENT SQUIB 1 - WIRES SHORTED TOGETHER?

Yes

- Go To 3

No

WARNING: Turn the ignition off, disconnect the 12-volt battery and wait two minutes before proceeding. Failure to follow these instructions may result in possible serious or fatal injury.

- Replace the Left Seat Airbag in accordance with the Service Information. Refer to **AIR BAG, DRIVER, REMOVAL** .
- Perform the RESTRAINTS SYSTEM VERIFICATION TEST. Refer to **STANDARD PROCEDURE** .

3. **CHECK FOR LEFT SEAT AIRBAG SQUIB CIRCUITS SHORTED TOGETHER IN THE SEAT BACK**

WARNING: Turn the ignition off, disconnect the 12-volt battery and wait two minutes before proceeding. Failure to follow these instructions may result in possible serious or fatal injury.

1. Disconnect the Left Seat Airbag in-line harness connector (under Left Seat).

NOTE: Check connectors - Clean and repair as necessary.

2. Connect the (special tool #8443A, SRS Load Tool) and the(special tool #8443-8, Jumper, SRS Load) to the Left Seat Airbag in-line harness connector (Body Side).
3. If equipped with the standard key ignition, use this ignition on warning.

WARNING: Turn the ignition on, then reconnect the 12-volt battery and wait two minutes before proceeding. Failure to follow these instructions may result in possible serious or fatal injury.

4. If equipped with the keyless ignition, use this ignition on warning.

WARNING: Disconnect the 12-volt battery wait two minutes before proceeding, remove the ORC fuses, connect the 12-volt battery, wait two minutes before proceeding. Cycle the ignition to the On position, then reconnect the ORC fuses. Wait two minutes before proceeding. Failure to follow these instructions may result in possible serious or fatal injury.

5. With the scan tool, read the active ORC DTC.

   Does the scan tool display: B0020-2B-LEFT SIDE SEAT DEPLOYMENT SQUIB 1 - WIRES SHORTED TOGETHER?

   Yes

   - Go To 4

No

WARNING: Turn the ignition off, disconnect the 12-volt battery and wait two minutes before proceeding. Failure to follow these instructions may result in possible serious or fatal injury.

- In accordance with the Service Information repair or replace the Left Seat Airbag wiring harness (Side Airbag Jumper). Circuits (R5) and (R7) are shorted together between the in-line connector and the Left Seat Airbag connector.
- Perform the RESTRAINTS SYSTEM VERIFICATION TEST. Refer to **STANDARD PROCEDURE** .

4. **CHECK (R5) LEFT SEAT SQUIB 1 LINE 2 CIRCUIT FOR A SHORT TO THE (R7) LEFT SEAT SQUIB 1 LINE 1 CIRCUIT**

WARNING: Turn the ignition off, disconnect the 12-volt battery and wait two minutes before proceeding. Failure to follow these instructions may result in possible serious or fatal injury.

1. Disconnect the (special tool #8443A, SRS Load Tool) and the (special tool #8443-8, Jumper, SRS Load) from the Left Seat Airbag harness connector.
2. Disconnect the ORC harness connectors.

NOTE: Check connectors - Clean and repair as necessary.

3. Connect the (special tool #8443-57, Adapter, Supplemental Restraint System Load Tool) to the ORC harness connectors.
4. Measure the resistance of the (R5) Left Seat Squib 1 line 2 circuit between the (special tool #8443-57, Adapter, Supplemental Restraint System Load Tool) connector C1B cavity 10 and the (R7) Left Seat Squib 1 Line 1 circuit at (special tool #8443-57, Adapter, Supplemental Restraint System Load Tool) connector C1B cavity 46

Is the resistance below or within the range of 1.5 - 2.18 Ohms?

Yes

- In accordance with the Service Information repair or replace the Left Seat Airbag wiring harness. Circuits (R5) and (R7) shorted together between the in-line connector and the ORC C2 (32 way) connector.
- Perform the RESTRAINTS SYSTEM VERIFICATION TEST. Refer to **STANDARD PROCEDURE** .

No

WARNING: If the Occupant Restraint Controller (ORC) is dropped at any

time, it must be replaced. Failure to take the proper precautions can result in accidental airbag deployment. Failure to follow these instructions may result in possible serious or fatal injury.

- Replace the ORC in accordance with Service Information. Refer to **MODULE, OCCUPANT RESTRAINT CONTROLLER, REMOVAL** .
- Perform the RESTRAINTS SYSTEM VERIFICATION TEST. Refer to **STANDARD PROCEDURE** .

B0021-11-LEFT CURTAIN DEPLOYMENT SQUIB 1 - CIRCUIT SHORT TO GROUND

For a complete wiring diagram, **refer to appropriate SYSTEM WIRING DIAGRAMS article** .

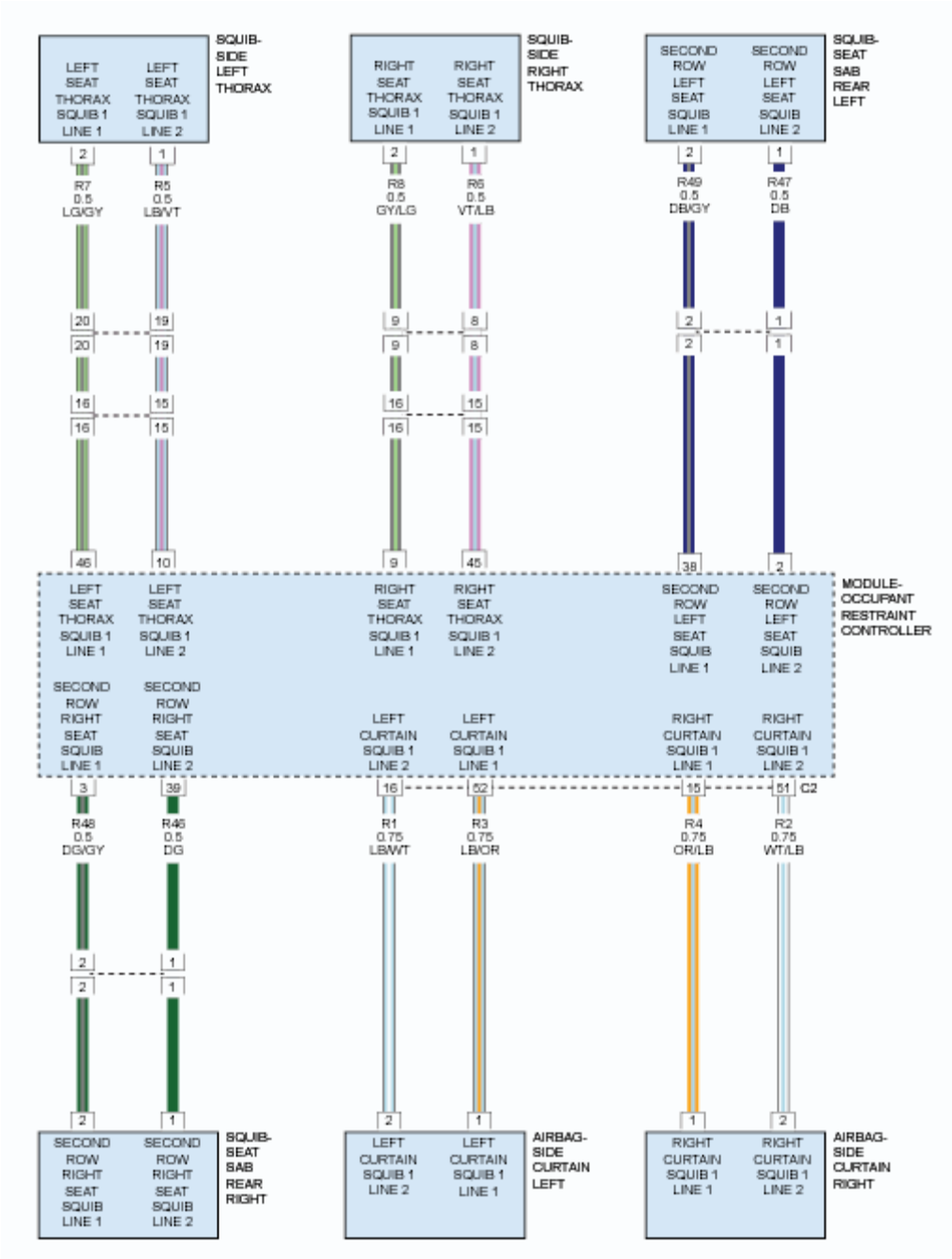

Fig. 37: Side, Thorax & Side Curtain Airbag Squib Circuit Diagram
Courtesy of CHRYSLER GROUP, LLC

THEORY OF OPERATION

When powered, the Occupant Restraint Controller (ORC) sends a test current to the squibs to verify the integrity of the squib and wiring. These circuits are maintained in a "floating" configuration at the ORC (connected to neither power nor ground) as protection against inadvertent deployment. Use of the (special tool #8443A, SRS Load Tool) in the tests below substitutes a suspect squib with a known good component. The (special tool #8443-57, Adapter, Supplemental Restraint System Load Tool) provides a test point as well as a

method for opening the shorting bar connections within the ORC harness connector. The side curtain airbags are a single-stage device that upon sensor detected impact they deploy. They are located above the headliner and fastened to one of the roof side rails. They protect the area from the A-pillar to the rear of the vehicle. The side curtain airbags and the seat thorax side airbags are deployed simultaneously independent of the front airbags during an impact event.

WHEN MONITORED

With the ignition on.

SET CONDITION

The Occupant Restraint Controller (ORC) monitors the resistance of the Left Curtain Squib 1 circuits. The ORC will set this DTC if it detects low resistance of the Left Curtain Squib 1 circuits for greater than 2.6 seconds. The DTC will change from Active to Stored status when the fault condition is not detected for greater than 2.6 seconds. The Airbag Warning Lamp (AWL) will set in the instrument cluster.

POSSIBLE CAUSES

Possible Causes
(R3) LEFT CURTAIN SQUIB 1 LINE 1 CIRCUIT SHORTED TO GROUND
(R1) LEFT CURTAIN SQUIB 1 LINE 2 CIRCUIT SHORTED TO GROUND
LEFT SIDE CURTAIN AIRBAG
OCCUPANT RESTRAINT CONTROLLER (ORC)

Always perform the Pre-Diagnostic Troubleshooting procedure before proceeding. Refer to STANDARD PROCEDURE .

DIAGNOSTIC TEST

1. **DETERMINE ACTIVE OR STORED DTC**

   NOTE: Make sure that the battery is fully charged.

   NOTE: The scan tool, (special tool #8443A, SRS Load Tool), and DVOM are required to perform the following test.

   1. Turn the ignition on.

      Select ACTIVE or STORED DTC:

      ACTIVE DTC

      - Go To 2

STORED DTC

- Perform the RESTRAINTS SYSTEM INTERMITTENT TEST. Refer to **STANDARD PROCEDURE** .

2. **CHECK FOR SHORTED SQUIB CIRCUITS IN LEFT SIDE CURTAIN AIRBAG**

WARNING: Turn the ignition off disconnect the 12-volt battery and wait two minutes before proceeding. Failure to follow these instructions may result in possible serious or fatal injury.

1. Disconnect the Left Side Curtain Airbag harness connector.

WARNING: Do not place an intact non-deployed curtain airbag face down on a hard surface, the airbag will propel into the air if accidentally deployed. Failure to follow these instructions may result in possible serious or fatal injury.

NOTE: Check connectors - Clean and repair as necessary.

2. Connect the (special tool #8443A, SRS Load Tool) and the (special tool #8443-8, Jumper, SRS Load) to the Left Side Curtain Airbag harness connector.
3. If equipped with the standard key ignition, use this ignition on warning.

WARNING: Turn the ignition on, then reconnect the 12-volt battery and wait two minutes before proceeding. Failure to follow these instructions may result in possible serious or fatal injury.

4. If equipped with the keyless ignition, use this ignition on warning.

WARNING: Disconnect the 12-volt battery wait two minutes before proceeding, remove the ORC fuses, connect the 12-volt battery, wait two minutes before proceeding. Cycle the ignition to the On position, then reconnect the ORC fuses. Wait two minutes before proceeding. Failure to follow these instructions may result in possible serious or fatal injury.

5. With the scan tool, read the active ORC DTCs.

Does the scan tool display: B0021-11-LEFT CURTAIN DEPLOYMENT SQUIB 1 - CIRCUIT SHORT TO GROUND?

Yes

- Go To 3

No

- Replace the Left Side Curtain Airbag in accordance with the Service Information. Refer to **AIR BAG, SIDE CURTAIN, REMOVAL** .
- Perform the RESTRAINTS SYSTEM VERIFICATION TEST. Refer to **STANDARD PROCEDURE** .

3. **CHECK THE (R3) LEFT CURTAIN SQUIB 1 LINE 1 CIRCUIT AND THE (R1) LEFT CURTAIN SQUIB 1 LINE 2 CIRCUIT FOR A SHORT TO GROUND**

WARNING: Turn the ignition off disconnect the 12-volt battery and wait two minutes before proceeding. Failure to follow these instructions may result in possible serious or fatal injury.

1. Disconnect the (special tool #8443A, SRS Load Tool) and the (special tool #8443-8, Jumper, SRS Load) from the Left Side Curtain Airbag harness connector.
2. Disconnect the ORC harness connectors.

NOTE: Check connectors - Clean and repair as necessary.

3. Connect the (special tool #8443-57, Adapter, Supplemental Restraint System Load Tool) to the ORC C1 and C2 harness connectors.
4. Measure the resistance of the (R3) Left Curtain Squib 1 Line 1 circuit between the (special tool #8443-57, Adapter, Supplemental Restraint System Load Tool) connector C1B cavity 52 and ground.
5. Measure the resistance of the (R1) Left Curtain Squib 1 Line 2 circuit between the(special tool #8443-57, Adapter, Supplemental Restraint System Load Tool) connector C1B cavity 16 and ground.

Is the resistance below 10k Ohms on either circuit?

Yes

- Repair the Left Curtain Squib 1 circuits with resistance below 10k Ohms for a short to ground in accordance with Service Information.
- Perform the RESTRAINTS SYSTEM VERIFICATION TEST. Refer to **STANDARD PROCEDURE** .

No

WARNING: If the Occupant Restraint Controller (ORC) is dropped at any time, it must be replaced. Failure to take the proper precautions can result in accidental airbag deployment. Failure to follow these instructions may result in possible serious or fatal injury.

- Replace the ORC in accordance with Service Information. Refer to **MODULE, OCCUPANT RESTRAINT CONTROLLER, REMOVAL** .
- Perform the RESTRAINTS SYSTEM VERIFICATION TEST. Refer to **STANDARD PROCEDURE** .

B0021-12-LEFT CURTAIN DEPLOYMENT SQUIB 1 - CIRCUIT SHORT TO BATTERY

For a complete wiring diagram, **refer to appropriate SYSTEM WIRING DIAGRAMS article** .

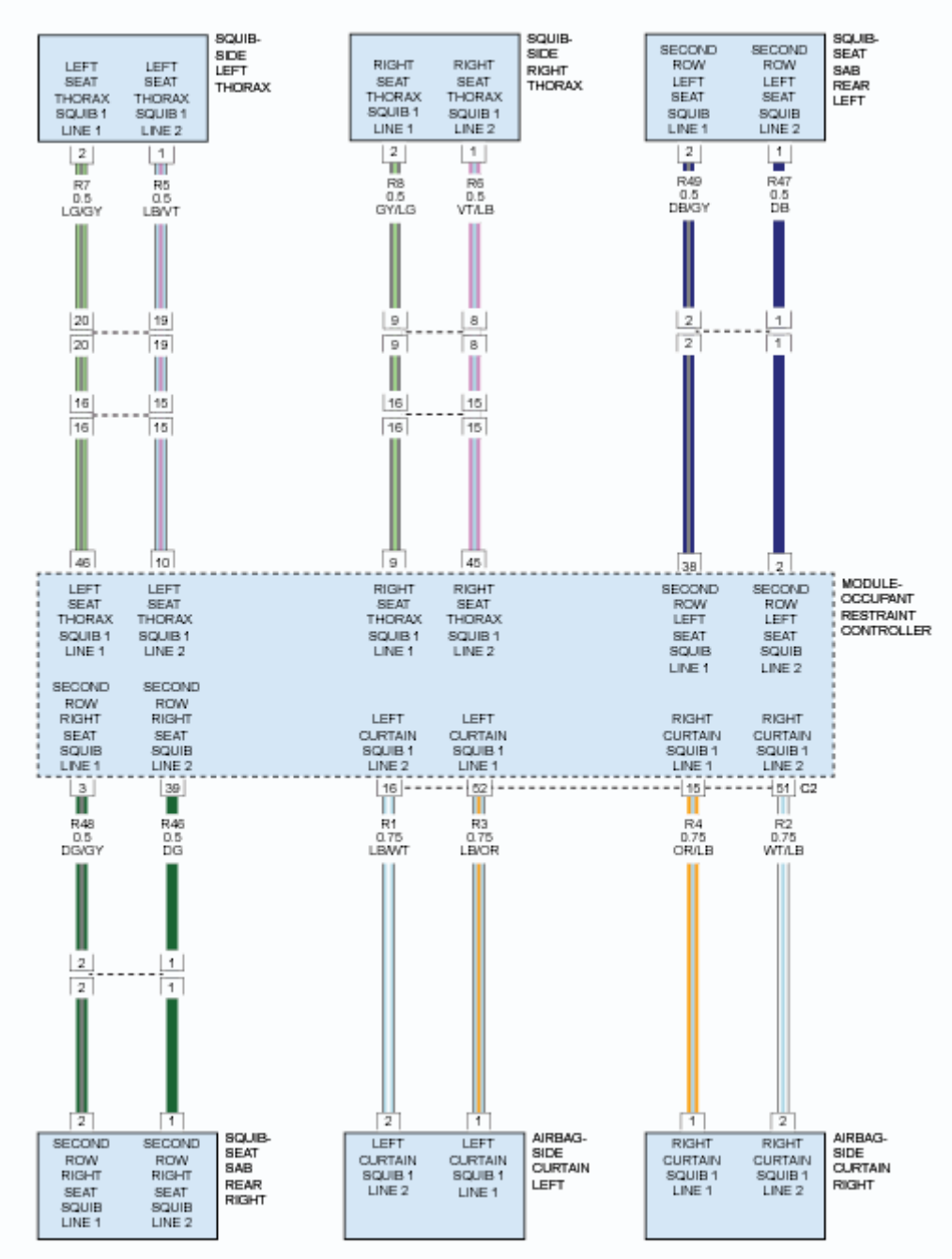

Fig. 38: Side, Thorax & Side Curtain Airbag Squib Circuit Diagram
Courtesy of CHRYSLER GROUP, LLC

THEORY OF OPERATION

When powered, the Occupant Restraint Controller (ORC) sends a test current to the squibs to verify the integrity of the squib and wiring. These circuits are maintained in a "floating" configuration at the ORC (connected to neither power nor ground) as protection against inadvertent deployment. Use of the (special tool #8443A, SRS Load Tool) in the tests below substitutes a suspect squib with a known good component. The (special tool #8443-57, Adapter, Supplemental Restraint System Load Tool) provides a test point as well as a method for opening the shorting bar connections within the ORC harness connector. The side curtain airbags are a single-stage device that upon sensor detected impact they deploy. They are located above the headliner and fastened to one of the roof side rails. They protect the area from the A-pillar to the rear of the vehicle. The side curtain airbags and the seat thorax side airbags are deployed simultaneously independent of the front airbags during an impact event.

WHEN MONITORED

With the ignition on.

SET CONDITION

The Occupant Restraint Controller (ORC) monitors the voltage on the Left Curtain Squib 1 circuits. The ORC will set this DTC if it detects voltage on the Left Curtain Squib 1 circuits for greater than 2.6 seconds. The DTC will change from Active to Stored status when the fault condition is not detected for greater than 2.6 seconds. The Airbag Warning Lamp (AWL) will set in the instrument cluster.

POSSIBLE CAUSES

Possible Causes
(R3) LEFT CURTAIN SQUIB 1 LINE 1 CIRCUIT SHORTED TO BATTERY
(R1) LEFT CURTAIN SQUIB 1 LINE 2 CIRCUIT SHORTED TO BATTERY
LEFT SIDE CURTAIN AIRBAG
OCCUPANT RESTRAINT CONTROLLER (ORC)

Always perform the Pre-Diagnostic Troubleshooting procedure before proceeding. Refer to STANDARD PROCEDURE .

DIAGNOSTIC TEST

1. **DETERMINE ACTIVE OR STORED DTC**

NOTE: **Make sure that the battery is fully charged.**

NOTE: **The scan tool, (special tool #8443A, SRS Load Tool), and DVOM are required to perform the following test.**

1. Turn the ignition on.

   Select ACTIVE or STORED DTC:

   ACTIVE DTC

   - Go To 2

   STORED DTC

   - Perform the RESTRAINTS SYSTEM INTERMITTENT TEST. Refer to **STANDARD PROCEDURE** .

2. **CHECK FOR SHORTED SQUIB CIRCUITS IN LEFT SIDE CURTAIN AIRBAG**

   WARNING: **Turn the ignition off disconnect the 12-volt battery and wait two minutes before proceeding. Failure to follow these instructions may result in possible serious or fatal injury.**

   1. Disconnect the Left Side Curtain Airbag harness connector.

      WARNING: **Do not place an intact non-deployed curtain airbag face down on a hard surface, the airbag will propel into the air if accidentally deployed. Failure to follow these instructions may result in possible serious or fatal injury.**

      NOTE: **Check connectors - Clean and repair as necessary.**

   2. Connect the (special tool #8443A, SRS Load Tool) and the (special tool #8443-8, Jumper, SRS Load) to the Left Side Curtain Airbag harness connectors.
   3. If equipped with the standard key ignition, use this ignition on warning.

      WARNING: **Turn the ignition on, then reconnect the 12-volt battery and wait two minutes before proceeding. Failure to follow these instructions may result in possible serious or fatal injury.**

   4. If equipped with the keyless ignition, use this ignition on warning.

      WARNING: **Disconnect the 12-volt battery wait two minutes before proceeding, remove the ORC fuses, connect the 12-volt battery, wait two minutes before proceeding. Cycle the ignition to the On position, then reconnect the ORC fuses. Wait two minutes before proceeding. Failure to follow these instructions may result in possible serious or fatal injury.**

5. With the scan tool, read the active ORC DTCs.

   Does the scan tool display: B0021-12-LEFT CURTAIN DEPLOYMENT SQUIB 1 - CIRCUIT SHORT TO BATTERY?

   Yes

   - Go To 3

   No

   - Replace the Left Side Curtain Airbag in accordance with the Service Information. Refer to **AIR BAG, SIDE CURTAIN, REMOVAL** .
   - Perform the RESTRAINTS SYSTEM VERIFICATION TEST. Refer to **STANDARD PROCEDURE** .

3. **CHECK THE (R3) LEFT CURTAIN SQUIB 1 LINE 1 CIRCUIT AND THE (R1) LEFT CURTAIN SQUIB 1 LINE 2 CIRCUIT FOR A SHORT TO BATTERY**

   WARNING: **Turn the ignition off disconnect the 12-volt battery and wait two minutes before proceeding. Failure to follow these instructions may result in possible serious or fatal injury.**

   1. Disconnect the (special tool #8443A, SRS Load Tool) and the (special tool #8443-8, Jumper, SRS Load) from the Left Side Curtain Airbag harness connector.
   2. Disconnect the ORC harness connectors.

      NOTE: Check connectors - Clean and repair as necessary.

   3. Connect the (special tool #8443-57, Adapter, Supplemental Restraint System Load Tool) to the ORC C1 and C2 harness connectors.
   4. If equipped with the standard key ignition, use this ignition on warning.

      WARNING: **Turn the ignition on, then reconnect the 12-volt battery and wait two minutes before proceeding. Failure to follow these instructions may result in possible serious or fatal injury.**

   5. If equipped with the keyless ignition, use this ignition on warning.

      WARNING: **Disconnect the 12-volt battery wait two minutes before proceeding, remove the ORC fuses, connect the 12-volt battery, wait two minutes before proceeding. Cycle the ignition to the On position, then reconnect the ORC fuses. Wait two minutes before proceeding. Failure to follow these instructions may result in possible serious or fatal injury.**

6. Measure the voltage of the (R3) Left Curtain Squib 1 Line 1 circuit between the (special tool #8443-57, Adapter, Supplemental Restraint System Load Tool) connector C1B cavity 52 and ground.
7. Measure the voltage of the (R1) Left Curtain Squib 1 Line 2 circuit between the (special tool #8443-57, Adapter, Supplemental Restraint System Load Tool) connector C1B cavity 16 and ground.

Is there any voltage present on either circuit?

Yes

- Repair the Left Curtain Squib 1 circuits with voltage present for a short to battery.
- Perform RESTRAINTS SYSTEM VERIFICATION TEST. Refer to **STANDARD PROCEDURE** .

No

WARNING: **If the Occupant Restraint Controller (ORC) is dropped at any time, it must be replaced. Failure to take the proper precautions can result in accidental airbag deployment. Failure to follow these instructions may result in possible serious or fatal injury.**

WARNING: **Turn the ignition off disconnect the 12-volt battery and wait two minutes before proceeding. Failure to follow these instructions may result in possible serious or fatal injury.**

- Replace the ORC in accordance with Service Information. Refer to **MODULE, OCCUPANT RESTRAINT CONTROLLER, REMOVAL** .
- Perform the AIRBAG SYSTEM VERIFICATION TEST. Refer to **STANDARD PROCEDURE** .

B0021-13-LEFT CURTAIN DEPLOYMENT SQUIB 1 - CIRCUIT OPEN

For a complete wiring diagram, **refer to appropriate SYSTEM WIRING DIAGRAMS article** .

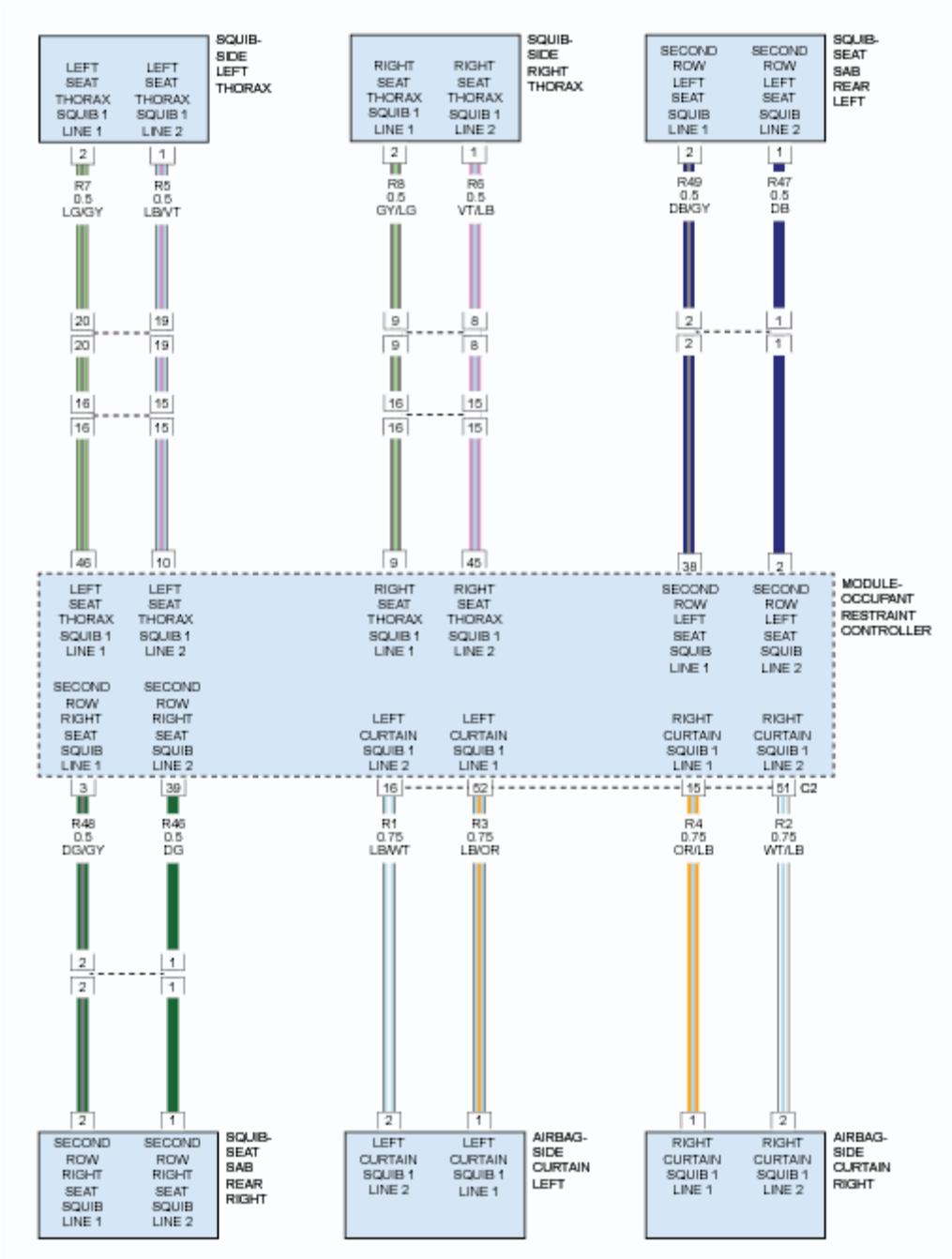

Fig. 39: Side, Thorax & Side Curtain Airbag Squib Circuit Diagram
Courtesy of CHRYSLER GROUP, LLC

THEORY OF OPERATION

When powered, the Occupant Restraint Controller (ORC) sends a test current to the squibs to verify the integrity of the squib and wiring. These circuits are maintained in a "floating" configuration at the ORC (connected to neither power nor ground) as protection against inadvertent deployment. Use of the (special tool #8443A, SRS Load Tool) in the tests below substitutes a suspect squib with a known good component. The (special tool #8443-57, Adapter, Supplemental Restraint System Load Tool) provides a test point as well as a

method for opening the shorting bar connections within the ORC harness connector. The side curtain airbags are a single-stage device that upon sensor detected impact they deploy. They are located above the headliner and fastened to one of the roof side rails. They protect the area from the A-pillar to the rear of the vehicle. The side curtain airbags and the seat thorax side airbags are deployed simultaneously independent of the front airbags during an impact event.

WHEN MONITORED

With the ignition on.

SET CONDITION

The Occupant Restraint Controller (ORC) monitors the resistance of the Left Curtain Squib 1 circuits. The ORC will set this DTC if it detects an open or high resistance on the Left Curtain Squib 1 circuits for 2.6 seconds. The fault will change from an active to stored status when the open or high resistance on the Left Curtain Squib 1 circuits is cleared for 2.6 seconds. The Airbag Warning Lamp (AWL) will set in the instrument cluster.

POSSIBLE CAUSES

Possible Causes
(R3) LEFT CURTAIN SQUIB 1 LINE 1 CIRCUIT OPEN
(R1) LEFT CURTAIN SQUIB 1 LINE 2 CIRCUIT OPEN
LEFT SIDE CURTAIN AIRBAG
OCCUPANT RESTRAINT CONTROLLER (ORC)

Always perform the Pre-Diagnostic Troubleshooting procedure before proceeding. Refer to STANDARD PROCEDURE .

DIAGNOSTIC TEST

1. **DETERMINE ACTIVE OR STORED DTC**

   NOTE: Make sure that the battery is fully charged.

   NOTE: The scan tool, (special tool #8443A, SRS Load Tool), and DVOM are required to perform the following test.

   1. Turn the ignition on.

      Select ACTIVE or STORED DTC:

      ACTIVE DTC

      - Go To 2

STORED DTC

- Perform the RESTRAINTS SYSTEM INTERMITTENT TEST. Refer to **STANDARD PROCEDURE** .

2. **CHECK FOR OPEN SQUIB CIRCUITS IN LEFT SIDE CURTAIN AIRBAG**

WARNING: Turn the ignition off disconnect the 12-volt battery and wait two minutes before proceeding. Failure to follow these instructions may result in possible serious or fatal injury.

1. Disconnect the Left Side Curtain Airbag harness connector.

WARNING: Do not place an intact non-deployed curtain airbag face down on a hard surface, the airbag will propel into the air if accidentally deployed. Failure to follow these instructions may result in possible serious or fatal injury.

NOTE: Check connectors - Clean and repair as necessary.

2. Connect the (special tool #8443A, SRS Load Tool) and the (special tool #8443-8, Jumper, SRS Load) to the Left Side Curtain Airbag harness connector.

WARNING: Turn the ignition on, then reconnect the 12-volt battery and wait two minutes before proceeding. Failure to follow these instructions may result in possible serious or fatal injury.

3. With the scan tool, read the active ORC DTCs.

Does the scan tool display: B0021-13-LEFT CURTAIN DEPLOYMENT SQUIB 1 - CIRCUIT OPEN DTC?

Yes

- Go To 3

No

- Replace the Left Side Curtain Airbag in accordance with the Service Information. Refer to **AIR BAG, SIDE CURTAIN, REMOVAL** .
- Perform the RESTRAINTS SYSTEM VERIFICATION TEST. Refer to **STANDARD PROCEDURE** .

3. **CHECK THE (R3) LEFT CURTAIN SQUIB 1 LINE 1 CIRCUIT FOR AN OPEN**

WARNING: Turn the ignition off disconnect the 12-volt battery and wait two

minutes before proceeding. Failure to follow these instructions may result in possible serious or fatal injury.

1. Disconnect the (special tool #8443A, SRS Load Tool) and the (special tool #8443-8, Jumper, SRS Load) from the Left Side Curtain Airbag harness connector.
2. Disconnect the ORC harness connectors.

NOTE: Check connectors - Clean and repair as necessary.

3. Connect the (special tool #8443-57, Adapter, Supplemental Restraint System Load Tool) to the ORC C1 and C2 harness connectors.
4. Measure the resistance of the (R3) Left Curtain Squib 1 Line 1 circuit between the Left Side Curtain Airbag connector cavity 2 and the (special tool #8443-57, Adapter, Supplemental Restraint System Load Tool) connector C1B cavity 52.

   Is the resistance below 2.0 Ohm?

   Yes

   - Go To 4

   No

   - Repair the (R3) Left Curtain Squib 1 Line 1 circuit for an open.
   - Perform the RESTRAINTS SYSTEM VERIFICATION TEST. Refer to **STANDARD PROCEDURE** .

4. **CHECK THE (R1) LEFT CURTAIN SQUIB 1 LINE 2 CIRCUIT FOR AN OPEN**
   1. Measure the resistance of the (R1) Left Curtain Squib 1 Line 2 circuit between the Left Side Curtain Airbag harness connector cavity 1 and the (special tool #8443-57, Adapter, Supplemental Restraint System Load Tool) connector C1B cavity 16.

      Is the resistance below 2.0 Ohm?

      Yes

      WARNING: If the Occupant Restraint Controller (ORC) is dropped at any time, it must be replaced. Failure to take the proper precautions can result in accidental airbag deployment. Failure to follow these instructions may result in possible serious or fatal injury.

      - Replace the ORC in accordance with Service Information. Refer to **MODULE, OCCUPANT RESTRAINT CONTROLLER, REMOVAL** .
      - Perform the RESTRAINTS SYSTEM VERIFICATION TEST. Refer to **STANDARD PROCEDURE** .

No

- Repair the (R1) Left Curtain Squib 1 Line 2 circuit for an open in accordance with Service Information.
- Perform the RESTRAINTS SYSTEM VERIFICATION TEST. Refer to **STANDARD PROCEDURE** .

B0021-2B-LEFT CURTAIN DEPLOYMENT SQUIB 1 - WIRES SHORTED TOGETHER

For a complete wiring diagram, **refer to appropriate SYSTEM WIRING DIAGRAMS article** .

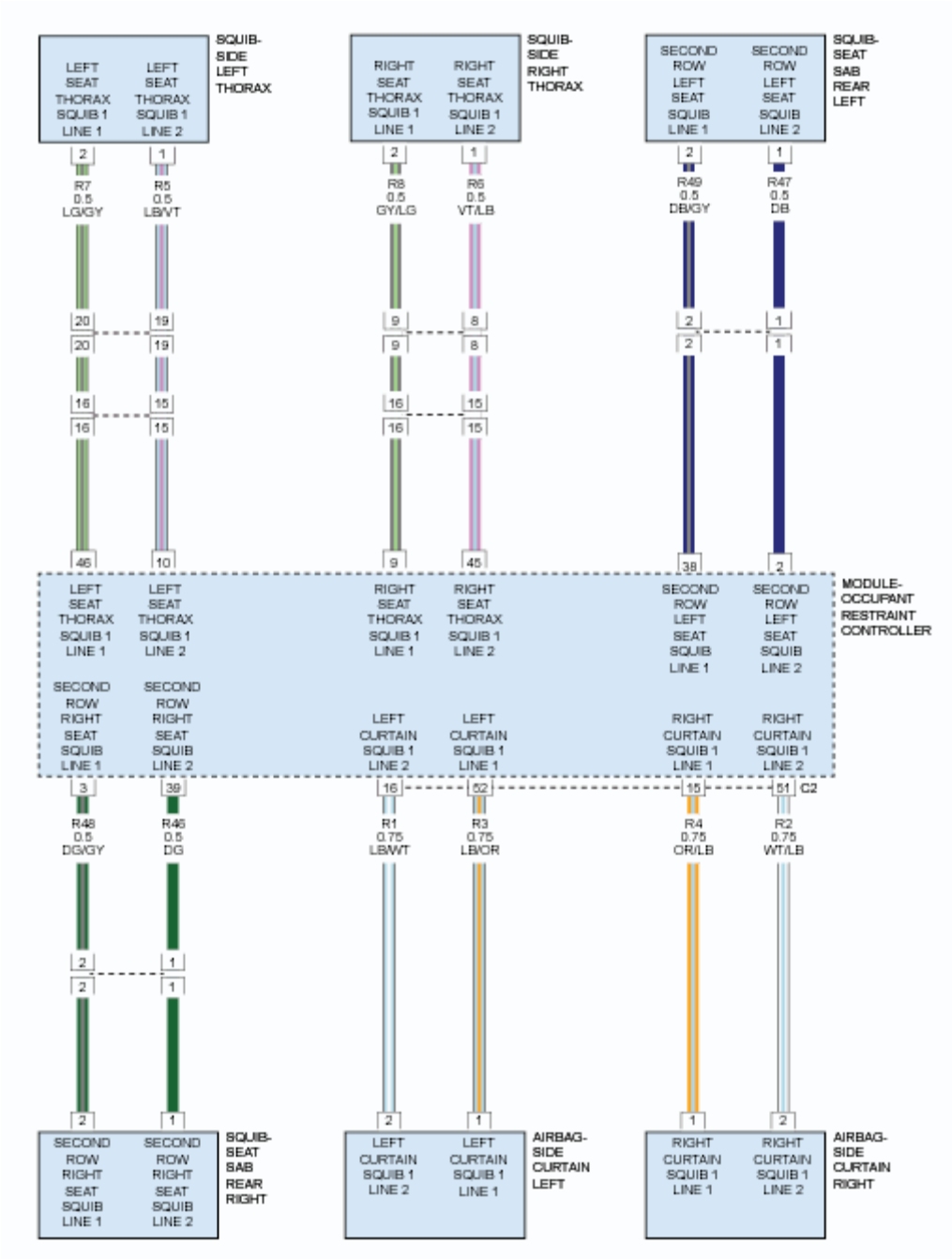

Fig. 40: Side, Thorax & Side Curtain Airbag Squib Circuit Diagram
Courtesy of CHRYSLER GROUP, LLC

THEORY OF OPERATION

When powered, the Occupant Restraint Controller (ORC) sends a test current to the squibs to verify the integrity of the squib and wiring. These circuits are maintained in a "floating" configuration at the ORC (connected to neither power nor ground) as protection against inadvertent deployment. Use of the (special tool #8443A, SRS Load Tool) in the tests below substitutes a suspect squib with a known good component. The (special tool #8443-57, Adapter, Supplemental Restraint System Load Tool) provides a test point as well as a

method for opening the shorting bar connections within the ORC harness connector. The side curtain airbags are a single-stage device that upon sensor detected impact they deploy. They are located above the headliner and fastened to one of the roof side rails. They protect the area from the A-pillar to the rear of the vehicle. The side curtain airbags and the seat thorax side airbags are deployed simultaneously independent of the front airbags during an impact event.

WHEN MONITORED

With the ignition on.

SET CONDITION

The Occupant Restraint Controller (ORC) monitors the resistance of the Left Curtain Squib 1 circuits. If low resistance is detected for greater than 2.6 seconds between the Left Curtain Squib 1 circuits the ORC will set this DTC. The DTC will change from Active to Stored status if the fault condition is not detected for greater than 2.6 seconds. The Airbag Warning Lamp (AWL) will set in the instrument cluster.

POSSIBLE CAUSES

Possible Causes
(R3) LEFT CURTAIN SQUIB 1 LINE 1 CIRCUIT SHORTED TO THE (R1) LEFT CURTAIN SQUIB 1 LINE 2 CIRCUIT
LEFT SIDE CURTAIN AIRBAG
OCCUPANT RESTRAINT CONTROLLER (ORC)

Always perform the Pre-Diagnostic Troubleshooting procedure before proceeding. Refer to STANDARD PROCEDURE .

DIAGNOSTIC TEST

1. **DETERMINE ACTIVE OR STORED DTC**

   NOTE: Make sure that the battery is fully charged.

   NOTE: The scan tool, (special tool #8443A, SRS Load Tool), and DVOM are required to perform the following test.

   1. Turn the ignition on.

      Select ACTIVE or STORED DTC:

      ACTIVE DTC

      - Go To 2

STORED DTC

- Perform the RESTRAINTS SYSTEM INTERMITTENT TEST. Refer to **STANDARD PROCEDURE** .

2. **CHECK FOR SHORTED SQUIB CIRCUITS IN LEFT SIDE CURTAIN AIRBAG**

WARNING: Turn the ignition off disconnect the 12-volt battery and wait two minutes before proceeding. Failure to follow these instructions may result in possible serious or fatal injury.

1. Disconnect the Left Side Curtain Airbag harness connector.

WARNING: Do not place an intact non-deployed curtain airbag face down on a hard surface, the airbag will propel into the air if accidentally deployed. Failure to follow these instructions may result in possible serious or fatal injury.

NOTE: Check connectors - Clean and repair as necessary.

2. Connect the (special tool #8443A, SRS Load Tool) and the (special tool #8443-8, Jumper, SRS Load) to the Left Side Curtain Airbag harness connector.
3. If equipped with the standard key ignition, use this ignition on warning.

WARNING: Turn the ignition on, then reconnect the 12-volt battery and wait two minutes before proceeding. Failure to follow these instructions may result in possible serious or fatal injury.

4. If equipped with the keyless ignition, use this ignition on warning.

WARNING: Disconnect the 12-volt battery wait two minutes before proceeding, remove the ORC fuses, connect the 12-volt battery, wait two minutes before proceeding. Cycle the ignition to the On position, then reconnect the ORC fuses. Wait two minutes before proceeding. Failure to follow these instructions may result in possible serious or fatal injury.

5. With the scan tool, read the active ORC DTCs.

Does the scan tool display: B0021-2B-LEFT CURTAIN DEPLOYMENT SQUIB 1 - WIRES SHORTED TOGETHER?

Yes

- Go To 3

No

- Replace the Left Side Curtain Airbag in accordance with the Service Information. Refer to **AIR BAG, SIDE CURTAIN, REMOVAL** .
- Perform the RESTRAINTS SYSTEM VERIFICATION TEST. Refer to **STANDARD PROCEDURE** .

3. **CHECK THE (R3) LEFT CURTAIN SQUIB 1 LINE 1 CIRCUIT FOR A SHORT TO THE (R1) LEFT CURTAIN SQUIB 1 LINE 2 CIRCUIT**

WARNING: Turn the ignition off disconnect the 12-volt battery and wait two minutes before proceeding. Failure to follow these instructions may result in possible serious or fatal injury.

1. Disconnect the (special tool #8443A, SRS Load Tool) and the (special tool #8443-8, Jumper, SRS Load) from the Left Side Curtain Airbag harness connector.
2. Disconnect the ORC harness connectors.

NOTE: Check connectors - Clean and repair as necessary.

3. Connect the (special tool #8443-57, Adapter, Supplemental Restraint System Load Tool) to the ORC C1 and C2 harness connectors.
4. Measure the resistance between the (R3) Left Curtain Squib 1 Line 1 circuit connector C1B cavity 52 and the (R1) Left Curtain Squib 1 Line 2 circuit connector C1B cavity 16 at the (special tool #8443-57, Adapter, Supplemental Restraint System Load Tool).

Is the resistance above 2.0 Ohms?

Yes

- Repair the (R3) Left Curtain Squib 1 Line 1 circuit for a short to the (R1) Left Curtain Squib 1 Line 2 circuit.
- Perform the RESTRAINTS SYSTEM VERIFICATION TEST. Refer to **STANDARD PROCEDURE** .

No

WARNING: If the Occupant Restraint Controller (ORC) is dropped at any time, it must be replaced. Failure to take the proper precautions can result in accidental airbag deployment. Failure to follow these instructions may result in possible serious or fatal injury.

- Replace the ORC in accordance with Service Information. Refer to **MODULE, OCCUPANT RESTRAINT CONTROLLER, REMOVAL** .
- Perform the RESTRAINTS SYSTEM VERIFICATION TEST. Refer to **STANDARD**

PROCEDURE .

B0028-11-RIGHT SIDE SEAT DEPLOYMENT SQUIB 1 - CIRCUIT SHORT TO GROUND

For a complete wiring diagram, **refer to appropriate SYSTEM WIRING DIAGRAMS article** .

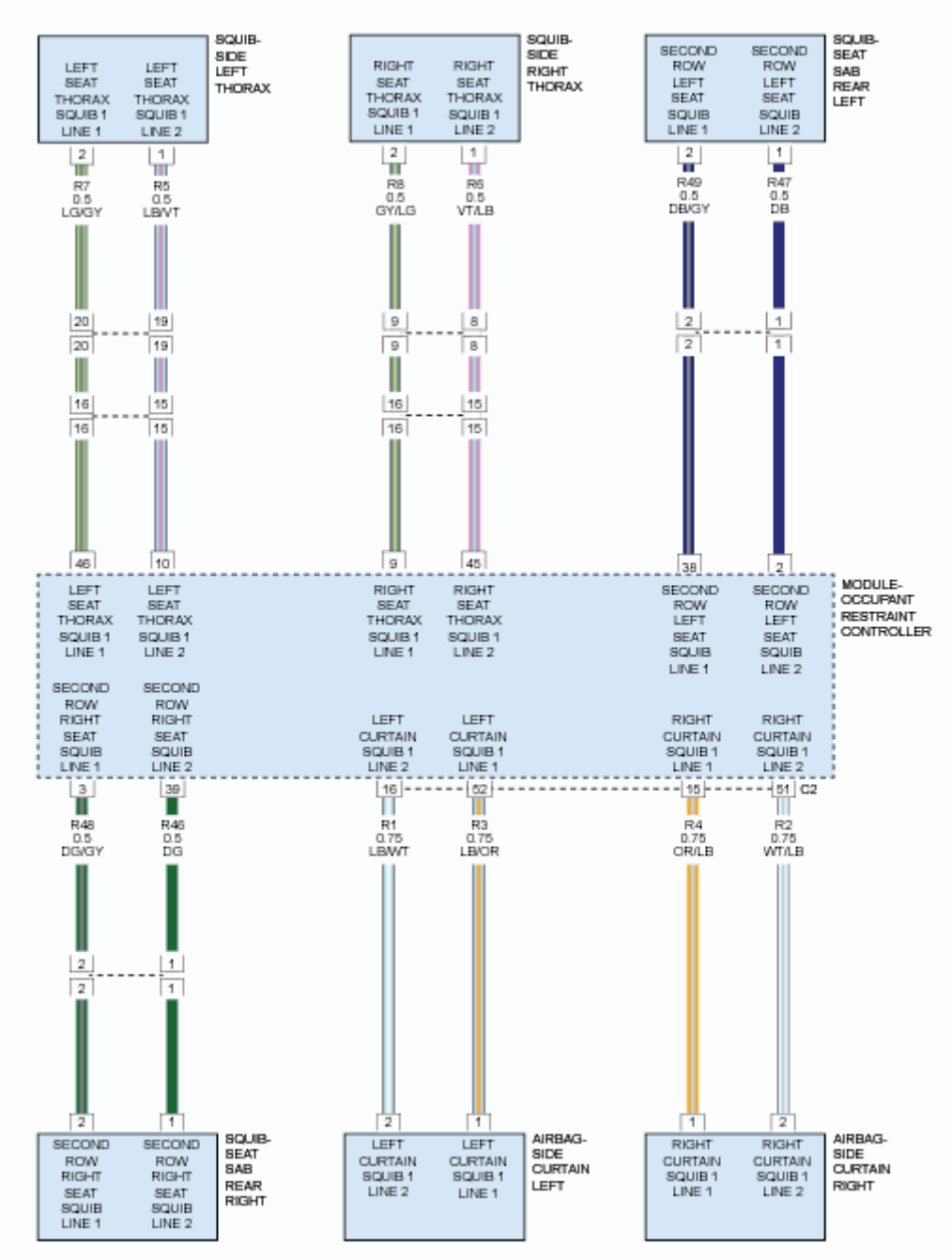

Fig. 41: Side, Thorax & Side Curtain Airbag Squib Circuit Diagram
Courtesy of CHRYSLER GROUP, LLC

THEORY OF OPERATION

When powered, the Occupant Restraint Controller (ORC) sends a test current to the squibs to verify the integrity of the squib and wiring. These circuits are maintained in a "floating" configuration at the module (connected to neither power nor ground) as protection against inadvertent deployment. Use of the (special tool #8443A, SRS Load Tool) in the tests below substitutes a suspect squib with a known good component. The use of the (special tool #8443-57, Adapter, Supplemental Restraint System Load Tool) provides a test point as well as a method for opening the shorting bar connections within the harness connector. The rear seat airbags (also known as pelvic and thorax airbags) are completely concealed beneath the seat cushion trim cover on the lower outboard sides of the rear seat cushion. The thorax side airbag is a single stage device. The thorax side airbags and the side curtain airbags deploy together during an event separate of the front airbags.

WHEN MONITORED

With the ignition on.

SET CONDITION

The Occupant Restraint Controller (ORC) monitors the resistance of the Right Side Thorax Airbag circuits. If low resistance is detected in the Right Side Thorax Airbag circuits for 2.6 seconds or longer the ORC will set this DTC. The DTC will change from Active to Stored status if the fault condition is not detected for greater than 2.6 seconds. The Airbag Warning Lamp (AWL) will set in the instrument cluster.

POSSIBLE CAUSES

Possible Causes
(R6) RIGHT SEAT THORAX SQUIB 1 LINE 2 CIRCUIT SHORTED TO GROUND
(R8) RIGHT SEAT THORAX SQUIB 1 LINE 1 CIRCUIT SHORTED TO GROUND
RIGHT SIDE THORAX AIRBAG
OCCUPANT RESTRAINT CONTROLLER (ORC)

Always perform the Pre-Diagnostic Troubleshooting procedure before proceeding. Refer to STANDARD PROCEDURE .

DIAGNOSTIC TEST

1. **DETERMINE ACTIVE OR STORED DTC**

NOTE: Make sure that the battery is fully charged.

NOTE: The scan tool, (special tool #8443A, SRS Load Tool), and DVOM are required to perform the following test.

1. Turn the ignition on.

Select ACTIVE or STORED DTC:

ACTIVE DTC

- Go To 2

STORED DTC

- Perform the RESTRAINTS SYSTEM INTERMITTENT TEST. Refer to **STANDARD PROCEDURE** .

2. **CHECK FOR SHORTED SQUIB CIRCUITS IN RIGHT SEAT AIRBAG**

WARNING: Turn the ignition off disconnect the 12-volt battery and wait two minutes before proceeding. Failure to follow these instructions may result in possible serious or fatal injury.

1. Disconnect the Right Seat Airbag harness connector.

WARNING: Do not place an intact non-deployed Seat Squib Airbag face down on a hard surface, the airbag will propel into the air if accidentally deployed. Failure to follow these instructions may result in possible serious or fatal injury.

NOTE: Check connectors - Clean and repair as necessary.

2. Connect the (special tool #8443A, SRS Load Tool) and the (special tool #8443-8, Jumper, SRS Load) to the Right Seat Airbag harness connector.
3. If equipped with the standard key ignition, use this ignition on warning.

WARNING: Turn the ignition on, then reconnect the 12-volt battery and wait two minutes before proceeding. Failure to follow these instructions may result in possible serious or fatal injury.

4. If equipped with the keyless ignition, use this ignition on warning.

WARNING: Disconnect the 12-volt battery wait two minutes before proceeding, remove the ORC fuses, connect the 12-volt battery, wait two minutes before proceeding. Cycle the ignition to the On position, then reconnect the ORC fuses. Wait two minutes before proceeding. Failure to follow these instructions may result in possible serious or fatal injury.

5. With the scan tool, read the active ORC DTC.

Does the scan tool display: B0028-11-RIGHT SIDE SEAT DEPLOYMENT SQUIB 1 - CIRCUIT SHORT TO GROUND?

Yes

- Go To 3

No

WARNING: Turn the ignition off, disconnect the 12-volt battery and wait two minutes before proceeding. Failure to follow these instructions may result in possible serious or fatal injury.

- Replace the Right Side Thorax Airbag in accordance with the Service Information. Refer to **AIR BAG, SEAT, REMOVAL** .
- Perform the RESTRAINTS SYSTEM VERIFICATION TEST. Refer to **STANDARD PROCEDURE** .

3. **CHECK RIGHT SEAT SQUIB CIRCUITS FOR A SHORT TO GROUND**

WARNING: Turn the ignition off, disconnect the 12-volt battery and wait two minutes before proceeding. Failure to follow these instructions may result in possible serious or fatal injury.

1. Disconnect the (special tool #8443A, SRS Load Tool) and the (special tool #8443-8, Jumper, SRS Load) from the Right Side Thorax Airbag harness connector.
2. Disconnect the ORC harness connectors.

NOTE: Check connectors - Clean and repair as necessary.

3. Connect the (special tool #8443-57, Adapter, Supplemental Restraint System Load Tool) to the ORC harness connectors.
4. Measure the resistance of the (R6) Right Seat Thorax Squib 1 Line 2 circuit between the(special tool #8443-57, Adapter, Supplemental Restraint System Load Tool) connector C1B cavity 45 and ground.
5. Measure the resistance of the (R8) Right Seat Thorax Squib 1 Line 1 circuit between the (special tool #8443-57, Adapter, Supplemental Restraint System Load Tool) connector C1B cavity 9 and ground.

Is the resistance below 10k Ohms on either circuit?

Yes

- In accordance with the Service Information repair or replace the Right Seat Thorax Squib circuits shorted to ground.
- Perform the RESTRAINTS SYSTEM VERIFICATION TEST. Refer to **STANDARD PROCEDURE** .

No

WARNING: If the Occupant Restraint Controller (ORC) is dropped at any time, it must be replaced. Failure to follow these instructions may result in possible serious or fatal injury.

- Replace the ORC in accordance with Service Information. Refer to **MODULE, OCCUPANT RESTRAINT CONTROLLER, REMOVAL** .
- Perform the RESTRAINTS SYSTEM VERIFICATION TEST. Refer to **STANDARD PROCEDURE** .

B0028-12-RIGHT SIDE SEAT DEPLOYMENT SQUIB 1 - CIRCUIT SHORT TO BATTERY

For a complete wiring diagram, **refer to appropriate SYSTEM WIRING DIAGRAMS article** .

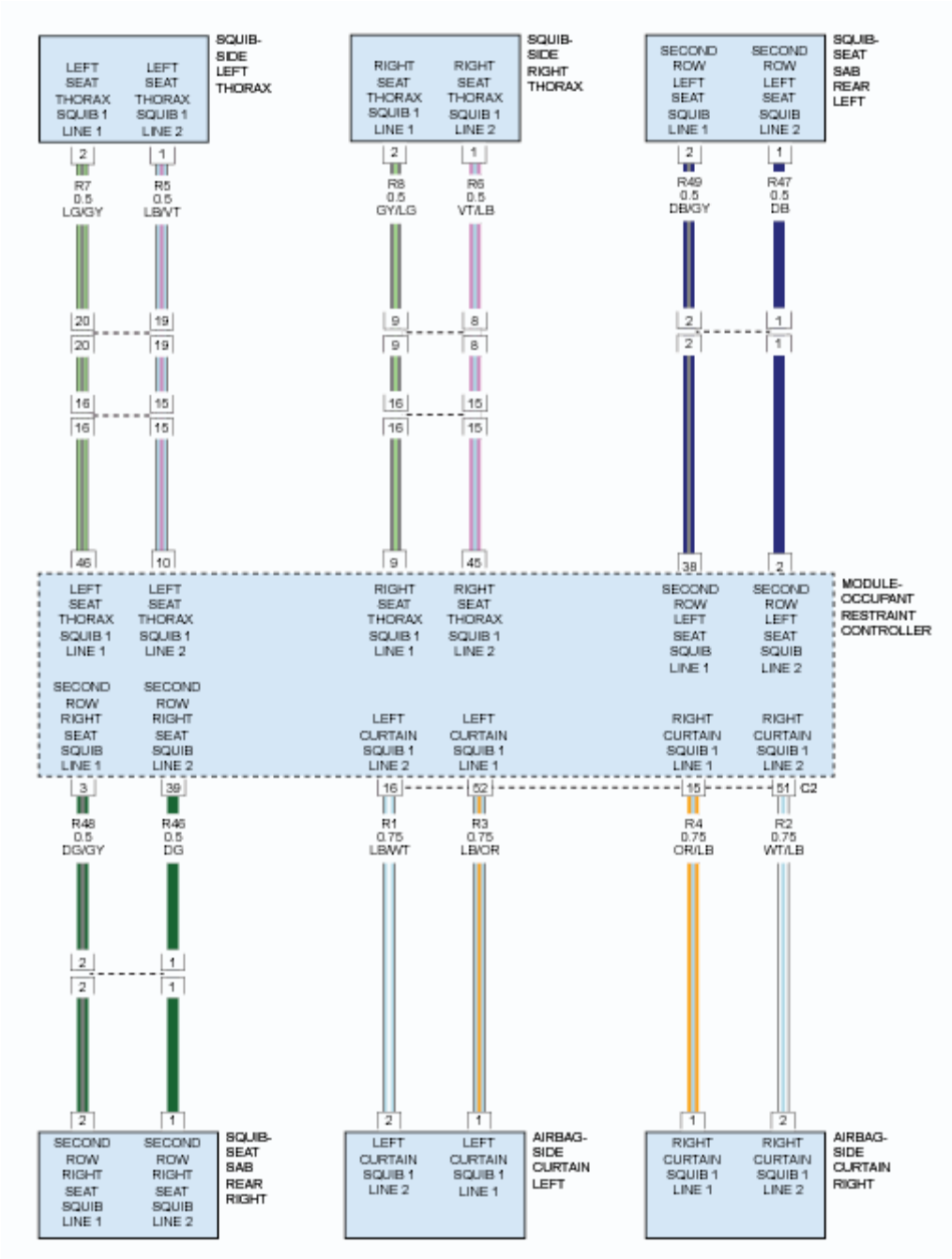

Fig. 42: Side, Thorax & Side Curtain Airbag Squib Circuit Diagram
Courtesy of CHRYSLER GROUP, LLC

THEORY OF OPERATION

When powered, the Occupant Restraint Controller (ORC) sends a test current to the squibs to verify the integrity of the squib and wiring. These circuits are maintained in a "floating" configuration at the module (connected to neither power nor ground) as protection against inadvertent deployment. Use of the (special tool #8443A, SRS Load Tool) in the tests below substitutes a suspect squib with a known good component. The use of the (special tool #8443-57, Adapter, Supplemental Restraint System Load Tool) provides a test point as well

as a method for opening the shorting bar connections within the harness connector. The rear seat airbags (also known as pelvic and thorax airbags) are completely concealed beneath the seat cushion trim cover on the lower outboard sides of the rear seat cushion. The thorax airbag is a single stage device. The thorax side airbags and the side curtain airbags deploy together during an event separate of the front airbags.

WHEN MONITORED

With the ignition on.

SET CONDITION

The Occupant Restraint Controller (ORC) monitors the voltage on the Right Seat Thorax Squib circuits. If voltage is detected for 2.6 seconds or longer on the Right Seat Thorax Squib circuits the ORC will set this DTC. The DTC will change from Active to Stored status if the fault condition is not detected for 2.6 seconds. The Airbag Warning Lamp (AWL) will set in the instrument cluster.

POSSIBLE CAUSES

Possible Causes
(R6) RIGHT SEAT THORAX SQUIB 1 LINE 2 CIRCUIT SHORTED TO VOLTAGE
(R8) RIGHT SEAT THORAX SQUIB 1 LINE 1 CIRCUIT SHORTED TO VOLTAGE
RIGHT SIDE THORAX AIRBAG
OCCUPANT RESTRAINT CONTROLLER (ORC)

Always perform the Pre-Diagnostic Troubleshooting procedure before proceeding. Refer to STANDARD PROCEDURE .

DIAGNOSTIC TEST

1. **DETERMINE ACTIVE OR STORED DTC**

   NOTE: Make sure that the battery is fully charged.

   NOTE: The scan tool, (special tool #8443A, SRS Load Tool), and DVOM are required to perform the following test.

   1. Turn the ignition on.

      Select ACTIVE or STORED DTC:

      ACTIVE DTC

      - Go To 2

      STORED DTC

- Perform the RESTRAINTS SYSTEM INTERMITTENT TEST. Refer to **STANDARD PROCEDURE** .

2. **CHECK FOR SHORTED SQUIB CIRCUITS IN RIGHT SEAT SQUIB AIRBAG**

WARNING: Turn the ignition off disconnect the 12-volt battery and wait two minutes before proceeding. Failure to follow these instructions may result in possible serious or fatal injury.

1. Disconnect the Right Seat Thorax Airbag harness connector.

WARNING: To avoid serious or fatal injury, do not place an intact uncoupled Seat Squib Airbag face down on a hard surface, the airbag will propel into the air if accidentally deployed.

NOTE: Check connectors - Clean and repair as necessary.

2. Connect the (special tool #8443A, SRS Load Tool) and the(special tool #8443-8, Jumper, SRS Load) to the Right Seat Thorax Airbag connector.
3. If equipped with the standard key ignition, use this ignition on warning.

WARNING: Turn the ignition on, then reconnect the 12-volt battery and wait two minutes before proceeding. Failure to follow these instructions may result in possible serious or fatal injury.

4. If equipped with the keyless ignition, use this ignition on warning.

WARNING: Disconnect the 12-volt battery wait two minutes before proceeding, remove the ORC fuses, connect the 12-volt battery, wait two minutes before proceeding. Cycle the ignition to the On position, then reconnect the ORC fuses. Wait two minutes before proceeding. Failure to follow these instructions may result in possible serious or fatal injury.

5. With the scan tool, read the active ORC DTC.

   Does the scan tool display: B0028-12-RIGHT SIDE SEAT DEPLOYMENT SQUIB 1 - CIRCUIT SHORT TO BATTERY?

   Yes

   - Go To 3

   No

WARNING: Turn the ignition off, disconnect the 12-volt battery and wait two minutes before proceeding. Failure to follow these instructions may result in possible serious or fatal injury.

- Replace the Right Seat Thorax Airbag in accordance with the Service Information. Refer to **AIR BAG, SEAT, REMOVAL** .
- Perform the RESTRAINTS SYSTEM VERIFICATION TEST. Refer to **STANDARD PROCEDURE** .

3. **CHECK (R6) RIGHT SEAT SQUIB 1 LINE 2 CIRCUIT AND (R8) RIGHT SEAT SQUIB 1 LINE 1 CIRCUIT FOR A SHORT TO BATTERY**

WARNING: Turn the ignition off, disconnect the 12-volt battery and wait two minutes before proceeding. Failure to follow these instructions may result in possible serious or fatal injury.

1. Disconnect the (special tool #8443A, SRS Load Tool) and the (special tool #8443-8, Jumper, SRS Load) from the Right Seat Thorax Airbag connector.
2. Disconnect the ORC connectors.

NOTE: Check connectors - Clean and repair as necessary.

3. Connect the ORC test adapter to the ORC harness connectors.
4. If equipped with the standard key ignition, use this ignition on warning.

WARNING: Turn the ignition on, then reconnect the 12-volt battery and wait two minutes before proceeding. Failure to follow these instructions may result in possible serious or fatal injury.

5. If equipped with the keyless ignition, use this ignition on warning.

WARNING: Disconnect the 12-volt battery wait two minutes before proceeding, remove the ORC fuses, connect the 12-volt battery, wait two minutes before proceeding. Cycle the ignition to the On position, then reconnect the ORC fuses. Wait two minutes before proceeding. Failure to follow these instructions may result in possible serious or fatal injury.

6. Measure the voltage of the (R6) Right Seat Thorax Squib 1 Line 2 circuit between the ORC test adapter and ground.
7. Measure the voltage of the (R8) Right Seat Thorax Squib 1 Line 1 circuit between the ORC test adapter and ground.

Is there any voltage present on either circuit?

Yes

- In accordance with Service Information repair or replace the Right Seat Thorax circuits shorted high.
- Perform the RESTRAINTS SYSTEM VERIFICATION TEST. Refer to **STANDARD PROCEDURE** .

No

WARNING: **If the Occupant Restraint Controller (ORC) is dropped at any time, it must be replaced. Failure to take the proper precautions can result in accidental airbag deployment. Failure to follow these instructions may result in possible serious or fatal injury.**

WARNING: **Turn the ignition off, disconnect the 12-volt battery and wait two minutes before proceeding. Failure to follow these instructions may result in possible serious or fatal injury.**

- Replace the ORC in accordance with Service Information. Refer to **MODULE, OCCUPANT RESTRAINT CONTROLLER, REMOVAL** .
- Perform the RESTRAINTS SYSTEM VERIFICATION TEST. Refer to **STANDARD PROCEDURE** .

B0028-13-RIGHT SIDE SEAT DEPLOYMENT SQUIB 1 - CIRCUIT OPEN

For a complete wiring diagram, **refer to appropriate SYSTEM WIRING DIAGRAMS article** .

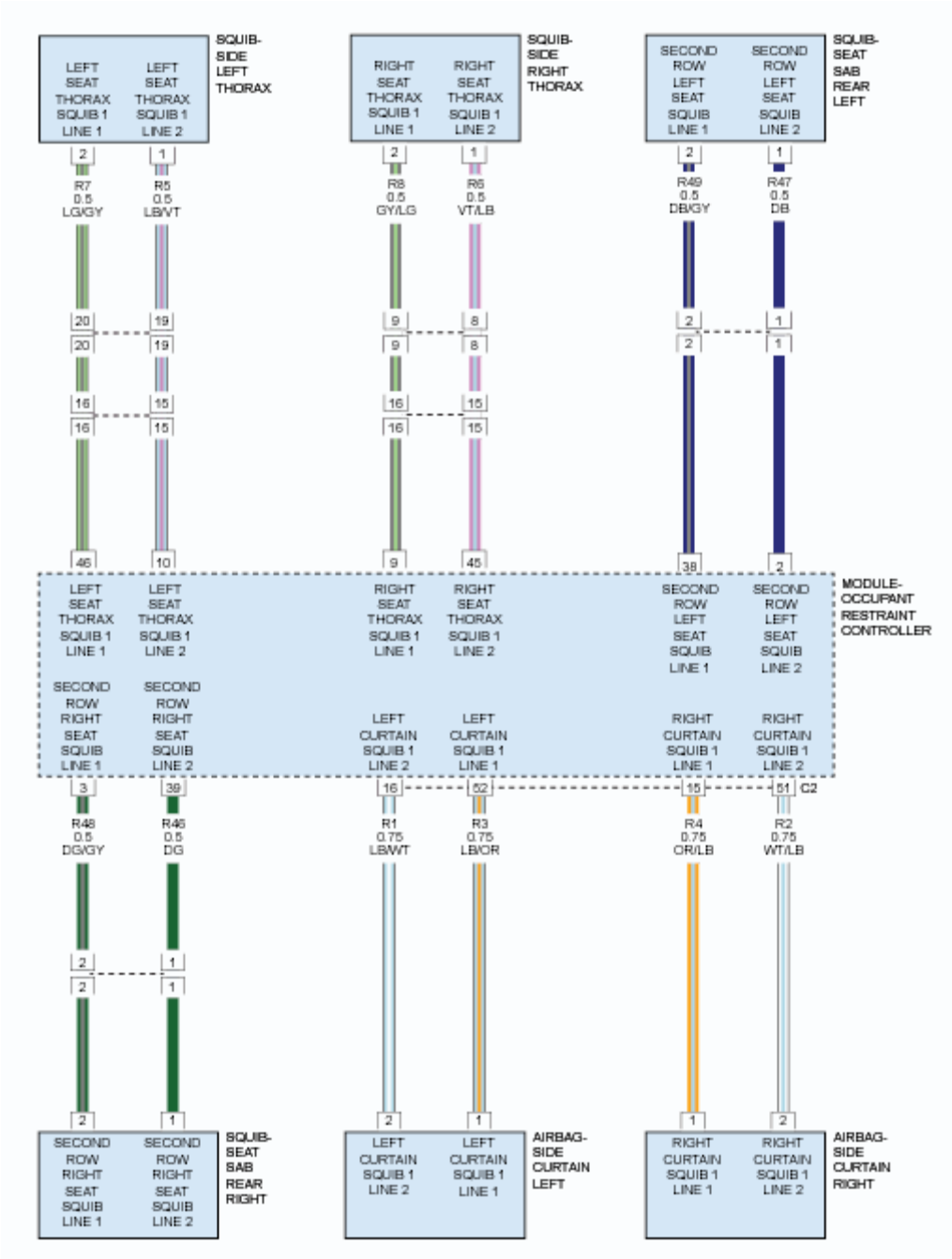

Fig. 43: Side, Thorax & Side Curtain Airbag Squib Circuit Diagram
Courtesy of CHRYSLER GROUP, LLC

THEORY OF OPERATION

When powered, the Occupant Restraint Controller (ORC) sends a test current to the squibs to verify the integrity of the squib and wiring. These circuits are maintained in a "floating" configuration at the module (connected to neither power nor ground) as protection against inadvertent deployment. Use of the (special tool #8443A, SRS Load Tool) in the tests below substitutes a suspect squib with a known good component. The use of the (special tool #8443-57, Adapter, Supplemental Restraint System Load Tool) provides a test point as well

as a method for opening the shorting bar connections within the harness connector. The rear seat airbags (also known as pelvic and thorax airbags) are completely concealed beneath the seat cushion trim cover on the lower outboard sides of the rear seat cushion. The thorax airbag is a single stage device. The thorax side airbags and the side curtain airbags deploy together during an event separate of the front airbags. The Airbag Warning Lamp (AWL) will set in the instrument cluster.

WHEN MONITORED

With the ignition on.

SET CONDITION

The Occupant Restraint Controller (ORC) monitors the resistance of the Right Seat Thorax Airbag Squib circuits. If an open or high resistance is detected on the Right Seat Thorax Squib circuits for 2.6 seconds the ORC will set this DTC. The DTC will change from Active to Stored status if the fault condition is not detected for 2.6 seconds. The Airbag Warning Lamp (AWL) will set in the instrument cluster.

POSSIBLE CAUSES

Possible Causes
(R6) RIGHT SEAT THORAX SQUIB 1 LINE 2 CIRCUIT OPEN
(R8) RIGHT SEAT THORAX SQUIB 1 LINE 1 CIRCUIT OPEN
RIGHT SIDE THORAX AIRBAG
OCCUPANT RESTRAINT CONTROLLER (ORC)

Always perform the Pre-Diagnostic Troubleshooting procedure before proceeding. Refer to STANDARD PROCEDURE .

DIAGNOSTIC TEST

1. **DETERMINE ACTIVE OR STORED DTC**

   NOTE: Make sure that the battery is fully charged.

   NOTE: The scan tool, (special tool #8443A, SRS Load Tool), and DVOM are required to perform the following test.

   1. Turn the ignition on.

      Select ACTIVE or STORED DTC:

      ACTIVE DTC

      - Go To 2

STORED DTC

- Perform the RESTRAINTS SYSTEM INTERMITTENT TEST. Refer to **STANDARD PROCEDURE** .

2. **CHECK FOR OPEN SQUIB CIRCUITS IN RIGHT SEAT AIRBAG**

WARNING: Turn the ignition off disconnect the 12-volt battery and wait two minutes before proceeding. Failure to follow these instructions may result in possible serious or fatal injury.

1. Disconnect the Right Side Thorax Airbag harness connector.

WARNING: To avoid serious or fatal injury, do not place an intact uncoupled Seat Squib Airbag face down on a hard surface, the airbag will propel into the air if accidentally deployed.

NOTE: Check connectors - Clean and repair as necessary.

2. Connect the (special tool #8443A, SRS Load Tool) and the (special tool #8443-8, Jumper, SRS Load) to the Right Side Thorax Airbag harness connector.
3. If equipped with the standard key ignition, use this ignition on warning.

WARNING: Turn the ignition on, then reconnect the 12-volt battery and wait two minutes before proceeding. Failure to follow these instructions may result in possible serious or fatal injury.

4. If equipped with the keyless ignition, use this ignition on warning.

WARNING: Disconnect the 12-volt battery wait two minutes before proceeding, remove the ORC fuses, connect the 12-volt battery, wait two minutes before proceeding. Cycle the ignition to the On position, then reconnect the ORC fuses. Wait two minutes before proceeding. Failure to follow these instructions may result in possible serious or fatal injury.

5. With the scan tool, read the active ORC DTC.

Does the scan tool display: B0028-13-RIGHT SIDE SEAT DEPLOYMENT SQUIB 1 - CIRCUIT OPEN?

Yes

- Go To 3

No

WARNING: Turn the ignition off, disconnect the 12-volt battery and wait two minutes before proceeding. Failure to follow these instructions may result in possible serious or fatal injury.

- Replace the Right Side Thorax Airbag in accordance with the Service Information. Refer to **AIR BAG, SEAT, REMOVAL** .
- Perform the RESTRAINTS SYSTEM VERIFICATION TEST. Refer to **STANDARD PROCEDURE** .

3. **CHECK (R8) RIGHT SEAT THORAX SQUIB 1 LINE 1 CIRCUIT FOR AN OPEN**

WARNING: Turn the ignition off, disconnect the 12-volt battery and wait two minutes before proceeding. Failure to follow these instructions may result in possible serious or fatal injury.

1. Disconnect the (special tool #8443A, SRS Load Tool) and (special tool #8443-8, Jumper, SRS Load) from the Right Side Thorax Airbag harness connector.
2. Disconnect the ORC harness connectors.

NOTE: Check connectors - Clean and repair as necessary.

3. Connect the (special tool #8443-57, Adapter, Supplemental Restraint System Load Tool) to the ORC harness connectors.
4. Measure the resistance of the (R8) Right Seat Thorax Squib 1 Line 1 circuit between the Right Side Thorax Airbag connector cavity 2 and the (special tool #8443-57, Adapter, Supplemental Restraint System Load Tool) connector C1B cavity 9.

Is the resistance below or within the range of 5.4 - 10.0 Ohm?

Yes

- Go To 4

No

- In accordance with the Service Information repair or replace the Right Seat Thorax Squib open circuit.
- Perform the RESTRAINTS SYSTEM VERIFICATION TEST. Refer to **STANDARD PROCEDURE** .

4. **CHECK (R6) RIGHT SEAT THORAX SQUIB 1 LINE 2 CIRCUIT FOR AN OPEN**
   1. Measure the resistance of the (R6) Right Seat Thorax Squib 1 Line 2 circuit between the Right Side Thorax Airbag connector cavity 1 and the(special tool #8443-57, Adapter, Supplemental Restraint System Load Tool) connector C1B cavity 45.

Is the resistance below or within the range of 5.4 - 10.0 Ohm?

Yes

WARNING: If the Occupant Restraint Controller (ORC) is dropped at any time, it must be replaced. Failure to take the proper precautions can result in accidental airbag deployment. Failure to follow these instructions may result in possible serious or fatal injury.

- Replace the ORC in accordance with Service Information. Refer to **MODULE, OCCUPANT RESTRAINT CONTROLLER, REMOVAL** .
- Perform the RESTRAINTS SYSTEM VERIFICATION TEST. Refer to **STANDARD PROCEDURE** .

No

- In accordance with the Service Information repair or replace the Right Seat Thorax Squib open circuit.
- Perform the RESTRAINTS SYSTEM VERIFICATION TEST. Refer to **STANDARD PROCEDURE** .

B0028-2B-RIGHT SIDE SEAT DEPLOYMENT SQUIB 1 - WIRES SHORTED TOGETHER

For a complete wiring diagram, **refer to appropriate SYSTEM WIRING DIAGRAMS article** .

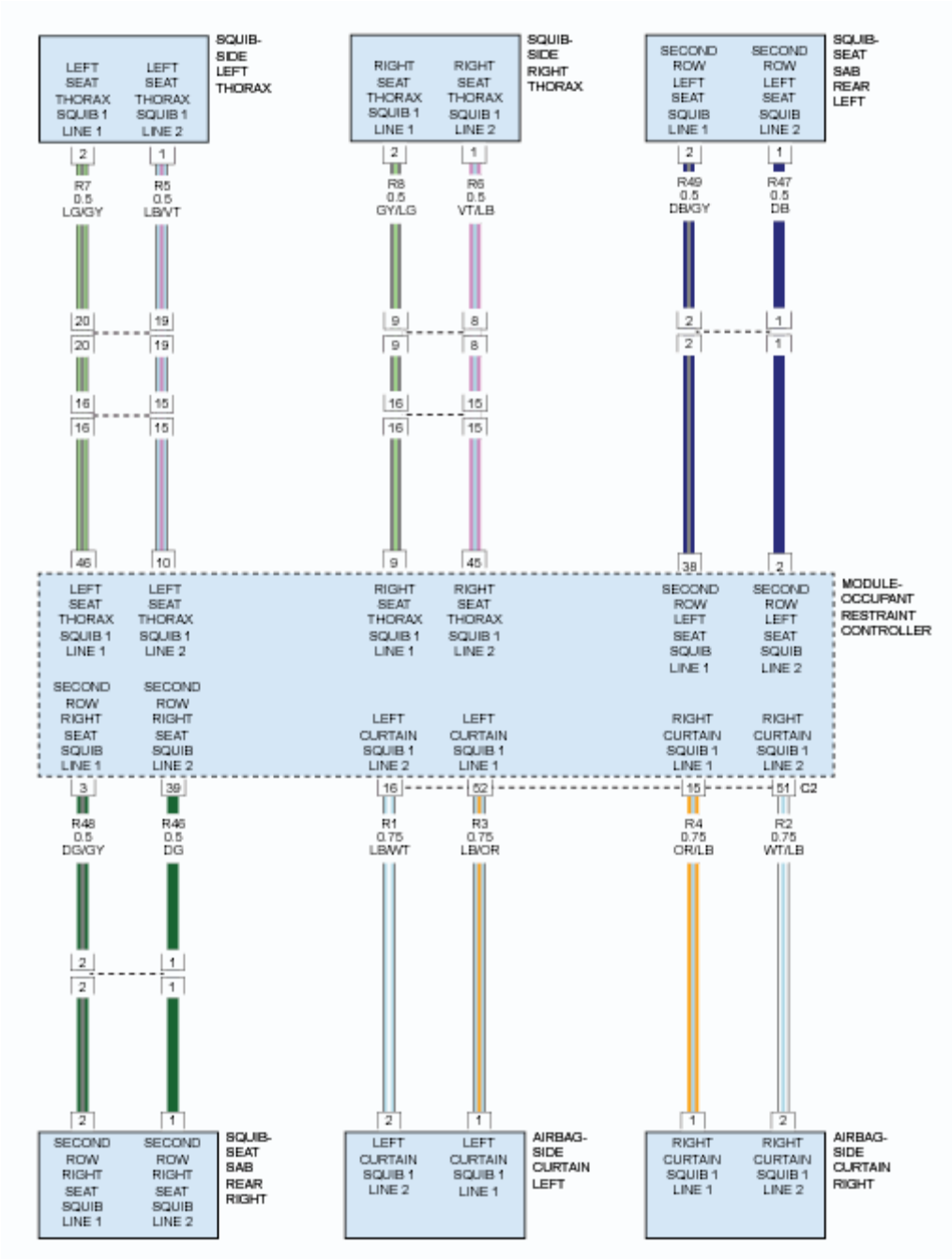

Fig. 44: Side, Thorax & Side Curtain Airbag Squib Circuit Diagram
Courtesy of CHRYSLER GROUP, LLC

THEORY OF OPERATION

When powered, the Occupant Restraint Controller (ORC) sends a test current to the squibs to verify the integrity of the squib and wiring. These circuits are maintained in a "floating" configuration at the module (connected to neither power nor ground) as protection against inadvertent deployment. Use of the (special tool #8443A, SRS Load Tool) in the tests below substitutes a suspect squib with a known good component. The use of the (special tool #8443-57, Adapter, Supplemental Restraint System Load Tool) provides a test point as well

as a method for opening the shorting bar connections within the harness connector. The rear seat airbags (also known as pelvic and thorax airbags) are completely concealed beneath the seat cushion trim cover on the lower outboard sides of the rear seat cushion. The thorax airbag is a single stage device. The thorax side airbags and the side curtain airbags deploy together during an event separate of the front airbags. The Airbag Warning Lamp (AWL) will set in the instrument cluster.

WHEN MONITORED

With the ignition on.

SET CONDITION

The Occupant Restraint Controller (ORC) monitors the resistance of the Right Seat Thorax Squib 1 circuits. If low resistance is detected for 2.6 seconds or longer between the Right Seat Squib circuits the ORC will set this DTC. If the shorted together fault condition is not detected for 2.6 seconds the DTC will change from Active to Stored status. The Airbag Warning Lamp (AWL) will set in the instrument cluster.

POSSIBLE CAUSES

Possible Causes
(R6) RIGHT SEAT THORAX SQUIB 1 LINE 2 CIRCUIT SHORTED TO (R8) RIGHT SEAT THORAX SQUIB 1 LINE 1 CIRCUIT
RIGHT SIDE THORAX AIRBAG
OCCUPANT RESTRAINT CONTROLLER (ORC)

Always perform the Pre-Diagnostic Troubleshooting procedure before proceeding. Refer to STANDARD PROCEDURE .

DIAGNOSTIC TEST

1. **DETERMINE ACTIVE OR STORED DTC**

   NOTE: Make sure that the battery is fully charged.

   NOTE: The scan tool, (special tool #8443A, SRS Load Tool), and DVOM are required to perform the following test.

   1. Turn the ignition on.

      Select ACTIVE or STORED DTC:

      ACTIVE DTC

      - Go To 2

STORED DTC

- Perform the RESTRAINTS SYSTEM INTERMITTENT TEST. Refer to **STANDARD PROCEDURE** .

2. **CHECK FOR SHORTED SQUIB CIRCUITS IN RIGHT SEAT AIRBAG**

WARNING: Turn the ignition off disconnect the 12-volt battery and wait two minutes before proceeding. Failure to follow these instructions may result in possible serious or fatal injury.

1. Disconnect the Right Seat Airbag harness connector.

WARNING: To avoid serious or fatal injury, do not place an intact uncoupled Right Seat Squib Airbag face down on a hard surface, the airbag will propel into the air if accidentally deployed.

NOTE: Check connectors - Clean and repair as necessary.

2. Connect the (special tool #8443A, SRS Load Tool) and the (special tool #8443-8, Jumper, SRS Load) to the Right Side Thorax Airbag harness connector.
3. If equipped with the standard key ignition, use this ignition on warning.

WARNING: Turn the ignition on, then reconnect the 12-volt battery and wait two minutes before proceeding. Failure to follow these instructions may result in possible serious or fatal injury.

4. If equipped with the keyless ignition, use this ignition on warning.

WARNING: Disconnect the 12-volt battery wait two minutes before proceeding, remove the ORC fuses, connect the 12-volt battery, wait two minutes before proceeding. Cycle the ignition to the On position, then reconnect the ORC fuses. Wait two minutes before proceeding. Failure to follow these instructions may result in possible serious or fatal injury.

5. With the scan tool, read the active ORC DTC.

Does the scan tool display: B0028-2B-RIGHT SIDE SEAT DEPLOYMENT SQUIB 1 - WIRES SHORTED TOGETHER?

Yes

- Go To 3

No

WARNING: Turn the ignition off, disconnect the 12-volt battery and wait two minutes before proceeding. Failure to follow these instructions may result in possible serious or fatal injury.

- Replace the Right Side Thorax Airbag in accordance with the Service Information. Refer to **AIR BAG, SEAT, REMOVAL** .
- Perform the RESTRAINTS SYSTEM VERIFICATION TEST. Refer to **STANDARD PROCEDURE** .

3. **CHECK (R6) RIGHT SEAT THORAX SQUIB 1 LINE 2 CIRCUIT FOR A SHORT TO (R8) RIGHT SEAT THORAX SQUIB 1 LINE 1 CIRCUIT**

WARNING: Turn the ignition off, disconnect the 12-volt battery and wait two minutes before proceeding. Failure to follow these instructions may result in possible serious or fatal injury.

1. Disconnect the (special tool #8443A, SRS Load Tool) and the (special tool #8443-8, Jumper, SRS Load) from the Right Side Thorax Airbag harness connector.
2. Disconnect the ORC harness connectors.

NOTE: Check connectors - Clean and repair as necessary.

3. Connect the (special tool #8443-57, Adapter, Supplemental Restraint System Load Tool) to the ORC harness connectors.
4. Measure the resistance between the (R6) Right Seat Thorax Squib 1 Line 2 circuit connector C1B cavity 45 and the (R8) Right Seat Thorax Squib 1 Line 1 circuit connector C1B cavity 9 at the (special tool #8443-57, Adapter, Supplemental Restraint System Load Tool).

   Is the resistance below or within the range of 1.5 - 2.18 Ohm?

   Yes

   - In accordance with the Service Information repair or replace the Right Seat Thorax Squib circuits shorted together.
   - Perform the RESTRAINTS SYSTEM VERIFICATION TEST. Refer to **STANDARD PROCEDURE** .

   No

   WARNING: If the Occupant Restraint Controller (ORC) is dropped at any time, it must be replaced. Failure to follow these instructions may result in possible serious or fatal injury.

- Replace the ORC in accordance with Service Information. Refer to **MODULE, OCCUPANT RESTRAINT CONTROLLER, REMOVAL** .
- Perform the RESTRAINTS SYSTEM VERIFICATION TEST. Refer to **STANDARD PROCEDURE** .

B0029-11-RIGHT CURTAIN DEPLOYMENT SQUIB 1 - CIRCUIT SHORT TO GROUND

For a complete wiring diagram, **refer to appropriate SYSTEM WIRING DIAGRAMS article** .

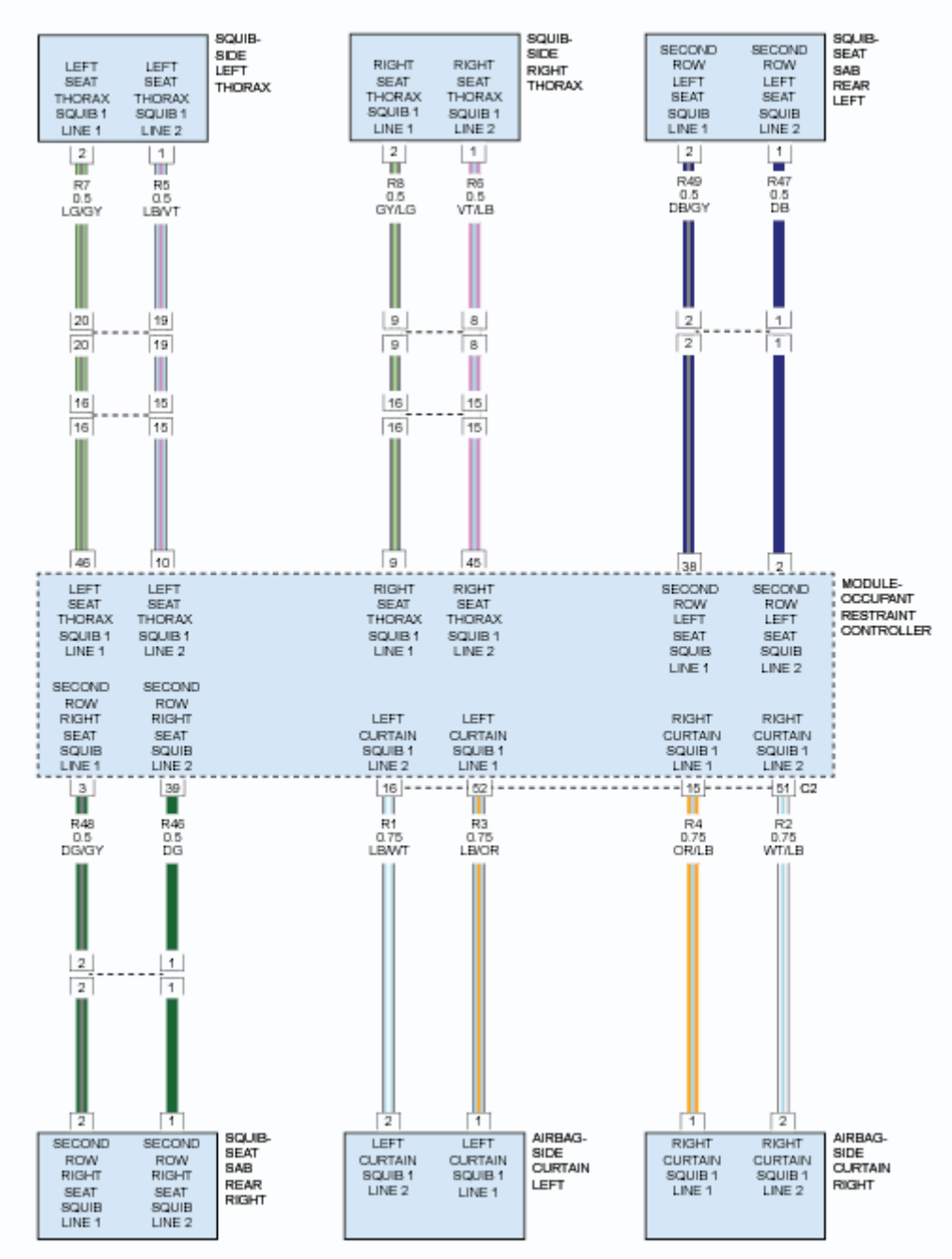

Fig. 45: Side, Thorax & Side Curtain Airbag Squib Circuit Diagram
Courtesy of CHRYSLER GROUP, LLC

THEORY OF OPERATION

When powered, the Occupant Restraint Controller (ORC) sends a test current to the squibs to verify the integrity of the squib and wiring. These circuits are maintained in a "floating" configuration at the ORC (connected to neither power nor ground) as protection against inadvertent deployment. Use of the (special tool #8443A, SRS Load Tool) in the tests below substitutes a suspect squib with a known good component. The (special tool #8443-57, Adapter, Supplemental Restraint System Load Tool) provides a test point as well as a method for opening the shorting bar connections within the ORC harness connector. The side curtain airbags are a single-stage device that upon sensor detected impact they deploy. They are located above the headliner and fastened to one of the roof side rails. They protect the area from the A-pillar to the rear of the vehicle. The side curtain airbags and the seat thorax side airbags are deployed simultaneously independent of the front airbags during an impact event.

WHEN MONITORED

With the ignition on.

SET CONDITION

The Occupant Restraint Controller (ORC) monitors the resistance of the Right Curtain Squib 1 circuits. The ORC will set this DTC if it detects low resistance of the Right Curtain Squib 1 circuits for greater than 2.6 seconds. The DTC will change from Active to Stored status when the fault condition is not detected for greater than 2.6 seconds. The Airbag Warning Lamp (AWL) will set in the instrument cluster.

POSSIBLE CAUSES

Possible Causes
(R4) RIGHT CURTAIN SQUIB 1 LINE 1 CIRCUIT SHORTED TO GROUND
(R2) RIGHT CURTAIN SQUIB 1 LINE 2 CIRCUIT SHORTED TO GROUND
RIGHT SIDE CURTAIN AIRBAG
OCCUPANT RESTRAINT CONTROLLER (ORC)

Always perform the Pre-Diagnostic Troubleshooting procedure before proceeding. Refer to STANDARD PROCEDURE .

DIAGNOSTIC TEST

1. **DETERMINE ACTIVE OR STORED DTC**

NOTE: **Make sure that the battery is fully charged.**

NOTE: **The scan tool, (special tool #8443A, SRS Load Tool), and DVOM are required to perform the following test.**

1. Turn the ignition on.

   Select ACTIVE or STORED DTC:

   ACTIVE DTC

   - Go To 2

   STORED DTC

   - Perform the RESTRAINTS SYSTEM INTERMITTENT TEST. Refer to **STANDARD PROCEDURE** .

2. **CHECK FOR SHORTED SQUIB CIRCUITS IN RIGHT SIDE CURTAIN AIRBAG**

   WARNING: **Turn the ignition off disconnect the 12-volt battery and wait two minutes before proceeding. Failure to follow these instructions may result in possible serious or fatal injury.**

   1. Disconnect the Right Side Curtain Airbag harness connector.

      WARNING: **Do not place an intact non-deployed curtain airbag face down on a hard surface, the airbag will propel into the air if accidentally deployed. Failure to follow these instructions may result in possible serious or fatal injury.**

      NOTE: **Check connectors - Clean and repair as necessary.**

   2. Connect the (special tool #8443A, SRS Load Tool) and the (special tool #8443-8, Jumper, SRS Load) to the Right Side Curtain Airbag harness connector.
   3. If equipped with the standard key ignition, use this ignition on warning.

      WARNING: **Turn the ignition on, then reconnect the 12-volt battery and wait two minutes before proceeding. Failure to follow these instructions may result in possible serious or fatal injury.**

   4. If equipped with the keyless ignition, use this ignition on warning.

      WARNING: **Disconnect the 12-volt battery wait two minutes before proceeding, remove the ORC fuses, connect the 12-volt battery, wait two minutes before proceeding. Cycle the ignition to the On position, then reconnect the ORC fuses. Wait two minutes before proceeding. Failure to follow these instructions may result in possible serious or fatal injury.**

5. With the scan tool, read the active ORC DTCs.

   Does the scan tool display: B0029-11-RIGHT CURTAIN DEPLOYMENT SQUIB 1 - CIRCUIT SHORT TO GROUND?

   Yes

   - Go To 3

   No

   - Replace the Right Side Curtain Airbag in accordance with the Service Information. Refer to **AIR BAG, SIDE CURTAIN, REMOVAL** .
   - Perform the RESTRAINTS SYSTEM VERIFICATION TEST. Refer to **STANDARD PROCEDURE** .

3. **CHECK THE (R4) RIGHT CURTAIN SQUIB 1 LINE 1 CIRCUIT AND THE (R2) RIGHT CURTAIN SQUIB 1 LINE 2 CIRCUIT FOR A SHORT TO GROUND**

   WARNING: Turn the ignition off disconnect the 12-volt battery and wait two minutes before proceeding. Failure to follow these instructions may result in possible serious or fatal injury.

   1. Disconnect the (special tool #8443A, SRS Load Tool) and the (special tool #8443-8, Jumper, SRS Load) from the Right Side Curtain Airbag harness connector.
   2. Disconnect the ORC harness connectors.

      NOTE: Check connectors - Clean and repair as necessary.

   3. Connect the (special tool #8443-57, Adapter, Supplemental Restraint System Load Tool) to the ORC harness connectors.
   4. Measure the resistance of the (R4) Right Curtain Squib 1 Line 1 circuit between (special tool #8443-57, Adapter, Supplemental Restraint System Load Tool) connector C1B cavity 15 and ground.
   5. Measure the resistance of the (R2) Right Curtain Squib 1 Line 2 circuit between (special tool #8443-57, Adapter, Supplemental Restraint System Load Tool) connector C1B cavity 51 and ground.

      Is the resistance below 10k Ohms on either circuit?

      Yes

      - Repair the Right Curtain Squib 1 circuits with resistance below 10k Ohms for a short to ground.
      - Perform the RESTRAINTS SYSTEM VERIFICATION TEST. Refer to **STANDARD**

PROCEDURE .

No

WARNING: If the Occupant Restraint Controller (ORC) is dropped at any time, it must be replaced. Failure to take the proper precautions can result in accidental airbag deployment. Failure to follow these instructions may result in possible serious or fatal injury.

- Replace the ORC in accordance with Service Information. Refer to **MODULE, OCCUPANT RESTRAINT CONTROLLER, REMOVAL** .
- Perform the RESTRAINTS SYSTEM VERIFICATION TEST. Refer to **STANDARD PROCEDURE** .

B0029-12-RIGHT CURTAIN DEPLOYMENT SQUIB 1 - CIRCUIT SHORT TO BATTERY

For a complete wiring diagram, **refer to appropriate SYSTEM WIRING DIAGRAMS article** .

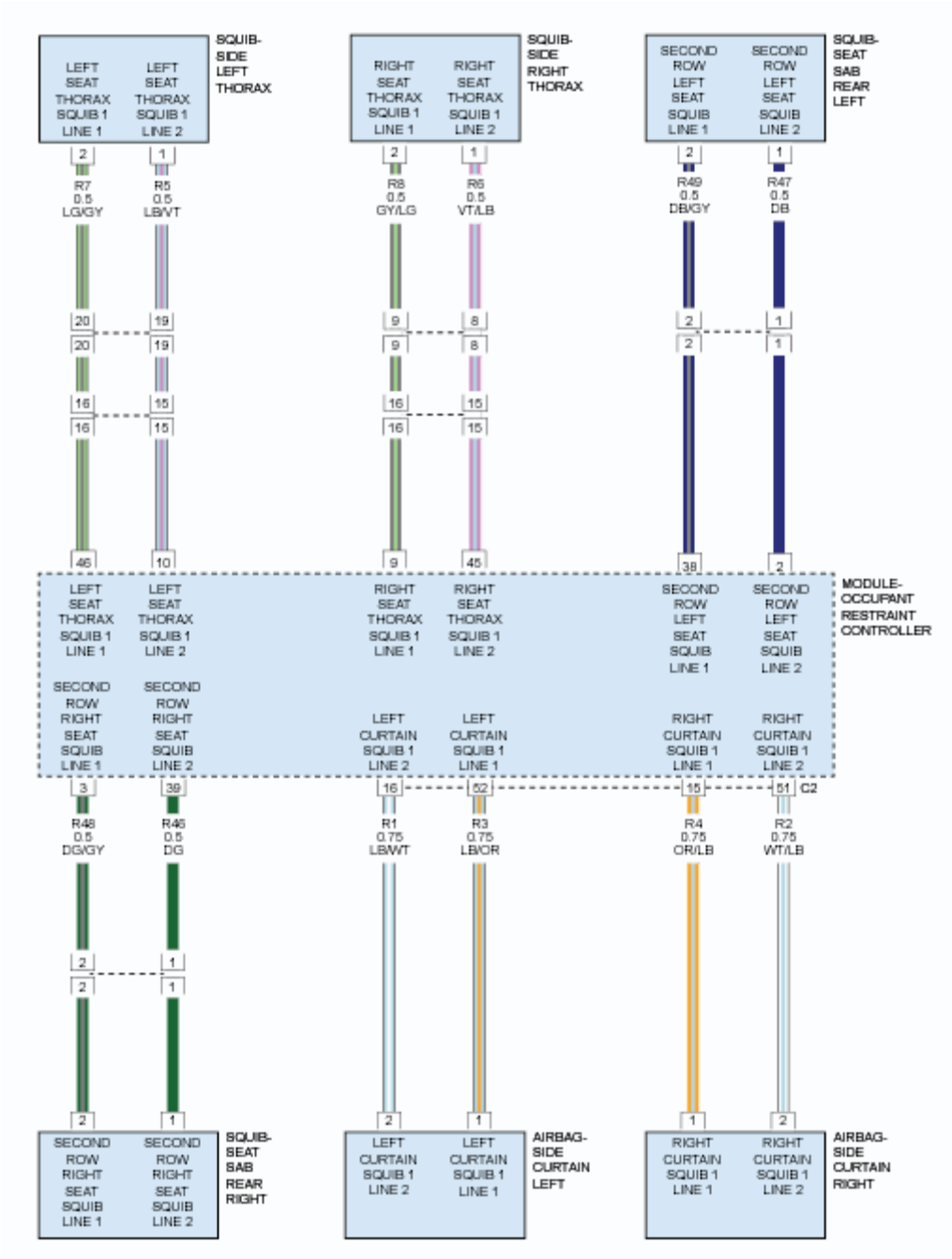

Fig. 46: Side, Thorax & Side Curtain Airbag Squib Circuit Diagram
Courtesy of CHRYSLER GROUP, LLC

THEORY OF OPERATION

When powered, the Occupant Restraint Controller (ORC) sends a test current to the squibs to verify the integrity of the squib and wiring. These circuits are maintained in a "floating" configuration at the ORC (connected to neither power nor ground) as protection against inadvertent deployment. Use of the (special tool #8443A, SRS Load Tool) in the tests below substitutes a suspect squib with a known good component. The (special tool #8443-57, Adapter, Supplemental Restraint System Load Tool) provides a test point as well as a

method for opening the shorting bar connections within the ORC harness connector. The side curtain airbags are a single-stage device that upon sensor detected impact they deploy. They are located above the headliner and fastened to one of the roof side rails. They protect the area from the A-pillar to the rear of the vehicle. The side curtain airbags and the seat thorax side airbags are deployed simultaneously independent of the front airbags during an impact event.

WHEN MONITORED

With the ignition on.

SET CONDITION

The Occupant Restraint Controller (ORC) monitors the resistance of the Right Curtain Squib 1 circuits. The ORC will set this DTC if it detects low resistance of the Right Curtain Squib 1 circuits for greater than 2.6 seconds. The DTC will change from Active to Stored status when the fault condition is not detected for greater than 2.6 seconds. The Airbag Warning Lamp (AWL) will set in the instrument cluster.

POSSIBLE CAUSES

Possible Causes
(R4) RIGHT CURTAIN SQUIB 1 LINE 1 CIRCUIT SHORTED TO BATTERY
(R2) RIGHT CURTAIN SQUIB 1 LINE 2 CIRCUIT SHORTED TO BATTERY
RIGHT SIDE CURTAIN AIRBAG
OCCUPANT RESTRAINT CONTROLLER (ORC)

Always perform the Pre-Diagnostic Troubleshooting procedure before proceeding. Refer to STANDARD PROCEDURE .

DIAGNOSTIC TEST

1. **DETERMINE ACTIVE OR STORED DTC**

   NOTE: Make sure that the battery is fully charged.

   NOTE: The scan tool, (special tool #8443A, SRS Load Tool), and DVOM are required to perform the following test.

   1. Turn the ignition on.

      Select ACTIVE or STORED DTC:

      ACTIVE DTC

      - Go To 2

STORED DTC

- Perform the RESTRAINTS SYSTEM INTERMITTENT TEST. Refer to **STANDARD PROCEDURE** .

2. **CHECK FOR SHORTED SQUIB CIRCUITS IN RIGHT SIDE CURTAIN AIRBAG**

WARNING: Turn the ignition off disconnect the 12-volt battery and wait two minutes before proceeding. Failure to follow these instructions may result in possible serious or fatal injury.

1. Disconnect the Right Side Curtain Airbag harness connector.

WARNING: Do not place an intact non-deployed curtain airbag face down on a hard surface, the airbag will propel into the air if accidentally deployed. Failure to follow these instructions may result in possible serious or fatal injury.

NOTE: Check connectors - Clean and repair as necessary.

2. Connect the (special tool #8443A, SRS Load Tool) and the (special tool #8443-8, Jumper, SRS Load) to the Right Side Curtain Airbag harness connector.
3. If equipped with the standard key ignition, use this ignition on warning.

WARNING: Turn the ignition on, then reconnect the 12-volt battery and wait two minutes before proceeding. Failure to follow these instructions may result in possible serious or fatal injury.

4. If equipped with the keyless ignition, use this ignition on warning.

WARNING: Disconnect the 12-volt battery wait two minutes before proceeding, remove the ORC fuses, connect the 12-volt battery, wait two minutes before proceeding. Cycle the ignition to the On position, then reconnect the ORC fuses. Wait two minutes before proceeding. Failure to follow these instructions may result in possible serious or fatal injury.

5. With the scan tool, read the active ORC DTCs.

Does the scan tool display: B0029-12-RIGHT CURTAIN DEPLOYMENT SQUIB 1 - CIRCUIT SHORT TO BATTERY?

Yes

- Go To 3

No

- Replace the Right Side Curtain Airbag in accordance with the Service Information. Refer to **AIR BAG, SIDE CURTAIN, REMOVAL** .
- Perform the RESTRAINTS SYSTEM VERIFICATION TEST. Refer to **STANDARD PROCEDURE** .

3. **CHECK THE (R4) RIGHT CURTAIN SQUIB 1 LINE 1 CIRCUIT AND THE (R2) RIGHT CURTAIN SQUIB 1 LINE 2 CIRCUIT FOR A SHORT TO BATTERY**

WARNING: Turn the ignition off disconnect the 12-volt battery and wait two minutes before proceeding. Failure to follow these instructions may result in possible serious or fatal injury.

1. Disconnect the (special tool #8443A, SRS Load Tool) and the (special tool #8443-8, Jumper, SRS Load) from the Right Side Curtain Airbag harness connector.
2. Disconnect the ORC harness connectors.

NOTE: Check connectors - Clean and repair as necessary.

3. Connect the (special tool #8443-57, Adapter, Supplemental Restraint System Load Tool) to the ORC harness connectors.
4. Measure the voltage of the (R4) Right Curtain Squib 1 Line 1 circuit between (special tool #8443-57, Adapter, Supplemental Restraint System Load Tool) connector C1B cavity 15 and ground.
5. Measure the voltage of the (R2) Right Curtain Squib 1 Line 2 circuit between (special tool #8443-57, Adapter, Supplemental Restraint System Load Tool) connector C1B cavity 51 and ground.

Is there any voltage present on either circuit?

Yes

- Repair the Right Curtain Squib 1 circuits with voltage present for a short to battery.
- Perform the RESTRAINTS SYSTEM VERIFICATION TEST. Refer to **STANDARD PROCEDURE** .

No

WARNING: If the Occupant Restraint Controller (ORC) is dropped at any time, it must be replaced. Failure to take the proper precautions can result in accidental airbag deployment. Failure to follow these instructions may result in possible serious or fatal injury.

- Replace the ORC in accordance with Service Information. Refer to **MODULE, OCCUPANT RESTRAINT CONTROLLER, REMOVAL** .
- Perform the RESTRAINTS SYSTEM VERIFICATION TEST. Refer to **STANDARD**

PROCEDURE .

B0029-13-RIGHT CURTAIN DEPLOYMENT SQUIB 1 - CIRCUIT OPEN

For a complete wiring diagram, **refer to appropriate SYSTEM WIRING DIAGRAMS article** .

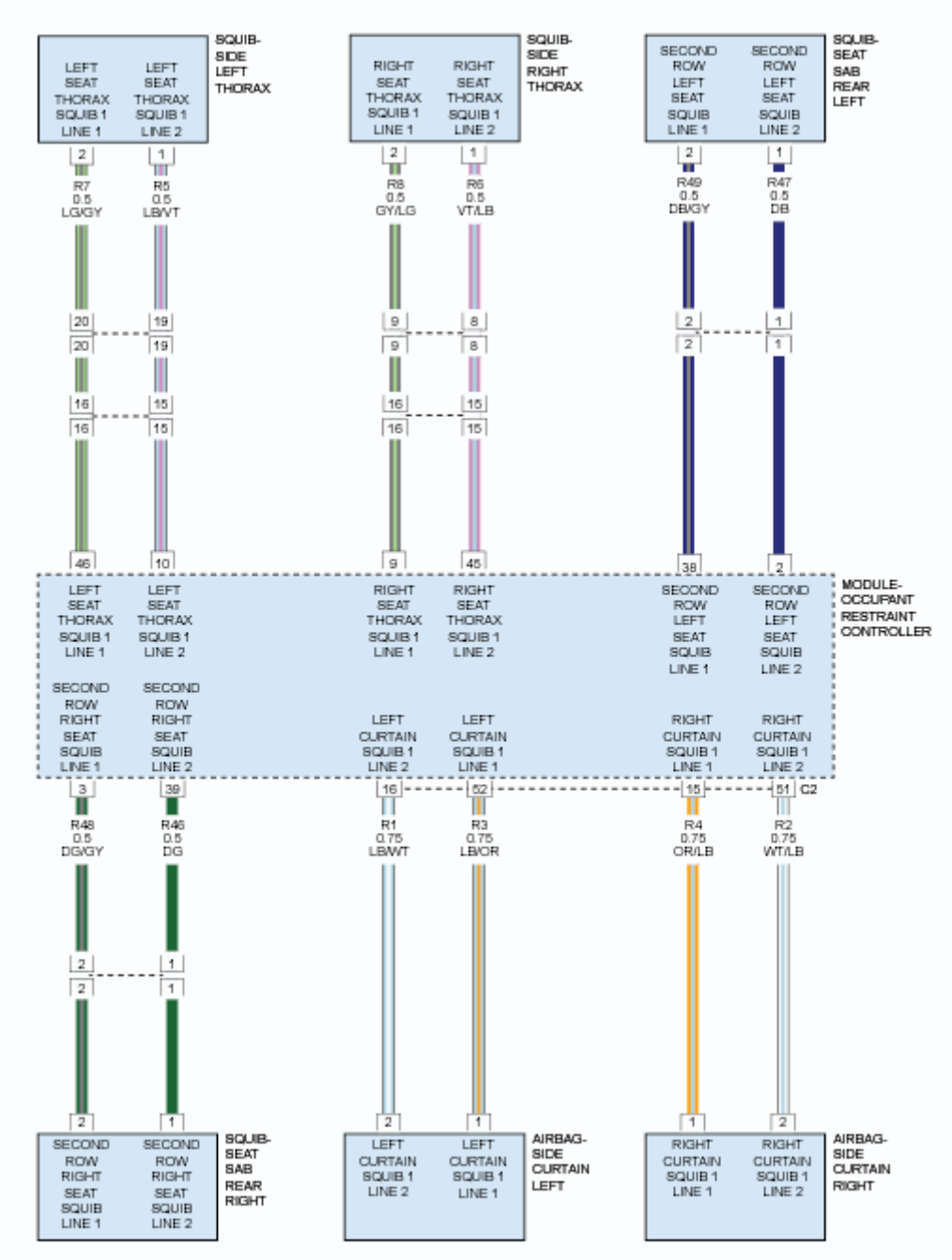

Fig. 47: Side, Thorax & Side Curtain Airbag Squib Circuit Diagram
Courtesy of CHRYSLER GROUP, LLC

THEORY OF OPERATION

When powered, the Occupant Restraint Controller (ORC) sends a test current to the squibs to verify the integrity of the squib and wiring. These circuits are maintained in a "floating" configuration at the ORC (connected to neither power nor ground) as protection against inadvertent deployment. Use of the (special tool #8443A, SRS Load Tool) in the tests below substitutes a suspect squib with a known good component. The (special tool #8443-57, Adapter, Supplemental Restraint System Load Tool) provides a test point as well as a method for opening the shorting bar connections within the ORC harness connector. The side curtain airbags are a single-stage device that upon sensor detected impact they deploy. They are located above the headliner and fastened to one of the roof side rails. They protect the area from the A-pillar to the rear of the vehicle. The side curtain airbags and the seat thorax side airbags are deployed simultaneously independent of the front airbags during an impact event.

WHEN MONITORED

With the ignition on.

SET CONDITION

The Occupant Restraint Controller (ORC) monitors the resistance of the Right Curtain Squib 1 circuits. The ORC will set this DTC if it detects high resistance of the Right Curtain Squib 1 circuits for greater than 2.6 seconds. The DTC will change from Active to Stored status when the fault condition is not detected for greater than 2.6 seconds. The Airbag Warning Lamp (AWL) will set in the instrument cluster.

POSSIBLE CAUSES

Possible Causes
(R4) RIGHT CURTAIN SQUIB 1 LINE 1 CIRCUIT OPEN
(R2) RIGHT CURTAIN SQUIB 1 LINE 2 CIRCUIT OPEN
RIGHT SIDE CURTAIN AIRBAG
OCCUPANT RESTRAINT CONTROLLER (ORC)

Always perform the Pre-Diagnostic Troubleshooting procedure before proceeding. Refer to STANDARD PROCEDURE .

DIAGNOSTIC TEST

1. **DETERMINE ACTIVE OR STORED DTC**

NOTE: Make sure that the battery is fully charged.

NOTE: The scan tool, (special tool #8443A, SRS Load Tool), and DVOM are required to perform the following test.

1. Turn the ignition on.

Select ACTIVE or STORED DTC:

ACTIVE DTC

- Go To 2

STORED DTC

- Perform the RESTRAINTS SYSTEM INTERMITTENT TEST. Refer to **STANDARD PROCEDURE** .

2. **CHECK FOR OPEN SQUIB CIRCUITS IN RIGHT SIDE CURTAIN AIRBAG**

WARNING: Turn the ignition off disconnect the 12-volt battery and wait two minutes before proceeding. Failure to follow these instructions may result in possible serious or fatal injury.

1. Disconnect the Right Side Curtain Airbag harness connector.

WARNING: Do not place an intact non-deployed curtain airbag face down on a hard surface, the airbag will propel into the air if accidentally deployed. Failure to follow these instructions may result in possible serious or fatal injury.

NOTE: Check connectors - Clean and repair as necessary.

2. Connect the (special tool #8443A, SRS Load Tool) and the (special tool #8443-8, Jumper, SRS Load) to the Right Side Curtain Airbag harness connector.
3. If equipped with the standard key ignition, use this ignition on warning.

WARNING: Turn the ignition on, then reconnect the 12-volt battery and wait two minutes before proceeding. Failure to follow these instructions may result in possible serious or fatal injury.

4. If equipped with the keyless ignition, use this ignition on warning.

WARNING: Disconnect the 12-volt battery wait two minutes before proceeding, remove the ORC fuses, connect the 12-volt battery, wait two minutes before proceeding. Cycle the ignition to the On position, then reconnect the ORC fuses. Wait two minutes before proceeding. Failure to follow these instructions may result in possible serious or fatal injury.

5. With the scan tool, read the active ORC DTCs.

Does the scan tool display: B0029-13-RIGHT CURTAIN DEPLOYMENT SQUIB 1 - CIRCUIT OPEN?

Yes

- Go To 3

No

- Replace the Right Side Curtain Airbag in accordance with the Service Information. Refer to **AIR BAG, SIDE CURTAIN, REMOVAL** .
- Perform the RESTRAINTS SYSTEM VERIFICATION TEST. Refer to **STANDARD PROCEDURE** .

3. **CHECK THE (R4) RIGHT CURTAIN SQUIB 1 LINE 1 CIRCUIT FOR AN OPEN**

WARNING: Turn the ignition off disconnect the 12-volt battery and wait two minutes before proceeding. Failure to follow these instructions may result in possible serious or fatal injury.

1. Disconnect the (special tool #8443A, SRS Load Tool) and the (special tool #8443-8, Jumper, SRS Load) from the Right Side Curtain Airbag harness connector.
2. Disconnect the ORC harness connectors.

NOTE: Check connectors - Clean and repair as necessary.

3. Connect the (special tool #8443-57, Adapter, Supplemental Restraint System Load Tool) to the ORC harness connectors.
4. Measure the resistance of the (R4) Left Curtain Squib 1 Line 1 circuit between the Right Side Curtain Airbag connector cavity 2 and the (special tool #8443-57, Adapter, Supplemental Restraint System Load Tool) connector C1B cavity 15.

Is the resistance below or within the range of 5.4 - 10.0 Ohm?

Yes

- Go To 4

No

- Repair the (R4) Right Curtain Squib 1 Line 1 circuit for an open.
- Perform the RESTRAINTS SYSTEM VERIFICATION TEST. Refer to **STANDARD PROCEDURE** .

4. **CHECK THE (R2) RIGHT CURTAIN SQUIB 1 LINE 2 CIRCUIT FOR AN OPEN**
   1. Measure the resistance of the (R2) Right Curtain Squib 1 Line 2 circuit between the Right Side

Curtain Airbag harness connector cavity 1 and the (special tool #8443-57, Adapter, Supplemental Restraint System Load Tool) connector C1B cavity 51.

Is the resistance below or within the range of 5.4 - 10.0 Ohm?

Yes

WARNING: If the Occupant Restraint Controller (ORC) is dropped at any time, it must be replaced. Failure to take the proper precautions can result in accidental airbag deployment. Failure to follow these instructions may result in possible serious or fatal injury.

- Replace the ORC in accordance with Service Information. Refer to **MODULE, OCCUPANT RESTRAINT CONTROLLER, REMOVAL** .
- Perform the RESTRAINTS SYSTEM VERIFICATION TEST. Refer to **STANDARD PROCEDURE** .

No

- Repair the (R2) Right Curtain Squib 1 Line 2 circuit for an open.
- Perform the RESTRAINTS SYSTEM VERIFICATION TEST. Refer to **STANDARD PROCEDURE** .

B0029-2B-RIGHT CURTAIN DEPLOYMENT SQUIB 1 - WIRES SHORTED TOGETHER

For a complete wiring diagram, **refer to appropriate SYSTEM WIRING DIAGRAMS article** .

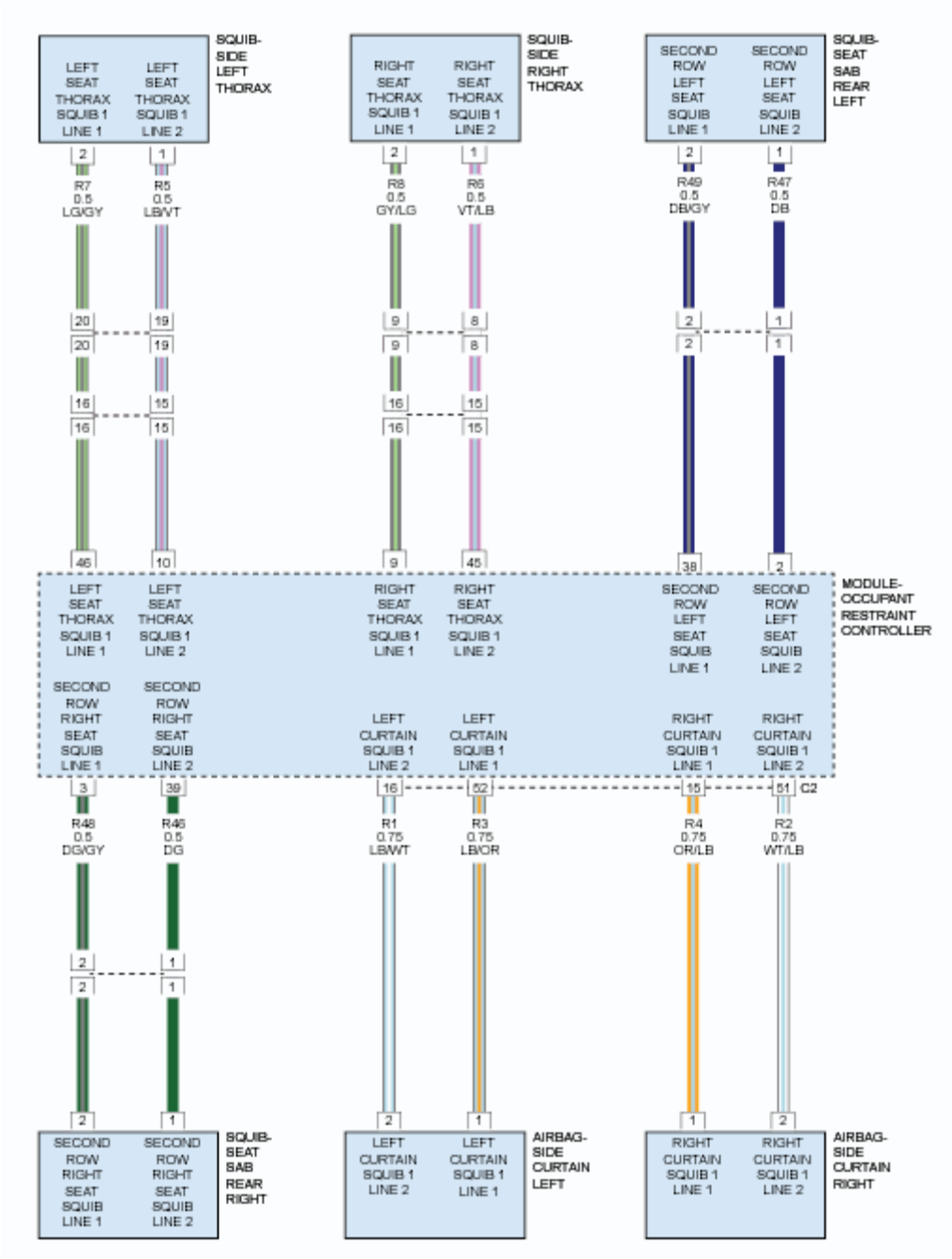

Fig. 48: Side, Thorax & Side Curtain Airbag Squib Circuit Diagram
Courtesy of CHRYSLER GROUP, LLC

THEORY OF OPERATION

When powered, the Occupant Restraint Controller (ORC) sends a test current to the squibs to verify the integrity of the squib and wiring. These circuits are maintained in a "floating" configuration at the ORC (connected to neither power nor ground) as protection against inadvertent deployment. Use of the (special tool #8443A, SRS Load Tool) in the tests below substitutes a suspect squib with a known good component. The (special tool #8443-57, Adapter, Supplemental Restraint System Load Tool) provides a test point as well as a

method for opening the shorting bar connections within the ORC harness connector. The side curtain airbags are a single-stage device that upon sensor detected impact they deploy. They are located above the headliner and fastened to one of the roof side rails. They protect the area from the A-pillar to the rear of the vehicle. The side curtain airbags and the seat thorax side airbags are deployed simultaneously independent of the front airbags during an impact event.

WHEN MONITORED

With the ignition on.

SET CONDITION

The Occupant Restraint Controller (ORC) monitors the resistance of the Right Curtain Squib 1 circuits. If low resistance is detected for greater than 2.6 seconds between the Right Curtain Squib 1 circuits the ORC will set this DTC. The DTC will change from Active to Stored status if the fault condition is not detected for greater than 2.6 seconds. The Airbag Warning Lamp (AWL) will set in the instrument cluster.

POSSIBLE CAUSES

Possible Causes
(R4) RIGHT CURTAIN SQUIB 1 LINE 1 CIRCUIT SHORTED TO (R2) RIGHT CURTAIN SQUIB 1 LINE 2 CIRCUIT
RIGHT SIDE CURTAIN AIRBAG
OCCUPANT RESTRAINT CONTROLLER (ORC)

Always perform the Pre-Diagnostic Troubleshooting procedure before proceeding. Refer to STANDARD PROCEDURE .

DIAGNOSTIC TEST

1. **DETERMINE ACTIVE OR STORED DTC**

   NOTE: Make sure that the battery is fully charged.

   NOTE: The scan tool, (special tool #8443A, SRS Load Tool), and DVOM are required to perform the following test.

   1. Turn the ignition on.

      Select ACTIVE or STORED DTC:

      ACTIVE DTC

      - Go To 2

STORED DTC

- Perform the RESTRAINTS SYSTEM INTERMITTENT TEST. Refer to **STANDARD PROCEDURE** .

2. **CHECK FOR SHORTED SQUIB CIRCUITS IN RIGHT SIDE CURTAIN AIRBAG**

WARNING: Turn the ignition off disconnect the 12-volt battery and wait two minutes before proceeding. Failure to follow these instructions may result in possible serious or fatal injury.

1. Disconnect the Right Side Curtain Airbag harness connector.

WARNING: Do not place an intact uncoupled curtain airbag face down on a hard surface, the airbag will propel into the air if accidentally deployed. Failure to follow these instructions may result in possible serious or fatal injury.

NOTE: Check connectors - Clean and repair as necessary.

2. Connect the (special tool #8443A, SRS Load Tool) and the (special tool #8443-8, Jumper, SRS Load) to the Right Side Curtain Airbag harness connector.
3. If equipped with the standard key ignition, use this ignition on warning.

WARNING: Turn the ignition on, then reconnect the 12-volt battery and wait two minutes before proceeding. Failure to follow these instructions may result in possible serious or fatal injury.

4. If equipped with the keyless ignition, use this ignition on warning.

WARNING: Disconnect the 12-volt battery wait two minutes before proceeding, remove the ORC fuses, connect the 12-volt battery, wait two minutes before proceeding. Cycle the ignition to the On position, then reconnect the ORC fuses. Wait two minutes before proceeding. Failure to follow these instructions may result in possible serious or fatal injury.

5. With the scan tool, read the active ORC DTCs.

Does the scan tool display: B0029-2B-RIGHT CURTAIN DEPLOYMENT SQUIB 1 - WIRES SHORTED TOGETHER?

Yes

- Go To 3

No

- Replace the Right Side Curtain Airbag in accordance with the Service Information. Refer to **AIR BAG, SIDE CURTAIN, REMOVAL** .
- Perform the RESTRAINTS SYSTEM VERIFICATION TEST. Refer to **STANDARD PROCEDURE** .

3. **CHECK THE (R4) RIGHT CURTAIN SQUIB 1 LINE 1 CIRCUIT FOR A SHORT TO THE (R2) RIGHT CURTAIN SQUIB 1 LINE 2 CIRCUIT**

WARNING: **Turn the ignition off disconnect the 12-volt battery and wait two minutes before proceeding. Failure to follow these instructions may result in possible serious or fatal injury.**

1. Disconnect the (special tool #8443A, SRS Load Tool) and the (special tool #8443-8, Jumper, SRS Load) from the Right Side Curtain Airbag harness connector.
2. Disconnect the ORC harness connectors.

NOTE: Check connectors - Clean and repair as necessary.

3. Connect the (special tool #8443-57, Adapter, Supplemental Restraint System Load Tool) to the ORC harness connectors.
4. Measure the resistance between the (R4) Right Curtain Squib 1 Line 1 circuit connector C1B cavity 15 and the (R2) Right Curtain Squib 1 Line 2 circuit connector C1B cavity 51 at the (special tool #8443-57, Adapter, Supplemental Restraint System Load Tool).

Is the resistance below or within 1.5 - 2.18 Ohm?

Yes

- Repair the (R4) Right Curtain Squib 1 Line 1 circuit for a short to the (R2) Right Curtain Squib 1 Line 2 circuit.
- Perform the RESTRAINTS SYSTEM VERIFICATION TEST. Refer to **STANDARD PROCEDURE** .

No

WARNING: **If the Occupant Restraint Controller (ORC) is dropped at any time, it must be replaced. Failure to take the proper precautions can result in accidental airbag deployment. Failure to follow these instructions may result in possible serious or fatal injury.**

- Replace the ORC in accordance with Service Information. Refer to **MODULE, OCCUPANT RESTRAINT CONTROLLER, REMOVAL** .
- Perform the RESTRAINTS SYSTEM VERIFICATION TEST. Refer to **STANDARD**

PROCEDURE .

B0030-11-SECOND ROW LEFT SIDE AIRBAG DEPLOYMENT CONTROL - CIRCUIT SHORT TO GROUND

For a complete wiring diagram, **refer to appropriate SYSTEM WIRING DIAGRAMS article** .

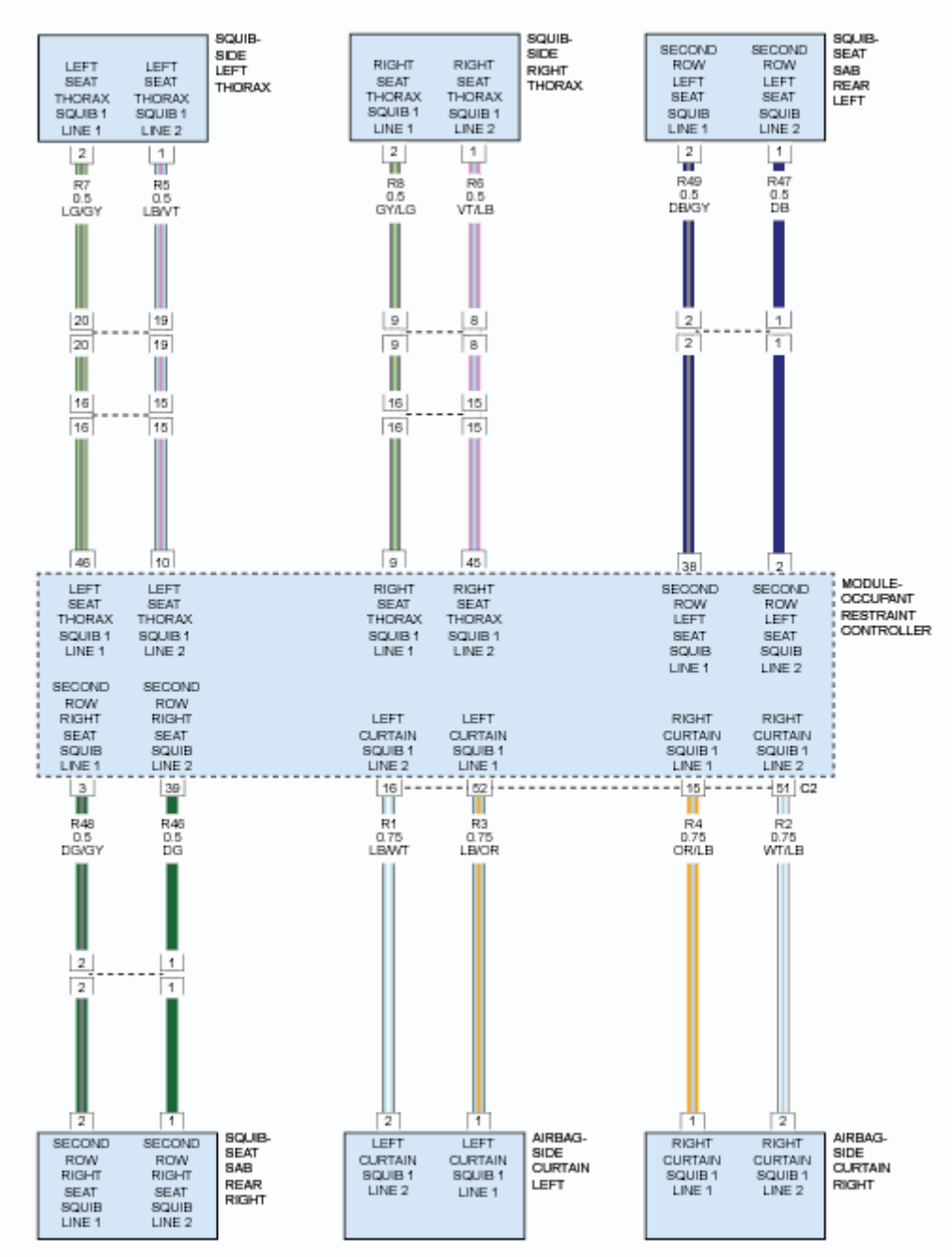

Fig. 49: Side, Thorax & Side Curtain Airbag Squib Circuit Diagram
Courtesy of CHRYSLER GROUP, LLC

THEORY OF OPERATION

When powered, the Occupant Restraint Controller (ORC) sends a test current to the squibs to verify the integrity of the squib and wiring. These circuits are maintained in a "floating" configuration at the module (connected to neither power nor ground) as protection against inadvertent deployment. Use of the (special tool #8443A, SRS Load Tool) in the tests below substitutes a suspect squib with a known good component. The use of the (special tool #8443-57, Adapter, Supplemental Restraint System Load Tool) provides a test point as well as a method for opening the shorting bar connections within the harness connector. The rear seat airbags (also known as pelvic and thorax airbags) are completely concealed beneath the seat cushion trim cover on the lower outboard sides of the rear seat cushion. The thorax airbag is a single stage device. The thorax side airbags and the side curtain airbags deploy together during an event separate of the front airbags.

WHEN MONITORED

With the ignition on.

SET CONDITION

The Occupant Restraint Controller (ORC) monitors the resistance of the Second Row Left Seat Airbag circuits. If low resistance is detected in the Second Row Left Seat Airbag circuits for 2.6 seconds or longer the ORC will set this DTC. The DTC will change from Active to Stored status if the fault condition is not detected for greater than 2.6 seconds. The Airbag Warning Lamp (AWL) will set in the instrument cluster.

POSSIBLE CAUSES

Possible Causes
(R47) SECOND ROW LEFT SEAT SQUIB 1 LINE 2 CIRCUIT SHORTED TO GROUND
(R49) SECOND ROW LEFT SEAT SQUIB 1 LINE 1 CIRCUIT SHORTED TO GROUND
SECOND ROW LEFT SEAT AIRBAG
OCCUPANT RESTRAINT CONTROLLER (ORC)

Always perform the Pre-Diagnostic Troubleshooting procedure before proceeding. Refer to STANDARD PROCEDURE .

DIAGNOSTIC TEST

1. **DETERMINE ACTIVE OR STORED DTC**

NOTE: Make sure that the battery is fully charged.

NOTE: The scan tool, (special tool #8443A, SRS Load Tool), and DVOM are required to perform the following test.

1. Turn the ignition on.
2. With the scan tool, read the active ORC DTC.

Select ACTIVE or STORED DTC:

ACTIVE DTC

- Go To 2

STORED DTC

- Perform the RESTRAINTS SYSTEM INTERMITTENT TEST. Refer to **STANDARD PROCEDURE** .

2. **CHECK FOR SHORTED SQUIB CIRCUITS AT THE SECOND ROW LEFT SEAT AIRBAG**

WARNING: Turn the ignition off disconnect the 12-volt battery and wait two minutes before proceeding. Failure to follow these instructions may result in possible serious or fatal injury.

1. Disconnect the Second Row Left Seat Airbag harness connector.

WARNING: To avoid serious or fatal injury, do not place an intact non-deployed Left Seat Squib Airbag face down on a hard surface, the airbag will propel into the air if accidentally deployed.

NOTE: Check connectors - Clean and repair as necessary.

2. Connect the (special tool #8443A, SRS Load Tool) and the (special tool #8443-8, Jumper, SRS Load) to the Second Row Left Seat Airbag harness connector.
3. If equipped with the standard key ignition, use this ignition on warning.

WARNING: Turn the ignition on, then reconnect the 12-volt battery and wait two minutes before proceeding. Failure to follow these instructions may result in possible serious or fatal injury.

4. If equipped with the keyless ignition, use this ignition on warning.

WARNING: Disconnect the 12-volt battery wait two minutes before proceeding, remove the ORC fuses, connect the 12-volt battery, wait two minutes before proceeding. Cycle the ignition to the On position, then reconnect the ORC fuses. Wait two minutes before proceeding. Failure to follow these instructions may result in possible serious or fatal injury.

5. With the scan tool, read the active ORC DTC.

Does the scan tool display: B0030-11-SECOND ROW LEFT SIDE AIRBAG DEPLOYMENT

CONTROL - CIRCUIT SHORT TO GROUND?

Yes

- Go To 3

No

WARNING: Turn the ignition off, disconnect the 12-volt battery and wait two minutes before proceeding. Failure to follow these instructions may result in possible serious or fatal injury.

- Replace the Second Row Left Seat Airbag in accordance with the Service Information. Refer to **AIR BAG, SEAT, REMOVAL** .
- Perform the RESTRAINTS SYSTEM VERIFICATION TEST. Refer to **STANDARD PROCEDURE** .

3. **CHECK SECOND ROW LEFT SEAT SQUIB CIRCUITS (R47) and (R49) FOR A SHORT TO GROUND**

WARNING: Turn the ignition off, disconnect the 12-volt battery and wait two minutes before proceeding. Failure to follow these instructions may result in possible serious or fatal injury.

1. Disconnect the (special tool #8443A, SRS Load Tool) and the (special tool #8443-8, Jumper, SRS Load) from the in-line connector.
2. Disconnect the ORC harness connectors.

NOTE: Check connectors - Clean and repair as necessary.

3. Connect the (special tool #8443-57, Adapter, Supplemental Restraint System Load Tool) to the ORC harness connectors.
4. Measure the resistance of the (R47) Second Row Left Seat Squib 1 Line 2 circuit between the (special tool #8443-57, Adapter, Supplemental Restraint System Load Tool) connector C1B cavity 2 and ground.
5. Measure the resistance of the (R49) Second Row Left Seat Squib 1 Line 1 circuit between the (special tool #8443-57, Adapter, Supplemental Restraint System Load Tool) connector C1B cavity 38 and ground.

Is the resistance below 10k Ohms on either circuit?

Yes

- In accordance with Service Information repair or replace the Left Seat Airbag Squib 1 circuits shorted to ground.

- Perform the RESTRAINTS SYSTEM VERIFICATION TEST. Refer to **STANDARD PROCEDURE** .

No

WARNING: If the Occupant Restraint Controller (ORC) is dropped at any time, it must be replaced. Failure to follow these instructions may result in possible serious or fatal injury.

- Replace the ORC in accordance with Service Information. Refer to **MODULE, OCCUPANT RESTRAINT CONTROLLER, REMOVAL** .
- Perform the RESTRAINTS SYSTEM VERIFICATION TEST. Refer to **STANDARD PROCEDURE** .

B0030-12-SECOND ROW LEFT SIDE AIRBAG DEPLOYMENT CONTROL - CIRCUIT SHORT TO BATTERY

For a complete wiring diagram, **refer to appropriate SYSTEM WIRING DIAGRAMS article** .

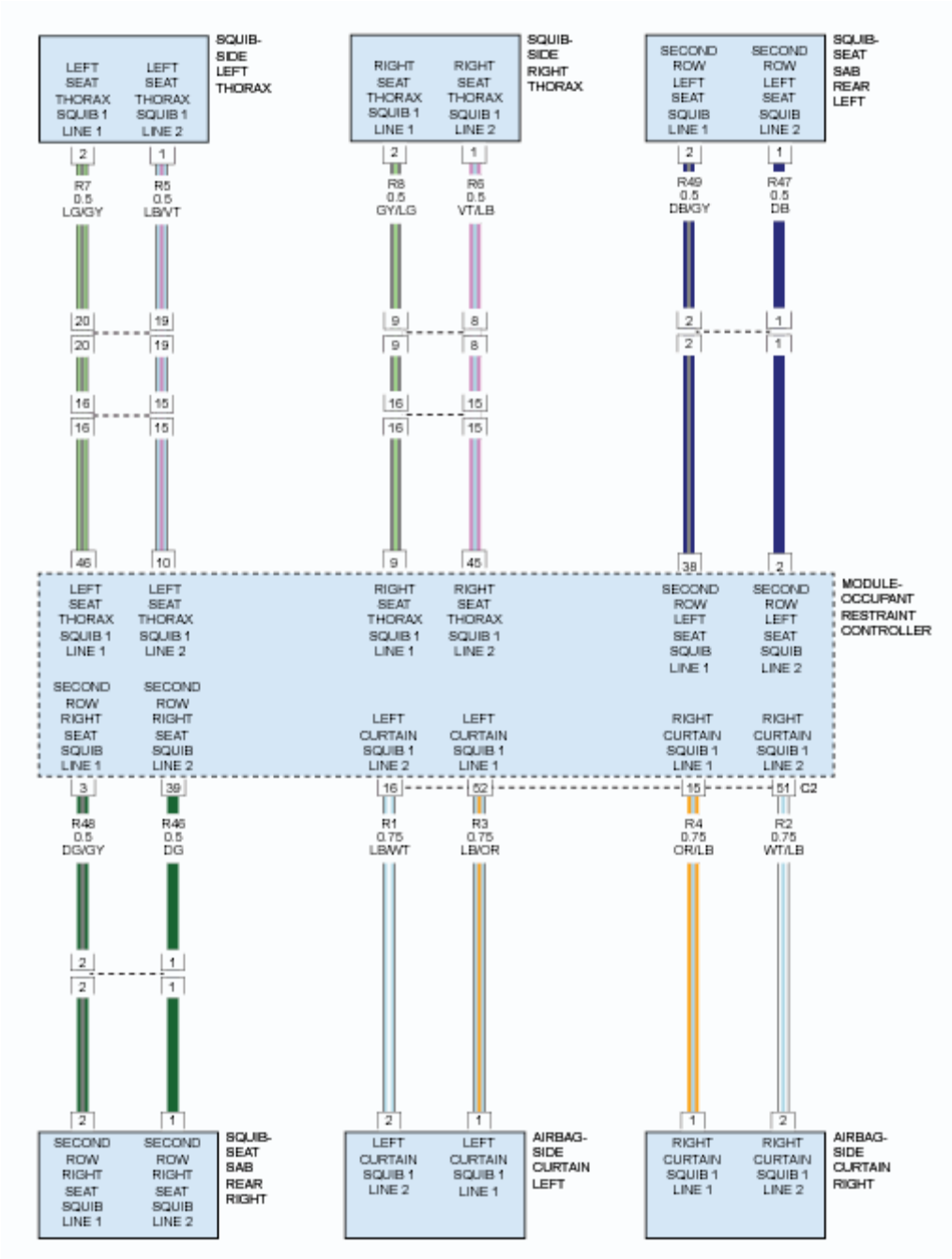

Fig. 50: Side, Thorax & Side Curtain Airbag Squib Circuit Diagram
Courtesy of CHRYSLER GROUP, LLC

THEORY OF OPERATION

When powered, the Occupant Restraint Controller (ORC) sends a test current to the squibs to verify the integrity of the squib and wiring. These circuits are maintained in a "floating" configuration at the module (connected to neither power nor ground) as protection against inadvertent deployment. Use of the (special tool #8443A, SRS Load Tool) in the tests below substitutes a suspect squib with a known good component. The use of the (special tool #8443-57, Adapter, Supplemental Restraint System Load Tool) provides a test point as well

as a method for opening the shorting bar connections within the harness connector. The rear seat airbags (also known as pelvic and thorax airbags) are completely concealed beneath the seat cushion trim cover on the lower outboard sides of the rear seat cushion. The thorax airbag is a single stage device. The thorax side airbags and the side curtain airbags deploy together during an event separate of the front airbags.

WHEN MONITORED

With the ignition on.

SET CONDITION

The Occupant Restraint Controller (ORC) monitors the voltage on the Second Row Left Seat Airbag circuits. If voltage is detected on the Second Row Left Seat Airbag circuits for greater than 2.6 seconds the ORC will set this DTC. The DTC will change from Active to Stored status when the fault condition is not detected for greater than 2.6 seconds. The Airbag Warning Lamp (AWL) will set in the instrument cluster.

POSSIBLE CAUSES

Possible Causes
(R47) SECOND ROW LEFT SEAT SQUIB 1 LINE 2 CIRCUIT SHORTED TO BATTERY
(R49) SECOND ROW LEFT SEAT SQUIB 1 LINE 1 CIRCUIT SHORTED TO BATTERY
SECOND ROW LEFT SEAT AIRBAG
OCCUPANT RESTRAINT CONTROLLER (ORC)

DIAGNOSTIC TEST

1. **DETERMINE ACTIVE OR STORED DTC**

   NOTE: Make sure that the battery is fully charged.

   NOTE: The scan tool, (special tool #8443A, SRS Load Tool), and DVOM are required to perform the following test.

   1. Turn the ignition on.

      Select ACTIVE or STORED DTC:

      ACTIVE DTC

      - Go To 2

      STORED DTC

      - Perform the RESTRAINTS SYSTEM INTERMITTENT TEST. Refer to **STANDARD PROCEDURE** .

2. **CHECK FOR SHORTED SQUIB CIRCUITS AT THE SECOND ROW LEFT SEAT SQUIB AIRBAG**

WARNING: Turn the ignition off disconnect the 12-volt battery and wait two minutes before proceeding. Failure to follow these instructions may result in possible serious or fatal injury.

1. Disconnect the Second Row Left Seat Airbag harness connector.

WARNING: To avoid serious or fatal injury, do not place an intact non-deployed Left Seat Squib Airbag face down on a hard surface, the airbag will propel into the air if accidentally deployed.

NOTE: Check connectors - Clean and repair as necessary.

2. Connect the (special tool #8443A, SRS Load Tool) and the (special tool #8443-8, Jumper, SRS Load) to the Second Row Left Seat Airbag harness connector.
3. If equipped with the standard key ignition, use this ignition on warning.

WARNING: Turn the ignition on, then reconnect the 12-volt battery and wait two minutes before proceeding. Failure to follow these instructions may result in possible serious or fatal injury.

4. If equipped with the keyless ignition, use this ignition on warning.

WARNING: Disconnect the 12-volt battery wait two minutes before proceeding, remove the ORC fuses, connect the 12-volt battery, wait two minutes before proceeding. Cycle the ignition to the On position, then reconnect the ORC fuses. Wait two minutes before proceeding. Failure to follow these instructions may result in possible serious or fatal injury.

5. With the scan tool, read the active ORC DTC.

Does the scan tool display: B0030-12-SECOND ROW LEFT SIDE AIRBAG DEPLOYMENT CONTROL - CIRCUIT SHORT TO BATTERY?

Yes

- Go To 3

No

WARNING: Turn the ignition off, disconnect the 12-volt battery and wait

two minutes before proceeding. Failure to follow these instructions may result in possible serious or fatal injury.

- Replace the Second Row Left Seat Airbag in accordance with the Service Information. Refer to **AIR BAG, SEAT, REMOVAL** .
- Perform the RESTRAINTS SYSTEM VERIFICATION TEST. Refer to **STANDARD PROCEDURE** .

3. **CHECK SECOND ROW LEFT SEAT SQUIB CIRCUITS (R47) and (R49) FOR A SHORT TO BATTERY**

WARNING: **Turn the ignition off, disconnect the 12-volt battery and wait two minutes before proceeding. Failure to follow these instructions may result in possible serious or fatal injury.**

1. Disconnect the (special tool #8443A, SRS Load Tool) and the (special tool #8443-8, Jumper, SRS Load) from the in-line connector.
2. Disconnect the ORC harness connectors.

NOTE: Check connectors - Clean and repair as necessary.

3. Connect the (special tool #8443-57, Adapter, Supplemental Restraint System Load Tool) to the ORC harness connectors.
4. Measure the resistance of the (R47) Second Row Left Seat Squib 1 Line 2 circuit between the (special tool #8443-57, Adapter, Supplemental Restraint System Load Tool) connector C1B cavity 2 and ground.
5. Measure the resistance of the (R49) Second Row Left Seat Squib 1 Line 1 circuit between the (special tool #8443-57, Adapter, Supplemental Restraint System Load Tool) connector C1B cavity 38 and ground.

Is there voltage on either circuit?

Yes

- In accordance with Service Information repair or replace the Second Row Left Seat Airbag Squib 1 circuits shorted to battery.
- Perform the RESTRAINTS SYSTEM VERIFICATION TEST. Refer to **STANDARD PROCEDURE** .

No

WARNING: **If the Occupant Restraint Controller (ORC) is dropped at any time, it must be replaced. Failure to follow these instructions may result in possible serious or fatal injury.**

- Replace the ORC in accordance with Service Information. Refer to **MODULE, OCCUPANT RESTRAINT CONTROLLER, REMOVAL** .
- Perform the RESTRAINTS SYSTEM VERIFICATION TEST. Refer to **STANDARD PROCEDURE** .

B0030-13-SECOND ROW LEFT SIDE AIRBAG DEPLOYMENT CONTROL - CIRCUIT OPEN

For a complete wiring diagram, **refer to appropriate SYSTEM WIRING DIAGRAMS article** .

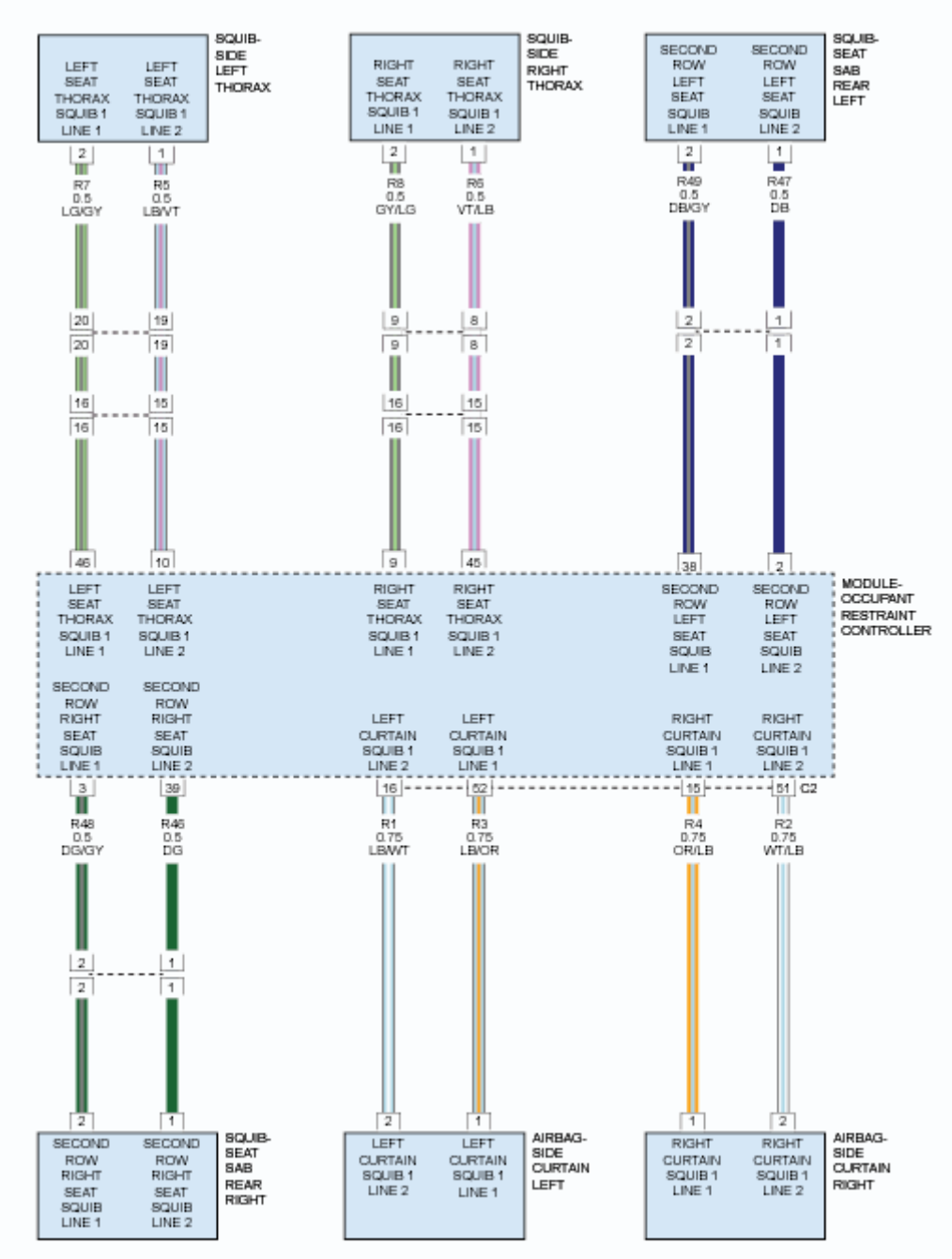

Fig. 51: Side, Thorax & Side Curtain Airbag Squib Circuit Diagram
Courtesy of CHRYSLER GROUP, LLC

THEORY OF OPERATION

When powered, the Occupant Restraint Controller (ORC) sends a test current to the squibs to verify the integrity of the squib and wiring. These circuits are maintained in a "floating" configuration at the module (connected to neither power nor ground) as protection against inadvertent deployment. Use of the (special tool #8443A, SRS Load Tool) in the tests below substitutes a suspect squib with a known good component. The use of the (special tool #8443-57, Adapter, Supplemental Restraint System Load Tool) provides a test point as well as a method for opening the shorting bar connections within the harness connector. The rear seat airbags (also known as pelvic and thorax airbags) are completely concealed beneath the seat cushion trim cover on the lower outboard sides of the rear seat cushion. The thorax airbag is a single stage device. The thorax side airbags and the side curtain airbags deploy together during an event separate of the front airbags.

WHEN MONITORED

With the ignition on.

SET CONDITION

This Diagnostic Trouble Code (DTC) sets when the ORC detects a open on the Second Row Left Seat Airbag squib circuits for more than 2.6 seconds. This DTC transitions from active to stored when the ORC sees a recovery from a open for greater than 2.6 seconds. The Airbag Warning Lamp (AWL) will set in the instrument cluster.

POSSIBLE CAUSES

Possible Causes
(R47) SECOND ROW LEFT SEAT SQUIB 1 LINE 2 CIRCUIT OPEN
(R49) SECOND ROW LEFT SEAT SQUIB 1 LINE 1 CIRCUIT OPEN
SECOND ROW LEFT SEAT AIRBAG
OCCUPANT RESTRAINT CONTROLLER (ORC)

Always perform the Pre-Diagnostic Troubleshooting procedure before proceeding. Refer to STANDARD PROCEDURE .

DIAGNOSTIC TEST

1. **DETERMINE ACTIVE OR STORED DTC**

NOTE: **Make sure that the battery is fully charged.**

NOTE: **The scan tool, (special tool #8443A, SRS Load Tool), and DVOM are required to perform the following test.**

1. Turn the ignition on.

   Select ACTIVE or STORED DTC:

   ACTIVE DTC

   - Go To 2

   STORED DTC

   - Perform the RESTRAINTS SYSTEM INTERMITTENT TEST. Refer to **STANDARD PROCEDURE** .

2. **CHECK FOR SHORTED SQUIB CIRCUITS IN THE SECOND ROW LEFT SEAT AIRBAG**

   WARNING: **Turn the ignition off disconnect the 12-volt battery and wait two minutes before proceeding. Failure to follow these instructions may result in possible serious or fatal injury.**

   1. Disconnect the Second Row Left Seat Airbag harness connector.

      WARNING: **To avoid serious or fatal injury, do not place an intact non-deployed Left Seat Squib Airbag face down on a hard surface, the airbag will propel into the air if accidentally deployed.**

      NOTE: Check connectors - Clean and repair as necessary.

   2. Connect the (special tool #8443A, SRS Load Tool) and the (special tool #8443-8, Jumper, SRS Load) to the Second Row Left Seat Airbag harness connector.
   3. If equipped with the standard key ignition, use this ignition on warning.

      WARNING: **Turn the ignition on, then reconnect the 12-volt battery and wait two minutes before proceeding. Failure to follow these instructions may result in possible serious or fatal injury.**

   4. If equipped with the keyless ignition, use this ignition on warning.

      WARNING: **Disconnect the 12-volt battery wait two minutes before proceeding, remove the ORC fuses, connect the 12-volt battery, wait two minutes before proceeding. Cycle the ignition to the On position, then reconnect the ORC fuses. Wait two minutes before proceeding. Failure to follow these instructions may result in possible serious or fatal injury.**

   5. With the scan tool, read the active ORC DTC.

Does the scan tool display: B0030-13-SECOND ROW LEFT SIDE AIRBAG DEPLOYMENT CONTROL - CIRCUIT OPEN?

Yes

- Go To 3

No

WARNING: Turn the ignition off, disconnect the 12-volt battery and wait two minutes before proceeding. Failure to follow these instructions may result in possible serious or fatal injury.

- Replace the Second Row Left Seat Airbag in accordance with the Service Information. Refer to **AIR BAG, SEAT, REMOVAL** .
- Perform the RESTRAINTS SYSTEM VERIFICATION TEST. Refer to **STANDARD PROCEDURE** .

3. **CHECK FOR OPEN (R47) SECOND ROW LEFT SEAT SQUIB 1 LINE 2 CIRCUIT**

WARNING: Turn the ignition off, disconnect the 12-volt battery and wait two minutes before proceeding. Failure to follow these instructions may result in possible serious or fatal injury.

1. Disconnect the (special tool #8443A, SRS Load Tool) and the (special tool #8443-8, Jumper, SRS Load) from the second row left side seat in-line harness connector (body side).
2. Disconnect the ORC harness connectors.

NOTE: Check connectors - Clean and repair as necessary.

3. Connect the (special tool #8443-57, Adapter, Supplemental Restraint System Load Tool) to the ORC harness connectors.
4. Measure the resistance of the (R47) Left Seat Squib 1 Line 2 circuit between the (special tool #8443-57, Adapter, Supplemental Restraint System Load Tool) connector C1B cavity 2 and Second Row Left Seat Airbag connector 1.

Is the resistance below or within 5.4 - 10.0 Ohm?

Yes

- Go To 4

No

- Repair or Replace the (R47) Left Seat Squib 1 Line 2 circuit for an open or high resistance in

accordance with Service Information.

- Perform the RESTRAINTS SYSTEM VERIFICATION TEST. Refer to **STANDARD PROCEDURE** .

4. **CHECK FOR AN OPEN (R49) SECOND ROW LEFT SEAT SQUIB 1 LINE 1 CIRCUIT IN THE BODY HARNESS**
   1. Measure the resistance of the (R49) Left Seat Squib 1 Line 1 circuit between the (special tool #8443-57, Adapter, Supplemental Restraint System Load Tool) connector C1B cavity 38 and Second Row Left Seat Airbag.

      Is the resistance below or within 5.4 - 10.0 Ohm?

      Yes

      WARNING: If the Occupant Restraint Controller (ORC) is dropped at any time, it must be replaced. Failure to take the proper precautions can result in accidental airbag deployment. Failure to follow these instructions may result in possible serious or fatal injury.

      - Replace the ORC in accordance with Service Information. Refer to **MODULE, OCCUPANT RESTRAINT CONTROLLER, REMOVAL** .
      - Perform the RESTRAINTS SYSTEM VERIFICATION TEST. Refer to **STANDARD PROCEDURE** .

      No

      - Repair or Replace the (R49) Left Seat Squib 1 Line 1 circuit for an open or high resistance in accordance with Service Information.
      - Perform the RESTRAINTS SYSTEM VERIFICATION TEST. Refer to **STANDARD PROCEDURE** .

B0030-2B-SECOND ROW LEFT SIDE AIRBAG DEPLOYMENT CONTROL - WIRES SHORTED TOGETHER

For a complete wiring diagram, **refer to appropriate SYSTEM WIRING DIAGRAMS article** .

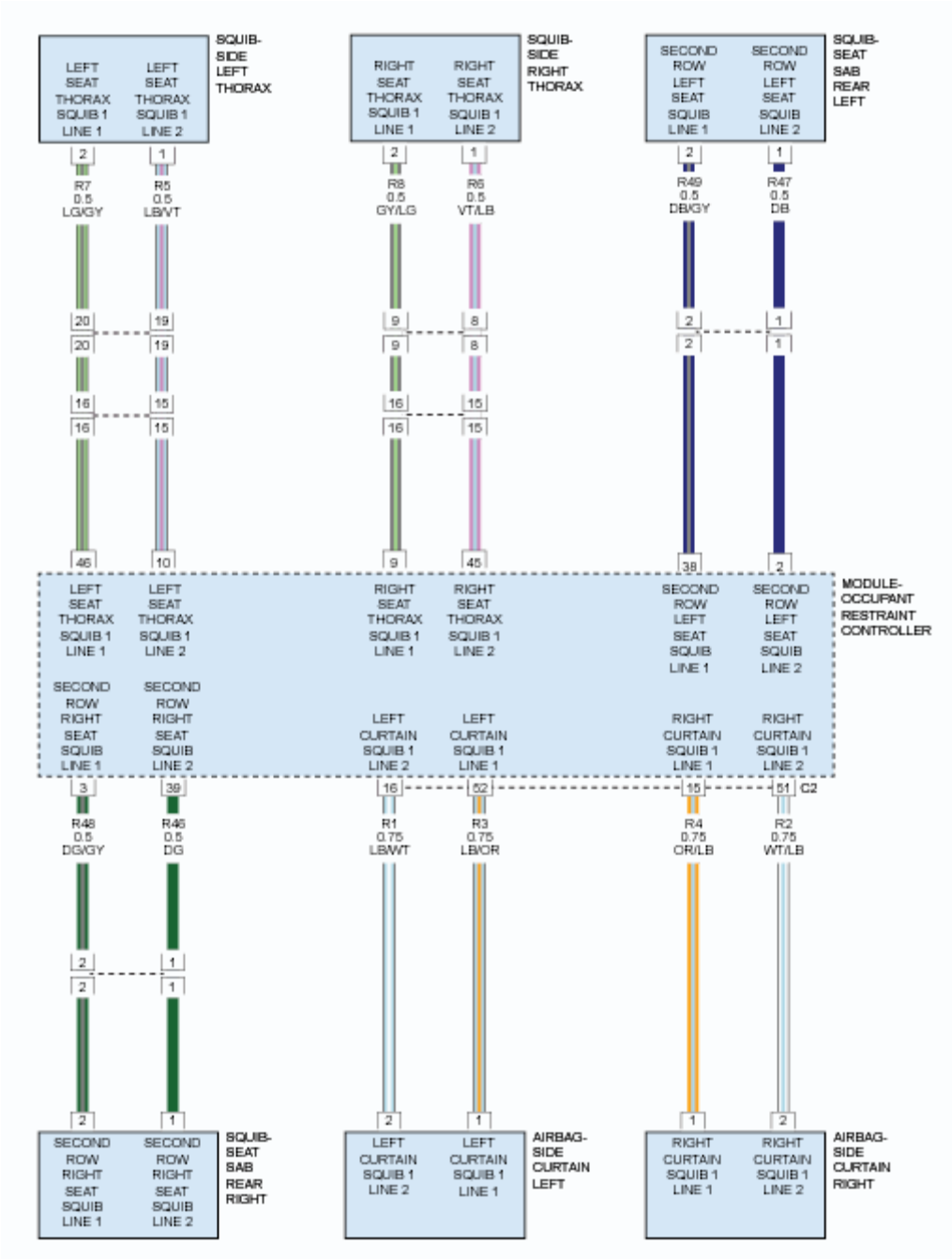

Fig. 52: Side, Thorax & Side Curtain Airbag Squib Circuit Diagram
Courtesy of CHRYSLER GROUP, LLC

THEORY OF OPERATION

When powered, the Occupant Restraint Controller (ORC) sends a test current to the squibs to verify the integrity of the squib and wiring. These circuits are maintained in a "floating" configuration at the module (connected to neither power nor ground) as protection against inadvertent deployment. Use of the (special tool #8443A, SRS Load Tool) in the tests below substitutes a suspect squib with a known good component. The use of the (special tool #8443-57, Adapter, Supplemental Restraint System Load Tool) provides a test point as well

as a method for opening the shorting bar connections within the harness connector. The rear seat airbags (also known as pelvic and thorax airbags) are completely concealed beneath the seat cushion trim cover on the lower outboard sides of the rear seat cushion. The thorax airbag is a single stage device. The thorax side airbags and the side curtain airbags deploy together during an event separate of the front airbags.

WHEN MONITORED

With the ignition on.

SET CONDITION

The Occupant Restraint Controller (ORC) monitors the resistance of the Second Row Left Seat Airbag circuits. If low resistance is detected for greater than 2.6 seconds between the Second Row Left Seat Airbag circuits the ORC will set this DTC. The DTC will change from Active to Stored status if the fault condition is not detected for greater than 2.6 seconds. The Airbag Warning Lamp (AWL) will set in the instrument cluster.

POSSIBLE CAUSES

Possible Causes
(R47) SECOND ROW LEFT SEAT SQUIB 1 LINE 2 CIRCUIT SHORTED TO THE (R49) SECOND ROW LEFT SEAT SQUIB 1 LINE 1 CIRCUIT
SECOND ROW LEFT SEAT AIRBAG
OCCUPANT RESTRAINT CONTROLLER (ORC)

Always perform the Pre-Diagnostic Troubleshooting procedure before proceeding. Refer to STANDARD PROCEDURE .

DIAGNOSTIC TEST

1. **DETERMINE ACTIVE OR STORED DTC**

   NOTE: Make sure that the battery is fully charged.

   NOTE: The scan tool, (special tool #8443A, SRS Load Tool), and DVOM are required to perform the following test.

   1. Turn the ignition on.

      Select ACTIVE or STORED DTC:

      ACTIVE DTC

      - Go To 2

      STORED DTC

- Perform the RESTRAINTS SYSTEM INTERMITTENT TEST. Refer to **STANDARD PROCEDURE** .

2. **CHECK FOR SHORTED SQUIB CIRCUITS IN THE SECOND ROW LEFT SEAT AIRBAG**

WARNING: Turn the ignition off disconnect the 12-volt battery and wait two minutes before proceeding. Failure to follow these instructions may result in possible serious or fatal injury.

1. Disconnect the Second Row Left Seat Airbag harness connector.

WARNING: Do not place an intact non-deployed Seat Squib Airbag face down on a hard surface, the airbag will propel into the air if accidentally deployed. Failure to follow these instructions may result in possible serious or fatal injury.

NOTE: Check connectors - Clean and repair as necessary.

2. Connect the (special tool #8443A, SRS Load Tool) and the(special tool #8443-8, Jumper, SRS Load) to the second row Left Seat Airbag harness connector.
3. If equipped with the standard key ignition, use this ignition on warning.

WARNING: Turn the ignition on, then reconnect the 12-volt battery and wait two minutes before proceeding. Failure to follow these instructions may result in possible serious or fatal injury.

4. If equipped with the keyless ignition, use this ignition on warning.

WARNING: Disconnect the 12-volt battery wait two minutes before proceeding, remove the ORC fuses, connect the 12-volt battery, wait two minutes before proceeding. Cycle the ignition to the On position, then reconnect the ORC fuses. Wait two minutes before proceeding. Failure to follow these instructions may result in possible serious or fatal injury.

5. With the scan tool, read the active ORC DTC.

Does the scan tool display: B0030-2B-SECOND ROW LEFT SIDE AIRBAG DEPLOYMENT CONTROL - WIRES SHORTED TOGETHER?

Yes

- Go To 3

No

WARNING: Turn the ignition off, disconnect the 12-volt battery and wait two minutes before proceeding. Failure to follow these instructions may result in possible serious or fatal injury.

- Replace the Left Seat Airbag in accordance with the Service Information. Refer to **AIR BAG, DRIVER, REMOVAL** .
- Perform the RESTRAINTS SYSTEM VERIFICATION TEST. Refer to **STANDARD PROCEDURE** .

3. **CHECK (R47) SECOND ROW LEFT SEAT SQUIB 1 LINE 2 CIRCUIT FOR A SHORT TO THE (R49) SECOND ROW LEFT SEAT SQUIB 1 LINE 1 CIRCUIT**

WARNING: Turn the ignition off, disconnect the 12-volt battery and wait two minutes before proceeding. Failure to follow these instructions may result in possible serious or fatal injury.

1. Disconnect the (special tool #8443A, SRS Load Tool) and the (special tool #8443-8, Jumper, SRS Load) from the Second Row Left Seat Airbag harness connector.
2. Disconnect the ORC harness connectors.

NOTE: Check connectors - Clean and repair as necessary.

3. Connect the (special tool #8443-57, Adapter, Supplemental Restraint System Load Tool) to the ORC harness connectors.
4. Measure the resistance of the (R47) Second Row Left Seat Squib 1 line 2 circuit between (special tool #8443-57, Adapter, Supplemental Restraint System Load Tool) connector C1B cavity 2 and the (R49) Second Row Left Seat Squib 1 Line 1 circuit at the (special tool #8443-57, Adapter, Supplemental Restraint System Load Tool) connector C1B cavity 38.

Is the resistance below or within 1.5 - 2.18 Ohm?

Yes

- In accordance with the Service Information repair or replace the Second Row Left Seat Airbag Squib circuits shorted together.
- Perform the RESTRAINTS SYSTEM VERIFICATION TEST. Refer to **STANDARD PROCEDURE** .

No

WARNING: If the Occupant Restraint Controller (ORC) is dropped at any time, it must be replaced. Failure to take the proper precautions can result in accidental airbag deployment. Failure to follow these instructions may result in possible serious or fatal injury.

- Replace the ORC in accordance with Service Information. Refer to **MODULE, OCCUPANT RESTRAINT CONTROLLER, REMOVAL** .
- Perform the RESTRAINTS SYSTEM VERIFICATION TEST. Refer to **STANDARD PROCEDURE** .

B0038-11-SECOND ROW RIGHT SIDE AIRBAG DEPLOYMENT CONTROL - CIRCUIT SHORT TO GROUND

For a complete wiring diagram, **refer to appropriate SYSTEM WIRING DIAGRAMS article** .

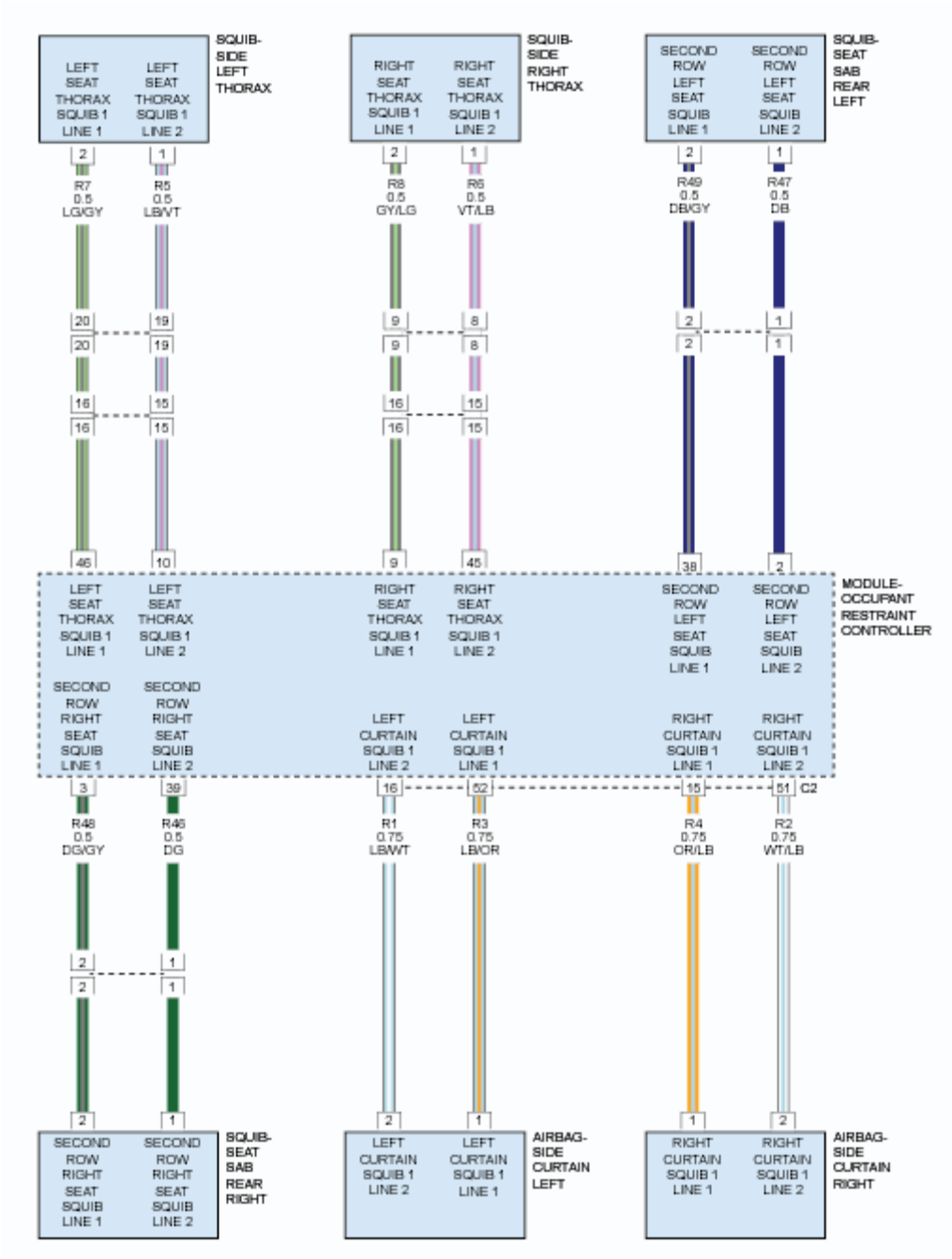

Fig. 53: Side, Thorax & Side Curtain Airbag Squib Circuit Diagram
Courtesy of CHRYSLER GROUP, LLC

THEORY OF OPERATION

When powered, the Occupant Restraint Controller (ORC) sends a test current to the squibs to verify the integrity of the squib and wiring. These circuits are maintained in a "floating" configuration at the module (connected to neither power nor ground) as protection against inadvertent deployment. Use of the (special tool #8443A, SRS Load Tool) in the tests below substitutes a suspect squib with a known good component. The use of the (special tool #8443-57, Adapter, Supplemental Restraint System Load Tool) provides a test point as well

as a method for opening the shorting bar connections within the harness connector. The rear seat airbags (also known as pelvic and thorax airbags) are completely concealed beneath the seat cushion trim cover on the lower outboard sides of the rear seat cushion. The thorax airbag is a single stage device. The thorax side airbags and the side curtain airbags deploy together during an event separate of the front airbags.

WHEN MONITORED

With the ignition on.

SET CONDITION

The Occupant Restraint Controller (ORC) monitors the resistance of the Second Row Right Seat Airbag circuits. If low resistance is detected in the Second Row Right Seat Airbag squib circuits for 2.6 seconds or longer the ORC will set this DTC. The DTC will change from active to stored status if the fault condition is not detected for greater than 2.6 seconds. The Airbag Warning Lamp (AWL) will set in the instrument cluster.

POSSIBLE CAUSES

Possible Causes
(R46) SECOND ROW RIGHT SEAT SQUIB LINE 2 CIRCUIT SHORTED TO GROUND
(R48) SECOND ROW RIGHT SEAT SQUIB LINE 1 CIRCUIT SHORTED TO GROUND
SECOND ROW RIGHT SEAT AIRBAG
OCCUPANT RESTRAINT CONTROLLER (ORC)

Always perform the Pre-Diagnostic Troubleshooting procedure before proceeding. Refer to STANDARD PROCEDURE .

DIAGNOSTIC TEST

1. **DETERMINE ACTIVE OR STORED DTC**

   NOTE: Make sure that the battery is fully charged.

   NOTE: The scan tool, (special tool #8443A, SRS Load Tool), and DVOM are required to perform the following test.

   1. Turn the ignition on.

      Select ACTIVE or STORED DTC:

      ACTIVE DTC

      - Go To 2

      STORED DTC

- Perform the RESTRAINTS SYSTEM INTERMITTENT TEST. Refer to **STANDARD PROCEDURE** .

2. **CHECK FOR SHORTED SQUIB CIRCUITS IN SECOND ROW RIGHT SEAT AIRBAG**

WARNING: Turn the ignition off disconnect the 12-volt battery and wait two minutes before proceeding. Failure to follow these instructions may result in possible serious or fatal injury.

1. Disconnect the Second Row Right Seat Airbag harness connector.

WARNING: Do not place an intact non-deployed Seat Squib Airbag face down on a hard surface, the airbag will propel into the air if accidentally deployed. Failure to follow these instructions may result in possible serious or fatal injury.

NOTE: Check connectors - Clean and repair as necessary.

2. Connect the (special tool #8443A, SRS Load Tool) and the (special tool #8443-8, Jumper, SRS Load) to the Second Row Right Seat Airbag harness connector.
3. If equipped with the standard key ignition, use this ignition on warning.

WARNING: Turn the ignition on, then reconnect the 12-volt battery and wait two minutes before proceeding. Failure to follow these instructions may result in possible serious or fatal injury.

4. If equipped with the keyless ignition, use this ignition on warning.

WARNING: Disconnect the 12-volt battery wait two minutes before proceeding, remove the ORC fuses, connect the 12-volt battery, wait two minutes before proceeding. Cycle the ignition to the On position, then reconnect the ORC fuses. Wait two minutes before proceeding. Failure to follow these instructions may result in possible serious or fatal injury.

5. With the scan tool, read the active ORC DTC.

Does the scan tool display: B0038-11-SECOND ROW RIGHT SIDE AIRBAG DEPLOYMENT CONTROL - CIRCUIT SHORT TO GROUND?

Yes

- Go To 3

No

WARNING: Turn the ignition off, disconnect the 12-volt battery and wait two minutes before proceeding. Failure to follow these instructions may result in possible serious or fatal injury.

- Replace the Second Row Right Seat Airbag in accordance with the Service Information. Refer to **AIR BAG, SEAT, REMOVAL** .
- Perform the RESTRAINTS SYSTEM VERIFICATION TEST. Refer to **STANDARD PROCEDURE** .

3. **CHECK SECOND ROW RIGHT SEAT SQUIB CIRCUITS FOR A SHORT TO GROUND**

WARNING: Turn the ignition off, disconnect the 12-volt battery and wait two minutes before proceeding. Failure to follow these instructions may result in possible serious or fatal injury.

1. Disconnect the (special tool #8443A, SRS Load Tool) and the(special tool #8443-8, Jumper, SRS Load) from the Second Row Right Seat Airbag harness connector.
2. Disconnect the ORC harness connectors.

NOTE: Check connectors - Clean and repair as necessary.

3. Connect the (special tool #8443-57, Adapter, Supplemental Restraint System Load Tool) to the ORC harness connectors.
4. Measure the resistance of the (R46) Second Row Right Seat Squib Line 2 circuit between the (special tool #8443-57, Adapter, Supplemental Restraint System Load Tool) connector C1B cavity 39 and ground.
5. Measure the resistance of the (R48) Second Row Right Seat Squib Line 1 circuit between the (special tool #8443-57, Adapter, Supplemental Restraint System Load Tool) connector C1B cavity 3 and ground.

Is the resistance below 10k Ohms on either circuit?

Yes

- In accordance with the Service Information repair or replace the Second Row Right Seat Airbag squib circuits shorted to ground.
- Perform the RESTRAINTS SYSTEM VERIFICATION TEST. Refer to **STANDARD PROCEDURE** .

No

WARNING: If the Occupant Restraint Controller (ORC) is dropped at any time, it must be replaced. Failure to follow these instructions may result in possible serious or fatal injury.

- Replace the ORC in accordance with Service Information. Refer to **MODULE, OCCUPANT RESTRAINT CONTROLLER, REMOVAL** .
- Perform the RESTRAINTS SYSTEM VERIFICATION TEST. Refer to **STANDARD PROCEDURE** .

2014 RESTRAINTS

Occupant Restraint Controller (ORC) - Electrical Diagnostics - Cherokee

DIAGNOSIS AND TESTING

B0038-12-SECOND ROW RIGHT SIDE AIRBAG DEPLOYMENT CONTROL - CIRCUIT SHORT TO BATTERY

For a complete wiring diagram, **refer to appropriate SYSTEM WIRING DIAGRAMS article** .

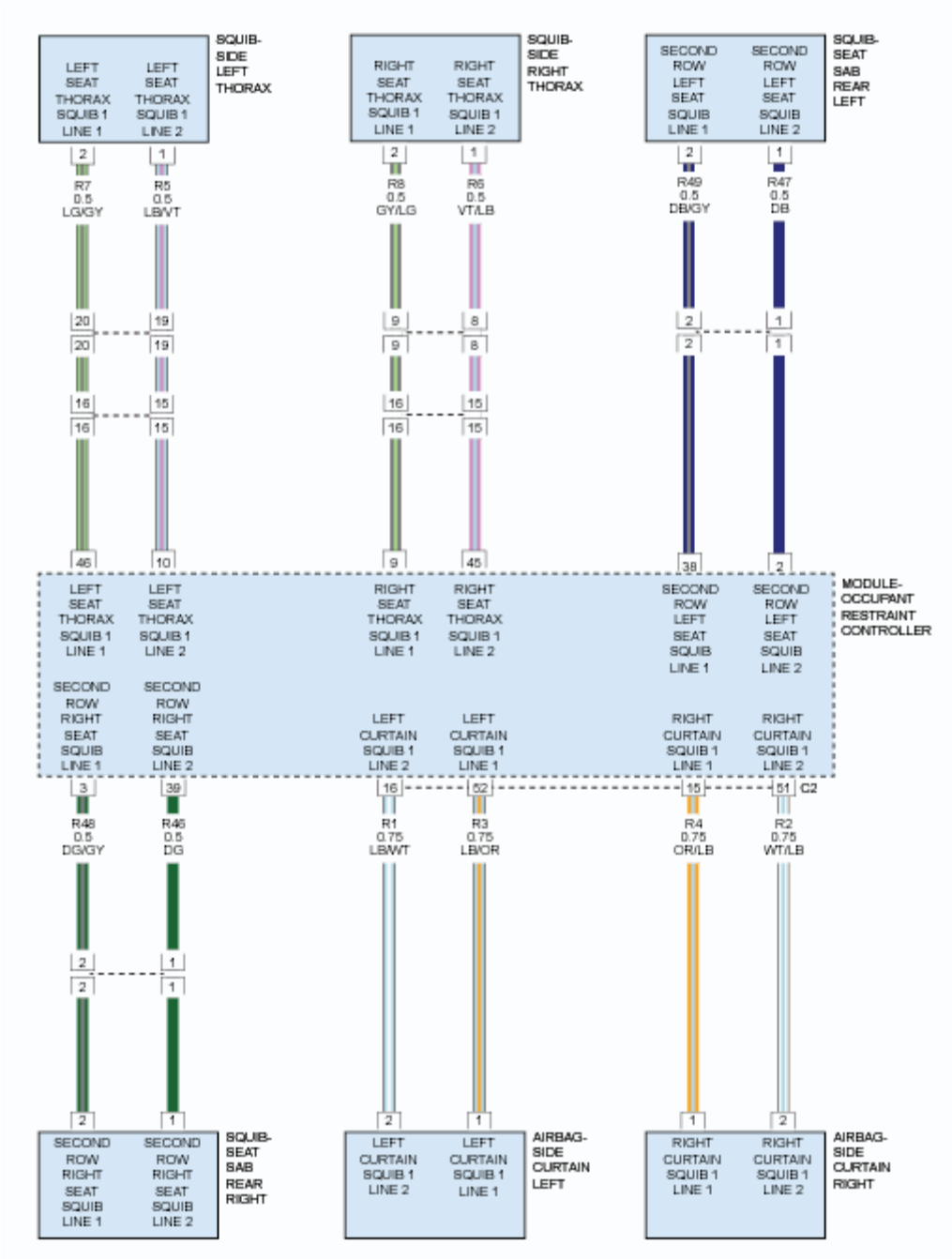

Fig. 1: Seat & Curtain Airbag Squib Circuit Diagram
Courtesy of CHRYSLER GROUP, LLC

THEORY OF OPERATION

When powered, the Occupant Restraint Controller (ORC) sends a test current to the squibs to verify the integrity of the squib and wiring. These circuits are maintained in a "floating" configuration at the module (connected to neither power nor ground) as protection against inadvertent deployment. Use of the (special tool #8443A, SRS Load Tool) in the tests below substitutes a suspect squib with a known good component. The use of the (special tool #8443-57, Adapter, Supplemental Restraint System Load Tool) provides a test point as well

as a method for opening the shorting bar connections within the harness connector. The rear seat airbags (also known as pelvic and thorax airbags) are completely concealed beneath the seat cushion trim cover on the lower outboard sides of the rear seat cushion. The thorax airbag is a single stage device. The thorax side airbags and the side curtain airbags deploy together during an event separate of the front airbags.

WHEN MONITORED

With the ignition on.

SET CONDITION

The Occupant Restraint Controller (ORC) monitors the voltage on the Second Row Right Seat Airbag circuits. If voltage is detected on the Second Row Right Seat Airbag circuits for greater than 2.6 seconds the ORC will set this DTC. The DTC will change from active to stored status when the fault condition is not detected for greater than 2.6 seconds. The Airbag Warning Lamp (AWL) will set in the instrument cluster.

POSSIBLE CAUSES

Possible Causes
(R46) SECOND ROW RIGHT SEAT SQUIB LINE 2 CIRCUIT SHORTED TO BATTERY
(R48) SECOND ROW RIGHT SEAT SQUIB LINE 1 CIRCUIT SHORTED TO BATTERY
SECOND ROW RIGHT SEAT AIRBAG
OCCUPANT RESTRAINT CONTROLLER (ORC)

Always perform the Pre-Diagnostic Troubleshooting procedure before proceeding. Refer to STANDARD PROCEDURE .

DIAGNOSTIC TEST

1. **DETERMINE ACTIVE OR STORED DTC**

   NOTE: Make sure that the battery is fully charged.

   NOTE: The scan tool, (special tool #8443A, SRS Load Tool), and DVOM are required to perform the following test.

   1. Turn the ignition on.

      Select ACTIVE or STORED DTC:

      ACTIVE DTC

      - Go To 2

      STORED DTC

- Perform the RESTRAINTS SYSTEM INTERMITTENT TEST. Refer to **STANDARD PROCEDURE** .

2. **CHECK FOR SHORTED SQUIB CIRCUITS IN SECOND ROW RIGHT SEAT AIRBAG**

WARNING: Turn the ignition off disconnect the 12-volt battery and wait two minutes before proceeding. Failure to follow these instructions may result in possible serious or fatal injury.

1. Disconnect the Second Row Right Seat Airbag harness connector.

WARNING: Do not place an intact non-deployed Seat Squib Airbag face down on a hard surface, the airbag will propel into the air if accidentally deployed. Failure to follow these instructions may result in possible serious or fatal injury.

NOTE: Check connectors - Clean and repair as necessary.

2. Connect the (special tool #8443A, SRS Load Tool) and the (special tool #8443-8, Jumper, SRS Load) to the Second Row Right Seat Airbag harness connector.
3. If equipped with the standard key ignition, use this ignition on warning.

WARNING: Turn the ignition on, then reconnect the 12-volt battery and wait two minutes before proceeding. Failure to follow these instructions may result in possible serious or fatal injury.

4. If equipped with the keyless ignition, use this ignition on warning.

WARNING: Disconnect the 12-volt battery wait two minutes before proceeding, remove the ORC fuses, connect the 12-volt battery, wait two minutes before proceeding. Cycle the ignition to the On position, then reconnect the ORC fuses. Wait two minutes before proceeding. Failure to follow these instructions may result in possible serious or fatal injury.

5. With the scan tool, read the active ORC DTC.

Does the scan tool display: B0038-12-SECOND ROW RIGHT SIDE AIRBAG DEPLOYMENT CONTROL - CIRCUIT SHORT TO BATTERY?

Yes

- Go To 3

No

WARNING: Turn the ignition off, disconnect the 12-volt battery and wait two minutes before proceeding. Failure to follow these instructions may result in possible serious or fatal injury.

- Replace the Second Row Right Seat Airbag in accordance with the Service Information. Refer to **AIR BAG, SEAT, REMOVAL** .
- Perform the RESTRAINTS SYSTEM VERIFICATION TEST. Refer to **STANDARD PROCEDURE** .

3. **CHECK SECOND ROW RIGHT SEAT SQUIB CIRCUITS FOR A SHORT TO BATTERY**

WARNING: Turn the ignition off, disconnect the 12-volt battery and wait two minutes before proceeding. Failure to follow these instructions may result in possible serious or fatal injury.

1. Disconnect the (special tool #8443A, SRS Load Tool) and the(special tool #8443-8, Jumper, SRS Load) from the Second Row Right Seat Airbag harness connector.
2. Disconnect the ORC harness connectors.

NOTE: Check connectors - Clean and repair as necessary.

3. Connect the (special tool #8443-57, Adapter, Supplemental Restraint System Load Tool) to the ORC harness connectors.
4. Measure the voltage of the (R46) Second Row Right Seat Squib 1 Line 2 circuit between the (special tool #8443-57, Adapter, Supplemental Restraint System Load Tool) connector C1B cavity 39 and ground.
5. Measure the voltage of the (R48) Second Row Right Seat Squib 1 Line 1 circuit between the (special tool #8443-57, Adapter, Supplemental Restraint System Load Tool) connector C1B cavity 3 and ground.

Is there voltage on either circuit?

Yes

- In accordance with the Service Information repair or replace the Second Row Right Seat Airbag Squib circuits shorted to voltage.
- Perform the RESTRAINTS SYSTEM VERIFICATION TEST. Refer to **STANDARD PROCEDURE** .

No

WARNING: If the Occupant Restraint Controller (ORC) is dropped at any time, it must be replaced. Failure to follow these instructions may result in possible serious or fatal injury.

- Replace the ORC in accordance with Service Information. Refer to **MODULE, OCCUPANT RESTRAINT CONTROLLER, REMOVAL** .
- Perform the RESTRAINTS SYSTEM VERIFICATION TEST. Refer to **STANDARD PROCEDURE** .

B0038-13-SECOND ROW RIGHT SIDE AIRBAG DEPLOYMENT CONTROL - CIRCUIT OPEN

For a complete wiring diagram, **refer to appropriate SYSTEM WIRING DIAGRAMS article** .

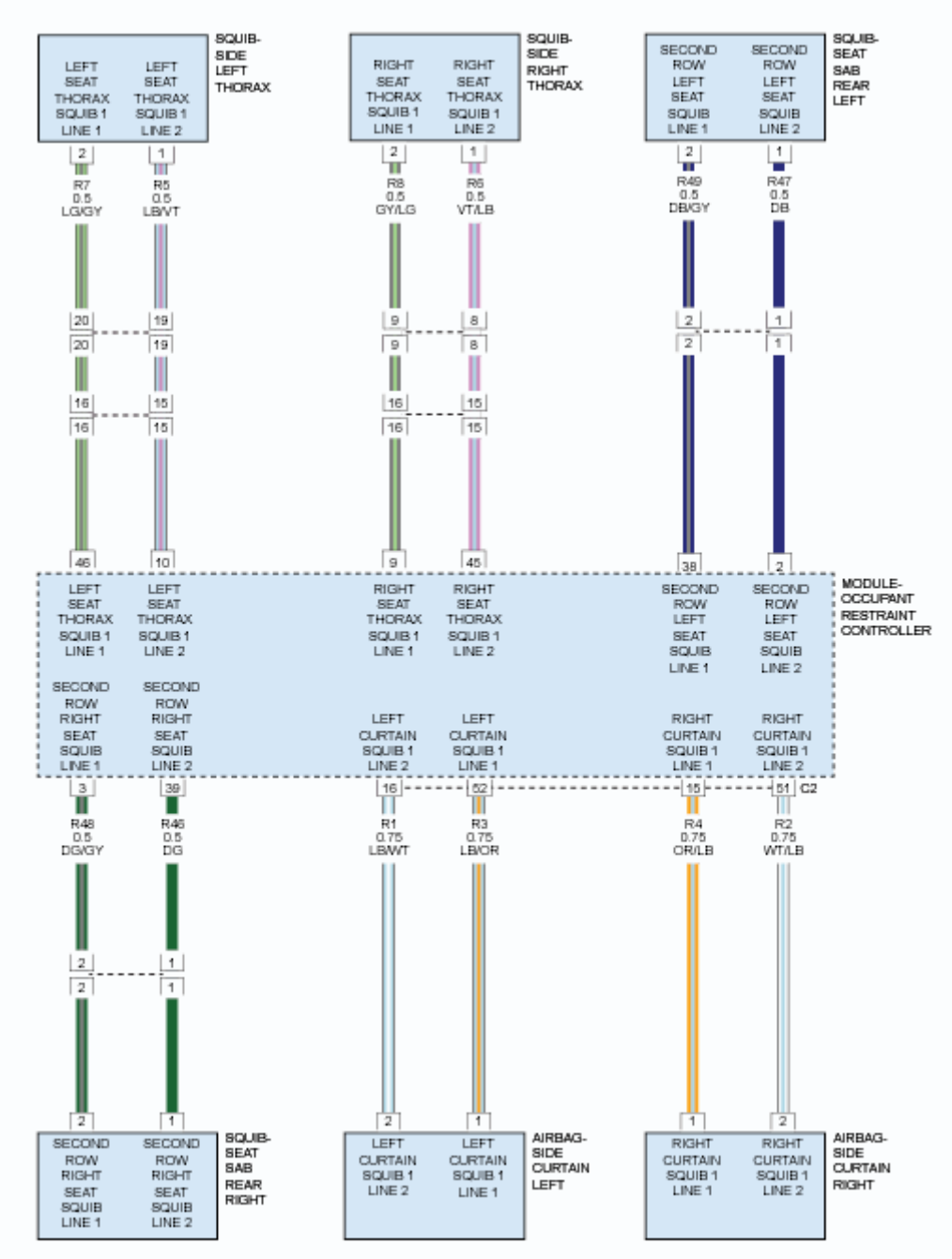

Fig. 2: Seat & Curtain Airbag Squib Circuit Diagram
Courtesy of CHRYSLER GROUP, LLC

THEORY OF OPERATION

When powered, the Occupant Restraint Controller (ORC) sends a test current to the squibs to verify the integrity of the squib and wiring. These circuits are maintained in a "floating" configuration at the module (connected to neither power nor ground) as protection against inadvertent deployment. Use of the (special tool #8443A, SRS Load Tool) in the tests below substitutes a suspect squib with a known good component. The use of the (special tool #8443-57, Adapter, Supplemental Restraint System Load Tool) provides a test point as well as a method for opening the shorting bar connections within the harness connector. The rear seat airbags (also known as pelvic and thorax airbags) are completely concealed beneath the seat cushion trim cover on the lower outboard sides of the rear seat cushion. The thorax airbag is a single stage device. The thorax side airbags and the side curtain airbags deploy together during an event separate of the front airbags.

WHEN MONITORED

With the ignition on.

SET CONDITION

This Diagnostic Trouble Code (DTC) sets when the ORC detects a open on the Second Row Right Seat Airbag squib circuits for more than 2.6 seconds. This DTC transitions from active to stored when the ORC sees a recovery from a open for greater than 2.6 seconds. The Airbag Warning Lamp (AWL) will set in the instrument cluster.

POSSIBLE CAUSES

Possible Causes
(R46) SECOND ROW RIGHT SEAT SQUIB LINE 2 CIRCUIT OPEN
(R48) SECOND ROW RIGHT SEAT SQUIB LINE 1 CIRCUIT OPEN
SECOND ROW RIGHT SEAT AIRBAG
OCCUPANT RESTRAINT CONTROLLER (ORC)

Always perform the Pre-Diagnostic Troubleshooting procedure before proceeding. Refer to STANDARD PROCEDURE .

DIAGNOSTIC TEST

1. **DETERMINE ACTIVE OR STORED DTC**

NOTE: **Make sure that the battery is fully charged.**

NOTE: **The scan tool, (special tool #8443A, SRS Load Tool), and DVOM are required to perform the following test.**

1. Turn the ignition on.

   Select ACTIVE or STORED DTC:

   ACTIVE DTC

   - Go To 2

   STORED DTC

   - Perform the RESTRAINTS SYSTEM INTERMITTENT TEST. Refer to **STANDARD PROCEDURE** .

2. **CHECK FOR OPEN SQUIB CIRCUITS IN SECOND ROW RIGHT SEAT AIRBAG**

   WARNING: **Turn the ignition off disconnect the 12-volt battery and wait two minutes before proceeding. Failure to follow these instructions may result in possible serious or fatal injury.**

   1. Disconnect the Second Row Right Seat Airbag harness connector.

      WARNING: **To avoid serious or fatal injury, do not place an intact uncoupled Seat Squib Airbag face down on a hard surface, the airbag will propel into the air if accidentally deployed.**

      NOTE: **Check connectors - Clean and repair as necessary.**

   2. Connect the (special tool #8443A, SRS Load Tool) and the (special tool #8443-8, Jumper, SRS Load) to the Second Row Right Seat Airbag harness connector.
   3. If equipped with the standard key ignition, use this ignition on warning.

      WARNING: **Turn the ignition on, then reconnect the 12-volt battery and wait two minutes before proceeding. Failure to follow these instructions may result in possible serious or fatal injury.**

   4. If equipped with the keyless ignition, use this ignition on warning.

      WARNING: **Disconnect the 12-volt battery wait two minutes before proceeding, remove the ORC fuses, connect the 12-volt battery, wait two minutes before proceeding. Cycle the ignition to the On position, then reconnect the ORC fuses. Wait two minutes before proceeding. Failure to follow these instructions may result in possible serious or fatal injury.**

   5. With the scan tool, read the active ORC DTC.

Does the scan tool display: B0038-13-SECOND ROW RIGHT SIDE AIRBAG DEPLOYMENT CONTROL - CIRCUIT OPEN?

Yes

- Go To 3

No

WARNING: Turn the ignition off, disconnect the 12-volt battery and wait two minutes before proceeding. Failure to follow these instructions may result in possible serious or fatal injury.

- Replace the Second Row Right Seat Airbag in accordance with the Service Information. Refer to **AIR BAG, SEAT, REMOVAL** .
- Perform the RESTRAINTS SYSTEM VERIFICATION TEST. Refer to **STANDARD PROCEDURE** .

3. **CHECK (R48) SECOND ROW RIGHT SEAT SQUIB LINE 1 CIRCUIT FOR AN OPEN**

WARNING: Turn the ignition off, disconnect the 12-volt battery and wait two minutes before proceeding. Failure to follow these instructions may result in possible serious or fatal injury.

1. Disconnect the (special tool #8443A, SRS Load Tool) and (special tool #8443-8, Jumper, SRS Load) from the Second Row Right Seat Airbag harness connector.
2. Disconnect the ORC harness connectors.

NOTE: Check connectors - Clean and repair as necessary.

3. Connect the (special tool #8443-57, Adapter, Supplemental Restraint System Load Tool) to the ORC harness connectors.
4. Measure the resistance of the (R48) Second Row Right Seat Squib Line 1 circuit between the Second Row Right Seat Airbag connector cavity 2 and the (special tool #8443-57, Adapter, Supplemental Restraint System Load Tool)connector C1B cavity 3.

Is the resistance below or within 5.4 - 10.0 Ohm?

Yes

- Go To 4

No

- In accordance with the Service Information repair or replace the open Second Row Right

Seat Airbag Squib circuit.

- Perform the RESTRAINTS SYSTEM VERIFICATION TEST. Refer to **STANDARD PROCEDURE** .

4. **CHECK (R46) SECOND ROW RIGHT SEAT SQUIB LINE 2 CIRCUIT FOR AN OPEN**
   1. Measure the resistance of the (R46) Second Row Right Seat Squib Line 2 circuit between the Second Row Right Seat Squib Airbag connector cavity 1 and the (special tool #8443-57, Adapter, Supplemental Restraint System Load Tool) connector C1B cavity 39.

      Is the resistance below or within 5.4 - 10.0 Ohm?

      Yes

      WARNING: **If the Occupant Restraint Controller (ORC) is dropped at any time, it must be replaced. Failure to take the proper precautions can result in accidental airbag deployment. Failure to follow these instructions may result in possible serious or fatal injury.**

      - Replace the ORC in accordance with Service Information. Refer to **MODULE, OCCUPANT RESTRAINT CONTROLLER, REMOVAL** .
      - Perform the RESTRAINTS SYSTEM VERIFICATION TEST. Refer to **STANDARD PROCEDURE** .

      No

      - In accordance with the Service Information repair or replace the open Second Row Right Seat Airbag Squib circuit.
      - Perform the RESTRAINTS SYSTEM VERIFICATION TEST. Refer to **STANDARD PROCEDURE** .

B0038-2B-SECOND ROW RIGHT SIDE AIRBAG DEPLOYMENT CONTROL - WIRES SHORTED TOGETHER

For a complete wiring diagram, **refer to appropriate SYSTEM WIRING DIAGRAMS article** .

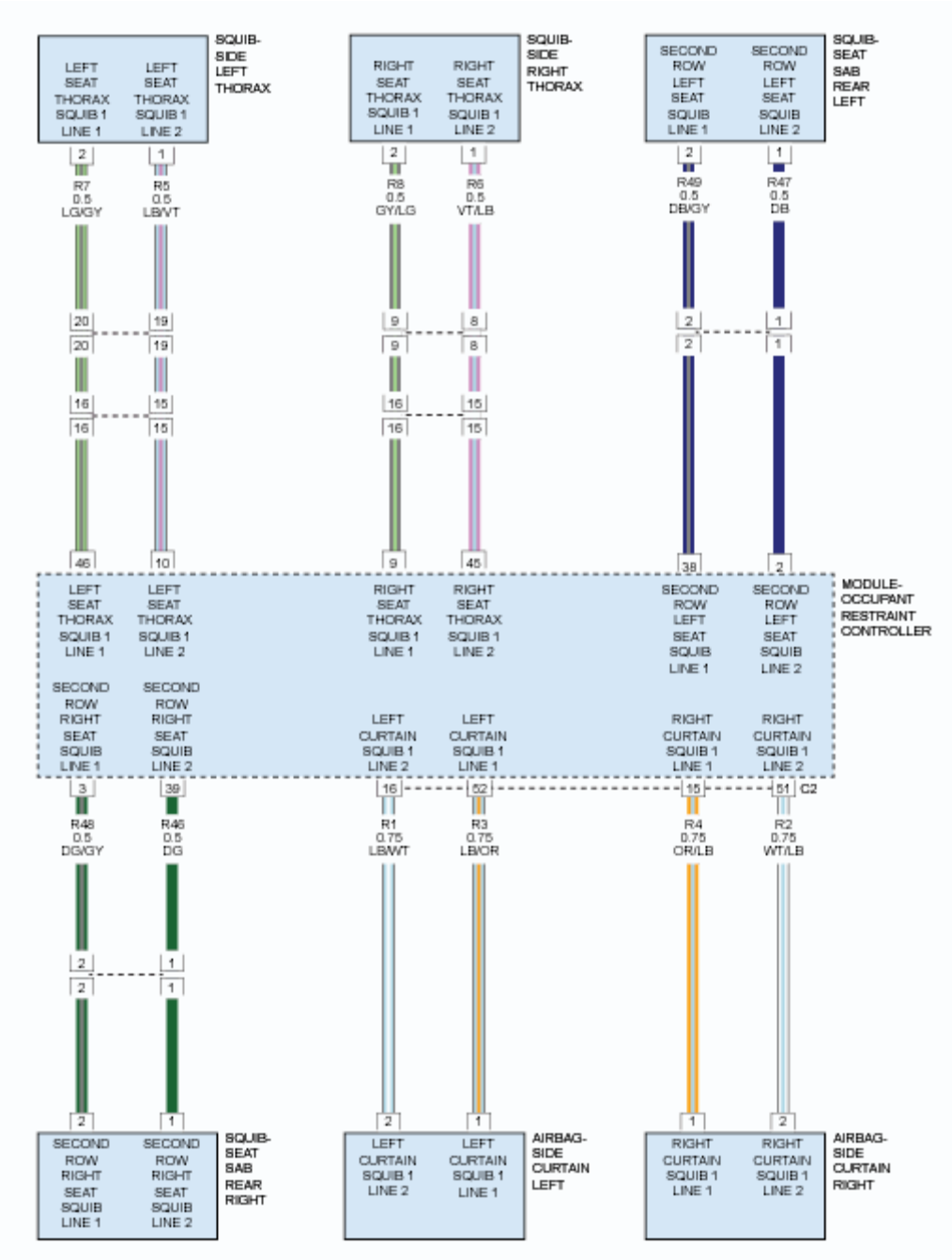

Fig. 3: Seat & Curtain Airbag Squib Circuit Diagram
Courtesy of CHRYSLER GROUP, LLC

THEORY OF OPERATION

When powered, the Occupant Restraint Controller (ORC) sends a test current to the squibs to verify the integrity of the squib and wiring. These circuits are maintained in a "floating" configuration at the module (connected to neither power nor ground) as protection against inadvertent deployment. Use of the (special tool #8443A, SRS Load Tool) in the tests below substitutes a suspect squib with a known good component. The use of the (special tool #8443-57, Adapter, Supplemental Restraint System Load Tool) provides a test point as well

as a method for opening the shorting bar connections within the harness connector. The rear seat airbags (also known as pelvic and thorax airbags) are completely concealed beneath the seat cushion trim cover on the lower outboard sides of the rear seat cushion. The thorax airbag is a single stage device. The thorax side airbags and the side curtain airbags deploy together during an event separate of the front airbags.

WHEN MONITORED

With the ignition on.

SET CONDITION

The Occupant Restraint Controller (ORC) monitors the resistance of the Second Row Right Seat Airbag Squib 1 circuits. If low resistance is detected for 2.6 seconds or longer between the Second Row Right Seat Squib circuits the ORC will set this DTC. If the shorted together fault condition is not detected for 2.6 seconds the DTC will change from Active to Stored status. The Airbag Warning Lamp (AWL) will set in the instrument cluster.

POSSIBLE CAUSES

Possible Causes
(R46) SECOND ROW RIGHT SEAT SQUIB LINE 2 CIRCUIT SHORTED TO (R48) SECOND ROW RIGHT SEAT SQUIB LINE 1 CIRCUIT
SECOND ROW RIGHT SEAT AIRBAG
OCCUPANT RESTRAINT CONTROLLER (ORC)

Always perform the Pre-Diagnostic Troubleshooting procedure before proceeding. Refer to STANDARD PROCEDURE .

DIAGNOSTIC TEST

1. **DETERMINE ACTIVE OR STORED DTC**

   NOTE: Make sure that the battery is fully charged.

   NOTE: The scan tool, (special tool #8443A, SRS Load Tool), and DVOM are required to perform the following test.

   1. Turn the ignition on.

      Select ACTIVE or STORED DTC:

      ACTIVE DTC

      - Go To 2

STORED DTC

- Perform the RESTRAINTS SYSTEM INTERMITTENT TEST. Refer to **STANDARD PROCEDURE** .

2. **CHECK FOR SHORTED SQUIB CIRCUITS IN SECOND ROW RIGHT SEAT AIRBAG**

WARNING: Turn the ignition off disconnect the 12-volt battery and wait two minutes before proceeding. Failure to follow these instructions may result in possible serious or fatal injury.

1. Disconnect the Second Row Right Seat Airbag harness connector.

WARNING: Do not place an intact non-deployed Seat Squib Airbag face down on a hard surface, the airbag will propel into the air if accidentally deployed. Failure to follow these instructions may result in possible serious or fatal injury.

NOTE: Check connectors - Clean and repair as necessary.

2. Connect the (special tool #8443A, SRS Load Tool) and the (special tool #8443-8, Jumper, SRS Load) to the Second Row Right Seat Airbag harness connector.
3. If equipped with the standard key ignition, use this ignition on warning.

WARNING: Turn the ignition on, then reconnect the 12-volt battery and wait two minutes before proceeding. Failure to follow these instructions may result in possible serious or fatal injury.

4. If equipped with the keyless ignition, use this ignition on warning.

WARNING: Disconnect the 12-volt battery wait two minutes before proceeding, remove the ORC fuses, connect the 12-volt battery, wait two minutes before proceeding. Cycle the ignition to the On position, then reconnect the ORC fuses. Wait two minutes before proceeding. Failure to follow these instructions may result in possible serious or fatal injury.

5. With the scan tool, read the active ORC DTC.

Does the scan tool display: B0038-2B-SECOND ROW RIGHT SIDE AIRBAG DEPLOYMENT CONTROL - WIRES SHORTED TOGETHER?

Yes

- Go To 3

No

WARNING: Turn the ignition off, disconnect the 12-volt battery and wait two minutes before proceeding. Failure to follow these instructions may result in possible serious or fatal injury.

- Replace the Second Row Right Seat Airbag in accordance with the Service Information. Refer to **AIR BAG, SEAT, REMOVAL** .
- Perform the RESTRAINTS SYSTEM VERIFICATION TEST. Refer to **STANDARD PROCEDURE** .

3. **CHECK (R46) SECOND ROW RIGHT SEAT SQUIB 1 LINE 2 CIRCUIT FOR A SHORT TO (R48) SECOND ROW RIGHT SEAT SQUIB LINE 1 CIRCUIT**

WARNING: Turn the ignition off, disconnect the 12-volt battery and wait two minutes before proceeding. Failure to follow these instructions may result in possible serious or fatal injury.

1. Disconnect the (special tool #8443A, SRS Load Tool) and the (special tool #8443-8, Jumper, SRS Load)from the Second Row Right Seat Airbag harness connector.
2. Disconnect the ORC harness connectors.

NOTE: Check connectors - Clean and repair as necessary.

3. Connect the (special tool #8443-57, Adapter, Supplemental Restraint System Load Tool) to the ORC harness connectors.
4. Measure the resistance between the (R46) Second Row Right Seat Squib Line 2 circuit connector C1B cavity 39 and the (R48) Second Row Right Seat Squib Line 1 circuit connector C1B cavity 3 at the (special tool #8443-57, Adapter, Supplemental Restraint System Load Tool).

Is the resistance below or within 1.5 - 2.18 Ohm?

Yes

- In accordance with the Service Information repair or replace the Second Row Right Seat Airbag Squib circuits (R46) and (R48) shorted together.
- Perform the RESTRAINTS SYSTEM VERIFICATION TEST. Refer to **STANDARD PROCEDURE** .

No

WARNING: If the Occupant Restraint Controller (ORC) is dropped at any time, it must be replaced. Failure to follow these instructions may result in possible serious or fatal injury.

- Replace the ORC in accordance with Service Information. Refer to **MODULE, OCCUPANT RESTRAINT CONTROLLER, REMOVAL** .
- Perform the RESTRAINTS SYSTEM VERIFICATION TEST. Refer to **STANDARD PROCEDURE** .

B0050-11-DRIVER SEATBELT SENSOR - CIRCUIT SHORT TO GROUND

For a complete wiring diagram, **refer to appropriate SYSTEM WIRING DIAGRAMS article** .

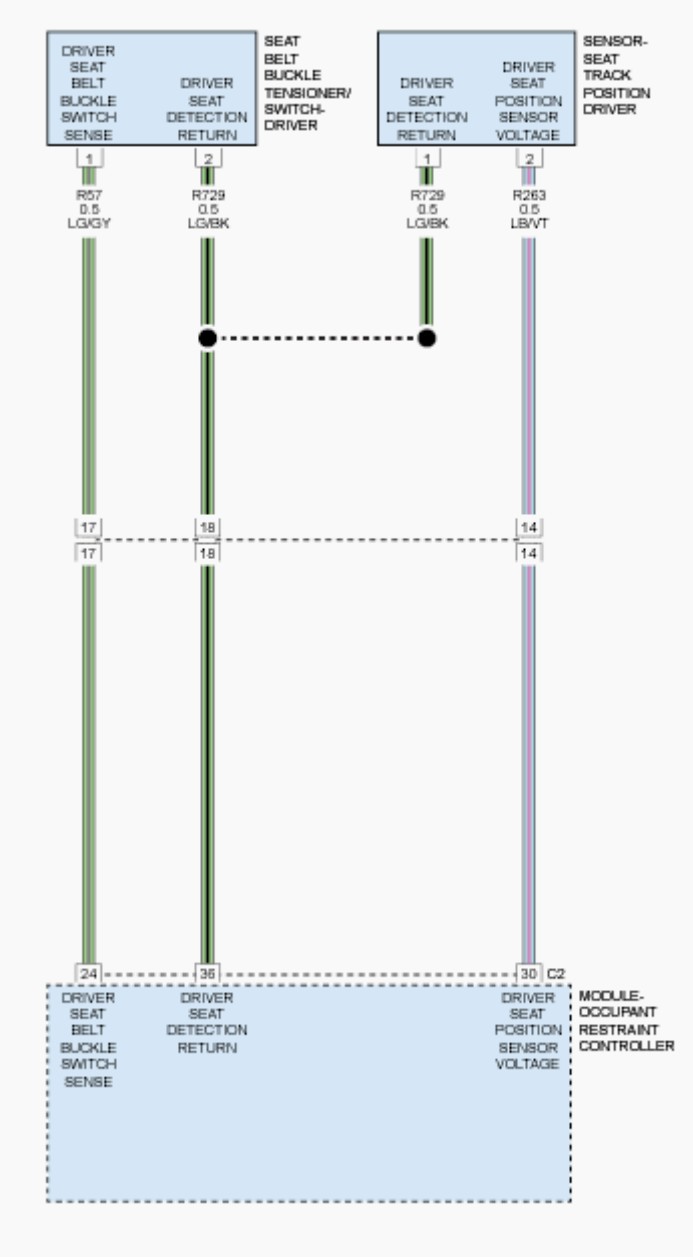

Fig. 4: Driver Seatbelt & Seat Track Position Sensor Circuit Diagram
Courtesy of CHRYSLER GROUP, LLC

THEORY OF OPERATION

When powered, the Occupant Restraint Controller (ORC) sends a test current across the Driver Seat Belt Buckle Switch circuits to verify the integrity of the switch and wiring. The front seat belt switches cannot be adjusted or repaired and, if ineffective or damaged, the entire front seat belt buckle-half unit must be replaced. The seatbelt reminder lamp will display in the instrument cluster for this fault. The ORC obtains the buckle switch status of the driver and front passenger, as well as the status of the front passenger seat occupant detection mat. If the driver or front passenger is unbelted, the ORC sends a message to the IPC over the CAN-B bus to turn on the seatbelt reminder light. The light remains on until the front seatbelts are fastened. An audible alert triggers within 60 seconds of vehicle speed over 5 mph. The seatbelt reminder light remains illuminated until the front belts are fastened. The seatbelt buckle switch consists of a Hall-effect sensor assembly. The ORC determines the status of the seatbelt (buckled/unbuckled) based on the amount of current drawn by the sensor. When the seatbelt is unbuckled, the sensor draws a current of approximately 6.5 mA. When the seat is buckled, the sensor draws a current of approximately 15 mA.

WHEN MONITORED

While the ignition on and the Occupant Restraint Controller (ORC) is configured for a Driver Seat Belt Switch, the ORC checks the switch input current ranges. The ORC monitors the switch input current ranges at power up and continuously every 100ms.

SET CONDITION

If the ORC detects the driver seat belt buckle switch circuits have been shorted to ground or driver seat belt switch signal and common return circuits are shorted together for 2.5 seconds. This DTC transitions from active to stored when the module sees a recovery from the shorted to ground or shorted together condition for greater than five seconds.

POSSIBLE CAUSES

Possible Causes
(R57) DRIVER SEAT BELT SWITCH SENSE SHORTED TO GROUND
(R57) DRIVER SEAT BELT SWITCH SENSE CIRCUIT SHORTED TO (R729) FIRST ROW DRIVER SEAT DETECTION RETURN CIRCUIT
DRIVER SEAT BELT BUCKLE SWITCH
OCCUPANT RESTRAINT CONTROLLER (ORC)

Always perform the Pre-Diagnostic Troubleshooting procedure before proceeding. Refer to STANDARD PROCEDURE .

DIAGNOSTIC TEST

1. **VERIFY ACTIVE DTC**

NOTE: Make sure the battery is fully charged.

1. Turn the ignition on.
2. With the scan tool, read ORC DTCs.

   Does the scan tool display active B0050-11-DRIVER SEATBELT SENSOR - CIRCUIT SHORT TO GROUND DTC?

   Yes

   - Go To 2

   No

   - Perform the RESTRAINTS SYSTEM INTERMITTENT TEST. Refer to **STANDARD PROCEDURE** .

2. **CHECK DRIVER SEAT BELT BUCKLE SWITCH CIRCUITS FOR A SHORT TO GROUND**

   WARNING: **Turn the ignition off, disconnect the 12-volt battery and wait two minutes before proceeding. Failure to follow these instructions may result in possible serious or fatal injury.**

   1. Disconnect the Driver Seat Belt Buckle Switch harness connector.

      NOTE: Check connectors - Clean and repair as necessary.

   2. Measure the resistance of the (R57) Driver Seat Belt Buckle Switch Sense circuit between terminal 1 of the Driver Seat Belt Buckle Switch harness connector and ground.
   3. Measure the resistance of the (R729) First Row Driver Seat Detection Return circuit between terminal 2 of the Driver Seat Belt Switch harness connector and ground.

      Is the resistance below 10k Ohms on any of these circuits?

      Yes

      - Repair the (R57) or (R729) Driver Seat Belt Buckle Switch circuits for a short to ground in accordance with the Service Information.
      - Perform the RESTRAINTS SYSTEM VERIFICATION TEST. Refer to **STANDARD PROCEDURE** .

      No

      - Go To 3

3. **CHECK (R57) DRIVER SEAT BELT SWITCH SENSE CIRCUIT FOR A SHORT TO THE (R729) FIRST ROW DRIVER SEAT DETECTION RETURN CIRCUIT**
   1. Measure the resistance between the (R57) Driver Seat Belt Buckle Switch Sense circuit and (R729)

First Row Driver Seat Detection Return circuit at the appropriate terminals of the Driver Seat Belt Buckle Switch harness connector.

Is the resistance below 5k Ohms?

Yes

NOTE: If the short is found in the Seat Harness, do not attempt to repair the Seat Harness. Replace the Seat Harness in accordance with the Service Information.

- Repair the (R57) Driver Seat Belt Buckle Switch Sense circuit for a short to the (R729) First Row Driver Seat Detection Return circuit in accordance with the Service Information.
- Perform the RESTRAINTS SYSTEM VERIFICATION TEST. Refer to **STANDARD PROCEDURE** .

No

- Go To 4

4. **CHECK OPERATION OF THE DRIVER SEAT BELT BUCKLE SWITCH**
   1. Replace the Driver Seat Belt Buckle Switch in accordance with the Service Information. Refer to **BUCKLE, SEAT BELT, REMOVAL** .
   2. Reconnect the vehicle body harness connector to the Driver Seat Belt Buckle Switch.
   3. Remove any special tools or jumper wires and reconnect all previously disconnected components - except the Battery.
   4. If equipped with the standard key ignition, use this ignition on warning.

      WARNING: Turn the ignition on, then reconnect the 12-volt battery and wait two minutes before proceeding. Failure to follow these instructions may result in possible serious or fatal injury.

   5. If equipped with the keyless ignition, use this ignition on warning.

      WARNING: Disconnect the 12-volt battery wait two minutes before proceeding, remove the ORC fuses, connect the 12-volt battery, wait two minutes before proceeding. Cycle the ignition to the On position, then reconnect the ORC fuses. Wait two minutes before proceeding. Failure to follow these instructions may result in possible serious or fatal injury.

   6. Connect the scan tool to the Data Link Connector - use the most current software available.
   7. Use the scan tool and erase the stored codes in all airbag system modules.
   8. Turn the Ignition OFF, and wait 15 seconds before turning the Ignition ON.

9. Wait one minute, and read active DTCs and if there are none present read the stored DTCs.

   Does the scan tool display active B0050-11-DRIVER SEATBELT SENSOR - CIRCUIT SHORT TO GROUND DTC?

   Yes

   WARNING: Turn the ignition off, disconnect the 12-volt battery and wait two minutes before proceeding. Failure to follow these instructions may result in possible serious or fatal injury.

   WARNING: If the Occupant Restraint Controller (ORC) is dropped at any time, it must be replaced. Failure to follow these instructions may result in possible serious or fatal injury.

   - Replace the Occupant Restrain Controller (ORC) in accordance with the Service Information. Refer to **MODULE, OCCUPANT RESTRAINT CONTROLLER, REMOVAL** .
   - Perform the RESTRAINTS SYSTEM VERIFICATION TEST. Refer to **STANDARD PROCEDURE** .

   No

   - Repair is complete.
   - Perform the RESTRAINTS SYSTEM VERIFICATION TEST. Refer to **STANDARD PROCEDURE** .

B0050-12-DRIVER SEATBELT SENSOR - CIRCUIT SHORT TO BATTERY

For a complete wiring diagram, **refer to appropriate SYSTEM WIRING DIAGRAMS article** .

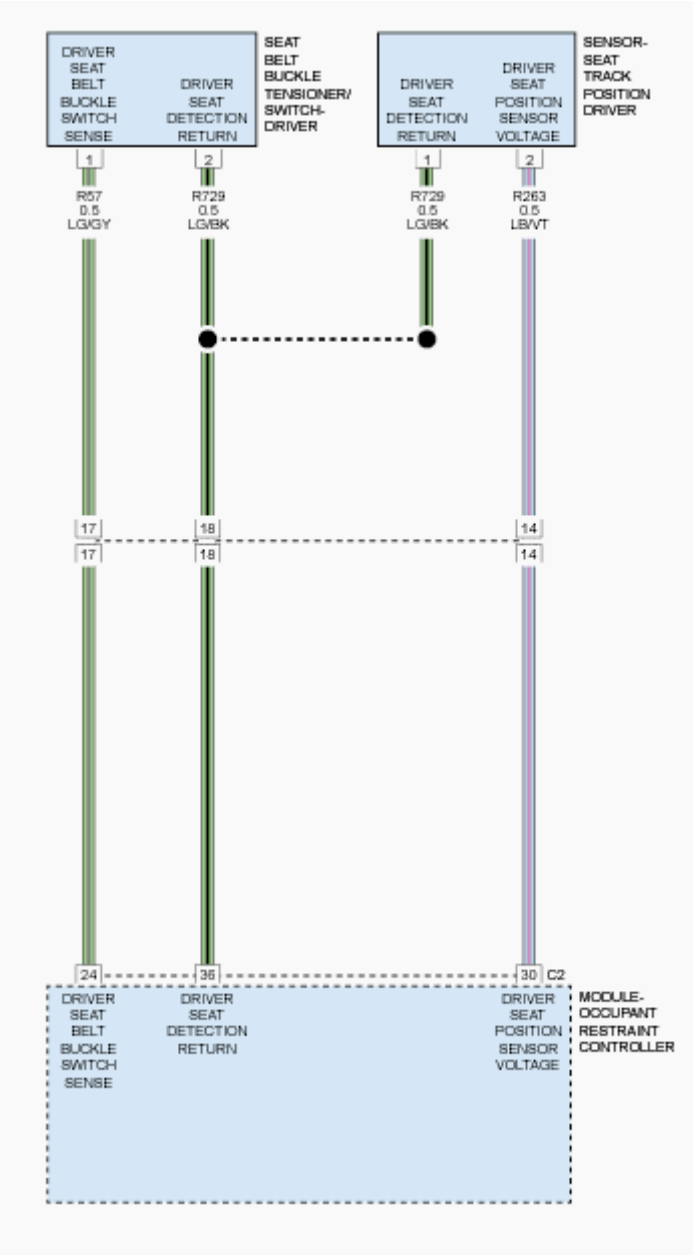

Fig. 5: Driver Seatbelt & Seat Track Position Sensor Circuit Diagram
Courtesy of CHRYSLER GROUP, LLC

THEORY OF OPERATION

When powered, the Occupant Restraint Controller (ORC) sends a test current across the Driver Seat Belt Buckle Switch circuits to verify the integrity of the switch and wiring. The front seat belt switches cannot be adjusted or repaired and, if ineffective or damaged, the entire front seat belt buckle-half unit must be replaced. The seatbelt reminder lamp will display in the instrument cluster for this fault. The ORC obtains the buckle switch status of the driver and front passenger, as well as the status of the front passenger seat occupant detection mat. If the driver or front passenger is unbelted, the ORC sends a message to the IPC over the CAN-B bus to turn on the seatbelt reminder light. The light remains on until the front seatbelts are fastened. An audible

alert triggers within 60 seconds of vehicle speed over 5 mph. The seatbelt reminder light remains illuminated until the front belts are fastened. The seatbelt buckle switch consists of a Hall-effect sensor assembly. The ORC determines the status of the seatbelt (buckled/unbuckled) based on the amount of current drawn by the sensor. When the seatbelt is unbuckled, the sensor draws a current of approximately 6.5 mA. When the seat is buckled, the sensor draws a current of approximately 15 mA.

WHEN MONITORED

The ORC monitors the status of the seat belt switch circuits at power up and every 60 ms thereafter while the ignition is in on.

SET CONDITION

This DTC sets when the ORC detects the seat belt switch circuits have become shorted to voltage for more than 2.5 seconds. This DTC transitions from active to stored when the module sees a recovery from the shorted to voltage condition for greater than five seconds. The seatbelt reminder lamp will illuminate in the instrument cluster and an audible alert triggers within a 60 second cyle.

POSSIBLE CAUSES

Possible Causes
(R57) DRIVER SEAT BELT BUCKLE SWITCH SENSE CIRCUIT SHORTED TO VOLTAGE
(R729) FIRST ROW DRIVER SEAT DETECTION RETURN CIRCUIT SHORTED TO VOLTAGE
(R57) DRIVER SEAT BELT BUCKLE SWITCH SENSE CIRCUIT OPEN
(R729) FIRST ROW DRIVER SEAT DETECTION RETURN CIRCUIT OPEN
DRIVER SEAT BELT BUCKLE SWITCH
OCCUPANT RESTRAINT CONTROLLER (ORC)

Always perform the Pre-Diagnostic Troubleshooting procedure before proceeding. Refer to STANDARD PROCEDURE .

DIAGNOSTIC TEST

1. **VERIFY ACTIVE DTC**

   NOTE: Make sure the battery is fully charged.

   1. Turn the ignition on.
   2. With the scan tool, read ORC DTC.

      Does the scan tool display active B0050-12-DRIVER SEATBELT SENSOR - CIRCUIT SHORT TO BATTERY DTC?

      Yes

- Go To 2

No

- Perform the RESTRAINTS SYSTEM INTERMITTENT TEST. Refer to **STANDARD PROCEDURE** .

2. **DRIVER SEAT BELT BUCKLE SWITCH SHORTED TO VOLTAGE**

WARNING: Turn the ignition off, disconnect the 12-volt battery and wait two minutes before proceeding. Failure to follow these instructions may result in possible serious or fatal injury.

1. Disconnect the Driver Seat Belt Buckle Switch harness connector.

NOTE: Check connectors - Clean and repair as necessary.

2. If equipped with the standard key ignition, use this ignition on warning.

WARNING: Turn the ignition on, then reconnect the 12-volt battery and wait two minutes before proceeding. Failure to follow these instructions may result in possible serious or fatal injury.

3. If equipped with the keyless ignition, use this ignition on warning.

WARNING: Disconnect the 12-volt battery wait two minutes before proceeding, remove the ORC fuses, connect the 12-volt battery, wait two minutes before proceeding. Cycle the ignition to the On position, then reconnect the ORC fuses. Wait two minutes before proceeding. Failure to follow these instructions may result in possible serious or fatal injury.

4. Measure the voltage on the (R57) Driver Seat Belt Buckle Switch Sense circuit between cavity 1 of the Driver Seat Belt Buckle Switch harness connector and ground.
5. Measure the voltage on the (R729) First Row Driver Seat Detection Return Circuit between cavity 2 of the Driver Seat Belt Buckle Switch harness connector and ground.

Is there voltage on any of these circuits?

Yes

WARNING: Turn the ignition off, disconnect the 12-volt battery and wait two minutes before proceeding. Failure to follow these instructions may result in possible serious or fatal injury.

- Repair the (R57, R729) Driver Seat Belt Buckle Switch circuit for a short to voltage in accordance with the Service Information.
- Perform the RESTRAINTS SYSTEM VERIFICATION TEST. Refer to **STANDARD PROCEDURE** .

No

- Go To 3

3. **(R57) DRIVER SEAT BELT BUCKLE SWITCH SENSE CIRCUIT AND (R729) FIRST ROW DRIVER SEAT DETECTION RETURN CIRCUIT FOR AN OPEN**

WARNING: **Turn the ignition off, disconnect the 12-volt battery and wait two minutes before proceeding. Failure to follow these instructions may result in possible serious or fatal injury.**

1. Disconnect the Driver Seat Belt Buckle Switch harness connector.
2. Disconnect the ORC harness connectors.

NOTE: Check connectors - Clean and repair as necessary.

3. Connect the (special tool #8443-57, Adapter, Supplemental Restraint System Load Tool) to the ORC harness connector.
4. Measure the resistance of the (R57) Driver Seat Belt Buckle Switch Sense circuit between cavity 1 of the Driver Seat Belt Buckle Switch harness connector and connector C1B cavity 46 of the (special tool #8443-57, Adapter, Supplemental Restraint System Load Tool).
5. Measure the resistance of the (R729) First Row Driver Seat Detection Return Circuit between cavity 2 of the Driver Seat Belt Buckle Switch harness connector and connector C1B cavity 36 of the (special tool #8443-57, Adapter, Supplemental Restraint System Load Tool).

Is the resistance below or within the range of 5.4 - 10.0 Ohm?

Yes

- Repair the (R57, R729) Driver Seat Belt Buckle Switch circuits for an open in accordance with the Service Information.
- Perform the RESTRAINTS SYSTEM VERIFICATION TEST. Refer to **STANDARD PROCEDURE** .

No

- Go To 4

4. **CHECK OPERATION OF THE FIRST ROW DRIVER SEAT BELT SWITCH**

WARNING: **Turn the ignition off, disconnect the 12-volt battery and wait two**

minutes before proceeding. Failure to follow these instructions may result in possible serious or fatal injury.

1. Replace the Driver Seat Belt Buckle Switch in accordance with the Service Information. Refer to **BUCKLE, SEAT BELT, REMOVAL** .
2. Reconnect the vehicle body harness connector to the Driver Seat Belt Buckle Switch.
3. Remove any special tools or jumper wires and reconnect all previously disconnected components - except the Battery.
4. If equipped with the standard key ignition, use this ignition on warning.

   WARNING: **Turn the ignition on, then reconnect the 12-volt battery and wait two minutes before proceeding. Failure to follow these instructions may result in possible serious or fatal injury.**

5. If equipped with the keyless ignition, use this ignition on warning.

   WARNING: **Disconnect the 12-volt battery wait two minutes before proceeding, remove the ORC fuses, connect the 12-volt battery, wait two minutes before proceeding. Cycle the ignition to the On position, then reconnect the ORC fuses. Wait two minutes before proceeding. Failure to follow these instructions may result in possible serious or fatal injury.**

6. Connect the scan tool to the Data Link Connector - use the most current software available.
7. Use the scan tool and erase the stored DTCs.
8. Turn the Ignition OFF, and wait 15 seconds before turning the Ignition ON.
9. Wait one minute, and read active DTCs and if there are none present read the stored DTCs.

   Does the scan tool display active B0050-12-DRIVER SEATBELT SENSOR - CIRCUIT SHORT TO BATTERY DTC?

   Yes

   WARNING: **Turn the ignition off, disconnect the 12-volt battery and wait two minutes before proceeding. Failure to follow these instructions may result in possible serious or fatal injury.**

   WARNING: **If the Occupant Restraint Controller (ORC) is dropped at any time, it must be replaced. Failure to follow these instructions may result in possible serious or fatal injury.**

   - Replace the Occupant Restrain Controller (ORC) in accordance with the Service Information. Refer to **MODULE, OCCUPANT RESTRAINT CONTROLLER, REMOVAL** .

- Perform the RESTRAINTS SYSTEM VERIFICATION TEST. Refer to **STANDARD PROCEDURE** .

No

- Repair is complete.
- Perform the RESTRAINTS SYSTEM VERIFICATION TEST. Refer to **STANDARD PROCEDURE** .

B0050-13-DRIVER SEATBELT SENSOR - CIRCUIT OPEN

For a complete wiring diagram, **refer to appropriate SYSTEM WIRING DIAGRAMS article** .

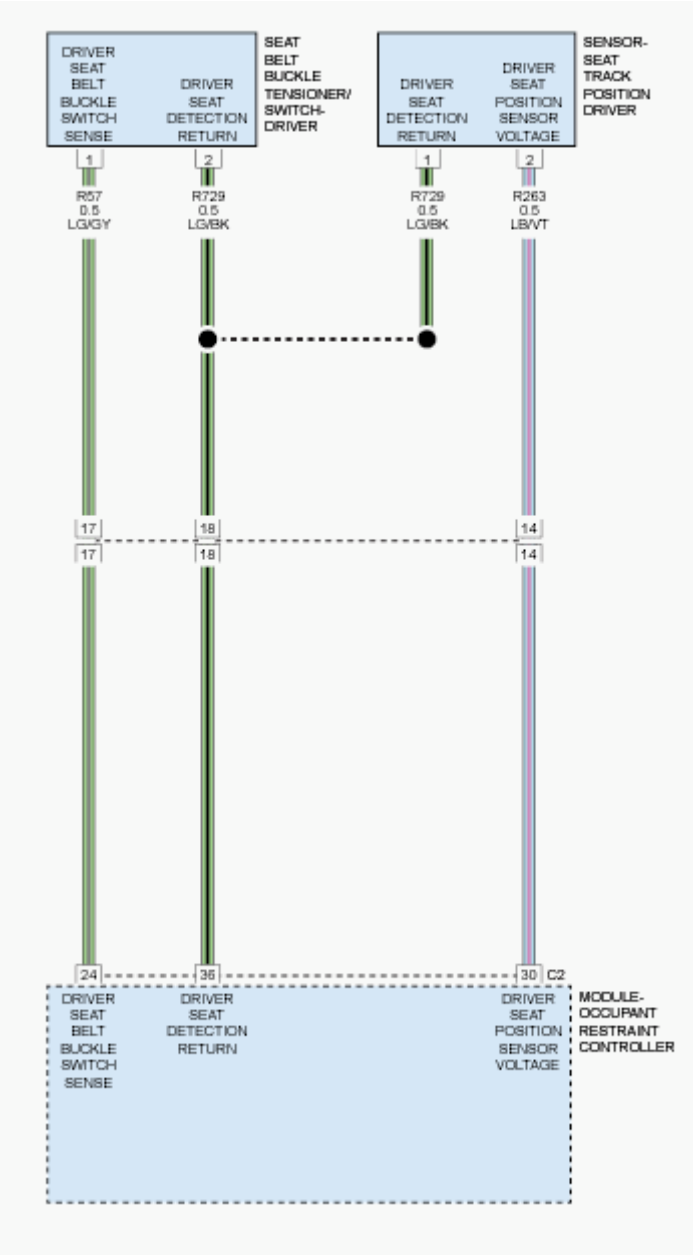

Fig. 6: Driver Seatbelt & Seat Track Position Sensor Circuit Diagram
Courtesy of CHRYSLER GROUP, LLC

THEORY OF OPERATION

When powered, the Occupant Restraint Controller (ORC) sends a test current across the Driver Seat Belt Buckle Switch circuits to verify the integrity of the switch and wiring. The front seat belt switches cannot be adjusted or repaired and, if ineffective or damaged, the entire front seat belt buckle-half unit must be replaced. The seatbelt reminder lamp will display in the instrument cluster for this fault. The ORC obtains the buckle switch status of the driver and front passenger, as well as the status of the front passenger seat occupant detection mat. If the driver or front passenger is unbelted, the ORC sends a message to the IPC over the CAN-B bus to turn on the seatbelt reminder light. The light remains on until the front seatbelts are fastened. An audible

alert triggers within 60 seconds of vehicle speed over 5 mph. The seatbelt reminder light remains illuminated until the front belts are fastened. The seatbelt buckle switch consists of a Hall-effect sensor assembly. The ORC determines the status of the seatbelt (buckled/unbuckled) based on the amount of current drawn by the sensor. When the seatbelt is unbuckled, the sensor draws a current of approximately 6.5 mA. When the seat is buckled, the sensor draws a current of approximately 15 mA.

WHEN MONITORED

With the ignition on and the Occupant Restraint Controller (ORC) configured for a Driver Seat Belt Buckle Switch. The ORC monitors the switch input current ranges at power up and continuously every 100ms while the ignition is in on.

SET CONDITION

If the ORC detects the driver seat belt buckle switch circuits have been open for 2.5 seconds an active code sets. The active code will change to stored after the ORC verifies the dirver seat belt buckle switch sense circuit voltage has returned to normal voltage range for five (5) seconds. The seatbelt reminder lamp will illuminate in the instrument cluster and an audible alert triggers within a 60 second cycle.

POSSIBLE CAUSES

Possible Causes
(R57) DRIVER SEAT BELT BUCKLE SWITCH SENSE CIRCUIT OPEN
(R729) FIRST ROW DRIVER SEAT DETECTION RETURN CIRCUIT OPEN
DRIVER SEAT BELT BUCKLE SWITCH
OCCUPANT RESTRAINT CONTROLLER (ORC)

Always perform the Pre-Diagnostic Troubleshooting procedure before proceeding. Refer to STANDARD PROCEDURE .

DIAGNOSTIC TEST

1. **VERIFY ACTIVE DTC**

   NOTE: Make sure the battery is fully charged.

   1. Turn the ignition on.
   2. With the scan tool, read ORC DTC.

      Does the scan tool display active B0050-13-DRIVER SEATBELT SENSOR - CIRCUIT OPEN DTC?

      Yes

      - Go To 2

No

- Perform the RESTRAINTS SYSTEM INTERMITTENT TEST. Refer to **STANDARD PROCEDURE** .

2. **(R57) DRIVER SEAT BELT BUCKLE SWITCH SENSE CIRCUIT AND (R729) FIRST ROW DRIVER SEAT DETECTION RETURN CIRCUIT FOR AN OPEN**

WARNING: Turn the ignition off, disconnect the 12-volt battery and wait two minutes before proceeding. Failure to follow these instructions may result in possible serious or fatal injury.

1. Disconnect the Driver Seat Belt Buckle Switch harness connector.
2. Disconnect the ORC harness connectors.

NOTE: Check connectors - Clean and repair as necessary.

3. Connect the (special tool #8443-57, Adapter, Supplemental Restraint System Load Tool) to the ORC harness connector.
4. Measure the resistance of the (R57) Driver Seat Belt Buckle Switch Sense circuit between cavity 1 of the Driver Seat Belt Buckle Switch harness connector and connector C1B cavity 46 of the (special tool #8443-57, Adapter, Supplemental Restraint System Load Tool).
5. Measure the resistance of the (R729) First Row Driver Seat Detection Return Circuit between cavity 2 of the Driver Seat Belt Buckle Switch harness connector and connector C1B cavity 36 of the (special tool #8443-57, Adapter, Supplemental Restraint System Load Tool).

Is the current less than or equal to 0.9 Ma on any of these circuits?

Yes

- Repair the (R57, R729) Driver Seat Belt Buckle Switch circuits for an open in accordance with the Service Information.
- Perform the RESTRAINTS SYSTEM VERIFICATION TEST. Refer to **STANDARD PROCEDURE** .

No

- Go To 3

3. **CHECK OPERATION OF THE FIRST ROW DRIVER SEAT BELT BUCKLE SWITCH**
   1. Replace the Driver Seat Belt Buckle Switch in accordance with the Service Information. Refer to **BUCKLE, SEAT BELT, REMOVAL** .
   2. Reconnect the vehicle body harness connector to the Driver Seat Belt Buckle Switch.
   3. Remove any special tools or jumper wires and reconnect all previously disconnected components - except the Battery.

4. If equipped with the standard key ignition, use this ignition on warning.

   WARNING: Turn the ignition on, then reconnect the 12-volt battery and wait two minutes before proceeding. Failure to follow these instructions may result in possible serious or fatal injury.

5. If equipped with the keyless ignition, use this ignition on warning.

   WARNING: Disconnect the 12-volt battery wait two minutes before proceeding, remove the ORC fuses, connect the 12-volt battery, wait two minutes before proceeding. Cycle the ignition to the On position, then reconnect the ORC fuses. Wait two minutes before proceeding. Failure to follow these instructions may result in possible serious or fatal injury.

6. Connect the scan tool to the Data Link Connector - use the most current software available.
7. Use the scan tool and erase the stored DTCs.
8. Turn the Ignition OFF, and wait 15 seconds before turning the Ignition ON.
9. Wait one minute, and read active DTCs and if there are none present read the stored DTCs.

   Does the scan tool display active B0050-13-DRIVER SEATBELT SENSOR - CIRCUIT OPEN DTC?

   Yes

   WARNING: Turn the ignition off, disconnect the 12-volt battery and wait two minutes before proceeding. Failure to follow these instructions may result in possible serious or fatal injury.

   WARNING: If the Occupant Restraint Controller (ORC) is dropped at any time, it must be replaced. Failure to follow these instructions may result in possible serious or fatal injury.

   - Replace the Occupant Restrain Controller (ORC) in accordance with the Service Information. Refer to **MODULE, OCCUPANT RESTRAINT CONTROLLER, REMOVAL** .
   - Perform the RESTRAINTS SYSTEM VERIFICATION TEST. Refer to **STANDARD PROCEDURE** .

   No

   - Repair is complete.
   - Perform the RESTRAINTS SYSTEM VERIFICATION TEST. Refer to **STANDARD PROCEDURE** .

B0050-95-DRIVER SEATBELT SENSOR - INCORRECT ASSEMBLY

For a complete wiring diagram, **refer to appropriate SYSTEM WIRING DIAGRAMS article** .

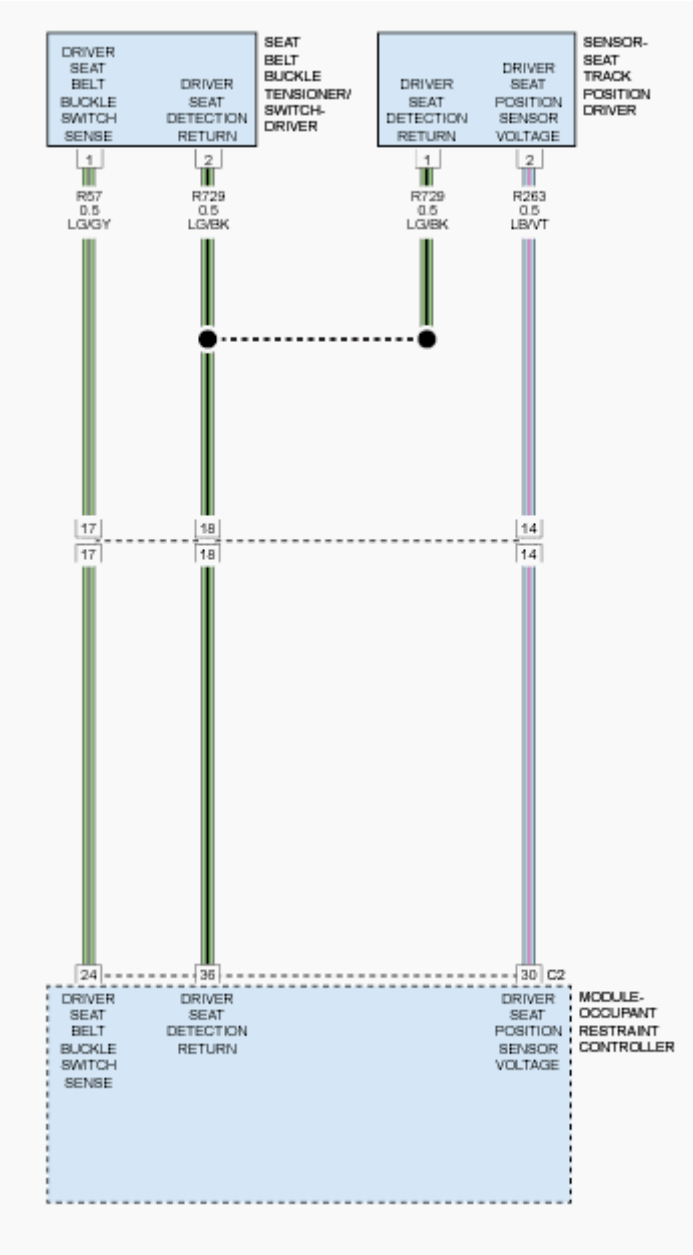

Fig. 7: Driver Seatbelt & Seat Track Position Sensor Circuit Diagram
Courtesy of CHRYSLER GROUP, LLC

THEORY OF OPERATION

When powered, the Occupant Restraint Controller (ORC) sends a test current to the Driver Seatbelt Buckle Switch. During this test, the sensors discovered are checked for agreement with the pre-programmed configuration of components assigned to the module.

WHEN MONITORED

The ORC checks for the presence of Seatbelt Buckle Switch circuits once during the initialization process. The initialization process takes 100ms.

SET CONDITION

This DTC sets when the ORC detects the presence of a Seatbelt Buckle Switch circuit while the configuration of the module does not reflect a Seatbelt Buckle Switch should be present. Once set, this DTC is latched for the entire power cycle and requires the module to be re-initalized to set code.

POSSIBLE CAUSES

Possible Causes
UNUSED SEATBELT BUCKLE SWITCH CIRCUITS SHORTED TO VOLTAGE, SHORTED TO GROUND, OR SHORTED TOGETHER
OCCUPANT RESTRAINT CONTROLLER (ORC)

Always perform the Pre-Diagnostic Troubleshooting procedure before proceeding. Refer to STANDARD PROCEDURE .

DIAGNOSTIC TEST

1. **DETERMINE ACTIVE OR STORED DTC**

   NOTE: Make sure the battery is fully charged.

   1. Turn the ignition on.
   2. With the scan tool, read ORC DTCs.

      Is the DTC active or stored?

      ORC - ACTIVE DTC

      - Go To 2

      ORC - STORED DTC

      - Perform the RESTRAINTS SYSTEM INTERMITTENT TEST. Refer to **STANDARD PROCEDURE** .

2. **CHECK UNUSED SEATBELT BUCKLE SWITCH CIRCUITS FOR A SHORT TO VOLTAGE, SHORT TO GROUND, OR SHORT TOGETHER**
   1. Check any unused Seatbelt Buckle Switch circuits for possible short to voltage.
   2. Check any unused Seatbelt Buckle Switch circuits for possible short to ground.
   3. Check any unused Seatbelt Buckle Switch circuits for possible short together.

Are any of the unused Seatbelt Buckle Switch circuits shorted?

Yes

WARNING: Turn the ignition off disconnect the 12-volt battery and wait two minutes before proceeding. Failure to follow these instructions may result in possible serious or fatal injury.

- Repair any unused Seatbelt Buckle Switch circuits that are shorted.
- Perform the RESTRAINTS SYSTEM INTERMITTENT TEST. Refer to **STANDARD PROCEDURE** .

No

NOTE: Make sure the part number of the replacement module is the correct part number for the vehicle.

WARNING: If the Occupant Restraint Controller (ORC) is dropped at any time, it must be replaced. Failure to take the proper precautions can result in accidental airbag deployment. Failure to follow these instructions may result in possible serious or fatal injury.

WARNING: Turn the ignition off disconnect the 12-volt battery and wait two minutes before proceeding. Failure to follow these instructions may result in possible serious or fatal injury.

- Replace the ORC in accordance with the Service Information. Refer to **MODULE, OCCUPANT RESTRAINT CONTROLLER, REMOVAL** .
- Perform the RESTRAINTS SYSTEM VERIFICATION TEST. Refer to **STANDARD PROCEDURE** .

B0052-11-PASSENGER SEATBELT SENSOR - CIRCUIT SHORT TO GROUND

For a complete wiring diagram, **refer to appropriate SYSTEM WIRING DIAGRAMS article** .

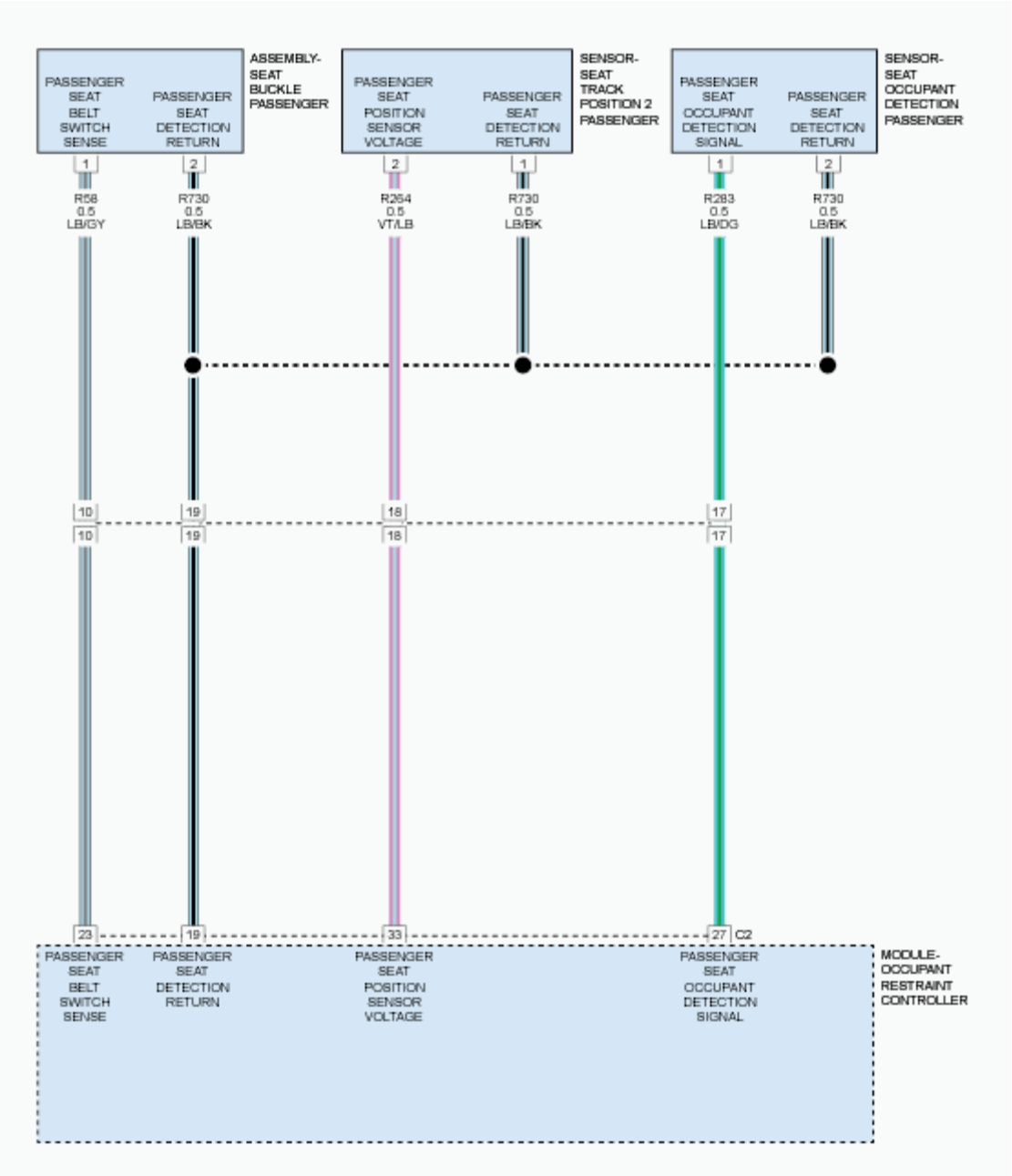

Fig. 8: Passenger Seatbelt, Seat Track Position & Occupant Detection Sensor Circuit Diagram
Courtesy of CHRYSLER GROUP, LLC

THEORY OF OPERATION

When powered, the Occupant Restraint Controller (ORC) sends a test current across the Passenger Seat Belt Buckle Switch circuits to verify the integrity of the switch and wiring. The front seat belt switches cannot be adjusted or repaired and, if ineffective or damaged, the entire front seat belt buckle-half unit must be replaced. The seatbelt reminder lamp will display in the instrument cluster for this fault. The ORC obtains the buckle switch status of the driver and front passenger, as well as the status of the front passenger seat occupant detection mat. If the driver or front passenger is unbelted, the ORC sends a message to the IPC over the CAN-B

bus to turn on the seatbelt reminder light. The light remains on until the front seatbelts are fastened. An audible alert triggers within 60 seconds of vehicle speed over 5 mph. The seatbelt reminder light remains illuminated until the front belts are fastened. The seatbelt buckle switch consists of a Hall-effect sensor assembly. The ORC determines the status of the seatbelt (buckled/unbuckled) based on the amount of current drawn by the sensor. When the seatbelt is unbuckled, the sensor draws a current of approximately 6.5 mA. When the seat is buckled, the sensor draws a current of approximately 15 mA.

WHEN MONITORED

While the ignition on and the Occupant Restraint Controller (ORC) is configured for a Driver Seat Belt Switch, the ORC checks the switch input current ranges. The ORC monitors the switch input current ranges at power up and continuously every 100ms.

SET CONDITION

The ORC monitors the status of the seat belt switch circuits at power up and every 60 ms thereafter while the ignition is in on.

This DTC sets when the ORC detects the seat belt switch circuits have become shorted to ground for more than 2.5 seconds. This DTC transitions from active to stored when the module sees a recovery from the shorted to ground condition for greater than five seconds.

POSSIBLE CAUSES

Possible Causes
(R58) PASSENGER SEAT BELT SWITCH SENSE CIRCUIT SHORTED TO GROUND
(R58) PASSENGER SEAT BELT SWITCH SENSE CIRCUIT SHORTED TO (R730) FIRST ROW PASSENGER SEAT SENSORS COMMON RETURN CIRCUIT
OCCUPANT RESTRAINT CONTROLLER (ORC)

Always perform the Pre-Diagnostic Troubleshooting procedure before proceeding. Refer to STANDARD PROCEDURE .

DIAGNOSTIC TEST

1. **VERIFY ACTIVE DTC**

   NOTE: Make sure the battery is fully charged.

   1. Turn the ignition on.
   2. With the scan tool, read the ORC DTCs.

      Does the scan tool display active B0052-11-PASSENGER SEATBELT SENSOR - CIRCUIT SHORT TO GROUND DTC?

      Yes

- Go To 2

No

- Perform the RESTRAINTS SYSTEM INTERMITTENT TEST. Refer to **STANDARD PROCEDURE** .

2. **CHECK PASSENGER SEAT BELT BUCKLE SWITCH CIRCUITS FOR A SHORT TO GROUND**

WARNING: Turn the ignition off, disconnect the 12-volt battery and wait two minutes before proceeding. Failure to follow these instructions may result in possible serious or fatal injury.

1. Disconnect the Passenger Seat Belt Buckle Switch harness connector.

NOTE: Check connectors - Clean and repair as necessary.

2. Measure the resistance of the (R58) Passenger Seat Belt Buckle Switch Sense circuit between terminal 1 of the Passenger Seat Belt Buckle Switch harness connector and ground.
3. Measure the resistance of the (R730) First Row Passenger Seat Sensors Common Return circuit between terminal 2 of the Passenger Seat Belt Switch harness connector and ground.

Is the resistance below 10k Ohms on any of these circuits?

Yes

- Repair the (R58) or (R730) Passenger Seat Belt Buckle Switch circuits for a short to ground in accordance with the Service Information.
- Perform the RESTRAINTS SYSTEM VERIFICATION TEST. Refer to **STANDARD PROCEDURE** .

No

- Go To 3

3. **CHECK (R58) PASSENGER SEAT BELT SWITCH SENSE CIRCUIT FOR A SHORT TO THE (R730) FIRST ROW PASSENGER SEAT SENSORS COMMON RETURN CIRCUIT**

1. Measure the resistance between the (R58) Passenger Seat Belt Buckle Switch Sense circuit connector and (R730) First Row Driver Seat Sensors Common Return circuit at the appropriate terminals of the Driver Seat Belt Buckle Switch harness connector.

Is the resistance below 5k Ohms?

Yes

NOTE: **If the short is found in the Seat Harness, do not attempt to repair the Seat Harness. Replace the Seat Harness in accordance with the Service Information.**

- Repair the (R58) Passenger Seat Belt Buckle Switch Sense circuit for a short to the (R730) First Row Passenger Seat Sensors Common Return circuit in accordance with the Service Information.
- Perform the RESTRAINTS SYSTEM VERIFICATION TEST. Refer to **STANDARD PROCEDURE** .

No

- Go To 4

4. **CHECK OPERATION OF THE PASSENGER SEAT BELT BUCKLE SWITCH**
   1. Replace the Passenger Seat Belt Buckle Switch in accordance with the Service Information. Refer to **BUCKLE, SEAT BELT, REMOVAL** .
   2. Reconnect the vehicle body harness connector to the Passenger Seat Belt Buckle Switch.
   3. Remove any special tools or jumper wires and reconnect all previously disconnected components - except the Battery.
   4. If equipped with the standard key ignition, use this ignition on warning.

      WARNING: **Turn the ignition on, then reconnect the 12-volt battery and wait two minutes before proceeding. Failure to follow these instructions may result in possible serious or fatal injury.**

   5. If equipped with the keyless ignition, use this ignition on warning.

      WARNING: **Disconnect the 12-volt battery wait two minutes before proceeding, remove the ORC fuses, connect the 12-volt battery, wait two minutes before proceeding. Cycle the ignition to the On position, then reconnect the ORC fuses. Wait two minutes before proceeding. Failure to follow these instructions may result in possible serious or fatal injury.**

   6. Connect the scan tool to the Data Link Connector - use the most current software available.
   7. Use the scan tool and erase the stored codes in all airbag system modules.
   8. Turn the Ignition OFF, and wait 15 seconds before turning the Ignition ON.
   9. Wait one minute, and read active DTCs and if there are none present read the stored DTCs.

      Does the scan tool display active B0052-11-PASSENGER SEATBELT SENSOR - CIRCUIT SHORT TO GROUND DTC?

      Yes

WARNING: Turn the ignition off, disconnect the 12-volt battery and wait two minutes before proceeding. Failure to follow these instructions may result in possible serious or fatal injury.

WARNING: If the Occupant Restraint Controller (ORC) is dropped at any time, it must be replaced. Failure to follow these instructions may result in possible serious or fatal injury.

- Replace the Occupant Restrain Controller (ORC) in accordance with the Service Information. Refer to **MODULE, OCCUPANT RESTRAINT CONTROLLER, REMOVAL** .
- Perform the RESTRAINTS SYSTEM VERIFICATION TEST. Refer to **STANDARD PROCEDURE** .

No

- Repair is complete.
- Perform the RESTRAINTS SYSTEM VERIFICATION TEST. Refer to **STANDARD PROCEDURE** .

B0052-12-PASSENGER SEATBELT SENSOR - CIRCUIT SHORT TO BATTERY

For a complete wiring diagram, **refer to appropriate SYSTEM WIRING DIAGRAMS article** .

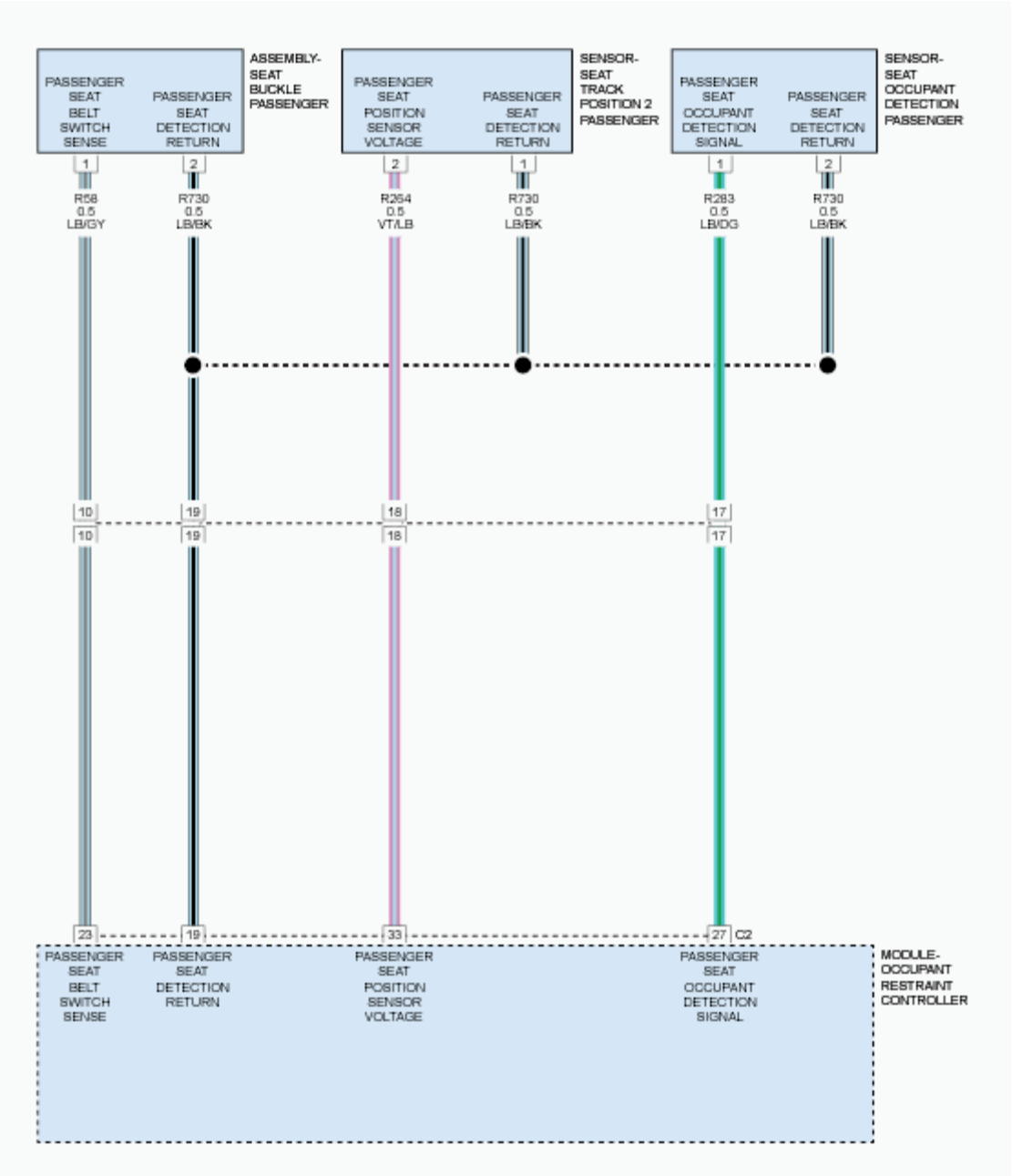

Fig. 9: Passenger Seatbelt, Seat Track Position & Occupant Detection Sensor Circuit Diagram
Courtesy of CHRYSLER GROUP, LLC

THEORY OF OPERATION

When powered, the Occupant Restraint Controller (ORC) sends a test current across the Passenger Seat Belt Buckle Switch circuits to verify the integrity of the switch and wiring. The front seat belt switches cannot be adjusted or repaired and, if ineffective or damaged, the entire front seat belt buckle-half unit must be replaced. The seatbelt reminder lamp will display in the instrument cluster for this fault. The ORC obtains the buckle switch status of the driver and front passenger, as well as the status of the front passenger seat occupant detection mat. If the driver or front passenger is unbelted, the ORC sends a message to the IPC over the CAN-B

bus to turn on the seatbelt reminder light. The light remains on until the front seatbelts are fastened. An audible alert triggers within 60 seconds of vehicle speed over 5 mph. The seatbelt reminder light remains illuminated until the front belts are fastened. The seatbelt buckle switch consists of a Hall-effect sensor assembly. The ORC determines the status of the seatbelt (buckled/unbuckled) based on the amount of current drawn by the sensor. When the seatbelt is unbuckled, the sensor draws a current of approximately 6.5 mA. When the seat is buckled, the sensor draws a current of approximately 15 mA.

WHEN MONITORED

The ORC monitors the status of the seat belt switch circuits at power up and every 60 ms thereafter while the ignition is in on.

SET CONDITION

This DTC sets when the ORC detects the seat belt switch circuits have become shorted to voltage for more than 2.5 seconds. This DTC transitions from active to stored when the module sees a recovery from the shorted to voltage condition for greater than five seconds. The seatbelt reminder lamp will illuminate in the instrument cluster and an audible alert triggers within a 60 second cyle.

POSSIBLE CAUSES

Possible Causes
(R58) PASSENGER SEAT BELT SWITCH SIGNAL CIRCUIT SHORTED TO VOLTAGE
(R730) FIRST ROW PASSENGER SEAT SENSORS COMMON RETURN CIRCUIT SHORTED TO VOLTAGE
(R58) PASSENGER SEAT BELT SWITCH SIGNAL CIRCUIT OPEN
(R730) FIRST ROW PASSENGER SEAT SENSORS COMMON RETURN CIRCUIT OPEN
PASSENGER SEAT BELT SWITCH
OCCUPANT RESTRAINT CONTROLLER (ORC)

Always perform the Pre-Diagnostic Troubleshooting procedure before proceeding. Refer to STANDARD PROCEDURE .

DIAGNOSTIC TEST

1. **VERIFY ACTIVE DTC**

   NOTE: Make sure the battery is fully charged.

   1. Turn the ignition on.
   2. With the scan tool, read all ORC DTCs.

      Does the scan tool display active B0052-12-PASSENGER SEATBELT SENSOR - CIRCUIT SHORT TO BATTERY DTC?

Yes

- Go To 2

No

- Perform the RESTRAINTS SYSTEM INTERMITTENT TEST. Refer to **STANDARD PROCEDURE** .

2. **(R58) PASSENGER SEAT BELT SWITCH SIGNAL CIRCUIT SHORTED TO VOLTAGE**

WARNING: Turn the ignition off, disconnect the 12-volt battery and wait two minutes before proceeding. Failure to follow these instructions may result in possible serious or fatal injury.

1. Disconnect the Passenger Seat Belt Buckle Switch connector.
2. Disconnect the ORC harness connector.

NOTE: Check connectors - Clean and repair as necessary.

3. Connect the (special tool #8443-57, Adapter, Supplemental Restraint System Load Tool) to the ORC harness connectors.
4. If equipped with the standard key ignition, use this ignition on warning.

WARNING: Turn the ignition on, then reconnect the 12-volt battery and wait two minutes before proceeding. Failure to follow these instructions may result in possible serious or fatal injury.

5. If equipped with the keyless ignition, use this ignition on warning.

WARNING: Disconnect the 12-volt battery wait two minutes before proceeding, remove the ORC fuses, connect the 12-volt battery, wait two minutes before proceeding. Cycle the ignition to the On position, then reconnect the ORC fuses. Wait two minutes before proceeding. Failure to follow these instructions may result in possible serious or fatal injury.

6. Measure the voltage of the (R58) Passenger Seat Belt Switch Signal circuit between the (special tool #8443-57, Adapter, Supplemental Restraint System Load Tool) connector C1B cavity 23 and ground.

   Is there any voltage present on the circuit?

   Yes

WARNING: Turn the ignition off, disconnect the 12-volt battery and wait two minutes before proceeding. Failure to follow these instructions may result in possible serious or fatal injury.

- Repair the (R58) Passenger Seat Belt Switch Signal circuit for a short to voltage.
- Perform the RESTRAINTS SYSTEM VERIFICATION TEST. Refer to **STANDARD PROCEDURE** .

No

- Go To 3

3. **(R730) FIRST ROW PASSENGER SEAT SENSORS COMMON RETURN CIRCUIT SHORTED TO VOLTAGE**
   1. Measure the voltage of the (R730) First Row Passenger Seat Sensors Common Return circuit between connector C1B cavity 19 of the (special tool #8443-57, Adapter, Supplemental Restraint System Load Tool) and ground.

      Is there any voltage present on the circuit?

      Yes

      WARNING: Turn the ignition off, disconnect the 12-volt battery and wait two minutes before proceeding. Failure to follow these instructions may result in possible serious or fatal injury.

      - Repair or replace the (R730) First Row Passenger Seat Sensors Common Return circuit for a short to voltage.
      - Perform the RESTRAINTS SYSTEM VERIFICATION TEST. Refer to **STANDARD PROCEDURE** .

      No

      - Go To 4

4. **(R58) PASSENGER SEAT BELT SWITCH SENSE CIRCUIT FOR AN OPEN**

   WARNING: Turn the ignition off, disconnect the 12-volt battery and wait two minutes before proceeding. Failure to follow these instructions may result in possible serious or fatal injury.

   1. Measure the resistance of the (R58) Passenger Seat Belt Switch Signal circuit between the Passenger Seat Belt Buckle Switch harness connector cavity 1 and connector C1B cavity 23 of the (special tool #8443-57, Adapter, Supplemental Restraint System Load Tool).

      Is the resistance below or within the range of 5.4 - 10.0 Ohm?

Yes

- Go To 5

No

- Repair or replace the (R58) Passenger Seat Belt Switch Signal circuit for an open or high resistance.
- Perform the RESTRAINTS SYSTEM VERIFICATION TEST. Refer to **STANDARD PROCEDURE** .

5. **(R730) FIRST ROW DRIVER SEAT SENSORS COMMON RETURN CIRCUIT FOR AN OPEN**
   1. Measure the resistance of the (R730) First Row Passenger Seat Sensors Common Return circuit between the Passenger Seat Belt Buckle Switch harness connector cavity 2 and the (special tool #8443-57, Adapter, Supplemental Restraint System Load Tool) connector C1B cavity.

      Is the resistance below or within the range of 5.4 - 10.0 Ohm?

      Yes

      - Go To 6

      No

      - Repair or replace the (R730) First Row Passenger Seat Sensors Common Return circuit for an open or high resistance.
      - Perform the RESTRAINTS SYSTEM VERIFICATION TEST. Refer to **STANDARD PROCEDURE** .

6. **CHECK OPERATION OF THE FIRST ROW PASSENGER SEAT BELT SWITCH**

   WARNING: **Turn the ignition off, disconnect the 12-volt battery and wait two minutes before proceeding. Failure to follow these instructions may result in possible serious or fatal injury.**

   1. Replace the Passenger Seat Belt Switch. Refer to **BUCKLE, SEAT BELT, REMOVAL** .
   2. Reconnect the vehicle body harness to the switch.
   3. If equipped with the standard key ignition, use this ignition on warning.

      WARNING: **Turn the ignition on, then reconnect the 12-volt battery and wait two minutes before proceeding. Failure to follow these instructions may result in possible serious or fatal injury.**

   4. If equipped with the keyless ignition, use this ignition on warning.

      WARNING: **Disconnect the 12-volt battery wait two minutes before**

proceeding, remove the ORC fuses, connect the 12-volt battery, wait two minutes before proceeding. Cycle the ignition to the On position, then reconnect the ORC fuses. Wait two minutes before proceeding. Failure to follow these instructions may result in possible serious or fatal injury.

5. Connect the scan tool to the Data Link Connector - use the most current software available.
6. Use the scan tool and erase all codes in the ORC.
7. Turn the ignition off, and wait 15 seconds before turning the Ignition On.
8. Wait one minute, and read active codes.

Did the active B0052-12-PASSENGER SEATBELT SENSOR - CIRCUIT SHORT TO BATTERY DTC return?

Yes

WARNING: **If the Occupant Restraint Controller (ORC) is dropped at any time, it must be replaced. Failure to take the proper precautions can result in accidental airbag deployment. Failure to follow these instructions may result in possible serious or fatal injury.**

WARNING: **Turn the ignition off, disconnect the 12-volt battery and wait two minutes before proceeding. Failure to follow these instructions may result in possible serious or fatal injury.**

- Replace the ORC in accordance with the Service Information. Refer to **MODULE, OCCUPANT RESTRAINT CONTROLLER, REMOVAL** .
- Perform the RESTRAINTS SYSTEM VERIFICATION TEST. Refer to **STANDARD PROCEDURE** .

No

- Repair is complete.
- Perform the RESTRAINTS SYSTEM VERIFICATION TEST. Refer to **STANDARD PROCEDURE** .

B0052-13-PASSENGER SEATBELT SENSOR - CIRCUIT OPEN

For a complete wiring diagram, **refer to appropriate SYSTEM WIRING DIAGRAMS article** .

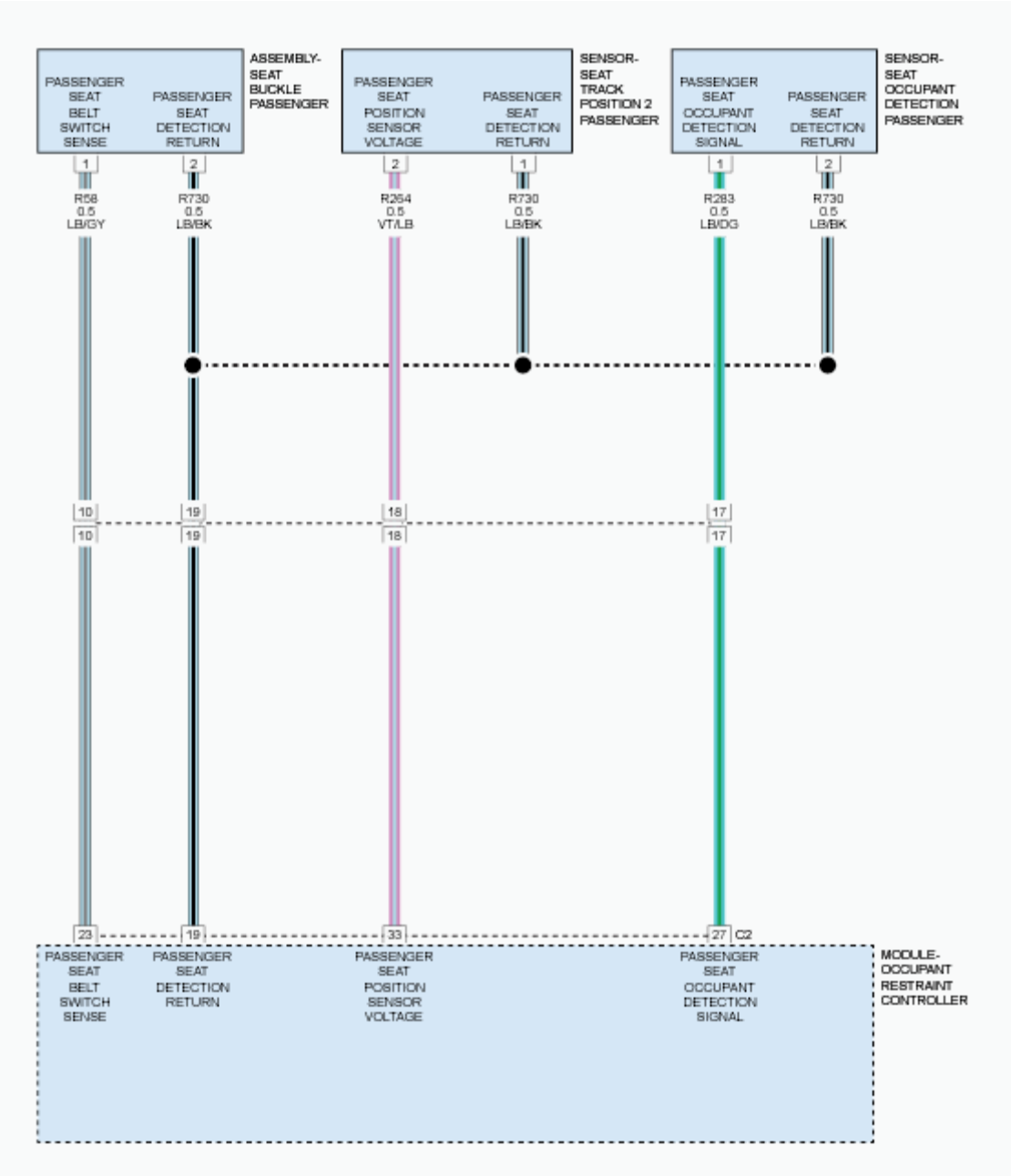

Fig. 10: Passenger Seatbelt, Seat Track Position & Occupant Detection Sensor Circuit Diagram
Courtesy of CHRYSLER GROUP, LLC

THEORY OF OPERATION

When powered, the Occupant Restraint Controller (ORC) sends a test current across the Passenger Seat Belt Buckle Switch circuits to verify the integrity of the switch and wiring. The front seat belt switches cannot be adjusted or repaired and, if ineffective or damaged, the entire front seat belt buckle-half unit must be replaced. The seatbelt reminder lamp will display in the instrument cluster for this fault. The ORC obtains the buckle switch status of the driver and front passenger, as well as the status of the front passenger seat occupant detection mat. If the driver or front passenger is unbelted, the ORC sends a message to the IPC over the CAN-B

bus to turn on the seatbelt reminder light. The light remains on until the front seatbelts are fastened. An audible alert triggers within 60 seconds of vehicle speed over 5 mph. The seatbelt reminder light remains illuminated until the front belts are fastened. The seatbelt buckle switch consists of a Hall-effect sensor assembly. The ORC determines the status of the seatbelt (buckled/unbuckled) based on the amount of current drawn by the sensor. When the seatbelt is unbuckled, the sensor draws a current of approximately 6.5 mA. When the seat is buckled, the sensor draws a current of approximately 15 mA.

WHEN MONITORED

With the ignition on and the Occupant Restraint Controller (ORC) configured for a Passenger Seat Belt Buckle Switch. The ORC monitors the switch input current ranges at power up and continuously every 100ms with the ignition in on.

SET CONDITION

If the ORC detects the passenger seat belt buckle switch circuits have been open for 2.5 seconds. The active code will change to stored after the ORC verifies the passenger seat belt buckle switch sense circuit voltage has returned to normal voltage range for five seconds. The seatbelt reminder lamp will illuminate in the instrument cluster and an audible alert triggers within a 60 second cyle

POSSIBLE CAUSES

Possible Causes
(R58) PASSENGER SEAT BELT BUCKLE SWITCH SENSE CIRCUIT OPEN
(R730) FIRST ROW PASSENGER SEAT SENSORS COMMON RETURN CIRCUIT OPEN
PASSENGER SEAT BELT BUCKLE SWITCH
OCCUPANT RESTRAINT CONTROLLER (ORC)

Always perform the Pre-Diagnostic Troubleshooting procedure before proceeding. Refer to STANDARD PROCEDURE .

DIAGNOSTIC TEST

1. **VERIFY ACTIVE DTC**

   NOTE: Make sure the battery is fully charged.

   1. Turn the ignition on.
   2. With the scan tool, read ORC DTC.

      Does the scan tool display active B0052-13-PASSENGER SEATBELT SENSOR - CIRCUIT OPEN DTC?

      Yes

      - Go To 2

No

- Perform the RESTRAINTS SYSTEM INTERMITTENT TEST. Refer to **STANDARD PROCEDURE** .

2. **(R58) PASSENGER SEAT BELT SWITCH SENSE CIRCUIT FOR AN OPEN**

WARNING: Turn the ignition off, disconnect the 12-volt battery and wait two minutes before proceeding. Failure to follow these instructions may result in possible serious or fatal injury.

1. Measure the resistance of the (R58) Passenger Seat Belt Switch Signal circuit between the Passenger Seat Belt Buckle Switch harness connector cavity 1 and connector C1B cavity 23 of the (special tool #8443-57, Adapter, Supplemental Restraint System Load Tool).

   Is the current less than or equal to 0.9 Ma?

   Yes

   - Go To 3

   No

   - Repair or replace the (R58) Passenger Seat Belt Switch Signal circuit for an open or high resistance.
   - Perform the RESTRAINTS SYSTEM VERIFICATION TEST. Refer to **STANDARD PROCEDURE** .

3. **(R730) FIRST ROW PASSENGER SEAT SENSORS COMMON RETURN CIRCUIT FOR AN OPEN**

1. Measure the resistance of the (R730) First Row Passenger Seat Sensors Common Return circuit between the Passenger Seat Belt Buckle Switch harness connector cavity 2 and the (special tool #8443-57, Adapter, Supplemental Restraint System Load Tool) connector C1B cavity 19.

   Is the current less than or equal to 0.9 Ma?

   Yes

   - Repair or replace the (R730) First Row Passenger Seat Sensors Common Return circuit for an open or high resistance.
   - Perform the RESTRAINTS SYSTEM VERIFICATION TEST. Refer to **STANDARD PROCEDURE** .

   No

   - Go To 4

4. **CHECK OPERATION OF THE FIRST ROW PASSENGER SEAT BELT BUCKLE SWITCH**

WARNING: Turn the ignition off, disconnect the 12-volt battery and wait two minutes before proceeding. Failure to follow these instructions may result in possible serious or fatal injury.

1. Replace the Passenger Seat Belt Switch. Refer to **BUCKLE, SEAT BELT, REMOVAL** .
2. Reconnect the vehicle body harness to the switch.
3. If equipped with the standard key ignition, use this ignition on warning.

WARNING: Turn the ignition on, then reconnect the 12-volt battery and wait two minutes before proceeding. Failure to follow these instructions may result in possible serious or fatal injury.

4. If equipped with the keyless ignition, use this ignition on warning.

WARNING: Disconnect the 12-volt battery wait two minutes before proceeding, remove the ORC fuses, connect the 12-volt battery, wait two minutes before proceeding. Cycle the ignition to the On position, then reconnect the ORC fuses. Wait two minutes before proceeding. Failure to follow these instructions may result in possible serious or fatal injury.

5. Connect the scan tool to the Data Link Connector - use the most current software available.
6. Use the scan tool and erase all codes in the ORC.
7. Turn the ignition off, and wait 15 seconds before turning the Ignition On.
8. Wait one minute, and read active codes.

Did the active B0052-13-PASSENGER SEATBELT SENSOR - CIRCUIT OPEN DTC return?

Yes

WARNING: If the Occupant Restraint Controller (ORC) is dropped at any time, it must be replaced. Failure to take the proper precautions can result in accidental airbag deployment. Failure to follow these instructions may result in possible serious or fatal injury.

WARNING: Turn the ignition off, disconnect the 12-volt battery and wait two minutes before proceeding. Failure to follow these instructions may result in possible serious or fatal injury.

- Replace the ORC in accordance with the Service Information. Refer to **MODULE, OCCUPANT RESTRAINT CONTROLLER, REMOVAL** .
- Perform the RESTRAINTS SYSTEM VERIFICATION TEST. Refer to **STANDARD PROCEDURE** .

No

- Repair is complete.
- Perform the RESTRAINTS SYSTEM VERIFICATION TEST. Refer to **STANDARD PROCEDURE** .

B0052-95-PASSENGER SEATBELT SENSOR - INCORRECT ASSEMBLY

For a complete wiring diagram, **refer to appropriate SYSTEM WIRING DIAGRAMS article** .

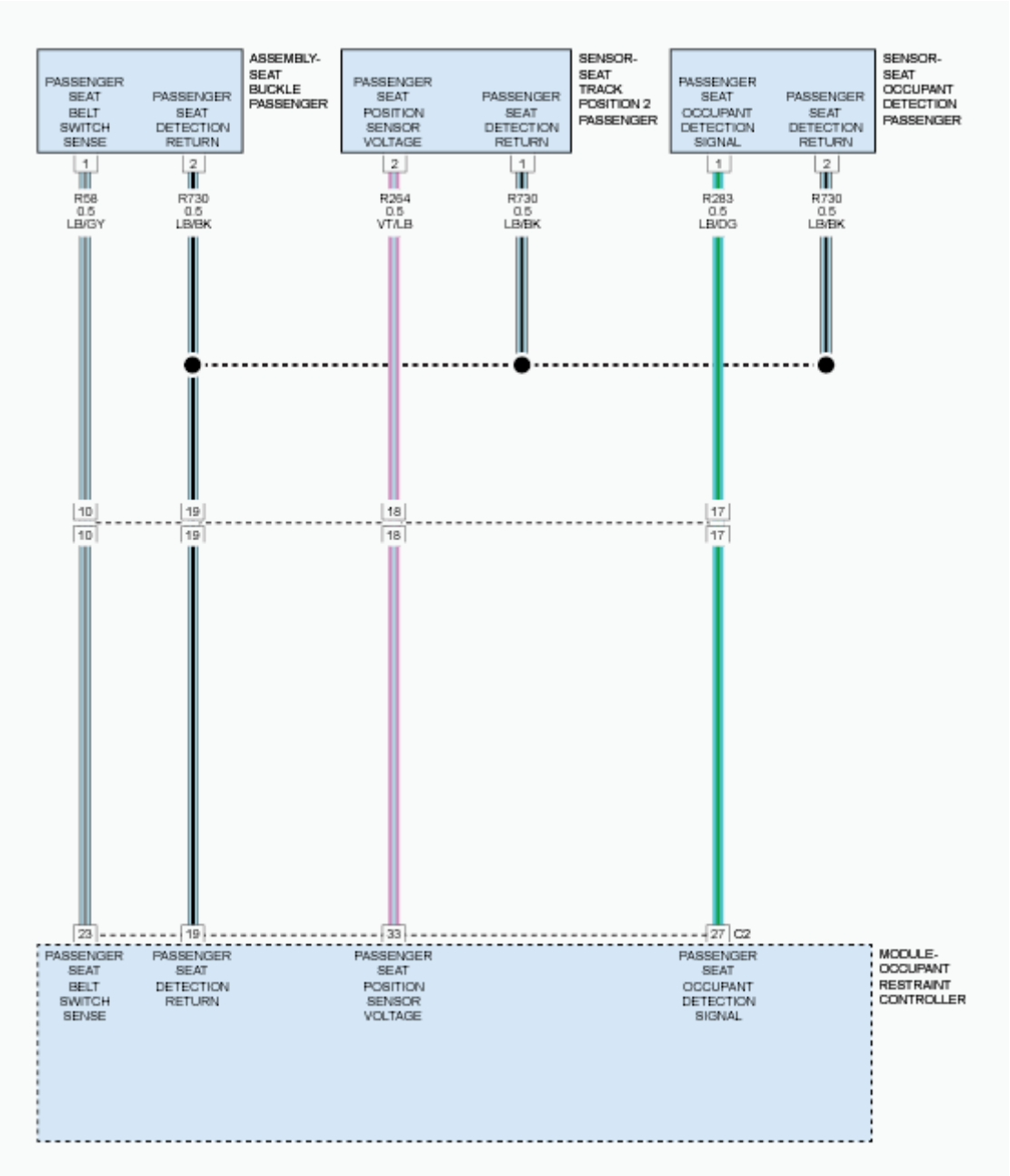

Fig. 11: Passenger Seatbelt, Seat Track Position & Occupant Detection Sensor Circuit Diagram
Courtesy of CHRYSLER GROUP, LLC

THEORY OF OPERATION

When powered, the Occupant Restraint Controller (ORC) sends a test current to the Seat Belt Buckle sensors. During this test, the sensors discovered are checked for agreement with the pre-programmed configuration of components assigned to the module.

WHEN MONITORED

The ORC checks for the presence of Seat Belt Buckle sensor circuits once during the initialization process.

SET CONDITION

This DTC sets when the ORC detects the presence of a Seat Belt Buckle sensor circuit while the configuration of the module does not reflect a Seat Belt Buckle sensor should be present. Once set, this DTC is latched for the entire power cycle and requires the module to be re-initalized to set code.

POSSIBLE CAUSES

Possible Causes
UNUSED SEAT BELT BUCKLE SENSOR CIRCUITS SHORTED TO VOLTAGE, SHORTED TO GROUND, OR SHORTED TOGETHER
OCCUPANT RESTRAINT CONTROLLER (ORC)

Always perform the Pre-Diagnostic Troubleshooting procedure before proceeding. Refer to STANDARD PROCEDURE .

DIAGNOSTIC TEST

1. **DETERMINE ACTIVE OR STORED DTC**

   NOTE: Make sure the battery is fully charged.

   1. Turn the ignition on.
   2. With the scan tool, read ORC DTCs.

      Is the DTC active or stored?

      ORC - ACTIVE DTC

      - Go To 2

      ORC - STORED DTC

- Perform the RESTRAINTS SYSTEM INTERMITTENT TEST. Refer to **STANDARD PROCEDURE** .

2. **CHECK UNUSED SEAT BELT BUCKLE SENSOR CIRCUITS FOR A SHORT TO VOLTAGE, SHORT TO GROUND, OR SHORT TOGETHER**
   1. Check any unused Seat Belt Buckle Sensor circuits for possible short to voltage.
   2. Check any unused Seat Belt Buckle Sensor circuits for possible short to ground.
   3. Check any unused Seat Belt Buckle Sensor circuits for possible short together.

   Are any of the unused Seat Position circuits shorted?

   Yes

   WARNING: Turn the ignition off disconnect the 12-volt battery and wait two minutes before proceeding. Failure to follow these instructions may result in possible serious or fatal injury.

   - Repair any unused Seat Belt Buckle Sensor circuits that are shorted.
   - Perform the RESTRAINTS SYSTEM INTERMITTENT TEST. Refer to **STANDARD PROCEDURE** .

   No

   NOTE: Make sure the part number of the replacement module is the correct part number for the vehicle.

   WARNING: If the Occupant Restraint Controller (ORC) is dropped at any time, it must be replaced. Failure to take the proper precautions can result in accidental airbag deployment. Failure to follow these instructions may result in possible serious or fatal injury.

   WARNING: Turn the ignition off disconnect the 12-volt battery and wait two minutes before proceeding. Failure to follow these instructions may result in possible serious or fatal injury.

   - Replace the ORC in accordance with the Service Information. Refer to **MODULE, OCCUPANT RESTRAINT CONTROLLER, REMOVAL** .
   - Perform the RESTRAINTS SYSTEM VERIFICATION TEST. Refer to **STANDARD PROCEDURE** .

B0079-11-DRIVER SEATBELT ANCHOR PRETENSIONER DEPLOYMENT CONTROL - CIRCUIT SHORT TO GROUND

For a complete wiring diagram, **refer to appropriate SYSTEM WIRING DIAGRAMS article** .

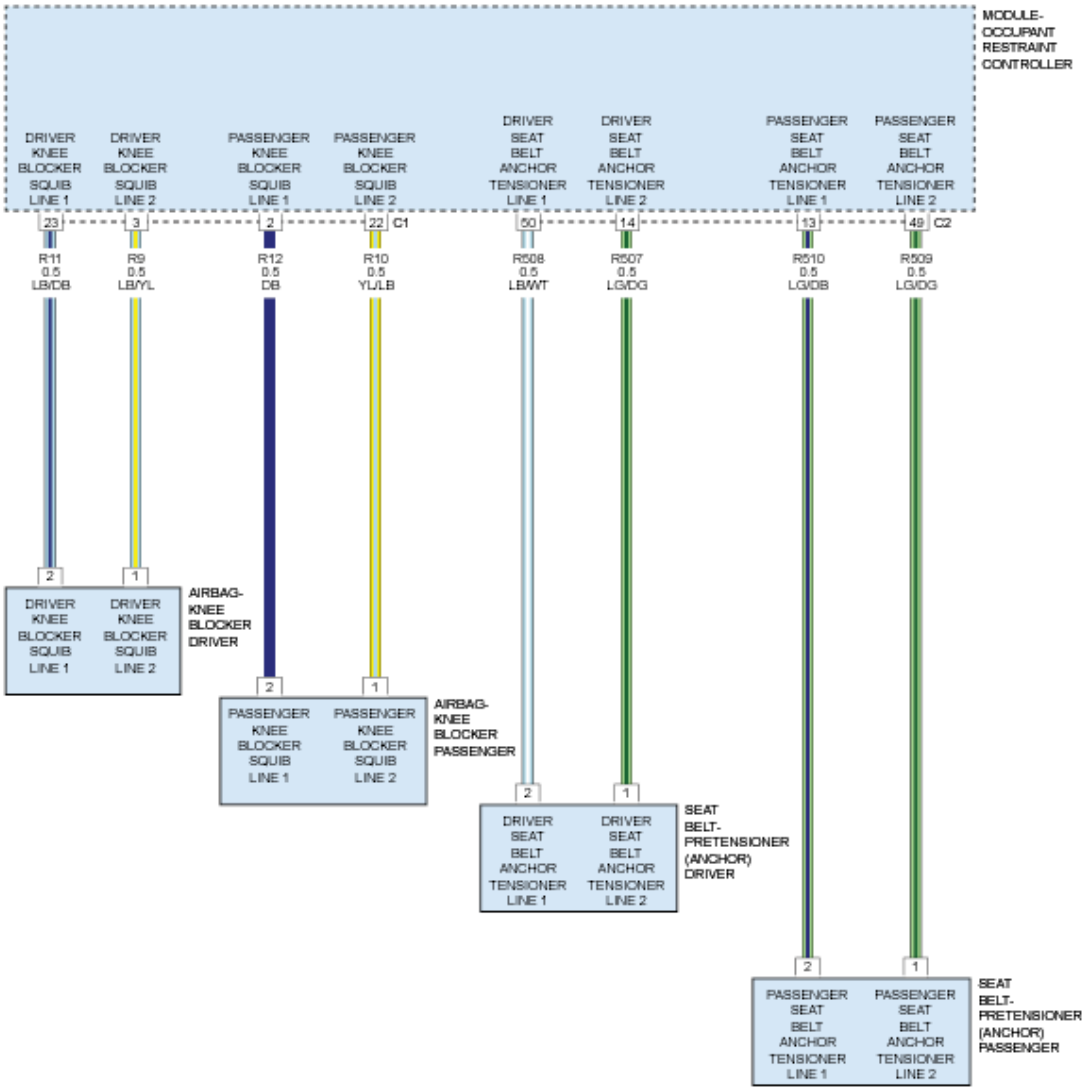

Fig. 12: Knee Blocker & Seat Belt Pretensioner Circuit Diagram
Courtesy of CHRYSLER GROUP, LLC

THEORY OF OPERATION

The location of the anchor buckle tensioner is at the base of the B-pillar. The anchor buckle tensioner is an internal part of the seat belt retractor. When powered, the Occupant Restraint Controller (ORC) sends a test current to the squibs to verify the integrity of the squib and wiring. These circuits are maintained in a "floating" configuration at the ORC (connected to neither power nor ground) as protection against inadvertent deployment. Use of the (special tool #8443A, SRS Load Tool)in the tests below substitutes a suspect squib with a known good component. The (special tool #8443-57, Adapter, Supplemental Restraint System Load Tool) provides a test point as well as a method for opening the shorting bar connections within the ORC harness connector. The anchor buckle tensioners can not be repaired and if ineffective or damaged the entire anchor buckle unit is to be replaced. Following any front airbag deployment the anchor buckle tensioners will also be

replaced.

WHEN MONITORED

With the ignition on.

SET CONDITION

The Occupant Restraint Controller (ORC) monitors the resistance of the Driver Seat Belt Tensioner circuits. The ORC will set this DTC if it detects low resistance on the Driver Seat Belt Tensioner circuits for 2.6 seconds. The DTC will change from active to stored when the ORC monitoring shows the short to ground circuit fault is gone for 2.6 seconds. The airbag warning lamp (AWL) will set in the instrument cluster.

POSSIBLE CAUSES

Possible Causes
(R508) DRIVER SEAT BELT ANCHOR TENSIONER LINE 1 CIRCUIT SHORTED TO GROUND
(R507) DRIVER SEAT BELT ANCHOR TENSIONER LINE 2 CIRCUIT SHORTED TO GROUND
DRIVER SEAT BELT ANCHOR PRETENSIONER
OCCUPANT RESTRAINT CONTROLLER (ORC)

Always perform the Pre-Diagnostic Troubleshooting procedure before proceeding. Refer to STANDARD PROCEDURE .

DIAGNOSTIC TEST

1. **DETERMINE ACTIVE OR STORED DTC**

   NOTE: Make sure that the battery is fully charged.

   NOTE: The scan tool, (special tool #8443A, SRS Load Tool), and DVOM are required to perform the following test.

   1. Turn the ignition on.

      Select ACTIVE or STORED DTC:

      ACTIVE DTC

      - Go To 2

      STORED DTC

      - Perform the RESTRAINTS SYSTEM INTERMITTENT TEST. Refer to **STANDARD PROCEDURE** .

2. **CHECK FOR SHORTED DRIVER SEAT BELT ANCHOR TENSIONER**

WARNING: Turn the ignition off, disconnect the 12-volt battery and wait two minutes before proceeding. Failure to follow these instructions may result in possible serious or fatal injury.

1. Disconnect the Driver Seat Belt Anchor Pretensioner harness connector.

NOTE: Check connectors - Clean and repair as necessary.

2. Connect the (special tool #8443A, SRS Load Tool) and the (special tool #8443-8, Jumper, SRS Load) to the Driver Seat Belt Anchor Pretensioner harness connector.
3. If equipped with the standard key ignition, use this ignition on warning.

WARNING: Turn the ignition on, then reconnect the 12-volt battery and wait two minutes before proceeding. Failure to follow these instructions may result in possible serious or fatal injury.

4. If equipped with the keyless ignition, use this ignition on warning.

WARNING: Disconnect the 12-volt battery wait two minutes before proceeding, remove the ORC fuses, connect the 12-volt battery, wait two minutes before proceeding. Cycle the ignition to the On position, then reconnect the ORC fuses. Wait two minutes before proceeding. Failure to follow these instructions may result in possible serious or fatal injury.

5. With the scan tool, read the active ORC DTCs.

Does the scan tool display: B0079-11-DRIVER ANCHOR PRETENSIONER DEPLOYMENT CONTROL - CIRCUIT SHORT TO GROUND?

Yes

- Go To 3

No

- Replace the Driver Seat Belt Anchor Pretensioner in accordance with the Service Information. Refer to **RETRACTOR, SEAT BELT, REMOVAL** .
- Perform the RESTRAINTS SYSTEM VERIFICATION TEST. Refer to **STANDARD PROCEDURE** .

3. **CHECK THE (R508) DRIVER SEAT BELT ANCHOR RETRACTOR LINE 1 CIRCUIT AND THE (R507) DRIVER SEAT BELT ANCHOR RETRACTOR LINE 2 CIRCUIT FOR A SHORT**

TO GROUND

WARNING: Turn the ignition off, disconnect the 12-volt battery and wait two minutes before proceeding. Failure to follow these instructions may result in possible serious or fatal injury.

1. Disconnect the (special tool #8443A, SRS Load Tool) and the (special tool #8443-8, Jumper, SRS Load) from the Driver Seat Belt Anchor Pretensioner harness connector.
2. Disconnect the ORC harness connectors.

NOTE: Check connectors - Clean and repair as necessary.

3. Connect the (special tool #8443-57, Adapter, Supplemental Restraint System Load Tool)to the ORC harness connector.
4. Measure the resistance between ground and the (R508) Driver Seat Belt Anchor Retractor Line 1 circuit at the (special tool #8443-57, Adapter, Supplemental Restraint System Load Tool) connector C1B cavity 50.
5. Measure the resistance between ground and the (R507) Driver Seat Belt Anchor Retractor Line 2 circuit at the (special tool #8443-57, Adapter, Supplemental Restraint System Load Tool) connector C1B cavity 14.

Is the resistance below 10k Ohms on either circuit?

Yes

- Repair the Driver Seat Belt Anchor Pretensioner circuits with resistance below 10k Ohms for a short to ground.
- Perform the RESTRAINTS SYSTEM VERIFICATION TEST. Refer to **STANDARD PROCEDURE** .

No

WARNING: If the Occupant Restraint Controller (ORC) is dropped at any time, it must be replaced. Failure to take the proper precautions can result in accidental airbag deployment. Failure to follow these instructions may result in possible serious or fatal injury.

- Replace the ORC in accordance with Service Information. Refer to **MODULE, OCCUPANT RESTRAINT CONTROLLER, REMOVAL** .
- Perform the RESTRAINTS SYSTEM VERIFICATION TEST. Refer to **STANDARD PROCEDURE** .

B0079-12-DRIVER SEATBELT ANCHOR PRETENSIONER DEPLOYMENT CONTROL - CIRCUIT SHORT TO BATTERY

For a complete wiring diagram, **refer to appropriate SYSTEM WIRING DIAGRAMS article** .

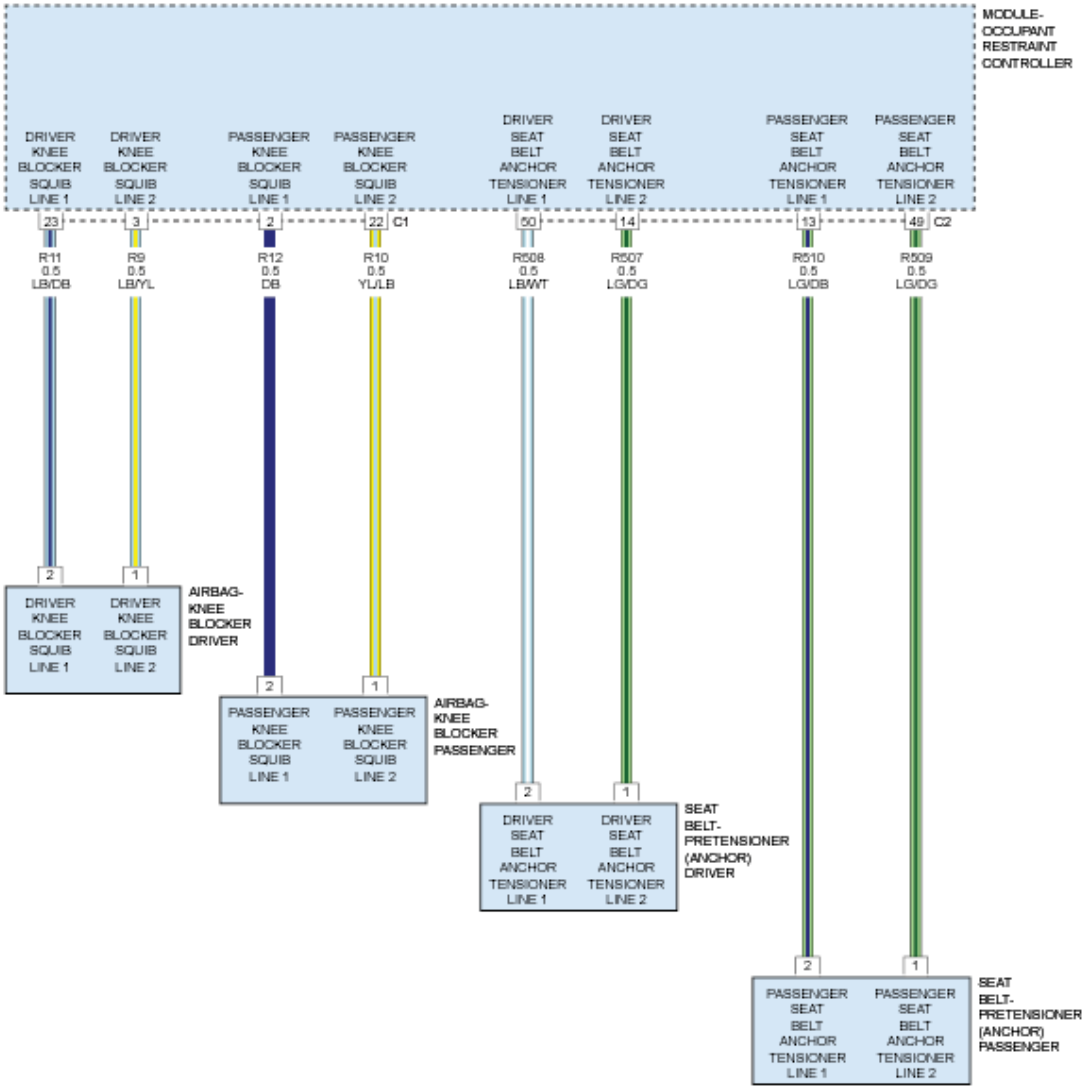

Fig. 13: Knee Blocker & Seat Belt Pretensioner Circuit Diagram
Courtesy of CHRYSLER GROUP, LLC

THEORY OF OPERATION

The location of the anchor buckle tensioner is at the base of the B-pillar. The anchor buckle tensioner is an internal part of the seat belt retractor. When powered, the Occupant Restraint Controller (ORC) sends a test current to the squibs to verify the integrity of the squib and wiring. These circuits are maintained in a "floating" configuration at the ORC (connected to neither power nor ground) as protection against inadvertent deployment. Use of the (special tool #8443A, SRS Load Tool) in the tests below substitutes a suspect squib with a known good component. The (special tool #8443-57, Adapter, Supplemental Restraint System Load Tool) provides a test point as well as a method for opening the shorting bar connections within the ORC harness

connector. The anchor buckle tensioners can not be repaired and if ineffective or damaged the entire anchor buckle unit is to be replaced. Following any front airbag deployment the anchor buckle tensioners will also be replaced.

WHEN MONITORED

With the ignition on.

SET CONDITION

The Occupant Restraint Controller (ORC) monitors the resistance of the Driver Seat Belt Tensioner circuits. The ORC will set this DTC if it detects voltage on the Driver Seat Belt Anchor Tensioner circuits for 2.6 seconds. The DTC will change from active to stored when the ORC monitoring shows the short to voltage circuit fault is gone for 2.6 seconds. The airbag warning lamp (AWL) will set in the instrument cluster.

POSSIBLE CAUSES

Possible Causes
(R508) DRIVER SEAT BELT ANCHOR TENSIONER LINE 1 CIRCUIT SHORTED TO VOLTAGE
(R507) DRIVER SEAT BELT ANCHOR TENSIONER LINE 2 CIRCUIT SHORTED TO VOLTAGE
DRIVER SEAT BELT ANCHOR PRETENSIONER (ANCHOR)
OCCUPANT RESTRAINT CONTROLLER (ORC)

Always perform the Pre-Diagnostic Troubleshooting procedure before proceeding. Refer to STANDARD PROCEDURE .

DIAGNOSTIC TEST

1. **DETERMINE ACTIVE OR STORED DTC**

   NOTE: Make sure that the battery is fully charged.

   NOTE: The scan tool, SRS Load Tool Kit 8443A, (special tool #8443A, SRS Load Tool)and DVOM are required to perform the following test.

   1. Turn the ignition on.

      Select ACTIVE or STORED DTC:

      ACTIVE DTC

      - Go To 2

      STORED DTC

- Perform the RESTRAINTS SYSTEM INTERMITTENT TEST. Refer to **STANDARD PROCEDURE** .

2. **CHECK FOR SHORTED DRIVER SEAT BELT TENSIONER (ANCHOR)**

WARNING: Turn the ignition off disconnect the 12-volt battery and wait two minutes before proceeding. Failure to follow these instructions may result in possible serious or fatal injury.

1. Disconnect the Driver Seat Belt Tensioner harness connector.

NOTE: Check connectors - Clean and repair as necessary.

2. Connect the (special tool #8443A, SRS Load Tool) and (special tool #8443-8, Jumper, SRS Load) to the Driver Seat Belt Anchor Pretensioner harness connector.
3. If equipped with the standard key ignition, use this ignition on warning.

WARNING: Turn the ignition on, then reconnect the 12-volt battery and wait two minutes before proceeding. Failure to follow these instructions may result in possible serious or fatal injury.

4. If equipped with the keyless ignition, use this ignition on warning.

WARNING: Disconnect the 12-volt battery wait two minutes before proceeding, remove the ORC fuses, connect the 12-volt battery, wait two minutes before proceeding. Cycle the ignition to the On position, then reconnect the ORC fuses. Wait two minutes before proceeding. Failure to follow these instructions may result in possible serious or fatal injury.

5. With the scan tool, read the active ORC DTCs.

Does the scan tool display: B0079-11-DRIVER ANCHOR PRETENSIONER DEPLOYMENT CONTROL - CIRCUIT SHORT TO BATTERY?

Yes

- Go To 3

No

- Replace the Driver Seat Belt Anchor Pretensioner in accordance with the Service Information. Refer to **RETRACTOR, SEAT BELT, REMOVAL** .
- Perform the RESTRAINTS SYSTEM VERIFICATION TEST. Refer to **STANDARD PROCEDURE** .

3. **CHECK THE (R508) DRIVER SEAT BELT ANCHOR TENSIONER LINE 1 CIRCUIT AND THE (R507) DRIVER SEAT BELT ANCHOR TENSIONER LINE 2 CIRCUIT FOR A SHORT TO BATTERY**

WARNING: Turn the ignition off disconnect the 12-volt battery and wait two minutes before proceeding. Failure to follow these instructions may result in possible serious or fatal injury.

1. Disconnect the (special tool #8443A, SRS Load Tool) and (special tool #8443-8, Jumper, SRS Load) from the Driver Seat Belt Anchor Pretensioner harness connector.
2. Disconnect the ORC harness connectors.

NOTE: Check connectors - Clean and repair as necessary.

3. Connect the (special tool #8443-57, Adapter, Supplemental Restraint System Load Tool)to the ORC harness connectors.
4. If equipped with the standard key ignition, use this ignition on warning.

WARNING: Turn the ignition on, then reconnect the 12-volt battery and wait two minutes before proceeding. Failure to follow these instructions may result in possible serious or fatal injury.

5. If equipped with the keyless ignition, use this ignition on warning.

WARNING: Disconnect the 12-volt battery wait two minutes before proceeding, remove the ORC fuses, connect the 12-volt battery, wait two minutes before proceeding. Cycle the ignition to the On position, then reconnect the ORC fuses. Wait two minutes before proceeding. Failure to follow these instructions may result in possible serious or fatal injury.

6. Measure the voltage of the (R508) Driver Seat Belt Anchor Tensioner Line 1 circuit between the (special tool #8443-57, Adapter, Supplemental Restraint System Load Tool) connector C1B cavity 50 and ground.
7. Measure the voltage of the (R507) Driver Seat Belt Anchor Tensioner Line 2 circuit between the (special tool #8443-57, Adapter, Supplemental Restraint System Load Tool) connector C1B cavity 14 and ground.

Is there any voltage present on either circuit?

Yes

- Repair the Driver Seat Belt Anchor Tensioner circuits with voltage present for a short to battery.

- Perform the RESTRAINTS SYSTEM VERIFICATION TEST. Refer to **STANDARD PROCEDURE** .

No

WARNING: If the Occupant Restraint Controller (ORC) is dropped at any time, it must be replaced. Failure to take the proper precautions can result in accidental airbag deployment. Failure to follow these instructions may result in possible serious or fatal injury.

WARNING: Turn the ignition off disconnect the 12-volt battery and wait two minutes before proceeding. Failure to follow these instructions may result in possible serious or fatal injury.

- Replace the ORC in accordance with Service Information. Refer to **MODULE, OCCUPANT RESTRAINT CONTROLLER, REMOVAL** .
- Perform the RESTRAINTS SYSTEM VERIFICATION TEST. Refer to **STANDARD PROCEDURE** .

B0079-13-DRIVER SEATBELT ANCHOR PRETENSIONER DEPLOYMENT CONTROL - CIRCUIT OPEN

For a complete wiring diagram, **refer to appropriate SYSTEM WIRING DIAGRAMS article** .

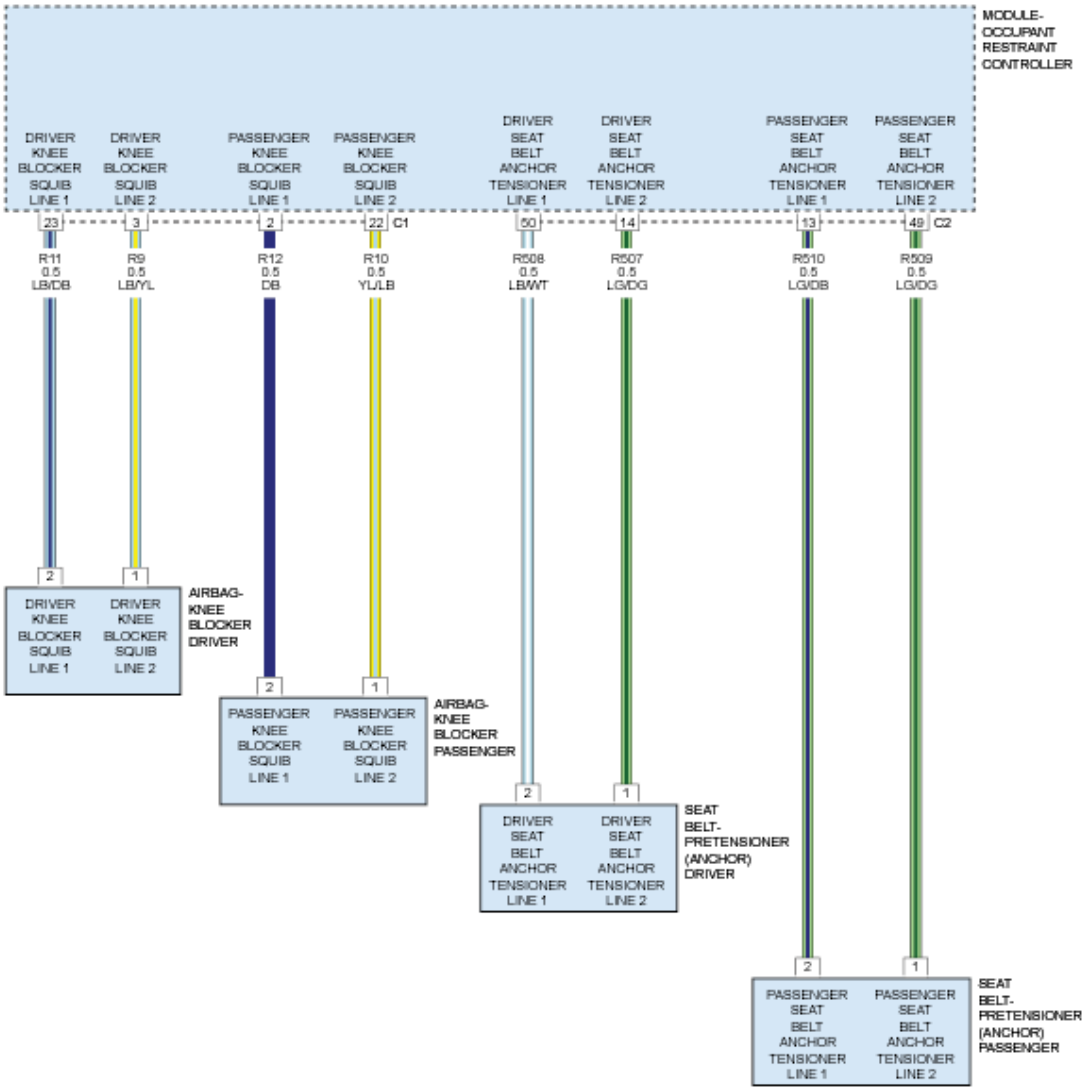

Fig. 14: Knee Blocker & Seat Belt Pretensioner Circuit Diagram
Courtesy of CHRYSLER GROUP, LLC

THEORY OF OPERATION

The location of the anchor buckle tensioner is at the base of the B-pillar. The anchor buckle tensioner is an internal part of the seat belt retractor. When powered, the Occupant Restraint Controller (ORC) sends a test current to the squibs to verify the integrity of the squib and wiring. These circuits are maintained in a "floating" configuration at the ORC (connected to neither power nor ground) as protection against inadvertent deployment. Use of the (special tool #8443A, SRS Load Tool) in the tests below substitutes a suspect squib with a known good component. The (special tool #8443-57, Adapter, Supplemental Restraint System Load Tool) provides a test point as well as a method for opening the shorting bar connections within the ORC harness connector. The anchor buckle tensioners can not be repaired and if ineffective or damaged the entire anchor buckle unit is to be replaced. Following any front airbag deployment the anchor buckle tensioners will also be

replaced.

WHEN MONITORED

With the ignition on.

SET CONDITION

The Occupant Restraint Controller (ORC) monitors the resistance of the Driver Seat Belt Tensioner circuits. The ORC will set this DTC if it detects high resistance on the Driver Seat Belt Anchor Tensioner circuits for 2.6 seconds. The DTC will change from active to stored when the ORC monitoring shows the open circuit fault is gone for 2.6 seconds. The airbag warning lamp (AWL) will set in the instrument cluster.

POSSIBLE CAUSES

Possible Causes
(R508) DRIVER SEAT BELT ANCHOR TENSIONER LINE 1 CIRCUIT OPEN
(R507) DRIVER SEAT BELT ANCHOR TENSIONER LINE 2 CIRCUIT OPEN
DRIVER SEAT BELT ANCHOR PRETENSIONER
OCCUPANT RESTRAINT CONTROLLER (ORC)

Always perform the Pre-Diagnostic Troubleshooting procedure before proceeding. Refer to STANDARD PROCEDURE .

DIAGNOSTIC TEST

1. **DETERMINE ACTIVE OR STORED DTC**

   NOTE: Make sure that the battery is fully charged.

   NOTE: The scan tool, (special tool #8443A, SRS Load Tool), and DVOM are required to perform the following test.

   1. Turn the ignition on.

      SELECT ACTIVE or STORED DTC:

      ACTIVE DTC

      - Go To 2

      STORED DTC

      - Perform the RESTRAINTS SYSTEM INTERMITTENT TEST. Refer to **STANDARD PROCEDURE** .

2. **CHECK FOR OPEN DRIVER SEAT BELT ANCHOR PRETENSIONER**

WARNING: Turn the ignition off, disconnect the 12-volt battery and wait two minutes before proceeding. Failure to follow these instructions may result in possible serious or fatal injury.

1. Disconnect the Driver Seat Belt Anchor Pretensioner harness connector.

NOTE: Check connectors - Clean and repair as necessary.

2. Connect the (special tool #8443A, SRS Load Tool) and the (special tool #8443-8, Jumper, SRS Load) to the Driver Seat Belt Tensioner (Anchor) harness connector.

WARNING: Turn the ignition on, then reconnect the 12-volt battery and wait two minutes before proceeding. Failure to follow these instructions may result in possible serious or fatal injury.

3. With the scan tool, read the active ORC DTCs.

Does the scan tool display: B0079-13-DRIVER SEATBELT ANCHOR PRETENSIONER DEPLOYMENT CONTROL - CIRCUIT OPEN?

Yes

- Go To 3

No

- Replace the Driver Seat Belt Anchor Pretensioner in accordance with the Service Information. Refer to **RETRACTOR, SEAT BELT, REMOVAL** .
- Perform the RESTRAINTS SYSTEM VERIFICATION TEST. Refer to **STANDARD PROCEDURE** .

3. **CHECK THE (R508) DRIVER SEAT BELT ANCHOR TENSIONER LINE 1 CIRCUIT FOR AN OPEN**

WARNING: Turn the ignition off, disconnect the 12-volt battery and wait two minutes before proceeding. Failure to follow these instructions may result in possible serious or fatal injury.

1. Disconnect the (special tool #8443A, SRS Load Tool) and the (special tool #8443-8, Jumper, SRS Load) from the Driver Seat Belt Anchor Pretensioner harness connector.
2. Disconnect the ORC harness connectors.

NOTE: Check connectors - Clean and repair as necessary.

3. Connect the (special tool #8443-57, Adapter, Supplemental Restraint System Load Tool) to the ORC harness connector.
4. Measure the resistance of the (R508) Driver Seat Belt Anchor Tensioner Line 1 circuit between the Driver Seat Belt Anchor Pretensioner harness connector cavity 2 and the (special tool #8443-57, Adapter, Supplemental Restraint System Load Tool) connector C1B cavity 50.

   Is the resistance below or within 5.4 - 10.0 Ohms?

   Yes

   - Go To 4

   No

   - Repair the open (R508) Driver Seat Belt Anchor Tensioner Line 1 circuit.
   - Perform the RESTRAINTS SYSTEM VERIFICATION TEST. Refer to **STANDARD PROCEDURE** .

4. **CHECK THE (R507) DRIVER SEAT BELT ANCHOR TENSIONER LINE 2 CIRCUIT FOR AN OPEN**
   1. Measure the resistance of the (R507) Driver Seat Belt Anchor Tensioner Line 2 circuit between the Driver Seat Belt Anchor Pretensioner harness connector cavity 1 and the (special tool #8443-57, Adapter, Supplemental Restraint System Load Tool) connector C1B cavity 14.

      Is the resistance below or within 5.4 - 10.0 Ohms?

      Yes

      WARNING: **If the Occupant Restraint Controller (ORC) is dropped at any time, it must be replaced. Failure to follow these instructions may result in possible serious or fatal injury.**

      - Replace the ORC in accordance with Service Information. Refer to **MODULE, OCCUPANT RESTRAINT CONTROLLER, REMOVAL** .
      - Perform the RESTRAINTS SYSTEM VERIFICATION TEST. Refer to **STANDARD PROCEDURE** .

      No

      - Repair the open (R507) Driver Seat Belt Anchor Tensioner Line 2 circuit.
      - Perform the RESTRAINTS SYSTEM VERIFICATION TEST. Refer to **STANDARD PROCEDURE** .

B0079-2B-DRIVER SEATBELT ANCHOR PRETENSIONER DEPLOYMENT CONTROL - WIRES SHORTED TOGETHER

For a complete wiring diagram, **refer to appropriate SYSTEM WIRING DIAGRAMS article** .

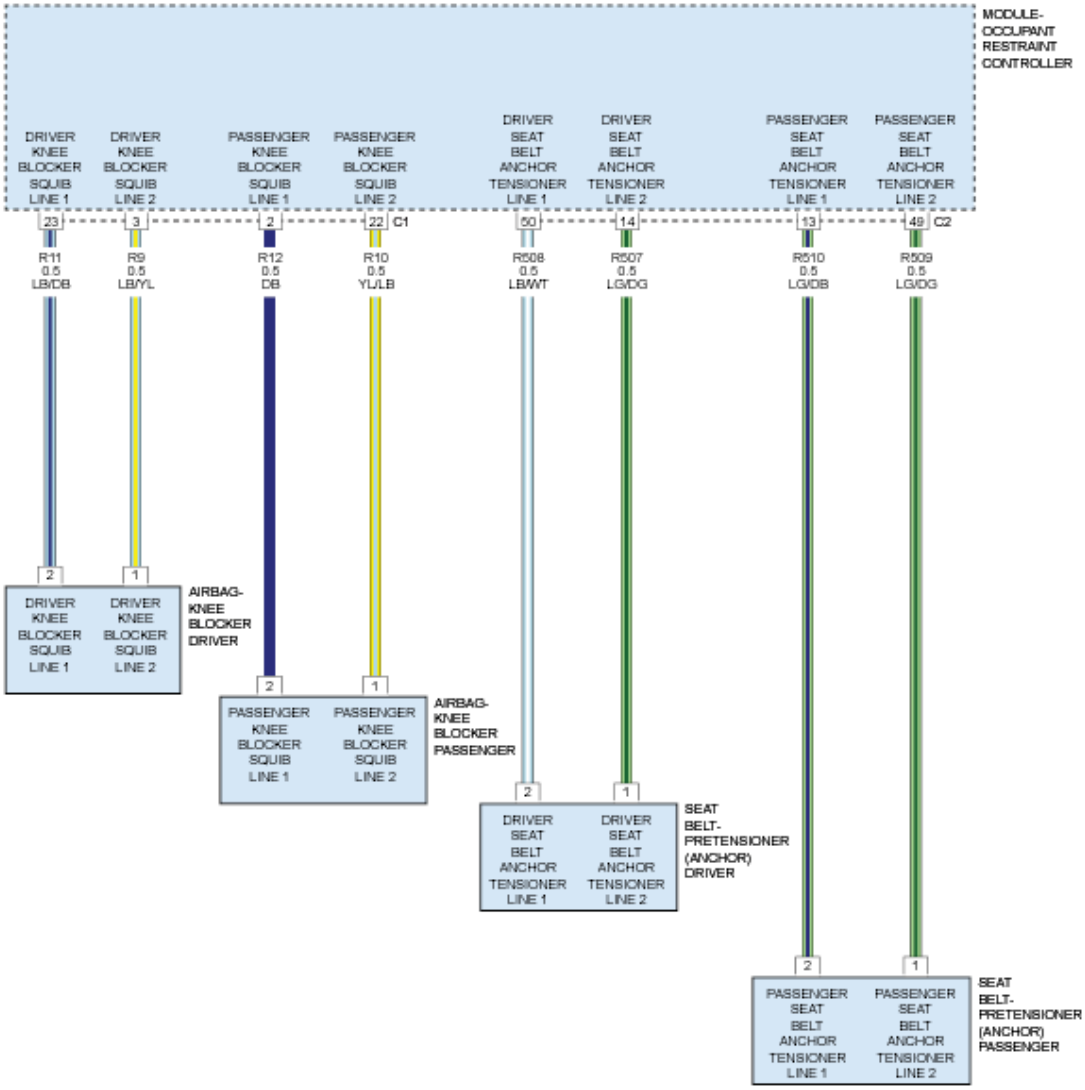

Fig. 15: Knee Blocker & Seat Belt Pretensioner Circuit Diagram
Courtesy of CHRYSLER GROUP, LLC

THEORY OF OPERATION

The location of the anchor buckle tensioner is at the base of the B-pillar. The anchor buckle tensioner is an internal part of the seat belt retractor. When powered, the Occupant Restraint Controller (ORC) sends a test current to the squibs to verify the integrity of the squib and wiring. These circuits are maintained in a "floating" configuration at the ORC (connected to neither power nor ground) as protection against inadvertent deployment. Use of the (special tool #8443A, SRS Load Tool) in the tests below substitutes a suspect squib with a known good component. The (special tool #8443-57, Adapter, Supplemental Restraint System Load Tool) provides a test point as well as a method for opening the shorting bar connections within the ORC harness

connector. The anchor buckle tensioners can not be repaired and if ineffective or damaged the entire anchor buckle unit is to be replaced. Following any front airbag deployment the anchor buckle tensioners will also be replaced.

WHEN MONITORED

With the ignition on.

SET CONDITION

The Occupant Restraint Controller (ORC) monitors the resistance of the Driver Seat Belt Anchor Pretensioner circuits. The ORC will set this DTC if it detects low resistance on the Driver Seat Belt Tensioner (Anchor) circuits for 2.6 seconds. The DTC will change from active to stored when the ORC monitoring shows the shorted together circuit fault is gone for 2.6 seconds. The airbag warning lamp (AWL) will set in the instrument cluster.

POSSIBLE CAUSES

Possible Causes
(R508) DRIVER SEAT BELT ANCHOR TENSIONER LINE 1 CIRCUIT SHORTED TO THE (R507) DRIVER SEAT BELT ANCHOR TENSIONER LINE 2 CIRCUIT
DRIVER SEAT BELT ANCHOR PRETENSIONER
OCCUPANT RESTRAINT CONTROLLER (ORC)

Always perform the Pre-Diagnostic Troubleshooting procedure before proceeding. Refer to STANDARD PROCEDURE .

DIAGNOSTIC TEST

1. **DETERMINE ACTIVE OR STORED DTC**

   NOTE: Make sure that the battery is fully charged.

   NOTE: The scan tool, (special tool #8443A, SRS Load Tool), and DVOM are required to perform the following test.

   1. Turn the ignition on.

      Select ACTIVE or STORED DTC:

      ACTIVE DTC

      - Go To 2

      STORED DTC

- Perform the RESTRAINTS SYSTEM INTERMITTENT TEST. Refer to **STANDARD PROCEDURE** .

2. **CHECK FOR SHORTED DRIVER SEAT BELT PRETENSIONER**

WARNING: Turn the ignition off disconnect the 12-volt battery and wait two minutes before proceeding. Failure to follow these instructions may result in possible serious or fatal injury.

1. Disconnect the Driver Seat Belt Anchor Pretensioner harness connector.

NOTE: Check connectors - Clean and repair as necessary.

2. Connect the (special tool #8443A, SRS Load Tool) and the (special tool #8443-8, Jumper, SRS Load) to the Driver Seat Belt Anchor Pretensioner harness connector.
3. If equipped with the standard key ignition, use this ignition on warning.

WARNING: Turn the ignition on, then reconnect the 12-volt battery and wait two minutes before proceeding. Failure to follow these instructions may result in possible serious or fatal injury.

4. If equipped with the keyless ignition, use this ignition on warning.

WARNING: Disconnect the 12-volt battery wait two minutes before proceeding, remove the ORC fuses, connect the 12-volt battery, wait two minutes before proceeding. Cycle the ignition to the On position, then reconnect the ORC fuses. Wait two minutes before proceeding. Failure to follow these instructions may result in possible serious or fatal injury.

5. With the scan tool, read the active ORC DTCs.

Does the scan tool display: B0079-2B-DRIVER SEATBELT ANCHOR PRETENSIONER DEPLOYMENT CONTROL- WIRES SHORTED TOGETHER?

Yes

- Go To 3

No

- Replace the Driver Seat Belt Anchor Pretensioner in accordance with the Service Information. Refer to **RETRACTOR, SEAT BELT, REMOVAL** .
- Perform the RESTRAINTS SYSTEM VERIFICATION TEST. Refer to **STANDARD PROCEDURE** .

3. **CHECK THE (R508) DRIVER SEAT BELT ANCHOR TENSIONER LINE 1 CIRCUIT FOR A SHORT TO THE (R507) DRIVER SEAT BELT ANCHOR TENSIONER LINE 2 CIRCUIT**

WARNING: Turn the ignition off disconnect the 12-volt battery and wait two minutes before proceeding. Failure to follow these instructions may result in possible serious or fatal injury.

1. Disconnect the (special tool #8443A, SRS Load Tool)and the (special tool #8443-8, Jumper, SRS Load) from the Driver Seat Belt Anchor Pretensioner harness connector.
2. Disconnect the ORC harness connectors.

NOTE: Check connectors - Clean and repair as necessary.

3. Connect the (special tool #8443-57, Adapter, Supplemental Restraint System Load Tool) to the ORC harness connector.
4. Measure the resistance between the (R508) Driver Seat Belt Anchor Tensioner Line 1 circuit connector C1B cavity 50 and the (R507) Driver Seat Belt Anchor Tensioner Line 2 circuit connector C1B cavity 14 at the (special tool #8443-57, Adapter, Supplemental Restraint System Load Tool).

Is the resistance below or within 1.5 - 2.18 Ohms?

Yes

- Repair the (R508) Driver Seat Belt Anchor Tensioner Line 1 circuit for a short to the (R507) Driver Seat Belt Anchor Tensioner Line 2 circuit.
- Perform the RESTRAINTS SYSTEM VERIFICATION TEST. Refer to **STANDARD PROCEDURE** .

No

WARNING: If the Occupant Restraint Controller (ORC) is dropped at any time, it must be replaced. Failure to take the proper precautions can result in accidental airbag deployment. Failure to follow these instructions may result in possible serious or fatal injury.

- Replace the ORC in accordance with Service Information. Refer to **MODULE, OCCUPANT RESTRAINT CONTROLLER, REMOVAL** .
- Perform the RESTRAINTS SYSTEM VERIFICATION TEST. Refer to **STANDARD PROCEDURE** .

B007A-11-PASSENGER SEATBELT ANCHOR PRETENSIONER DEPLOYMENT CONTROL - CIRCUIT SHORT TO GROUND

For a complete wiring diagram, **refer to appropriate SYSTEM WIRING DIAGRAMS article** .

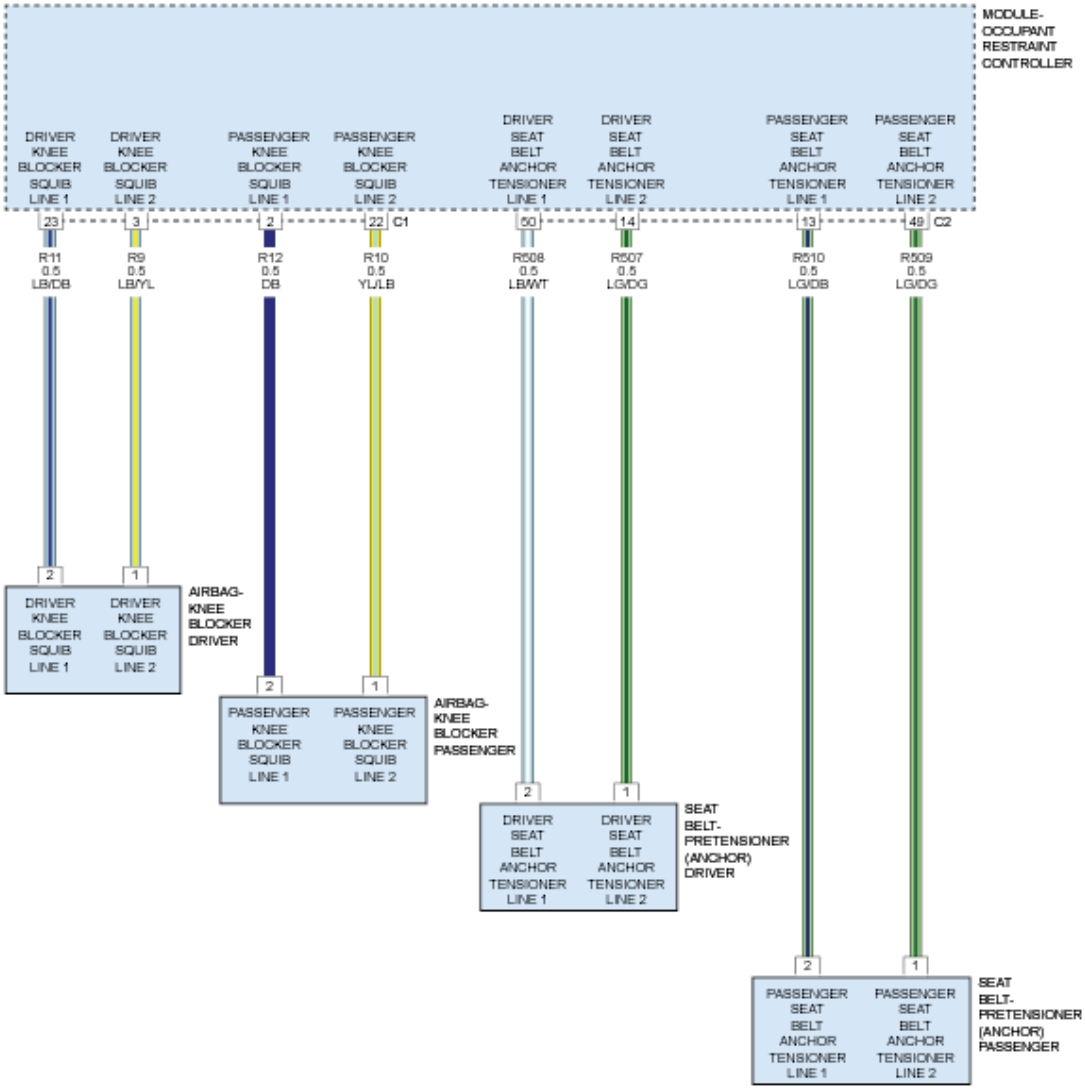

Fig. 16: Knee Blocker & Seat Belt Pretensioner Circuit Diagram
Courtesy of CHRYSLER GROUP, LLC

THEORY OF OPERATION

The location of the anchor buckle tensioner is at the base of the B-pillar. The anchor buckle tensioner is an internal part of the seat belt retractor. When powered, the Occupant Restraint Controller (ORC) sends a test current to the squibs to verify the integrity of the squib and wiring. These circuits are maintained in a "floating" configuration at the ORC (connected to neither power nor ground) as protection against inadvertent deployment. Use of the (special tool #8443A, SRS Load Tool) in the tests below substitutes a suspect squib with a known good component. The (special tool #8443-57, Adapter, Supplemental Restraint System Load Tool) provides a test point as well as a method for opening the shorting bar connections within the ORC harness

connector. The anchor buckle tensioners can not be repaired and if ineffective or damaged the entire anchor buckle unit is to be replaced. Following any front airbag deployment the anchor buckle tensioners will also be replaced.

WHEN MONITORED

With the ignition on.

SET CONDITION

The Occupant Restraint Controller (ORC) monitors the resistance of the Passenger Seat Belt Tensioner circuits. The ORC will set this DTC if it detects low resistance on the Passenger Seat Belt Anchor Pretensioner circuits for 2.6 seconds. The DTC will change from active to stored when the ORC monitoring shows the short to ground circuit fault is gone for 2.6 seconds.

POSSIBLE CAUSES

Possible Causes
(R509) PASSENGER SEAT BELT ANCHOR TENSIONER LINE 1 CIRCUIT SHORTED TO GROUND
(R510) PASSENGER SEAT BELT ANCHOR TENSIONER LINE 2 CIRCUIT SHORTED TO GROUND
PASSENGER SEAT BELT ANCHOR PRETENSIONER
OCCUPANT RESTRAINT CONTROLLER (ORC)

Always perform the Pre-Diagnostic Troubleshooting procedure before proceeding. Refer to STANDARD PROCEDURE .

DIAGNOSTIC TEST

1. **DETERMINE ACTIVE OR STORED DTC**

   NOTE: Make sure that the battery is fully charged.

   NOTE: The scan tool, (special tool #8443A, SRS Load Tool), and DVOM are required to perform the following test.

   1. Turn the ignition on.

      Select ACTIVE or STORED DTC:

      ACTIVE DTC

      - Go To 2

STORED DTC

- Perform the RESTRAINTS SYSTEM INTERMITTENT TEST. Refer to **STANDARD PROCEDURE** .

2. **CHECK FOR SHORTED PASSENGER SEAT BELT TENSIONER (ANCHOR)**

WARNING: Turn the ignition off disconnect the 12-volt battery and wait two minutes before proceeding. Failure to follow these instructions may result in possible serious or fatal injury.

1. Disconnect the Passenger Seat Belt Anchor Pretensioner harness connector.

NOTE: Check connectors - Clean and repair as necessary.

2. Connect the (special tool #8443A, SRS Load Tool) and the (special tool #8443-8, Jumper, SRS Load) to the Passenger Seat Belt Anchor Pretensioner harness connector.
3. If equipped with the standard key ignition, use this ignition on warning.

WARNING: Turn the ignition on, then reconnect the 12-volt battery and wait two minutes before proceeding. Failure to follow these instructions may result in possible serious or fatal injury.

4. If equipped with the keyless ignition, use this ignition on warning.

WARNING: Disconnect the 12-volt battery wait two minutes before proceeding, remove the ORC fuses, connect the 12-volt battery, wait two minutes before proceeding. Cycle the ignition to the On position, then reconnect the ORC fuses. Wait two minutes before proceeding. Failure to follow these instructions may result in possible serious or fatal injury.

5. With the scan tool, read the active ORC DTCs.

Does the scan tool display: B007A-11-FRONT PASSENGER SEATBELT ANCHOR PRETENSIONER DEPLOYMENT CONTROL - CIRCUIT SHORT TO GROUND?

Yes

- Go To 3

No

- Replace the Passenger Seat Belt Tensioner in accordance with the Service Information. Refer to **RETRACTOR, SEAT BELT, REMOVAL** .

- Perform the RESTRAINTS SYSTEM VERIFICATION TEST. Refer to **STANDARD PROCEDURE** .

3. **CHECK THE (R510) PASSENGER SEAT BELT ANCHOR TENSIONER LINE 1 CIRCUIT AND THE (R509) PASSENGER SEAT BELT ANCHOR TENSIONER LINE 2 CIRCUIT FOR A SHORT TO GROUND**

WARNING: Turn the ignition off disconnect the 12-volt battery and wait two minutes before proceeding. Failure to follow these instructions may result in possible serious or fatal injury.

1. Disconnect the (special tool #8443A, SRS Load Tool)and the (special tool #8443-8, Jumper, SRS Load) from the Passenger Seat Belt Anchor Pretensioner harness connector.
2. Disconnect the ORC harness connectors.

NOTE: Check connectors - Clean and repair as necessary.

3. Connect the (special tool #8443-57, Adapter, Supplemental Restraint System Load Tool) to the ORC harness connector.
4. Measure the resistance of the (R510) Passenger Seat Belt Anchor Tensioner Line 1 circuit between ground and the (special tool #8443-57, Adapter, Supplemental Restraint System Load Tool) connector C1B cavity 13.
5. Measure the resistance of the (R509) Passenger Seat Belt Anchor Tensioner Line 2 circuit between ground and the (special tool #8443-57, Adapter, Supplemental Restraint System Load Tool) connector C1B cavity 49.

Is the resistance below 10k Ohms on either circuit?

Yes

- Repair the Passenger Seat Belt Anchor Pretensioner circuits with resistance below 10k Ohms for a short to ground.
- Perform the RESTRAINTS SYSTEM VERIFICATION TEST. Refer to **STANDARD PROCEDURE** .

No

WARNING: Turn the ignition off disconnect the 12-volt battery and wait two minutes before proceeding. Failure to follow these instructions may result in possible serious or fatal injury.

- Replace the ORC in accordance with Service Information. Refer to **MODULE, OCCUPANT RESTRAINT CONTROLLER, REMOVAL** .
- Perform the RESTRAINTS SYSTEM VERIFICATION TEST. Refer to **STANDARD PROCEDURE** .

B007A-12-PASSENGER SEATBELT ANCHOR PRETENSIONER DEPLOYMENT CONTROL - CIRCUIT SHORT TO BATTERY

For a complete wiring diagram, **refer to appropriate SYSTEM WIRING DIAGRAMS article** .

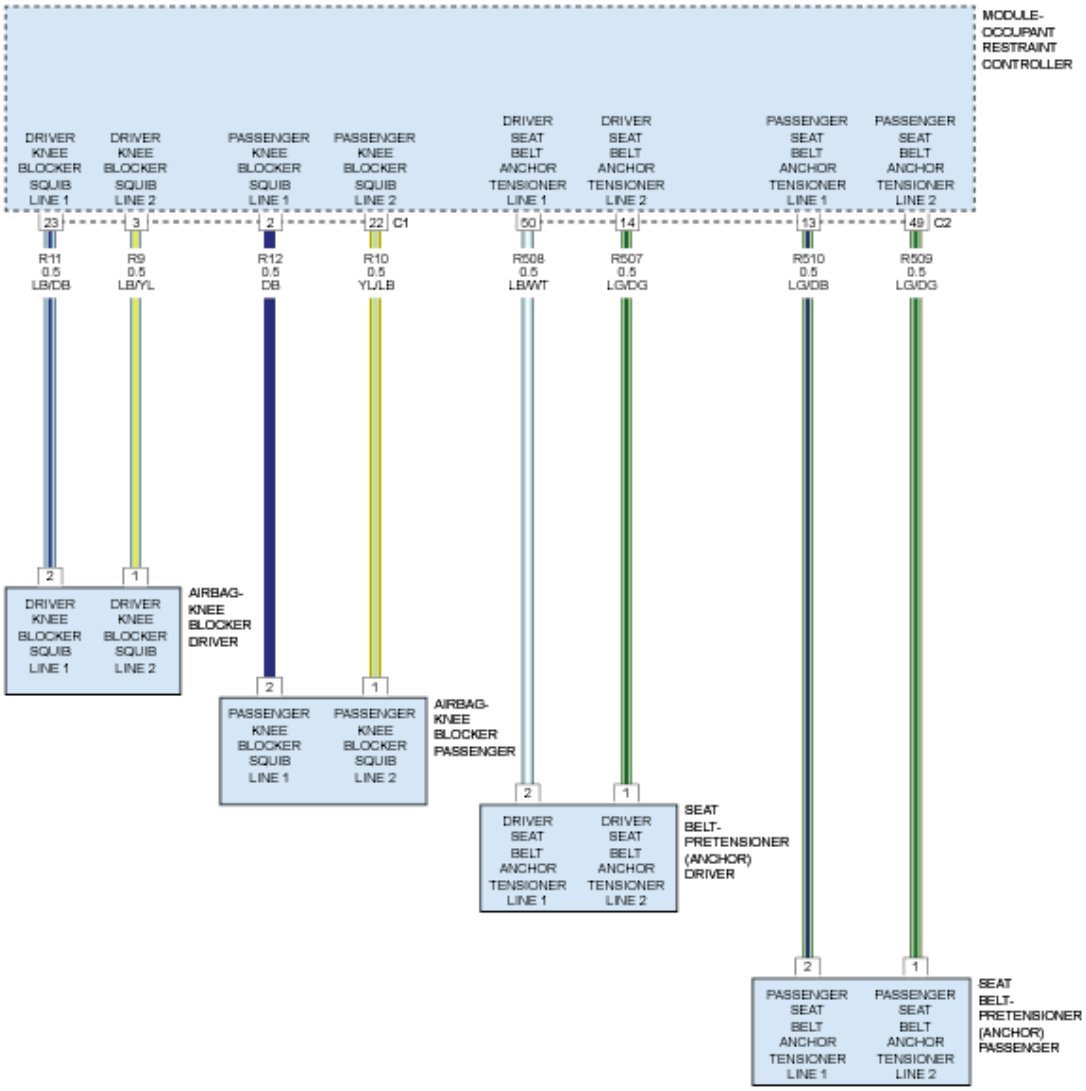

Fig. 17: Knee Blocker & Seat Belt Pretensioner Circuit Diagram
Courtesy of CHRYSLER GROUP, LLC

THEORY OF OPERATION

The location of the anchor buckle tensioner is at the base of the B-pillar. The anchor buckle tensioner is an internal part of the seat belt retractor. When powered, the Occupant Restraint Controller (ORC) sends a test current to the squibs to verify the integrity of the squib and wiring. These circuits are maintained in a "floating" configuration at the ORC (connected to neither power nor ground) as protection against inadvertent

deployment. Use of the (special tool #8443A, SRS Load Tool) in the tests below substitutes a suspect squib with a known good component. The (special tool #8443-57, Adapter, Supplemental Restraint System Load Tool) provides a test point as well as a method for opening the shorting bar connections within the ORC harness connector. The anchor buckle tensioners can not be repaired and if ineffective or damaged the entire anchor buckle unit is to be replaced. Following any front airbag deployment the anchor buckle tensioners will also be replaced.

WHEN MONITORED

With the ignition on.

SET CONDITION

The Occupant Restraint Controller (ORC) monitors the resistance of the Passenger Seat Belt Anchor Tensioner circuits. The ORC will set this DTC if it detects voltage on the Passenger Seat Belt Anchor Pretensioner circuits for 2.6 seconds. The DTC will change from active to stored when the ORC monitoring shows the short to voltage circuit fault is gone for 2.6 seconds.

POSSIBLE CAUSES

Possible Causes
(R510) PASSENGER SEAT BELT ANCHOR TENSIONER LINE 1 CIRCUIT SHORTED TO VOLTAGE
(R509) PASSENGER SEAT BELT ANCHOR TENSIONER LINE 2 CIRCUIT SHORTED TO VOLTAGE
PASSENGER SEAT BELT ANCHOR PRETENSIONER
OCCUPANT RESTRAINT CONTROLLER (ORC)

Always perform the Pre-Diagnostic Troubleshooting procedure before proceeding. Refer to STANDARD PROCEDURE .

DIAGNOSTIC TEST

1. **DETERMINE ACTIVE OR STORED DTC**

   NOTE: Make sure that the battery is fully charged.

   NOTE: The scan tool, (special tool #8443A, SRS Load Tool), and DVOM are required to perform the following test.

   1. Turn the ignition on.

      Select ACTIVE or STORED DTC:

      ACTIVE DTC

- Go To 2

STORED DTC

- Perform the RESTRAINTS SYSTEM INTERMITTENT TEST. Refer to **STANDARD PROCEDURE** .

2. **CHECK FOR SHORTED PASSENGER SEAT BELT TENSIONER (ANCHOR)**

WARNING: Turn the ignition off disconnect the 12-volt battery and wait two minutes before proceeding. Failure to follow these instructions may result in possible serious or fatal injury.

1. Disconnect the Passenger Seat Belt Anchor Pretensioner harness connector.

NOTE: Check connectors - Clean and repair as necessary.

2. Connect the (special tool #8443A, SRS Load Tool) and the (special tool #8443-8, Jumper, SRS Load) to the Passenger Seat Belt Anchor Pretensioner harness connector.
3. If equipped with the standard key ignition, use this ignition on warning.

WARNING: Turn the ignition on, then reconnect the 12-volt battery and wait two minutes before proceeding. Failure to follow these instructions may result in possible serious or fatal injury.

4. If equipped with the keyless ignition, use this ignition on warning.

WARNING: Disconnect the 12-volt battery wait two minutes before proceeding, remove the ORC fuses, connect the 12-volt battery, wait two minutes before proceeding. Cycle the ignition to the On position, then reconnect the ORC fuses. Wait two minutes before proceeding. Failure to follow these instructions may result in possible serious or fatal injury.

5. With the scan tool, read the active ORC DTCs.

Does the scan tool display: B007A-12-PASSENGER SEATBELT ANCHOR PRETENSIONER DEPLOYMENT CONTROL - CIRCUIT SHORT TO BATTERY?

Yes

- Go To 3

No

- Replace the Passenger Seat Belt Anchor Pretensioner in accordance with the Service Information. Refer to **RETRACTOR, SEAT BELT, REMOVAL** .
- Perform the RESTRAINTS SYSTEM VERIFICATION TEST. Refer to **STANDARD PROCEDURE** .

3. **CHECK THE (R510) PASSENGER SEAT BELT ANCHOR TENSIONER LINE 1 CIRCUIT AND THE (R509) PASSENGER SEAT BELT ANCHOR TENSIONER LINE 2 CIRCUIT FOR A SHORT TO BATTERY**

WARNING: Turn the ignition off, disconnect the 12-volt battery and wait two minutes before proceeding. Failure to follow these instructions may result in possible serious or fatal injury.

1. Disconnect the (special tool #8443A, SRS Load Tool) and the (special tool #8443-8, Jumper, SRS Load) from the Passenger Seat Belt Anchor Pretensioner harness connector.
2. Disconnect the ORC harness connectors.

NOTE: Check connectors - Clean and repair as necessary.

3. Connect the (special tool #8443-57, Adapter, Supplemental Restraint System Load Tool) to the ORC harness connector.
4. If equipped with the standard key ignition, use this ignition on warning.

WARNING: Turn the ignition on, then reconnect the 12-volt battery and wait two minutes before proceeding. Failure to follow these instructions may result in possible serious or fatal injury.

5. If equipped with the keyless ignition, use this ignition on warning.

WARNING: Disconnect the 12-volt battery wait two minutes before proceeding, remove the ORC fuses, connect the 12-volt battery, wait two minutes before proceeding. Cycle the ignition to the On position, then reconnect the ORC fuses. Wait two minutes before proceeding. Failure to follow these instructions may result in possible serious or fatal injury.

6. Measure the voltage of the (R510) Passenger Seat Belt Anchor Tensioner Line 1 circuit between the (special tool #8443-57, Adapter, Supplemental Restraint System Load Tool) connector C1B cavity 13 and ground.
7. Measure the voltage of the (R509) Passenger Seat Belt Anchor Tensioner Line 2 circuit between the (special tool #8443-57, Adapter, Supplemental Restraint System Load Tool) connector C1B cavity 49 and ground.

Is there any voltage present on either circuit?

Yes

- Repair the Passenger Seat Belt Anchor Tensioner circuits with voltage present for a short to battery.
- Perform the RESTRAINTS SYSTEM VERIFICATION TEST. Refer to **STANDARD PROCEDURE** .

No

WARNING: **Turn the ignition off, disconnect the 12-volt battery and wait two minutes before proceeding. Failure to follow these instructions may result in possible serious or fatal injury.**

WARNING: **If the Occupant Restraint Controller (ORC) is dropped at any time, it must be replaced. Failure to take the proper precautions can result in accidental airbag deployment. Failure to follow these instructions may result in possible serious or fatal injury.**

- Replace the ORC in accordance with Service Information. Refer to **MODULE, OCCUPANT RESTRAINT CONTROLLER, REMOVAL** .
- Perform the RESTRAINTS SYSTEM VERIFICATION TEST. Refer to **STANDARD PROCEDURE** .

B007A-13-PASSENGER SEATBELT ANCHOR PRETENSIONER DEPLOYMENT CONTROL - CIRCUIT OPEN

For a complete wiring diagram, **refer to appropriate SYSTEM WIRING DIAGRAMS article** .

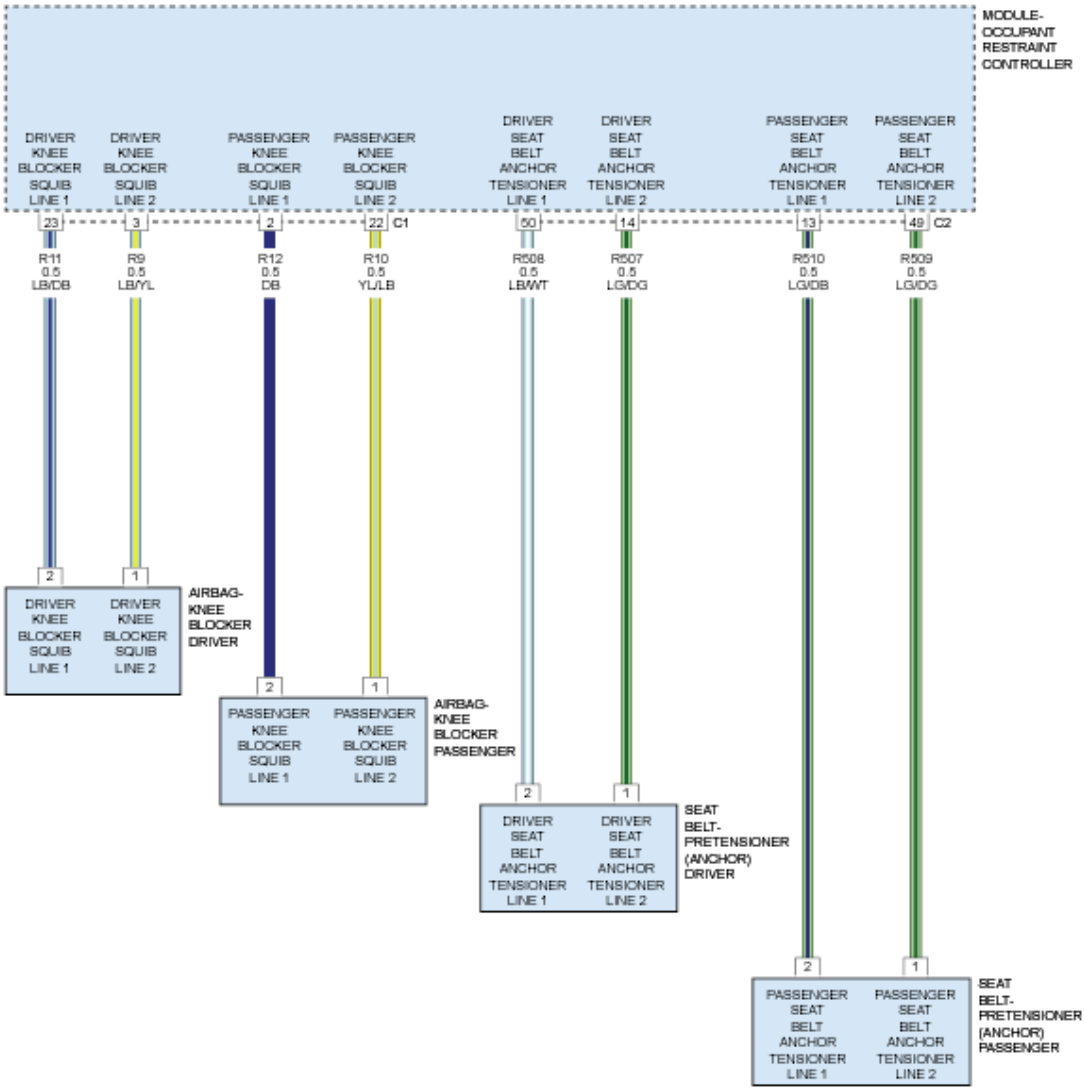

Fig. 18: Knee Blocker & Seat Belt Pretensioner Circuit Diagram
Courtesy of CHRYSLER GROUP, LLC

THEORY OF OPERATION

The location of the anchor buckle tensioner is at the base of the B-pillar. The anchor buckle tensioner is an internal part of the seat belt retractor. When powered, the Occupant Restraint Controller (ORC) sends a test current to the squibs to verify the integrity of the squib and wiring. These circuits are maintained in a "floating" configuration at the ORC (connected to neither power nor ground) as protection against inadvertent deployment. Use of the (special tool #8443A, SRS Load Tool) in the tests below substitutes a suspect squib with a known good component. The (special tool #8443-57, Adapter, Supplemental Restraint System Load Tool) provides a test point as well as a method for opening the shorting bar connections within the ORC harness connector. The anchor buckle tensioners can not be repaired and if ineffective or damaged the entire anchor buckle unit is to be replaced. Following any front airbag deployment the anchor buckle tensioners will also be

replaced.

WHEN MONITORED

With the ignition on.

SET CONDITION

The Occupant Restraint Controller (ORC) monitors the resistance of the Passenger Seat Belt Anchor Tensioner circuits. The ORC will set this DTC if it detects high resistance on the Passenger Seat Belt Anchor Tensioner circuits for 2.6 seconds. The DTC will change from active to stored when the ORC monitoring shows the open circuit fault is gone for 2.6 seconds.

POSSIBLE CAUSES

Possible Causes
(R510) PASSENGER SEAT BELT ANCHOR TENSIONER LINE 1 CIRCUIT OPEN
(R509) PASSENGER SEAT BELT ANCHOR TENSIONER LINE 2 CIRCUIT OPEN
PASSENGER SEAT BELT ANCHOR TENSIONER
OCCUPANT RESTRAINT CONTROLLER (ORC)

Always perform the Pre-Diagnostic Troubleshooting procedure before proceeding. Refer to STANDARD PROCEDURE .

DIAGNOSTIC TEST

1. **DETERMINE ACTIVE OR STORED DTC**

   NOTE: Make sure that the battery is fully charged.

   NOTE: The scan tool, (special tool #8443A, SRS Load Tool), and DVOM are required to perform the following test.

   1. Turn the ignition on.

      Select ACTIVE or STORED DTC:

      ACTIVE DTC

      - Go To 2

      STORED DTC

      - Perform the RESTRAINTS SYSTEM INTERMITTENT TEST. Refer to **STANDARD PROCEDURE** .

2. **CHECK FOR AN OPEN PASSENGER SEAT BELT TENSIONER (ANCHOR)**

WARNING: Turn the ignition off disconnect the 12-volt battery and wait two minutes before proceeding. Failure to follow these instructions may result in possible serious or fatal injury.

1. Disconnect the Passenger Seat Belt Tensioner (Anchor) harness connector.

NOTE: Check connectors - Clean and repair as necessary.

2. Connect the (special tool #8443A, SRS Load Tool) and the (special tool #8443-8, Jumper, SRS Load) to the Passenger Seat Belt Abchor Pretensioner harness connector.
3. If equipped with the standard key ignition, use this ignition on warning.

WARNING: Turn the ignition on, then reconnect the 12-volt battery and wait two minutes before proceeding. Failure to follow these instructions may result in possible serious or fatal injury.

4. If equipped with the keyless ignition, use this ignition on warning.

WARNING: Disconnect the 12-volt battery wait two minutes before proceeding, remove the ORC fuses, connect the 12-volt battery, wait two minutes before proceeding. Cycle the ignition to the On position, then reconnect the ORC fuses. Wait two minutes before proceeding. Failure to follow these instructions may result in possible serious or fatal injury.

5. With the scan tool, read the active ORC DTCs.

Does the scan tool display: B007A-13-PASSENGER SEATBELT ANCHOR PRETENSIONER DEPLOYMENT CONTROL - CIRCUIT OPEN?

Yes

- Go To 3

No

- Replace the Passenger Seat Belt Anchor Pretensioner in accordance with the Service Information. Refer to **RETRACTOR, SEAT BELT, REMOVAL** .
- Perform the RESTRAINTS SYSTEM VERIFICATION TEST. Refer to **STANDARD PROCEDURE** .

3. **CHECK THE (R510) PASSENGER SEAT BELT ANCHOR TENSIONER LINE 1 CIRCUIT FOR AN OPEN**

WARNING: Turn the ignition off, disconnect the 12-volt battery and wait two minutes before proceeding. Failure to follow these instructions may result in possible serious or fatal injury.

1. Disconnect the (special tool #8443A, SRS Load Tool) and (special tool #8443-8, Jumper, SRS Load) from the Passenger Seat Belt Anchor Pretensioner harness connector.
2. Disconnect the ORC harness connectors.

NOTE: Check connectors - Clean and repair as necessary.

3. Connect the (special tool #8443-57, Adapter, Supplemental Restraint System Load Tool) to the ORC harness connector.
4. Measure the resistance of the (R510) Passenger Seat Belt Anchor Tensioner Line 1 circuit between the Passenger Seat Belt Anchor Tensioner harness connector cavity 2 and the (special tool #8443-57, Adapter, Supplemental Restraint System Load Tool) connector C1B cavity 13.

   Is the resistance within 5.4 - 10.0 Ohms?

   Yes

   - Go To 4

   No

   - Repair the (R510) Passenger Seat Belt Anchor Tensioner Line 1 circuit for an open.
   - Perform the RESTRAINTS SYSTEM VERIFICATION TEST. Refer to **STANDARD PROCEDURE** .

4. **CHECK THE (R509) PASSENGER SEAT BELT ANCHOR TENSIONER LINE 2 CIRCUIT FOR AN OPEN**
   1. Measure the resistance of the (R509) Passenger Seat Belt Anchor Tensioner Line 2 circuit between the Passenger Seat Belt Anchor Tensioner connector cavity 1 and the (special tool #8443-57, Adapter, Supplemental Restraint System Load Tool) connector C1B cavity 49.

      Is the resistance within 5.4 - 10.0 Ohms?

      Yes

      WARNING: If the Occupant Restraint Controller (ORC) is dropped at any time, it must be replaced. Failure to follow these instructions may result in possible serious or fatal injury.

      - Replace the ORC in accordance with Service Information. Refer to **MODULE, OCCUPANT RESTRAINT CONTROLLER, REMOVAL** .
      - Perform the RESTRAINTS SYSTEM VERIFICATION TEST. Refer to **STANDARD**

PROCEDURE .

No

- Repair the (R509) Passenger Seat Belt Anchor Pretensioner Line 2 circuit for an open.
- Perform the RESTRAINTS SYSTEM VERIFICATION TEST. Refer to **STANDARD PROCEDURE** .

B007A-2B-PASSENGER SEATBELT ANCHOR PRETENSIONER DEPLOYMENT CONTROL - WIRES SHORTED TOGETHER

For a complete wiring diagram, **refer to appropriate SYSTEM WIRING DIAGRAMS article** .

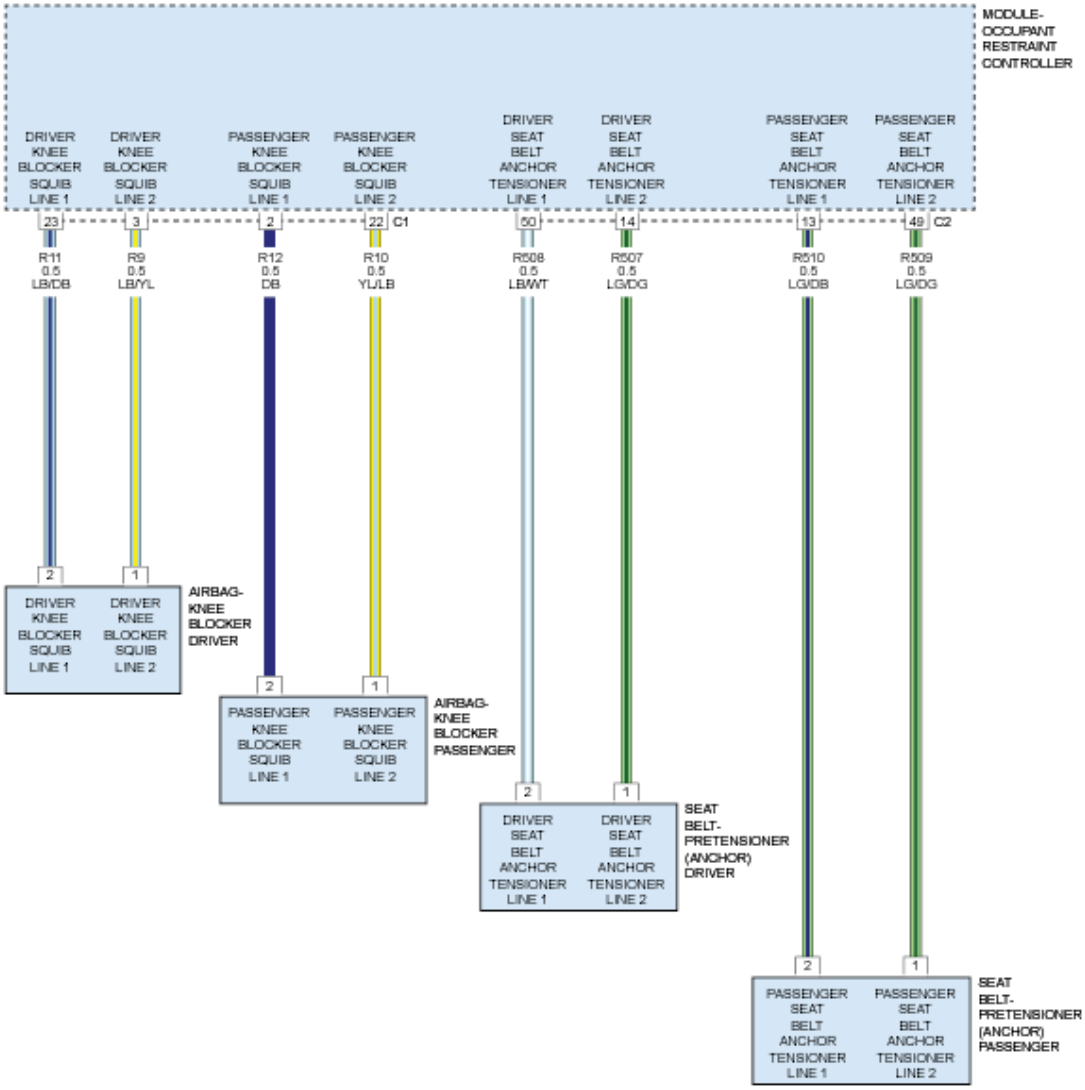

Fig. 19: Knee Blocker & Seat Belt Pretensioner Circuit Diagram

Courtesy of CHRYSLER GROUP, LLC

THEORY OF OPERATION

The location of the anchor buckle tensioner is at the base of the B-pillar. The anchor buckle tensioner is an internal part of the seat belt retractor. When powered, the Occupant Restraint Controller (ORC) sends a test current to the squibs to verify the integrity of the squib and wiring. These circuits are maintained in a "floating" configuration at the ORC (connected to neither power nor ground) as protection against inadvertent deployment. Use of the (special tool #8443A, SRS Load Tool) in the tests below substitutes a suspect squib with a known good component. The (special tool #8443-57, Adapter, Supplemental Restraint System Load Tool) provides a test point as well as a method for opening the shorting bar connections within the ORC harness connector. The anchor buckle tensioners can not be repaired and if ineffective or damaged the entire anchor buckle unit is to be replaced. Following any front airbag deployment the anchor buckle tensioners will also be replaced.

WHEN MONITORED

With the ignition on.

SET CONDITION

The Occupant Restraint Controller (ORC) monitors the resistance of the Passenger Seat Belt Anchor Tensioner circuits. The ORC will set this DTC if it detects low resistance on the Passenger Seat Belt Anchor Tensioner circuits for 2.6 seconds. The DTC will change from active to stored when the ORC monitoring shows the shorted together circuit fault is gone for 2.6 seconds.

POSSIBLE CAUSES

Possible Causes
(R510) PASSENGER SEAT BELT ANCHOR TENSIONER LINE 1 CIRCUIT SHORTED TO THE (R509) PASSENGER SEAT BELT ANCHOR TENSIONER LINE 2 CIRCUIT
PASSENGER SEAT BELT ANCHOR PRETENSIONER
OCCUPANT RESTRAINT CONTROLLER (ORC)

Always perform the Pre-Diagnostic Troubleshooting procedure before proceeding. Refer to STANDARD PROCEDURE .

DIAGNOSTIC TEST

1. **DETERMINE ACTIVE OR STORED DTC**

NOTE: **Make sure that the battery is fully charged.**

NOTE: **The scan tool, (special tool #8443A, SRS Load Tool), and DVOM are required to perform the following test.**

1. Turn the ignition on.

   Select ACTIVE or STORED DTC:

   ACTIVE DTC

   - Go To 2

   STORED DTC

   - Perform the RESTRAINTS SYSTEM INTERMITTENT TEST. Refer to **STANDARD PROCEDURE** .

2. **CHECK FOR SHORTED PASSENGER SEAT BELT PRETENSIONER**

   WARNING: **Turn the ignition off disconnect the 12-volt battery and wait two minutes before proceeding. Failure to follow these instructions may result in possible serious or fatal injury.**

   1. Disconnect the Passenger Seat Belt Anchor Pretensioner harness connector.

      NOTE: Check connectors - Clean and repair as necessary.

   2. Connect the (special tool #8443A, SRS Load Tool) and the (special tool #8443-8, Jumper, SRS Load) to the Passenger Seat Belt Anchor Pretensioner (Anchor) harness connector.
   3. If equipped with the standard key ignition, use this ignition on warning.

      WARNING: **Turn the ignition on, then reconnect the 12-volt battery and wait two minutes before proceeding. Failure to follow these instructions may result in possible serious or fatal injury.**

   4. If equipped with the keyless ignition, use this ignition on warning.

      WARNING: **Disconnect the 12-volt battery wait two minutes before proceeding, remove the ORC fuses, connect the 12-volt battery, wait two minutes before proceeding. Cycle the ignition to the On position, then reconnect the ORC fuses. Wait two minutes before proceeding. Failure to follow these instructions may result in possible serious or fatal injury.**

   5. With the scan tool, read the active ORC DTCs.

      Does the scan tool display: B007A-2B-PASSENGER SEATBELT ANCHOR PRETENSIONER DEPLOYMENT CONTROL- WIRES SHORTED TOGETHER?

Yes

- Go To 3

No

- Replace the Passenger Seat Belt Anchor Pretensioner in accordance with the Service Information. Refer to **RETRACTOR, SEAT BELT, REMOVAL** .
- Perform the RESTRAINTS SYSTEM VERIFICATION TEST. Refer to **STANDARD PROCEDURE** .

3. **CHECK THE (R510) PASSENGER SEAT BELT ANCHOR TENSIONER LINE 1 CIRCUIT FOR A SHORT TO THE (R509) PASSENGER SEAT BELT ANCHOR TENSIONER LINE 2 CIRCUIT**

WARNING: Turn the ignition off disconnect the 12-volt battery and wait two minutes before proceeding. Failure to follow these instructions may result in possible serious or fatal injury.

1. Disconnect the (special tool #8443A, SRS Load Tool)and the (special tool #8443-8, Jumper, SRS Load) from the Passenger Seat Belt Anchor Pretensioner harness connector.
2. Disconnect the ORC harness connectors.

NOTE: Check connectors - Clean and repair as necessary.

3. Connect the (special tool #8443-57, Adapter, Supplemental Restraint System Load Tool) to the ORC harness connector.
4. Measure the resistance between the (R510) Passenger Seat Belt Anchor Tensioner Line 1 circuit connector C1B cavity 13 and the (R509) Passenger Seat Belt Anchor Tensioner Line 2 circuit connector C1B cavity 49 at the (special tool #8443-57, Adapter, Supplemental Restraint System Load Tool).

   Is the resistance below or within 1.5 - 2.18 Ohms?

   Yes

   - Repair the (R510) Passenger Seat Belt Anchor Tensioner Line 1 circuit for a short to the (R509) Passenger Seat Belt Anchor Tensioner Line 2 circuit.
   - Perform the RESTRAINTS SYSTEM VERIFICATION TEST. Refer to **STANDARD PROCEDURE** .

   No

WARNING: If the Occupant Restraint Controller (ORC) is dropped at any time, it must be replaced. Failure to take the proper precautions

can result in accidental airbag deployment. Failure to follow these instructions may result in possible serious or fatal injury.

- Replace the ORC in accordance with Service Information. Refer to **MODULE, OCCUPANT RESTRAINT CONTROLLER, REMOVAL** .
- Perform the RESTRAINTS SYSTEM VERIFICATION TEST. Refer to **STANDARD PROCEDURE** .

B007E-11-DRIVER SEATBELT RETRACTOR PRETENSIONER DEPLOYMENT CONTROL - CIRCUIT SHORT TO GROUND

For a complete wiring diagram, **refer to appropriate SYSTEM WIRING DIAGRAMS article** .

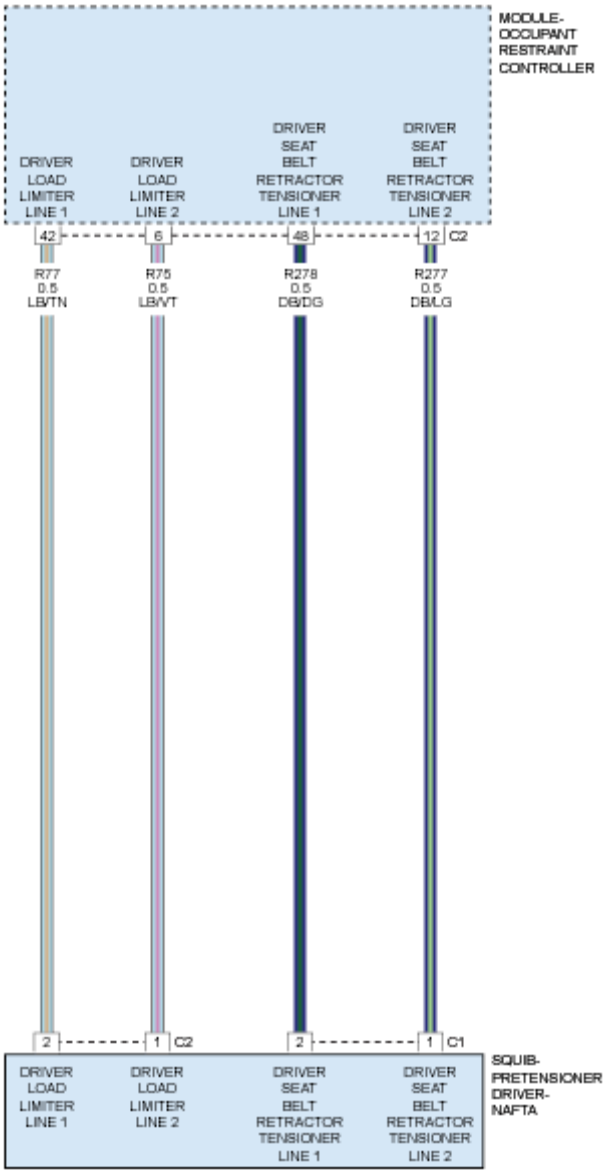

Fig. 20: Driver Seatbelt Retractor Pretensioner Circuit Diagram
Courtesy of CHRYSLER GROUP, LLC

THEORY OF OPERATION

The location of the retractor tensioner (driver sill end pretensioner) is within the plastic trim of the B-pillar. The anchor buckle tensioner is an internal part of the seat belt retractor. When powered, the Occupant Restraint Controller (ORC) sends a test current to the squibs to verify the integrity of the squib and wiring. These circuits are maintained in a "floating" configuration at the ORC (connected to neither power nor ground) as protection against inadvertent deployment. Use of the (special tool #8443A, SRS Load Tool) in the tests below substitutes a suspect squib with a known good component. The (special tool #8443-57, Adapter, Supplemental Restraint System Load Tool) provides a test point as well as a method for opening the shorting bar connections within the

ORC harness connector. The retractor tensioners can not be repaired and if ineffective or damaged the entire retractor tensioner unit is to be replaced. Following any front airbag deployment the retractor tensioners will also be replaced. A growling or grinding sound while attempting to operate the seat belt retractor is a sure sign the retractor tensioner has been deployed and needs to be replaced.

WHEN MONITORED

With the ignition on.

SET CONDITION

The Occupant Restraint Controller (ORC) monitors the resistance of the Driver Seat Belt Retractor Tensoner C1 circuits. The ORC will set this DTC if it detects low resistance on the Driver Seat Belt Retractor Tensioner C1 circuits for 2.6 seconds. The DTC will change from active to stored when the ORC monitoring shows the short to ground circuit fault is gone for 2.6 seconds.

POSSIBLE CAUSES

Possible Causes
(R278) DRIVER SEAT BELT RETRACTOR TENSIONER LINE 1 CIRCUIT OR (R277) DRIVER SEAT BELT RETRACTOR TENSIONER LINE 2 CIRCUIT SHORTED TO GROUND
DRIVER SEAT BELT RETRACTOR TENSIONER C1
OCCUPANT RESTRAINT CONTROLLER (ORC)

Always perform the Pre-Diagnostic Troubleshooting procedure before proceeding. Refer to STANDARD PROCEDURE .

DIAGNOSTIC TEST

1. **DETERMINE ACTIVE OR STORED DTC**

   NOTE: Make sure that the battery is fully charged.

   NOTE: The scan tool, (special tool #8443A, SRS Load Tool), and DVOM are required to perform the following test.

   1. Turn the ignition on.

      Select ACTIVE or STORED DTC:

      ACTIVE DTC

      - Go To 2

      STORED DTC

- Perform the RESTRAINTS SYSTEM INTERMITTENT TEST. Refer to **STANDARD PROCEDURE** .

2. **CHECK FOR SHORTED DRIVER SEAT BELT RETRACTOR TENSIONER)**

WARNING: Turn the ignition off, disconnect the 12-volt battery and wait two minutes before proceeding. Failure to follow these instructions may result in possible serious or fatal injury.

1. Disconnect the Driver Seat Belt Retractor Tensioner harness connector.

NOTE: Check connectors - Clean and repair as necessary.

2. Connect the (special tool #8443A, SRS Load Tool)and the (special tool #8443-8, Jumper, SRS Load) to the Driver Seat Belt Retractor Tensioner C1 harness connector.
3. If equipped with the standard key ignition, use this ignition on warning.

WARNING: Turn the ignition on, then reconnect the 12-volt battery and wait two minutes before proceeding. Failure to follow these instructions may result in possible serious or fatal injury.

4. If equipped with the keyless ignition, use this ignition on warning.

WARNING: Disconnect the 12-volt battery wait two minutes before proceeding, remove the ORC fuses, connect the 12-volt battery, wait two minutes before proceeding. Cycle the ignition to the On position, then reconnect the ORC fuses. Wait two minutes before proceeding. Failure to follow these instructions may result in possible serious or fatal injury.

5. With the scan tool, read the active ORC DTCs.

Does the scan tool display: B007E-11-DRIVER SEATBELT RETRACTOR PRETENSIONER DEPLOYMENT CONTROL - CIRCUIT SHORT TO GROUND?

Yes

- Go To 3

No

- Replace the Driver Seat Belt Retractor Tensioner in accordance with the Service Information. Refer to **RETRACTOR, SEAT BELT, REMOVAL** .
- Perform the RESTRAINTS SYSTEM VERIFICATION TEST. Refer to **STANDARD PROCEDURE** .

3. **CHECK THE (R278) DRIVER SEAT BELT RETRACTOR TENSIONER LINE 1 CIRCUIT AND THE (R277) DRIVER SEAT BELT RETRACTOR TENSIONER LINE 2 CIRCUIT FOR A SHORT TO GROUND**

WARNING: Turn the ignition off, disconnect the 12-volt battery and wait two minutes before proceeding. Failure to follow these instructions may result in possible serious or fatal injury.

1. Disconnect the (special tool #8443A, SRS Load Tool)and the (special tool #8443-8, Jumper, SRS Load) from the Driver Seat Belt Retractor Tensioner C1 harness connector.
2. Disconnect the ORC harness connectors.

NOTE: Check connectors - Clean and repair as necessary.

3. Connect the (special tool #8443-57, Adapter, Supplemental Restraint System Load Tool) to the ORC harness connector.
4. Measure the resistance of the (R278) Driver Seat Belt Retractor Tensioner Line 1 circuit between ground and the (special tool #8443-57, Adapter, Supplemental Restraint System Load Tool) connector C1B cavity 48.
5. Measure the resistance of the (R277) Driver Seat Belt Retractor Tensioner Line 2 circuit between ground and the (special tool #8443-57, Adapter, Supplemental Restraint System Load Tool) connector C1B cavity 12.

Is the resistance below 10k Ohms on either circuit?

Yes

- Repair the Driver Seat Belt Retractor Tensioner circuits with resistance below 10k Ohms for a short to ground.
- Perform the RESTRAINTS SYSTEM VERIFICATION TEST. Refer to **STANDARD PROCEDURE** .

No

WARNING: If the Occupant Restraint Controller (ORC) is dropped at any time, it must be replaced. Failure to take the proper precautions can result in accidental airbag deployment. Failure to follow these instructions may result in possible serious or fatal injury.

- Replace the ORC in accordance with Service Information. Refer to **MODULE, OCCUPANT RESTRAINT CONTROLLER, REMOVAL** .
- Perform the RESTRAINTS SYSTEM VERIFICATION TEST. Refer to **STANDARD PROCEDURE** .

B007E-11-DRIVER SEATBELT RETRACTOR PRETENSIONER DEPLOYMENT CONTROL - CIRCUIT SHORT TO BATTERY

For a complete wiring diagram, **refer to appropriate SYSTEM WIRING DIAGRAMS article** .

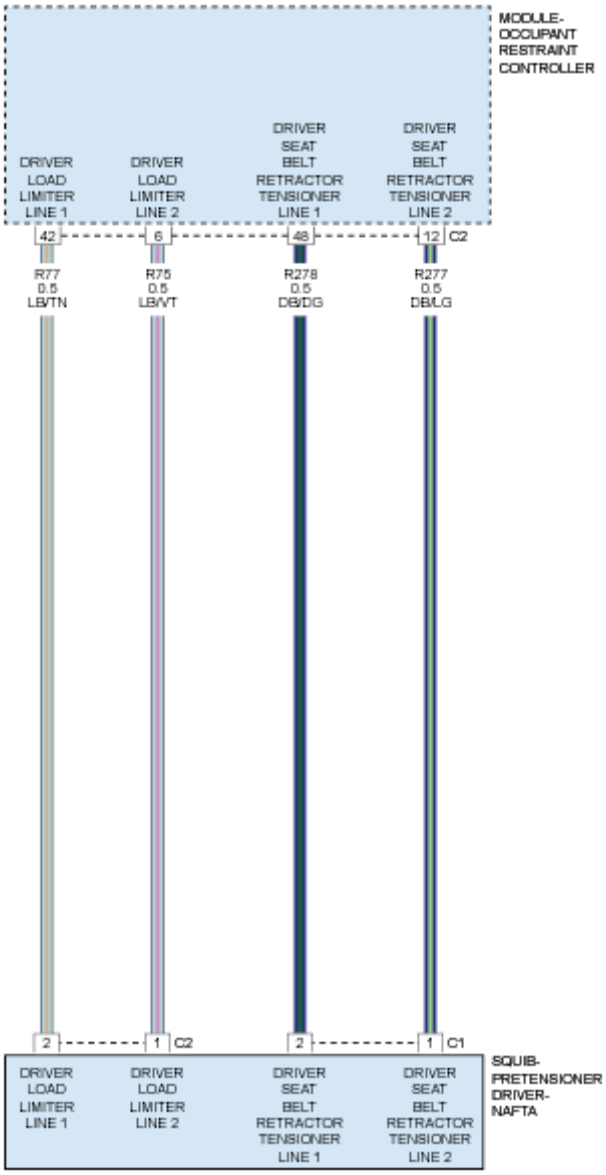

Fig. 21: Driver Seatbelt Retractor Pretensioner Circuit Diagram
Courtesy of CHRYSLER GROUP, LLC

THEORY OF OPERATION

The location of the retractor tensioner (driver sill end pretensioner) is within the plastic trim of the B-pillar. The anchor buckle tensioner is an internal part of the seat belt retractor. When powered, the Occupant Restraint

Controller (ORC) sends a test current to the squibs to verify the integrity of the squib and wiring. These circuits are maintained in a "floating" configuration at the ORC (connected to neither power nor ground) as protection against inadvertent deployment. Use of the (special tool #8443A, SRS Load Tool) in the tests below substitutes a suspect squib with a known good component. The (special tool #8443-57, Adapter, Supplemental Restraint System Load Tool) provides a test point as well as a method for opening the shorting bar connections within the ORC harness connector. The retractor tensioners can not be repaired and if ineffective or damaged the entire retractor tensioner unit is to be replaced. Following any front airbag deployment the retractor tensioners will also be replaced. A growling or grinding sound while attempting to operate the seat belt retractor is a sure sign the retractor tensioner has been deployed and needs to be replaced.

WHEN MONITORED

With the ignition on.

SET CONDITION

The Occupant Restraint Controller (ORC) monitors the resistance of the Driver Seat Belt Retractor Tensioner C1 circuits. The ORC will set this DTC if it detects voltage on the Driver Seat Belt Retractor Tensioner C1 circuits for 2.6 seconds. The DTC will change from active to stored when the ORC monitoring shows the short to voltage circuit fault is gone for 2.6 seconds.

POSSIBLE CAUSES

Possible Causes
(R277) DRIVER SEAT BELT RETRACTOR TENSIONER LINE 1 CIRCUIT SHORTED TO VOLTAGE
(R278) DRIVER SEAT BELT RETRACTOR TENSIONER LINE 2 CIRCUIT SHORTED TO VOLTAGE
DRIVER SEAT BELT RETRACTOR TENSIONER C1
OCCUPANT RESTRAINT CONTROLLER (ORC)

Always perform the Pre-Diagnostic Troubleshooting procedure before proceeding. Refer to STANDARD PROCEDURE .

DIAGNOSTIC TEST

1. **DETERMINE ACTIVE OR STORED DTC**

NOTE: Make sure that the battery is fully charged.

NOTE: The scan tool, (special tool #8443A, SRS Load Tool), and DVOM are required to perform the following test.

1. Turn the ignition on.

Select ACTIVE or STORED DTC:

ACTIVE DTC

- Go To 2

STORED DTC

- Perform the RESTRAINTS SYSTEM INTERMITTENT TEST. Refer to **STANDARD PROCEDURE** .

2. **CHECK FOR SHORTED DRIVER SEAT BELT RETRACTOR TENSIONER**

WARNING: Turn the ignition off disconnect the 12-volt battery and wait two minutes before proceeding. Failure to follow these instructions may result in possible serious or fatal injury.

1. Disconnect the Driver Seat Belt Retractor Tensioner C1 harness connector.

NOTE: Check connectors - Clean and repair as necessary.

2. Connect the (special tool #8443A, SRS Load Tool)and the (special tool #8443-8, Jumper, SRS Load) to the Driver Seat Belt Retractor Tensioner C1 harness connector.
3. If equipped with the standard key ignition, use this ignition on warning.

WARNING: Turn the ignition on, then reconnect the 12-volt battery and wait two minutes before proceeding. Failure to follow these instructions may result in possible serious or fatal injury.

4. If equipped with the keyless ignition, use this ignition on warning.

WARNING: Disconnect the 12-volt battery wait two minutes before proceeding, remove the ORC fuses, connect the 12-volt battery, wait two minutes before proceeding. Cycle the ignition to the On position, then reconnect the ORC fuses. Wait two minutes before proceeding. Failure to follow these instructions may result in possible serious or fatal injury.

5. With the scan tool, read the active ORC DTCs.

Does the scan tool display: B007E-11-DRIVER SEATBELT RETRACTOR PRETENSIONER DEPLOYMENT CONTROL - CIRCUIT SHORT TO BATTERY?

Yes

- Go To 3

No

- Replace the Driver Seat Belt Retractor Tensioner in accordance with the Service Information. Refer to **RETRACTOR, SEAT BELT, REMOVAL** .
- Perform the RESTRAINTS SYSTEM VERIFICATION TEST. Refer to **STANDARD PROCEDURE** .

3. **CHECK THE (R278) DRIVER SEAT BELT RETRACTOR TENSIONER LINE 1 CIRCUIT AND THE (R277) DRIVER SEAT BELT RETRACTOR LINE 2 CIRCUIT TENSIONER FOR A SHORT TO BATTERY**

WARNING: Turn the ignition off disconnect the 12-volt battery and wait two minutes before proceeding. Failure to follow these instructions may result in possible serious or fatal injury.

1. Disconnect the (special tool #8443A, SRS Load Tool)and the (special tool #8443-8, Jumper, SRS Load)from the Driver Seat Belt Retractor Tensioner C1 harness connector.
2. Disconnect the ORC harness connectors.

NOTE: Check connectors - Clean and repair as necessary.

3. Connect the (special tool #8443-57, Adapter, Supplemental Restraint System Load Tool) to the ORC harness connectors.
4. If equipped with the standard key ignition, use this ignition on warning.

WARNING: Turn the ignition on, then reconnect the 12-volt battery and wait two minutes before proceeding. Failure to follow these instructions may result in possible serious or fatal injury.

5. If equipped with the keyless ignition, use this ignition on warning.

WARNING: Disconnect the 12-volt battery wait two minutes before proceeding, remove the ORC fuses, connect the 12-volt battery, wait two minutes before proceeding. Cycle the ignition to the On position, then reconnect the ORC fuses. Wait two minutes before proceeding. Failure to follow these instructions may result in possible serious or fatal injury.

6. Measure the voltage of the (R278) Driver Seat Belt Retractor Tensioner Line 1 circuit between the (special tool #8443-57, Adapter, Supplemental Restraint System Load Tool) connector C1B cavity 48 and ground.
7. Measure the voltage of the (R277) Driver Seat Belt Retractor Line 2 circuit between the (special tool #8443-57, Adapter, Supplemental Restraint System Load Tool) connector C1B cavity 12 and ground.

Is there any voltage present on either circuit?

Yes

- Repair the Driver Seat Belt Retractor Tensioner C1 circuits with voltage present for a short to battery.
- Perform the RESTRAINTS SYSTEM VERIFICATION TEST. Refer to **STANDARD PROCEDURE** .

No

WARNING: **If the Occupant Restraint Controller (ORC) is dropped at any time, it must be replaced. Failure to take the proper precautions can result in accidental airbag deployment. Failure to follow these instructions may result in possible serious or fatal injury.**

WARNING: **Turn the ignition off disconnect the 12-volt battery and wait two minutes before proceeding. Failure to follow these instructions may result in possible serious or fatal injury.**

- Replace the ORC in accordance with Service Information. Refer to **MODULE, OCCUPANT RESTRAINT CONTROLLER, REMOVAL** .
- Perform the RESTRAINTS SYSTEM VERIFICATION TEST. Refer to **STANDARD PROCEDURE** .

B007E-13-DRIVER SEATBELT RETRACTOR PRETENSIONER DEPLOYMENT CONTROL - CIRCUIT OPEN

For a complete wiring diagram, **refer to appropriate SYSTEM WIRING DIAGRAMS article** .

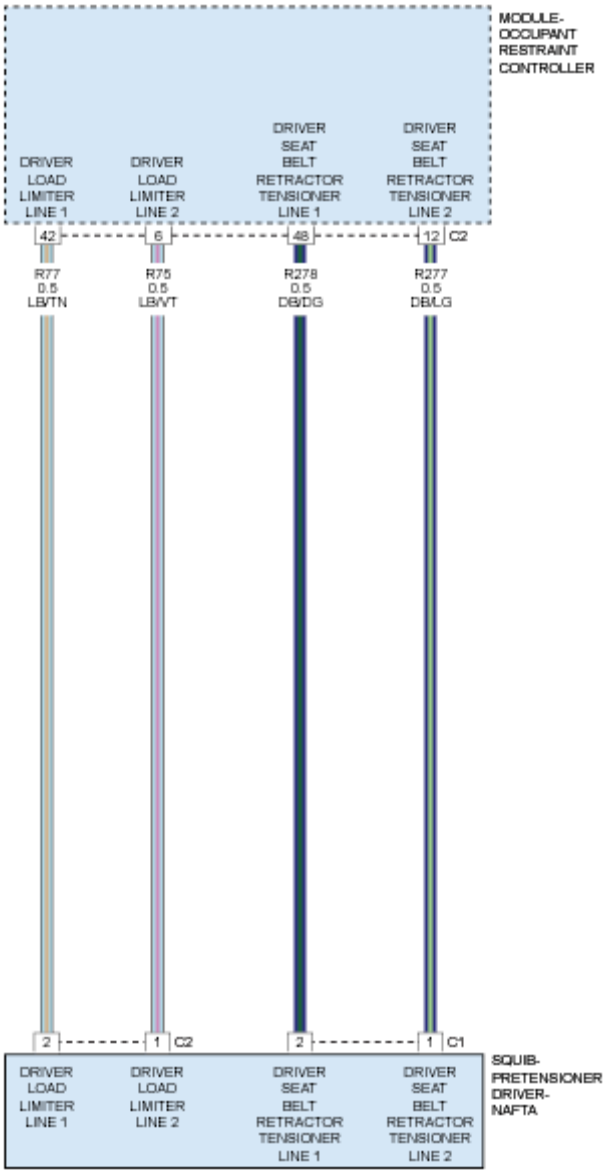

Fig. 22: Driver Seatbelt Retractor Pretensioner Circuit Diagram
Courtesy of CHRYSLER GROUP, LLC

THEORY OF OPERATION

The location of the retractor tensioner (driver sill end pretensioner) is within the plastic trim of the B-pillar. The anchor buckle tensioner is an internal part of the seat belt retractor. When powered, the Occupant Restraint Controller (ORC) sends a test current to the squibs to verify the integrity of the squib and wiring. These circuits are maintained in a "floating" configuration at the ORC (connected to neither power nor ground) as protection against inadvertent deployment. Use of the (special tool #8443A, SRS Load Tool) in the tests below substitutes a suspect squib with a known good component. The (special tool #8443-57, Adapter, Supplemental Restraint System Load Tool) provides a test point as well as a method for opening the shorting bar connections within the

ORC harness connector. The retractor tensioners can not be repaired and if ineffective or damaged the entire retractor tensioner unit is to be replaced. Following any front airbag deployment the retractor tensioners will also be replaced. A growling or grinding sound while attempting to operate the seat belt retractor is a sure sign the retractor tensioner has been deployed and needs to be replaced.

WHEN MONITORED

With the ignition on.

SET CONDITION

The Occupant Restraint Controller (ORC) monitors the resistance of the Driver Seat Belt Retractor Tensioner C1 circuits. The ORC will set this DTC if it detects high resistance on the Driver Seat Belt Retractor Tensioner C1 circuits for 2.6 seconds. The DTC will change from active to stored when the ORC monitoring shows the open circuit fault is gone for 2.6 seconds.

POSSIBLE CAUSES

Possible Causes
(R277) DRIVER SEAT BELT RETRACTOR TENSIONER LINE 1 CIRCUIT OPEN
(R278) DRIVER SEAT BELT RETRACTOR TENSIONER LINE 2 CIRCUIT OPEN
DRIVER SEAT BELT RETRACTOR TENSIONER C1
OCCUPANT RESTRAINT CONTROLLER (ORC)

Always perform the Pre-Diagnostic Troubleshooting procedure before proceeding. Refer to STANDARD PROCEDURE .

DIAGNOSTIC TEST

1. **DETERMINE ACTIVE OR STORED DTC**

   NOTE: Make sure that the battery is fully charged.

   NOTE: The scan tool, (special tool #8443A, SRS Load Tool), and DVOM are required to perform the following test.

   1. Turn the ignition on.

      SELECT ACTIVE or STORED DTC:

      ACTIVE DTC

      - Go To 2

      STORED DTC

- Perform the RESTRAINTS SYSTEM INTERMITTENT TEST. Refer to **STANDARD PROCEDURE** .

2. **CHECK FOR OPEN DRIVER SEAT BELT RETRACTOR TENSIONER**

WARNING: Turn the ignition off, disconnect the 12-volt battery and wait two minutes before proceeding. Failure to follow these instructions may result in possible serious or fatal injury.

1. Disconnect the Driver Seat Belt Retrctor Tensioner C1 harness connector.

NOTE: Check connectors - Clean and repair as necessary.

2. Connect the (special tool #8443A, SRS Load Tool) and the (special tool #8443-8, Jumper, SRS Load) to the Driver Seat Belt Retractor Tensioner C1 harness connector.
3. If equipped with the standard key ignition, use this ignition on warning.

WARNING: Turn the ignition on, then reconnect the 12-volt battery and wait two minutes before proceeding. Failure to follow these instructions may result in possible serious or fatal injury.

4. If equipped with the keyless ignition, use this ignition on warning.

WARNING: Disconnect the 12-volt battery wait two minutes before proceeding, remove the ORC fuses, connect the 12-volt battery, wait two minutes before proceeding. Cycle the ignition to the On position, then reconnect the ORC fuses. Wait two minutes before proceeding. Failure to follow these instructions may result in possible serious or fatal injury.

5. With the scan tool, read the active ORC DTCs.

Does the scan tool display: B007E-13-DRIVER SEATBELT ANCHOR PRETENSIONER DEPLOYMENT CONTROL - CIRCUIT OPEN?

Yes

- Go To 3

No

- Replace the Driver Seat Belt Retractor Tensioner in accordance with the Service Information. Refer to **RETRACTOR, SEAT BELT, REMOVAL** .
- Perform the RESTRAINTS SYSTEM VERIFICATION TEST. Refer to **STANDARD PROCEDURE** .

3. **CHECK THE (R278) DRIVER SEAT BELT RETRACTOR TENSIONER LINE 1 CIRCUIT FOR AN OPEN**

   WARNING: Turn the ignition off, disconnect the 12-volt battery and wait two minutes before proceeding. Failure to follow these instructions may result in possible serious or fatal injury.

   1. Disconnect the (special tool #8443A, SRS Load Tool) and the (special tool #8443-8, Jumper, SRS Load) from the Driver Seat Belt Retactor Tensioner C1 harness connector.
   2. Disconnect the ORC harness connectors.

      NOTE: Check connectors - Clean and repair as necessary.

   3. Connect the (special tool #8443-57, Adapter, Supplemental Restraint System Load Tool) to the ORC harness connector.
   4. Measure the resistance of the (R278) Driver Seat Belt Retractor Tensioner Line 1 circuit between the Driver Seat Belt Retractor Tensioner connector cavity 2 and the (special tool #8443-57, Adapter, Supplemental Restraint System Load Tool) connector C1B cavity 48.

      Is the resistance within 5.4 - 10.0 Ohms?

      Yes

      - Go To 4

      No

      - Repair the open (R278) Driver Seat Belt Retractor Tensioner Line 1 circuit.
      - Perform the RESTRAINTS SYSTEM VERIFICATION TEST. Refer to **STANDARD PROCEDURE** .

4. **CHECK THE (R277) DRIVER SEAT BELT RETRACTOR TENSONER LINE 2 CIRCUIT FOR AN OPEN**
   1. Measure the resistance of the (R277) Driver Seat Belt Retractor Tensioner Line 2 circuit between the Driver Seat Belt Retractor Tensioner connector cavity 1 and the (special tool #8443-57, Adapter, Supplemental Restraint System Load Tool) connector C1B cavity 12.

      Is the resistance within 5.4 - 10.0 Ohms?

      Yes

      WARNING: If the Occupant Restraint Controller (ORC) is dropped at any time, it must be replaced. Failure to follow these instructions may result in possible serious or fatal injury.

- Replace the ORC in accordance with Service Information. Refer to **MODULE, OCCUPANT RESTRAINT CONTROLLER, REMOVAL** .
- Perform the RESTRAINTS SYSTEM VERIFICATION TEST. Refer to **STANDARD PROCEDURE** .

No

- Repair the open (R277) Driver Seat Belt Retractor Tensioner Line 2 circuit.
- Perform the RESTRAINTS SYSTEM VERIFICATION TEST. Refer to **STANDARD PROCEDURE** .

B007E-2B-DRIVER SEATBELT RETRACTOR PRETENSIONER DEPLOYMENT CONTROL - WIRES SHORTED TOGETHER

For a complete wiring diagram, **refer to appropriate SYSTEM WIRING DIAGRAMS article** .

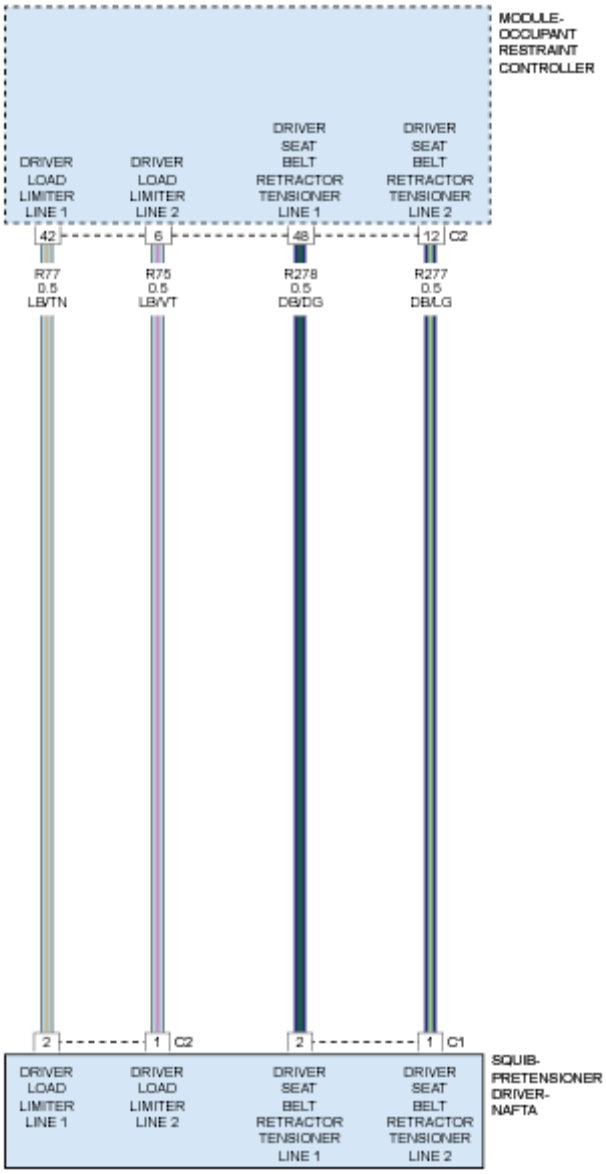

Fig. 23: Driver Seatbelt Retractor Pretensioner Circuit Diagram
Courtesy of CHRYSLER GROUP, LLC

THEORY OF OPERATION

The location of the retractor tensioner (driver sill end pretensioner) is within the plastic trim of the B-pillar. The anchor buckle tensioner is an internal part of the seat belt retractor. When powered, the Occupant Restraint Controller (ORC) sends a test current to the squibs to verify the integrity of the squib and wiring. These circuits are maintained in a "floating" configuration at the ORC (connected to neither power nor ground) as protection against inadvertent deployment. Use of the (special tool #8443A, SRS Load Tool) in the tests below substitutes a suspect squib with a known good component. The (special tool #8443-57, Adapter, Supplemental Restraint System Load Tool) provides a test point as well as a method for opening the shorting bar connections within the

ORC harness connector. The retractor tensioners can not be repaired and if ineffective or damaged the entire retractor tensioner unit is to be replaced. Following any front airbag deployment the retractor tensioners will also be replaced. A growling or grinding sound while attempting to operate the seat belt retractor is a sure sign the retractor tensioner has been deployed and needs to be replaced.

WHEN MONITORED

With the ignition on.

SET CONDITION

The Occupant Restraint Controller (ORC) monitors the resistance of the Driver Seat Belt Retractor Tensioner C1 circuits. The ORC will set this DTC if it detects low resistance on the Driver Seat Belt Retractor Tensioner C1 circuits for 2.6 seconds. The DTC will change from active to stored when the ORC monitoring shows the shorted together fault is gone for 2.6 seconds.

POSSIBLE CAUSES

Possible Causes
(R277) DRIVER SEAT BELT RETRACTOR TENSIONER LINE 1 CIRCUIT SHORTED TO THE (R278) DRIVER SEAT BELT RETRACTOR TENSIONER LINE 2 CIRCUIT
DRIVER SEAT BELT RETRACTOR TENSIONER C1
OCCUPANT RESTRAINT CONTROLLER (ORC)

Always perform the Pre-Diagnostic Troubleshooting procedure before proceeding. Refer to STANDARD PROCEDURE .

DIAGNOSTIC TEST

1. **SELECT ACTIVE OR STORED DTC**

   NOTE: Make sure that the battery is fully charged.

   NOTE: The scan tool, (special tool #8443A, SRS Load Tool), and DVOM are required to perform the following test.

   1. Turn the ignition on.

      Select ACTIVE or STORED DTC:

      ACTIVE DTC

      - Go To 2

      STORED DTC

- Perform the RESTRAINTS SYSTEM INTERMITTENT TEST. Refer to **STANDARD PROCEDURE** .

2. **CHECK FOR SHORTED DRIVER SEAT BELT RETRACTOR TENSIONER**

WARNING: Turn the ignition off, disconnect the 12-volt battery and wait two minutes before proceeding. Failure to follow these instructions may result in possible serious or fatal injury.

1. Disconnect the Driver Seat Belt Retractor Tensioner C1 harness connector.

NOTE: Check connectors - Clean and repair as necessary.

2. Connect the (special tool #8443A, SRS Load Tool)and the (special tool #8443-8, Jumper, SRS Load)to the Driver Seat Belt Retractor Tensioner C1 harness connector.
3. If equipped with the standard key ignition, use this ignition on warning.

WARNING: Turn the ignition on, then reconnect the 12-volt battery and wait two minutes before proceeding. Failure to follow these instructions may result in possible serious or fatal injury.

4. If equipped with the keyless ignition, use this ignition on warning.

WARNING: Disconnect the 12-volt battery wait two minutes before proceeding, remove the ORC fuses, connect the 12-volt battery, wait two minutes before proceeding. Cycle the ignition to the On position, then reconnect the ORC fuses. Wait two minutes before proceeding. Failure to follow these instructions may result in possible serious or fatal injury.

5. With the scan tool, read the active ORC DTCs.

Does the scan tool display: B007E-2B-DRIVER SEATBELT RETRACTOR PRETENSIONER DEPLOYMENT CONTROL - WIRES SHORTED TOGETHER?

Yes

- Go To 3

No

- Replace the Driver Seat Belt Retractor Tensioner in accordance with the Service Information. Refer to **RETRACTOR, SEAT BELT, REMOVAL** .
- Perform the RESTRAINTS SYSTEM VERIFICATION TEST. Refer to **STANDARD PROCEDURE** .

3. **CHECK THE (R277) DRIVER SEAT BELT RETRACTOR TENSIONER LINE 1 CIRCUIT FOR A SHORT TO THE (R278) DRIVER SEAT BELT RETRACTOR TENSIONER LINE 2 CIRCUIT**

WARNING: Turn the ignition off, disconnect the 12-volt battery and wait two minutes before proceeding. Failure to follow these instructions may result in possible serious or fatal injury.

1. Disconnect the (special tool #8443A, SRS Load Tool)and (special tool #8443-8, Jumper, SRS Load)from the Driver Seat Belt Retractor Tensioner C1 harness connector.
2. Disconnect the ORC harness connectors.

NOTE: Check connectors - Clean and repair as necessary.

3. Connect the (special tool #8443-57, Adapter, Supplemental Restraint System Load Tool) to the ORC harness connector.
4. Measure the resistance between the (R277) Driver Seat Belt Retractor Tensioner Line 1 circuit connector C1B cavity 12 and the (R278) Driver Seat Belt Retractor Tensioner Line 2 circuit connector C1B cavity 48 at the (special tool #8443-57, Adapter, Supplemental Restraint System Load Tool).

   Is the resistance below or within 1.5 - 2.18 Ohms?

   Yes

   - Repair the (R277) Driver Seat Belt Retractor Tensioner Line 1 circuit for a short to the (R278) Driver Seat Belt Retractor Tensioner Line 2 circuit.
   - Perform the RESTRAINTS SYSTEM VERIFICATION TEST. Refer to **STANDARD PROCEDURE** .

   No

   WARNING: If the Occupant Restraint Controller (ORC) is dropped at any time, it must be replaced. Failure to follow these instructions may result in possible serious or fatal injury.

   - Replace the ORC in accordance with Service Information. Refer to **MODULE, OCCUPANT RESTRAINT CONTROLLER, REMOVAL** .
   - Perform the RESTRAINTS SYSTEM VERIFICATION TEST. Refer to **STANDARD PROCEDURE** .

B007F-11-PASSENGER SEATBELT RETRACTOR PRETENSIONER DEPLOYMENT CONTROL - CIRCUIT SHORT TO GROUND

For a complete wiring diagram, **refer to appropriate SYSTEM WIRING DIAGRAMS article** .

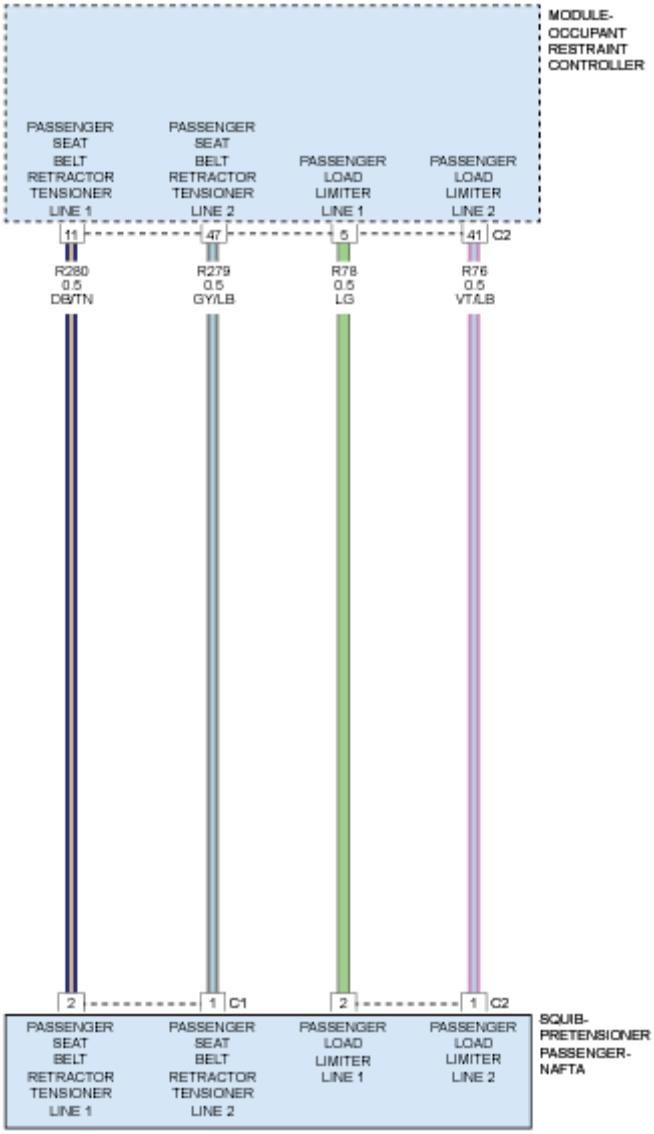

Fig. 24: Passenger Seatbelt Retractor Pretensioner Circuit Diagram
Courtesy of CHRYSLER GROUP, LLC

THEORY OF OPERATION

The location of the retractor tensioner (passenger sill end pretensioner) is within the plastic trim of the B-pillar. The anchor buckle tensioner is an internal part of the seat belt retractor. When powered, the Occupant Restraint Controller (ORC) sends a test current to the squibs to verify the integrity of the squib and wiring. These circuits are maintained in a "floating" configuration at the ORC (connected to neither power nor ground) as protection against inadvertent deployment. Use of the Supplemental Restraints System (special tool #8443A, SRS Load Tool) in the tests below substitutes a suspect squib with a known good component. The (special tool #8443-57, Adapter, Supplemental Restraint System Load Tool) provides a test point as well as a method for opening the shorting bar connections within the ORC harness connector. The retractor tensioners can not be repaired and if ineffective or damaged the entire retractor tensioner unit is to be replaced. Following any front airbag

deployment the retractor tensioners will also be replaced. A growling or grinding sound while attempting to operate the seat belt retractor is a sure sign the retractor tensioner has been deployed and needs to be replaced.

WHEN MONITORED

With the ignition on.

SET CONDITION

The Occupant Restraint Controller (ORC) monitors the resistance of the Passenger Seat Belt Retractor Tensioner C2 circuits. The ORC will set this DTC if it detects low resistance on the Passenger Seat Belt Retractor Tensioner C2 circuits for 2.6 seconds. The DTC will change from active to stored when the ORC monitoring shows the short to ground circuit fault is gone for 2.6 seconds.

POSSIBLE CAUSES

Possible Causes
(R280) PASSENGER SEAT BELT RETRACTOR TENSIONER LINE 1 CIRCUIT SHORTED TO GROUND
(R279) PASSENGER SEAT BELT RETRACTOR TENSIONER LINE 2 CIRCUIT SHORTED TO GROUND
PASSENGER SEAT BELT RETRACTOR TENSIONER C2
OCCUPANT RESTRAINT CONTROLLER (ORC)

Always perform the Pre-Diagnostic Troubleshooting procedure before proceeding. Refer to STANDARD PROCEDURE .

DIAGNOSTIC TEST

1. **DETERMINE ACTIVE OR STORED DTC**

   NOTE: Make sure that the battery is fully charged.

   NOTE: The scan tool, (special tool #8443A, SRS Load Tool), and DVOM are required to perform the following test.

   1. Turn the ignition on.

      Select ACTIVE or STORED DTC:

      ACTIVE DTC

      - Go To 2

      STORED DTC

- Perform the RESTRAINTS SYSTEM INTERMITTENT TEST. Refer to **STANDARD PROCEDURE** .

2. **CHECK FOR SHORTED PASSENGER SEAT BELT TENSIONER**

WARNING: Turn the ignition off disconnect the 12-volt battery and wait two minutes before proceeding. Failure to follow these instructions may result in possible serious or fatal injury.

1. Disconnect the Passenger Seat Belt RetractorTensioner C2 harness connector.

NOTE: Check connectors - Clean and repair as necessary.

2. Connect the (special tool #8443A, SRS Load Tool)and the (special tool #8443-8, Jumper, SRS Load) to the Passenger Seat Belt Retractor Tensioner C2 harness connector.
3. If equipped with the standard key ignition, use this ignition on warning.

WARNING: Turn the ignition on, then reconnect the 12-volt battery and wait two minutes before proceeding. Failure to follow these instructions may result in possible serious or fatal injury.

4. If equipped with the keyless ignition, use this ignition on warning.

WARNING: Disconnect the 12-volt battery wait two minutes before proceeding, remove the ORC fuses, connect the 12-volt battery, wait two minutes before proceeding. Cycle the ignition to the On position, then reconnect the ORC fuses. Wait two minutes before proceeding. Failure to follow these instructions may result in possible serious or fatal injury.

5. With the scan tool, read the active ORC DTCs.

Does the scan tool display: B007F-11-PASSENGER SEATBELT RETRACTOR PRETENSIONER DEPLOYMENT CONTROL - CIRCUIT SHORT TO GROUND?

Yes

- Go To 3

No

- Replace the Passenger Seat Belt Retractor Tensioner in accordance with the Service Information. Refer to **RETRACTOR, SEAT BELT, REMOVAL** .
- Perform the RESTRAINTS SYSTEM VERIFICATION TEST. Refer to **STANDARD PROCEDURE** .

3. **CHECK THE (R280) PASSENGER SEAT BELT RETRACTOR TENSIONER LINE 1 CIRCUIT AND THE (R279) PASSENGER SEAT BELT RESTRACTOR TENSIONER LINE 2 CIRCUIT FOR A SHORT TO GROUND**

WARNING: Turn the ignition off disconnect the 12-volt battery and wait two minutes before proceeding. Failure to follow these instructions may result in possible serious or fatal injury.

1. Disconnect the (special tool #8443A, SRS Load Tool) and the (special tool #8443-8, Jumper, SRS Load) from the Passenger Seat Belt Retractor Tensioner C2 harness connector.
2. Disconnect the ORC harness connectors.

NOTE: Check connectors - Clean and repair as necessary.

3. Connect the (special tool #8443-57, Adapter, Supplemental Restraint System Load Tool) to the ORC harness connector.
4. Measure the resistance of the (R280) Passenger Seat Belt Retractor Tensioner Line 1 circuit between ground and the (special tool #8443-57, Adapter, Supplemental Restraint System Load Tool) connector C1B cavity 11.
5. Measure the resistance of the (R279) Passenger Seat Belt Retractor Tensioner Line 2 circuit between ground and the (special tool #8443-57, Adapter, Supplemental Restraint System Load Tool) connector C1B cavity 47.

Is the resistance below 10k Ohms on either circuit?

Yes

- Repair the Passenger Seat Belt Retractor Tensioner C2 circuits with resistance below 10k Ohms for a short to ground.
- Perform the RESTRAINTS SYSTEM VERIFICATION TEST. Refer to **STANDARD PROCEDURE** .

No

WARNING: Turn the ignition off disconnect the 12-volt battery and wait two minutes before proceeding. Failure to follow these instructions may result in possible serious or fatal injury.

- Replace the ORC in accordance with Service Information. Refer to **MODULE, OCCUPANT RESTRAINT CONTROLLER, REMOVAL** .
- Perform the RESTRAINTS SYSTEM VERIFICATION TEST. Refer to **STANDARD PROCEDURE** .

B007F-12-PASSENGER SEATBELT RETRACTOR PRETENSIONER DEPLOYMENT CONTROL -

CIRCUIT RESISTANCE SHORT TO BATTERY

For a complete wiring diagram, **refer to appropriate SYSTEM WIRING DIAGRAMS article** .

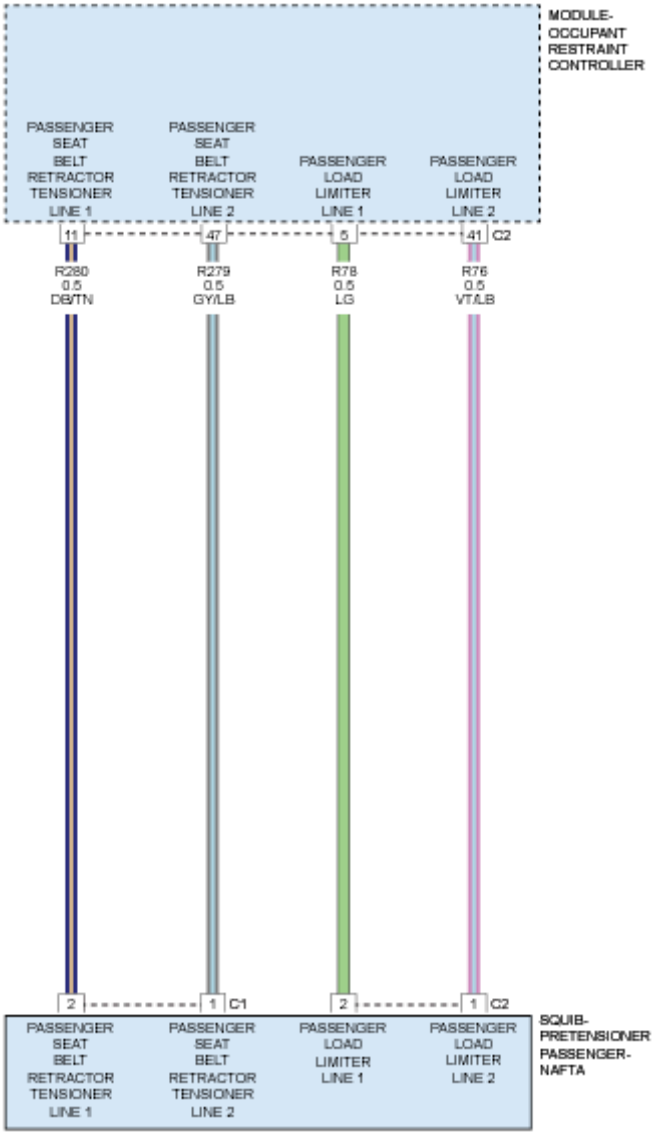

Fig. 25: Passenger Seatbelt Retractor Pretensioner Circuit Diagram
Courtesy of CHRYSLER GROUP, LLC

THEORY OF OPERATION

The location of the retractor tensioner (passenger sill end pretensioner) is within the plastic trim of the B-pillar. The anchor buckle tensioner is an internal part of the seat belt retractor. When powered, the Occupant Restraint Controller (ORC) sends a test current to the squibs to verify the integrity of the squib and wiring. These circuits are maintained in a "floating" configuration at the ORC (connected to neither power nor ground) as protection against inadvertent deployment. Use of the (special tool #8443A, SRS Load Tool) in the tests below substitutes

a suspect squib with a known good component. The (special tool #8443-57, Adapter, Supplemental Restraint System Load Tool) provides a test point as well as a method for opening the shorting bar connections within the ORC harness connector. The retractor tensioners can not be repaired and if ineffective or damaged the entire retractor tensioner unit is to be replaced. Following any front airbag deployment the retractor tensioners will also be replaced. A growling or grinding sound while attempting to operate the seat belt retractor is a sure sign the retractor tensioner has been deployed and needs to be replaced.

WHEN MONITORED

With the ignition on.

SET CONDITION

The Occupant Restraint Controller (ORC) monitors the resistance of the Passenger Seat Belt Retractor Tensioner C1 circuits. The ORC will set this DTC if it detects voltage on the Passenger Seat Belt Retractor Tensioner C1 circuits for 2.6 seconds. The DTC will change from active to stored when the ORC monitoring shows the short to voltage circuit fault is gone for 2.6 seconds.

POSSIBLE CAUSES

Possible Causes
(R280) PASSENGER SEAT BELT RETRACTOR TENSIONER LINE 1 CIRCUIT SHORTED TO VOLTAGE
(R279) PASSENGER SEAT BELT RETRACTOR TENSIONER LINE 2 CIRCUIT SHORTED TO VOLTAGE
PASSENGER SEAT BELT RETRACTOR TENSIONER
OCCUPANT RESTRAINT CONTROLLER (ORC)

Always perform the Pre-Diagnostic Troubleshooting procedure before proceeding. Refer to STANDARD PROCEDURE .

DIAGNOSTIC TEST

1. **DETERMINE ACTIVE OR STORED DTC**

   NOTE: Make sure that the battery is fully charged.

   NOTE: The scan tool, (special tool #8443A, SRS Load Tool), and DVOM are required to perform the following test.

   1. Turn the ignition on.

      Select ACTIVE or STORED DTC:

      ACTIVE DTC

- Go To 2

STORED DTC

- Perform the RESTRAINTS SYSTEM INTERMITTENT TEST. Refer to **STANDARD PROCEDURE** .

2. **CHECK FOR SHORTED PASSENGER SEAT BELT RETRACTOR TENSIONER**

WARNING: Turn the ignition off disconnect the 12-volt battery and wait two minutes before proceeding. Failure to follow these instructions may result in possible serious or fatal injury.

1. Disconnect the Passenger Seat Belt Retractor Tensioner C1 harness connector.

NOTE: Check connectors - Clean and repair as necessary.

2. Connect the (special tool #8443A, SRS Load Tool) and the (special tool #8443-57, Adapter, Supplemental Restraint System Load Tool) to the Passenger Seat Belt Retractor Tensioner C1 harness connector.
3. If equipped with the standard key ignition, use this ignition on warning.

WARNING: Turn the ignition on, then reconnect the 12-volt battery and wait two minutes before proceeding. Failure to follow these instructions may result in possible serious or fatal injury.

4. If equipped with the keyless ignition, use this ignition on warning.

WARNING: Disconnect the 12-volt battery wait two minutes before proceeding, remove the ORC fuses, connect the 12-volt battery, wait two minutes before proceeding. Cycle the ignition to the On position, then reconnect the ORC fuses. Wait two minutes before proceeding. Failure to follow these instructions may result in possible serious or fatal injury.

5. With the scan tool, read the active ORC DTCs.

Does the scan tool display: B007F-12-PASSENGER SEATBELT RETRACTOR PRETENSIONER DEPLOYMENT CONTROL - CIRCUIT RESISTANCE SHORT TO BATTERY?

Yes

- Go To 3

No

- Replace the Passenger Seat Belt Retractor Tensioner in accordance with the Service Information. Refer to **RETRACTOR, SEAT BELT, REMOVAL** .
- Perform the RESTRAINTS SYSTEM VERIFICATION TEST. Refer to **STANDARD PROCEDURE** .

3. **CHECK THE (R280) PASSENGER SEAT BELT RETRACTOR TENSIONER LINE 1 CIRCUIT AND THE (R279) PASSENGER SEAT BELT RETRACTOR TENSIONER LINE 2 CIRCUIT FOR A SHORT TO BATTERY**

WARNING: Turn the ignition off, disconnect the 12-volt battery and wait two minutes before proceeding. Failure to follow these instructions may result in possible serious or fatal injury.

1. Disconnect the (special tool #8443A, SRS Load Tool) and the (special tool #8443-8, Jumper, SRS Load)from the Passenger Seat Belt Retractor Tensioner C1 harness connector.
2. Disconnect the ORC harness connectors.

NOTE: Check connectors - Clean and repair as necessary.

3. Connect the (special tool #8443-57, Adapter, Supplemental Restraint System Load Tool)to the ORC harness connector.

WARNING: Turn the ignition on, then reconnect the 12-volt battery and wait two minutes before proceeding. Failure to follow these instructions may result in possible serious or fatal injury.

4. Measure the voltage of the (R280) Passenger Seat Belt Retractor Tensioner Line 1 circuit between the (special tool #8443-57, Adapter, Supplemental Restraint System Load Tool) connector C1B cavity 11 and ground.
5. Measure the voltage of the (R279) Passenger Seat Belt Retractor Tensioner Line 2 circuit between the (special tool #8443-57, Adapter, Supplemental Restraint System Load Tool) connector C1B cavity 47 and ground.

Is there any voltage present on either circuit?

Yes

- Repair the Passenger Seat Belt Retractor Tensioner C1 circuits with voltage present for a short to battery.
- Perform the RESTRAINTS SYSTEM VERIFICATION TEST. Refer to **STANDARD PROCEDURE** .

No

WARNING: Turn the ignition off, disconnect the 12-volt battery and wait two minutes before proceeding. Failure to follow these instructions may result in possible serious or fatal injury.

WARNING: If the Occupant Restraint Controller (ORC) is dropped at any time, it must be replaced. Failure to take the proper precautions can result in accidental airbag deployment. Failure to follow these instructions may result in possible serious or fatal injury.

- Replace the ORC in accordance with Service Information. Refer to **MODULE, OCCUPANT RESTRAINT CONTROLLER, REMOVAL** .
- Perform the RESTRAINTS SYSTEM VERIFICATION TEST. Refer to **STANDARD PROCEDURE** .

B007F-13-PASSENGER SEATBELT RETRACTOR PRETENSIONER DEPLOYMENT CONTROL - CIRCUIT OPEN

For a complete wiring diagram, **refer to appropriate SYSTEM WIRING DIAGRAMS article** .

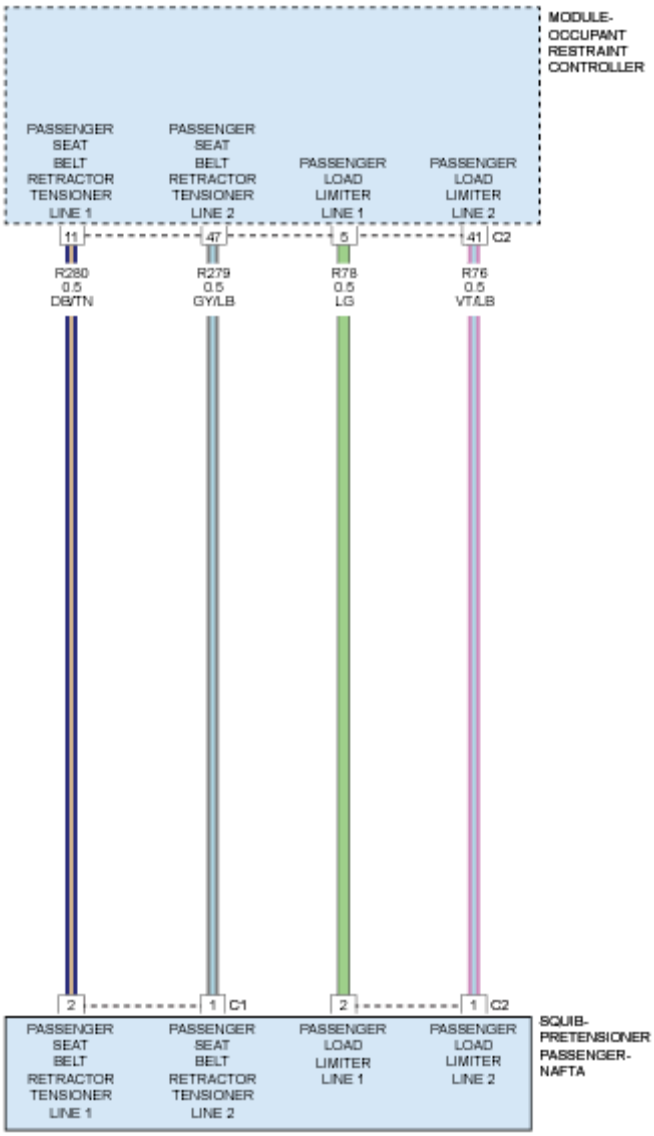

Fig. 26: Passenger Seatbelt Retractor Pretensioner Circuit Diagram
Courtesy of CHRYSLER GROUP, LLC

THEORY OF OPERATION

The location of the retractor tensioner (passenger sill end pretensioner) is within the plastic trim of the B-pillar. The anchor buckle tensioner is an internal part of the seat belt retractor. When powered, the Occupant Restraint Controller (ORC) sends a test current to the squibs to verify the integrity of the squib and wiring. These circuits are maintained in a "floating" configuration at the ORC (connected to neither power nor ground) as protection against inadvertent deployment. Use of the (special tool #8443A, SRS Load Tool) in the tests below substitutes a suspect squib with a known good component. The (special tool #8443-57, Adapter, Supplemental Restraint System Load Tool) provides a test point as well as a method for opening the shorting bar connections within the ORC harness connector. The retractor tensioners can not be repaired and if ineffective or damaged the entire retractor tensioner unit is to be replaced. Following any front airbag deployment the retractor tensioners will

also be replaced. A growling or grinding sound while attempting to operate the seat belt retractor is a sure sign the retractor tensioner has been deployed and needs to be replaced.

WHEN MONITORED

With the ignition on.

SET CONDITION

The Occupant Restraint Controller (ORC) monitors the resistance of the Passenger Seat Belt Retractor Tensioner C1circuits. The ORC will set this DTC if it detects high resistance on the Passenger Seat Belt Retractor Tensioner C1 circuits for 2.6 seconds. The DTC will change from active to stored when the ORC monitoring shows the open circuit fault is gone for 2.6 seconds.

POSSIBLE CAUSES

Possible Causes
(R280) PASSENGER SEAT BELT RETRACTOR TENSIONER LINE 1 CIRCUIT SHORTED TO OPEN
(R279) PASSENGER SEAT BELT RETRACTOR TENSIONER LINE 2 CIRCUIT SHORTED TO OPEN
PASSENGER SEAT BELT RETRACTOR TENSIONER C1
OCCUPANT RESTRAINT CONTROLLER (ORC)

Always perform the Pre-Diagnostic Troubleshooting procedure before proceeding. Refer to STANDARD PROCEDURE .

DIAGNOSTIC TEST

1. **DETERMINE ACTIVE OR STORED DTC**

   NOTE: Make sure that the battery is fully charged.

   NOTE: The scan tool, (special tool #8443A, SRS Load Tool), and DVOM are required to perform the following test.

   1. Turn the ignition on.

      Select ACTIVE or STORED DTC:

      ACTIVE DTC

      - Go To 2

      STORED DTC

- Perform the RESTRAINTS SYSTEM INTERMITTENT TEST. Refer to **STANDARD PROCEDURE** .

2. **CHECK FOR AN OPEN PASSENGER SEAT BELT TENSIONER**

WARNING: Turn the ignition off disconnect the 12-volt battery and wait two minutes before proceeding. Failure to follow these instructions may result in possible serious or fatal injury.

1. Disconnect the Passenger Seat Belt Retractor Tensioner C1 harness connector.

NOTE: Check connectors - Clean and repair as necessary.

2. Connect the (special tool #8443A, SRS Load Tool) and the (special tool #8443-8, Jumper, SRS Load) to the Passenger Seat Belt Retractor Tensioner C1 harness connector.
3. If equipped with the standard key ignition, use this ignition on warning.

WARNING: Turn the ignition on, then reconnect the 12-volt battery and wait two minutes before proceeding. Failure to follow these instructions may result in possible serious or fatal injury.

4. If equipped with the keyless ignition, use this ignition on warning.

WARNING: Disconnect the 12-volt battery wait two minutes before proceeding, remove the ORC fuses, connect the 12-volt battery, wait two minutes before proceeding. Cycle the ignition to the On position, then reconnect the ORC fuses. Wait two minutes before proceeding. Failure to follow these instructions may result in possible serious or fatal injury.

5. With the scan tool, read the active ORC DTCs.

Does the scan tool display: B007F-13-PASSENGER SEATBELT RETRACTOR PRETENSIONER DEPLOYMENT CONTROL - CIRCUIT OPEN?

Yes

- Go To 3

No

- Replace the Passenger Seat Belt Retractor Tensioner in accordance with the Service Information. Refer to **RETRACTOR, SEAT BELT, REMOVAL** .
- Perform the RESTRAINTS SYSTEM VERIFICATION TEST. Refer to **STANDARD PROCEDURE** .

3. **CHECK THE (R280) PASSENGER SEAT BELT RETRACTOR TENSIONER LINE 1 CIRCUIT FOR AN OPEN**

   WARNING: Turn the ignition off, disconnect the 12-volt battery and wait two minutes before proceeding. Failure to follow these instructions may result in possible serious or fatal injury.

   1. Disconnect the (special tool #8443A, SRS Load Tool) and the (special tool #8443-8, Jumper, SRS Load) from the Passenger Seat Belt Retractor Tensioner C1 harness connector.
   2. Disconnect the ORC harness connectors.

      NOTE: Check connectors - Clean and repair as necessary.

   3. Connect the (special tool #8443-57, Adapter, Supplemental Restraint System Load Tool) to the ORC harness connector.
   4. Measure the resistance of the (R280) Passenger Seat Belt Retractor Tensioner Line 1 circuit between the Passenger Seat Belt Retractor Tensioner C1 connector cavity 2 and the (special tool #8443-57, Adapter, Supplemental Restraint System Load Tool) connector C1B cavity 11.

      Is the resistance within 5.4 - 10.0 Ohms?

      Yes

      - Go To 4

      No

      - Repair the (R280) Passenger Seat Belt Retractor Tensioner Line 1 circuit for an open.
      - Perform the RESTRAINTS SYSTEM VERIFICATION TEST. Refer to **STANDARD PROCEDURE** .

4. **CHECK THE (R279) PASSENGER SEAT BELT RETRACTOR TENSIONER LINE 2 CIRCUIT FOR AN OPEN**
   1. Measure the resistance of the (R279) Passenger Seat Belt Retractor Tensioner Line 2 circuit between the Passenger Seat Belt Retractor Tensioner C1 connector cavity 1 and the (special tool #8443-57, Adapter, Supplemental Restraint System Load Tool) connector C1B cavity 47.

      Is the resistance within 5.4 - 10.0 Ohms?

      Yes

      WARNING: If the Occupant Restraint Controller (ORC) is dropped at any time, it must be replaced. Failure to follow these instructions may result in possible serious or fatal injury.

- Replace the ORC in accordance with Service Information. Refer to **MODULE, OCCUPANT RESTRAINT CONTROLLER, REMOVAL** .
- Perform the RESTRAINTS SYSTEM VERIFICATION TEST. Refer to **STANDARD PROCEDURE** .

No

- Repair the (R279) Passenger Seat Belt Retractor Tensioner Line 2 circuit for an open.
- Perform the RESTRAINTS SYSTEM VERIFICATION TEST. Refer to **STANDARD PROCEDURE** .

B007F-2B-PASSENGER SEATBELT RETRACTOR PRETENSIONER DEPLOYMENT CONTROL - WIRES SHORTED TOGETHER

For a complete wiring diagram, **refer to appropriate SYSTEM WIRING DIAGRAMS article** .

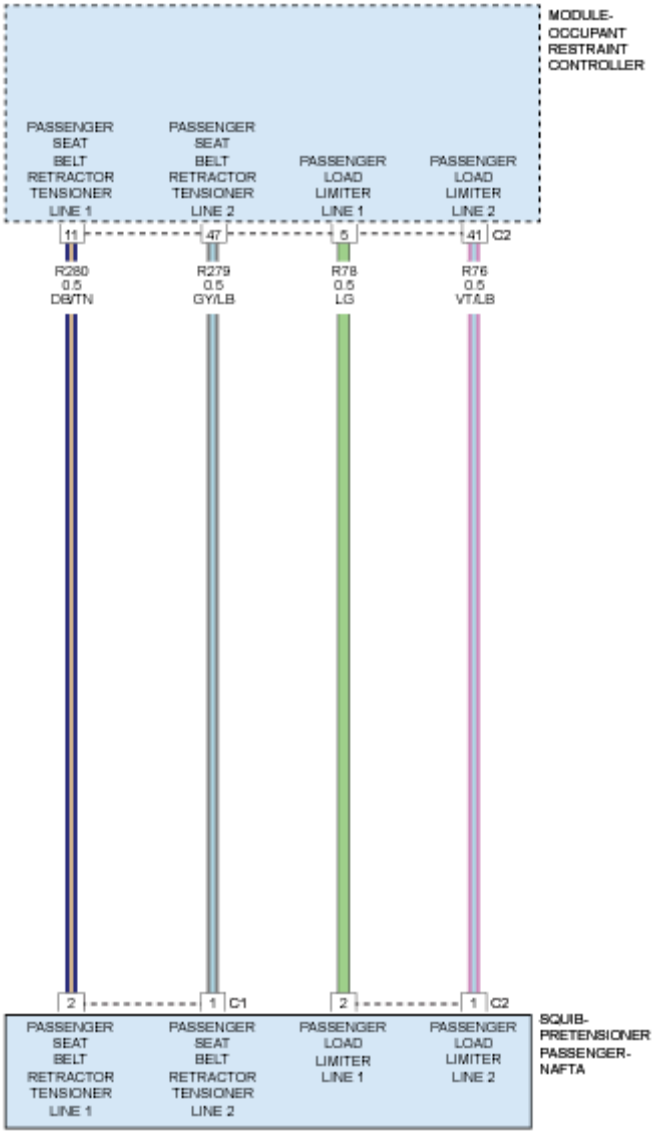

Fig. 27: Passenger Seatbelt Retractor Pretensioner Circuit Diagram
Courtesy of CHRYSLER GROUP, LLC

THEORY OF OPERATION

The location of the retractor tensioner (passenger sill end pretensioner) is within the plastic trim of the B-pillar. The anchor buckle tensioner is an internal part of the seat belt retractor. When powered, the Occupant Restraint Controller (ORC) sends a test current to the squibs to verify the integrity of the squib and wiring. These circuits are maintained in a "floating" configuration at the ORC (connected to neither power nor ground) as protection against inadvertent deployment. Use of the (special tool #8443A, SRS Load Tool) in the tests below substitutes a suspect squib with a known good component. The (special tool #8443-57, Adapter, Supplemental Restraint System Load Tool) provides a test point as well as a method for opening the shorting bar connections within the ORC harness connector. The retractor tensioners can not be repaired and if ineffective or damaged the entire retractor tensioner unit is to be replaced. Following any front airbag deployment the retractor tensioners will

also be replaced. A growling or grinding sound while attempting to operate the seat belt retractor is a sure sign the retractor tensioner has been deployed and needs to be replaced.

WHEN MONITORED

With the ignition on.

SET CONDITION

The Occupant Restraint Controller (ORC) monitors the resistance of the Passenger Seat Belt Retractor Tensioner C1 circuits. The ORC will set this DTC if it detects low resistance on the Passenger Seat Belt Retractor Tensioner C1 circuits for 2.6 seconds. The DTC will change from active to stored when the ORC monitoring shows the shorted together circuit fault is gone for 2.6 seconds.

POSSIBLE CAUSES

Possible Causes
(R280) PASSENGER SEAT BELT RETRACTOR TENSIONER LINE 1 CIRCUIT SHORTED TO THE (R279) PASSENGER SEAT BELT RETRACTOR TENSIONER LINE 2 CIRCUIT
PASSENGER SEAT BELT RETRACTOR TENSIONER C1
OCCUPANT RESTRAINT CONTROLLER (ORC)

Always perform the Pre-Diagnostic Troubleshooting procedure before proceeding. Refer to STANDARD PROCEDURE .

DIAGNOSTIC TEST

1. **DETERMINE ACTIVE OR STORED DTC**

   NOTE: Make sure that the battery is fully charged.

   NOTE: The scan tool, (special tool #8443A, SRS Load Tool), and DVOM are required to perform the following test.

   1. Turn the ignition on.

      Select ACTIVE or STORED DTC:

      ACTIVE DTC

      - Go To 2

      STORED DTC

      - Perform the RESTRAINTS SYSTEM INTERMITTENT TEST. Refer to **STANDARD**

PROCEDURE .

2. **CHECK FOR SHORTED PASSENGER SEAT BELT RETRACTOR TENSIONER**

WARNING: Turn the ignition off disconnect the 12-volt battery and wait two minutes before proceeding. Failure to follow these instructions may result in possible serious or fatal injury.

1. Disconnect the Passenger Seat Belt Retractor Tensioner C1 harness connector.

NOTE: Check connectors - Clean and repair as necessary.

2. Connect the (special tool #8443A, SRS Load Tool)and the (special tool #8443-8, Jumper, SRS Load) to the Passenger Seat Belt Retractor Tensioner C1 harness connector.
3. If equipped with the standard key ignition, use this ignition on warning.

WARNING: Turn the ignition on, then reconnect the 12-volt battery and wait two minutes before proceeding. Failure to follow these instructions may result in possible serious or fatal injury.

4. If equipped with the keyless ignition, use this ignition on warning.

WARNING: Disconnect the 12-volt battery wait two minutes before proceeding, remove the ORC fuses, connect the 12-volt battery, wait two minutes before proceeding. Cycle the ignition to the On position, then reconnect the ORC fuses. Wait two minutes before proceeding. Failure to follow these instructions may result in possible serious or fatal injury.

5. With the scan tool, read the active ORC DTCs.

Does the scan tool display: B007F-2B-PASSENGER SEATBELT RETRACTOR PRETENSIONER DEPLOYMENT CONTROL - WIRES SHORTED TOGETHER?

Yes

- Go To 3

No

- Replace the Passenger Seat Belt Retractor Tensioner in accordance with the Service Information. Refer to **RETRACTOR, SEAT BELT, REMOVAL** .
- Perform the RESTRAINTS SYSTEM VERIFICATION TEST. Refer to **STANDARD PROCEDURE** .

3. **CHECK THE (R280) PASSENGER SEAT BELT RETRACTOR TENSIONER LINE 1 CIRCUIT**

FOR A SHORT TO THE (R279) PASSENGER SEAT BELT RETRACTOR TENSIONER LINE 2 CIRCUIT

WARNING: Turn the ignition off disconnect the 12-volt battery and wait two minutes before proceeding. Failure to follow these instructions may result in possible serious or fatal injury.

1. Disconnect the (special tool #8443A, SRS Load Tool)and the (special tool #8443-8, Jumper, SRS Load) from the Passenger Seat Belt Retractor Tensioner C1 harness connector.
2. Disconnect the ORC harness connectors.

NOTE: Check connectors - Clean and repair as necessary.

3. Connect the (special tool #8443-57, Adapter, Supplemental Restraint System Load Tool)to the ORC harness connector.
4. Measure the resistance between the (R280) Passenger Seat Belt Retractor Tensioner Line 1 circuit connector C1B cavity 11 and the (R279) Passenger Seat Belt Retractor Tensioner Line 2 circuit connector C1B cavity 47 at the (special tool #8443-57, Adapter, Supplemental Restraint System Load Tool).

   Is the resistance below or within 1.5 - 2.18 Ohms?

   Yes

   - Repair the (R280) Passenger Seat Belt Retractor Tensioner Line 1 circuit for a short to the (R279) Passenger Seat Belt RetractorTensioner Line 2 circuit.
   - Perform the RESTRAINTS SYSTEM VERIFICATION TEST. Refer to **STANDARD PROCEDURE** .

   No

   WARNING: If the Occupant Restraint Controller (ORC) is dropped at any time, it must be replaced. Failure to take the proper precautions can result in accidental airbag deployment. Failure to follow these instructions may result in possible serious or fatal injury.

   - Replace the ORC in accordance with Service Information. Refer to **MODULE, OCCUPANT RESTRAINT CONTROLLER, REMOVAL** .
   - Perform the RESTRAINTS SYSTEM VERIFICATION TEST. Refer to **STANDARD PROCEDURE** .

B0080-11-DRIVER SEATBELT LOAD LIMITER DEPLOYMENT CONTROL - CIRCUIT SHORT TO GROUND

For a complete wiring diagram, **refer to appropriate SYSTEM WIRING DIAGRAMS article** .

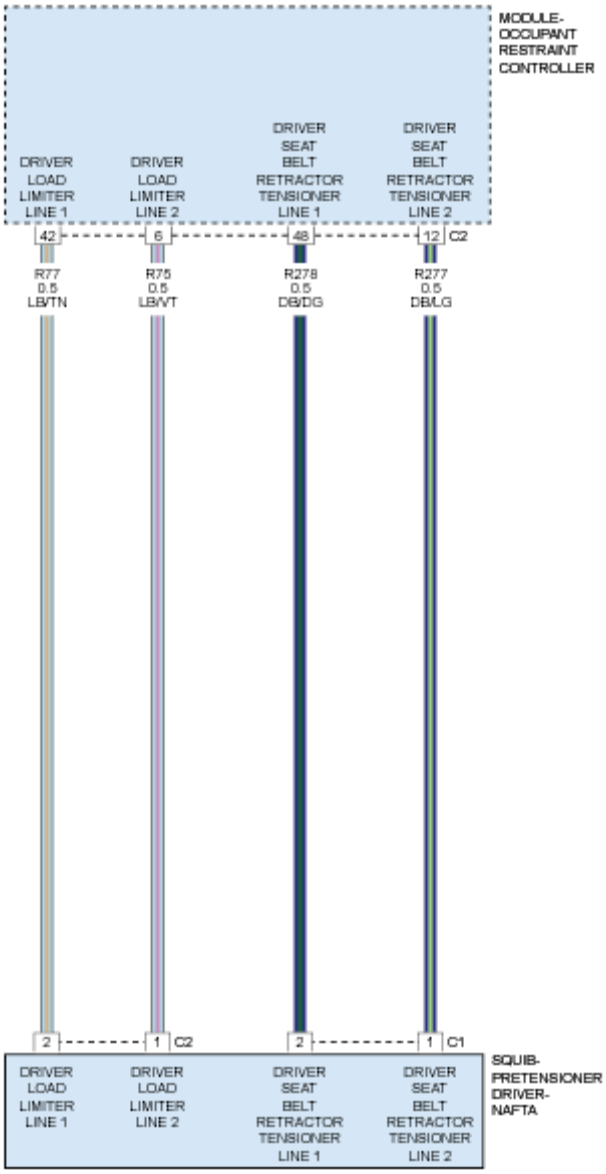

Fig. 28: Driver Seatbelt Retractor Pretensioner Circuit Diagram
Courtesy of CHRYSLER GROUP, LLC

THEORY OF OPERATION

When powered, the Occupant Restraint Controller (ORC) sends a test current to the squibs to verify the integrity of the squib and wiring. These circuits are maintained in a "floating" configuration at the ORC (connected to neither power nor ground) as protection against inadvertent deployment. Use of the in the tests below substitutes a suspect squib with a known good component. The use of the (special tool #8443-57, Adapter, Supplemental Restraint System Load Tool) provides a test point as well as a method for opening the shorting bar connections within the ORC harness connector. The adaptive load limiter on the driver side front retractor is activated only after both the retractor and anchor buckle tensioners. The ORC uses the adaptive load

limiter to adjust the belt resistance based upon impact data, to reduce the force of the tightened seat belt on the chest of the front driver seat occupant, reducing the potential for injuries. The adaptive load limiter cannot be repaired and, if ineffective or damaged, the entire front seat belt and retractor unit must be replaced. If the front airbags have been deployed, the adaptive load limiter has also been deployed. An adaptive load-limiting device is integral to the front driver seat belt retractor to supplement the anchor buckle and retractor tensioners. The adaptive load limiter is controlled by the Occupant Restraint Controller (ORC). The front driver retractor has a two pyrotechnic initiators, one for the adaptive load limiter and one for the tensioner. The adaptive load limiter initiator is connected to the vehicle electrical system through a dedicated take out of the body wire harness by a keyed and latching yellow molded plastic connector insulator to ensure a secure connection. The adaptive load limiter is not intended for reuse and must be replaced following any front airbag deployment. Refer to **RETRACTOR, SEAT BELT, REMOVAL** .

WHEN MONITORED

With the ignition on.

SET CONDITION

The Occupant Restraint Controller (ORC) monitors the resistance of the Driver Load Limiter circuits. The ORC will set this DTC if it detects low resistance on the Driver Load Limiter circuits for 2.6 seconds. This DTC transitions from active to stored when the module sees a recovery from the shorted to ground condition for greater than 2.6 seconds.

POSSIBLE CAUSES

Possible Causes
(R77) DRIVER LOAD LIMITER LINE 1 CIRCUIT SHORTED TO GROUND
(R75) DRIVER LOAD LIMITER LINE 2 CIRCUIT SHORTED TO GROUND
DRIVER SEAT BELT RETRACTOR TENSIONER C2
OCCUPANT RESTRAINT CONTROLLER (ORC)

Always perform the Pre-Diagnostic Troubleshooting procedure before proceeding. Refer to STANDARD PROCEDURE .

DIAGNOSTIC TEST

1. **DETERMINE ACTIVE OR STORED DTC**

NOTE: Make sure that the battery is fully charged.

NOTE: The scan tool, (special tool #8443A, SRS Load Tool), and DVOM are required to perform the following test.

1. Turn the ignition on.

Select ACTIVE or STORED DTC:

ACTIVE DTC

- Go To 2

STORED DTC

- Perform the RESTRAINTS SYSTEM INTERMITTENT TEST. Refer to **STANDARD PROCEDURE** .

2. **CHECK FOR SHORTED DRIVER LOAD LIMITER CIRCUITS**

WARNING: Turn the ignition off disconnect the 12-volt battery and wait two minutes before proceeding. Failure to follow these instructions may result in possible serious or fatal injury.

1. Disconnect the Driver Seat Belt Retractor Tensioner C2 harness connector.

NOTE: Check connectors - Clean and repair as necessary.

2. Connect the (special tool #8443A, SRS Load Tool) and the (special tool #8443-8, Jumper, SRS Load) to the Driver Seat Belt Retractor Tensioner C2 harness connector.
3. If equipped with the standard key ignition, use this ignition on warning.

WARNING: Turn the ignition on, then reconnect the 12-volt battery and wait two minutes before proceeding. Failure to follow these instructions may result in possible serious or fatal injury.

4. If equipped with the keyless ignition, use this ignition on warning.

WARNING: Disconnect the 12-volt battery wait two minutes before proceeding, remove the ORC fuses, connect the 12-volt battery, wait two minutes before proceeding. Cycle the ignition to the On position, then reconnect the ORC fuses. Wait two minutes before proceeding. Failure to follow these instructions may result in possible serious or fatal injury.

5. With the scan tool, read the active ORC DTCs.

Does the scan tool display: B0080-11-DRIVER SEATBELT LOAD LIMITER DEPLOYMENT CONTROL - CIRCUIT SHORT TO GROUND - DTC?

Yes

- Go To 3

No

- Replace the Driver Seat Belt Retractor Tensioner in accordance with the Service Information. Refer to **RETRACTOR, SEAT BELT, REMOVAL** .
- Perform the RESTRAINTS SYSTEM VERIFICATION TEST. Refer to **STANDARD PROCEDURE** .

3. **CHECK THE (R77) DRIVER LOAD LIMITER LINE 1 CIRCUIT AND THE (R75) DRIVER LOAD LIMITER LINE 2 CIRCUIT FOR A SHORT TO GROUND**

WARNING: Turn the ignition off disconnect the 12-volt battery and wait two minutes before proceeding. Failure to follow these instructions may result in possible serious or fatal injury.

1. Disconnect the (special tool #8443A, SRS Load Tool) and the (special tool #8443-8, Jumper, SRS Load) from the Driver Seat Belt Retractor Tensioner C2 harness connector.
2. Disconnect the ORC harness connectors.

NOTE: Check connectors - Clean and repair as necessary.

3. Connect the (special tool #8443-57, Adapter, Supplemental Restraint System Load Tool) to the ORC harness connector.
4. Measure the resistance of the (R77) Driver Load Limiter Line 1 circuit between ground and the (special tool #8443-57, Adapter, Supplemental Restraint System Load Tool) connector C1B cavity 42.
5. Measure the resistance of the (R75) Driver Load Limiter Line 2 circuit between ground and the (special tool #8443-57, Adapter, Supplemental Restraint System Load Tool) connector C1B cavity 6.

Is the resistance below 10k Ohms on either circuit?

Yes

- Repair the Driver Load Limiter circuits with resistance below 10k Ohms for a short to ground.
- Perform the RESTRAINTS SYSTEM VERIFICATION TEST. Refer to **STANDARD PROCEDURE** .

No

WARNING: Turn the ignition off disconnect the 12-volt battery and wait two minutes before proceeding. Failure to follow these instructions may result in possible serious or fatal injury.

- Replace the ORC in accordance with Service Information. Refer to **MODULE, OCCUPANT RESTRAINT CONTROLLER, REMOVAL** .
- Perform the RESTRAINTS SYSTEM VERIFICATION TEST. Refer to **STANDARD**

PROCEDURE .

B0080-12-DRIVER SEATBELT LOAD LIMITER DEPLOYMENT CONTROL - CIRCUIT SHORT TO BATTERY

For a complete wiring diagram, **refer to appropriate SYSTEM WIRING DIAGRAMS article** .

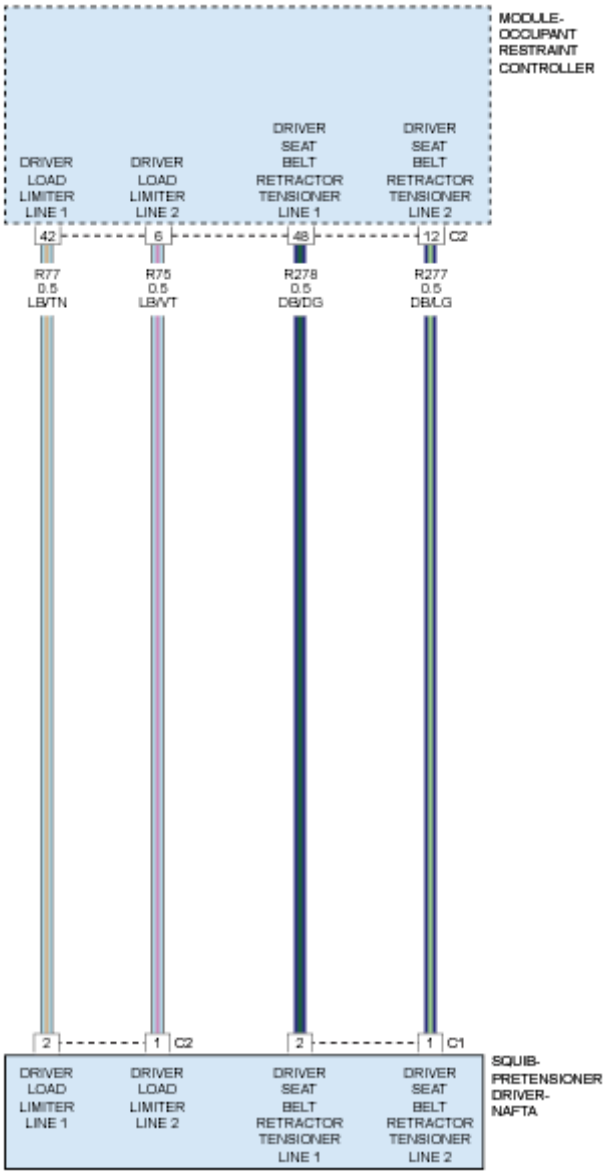

Fig. 29: Driver Seatbelt Retractor Pretensioner Circuit Diagram
Courtesy of CHRYSLER GROUP, LLC

THEORY OF OPERATION

When powered, the Occupant Restraint Controller (ORC) sends a test current to the squibs to verify the integrity of the squib and wiring. These circuits are maintained in a "floating" configuration at the ORC (connected to neither power nor ground) as protection against inadvertent deployment. Use of the in the tests below substitutes a suspect squib with a known good component. The use of the (special tool #8443-57, Adapter, Supplemental Restraint System Load Tool) provides a test point as well as a method for opening the shorting bar connections within the ORC harness connector. The adaptive load limiter on the driver side front retractor is activated only after both the retractor and anchor buckle tensioners. The ORC uses the adaptive load limiter to adjust the belt resistance based upon impact data, to reduce the force of the tightened seat belt on the chest of the front driver seat occupant, reducing the potential for injuries. The adaptive load limiter cannot be repaired and, if ineffective or damaged, the entire front seat belt and retractor unit must be replaced. If the front airbags have been deployed, the adaptive load limiter has also been deployed. An adaptive load-limiting device is integral to the front driver seat belt retractor to supplement the anchor buckle and retractor tensioners. The adaptive load limiter is controlled by the Occupant Restraint Controller (ORC). The front driver retractor has a two pyrotechnic initiators, one for the adaptive load limiter and one for the tensioner. The adaptive load limiter initiator is connected to the vehicle electrical system through a dedicated take out of the body wire harness by a keyed and latching yellow molded plastic connector insulator to ensure a secure connection. The adaptive load limiter is not intended for reuse and must be replaced following any front airbag deployment. Refer to **RETRACTOR, SEAT BELT, REMOVAL** .

WHEN MONITORED

With the ignition on.

SET CONDITION

The Occupant Restraint Controller (ORC) monitors the voltage on the Driver Load Limiter circuits. The ORC will set this DTC if it detects voltage on the Driver Load Limiter circuits for 2.6 seconds. This DTC transitions from active to stored when the module sees a recovery from the shorted to voltage condition for greater than 2.6 seconds.

POSSIBLE CAUSES

Possible Causes
(R77) DRIVER LOAD LIMITER LINE 1 CIRCUIT SHORTED TO VOLTAGE
(R75) DRIVER LOAD LIMITER LINE 2 CIRCUIT SHORTED TO VOLTAGE
DRIVER SEAT BELT RETRACTOR TENSIONER C2
OCCUPANT RESTRAINT CONTROLLER (ORC)

Always perform the Pre-Diagnostic Troubleshooting procedure before proceeding. Refer to STANDARD PROCEDURE .

DIAGNOSTIC TEST

1. **DETERMINE ACTIVE OR STORED DTC**

NOTE: Make sure that the battery is fully charged.

NOTE: The scan tool, (special tool #8443A, SRS Load Tool), and DVOM are required to perform the following test.

1. Turn the ignition on.

   Select ACTIVE or STORED DTC:

   ACTIVE DTC

   - Go To 2

   STORED DTC

   - Perform the RESTRAINTS SYSTEM INTERMITTENT TEST. Refer to **STANDARD PROCEDURE** .

2. **CHECK FOR SHORTED DRIVER LOAD LIMITER CIRCUITS**

   WARNING: **Turn the ignition off disconnect the 12-volt battery and wait two minutes before proceeding. Failure to follow these instructions may result in possible serious or fatal injury.**

   1. Disconnect the Driver Seat Belt Retractor Tensioner C2 harness connector.

      NOTE: Check connectors - Clean and repair as necessary.

   2. Connect the (special tool #8443A, SRS Load Tool) and the (special tool #8443-8, Jumper, SRS Load) to the Driver Seat Belt Retractor Tensioner C2 harness connector.
   3. If equipped with the standard key ignition, use this ignition on warning.

      WARNING: **Turn the ignition on, then reconnect the 12-volt battery and wait two minutes before proceeding. Failure to follow these instructions may result in possible serious or fatal injury.**

   4. If equipped with the keyless ignition, use this ignition on warning.

      WARNING: **Disconnect the 12-volt battery wait two minutes before proceeding, remove the ORC fuses, connect the 12-volt battery, wait two minutes before proceeding. Cycle the ignition to the On position, then reconnect the ORC fuses. Wait two minutes before proceeding. Failure to follow these instructions may result in possible serious or fatal injury.**

   5. With the scan tool, read the active ORC DTCs.

Does the scan tool display: B0080-12-DRIVER SEATBELT LOAD LIMITER DEPLOYMENT CONTROL - CIRCUIT SHORT TO BATTERY - DTC?

Yes

- Go To 3

No

- Replace the Driver Seat Belt Retractor Tensioner in accordance with the Service Information. Refer to **RETRACTOR, SEAT BELT, REMOVAL** .
- Perform the RESTRAINTS SYSTEM VERIFICATION TEST. Refer to **STANDARD PROCEDURE** .

3. **CHECK THE (R77) DRIVER LOAD LIMITER LINE 1 CIRCUIT AND THE (R75) DRIVER LOAD LIMITER LINE 2 CIRCUIT FOR A SHORT TO BATTERY**

WARNING: **Turn the ignition off, disconnect the 12-volt battery and wait two minutes before proceeding. Failure to follow these instructions may result in possible serious or fatal injury.**

1. Disconnect the (special tool #8443A, SRS Load Tool) and the (special tool #8443-8, Jumper, SRS Load) from the Driver Seat Belt Retractor Tensioner C2 harness connector.
2. Disconnect the ORC harness connectors.

NOTE: Check connectors - Clean and repair as necessary.

3. Connect the (special tool #8443-57, Adapter, Supplemental Restraint System Load Tool) to the ORC harness connector.
4. If equipped with the standard key ignition, use this ignition on warning.

WARNING: **Turn the ignition on, then reconnect the 12-volt battery and wait two minutes before proceeding. Failure to follow these instructions may result in possible serious or fatal injury.**

5. If equipped with the keyless ignition, use this ignition on warning.

WARNING: **Disconnect the 12-volt battery wait two minutes before proceeding, remove the ORC fuses, connect the 12-volt battery, wait two minutes before proceeding. Cycle the ignition to the On position, then reconnect the ORC fuses. Wait two minutes before proceeding. Failure to follow these instructions may result in possible serious or fatal injury.**

6. Measure the voltage of the (R77) Driver Adaptive Load Limiter Line 1 circuit between the (special

tool #8443-57, Adapter, Supplemental Restraint System Load Tool) connector C1B cavity 42 and ground.

7. Measure the voltage of the (R75) Driver Adaptive Load Limiter Line 2 circuit between the (special tool #8443-57, Adapter, Supplemental Restraint System Load Tool) connector C1B cavity 6 and ground.

   Is there any voltage present on either circuit?

   Yes

   - Repair the Driver Load Limiter circuits with voltage present for a short to battery.
   - Perform the RESTRAINTS SYSTEM VERIFICATION TEST. Refer to **STANDARD PROCEDURE** .

   No

   WARNING: Turn the ignition off, disconnect the 12-volt battery and wait two minutes before proceeding. Failure to follow these instructions may result in possible serious or fatal injury.

   WARNING: If the Occupant Restraint Controller (ORC) is dropped at any time, it must be replaced. Failure to take the proper precautions can result in accidental airbag deployment. Failure to follow these instructions may result in possible serious or fatal injury.

   - Replace the ORC in accordance with Service Information. Refer to **MODULE, OCCUPANT RESTRAINT CONTROLLER, REMOVAL** .
   - Perform the RESTRAINTS SYSTEM VERIFICATION TEST. Refer to **STANDARD PROCEDURE** .

B0080-13-DRIVER SEATBELT LOAD LIMITER DEPLOYMENT CONTROL - CIRCUIT OPEN

For a complete wiring diagram, **refer to appropriate SYSTEM WIRING DIAGRAMS article** .

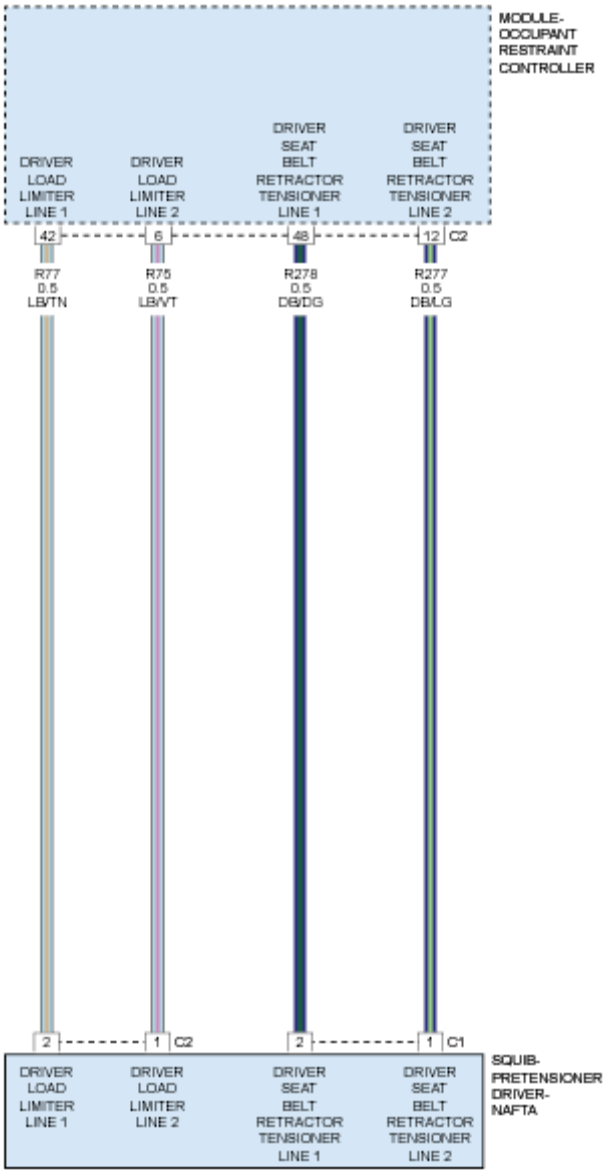

Fig. 30: Driver Seatbelt Retractor Pretensioner Circuit Diagram
Courtesy of CHRYSLER GROUP, LLC

THEORY OF OPERATION

When powered, the Occupant Restraint Controller (ORC) sends a test current to the squibs to verify the integrity of the squib and wiring. These circuits are maintained in a "floating" configuration at the ORC (connected to neither power nor ground) as protection against inadvertent deployment. Use of the in the tests below substitutes a suspect squib with a known good component. The use of the (special tool #8443-57, Adapter, Supplemental Restraint System Load Tool) provides a test point as well as a method for opening the shorting bar connections within the ORC harness connector. The adaptive load limiter on the driver side front retractor is activated only after both the retractor and anchor buckle tensioners. The ORC uses the adaptive load

limiter to adjust the belt resistance based upon impact data, to reduce the force of the tightened seat belt on the chest of the front driver seat occupant, reducing the potential for injuries. The adaptive load limiter cannot be repaired and, if ineffective or damaged, the entire front seat belt and retractor unit must be replaced. If the front airbags have been deployed, the adaptive load limiter has also been deployed. An adaptive load-limiting device is integral to the front driver seat belt retractor to supplement the anchor buckle and retractor tensioners. The adaptive load limiter is controlled by the Occupant Restraint Controller (ORC). The front driver retractor has a two pyrotechnic initiators, one for the adaptive load limiter and one for the tensioner. The adaptive load limiter initiator is connected to the vehicle electrical system through a dedicated take out of the body wire harness by a keyed and latching yellow molded plastic connector insulator to ensure a secure connection. The adaptive load limiter is not intended for reuse and must be replaced following any front airbag deployment. Refer to **RETRACTOR, SEAT BELT, REMOVAL** .

WHEN MONITORED

With the ignition on.

SET CONDITION

The Occupant Restraint Controller (ORC) monitors the resistance of the Driver Seat Belt Load Limiter circuits. The ORC will set this DTC if it detects an open or high resistance on the Driver Load Limiter circuits for 2.6 seconds. This DTC transitions from active to stored when the module sees a recovery from the open condition for greater than 2.6 seconds.

POSSIBLE CAUSES

Possible Causes
(R77) DRIVER LOAD LIMITER LINE 1 CIRCUIT OPEN
(R75) DRIVER LOAD LIMITER LINE 2 CIRCUIT OPEN
DRIVER SEAT BELT RETRACTOR TENSIONER C2
OCCUPANT RESTRAINT CONTROLLER (ORC)

Always perform the Pre-Diagnostic Troubleshooting procedure before proceeding. Refer to STANDARD PROCEDURE .

DIAGNOSTIC TEST

1. **DETERMINE ACTIVE OR STORED DTC**

NOTE: Make sure that the battery is fully charged.

NOTE: The scan tool, (special tool #8443A, SRS Load Tool), and DVOM are required to perform the following test.

1. Turn the ignition on.

Select ACTIVE or STORED DTC:

ACTIVE DTC

- Go To 2

STORED DTC

- Perform the RESTRAINTS SYSTEM INTERMITTENT TEST. Refer to **STANDARD PROCEDURE** .

2. **CHECK FOR AN OPEN DRIVER LOAD LIMITER CIRCUITS**

WARNING: Turn the ignition off disconnect the 12-volt battery and wait two minutes before proceeding. Failure to follow these instructions may result in possible serious or fatal injury.

1. Disconnect the Driver Seat Belt Retractor Tensioner C2 harness connector.

NOTE: Check connectors - Clean and repair as necessary.

2. Connect the (special tool #8443A, SRS Load Tool)and the (special tool #8443-8, Jumper, SRS Load)to the Driver Seat Belt Retractor Tensioner C2 harness connector.

WARNING: Turn the ignition on, then reconnect the 12-volt battery and wait two minutes before proceeding. Failure to follow these instructions may result in possible serious or fatal injury.

3. With the scan tool, read the active ORC DTCs.

Does the scan tool display: B0080-13-DRIVER SEATBELT LOAD LIMITER DEPLOYMENT CONTROL - CIRCUIT SHORT TO GROUND - DTC?

Yes

- Go To 3

No

- Replace the Driver Seat Belt Retractor Tensioner C2 in accordance with the Service Information. Refer to **RETRACTOR, SEAT BELT, REMOVAL** .
- Perform the RESTRAINTS SYSTEM VERIFICATION TEST. Refer to **STANDARD PROCEDURE** .

3. **CHECK THE (R77) DRIVER LOAD LIMITER LINE 1 CIRCUIT FOR AN OPEN**

WARNING: Turn the ignition off, disconnect the 12-volt battery and wait two minutes before proceeding. Failure to follow these instructions may

result in possible serious or fatal injury.

1. Disconnect the (special tool #8443A, SRS Load Tool) and the (special tool #8443-8, Jumper, SRS Load) from the Driver Seat Belt Retractor Tensioner C2 harness connector.
2. Disconnect the ORC harness connectors.

NOTE: Check connectors - Clean and repair as necessary.

3. Connect the (special tool #8443-57, Adapter, Supplemental Restraint System Load Tool) to the ORC harness connector.
4. Measure the resistance of the (R77) Driver Load Limiter Line 1 circuit between the Driver Seat Belt Retractor Tensioner C2 connector cavity 2 and the (special tool #8443-57, Adapter, Supplemental Restraint System Load Tool) connector C1B cavity 42.

   Is the resistance below or within 5.4 - 10.0 Ohms?

   Yes

   - Go To 4

   No

   - Repair the (R77) Driver Load Limiter Line 1 circuit for an open.
   - Perform the RESTRAINTS SYSTEM VERIFICATION TEST. Refer to **STANDARD PROCEDURE** .

4. **CHECK THE (R75) DRIVER LOAD LIMITER LINE 2 CIRCUIT FOR AN OPEN**
   1. Measure the resistance of the (R75) Driver Load Limiter Line 2 circuit between the Driver Seat Belt Retractor Tensioner C2 connector cavity 1 and the (special tool #8443-57, Adapter, Supplemental Restraint System Load Tool) connector C1B cavity 6.

      Is the resistance below or within 5.4 - 10.0 Ohms?

      Yes

      WARNING: If the Occupant Restraint Controller (ORC) is dropped at any time, it must be replaced. Failure to follow these instructions may result in possible serious or fatal injury.

      - Replace the ORC in accordance with Service Information. Refer to **MODULE, OCCUPANT RESTRAINT CONTROLLER, REMOVAL** .
      - Perform the RESTRAINTS SYSTEM VERIFICATION TEST. Refer to **STANDARD PROCEDURE** .

      No

- Repair the (R75) Driver Load Limiter Line 2 circuit for an open.
- Perform the RESTRAINTS SYSTEM VERIFICATION TEST. Refer to **STANDARD PROCEDURE** .

B0080-2B-DRIVER SEATBELT LOAD LIMITER DEPLOYMENT CONTROL - WIRES SHORTED TOGETHER

For a complete wiring diagram, **refer to appropriate SYSTEM WIRING DIAGRAMS article** .

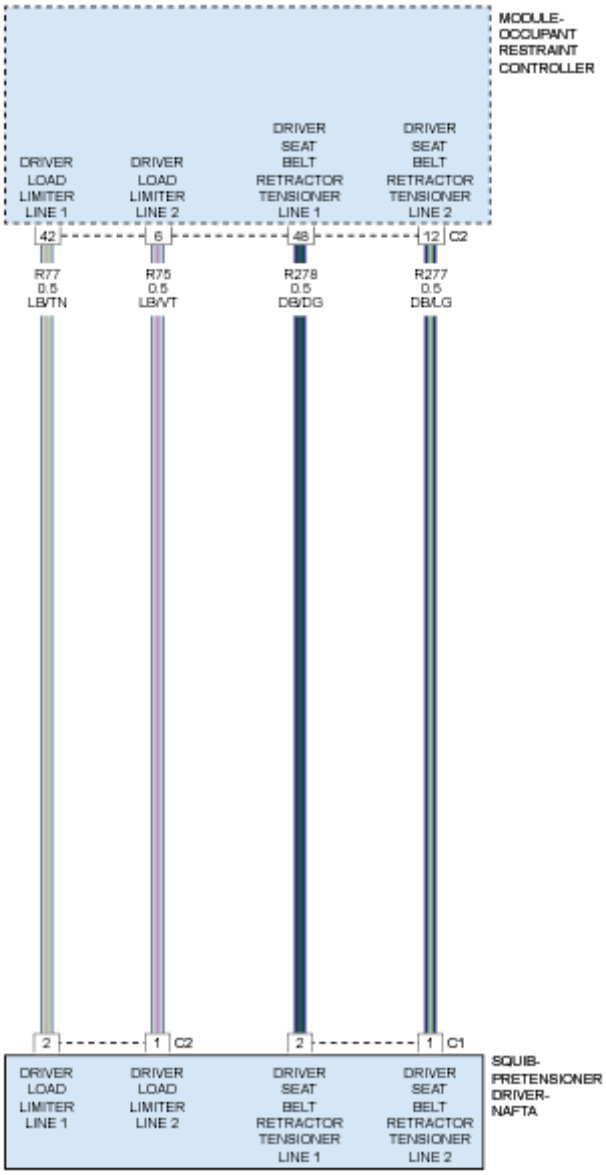

Fig. 31: Driver Seatbelt Retractor Pretensioner Circuit Diagram
Courtesy of CHRYSLER GROUP, LLC

THEORY OF OPERATION

When powered, the Occupant Restraint Controller (ORC) sends a test current to the squibs to verify the integrity of the squib and wiring. These circuits are maintained in a "floating" configuration at the ORC (connected to neither power nor ground) as protection against inadvertent deployment. Use of the in the tests below substitutes a suspect squib with a known good component. The use of the (special tool #8443-57, Adapter, Supplemental Restraint System Load Tool) provides a test point as well as a method for opening the shorting bar connections within the ORC harness connector. The adaptive load limiter on the driver side front retractor is activated only after both the retractor and anchor buckle tensioners. The ORC uses the adaptive load limiter to adjust the belt resistance based upon impact data, to reduce the force of the tightened seat belt on the chest of the front driver seat occupant, reducing the potential for injuries. The adaptive load limiter cannot be repaired and, if ineffective or damaged, the entire front seat belt and retractor unit must be replaced. If the front airbags have been deployed, the adaptive load limiter has also been deployed. An adaptive load-limiting device is integral to the front driver seat belt retractor to supplement the anchor buckle and retractor tensioners. The adaptive load limiter is controlled by the Occupant Restraint Controller (ORC). The front driver retractor has a two pyrotechnic initiators, one for the adaptive load limiter and one for the tensioner. The adaptive load limiter initiator is connected to the vehicle electrical system through a dedicated take out of the body wire harness by a keyed and latching yellow molded plastic connector insulator to ensure a secure connection. The adaptive load limiter is not intended for reuse and must be replaced following any front airbag deployment. Refer to **RETRACTOR, SEAT BELT, REMOVAL** .

WHEN MONITORED

With the ignition on.

SET CONDITION

The Occupant Restraint Controller (ORC) monitors the resistance of the Driver Load Limiter circuits. The ORC will set this DTC if it detects low resistance between the Driver Load Limiter circuits for 2.6 seconds. This DTC transitions from active to stored when the module sees a recovery from the wires shorted together condition for greater than 2.6 seconds.

POSSIBLE CAUSES

Possible Causes
(R77) DRIVER LOAD LIMITER LINE 1 CIRCUIT SHORTED TO THE (R75) DRIVER LOAD LIMITER LINE 2 CIRCUIT
DRIVER SEAT BELT RETRACTOR TENSIONER C2
OCCUPANT RESTRAINT CONTROLLER (ORC)

Always perform the Pre-Diagnostic Troubleshooting procedure before proceeding. Refer to STANDARD PROCEDURE .

DIAGNOSTIC TEST

1. **DETERMINE ACTIVE OR STORED DTC**

NOTE: Make sure that the battery is fully charged.

NOTE: The scan tool, (special tool #8443A, SRS Load Tool), and DVOM are required to perform the following test.

1. Turn the ignition on.

   Select ACTIVE or STORED DTC:

   ACTIVE DTC

   - Go To 2

   STORED DTC

   - Perform the RESTRAINTS SYSTEM INTERMITTENT TEST. Refer to **STANDARD PROCEDURE** .

2. **CHECK FOR SHORTED DRIVER LOAD LIMITER CIRCUITS**

   WARNING: **Turn the ignition off disconnect the 12-volt battery and wait two minutes before proceeding. Failure to follow these instructions may result in possible serious or fatal injury.**

   1. Disconnect the Driver Seat Belt Retractor Tensioner C2 harness connector.

      NOTE: Check connectors - Clean and repair as necessary.

   2. Connect the (special tool #8443A, SRS Load Tool)and the (special tool #8443-8, Jumper, SRS Load)to the Driver Seat Belt Retractor Tensioner C2 harness connector.
   3. If equipped with the standard key ignition, use this ignition on warning.

      WARNING: **Turn the ignition on, then reconnect the 12-volt battery and wait two minutes before proceeding. Failure to follow these instructions may result in possible serious or fatal injury.**

   4. If equipped with the keyless ignition, use this ignition on warning.

      WARNING: **Disconnect the 12-volt battery wait two minutes before proceeding, remove the ORC fuses, connect the 12-volt battery, wait two minutes before proceeding. Cycle the ignition to the On position, then reconnect the ORC fuses. Wait two minutes before proceeding. Failure to follow these instructions may result in possible serious or fatal injury.**

5. With the scan tool, read the active ORC DTCs.

   Does the scan tool display: B0080-2B-DRIVER SEATBELT LOAD LIMITER DEPLOYMENT CONTROL - WIRES SHORTED TOGETHER - DTC?

   Yes

   - Go To 3

   No

   - Replace the Driver Seat Belt Retractor Tensioner C2 in accordance with the Service Information. Refer to **RETRACTOR, SEAT BELT, REMOVAL** .
   - Perform the RESTRAINTS SYSTEM VERIFICATION TEST. Refer to **STANDARD PROCEDURE** .

3. **CHECK THE (R77) DRIVER LOAD LIMITER LINE 1 CIRCUIT FOR A SHORT TO THE (R75) DRIVER LOAD LIMITER LINE 2 CIRCUIT**

   WARNING: **Turn the ignition off disconnect the 12-volt battery and wait two minutes before proceeding. Failure to follow these instructions may result in possible serious or fatal injury.**

   1. Disconnect the (special tool #8443A, SRS Load Tool)and the (special tool #8443-8, Jumper, SRS Load)from the Driver Seat Belt Retractor Tensioner C2 harness connector.
   2. Disconnect the ORC harness connectors.

      NOTE: Check connectors - Clean and repair as necessary.

   3. Connect the (special tool #8443-57, Adapter, Supplemental Restraint System Load Tool) to the ORC harness connector.
   4. Measure the resistance between the (R77) Driver Load Limiter Line 1 circuit connector C1B cavity 42 and the (R75) Driver Load Limiter Line 2 circuit connector C1B cavity 42 at the (special tool #8443-57, Adapter, Supplemental Restraint System Load Tool).

      Is the resistance below or within 1.5 - 2.18 Ohms?

      Yes

      - Repair the (R77) Driver Load Limiter Line 1 circuit for a short to the (R75) Driver Load Limiter Line 2 circuit.
      - Perform the RESTRAINTS SYSTEM VERIFICATION TEST. Refer to **STANDARD PROCEDURE** .

      No

WARNING: If the Occupant Restraint Controller (ORC) is dropped at any time, it must be replaced. Failure to take the proper precautions can result in accidental airbag deployment. Failure to follow these instructions may result in possible serious or fatal injury.

- Replace the ORC in accordance with Service Information. Refer to **MODULE, OCCUPANT RESTRAINT CONTROLLER, REMOVAL** .
- Perform the RESTRAINTS SYSTEM VERIFICATION TEST. Refer to **STANDARD PROCEDURE** .

B0082-11-PASSENGER SEATBELT LOAD LIMITER DEPLOYMENT CONTROL - CIRCUIT SHORT TO GROUND

For a complete wiring diagram, **refer to appropriate SYSTEM WIRING DIAGRAMS article** .

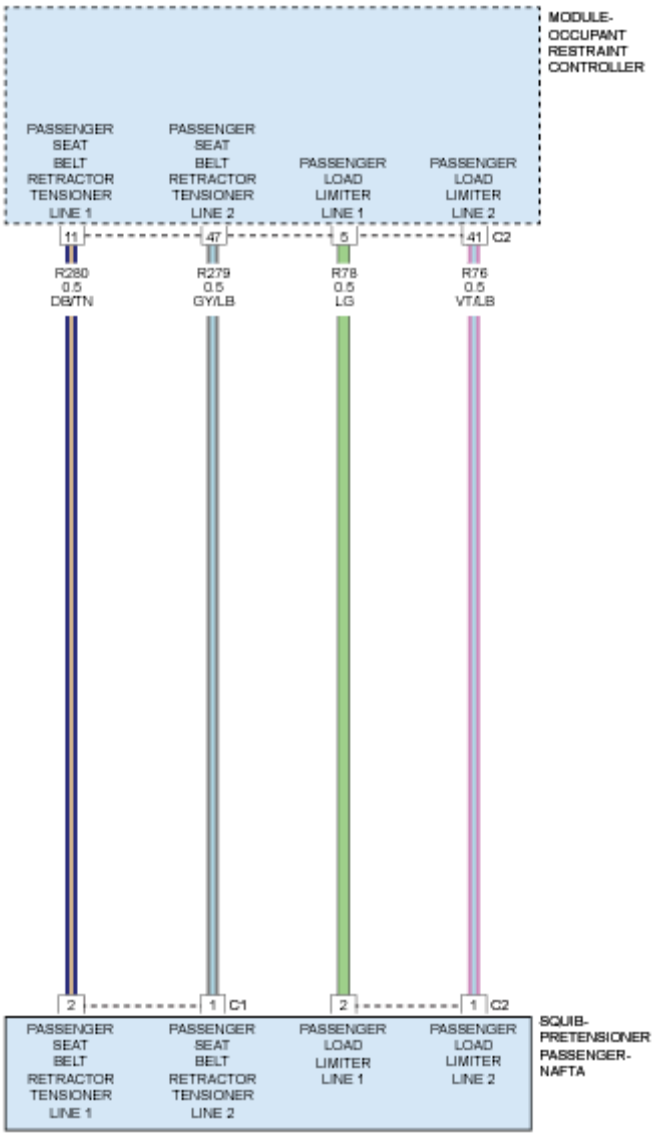

Fig. 32: Passenger Seatbelt Retractor Pretensioner Circuit Diagram
Courtesy of CHRYSLER GROUP, LLC

THEORY OF OPERATION

When powered, the Occupant Restraint Controller (ORC) sends a test current to the squibs to verify the integrity of the squib and wiring. These circuits are maintained in a "floating" configuration at the ORC (connected to neither power nor ground) as protection against inadvertent deployment. Use of the (special tool #8443A, SRS Load Tool) in the tests below substitutes a suspect squib with a known good component. The use of the (special tool #8443-57, Adapter, Supplemental Restraint System Load Tool) provides a test point as well as a method for opening the shorting bar connections within the ORC harness connector. The adaptive load limiter on the passenger side front retractor is activated only after both the retractor and anchor buckle tensioners. The ORC uses the adaptive load limiter to adjust the belt resistance based upon impact data, to reduce the force of the tightened seat belt on the chest of the front passenger seat occupant, reducing the

potential for injuries. The adaptive load limiter cannot be repaired and, if ineffective or damaged, the entire front seat belt and retractor unit must be replaced. If the front airbags have been deployed, the adaptive load limiter has also been deployed. An adaptive load-limiting device is integral to the front passenger seat belt retractor to supplement the anchor buckle and retractor tensioners. The adaptive load limiter is controlled by the Occupant Restraint Controller (ORC). The front passenger retractor has a two pyrotechnic initiators, one for the adaptive load limiter and one for the tensioner. The adaptive load limiter initiator is connected to the vehicle electrical system through a dedicated take out of the body wire harness by a keyed and latching yellow molded plastic connector insulator to ensure a secure connection. The adaptive load limiter is not intended for reuse and must be replaced following any front airbag deployment. Refer to **RETRACTOR, SEAT BELT, REMOVAL** .

WHEN MONITORED

With the ignition on.

SET CONDITION

The Occupant Restraint Controller (ORC) monitors the resistance of the Passenger Load Limiter circuits. The ORC will set this DTC if it detects low resistance on the Passenger Load Limiter circuits for 2.6 seconds. This DTC transitions from active to stored when the module sees a recovery from the shorted to ground condition for greater than 2.6 seconds.

POSSIBLE CAUSES

Possible Causes
(R78) PASSENGER LOAD LIMITER LINE 1 CIRCUIT SHORTED TO GROUND
(R76) PASSENGER LOAD LIMITER LINE 2 CIRCUIT SHORTED TO GROUND
PASSENGER SEAT BELT RETRACTOR TENSIONER C2
OCCUPANT RESTRAINT CONTROLLER (ORC)

Always perform the Pre-Diagnostic Troubleshooting procedure before proceeding. Refer to STANDARD PROCEDURE .

DIAGNOSTIC TEST

1. **DETERMINE ACTIVE OR STORED DTC**

NOTE: Make sure that the battery is fully charged.

NOTE: The scan tool, (special tool #8443A, SRS Load Tool), and DVOM are required to perform the following test.

1. Turn the ignition on.

   Select ACTIVE or STORED DTC:

ACTIVE DTC

- Go To 2

STORED DTC

- Perform the RESTRAINTS SYSTEM INTERMITTENT TEST. Refer to **STANDARD PROCEDURE** .

2. **CHECK FOR SHORTED PASSENGER LOAD LIMITER CIRCUITS**

WARNING: Turn the ignition off disconnect the 12-volt battery and wait two minutes before proceeding. Failure to follow these instructions may result in possible serious or fatal injury.

1. Disconnect the Passenger Seat Belt Retractor Tensioner C2 harness connector.

NOTE: Check connectors - Clean and repair as necessary.

2. Connect the (special tool #8443A, SRS Load Tool) and the (special tool #8443-8, Jumper, SRS Load) to the Passenger Seat Belt Retractor Tensioner C2 harness connector.
3. If equipped with the standard key ignition, use this ignition on warning.

WARNING: Turn the ignition on, then reconnect the 12-volt battery and wait two minutes before proceeding. Failure to follow these instructions may result in possible serious or fatal injury.

4. If equipped with the keyless ignition, use this ignition on warning.

WARNING: Disconnect the 12-volt battery wait two minutes before proceeding, remove the ORC fuses, connect the 12-volt battery, wait two minutes before proceeding. Cycle the ignition to the On position, then reconnect the ORC fuses. Wait two minutes before proceeding. Failure to follow these instructions may result in possible serious or fatal injury.

5. With the scan tool, read the active ORC DTCs.

Does the scan tool display: B0082-11-PASSENGER SEATBELT LOAD LIMITER DEPLOYMENT CONTROL - CIRCUIT SHORT TO GROUND- DTC?

Yes

- Go To 3

No

- Replace the Passenger Seat Belt Retractor Tensioner C2 in accordance with the Service Information. Refer to **RETRACTOR, SEAT BELT, REMOVAL** .
- Perform the RESTRAINTS SYSTEM VERIFICATION TEST. Refer to **STANDARD PROCEDURE** .

3. **CHECK THE (R78) PASSENGER LOAD LIMITER LINE 1 CIRCUIT AND THE (R76) PASSENGER LOAD LIMITER LINE 2 CIRCUIT FOR A SHORT TO GROUND**

WARNING: Turn the ignition off disconnect the 12-volt battery and wait two minutes before proceeding. Failure to follow these instructions may result in possible serious or fatal injury.

1. Disconnect the (special tool #8443A, SRS Load Tool) and the (special tool #8443-8, Jumper, SRS Load) from the Passenger Seat Belt Retractor Tensioner C2 harness connector.
2. Disconnect the ORC harness connectors.

NOTE: Check connectors - Clean and repair as necessary.

3. Connect the (special tool #8443-57, Adapter, Supplemental Restraint System Load Tool) to the ORC harness connector.
4. Measure the resistance of the (R78) Passenger Load Limiter Line 1 circuit between ground and the (special tool #8443-57, Adapter, Supplemental Restraint System Load Tool) connector C1B cavity 5.
5. Measure the resistance of the (R76) Passenger Load Limiter Line 2 circuit between ground and the (special tool #8443-57, Adapter, Supplemental Restraint System Load Tool) connector C1B cavity 41.

Is the resistance below 10k Ohms on either circuit?

Yes

- Repair the Passenger Seat Belt Retractor Tensioner C2 circuits with resistance below 10k Ohms for a short to ground.
- Perform the RESTRAINTS SYSTEM VERIFICATION TEST. Refer to **STANDARD PROCEDURE** .

No

WARNING: Turn the ignition off disconnect the 12-volt battery and wait two minutes before proceeding. Failure to follow these instructions may result in possible serious or fatal injury.

- Replace the ORC in accordance with Service Information. Refer to **MODULE, OCCUPANT RESTRAINT CONTROLLER, REMOVAL** .
- Perform the RESTRAINTS SYSTEM VERIFICATION TEST. Refer to **STANDARD**

PROCEDURE .

B0082-12-PASSENGER SEATBELT LOAD LIMITER DEPLOYMENT CONTROL - CIRCUIT SHORT TO BATTERY

For a complete wiring diagram, **refer to appropriate SYSTEM WIRING DIAGRAMS article** .

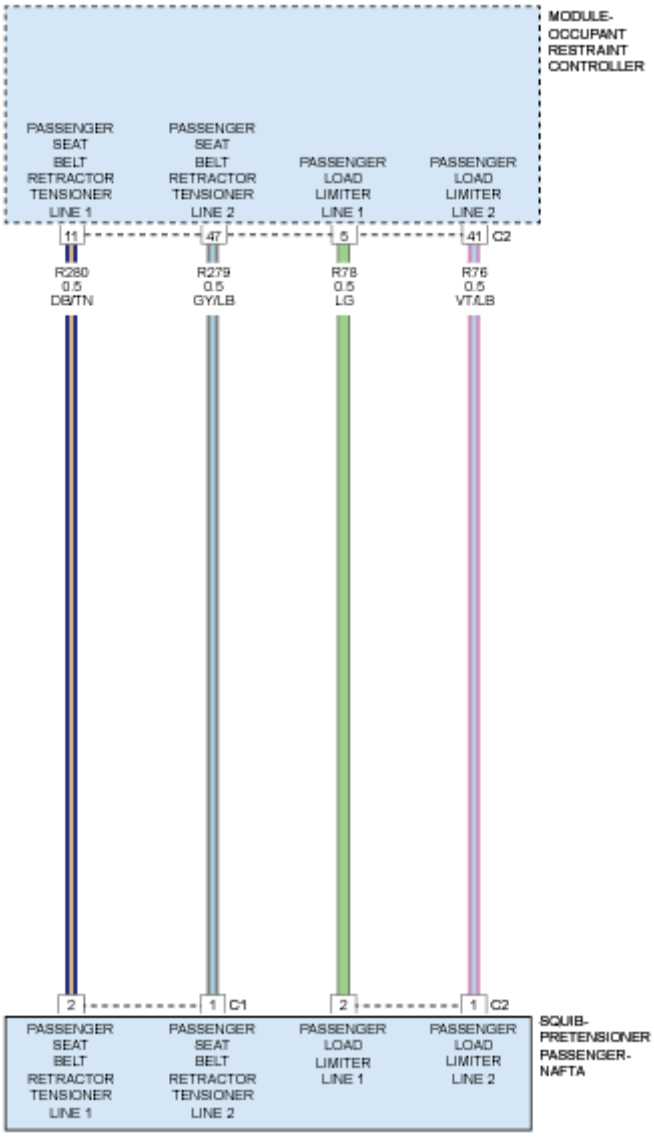

Fig. 33: Passenger Seatbelt Retractor Pretensioner Circuit Diagram
Courtesy of CHRYSLER GROUP, LLC

THEORY OF OPERATION

When powered, the Occupant Restraint Controller (ORC) sends a test current to the squibs to verify the integrity of the squib and wiring. These circuits are maintained in a "floating" configuration at the ORC

(connected to neither power nor ground) as protection against inadvertent deployment. Use of the (special tool #8443A, SRS Load Tool) in the tests below substitutes a suspect squib with a known good component. The use of the (special tool #8443-57, Adapter, Supplemental Restraint System Load Tool) provides a test point as well as a method for opening the shorting bar connections within the ORC harness connector. The adaptive load limiter on the passenger side front retractor is activated only after both the retractor and anchor buckle tensioners. The ORC uses the adaptive load limiter to adjust the belt resistance based upon impact data, to reduce the force of the tightened seat belt on the chest of the front passenger seat occupant, reducing the potential for injuries. The adaptive load limiter cannot be repaired and, if ineffective or damaged, the entire front seat belt and retractor unit must be replaced. If the front airbags have been deployed, the adaptive load limiter has also been deployed. An adaptive load-limiting device is integral to the front passenger seat belt retractor to supplement the anchor buckle and retractor tensioners. The adaptive load limiter is controlled by the Occupant Restraint Controller (ORC). The front passenger retractor has a two pyrotechnic initiators, one for the adaptive load limiter and one for the tensioner. The adaptive load limiter initiator is connected to the vehicle electrical system through a dedicated take out of the body wire harness by a keyed and latching yellow molded plastic connector insulator to ensure a secure connection. The adaptive load limiter is not intended for reuse and must be replaced following any front airbag deployment. Refer to **RETRACTOR, SEAT BELT, REMOVAL** .

WHEN MONITORED

With the ignition on.

SET CONDITION

The Occupant Restraint Controller (ORC) monitors the voltage on the Passenger Load Limiter circuits. The ORC will set this DTC if it detects voltage on the Passenger Load Limiter circuits for 2.6 seconds. This DTC transitions from active to stored when the module sees a recovery from the shorted to voltage condition for greater than 2.6 seconds.

POSSIBLE CAUSES

Possible Causes
(R78) PASSENGER LOAD LIMITER LINE 1 CIRCUIT SHORTED TO VOLTAGE
(R76) PASSENGER LOAD LIMITER LINE 2 CIRCUIT SHORTED TO VOLTAGE
PASSENGER SEAT BELT RETRACTOR TENSIONER C2
OCCUPANT RESTRAINT CONTROLLER (ORC)

Always perform the Pre-Diagnostic Troubleshooting procedure before proceeding. Refer to STANDARD PROCEDURE .

DIAGNOSTIC TEST

1. **DETERMINE ACTIVE OR STORED DTC**

NOTE: Make sure that the battery is fully charged.

NOTE: The scan tool, (special tool #8443A, SRS Load Tool), and DVOM are required to perform the following test.

1. Turn the ignition on.

   Select ACTIVE or STORED DTC:

   ACTIVE DTC

   - Go To 2

   STORED DTC

   - Perform the RESTRAINTS SYSTEM INTERMITTENT TEST. Refer to **STANDARD PROCEDURE** .

2. **CHECK FOR SHORTED PASSENGER LOAD LIMITER CIRCUITS**

   WARNING: Turn the ignition off disconnect the 12-volt battery and wait two minutes before proceeding. Failure to follow these instructions may result in possible serious or fatal injury.

   1. Disconnect the Passenger Seat Belt Retractor Tensioner C2 harness connector.

      NOTE: Check connectors - Clean and repair as necessary.

   2. Connect the (special tool #8443A, SRS Load Tool) and the (special tool #8443-8, Jumper, SRS Load) to the Passenger Seat Belt Retractor Tensioner C2 harness connector.
   3. If equipped with the standard key ignition, use this ignition on warning.

      WARNING: Turn the ignition on, then reconnect the 12-volt battery and wait two minutes before proceeding. Failure to follow these instructions may result in possible serious or fatal injury.

   4. If equipped with the keyless ignition, use this ignition on warning.

      WARNING: Disconnect the 12-volt battery wait two minutes before proceeding, remove the ORC fuses, connect the 12-volt battery, wait two minutes before proceeding. Cycle the ignition to the On position, then reconnect the ORC fuses. Wait two minutes before proceeding. Failure to follow these instructions may result in possible serious or fatal injury.

   5. With the scan tool, read the active ORC DTCs.

Does the scan tool display: B0082-12-PASSENGER SEATBELT LOAD LIMITER DEPLOYMENT CONTROL - CIRCUIT SHORT TO BATTERY- DTC?

Yes

- Go To 3

No

- Replace the Passenger Seat Belt Retractor Tensioner C2 in accordance with the Service Information. Refer to **RETRACTOR, SEAT BELT, REMOVAL** .
- Perform the RESTRAINTS SYSTEM VERIFICATION TEST. Refer to **STANDARD PROCEDURE** .

3. **CHECK THE (R78) PASSENGER LOAD LIMITER LINE 1 CIRCUIT AND THE (R76) PASSENGER LOAD LIMITER LINE 2 CIRCUIT FOR A SHORT TO GROUND**

WARNING: Turn the ignition off disconnect the 12-volt battery and wait two minutes before proceeding. Failure to follow these instructions may result in possible serious or fatal injury.

1. Disconnect the (special tool #8443A, SRS Load Tool) and the (special tool #8443-8, Jumper, SRS Load) from the Passenger Seat Belt Retractor Tensioner C2 harness connector.
2. Disconnect the ORC harness connectors.

NOTE: Check connectors - Clean and repair as necessary.

3. Connect the (special tool #8443-57, Adapter, Supplemental Restraint System Load Tool) to the ORC harness connector.
4. Measure the voltage of the (R78) Passenger Load Limiter Line 1 circuit between ground and the (special tool #8443-57, Adapter, Supplemental Restraint System Load Tool) connector C1B cavity 5.
5. Measure the voltage of the (R76) Passenger Load Limiter Line 2 circuit between ground and the (special tool #8443-57, Adapter, Supplemental Restraint System Load Tool) connector C1B cavity 41.

Is there any voltage present on either circuit?

Yes

- Repair the Passenger Seat Belt Retractor Tensioner C2 circuits with voltage present for a short to battery.
- Perform the RESTRAINTS SYSTEM VERIFICATION TEST. Refer to **STANDARD PROCEDURE** .

No

WARNING: Turn the ignition off disconnect the 12-volt battery and wait two minutes before proceeding. Failure to follow these instructions may result in possible serious or fatal injury.

- Replace the ORC in accordance with Service Information. Refer to **MODULE, OCCUPANT RESTRAINT CONTROLLER, REMOVAL** .
- Perform the RESTRAINTS SYSTEM VERIFICATION TEST. Refer to **STANDARD PROCEDURE** .

B0082-13-PASSENGER SEATBELT LOAD LIMITER DEPLOYMENT CONTROL - CIRCUIT OPEN

For a complete wiring diagram, **refer to appropriate SYSTEM WIRING DIAGRAMS article** .

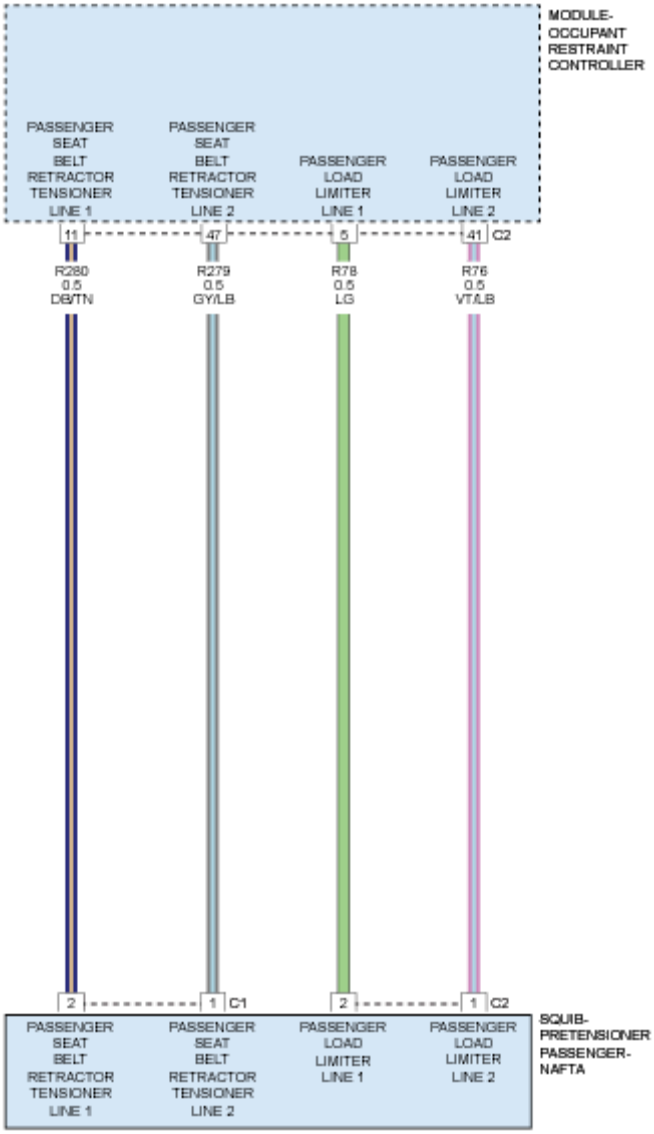

Fig. 34: Passenger Seatbelt Retractor Pretensioner Circuit Diagram
Courtesy of CHRYSLER GROUP, LLC

THEORY OF OPERATION

When powered, the Occupant Restraint Controller (ORC) sends a test current to the squibs to verify the integrity of the squib and wiring. These circuits are maintained in a "floating" configuration at the ORC (connected to neither power nor ground) as protection against inadvertent deployment. Use of the (special tool #8443A, SRS Load Tool) in the tests below substitutes a suspect squib with a known good component. The use of the (special tool #8443-57, Adapter, Supplemental Restraint System Load Tool) provides a test point as well as a method for opening the shorting bar connections within the ORC harness connector. The adaptive load limiter on the passenger side front retractor is activated only after both the retractor and anchor buckle tensioners. The ORC uses the adaptive load limiter to adjust the belt resistance based upon impact data, to reduce the force of the tightened seat belt on the chest of the front passenger seat occupant, reducing the

potential for injuries. The adaptive load limiter cannot be repaired and, if ineffective or damaged, the entire front seat belt and retractor unit must be replaced. If the front airbags have been deployed, the adaptive load limiter has also been deployed. An adaptive load-limiting device is integral to the front passenger seat belt retractor to supplement the anchor buckle and retractor tensioners. The adaptive load limiter is controlled by the Occupant Restraint Controller (ORC). The front passenger retractor has a two pyrotechnic initiators, one for the adaptive load limiter and one for the tensioner. The adaptive load limiter initiator is connected to the vehicle electrical system through a dedicated take out of the body wire harness by a keyed and latching yellow molded plastic connector insulator to ensure a secure connection. The adaptive load limiter is not intended for reuse and must be replaced following any front airbag deployment. Refer to **RETRACTOR, SEAT BELT, REMOVAL** .

WHEN MONITORED

With the ignition on.

SET CONDITION

The Occupant Restraint Controller (ORC) monitors the resistance of the Passenger Load Limiter circuits. The ORC will set this DTC if it detects an open or high resistance on the Passenger Load Limiter circuits for 2.6 seconds. This DTC transitions from active to stored when the module sees a recovery from the open condition for greater than 2.6 seconds.

POSSIBLE CAUSES

Possible Causes
(R78) PASSENGER LOAD LIMITER LINE 1 CIRCUIT OPEN
(R76) PASSENGER LOAD LIMITER LINE 2 CIRCUIT OPEN
PASSENGER SEAT BELT RETRACTOR TENSIONER C2
OCCUPANT RESTRAINT CONTROLLER (ORC)

Always perform the Pre-Diagnostic Troubleshooting procedure before proceeding. Refer to STANDARD PROCEDURE .

DIAGNOSTIC TEST

1. **DETERMINE ACTIVE OR STORED DTC**

NOTE: Make sure that the battery is fully charged.

NOTE: The scan tool, (special tool #8443A, SRS Load Tool), and DVOM are required to perform the following test.

1. Turn the ignition on.

   Select ACTIVE or STORED DTC:

ACTIVE DTC

- Go To 2

STORED DTC

- Perform the RESTRAINTS SYSTEM INTERMITTENT TEST. Refer to **STANDARD PROCEDURE** .

2. **CHECK FOR AN OPEN PASSENGER LOAD LIMITER CIRCUITS**

WARNING: Turn the ignition off disconnect the 12-volt battery and wait two minutes before proceeding. Failure to follow these instructions may result in possible serious or fatal injury.

1. Disconnect the Passenger Seat Belt Retractor Tensioner C2 connector.

NOTE: Check connectors - Clean and repair as necessary.

2. Connect the (special tool #8443A, SRS Load Tool)and the (special tool #8443-8, Jumper, SRS Load) to the Passenger Seat Belt Retractor Tensioner C2 harness connector.
3. If equipped with the standard key ignition, use this ignition on warning.

WARNING: Turn the ignition on, then reconnect the 12-volt battery and wait two minutes before proceeding. Failure to follow these instructions may result in possible serious or fatal injury.

4. If equipped with the keyless ignition, use this ignition on warning.

WARNING: Disconnect the 12-volt battery wait two minutes before proceeding, remove the ORC fuses, connect the 12-volt battery, wait two minutes before proceeding. Cycle the ignition to the On position, then reconnect the ORC fuses. Wait two minutes before proceeding. Failure to follow these instructions may result in possible serious or fatal injury.

5. With the scan tool, read the active ORC DTCs.

Does the scan tool display: B0082-13-PASSENGER SEATBELT LOAD LIMITER DEPLOYMENT CONTROL - CIRCUIT OPEN - DTC?

Yes

- Go To 3

No

- Replace the Passenger Seat Belt Retractor Tensioner C2 in accordance with the Service Information. Refer to **RETRACTOR, SEAT BELT, REMOVAL** .
- Perform the RESTRAINTS SYSTEM VERIFICATION TEST. Refer to **STANDARD PROCEDURE** .

3. **CHECK THE (R78) PASSENGER LOAD LIMITER LINE 1 CIRCUIT FOR AN OPEN**

WARNING: Turn the ignition off, disconnect the 12-volt battery and wait two minutes before proceeding. Failure to follow these instructions may result in possible serious or fatal injury.

1. Disconnect the (special tool #8443A, SRS Load Tool) and the (special tool #8443-8, Jumper, SRS Load) from the Passenger Seat Belt Retractor Tensioner C2 harness connector.
2. Disconnect the ORC harness connectors.

NOTE: Check connectors - Clean and repair as necessary.

3. Connect the (special tool #8443-57, Adapter, Supplemental Restraint System Load Tool) to the ORC harness connector.
4. Measure the resistance of the (R78) Passenger Load Limiter Line 1 circuit between the Passenger Seat Belt Retractor Tensioner C2 connector cavity 2 and the (special tool #8443-57, Adapter, Supplemental Restraint System Load Tool) connector C1B cavity 5.

Is the resistance less than or within 1.5 - 2.18 Ohms?

Yes

- Go To 4

No

- Repair the (R78) Passenger Load Limiter Line 1 circuit for an open.
- Perform the RESTRAINTS SYSTEM VERIFICATION TEST. Refer to **STANDARD PROCEDURE** .

4. **CHECK THE (R76) PASSENGER LOAD LIMITER LINE 2 CIRCUIT FOR AN OPEN**

1. Measure the resistance of the (R76) Passenger Load Limiter Line 2 circuit between the Passenger Seat Belt Retractor Tensioner C2 connector cavity 1 and the (special tool #8443-57, Adapter, Supplemental Restraint System Load Tool) connector C1B cavity 41.

Is the resistance less than or within 1.5 - 2.18 Ohms?

Yes

WARNING: If the Occupant Restraint Controller (ORC) is dropped at any

time, it must be replaced. Failure to follow these instructions may result in possible serious or fatal injury.

- Replace the ORC in accordance with Service Information. Refer to **MODULE, OCCUPANT RESTRAINT CONTROLLER, REMOVAL** .
- Perform the RESTRAINTS SYSTEM VERIFICATION TEST. Refer to **STANDARD PROCEDURE** .

No

- Repair the (R76) Passenger Load Limiter Line 2 circuit for an open.
- Perform the RESTRAINTS SYSTEM VERIFICATION TEST. Refer to **STANDARD PROCEDURE** .

B0082-2B-PASSENGER SEATBELT LOAD LIMITER DEPLOYMENT CONTROL - WIRES SHORTED TOGETHER

For a complete wiring diagram, **refer to appropriate SYSTEM WIRING DIAGRAMS article** .

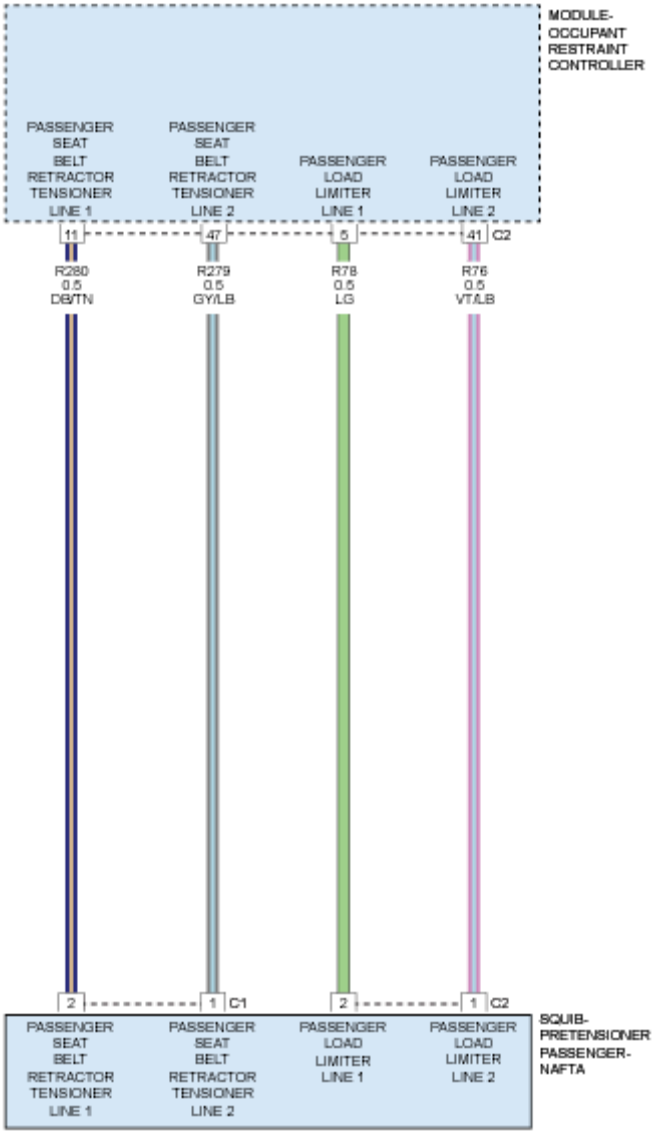

Fig. 35: Passenger Seatbelt Retractor Pretensioner Circuit Diagram
Courtesy of CHRYSLER GROUP, LLC

THEORY OF OPERATION

When powered, the Occupant Restraint Controller (ORC) sends a test current to the squibs to verify the integrity of the squib and wiring. These circuits are maintained in a "floating" configuration at the ORC (connected to neither power nor ground) as protection against inadvertent deployment. Use of the (special tool #8443A, SRS Load Tool)in the tests below substitutes a suspect squib with a known good component. The use of the(special tool #8443-57, Adapter, Supplemental Restraint System Load Tool) provides a test point as well as a method for opening the shorting bar connections within the ORC harness connector. The adaptive load limiter on the passenger side front retractor is activated only after both the retractor and anchor buckle tensioners. The ORC uses the adaptive load limiter to adjust the belt resistance based upon impact data, to reduce the force of the tightened seat belt on the chest of the front passenger seat occupant, reducing the

potential for injuries. The adaptive load limiter cannot be repaired and, if ineffective or damaged, the entire front seat belt and retractor unit must be replaced. If the front airbags have been deployed, the adaptive load limiter has also been deployed. An adaptive load-limiting device is integral to the front passenger seat belt retractor to supplement the anchor buckle and retractor tensioners. The adaptive load limiter is controlled by the Occupant Restraint Controller (ORC). The front passenger retractor has a two pyrotechnic initiators, one for the adaptive load limiter and one for the tensioner. The adaptive load limiter initiator is connected to the vehicle electrical system through a dedicated take out of the body wire harness by a keyed and latching yellow molded plastic connector insulator to ensure a secure connection. The adaptive load limiter is not intended for reuse and must be replaced following any front airbag deployment. Refer to **RETRACTOR, SEAT BELT, REMOVAL** .

WHEN MONITORED

With the ignition on.

SET CONDITION

The Occupant Restraint Controller (ORC) monitors the resistance of the Passenger Load Limiter circuits. The ORC will set this DTC if it detects low resistance between the Passenger Load Limiter circuits for 2.6 seconds. This DTC transitions from active to stored when the module sees a recovery from the wires shorted together condition for greater than 2.6 seconds.

POSSIBLE CAUSES

Possible Causes
(R78) PASSENGER LOAD LIMITER LINE 1 CIRCUIT SHORTED TO THE (R76) PASSENGER LOAD LIMITER LINE 2 CIRCUIT
PASSENGER SEAT BELT RETRACTORTENSIONER C2
OCCUPANT RESTRAINT CONTROLLER (ORC)

Always perform the Pre-Diagnostic Troubleshooting procedure before proceeding. Refer to STANDARD PROCEDURE .

DIAGNOSTIC TEST

1. **DETERMINE ACTIVE OR STORED DTC**

   NOTE: Make sure that the battery is fully charged.

   NOTE: The scan tool, (special tool #8443A, SRS Load Tool), and DVOM are required to perform the following test.

   1. Turn the ignition on.

      Select ACTIVE or STORED DTC:

ACTIVE DTC

- Go To 2

STORED DTC

- Perform the RESTRAINTS SYSTEM INTERMITTENT TEST. Refer to **STANDARD PROCEDURE** .

2. **CHECK FOR SHORTED PASSENGER LOAD LIMITER CIRCUITS**

WARNING: Turn the ignition off disconnect the 12-volt battery and wait two minutes before proceeding. Failure to follow these instructions may result in possible serious or fatal injury.

1. Disconnect the Passenger Seat Belt Retractor Tensioner C2 harness connector.

NOTE: Check connectors - Clean and repair as necessary.

2. Connect the (special tool #8443A, SRS Load Tool)and the (special tool #8443-8, Jumper, SRS Load)to the Passenger Seat Belt Retractor Tensioner C2 harness connector.
3. If equipped with the standard key ignition, use this ignition on warning.

WARNING: Turn the ignition on, then reconnect the 12-volt battery and wait two minutes before proceeding. Failure to follow these instructions may result in possible serious or fatal injury.

4. If equipped with the keyless ignition, use this ignition on warning.

WARNING: Disconnect the 12-volt battery wait two minutes before proceeding, remove the ORC fuses, connect the 12-volt battery, wait two minutes before proceeding. Cycle the ignition to the On position, then reconnect the ORC fuses. Wait two minutes before proceeding. Failure to follow these instructions may result in possible serious or fatal injury.

5. With the scan tool, read the active ORC DTCs.

Does the scan tool display: B0082-2B-PASSENGER SEATBELT LOAD LIMITER DEPLOYMENT CONTROL - WIRES SHORTED TOGETHER - DTC?

Yes

- Go To 3

No

- Replace the Passenger Seat Belt Retractor Tensioner C2 in accordance with the Service Information. Refer to **RETRACTOR, SEAT BELT, REMOVAL** .
- Perform the RESTRAINTS SYSTEM VERIFICATION TEST. Refer to **STANDARD PROCEDURE** .

3. **CHECK THE (R78) PASSENGER LOAD LIMITER LINE 1 CIRCUIT FOR A SHORT TO THE (R76) PASSENGER LOAD LIMITER LINE 2 CIRCUIT**

WARNING: Turn the ignition off disconnect the 12-volt battery and wait two minutes before proceeding. Failure to follow these instructions may result in possible serious or fatal injury.

1. Disconnect the (special tool #8443A, SRS Load Tool)and the (special tool #8443-8, Jumper, SRS Load)from the Passenger Seat Belt Retractor Tensioner C2 harness connector.
2. Disconnect the ORC harness connectors.

NOTE: Check connectors - Clean and repair as necessary.

3. Connect the (special tool #8443-57, Adapter, Supplemental Restraint System Load Tool) to the ORC harness connector.
4. Measure the resistance between the (R78) Passenger Load Limiter Line 1 circuit connector C1B cavity 5 and the (R76) Passenger Load Limiter Line 2 circuit connector C1B cavity 41 at the (special tool #8443-57, Adapter, Supplemental Restraint System Load Tool).

Is the resistance below or within 1.5 - 2.18 Ohms?

Yes

- Repair the (R78) Passenger Load Limiter Line 1 circuit for a short to the (R76) Passenger Load Limiter Line 2 circuit.
- Perform the RESTRAINTS SYSTEM VERIFICATION TEST. Refer to **STANDARD PROCEDURE** .

No

WARNING: If the Occupant Restraint Controller (ORC) is dropped at any time, it must be replaced. Failure to take the proper precautions can result in accidental airbag deployment. Failure to follow these instructions may result in possible serious or fatal injury.

- Replace the ORC in accordance with Service Information. Refer to **MODULE, OCCUPANT RESTRAINT CONTROLLER, REMOVAL** .
- Perform the RESTRAINTS SYSTEM VERIFICATION TEST. Refer to **STANDARD PROCEDURE** .

B0095-49-RIGHT FRONT ACCELERATION SENSOR - INTERNAL ELECTRONIC FAILURE

For a complete wiring diagram, **refer to appropriate SYSTEM WIRING DIAGRAMS article** .

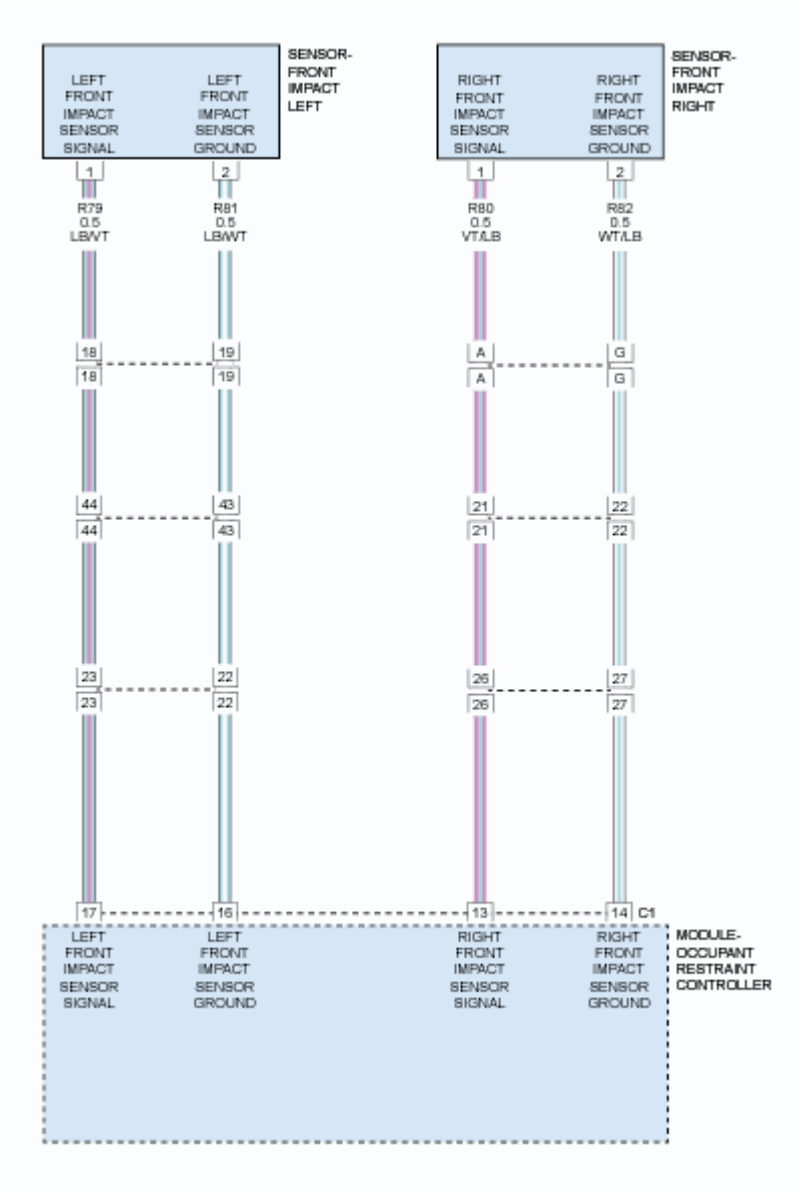

Fig. 36: Front Impact Sensor Circuit Diagram
Courtesy of CHRYSLER GROUP, LLC

THEORY OF OPERATION

The Right Front Impact Sensor is mounted in the engine compartment behind the front lamp unit. Refer to **DESCRIPTION** . The Right Front Impact Sensor is directly hard wired to the Occupant Restraint Controller (ORC) Module. The impact sensors perform their own self test using power supplied by the Occupant Restraint Controller (ORC) then communicate this status back to the ORC with periodic updates. The repair of this fault condition involves verifying the integrity of the wiring between the ORC and the sensor.

WHEN MONITORED

With the ignition on, the Right Front Impact Sensor is equipped with on board diagnostics to monitor to the sensor's circuits. If a problem is identified, the sensor sends the Right Front Impact Sensor Internal message to the Occupant Restraint Controller (ORC).

SET CONDITION

This code will set, if the ORC and the Right Front Impact Sensor do not establish and maintain valid data communications. The DTC will become Active after the fault has set for a minimum of 100 milliseconds (ms). The DTC will go to Stored after the ORC Right Front Impact Sensor communication fault has been removed or the suspect front impact sensor has been replaced. The clearing of this fault is immediate upon the suspect internal error being removed or the suspect sensor replaced. The Airbag Warning Lamp (AWL) will set in the instrument cluster.

POSSIBLE CAUSES

Possible Causes
INTERMITTENT CONNECTION (WIRING/CONNECTORS)
RIGHT FRONT IMPACT SENSOR
OCCUPANT RESTRAINT CONTROLLER (ORC)

DIAGNOSTIC TEST

1. **DETERMINE ACTIVE OR STORED FAULT CODE**
    1. Turn the ignition on.

       NOTE: Make sure the battery is fully charged.

    2. With the scan tool, read the active ORC DTCs.

       Is the DTC: B0095-49-RIGHT FRONTAL ACCELERATION SENSOR - INTERNAL ELECTRONIC FAILURE active?

       Yes

       WARNING: Turn the ignition off disconnect the 12-volt battery and wait two minutes before proceeding. Failure to follow these instructions may result in possible serious or fatal injury.

       NOTE: Inspect the related wiring harness for chafed, pierced, pinched, and partially broken wires. Also, inspect the related connectors for broken, bent, pushed out, spread, corroded, or contaminated terminals. Repair as necessary. Then Recheck for the active DTC B0095-49-RIGHT FRONTAL ACCELERATION SENSOR - INTERNAL

ELECTRONIC FAILURE. If active go to 2. If code is now stored perform the RESTRAINTS SYSTEM VERIFICATION TEST. Refer to STANDARD PROCEDURE .

No

- Perform the RESTRAINTS SYSTEM INTERMITTENT TEST. Refer to **STANDARD PROCEDURE** .

2. **VERIFY OPERATION OF THE RIGHT FRONT IMPACT SENSOR**

WARNING: **Turn the ignition off disconnect the 12-volt battery and wait two minutes before proceeding. Failure to follow these instructions may result in possible serious or fatal injury.**

1. Replace the Right Front Impact Sensor in accordance with the Service Information. Refer to **SENSOR, IMPACT, REMOVAL** . Perform the RESTRAINTS SYSTEM VERIFICATION TEST. Refer to **STANDARD PROCEDURE** .
2. Reconnect the vehicle wire harness to the sensor.
3. Remove any special tools or jumper wires and reconnect all previously disconnected components - except the Battery.
4. If equipped with the standard key ignition, use this ignition on warning.

WARNING: **Turn the ignition on, then reconnect the 12-volt battery and wait two minutes before proceeding. Failure to follow these instructions may result in possible serious or fatal injury.**

5. If equipped with the keyless ignition, use this ignition on warning.

WARNING: **Disconnect the 12-volt battery wait two minutes before proceeding, remove the ORC fuses, connect the 12-volt battery, wait two minutes before proceeding. Cycle the ignition to the On position, then reconnect the ORC fuses. Wait two minutes before proceeding. Failure to follow these instructions may result in possible serious or fatal injury.**

6. Use the scan tool and erase the stored codes in all airbag system modules.
7. Turn the Ignition Off, and wait 15 seconds before turning the Ignition On.
8. Wait one minute, and read active codes.

Did the active DTC: B0095-49-RIGHT FRONTAL ACCELERATION SENSOR - INTERNAL ELECTRONIC FAILURE return?

Yes

- Go To 3

No

- Repair is complete.
- Perform the RESTRAINTS SYSTEM VERIFICATION TEST. Refer to **STANDARD PROCEDURE** .

3. **REPLACE THE OCCUPANT RESTRAINT CONTROLLER**

WARNING: **Turn the ignition off, disconnect the 12-volt battery and wait two minutes before proceeding. Failure to follow these instructions may result in possible serious or fatal injury.**

WARNING: **If the Occupant Restraint Controller (ORC) is dropped at any time, it must be replaced. Failure to take the proper precautions can result in accidental airbag deployment. Failure to follow these instructions may result in possible serious or fatal injury.**

If there are no possible causes remaining, view repair.

Repair

- Replace the ORC in accordance with Service Information. Refer to **MODULE, OCCUPANT RESTRAINT CONTROLLER, REMOVAL** .
- Perform the RESTRAINTS SYSTEM VERIFICATION TEST. Refer to **STANDARD PROCEDURE** .

B0099-96-ROLL OVER SENSOR - COMPONENT INTERNAL FAILURE

WHEN MONITORED

The ORC checks the status of the internal roll over sensor continuously through the ignition cycle.

SET CONDITION

This DTC sets when the ORC detects corruption in the data and circuitry related to the internal roll over sensor. Once set, this DTC is latched for the entire ignition cycle. If the failure is detected in two consecutive power cycles, the DTC is set indefinitely.

POSSIBLE CAUSES

Possible Causes
OCCUPANT RESTRAINT CONTROLLER (ORC)

Always perform the Pre-Diagnostic Troubleshooting procedure before proceeding. Refer to STANDARD

PROCEDURE .

DIAGNOSTIC TEST

NOTE: Make sure the battery is fully charged.

1. Turn the ignition on.
2. With the scan tool, read ORC DTCs.

   Is the DTC active or stored?

   ORC - ACTIVE DTC

   NOTE: Make sure the part number of the replacement module is the correct part number for the vehicle.

   WARNING: If the Occupant Restraint Controller (ORC) is dropped at any time, it must be replaced. Failure to take the proper precautions can result in accidental airbag deployment. Failure to follow these instructions may result in possible serious or fatal injury.

   WARNING: Turn the ignition off disconnect the 12-volt battery and wait two minutes before proceeding. Failure to follow these instructions may result in possible serious or fatal injury.

   - Replace the ORC in accordance with the Service Information. Refer to **MODULE, OCCUPANT RESTRAINT CONTROLLER, REMOVAL** .
   - Perform the RESTRAINTS SYSTEM VERIFICATION TEST. Refer to **STANDARD PROCEDURE** .

   ORC - STORED DTC

   - Perform the RESTRAINTS SYSTEM INTERMITTENT TEST. Refer to **STANDARD PROCEDURE** .

B00A0-81-OCCUPANT CLASSIFICATION SYSTEM - INVALID SERIAL DATA RECEIVED

For a complete wiring diagram, **refer to appropriate SYSTEM WIRING DIAGRAMS article** .

WHEN MONITORED

While the IGN status is in the RUN position or the signal is not available, while the CAN bus system voltage is between 10 and 16 volts.

SET CONDITION

This DTC will set if the Occupant Restraint Controller (ORC) detects an Occupant Classification Module (OCM) an internal failure.

POSSIBLE CAUSES

Possible Causes
OCCUPANT CLASSIFICATION MODULE (OCM)

Always perform the Pre-Diagnostic Troubleshooting procedure before proceeding. Refer to STANDARD PROCEDURE .

DIAGNOSTIC TEST

Replace the Occupant Classification Module (OCM)

1. Make sure the battery is fully charged.
2. Turn the ignition off, wait ten seconds and turn ignition on.
3. With the scan tool, read the OCM DTC.

   Did the scan tool display active or stored DTC?

   Yes

   - Replace the OCCUPANT CLASSIFICATION MODULE (OCM).

     .

   - Perform the OCCUPANT CLASSIFICATION MODULE (OCM) VERIFICATION TEST. Refer to **STANDARD PROCEDURE** .

   No

   - Perform the OCCUPANT CLASSIFICATION MODULE (OCM) VERIFICATION TEST. Refer to **STANDARD PROCEDURE** .

B00A0-96-OCCUPANT CLASSIFICATION SYSTEM - COMPONENT INTERNAL FAILURE

For a complete wiring diagram, **refer to appropriate SYSTEM WIRING DIAGRAMS article** .

WHEN MONITORED

While the IGN status is in the RUN position or the signal is not available, while the CAN bus system voltage is between 10 and 16 volts.

SET CONDITION

This DTC will set if the Occupant Restraint Controller (ORC) detects an Occupant Classification Module (OCM) an internal failure.

POSSIBLE CAUSES

Possible Causes
OCCUPANT CLASSIFICATION MODULE (OCM)

Always perform the Pre-Diagnostic Troubleshooting procedure before proceeding. Refer to STANDARD PROCEDURE .

DIAGNOSTIC TEST

Replace the Occupant Classification Module (OCM)

1. Make sure the battery is fully charged.
2. Turn the ignition off, wait ten seconds and turn ignition on.
3. With the scan tool, read the OCM DTC.

   Did the scan tool display active or stored DTC?

   Yes

   - Check and repair OCCUPANT CLASSIFICATION MODULE (OCM) codes.

     .

   - Perform the OCCUPANT CLASSIFICATION MODULE (OCM) VERIFICATION TEST. Refer to **STANDARD PROCEDURE** .

   No

   - Perform the OCCUPANT CLASSIFICATION MODULE (OCM) VERIFICATION TEST. Refer to **STANDARD PROCEDURE** .

B00B5-11-DRIVER SEAT TRACK POSITION SENSOR - CIRCUIT SHORT TO GROUND

For a complete wiring diagram, **refer to appropriate SYSTEM WIRING DIAGRAMS article** .

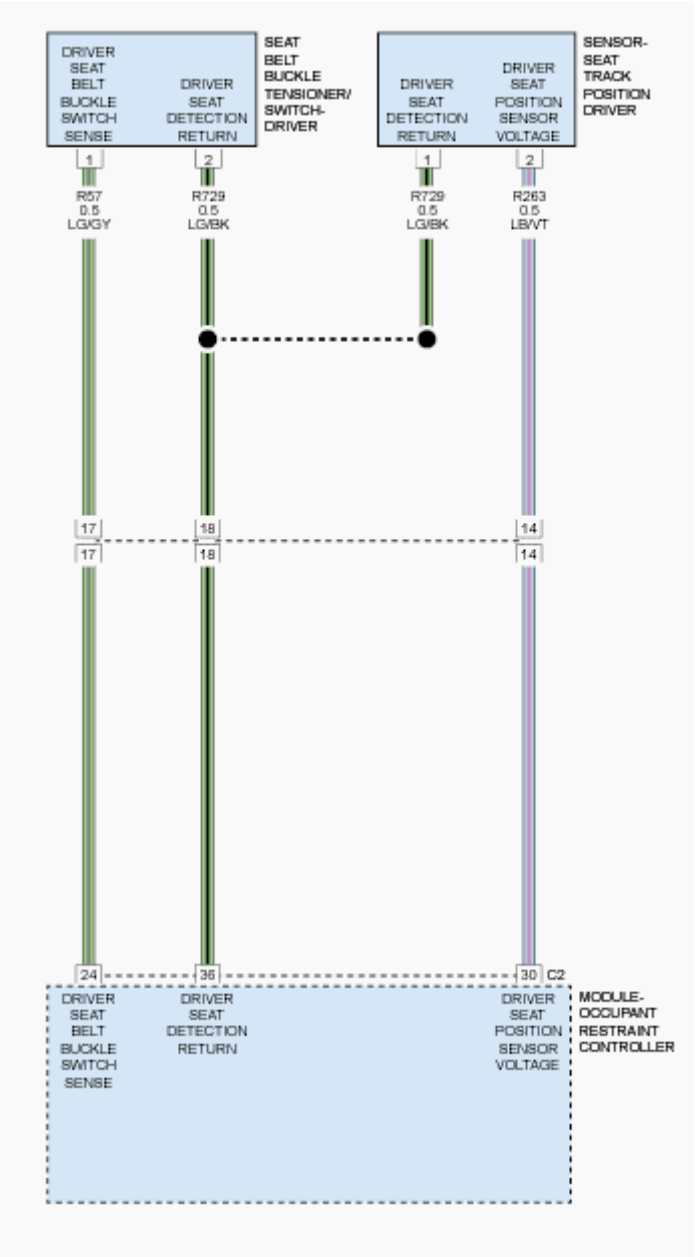

Fig. 37: Driver Seatbelt & Seat Track Position Sensor Circuit Diagram
Courtesy of CHRYSLER GROUP, LLC

THEORY OF OPERATION

When powered, the Occupant Restraint Controller (ORC) sends a test current to the seat track position sensors to verify the integrity of the sensor and wiring. The use of the (special tool #8443-57, Adapter, Supplemental Restraint System Load Tool)in the tests below provides a test point in place of the module. The Seat Track Position Sensor will default to the full forward position for the short to ground fault.

WHEN MONITORED

While the CAN bus ignition status is in IGN_RUN and the module is configured for a Driver Seat Track Position Sensor, the module checks the sensor input current ranges.

SET CONDITION

If the module detects that the sensor input is greater than or equal to 20.5 mA for greater than 3 seconds the DTC will set. This DTC may set when the current is between 17 mA and 20.5 mA. This DTC transitions from active to stored when the module sees a recovery from the shorted to ground condition for greater then 5 seconds. The multifunction indicator lamp (MIL) will set in the instrument cluster.

POSSIBLE CAUSES

Possible Causes
DRIVER SEAT HARNESS IMPROPERLY ROUTED
DRIVER SEAT HARNESS WIRES CHAFED, PIERCED, PINCHED, PARTIALLY BROKEN
DRIVER SEAT HARNESS CONNECTOR TERMINALS BROKEN, BENT, PUSHED OUT, SPREAD, CORRODED, CONTAMINATED
(R729) DRIVER SEAT DETECTION RETURN CIRCUIT SHORTED TO GROUND
(R263) DRIVER SEAT POSITION SENSOR VOLTAGE CIRCUIT SHORTED TO GROUND
(R729) DRIVER SEAT DETECTION RETURN CIRCUIT OPEN
(R263) DRIVER SEAT POSITION SENSOR VOLTAGE CIRCUIT OPEN
DRIVER SEAT TRACK POSITION SENSOR
OCCUPANT RESTRAINT CONTROLLER (ORC)

DIAGNOSTIC TEST

1. **IDENTIFYING VEHICLE EQUIPMENT**

   NOTE: Make sure the battery is fully charged.

   1. Turn the ignition on.
   2. With the scan tool, read ORC active DTCs.

      Does the scan tool display active DTC: B00B5-11-DRIVER SEAT TRACK POSITION SENSOR - CIRCUIT SHORT TO GROUND?

      Yes

      - Go To 2

      No

      - Perform the RESTRAINTS SYSTEM INTERMITTENT TEST. Refer to **STANDARD PROCEDURE** .

2. **CHECK FOR ACTIVE INTERNAL FAULTS, IGNITION FAULTS, AND BATTERY FAULTS IN THE OCCUPANT RESTRAINT CONTROLLER (ORC)**
   1. With the scan tool, read Occupant restraint Controller (ORC) DTCs.

      Does the scan tool display any active DTCs relating to internal faults, ignition faults, or battery faults?

      Yes

      - Refer to the **DIAGNOSTIC CODE INDEX** and perform the appropriate diagnostic procedure.

      No

      - Go To 3
3. **INSPECT DRIVER SEAT HARNESS WIRES AND CONNECTORS**

   WARNING: Turn the ignition off, disconnect the 12-volt battery and wait two minutes before proceeding. Failure to follow these instructions may result in possible serious or fatal injury.

   1. Using the wiring diagram/schematic as a guide, inspect the driver seat harness wiring and connectors. Look for chafed, pierced, pinched, or partially broken wires and broken, bent, pushed out, spread, corroded, or contaminated terminals.

      Are any of these conditions present?

      Yes

      NOTE: Do not attempt to repair the Seat Harness. Replace the Seat Harness if the condition inspecting or testing for is present in the Seat Harness.

      - Replace the driver seat harness in accordance with the Service Information.
      - Perform the RESTRAINTS SYSTEM VERIFICATION TEST. Refer to **STANDARD PROCEDURE** .

      No

      - Go To 4
4. **VERIFY THAT DRIVER SEAT HARNESS IS ROUTED CORRECTLY**
   1. Verify that the driver seat harness is routed correctly.

      Is the Driver Seat Harness routed correctly?

Yes

- Go To 5

No

- Reroute the driver seat harness as necessary.
- Perform the RESTRAINTS SYSTEM VERIFICATION TEST. Refer to **STANDARD PROCEDURE** .

5. **CHECK (R729) DRIVER SEAT DETECTION RETURN CIRCUIT AND (R263) DRIVER SEAT POSITION SENSOR VOLTAGE CIRCUIT FOR A SHORT TO GROUND**
   1. Measure the resistance between ground and the (R729) Driver Seat Detection Return circuit cavity 1.
   2. Measure the resistance between ground and the (R263) Driver Seat Position Sensor Voltage circuit cavity 2.

   Is the resistance below 10k Ohms on either circuit?

   Yes

   NOTE: Do not attempt to repair the Seat Harness. Replace the Seat Harness if the condition inspecting or testing for is present in the Seat Harness.

   - Replace the Driver Seat Harness in accordance with the service information.
   - Perform the RESTRAINTS SYSTEM VERIFICATION TEST. Refer to **STANDARD PROCEDURE** .

   No

   - Go To 6

6. **CHECK (R729) DRIVER SEAT DETECTION RETURN CIRCUIT AND (R263) DRIVER SEAT POSITION SENSOR VOLTAGE CIRCUIT FOR AN OPEN**
   1. Disconnect the ORC harness connectors.

   NOTE: Check connectors - Clean and repair as necessary.

   NOTE: After disconnecting the ORC module and the ORC module body harness connector, check the ORC module body harness connector shorting bar pin location. The shorting bar pin location should be down and not visible through the larger center holes of the ORC module body harness connector.

   2. Connect the (special tool #8443-57, Adapter, Supplemental Restraint System Load Tool) to the

ORC harness connector.

3. Measure the resistance of the (R729) Driver Seat Detection Return circuit between the (special tool #8443-57, Adapter, Supplemental Restraint System Load Tool)cavity 36 and the Driver Seat Track Position Sensor harness connector cavity 1.
4. Measure the resistance of the (R263) Driver Seat Position Sensor Voltage circuit between the (special tool #8443-57, Adapter, Supplemental Restraint System Load Tool)cavity 30 and the Driver Seat Track Position Sensor harness connector cavity 2.

Is the resistance of either circuit above 5.0 Ohms?

Yes

NOTE: Do not attempt to repair the Seat Harness. Replace the Seat Harness if the condition inspecting or testing for is present in the Seat Harness.

- Replace the Driver Seat Harness in accordance with the Service Information.
- Perform the RESTRAINTS SYSTEM VERIFICATION TEST. Refer to **STANDARD PROCEDURE** .

No

WARNING: Turn the ignition off disconnect the 12-volt battery and wait two minutes before proceeding. Failure to follow these instructions may result in possible serious or fatal injury.

WARNING: If the Occupant Restraint Controller (ORC) is dropped at any time, it must be replaced. Failure to take the proper precautions can result in accidental airbag deployment. Failure to follow these instructions may result in possible serious or fatal injury.

- Replace the Occupant Restraint Controller (ORC) in accordance with the service information. Refer to **MODULE, OCCUPANT RESTRAINT CONTROLLER, REMOVAL** .
- Perform the RESTRAINTS SYSTEM VERIFICATION TEST. Refer to **STANDARD PROCEDURE** .

B00B5-12-DRIVER SEAT TRACK POSITION SENSOR - CIRCUIT SHORT TO BATTERY

For a complete wiring diagram, **refer to appropriate SYSTEM WIRING DIAGRAMS article** .

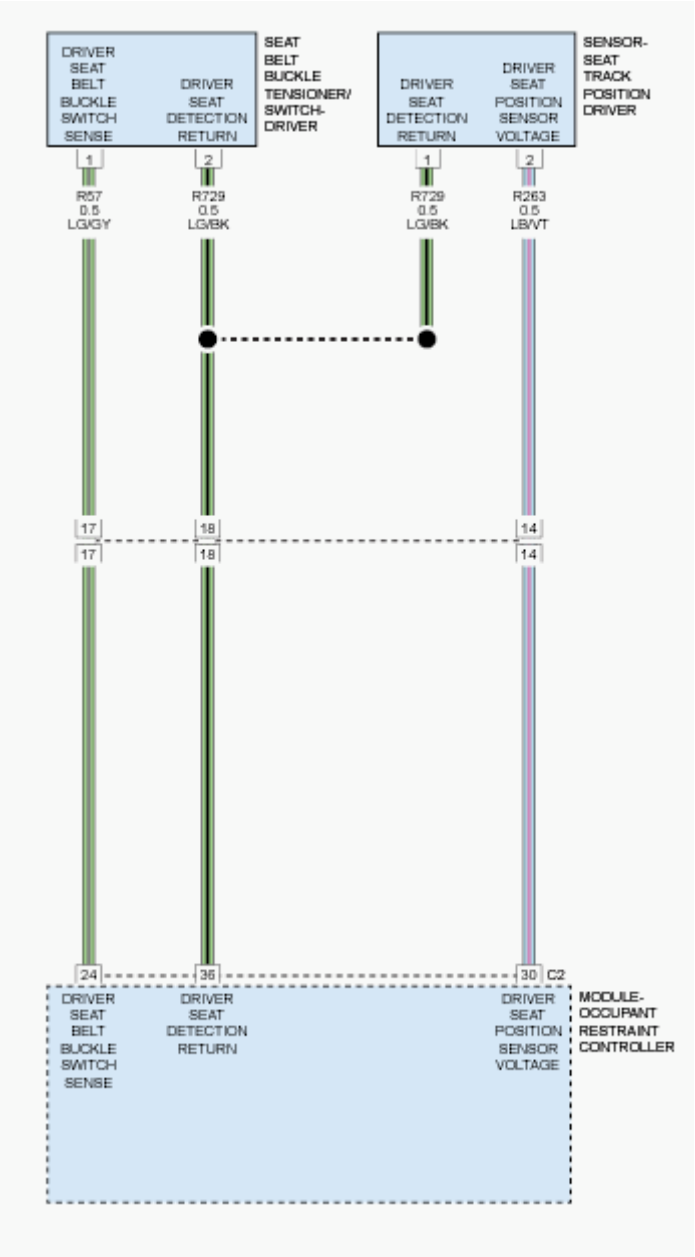

Fig. 38: Driver Seatbelt & Seat Track Position Sensor Circuit Diagram
Courtesy of CHRYSLER GROUP, LLC

THEORY OF OPERATION

When powered, the Occupant Restraint Controller (ORC) sends a test current to the seat track position sensors to verify the integrity of the sensor and wiring. The use of the ORC connector adapter tool in the tests below provides a test point in place of the module. The Seat Track Position Sensor will default to the full forward position for the short to battery fault.

WHEN MONITORED

While the CAN bus ignition status is in IGN_RUN and the module is configured for a Driver Seat Track Position Sensor, the module checks the sensor input current ranges.

SET CONDITION

If the module detects that the sensor input is greater than or equal to 8 volts. This DTC will set if the module detects the seat track position sensor circuits have become shorted to voltage for greater than 2.5 seconds. This DTC transitions from active to stored when the module sees a recovery from the shorted to voltage condition for greater then 5 seconds. The multifunction indicator lamp (MIL) will set in the instrument cluster.

POSSIBLE CAUSES

Possible Causes
DRIVER SEAT HARNESS IMPROPERLY ROUTED
DRIVER SEAT HARNESS WIRES CHAFED, PIERCED, PINCHED, PARTIALLY BROKEN
DRIVER SEAT HARNESS CONNECTOR TERMINALS BROKEN, BENT, PUSHED OUT, SPREAD, CORRODED, CONTAMINATED
(R729) DRIVER SEAT DETECTION RETURN CIRCUIT SHORTED TO VOLTAGE
(R263) DRIVER SEAT POSITION SENSOR VOLTAGE CIRCUIT SHORTED TO VOLTAGE
(R729) DRIVER SEAT DETECTION RETURN CIRCUIT SHORTED TO THE (R263) DRIVER SEAT POSITION SENSOR VOLTAGE CIRCUIT
DRIVER SEAT TRACK POSITION SENSOR
OCCUPANT RESTRAINT CONTROLLER (ORC)

DIAGNOSTIC TEST

1. **IDENTIFYING VEHICLE EQUIPMENT**

   NOTE: Make sure the battery is fully charged.

   1. Turn the ignition on.
   2. With the scan tool, read ORC active DTCs.

      Does the scan tool display active DTC: B00B5-12-DRIVER SEAT TRACK POSITION SENSOR - CIRCUIT SHORT TO BATTERY?

      Yes

      - Go To 2

      No

      - Perform the RESTRAINTS SYSTEM INTERMITTENT TEST. Refer to **STANDARD PROCEDURE** .

2. **CHECK FOR ACTIVE INTERNAL FAULTS, IGNITION FAULTS, AND BATTERY FAULTS**

IN THE OCCUPANT RESTRAINT CONTROLLER (ORC)

1. With the scan tool, read Occupant Restraint Controller (ORC) DTCs.

   Does the scan tool display any active DTCs relating to internal faults, ignition faults, or battery faults?

   Yes

   - Refer to the **DIAGNOSTIC CODE INDEX** and perform the appropriate diagnostic procedure.

   No

   - Go To 3

3. **INSPECT DRIVER SEAT HARNESS WIRES AND CONNECTORS**

   WARNING: **Turn the ignition off, disconnect the 12-volt battery and wait two minutes before proceeding. Failure to follow these instructions may result in possible serious or fatal injury.**

   1. Using the wiring diagram/schematic as a guide, inspect the driver seat harness wiring and connectors. Look for chafed, pierced, pinched, or partially broken wires and broken, bent, pushed out, spread, corroded, or contaminated terminals.

      Are any of these conditions present?

      Yes

      NOTE: **Do not attempt to repair the Seat Harness. Replace the Seat Harness if the condition inspecting or testing for is present in the Seat Harness.**

      - Replace the driver seat harness in accordance with the Service Information.
      - Perform the RESTRAINTS SYSTEM VERIFICATION TEST. Refer to **STANDARD PROCEDURE** .

      No

      - Go To 4

4. **VERIFY THAT DRIVER SEAT HARNESS IS ROUTED CORRECTLY**

   1. Verify that the driver seat harness is routed correctly.

      Is the Driver Seat Harness routed correctly?

Yes

- Go To 5

No

- Reroute the driver seat harness as necessary.
- Perform the RESTRAINTS SYSTEM VERIFICATION TEST. Refer to **STANDARD PROCEDURE** .

5. **CHECK FOR DTC B00B5-12-DRIVER SEAT TRACK POSITION SENSOR - CIRCUIT SHORT TO BATTERY WITH DRIVER SEAT TRACK POSITION SENSOR DISCONNECTED**

   WARNING: **Turn the ignition off disconnect the 12-volt battery and wait two minutes before proceeding. Failure to follow these instructions may result in possible serious or fatal injury.**

   1. Disconnect the Driver Seat Track Position Sensor harness connector.

      WARNING: **Turn the ignition on, then reconnect the 12-volt battery and wait two minutes before proceeding. Failure to follow these instructions may result in possible serious or fatal injury.**

   2. Wait two minutes, and then with the scan tool, read ORC DTCs.

      Does the scan tool display: B00B5-12-DRIVER SEAT TRACK POSITION SENSOR - CIRCUIT SHORT TO BATTERY?

      Yes

      - Go To 6

      No

      WARNING: **Turn the ignition off, disconnect the 12-volt battery and wait two minutes before proceeding. Failure to follow these instructions may result in possible serious or fatal injury.**

      - Replace the Driver Seat Track Position Sensor in accordance with the service information. Refer to **SENSOR, SEAT TRACK POSITION, REMOVAL** .
      - Perform the RESTRAINTS SYSTEM VERIFICATION TEST. Refer to **STANDARD PROCEDURE** .

6. **CHECK (R729) DRIVE SEAT DETECTION RETURN CIRCUIT AND (R263) DRIVE SEAT POSITION SENSOR VOLTAGE CIRCUIT FOR A SHORT TO VOLTAGE**

WARNING: Turn the ignition off, disconnect the 12-volt battery and wait two minutes before proceeding. Failure to follow these instructions may result in possible serious or fatal injury.

1. Disconnect the ORC harness connectors.

NOTE: Check connectors - Clean and repair as necessary.

NOTE: After disconnecting the ORC module and the ORC module body harness connector, check the ORC module body harness connector shorting bar pin location. The shorting bar pin location should be down and not visible through the larger center holes of the ORC module body harness connector.

2. Connect the (special tool #8443-57, Adapter, Supplemental Restraint System Load Tool) to the ORC harness connector.

WARNING: Turn the ignition on, then reconnect the 12-volt battery and wait two minutes before proceeding. Failure to follow these instructions may result in possible serious or fatal injury.

3. Measure the voltage of the (R729) Driver Seat Detection Return circuit at the Driver Seat Track Position Sensor harness connector cavity 1.
4. Measure the voltage of the (R263) Driver Seat Position Sensor Voltage circuit at the Driver Seat Track Position Sensor harness connector cavity 2.

Is the voltage above 0.2 of a volt on either circuit?

Yes

NOTE: Do not attempt to repair the Seat Harness. Replace the Seat Harness if the condition inspecting or testing for is present in the Seat Harness.

WARNING: Turn the ignition off, disconnect the 12-volt battery and wait two minutes before proceeding. Failure to follow these instructions may result in possible serious or fatal injury.

- Replace the Driver Seat Harness in accordance with the Service Information.
- Perform the RESTRAINTS SYSTEM VERIFICATION TEST. Refer to **STANDARD PROCEDURE** .

No

- Go To 7

7. **CHECK (R729) DRIVER SEAT DETECTION RETURN CIRCUIT FOR A SHORT TO (R263) DRIVER SEAT POSITION SENSOR VOLTAGE CIRCUIT**

WARNING: Turn the ignition off, disconnect the 12-volt battery and wait two minutes before proceeding. Failure to follow these instructions may result in possible serious or fatal injury.

1. Measure the resistance between the (R729) Driver Seat Detection Return circuit cavity 1 and the (R263) Driver Seat Position Sensor Voltage circuit cavity 2 in the Driver Seat Track Position Sensor harness connector.

   Is the resistance below 10k Ohms?

   Yes

   NOTE: Do not attempt to repair the Seat Harness. Replace the Seat Harness if the condition inspecting or testing for is present in the Seat Harness.

   - Replace the Driver Seat Harness in accordance with the service information.
   - Perform the RESTRAINTS SYSTEM VERIFICATION TEST. Refer to **STANDARD PROCEDURE** .

   No

   - Replace the ORC in accordance with the Service information. Refer to **MODULE, OCCUPANT RESTRAINT CONTROLLER, REMOVAL** .
   - Perform the RESTRAINTS SYSTEM VERIFICATION TEST. Refer to **STANDARD PROCEDURE** .

B00B5-13-DRIVER SEAT TRACK POSITION SENSOR - CIRCUIT OPEN

For a complete wiring diagram, **refer to appropriate SYSTEM WIRING DIAGRAMS article** .

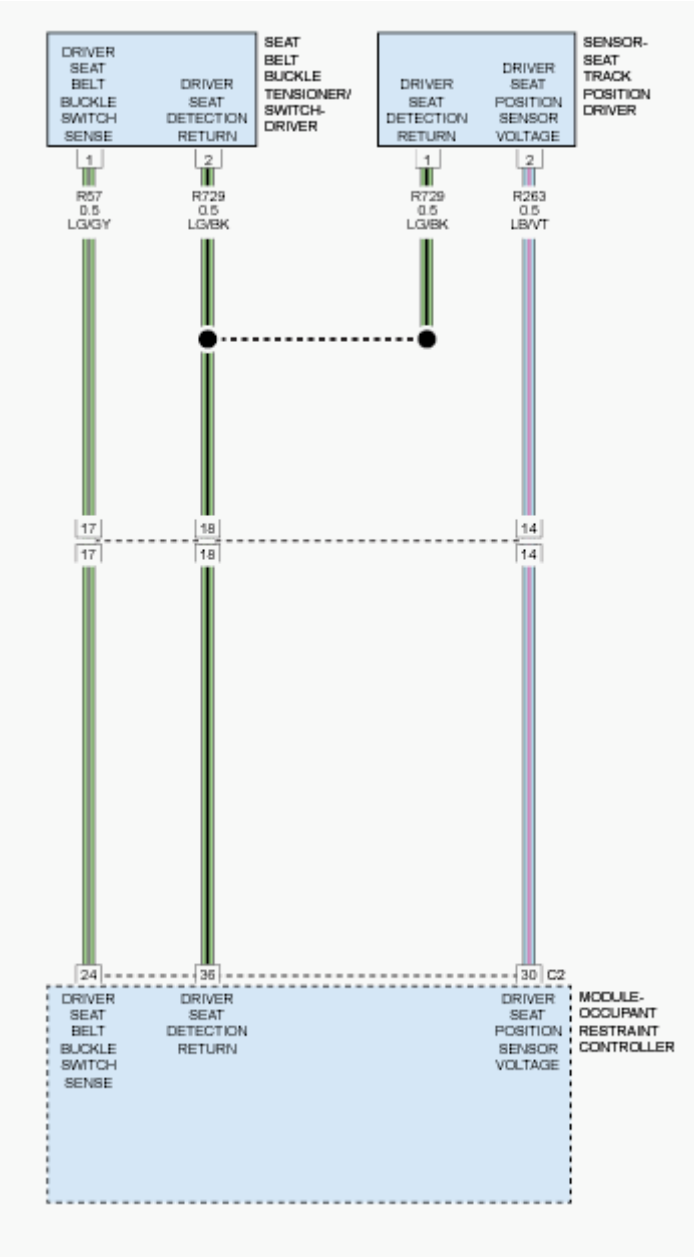

Fig. 39: Driver Seatbelt & Seat Track Position Sensor Circuit Diagram
Courtesy of CHRYSLER GROUP, LLC

THEORY OF OPERATION

When powered, the Occupant Restraint Controller (ORC) sends a test current to the seat track position sensors to verify the integrity of the sensor and wiring. The use of the (special tool #8443-57, Adapter, Supplemental Restraint System Load Tool)in the tests below provides a test point in place of the module. The Seat Track Position Sensor will default to the full forward position for the open fault.

WHEN MONITORED

While the CAN bus ignition status is in IGN_RUN and the module is configured for a Seat Track Position Sensor, the module checks the sensor input current ranges.

SET CONDITION

This DTC may set when the module detects that the sensor input current is below.9 mA for greater than 2.5 seconds. This DTC transitions form active to stored when the ORC module sees a recovery from the open condition for greater than 5 seconds. The multifunction indicator lamp (MIL) will set in the instrument cluster.

POSSIBLE CAUSES

Possible Causes
DRIVER SEAT HARNESS IMPROPERLY ROUTED
DRIVER SEAT HARNESS WIRES CHAFED, PIERCED, PINCHED, PARTIALLY BROKEN
DRIVER SEAT HARNESS CONNECTOR TERMINALS BROKEN, BENT, PUSHED OUT, SPREAD, CORRODED, CONTAMINATED
(R729) DRIVER SEAT DETECTION RETURN CIRCUIT SHORTED TO VOLTAGE
(R263) DRIVER SEAT POSITION SENSOR VOLTAGE CIRCUIT SHORTED TO VOLTAGE
(R729) DRIVER SEAT DETECTION RETURN CIRCUIT SHORTED TO THE (R263) DRIVER SEAT POSITION SENSOR VOLTAGE CIRCUIT
DRIVER SEAT TRACK POSITION SENSOR
OCCUPANT RESTRAINT CONTROLLER (ORC)

DIAGNOSTIC TEST

1. **CHECK FOR ACTIVE INTERNAL FAULTS, IGNITION FAULTS, AND BATTERY FAULTS IN THE OCCUPANT RESTRAINT CONTROLLER (ORC)**
   1. With the scan tool, read Occupant Restraint Controller (ORC) DTCs.

      Does the scan tool display any active DTCs relating to internal faults, ignition faults, or battery faults?

      Yes

      - Refer to the **DIAGNOSTIC CODE INDEX** and perform the appropriate diagnostic procedure.

      No

      - Go To 2
2. **VERIFY THAT DTC B00B5-13-FRONT DRIVER SEAT TRACK POSITION SENSOR - CIRCUIT OPEN IS ACTIVE**

   Does the scan tool display active: B00B5-13-FRONT DRIVER SEAT TRACK POSITION SENSOR - CIRCUIT OPEN?

Yes

- Go To 3

No

- Go To 8

3. **INSPECT DRIVER SEAT HARNESS WIRES AND CONNECTORS**

WARNING: Turn the ignition off, disconnect the 12-volt battery and wait two minutes before proceeding. Failure to follow these instructions may result in possible serious or fatal injury.

1. Using the wiring diagram/schematic as a guide, inspect the Driver Seat Harness wiring and connectors. Look for chafed, pierced, pinched, or partially broken wires and broken, bent, pushed out, spread, corroded, or contaminated terminals.

   Are any of these conditions present?

   Yes

   NOTE: Do not attempt to repair the Seat Harness. Replace the Seat Harness if any of these conditions exist

   - Replace the Driver Seat Harness in accordance with the Service Information.
   - Perform the RESTRAINTS SYSTEM VERIFICATION TEST. Refer to **STANDARD PROCEDURE** .

   No

   - Go To 4

4. **VERIFY THAT DRIVER SEAT HARNESS IS ROUTED CORRECTLY**

1. Verify that the Driver Seat Harness is routed correctly.

   Is the Driver Seat Harness routed correctly?

   Yes

   - Go To 5

   No

   - Reroute the Driver Seat Harness as necessary.
   - Perform the RESTRAINTS SYSTEM VERIFICATION TEST. Refer to **STANDARD**

PROCEDURE .

5. **CHECK FOR DTC B00B5-13-FRONT DRIVER SEAT TRACK POSITION SENSOR - CIRCUIT OPEN WITH DRIVER SEAT TRACK POSITION SENSOR DISCONNECTED**

WARNING: Turn the ignition off disconnect the 12-volt battery and wait two minutes before proceeding. Failure to follow these instructions may result in possible serious or fatal injury.

1. Disconnect the Driver Seat Track Position Sensor harness connector.

WARNING: Turn the ignition on, then reconnect the 12-volt battery and wait two minutes before proceeding. Failure to follow these instructions may result in possible serious or fatal injury.

2. Wait two minutes, and then with the scan tool, read ORC DTCs.

Does the scan tool display: B00B5-13-FRONT DRIVER SEAT TRACK POSITION SENSOR - CIRCUIT OPEN?

Yes

- Go To 6

No

WARNING: Turn the ignition off, disconnect the 12-volt battery and wait two minutes before proceeding. Failure to follow these instructions may result in possible serious or fatal injury.

- Replace the Driver Seat Track Position Sensor in accordance with the service information. Refer to **SENSOR, SEAT TRACK POSITION, REMOVAL** .
- Perform the RESTRAINTS SYSTEM VERIFICATION TEST. Refer to **STANDARD PROCEDURE** .

6. **CHECK (R729) DRIVER SEAT DETECTION RETURN CIRCUIT AND (R263) DRIVER SEAT POSITION SENSOR VOLTAGE CIRCUIT FOR A SHORT TO VOLTAGE**

WARNING: Turn the ignition off, disconnect the 12-volt battery and wait two minutes before proceeding. Failure to follow these instructions may result in possible serious or fatal injury.

1. Disconnect the ORC C1 harness connector.

NOTE: Check connectors - Clean and repair as necessary.

NOTE: **After disconnecting the ORC module and the ORC module body harness connector, check the ORC module body harness connector pin to shorting bar location. The pins location should be down and not visible through the larger center holes of the ORC module body harness connector.**

WARNING: **Turn the ignition on, then reconnect the 12-volt battery and wait two minutes before proceeding. Failure to follow these instructions may result in possible serious or fatal injury.**

2. Connect the (special tool #8443-57, Adapter, Supplemental Restraint System Load Tool) to the ORC harness connector.
3. Measure the voltage of the (R729) Driver Seat Detection Return circuit between the Driver Seat Track Position Sensor harness connector and ground.
4. Measure the voltage of the (R263) Driver Seat Position Sensor Voltage circuit between the Driver Seat Track Position Sensor harness connector and ground.

Is the voltage above 0.2 of a volt on either circuit?

Yes

NOTE: **Do not attempt to repair the Seat Harness. Replace the Seat Harness if the condition inspecting or testing for is present in the Seat Harness.**

WARNING: **Turn the ignition off, disconnect the 12-volt battery and wait two minutes before proceeding. Failure to follow these instructions may result in possible serious or fatal injury.**

- Replace the Driver Seat Harness in accordance with the Service Information.
- Perform the RESTRAINTS SYSTEM VERIFICATION TEST. Refer to **STANDARD PROCEDURE** .

No

- Go To 7

7. **CHECK (R729) DRIVER SEAT DETECTION RETURN CIRCUIT FOR A SHORT TO (R263) DRIVER SEAT POSITION SENSOR VOLTAGE CIRCUIT**

WARNING: **Turn the ignition off, disconnect the 12-volt battery and wait two minutes before proceeding. Failure to follow these instructions may result in possible serious or fatal injury.**

1. Measure the resistance between the (R729) Driver Seat Detection Return circuit and the (R263)

Driver Seat Position Sensor Voltage circuit in the Driver Seat Track Position Sensor harness connector.

Is the resistance below 10k Ohms?

Yes

NOTE: Do not attempt to repair the Seat Harness. Replace the Seat Harness if any of these conditions exist

- Replace the Driver Seat Harness in accordance with the service information.
- Perform the RESTRAINTS SYSTEM VERIFICATION TEST. Refer to **STANDARD PROCEDURE** .

No

- Replace the ORC in accordance with the Service information. Refer to **MODULE, OCCUPANT RESTRAINT CONTROLLER, REMOVAL** .
- Perform the RESTRAINTS SYSTEM VERIFICATION TEST. Refer to **STANDARD PROCEDURE** .

8. **TEST FOR AN INTERMITTENT CONDITION**
   1. With the scan tool, record and erase all DTCs from the ORC.
   2. If any ACTIVE codes are present they must be resolved before diagnosing any stored codes.

      WARNING: **Turn the ignition off disconnect the 12-volt battery and wait two minutes before proceeding. Failure to follow these instructions may result in possible serious or fatal injury.**

   3. Using the wiring diagram/schematic as a guide, inspect the wiring and connectors.
   4. Look for chafed, pierced, pinched, or partially broken wires and broken, bent, pushed out, spread, corroded, or contaminated terminals.
   5. The following additional checks may assist you in identifying a possible intermittent problem.
   6. Reconnect any disconnected components and harness connector.

      WARNING: **Turn the ignition on, then reconnect the 12-volt battery and wait two minutes before proceeding. Failure to follow these instructions may result in possible serious or fatal injury.**

   7. With the scan tool monitor active codes as you work through the following steps.

      WARNING: **Maintain a safe distance from all airbags while performing the following steps. Failure to follow these instructions may result in possible serious or fatal injury.**

8. Wiggle the wiring harness and connectors of the related airbag circuit or component.
9. If only stored codes return continue the test until the problem area has been isolated.
10. In the previous steps you have attempted to recreate the conditions responsible for setting active DTC in question.

    Are any ACTIVE DTCs present?

    Yes

    - Refer to the **DIAGNOSTIC CODE INDEX** and perform the appropriate diagnostic procedure.

    No

    - No problem found at this time. Erase all codes before returning vehicle to customer.

B00B5-95-DRIVER SEAT TRACK POSITION SENSOR - INCORRECT ASSEMBLY

For a complete wiring diagram, **refer to appropriate SYSTEM WIRING DIAGRAMS article** .

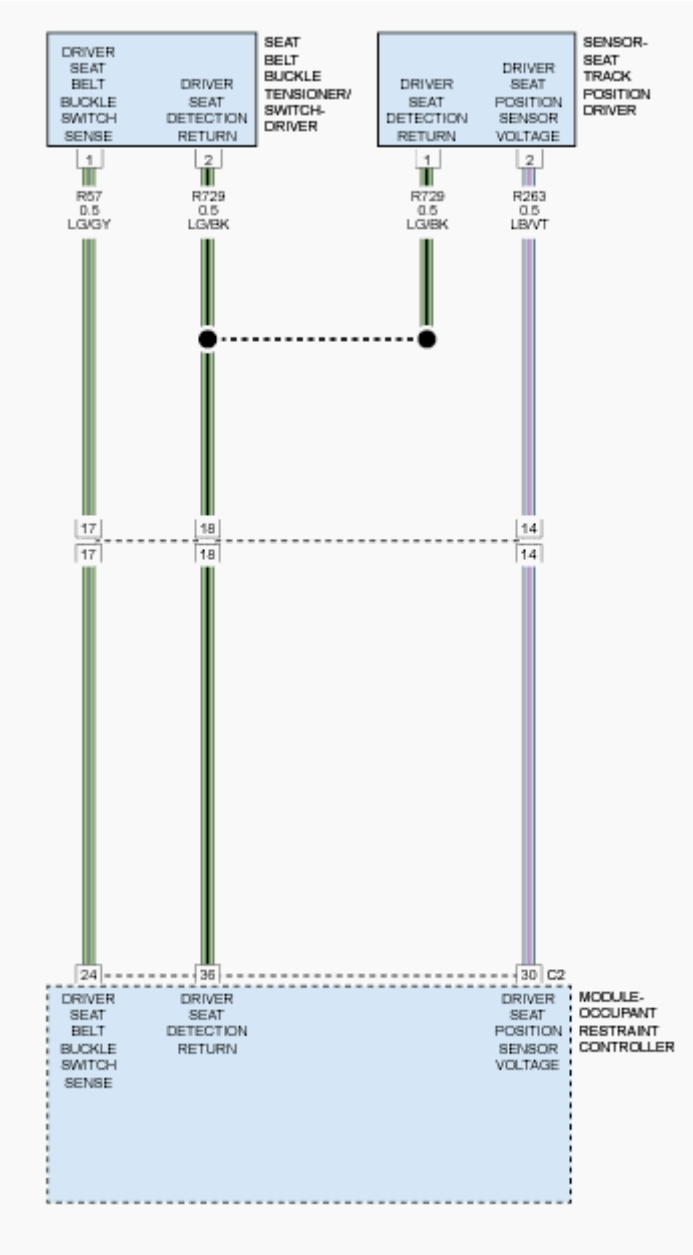

Fig. 40: Driver Seatbelt & Seat Track Position Sensor Circuit Diagram
Courtesy of CHRYSLER GROUP, LLC

THEORY OF OPERATION

When powered, the Occupant Restraint Controller (ORC) sends a test current to the seat track position sensors. During this test, the sensors discovered are checked for agreement with the pre-programmed configuration of components assigned to the module.

WHEN MONITORED

The ORC checks for the presence of seat position sensor circuits once during the initialization process.

SET CONDITION

This DTC sets when the ORC detects the presence of a seat position sensor circuit while the configuration of the module does not reflect a seat track position sensor should be present. Once set, this DTC is latched for the entire power cycle and requires the module to be re-initalized to set code.

POSSIBLE CAUSES

Possible Causes
SEAT POSITION SENSORS
WIRING
OCCUPANT RESTRAINT CONTROLLER (ORC)

Always perform the Pre-Diagnostic Troubleshooting procedure before proceeding. Refer to STANDARD PROCEDURE .

DIAGNOSTIC TEST

1. **CHECK FOR ACTIVE INTERNAL FAULTS, IGNITION FAULTS, AND BATTERY FAULTS IN THE OCCUPANT RESTRAINT CONTROLLER (ORC)**

   NOTE: Make sure the battery is fully charged.

   1. With the scan tool, read Occupant Restraint Controller (ORC) DTCs.

      Does the scan tool display any active DTCs relating to internal faults, ignition faults, or battery faults?

      Yes

      - Diagnose and repair the DTCs. Refer to the **DIAGNOSTIC CODE INDEX** .

      No

      - Go To 2

2. **VERIFY THAT B00B5-95-DRIVER SEAT TRACK POSITION SENSOR - INCORRECT ASSEMBLY IS ACTIVE**
   1. With the scan tool, erase ORC DTCs.
   2. Turn the ignition off, wait 10 seconds and then turn the ignition on.
   3. Wait 2 minutes, and then with the scan tool, read ORC DTCs.

      Does the scan tool display active: B00B5-95-DRIVER SEAT TRACK POSITION SENSOR - INCORRECT ASSEMBLY?

      Yes

- Go To 3

No

- Perform the RESTRAINTS SYSTEM VERIFICATION TEST. Refer to **STANDARD PROCEDURE** .

3. **VERIFY WIRING**
   1. Turn the ignition off.
   2. Inspect the driver seat wiring for Seat Position Sensors.

   Are Seat Position Sensor(s) present?

   Yes

   WARNING: Turn the ignition off, disconnect the battery and wait two minutes before proceeding. Failure to follow these instructions may result in possible serious or fatal injury.

   WARNING: If the Occupant Restraint Controller (ORC) is dropped at any time, it must be replaced. Failure to take the proper precautions can result in accidental airbag deployment.

   - Replace the ORC in accordance with the Service Information. Refer to **MODULE, OCCUPANT RESTRAINT CONTROLLER, REMOVAL** .
   - Perform the RESTRAINTS SYSTEM VERIFICATION TEST. Refer to **STANDARD PROCEDURE** .

   No

   - Perform the RESTRAINTS SYSTEM VERIFICATION TEST. Refer to **STANDARD PROCEDURE** .

B00C5-11-PASSENGER SEAT TRACK POSITION SENSOR - CIRCUIT SHORT TO GROUND

For a complete wiring diagram, **refer to appropriate SYSTEM WIRING DIAGRAMS article** .

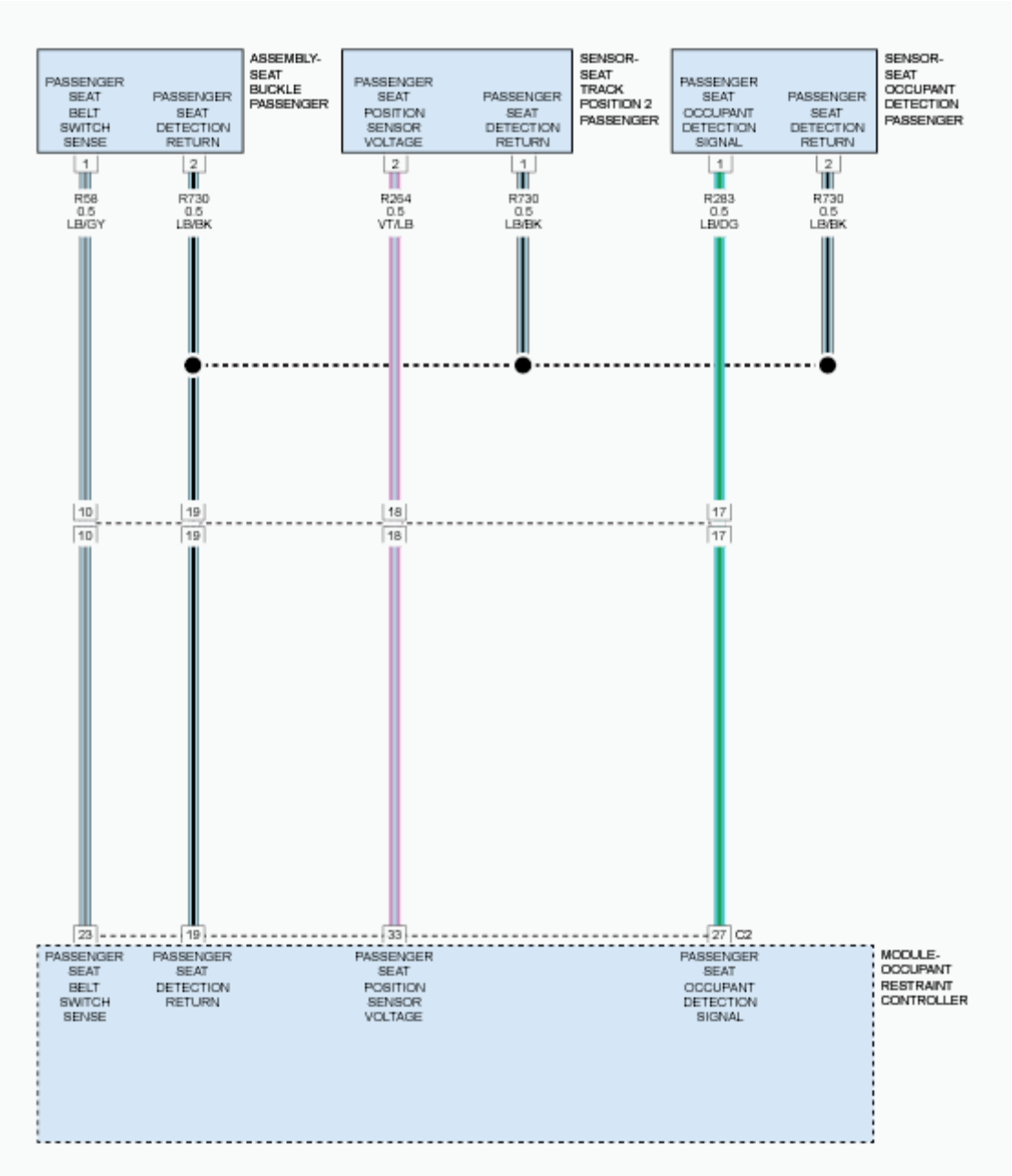

Fig. 41: Passenger Seatbelt, Seat Track Position & Occupant Detection Sensor Circuit Diagram
Courtesy of CHRYSLER GROUP, LLC

THEORY OF OPERATION

When powered, the Occupant Restraint Controller (ORC) sends a test current to the seat track position sensors to verify the integrity of the sensors and wiring.

WHEN MONITORED

While the CAN bus ignition status is in IGN_RUN with a minimum of 8.5 volts at startup and the module is

configured for a Passenger Seat Track Position Sensor, the module checks the sensor input current ranges.

SET CONDITION

If the module detects that the sensor resistance is greater than 5k Ohms for minimum of 2.5 seconds. This DTC will switch from an active to a stored status upon the short to ground fault clearing for longer than five seconds.

POSSIBLE CAUSES

Possible Causes
PASSENEGER SEAT HARNESS IMPROPERLY ROUTED
PASSENGER SEAT HARNESS WIRES CHAFED, PIERCED, PINCHED, PARTIALLY BROKEN
PASSENGER SEAT HARNESS CONNECTOR TERMINALS BROKEN, BENT, PUSHED OUT, SPREAD, CORRODED, CONTAMINATED
(R730) PASSENGER SEAT DETECTION RETURN CIRCUIT SHORTED TO VOLTAGE
(R264) PASSENGER SEAT POSITION SENSOR VOLTAGE CIRCUIT SHORTED TO VOLTAGE
(R730) PASSENGER SEAT DETECTION RETURN CIRCUIT SHORTED TO THE (R263) DRIVER SEAT POSITION SENSOR VOLTAGE CIRCUIT
PASSENGER SEAT TRACK POSITION SENSOR
OCCUPANT RESTRAINT CONTROLLER (ORC)

Always perform the Pre-Diagnostic Troubleshooting procedure before proceeding. Refer to STANDARD PROCEDURE .

DIAGNOSTIC TEST

1. **IDENTIFYING VEHICLE EQUIPMENT**

NOTE: **Make sure the battery is fully charged.**

NOTE: **The use of a approved special tool or Digital Multimeter such as a Fluke Meter that will not apply more than 20 milliamperes to a circuit are the only measurement tools to be used.**

NOTE: **Probing of the circuit cavities at the ORC Module C1 or C2 body harness connectors is only to be done with a approved test lead from the (special tool #10159, Test Leads, Dedicated). Or a comparable test lead to prevent vehicle wiring harness connector damage during diagnostic procedures.**

1. Turn the ignition on.
2. With the scan tool, read ORC active DTCs.

   Does the scan tool display active DTC: B00C5-11-PASSENGER SEAT TRACK POSITION SENSOR - CIRCUIT SHORT TO GROUND?

Yes

- Go To 2.

No

- Perform the RESTRAINTS SYSTEM INTERMITTENT TEST. Refer to **STANDARD PROCEDURE** .

2. **CHECK FOR ACTIVE INTERNAL FAULTS, IGNITION FAULTS, AND BATTERY FAULTS IN THE OCCUPANT RESTRAINT CONTROLLER (ORC)**
   1. With the scan tool, read Occupant restraint Controller (ORC) DTCs.

      Does the scan tool display any active DTCs relating to internal faults, ignition faults, or battery faults?

      Yes

      - Diagnose and repair the DTCs. Refer to the **DIAGNOSTIC CODE INDEX** .

      No

      - Go To 3

3. **INSPECT PASSENGER SEAT HARNESS WIRES AND CONNECTORS**

   WARNING: Turn the ignition off, disconnect the battery and wait two minutes before proceeding. Failure to follow these instructions may result in possible serious or fatal injury.

   1. Using the wiring diagram/schematic as a guide, inspect the passenger seat harness wiring and connectors. Look for chafed, pierced, pinched, or partially broken wires and broken, bent, pushed out, spread, corroded, or contaminated terminals.

      Are any of these conditions present?

      Yes

      NOTE: Do not attempt to repair the Seat Harness. Replace the Seat Harness if the condition inspecting or testing for is present in the Seat Harness.

      - Replace the passenger seat harness in accordance with the Service Information.
      - Perform the RESTRAINTS SYSTEM VERIFICATION TEST. Refer to **STANDARD PROCEDURE** .

      No

- Go To 4

4. **VERIFY THAT PASSENGER SEAT HARNESS IS ROUTED CORRECTLY**
   1. Verify that the passenger seat harness is routed correctly.

      Is the Driver Seat Harness routed correctly?

      Yes

      - Go To 5

      No

      - Reroute the passenger seat harness as necessary.
      - Perform the RESTRAINTS SYSTEM VERIFICATION TEST. Refer to **STANDARD PROCEDURE** .

5. **CHECK (R730) PASSENGER SEAT DETECTION RETURN CIRCUIT AND (R264) PASSENGER SEAT POSITION SENSOR VOLTAGE CIRCUIT FOR A SHORT TO GROUND**
   1. Measure the resistance between ground and the (R730) Passenger Seat Detection Return circuit.
   2. Measure the resistance between ground and the (R264) Passenger Seat Position Sensor Voltage circuit.

      Is the resistance below 10k Ohms on either circuit?

      Yes

      NOTE: Do not attempt to repair the Seat Harness. Replace the Seat Harness if the condition inspecting or testing for is present in the Seat Harness.

      - Replace the Passenger Seat Harness in accordance with the service information.
      - Perform the RESTRAINTS SYSTEM VERIFICATION TEST. Refer to **STANDARD PROCEDURE** .

      No

      - Go To 6

6. **CHECK (R730) PASSENGER SEAT DETECTION RETURN CIRCUIT AND (R264) PASSENGER SEAT POSITION SENSOR VOLTAGE CIRCUIT FOR AN OPEN**
   1. Disconnect the ORC harness connectors.
   2. Connect the test leads to the DVOM.
   3. Measure the resistance of the (R730) Passenger Seat Detection Return circuit between the ORC module body harness connector cavity C2 19 and the Passenger Seat Track Position Sensor connector cavity 1.

4. Measure the resistance of the (R264) Passenger Seat Position Sensor Voltage circuit between the ORC module body harness connector cavity C2 33 and the Passenger Seat Track Position Sensor connector cavity 2.

   Is the resistance of either circuit above 5.0k Ohms?

   Yes

   NOTE: Do not attempt to repair the Seat Harness. Replace the Seat Harness if the condition inspecting or testing for is present in the Seat Harness.

   - Replace the Passenger Seat Harness in accordance with the Service Information.
   - Perform the RESTRAINTS SYSTEM VERIFICATION TEST. Refer to **STANDARD PROCEDURE** .

   No

   WARNING: Turn the ignition off, disconnect the battery and wait two minutes before proceeding. Failure to follow these instructions may result in possible serious or fatal injury.

   WARNING: If the Occupant Restraint Controller (ORC) is dropped at any time, it must be replaced. Failure to take the proper precautions can result in accidental airbag deployment.

   - Replace the Occupant Restraint Controller (ORC) in accordance with the service information. Refer to **MODULE, OCCUPANT RESTRAINT CONTROLLER, REMOVAL** .
   - Perform the RESTRAINTS SYSTEM VERIFICATION TEST. Refer to **STANDARD PROCEDURE** .

B00C5-12-PASSENGER SEAT TRACK POSITION SENSOR - CIRCUIT SHORT TO BATTERY

For a complete wiring diagram, **refer to appropriate SYSTEM WIRING DIAGRAMS article** .

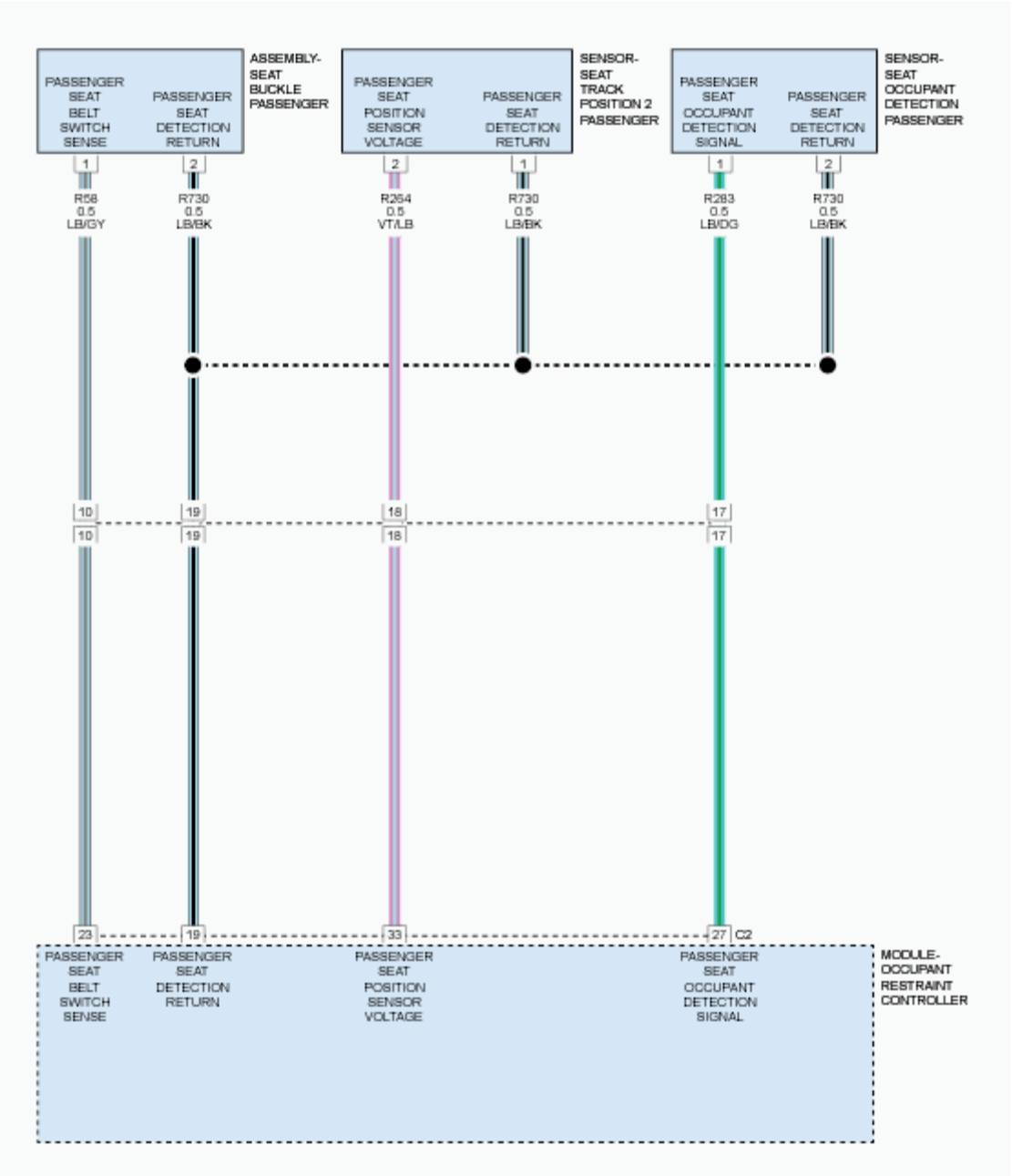

Fig. 42: Passenger Seatbelt, Seat Track Position & Occupant Detection Sensor Circuit Diagram
Courtesy of CHRYSLER GROUP, LLC

THEORY OF OPERATION

When powered, the Occupant Restraint Controller (ORC) sends a test current to the seat track position sensors to verify the integrity of the sensors and wiring.

WHEN MONITORED

While the CAN bus ignition status is in IGN_RUN with a minimum of 8.5 volts at startup and the module is

configured for a Driver Seat Track Position Sensor, the module checks the sensor input current ranges.

SET CONDITION

If the module detects that the sensor input is greater than 5K Ohms for a minimum of 2.5 seconds.

POSSIBLE CAUSES

Possible Causes
PASSENEGER SEAT HARNESS IMPROPERLY ROUTED
PASSENGER SEAT HARNESS WIRES CHAFED, PIERCED, PINCHED, PARTIALLY BROKEN
PASSENGER SEAT HARNESS CONNECTOR TERMINALS BROKEN, BENT, PUSHED OUT, SPREAD, CORRODED, CONTAMINATED
(R264) PASSENGER SEAT POSITION SENSOR VOLTAGE CIRCUIT SHORTED TO VOLTAGE
PASSENGER SEAT TRACK POSITION SENSOR
OCCUPANT RESTRAINT CONTROLLER (ORC)

Always perform the Pre-Diagnostic Troubleshooting procedure before proceeding. Refer to STANDARD PROCEDURE .

DIAGNOSTIC TEST

1. **IDENTIFYING VEHICLE EQUIPMENT**

   NOTE: Make sure the battery is fully charged.

   1. Turn the ignition on.
   2. With the scan tool, read ORC active DTCs.

      Does the scan tool display active DTC: B00C5-12-PASSENGER SEAT TRACK POSITION SENSOR - CIRCUIT SHORT TO BATTERY?

      Yes

      - Go To 2

      No

      - Perform the RESTRAINTS SYSTEM INTERMITTENT TEST Refer to **STANDARD PROCEDURE** .

2. **CHECK FOR ACTIVE INTERNAL FAULTS, IGNITION FAULTS, AND BATTERY FAULTS IN THE OCCUPANT RESTRAINT CONTROLLER (ORC)**
   1. With the scan tool, read Occupant Restraint Controller (ORC) DTCs.

Does the scan tool display any active DTCs relating to internal faults, ignition faults, or battery faults?

Yes

- Diagnose and repair the DTCs. Refer to the **DIAGNOSTIC CODE INDEX** for a complete list of symptoms.

No

- Go To 3

3. **INSPECT DRIVER SEAT HARNESS WIRES AND CONNECTORS**

WARNING: Turn the ignition off, disconnect the battery and wait two minutes before proceeding. Failure to follow these instructions may result in possible serious or fatal injury.

1. Using the wiring diagram/schematic as a guide, inspect the driver seat harness wiring and connectors. Look for chafed, pierced, pinched, or partially broken wires and broken, bent, pushed out, spread, corroded, or contaminated terminals.

   Are any of these conditions present?

   Yes

   NOTE: Do not attempt to repair the Seat Harness. Replace the Seat Harness if the condition inspecting or testing for is present in the Seat Harness.

   - Replace the driver seat harness in accordance with the Service Information.
   - Perform the RESTRAINTS SYSTEM INTERMITTENT TEST. Refer to **STANDARD PROCEDURE** .

   No

   - Go To 4

4. **VERIFY THAT DRIVER SEAT HARNESS IS ROUTED CORRECTLY**

1. Verify that the driver seat harness is routed correctly.

   Is the Driver Seat Harness routed correctly?

   Yes

   - Go To 5

No

- Reroute the driver seat harness as necessary.
- Perform the RESTRAINTS SYSTEM VERIFICATION TEST. Refer to **STANDARD PROCEDURE** .

5. **CHECK FOR DTC B00C5-12-PASSENGER SEAT TRACK POSITION SENSOR - CIRCUIT SHORT TO BATTERY WITH DRIVER SEAT TRACK POSITION SENSOR DISCONNECTED**

WARNING: **Turn the ignition off disconnect the 12-volt battery and wait two minutes before proceeding. Failure to follow these instructions may result in possible serious or fatal injury.**

1. Disconnect the Driver Seat Track Position Sensor harness connector.
2. If the vehicle is equipped with the standard key ignition, follow this ignition on warning.

WARNING: **Turn the ignition on, then reconnect the 12-volt battery and wait two minutes before proceeding. Failure to follow these instructions may result in possible serious or fatal injury.**

3. If the vehicle is equipped with the keyless ignition, follow this ignition on warning.

WARNING: **Disconnect the 12-volt battery wait two minutes before proceeding, remove the ORC fuses, connect the 12-volt battery, wait two minutes before proceeding. Cycle the ignition to the On position, then reconnect the ORC fuses. Wait two minutes before proceeding. Failure to follow these instructions may result in possible serious or fatal injury.**

4. Wait two minutes, and then with the scan tool, read ORC DTCs.

   Does the scan tool display: B00C5-12-PASSENGER SEAT TRACK POSITION SENSOR - CIRCUIT SHORT TO BATTERY?

   Yes

   - Go To 6

   No

   WARNING: **Turn the ignition off, disconnect the 12-volt battery and wait two minutes before proceeding. Failure to follow these instructions may result in possible serious or fatal injury.**

   - Replace the Driver Seat Track Position Sensor in accordance with the service information.

Refer to **SENSOR, SEAT TRACK POSITION, REMOVAL** .

- Perform the RESTRAINTS SYSTEM VERIFICATION TEST. Refer to **STANDARD PROCEDURE** .

6. **CHECK (R730) PASSENGER SEAT DETECTION RETURN CIRCUIT AND (R264) PASSENGER SEAT POSITION SENSOR VOLTAGE CIRCUIT FOR A SHORT TO VOLTAGE**

WARNING: Turn the ignition off, disconnect the 12-volt battery and wait two minutes before proceeding. Failure to follow these instructions may result in possible serious or fatal injury.

1. Disconnect the ORC harness connectors.
2. If the vehicle is equipped with the standard key ignition, follow this ignition on warning.

WARNING: Turn the ignition on, then reconnect the 12-volt battery and wait two minutes before proceeding. Failure to follow these instructions may result in possible serious or fatal injury.

3. If the vehicle is equipped with the keyless ignition, follow this ignition on warning.

WARNING: Disconnect the 12-volt battery wait two minutes before proceeding, remove the ORC fuses, connect the 12-volt battery, wait two minutes before proceeding. Cycle the ignition to the On position, then reconnect the ORC fuses. Wait two minutes before proceeding. Failure to follow these instructions may result in possible serious or fatal injury.

4. Measure the voltage of the (R730) Passenger Seat Detection Return circuit at the Passenger Seat Track Position Sensor connector cavity 1.
5. Measure the voltage of the (R264) Passenger Seat Position Sensor Voltage circuit at the Passenger Seat Track Position Sensor connector cavity 2.

Is the voltage above 0.2 volt on either circuit?

Yes

NOTE: Do not attempt to repair the Seat Harness. Replace the Seat Harness if the condition inspecting or testing for is present in the Seat Harness.

WARNING: Turn the ignition off, disconnect the battery and wait two minutes before proceeding. Failure to follow these instructions may result in possible serious or fatal injury.

- Replace the Driver Seat Harness in accordance with the Service Information.

- Perform the RESTRAINTS SYSTEM VERIFICATION TEST. Refer to **STANDARD PROCEDURE** .

No

- Perform the RESTRAINTS SYSTEM VERIFICATION TEST. Refer to **STANDARD PROCEDURE** .

7. **CHECK (R730) PASSENGER SEAT DETECTION RETURN CIRCUIT FOR A SHORT TO THE (R264) PASSENGER SEAT POSITION SENSOR VOLTAGE CIRCUIT**

WARNING: Turn the ignition off, disconnect the 12-volt battery and wait two minutes before proceeding. Failure to follow these instructions may result in possible serious or fatal injury.

1. Measure the resistance between the (R730) Passenger Seat Detection Return circuit cavity 1 and the (R264) Passenger Seat Position Sensor Voltage circuit cavity 2 in the Passenger Seat Track Position Sensor harness connector.

   Is the resistance below 10K Ohms?

   Yes

   NOTE: Do not attempt to repair the Seat Harness. Replace the Seat Harness if the condition inspecting or testing for is present in the Seat Harness.

   - Replace the Driver Seat Harness in accordance with the service information.
   - Perform the RESTRAINTS SYSTEM VERIFICATION TEST. Refer to **STANDARD PROCEDURE** .

   No

   - Replace the ORC in accordance with the Service information. Refer to **MODULE, OCCUPANT RESTRAINT CONTROLLER, REMOVAL** .
   - Perform the RESTRAINTS SYSTEM VERIFICATION TEST. Refer to **STANDARD PROCEDURE** .

B00C5-13-PASSENGER SEAT TRACK POSITION SENSOR - CIRCUIT OPEN

For a complete wiring diagram, **refer to appropriate SYSTEM WIRING DIAGRAMS article** .

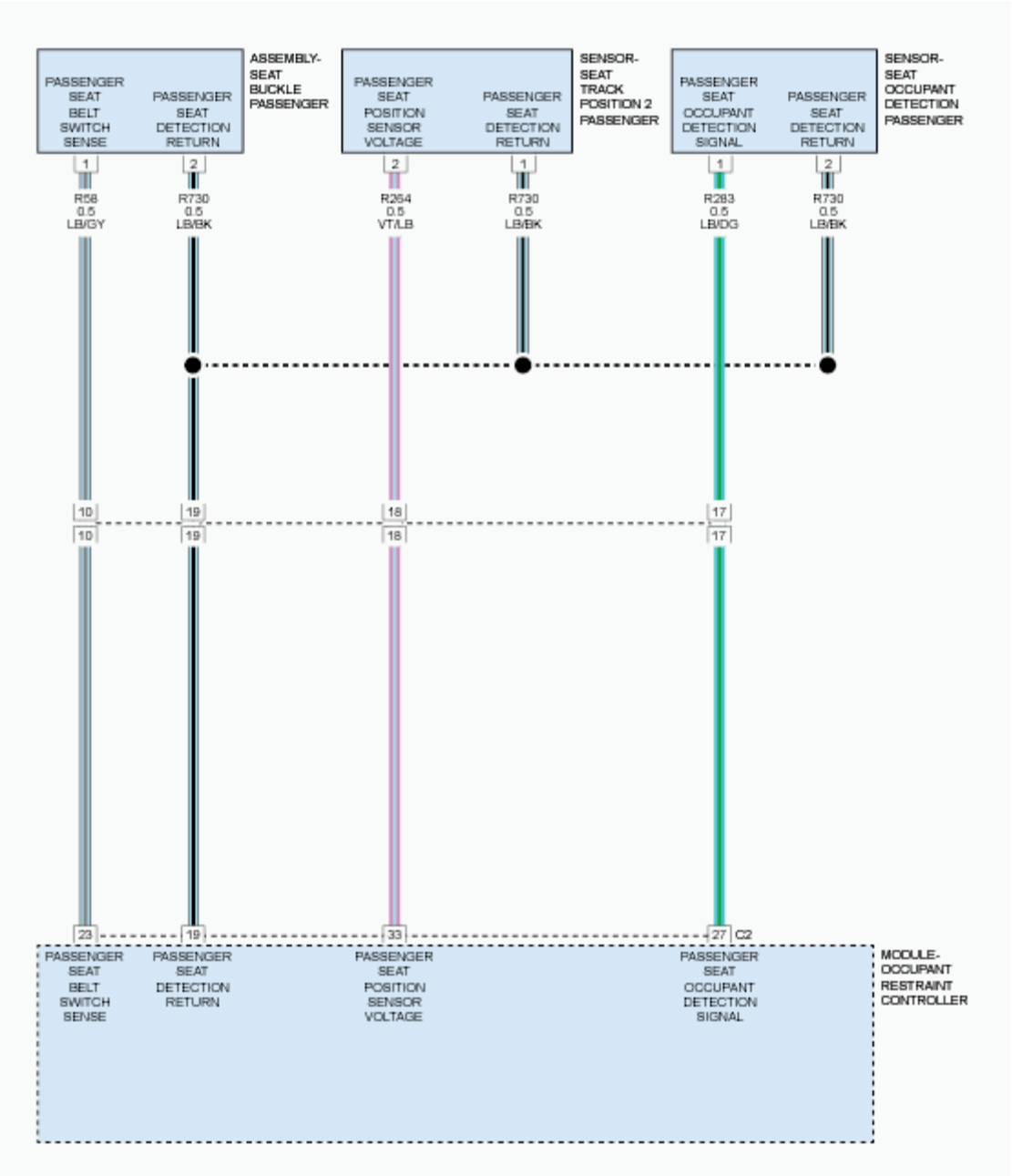

Fig. 43: Passenger Seatbelt, Seat Track Position & Occupant Detection Sensor Circuit Diagram
Courtesy of CHRYSLER GROUP, LLC

THEORY OF OPERATION

When powered, the Occupant Restraint Controller (ORC) sends a test current to the seat track position sensors to verify the integrity of the sensor and wiring.

WHEN MONITORED

While the Controller Area Network (CAN) bus ignition status is in IGN_RUN and the module is configured for

a seat track position sensor, the module checks the sensor input current ranges.

SET CONDITION

This Diagnostic Trouble Code (DTC) may set when the module detects that the sensor input current is below 1 mA.

POSSIBLE CAUSES

Possible Causes
PASSENGER SEAT HARNESS IMPROPERLY ROUTED
PASSENGER SEAT HARNESS WIRES CHAFED, PIERCED, PINCHED, PARTIALLY BROKEN
PASSENGER SEAT HARNESS CONNECTOR TERMINALS BROKEN, BENT, PUSHED OUT, SPREAD, CORRODED, CONTAMINATED
(R730) PASSENGER SEAT DETECTION RETURN CIRCUIT SHORTED TO VOLTAGE
(R264) PASSENGER SEAT POSITION SENSOR VOLTAGE CIRCUIT SHORTED TO VOLTAGE
(R730) PASSENGER SEAT DETECTION RETURN CIRCUIT SHORTED TO THE (R263) DRIVER SEAT POSITION SENSOR VOLTAGE CIRCUIT
PASSENGER SEAT TRACK POSITION SENSOR
OCCUPANT RESTRAINT CONTROLLER (ORC)

Always perform the Pre-Diagnostic Troubleshooting procedure before proceeding. Refer to STANDARD PROCEDURE .

DIAGNOSTIC TEST

1. **CHECK FOR ACTIVE INTERNAL FAULTS, IGNITION FAULTS, AND BATTERY FAULTS IN THE OCCUPANT RESTRAINT CONTROLLER (ORC)**
   1. Using a scan tool, read Occupant Restraint Controller (ORC) DTCs.

      Does the scan tool display any active DTCs relating to internal faults, ignition faults, or battery faults?

      Yes

      - Refer to the **DIAGNOSTIC CODE INDEX** and perform the appropriate diagnostic procedure.

      No

      - Go To 2
2. **VERIFY THAT DTC B00C5-13-PASSENGER SEAT TRACK POSITION SENSOR - CIRCUIT OPEN IS ACTIVE**

   Does the scan tool display active B00C5-13-PASSENGER SEAT TRACK POSITION SENSOR -

CIRCUIT OPEN?

Yes

- Go To 3

No

- Perform the RESTRAINTS SYSTEM INTERMITTENT TEST. Refer to **STANDARD PROCEDURE** .

3. **INSPECT PASSENGER SEAT HARNESS WIRES AND CONNECTORS**

WARNING: Turn the ignition off, disconnect the battery and wait two minutes before proceeding. Failure to follow these instructions may result in possible serious or fatal injury.

1. Using the wiring diagram/schematic as a guide, inspect the passenger seat harness wiring and connectors. Look for chafed, pierced, pinched, or partially broken wires and broken, bent, pushed out, spread, corroded, or contaminated terminals.

   Are any of these conditions present?

   Yes

   NOTE: Do not attempt to repair the passenger seat harness. Replace the passenger seat harness if any of these conditions exist.

   - Replace the passenger seat harness according to the Service Information.
   - Perform the RESTRAINTS SYSTEM VERIFICATION TEST. Refer to **STANDARD PROCEDURE** .

   No

   - Go To 4

4. **VERIFY THE PASSENGER SEAT HARNESS IS ROUTED CORRECTLY**

1. Verify the passenger seat harness is routed correctly.

   Is the passenger seat harness routed correctly?

   Yes

   - Go To 5

   No

- Reroute the passenger seat harness as necessary.
- Perform the RESTRAINTS SYSTEM VERIFICATION TEST. Refer to **STANDARD PROCEDURE** .

5. **CHECK FOR DTC B00C5-13-PASSENGER SEAT TRACK POSITION SENSOR - CIRCUIT OPEN WITH PASSENGER SEAT TRACK POSITION SENSOR DISCONNECTED**

WARNING: **Turn the ignition off disconnect the 12-volt battery and wait two minutes before proceeding. Failure to follow these instructions may result in possible serious or fatal injury.**

1. Disconnect the Passenger Seat Track Position Sensor connector.
2. If the vehicle is equipped with the standard key ignition, follow this ignition on warning.

WARNING: **Turn the ignition on, then reconnect the 12-volt battery and wait two minutes before proceeding. Failure to follow these instructions may result in possible serious or fatal injury.**

3. If the vehicle is equipped with the keyless ignition, follow this ignition on warning.

WARNING: **Disconnect the 12-volt battery wait two minutes before proceeding, remove the ORC fuses, connect the 12-volt battery, wait two minutes before proceeding. Cycle the ignition to the On position, then reconnect the ORC fuses. Wait two minutes before proceeding. Failure to follow these instructions may result in possible serious or fatal injury.**

4. Wait two minutes, then using a scan tool, read ORC DTCs.

   Does the scan tool display: B00C5-13-PASSENGER SEAT TRACK POSITION SENSOR - CIRCUIT OPEN?

   Yes

   - Go To 6

   No

WARNING: **Turn the ignition off, disconnect the 12-volt battery and wait two minutes before proceeding. Failure to follow these instructions may result in possible serious or fatal injury.**

- Replace the passenger seat track position sensor according to the Service Information. Refer to **SENSOR, SEAT TRACK POSITION, REMOVAL** .
- Perform the RESTRAINTS SYSTEM VERIFICATION TEST. Refer to **STANDARD**

PROCEDURE .

6. **CHECK (R730) PASSENGER SEAT DETECTION RETURN CIRCUIT AND (R264) PASSENGER SEAT POSITION SENSOR VOLTAGE CIRCUIT FOR A SHORT TO VOLTAGE**

WARNING: Turn the ignition off, disconnect the 12-volt battery and wait two minutes before proceeding. Failure to follow these instructions may result in possible serious or fatal injury.

1. Disconnect the ORC harness connector.
2. If the vehicle is equipped with the standard key ignition, follow this ignition on warning.

WARNING: Turn the ignition on, then reconnect the 12-volt battery and wait two minutes before proceeding. Failure to follow these instructions may result in possible serious or fatal injury.

3. If the vehicle is equipped with the keyless ignition, follow this ignition on warning.

WARNING: Disconnect the 12-volt battery wait two minutes before proceeding, remove the ORC fuses, connect the 12-volt battery, wait two minutes before proceeding. Cycle the ignition to the On position, then reconnect the ORC fuses. Wait two minutes before proceeding. Failure to follow these instructions may result in possible serious or fatal injury.

4. Measure the voltage of the (R730) Passenger Seat Detection Return circuit between the passenger seat track position sensor connector and ground.
5. Measure the voltage of the (R264) Passenger Seat Position Sensor Voltage circuit between the passenger seat track position connector and ground.

Is the voltage above 0.2 of a Volt for either circuit?

Yes

NOTE: Do not attempt to repair the passenger seat harness. Replace the passenger seat harness if any of these conditions exist.

WARNING: To avoid serious or fatal injury, turn the ignition off, disconnect the battery and wait two minutes before proceeding. Failure to follow these instructions may result in possible serious or fatal injury.

- Replace the passenger seat harness according to the Service Information.
- Perform the RESTRAINTS SYSTEM VERIFICATION TEST. Refer to **STANDARD PROCEDURE** .

No

- Go To 7

7. **CHECK (R730) PASSENGER SEAT DETECTION RETURN CIRCUIT FOR A SHORT TO THE (R264) PASSENGER SEAT POSITION SENSOR VOLTAGE CIRCUIT**

WARNING: Turn the ignition off, disconnect the 12-volt battery and wait two minutes before proceeding. Failure to follow these instructions may result in possible serious or fatal injury.

1. Measure the resistance between the (R730) Passenger Seat Detection Return circuit and the (R264) Passenger Seat Position Sensor Voltage circuit in the Passenger Seat Track Position Sensor harness connector.

   Is the resistance below 10k Ohms?

   Yes

   NOTE: Do not attempt to repair the seat harness. Replace the seat harness if any of these conditions exist.

   - Replace the passenger seat harness according to the Service Information.
   - Perform the RESTRAINTS SYSTEM VERIFICATION TEST. Refer to **STANDARD PROCEDURE** .

   No

   - Replace the ORC according to the Service Information. Refer to **MODULE, OCCUPANT RESTRAINT CONTROLLER, REMOVAL** .
   - Perform the RESTRAINTS SYSTEM VERIFICATION TEST. Refer to **STANDARD PROCEDURE** .

B00C5-95-PASSENGER SEAT TRACK POSITION SENSOR - INCORRECT ASSEMBLY

For a complete wiring diagram, **refer to appropriate SYSTEM WIRING DIAGRAMS article** .

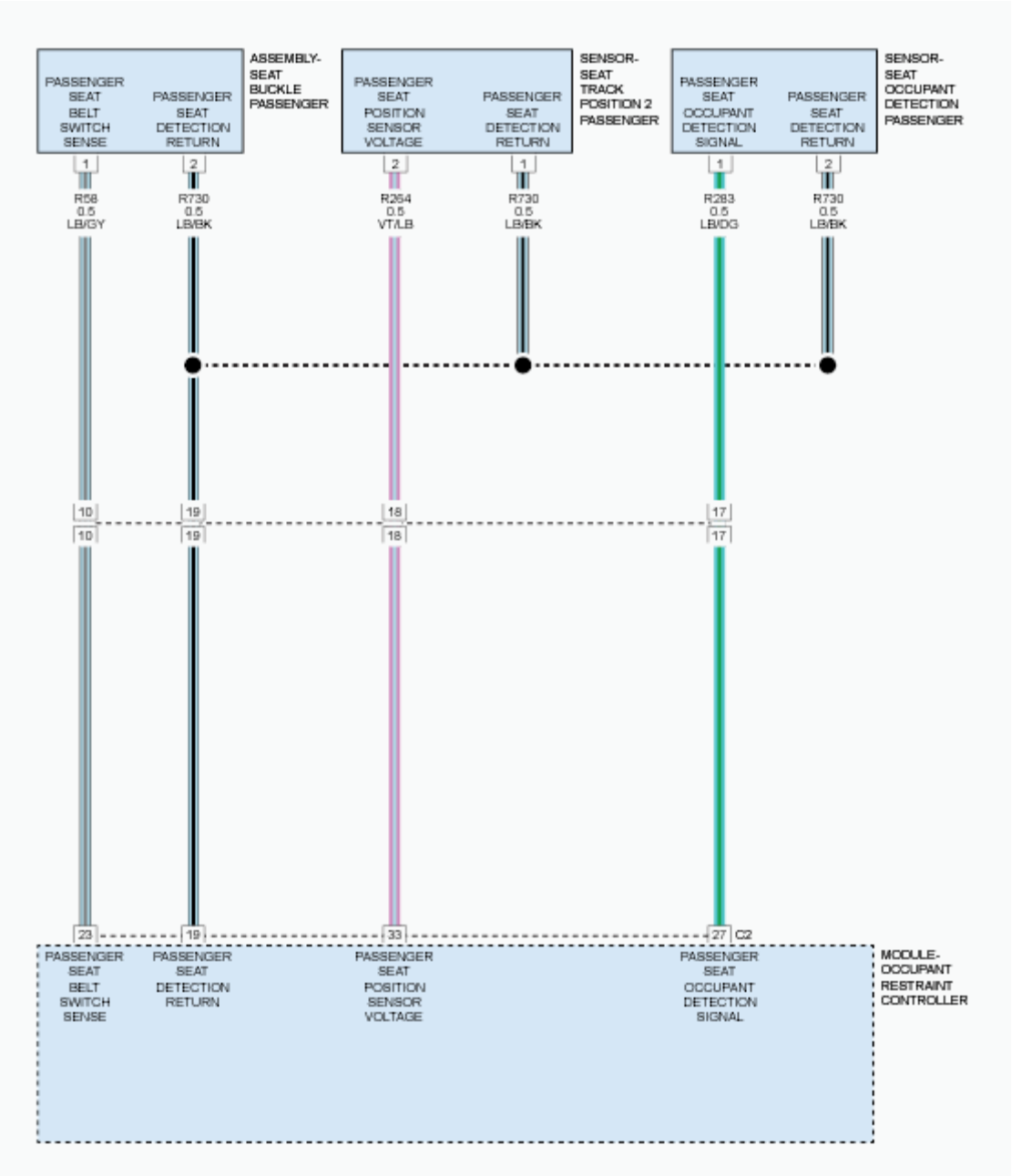

Fig. 44: Passenger Seatbelt, Seat Track Position & Occupant Detection Sensor Circuit Diagram
Courtesy of CHRYSLER GROUP, LLC

THEORY OF OPERATION

When powered, the Occupant Restraint Controller (ORC) sends a test current to the seat track position sensors. During this test, the sensors discovered are checked for agreement with the pre-programmed configuration of components assigned to the module.

WHEN MONITORED

The ORC checks for the presence of seat position sensor circuits once during the initialization process.

SET CONDITION

This DTC sets when the ORC detects the presence of a seat position sensor circuit while the configuration of the module does not reflect a seat track position sensor should be present. Once set, this DTC is latched for the entire power cycle and requires the module to be re-initalized to set code.

POSSIBLE CAUSES

Possible Causes
SENSORS
WIRING
OCCUPANT RESTRAINT CONTROLLER (ORC)

Always perform the Pre-Diagnostic Troubleshooting procedure before proceeding. Refer to STANDARD PROCEDURE .

DIAGNOSTIC TEST

1. **CHECK FOR ACTIVE INTERNAL FAULTS, IGNITION FAULTS, AND BATTERY FAULTS IN THE OCCUPANT RESTRAINT CONTROLLER (ORC)**

   NOTE: Make sure the battery is fully charged.

   1. With the scan tool, read Occupant Restraint Controller (ORC) DTCs.

      Does the scan tool display any active DTCs relating to internal faults, ignition faults, or battery faults?

      Yes

      - Diagnose and repair the DTCs. Refer to the **DIAGNOSTIC CODE INDEX** .

      No

      - Go To 2

2. **VERIFY THAT B00C5-95-PASSENGER SEAT TRACK POSITION SENSOR - INCORRECT ASSEMBLY IS ACTIVE**
   1. With the scan tool, erase ORC DTCs.
   2. Turn the ignition off, wait 10 seconds and then turn the ignition on.
   3. Wait 2 minutes, and then with the scan tool, read ORC DTCs.

      Does the scan tool display active: B00C5-95-PASSENGER SEAT TRACK POSITION SENSOR - INCORRECT ASSEMBLY?

Yes

- Go To 3

No

- Perform the RESTRAINTS SYSTEM VERIFICATION TEST. Refer to **STANDARD PROCEDURE** .

3. **VERIFY WIRING**
   1. Turn the ignition off.
   2. Inspect the passenger seat wiring for Seat Position Sensors.

   Are Seat Position Sensor(s) present?

   Yes

   WARNING: Turn the ignition off, disconnect the battery and wait two minutes before proceeding. Failure to follow these instructions may result in possible serious or fatal injury.

   WARNING: If the Occupant Restraint Controller (ORC) is dropped at any time, it must be replaced. Failure to take the proper precautions can result in accidental airbag deployment.

   - Replace the ORC in accordance with the Service Information. Refer to **MODULE, OCCUPANT RESTRAINT CONTROLLER, REMOVAL** .
   - Perform the RESTRAINTS SYSTEM VERIFICATION TEST. Refer to **STANDARD PROCEDURE** .

   No

   - Perform the RESTRAINTS SYSTEM VERIFICATION TEST. Refer to **STANDARD PROCEDURE** .

B0100-49-ECU INTERNAL ERRORS - INTERNAL ELECTRONIC FAILURE

For a complete wiring diagram, **refer to appropriate SYSTEM WIRING DIAGRAMS article** .

THEORY OF OPERATION

When powered, the Occupant Restraint Controller (ORC) performs an internal self test. The repair of this fault condition does not involve any external circuitry and centers on verifying the integrity of the module's internal circuitry and software validity.

WHEN MONITORED

The ORC checks the status and validity of the internal operating hardware and software at power up during the initialization process, and continuously through the ignition cycle.

SET CONDITION

This Diagnostic Trouble Code (DTC) sets when a fault is detected internal to ORC hardware and/or software. Once set, this DTC is latched permanently and the module must be replaced.

POSSIBLE CAUSES

Possible Causes
OCCUPANT RESTRAINT CONTROLLER (ORC)

Always Perform the Pre-Diagnostic Troubleshooting procedure before proceeding. Refer to STANDARD PROCEDURE .

DIAGNOSTIC TEST

REPLACE OCCUPANT RESTRAINT CONTROLLER (ORC)

NOTE: When this DTC is set, the module self test has discovered an internal fault that cannot be repaired and the module must be replaced regardless of DTC status.

When this code is set do not clear codes, view repair.

Repair

WARNING: If the Occupant Restraint Controller (ORC) is dropped at any time, it must be replaced. Failure to take the proper precautions can result in accidental airbag deployment. Failure to follow these instructions may result in possible serious or fatal injury.

WARNING: Turn the ignition off disconnect the 12-volt battery and wait two minutes before proceeding. Failure to follow these instructions may result in possible serious or fatal injury.

- Replace the ORC module according to the Service Information. Refer to **MODULE, OCCUPANT RESTRAINT CONTROLLER, REMOVAL** .
- Perform the RESTRAINTS SYSTEM VERIFICATION TEST. Refer to **STANDARD PROCEDURE** .

B0101-16-POWER SUPPLY - CIRCUIT VOLTAGE BELOW THRESHOLD

For a complete wiring diagram, **refer to appropriate SYSTEM WIRING DIAGRAMS article** .

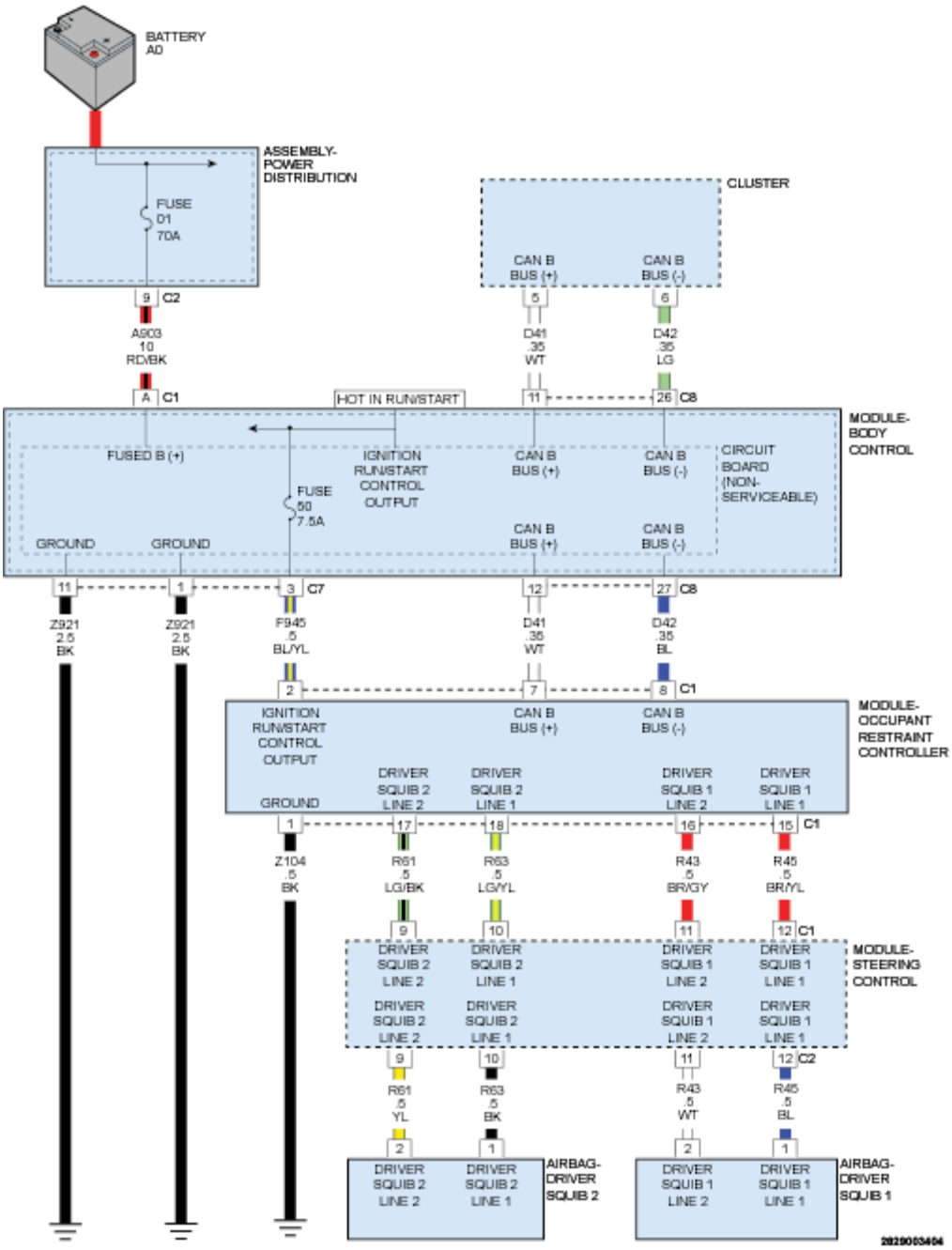

Fig. 45: Occupant Restraint Controller (ORC) Power Supply Wiring Diagram
Courtesy of CHRYSLER GROUP, LLC

THEORY OF OPERATION

The Occupant Restraint Controller (ORC) module receives power from a single fused ignition 1 switch output run circuit from the Body Control Module (BCM). This circuit powers the ORC and the capacitors used to initiate the squib deployment circuits in the event of collision detection.

WHEN MONITORED

The Occupant Restraint Module (ORC) tests the single power feed circuit starting from 1 second after key on, and then continuously through the ignition cycle.

SET CONDITION

This code is set immediately after the Occupant Restraint Module (ORC) detects that voltage on the single power feed circuit is below 10 volts for greater than 15 seconds. The DTC will go from active to stored when the condition that set the code is not present for five seconds. The Multifunction Indicator Lamp (MIL) will set in the Instrument Cluster.

POSSIBLE CAUSES

Possible Causes
CHARGING SYSTEM VOLTAGE LOW
(F945) FUSED IGNITION RUN/START CIRCUIT OPEN OR SHORTED TO GROUND
BODY CONTROL MODULE (BCM)
OCCUPANT RESTRAINT CONTROLLER (ORC)

WARNING: **On vehicles equipped with the high voltage system, disconnecting the 12-volt battery negative cable alone will not power down the 12-volt system. You must perform the 12-volt Power Down procedure before proceeding. Failure to follow these instructions may result in possible serious or fatal injury.**

Always perform the Pre-Diagnostic Troubleshooting procedure before proceeding. Refer to STANDARD PROCEDURE .

DIAGNOSTIC TEST

1. **CHECK PCM FOR CHARGING SYSTEM DTCS**

NOTE: Make sure the battery is fully charged.

1. With the scan tool, read Powertrain Control Module DTCs.

   Are there any Charging System DTCs set in the PCM?

   Yes

   - Perform the appropriate diagnostic procedure for the Charging System.

   No

- Go To 2

2. **DETERMINE ACTIVE OR STORED DTC**
   1. Turn the ignition on.
   2. With the scan tool, read all active ORC DTCs.

      Is the DTC active or stored?

      ORC - ACTIVE DTC

      - Go To 3

      ORC - STORED DTC

      - Perform the RESTRAINTS SYSTEM VERIFICATION TEST. Refer to **STANDARD PROCEDURE** .

3. **CHECK FOR A SHORT TO GROUND ON THE (F945) FUSED IGN RUN CIRCUIT WITH THE ORC CONNECTED**

   WARNING: **To avoid serious or fatal injury, turn the ignition off, disconnect the battery and wait two minutes before proceeding. Failure to follow these instructions may result in possible serious or fatal injury.**

   NOTE: Check the connectors - Clean and repair as necessary.

   1. Measure the resistance between the Body Control Module fused IGN run circuit output cavity C7 - 3 and ground.

      Is the resistance 100 Ohms or less?

      Yes

      - Go To 4

      No

      - Check and replace the BCM #50 7.5A fuse if blown.
      - Perform the RESTRAINTS SYSTEM VERIFICATION TEST. Refer to **STANDARD PROCEDURE** .

4. **CHECK FOR A SHORT TO GROUND ON THE (F945) FUSED IGN RUN CIRCUIT WITH THE ORC DISCONNECTED**
   1. Disconnect the ORC harness connector.

      NOTE: Check connectors - Clean and repair as necessary.

NOTE: **After disconnecting the ORC module and the ORC module body harness connector, check the ORC module body harness connector shorting bar pin location. The shorting bar pin location should be down and not visible through the larger center holes of the ORC module body harness connector.**

2. Connect the to the ORC harness connector.
3. Measure the resistance between the Body Control Module (F945) IGN run circuit output terminal C7 - 3 and ground.

   Is the resistance 100 Ohms or less on the IGN run circuit ?

   Yes

   - Go To 5

   No

   WARNING: **If the Occupant Restraint Controller (ORC) is dropped at any time, it must be replaced. Failure to take the proper precautions can result in accidental airbag deployment. Failure to follow these instructions may result in possible serious or fatal injury.**

   - Replace the ORC in accordance with Service Information. Refer to **MODULE, OCCUPANT RESTRAINT CONTROLLER, REMOVAL** .
   - Perform the RESTRAINTS SYSTEM VERIFICATION TEST. Refer to **STANDARD PROCEDURE** .

5. **CHECK FOR A SHORT TO GROUND ON THE (F945) FUSED IGN 1 RUN CIRCUIT WITH THE BODY CONTROL MODULE DISCONNECTED**
   1. Disconnect the feed circuit from the Body Control Module 60A Maxi Fuse.
   2. Measure the resistance between the Fused run circuit at the appropriate terminals of the connector and ground.

      Is the resistance 100 Ohms or less?

      Yes

      - Repair the Fuse circuit for a short to ground.

        Using the wiring diagram/schematic as a guide, inspect the related wiring and connectors. Look for chafed, pierced, pinched, or partially broken wires and broken, bent, pushed out, spread, corroded, or contaminated terminals.

        Replace the Body Control Module 60A MAXI Fuse, then Go To 6.

- Perform the RESTRAINTS SYSTEM VERIFICATION TEST. Refer to **STANDARD PROCEDURE** .

No

- Replace the Body Control Module and reinstall fuse in accordance with the Service Information. Refer to **MODULE, BODY CONTROL, REMOVAL** .
- Perform the RESTRAINTS SYSTEM VERIFICATION TEST. Refer to **STANDARD PROCEDURE** .

6. **CHECK FOR A SHORT TO GROUND ON THE (F945) FUSED IGN 1 RUN CIRCUIT WITH THE ORC CONNECTED**

WARNING: To avoid serious or fatal injury, turn the ignition off, disconnect the battery and wait two minutes before proceeding. Failure to follow these instructions may result in possible serious or fatal injury.

NOTE: Check connectors - Clean and repair as necessary.

1. Measure the resistance between the Body Control Module (F945) Fused Ignition Switch Output (Run) Circuit BCM terminal cavity C7 - 3 and ground.

   Is the resistance 100 Ohms or less?

   Yes

   - Repair the Fuse circuit for a short to ground.

     Using the wiring diagram/schematic as a guide, inspect the related wiring and connectors. Look for chafed, pierced, pinched, or partially broken wires and broken, bent, pushed out, spread, corroded, or contaminated terminals.

     Inspect and possibly replace the Body Control Module #50 7.5A fuse.

   - Perform the RESTRAINTS SYSTEM VERIFICATION TEST. Refer to **STANDARD PROCEDURE** .

   No

   - Replace the Body Control Module #50 7.5A fuse.
   - Perform the RESTRAINTS SYSTEM VERIFICATION TEST. Refer to **STANDARD PROCEDURE** .

B0101-17-POWER SUPPLY - CIRCUIT VOLTAGE ABOVE THRESHOLD

For a complete wiring diagram, **refer to Wiring Information** .

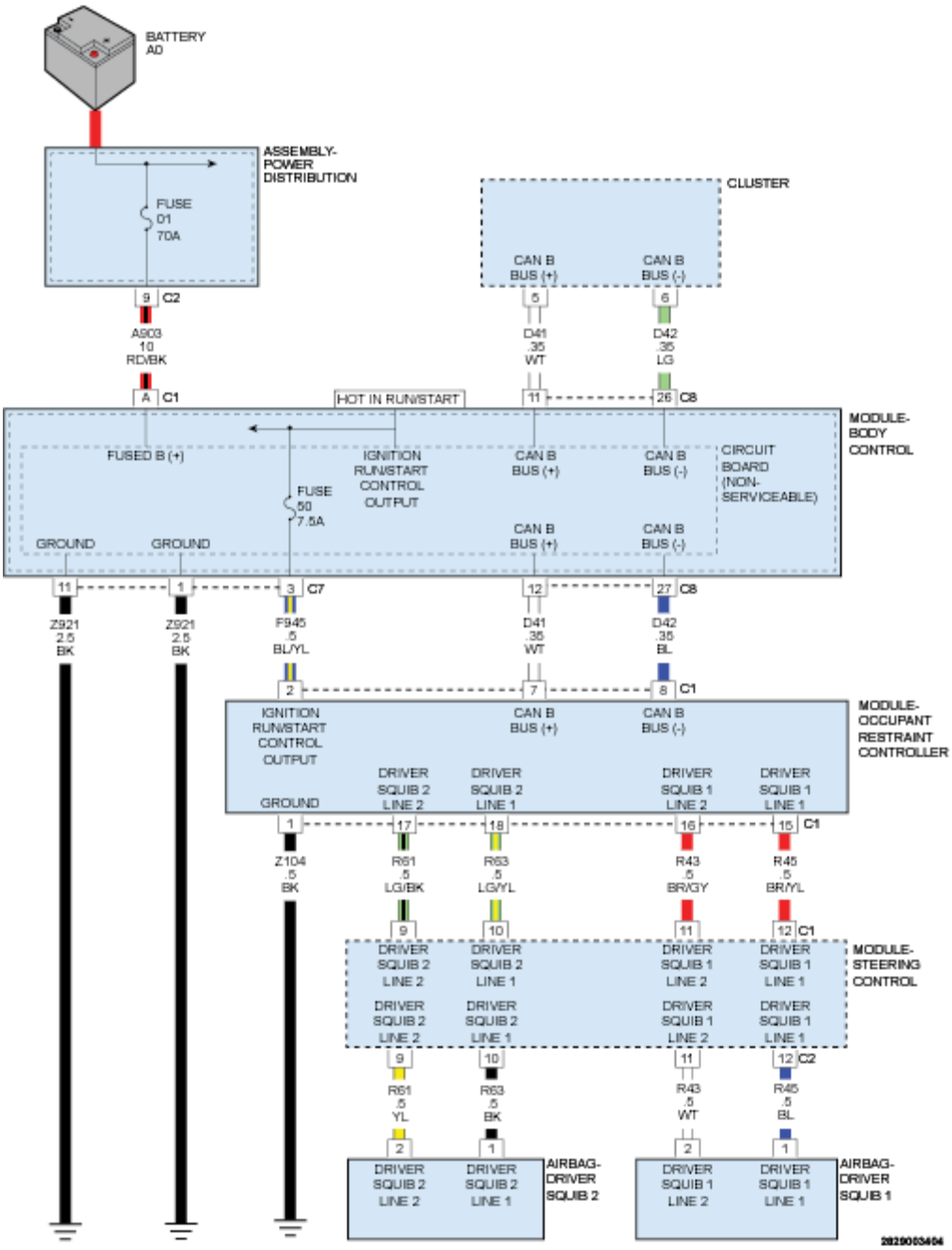

Fig. 46: Occupant Restraint Controller (ORC) Power Supply Wiring Diagram
Courtesy of CHRYSLER GROUP, LLC

THEORY OF OPERATION

The Occupant Restraint Controller (ORC) module receives power from a single fused ignition 1 switch output run circuit from the Body Control Module (BCM). This circuit powers the ORC and the capacitors used to initiate the squib deployment circuits in the event of collision detection.

WHEN MONITORED

The Occupant Restraint Module (ORC) tests the power feed circuit starting from 1 second after key on, and then continuously through the ignition cycle.

SET CONDITION

This code is set immediately after the Occupant Restraint Controller (ORC) Module detects that voltage on the power feed circuit is above 15 volts for greater than 15 seconds. The DTC will go from active to stored when the condition that set the code is not present for five seconds. The Multifunction Indicator Lamp (MIL) will set in the Instrument Cluster.

POSSIBLE CAUSES

Possible Causes
CHARGING SYSTEM VOLTAGE HIGH
(F945) FUSED IGNITION RUN SHORTED TO GROUND
BODY CONTROL MODULE (BCM)
OCCUPANT RESTRAINT CONTROLLER (ORC)

WARNING: **On vehicles equipped with the high voltage system, disconnecting the 12-volt battery negative cable alone will not power down the 12-volt system. You must perform the 12-volt Power Down procedure before proceeding. Failure to follow these instructions may result in possible serious or fatal injury.**

Always perform the Pre-Diagnostic Troubleshooting procedure before proceeding. Refer to STANDARD PROCEDURE .

DIAGNOSTIC TEST

1. **CHECK FOR ACTIVE DIAGNOSTIC TROUBLE CODE (DTC)**
    1. Turn the ignition on.
    2. With the scan tool, read DTCs.

    Does the scan tool display this DTC as active?

    Yes

    - Go To 2

    No

    - The condition that caused this code to set is not present at this time. Check for an intermittent condition by inspecting the related wiring harness for chafed, pierced, pinched and partially

broken wires. Also inspect the related connectors for broken, bent, pushed out, spread, corroded or contaminated terminals.

- Perform the RESTRAINTS SYSTEM VERIFICATION TEST. Refer to **STANDARD PROCEDURE** .

2. **VERIFY OPERATION OF THE VEHICLE CHARGING SYSTEM**

NOTE: Troubleshoot any PCM charging/cranking DTCs before proceeding.

NOTE: Make sure the battery is fully charged.

Are any charging system DTCs present?

Yes

- Refer to the **DTC INDEX** article and perform the appropriate charging system or battery diagnostic procedure.

No

- Replace the ORC in accordance with the Service Information. Refer to **MODULE, OCCUPANT RESTRAINT CONTROLLER, REMOVAL** .
- Perform the RESTRAINTS SYSTEM VERIFICATION TEST. Refer to **STANDARD PROCEDURE** .

B1BA5-00-AIRBAG SQUIB CONFIGURATION MISMATCH

For a complete wiring diagram **Refer to the Wiring Information** .

THEORY OF OPERATION

When powered, the Occupant Restraint Controller (ORC) sends a test current to the squibs to verify the integrity of the squib and wiring. The presence of this code indicates the ORC is not configured for the squib resistance or shorted squib circuits detected.

WHEN MONITORED

With the ignition on.

SET CONDITION

The ORC detects a squib load that the vehicle is not configured for.

POSSIBLE CAUSES

Possible Causes

ORC CONFIGURATION/PROXI
OCCUPANT RESTRAINT CONTROLLER (ORC)

DIAGNOSTIC TEST

1. **DETERMINE ACTIVE OR STORED DTC**

   NOTE: Ensure the battery is fully charged.

   1. Turn the ignition on.
   2. With the scan tool, read ORC DTCs.

      Does the scan tool display active: B1BA5-00-AIRBAG SQUIB CONFIGURATION MISMATCH?

      Yes

      - Go To 2

      No

      - Perform the RESTRAINTS SYSTEM INTERMITTENT TEST. Refer to **STANDARD PROCEDURE** .
2. **CHECK ORC PART NUMBER WITH SCAN TOOL**
   1. With the scan tool, select ECU View, select ORC, select ECU Details, and read the ORC part number.

      Is the part number correct for the vehicle?

      Yes

      - Go To 3

      No

      - Using the scan tool, select Misc. Functions then Proxi Alignmen

        .

      - Perform the RESTRAINT SYSTEM VERIFICATION TEST. Refer to **STANDARD PROCEDURE** .
3. **CHECK VIN WITH SCAN TOOL**
   1. With the scan tool, read the VIN.

Is the correct VIN displayed?

Yes

- Go To 4.

No

- Using the scan tool, select Misc. Functions then Proxi Alignmen

  .

- Perform the RESTRAINT SYSTEM VERIFICATION TEST. Refer to **STANDARD PROCEDURE** .

4. **CHECK WIRING AND CONNECTOR**
   1. Check wiring for shorted short to ground or battery and check the ORC connector corrosion and bent terminal at the rear seat airbag terminals.

      Is any problems found?

      Yes

      - Repair or replace wiring or connector in accordance with Service Information.
      - Perform the RESTRAINT SYSTEM VERIFICATION TEST. Refer to **STANDARD PROCEDURE** .

      No

      - Replace the ORC in accordance with Service Information. Refer to **MODULE, OCCUPANT RESTRAINT CONTROLLER, REMOVAL** .
      - Perform the RESTRAINT SYSTEM VERIFICATION TEST. Refer to **STANDARD PROCEDURE** .

B1BAA-00-OCCUPANT CLASSIFICATION MODULE CONFIGURATION MISMATCH

For a complete wiring diagram, **refer to appropriate SYSTEM WIRING DIAGRAMS article** .

THEORY OF OPERATION

When powered, the Occupant Restraint Controller (ORC) performs an internal self test. The repair of this fault centers on verifying ORC and Body Control Module (BCM) configuration.

WHEN MONITORED

The ORC checks its feature configuration for Occupant Classification Module (OCM) present on the BUS after initialization.

SET CONDITION

This DTC sets when the ORC detects a mismatch between the current and originally intended configuration of the module. Once set, this DTC is latched for the entire power cycle.

POSSIBLE CAUSES

Possible Causes
BODY CONTROL MODULE (BCM) CONFIGURATION
OCCUPANT RESTRAINT CONTROLLER (ORC)

Always perform the Pre-Diagnostic Troubleshooting procedure before proceeding. Refer to STANDARD PROCEDURE .

DIAGNOSTIC TEST

1. **DETERMINE ACTIVE OR STORED DTC**

   NOTE: Make sure the battery is fully charged.

   1. Turn the ignition on.
   2. Wait 12 seconds, then with the scan tool, read all active ORC DTCs.

      Is the DTC active or stored?

      ORC - ACTIVE DTC

      - Go To 2

      ORC - STORED DTC

      - Perform the RESTRAINTS SYSTEM INTERMITTENT TEST. Refer to **STANDARD PROCEDURE** .

2. **CHECK BCM OCM PRESENT CONFIGURATION**
   1. With the scan tool, check for OCM present configuration.

      Does the Vehicle Configuration in the BCM match the Vehicle Configuration in the ORC?

      Yes

      WARNING: If the Occupant Restraint Controller (ORC) is dropped at any time, it must be replaced. Failure to take the proper precautions can result in accidental airbag deployment and serious or fatal injury.

WARNING: To avoid serious or fatal injury, turn the ignition off, disconnect the battery and wait two minutes before proceeding.

- Replace the ORC in accordance with Service Information. Refer to **MODULE, OCCUPANT RESTRAINT CONTROLLER, REMOVAL** .
- Perform the RESTRAINTS SYSTEM VERIFICATION TEST. Refer to **STANDARD PROCEDURE** .

No

- Perform the ORC PROXII to configure the module in accordance with the service information.

NOTE: The ORC Reset Function must be performed after the repair to force the module to retest for this DTC. Access the Miscellaneous Function or Diagnostic Procedures menu from the ORC ECU Overview screen on the scan tool to perform this operation.

-

B1BB9-00-AIRBAG SQUIB CIRCUIT COUPLING

For a complete wiring diagram, **refer to appropriate SYSTEM WIRING DIAGRAMS article** .

THEORY OF OPERATION

When powered, the Occupant Restraint Controller (ORC) sends a test current to the squibs to verify the integrity of the squib and wiring. The presence of this code indicates that any two circuits, from two or more squibs, have become shorted or "coupled" together.

WHEN MONITORED

The ORC checks for the presence of coupled squib circuits once during the initialization process.

SET CONDITION

This DTC sets when the ORC detects that any two circuits, from two or more squibs, have become shorted or "coupled" together. Once set, this DTC is latched for the entire ignition cycle.

POSSIBLE CAUSES

Possible Causes
SQUIB CIRCUIT WIRING
OCCUPANT RESTRAINT CONTROLLER (ORC)

Always perform the Pre-Diagnostic Troubleshooting procedure before proceeding. Refer to STANDARD PROCEDURE .

DIAGNOSTIC TEST

1. **DETERMINE ACTIVE OR STORED DTC**

   NOTE: Make sure the battery is fully charged.

   1. Turn the ignition on.
   2. Perform ORC module reset. Access the Miscellaneous Function menu from the ORC ECU Overview screen on the scan tool to perform this operation.
   3. With the scan tool, read ORC DTCs.

      Is the DTC active or stored?

      ORC - ACTIVE DTC

      - Go To 2

      ORC - STORED DTC

      - Perform the RESTRAINTS SYSTEM INTERMITTENT TEST. Refer to **STANDARD PROCEDURE** .
2. **CHECK FOR ADDITIONAL ACTIVE SQUIB DTCS**
   1. With the scan tool, read ORC DTCs.

      Are there squib specific DTCs set as active in addition to B1BB9-00-AIRBAG SQUIB CIRCUIT COUPLING?

      Yes

      - Repair all other active squib specific DTCs before repairing B1BB9-00-AIRBAG SQUIB CIRCUIT COUPLING. Refer to the **DIAGNOSTIC CODE INDEX** .

      No

      - Go To 3
3. **USE THE SCAN TOOL TO IDENTIFY THE COUPLED CIRCUITS**
   1. With the scan tool, identify the two or more Squib circuits that read SET.

      Are two or more Squib circuits SET?

      Yes

- Repair the two or more Squib circuits for a Squib Circuit Coupling condition.
- Perform the RESTRAINTS SYSTEM VERIFICATION TEST. Refer to **STANDARD PROCEDURE** .

No

- Perform the RESTRAINTS SYSTEM INTERMITTENT TEST. Refer to **STANDARD PROCEDURE** .

2014 RESTRAINTS

Occupant Restraint Controller (ORC) - Electrical Diagnostics - Cherokee

DIAGNOSIS AND TESTING

B1BC7-00-DEPLOYMENT DATA RECORD FULL

For a complete wiring diagram, **refer to appropriate SYSTEM WIRING DIAGRAMS article** .

THEORY OF OPERATION

When powered, the Occupant Restraint Controller (ORC) performs an internal self test. The repair of this fault condition does not involve any external circuitry and centers on verifying the integrity of the module's internal memory.

WHEN MONITORED

The ORC checks its internal memory for the number of deployment events once at every power up, during the initialization process.

SET CONDITION

This DTC sets when the ORC detects that crash data memory space is full. Once set, this DTC is latched indefinitely.

POSSIBLE CAUSES

Possible Causes
OCCUPANT RESTRAINT CONTROLLER (ORC)

Always perform the Pre-Diagnostic Troubleshooting procedure before proceeding. Refer to STANDARD PROCEDURE .

DIAGNOSTIC TEST

CHECK FOR ACTIVE DTC

1. Turn the ignition on.
2. With the scan tool, read ORC DTCs.

   Is the Deployment Data Record Full DTC active?

   Yes

   - Replace the Occupant Restraint Controller (ORC) in accordance with the service information.

Refer to **MODULE, OCCUPANT RESTRAINT CONTROLLER, REMOVAL** .

- Perform the RESTRAINTS SYSTEM VERIFICATION TEST. Refer to **STANDARD PROCEDURE** .

No

- Perform the RESTRAINTS SYSTEM VERIFICATION TEST. Refer to **STANDARD PROCEDURE** .

B1C32-00-AIRBAG DEPLOYMENT DETECTED

For a complete wiring diagram, **refer to appropriate SYSTEM WIRING DIAGRAMS article** .

THEORY OF OPERATION

After a deployment event the Occupant Restraint Controller (ORC) sets this DTC active will be set active and remain latched until cleared with the scan tool.

WHEN MONITORED

With the ignition on.

SET CONDITION

This DTC sets when the ORC detects a deployment event remain latched until cleared with the scan tool. This DTC will not set as a Stored Code.

POSSIBLE CAUSES

Possible Causes
AIRBAG DEPLOYMENT DETECTED

DIAGNOSTIC TEST

CHECK FOR ACTIVE DTCS

1. Turn the ignition on.
2. With the scan tool, read the Occupant Restraint Controller (ORC) DTCs.

   Is the active B1C32-00-AIRBAG DEPLOYMENT DETECTED DTCs present?

   Repair

   - With the scan tool erase the DTC.
   - Perform the RESTRAINT SYSTEM VERIFICATION TEST. Refer to **STANDARD PROCEDURE** .

B212C-13-IGNITION RUN/START INPUT - CIRCUIT OPEN

For a complete wiring diagram, **refer to appropriate SYSTEM WIRING DIAGRAMS article** .

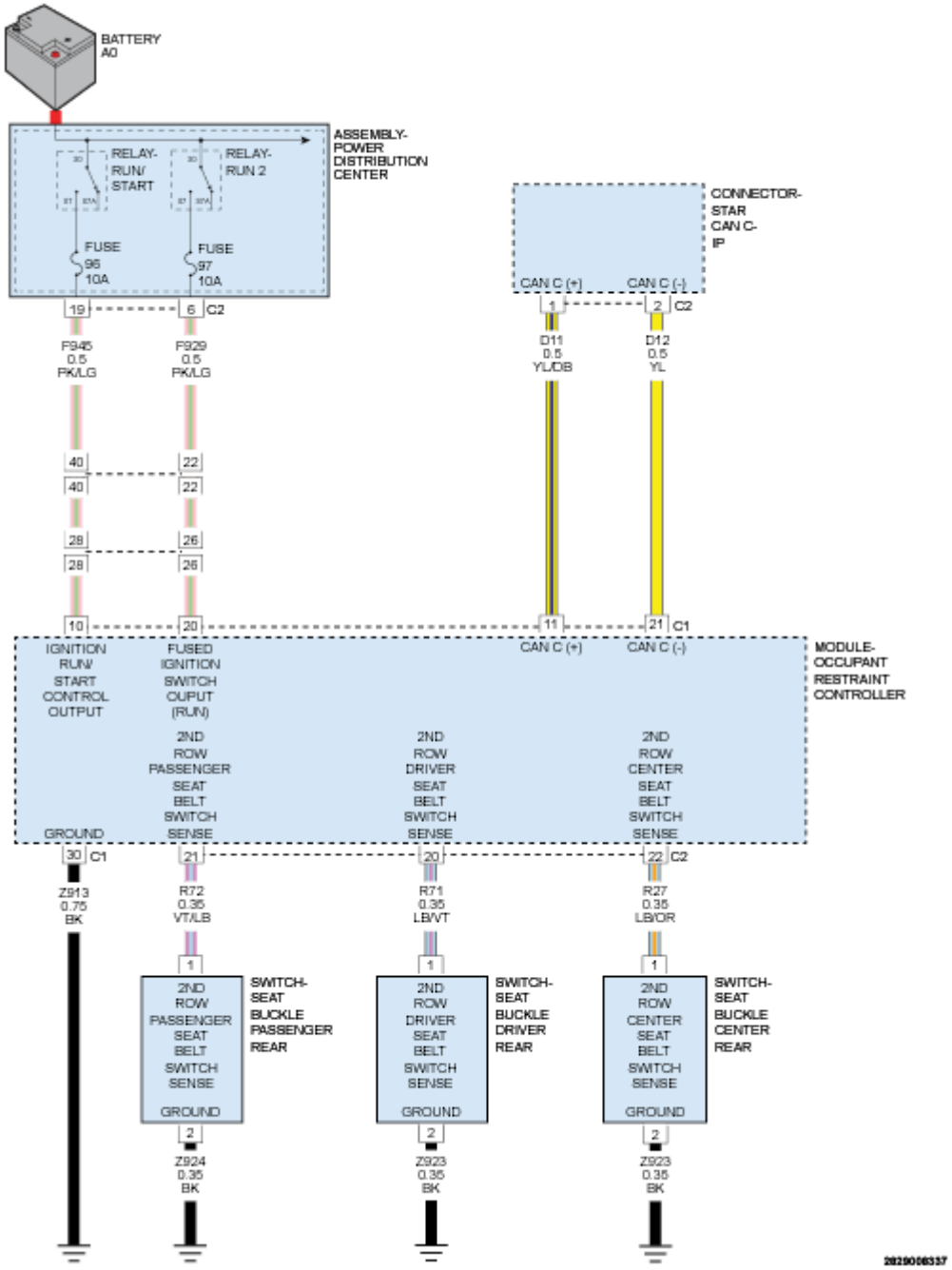

Fig. 1: Occupant Restraint Controller Module (ORC) Circuit Diagram
Courtesy of CHRYSLER GROUP, LLC

THEORY OF OPERATION

The Occupant Restraint Controller module (ORC) receives power from both a Fused Ignition Switch Output (Run) and Ignition Run/Start Control Output Circuit from the Underhood Power Distribution Center. These circuits power the ORC and the capacitors used to initiate the squib deployment circuits in the event of collision detection.

WHEN MONITORED

With the ignition on.

SET CONDITION

If voltage on the Ignition Run/Start Control Output circuit drops below 6.0 volts and the voltage on the Fused Ignition Switch Output (RUN) circuit is greater then or equal to 9 volts for 15 seconds in the bussed ignition RUN position.

POSSIBLE CAUSES

Possible Causes
IGNITION RUN/START CONTROL OUTPUT CIRCUIT OPEN OR SHORTED TO GROUND
OCCUPANT RESTRAINT CONTROLLER (ORC)

Always perform the Pre-Diagnostic Troubleshooting procedure before proceeding. Refer to STANDARD PROCEDURE .

DIAGNOSTIC TEST

1. **CHECK FOR AN ACTIVE DTC**
    1. Turn the ignition on.
    2. With the scan tool, read DTCs.

    Does the scan tool display this DTC as active?

    Yes

    - Go To 2

    No

    - Test complete, the condition or conditions that originally set this DTC are not present at this time. Using the wiring diagrams as a guide, check all related splices and connectors for signs of water intrusion, corrosion, pushed out or bent terminals, and correct pin tension.
    - Perform the RESTRAINTS SYSTEM VERIFICATION TEST. Refer to **STANDARD PROCEDURE** .
2. **CHECK (F929) IGNITION RUN/START CONTROL OUTPUT CIRCUIT VOLTAGE AT THE ORC HARNESS CONNECTOR**

NOTE: **Using the wiring diagrams as a guide, check all appropriate fuses before proceeding with this diagnostic procedure. Repair as necessary.**

NOTE: **Probing of the circuit cavities at the ORC Module C1-A, C1-B, or C2-A body harness connectors is only to be done with a approved test lead from the (special tool #10159, Test Leads, Dedicated). Or a comparable test lead to prevent vehicle wiring harness connector damage during diagnostic procedures.**

WARNING: **Turn the ignition off disconnect the 12-volt battery and wait two minutes before proceeding. Failure to follow these instructions may result in possible serious or fatal injury.**

1. Disconnect the ORC harness connectors.
2. Turn the ignition on.
3. Using the appropriate test lead, measure the voltage of the (F929) Ignition Run/Start Control Output circuit between the ORC C1 harness connector and ground.

   Is the voltage above 6.5 volts?

   Yes

   - Replace the ORC in accordance with the Service Information. Refer to **MODULE, OCCUPANT RESTRAINT CONTROLLER, REMOVAL** .
   - Perform the RESTRAINTS SYSTEM VERIFICATION TEST. Refer to **STANDARD PROCEDURE** .

   No

   - Using the wiring diagrams as a guide, repair the (F929) Ignition Run/Start Control Output Circuit for an open or short to ground.
   - Perform the RESTRAINTS SYSTEM VERIFICATION TEST. Refer to **STANDARD PROCEDURE** .

B212D-IGNITION RUN ONLY INPUT CIRCUIT OPEN

For a complete wiring diagram, **refer to appropriate SYSTEM WIRING DIAGRAMS article** .

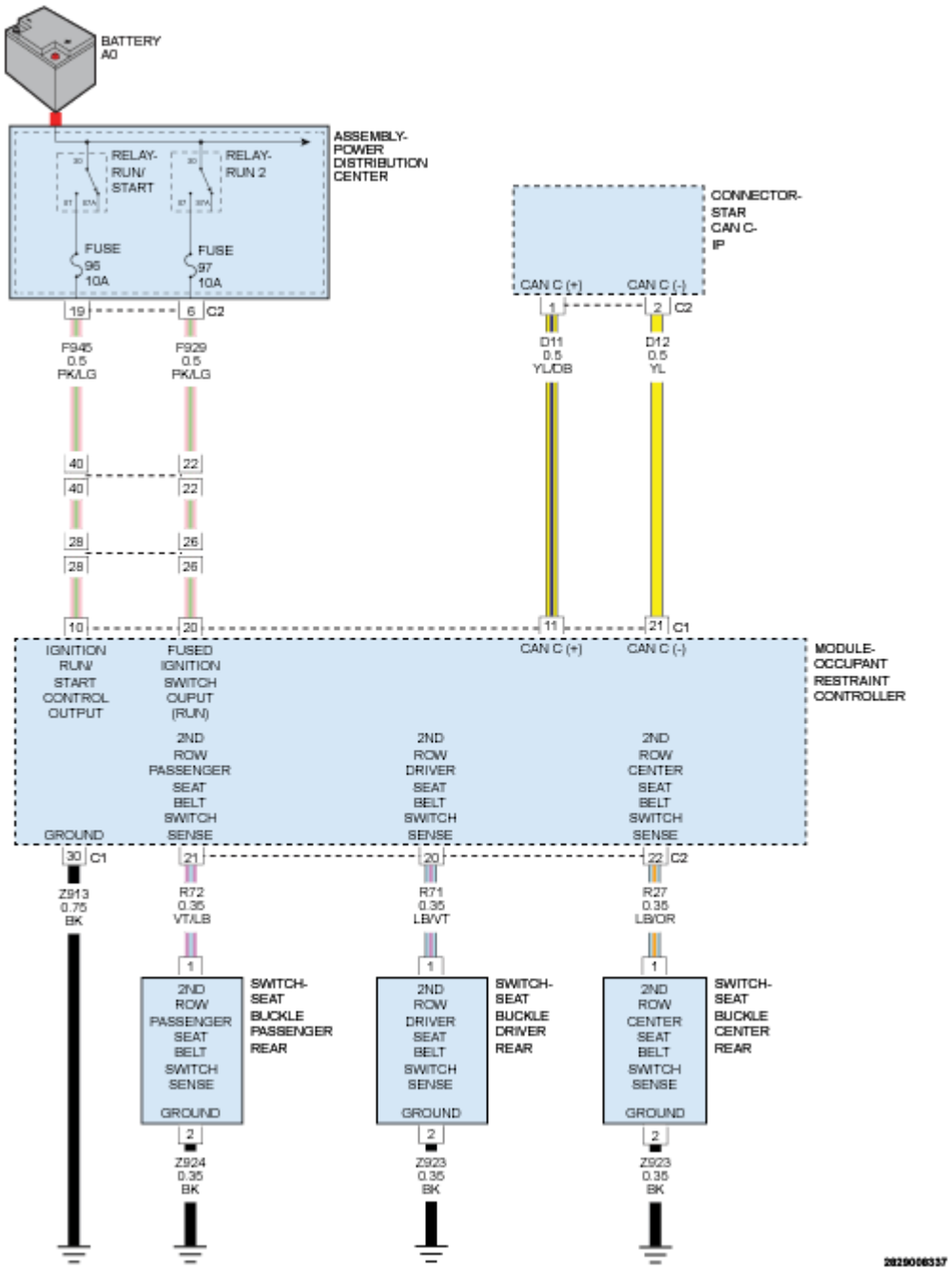

Fig. 2: Occupant Restraint Controller Module (ORC) Circuit Diagram
Courtesy of CHRYSLER GROUP, LLC

THEORY OF OPERATION

The Occupant Restraint Controller module (ORC) receives power from both a Fused Ignition Switch Output (Run) and Ignition Run/Start Control Output Circuit from the Underhood Power Distribution Center. These circuits power the ORC and the capacitors used to initiate the squib deployment circuits in the event of collision detection.

WHEN MONITORED

With the ignition on.

SET CONDITION

If voltage on the Fused Ignition Switch Output (RUN) circuit drops below 6.0 volts and the voltage on the Ignition Run/Start Control Output circuit is greater then or equal to 9 volts for 15 seconds in the bussed ignition RUN position.

POSSIBLE CAUSES

Possible Causes
FUSED IGNITION SWITCH OUTPUT (RUN) CIRCUIT OPEN OR SHORTED TO GROUND
OCCUPANT RESTRAINT CONTROLLER (ORC)

Always perform the Pre-Diagnostic Troubleshooting procedure before proceeding. Refer to STANDARD PROCEDURE .

DIAGNOSTIC TEST

1. **CHECK FOR AN ACTIVE DTC**
   1. Turn the ignition on.
   2. With the scan tool, read DTCs.

      Does the scan tool display this DTC as active?

      Yes

      - Go To 2

      No

      - Test complete, the condition or conditions that originally set this DTC are not present at this time. Using the wiring diagrams as a guide, check all related splices and connectors for signs of water intrusion, corrosion, pushed out or bent terminals, and correct pin tension.
      - Perform the RESTRAINTS SYSTEM VERIFICATION TEST. Refer to **STANDARD PROCEDURE** .
2. **CHECK (F945) FUSED IGNITION SWITCH OUTPUT (RUN) CIRCUIT VOLTAGE AT THE ORC HARNESS CONNECTOR**

   NOTE: Using the wiring diagrams as a guide, check all appropriate fuses before proceeding with this diagnostic procedure. Repair as necessary.

   NOTE: Probing of the circuit cavities at the ORC Module C1-A, C1-B, or C2-A body

harness connectors is only to be done with a approved test lead from the (special tool #10159, Test Leads, Dedicated). Or a comparable test lead to prevent vehicle wiring harness connector damage during diagnostic procedures.

WARNING: **Turn the ignition off disconnect the 12-volt battery and wait two minutes before proceeding. Failure to follow these instructions may result in possible serious or fatal injury.**

1. Disconnect the ORC harness connectors.
2. Turn the ignition on.
3. Using the appropriate test lead, measure the voltage of the (F945) Fused Ignition Switch Output (Run) circuit between the ORC C1 harness connector and ground.

   Is the voltage above 6.5 volts?

   Yes

   - Replace the ORC in accordance with the Service Information. Refer to **MODULE, OCCUPANT RESTRAINT CONTROLLER, REMOVAL** .
   - Perform the RESTRAINTS SYSTEM VERIFICATION TEST. Refer to **STANDARD PROCEDURE** .

   No

   - Using the wiring diagrams as a guide, repair the (F945) Fused Ignition Switch Output (Run) circuit for an open or short to ground.
   - Perform the RESTRAINTS SYSTEM VERIFICATION TEST. Refer to **STANDARD PROCEDURE** .

B0101-16-POWER SUPPLY - CIRCUIT VOLTAGE BELOW THRESHOLD

For a complete wiring diagram, **refer to appropriate SYSTEM WIRING DIAGRAMS article** .

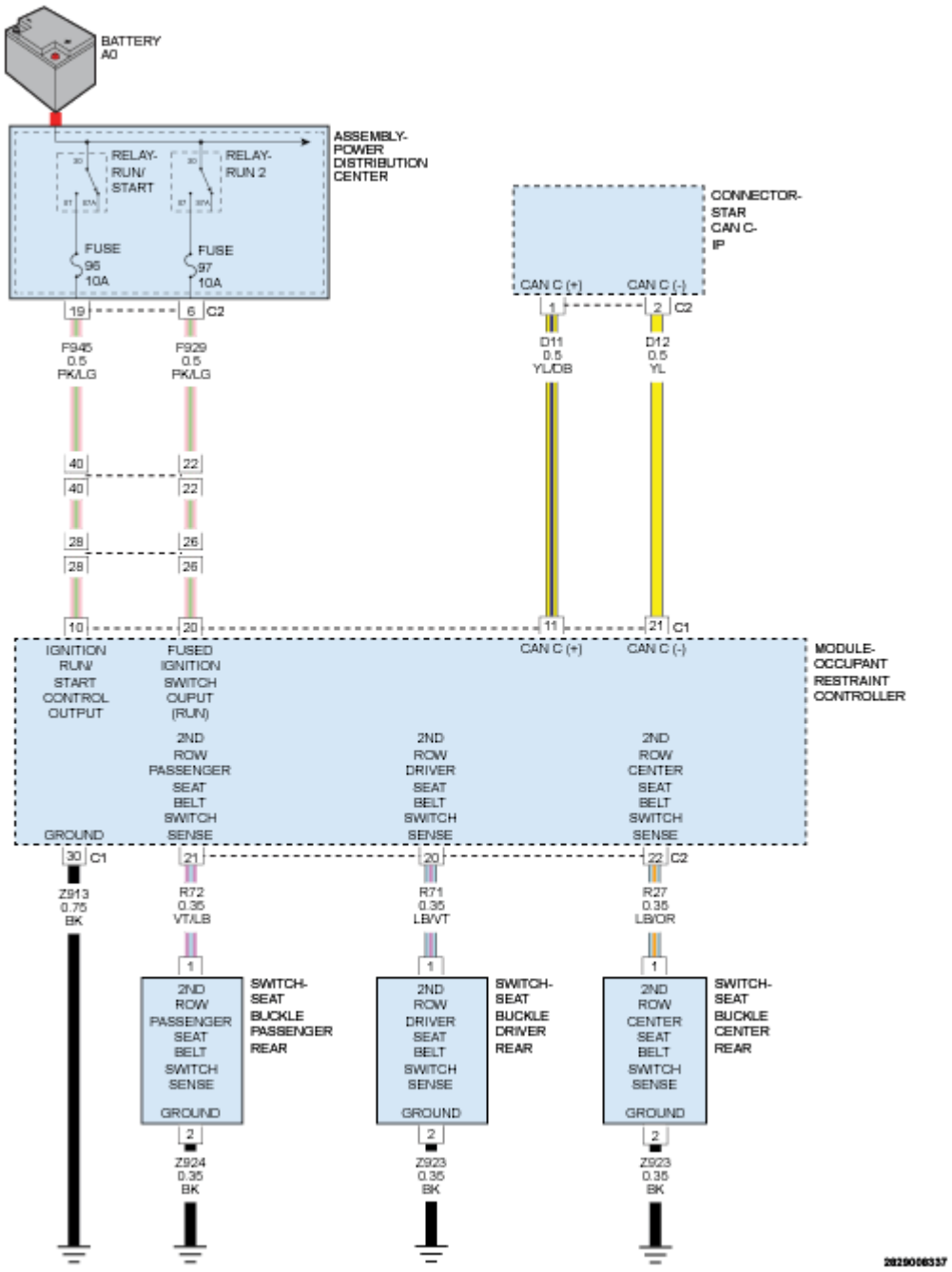

Fig. 3: Occupant Restraint Controller Module (ORC) Circuit Diagram
Courtesy of CHRYSLER GROUP, LLC

WHEN MONITORED

With the ignition on.

SET CONDITION

Vehicle System voltage less than 10.0 volts.

POSSIBLE CAUSES

Possible Causes
VEHICLE CHARGING SYSTEM MODULE THAT SET THIS DTC

DIAGNOSTIC TEST

1. **CHECK FOR ACTIVE DIAGNOSTIC TROUBLE CODE (DTC)**
    1. Turn the ignition on.
    2. With the scan tool, read DTCs.

    Does the scan tool display this DTC as active?

    Yes

    - Go To 2

    No

    - The condition that caused this code to set is not present at this time. Check for an intermittent condition by inspecting the related wiring harness for chafed, pierced, pinched and partially broken wires. Also inspect the related connectors for broken, bent, pushed out, spread, corroded or contaminated terminals.
    - Perform the RESTRAINTS SYSTEM VERIFICATION TEST. Refer to **STANDARD PROCEDURE** .
2. **VERIFY OPERATION OF THE VEHICLE CHARGING SYSTEM**

    NOTE: Troubleshoot any PCM charging/cranking DTCs before proceeding.

    NOTE: Make sure the battery is fully charged.

    Are any charging system DTCs present?

    Yes

    - Refer to the **DTC INDEX** article and perform the appropriate charging system or battery diagnostic procedure.

    No

    - Replace the ORC in accordance with the Service Information. Refer to **MODULE, OCCUPANT**

RESTRAINT CONTROLLER, REMOVAL .

- Perform the RESTRAINTS SYSTEM VERIFICATION TEST. Refer to **STANDARD PROCEDURE** .

B0101-17-POWER SUPPLY - CIRCUIT VOLTAGE ABOVE THRESHOLD

For a complete wiring diagram, **refer to Wiring Information** .

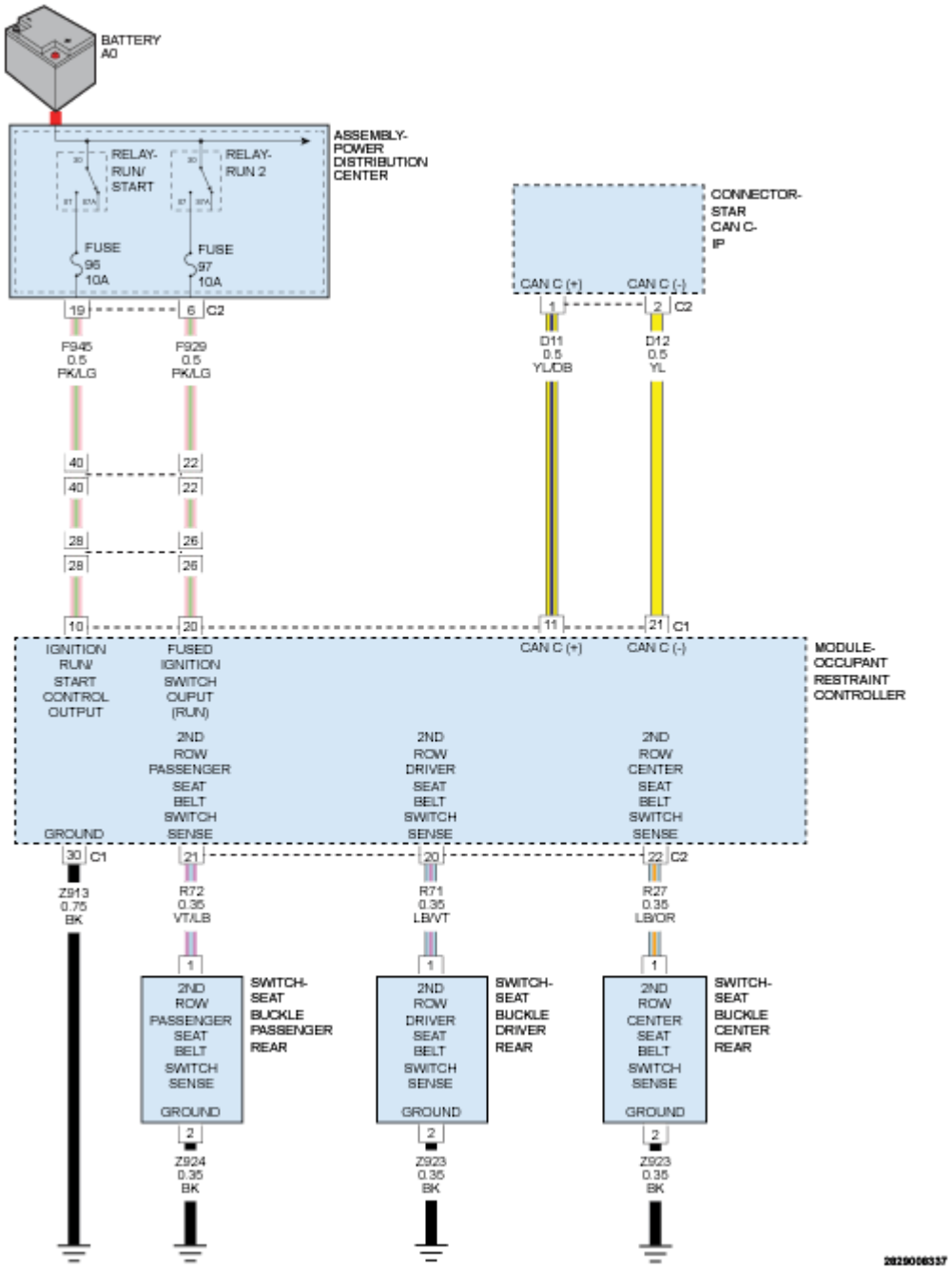

Fig. 4: Occupant Restraint Controller Module (ORC) Circuit Diagram

Courtesy of CHRYSLER GROUP, LLC

WHEN MONITORED

With the ignition on.

SET CONDITION

Vehicle System voltage greater than 16.0 volts.

POSSIBLE CAUSES

Possible Causes
VEHICLE CHARGING SYSTEM MODULE THAT SET THIS DTC

DIAGNOSTIC TEST

1. **CHECK FOR ACTIVE DIAGNOSTIC TROUBLE CODE (DTC)**
    1. Turn the ignition on.
    2. With the scan tool, read DTCs.

    Does the scan tool display this DTC as active?

    Yes

    - Go To 2

    No

    - The condition that caused this code to set is not present at this time. Check for an intermittent condition by inspecting the related wiring harness for chafed, pierced, pinched and partially broken wires. Also inspect the related connectors for broken, bent, pushed out, spread, corroded or contaminated terminals.
    - Perform the RESTRAINTS SYSTEM VERIFICATION TEST. Refer to **STANDARD PROCEDURE** .
2. **VERIFY OPERATION OF THE VEHICLE CHARGING SYSTEM**

    NOTE: Troubleshoot any PCM charging/cranking DTCs before proceeding.

    NOTE: Make sure the battery is fully charged.

    Are any charging system DTCs present?

    Yes

- Refer to the **DTC INDEX** article and perform the appropriate charging system or battery diagnostic procedure.

No

- Replace the ORC in accordance with the Service Information. Refer to **MODULE, OCCUPANT RESTRAINT CONTROLLER, REMOVAL** .
- Perform the RESTRAINTS SYSTEM VERIFICATION TEST. Refer to **STANDARD PROCEDURE** .

B2204-00-ECU CONFIGURATION MISMATCH

For a complete wiring diagram, **refer to appropriate SYSTEM WIRING DIAGRAMS article** .

THEORY OF OPERATION

When powered, during flash programming of the Occupant Restraint Controller (ORC) experienced an interruption of the programming procedure due to a software or hardware failure. The repair of this fault centers on verifying the ORC completed successfully the flash programming process completely. The flash programming process is asked to run again in the diagnostics written to possibly clear the internal hardware or software failure.

WHEN MONITORED

Throughout the complete flash programming of the ORC module.

SET CONDITION

This DTC sets when the ORC detects a failure of the flash programming process in the bootloader mode not allowing the ORC module to enter the application mode. This DTC will not set as a Stored Code.

POSSIBLE CAUSES

Possible Causes
PROXI
OCCUPANT RESTRAINT CONTROLLER (ORC)

Always perform the Pre-Diagnostic Troubleshooting procedure before proceeding. Refer to STANDARD PROCEDURE .

DIAGNOSTIC TEST

1. **DETERMINE ACTIVE DTC**

NOTE: Make sure the battery is fully charged.

1. Turn the ignition on.
2. Wait 12 seconds, then with the scan tool, read all active ORC DTCs.

   Is DTC B2204-00-ECU CONFIGURATION MISMATCH set?

   Yes

   - Go To 2

2. **PERFORM THE ORC MODULE FLASH PROGRAMMING PROCEDURE**

   NOTE: Make sure the battery is fully charged.

   NOTE: Service replacement ORC modules are shipped in a LOCKED OUT state and after installed will set a ORC UNLOCKED - ALL DEPLOYMENT DISABLED fault. Use a diagnostic scan tool to access the ORC module and go to the MISCELLANEOUS FUNCTIONS menu item to perform the MODULE INITIALIZATION procedure to erase the fault and initialize the new replacement ORC.

   1. Perform the ORC Module Flash Programming procedure.

      Did the ORC Module flash programming procedure run 100 percent completely?

      Yes

      - Perform the Restraints System Verification Test. Refer to **STANDARD PROCEDURE** .

      No

      - Go To 3

3. **REPEAT THE ORC MODULE FLASH PROGRAMMING PROCEDURE**
   1. Perform the ORC Module Flash Programming procedure.

      Did the ORC Module flash programming procedure run 100 percent completely?

      Yes

      - Perform the RESTRAINTS SYSTEM VERIFICATION TEST. Refer to **STANDARD PROCEDURE** .

      No

      WARNING: If the Occupant Restraint Controller (ORC) is dropped at any time, it must be replaced. Failure to take the proper precautions

can result in accidental airbag deployment. Failure to follow these instructions may result in possible serious or fatal injury.

WARNING: **Turn the ignition off disconnect the 12-volt battery and wait two minutes before proceeding. Failure to follow these instructions may result in possible serious or fatal injury.**

- Replace the ORC in accordance with Service Information. Refer to **MODULE, OCCUPANT RESTRAINT CONTROLLER, REMOVAL** .
- Perform the RESTRAINTS SYSTEM VERIFICATION TEST. Refer to **STANDARD PROCEDURE** .

B2207-OCCUPANT RESTRAINT CONTROLLER INTERNAL 1

WHEN MONITORED

With the ignition on. The modules on board diagnostics continuously performs internal circuit tests.

SET CONDITION

This DTC will set if the module identifies an out of range internal circuit.

POSSIBLE CAUSES

Possible Causes
OCCUPANT RESTRAINT CONTROLLER (ORC)

DIAGNOSTIC TEST

REPLACE OCCUPANT RESTRAINT CONTROLLER

WARNING: **Turn the ignition off, disconnect the 12-volt battery and wait two minutes before proceeding. Failure to follow these instructions may result in possible serious or fatal injury.**

WARNING: **If the Occupant Restraint Controller (ORC) is dropped at any time, it must be replaced. Failure to follow these instructions may result in possible serious or fatal injury.**

Repair

- Replace the ORC in accordance with Service Information. Refer to **MODULE, OCCUPANT RESTRAINT CONTROLLER, REMOVAL** .
- Perform the RESTRAINT SYSTEM VERIFICATION TEST. Refer to **STANDARD PROCEDURE** .

B2208-OCCUPANT RESTRAINT CONTROLLER INTERNAL 2

WHEN MONITORED

With the ignition on. The modules on board diagnostics continuously performs internal circuit tests.

SET CONDITION

This DTC will set if the module identifies an out of range internal circuit.

POSSIBLE CAUSES

Possible Causes
OCCUPANT RESTRAINT CONTROLLER (ORC)

DIAGNOSTIC TEST

REPLACE OCCUPANT RESTRAINT CONTROLLER

WARNING: Turn the ignition off, disconnect the 12-volt battery and wait two minutes before proceeding. Failure to follow these instructions may result in possible serious or fatal injury.

WARNING: If the Occupant Restraint Controller (ORC) is dropped at any time, it must be replaced. Failure to follow these instructions may result in possible serious or fatal injury.

Repair

- Replace the ORC in accordance with Service Information. Refer to **MODULE, OCCUPANT RESTRAINT CONTROLLER, REMOVAL** .
- Perform the RESTRAINT SYSTEM VERIFICATION TEST. Refer to **STANDARD PROCEDURE** .

B2209-OCCUPANT RESTRAINT CONTROLLER INTERNAL 3

WHEN MONITORED

With the ignition on. The modules on board diagnostics continuously performs internal circuit tests.

SET CONDITION

This DTC will set if the module identifies an out of range internal circuit.

POSSIBLE CAUSES

Possible Causes
OCCUPANT RESTRAINT CONTROLLER (ORC)

DIAGNOSTIC TEST

REPLACE OCCUPANT RESTRAINT CONTROLLER

WARNING: Turn the ignition off, disconnect the 12-volt battery and wait two minutes before proceeding. Failure to follow these instructions may result in possible serious or fatal injury.

WARNING: If the Occupant Restraint Controller (ORC) is dropped at any time, it must be replaced. Failure to follow these instructions may result in possible serious or fatal injury.

Repair

- Replace the ORC in accordance with Service Information. Refer to **MODULE, OCCUPANT RESTRAINT CONTROLLER, REMOVAL** .
- Perform the RESTRAINT SYSTEM VERIFICATION TEST. Refer to **STANDARD PROCEDURE** .

B220A-OCCUPANT RESTRAINT CONTROLLER INTERNAL 4

WHEN MONITORED

With the ignition on. The modules on board diagnostics continuously performs internal circuit tests.

SET CONDITION

This DTC will set if the module identifies an out of range internal circuit.

POSSIBLE CAUSES

Possible Causes
OCCUPANT RESTRAINT CONTROLLER (ORC)

DIAGNOSTIC TEST

REPLACE OCCUPANT RESTRAINT CONTROLLER

WARNING: Turn the ignition off, disconnect the 12-volt battery and wait two minutes before proceeding. Failure to follow these instructions may result in possible serious or fatal injury.

WARNING: If the Occupant Restraint Controller (ORC) is dropped at any time, it must be replaced. Failure to follow these instructions may result in possible serious or fatal injury.

Repair

- Replace the ORC in accordance with Service Information. Refer to **MODULE, OCCUPANT RESTRAINT CONTROLLER, REMOVAL** .
- Perform the RESTRAINT SYSTEM VERIFICATION TEST. Refer to **STANDARD PROCEDURE** .

B220B-OCCUPANT RESTRAINT CONTROLLER FIRING STORED ENERGY

WHEN MONITORED

With the ignition on. The modules on board diagnostics continuously performs internal circuit tests.

SET CONDITION

This DTC will set if the module identifies an out of range internal circuit.

POSSIBLE CAUSES

Possible Causes
OCCUPANT RESTRAINT CONTROLLER (ORC)

DIAGNOSTIC TEST

REPLACE OCCUPANT RESTRAINT CONTROLLER

WARNING: Turn the ignition off, disconnect the 12-volt battery and wait two minutes before proceeding. Failure to follow these instructions may result in possible serious or fatal injury.

WARNING: If the Occupant Restraint Controller (ORC) is dropped at any time, it must be replaced. Failure to follow these instructions may result in possible serious or fatal injury.

Repair

- Replace the ORC in accordance with Service Information. Refer to **MODULE, OCCUPANT RESTRAINT CONTROLLER, REMOVAL** .
- Perform the OCCUPANT CLASSIFICATION MODULE SYSTEM VERIFICATION TEST. Refer to **STANDARD PROCEDURE** .

B222A-00-VEHICLE LINE MISMATCH

For a complete wiring diagram, **refer to appropriate SYSTEM WIRING DIAGRAMS article** .

THEORY OF OPERATION

When powered, the Occupant Restraint Controller (ORC) performs an internal self test. The repair of this fault centers on verifying the ORC and Body Control Module (BCM) configuration.

WHEN MONITORED

The ORC checks its feature configuration for a stored Vehicle Line and Country Code continuously 12 seconds after initialization. The monitoring is continuous and repeats at a rate of every 500 ms.

SET CONDITION

This DTC sets when the ORC detects a mismatch between the Vehicle Configuration and the ORC configuration for four seconds. Once the code sets in this ignition cyle it stays active for this ignition cycle.

POSSIBLE CAUSES

Possible Causes
INCORRECT VEHICLE CONFIGURATION
OCCUPANT RESTRAINT CONTROLLER (ORC)

Always perform the Pre-Diagnostic Troubleshooting procedure before proceeding. Refer to STANDARD PROCEDURE .

DIAGNOSTIC TEST

1. **DETERMINE ACTIVE OR STORED DTC**

   NOTE: Make sure the battery is fully charged.

   1. Turn the ignition on.
   2. Wait 12 seconds, then with the scan tool, read all active ORC DTCs.

      Is the DTC active or stored?

      ORC - ACTIVE DTC

      - Go To 2

      ORC - STORED DTC

      - Perform the RESTRAINTS SYSTEM INTERMITTENT TEST. Refer to **STANDARD PROCEDURE** .

2. **CHECK BCM COUNTRY CODE AND VEHICLE LINE**
   1. Using the scan tool, check for the correct Country Code, Vehicle Line, and Body Style.

      Does the Vehicle Configuration in the BCM match the Vehicle Configuration in the ORC?

      Yes

      WARNING: **If the Occupant Restraint Controller (ORC) is dropped at any time, it must be replaced. Failure to take the proper precautions can result in accidental airbag deployment. Failure to follow these instructions may result in possible serious or fatal injury.**

      WARNING: **Turn the ignition off disconnect the 12-volt battery and wait two minutes before proceeding. Failure to follow these instructions may result in possible serious or fatal injury.**

      - Replace the ORC in accordance with Service Information. Refer to **MODULE, OCCUPANT RESTRAINT CONTROLLER, REMOVAL** .
      - Perform the RESTRAINTS SYSTEM VERIFICATION TEST. Refer to **STANDARD PROCEDURE** .

      No

      - Perform the RESTRAINTS SYSTEM VERIFICATION TEST. Refer to **STANDARD PROCEDURE** .

B2255-00-OCCUPANT RESTRAINT CONTROLLER ROLL-OVER FEATURE DISABLE

THEORY OF OPERATION

When powered, the Occupant Restraint Controller (ORC) performs an internal self test. The repair of this fault does not involve any external circuitry and centers on verifying the module is configured correctly for the vehicle's restraint system components.

WHEN MONITORED

This DTC occurrence sets upon receiving the message.

SET CONDITION

This DTC sets when the ORC detects the roll over feature has been disabled contrary to the correct vehicle configuration or has been disabled with the scan tool. This DTC can only be Active.

POSSIBLE CAUSES

Possible Causes
OCCUPANT RESTRAINT CONTROLLER (ORC)

Always perform the Pre-Diagnostic Troubleshooting procedure before proceeding. Refer to STANDARD PROCEDURE .

DIAGNOSTIC TEST

OCCUPANT RESTRAINT CONTROLLER ROLL OVER FEATURE DISABLED

1. Turn the ignition on.
2. With the scan tool read the ORC Roll Over Feature status Enabled or Disabled.

   Does the scan tool show Roll Over Feature Disabled?

   Repair

   - With the scan tool select Enable to clear the active B2255 DTC.
   - Perform the RESTRAINTS SYSTEM VERIFICATION TEST. Refer to **STANDARD PROCEDURE** .

B2722-00-ORC UNLOCKED - ALL DEPLOYMENT DISABLED

THEORY OF OPERATION

All Occupant Restraint Controller (ORC) modules destined for service part usage are shipped in a state that inhibits the deployment of all supplemental restraint squib circuits (ORC unlocked) for safe, initial installation. Once the ORC initialization procedure is performed (ORC locked). The ORC enters a full state of readiness and can no longer transition to the unlocked status.

WHEN MONITORED

The ORC will detect the Deployment Disable Status (ORC LOCKED, ORC UNLOCKED or ORC IS RESPONDING WITH INCORRECT DATA) as soon as the ignition is turned on and the power is supplied to the new ORC.

SET CONDITION

This DTC will be set as active for all service replacement ORC modules prior to the initialization procedure (ORC locked). This DTC is Active within four to six seconds for the ORC unlocked state at start up. The DTC will change from Active to non Active state immediately upon the ORC state changing to locked. The ORC module will not show this DTC as Stored. It will just not show the DTC in a Stored state. Supply voltage range is 9 - 16 volts.

POSSIBLE CAUSES

Possible Causes
UNLOCKED OCCUPANT RESTRAINT CONTROLLER (ORC) Module

Always perform the Pre-Diagnostic Troubleshooting procedure before proceeding. Refer to STANDARD PROCEDURE .

DIAGNOSTIC TEST

1. **CHECK FOR ADDITIONAL ACTIVE ORC DTCS**

   NOTE: Make sure the battery is fully charged.

   1. Turn the ignition on.
   2. With the scan tool, read the active ORC DTC.

      Is B2722-ORC UNLOCKED - ALL DEPLOYMENT DISABLED the only active DTC?

      Yes

      - Go To 2

      No

      - Select the appropriate diagnostic procedure from the Table of Contents in this section. Refer to **DIAGNOSIS AND TESTING** .
2. **INITIALIZE ORC**
   1. With the scan tool, select Initialize ORC.
   2. The Scan Tool will display the current Deployment Disable Status (CURRENT STATUS)

      Select the CURRENT STATUS displayed on the Scan Tool.

      CURRENT STATUS

      - LOCKED
      - The ORC is in a full state of readiness.
      - Perform the RESTRAINTS SYSTEM VERIFICATION TEST. Refer to **STANDARD PROCEDURE** .

      CURRENT STATUS

      - UNLOCKED
      - Go To 3

      CURRENT STATUS

- ORC is Responding with incorrect Data
- With the scan tool, select MISC. FUNCTION and then ORC RESET.
- After the ORC RESET is complete: Restart this test at step 1.
- Go To 1

3. **CHANGE ORC STATUS**
   1. Follow the instruction on the screen to change the status to LOCKED.
   2. The Scan Tool will display the result of the initialization.

   Does the Scan Tool display: ORC LOCK Successful?

   Yes

   - CURRENT STATUS is ORC LOCK Successful
   - Perform the RESTRAINTS SYSTEM VERIFICATION TEST. Refer to **STANDARD PROCEDURE** .

   No

   - Go To 4

4. **INCOMPLETE OR FAILED ORC INITIALIZATION**

   Does the Scan Tool display: ORC Initialization Failed?

   Yes

   - CURRENT STATUS is ORC Initialization Failed

     WARNING: **Turn the ignition off disconnect the 12-volt battery and wait two minutes before proceeding. Failure to follow these instructions may result in possible serious or fatal injury.**

     WARNING: **If the Occupant Restraint Controller (ORC) is dropped at any time, it must be replaced. Failure to take the proper precautions can result in accidental airbag deployment. Failure to follow these instructions may result in possible serious or fatal injury.**

   -
   -
   - Replace the ORC in accordance with service information. Refer to **MODULE, OCCUPANT RESTRAINT CONTROLLER, REMOVAL** .
   - Perform the RESTRAINTS SYSTEM VERIFICATION TEST. Refer to **STANDARD PROCEDURE** .

   No

- CURRENT STATUS is Current and original VIN have not been learned by ORC
- With the scan tool, select MISC. FUNCTION and then ORC RESET.
- After the ORC RESET is complete: Restart this test at step 1.
- Go To 1

B2734-13-PASSENGER OCCUPANT DETECTION SENSOR - CIRCUIT OPEN

For a complete wiring diagram, **refer to appropriate SYSTEM WIRING DIAGRAMS article** .

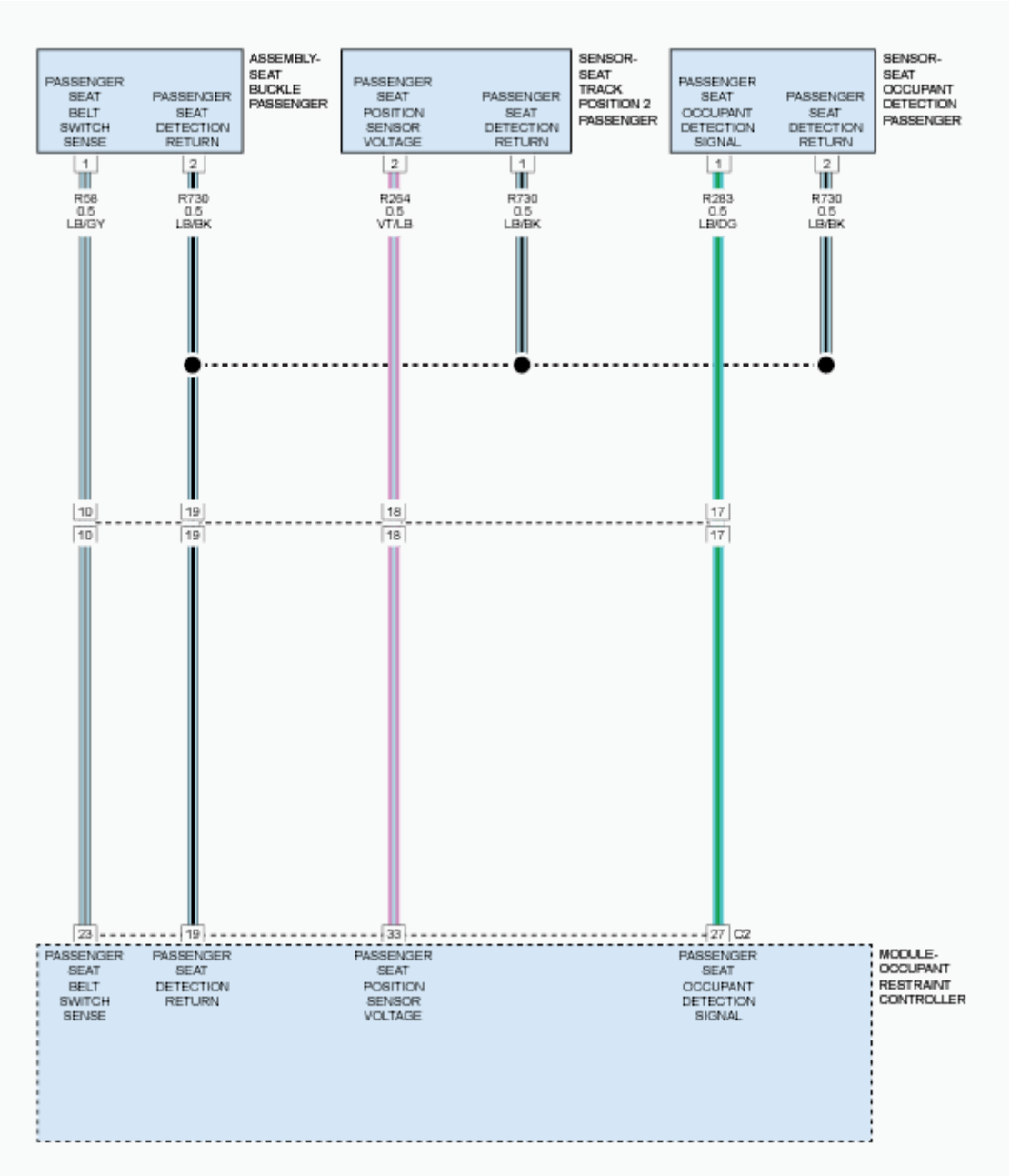

Fig. 5: Passenger Seatbelt, Seat Track Position & Occupant Detection Sensor Circuit Diagram

Courtesy of CHRYSLER GROUP, LLC

THEORY OF OPERATION

The Occupant Detection Sensor (ODS) is a electrical resistance mat with cells that is located in the front passenger seat. This sensor is only used for passenger seatbelt reminder. The seat sensor assumes a passenger is present when a minimum of 103 pounds (47kg) of weight is placed in the seat the resistance will show 214 ohms. When a package or no person is occupying the passenger seat the resistance range will be between 701 and 1.5k ohms. The resistance of the mat decreases, signaling to the ORC module that a passenger is present. The ORC then transmits this information to the instrument cluster over the CAN bus. The passenger is only reminded to buckle up if the passenger seat occupant minimum weight threshold determined by the ODS is surpassed and the seat belt buckle is still not latched. The ODS receives battery voltage and clean ground through dedicated sensor plus and minus circuits from the ORC. The ORC receives, processes, and continuously monitors (monitor rate of 500 ms) the analog signal from the ODS. The ODS component is not repairable, if determined inoperable, it would require to be replaced with a new component. The seatbelt warning lamp will not set for this fault.

WHEN MONITORED

The ORC receives, processes, and continuously monitors (monitor rate of 500 ms) the analog signal from the ODS.

SET CONDITION

The ORC detects High voltage on the (R283) Passenger Occupant Detector Sensor Signal circuit for 2.5 - 5 seconds. The DTC will not latch for the entire ignition cycle. The code goes from Active to Stored 2.5 - 5 seconds after the code setting criteria is gone. This code also covers the Open, and Short to Ground fault. The Occupant Detector Signal Circuit will default to a unoccupied status with the open or short to battery, and short to ground fault.

POSSIBLE CAUSES

Possible Causes
(R283) PASSENGER OCCUPANT DETECTOR SIGNAL CIRCUIT OPEN
(R283) PASSENGER OCCUPANT DETECTOR SIGNAL CIRCUIT SHORTED TO VOLTAGE
(R283) PASSENGER SEAT OCCUPANT DETECTOR SIGNAL CIRCUIT SHORTED TO GROUND
PASSENGER SEAT OCCUPANT DETECTOR GROUND CIRCUIT OPEN
(R283) PASSENGER SEAT OCCUPANT DETECTOR SIGNAL CIRCUIT SHORTED TO THE PASSENGER SEAT OCCUPANT DETECTOR GROUND CIRCUIT
PASSENGER SEAT OCCUPANT DETECTION SENSOR
OCCUPANT RESTRAINT CONTROLLER (ORC)

Always Perform the Pre-Diagnostic Troubleshooting procedure before proceeding. Refer to STANDARD PROCEDURE .

DIAGNOSTIC TEST

1. **VERIFY ACTIVE DTC**

NOTE: **The seat belt warning lamp in the instrument cluster does not set to indicate a passenger seat belt reminder feature.**

NOTE: **The use of a approved special tool or Digital Multimeter such as a Fluke Meter that will not apply more than 20 milliamperes to a circuit are the only measurement tools to be used.**

1. **VERIFY ACTIVE DTC**

NOTE: **Make sure the battery is fully charged.**

2. Turn the ignition on.
3. With the scan tool, read the ORC DTCs

NOTE: **Diagnosing for the high code but also will be checking for an Open fault in both the (R283) signal and ground circuits.**

Does the scan tool display active B2734-13-PASSENGER OCCUPANT DETECTION SENSOR - CIRCUIT OPEN - DTC?

Yes

- Go To 2

No

- Perform the RESTRAINTS SYSTEM INTERMITTENT TEST. Refer to **STANDARD PROCEDURE** .

2. **CHECK THE (R283) PASSENGER OCCUPANT DETECTOR SIGNAL CIRCUIT FOR A SHORT TO VOLTAGE**

NOTE: **Repair of the wiring is only to be done on the seat body harness side of the connector. If the wiring fault is in the component side of the wiring harness routed into the seat cushion a ODS sensor replacement is to be performed.**

WARNING: **Turn the ignition off, disconnect the 12-volt battery and wait two minutes before proceeding. Failure to follow these instructions may result in possible serious or fatal injury.**

1. Keep the Passenger Occupant Detector Sensor harness connector in the seat cushion connected.

2. Keep the passenger inline harness underseat connector connected.
3. Keep the Occupant Detection Sensor (ODS) in the passenger seat cushion connected.
4. Disconnect the ORC harness connectors.

NOTE: Check connectors - Clean and repair as necessary.

5. Connect the (special tool #8443-57, Adapter, Supplemental Restraint System Load Tool)to the ORC harness connectors.
6. If equipped with the standard key ignition, use this ignition on warning.
7. If equipped with the keyless ignition, use this ignition on warning.

WARNING: Disconnect the 12-volt battery wait two minutes before proceeding, remove the ORC fuses, connect the 12-volt battery, wait two minutes before proceeding. Cycle the ignition to the On position, then reconnect the ORC fuses. Wait two minutes before proceeding. Failure to follow these instructions may result in possible serious or fatal injury.

8. Measure the voltage of the (R283) Passenger Occupant Detection Signal circuit between the(special tool #8443-57, Adapter, Supplemental Restraint System Load Tool) connector C1B cavity 27 and connector C1B cavity 19 R730 ground.

   Is there any voltage present?

   Yes

NOTE: The ODS sensor is to be replaced whenever a short to voltage fault has been found in the ODS harness even after the harness repair has been performed.

WARNING: Turn the ignition off disconnect the 12-volt battery and wait two minutes before proceeding. Failure to follow these instructions may result in possible serious or fatal injury.

- Repair the (R283) Passenger Occupant Detector Signal circuit for a short to voltage.
- Replace the ODS sensor in accordance with the Service Information.
- Follow the WiTech Scan Tool Miscellaneous Function / Empty Seat Value Relearn and perform a Rezeroing of the OCM.
- Perform the RESTRAINTS SYSTEM VERIFICATION TEST. Refer to **STANDARD PROCEDURE** .

No

- Go To 3

3. **CHECK THE (R283) PASSENGER OCCUPANT DETECTOR SIGNAL CIRCUIT FOR A SHORT TO VOLTAGE BETWEEN THE ORC AND THE PASSENGER INLINE UNDERSEAT CONNECTOR**

WARNING: Turn the ignition off disconnect the 12-volt battery and wait two minutes before proceeding. Failure to follow these instructions may result in possible serious or fatal injury.

NOTE: Check connectors - Clean/Repair as necessary.

1. Disconnect the passenger underseat harness connector.
2. If equipped with the standard key ignition, use this ignition on warning.

WARNING: Turn the ignition on, then reconnect the 12-volt battery and wait two minutes before proceeding. Failure to follow these instructions may result in possible serious or fatal injury.

3. If equipped with the keyless ignition, use this ignition on warning.

WARNING: Disconnect the 12-volt battery wait two minutes before proceeding, remove the ORC fuses, connect the 12-volt battery, wait two minutes before proceeding. Cycle the ignition to the On position, then reconnect the ORC fuses. Wait two minutes before proceeding. Failure to follow these instructions may result in possible serious or fatal injury.

4. Measure the voltage between the common (R730) Ground circuit at connector C1B cavity 19 and the (R283) Passenger Occupant Detector Signal circuit at connector C1B cavity 27 of the (special tool #8443-57, Adapter, Supplemental Restraint System Load Tool).

   Is there voltage present?

   Yes

NOTE: The ODS sensor is to be replaced whenever a short to voltage fault has been found in the ODS harness even after the harness repair has been performed.

WARNING: Turn the ignition off disconnect the 12-volt battery and wait two minutes before proceeding. Failure to follow these instructions may result in possible serious or fatal injury.

- Repair the short to voltage in the (R283) Passenger Occupant Detector Signal circuit located

between the ORC and the passenger underseat jumper harness connector.

- Replace the ODS Sensor in accordance with the Service Information.
- Perform the RESTRAINTS SYSTEM VERIFICATION TEST. Refer to **STANDARD PROCEDURE** .

No

- Go To 4

4. **CHECK THE (R283) PASSENGER OCCUPANT DETECTOR SENSOR SIGNAL CIRCUIT FOR A SHORT TO VOLTAGE IN THE UNDERSEAT JUMPER HARNESS**

WARNING: Turn the ignition off disconnect the 12-volt battery and wait two minutes before proceeding. Failure to follow these instructions may result in possible serious or fatal injury.

1. Connect the passenger seat underseat connector.

NOTE: Confirm the connector is seated firmly and the lock tab is fully seated.

2. Access the Passenger Occupant Detector Sensor (ODS) harness connector located at the passenger seat cushion.
3. Disconnect the Passenger Occupant Detector Sensor (ODS) harness connector.
4. If equipped with the standard key ignition, use this ignition on warning.

WARNING: Turn the ignition on, then reconnect the 12-volt battery and wait two minutes before proceeding. Failure to follow these instructions may result in possible serious or fatal injury.

5. If equipped with the keyless ignition, use this ignition on warning.

WARNING: Disconnect the 12-volt battery wait two minutes before proceeding, remove the ORC fuses, connect the 12-volt battery, wait two minutes before proceeding. Cycle the ignition to the On position, then reconnect the ORC fuses. Wait two minutes before proceeding. Failure to follow these instructions may result in possible serious or fatal injury.

6. Measure the voltage between common (R730) Ground circuit at connector C1B cavity 19 and the (R283) Passenger Occupant Detector Signal circuit at connector C1B cavity 27 of the (special tool #8443-57, Adapter, Supplemental Restraint System Load Tool).

   Is there voltage present?

Yes

NOTE: The ODS sensor is to be replaced whenever a short to voltage fault has been found in the ODS harness even after the harness repair has been performed.

WARNING: Turn the ignition off disconnect the 12-volt battery and wait two minutes before proceeding. Failure to follow these instructions may result in possible serious or fatal injury.

- Repair the short to voltage in the (R283) Passenger Occupant Detector Signal Circuit located between the passenger underseat connector and the Passenger Occupant Detector Sensor connector.
- Replace the ODS Sensor in accordance with the Service Information.
- Perform the RESTRAINTS SYSTEM VERIFICATION TEST. Refer to **STANDARD PROCEDURE** .

No

- Go To 5

5. **CHECK THE (R283) PASSENGER OCCUPANT DETECTOR SENSOR SIGNAL CIRCUIT AND (R730) ORC COMMON GROUND CIRCUIT FOR AN OPEN OR HIGH RESISTANCE BETWEEN THE ORC AND THE PASSENGER UNDERSEAT HARNESS CONNECTOR**

WARNING: Turn the ignition off disconnect the 12-volt battery and wait two minutes before proceeding. Failure to follow these instructions may result in possible serious or fatal injury.

1. Disconnect the passenger underseat harness connector.
2. Measure the resistance of the (R283) Occupant Detector Sensor Signal circuit from the inline underseat harness connector to the (special tool #8443-57, Adapter, Supplemental Restraint System Load Tool) connector C1B cavity 27.
3. Measure the resistance of the (R730) Ground circuit from the inline underseat harness connector to the (special tool #8443-57, Adapter, Supplemental Restraint System Load Tool) connector C1B cavity 19.

Is the resistance below 700 Ohms?

Yes

- Go To 6

No

- Repair the (R283) Occupant Detector Sensor Signal circuit or Ground circuit for an open or high resistance.
- Perform the RESTRAINTS SYSTEM VERIFICATION TEST. Refer to **STANDARD PROCEDURE** .

6. **CHECK THE (R283) PASSENGER OCCUPANT DETECTOR SENSOR SIGNAL CIRCUIT AND (R730) PASSENGER OCCUPANT DETECTOR GROUND CIRCUIT FOR AN OPEN OR HIGH RESISTANCE IN THE SEATBACK JUMPER HARNESS**

WARNING: Turn the ignition off disconnect the 12-volt battery and wait two minutes before proceeding. Failure to follow these instructions may result in possible serious or fatal injury.

1. Reconnect the underseat harness connector.

NOTE: Inspect terminal pins and verify the underseat harness connector is fully seated correctly and that the connector locking tab is correctly in place.

2. Access the Passenger Occupant Detector Sensor located in the passenger seat cushion.
3. Disconnect the Passenger Occupant Detector Sensor harness connector.
4. Measure the resistance of the (R283) Occupant Detector Sensor Signal circuit from cavity 1 of the ODS connector to the C1B connector (special tool #8443-57, Adapter, Supplemental Restraint System Load Tool)cavity 27.
5. Measure the resistance of the Occupant Detector Sensor (R730) Ground circuit from cavity 2 of the ODS connector to connector C1B cavity 19 of the (special tool #8443-57, Adapter, Supplemental Restraint System Load Tool).

Is the resistance below 700 Ohms?

Yes

- Go To 7

No

NOTE: Repair of the wiring is only to be done on the seat body harness side of the connector. If the wiring fault is in the component side of the wiring harness routed into the seat cushion a ODS sensor replacement is to be performed.

- Repair the (R283) Passenger Occupant Detector Signal circuit or R730 Ground circuit in the body harness for an open or high resistance.
- Perform the RESTRAINTS SYSTEM VERIFICATION TEST. Refer to **STANDARD PROCEDURE** .

7. **CHECK THE (R283) PASSENGER OCCUPANT DETECTOR SENSOR SIGNAL CIRCUIT AND PASSENGER OCCUPANT DETECTOR SENSOR GROUND CIRCUIT FOR AN OPEN OR HIGH RESISTANCE WITH THE ODS HARNESS FULLY CONNECTED**

NOTE: Confirm the connector is seated firmly and the lock tab is fully seated.

1. Connect the Occupant Detector Sensor (ODS), verify all in-line connections are secure.
2. Measure the resistance of the (R283) Passenger Occupant Detector Signal circuit connector C1B cavity 27 to the (Z913) Ground circuit connector C1A cavity 30(special tool #8443-57, Adapter, Supplemental Restraint System Load Tool).

   Is the resistance below 700 Ohms?

   Yes

   WARNING: Turn the ignition on, then reconnect the 12-volt battery and wait two minutes before proceeding. Failure to follow these instructions may result in possible serious or fatal injury.

   - Turn the ignition Off and wait 15 seconds before turning the ignition On.
   - Wait one minute and read active codes.
   - If the B2734-13-PASSENGER OCCUPANT DETECTION SENSOR - CIRCUIT OPEN becomes active, replace the ORC in accordance with the Service Information. Refer to **MODULE, OCCUPANT RESTRAINT CONTROLLER, REMOVAL** .

   No

   - Go To 8

8. **CHECK OPERATION OF THE PASSENGER OCCUPANT DETECTOR SENSOR**

WARNING: Turn the ignition off disconnect the 12-volt battery and wait two minutes before proceeding. Failure to follow these instructions may result in possible serious or fatal injury.

1. Replace the Passenger Occupant Detector Sensor in accordance with the Service Information.
2. Remove any special tools or jumper wires and reconnect all previously disconnected components - except the Battery.
3. If equipped with the standard key ignition, use this ignition on warning.

WARNING: Turn the ignition on, then reconnect the 12-volt battery and wait two minutes before proceeding. Failure to follow these instructions may result in possible serious or fatal injury.

4. If equipped with the keyless ignition, use this ignition on warning.

   WARNING: **Disconnect the 12-volt battery wait two minutes before proceeding, remove the ORC fuses, connect the 12-volt battery, wait two minutes before proceeding. Cycle the ignition to the On position, then reconnect the ORC fuses. Wait two minutes before proceeding. Failure to follow these instructions may result in possible serious or fatal injury.**

5. Connect the scan tool to the Data Link Connector - use the most current software available.
6. Use the scan tool and erase the ORC stored codes.
7. Turn the Ignition Off and wait 15 seconds before turning the Ignition On.
8. Wait one minute and read active codes and if there are none present read the stored codes.

   Does the scan tool display active B2734-13-PASSENGER OCCUPANT DETECTION SENSOR - CIRCUIT OPEN DTC?

   Yes

   WARNING: **Turn the ignition off, disconnect the 12-volt battery and wait two minutes before proceeding. Failure to follow these instructions may result in possible serious or fatal injury.**

   WARNING: **If the Occupant Restraint Controller (ORC) is dropped at any time, it must be replaced. Failure to follow these instructions may result in possible serious or fatal injury.**

   - Replace the ORC in accordance with the Service Information. Refer to **MODULE, OCCUPANT RESTRAINT CONTROLLER, REMOVAL** .
   - Perform the RESTRAINTS SYSTEM VERIFICATION TEST. Refer to **STANDARD PROCEDURE** .

   No

   - Repair is complete.
   - Perform the RESTRAINTS SYSTEM VERIFICATION TEST. Refer to **STANDARD PROCEDURE** .

B2734-95-PASSENGER OCCUPANT DETECTION SENSOR - INCORRECT ASSEMBLY

For a complete wiring diagram, **refer to appropriate SYSTEM WIRING DIAGRAMS article** .

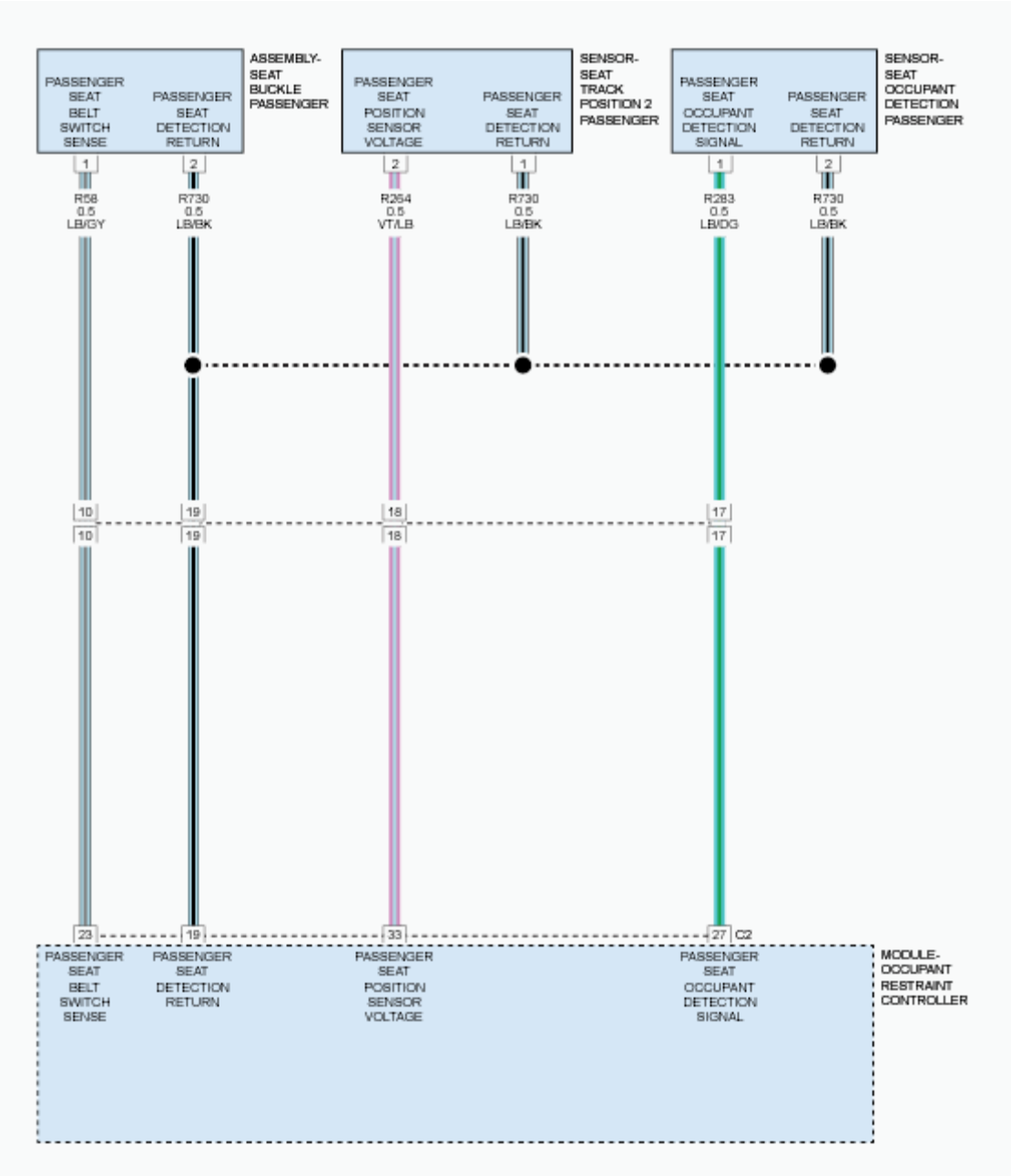

Fig. 6: Passenger Seatbelt, Seat Track Position & Occupant Detection Sensor Circuit Diagram
Courtesy of CHRYSLER GROUP, LLC

THEORY OF OPERATION

When powered, the Occupant Restraint Controller (ORC) sends a test current to the passenger occupant detection sensor. During this test, the sensor discovered are checked for agreement with the pre-programmed configuration of components assigned to the module.

WHEN MONITORED

The ORC checks for the presence of occupant detection sensor circuits once during the initialization process.

SET CONDITION

This DTC sets when the ORC detects the presence of a occupant detection sensor circuit while the configuration of the module does not reflect a occupant detection sensor should be present. Once set, this DTC is latched for the entire power cycle and requires the module to be re-initalized to set code.

POSSIBLE CAUSES

Possible Causes
PASSENGER OCCUPANT DETECTION SENSOR
WIRING
OCCUPANT RESTRAINT CONTROLLER (ORC)

Always perform the Pre-Diagnostic Troubleshooting procedure before proceeding. Refer to STANDARD PROCEDURE .

DIAGNOSTIC TEST

1. **CHECK FOR ACTIVE INTERNAL FAULTS, IGNITION FAULTS, AND BATTERY FAULTS IN THE OCCUPANT RESTRAINT CONTROLLER (ORC)**

   NOTE: Make sure the battery is fully charged.

   1. With the scan tool, read Occupant Restraint Controller (ORC) DTCs.

      Does the scan tool display any active DTCs relating to internal faults, ignition faults, or battery faults?

      Yes

      - Diagnose and repair the DTCs. Refer to **DIAGNOSIS AND TESTING** .

      No

      - Go To 2

2. **VERIFY THAT B2734-95-PASSENGER OCCUPANT DETECTION SENSOR - INCORRECT ASSEMBLY IS ACTIVE**
   1. With the scan tool, erase ORC DTCs.
   2. Turn the ignition off, wait 10 seconds and then turn the ignition on.
   3. Wait 2 minutes, and then with the scan tool, read ORC DTCs.

      Does the scan tool display active: B2734-95-PASSENGER OCCUPANT DETECTION SENSOR - INCORRECT ASSEMBLY?

Yes

- Go To 3

No

- Perform the RESTRAINTS SYSTEM VERIFICATION TEST. Refer to **STANDARD PROCEDURE** .

3. **VERIFY WIRING**
   1. Turn the ignition off.
   2. Inspect the passenger seat wiring for Passenger Occupant Detection Sensor.

   Is Passenger Occupant Detection Sensor present?

   Yes

   WARNING: Turn the ignition off, disconnect the battery and wait two minutes before proceeding. Failure to follow these instructions may result in possible serious or fatal injury.

   WARNING: If the Occupant Restraint Controller (ORC) is dropped at any time, it must be replaced. Failure to take the proper precautions can result in accidental airbag deployment.

   - Replace the ORC in accordance with the Service Information. Refer to **MODULE, OCCUPANT RESTRAINT CONTROLLER, REMOVAL** .
   - Perform the RESTRAINTS SYSTEM VERIFICATION TEST. Refer to **STANDARD PROCEDURE** .

   No

   - Perform the RESTRAINTS SYSTEM VERIFICATION TEST. Refer to **STANDARD PROCEDURE** .

B2761-96-LEFT B-PILLAR IMPACT ACCELERATION SENSOR - COMPONENT INTERNAL FAILURE

For a complete wiring diagram, **refer to appropriate SYSTEM WIRING DIAGRAMS article** .

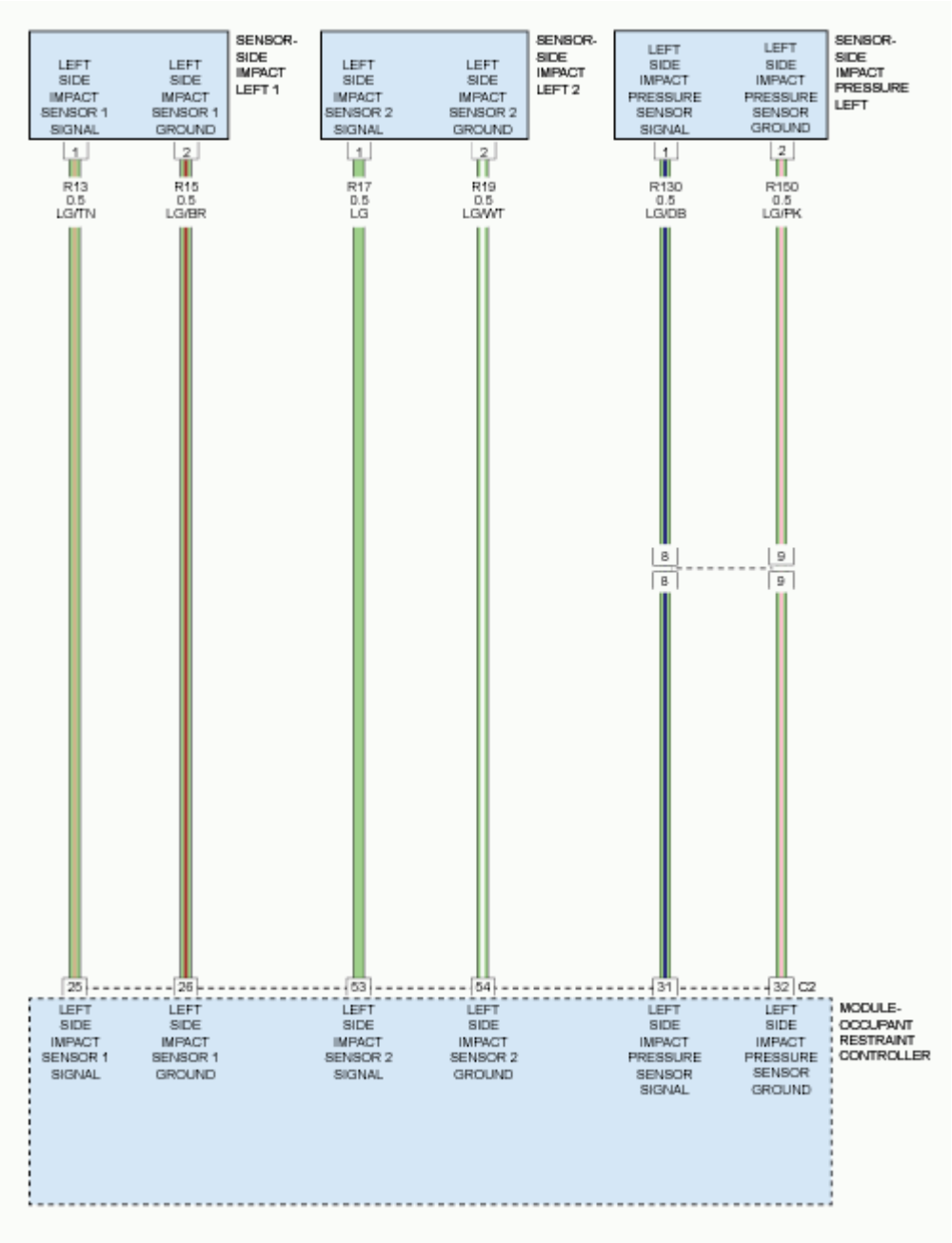

Fig. 7: Left Impact Sensor Circuit Diagram
Courtesy of CHRYSLER GROUP, LLC

THEORY OF OPERATION

The Left Side Impact Sensor 1 is mounted near the base of the B-pillar. Refer to **DESCRIPTION** . Impact sensors perform their own self test using power supplied by the Occupant Restraint Controller (ORC) then communicate this status back to the module. The repair of this fault centers on verifying the integrity of the sensor's internal circuitry and software validity.

WHEN MONITORED

The Occupant Restraint Controller (ORC) continuously communicates with the Left Side Impact Sensor 1 over the sensor signal circuit. The sensor communication and on board diagnostics are powered by the ORC signal.

SET CONDITION

This code will set, if the ORC and the Left Side Impact Sensor 1 do not establish and maintain valid data communications. The DTC will become Active after the fault has set for a minimum of 100 milliseconds (ms). The DTC will go to Stored after the ORC Left Side r Impact Sensor 1 communication fault has been removed or the suspect sensor has been replaced. The clearing of this fault is immediate upon the suspect internal error being removed or the suspect sensor being replaced. The Airbag Warning Lamp (AWL) will set in the instrument cluster.

POSSIBLE CAUSES

Possible Causes
INTERMITTENT CONNECTION (WIRING/CONNECTORS)
LEFT SIDE IMPACT SENSOR 1
OCCUPANT RESTRAINT CONTROLLER (ORC)

Always Perform the Pre-Diagnostic Troubleshooting procedure before proceeding. Refer to STANDARD PROCEDURE .

DIAGNOSTIC TEST

1. **DETERMINE ACTIVE OR STORED FAULT CODE**
   1. Turn the ignition on.

      NOTE: Make sure the battery is fully charged.

   2. With the scan tool, read the active ORC DTCs.

      Is the DTC: B2761-96-LEFT B-PILLAR IMPACT ACCELERATION SENSOR - COMPONENT INTERNAL FAILURE - Active?

      Yes

      WARNING: Turn the ignition off disconnect the 12-volt battery and wait two minutes before proceeding. Failure to follow these instructions may result in possible serious or fatal injury.

      NOTE: Inspect the related wiring harness for chafed, pierced, pinched, and partially broken wires. Also, inspect the related connectors for broken, bent, pushed out, spread, corroded, or contaminated terminals. Repair as necessary. Recheck for active DTC B2761-96-LEFT B-PILLAR IMPACT ACCELERATION SENSOR - COMPONENT

INTERNAL FAILURE. If active go to 2 if stored then repair is complete.

- Perform the RESTRAINTS SYSTEM VERIFICATION TEST.

  Refer to **STANDARD PROCEDURE** .

No

- Perform the RESTRAINTS SYSTEM INTERMITTENT TEST. Refer to **STANDARD PROCEDURE** .

2. **VERIFY OPERATION OF THE LEFT SIDE IMPACT SENSOR 1**

WARNING: **Turn the ignition off, disconnect the 12-volt battery and wait two minutes before proceeding. Failure to follow these instructions may result in possible serious or fatal injury.**

1. Replace the Left Side Impact Sensor 1 in accordance with the Service Information. Refer to **SENSOR, IMPACT, REMOVAL** .
2. Reconnect the vehicle wire harness to the sensor.
3. Remove any special tools or jumper wires and reconnect all previously disconnected components - except the Battery.
4. If equipped with the standard key ignition, use this ignition on warning.

WARNING: **Turn the ignition on, then reconnect the 12-volt battery and wait two minutes before proceeding. Failure to follow these instructions may result in possible serious or fatal injury.**

If equipped with the keyless ignition, use this ignition on warning.

WARNING: **Disconnect the 12-volt battery wait two minutes before proceeding, remove the ORC fuses, connect the 12-volt battery, wait two minutes before proceeding. Cycle the ignition to the On position, then reconnect the ORC fuses. Wait two minutes before proceeding. Failure to follow these instructions may result in possible serious or fatal injury.**

5. Use the scan tool and erase the stored codes in all airbag system modules.
6. Turn the Ignition Off, and wait 15 seconds before turning the Ignition On.
7. With the scan tool, read the active ORC DTCs.

   Did the active DTC: B2761-96-LEFT B-PILLAR IMPACT ACCELERATION SENSOR - COMPONENT INTERNAL FAILURE return?

Yes

- Go To 3

No

- Repair is complete.
- Perform the RESTRAINTS SYSTEM VERIFICATION TEST. Refer to **STANDARD PROCEDURE** .

3. **REPLACE THE OCCUPANT RESTRAINT CONTROLLER**

WARNING: **Turn the ignition off, disconnect the 12-volt battery and wait two minutes before proceeding. Failure to follow these instructions may result in possible serious or fatal injury.**

WARNING: **If the Occupant Restraint Controller (ORC) is dropped at any time, it must be replaced. Failure to take the proper precautions can result in accidental airbag deployment. Failure to follow these instructions may result in possible serious or fatal injury.**

If there are no possible causes remaining, view repair

Repair

- Replace the ORC in accordance with the Service Information. Refer to **MODULE, OCCUPANT RESTRAINT CONTROLLER, REMOVAL** .
- Perform the RESTRAINTS SYSTEM VERIFICATION TEST. Refer to **STANDARD PROCEDURE** .

B2762-96-LEFT C PILLAR IMPACT ACCELERATION SENSOR - COMPONENT INTERNAL FAILURE

For a complete wiring diagram, **refer to appropriate SYSTEM WIRING DIAGRAMS article** .

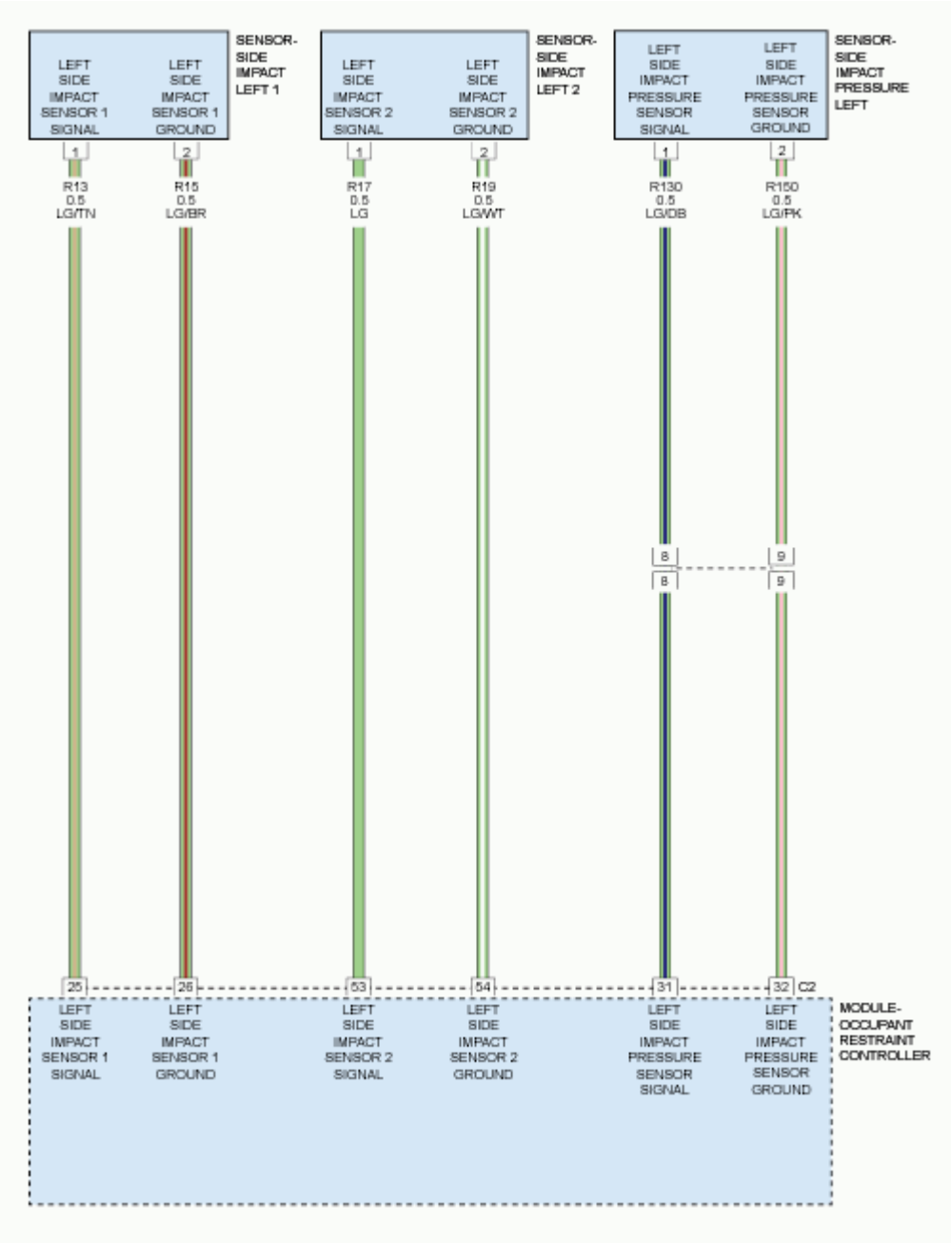

Fig. 8: Left Impact Sensor Circuit Diagram
Courtesy of CHRYSLER GROUP, LLC

THEORY OF OPERATION

The Left Side Impact Sensor 2 is mounted near the base of the C-pillar. Refer to **DESCRIPTION** . Impact sensors perform their own self test using power supplied by the Occupant Restraint Controller (ORC) then communicate this status back to the module. The repair of this fault centers on verifying the integrity of the sensor's internal circuitry and software validity.

WHEN MONITORED

The Occupant Restraint Controller (ORC) continuously communicates with the Left Side Impact Sensor 2 over the sensor signal circuit. The sensor communication and on board diagnostics are powered by the ORC signal.

SET CONDITION

This code will set, if the ORC and the Left Side Impact Sensor 2 do not establish and maintain valid data communications. The DTC will become Active after the fault has set for a minimum of 100 milliseconds (ms). The DTC will go to Stored after the ORC Left Side Impact Sensor 2 communication fault has been removed or the suspect sensor has been replaced. The clearing of this fault is immediate upon the suspect internal error being removed or the suspect sensor being replaced. The Airbag Warning Lamp (AWL) will set in the instrument cluster

POSSIBLE CAUSES

Possible Causes
INTERMITTENT CONNECTION (WIRING/CONNECTORS)
LEFT SIDE IMPACT SENSOR 2
OCCUPANT RESTRAINT CONTROLLER (ORC)

Always Perform the Pre-Diagnostic Troubleshooting procedure before proceeding. Refer to STANDARD PROCEDURE .

DIAGNOSTIC TEST

1. **DETERMINE ACTIVE OR STORED FAULT CODE**
   1. Turn the ignition on.

      NOTE: Make sure the battery is fully charged.

   2. With the scan tool, read the active ORC DTCs.

      Is the DTC: B2762-96-LEFT C-PILLAR IMPACT ACCELERATION SENSOR - COMPONENT INTERNAL FAILURE- Active?

      Yes

      WARNING: Turn the ignition off disconnect the 12-volt battery and wait two minutes before proceeding. Failure to follow these instructions may result in possible serious or fatal injury.

      NOTE: Inspect the related wiring harness for chafed, pierced, pinched, and partially broken wires. Also, inspect the related connectors for broken, bent, pushed out, spread, corroded, or contaminated terminals. Repair as necessary. Recheck for active DTC B2762-96-LEFT C-PILLAR IMPACT ACCELERATION SENSOR - COMPONENT

INTERNAL FAILURE. If active go to 2 if stored then repair is complete.

- Perform the RESTRAINTS SYSTEM VERIFICATION TEST.

  Refer to **STANDARD PROCEDURE** .

No

- Perform the RESTRAINTS SYSTEM INTERMITTENT TEST. Refer to **STANDARD PROCEDURE** .

2. **VERIFY OPERATION OF THE LEFT SIDE IMPACT SENSOR 2**

WARNING: **Turn the ignition off, disconnect the 12-volt battery and wait two minutes before proceeding. Failure to follow these instructions may result in possible serious or fatal injury.**

1. Replace the Left Side Impact Sensor 2 in accordance with the Service Information. Refer to **SENSOR, IMPACT, REMOVAL** .
2. Reconnect the vehicle wire harness to the sensor.
3. Remove any special tools or jumper wires and reconnect all previously disconnected components - except the Battery.
4. If equipped with the standard key ignition, use this ignition on warning.

WARNING: **Turn the ignition on, then reconnect the 12-volt battery and wait two minutes before proceeding. Failure to follow these instructions may result in possible serious or fatal injury.**

5. If equipped with the keyless ignition, use this ignition on warning.

WARNING: **Disconnect the 12-volt battery wait two minutes before proceeding, remove the ORC fuses, connect the 12-volt battery, wait two minutes before proceeding. Cycle the ignition to the On position, then reconnect the ORC fuses. Wait two minutes before proceeding. Failure to follow these instructions may result in possible serious or fatal injury.**

6. Use the scan tool and erase the stored codes in all airbag system modules.
7. Turn the Ignition Off, and wait 15 seconds before turning the Ignition On.
8. With the scan tool, read the active ORC DTCs.

   Did the active DTC: B2762-96-LEFT C-PILLAR IMPACT ACCELERATION SENSOR - COMPONENT INTERNAL FAILURE return?

Yes

- Go To 3

No

- Repair is complete.
- Perform the RESTRAINTS SYSTEM VERIFICATION TEST. Refer to **STANDARD PROCEDURE** .

3. **REPLACE THE OCCUPANT RESTRAINT CONTROLLER**

WARNING: **Turn the ignition off, disconnect the 12-volt battery and wait two minutes before proceeding. Failure to follow these instructions may result in possible serious or fatal injury.**

WARNING: **If the Occupant Restraint Controller (ORC) is dropped at any time, it must be replaced. Failure to take the proper precautions can result in accidental airbag deployment. Failure to follow these instructions may result in possible serious or fatal injury.**

If there are no possible causes remaining, view repair

Repair

- Replace the ORC in accordance with the Service Information. Refer to **MODULE, OCCUPANT RESTRAINT CONTROLLER, REMOVAL** .
- Perform the RESTRAINTS SYSTEM VERIFICATION TEST. Refer to **STANDARD PROCEDURE** .

B2764-96-RIGHT B-PILLAR IMPACT ACCELERATION SENSOR - COMPONENT INTERNAL FAILURE

For a complete wiring diagram, **refer to appropriate SYSTEM WIRING DIAGRAMS article** .

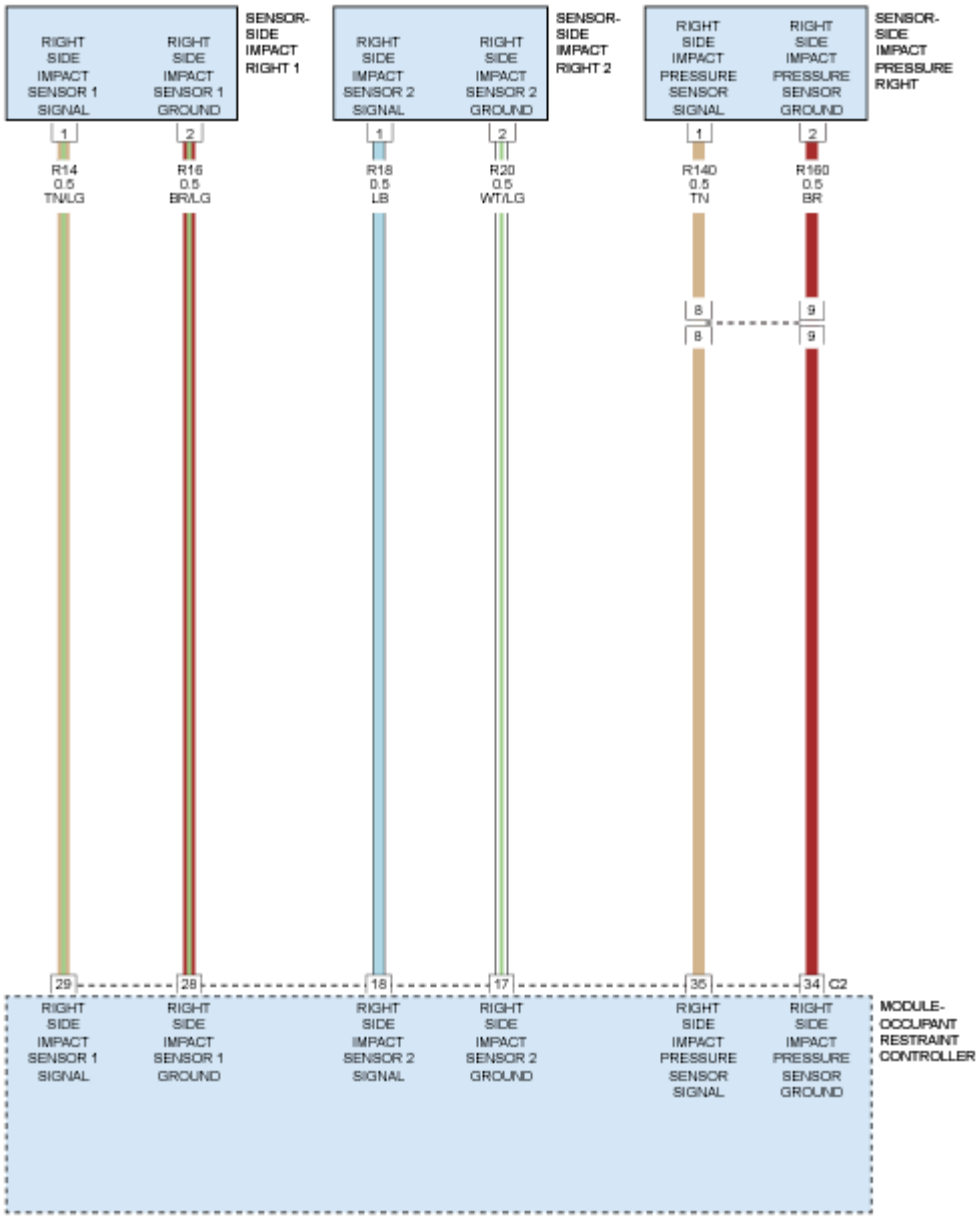

Fig. 9: Right Impact Sensor Circuit Diagram
Courtesy of CHRYSLER GROUP, LLC

THEORY OF OPERATION

The Right Side Impact Sensor 1 (Right B-Pillar Impact Acceleration Sensor) is mounted near the base of the B-pillar. Refer to **DESCRIPTION** . Impact sensors perform their own self test using power supplied by the Occupant Restraint Controller (ORC) then communicate this status back to the module. The repair of this fault centers on verifying the integrity of the sensor's internal circuitry and software validity.

WHEN MONITORED

The Occupant Restraint Controller (ORC) continuously communicates with the Right Side Impact Sensor 1 over the sensor signal circuit. The sensor communication and on board diagnostics are powered by the ORC signal.

SET CONDITION

This code will set, if the ORC and the Right Side Impact Sensor 1 do not establish and maintain valid data communications. The DTC will become Active after the fault has set for a minimum of 100 milliseconds (ms). The DTC will go to Stored after the ORC Right Side Impact Sensor 12 communication fault has been removed or the suspect sensor has been replaced. The clearing of this fault is immediate upon the suspect internal error being removed or the suspect sensor being replaced. The Airbag Warning Lamp (AWL) will set in the instrument cluster.

POSSIBLE CAUSES

Possible Causes
INTERMITTENT CONNECTION (WIRING/CONNECTORS)
RIGHT SIDE IMPACT SENSOR 1
OCCUPANT RESTRAINT CONTROLLER (ORC)

Always Perform the Pre-Diagnostic Troubleshooting procedure before proceeding. Refer to STANDARD PROCEDURE .

DIAGNOSTIC TEST

1. **DETERMINE ACTIVE OR STORED FAULT CODE**
   1. Turn the ignition on.

      NOTE: Make sure the battery is fully charged.

   2. With the scan tool, read the active ORC DTCs.

      Is the DTC: B2764-96-RIGHT B-PILLAR IMPACT ACCELERATION SENSOR - COMPONENT INTERNAL FAILURE active?

      Yes

      WARNING: Turn the ignition off disconnect the 12-volt battery and wait two minutes before proceeding. Failure to follow these instructions may result in possible serious or fatal injury.

      NOTE: Inspect the related wiring harness for chafed, pierced, pinched, and partially broken wires. Also, inspect the related connectors for broken, bent, pushed out, spread, corroded, or contaminated terminals. Repair as necessary. Recheck for active DTC B2764-96-

RIGHT B-PILLAR IMPACT ACCELERATION SENSOR - COMPONENT INTERNAL FAILURE. If active go to 2 if stored then repair is complete. Perform the RESTRAINTS SYSTEM VERIFICATION TEST. Refer to STANDARD PROCEDURE .

No

- Go To Perform the RESTRAINTS SYSTEM INTERMITTENT TEST. Refer to **STANDARD PROCEDURE** .

2. **VERIFY OPERATION OF THE RIGHT SIDE IMPACT SENSOR 1**

WARNING: **Turn the ignition off, disconnect the 12-volt battery and wait two minutes before proceeding. Failure to follow these instructions may result in possible serious or fatal injury.**

1. Replace the Right Side Impact Sensor 1 in accordance with the Service Information. Refer to **SENSOR, IMPACT, REMOVAL** .
2. Reconnect the vehicle wire harness to the sensor.
3. Remove any special tools or jumper wires and reconnect all previously disconnected components - except the Battery.
4. If equipped with the standard key ignition, use this ignition on warning.

WARNING: **Turn the ignition on, then reconnect the 12-volt battery and wait two minutes before proceeding. Failure to follow these instructions may result in possible serious or fatal injury.**

5. If equipped with the keyless ignition, use this ignition on warning.

WARNING: **Disconnect the 12-volt battery wait two minutes before proceeding, remove the ORC fuses, connect the 12-volt battery, wait two minutes before proceeding. Cycle the ignition to the On position, then reconnect the ORC fuses. Wait two minutes before proceeding. Failure to follow these instructions may result in possible serious or fatal injury.**

6. Use the scan tool and erase the stored codes in all airbag system modules.
7. Turn the Ignition Off, and wait 15 seconds before turning the Ignition On.
8. Wait one minute, and read active codes.

Did the active DTC: B2764-96-RIGHT B-PILLAR IMPACT ACCELERATION SENSOR - COMPONENT INTERNAL FAILURE return?

Yes

- Go To 3

No

- Repair is complete.
- Perform the RESTRAINTS SYSTEM VERIFICATION TEST. Refer to **STANDARD PROCEDURE** .

3. **REPLACE THE OCCUPANT RESTRAINT CONTROLLER**

WARNING: **Turn the ignition off, disconnect the 12-volt battery and wait two minutes before proceeding. Failure to follow these instructions may result in possible serious or fatal injury.**

If there are no possible causes remaining, view repair

Repair

WARNING: **If the Occupant Restraint Controller (ORC) is dropped at any time, it must be replaced. Failure to follow these instructions may result in possible serious or fatal injury.**

- Replace the ORC in accordance with Service Instructions. Refer to **MODULE, OCCUPANT RESTRAINT CONTROLLER, REMOVAL** .
- Perform the RESTRAINTS SYSTEM VERIFICATION TEST. Refer to **STANDARD PROCEDURE** .

B2765-96-RIGHT C-PILLAR IMPACT ACCELERATION SENSOR - COMPONENT INTERNAL FAILURE

For a complete wiring diagram, **refer to appropriate SYSTEM WIRING DIAGRAMS article** .

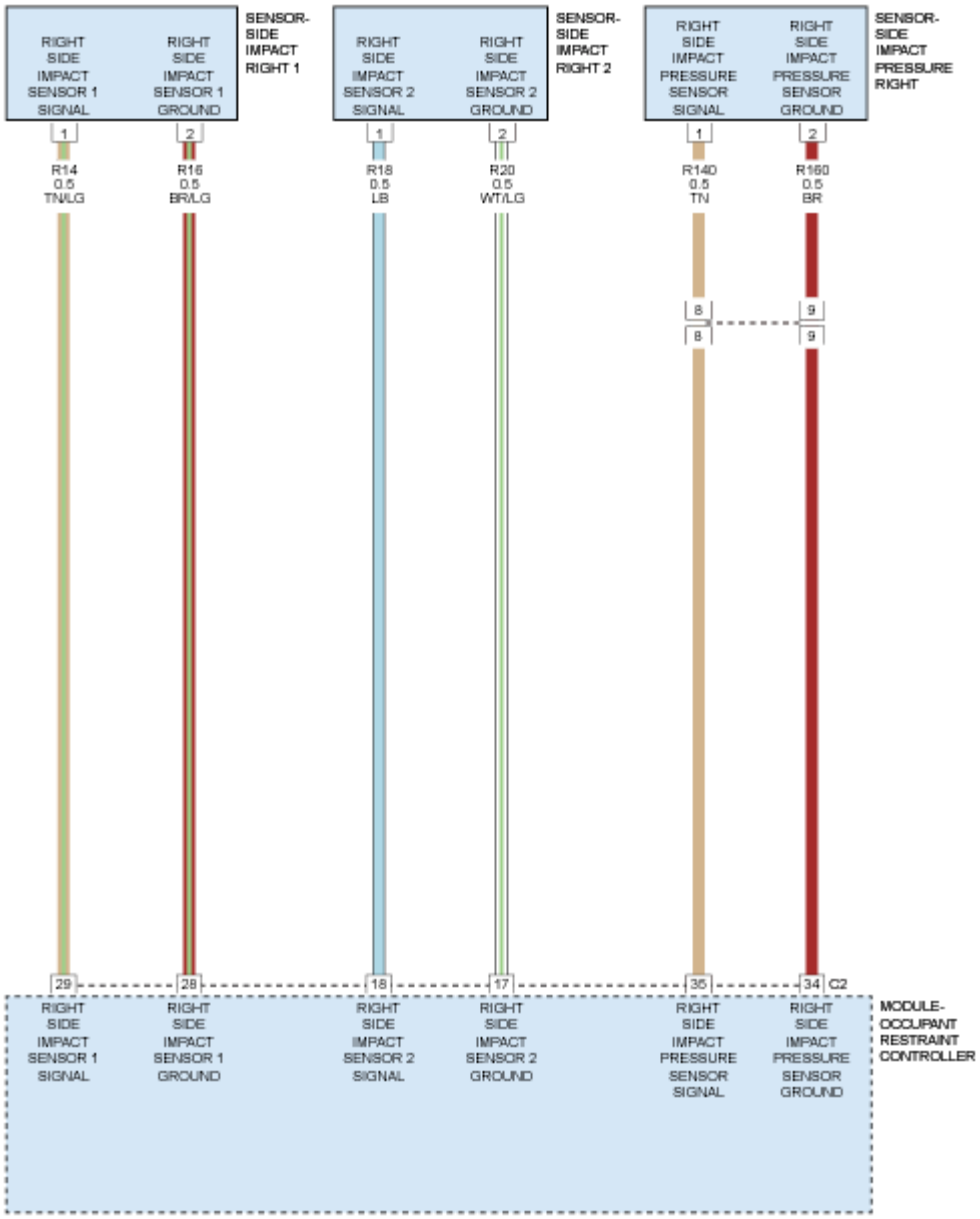

Fig. 10: Right Impact Sensor Circuit Diagram
Courtesy of CHRYSLER GROUP, LLC

THEORY OF OPERATION

The Right Side Impact Sensor 2 is mounted near the base of the C-pillar. Refer to **DESCRIPTION** . Impact sensors perform their own self test using power supplied by the Occupant Restraint Controller (ORC) then communicate this status back to the module. The repair of this fault centers on verifying the integrity of the sensor's internal circuitry and software validity.

WHEN MONITORED

The Occupant Restraint Controller (ORC) continuously communicates with the Right Side Impact Sensor 2 over the sensor signal circuit. The sensor communication and on board diagnostics are powered by the ORC signal.

SET CONDITION

This code will set, if the ORC and the Right Side Impact Sensor 2 do not establish and maintain valid data communications. The DTC will become Active after the fault has set for a minimum of 100 milliseconds (ms). The DTC will go to Stored after the ORC Right Side Impact Sensor 2 communication fault has been removed or the suspect sensor has been replaced. The clearing of this fault is immediate upon the suspect internal error being removed or the suspect sensor being replaced. The Airbag Warning Lamp (AWL) will set in the instrument cluster

POSSIBLE CAUSES

Possible Causes
INTERMITTENT CONNECTION (WIRING/CONNECTORS)
RIGHT SIDE IMPACT SENSOR 2
OCCUPANT RESTRAINT CONTROLLER (ORC)

Always Perform the Pre-Diagnostic Troubleshooting procedure before proceeding. Refer to STANDARD PROCEDURE .

DIAGNOSTIC TEST

1. **DETERMINE ACTIVE OR STORED FAULT CODE**
   1. Turn the ignition on.

      NOTE: Make sure the battery is fully charged.

   2. With the scan tool, read the active ORC DTCs.

      Is the DTC: B2765-96-RIGHT C-PILLAR IMPACT ACCELERATION SENSOR - COMPONENT INTERNAL FAILURE- Active?

      Yes

      WARNING: Turn the ignition off disconnect the 12-volt battery and wait two minutes before proceeding. Failure to follow these instructions may result in possible serious or fatal injury.

      NOTE: Inspect the related wiring harness for chafed, pierced, pinched, and partially broken wires. Also, inspect the related connectors for broken, bent, pushed out, spread, corroded, or contaminated terminals. Repair as necessary. Recheck for active DTC B2765-96-

RIGHT C-PILLAR IMPACT ACCELERATION SENSOR - COMPONENT INTERNAL FAILURE. If active go to 2 if stored then repair is complete. Perform the RESTRAINTS SYSTEM VERIFICATION TEST. Refer to STANDARD PROCEDURE .

No

- Perform the RESTRAINTS SYSTEM INTERMITTENT TEST. Refer to **STANDARD PROCEDURE** .

2. **VERIFY OPERATION OF THE RIGHT SIDE IMPACT SENSOR 2**

WARNING: **Turn the ignition off, disconnect the 12-volt battery and wait two minutes before proceeding. Failure to follow these instructions may result in possible serious or fatal injury.**

1. Replace the Right Side Impact Sensor 2 in accordance with the Service Information. Refer to **SENSOR, IMPACT, REMOVAL** .
2. Reconnect the vehicle wire harness to the sensor.
3. Remove any special tools or jumper wires and reconnect all previously disconnected components - except the Battery.
4. If equipped with the standard key ignition, use this ignition on warning.

WARNING: **Turn the ignition on, then reconnect the 12-volt battery and wait two minutes before proceeding. Failure to follow these instructions may result in possible serious or fatal injury.**

5. If equipped with the keyless ignition, use this ignition on warning.

WARNING: **Disconnect the 12-volt battery wait two minutes before proceeding, remove the ORC fuses, connect the 12-volt battery, wait two minutes before proceeding. Cycle the ignition to the On position, then reconnect the ORC fuses. Wait two minutes before proceeding. Failure to follow these instructions may result in possible serious or fatal injury.**

6. Use the scan tool and erase the stored codes in all airbag system modules.
7. Turn the Ignition Off, and wait 15 seconds before turning the Ignition On.
8. With the scan tool, read the active ORC DTCs.

Did the active DTC: B2765-96-RIGHT C-PILLAR IMPACT ACCELERATION SENSOR - COMPONENT INTERNAL FAILURE return?

Yes

- Go To 3

No

- Repair is complete.
- Perform the RESTRAINTS SYSTEM VERIFICATION TEST. Refer to **STANDARD PROCEDURE** .

3. **REPLACE THE OCCUPANT RESTRAINT CONTROLLER**

WARNING: **Turn the ignition off, disconnect the 12-volt battery and wait two minutes before proceeding. Failure to follow these instructions may result in possible serious or fatal injury.**

WARNING: **If the Occupant Restraint Controller (ORC) is dropped at any time, it must be replaced. Failure to take the proper precautions can result in accidental airbag deployment. Failure to follow these instructions may result in possible serious or fatal injury.**

If there are no possible causes remaining, view repair

Repair

- Replace the ORC in accordance with the Service Information. Refer to **MODULE, OCCUPANT RESTRAINT CONTROLLER, REMOVAL** .
- Perform the RESTRAINTS SYSTEM VERIFICATION TEST. Refer to **STANDARD PROCEDURE** .

B2767-96-LEFT IMPACT PRESSURE SENSOR - COMPONENT INTERNAL FAILURE

For a complete wiring diagram, **refer to appropriate SYSTEM WIRING DIAGRAMS article** .

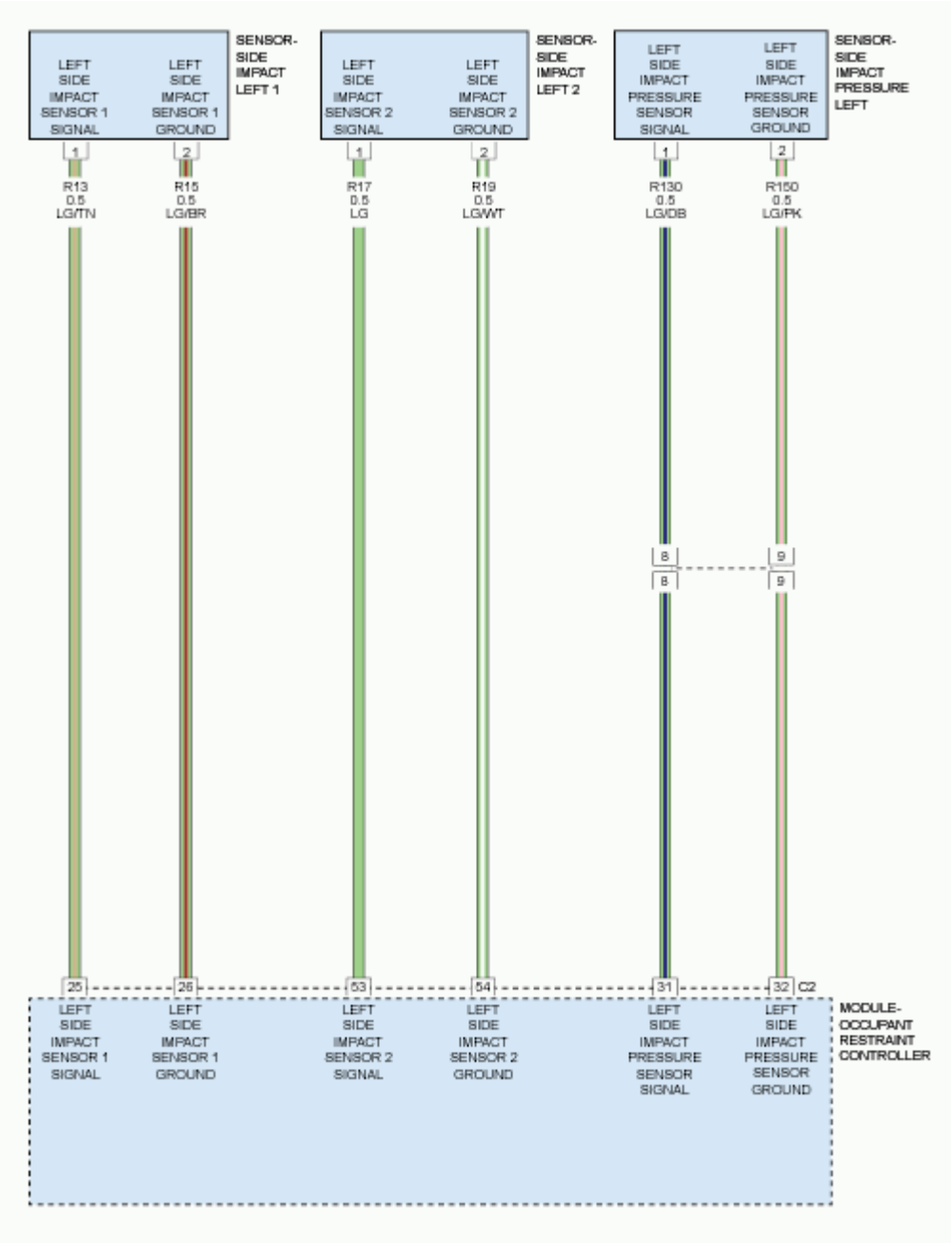

Fig. 11: Left Impact Sensor Circuit Diagram
Courtesy of CHRYSLER GROUP, LLC

THEORY OF OPERATION

The driver door pressure sensor is mounted to the driver inner door panel behind the door trim panel. Refer to **DESCRIPTION** . The impact sensors perform their own self test using power supplied by the Occupant Restraint Controller (ORC) then communicate this status back to the ORC with periodic updates. The repair of this fault condition involves verifying the integrity of the wiring between the ORC and the sensor.

WHEN MONITORED

The Occupant Restraint Controller (ORC) continuously communicates with the Driver Door Pressure Sensor over the sensor signal circuit. The sensor communication and on board diagnostics are powered by the ORC signal.

SET CONDITION

This code will set, if the ORC and the Driver Door Pressure Sensor (Satellite) do not establish and maintain valid data communications. The DTC will become Active after the fault has set for a minimum of 100 milliseconds (ms). The DTC will go to Stored after the ORC to Driver Door Pressure Sensor communication fault has been removed or the suspect pressure sensor has been replaced. The clearing of this fault is immediate upon the suspect internal error being removed or the suspect sensor replaced.

POSSIBLE CAUSES

Possible Causes
(R130) LEFT SIDE IMPACT PRESSURE SENSOR SIGNAL CIRCUIT SHORTED TO VOLTAGE
(R150) LEFT SIDE IMPACT PRESSURE SENSOR SIGNAL CIRCUIT SHORTED TO GROUND
(R130), (R150) LEFT SIDE IMPACT PRESSURE SENSOR CIRCUITS SHORTED TOGETHER
(R150) LEFT SIDE IMPACT PRESSURE SENSOR GROUND CIRCUIT OPEN
(R130) LEFT SIDE IMPACT PRESSURE SENSOR SIGNAL CIRCUIT OPEN
OCCUPANT RESTRAINT CONTROLLER (ORC)

DIAGNOSTIC TEST

1. **VERIFY THAT DTC B2767-96-LEFT IMPACT PRESSURE SENSOR-COMPONENT INTERNAL FAILURE IS ACTIVE**

   NOTE: Make sure the battery is fully charged.

   1. Turn the ignition on.
   2. With the scan tool, read ORC DTCs.

      Does the scan tool display active: B2767-96-LEFT IMPACT PRESSURE SENSOR-COMPONENT INTERNAL FAILURE - DTC?

      Yes

      - Go To 2

      No

      - Perform the RESTRAINTS SYSTEM INTERMITTENT TEST. Refer to **STANDARD PROCEDURE** .

2. **CHECK THE (R130), (R150) LEFT SIDE IMPACT PRESSURE SENSOR SIGNAL AND GROUND CIRCUITS FOR A SHORT TO VOLTAGE**

WARNING: Turn the ignition off disconnect the 12-volt battery and wait two minutes before proceeding. Failure to follow these instructions may result in possible serious or fatal injury.

1. Disconnect the Left Side Impact Pressure Sensor harness connector.
2. Disconnect the ORC harness connectors.

NOTE: Check the connectors - Clean and repair as necessary.

3. Connect the (special tool #8443-57, Adapter, Supplemental Restraint System Load Tool)to the ORC C1 and C2 harness connectors.
4. Measure the voltage of the (R130) Left Side Impact Pressure Sensor Signal circuit and (R150) Sensor Ground circuit between the(special tool #8443-57, Adapter, Supplemental Restraint System Load Tool)cavity C1B-31, C1B-32 and ground.

   Is there any voltage present on either circuit?

   Yes

   - Repair the (R130), (R150) Left Side Impact Pressure Sensor circuits for a short to voltage.
   - Perform the RESTRAINTS SYSTEM VERIFICATION TEST. Refer to **STANDARD PROCEDURE** .

   No

   - Go To 3

3. **CHECK THE (R130) LEFT SIDE IMPACT PRESSURE SENSOR SIGNAL CIRCUIT FOR A SHORT TO GROUND**

WARNING: Turn the ignition off disconnect the 12-volt battery and wait two minutes before proceeding. Failure to follow these instructions may result in possible serious or fatal injury.

1. Measure the resistance of the (R130) Left Side Impact Pressure Sensor Signal circuit between the (special tool #8443-57, Adapter, Supplemental Restraint System Load Tool)cavity C1B-31 and ground.

   Is the resistance below 20 Ohms?

   Yes

   - Repair the (R130) Left Side Impact Pressure Sensor Signal circuit for a short to ground.
   - Perform the RESTRAINTS SYSTEM VERIFICATION TEST. Refer to **STANDARD PROCEDURE** .

No

- Go To 4

4. **CHECK THE (R150) LEFT SIDE IMPACT PRESSURE SENSOR GROUND CIRCUIT FOR A SHORT TO GROUND**

   WARNING: **Turn the ignition off disconnect the 12-volt battery and wait two minutes before proceeding. Failure to follow these instructions may result in possible serious or fatal injury.**

   1. Measure the resistance of the (R150) Left Side Impact Pressure Sensor Ground circuit between the (special tool #8443-57, Adapter, Supplemental Restraint System Load Tool)cavity C1B-32 and ground.

      Is the resistance below 20 Ohms?

      Yes

      - Repair the (R150) Left Side Impact Pressure Sensor Groundl circuit for a short to ground.
      - Perform the RESTRAINTS SYSTEM VERIFICATION TEST. Refer to **STANDARD PROCEDURE** .

      No

      - Go To 5

5. **CHECK THE (R130), (R150) LEFT SIDE IMPACT PRESSURE SENSOR CIRCUITS FOR A SHORT TOGETHER**
   1. Measure the resistance between the (R130) Left Side Impact Pressure Sensor Signal circuit and the (R150) Sensor Ground circuits between the (special tool #8443-57, Adapter, Supplemental Restraint System Load Tool)cavity C1B- 31 and C1B-32.

      Is the resistance below 20 Ohms?

      Yes

      - Repair the (R130), (R150) Left Side Impact Pressure Sensor circuits shorted together.
      - Perform the RESTRAINTS SYSTEM VERIFICATION TEST. Refer to **STANDARD PROCEDURE** .

      No

      - Go To 6

6. **CHECK THE (R150) LEFT SIDE IMPACT PRESSURE SENSOR GROUND CIRCUIT FOR AN OPEN OR HIGH RESISTANCE**

1. Measure the resistance of the (R150) Left Side Impact Pressure Sensor Ground circuit between terminal 2 of the Left Side Impact Pressure Sensor harness connector and the (special tool #8443-57, Adapter, Supplemental Restraint System Load Tool)cavity C1B-32.

   Is the resistance below 1 Ohm?

   Yes

   - Go To 7

   No

   - Repair the (R150) Left Side Impact Pressure Sensor Ground circuit for an open or high resistance.
   - Perform the RESTRAINTS SYSTEM VERIFICATION TEST. Refer to **STANDARD PROCEDURE** .

7. **CHECK THE (R130) LEFT SIDE IMPACT PRESSURE SENSOR SIGNAL CIRCUIT FOR AN OPEN OR HIGH RESISTANCE**
   1. Measure the resistance of the (R130) Left Side Impact Pressure Sensor Ground circuit between terminal 1 of the Left Side Impact Pressure Sensor harness connector and the (special tool #8443-57, Adapter, Supplemental Restraint System Load Tool)cavity C1B-31.

      Is the resistance below 1 Ohm?

      Yes

      - Go To 8

      No

      - Repair the (R130) Right Side Impact Pressure Sensor Signal circuit for an open or high resistance.
      - Perform the RESTRAINTS SYSTEM VERIFICATION TEST. Refer to **STANDARD PROCEDURE** .

8. **CHECK OPERATION OF THE LEFT SIDE IMPACT PRESSURE SENSOR**
   1. Replace the Left Side Impact Pressure Sensor. Refer to **SENSOR, IMPACT, REMOVAL** .
   2. Reconnect the vehicle body harness to the impact pressure sensor.
   3. Remove any special tools or jumper wires and reconnect all previously disconnected components - except the Battery.

   WARNING: **Turn the ignition on, then reconnect the 12-volt battery and wait two minutes before proceeding. Failure to follow these instructions may result in possible serious or fatal injury.**

4. Connect the scan tool to the Data Link Connector - use the most current software available.
5. Use the scan tool and erase the stored codes in all airbag system modules.
6. Turn the Ignition Off, and wait five seconds before turning the Ignition On.
7. Wait one minute, and read active codes and if there are none present read the stored codes.

   Did the active: B2767-96-LEFT IMPACT PRESSURE SENSOR-COMPONENT INTERNAL FAILURE - DTC return?

   Yes

   WARNING: Turn the ignition off, disconnect the 12-volt battery and wait two minutes before proceeding. Failure to follow these instructions may result in possible serious or fatal injury.

   WARNING: If the Occupant Restraint Controller (ORC) is dropped at any time, it must be replaced. Failure to take the proper precautions can result in accidental airbag deployment. Failure to follow these instructions may result in possible serious or fatal injury.

   - Replace the Occupant Restraint Controller (ORC) in accordance with the Service Information. Refer to **MODULE, OCCUPANT RESTRAINT CONTROLLER, REMOVAL** .
   - Perform the RESTRAINTS SYSTEM VERIFICATION TEST. Refer to **STANDARD PROCEDURE** .

   No

   - Repair is complete.
   - Perform the RESTRAINTS SYSTEM VERIFICATION TEST. Refer to **STANDARD PROCEDURE** .

B2768-96-RIGHT IMPACT PRESSURE SENSOR - COMPONENT INTERNAL FAILURE

For a complete wiring diagram, **refer to appropriate SYSTEM WIRING DIAGRAMS article** .

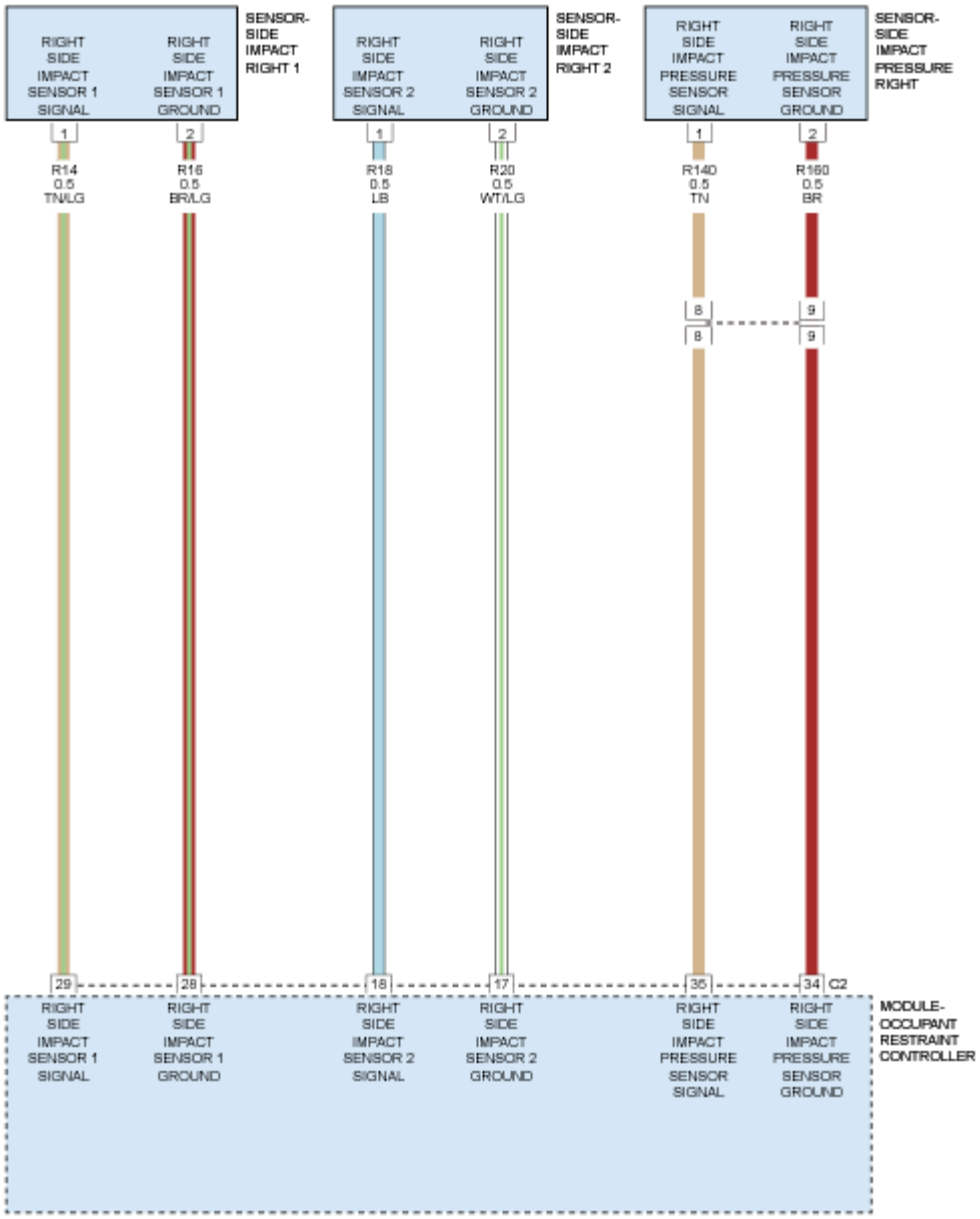

Fig. 12: Right Impact Sensor Circuit Diagram
Courtesy of CHRYSLER GROUP, LLC

THEORY OF OPERATION

The passenger door pressure sensor is mounted to the passenger inner door panel behind the door trim panel. Refer to **DESCRIPTION** . The impact sensors perform their own self test using power supplied by the Occupant Restraint Controller (ORC) then communicate this status back to the ORC with periodic updates. The repair of this fault condition involves verifying the integrity of the wiring between the ORC and the sensor. A short to voltage fault on the door pressure sensor wiring can cause a loss of comm side impact code to set and the possible replacement of a good side impact sensor. The door pressure sensor is hardwired to the side impact

sensor which is hard wired to the ORC creating a daisy chain circuit. The short to battery fault in a loss of comm or internal circuit failure of the door pressure sensor can cause the side impact sensor on the same side to set a loss of comm code.

WHEN MONITORED

The Occupant Restraint Controller (ORC) continuously communicates with the Passenger Door Pressure Sensor (Satellite) over the sensor signal circuit. The sensor communication and on board diagnostics are powered by the ORC signal.

SET CONDITION

This code will set, if the ORC and the Passenger Door Pressure Sensor (Satellite) do not establish and maintain valid data communications. The DTC will become Active after the fault has set for a minimum of 100 milliseconds (ms). The DTC will go to Stored after the ORC to Passenger Door Pressure Sensor (Satellite) communication fault has been removed or the suspect pressure sensor has been replaced. The clearing of this fault is immediate upon the suspect internal error being removed or the suspect sensor replaced. The Multifunction Indicator Lamp (MIL) will set in the instrument cluster.

POSSIBLE CAUSES

Possible Causes
(R140) RIGHT SIDE IMPACT PRESSURE SENSOR SIGNAL CIRCUIT SHORTED TO VOLTAGE
(R140) RIGHT SIDE IMPACT PRESSURE SENSOR SIGNAL CIRCUIT SHORTED TO GROUND
(R140), (R160) RIGHT SIDE IMPACT PRESSURE SENSOR CIRCUITS SHORTED TOGETHER
(R160) RIGHT SIDE IMPACT PRESSURE SENSOR GROUND CIRCUIT OPEN
(R140) RIGHT SIDE IMPACT PRESSURE SENSOR SIGNAL CIRCUIT OPEN
OCCUPANT RESTRAINT CONTROLLER (ORC)

DIAGNOSTIC TEST

1. **VERIFY ACTIVE B2768-96-RIGHT IMPACT PRESSURE SENSOR-COMPONENT INTERNAL FAILURE- DTC**
    1. Turn the ignition on.
    2. With the scan tool, read ORC DTCs.

    NOTE: Make sure the battery is fully charged.

    Does the scan tool display an active: B2768-96-RIGHT IMPACT PRESSURE SENSOR-COMPONENT INTERNAL FAILURE - DTC?

    Yes

    - Go To 2

No

- Perform the RESTRAINTS SYSTEM INTERMITTENT TEST. Refer to **STANDARD PROCEDURE** .

2. **CHECK THE (R140), (R160) RIGHT SIDE IMPACT PRESSURE SENSOR SIGNAL AND GROUND CIRCUITS FOR A SHORT TO VOLTAGE**

WARNING: Turn the ignition off disconnect the 12-volt battery and wait two minutes before proceeding. Failure to follow these instructions may result in possible serious or fatal injury.

1. Disconnect the Right Door Pressure Sensor harness connector.
2. Disconnect the ORC harness connector.

NOTE: Check connectors - Clean and repair as necessary.

3. Connect the (special tool #8443-57, Adapter, Supplemental Restraint System Load Tool)to the ORC C1 and C2 harness connectors.

WARNING: Turn the ignition on, then reconnect the 12-volt battery and wait two minutes before proceeding. Failure to follow these instructions may result in possible serious or fatal injury.

4. Measure the voltage of the (R140) Right Side Impact Pressure Sensor Signal circuit and (R160) Sensor Ground circuit between the (special tool #8443-57, Adapter, Supplemental Restraint System Load Tool)C1B-34 and C1B-35 terminals and ground.

Is there any voltage present?

Yes

- Repair the (R140), (R160) Right Side Impact Pressure Sensor circuits for a short to voltage.
- Perform the RESTRAINTS SYSTEM VERIFICATION TEST. Refer to **STANDARD PROCEDURE** .

No

- Go To 3

3. **CHECK THE (R140) RIGHT SIDE IMPACT PRESSURE SENSOR SIGNAL CIRCUIT FOR A SHORT TO GROUND**

WARNING: Turn the ignition off disconnect the 12-volt battery and wait two minutes before proceeding. Failure to follow these instructions may result in possible serious or fatal injury.

1. Measure the resistance of the (R140) Right Side Impact Pressure Sensor Signal circuit between the (special tool #8443-57, Adapter, Supplemental Restraint System Load Tool)C1B-35 terminals and ground.

   Is the resistance below 20 Ohms?

   Yes

   - Repair the (R140) Right Side Impact Pressure Sensor Signal circuit for a short to ground.
   - Perform the RESTRAINTS SYSTEM VERIFICATION TEST. Refer to **STANDARD PROCEDURE** .

   No

   - Go To 4

4. **CHECK THE (R140), (R160) RIGHT SIDE IMPACT PRESSURE SENSOR CIRCUITS FOR A SHORT TOGETHER**
   1. Measure the resistance between the (R140) Right Side Impact Pressure Sensor 4 Signal circuit and the (R160) Sensor Ground circuits between the (special tool #8443-57, Adapter, Supplemental Restraint System Load Tool)C1B-34 and C1B-35 terminals.

      Is the resistance below 20 Ohms?

      Yes

      - Repair the (R140), (R160) Right Side Impact Pressure Sensor circuits shorted together.
      - Perform the RESTRAINTS SYSTEM VERIFICATION TEST. Refer to **STANDARD PROCEDURE** .

      No

      - Go To 5

5. **CHECK THE (R140) RIGHT SIDE IMPACT PRESSURE SENSOR GROUND CIRCUIT FOR AN OPEN OR HIGH RESISTANCE**
   1. Measure the resistance of the (R140) Right Side Impact Pressure Sensor Ground circuit between terminal between the (special tool #8443-57, Adapter, Supplemental Restraint System Load Tool) C1B-34 terminal Right Side Impact Pressure Sensor harness connector terminal 2.

      Is the resistance below 1 Ohm?

      Yes

      - Go To 6

      No

- Repair the (R160) Right Side Impact Pressure Sensor Ground circuit for an open or high resistance.
- Perform the RESTRAINTS SYSTEM VERIFICATION TEST. Refer to **STANDARD PROCEDURE** .

6. **CHECK THE (R140) RIGHT SIDE IMPACT PRESSURE SENSOR SIGNAL CIRCUIT FOR AN OPEN OR HIGH RESISTANCE**
   1. Measure the resistance of the (R160) Right Side Impact Pressure Sensor Signal circuit between terminal between the (special tool #8443-57, Adapter, Supplemental Restraint System Load Tool) C1B-35 terminal and Right Side Impact Pressure Sensor harness connector terminal 1.

      Is the resistance below 1 Ohm?

      Yes

      - Go To 7

      No

      - Repair the (R160) Right Side Impact Pressure Sensor Signal circuit for an open or high resistance.
      - Perform the RESTRAINTS SYSTEM VERIFICATION TEST. Refer to **STANDARD PROCEDURE** .

7. **CHECK OPERATION OF THE PASSENGER DOOR PRESSURE SENSOR**
   1. Replace the Passenger Door Pressure Sensor. Refer to **SENSOR, IMPACT, REMOVAL** .
   2. Reconnect the vehicle body harness to the impact sensor.
   3. Remove any special tools or jumper wires and reconnect all previously disconnected components - except the Battery.

      WARNING: Turn the ignition on, then reconnect the 12-volt battery and wait two minutes before proceeding. Failure to follow these instructions may result in possible serious or fatal injury.

   4. Connect the scan tool to the Data Link Connector - use the most current software available.
   5. Use the scan tool and erase the stored codes in all airbag system modules.
   6. Turn the Ignition Off, and wait 15 seconds before turning the Ignition On.
   7. Wait one minute, and read active codes and if there are none present read the stored codes.

      Did the active B2768-96-RIGHT IMPACT PRESSURE SENSOR-COMPONENT INTERNAL FAILURE return?

      Yes

      - Go To 8

No

- Repair is complete.
- Perform the RESTRAINTS SYSTEM VERIFICATION TEST. Refer to **STANDARD PROCEDURE** .

8. **REPLACE THE OCCUPANT RESTRAINT CONTROLLER**

WARNING: **Turn the ignition off, disconnect the 12-volt battery and wait two minutes before proceeding. Failure to follow these instructions may result in possible serious or fatal injury.**

WARNING: **If the Occupant Restraint Controller (ORC) is dropped at any time, it must be replaced. Failure to take the proper precautions can result in accidental airbag deployment. Failure to follow these instructions may result in possible serious or fatal injury.**

Repair

- Replace the Occupant Restraint Controller in accordance with Service Information. Refer to **MODULE, OCCUPANT RESTRAINT CONTROLLER, REMOVAL** .
- Perform the RESTRAINTS SYSTEM VERIFICATION TEST. Refer to **STANDARD PROCEDURE** .

B2771-00-IMPACT CALIBRATION MISSING

For a complete wiring diagram, **refer to appropriate SYSTEM WIRING DIAGRAMS article** .

WHEN MONITORED

With the ignition on. The modules on board diagnostics continuously performs internal circuit tests.

SET CONDITION

This DTC will set if the module identifies the calibration missing.

POSSIBLE CAUSES

Possible Causes
OCCUPANT RESTRAINT CONTROLLER (ORC)

DIAGNOSTIC TEST

REPLACE OCCUPANT RESTRAINT CONTROLLER

WARNING: **Turn the ignition off, disconnect the 12-volt battery and wait two minutes**

before proceeding. Failure to follow these instructions may result in possible serious or fatal injury.

WARNING: If the Occupant Restraint Controller (ORC) is dropped at any time, it must be replaced. Failure to follow these instructions may result in possible serious or fatal injury.

Repair

- Replace the ORC in accordance with the Service Information.
- Perform the RESTRAINT SYSTEM VERIFICATION TEST. Refer to **STANDARD PROCEDURE** .

C10CC-49-ESC SENSORS - INTERNAL ELECTRONIC FAILURE

THEORY OF OPERATION

- The ESC (Dynamics Sensor) is located inside the Occupant Restraint Controller (ORC). The sensor measure side-to-side (Lateral) motion and vehicle rotational sensing (how fast the vehicle is turning - Yaw). The sensors output is sent to the Antilock Brake System (ABS) in a Can Bus message.

WHEN MONITORED

The Occupant Restraint Controller (ORC) checks the ESC Sensor at power up during the initialization process, and continuously through the ignition cycle.

SET CONDITION

This DTC sets when the ORC detects a ESC Sensor internal conditions that latches the fault for the ignitioncycle.

POSSIBLE CAUSES

Possible Causes
OCCUPANT RESTRAINT CONTROLLER (ORC)

DIAGNOSTIC TEST

VERIFY DIAGNOSTIC TROUBLE CODE (DTC) IS ACTIVE

NOTE: Make sure the battery voltage is between 10 and 16 volts before proceeding.

1. Turn the ignition on.
2. With the scan tool, read the active DTCs.

Does the scan tool display: C10CC-00-ESC SENSOR INTERNAL ELECTRONIC FAILURE?

Yes

NOTE: For the C10CC-00-ESC Sensor Internal Electronic Failure, use the C006A-54-Multi-Axis Acceleration Sensor-Missing Calibration.

- Perform the C006A-54-Multi-AXIS ACCERELERATION SENSOR-MISSING CALIBRATION procedure Refer to **DIAGNOSIS AND TESTING** .

No

- Perform the RESTRAINTS SYSTEM INTERMITTENT TEST Refer to **STANDARD PROCEDURE** .

C15B2-49-LEFT FRONT ACCELERATION SENSOR - INTERNAL ELECTRONIC FAILURE

For a complete wiring diagram, **refer to appropriate SYSTEM WIRING DIAGRAMS article** .

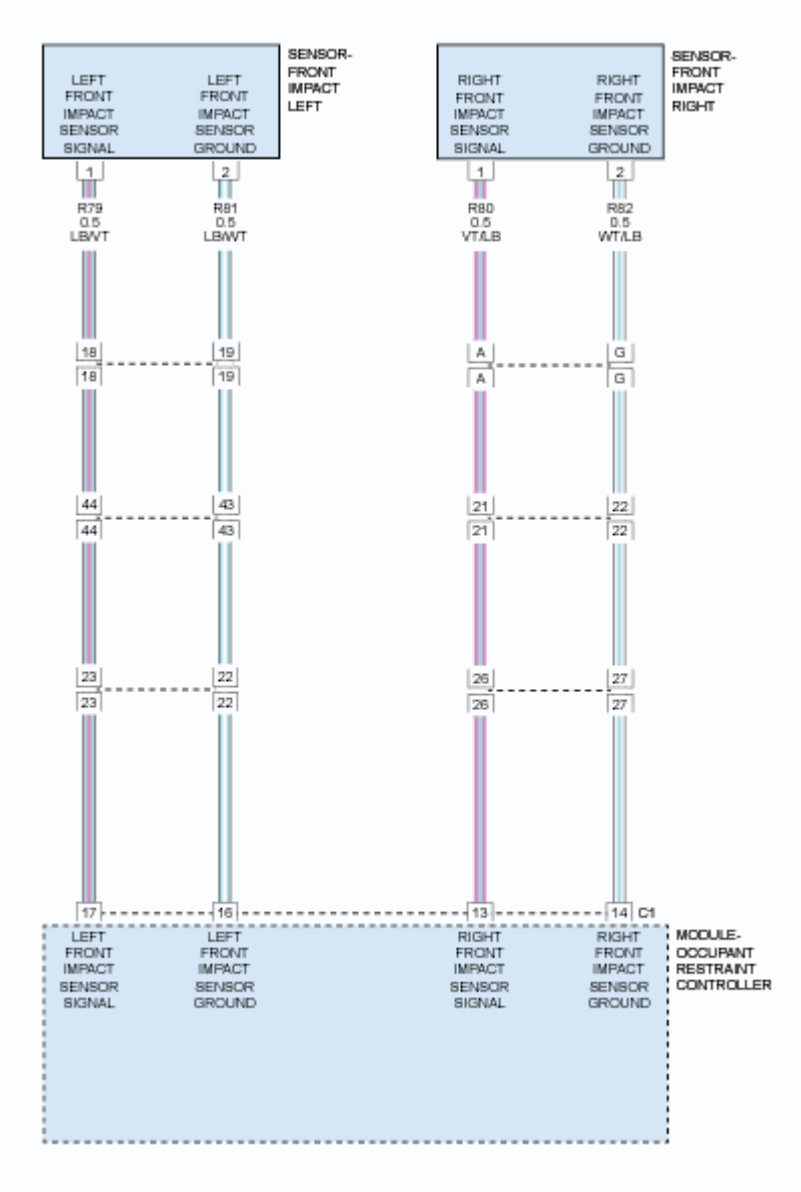

Fig. 13: Front Impact Sensor Circuit Diagram
Courtesy of CHRYSLER GROUP, LLC

THEORY OF OPERATION

The Left Front Impact Sensor is mounted in the engine compartment behind the front lamp unit. Refer to **DESCRIPTION** . The Left Front Impact Sensor is directly hard wired to the Occupant Restraint Controller (ORC) Module. The impact sensors perform their own self test using power supplied by the Occupant Restraint Controller (ORC) then communicate this status back to the ORC with periodic updates. The repair of this fault condition involves verifying the integrity of the wiring between the ORC and the sensor.

WHEN MONITORED

With the ignition on, the Left Front Impact Sensor is equipped with on board diagnostics to monitor the sensor's

internal circuits. If a problem is identified, the sensor sends the Left Front Impact Sensor Internal message to the Occupant Restraint Controller (ORC).

SET CONDITION

This code will set, if the ORC and the Left Front Impact Sensor do not establish and maintain valid data communications. The DTC will become Active after the fault has set for a minimum of 100 milliseconds (ms). The DTC will go to Stored after the ORC Left Front Impact Sensor communication fault has been removed or the suspect front impact sensor has been replaced. The clearing of this fault is immediate upon the suspect internal error being removed or the suspect sensor replaced. The Airbag Warning Lamp (AWL) will set in the instrument cluster.

POSSIBLE CAUSES

Possible Causes
INTERMITTENT CONNECTION (WIRING/CONNECTORS)
LEFT FRONT IMPACT SENSOR
OCCUPANT RESTRAINT CONTROLLER (ORC)

Always perform the Pre-Diagnostic Troubleshooting procedure before proceeding. Refer to STANDARD PROCEDURE .

DIAGNOSTIC TEST

1. **DETERMINE ACTIVE OR STORED DTC**
   1. Turn the ignition on.

      NOTE: Make sure the battery is fully charged.

   2. With the scan tool, read the active ORC DTCs.

      Is DTC C15B2-9-LEFT FRONT ACCELERATION SENSOR - INTERNAL ELECTRONIC FAILURE - active?

      Yes

      WARNING: Turn the ignition off disconnect the 12-volt battery and wait two minutes before proceeding. Failure to follow these instructions may result in possible serious or fatal injury.

      NOTE: Inspect the related wiring harness for chafed, pierced, pinched, and partially broken wires. Also, inspect the related connectors for broken, bent, pushed out, spread, corroded, or contaminated terminals. Repair as necessary. Then Recheck for the active DTC C15B2-49-LEFT FRONT ACCELERATION SENSOR - INTERNAL

ELECTRONIC FAILURE. If active go to 2If code is now stored perform the RESTRAINTS SYSTEM VERIFICATION TEST. Refer to STANDARD PROCEDURE .

No.

- Perform the RESTRAINTS SYSTEM INTERMITTENT TEST. Refer to **STANDARD PROCEDURE** .

2. **VERIFY OPERATION OF THE LEFT FRONT IMPACT SENSOR**

WARNING: **Turn the ignition off disconnect the 12-volt battery and wait two minutes before proceeding. Failure to follow these instructions may result in possible serious or fatal injury.**

1. Replace the Left Front Impact Sensor in accordance with the Service Information. Refer to **SENSOR, IMPACT, REMOVAL** .
2. Reconnect the vehicle body harness to the impact sensor.
3. Remove any special tools or jumper wires and reconnect all previously disconnected components - except the Battery.
4. If equipped with the standard key ignition, use this ignition on warning.

WARNING: **Turn the ignition on, then reconnect the 12-volt battery and wait two minutes before proceeding. Failure to follow these instructions may result in possible serious or fatal injury.**

5. If equipped with the keyless ignition, use this ignition on warning.

WARNING: **Disconnect the 12-volt battery wait two minutes before proceeding, remove the ORC fuses, connect the 12-volt battery, wait two minutes before proceeding. Cycle the ignition to the On position, then reconnect the ORC fuses. Wait two minutes before proceeding. Failure to follow these instructions may result in possible serious or fatal injury.**

6. Use the scan tool and erase the stored codes in all airbag system modules.
7. Turn the Ignition Off, and wait 15 seconds before turning the Ignition On.
8. Wait one minute, and read active codes.

Did the active DTC: C15B2-49-LEFT FRONT ACCELERATION SENSOR - INTERNAL ELECTRONIC FAILURE- return?

Yes

- Go To 3

No

- Repair is complete.
- Perform the RESTRAINTS SYSTEM VERIFICATION TEST. Refer to **STANDARD PROCEDURE** .

3. **REPLACE THE OCCUPANT RESTRAINT CONTROLLER**

WARNING: Turn the ignition off, disconnect the 12-volt battery and wait two minutes before proceeding. Failure to follow these instructions may result in possible serious or fatal injury.

WARNING: If the Occupant Restraint Controller (ORC) is dropped at any time, it must be replaced. Failure to take the proper precautions can result in accidental airbag deployment. Failure to follow these instructions may result in possible serious or fatal injury.

If there are no possible causes remaining, view repair.

Repair

- Replace the ORC in accordance with Service Information. Refer to **MODULE, OCCUPANT RESTRAINT CONTROLLER, REMOVAL** .
- Perform the RESTRAINTS SYSTEM VERIFICATION TEST. Refer to **STANDARD PROCEDURE** .

U0001-00-CAN C BUS

For a complete wiring diagram, **refer to appropriate SYSTEM WIRING DIAGRAMS article** .

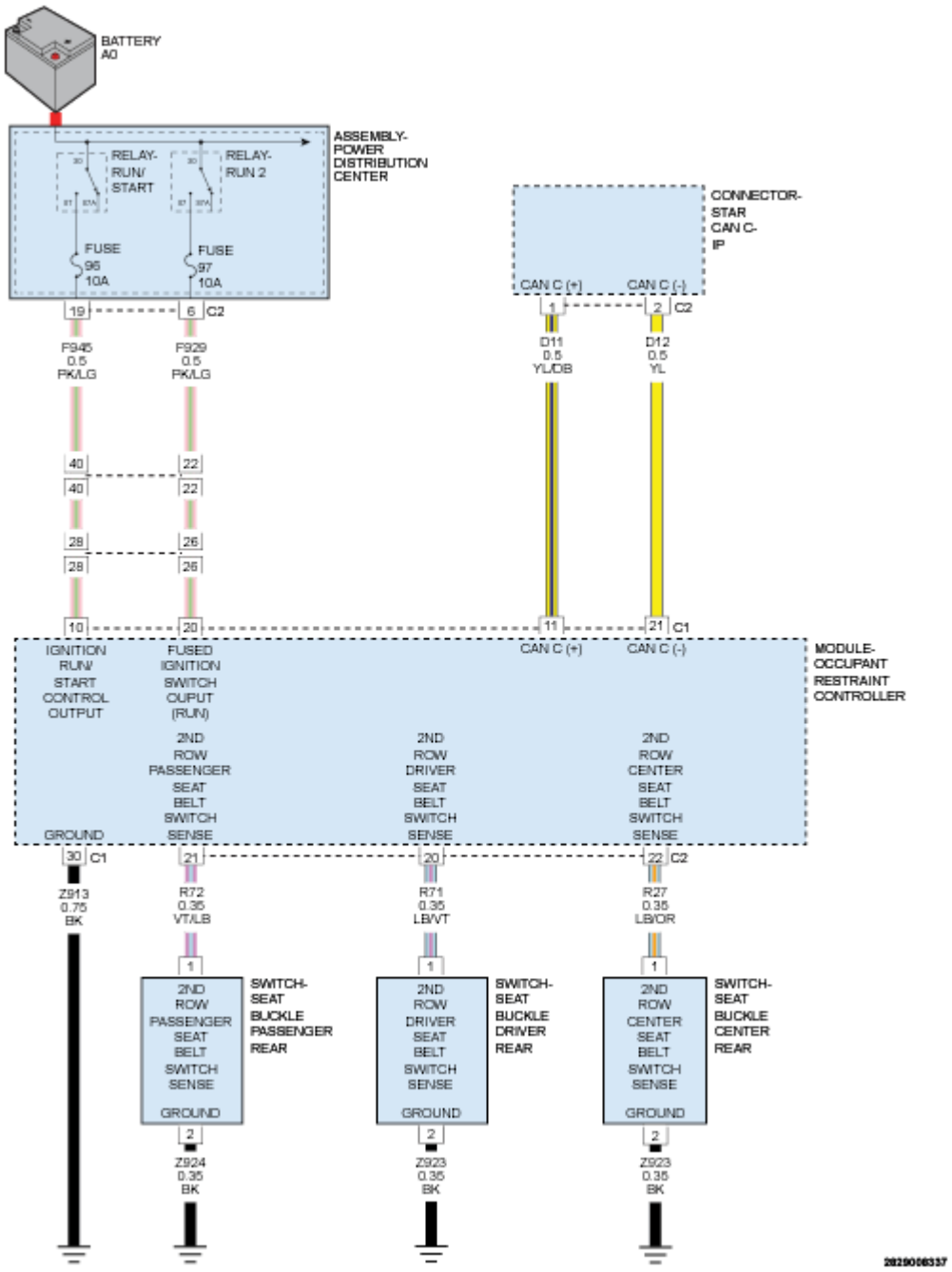

Fig. 14: Occupant Restraint Controller Module (ORC) Circuit Diagram
Courtesy of CHRYSLER GROUP, LLC

WHEN MONITORED

Continuously when the ignition is on.

Battery voltage between 10 and 16 volts.

SET CONDITION

The controller detects an open, short to ground or a short to voltage on the CAN C Bus circuit.

POSSIBLE CAUSES

Possible Causes
CAN C BUS CIRCUITS OPEN OR SHORTED
DTCS RELATED TO BATTERY VOLTAGE, IGNITION, OR VIN MESSAGES
BODY CONTROL MODULE (BCM) POWER AND GROUND
BODY CONTROL MODULE (BCM)
MODULE THAT SET THIS DTC

DIAGNOSTIC TEST

VERIFY DIAGNOSTIC TROUBLE CODE (DTC) IS ACTIVE

NOTE: Make sure the battery voltage is between 10 and 16 volts before proceeding.

1. Cycle the ignition on.
2. With the scan tool, read the active DTCs.

   Does the scan tool display: U0001-00-CAN C BUS?

   Yes

   - For the DTC U0001-00 Can C Bus, use the U0002-00 Can C Bus Off Performance diagnostic procedure.
   - Refer to **U0002-00-CAN C BUS OFF PERFORMANCE** and perform the U0002-CAN C Bus Off Performance diagnostic procedure.

   No

   - Perform the Stored Lost Communication DTCs diagnostic procedure. Refer to **STORED LOST COMMUNICATION DTCS** .

U0002-00-CAN C BUS OFF PERFORMANCE

For a complete wiring diagram **refer to appropriate SYSTEM WIRING DIAGRAMS article** .

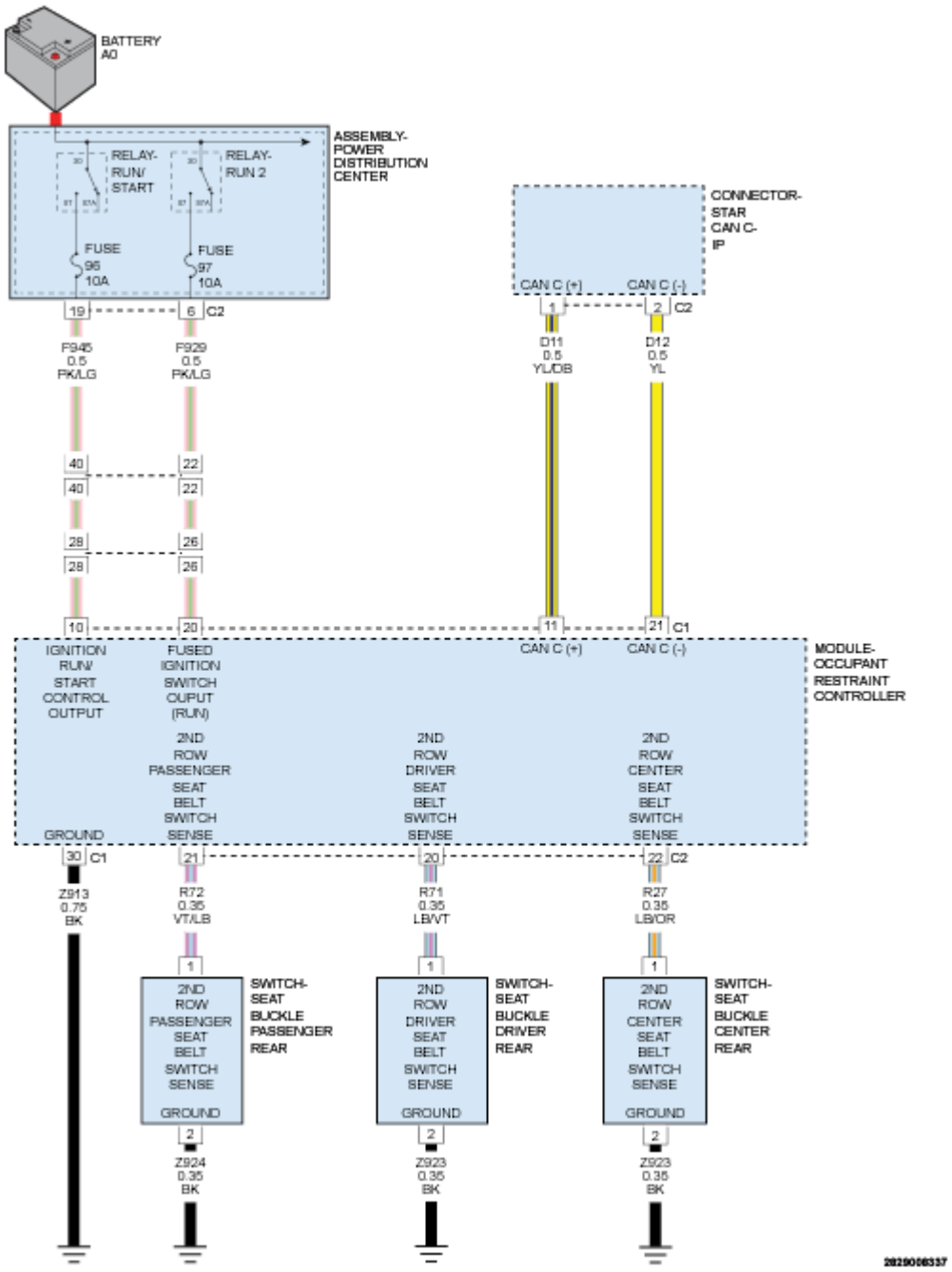

Fig. 15: Occupant Restraint Controller Module (ORC) Circuit Diagram
Courtesy of CHRYSLER GROUP, LLC

WHEN MONITORED

The ORC checks for serial data message traffic at power up during the initialization process, and continuously through the ignition cycle.

SET CONDITION

This DTC sets when the ORC fails to detect serial data message traffic for more than 5 seconds. In the event the ORC detects serial data message traffic, this DTC will immediately transition to stored status.

POSSIBLE CAUSES

Possible Causes
OCCUPANT RESTRAINT CONTROLLER (ORC)

Always perform the Pre-Diagnostic Troubleshooting procedure before proceeding. Refer to STANDARD PROCEDURE .

DIAGNOSTIC TEST

1. **DETERMINE ACTIVE OR STORED DTC**

   Is the DTC active or stored?

   ORC - ACTIVE DTC

   - Go To 2

   ORC - STORED DTC

   - Go To 3
2. **REPLACE OCCUPANT RESTRAINT CONTROLLER**

   When this code is set, view repair.

   Repair

   WARNING: **If the Occupant Restraint Controller (ORC) is dropped at any time, it must be replaced. Failure to take the proper precautions can result in accidental airbag deployment. Failure to follow these instructions may result in possible serious or fatal injury.**

   WARNING: **Turn the ignition off, disconnect the 12-volt battery and wait two minutes before proceeding. Failure to follow these instructions may result in possible serious or fatal injury.**

   - Replace the ORC in accordance with Service Information. Refer to **MODULE, OCCUPANT RESTRAINT CONTROLLER, REMOVAL** .
   - Perform the RESTRAINTS SYSTEM VERIFICATION TEST. Refer to **STANDARD PROCEDURE** .
3. **STORED ORC DTC**

1. With the scan tool, record and erase all DTC's from all Airbag System Modules.
2. If any ACTIVE codes are present they must be resolved before diagnosing any stored codes.

   WARNING: Turn the ignition off, disconnect the 12-volt battery and wait two minutes before proceeding. Failure to follow these instructions may result in possible serious or fatal injury.

3. Using the wiring diagram/schematic as a guide, inspect the wiring and connectors.
4. Look for chafed, pierced, pinched, or partially broken wires and broken, bent, pushed out, spread, corroded, or contaminated terminals.
5. The following additional checks may assist you in identifying a possible intermittent problem.
6. Reconnect any disconnected components and harness connector.

   WARNING: Turn the ignition on, then reconnect the 12-volt battery and wait two minutes before proceeding. Failure to follow these instructions may result in possible serious or fatal injury.

7. With the scan tool monitor active codes as you work through the following steps.

   WARNING: Maintain a safe distance from all airbags while performing the following steps. Failure to follow these instructions may result in possible serious or fatal injury.

8. Wiggle the wiring harness and connectors of the related airbag circuit or component.
9. If codes are related to the Driver Airbag circuits, rotate the steering wheel from stop to stop.
10. If only stored codes return continue the test until the problem area has been isolated.
11. In the previous steps you have attempted to recreate the conditions responsible for setting active DTC in question.

    Are any ACTIVE DTC's present?

    Yes

    - Select the appropriate diagnostic procedure . Refer to **OCCUPANT RESTRAINT CONTROLLER (ORC) - DIAGNOSTIC CODE INDEX** .

    No

    - No problem found at this time. Erase all codes before returning vehicle to customer.

U0100-00-LOST COMMUNICATION WITH ECM/PCM

For a complete wiring diagram, **refer to appropriate SYSTEM WIRING DIAGRAMS article** .

WHEN MONITORED

Ignition run time is greater than one second. Battery voltage between 9 and 16 volts. Engine run time greater than three seconds.

SET CONDITION

Bus messages not received from the Powertrain Control Module (ECM/PCM) for approximately two to five seconds.

POSSIBLE CAUSES

Possible Causes
CAN BUS CIRCUITS OPEN OR SHORTED
DTCS RELATED TO BATTERY VOLTAGE, IGNITION, OR VIN MESSAGES
POWERTRAIN CONTROL MODULE POWER AND GROUND
BODY CONTROL MODULE (BCM) NOT CONFIGURED CORRECTLY
POWERTRAIN CONTROL MODULE (ECM/PCM)
MODULE THAT SET THIS DTC

DIAGNOSTIC TEST

VERIFY THE DIAGNOSTIC TROUBLE CODE (DTC) IS ACTIVE

NOTE: Make sure the battery is fully charged before proceeding.

1. Turn the ignition on.
2. Using the scan tool, read the active DTCs.

   Does the scan tool display: 100-00-LOST COMMUNICATION WITH ECM/PCM?

   Yes

   - Refer to **DIAGNOSTIC CODE INDEX** and perform the U0100-87-Lost Communication with ECM/PCM diagnostic procedure.

   No

   - Perform the Stored Lost Communication DTCs diagnostic procedure. Refer to the **STORED LOST COMMUNICATION DTCS** .

U0121-00-LOST COMMUNICATION WITH ANTI-LOCK BRAKE SYSTEM (ABS) CONTROL MODULE

For a complete wiring diagram, **refer to appropriate SYSTEM WIRING DIAGRAMS article** .

WHEN MONITORED

Continuously when the ignition is on and the battery voltage is between 10 and 16 volts.

Body Control Module (BCM) is configured correctly.

SET CONDITION

Bus messages not received from the Anti-lock Brake System (ABS) Module for approximately two to five seconds.

POSSIBLE CAUSES

Possible Causes
CAN BUS CIRCUITS OPEN OR SHORTED
DTCS RELATED TO BATTERY VOLTAGE, IGNITION, OR VIN MESSAGES
BODY CONTROL MODULE (BCM) POWER AND GROUND
BCM NOT CONFIGURED CORRECTLY
BODY CONTROL MODULE (BCM)
MODULE THAT SET THIS DTC

DIAGNOSTIC TEST

VERIFY DTC IS ACTIVE

NOTE: Make sure the battery is fully charged before proceeding.

1. Turn the ignition on.
2. With the scan tool, read the active DTCs.

   Does the scan tool display: U0121-00-LOST COMMUNICATION WITH ANTI-LOCK BRAKE SYSTEM (ABS) CONTROL MODULE?

   Yes

   - Refer to **DIAGNOSTIC CODE INDEX** and perform the U0121-87-Lost Communication with Anti-lock Brake System (ABS) Control Module-Missing Messages diagnostic procedure.

   No

   - Perform the Stored Lost Communication DTCs diagnostic procedure. Refer to the **STORED LOST COMMUNICATION DTCS** .

U0131-00-LOST COMMUNICATION WITH POWER STEERING CONTROL MODULE

For a complete wiring diagram, **refer to appropriate SYSTEM WIRING DIAGRAMS article** .

WHEN MONITORED

Continuously when the ignition is on.

The battery voltage between 10 and 16 Volts.

Body Control Module (BCM) is configured correctly.

SET CONDITION

Bus messages not received from the Electric Power Steering (EPS) Module for approximately two to five seconds.

POSSIBLE CAUSES

Possible Causes
CAN BUS CIRCUITS OPEN OR SHORTED
DTCS RELATED TO BATTERY VOLTAGE, IGNITION, OR VIN MESSAGES
ELECTRIC POWER STEERING (EPS) MODULE POWER AND GROUND
BCM NOT CONFIGURED CORRECTLY
ELECTRIC POWER STEERING (EPS) MODULE
MODULE THAT SET THIS DTC

DIAGNOSTIC TEST

VERIFY THE DIAGNOSTIC TROUBLE CODE (DTC) IS ACTIVE

NOTE: Make sure the battery is fully charged before proceeding.

1. Turn the ignition on.
2. With the scan tool, read the active DTCs.

   Does the scan tool display: U0131-00-LOST COMMUNICATION WITH ELECTRIC POWER STEERING CONTROL MODULE?

   Yes

   - Refer to **DIAGNOSTIC CODE INDEX** and perform the U0131-87-LOST COMMUNICATION WITH ELECTRIC POWER STEERING CONTROL MODULE-MISSING MESSAGE diagnostic procedure.

   No

- Perform the Stored Lost Communication DTCs diagnostic procedure. Refer to the **STORED LOST COMMUNICATION DTCS** .

U0140-00-LOST COMMUNICATION WITH BODY CONTROL MODULE

For a complete wiring diagram, **refer to appropriate SYSTEM WIRING DIAGRAMS article** .

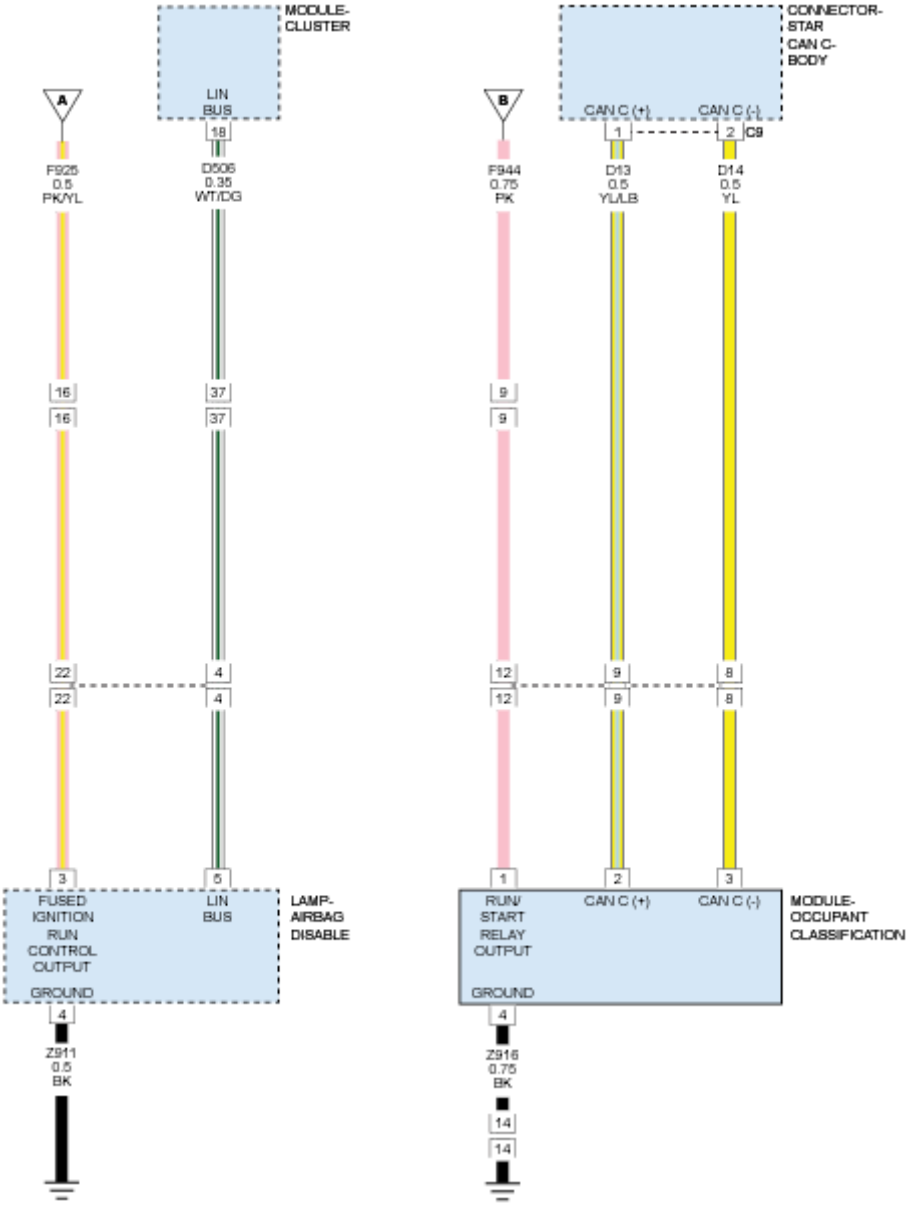

Fig. 16: Battery Voltage Circuit Diagram
Courtesy of CHRYSLER GROUP, LLC

WHEN MONITORED

Continuously when the ignition is on.

The battery voltage between 10.0 and 16.0 Volts.

Body Control Module (BCM) is configured correctly.

SET CONDITION

Bus messages not received from the Body Control Module (BCM) for 2.5 seconds.

POSSIBLE CAUSES

Possible Causes
CAN BUS CIRCUITS OPEN OR SHORTED
DTCS RELATED TO BATTERY VOLTAGE, IGNITION, OR VIN MESSAGES
BODY CONTROL MODULE POWER AND GROUND
BCM NOT CONFIGURED CORRECTLY
BODY CONTROL MODULE (BCM)
MODULE THAT SET THIS DTC

DIAGNOSTIC TEST

VERIFY DTC IS ACTIVE

1. Turn the ignition on.
2. With the scan tool, read the active DTCs.

   Does the scan tool display; U0140-00-LOST COMMUNICATION WITH BODY CONTROL MODULE as active?

   Yes

   - Refer to **DIAGNOSTIC CODE INDEX** and perform the NO RESPONSE FROM BCM (BODY CONTROL MODULE) diagnostic procedure.

   No

   - Perform the Stored Lost Communication DTCs diagnostic procedure. Refer to the **STORED LOST COMMUNICATION DTCS** .

U0154-00-LOST COMMUNICATION WITH OCCUPANT CLASSIFICATION MODULE

For a complete wiring diagram, **refer to appropriate SYSTEM WIRING DIAGRAMS article** .

WHEN MONITORED

Continuously when the ignition is on.

The battery voltage between 10.0 and 16.0 Volts.

Body Control Module (BCM) is configured correctly.

SET CONDITION

Bus messages not received from the Occupant Classification Module (OCM) for fifteen seconds.

POSSIBLE CAUSES

Possible Causes
CAN BUS CIRCUITS OPEN OR SHORTED
DTCS RELATED TO BATTERY VOLTAGE, IGNITION, OR VIN MESSAGES
OCCUPANT CLASSIFICATION MODULE POWER AND GROUND
BCM NOT CONFIGURED CORRECTLY
BODY CONTROL MODULE (BCM)
MODULE THAT SET THIS DTC

DIAGNOSTIC TEST

VERIFY THE DIAGNOSTIC TROUBLE CODE (DTC) IS ACTIVE

NOTE: Make sure the IOD fuse is installed and the battery is fully charged before proceeding.

1. Turn the ignition on.
2. With the scan tool, read active DTCs.

   Is this DTC active?

   Yes

   - Refer to **DIAGNOSTIC CODE INDEX** and perform the U0154-87-LOST COMMUNICATION WITH OCCUPANT CLASSIFICATION MODULE-MISSING MESSAGE diagnostic procedure.

   No

   - Perform the Stored Lost Communication DTCs diagnostic procedure. Refer to the **STORED LOST COMMUNICATION DTCS** .

U0155-00-LOST COMMUNICATION WITH CLUSTER/CCN

For a complete wiring diagram, **refer to appropriate SYSTEM WIRING DIAGRAMS article** .

WHEN MONITORED

Continuously when the ignition is on.

Battery voltage between 10 and 16 volts.

Body Control Module (BCM) is configured correctly.

SET CONDITION

Bus messages not received from the Instrument Cluster (IC) for approximately two to five seconds.

POSSIBLE CAUSES

Possible Causes
CAN BUS (+) CIRCUIT SHORTED TO VOLTAGE
CAN BUS (-) CIRCUIT SHORTED TO GROUND
INSTRUMENT CLUSTER (IC) POWER AND GROUND
BCM NOT CONFIGURED CORRECTLY
INSTRUMENT CLUSTER (IC)
MODULE THAT SET THIS DTC

DIAGNOSTIC TEST

VERIFY DTC IS ACTIVE

NOTE: Make sure the battery is fully charged before proceeding.

1. Turn the ignition on.
2. With the scan tool, read the active DTCs.

   Does the scan tool display: U0155-00-LOST COMMUNICATION WITH CLUSTER/CCN?

   Yes

   - Refer to **DIAGNOSTIC CODE INDEX** and perform the U0155-00-Lost Communication with Cluster/CCN diagnostic procedure.

   No

   - Perform the Stored Lost Communication DTCs diagnostic procedure. Refer to the **STORED LOST COMMUNICATION DTCS** .

U0170-00-LOST COMMUNICATION W/UP-FRONT LEFT SATELLITE SENSOR

For a complete wiring diagram, **refer to appropriate SYSTEM WIRING DIAGRAMS article** .

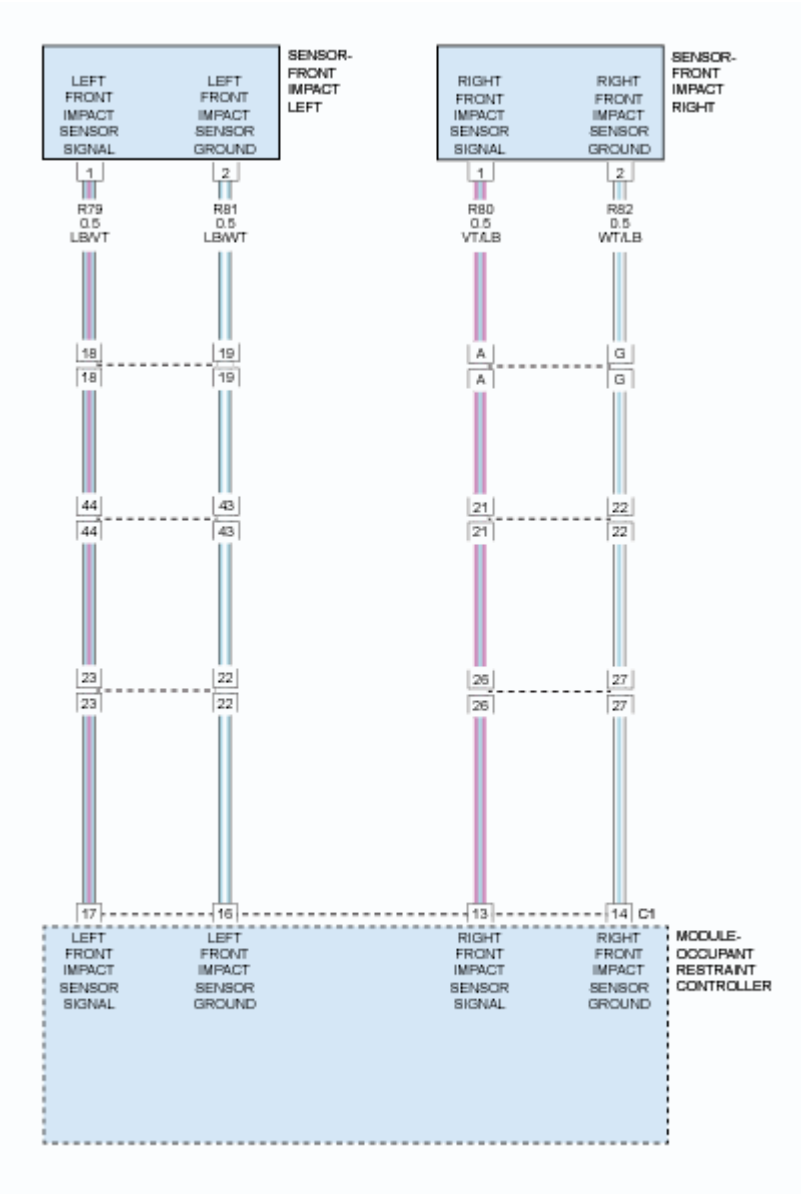

Fig. 17: Front Impact Sensor Circuit Diagram
Courtesy of CHRYSLER GROUP, LLC

THEORY OF OPERATION

The Left Front Impact Sensor is mounted in the engine compartment behind the front lamp unit. Refer to **DESCRIPTION** . The Left Front Impact Sensor is directly hard wired to the Occupant Restraint Controller (ORC) Module. The impact sensors perform their own self test using power supplied by the Occupant Restraint Controller (ORC) then communicate this status back to the ORC with periodic updates. The repair of this fault condition involves verifying the integrity of the wiring between the ORC and the sensor.

WHEN MONITORED

With the ignition on, the Left Front Impact Sensor is equipped with on board diagnostics to monitor the sensor's internal circuits. If a problem is identified, the sensor sends the Left Front Impact Sensor Internal message to the Occupant Restraint Controller (ORC).

SET CONDITION

This code will set, if the ORC and the Left Front Impact Sensor do not establish and maintain valid data communications. The DTC will become Active after the fault has set for a minimum of 100 milliseconds (ms). The DTC will go to Stored after the ORC Left Front Impact Sensor communication fault has been removed or the suspect front impact sensor has been replaced. The clearing of this fault is immediate upon the suspect internal error being removed or the suspect sensor replaced. The Airbag Warning Lamp (AWL) will set in the instrument cluster.

POSSIBLE CAUSES

Possible Causes
(R79) LEFT FRONT IMPACT SENSOR SIGNAL CIRCUIT SHORTED TO VOLTAGE
(R79) LEFT FRONT IMPACT SENSOR SIGNAL CIRCUIT SHORTED TO GROUND
(R79, R81) LEFT FRONT IMPACT SENSOR CIRCUITS SHORTED TOGETHER
(R81) LEFT FRONT IMPACT SENSOR GROUND CIRCUIT OPEN
(R79) LEFT FRONT IMPACT SENSOR SIGNAL CIRCUIT OPEN
OCCUPANT RESTRAINT CONTROLLER (ORC)
LEFT SIDE IMPACT SENSOR

DIAGNOSTIC TEST

1. **DETERMINE ACTIVE OR STORED DTC**

   NOTE: Make sure the battery is fully charged.

   1. Turn the ignition on.
   2. With the scan tool, read ORC DTCs.

      Does the scan tool display active: U0170-00-LOST COMMUNICATION W/UP-FRONT LEFT SATELLITE SENSOR - DTC?

      Yes

      - Go To 2

      No

      - Perform the RESTRAINTS SYSTEM INTERMITTENT TEST. Refer to **STANDARD PROCEDURE** .

2. **CHECK THE (R79), (R81) LEFT FRONT IMPACT SENSOR SIGNAL AND GROUND**

CIRCUITS FOR A SHORT TO VOLTAGE

WARNING: Turn the ignition off disconnect the 12-volt battery and wait two minutes before proceeding. Failure to follow these instructions may result in possible serious or fatal injury.

1. Disconnect the Left Front Impact Sensor harness connector.
2. Disconnect the ORC harness connector.

NOTE: Check the connectors - Clean and repair as necessary.

3. Connect the (special tool #8443-57, Adapter, Supplemental Restraint System Load Tool)to the ORC C1 and C2 harness connectors.

WARNING: Turn the ignition on, then reconnect the 12-volt battery and wait two minutes before proceeding. Failure to follow these instructions may result in possible serious or fatal injury.

4. Measure the voltage of the (R79) Left Front Impact Sensor Signal circuit and (R81) Left Front Impact Sensor Ground circuit between the (special tool #8443-57, Adapter, Supplemental Restraint System Load Tool)the C1A-17 and C1A-16 terminals and ground.

   Is there any voltage present on either circuit?

   Yes

   - Repair the (R79), (R81) Left Front Impact Sensor circuits for a short to voltage.
   - Perform the RESTRAINTS SYSTEM VERIFICATION TEST. Refer to **STANDARD PROCEDURE** .

   No

   - Go To 3

3. **CHECK THE (R79) LEFT FRONT IMPACT SENSOR SIGNAL CIRCUIT FOR A SHORT TO GROUND**

WARNING: Turn the ignition off disconnect the 12-volt battery and wait two minutes before proceeding. Failure to follow these instructions may result in possible serious or fatal injury.

1. Measure the resistance of the (R79) Left Front Impact Sensor Signal circuit between the (special tool #8443-57, Adapter, Supplemental Restraint System Load Tool)the C1A-17 terminals and ground.

Is the resistance below 20 Ohms?

Yes

- Repair the (R79) Left Front Impact Sensor Signal circuit for a short to ground.
- Perform the RESTRAINTS SYSTEM VERIFICATION TEST. Refer to **STANDARD PROCEDURE** .

No

- Go To 4

4. **CHECK THE (R79), (R81) LEFT FRONT IMPACT SENSOR CIRCUITS FOR A SHORT TOGETHER**
   1. Measure the voltage of the (R79) Left Front Impact Sensor Signal circuit and (R81) Left Front Impact Sensor Ground circuits between the (special tool #8443-57, Adapter, Supplemental Restraint System Load Tool)the C1A-17 and C1A-16 terminals.

   Is the resistance below 20 Ohms?

   Yes

   - Repair the (R79), (R81) Left Front Impact Sensor circuits shorted together.
   - Perform the RESTRAINTS SYSTEM VERIFICATION TEST. Refer to **STANDARD PROCEDURE** .

   No

   - Go To 5

5. **CHECK THE (R81) LEFT FRONT IMPACT SENSOR GROUND CIRCUIT FOR AN OPEN OR HIGH RESISTANCE**
   1. Measure the resistance of the (R81) Left Front Impact Sensor Ground circuit between the (special tool #8443-57, Adapter, Supplemental Restraint System Load Tool)the C1A-16 terminals and Left Front Impact Sensor harness connector terminal 2.

   Is the resistance below 1 Ohm?

   Yes

   - Go To 6

   No

   - Repair the (R81) Left Front Impact Sensor Ground circuit for an open or high resistance.
   - Perform the RESTRAINTS SYSTEM VERIFICATION TEST. Refer to **STANDARD PROCEDURE** .

6. **CHECK THE (R79) LEFT FRONT IMPACT SENSOR SIGNAL CIRCUIT FOR AN OPEN OR HIGH RESISTANCE**
   1. Measure the resistance of the (R79) Left Front Impact Sensor Signal circuit between the (special tool #8443-57, Adapter, Supplemental Restraint System Load Tool)the C1A-17 terminals and Left Front Impact Sensor harness connector terminal 1.

      Is the resistance below 1 Ohm?

      Yes

      - Go To 7

      No

      - Repair the (R79) Right Front Impact Sensor Signal circuit for an open or high resistance.
      - Perform the RESTRAINTS SYSTEM VERIFICATION TEST. Refer to **STANDARD PROCEDURE** .
7. **CHECK OPERATION OF THE LEFT FRONT IMPACT SENSOR**
   1. Replace the Left Front Impact Sensor. Refer to **SENSOR, IMPACT, REMOVAL** .
   2. Reconnect the vehicle body harness to the impact sensor.
   3. Remove any special tools or jumper wires and reconnect all previously disconnected components - except the Battery.

      WARNING: **Turn the ignition on, then reconnect the 12-volt battery and wait two minutes before proceeding. Failure to follow these instructions may result in possible serious or fatal injury.**

   4. Connect the scan tool to the Data Link Connector - use the most current software available.
   5. Use the scan tool and erase the stored codes in all airbag system modules.
   6. Turn the Ignition Off, and wait five seconds before turning the Ignition On.
   7. Wait one minute, and read active codes and if there are none present read the stored codes.

      Did the active: U0170-00-LOST COMMUNICATION W/UP-FRONT LEFT SATELLITE SENSOR - DTC return?

      Yes

      - Go To 8

      No

      - Repair is complete.
      - Perform the RESTRAINTS SYSTEM VERIFICATION TEST. Refer to **STANDARD**

PROCEDURE .

8. **REPLACE THE OCCUPANT RESTRAINT CONTROLLER**

WARNING: Turn the ignition off, disconnect the 12-volt battery and wait two minutes before proceeding. Failure to follow these instructions may result in possible serious or fatal injury.

WARNING: If the Occupant Restraint Controller (ORC) is dropped at any time, it must be replaced. Failure to take the proper precautions can result in accidental airbag deployment. Failure to follow these instructions may result in possible serious or fatal injury.

Repair

- Replace the Occupant Restraint Controller in accordance with Service Information. Refer to **MODULE, OCCUPANT RESTRAINT CONTROLLER, REMOVAL** .
- Perform the RESTRAINTS SYSTEM VERIFICATION TEST. Refer to **STANDARD PROCEDURE** .

U0171-00-LOST COMMUNICATION W/UP-FRONT RIGHT SATELLITE SENSOR

For a complete wiring diagram, **refer to appropriate SYSTEM WIRING DIAGRAMS article** .

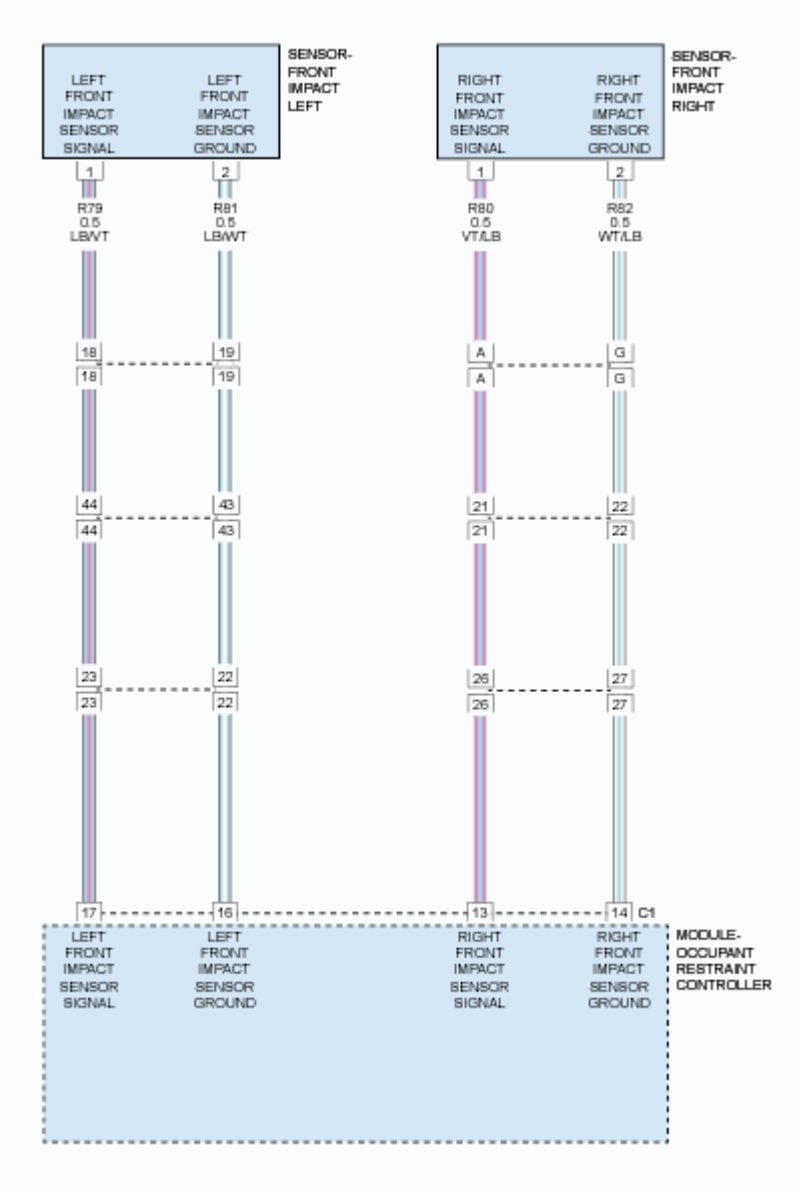

Fig. 18: Front Impact Sensor Circuit Diagram
Courtesy of CHRYSLER GROUP, LLC

THEORY OF OPERATION

The Right Front Impact Sensor is mounted in the engine compartment behind the front lamp unit. Refer to **DESCRIPTION** . The Right Front Impact Sensor is directly hard wired to the Occupant Restraint Controller (ORC) Module. The impact sensors perform their own self test using power supplied by the Occupant Restraint Controller (ORC) then communicate this status back to the ORC with periodic updates. The repair of this fault condition involves verifying the integrity of the wiring between the ORC and the sensor.

WHEN MONITORED

With the ignition on, the Right Front Impact Sensor is equipped with on board diagnostics to monitor the

sensor's internal circuits. If a problem is identified, the sensor sends the Right Front Impact Sensor Internal message to the Occupant Restraint Controller (ORC).

SET CONDITION

This code will set, if the ORC and the Right Front Impact Sensor do not establish and maintain valid data communications. The DTC will become Active after the fault has set for a minimum of 100 milliseconds (ms). The DTC will go to Stored after the ORC Right Front Impact Sensor communication fault has been removed or the suspect front impact sensor has been replaced. The clearing of this fault is immediate upon the suspect internal error being removed or the suspect sensor replaced. The Airbag Warning Lamp (AWL) will set in the instrument cluster.

POSSIBLE CAUSES

Possible Causes
(R80) RIGHT FRONT IMPACT SENSOR SIGNAL CIRCUIT SHORTED TO VOLTAGE
(R80) RIGHT FRONT IMPACT SENSOR SIGNAL CIRCUIT SHORTED TO GROUND
(R80, R82) RIGHT FRONT IMPACT SENSOR CIRCUITS SHORTED TOGETHER
(R82) RIGHT FRONT IMPACT SENSOR GROUND CIRCUIT OPEN
(R80) RIGHT FRONT IMPACT SENSOR SIGNAL CIRCUIT OPEN
RIGHT SIDE IMPACT SENSOR
OCCUPANT RESTRAINT CONTROLLER (ORC)

DIAGNOSTIC TEST

1. **DETERMINE ACTIVE OR STORED DTC**

   NOTE: Make sure the battery is fully charged.

   1. Turn the ignition on.
   2. With the scan tool, read ORC DTCs.

      Does the scan tool display active: U0171-00-LOST-COMMUNICATION-W/UP-FRONT-RIGHT-SATELLITE-SENSOR- DTC?

      Yes

      - Go To 2

      No

      - Perform the RESTRAINTS SYSTEM INTERMITTENT TEST. Refer to **STANDARD PROCEDURE** .

2. **CHECK THE (R80), (R82) RIGHT FRONT IMPACT SENSOR SIGNAL AND GROUND CIRCUITS FOR A SHORT TO VOLTAGE**

WARNING: Turn the ignition off disconnect the 12-volt battery and wait two minutes before proceeding. Failure to follow these instructions may result in possible serious or fatal injury.

1. Disconnect the Right Front Impact Sensor harness connector.
2. Disconnect the ORC harness connector.

NOTE: Check the connectors - Clean and repair as necessary.

3. Connect the (special tool #8443-57, Adapter, Supplemental Restraint System Load Tool)to the ORC C1 and C2 harness connectors.

WARNING: Turn the ignition on, then reconnect the 12-volt battery and wait two minutes before proceeding. Failure to follow these instructions may result in possible serious or fatal injury.

4. Measure the voltage of the (R80) Right Front Impact Sensor Signal circuit and (R82) Right Front Impact Sensor Ground circuit between the (special tool #8443-57, Adapter, Supplemental Restraint System Load Tool)the C1A-13 and C1A-14 terminals and ground.

   Is there any voltage present on either circuit?

   Yes

   - Repair the (R80), (R82) Right Front Impact Sensor circuits for a short to voltage.
   - Perform the RESTRAINTS SYSTEM VERIFICATION TEST. Refer to **STANDARD PROCEDURE** .

   No

   - Go To 3

3. **CHECK THE (R80) RIGHT FRONT IMPACT SENSOR SIGNAL CIRCUIT FOR A SHORT TO GROUND**

WARNING: Turn the ignition off disconnect the 12-volt battery and wait two minutes before proceeding. Failure to follow these instructions may result in possible serious or fatal injury.

1. Measure the resistance of the (R80) Right Front Impact Sensor Signal circuit between the (special tool #8443-57, Adapter, Supplemental Restraint System Load Tool)the C1A-13 terminals and ground.

   Is the resistance below 20 Ohms?

Yes

- Repair the (R80) Right Front Impact Sensor Signal circuit for a short to ground.
- Perform the RESTRAINTS SYSTEM VERIFICATION TEST. Refer to **STANDARD PROCEDURE** .

No

- Go To 4

4. **CHECK THE (R80), (R820) RIGHT FRONT IMPACT SENSOR CIRCUITS FOR A SHORT TOGETHER**
   1. Measure the voltage of the (R80) Right Front Impact Sensor Signal circuit and (R82) Right Front Impact Sensor Ground circuits between the (special tool #8443-57, Adapter, Supplemental Restraint System Load Tool)the C1A-13 and C1A-14 terminals.

      Is the resistance below 20 Ohms?

      Yes

      - Repair the (R80), (R82) Right Front Impact Sensor circuits shorted together.
      - Perform the RESTRAINTS SYSTEM VERIFICATION TEST. Refer to **STANDARD PROCEDURE** .

      No

      - Go To 5

5. **CHECK THE (R82) RIGHT FRONT IMPACT SENSOR GROUND CIRCUIT FOR AN OPEN OR HIGH RESISTANCE**
   1. Measure the resistance of the (R821) Right Front Impact Sensor Ground circuit between the (special tool #8443-57, Adapter, Supplemental Restraint System Load Tool)the C1A-14 terminals and Right Front Impact Sensor harness connector terminal 2.

      Is the resistance below 1 Ohm?

      Yes

      - Go To 6

      No

      - Repair the (R82) Right Front Impact Sensor Ground circuit for an open or high resistance.
      - Perform the RESTRAINTS SYSTEM VERIFICATION TEST. Refer to **STANDARD PROCEDURE** .

6. **CHECK THE (R80) RIGHT FRONT IMPACT SENSOR SIGNAL CIRCUIT FOR AN OPEN OR**

HIGH RESISTANCE

1. Measure the resistance of the (R80) Right Front Impact Sensor Signal circuit between the (special tool #8443-57, Adapter, Supplemental Restraint System Load Tool)the C1A-13 terminals and Right Front Impact Sensor harness connector terminal 1.

   Is the resistance below 1 Ohm?

   Yes

   - Go To 7

   No

   - Repair the (R80) Right Front Impact Sensor Signal circuit for an open or high resistance.
   - Perform the RESTRAINTS SYSTEM VERIFICATION TEST. Refer to **STANDARD PROCEDURE** .

7. **CHECK OPERATION OF THE RIGHT FRONT IMPACT SENSOR**
   1. Replace the Right Front Impact Sensor. Refer to **SENSOR, IMPACT, REMOVAL** .
   2. Reconnect the vehicle body harness to the impact sensor.
   3. Remove any special tools or jumper wires and reconnect all previously disconnected components - except the Battery.

      WARNING: **Turn the ignition on, then reconnect the 12-volt battery and wait two minutes before proceeding. Failure to follow these instructions may result in possible serious or fatal injury.**

   4. Connect the scan tool to the Data Link Connector - use the most current software available.
   5. Use the scan tool and erase the stored codes in all airbag system modules.
   6. Turn the Ignition Off, and wait five seconds before turning the Ignition On.
   7. Wait one minute, and read active codes and if there are none present read the stored codes.

      Did the active: U0171-00-LOST-COMMUNICATION-W/UP-FRONT-RIGHT-SATELLITE-SENSOR - DTC return?

      Yes

      - Go To 8.

      No

      - Repair is complete.
      - Perform the RESTRAINTS SYSTEM VERIFICATION TEST. Refer to **STANDARD PROCEDURE** .

8. **REPLACE THE OCCUPANT RESTRAINT CONTROLLER**

WARNING: Turn the ignition off, disconnect the 12-volt battery and wait two minutes before proceeding. Failure to follow these instructions may result in possible serious or fatal injury.

WARNING: If the Occupant Restraint Controller (ORC) is dropped at any time, it must be replaced. Failure to take the proper precautions can result in accidental airbag deployment. Failure to follow these instructions may result in possible serious or fatal injury.

Repair

- Replace the Occupant Restraint Controller in accordance with Service Information. Refer to **MODULE, OCCUPANT RESTRAINT CONTROLLER, REMOVAL** .
- Perform the RESTRAINTS SYSTEM VERIFICATION TEST. Refer to **STANDARD PROCEDURE** .

U11EA-00-LOST COMMUNICATION WITH LEFT B-PILLAR IMPACT ACCELERATION SENSOR

For a complete wiring diagram, **refer to appropriate SYSTEM WIRING DIAGRAMS article** .

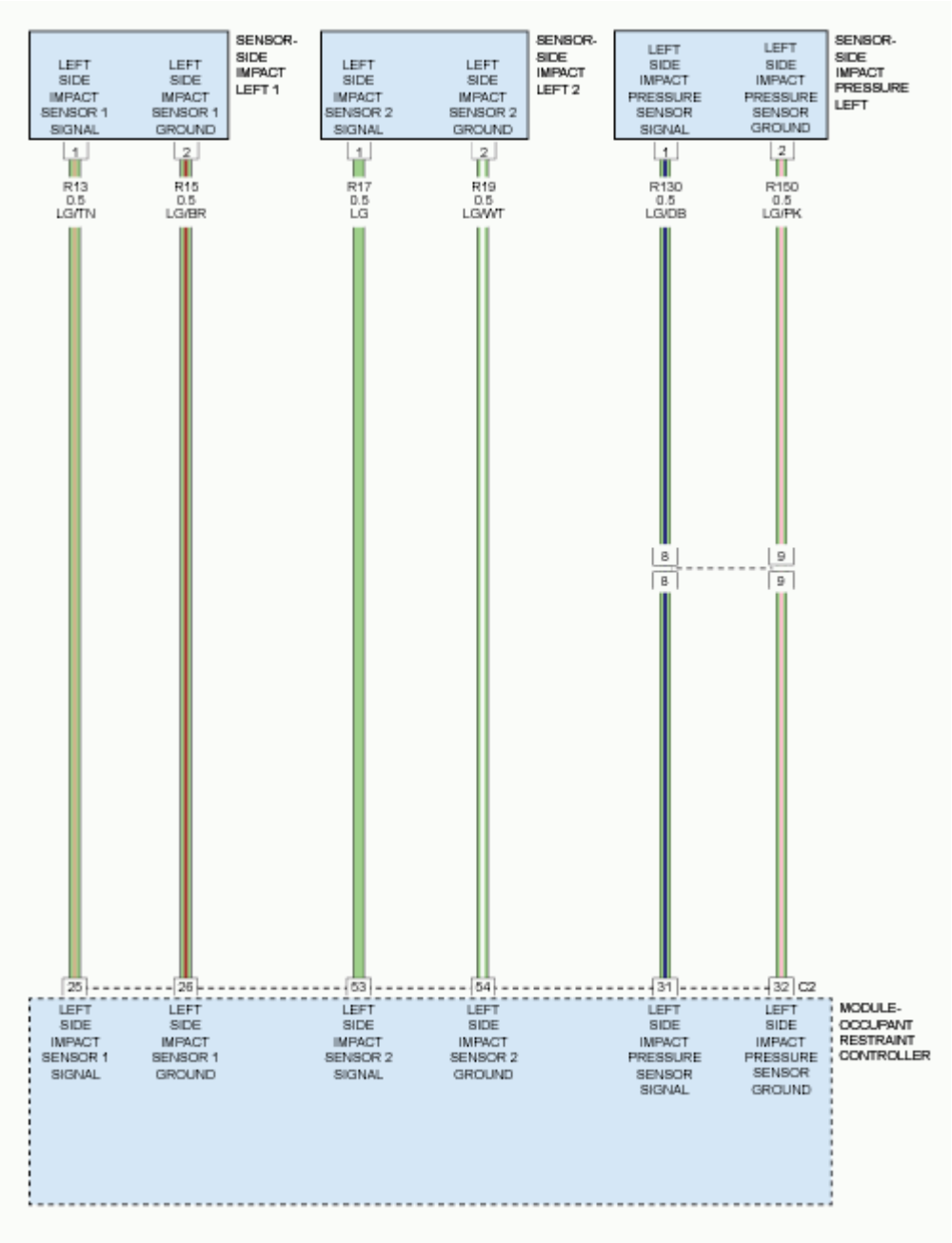

Fig. 19: Left Impact Sensor Circuit Diagram
Courtesy of CHRYSLER GROUP, LLC

THEORY OF OPERATION

The Left Side Impact Sensor 1 is mounted to the passenger rear door opening. Refer to **DESCRIPTION** . The impact sensors perform their own self test using power supplied by the Occupant Restraint Controller (ORC) then communicate this status back to the ORC with periodic updates. The repair of this fault condition involves verifying the integrity of the wiring between the ORC and the sensor.

WHEN MONITORED

The Occupant Restraint Controller (ORC) continuously communicates with the Left Side Impact Sensor 1 over the sensor signal circuit. The sensor communication and on board diagnostics are powered by the ORC signal.

SET CONDITION

This code will set, if the ORC and the Left Side Impact Sensor 1 do not establish and maintain valid data communications. The DTC will become active after the fault has set for a minimum of 2.5 seconds. The DTC will go to Stored after the ORC to Left Side Impact Sensor 1 communication fault has been removed or the suspect sensor has been replaced for 2.5 seconds. The Airbag Warning Lamp (AWL) will set in the instrument cluster.

POSSIBLE CAUSES

Possible Causes
(R13) LEFT SIDE IMPACT SENSOR 1 SIGNAL CIRCUIT SHORTED TO VOLTAGE
(R13) LEFT SIDE IMPACT SENSOR 1 SIGNAL CIRCUIT SHORTED TO GROUND
(R13), (R15) LEFT SIDE IMPACT SENSOR 1 CIRCUITS SHORTED TOGETHER
(R15) LEFT SIDE IMPACT SENSOR 1 GROUND CIRCUIT OPEN
(R13) LEFT SIDE IMPACT SENSOR 1 SIGNAL CIRCUIT OPEN
LEFT SIDE IMPACT PRESSURE SENSOR 1
OCCUPANT RESTRAINT CONTROLLER (ORC)

DIAGNOSTIC TEST

1. **DETERMINE ACTIVE OR STORED DTC**
    1. Turn the ignition on.
    2. With the scan tool, read ORC DTCs.

    NOTE: Make sure the battery is fully charged.

    Does the scan tool display an active: U11EA-00-LOST COMMUNICATION WITH LEFT B-PILLAR IMPACT ACCELERATION SENSOR - DTC?

    Yes

    - Go To 2

    No

    - Perform the RESTRAINTS SYSTEM INTERMITTENT TEST. Refer to **STANDARD PROCEDURE** .
2. **CHECK THE (R13), (R15) LEFT SIDE IMPACT SENSOR 1 SIGNAL AND GROUND CIRCUITS FOR A SHORT TO VOLTAGE**

WARNING: Turn the ignition off disconnect the 12-volt battery and wait two minutes before proceeding. Failure to follow these instructions may result in possible serious or fatal injury.

1. Disconnect the Left Side Impact Sensor 1 harness connector.
2. Disconnect the ORC harness connector.

WARNING: Turn the ignition on, then reconnect the 12-volt battery and wait two minutes before proceeding. Failure to follow these instructions may result in possible serious or fatal injury.

3. Connect the (special tool #8443-57, Adapter, Supplemental Restraint System Load Tool)to the ORC C1 and C2 harness connectors.
4. Measure the voltage of the (R13) Left Side Impact Sensor 1 Signal circuit and (R15) Left Side Impact Sensor 1 Ground circuit between the (special tool #8443-57, Adapter, Supplemental Restraint System Load Tool)the C1B-25 and C1B-26 terminals and ground.

   Is there any voltage present?

   Yes

   - Repair the (R13) and (R15) Left Side Impact Sensor 1 circuits for a short to voltage.
   - Perform the RESTRAINTS SYSTEM VERIFICATION TEST. Refer to **STANDARD PROCEDURE** .

   No

   - Go To 3

3. **CHECK THE (R13) LEFT SIDE IMPACT SENSOR 1 SIGNAL CIRCUIT FOR A SHORT TO GROUND**

WARNING: Turn the ignition off disconnect the 12-volt battery and wait two minutes before proceeding. Failure to follow these instructions may result in possible serious or fatal injury.

1. Measure the resistance of the (R13) Left Side Impact Sensor 1 Signal circuit between the (special tool #8443-57, Adapter, Supplemental Restraint System Load Tool)the C1B-25 terminals and ground.

   Is the resistance below 20 Ohms?

   Yes

   - Repair the (R13) Left Side Impact Sensor 1 Signal circuit for a short to ground.

- Perform the RESTRAINTS SYSTEM VERIFICATION TEST. Refer to **STANDARD PROCEDURE** .

No

- Go To 4

4. **CHECK THE (R13) AND (R15) LEFT SIDE IMPACT SENSOR 1 CIRCUITS FOR A SHORT TOGETHER**
   1. Measure the voltage of the (R13) Left Side Impact Sensor 1 Signal circuit and (R15) Left Side Impact Sensor 1 Ground circuits between the (special tool #8443-57, Adapter, Supplemental Restraint System Load Tool)the C1B-25 and C1B-26 terminals.

      Is the resistance below 20 Ohms?

      Yes

      - Repair the (R13) and(R15) Left Side Impact Sensor 1 circuits shorted together.
      - Perform the RESTRAINTS SYSTEM VERIFICATION TEST. Refer to **STANDARD PROCEDURE** .

      No

      - Go To 5

5. **CHECK THE (R15) LEFT SIDE IMPACT SENSOR 1 GROUND CIRCUIT FOR AN OPEN OR HIGH RESISTANCE**
   1. Measure the resistance of the (R15) Left Side Impact Sensor 1 Ground circuit between the (special tool #8443-57, Adapter, Supplemental Restraint System Load Tool)the C1B-26 terminals and Left Side Impact Sensor 1 harness connector terminal 2.

      Is the resistance below 1 Ohm?

      Yes

      - Go To 6

      No

      - Repair the (R15) Left Side Impact Sensor 1 Ground circuit for an open or high resistance.
      - Perform the RESTRAINTS SYSTEM VERIFICATION TEST. Refer to **STANDARD PROCEDURE** .

6. **CHECK THE (R13) LEFT SIDE IMPACT SENSOR 1 SIGNAL CIRCUIT FOR AN OPEN OR HIGH RESISTANCE**
   1. Measure the resistance of the (R13) Left Side Impact Sensor 1 Signal circuit between the (special tool #8443-57, Adapter, Supplemental Restraint System Load Tool)the C1B-25 terminals and Left

Side Impact Sensor 1 harness connector terminal 1.

Is the resistance below 1 Ohm?

Yes

- Go To 7

No

- Repair the (R13) Left Side Impact Sensor 1 Signal circuit for an open or high resistance.
- Perform the RESTRAINTS SYSTEM VERIFICATION TEST. Refer to **STANDARD PROCEDURE** .

7. **CHECK OPERATION OF THE LEFT SIDE IMPACT SENSOR 1**
   1. Replace the Left Side Impact Sensor 1. Refer to **SENSOR, IMPACT, REMOVAL** .
   2. Reconnect the vehicle body harness to the impact sensor.
   3. Remove any special tools or jumper wires and reconnect all previously disconnected components - except the Battery.

      WARNING: **Turn the ignition on, then reconnect the 12-volt battery and wait two minutes before proceeding. Failure to follow these instructions may result in possible serious or fatal injury.**

   4. Connect the scan tool to the Data Link Connector - use the most current software available.
   5. Use the scan tool and erase the stored codes in all airbag system modules.
   6. Turn the Ignition Off, and wait 15 seconds before turning the Ignition On.
   7. Wait one minute, and read active codes and if there are none present read the stored codes.

      Did the active U11EA-00-LOST COMMUNICATION WITH LEFT B-PILLAR IMPACT ACCELERATION SENSOR return?

      Yes

      - Go To 8

      No

      - Repair is complete.
      - Perform the RESTRAINTS SYSTEM VERIFICATION TEST. Refer to **STANDARD PROCEDURE** .

8. **REPLACE THE OCCUPANT RESTRAINT CONTROLLER**

   WARNING: **Turn the ignition off, disconnect the 12-volt battery and wait two**

minutes before proceeding. Failure to follow these instructions may result in possible serious or fatal injury.

WARNING: **If the Occupant Restraint Controller (ORC) is dropped at any time, it must be replaced. Failure to take the proper precautions can result in accidental airbag deployment. Failure to follow these instructions may result in possible serious or fatal injury.**

Repair

- Replace the Occupant Restraint Controller in accordance with Service Information. Refer to **MODULE, OCCUPANT RESTRAINT CONTROLLER, REMOVAL** .
- Perform the RESTRAINTS SYSTEM VERIFICATION TEST. Refer to **STANDARD PROCEDURE** .

U11EB-00-LOST COMMUNICATION WITH LEFT C-PILLAR IMPACT ACCELERATION SENSOR

For a complete wiring diagram, **refer to appropriate SYSTEM WIRING DIAGRAMS article** .

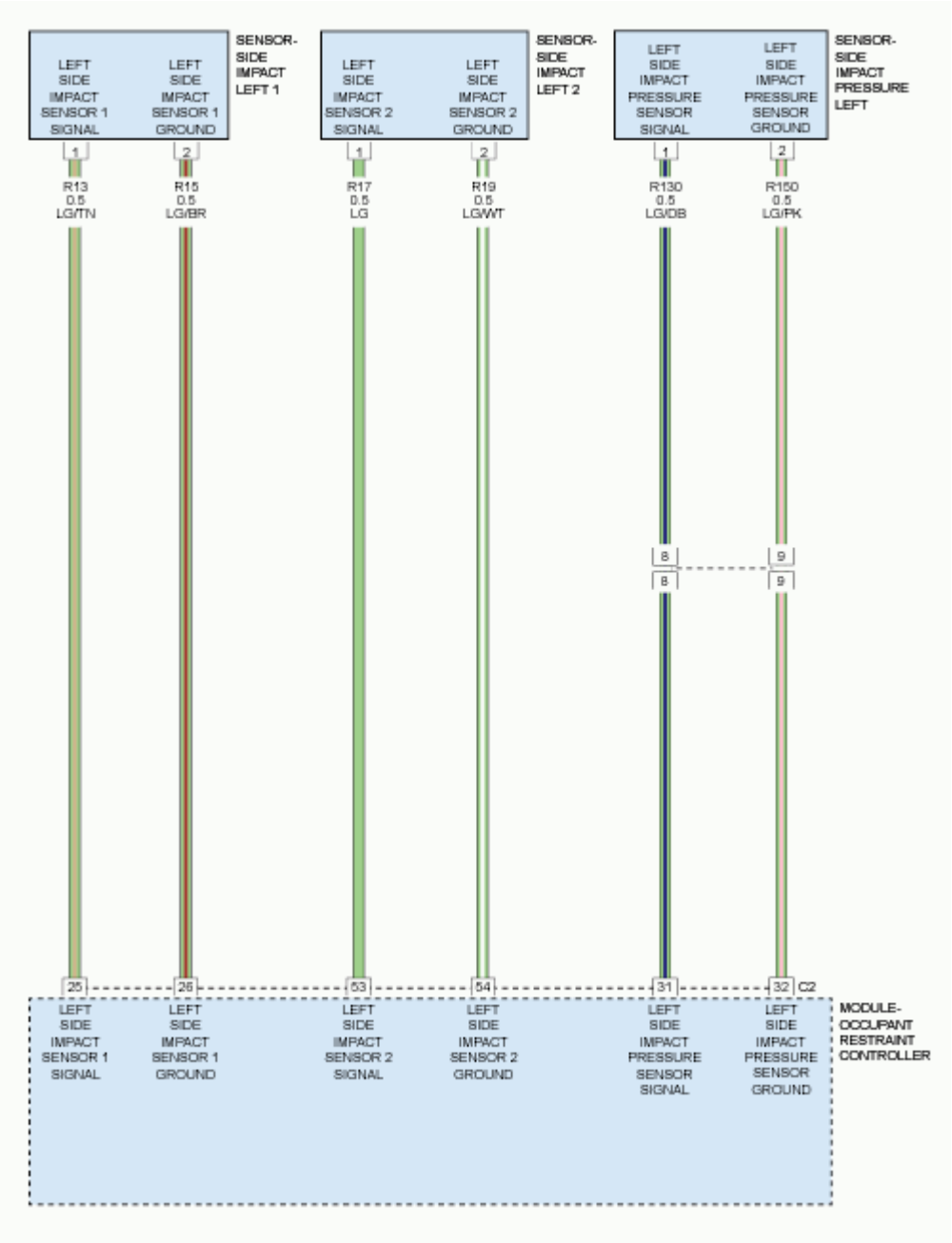

Fig. 20: Left Impact Sensor Circuit Diagram
Courtesy of CHRYSLER GROUP, LLC

THEORY OF OPERATION

The Left Side Impact Sensor 2 is mounted to the passenger rear door opening. Refer to **DESCRIPTION** . The impact sensors perform their own self test using power supplied by the Occupant Restraint Controller (ORC) then communicate this status back to the ORC with periodic updates. The repair of this fault condition involves verifying the integrity of the wiring between the ORC and the sensor.

WHEN MONITORED

The Occupant Restraint Controller (ORC) continuously communicates with the Left Side Impact Sensor 2 over the sensor signal circuit. The sensor communication and on board diagnostics are powered by the ORC signal.

SET CONDITION

This code will set, if the ORC and the Left Side Impact Sensor 2 do not establish and maintain valid data communications. The DTC will become active after the fault has set for a minimum of 2.5 seconds. The DTC will go to Stored after the ORC to Left Side Impact Sensor 2 communication fault has been removed or the suspect sensor has been replaced for 2.5 seconds. The Airbag Warning Lamp (AWL) will set in the instrument cluster.

POSSIBLE CAUSES

Possible Causes
(R17) LEFT SIDE IMPACT SENSOR 2 SIGNAL CIRCUIT SHORTED TO VOLTAGE
(R17) LEFT SIDE IMPACT SENSOR 2 SIGNAL CIRCUIT SHORTED TO GROUND
(R17), (R19) LEFT SIDE IMPACT SENSOR 2 CIRCUITS SHORTED TOGETHER
(R19) LEFT SIDE IMPACT SENSOR 2 GROUND CIRCUIT OPEN
(R17) LEFT SIDE IMPACT SENSOR 2 SIGNAL CIRCUIT OPEN
LEFT SIDE IMPACT PRESSURE SENSOR 2
OCCUPANT RESTRAINT CONTROLLER (ORC)

DIAGNOSTIC TEST

1. **DETERMINE ACTIVE OR STORED**
    1. Turn the ignition on.
    2. With the scan tool, read ORC DTCs.

    NOTE: Make sure the battery is fully charged.

    Does the scan tool display an active: U11EB-00-LOST COMMUNICATION WITH LEFT C-PILLAR IMPACT ACCELERATION SENSOR - DTC?

    Yes

    - Go To 2

    No

    - Perform the RESTRAINTS SYSTEM INTERMITTENT TEST. Refer to **STANDARD PROCEDURE** .
2. **CHECK THE (R17), (R19) LEFT SIDE IMPACT SENSOR 2 SIGNAL AND GROUND CIRCUITS FOR A SHORT TO VOLTAGE**

WARNING: Turn the ignition off disconnect the 12-volt battery and wait two minutes before proceeding. Failure to follow these instructions may result in possible serious or fatal injury.

1. Disconnect the Left Side Impact Sensor 2 harness connector.
2. Disconnect the ORC harness connector.

WARNING: Turn the ignition on, then reconnect the 12-volt battery and wait two minutes before proceeding. Failure to follow these instructions may result in possible serious or fatal injury.

3. Connect the (special tool #8443-57, Adapter, Supplemental Restraint System Load Tool)to the ORC C1 and C2 harness connectors.
4. Measure the voltage of the (R17) Left Side Impact Sensor 2 Signal circuit and (R19) Left Side Impact Sensor 2 Ground circuit between the (special tool #8443-57, Adapter, Supplemental Restraint System Load Tool)the C1B-53 and C1B-54 terminals and ground.

   Is there any voltage present?

   Yes

   - Repair the (R17), (R19) Left Side Impact Sensor 2 circuits for a short to voltage.
   - Perform the RESTRAINTS SYSTEM VERIFICATION TEST. Refer to **STANDARD PROCEDURE** .

   No

   - Go To 3

3. **CHECK THE (R17) LEFT SIDE IMPACT SENSOR 2 SIGNAL CIRCUIT FOR A SHORT TO GROUND**

WARNING: Turn the ignition off disconnect the 12-volt battery and wait two minutes before proceeding. Failure to follow these instructions may result in possible serious or fatal injury.

1. Measure the resistance of the (R17) Left Side Impact Sensor 2 Signal circuit between the (special tool #8443-57, Adapter, Supplemental Restraint System Load Tool)the C1B-53 terminals and ground.

   Is the resistance below 20 Ohms?

   Yes

   - Repair the (R17) Left Side Impact Sensor 2 Signal circuit for a short to ground.

- Perform the RESTRAINTS SYSTEM VERIFICATION TEST. Refer to **STANDARD PROCEDURE** .

No

- Go To 4

4. **CHECK THE (R17) AND (R19) LEFT SIDE IMPACT SENSOR 2 CIRCUITS FOR A SHORT TOGETHER**
   1. Measure the voltage of the (R17) Left Side Impact Sensor 2 Signal circuit and (R19) Left Side Impact Sensor 2 Ground circuits between the (special tool #8443-57, Adapter, Supplemental Restraint System Load Tool)the C1B-53 and C1B-54 terminals.

      Is the resistance below 20 Ohms?

      Yes

      - Repair the (R17), (R19) Left Side Impact Sensor 2 circuits shorted together.
      - Perform the RESTRAINTS SYSTEM VERIFICATION TEST. Refer to **STANDARD PROCEDURE** .

      No

      - Go To 5

5. **CHECK THE (R19) LEFT SIDE IMPACT SENSOR 2 GROUND CIRCUIT FOR AN OPEN OR HIGH RESISTANCE**
   1. Measure the resistance of the (R19) Left Side Impact Sensor 2 Ground circuit between the (special tool #8443-57, Adapter, Supplemental Restraint System Load Tool)the C1B-54 terminals and Left Side Impact Sensor 2 harness connector terminal 2.

      Is the resistance below 1 Ohm?

      Yes

      - Go To 6

      No

      - Repair the (R19) Left Side Impact Sensor 2 Ground circuit for an open or high resistance.
      - Perform the RESTRAINTS SYSTEM VERIFICATION TEST. Refer to **STANDARD PROCEDURE** .

6. **CHECK THE (R17) LEFT SIDE IMPACT SENSOR 2 SIGNAL CIRCUIT FOR AN OPEN OR HIGH RESISTANCE**
   1. Measure the resistance of the (R17) Left Side Impact Sensor 2 Signal circuit between the (special tool #8443-57, Adapter, Supplemental Restraint System Load Tool)the C1B-53 terminals and Left

Side Impact Sensor 2 harness connector terminal 1.

Is the resistance below 1 Ohm?

Yes

- Go To 7

No

- Repair the (R17) Left Side Impact Sensor 2 Signal circuit for an open or high resistance.
- Perform the RESTRAINTS SYSTEM VERIFICATION TEST. Refer to **STANDARD PROCEDURE** .

7. **CHECK OPERATION OF THE LEFT SIDE IMPACT SENSOR 2**
   1. Replace the Left Side Impact Sensor 2. Refer to **SENSOR, IMPACT, REMOVAL** .
   2. Reconnect the vehicle body harness to the impact sensor.
   3. Remove any special tools or jumper wires and reconnect all previously disconnected components - except the Battery.

      WARNING: **Turn the ignition on, then reconnect the 12-volt battery and wait two minutes before proceeding. Failure to follow these instructions may result in possible serious or fatal injury.**

   4. Connect the scan tool to the Data Link Connector - use the most current software available.
   5. Use the scan tool and erase the stored codes in all airbag system modules.
   6. Turn the Ignition Off, and wait 15 seconds before turning the Ignition On.
   7. Wait one minute, and read active codes and if there are none present read the stored codes.

      Did the active U11EB-00-LOST COMMUNICATION WITH LEFT C-PILLAR IMPACT ACCELERATION SENSOR return?

      Yes

      - Go To 8

      No

      - Repair is complete.
      - Perform the RESTRAINTS SYSTEM VERIFICATION TEST. Refer to **STANDARD PROCEDURE** .

8. **REPLACE THE OCCUPANT RESTRAINT CONTROLLER**

   WARNING: **Turn the ignition off, disconnect the 12-volt battery and wait two**

minutes before proceeding. Failure to follow these instructions may result in possible serious or fatal injury.

WARNING: **If the Occupant Restraint Controller (ORC) is dropped at any time, it must be replaced. Failure to take the proper precautions can result in accidental airbag deployment. Failure to follow these instructions may result in possible serious or fatal injury.**

Repair

- Replace the Occupant Restraint Controller in accordance with Service Information. Refer to **MODULE, OCCUPANT RESTRAINT CONTROLLER, REMOVAL** .
- Perform the RESTRAINTS SYSTEM VERIFICATION TEST. Refer to **STANDARD PROCEDURE** .

U11ED-00-LOST COMMUNICATION WITH RIGHT B-PILLAR IMPACT ACCELERATION SENSOR

For a complete wiring diagram, **refer to appropriate SYSTEM WIRING DIAGRAMS article** .

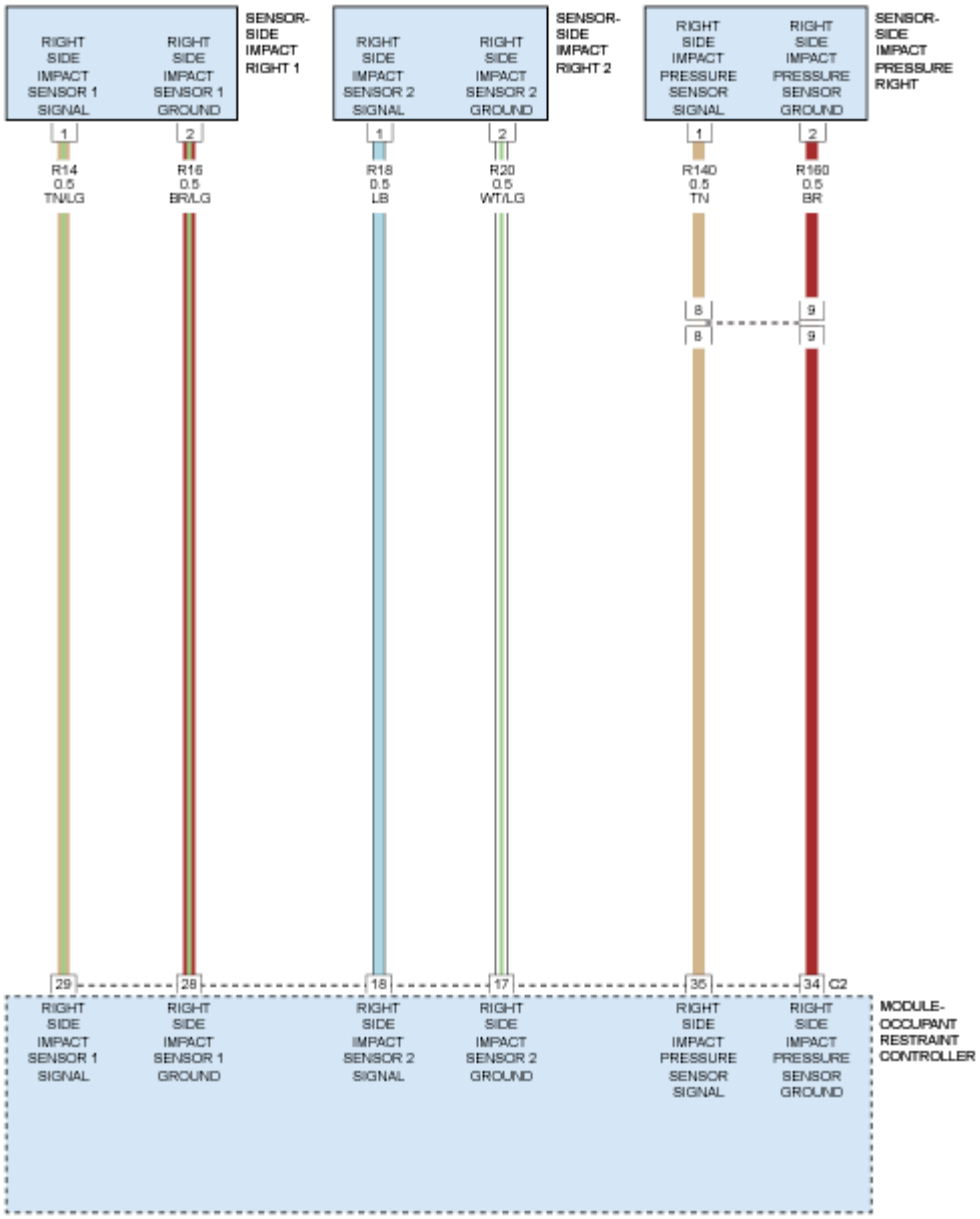

Fig. 21: Right Impact Sensor Circuit Diagram
Courtesy of CHRYSLER GROUP, LLC

THEORY OF OPERATION

The Right Side Impact Sensor 1 is mounted to the passenger rear door opening. Refer to **DESCRIPTION** . The impact sensors perform their own self test using power supplied by the Occupant Restraint Controller (ORC) then communicate this status back to the ORC with periodic updates. The repair of this fault condition involves verifying the integrity of the wiring between the ORC and the sensor.

WHEN MONITORED

The Occupant Restraint Controller (ORC) continuously communicates with the Right Side Impact Sensor 1 over the sensor signal circuit. The sensor communication and on board diagnostics are powered by the ORC signal.

SET CONDITION

This code will set, if the ORC and the Right Side Impact Sensor 1 do not establish and maintain valid data communications. The DTC will become active after the fault has set for a minimum of 2.5 seconds. The DTC will go to Stored after the ORC to Right Side Impact Sensor 1 communication fault has been removed or the suspect sensor has been replaced for 2.5 seconds. The Airbag Warning Lamp (AWL) will set in the instrument cluster.

POSSIBLE CAUSES

Possible Causes
(R14) RIGHT SIDE IMPACT SENSOR 1 SIGNAL CIRCUIT SHORTED TO VOLTAGE
(R14) RIGHT SIDE IMPACT SENSOR 1 SIGNAL CIRCUIT SHORTED TO GROUND
(R14), (R16) RIGHT SIDE IMPACT SENSOR 1 CIRCUITS SHORTED TOGETHER
(R16) RIGHT SIDE IMPACT SENSOR 1 GROUND CIRCUIT OPEN
(R14) RIGHT SIDE IMPACT SENSOR 1 SIGNAL CIRCUIT OPEN
RIGHT SIDE IMPACT PRESSURE SENSOR 1
OCCUPANT RESTRAINT CONTROLLER (ORC)

DIAGNOSTIC TEST

1. **DETERMINE ACTIVE OR STORED DTC**
    1. Turn the ignition on.
    2. With the scan tool, read ORC DTCs.

    NOTE: Make sure the battery is fully charged.

    Does the scan tool display an active: U11ED-00-LOST COMMUNICATION WITH RIGHT B-PILLAR IMPACT ACCELERATION SENSOR - DTC?

    Yes

    - Go To 2

    No

    - Perform the RESTRAINTS SYSTEM INTERMITTENT TEST. Refer to **STANDARD PROCEDURE** .
2. **CHECK THE (R14), (R16) RIGHT SIDE IMPACT SENSOR 1 SIGNAL AND GROUND CIRCUITS FOR A SHORT TO VOLTAGE**

WARNING: Turn the ignition off disconnect the 12-volt battery and wait two minutes before proceeding. Failure to follow these instructions may result in possible serious or fatal injury.

1. Disconnect the Right Side Impact Sensor 1 harness connector.
2. Disconnect the ORC harness connector.

WARNING: Turn the ignition on, then reconnect the 12-volt battery and wait two minutes before proceeding. Failure to follow these instructions may result in possible serious or fatal injury.

3. Connect the (special tool #8443-57, Adapter, Supplemental Restraint System Load Tool)to the ORC C1 and C2 harness connectors.
4. Measure the voltage of the (R14) Right Side Impact Sensor 1 Signal circuit and (R16) Right Side Impact Sensor 1 Ground circuit between the (special tool #8443-57, Adapter, Supplemental Restraint System Load Tool)the C1B-29 and C1B-28 terminals and ground.

   Is there any voltage present?

   Yes

   - Repair the (R14) and (R16) Right Side Impact Sensor 1 circuits for a short to voltage.
   - Perform the RESTRAINTS SYSTEM VERIFICATION TEST. Refer to **STANDARD PROCEDURE** .

   No

   - Go To 3

3. **CHECK THE (R14) RIGHT SIDE IMPACT SENSOR 1 SIGNAL CIRCUIT FOR A SHORT TO GROUND**

WARNING: Turn the ignition off disconnect the 12-volt battery and wait two minutes before proceeding. Failure to follow these instructions may result in possible serious or fatal injury.

1. Measure the resistance of the (R14) Right Side Impact Sensor 1 Signal circuit between the (special tool #8443-57, Adapter, Supplemental Restraint System Load Tool)the C1B-29 terminals and ground.

   Is the resistance below 20 Ohms?

   Yes

   - Repair the (R14) Right Side Impact Sensor 1 Signal circuit for a short to ground.

- Perform the RESTRAINTS SYSTEM VERIFICATION TEST. Refer to **STANDARD PROCEDURE** .

No

- Go To 4

4. **CHECK THE (R14) AND (R16) RIGHT SIDE IMPACT SENSOR 1 CIRCUITS FOR A SHORT TOGETHER**
   1. Measure the voltage of the (R14) Right Side Impact Sensor 1 Signal circuit and (R16) Right Side Impact Sensor 1 Ground circuits between the (special tool #8443-57, Adapter, Supplemental Restraint System Load Tool)the C1B-29 and C1B-28 terminals.

      Is the resistance below 20 Ohms?

      Yes

      - Repair the (R14) and(R165) Right Side Impact Sensor 1 circuits shorted together.
      - Perform the RESTRAINTS SYSTEM VERIFICATION TEST. Refer to **STANDARD PROCEDURE** .

      No

      - Go To 5

5. **CHECK THE (R16) RIGHT SIDE IMPACT SENSOR 1 GROUND CIRCUIT FOR AN OPEN OR HIGH RESISTANCE**
   1. Measure the resistance of the (R16) Right Side Impact Sensor 1 Ground circuit between the (special tool #8443-57, Adapter, Supplemental Restraint System Load Tool)the C1B-28 terminals and Right Side Impact Sensor 1 harness connector terminal 2.

      Is the resistance below 1 Ohm?

      Yes

      - Go To 6

      No

      - Repair the (R16) Right Side Impact Sensor 1 Ground circuit for an open or high resistance.
      - Perform the RESTRAINTS SYSTEM VERIFICATION TEST. Refer to **STANDARD PROCEDURE** .

6. **CHECK THE (R14) RIGHT SIDE IMPACT SENSOR 1 SIGNAL CIRCUIT FOR AN OPEN OR HIGH RESISTANCE**
   1. Measure the resistance of the (R14) Right Side Impact Sensor 1 Signal circuit between the (special tool #8443-57, Adapter, Supplemental Restraint System Load Tool)the C1B-29 terminals and Right

Side Impact Sensor 1 harness connector terminal 1.

Is the resistance below 1 Ohm?

Yes

- Go To 7

No

- Repair the (R14) Right Side Impact Sensor 1 Signal circuit for an open or high resistance.
- Perform the RESTRAINTS SYSTEM VERIFICATION TEST. Refer to **STANDARD PROCEDURE** .

7. **CHECK OPERATION OF THE RIGHT SIDE IMPACT SENSOR 1**
   1. Replace the Right Side Impact Sensor 1. Refer to **SENSOR, IMPACT, REMOVAL** .
   2. Reconnect the vehicle body harness to the impact sensor.
   3. Remove any special tools or jumper wires and reconnect all previously disconnected components - except the Battery.

      WARNING: **Turn the ignition on, then reconnect the 12-volt battery and wait two minutes before proceeding. Failure to follow these instructions may result in possible serious or fatal injury.**

   4. Connect the scan tool to the Data Link Connector - use the most current software available.
   5. Use the scan tool and erase the stored codes in all airbag system modules.
   6. Turn the Ignition Off, and wait 15 seconds before turning the Ignition On.
   7. Wait one minute, and read active codes and if there are none present read the stored codes.

      Did the active U11ED-00-LOST COMMUNICATION WITH RIGHT B-PILLAR IMPACT ACCELERATION SENSOR return?

      Yes

      - Go To 8

      No

      - Repair is complete.
      - Perform the RESTRAINTS SYSTEM VERIFICATION TEST. Refer to **STANDARD PROCEDURE** .

8. **REPLACE THE OCCUPANT RESTRAINT CONTROLLER**

   WARNING: **Turn the ignition off, disconnect the 12-volt battery and wait two**

minutes before proceeding. Failure to follow these instructions may result in possible serious or fatal injury.

WARNING: **If the Occupant Restraint Controller (ORC) is dropped at any time, it must be replaced. Failure to take the proper precautions can result in accidental airbag deployment. Failure to follow these instructions may result in possible serious or fatal injury.**

Repair

- Replace the Occupant Restraint Controller in accordance with Service Information. Refer to **MODULE, OCCUPANT RESTRAINT CONTROLLER, REMOVAL** .
- Perform the RESTRAINTS SYSTEM VERIFICATION TEST. Refer to **STANDARD PROCEDURE** .

U11EE-00-LOST COMMUNICATION WITH RIGHT C-PILLAR IMPACT ACCELERATION SENSOR

For a complete wiring diagram, **refer to appropriate SYSTEM WIRING DIAGRAMS article** .

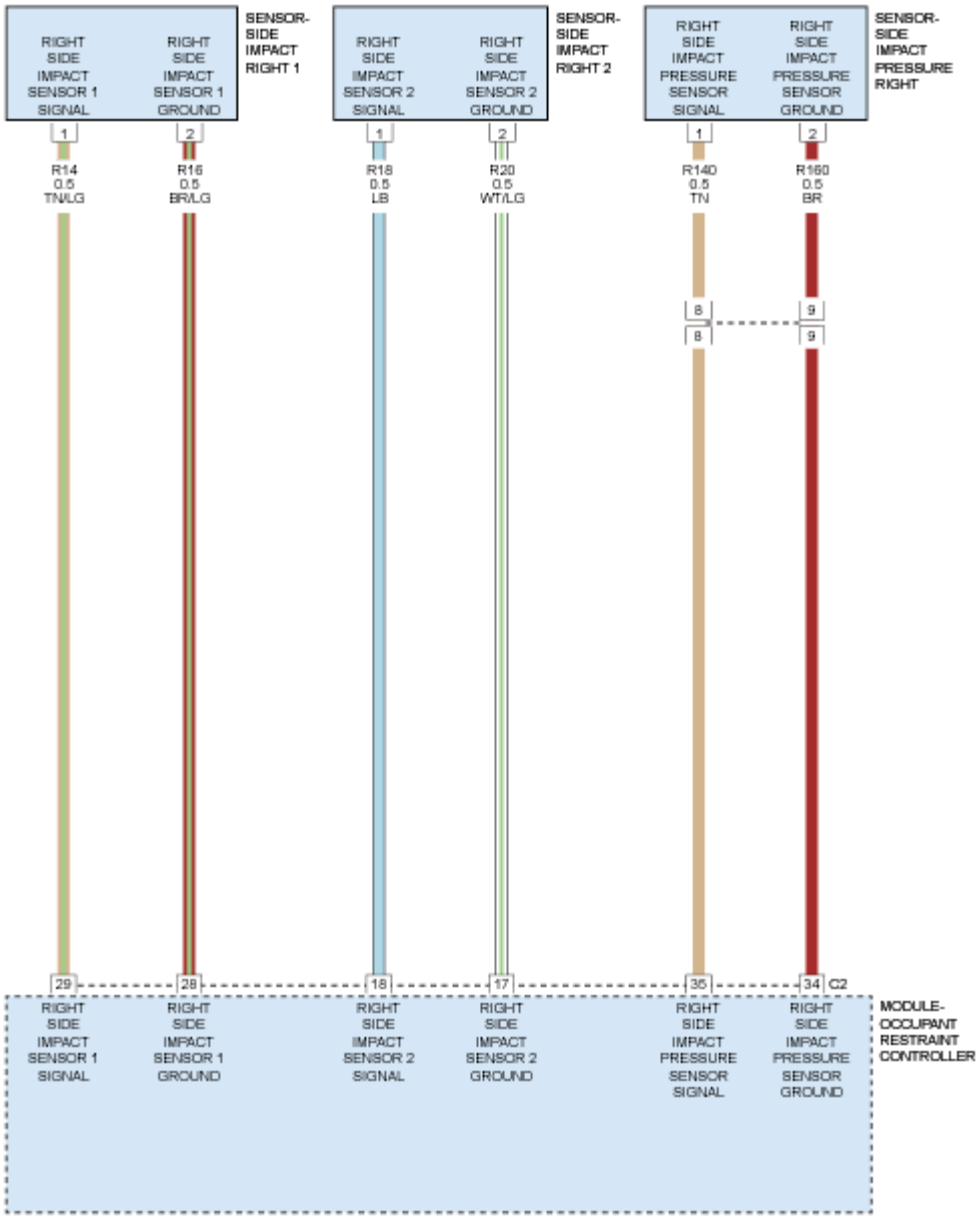

Fig. 22: Right Impact Sensor Circuit Diagram
Courtesy of CHRYSLER GROUP, LLC

THEORY OF OPERATION

The Right Side Impact Sensor 2 is mounted to the passenger rear door opening. Refer to **DESCRIPTION** . The impact sensors perform their own self test using power supplied by the Occupant Restraint Controller (ORC) then communicate this status back to the ORC with periodic updates. The repair of this fault condition involves verifying the integrity of the wiring between the ORC and the sensor.

WHEN MONITORED

The Occupant Restraint Controller (ORC) continuously communicates with the Right Side Impact Sensor 2 over the sensor signal circuit. The sensor communication and on board diagnostics are powered by the ORC signal.

SET CONDITION

This code will set, if the ORC and the Right Side Impact Sensor 2 do not establish and maintain valid data communications. The DTC will become active after the fault has set for a minimum of 2.5 seconds. The DTC will go to Stored after the ORC to Right Side Impact Sensor 2 communication fault has been removed or the suspect sensor has been replaced for 2.5 seconds. The Airbag Warning Lamp (AWL) will set in the instrument cluster.

POSSIBLE CAUSES

Possible Causes
(R18) RIGHT SIDE IMPACT SENSOR 2 SIGNAL CIRCUIT SHORTED TO VOLTAGE
(R18) RIGHT SIDE IMPACT SENSOR 2 SIGNAL CIRCUIT SHORTED TO GROUND
(R18), (R160) RIGHT SIDE IMPACT SENSOR 2 CIRCUITS SHORTED TOGETHER
(R20) RIGHT SIDE IMPACT SENSOR 2 GROUND CIRCUIT OPEN
(R18) RIGHT SIDE IMPACT SENSOR 2 SIGNAL CIRCUIT OPEN
RIGHT SIDE IMPACT PRESSURE SENSOR 2
OCCUPANT RESTRAINT CONTROLLER (ORC)

DIAGNOSTIC TEST

1. **DETERMINE ACTIVE OR STORED DTC**
    1. Turn the ignition on.
    2. With the scan tool, read ORC DTCs.

    NOTE: Make sure the battery is fully charged.

    Does the scan tool display an active: U11EE-00-LOST-COMMUNICATION-WITH-RIGHT-C-PILLAR-IMPACT-ACCELERATION-SENSOR - DTC?

    Yes

    - Go To 2

    No

    - Perform the RESTRAINTS SYSTEM INTERMITTENT TEST. Refer to **STANDARD PROCEDURE** .
2. **CHECK THE (R18), (R20) RIGHT SIDE IMPACT SENSOR 2 SIGNAL AND GROUND CIRCUITS FOR A SHORT TO VOLTAGE**

WARNING: Turn the ignition off disconnect the 12-volt battery and wait two minutes before proceeding. Failure to follow these instructions may result in possible serious or fatal injury.

1. Disconnect the Right Side Impact Sensor 2 harness connector.
2. Disconnect the ORC harness connector.

WARNING: Turn the ignition on, then reconnect the 12-volt battery and wait two minutes before proceeding. Failure to follow these instructions may result in possible serious or fatal injury.

3. Connect the (special tool #8443-57, Adapter, Supplemental Restraint System Load Tool)to the ORC C1 and C2 harness connectors.
4. Measure the voltage of the (R18) Right Side Impact Sensor 2 Signal circuit and (R20) Right Side Impact Sensor 2 Ground circuit between the (special tool #8443-57, Adapter, Supplemental Restraint System Load Tool)the C1B-18 and C1B-17 terminals and ground.

   Is there any voltage present?

   Yes

   - Repair the (R18), (R20) Right Side Impact Sensor 2 circuits for a short to voltage.
   - Perform the RESTRAINTS SYSTEM VERIFICATION TEST. Refer to **STANDARD PROCEDURE** .

   No

   - Go To 3

3. **CHECK THE (R18) RIGHT SIDE IMPACT SENSOR 2 SIGNAL CIRCUIT FOR A SHORT TO GROUND**

WARNING: Turn the ignition off disconnect the 12-volt battery and wait two minutes before proceeding. Failure to follow these instructions may result in possible serious or fatal injury.

1. Measure the resistance of the (R18) Right Side Impact Sensor 2 Signal circuit between the (special tool #8443-57, Adapter, Supplemental Restraint System Load Tool)the C1B-18 terminals and ground.

   Is the resistance below 20 Ohms?

   Yes

   - Repair the (R18) Right Side Impact Sensor 2 Signal circuit for a short to ground.

- Perform the RESTRAINTS SYSTEM VERIFICATION TEST. Refer to **STANDARD PROCEDURE** .

No

- Go To 4

4. **CHECK THE (R18), (R20) RIGHT SIDE IMPACT SENSOR 2 CIRCUITS FOR A SHORT TOGETHER**
   1. Measure the voltage of the (R18) Right Side Impact Sensor 2 Signal circuit and (R20) Right Side Impact Sensor 2 Ground circuits between the (special tool #8443-57, Adapter, Supplemental Restraint System Load Tool)the C1B-18 and C1B-17 terminals.

      Is the resistance below 20 Ohms?

      Yes

      - Repair the (R18), (R20) Right Side Impact Sensor 2 circuits shorted together.
      - Perform the RESTRAINTS SYSTEM VERIFICATION TEST. Refer to **STANDARD PROCEDURE** .

      No

      - Go To 5

5. **CHECK THE (R20) RIGHT SIDE IMPACT SENSOR 2 GROUND CIRCUIT FOR AN OPEN OR HIGH RESISTANCE**
   1. Measure the resistance of the (R20) Right Side Impact Sensor 2 Ground circuit between the (special tool #8443-57, Adapter, Supplemental Restraint System Load Tool)the C1B-17 terminals and Right Side Impact Sensor 2 harness connector terminal 2.

      Is the resistance below 1 Ohm?

      Yes

      - Go To 6

      No

      - Repair the (R20) Right Side Impact Sensor 2 Ground circuit for an open or high resistance.
      - Perform the RESTRAINTS SYSTEM VERIFICATION TEST. Refer to **STANDARD PROCEDURE** .

6. **CHECK THE (R18) RIGHT SIDE IMPACT SENSOR 2 SIGNAL CIRCUIT FOR AN OPEN OR HIGH RESISTANCE**
   1. Measure the resistance of the (R18) Right Side Impact Sensor 2 Signal circuit between the (special tool #8443-57, Adapter, Supplemental Restraint System Load Tool)the C1B-18 terminals and Right

Side Impact Sensor 2 harness connector terminal 1.

Is the resistance below 1 Ohm?

Yes

- Go To 7

No

- Repair the (R18) Right Side Impact Sensor 2 Signal circuit for an open or high resistance.
- Perform the RESTRAINTS SYSTEM VERIFICATION TEST. Refer to **STANDARD PROCEDURE** .

7. **CHECK OPERATION OF THE RIGHT SIDE IMPACT SENSOR 2**
   1. Replace the Right Side Impact Sensor 2. Refer to **SENSOR, IMPACT, REMOVAL** .
   2. Reconnect the vehicle body harness to the impact sensor.
   3. Remove any special tools or jumper wires and reconnect all previously disconnected components - except the Battery.

      WARNING: **Turn the ignition on, then reconnect the 12-volt battery and wait two minutes before proceeding. Failure to follow these instructions may result in possible serious or fatal injury.**

   4. Connect the scan tool to the Data Link Connector - use the most current software available.
   5. Use the scan tool and erase the stored codes in all airbag system modules.
   6. Turn the Ignition Off, and wait 15 seconds before turning the Ignition On.
   7. Wait one minute, and read active codes and if there are none present read the stored codes.

      Did the active U11EE-00-LOST-COMMUNICATION-WITH-RIGHT-C-PILLAR-IMPACT-ACCELERATION-SENSOR return?

      Yes

      - Go To 8

      No

      - Repair is complete.
      - Perform the RESTRAINTS SYSTEM VERIFICATION TEST. Refer to **STANDARD PROCEDURE** .

8. **REPLACE THE OCCUPANT RESTRAINT CONTROLLER**

   WARNING: **Turn the ignition off, disconnect the 12-volt battery and wait two**

minutes before proceeding. Failure to follow these instructions may result in possible serious or fatal injury.

WARNING: **If the Occupant Restraint Controller (ORC) is dropped at any time, it must be replaced. Failure to take the proper precautions can result in accidental airbag deployment. Failure to follow these instructions may result in possible serious or fatal injury.**

Repair

- Replace the Occupant Restraint Controller in accordance with Service Information. Refer to **MODULE, OCCUPANT RESTRAINT CONTROLLER, REMOVAL** .
- Perform the RESTRAINTS SYSTEM VERIFICATION TEST. Refer to **STANDARD PROCEDURE** .

U11F0-00-LOST COMMUNICATION WITH LEFT IMPACT PRESSURE SENSOR

For a complete wiring diagram, **refer to appropriate SYSTEM WIRING DIAGRAMS article** .

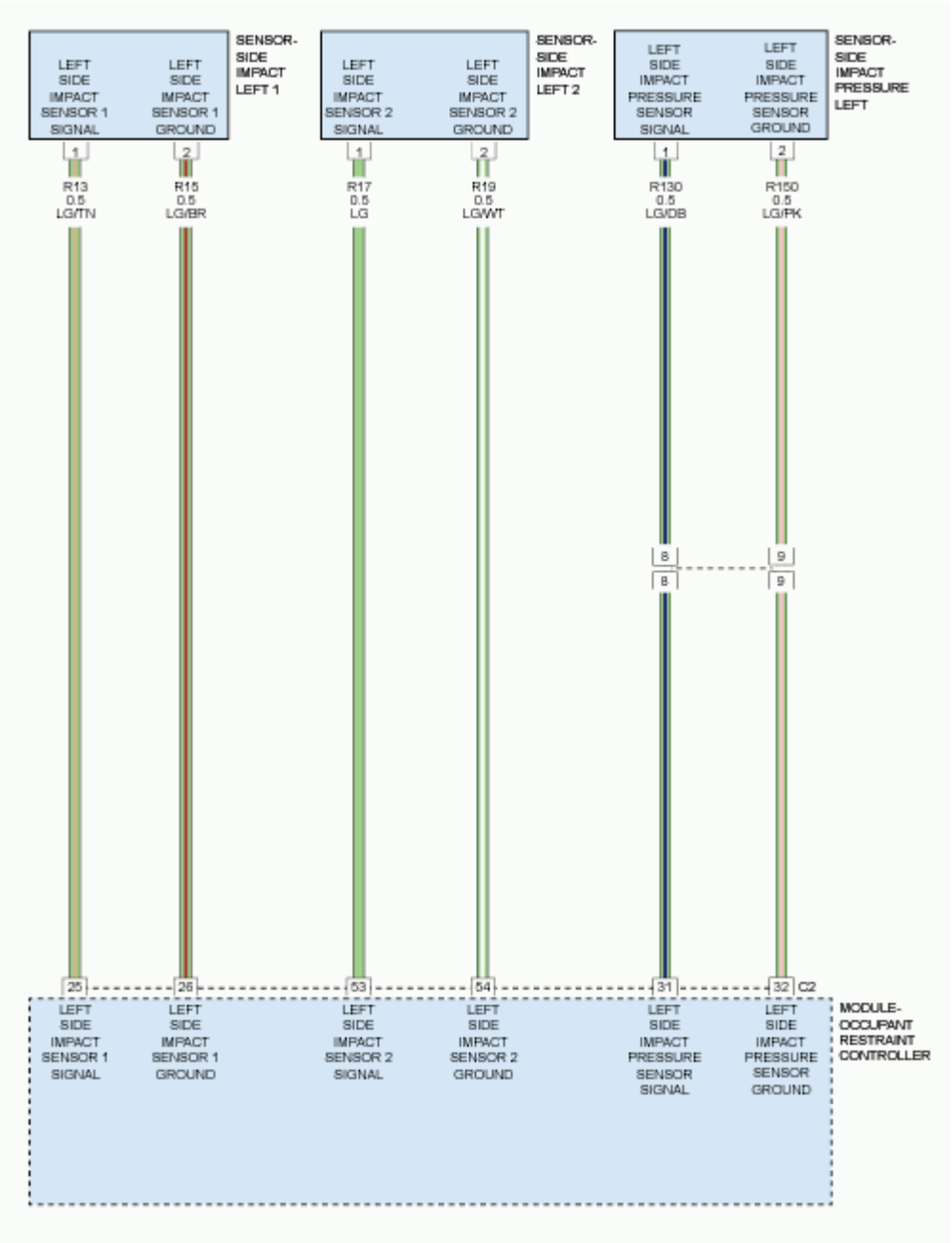

Fig. 23: Left Impact Sensor Circuit Diagram
Courtesy of CHRYSLER GROUP, LLC

THEORY OF OPERATION

The driver door pressure sensor is mounted to the driver inner door panel behind the door trim panel. Refer to **DESCRIPTION** . The impact sensors perform their own self test using power supplied by the Occupant Restraint Controller (ORC) then communicate this status back to the ORC with periodic updates. The repair of this fault condition involves verifying the integrity of the wiring between the ORC and the sensor. A short to voltage fault on the door pressure sensor wiring can cause a loss of comm side impact code to set and the possible replacement of a good side impact sensor. The door pressure sensor is hardwired to the side impact

sensor which is hard wired to the ORC creating a daisy chain circuit. The short to battery fault in a loss of comm or internal circuit failure of the door pressure sensor can cause the side impact sensor on the same side to set a loss of comm code.

WHEN MONITORED

The Occupant Restraint Controller (ORC) continuously communicates with the Driver Door Pressure Sensor (Satellite) over the sensor signal circuit. The sensor communication and on board diagnostics are powered by the ORC signal.

SET CONDITION

This code will set, if the ORC and the Driver Door Pressure Sensor do not establish and maintain valid data communications. The DTC will become Active after the fault has set for a minimum of 2.5 seconds. The DTC will go to Stored after the ORC to Driver Door Pressure Sensor communication fault has been removed or the suspect pressure sensor has been replaced for 2.5 seconds. The Multifunction Indicator Lamp (MIL) will set in the instrument cluster.

POSSIBLE CAUSES

Possible Causes
(R130) LEFT SIDE IMPACT PRESSURE SENSOR SIGNAL CIRCUIT SHORTED TO VOLTAGE
(R150) LEFT SIDE IMPACT PRESSURE SENSOR SIGNAL CIRCUIT SHORTED TO GROUND
(R130), (R150) LEFT SIDE IMPACT PRESSURE SENSOR CIRCUITS SHORTED TOGETHER
(R150) LEFT SIDE IMPACT PRESSURE SENSOR GROUND CIRCUIT OPEN
(R130) LEFT SIDE IMPACT PRESSURE SENSOR SIGNAL CIRCUIT OPEN
OCCUPANT RESTRAINT CONTROLLER (ORC)

DIAGNOSTIC TEST

1. **VERIFY THAT DTC - U11F0-00-LOST COMMUNICATION WITH LEFT IMPACT PRESSURE SENSOR IS ACTIVE**

   NOTE: Make sure the battery is fully charged.

   1. Turn the ignition on.
   2. With the scan tool, read ORC DTCs.

      Does the scan tool display active: U11F0-00-LOST COMMUNICATION WITH LEFT IMPACT PRESSURE SENSOR - DTC?

      Yes

      - Go To 2

No

- Perform the RESTRAINTS SYSTEM INTERMITTENT TEST. Refer to **STANDARD PROCEDURE** .

2. **CHECK THE (R130), (R150) LEFT SIDE IMPACT PRESSURE SENSOR SIGNAL AND GROUND CIRCUITS FOR A SHORT TO VOLTAGE**

WARNING: Turn the ignition off disconnect the 12-volt battery and wait two minutes before proceeding. Failure to follow these instructions may result in possible serious or fatal injury.

1. Disconnect the Left Side Impact Pressure Sensor harness connector.
2. Disconnect the ORC harness connector.

NOTE: Check the connectors - Clean and repair as necessary.

3. Connect the (special tool #8443-57, Adapter, Supplemental Restraint System Load Tool)to the ORC C1 and C2 harness connectors.

WARNING: Turn the ignition on, then reconnect the 12-volt battery and wait two minutes before proceeding. Failure to follow these instructions may result in possible serious or fatal injury.

4. Measure the voltage of the (R130) Left Side Impact Pressure Sensor Signal circuit and (R150) Left Side Impact Pressure Sensor Ground circuit between the (special tool #8443-57, Adapter, Supplemental Restraint System Load Tool)the C1B-31 and C1B-32 terminals and ground.

   Is there any voltage present on either circuit?

   Yes

   - Repair the (R130), (R150) Left Side Impact Pressure Sensor circuits for a short to voltage.
   - Perform the RESTRAINTS SYSTEM VERIFICATION TEST. Refer to **STANDARD PROCEDURE** .

   No

   - Go To 3

3. **CHECK THE (R130) LEFT SIDE IMPACT PRESSURE SENSOR SIGNAL CIRCUIT FOR A SHORT TO GROUND**

WARNING: Turn the ignition off disconnect the 12-volt battery and wait two minutes before proceeding. Failure to follow these instructions may result in possible serious or fatal injury.

1. Measure the resistance of the (R130) Left Side Impact Pressure Sensor Signal circuit between the (special tool #8443-57, Adapter, Supplemental Restraint System Load Tool)the C1B-31 terminals and ground.

   Is the resistance below 20 Ohms?

   Yes

   - Repair the (R130) Left Side Impact Pressure Sensor Signal circuit for a short to ground.
   - Perform the RESTRAINTS SYSTEM VERIFICATION TEST. Refer to **STANDARD PROCEDURE** .

   No

   - Go To 4

4. **CHECK THE (R130), (R150) LEFT SIDE IMPACT PRESSURE SENSOR CIRCUITS FOR A SHORT TOGETHER**
   1. Measure the voltage of the (R130) Left Side Impact Pressure Sensor Signal circuit and (R150) Left Side Impact Pressure Sensor Ground circuits between the (special tool #8443-57, Adapter, Supplemental Restraint System Load Tool)the C1B-31 and C1B-32 terminals.

      Is the resistance below 20 Ohms?

      Yes

      - Repair the (R130), (R150) Left Side Impact Pressure Sensor circuits shorted together.
      - Perform the RESTRAINTS SYSTEM VERIFICATION TEST. Refer to **STANDARD PROCEDURE** .

      No

      - Go To 5

5. **CHECK THE (R150) LEFT SIDE IMPACT PRESSURE SENSOR GROUND CIRCUIT FOR AN OPEN OR HIGH RESISTANCE**
   1. Measure the resistance of the (R150) Left Side Impact Pressure Sensor Ground circuit between the (special tool #8443-57, Adapter, Supplemental Restraint System Load Tool)the C1B-32 terminals and Left Side Impact Pressure Sensor harness connector terminal 2.

      Is the resistance below 1 Ohm?

      Yes

      - Go To 6

      No

- Repair the (R150) Left Side Impact Pressure Sensor Ground circuit for an open or high resistance.
- Perform the RESTRAINTS SYSTEM VERIFICATION TEST. Refer to **STANDARD PROCEDURE** .

6. **CHECK THE (R130) LEFT SIDE IMPACT PRESSURE SENSOR SIGNAL CIRCUIT FOR AN OPEN OR HIGH RESISTANCE**
   1. Measure the resistance of the (R130) Left Side Impact Pressure Sensor Signal circuit between the (special tool #8443-57, Adapter, Supplemental Restraint System Load Tool)the C1B-31 terminals and Left Side Impact Pressure Sensor harness connector terminal 1.

      Is the resistance below 1 Ohm?

      Yes

      - Go To 7

      No

      - Repair the (R130) Left Side Impact Pressure Sensor Signal circuit for an open or high resistance.
      - Perform the RESTRAINTS SYSTEM VERIFICATION TEST. Refer to **STANDARD PROCEDURE** .

7. **CHECK OPERATION OF THE LEFT SIDE IMPACT PRESSURE SENSOR**
   1. Replace the Left Side Impact Pressure Sensor. Refer to **SENSOR, IMPACT, REMOVAL** .
   2. Reconnect the vehicle body harness to the impact pressure sensor.
   3. Remove any special tools or jumper wires and reconnect all previously disconnected components - except the Battery.

      WARNING: Turn the ignition on, then reconnect the 12-volt battery and wait two minutes before proceeding. Failure to follow these instructions may result in possible serious or fatal injury.

   4. Connect the scan tool to the Data Link Connector - use the most current software available.
   5. Use the scan tool and erase the stored codes in all airbag system modules.
   6. Turn the Ignition Off, and wait five seconds before turning the Ignition On.
   7. Wait one minute, and read active codes and if there are none present read the stored codes.

      Did the active: U11F0-00-LOST COMMUNICATION WITH LEFT IMPACT PRESSURE SENSOR - DTC return?

      Yes

      - Go To 8

No

- Repair is complete.
- Perform the RESTRAINTS SYSTEM VERIFICATION TEST. Refer to **STANDARD PROCEDURE** .

8. **REPLACE THE OCCUPANT RESTRAINT CONTROLLER**

WARNING: **Turn the ignition off, disconnect the 12-volt battery and wait two minutes before proceeding. Failure to follow these instructions may result in possible serious or fatal injury.**

WARNING: **If the Occupant Restraint Controller (ORC) is dropped at any time, it must be replaced. Failure to take the proper precautions can result in accidental airbag deployment. Failure to follow these instructions may result in possible serious or fatal injury.**

Repair

- Replace the Occupant Restraint Controller in accordance with Service Information. Refer to **MODULE, OCCUPANT RESTRAINT CONTROLLER, REMOVAL** .
- Perform the RESTRAINTS SYSTEM VERIFICATION TEST. Refer to **STANDARD PROCEDURE** .

U11F1-00-LOST COMMUNICATION WITH RIGHT IMPACT PRESSURE SENSOR

For a complete wiring diagram, **refer to appropriate SYSTEM WIRING DIAGRAMS article** .

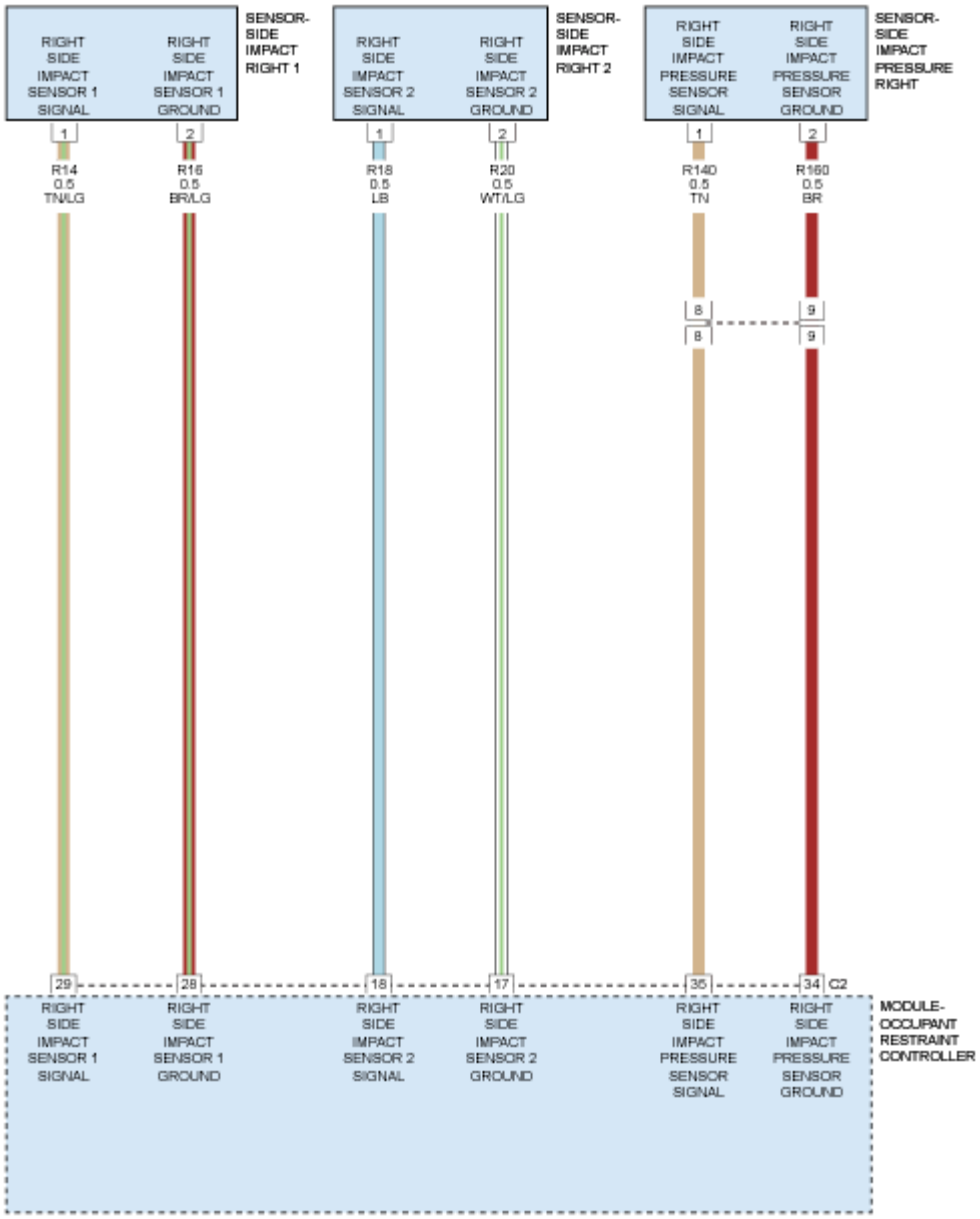

Fig. 24: Right Impact Sensor Circuit Diagram
Courtesy of CHRYSLER GROUP, LLC

THEORY OF OPERATION

The passenger door pressure sensor is mounted to the passenger inner door panel behind the door trim panel. Refer to **DESCRIPTION** . The impact sensors perform their own self test using power supplied by the Occupant Restraint Controller (ORC) then communicate this status back to the ORC with periodic updates. The repair of this fault condition involves verifying the integrity of the wiring between the ORC and the sensor.

WHEN MONITORED

The Occupant Restraint Controller (ORC) continuously communicates with the Passenger Door Pressure Sensor (Satellite) over the sensor signal circuit. The sensor communication and on board diagnostics are powered by the ORC signal.

SET CONDITION

This code will set, if the ORC and the Passenger Door Pressure Sensor do not establish and maintain valid data communications. The DTC will become Active after the fault has set for a minimum of 2.5 seconds. The DTC will go to Stored after the ORC to Passenger Door Pressure Sensor communication fault has been removed or the suspect pressure sensor has been replaced for 2.5 seconds. The Airbag Warning Lamp (AWL) will set in the instrument cluster.

POSSIBLE CAUSES

Possible Causes
(R140) RIGHT SIDE IMPACT PRESSURE SENSOR SIGNAL CIRCUIT SHORTED TO VOLTAGE
(R140) RIGHT SIDE IMPACT PRESSURE SENSOR SIGNAL CIRCUIT SHORTED TO GROUND
(R140), (R160) RIGHT SIDE IMPACT PRESSURE SENSOR CIRCUITS SHORTED TOGETHER
(R160) RIGHT SIDE IMPACT PRESSURE SENSOR GROUND CIRCUIT OPEN
(R140) RIGHT SIDE IMPACT PRESSURE SENSOR SIGNAL CIRCUIT OPEN
RIGHT SIDE IMPACT PRESSURE SENSOR
OCCUPANT RESTRAINT CONTROLLER (ORC)

DIAGNOSTIC TEST

1. **DETERMINE ACTIVE OR STORED DTC**
    1. Turn the ignition on.
    2. With the scan tool, read ORC DTCs.

    NOTE: Make sure the battery is fully charged.

    Does the scan tool display an active: U11F1-00-LOST COMMUNICATION WITH RIGHT IMPACT PRESSURE SENSOR - DTC?

    Yes

    - Go To 2

    No

    - Perform the RESTRAINTS SYSTEM INTERMITTENT TEST. Refer to **STANDARD PROCEDURE** .
2. **CHECK THE (R140), (R160) RIGHT SIDE IMPACT PRESSURE SENSOR SIGNAL AND GROUND CIRCUITS FOR A SHORT TO VOLTAGE**

WARNING: Turn the ignition off disconnect the 12-volt battery and wait two minutes before proceeding. Failure to follow these instructions may result in possible serious or fatal injury.

1. Disconnect the Right Side Impact Pressure Sensor harness connector.
2. Disconnect the ORC harness connector.

WARNING: Turn the ignition on, then reconnect the 12-volt battery and wait two minutes before proceeding. Failure to follow these instructions may result in possible serious or fatal injury.

3. Connect the (special tool #8443-57, Adapter, Supplemental Restraint System Load Tool)to the ORC C1 and C2 harness connectors.
4. Measure the voltage of the (R140) Right Side Impact Pressure Sensor Signal circuit and (R160) Right Side Impact Pressure Sensor Ground circuit between the (special tool #8443-57, Adapter, Supplemental Restraint System Load Tool)the C1B-34 and C1B-35 terminals and ground.

   Is there any voltage present?

   Yes

   - Repair the (R140), (R160) Right Side Impact Pressure Sensor circuits for a short to voltage.
   - Perform the RESTRAINTS SYSTEM VERIFICATION TEST. Refer to **STANDARD PROCEDURE** .

   No

   - Go To 3

3. **CHECK THE (R140) RIGHT SIDE IMPACT PRESSURE SENSOR SIGNAL CIRCUIT FOR A SHORT TO GROUND**

WARNING: Turn the ignition off disconnect the 12-volt battery and wait two minutes before proceeding. Failure to follow these instructions may result in possible serious or fatal injury.

1. Measure the resistance of the (R140) Right Side Impact Pressure Sensor Signal circuit between the (special tool #8443-57, Adapter, Supplemental Restraint System Load Tool)the C1B-35 terminals and ground.

   Is the resistance below 20 Ohms?

   Yes

   - Repair the (R140) Right Side Impact Pressure Sensor Signal circuit for a short to ground.

- Perform the RESTRAINTS SYSTEM VERIFICATION TEST. Refer to **STANDARD PROCEDURE** .

No

- Go To 4

4. **CHECK THE (R140), (R160) RIGHT SIDE IMPACT PRESSURE SENSOR CIRCUITS FOR A SHORT TOGETHER**
   1. Measure the voltage of the (R140) Right Side Impact Pressure Sensor Signal circuit and (R160) Right Side Impact Pressure Sensor Ground circuits between the (special tool #8443-57, Adapter, Supplemental Restraint System Load Tool)the C1B-34 and C1B-35 terminals.

      Is the resistance below 20 Ohms?

      Yes

      - Repair the (R140), (R160) Right Side Impact Pressure Sensor circuits shorted together.
      - Perform the RESTRAINTS SYSTEM VERIFICATION TEST. Refer to **STANDARD PROCEDURE** .

      No

      - Go To 5

5. **CHECK THE (R160) RIGHT SIDE IMPACT PRESSURE SENSOR GROUND CIRCUIT FOR AN OPEN OR HIGH RESISTANCE**
   1. Measure the resistance of the (R160) Right Side Impact Pressure Sensor Ground circuit between the (special tool #8443-57, Adapter, Supplemental Restraint System Load Tool)the C1B-34 terminals and Right Side Impact Pressure Sensor harness connector terminal 2.

      Is the resistance below 1 Ohm?

      Yes

      - Go To 6

      No

      - Repair the (R160) Right Side Impact Pressure Sensor Ground circuit for an open or high resistance.
      - Perform the RESTRAINTS SYSTEM VERIFICATION TEST. Refer to **STANDARD PROCEDURE** .

6. **CHECK THE (R140) RIGHT SIDE IMPACT PRESSURE SENSOR SIGNAL CIRCUIT FOR AN OPEN OR HIGH RESISTANCE**
   1. Measure the resistance of the (R140) Right Side Impact Pressure Sensor Signal circuit between the

(special tool #8443-57, Adapter, Supplemental Restraint System Load Tool)the C1B-35 terminals and Right Side Impact Pressure Sensor harness connector terminal 1.

Is the resistance below 1 Ohm?

Yes

- Go To 7

No

- Repair the (R140) Right Side Impact Pressure Sensor Signal circuit for an open or high resistance.
- Perform the RESTRAINTS SYSTEM VERIFICATION TEST. Refer to **STANDARD PROCEDURE** .

7. **CHECK OPERATION OF THE RIGHT SIDE IMPACT PRESSURE SENSOR**
   1. Replace the Right Side Impact Pressure Sensor. Refer to **SENSOR, IMPACT, REMOVAL** .
   2. Reconnect the vehicle body harness to the impact sensor.
   3. Remove any special tools or jumper wires and reconnect all previously disconnected components - except the Battery.

      WARNING: **Turn the ignition on, then reconnect the 12-volt battery and wait two minutes before proceeding. Failure to follow these instructions may result in possible serious or fatal injury.**

   4. Connect the scan tool to the Data Link Connector - use the most current software available.
   5. Use the scan tool and erase the stored codes in all airbag system modules.
   6. Turn the Ignition Off, and wait 15 seconds before turning the Ignition On.
   7. Wait one minute, and read active codes and if there are none present read the stored codes.

      Did the active U11F1-00-LOST COMMUNICATION WITH RIGHT IMPACT PRESSURE SENSOR return?

      Yes

      - Go To 8

      No

      - Repair is complete.
      - Perform the RESTRAINTS SYSTEM VERIFICATION TEST. Refer to **STANDARD PROCEDURE** .

8. **REPLACE THE OCCUPANT RESTRAINT CONTROLLER**

WARNING: Turn the ignition off, disconnect the 12-volt battery and wait two minutes before proceeding. Failure to follow these instructions may result in possible serious or fatal injury.

WARNING: If the Occupant Restraint Controller (ORC) is dropped at any time, it must be replaced. Failure to take the proper precautions can result in accidental airbag deployment. Failure to follow these instructions may result in possible serious or fatal injury.

Repair

- Replace the Occupant Restraint Controller in accordance with Service Information. Refer to **MODULE, OCCUPANT RESTRAINT CONTROLLER, REMOVAL** .
- Perform the RESTRAINTS SYSTEM VERIFICATION TEST. Refer to **STANDARD PROCEDURE** .

U146D-00-IMPLAUSIBLE DATA RECEIVED FROM LEFT B-PILLAR IMPACT ACCELERATION SENSOR

For a complete wiring diagram, **refer to appropriate SYSTEM WIRING DIAGRAMS article** .

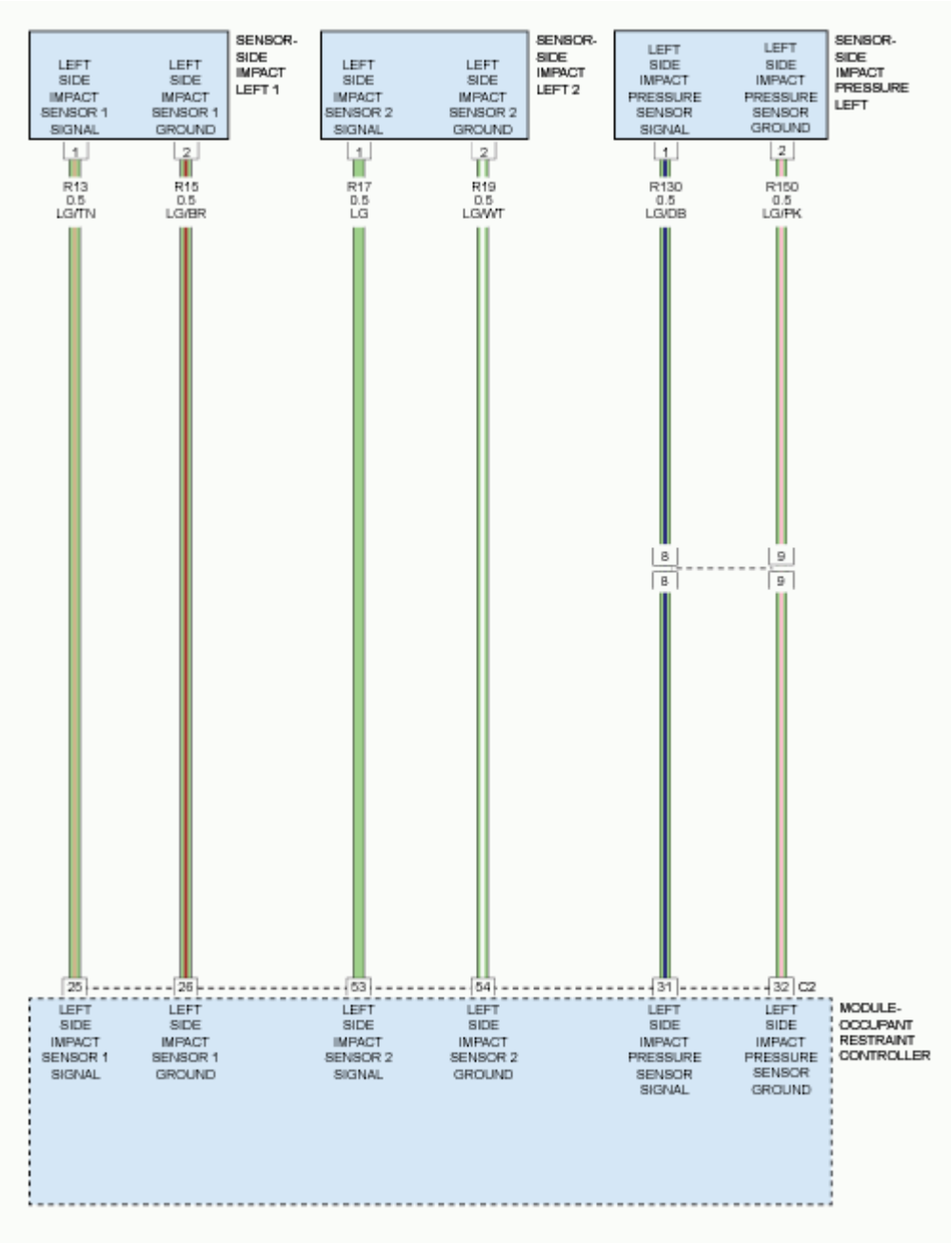

Fig. 25: Left Impact Sensor Circuit Diagram
Courtesy of CHRYSLER GROUP, LLC

THEORY OF OPERATION

The Left Side Impact Sensor 1 is mounted to the passenger rear door opening. Refer to **DESCRIPTION** . The impact sensors perform their own self test using power supplied by the Occupant Restraint Controller (ORC) then communicate this status back to the ORC with periodic updates. The repair of this fault condition involves verifying the integrity of the wiring between the ORC and the sensor.

WHEN MONITORED

The Occupant Restraint Controller (ORC) continuously communicates with the Left Side Impact Sensor 1 over the sensor signal circuit. The sensor communication and on board diagnostics are powered by the ORC signal.

SET CONDITION

This code will set, if the ORC and the Left Side Impact Sensor 1 do not establish and maintain valid data communications. The DTC will become active after the fault has set for a minimum of 2.5 seconds. The DTC will go to Stored after the ORC to Left Side Impact Sensor 1 communication fault has been removed or the suspect sensor has been replaced for 2.5 seconds. The Airbag Warning Lamp (AWL) will set in the instrument cluster.

POSSIBLE CAUSES

Possible Causes
(R13) LEFT SIDE IMPACT SENSOR 1 SIGNAL CIRCUIT SHORTED TO VOLTAGE
(R13) LEFT SIDE IMPACT SENSOR 1 SIGNAL CIRCUIT SHORTED TO GROUND
(R13), (R15) LEFT SIDE IMPACT SENSOR 1 CIRCUITS SHORTED TOGETHER
(R15) LEFT SIDE IMPACT SENSOR 1 GROUND CIRCUIT OPEN
(R13) LEFT SIDE IMPACT SENSOR 1 SIGNAL CIRCUIT OPEN
LEFT SIDE IMPACT PRESSURE SENSOR 1
OCCUPANT RESTRAINT CONTROLLER (ORC)

DIAGNOSTIC TEST

1. **DETERMINE ACTIVE OR STORED DTC**
    1. Turn the ignition on.
    2. With the scan tool, read ORC DTCs.

    NOTE: Make sure the battery is fully charged.

    Does the scan tool display an active: U146D-00-IMPLAUSIBLE DATA RECEIVED FROM LEFT B-PILLAR IMPACT ACCELERATION SENSOR - DTC?

    Yes

    - Go To 2

    No

    - Perform the RESTRAINTS SYSTEM INTERMITTENT TEST. Refer to **STANDARD PROCEDURE** .
2. **CHECK THE (R13), (R15) LEFT SIDE IMPACT SENSOR 1 SIGNAL AND GROUND CIRCUITS FOR A SHORT TO VOLTAGE**

WARNING: Turn the ignition off disconnect the 12-volt battery and wait two minutes before proceeding. Failure to follow these instructions may result in possible serious or fatal injury.

1. Disconnect the Left Side Impact Sensor 1 harness connector.
2. Disconnect the ORC harness connector.

WARNING: Turn the ignition on, then reconnect the 12-volt battery and wait two minutes before proceeding. Failure to follow these instructions may result in possible serious or fatal injury.

3. Connect the (special tool #8443-57, Adapter, Supplemental Restraint System Load Tool)to the ORC C1 and C2 harness connectors.
4. Measure the voltage of the (R13) Left Side Impact Sensor 1 Signal circuit and (R15) Left Side Impact Sensor 1 Ground circuit between the (special tool #8443-57, Adapter, Supplemental Restraint System Load Tool)the C1B-25 and C1B-26 terminals and ground.

   Is there any voltage present?

   Yes

   - Repair the (R13) and (R15) Left Side Impact Sensor 1 circuits for a short to voltage.
   - Perform the RESTRAINTS SYSTEM VERIFICATION TEST. Refer to **STANDARD PROCEDURE** .

   No

   - Go To 3

3. **CHECK THE (R13) LEFT SIDE IMPACT SENSOR 1 SIGNAL CIRCUIT FOR A SHORT TO GROUND**

WARNING: Turn the ignition off disconnect the 12-volt battery and wait two minutes before proceeding. Failure to follow these instructions may result in possible serious or fatal injury.

1. Measure the resistance of the (R13) Left Side Impact Sensor 1 Signal circuit between the (special tool #8443-57, Adapter, Supplemental Restraint System Load Tool)the C1B-25 terminals and ground.

   Is the resistance below 20 Ohms?

   Yes

   - Repair the (R13) Left Side Impact Sensor 1 Signal circuit for a short to ground.

- Perform the RESTRAINTS SYSTEM VERIFICATION TEST. Refer to **STANDARD PROCEDURE** .

No

- Go To 4

4. **CHECK THE (R13), (R15) LEFT SIDE IMPACT SENSOR 1 CIRCUITS FOR A SHORT TOGETHER**
   1. Measure the voltage of the (R13) Left Side Impact Sensor 1 Signal circuit and (R15) Left Side Impact Sensor 1 Ground circuits between the (special tool #8443-57, Adapter, Supplemental Restraint System Load Tool)the C1B-25 and C1B-26 terminals.

      Is the resistance below 20 Ohms?

      Yes

      - Repair the (R13) and(R15) Left Side Impact Sensor 1 circuits shorted together.
      - Perform the RESTRAINTS SYSTEM VERIFICATION TEST. Refer to **STANDARD PROCEDURE** .

      No

      - Go To 5

5. **CHECK THE (R15) LEFT SIDE IMPACT SENSOR 1 GROUND CIRCUIT FOR AN OPEN OR HIGH RESISTANCE**
   1. Measure the resistance of the (R15) Left Side Impact Sensor 1 Ground circuit between the (special tool #8443-57, Adapter, Supplemental Restraint System Load Tool)the C1B-26 terminals and Left Side Impact Sensor 1 harness connector terminal 2.

      Is the resistance below 1 Ohm?

      Yes

      - Go To 6

      No

      - Repair the (R15) Left Side Impact Sensor 1 Ground circuit for an open or high resistance.
      - Perform the RESTRAINTS SYSTEM VERIFICATION TEST. Refer to **STANDARD PROCEDURE** .

6. **CHECK THE (R13) LEFT SIDE IMPACT SENSOR 1 SIGNAL CIRCUIT FOR AN OPEN OR HIGH RESISTANCE**
   1. Measure the resistance of the (R13) Left Side Impact Sensor 1 Signal circuit between the (special tool #8443-57, Adapter, Supplemental Restraint System Load Tool)the C1B-25 terminals and Left

Side Impact Sensor 1 harness connector terminal 1.

Is the resistance below 1 Ohm?

Yes

- Go To 7

No

- Repair the (R13) Left Side Impact Sensor 1 Signal circuit for an open or high resistance.
- Perform the RESTRAINTS SYSTEM VERIFICATION TEST. Refer to **STANDARD PROCEDURE** .

7. **CHECK OPERATION OF THE LEFT SIDE IMPACT SENSOR 1**
   1. Replace the Left Side Impact Sensor 1. Refer to **SENSOR, IMPACT, REMOVAL** .
   2. Reconnect the vehicle body harness to the impact sensor.
   3. Remove any special tools or jumper wires and reconnect all previously disconnected components - except the Battery.

      WARNING: **Turn the ignition on, then reconnect the 12-volt battery and wait two minutes before proceeding. Failure to follow these instructions may result in possible serious or fatal injury.**

   4. Connect the scan tool to the Data Link Connector - use the most current software available.
   5. Use the scan tool and erase the stored codes in all airbag system modules.
   6. Turn the Ignition Off, and wait 15 seconds before turning the Ignition On.
   7. Wait one minute, and read active codes and if there are none present read the stored codes.

      Did the active U146D-00-IMPLAUSIBLE DATA RECEIVED FROM LEFT B-PILLAR IMPACT ACCELERATION SENSOR return?

      Yes

      - Go To 8

      No

      - Repair is complete.
      - Perform the RESTRAINTS SYSTEM VERIFICATION TEST. Refer to **STANDARD PROCEDURE** .

8. **REPLACE THE OCCUPANT RESTRAINT CONTROLLER**

   WARNING: **Turn the ignition off, disconnect the 12-volt battery and wait two**

minutes before proceeding. Failure to follow these instructions may result in possible serious or fatal injury.

WARNING: **If the Occupant Restraint Controller (ORC) is dropped at any time, it must be replaced. Failure to take the proper precautions can result in accidental airbag deployment. Failure to follow these instructions may result in possible serious or fatal injury.**

Repair

- Replace the Occupant Restraint Controller in accordance with Service Information. Refer to **MODULE, OCCUPANT RESTRAINT CONTROLLER, REMOVAL** .
- Perform the RESTRAINTS SYSTEM VERIFICATION TEST. Refer to **STANDARD PROCEDURE** .

U146E-00-IMPLAUSIBLE DATA RECEIVED FROM LEFT C-PILLAR IMPACT ACCELERATION SENSOR

For a complete wiring diagram, **refer to appropriate SYSTEM WIRING DIAGRAMS article** .

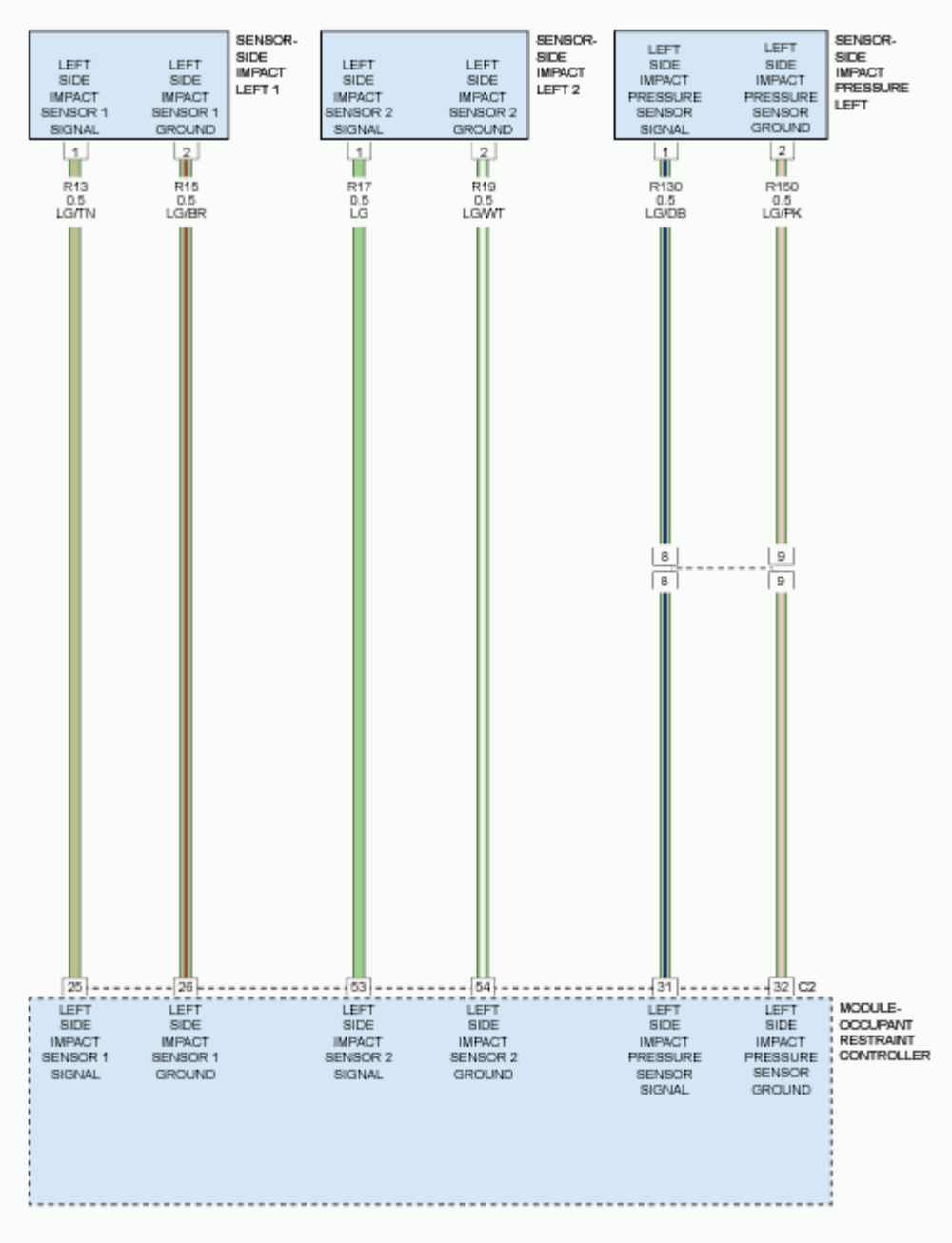

Fig. 26: Left Impact Sensor Circuit Diagram
Courtesy of CHRYSLER GROUP, LLC

THEORY OF OPERATION

The Left Side Impact Sensor 2 is mounted to the passenger rear door opening. Refer to **DESCRIPTION** . The impact sensors perform their own self test using power supplied by the Occupant Restraint Controller (ORC) then communicate this status back to the ORC with periodic updates. The repair of this fault condition involves verifying the integrity of the wiring between the ORC and the sensor.

WHEN MONITORED

The Occupant Restraint Controller (ORC) continuously communicates with the Left Side Impact Sensor 2 over the sensor signal circuit. The sensor communication and on board diagnostics are powered by the ORC signal.

SET CONDITION

This code will set, if the ORC and the Left Side Impact Sensor 2 do not establish and maintain valid data communications. The DTC will become active after the fault has set for a minimum of 2.5 seconds. The DTC will go to Stored after the ORC to Left Side Impact Sensor 2 communication fault has been removed or the suspect sensor has been replaced for 2.5 seconds. The Airbag Warning Lamp (AWL) will set in the instrument cluster.

POSSIBLE CAUSES

Possible Causes
(R17) LEFT SIDE IMPACT SENSOR 2 SIGNAL CIRCUIT SHORTED TO VOLTAGE
(R17) LEFT SIDE IMPACT SENSOR 2 SIGNAL CIRCUIT SHORTED TO GROUND
(R17), (R19) LEFT SIDE IMPACT SENSOR 2 CIRCUITS SHORTED TOGETHER
(R19) LEFT SIDE IMPACT SENSOR 2 GROUND CIRCUIT OPEN
(R17) LEFT SIDE IMPACT SENSOR 2 SIGNAL CIRCUIT OPEN
LEFT SIDE IMPACT PRESSURE SENSOR 2
OCCUPANT RESTRAINT CONTROLLER (ORC)

DIAGNOSTIC TEST

1. **DETERMINE ACTIVE OR STORED DTC**
    1. Turn the ignition on.
    2. With the scan tool, read ORC DTCs.

    NOTE: Make sure the battery is fully charged.

    Does the scan tool display an active: U146E-00-IMPLAUSIBLE DATA RECEIVED FROM LEFT C-PILLAR IMPACT ACCELERATION SENSOR - DTC?

    Yes

    - Go To 2

    No

    - Perform the RESTRAINTS SYSTEM INTERMITTENT TEST. Refer to **STANDARD PROCEDURE** .
2. **CHECK THE (R17), (R19) LEFT SIDE IMPACT SENSOR 2 SIGNAL AND GROUND CIRCUITS FOR A SHORT TO VOLTAGE**

WARNING: Turn the ignition off disconnect the 12-volt battery and wait two minutes before proceeding. Failure to follow these instructions may result in possible serious or fatal injury.

1. Disconnect the Left Side Impact Sensor 2 harness connector.
2. Disconnect the ORC harness connector.

WARNING: Turn the ignition on, then reconnect the 12-volt battery and wait two minutes before proceeding. Failure to follow these instructions may result in possible serious or fatal injury.

3. Connect the (special tool #8443-57, Adapter, Supplemental Restraint System Load Tool)to the ORC C1 and C2 harness connectors.
4. Measure the voltage of the (R17) Left Side Impact Sensor 2 Signal circuit and (R19) Left Side Impact Sensor 2 Ground circuit between the (special tool #8443-57, Adapter, Supplemental Restraint System Load Tool)the C1B-53 and C1B-54 terminals and ground.

   Is there any voltage present?

   Yes

   - Repair the (R17), (R19) Left Side Impact Sensor 2 circuits for a short to voltage.
   - Perform the RESTRAINTS SYSTEM VERIFICATION TEST. Refer to **STANDARD PROCEDURE** .

   No

   - Go To 3

3. **CHECK THE (R17) LEFT SIDE IMPACT SENSOR 2 SIGNAL CIRCUIT FOR A SHORT TO GROUND**

WARNING: Turn the ignition off disconnect the 12-volt battery and wait two minutes before proceeding. Failure to follow these instructions may result in possible serious or fatal injury.

1. Measure the resistance of the (R17) Left Side Impact Sensor 2 Signal circuit between the (special tool #8443-57, Adapter, Supplemental Restraint System Load Tool)the C1B-53 terminals and ground.

   Is the resistance below 20 Ohms?

   Yes

   - Repair the (R17) Left Side Impact Sensor 2 Signal circuit for a short to ground.

- Perform the RESTRAINTS SYSTEM VERIFICATION TEST. Refer to **STANDARD PROCEDURE** .

No

- Go To 4

4. **CHECK THE (R17), (R19) LEFT SIDE IMPACT SENSOR 2 CIRCUITS FOR A SHORT TOGETHER**
   1. Measure the voltage of the (R17) Left Side Impact Sensor 2 Signal circuit and (R19) Left Side Impact Sensor 2 Ground circuits between the (special tool #8443-57, Adapter, Supplemental Restraint System Load Tool)the C1B-53 and C1B-54 terminals.

      Is the resistance below 20 Ohms?

      Yes

      - Repair the (R17), (R19) Left Side Impact Sensor 2 circuits shorted together.
      - Perform the RESTRAINTS SYSTEM VERIFICATION TEST. Refer to **STANDARD PROCEDURE** .

      No

      - Go To 5

5. **CHECK THE (R19) LEFT SIDE IMPACT SENSOR 2 GROUND CIRCUIT FOR AN OPEN OR HIGH RESISTANCE**
   1. Measure the resistance of the (R19) Left Side Impact Sensor 2 Ground circuit between the (special tool #8443-57, Adapter, Supplemental Restraint System Load Tool)the C1B-54 terminals and Left Side Impact Sensor 2 harness connector terminal 2.

      Is the resistance below 1 Ohm?

      Yes

      - Go To 6

      No

      - Repair the (R19) Left Side Impact Sensor 2 Ground circuit for an open or high resistance.
      - Perform the RESTRAINTS SYSTEM VERIFICATION TEST. Refer to **STANDARD PROCEDURE** .

6. **CHECK THE (R17) LEFT SIDE IMPACT SENSOR 2 SIGNAL CIRCUIT FOR AN OPEN OR HIGH RESISTANCE**
   1. Measure the resistance of the (R17) Left Side Impact Sensor 2 Signal circuit between the (special tool #8443-57, Adapter, Supplemental Restraint System Load Tool)the C1B-53 terminals and Left

Side Impact Sensor 2 harness connector terminal 1.

Is the resistance below 1 Ohm?

Yes

- Go To 7

No

- Repair the (R17) Left Side Impact Sensor 2 Signal circuit for an open or high resistance.
- Perform the RESTRAINTS SYSTEM VERIFICATION TEST. Refer to **STANDARD PROCEDURE** .

7. **CHECK OPERATION OF THE LEFT SIDE IMPACT SENSOR 2**
   1. Replace the Left Side Impact Sensor 2. Refer to **SENSOR, IMPACT, REMOVAL** .
   2. Reconnect the vehicle body harness to the impact sensor.
   3. Remove any special tools or jumper wires and reconnect all previously disconnected components - except the Battery.

      WARNING: **Turn the ignition on, then reconnect the 12-volt battery and wait two minutes before proceeding. Failure to follow these instructions may result in possible serious or fatal injury.**

   4. Connect the scan tool to the Data Link Connector - use the most current software available.
   5. Use the scan tool and erase the stored codes in all airbag system modules.
   6. Turn the Ignition Off, and wait 15 seconds before turning the Ignition On.
   7. Wait one minute, and read active codes and if there are none present read the stored codes.

      Did the active U11EB-00-LOST COMMUNICATION WITH LEFT C-PILLAR IMPACT ACCELERATION SENSOR return?

      Yes

      - Go To 8

      No

      - Repair is complete.
      - Perform the RESTRAINTS SYSTEM VERIFICATION TEST. Refer to **STANDARD PROCEDURE** .

8. **REPLACE THE OCCUPANT RESTRAINT CONTROLLER**

   WARNING: **Turn the ignition off, disconnect the 12-volt battery and wait two**

minutes before proceeding. Failure to follow these instructions may result in possible serious or fatal injury.

WARNING: **If the Occupant Restraint Controller (ORC) is dropped at any time, it must be replaced. Failure to take the proper precautions can result in accidental airbag deployment. Failure to follow these instructions may result in possible serious or fatal injury.**

Repair

- Replace the Occupant Restraint Controller in accordance with Service Information. Refer to **MODULE, OCCUPANT RESTRAINT CONTROLLER, REMOVAL** .
- Perform the RESTRAINTS SYSTEM VERIFICATION TEST. Refer to **STANDARD PROCEDURE** .

U1470-00-IMPLAUSIBLE DATA RECEIVED FROM LEFT IMPACT PRESSURE SENSOR

For a complete wiring diagram, **refer to appropriate SYSTEM WIRING DIAGRAMS article** .

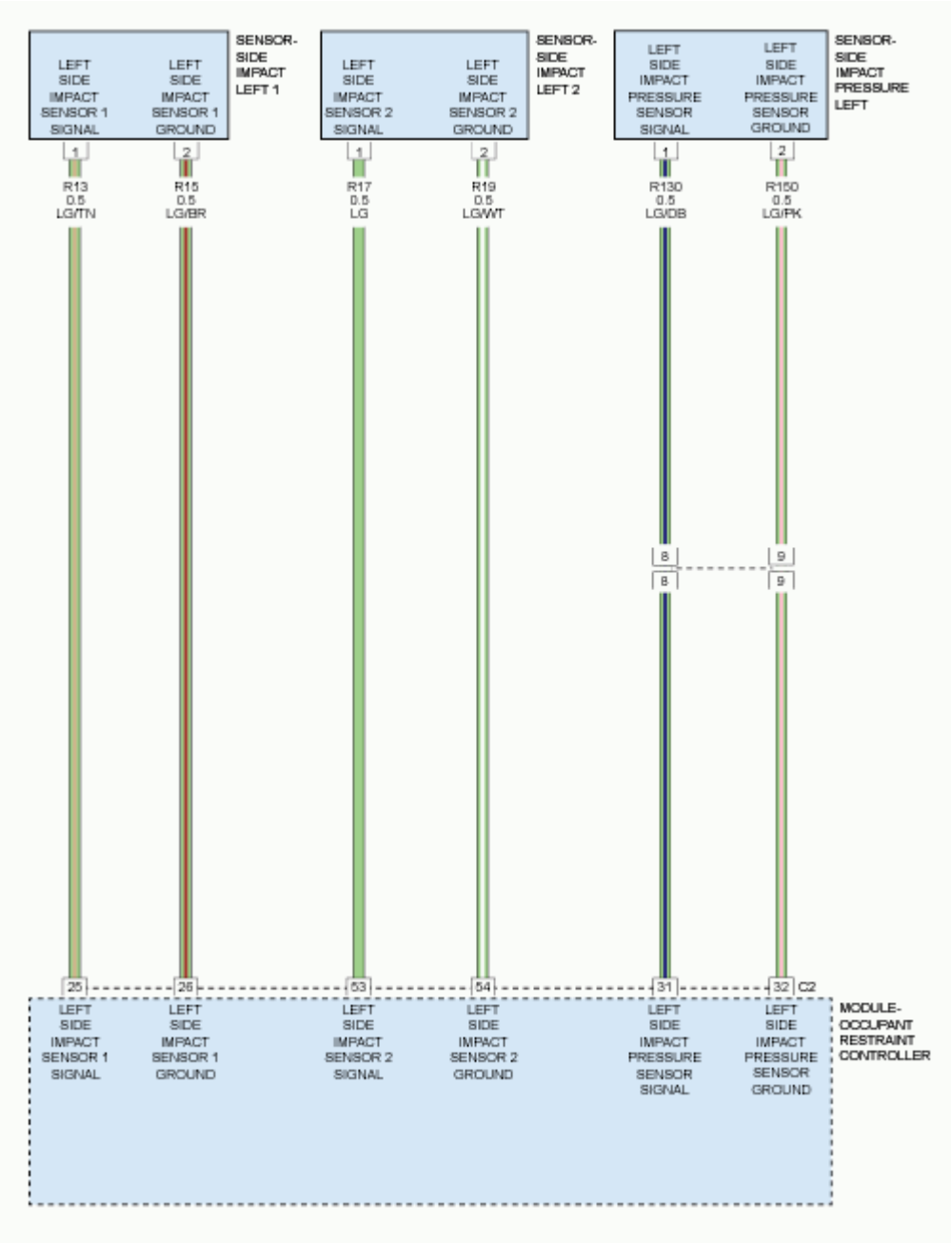

Fig. 27: Left Impact Sensor Circuit Diagram
Courtesy of CHRYSLER GROUP, LLC

THEORY OF OPERATION

The driver door pressure sensor is mounted to the driver inner door panel behind the door trim panel. Refer to **DESCRIPTION** . The impact sensors perform their own self test using power supplied by the Occupant Restraint Controller (ORC) then communicate this status back to the ORC with periodic updates. The repair of this fault condition involves verifying the integrity of the wiring between the ORC and the sensor. The door pressure sensor is hardwired to the Occupant Restraint Controller (ORC).

WHEN MONITORED

The Occupant Restraint Controller (ORC) continuously communicates with the Driver Door Pressure Sensor (Satellite) over the sensor signal circuit. The sensor communication and on board diagnostics are powered by the ORC signal.

SET CONDITION

This code will set, if the ORC and the Driver Door Pressure Sensor (Satellite) do not establish and maintain valid data communications. The DTC will become Active after the fault has set for a minimum of 100 milliseconds (ms). The DTC will go to Stored after the ORC to Driver Door Pressure Sensor (Satellite) communication fault has been removed or the suspect pressure sensor has been replaced. The clearing of this fault is immediate upon the suspect internal error being removed or the suspect sensor replaced. The Multifunction Indicator Lamp (MIL) will set in the instrument cluster.

POSSIBLE CAUSES

Possible Causes
(R130) LEFT SIDE IMPACT PRESSURE SENSOR SIGNAL CIRCUIT SHORTED TO VOLTAGE
(R150) LEFT SIDE IMPACT PRESSURE SENSOR SIGNAL CIRCUIT SHORTED TO GROUND
(R130), (R150) LEFT SIDE IMPACT PRESSURE SENSOR CIRCUITS SHORTED TOGETHER
(R150) LEFT SIDE IMPACT PRESSURE SENSOR GROUND CIRCUIT OPEN
(R130) LEFT SIDE IMPACT PRESSURE SENSOR SIGNAL CIRCUIT OPEN
OCCUPANT RESTRAINT CONTROLLER (ORC)

Always perform the Pre-Diagnostic Troubleshooting procedure before proceeding. Refer to STANDARD PROCEDURE .

DIAGNOSTIC TEST

1. **VERIFY THAT DTC U1470-00-IMPLAUSIBLE DATA RECEIVED FROM LEFT IMPACT PRESSURE SENSOR IS ACTIVE**

   NOTE: Make sure the battery is fully charged.

   1. Turn the ignition on.
   2. With the scan tool, read ORC DTCs.

      Does the scan tool display active: DTC U1470-00-IMPLAUSIBLE DATA RECEIVED FROM LEFT IMPACT PRESSURE SENSOR?

      Yes

      - Go To 2

No

- Perform the RESTRAINTS SYSTEM INTERMITTENT TEST. Refer to **STANDARD PROCEDURE** .

2. **CHECK THE (R130), (R150) LEFT SIDE IMPACT PRESSURE SENSOR SIGNAL AND GROUND CIRCUITS FOR A SHORT TO VOLTAGE**

WARNING: Turn the ignition off disconnect the 12-volt battery and wait two minutes before proceeding. Failure to follow these instructions may result in possible serious or fatal injury.

1. Disconnect the Left Side Impact Pressure Sensor harness connector.
2. Disconnect the ORC harness connectors.

NOTE: Check connectors - Clean and repair as necessary.

3. Connect the (special tool #8443-57, Adapter, Supplemental Restraint System Load Tool)to the ORC C1 and C2 harness connectors.

WARNING: Turn the ignition on, then reconnect the 12-volt battery and wait two minutes before proceeding. Failure to follow these instructions may result in possible serious or fatal injury.

4. Measure the voltage of the (R130) Left Side Impact Pressure Sensor Signal circuit and (R150) Left Side Impact Pressure Sensor Ground circuit between the (special tool #8443-57, Adapter, Supplemental Restraint System Load Tool)C1B-31 and ground and the C1B-32 and ground.

   Is there any voltage present?

   Yes

   - Repair the (R130), (R150) Left Side Impact Pressure Sensor circuits for a short to voltage.
   - Perform the RESTRAINTS SYSTEM VERIFICATION TEST. Refer to **STANDARD PROCEDURE** .

   No

   - Go To 6

3. **CHECK THE (R130) LEFT SIDE IMPACT PRESSURE SENSOR SIGNAL CIRCUIT FOR A SHORT TO GROUND**

WARNING: Turn the ignition off disconnect the 12-volt battery and wait two minutes before proceeding. Failure to follow these instructions may result in possible serious or fatal injury.

1. Measure the resistance of the (R130) Left Side Impact Pressure Sensor Signal circuit between the (special tool #8443-57, Adapter, Supplemental Restraint System Load Tool)C1B-31 and ground.

   Is the resistance below 20 Ohms?

   Yes

   - Repair the (R130) Leftt Side Impact Pressure Sensor Signal circuit for a short to ground.
   - Perform the RESTRAINTS SYSTEM VERIFICATION TEST. Refer to **STANDARD PROCEDURE** .

   No

   - Go To 4

4. **CHECK THE (R130), (R150) LEFT SIDE IMPACT PRESSURE SENSOR CIRCUITS FOR A SHORT TOGETHER**
   1. Measure the resistance between the (R130) Left Side Impact Pressure Sensor Signal circuit and the (R150) Left Side Impact Pressure Sensor Ground circuits between the (special tool #8443-57, Adapter, Supplemental Restraint System Load Tool)C1B-31 and C1B-32.

      Is the resistance below 20 Ohms?

      Yes

      - Repair the (R130), (R150) Left Side Impact Pressure Sensor circuits shorted together.
      - Perform the RESTRAINTS SYSTEM VERIFICATION TEST. Refer to **STANDARD PROCEDURE** .

      No

      - Go To 5

5. **CHECK THE (R150) LEFT SIDE IMPACT PRESSURE SENSOR GROUND CIRCUIT FOR AN OPEN OR HIGH RESISTANCE**
   1. Measure the resistance of the (R150) Left Side Impact Pressure Sensor Ground circuit between the (special tool #8443-57, Adapter, Supplemental Restraint System Load Tool)C1B-32 and the Left Side Impact Pressure Sensor harness connector terminal 2.

      Is the resistance below 1 Ohm?

      Yes

      - Go To 6

      No

- Repair the (R150) Left Side Impact Pressure Sensor Ground circuit for an open or high resistance.
- Perform the RESTRAINTS SYSTEM VERIFICATION TEST. Refer to **STANDARD PROCEDURE** .

6. **CHECK THE (R130) LEFT SIDE IMPACT PRESSURE SENSOR SIGNAL CIRCUIT FOR AN OPEN OR HIGH RESISTANCE**
   1. Measure the resistance of the (R130) Left Side Impact Pressure Sensor Signal circuit between the (special tool #8443-57, Adapter, Supplemental Restraint System Load Tool)C1B-31 and the Left Side Impact Pressure Sensor harness connector terminal 1.

      Is the resistance below 1 Ohm?

      Yes

      - Go To 7

      No

      - Repair the (R130) Left Side Impact Pressure Sensor Signal circuit for an open or high resistance.
      - Perform the RESTRAINTS SYSTEM VERIFICATION TEST. Refer to **STANDARD PROCEDURE** .

7. **CHECK OPERATION OF THE PASSENGER DOOR PRESSURE SENSOR (SATELLITE)**
   1. Replace the Left Door Pressure Sensor. Refer to **SENSOR, IMPACT, REMOVAL** .
   2. Reconnect the vehicle body harness to the impact pressure sensor.
   3. Remove any special tools or jumper wires and reconnect all previously disconnected components - except the Battery.

      WARNING: **Turn the ignition on, then reconnect the 12-volt battery and wait two minutes before proceeding. Failure to follow these instructions may result in possible serious or fatal injury.**

   4. Connect the scan tool to the Data Link Connector - use the most current software available.
   5. Use the scan tool and erase the stored codes in all airbag system modules.
   6. Turn the Ignition Off, and wait five seconds before turning the Ignition On.
   7. Wait one minute, and read active codes and if there are none present read the stored codes.

      Did the active: U1470-00-IMPLAUSIBLE DATA RECEIVED FROM LEFT IMPACT PRESSURE SENSOR return?

      Yes

      WARNING: **Turn the ignition off, disconnect the 12-volt battery and wait**

two minutes before proceeding. Failure to follow these instructions may result in possible serious or fatal injury.

WARNING: **If the Occupant Restraint Controller (ORC) is dropped at any time, it must be replaced. Failure to take the proper precautions can result in accidental airbag deployment. Failure to follow these instructions may result in possible serious or fatal injury.**

- Replace the Occupant Restrain Controller (ORC) in accordance with the Service Information. Refer to **MODULE, OCCUPANT RESTRAINT CONTROLLER, REMOVAL** .
- Perform the RESTRAINTS SYSTEM VERIFICATION TEST. Refer to **STANDARD PROCEDURE** .

No

- Repair is complete.
- Perform the RESTRAINTS SYSTEM VERIFICATION TEST. Refer to **STANDARD PROCEDURE** .

U1471-00-IMPLAUSIBLE DATA RECEIVED FROM LEFT FRONTAL ACCELERATION SENSOR

For a complete wiring diagram, **refer to appropriate SYSTEM WIRING DIAGRAMS article** .

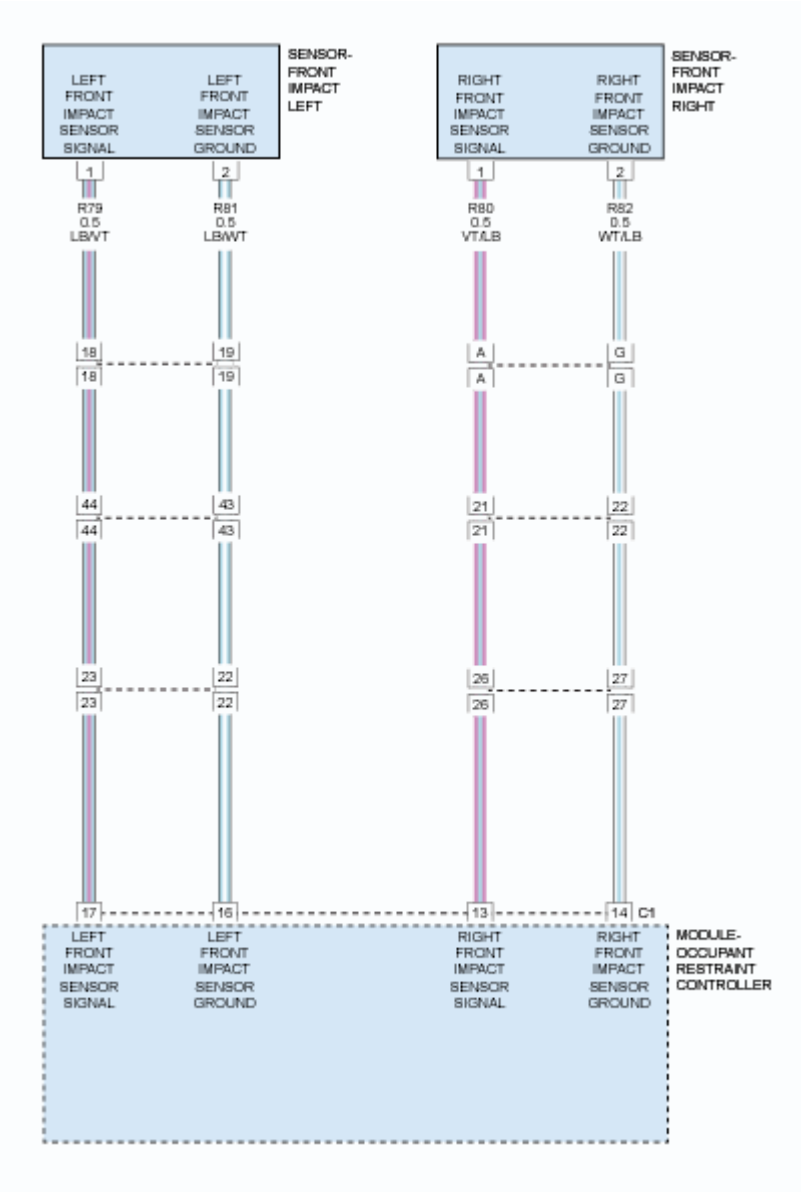

Fig. 28: Front Impact Sensor Circuit Diagram
Courtesy of CHRYSLER GROUP, LLC

THEORY OF OPERATION

The Left Front Impact Sensor is mounted in the engine compartment behind the front lamp unit. Refer to **DESCRIPTION** . The Left Front Impact Sensor is directly hard wired to the Occupant Restraint Controller (ORC) Module. The impact sensors perform their own self test using power supplied by the Occupant Restraint Controller (ORC) then communicate this status back to the ORC with periodic updates. The repair of this fault condition involves verifying the integrity of the wiring between the ORC and the sensor.

WHEN MONITORED

With the ignition on, the Left Front Impact Sensor is equipped with on board diagnostics to monitor the sensor's

internal circuits. If a problem is identified, the sensor sends the Left Front Impact Sensor Internal message to the Occupant Restraint Controller (ORC).

SET CONDITION

This code will set, if the ORC and the Left Front Impact Sensor do not establish and maintain valid data communications. The DTC will become Active after the fault has set for a minimum of 100 milliseconds (ms). The DTC will go to Stored after the ORC Left Front Impact Sensor communication fault has been removed or the suspect front impact sensor has been replaced. The clearing of this fault is immediate upon the suspect internal error being removed or the suspect sensor replaced. The Airbag Warning Lamp (AWL) will set in the instrument cluster.

POSSIBLE CAUSES

Possible Causes
(R79) LEFT FRONT IMPACT SENSOR SIGNAL CIRCUIT SHORTED TO VOLTAGE
(R79) LEFT FRONT IMPACT SENSOR SIGNAL CIRCUIT SHORTED TO GROUND
(R79, R81) LEFT FRONT IMPACT SENSOR CIRCUITS SHORTED TOGETHER
(R81) LEFT FRONT IMPACT SENSOR GROUND CIRCUIT OPEN
(R79) LEFT FRONT IMPACT SENSOR SIGNAL CIRCUIT OPEN
OCCUPANT RESTRAINT CONTROLLER (ORC)
LEFT SIDE IMPACT SENSOR

DIAGNOSTIC TEST

1. **DETERMINE ACTIVE OR STORED DTC**

   NOTE: Make sure the battery is fully charged.

   1. Turn the ignition on.
   2. With the scan tool, read ORC DTCs.

      Does the scan tool display active: U1471-00-IMPLAUSIBLE-DATA-RECEIVED-FROM-LEFT-FRONTAL-ACCELERATION-SENSOR- DTC?

      Yes

      - Go To 2

      No

      - Perform the RESTRAINTS SYSTEM INTERMITTENT TEST. Refer to **STANDARD PROCEDURE** .

2. **CHECK THE (R79), (R81) LEFT FRONT IMPACT SENSOR SIGNAL AND GROUND CIRCUITS FOR A SHORT TO VOLTAGE**

WARNING: Turn the ignition off disconnect the 12-volt battery and wait two minutes before proceeding. Failure to follow these instructions may result in possible serious or fatal injury.

1. Disconnect the Left Front Impact Pressure Sensor harness connector.
2. Disconnect the ORC harness connector.

NOTE: Check the connectors - Clean and repair as necessary.

3. Connect the (special tool #8443-57, Adapter, Supplemental Restraint System Load Tool)to the ORC C1 and C2 harness connectors.

WARNING: Turn the ignition on, then reconnect the 12-volt battery and wait two minutes before proceeding. Failure to follow these instructions may result in possible serious or fatal injury.

4. Measure the voltage of the (R79) Left Front Impact Sensor Signal circuit and (R81) Left Front Impact Sensor Ground circuit between the (special tool #8443-57, Adapter, Supplemental Restraint System Load Tool)the C1A-17 and C1A-16 terminals and ground.

   Is there any voltage present on either circuit?

   Yes

   - Repair the (R79), (R81) Left Front Impact Sensor circuits for a short to voltage.
   - Perform the RESTRAINTS SYSTEM VERIFICATION TEST. Refer to **STANDARD PROCEDURE** .

   No

   - Go To 3

3. **CHECK THE (R79) LEFT FRONT IMPACT SENSOR SIGNAL CIRCUIT FOR A SHORT TO GROUND**

WARNING: Turn the ignition off disconnect the 12-volt battery and wait two minutes before proceeding. Failure to follow these instructions may result in possible serious or fatal injury.

1. Measure the resistance of the (R79) Left Front Impact Sensor Signal circuit between the (special tool #8443-57, Adapter, Supplemental Restraint System Load Tool)the C1A-17 terminals and ground.

   Is the resistance below 20 Ohms?

Yes

- Repair the (R79) Left Front Impact Sensor Signal circuit for a short to ground.
- Perform the RESTRAINTS SYSTEM VERIFICATION TEST. Refer to **STANDARD PROCEDURE** .

No

- Go To 4

4. **CHECK THE (R79), (R810) LEFT FRONT IMPACT SENSOR CIRCUITS FOR A SHORT TOGETHER**
   1. Measure the voltage of the (R79) Left Front Impact Sensor Signal circuit and (R810) Left Front Impact Sensor Ground circuits between the (special tool #8443-57, Adapter, Supplemental Restraint System Load Tool)the C1A-17 and C1A-16 terminals.

      Is the resistance below 20 Ohms?

      Yes

      - Repair the (R79), (R81) Left Front Impact Sensor circuits shorted together.
      - Perform the RESTRAINTS SYSTEM VERIFICATION TEST. Refer to **STANDARD PROCEDURE** .

      No

      - Go To 5

5. **CHECK THE (R81) LEFT FRONT IMPACT SENSOR GROUND CIRCUIT FOR AN OPEN OR HIGH RESISTANCE**
   1. Measure the resistance of the (R81) Left Front Impact Sensor Ground circuit between the (special tool #8443-57, Adapter, Supplemental Restraint System Load Tool)the C1A-16 terminals and Left Front Impact Sensor harness connector terminal 2.

      Is the resistance below 1 Ohm?

      Yes

      - Go To 6

      No

      - Repair the (R81) Left Front Impact Sensor Ground circuit for an open or high resistance.
      - Perform the RESTRAINTS SYSTEM VERIFICATION TEST. Refer to **STANDARD PROCEDURE** .

6. **CHECK THE (R79) LEFT FRONT IMPACT SENSOR SIGNAL CIRCUIT FOR AN OPEN OR**

HIGH RESISTANCE

1. Measure the resistance of the (R79) Left Front Impact Sensor Signal circuit between the (special tool #8443-57, Adapter, Supplemental Restraint System Load Tool)the C1A-17 terminals and Left Front Impact Sensor harness connector terminal 1.

   Is the resistance below 1 Ohm?

   Yes

   - Go To 7

   No

   - Repair the (R79) Right Front Impact Sensor Signal circuit for an open or high resistance.
   - Perform the RESTRAINTS SYSTEM VERIFICATION TEST. Refer to **STANDARD PROCEDURE** .

7. **CHECK OPERATION OF THE LEFT SIDE IMPACT PRESSURE SENSOR**
   1. Replace the Left Front Impact Sensor. Refer to **SENSOR, IMPACT, REMOVAL** .
   2. Reconnect the vehicle body harness to the impact sensor.
   3. Remove any special tools or jumper wires and reconnect all previously disconnected components - except the Battery.

      WARNING: **Turn the ignition on, then reconnect the 12-volt battery and wait two minutes before proceeding. Failure to follow these instructions may result in possible serious or fatal injury.**

   4. Connect the scan tool to the Data Link Connector - use the most current software available.
   5. Use the scan tool and erase the stored codes in all airbag system modules.
   6. Turn the Ignition Off, and wait five seconds before turning the Ignition On.
   7. Wait one minute, and read active codes and if there are none present read the stored codes.

      Did the active: U1471-00-IMPLAUSIBLE-DATA-RECEIVED-FROM-LEFT-FRONTAL-ACCELERATION-SENSOR- DTC return?

      Yes

      - Go To 8

      No

      - Repair is complete.
      - Perform the RESTRAINTS SYSTEM VERIFICATION TEST. Refer to **STANDARD PROCEDURE** .

8. **REPLACE THE OCCUPANT RESTRAINT CONTROLLER**

WARNING: Turn the ignition off, disconnect the 12-volt battery and wait two minutes before proceeding. Failure to follow these instructions may result in possible serious or fatal injury.

WARNING: If the Occupant Restraint Controller (ORC) is dropped at any time, it must be replaced. Failure to take the proper precautions can result in accidental airbag deployment. Failure to follow these instructions may result in possible serious or fatal injury.

Repair

- Replace the Occupant Restraint Controller in accordance with Service Information. Refer to **MODULE, OCCUPANT RESTRAINT CONTROLLER, REMOVAL** .
- Perform the RESTRAINTS SYSTEM VERIFICATION TEST. Refer to **STANDARD PROCEDURE** .

U1472-00-IMPLAUSIBLE DATA RECEIVED FROM RIGHT B-PILLAR IMPACT ACCELERATION SENSOR

For a complete wiring diagram, **refer to appropriate SYSTEM WIRING DIAGRAMS article** .

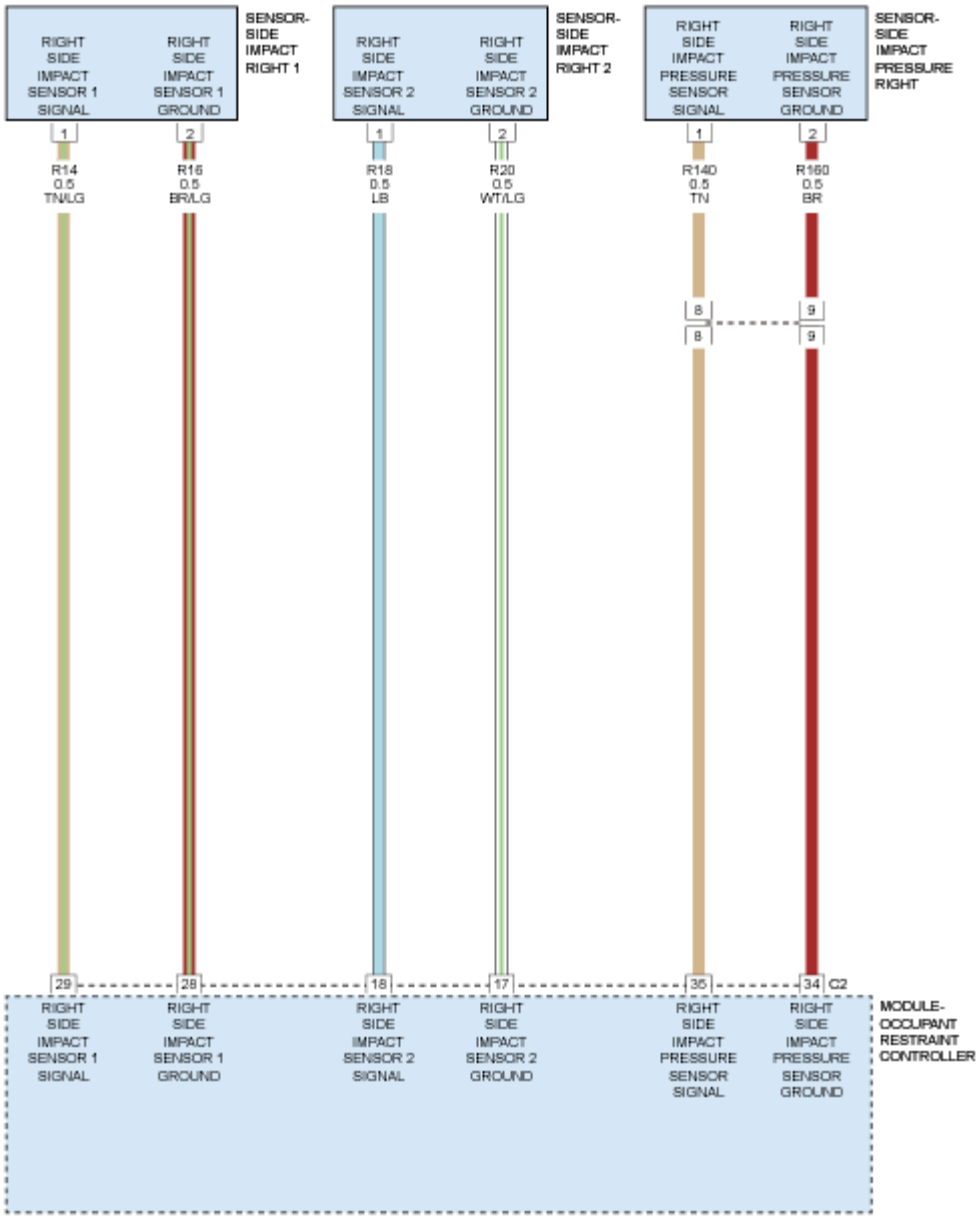

Fig. 29: Right Impact Sensor Circuit Diagram
Courtesy of CHRYSLER GROUP, LLC

THEORY OF OPERATION

The Right Side Impact Sensor 1 is mounted to the passenger rear door opening. Refer to **DESCRIPTION** . The impact sensors perform their own self test using power supplied by the Occupant Restraint Controller (ORC) then communicate this status back to the ORC with periodic updates. The repair of this fault condition involves verifying the integrity of the wiring between the ORC and the sensor.

WHEN MONITORED

The Occupant Restraint Controller (ORC) continuously communicates with the Right Side Impact Sensor 1 over the sensor signal circuit. The sensor communication and on board diagnostics are powered by the ORC signal.

SET CONDITION

This code will set, if the ORC and the Right Side Impact Sensor 1 do not establish and maintain valid data communications. The DTC will become active after the fault has set for a minimum of 2.5 seconds. The DTC will go to Stored after the ORC to Right Side Impact Sensor 1 communication fault has been removed or the suspect sensor has been replaced for 2.5 seconds. The Airbag Warning Lamp (AWL) will set in the instrument cluster.

POSSIBLE CAUSES

Possible Causes
(R14) RIGHT SIDE IMPACT SENSOR 1 SIGNAL CIRCUIT SHORTED TO VOLTAGE
(R14) RIGHT SIDE IMPACT SENSOR 1 SIGNAL CIRCUIT SHORTED TO GROUND
(R14), (R16) RIGHT SIDE IMPACT SENSOR 1 CIRCUITS SHORTED TOGETHER
(R16) RIGHT SIDE IMPACT SENSOR 1 GROUND CIRCUIT OPEN
(R14) RIGHT SIDE IMPACT SENSOR 1 SIGNAL CIRCUIT OPEN
RIGHT SIDE IMPACT PRESSURE SENSOR 1
OCCUPANT RESTRAINT CONTROLLER (ORC)

DIAGNOSTIC TEST

1. **DETERMINE ACTIVE OR STORED DTC**
    1. Turn the ignition on.
    2. With the scan tool, read ORC DTCs.

    NOTE: Make sure the battery is fully charged.

    Does the scan tool display an active: U1472-00-IMPLAUSIBLE DATA RECEIVED FROM RIGHT B-PILLAR IMPACT ACCELERATION SENSOR - DTC?

    Yes

    - Go To 2

    No

    - Perform the RESTRAINTS SYSTEM INTERMITTENT TEST. Refer to **STANDARD PROCEDURE** .
2. **CHECK THE (R14), (R16) RIGHT SIDE IMPACT SENSOR 1 SIGNAL AND GROUND CIRCUITS FOR A SHORT TO VOLTAGE**

WARNING: Turn the ignition off disconnect the 12-volt battery and wait two minutes before proceeding. Failure to follow these instructions may result in possible serious or fatal injury.

1. Disconnect the Right Side Impact Sensor 1 harness connector.
2. Disconnect the ORC harness connector.

WARNING: Turn the ignition on, then reconnect the 12-volt battery and wait two minutes before proceeding. Failure to follow these instructions may result in possible serious or fatal injury.

3. Connect the (special tool #8443-57, Adapter, Supplemental Restraint System Load Tool)to the ORC C1 and C2 harness connectors.
4. Measure the voltage of the (R14) Right Side Impact Sensor 1 Signal circuit and (R16) Right Side Impact Sensor 1 Ground circuit between the (special tool #8443-57, Adapter, Supplemental Restraint System Load Tool)the C1B-29 and C1B-28 terminals and ground.

   Is there any voltage present?

   Yes

   - Repair the (R14) and (R16) Right Side Impact Sensor 1 circuits for a short to voltage.
   - Perform the RESTRAINTS SYSTEM VERIFICATION TEST. Refer to **STANDARD PROCEDURE** .

   No

   - Go To 3

3. **CHECK THE (R14) RIGHT SIDE IMPACT SENSOR 1 SIGNAL CIRCUIT FOR A SHORT TO GROUND**

WARNING: Turn the ignition off disconnect the 12-volt battery and wait two minutes before proceeding. Failure to follow these instructions may result in possible serious or fatal injury.

1. Measure the resistance of the (R14) Right Side Impact Sensor 1 Signal circuit between the (special tool #8443-57, Adapter, Supplemental Restraint System Load Tool)the C1B-29 terminals and ground.

   Is the resistance below 20 Ohms?

   Yes

   - Repair the (R14) Right Side Impact Sensor 1 Signal circuit for a short to ground.

- Perform the RESTRAINTS SYSTEM VERIFICATION TEST. Refer to **STANDARD PROCEDURE** .

No

- Go To 4

4. **CHECK THE (R14) AND (R16) RIGHT SIDE IMPACT SENSOR 1 CIRCUITS FOR A SHORT TOGETHER**
   1. Measure the voltage of the (R14) Right Side Impact Sensor 1 Signal circuit and (R16) Right Side Impact Sensor 1 Ground circuits between the (special tool #8443-57, Adapter, Supplemental Restraint System Load Tool)the C1B-29 and C1B-28 terminals.

      Is the resistance below 20 Ohms?

      Yes

      - Repair the (R14) and(R16) Right Side Impact Sensor 1 circuits shorted together.
      - Perform the RESTRAINTS SYSTEM VERIFICATION TEST. Refer to **STANDARD PROCEDURE** .

      No

      - Go To 5

5. **CHECK THE (R16) RIGHT SIDE IMPACT SENSOR 1 GROUND CIRCUIT FOR AN OPEN OR HIGH RESISTANCE**
   1. Measure the resistance of the (R16) Right Side Impact Sensor 1 Ground circuit between the (special tool #8443-57, Adapter, Supplemental Restraint System Load Tool)the C1B-28 terminals and Right Side Impact Sensor 1 harness connector terminal 2.

      Is the resistance below 1 Ohm?

      Yes

      - Go To 6

      No

      - Repair the (R16) Right Side Impact Sensor 1 Ground circuit for an open or high resistance.
      - Perform the RESTRAINTS SYSTEM VERIFICATION TEST. Refer to **STANDARD PROCEDURE** .

6. **CHECK THE (R14) RIGHT SIDE IMPACT SENSOR 1 SIGNAL CIRCUIT FOR AN OPEN OR HIGH RESISTANCE**
   1. Measure the resistance of the (R14) Right Side Impact Sensor 1 Signal circuit between the (special tool #8443-57, Adapter, Supplemental Restraint System Load Tool)the C1B-29 terminals and Right

Side Impact Sensor 1 harness connector terminal 1.

Is the resistance below 1 Ohm?

Yes

- Go To 7

No

- Repair the (R14) Right Side Impact Sensor 1 Signal circuit for an open or high resistance.
- Perform the RESTRAINTS SYSTEM VERIFICATION TEST. Refer to **STANDARD PROCEDURE** .

7. **CHECK OPERATION OF THE RIGHT SIDE IMPACT SENSOR 1**
   1. Replace the Right Side Impact Sensor 1. Refer to **SENSOR, IMPACT, REMOVAL** .
   2. Reconnect the vehicle body harness to the impact sensor.
   3. Remove any special tools or jumper wires and reconnect all previously disconnected components - except the Battery.

      WARNING: **Turn the ignition on, then reconnect the 12-volt battery and wait two minutes before proceeding. Failure to follow these instructions may result in possible serious or fatal injury.**

   4. Connect the scan tool to the Data Link Connector - use the most current software available.
   5. Use the scan tool and erase the stored codes in all airbag system modules.
   6. Turn the Ignition Off, and wait 15 seconds before turning the Ignition On.
   7. Wait one minute, and read active codes and if there are none present read the stored codes.

      Did the active U1472-00-IMPLAUSIBLE DATA RECEIVED FROM RIGHT B-PILLAR IMPACT ACCELERATION SENSOR return?

      Yes

      - Go To 8

      No

      - Repair is complete.
      - Perform the RESTRAINTS SYSTEM VERIFICATION TEST. Refer to **STANDARD PROCEDURE** .

8. **REPLACE THE OCCUPANT RESTRAINT CONTROLLER**

   WARNING: **Turn the ignition off, disconnect the 12-volt battery and wait two**

minutes before proceeding. Failure to follow these instructions may result in possible serious or fatal injury.

WARNING: **If the Occupant Restraint Controller (ORC) is dropped at any time, it must be replaced. Failure to take the proper precautions can result in accidental airbag deployment. Failure to follow these instructions may result in possible serious or fatal injury.**

Repair

- Replace the Occupant Restraint Controller in accordance with Service Information. Refer to **MODULE, OCCUPANT RESTRAINT CONTROLLER, REMOVAL** .
- Perform the RESTRAINTS SYSTEM VERIFICATION TEST. Refer to **STANDARD PROCEDURE** .

U1473-00-IMPLAUSIBLE DATA RECEIVED FROM RIGHT C-PILLAR IMPACT ACCELERATION SENSOR

For a complete wiring diagram, **refer to appropriate SYSTEM WIRING DIAGRAMS article** .

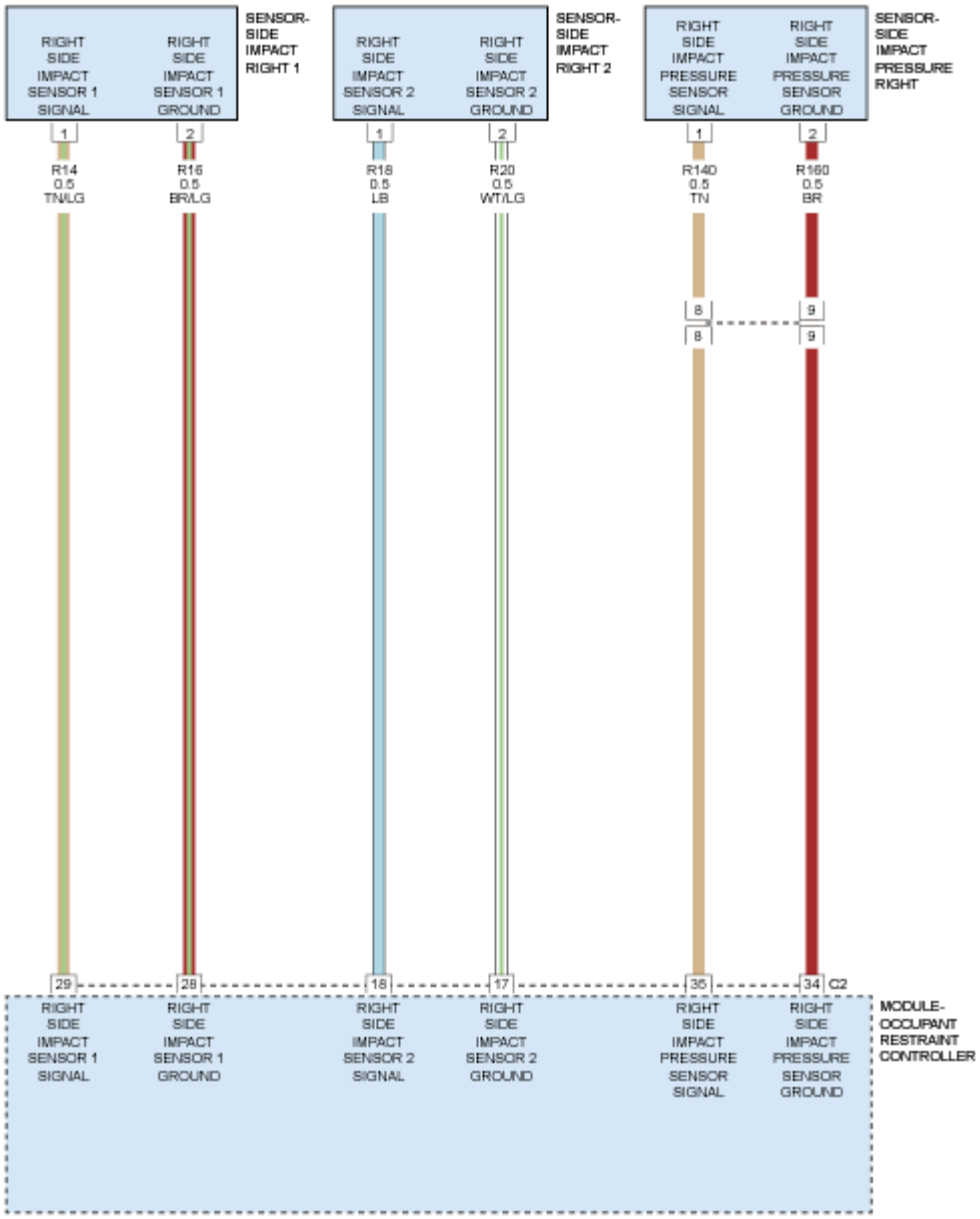

Fig. 30: Right Impact Sensor Circuit Diagram
Courtesy of CHRYSLER GROUP, LLC

THEORY OF OPERATION

The Right Side Impact Sensor 2 is mounted to the passenger rear door opening. Refer to **DESCRIPTION** . The impact sensors perform their own self test using power supplied by the Occupant Restraint Controller (ORC) then communicate this status back to the ORC with periodic updates. The repair of this fault condition involves verifying the integrity of the wiring between the ORC and the sensor.

WHEN MONITORED

The Occupant Restraint Controller (ORC) continuously communicates with the Right Side Impact Sensor 2 over the sensor signal circuit. The sensor communication and on board diagnostics are powered by the ORC signal.

SET CONDITION

This code will set, if the ORC and the Right Side Impact Sensor 2 do not establish and maintain valid data communications. The DTC will become active after the fault has set for a minimum of 2.5 seconds. The DTC will go to Stored after the ORC to Right Side Impact Sensor 2 communication fault has been removed or the suspect sensor has been replaced for 2.5 seconds. The Airbag Warning Lamp (AWL) will set in the instrument cluster.

POSSIBLE CAUSES

Possible Causes
(R18) RIGHT SIDE IMPACT SENSOR 2 SIGNAL CIRCUIT SHORTED TO VOLTAGE
(R18) RIGHT SIDE IMPACT SENSOR 2 SIGNAL CIRCUIT SHORTED TO GROUND
(R18), (R20) RIGHT SIDE IMPACT SENSOR 2 CIRCUITS SHORTED TOGETHER
(R20) RIGHT SIDE IMPACT SENSOR 2 GROUND CIRCUIT OPEN
(R18) RIGHT SIDE IMPACT SENSOR 2 SIGNAL CIRCUIT OPEN
RIGHT SIDE IMPACT PRESSURE SENSOR 2
OCCUPANT RESTRAINT CONTROLLER (ORC)

DIAGNOSTIC TEST

1. **DETERMINE ACTIVE OR STORED DTC**
    1. Turn the ignition on.
    2. With the scan tool, read ORC DTCs.

    NOTE: Make sure the battery is fully charged.

    Does the scan tool display an active: U1473-00-IMPLAUSIBLE-DATA-RECEIVED-FROM-RIGHT-C-PILLAR-IMPACT-ACCELERATION-SENSOR - DTC?

    Yes

    - Go To 2

    No

    - Perform the RESTRAINTS SYSTEM INTERMITTENT TEST. Refer to **STANDARD PROCEDURE** .
2. **CHECK THE (R18), (R20) RIGHT SIDE IMPACT SENSOR 2 SIGNAL AND GROUND CIRCUITS FOR A SHORT TO VOLTAGE**

WARNING: Turn the ignition off disconnect the 12-volt battery and wait two minutes before proceeding. Failure to follow these instructions may result in possible serious or fatal injury.

1. Disconnect the Right Side Impact Sensor 2 harness connector.
2. Disconnect the ORC harness connector.

WARNING: Turn the ignition on, then reconnect the 12-volt battery and wait two minutes before proceeding. Failure to follow these instructions may result in possible serious or fatal injury.

3. Connect the (special tool #8443-57, Adapter, Supplemental Restraint System Load Tool)to the ORC C1 and C2 harness connectors.
4. Measure the voltage of the (R18) Right Side Impact Sensor 2 Signal circuit and (R20) Right Side Impact Sensor 2 Ground circuit between the (special tool #8443-57, Adapter, Supplemental Restraint System Load Tool)the C1B-18 and C1B-17 terminals and ground.

   Is there any voltage present?

   Yes

   - Repair the (R18), (R20) Right Side Impact Sensor 2 circuits for a short to voltage.
   - Perform the RESTRAINTS SYSTEM VERIFICATION TEST. Refer to **STANDARD PROCEDURE** .

   No

   - Go To 3

3. **CHECK THE (R18) RIGHT SIDE IMPACT SENSOR 2 SIGNAL CIRCUIT FOR A SHORT TO GROUND**

WARNING: Turn the ignition off disconnect the 12-volt battery and wait two minutes before proceeding. Failure to follow these instructions may result in possible serious or fatal injury.

1. Measure the resistance of the (R18) Right Side Impact Sensor 2 Signal circuit between the (special tool #8443-57, Adapter, Supplemental Restraint System Load Tool)the C1B-18 terminals and ground.

   Is the resistance below 20 Ohms?

   Yes

   - Repair the (R18) Right Side Impact Sensor 2 Signal circuit for a short to ground.

- Perform the RESTRAINTS SYSTEM VERIFICATION TEST. Refer to **STANDARD PROCEDURE** .

No

- Go To 4

4. **CHECK THE (R18), (R20) RIGHT SIDE IMPACT SENSOR 2 CIRCUITS FOR A SHORT TOGETHER**
   1. Measure the voltage of the (R18) Right Side Impact Sensor 2 Signal circuit and (R20) Right Side Impact Sensor 2 Ground circuits between the (special tool #8443-57, Adapter, Supplemental Restraint System Load Tool)the C1B-18 and C1B-17 terminals.

      Is the resistance below 20 Ohms?

      Yes

      - Repair the (R18), (R20) Right Side Impact Sensor 2 circuits shorted together.
      - Perform the RESTRAINTS SYSTEM VERIFICATION TEST. Refer to **STANDARD PROCEDURE** .

      No

      - Go To 5

5. **CHECK THE (R20) RIGHT SIDE IMPACT SENSOR 2 GROUND CIRCUIT FOR AN OPEN OR HIGH RESISTANCE**
   1. Measure the resistance of the (R20) Right Side Impact Sensor 2 Ground circuit between the (special tool #8443-57, Adapter, Supplemental Restraint System Load Tool)the C1B-17 terminals and Right Side Impact Sensor 2 harness connector terminal 2.

      Is the resistance below 1 Ohm?

      Yes

      - Go To 3

      No

      - Repair the (R20) Right Side Impact Sensor 2 Ground circuit for an open or high resistance.
      - Perform the RESTRAINTS SYSTEM VERIFICATION TEST. Refer to **STANDARD PROCEDURE** .

6. **CHECK THE (R18) RIGHT SIDE IMPACT SENSOR 2 SIGNAL CIRCUIT FOR AN OPEN OR HIGH RESISTANCE**
   1. Measure the resistance of the (R18) Right Side Impact Sensor 2 Signal circuit between the (special tool #8443-57, Adapter, Supplemental Restraint System Load Tool)the C1B-18 terminals and Right

Side Impact Sensor 2 harness connector terminal 1.

Is the resistance below 1 Ohm?

Yes

- Go To 7

No

- Repair the (R18) Right Side Impact Sensor 2 Signal circuit for an open or high resistance.
- Perform the RESTRAINTS SYSTEM VERIFICATION TEST. Refer to **STANDARD PROCEDURE** .

7. **CHECK OPERATION OF THE RIGHT SIDE IMPACT SENSOR 2**
   1. Replace the Right Side Impact Sensor 2. Refer to **SENSOR, IMPACT, REMOVAL** .
   2. Reconnect the vehicle body harness to the impact sensor.
   3. Remove any special tools or jumper wires and reconnect all previously disconnected components - except the Battery.

      WARNING: **Turn the ignition on, then reconnect the 12-volt battery and wait two minutes before proceeding. Failure to follow these instructions may result in possible serious or fatal injury.**

   4. Connect the scan tool to the Data Link Connector - use the most current software available.
   5. Use the scan tool and erase the stored codes in all airbag system modules.
   6. Turn the Ignition Off, and wait 15 seconds before turning the Ignition On.
   7. Wait one minute, and read active codes and if there are none present read the stored codes.

      Did the active U1473-00-IMPLAUSIBLE-DATA-RECEIVED-FROM-RIGHT-C-PILLAR-IMPACT-ACCELERATION-SENSOR return?

      Yes

      - Go To 8

      No

      - Repair is complete.
      - Perform the RESTRAINTS SYSTEM VERIFICATION TEST. Refer to **STANDARD PROCEDURE** .

8. **REPLACE THE OCCUPANT RESTRAINT CONTROLLER**

   WARNING: **Turn the ignition off, disconnect the 12-volt battery and wait two**

minutes before proceeding. Failure to follow these instructions may result in possible serious or fatal injury.

WARNING: **If the Occupant Restraint Controller (ORC) is dropped at any time, it must be replaced. Failure to take the proper precautions can result in accidental airbag deployment. Failure to follow these instructions may result in possible serious or fatal injury.**

Repair

- Replace the Occupant Restraint Controller in accordance with Service Information. Refer to **MODULE, OCCUPANT RESTRAINT CONTROLLER, REMOVAL** .
- Perform the RESTRAINTS SYSTEM VERIFICATION TEST. Refer to **STANDARD PROCEDURE** .

U1475-00-IMPLAUSIBLE DATA RECEIVED FROM RIGHT IMPACT PRESSURE SENSOR IS ACTIVE

For a complete wiring diagram, **refer to appropriate SYSTEM WIRING DIAGRAMS article** .

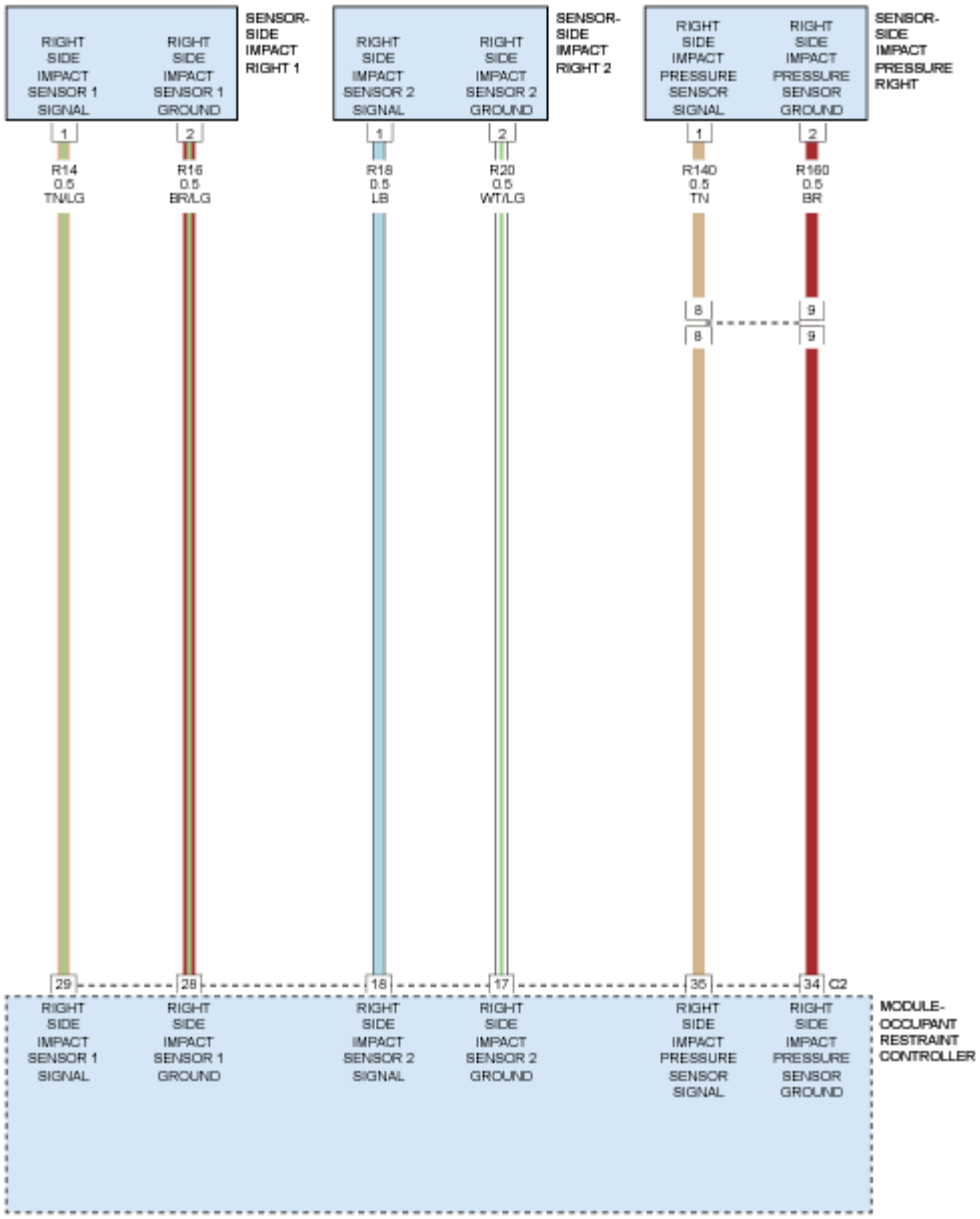

Fig. 31: Right Impact Sensor Circuit Diagram
Courtesy of CHRYSLER GROUP, LLC

THEORY OF OPERATION

The passenger door pressure sensor is mounted to the passenger inner door panel behind the door trim panel. Refer to **DESCRIPTION** . The impact sensors perform their own self test using power supplied by the Occupant Restraint Controller (ORC) then communicate this status back to the ORC with periodic updates. The repair of this fault condition involves verifying the integrity of the wiring between the ORC and the sensor. A short to voltage fault on the door pressure sensor wiring can cause a loss of comm side impact code to set and the possible replacement of a good side impact sensor. The door pressure sensor is hardwired to the side impact

sensor which is hard wired to the ORC creating a daisy chain circuit. The short to battery fault in a loss of comm or internal circuit failure of the door pressure sensor can cause the side impact sensor on the same side to set a loss of comm code.

WHEN MONITORED

The Occupant Restraint Controller (ORC) continuously communicates with the Passenger Door Pressure Sensor (Satellite) over the sensor signal circuit. The sensor communication and on board diagnostics are powered by the ORC signal.

SET CONDITION

This code will set, if the ORC and the Passenger Door Pressure Sensor (Satellite) do not establish and maintain valid data communications. The DTC will become Active after the fault has set for a minimum of 100 milliseconds (ms). The DTC will go to Stored after the ORC to Passenger Door (Pressure) Sensor communication fault has been removed or the suspect pressure sensor has been replaced. This fault will clear upon the next ignition cycle. The Multifunction Indicator Lamp (MIL) will set in the instrument cluster.

POSSIBLE CAUSES

Possible Causes
(R140) RIGHT SIDE IMPACT PRESSURE SENSOR SIGNAL CIRCUIT SHORTED TO VOLTAGE
(R140) RIGHT SIDE IMPACT PRESSURE SENSOR SIGNAL CIRCUIT SHORTED TO GROUND
(R140), (R160) RIGHT SIDE IMPACT PRESSURE SENSOR CIRCUITS SHORTED TOGETHER
(R160) RIGHT SIDE IMPACT PRESSURE SENSOR GROUND CIRCUIT OPEN
(R140) RIGHT SIDE IMPACT PRESSURE SENSOR SIGNAL CIRCUIT OPEN
OCCUPANT RESTRAINT CONTROLLER (ORC)

Always perform the Pre-Diagnostic Troubleshooting procedure before proceeding. Refer to STANDARD PROCEDURE .

DIAGNOSTIC TEST

1. **VERIFY THAT DTC U1475-00-IMPLAUSIBLE DATA RECEIVED FROM RIGHT IMPACT PRESSURE SENSOR IS ACTIVE**

   NOTE: Make sure the battery is fully charged.

   1. Turn the ignition on.
   2. With the scan tool, read ORC DTCs.

      Does the scan tool display active: DTC U1475-00-IMPLAUSIBLE DATA RECEIVED FROM RIGHT IMPACT PRESSURE SENSOR?

      Yes

- Go To 2

No

- Perform the RESTRAINTS SYSTEM INTERMITTENT TEST. Refer to **STANDARD PROCEDURE** .

2. **CHECK THE (R140), (R160) RIGHT SIDE IMPACT PRESSURE SENSOR SIGNAL AND GROUND CIRCUITS FOR A SHORT TO VOLTAGE**

WARNING: Turn the ignition off disconnect the 12-volt battery and wait two minutes before proceeding. Failure to follow these instructions may result in possible serious or fatal injury.

1. Disconnect the Right Side Impact Pressure Sensor harness connector.
2. Disconnect the ORC harness connectors.

NOTE: Check connectors - Clean and repair as necessary.

3. Connect the (special tool #8443-57, Adapter, Supplemental Restraint System Load Tool)to the ORC C1 and C2 harness connectors.

WARNING: Turn the ignition on, then reconnect the 12-volt battery and wait two minutes before proceeding. Failure to follow these instructions may result in possible serious or fatal injury.

4. Measure the voltage of the (R140) Right Side Impact Pressure Sensor Signal circuit and (R160) Sensor Ground circuit between the (special tool #8443-57, Adapter, Supplemental Restraint System Load Tool)C1B-34 and ground and the C1B-35 and ground.

Is there any voltage present?

Yes

- Repair the (R140), (R160) Right Side Impact Pressure Sensor circuits for a short to voltage.
- Perform the RESTRAINTS SYSTEM VERIFICATION TEST. Refer to **STANDARD PROCEDURE** .

No

- Go To 3

3. **CHECK THE (R140) RIGHT SIDE IMPACT PRESSURE SENSOR SIGNAL CIRCUIT FOR A SHORT TO GROUND**

WARNING: Turn the ignition off disconnect the 12-volt battery and wait two

minutes before proceeding. Failure to follow these instructions may result in possible serious or fatal injury.

1. Measure the resistance of the (R140) Right Side Impact Pressure Sensor Signal circuit between the (special tool #8443-57, Adapter, Supplemental Restraint System Load Tool)C1B-34 and ground.

   Is the resistance below 20 Ohms?

   Yes

   - Repair the (R140) Right Side Impact Pressure Sensor Signal circuit for a short to ground.
   - Perform the RESTRAINTS SYSTEM VERIFICATION TEST. Refer to **STANDARD PROCEDURE** .

   No

   - Go To 4

4. **CHECK THE (R140), (R160) RIGHT SIDE IMPACT PRESSURE SENSOR CIRCUITS FOR A SHORT TOGETHER**
   1. Measure the resistance between the (R140) Right Side Impact Pressure Sensor Signal circuit and the (R160) Sensor Ground circuits between the (special tool #8443-57, Adapter, Supplemental Restraint System Load Tool)C1B-34 and C1B-35.

      Is the resistance below 20 Ohms?

      Yes

      - Repair the (R140), (R160) Right Side Impact Pressure Sensor circuits shorted together.
      - Perform the RESTRAINTS SYSTEM VERIFICATION TEST. Refer to **STANDARD PROCEDURE** .

      No

      - Go To 5

5. **CHECK THE (R160) RIGHT SIDE IMPACT PRESSURE SENSOR GROUND CIRCUIT FOR AN OPEN OR HIGH RESISTANCE**
   1. Measure the resistance of the (R160) Right Side Impact Pressure Sensor Ground circuit between the (special tool #8443-57, Adapter, Supplemental Restraint System Load Tool)C1B-34 and the Right Side Impact Pressure Sensor harness connector terminal 2.

      Is the resistance below 1 Ohm?

      Yes

      - Go To 6

No

- Repair the (R160) Right Side Impact Pressure Sensor Ground circuit for an open or high resistance.
- Perform the RESTRAINTS SYSTEM VERIFICATION TEST. Refer to **STANDARD PROCEDURE** .

6. **CHECK THE (R140) RIGHT SIDE IMPACT PRESSURE SENSOR SIGNAL CIRCUIT FOR AN OPEN OR HIGH RESISTANCE**
   1. Measure the resistance of the (R140) Right Side Impact Pressure Sensor Signal circuit between the (special tool #8443-57, Adapter, Supplemental Restraint System Load Tool)C1B-35 and the Right Side Impact Pressure Sensor harness connector terminal 1.

      Is the resistance below 1 Ohm?

      Yes

      - Go To 7

      No

      - Repair the (R140) Right Side Impact Pressure Sensor Signal circuit for an open or high resistance.
      - Perform the RESTRAINTS SYSTEM VERIFICATION TEST. Refer to **STANDARD PROCEDURE** .

7. **CHECK OPERATION OF THE PASSENGER DOOR PRESSURE SENSOR (SATELLITE)**
   1. Replace the Right Door Pressure Sensor. Refer to **SENSOR, IMPACT, REMOVAL** .
   2. Reconnect the vehicle body harness to the impact pressure sensor.
   3. Remove any special tools or jumper wires and reconnect all previously disconnected components - except the Battery.

      WARNING: **Turn the ignition on, then reconnect the 12-volt battery and wait two minutes before proceeding. Failure to follow these instructions may result in possible serious or fatal injury.**

   4. Connect the scan tool to the Data Link Connector - use the most current software available.
   5. Use the scan tool and erase the stored codes in all airbag system modules.
   6. Turn the Ignition Off, and wait five seconds before turning the Ignition On.
   7. Wait one minute, and read active codes and if there are none present read the stored codes.

      Did the active: U1475-00-IMPLAUSIBLE DATA RECEIVED FROM RIGHT IMPACT PRESSURE SENSOR return?

      Yes

WARNING: Turn the ignition off, disconnect the 12-volt battery and wait two minutes before proceeding. Failure to follow these instructions may result in possible serious or fatal injury.

WARNING: If the Occupant Restraint Controller (ORC) is dropped at any time, it must be replaced. Failure to take the proper precautions can result in accidental airbag deployment. Failure to follow these instructions may result in possible serious or fatal injury.

- Replace the Occupant Restrain Controller (ORC) in accordance with the Service Information. Refer to **MODULE, OCCUPANT RESTRAINT CONTROLLER, REMOVAL** .
- Perform the RESTRAINTS SYSTEM VERIFICATION TEST. Refer to **STANDARD PROCEDURE** .

No

- Repair is complete.
- Perform the RESTRAINTS SYSTEM VERIFICATION TEST. Refer to **STANDARD PROCEDURE** .

U1476-00-IMPLAUSIBLE DATA RECEIVED FROM RIGHT FRONTAL ACCELERATION SENSOR

For a complete wiring diagram, **refer to appropriate SYSTEM WIRING DIAGRAMS article** .

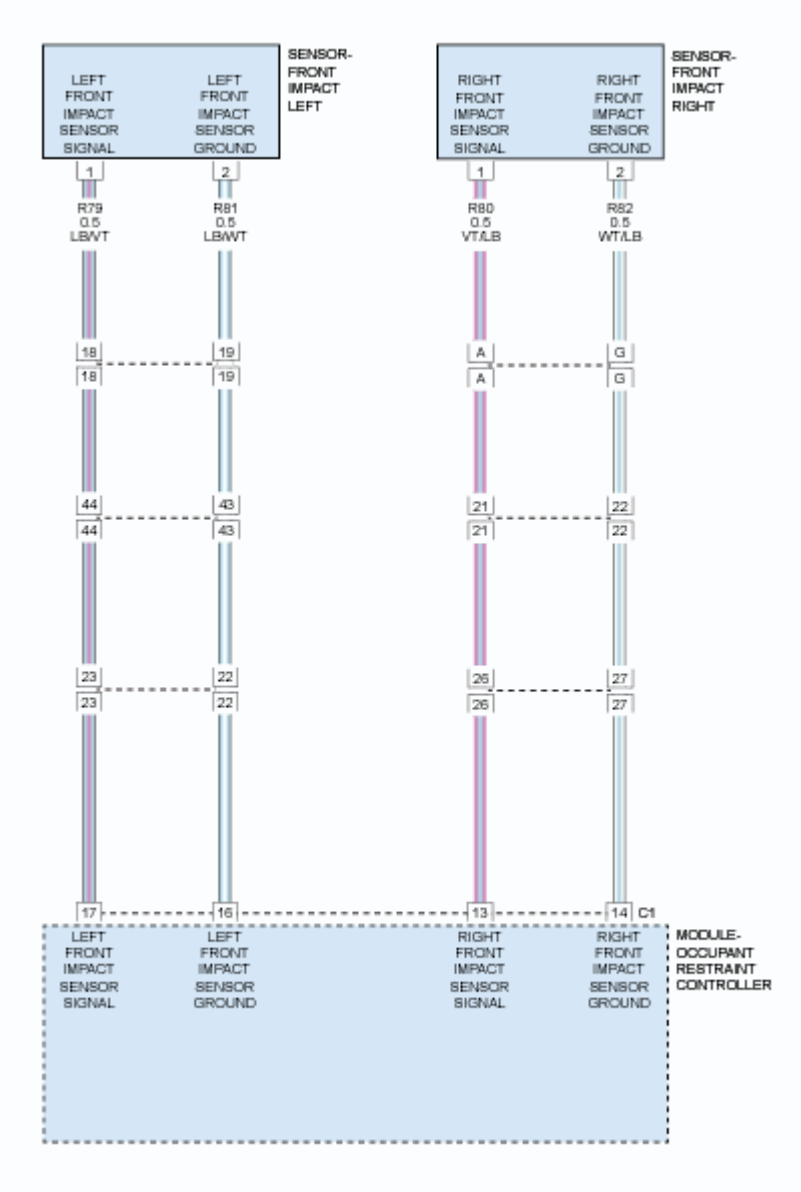

Fig. 32: Front Impact Sensor Circuit Diagram
Courtesy of CHRYSLER GROUP, LLC

THEORY OF OPERATION

The Right Front Impact Sensor is mounted in the engine compartment behind the front lamp unit. Refer to **DESCRIPTION** . The Right Front Impact Sensor is directly hard wired to the Occupant Restraint Controller (ORC) Module. The impact sensors perform their own self test using power supplied by the Occupant Restraint Controller (ORC) then communicate this status back to the ORC with periodic updates. The repair of this fault condition involves verifying the integrity of the wiring between the ORC and the sensor.

WHEN MONITORED

With the ignition on, the Right Front Impact Sensor is equipped with on board diagnostics to monitor the

sensor's internal circuits. If a problem is identified, the sensor sends the Right Front Impact Sensor Internal message to the Occupant Restraint Controller (ORC).

SET CONDITION

This code will set, if the ORC and the Right Front Impact Sensor do not establish and maintain valid data communications. The DTC will become Active after the fault has set for a minimum of 100 milliseconds (ms). The DTC will go to Stored after the ORC Right Front Impact Sensor communication fault has been removed or the suspect front impact sensor has been replaced. The clearing of this fault is immediate upon the suspect internal error being removed or the suspect sensor replaced. The Airbag Warning Lamp (AWL) will set in the instrument cluster.

POSSIBLE CAUSES

Possible Causes
(R80) RIGHT FRONT IMPACT SENSOR SIGNAL CIRCUIT SHORTED TO VOLTAGE
(R80) RIGHT FRONT IMPACT SENSOR SIGNAL CIRCUIT SHORTED TO GROUND
(R80, R82) RIGHT FRONT IMPACT SENSOR CIRCUITS SHORTED TOGETHER
(R82) RIGHT FRONT IMPACT SENSOR GROUND CIRCUIT OPEN
(R80) RIGHT FRONT IMPACT SENSOR SIGNAL CIRCUIT OPEN
RIGHT SIDE IMPACT SENSOR
OCCUPANT RESTRAINT CONTROLLER (ORC)

DIAGNOSTIC TEST

1. **DETERMINE ACTIVE OR STORED DTC**

   NOTE: Make sure the battery is fully charged.

   1. Turn the ignition on.
   2. With the scan tool, read ORC DTCs.

      Does the scan tool display active: U1476-00-IMPLAUSIBLE-DATA-RECEIVED-FROM-RIGHT-FRONTAL-ACCELERATION-SENSOR- DTC?

      Yes

      - Go To 2

      No

      - Perform the RESTRAINTS SYSTEM INTERMITTENT TEST. Refer to **STANDARD PROCEDURE** .

2. **CHECK THE (R80), (R82) RIGHT FRONT IMPACT SENSOR SIGNAL AND GROUND CIRCUITS FOR A SHORT TO VOLTAGE**

WARNING: Turn the ignition off disconnect the 12-volt battery and wait two minutes before proceeding. Failure to follow these instructions may result in possible serious or fatal injury.

1. Disconnect the Right Front Impact Sensor harness connector.
2. Disconnect the ORC harness connector.

NOTE: Check the connectors - Clean and repair as necessary.

3. Connect the (special tool #8443-57, Adapter, Supplemental Restraint System Load Tool)to the ORC C1 and C2 harness connectors.

WARNING: Turn the ignition on, then reconnect the 12-volt battery and wait two minutes before proceeding. Failure to follow these instructions may result in possible serious or fatal injury.

4. Measure the voltage of the (R80) Right Front Impact Sensor Signal circuit and (R82) Right Front Impact Sensor Ground circuit between the (special tool #8443-57, Adapter, Supplemental Restraint System Load Tool)the C1A-13 and C1A-14 terminals and ground.

   Is there any voltage present on either circuit?

   Yes

   - Repair the (R80), (R82) Right Front Impact Sensor circuits for a short to voltage.
   - Perform the RESTRAINTS SYSTEM VERIFICATION TEST. Refer to **STANDARD PROCEDURE** .

   No

   - Go To 3

3. **CHECK THE (R80) RIGHT FRONT IMPACT SENSOR SIGNAL CIRCUIT FOR A SHORT TO GROUND**

WARNING: Turn the ignition off disconnect the 12-volt battery and wait two minutes before proceeding. Failure to follow these instructions may result in possible serious or fatal injury.

1. Measure the resistance of the (R80) Right Front Impact Sensor Signal circuit between the (special tool #8443-57, Adapter, Supplemental Restraint System Load Tool)the C1A-13 terminals and ground.

   Is the resistance below 20 Ohms?

Yes

- Repair the (R80) Right Front Impact Sensor Signal circuit for a short to ground.
- Perform the RESTRAINTS SYSTEM VERIFICATION TEST. Refer to **STANDARD PROCEDURE** .

No

- Go To 4

4. **CHECK THE (R80), (R820) RIGHT FRONT IMPACT SENSOR CIRCUITS FOR A SHORT TOGETHER**
   1. Measure the voltage of the (R80) Right Front Impact Sensor Signal circuit and (R82) Right Front Impact Sensor Ground circuits between the (special tool #8443-57, Adapter, Supplemental Restraint System Load Tool)the C1A-13 and C1A-14 terminals.

      Is the resistance below 20 Ohms?

      Yes

      - Repair the (R80), (R82) Right Front Impact Sensor circuits shorted together.
      - Perform the RESTRAINTS SYSTEM VERIFICATION TEST. Refer to **STANDARD PROCEDURE** .

      No

      - Go To 5

5. **CHECK THE (R82) RIGHT FRONT IMPACT SENSOR GROUND CIRCUIT FOR AN OPEN OR HIGH RESISTANCE**
   1. Measure the resistance of the (R821) Right Front Impact Sensor Ground circuit between the (special tool #8443-57, Adapter, Supplemental Restraint System Load Tool)the C1A-14 terminals and Right Front Impact Sensor harness connector terminal 2.

      Is the resistance below 1 Ohm?

      Yes

      - Go To 6

      No

      - Repair the (R82) Right Front Impact Sensor Ground circuit for an open or high resistance.
      - Perform the RESTRAINTS SYSTEM VERIFICATION TEST. Refer to **STANDARD PROCEDURE** .

6. **CHECK THE (R80) RIGHT FRONT IMPACT SENSOR SIGNAL CIRCUIT FOR AN OPEN OR**

HIGH RESISTANCE

1. Measure the resistance of the (R80) Right Front Impact Sensor Signal circuit between the (special tool #8443-57, Adapter, Supplemental Restraint System Load Tool)the C1A-13 terminals and Right Front Impact Sensor harness connector terminal 1.

   Is the resistance below 1 Ohm?

   Yes

   - Go To 7

   No

   - Repair the (R80) Right Front Impact Sensor Signal circuit for an open or high resistance.
   - Perform the RESTRAINTS SYSTEM VERIFICATION TEST. Refer to **STANDARD PROCEDURE** .

7. **CHECK OPERATION OF THE RIGHT FRONT IMPACT SENSOR**
   1. Replace the Right Front Impact Sensor. Refer to **SENSOR, IMPACT, REMOVAL** .
   2. Reconnect the vehicle body harness to the impact sensor.
   3. Remove any special tools or jumper wires and reconnect all previously disconnected components - except the Battery.

      WARNING: **Turn the ignition on, then reconnect the 12-volt battery and wait two minutes before proceeding. Failure to follow these instructions may result in possible serious or fatal injury.**

   4. Connect the scan tool to the Data Link Connector - use the most current software available.
   5. Use the scan tool and erase the stored codes in all airbag system modules.
   6. Turn the Ignition Off, and wait five seconds before turning the Ignition On.
   7. Wait one minute, and read active codes and if there are none present read the stored codes.

      Did the active: U1476-00-IMPLAUSIBLE-DATA-RECEIVED-FROM-RIGHT-FRONTAL-ACCELERATION-SENSOR- DTC return?

      Yes

      - Go To 8

      No

      - Repair is complete.
      - Perform the RESTRAINTS SYSTEM VERIFICATION TEST. Refer to **STANDARD PROCEDURE** .

8. **REPLACE THE OCCUPANT RESTRAINT CONTROLLER**

WARNING: Turn the ignition off, disconnect the 12-volt battery and wait two minutes before proceeding. Failure to follow these instructions may result in possible serious or fatal injury.

WARNING: If the Occupant Restraint Controller (ORC) is dropped at any time, it must be replaced. Failure to take the proper precautions can result in accidental airbag deployment. Failure to follow these instructions may result in possible serious or fatal injury.

Repair

- Replace the Occupant Restraint Controller in accordance with Service Information. Refer to **MODULE, OCCUPANT RESTRAINT CONTROLLER, REMOVAL** .
- Perform the RESTRAINTS SYSTEM VERIFICATION TEST. Refer to **STANDARD PROCEDURE** .

2014 RESTRAINTS

Occupant Restraint Controller (ORC) - Electrical Diagnostics - Cherokee

DIAGNOSTIC CODE INDEX

DIAGNOSTIC CODE INDEX

DTC	Description
B0001-11	DRIVER FRONTAL SQUIB 1 CONTROL - CIRCUIT SHORT TO GROUND
B0001-12	DRIVER FRONTAL SQUIB 1 CONTROL - CIRCUIT SHORT TO BATTERY
B0001-13	DRIVER FRONTAL SQUIB 1 CONTROL - CIRCUIT OPEN
B0001-2B	DRIVER FRONTAL SQUIB 1 CONTROL - WIRES SHORTED TOGETHER
B0002-11	DRIVER FRONTAL SQUIB 2 CONTROL CIRCUIT - SHORT TO GROUND
B0002-12	DRIVER FRONTAL SQUIB 2 CONTROL CIRCUIT - SHORT TO BATTERY
B0002-13	DRIVER FRONTAL SQUIB 2 CONTROL - CIRCUIT OPEN
B0002-2B	DRIVER FRONTAL SQUIB 2 CONTROL - WIRES SHORTED TOGETHER
B0003-11	DRIVER FRONTAL SQUIB 3 CONTROL - CIRCUIT SHORT TO GROUND
B0003-12	DRIVER FRONTAL SQUIB 3 CONTROL - CIRCUIT SHORT TO BATTERY
B0003-13	DRIVER FRONTAL SQUIB 3 CONTROL - CIRCUIT OPEN
B0003-2B	DRIVER FRONTAL SQUIB 3 CONTROL - WIRES SHORTED TOGETHER
B0004-11	DRIVER KNEE BOLSTER SQUIB CONTROL - CIRCUIT SHORT TO GROUND
B0004-12	DRIVER KNEE BOLSTER SQUIB CONTROL - CIRCUIT SHORT TO BATTERY
B0004-13	DRIVER KNEE BOLSTER SQUIB CONTROL - CIRCUIT OPEN
B0004-2B	DRIVER KNEE BOLSTER SQUIB CONTROL - WIRES SHORTED TOGETHER
B0010-11	PASSENGER FRONTAL SQUIB 1 CONTROL - CIRCUIT SHORT TO GROUND
B0010-12	PASSENGER FRONTAL SQUIB 1 CONTROL - CIRCUIT SHORT TO BATTERY
B0010-13	PASSENGER FRONTAL SQUIB 1 CONTROL - CIRCUIT OPEN
B0010-2B	PASSENGER FRONTAL SQUIB 1 CONTROL - WIRES SHORTED TOGETHER
B0011-11	PASSENGER FRONTAL SQUIB 2 CONTROL - CIRCUIT SHORT TO GROUND
B0011-12	PASSENGER FRONTAL SQUIB 2 CONTROL - CIRCUIT SHORT TO BATTERY
B0011-13	PASSENGER FRONTAL SQUIB 2 CONTROL - CIRCUIT OPEN
B0011-2B	PASSENGER FRONTAL SQUIB 2 CONTROL - WIRES SHORTED TOGETHER
B0012-11	PASSENGER FRONTAL SQUIB 3 CONTROL - CIRCUIT SHORT TO GROUND

B0012-12	PASSENGER FRONTAL SQUIB 3 CONTROL - CIRCUIT SHORT TO BATTERY
B0012-13	PASSENGER FRONTAL SQUIB 3 CONTROL - CIRCUIT OPEN
B0012-2B	PASSENGER FRONTAL SQUIB 3 CONTROL - WIRES SHORTED TOGETHER
B0013-11	PASSENGER KNEE BOLSTER SQUIB CONTROL - CIRCUIT SHORT TO GROUND
B0013-12	PASSENGER KNEE BOLSTER SQUIB CONTROL - CIRCUIT SHORT TO BATTERY
B0013-13	PASSENGER KNEE BOLSTER SQUIB CONTROL - CIRCUIT OPEN
B0013-2B	PASSENGER KNEE BOLSTER SQUIB CONTROL - WIRES SHORTED TOGETHER
B0020-11	LEFT SIDE SEAT DEPLOYMENT SQUIB 1 - CIRCUIT SHORT TO GROUND
B0020-12	LEFT SIDE SEAT DEPLOYMENT SQUIB 1 - CIRCUIT SHORT TO BATTERY
B0020-13	LEFT SIDE SEAT DEPLOYMENT SQUIB 1 - CIRCUIT OPEN
B0020-2B	LEFT SIDE SEAT DEPLOYMENT SQUIB 1 - WIRES SHORTED TOGETHER
B0021-11	LEFT CURTAIN DEPLOYMENT SQUIB 1 - CIRCUIT SHORT TO GROUND
B0021-12	LEFT CURTAIN DEPLOYMENT SQUIB 1 - CIRCUIT SHORT TO BATTERY
B0021-13	LEFT CURTAIN DEPLOYMENT SQUIB 1 - CIRCUIT OPEN
B0021-2B	LEFT CURTAIN DEPLOYMENT SQUIB 1 - WIRES SHORTED TOGETHER
B0028-11	RIGHT SIDE SEAT DEPLOYMENT SQUIB 1 - CIRCUIT SHORT TO GROUND
B0028-12	RIGHT SIDE SEAT DEPLOYMENT SQUIB 1 - CIRCUIT SHORT TO BATTERY
B0028-13	RIGHT SIDE SEAT DEPLOYMENT SQUIB 1 - CIRCUIT OPEN
B0028-2B	RIGHT SIDE SEAT DEPLOYMENT SQUIB 1 - WIRES SHORTED TOGETHER
B0029-11	RIGHT CURTAIN DEPLOYMENT SQUIB 1 - CIRCUIT SHORT TO GROUND
B0029-12	RIGHT CURTAIN DEPLOYMENT SQUIB 1 - CIRCUIT SHORT TO BATTERY
B0029-13	RIGHT CURTAIN DEPLOYMENT SQUIB 1 - CIRCUIT OPEN
B0029-2B	RIGHT CURTAIN DEPLOYMENT SQUIB 1 - WIRES SHORTED TOGETHER
B0030-11	SECOND ROW LEFT SIDE AIRBAG DEPLOYMENT CONTROL - CIRCUIT SHORT TO GROUND
B0030-12	SECOND ROW LEFT SIDE AIRBAG DEPLOYMENT CONTROL - CIRCUIT SHORT TO BATTERY
B0030-13	SECOND ROW LEFT SIDE AIRBAG DEPLOYMENT CONTROL - CIRCUIT OPEN
B0030-2B	SECOND ROW LEFT SIDE AIRBAG DEPLOYMENT CONTROL - WIRES SHORTED TOGETHER
B0038-11	SECOND ROW RIGHT SIDE AIRBAG DEPLOYMENT CONTROL - CIRCUIT SHORT TO GROUND
B0038-12	SECOND ROW RIGHT SIDE AIRBAG DEPLOYMENT CONTROL - CIRCUIT SHORT TO BATTERY

B0038-13	SECOND ROW RIGHT SIDE AIRBAG DEPLOYMENT CONTROL - CIRCUIT OPEN
B0038-2B	SECOND ROW RIGHT SIDE AIRBAG DEPLOYMENT CONTROL - WIRES SHORTED TOGETHER
B0050-11	DRIVER SEATBELT SENSOR - CIRCUIT SHORT TO GROUND
B0050-12	DRIVER SEATBELT SENSOR - CIRCUIT SHORT TO BATTERY
B0050-13	DRIVER SEATBELT SENSOR - CIRCUIT OPEN
B0050-95	DRIVER SEATBELT SENSOR - INCORRECT ASSEMBLY
B0052-11	PASSENGER SEATBELT SENSOR - CIRCUIT SHORT TO GROUND
B0052-12	PASSENGER SEATBELT SENSOR - CIRCUIT SHORT TO BATTERY
B0052-13	PASSENGER SEATBELT SENSOR - CIRCUIT OPEN
B0052-95	PASSENGER SEATBELT SENSOR - INCORRECT ASSEMBLY
B0079-11	DRIVER SEATBELT ANCHOR PRETENSIONER DEPLOYMENT CONTROL - CIRCUIT SHORT TO GROUND
B0079-12	DRIVER SEATBELT ANCHOR PRETENSIONER DEPLOYMENT CONTROL - CIRCUIT SHORT TO BATTERY
B0079-13	DRIVER SEATBELT ANCHOR PRETENSIONER DEPLOYMENT CONTROL - CIRCUIT OPEN
B0079-2B	DRIVER SEATBELT ANCHOR PRETENSIONER DEPLOYMENT CONTROL - WIRES SHORTED TOGETHER
B007A-11	PASSENGER SEATBELT ANCHOR PRETENSIONER DEPLOYMENT CONTROL - CIRCUIT SHORT TO GROUND
B007A-12	PASSENGER SEATBELT ANCHOR PRETENSIONER DEPLOYMENT CONTROL - CIRCUIT SHORT TO BATTERY
B007A-13	PASSENGER SEATBELT ANCHOR PRETENSIONER DEPLOYMENT CONTROL - CIRCUIT OPEN
B007A-2B	PASSENGER SEATBELT ANCHOR PRETENSIONER DEPLOYMENT CONTROL - WIRES SHORTED TOGETHER
B007E-11	DRIVER SEATBELT RETRACTOR PRETENSIONER DEPLOYMENT CONTROL - CIRCUIT SHORT TO GROUND
B007E-11	DRIVER SEATBELT RETRACTOR PRETENSIONER DEPLOYMENT CONTROL - CIRCUIT SHORT TO BATTERY
B007E-13	DRIVER SEATBELT RETRACTOR PRETENSIONER DEPLOYMENT CONTROL - CIRCUIT OPEN
B007E-2B	DRIVER SEATBELT RETRACTOR PRETENSIONER DEPLOYMENT CONTROL - WIRES SHORTED TOGETHER
B007F-11	PASSENGER SEATBELT RETRACTOR PRETENSIONER DEPLOYMENT CONTROL - CIRCUIT SHORT TO GROUND
B007F-12	PASSENGER SEATBELT RETRACTOR PRETENSIONER DEPLOYMENT CONTROL - CIRCUIT RESISTANCE SHORT TO BATTERY
B007F-13	PASSENGER SEATBELT RETRACTOR PRETENSIONER DEPLOYMENT CONTROL - CIRCUIT OPEN
B007F-2B	PASSENGER SEATBELT RETRACTOR PRETENSIONER DEPLOYMENT

	CONTROL - WIRES SHORTED TOGETHER
B0080-11	DRIVER SEATBELT LOAD LIMITER DEPLOYMENT CONTROL - CIRCUIT SHORT TO GROUND
B0080-12	DRIVER SEATBELT LOAD LIMITER DEPLOYMENT CONTROL - CIRCUIT SHORT TO BATTERY
B0080-13	DRIVER SEATBELT LOAD LIMITER DEPLOYMENT CONTROL - CIRCUIT OPEN
B0080-2B	DRIVER SEATBELT LOAD LIMITER DEPLOYMENT CONTROL - WIRES SHORTED TOGETHER
B0082-11	PASSENGER SEATBELT LOAD LIMITER DEPLOYMENT CONTROL - CIRCUIT SHORT TO GROUND
B0082-12	PASSENGER SEATBELT LOAD LIMITER DEPLOYMENT CONTROL - CIRCUIT SHORT TO BATTERY
B0082-13	PASSENGER SEATBELT LOAD LIMITER DEPLOYMENT CONTROL - CIRCUIT OPEN
B0082-2B	PASSENGER SEATBELT LOAD LIMITER DEPLOYMENT CONTROL - WIRES SHORTED TOGETHER
B0095-49	RIGHT FRONT ACCELERATION SENSOR - INTERNAL ELECTRONIC FAILURE
B0099-96	ROLL OVER SENSOR - COMPONENT INTERNAL FAILURE
B00A0-81	OCCUPANT CLASSIFICATION SYSTEM - INVALID SERIAL DATA RECEIVED
B00A0-96	OCCUPANT CLASSIFICATION SYSTEM - COMPONENT INTERNAL FAILURE
B00B5-11	DRIVER SEAT TRACK POSITION SENSOR - CIRCUIT SHORT TO GROUND
B00B5-12	DRIVER SEAT TRACK POSITION SENSOR - CIRCUIT SHORT TO BATTERY
B00B5-13	DRIVER SEAT TRACK POSITION SENSOR - CIRCUIT OPEN
B00B5-95	DRIVER SEAT TRACK POSITION SENSOR - INCORRECT ASSEMBLY
B00C5-11	PASSENGER SEAT TRACK POSITION SENSOR - CIRCUIT SHORT TO GROUND
B00C5-12	PASSENGER SEAT TRACK POSITION SENSOR - CIRCUIT SHORT TO BATTERY
B00C5-13	PASSENGER SEAT TRACK POSITION SENSOR - CIRCUIT OPEN
B00C5-95	PASSENGER SEAT TRACK POSITION SENSOR - INCORRECT ASSEMBLY
B0100-49	ECU INTERNAL ERRORS - INTERNAL ELECTRONIC FAILURE
B0101-16	POWER SUPPLY - CIRCUIT VOLTAGE BELOW THRESHOLD
B0101-17	POWER SUPPLY - CIRCUIT VOLTAGE ABOVE THRESHOLD
B1BA5-00	AIRBAG SQUIB CONFIGURATION MISMATCH
B1BAA-00	OCCUPANT CLASSIFICATION MODULE CONFIGURATION MISMATCH
B1BB9-00	AIRBAG SQUIB CIRCUIT COUPLING
B1BC7-00	DEPLOYMENT DATA RECORD FULL
B1C32-00	AIRBAG DEPLOYMENT DETECTED

B212C-13	IGNITION RUN/START INPUT - CIRCUIT OPEN
B212D	IGNITION RUN ONLY INPUT CIRCUIT OPEN
B0101-16	POWER SUPPLY - CIRCUIT VOLTAGE BELOW THRESHOLD
B0101-17	POWER SUPPLY - CIRCUIT VOLTAGE ABOVE THRESHOLD
B2204-00	ECU CONFIGURATION MISMATCH
B2207	OCCUPANT RESTRAINT CONTROLLER INTERNAL 1
B2208	OCCUPANT RESTRAINT CONTROLLER INTERNAL 2
B2209	OCCUPANT RESTRAINT CONTROLLER INTERNAL 3
B220A	OCCUPANT RESTRAINT CONTROLLER INTERNAL 4
B220B	OCCUPANT RESTRAINT CONTROLLER FIRING STORED ENERGY
B222A-00	VEHICLE LINE MISMATCH
B2255-00	OCCUPANT RESTRAINT CONTROLLER ROLL-OVER FEATURE DISABLE
B2722-00	ORC UNLOCKED - ALL DEPLOYMENT DISABLED
B2734-13	PASSENGER OCCUPANT DETECTION SENSOR - CIRCUIT OPEN
B2734-95	PASSENGER OCCUPANT DETECTION SENSOR - INCORRECT ASSEMBLY
B2761-96	LEFT B-PILLAR IMPACT ACCELERATION SENSOR - COMPONENT INTERNAL FAILURE
B2762-96	LEFT C PILLAR IMPACT ACCELERATION SENSOR - COMPONENT INTERNAL FAILURE
B2764-96	RIGHT B-PILLAR IMPACT ACCELERATION SENSOR - COMPONENT INTERNAL FAILURE
B2765-96	RIGHT C-PILLAR IMPACT ACCELERATION SENSOR - COMPONENT INTERNAL FAILURE
B2767-96	LEFT IMPACT PRESSURE SENSOR - COMPONENT INTERNAL FAILURE
B2768-96	RIGHT IMPACT PRESSURE SENSOR - COMPONENT INTERNAL FAILURE
B2771-00	IMPACT CALIBRATION MISSING
C10CC-49	ESC SENSORS - INTERNAL ELECTRONIC FAILURE
C15B2-49	LEFT FRONT ACCELERATION SENSOR - INTERNAL ELECTRONIC FAILURE
U0001-00	CAN C BUS
U0002-00	CAN C BUS OFF PERFORMANCE
U0100-00	LOST COMMUNICATION WITH ECM/PCM
U0121-00	LOST COMMUNICATION WITH ANTI-LOCK BRAKE SYSTEM (ABS) CONTROL MODULE
U0131	00-LOST COMMUNICATION WITH POWER STEERING CONTROL MODULE
U0140-00	LOST COMMUNICATION WITH BODY CONTROL MODULE
U0154-00	LOST COMMUNICATION WITH OCCUPANT CLASSIFICATION MODULE
U0155-00	LOST COMMUNICATION WITH CLUSTER/CCN
U0170-00	LOST COMMUNICATION W/UP-FRONT LEFT SATELLITE SENSOR
U0171-00	LOST COMMUNICATION W/UP-FRONT RIGHT SATELLITE SENSOR
U11EA-00	LOST COMMUNICATION WITH LEFT B-PILLAR IMPACT ACCELERATION

	SENSOR
U11EB-00	LOST COMMUNICATION WITH LEFT C-PILLAR IMPACT ACCELERATION SENSOR
U11ED-00	LOST COMMUNICATION WITH RIGHT B-PILLAR IMPACT ACCELERATION SENSOR
U11EE-00	LOST COMMUNICATION WITH RIGHT C-PILLAR IMPACT ACCELERATION SENSOR
U11F0-00	LOST COMMUNICATION WITH LEFT IMPACT PRESSURE SENSOR
U11F1-00	LOST COMMUNICATION WITH RIGHT IMPACT PRESSURE SENSOR
U146D-00	IMPLAUSIBLE DATA RECEIVED FROM LEFT B-PILLAR IMPACT ACCELERATION SENSOR
U146E-00	IMPLAUSIBLE DATA RECEIVED FROM LEFT C-PILLAR IMPACT ACCELERATION SENSOR
U1470-00	IMPLAUSIBLE DATA RECEIVED FROM LEFT IMPACT PRESSURE SENSOR
U1471-00	IMPLAUSIBLE DATA RECEIVED FROM LEFT FRONTAL ACCELERATION SENSOR
U1472-00	IMPLAUSIBLE DATA RECEIVED FROM RIGHT B-PILLAR IMPACT ACCELERATION SENSOR
U1473-00	IMPLAUSIBLE DATA RECEIVED FROM RIGHT C-PILLAR IMPACT ACCELERATION SENSOR
U1475-00	IMPLAUSIBLE DATA RECEIVED FROM RIGHT IMPACT PRESSURE SENSOR IS ACTIVE
U1476-00	IMPLAUSIBLE DATA RECEIVED FROM RIGHT FRONTAL ACCELERATION SENSOR

2014 RESTRAINTS

Occupant Restraint Controller (ORC) - Electrical Diagnostics - Cherokee

STANDARD PROCEDURE

RESTRAINTS SYSTEM INTERMITTENT TEST

For a complete wiring diagram, **refer to appropriate SYSTEM WIRING DIAGRAMS article** .

DIAGNOSTIC INTERMITTENT TEST

1. **RECORD AND ERASE ALL RESTRAINT SYSTEM DTCS**
    1. With the scan tool, record and erase all DTCs from all restraints system modules. Monitor for any active codes as you work through the following steps.
        - Review the code monitored and set conditions for any DTCs that are stored and attempt to reproduce the conditions listed.

            WARNING: **Maintain a safe distance from all airbags while performing the following steps. Failure to follow these instructions may result in possible serious or fatal injury.**

        - Wiggle the wiring harness and connectors of the related airbag circuit, sensor, or component.

            WARNING: **Turn the ignition off disconnect the 12-volt battery and wait two minutes before proceeding. Failure to follow these instructions may result in possible serious or fatal injury.**

        - Disconnect components and inspect the harness and connectors for damage.
        - Reconnect components and ensure they are properly seated.

        If equipped with the keyless ignition, use this ignition on warning.

            WARNING: **Disconnect the 12-volt battery wait two minutes before proceeding, remove the ORC fuses, connect the 12-volt battery, wait two minutes before proceeding. Cycle the ignition to the On position, then reconnect the ORC fuses. Wait two minutes before proceeding. Failure to follow these instructions may result in possible serious or fatal injury.**

        If equipped with the standard key ignition, use this ignition on warning.

WARNING: Turn the ignition on, then reconnect the 12-volt battery and wait two minutes before proceeding. Failure to follow these instructions may result in possible serious or fatal injury.

- If codes are related to the Driver Airbag circuits, rotate the steering wheel from stop to stop.
- Turn the ignition off.
- Perform any Technical Service Bulletins (TSBs) that may apply.

Was the source of the customer complaint found or did any DTCs appear and stay active?

Yes

- Make the appropriate repairs and either perform the RESTRAINTS SYSTEM VERIFICATION TEST, refer to **RESTRAINTS SYSTEM VERIFICATION TEST**, or for the appropriate diagnostic procedure refer to the **OCCUPANT RESTRAINT CONTROLLER (ORC) - DIAGNOSTIC CODE INDEX** .

No

- Go To 2

2. **ATTEMPT TO REPRODUCE THE CONDITION**
   1. In the event the customer complaint cannot be duplicated due to an intermittent condition in the restraints system, the following may aid in attempting to reproduce the condition.

WARNING: Turn the ignition off, disconnect the battery and wait two minutes before proceeding. Failure to follow these instructions may result in possible serious or fatal injury.

- Using the wiring diagram/schematic as a guide, inspect the wiring and connectors related to the stored code or component in question.
- Look for chafed, pierced, pinched, or partially broken wires and broken, bent, pushed out, spread, corroded, or contaminated terminals.
- Reconnect any disconnected components and harness connectors and ensure they are properly seated.

If equipped with the keyless ignition, use this ignition on warning.

WARNING: Disconnect the 12-volt battery wait two minutes before proceeding, remove the ORC fuses, connect the 12-volt battery, wait two minutes before proceeding. Cycle the ignition to the On position, then reconnect the ORC fuses. Wait two minutes before proceeding. Failure to follow these instructions may result in possible serious or fatal

injury.

If equipped with the standard key ignition, use this ignition on warning.

WARNING: **Turn the ignition on, then reconnect the 12-volt battery and wait two minutes before proceeding. Failure to follow these instructions may result in possible serious or fatal injury.**

- If numerous trouble codes were set, use a schematic and inspect any common ground or supply circuits.

Was the source of the intermittent condition located?

Yes

- Make the appropriate repairs and perform the RESTRAINTS SYSTEM VERIFICATION PROCEDURE. Refer to **RESTRAINTS SYSTEM VERIFICATION TEST**.

No

- The problem cannot be found at this time.

RESTRAINTS SYSTEM PRE-DIAGNOSTIC PROCEDURE

DIAGNOSTIC PRE-TEST

1. Before attempting to repair any restraint system, technicians should be familiar with and fully understand the system operation. Refer to Restraints System **DESCRIPTION** and **OPERATION** for complete details. The following should be used as a checklist to be completed in its entirety prior to referencing specific Restraints Diagnostic Procedures.
2. **FOLLOW THE BASIC OUTLINE SET FORTH IN THE SIX-STEP TROUBLESHOOTING PROCEDURE**
    1. Verification of complaint.
    2. Verification of any related symptoms.
    3. Symptom analysis.
    4. Problem isolation.
    5. Repair of isolated problem.
    6. Verification of proper operation.
3. **TAKE INTO ACCOUNT CURRENT VEHICLE CONDITION, REPAIR HISTORY, AND TECHNICAL SERVICE BULLETINS (TSBs)**
    - Verify that there are no outward signs of vehicle damage or effects from a collision that could impact the proper operation of the Restraints system.

- Check for aftermarket vehicle accessories that may have been installed improperly or could interfere with the system.
- Check the vehicle repair history for repairs that may relate to the current condition.
- Check for current Technical Service Bulletins (TSBs) for the Restraints system related to the customer concern. If a TSB applies, follow the procedure outlined in the TSB.

4. **DIAGNOSE ONLY THOSE FAILURES THAT ARE ACTIVE AND CAN BE REPRODUCED**
   - Check the control module central to the subsystem that is exhibiting the condition for active DTCs.
   - For an intermittent failure that is not active at the time of vehicle inspection, perform the RESTRAINTS SYSTEM INTERMITTENT TEST diagnostic procedure and document the event on the repair order. Refer to **RESTRAINTS SYSTEM INTERMITTENT TEST**.
5. **ADDRESS ACTIVE DIAGNOSTIC TROUBLE CODES (DTCs) IN THE CORRECT ORDER**
   1. Low/High Voltage and Serial Data Loss of Communication Codes.
   2. Module Internal Failure and Configuration Mismatch Codes.
   3. Circuit specific DTC failures.
6. Should the malfunction still be present after conducting this Pre-diagnostic Procedure, technicians should continue to the appropriate DTC procedure. Refer to the **OCCUPANT RESTRAINT CONTROLLER (ORC) - DIAGNOSTIC CODE INDEX** .

   Was the Pre-Test reviewed and is the DTC still present?

   Yes

   - Perform the appropriate DTC procedure. Refer to the **OCCUPANT RESTRAINT CONTROLLER (ORC) - DIAGNOSTIC CODE INDEX** .

   No

   - Test Complete.

RESTRAINTS SYSTEM VERIFICATION TEST

DIAGNOSTIC VERIFICATION TEST

PERFORM RESTRAINTS SYSTEM VERIFICATION TEST

NOTE: **If the ORC has been replaced, the ORC Initialization Procedure must be performed to clear the ORC Unlocked DTC and bring the module to a full state of readiness."If the ORC is being replaced with a new unit or if the ORC software has been re-flashed, the Electronic Stability Control (ESC) system will require re-initialization using a diagnostic scan tool. Refer to the appropriate diagnostic procedures." Refer to the DTC list. Refer to the OCCUPANT RESTRAINT CONTROLLER (ORC) - DIAGNOSTIC CODE INDEX .**

1. Remove any special tools or jumper wires and reconnect all previously disconnected components - except

the Battery.

If equipped with the keyless ignition, use this ignition on warning.

WARNING: Disconnect the 12-volt battery wait two minutes before proceeding, remove the ORC fuses, connect the 12-volt battery, wait two minutes before proceeding. Cycle the ignition to the On position, then reconnect the ORC fuses. Wait two minutes before proceeding. Failure to follow these instructions may result in possible serious or fatal injury.

If equipped with the standard key ignition, use this ignition on warning.

WARNING: Turn the ignition on, then reconnect the 12-volt battery and wait two minutes before proceeding. Failure to follow these instructions may result in possible serious or fatal injury.

2. Connect the scan tool to the Data Link Connector - use the most current software available.
3. With the scan tool, erase stored DTCs in all airbag system modules.
4. Perform module reset.

NOTE: If equipped with an Airbag On - Off switch, read the DTCs in all switch positions.

5. Exercise the Restraints System to duplicate the appropriate monitor conditions for any DTCs that were set.
6. Wait one minute, and read active codes, if there are none present, read the stored codes.
7. If the scan tool shows any active or stored codes, return to the DTC index and follow the path specified for that trouble code. If no active or stored codes are present, the repair is complete.

Are any DTCs present or, is the original condition still present?

Yes

- Refer to the **OCCUPANT RESTRAINT CONTROLLER (ORC) - DIAGNOSTIC CODE INDEX** and perform the appropriate diagnostic procedure.

No

- If the battery was disconnected for any reason, you must perform the Battery Reconnection procedure of the Service Information.
- Repair is complete.

2014 RESTRAINTS

Service Information - Cherokee

WARNING

WARNING

WARNING: To avoid serious or fatal injury on vehicles equipped with the Supplemental Restraint System (SRS), never attempt to repair the electrically conductive circuits or wiring components related to the SRS for which there is no MOPAR wiring repair kit. It is important to use ONLY the recommended splicing kit and procedure. For applicable and available MOPAR wiring repair kits, please visit the MOPAR® Connector Web Site at the following address on the internet: (http://dto.vftis.com/mopar/disclaimer.asp). Inappropriate repairs can compromise the conductivity and current carrying capacity of those critical electrical circuits, which may cause SRS components not to deploy when required, or to deploy when not required. Only minor cuts or abrasions of wire and terminal insulation where the conductive material has not been damaged, or connector insulators where the integrity of the latching and locking mechanisms have not been compromised may be repaired using appropriate methods.

WARNING: To avoid serious or fatal injury during and following any seat belt or child restraint anchor service, carefully inspect all seat belts, buckles, mounting hardware, retractors, tether straps, and anchors for proper installation, operation, or damage. Replace any belt that is cut, frayed, or torn. Straighten any belt that is twisted. Tighten any loose fasteners. Replace any belt that has a damaged or ineffective buckle or retractor. Replace any belt that has a bent or damaged latch plate or anchor plate. Replace any child restraint anchor or the unit to which the anchor is integral that has been bent or damaged. Never attempt to repair a seat belt or child restraint component. Always replace damaged or ineffective seat belt and child restraint components with the correct, new and unused replacement parts listed in the Chrysler Mopar® Parts Catalog. Failure to follow these instructions may result in possible serious or fatal injury.

WARNING: To avoid serious or fatal injury on vehicles equipped with airbags, disable the Supplemental Restraint System (SRS) before attempting any steering wheel, steering column, airbag, Occupant Classification System (OCS), seat belt tensioner, impact sensor or instrument panel component diagnosis or service. Disconnect and isolate the battery negative (ground) cable, then wait two minutes for the system capacitor to discharge before performing further diagnosis or service. This is the only sure way to

disable the SRS. Failure to follow these instructions may result in accidental airbag deployment.

WARNING: To avoid potential physical injury or damage to sensitive electronic circuits and systems, always disconnect and isolate the battery negative (ground) cable and the positive cable, then ground the positive cable to discharge the Occupant Restraint Controller (ORC) capacitor before performing any welding operations on the vehicle. Failure to take the proper precautions could result in accidental airbag deployment, possible damage to the Supplemental Restraint System (SRS) circuits and components, and possible damage to other electronic circuits and components. Whenever a welding process is being performed within 12 inches (30 centimeters) of an electronic module or wiring harness, then that module or harness should be relocated out of the way, or disconnected. Always protect against component or vehicle damage from weld spatter by using weld blankets and screens.

WARNING: To avoid serious or fatal injury, do not attempt to dismantle an airbag unit or tamper with its inflator. Do not puncture, incinerate or bring into contact with electricity. Do not store at temperatures exceeding 93°C (200°F). An airbag inflator unit may contain sodium azide and potassium nitrate. These materials are poisonous and extremely flammable. Contact with acid, water, or heavy metals may produce harmful and irritating gases (sodium hydroxide is formed in the presence of moisture) or combustible compounds. An airbag inflator unit may also contain a gas canister pressurized to over 17.24 kPa (2500 psi). Failure to follow these instructions may result in possible serious or fatal injury.

WARNING: To avoid serious or fatal injury when handling a seat belt tensioner retractor or buckle, proper care should be exercised to keep fingers out from under the retractor or buckle cover and away from the seat belt webbing or cable where it exits from the retractor or buckle cover.

WARNING: To avoid serious or fatal injury, replace all Supplemental Restraint System (SRS) components only with parts specified in the Chrysler Mopar® Parts Catalog. Substitute parts may appear interchangeable, but internal differences may result in inferior occupant protection.

WARNING: To avoid serious or fatal injury, the fasteners, screws, and bolts originally used for the Supplemental Restraint System (SRS) components must never be replaced with any substitutes. These fasteners have special coatings and are specifically designed for the SRS. Anytime a new fastener is needed, replace it with the correct fasteners provided in the service package or specified in the Chrysler Mopar® Parts Catalog.

WARNING: To avoid serious or fatal injury when a steering column has an airbag unit attached, never place the column on the floor or any other surface with the steering wheel or airbag unit face down. Failure to follow these instructions may result in possible serious or fatal injury.

DESCRIPTION

SUPPLEMENTAL RESTRAINT SYSTEM

A Supplemental Restraint System (SRS) is standard factory-installed safety equipment on this vehicle. Available supplemental occupant restraints for this vehicle include both active and passive types. Active restraints are those which require the vehicle occupants to take some action to employ, such as fastening and adjusting a seat belt; while passive restraints require no action by the vehicle occupants to be employed. Additional details of each of these subsystems of the SRS can be found elsewhere within this service information.

ACTIVE RESTRAINTS

The active restraints for this vehicle include:

- **Child Restraint Anchors** - All vehicles are equipped with three, fixed-position child seat upper tether anchors for the rear seating. Two anchors are integral to the back of the left (60 percent) rear seat back panel, and one is integral to the right (40 percent) rear seat back panel. Two lower anchors are also provided for each outboard rear seating position. The lower anchors are integral to each rear seat stanchion assembly on the rear floor panel and are accessed from the front of the rear seat where the seat back meets the seat cushion.
- **Front Seat Belts** - Both front seating positions are equipped with three-point seat belt systems employing a lower B-pillar mounted inertia latch-type emergency locking retractor, a height-adjustable upper B-pillar mounted turning loop, a fixed lower seat belt anchor buckle secured to an anchor latch plate on the inner sill near the base of the B-pillar and a traveling end-release seat belt buckle secured to a bracket near the back of the upper inboard seat track. The driver and passenger side front seat belt buckles include an integral seat belt switch that detects whether the front seat belts have been fastened.
- **Rear Seat Belts** - All three rear seating positions are equipped with three-point seat belt systems. The outboard rear seating position belts employ a C-pillar mounted inertia latch-type emergency locking retractors, fixed position upper C-pillar mounted turning loops and fixed lower seat belt anchors secured to the lower C-pillars. The rear center seating position has an inertia latch-type emergency locking retractor that is secured within the left (60 percent) rear seat back. The rear center seating position belt lower anchor is secured to the traveling left rear seat cushion frame along with the left outboard and center end-release seat belt buckles. The right outboard seating position also has a end-release seat belt buckle secured to the traveling right rear seat cushion frame. In vehicles manufactured for certain export markets, each rear seat belt buckle includes an integral seat belt switch that detects whether the rear seat belts have been fastened.

PASSIVE RESTRAINTS

Fig. 1: SRS Logo
Courtesy of CHRYSLER GROUP, LLC

The passive restraints available for this vehicle include the following:

- **Active Head Restraints** - Inertia activated Active Head Restraints (AHR) are standard equipment for both front seating positions in this vehicle.
- **Dual Front Airbags** - A multistage Driver AirBag (DAB) and front Passenger AirBag (PAB) are used in this vehicle. This airbag system consists of passive, inflatable, Supplemental Restraint System (SRS) components and vehicles with this equipment can be readily identified by the **SRS - AIRBAG** logo molded into the DAB trim cover in the center of the steering wheel and also into the PAB area on the top of the instrument panel above the glove box. Vehicles with the airbag system can also be identified by the airbag indicator, which will illuminate in the Instrument Cluster (IC) (also known as the Instrument Panel Cluster/IPC) from four to six seconds as a bulb test each time the status of the ignition switch transitions to On. Pyrotechnic-type driver and passenger front seat belt retractors and anchor buckle tensioners also work in conjunction with the dual front and side curtain airbags.
- **Knee Airbags** - The front airbag system also includes driver and passenger front Knee AirBags (KAB) (also known as Inflatable Knee Blockers/IKB) that are located just below the lower instrument panel reinforcements. These airbags are also passive, inflatable, SRS components and vehicles with this equipment can be readily identified by the **SRS - AIRBAG** logo molded into the instrument panel trim just above each airbag location.
- **Front Seat Airbags** - Front seat integrated Seat AirBags (SAB) (also known as pelvic and thoracic airbags) are standard equipment in these vehicles. This airbag system consists of passive, inflatable SRS components and vehicles with this equipment can be readily identified by a sewn tag with the **SRS - AIRBAG** logo located on the outboard side of the front seat back trim cover.
- **Rear Seat Airbags** - Rear seat integrated Seat AirBags (SAB) (also known as pelvic and thoracic airbags) are optional equipment in these vehicles. This airbag system consists of passive, inflatable SRS components and vehicles with this equipment can be readily identified by a sewn tag with the **SRS - AIRBAG** logo located on the outboard sides of the rear seat cushion trim cover.
- **Side Curtain Airbags** - Side curtain airbags (also known as Side AirBag Inflatable Curtains/SABIC) are standard equipment in this vehicle. This airbag system consists of passive, inflatable SRS components and vehicles with this equipment can be readily identified by a molded identification **SRS - AIRBAG**

logo located near the top of each B-pillar trim panel.

The SRS includes the following major components, which are described in further detail elsewhere in this service information:

- **Active Head Restraints** - One Active Head Restraint (AHR) is located atop each front seat back unit.
- **Airbag Indicator** - The airbag indicator is integral to the Instrument Cluster (IC) (also known as the Instrument Panel Cluster/IPC), which is located on the instrument panel in front of the driver.
- **Clockspring** - The clockspring is located near the top of the steering column, directly beneath the steering wheel.
- **Driver Airbag** - The Driver AirBag (DAB) is located in the center of the steering wheel, beneath the DAB trim cover.
- **Front Impact Sensor** - Two front impact sensors are used on vehicles equipped with dual front airbags, one left side and one right side. One sensor is located on the back side of the Front End Module (FEM) carrier, just outboard of each side of the cooling module.
- **Knee Airbags** - This vehicle is equipped with Knee AirBags (KAB) (also known as Inflatable Knee Blockers/IKB). The KAB are mounted below the lower instrument panel reinforcements on each side of the vehicle.
- **Occupant Classification System** - Vehicles manufactured for domestic markets have a Occupant Classification System (OCS). The OCS includes a Seat Weight Sensor (SWS) bladder, a pressure hose and an Occupant Classification Module (OCM) integral to the calibrated passenger front seat cushion.
- **Occupant Detection Sensor** - Vehicles manufactured for export markets have a Occupant Detection Sensor (ODS) located on the top of the seat cushion foam of the passenger side front seat.
- **Occupant Restraint Controller** - The Occupant Restraint Controller (ORC) is located on the floor panel transmission tunnel, between the dash panel and the instrument panel center stack support.
- **Passenger Airbag** - The Passenger AirBag (PAB) is located in the instrument panel, beneath the instrument panel cover and above the glove box on the passenger side of the vehicle.
- **Front Seat Airbag** - A front Seat AirBag (SAB) (also known as pelvic and thoracic airbag) is secured to each outboard front seat back frame, where it is concealed beneath the seat back trim cover and foam.
- **Rear Seat Airbag** - The optional rear Seat AirBags (SAB) (also known as pelvic and thoracic airbags) are secured to each outboard end of the rear seat cushion pan, where they are concealed beneath the seat cushion trim cover and foam.
- **Seat Belt Tensioner** - A seat belt tensioner is integral to both front seat belt retractors and both front seat belt anchor buckle units. The seat belt retractor tensioner units are secured to each lower inner B-pillar and are concealed behind the lower B-pillar trim. The seat belt anchor buckle tensioner units are located on the inner sill near the base of the B-pillar and are concealed behind the inner sill trim.
- **Seat Track Position Sensor** - There are two Seat Track Position Sensors (STPS). One sensor is located on the inboard side of one of the seat adjuster tracks on both the driver and the passenger front seats.
- **Side Curtain Airbag** - A standard equipment side curtain airbag (also known as a Side AirBag Inflatable Curtain/SABIC) is secured to each inside roof side rail above the headliner, and extends from the A-pillar to just beyond the C-pillar.
- **Side Impact Sensor** - Six side impact sensors are used on vehicles equipped with side curtain airbags, three on each side of the vehicle. One acceleration-type sensor is located behind the B-pillar trim near the

base of each B-pillar, and one acceleration-type sensor is located behind the quarter panel trim near the base of each C-pillar. One pressure-type sensor is located on each front poor hardware carrier panel, concealed behind each front door inside trim panel.

The ORC, the IPC and the OCM each contain a microcontroller and programming that allow them to communicate with each other using the Controller Area Network (CAN) data bus. This method of communication is used by the ORC for control of the airbag indicator in the IPC. Refer to **COMMUNICATION, DESCRIPTION** .

Hard wired circuitry connects the SRS components to each other through the electrical system of the vehicle. These hard wired circuits are integral to several wire harnesses, which are routed throughout the vehicle and retained by many different methods. These circuits may be connected to each other, to the vehicle electrical system, and to the SRS components through the use of a combination of soldered splices, splice block connectors, and many different types of wire harness terminal connectors and insulators. Refer to the appropriate wiring information. The wiring information includes wiring diagrams, proper wire and connector repair procedures, further details on wire harness routing and retention, as well as pin out and location views for the various wire harness connectors, splices and grounds.

OPERATION

SUPPLEMENTAL RESTRAINT SYSTEM

The Supplemental Restraint System (SRS) is comprised of two primary subsystems: Active Restraints and Passive Restraints. Additional operational details on each of these subsystems of the SRS can be found elsewhere within this service information.

ACTIVE RESTRAINTS

The primary passenger restraints in this or any other vehicle are the standard equipment factory-installed seat belts and child restraint anchors. Seat belts and child restraint anchors are referred to as an active restraint because the vehicle occupants are required to physically fasten and properly adjust these restraints in order to benefit from them.

PASSIVE RESTRAINTS

The passive restraints are referred to as Supplemental Restraint System (SRS) components because they were designed and are intended to enhance the protection for the occupants of the vehicle **only** when used in conjunction with the seat belts. They are referred to as passive restraints because the vehicle occupants are not required to do anything to make them operate; however, the vehicle occupants must be wearing their seat belts in order to obtain the maximum safety benefit from the factory-installed SRS components. In addition, each front seat occupant must have their Active Head Restraint (AHR) unit properly adjusted in order to obtain its maximum safety benefit.

The SRS electrical circuits are continuously monitored and controlled by a microcontroller and software contained within the Occupant Restraint Controller (ORC). An airbag indicator in the Instrument Cluster (IC) (also known as the Instrument Panel Cluster/IPC) illuminates from four to six seconds as a bulb test each time the status of the ignition switch transitions to On or Start. Following the bulb test, the airbag indicator is turned

On or Off by the ORC to indicate the status of the SRS. If the airbag indicator comes On at any time other than during the bulb test, it indicates that there is a problem in the SRS electrical circuits. Such a problem may cause airbags not to deploy when required, or to deploy when not required.

Deployment of the SRS components depends upon the angle and severity of an impact. Deployment is not based upon vehicle speed; rather, deployment is based upon the rate of deceleration as measured by the forces of gravity (also known as G forces) upon the acceleration-type impact sensors, or by a pressure wave within a door as measured by the pressure-type impact sensor. When an impact is severe enough, the microcontroller within the ORC signals the inflator of the appropriate airbag units to deploy their airbag cushions. The Occupant Classification System (OCS) monitors the passenger side front seat to determine whether or not the passenger side front seat is occupied and, if the seat is occupied, classifies the size of the occupant. The Occupant Classification Module (OCM) then provides an additional logic input that is used by the ORC to determine the appropriate force with which the Passenger AirBag (PAB) and seat belt tensioner should be deployed.

The front seat belt retractor tensioners, front seat belt anchor buckle tensioners, the front seat belt adaptive load limiters and the Knee AirBags (KAB) (also known as the Inflatable Knee Blockers/IKB) are provided with a deployment signal by the ORC in conjunction with the front airbags. The side curtain airbags (also known as the Side AirBag Inflatable Curtains/SABIC) and the Seat AirBags (SAB) (also known as pelvic and thoracic airbags) are provided with a deployment signal individually by the ORC based upon a side impact sensor input for the same side of the vehicle. The ORC also contains a rollover sensor. Should the vehicle roll over and not cause any impact sensor to signal the need for a deployment, the rollover sensor in the ORC will deploy the SABIC units, the SAB units and under certain conditions, will also actuate the front seat belt retractor and anchor buckle tensioners.

During a frontal vehicle impact, the KAB units work in concert with properly fastened and adjusted seat belts to restrain both the driver and the front seat passenger in the proper position for an airbag deployment. The KAB units also absorb and distribute the crash energy from the driver and the front seat passenger to the structure of the instrument panel. The seat belt tensioners remove the slack from the front seat belts to provide further assurance that the driver and front seat passenger are properly positioned and restrained for a front airbag deployment. The adaptive load limiters for the front seat belts allow the ORC to control the belt pressure applied to the chests of the front seat occupants based upon the impact sensor inputs.

Typically, the vehicle occupants recall more about the events preceding and following a collision than they do of an airbag deployment itself. This is because the airbag deployment and deflation occur very rapidly. In a typical 48 kilometer-per-hour (30 mile-per-hour) barrier impact, from the moment of impact until the airbags are fully inflated takes about 40 milliseconds. Within one to two seconds from the moment of impact, the airbags are almost entirely deflated. The times cited for these events are approximations, which apply only to a barrier impact at the given speed. Actual times will vary somewhat, depending upon the vehicle speed, impact angle, severity of the impact and the type of collision.

When the ORC monitors a problem in any of the SRS circuits or components, including the seat belt tensioners and adaptive load limiter units, it stores a fault code or Diagnostic Trouble Code (DTC) in its memory circuit and sends an electronic message to the IC to turn On the airbag indicator. The hard wired circuits between components related to the SRS may be diagnosed using conventional diagnostic tools and procedures. Refer to the appropriate wiring information. The wiring information includes wiring diagrams, proper wire and connector repair procedures, details of wire harness routing and retention, connector pin out information and

location views for the various wire harness connectors, splices and grounds.

However, conventional diagnostic methods will not prove conclusive in the diagnosis of the SRS or the electronic controls and communication between other modules and devices that provide features of the SRS. The most reliable, efficient and accurate means to diagnose the SRS or the electronic controls and communication related to SRS operation, as well as the retrieval or erasure of a DTC requires the use of a diagnostic scan tool and may also require the use of the SRS Load Tool special tool along with the appropriate Load Tool Jumpers and Adapters. Refer to the appropriate diagnostic information.

DIAGNOSIS AND TESTING

DIAGNOSIS AND TESTING - SUPPLEMENTAL RESTRAINT SYSTEM

The hard wired circuits between modules and components related to the Supplemental Restraint System (SRS) may be diagnosed using conventional diagnostic tools and procedures. Refer to the appropriate wiring information. The wiring information includes wiring diagrams, proper wire and connector repair procedures, details of wire harness routing and retention, connector pin out information and location views for the various wire harness connectors, splices and grounds.

However, conventional diagnostic methods will not prove conclusive in the diagnosis of the SRS or the electronic controls and communication between other modules and devices that provide features of the SRS. The most reliable, efficient and accurate means to diagnose the SRS or the electronic controls and communication related to SRS operation, as well as the retrieval or erasure of a DTC requires the use of a diagnostic scan tool. Refer to the appropriate diagnostic information.

In addition to a diagnostic scan tool that contains the latest version of the proper diagnostic software, certain diagnostic procedures for the SRS may require the use of the SRS Load Tool special tool along with the appropriate Load Tool Jumpers and Adapters. Refer to the appropriate diagnostic information.

WARNING: **To avoid serious or fatal injury on vehicles equipped with airbags, disable the Supplemental Restraint System (SRS) before attempting any steering wheel, steering column, airbag, Occupant Classification System (OCS), seat belt tensioner, impact sensor or instrument panel component diagnosis or service. Disconnect and isolate the battery negative (ground) cable, then wait two minutes for the system capacitor to discharge before performing further diagnosis or service. This is the only sure way to disable the SRS. Failure to follow these instructions may result in accidental airbag deployment.**

STANDARD PROCEDURE

HANDLING NON-DEPLOYED SUPPLEMENTAL RESTRAINTS

At no time should any source of electricity be permitted near the inflator on the back of a non-deployed airbag or seat belt tensioner. When carrying a non-deployed airbag, the trim cover or airbag cushion side of the unit should be pointed away from the body to minimize injury in the event of an accidental deployment. If the airbag

unit is placed on a bench or any other surface, the trim cover or airbag cushion side of the unit should be face up to minimize movement in the event of an accidental deployment.

When handling a non-deployed seat belt tensioner, take proper care to keep fingers out from under the retractor or buckle cover and away from the seat belt webbing or cable where it exits from the retractor or buckle cover. In addition, the Supplemental Restraint System (SRS) should be disarmed whenever any steering wheel, steering column, seat belt tensioner, airbag, impact sensor or instrument panel components require diagnosis or service. Failure to observe this warning could result in accidental airbag deployment and possible personal injury.

All damaged, ineffective or non-deployed airbags and seat belt tensioners which are replaced on vehicles are to be handled and disposed of properly. If an airbag or seat belt tensioner unit is ineffective or damaged and non-deployed, refer to the Hazardous Substance Control System for information regarding the potentially hazardous properties of the subject component and the proper safe handling procedures. Then dispose of all non-deployed and deployed airbags and seat belt tensioners in a manner consistent with state, provincial, local and federal regulations.

SERVICE AFTER A SUPPLEMENTAL RESTRAINT SYSTEM DEPLOYMENT

Any vehicle which is to be returned to use following a Supplemental Restraint System (SRS) component deployment must have the deployed restraints replaced. In addition, the following guidelines MUST be observed.

- **Following ANY major vehicle impact damage in the vicinity of an impact sensor or the ORC** - It is critical that the mounting surfaces and mounting brackets for the Occupant Restraint Controller (ORC), front impact sensors and side impact sensors located within the proximity of the impact damage be closely inspected and restored to their original conditions. Because the ORC and each impact sensor are used by the SRS to monitor or confirm the direction and severity of a vehicle impact, improper orientation or insecure fastening of these components may cause airbags not to deploy when required, or to deploy when not required.
- **If an active head restraint is deployed** - An inertia-based Active Head Restraint (AHR) unit that is undamaged following a deployment may be reset. These units are designed with the intention of reuse.
- **If the driver airbag is deployed** - If the Driver AirBag (DAB) has been deployed, the clockspring and the steering column must also be replaced.
- **If the knee airbags are deployed** - If the Knee AirBags (KAB) (also known as Inflatable Knee Blockers/IKB) have been deployed, the instrument panel steering column opening cover (left side) and the glove box (right side) must also be replaced.
- **If the passenger airbag is deployed** - If the Passenger AirBag (PAB) has been deployed, the instrument panel upper trim cover must also be replaced.
- **If a front seat airbag is deployed** - If a front Seat AirBag (SAB) (also known as a pelvic and thoracic airbag) has been deployed, the front seat back frame, the front seat back foam and the front seat back trim cover on the same side of the vehicle as the deployed airbag must also be replaced.
- **If a rear seat airbag is deployed** - If a rear Seat AirBag (SAB) (also known as a pelvic and thoracic airbag) has been deployed, the rear seat cushion foam and the rear seat cushion trim cover must also be replaced.

- **If a seat belt tensioner is deployed** - The seat belt retractor and anchor buckle tensioners as well as the adaptive load limiters are deployed in conjunction with the front airbags, but can also be deployed with front Seat AirBag (SAB) (also known as a pelvic and thoracic airbag) or side curtain airbags (also known as Side AirBag Inflatable Curtains/SABIC). The seat belt tensioners must be replaced if either front airbag has been deployed, and must be inspected if either front SAB or SABIC has been deployed.
- **If a side curtain airbag is deployed** - If a side curtain airbag (also known as a Side AirBag Inflatable Curtain/SABIC) has been deployed, the headliner as well as the deploy brackets on the upper B-pillars and the upper C and D-pillars and the trim on the upper A, B, C and D-pillars on the same side of the vehicle as the deployed airbag must also be replaced. On vehicles with an optional sunroof, the sunroof drain tubes and hoses must be closely inspected following a SABIC deployment.

The components identified with the deployed SRS components in the preceding list are not intended for reuse and will be damaged or weakened as a result of an airbag deployment, which may or may not be obvious during a visual inspection. All other vehicle components should be closely inspected following any SRS component deployment, but are to be replaced only as required by the extent of the visible damage incurred.

SQUIB CIRCUIT DAMAGE

In addition to the preceding guidelines, be aware that the heat created by the initiator during an airbag or tensioner deployment will cause collateral damage to the connected wiring (squib circuits) and connector insulators. There are two methods by which an airbag or seat belt tensioner may be connected to the vehicle electrical system. The first method involves a short pigtail harness and connector insulator that are integral to the airbag or tensioner unit and are replaced as a unit with the service replacement airbag or seat belt tensioner. This connection method typically requires no additional wiring repair following a deployment.

However, the second connection method involves a wire harness takeout and connector insulator that are connected directly to the airbag or tensioner initiator or squib. These direct-connect type take outs and connector insulators **MUST** be repaired following an airbag or seat belt tensioner deployment using the approved Supplemental Restraint System Wiring Repairs procedure.

AIRBAG SQUIB STATUS

Multistage airbags with multiple initiators (squibs) must be checked to determine that all squibs were used during the deployment event. The Driver AirBag (DAB) and Passenger AirBag (PAB) in this vehicle are deployed by electrical signals generated by the Occupant Restraint Controller (ORC) through the driver or passenger squib 1 and squib 2 circuits to the two initiators in the airbag inflators. Typically, both initiators are used and all potentially hazardous chemicals are burned during an airbag deployment event. However, it is possible for only one initiator to be used; therefore, it is always necessary to confirm that both initiators have been used in order to avoid the improper handling or disposal of potentially live pyrotechnic or hazardous materials. The following procedure should be performed using a diagnostic scan tool to verify the status of both airbag squibs before either deployed airbag is removed from the vehicle for disposal.

CAUTION: Deployed front airbags having two initiators (squibs) in the airbag inflator may or may not have live pyrotechnic material within the inflator. Do not dispose of these airbags unless you are certain of complete deployment. Refer to the Hazardous Substance Control System for information

regarding the potentially hazardous properties of the subject component and the proper safe handling procedures. Then dispose of all non-deployed and deployed airbags and seat belt tensioners in a manner consistent with state, provincial, local and federal regulations.

1. Be certain that the diagnostic scan tool contains the latest version of the proper diagnostic software. Connect the scan tool to the 16-way Data Link Connector (DLC). The DLC is located on the driver side lower edge of the instrument panel, outboard of the steering column.
2. Transition the ignition switch to the On status.
3. Using the scan tool, read and record the active (current) Diagnostic Trouble Code (DTC) data.

Using the active DTC information, refer to the **AIRBAG SQUIB STATUS** table to determine the status of both DAB squibs and both PAB squibs.

AIRBAG SQUIB STATUS		
IF THE ACTIVE DTC IS:	**CONDITIONS**	**SQUIB STATUS**
Driver or Passenger Squib 1 open	**AND** the stored DTC minutes for both Driver or Passenger squibs are within 15 minutes of each other	Both Squib 1 and 2 were used.
Driver or Passenger Squib 2 open		
Driver or Passenger Squib 1 open	**AND** the stored DTC minutes for Driver or Passenger Squib 2 open is GREATER than the stored DTC minutes for Driver or Passenger Squib 1 by 15 minutes or more	Squib 1 was used; Squib 2 is live.
Driver or Passenger Squib 2 open		
Driver or Passenger Squib 1 open	**AND** the stored DTC minutes for Driver or Passenger Squib 1 open is GREATER than the stored DTC minutes for Driver or Passenger Squib 2 by 15 minutes or more	Squib 1 is live; Squib 2 was used.
Driver or Passenger Squib 2 open		
Driver or Passenger Squib 1 open	**AND** Driver or Passenger Squib 2 open is NOT an active code	Squib 1 was used; Squib 2 is live.
Driver or Passenger Squib 2 open	**AND** Driver or Passenger Squib 1 open is NOT an active code	Squib 1 is live; Squib 2 was used.

NOTE: **If none of the Driver or Passenger Squib 1 or 2 open are active codes, the status of the airbag squibs is unknown. In this case the airbag should be handled and disposed of as if the squibs were both live.**

CLEANUP PROCEDURE

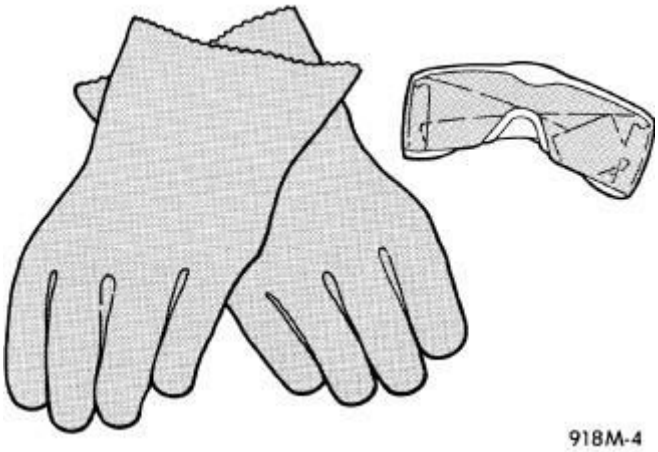

Fig. 2: Clean Up Safety Equipment
Courtesy of CHRYSLER GROUP, LLC

Following a Supplemental Restraint System (SRS) component deployment, the vehicle interior will contain a powdery residue. This residue consists primarily of harmless particulate by-products of the small pyrotechnic charge that initiates the propellant used to deploy a SRS component. However, this residue may also contain traces of sodium hydroxide powder, a chemical by-product of the propellant material that is used to generate the inert gas that inflates the airbag. Since sodium hydroxide powder can irritate the skin, eyes, nose, or throat, be certain to wear safety glasses, rubber gloves, and a long-sleeved shirt during cleanup.

WARNING: **To avoid serious or fatal injury, if you experience skin irritation during cleanup, run cool water over the affected area. Also, if you experience irritation of the nose or throat, exit the vehicle for fresh air until the irritation ceases. If irritation continues, see a physician.**

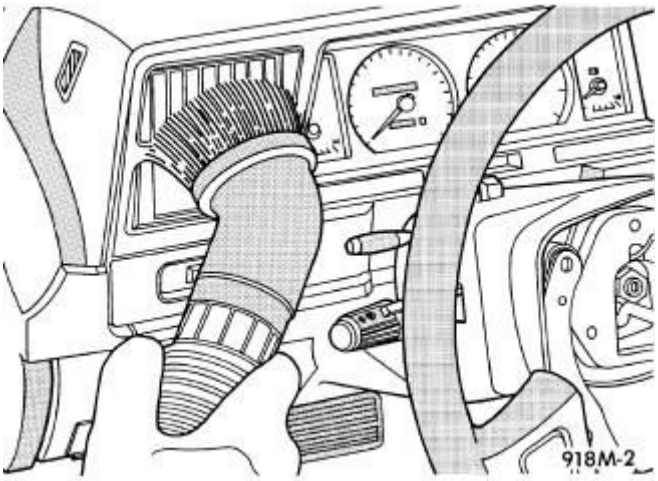

Fig. 3: Vacuuming Residual Powder
Courtesy of CHRYSLER GROUP, LLC

1. Begin the cleanup by using a vacuum cleaner to remove any residual powder from the vehicle interior.

Clean from outside the vehicle and work your way inside, so that you avoid kneeling or sitting on a non-cleaned area.

2. Be certain to vacuum the heater and air conditioning outlets as well. Run the heater and air conditioner blower on the lowest speed setting and vacuum any powder expelled from the outlets.

CAUTION: Deployed front airbags having two initiators (squibs) in the airbag inflator may or may not have live pyrotechnic material within the inflator. Do not dispose of these airbags unless you are certain of complete deployment. Refer to the AIRBAG SQUIB STATUS heading within this information. All damaged, ineffective, or non-deployed Supplemental Restraint System (SRS) components which are replaced on vehicles are to be handled and disposed of properly. If an airbag or seat belt tensioner unit is ineffective or damaged and non-deployed, refer to the Hazardous Substance Control System for information regarding the potentially hazardous properties of the subject component and the proper safe handling procedures. Then dispose of all non-deployed and deployed airbags and seat belt tensioners in a manner consistent with state, provincial, local and federal regulations.

3. Next, remove the deployed SRS components from the vehicle. Refer to the appropriate service removal procedures.
4. You may need to vacuum the interior of the vehicle a second time to recover all of the powder.

SUPPLEMENTAL RESTRAINT STORAGE

Airbags and seat belt tensioners must be stored in their original, special container until they are used for service. Also, they must be stored in a clean, dry environment away from sources of extreme heat, sparks and high electrical energy. Always place or store any airbag on a surface with its trim cover or airbag cushion side facing up, to minimize movement in case of an accidental deployment.

SUPPLEMENTAL RESTRAINT SYSTEM VERIFICATION TEST

WARNING: To avoid serious or fatal injury on vehicles equipped with airbags, disable the Supplemental Restraint System (SRS) before attempting any steering wheel, steering column, airbag, Occupant Classification System (OCS), seat belt tensioner, impact sensor or instrument panel component diagnosis or service. Disconnect and isolate the battery negative (ground) cable, then wait two minutes for the system capacitor to discharge before performing further diagnosis or service. This is the only sure way to disable the SRS. Failure to follow these instructions may result in accidental airbag deployment.

NOTE: The following procedure should be performed using a diagnostic scan tool to verify proper Supplemental Restraint System (SRS) operation following the

service or replacement of any SRS component. Refer to the appropriate diagnostic procedures.

1. During the following test, the negative cable of the battery remains disconnected and isolated, as it was during the Supplemental Restraint System (SRS) component removal and installation procedures.
2. Be certain that the diagnostic scan tool contains the latest version of the proper diagnostic software. Connect the scan tool to the 16-way Data Link Connector (DLC). The DLC is located on the driver side lower edge of the instrument panel, near the steering column opening cover and outboard of the steering column.
3. Transition the status of the ignition switch (also known as the Wireless Ignition Node/WIN, Keyless Ignition Node/KIN or IGnition Node Module/IGNM) to On and exit the vehicle with the scan tool.
4. Check to be certain that nobody is in the vehicle, then reconnect the negative cable to the battery.
5. Using the scan tool, read and record the active (current) Diagnostic Trouble Code (DTC) data.
6. Next, use the scan tool to read and record any stored (historical) DTC data.
7. If any DTC is found in Step 5 or Step 6, refer to the appropriate diagnostic information.
8. Use the scan tool to erase the stored DTC data. If any problems remain, the stored DTC data will not erase. Refer to the appropriate diagnostic information to diagnose any stored DTC that will not erase. If the stored DTC information is successfully erased, go to Step 9.
9. Transition the status of the ignition switch to Off for about 15 seconds, and then back to On. Observe the airbag indicator in the instrument cluster. It should light from four to six seconds, and then go out. This indicates that the SRS is functioning normally and that the repairs are complete. If the airbag indicator fails to light, or lights and stays On, there is still an active SRS fault or malfunction. Refer to the appropriate diagnostic information to diagnose the problem.

SUPPLEMENTAL RESTRAINT SYSTEM WIRING REPAIRS

It is important when repairing any Supplemental Restraint System (SRS) electrical circuits to use the recommended splicing kit and procedure. For applicable and available MOPAR wiring repair kits, please visit the MOPAR Connector Web Site at the following address on the internet: (http://dto.vftis.com/mopar/disclaimer.asp).

This recommended procedure involves crimping the wires together with a splice band, soldering the crimped connection and, finally, sealing and protecting the repair. The crimp and solder ensure a strong mechanical bond that will always pass a pull test while also maintaining the conductivity and current carrying capacity of the circuit. The adhesive sealant and heat shrink tubing ensures the splice repair will perform as well or better than the original wire and be safe from potential corrosion or short circuits.

There is no limit to the number of splice repairs that can be made in one harness using this procedure. However, as has been past practice, multiple adjacent splices should be offset from each other. This wiring splice repair procedure is approved for harness side repairs only. Repairs and splices to pigtail wires on SRS components such as airbag units, seat belt tensioner units or clocksprings are not approved or recommended.

REPAIR PROCEDURE

CAUTION: If additional wire is needed when making a splice repair to any wire, it is important that the same or next larger size wire gauge be used. Refer to the appropriate wiring diagram for the original wire gauge size.

1. Remove 13 millimeters (0.50 inch) of insulation from each wire that needs to be spliced.

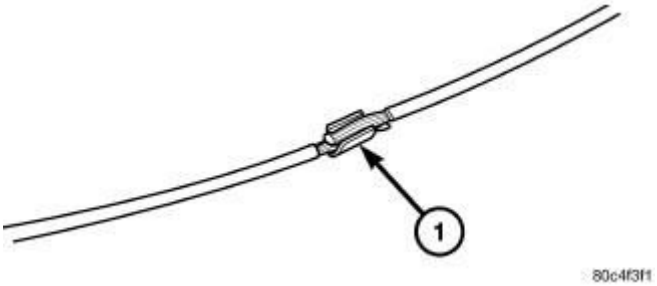

Fig. 4: Splice Band
Courtesy of CHRYSLER GROUP, LLC

2. Place a piece of adhesive sealant-lined heat shrink tubing (Part Number 04778570 or equivalent) over the wire on one side of the splice. Be certain the length of tubing will be sufficient to cover and seal the entire repair area.
3. Place the strands of the wires being spliced so that they are overlapping each other within the splice band (1).

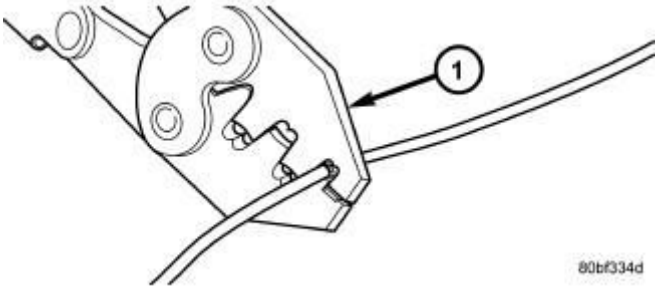

Fig. 5: Crimping Tool
Courtesy of CHRYSLER GROUP, LLC

4. Using a crimping tool (1) (MOPAR Part Number 05019912AA, Miller Special Tool Number (special tool #10042, Crimper, Wire/Terminal) or equivalent) crimp the splice band and wires together securely.

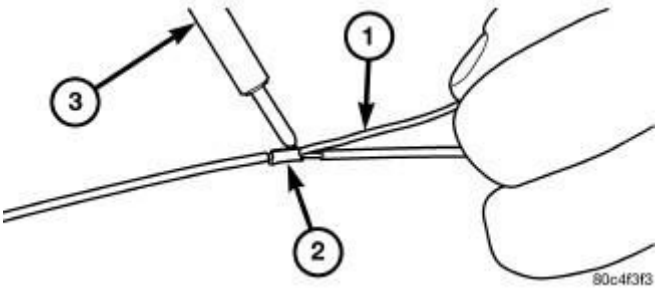

Fig. 6: Solder Splice
Courtesy of CHRYSLER GROUP, LLC

CAUTION: Never use acid core solder for electrical wiring repairs.

5. Using rosin core type solder (1) only and a suitable soldering iron (3), solder the wire and splice band connection (2) together.

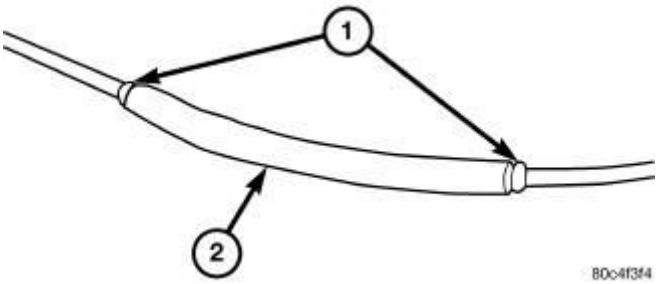

Fig. 7: Heat Shrink Tube
Courtesy of CHRYSLER GROUP, LLC

6. Center the heat shrink tubing (2) over the splice joint repair and heat using a suitable heat gun. Heat the joint until the tubing is tightly sealed and sealant (1) begins to ooze out of both ends of the tubing.

SPECIFICATIONS

TORQUE SPECIFICATIONS

TORQUE SPECIFICATIONS

TORQUE SPECIFICATIONS			
DESCRIPTION	**N.m**	**Ft. Lbs.**	**In. Lbs.**
Seat Belt Turning Loop Height Adjuster Screws	45	33	-
Seat Belt Turning Loop To Height Adjuster Nuts	45	33	-
Inflatable Knee Blocker To Instrument Panel Nuts	9	-	80
Passenger Airbag To Instrument Panel Structural Support Screws	9	-	80
Front Seat Airbag To Seat Back Frame Nuts	10	-	88
Rear Seat Airbag To Rear Seat Cushion Frame Nuts	7	-	62
Rear Seat Airbag Initiator Cover Screw	3	-	27
Rear Seat Airbag Tether Anchor Clip			

Screw	5	-	44
Side Curtain Airbag To Inner Roof Rail Screws	7	-	62
Side Curtain Airbag Front Tether Clip Screw	7	-	62
Side Curtain Airbag Rear Tether Clip Screw	7	-	62
Front Seat Belt Anchor Tensioner To Inner Sill Screws	45	33	-
Front Seat Belt Buckle Lower Anchor To Seat Screws	45	33	-
Rear Seat Belt Buckle Lower Anchor To Floor Panel Nuts	40	30	-
Occupant Restraint Controller To Floor Panel Nuts	8	-	71
Front Seat Belt Retractor To Inner B-Pillar Screws	58	43	-
Front Seat Belt Turning Loop To Height Adjuster Nut	45	33	-
Rear Seat Belt Retractor To Shelf Panel Nut	45	33	-
Rear Seat Belt Lower Anchor To Floor Panel Nut	45	33	-
Front Impact Sensor To Front End Module Screws	11	-	97
Side Impact Sensor To Inner B-Pillar Nuts	11	-	97
Side Impact Sensor To Inner C-Pillar Nuts	11	-	97
Side Impact Sensor To Front Door Hardware Module Carrier Screws	2.4	-	21

SPECIAL TOOLS

SPECIAL TOOLS

	10042 - Crimper, Wire/Terminal (Originally Shipped In Kit Number(s) 10042.)

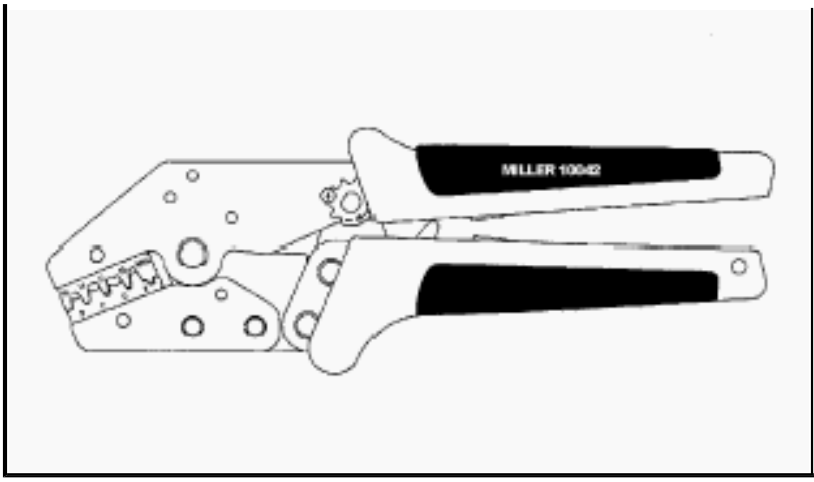

ADJUSTER, SEAT BELT TURNING LOOP

REMOVAL

REMOVAL

WARNING: To avoid serious or fatal injury during and following any seat belt or child restraint anchor service, carefully inspect all seat belts, buckles, mounting hardware, retractors, tether straps, and anchors for proper installation, operation, or damage. Replace any belt that is cut, frayed, or torn. Straighten any belt that is twisted. Tighten any loose fasteners. Replace any belt that has a damaged or ineffective buckle or retractor. Replace any belt that has a bent or damaged latch plate or anchor plate. Replace any child restraint anchor or the unit to which the anchor is integral that has been bent or damaged. Never attempt to repair a seat belt or child restraint component. Always replace damaged or ineffective seat belt and child restraint components with the correct, new and unused replacement parts listed in the Chrysler Mopar® Parts Catalog.

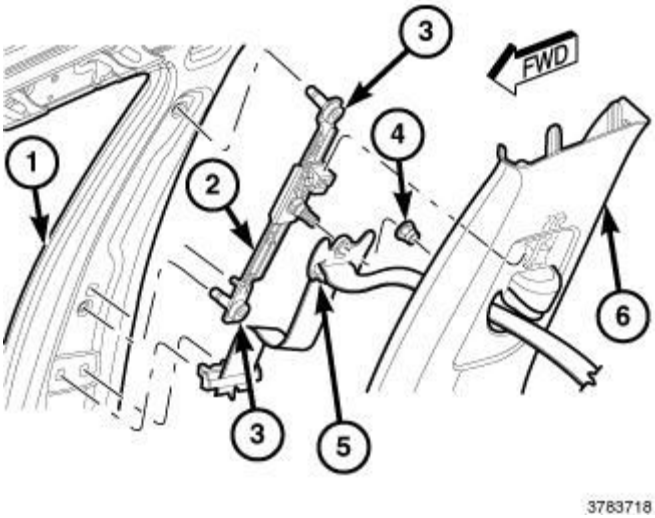

Fig. 8: B-Pillar, Height Adjuster, Screws, Nut, Seat Belt Turning Loop & Upper Trim
Courtesy of CHRYSLER GROUP, LLC

1. Remove the upper trim (6) from the inside of the B-pillar (1). Refer to **PANEL, B-PILLAR TRIM, REMOVAL** .
2. Remove the nut (4) that secures the seat belt turning loop (5) to the stud on the height adjuster (2).
3. Remove the seat belt turning loop from the height adjuster.
4. Remove the two screws (3) that secure the height adjuster to the upper inner B-pillar.
5. Remove the seat belt turning loop adjuster from the B-pillar.

INSTALLATION

INSTALLATION

WARNING: To avoid serious or fatal injury during and following any seat belt or child restraint anchor service, carefully inspect all seat belts, buckles, mounting hardware, retractors, tether straps, and anchors for proper installation, operation, or damage. Replace any belt that is cut, frayed, or torn. Straighten any belt that is twisted. Tighten any loose fasteners. Replace any belt that has a damaged or ineffective buckle or retractor. Replace any belt that has a bent or damaged latch plate or anchor plate. Replace any child restraint anchor or the unit to which the anchor is integral that has been bent or damaged. Never attempt to repair a seat belt or child restraint component. Always replace damaged or ineffective seat belt and child restraint components with the correct, new and unused replacement parts listed in the Chrysler Mopar® Parts Catalog.

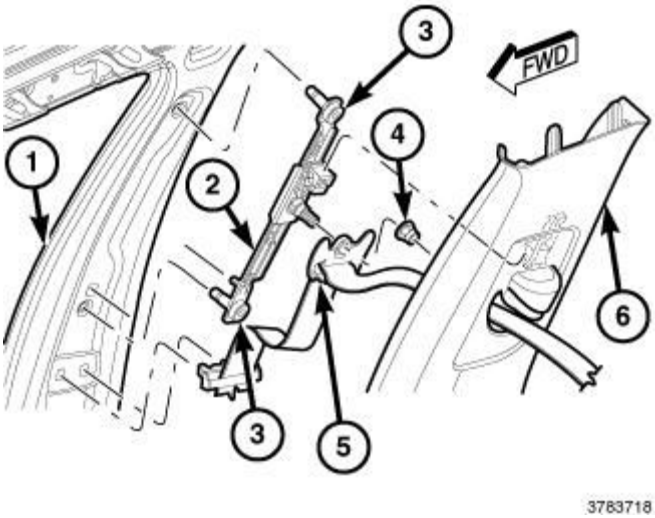

Fig. 9: B-Pillar, Height Adjuster, Screws, Nut, Seat Belt Turning Loop & Upper Trim
Courtesy of CHRYSLER GROUP, LLC

1. Position the seat belt turning loop height adjuster (2) to the inside of the upper inner B-pillar (1).
2. Install and tighten the two screws (3) that secure the adjuster to the B-pillar. Tighten the screws to 45 N.m (33 ft. lbs.).
3. Position the seat belt turning loop (5) onto the stud of the height adjuster on the B-pillar. Be certain that the seat belt webbing between the retractor and the turning loop is not twisted.
4. Install and tighten the nut (4) that secures the turning loop to the height adjuster. Tighten the nut to 45 N.m (33 ft. lbs.).
5. Reinstall the upper trim (6) onto the inside of the B-pillar. Refer to **PANEL, B-PILLAR TRIM, INSTALLATION** .

AIR BAG, DRIVER

DESCRIPTION

DESCRIPTION

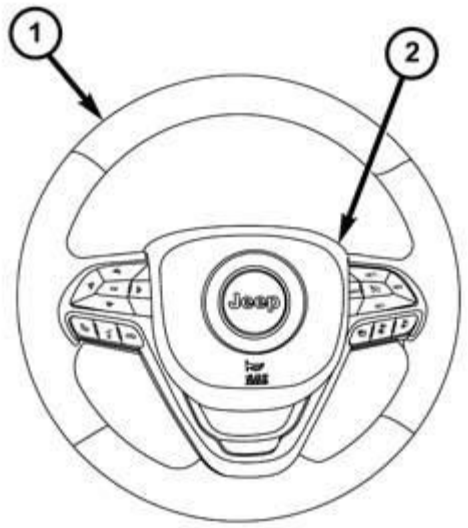

1012006765

Fig. 10: Steering Wheel & Driver AirBag (DAB)
Courtesy of CHRYSLER GROUP, LLC

The injection molded, thermoplastic Driver AirBag (DAB) protective trim cover (2) is the most visible part of the DAB. The DAB is located in the center of the steering wheel (1), where it is secured by a spring wire retainer integral to the fixing plate to two hooks of the steering wheel armature within the hub cavity of the steering wheel. An injection molded, bright emblem with the Chrysler logo is applied to the center of the trim cover.

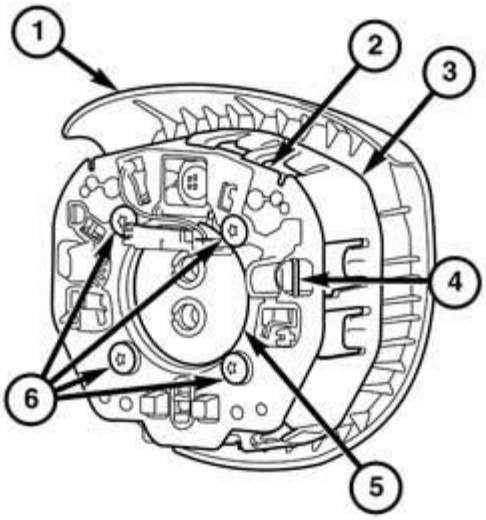

1012006766

Fig. 11: Driver AirBag (DAB) Components
Courtesy of CHRYSLER GROUP, LLC

Concealed beneath the DAB trim cover (1) are the folded airbag cushion, the airbag housing (3), the airbag inflator (5) and the retainers that secure the inflator to the housing. The airbag cushion, housing and inflator are secured within an integral receptacle molded into the back of the trim cover. The vertical walls of this receptacle have numerous integral window features that are engaged by numerous hook features around the perimeter of the DAB housing. Once the trim cover is fully seated onto the housing, it can only be removed by cutting it off. The DAB housing also has four well nuts, to which four screws (6) are fastened to secure the spring wire retainer (4) and the floating horn switch/mounting plate unit (2) to the back of the housing.

The DAB used in this vehicle is a multistage-type that complies with revised federal airbag standards to deploy with less force than those used in some prior vehicles. A radial deploying fabric airbag cushion with internal tethers is used. The airbag inflator is a dual-initiator, non-azide, pyrotechnic-type unit and is secured to the airbag housing.

Keyed and color-coded connector receptacles on the two inflator initiators and a third, non-azide, pyrotechnic-type Micro Gas Generator (MGG) inflator for the DAB active vent are integral to the airbag housing. The three keyed and color-coded connector receptacles are connected to the vehicle electrical system through three jacketed, two-wire pigtail harnesses from the clockspring.

The DAB cannot be repaired, and must be replaced if deployed, ineffective or in any way damaged. The DAB trim cover and the floating horn switch are serviced only as a unit with the DAB.

OPERATION

OPERATION

The multistage Driver AirBag (DAB) and the active vent (domestic market vehicles only) are deployed by electrical signals generated by the Occupant Restraint Controller (ORC) through the DAB squib 1, 2 and 3 circuits to the two initiators in the airbag inflator and the active vent inflator. By using two initiators and an active vent, the airbag can be deployed at multiple levels of force. The force level is managed by the ORC to suit the monitored impact conditions by providing one of several delay intervals between the electrical signals provided to the two initiators and the active vent. The longer the delay between the initiator signals and the later the active vent is released, the less forcefully the DAB will deploy.

When the ORC sends the proper electrical signals to each inflator initiator, the electrical energy generates enough heat to initiate a small pyrotechnic charge which ignites chemical pellets within the inflator. Once ignited, these chemical pellets burn rapidly and produce a large quantity of inert gas. The inflator is sealed to the back of the DAB housing and a diffuser in the inflator directs all of the inert gas into the airbag cushion, causing the cushion to inflate. As the cushion inflates, the DAB trim cover will split at predetermined breakout lines, then fold back out of the way. Following a deployment, the airbag cushion quickly deflates by venting the inert gas towards the instrument panel through discrete vents within the fabric used to construct the back (steering wheel side) panel of the airbag cushion.

The active vent is like a small airbag cushion within the airbag cushion except the active vent cushion slows the deflation of the primary cushion by partially blocking the vents in the primary cushion. The ORC monitors a seat track position sensor on the driver front seat. The ORC signals the active vent Micro Gas Generator (MGG) to deploy in a manner that provides the optimal airbag deployment force to reduce the possibility of an airbag-induced injury.

Some of the chemicals used to create the inert gas may be considered hazardous while in their solid state before they are burned, but they are securely sealed within the airbag inflator. Typically, both initiators are used and all potentially hazardous chemicals are burned during an airbag deployment event. However, it is possible for only one initiator to be used during a deployment due to a Supplemental Restraint System (SRS) fault; therefore, it is necessary to always confirm that both initiators have been used in order to avoid the improper disposal of potentially live pyrotechnic or hazardous materials. Refer to **STANDARD PROCEDURE**.

The inert gas that is produced when the chemicals are burned during a deployment is harmless. However, a small amount of residue from the burned chemicals may cause some temporary discomfort if it contacts the skin, eyes or breathing passages. If skin or eye irritation is noted, rinse the affected area with plenty of cool, clean water. If breathing passages are irritated, move to another area where there is plenty of clean, fresh air to breath. If the irritation is not alleviated by these actions, contact a physician.

The ORC monitors the condition of the DAB through circuit resistance, and will illuminate the airbag indicator in the instrument cluster and store a Diagnostic Trouble Code (DTC) for any fault that is detected. Proper diagnosis of the DAB inflator and squib circuits requires the use of a diagnostic scan tool and may also require the use of the SRS Load Tool special tool along with the appropriate Load Tool Jumpers and Adapters. Refer to the appropriate diagnostic information.

REMOVAL

REMOVAL

WARNING: To avoid serious or fatal injury on vehicles equipped with airbags, disable

the Supplemental Restraint System (SRS) before attempting any steering wheel, steering column, airbag, Occupant Classification System (OCS), seat belt tensioner, impact sensor or instrument panel component diagnosis or service. Disconnect and isolate the battery negative (ground) cable, then wait two minutes for the system capacitor to discharge before performing further diagnosis or service. This is the only sure way to disable the SRS. Failure to follow these instructions may result in accidental airbag deployment.

WARNING: To avoid serious or fatal injury when removing a deployed airbag, rubber gloves, eye protection, and a long-sleeved shirt should be worn. There may be deposits on the airbag cushion and other interior surfaces. In large doses, these deposits may cause irritation to the skin and eyes.

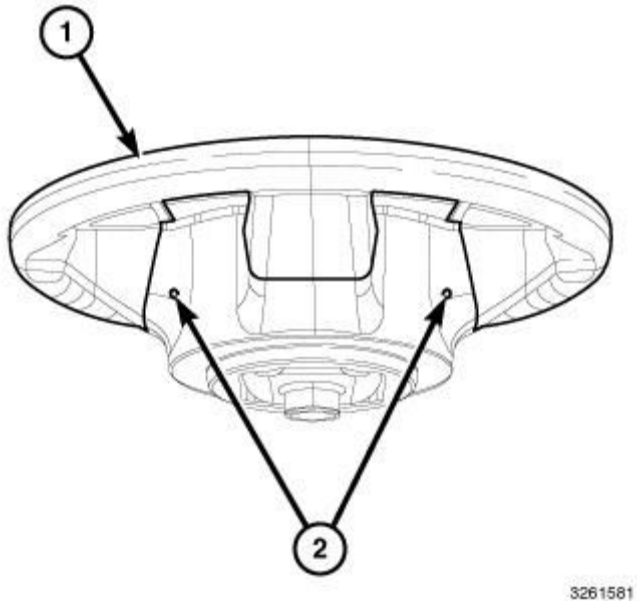

Fig. 12: Access Holes & Steering Wheel
Courtesy of CHRYSLER GROUP, LLC

NOTE: The following procedure is for replacement of an ineffective or damaged Driver AirBag (DAB). If the airbag is ineffective or damaged, but not deployed, review the recommended procedures for Handling Non-Deployed Supplemental Restraints. Refer to HANDLING NON-DEPLOYED SUPPLEMENTAL RESTRAINTS. If the DAB has been deployed, review the recommended procedures for Service After A Supplemental Restraint Deployment before removing the airbag from the vehicle. Refer to SERVICE AFTER A SUPPLEMENTAL RESTRAINT SYSTEM DEPLOYMENT.

1. Disconnect and isolate the negative cable from the battery. Wait two minutes for the system capacitor to discharge before further service.

2. Locate the access holes (2) in the lower surface of the steering wheel (1) hub rear trim cover near each of the two horizontal spokes.

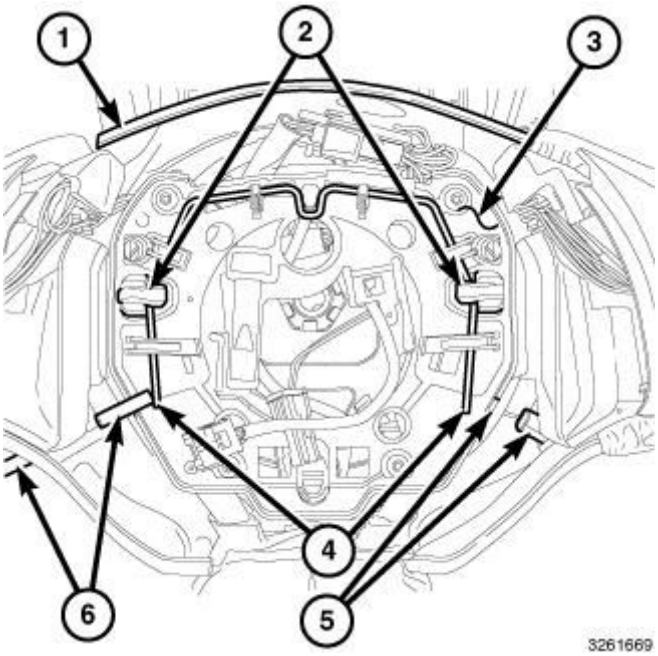

Fig. 13: Driver AirBag (DAB) Mounting/Horn Switch Plate, Retainer Spring, Hooks & Steering Wheel Hub Cavity
Courtesy of CHRYSLER GROUP, LLC

NOTE: **The graphic for this procedure shows the Driver AirBag (DAB) mounting/horn switch plate (3) and the retainer spring (4) engaged under the hooks (2) of the armature within the steering wheel hub cavity (1) without the DAB trim cover, cushion, housing and inflator present. This was done to provide graphical clarity of the components involved in DAB retention. The DAB trim cover, cushion, housing and inflator can only be removed as a unit with the mounting/horn switch plate and retainer spring as outlined in the following procedure.**

3. Insert an appropriately sized pin punch or Allen wrench through one of the steering wheel access holes. A guide and notch (5) integral to each side of the steering wheel hub rear trim cover (1) and the mounting/horn switch plate (3) will assist in directing the tool to the ends of the retainer spring (4).

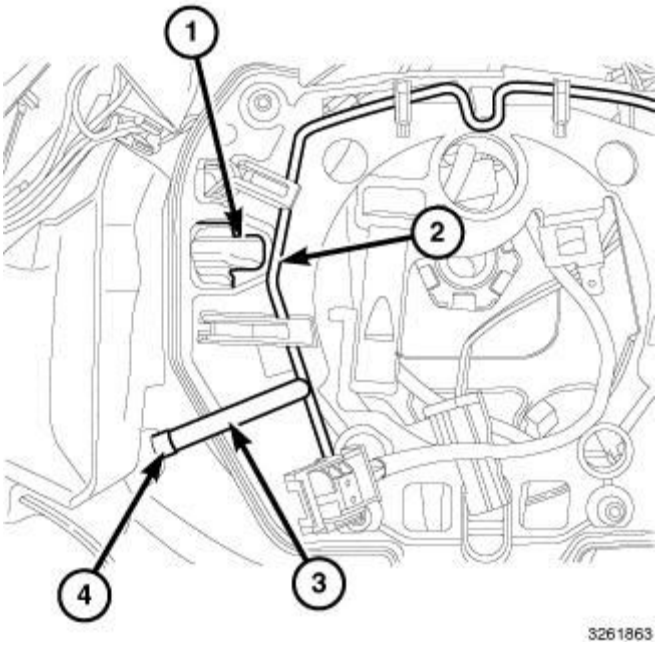

Fig. 14: Special Tool, Groove, Retainer Spring & Hook
Courtesy of CHRYSLER GROUP, LLC

4. When the tool (3) makes contact with the retainer spring (2), push inward (toward the steering column) on the tool far enough to disengage the retainer spring from under the hook (1) of the steering wheel armature.

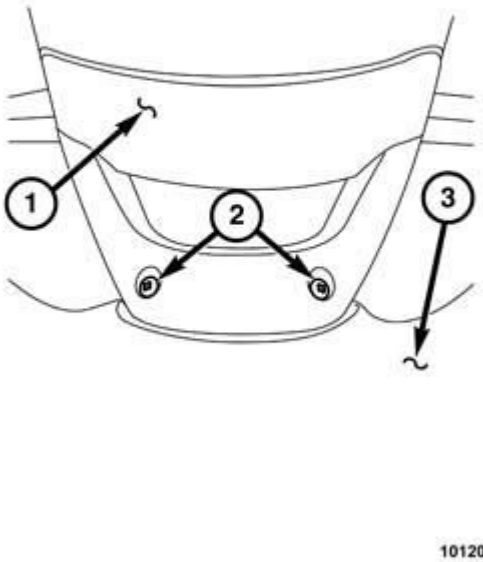

Fig. 15: Lower Rear Spoke Cover, Screws & Steering Wheel
Courtesy of CHRYSLER GROUP, LLC

NOTE: **It is not necessary, but may prove helpful to remove the two screws (2) that secure the lower rear spoke cover (1) to the back of the steering wheel (3) and remove the cover. It will then be possible to observe the Allen wrench or pin punch contacting and releasing the retainer spring.**

5. Pull the released side of the DAB away from the steering wheel far enough to insert a trim stick or another long and thin obstacle between the released side of the DAB trim cover and the steering wheel hub cavity. This will help to prevent the released end of the retainer spring from becoming accidentally engaged again, while the opposite end of the retainer spring is being released.
6. Repeat Steps 3 and 4 for the opposite end of the retainer spring.

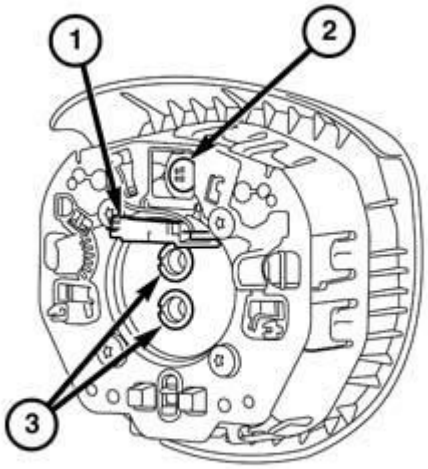

1012006767

Fig. 16: View Of DAB Wiring Connections
Courtesy of CHRYSLER GROUP, LLC

7. Pull the DAB away from the steering wheel far enough to access the clockspring pigtail wire connections to the horn switch (1), the active vent (2 - domestic market vehicles only) and the DAB inflator initiators (3).
8. Disconnect the clockspring pigtail wire connector from the floating horn switch plate connector on the back of the switch plate.
9. On domestic market vehicles only, the clockspring DAB pigtail wire connector insulator is secured by an integral Connector Position Assurance (CPA) lock to the active vent connector receptacle, which is located on the back of the DAB housing. Pull the lock straight back from the connector insulator, then pull the insulator straight out from the connector receptacle to disengage and disconnect it.

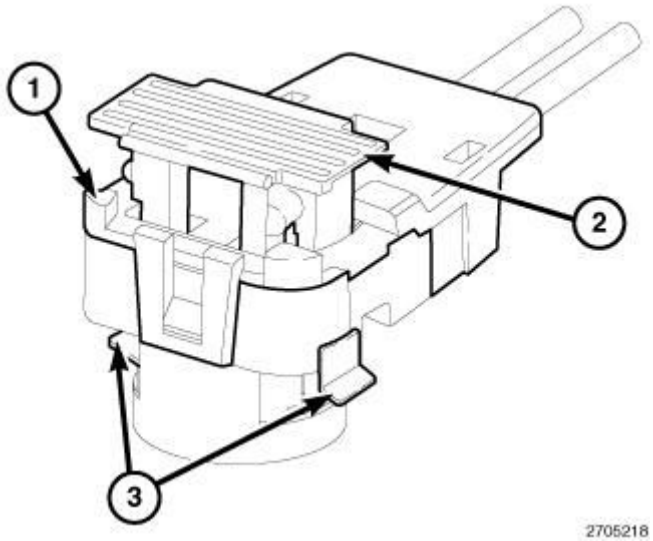

Fig. 17: Clockspring DAB Pigtail Wire Connector Insulators, Latches & Connector Position Assurance (CPA) Lock
Courtesy of CHRYSLER GROUP, LLC

10. The clockspring DAB pigtail wire connector insulators (1) are secured by integral latches (3) and a CPA lock (2) to the airbag inflator connector receptacles, which are located on the back of the floating horn switch plate and the DAB housing. Pull the lock straight out from the connector insulator, then pull the insulators straight out from the connector receptacles to disengage and disconnect them.
11. Remove the DAB and floating horn switch plate from the steering wheel as a unit.
12. If the DAB has been deployed, the clockspring and the steering column must also be replaced. Refer to **CLOCKSPRING, REMOVAL**. Refer to **COLUMN, REMOVAL** .

INSTALLATION

INSTALLATION

WARNING: To avoid serious or fatal injury on vehicles equipped with airbags, disable the Supplemental Restraint System (SRS) before attempting any steering wheel, steering column, airbag, Occupant Classification System (OCS), seat belt tensioner, impact sensor or instrument panel component diagnosis or service. Disconnect and isolate the battery negative (ground) cable, then wait two minutes for the system capacitor to discharge before performing further diagnosis or service. This is the only sure way to disable the SRS. Failure to follow these instructions may result in accidental airbag deployment.

WARNING: To avoid serious or fatal injury, use extreme care to prevent any foreign material from entering the Driver AirBag (DAB), or becoming entrapped between the DAB cushion and the DAB trim cover. Failure to observe this warning could result in occupant injuries upon airbag deployment.

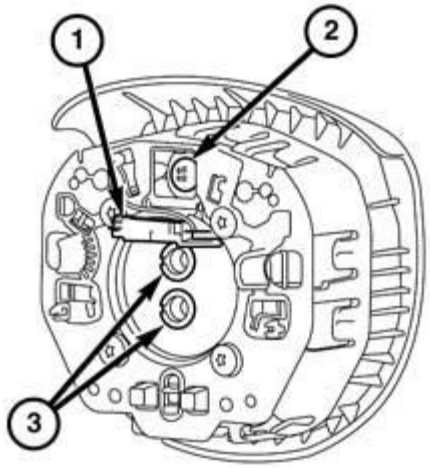

1012006767

Fig. 18: View Of DAB Wiring Connections
Courtesy of CHRYSLER GROUP, LLC

NOTE: **The following procedure is for replacement of an ineffective or damaged Driver AirBag (DAB). If the airbag is ineffective or damaged, but not deployed, review the recommended procedures for Handling Non-Deployed Supplemental Restraints. Refer to HANDLING NON-DEPLOYED SUPPLEMENTAL RESTRAINTS. If the DAB has been deployed, review the recommended procedures for Service After A Supplemental Restraint Deployment before removing the airbag from the vehicle. Refer to SERVICE AFTER A SUPPLEMENTAL RESTRAINT SYSTEM DEPLOYMENT.**

1. Position the Driver AirBag (DAB) and floating horn switch unit close enough to the steering wheel to access the clockspring pigtail wire connections to the horn switch (1), the active vent (2 - domestic market vehicles only) and the DAB inflator initiators (3).
2. Reconnect the clockspring pigtail wire connectors to the airbag inflator initiator connector receptacles by pressing straight in on the connector insulator. Be certain to engage each keyed and color-coded connector to the matching connector receptacle. Be certain that each connector is fully engaged in its receptacle, then push the Connector Position Assurance (CPA) lock straight into the connector to lock it into place.
3. For domestic market vehicles only, reconnect the clockspring pigtail wire connector to the DAB active vent connector receptacle on the back of the mounting and horn switch plate. Be certain that the connector is fully engaged in its receptacle, then slide the CPA lock straight into the connector to lock it into place.
4. Reconnect the clockspring wire harness connector to the floating horn switch connector on the back of the mounting/horn switch plate.

5. Carefully position the DAB and floating horn switch unit into the steering wheel hub cavity while tugging lightly upward on the clockspring pigtail wires for the airbag and tucking the wires into the upper hub cavity of the steering wheel. Be certain that none of the steering wheel wiring is pinched between the airbag housing or the horn switch and the steering wheel armature.
6. Using both hands, push firmly and evenly on both sides of the DAB trim cover until both ends of the spring retainer have snapped into place under the hooks within the hub cavity of the steering wheel.
7. Do not reconnect the negative cable to the battery at this time. The Supplemental Restraint System (SRS) Verification Test procedure should be performed following service of any SRS component. Refer to **SUPPLEMENTAL RESTRAINT SYSTEM VERIFICATION TEST**.

AIR BAG, KNEE BLOCKER

DESCRIPTION

DESCRIPTION

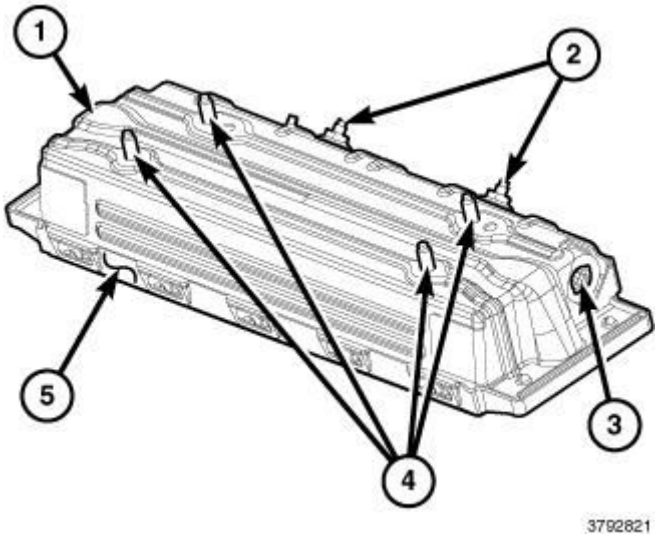

Fig. 19: Airbag Housing, Studs, Inflator Initiator & Protective Cover
Courtesy of CHRYSLER GROUP, LLC

Knee AirBags (KAB) (also known as Inflatable Knee Blockers/IKB) are used on both the driver and passenger sides of this vehicle when it is manufactured for domestic markets. Vehicles manufactured for export markets have only a driver side KAB. These airbags are passive, inflatable Supplemental Restraint System (SRS) components. Vehicles with this equipment may be readily identified by the **SRS - AIRBAG** logo located on the instrument panel steering column opening cover for the driver side and on the glove box door for the passenger side. The KAB units are concealed below the lower edge of the instrument panel, just beneath the steering column opening cover on the driver side or just beneath the glove box door on the passenger side.

The stamped metal airbag housing (1) is secured by four studs (4) with nuts to the stamped metal lower instrument panel reinforcement of the instrument panel support structure. A molded plastic protective cover (5) is secured over the folded airbag cushion by several hook formations stamped into the airbag housing that are engaged through window openings in tabs integral to the outer perimeter of the cover.

The airbag housing contains the airbag inflator and a heat shield. The airbag inflator is a single-initiator, non-azide hybrid-type unit that is secured to the housing by two studs (2) with nuts and sealed within the airbag housing. The airbags are connected to the vehicle electrical system through dedicated take outs and connector insulators of the instrument panel wire harness that connect directly to the inflator initiator (3) of each airbag.

The driver and passenger side KAB units are not interchangeable. The inflator initiators are on the opposite, inboard ends of the module housing and the mounting stud locations are offset to prevent each airbag unit from being installed in the improper location.

The KAB units cannot be repaired, and must be replaced if deployed, ineffective or in any way damaged. If the KAB units are deployed, the steering column opening cover and the glove box must also be replaced.

OPERATION

OPERATION

The Knee AirBags (KAB) (also known as Inflatable Knee Blockers/IKB) are deployed by electrical signals generated by the Occupant Restraint Controller (ORC) to which it is connected through a driver or passenger KAB line 1 (or squib) circuit to the initiator in the airbag inflator. The hybrid-type inflator assembly for each airbag contains a small canister of highly compressed inert gas. When the ORC sends the proper electrical signal to the airbag inflator, the electrical energy creates enough heat to ignite chemical pellets within the inflator.

Once ignited, these chemical pellets burn rapidly and produce the pressure necessary to rupture a containment disk in the inert gas canister. The inflator is sealed to the airbag cushion and a diffuser in the inflator directs all of the inert gas into the airbag cushion, causing the cushion to inflate. As the cushion inflates, the KAB protective cover will split at predetermined tear seam lines concealed on the underside of the cover, then fold open and out of the way.

The cushion protects the lower extremities of the vehicle driver or front seat passenger and helps to keep the seat occupant properly positioned for the Driver AirBag (DAB) or Passenger AirBag (PAB) deployment during a frontal impact collision. Following an airbag deployment, the KAB cushion quickly deflates by venting the inert gas through the loose weave of the fabric used to construct the instrument panel side of the airbag cushion, and the deflated cushion hangs down loosely from the lower instrument panel.

The ORC monitors the condition of the KAB through circuit resistance, and will illuminate the airbag indicator in the instrument cluster and store a Diagnostic Trouble Code (DTC) for any fault that is detected. Proper diagnosis of the KAB initiators and squib circuits requires the use of a diagnostic scan tool and may also require the use of the SRS Load Tool special tool along with the appropriate Load Tool Jumpers and Adapters. Refer to the appropriate diagnostic information.

REMOVAL

DRIVER

WARNING: To avoid serious or fatal injury on vehicles equipped with airbags, disable the Supplemental Restraint System (SRS) before attempting any steering

wheel, steering column, airbag, Occupant Classification System (OCS), seat belt tensioner, impact sensor or instrument panel component diagnosis or service. Disconnect and isolate the battery negative (ground) cable, then wait two minutes for the system capacitor to discharge before performing further diagnosis or service. This is the only sure way to disable the SRS. Failure to follow these instructions may result in accidental airbag deployment.

WARNING: **To avoid serious or fatal injury when removing a deployed airbag, rubber gloves, eye protection, and a long-sleeved shirt should be worn. There may be deposits on the airbag cushion and other interior surfaces. In large doses, these deposits may cause irritation to the skin and eyes.**

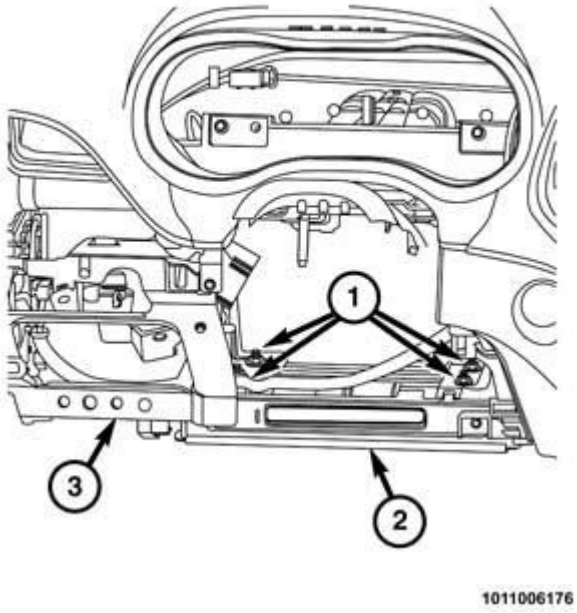

Fig. 20: View Of Knee AirBag (KAB) Fasteners LH Side
Courtesy of CHRYSLER GROUP, LLC

NOTE: **The following procedure is for replacement of an ineffective or damaged Knee AirBag (KAB) (also known as the Inflatable Knee Blocker/IKB). If the airbag is ineffective or damaged, but not deployed, review the recommended procedures for Handling Non-Deployed Supplemental Restraints. Refer to HANDLING NON-DEPLOYED SUPPLEMENTAL RESTRAINTS. If the KAB has been deployed, review the recommended procedures for Service After A Supplemental Restraint Deployment before removing the airbag from the vehicle. Refer to SERVICE AFTER A SUPPLEMENTAL RESTRAINT SYSTEM DEPLOYMENT.**

1. Disconnect and isolate the negative cable from the battery. Wait two minutes for the system capacitor to

discharge before further service.

2. Remove the steering column opening cover from the instrument panel. Refer to **COVER, STEERING COLUMN OPENING, REMOVAL** .
3. Remove the four nuts (1) that secure the Knee AirBag (KAB) (2) to the lower reinforcement (3) of the instrument panel structural support.
4. Rotate the outboard end of the KAB downward so that the KAB is vertical and the instrument panel wire harness connection to the KAB faces upward.

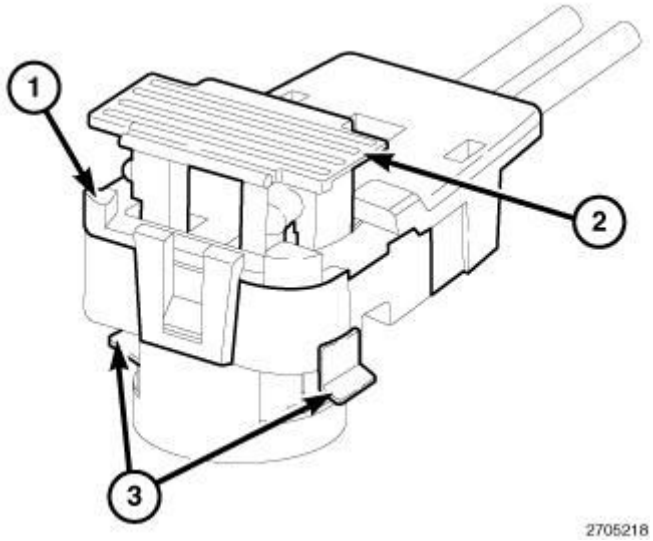

Fig. 21: Clockspring DAB Pigtail Wire Connector Insulators, Latches & Connector Position Assurance (CPA) Lock
Courtesy of CHRYSLER GROUP, LLC

5. The KAB connector insulator (1) is secured by integral latches (3) and a Connector Position Assurance (CPA) lock (2) to the airbag inflator connector receptacle. Pull the lock straight out from the connector insulator, then pull the insulator straight out from the connector receptacle to disengage and disconnect it.
6. Remove the KAB from the vehicle.

PASSENGER

WARNING: **To avoid serious or fatal injury on vehicles equipped with airbags, disable the Supplemental Restraint System (SRS) before attempting any steering wheel, steering column, airbag, Occupant Classification System (OCS), seat belt tensioner, impact sensor or instrument panel component diagnosis or service. Disconnect and isolate the battery negative (ground) cable, then wait two minutes for the system capacitor to discharge before performing further diagnosis or service. This is the only sure way to disable the SRS. Failure to follow these instructions may result in accidental airbag deployment.**

WARNING: **To avoid serious or fatal injury when removing a deployed airbag, rubber**

gloves, eye protection, and a long-sleeved shirt should be worn. There may be deposits on the airbag cushion and other interior surfaces. In large doses, these deposits may cause irritation to the skin and eyes.

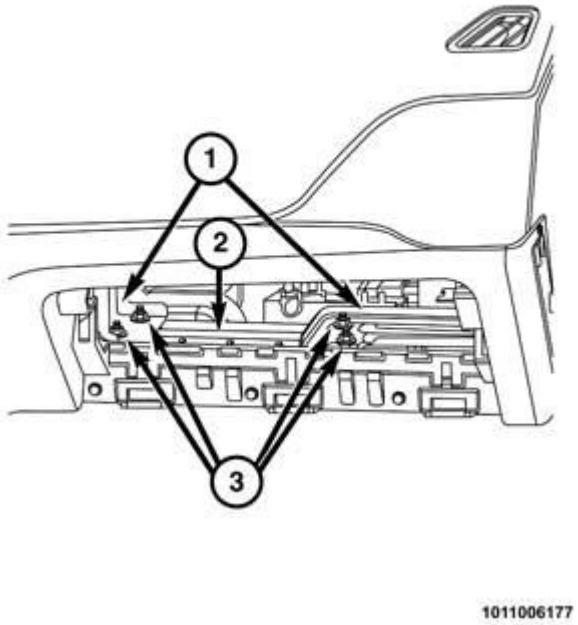

Fig. 22: Knee AirBag (KAB) Fasteners RH Side
Courtesy of CHRYSLER GROUP, LLC

NOTE: **The following procedure is for replacement of an ineffective or damaged Knee AirBag (KAB) (also known as the Inflatable Knee Blocker/IKB). If the airbag is ineffective or damaged, but not deployed, review the recommended procedures for Handling Non-Deployed Supplemental Restraints. Refer to HANDLING NON-DEPLOYED SUPPLEMENTAL RESTRAINTS. If the KAB has been deployed, review the recommended procedures for Service After A Supplemental Restraint Deployment before removing the airbag from the vehicle. Refer to SERVICE AFTER A SUPPLEMENTAL RESTRAINT SYSTEM DEPLOYMENT.**

1. Disconnect and isolate the negative cable from the battery. Wait two minutes for the system capacitor to discharge before further service.
2. Remove the glove box from the instrument panel. Refer to **GLOVE BOX, INSTRUMENT PANEL, REMOVAL** .
3. Remove the four nuts (3) that secure the Knee AirBag (KAB) (2) to the lower reinforcement (1) of the instrument panel structural support.
4. Rotate the outboard end of the KAB unit downward so that the KAB is vertical and the instrument panel wire harness connection to the KAB faces upward.

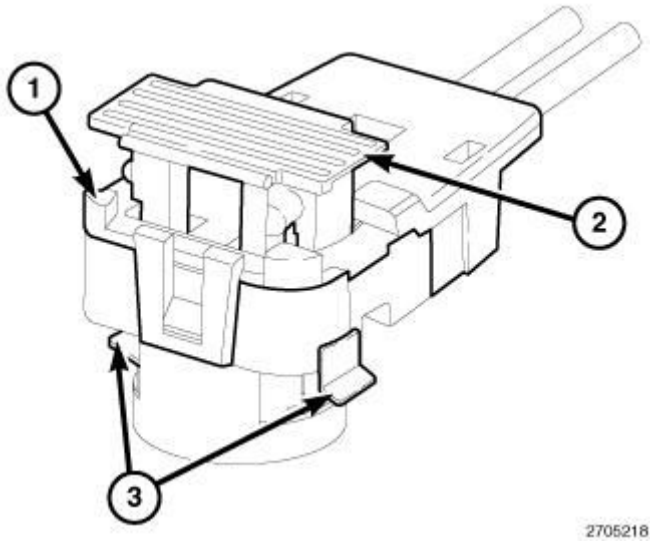

Fig. 23: Clockspring DAB Pigtail Wire Connector Insulators, Latches & Connector Position Assurance (CPA) Lock
Courtesy of CHRYSLER GROUP, LLC

5. The KAB connector insulator (1) is secured by integral latches (3) and a Connector Position Assurance (CPA) lock (2) to the airbag inflator connector receptacle. Pull the lock straight out from the connector insulator, then pull the insulator straight out from the connector receptacle to disengage and disconnect it.
6. Remove the KAB from the vehicle.

INSTALLATION

DRIVER

WARNING: To avoid serious or fatal injury on vehicles equipped with airbags, disable the Supplemental Restraint System (SRS) before attempting any steering wheel, steering column, airbag, Occupant Classification System (OCS), seat belt tensioner, impact sensor or instrument panel component diagnosis or service. Disconnect and isolate the battery negative (ground) cable, then wait two minutes for the system capacitor to discharge before performing further diagnosis or service. This is the only sure way to disable the SRS. Failure to follow these instructions may result in accidental airbag deployment.

WARNING: To avoid serious or fatal injury when removing a deployed airbag, rubber gloves, eye protection, and a long-sleeved shirt should be worn. There may be deposits on the airbag unit and other interior surfaces. In large doses, these deposits may cause irritation to the skin and eyes.

WARNING: To avoid serious or fatal injury, use extreme care to prevent any foreign material from entering the Inflatable Knee Blocker (IKB) airbag, or

becoming entrapped between the IKB airbag cushion and the IKB cover. Failure to observe this warning could result in occupant injuries upon airbag deployment.

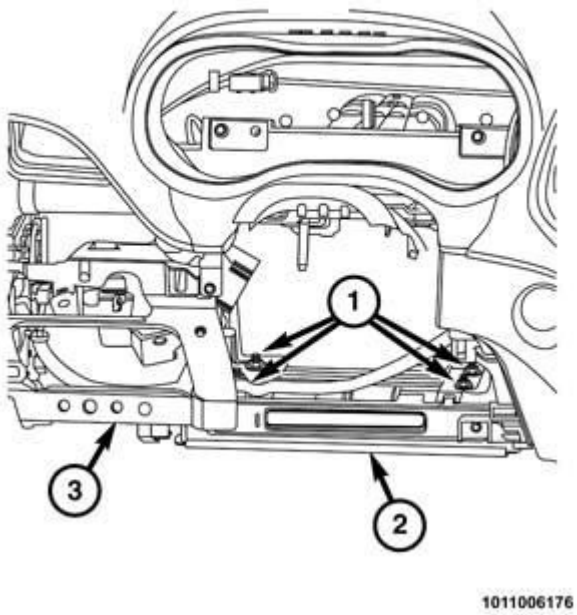

Fig. 24: View Of Knee AirBag (KAB) Fasteners LH Side
Courtesy of CHRYSLER GROUP, LLC

NOTE: **The following procedure is for replacement of an ineffective or damaged Knee AirBag (KAB) (also known as the Inflatable Knee Blocker/IKB). If the airbag is ineffective or damaged, but not deployed, review the recommended procedures for Handling Non-Deployed Supplemental Restraints. Refer to HANDLING NON-DEPLOYED SUPPLEMENTAL RESTRAINTS. If the KAB has been deployed, review the recommended procedures for Service After A Supplemental Restraint Deployment before removing the airbag from the vehicle. Refer to SERVICE AFTER A SUPPLEMENTAL RESTRAINT SYSTEM DEPLOYMENT.**

1. Position the Knee AirBag (KAB) (2) unit below the steering column opening of the instrument panel in a vertical orientation with the KAB inflator initiator connector receptacle facing upward.
2. Reconnect the connector insulator of the instrument panel wire harness take out for the KAB to the inflator initiator connector receptacle by pressing straight in on the connector. Be certain that the connector is fully engaged in its receptacle, then push the Connector Position Assurance (CPA) lock straight into the connector to lock it into place.
3. Carefully position the KAB unit to the lower reinforcement (3) of the instrument panel structural support. **Be certain the instrument panel wire harness take out for the KAB is routed behind the KAB and is not pinched between the KAB housing and the lower reinforcement of the instrument panel structural support.**

4. Install and tighten the four nuts (1) that secure the mounting studs of the KAB unit to the lower reinforcement of the instrument panel structural support. Tighten the nuts to 9 N.m (80 in. lbs.).
5. Reinstall the steering column opening cover onto the instrument panel. Refer to **COVER, STEERING COLUMN OPENING, INSTALLATION** .
6. Do not reconnect the negative cable to the battery at this time. The Supplemental Restraint System (SRS) Verification Test procedure should be performed following service of any SRS component. Refer to **SUPPLEMENTAL RESTRAINT SYSTEM VERIFICATION TEST**.

PASSENGER

WARNING: **To avoid serious or fatal injury on vehicles equipped with airbags, disable the Supplemental Restraint System (SRS) before attempting any steering wheel, steering column, airbag, Occupant Classification System (OCS), seat belt tensioner, impact sensor or instrument panel component diagnosis or service. Disconnect and isolate the battery negative (ground) cable, then wait two minutes for the system capacitor to discharge before performing further diagnosis or service. This is the only sure way to disable the SRS. Failure to follow these instructions may result in accidental airbag deployment.**

WARNING: **To avoid serious or fatal injury, use extreme care to prevent any foreign material from entering the Inflatable Knee Blocker (IKB) airbag, or becoming entrapped between the IKB airbag cushion and the IKB cover. Failure to observe this warning could result in occupant injuries upon airbag deployment.**

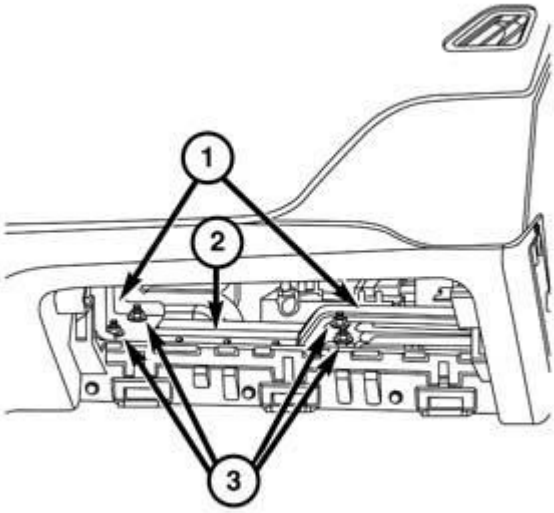

1011006177

Fig. 25: Knee AirBag (KAB) Fasteners RH Side
Courtesy of CHRYSLER GROUP, LLC

NOTE: The following procedure is for replacement of an ineffective or damaged Knee AirBag (KAB) (also known as the Inflatable Knee Blocker/IKB). If the airbag is ineffective or damaged, but not deployed, review the recommended procedures for Handling Non-Deployed Supplemental Restraints. Refer to HANDLING NON-DEPLOYED SUPPLEMENTAL RESTRAINTS. If the KAB has been deployed, review the recommended procedures for Service After A Supplemental Restraint Deployment before removing the airbag from the vehicle. Refer to SERVICE AFTER A SUPPLEMENTAL RESTRAINT SYSTEM DEPLOYMENT.

1. Position the Knee AirBag (KAB) (2) unit below the glove box opening of the instrument panel in a vertical orientation with the KAB inflator initiator connector receptacle facing upward.
2. Reconnect the connector insulator of the instrument panel wire harness take out for the KAB to the inflator initiator connector receptacle by pressing straight in on the connector. Be certain that the connector is fully engaged in its receptacle, then push the Connector Position Assurance (CPA) lock straight into the connector to lock it into place.
3. Carefully position the KAB unit to the lower reinforcement (1) of the instrument panel structural support. **Be certain the instrument panel wire harness take out for the KAB is routed behind the KAB and is not pinched between the KAB housing and the lower reinforcement of the instrument panel structural support.**
4. Install and tighten the four nuts (3) that secure the mounting studs of the KAB unit to the lower reinforcement of the instrument panel structural support. Tighten the nuts to 9 N.m (80 in. lbs.).
5. Reinstall the glove box into the instrument panel. Refer to **GLOVE BOX, INSTRUMENT PANEL, INSTALLATION** .
6. Do not reconnect the negative cable to the battery at this time. The Supplemental Restraint System (SRS) Verification Test procedure should be performed following service of any SRS component. Refer to **SUPPLEMENTAL RESTRAINT SYSTEM VERIFICATION TEST**.

AIR BAG, PASSENGER

DESCRIPTION

DESCRIPTION

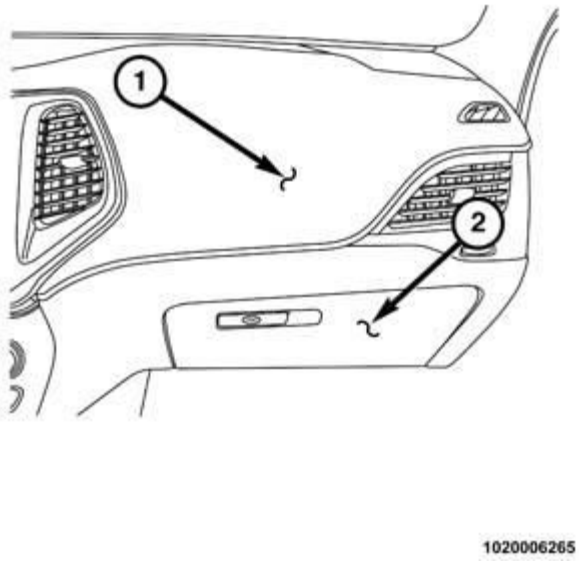

Fig. 26: Air Bag, Passenger (PAB)
Courtesy of CHRYSLER GROUP, LLC

The horizontal surface of the instrument panel top pad (1) above the glove box (2) is the most visible part of the Passenger Airbag (PAB). The PAB door is integral to the top of the instrument panel top pad forward of and above the glove box on the instrument panel in front of the front seat passenger seating position.

Located below the PAB door area of the instrument panel top pad, the molded thermoplastic PAB retainer or chute is secured to the underside of the top pad. The retainer defines the PAB door breakout area of the top pad and serves as the receptacle for the PAB cushion and housing. Numerous small window openings on the forward and rearward flanges of the receptacle receive mating hook formations stamped into the airbag housing, which locate and secure the housing to the top pad.

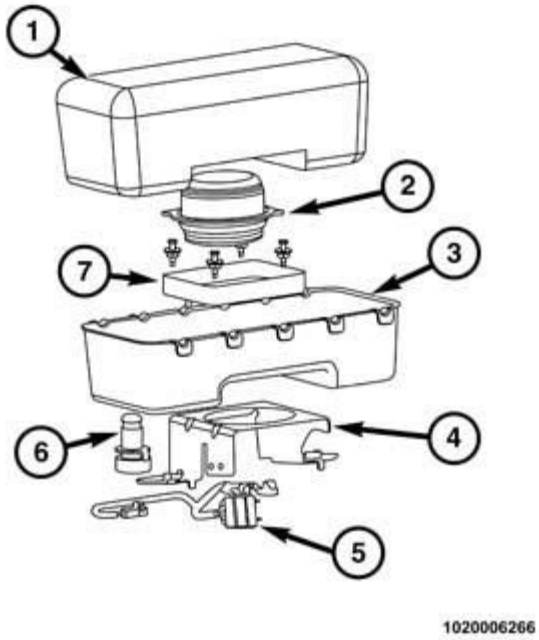

Fig. 27: PAB Unit Components
Courtesy of CHRYSLER GROUP, LLC

The PAB unit is also secured by a mounting bracket (4) and two screws to the instrument panel structural support. The PAB unit used in this vehicle is a multistage type that complies with revised federal airbag standards to deploy with less force than those used in some prior vehicles. The PAB unit consists of a stamped metal housing (3), the airbag cushion (1), a Micro Gas Generator (MGG) for the active vent (6) (domestic market vehicles only) and the two-stage airbag inflator (2). The PAB inflator, the mounting bracket and the airbag cushion are secured to the housing by four studs and four nuts. The airbag housing contains the folded airbag cushion and the cushion retainer (7). An approximately 66 centimeter (26 inch) wide by 76 centimeter (30 inch) high rectangular fabric cushion is used.

The PAB inflator is a non-azide, pyrotechnic-type unit that is secured to and sealed within the airbag housing. Three dedicated take outs and yellow connectors of the PAB wire harness (5) with keyed, color-coded insulators connect the two inflator initiators and the active vent MGG to a yellow, 6 way connector secured to the mounting bracket. A dedicated take out and connector of the instrument panel wire harness connects the PAB to the vehicle electrical system.

The PAB cannot be repaired, and must be replaced if deployed, ineffective or in any way damaged. The PAB door and chute or retainer are serviced only as a unit with the instrument panel top pad. If the PAB is deployed, the top pad must also be replaced.

OPERATION

OPERATION

The multistage Passenger AirBag (PAB) is deployed by electrical signals generated by the Occupant Restraint

Controller (ORC) through PAB squib 1 and squib 2 circuits to the two initiators in the airbag inflator, and by a PAB squib 3 circuit to the initiator of the Micro Gas Generator (MGG) for the active vent (domestic market vehicles only). By using two initiators and an active vent, the PAB can be deployed at multiple levels of force. The force level is managed by the ORC to suit the monitored impact conditions by providing one of multiple delay intervals between the electrical signals provided to the two initiators and the tether release. The longer the delay between the initiator signals and the sooner the active vent is opened, the less forcefully the PAB will deploy.

When the ORC sends the proper electrical signals to each initiator, the electrical energy generates enough heat to initiate a small pyrotechnic charge which, in turn ignites chemical pellets within the inflator. Once ignited, these chemical pellets burn rapidly and produce a large quantity of inert gas. The inflator is sealed to the airbag cushion and a diffuser in the inflator directs all of the inert gas into the airbag cushion, causing the cushion to inflate. As the cushion inflates, the PAB door will split at predetermined tear seam lines concealed on the inside surface of the door, then the door will pivot up over the top of the instrument panel and out of the way. Following an airbag deployment, the airbag cushion quickly deflates by venting the inert gas through a discrete vent in each fabric side panel of the airbag cushion.

The MGG inflates a small cushion within the primary cushion to control the active vent. The ORC monitors a seat track position sensor on the passenger front seat. If the seat is in the full forward position when an airbag deployment occurs, the ORC keeps the active vent open. With the active vent open the airbag deployment is less forceful, which reduces the possibility of an airbag-induced injury when the passenger is seated close to the deploying airbag. If the passenger front seat is not in the full forward position, the active vent is closed during airbag deployment.

Typically, all initiators are used during a PAB deployment event. However, it is possible for only one initiator to be used during a deployment due to an airbag system fault; therefore, it is necessary to always confirm that all initiators have been used in order to avoid the improper disposal of potentially live pyrotechnic materials. Refer to **STANDARD PROCEDURE**.

The ORC monitors the condition of the PAB through circuit resistance, and will illuminate the airbag indicator in the instrument cluster and store a Diagnostic Trouble Code (DTC) for any fault that is detected. Proper diagnosis of the PAB inflator, the active vent MGG and the squib circuits requires the use of a diagnostic scan tool and may also require the use of the SRS Load Tool special tool along with the appropriate Load Tool Jumpers and Adapters. Refer to the appropriate diagnostic information.

REMOVAL

REMOVAL

WARNING: **To avoid serious or fatal injury on vehicles equipped with airbags, disable the Supplemental Restraint System (SRS) before attempting any steering wheel, steering column, airbag, Occupant Classification System (OCS), seat belt tensioner, impact sensor or instrument panel component diagnosis or service. Disconnect and isolate the battery negative (ground) cable, then wait two minutes for the system capacitor to discharge before performing further diagnosis or service. This is the only sure way to disable the SRS. Failure to follow these instructions may result in**

accidental airbag deployment.

WARNING: To avoid serious or fatal injury when removing a deployed airbag, rubber gloves, eye protection, and a long-sleeved shirt should be worn. There may be deposits on the airbag unit and other interior surfaces. In large doses, these deposits may cause irritation to the skin and eyes.

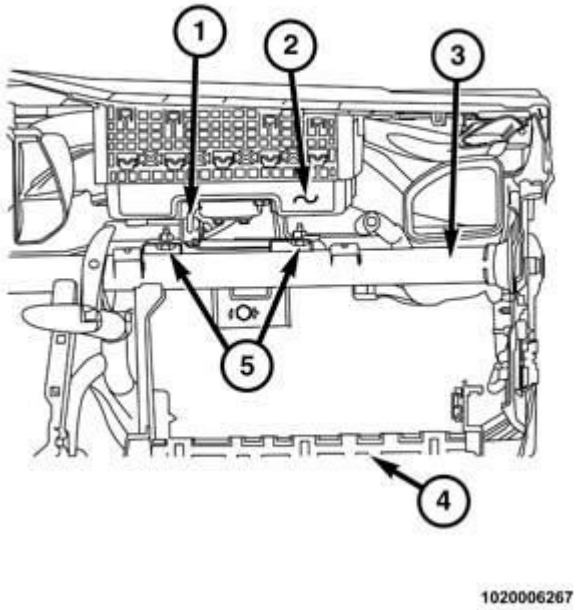

Fig. 28: Removing/Installing Passenger AirBag (PAB)
Courtesy of CHRYSLER GROUP, LLC

NOTE: The following procedure is for replacement of an ineffective or damaged Passenger AirBag (PAB). If the airbag is ineffective or damaged, but not deployed, review the recommended procedures for Handling Non-Deployed Supplemental Restraints. Refer to HANDLING NON-DEPLOYED SUPPLEMENTAL RESTRAINTS. If the PAB has been deployed, review the recommended procedures for Service After A Supplemental Restraint Deployment before removing the airbag from the vehicle. Refer to SERVICE AFTER A SUPPLEMENTAL RESTRAINT SYSTEM DEPLOYMENT.

1. Disconnect and isolate the negative cable from the battery. Wait two minutes for the system capacitor to discharge before further service.
2. Remove the glove box from the instrument panel. Refer to **GLOVE BOX, INSTRUMENT PANEL, REMOVAL** .
3. Reach through and above the glove box opening (4) of the instrument panel to access and remove the two screws (5) that secure the Passenger AirBag (PAB) (2) lower mounting bracket to the instrument panel structural support (3).

4. Still reaching through the glove box opening, disconnect the instrument panel wire harness connector from the PAB pigtail wire harness connector (1).

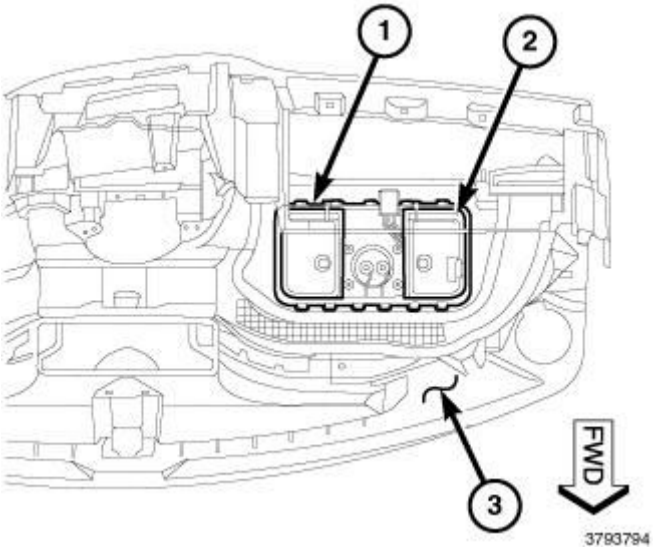

Fig. 29: Chute, Housing & Top Pad
Courtesy of CHRYSLER GROUP, LLC

5. Remove the top pad (3) and PAB from the instrument panel as a unit. Refer to **PAD, INSTRUMENT PANEL, REMOVAL** .
6. Place the top pad on a suitable work surface with the top facing down. If the top pad will be reused, be certain to take the proper precautions to prevent the top pad from receiving cosmetic damage during the following procedures.
7. Disengage each of the hooks on one side of the PAB housing (2) from the windows in the forward or rearward vertical walls of the PAB retainer or chute (1) on the underside of the top pad. To disengage the hooks, use hand pressure to pull the adjacent edge of the PAB housing firmly and evenly upward out of the retainer receptacle, while at the same time pulling the upper edge of the receptacle wall outward far enough to disengage the hooks.
8. With all of the hooks on one side of the PAB housing disengaged from the retainer, rotate that side of the housing upward far enough to disengage the hooks on the opposite side of the housing from the retainer.
9. With all of the hooks disengaged, lift the PAB housing, inflator, and cushion as a unit from the receptacle of the PAB retainer or chute on the underside of the instrument panel top pad.

INSTALLATION

INSTALLATION

WARNING: To avoid serious or fatal injury on vehicles equipped with airbags, disable the Supplemental Restraint System (SRS) before attempting any steering wheel, steering column, airbag, Occupant Classification System (OCS), seat belt tensioner, impact sensor or instrument panel component diagnosis or service. Disconnect and isolate the battery negative (ground)

cable, then wait two minutes for the system capacitor to discharge before performing further diagnosis or service. This is the only sure way to disable the SRS. Failure to follow these instructions may result in accidental airbag deployment.

WARNING: To avoid serious or fatal injury when removing a deployed airbag, rubber gloves, eye protection, and a long-sleeved shirt should be worn. There may be deposits on the airbag unit and other interior surfaces. In large doses, these deposits may cause irritation to the skin and eyes.

WARNING: To avoid serious or fatal injury, use extreme care to prevent any foreign material from entering the passenger airbag, or becoming entrapped between the passenger airbag cushion and the instrument panel top pad. Failure to observe this warning could result in occupant injuries upon airbag deployment.

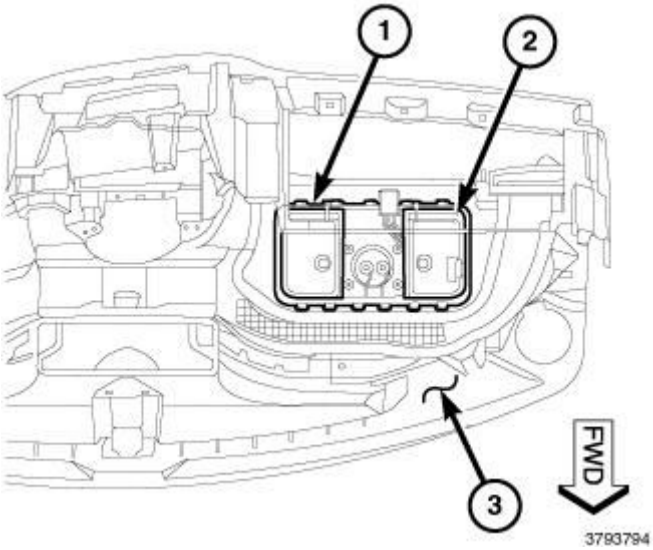

Fig. 30: Chute, Housing & Top Pad
Courtesy of CHRYSLER GROUP, LLC

NOTE: The following procedure is for replacement of an ineffective or damaged Passenger AirBag (PAB). If the airbag is ineffective or damaged, but not deployed, review the recommended procedures for Handling Non-Deployed Supplemental Restraints. Refer to HANDLING NON-DEPLOYED SUPPLEMENTAL RESTRAINTS. If the PAB has been deployed, review the recommended procedures for Service After A Supplemental Restraint Deployment before removing the airbag from the vehicle. Refer to SERVICE AFTER A SUPPLEMENTAL RESTRAINT SYSTEM DEPLOYMENT.

1. Place the instrument panel top pad (3) on a suitable work surface with the Passenger AirBag (PAB) retainer or chute (1) receptacle facing up. Be certain to take the proper precautions to prevent the top pad

from receiving cosmetic damage during the following procedures.

2. Carefully position the PAB housing (2) to the PAB retainer or chute receptacle. The side of the PAB housing with 5 hooks faces rearward in the vehicle.
3. Engage all of the hooks on one side of the PAB housing through the windows on the same side of the PAB retainer or chute, then rotate the opposite side of the PAB housing downward into the receptacle.
4. Inspect around the perimeter of the PAB making certain each of the hooks on the PAB housing is fully engaged through the windows in the forward and rearward vertical walls of the PAB retainer or chute receptacle.
5. Reinstall the top pad onto the instrument panel. Refer to **PAD, INSTRUMENT PANEL, INSTALLATION** .

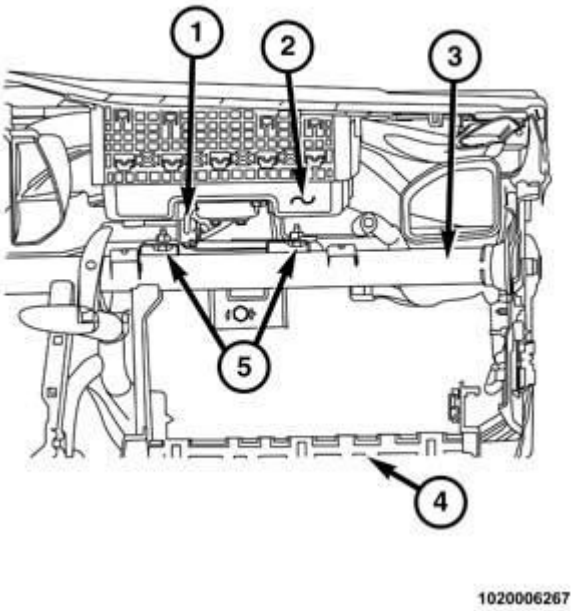

Fig. 31: Removing/Installing Passenger AirBag (PAB)
Courtesy of CHRYSLER GROUP, LLC

6. Reach through and above the glove box opening (4) of the instrument panel to reconnect the instrument panel wire harness connector to the PAB pigtail wire harness connector (1). Be certain that the connector is fully engaged and locked.
7. Still reaching through the glove box opening, install and tighten the two screws (5) that secure the PAB (2) lower mounting bracket to the instrument panel structural support (3). Tighten the screws to 9 N.m (80 in. lbs.).
8. Reinstall the glove box into the instrument panel. Refer to **GLOVE BOX, INSTRUMENT PANEL, INSTALLATION** .
9. Do not reconnect the negative cable to the battery at this time. The Supplemental Restraint System (SRS) Verification Test procedure should be performed following service of any SRS component. Refer to **SUPPLEMENTAL RESTRAINT SYSTEM VERIFICATION TEST**.

AIR BAG, SEAT

DESCRIPTION

FRONT

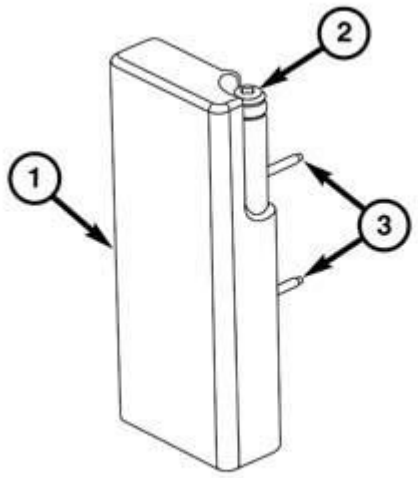

1011006269

Fig. 32: Front Seat Airbags (SAB)
Courtesy of CHRYSLER GROUP, LLC

The front Seat AirBags (SAB) (1) (also known as pelvic and thoracic airbags) are completely concealed beneath the seat back trim cover on the outboard sides of both front seat backs. Vehicles with this equipment can be readily identified by a sewn tag with the **SRS - AIRBAG** logo located on the outboard side of the front seat back trim cover. The folded SAB cushion is contained within a fabric wrap secured to the two airbag mounting studs. The airbag cushion is constructed of a coated nylon fabric. The airbags are inserted into a sewn pouch called an intensifier on the inside of the trim cover. The pouch is made of the same material as the airbag cushion.

The fabric wrap of the SAB also contains the airbag inflator and a heat shield. Two studs (3) are installed on the inflator within the fabric wrap and extend through the rearward side of the unit. The airbag is then secured to the seat back frame by nuts on those two studs. The SAB inflator is a single-initiator, pyrotechnic-type Micro Gas Generator (MGG) unit (2) that is secured to and sealed within the SAB. The SAB is connected to the vehicle electrical system through a dedicated jumper wire harness with a connector insulator that connects directly to the MGG initiator. The connector insulator is uniquely keyed and color-coded to ensure that it can only be connected to the initiator.

There are unique versions of the SAB for the various seat options available, and they are not interchangeable. Besides unique part numbers, the SAB for the standard seat is taller and narrower, while the SAB for the fold

flat (also known as the storage seat) is shorter and wider.

The front SAB cannot be repaired, and must be replaced if deployed, ineffective or in any way damaged. If the front SAB is deployed, the seat back frame, the seat back foam cushion, the seat back trim cover and the SAB jumper wire harness must also be replaced.

REAR

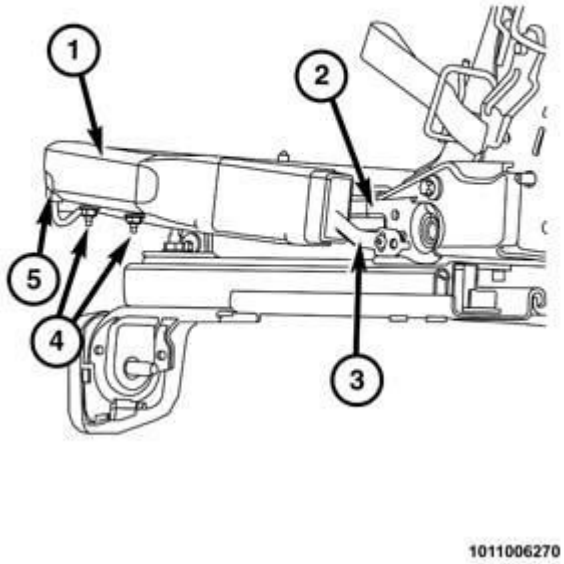

Fig. 33: Rear Seat Airbags (SAB)
Courtesy of CHRYSLER GROUP, LLC

The available rear Seat AirBags (SAB) (also known as pelvic and thoracic airbags) are completely concealed within the lower outboard ends of the rear seat cushion beneath the rear seat cushion trim cover and sandwiched between the outboard seat cushion frame (2) and the outboard seat cushion trim. Vehicles with this equipment can be readily identified by a sewn tag with the **SRS - AIRBAG** logo located on the outboard side of the rear seat cushion trim cover. The rear SAB cushion is constructed of a coated nylon fabric. The folded SAB cushion is contained within and protected by a soft fabric wrap (1) made of the same material as the airbag cushion. The airbags are inserted into a sewn pouch called an intensifier on the inside of the trim cover. The pouch is also made of the same material as the airbag cushion.

The open end of the SAB cushion is clamped over the outlet tube integral to the SAB inflator. Two studs (4) on the inflator are secured by nuts to a stamped metal bracket on the outboard side of the seat cushion frame, while a tether strap (3) on the loose end of the SAB cushion is secured by a screw to the rear corner of the seat cushion frame. The SAB inflator is a single-initiator, pyrotechnic-type unit. The SAB is connected to the vehicle electrical system through a dedicated take out and connector insulator of a rear seat cushion wire harness that connects directly to the inflator initiator (5). The connector insulators are uniquely keyed and color-coded to ensure they can only be connected to the initiator.

The rear SAB cannot be repaired, and must be replaced if deployed, ineffective or in any way damaged. If a rear SAB is deployed, the rear seat cushion foam, the seat cushion trim cover and the rear seat cushion wire harness must also be replaced.

OPERATION

FRONT

Each front Seat AirBag (SAB) (also known as a pelvic and thoracic airbag) is deployed individually by an electrical signal generated by the Occupant Restraint Controller (ORC) to which it is connected through left or right front SAB line 1 and line 2 (or squib) circuits. When the ORC sends the proper electrical signal to the pyrotechnic-type Micro Gas Generator (MGG) inflator, the electrical energy generates enough heat to initiate a small pyrotechnic charge which ignites chemical pellets within the inflator.

Once ignited, these chemical pellets burn rapidly and produce a large quantity of inert gas. The inflator is sealed to the SAB cushion and a diffuser in the inflator directs all of the inert gas into the folded SAB cushion, causing the cushion to inflate. As the cushion inflates it will split the fabric wrap, the pouch (intensifier) integral to the seat back trim cover and the outboard side of the seat back trim cover. The cushion then expands into the area between the outboard side of the front seat and the front door to form a cushion to protect the front seat occupant during a side impact collision or a vehicle rollover incident.

Following the SAB deployment, the cushion slowly deflates by venting the inert gas through the loose weave of the cushion fabric, and through a vent in the cushion. After venting is achieved, the deflated cushion hangs down loosely from the outboard side of the front seat back.

The ORC monitors the condition of the front SAB through circuit resistance, and will illuminate the airbag indicator in the Instrument Cluster (IC) (also known as the Instrument Panel Cluster/IPC) and store a Diagnostic Trouble Code (DTC) for any fault that is detected. Proper diagnosis of the front MGG SAB inflator and squib circuits requires the use of a diagnostic scan tool and may also require the use of the SRS Load Tool special tool along with the appropriate Load Tool Jumpers and Adapters. Refer to the appropriate diagnostic information.

REAR

Each rear Seat AirBag (SAB) (also known as a pelvic and thoracic airbag) is deployed individually by an electrical signal generated by the Occupant Restraint Controller (ORC) to which it is connected through left or right rear SAB line 1 and line 2 (or squib) circuits. Each SAB has a pyrotechnic-type Micro Gas Generator (MGG) inflator assembly.

When the ORC sends the proper electrical signal to the SAB inflator initiator, the electrical energy creates enough heat to initiate a small pyrotechnic charge which, in turn ignites chemical pellets within the inflator. Once ignited, these chemical pellets burn rapidly and produce a large quantity of inert gas.

The inflator is sealed to the airbag cushion and a diffuser in the inflator directs all of the inert gas into the airbag cushion, causing the cushion to inflate. As the cushion inflates it will split the fabric wrap, the pouch (intensifier) integral to the seat cushion trim cover and the outboard side of the seat cushion trim cover, then expand into the area between the outboard side of the rear seat and the rear door to form a cushion to protect the rear seat occupant during a side impact collision or a vehicle rollover incident.

Following the rear SAB deployment, the cushion slowly deflates by venting the inert gas through the loose weave of the cushion fabric and through a vent in the cushion. After venting is achieved, the deflated cushion hangs down loosely from the outboard side of the rear seat cushion.

The ORC monitors the condition of the rear SAB through circuit resistance, and will illuminate the airbag indicator in the Instrument Cluster (IC) (also known as the Instrument Panel Cluster/IPC) and store a Diagnostic Trouble Code (DTC) for any fault that is detected. Proper diagnosis of the rear SAB inflator and squib circuits requires the use of a diagnostic scan tool and may also require the use of the SRS Load Tool special tool along with the appropriate Load Tool Jumpers and Adapters. Refer to the appropriate diagnostic information.

REMOVAL

FRONT

WARNING: To avoid serious or fatal injury on vehicles equipped with airbags, disable the Supplemental Restraint System (SRS) before attempting any steering wheel, steering column, airbag, Occupant Classification System (OCS), seat belt tensioner, impact sensor or instrument panel component diagnosis or service. Disconnect and isolate the battery negative (ground) cable, then wait two minutes for the system capacitor to discharge before performing further diagnosis or service. This is the only sure way to disable the SRS. Failure to follow these instructions may result in accidental airbag deployment.

WARNING: To avoid serious or fatal injury when removing a deployed airbag, rubber gloves, eye protection, and a long-sleeved shirt should be worn. There may be deposits on the airbag unit and other interior surfaces. In large doses, these deposits may cause irritation to the skin and eyes.

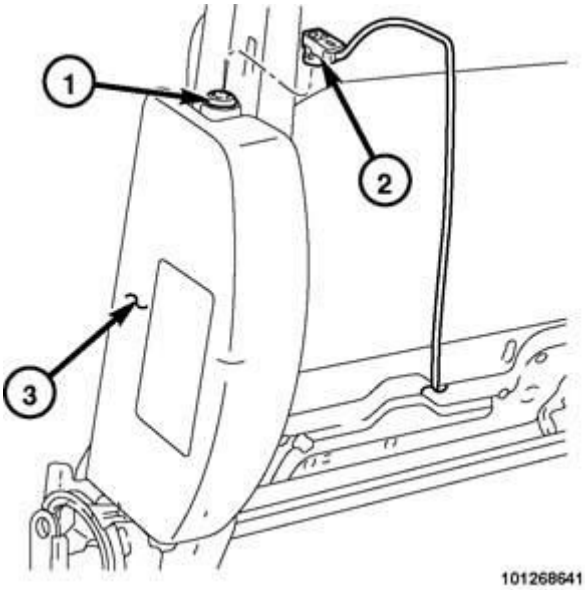

Fig. 34: Inflator Connector Receptacle, Jumper Wire Harness & Seat Airbag

Courtesy of CHRYSLER GROUP, LLC

NOTE: The following procedure is for replacement of an ineffective or damaged Seat AirBag (SAB). If the airbag is ineffective or damaged, but not deployed, review the recommended procedures for Handling Non-Deployed Supplemental Restraints. Refer to HANDLING NON-DEPLOYED SUPPLEMENTAL RESTRAINTS. If the SAB has been deployed, review the recommended procedures for Service After A Supplemental Restraint Deployment before removing the airbag from the vehicle. Refer to SERVICE AFTER A SUPPLEMENTAL RESTRAINT SYSTEM DEPLOYMENT.

1. Position the front seat to its most forward position for easiest access to the front seat mounting hardware.
2. Disconnect and isolate the negative cable from the battery. Wait two minutes for the system capacitor to discharge before further service.
3. Remove the front seat from the vehicle. Refer to **SEAT, REMOVAL** .

CAUTION: During removal of the seat back trim cover, be certain not to tear or damage the integral nylon pouch that contains the seat airbag. If the nylon pouch or the trim cover are torn or damaged, the entire front seat back trim cover must be replaced with a new unit.

4. Remove the trim from the front and back of the front seat back frame, but do not remove from the outboard side of the seat back until after the Seat AirBag (SAB) (3) has been detached from the seat. Refer to **COVER, SEAT BACK, REMOVAL** .

CAUTION: Do not pull on the seat airbag jumper wire harness (4) take out or pry on the connector insulator to disengage the connector from the seat airbag (1) inflator connector receptacle. Improper removal of this take out and its connector insulator can result in damage to the airbag circuits or the connector insulator.

5. Disconnect the seat wire harness connector (2) from the top of the SAB inflator (1). Pull the lock straight out from the connector insulator, then pull the insulator straight out from the connector receptacle to disengage and disconnect it.

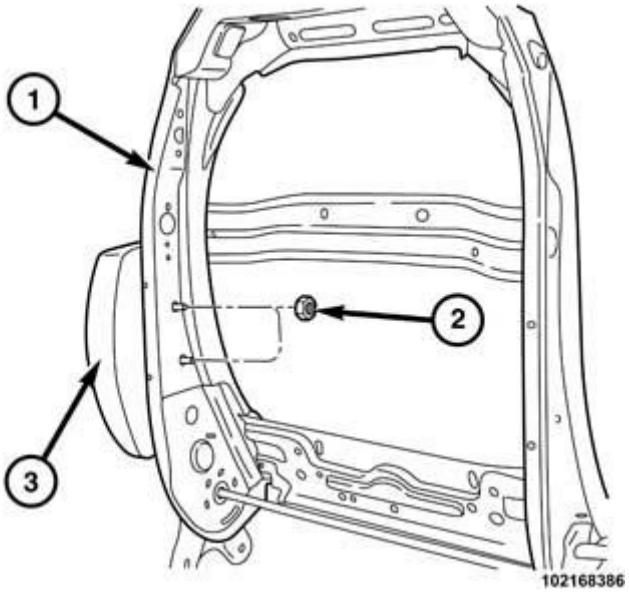

Fig. 35: Seat Back Frame, Nuts & Seat Airbag
Courtesy of CHRYSLER GROUP, LLC

6. Remove the two nuts (2) from the inside of the seat back frame (1) that secure the SAB (3) to the outside of the seat back frame.
7. Disengage the SAB mounting studs from the outboard side of the seat back frame, then remove the trim cover and the SAB from the seat back frame as a unit.
8. Carefully disengage the two SAB mounting studs from the nylon pouch (intensifier) and slide the SAB out of the pouch. Be careful not to tear or damage the pouch or the trim cover.

REAR

WARNING: **To avoid serious or fatal injury on vehicles equipped with airbags, disable the Supplemental Restraint System (SRS) before attempting any steering wheel, steering column, airbag, Occupant Classification System (OCS), seat belt tensioner, impact sensor or instrument panel component diagnosis or service. Disconnect and isolate the battery negative (ground) cable, then wait two minutes for the system capacitor to discharge before performing further diagnosis or service. This is the only sure way to disable the SRS. Failure to follow these instructions may result in accidental airbag deployment.**

WARNING: **To avoid serious or fatal injury when removing a deployed airbag, rubber gloves, eye protection, and a long-sleeved shirt should be worn. There may be deposits on the airbag unit and other interior surfaces. In large doses, these deposits may cause irritation to the skin and eyes.**

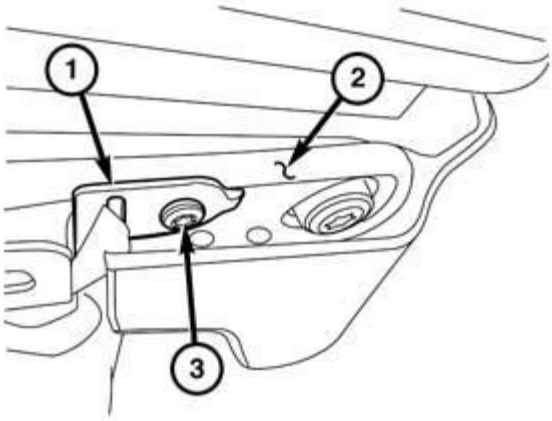

1021006273

Fig. 36: Rear Seat Airbag (SAB) & Tether Anchor Clip
Courtesy of CHRYSLER GROUP, LLC

NOTE: **The following procedure is for replacement of an ineffective or damaged Seat AirBag (SAB). If the airbag is ineffective or damaged, but not deployed, review the recommended procedures for Handling Non-Deployed Supplemental Restraints. Refer to HANDLING NON-DEPLOYED SUPPLEMENTAL RESTRAINTS. If the SAB has been deployed, review the recommended procedures for Service After A Supplemental Restraint Deployment before removing the airbag from the vehicle. Refer to SERVICE AFTER A SUPPLEMENTAL RESTRAINT SYSTEM DEPLOYMENT.**

1. Disconnect and isolate the negative cable from the battery. Wait two minutes for the system capacitor to discharge before further service.
2. Remove the rear seat cushion from the vehicle. (Refer to **SEATS, REAR**).
3. Disengage the outboard end of the trim cover from the rear seat cushion.
4. Remove the screw (3) that secures the rear Seat AirBag (SAB) tether anchor clip (1) to the outboard rear corner of the seat cushion frame (2).

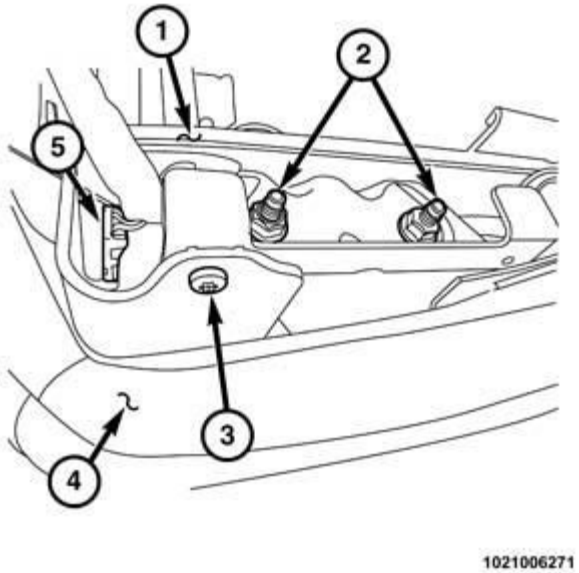

Fig. 37: Removing/Installing Seat AirBag (SAB)
Courtesy of CHRYSLER GROUP, LLC

5. Remove the screw (3) that secures the plastic SAB initiator cover to the bracket on the outboard front corner of the seat cushion frame (1).
6. Move the plastic SAB initiator cover far enough to access and disconnect the seat wire harness connector (5) from the rear SAB inflator initiator. Pull the Connector Position Assurance (CPA) lock straight out from the connector insulator, then pull the insulator straight out from the connector receptacle to disengage and disconnect it.
7. Remove the two nuts that secure the studs (2) of the SAB inflator to the bracket near the outboard front corner of the seat cushion frame.
8. Carefully disengage the SAB from the nylon pouch (intensifier) and slide the SAB out of the pouch. Be careful not to tear or damage the pouch or the trim cover.
9. Remove the SAB from the seat cushion frame.

INSTALLATION

FRONT

WARNING: To avoid serious or fatal injury on vehicles equipped with airbags, disable the Supplemental Restraint System (SRS) before attempting any steering wheel, steering column, airbag, Occupant Classification System (OCS), seat belt tensioner, impact sensor or instrument panel component diagnosis or service. Disconnect and isolate the battery negative (ground) cable, then wait two minutes for the system capacitor to discharge before performing further diagnosis or service. This is the only sure way to

disable the SRS. Failure to follow these instructions may result in accidental airbag deployment.

CAUTION: The seat airbag (1) must be installed into the nylon mesh pouch integral to the front seat back trim cover before the airbag or the trim cover are installed on the front seat back frame (2). Failure to do so will adversely affect the function of the seat airbag system.

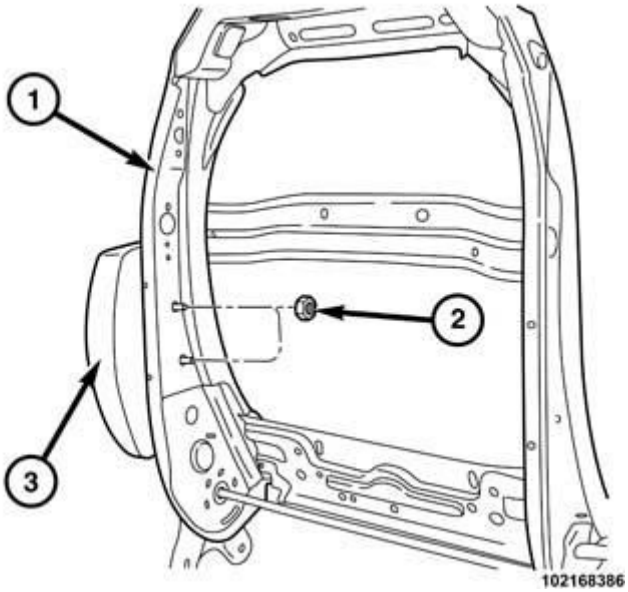

Fig. 38: Seat Back Frame, Nuts & Seat Airbag
Courtesy of CHRYSLER GROUP, LLC

NOTE: The following procedure is for replacement of an ineffective or damaged Seat AirBag (SAB). If the airbag is ineffective or damaged, but not deployed, review the recommended procedures for Handling Non-Deployed Supplemental Restraints. Refer to HANDLING NON-DEPLOYED SUPPLEMENTAL RESTRAINTS. If the SAB has been deployed, review the recommended procedures for Service After A Supplemental Restraint Deployment before removing the airbag from the vehicle. Refer to SERVICE AFTER A SUPPLEMENTAL RESTRAINT SYSTEM DEPLOYMENT.

1. Carefully slide the Seat AirBag (SAB) (3) into the nylon pouch (intensifier) integral to the outboard side of the front seat back trim cover and engage the two SAB mounting studs through the holes provided in the pouch. Be careful not to tear or damage the pouch or the trim cover.
2. Position the SAB and trim cover as a unit to the outboard side of the seat back frame (1) and insert the studs through the mounting holes in the seat back frame.
3. Install and tighten the two nuts (2) that secure the SAB to the inside of the seat back frame. Tighten the nuts to 10 N.m (88 in. lbs.).

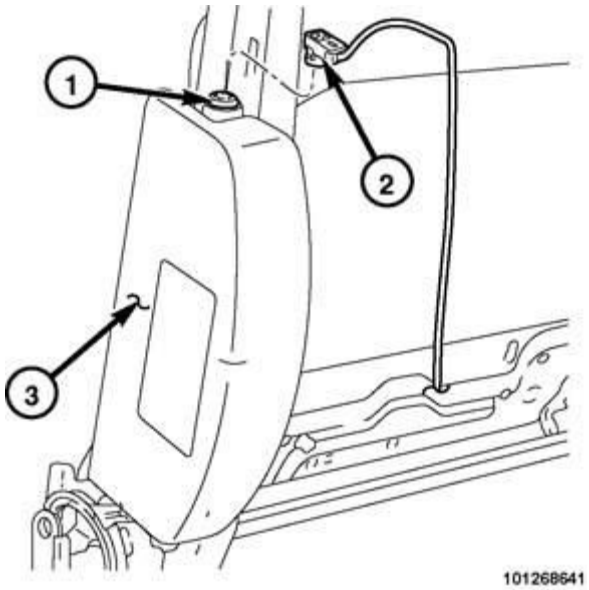

Fig. 39: Inflator Connector Receptacle, Jumper Wire Harness & Seat Airbag
Courtesy of CHRYSLER GROUP, LLC

4. Reconnect the seat wire harness connector (2) to the top of the SAB (3) inflator (1). You can be certain that the connector is fully engaged in its receptacle by listening carefully for a distinct, audible click as the connector snaps into place.
5. Push the Connector Position Assurance (CPA) lock firmly into the SAB connector insulator until it is flush with the upper surface of the insulator.

CAUTION: Be certain that all of the trim is properly reinstalled on the front seat back frame. Failure to do so will adversely affect the function of the seat airbag system.

6. Reinstall the trim onto the front and back of the front seat back frame. Refer to **COVER, SEAT BACK, INSTALLATION** .
7. Reinstall the front seat into the vehicle. Refer to **SEAT, INSTALLATION** .
8. Do not reconnect the negative cable to the battery at this time. The Supplemental Restraint System (SRS) Verification Test procedure should be performed following service of any SRS component. Refer to **SUPPLEMENTAL RESTRAINT SYSTEM VERIFICATION TEST**.

REAR

WARNING: To avoid serious or fatal injury on vehicles equipped with airbags, disable the Supplemental Restraint System (SRS) before attempting any steering wheel, steering column, airbag, Occupant Classification System (OCS), seat belt tensioner, impact sensor or instrument panel component diagnosis or service. Disconnect and isolate the battery negative (ground) cable, then wait two minutes for the system capacitor to discharge before performing further diagnosis or service. This is the only sure way to

disable the SRS. Failure to follow these instructions may result in accidental airbag deployment.

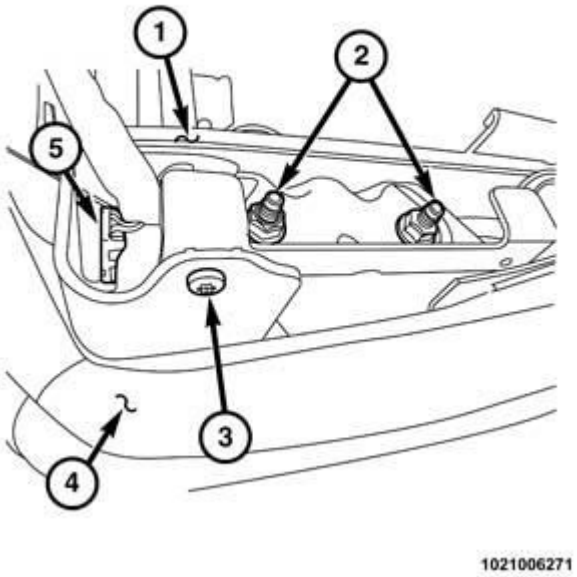

Fig. 40: Removing/Installing Seat AirBag (SAB)
Courtesy of CHRYSLER GROUP, LLC

NOTE: The following procedure is for replacement of an ineffective or damaged Seat AirBag (SAB). If the airbag is ineffective or damaged, but not deployed, review the recommended procedures for Handling Non-Deployed Supplemental Restraints. Refer to HANDLING NON-DEPLOYED SUPPLEMENTAL RESTRAINTS. If the SAB has been deployed, review the recommended procedures for Service After A Supplemental Restraint Deployment before removing the airbag from the vehicle. Refer to SERVICE AFTER A SUPPLEMENTAL RESTRAINT SYSTEM DEPLOYMENT.

1. Carefully slide the Seat AirBag (SAB) (3) into the nylon pouch (intensifier) integral to the outboard side of the rear seat cushion trim cover. Use care not to tear or damage the pouch or the trim cover.
2. Position the rear Seat AirBag (SAB) onto the bracket near the outboard front corner of the seat cushion frame (1).
3. Install and tighten the two nuts that secure the studs (2) of the SAB inflator to the bracket on the outboard front corner of the seat cushion frame. Tighten the nuts to 7 N.m (62 in. lbs.).
4. Reconnect the seat wire harness connector (5) to the SAB inflator. You can be certain that the connector is fully engaged in its receptacle by listening carefully for a distinct, audible click as the connector snaps into place.
5. Push the Connector Position Assurance (CPA) lock firmly into the SAB connector insulator until it is flush with the upper surface of the insulator.

6. Position the plastic SAB initiator cover to the bracket on the outboard front corner of the seat cushion frame.
7. Install and tighten the screw that secures the plastic SAB initiator cover to the bracket on the outboard front corner of the seat cushion frame. Tighten the screw to 3 N.m (27 in. lbs.).
8. Reinstall the outboard end of the trim cover (4) onto the rear seat cushion frame.
9. Position rear SAB tether anchor clip (1) to the outboard rear corner of the seat cushion frame (2).
10. Install and tighten the screw (3) that secures the rear SAB tether anchor clip to the seat cushion frame. Tighten the screw to 5 N.m (44 in. lbs.).
11. Reinstall the rear seat cushion into the vehicle. (Refer to **SEATS, REAR**).
12. Do not reconnect the negative cable to the battery at this time. The Supplemental Restraint System (SRS) Verification Test procedure should be performed following service of any SRS component. Refer to **SUPPLEMENTAL RESTRAINT SYSTEM VERIFICATION TEST**.

AIR BAG, SIDE CURTAIN

DESCRIPTION

DESCRIPTION

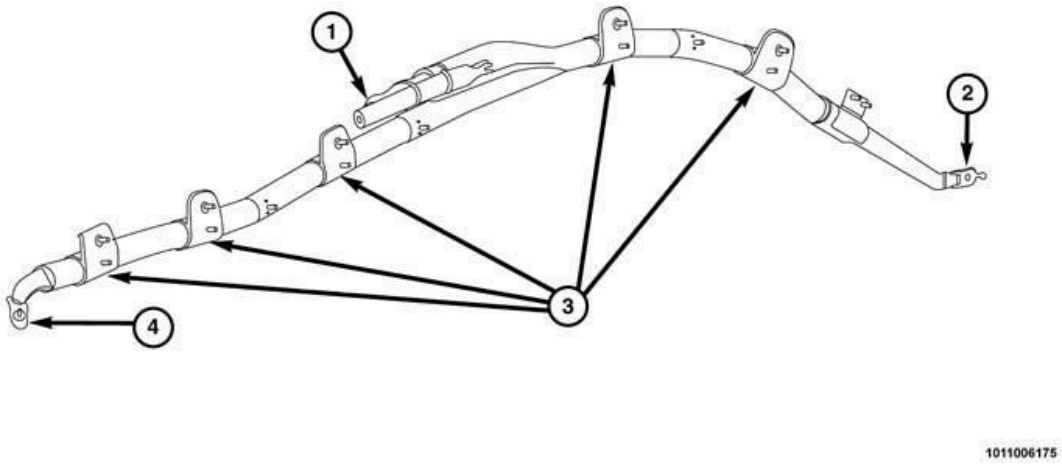

Fig. 41: Side Curtain Airbag
Courtesy of CHRYSLER GROUP, LLC

Side curtain airbags (also known as Side AirBag Inflatable Curtains/SABIC) are standard factory-installed equipment for this vehicle. These airbags are passive, inflatable, Supplemental Restraint System (SRS) components. The side curtain airbag system is designed to reduce injuries to the vehicle occupants in the event of a side impact collision or a vehicle rollover incident. Each side curtain airbag cushion provides full coverage of the side glass on the same side of the vehicle as the monitored impact.

Each vehicle is equipped with two individually controlled side curtain airbag units. These side curtain airbag units are concealed and mounted above the headliner where they are each secured to one of the roof side rails. Each folded airbag cushion is contained within a fabric wrap and suspended from plastic clamp hangers (3) that are spaced along the inner roof rail from the A-pillar at the front of the vehicle to near the D-pillar at the rear of the vehicle. A tether (2) extends down the A-pillar from the front of the side curtain airbag cushion, while a second tether (4) is secured above the D-pillar at the rear. A stamped retainer at the end of each tether is secured to a slot in the sheet metal. A nut secures the front tether retainer to a weld stud on the A-pillar, while a screw secures the rear tether to the inner roof rail.

The hybrid-type inflator (1) for each side curtain airbag is secured to the roof rail above the B-pillar and is connected to the airbag cushion by a long tubular manifold. The inflator bracket has an integral hook formation on one end. The inflator is initially hung from the roof rail by the hook formation, then plastic push-in fasteners secure the clamp hangers and the body of the airbag cushion to the roof rail and to stamped metal deploy brackets at the top of the B-pillar and above the C and D-pillars. Finally, the entire assembly is secured with screws to the inner roof rail.

The airbag inflator is connected to the vehicle electrical system through a dedicated take out and connector of the body wire harness near the top of the B-pillar. The body wire harness connects the side curtain airbag unit to the Occupant Restraint Controller (ORC).

The side curtain airbag units cannot be adjusted or repaired and must be replaced if deployed, ineffective or in any way damaged. Once a side curtain airbag has been deployed, the complete side curtain airbag unit, the deploy brackets, the headliner, the A-pillar trim as well as all other visibly damaged components must be replaced.

OPERATION

OPERATION

Each side curtain airbag (also known as Side AirBag Inflatable Curtain/SABIC) is deployed individually by an electrical signal generated by the Occupant Restraint Controller (ORC) to which it is connected through the left or right SABIC line 1 and line 2 (or squib) circuits. The hybrid-type inflator assembly for each airbag contains a small canister of highly compressed inert gas. When the ORC sends the proper electrical signal to the airbag inflator, the electrical energy creates enough heat to ignite chemical pellets within the inflator.

Once ignited, these chemicals burn rapidly and produce the pressure necessary to rupture a containment disk in the inert gas canister. The inflator and inert gas canister are sealed and connected to a tubular manifold so that all of the released gas is directed into the folded airbag cushion, causing the cushion to inflate. As the cushion inflates it will drop down from the roof rail between the edge of the headliner and the side glass/body pillars to form a curtain-like cushion to protect the vehicle occupants during a side impact collision or a vehicle rollover incident. The cushion features large chambers that inflate adjacent to the head of each front and rear seat occupant.

The front and rear tethers keep the side curtain airbag cushion taut to the side of the vehicle. In addition, the deploy brackets at the top of each B-pillar and above the C and D-pillars guide the cushion past the upper B, C and D-pillar trim into the proper deployment position. Following the deployment, the cushion slowly deflates by venting the inert gas through the loose weave of the cushion fabric and the deflated cushion hangs down

loosely from the roof rail.

The ORC monitors the condition of the side curtain airbags through circuit resistance, will illuminate the airbag indicator in the instrument cluster and will store a Diagnostic Trouble Code (DTC) for any fault that is detected. Proper diagnosis of the side curtain airbag inflator and squib circuits requires the use of a diagnostic scan tool and may also require the use of the SRS Load Tool special tool along with the appropriate Load Tool Jumpers and Adapters. Refer to the appropriate diagnostic information.

REMOVAL

AIRBAG

WARNING: **To avoid serious or fatal injury on vehicles equipped with airbags, disable the Supplemental Restraint System (SRS) before attempting any steering wheel, steering column, airbag, Occupant Classification System (OCS), seat belt tensioner, impact sensor or instrument panel component diagnosis or service. Disconnect and isolate the battery negative (ground) cable, then wait two minutes for the system capacitor to discharge before performing further diagnosis or service. This is the only sure way to disable the SRS. Failure to follow these instructions may result in accidental airbag deployment.**

WARNING: **To avoid serious or fatal injury when removing a deployed airbag, rubber gloves, eye protection, and a long-sleeved shirt should be worn. There may be deposits on the airbag unit and other interior surfaces. In large doses, these deposits may cause irritation to the skin and eyes.**

WARNING: **To avoid serious or fatal injury, use extreme care to prevent any foreign material from entering the side curtain airbag, or becoming entrapped between the side curtain airbag cushion and the headliner. Failure to observe this warning could result in occupant injuries upon airbag deployment.**

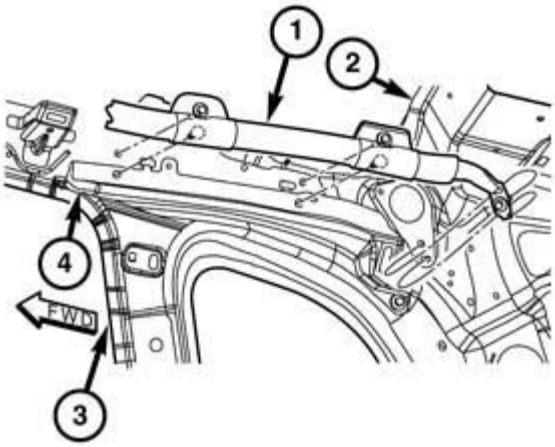

1009005966

Fig. 42: Removing/Installing C&D-Pillar Side AirBag Curtain
Courtesy of CHRYSLER GROUP, LLC

NOTE: The following procedure is for replacement of an ineffective or damaged side curtain airbag (also known as Side AirBag Inflatable Curtain/SABIC). If the airbag is ineffective or damaged, but not deployed, review the recommended procedures for Handling Non-Deployed Supplemental Restraints. Refer to HANDLING NON-DEPLOYED SUPPLEMENTAL RESTRAINTS. If the side curtain airbag has been deployed, review the recommended procedures for Service After A Supplemental Restraint Deployment before removing the airbag from the vehicle. Refer to SERVICE AFTER A SUPPLEMENTAL RESTRAINT SYSTEM DEPLOYMENT.

1. Disconnect and isolate the negative cable from the battery. Wait two minutes for the system capacitor to discharge before further service.
2. Remove the headliner from the vehicle. Refer to **HEADLINER, REMOVAL** .
3. Remove the screw that secures the Side AirBag Inflatable Curtain (SABIC) (1) rear tether to the inner roof rail (2).
4. Remove the two screws that secure the SABIC mounting tabs to the inner roof rail above the C (3) and D-pillars.
5. Disengage the plastic push-in retainers that secure the SABIC to the C and D-pillar deploy bracket (4) above the C and D-pillars.

NOTE: If the SABIC has been deployed, the C and D-pillar deploy bracket must also be replaced.

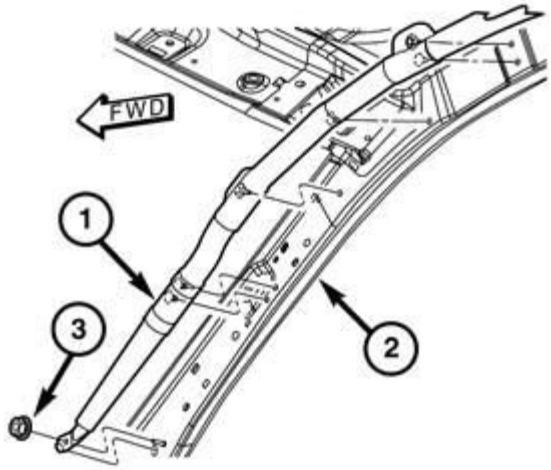

Fig. 43: Removing/Installing A-Pillar Side AirBag Curtain
Courtesy of CHRYSLER GROUP, LLC

6. Remove the nut (3) that secures the SABIC (1) front tether to the inner A-pillar (2) near the belt line.
7. Remove the two screws that secure the SABIC mounting tabs to the inner A-pillar and the inner roof rail above the A-pillar.
8. Disengage the plastic push-in retainers that secure the SABIC to the inner A-pillar and the inner roof rail above the A-pillar.

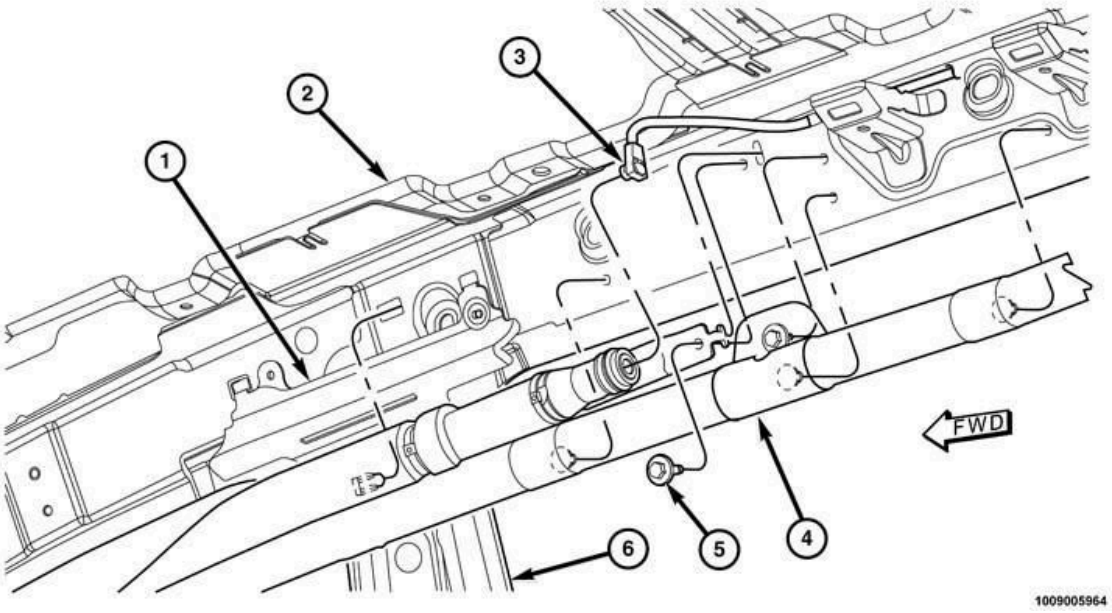

Fig. 44: Removing/Installing B-Pillar Side AirBag Curtain
Courtesy of CHRYSLER GROUP, LLC

9. Disconnect the body wire harness connector (3) from the connector receptacle at the rear of the SABIC inflator located on the inner roof rail (2) above the B-pillar (6). The SABIC connector insulator is secured by integral latches and a Connector Position Assurance (CPA) lock to the airbag inflator connector receptacle. Pull the lock straight out from the connector insulator, then pull the insulator straight out from the connector receptacle to disengage and disconnect it.
10. Remove the two screws (5) that secure the SABIC mounting tab to the inner roof rail above the rear door opening and the inflator bracket above the B-pillar.

NOTE: If the SABIC has been deployed, the B-pillar deploy bracket (1) must also be replaced.

11. Disengage the plastic push-in retainers that secure the SABIC to the inner roof rail.
12. Disengage the metal hooks that secure the inflator mounting bracket from the slots in the inner roof rail.
13. Remove the SABIC and inflator from the vehicle as a unit.

B-PILLAR

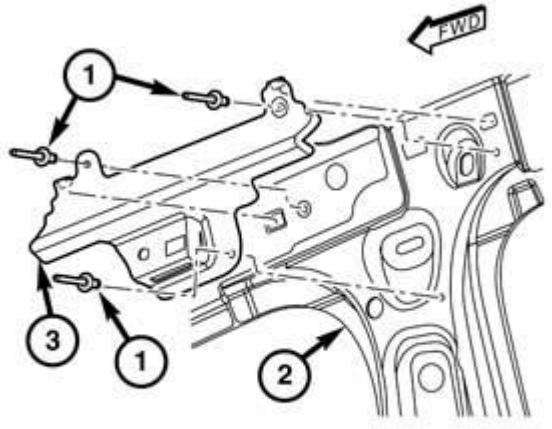

1009005962

Fig. 45: Removing/Installing B-Pillar Side Curtain Airbag
Courtesy of CHRYSLER GROUP, LLC

1. Remove the side curtain airbag (also known as Side AirBag Inflatable Curtain/SABIC) from the vehicle. Refer to **AIR BAG, SIDE CURTAIN, REMOVAL**.
2. Remove the three blind rivets (1) that secure the deploy bracket (3) near the top of the B-pillar (2).

3. Slide the bracket upward far enough to disengage the tabs at the top of the bracket from the locator holes in the inner B-pillar and roof rail.
4. Remove the deploy bracket from the vehicle and discard.

C AND D-PILLAR

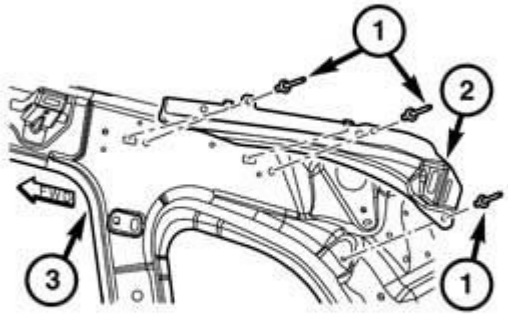

1009005963

Fig. 46: Removing/Installing C&D-Pillar Side Curtain Airbag
Courtesy of CHRYSLER GROUP, LLC

1. Remove the side curtain airbag (also known as Side AirBag Inflatable Curtain/SABIC) from the vehicle. Refer to **AIR BAG, SIDE CURTAIN, REMOVAL**.
2. Remove the three blind rivets (1) that secure the deploy bracket (2) near the tops of the C-pillar (3) and D-pillar.
3. Disengage the tabs at the top of the bracket from the locator holes in the upper inner C-pillar.
4. Remove the deploy bracket from the vehicle and discard.

INSTALLATION

AIRBAG

WARNING: To avoid serious or fatal injury on vehicles equipped with airbags, disable the Supplemental Restraint System (SRS) before attempting any steering wheel, steering column, airbag, Occupant Classification System (OCS), seat belt tensioner, impact sensor or instrument panel component diagnosis or service. Disconnect and isolate the battery negative (ground) cable, then wait two minutes for the system capacitor to discharge before

performing further diagnosis or service. This is the only sure way to disable the SRS. Failure to follow these instructions may result in accidental airbag deployment.

WARNING: To avoid serious or fatal injury when removing a deployed airbag, rubber gloves, eye protection, and a long-sleeved shirt should be worn. There may be deposits on the airbag unit and other interior surfaces. In large doses, these deposits may cause irritation to the skin and eyes.

WARNING: To avoid serious or fatal injury, use extreme care to prevent any foreign material from entering the side curtain airbag, or becoming entrapped between the side curtain airbag cushion and the headliner. Failure to observe this warning could result in occupant injuries upon airbag deployment.

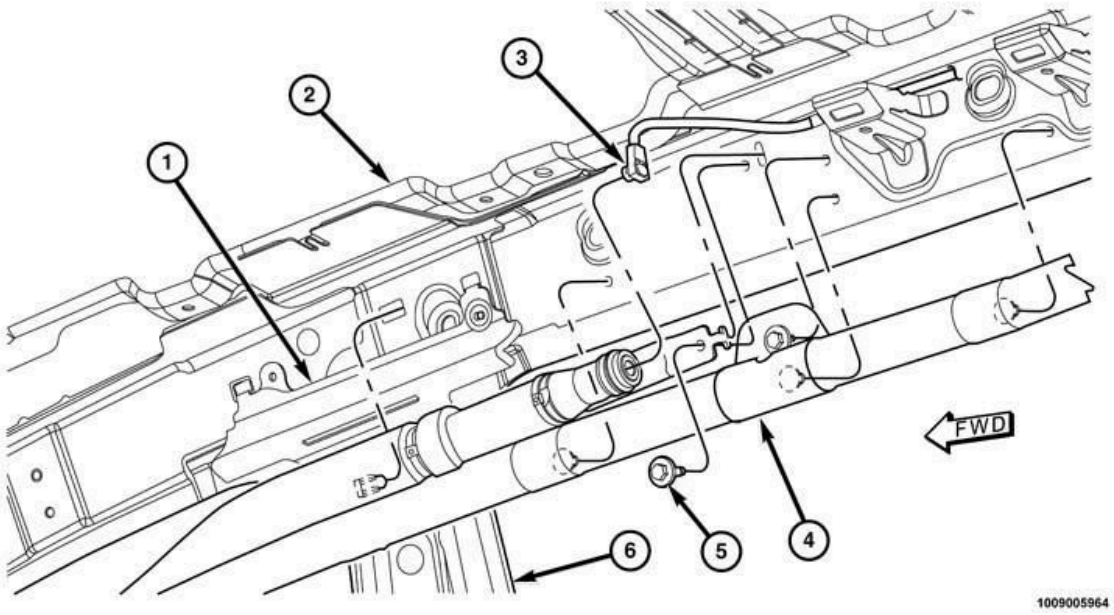

Fig. 47: Removing/Installing B-Pillar Side AirBag Curtain
Courtesy of CHRYSLER GROUP, LLC

NOTE: The following procedure is for replacement of an ineffective or damaged side curtain airbag (also known as Side AirBag Inflatable Curtain/SABIC). If the airbag is ineffective or damaged, but not deployed, review the recommended procedures for Handling Non-Deployed Supplemental Restraints. Refer to HANDLING NON-DEPLOYED SUPPLEMENTAL RESTRAINTS. If the side curtain airbag has been deployed, review the recommended procedures for Service After A Supplemental Restraint Deployment before removing the airbag from the vehicle. Refer to SERVICE AFTER A SUPPLEMENTAL RESTRAINT SYSTEM DEPLOYMENT.

1. Position the Side AirBag Inflatable Curtain (SABIC) and inflator (4) into the vehicle as a unit.
2. Position the inflator mounting bracket to the inner roof rail above the deploy bracket (1) on the B-pillar (6) and engage the metal hooks on the inflator bracket into the slots in the inner roof rail (2).
3. Engage the plastic push-in retainers that temporarily secure the SABIC to the inner roof rail.
4. Install and tighten the two screws (5) that secure the inflator bracket above the B-pillar and the mounting tab to the inner roof rail above the rear door opening. Tighten the screw to 7 N.m (62 in. lbs.).
5. Reconnect the connector insulator (3) of the body wire harness take out for the SABIC to the inflator initiator connector receptacle at the rear of the inflator by pressing straight in on the connector. Be certain that the connector is fully engaged in its receptacle, then push the Connector Position Assurance (CPA) lock straight into the connector to lock it into place.

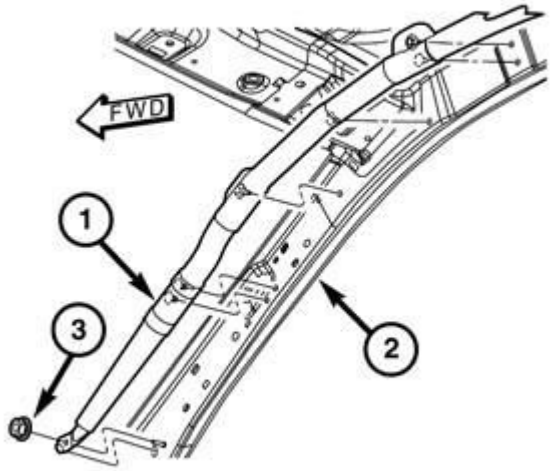

1009005965

Fig. 48: Removing/Installing A-Pillar Side AirBag Curtain
Courtesy of CHRYSLER GROUP, LLC

6. Engage the plastic push-in retainers that secure the SABIC (1) to the inner roof rail above the A-pillar and to the inner A-pillar (2).
7. Install and tighten the two screws (2) that secure SABIC mounting tabs to the inner roof rail above the A-pillar and to the inner A-pillar. Tighten the screws to 7 N.m (62 in. lbs.).
8. Install and tighten the nut (3) that secures the front tether to the inner A-pillar near the belt line. Tighten the nut to 7 N.m (62 in. lbs.).

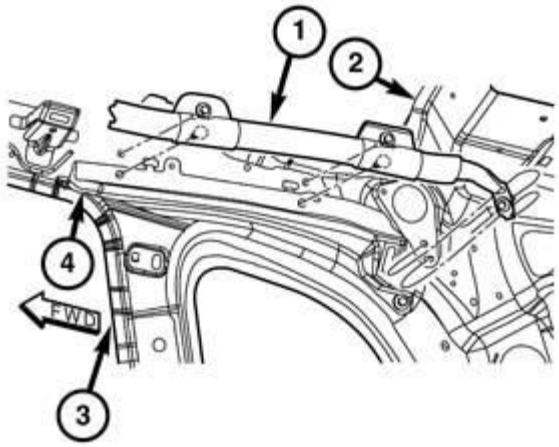

1009005966

Fig. 49: Removing/Installing C&D-Pillar Side AirBag Curtain
Courtesy of CHRYSLER GROUP, LLC

9. Engage the plastic push-in retainers that secure the SABIC (1) to the C and D-pillar deploy bracket (4) above the C (3) and D-pillars.
10. Install and tighten the two screws that secure the SABIC mounting tabs to the inner roof rail (2). Tighten the screws to 7 N.m (62 in. lbs.).
11. Install and tighten the screw that secures the SABIC rear tether to the inner roof rail. Tighten the screw to 7 N.m (62 in. lbs.).
12. Reinstall the headliner into the vehicle. Refer to **HEADLINER, INSTALLATION** .
13. Do not reconnect the negative cable to the battery at this time. The Supplemental Restraint System (SRS) Verification Test procedure should be performed following service of any SRS component. Refer to **SUPPLEMENTAL RESTRAINT SYSTEM VERIFICATION TEST**.

B-PILLAR

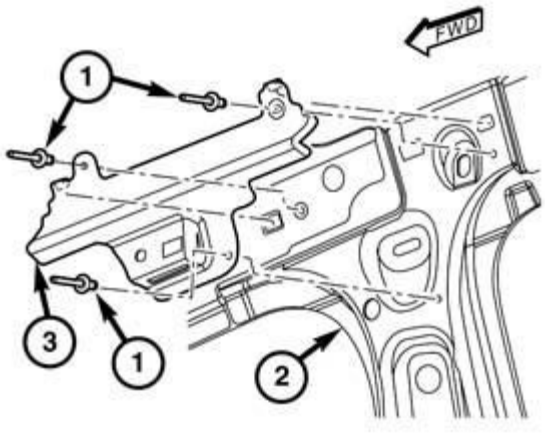

1009005962

Fig. 50: Removing/Installing B-Pillar Side Curtain Airbag
Courtesy of CHRYSLER GROUP, LLC

1. Position the deploy bracket (3) near the top of the inner B-pillar (2).
2. Engage the tabs at the top of the bracket into the locator holes in the inner B-pillar.
3. Install three new blind rivets (1) to secure the bracket to the B-pillar.
4. Reinstall the side curtain airbag (also known as Side AirBag Inflatable Curtain/SABIC) into the vehicle. Refer to **AIR BAG, SIDE CURTAIN, INSTALLATION**.

C AND D-PILLAR

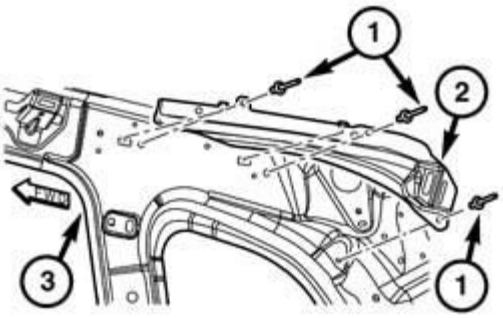

1009005963

Fig. 51: Removing/Installing C&D-Pillar Side Curtain Airbag
Courtesy of CHRYSLER GROUP, LLC

1. Position the deploy bracket (2) near the tops of the inner C-pillar (3) and D-pillar.
2. Engage the tabs at the top of the bracket into the locator holes in the upper inner C-pillar.
3. Install three new blind rivets (1) to secure the bracket near the tops of the C-pillar and D-pillar.
4. Reinstall the side curtain airbag (also known as Side AirBag Inflatable Curtain/SABIC) into the vehicle. Refer to **AIR BAG, SIDE CURTAIN, INSTALLATION**.

ANCHOR, CHILD SEAT

DESCRIPTION

DESCRIPTION

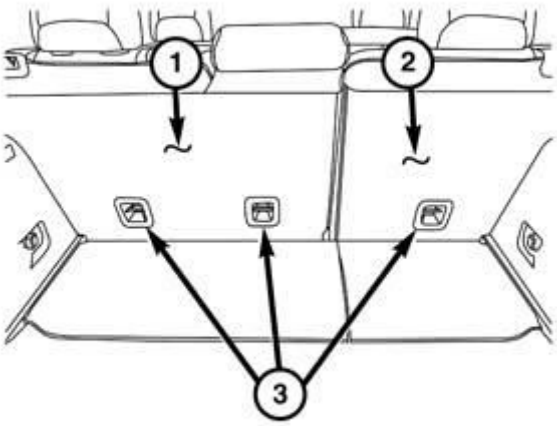

1009005960

Fig. 52: Child Seat Anchor/Tether
Courtesy of CHRYSLER GROUP, LLC

This vehicle is equipped with a Lower Anchors and Tether for CHildren (LATCH) child restraint anchorage system for domestic markets. The LATCH system provides for the installation of suitable child restraints in certain seating positions without using the standard equipment seat belt provided for that seating position. The rear seats in these vehicles are equipped with a fixed-position child restraint upper tether anchor for both the center and the two outboard seating positions, and child restraint lower anchors (also known as ISOFIX anchors) for child restraints in either the two outboard seating positions or for the right outboard and the center positions only. There should never be three child restraints installed in the rear seat at the same time. Vehicles manufactured for export markets are not equipped with the upper tether anchors, but do have the ISOFIX lower anchors.

The three upper tether anchors (3) are integral to the rear seat back panels. One anchor is integral to the back of the right rear panel (2), and two are integral to the left rear panel (1). These anchors are each constructed from short lengths of heavy-gauge steel wire that is securely welded to the seat back frames. A molded plastic trim bezel and cup provides a neat appearance to each of the anchor openings in the seat back panels.

These child restraint upper tether anchors cannot be adjusted or repaired and, if ineffective or damaged, they must be replaced as a unit with their respective rear seat back panels. The trim bezels are available for separate service replacement.

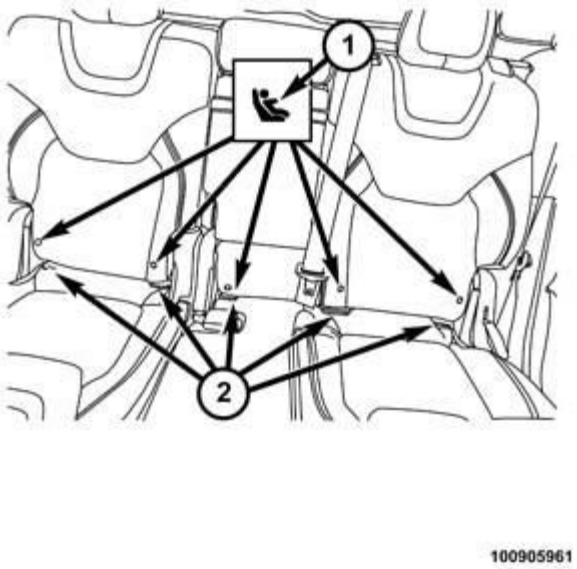

Fig. 53: ISOFIX Lower Anchors
Courtesy of CHRYSLER GROUP, LLC

The ISOFIX lower anchors are integral to the left or right rear seat stanchion assembly located beneath the rear edge of the rear seat cushion. These anchors are each constructed from a heavy-gauge steel wire loop that is securely welded to the rear seat stanchion frame. The rear seat ISOFIX lower anchors are each accessed from the front of their respective seat, at each side where the seat back meets the seat cushion. Round marker buttons with a molded child seat icon help identify the ISOFIX anchor locations as they may be otherwise difficult to see with the seat back in the upright position.

The child restraint ISOFIX lower tether anchors cannot be adjusted or repaired and, if ineffective or damaged, they must be replaced as a unit with the rear seat stanchion assembly.

WARNING: **To avoid serious or fatal injury during and following any seat belt or child restraint anchor service, carefully inspect all seat belts, buckles, mounting hardware, retractors, tether straps, and anchors for proper installation, operation, or damage. Replace any belt that is cut, frayed, or torn. Straighten any belt that is twisted. Tighten any loose fasteners. Replace any belt that has a damaged or ineffective buckle or retractor. Replace any belt that has a bent or damaged latch plate or anchor plate. Replace any child restraint anchor or the unit to which the anchor is integral that has been bent or damaged. Never attempt to repair a seat belt or child restraint component. Always replace damaged or ineffective seat belt and child restraint components with the correct, new and unused replacement parts listed in the Chrysler Mopar® Parts Catalog.**

OPERATION

OPERATION

All vehicles manufactured for sale in the United States and Canada are required to be equipped with a Lower Anchors and Tether for CHildren, or LATCH child restraint anchorage system. The second row seats in this vehicle have two pairs of anchor provisions for installing a LATCH-compatible child seat. A single seat may be mounted in the center seating position, one in each outboard seating position or one in the center and another in the right outboard position. There should never be three seats installed at the same time, or a seat in the center position in combination with a seat in the left outboard position.

With LATCH, child seats are secured by direct attachment to the vehicle seat structure, rather than by the seat belts. With LATCH-compatible child seats, lower (also known as ISOFIX) anchors attach to the seat structure through heavy-gauge wire loops located at the intersection between the seat cushion and the seat back surfaces.

Three upper tether anchors are integral to the second row seat back frames to secure the top tether strap of child seats equipped with this feature. These upper tether anchors work with both LATCH-compatible and other child seats equipped with a top tether strap. Vehicles manufactured for export markets are equipped with only the ISOFIX lower anchors, and have no upper tether anchor provisions.

The owner's information packet in the vehicle glove box contains details and suggestions on the proper use of all of the factory-installed child restraint anchors.

BUCKLE, SEAT BELT

STANDARD PROCEDURE

STANDARD PROCEDURE - SEAT BELT ANCHOR RELEASE

WARNING: To avoid serious or fatal injury during and following any seat belt or child restraint anchor service, carefully inspect all seat belts, buckles, mounting hardware, retractors, tether straps, and anchors for proper installation, operation, or damage. Replace any belt that is cut, frayed, or torn. Straighten any belt that is twisted. Tighten any loose fasteners. Replace any belt that has a damaged or ineffective buckle or retractor. Replace any belt that has a bent or damaged latch plate or anchor plate. Replace any child restraint anchor or the unit to which the anchor is integral that has been bent or damaged. Never attempt to repair a seat belt or child restraint component. Always replace damaged or ineffective seat belt and child restraint components with the correct, new and unused replacement parts listed in the Chrysler Mopar® Parts Catalog.

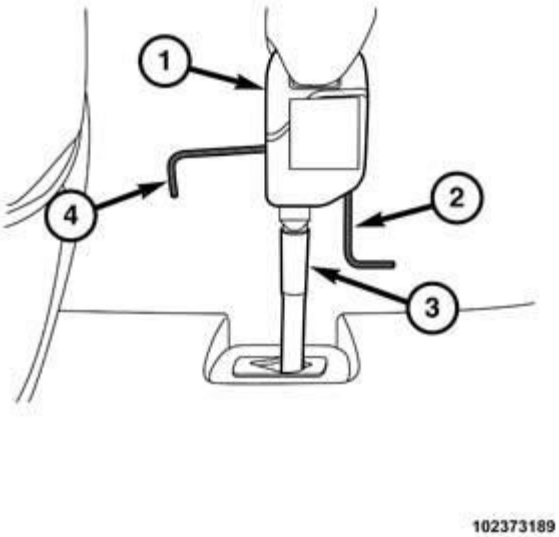

Fig. 54: Lower Anchor Buckle, Allen Key Wrench & Lower Anchor Latch Plate
Courtesy of CHRYSLER GROUP, LLC

Use two Allen key wrenches and the following steps in sequence to disconnect the front seat belt lower anchor latch plate (3) from the lower anchor buckle (1).

1. Insert an Allen key wrench (2) of the appropriate size into the outer hole at the bottom of the anchor buckle housing far enough to compress and hold compressed the internal lock feature of the buckle.
2. While pushing the anchor buckle lightly downward to relieve the tension of the buckle latch mechanism on the latch plate, insert a second Allen key wrench (4) of the appropriate size into the hole in the side of the buckle housing far enough to compress the internal latch plate release feature of the buckle.
3. Pull the seat belt anchor latch plate out of the anchor buckle.
4. Remove both Allen key wrenches from the holes in the anchor buckle housing.

REMOVAL

FRONT ANCHOR TENSIONER

WARNING: **To avoid serious or fatal injury on vehicles equipped with airbags, disable the Supplemental Restraint System (SRS) before attempting any steering wheel, steering column, airbag, Occupant Classification System (OCS), seat belt tensioner, impact sensor or instrument panel component diagnosis or service. Disconnect and isolate the battery negative (ground) cable, then wait two minutes for the system capacitor to discharge before performing further diagnosis or service. This is the only sure way to disable the SRS. Failure to follow these instructions may result in**

accidental airbag deployment.

WARNING: To avoid serious or fatal injury during and following any seat belt or child restraint anchor service, carefully inspect all seat belts, buckles, mounting hardware, retractors, tether straps, and anchors for proper installation, operation, or damage. Replace any belt that is cut, frayed, or torn. Straighten any belt that is twisted. Tighten any loose fasteners. Replace any belt that has a damaged or ineffective buckle or retractor. Replace any belt that has a bent or damaged latch plate or anchor plate. Replace any child restraint anchor or the unit to which the anchor is integral that has been bent or damaged. Never attempt to repair a seat belt or child restraint component. Always replace damaged or ineffective seat belt and child restraint components with the correct, new and unused replacement parts listed in the Chrysler Mopar® Parts Catalog.

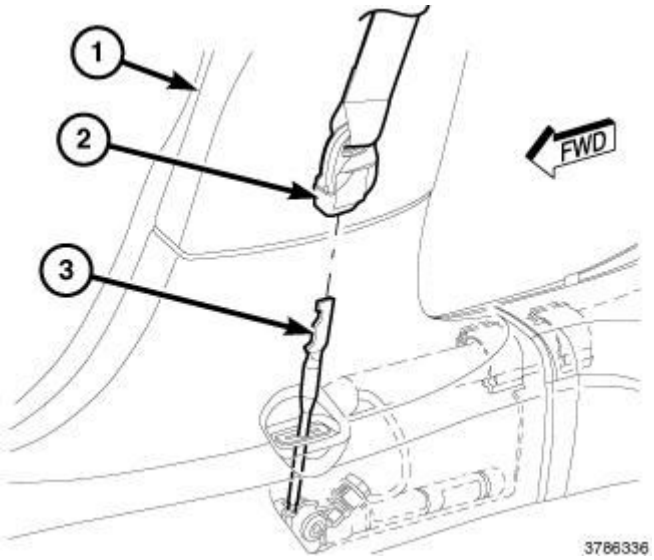

Fig. 55: B-Pillar, Front Seat Belt Anchor Tensioner Buckle & Front Seat Belt Anchor Latch Plate
Courtesy of CHRYSLER GROUP, LLC

NOTE: The following procedure is for replacement of an ineffective or damaged seat belt anchor tensioner unit. If the front seat belt anchor tensioner is ineffective or damaged, but is not deployed, review the recommended procedures for Handling Non-Deployed Supplemental Restraints. Refer to HANDLING NON-DEPLOYED SUPPLEMENTAL RESTRAINTS. If the seat belt anchor tensioner has been deployed, review the recommended procedures for Service After A Supplemental Restraint Deployment before removing the unit from the vehicle. Refer to SERVICE AFTER A SUPPLEMENTAL RESTRAINT SYSTEM DEPLOYMENT.

1. Position the front seat for easiest access to the front seat belt anchor tensioner buckle (2).
2. Disconnect and isolate the negative cable from the battery. Wait two minutes for the system capacitor to

discharge before further service.

3. Release the front seat belt anchor latch plate (3) from the anchor buckle. Refer to **BUCKLE, SEAT BELT, STANDARD PROCEDURE**.

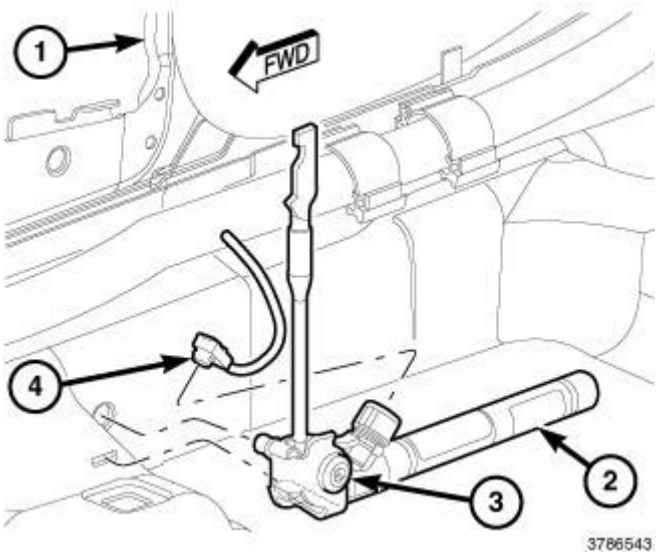

Fig. 56: Lower B-Pillar, Front Seat Belt Anchor Tensioner Unit, Screw & Harness Connector
Courtesy of CHRYSLER GROUP, LLC

4. Remove the trim from the lower B-pillar (1) and from over the front seat belt anchor tensioner unit (2) on the inner sill at the base of the B-pillar. Refer to **PANEL, B-PILLAR TRIM, REMOVAL** .
5. Disconnect the body wire harness connector (4) from the anchor tensioner initiator.
6. Remove the screw (3) that secures the anchor tensioner unit to the inner sill.
7. Remove the anchor tensioner unit from the vehicle.

FRONT SEAT

WARNING: **To avoid serious or fatal injury during and following any seat belt or child restraint anchor service, carefully inspect all seat belts, buckles, mounting hardware, retractors, tether straps, and anchors for proper installation, operation, or damage. Replace any belt that is cut, frayed, or torn. Straighten any belt that is twisted. Tighten any loose fasteners. Replace any belt that has a damaged or ineffective buckle or retractor. Replace any belt that has a bent or damaged latch plate or anchor plate. Replace any child restraint anchor or the unit to which the anchor is integral that has been bent or damaged. Never attempt to repair a seat belt or child restraint component. Always replace damaged or ineffective seat belt and child restraint components with the correct, new and unused replacement parts listed in the Chrysler Mopar® Parts Catalog.**

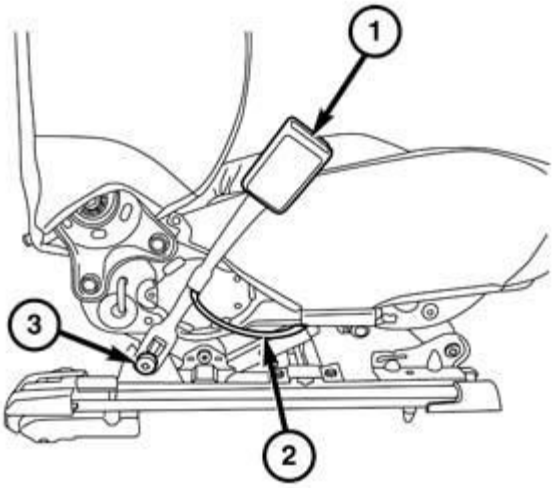

Fig. 57: Front Seat Belt Buckle, Seat Belt Buckle Switch Pigtail Wire Connector & Screw
Courtesy of CHRYSLER GROUP, LLC

1. Disconnect and isolate the negative cable from the battery.
2. Remove the front seat from the vehicle. Refer to **SEAT, REMOVAL** .
3. Remove the screw (3) that secures the front seat belt buckle (1) lower anchor to the bracket near the back of the upper inboard seat track.
4. Reach under the seat cushion to access and disconnect the seat wire harness connector from the seat belt buckle switch pigtail wire (2) connector.
5. Remove the seat belt buckle from the front seat.

REAR CENTER

WARNING: **To avoid serious or fatal injury during and following any seat belt or child restraint anchor service, carefully inspect all seat belts, buckles, mounting hardware, retractors, tether straps, and anchors for proper installation, operation, or damage. Replace any belt that is cut, frayed, or torn. Straighten any belt that is twisted. Tighten any loose fasteners. Replace any belt that has a damaged or ineffective buckle or retractor. Replace any belt that has a bent or damaged latch plate or anchor plate. Replace any child restraint anchor or the unit to which the anchor is integral that has been bent or damaged. Never attempt to repair a seat belt or child restraint component. Always replace damaged or ineffective seat belt and child restraint components with the correct, new and unused replacement parts listed in the Chrysler Mopar® Parts Catalog. Failure to follow these instructions may result in possible serious or fatal**

injury.

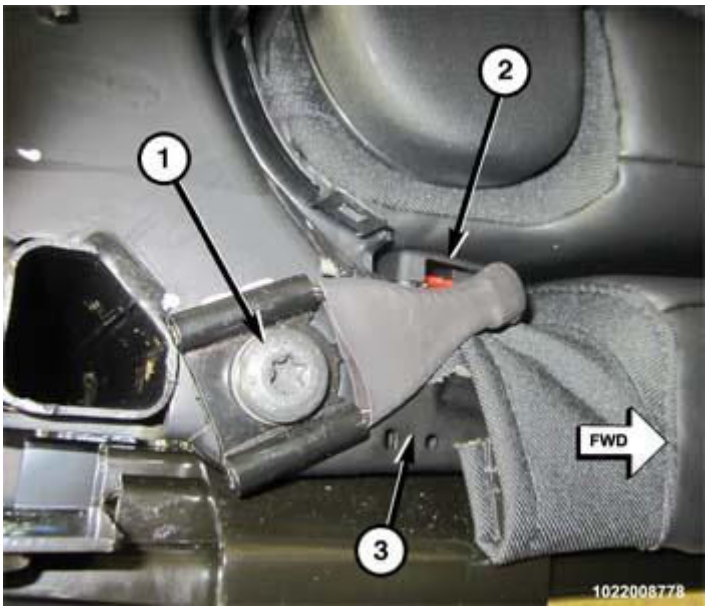

Fig. 58: Center Seat Belt Buckle And Anchor
Courtesy of CHRYSLER GROUP, LLC

1. Adjust the right (40 percent) rear seat to the full forward position, and the left (60 percent) rear seat to the full rearward position.
2. Working from behind the rear seats, unsnap and remove the trim cover from the inboard hinge bracket of the left (60 percent) rear seat.
3. Still working from behind the rear seats, remove the screw (1) that secures the lower anchor for the rear center seat belt buckle (2) to the inboard side of the left (60 percent) rear seat cushion frame (3).
4. Remove the center seat belt buckle and anchor from the left (60 percent) rear seat.

REAR LEFT

WARNING: **To avoid serious or fatal injury during and following any seat belt or child restraint anchor service, carefully inspect all seat belts, buckles, mounting hardware, retractors, tether straps, and anchors for proper installation, operation, or damage. Replace any belt that is cut, frayed, or torn. Straighten any belt that is twisted. Tighten any loose fasteners. Replace any belt that has a damaged or ineffective buckle or retractor. Replace any belt that has a bent or damaged latch plate or anchor plate. Replace any child restraint anchor or the unit to which the anchor is integral that has been bent or damaged. Never attempt to repair a seat belt or child restraint component. Always replace damaged or ineffective seat belt and child restraint components with the correct, new and unused replacement parts listed in the Chrysler Mopar® Parts Catalog. Failure to follow these instructions may result in possible serious or fatal injury.**

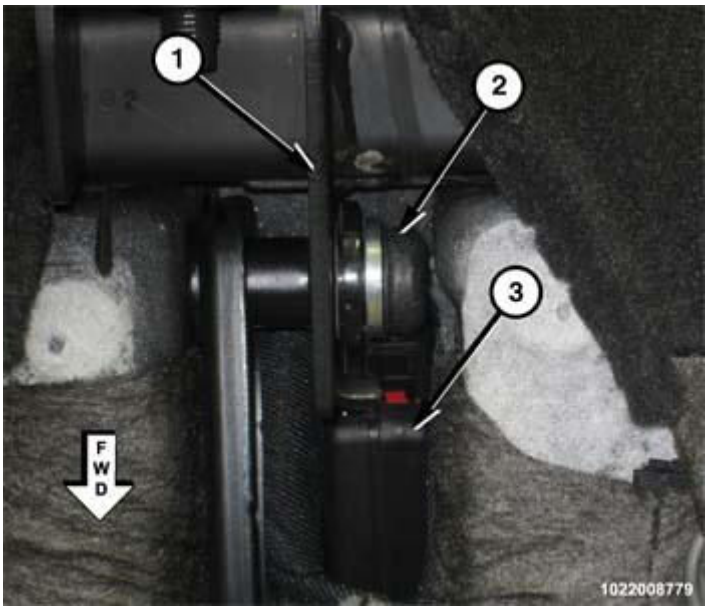

Fig. 59: Rear Left Seat Belt Buckle And Anchor Plate (60 Percent)
Courtesy of CHRYSLER GROUP, LLC

1. Remove the left (60 percent) rear seat from the vehicle. Refer to **SEAT, REAR, REMOVAL** .
2. Working beneath the rear of the left (60 percent) rear seat cushion, remove the screw (2) that secures the anchor plate of the rear left seat belt buckle (3) to the rear seat cushion frame (1).
3. Remove the rear left seat belt buckle and anchor plate from the left (60 percent) rear seat cushion as a unit.

REAR RIGHT

WARNING: **To avoid serious or fatal injury during and following any seat belt or child restraint anchor service, carefully inspect all seat belts, buckles, mounting hardware, retractors, tether straps, and anchors for proper installation, operation, or damage. Replace any belt that is cut, frayed, or torn. Straighten any belt that is twisted. Tighten any loose fasteners. Replace any belt that has a damaged or ineffective buckle or retractor. Replace any belt that has a bent or damaged latch plate or anchor plate. Replace any child restraint anchor or the unit to which the anchor is integral that has been bent or damaged. Never attempt to repair a seat belt or child restraint component. Always replace damaged or ineffective seat belt and child restraint components with the correct, new and unused replacement parts listed in the Chrysler Mopar® Parts Catalog. Failure to follow these instructions may result in possible serious or fatal injury.**

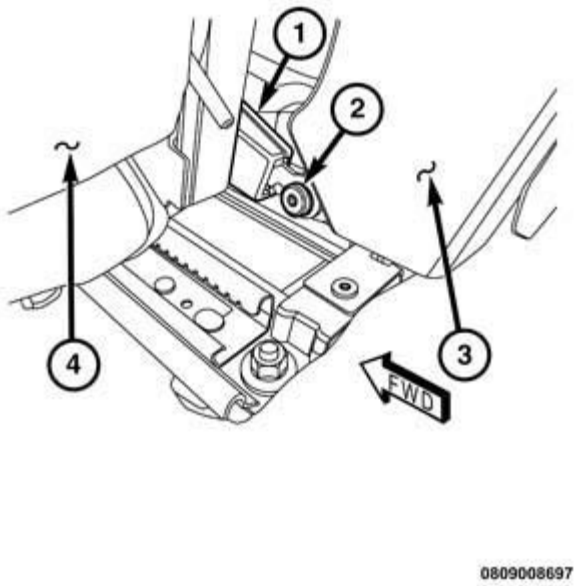

Fig. 60: Right Rear Seat Belt Buckle Ancchor
Courtesy of CHRYSLER GROUP, LLC

1. Adjust the left (60 percent) rear seat (4) to the full forward position, and the right (40 percent) rear seat (3) to the full rearward position.
2. Working from behind the rear seats, remove the screw (2) that secures the lower anchor for the right rear seat belt buckle (1) to the bracket at the back of the right rear seat upper inner adjuster track.
3. Remove the right rear seat belt buckle from between the rear seat cushions as a unit.

INSTALLATION

FRONT ANCHOR TENSIONER

WARNING: **To avoid serious or fatal injury on vehicles equipped with airbags, disable the Supplemental Restraint System (SRS) before attempting any steering wheel, steering column, airbag, Occupant Classification System (OCS), seat belt tensioner, impact sensor or instrument panel component diagnosis or service. Disconnect and isolate the battery negative (ground) cable, then wait two minutes for the system capacitor to discharge before performing further diagnosis or service. This is the only sure way to disable the SRS. Failure to follow these instructions may result in accidental airbag deployment.**

WARNING: **To avoid serious or fatal injury during and following any seat belt or child restraint anchor service, carefully inspect all seat belts, buckles, mounting hardware, retractors, tether straps, and anchors for proper**

installation, operation, or damage. Replace any belt that is cut, frayed, or torn. Straighten any belt that is twisted. Tighten any loose fasteners. Replace any belt that has a damaged or ineffective buckle or retractor. Replace any belt that has a bent or damaged latch plate or anchor plate. Replace any child restraint anchor or the unit to which the anchor is integral that has been bent or damaged. Never attempt to repair a seat belt or child restraint component. Always replace damaged or ineffective seat belt and child restraint components with the correct, new and unused replacement parts listed in the Chrysler Mopar® Parts Catalog.

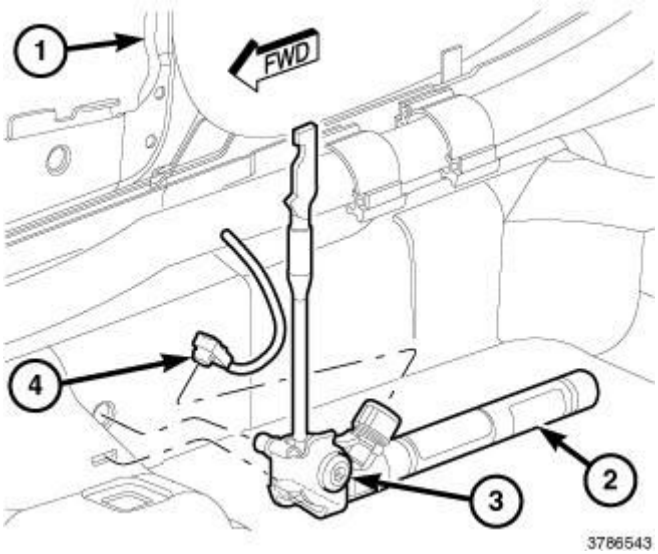

Fig. 61: Lower B-Pillar, Front Seat Belt Anchor Tensioner Unit, Screw & Harness Connector
Courtesy of CHRYSLER GROUP, LLC

NOTE: **The following procedure is for replacement of an ineffective or damaged seat belt anchor buckle tensioner unit. The front seat belt anchor buckle is secured to a seat belt anchor buckle tensioner. If the front seat belt anchor buckle tensioner is ineffective or damaged, but the tensioner is not deployed, review the recommended procedures for Handling Non-Deployed Supplemental Restraints. Refer to HANDLING NON-DEPLOYED SUPPLEMENTAL RESTRAINTS. If the seat belt anchor buckle tensioner has been deployed, review the recommended procedures for Service After A Supplemental Restraint Deployment before removing the unit from the vehicle. Refer to SERVICE AFTER A SUPPLEMENTAL RESTRAINT SYSTEM DEPLOYMENT.**

1. Position the front seat belt anchor buckle tensioner unit (2) into the vehicle.
2. Install and tighten the screw (3) that secures the anchor tensioner unit to the inner sill. Tighten the screw to 45 N.m (33 ft. lbs.).
3. Reconnect the body wire harness connector (4) to the anchor tensioner initiator.
4. Reinstall the lower B-pillar trim panel over the front seat belt anchor tensioner unit on the inner sill at the base of the B-pillar. Refer to **PANEL, B-PILLAR TRIM, INSTALLATION** .

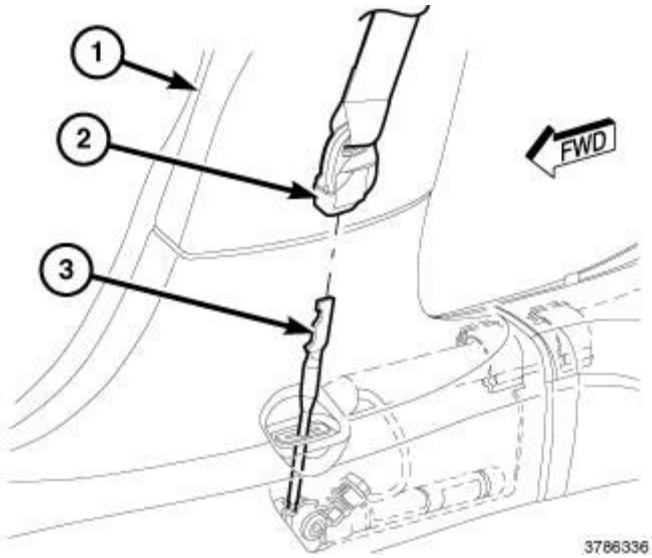

Fig. 62: B-Pillar, Front Seat Belt Anchor Tensioner Buckle & Front Seat Belt Anchor Latch Plate
Courtesy of CHRYSLER GROUP, LLC

5. Engage the front seat belt anchor latch plate (3) into the anchor buckle (2).
6. Do not reconnect the negative cable to the battery at this time. The Supplemental Restraint System (SRS) Verification Test procedure should be performed following service of any SRS component. Refer to **SUPPLEMENTAL RESTRAINT SYSTEM VERIFICATION TEST**.

FRONT SEAT

WARNING: **To avoid serious or fatal injury during and following any seat belt or child restraint anchor service, carefully inspect all seat belts, buckles, mounting hardware, retractors, tether straps, and anchors for proper installation, operation, or damage. Replace any belt that is cut, frayed, or torn. Straighten any belt that is twisted. Tighten any loose fasteners. Replace any belt that has a damaged or ineffective buckle or retractor. Replace any belt that has a bent or damaged latch plate or anchor plate. Replace any child restraint anchor or the unit to which the anchor is integral that has been bent or damaged. Never attempt to repair a seat belt or child restraint component. Always replace damaged or ineffective seat belt and child restraint components with the correct, new and unused replacement parts listed in the Chrysler Mopar® Parts Catalog.**

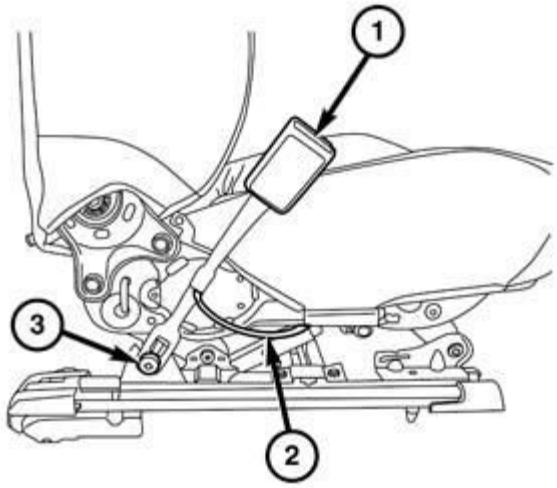

Fig. 63: Front Seat Belt Buckle, Seat Belt Buckle Switch Pigtail Wire Connector & Screw
Courtesy of CHRYSLER GROUP, LLC

1. Position the front seat belt buckle (1) lower anchor to the bracket near the back of the upper inboard seat track.
2. Reach under the seat cushion to access and reconnect the seat wire harness connector to the seat belt buckle switch pigtail wire (2) connector.
3. Install and tighten the screw (3) that secures the buckle lower anchor to the bracket. Tighten the screw to 45 N.m (33 ft. lbs.).
4. Reinstall the front seat into the vehicle. Refer to **SEAT, INSTALLATION** .
5. Reconnect the negative cable to the battery.

REAR CENTER

WARNING: **To avoid serious or fatal injury during and following any seat belt or child restraint anchor service, carefully inspect all seat belts, buckles, mounting hardware, retractors, tether straps, and anchors for proper installation, operation, or damage. Replace any belt that is cut, frayed, or torn. Straighten any belt that is twisted. Tighten any loose fasteners. Replace any belt that has a damaged or ineffective buckle or retractor. Replace any belt that has a bent or damaged latch plate or anchor plate. Replace any child restraint anchor or the unit to which the anchor is integral that has been bent or damaged. Never attempt to repair a seat belt or child restraint component. Always replace damaged or ineffective seat belt and child restraint components with the correct, new and unused replacement parts listed in the Chrysler Mopar® Parts Catalog.**

Failure to follow these instructions may result in possible serious or fatal injury.

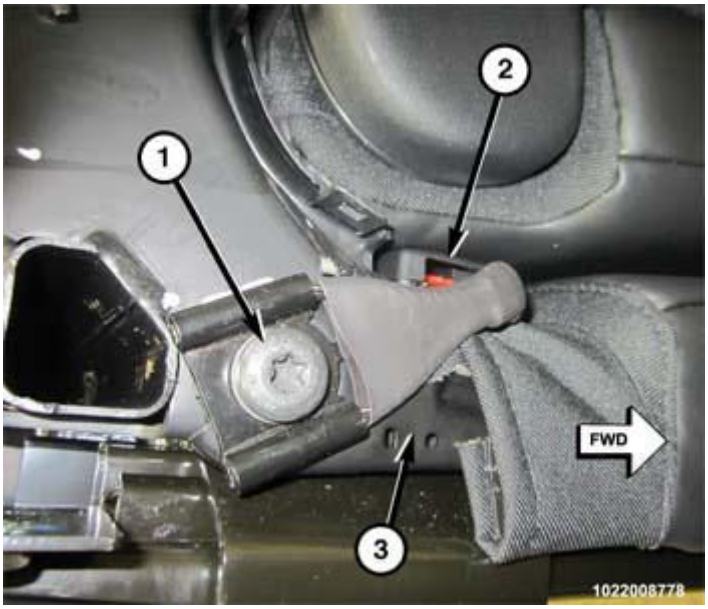

Fig. 64: Center Seat Belt Buckle And Anchor
Courtesy of CHRYSLER GROUP, LLC

1. Position the rear center seat belt buckle (2) and anchor plate to the left (60 percent) rear seat.
2. Working from behind the rear seats, install and tighten the screw (1) that secures the lower anchor for the rear center seat belt buckle to the inboard side of the left (60 percent) rear seat cushion frame (3). Tighten the screw to 55 N.m (41 ft. lbs.).
3. Still working from behind the rear seats, reinstall the trim cover onto the inboard hinge bracket of the left (60 percent) rear seat.
4. Adjust the left (60 percent) rear seat and right (40 percent) rear seat to their original positions.

REAR LEFT

WARNING: **To avoid serious or fatal injury during and following any seat belt or child restraint anchor service, carefully inspect all seat belts, buckles, mounting hardware, retractors, tether straps, and anchors for proper installation, operation, or damage. Replace any belt that is cut, frayed, or torn. Straighten any belt that is twisted. Tighten any loose fasteners. Replace any belt that has a damaged or ineffective buckle or retractor. Replace any belt that has a bent or damaged latch plate or anchor plate. Replace any child restraint anchor or the unit to which the anchor is integral that has been bent or damaged. Never attempt to repair a seat belt or child restraint component. Always replace damaged or ineffective seat belt and child restraint components with the correct, new and unused replacement parts listed in the Chrysler Mopar® Parts Catalog. Failure to follow these instructions may result in possible serious or fatal**

injury.

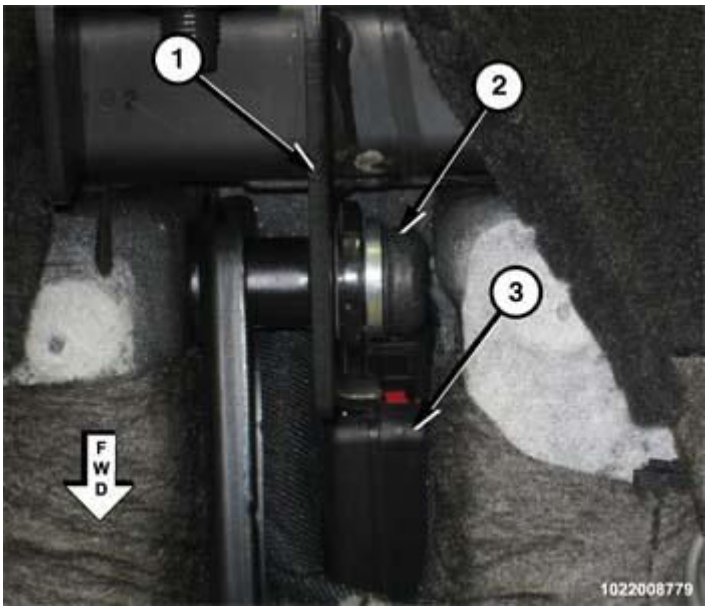

Fig. 65: Rear Left Seat Belt Buckle And Anchor Plate
Courtesy of CHRYSLER GROUP, LLC

1. Working beneath the rear of the left (60 percent) rear seat cushion, position the rear left seat belt buckle (3) to the rear seat cushion frame (1).
2. Install and tighten the screw (2) that secures the anchor plate of the rear left seat belt buckle to the rear seat cushion frame. Tighten the screw to 55 N.m (41 ft. lbs.).
3. Reinstall the left (60 percent) rear seat into the vehicle. Refer to **SEAT, REAR, INSTALLATION** .

REAR RIGHT

WARNING: **To avoid serious or fatal injury during and following any seat belt or child restraint anchor service, carefully inspect all seat belts, buckles, mounting hardware, retractors, tether straps, and anchors for proper installation, operation, or damage. Replace any belt that is cut, frayed, or torn. Straighten any belt that is twisted. Tighten any loose fasteners. Replace any belt that has a damaged or ineffective buckle or retractor. Replace any belt that has a bent or damaged latch plate or anchor plate. Replace any child restraint anchor or the unit to which the anchor is integral that has been bent or damaged. Never attempt to repair a seat belt or child restraint component. Always replace damaged or ineffective seat belt and child restraint components with the correct, new and unused replacement parts listed in the Chrysler Mopar® Parts Catalog. Failure to follow these instructions may result in possible serious or fatal injury.**

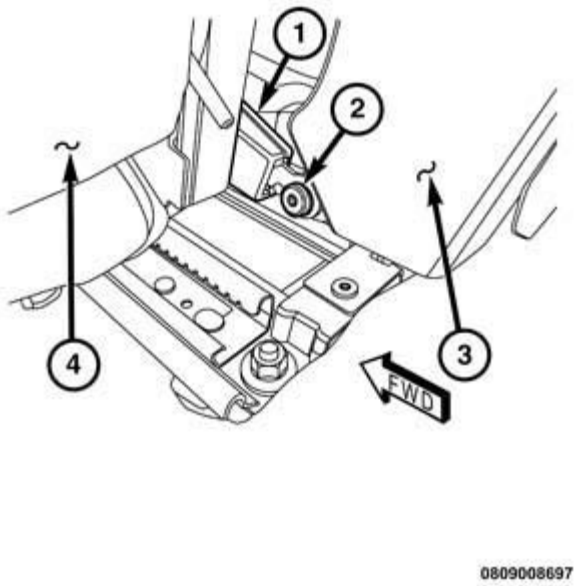

Fig. 66: Right Rear Seat Belt Buckle Ancchor
Courtesy of CHRYSLER GROUP, LLC

1. Working from behind the rear seats, position the rear right seat belt buckle (1) between the rear seat cushions as a unit.
2. Position the lower anchor of the seat belt buckle to the bracket at the back of the right rear seat upper inner adjuster track.
3. Install and tighten the screw (2) that secures the buckle anchor to the bracket at the back of the right rear seat upper inner adjuster track. Tighten the screw to 55 N.m (41 ft. lbs.).
4. Adjust the left (60 percent) rear seat (4) and right (40 percent) rear seat (3) to their original positions.

CLOCKSPRING

DESCRIPTION

DESCRIPTION

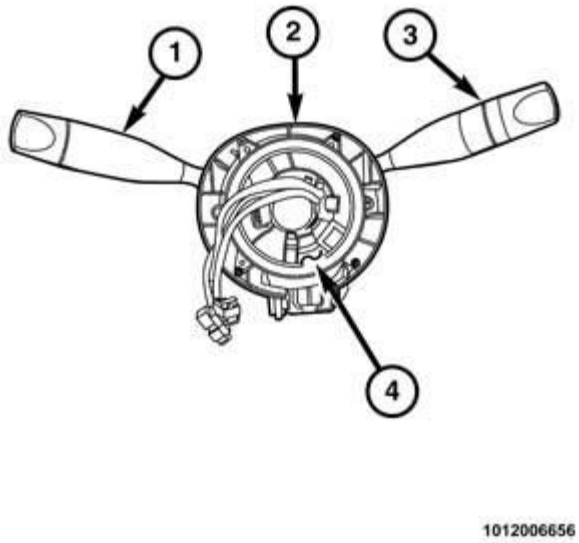

Fig. 67: Steering Column Control Module (SCCM) & Clockspring
Courtesy of CHRYSLER GROUP, LLC

The clockspring (4) for this vehicle is secured to the Steering Column Control Module (SCCM) mounting housing (2) near the top of the steering column below the steering wheel. The clockspring is contained within a flat, molded plastic case that includes four integral mounting tabs that secure the unit with screws to mounts integral to the outer circumference of the SCCM mounting housing. The clockspring also includes an integral turn signal cancel cam that is serviced as a unit with the clockspring. The SCCM mounting housing also supports the left (1) and right (3) multifunction switches and the Steering Control Module (SCM), which is internal to the mounting housing. The multifunction switches and the SCM are serviced only as a unit with the SCCM mounting housing, while the clockspring can be separated from and is serviced separately from the SCCM mounting housing.

Within the plastic clockspring case is a spool-like molded clear plastic rotor with an exposed hub. The upper surface of the rotor hub has a large center hole, three short pigtail wires with connectors and a connector receptacle that face toward the steering wheel. The inner surface of the clockspring rotor hub has keyway features that are engaged by lug features on the outer circumference of the steering wheel hub. These interlocking features allow the steering wheel to drive the clockspring and also unlock the clockspring rotor when the steering wheel has been properly installed.

Wound around the rotor spool within the case are long ribbon-like tapes that consist of several thin copper wire leads sandwiched between two thin plastic membranes. The outer end of the tapes terminate at the terminal pins that are housed within a connector receptacle integral to the SCCM mounting housing and face the instrument panel, while the inner ends of the tapes terminate at the pigtail wires and connector receptacle on the hub of the clockspring rotor that face the steering wheel. The outer surface of the rotor spool hub within the clockspring case also has the integral lobes of the turn signal cancel cam.

The clockspring also has an interconnect with terminal pins that engage a mating interconnect receptacle integral to the SCCM mounting housing. This interconnect features several circuits which pass through the clockspring to connect the SCM to the vehicle electrical system.

The clear plastic clockspring rotor has an outer band that has a translucent or frosted appearance except for a small, clear inspection window area. The clockspring tape has several black squares that are only visible through the clear inspection window when the clockspring is properly centered. If these squares are not visible through the inspection window, clockspring centering has been compromised and the entire clockspring must be replaced with a new unit.

The service replacement clockspring is shipped with the clockspring pre-centered and with a yellow molded plastic locking tab installed. The locking tab secures the centered clockspring rotor to the clockspring case during shipment and handling, but must be removed after the clockspring is installed on the steering column and before the steering wheel can be installed. The clockspring cannot be repaired. If the clockspring is ineffective, damaged, if clockspring centering is compromised or if the Driver AirBag (DAB) has been deployed the entire clockspring unit must be replaced. Refer to **CLOCKSPRING, STANDARD PROCEDURE**.

OPERATION

OPERATION

The clockspring is a mechanical electrical circuit component that is used to provide continuous electrical continuity between the fixed instrument panel wire harness and certain electrical components mounted on or in the rotating steering wheel. On this vehicle the rotating electrical components include the Driver AirBag (DAB), the horn switch and, if the vehicle is so equipped, the odometer switch pod or the Electronic Vehicle Information Center (EVIC) switch pod, the Local Interface Network (LIN) module, the speed control switch pod and the remote radio switches. The clockspring is positioned and secured near the top of the steering column. The fixed connector receptacle on the back of the fixed Steering Column Control Module (SCCM) mounting housing connects the clockspring to the vehicle electrical system through a take out with connector from the instrument panel wire harness.

The turn signal cancel cam is integral to the rim of the clockspring rotor hub within the SCCM mounting housing so it also moves with the rotation of the steering wheel. Three short, sleeved pigtail wires on the upper surface of the clockspring rotor connect the clockspring to the DAB, while a steering wheel wire harness connected to the connector receptacle on the upper surface of the clockspring rotor completes circuits to the horn switch and, if the vehicle is so equipped, the odometer switch pod or the EVIC switch pod, the LIN module, the speed control switch pod and the remote radio switches.

Like the clockspring in a timepiece, the clockspring tape has travel limits and can be damaged by being wound too tightly during full stop-to-stop steering wheel rotation. To prevent this from occurring, the clockspring is centered when it is installed on the steering column. Centering the clockspring indexes the clockspring tape to the movable steering components so that the tape can operate within its designed travel limits.

However, if the steering shaft is disconnected from the steering gear the clockspring rotor spool can change position relative to other movable steering components. Clockspring centering must be confirmed by viewing the inspection window on the clockspring rotor. If the black squares of the clockspring tape are not visible in

the inspection window, clockspring centering has been compromised and the entire clockspring must be replaced with a new unit.

Service replacement clocksprings are shipped pre-centered and with a yellow plastic locking tab installed. This locking tab should not be removed until the clockspring has been properly installed on the steering column. If the locking tab is removed before the clockspring is installed on a steering column, clockspring centering must be confirmed by viewing the inspection window on the clockspring rotor. If the black squares of the clockspring tape are not visible in the inspection window, the clockspring must be replaced with a new unit.

The hard wired clockspring circuits may be diagnosed using conventional diagnostic tools and procedures. Refer to the appropriate wiring information. However, conventional diagnostic methods will not prove conclusive in the diagnosis of the electronic controls and communication between stationary electronic modules and devices in the vehicle and the rotating electronic modules and devices on or in the steering wheel. The most reliable, efficient and accurate means to diagnose the electronic controls and communication related to clockspring operation requires the use of a diagnostic scan tool and may also require the use of the SRS Load Tool special tool along with the appropriate Load Tool Jumpers and Adapters. Refer to the appropriate diagnostic information.

STANDARD PROCEDURE

STANDARD PROCEDURE - CLOCKSPRING CENTERING

WARNING: To avoid serious or fatal injury on vehicles equipped with airbags, disable the Supplemental Restraint System (SRS) before attempting any steering wheel, steering column, airbag, Occupant Classification System (OCS), seat belt tensioner, impact sensor or instrument panel component diagnosis or service. Disconnect and isolate the battery negative (ground) cable, then wait two minutes for the system capacitor to discharge before performing further diagnosis or service. This is the only sure way to disable the SRS. Failure to follow these instructions may result in accidental airbag deployment.

CAUTION: Always turn the steering wheel until the front wheels are in the straight-ahead position. Then, prior to disconnecting the steering column from the steering gear, lock the steering wheel to the steering column. If clockspring centering has been compromised for ANY reason, the entire Steering Column Control Module (SCCM) and clockspring unit MUST be replaced with a new unit.

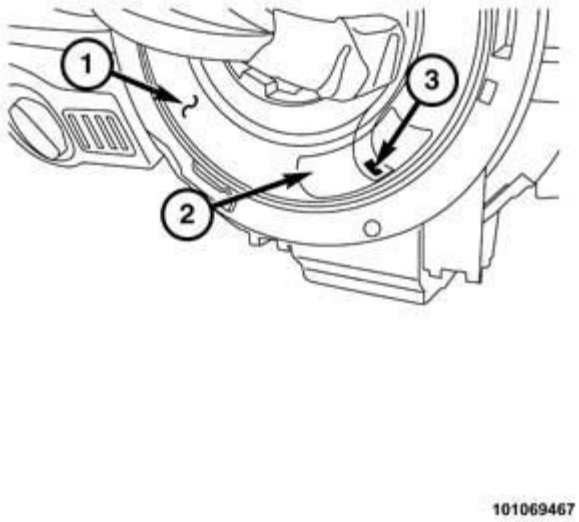

Fig. 68: Clockspring Rotor, Inspection Window & Black Squares
Courtesy of CHRYSLER GROUP, LLC

Like the clockspring in a timepiece, the clockspring tape has travel limits and can be damaged by being wound too tightly during full stop-to-stop steering wheel rotation. To prevent this from occurring, the clockspring is centered when it is installed on the steering column. Centering the clockspring indexes the clockspring tape to the movable steering components so that the tape can operate within its designed travel limits. However, if the steering shaft is disconnected from the steering gear, the clockspring rotor spool can change position relative to the fixed steering components.

Clockspring centering must always be confirmed by viewing the inspection window (2) on the clockspring rotor (1). If the black squares (3) on the clockspring tape are not visible through the inspection window, clockspring centering has been compromised and the clockspring must be replaced with a new unit. Refer to **CLOCKSPRING, REMOVAL**.

The service replacement clockspring is shipped pre-centered and with a yellow plastic locking tab installed. This locking tab should not be removed until the clockspring has been properly installed on the steering column. If the locking tab is removed before the clockspring is installed on a steering column, clockspring centering must be confirmed by viewing the black squares on the clockspring tape through the inspection window on the clockspring rotor. If the black squares of the clockspring tape are not visible through the inspection window, clockspring centering has been compromised and the clockspring must be replaced with a new unit. Refer to **CLOCKSPRING, INSTALLATION**.

REMOVAL

REMOVAL

WARNING: To avoid serious or fatal injury on vehicles equipped with airbags, disable the Supplemental Restraint System (SRS) before attempting any steering wheel, steering column, airbag, Occupant Classification System (OCS), seat belt tensioner, impact sensor or instrument panel component diagnosis or service. Disconnect and isolate the battery negative (ground) cable, then wait two minutes for the system capacitor to discharge before performing further diagnosis or service. This is the only sure way to disable the SRS. Failure to follow these instructions may result in accidental airbag deployment.

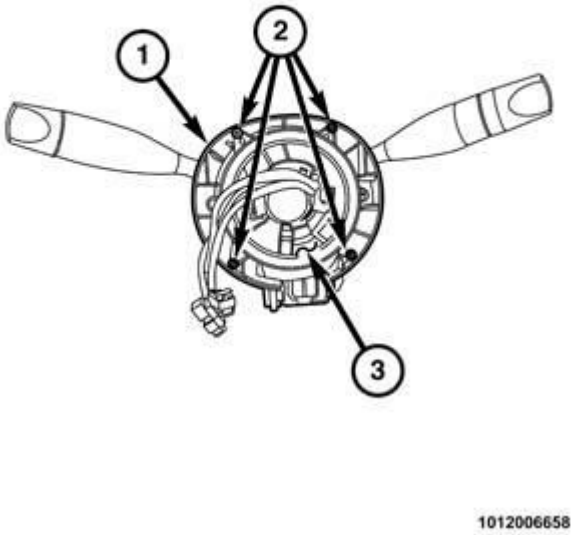

Fig. 69: Clockspring & Fasteners
Courtesy of CHRYSLER GROUP, LLC

NOTE: Before starting this procedure, be certain to turn the steering wheel until the front wheels are in the straight-ahead position and be certain that the entire steering system is locked or inhibited from rotation.

1. Place the front wheels in the straight ahead position.
2. Disconnect and isolate the negative cable from the battery.
3. Remove the Driver AirBag (DAB) from the steering wheel. Refer to **AIR BAG, DRIVER, REMOVAL**.
4. Disconnect the steering wheel wire harness connector from the upper clockspring connector receptacle.
5. Remove the steering wheel from the upper steering column shaft. Refer to **WHEEL, STEERING, REMOVAL** .
6. If the removed clockspring is to be reused, be certain that the clockspring rotor is secured to the clockspring case to maintain clockspring centering until the steering wheel is reinstalled on the steering

column. If clockspring centering is not maintained, the clockspring must be replaced with a new unit. Refer to **CLOCKSPRING, STANDARD PROCEDURE**.

7. Move the steering column to the fully lowered position and leave the tilt release lever in the released (down) position.
8. Remove the upper and lower shrouds from the steering column. Refer to **SHROUD, STEERING COLUMN, LOWER, REMOVAL** and **SHROUD, STEERING COLUMN, UPPER, REMOVAL** .
9. Disconnect the instrument panel wire harness connectors from the back of the Steering Column Control Module (SCCM) mounting housing (1).
10. Remove the four screws (2) that secure the clockspring to the outer circumference of the SCCM mounting housing.
11. Carefully pull the clockspring (3) away from the SCCM mounting housing far enough to disengage the interconnect terminal pins of the clockspring from the interconnect receptacle of the SCCM mounting housing.
12. Remove the clockspring from the steering column.

INSTALLATION

INSTALLATION

WARNING: To avoid serious or fatal injury on vehicles equipped with airbags, disable the Supplemental Restraint System (SRS) before attempting any steering wheel, steering column, airbag, Occupant Classification System (OCS), seat belt tensioner, impact sensor or instrument panel component diagnosis or service. Disconnect and isolate the battery negative (ground) cable, then wait two minutes for the system capacitor to discharge before performing further diagnosis or service. This is the only sure way to disable the SRS. Failure to follow these instructions may result in accidental airbag deployment.

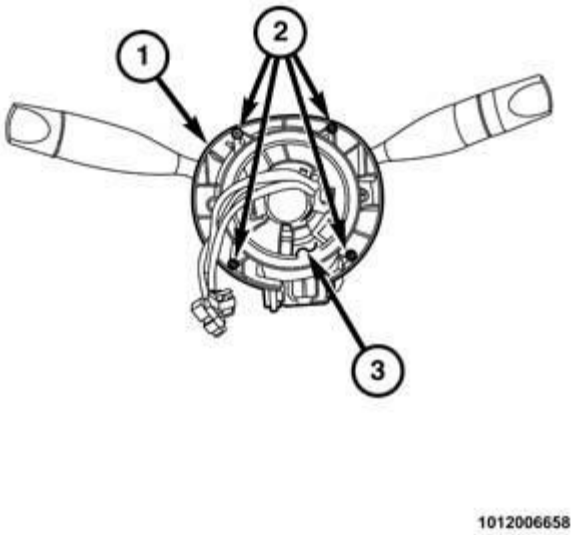

Fig. 70: Clockspring & Fasteners
Courtesy of CHRYSLER GROUP, LLC

NOTE: Before starting this procedure, be certain to turn the steering wheel until the front wheels are in the straight-ahead position and be certain that the entire steering system is locked or inhibited from rotation.

1. Carefully slide the clockspring (3) down over the steering column upper shaft far enough to align and engage the interconnect terminal pins of the clockspring with the interconnect receptacle of the Steering Column Control Module (SCCM) mounting housing (1).
2. Install and tighten the four screws (2) that secure the mounting tabs of the clockspring to the outer circumference of the SCCM mounting housing. Tighten the screws securely.
3. Reconnect the instrument panel wire harness connectors to the back of the SCCM mounting housing.
4. Reinstall the upper and lower shrouds onto the steering column. Refer to **SHROUD, STEERING COLUMN, LOWER, INSTALLATION** and **SHROUD, STEERING COLUMN, UPPER, INSTALLATION** .
5. Move the steering column back to the fully raised position and move the tilt release lever back to the locked (up) position.
6. If a new clockspring is being installed, remove (break off) the yellow locking tab that secures the clockspring rotor to the clockspring case.
7. Reinstall the steering wheel onto the upper steering column shaft. Be certain to align and insert the rotational lugs on the steering wheel hub into the slots in the hub of the clockspring. Also, the steering wheel fastener **MUST** be tightened to the proper torque specification to ensure proper clockspring operation. Refer to **WHEEL, STEERING, INSTALLATION** .
8. Reconnect the steering wheel wire harness connector to the upper clockspring connector receptacle.

9. Reinstall the Driver AirBag (DAB) onto the steering wheel. Refer to **AIR BAG, DRIVER, REMOVAL**.
10. Do not reconnect the negative cable to the battery at this time. The Supplemental Restraint System (SRS) Verification Test procedure should be performed following service of any SRS component. Refer to **SUPPLEMENTAL RESTRAINT SYSTEM VERIFICATION TEST**.

INDICATOR, SEAT BELT REMINDER (SBR)

DESCRIPTION

DESCRIPTION

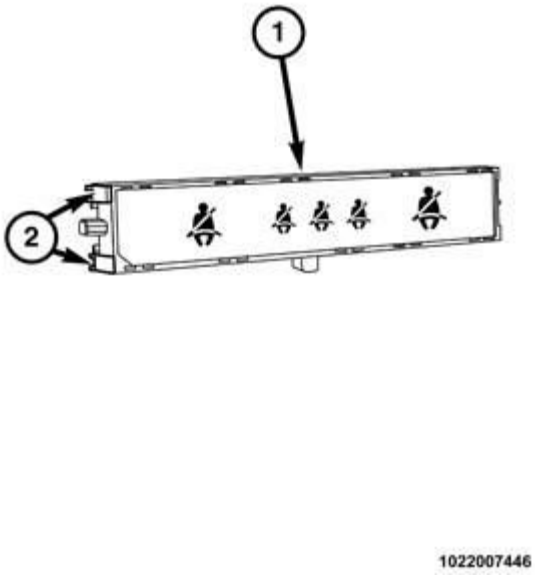

Fig. 71: Seat Belt Reminder (SBR) Indicator
Courtesy of CHRYSLER GROUP, LLC

Vehicles manufactured for certain export markets are equipped with the Seat Belt Reminder (SBR) indicator (1), which is located within the overhead console. The SBR indicator consists of Light Emitting Diode (LED) units, a Local Interface Network (LIN) data bus communication microchip, an opaque overlay and a translucent outer lens.

The molded plastic indicator housing is secured to the inner surface of the overhead console housing by two spring clips (2) on each end of the housing. An integral connector receptacle on the back of the housing connects the SBR to the vehicle electrical system through a dedicated take out and connector of the overhead console wire harness.

The opaque overlay of the SBR includes five stencil-like cutouts of the International Control and Display Symbol icon for **Seat Belt** within the SBR indicator. Three of the icons in the center of the display are smaller and represent the three rear seating positions, while the two larger icons border the smaller ones and represent

the two front seating positions. An LED unit behind each icon causes that icon to appear in green or red through the translucent lens when it is illuminated from behind by the LED.

Some settings for the SBR feature may be programmable using a diagnostic scan tool and the appropriate commands through the Instrument Cluster (IC) (also known as the Instrument Panel Cluster/IPC) Electronic Control Unit (ECU). The SBR indicator cannot be adjusted or repaired and, if ineffective or damaged the SBR indicator unit must be replaced.

OPERATION

OPERATION

The Seat Belt Reminder (SBR) indicator gives an indication to the vehicle operator and occupants of the status of the seat belt for each seating position of the vehicle. When a seat belt is buckled, the icon for that seating position is illuminated in green and when a seat belt is unbuckled, the icon for that seating position is illuminated in red. In the case of the larger icons representing the front seating positions, the indicator is illuminated in red only if the seat is occupied (the driver seat is assumed to be occupied while the status of the ignition is On) and the seat belt is unbuckled, while the smaller icons representing the rear seating positions are illuminated in red with the seat belt unbuckled regardless of whether that seating position is occupied.

The Occupant Restraint Controller (ORC) monitors the status of each of the seat belt switches and the Occupant Detection Sensor (ODS) for the passenger side front seat. The ORC then sends the appropriate seat belt switch status messages over the Controller Area Network (CAN) data bus to the Instrument Cluster (IC) (also known as the Instrument Panel Cluster/IPC). The IC uses internal hardware and programming to interpret the messages from the ORC and manage both the audible and visual features of the seat belt reminder function. The IC controls audible outputs related to the seat belt reminder through an on board transducer soldered onto its Printed Circuit Board (PCB). The IC is also a Local Interface Network (LIN) master node and uses a number of electronic command messages to control the visual output of the SBR indicator, which is a LIN slave node.

Besides the seat belt switch messages from the ORC, the IC also monitors vehicle speed and the Reverse (**R**) gear status in order to implement the various visual and audible outputs it controls. Besides the solid red or green indications, the SBR red indication may be flashed on and off, as dictated by the LIN bus message from the IC. All seat belt reminder audible and visual indications have several pre-programmed counters that will cause the indications to change or cease upon expiration of certain timed intervals or due to a change of an input status. Some of the feature programming is mandated by state, provincial, local and federal regulations.

The SBR indicator is completely controlled by the IC. The indicator receives a battery current input on a fused ignition (run) circuit and is connected to a path to ground at all times. Therefore, the SBR indicator will always be Off when the status of the ignition switch (also known as the Keyless Ignition Node/KIN or IGnition Node Module/IGNM) is anything except On.

The IC and the ORC will store Diagnostic Trouble Codes (DTC) for any malfunctions they detect. The hard wired circuits between the SBR indicator and the IC may be diagnosed using conventional diagnostic tools and procedures. Refer to the appropriate wiring information. However, conventional diagnostic methods will not prove conclusive in the diagnosis of the SBR indicator or the electronic controls and communication between other modules and devices that provide some features of the SBR. The most reliable, efficient and accurate means to diagnose the SBR indicator or the electronic controls and communication related to SBR indicator

operation requires the use of a diagnostic scan tool. Refer to the appropriate diagnostic information.

REMOVAL

REMOVAL

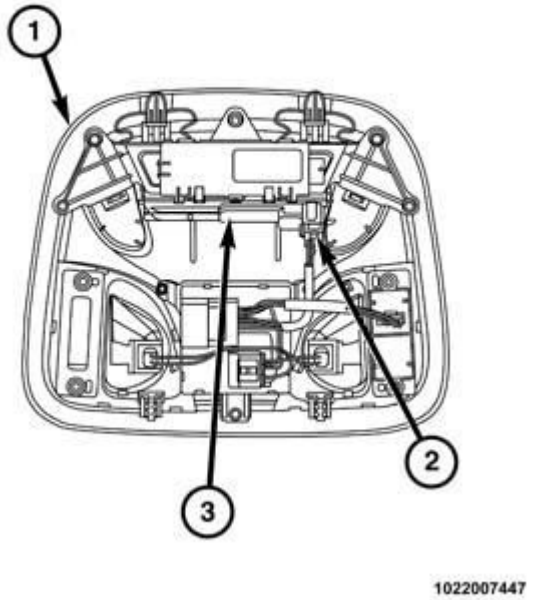

Fig. 72: Overhead Console & Seat Belt Reminder (SBR) Indicator Location
Courtesy of CHRYSLER GROUP, LLC

1. Disconnect and isolate the negative cable from the battery.
2. Remove the overhead console (1) from the headliner. Refer to **CONSOLE, OVERHEAD, FRONT, REMOVAL** .
3. If the vehicle is so equipped, remove the Ultrasonic and Antitilt Module (UAM) (also known as the Ultrasonic Alarm Module/UAM or the Intrusion Transceiver Module/ITM) from the overhead console. Refer to **MODULE, ULTRASONIC AND ANTI-TILT, REMOVAL** .
4. Disconnect the overhead console wire harness connector (2) from the Seat Belt Reminder (SBR) indicator (3) connector receptacle.
5. Using a trim stick or another suitable wide flat-bladed tool, carefully and evenly pry each outboard end of the SBR away from the overhead console housing until all four spring clips are free.
6. Remove the SBR indicator from the overhead console.

INSTALLATION

INSTALLATION

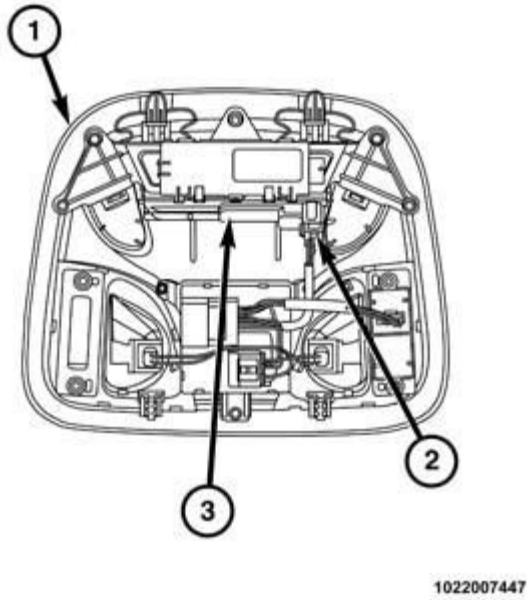

Fig. 73: Overhead Console & Seat Belt Reminder (SBR) Indicator Location
Courtesy of CHRYSLER GROUP, LLC

1. Position the Seat Belt Reminder (SBR) indicator (3) to the overhead console (1) housing.
2. Align the SBR indicator to the opening in the overhead console housing.
3. Press the outboard ends of the SBR indicator firmly and evenly into the overhead console housing until the four spring clips are fully seated.
4. Reconnect the overhead console wire harness connector (2) to the SBR indicator connector receptacle.
5. If the vehicle is so equipped, reinstall the Ultrasonic and Antitilt Module (UAM) (also known as the Ultrasonic Alarm Module/UAM or the Intrusion Transceiver Module/ITM) onto the overhead console. Refer to **MODULE, ULTRASONIC AND ANTI-TILT, INSTALLATION** .
6. Reinstall the overhead console onto the headliner. Refer to **CONSOLE, OVERHEAD, FRONT, INSTALLATION** .
7. Reconnect the negative cable to the battery.

MODULE, OCCUPANT CLASSIFICATION

DESCRIPTION

DESCRIPTION

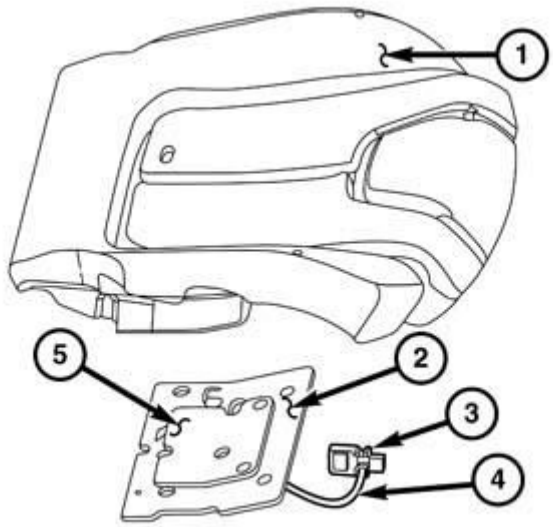

100868364

Fig. 74: Seat Cushion Foam, Insulator Pad, Occupant Classification Module, Pressure Hose & Bladder
Courtesy of CHRYSLER GROUP, LLC

In vehicles manufactured for domestic markets, the passenger side front seat incorporates the Occupant Classification System (OCS). The OCS consists of a single factory-calibrated unit, which includes the following components:

- **Electronic Pressure Sensor** - The electronic pressure sensor is integral and internal to the Occupant Classification Module (OCM). Only the hose nipple for the pressure hose is visible on the outside of the OCM housing. The remainder of the sensor and the sensor circuitry are concealed and protected within the molded black plastic OCM housing.
- **Occupant Classification Module** - The Occupant Classification Module (OCM) (3) is located beneath the front of the passenger front seat cushion. Concealed within a hollow in the center of the molded black plastic OCM housing is the electronic circuitry of the module. The module housing is sealed to enclose and protect the internal electronic circuitry. A connector receptacle integral to the front of the OCM housing contains terminal pins that connect the sensor to the vehicle electrical system through a dedicated take out and connector of the passenger front seat wire harness. A hose nipple formation is integral to the OCM housing.

  A slot integral to the top of the OCM housing snaps over a blade on a stamped metal bracket riveted to the inboard upper seat track on models with the base seat. On models with the optional storage seat, the OCM housing snaps over a blade on a molded plastic stanchion integral to the forward inboard underside of the seat cushion pan.

- **Pressure Hose** - Beneath the seat cushion a length of clear poly hose serves as the OCS pressure hose (4). The hose is securely clamped at one end to a hose nipple fitting that extends downward from the Seat Weight Sensor (SWS) (also known as the seat weight bladder), and at the opposite end to the hose nipple formation of the electronic pressure sensor integral to the outside of the OCM housing. The pressure sensor circuitry is internal and integral to the OCM. The pressure hose is filled with the same silicone fluid that fills the SWS.

- **Seat Cushion Foam** - The passenger front seat cushion foam (1) is an integral part of the factory-calibrated OCS. There are two unique foam configurations: one for the standard passenger front seat and another for the optional storage front seat. The storage front seat includes a small storage bin which is accessed by lifting the center insert of the seat cushion.
- **Seat Weight Sensor** - The Seat Weight Sensor (SWS) (also known as the seat weight bladder) is sandwiched between the seat cushion springs and the seat cushion foam. A heavy jute-like insulator pad (2) is installed between the lower surface of the bladder (5) and the seat cushion pan and springs. The bladder and pad are secured near the forward end to the seat cushion pan by two plastic push-in fasteners. There are two unique bladder configurations: one for the standard passenger front seat and another for the optional storage front seat. The storage front seat includes a small storage bin which is accessed by lifting the center insert of the seat cushion.

  The bladder consists of two sheets of an elastomeric material and a molded plastic hose nipple fitting. The two sheets of elastomeric material are sealed together around their perimeter and joined at numerous specific intervals within their field. The hose nipple fitting is sealed to a small round hole in the lower surface of the bladder and is pointed downward where it passes through a clearance hole in the insulator pad and extends to just below the seat cushion springs. The bladder is filled with a silicone fluid to become a pliable, quilted, resistive mat and is connected to a pressure hose that connects it to the electronic pressure sensor within the OCM unit.

All of the components that make up the OCS are a factory-calibrated and assembled unit. The OCS components cannot be adjusted or repaired and, if damaged or ineffective, they must be replaced as a calibrated unit. Any time the OCS is removed or replaced for any reason, the new OCS data must be configured within the Occupant Restraint Controller (ORC) using a diagnostic scan tool. Refer to the appropriate diagnostic information.

OPERATION

OPERATION

In vehicles manufactured for domestic markets, the Occupant Classification System (OCS) provides electronic message inputs to other electronic modules in the vehicle indicating whether the passenger front seat is occupied and the relative size classification of the seat occupant. The microcontroller within the Occupant Classification Module (OCM) contains the OCS logic and communication circuitry. The OCM uses On-Board Diagnostics (OBD) and can communicate with other electronic modules in the vehicle as well as with a diagnostic scan tool using the Controller Area Network (CAN) data bus. This method of communication is also used for OCS diagnosis and testing through the 16-way data link connector located on the driver side lower edge of the instrument panel.

The Seat Weight Sensor (SWS) (also known as the seat weight bladder) and the electronic pressure sensor integral and internal to the OCM allow the OCS logic circuits to sense the relative weight of a load applied to the passenger front seat cushion. When a load is applied to the seat cushion, silicone fluid within the bladder becomes pressurized. These changes in bladder fluid pressure are measured by the electronic pressure sensor circuitry through the OCS pressure hose. As the pressure within the bladder changes, the electronic pressure sensor input to the OCM microcontroller also changes. This electronic pressure sensor input allows the OCM to monitor the passenger front seat cushion by providing a weight-sensing reference to the relative load on the seat cushion.

Pre-programmed decision algorithms and OCS calibration allow the OCM microcontroller to determine the appropriate occupant classification based upon the seat cushion load as signaled by the pressure sensor. The OCM then sends the proper electronic **occupant classification status** messages over the CAN data bus to the Occupant Restraint Controller (ORC) and the ORC controls the deployment circuits for the passenger front supplemental restraints accordingly.

The OCM continuously monitors all of the OCS electrical circuits and components to determine the system readiness. If the OCM detects a monitored system fault, it sets an active and stored Diagnostic Trouble Code (DTC) and sends the appropriate electronic messages to the Occupant Restraint Controller (ORC) over the CAN data bus. Then the ORC sets a DTC and sends electronic messages to the Instrument Cluster (IC) (also known as the Instrument Panel Cluster/IPC) to control airbag indicator operation.

The OCM receives battery current on a fused ignition output (run-start) circuit through a fuse in the Power Distribution Center (PDC). The OCM circuitry has a path to ground at all times through a ground circuit and take out of the instrument panel wire harness, which it shares with the ORC. This take out is secured to the body sheet metal. These connections allow the OCM to be operational whenever the ignition switch status is ON or START.

The Body Control Module (BCM) stores and compares vehicle configuration data with the OCM as well as with other Electronic Control Units (ECU) in the vehicle. This process is referred to as PRogramming Of Configuration of Systems Integrated (PROCSI) (also known as PROXI). If a configuration mismatch is detected, the BCM sets a DTC. A configuration mismatch DTC will require the performance of a Restore BCM PROXI Configuration routine, or a PROXI Configuration Alignment routine using a diagnostic scan tool.

The hard wired inputs and outputs for the OCM may be diagnosed using conventional diagnostic tools and procedures. Refer to the appropriate wiring information. However, conventional diagnostic methods will not prove conclusive in the diagnosis of the OCM or the electronic controls and communication between other modules and devices that provide some features of the OCS. The most reliable, efficient and accurate means to diagnose the OCM or the electronic controls and communication related to OCS operation requires the use of a diagnostic scan tool. Refer to the appropriate diagnostic information.

REMOVAL

REMOVAL

WARNING: **To avoid serious or fatal injury on vehicles equipped with airbags, disable the Supplemental Restraint System (SRS) before attempting any steering wheel, steering column, airbag, Occupant Classification System (OCS), seat belt tensioner, impact sensor or instrument panel component diagnosis or service. Disconnect and isolate the battery negative (ground) cable, then wait two minutes for the system capacitor to discharge before performing further diagnosis or service. This is the only sure way to disable the SRS. Failure to follow these instructions may result in accidental airbag deployment.**

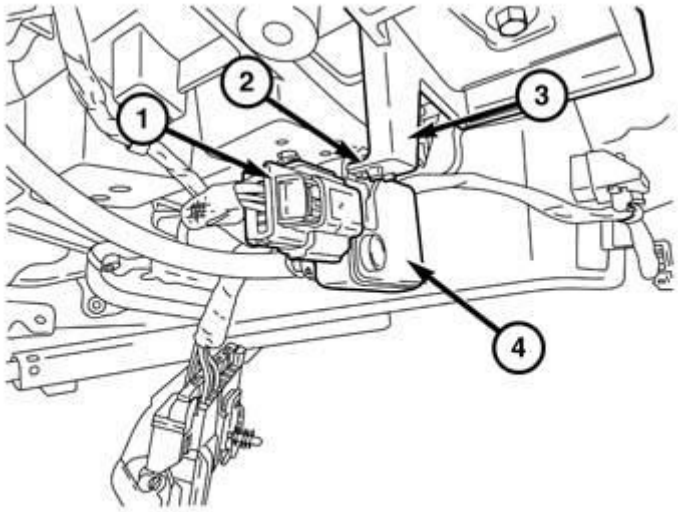

100868365

Fig. 75: Harness Connector, Blade, Stanchion & Occupant Classification Module
Courtesy of CHRYSLER GROUP, LLC

NOTE: **The Occupant Classification System (OCS) is used only in the passenger side front seat of vehicles manufactured for domestic markets. Vehicles manufactured for export markets use the Occupant Detection Sensor (ODS) instead of the OCS on the passenger side front seat.**

NOTE: **All of the components of the Occupant Classification System (OCS) including the Occupant Classification Module (OCM), the Seat Weight Sensor (SWS) (also known as the seat weight bladder), the jute-like SWS pad, the passenger seat cushion foam, the electronic pressure sensor and the OCS pressure hose are serviced only as a factory-calibrated and assembled unit. Any time any one of these components requires replacement for any reason, the entire calibrated OCS must be replaced and re-zeroed in the Occupant Restraint Controller (ORC) using a diagnostic scan tool. Refer to the appropriate diagnostic information.**

1. Disconnect and isolate the negative cable from the battery. Wait two minutes for the system capacitor to discharge before further service.
2. Remove the passenger front seat from the vehicle. Refer to **SEAT, REMOVAL** .
3. Disconnect the seat wire harness connector (1) from the Occupant Classification Module (OCM) (4) beneath the inboard front corner of the seat cushion pan.
4. Using a small flat-bladed screwdriver or a small pick tool, carefully pry the latch tab integral to the OCM mount to release it from the blade (2) of the mounting bracket (base seat) or stanchion (3) (storage seat) beneath the inboard front corner of the seat cushion.
5. Remove the trim cover from the passenger front seat cushion. Refer to **COVER, SEAT CUSHION, REMOVAL** .

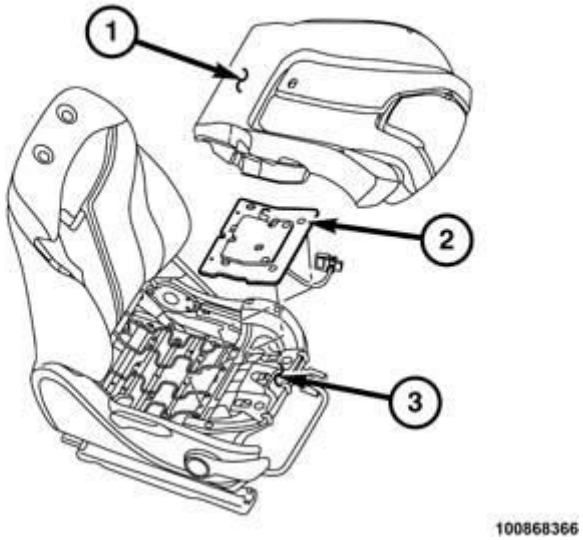

Fig. 76: Seat Cushion Foam, Seat Weight Sensor Pad & Seat Frame
Courtesy of CHRYSLER GROUP, LLC

6. Remove the foam (1) from the seat cushion.
7. Remove the two push-in plastic fasteners that secure the Seat Weight Sensor (SWS) (also known as the seat weight bladder) and the jute-like SWS pad (2) to the seat cushion pan (3).
8. Remove the SWS, the pad, the pressure hose and the OCM with integral electronic pressure sensor from above the front seat cushion as a unit.
9. If any of the OCS components requires replacement, discard the entire OCS unit. **Replace it with the entire contents of the factory-calibrated service replacement package, which includes an OCM with integral and internal electronic pressure sensor, a pressure hose, the SWS, the jute-like SWS pad and the seat cushion foam.**

INSTALLATION

INSTALLATION

WARNING: To avoid serious or fatal injury on vehicles equipped with airbags, disable the Supplemental Restraint System (SRS) before attempting any steering wheel, steering column, airbag, Occupant Classification System (OCS), seat belt tensioner, impact sensor or instrument panel component diagnosis or service. Disconnect and isolate the battery negative (ground) cable, then wait two minutes for the system capacitor to discharge before performing further diagnosis or service. This is the only sure way to disable the SRS. Failure to follow these instructions may result in accidental airbag deployment.

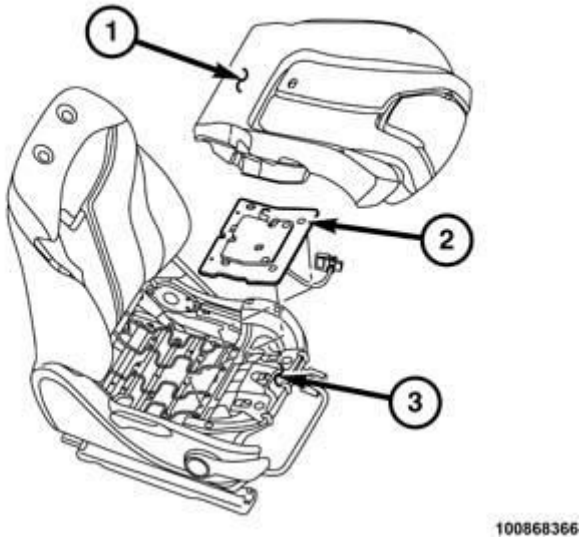

Fig. 77: Seat Cushion Foam, Seat Weight Sensor Pad & Seat Frame
Courtesy of CHRYSLER GROUP, LLC

NOTE: **The Occupant Classification System (OCS) is used only in the passenger side front seat of vehicles manufactured for domestic markets. Vehicles manufactured for export markets use the Occupant Detection Sensor (ODS) instead of the OCS on the passenger side front seat.**

NOTE: **All of the components of the Occupant Classification System (OCS) including the Occupant Classification Module (OCM), the Seat Weight Sensor (SWS) (also known as the seat weight bladder), the jute-like SWS pad, the passenger seat cushion foam, the electronic pressure sensor and the OCS pressure hose are serviced only as a factory-calibrated and assembled unit. Any time any one of these components requires replacement for any reason, discard all of the removed OCS components including the OCM with integral and internal electronic pressure sensor, the pressure hose, the SWS, the jute-like SWS pad and the seat cushion foam and replace them with the entire contents of the factory-calibrated OCS service replacement package.**

1. Position the Seat Weight Sensor (SWS) (also known as the seat weight bladder), the jute-like SWS pad (2), the Occupant Classification System (OCS) pressure hose and the Occupant Classification Module (OCM) with integral electronic pressure sensor to the top of the front seat cushion as a unit. Lift the back of the SWS and pad far enough to access and insert the OCM and pressure hose between the seat cushion springs to the underside of the seat cushion. Be certain the pressure hose is not pinched or kinked.
2. Install the two push-in plastic fasteners that secure the SWS and jute-like pad to the seat cushion pan (3).
3. Position the foam (1) onto the seat cushion.
4. Reinstall the trim cover onto the passenger front seat cushion. Refer to **COVER, SEAT CUSHION, INSTALLATION** .

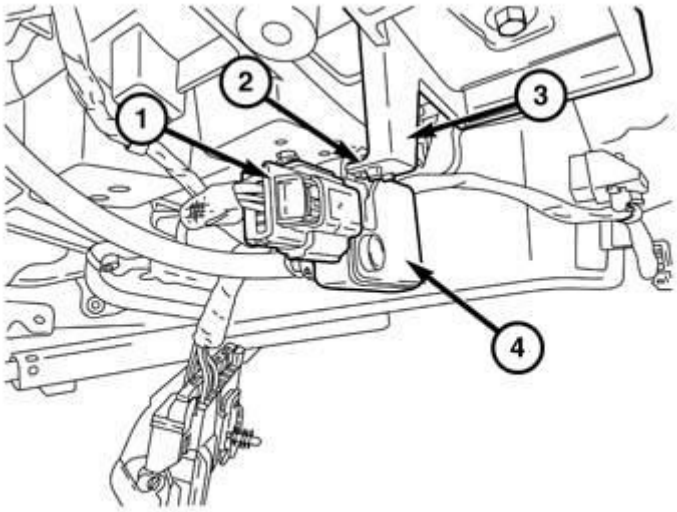

100868365

Fig. 78: Harness Connector, Blade, Stanchion & Occupant Classification Module
Courtesy of CHRYSLER GROUP, LLC

5. From the underside of the seat cushion, snap the OCM (4) onto the blade (2) of the mounting bracket (base seat) or stanchion (3) (storage seat) beneath the inboard front corner of the seat cushion. Route the pressure hose away from sharp or moving objects and be certain the hose is not kinked.
6. Reconnect the seat wire harness connector (1) to the OCM beneath the inboard front corner of the seat cushion.
7. Reinstall the passenger front seat into the vehicle. Refer to **SEAT, INSTALLATION** .
8. If this Electronic Control Unit (ECU) is being replaced with a new unit, a diagnostic scan tool MUST be used to align the PROXI configuration data into the new ECU. Follow the routine outlined in the diagnostic scan tool for PROXI Configuration Alignment under Body Control Module (BCM) Miscellaneous Functions menu.
9. Do not reconnect the negative cable to the battery at this time. The Supplemental Restraint System (SRS) Verification Test procedure should be performed following service of any SRS component. Refer to **SUPPLEMENTAL RESTRAINT SYSTEM VERIFICATION TEST**.
10. Following successful completion of the SRS Verification Test procedure, perform the OCM System Verification Test procedure found in the diagnostic scan tool under Miscellaneous Functions. Refer to the appropriate diagnostic procedures.

MODULE, OCCUPANT RESTRAINT CONTROLLER

DESCRIPTION

DESCRIPTION

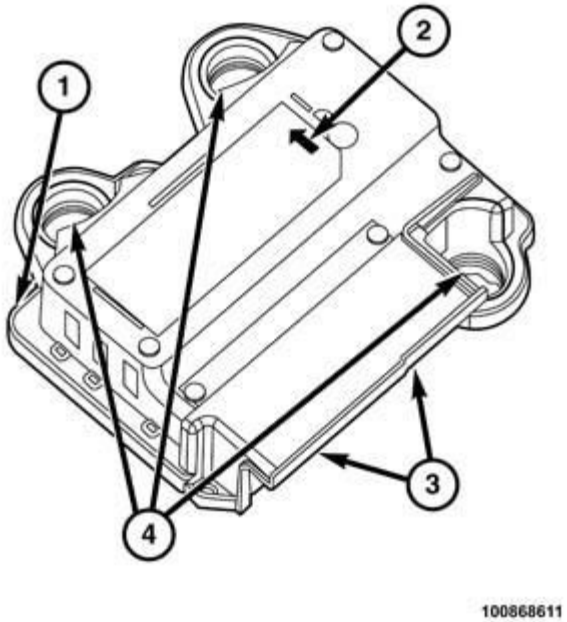

Fig. 79: Occupant Restraint Controller, Printed Arrow, Connector Receptacles & Mounting Flanges
Courtesy of CHRYSLER GROUP, LLC

The Occupant Restraint Controller (ORC) (1) is secured by three nuts to three studs on the top of the floor panel transmission tunnel near the dash panel and beneath the instrument panel forward of the center stack in the passenger compartment of the vehicle. Concealed within a hollow in the center of the molded black plastic ORC housing is the electronic circuitry of the ORC which includes a microcontroller, an electronic impact sensor, an electronic safing sensor, a rollover sensor, a integral Electronic Stability Control (ESC) dynamics sensor (also known as the yaw sensor or sensor cluster) and an energy storage capacitor. A stamped metal cover plate is secured to the bottom of the ORC housing to enclose and protect the internal electronic circuitry and components.

An arrow (2) printed on the label on the top of the ORC housing provides a visual verification of the proper orientation of the unit, and should always be pointed toward the front of the vehicle. The ORC housing has integral mounting flanges (4) on the right and left front and the right rear corners. Two molded plastic electrical connector receptacles (3) exit the rearward facing side of the ORC housing. These receptacles connect the ORC to the vehicle electrical system through two dedicated take outs and connectors, one from the instrument panel wire harness and the second from the body wire harness.

The impact sensor and safing sensor internal to the ORC are calibrated for the specific vehicle, and are only serviced as a unit with the ORC. In addition, there are unique versions of the ORC for vehicles with or without certain optional Supplemental Restraint System (SRS) components. The ORC cannot be repaired or adjusted and, if damaged or ineffective, it must be replaced.

OPERATION

OPERATION

The microcontroller within the Occupant Restraint Controller (ORC) contains the Supplemental Restraint System (SRS) logic circuits and controls all of the SRS components. The ORC uses On-Board Diagnostics (OBD) and can communicate with other electronic modules in the vehicle as well as with the diagnostic scan tool using the Controller Area Network (CAN) data bus. This method of communication is used for control of the airbag and seat belt indicators in the Instrument Cluster (IC) (also known as the Instrument Panel Cluster/IPC) and for SRS diagnosis and testing through the 16-way data link connector located on the driver side lower edge of the instrument panel.

The ORC microcontroller continuously monitors all of the SRS electrical circuits to determine the system readiness. If the ORC detects a monitored system fault, it sets an active and stored Diagnostic Trouble Code (DTC) and sends electronic messages to the IC over the CAN data bus to turn On the airbag indicator. An active fault only remains for the duration of the fault, or in some cases for the duration of the current ignition cycle, while a stored fault causes a DTC to be stored in memory by the ORC. In the case of some faults which have not recurred for a number of ignition cycles, the ORC will automatically erase the stored DTC. For other internal faults, the stored DTC is latched forever.

The ORC receives battery current through two circuits; a fused ignition output (run) circuit through a fuse in the Power Distribution Center (PDC) and a fused ignition output (run-start) circuit through a second fuse in the PDC. The ORC receives ground through a ground circuit and take out of the instrument panel wire harness that is secured by a ground screw to the body sheet metal. These connections allow the ORC to be operational whenever the status of the ignition switch (also known as the Keyless Ignition Node/KIN or the IGnition Node Module/IGNM) is Start or On.

The ORC also contains an energy-storage capacitor. When the ignition switch status is Start or On, this capacitor is continually being charged with enough electrical energy to deploy the SRS components for up to one second following a battery disconnect or failure. The purpose of the capacitor is to provide backup SRS protection in case there is a loss of battery current supply to the ORC during an impact event.

Various sensors within the ORC are continuously monitored by the ORC logic. These internal sensors, along with several external impact sensor inputs allow the ORC to determine both the severity of an impact and to verify the necessity for deployment of any SRS components. Two remote front impact sensors are located on the back of the right and left sides of the Front End Module (FEM) carrier inboard of the headlamps near the front of the vehicle. The electronic impact sensors are accelerometers that sense the rate of vehicle deceleration, which provides verification of the direction and severity of an impact.

The ORC also monitors inputs from an internal rollover sensor, the seat track position sensors, the front seat belt switches, the rear seat belt switches (export markets only) and six additional remote side impact sensors located on the left and right front door hardware module carriers, on the right and left lower B-pillars and on the right and left lower C-pillars to control deployment of the side curtain airbag units, the front seat airbags (also known as pelvic and thoracic airbags) and, if equipped, the rear seat airbags. The ORC also uses electronic message inputs from the Occupant Classification Module (OCM) beneath the passenger front seat cushion pan and will send electronic messages to the IC to illuminate the seat belt indicator when appropriate.

The impact sensors within the ORC are electronic accelerometer sensors that provide an additional logic input to the ORC microcontroller. These sensors are used to verify the need for a SRS component deployment by detecting impact energy of a lesser magnitude than that of the primary electronic impact sensors, and must exceed a safing threshold in order for the SRS components to deploy. A separate impact sensor within the ORC

provides confirmation to the ORC microcontroller of side impact forces. The ORC uses this input to verify the need for side curtain airbags or seat airbag deployment. This separate sensor is a bi-directional unit that detects impact forces from either side of the vehicle.

In most domestic markets this vehicle is also equipped with the Occupant Classification System (OCS). The ORC communicates with the Occupant Classification Module (OCM) over the CAN data bus. The ORC uses inputs from the OCM as an additional logic input for determining the appropriate level of airbag deployment force required for the front passenger seating position. The OCM notifies the ORC when it has detected a monitored system fault and stored a DTC in its memory for any ineffective OCS component or circuit, then the ORC sets a DTC and will send electronic messages to the IC to illuminate the airbag indicator as appropriate.

Pre-programmed decision algorithms in the ORC microcontroller determine when the deceleration rate as signaled by the impact sensors indicate an impact that is severe enough to require SRS protection. Based upon the severity of the monitored impact as well as the seat track position sensor and the passenger front seat OCS inputs, the ORC logic determines the level of front airbag deployment force required for each front seating position. When the programmed conditions are met, the ORC sends the proper electrical signals to deploy the dual multistage front airbags at the programmed force levels, the knee airbags, the front seat belt tensioners, either side curtain airbag and either right or left, front and rear seat airbag units.

The ORC also contains a integral Electronic Stability Control (ESC) dynamics sensor (also known as the yaw sensor or the sensor cluster). The ORC microcontroller energizes the ESC dynamics sensor, then relays the sensor outputs to the Antilock Brake Module (ABM) over the CAN data bus. Refer to **MODULE, ANTI-LOCK BRAKE SYSTEM, OPERATION** .

The Body Control Module (BCM) stores and compares vehicle configuration data with the ORC as well as with other Electronic Control Units (ECU) in the vehicle. This process is referred to as PRogramming Of Configuration of Systems Integrated (PROCSI) (also known as PROXI). If a configuration mismatch is detected, the BCM sets a DTC. A configuration mismatch DTC will require the performance of a Restore BCM PROXI Configuration routine, or a PROXI Configuration Alignment routine using a diagnostic scan tool.

The hard wired inputs and outputs for the ORC may be diagnosed using conventional diagnostic tools and procedures. Refer to the appropriate wiring information. However, conventional diagnostic methods will not prove conclusive in the diagnosis of the ORC or the electronic controls and communication between other modules and devices that provide some features of the SRS. The most reliable, efficient and accurate means to diagnose the ORC or the electronic controls and communication related to SRS operation requires the use of a diagnostic scan tool and may also require the use of the SRS Load Tool special tool along with the appropriate Load Tool Jumpers and Adapters. Refer to the appropriate diagnostic information.

REMOVAL

REMOVAL

WARNING: To avoid serious or fatal injury on vehicles equipped with side curtain airbags, disable the Supplemental Restraint System (SRS) before attempting any Occupant Restraint Controller (ORC) diagnosis or service. The ORC may contain a rollover sensor, which enables the system to deploy the side SRS components in the event of a vehicle rollover event.

If an ORC containing a rollover sensor is accidentally rolled during service while still connected to battery power, the side SRS components will deploy. Disconnect and isolate the battery negative (ground) cable, then wait two minutes for the system capacitor to discharge before performing further diagnosis or service. This is the only sure way to disable the SRS. Failure to take the proper precautions could result in accidental airbag deployment.

WARNING: **To avoid serious or fatal injury on vehicles equipped with airbags, disable the Supplemental Restraint System (SRS) before attempting any steering wheel, steering column, airbag, Occupant Classification System (OCS), seat belt tensioner, impact sensor or instrument panel component diagnosis or service. Disconnect and isolate the battery negative (ground) cable, then wait two minutes for the system capacitor to discharge before performing further diagnosis or service. This is the only sure way to disable the SRS. Failure to follow these instructions may result in accidental airbag deployment.**

WARNING: **To avoid serious or fatal injury, never strike or drop the Occupant Restraint Controller (ORC), as it can damage the impact sensor or affect its calibration. The ORC contains the impact sensor, which enables the system to deploy the Supplemental Restraint System (SRS) components. If an ORC is accidentally dropped during service, the module must be scrapped and replaced with a new unit. Failure to observe this warning could result in accidental, incomplete, or improper SRS component deployment.**

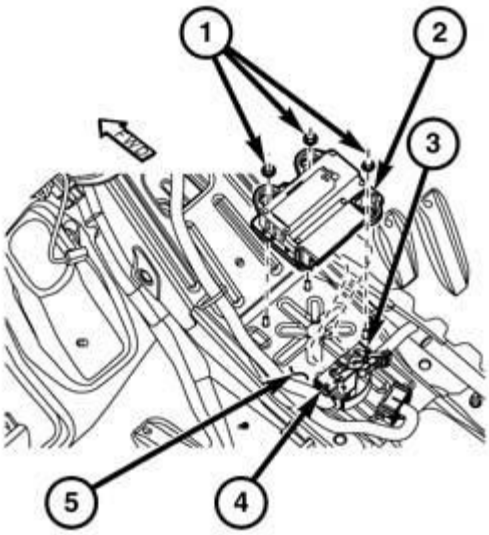

100868612

Fig. 80: Nuts, Occupant Restraint Controller, Harness Connectors & Transmission Tunnel
Courtesy of CHRYSLER GROUP, LLC

1. Disconnect and isolate the negative cable from the battery. Wait two minutes for the system capacitor to discharge before further service.
2. Remove the front side panels from the center floor console on both the right and left sides of the floor panel transmission tunnel. Refer to **CONSOLE, FLOOR, REMOVAL** .
3. Working from the left side front floor panel, reach around the forward edge of the instrument panel center stack support on the floor panel transmission tunnel (5) to access, unlatch and disconnect the body wire harness connector (4) from the Occupant Restraint Controller (ORC) (2) connector receptacle located on the rearward facing side of the module. To disconnect the wire harness connector from the ORC, depress the release tab and lift the lever arm on the connector.
4. Still working from the left side front floor panel, remove the nut (1) that secures the left front mount of the ORC to the stud on the top of the floor panel transmission tunnel.
5. Working from the right side front floor panel, remove the bracket that secures the lower instrument panel center stack structural support to the floor panel transmission tunnel. Refer to **PANEL, INSTRUMENT, REMOVAL** .
6. Still working from the right side front floor panel, reach around the forward edge of the instrument panel center stack support to access, unlatch and disconnect the instrument panel wire harness connector (3) from the ORC connector receptacle located on the rearward facing side of the module. To disconnect the wire harness connector from the ORC, depress the release tab and lift the lever arm on the connector.
7. Still on the right side, remove the two nuts (1) that secure the right front and rear mounts of the ORC to the studs on the top of the floor panel transmission tunnel.
8. Remove the ORC from the vehicle.

INSTALLATION

INSTALLATION

WARNING: To avoid serious or fatal injury on vehicles equipped with side curtain airbags, disable the Supplemental Restraint System (SRS) before attempting any Occupant Restraint Controller (ORC) diagnosis or service. The ORC may contain a rollover sensor, which enables the system to deploy the side SRS components in the event of a vehicle rollover event. If an ORC containing a rollover sensor is accidentally rolled during service while still connected to battery power, the side SRS components will deploy. Disconnect and isolate the battery negative (ground) cable, then wait two minutes for the system capacitor to discharge before performing further diagnosis or service. This is the only sure way to disable the SRS. Failure to take the proper precautions could result in accidental airbag deployment.

WARNING: To avoid serious or fatal injury on vehicles equipped with airbags, disable the Supplemental Restraint System (SRS) before attempting any steering wheel, steering column, airbag, Occupant Classification System (OCS), seat belt tensioner, impact sensor or instrument panel component diagnosis or service. Disconnect and isolate the battery negative (ground) cable, then wait two minutes for the system capacitor to discharge before performing further diagnosis or service. This is the only sure way to disable the SRS. Failure to follow these instructions may result in accidental airbag deployment.

WARNING: To avoid serious or fatal injury, never strike or drop the Occupant Restraint Controller (ORC), as it can damage the impact sensor or affect its calibration. The ORC contains the impact sensor, which enables the system to deploy the Supplemental Restraint System (SRS) components. If an ORC is accidentally dropped during service, the module must be scrapped and replaced with a new unit. Failure to observe this warning could result in accidental, incomplete, or improper SRS component deployment.

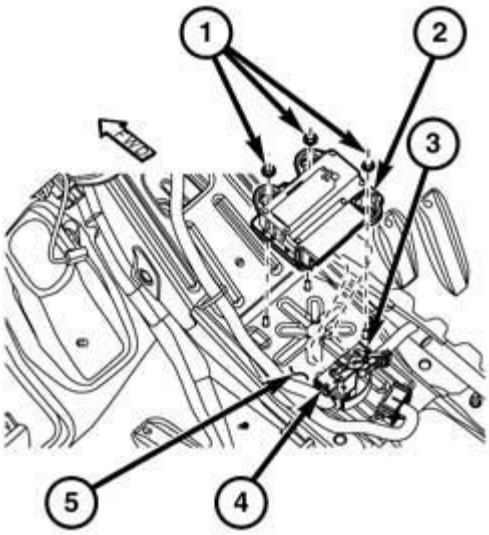

100868612

Fig. 81: Nuts, Occupant Restraint Controller, Harness Connectors & Transmission Tunnel
Courtesy of CHRYSLER GROUP, LLC

1. Working from the right side front floor panel, carefully position the Occupant Restraint Controller (ORC) (2) onto the front of the floor panel transmission tunnel (5), aligning the mounts of the ORC to the studs on the floor panel. When the ORC is correctly positioned, the bottom of the housing will fit flush with the floor and the orientation arrow on the label on top of the housing will be pointed forward in the vehicle.
2. Still working from the right side front floor panel, reach around the forward edge of the instrument panel center stack support on the floor panel transmission tunnel to install and tighten the two nuts (1) that secure the ORC to the studs on the floor panel transmission tunnel. Tighten the nuts to 8 N.m (71 in. lbs.).
3. Still on the right side, reconnect and latch the instrument panel wire harness connector (3) to the ORC connector receptacle located on the rearward facing side of the module. Be certain that the latch on the connector is fully engaged.
4. Still on the right side, reinstall the bracket that secures the lower instrument panel center stack structural support to the floor panel transmission tunnel. Refer to **PANEL, INSTRUMENT, INSTALLATION** .
5. Working from the left side front floor panel, reach around the forward edge of the instrument panel center stack support on the floor panel transmission tunnel to install and tighten the nut (1) that secures the ORC to the stud on the floor panel transmission tunnel. Tighten the nut to 8 N.m (71 in. lbs.).
6. Still working from the left side front floor panel, reconnect and latch the body wire harness connector (4) to the ORC connector receptacle located on the rearward facing side of the module. Be certain that the latch on the connector is fully engaged.
7. Reinstall the front side panels onto the center floor console on both the right and left sides of the floor panel transmission tunnel. Refer to **CONSOLE, FLOOR, INSTALLATION** .
8. If this Electronic Control Unit (ECU) is being replaced with a new unit, a diagnostic scan tool MUST be used to align the PROXI configuration data into the new ECU. Follow the routine outlined in the diagnostic scan tool for PROXI Configuration Alignment under Body Control Module (BCM)

Miscellaneous Functions menu.

9. If this Electronic Control Unit (ECU) is being replaced with a new unit, the Initialize ORC Miscellaneous Function must be run using a diagnostic scan tool. Refer to **STANDARD PROCEDURE** .
10. Do not reconnect the negative cable to the battery at this time. The Supplemental Restraint System (SRS) Verification Test procedure should be performed following service of any SRS component. Refer to **SUPPLEMENTAL RESTRAINT SYSTEM VERIFICATION TEST**.

RESTRAINT, ACTIVE HEAD

DESCRIPTION

DESCRIPTION

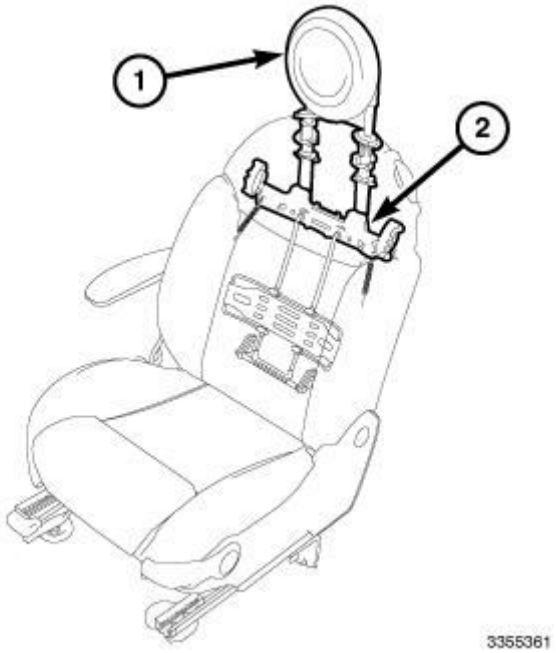

Fig. 82: Active Head Restraint (AHR) Units & Mechanical Components
Courtesy of CHRYSLER GROUP, LLC

Active Head Restraint (AHR) units (1) are standard equipment for both front seating positions in this vehicle. One inertia-activated AHR unit is located atop each front seat back. Outwardly, an inertia-activated AHR appears the same as a non-active head restraint. The mechanical components (2) that articulate the inertia-activated AHR headrest pad are all concealed within the front seat back frame assembly.

At the top of the seat back frame are two stamped steel headrest guide tubes. The guide tubes are each inserted through a molded plastic fulcrum bushing installed in the upper seat back frame member and are permanently fixed to a movable stamped steel armature bracket located just below the upper frame member near the top of the seat back. The armature bracket is secured to a stamped steel pivot link at each side that pivots on a screw threaded into a mounting bracket welded to each side member of the seat back frame.

The pivot links are each have a spring attached to a lever opposite the armature bracket attachment that is

anchored to the seat back frame side member below, which provides the spring-loaded return action of the inertia mechanism. The upper end of the static lumbar assembly is secured at each side to the base of the armature bracket. Each side of the lower end of the lumbar assembly is engaged in a ramp bracket riveted to the lower seat back frame member.

The inertia-activated AHR linkage cannot be repaired. If damaged or ineffective, it must be replaced as a unit with a new seat back frame assembly.

OPERATION

OPERATION

The inertia-activated Active Head Restraint (AHR) units are deployed automatically by the mechanism contained within each front seat back assembly. During a rear impact, inertia drives the seat occupant rearward into the seat back, loading the seat lumbar assembly. The ramp brackets at the base of the lumbar assembly translate this rearward travel into a vertical motion. The vertical motion of the lumbar assembly is then transmitted to the armature bracket.

Through the rotation of the pivot links at each side of the armature bracket, the vertical motion of the lumbar assembly is converted to a slightly forward and upward arc of the armature bracket, headrest guide tubes and headrest that is designed to reduce the space between the back of the head of the seat occupant and the head restraint pad. Closing this space catches the head of the seat occupant during a low speed rear impact collision event and is important in reducing or eliminating potentially debilitating cervical (also known as whiplash) injuries.

Unless damaged following the rear impact, the inertia-activated AHR can be reset by simply pushing the front seat headrests rearward to their normal positions.

STANDARD PROCEDURE

STANDARD PROCEDURE - ACTIVE HEAD RESTRAINT RESET

If the Active Head Restraint (AHR) units have been deployed, both the driver and passenger side units must be reset. You can recognize that an AHR has been deployed by the forward position of the head restraint cushion. If deployed, the AHR units can be manually reset by pressing the head restraint rearward.

RETRACTOR, SEAT BELT

DESCRIPTION

DESCRIPTION

The seat belt retractors used in all seating positions include an inertia-type, Emergency Locking Retractor (ELR) mechanism as standard equipment. However, the ELR for all seating positions except the driver side front are mechanically switchable from an ELR to an Automatic Locking Retractor (ALR). Both front seat belt retractors also include a seat belt tensioner feature and an adaptive load limiting feature. Refer to **TENSIONER, SEAT BELT, DESCRIPTION**.

The ELR mechanism, the ALR mechanism, the tensioner mechanism and the adaptive load limiting feature are all integral to the seat belt and retractor unit and are concealed beneath molded plastic covers located on the sides of the retractor spool. These features cannot be adjusted or repaired and if ineffective, damaged or deployed, the entire seat belt and retractor unit must be replaced.

OPERATION

OPERATION

The standard inertia-type Emergency Locking Retractor (ELR) will allow the seat belt webbing to unwind from and wind onto the retractor spool freely unless and until a predetermined inertia load is sensed. The retractor has an internal inertia latch mechanism that will lock the retractor spool once the predetermined inertia load is sensed. Locking the retractor spool prevents the seat belt webbing from being extracted from the retractor and firmly restrains the occupant wearing the seat belt. The retractor spool is automatically unlatched once the loading of the retractor inertia mechanism and the seat belt are relieved.

The primary function of the switchable ELR to Automatic Locking Retractor (ALR) feature is to securely accommodate an infant or child booster seat in any seating position of the vehicle except the driver side front seat without the need for a self-cinching seat belt tip half latch plate unit or another supplemental device that would be required to prevent the seat belt webbing from unwinding freely from the retractor spool of an inertia-type ELR in situations where the minimum inertia locking threshold has not been achieved.

The locked mode of the ALR is engaged and the retractor is switched from operating as a standard inertia-type ELR by first buckling the combination lap and shoulder belt buckle. Then all of the shoulder belt webbing is pulled out from the retractor. Once all of the belt webbing is extracted from the retractor spool, the retractor will automatically become engaged in the pre-locked ALR mode and will make a light, audible clicking or ratchet-like sound as the shoulder belt is allowed to retract onto the spool to provide an audible confirmation that the ALR mode is engaged. Once the ALR mode is engaged, the retractor will remain locked and the belt will remain tight around whatever it is restraining.

The retractor is returned to standard ELR (inertia) mode by unbuckling the combination lap and shoulder belt buckle and allowing the belt webbing to be almost fully retracted back onto the retractor spool. The ELR mode is confirmed by the absence of the light, audible clicking or ratchet-like sound as the belt webbing retracts. This mode will allow the belt to unwind from and wind onto the retractor spool freely unless and until a predetermined inertia load threshold is sensed, or until the retractor is again switched to the ALR mode.

REMOVAL

FRONT

WARNING: **To avoid serious or fatal injury on vehicles equipped with airbags, disable the Supplemental Restraint System (SRS) before attempting any steering wheel, steering column, airbag, Occupant Classification System (OCS), seat belt tensioner, impact sensor or instrument panel component diagnosis or service. Disconnect and isolate the battery negative (ground) cable, then wait two minutes for the system capacitor to discharge before performing further diagnosis or service. This is the only sure way to**

disable the SRS. Failure to follow these instructions may result in accidental airbag deployment.

WARNING: To avoid serious or fatal injury during and following any seat belt or child restraint anchor service, carefully inspect all seat belts, buckles, mounting hardware, retractors, tether straps, and anchors for proper installation, operation, or damage. Replace any belt that is cut, frayed, or torn. Straighten any belt that is twisted. Tighten any loose fasteners. Replace any belt that has a damaged or ineffective buckle or retractor. Replace any belt that has a bent or damaged latch plate or anchor plate. Replace any child restraint anchor or the unit to which the anchor is integral that has been bent or damaged. Never attempt to repair a seat belt or child restraint component. Always replace damaged or ineffective seat belt and child restraint components with the correct, new and unused replacement parts listed in the Chrysler Mopar® Parts Catalog.

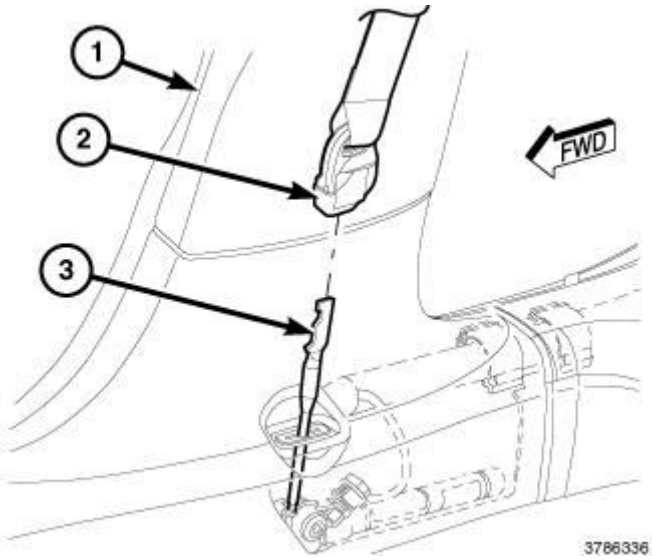

Fig. 83: B-Pillar, Front Seat Belt Anchor Tensioner Buckle & Front Seat Belt Anchor Latch Plate
Courtesy of CHRYSLER GROUP, LLC

NOTE: The following procedure is for replacement of an ineffective or damaged seat belt and retractor unit. The front retractor also includes a seat belt tensioner. If the front seat belt or retractor is ineffective or damaged, but the seat belt tensioner is not deployed, review the recommended procedures for Handling Non-Deployed Supplemental Restraints. Refer to HANDLING NON-DEPLOYED SUPPLEMENTAL RESTRAINTS. If the seat belt tensioner has been deployed, review the recommended procedures for Service After A Supplemental Restraint Deployment before removing the unit from the vehicle. Refer to SERVICE AFTER A SUPPLEMENTAL RESTRAINT SYSTEM DEPLOYMENT.

1. Position the front seat for easiest access to the front seat belt anchor buckle (2).

2. Disconnect and isolate the negative cable from the battery. Wait two minutes for the system capacitor to discharge before further service.
3. Release the front seat belt anchor latch plate (3) from the anchor buckle. Refer to **BUCKLE, SEAT BELT, STANDARD PROCEDURE**.

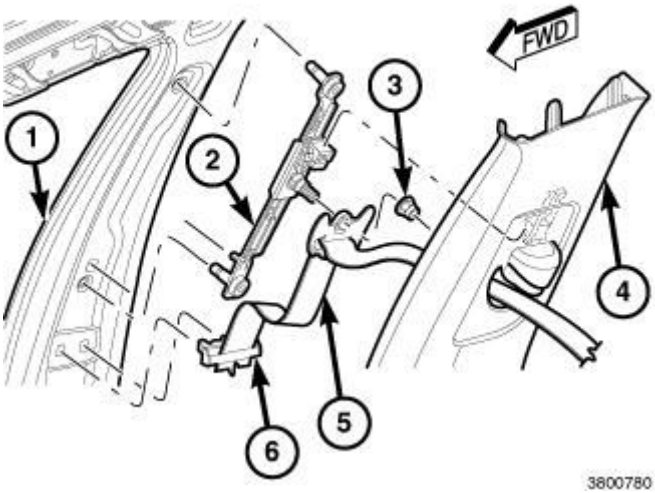

Fig. 84: B-Pillar, Height Adjuster, Nut, Upper Trim, Seat Belt & Web Guide
Courtesy of CHRYSLER GROUP, LLC

4. Remove the upper trim (4) from the inside of the B-pillar (1). Refer to **PANEL, B-PILLAR TRIM, REMOVAL** .
5. Remove the nut (3) that secures the seat belt (5) turning loop to the stud on the height adjuster (2).
6. Remove the seat belt turning loop from the height adjuster.
7. Unsnap the seat belt web guide (6) from the inside of the B-pillar.

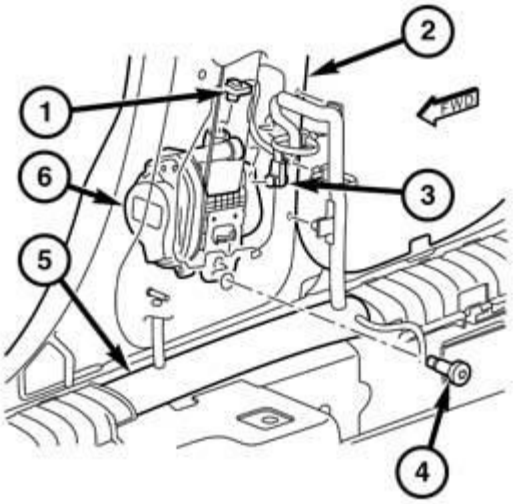

1012006768

Fig. 85: Remove/Install B-Pillar Seat Belt Retractor
Courtesy of CHRYSLER GROUP, LLC

8. Remove the lower trim from the inside of the B-pillar (2) and from over the front seat belt retractor tensioner unit (6) near the base of the B-pillar. Refer to **PANEL, B-PILLAR TRIM, REMOVAL** .
9. Remove the screw (4) that secures the retractor lower bracket to the base of the inner B-pillar.
10. Pull the retractor out from the B-pillar far enough to access the yellow body wire harness (5) connectors on the retractor.
11. Disconnect the yellow body wire harness connector (3) from the retractor tensioner initiator. The connector insulator is secured by integral latches and a Connector Position Assurance (CPA) lock to the initiator connector receptacle. Pull the lock straight out from the connector insulator, then pull the insulator straight out from the connector receptacle to disengage and disconnect it.
12. Disconnect the yellow body wire harness connector (1) from the retractor adaptive tension limiter initiator. The connector insulator is secured by integral latches and a CPA lock to the initiator connector receptacle. Pull the lock straight out from the connector insulator, then pull the insulator straight out from the connector receptacle to disengage and disconnect it.
13. Remove the front seat belt and retractor from the vehicle as a unit.

REAR CENTER

WARNING: **To avoid serious or fatal injury during and following any seat belt or child restraint anchor service, carefully inspect all seat belts, buckles, mounting hardware, retractors, tether straps, and anchors for proper installation, operation, or damage. Replace any belt that is cut, frayed, or torn. Straighten any belt that is twisted. Tighten any loose fasteners. Replace any belt that has a damaged or ineffective buckle or retractor.**

Replace any belt that has a bent or damaged latch plate or anchor plate. Replace any child restraint anchor or the unit to which the anchor is integral that has been bent or damaged. Never attempt to repair a seat belt or child restraint component. Always replace damaged or ineffective seat belt and child restraint components with the correct, new and unused replacement parts listed in the Chrysler Mopar® Parts Catalog. Failure to follow these instructions may result in possible serious or fatal injury.

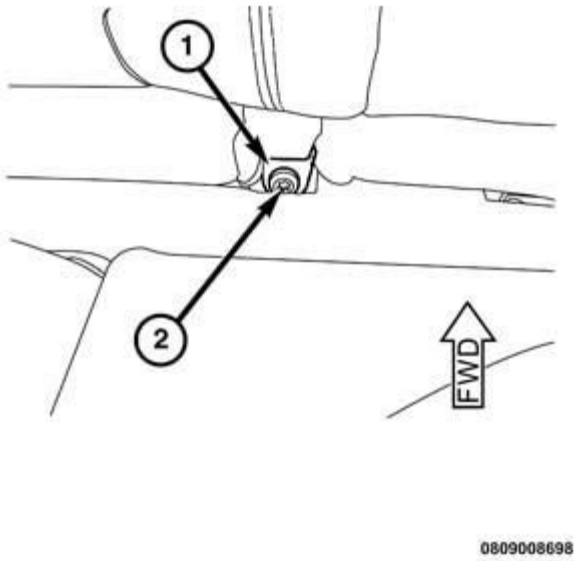

Fig. 86: Seat Belt Lower Anchor Plate
Courtesy of CHRYSLER GROUP, LLC

NOTE: **All seat belt retractors except the driver side front and the rear center include a switchable automatic locking mechanism. Refer to RETRACTOR, SEAT BELT, DESCRIPTION.**

1. Remove the left (60 percent) rear seat from the vehicle as a unit and place it on a suitable work surface. Be certain to take the proper precautions to prevent the trim cover from receiving cosmetic damage during the following procedures. Refer to **SEAT, REAR, REMOVAL** .
2. Working from behind the seat, remove the screw (2) that secures the seat belt lower anchor plate (1) to the bracket on the back of the seat cushion frame.

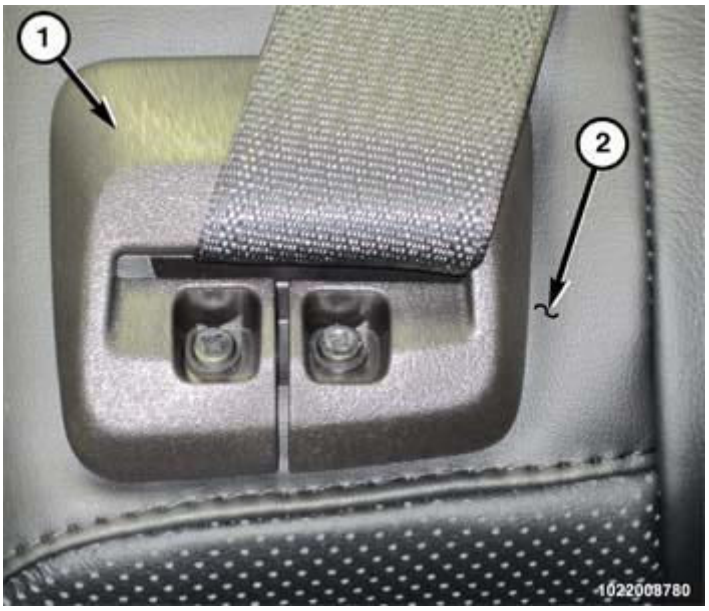

Fig. 87: Seat Belt Web Bezel & Fasteners
Courtesy of CHRYSLER GROUP, LLC

3. Remove the two screws that secure the seat belt web bezel (1) to the top of the seat back and disengage the webbing through the slot in the bezel.
4. Remove the trim cover (2) and foam from the left (60 percent) seat back frame. Refer to **SEAT BACK, FRONT, DISASSEMBLY** .

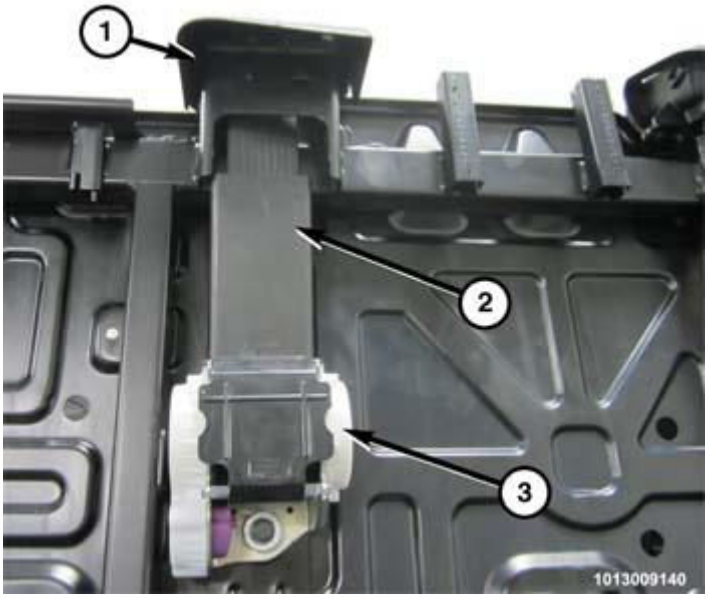

Fig. 88: Seat Back Frame & Seat Belt Web Guide
Courtesy of CHRYSLER GROUP, LLC

5. Remove the two screws that secure the seat belt web guide (1) to the top of the seat back frame and disengage the webbing through the slot in the guide.

6. Disengage the push-in plastic fastener that secures the plastic scabbard (2) of the retractor (3) to the seat back frame.

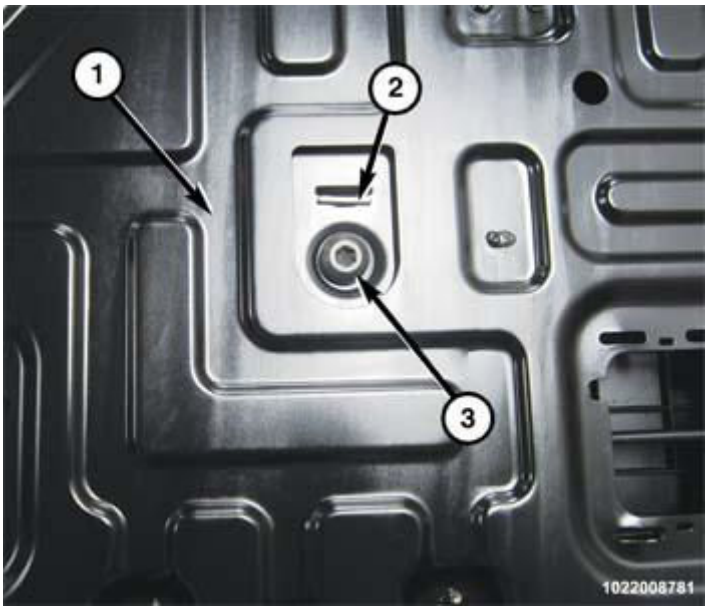

Fig. 89: Rear Center Seat Belt Retractor Fastener
Courtesy of CHRYSLER GROUP, LLC

7. Remove the screw (3) that secures the rear center seat belt retractor to the rear left (60 percent) seat back panel.
8. Disengage the T-tab (2) of the retractor bracket from the T-slot of the seat back panel.
9. Remove the rear center seat belt and retractor unit from the seat back panel.

REAR OUTBOARD

WARNING: **To avoid serious or fatal injury during and following any seat belt or child restraint anchor service, carefully inspect all seat belts, buckles, mounting hardware, retractors, tether straps, and anchors for proper installation, operation, or damage. Replace any belt that is cut, frayed, or torn. Straighten any belt that is twisted. Tighten any loose fasteners. Replace any belt that has a damaged or ineffective buckle or retractor. Replace any belt that has a bent or damaged latch plate or anchor plate. Replace any child restraint anchor or the unit to which the anchor is integral that has been bent or damaged. Never attempt to repair a seat belt or child restraint component. Always replace damaged or ineffective seat belt and child restraint components with the correct, new and unused replacement parts listed in the Chrysler Mopar® Parts Catalog. Failure to follow these instructions may result in possible serious or fatal injury.**

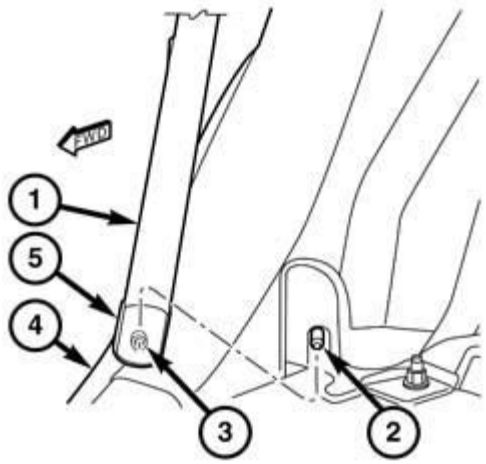

1012006769

Fig. 90: C-Pillar Seat Belt Webbing Lower Anchor Attachment
Courtesy of CHRYSLER GROUP, LLC

1. Adjust the left or right rear seat to its most forward position for easiest access to the base of the C-pillar (4).
2. Disengage and slide the lower anchor cover (5) up the seat belt webbing (1) far enough to access the lower anchor attachment.
3. Unscrew the captive nut (3) on the lower anchor from the stud (2) at the base of the C-pillar.

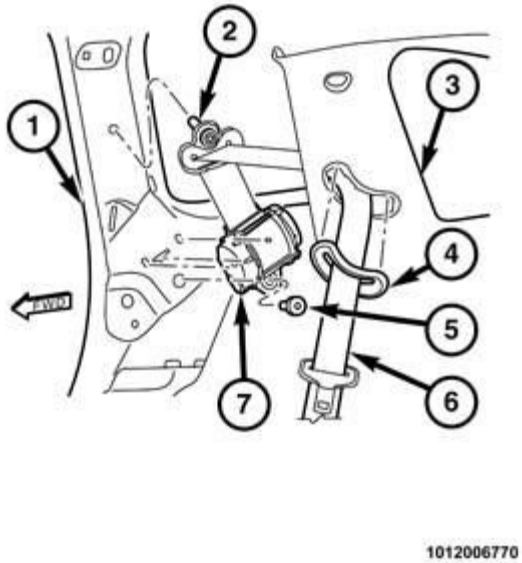

Fig. 91: Remove/Install Rear Outboard Seat Belt And Retractor
Courtesy of CHRYSLER GROUP, LLC

4. Disengage the upper quarter trim panel (3) from the upper C-pillar (1). Refer to **PANEL, QUARTER TRIM, REMOVAL** .
5. Unsnap the C-pillar belt opening bezel (4) from the upper quarter trim panel.
6. Feed the bezel, the belt webbing (6), the latch plate and the lower anchor through the upper quarter trim panel belt opening.
7. Remove the screw (2) that secures the seat belt turning loop to the inside of the upper C-pillar.
8. Remove the seat belt turning loop from the upper inner C-pillar.
9. Remove the screw (5) that secures the retractor (7) bracket to the inner C-pillar.
10. Lift the retractor upward far enough to disengage the retractor bracket tab from the keyed slot in the inner C-pillar.
11. Remove the rear outboard seat belt and retractor from the vehicle as a unit.

INSTALLATION

FRONT

WARNING: To avoid serious or fatal injury on vehicles equipped with airbags, disable the Supplemental Restraint System (SRS) before attempting any steering wheel, steering column, airbag, Occupant Classification System (OCS), seat belt tensioner, impact sensor or instrument panel component diagnosis or service. Disconnect and isolate the battery negative (ground) cable, then wait two minutes for the system capacitor to discharge before

performing further diagnosis or service. This is the only sure way to disable the SRS. Failure to follow these instructions may result in accidental airbag deployment.

WARNING: To avoid serious or fatal injury during and following any seat belt or child restraint anchor service, carefully inspect all seat belts, buckles, mounting hardware, retractors, tether straps, and anchors for proper installation, operation, or damage. Replace any belt that is cut, frayed, or torn. Straighten any belt that is twisted. Tighten any loose fasteners. Replace any belt that has a damaged or ineffective buckle or retractor. Replace any belt that has a bent or damaged latch plate or anchor plate. Replace any child restraint anchor or the unit to which the anchor is integral that has been bent or damaged. Never attempt to repair a seat belt or child restraint component. Always replace damaged or ineffective seat belt and child restraint components with the correct, new and unused replacement parts listed in the Chrysler Mopar® Parts Catalog.

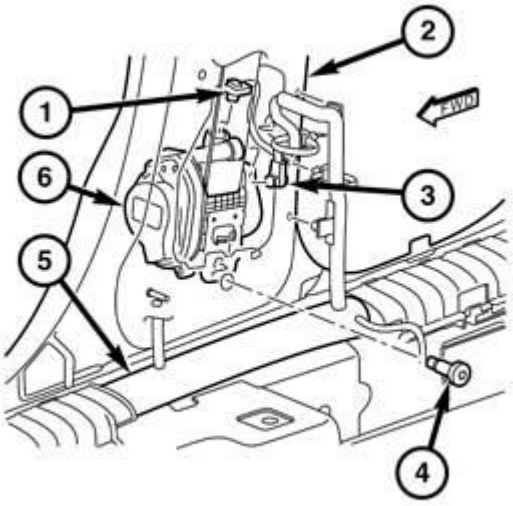

1012006768

Fig. 92: Remove/Install B-Pillar Seat Belt Retractor
Courtesy of CHRYSLER GROUP, LLC

NOTE: The following procedure is for replacement of an ineffective or damaged seat belt and retractor unit. The front retractor also includes a seat belt tensioner. If the front seat belt or retractor is ineffective or damaged, but the seat belt tensioner is not deployed, review the recommended procedures for Handling Non-Deployed Supplemental Restraints. Refer to HANDLING NON-DEPLOYED SUPPLEMENTAL RESTRAINTS. If the seat belt tensioner has been deployed,

review the recommended procedures for Service After A Supplemental Restraint Deployment before removing the unit from the vehicle. Refer to SERVICE AFTER A SUPPLEMENTAL RESTRAINT SYSTEM DEPLOYMENT.

1. Position the seat belt and retractor (5) into the vehicle as a unit.
2. Reconnect the yellow body wire harness connector (3) to the retractor seat belt tensioner initiator by pressing straight in on the connector. Be certain that the connector is fully engaged in its receptacle, then push the Connector Position Assurance (CPA) lock straight into the connector to lock it into place.
3. Reconnect the yellow body wire harness connector (2) to the retractor adaptive tension limiter initiator by pressing straight in on the connector. Be certain that the connector is fully engaged in its receptacle, then push the CPA lock straight into the connector to lock it into place.
4. Position the retractor lower bracket to the inner B-pillar (1).
5. Install and tighten the screw (4) that secures the retractor to the inner B-pillar. Tighten the screw to 58 N.m (43 ft. lbs.).
6. Reinstall the lower trim onto the inside of the B-pillar. Refer to **PANEL, B-PILLAR TRIM, INSTALLATION** .

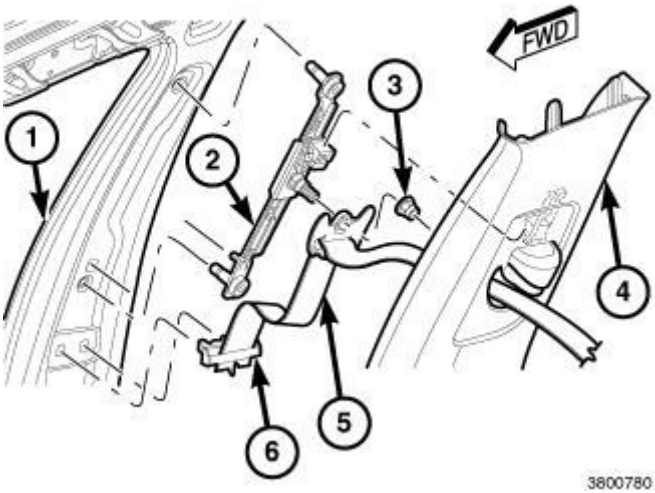

Fig. 93: B-Pillar, Height Adjuster, Nut, Upper Trim, Seat Belt & Web Guide
Courtesy of CHRYSLER GROUP, LLC

7. Snap the seat belt web guide (6) onto the inner B-pillar (1). Be certain that the seat belt webbing (5) between the retractor and the web guide is not twisted.
8. Position the seat belt turning loop onto the stud on the height adjuster (2). Be certain that the seat belt webbing between the web guide and the turning loop is not twisted.
9. Install and tighten the nut (3) that secures the turning loop to the bracket. Tighten the nut to 45 N.m (33 ft. lbs.).
10. Reinstall the upper trim onto the inside of the B-pillar. Refer to **PANEL, B-PILLAR TRIM, INSTALLATION** .

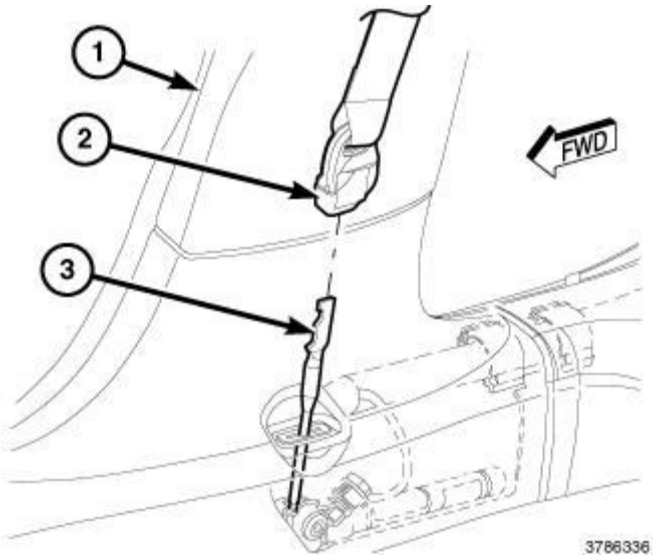

Fig. 94: B-Pillar, Front Seat Belt Anchor Tensioner Buckle & Front Seat Belt Anchor Latch Plate
Courtesy of CHRYSLER GROUP, LLC

11. Be certain the seat belt webbing between the turning loop and the lower anchor buckle (2) is not twisted.
12. Insert the lower anchor latch plate into the anchor buckle until it latches into position.
13. Do not reconnect the negative cable to the battery at this time. The Supplemental Restraint System (SRS) Verification Test procedure should be performed following service of any SRS component. Refer to **SUPPLEMENTAL RESTRAINT SYSTEM VERIFICATION TEST**.

REAR CENTER

WARNING: **To avoid serious or fatal injury during and following any seat belt or child restraint anchor service, carefully inspect all seat belts, buckles, mounting hardware, retractors, tether straps, and anchors for proper installation, operation, or damage. Replace any belt that is cut, frayed, or torn. Straighten any belt that is twisted. Tighten any loose fasteners. Replace any belt that has a damaged or ineffective buckle or retractor. Replace any belt that has a bent or damaged latch plate or anchor plate. Replace any child restraint anchor or the unit to which the anchor is integral that has been bent or damaged. Never attempt to repair a seat belt or child restraint component. Always replace damaged or ineffective seat belt and child restraint components with the correct, new and unused replacement parts listed in the Chrysler Mopar® Parts Catalog. Failure to follow these instructions may result in possible serious or fatal injury.**

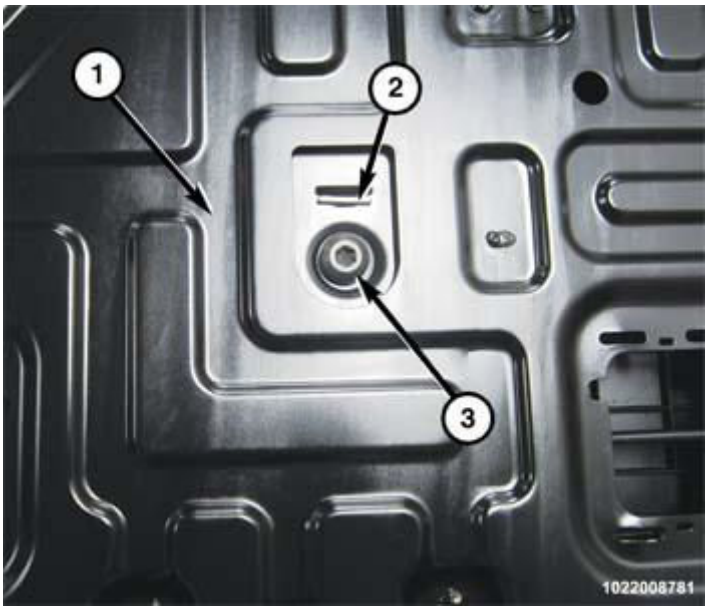

Fig. 95: Rear Center Seat Belt Retractor Fastener
Courtesy of CHRYSLER GROUP, LLC

NOTE: **All seat belt retractors except the driver side front and the rear center include a switchable automatic locking mechanism. Refer to RETRACTOR, SEAT BELT, DESCRIPTION.**

1. Position the rear center seat belt and retractor unit onto the left (60 percent) seat back panel (1). Be certain to engage the T-tab (2) on the retractor frame into the T-slot in the back panel.
2. Install and tighten the screw (3) that secures the retractor to the seat back panel. Tighten the screw to 55 N.m (41 ft. lbs.).

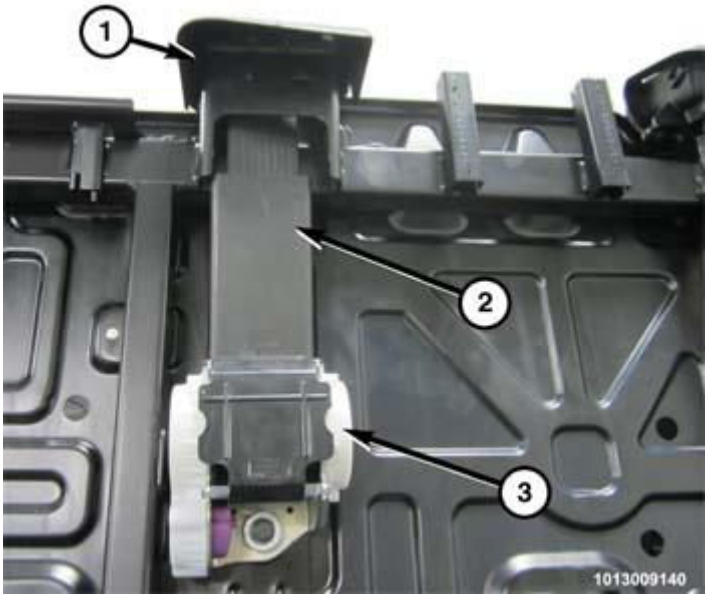

Fig. 96: Seat Back Frame & Seat Belt Web Guide

Courtesy of CHRYSLER GROUP, LLC

3. Engage the push-in plastic fastener that secures the plastic scabbard (2) of the retractor (3) to the seat back frame.
4. Engage the seat belt webbing through the slot in the seat belt web guide (1) and position the guide to the top of the seat back frame. Be certain the seat belt webbing between the retractor and the guide is not twisted.
5. Install and tighten the two screws that secure the seat belt web guide to the top of the seat back frame. Tighten the screws securely.

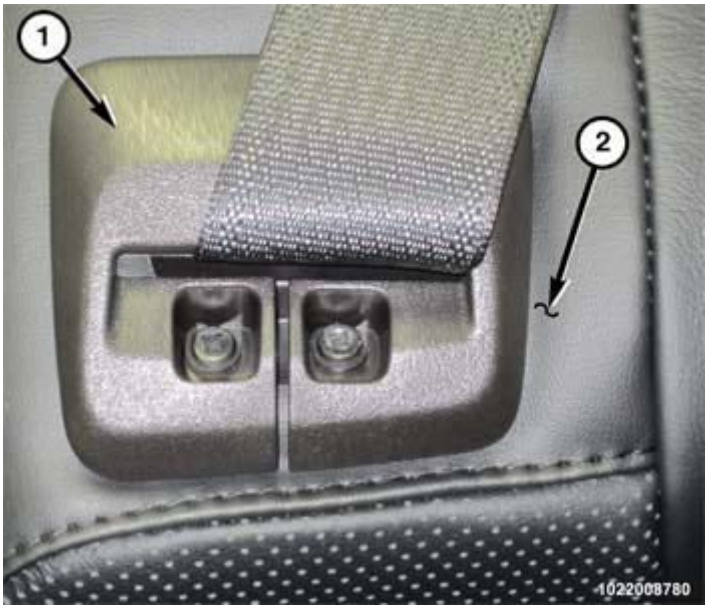

Fig. 97: Seat Belt Web Bezel & Fasteners
Courtesy of CHRYSLER GROUP, LLC

6. Reinstall the foam and the trim cover (2) onto the seat back frame. Refer to **SEAT BACK, FRONT, ASSEMBLY** .
7. Engage the seat belt webbing through the slot in the seat belt web bezel (1) and position the bezel to the top of the seat back.
8. Install and tighten the two screw that secure the seat belt web bezel to the top of the seat back frame. Tighten the screws securely.

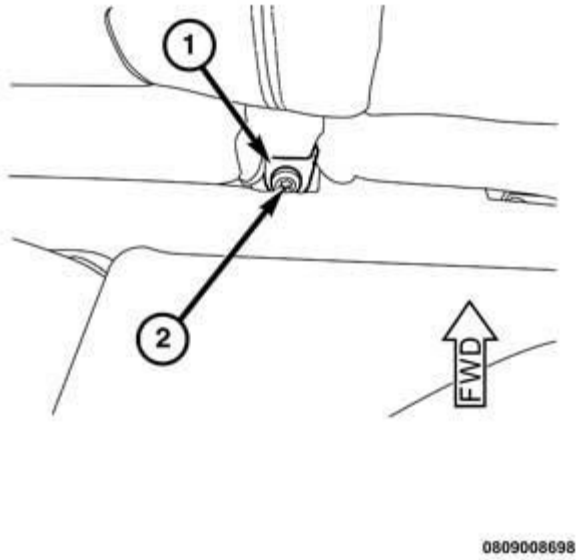

Fig. 98: Seat Belt Lower Anchor Plate
Courtesy of CHRYSLER GROUP, LLC

9. Working from behind the rear seat, position the rear center seat belt lower anchor plate (1) to the bracket at the back of the seat cushion frame. Be certain the seat belt webbing between the bezel at the top of the seat back and the lower anchor plate is not twisted.
10. Install and tighten the screw (2) that secures the rear center seat belt lower anchor plate to the bracket at the back of the seat cushion frame. Tighten the screw to 55 N.m (41 ft. lbs.).
11. Reinstall the left (60 percent) rear seat into the vehicle. Refer to **SEAT, INSTALLATION** **SEAT, REAR, INSTALLATION** .

REAR OUTBOARD

WARNING: **To avoid serious or fatal injury during and following any seat belt or child restraint anchor service, carefully inspect all seat belts, buckles, mounting hardware, retractors, tether straps, and anchors for proper installation, operation, or damage. Replace any belt that is cut, frayed, or torn. Straighten any belt that is twisted. Tighten any loose fasteners. Replace any belt that has a damaged or ineffective buckle or retractor. Replace any belt that has a bent or damaged latch plate or anchor plate. Replace any child restraint anchor or the unit to which the anchor is integral that has been bent or damaged. Never attempt to repair a seat belt or child restraint component. Always replace damaged or ineffective seat belt and child restraint components with the correct, new and unused replacement parts listed in the Chrysler Mopar® Parts Catalog.**

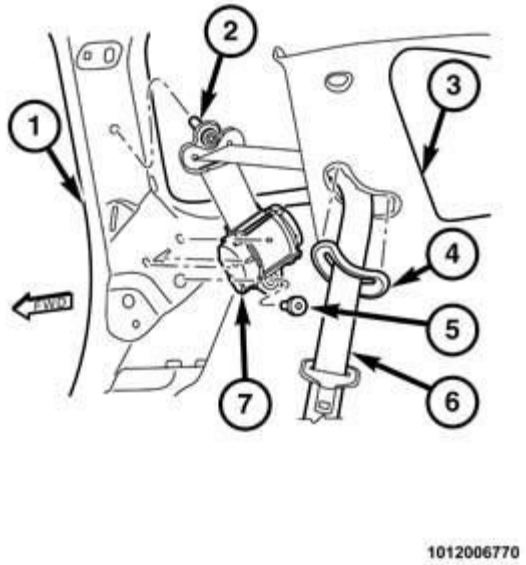

Fig. 99: Remove/Install Rear Outboard Seat Belt And Retractor
Courtesy of CHRYSLER GROUP, LLC

1. Position the rear outboard seat belt and retractor unit (7) onto the inner C-pillar (1). Be certain to engage the retractor bracket tab into the keyed slot in the inner C-pillar.
2. Install and tighten the screw (5) that secures the retractor bracket to the inner C-pillar. Tighten the screw to 45 N.m (33 ft. lbs.).
3. Position the seat belt turning loop onto the upper inner C-pillar. Be certain the seat belt webbing (6) is not twisted between the retractor and the turning loop.
4. Install and tighten the screw (2) that secures the seat belt turning loop to the inside of the upper C-pillar. Tighten the screw to 45 N.m (33 ft. lbs.).
5. Feed the seat belt lower anchor, the latch plate, the seat belt opening bezel (4) and the belt webbing (6) through the upper quarter trim panel (3) belt opening. Be certain the seat belt webbing is not twisted between the turning loop and the upper quarter trim panel belt opening.
6. Snap the C-pillar belt opening bezel into the upper quarter trim panel.
7. Reinstall the upper quarter trim panel onto the upper C-pillar. Refer to **PANEL, QUARTER TRIM, INSTALLATION** .

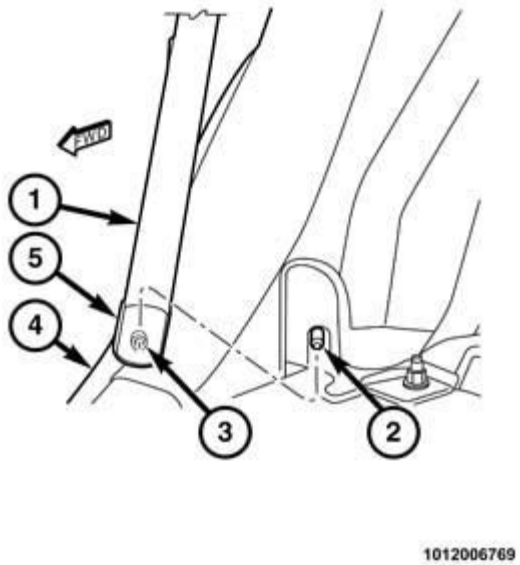

Fig. 100: C-Pillar Seat Belt Webbing Lower Anchor Attachment
Courtesy of CHRYSLER GROUP, LLC

8. Position the rear outboard seat belt lower anchor to the stud (2) at the base of the C-pillar (4). Be certain the seat belt webbing (1) is not twisted between the upper C-pillar belt opening bezel and the lower anchor.
9. Install and tighten the captive nut (3) that secures the rear outboard seat belt lower anchor to the stud at the base of the C-pillar. Tighten the nut to 45 N.m (33 ft. lbs.).
10. Slide the lower anchor cover (5) down the seat belt webbing and engage it over the lower anchor attachment.
11. Restore the left or right rear seat to its rearward position.

SENSOR, IMPACT

DESCRIPTION

IMPACT SENSORS

Remote or satellite impact sensors are mounted in various strategic locations of the vehicle. These sensors are mounted remotely from the impact sensor that is internal to the Occupant Restraint Controller (ORC). Sensors at the front of the vehicle provide an additional logic input for use by the Occupant Restraint Controller (ORC) to control the front airbags and the seat belt pretensioners. Sensors on each side of the vehicle provide an additional logic input for use by the ORC to control the side curtain airbags, seat airbags and the seat belt pretensioners. Two types of sensors are used in this vehicle. They are the acceleration-type and the pressure-type, which are described in further detail elsewhere within this service information.

ACCELERATION TYPE

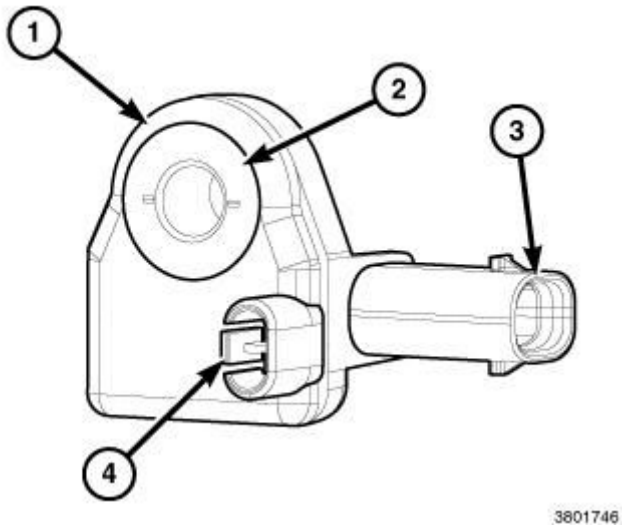

Fig. 101: Acceleration-Type Impact Sensor, Metal Sleeve, Connector Receptacle & Latch
Courtesy of CHRYSLER GROUP, LLC

Remote or satellite acceleration-type impact sensors (1) are mounted in various locations in the vehicle. These sensors are mounted remotely from the impact sensor that is internal to the Occupant Restraint Controller (ORC). Sensors at the front of the vehicle provide an additional logic input for use by the ORC to control the front airbags and the seat belt pretensioners. Sensors on each side of the vehicle provide an additional logic input for use by the ORC to control the side curtain airbags, the seat belt pretensioners and the seat (also known as pelvic and thorax) airbags.

Although the front and side acceleration-type impact sensors are similar in appearance and construction, they may not be interchangeable. The front impact sensors may monitor acceleration forces on a different axis than those monitored by the side impact sensors. Each sensor is secured to its mounting location by a single screw or by a nut and a weld stud. The front sensors are located on each vertical support member of the Front End Module (FEM) carrier between the cooling module and the front lamp unit. A side sensor is located on each inner B-pillar and each inner C-pillar and concealed behind the interior trim.

Each sensor housing has an integral connector receptacle (3), an integral locator pin with a latch feature (4) and an integral mounting hole with a metal sleeve (2) to provide crush protection. A cavity in the center of the molded plastic impact sensor housing contains the electronic circuitry of the sensor which includes an electronic communication chip and an electronic acceleration sensor. Potting material fills the housing, which is laser welded to seal and protect the internal electronic circuitry and components.

The front impact sensors are each connected to the vehicle electrical system through dedicated take outs and connectors of the Front End Module (FEM) wire harness, while the side impact sensors are connected through dedicated take outs and connectors of the body wire harness.

The acceleration-type impact sensors cannot be repaired or adjusted and, if damaged or ineffective, they must be replaced.

PRESSURE TYPE

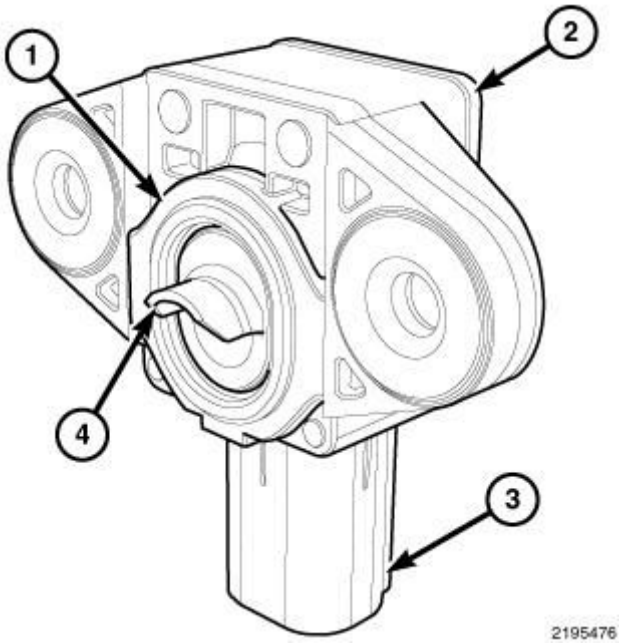

Fig. 102: Pressure-Type Front Door Side Impact Sensors
Courtesy of CHRYSLER GROUP, LLC

Two pressure-type front door side impact sensors (2) are used on this vehicle, one each for the left and right sides of the vehicle. These sensors are mounted remotely from the impact sensor that is internal to the Occupant Restraint Controller (ORC). Each side sensor is secured with two screws and is sealed by a resilient gasket (1) to the front door hardware module carrier on the front door inner panel. The sensors are concealed behind the front door trim panel within the passenger compartment.

The right and left front door side impact sensors are identical in construction and calibration. The impact sensor housing has an integral connector receptacle (3), two integral mounting tabs, and an integral hood-like water shield (4). The water shield extends through a hole in the front door module carrier into the interior of the door cavity and protects the sensor orifice from contamination.

A cavity in the center of the molded plastic impact sensor housing contains the electronic circuitry of the sensor, which includes an electronic communication chip and the pressure sensor. The housing cavity is filled with a potting material to seal and protect the internal electronic circuitry and components. The pressure-type side impact sensors are each connected to the vehicle electrical system through a dedicated take out and connector of the front door wire harness.

The pressure-type side impact sensors cannot be repaired or adjusted and, if damaged or ineffective, they must be replaced.

OPERATION

IMPACT SENSORS

Two types of impact sensors are used in this vehicle. They are the acceleration-type and the pressure-type. Additional operational details of each of these sensor types is described in further detail elsewhere within this service information.

ACCELERATION TYPE

The acceleration-type impact sensors are electronic accelerometers that sense the rate of vehicle deceleration, which provides verification of the direction and severity of an impact. Each sensor also contains an electronic communication chip that allows the unit to communicate the sensor status as well as sensor fault information to the microcontroller within the Occupant Restraint Controller (ORC).

The ORC microcontroller continuously monitors all of the Supplemental Restraint System (SRS) electrical circuits to determine the system readiness. If the ORC detects a monitored system fault, it sets a Diagnostic Trouble Code (DTC) and controls the airbag indicator operation accordingly. The impact sensors each receive battery current and ground through dedicated left and right sensor plus and minus circuits from the ORC. The impact sensors and the ORC communicate by modulating the voltage in the sensor plus circuit.

The hard wired circuits between the impact sensors and the ORC may be diagnosed using conventional diagnostic tools and procedures. Refer to the appropriate wiring information. However, conventional diagnostic methods will not prove conclusive in the diagnosis of the impact sensors or the electronic controls and communication between other modules and devices that provide some features of the SRS. The most reliable, efficient and accurate means to diagnose the acceleration-type impact sensors or the electronic controls and communication related to impact sensor operation requires the use of a diagnostic scan tool. Refer to the appropriate diagnostic information.

PRESSURE TYPE

The pressure-type front door side impact sensors recognize a side impact in the front door area by monitoring changes in pressure within the front door cavity. A sudden pressure wave is created as the door collapses during an impact event. Each sensor also contains an electronic communication chip that allows the unit to communicate the sensor status as well as sensor fault information to the microcontroller within the Occupant Restraint Controller (ORC).

The ORC microcontroller continuously monitors all of the Supplemental Restraint System (SRS) electrical circuits to determine the system readiness. If the ORC detects a monitored system fault, it sets a Diagnostic Trouble Code (DTC) and controls the airbag indicator operation accordingly. The impact sensors each receive battery current and ground through dedicated left and right sensor plus and minus circuits from the ORC. The impact sensors and the ORC communicate by modulating the current in the sensor plus circuit.

The hard wired circuits between the pressure-type front door side impact sensors and the ORC may be diagnosed using conventional diagnostic tools and procedures. Refer to the appropriate wiring information. However, conventional diagnostic methods will not prove conclusive in the diagnosis of the impact sensors or the electronic controls and communication between other modules and devices that provide features of the SRS. The most reliable, efficient and accurate means to diagnose the pressure-type impact sensors or the electronic controls and communication related to impact sensor operation requires the use of a diagnostic scan tool. Refer to the appropriate diagnostic information.

REMOVAL

FRONT

WARNING: To avoid serious or fatal injury on vehicles equipped with airbags, disable the Supplemental Restraint System (SRS) before attempting any steering wheel, steering column, airbag, Occupant Classification System (OCS), seat belt tensioner, impact sensor or instrument panel component diagnosis or service. Disconnect and isolate the battery negative (ground) cable, then wait two minutes for the system capacitor to discharge before performing further diagnosis or service. This is the only sure way to disable the SRS. Failure to follow these instructions may result in accidental airbag deployment.

WARNING: To avoid serious or fatal injury, never strike or drop the front impact sensor, as it can damage the impact sensor or affect its calibration. The front impact sensor enables the system to deploy the front supplemental restraints. If an impact sensor is accidentally dropped during service, the sensor must be scrapped and replaced with a new unit. Failure to observe this warning could result in accidental, incomplete, or improper front supplemental restraint deployment.

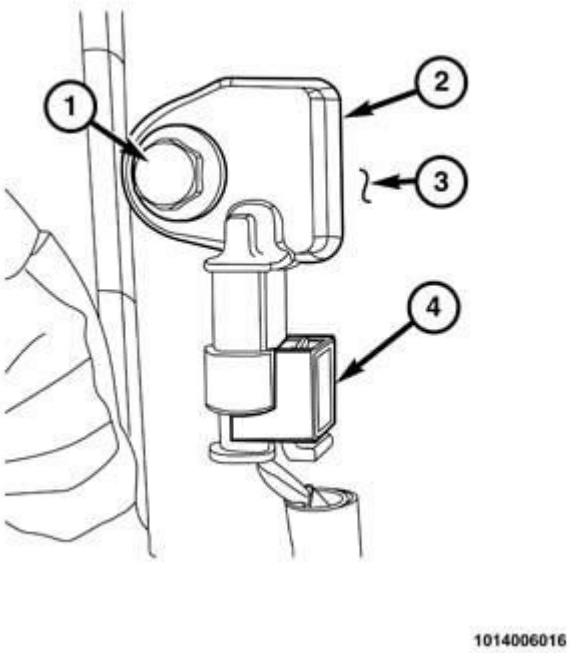

Fig. 103: Front Impact Sensor
Courtesy of CHRYSLER GROUP, LLC

NOTE: The front and the side impact sensors are NOT interchangeable.

1. Disconnect and isolate the negative cable from the battery. Wait two minutes for the system capacitor to discharge before further service.
2. For the left impact sensor only, remove the battery tray from the left side of the engine compartment.

   Refer to **TRAY, BATTERY, REMOVAL** .

3. For the right impact sensor only, remove the engine air cleaner housing from the right side of the engine compartment. Refer to **BODY, AIR CLEANER, REMOVAL** -2.0L, **BODY, AIR CLEANER, REMOVAL** -2.4L, or **BODY, AIR CLEANER, REMOVAL** -3.2L.
4. Locate the front impact sensor (2) located on the engine compartment side of the Front End Module (FEM) carrier (3), below the upper radiator cross member and just outboard of the cooling module.
5. Disconnect the FEM wire harness connector (4) from the right or left front impact sensor connector receptacle.
6. Remove the screw (1) that secures the sensor to the back of the FEM carrier.
7. Gently pry the sensor away from the FEM carrier far enough to disengage the latch feature of the locator pin on the back of the sensor from the locator hole in the FEM carrier.
8. Remove the right or left front impact sensor from the vehicle.

SIDE - B-PILLAR

WARNING: **To avoid serious or fatal injury on vehicles equipped with airbags, disable the Supplemental Restraint System (SRS) before attempting any steering wheel, steering column, airbag, Occupant Classification System (OCS), seat belt tensioner, impact sensor or instrument panel component diagnosis or service. Disconnect and isolate the battery negative (ground) cable, then wait two minutes for the system capacitor to discharge before performing further diagnosis or service. This is the only sure way to disable the SRS. Failure to follow these instructions may result in accidental airbag deployment.**

WARNING: **To avoid serious or fatal injury, never strike or drop the side impact sensor, as it can damage the impact sensor or affect its calibration. The side impact sensor enables the system to deploy the side Supplemental Restraint System (SRS) components. If an impact sensor is accidentally dropped during service, the sensor must be scrapped and replaced with a new unit. Failure to observe this warning could result in accidental, incomplete, or improper side SRS component deployment.**

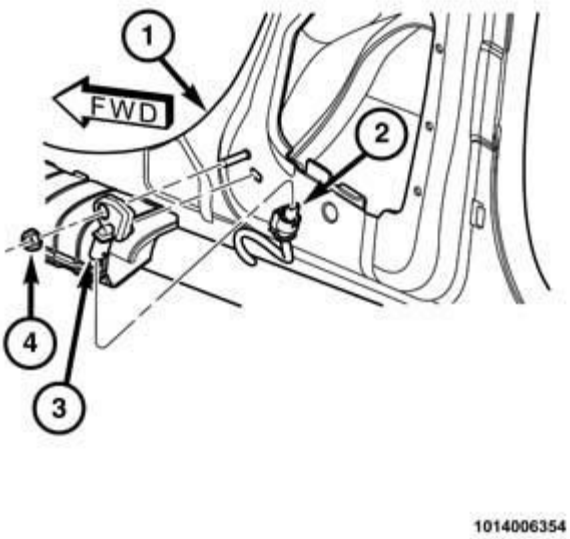

Fig. 104: B-Pillar Side Impact Sensor
Courtesy of CHRYSLER GROUP, LLC

NOTE: The front and the side impact sensors are NOT interchangeable.

1. Adjust the driver or passenger side front seat to its most forward position for easiest access to the B-pillar trim.
2. Disconnect and isolate the negative cable from the battery. Wait two minutes for the system capacitor to discharge before further service.
3. Remove the trim from the inside of the B-pillar (1). Refer to **PANEL, B-PILLAR TRIM, REMOVAL** .
4. Disconnect the body wire harness connector (2) from the side impact sensor (3) connector receptacle.
5. Remove the nut (4) that secures the sensor to the weld stud on the lower B-pillar.
6. Gently pry the sensor away from the inner B-pillar far enough to disengage the latch feature of the locator pin from the locator hole.
7. Remove the sensor from the inner B-pillar.

SIDE - C-PILLAR

WARNING: To avoid serious or fatal injury on vehicles equipped with airbags, disable the Supplemental Restraint System (SRS) before attempting any steering wheel, steering column, airbag, Occupant Classification System (OCS), seat belt tensioner, impact sensor or instrument panel component diagnosis or service. Disconnect and isolate the battery negative (ground) cable, then wait two minutes for the system capacitor to discharge before performing further diagnosis or service. This is the only sure way to

disable the SRS. Failure to follow these instructions may result in accidental airbag deployment.

WARNING: To avoid serious or fatal injury, never strike or drop the side impact sensor, as it can damage the impact sensor or affect its calibration. The side impact sensor enables the system to deploy the side Supplemental Restraint System (SRS) components. If an impact sensor is accidentally dropped during service, the sensor must be scrapped and replaced with a new unit. Failure to observe this warning could result in accidental, incomplete, or improper side SRS component deployment.

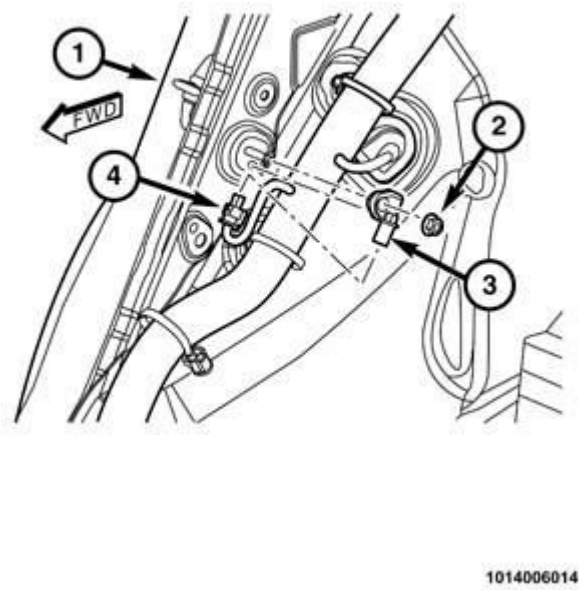

Fig. 105: C-Pillar Side Impact Sensor
Courtesy of CHRYSLER GROUP, LLC

NOTE: The front and the side impact sensors are NOT interchangeable.

1. Disconnect and isolate the negative cable from the battery. Wait two minutes for the system capacitor to discharge before further service.
2. Remove the trim from the inside of the lower C-pillar (1). Refer to **PANEL, QUARTER TRIM, REMOVAL** .
3. Disconnect the body wire harness connector (4) from the side impact sensor (3) connector receptacle.
4. Remove the nut (2) that secures the sensor to the weld stud on the inner C-pillar.
5. Gently pry the sensor away from the inner C-pillar far enough to disengage the latch feature of the locator pin from the locator hole.
6. Remove the sensor from the inner C-pillar.

SIDE - FRONT DOOR

WARNING: To avoid serious or fatal injury on vehicles equipped with airbags, disable the Supplemental Restraint System (SRS) before attempting any steering wheel, steering column, airbag, Occupant Classification System (OCS), seat belt tensioner, impact sensor or instrument panel component diagnosis or service. Disconnect and isolate the battery negative (ground) cable, then wait two minutes for the system capacitor to discharge before performing further diagnosis or service. This is the only sure way to disable the SRS. Failure to follow these instructions may result in accidental airbag deployment.

WARNING: To avoid serious or fatal injury, never strike or drop the side impact sensor, as it can damage the impact sensor or affect its calibration. The side impact sensor enables the system to deploy the side Supplemental Restraint System (SRS) components. If an impact sensor is accidentally dropped during service, the sensor must be scrapped and replaced with a new unit. Failure to observe this warning could result in accidental, incomplete, or improper side SRS component deployment.

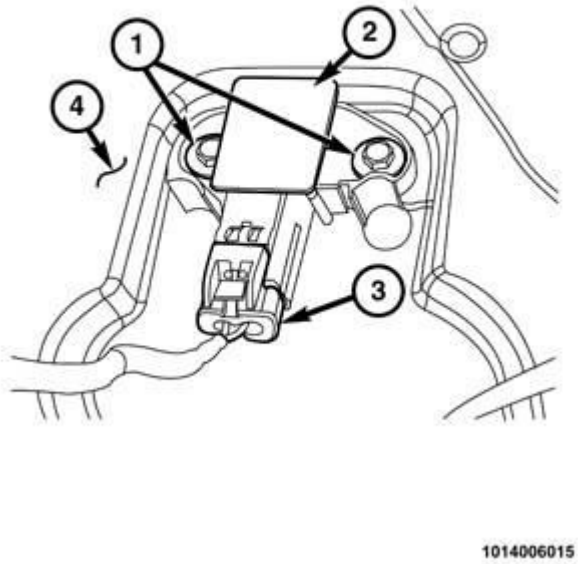

Fig. 106: Front Door Side Impact Sensor
Courtesy of CHRYSLER GROUP, LLC

1. Disconnect and isolate the negative cable from the battery. Wait two minutes for the system capacitor to discharge before further service.
2. Remove the trim panel from the inside of the right or left front door. Refer to **PANEL, DOOR TRIM,**

REMOVAL .

3. Disconnect the front door wire harness connector (3) from the side impact sensor (2) connector receptacle.
4. Remove the two screws (1) that secure the side impact sensor to the front door hardware module carrier panel (4).
5. Remove the side impact sensor from the vehicle.

INSTALLATION

FRONT

WARNING: To avoid serious or fatal injury on vehicles equipped with airbags, disable the Supplemental Restraint System (SRS) before attempting any steering wheel, steering column, airbag, Occupant Classification System (OCS), seat belt tensioner, impact sensor or instrument panel component diagnosis or service. Disconnect and isolate the battery negative (ground) cable, then wait two minutes for the system capacitor to discharge before performing further diagnosis or service. This is the only sure way to disable the SRS. Failure to follow these instructions may result in accidental airbag deployment.

WARNING: To avoid serious or fatal injury, never strike or drop the front impact sensor, as it can damage the impact sensor or affect its calibration. The front impact sensor enables the system to deploy the front Supplemental Restraint System (SRS) components. If an impact sensor is accidentally dropped during service, the sensor must be scrapped and replaced with a new unit. Failure to observe this warning could result in accidental, incomplete, or improper front SRS component deployment.

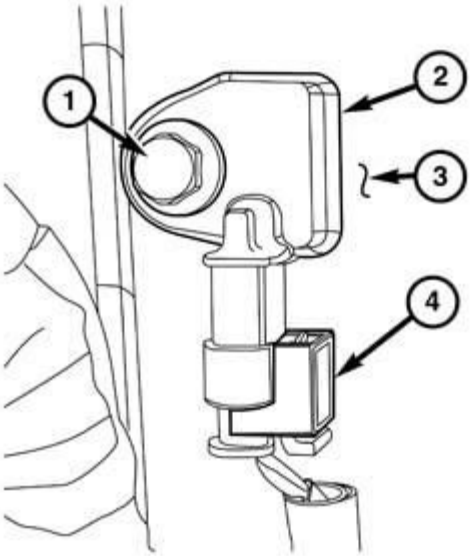

1014006016

Fig. 107: Front Impact Sensor
Courtesy of CHRYSLER GROUP, LLC

NOTE: The front and the side impact sensors are NOT interchangeable.

1. Position the right or left front impact sensor (2) to the back of the Front End Module (FEM) carrier (3) just outboard of the cooling module.
2. Be certain to engage the locating pin integral to the back of the sensor into the locating hole in the FEM carrier.
3. Install and tighten the screw (1) that secures the sensor to the back of the FEM carrier. Tighten the screw to 11 N.m (97 in. lbs.).
4. Reconnect the FEM wire harness connector (4) to the sensor connector receptacle.
5. For the left impact sensor only, reinstall the battery tray into the left side of the engine compartment. Refer to **TRAY, BATTERY, INSTALLATION** .
6. For the right impact sensor only, reinstall the engine air cleaner housing into the right side of the engine compartment. Refer to **BODY, AIR CLEANER, INSTALLATION** -2.0L, **BODY, AIR CLEANER, INSTALLATION** -2.4L, or **BODY, AIR CLEANER, INSTALLATION** -3.2L.
7. Do not reconnect the negative cable to the battery at this time. The Supplemental Restraint System (SRS) Verification Test procedure should be performed following service of any SRS component. Refer to **SUPPLEMENTAL RESTRAINT SYSTEM VERIFICATION TEST**.

SIDE - B-PILLAR

WARNING: To avoid serious or fatal injury on vehicles equipped with airbags, disable the Supplemental Restraint System (SRS) before attempting any steering

wheel, steering column, airbag, Occupant Classification System (OCS), seat belt tensioner, impact sensor or instrument panel component diagnosis or service. Disconnect and isolate the battery negative (ground) cable, then wait two minutes for the system capacitor to discharge before performing further diagnosis or service. This is the only sure way to disable the SRS. Failure to follow these instructions may result in accidental airbag deployment.

WARNING: **To avoid serious or fatal injury, never strike or drop the side impact sensor, as it can damage the impact sensor or affect its calibration. The side impact sensor enables the system to deploy the side Supplemental Restraint System (SRS) components. If an impact sensor is accidentally dropped during service, the sensor must be scrapped and replaced with a new unit. Failure to observe this warning could result in accidental, incomplete, or improper side SRS component deployment.**

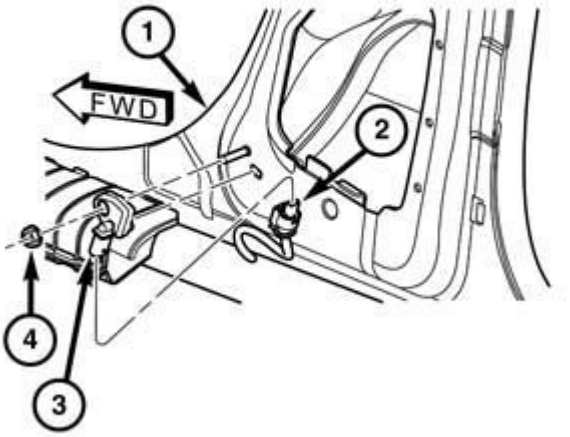

Fig. 108: B-Pillar Side Impact Sensor
Courtesy of CHRYSLER GROUP, LLC

NOTE: The front and the side impact sensors are NOT interchangeable.

1. Position the side impact sensor (3) onto the weld stud on the inner B-pillar (1). Be certain that the locator pin on the sensor is fully engaged in the locator hole of the inner B-pillar.
2. Install and tighten the nut (4) that secures the sensor to the inner B-pillar. Tighten the nut to 11 N.m (97 in. lbs.).
3. Reconnect the body wire harness connector (2) to the sensor connector receptacle.

4. Reinstall the trim onto the inside of the B-pillar. Refer to **PANEL, B-PILLAR TRIM, INSTALLATION** .
5. Do not reconnect the negative cable to the battery at this time. The Supplemental Restraint System (SRS) Verification Test procedure should be performed following service of any SRS component. Refer to **SUPPLEMENTAL RESTRAINT SYSTEM VERIFICATION TEST**.

SIDE - C-PILLAR

WARNING: **To avoid serious or fatal injury on vehicles equipped with airbags, disable the Supplemental Restraint System (SRS) before attempting any steering wheel, steering column, airbag, Occupant Classification System (OCS), seat belt tensioner, impact sensor or instrument panel component diagnosis or service. Disconnect and isolate the battery negative (ground) cable, then wait two minutes for the system capacitor to discharge before performing further diagnosis or service. This is the only sure way to disable the SRS. Failure to follow these instructions may result in accidental airbag deployment.**

WARNING: **To avoid serious or fatal injury, never strike or drop the side impact sensor, as it can damage the impact sensor or affect its calibration. The side impact sensor enables the system to deploy the side Supplemental Restraint System (SRS) components. If an impact sensor is accidentally dropped during service, the sensor must be scrapped and replaced with a new unit. Failure to observe this warning could result in accidental, incomplete, or improper side SRS component deployment.**

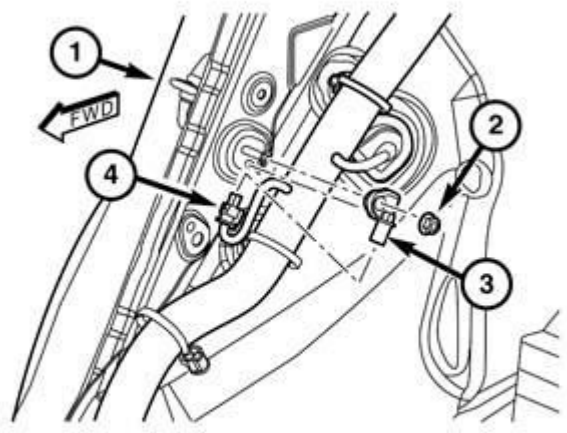

1014006014

Fig. 109: C-Pillar Side Impact Sensor
Courtesy of CHRYSLER GROUP, LLC

NOTE: The front and the side impact sensors are NOT interchangeable.

1. Position the side impact sensor (3) onto the weld stud on the inner C-pillar (1). Be certain that the locator pin on the sensor is fully engaged in the locator hole of the inner C-pillar.
2. Install and tighten the nut (2) that secures the sensor to the inner C-pillar. Tighten the nut to 11 N.m (97 in. lbs.).
3. Reconnect the body wire harness connector (4) to the sensor connector receptacle.
4. Reinstall the trim onto the inside of the C-pillar. Refer to **PANEL, QUARTER TRIM, INSTALLATION** .
5. Do not reconnect the negative cable to the battery at this time. The Supplemental Restraint System (SRS) Verification Test procedure should be performed following service of any SRS component. Refer to **SUPPLEMENTAL RESTRAINT SYSTEM VERIFICATION TEST**.

SIDE - FRONT DOOR

WARNING: **To avoid serious or fatal injury on vehicles equipped with airbags, disable the Supplemental Restraint System (SRS) before attempting any steering wheel, steering column, airbag, Occupant Classification System (OCS), seat belt tensioner, impact sensor or instrument panel component diagnosis or service. Disconnect and isolate the battery negative (ground) cable, then wait two minutes for the system capacitor to discharge before performing further diagnosis or service. This is the only sure way to disable the SRS. Failure to follow these instructions may result in accidental airbag deployment.**

WARNING: **To avoid serious or fatal injury, never strike or drop the side impact sensor, as it can damage the impact sensor or affect its calibration. The side impact sensor enables the system to deploy the side Supplemental Restraint System (SRS) components. If an impact sensor is accidentally dropped during service, the sensor must be scrapped and replaced with a new unit. Failure to observe this warning could result in accidental, incomplete, or improper side SRS component deployment.**

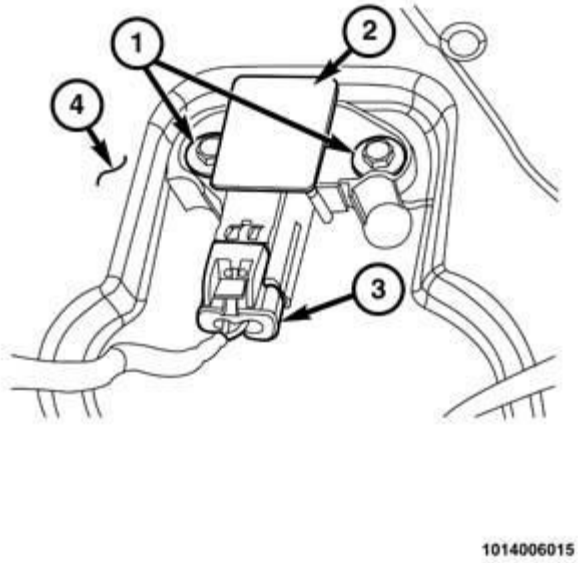

Fig. 110: Front Door Side Impact Sensor
Courtesy of CHRYSLER GROUP, LLC

NOTE: Be certain that the gasket between the pressure-type side impact sensor and the front door hardware module carrier panel is in good condition and positioned on the back of the sensor. There MUST be a good seal between the sensor and the hardware module carrier panel for the sensor to operate properly. If the gasket is in poor condition, replace the sensor.

1. Position the side impact sensor (2) to the right or left front door hardware module carrier panel (4). When the sensor is correctly positioned, the sensor connector receptacle will be pointed toward the bottom of the door.
2. Install and tighten the two screws (1) that secure the side impact sensor to the door hardware module carrier panel. Tighten the screws to 2.4 N.m (21 in. lbs.).
3. Reconnect the front door wire harness connector (3) to the sensor connector receptacle.
4. Reinstall the trim panel onto the inside of the right or left front door. Refer to **PANEL, DOOR TRIM, INSTALLATION** .
5. Do not reconnect the negative cable to the battery at this time. The Supplemental Restraint System (SRS) Verification Test procedure should be performed following service of any SRS component. Refer to **SUPPLEMENTAL RESTRAINT SYSTEM VERIFICATION TEST**.

SENSOR, OCCUPANT DETECTION

DESCRIPTION

DESCRIPTION

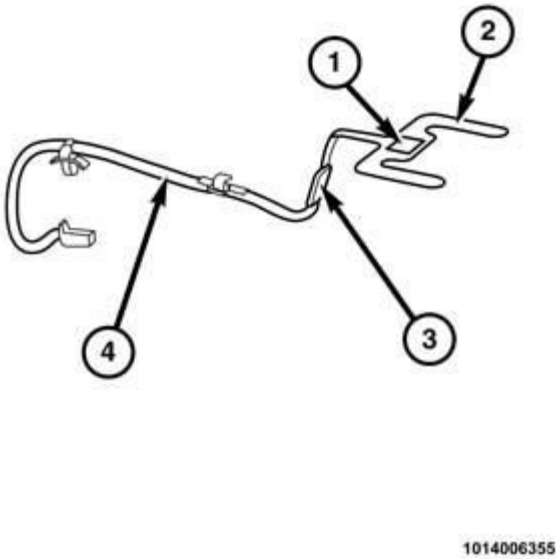

Fig. 111: Occupant Detection Sensor (ODS)
Courtesy of CHRYSLER GROUP, LLC

Vehicles manufactured for export markets have an Occupant Detection Sensor (ODS) as standard equipment. The ODS is located directly below the passenger side front seat cushion trim cover. This sensor provides information to the Occupant Restraint Controller (ORC) used for control of the passenger belt alert feature.

The ODS consists of a flexible clear plastic sensor mat (2) containing several resistive membrane, force sensing resistor cells that is secured by an adhesive strip (1) to the top surface of the seat cushion foam. The adhesive patch on the ODS is a one time only material and cannot be reactivated or reused if removed.

A short, two-conductor pigtail wire and connector (4) connect the sensor to the vehicle electrical system through a dedicated take out and connector of the seat wire harness. A hot melt adhesive block (3) encapsulates and protects the connections between the electrical conductors in the tail of the sensor mat and the pigtail wires as well as a diagnostic resistor.

The ODS cannot be adjusted or repaired, and must be replaced if damaged or ineffective.

OPERATION

OPERATION

In vehicles manufactured for export markets, the Occupant Detection Sensor (ODS) acts as a simple switch to detect loads placed upon the passenger side front seat cushion. The sensor circuits are connected to and monitored by the Occupant Restraint Controller (ORC) whenever the status of the ignition switch (also known as the Keyless Ignition Node/KIN or the IGnition Node Module/IGNM) is On. The ORC uses an algorithm logic in monitoring the changing states of the sensor input to determine whether the seat cushion load is static or

dynamic.

The ORC microcontroller continuously monitors all of the Supplemental Restraint System (SRS) electrical circuits to determine the system status and readiness. If the ORC detects a monitored system fault, it sets a Diagnostic Trouble Code (DTC). However, because the ODS input is only used for control of the passenger belt alert feature, which has no effect on SRS component features or functions, the airbag indicator is **NOT** illuminated in response to a detected ODS circuit fault.

The ODS receives source current and a clean ground through dedicated sensor plus and minus circuits from the ORC. The ORC then sends the appropriate sensor status information over the Controller Area Network (CAN) data bus to the Instrument Cluster (IC) (also known as the Instrument Panel Cluster/IPC), which uses this information as an additional logic input used for control of the seat belt indicator and the passenger belt alert feature.

The hard wired circuits between the ODS and the ORC may be diagnosed using conventional diagnostic tools and procedures. Refer to the appropriate wiring information. However, conventional diagnostic methods will not prove conclusive in the diagnosis of the ODS or the electronic controls and communication between other modules and devices that provide some features of the passenger belt alert feature. The most reliable, efficient and accurate means to diagnose the ODS or the electronic controls and communication related to the passenger belt alert feature operation requires the use of a diagnostic scan tool. Refer to the appropriate diagnostic information.

REMOVAL

REMOVAL

WARNING: **To avoid serious or fatal injury on vehicles equipped with airbags, disable the Supplemental Restraint System (SRS) before attempting any steering wheel, steering column, airbag, seat belt tensioner, impact sensor or instrument panel component diagnosis or service. Disconnect and isolate the battery negative (ground) cable, then wait two minutes for the system capacitor to discharge before performing further diagnosis or service. This is the only sure way to disable the SRS. Failure to take the proper precautions could result in accidental airbag deployment.**

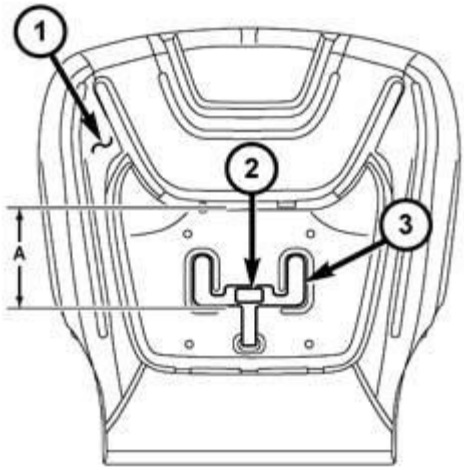

1017009895

Fig. 112: Base (Non-Storage) Seat
Courtesy of CHRYSLER GROUP, LLC

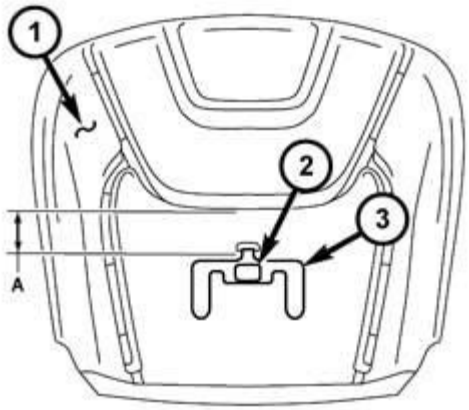

1017009896

Fig. 113: Storage Seat
Courtesy of CHRYSLER GROUP, LLC

NOTE: The Occupant Detection Sensor (ODS) is used only in the passenger side front

seat of vehicles manufactured for export markets. Vehicles manufactured for domestic markets use the Occupant Classification System (OCS) instead of the ODS on the passenger side front seat.

1. Position the passenger side front seat to its most forward position for easiest access to the front seat mounting hardware.
2. Disconnect and isolate the negative cable from the battery. Wait two minutes for the system capacitor to discharge before further service.
3. Remove the passenger side front seat from the vehicle. Refer to **SEAT, REMOVAL** .
4. Remove the trim from the front seat cushion foam (1) and frame. Refer to **COVER, SEAT CUSHION, REMOVAL** .
5. If equipped, remove the heater and/or ventilation elements from the seat cushion foam. Refer to **PAD, HEATER, REMOVAL** .
6. Reach under the seat cushion pan to access and disconnect the Occupant Detection Sensor (ODS) pigtail wire harness connector from the seat wire harness.
7. Carefully disengage the adhesive patch (2) of the ODS mat (3) from the top surface of the seat cushion foam.

NOTE: **Care must be taken not to pull off any of the seat cushion foam along with the ODS mat. If part of the seat cushion foam is removed with the mat, the entire seat cushion foam should be replaced.**

8. Extract the tail of the ODS and the sensor pigtail wire harness from the clearance hole in the seat cushion foam.

INSTALLATION

INSTALLATION

WARNING: **To avoid serious or fatal injury on vehicles equipped with airbags, disable the Supplemental Restraint System (SRS) before attempting any steering wheel, steering column, airbag, seat belt tensioner, impact sensor or instrument panel component diagnosis or service. Disconnect and isolate the battery negative (ground) cable, then wait two minutes for the system capacitor to discharge before performing further diagnosis or service. This is the only sure way to disable the SRS. Failure to take the proper precautions could result in accidental airbag deployment.**

CAUTION: **When handling a new Occupant Detection Sensor (ODS), it should never be bent, creased, torn, cut or abraded. The ODS should not be handled with or come into contact with hard or sharp-edged tools or objects. Do not allow the ODS to drop more than 2 meters (6.5 feet). Prior to installation, do not sit on, stand on or place boxes, tools or any other foreign object on the ODS. If the ODS adhesive patches become**

inadvertently adhered to any seat materials or foreign objects prior to proper positioning on the seat cushion, the ODS must be scrapped and replaced with a new unit. Do not modify the seat foam or trim materials of a seat that contains an ODS. Failure to observe these cautions may result in an inoperative ODS, or an ODS that provides inaccurate inputs to the Occupant Restraint Controller (ORC).

CAUTION: The adhesive used to secure the ODS to the seat is heat activated and requires that both the adhesive and the material it is applied to be ideally between 21° and 38° C (between 70° and 100° F). Application of the ODS to surfaces below 10° C (50° F) is not recommended as the adhesive becomes too firm to readily adhere. Do not touch or allow the adhesive patches to contact any foreign materials with the release paper removed. Do not attempt to add adhesive materials to the ODS.

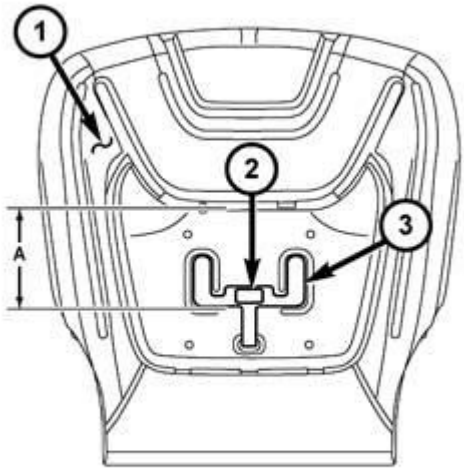

1017009895

Fig. 114: Base (Non-Storage) Seat
Courtesy of CHRYSLER GROUP, LLC

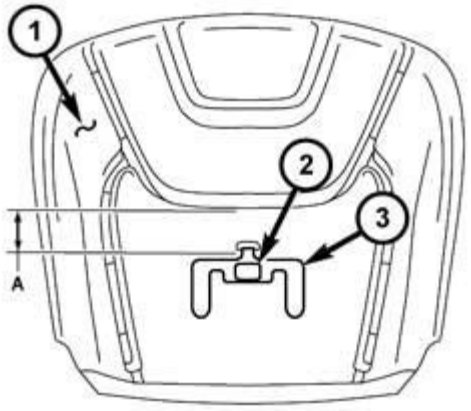

1017009896

Fig. 115: Storage Seat
Courtesy of CHRYSLER GROUP, LLC

NOTE: The Occupant Detection Sensor (ODS) is used only in the passenger side front seat of vehicles manufactured for export markets. Vehicles manufactured for domestic markets use the Occupant Classification System (OCS) instead of the ODS on the passenger side front seat.

1. Carefully inspect the Occupant Detection Sensor (ODS) (3) to be certain that it is in good condition.
2. Insert the ODS pigtail wire harness and the tail of the ODS through the clearance hole near the back (with base, non-storage seat) or near the center (with storage seat) of the seat cushion foam.
3. Carefully position and center the ODS mat onto the seat cushion foam (1). On a base (non-storage) seat, the distance (A) from the rear edge of the trench in the foam to the rear edge of the sensor mat should be 145 millimeters (inches). On a storage seat, the distance (A) from the rear edge of the trench to the front edge of the sensor mat should be 70 millimeters (inches).
4. Remove the release paper from the adhesive patch of the ODS mat.

NOTE: The release paper should not be removed from the adhesive patch of a new ODS mat until just prior to application to the seat cushion foam.

5. Apply hand pressure (0.8 bar or 12 psi) over the adhesive patch of the ODS for at least four seconds to activate and adhere the adhesive to the seat cushion foam.
6. Reach under the seat cushion pan to access and reconnect the ODS pigtail wire connector to the seat wire harness.
7. If equipped, reinstall the heater and/or ventilation elements onto the seat cushion foam.

Refer to **PAD, HEATER, INSTALLATION** .

8. Reinstall the trim onto the front seat cushion foam and pan. Refer to **COVER, SEAT CUSHION, INSTALLATION** .
9. Reinstall the passenger side front seat into the vehicle. Refer to **SEAT, INSTALLATION** .
10. Reconnect the negative cable to the battery.

SENSOR, SEAT TRACK POSITION

DESCRIPTION

DESCRIPTION

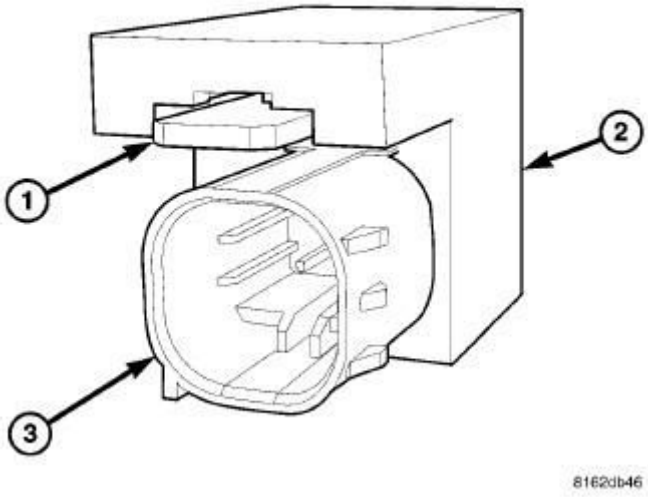

Fig. 116: Identifying Seat Track Position Sensor
Courtesy of CHRYSLER GROUP, LLC

The Seat Track Position Sensor (STPS) (2) is a Hall Effect-type sensor used on some vehicles. This sensor consists of a Hall Effect Integrated Circuit (IC) chip encased in potting material within a cavity of the molded plastic sensor housing.

The STPS housing has a mounting slot containing an integral latch feature (1) and slides and latches onto a stamped metal blade-type bracket located on the inboard side of the upper inboard seat adjuster track near the rear of both the passenger and driver front seats. A molded connector receptacle (3) integral to the STPS housing is connected to the vehicle electrical system through a connector and take out of the seat wire harness beneath the front seat cushion frame.

The STPS cannot be adjusted or repaired and, if ineffective or damaged, the entire STPS unit must be replaced.

OPERATION

OPERATION

The Seat Track Position Sensor (STPS) is designed to provide a seat position data input to the Occupant Restraint Controller (ORC) indicating whether the driver or passenger front seat is in a full forward or a not full forward position. The ORC uses this data as an additional logic input for use in determining the appropriate force to be used when deploying the multistage Driver AirBag (DAB) or Passenger AirBag (PAB).

The STPS receives a nominal five volt supply from the ORC. The STPS communicates the seat position by modulating the voltage returned to the ORC on a sensor data circuit. The ORC also monitors the condition of the STPS circuits and will store a Diagnostic Trouble Code (DTC) for any fault that is detected. The ORC sends messages over the CAN data bus to control the illumination of the airbag indicator in the Instrument Cluster (IC) (also known as the Instrument Panel Cluster/IPC).

The hard wired circuits between the STPS and the ORC may be diagnosed using conventional diagnostic tools and procedures. Refer to the appropriate wiring information. However, conventional diagnostic methods will not prove conclusive in the diagnosis of the STPS or the electronic controls and communication between other modules and devices that provide features of the Supplemental Restraint System (SRS). The most reliable, efficient and accurate means to diagnose the STPS or the electronic controls and communication related to STPS operation requires the use of a diagnostic scan tool. Refer to the appropriate diagnostic information.

REMOVAL

REMOVAL

WARNING: **To avoid serious or fatal injury on vehicles equipped with airbags, disable the Supplemental Restraint System (SRS) before attempting any steering wheel, steering column, airbag, Occupant Classification System (OCS), seat belt tensioner, impact sensor or instrument panel component diagnosis or service. Disconnect and isolate the battery negative (ground) cable, then wait two minutes for the system capacitor to discharge before performing further diagnosis or service. This is the only sure way to disable the SRS. Failure to follow these instructions may result in accidental airbag deployment.**

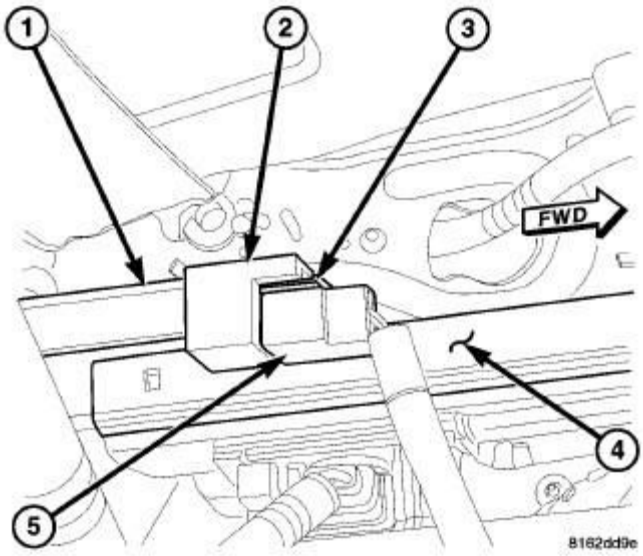

Fig. 117: Seat Track Position Sensor, Bracket, Upper Inboard Seat Track & Harness Connector
Courtesy of CHRYSLER GROUP, LLC

1. Disconnect and isolate the negative cable from the battery. Wait two minutes for the system capacitor to discharge before further service.
2. Reach under the rear edge of the front seat cushion to access the Seat Track Position Sensor (STPS) (2) on a bracket (1) located on the inboard side near the rear of one of the upper seat tracks (4).
3. Using a small screwdriver, hold the latch feature (3) depressed while sliding the connector end of the STPS off of the bracket.
4. Disconnect the seat wire harness connector (5) from the STPS connector receptacle.
5. Remove the STPS from under the front seat.

INSTALLATION

INSTALLATION

WARNING: To avoid serious or fatal injury on vehicles equipped with airbags, disable the Supplemental Restraint System (SRS) before attempting any steering wheel, steering column, airbag, Occupant Classification System (OCS), seat belt tensioner, impact sensor or instrument panel component diagnosis or service. Disconnect and isolate the battery negative (ground) cable, then wait two minutes for the system capacitor to discharge before performing further diagnosis or service. This is the only sure way to disable the SRS. Failure to follow these instructions may result in accidental airbag deployment.

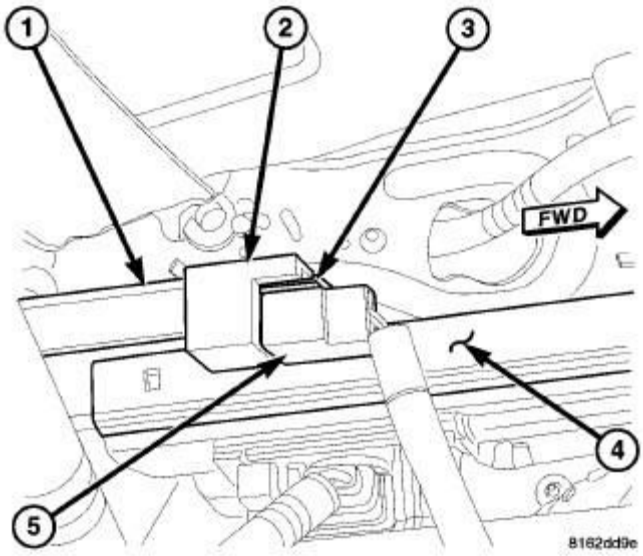

Fig. 118: Seat Track Position Sensor, Bracket, Upper Inboard Seat Track & Harness Connector
Courtesy of CHRYSLER GROUP, LLC

1. Reach under the rear edge of the front seat cushion to reconnect the seat wire harness connector (5) to the Seat Track Position Sensor (STPS) (2) connector receptacle. Be certain that the latch on the connector is fully engaged.
2. Align the open end of the STPS mounting slot to the blade of the STPS bracket (1) located on the inboard side near the rear of one of the upper seat tracks (4).
3. Push the STPS firmly onto the bracket until the latch feature (3) snaps into place with an audible click.
4. Do not reconnect the negative cable to the battery at this time. The Supplemental Restraint System (SRS) Verification Test procedure should be performed following service of any SRS component. Refer to **SUPPLEMENTAL RESTRAINT SYSTEM VERIFICATION TEST**.

SWITCH, SEAT BELT

DESCRIPTION

DESCRIPTION

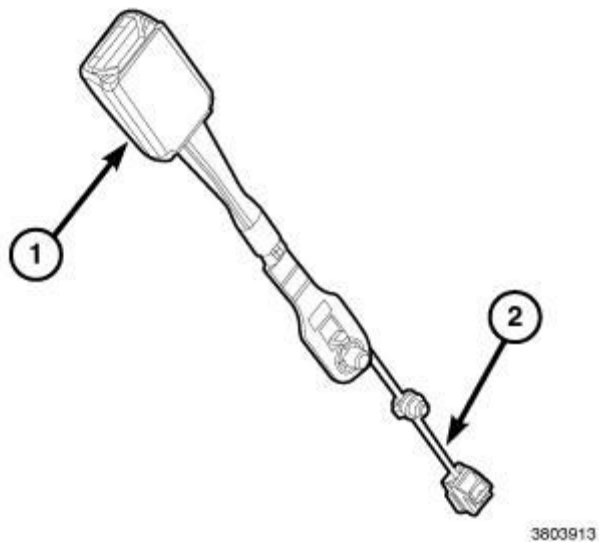

Fig. 119: Seat Belt Buckle, Pigtail Wire & Connector
Courtesy of CHRYSLER GROUP, LLC

Both the driver and passenger front seat belt switches for this vehicle are actually Hall Effect-type sensors. These sensors consist of a fixed-position, Hall Effect Integrated Circuit (IC) chip and a small permanent magnet that are integral to the front seat belt buckles (1). The front seat belt buckles are located on a molded plastic scabbard and secured by a screw to a bracket near the back of the upper, inboard seat adjuster track. The front seat belt switches are connected to the vehicle electrical system through a two-lead pigtail wire and connector (2) on the front seat belt buckle-half, which is connected to a wire harness connector and take out of the seat wire harness. A one kilohm diagnostic resistor is connected in parallel with the IC where the two pigtail wire leads connect to the IC pins.

Vehicles manufactured for certain export markets also have seat belt switches for each of the rear seating positions. The rear seat belt switches are small, normally open, single pole, single throw, mechanical leaf contact, momentary switches. These switches are integral to the buckle of each rear seat belt buckle-half. The rear seat belt switches are connected to the vehicle electrical system through a two-wire pigtail wire and connector on the seat belt buckle-half, which is connected to a wire harness connector and take out of the seat wire harness routed beneath the rear seat cushions in the passenger compartment.

The front and rear seat belt switches cannot be adjusted or repaired and, if ineffective or damaged, the entire front or rear seat belt buckle-half unit must be replaced.

OPERATION

OPERATION

The driver front seat belt switch is designed to control a hard wired sense input to the Occupant Restraint Controller (ORC), while the passenger front seat belt switch controls a similar input to the Occupant Classification Module (OCM). A spring-loaded slide with a small window-like opening is integral to each buckle latch mechanism. When a seat belt tip-half is inserted and latched into the seat belt buckle, the slide is pushed downward and the window of the slide exposes the Hall-effect Integrated Circuit (IC) chip within the buckle. The field of the permanent magnet induces a current within the chip. The chip provides this induced

current as an output to the ORC or the OCM. When the seat belt is unbuckled, the spring-loaded slide moves upward and shields the IC from the field of the permanent magnet, causing the output current from the seat belt switch to be reduced. The front seat belt switches receive a supply of current from the ORC or the OCM, and the ORC or OCM senses the status of the front seat belt switch through its connection to the seat wire harnesses.

In vehicles built for certain export markets equipped with rear seat belt switches, the seat belt switches are designed to control a path to ground for the seat belt switch sense inputs of the ORC. When the rear seat belt tip-half is inserted into the seat belt buckle, the switch closes the path to ground; and, when the rear seat belt tip-half is removed from the seat belt buckle, the switch opens the ground path. The switch is actuated by the latch mechanism within the seat belt buckle. The seat belt switch is connected in series between ground and the seat belt switch sense input of the ORC. The seat belt switch receives ground at all times through its pigtail wire connection to the seat wire harness from a take out of the body wire harness. An eyelet terminal connector on the body wire harness ground take out is secured to the body sheet metal.

The ORC or the OCM provides electronic **seat belt switch status** messages to the Instrument Cluster (IC) (also known as the Instrument Panel Cluster/IPC) over the Controller Area Network (CAN) data bus. The IC uses these messages as an additional logic input for control of the seat belt indicator. In vehicles built for certain export markets equipped with rear seat belt switches, the IC reads the messages received from the ORC then controls the Seat Belt Reminder (SBR) indications in the overhead console using Local Interface Network (LIN) data bus communication. The ORC and OCM monitor the condition of the seat belt switch circuits and will store a Diagnostic Trouble Code (DTC) for any fault that is detected.

The hard wired circuits between the seat belt switches and the ORC or OCM may be diagnosed using conventional diagnostic tools and procedures. Refer to the appropriate wiring information. However, conventional diagnostic methods will not prove conclusive in the diagnosis of the switches or the electronic controls and communication between other modules and devices that provide some features of the seat belt reminder system. The most reliable, efficient and accurate means to diagnose the seat belt switches or the electronic controls and communication related to seat belt switch operation requires the use of a diagnostic scan tool. Refer to the appropriate diagnostic information.

TENSIONER, SEAT BELT

DESCRIPTION

SEAT BELT TENSIONERS

The seat belts for both front seats in this vehicle incorporate dual tensioners. One tensioner is integral to the seat belt retractor, and one tensioner is integral to the seat belt lower anchor. Each of these tensioner types is described in further detail elsewhere within this service information.

ANCHOR TENSIONER

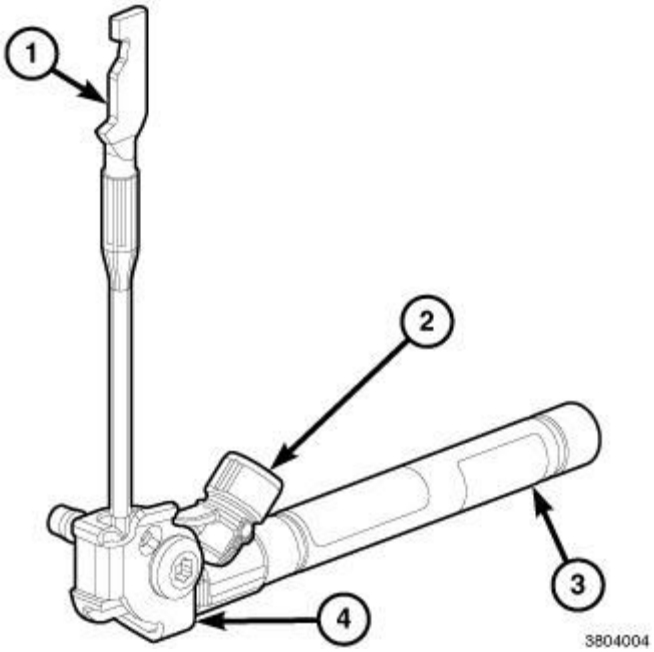

Fig. 120: Anchor Latch Plate, Gas Generator, Metal Cylinder Tube & Bracket
Courtesy of CHRYSLER GROUP, LLC

A seat belt anchor tensioner supplements the dual front airbag system for all versions of this vehicle. These tensioners are integral to the front seat belt anchor units, which are secured to the inside of the sill at the base of the B-pillar outboard of each front seat. The anchor tensioner consists of the anchor latch plate (1), a cable and piston, a cable guide and bracket (4), a metal cylinder tube (3) and a small pyrotechnically activated Micro Gas Generator (MGG) (2). The anchor tensioners are controlled by the Occupant Restraint Controller (ORC) and are connected to the vehicle electrical system through dedicated take outs of the body wire harness by keyed and latching yellow molded plastic connector insulators to ensure a secure connection.

A special procedure requiring two small Allen key wrenches is used to disconnect the seat belt anchor latch plate from the anchor buckle. Refer to **BUCKLE, SEAT BELT, STANDARD PROCEDURE**.

The anchor tensioners cannot be repaired and, if ineffective or damaged, the entire anchor tensioner unit must be replaced. If the front airbags have been deployed, the anchor tensioners have also been deployed. The anchor tensioners are not intended for reuse and must be replaced following any front airbag deployment. Refer to **BUCKLE, SEAT BELT, REMOVAL**.

RETRACTOR TENSIONER

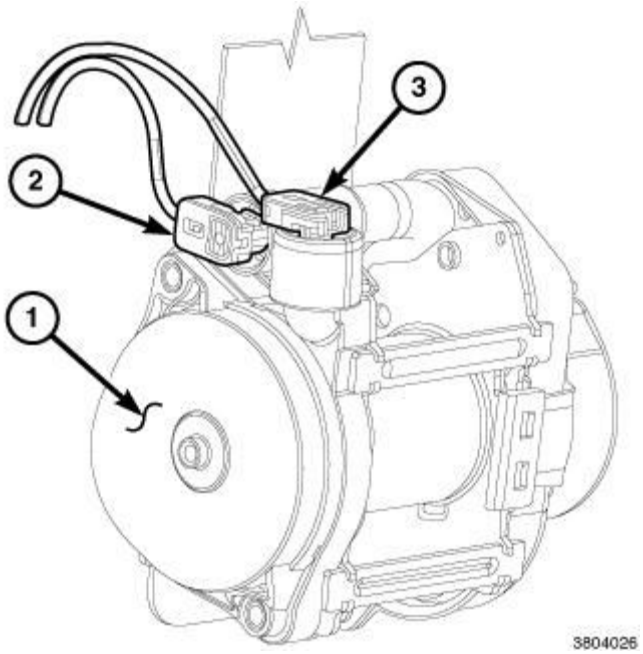

Fig. 121: Seat Belt Retractor Unit & Connector Insulator
Courtesy of CHRYSLER GROUP, LLC

Seat belt retractor tensioners supplement the dual front airbag system for all versions of this vehicle. These tensioners are integral to the front seat belt retractor units (1), which are secured near the base of the inner B-pillar on the right and left sides of the vehicle. The retractor is concealed beneath the molded plastic inner B-pillar trim. The retractor tensioners are controlled by the Occupant Restraint Controller (ORC). Each retractor tensioner has an initiator connected to the vehicle electrical system through a dedicated take out of the body wire harness by a keyed and latching yellow molded plastic connector insulator (2) to ensure a secure connection.

An adaptive load-limiting device is also integral to the front seat belt retractor to supplement the anchor and retractor tensioners. The adaptive load limiter is also controlled by the ORC. Each adaptive load limiter initiator is connected to the vehicle electrical system through a dedicated take out of the body wire harness by a keyed and latching yellow molded plastic connector insulator (3) to ensure a secure connection.

The retractor tensioners and adaptive load limiters cannot be repaired and, if ineffective or damaged, the entire front seat belt and retractor unit must be replaced. If the front airbags have been deployed, the retractor tensioners and adaptive load limiters have also been deployed. The retractor tensioners and adaptive load limiters are not intended for reuse and must be replaced following any front airbag deployment. A growling or grinding sound while attempting to operate the seat belt retractor is a sure indication that the retractor tensioner and adaptive load limiter have been deployed and require replacement. Refer to **RETRACTOR, SEAT BELT, REMOVAL**.

OPERATION

OPERATION

The seat belt tensioners and adaptive load limiter are deployed in conjunction with the dual front airbags by

signals generated by the Occupant Restraint Controller (ORC) through the individual driver or passenger retractor (or sill end), pretensioner (or anchor) or adaptive load limiter line 1 and line 2 (or squib) circuits. When the ORC sends the proper electrical signal to the tensioner and adaptive load limiter initiators, the electrical energy generates enough heat to initiate a small pyrotechnic Micro Gas Generator (MGG).

In sequence, the ORC activates the retractor tensioner, followed by the anchor tensioner. The adaptive load limiter on the retractor is activated only after both the retractor and anchor buckle tensioners. The retractor tensioner gas generator drives the seat belt retractor spool causing slack to be removed from the front seat belt. The anchor tensioner gas generator pulls the buckle downward, causing the slack to be removed from the front seat belt. The ORC uses the adaptive load limiter to adjust the belt resistance based upon impact data, to reduce the force of the tightened seat belt on the chest of the front seat occupant, reducing the potential for injuries.

Removing excess slack from the front seat belts not only keeps the occupants properly positioned for an airbag deployment following a frontal impact of the vehicle, but also helps to reduce injuries that the occupants of the front seats might experience in these situations as a result of harmful contact with the steering wheel, steering column, instrument panel or windshield.

The ORC monitors the condition of the seat belt tensioners and adaptive load limiter through circuit resistance, and will illuminate the airbag indicator in the Instrument Cluster (IC) (also known as the (Instrument Panel Cluster/IPC) and store a Diagnostic Trouble Code (DTC) for any fault that is detected. Proper diagnosis of the seat belt tensioner and adaptive load limiter initiators and squib circuits requires the use of a diagnostic scan tool and may also require the use of the SRS Load Tool special tool along with the appropriate Load Tool Jumpers and Adapters. Refer to the appropriate diagnostic information.

2014 STEERING

Electronic Power Steering (EPS) Module - Electrical Diagnostics - Cherokee

DIAGNOSTIC CODE INDEX

DIAGNOSTIC CODE INDEX

DTC	Description
C0051-04	STEERING WHEEL POSITION SENSOR - SYSTEM INTERNAL FAILURES
C0051-2F	STEERING WHEEL POSITION SENSOR - SIGNAL ERRATIC
C0051-31	STEERING WHEEL POSITION SENSOR - NO SIGNAL
C0051-54	STEERING WHEEL POSITION SENSOR - MISSING CALIBRATION
C006A-49	MULTI-AXIS ACCELERATION SENSOR - INTERNAL ELECTRONIC FAILURE
C1592-01	ELECTRONIC POWER STEERING MOTOR CIRCUIT - GENERAL ELECTRICAL FAILURE
C1592-16	ELECTRONIC POWER STEERING MOTOR CIRCUIT - CIRCUIT VOLTAGE BELOW THRESHOLD
C1592	ELECTRIC POWER STEERING MOTOR CIRCUIT - SIGNAL INVALID
C1592-4B	ELECTRONIC POWER STEERING MOTOR CIRCUIT - OVER TEMPERATURE
C1592-74	ELECTRONIC POWER STEERING MOTOR CIRCUIT - ACTUATOR SLIPPING
C1592-98	ELECTRONIC POWER STEERING MOTOR CIRCUIT - COMPONENT OR SYSTEM OVER TEMPERATURE
C15C1-00	EPS MECHANICAL PERFORMANCE
C15CA-00	BRAKE SYSTEM MODULE - EVENT INFORMATION
C2100-16	BATTERY VOLTAGE LOW - CIRCUIT VOLTAGE BELOW THRESHOLD
C2101-17	BATTERY VOLTAGE HIGH - CIRCUIT VOLTAGE ABOVE THRESHOLD
C2129-13	BATTERY VOLTAGE - CIRCUIT OPEN
C2202-00	ORIGINAL VIN MISMATCH/MISSING
C2217-00	ELECTRIC POWER STEERING MODULE INTERNAL
C221C-00	ECU FLASH REQUIRED
C221F-00	ECU NOT INITIALIZED
U0001-87	CAN-C BUS MISSING MESSAGE
U0002-00	CAN C BUS OFF PERFORMANCE
U0100-00	LOST COMMUNICATION WITH ECM/PCM
U0102-00	LOST COMMUNICATION WITH TRANSFER CASE CONTROL

	MODULE / AWD
U0103-00	LOST COMMUNICATION WITH ELECTRIC GEAR SHIFT MODULE
U0121-00	LOST COMMUNICATION WITH ANTI-LOCK BRAKE SYSTEM (ABS) CONTROL MODULE
U0140-00	LOST COMMUNICATION WITH BODY CONTROL MODULE
U0151-00	LOST COMMUNICATION WITH OCCUPANT RESTRAINT CONTROLLER (ORC)
U0159-00	LOST COMMUNICATION WITH PARK ASSIST CONTROL MODULE (PTS)
U0401-86	IMPLAUSIBLE DATA RECEIVED FROM ECM/PCM - SIGNAL INVALID
U0403-00	IMPLAUSIBLE DATA RECEIVED FROM T-CASE
U0404-00	IMPLAUSIBLE DATA RECEIVED FROM ESM
U0415-00	IMPLAUSIBLE DATA RECEIVED FROM ABS
U0415-27	IMPLAUSIBLE DATA RECEIVED FROM ABS - SIGNAL RATE OF CHANGE ABOVE THRESHOLD
U0415-35	IMPLAUSIBLE DATA RECEIVED FROM ABS - SIGNAL HIGH TIME > MAXIMUM
U0415-85	IMPLAUSIBLE DATA RECEIVED FROM ABS - SIGNAL ABOVE ALLOWABLE RANGE
U0415-86	IMPLAUSIBLE DATA RECEIVED FROM ABS - SIGNAL INVALID
U0415-90	IMPLAUSIBLE DATA RECEIVED FROM ABS - STUCK ON
U0422-00	IMPLAUSIBLE DATA RECEIVED FROM BODY CONTROL MODULE
U0452-00	IMPLAUSIBLE DATA RECEIVED FROM RESTRAINTS CONTROL MODULE
U0452-86	IMPLAUSIBLE DATA RECEIVED FROM RESTRAINTS CONTROL MODULE - SIGNAL INVALID
U045A-00	IMPLAUSIBLE DATA RECEIVED FROM PARKING ASSIST MODULE
U1206-00	LOST COMMUNICATION WITH ELECTRONIC PARK BRAKE MODULE
U1215-00	LOST COMMUNICATION WITH FORWARD FACING CAMERA
U148D-00	IMPLAUSIBLE DATA RECEIVED FROM FORWARD FACING CAMERA
U148D-27	IMPLAUSIBLE DATA RECEIVED FROM FORWARD FACING CAMERA - SIGNAL RATE OF CHANGE ABOVE THRESHOLD
U148D-2A	IMPLAUSIBLE DATA RECEIVED FROM FORWARD FACING CAMERA - STUCK
U148D-85	IMPLAUSIBLE DATA RECEIVED FROM FORWARD FACING

	CAMERA - SIGNAL ABOVE ALLOWABLE RANGE

DIAGNOSIS AND TESTING

C0051-04 STEERING WHEEL POSITION SENSOR - SYSTEM INTERNAL FAILURES

For a complete wiring diagram, refer to appropriate SYSTEM WIRING DIAGRAMS article.

WHEN MONITORED

Continuously.

SET CONDITION

If the Electronic Power Steering (EPS) Module detects an internal fault from the Steering Angle Sensor (SAS), this DTC will set. Most of internal faults that can set this DTC will result in the EPS assist not operating for the remainder of the current key cycle.

POSSIBLE CAUSES

Possible Causes
STEERING ANGLE SENSOR (SAS) ELECTRONIC POWER STEERING (EPS) MODULE

DIAGNOSTIC TEST

VERIFY THE DTC IS ACTIVE

NOTE: This DTC must be active for the results of this test to be valid.

1. Ignition on, engine not running.
2. With the scan tool, read DTCs and record on vehicle work order.
3. With the scan tool, erase DTCs.
4. Start the engine and run for two minutes.
5. Turn the steering wheel from lock to lock.
6. With the scan tool, read DTCs.

   Is the DTC active at this time?

   Yes

   - Replace the Electronic Power Steering (EPS) Module in accordance with service information. Refer to **GEAR, REMOVAL** .
   - Perform the EPS VERIFICATION TEST. Refer to **STANDARD PROCEDURE**.

No

- The conditions that caused this code to set are not present at this time. Using the wiring diagram/schematic as a guide, inspect the wiring harness and electrical connectors.
- Perform the EPS VERIFICATION TEST. Refer to **STANDARD PROCEDURE**.

C0051-2F-STEERING WHEEL POSITION SENSOR - SIGNAL ERRATIC

For a complete wiring diagram, refer to appropriate SYSTEM WIRING DIAGRAMS article.

WHEN MONITORED

Continuously.

SET CONDITION

When the Electronic Power Steering (EPS) Module detects an erratic signal from the Steering Angle Sensor (SAS).

POSSIBLE CAUSES

Possible Causes
STEERING ANGLE SENSOR (SAS) NOT CALIBRATED
STEERING ANGLE SENSOR (SAS)
ELECTRONIC POWER STEERING (EPS) MODULE

DIAGNOSTIC TEST

VERIFY THE DTC IS ACTIVE

1. Perform any Technical Service Bulletins (TSBs) that may apply.
2. Ignition on, engine running.
3. With the scan tool, read DTCs and record on vehicle work order.
4. With the scan tool, erase DTCs.
5. With the scan tool, graph the steering angle while slowly rotating steering wheel from lock to lock.
6. With the scan tool, under "Miscellaneous Functions" run the EPS Learn routine.
7. With the scan tool, read the DTCs.

   Is the graph displaying an erratic behavior or is the DTC active at this time?

   Yes

   - Replace the Electronic Power Steering (EPS) Module in accordance with service information. Refer to **GEAR, REMOVAL** .

- Perform the EPS VERIFICATION TEST. Refer to **STANDARD PROCEDURE**.

No

- The conditions that caused this code to set are not present at this time. Using the wiring diagram/schematic as a guide, inspect the wiring harness and electrical connectors.
- Perform the EPS VERIFICATION TEST. Refer to **STANDARD PROCEDURE**.

C0051-31-STEERING WHEEL POSITION SENSOR - NO SIGNAL

For a complete wiring diagram, refer to appropriate SYSTEM WIRING DIAGRAMS article.

WHEN MONITORED

Continuously with the ignition on.

SET CONDITION

When the Electronic Power Steering (EPS) Module detects an internal voltage out of range from the Steering Angle Sensor (SAS).

POSSIBLE CAUSES

Possible Causes
STEERING ANGLE SENSOR (SAS) ELECTRONIC POWER STEERING (EPS) MODULE

DIAGNOSTIC TEST

VERIFY THE DTC IS ACTIVE

1. Perform any Technical Service Bulletins (TSBs) that may apply.
2. Ignition on, engine not running.
3. With the scan tool, read DTCs and record on vehicle work order.
4. With the scan tool, erase DTCs.
5. Cycle the ignition from off to on and start the engine.
6. Slowly rotate the steering wheel from lock to lock.
7. With the scan tool, read the DTCs.

   Is the DTC active at this time?

   Yes

   - Replace the Electronic Power Steering (EPS) Module in accordance with service information.

Refer to **GEAR, REMOVAL** .

- Perform the EPS VERIFICATION TEST. Refer to **STANDARD PROCEDURE**.

No

- The conditions that caused this code to set are not present at this time. Using the wiring diagram/schematic as a guide, inspect the wiring harness and electrical connectors.
- Perform the EPS VERIFICATION TEST. Refer to **STANDARD PROCEDURE**.

C0051-54-STEERING WHEEL POSITION SENSOR - MISSING CALIBRATION

For a complete wiring diagram, **refer to appropriate SYSTEM WIRING DIAGRAMS article** .

WHEN MONITORED

Ignition on.

SET CONDITION

When the Electronic Power Steering (EPS) Module detects that the supply voltage is out of range or the Steering Angle Sensor has not been calibrated.

POSSIBLE CAUSES

Possible Causes
STEERING ANGLE SENSOR (SAS) NOT INITIALIZED
ELECTRONIC POWER STEERING (EPS) MODULE SUPPLY VOLTAGE
ELECTRONIC POWER STEERING (EPS) MODULE

DIAGNOSTIC TEST

1. **VERIFY THE DTC IS ACTIVE**
    1. Perform any Technical Service Bulletins (TSBs) that may apply.
    2. Ignition on, engine running.
    3. With the scan tool, read DTCs and record on vehicle work order.
    4. With the scan tool, erase DTCs.
    5. Start the engine.
    6. Turn the steering wheel slowly from lock to lock and back to center.
    7. With the scan tool, read the DTCs.

    Is the DTC active at this time?

    Yes

- Go To 2

No

- The conditions that caused this code to set are not present at this time. Using the wiring diagram/schematic as a guide, inspect the wiring harness and electrical connectors.
- Perform the EPS VERIFICATION TEST. Refer to **STANDARD PROCEDURE**.

2. **INITIALIZE EPS MODULE**
   1. With the scan tool, under "Miscellaneous Functions" run the EPS Learn routine.
   2. Cycle the ignition off to on.
   3. With the scan tool, erase the DTCs.
   4. Cycle the ignition off to on.
   5. Wait ten seconds.
   6. With the scan tool, read the DTCs.

   Does the DTC remain active?

   Yes

   - Replace the Electric Power Steering (EPS) Module in accordance with service information. Refer to **GEAR, REMOVAL** .
   - Perform the EPS VERIFICATION TEST. Refer to **STANDARD PROCEDURE**.

   No

   - Test complete.

C006A-49-MULTI-AXIS ACCELERATION SENSOR - INTERNAL ELECTRONIC FAILURE

For a complete wiring diagram, **refer to appropriate SYSTEM WIRING DIAGRAMS article** .

WHEN MONITORED

Ignition on.

SET CONDITION

The Dynamics Sensor has indicated that it has detected an internal failure.

NOTE: The Dynamics Sensor is internal to the Occupant Restraint Controller (ORC).

POSSIBLE CAUSES

Possible Causes
OCCUPANT RESTRAINT CONTROLLER (ORC) ELECTRIC POWER STEERING (EPS) MODULE

NOTE: **If DTC U0002-88 is present, perform the diagnostics for this DTC before continuing with this test. Refer to DTC INDEX .**

DIAGNOSTIC TEST

1. **ANTI-LOCK BRAKE SYSTEM (ABS) MODULE DTCS PRESENT**
   1. Turn the ignition on, engine not running.
   2. With the scan tool, read DTCs in the ABS Module.

      Are there any ABS Module DTCs present?

      Yes

      - Perform the appropriate diagnostic procedures before continuing with this test. Refer to **DIAGNOSIS AND TESTING** .

      No

      - Go To 2
2. **VERIFY THE IS ACTIVE**
   1. Perform any Technical Service Bulletins (TSBs) that may apply.
   2. Ignition on, engine not running.
   3. With the scan tool, read and record Environmental Data (EV Data).
   4. With the scan tool, read the DTCs and record on vehicle work order.
   5. With the scan tool, erase the DTCs.
   6. Test drive the vehicle at a velocity between 15 and 35 km/h (9 and 22 mph).
   7. With the scan tool, read the DTCs.

      Is the DTC active at this time?

      Yes

      - Go To 3

      No

      - Test complete, the condition or conditions that originally set this DTC are not present at this time. Using the wiring diagrams as a guide, check all related splices and connectors for signs of water intrusion, corrosion, pushed out or bent terminals, and correct pin tension.

3. **ELECTRIC POWER STEERING (EPS) MODULE**
    1. Turn the ignition off to the lock position.
    2. Replace the Occupant Restraint Controller (ORC) in accordance with the Service Information. Refer to **MODULE, OCCUPANT RESTRAINT CONTROLLER, REMOVAL** .
    3. Perform the EPS VERIFICATION TEST. Refer to **STANDARD PROCEDURE**.
    4. Test drive the vehicle on mainly straight road conditions at a velocity between 15 and 35 km/h (9 and 22 mph).
    5. With the scan tool, read the DTCs.

       Does the DTC remain active?

       Yes

       - Replace the Electric Power Steering (EPS) Module in accordance with the Service Information. Refer to **GEAR, REMOVAL** .
       - Perform the EPS VERIFICATION TEST. Refer to **STANDARD PROCEDURE**.

       No

       - Test complete.

C1592-01-ELECTRONIC POWER STEERING MOTOR CIRCUIT - GENERAL ELECTRICAL FAILURE

For a complete wiring diagram, **refer to appropriate SYSTEM WIRING DIAGRAMS article** .

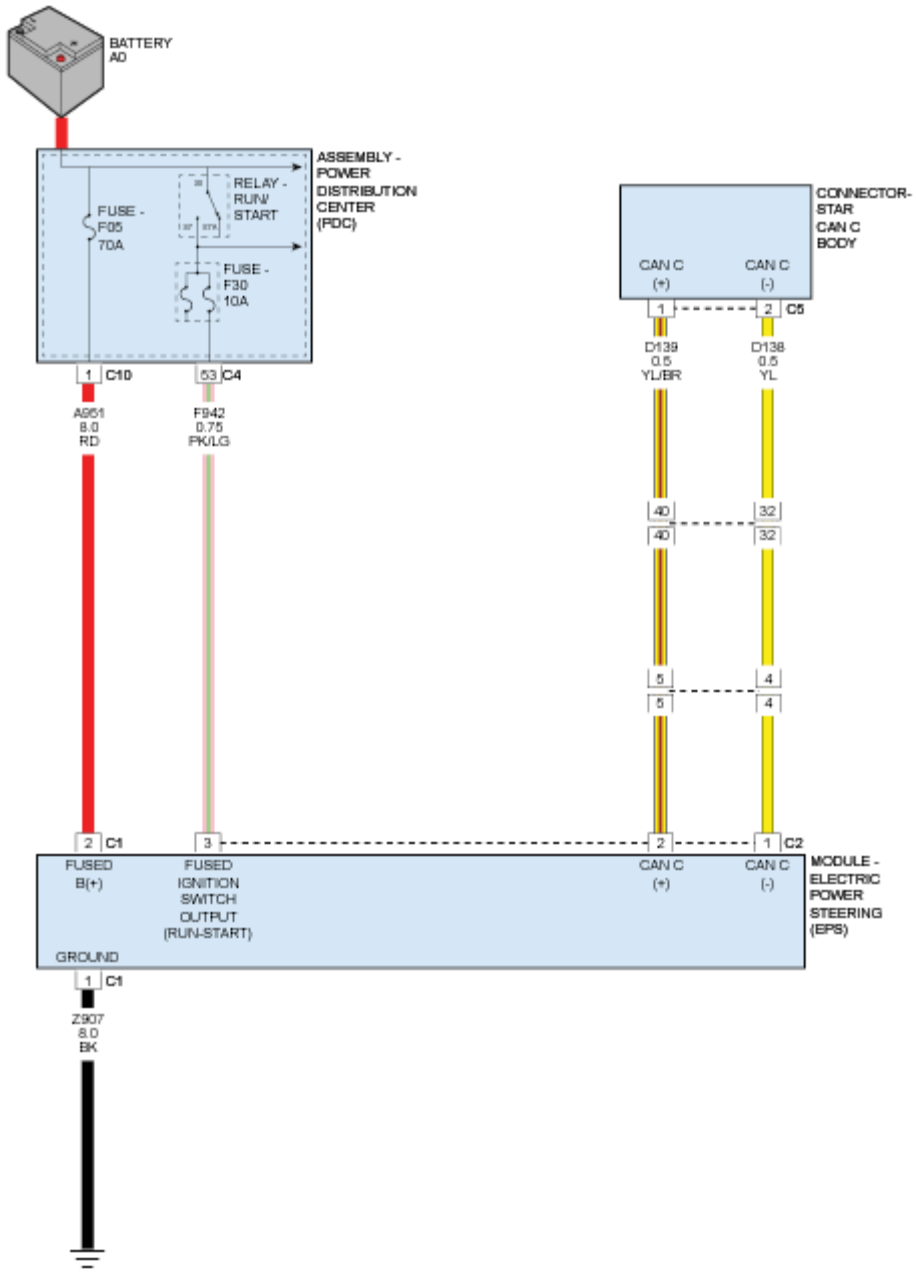

Fig. 1: Electric Power Steering (EPS) Module - Circuit Diagram
Courtesy of CHRYSLER GROUP, LLC

WHEN MONITORED

Continuously with the ignition on.

SET CONDITION

The Electric Power Steering (EPS) Module as detected a short to ground in the motor circuit.

POSSIBLE CAUSES

Possible Causes
(A951) FUSED B(+) SHORT TO GROUND ELECTRIC POWER STEERING (EPS) MODULE

NOTE: If DTC C0051-54 is present, perform the diagnostics for this DTC before continuing with this diagnostic procedure. Refer to C0051-54-STEERING WHEEL POSITION SENSOR - MISSING CALIBRATION.

DIAGNOSTIC TEST

1. **VERIFY THE DTC IS ACTIVE**

   NOTE: This DTC must be active for the results of this test to be valid.

   1. Ignition on, engine not running.
   2. With the scan tool, read and record DTCs on vehicle work order.
   3. With the scan tool, erase DTCs.
   4. Start the engine and run for two minutes.
   5. Turn the steering wheel from lock to lock.
   6. With the scan tool, read DTCs.

   Is the DTC active at this time?

   Yes

   - Go To 2

   No

   - The conditions that caused this code to set are not present at this time. Using the wiring diagram/schematic as a guide, inspect the wiring harness and electrical connectors.
   - Perform the EPS VERIFICATION TEST. Refer to **STANDARD PROCEDURE**.

2. **(A951) FUSED B(+) CIRCUIT SHORTED TO GROUND**
   1. Turn the ignition off.
   2. Remove the F1 70A fuse.
   3. Disconnect the EPS Module C1 harness connector.
   4. Measure the resistance between ground and the (A951) Fused B(+) circuit in the EPS Module harness connector.

   Is the resistance above 100 Ohms?

Yes

- Replace the Electronic Power Steering (EPS) Module in accordance with service information. Refer to **GEAR, REMOVAL** .
- Perform the EPS VERIFICATION TEST. Refer to **STANDARD PROCEDURE**.

No

- Repair the (A951) Fused B(+) circuit for a short to ground.
- Perform the BODY VERIFICATION TEST. Refer to **STANDARD PROCEDURE** .

C1592-16-ELECTRONIC POWER STEERING MOTOR CIRCUIT - CIRCUIT VOLTAGE BELOW THRESHOLD

For a complete wiring diagram, **refer to appropriate SYSTEM WIRING DIAGRAMS article** .

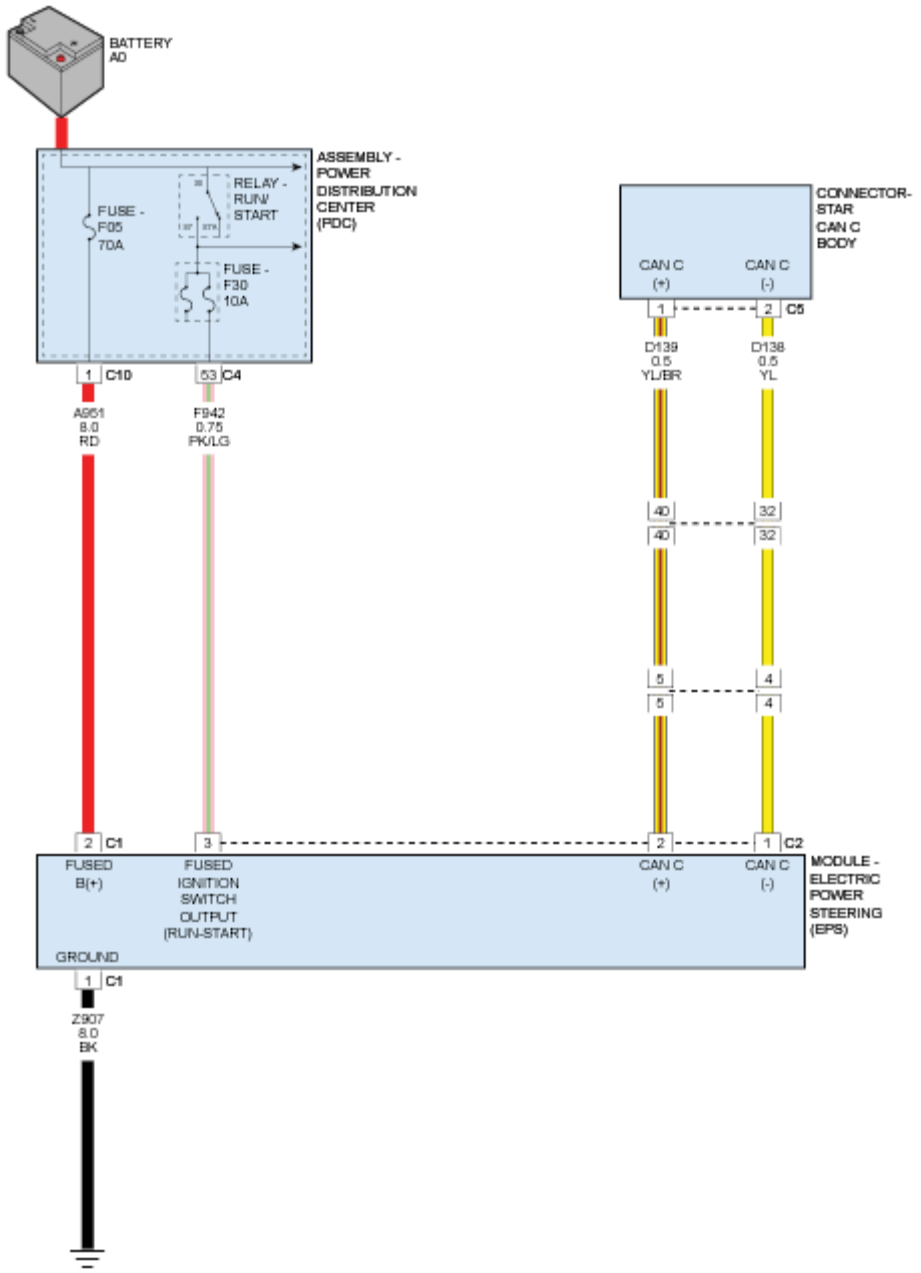

Fig. 2: Electric Power Steering (EPS) Module - Circuit Diagram
Courtesy of CHRYSLER GROUP, LLC

WHEN MONITORED

Continuously with the ignition on.

SET CONDITION

If the voltage to the Electric Power Steering (EPS) Module is below 10 volts for more than 15 seconds.

POSSIBLE CAUSES

Possible Causes
POWERTRAIN CONTROL MODULE (PCM) CHARGING SYSTEM DTCS PRESENT (A951) FUSED B(+) CIRCUIT OPEN OR HIGH RESISTANCE ELECTRIC POWER STEERING (EPS) MODULE

DIAGNOSTIC TEST

1. **CHARGING SYSTEM DTCS PRESENT**

   NOTE: Disconnect battery charger before continuing.

   1. Start the engine.
   2. With the scan tool, read DTCs in the PCM.

      Are there any Charging System or related voltage DTCs present?

      Yes

      - Perform the appropriate Charging System DTC diagnostic procedures before continuing with this test. Refer to **DTC INDEX** .

      No

      - Go To 2

2. **VERIFY THE DTC IS ACTIVE**

   NOTE: If any other DTCs are present, repair them first before continuing with this diagnostic procedure.

   1. Ignition on, engine not running.
   2. With the scan tool, read DTCs and record on vehicle work order.
   3. With the scan tool, erase DTCs.
   4. Start the engine and run for two minutes.
   5. Turn the steering wheel from lock to lock.
   6. With the scan tool, read DTCs.

      Is the DTC active at this time?

      Yes

      - Go To 3

No

- The conditions that caused this code to set are not present at this time. Using the wiring diagram/schematic as a guide, inspect the wiring harness and electrical connectors.
- Perform the EPS VERIFICATION TEST. Refer to **STANDARD PROCEDURE**.

3. **(A951) FUSED B(+) CIRCUIT OPEN OR HIGH RESISTANCE**
   1. Turn the ignition off.
   2. Disconnect the EPS Module C1 harness connector.
   3. Turn the ignition on.
   4. With a 12-volt test light connected to ground, check the (A951) Fused B+ circuit at the EPS Module C1 harness connector.

      Does the test light illuminate brightly?

      Yes

      - Replace the Electronic Power Steering (EPS) Module in accordance with service information. Refer to **GEAR, REMOVAL** .
      - Perform the EPS VERIFICATION TEST. Refer to **STANDARD PROCEDURE**.

      No

      - Repair the (A951) Fused B(+) circuit for an open or high resistance.
      - Perform the BODY VERIFICATION TEST. Refer to **STANDARD PROCEDURE** .

C1592-29-ELECTRIC POWER STEERING MOTOR CIRCUIT - SIGNAL INVALID

For a complete wiring diagram, **refer to appropriate SYSTEM WIRING DIAGRAMS article** .

WHEN MONITORED

Continuously with the ignition on.

SET CONDITION

The Electronic Power Steering (EPS) Module is not detecting a signal the internal power steering gear motor.

POSSIBLE CAUSES

Possible Causes
ELECTRONIC POWER STEERING (EPS) MODULE

DIAGNOSTIC TEST

VERIFY THE DTC IS ACTIVE

NOTE: This DTC must be active for the results of this test to be valid.

1. Ignition on, engine not running.
2. With the scan tool, read DTCs and record on vehicle work order.
3. With the scan tool, erase DTCs.
4. Start the engine.
5. Turn the steering wheel from lock to lock and back to center.
6. With the scan tool, read DTCs.

Is the DTC active at this time?

Yes

- Replace the Electronic Power Steering (EPS) Module in accordance with service information. Refer to **GEAR, REMOVAL** .
- Perform the EPS VERIFICATION TEST. Refer to **STANDARD PROCEDURE**.

No

- The conditions that caused this code to set are not present at this time. Using the wiring diagram/schematic as a guide, inspect the wiring harness and electrical connectors.
- Perform the EPS VERIFICATION TEST. Refer to **STANDARD PROCEDURE**.

C1592-4B-ELECTRONIC POWER STEERING MOTOR CIRCUIT - OVER TEMPERATURE

For a complete wiring diagram, **refer to appropriate SYSTEM WIRING DIAGRAMS article** .

WHEN MONITORED

Continuously with the ignition on.

SET CONDITION

The Electronic Power Steering (EPS) Module is sensing steering system temperature is above 120°C (248°F).

POSSIBLE CAUSES

Possible Causes
STEERING GEAR MECHANICAL FAILURE
ELECTRONIC POWER STEERING (EPS) MODULE

DIAGNOSTIC TEST

1. **INSPECT THE STEERING GEAR FOR INCORRECT INSTALLATION, DAMAGE OR MECHANICAL FAILURE**
   1. Turn the ignition off.
   2. Visually inspect the Steering Gear for Improper installation, damage or mechanical failure. Refer to **GEAR, INSTALLATION** .

      Were any problems found?

      Yes

      - Repair as necessary.
      - Perform the EPS VERIFICATION TEST. Refer to **STANDARD PROCEDURE**.

      No

      - Go To 2
2. **VERIFY THE DTC IS ACTIVE**

   NOTE: This DTC must be active for the results of this test to be valid.

   NOTE: Let the vehicle sit for 30 minutes before continuing with this test.

   1. Ignition on, engine not running.
   2. With the scan tool, read DTCs and record on vehicle work order.
   3. With the scan tool, erase DTCs.
   4. Start the engine.
   5. Turn the steering wheel from lock to lock several times.
   6. With the scan tool, read DTCs.

      Is the DTC active at this time?

      Yes

      - Replace the Electronic Power Steering (EPS) Module in accordance with service information. Refer to **GEAR, REMOVAL** .
      - Perform the EPS VERIFICATION TEST. Refer to **STANDARD PROCEDURE**.

      No

      - The conditions that caused this code to set are not present at this time. Using the wiring diagram/schematic as a guide, inspect the wiring harness and electrical connectors.
      - Perform the EPS VERIFICATION TEST. Refer to **STANDARD PROCEDURE**.

C1592-74-ELECTRONIC POWER STEERING MOTOR CIRCUIT - ACTUATOR SLIPPING

For a complete wiring diagram, **refer to appropriate SYSTEM WIRING DIAGRAMS article** .

WHEN MONITORED

Continuously with the ignition on.

SET CONDITION

The Electronic Power Steering (EPS) Module receives a calculated torque on a slipping power steering clutch exceeding 6, 5Nm (4.8ft. lbs) for more than three times consecutively.

POSSIBLE CAUSES

Possible Causes
STEERING WHEEL ALIGNMENT
STEERING GEAR MECHANICAL FAILURE
ELECTRONIC POWER STEERING (EPS) MODULE

NOTE: **If DTC C0051-54 is present, perform the diagnostics for this DTC before continuing with this diagnostic procedure. Refer to C0051-54-STEERING WHEEL POSITION SENSOR - MISSING CALIBRATION.**

DIAGNOSTIC TEST

1. **CHECK FOR STEERING ALIGNMENT**
   1. Check the Steering Alignment.

      Is the Steering Alignment with in specifications?

      Yes

      - Go To 2

      No

      - Repair as necessary.
      - Perform the EPS VERIFICATION TEST. Refer to **STANDARD PROCEDURE**.
2. **INSPECT THE STEERING GEAR FOR INCORRECT INSTALLATION, DAMAGE OR MECHANICAL FAILURE**
   1. Turn the ignition off.
   2. Visually inspect the Steering Gear for Improper installation, damage or mechanical failure. Refer to **GEAR, INSTALLATION** .

Were any problems found?

Yes

- Repair as necessary.
- Perform the EPS VERIFICATION TEST. Refer to **STANDARD PROCEDURE**.

No

- Go To 3

3. **VERIFY THE DTC IS ACTIVE**

NOTE: This DTC must be active for the results of this test to be valid.

1. Ignition on, engine not running.
2. With the scan tool, read DTCs and record on vehicle work order.
3. With the scan tool, erase DTCs.
4. Start the engine.
5. Turn the steering wheel from lock to lock and back to center.
6. With the scan tool, read DTCs.

Is the DTC active at this time?

Yes

- Replace the Electronic Power Steering (EPS) Module in accordance with service information. Refer to **GEAR, REMOVAL** .
- Perform the EPS VERIFICATION TEST. Refer to **STANDARD PROCEDURE**.

No

- The conditions that caused this code to set are not present at this time. Using the wiring diagram/schematic as a guide, inspect the wiring harness and electrical connectors.
- Perform the EPS VERIFICATION TEST. Refer to **STANDARD PROCEDURE**.

C1592-98-ELECTRONIC POWER STEERING MOTOR CIRCUIT - COMPONENT OR SYSTEM OVER TEMPERATURE

For a complete wiring diagram, **refer to appropriate SYSTEM WIRING DIAGRAMS article** .

WHEN MONITORED

Continuously with the ignition on.

SET CONDITION

The Electronic Power Steering (EPS) Module is sensing steering system temperature is above 120°C (248°F).

POSSIBLE CAUSES

Possible Causes
STEERING GEAR INCORRECT INSTALLATION, DAMAGE OR MECHANICAL FAILURE ELECTRONIC POWER STEERING (EPS) MODULE

DIAGNOSTIC TEST

1. **INSPECT THE STEERING GEAR FOR INCORRECT INSTALLATION, DAMAGE OR MECHANICAL FAILURE**
   1. Turn the ignition off.
   2. Visually inspect the Steering Gear for Improper installation, damage or mechanical failure. Refer to **GEAR, INSTALLATION** .

      Were any problems found?

      Yes

      - Repair as necessary.
      - Perform the EPS VERIFICATION TEST. Refer to **STANDARD PROCEDURE**.

      No

      - Go To 2
2. **VERIFY THE DTC IS ACTIVE**

   NOTE: This DTC must be active for the results of this test to be valid.

   NOTE: Let the vehicle sit for 30 minutes before continuing with this test.

   1. Ignition on, engine not running.
   2. With the scan tool, read DTCs and record on vehicle work order.
   3. With the scan tool, erase DTCs.
   4. Start the engine.
   5. Turn the steering wheel from lock to lock and back to center.
   6. With the scan tool, read DTCs.

      Is the DTC active at this time?

Yes

- Replace the Electronic Power Steering (EPS) Module in accordance with service information. Refer to **GEAR, REMOVAL** .
- Perform the EPS VERIFICATION TEST. Refer to **STANDARD PROCEDURE**.

No

- The conditions that caused this code to set are not present at this time. Using the wiring diagram/schematic as a guide, inspect the wiring harness and electrical connectors.
- Perform the EPS VERIFICATION TEST. Refer to **STANDARD PROCEDURE**.

C15C1-00-EPS MECHANICAL PERFORMANCE

WHEN MONITORED

Continuously above 30 km/h (19 mph).

SET CONDITION

The Electric Power Steering (EPS) Module detects high friction in the steering system when requesting a motor torque change and the rotor positioning is not responding within two seconds.

POSSIBLE CAUSES

Possible Causes
SUSPENSION DAMAGE OR MECHANICAL FAILURE STEERING GEAR IMPROPERLY INSTALLED, DAMAGED OR MECHANICAL FAILURE ELECTRIC POWER STEERING (EPS) MODULE

DIAGNOSTIC TEST

1. **INSPECT THE FRONT SUSPENSION FOR DAMAGE OR MECHANICAL FAILURE**
    1. Turn the ignition off.
    2. Visually inspect the Front Suspension for binding, damage or mechanical failure. Refer to **WHEEL ALIGNMENT, STANDARD PROCEDURE** .

    Were any problems found?

    Yes

    - Repair as necessary.
    - Perform the EPS VERIFICATION TEST. Refer to **STANDARD PROCEDURE**.

    No

- Go To 2

2. **INSPECT THE STEERING GEAR FOR INCORRECT INSTALLATION, DAMAGE OR MECHANICAL FAILURE**

NOTE: Pay particular attention to the inner tie rod boots for damage.

Visually inspect the Steering Gear for Improper installation, damage or mechanical failure. Refer to **GEAR, INSTALLATION** .

Were any problems found?

Yes

- Repair as necessary.
- Perform the EPS VERIFICATION TEST. Refer to **STANDARD PROCEDURE**.

No

- Go To 3

3. **VERIFY THE DTC IS ACTIVE**

NOTE: This DTC must be active for the results of this test to be valid.

1. Ignition on, engine not running.
2. With the scan tool, read DTCs and record on vehicle work order.
3. With the scan tool, erase DTCs.
4. Test drive the vehicle at speeds above 30 k/mh (19 mph) and evaluate return effort of power steering.
5. Park the vehicle.
6. With the scan tool, read DTCs.

Is there excessive return effort in the power steering or is the DTC active at this time?

Yes

- Replace the Electric Power Steering (EPS) Module in accordance with service information. Refer to **GEAR, REMOVAL** .
- Perform the EPS VERIFICATION TEST. Refer to **STANDARD PROCEDURE**.

No

- The conditions that caused this code to set are not present at this time. Using the wiring diagram/schematic as a guide, inspect the wiring harness and electrical connectors.

- Perform the EPS VERIFICATION TEST. Refer to **STANDARD PROCEDURE**.

C15CA-00-BRAKE SYSTEM MODULE - EVENT INFORMATION

WHEN MONITORED

Continuously.

SET CONDITION

The Electronic Power Steering (EPS) Module receiving invalid CAN bus messages from the Anti-lock Brake System (ABS) Module.

POSSIBLE CAUSES

Possible Causes
ANTI-LOCK BRAKE SYSTEM (ABS) MODULE DTCS ELECTRONIC POWER STEERING (EPS) MODULE

DIAGNOSTIC TEST

1. **CHECK IF ABS DTCS ARE PRESENT**
   1. With the scan tool, read the DTCs in the ABS Module.

      Are there any ABS DTCs present?

      Yes

      - Perform the appropriate diagnostic procedure. Refer to **DIAGNOSIS AND TESTING** .

      No

      - Go To 2
2. **VERIFY THE DTC IS ACTIVE**

   NOTE: This DTC must be active for the results of this test to be valid.

   1. Ignition on, engine not running.
   2. With the scan tool, read DTCs and record on vehicle work order.
   3. With the scan tool, erase DTCs.
   4. Start the engine and run for two minutes.
   5. Turn the steering wheel from lock to lock and back to center.
   6. With the scan tool, read DTCs.

Is the DTC active at this time?

Yes

- Replace the Electronic Power Steering (EPS) Module in accordance with service information. Refer to **GEAR, REMOVAL** .
- Perform the EPS VERIFICATION TEST. Refer to **STANDARD PROCEDURE**.

No

- The conditions that caused this code to set are not present at this time. Using the wiring diagram/schematic as a guide, inspect the wiring harness and electrical connectors.
- Perform the EPS VERIFICATION TEST. Refer to **STANDARD PROCEDURE**.

C2100-16-BATTERY VOLTAGE LOW - CIRCUIT VOLTAGE BELOW THRESHOLD

For a complete wiring diagram, **refer to appropriate SYSTEM WIRING DIAGRAMS article** .

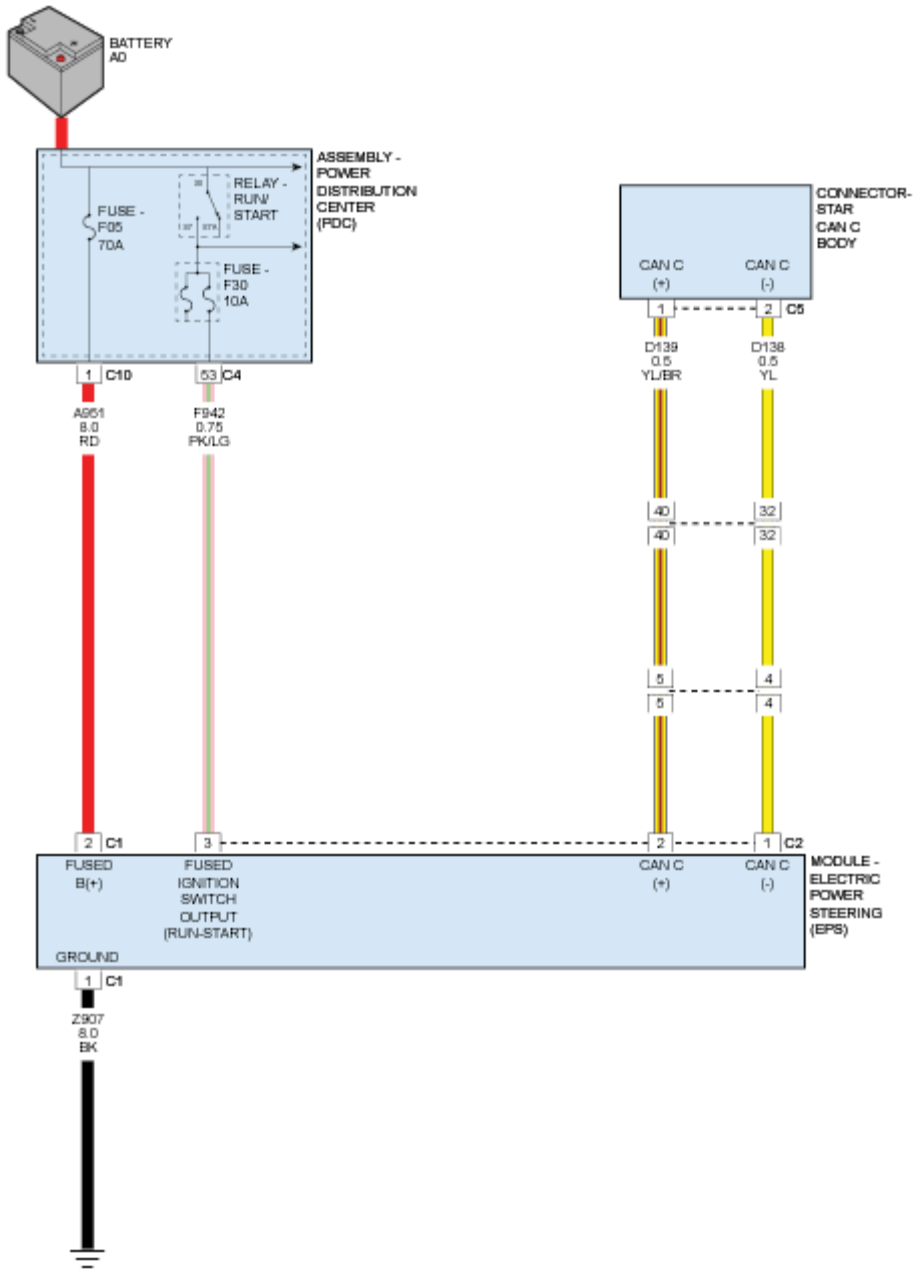

Fig. 3: Electric Power Steering (EPS) Module - Circuit Diagram
Courtesy of CHRYSLER GROUP, LLC

WHEN MONITORED

Ignition on.

SET CONDITION

If the sensed battery voltage is below 10.7 volts and engine speeds are above 750 RPM for three seconds, undervoltage detection is activated.

POSSIBLE CAUSES

Possible Causes
CHARGING SYSTEM (A951) FUSED B(+) CIRCUIT OPEN OR HIGH RESISTANCE (F942) FUSED IGNITION SWITCH OUTPUT (RUN-START) CIRCUIT OPEN OR HIGH RESISTANCE (Z907) GROUND CIRCUIT OPEN OR HIGH RESISTANCE ELECTRONIC POWER STEERING (ESP) MODULE

DIAGNOSTIC TEST

1. **VERIFY THE DTC IS ACTIVE**

   NOTE: Diagnose and repair any Powertrain Charging system DTCs before continuing with this procedure.

   NOTE: Make sure the battery is fully charged.

   1. Ignition on, engine not running.
   2. With the scan tool, record and erase DTCs.
   3. Turn the ignition off and wait ten seconds.
   4. Ignition on, engine not running.
   5. With the scan tool, read DTCs.

   Is the DTC active at this time?

   Yes

   - Go To 2

   No

   - The conditions that caused this code to set are not present at this time. Using the wiring diagram/schematic as a guide, inspect the wiring harness and electrical connectors.
   - Perform the EPS VERIFICATION TEST. Refer to **STANDARD PROCEDURE**.

2. **CHARGING SYSTEM DTCS PRESENT**
   1. Start the engine.
   2. With the scan tool, read DTCs in the PCM.

   Are there any Charging System or related voltage DTCs present?

   Yes

- Perform the appropriate Charging System DTC diagnostic procedures before continuing with this test. Refer to **DTC INDEX** .

No

- Go To 3

3. **(A951) FUSED B(+) CIRCUIT OPEN OR HIGH RESISTANCE**
   1. Turn the ignition off.
   2. Disconnect the EPS Module C1 harness connector.
   3. Turn the ignition on.
   4. With a 12-volt test light connected to ground, check the (A951) Fused B+ circuit at the EPS Module C1 harness connector.

      Does the test light illuminate brightly?

      Yes

      - Go To 4

      No

      - Repair the (A951) Fused B(+) circuit for an open or high resistance.
      - Perform the BODY VERIFICATION TEST. Refer to **STANDARD PROCEDURE** .
4. **(F942) FUSED IGNITION SWITCH OUTPUT (RUN-START) CIRCUIT OPEN OR HIGH RESISTANCE**
   1. Turn the ignition off.
   2. Disconnect the EPS Module C2 harness connector.
   3. Turn the ignition on.
   4. With a 12-volt test light connected to ground, check the (F942) Fused Ignition Switch Output circuit at the EPS Module C2 harness connector.

      Does the test light illuminate brightly?

      Yes

      - Go To 5

      No

      - Repair the (F942) Fused Ignition Switch Output circuit for an open or high resistance.
      - Perform the BODY VERIFICATION TEST. Refer to **STANDARD PROCEDURE** .
5. **(Z907) GROUND CIRCUIT OPEN OR HIGH RESISTANCE**
   1. Turn the ignition off.

2. With a test light connected to B+ check the (Z907) Ground circuit at the EPS Module C1 harness connector.

   Does the test light illuminate brightly?

   Yes

   - Replace the Electronic Power Steering (EPS) Module in accordance with service information. Refer to **GEAR, REMOVAL** .
   - Perform the EPS VERIFICATION TEST. Refer to **STANDARD PROCEDURE**.

   No

   - Repair the (Z907) Ground circuit for an open or high resistance.
   - Perform the BODY VERIFICATION TEST. Refer to **STANDARD PROCEDURE** .

C2101-17-BATTERY VOLTAGE HIGH - CIRCUIT VOLTAGE ABOVE THRESHOLD

For a complete wiring diagram, **refer to appropriate SYSTEM WIRING DIAGRAMS article** .

WHEN MONITORED

Ignition on.

SET CONDITION

If the sensed ignition voltage is greater than 17 volts for three seconds.

POSSIBLE CAUSES

Possible Causes
POWERTRAIN CONTROL MODULE (PCM) CHARGING SYSTEM DTCS PRESENT ELECTRONIC POWER STEERING (EPS) MODULE

DIAGNOSTIC TEST

1. **CHARGING SYSTEM DTCS PRESENT**

   NOTE: Disconnect battery charger before continuing.

   1. Start the engine.
   2. With the scan tool, read DTCs in the PCM.

      Are there any Charging System or related voltage DTCs present?

Yes

- Perform the appropriate Charging System DTC diagnostic procedures before continuing with this test. Refer to **DTC INDEX** .

No

- Go To 2

2. **VERIFY THE DTC IS ACTIVE**
   1. Ignition on, engine not running.
   2. With the scan tool, read DTCs and record on vehicle work order.
   3. With the scan tool, erase DTCs.
   4. Turn ignition off to the lock position.
   5. Start the engine.
   6. With the scan tool, read DTCs.

   Is the DTC active at this time?

   Yes

   - Replace the Electronic Power Steering (EPS) Module in accordance with service information. Refer to **GEAR, REMOVAL** .
   - Perform the EPS VERIFICATION TEST. Refer to **STANDARD PROCEDURE**.

   No

   - The conditions that caused this code to set are not present at this time. Using the wiring diagram/schematic as a guide, inspect the wiring harness and electrical connectors.
   - Perform the EPS VERIFICATION TEST. Refer to **STANDARD PROCEDURE**.

C2129-13-BATTERY VOLTAGE - CIRCUIT OPEN

For a complete wiring diagram, **refer to appropriate SYSTEM WIRING DIAGRAMS article** .

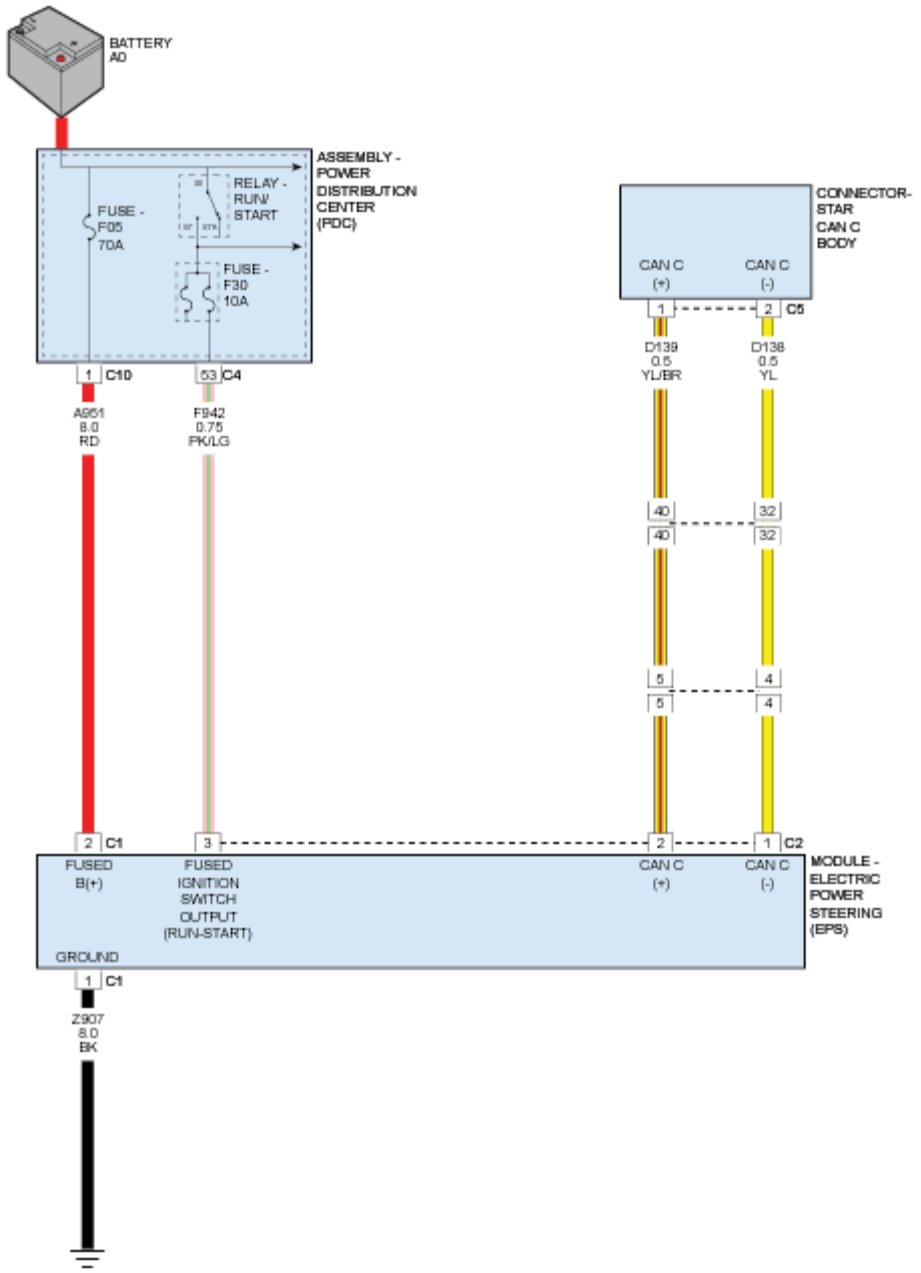

Fig. 4: Electric Power Steering (EPS) Module - Circuit Diagram
Courtesy of CHRYSLER GROUP, LLC

WHEN MONITORED

Continuously with the ignition on.

SET CONDITION

If the voltage to the Electric Power Steering (EPS) Module is below 10 volts for more than 15 seconds.

POSSIBLE CAUSES

Possible Causes
(A951) FUSED B(+) CIRCUIT OPEN OR HIGH RESISTANCE DTCS PRESENT (Z907) GROUND CIRCUIT OPEN OR HIGH RESISTANCE ELECTRIC POWER STEERING (EPS) MODULE

DIAGNOSTIC TEST

1. **VERIFY THE DTC IS ACTIVE**

   NOTE: This DTC must be active for the results of this test to be valid.

   1. Ignition on, engine not running.
   2. With the scan tool, read DTCs and record on vehicle work order.
   3. With the scan tool, erase DTCs.
   4. Start the engine and run for two minutes.
   5. Turn the steering wheel from lock to lock.
   6. With the scan tool, read DTCs.

   Is the DTC active at this time?

   Yes

   - Go To 2

   No

   - The conditions that caused this code to set are not present at this time. Using the wiring diagram/schematic as a guide, inspect the wiring harness and electrical connectors.
   - Perform the EPS VERIFICATION TEST. Refer to **STANDARD PROCEDURE**.

2. **(A951) FUSED B(+) CIRCUIT OPEN OR HIGH RESISTANCE**
   1. Turn the ignition off.
   2. Disconnect the EPS Module C1 harness connector.
   3. Turn the ignition on.
   4. With a 12-volt test light connected to ground, check the (A951) Fused B+ circuit at the EPS Module C1 harness connector.

   Does the test light illuminate brightly?

   Yes

   - Go To 3

No

- Repair the (A951) Fused B(+) circuit for an open or high resistance.
- Perform the BODY VERIFICATION TEST. Refer to **STANDARD PROCEDURE** .

3. **(Z907) GROUND CIRCUIT OPEN OR HIGH RESISTANCE**
   1. Turn the ignition off.
   2. With a test light connected to B+ check the (Z907) Ground circuit at the EPS Module C1 harness connector.

      Does the test light illuminate brightly?

      Yes

      - Replace the Electronic Power Steering (EPS) Module in accordance with service information. Refer to **GEAR, REMOVAL** .
      - Perform the EPS VERIFICATION TEST. Refer to **STANDARD PROCEDURE**.

      No

      - Repair the (Z907) Ground circuit for an open or high resistance.
      - Perform the BODY VERIFICATION TEST. Refer to **STANDARD PROCEDURE** .

C2202-00-ORIGINAL VIN MISMATCH/MISSING

WHEN MONITORED

Ignition on.

SET CONDITION

This DTC will set if the current VIN does not match the broadcast VIN.

POSSIBLE CAUSES

Possible Causes
ELECTRONIC POWER STEERING (EPS) MODULE NOT INITIALIZED
POWERTRAIN CONTROL MODULE (PCM) VIN NOT PROGRAMMED
ELECTRONIC POWER STEERING (EPS) MODULE
POWERTRAIN CONTROL MODULE (PCM)

DIAGNOSTIC TEST

1. **VERIFY THE DTC IS ACTIVE**

NOTE: This DTC must be active for the results of this test to be valid.

1. Ignition on, engine not running.
2. With the scan tool, read DTCs and record on vehicle work order.
3. With the scan tool, erase DTCs.
4. Turn ignition off to the lock position.
5. Ignition on, engine not running.
6. Wait ten seconds.
7. With the scan tool, read DTCs.

   Is the DTC active at this time?

   Yes

   - Go To 2

   No

   - The conditions that caused this code to set are not present at this time. Using the wiring diagram/schematic as a guide, inspect the wiring harness and electrical connectors.
   - Perform the EPS VERIFICATION TEST. Refer to **STANDARD PROCEDURE**.

2. **WRONG VIN PROGRAMMED IN PCM**
   1. Ignition on, engine not running.
   2. With the scan tool, read the VIN in the PCM.
   3. Compare VIN in the PCM to the vehicle VIN.

      Is the correct VIN programmed in the PCM?

      Yes

      - Go To 3

      No

      - Program the correct VIN into the PCM. Follow the VIN programing procedure in the PCM/ECM reprogramming procedure. Refer to the appropriate Testing & Diagnostics article in Engine Performance .
      - Perform the ABS VERIFICATION TEST. Refer to **STANDARD PROCEDURE** .

3. **INITIALIZE THE EPS MODULE**
   1. Perform any Technical Service Bulletins that may apply.
   2. With the scan tool, under "Miscellaneous Functions" run the EPS Learn routine.
   3. Turn ignition off to the lock position.

4. Cycle the ignition from off to on.
5. Wait ten seconds.
6. With the scan tool, read DTCs.

   Does the DTC remain active?

   Yes

   - Replace the Electronic Power Steering (EPS) Module in accordance with service information. Refer to **GEAR, REMOVAL** .
   - Perform the EPS VERIFICATION TEST. Refer to **STANDARD PROCEDURE**.

   No

   - Test complete, the condition or conditions that originally set this DTC are not present at this time.

C2217-00-ELECTRIC POWER STEERING MODULE INTERNAL

For a complete wiring diagram, **refer to appropriate SYSTEM WIRING DIAGRAMS article** .

WHEN MONITORED

Continuously.

SET CONDITION

If the Electric Power Steering (EPS) Module detects an internal fault, this DTC will set. Most of internal faults that can set this DTC will result in the EPS assist not operating for the remainder of the current key cycle.

POSSIBLE CAUSES

Possible Causes
ELECTRIC POWER STEERING (EPS) MODULE

DIAGNOSTIC TEST

1. **VERIFY THE DTC IS ACTIVE**
   1. Ignition on, engine not running.
   2. With the scan tool, read and record the Environmental Data to help identify the conditions in which the DTC was set.
   3. With the scan tool, read DTCs and record on vehicle work order.

   NOTE: Do not erase the DTCs at this time.

Is the DTC active at this time?

Yes

- Replace the Electric Power Steering (EPS) Module in accordance with service information. Refer to **GEAR, REMOVAL** .
- Perform the EPS VERIFICATION TEST. Refer to **STANDARD PROCEDURE**.

No

- Go To 2

2. **VERIFY CUSTOMER COMPLAINT**
   1. Check with customer to verify loss or degradation of power steering assist.

   Was the customer complaint related to a loss or degradation of power steering assist?

   Yes

   - Replace the Electric Power Steering (EPS) Module in accordance with service information. Refer to **GEAR, REMOVAL** .
   - Perform the EPS VERIFICATION TEST. Refer to **STANDARD PROCEDURE**.

   No

   - Go To 3

3. **VERIFY THE DTC IS STILL ACTIVE**

NOTE: This DTC must be active for the results of this test to be valid.

1. Ignition on, engine not running.
2. With the scan tool, read DTCs and record on vehicle work order.
3. With the scan tool, erase DTCs.
4. Test drive the vehicle at speeds above 30 k/mh (19 mph).
5. Park the vehicle.
6. With the scan tool, read DTCs.

Is the DTC active at this time?

Yes

- Replace the Electric Power Steering (EPS) Module in accordance with service information. Refer to **GEAR, REMOVAL** .
- Perform the EPS VERIFICATION TEST. Refer to **STANDARD PROCEDURE**.

No

- The conditions that caused this code to set are not present at this time. Using the wiring diagram/schematic as a guide, inspect the wiring harness and electrical connectors.
- Perform the EPS VERIFICATION TEST. Refer to **STANDARD PROCEDURE**.

C221C-00-ECU FLASH REQUIRED

WHEN MONITORED

Continuously with ignition on and battery voltage above 10 volts.

SET CONDITION

The Electronic Power Steering (EPS) Module has incorrect software installed.

POSSIBLE CAUSES

Possible Causes
ELECTRONIC POWER STEERING (EPS) MODULE NOT FLASHED
ELECTRONIC POWER STEERING (EPS) MODULE

DIAGNOSTIC TEST

CONTROL MODULE PROGRAMMING ERROR

NOTE: Controller is programmed with outdated or generic software.

1. With the scan tool read and record the vehicles controller part number.
2. Select Use Controller Part Number under the Flash Tab.
3. Flash the controller with the correct software.

   Verify the controller flashed successfully.

   Test Complete

   - Perform the EPS VERIFICATION TEST. Refer to **STANDARD PROCEDURE**.

C221F-00-ECU NOT INITIALIZED

WHEN MONITORED

Continuously.

SET CONDITION

The Steering Angle Sensor is not Calibrated and or the Electronic Power Steering (EPS) Module is not initialized, this DTC will set. Most of internal faults that can set this DTC will result in the EPS assist not operating for the remainder of the current key cycle.

POSSIBLE CAUSES

Possible Causes
STEERING ANGLE SENSOR NOT CALIBRATED
ELECTRONIC POWER STEERING (EPS) MODULE NOT INITIALIZED
ELECTRONIC POWER STEERING (EPS) MODULE

DIAGNOSTIC TEST

1. **VERIFY THE DTC IS ACTIVE**

   NOTE: This DTC must be active for the results of this test to be valid.

   1. Perform any Technical Service Bulletins that may apply.
   2. Ignition on, engine not running.
   3. With the scan tool, read DTCs and record on vehicle work order.
   4. With the scan tool, erase DTCs.
   5. Start the engine.
   6. Turn the steering wheel from lock to lock and back to center.
   7. With the scan tool, read DTCs.

   Is the DTC active at this time?

   Yes

   - Go To 2

   No

   - The conditions that caused this code to set are not present at this time. Using the wiring diagram/schematic as a guide, inspect the wiring harness and electrical connectors.
   - Perform the EPS VERIFICATION TEST. Refer to **STANDARD PROCEDURE**.

2. **INITIALIZE EPS MODULE**
   1. With the scan tool, under "Miscellaneous Functions" run the EPS Learn routine.
   2. Turn ignition off to the lock position.
   3. Cycle the ignition from off to on.
   4. Wait ten seconds.
   5. With the scan tool, read DTCs.

Does the DTC remain active?

Yes

- Replace the Electronic Power Steering (EPS) Module in accordance with service information. Refer to **GEAR, REMOVAL** .
- Perform the EPS VERIFICATION TEST. Refer to **STANDARD PROCEDURE**.

No

- Test complete, the condition or conditions that originally set this DTC are not present at this time.

U0001-87-CAN-C BUS MISSING MESSAGE

For a complete wiring diagram, **refer to appropriate SYSTEM WIRING DIAGRAMS article** .

WHEN MONITORED

Continuously when the ignition is on.

The battery voltage between 10 and 16 Volts.

Body Control Module (BCM) is configured correctly.

SET CONDITION

The controller detects an open, short to ground or a short to voltage on the High Speed CAN Bus circuits.

POSSIBLE CAUSES

Possible Causes
HIGH SPEED CAN BUS CIRCUITS OPEN OR SHORTED DTCS RELATED TO BATTERY VOLTAGE, IGNITION, OR VIN MESSAGES ANY HIGH SPEED CAN BUS MODULE

DIAGNOSTIC TEST

VERIFY THE DTC IS ACTIVE

1. Turn the ignition on.
2. With the scan tool, read the DTCs.

   Is this DTC active at this time?

   Yes

- **Refer to DTC INDEX** and perform the U0001-87-CAN C BUS - NO SIGNAL diagnostic procedure.

No

- **Refer to DIAGNOSIS AND TESTING** and perform the Stored Lost Communication DTCs diagnostic procedure.

U0002-00 CAN C BUS OFF PERFORMANCE

WHEN MONITORED

Ignition run time is greater than one second. Battery voltage between 9 and 16 volts. Engine run time greater than three seconds.

SET CONDITION

Bus messages not received from the Body Control Module (BCM) for approximately two to five seconds.

POSSIBLE CAUSES

Possible Causes
CAN C BUS CIRCUITS OPEN OR SHORTED
DTCS RELATED TO BATTERY VOLTAGE, IGNITION, OR VIN MESSAGES
BODY CONTROL MODULE (BCM) POWER AND GROUND
BCM NOT CONFIGURED CORRECTLY
BODY CONTROL MODULE (BCM)
MODULE THAT SET THIS DTC

DIAGNOSTIC TEST

VERIFY THE DTC IS ACTIVE

1. Ignition on, engine not running.
2. With the scan tool, read DTCs and record on vehicle work order.

   Is the DTC Active at this time?

   Yes

   NOTE: Diagnose the U0002-88 CAN C BUS OFF PERFORMANCE-BUSS OFF as the U0010-00 CAN C BUS CIRCUIT test.

   - Perform the U0010-00-Can C Bus diagnostic procedure. **Refer to DTC INDEX** .

No

- Perform the Stored Lost Communication DTCs diagnostic procedure. **Refer to DIAGNOSIS AND TESTING** .

U0100-00-LOST COMMUNICATION WITH ECM/PCM

Perform the COMMUNICATION PRE-DIAGNOSTIC PROCEDURE. Refer to **STANDARD PROCEDURE** .

U0102-00-LOST COMMUNICATION WITH TRANSFER CASE CONTROL MODULE / AWD

Perform the COMMUNICATION PRE-DIAGNOSTIC PROCEDURE. Refer to **STANDARD PROCEDURE** .

U0103-00-LOST COMMUNICATION WITH ELECTRIC GEAR SHIFT MODULE

Perform the COMMUNICATION PRE-DIAGNOSTIC PROCEDURE. Refer to **STANDARD PROCEDURE** .

U0121-00-LOST COMMUNICATION WITH ANTI-LOCK BRAKE SYSTEM (ABS) CONTROL MODULE

Perform the COMMUNICATION PRE-DIAGNOSTIC PROCEDURE. Refer to **STANDARD PROCEDURE** .

U0140-00-LOST COMMUNICATION WITH BODY CONTROL MODULE

Perform the COMMUNICATION PRE-DIAGNOSTIC PROCEDURE. Refer to **STANDARD PROCEDURE** .

U0151-00-LOST COMMUNICATION WITH OCCUPANT RESTRAINT CONTROLLER (ORC)

Perform the COMMUNICATION PRE-DIAGNOSTIC PROCEDURE. Refer to **STANDARD PROCEDURE** .

U0159-00-LOST COMMUNICATION WITH PARK ASSIST CONTROL MODULE (PTS)

Perform the COMMUNICATION PRE-DIAGNOSTIC PROCEDURE. Refer to **STANDARD PROCEDURE** .

U0401-86-IMPLAUSIBLE DATA RECEIVED FROM ECM/PCM - SIGNAL INVALID

For a complete wiring diagram, **refer to appropriate SYSTEM WIRING DIAGRAMS article** .

WHEN MONITORED

Continuously with the ignition on, one valid CAN message received at least once, and no U0002-00-CAN C Bus Off Performance DTC present.

SET CONDITION

When the Electric Power Steering (EPS) Module detects an incorrect CAN message from the Powertrain Control Module (PCM).

POSSIBLE CAUSES

Possible Causes
ELECTRIC POWER STEERING (EPS) MODULE CAN BUS DTCS
POWERTRAIN CONTROL MODULE (PCM) DTCS
ELECTRIC POWER STEERING (EPS) MODULE

DIAGNOSTIC TEST

1. **VERIFY THE DTC IS ACTIVE**

   NOTE: This DTC must be active for the results of this test to be valid.

   1. Turn the ignition on.
   2. With the scan tool, record and erase DTCs.
   3. Cycle the ignition switch from off to on.
   4. With the scan tool, read DTCs.

   Is the DTC active at this time?

   Yes

   - Go To 2

   No

   - Test complete. The condition or conditions that originally set this DTC are not present at this time. Using the wiring diagrams as a guide, check all related splices and connectors for signs of water intrusion, corrosion, pushed out or bent terminals, and correct pin tension.
2. **CHECK IF BCM CAN BUS DTCS ARE PRESENT**
   1. With the scan tool, read BCM DTCs.

   Are there any BCM CAN BUS DTCs present?

   Yes

- Perform the appropriate diagnostic procedure. Refer to **DIAGNOSTIC CODE INDEX** .

No

- Go To 3

3. **CHECK IF ENGINE DTCS ARE PRESENT**
   1. With the scan tool, read PCM DTCs.

      Are there any PCM DTCs present?

      Yes

      - Perform the appropriate diagnostic procedure. Refer to **DTC INDEX** .

      No

      - Using the schematics as a guide, check the Electric Power Steering (EPS) Module pins, terminals, and connectors for corrosion, damage, or terminal push out. Pay particular attention to all power and ground circuits. If no problems are found, replace the Electric Power Steering (EPS) Module in accordance with the Service Information. Refer to **GEAR, REMOVAL** .
      - Perform the EPS Module Verification Test. Refer to **STANDARD PROCEDURE**.

U0403-00-IMPLAUSIBLE DATA RECEIVED FROM T-CASE

For a complete wiring diagram, **refer to appropriate SYSTEM WIRING DIAGRAMS article** .

WHEN MONITORED

Continuously with the ignition on, one valid CAN message received at least once, and no CAN C Bus Off Performance DTC present.

SET CONDITION

When the Electric Power Steering (EPS) Module detects an incorrect CAN message from the Drive Train Control Module (DTCM).

POSSIBLE CAUSES

Possible Causes
ELECTRIC POWER STEERING (EPS) MODULE CAN BUS DTCS
BODY CONTROL MODULE (BCM) DTCS
DRIVE TRAIN CONTROL MODULE (DTCM) DTCS
ELECTRIC POWER STEERING (EPS) MODULE

DIAGNOSTIC TEST

1. **VERIFY THE DTC IS ACTIVE**
    1. Turn the ignition on.
    2. With the scan tool, record and erase DTCs.
    3. Cycle the ignition from off to on.
    4. With the scan tool, read DTCs.

    Is the DTC active at this time?

    Yes

    - Go To 2

    No

    - Go To 5
2. **CHECK FOR BODY CONTROL MODULE (BCM) DTCS**
    1. With the scan tool, read BCM DTCs.

    Are there any BCM CAN Bus DTCs present?

    Yes

    - Perform the appropriate diagnostic procedure. Refer to **DIAGNOSIS AND TESTING** .

    No

    - Go To 3
3. **CHECK FOR DRIVE TRAIN CONTROL MODULE (DTCM) DTCS**
    1. With the scan tool, read DTCM DTCs.

    Are there any DTCM DTCs present?

    Yes

    - Perform the appropriate diagnostic procedure. Refer to **DIAGNOSIS AND TESTING** .

    No

    - Go To 4
4. **CHECK OTHER MODULES FOR DTCS**
    1. With the scan tool, read DTCs.

Are there any other modules reporting implausible communication DTCs against the DTCM?

Yes

- Replace the Drive Train Control Module (DTCM) in accordance with the Service Information. Refer to **MODULE, DRIVETRAIN CONTROL, REMOVAL** .
- Perform the EPS VERIFICATION TEST. Refer to **STANDARD PROCEDURE**.

No

- Using the schematics as a guide, check the EPS pins, terminals, and connectors for corrosion, damage, or terminal push out. Pay particular attention to all power and ground circuits. If no problems are found, replace the Electric Power Steering (EPS) Module in accordance with the Service Information. Refer to **GEAR, REMOVAL** .
- Perform the EPS VERIFICATION TEST. Refer to **STANDARD PROCEDURE**.

5. **CHECK THE WIRING AND CONNECTORS**
   1. The conditions necessary to set the DTC are not present at this time.
   2. Using the schematics as a guide, inspect the wiring and connectors specific to this module. Wiggle the wiring and connectors while checking for shorted and open circuits.
   3. Check all related splices and connectors for signs of water intrusion, corrosion, pushed out or bent terminals, and correct pin tension.
   4. Check Service Bulletins for any possible causes that may apply.

   Were there any problems found?

   Yes

   - Repair as necessary.
   - Perform the EPS VERIFICATION TEST. Refer to **STANDARD PROCEDURE**.

   No

   - Test complete.

U0404-00-IMPLAUSIBLE DATA RECEIVED FROM ESM

For a complete wiring diagram, **refer to appropriate SYSTEM WIRING DIAGRAMS article** .

WHEN MONITORED

Continuously with the ignition on, one valid CAN message received at least once, and no CAN C Bus Off Performance DTC present.

SET CONDITION

When the Electric Power Steering (EPS) Module detects an incorrect CAN message from the Electronic Shift Module (ESM).

POSSIBLE CAUSES

Possible Causes
ELECTRIC POWER STEERING (EPS) MODULE CAN BUS DTCS
BODY CONTROL MODULE (BCM) DTCS
ELECTRONIC SHIFT MODULE (ESM) DTCS
ELECTRIC POWER STEERING (EPS) MODULE

DIAGNOSTIC TEST

1. **VERIFY THE DTC IS ACTIVE**
    1. Turn the ignition on.
    2. With the scan tool, record and erase DTCs.
    3. Cycle the ignition from off to on.
    4. With the scan tool, read DTCs.

    Is the DTC active at this time?

    Yes

    - Go To 2

    No

    - Go To 5
2. **CHECK FOR BODY CONTROL MODULE (BCM) DTCS**
    1. With the scan tool, read BCM DTCs.

    Are there any BCM CAN Bus DTCs present?

    Yes

    - Perform the appropriate diagnostic procedure. Refer to **DIAGNOSIS AND TESTING** .

    No

    - Go To 3
3. **CHECK FOR ELECTRONIC SHIFT MODULE (ESM) DTCS**
    1. With the scan tool, read ESM DTCs.

    Are there any ESM DTCs present?

Yes

- Perform the appropriate diagnostic procedure. Refer to **DIAGNOSIS AND TESTING** .

No

- Go To 4

4. **CHECK OTHER MODULES FOR DTCS**
   1. With the scan tool, read DTCs.

      Are there any other modules reporting implausible communication DTCs against the ESM?

      Yes

      - Replace the Electronic Shift Module (ESM) in accordance with the Service Information. Refer to **SHIFTER, FLOOR CONSOLE, REMOVAL** .
      - Perform the EPS VERIFICATION TEST. Refer to **STANDARD PROCEDURE**.

      No

      - Using the schematics as a guide, check the EPS pins, terminals, and connectors for corrosion, damage, or terminal push out. Pay particular attention to all power and ground circuits. If no problems are found, replace the Electric Power Steering (EPS) Module in accordance with the Service Information. Refer to **GEAR, REMOVAL** .
      - Perform the EPS VERIFICATION TEST. Refer to **STANDARD PROCEDURE**.

5. **CHECK THE WIRING AND CONNECTORS**
   1. The conditions necessary to set the DTC are not present at this time.
   2. Using the schematics as a guide, inspect the wiring and connectors specific to this module. Wiggle the wiring and connectors while checking for shorted and open circuits.
   3. Check all related splices and connectors for signs of water intrusion, corrosion, pushed out or bent terminals, and correct pin tension.
   4. Check Service Bulletins for any possible causes that may apply.

      Were there any problems found?

      Yes

      - Repair as necessary.
      - Perform the EPS VERIFICATION TEST. Refer to **STANDARD PROCEDURE**.

      No

      - Test complete.

U0415-00-IMPAUSIBLE DATA RECEIVED FROM ABS

For a complete wiring diagram, **refer to appropriate SYSTEM WIRING DIAGRAMS article** .

WHEN MONITORED

Continuously while the system is active.

SET CONDITION

An error message has been received over the bus from the Anti-lock Brake System (ABS) Module.

POSSIBLE CAUSES

Possible Causes
CAN BUS OPEN OR SHORTED CONDITION ANTI-LOCK BRAKE SYSTEM (ABS) MODULE DTCS ELECTRIC POWER STEERING (EPS) MODULE

DIAGNOSTIC TEST

1. **VERIFY THE DTC IS ACTIVE**
    1. Turn the ignition on.
    2. With the scan tool, read DTCs and record on vehicle work order.
    3. With the scan tool, erase DTCs.
    4. Cycle the ignition from off to on.
    5. With the scan tool, read the DTCs.

    Is the DTC active at this time?

    Yes

    - Go To 2

    No

    - Go To 3
2. **CHECK FOR DTCS IN THE ABS MODULE**
    1. With the scan tool, read DTCs in the ABS Module.

    Is the ABS Module reporting any DTCs?

    Yes

- Perform the appropriate diagnostic procedure. Refer to **DIAGNOSIS AND TESTING** .

No

- Replace the Electric Power Steering (EPS) Module in accordance with the Service Information. Refer to **GEAR, REMOVAL** .
- Perform the EPS VERIFICATION TEST. Refer to **STANDARD PROCEDURE**.

3. **CHECK THE WIRING AND CONNECTORS**
   1. The conditions necessary to set the DTC are not present at this time.
   2. With the scan tool, check the Environmental Data to help identify the conditions in which the DTC was set.
   3. Using the wiring diagrams as a guide, check all related splices and connectors for signs of water intrusion, corrosion, pushed out or bent terminals, and correct pin tension.
   4. Wiggle the wiring and connectors while checking for shorted and open circuits.

   Were there any problems found?

   Yes

   - Repair as necessary.
   - Perform the EPS VERIFICATION TEST. Refer to **STANDARD PROCEDURE**.

   No

   - Test complete.

U0415-27-IMPAUSIBLE DATA RECEIVED FROM ABS - SIGNAL RATE OF CHANGE ABOVE THRESHOLD

For a complete wiring diagram, **refer to appropriate SYSTEM WIRING DIAGRAMS article** .

WHEN MONITORED

Continuously with the ignition on, one valid CAN message received at least once, and no U0002-00-CAN C Bus Off Performance DTC present.

SET CONDITION

When the Electric Power Steering (EPS) Module detects an incorrect CAN message from the Anti-lock Brake System (ABS) Module.

POSSIBLE CAUSES

Possible Causes

ELECTRIC POWER STEERING (EPS) MODULE CAN BUS DTCS
BODY CONTROL MODULE (BCM) DTCS
ANTI-LOCK BRAKE SYSTEM (ABS) MODULE DTCS
ELECTRIC POWER STEERING (EPS) MODULE

DIAGNOSTIC TEST

1. **VERIFY THE DTC IS ACTIVE**
    1. Turn the ignition on.
    2. With the scan tool, record and erase DTCs.
    3. Cycle the ignition from off to on.
    4. With the scan tool, read DTCs.

    Is the DTC active at this time?

    Yes

    - Go To 2

    No

    - Go To 5
2. **CHECK FOR BODY CONTROL MODULE (BCM) DTCS**
    1. With the scan tool, read BCM DTCs.

    Are there any BCM CAN Bus DTCs present?

    Yes

    - Perform the appropriate diagnostic procedure. Refer to **DIAGNOSIS AND TESTING** .

    No

    - Go To 3
3. **CHECK FOR ANTI-LOCK BRAKE SYSTEM (ABS) MODULE DTCS**
    1. With the scan tool, read ABS Module DTCs.

    Are there any ABS Module DTCs present?

    Yes

    - Perform the appropriate diagnostic procedure. Refer to **DIAGNOSIS AND TESTING** .

    No

- Go To 4

4. **CHECK OTHER MODULES FOR DTCS**
   1. With the scan tool, read DTCs.

      Are there any other modules reporting implausible communication DTCs against the ABS Module?

      Yes

      - Replace the Anti-lock Brake System (ABS) Module in accordance with the Service Information. Refer to **MODULE, ANTI-LOCK BRAKE SYSTEM, REMOVAL** .
      - Perform the EPS VERIFICATION TEST. Refer to **STANDARD PROCEDURE**.

      No

      - Using the schematics as a guide, check the EPS Module pins, terminals, and connectors for corrosion, damage, or terminal push out. Pay particular attention to all power and ground circuits. If no problems are found, replace the Electric Power Steering (EPS) Module in accordance with the Service Information. Refer to **GEAR, REMOVAL** .
      - Perform the EPS VERIFICATION TEST. Refer to **STANDARD PROCEDURE**.
5. **CHECK THE WIRING AND CONNECTORS**
   1. The conditions necessary to set the DTC are not present at this time.
   2. Using the schematics as a guide, inspect the wiring and connectors specific to this module. Wiggle the wiring and connectors while checking for shorted and open circuits.
   3. Check all related splices and connectors for signs of water intrusion, corrosion, pushed out or bent terminals, and correct pin tension.
   4. Check Service Bulletins for any possible causes that may apply.

      Were there any problems found?

      Yes

      - Repair as necessary.
      - Perform the EPS VERIFICATION TEST. Refer to **STANDARD PROCEDURE**.

      No

      - Test complete.

U0415-35-IMPAUSIBLE DATA RECEIVED FROM ABS - SIGNAL HIGH TIME > MAXIMUM

For a complete wiring diagram, **refer to appropriate SYSTEM WIRING DIAGRAMS article** .

WHEN MONITORED

Continuously with the ignition on, one valid CAN message received at least once, and no U0002-00-CAN C Bus Off Performance DTC present.

SET CONDITION

When the Electric Power Steering (EPS) Module detects an incorrect CAN message from the Anti-lock Brake System (ABS) Module.

POSSIBLE CAUSES

Possible Causes
ELECTRIC POWER STEERING (EPS) MODULE CAN BUS DTCS
BODY CONTROL MODULE (BCM) DTCS
ANTI-LOCK BRAKE SYSTEM (ABS) MODULE DTCS
ELECTRIC POWER STEERING (EPS) MODULE

DIAGNOSTIC TEST

1. **VERIFY THE DTC IS ACTIVE**
    1. Turn the ignition on.
    2. With the scan tool, record and erase DTCs.
    3. Cycle the ignition from off to on.
    4. With the scan tool, read DTCs.

    Is the DTC active at this time?

    Yes

    - Go To 2

    No

    - Go To 5
2. **CHECK FOR BODY CONTROL MODULE (BCM) DTCS**
    1. With the scan tool, read BCM DTCs.

    Are there any BCM CAN Bus DTCs present?

    Yes

    - Perform the appropriate diagnostic procedure. Refer to **DIAGNOSIS AND TESTING** .

    No

- Go To 3

3. **CHECK FOR ANTI-LOCK BRAKE SYSTEM (ABS) MODULE DTCS**
   1. With the scan tool, read ABS Module DTCs.

      Are there any ABS Module DTCs present?

      Yes

      - Perform the appropriate diagnostic procedure. Refer to **DIAGNOSIS AND TESTING** .

      No

      - Go To 4

4. **CHECK OTHER MODULES FOR DTCS**
   1. With the scan tool, read DTCs.

      Are there any other modules reporting implausible communication DTCs against the ABS Module?

      Yes

      - Replace the Anti-lock Brake System (ABS) Module in accordance with the Service Information. Refer to **MODULE, ANTI-LOCK BRAKE SYSTEM, REMOVAL** .
      - Perform the EPS VERIFICATION TEST. Refer to **STANDARD PROCEDURE**.

      No

      - Using the schematics as a guide, check the EPS Module pins, terminals, and connectors for corrosion, damage, or terminal push out. Pay particular attention to all power and ground circuits. If no problems are found, replace the Electric Power Steering (EPS) Module in accordance with the Service Information. Refer to **GEAR, REMOVAL** .
      - Perform the EPS VERIFICATION TEST. Refer to **STANDARD PROCEDURE**.

5. **CHECK THE WIRING AND CONNECTORS**
   1. The conditions necessary to set the DTC are not present at this time.
   2. Using the schematics as a guide, inspect the wiring and connectors specific to this module. Wiggle the wiring and connectors while checking for shorted and open circuits.
   3. Check all related splices and connectors for signs of water intrusion, corrosion, pushed out or bent terminals, and correct pin tension.
   4. Check Service Bulletins for any possible causes that may apply.

      Were there any problems found?

      Yes

- Repair as necessary.
- Perform the EPS VERIFICATION TEST. Refer to **STANDARD PROCEDURE**.

No

- Test complete.

U0415-85-IMPAUSIBLE DATA RECEIVED FROM ABS - SIGNAL ABOVE ALLOWABLE RANGE

For a complete wiring diagram, **refer to appropriate SYSTEM WIRING DIAGRAMS article** .

WHEN MONITORED

Continuously with the ignition on, one valid CAN message received at least once, and no U0002-00-CAN C Bus Off Performance DTC present.

SET CONDITION

When the Electric Power Steering (EPS) Module detects an incorrect CAN message from the Anti-lock Brake System (ABS) Module.

POSSIBLE CAUSES

Possible Causes
ELECTRIC POWER STEERING (EPS) MODULE CAN BUS DTCS
BODY CONTROL MODULE (BCM) DTCS
ANTI-LOCK BRAKE SYSTEM (ABS) MODULE DTCS
ELECTRIC POWER STEERING (EPS) MODULE

DIAGNOSTIC TEST

1. **VERIFY THE DTC IS ACTIVE**
    1. Turn the ignition on.
    2. With the scan tool, record and erase DTCs.
    3. Cycle the ignition from off to on.
    4. With the scan tool, read DTCs.

    Is the DTC active at this time?

    Yes

    - Go To 2

    No

- Go To 5

2. **CHECK FOR BODY CONTROL MODULE (BCM) DTCS**
   1. With the scan tool, read BCM DTCs.

      Are there any BCM CAN Bus DTCs present?

      Yes

      - Perform the appropriate diagnostic procedure. Refer to **DIAGNOSIS AND TESTING** .

      No

      - Go To 3

3. **CHECK FOR ANTI-LOCK BRAKE SYSTEM (ABS) MODULE DTCS**
   1. With the scan tool, read ABS Module DTCs.

      Are there any ABS Module DTCs present?

      Yes

      - Perform the appropriate diagnostic procedure. Refer to **DIAGNOSIS AND TESTING** .

      No

      - Go To 4

4. **CHECK OTHER MODULES FOR DTCS**
   1. With the scan tool, read DTCs.

      Are there any other modules reporting implausible communication DTCs against the ABS Module?

      Yes

      - Replace the Anti-lock Brake System (ABS) Module in accordance with the Service Information. Refer to **MODULE, ANTI-LOCK BRAKE SYSTEM, REMOVAL** .
      - Perform the EPS VERIFICATION TEST. Refer to **STANDARD PROCEDURE**.

      No

      - Using the schematics as a guide, check the EPS Module pins, terminals, and connectors for corrosion, damage, or terminal push out. Pay particular attention to all power and ground circuits. If no problems are found, replace the Electric Power Steering (EPS) Module in accordance with the Service Information. Refer to **GEAR, REMOVAL** .
      - Perform the EPS VERIFICATION TEST. Refer to **STANDARD PROCEDURE**.

5. **CHECK THE WIRING AND CONNECTORS**

1. The conditions necessary to set the DTC are not present at this time.
2. Using the schematics as a guide, inspect the wiring and connectors specific to this module. Wiggle the wiring and connectors while checking for shorted and open circuits.
3. Check all related splices and connectors for signs of water intrusion, corrosion, pushed out or bent terminals, and correct pin tension.
4. Check Service Bulletins for any possible causes that may apply.

   Were there any problems found?

   Yes

   - Repair as necessary.
   - Perform the EPS VERIFICATION TEST. Refer to **STANDARD PROCEDURE**.

   No

   - Test complete.

U0415-86-IMPAUSIBLE DATA RECEIVED FROM ABS - SIGNAL INVALID

For a complete wiring diagram, **refer to appropriate SYSTEM WIRING DIAGRAMS article** .

WHEN MONITORED

Continuously with the ignition on, one valid CAN message received at least once, and no U0002-00-CAN C Bus Off Performance DTC present.

SET CONDITION

When the Electric Power Steering (EPS) Module detects an incorrect CAN message from the Anti-lock Brake System (ABS) Module.

POSSIBLE CAUSES

Possible Causes
ELECTRIC POWER STEERING (EPS) MODULE CAN BUS DTCS
BODY CONTROL MODULE (BCM) DTCS
ANTI-LOCK BRAKE SYSTEM (ABS) MODULE DTCS
ELECTRIC POWER STEERING (EPS) MODULE

DIAGNOSTIC TEST

1. **VERIFY THE DTC IS ACTIVE**

NOTE: This DTC must be active for the results of this test to be valid.

1. Turn the ignition on.
2. With the scan tool, read DTCs and record on vehicle work order.
3. With the scan tool, erase DTCs.
4. Cycle the ignition switch from off to on.
5. With the scan tool, read DTCs.

   Is the DTC active at this time?

   Yes

   - Go To 2

   No

   - Test complete. The condition or conditions that originally set this DTC are not present at this time. Using the wiring diagrams as a guide, check all related splices and connectors for signs of water intrusion, corrosion, pushed out or bent terminals, and correct pin tension.

2. **CHECK IF BCM CAN BUS DTCS ARE PRESENT**
   1. With the scan tool, read the DTCs in the BCM.

      Are there any BCM CAN BUS DTCs present?

      Yes

      - Perform the appropriate diagnostic procedure. Refer to **STANDARD PROCEDURE** .

      No

      - Go To 3

3. **CHECK IF ABS DTCS ARE PRESENT**
   1. With the scan tool, read the DTCs in the ABS Module.

      Are there any ABS DTCs present?

      Yes

      - Perform the appropriate diagnostic procedure. Refer to **DIAGNOSIS AND TESTING** .

      No

      - Using the schematics as a guide, check the Electric Power Steering (EPS) Module pins, terminals, and connectors for corrosion, damage, or terminal push out. Pay particular

attention to all power and ground circuits. If no problems are found, replace the Electric Power Steering (EPS) Module in accordance with the Service Information. Refer to **GEAR, REMOVAL** .

- Perform the EPS Module Verification Test. Refer to **STANDARD PROCEDURE**.

U0415-90-IMPAUSIBLE DATA RECEIVED FROM ABS - STUCK ON

For a complete wiring diagram, **refer to appropriate SYSTEM WIRING DIAGRAMS article** .

WHEN MONITORED

Continuously with the ignition on, one valid CAN message received at least once, and no U0002-00-CAN C Bus Off Performance DTC present.

SET CONDITION

When the Electric Power Steering (EPS) Module detects an incorrect CAN message from the Anti-lock Brake System (ABS) Module.

POSSIBLE CAUSES

Possible Causes
ELECTRIC POWER STEERING (EPS) MODULE CAN BUS DTCS
BODY CONTROL MODULE (BCM) DTCS
ANTI-LOCK BRAKE SYSTEM (ABS) MODULE DTCS
ELECTRIC POWER STEERING (EPS) MODULE

DIAGNOSTIC TEST

1. **VERIFY THE DTC IS ACTIVE**
    1. Turn the ignition on.
    2. With the scan tool, record and erase DTCs.
    3. Cycle the ignition from off to on.
    4. With the scan tool, read DTCs.

    Is the DTC active at this time?

    Yes

    - Go To 2

    No

    - Go To 5
2. **CHECK FOR BODY CONTROL MODULE (BCM) DTCS**

1. With the scan tool, read BCM DTCs.

   Are there any BCM CAN Bus DTCs present?

   Yes

   - Perform the appropriate diagnostic procedure. Refer to **DIAGNOSIS AND TESTING** .

   No

   - Go To 3

3. **CHECK FOR ANTI-LOCK BRAKE SYSTEM (ABS) MODULE DTCS**
   1. With the scan tool, read ABS Module DTCs.

      Are there any ABS Module DTCs present?

      Yes

      - Perform the appropriate diagnostic procedure. Refer to **DIAGNOSIS AND TESTING** .

      No

      - Go To 4

4. **CHECK OTHER MODULES FOR DTCS**
   1. With the scan tool, read DTCs.

      Are there any other modules reporting implausible communication DTCs against the ABS Module?

      Yes

      - Replace the Anti-lock Brake System (ABS) Module in accordance with the Service Information. Refer to **MODULE, ANTI-LOCK BRAKE SYSTEM, REMOVAL** .
      - Perform the EPS VERIFICATION TEST. Refer to **STANDARD PROCEDURE**.

      No

      - Using the schematics as a guide, check the EPS Module pins, terminals, and connectors for corrosion, damage, or terminal push out. Pay particular attention to all power and ground circuits. If no problems are found, replace the Electric Power Steering (EPS) Module in accordance with the Service Information. Refer to **GEAR, REMOVAL** .
      - Perform the EPS VERIFICATION TEST. Refer to **STANDARD PROCEDURE**.

5. **CHECK THE WIRING AND CONNECTORS**
   1. The conditions necessary to set the DTC are not present at this time.
   2. Using the schematics as a guide, inspect the wiring and connectors specific to this module. Wiggle

the wiring and connectors while checking for shorted and open circuits.

3. Check all related splices and connectors for signs of water intrusion, corrosion, pushed out or bent terminals, and correct pin tension.
4. Check Service Bulletins for any possible causes that may apply.

Were there any problems found?

Yes

- Repair as necessary.
- Perform the EPS VERIFICATION TEST. Refer to **STANDARD PROCEDURE**.

No

- Test complete.

U0422-00-IMPAUSIBLE DATA RECEIVED FROM BODY CONTROL MODULE

For a complete wiring diagram, **refer to appropriate SYSTEM WIRING DIAGRAMS article** .

WHEN MONITORED

Continuously with the ignition on, one valid CAN message received at least once, and no U0002-00-CAN C Bus Off Performance DTC present.

SET CONDITION

When the Electric Power Steering (EPS) Module detects an incorrect CAN message from the Body Control Module (BCM).

POSSIBLE CAUSES

Possible Causes
ELECTRIC POWER STEERING (EPS) MODULE CAN BUS DTCS
BODY CONTROL MODULE (BCM) DTCS
POWERTRAIN CONTROL MODULE (PCM) DTCS
ELECTRIC POWER STEERING (EPS) MODULE

DIAGNOSTIC TEST

1. **VERIFY THE DTC IS ACTIVE**

NOTE: This DTC must be active for the results of this test to be valid.

1. Perform any Technical Service Bulletins (TSBs) that may apply.

2. Turn the ignition on.
3. With the scan tool, record and erase DTCs.
4. Cycle the ignition switch from off to on.
5. With the scan tool, read the DTCs.

Is the DTC active at this time?

Yes

- Go To 2

No

- Perform the EPS VERIFICATION TEST. Refer to **STANDARD PROCEDURE**.

2. **CHECK POWERTRAIN CONTROL MODULE (PCM) CAN BUS DTCS ARE PRESENT**
   1. With the scan tool, read the PCM DTCs.

   Are there any PCM CAN BUS DTCs present?

   Yes

   - Perform the appropriate diagnostic procedures. Refer to **DTC INDEX** .
   - Perform the EPS VERIFICATION TEST. Refer to **STANDARD PROCEDURE**.

   No

   - Go To 3

3. **CHECK BODY CONTROL MODULE (BCM) CAN BUS DTCS ARE PRESENT**
   1. With the scan tool, read the BCM DTCs.

   Are there any BCM CAN BUS DTCs present?

   Yes

   - Perform the appropriate diagnostic procedures. Refer to **DIAGNOSIS AND TESTING** .
   - Perform the EPS VERIFICATION TEST. Refer to **STANDARD PROCEDURE**.

   No

   - Using the schematics as a guide, check the Electric Power Steering (EPS) Module pins, terminals, and connectors for corrosion, damage, or terminal push out. Pay particular attention to all power and ground circuits. If no problems are found, replace the Electric Power Steering (EPS) Module accordance with Service Information. Refer to **GEAR, REMOVAL** .

- Perform the EPS VERIFICATION TEST. Refer to **STANDARD PROCEDURE**.

U0452-00-IMPLAUSIBLE DATA RECEIVED FROM RESTRAINTS CONTROL MODULE

For a complete wiring diagram, **refer to appropriate SYSTEM WIRING DIAGRAMS article** .

WHEN MONITORED

Continuously with the ignition on, one valid CAN message received at least once, and no CAN C Bus Off Performance DTC present.

SET CONDITION

When the Electric Power Steering (EPS) Module detects an incorrect CAN message from the Occupant Restraint Controller (ORC).

POSSIBLE CAUSES

Possible Causes
ELECTRIC POWER STEERING (EPS) MODULE CAN BUS DTCS
BODY CONTROL MODULE (BCM) DTCS
OCCUPANT RESTRAINT CONTROLLER (ORC) DTCS
ELECTRIC POWER STEERING (EPS) MODULE

DIAGNOSTIC TEST

1. **VERIFY THE DTC IS ACTIVE**
    1. Turn the ignition on.
    2. With the scan tool, record and erase DTCs.
    3. Cycle the ignition from off to on.
    4. With the scan tool, read DTCs.

    Is the DTC active at this time?

    Yes

    - Go To 2

    No

    - Go To 5
2. **CHECK FOR BODY CONTROL MODULE (BCM) DTCS**
    1. With the scan tool, read BCM DTCs.

Are there any BCM CAN Bus DTCs present?

Yes

- Perform the appropriate diagnostic procedure. Refer to **DIAGNOSIS AND TESTING** .

No

- Go To 3

3. **CHECK FOR OCCUPANT RESTRAINT CONTROLLER (ORC) DTCS**
   1. With the scan tool, read ORC DTCs.

   Are there any ORC DTCs present?

   Yes

   - Perform the appropriate diagnostic procedure. Refer to **DIAGNOSIS AND TESTING** .

   No

   - Go To 4

4. **CHECK OTHER MODULES FOR DTCS**
   1. With the scan tool, read DTCs.

   Are there any other modules reporting implausible communication DTCs against the ORC?

   Yes

   - Replace the Occupant Restraint Controller (ORC) in accordance with the Service Information. Refer to **REMOVAL** .
   - Perform the EPS VERIFICATION TEST. Refer to **STANDARD PROCEDURE**.

   No

   - Using the schematics as a guide, check the EPS pins, terminals, and connectors for corrosion, damage, or terminal push out. Pay particular attention to all power and ground circuits. If no problems are found, replace the Electric Power Steering (EPS) Module in accordance with the Service Information. Refer to **GEAR, REMOVAL** .
   - Perform the EPS VERIFICATION TEST. Refer to **STANDARD PROCEDURE**.

5. **CHECK THE WIRING AND CONNECTORS**
   1. The conditions necessary to set the DTC are not present at this time.
   2. Using the schematics as a guide, inspect the wiring and connectors specific to this module. Wiggle the wiring and connectors while checking for shorted and open circuits.
   3. Check all related splices and connectors for signs of water intrusion, corrosion, pushed out or bent

terminals, and correct pin tension.

4. Check Service Bulletins for any possible causes that may apply.

   Were there any problems found?

   Yes

   - Repair as necessary.
   - Perform the EPS VERIFICATION TEST. Refer to **STANDARD PROCEDURE**.

   No

   - Test complete.

U0452-86-IMPLAUSIBLE DATA RECEIVED FROM RESTRAINTS CONTROL MODULE - SIGNAL INVALID

For a complete wiring diagram, **refer to appropriate SYSTEM WIRING DIAGRAMS article** .

WHEN MONITORED

Continuously with the ignition on, one valid CAN message received at least once, and no CAN C Bus Off Performance DTC present.

SET CONDITION

When the Electric Power Steering (EPS) Module detects an incorrect CAN message from the Occupant Restraint Controller (ORC).

POSSIBLE CAUSES

Possible Causes
ELECTRIC POWER STEERING (EPS) MODULE CAN BUS DTCS
BODY CONTROL MODULE (BCM) DTCS
OCCUPANT RESTRAINT CONTROLLER (ORC) DTCS
ELECTRIC POWER STEERING (EPS) MODULE

DIAGNOSTIC TEST

1. **VERIFY THE DTC IS ACTIVE**
   1. Turn the ignition on.
   2. With the scan tool, record and erase DTCs.
   3. Cycle the ignition from off to on.
   4. With the scan tool, read DTCs.

Is the DTC active at this time?

Yes

- Go To 2

No

- Go To 5

2. **CHECK FOR BODY CONTROL MODULE (BCM) DTCS**
   1. With the scan tool, read BCM DTCs.

      Are there any BCM CAN Bus DTCs present?

      Yes

      - Perform the appropriate diagnostic procedure. Refer to **DIAGNOSIS AND TESTING** .

      No

      - Go To 3

3. **CHECK FOR OCCUPANT RESTRAINT CONTROLLER (ORC) DTCS**
   1. With the scan tool, read ORC DTCs.

      Are there any ORC DTCs present?

      Yes

      - Perform the appropriate diagnostic procedure. Refer to **DIAGNOSIS AND TESTING** .

      No

      - Go To 4

4. **CHECK OTHER MODULES FOR DTCS**
   1. With the scan tool, read DTCs.

      Are there any other modules reporting implausible communication DTCs against the ORC?

      Yes

      - Replace the Occupant Restraint Controller (ORC) in accordance with the Service Information. Refer to **REMOVAL** .
      - Perform the EPS VERIFICATION TEST. Refer to **STANDARD PROCEDURE**.

No

- Using the schematics as a guide, check the EPS pins, terminals, and connectors for corrosion, damage, or terminal push out. Pay particular attention to all power and ground circuits. If no problems are found, replace the Electric Power Steering (EPS) Module in accordance with the Service Information. Refer to **GEAR, REMOVAL** .
- Perform the EPS VERIFICATION TEST. Refer to **STANDARD PROCEDURE**.

5. **CHECK THE WIRING AND CONNECTORS**
   1. The conditions necessary to set the DTC are not present at this time.
   2. Using the schematics as a guide, inspect the wiring and connectors specific to this module. Wiggle the wiring and connectors while checking for shorted and open circuits.
   3. Check all related splices and connectors for signs of water intrusion, corrosion, pushed out or bent terminals, and correct pin tension.
   4. Check Service Bulletins for any possible causes that may apply.

   Were there any problems found?

   Yes

   - Repair as necessary.
   - Perform the EPS VERIFICATION TEST. Refer to **STANDARD PROCEDURE**.

   No

   - Test complete.

U045A-00-IMPLAUSIBLE DATA RECEIVED FROM PARKING ASSIST MODULE

For a complete wiring diagram, **refer to appropriate SYSTEM WIRING DIAGRAMS article** .

WHEN MONITORED

Continuously with the ignition on, one valid CAN message received at least once, and no CAN C Bus Off Performance DTC present.

SET CONDITION

When the Electric Power Steering (EPS) Module detects an incorrect CAN message from the Park Assist Module (PAM).

POSSIBLE CAUSES

Possible Causes
ELECTRIC POWER STEERING (EPS) MODULE CAN BUS DTCS

BODY CONTROL MODULE (BCM) DTCS
PARK ASSIST MODULE (PAM) DTCS
ELECTRIC POWER STEERING (EPS) MODULE

DIAGNOSTIC TEST

1. **VERIFY THE DTC IS ACTIVE**
    1. Turn the ignition on.
    2. With the scan tool, record and erase DTCs.
    3. Cycle the ignition from off to on.
    4. With the scan tool, read DTCs.

    Is the DTC active at this time?

    Yes

    - Go To 2

    No

    - Go To 5
2. **CHECK FOR BODY CONTROL MODULE (BCM) DTCS**
    1. With the scan tool, read BCM DTCs.

    Are there any BCM CAN Bus DTCs present?

    Yes

    - Perform the appropriate diagnostic procedure. Refer to **DIAGNOSIS AND TESTING** .

    No

    - Go To 3
3. **CHECK FOR PARK ASSIST MODULE (PAM) DTCS**
    1. With the scan tool, read PAM DTCs.

    Are there any PAM DTCs present?

    Yes

    - Perform the appropriate diagnostic procedure. Refer to **DIAGNOSIS AND TESTING** .

    No

- Go To 4

4. **CHECK OTHER MODULES FOR DTCS**
   1. With the scan tool, read DTCs.

      Are there any other modules reporting implausible communication DTCs against the PAM?

      Yes

      - Replace the Park Assist Module (PAM) in accordance with the Service Information. Refer to **MODULE, PARK ASSIST, REMOVAL** .
      - Perform the EPS VERIFICATION TEST. Refer to **STANDARD PROCEDURE**.

      No

      - Using the schematics as a guide, check the EPS pins, terminals, and connectors for corrosion, damage, or terminal push out. Pay particular attention to all power and ground circuits. If no problems are found, replace the Electric Power Steering (EPS) Module in accordance with the Service Information. Refer to **GEAR, REMOVAL** .
      - Perform the EPS VERIFICATION TEST. Refer to **STANDARD PROCEDURE**.
5. **CHECK THE WIRING AND CONNECTORS**
   1. The conditions necessary to set the DTC are not present at this time.
   2. Using the schematics as a guide, inspect the wiring and connectors specific to this module. Wiggle the wiring and connectors while checking for shorted and open circuits.
   3. Check all related splices and connectors for signs of water intrusion, corrosion, pushed out or bent terminals, and correct pin tension.
   4. Check Service Bulletins for any possible causes that may apply.

      Were there any problems found?

      Yes

      - Repair as necessary.
      - Perform the EPS VERIFICATION TEST. Refer to **STANDARD PROCEDURE**.

      No

      - Test complete.

U1206-00-LOST COMMUNICATION WITH ELECTRONIC PARK BRAKE MODULE

Perform the COMMUNICATION PRE-DIAGNOSTIC PROCEDURE. Refer to **STANDARD PROCEDURE** .

U1215-00-LOST COMMUNICATION WITH FORWARD FACING CAMERA

Perform the COMMUNICATION PRE-DIAGNOSTIC PROCEDURE. Refer to **STANDARD PROCEDURE** .

U148D-00-IMPLAUSIBLE DATA RECEIVED FROM FORWARD FACING CAMERA

For a complete wiring diagram, **refer to appropriate SYSTEM WIRING DIAGRAMS article** .

WHEN MONITORED

Continuously with the ignition on, one valid CAN message received at least once, and no CAN C Bus Off Performance DTC present.

SET CONDITION

When the Electric Power Steering (EPS) Module detects an incorrect CAN message from the Forward Facing Camera Module (FFCM).

POSSIBLE CAUSES

Possible Causes
ELECTRIC POWER STEERING (EPS) MODULE CAN BUS DTCS
BODY CONTROL MODULE (BCM) DTCS
FORWARD FACING CAMERA MODULE (FFCM) DTCS
ELECTRIC POWER STEERING (EPS) MODULE

DIAGNOSTIC TEST

1. **VERIFY THE DTC IS ACTIVE**
    1. Turn the ignition on.
    2. With the scan tool, record and erase DTCs.
    3. Cycle the ignition from off to on.
    4. With the scan tool, read DTCs.

    Is the DTC active at this time?

    Yes

    - Go To 2

    No

    - Go To 5
2. **CHECK FOR BODY CONTROL MODULE (BCM) DTCS**
    1. With the scan tool, read BCM DTCs.

Are there any BCM CAN Bus DTCs present?

Yes

- Perform the appropriate diagnostic procedure. Refer to **DIAGNOSIS AND TESTING** .

No

- Go To 3

3. **CHECK FOR FORWARD FACING CAMERA MODULE (FFCM) DTCS**
   1. With the scan tool, read FFCM DTCs.

   Are there any FFCM DTCs present?

   Yes

   - Perform the appropriate diagnostic procedure. Refer to **DIAGNOSIS AND TESTING** .

   No

   - Go To 4

4. **CHECK OTHER MODULES FOR DTCS**
   1. With the scan tool, read DTCs.

   Are there any other modules reporting implausible communication DTCs against the FFCM?

   Yes

   - Replace the Forward Facing Camera Module (FFCM) in accordance with the Service Information. Refer to **MODULE, FORWARD FACING CAMERA, REMOVAL** .
   - Perform the EPS VERIFICATION TEST. Refer to **STANDARD PROCEDURE**.

   No

   - Using the schematics as a guide, check the EPS pins, terminals, and connectors for corrosion, damage, or terminal push out. Pay particular attention to all power and ground circuits. If no problems are found, replace the Electric Power Steering (EPS) Module in accordance with the Service Information. Refer to **GEAR, REMOVAL** .
   - Perform the EPS VERIFICATION TEST. Refer to **STANDARD PROCEDURE**.

5. **CHECK THE WIRING AND CONNECTORS**
   1. The conditions necessary to set the DTC are not present at this time.
   2. Using the schematics as a guide, inspect the wiring and connectors specific to this module. Wiggle the wiring and connectors while checking for shorted and open circuits.
   3. Check all related splices and connectors for signs of water intrusion, corrosion, pushed out or bent

terminals, and correct pin tension.

4. Check Service Bulletins for any possible causes that may apply.

   Were there any problems found?

   Yes

   - Repair as necessary.
   - Perform the EPS VERIFICATION TEST. Refer to **STANDARD PROCEDURE**.

   No

   - Test complete.

U148D-27-IMPLAUSIBLE DATA RECEIVED FROM FORWARD FACING CAMERA - SIGNAL RATE OF CHANGE ABOVE THRESHOLD

For a complete wiring diagram, **refer to appropriate SYSTEM WIRING DIAGRAMS article** .

WHEN MONITORED

Continuously with the ignition on, one valid CAN message received at least once, and no CAN C Bus Off Performance DTC present.

SET CONDITION

When the Electric Power Steering (EPS) Module detects an incorrect CAN message from the Forward Facing Camera Module (FFCM).

POSSIBLE CAUSES

Possible Causes
ELECTRIC POWER STEERING (EPS) MODULE CAN BUS DTCS
BODY CONTROL MODULE (BCM) DTCS
FORWARD FACING CAMERA MODULE (FFCM) DTCS
ELECTRIC POWER STEERING (EPS) MODULE

DIAGNOSTIC TEST

1. **VERIFY THE DTC IS ACTIVE**
   1. Turn the ignition on.
   2. With the scan tool, record and erase DTCs.
   3. Cycle the ignition from off to on.
   4. With the scan tool, read DTCs.

Is the DTC active at this time?

Yes

- Go To 2

No

- Go To 5

2. **CHECK FOR BODY CONTROL MODULE (BCM) DTCS**
   1. With the scan tool, read BCM DTCs.

      Are there any BCM CAN Bus DTCs present?

      Yes

      - Perform the appropriate diagnostic procedure. Refer to **DIAGNOSIS AND TESTING** .

      No

      - Go To 3

3. **CHECK FOR FORWARD FACING CAMERA MODULE (FFCM) DTCS**
   1. With the scan tool, read FFCM DTCs.

      Are there any FFCM DTCs present?

      Yes

      - Perform the appropriate diagnostic procedure. Refer to **DIAGNOSIS AND TESTING** .

      No

      - Go To 4

4. **CHECK OTHER MODULES FOR DTCS**
   1. With the scan tool, read DTCs.

      Are there any other modules reporting implausible communication DTCs against the FFCM?

      Yes

      - Replace the Forward Facing Camera Module (FFCM) in accordance with the Service Information. Refer to **MODULE, FORWARD FACING CAMERA, REMOVAL** .
      - Perform the EPS VERIFICATION TEST. Refer to **STANDARD PROCEDURE**.

No

- Using the schematics as a guide, check the EPS pins, terminals, and connectors for corrosion, damage, or terminal push out. Pay particular attention to all power and ground circuits. If no problems are found, replace the Electric Power Steering (EPS) Module in accordance with the Service Information. Refer to **GEAR, REMOVAL** .
- Perform the EPS VERIFICATION TEST. Refer to **STANDARD PROCEDURE**.

5. **CHECK THE WIRING AND CONNECTORS**
   1. The conditions necessary to set the DTC are not present at this time.
   2. Using the schematics as a guide, inspect the wiring and connectors specific to this module. Wiggle the wiring and connectors while checking for shorted and open circuits.
   3. Check all related splices and connectors for signs of water intrusion, corrosion, pushed out or bent terminals, and correct pin tension.
   4. Check Service Bulletins for any possible causes that may apply.

   Were there any problems found?

   Yes

   - Repair as necessary.
   - Perform the EPS VERIFICATION TEST. Refer to **STANDARD PROCEDURE**.

   No

   - Test complete.

U148D-2A-IMPLAUSIBLE DATA RECEIVED FROM FORWARD FACING CAMERA - STUCK

For a complete wiring diagram, **refer to appropriate SYSTEM WIRING DIAGRAMS article** .

WHEN MONITORED

Continuously with the ignition on, one valid CAN message received at least once, and no CAN C Bus Off Performance DTC present.

SET CONDITION

When the Electric Power Steering (EPS) Module detects an incorrect CAN message from the Forward Facing Camera Module (FFCM).

POSSIBLE CAUSES

Possible Causes
ELECTRIC POWER STEERING (EPS) MODULE CAN BUS DTCS

BODY CONTROL MODULE (BCM) DTCS
FORWARD FACING CAMERA MODULE (FFCM) DTCS
ELECTRIC POWER STEERING (EPS) MODULE

DIAGNOSTIC TEST

1. **VERIFY THE DTC IS ACTIVE**
    1. Turn the ignition on.
    2. With the scan tool, record and erase DTCs.
    3. Cycle the ignition from off to on.
    4. With the scan tool, read DTCs.

    Is the DTC active at this time?

    Yes

    - Go To 2

    No

    - Go To 5
2. **CHECK FOR BODY CONTROL MODULE (BCM) DTCS**
    1. With the scan tool, read BCM DTCs.

    Are there any BCM CAN Bus DTCs present?

    Yes

    - Perform the appropriate diagnostic procedure. Refer to **DIAGNOSIS AND TESTING** .

    No

    - Go To 3
3. **CHECK FOR FORWARD FACING CAMERA MODULE (FFCM) DTCS**
    1. With the scan tool, read FFCM DTCs.

    Are there any FFCM DTCs present?

    Yes

    - Perform the appropriate diagnostic procedure. Refer to **DIAGNOSIS AND TESTING** .

    No

- Go To 4

4. **CHECK OTHER MODULES FOR DTCS**
   1. With the scan tool, read DTCs.

      Are there any other modules reporting implausible communication DTCs against the FFCM?

      Yes

      - Replace the Forward Facing Camera Module (FFCM) in accordance with the Service Information. Refer to **MODULE, FORWARD FACING CAMERA, REMOVAL** .
      - Perform the EPS VERIFICATION TEST. Refer to **STANDARD PROCEDURE**.

      No

      - Using the schematics as a guide, check the EPS pins, terminals, and connectors for corrosion, damage, or terminal push out. Pay particular attention to all power and ground circuits. If no problems are found, replace the Electric Power Steering (EPS) Module in accordance with the Service Information. Refer to **GEAR, REMOVAL** .
      - Perform the EPS VERIFICATION TEST. Refer to **STANDARD PROCEDURE**.
5. **CHECK THE WIRING AND CONNECTORS**
   1. The conditions necessary to set the DTC are not present at this time.
   2. Using the schematics as a guide, inspect the wiring and connectors specific to this module. Wiggle the wiring and connectors while checking for shorted and open circuits.
   3. Check all related splices and connectors for signs of water intrusion, corrosion, pushed out or bent terminals, and correct pin tension.
   4. Check Service Bulletins for any possible causes that may apply.

      Were there any problems found?

      Yes

      - Repair as necessary.
      - Perform the EPS VERIFICATION TEST. Refer to **STANDARD PROCEDURE**.

      No

      - Test complete.

U148D-85-IMPLAUSIBLE DATA RECEIVED FROM FORWARD FACING CAMERA - SIGNAL ABOVE ALLOWABLE RANGE

For a complete wiring diagram, **refer to appropriate SYSTEM WIRING DIAGRAMS article** .

WHEN MONITORED

Continuously with the ignition on, one valid CAN message received at least once, and no CAN C Bus Off Performance DTC present.

SET CONDITION

When the Electric Power Steering (EPS) Module detects an incorrect CAN message from the Forward Facing Camera Module (FFCM).

POSSIBLE CAUSES

Possible Causes
ELECTRIC POWER STEERING (EPS) MODULE CAN BUS DTCS
BODY CONTROL MODULE (BCM) DTCS
FORWARD FACING CAMERA MODULE (FFCM) DTCS
ELECTRIC POWER STEERING (EPS) MODULE

DIAGNOSTIC TEST

1. **VERIFY THE DTC IS ACTIVE**
    1. Turn the ignition on.
    2. With the scan tool, record and erase DTCs.
    3. Cycle the ignition from off to on.
    4. With the scan tool, read DTCs.

    Is the DTC active at this time?

    Yes

    - Go To 2

    No

    - Go To 5
2. **CHECK FOR BODY CONTROL MODULE (BCM) DTCS**
    1. With the scan tool, read BCM DTCs.

    Are there any BCM CAN Bus DTCs present?

    Yes

    - Perform the appropriate diagnostic procedure. Refer to **DIAGNOSIS AND TESTING** .

    No

- Go To 3

3. **CHECK FOR FORWARD FACING CAMERA MODULE (FFCM) DTCS**
   1. With the scan tool, read FFCM DTCs.

      Are there any FFCM DTCs present?

      Yes

      - Perform the appropriate diagnostic procedure. Refer to **DIAGNOSIS AND TESTING** .

      No

      - Go To 4

4. **CHECK OTHER MODULES FOR DTCS**
   1. With the scan tool, read DTCs.

      Are there any other modules reporting implausible communication DTCs against the FFCM?

      Yes

      - Replace the Forward Facing Camera Module (FFCM) in accordance with the Service Information. Refer to **MODULE, FORWARD FACING CAMERA, REMOVAL** .
      - Perform the EPS VERIFICATION TEST. Refer to **STANDARD PROCEDURE**.

      No

      - Using the schematics as a guide, check the EPS pins, terminals, and connectors for corrosion, damage, or terminal push out. Pay particular attention to all power and ground circuits. If no problems are found, replace the Electric Power Steering (EPS) Module in accordance with the Service Information. Refer to **GEAR, REMOVAL** .
      - Perform the EPS VERIFICATION TEST. Refer to **STANDARD PROCEDURE**.

5. **CHECK THE WIRING AND CONNECTORS**
   1. The conditions necessary to set the DTC are not present at this time.
   2. Using the schematics as a guide, inspect the wiring and connectors specific to this module. Wiggle the wiring and connectors while checking for shorted and open circuits.
   3. Check all related splices and connectors for signs of water intrusion, corrosion, pushed out or bent terminals, and correct pin tension.
   4. Check Service Bulletins for any possible causes that may apply.

      Were there any problems found?

      Yes

- Repair as necessary.
- Perform the EPS VERIFICATION TEST. Refer to **STANDARD PROCEDURE**.

No

- Test complete.

STANDARD PROCEDURE

EPS VERIFICATION TEST

For a complete wiring diagram, **refer to appropriate SYSTEM WIRING DIAGRAMS article** .

EPS VERIFICATION TEST

1. Turn the ignition off to the lock position.
2. Remove all test equipment.
3. Connect all previously disconnected components and connectors.
4. Verify all accessories are turned off, the battery is fully charged and the charging system has a status of "recharging".
5. Verify that the ignition is on. With the scan tool, record and erase all DTCs from all modules. Start the engine and allow it to run for two minutes and fully operate the system that was indicating the failure.

   NOTE: Turn the steering wheel from lock to lock, holding at each lock position for One second.

6. Turn the ignition off and wait five seconds. Turn the ignition on and using the scan tool, read Diagnostic Trouble Codes (DTCs) from all modules.
7. If there are no DTCs present after turning ignition on, road test the vehicle for at least five minutes.
8. Again, with the scan tool read DTCs. If any DTCs are present, refer to **DTC INDEX** for the Diagnostic procedure and troubleshoot the new or recurring symptom.
9. If there are no DTCs present and the customer's concern can no longer be duplicated, the repair is complete.

   Are any DTCs present or is the original concern still present?

   Yes

   - Perform the appropriate diagnostic procedure. Refer to **DIAGNOSIS AND TESTING**.

   No

   - Repair is complete.

EPS LEARN PROCEDURE

PERFORMING EPS LEARN PROCEDURE

1. Using the scan tool, under "Miscellaneous Functions" perform the EPS Learn procedure.
2. With the scan tool, select View DTCs in the EPS.

   Are there any DTCs present?

   Yes

   - Refer to **DIAGNOSTIC CODE INDEX** and perform the appropriate diagnostic procedure(s).

   No

   - Test Complete
   - Perform the EPS VERIFICATION TEST. Refer to **STANDARD PROCEDURE**.

2014 STEERING

Steering Control Module (SCM) - Electrical Diagnostics - Cherokee

DIAGNOSTIC CODE INDEX

DIAGNOSTIC CODE INDEX

DTC	Description
B178F-92	TURN SIGNAL SWITCH - PERFORMANCE OR INCORRECT OPERATION
B2225-00	SCM STEERING COLUMN MODULE INTERNAL
B2309-29	REAR WIPER SWITCH - SIGNAL INVALID
B232E-00	REAR WASHER SWITCH STUCK
B232F-00	MIST SWITCH STUCK
B23A1-2A	FLASH TO PASS/OPTICAL HORN SWITCH - STUCK
C2129-16	BATTERY VOLTAGE - CIRCUIT VOLTAGE BELOW THRESHOLD
C2129-17	BATTERY VOLTAGE - CIRCUIT VOLTAGE ABOVE THRESHOLD
U0001-00	CAN C BUS
U0002-00	CAN C BUS OFF PERFORMANCE
U0100-00	LOST COMMUNICATION WITH ECM/PCM
U0140-00	LOST COMMUNICATION WITH BODY CONTROL MODULE
U0401-00	IMPLAUSIBLE DATA RECEIVED FROM ECM/PCM
U0422-00	IMPLAUSIBLE DATA RECEIVED FROM THE BODY CONTROL MODULE
U1008-00	LIN 1 BUS
U121E-00	LOST COMMUNICATION WITH STEERING WHEEL CRUISE CONTROL SWITCH

DIAGNOSIS AND TESTING

B178F-92-TURN SIGNAL SWITCH - PERFORMANCE OR INCORRECT OPERATION

For a complete wiring diagram, **refer to appropriate SYSTEM WIRING DIAGRAMS article** .

WHEN MONITORED

With the ignition on.

SET CONDITION

The BCM detects the Turn Signal function inoperative.

POSSIBLE CAUSES

Possible Causes
LEFT MULTIFUNCTION SWITCH

DIAGNOSTIC TEST

CHECK FOR AN ACTIVE DTC

NOTE: Before proceeding with this diagnostic procedure, verify the Left and Right Multifunction Switch and Clockspring harness connectors are properly seated and verify proper pin terminal tension. A loose connection at any of these connectors may cause this DTC to set.

1. Turn the ignition on.
2. Actuate the left and right turn signals with the Left Multifunction Switch.
3. With the scan tool, read DTCs.

   Does the scan tool display this DTC as active?

   Yes

   - Replace the Left Multifunction Switch in accordance with the Service Information.
   - Perform the BODY VERIFICATION TEST. Refer to **STANDARD PROCEDURE** .

   No

   - Test complete. The condition or conditions that originally set this DTC are not present at this time. Using the wiring diagrams as a guide, check all related splices and connectors for signs of water intrusion, corrosion, pushed out or bent terminals and correct pin tension.

B2225-00-SCM STEERING COLUMN MODULE INTERNAL

For a complete wiring diagram, **refer to appropriate SYSTEM WIRING DIAGRAMS article** .

THEORY OF OPERATION

The SCCM is located near the top of the steering column below the steering wheel. The SCCM includes the Clockspring, the Multi-function Switch and a LIN/CAN C Gateway. LIN Bus messages received by the LIN/CAN C Gateway are broadcast over the CAN C Bus to the appropriate modules.

WHEN MONITORED

With the ignition on.

SET CONDITION

The Steering Column Control Module (SCCM) has set an internal electronic failure status.

POSSIBLE CAUSES

Possible Causes
(A929) FUSED B(+) CIRCUIT OPEN, SHORTED TO GROUND OR HIGH RESISTANCE
LOW BATTERY VOLTAGE
STEERING COLUMN CONTROL MODULE (SCCM)

DIAGNOSTIC TEST

1. **CHECK FOR AN ACTIVE DTC**
   1. Turn the ignition on.
   2. With the scan tool, read DTCs.

      Does the scan tool display this DTC as active?

      Yes

      - Go To 2

      No

      - Test complete. The condition or conditions that originally set this DTC are not present at this time. Using the wiring diagrams as a guide, check all related splices and connectors for signs of water intrusion, corrosion, pushed out or bent terminals and correct pin tension.
      - Perform the BODY VERIFICATION TEST. Refer to **STANDARD PROCEDURE** .
2. **LOW BATTERY VOLTAGE**
   1. Turn the ignition off.
   2. Disconnect the Steering Control Module C2 harness connector.
   3. Turn the ignition on.
   4. Measure the voltage of the (A929) Fused B(+) circuit.

      Is battery voltage present?

      Yes

      - Replace the Steering Column Control Module (SCCM) in accordance with the Service Information. Refer to **MODULE, STEERING COLUMN, REMOVAL** .
      - Perform the BODY VERIFICATION TEST. Refer to **STANDARD PROCEDURE** .

      No

- Repair the (A929) Fused B(+) circuit for an open, short to ground or high resistance.
- Perform the BODY VERIFICATION TEST. Refer to **STANDARD PROCEDURE** .

B2309-29-REAR WIPER SWITCH - SIGNAL INVALID

For a complete wiring diagram, **refer to appropriate SYSTEM WIRING DIAGRAMS article** .

THEORY OF OPERATION

The Rear Wiper/Washer Switch is part of the Multi-function Switch and is integral to the Steering Column Control Module (SCCM). The SCCM is located near the top of the steering column below the steering wheel. The SCCM includes the Clockspring, the Multi-function Switch and a LIN/CAN C Gateway. LIN Bus messages received by the LIN/CAN C Gateway are broadcast over the CAN C Bus to the appropriate modules.

WHEN MONITORED

With the ignition on.

SET CONDITION

The BCM detects the Rear Wiper Switch function is inoperative.

POSSIBLE CAUSES

Possible Causes
REAR WIPER SWITCH

DIAGNOSTIC TEST

CHECK FOR AN ACTIVE DTC

NOTE: Before proceeding with this diagnostic procedure, verify the Left and Right Multifunction Switch and Clockspring harness connectors are properly seated and verify proper pin terminal tension. A loose connection at any of these connectors may cause this DTC to set.

1. Turn the ignition on.
2. Activate the Rear Wiper Switch.
3. With the scan tool, read DTCs.

   Does the scan tool display this DTC as active?

   Yes

   - Replace the Rear Wiper Switch in accordance with the Service Information.

- Perform the BODY VERIFICATION TEST. Refer to **STANDARD PROCEDURE** .

No

- Test complete. The condition or conditions that originally set this DTC are not present at this time. Using the wiring diagrams as a guide, check all related splices and connectors for signs of water intrusion, corrosion, pushed out or bent terminals and correct pin tension.

B232E-00-REAR WASHER SWITCH STUCK

For a complete wiring diagram, **refer to appropriate SYSTEM WIRING DIAGRAMS article** .

THEORY OF OPERATION

The Rear Wiper/Washer Switch is part of the Multi-function Switch and is integral to the Steering Column Control Module (SCCM). The SCCM is located near the top of the steering column below the steering wheel. The SCCM includes the Clockspring, the Multi-function Switch and a LIN/CAN C Gateway. LIN Bus messages received by the LIN/CAN C Gateway are broadcast over the CAN C Bus to the appropriate modules.

WHEN MONITORED

With the ignition on.

SET CONDITION

The SCCM detects the Rear Washer Switch is active for greater than 20 seconds.

POSSIBLE CAUSES

Possible Causes
STEERING COLUMN CONTROL MODULE (SCCM)
REAR WASHER SWITCH STUCK

DIAGNOSTIC TEST

CHECK FOR AN ACTIVE DTC

1. Turn the ignition on.
2. Press the Rear Washer Switch twice.
3. With the scan tool, read DTCs.

   Does the scan tool display this DTC as active?

   Yes

- Replace the Steering Column Control Module (SCCM) in accordance with the Service Information. Refer to **MODULE, STEERING COLUMN, REMOVAL** .
- Perform the BODY VERIFICATION TEST. Refer to **STANDARD PROCEDURE** .

No

- Test complete. The condition or conditions that originally set this DTC are not present at this time. Using the wiring diagrams as a guide, check all related splices and connectors for signs of water intrusion, corrosion, pushed out or bent terminals and correct pin tension.
- Perform the BODY VERIFICATION TEST. Refer to **STANDARD PROCEDURE** .

B232F-00-MIST SWITCH STUCK

For a complete wiring diagram, **refer to appropriate SYSTEM WIRING DIAGRAMS article** .

WHEN MONITORED

With the ignition on.

SET CONDITION

The SCCM detects the Mist Switch is active for greater than 20 seconds.

POSSIBLE CAUSES

Possible Causes
STEERING COLUMN CONTROL MODULE (SCCM)
MIST SWITCH STUCK

DIAGNOSTIC TEST

CHECK FOR AN ACTIVE DTC

1. Turn the ignition on.
2. Activate the Mist Switch twice.
3. With the scan tool, read DTCs.

   Does the scan tool display this DTC as active?

   Yes

   - Replace the Steering Column Control Module (SCCM) in accordance with the Service Information. Refer to **MODULE, STEERING COLUMN, REMOVAL** .
   - Perform the BODY VERIFICATION TEST. Refer to **STANDARD PROCEDURE** .

No

- Test complete. The condition or conditions that originally set this DTC are not present at this time. Using the wiring diagrams as a guide, check all related splices and connectors for signs of water intrusion, corrosion, pushed out or bent terminals and correct pin tension.
- Perform the BODY VERIFICATION TEST. Refer to **STANDARD PROCEDURE** .

B23A1-2A-FLASH TO PASS/OPTICAL HORN SWITCH - STUCK

For a complete wiring diagram, **refer to appropriate SYSTEM WIRING DIAGRAMS article** .

THEORY OF OPERATION

The Flash to Pass/Optical Horn Switch is part of the Multi-function Switch and is integral to the Steering Column Control Module (SCCM). The SCCM is located near the top of the steering column below the steering wheel. The SCCM includes the Clockspring, the Multi-function Switch and a LIN/CAN C Gateway. LIN Bus messages received by the LIN/CAN C Gateway are broadcast over the CAN C Bus to the appropriate modules.

WHEN MONITORED

With the ignition on.

SET CONDITION

The SCCM detects the Flash to Pass/Optical Horn Switch is active for greater than 20 seconds.

POSSIBLE CAUSES

Possible Causes
STEERING COLUMN CONTROL MODULE (SCCM)
FLASH TO PASS/OPTICAL HORN SWITCH STUCK

DIAGNOSTIC TEST

CHECK FOR AN ACTIVE DTC

1. Turn the ignition on.
2. Actuate the Flash To Pass/Optical Horn Switch twice.
3. With the scan tool, read DTCs.

   Does the scan tool display this DTC as active?

   Yes

   - Replace the Steering Column Control Module (SCCM) in accordance with the Service Information. Refer to **MODULE, STEERING COLUMN, REMOVAL** .

- Perform the BODY VERIFICATION TEST. Refer to **STANDARD PROCEDURE** .

No

- Test complete. The condition or conditions that originally set this DTC are not present at this time. Using the wiring diagrams as a guide, check all related splices and connectors for signs of water intrusion, corrosion, pushed out or bent terminals and correct pin tension.
- Perform the BODY VERIFICATION TEST. Refer to **STANDARD PROCEDURE** .

C2129-16-BATTERY VOLTAGE - CIRCUIT VOLTAGE BELOW THRESHOLD

For a complete wiring diagram, **refer to appropriate SYSTEM WIRING DIAGRAMS article** .

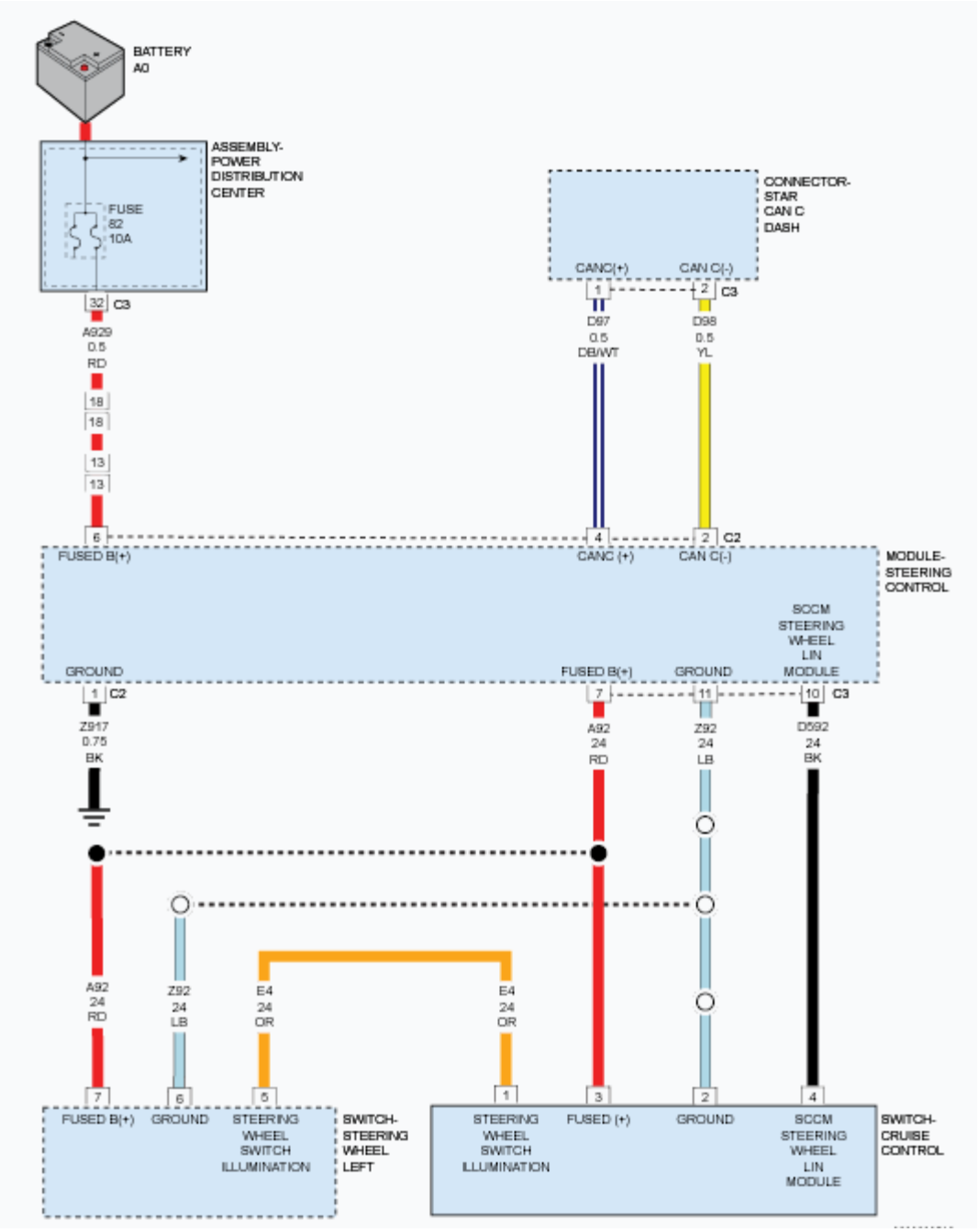

Fig. 1: Steering Control Module - Circuit Diagram
Courtesy of CHRYSLER GROUP, LLC

WHEN MONITORED

Continuously with the ignition on.

SET CONDITION

If the voltage to the Steering Column Control Module (SCCM) is below 10 volts for more than 15 seconds.

POSSIBLE CAUSES

Possible Causes
RELATED DTCS PRESENT IN PCM
LOW BATTERY VOLTAGE
(A929) FUSED B(+) CIRCUIT HIGH RESISTANCE
(Z917) GROUND CIRCUIT HIGH RESISTANCE
STEERING COLUMN CONTROL MODULE (SCCM)

DIAGNOSTIC TEST

1. **RELATED DTC(S) PRESENT IN PCM**
    1. Turn the ignition on.
    2. With the scan tool, select View DTCs in the Powertrain Control Module (PCM).

    Are there any charging system or related battery voltage DTCs present in the PCM?

    Yes

    - Perform the appropriate diagnostic procedure. Refer to **DTC INDEX** .

    No

    - Go To 2
2. **CHECK FOR AN ACTIVE DTC**
    1. With the scan tool, read DTCs.

    Does the scan tool display this DTC as active?

    Yes

    - Go To 3

    No

    - Test complete. The condition or conditions that originally set this DTC are not present at this time. Using the wiring diagrams as a guide, check all related splices and connectors for signs of water intrusion, corrosion, pushed out or bent terminals and correct pin tension.
    - Perform the BODY VERIFICATION TEST. Refer to **STANDARD PROCEDURE** .
3. **(A929) FUSED B(+) CIRCUIT OPEN OR SHORTED TO GROUND**
    1. Turn the ignition off.
    2. Disconnect the Steering Control Module C2 harness connector.
    3. Turn the ignition on.

4. Measure the voltage of the (A929) Fused B(+) circuit.

   Is battery voltage present?

   Yes

   - Go To 4

   No

   - Repair the (A929) Fused B(+) circuit for an open, short to ground or high resistance.
   - Perform the BODY VERIFICATION TEST. Refer to **STANDARD PROCEDURE** .

4. **(Z917) GROUND CIRCUIT OPEN OR HIGH RESISTANCE**
   1. Turn the ignition off.
   2. Measure the resistance between ground and the (Z917) Ground circuit.

      Is the resistance below 5.0 Ohms?

      Yes

      - Replace the Steering Column Control Module (SCCM) in accordance with the Service Information. Refer to **MODULE, STEERING COLUMN, REMOVAL** .
      - Perform the BODY VERIFICATION TEST. Refer to **STANDARD PROCEDURE** .

      No

      - Repair the (Z917) Ground circuit for an open or high resistance.
      - Perform the BODY VERIFICATION TEST. Refer to **STANDARD PROCEDURE** .

C2129-17-BATTERY VOLTAGE - CIRCUIT VOLTAGE ABOVE THRESHOLD

For a complete wiring diagram, **refer to appropriate SYSTEM WIRING DIAGRAMS article** .

WHEN MONITORED

Continuously.

SET CONDITION

If the voltage to the Steering Column Control Module (SCCM) is above 16 volts for more than 15 seconds.

POSSIBLE CAUSES

Possible Causes

RELATED DTC(S) PRESENT IN THE PCM
HIGH BATTERY VOLTAGE
STEERING COLUMN CONTROL MODULE (SCCM)

DIAGNOSTIC TEST

1. **RELATED DTC(S) PRESENT IN THE PCM**
   1. Ignition on, engine not running.
   2. With the scan tool, select View DTCs in the Powertrain Control Module (PCM).

      Are there any charging system or related battery voltage DTCs present in the PCM?

      Yes

      - Perform the appropriate diagnostic procedure. Refer to **DTC INDEX** .
      - Perform the BODY VERIFICATION TEST. Refer to **STANDARD PROCEDURE** .

      No

      - Go To 2
2. **CHECK FOR AN ACTIVE DTC**
   1. Ignition on, engine not running.
   2. With the scan tool, read DTCs.

      Does the scan tool display this DTC as active?

      Yes

      - Replace the Steering Column Control Module (SCCM) in accordance with the Service information. Refer to **MODULE, STEERING COLUMN, REMOVAL** .
      - Perform the BODY VERIFICATION TEST. Refer to **STANDARD PROCEDURE** .

      No

      - Test complete. The condition or conditions that originally set this DTC are not present at this time. Using the wiring diagrams as a guide, check all related splices and connectors for signs of water intrusion, corrosion, pushed out or bent terminals and correct pin tension.
      - Perform the BODY VERIFICATION TEST. Refer to **STANDARD PROCEDURE** .

U0001-00-CAN C BUS

For a complete wiring diagram, **refer to appropriate SYSTEM WIRING DIAGRAMS article** .

WHEN MONITORED

Continuously when the ignition is on.

Battery voltage between 10 and 16 volts.

SET CONDITION

The controller detects an open, short to ground or a short to voltage on the CAN C Bus circuit.

POSSIBLE CAUSES

Possible Causes
CAN C BUS CIRCUITS OPEN OR SHORTED
DTCS RELATED TO BATTERY VOLTAGE, IGNITION, OR VIN MESSAGES
BODY CONTROL MODULE (BCM) POWER AND GROUND
BODY CONTROL MODULE (BCM)

DIAGNOSTIC TEST

VERIFY DIAGNOSTIC TROUBLE CODE (DTC) IS ACTIVE

NOTE: Make sure the battery voltage is between 10 and 16 volts before proceeding.

1. Turn the ignition on.
2. With the scan tool, read the active DTCs.

   Does the scan tool display: U0001-00-CAN C BUS?

   Yes

   - **Refer to DTC INDEX** and perform the CAN C Signal Missing - Bus Off Performance diagnostic procedure.

   No

   - **Refer to DIAGNOSIS AND TESTING** and perform the Stored Lost Communication DTCs diagnostic procedure.

U0002-00-CAN C BUS OFF PERFORMANCE

For a complete wiring diagram, **refer to appropriate SYSTEM WIRING DIAGRAMS article** .

WHEN MONITORED

Ignition run time is greater than one second.

Battery voltage between 9 and 16 volts.

Engine run time greater than three seconds.

SET CONDITION

The Steering Column Control Module (SCCM) detects a short condition on one of the CAN C Bus circuits.

POSSIBLE CAUSES

Possible Causes
CAN C BUS (+) CIRCUIT SHORTED TO GROUND
CAN C BUS (-) CIRCUIT SHORTED TO VOLTAGE
CAN C BUS (+) CIRCUIT SHORTED TO THE CAN C BUS (-) CIRCUIT
STAR CONNECTOR
ANY MODULE CONNECTED TO THE CAN C BUS

DIAGNOSTIC TEST

CHECK FOR AN ACTIVE DTC

1. Ignition on, engine not running.
2. With the scan tool, select view DTCs.

   Does the scan tool display this DTC as active?

   Yes

   - **Refer to DTC INDEX** and perform the U0002-00-CAN C BUS OFF PERFORMANCE diagnostic procedure.

   No

   - **Refer to DIAGNOSIS AND TESTING** and perform the Stored Lost Communication DTCs diagnostic procedure.

U0100-00-LOST COMMUNICATION WITH ECM/PCM

For a complete wiring diagram, **refer to appropriate SYSTEM WIRING DIAGRAMS article** .

WHEN MONITORED

Continuously when the ignition is on.

The battery voltage between 10 and 16 Volts.

Body Control Module (BCM) is configured correctly.

SET CONDITION

Bus messages not received from the Powertrain Control Module (PCM) for approximately two to five seconds.

POSSIBLE CAUSES

Possible Causes
CAN C BUS CIRCUITS OPEN OR SHORTED
DTCS RELATED TO BATTERY VOLTAGE, IGNITION, OR VIN MESSAGES
POWERTRAIN CONTROL MODULES POWER AND GROUND
BCM NOT CONFIGURED CORRECTLY
POWERTRAIN CONTROL MODULE (PCM)
ANY MODULE THAT SET THIS DTC

DIAGNOSTIC TEST

VERIFY THE DTC IS ACTIVE

1. Turn the ignition on.
2. With the scan tool, read the active DTCs.

   Is the DTC active at this time?

   Yes

   - Perform the U0100-87-Lost Communication with ECM/PCM diagnostic procedure. **Refer to DIAGNOSIS AND TESTING** .

   No

   - Perform the Stored Lost Communication DTCs diagnostic procedure. **Refer to DIAGNOSIS AND TESTING** .

U0140-00-LOST COMMUNICATION WITH BODY CONTROL MODULE

For a complete wiring diagram, **refer to appropriate SYSTEM WIRING DIAGRAMS article** .

WHEN MONITORED

Continuously when the ignition is on.

The battery voltage between 10.0 and 16.0 Volts.

Body Control Module (BCM) is configured correctly.

SET CONDITION

Bus messages not received from the Body Control Module (BCM) for approximately two to five seconds.

POSSIBLE CAUSES

Possible Causes
CAN BUS CIRCUITS OPEN OR SHORTED
DTCS RELATED TO BATTERY VOLTAGE, IGNITION, OR VIN MESSAGES
BODY CONTROL MODULE POWER AND GROUND
BCM NOT CONFIGURED CORRECTLY
BODY CONTROL MODULE (BCM)
MODULE THAT SET THIS DTC

DIAGNOSTIC TEST

VERIFY DTC IS ACTIVE

1. Turn the ignition on.
2. With the scan tool, read the active DTCs.

   Does the scan tool display; U0140-00-LOST COMMUNICATION WITH BODY CONTROL MODULE as active?

   Yes

   - **Refer to DIAGNOSIS AND TESTING** and perform the NO RESPONSE FROM BCM (BODY CONTROL MODULE) diagnostic procedure.

   No

   - **Refer to DIAGNOSIS AND TESTING** and perform the Stored Lost Communication DTCs diagnostic procedure.

U0401-00-IMPLAUSIBLE DATA RECEIVED FROM ECM/PCM

For a complete wiring diagram, **refer to appropriate SYSTEM WIRING DIAGRAMS article** .

WHEN MONITORED

With the ignition on.

SET CONDITION

Implausible data from the PCM.

POSSIBLE CAUSES

Possible Causes
POWERTRAIN CONTROL MODULE (PCM) DTCS PRESENT STEERING COLUMN CONTROL MODULE (SCCM)

DIAGNOSTIC TEST

CHECK FOR AN ACTIVE DIAGNOSTIC TROUBLE CODE (DTC)

1. Turn the ignition on.
2. With the scan tool, read active DTCs.

   Does the scan tool display this DTC as active?

   Yes

   - Refer to **DTC INDEX** and perform the appropriate diagnostic procedure.

   No

   - Replace Steering Column Control Module (SCCM) in accordance with the Service Information.
   - Perform the BODY VERIFICATION TEST. Refer to **STANDARD PROCEDURE** .

U0422-00-IMPLAUSIBLE DATA RECEIVED FROM THE BODY CONTROL MODULE

For a complete wiring diagram, **refer to appropriate SYSTEM WIRING DIAGRAMS article** .

WHEN MONITORED

With the ignition on.

SET CONDITION

Incorrect data received from the Body Control Module (BCM).

POSSIBLE CAUSES

Possible Causes
NO COMMUNICATION WITH THE BODY CONTROL MODULE (BCM)
DTCS STORED OR ACTIVE IN THE BCM
STEERING COLUMN CONTROL MODULE (SCCM)

DIAGNOSTIC TEST

1. **CHECK FOR AN ACTIVE DIAGNOSTIC TROUBLE CODE (DTC)**

   NOTE: Diagnose and repair any Body Control Module DTCs before proceeding with this diagnostic procedure.

   1. Turn the ignition on.
   2. With the scan tool, read active DTCs.

      Does the scan tool display this DTC as active?

      Yes

      - Go To 2

      No

      - Test Complete. The condition that caused this code to set is not present at this time. Check for an intermittent condition by inspecting the related wiring harness for chafed, pierced, pinched, and partially broken wires. Also inspect the related connectors for broken, bent, pushed out, spread, corroded, or contaminated terminals.
      - Perform the BODY VERIFICATION TEST. Refer to **STANDARD PROCEDURE** .
2. **VERIFY THE BCM IS ACTIVE ON THE CAN BUS**
   1. With the scan tool, verify that the BCM is active on the bus.

      Is the BCM active on the bus?

      Yes

      - Replace Steering Column Control Module (SCCM) in accordance with the Service Information.
      - Perform the BODY VERIFICATION TEST. Refer to **STANDARD PROCEDURE** .

      No

      - Refer to **DIAGNOSIS AND TESTING** and perform the No Response from BCM diagnostic procedure.
      - Perform the BODY VERIFICATION TEST. Refer to **STANDARD PROCEDURE** .

U1008-00-LIN 1 BUS

For a complete wiring diagram, **refer to appropriate SYSTEM WIRING DIAGRAMS article** .

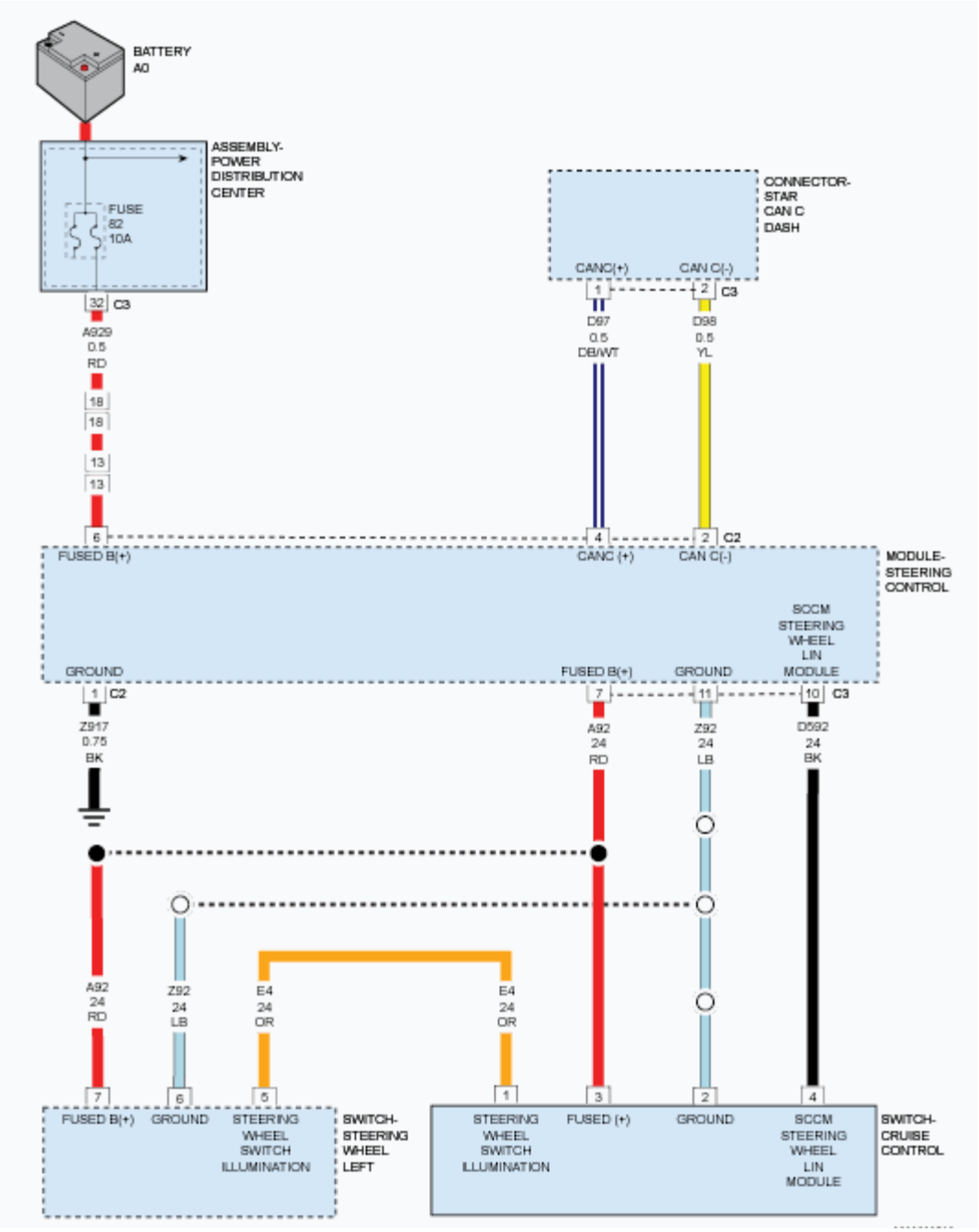

Fig. 2: Steering Control Module - Circuit Diagram
Courtesy of CHRYSLER GROUP, LLC

THEORY OF OPERATION

The Right Steering Wheel Switch communicates with the Steering Column Control Module (SCCM) via the LIN Bus.

The SCCM is located near the top of the steering column below the steering wheel. The SCCM includes the Clockspring, the Multi-function Switch and a LIN/CAN C Gateway. LIN Bus messages received by the

LIN/CAN C Gateway are broadcast over the CAN C Bus to the appropriate modules.

WHEN MONITORED

Continuously with the ignition on.

SET CONDITION

Fault signifies when the LIN Bus is shorted to ground, shorted to battery, or a defective Right Steering Wheel Switch (Speed Control Switch).

POSSIBLE CAUSES

Possible Causes
RIGHT STEERING WHEEL SWITCH (SPEED CONTROL SWITCH)
STEERING WHEEL WIRING HARNESS / CONNECTORS

DIAGNOSTIC TEST

CHECK FOR AN ACTIVE DTC

1. Turn the ignition on.
2. With the scan tool, read DTCs

   Does the scan tool display this DTC as active?

   Yes

   WARNING: Turn the ignition off disconnect the 12-volt battery and wait two minutes before proceeding. Failure to follow these instructions may result in possible serious or fatal injury.

   WARNING: Do not place an intact non-deployed airbag face down on a hard surface, the airbag propels into the air if accidentally deployed. Failure to follow these instructions may result in possible serious or fatal injury.

   NOTE: Visually and physically inspect the wiring harness between the Right Steering Wheel Switch (Speed Control Switch) harness connector and the SCCM harness connector. Repair any damaged wires, connectors, and open/spread terminals. If harness is OK, view repair.

   - Replace the Right Steering Wheel Switch (Speed Control Switch) in accordance with the Service Information. Refer to **SWITCH, SPEED CONTROL, REMOVAL** .
   - Perform the BODY VERIFICATION TEST. Refer to **STANDARD PROCEDURE** .

No

- Test complete. The condition or conditions that originally set this DTC are not present at this time. Using the wiring diagrams as a guide, check all related splices and connectors for signs of water intrusion, corrosion, pushed out or bent terminals and correct pin tension.
- Perform the BODY VERIFICATION TEST. Refer to **STANDARD PROCEDURE** .

U121E-00-LOST COMMUNICATION WITH STEERING WHEEL CRUISE CONTROL SWITCH

For a complete wiring diagram, **refer to appropriate SYSTEM WIRING DIAGRAMS article** .

WHEN MONITORED

Ignition on. No active LIN Bus DTCs present.

SET CONDITION

The Steering Column Control Module (SCCM) detects no communication with the Cruise Control Switch over the LIN Bus.

POSSIBLE CAUSES

Possible Causes
RIGHT STEERING WHEEL SWITCH (SPEED CONTROL SWITCH) UNPLUGGED, POOR CONNECTION OR WIRING HARNESS
RIGHT STEERING WHEEL SWITCH (SPEED CONTROL SWITCH)
STEERING COLUMN CONTROL MODULE (SCCM)

DIAGNOSTIC TEST

1. **CHECK IF THE DTC IS ACTIVE**
   1. Turn the ignition on.
   2. With the scan tool, read DTCs.

      Does the scan tool display this DTC as active?

      Yes

      - Go To 2

      No

      - The condition or conditions that originally set this DTC are not present at this time. Using the wiring diagrams as a guide, check all related splices and connectors for signs of water intrusion, corrosion, pushed out or bent terminals, and correct pin tension.

- Perform the BODY VERIFICATION TEST. Refer to **STANDARD PROCEDURE** .

2. **CHECK THE RIGHT STEERING WHEEL SWITCH AND WIRING HARNESS**

WARNING: Turn the ignition off disconnect the 12-volt battery and wait two minutes before proceeding. Failure to follow these instructions may result in possible serious or fatal injury.

WARNING: Do not place an intact non-deployed airbag face down on a hard surface, the airbag propels into the air if accidentally deployed. Failure to follow these instructions may result in possible serious or fatal injury.

1. Visually and physically inspect the wiring harness between the Right Steering Wheel Switch (Speed Control Switch) harness connector and the SCCM harness connector for damaged wires, connectors, and open/spread terminals.

   Were there any problems found?

   Yes

   - Repair or replace the wiring harness as necessary.
   - Perform the BODY VERIFICATION TEST. Refer to **STANDARD PROCEDURE** .

   No

   - Go To 3

3. **CHECK THE STEERING COLUMN CONTROL MODULE**
   1. Replace the Right Steering Wheel Switch (Speed Control Switch) in accordance with the Service Information. Refer to **SWITCH, SPEED CONTROL, REMOVAL** .
   2. Perform the BODY VERIFICATION TEST. Refer to **STANDARD PROCEDURE** .

   Does this DTC reset?

   Yes

   - Replace the Steering Column Control Module (SCCM) in accordance with the Service Information. Refer to **MODULE, STEERING COLUMN, REMOVAL** .
   - Perform the BODY VERIFICATION TEST. Refer to **STANDARD PROCEDURE** .

   No

   - Test Complete.

2014 STEERING

Steering System - Cherokee

DESCRIPTION

DESCRIPTION

This vehicle comes with Electric Power Steering (EPS) as standard equipment and it is the only steering system available. The power steering system consists of these major components:

- Rack and Pinion Steering Gear with EPS assist
- Steering Column
- Inner and Outer Tie Rod Ends

DIAGNOSIS AND TESTING

DIAGNOSIS AND TESTING - STEERING DIAGNOSIS CHARTS

NOTE: There are two diagnosis charts following that cover PERFORMANCE ISSUES and NOISE, VIBRATION AND HARSHNESS (NVH) ISSUES.

NOTE: For any performance issues, check for DTCs related to the steering system. Verify the correct software and calibration files are loaded in the Electric Power Steering (EPS) system.

PERFORMANCE ISSUES

CONDITION	POSSIBLE CAUSES	EVALUATION/CORRECTION
STEERING WHEEL IS OFF CENTER	1. Front toe is out of adjustment.	1. Perform wheel alignment. Refer to **WHEEL ALIGNMENT, STANDARD PROCEDURE** .
VEHICLE PULLS LEFT OR RIGHT	1. The center position of the column does not match the center position of the vehicle alignment.	1. Perform wheel alignment. Refer to **WHEEL ALIGNMENT, STANDARD PROCEDURE** .
	2. Suspension components are bent and/or damaged.	2. Inspect suspension components for damage.
STEERING WHEEL OR COLUMN HAS FREE-PLAY/LASH/LOOSENESS	1. Loose coupling pinch bolt at gear input shaft.	1. Check pinch bolt torque. Replace pinch bolt with thread locker patch and tighten to specifications.

(CLUNKING OR RATTLING)		
	2. Steering gear loose on cradle/crossmember.	2. Inspect gear mounting bolts. Replace if necessary and tighten to specifications.
	3. Excessive free-play or noise from steering column bearings.	3. Replace steering column. Refer to **COLUMN, REMOVAL**.
	4. Excessive intermediate (steering) shaft coupling U-joint free-play.	4. Rotate steering wheel back-and-forth while watching coupling. Observe for free-play. Replace the column as necessary. Refer to **COLUMN, REMOVAL**.
	5. Loose or worn inner tie rod or outer tie rod.	5. For evaluation and correction, refer to **TIE ROD, STEERING, DIAGNOSIS AND TESTING**.
	6. Lack of lubrication in lower ball joint or ball joint is damaged.	6. Lubricate ball joint if equipped with a zerk fitting and check for function. If not equipped with a zerk fitting, test and replace ball joint/lower control arm as necessary.
	7. Excessive lash inside steering gear.	7. Disconnect intermediate shaft and turn steering gear input shaft. Observe for any movement without a corresponding tire movement. Replace steering gear as necessary.
STEERING WHEEL HAS FORE AND AFT LOOSENESS	1. Steering wheel retaining bolt loose.	1. Check steering wheel retaining bolt torque and tighten to specifications as necessary.
	2. Loose steering column to instrument panel fasteners.	2. Check steering column to instrument panel fastener torque and tighten to specifications as necessary.
STEERING WHEEL, DASH OR VEHICLE VIBRATES DURING STEERING MANEUVERS (ESPECIALLY AT LOW SPEED OR STANDSTILL)	1. Tire(s) not properly inflated.	1. Check and inflate tires to the specified pressure.
	2. Excessive engine vibration.	2. Ensure that the engine is tuned properly.
	3. Loose tie rod end jam nut.	3. Check torque and tighten the inner to outer tie rod jam nut to specifications.
	4. Grounded, damaged or loose engine mount.	4. Visually inspect for damaged or misaligned mounts. Check fastener torque. Replace or realign as necessary.
	5. Loose or worn outer tie rod.	5. For evaluation and correction, refer to **TIE ROD, STEERING, DIAGNOSIS AND TESTING**.
	6. Steering gear noisy.	6. During a parking event at 0 mph, verify there is vibration only with steering. Steer in both directions

		and verify that the noise follows the steering input. Check TSBs for any known issues. Replace steering gear as necessary.
	7. Steering gear has instability, shudder, etc.	7. Perform EPS calibration procedures. If this does not fix the issue, replace the steering gear.
INCREASED STEERING EFFORT/STEERING WHEEL DOES NOT RETURN TO CENTER POSITION	1. Tire(s) not properly inflated.	1. Check and inflate tires to the specified pressure.
	2. Lack of lubrication in lower ball joint or ball joint is damaged.	2. Lubricate ball joint if equipped with a zerk fitting and check for function. If not equipped with a zerk fitting, test and replace ball joint as necessary.
	3. Steering knuckle binding.	3. Disconnect the outer tie rod end from knuckle and then rotate knuckle. Refer to **TIE ROD, STEERING, REMOVAL**. If the knuckle does not rotate freely separate the strut from the knuckle to determine if the ball joint or strut mount bearing is the cause of the binding and replace components as necessary or refer to **STRUT, SUSPENSION, ASSEMBLY, REMOVAL** .
	4. EPS steering not functioning.	4. Perform EPS calibration procedures. If this does not fix the issue, replace the steering gear.
	5. Steering column internal issue.	**Do not turn past two revolutions. Damage to the clockspring may occur. Always rotate steering column back to initial position. Steering column is equipped with an absolute position sensor that has a unique zero position.** 5. Disconnect the intermediate shaft and rotate steering column. If condition is still present, replace steering column. Refer to **COLUMN, INSTALLATION**.
	6. Binding outer tie rod.	6. For evaluation and correction, refer to **TIE ROD, STEERING, DIAGNOSIS AND TESTING**.
	7. Improper front wheel alignment.	7. Check and adjust wheel alignment as necessary.
EXCESSIVE STEERING WHEEL KICKBACK FROM ROAD INPUTS	1. Steering gear loose on cradle/crossmember.	1. Inspect gear mounting bolts. Replace if necessary and tighten to specifications.
	2. Steering column, coupling or intermediate shaft worn or loose.	2. Rotate steering wheel back-and-forth while inspecting intermediate shaft going into steering gear. Look for excessive free-play. Retighten if loose bolt is found. Replace steering column if necessary. Refer to **COLUMN, REMOVAL**.

NOISE, VIBRATION AND HARSHNESS (NVH) ISSUES

CONDITION	POSSIBLE CAUSES	EVALUATION/CORRECTION
RATTLE OR EXCESSIVE CLUNK*	1. Steering gear loose on engine cradle/crossmember.	1. Check fastener torque and tighten to specifications. Replace as necessary. Check steering wheel center following repair.
	2. Loose strut assembly mounting fasteners at tower or knuckle.	2. Check fastener torque and tighten to specifications.
	3. Excessive play in inner or outer tie rod.	3. For evaluation and correction, refer to **TIE ROD, STEERING, DIAGNOSIS AND TESTING**.
	4. Engine cradle/crossmember mounting fasteners loose at frame or bushings worn.	4. Check fastener torque and tighten to specifications. Inspect bushings and repair as necessary.
	5. Wheel mounting (lug) bolts loose.	5. Inspect wheel mounting (Lug) bolts and repair as necessary. Tighten bolts to specifications.
	6. Stabilizer bar link joints worn (occurs with steering input only when moving, not stationary).	6. At park, jounce only one side of vehicle front to exercise stabilizer bar. Replace stabilizer bar link.
	7. Loose lower control arm mounting bolts at engine cradle, frame or crossmember (occurs with steering input only when moving, not stationary).	7. Check control arm mounting bolts and tighten to specified torque.
	8. Loose intermediate shaft or column.	8. Rotate intermediate (steering) shaft in relationship to gear, checking for free-play. Check column fasteners and tighten to specifications as necessary.
	9. Lower control arm pivot bushing worn (occurs with steering input only when moving, not stationary).	9. Inspect bushings for wear and replace lower control arm as necessary.
	10. Internal steering gear noise.	10. Drive vehicle on rough road listening for noises. Also, steer rapidly back and forth when stopped listening for noises. Replace steering gear as necessary.
	11. Loose inner or outer tie rod.	11. For evaluation and correction, refer to **TIE ROD, STEERING, DIAGNOSIS AND TESTING**.
	12. Damaged engine cradle/crossmember.	12. Inspect the cradle/crossmember for cracks or other damage. Replace as necessary.
POPPING NOISE	1. Loose steering gear mounting fasteners.	1. Check fasteners for proper torque and retighten as necessary.
	2. Loose outer tie rod mounting nut or jam nut.	2. Check fastener torque. Replace nuts as necessary and tighten to specifications.
	3. Loose intermediate (steering)	3. Make sure coupling is fully seated on gear

	shaft coupling at gear input shaft.	input shaft. Retighten or re-seat as necessary.
	4. Worn tie rod (outer or inner).	4. For evaluation and correction, refer to **TIE ROD, STEERING, DIAGNOSIS AND TESTING**.
	5. Worn axle half-shaft.	5. For evaluation and correction, refer to **DIAGNOSIS AND TESTING** .
SQUEAKING OR RUBBING SOUND	1. Steering column shroud or shaft rubbing.	1. While turning the steering wheel, listen down column to locate. Check interference between moving components. Move or realign shrouds or shaft as necessary. Replace components if this does not correct problem.
	2. Clockspring inside steering column noisy.	2. Remove clockspring and reinstall steering wheel for testing. If noise is gone, replace clockspring.
	3. Boot/dash seal lubrication inadequate.	3. Remove boot seal and recheck for noise. Lubricate seal as necessary.
	4. Steering gear inner or outer tie rod noisy.	4. While a helper turns the steering wheel, use an electronic listening tool to determine if noise is coming from either outer tie rod. Replace outer tie rods as necessary. Refer to **DIAGNOSIS AND TESTING**.
	5. Steering gear internally noisy.	5. Remove dash seal boot, then exercise the steering wheel. If noise is still present at gear, replace steering gear.
SCRUBBING OR KNOCKING SOUND	1. Incorrect tire or wheel size.	1. Replace incorrect size tire or wheel with original equipment size.
	2. Worn motor or transmission mount.	2. Drive vehicle, moving accelerator pedal rapidly up and down attempting to locate noise. Try in both forward and reverse. Replace mounts as necessary.
	3. Tires contacting wheel well.	3. Make sure wheel house is properly positioned. If not, reposition as necessary. If steering wheel is properly centered, check steering gear travel left to right by rotating the steering wheel to each stop. Steering wheel should rotate the same amount in both directions from center. If not, replace steering gear.
	4. Interference between moving steering components and other components.	4. Check for bent or misaligned components. Correct or replace as necessary.

NOTE: *** A light clunk may be felt or heard during steering wheel reversal while vehicle is stationary. This results from internal steering gear rack movement at the bushings and in no way affects the performance of the steering system. This**

movement may be felt in the steering components during steering wheel reversal.

SPECIFICATIONS

SPECIFICATIONS

DESCRIPTION	N.m	Ft. Lbs.	In. Lbs.
Gear Mounting Bolts	115	85	-
Front Bumper Extension and Support Beams Mounting Bolts	45	33	-
Inner Tie Rod	110	81	-
Intermediate Shaft Coupling Bolt	30	22	-
Lower Ball Joint Pinch Bolt	25 Plus 180°	18 Plus 180°	-
Outer Tie Rod to Knuckle	30 Plus 90°	22 Plus 90°	-
Rear Engine Mount Bracket Mounting Bolts	60	44	-
Rear Engine Isolator Mounting Bolt	130	96	-
Stabilizer Link to Stabilizer Bar	55	41	-
Stabilizer Link to Strut	63	46	-
Steering Gear Heat Shield	7	-	62
Suspension Crossmember to Front Support Beams Bracket	95	70	-
Suspension Crossmember Mounting Bolts	189	139	-
Suspension Crossmember Mounting Bolts - Above Control Arms	120	86	-
Tie Rod Adjuster Jam Nut	70	52	-

SPECIAL TOOLS

SPECIAL TOOLS

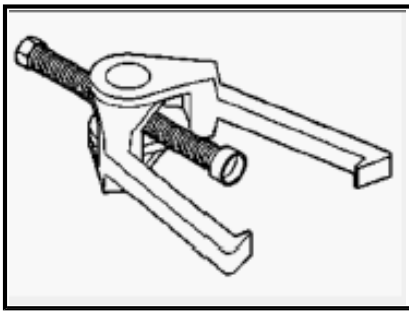	C-3894-A - Puller, Tie Rod (Originally Shipped In Kit Number(s) 9202, 9202A-CAN, 9202CC, 9299, 9299CC, 9299CC, 9300A-CAN.)

COLUMN

WARNING

WARNING

WARNING: Safety goggles should be worn at all times when working on steering columns.

WARNING: Before beginning any service procedure that involves removing the air bag: Remove and isolate the negative (-) battery cable (ground) from the vehicle battery. This is the only sure way to disable the air bag system. Failure to do this could result in accidental air bag deployment and possible personal injury.

WARNING: The air bag system is a sensitive, complex electro-mechanical unit. Before attempting to diagnose, remove or install the air bag system components you must first disconnect and isolate the battery negative (ground) cable. Failure to do so could result in accidental deployment of the air bag and possible personal injury. The fasteners, screws, and bolts, originally used for the air bag components, have special coatings and are specifically designed for the air bag system. They must never be replaced with any substitutes. Anytime a new fastener is needed, replace with the correct fasteners provided in the service package or fasteners listed in the parts books. Before servicing a steering column equipped with an air bag,

WARNING: When handling an undeployed air bag during servicing of the steering column, the following precautions should be observed:

- **At no time should any source of electricity be permitted near the inflator on the back of the air bag.**
- **When carrying a live air bag, the trim cover should be pointed away from the body to minimize injury if the air bag should accidently deploy.**
- **If the air bag is placed on a bench or other surface, the plastic cover should be face-up to minimize movement, in case of accidental deployment.**

CAUTION: Disconnect negative (ground) cable from the battery before servicing any column component.

DESCRIPTION

DESCRIPTION

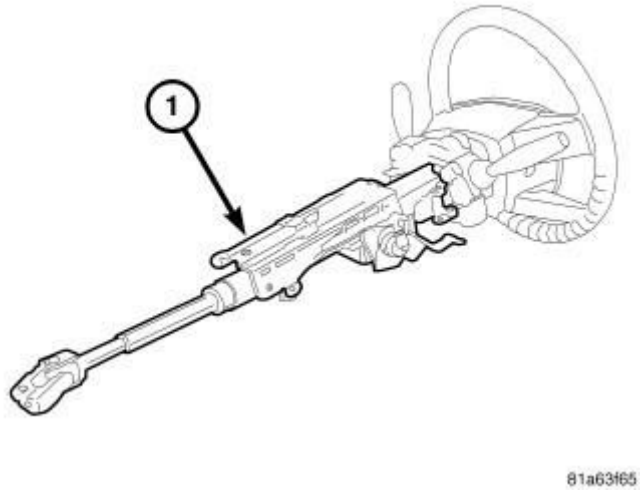

Fig. 1: Identifying Steering Column
Courtesy of CHRYSLER GROUP, LLC

This vehicle is equipped with a tilt/telescoping type steering column (1). When the lever is in the released position, the column can be tilted or telescoped manually.

The steering column is designed to be serviced only as a complete assembly if an internal component is found to be defective. The shaft, bearings and intermediate shaft are all serviced with the column.

The major components on the steering column assembly are:

- Clockspring (Integral part of Steering Column Control Module (SCCM))
- Driver Airbag
- Multi-Function Switches
- Tilt Lever
- Shrouds
- Steering Wheel

These components can be serviced without removal of the steering column from the vehicle. Refer to the appropriate Service Information for servicing these components separately.

DIAGNOSIS AND TESTING

DIAGNOSIS AND TESTING - STEERING COLUMN

NOTE: Refer to DIAGNOSIS AND TESTING .

If the vehicle is involved in a front end collision or the air bag has deployed or both, the steering column must be replaced.

SPECIFICATIONS

SPECIFICATIONS

DESCRIPTION	N.m	Ft. Lbs.	In. Lbs.
Intermediate Shaft Coupling Bolt	30	22	-
Steering Column Mounting Bolt	24	18	-
Steering Column Mounting Nuts	24	18	-
Steering Wheel Retaining Bolt	50	37	-

REMOVAL

REMOVAL

WARNING: When an undeployed airbag module is to be removed from the vehicle, first disconnect the battery ground cable and isolate it. Allow the system capacitor to discharge for a minimum of two minutes before starting any removal.

NOTE: Before proceeding, refer to COLUMN, WARNING.

1. Disconnect the negative cable from the battery and isolate the cable.
2. Position the column tilt at the full-downward position.

Fig. 2: Identifying Lower Shroud & Fasteners
Courtesy of CHRYSLER GROUP, LLC

3. Remove upper and lower (2) shrouds from the steering column. Refer to **SHROUD, STEERING**

COLUMN, LOWER, REMOVAL and **SHROUD, STEERING COLUMN, UPPER, REMOVAL**.

4. Remove the steering column opening cover. Refer to **COVER, STEERING COLUMN OPENING, REMOVAL** .
5. Remove the screws to the steering column trim ring.
6. Remove knee blocker air bag, if equipped. Refer to **AIR BAG, KNEE BLOCKER, REMOVAL** .
7. Remove the driver air bag. Refer to **AIR BAG, DRIVER, REMOVAL** .
8. Disconnect the wiring harness connectors at the Steering Column Control Module (SCCM).
9. Disconnect all other wiring harness connectors at column components.

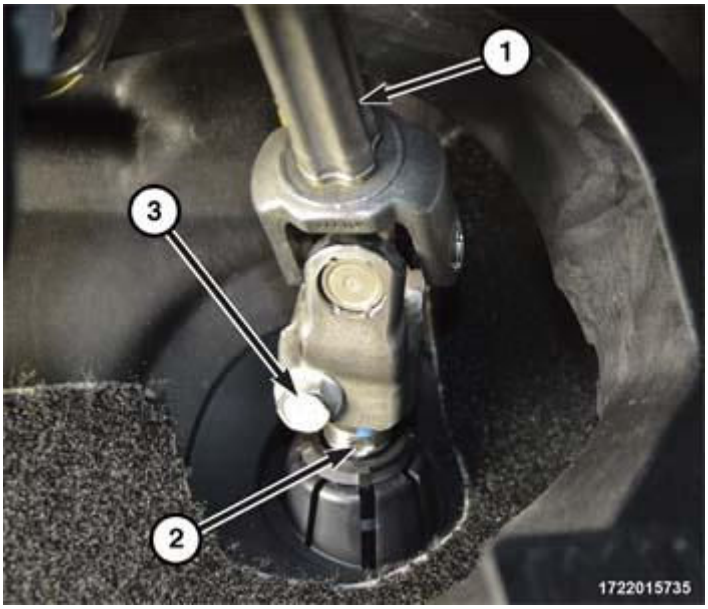

Fig. 3: Identifying Intermediate Shaft, Pinch Bolt And Steering Gear Pinion Shaft
Courtesy of CHRYSLER GROUP, LLC

10. Remove intermediate shaft pinch bolt (3) and separate the intermediate shaft (1) at the base of the column from the steering gear pinion shaft (2). Discard the pinch bolt (3); it is not to be reused.

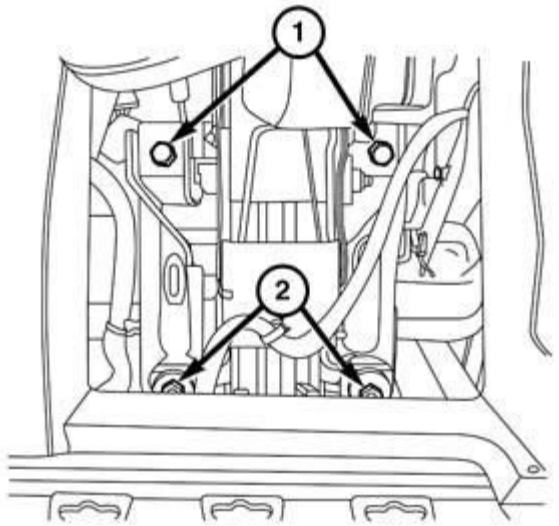

190968837

Fig. 4: Steering Column Mounting Bolts & Nuts
Courtesy of CHRYSLER GROUP, LLC

11. Remove the two mounting bolts (1) and nuts (2) attaching the steering column to the instrument panel.
12. Remove the steering column from the vehicle.

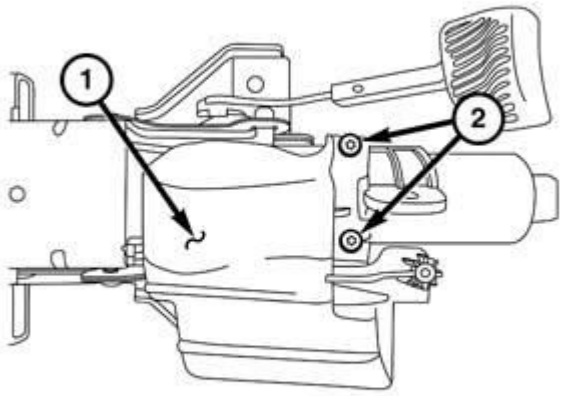

190968836

Fig. 5: Plastic Bracket & Screws

Courtesy of CHRYSLER GROUP, LLC

13. If replacing the column, remove the mounting screws (2) and transfer the plastic bracket (1) to the new column.

INSTALLATION

INSTALLATION

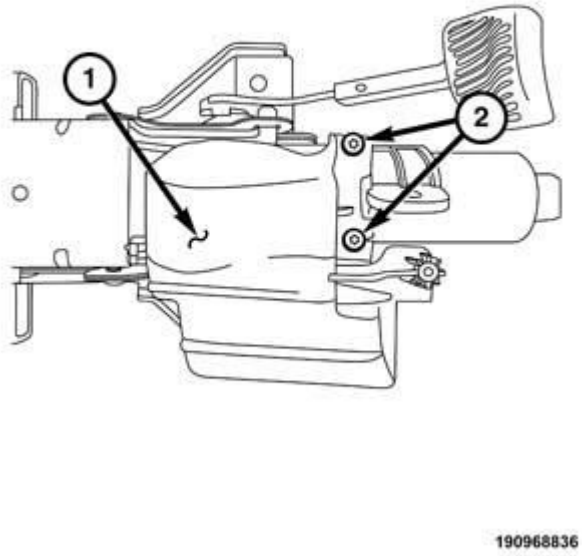

Fig. 6: Plastic Bracket & Screws
Courtesy of CHRYSLER GROUP, LLC

1. If the column was replaced, position the plastic bracket (1) and install and securely tighten the screws (2).

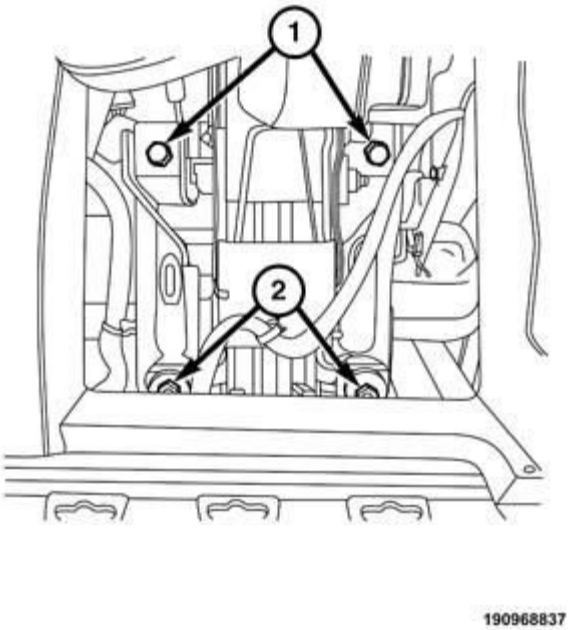

Fig. 7: Steering Column Mounting Bolts & Nuts
Courtesy of CHRYSLER GROUP, LLC

2. Install the steering column with the steering column trim ring, through the steering column opening.
3. Raise the column onto the mounting studs and install the two mounting nuts (2) on the studs and install the mounting bolts (1).

NOTE: Verify that the tilt lever is in the unlocked position prior to tightening the steering column fasteners.

4. Install two column mounting bolts (1). Tighten all 4 column fasteners to 24 N.m (18 ft. lbs.).

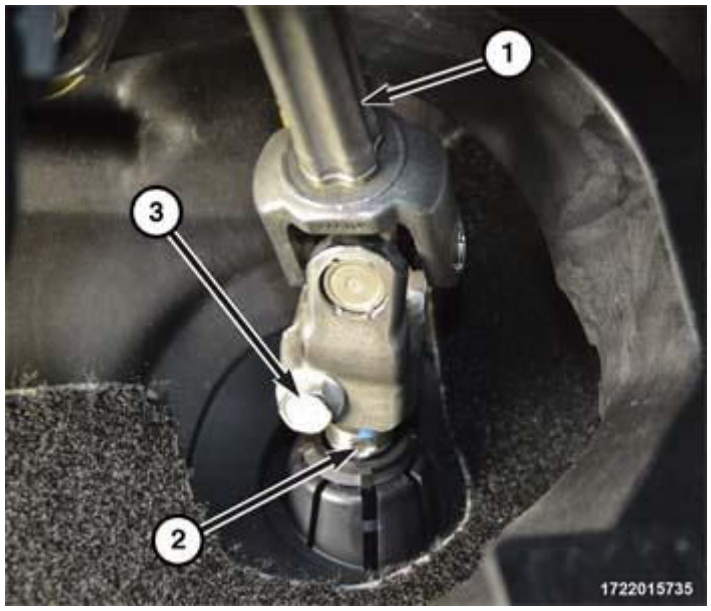

Fig. 8: Identifying Intermediate Shaft, Pinch Bolt And Steering Gear Pinion Shaft
Courtesy of CHRYSLER GROUP, LLC

NOTE: A new pinch bolt (3) must be installed every time the pinch bolt is removed.

5. Verify the front wheels of vehicle are in the STRAIGHT-AHEAD position.
6. Slide the intermediate shaft (1) onto the steering gear pinion shaft (2).
7. Install a **NEW** pinch bolt (3) and tighten the bolt to 30 N.m (22 ft. lbs.).
8. Confirm that:
   a. The front wheels are in the STRAIGHT-AHEAD position.
   b. The turn signal stalk is in the NEUTRAL position.
9. Connect wiring harness connectors at the Steering Column Control Module (SCCM).
10. Connect any other wiring harness connectors at the steering column components.
11. Install knee blocker air bag, if equipped. Refer to **AIR BAG, KNEE BLOCKER, INSTALLATION** .
12. Install the driver air bag. Refer to **AIR BAG, DRIVER, INSTALLATION** .
13. Install the screws to the steering column trim ring.
14. Install the steering column opening cover. Refer to **COVER, STEERING COLUMN OPENING, INSTALLATION** .

Fig. 9: Identifying Lower Shroud & Fasteners
Courtesy of CHRYSLER GROUP, LLC

15. Install the upper and lower (2) shrouds on the steering column. Refer to **SHROUD, STEERING COLUMN, LOWER, INSTALLATION** and **SHROUD, STEERING COLUMN, UPPER, INSTALLATION**.

WARNING: **Do not connect the battery ground cable without following the proper procedure as indicated in the following step. Personal injury or death may result if the Airbag System Test is not performed first.**

16. Reconnect the battery ground terminal following the air bag system test found in restraints. Refer to **DIAGNOSIS AND TESTING** .
17. Perform Vehicle Trim Procedure. Refer to **STANDARD PROCEDURE** .
18. Test the operation of all column mounted components.
19. Road test the vehicle to ensure proper operation of the steering system.

SHROUD, STEERING COLUMN, LOWER

REMOVAL

REMOVAL

Fig. 10: Identifying Lower Shroud & Fasteners
Courtesy of CHRYSLER GROUP, LLC

1. Push the column tilt lever downward.
2. Remove the screws (3, 1) attaching the lower shroud (2) to the column.
3. Separate the lower shroud (2) from the upper shroud by pressing on the edges of the shrouds.
4. Remove the lower shroud from the column.

INSTALLATION

INSTALLATION

Fig. 11: Identifying Lower Shroud & Fasteners

Courtesy of CHRYSLER GROUP, LLC

1. Push the column tilt lever downward.
2. Install the lower shroud (2) into the upper shroud, snapping the shrouds together.
3. Install the screws (3, 1) attaching the lower shroud (2) to the column.

SHROUD, STEERING COLUMN, UPPER

REMOVAL

REMOVAL

Fig. 12: Identifying Lower Shroud & Fasteners
Courtesy of CHRYSLER GROUP, LLC

1. Push the column tilt lever downward.
2. Remove the screws (3, 1) attaching the lower shroud (2) to the column.
3. Separate the lower shroud (2) from the upper shroud by pressing on the edges of the shrouds.

Fig. 13: Identifying Upper Shroud
Courtesy of CHRYSLER GROUP, LLC

4. Remove the upper shroud (1) from the lower shroud.

INSTALLATION

INSTALLATION

Fig. 14: Identifying Upper Shroud, Positioning Keys & Fasteners
Courtesy of CHRYSLER GROUP, LLC

1. Install the upper shroud onto the column and position the keys (1) into the steering column trim ring.

Fig. 15: Identifying Lower Shroud & Fasteners
Courtesy of CHRYSLER GROUP, LLC

2. Push the column tilt lever downward.
3. Install the lower shroud (2) into the upper shroud, snapping the shrouds together.
4. Install the screws (3, 1) attaching the lower shroud (2) to the column.

WHEEL, STEERING

REMOVAL

REMOVAL

WARNING:

- **Do not place a non-deployed airbag face down on a hard surface. The airbag will propel into the air if accidentally deployed. Failure to follow this instruction may result in possible serious or fatal injury.**
- **Disconnect and isolate the battery negative (ground) cable before beginning steering wheel removal or installation. This will disable the airbag system. Failure to follow this instruction may result in accidental airbag deployment and possible serious or fatal injury.**
- **Allow the airbag system capacitor to discharge for two minutes before removing the steering wheel or any airbag system component. Failure to follow this instruction may result in accidental airbag deployment and possible serious or fatal injury.**

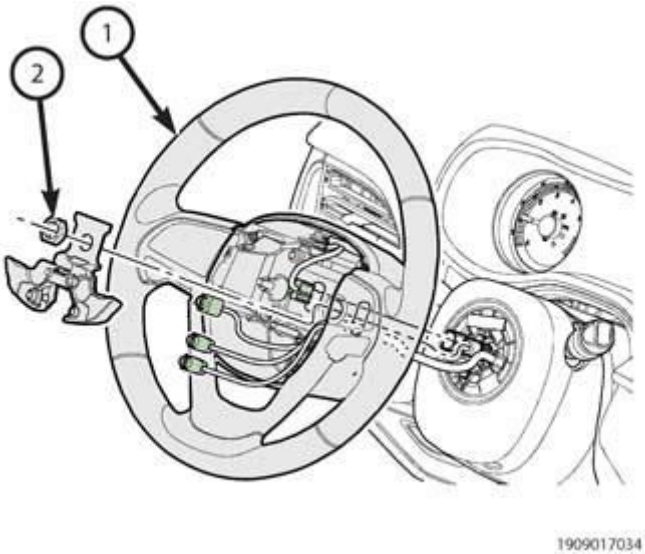

Fig. 16: Identifying Steering Wheel & Nut
Courtesy of CHRYSLER GROUP, LLC

1. Adjust the steering wheel so that the tires are in the STRAIGHT-AHEAD position.
2. Disconnect and isolate the negative battery cable.
3. Remove the driver airbag. Refer to **AIR BAG, DRIVER, REMOVAL** .
4. Disconnect the wiring connector at the clockspring.

CAUTION: Do not bump or hammer on the steering wheel or steering column shaft when removing the steering wheel.

CAUTION: Do not attempt to rotate the clockspring rotor once the steering wheel is removed. The clockspring must remain centered in its travel to avoid overextending the clockspring inner parts, causing the clockspring to become inoperative. If removed and handled properly using the correct procedures, it should remain in the "centered" position. If there is any question as to whether the clockspring is in the "centered" position of travel, perform the clockspring centering procedure before installing the steering wheel.

5. While holding the steering wheel (1) firmly in place, remove the nut (2) that secures the steering wheel to the steering column shaft.
6. While holding the steering wheel firmly in the STRAIGHT-AHEAD position, remove the steering wheel from the steering column shaft splines.

INSTALLATION

INSTALLATION

CAUTION: When installing the steering wheel, the clockspring must be centered in its travel to avoid overextending the clockspring inner parts, causing the clockspring to become inoperative. If removed and handled properly using the correct procedures, it should be in the "centered" position. If there is any question as to whether the clockspring is in the "centered" position of travel, perform the clockspring centering procedure before proceeding.

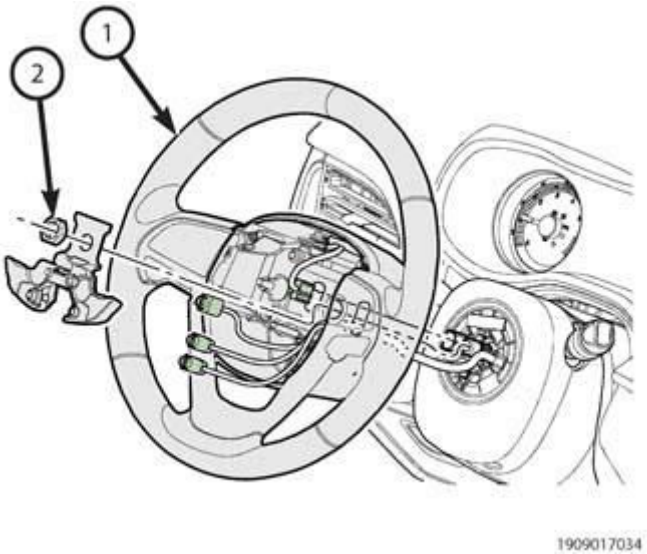

Fig. 17: Identifying Steering Wheel & Nut
Courtesy of CHRYSLER GROUP, LLC

1. Confirm that:
   a. The front wheels are in the STRAIGHT-AHEAD position.
   b. The turn signal stalk is in the NEUTRAL position.
2. Install the steering wheel retaining nut (2). Tighten the steering wheel retaining nut to 50 N.m (37 ft. lbs.).
3. Connect the wiring connector at the clockspring.
4. Install the driver airbag. Refer to **AIR BAG, DRIVER, INSTALLATION** .

WARNING: Do not reconnect the battery without first performing the Airbag System Test procedure. Failure to perform the Airbag System Test may result in accidental airbag deployment and serious or fatal injury.

5. Reconnect the battery using the Airbag System Test procedure. Refer to **DIAGNOSIS AND TESTING** .
6. Verify vehicle and system operation.

GEAR

DESCRIPTION

DESCRIPTION

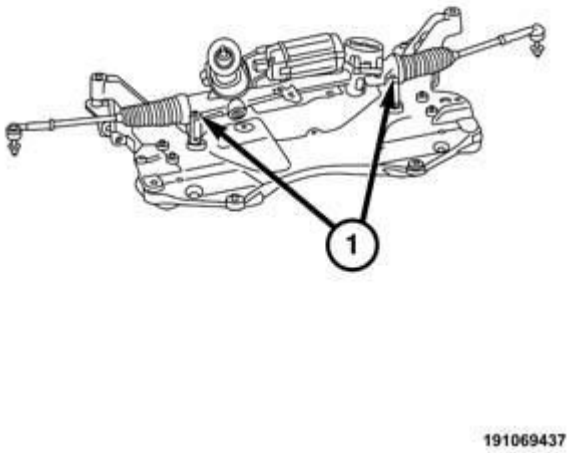

Fig. 18: Steering Gear
Courtesy of CHRYSLER GROUP, LLC

The steering gear is the rack-and-pinion type with Electric Power Assist (EPS). It is mounted on the front suspension crossmember, and the front crossmember must be removed from the vehicle to service the steering gear. The only serviceable parts of the steering gear are the inner tie rods, outer tie rods, and the inner tie rod bellows.

The EPS system is only serviced as an assembly, including the Steering Angle Sensor (SAS). If the SAS requires replacement, the entire steering gear must be replaced.

NOTE: If a NEW steering gear is installed, programming is required. Refer to STANDARD PROCEDURE .

OPERATION

OPERATION

Turning of the steering wheel is converted into linear (side-to-side) travel through the meshing of the helical pinion teeth with the rack teeth within the steering gear. The lateral travel pushes and pulls the tie rods to change the direction of the vehicle's front wheels.

Power assist steering is provided by an electric motor and control unit connected to the steering gear. The Electric Power Steering (EPS) system provides variable assist for steering maneuvers based on several inputs:

- Steering wheel position and rate of movement from Steering Angle Sensor (SAS)
- Steering wheel torque from torque sensors in the EPS Gear
- Vehicle speed

No components of the EPS system can be serviced separately. If any component of the EPS requires service, the entire steering gear must be replaced. The only serviceable parts are inner and outer tie rods, and tie rod bellows.

The EPS system communicates over the CAN network, including broadcasting the Steering Angle Sensor (SAS) position.

Manual steering control of the vehicle can be maintained if power steering assist is lost. However, under this condition, steering effort is significantly increased.

REMOVAL

REMOVAL

NOTE: Before proceeding, refer to FRONT, WARNING .

NOTE: If equipped, removal of the power transfer unit may be necessary in order to remove the steering gear . Refer to REMOVAL .

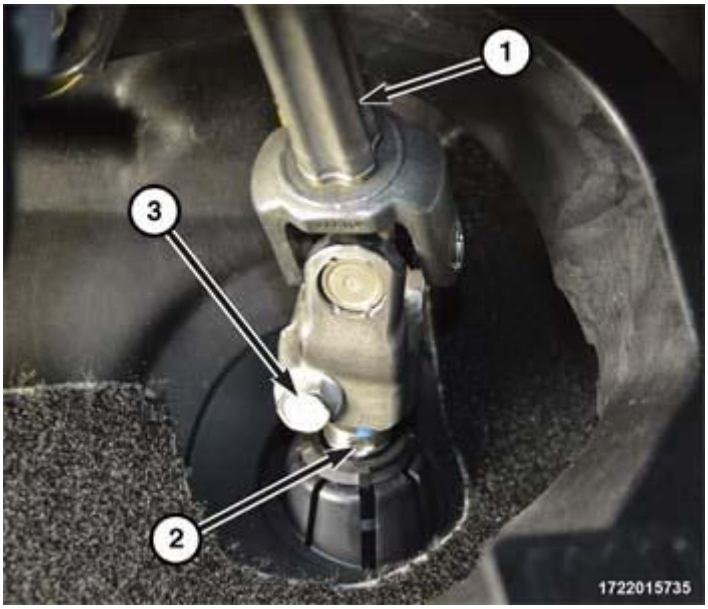

Fig. 19: Identifying Intermediate Shaft, Pinch Bolt And Steering Gear Pinion Shaft
Courtesy of CHRYSLER GROUP, LLC

1. Disconnect battery negative cable.
2. Using a steering wheel holder, lock the steering wheel in place to keep it from rotating. This keeps the

clockspring in the proper orientation.

3. Remove pinch bolt (3) and separate intermediate shaft (1) from steering gear shaft (2).

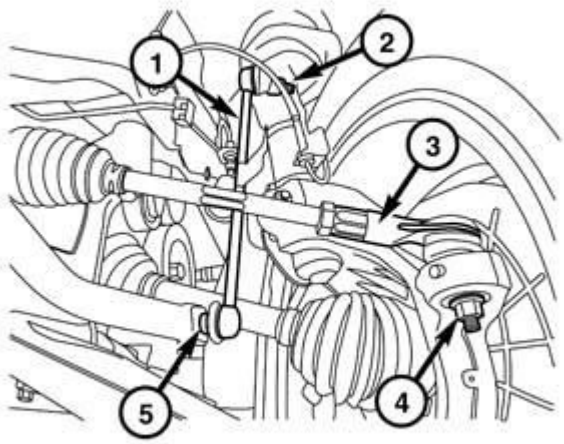

1715005812

Fig. 20: Identifying Steering Link, Outer Tie Rod End & Nuts
Courtesy of CHRYSLER GROUP, LLC

4. Raise and support the vehicle. Refer to **HOISTING, STANDARD PROCEDURE** .
5. Remove the wheel mounting bolts, then the tire and wheel assembly.
6. Remove the engine belly pan. Refer to **BELLY PAN, REMOVAL** .

NOTE: Repeat STEP 7 to STEP 14 on opposite side of vehicle.

7. While holding the stabilizer bar link stud stationary, remove the nut securing the link (1) to the stabilizer bar.

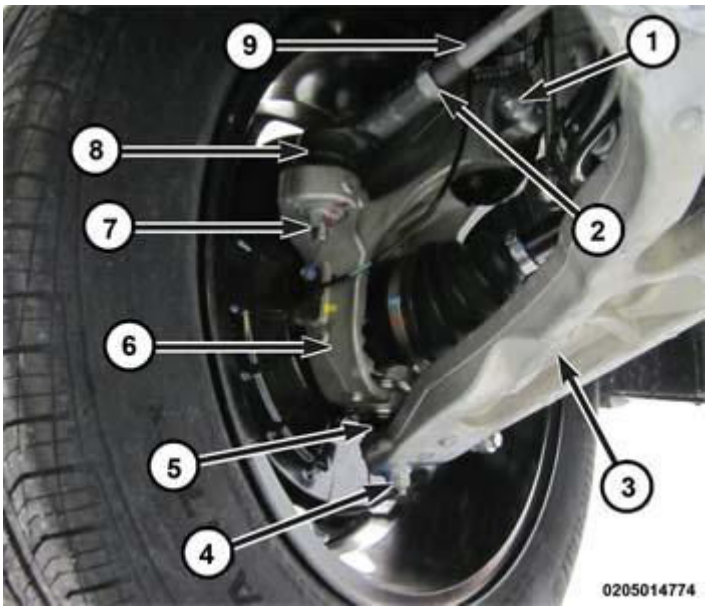

Fig. 21: Removing/Installing The Lower Ball Joint Nut To Control Arm
Courtesy of CHRYSLER GROUP, LLC

8. Remove the outer tie rod end (8) from the knuckle. Refer to **TIE ROD, STEERING, REMOVAL**.
9. Remove the ball joint to control arm retaining nut (4). **Discard the nut; it is not to be reused.**
10. Using (special tool #C-3894-A, Puller, Tie Rod) separate the ball joint stud from the control arm.

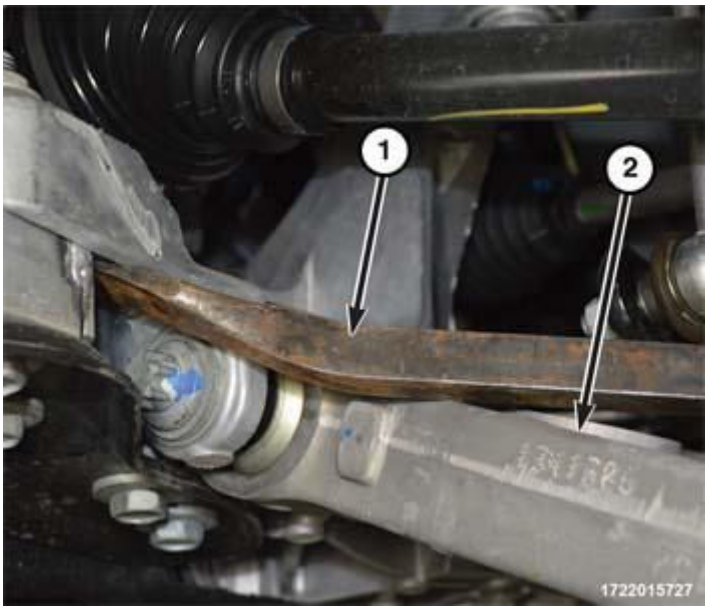

Fig. 22: Identifying Pry Bar & Control Arm
Courtesy of CHRYSLER GROUP, LLC

NOTE: **Use care when separating the ball joint stud from the knuckle so the ball joint boot does not get cut**

NOTE: After separating the control arm from the knuckle, do not let it swing rapidly back up, this can tear the ball joint dust boot.

11. Insert a pry bar (1) in the opening between the control arm front mounting bolt and the front fascia support beam.
12. Pry down on the control arm (2) until the ball joint stud is clear of the control arm, then push the knuckle assembly to the side when it is clear of the ball joint stud and slowly release the control arm.

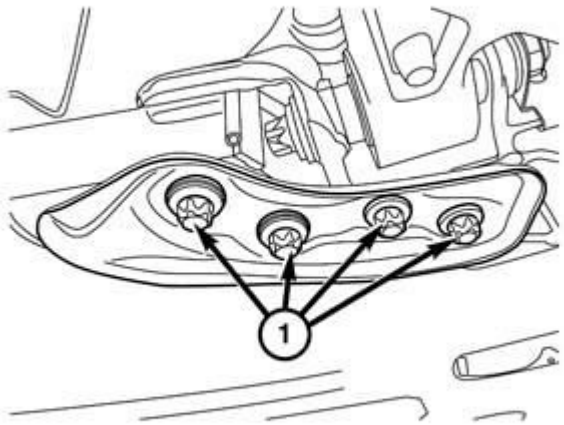

020568625

Fig. 23: Crossmember To Fascia Support Beams Bracket Retaining Bolts
Courtesy of CHRYSLER GROUP, LLC

13. Remove the four bracket retaining bolts (1) from the cross member to fascia support beams bracket, then remove the bracket.

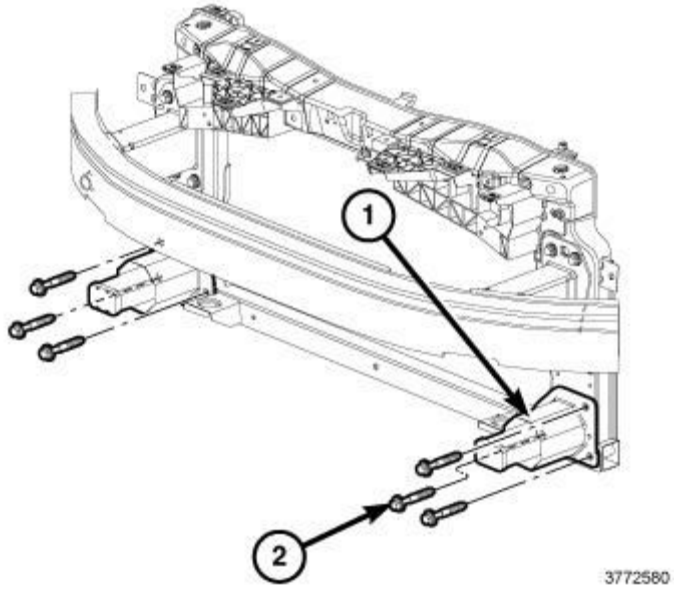

Fig. 24: Lower Bumper Reinforcements & Fasteners
Courtesy of CHRYSLER GROUP, LLC

14. Remove the fasteners (2) securing the lower bumper reinforcement (1) and front fascia support beams to the frame/front end module.

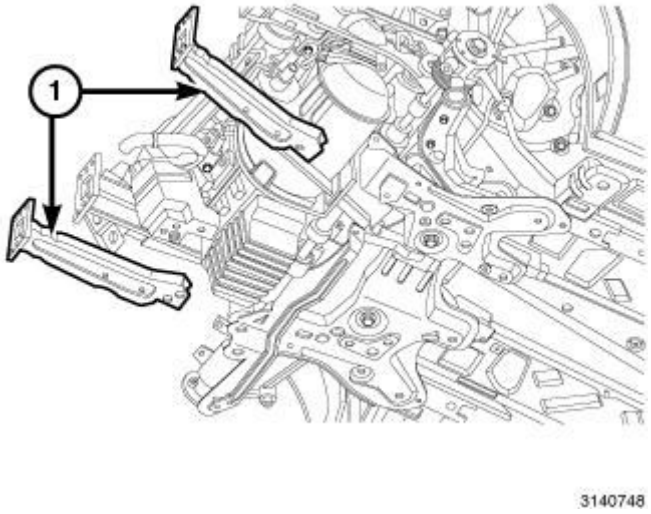

Fig. 25: Front Fascia Support Beams
Courtesy of CHRYSLER GROUP, LLC

15. Remove the front fascia support beams.

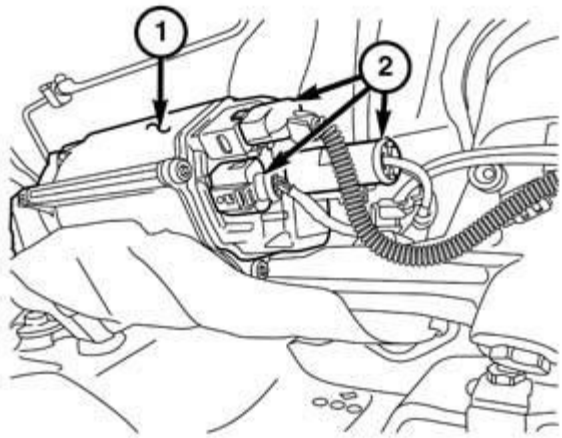

191069435

Fig. 26: Steering Gear Control Module & Harness Connectors
Courtesy of CHRYSLER GROUP, LLC

16. Disconnect the downstream oxygen sensor harness connector.
17. Remove the exhaust extension pipe.
18. Disconnect the harness connectors (2) at the steering gear control module (1).

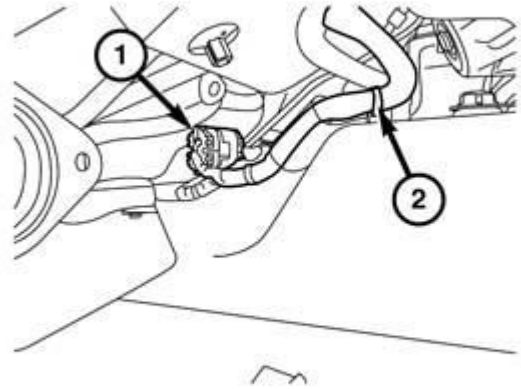

191069436

Fig. 27: Steering Gear Connector & Tie Strap
Courtesy of CHRYSLER GROUP, LLC

19. Disconnect the steering gear connector (1) from the body harness connector at the bottom of the dash panel.
20. Separate the steering gear harness from the crossmember by removing the tie strap (2) from the crossmember.
21. Remove the rear engine mount.

NOTE: **Before lowering the front suspension crossmember, the location of the crossmember must be marked on the body of the vehicle. Do this so the crossmember can be relocated, upon reinstallation, against the body of vehicle in the same location as before removal. If the front suspension crossmember is not reinstalled in exactly the same location as before removal, the preset front wheel alignment settings (caster and camber) may be lost.**

22. Mark the position of the cross member with a grease pencil or equivalent.

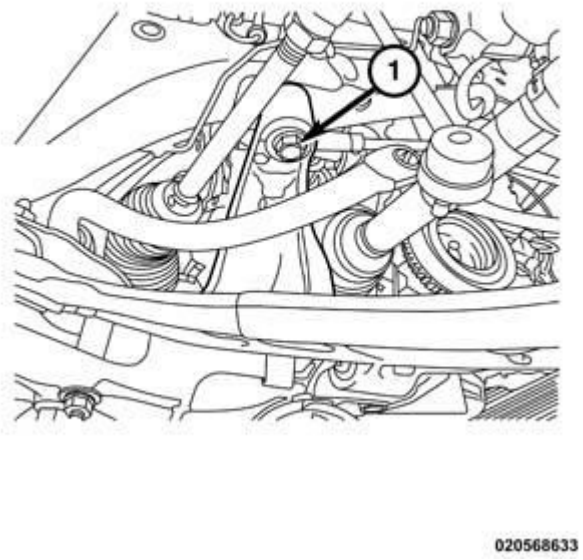

Fig. 28: Upper Crossmember Mounting Bolt
Courtesy of CHRYSLER GROUP, LLC

23. Support the crossmember with a transmission jack, or equivalent.
24. Remove the upper mounting bolt (1) from each side of the crossmember.

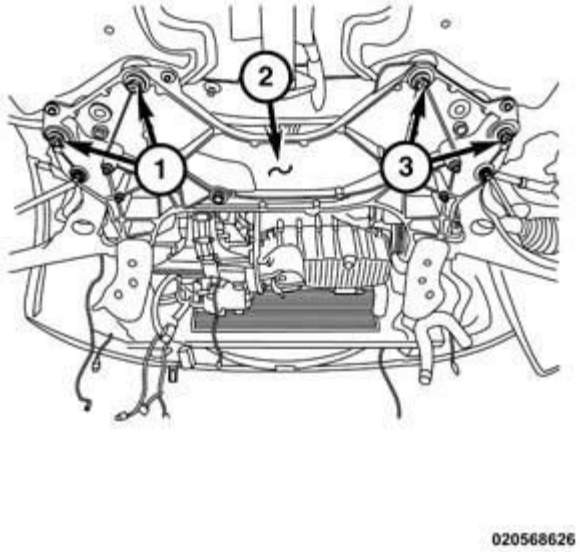

Fig. 29: Crossmember Rear Mounting Bolts
Courtesy of CHRYSLER GROUP, LLC

25. Remove the four rear mounting bolts (1, 3) that secure the crossmember (2) to the vehicle
26. Slowly lower the crossmember with the jack and remove from the vehicle.

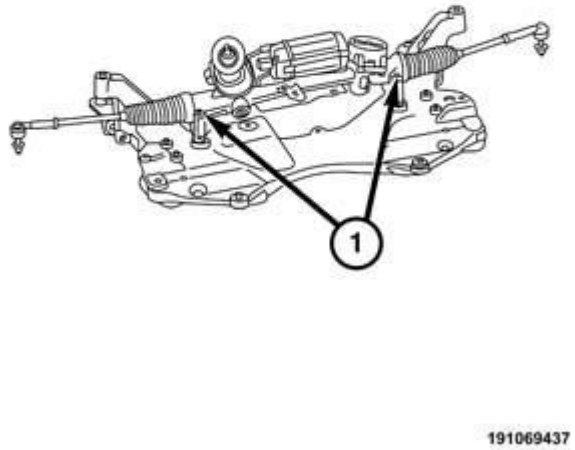

Fig. 30: Steering Gear

Courtesy of CHRYSLER GROUP, LLC

27. Remove the steering rack mounting fasteners (1) and remove the steering rack from the crossmember.

INSTALLATION

INSTALLATION

NOTE: Transfer the tie rod ends if they are being reused.

NOTE: If removed, install the power transfer unit Refer to INSTALLATION .

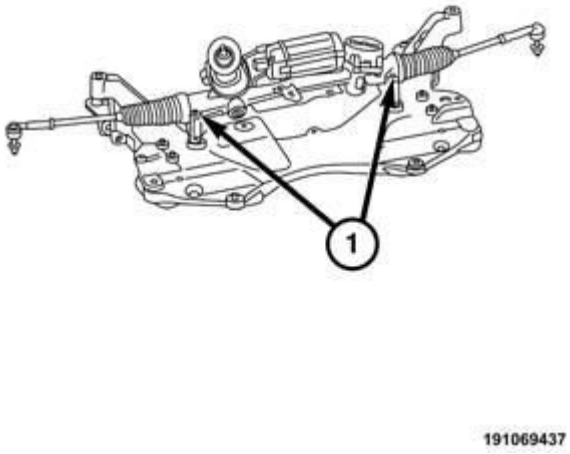

Fig. 31: Steering Gear
Courtesy of CHRYSLER GROUP, LLC

1. Install the steering gear to the crossmember.
2. Install the steering gear mounting bolts (1) and tighten to 115 N.m (85 ft. lbs.).

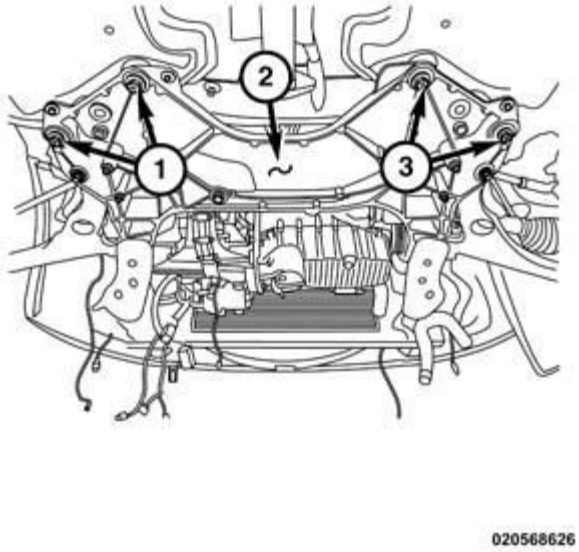

Fig. 32: Crossmember Rear Mounting Bolts
Courtesy of CHRYSLER GROUP, LLC

3. Slowly raise the crossmember (2) into mounted position using the transmission jack matching the crossmember to the marked locations on the body made during removal.
4. Install four mounting bolts (1, 3) and tighten to 126 N.m (93 ft. lbs.).

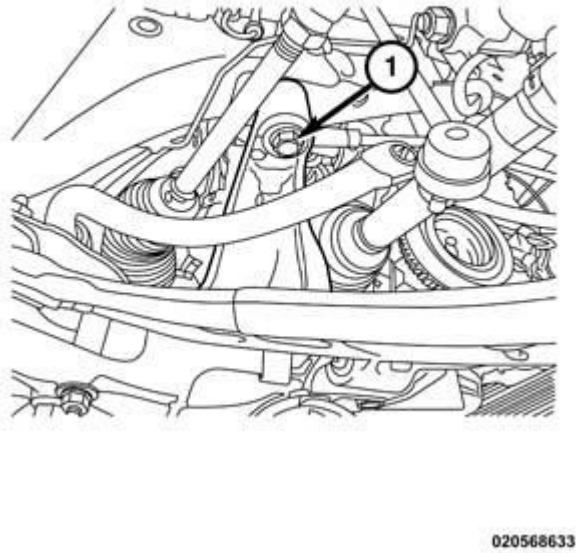

Fig. 33: Upper Crossmember Mounting Bolt
Courtesy of CHRYSLER GROUP, LLC

5. Install the upper mounting bolt (1) on each side of the crossmember and tighten to 120 N.m (86 ft. lbs.).

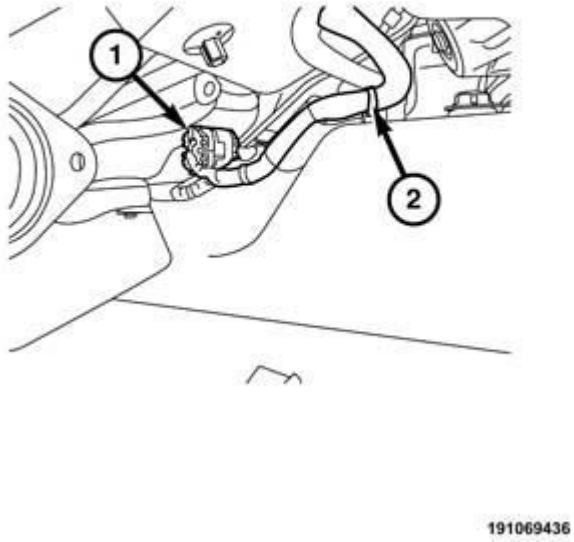

Fig. 34: Steering Gear Connector & Tie Strap
Courtesy of CHRYSLER GROUP, LLC

6. Connect the steering harness connector (1) to the body harness connector at the bottom of the dash panel.
7. Install the tie strap (2) to the crossmember.

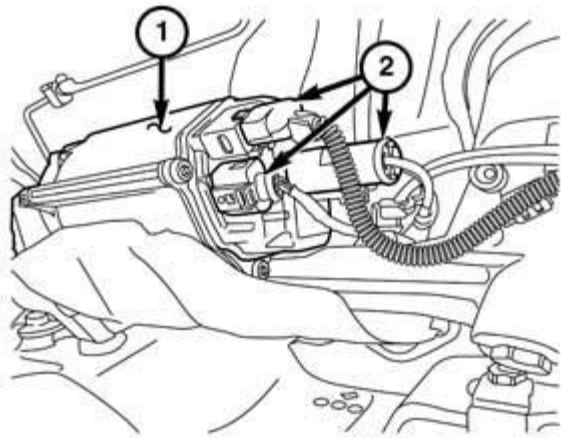

191069435

Fig. 35: Steering Gear Control Module & Harness Connectors
Courtesy of CHRYSLER GROUP, LLC

8. Connect the harness connectors (2) at the steering gear module (1).
9. Install the rear engine mount. Refer to **INSULATOR, ENGINE MOUNT, RIGHT, INSTALLATION** for 2.0L Diesel, **INSULATOR, ENGINE MOUNT, LEFT, INSTALLATION** for 2.0L Diesel, **INSULATOR, ENGINE MOUNT, REAR, INSTALLATION** for 2.0L Diesel, **INSULATOR, ENGINE MOUNT, LEFT, INSTALLATION** for 2.4L, **INSULATOR, ENGINE MOUNT, REAR, INSTALLATION** for 2.4L, **INSULATOR, ENGINE MOUNT, RIGHT, INSTALLATION** for 2.4L, **INSULATOR, ENGINE MOUNT, LEFT, INSTALLATION** for 3.2L, **INSULATOR, ENGINE MOUNT, RIGHT, INSTALLATION** for 3.2L, **INSULATOR, ENGINE MOUNT, REAR, INSTALLATION** for 3.2L.
10. Install the exhaust extension pipe.
11. Connect the downstream oxygen sensor harness connector.

NOTE: Repeat STEP 12 through STEP 19 on each side of vehicle.

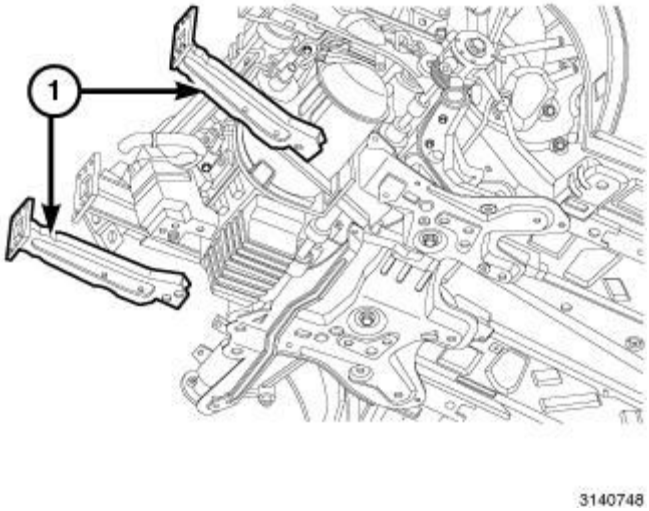

Fig. 36: Front Fascia Support Beams
Courtesy of CHRYSLER GROUP, LLC

12. Install the front fascia beams (1).

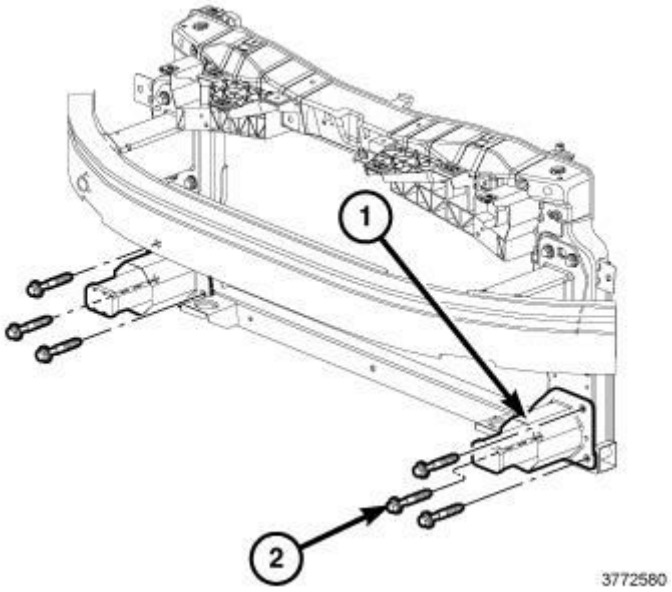

Fig. 37: Lower Bumper Reinforcements & Fasteners
Courtesy of CHRYSLER GROUP, LLC

13. Install the fasteners (2) securing the lower bumper reinforcement (1) to the frame/front end module. Tighten the fasteners to 45 N.m (33 ft. lbs.).

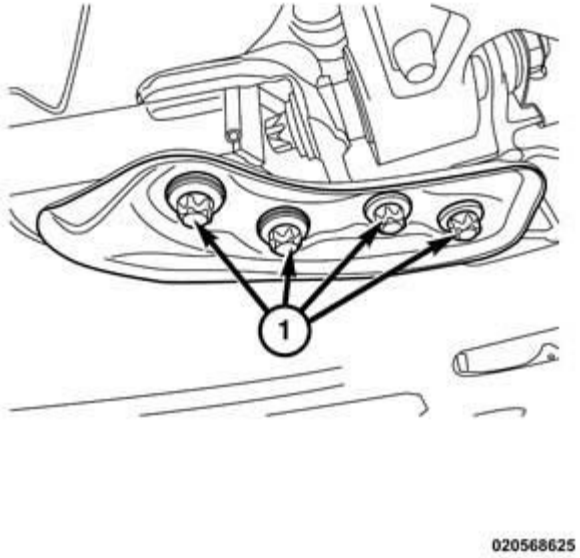

Fig. 38: Crossmember To Fascia Support Beams Bracket Retaining Bolts
Courtesy of CHRYSLER GROUP, LLC

14. Install the crossmember to fascia support beam bracket and install the four retaining bolts (1) and tighten to 95 N.m (70 ft. lbs.).

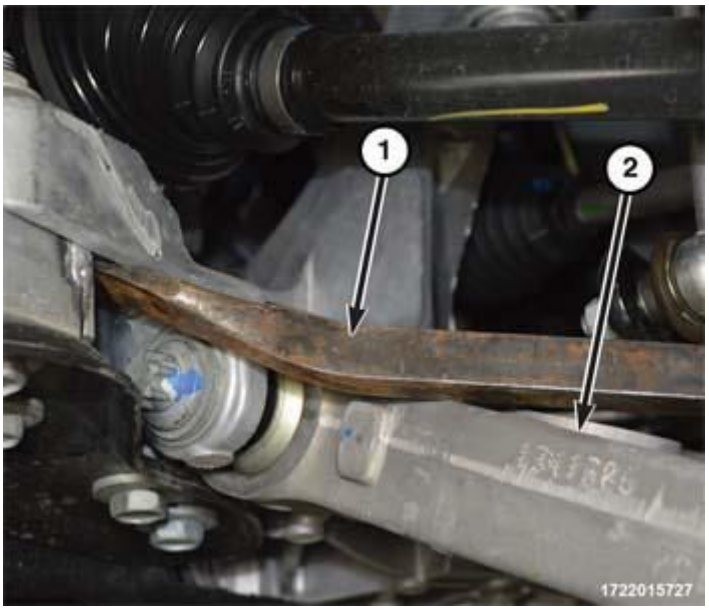

Fig. 39: Identifying Pry Bar & Control Arm
Courtesy of CHRYSLER GROUP, LLC

15. Insert a pry bar (1) in the opening between the control arm front mounting bolt and the front fascia

support beam.

16. Pry down on the control arm (2) until the ball joint stud is clear of the control arm, align the stud with hole in control arm then slowly release the control arm.

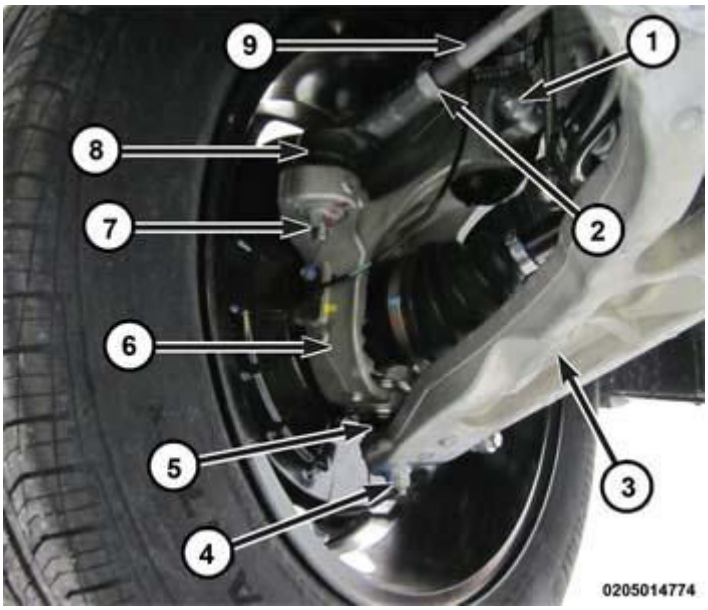

Fig. 40: Removing/Installing The Lower Ball Joint Nut To Control Arm
Courtesy of CHRYSLER GROUP, LLC

17. Install a **NEW** ball joint to control arm retaining nut (4) and tighten to 25 N.m plus 175° (18 ft. lbs. plus 175°).
18. Install the outer tie rod end (8) into the knuckle. Refer to **TIE ROD, STEERING, INSTALLATION**.

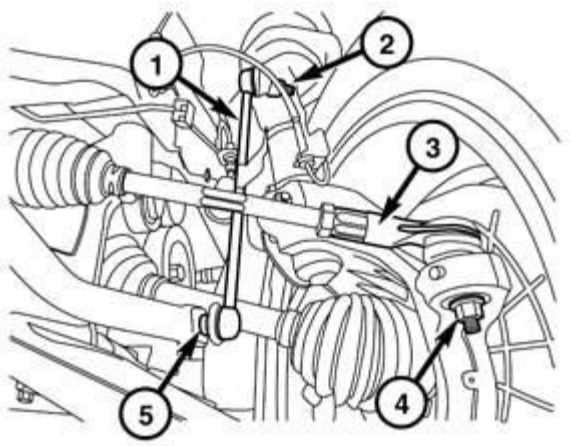

1715005812

Fig. 41: Identifying Steering Link, Outer Tie Rod End & Nuts
Courtesy of CHRYSLER GROUP, LLC

19. Install the stabilizer link stud into the stabilizer bar. Refer to **LINK, STABILIZER BAR, INSTALLATION** .
20. Install the engine belly pan. Refer to **BELLY PAN, INSTALLATION** .
21. Install the tire and wheel assembly. Refer to **INSTALLATION** .
22. Lower the vehicle.

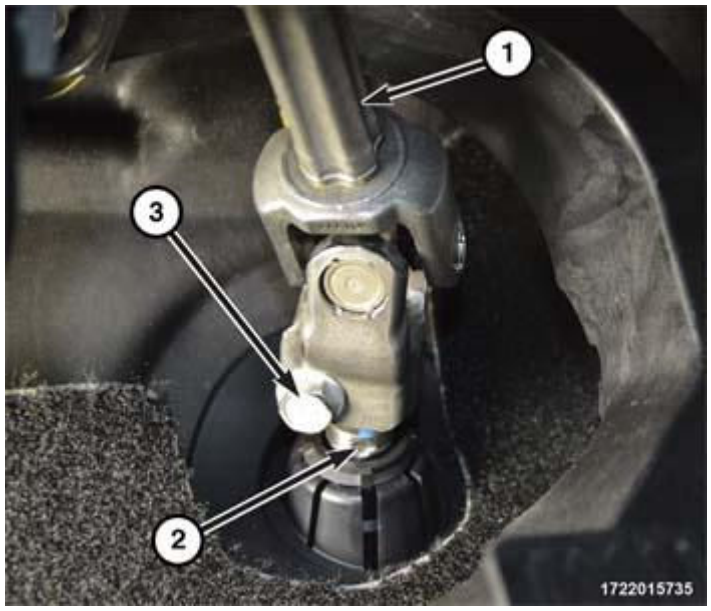

Fig. 42: Identifying Intermediate Shaft, Pinch Bolt And Steering Gear Pinion Shaft

Courtesy of CHRYSLER GROUP, LLC

NOTE: The intermediate shaft has a block teeth design and can only be installed in the correct direction. Do not force the shaft onto the pinion shaft.

23. Install the intermediate shaft (1) to the steering gear pinion shaft (2).
24. Install a **NEW** pinch bolt (3) and tighten to 30 N-m (22 ft. lbs.).
25. Remove the steering wheel holder.
26. Connect the battery negative cable.
27. If a **NEW** steering gear is installed, programming is required. Refer to **STANDARD PROCEDURE** .

TIE ROD, STEERING

DIAGNOSIS AND TESTING

DIAGNOSIS AND TESTING - TIE ROD

Tie rod free-play can be measured using the following hand methods:

OUTER TIE ROD

1. Raise and support the vehicle. Refer to **HOISTING, STANDARD PROCEDURE** .
2. Remove the front wheels. Refer to **REMOVAL** .
3. Install two standard wheel mounting nuts, flat side to rotor, diagonally opposite to each on the rotor.

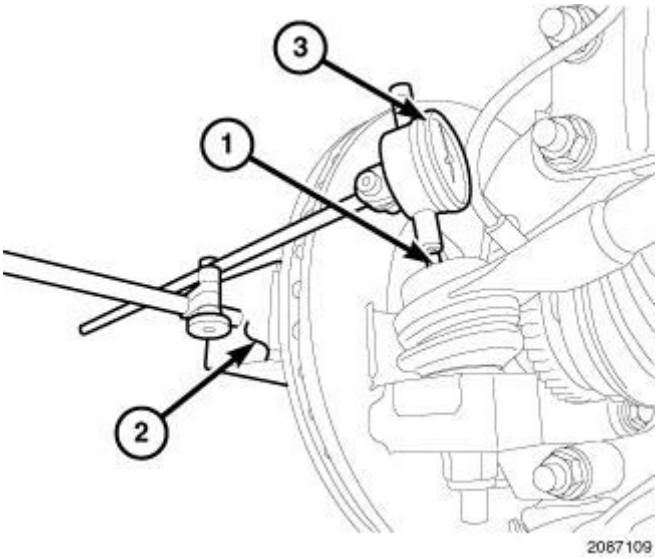

Fig. 43: Magnetic Dial Indicator (2)
Courtesy of CHRYSLER GROUP, LLC

4. Attach a magnetic dial indicator (2) to the inside or outside of the brake rotor, then align the dial indicator's contact pointer (1) with the direction of the stud axis and touch the outer tie rod.

5. Zero the dial indicator. (3)

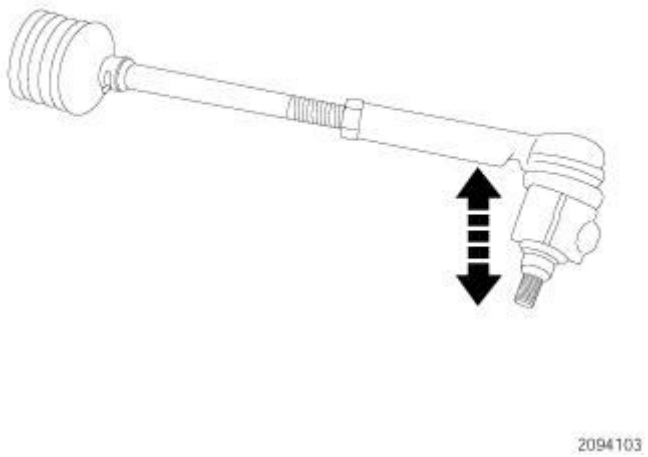

Fig. 44: Checking Outer Tie Rod Free-Play
Courtesy of CHRYSLER GROUP, LLC

NOTE: When checking free-play, DO NOT rotate the tie rod. Just because a tie rod rotates easily does not mean that it is necessarily faulty. Using more than light hand pressure will result in a false reading.

6. Grasp the outer tie rod near the ball stud and attempt to move the tie rod straight up and down using light hand pressure. (Less than 10 lbs. of force.)
7. Measure and record any tie rod free-play movement.
8. Remove the magnetic dial indicator.
9. Remove the standard wheel mounting nuts from the two studs.

If the free-play in the tie rod exceeds 0.05 mm (.002 in.), replace the outer tie rod. Refer to **TIE ROD, STEERING, REMOVAL**. If the free-play is less than 0.05 mm (.002 in.) at the outer tie rod check the inner tie rod for free-play. Refer to the following procedure.

INNER TIE ROD

NOTE: Always check and repair (if necessary) outer tie rod free-play before checking inner tie rod free-play. False results can otherwise be obtained.

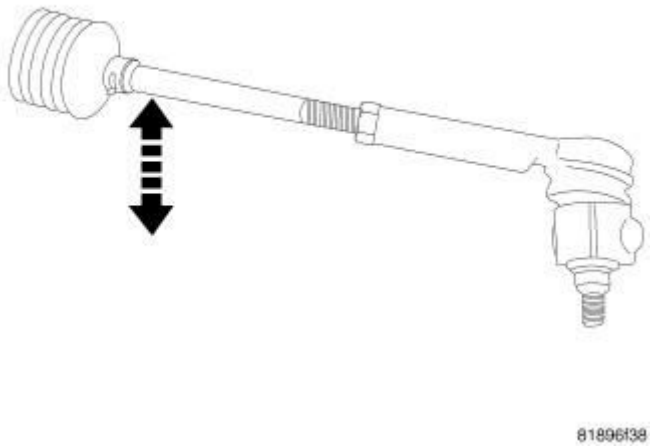

Fig. 45: Checking Inner Tie Rod Free-Play
Courtesy of CHRYSLER GROUP, LLC

1. Grasp the inner tie rod near the steering gear bellows and attempt to move the tie rod straight up and down. If any free-play is felt, replace the inner tie rod. Refer to **TIE ROD, STEERING, REMOVAL**.
2. If no free-play is felt, install the front wheels. Refer to **INSTALLATION** .
3. Remove support and lower the vehicle.

REMOVAL

OUTER TIE ROD END

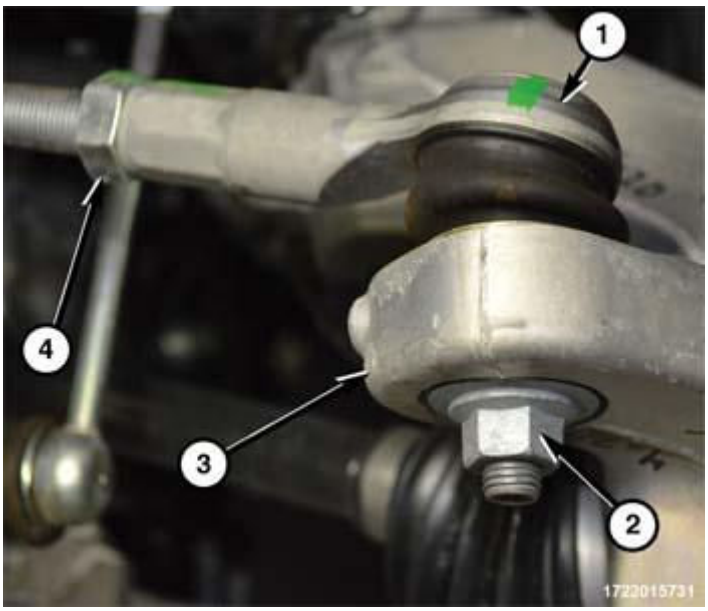

Fig. 46: Identifying Tie Rod End, Jam Nut, Knuckle & Nut
Courtesy of CHRYSLER GROUP, LLC

NOTE: **When unscrewing the outer tie rod from inner, count the number of revolutions to take it off. This action will aid in installation, getting the toe close to where it needs to be when setting the wheel alignment.**

1. Raise and support the vehicle. Refer to **HOISTING, STANDARD PROCEDURE** .
2. Remove the front wheel mounting bolts and remove the front wheel.
3. Loosen the jam nut (4) from the tie rod end (1).
4. Remove the retaining nut (2) from the outer tie rod end (1).

   Discard the nut; it is not to be reused.

5. Separate the outer tie rod end (1) from the knuckle (3) using (special tool #C-3894-A, Puller, Tie Rod) and remove from the inner tie rod.

INNER TIE ROD

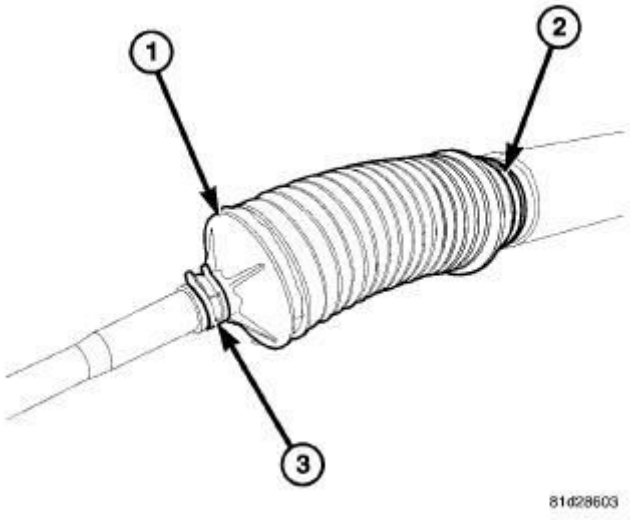

Fig. 47: Bellows Clamps
Courtesy of CHRYSLER GROUP, LLC

1. Remove the outer tie rod. Refer to **TIE ROD, STEERING, REMOVAL**.
2. Remove the tie rod jam nut from the inner tie rod.
3. Remove the clamp (2) securing the bellows (1) to the steering gear body.
4. Remove the clamp (3) from the small end of the bellows and remove the bellows (1) from the gear.

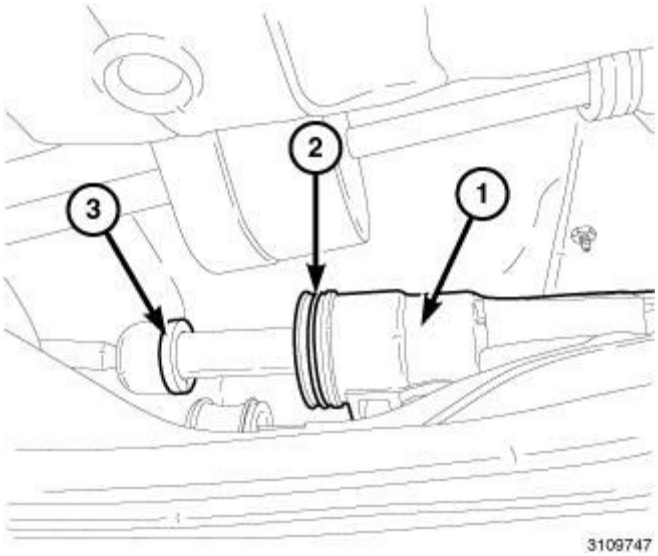

Fig. 48: Travel Restrictor, O Ring & Steering Gear
Courtesy of CHRYSLER GROUP, LLC

CAUTION: If the inner tie rod cannot be removed using the specified tools, do not use a hammer or heat to loosen. Damage to the steering gear will occur. Replace the entire steering gear.

5. Install an appropriate inner tie rod removal tool on the flats of the inner tie rod.
6. Unthread and remove the inner tie rod from the steering gear (1).
7. Inspect the inner portion of the gear for corrosion, contamination, and damage. If any is found, replace the steering gear.

INSTALLATION

OUTER TIE ROD END

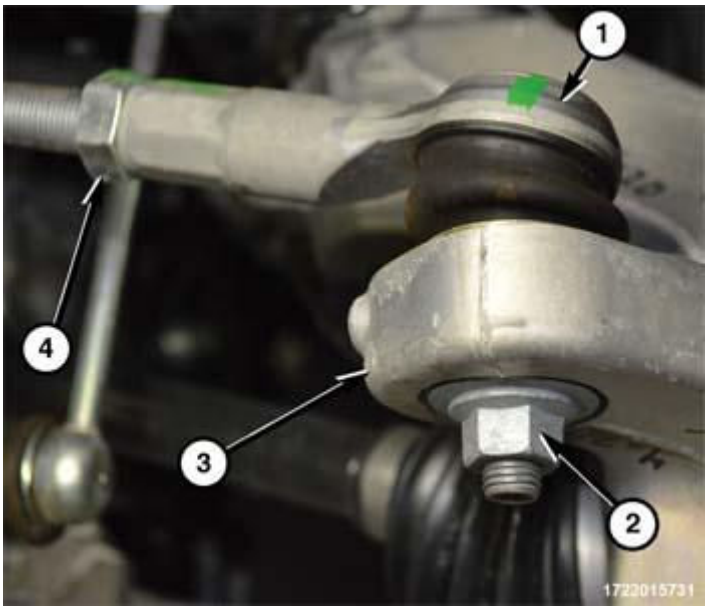

Fig. 49: Identifying Tie Rod End, Jam Nut, Knuckle & Nut
Courtesy of CHRYSLER GROUP, LLC

1. If it is not already installed, install the jam nut (4) on the inner tie rod threads.
2. Thread the outer tie rod (1) onto the inner tie rod approximately the same amount of revolutions as the original was installed.
3. Thread the jam nut (4) down the inner tie rod far enough to hold the outer tie rod. Do not tighten the jam nut at this time.
4. Install the outer tie rod end (1) stud into the hole in the knuckle arm (3). Start a **NEW** tie rod retaining nut (2) on the stud. While holding the tie rod end stud with a wrench, tighten the nut (2) to 30 N.m Plus 90° (22 ft. lbs. Plus 90°).
5. Install the tire and wheel assembly. Refer to **INSTALLATION** .
6. Adjust the front wheel toe setting. Refer to **WHEEL ALIGNMENT, STANDARD PROCEDURE** .
7. Tighten the tie rod jam nut (4) to 70 N.m (52 ft. lbs.) once wheel toe is set.
8. Lower the vehicle.

INNER TIE ROD

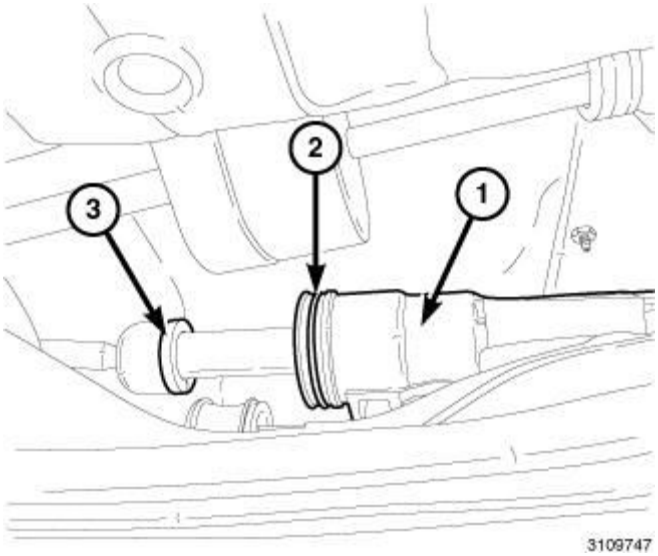

Fig. 50: Travel Restrictor, O Ring & Steering Gear
Courtesy of CHRYSLER GROUP, LLC

1. Apply Mopar® Lock AND Seal Adhesive or equivalent medium thread locker adhesive to the inboard end threads of the inner tie rod.
2. Install the inner tie rod onto the gear (1) using an appropriate inner tie rod installation tool on the flats. Tighten the inner tie rod to 110 N.m. (81 ft. lbs.).

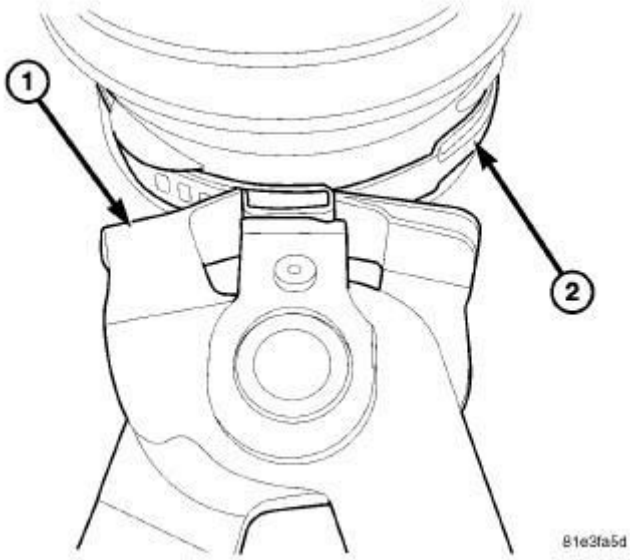

Fig. 51: Crimping Pliers On Bellows Clamp
Courtesy of CHRYSLER GROUP, LLC

3. Loosely place a NEW clamp over the large end of the NEW bellows.
4. Using crimping pliers (1), crimp the large clamp (2) securing the bellows to the gear body.

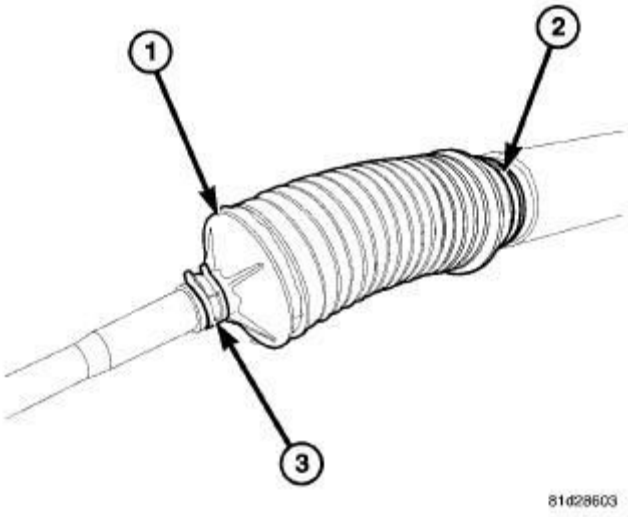

Fig. 52: Bellows Clamps
Courtesy of CHRYSLER GROUP, LLC

5. Install small end of bellows into groove and secure with clip (3).
6. Thread the tie rod jam nut onto the inner tie rod far enough to install the outer tie rod.
7. Install the outer tie rod. Refer to **TIE ROD, STEERING, INSTALLATION**.

2014 SUSPENSION

Front Suspension & Wheel Alignment - Cherokee

STANDARD PROCEDURE

STANDARD PROCEDURE - LUBRICATION

There are no serviceable lubrication points on the front or rear suspension. The ball joints and tie rod ends are sealed for life and require no maintenance.

SPECIAL TOOLS

SPECIAL TOOLS

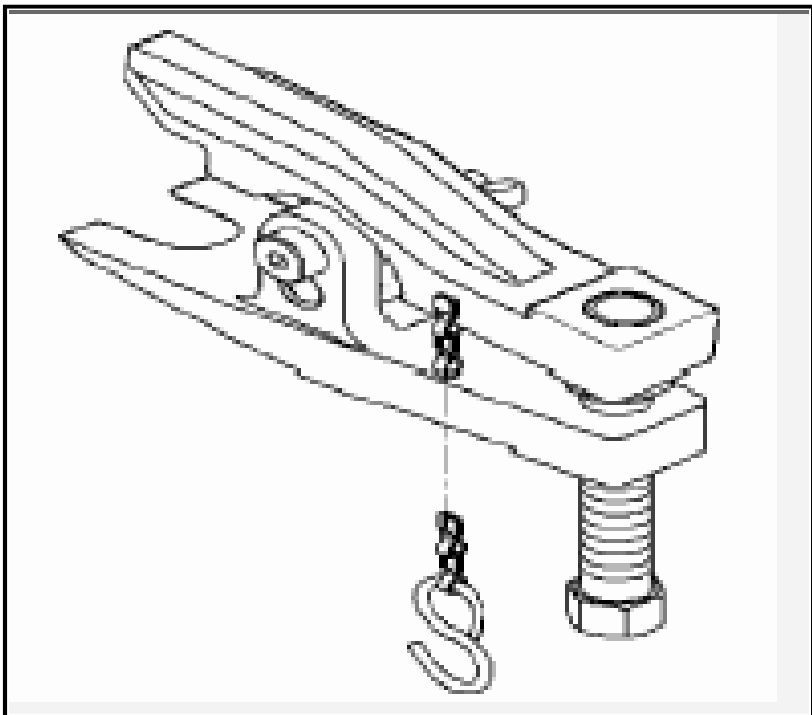	9360 - Remover, Ball Joint (Originally Shipped In Kit Number(s) 9329, 9515, 9516, 9516-CAN, 9517, 9517-CAN, 9518, 9519, 9540, 9541.)
	9362 - Wrench, Strut Nut (Originally Shipped In Kit Number(s) 9329, 9515, 9516, 9516-CAN, 9517,

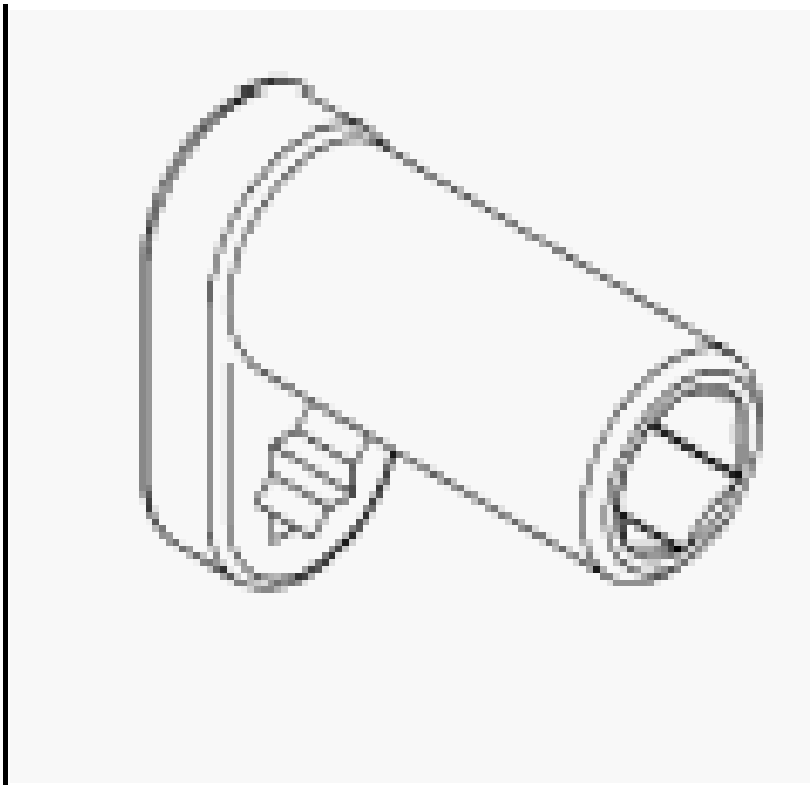	9517-CAN, 9518, 9519, 9540, 9541.)
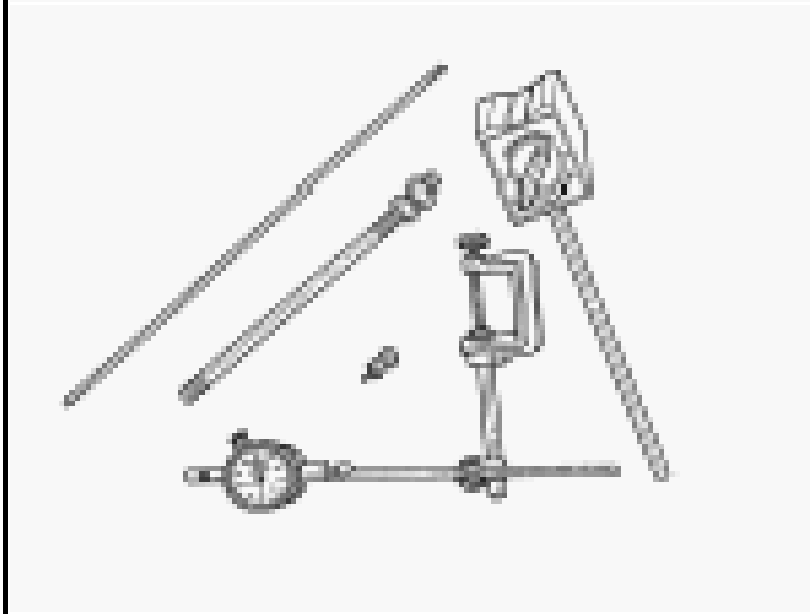	C-3339A - Set, Dial Indicator (Originally Shipped In Kit Number(s) 9202.)
	C-3894-A - Puller, Tie Rod (Originally Shipped In Kit Number(s)

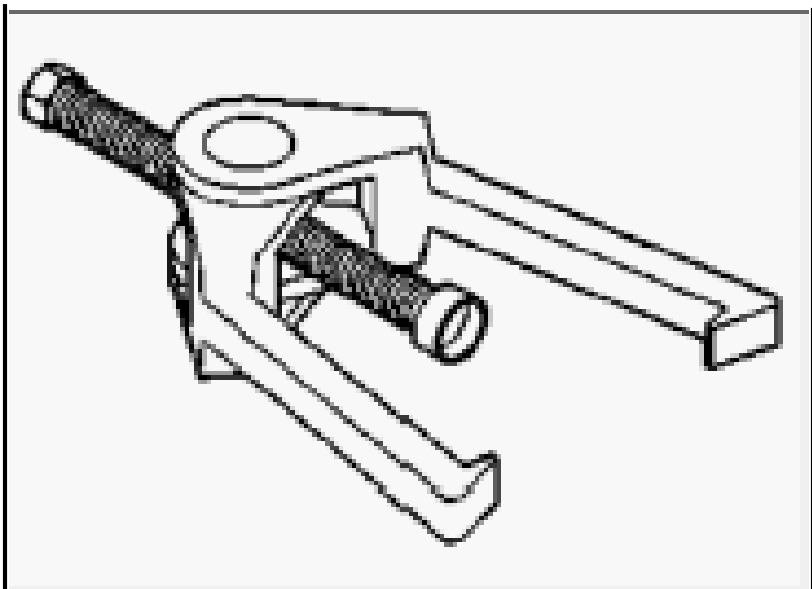	9202, 9202A-CAN, 9202CC, 9299, 9299CC, 9299CC, 9300A-CAN.)

FRONT

WARNING

WARNING

WARNING: Chrysler does not manufacture any vehicles or replacement parts that contain asbestos. Aftermarket products may or may not contain asbestos. Refer to aftermarket product packaging for product information.

Whether the product contains asbestos or not, dust and dirt can accumulate on brake parts during normal use. Follow practices prescribed by appropriate regulations for the handling, processing and disposing of dust and debris.

WARNING: Do not remove the strut rod nut while strut assembly is installed in vehicle, or before the coil spring is compressed with a compression tool. The spring is held under high pressure.

CAUTION: At no time when servicing a vehicle can a sheet metal screw, bolt, or other metal fastener be installed in the shock tower to take the place of an original plastic clip. It may come into contact with the strut or coil spring.

CAUTION: Wheel bearing damage will result if after loosening the axle hub nut, the vehicle is rolled on the ground or the weight of the vehicle is allowed to be supported by the tires for any length of time.

SPECIFICATIONS

SPECIFICATIONS

SPECIFICATIONS

DESCRIPTION	N.m	Ft. Lbs.	In. Lbs.
Brake Shield	8	-	71
Hub and Bearing to Knuckle Mounting Bolts	95	70	-
Hub Nut	200	148	-
Lower Ball Joint to Control Arm Nut	25 plus 175°	18 plus 175°	-
Lower Control Arm Front Horizontal Pivot Bolt	100 Plus 135°	74 Plus 135°	-
Lower Control Arm Rear Vertical Bolt	75 Plus 90°	55 Plus 90°	-
Stabilizer Bar to Cross-member Mounting Bolts	50	37	-
Stabilizer Bar Link to Stabilizer Bar	55	41	-
Stabilizer Bar Link to Strut	55	41	-
Strut-to-Knuckle Lower Retaining Bolt	110	81	-
Suspension Cross-member to Front Support Beams Bracket	95	70	-
Suspension Cross-member Mounting Bolts	126	93	-
Suspension Cross-member Mounting Bolts - Above Control Arms	120	89	-
Tie Rod Adjuster Jam Nut	80	59	-
Tie Rod End Knuckle Nut	30 Plus 90°	22 Plus 90°	-
Wheel Mounting (Lug) Bolts - Aluminum	130	96	-

ARM, LOWER CONTROL

DIAGNOSIS AND TESTING

DIAGNOSIS AND TESTING - LOWER CONTROL ARM

Inspect the lower control arm for signs of damage from contact with the ground or road debris. If the lower control arm shows any sign of damage, look for distortion. Do not attempt to repair or straighten a broken or bent lower control arm. If damaged, the lower control arm is serviced only as a complete component.

Inspect both lower control arm isolator bushings for severe deterioration and replace the lower control arm as required.

REMOVAL

REMOVAL

NOTE: Before proceeding, refer to FRONT, WARNING.

1. Raise and support the vehicle. Refer to **HOISTING, STANDARD PROCEDURE** .
2. Remove the wheel mounting bolts and the tire and wheel assembly.

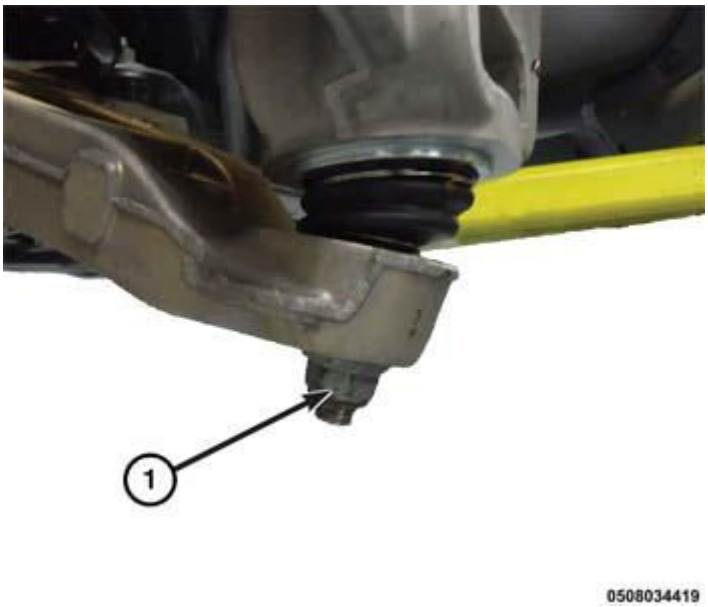

Fig. 1: Identifying Lower Ball Joint Nut
Courtesy of CHRYSLER GROUP, LLC

3. Remove and discard the lower ball joint nut (1).
4. Using (special tool #C-3894-A, Puller, Tie Rod), separate the lower ball joint stud from the control arm.

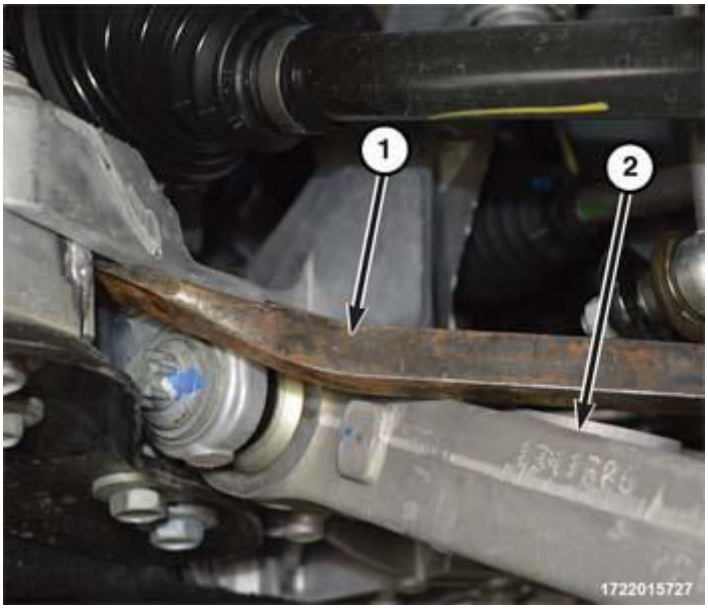

Fig. 2: Identifying Pry Bar & Control Arm
Courtesy of CHRYSLER GROUP, LLC

NOTE: **Make sure the ball joint boot does not get cut when separating the ball joint stud from the control arm.**

NOTE: **After separating the control arm from the knuckle, do not let it swing rapidly back up. This can tear the ball joint dust boot.**

5. Insert a pry bar (1) in the opening between the control arm front mounting bolt and the front fascia support beam.
6. Pry down on the control arm (2) until the ball joint stud is clear of the control arm, then push the knuckle assembly to the side when it is clear of the ball joint stud and slowly release the control arm.
7. Remove the Lower Load Beam. Refer to **REMOVAL** .

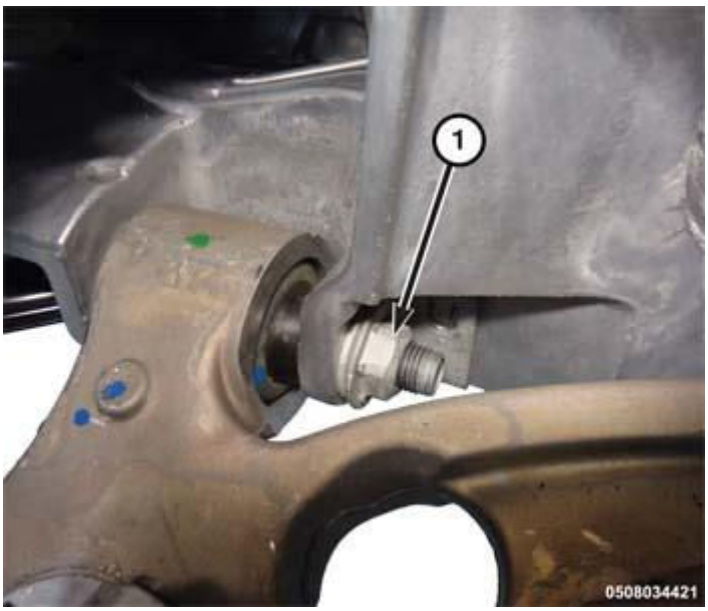

Fig. 3: Identifying Front Lower Control Arm Nut
Courtesy of CHRYSLER GROUP, LLC

8. Remove and discard the front lower control arm nut (1). Then remove the bolt attaching the lower control arm to the front suspension crossmember.

Fig. 4: Identifying Rear Lower Control Arm Nut
Courtesy of CHRYSLER GROUP, LLC

9. Remove and discard the rear lower control arm nut (1). Then remove the lower control arm bolt.
10. Remove the lower control arm from the crossmember.

INSTALLATION

INSTALLATION

1. Position the lower control arm in the front suspension crossmember.

Fig. 5: Identifying Rear Lower Control Arm Nut

Courtesy of CHRYSLER GROUP, LLC

2. Install a **NEW** rear lower control arm bolt and a **NEW** rear lower control arm nut (1). Do not tighten to specification at this time.

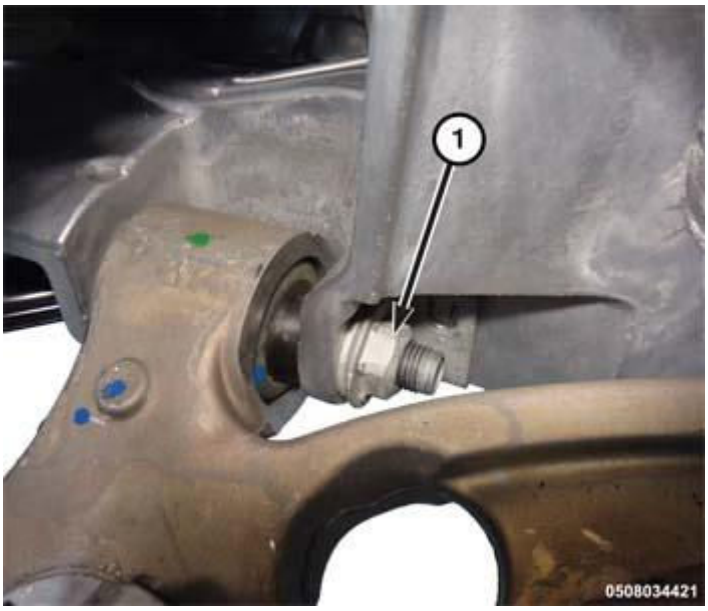

Fig. 6: Identifying Front Lower Control Arm Nut
Courtesy of CHRYSLER GROUP, LLC

3. Install a **NEW** front lower control arm bolt and a **NEW** front lower control arm nut (1). Do not tighten to specification at this time.

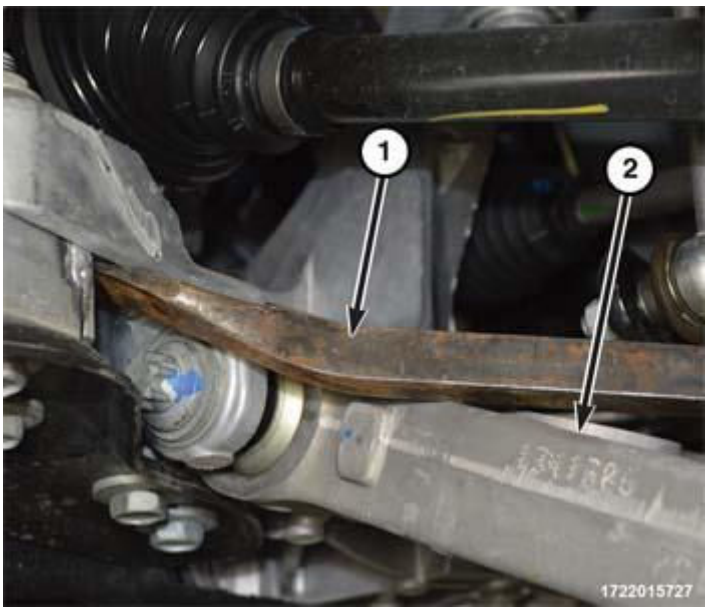

Fig. 7: Identifying Pry Bar & Control Arm
Courtesy of CHRYSLER GROUP, LLC

4. Insert a pry bar (1) in the opening between the control arm front mounting bolt and the front fascia support beam.
5. Pry down on the control arm (2) until the ball joint stud is clear of the control arm, align the stud with hole in control arm then slowly release the control arm.
6. Lower the vehicle and install a floor jack under the control arm. Raise the jack until the lower control arm is at ride height. Tighten the bolts:
   - Front lower control arm bolt: 100 N.m Plus 135° (74 ft. lbs. Plus 135°).
   - Rear lower control arm bolt: 75 N.m Plus 90° (55 ft. lbs Plus 90°.).
7. Raise the vehicle back up to the original position.
8. Install the Lower Load Beam. Refer to **LOAD BEAM, LOWER, INSTALLATION** .

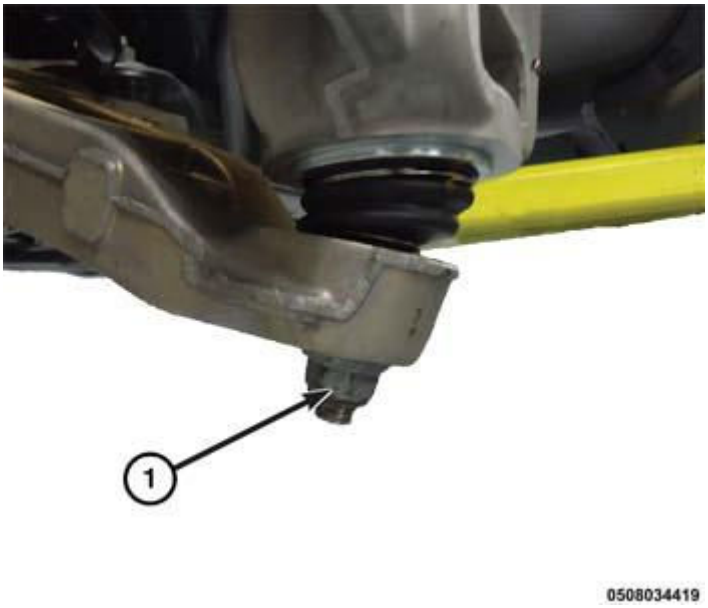

Fig. 8: Identifying Lower Ball Joint Nut
Courtesy of CHRYSLER GROUP, LLC

9. Install a **NEW** ball joint nut (1) and tighten to 25 N.m plus 175° (18 ft. lbs. plus 175°).
10. Install the wheel and tire assembly. Refer to **INSTALLATION** .
11. Lower the vehicle.

BALL JOINT, SUSPENSION, LOWER

DIAGNOSIS AND TESTING

DIAGNOSIS AND TESTING - LOWER BALL JOINT

1. Raise the vehicle allowing the front suspension to hang.
2. Remove the tire and wheel assembly.
3. Using Dial Indicator (special tool #C-3339A, Set, Dial Indicator), or equivalent, attach the dial indicator

mount to the knuckle and align the dial indicator's plunger with the direction of the stud axis, touching the end of the ball joint stud in the lower control arm.

4. Push up on the lower control arm and zero the dial indicator.

NOTE: Use care when applying load to the knuckle as to avoid damaging the ball joint seal boot.

5. From the front of the vehicle, insert a pry bar between the knuckle and lower control arm, resting it on the lower control arm. Use lever principle to push the knuckle up from the lower control arm. Apply the load until the needle of the dial indicator no longer moves.
6. Record the ball joint movement. The end play is acceptable if no more than 1.0 mm (0.039 in.) of end play is achieved back-to-back.
7. Perform this procedure on each side of the vehicle as necessary.

HUB AND BEARING

DIAGNOSIS AND TESTING

DIAGNOSIS AND TESTING - HUB AND BEARING - NOISE

NOTE: The wheel bearing is designed to last for the life of the vehicle and requires no type of periodic maintenance.

Bearings will produce noise if worn or damaged. The noise will generally change when the bearings are loaded. A road test of the vehicle is normally required to determine if there is a bearing noise, or if it may be some other component, and to assist in finding the location. The following procedure, together with the **DIAGNOSTIC CHART** , should help determine the proper cause. Note that if a particular vehicle road test maneuver, steering to the right for instance, results in noise only part of the time, it is not likely a faulty bearing. Bearing noises are not typically intermittent.

NOTE: Damaged bearing seals and the resulting excessive grease loss may also require bearing replacement. Moderate grease seepage from the bearing is considered normal and should not require replacement of the wheel bearing. Wheel bearings are designed to last the life of the vehicle and require no type of periodic maintenance. To diagnose the hub, measure hub runout. Refer to ROTOR, BRAKE, DIAGNOSIS AND TESTING .

DIAGNOSTIC PROCEDURE:

1. Perform drive evaluation. Find a smooth level road surface void of traffic or obstructions. Turn off any accessories which may cause background noise. Evaluate for noise at 50 km/h (30 mph) and 100 km/h (60 mph) and with vehicle in neutral to eliminate potential drivetrain noises. With vehicle at a constant speed, steer back and forth to left and right (approximately 45 degree steering input each way). This will load and unload the bearings and may change the noise level. When bearing damage is slight, the noise is sometimes noticeable at lower speeds and at other times is more noticeable at higher speeds.

2. Drive evaluation results: Noise increase when turning right may indicate a problem with the left bearing. Noise increase when turning left may indicate a problem with the right bearing.
3. Put vehicle up on hoist. Grab the tire by pushing in on the top center and pulling out on the bottom center to check for excessive movement in the bearing.
4. Check for potential rubbing on rotating components, such as rotor splash shields, heat shields touching propshaft or halfshaft, wheel well liners contacting tire, wheel cover on wheel, etc. Any cyclic noise (once per wheel revolution for example) is not likely a wheel bearing fault.
5. Remove the wheel and tire assembly, disc brake caliper and brake rotor. Refer to **ROTOR, BRAKE, DIAGNOSIS AND TESTING** .
6. Rotate the wheel hub, checking for resistance or roughness.
7. Any roughness or resistance to rotation may indicate dirt intrusion or a failed hub bearing. If the bearing exhibits any of these conditions, the hub & bearing will require replacement. Do not attempt to disassemble the bearing for repair.
8. Rotate the wheel hub, utilize Chassis Ears (or equivalent) to check for noise.
9. If none of the above checks indicate a bearing failure, refer to the **DIAGNOSTIC CHART** for other possible causes.

DIAGNOSTIC CHART - HUB & BEARING

CONDITION	POSSIBLE CAUSES	POTENTIAL CORRECTIONS
FRONT END WHINE ON TURNS	1. Low Power Steering Fluid Level (if applicable)	1. Fill power steering fluid reservoir to proper level, check for leaks (make sure all air is bled from system fluid)
	2. Worn Tires and/or Incorrect Wheel Alignment	2. Replace Tires, Check And Reset Wheel Alignment
	3. Defective Wheel Bearing	3. Replace Wheel Bearing
	4. Wrong Power Steering Fluid (if applicable)	4. Replace With Correct Power Steering Fluid
FRONT END GROWL OR GRINDING ON TURNS	1. Loose Wheel Lug Nuts	1. Verify Wheel Lug Nut Torque
	2. Engine Mount Grounding Against Frame Or Body Of Vehicle	2. Check For Engine Mount Hitting Frame Rail And Reposition Engine As Required
	3. Worn Tires and/or Incorrect Wheel Alignment	3. Replace Tires, Check and Reset Wheel Alignment
	4. Defective Wheel Bearing	4. Replace Wheel Bearing
	5. Worn or Broken C/V Joint	5. Replace C/V Joint
	6. Engine Not Centered, Causing Axle Half Shaft to Bottom Out	6. Center the Engine

POPPING/CLICKING/SNAPPING DURING ACCELERATION AFTER DRIVE-TO-REVERSE SHIFT, REVERSE-TO-DRIVE SHIFT OR WHILE TURNING	1. Insufficient Hub Nut Torque 2. Insufficient Grease on Mating Surface of Axle Half Shaft Outer C/V Joint to Wheel Hub/Bearing, or Worn/Damaged Gasket	1. Torque Hub Nut to Spec 2. Separate Half Shaft From Hub and Bearing and Wipe Mating Surfaces Clean. Apply Light Coating of Wheel Bearing Grease to C/V Joint Surface and Reassemble, or Replace Gasket. Torque Hub Nut to Spec
WHINE/HUM/ROAR WITH VEHICLE GOING STRAIGHT AT A CONSTANT SPEED	1. Worn Tires and/or Incorrect Wheel Alignment 2. Defective Wheel Bearing	1. Replace Tires and Reset Wheel Alignment 2. Replace Wheel Bearing
GROWL OR GRINDING WITH VEHICLE GOING STRAIGHT AT A CONSTANT SPEED	1. Engine Mount Grinding Against Frame or Body 2. Defective Wheel Bearing 3. Worn or Broken C/V Joint	1. Check and Reposition Engine as Required 2. Replace Wheel Bearing 3. Replace C/V Joint

REMOVAL

REMOVAL

NOTE: Before proceeding, review all Warnings and Cautions. Refer to FRONT, WARNING.

1. Raise and support the vehicle. Refer to **HOISTING, STANDARD PROCEDURE** .
2. Remove the wheel mounting bolts and the tire and wheel assembly.

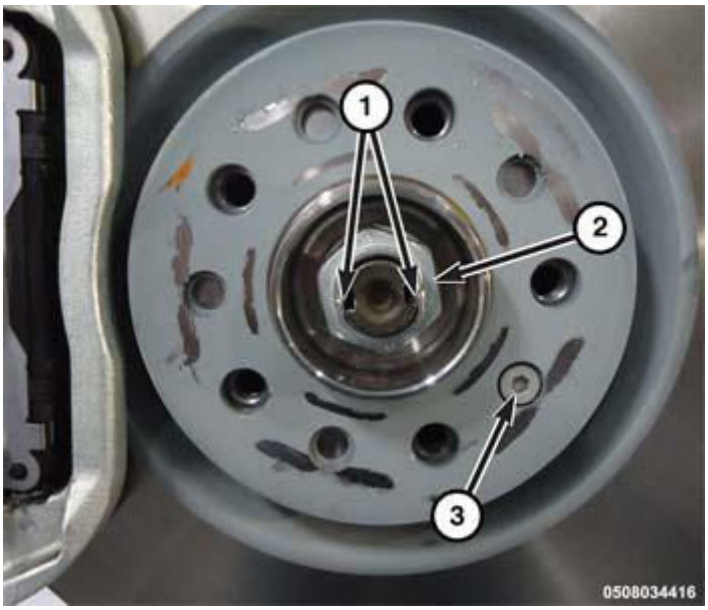

Fig. 9: Identifying Staked Areas, Hub Nut & Rotor Bolt
Courtesy of CHRYSLER GROUP, LLC

3. Using a suitable punch, lift the two staked areas (1) in the hub nut. Use care not to damage the half-shaft.
4. While a helper applies the brakes to keep the hub from rotating, remove the hub nut (2) and discard it. Remove the rotor bolt (3).**Do not reuse hub nut.**
5. Remove the front brake rotor. Refer to **ROTOR, BRAKE, REMOVAL** .
6. Remove the four hub and bearing bolts.

NOTE: The bolts are one time use. Discard the bolts.

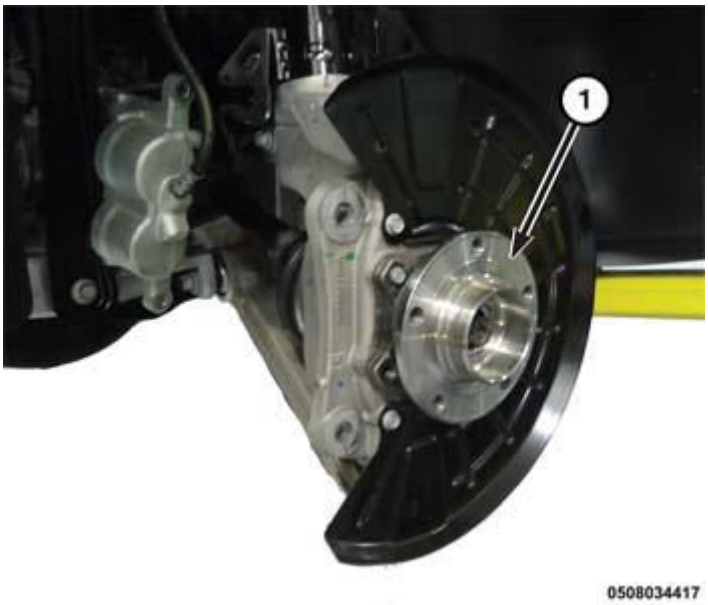

Fig. 10: Identifying Hub & Bearing
Courtesy of CHRYSLER GROUP, LLC

7. Slide the hub and bearing (1) off the half shaft and out of the knuckle.

INSTALLATION

INSTALLATION

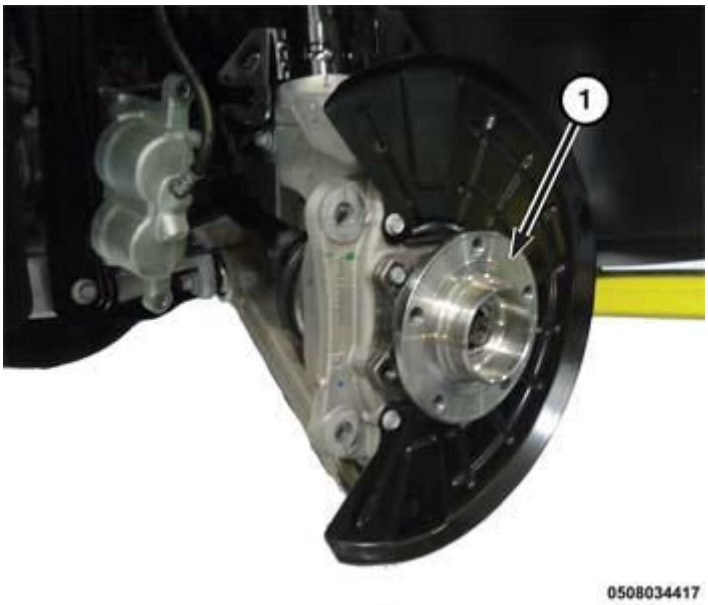

Fig. 11: Identifying Hub & Bearing
Courtesy of CHRYSLER GROUP, LLC

1. Position the halfshaft into the hub and bearing. Install the hub and bearing (1) in to the knuckle.
2. Install four **NEW** hub and bearing bolts and tighten to. Refer to **FRONT, SPECIFICATIONS**.
3. Install the front brake rotor and caliper assembly. Refer to **ROTOR, BRAKE, INSTALLATION** .
4. Install a **NEW** hub nut and while a helper applies the brakes, tighten to specification. Refer to **SPECIFICATIONS** .

NOTE: Do not use air tools on staking tool while staking hub nut.

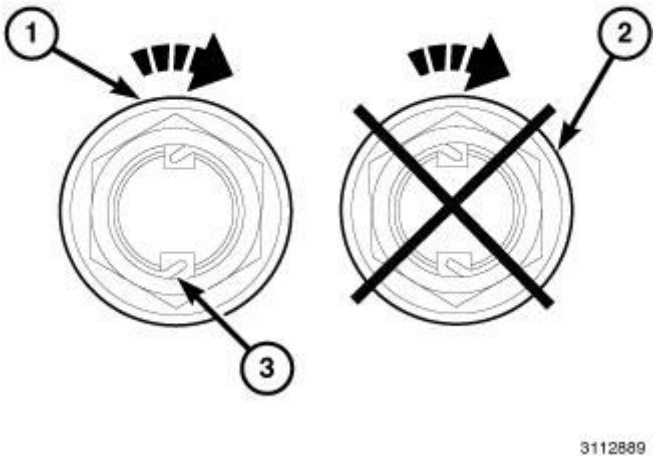

Fig. 12: Correct Hub Nut Staking
Courtesy of CHRYSLER GROUP, LLC

Correct Hub Nut Staking

5. Using (special tool #10287, Tool, Front Hub Staking) align the leading cutting edge of tool with the top left side channel on axle. Tighten fastener on staking tool with hand tools until the threads bottom out completely.

NOTE: The hub nut must be staked (1) as shown in Correct Hub Nut Staking. Both edges must be split and bent into the shape shown (3). The staking must be in the opposite direction from the forward rotation of the wheel.

NOTE: Do not stake the hub nut as shown (2).

6. Install the wheel and tire assembly. Refer to **INSTALLATION** .

KNUCKLE, STEERING

DIAGNOSIS AND TESTING

DIAGNOSIS AND TESTING - KNUCKLE

The front suspension knuckle is not a repairable component of the front suspension. It must be replaced if found to be damaged in any way. If it is determined that the knuckle is bent when servicing the vehicle, no attempt is to be made to straighten the knuckle.

REMOVAL

REMOVAL

NOTE: Before proceeding, review all Warnings and Cautions. Refer to FRONT, WARNING.

1. Raise and support the vehicle. Refer to **HOISTING, STANDARD PROCEDURE** .
2. Remove the wheel mounting bolts and the tire and wheel assembly.

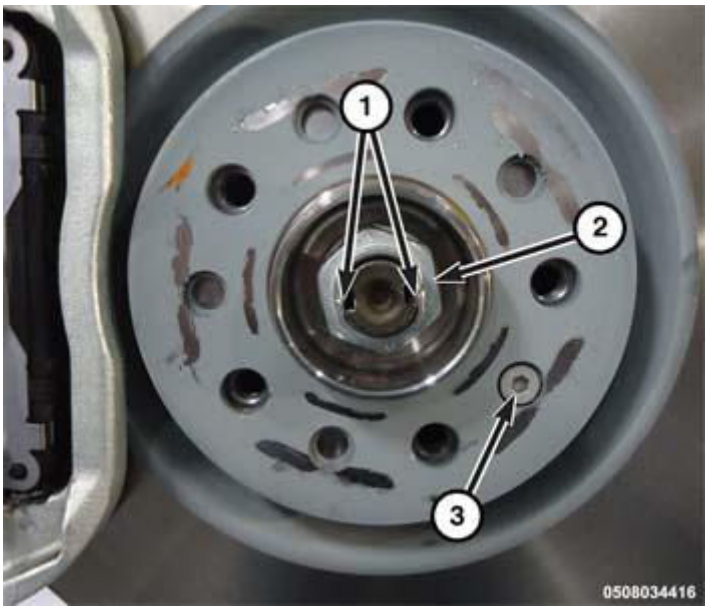

Fig. 13: Identifying Staked Areas, Hub Nut & Rotor Bolt
Courtesy of CHRYSLER GROUP, LLC

3. Using a suitable punch, lift the two staked areas (1) on the hub nut. Use care not to damage the half-shaft.
4. While a helper applies the brakes to keep the hub from rotating, remove the hub nut (2) and discard it. Remove the rotor bolt (3). **Do not reuse the hub nut.**
5. Remove the front brake rotor. Refer to **ROTOR, BRAKE, REMOVAL** .

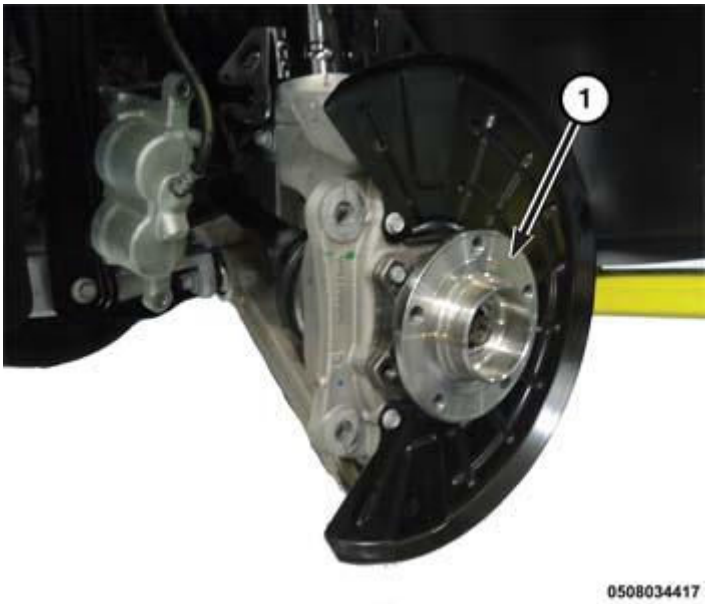

Fig. 14: Identifying Hub & Bearing
Courtesy of CHRYSLER GROUP, LLC

6. Remove the four hub and bearing to knuckle bolts and slide the hub and bearing (1) off the half shaft and out of the knuckle.

7. Remove the front brake rotor splash shield.

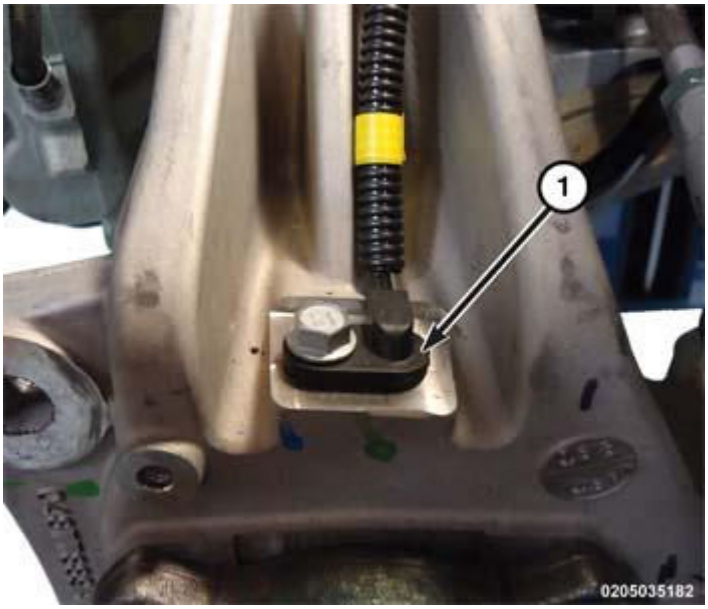

Fig. 15: Identifying Wheel Speed Sensor
Courtesy of CHRYSLER GROUP, LLC

8. Remove the wheel speed sensor (1) and position it aside.

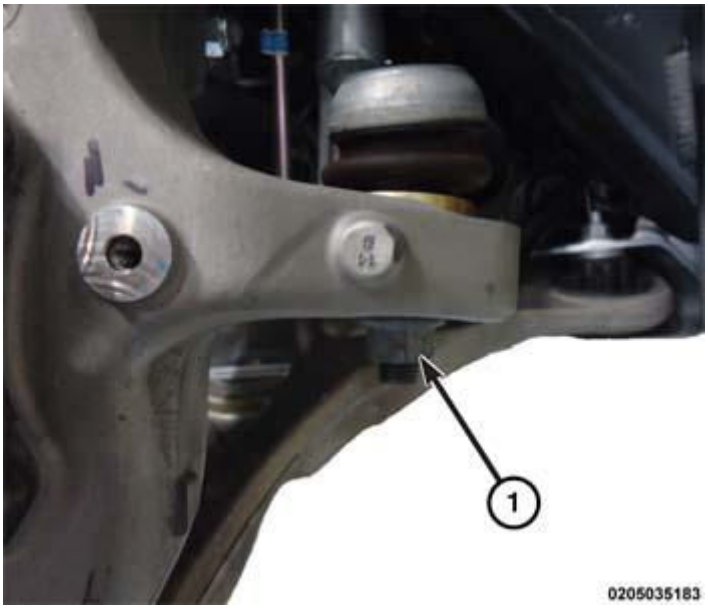

Fig. 16: Identifying Outer Tie Rod End
Courtesy of CHRYSLER GROUP, LLC

9. Remove the outer tie rod end (1) from the knuckle. Refer to **TIE ROD, STEERING, REMOVAL** .

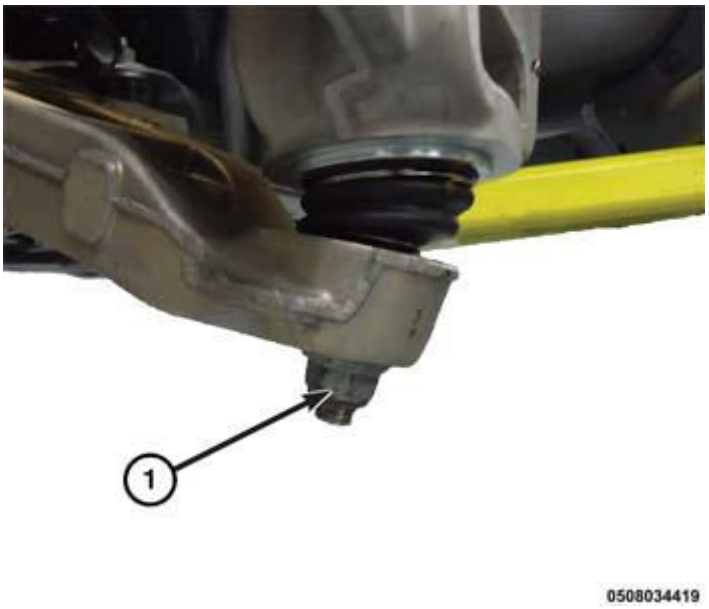

Fig. 17: Identifying Lower Ball Joint Nut
Courtesy of CHRYSLER GROUP, LLC

10. Remove and discard the lower ball joint nut (1).
11. Using (special tool #C-3894-A, Puller, Tie Rod) separate the ball joint stud from the control arm.

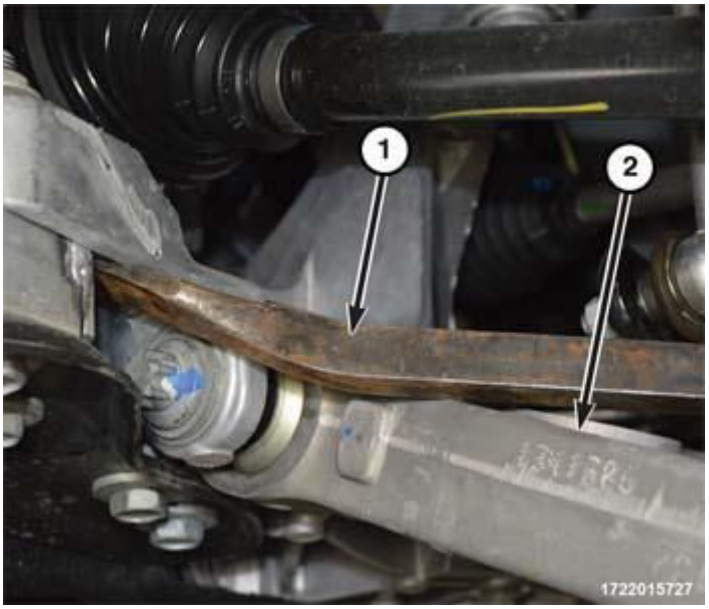

Fig. 18: Identifying Pry Bar & Control Arm
Courtesy of CHRYSLER GROUP, LLC

NOTE: **Make sure the ball joint boot does not get cut when separating the control arm from the knuckle.**

NOTE: After separating the control arm from the knuckle, do not let it swing rapidly back up. This can tear the ball joint dust boot.

12. Insert a pry bar (1) in the opening between the control arm front mounting bolt and the front fascia support beam.
13. Pry down on the control arm (2) until the ball joint stud is clear of the control arm. Position the knuckle assembly to the side until it is clear of the ball joint stud. Slowly release the control arm.

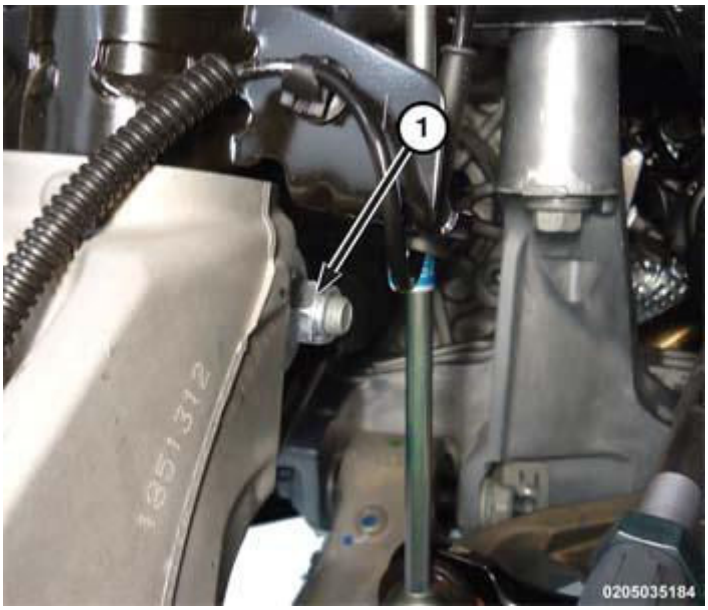

Fig. 19: Identifying Knuckle To Strut Pinch Bolt & Nut
Courtesy of CHRYSLER GROUP, LLC

14. Remove the knuckle to strut pinch bolt and nut (1).

Discard the nut and bolt.

NOTE: Do not allow the half shaft to hang by the inner C/V joint. Support the half shaft to keep the joint from separating.

15. Remove the knuckle.

INSTALLATION

INSTALLATION

1. Position the half shaft into the knuckle and slide the strut into the knuckle.

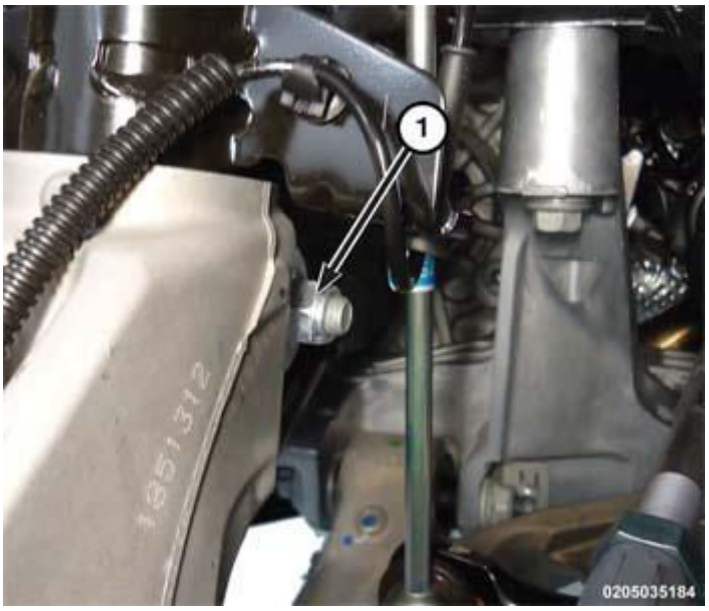

Fig. 20: Identifying Knuckle To Strut Pinch Bolt & Nut
Courtesy of CHRYSLER GROUP, LLC

2. Install a **NEW** strut pinch bolt and nut (1). Tighten the pinch bolt to specification.

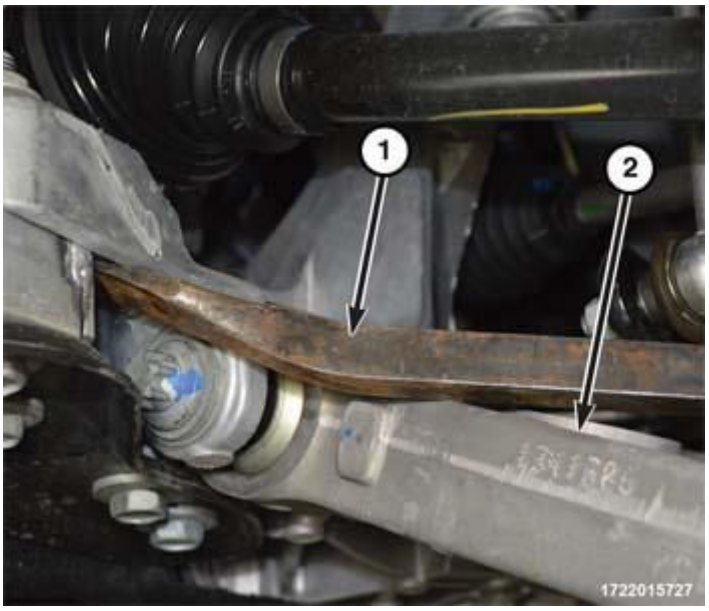

Fig. 21: Identifying Pry Bar & Control Arm
Courtesy of CHRYSLER GROUP, LLC

3. Insert a pry bar (1) in the opening between the control arm front mounting bolt and the front fascia support beam.
4. Pry down on the control arm (2) until the ball joint stud is clear of the control arm, align the stud with hole in control arm then slowly release the control arm.

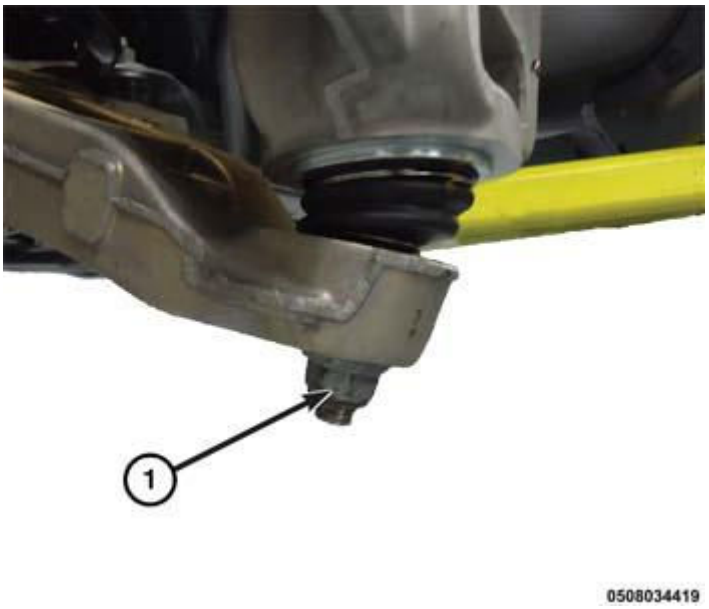

Fig. 22: Identifying Lower Ball Joint Nut
Courtesy of CHRYSLER GROUP, LLC

5. Install a **NEW** lower ball joint nut (1). Tighten the lower ball joint nut to specification.

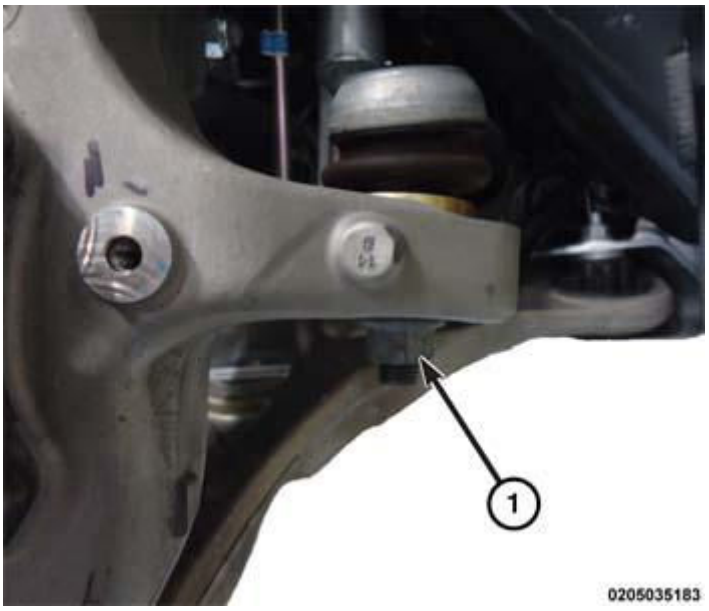

Fig. 23: Identifying Outer Tie Rod End
Courtesy of CHRYSLER GROUP, LLC

6. Install the outer tie rod to the knuckle. Refer to **TIE ROD, STEERING, INSTALLATION** .

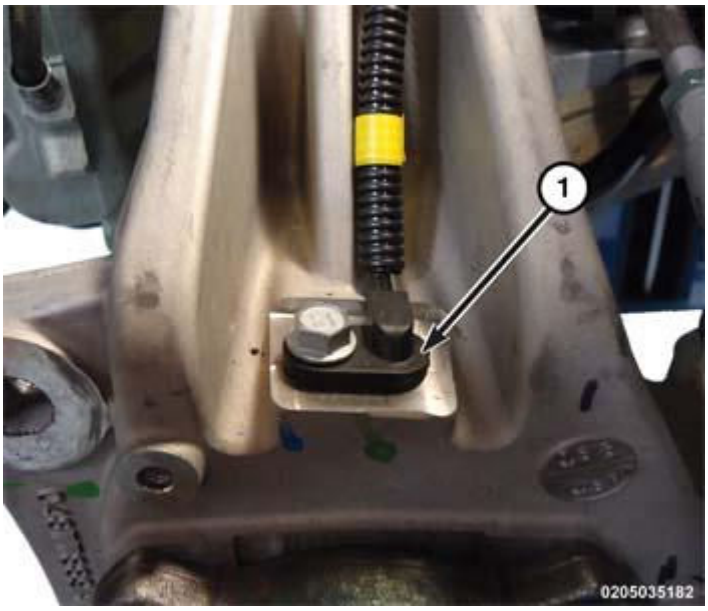

Fig. 24: Identifying Wheel Speed Sensor
Courtesy of CHRYSLER GROUP, LLC

7. Install the wheel speed sensor. Tighten the wheel speed sensor bolt to specification.
8. Install the front brake rotor splash shield.

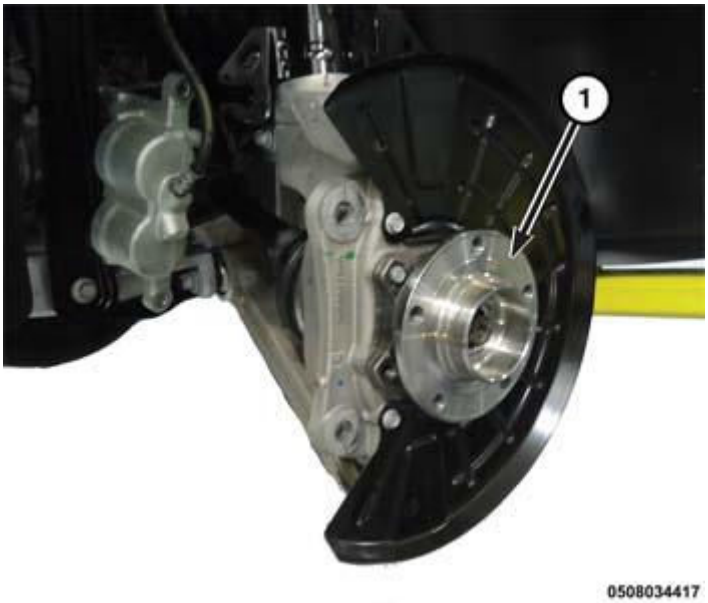

Fig. 25: Identifying Hub & Bearing
Courtesy of CHRYSLER GROUP, LLC

9. Position the half shaft into the hub and bearing. Install the hub and bearing (1) to the knuckle. Install four **new** hub an bearing bolts. Tighten the hub bolts to specification.
10. Install the front brake rotor and brake caliper. Refer to **CALIPER, DISC BRAKE, FRONT, INSTALLATION** and **ROTOR, BRAKE, INSTALLATION** .

NOTE: **Always install a new hub nut. The original hub nut is one-time use only and must be discarded when removed.**

11.
12. Install a **NEW** hub nut and while a helper applies the brakes, tighten the nut to 200 N.m (148 ft. lbs.)

NOTE: **Do not use air tools on staking tool while staking hub nut.**

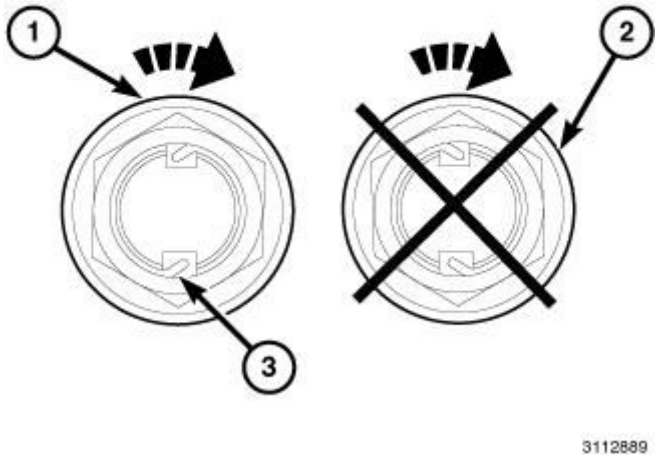

Fig. 26: Correct Hub Nut Staking
Courtesy of CHRYSLER GROUP, LLC

Correct Hub Nut Staking

13. Using (special tool #10287, Tool, Front Hub Staking) align the leading cutting edge of tool with the top left side channel on axle. Tighten fastener on staking tool with hand tools until the threads bottom out completely.

NOTE: **The hub nut must be staked (1) as shown in Correct Hub Nut Staking. Both edges must be split and bent into the shape shown (3). The staking must be in the opposite direction from the forward rotation of the wheel.**

NOTE: **Do not stake the hub nut as shown (2).**

14. Install the wheel and tire assembly. Refer to **INSTALLATION** .

LINK, STABILIZER BAR

REMOVAL

REMOVAL

NOTE: Before proceeding, refer to FRONT, WARNING.

1. Raise and support the vehicle. Refer to **HOISTING, STANDARD PROCEDURE** .
2. Remove the wheel mounting bolts and the tire and wheel assembly.

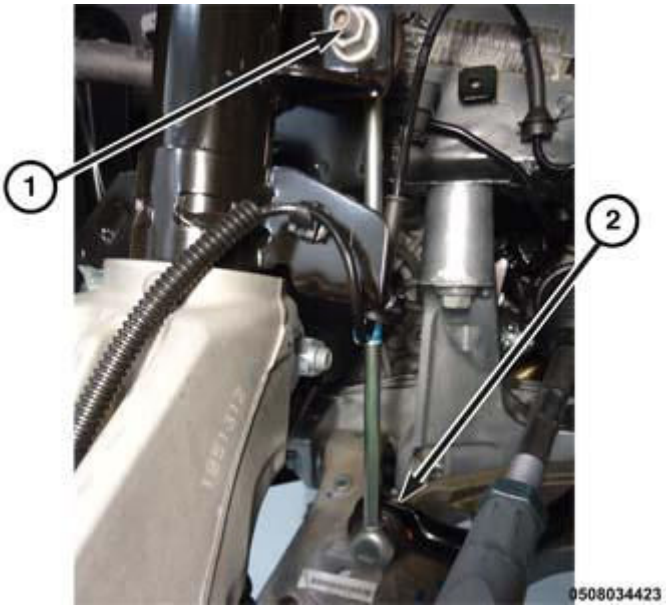

Fig. 27: Identifying Upper & Lower Nut
Courtesy of CHRYSLER GROUP, LLC

3. Hold the stabilizer bar link studs stationary and remove the upper nut (1) and the lower nut (2).
4. Remove the stabilizer bar link.

INSTALLATION

INSTALLATION

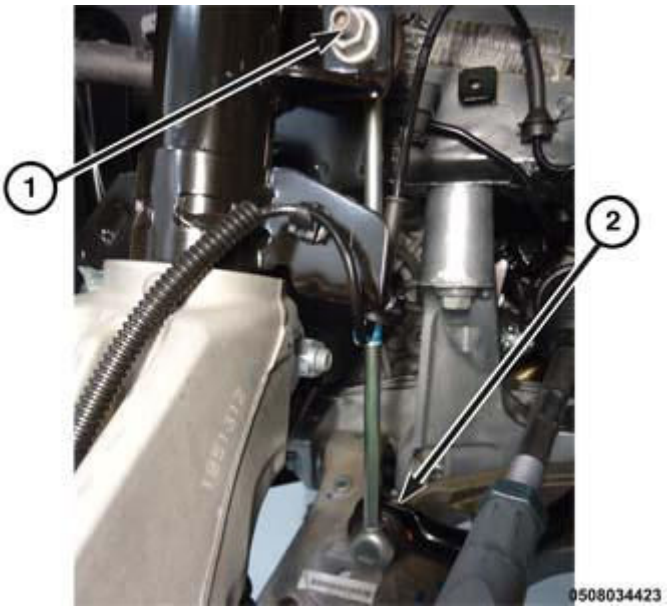

Fig. 28: Identifying Upper & Lower Nut
Courtesy of CHRYSLER GROUP, LLC

1. Position the stabilizer bar link to the strut and install the stabilizer bar link nut (1).
2. Position the stabilizer bar link to the stabilizer bar and install the stabilizer bar link nut (2).
3. Hold the stabilizer bar link studs stationary and tighten the Stabilizer Bar Link Nuts to Specification.
4. Install the tire and wheel assembly and the lug bolts. Refer to **INSTALLATION** .
5. Lower the vehicle.

STABILIZER BAR, FRONT

REMOVAL

REMOVAL

NOTE: Before proceeding, refer to FRONT, WARNING.

1. Raise and support the vehicle. Refer to **HOISTING, STANDARD PROCEDURE** .
2. Remove the crossmember. Refer to **CROSSMEMBER, FRONT SUSPENSION, REMOVAL** .

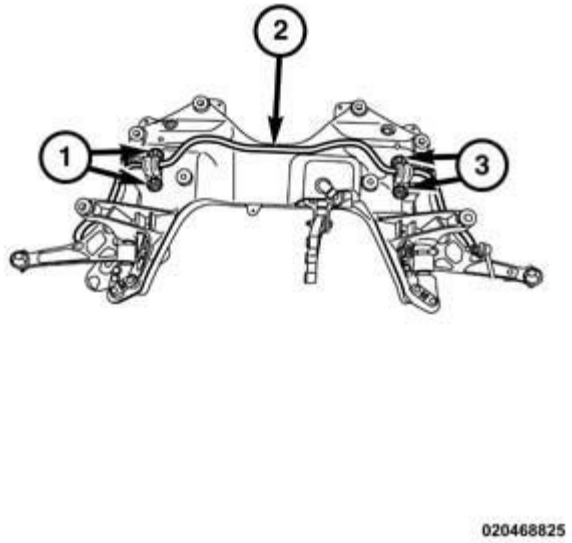

Fig. 29: Stabilizer Bar Retaining Bolts
Courtesy of CHRYSLER GROUP, LLC

3. Remove the four stabilizer bolts (1, 3) and separate the stabilizer bar (2) from the crossmember.

INSTALLATION

INSTALLATION

NOTE: Inspect the brackets, insulators and links for wear or damage. Install new components as necessary.

1. Install the stabilizer bar (2) to the crossmember.

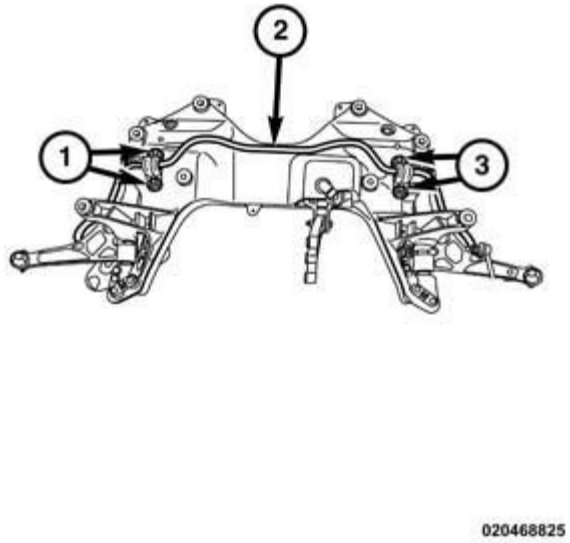

Fig. 30: Stabilizer Bar Retaining Bolts
Courtesy of CHRYSLER GROUP, LLC

2. Install the four stabilizer bar mounting bolts (1, 3). Tighten the to Stabilizer Bar Mounting Bolts to Specification.
3. Install the crossmember. Refer to **CROSSMEMBER, FRONT SUSPENSION, INSTALLATION** .

STRUT, SUSPENSION, ASSEMBLY

DESCRIPTION

DESCRIPTION

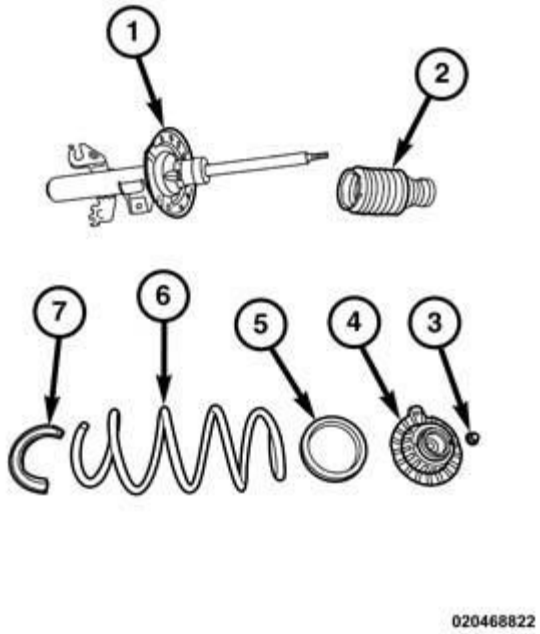

Fig. 31: Front Strut Components
Courtesy of CHRYSLER GROUP, LLC

A Macpherson type design strut assembly is used in place of the traditional front suspension upper control arm and upper ball joint. The bottom of the strut mounts directly to the steering knuckle using a "shark fin" and pinch bolt going through the knuckle. The top of the strut mounts directly to the strut tower of the vehicle using a retaining clip on the strut assembly upper mount.

The strut assembly includes the following components:

- Strut (damper) (1)
- Dust shield (2)
- Strut rod nut (3)
- Bearing and upper spring seat (4)
- Upper spring isolator (5)
- Coil spring (6)
- Lower spring isolator (7)

Each component is serviced by removing the strut assembly from the vehicle and disassembling it.

Coil springs are rated separately for each corner or side of the vehicle depending on optional equipment and type of vehicle service. If a coil spring requires replacement, be sure that it is replaced with a spring meeting the correct load rating for the vehicle and its specific options.

DIAGNOSIS AND TESTING

DIAGNOSIS AND TESTING - STRUT ASSEMBLY

Inspect the strut assembly for the following conditions:

- Inspect for a damaged or broken coil spring.
- Inspect for a torn or damaged dust shield.
- Lift the dust shield and inspect the strut assembly for evidence of fluid running from the upper end of the strut fluid reservoir. (Actual leakage will be a stream of fluid running down the side and dripping off lower end of unit). A slight amount of seepage between the strut shaft and strut shaft seal is not unusual and does not affect performance of the strut assembly.
- Inspect the jounce bumper for signs of damage or deterioration.
- Inspect the clearance between the shock tower and the coil spring. Make sure no fasteners are protruding through the shock tower possibly contacting the coil spring and strut. Because of the minimum clearance in this area, installation of metal fasteners could damage the coil spring coating and lead to a corrosion failure of the spring.

REMOVAL

REMOVAL

NOTE: Before proceeding, refer to FRONT, WARNING.

NOTE: Removal of the strut assembly is the same for both sides.

NOTE: If both strut assemblies are removed, label the strut assemblies right or left. Keep the other strut parts separated with right or left as well. Not all parts of the strut assembly are interchangeable side-to-side.

1. Raise and support the vehicle. Refer to **HOISTING, STANDARD PROCEDURE** .
2. Remove the wheel mounting bolts and the tire and wheel assembly.

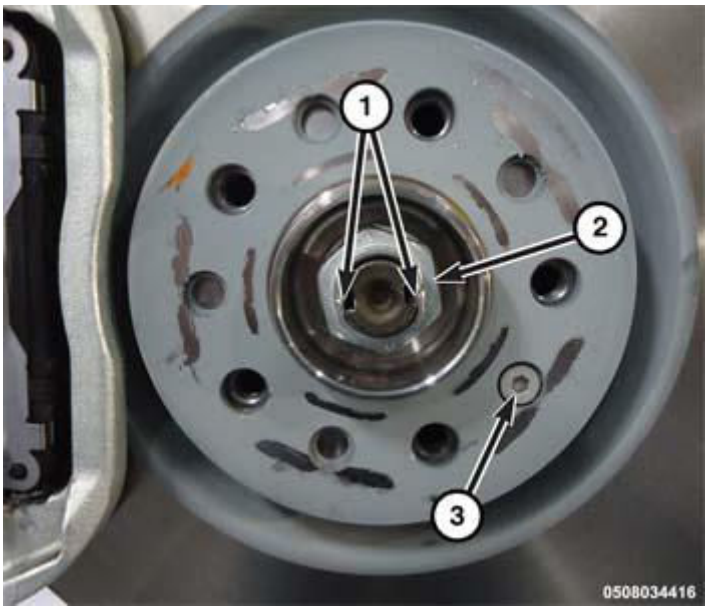

Fig. 32: Identifying Staked Areas, Hub Nut & Rotor Bolt
Courtesy of CHRYSLER GROUP, LLC

3. Using a suitable punch, lift the two staked areas (1) on the hub nut. Use care not to damage the halfshaft.
4. While a helper applies the brakes to keep the hub from rotating, remove the hub nut (2) and discard it. Remove the rotor bolt (3). **Do not reuse the hub nut.**
5. Remove the font brake rotor. Refer to **ROTOR, BRAKE, REMOVAL** .

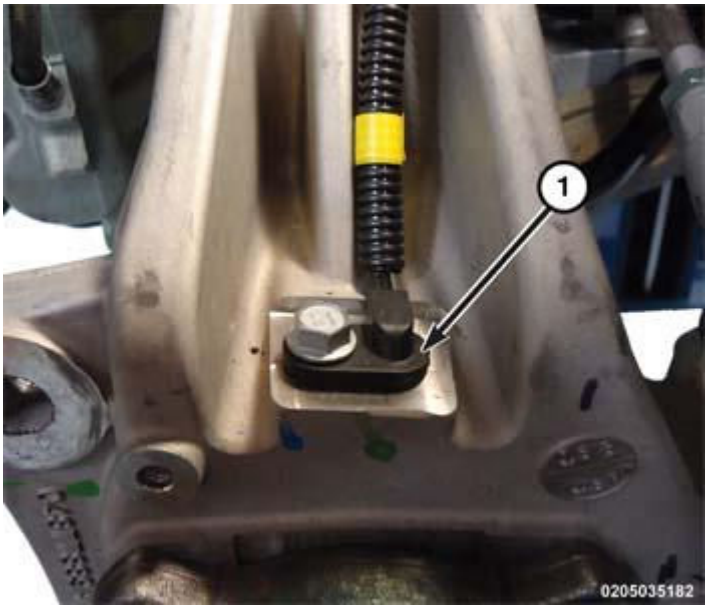

Fig. 33: Identifying Wheel Speed Sensor
Courtesy of CHRYSLER GROUP, LLC

6. Remove the wheel speed sensor (1) and remove the wire harness from the strut. Position the wire harness aside.

7. Remove the stabilizer bar link. Refer to **LINK, STABILIZER BAR, REMOVAL**.

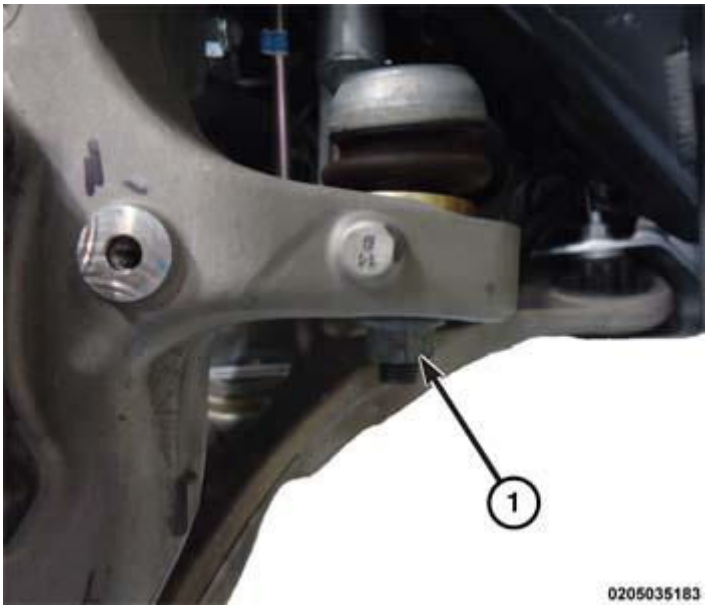

Fig. 34: Identifying Outer Tie Rod End
Courtesy of CHRYSLER GROUP, LLC

8. Remove the outer tie rod end from the knuckle (1). Refer to **TIE ROD, STEERING, REMOVAL** .

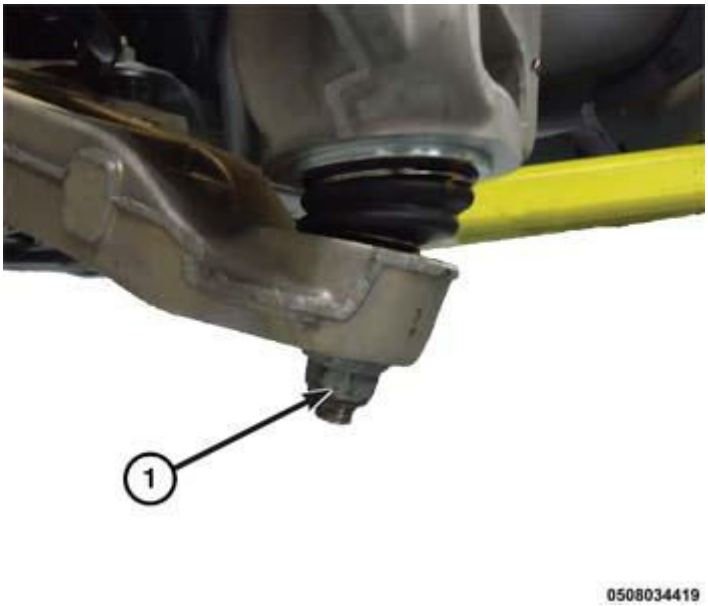

Fig. 35: Identifying Lower Ball Joint Nut
Courtesy of CHRYSLER GROUP, LLC

9. Remove and discard the lower ball joint nut (1).
10. Using (special tool #C-3894-A, Puller, Tie Rod) separate the ball joint stud from the control arm.

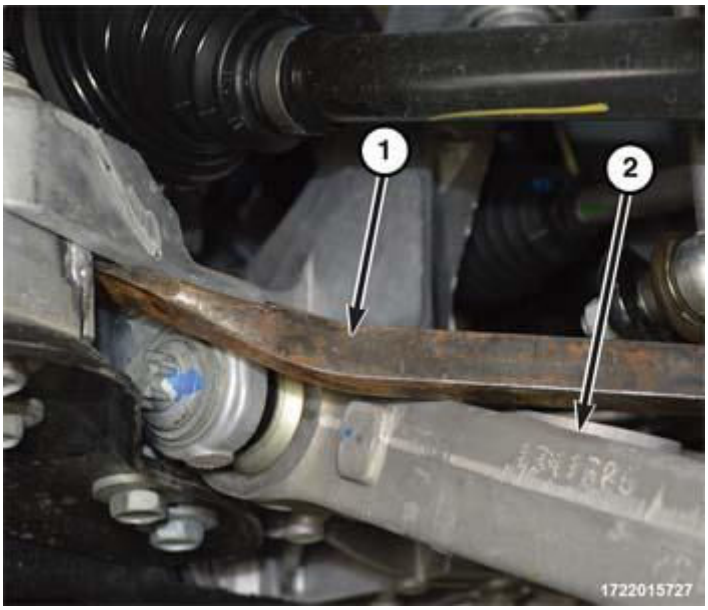

Fig. 36: Identifying Pry Bar & Control Arm
Courtesy of CHRYSLER GROUP, LLC

NOTE: **Make sure the ball joint boot does not get cut when separating the control arm from the knuckle.**

NOTE: **After separating the control arm from the knuckle, do not let it swing rapidly back up. This can tear the ball joint dust boot.**

11. Insert a pry bar (1) in the opening between the control arm front mounting bolt and the front fascia support beam.
12. Pry down on the control arm (2) until the ball joint stud is clear of the control arm, then push the knuckle assembly to the side when it is clear of the ball joint stud and slowly release the control arm.
13. Separate the axle from the knuckle and support the axle.

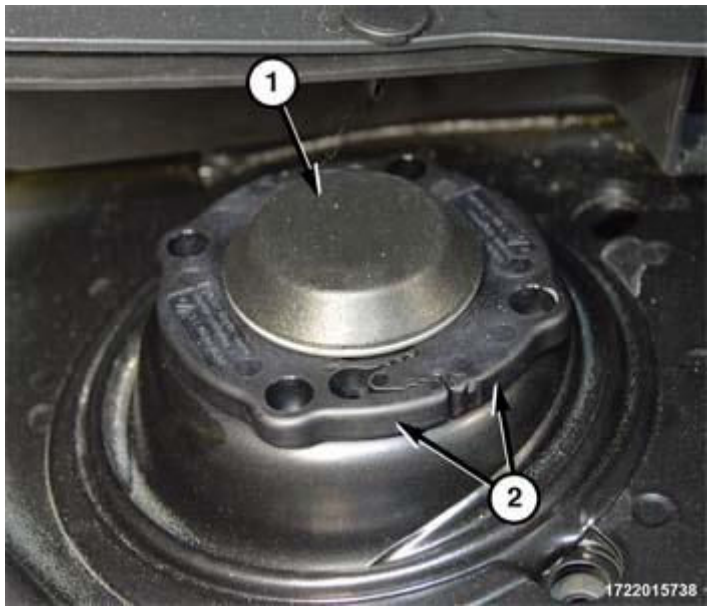

Fig. 37: Identifying Strut & Clips
Courtesy of CHRYSLER GROUP, LLC

14. Insert the ball joint back into the control arm to support the strut during upper strut clip removal.
15. Lower the hoist until a floor jack can be used to raise the strut (1) to relieve tension on the upper strut clip.
16. Using two screwdrivers, pry the two ends (2) of the strut clip in opposite directions to separate and break the clip. **Discard the clips after removal.**

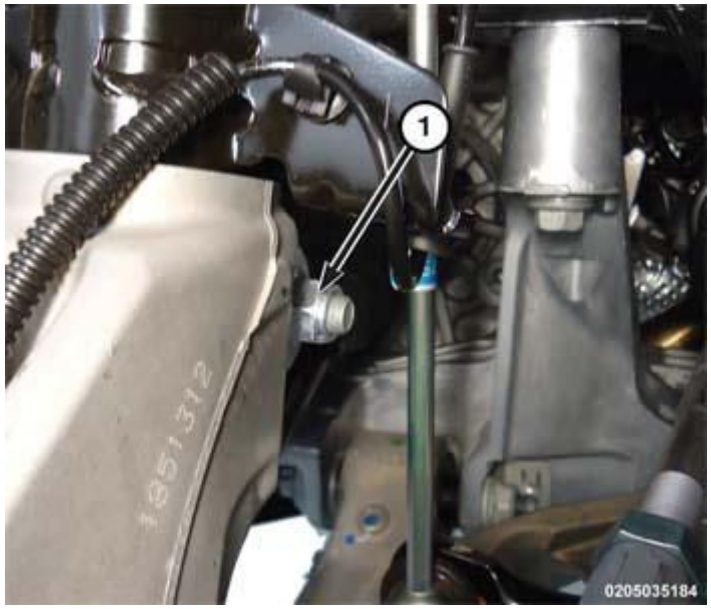

Fig. 38: Identifying Knuckle To Strut Pinch Bolt & Nut
Courtesy of CHRYSLER GROUP, LLC

17. Remove the knuckle to strut pinch bolt and nut (1). **Discard the nut and bolt.**

18. Remove the strut from the vehicle.
19. To disassemble the strut, refer to **STRUT, SUSPENSION, ASSEMBLY, DISASSEMBLY**.

DISASSEMBLY

DISASSEMBLY

Fig. 39: Identifying Pliers On Chrome Machined Surface Of Shock/Strut Rod
Courtesy of CHRYSLER GROUP, LLC

CAUTION: Do not use any type of pliers on the chrome machined surface of shock/strut rod to assist in the disassembly/assembly of shocks or struts. Use only tools designed to hold the shock/strut rod stationary when servicing shock or strut components.

NOTE: The strut assembly must be removed from the vehicle for it to be disassembled and assembled. Refer to STRUT, SUSPENSION, ASSEMBLY, REMOVAL.

For the disassembly and assembly of the strut assembly, use strut spring compressor, teamPSE tool 223-7400, or the equivalent, to compress the coil spring. Follow the manufacturer's instructions closely.

WARNING: Do not remove the strut rod nut before the coil spring is properly compressed. The coil spring is held under pressure. The coil spring must be compressed, removing spring tension from the upper mount and bearing, before the strut rod nut is removed.

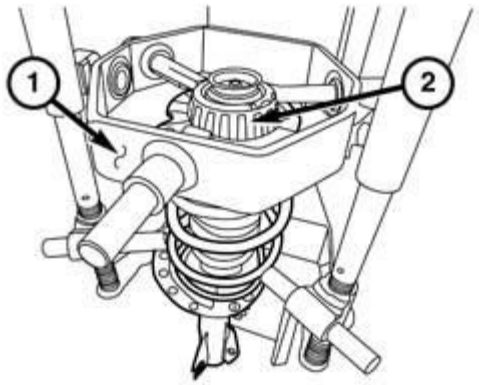

050870143

Fig. 40: Spring Compressor & Strut Assembly
Courtesy of CHRYSLER GROUP, LLC

1. If both struts are being serviced at the same time, mark both the coil spring and strut assembly according to which side of the vehicle the strut is being removed from.
2. Position the strut assembly (2) in the strut coil spring compressor (1) following the manufacturer's instructions and set the lower and upper hooks of the compressor on the coil spring. Position the strut clevis bracket straight outward, away from the compressor.
3. Compress the coil spring until all coil spring tension is removed from the upper mount and bearing.

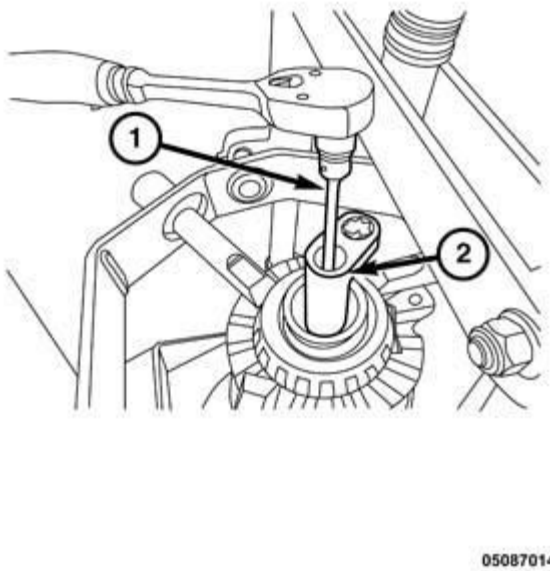

Fig. 41: Hex Head Wrench & Special Tool #9362
Courtesy of CHRYSLER GROUP, LLC

CAUTION: Never use impact or high speed tools to remove the strut rod nut. Damage to the strut internal bearings can occur.

4. Once the spring is sufficiently compressed, install (special tool #9362, Wrench, Strut Nut) (2), on the strut rod nut. Next, install a hex head wrench (1) into the strut rod internal hex. While holding the strut rod from turning, remove the nut using the strut nut wrench.
5. Remove the clamp (if installed) from the bottom of the coil spring and remove the strut (damper) out through the bottom of the coil spring.
6. Remove the lower spring isolator from the strut seat.
7. Remove the dust shield.
8. Remove the upper strut mount from the top of the bearing and upper spring seat.
9. Remove the upper spring seat and isolator from the top of the coil spring.
10. Release the tension from the coil spring by backing off the compressor drive completely. Push back the compressor hooks and remove the coil spring.
11. Inspect the strut assembly components for the following and replace as necessary:

- Inspect the strut (damper) for shaft binding over the full stroke of the shaft.
- Inspect the jounce bumper for cracks and signs of deterioration.
- Inspect the dust shield for cracks and tears.
- Check the upper mount for cracks and distortion and its retaining studs for any sign of damage.
- Check the bearing and upper spring seat for any binding.

- Inspect the upper and lower spring isolators for material deterioration and distortion.
- Inspect the coil spring for any sign of damage to the coating.

NOTE: For reassembly, refer to STRUT, SUSPENSION, ASSEMBLY, ASSEMBLY.

ASSEMBLY

ASSEMBLY

Fig. 42: Identifying Pliers On Chrome Machined Surface Of Shock/Strut Rod
Courtesy of CHRYSLER GROUP, LLC

CAUTION: Do not use any type of pliers on the chrome machined surface of shock/strut rod to assist in the disassembly/assembly of shocks or struts. Use only tools designed to hold the shock/strut rod stationary when servicing shock or strut components.

1. Place the coil spring in the spring compressor following the manufacturer's instructions. Before compressing the spring, rotate the spring so the end of the bottom coil is at approximately the 9 o'clock position as viewed above (or to where the spring was when removed from the compressor). This action will allow the strut (damper) clevis bracket to be positioned outward, away from the compressor once installed.
2. Slowly compress the coil spring until enough room is available for strut assembly reassembly.
3. Install the bearing and upper spring seat, and isolator on top of the coil spring.
4. Install the upper mount on top of the bearing and upper spring seat.
5. Install the lower spring isolator on the spring seat on the strut (damper).
6. Slide the jounce bumper and dust shield onto the strut rod.

7. Install the strut up through the bottom of the coil spring and upper spring seat, mount, and bearing until the lower spring seat contacts the lower end of the coil spring. Rotate the strut as necessary until the end of the bottom coil comes in contact with the stop built into the lower spring isolator.
8. While holding the strut in position, install the (special tool #10140-2, Receiver) nut on the end of the strut rod.

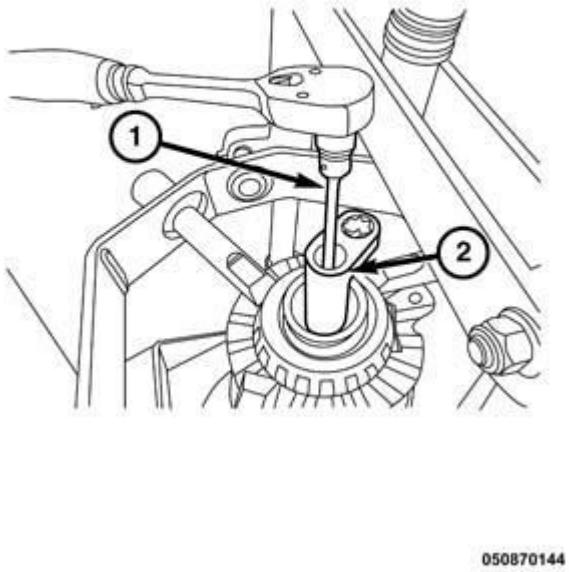

Fig. 43: Hex Head Wrench & Special Tool #9362
Courtesy of CHRYSLER GROUP, LLC

CAUTION: Never use impact or high speed tools to remove the strut rod nut. Damage to the strut internal bearings can occur.

9. Install (special tool #9362, Wrench, Strut Nut) (2) on the strut rod nut. Next, install an hex head wrench (1) on the end of the strut rod. While holding the strut rod from turning, tighten the strut rod nut to 68 N.m (50 ft. lbs.) using a torque wrench on the end of Special Tool (special tool #9362, Wrench, Strut Nut).

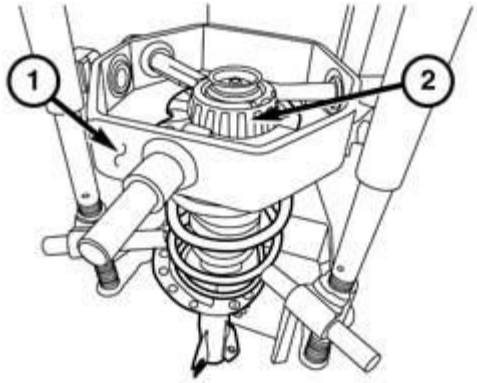

050870143

Fig. 44: Spring Compressor & Strut Assembly
Courtesy of CHRYSLER GROUP, LLC

10. Slowly release the tension from the coil spring by backing off the compressor drive completely. As the tension is relieved, make sure the upper mount and bearing align properly. Verify the upper mount does not bind when rotated.
11. Remove the strut assembly (2) from the spring compressor (1).
12. Install the strut assembly on the vehicle. Refer to **STRUT, SUSPENSION, ASSEMBLY, INSTALLATION**.

INSTALLATION

INSTALLATION

NOTE: Installation of the strut assembly is the same for both sides.

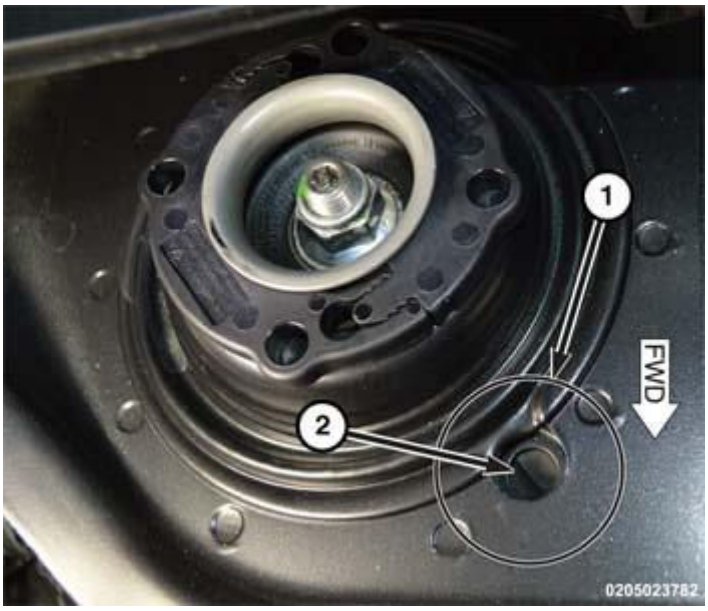

Fig. 45: Identifying Strut Mount Slot & Forward Hole
Courtesy of CHRYSLER GROUP, LLC

1. Install the strut into the vehicle. **When installing the strut, align the slot in the strut mount (2) with the forward hole (1) in the body of the strut tower.**

NOTE: The strut retaining clip must be fully closed and the serrations fully engaged after installation.

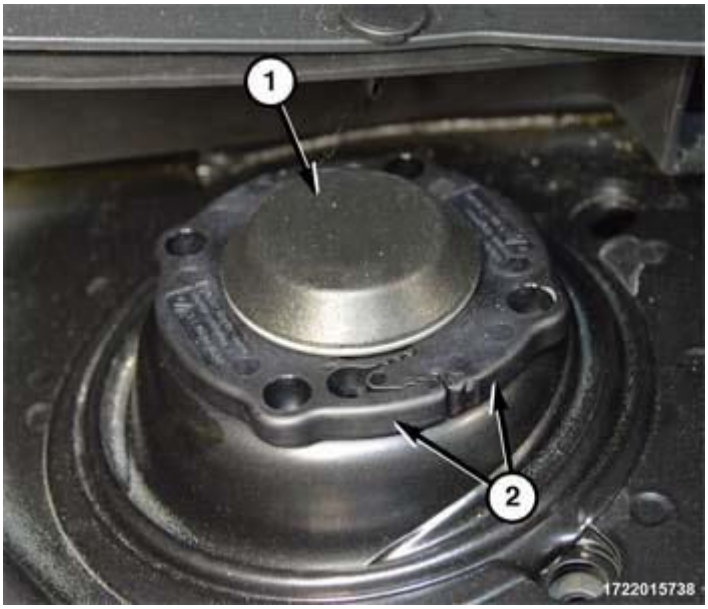

Fig. 46: Identifying Strut & Clips
Courtesy of CHRYSLER GROUP, LLC

2. Install the cover (1) and each half of the upper strut clip (2).

3. Press each side of the strut clip (2) toward each other to assemble the clip. Make sure that the clip is fully closed and the serrations fully engaged.
4. Install the strut into the top of the knuckle.

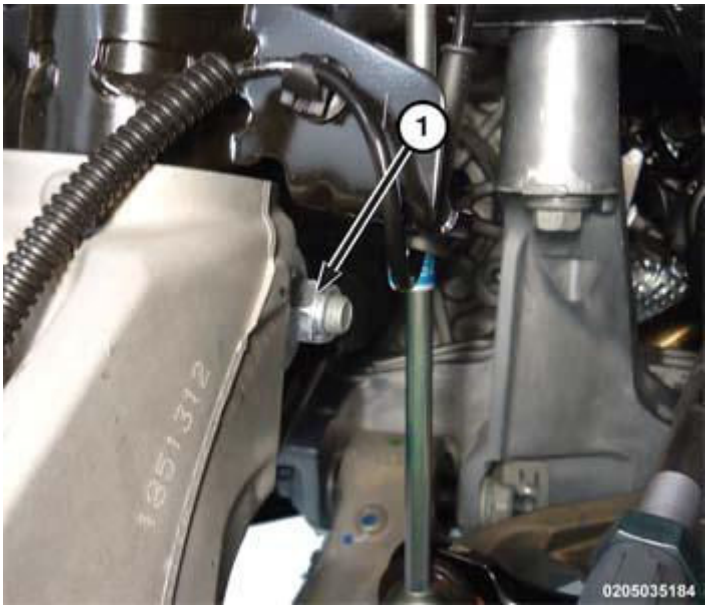

Fig. 47: Identifying Knuckle To Strut Pinch Bolt & Nut
Courtesy of CHRYSLER GROUP, LLC

5. Install the **NEW** knuckle to strut pinch bolt and nut (1). Tighten the Knuckle to Strut Nut to Specification.
6. Install the axle into the knuckle.

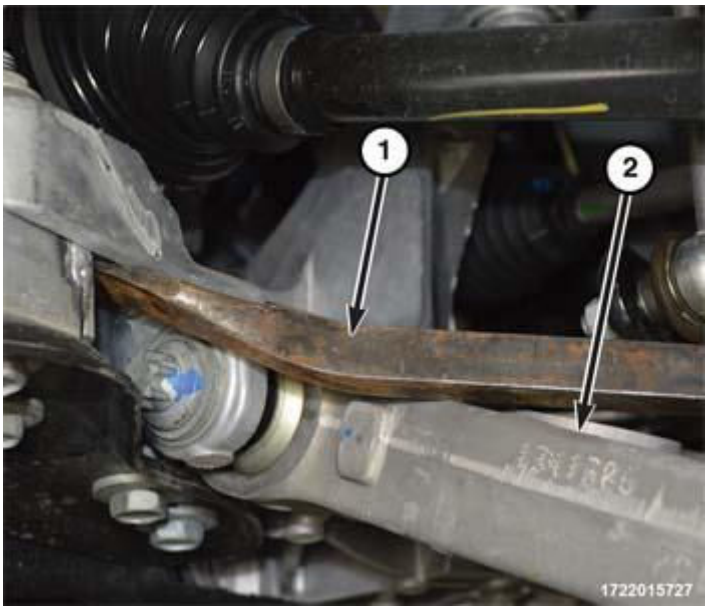

Fig. 48: Identifying Pry Bar & Control Arm

Courtesy of CHRYSLER GROUP, LLC

7. Insert a pry bar (1) in the opening between the control arm front mounting bolt and the front fascia support beam.
8. Pry down on the control arm (2) until the ball joint stud is clear of the control arm, align the stud with hole in control arm then slowly release the control arm.

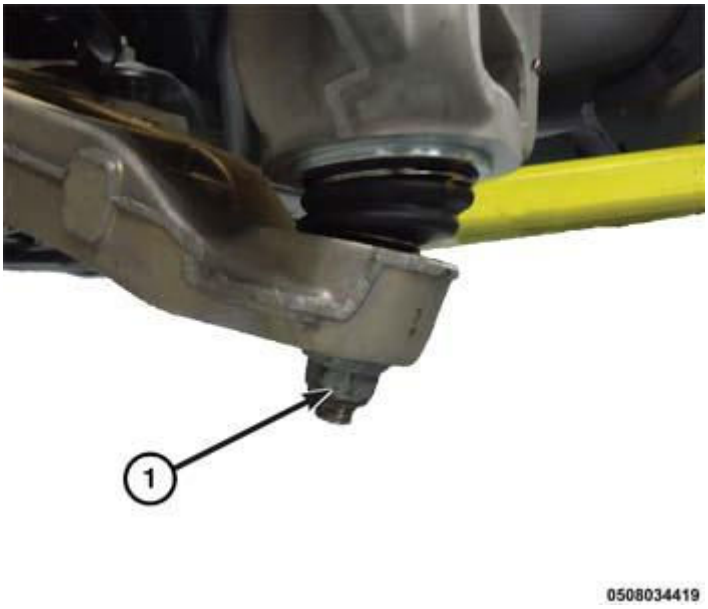

Fig. 49: Identifying Lower Ball Joint Nut
Courtesy of CHRYSLER GROUP, LLC

9. Install a **NEW** lower ball joint nut (1). Tighten the Lower Ball Joint Nut to Specification.

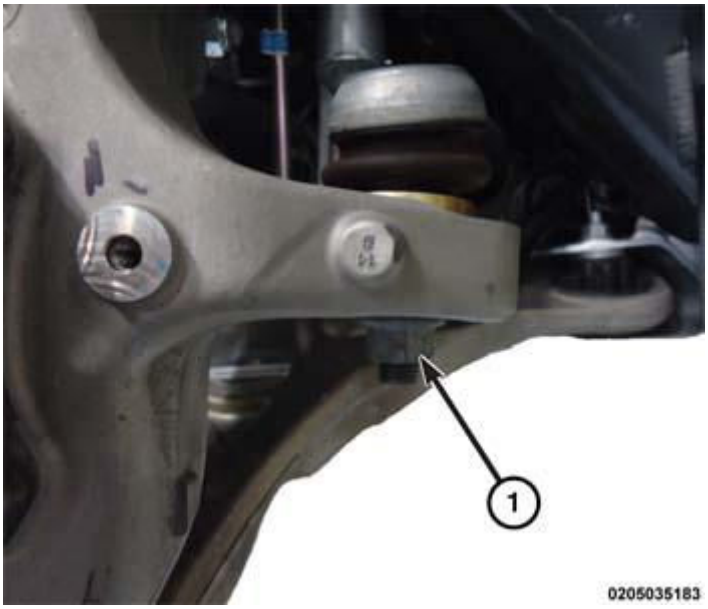

Fig. 50: Identifying Outer Tie Rod End

Courtesy of CHRYSLER GROUP, LLC

10. Install the outer tie rod end into the knuckle (1). Tighten the Outer Tie Rod End Nut to Specification. Refer to **TIE ROD, STEERING, INSTALLATION** .
11. Install the stabilizer bar link. Refer to **LINK, STABILIZER BAR, INSTALLATION**.

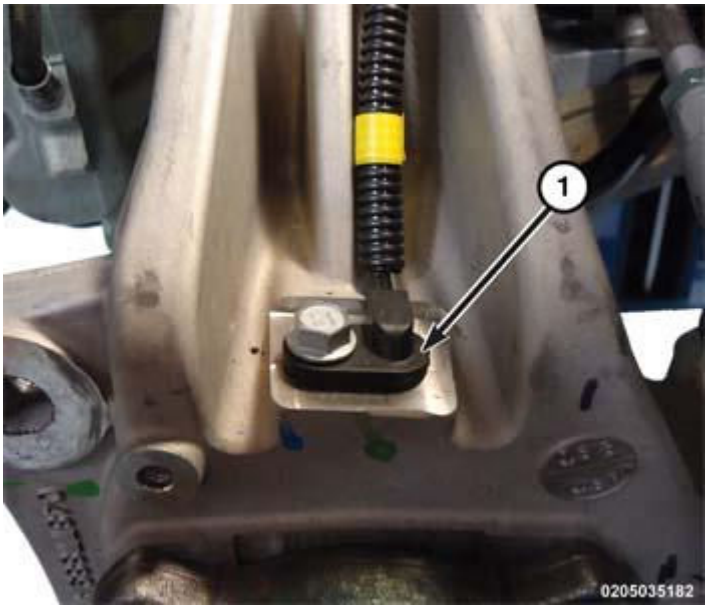

Fig. 51: Identifying Wheel Speed Sensor
Courtesy of CHRYSLER GROUP, LLC

12. Install the wheel speed sensor (1) and connect the harness to the strut. Tighten the Wheel Speed Sensor Bolt to Specification.
13. Install the front brake rotor and caliper assembly. Refer to **ROTOR, BRAKE, INSTALLATION** .
14. Install the **NEW** hub nut and while a helper applies the brakes, tighten the Hub Nut to Specification.

NOTE: Do not use air tools on staking tool while staking hub nut.

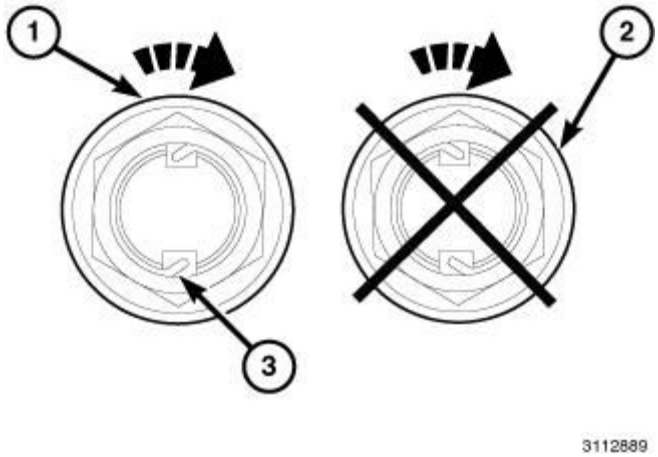

Fig. 52: Correct Hub Nut Staking
Courtesy of CHRYSLER GROUP, LLC

Correct Hub Nut Staking

15. Using (special tool #10287, Tool, Front Hub Staking)align the leading cutting edge of tool with the top left side channel on the axle. Tighten fastener on staking tool with hand tools until the threads bottom out completely.

NOTE: **The hub nut must be staked as shown (1) in Correct Hub Nut Staking. Both edges must be split and bent into the shape shown (3). The staking must be in the opposite direction from the forward rotation of the wheel.**

NOTE: **Do not stake the hub nut as shown in Correct Hub Nut Staking (2).**

16. Install wheel and tire assembly. Refer to **INSTALLATION** .
17. Perform alignment procedure. Refer to **WHEEL ALIGNMENT, STANDARD PROCEDURE**.

WHEEL ALIGNMENT

STANDARD PROCEDURE

CURB HEIGHT MEASUREMENT

The wheel alignment is to be checked and all alignment adjustments made with the vehicle at its required curb height specification.

Vehicle height is to be checked with the vehicle on a flat, level surface, preferably a vehicle alignment rack. The tires are to be inflated to the recommended pressure. All tires are to be the same size as standard equipment. **Vehicle height is checked with the fuel tank full of fuel, and no passenger or luggage compartment load.**

Vehicle height is not adjustable. If the measurement is not within specifications, inspect the vehicle for bent or weak suspension components. Compare the parts tag on the suspect coil spring(s) to the parts book and the vehicle sales code, checking for a match. Once removed from the vehicle, compare the coil spring height to a correct new or known good coil spring. The heights should vary if the suspect spring is weak.

NOTE: Do not apply the electric park brake (EPB) during ride height and alignment measurements.

NOTE: Prior to reading the curb height measurement, the front and rear of the vehicle must be jounced to settle the suspension. Induce jounce by pushing down on the center of the bumper (fascia), using care not to damage the vehicle, moving the vehicle up and down, gradually increasing the suspension travel with each stroke. Release the bumper at the bottom of each stroke, repeating this action several times. Perform this to both front and rear suspensions an equal amount of times.

Measure curb height as follows:

1. Jounce the vehicle. Refer to above note.

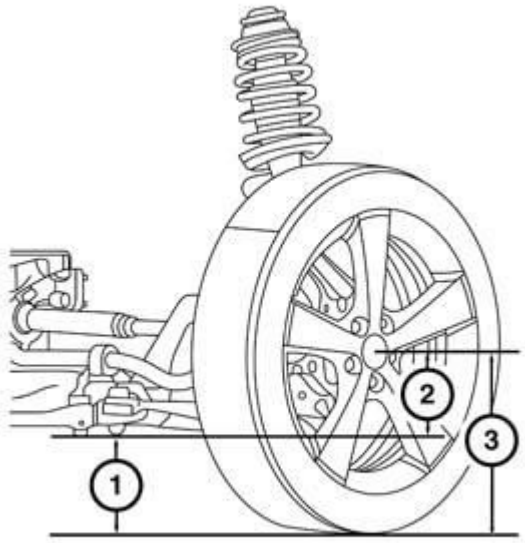

0207014766

Fig. 53: Identifying Distance Measurements
Courtesy of CHRYSLER GROUP, LLC

NOTE: On some vehicles it may be necessary to remove an engine belly pan in order to gain access to the cradle bolt.

2. FRONT - On each side of the vehicle, measure the distance (1) from the center of the front cradle bolt head to the floor or alignment rack/lift runway surface. It may be necessary to measure to the bottom of a straight edge placed from lift runway to runway to get an accurate measurement.
3. FRONT - Measure and record the distance (3) from the center of the spindle to the same surface or straight edge used to measure from the vertical pivot bolt.
4. Subtract the cradle bolt height (1) from the spindle height (3) to obtain the curb height value (2). Compare the curb height value (2) to specifications listed in the following CURB HEIGHT SPECIFICATIONS chart. **Maximum left-to-right differential is not to exceed 10 mm (0.39 in.).**

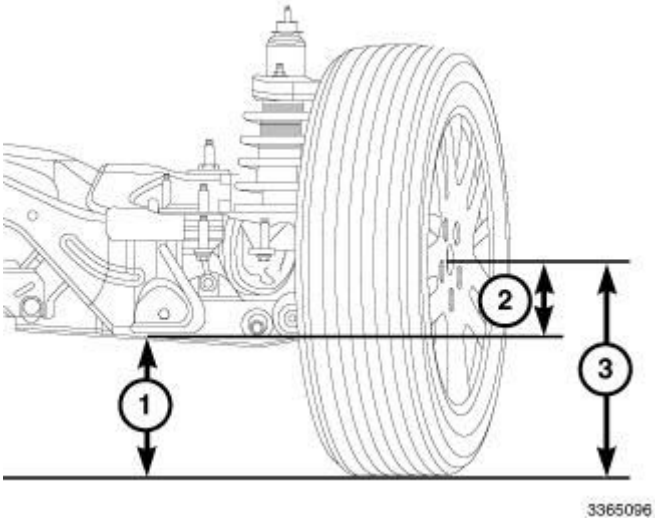

Fig. 54: Mounting Bolt Height, Spindle Height & Curb Height Value
Courtesy of CHRYSLER GROUP, LLC

5. REAR - On each side of the vehicle, measure and record the distance (1) from the bottom of the cradle toe link mount to the floor or alignment rack/lift runway surface. It may be necessary to measure to the bottom of a straight edge placed from lift runway to runway, to get an accurate measurement.
6. REAR - On each side of the vehicle, measure and record the distance (3) from the center of the rear spindle to the same surface that was used to measure the cradle toe link mount.
7. REAR - Subtract the cradle toe link mount height (1) from the spindle height (3) to obtain the curb height value (2). Compare the curb height value (2) to specifications listed in the following CURB HEIGHT SPECIFICATIONS chart. **Maximum left-to-right differential is not to exceed 10 mm (0.39 in.).**
8. If curb height is found to be out of specification and there is no sign of excessive body damage, curb height can be changed by replacing the applicable spring with a spring offering a different check load. Refer to **STRUT, SUSPENSION, ASSEMBLY, REMOVAL**.

CURB HEIGHT SPECIFICATIONS

		FWD	AWD	Lifted
Center of Spindle to Front Cradle Attachment Bolt	**Front**	130 mm (5.12 in.)	117 mm (4.61)	88 mm (3.46 in.)

Center of Spindle to Rear Cradle	**Rear**	106 mm (4.17 in.)	105 mm (4.13 in.)	92 mm (3.62 in.)
All curb height tolerances +/- 10 mm (0.39 in.) with full tank of fuel.				

WHEEL ALIGNMENT

PRE-WHEEL ALIGNMENT INSPECTION

Before any attempt is made to change or correct the wheel alignment, the following inspection and necessary corrections must be made to the vehicle to ensure proper alignment.

1. This vehicle is equipped with an Electronic Power Steering (EPS) system. Make sure there are no faults or problems with the EPS system before diagnosing an alignment issue.
2. Verify the fuel tank is full of fuel. If the fuel tank is not full, the reduction in weight will affect the curb height of the vehicle and the alignment specifications.
3. The passenger and luggage compartments of the vehicle should be free of any load that is not factory equipment.
4. Check the tires on the vehicle. The tires are to be inflated to the recommended air pressure. All tires must be the same size and in good condition with approximately the same tread wear.
5. Check the front tire and wheel assemblies for excessive radial runout.
6. Inspect all suspension component fasteners for looseness and proper torque.
7. Inspect the lower front ball joints and all steering linkage for looseness and any sign of wear or damage.
8. Inspect the rubber bushings on all the suspension components for signs of wear or deterioration. If any bushings show signs of wear or deterioration, they should be replaced prior to aligning the vehicle.
9. Check vehicle curb height to verify it is within specifications. Refer to **WHEEL ALIGNMENT, STANDARD PROCEDURE**.

WHEEL ALIGNMENT SETUP

1. Position the vehicle on an alignment rack.
2. Install all required alignment equipment on the vehicle, per the alignment equipment manufacturer's instructions. On this vehicle, a four-wheel alignment is recommended.

NOTE: **Prior to reading the vehicle's alignment readouts, the front and rear of vehicle should be jounced. Induce jounce (rear first, then front) by grasping the center of the bumper and jouncing each end of vehicle an equal number of times. The bumper should always be released when vehicle is at the bottom of the jounce cycle.**

3. Read the vehicle's current front and rear alignment settings. Compare the vehicle's current alignment settings to the vehicle specifications for camber, caster and toe-in. Refer to **WHEEL ALIGNMENT, SPECIFICATIONS**.

REAR CAMBER

CAUTION: Do not attempt to adjust the vehicle's wheel alignment by heating or bending any of the suspension components.

The rear toe link mounting location to the cradle is slotted with a cam bolt to adjust the camber.

FRONT CAMBER AND CASTER

Front camber and caster settings on this vehicle are determined at the time the vehicle is designed, by the location of the vehicle's suspension components. This is referred to as Net Build. The result is no required adjustment of camber and caster after the vehicle is built or when servicing the suspension components. Thus, when performing a wheel alignment, caster and camber are not normally considered adjustable angles but some adjustment can be made. Camber and caster should be checked to ensure they meet vehicle specifications. Refer to **WHEEL ALIGNMENT, SPECIFICATIONS**.

If individual front camber or caster is found not to meet alignment specifications, the only adjustment available is shifting the front crossmember.

CAUTION: Do not attempt to adjust the vehicle's wheel alignment by heating or bending any of the suspension components.

ADJUSTMENT BY SHIFTING CROSSMEMBER

CAUTION: Always use care when shifting crossmember to avoid damaging other components on the vehicle.

1. Loosen the bolts fastening the front crossmember to the frame just enough to allow movement of the crossmember. Refer to **CROSSMEMBER, FRONT SUSPENSION, REMOVAL** .

CAUTION: When shifting the front crossmember, keep in mind that the front and rear engine mounts are attached to the front crossmember and fore/aft crossmember and should be inspected following the crossmember shift to make sure they are properly aligned.

2. Shift front crossmember as necessary (See following charts) to bring camber or caster into specifications. When shifting crossmember, use care not to move other angles (camber or caster) that are within specifications, out of specifications.

FRONT CAMBER ADJUSTMENT BY SHIFTING CROSSMEMBER*	
Left Camber Below Specification	Move crossmember to the right
Left Camber Above Specification	Move crossmember to the left
Right Camber Below Specification	Move crossmember to the left
Right Camber Above Specification	Move crossmember to the right
Cross Camber Below Specification	Move crossmember to the right

Cross Camber Above Specification	Move crossmember to the left
* For every move to adjust one side of the vehicle, a countermove on the opposite side will occur.	

FRONT CASTER ADJUSTMENT BY SHIFTING CROSSMEMBER	
Left Caster Below Specification	Move left side of crossmember forward
Left Caster Above Specification	Move left side of crossmember rearward
Right Caster Below Specification	Move right side of crossmember forward
Right Caster Above Specification	Move right side of crossmember rearward
Cross Caster Below Specification	Move left side of crossmember forward and right side rearward
Cross Caster Above Specification	Move left side of crossmember rearward and right side forward

3. Tighten all previously loosened fasteners (bolts) securing the crossmember to the vehicle to specifications. Refer to **CROSSMEMBER, FRONT SUSPENSION, INSTALLATION** .
4. Jounce the rear, then front of the vehicle an equal amount of times.
5. Measure camber and caster. If camber and caster are within specifications, proceed to TOE. If camber and/or caster cannot be brought into specifications, check for bent or damaged components.

TOE

NOTE: When setting toe, make sure to set rear toe to the preferred specifications before setting front toe to the preferred specifications

1. Center the steering wheel and lock it in place using a steering wheel clamp.

REAR TOE

NOTE: Perform the following at each rear wheel as necessary.

1. While holding the cam bolt head stationary, loosen the spring link mounting cam bolt nut.
2. Rotate the cam bolt head left or right until the rear wheel toe for that rear wheel is set to the preferred specification. Refer to **WHEEL ALIGNMENT, SPECIFICATIONS**.
3. While holding the cam bolt head stationary, tighten the spring link mounting cam bolt nut to specifications. Refer to **SPECIFICATIONS** .

FRONT TOE

NOTE: Perform the following at each front wheel as necessary.

CAUTION: Do not twist the inner tie rod-to-steering gear boot (bellows) while turning the inner tie rod during front toe adjustment. It may be necessary to remove the clamp where the boot meets the inner tie rod.

1. Loosen the tie rod adjusting jam nut. Grasp the inner tie rod and rotate it one way or the other until the front wheel toe is set to the preferred specification. Refer to **WHEEL ALIGNMENT, SPECIFICATIONS**.
2. Tighten the tie rod adjusting jam nut to specifications. Refer to **FRONT, SPECIFICATIONS**.
3. Make sure the inner tie rod-to-steering gear boot is not twisted. If removed, reinstall the clamp where the boot meets the inner tie rod.
4. Remove the steering wheel clamp.
5. Remove the alignment equipment.
6. Perform the Clear Steering Pull Compensation Procedure. Refer to **STANDARD PROCEDURE** .
7. Road test the vehicle to verify the steering wheel is straight and the vehicle does not pull or wander.

SPECIFICATIONS

SPECIFICATIONS

NOTE: All specifications are given in degrees.

NOTE: All wheel alignments are to be set with the vehicle at curb height. Refer to WHEEL ALIGNMENT, STANDARD PROCEDURE.

FRONT WHEEL ALIGNMENT SPECIFICATIONS

Front Wheel Alignment Specifications					
	Total Toe**	**Caster***	**Cross Caster***	**Camber***	**Cross Camber***
FWD	0.10° +/- 0.15°	3.51° +/- 0.40°	0.00° +/- 0.50°	-0.55 °+/- 0.40°	0.00° +/- 0.50°
AWD	0.10° +/- 0.15°	3.83° +/- 0.40°	0.00° +/- 0.50°	-0.55 °+/- 0.40°	0.00° +/- 0.50°
LIFTED	0.10° +/- 0.15°	4.13° +/- 0.40°	0.00° +/- 0.50°	-0.45° +/- 0.40°	0.00° +/- 0.50°
Notes:					
* For reference only. These are nonadjustable angles.					
** TOTAL TOE is the sum of both the left and right wheel toe settings. TOTAL TOE should be equally split between each wheel on the same axle to ensure the steering wheel is centered after setting toe.					
Positive toe (+) is toe-in and negative toe (?) is Toe-out.					

REAR WHEEL ALIGNMENT SPECIFICATIONS

Rear Wheel Alignment Specifications					
	Toe	**Total Toe****	**Thrust Angle**	**Camber**	**Cross Camber**
FWD	0.00° +/- 0.10°	0.00° +/- 0.15°	0.00° +/- 0.10°	-0.99° +/- 0.40°	0.00° +/- 0.40°
AWD	0.00° +/- 0.10°	0.00° +/- 0.15°	0.00° +/- 0.10°	-0.99° +/- 0.40°	0.00° +/- 0.40°
LIFTED	0.00° +/- 0.10°	0.00° +/- 0.15°	0.00° +/- 0.10°	-1.15° +/- 0.40°	0.00° +/- 0.40°
Notes:					

* For reference only. These are nonadjustable angles.
** TOTAL TOE is the sum of both the left and right wheel toe settings. TOTAL TOE should be equally split between each wheel on the same axle to ensure the steering wheel is centered after setting toe.
Positive toe (+) is toe-in and negative toe (?) is Toe-out.

2014 SUSPENSION

JEEP WHEEL ALIGNMENT SPECIFICATIONS

WHEEL ALIGNMENT SPECIFICATIONS

CHEROKEE

CHEROKEE (KL) AWD

Measurement	Minimum	Preferred	Maximum
Left Front Caster (°)	3.43	3.83	4.23
Right Front Caster (°)	3.43	3.83	4.23
Left Front Camber (°)	-0.95	-0.55	-0.15
Right Front Camber (°)	-0.95	-0.55	-0.15
Front Toe (°)	-0.05	0.1	0.25
Left SAI (°)	0	0	0
Right SAI (°)	0	0	0
Left Rear Camber (°)	-1.39	-0.99	-0.59
Right Rear Camber (°)	-1.39	-0.99	-0.59
Rear Toe (°)	-0.15	0	0.15
Thrust Angle	0.1	0	0
Left Toe Out, Inward (°)	0	0	0
Right Toe Out, Inward (°)	0	0	0
Left Toe Out, Outward (°)	0	0	0
Right Toe Out, Outward (°)	0	0	0
Left Max Turn, Inward (°)	0	0	0
Right Max Turn, Inward (°)	0	0	0
Left Max Turn, Outward (°)	0	0	0
Right Max Turn, Outward (°)	0	-	-

CHEROKEE (KL) FWD

Measurement	Minimum	Preferred	Maximum
Left Front Caster (°)	3.11	3.51	3.91
Right Front Caster (°)	3.11	3.51	3.91
Left Front Camber (°)	-0.95	-0.55	-0.15
Right Front Camber (°)	-0.95	-0.55	-0.15
Front Toe (°)	-0.05	0.1	0.25
Left SAI (°)	0	0	0
Right SAI (°)	0	0	0
Left Rear Camber (°)	-1.39	-0.99	-0.59
Right Rear Camber (°)	-1.39	-0.99	-0.59

Rear Toe (°)	-0.15	0	0.15
Thrust Angle	0.1	0	0
Left Toe Out, Inward (°)	0	0	0
Right Toe Out, Inward (°)	0	0	0
Left Toe Out, Outward (°)	0	0	0
Right Toe Out, Outward (°)	0	0	0
Left Max Turn, Inward (°)	0	0	0
Right Max Turn, Inward (°)	0	0	0
Left Max Turn, Outward (°)	0	0	0
Right Max Turn, Outward (°)	0	-	-

CHEROKEE (KL) Lifted

Measurement	Minimum	Preferred	Maximum
Left Front Caster (°)	3.73	4.13	4.53
Right Front Caster (°)	3.73	4.13	4.53
Left Front Camber (°)	-0.85	-0.45	-0.05
Right Front Camber (°)	-0.85	-0.45	-0.05
Front Toe (°)	-0.05	0.1	0.25
Left SAI (°)	0	0	0
Right SAI (°)	0	0	0
Left Rear Camber (°)	-1.55	-1.15	-0.75
Right Rear Camber (°)	-1.55	-1.15	-0.75
Rear Toe (°)	-0.15	0	0.15
Thrust Angle	0.1	0	0
Left Toe Out, Inward (°)	0	0	0
Right Toe Out, Inward (°)	0	0	0
Left Toe Out, Outward (°)	0	0	0
Right Toe Out, Outward (°)	0	0	0
Left Max Turn, Inward (°)	0	0	0
Right Max Turn, Inward (°)	0	0	0
Left Max Turn, Outward (°)	0	0	0
Right Max Turn, Outward (°)	0	-	-

COMPASS

COMPASS Gas Engine 4X2

Measurement	Minimum	Preferred	Maximum
Left Front Caster (°)	2	3	4
Right Front Caster (°)	1.7	2.7	3.7
Left Front Camber (°)	-1.19	-0.64	-0.09
Right Front Camber (°)	-1.19	-0.64	-0.09

Front Toe (°)	0	0.2	0.4
Left SAI (°)	0	0	0
Right SAI (°)	0	0	0
Left Rear Camber (°)	-1.26	-0.61	0.04
Right Rear Camber (°)	-1.26	-0.61	0.04
Rear Toe (°)	-0.05	0.2	0.45
Thrust Angle	0.15	0	0
Left Toe Out, Inward (°)	0	0	0
Right Toe Out, Inward (°)	0	0	0
Left Toe Out, Outward (°)	0	0	0
Right Toe Out, Outward (°)	0	0	0
Left Max Turn, Inward (°)	0	0	0
Right Max Turn, Inward (°)	0	0	0
Left Max Turn, Outward (°)	0	0	0
Right Max Turn, Outward (°)	0	-	-

COMPASS Gas Engine 4X4 With Off-road Group (AWL)

Measurement	Minimum	Preferred	Maximum
Left Front Caster (°)	2	3	4
Right Front Caster (°)	1.7	2.7	3.7
Left Front Camber (°)	-1.26	-0.71	-0.16
Right Front Camber (°)	-1.26	-0.71	-0.16
Front Toe (°)	0	0.2	0.4
Left SAI (°)	0	0	0
Right SAI (°)	0	0	0
Left Rear Camber (°)	-1.45	-0.8	-0.15
Right Rear Camber (°)	-1.45	-0.8	-0.15
Rear Toe (°)	-0.05	0.2	0.45
Thrust Angle	0.15	0	0
Left Toe Out, Inward (°)	0	0	0
Right Toe Out, Inward (°)	0	0	0
Left Toe Out, Outward (°)	0	0	0
Right Toe Out, Outward (°)	0	0	0
Left Max Turn, Inward (°)	0	0	0
Right Max Turn, Inward (°)	0	0	0
Left Max Turn, Outward (°)	0	0	0
Right Max Turn, Outward (°)	0	-	-

COMPASS Gas Engine 4X4 Without Off-road Group (AWL)

Measurement	Minimum	Preferred	Maximum
Left Front Caster (°)	2	3	4

Right Front Caster (°)	1.7	2.7	3.7
Left Front Camber (°)	-1.19	-0.64	-0.09
Right Front Camber (°)	-1.19	-0.64	-0.09
Front Toe (°)	0	0.2	0.4
Left SAI (°)	0	0	0
Right SAI (°)	0	0	0
Left Rear Camber (°)	-1.26	-0.61	0.04
Right Rear Camber (°)	-1.26	-0.61	0.04
Rear Toe (°)	-0.05	0.2	0.45
Thrust Angle	0.15	0	0
Left Toe Out, Inward (°)	0	0	0
Right Toe Out, Inward (°)	0	0	0
Left Toe Out, Outward (°)	0	0	0
Right Toe Out, Outward (°)	0	0	0
Left Max Turn, Inward (°)	0	0	0
Right Max Turn, Inward (°)	0	0	0
Left Max Turn, Outward (°)	0	0	0
Right Max Turn, Outward (°)	0	-	-

COMPASS Gas Engine Export

Measurement	Minimum	Preferred	Maximum
Left Front Caster (°)	2	3	4
Right Front Caster (°)	1.7	2.7	3.7
Left Front Camber (°)	-1.19	-0.64	-0.09
Right Front Camber (°)	-1.19	-0.64	-0.09
Front Toe (°)	0	0.2	0.4
Left SAI (°)	0	0	0
Right SAI (°)	0	0	0
Left Rear Camber (°)	-1.26	-0.61	0.04
Right Rear Camber (°)	-1.26	-0.61	0.04
Rear Toe (°)	-0.05	0.2	0.45
Thrust Angle	0.15	0	0
Left Toe Out, Inward (°)	0	0	0
Right Toe Out, Inward (°)	0	0	0
Left Toe Out, Outward (°)	0	0	0
Right Toe Out, Outward (°)	0	0	0
Left Max Turn, Inward (°)	0	0	0
Right Max Turn, Inward (°)	0	0	0
Left Max Turn, Outward (°)	0	0	0
Right Max Turn, Outward (°)	0	-	-

GRAND CHEROKEE

GRAND CHEROKEE Aero Suspension

Measurement	Minimum	Preferred	Maximum
Left Front Caster (°)	4.4	5	5.6
Right Front Caster (°)	4.4	5	5.6
Left Front Camber (°)	-1.07	-0.47	0.13
Right Front Camber (°)	-1.57	-0.97	-0.37
Front Toe (°)	0.07	0.2	0.33
Left SAI (°)	0	0	0
Right SAI (°)	0	0	0
Left Rear Camber (°)	-1.36	-0.81	-0.26
Right Rear Camber (°)	-1.36	-0.81	-0.26
Rear Toe (°)	-0.1	0.2	0.5
Thrust Angle	0.15	0	0
Left Toe Out, Inward (°)	0	0	0
Right Toe Out, Inward (°)	0	0	0
Left Toe Out, Outward (°)	0	0	0
Right Toe Out, Outward (°)	0	0	0
Left Max Turn, Inward (°)	0	0	0
Right Max Turn, Inward (°)	0	0	0
Left Max Turn, Outward (°)	0	0	0
Right Max Turn, Outward (°)	0	-	-

GRAND CHEROKEE LHD With Air suspension

Measurement	Minimum	Preferred	Maximum
Left Front Caster (°)	4.9	5.5	6.1
Right Front Caster (°)	4.9	5.5	6.1
Left Front Camber (°)	-1.24	-0.64	-0.04
Right Front Camber (°)	-1.74	-1.14	-0.54
Front Toe (°)	0.07	0.2	0.33
Left SAI (°)	0	0	0
Right SAI (°)	0	0	0
Left Rear Camber (°)	-1.69	-1.14	-0.59
Right Rear Camber (°)	-1.69	-1.14	-0.59
Rear Toe (°)	0.1	0.4	0.7
Thrust Angle	0.15	0	0
Left Toe Out, Inward (°)	0	0	0
Right Toe Out, Inward (°)	0	0	0
Left Toe Out, Outward (°)	0	0	0
Right Toe Out, Outward (°)	0	0	0

Left Max Turn, Inward (°)	0	0	0
Right Max Turn, Inward (°)	0	0	0
Left Max Turn, Outward (°)	0	0	0
Right Max Turn, Outward (°)	0	-	-

GRAND CHEROKEE LHD With Standard Suspension

Measurement	Minimum	Preferred	Maximum
Left Front Caster (°)	4.4	5	5.6
Right Front Caster (°)	4.4	5	5.6
Left Front Camber (°)	-0.72	-0.12	0.48
Right Front Camber (°)	-1.22	-0.62	-0.02
Front Toe (°)	0.07	0.2	0.33
Left SAI (°)	0	0	0
Right SAI (°)	0	0	0
Left Rear Camber (°)	-1.09	-0.54	0.01
Right Rear Camber (°)	-1.09	-0.54	0.01
Rear Toe (°)	-0.1	0.2	0.5
Thrust Angle	0.15	0	0
Left Toe Out, Inward (°)	0	0	0
Right Toe Out, Inward (°)	0	0	0
Left Toe Out, Outward (°)	0	0	0
Right Toe Out, Outward (°)	0	0	0
Left Max Turn, Inward (°)	0	0	0
Right Max Turn, Inward (°)	0	0	0
Left Max Turn, Outward (°)	0	0	0
Right Max Turn, Outward (°)	0	-	-

GRAND CHEROKEE RHD With Air suspension

Measurement	Minimum	Preferred	Maximum
Left Front Caster (°)	4.9	5.5	6.1
Right Front Caster (°)	4.9	5.5	6.1
Left Front Camber (°)	-1.49	-0.89	-0.29
Right Front Camber (°)	-1.49	-0.89	-0.29
Front Toe (°)	0.07	0.2	0.33
Left SAI (°)	0	0	0
Right SAI (°)	0	0	0
Left Rear Camber (°)	-1.69	-1.14	-0.59
Right Rear Camber (°)	-1.69	-1.14	-0.59
Rear Toe (°)	0.1	0.4	0.7
Thrust Angle	0.15	0	0
Left Toe Out, Inward (°)	0	0	0

Right Toe Out, Inward (°)	0	0	0
Left Toe Out, Outward (°)	0	0	0
Right Toe Out, Outward (°)	0	0	0
Left Max Turn, Inward (°)	0	0	0
Right Max Turn, Inward (°)	0	0	0
Left Max Turn, Outward (°)	0	0	0
Right Max Turn, Outward (°)	0	-	-

GRAND CHEROKEE RHD With Standard Suspension

Measurement	Minimum	Preferred	Maximum
Left Front Caster (°)	4.4	5	5.6
Right Front Caster (°)	4.4	5	5.6
Left Front Camber (°)	-0.97	-0.37	0.23
Right Front Camber (°)	-0.97	-0.37	0.23
Front Toe (°)	0.07	0.2	0.33
Left SAI (°)	0	0	0
Right SAI (°)	0	0	0
Left Rear Camber (°)	-1.09	-0.54	0.01
Right Rear Camber (°)	-1.09	-0.54	0.01
Rear Toe (°)	-0.1	0.2	0.5
Thrust Angle	0.15	0	0
Left Toe Out, Inward (°)	0	0	0
Right Toe Out, Inward (°)	0	0	0
Left Toe Out, Outward (°)	0	0	0
Right Toe Out, Outward (°)	0	0	0
Left Max Turn, Inward (°)	0	0	0
Right Max Turn, Inward (°)	0	0	0
Left Max Turn, Outward (°)	0	0	0
Right Max Turn, Outward (°)	0	-	-

GRAND CHEROKEE SRT-8

Measurement	Minimum	Preferred	Maximum
Left Front Caster (°)	4.65	5.2	5.75
Right Front Caster (°)	4.65	5.2	5.75
Left Front Camber (°)	-2.15	-1.6	-1.05
Right Front Camber (°)	-2.15	-1.6	-1.05
Front Toe (°)	0.07	0.2	0.33
Left SAI (°)	0	0	0
Right SAI (°)	0	0	0
Left Rear Camber (°)	-1.8	-1.3	-0.8
Right Rear Camber (°)	-1.8	-1.3	-0.8

Rear Toe (°)	0.05	0.25	0.45
Thrust Angle	0.1	0	0
Left Toe Out, Inward (°)	0	0	0
Right Toe Out, Inward (°)	0	0	0
Left Toe Out, Outward (°)	0	0	0
Right Toe Out, Outward (°)	0	0	0
Left Max Turn, Inward (°)	0	0	0
Right Max Turn, Inward (°)	0	0	0
Left Max Turn, Outward (°)	0	0	0
Right Max Turn, Outward (°)	0	-	-

PATRIOT

PATRIOT Diesel Engine 4X2

Measurement	Minimum	Preferred	Maximum
Left Front Caster (°)	2	3	4
Right Front Caster (°)	1.7	2.7	3.7
Left Front Camber (°)	-1.19	-0.64	-0.09
Right Front Camber (°)	-1.19	-0.64	-0.09
Front Toe (°)	0	0.2	0.4
Left SAI (°)	0	0	0
Right SAI (°)	0	0	0
Left Rear Camber (°)	-1.26	-0.61	0.04
Right Rear Camber (°)	-1.26	-0.61	0.04
Rear Toe (°)	-0.05	0.2	0.45
Thrust Angle	0.15	0	0
Left Toe Out, Inward (°)	0	0	0
Right Toe Out, Inward (°)	0	0	0
Left Toe Out, Outward (°)	0	0	0
Right Toe Out, Outward (°)	0	0	0
Left Max Turn, Inward (°)	0	0	0
Right Max Turn, Inward (°)	0	0	0
Left Max Turn, Outward (°)	0	0	0
Right Max Turn, Outward (°)	0	-	-

PATRIOT Diesel Engine 4X4

Measurement	Minimum	Preferred	Maximum
Left Front Caster (°)	2	3	4
Right Front Caster (°)	1.7	2.7	3.7
Left Front Camber (°)	-1.42	-0.87	-0.32
Right Front Camber (°)	-1.42	-0.87	-0.32

Front Toe (°)	0	0.2	0.4
Left SAI (°)	0	0	0
Right SAI (°)	0	0	0
Left Rear Camber (°)	-1.57	-0.92	-0.27
Right Rear Camber (°)	-1.57	-0.92	-0.27
Rear Toe (°)	-0.05	0.2	0.45
Thrust Angle	0.15	0	0
Left Toe Out, Inward (°)	0	0	0
Right Toe Out, Inward (°)	0	0	0
Left Toe Out, Outward (°)	0	0	0
Right Toe Out, Outward (°)	0	0	0
Left Max Turn, Inward (°)	0	0	0
Right Max Turn, Inward (°)	0	0	0
Left Max Turn, Outward (°)	0	0	0
Right Max Turn, Outward (°)	0	-	-

PATRIOT Gas Engine 4X2

Measurement	Minimum	Preferred	Maximum
Left Front Caster (°)	2	3	4
Right Front Caster (°)	1.7	2.7	3.7
Left Front Camber (°)	-1.19	-0.64	-0.09
Right Front Camber (°)	-1.19	-0.64	-0.09
Front Toe (°)	0	0.2	0.4
Left SAI (°)	0	0	0
Right SAI (°)	0	0	0
Left Rear Camber (°)	-1.26	-0.61	0.04
Right Rear Camber (°)	-1.26	-0.61	0.04
Rear Toe (°)	-0.05	0.2	0.45
Thrust Angle	0.15	0	0
Left Toe Out, Inward (°)	0	0	0
Right Toe Out, Inward (°)	0	0	0
Left Toe Out, Outward (°)	0	0	0
Right Toe Out, Outward (°)	0	0	0
Left Max Turn, Inward (°)	0	0	0
Right Max Turn, Inward (°)	0	0	0
Left Max Turn, Outward (°)	0	0	0
Right Max Turn, Outward (°)	0	-	-

PATRIOT Gas Engine 4X4 With Off-road Group (AWL)

Measurement	Minimum	Preferred	Maximum
Left Front Caster (°)	2	3	4

Right Front Caster (°)	1.7	2.7	3.7
Left Front Camber (°)	-1.26	-0.71	-0.16
Right Front Camber (°)	-1.26	-0.71	-0.16
Front Toe (°)	0	0.2	0.4
Left SAI (°)	0	0	0
Right SAI (°)	0	0	0
Left Rear Camber (°)	-1.45	-0.8	-0.15
Right Rear Camber (°)	-1.45	-0.8	-0.15
Rear Toe (°)	-0.05	0.2	0.45
Thrust Angle	0.15	0	0
Left Toe Out, Inward (°)	0	0	0
Right Toe Out, Inward (°)	0	0	0
Left Toe Out, Outward (°)	0	0	0
Right Toe Out, Outward (°)	0	0	0
Left Max Turn, Inward (°)	0	0	0
Right Max Turn, Inward (°)	0	0	0
Left Max Turn, Outward (°)	0	0	0
Right Max Turn, Outward (°)	0	-	-

PATRIOT Gas Engine 4X4 Without Off-road Group (AWL)

Measurement	Minimum	Preferred	Maximum
Left Front Caster (°)	2	3	4
Right Front Caster (°)	1.7	2.7	3.7
Left Front Camber (°)	-1.19	-0.64	-0.09
Right Front Camber (°)	-1.19	-0.64	-0.09
Front Toe (°)	0	0.2	0.4
Left SAI (°)	0	0	0
Right SAI (°)	0	0	0
Left Rear Camber (°)	-1.26	-0.61	0.04
Right Rear Camber (°)	-1.26	-0.61	0.04
Rear Toe (°)	-0.05	0.2	0.45
Thrust Angle	0.15	0	0
Left Toe Out, Inward (°)	0	0	0
Right Toe Out, Inward (°)	0	0	0
Left Toe Out, Outward (°)	0	0	0
Right Toe Out, Outward (°)	0	0	0
Left Max Turn, Inward (°)	0	0	0
Right Max Turn, Inward (°)	0	0	0
Left Max Turn, Outward (°)	0	0	0
Right Max Turn, Outward (°)	0	-	-

PATRIOT Gas Engine Export

Measurement	Minimum	Preferred	Maximum
Left Front Caster (°)	2	3	4
Right Front Caster (°)	1.7	2.7	3.7
Left Front Camber (°)	-1.19	-0.64	-0.09
Right Front Camber (°)	-1.19	-0.64	-0.09
Front Toe (°)	0	0.2	0.4
Left SAI (°)	0	0	0
Right SAI (°)	0	0	0
Left Rear Camber (°)	-1.26	-0.61	0.04
Right Rear Camber (°)	-1.26	-0.61	0.04
Rear Toe (°)	-0.05	0.2	0.45
Thrust Angle	0.15	0	0
Left Toe Out, Inward (°)	0	0	0
Right Toe Out, Inward (°)	0	0	0
Left Toe Out, Outward (°)	0	0	0
Right Toe Out, Outward (°)	0	0	0
Left Max Turn, Inward (°)	0	0	0
Right Max Turn, Inward (°)	0	0	0
Left Max Turn, Outward (°)	0	0	0
Right Max Turn, Outward (°)	0	-	-

WRANGLER

WRANGLER (CKD) 2.8L 4 CYL TURBO DIESEL

Measurement	Minimum	Preferred	Maximum
Left Front Caster (°)	1.6	2.6	3.6
Right Front Caster (°)	1.6	2.6	3.6
Left Front Camber (°)	-0.62	-0.25	0.12
Right Front Camber (°)	-0.62	-0.25	0.12
Front Toe (°)	0.17	0.2	0.23
Left SAI (°)	0	0	0
Right SAI (°)	0	0	0
Left Rear Camber (°)	-0.45	-0.25	0.25
Right Rear Camber (°)	-0.45	-0.25	0.25
Rear Toe (°)	-0.5	0.3	0.5
Thrust Angle	0.25	0	0
Left Toe Out, Inward (°)	0	0	0
Right Toe Out, Inward (°)	0	0	0
Left Toe Out, Outward (°)	0	0	0
Right Toe Out, Outward (°)	0	0	0

Left Max Turn, Inward (°)	0	0	0
Right Max Turn, Inward (°)	0	0	0
Left Max Turn, Outward (°)	0	0	0
Right Max Turn, Outward (°)	0	-	-

WRANGLER (JK) All Models

Measurement	Minimum	Preferred	Maximum
Left Front Caster (°)	3.2	4.2	5.2
Right Front Caster (°)	3.4	4.4	5.4
Left Front Camber (°)	-0.62	-0.25	0.12
Right Front Camber (°)	-0.62	-0.25	0.12
Front Toe (°)	0.17	0.2	0.23
Left SAI (°)	0	0	0
Right SAI (°)	0	0	0
Left Rear Camber (°)	-0.5	-0.25	0
Right Rear Camber (°)	-0.5	-0.25	0
Rear Toe (°)	0	0.25	0.5
Thrust Angle	0.25	0	0
Left Toe Out, Inward (°)	0	0	0
Right Toe Out, Inward (°)	0	0	0
Left Toe Out, Outward (°)	0	0	0
Right Toe Out, Outward (°)	0	0	0
Left Max Turn, Inward (°)	0	0	0
Right Max Turn, Inward (°)	0	0	0
Left Max Turn, Outward (°)	0	0	0
Right Max Turn, Outward (°)	0	-	-

2014 SUSPENSION

Rear Suspension - Cherokee

WARNING

WARNING

WARNING: Chrysler LLC does not manufacture any vehicles or replacement parts that contain asbestos. Aftermarket products may or may not contain asbestos. Refer to aftermarket product packaging for product information.

Whether the product contains asbestos or not, dust and dirt can accumulate on brake parts during normal use. Follow practices prescribed by appropriate regulations for the handling, processing and disposing of dust and debris.

CAUTION: Only frame contact or wheel lift hoisting equipment can be used on this vehicle. It cannot be hoisted using equipment designed to lift a vehicle by the rear axle. If this type of hoisting equipment is used, damage to rear suspension components will occur.

NOTE: If a rear suspension component becomes bent, damaged or fails, no attempt should be made to straighten or repair it. Always replace it with a new component.

SPECIFICATIONS

SPECIFICATIONS

SPECIFICATIONS

DESCRIPTION	N.m	Ft. Lbs.	In. Lbs.
Brake Tube Bracket Mounting Screw	12	-	106
Crossmember to Body Mounting Bolt	130	96	-
Hub And Bearing Mounting Bolt	95	70	-
Hub Nut	200	148	-
Spring Link to Knuckle Mounting Bolt	80 Plus 90°	59 Plus 90°	-
Spring Link Mounting to Cradle Nut	150	113	-
Toe Link to Cradle Mounting Nut	180	133	-
Toe Link to Knuckle Mounting Bolt (Steel Link)	155	116	-
Camber Link to Cradle Mounting Nut	60 Plus 90°	44 Plus 90°	-
Camber Link to Knuckle Mounting Nut	60 Plus 90°	44 Plus 90°	-

Shock to Knuckle Bolt (M14 bolt)	185	139	-
Shock Upper Mounting Nuts	49	37	-
Shock Rod Nut	30	22	-
Stabilizer Bar to Rear Crossmember Nut	60	44	-
Stabilizer Link Nut to Stabilizer Bar	55	41	-
Stabilizer Link Nut to Spring Link	55	41	-
Trailing Link to Body Mounting Bolts	105	79	-
Trailing Link to Knuckle Mounting Bolts	120	90	-
Wheel Mounting (Lug) Bolt - Aluminum Wheels	135	100	-

KNUCKLE, REAR

REMOVAL

REMOVAL

1. Raise and support the vehicle. Refer to **HOISTING, STANDARD PROCEDURE** .
2. Remove the wheel mounting bolts, then the tire and wheel assembly.

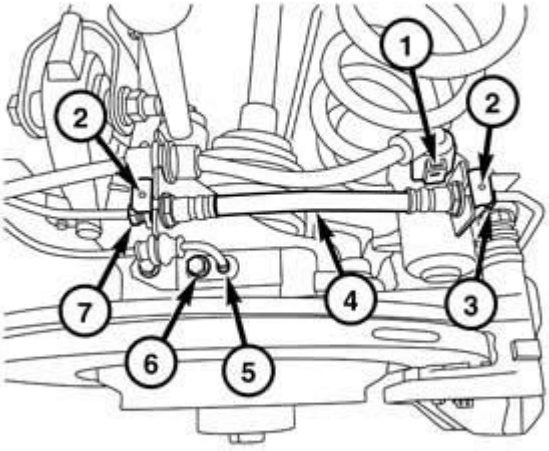

1715005817

Fig. 1: Removing/Installing Rear Wheel Speed Sensor
Courtesy of CHRYSLER GROUP, LLC

3. Remove wheel speed sensor retaining bolt (6) and wheel speed sensor (5) from knuckle.

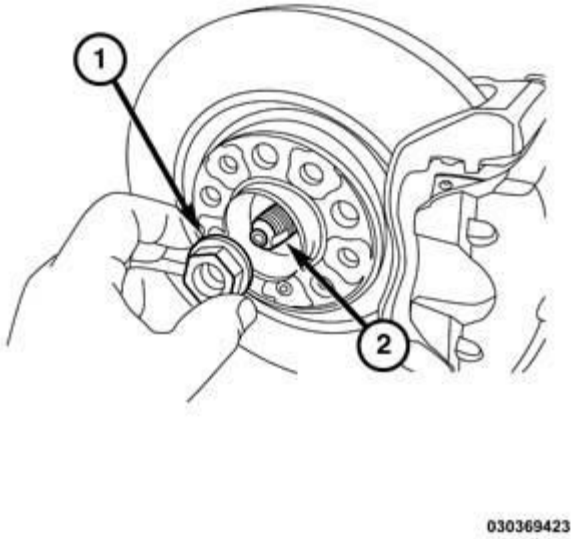

Fig. 2: Hub Nut & Halfshaft
Courtesy of CHRYSLER GROUP, LLC

4. If equipped with halfshaft, using a suitable punch, lift the two staked areas in the hub nut to avoid damaging the halfshaft.
5. While a helper applies the brakes to keep the hub from rotating, remove the hub nut (1) from the halfshaft (2) and discard it.

   The used hub nut is not reusable.

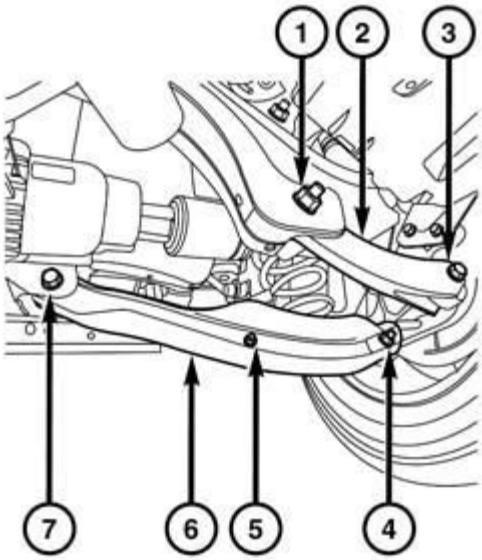

1715005823

Fig. 3: Identifying Spring Link, Camber Link, Nuts & Bolts
Courtesy of CHRYSLER GROUP, LLC

6. Remove the brake rotor. Refer to **ROTOR, BRAKE, REMOVAL** .
7. Support the outer end of the spring link (6).
8. Remove spring assembly. Refer to **SPRING(S), REMOVAL**.
9. Remove the camber link (2) from the knuckle. Refer to **LINK, CAMBER, REMOVAL**, **LINK, TOE, REMOVAL** and **LINK, SPRING, REMOVAL**.

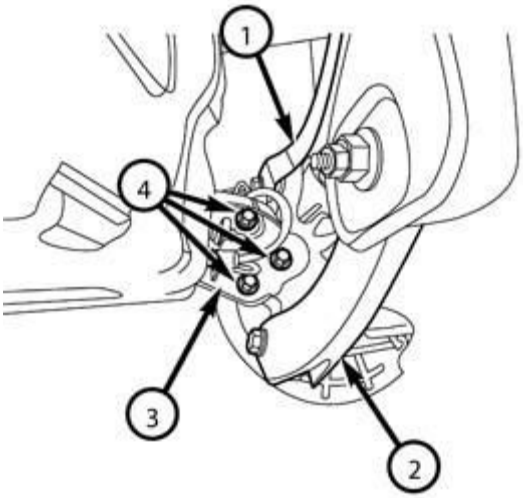

1710009331

Fig. 4: Identifying Toe Link, Trailing Link, Knuckle, Nuts & Bolts

Courtesy of CHRYSLER GROUP, LLC

10. Remove the trailing link (3) from the knuckle. Refer to **LINK, TRAILING, REAR, REMOVAL**.

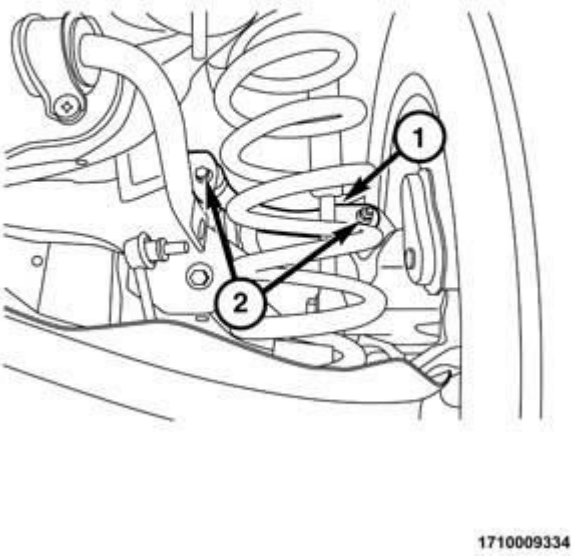

Fig. 5: Identifying Toe Link, Nuts & Bolts
Courtesy of CHRYSLER GROUP, LLC

11. Remove the toe link (1) from the knuckle. Refer to **LINK, CAMBER, REMOVAL**, **LINK, TOE, REMOVAL** and **LINK, SPRING, REMOVAL**.

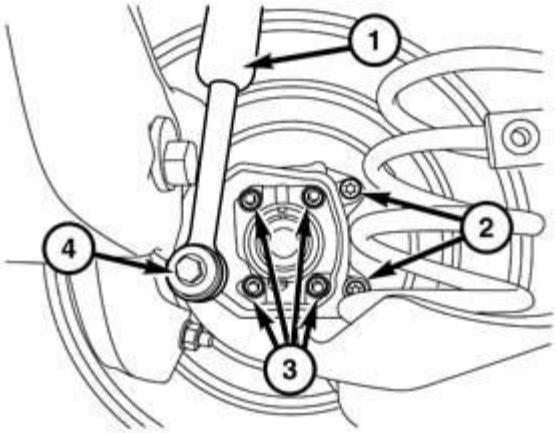

0508006463

Fig. 6: Identifying Lower Shock, Nuts & Bolts
Courtesy of CHRYSLER GROUP, LLC

12. Disconnect the lower shock (1) from knuckle. Refer to **SHOCK ABSORBER, SUSPENSION, REMOVAL**.
13. Remove the rear knuckle from vehicle.
14. If necessary, remove the hub from the knuckle. Refer to **HUB AND BEARING, REMOVAL**.

INSTALLATION

INSTALLATION

1. If necessary, install the hub/bearing in the knuckle. Refer to **HUB AND BEARING, INSTALLATION**.

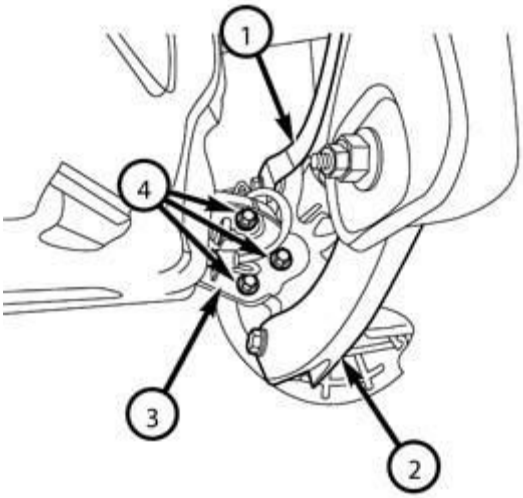

1710009331

Fig. 7: Identifying Toe Link, Trailing Link, Knuckle, Nuts & Bolts
Courtesy of CHRYSLER GROUP, LLC

2. Position the knuckle to the trailing arm link (3) and install fasteners (4). Refer to **KNUCKLE, REAR, INSTALLATION**.

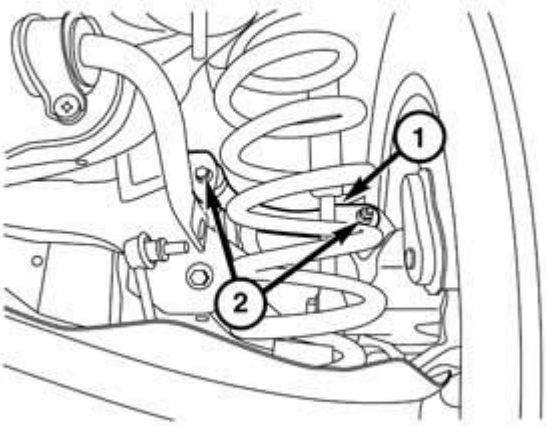

1710009334

Fig. 8: Identifying Toe Link, Nuts & Bolts
Courtesy of CHRYSLER GROUP, LLC

3. Install the toe link (1) to the knuckle. Refer to **LINK, CAMBER, INSTALLATION**, **LINK, TOE, INSTALLATION** and **LINK, SPRING, INSTALLATION**.

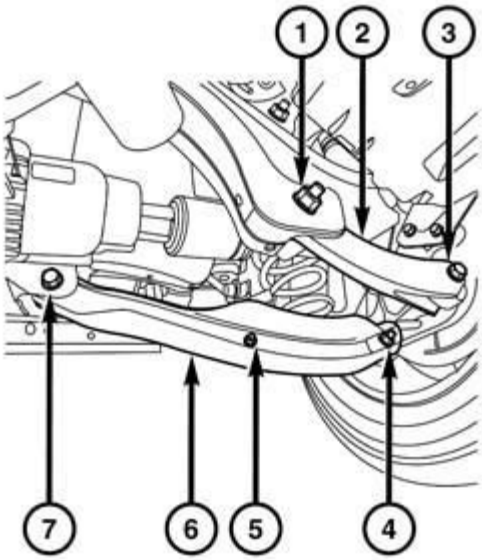

1715005823

Fig. 9: Identifying Spring Link, Camber Link, Nuts & Bolts
Courtesy of CHRYSLER GROUP, LLC

4. Install the camber link (2) to the knuckle. Refer to **LINK, CAMBER, INSTALLATION**, **LINK, TOE, INSTALLATION** and **LINK, SPRING, INSTALLATION**.
5. Install the spring. Refer to **SPRING(S), INSTALLATION**.
6. Remove the support from the spring link.
7. Install the brake rotor and brake caliper assembly. Refer to **ROTOR, BRAKE, INSTALLATION** .

NOTE: **Always install a new hub nut. The original hub nut is one-time use only and must be discarded when removed.**

8. If equipped with halfshaft, install a **NEW** hub nut and while a helper applies the brakes, tighten the nut to specifications. Refer to **SPECIFICATIONS**.

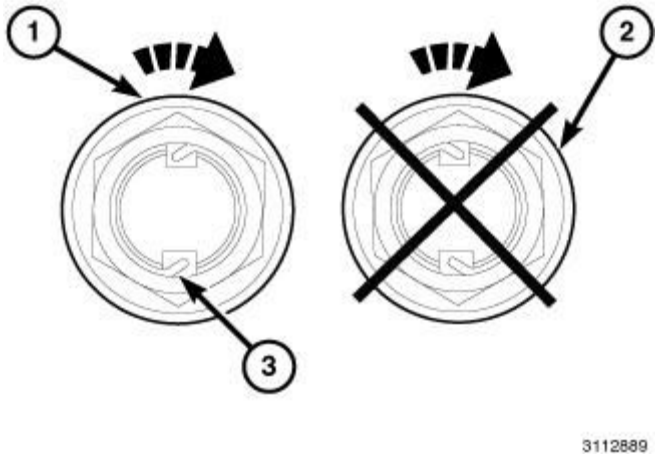

Fig. 10: Correct Hub Nut Staking
Courtesy of CHRYSLER GROUP, LLC

NOTE: Do not use air tools on staking tool while staking hub nut.

9. Using (special tool #10287, Tool, Front Hub Staking) align the leading cutting edge of tool with the top left side channel on axle as shown (1). Tighten fastener on staking tool with hand tools until the threads bottom out completely.

NOTE: The hub nut must be staked so that it looks similar to. Both edges must be split and bent into the shape shown (3). The staking must be in the opposite direction from the forward rotation of the wheel.

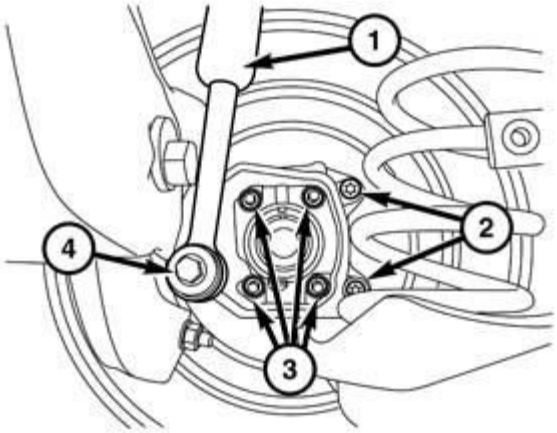

0508006463

Fig. 11: Identifying Lower Shock, Nuts & Bolts
Courtesy of CHRYSLER GROUP, LLC

10. Connect the lower shock (1) from knuckle. Refer to **SHOCK ABSORBER, SUSPENSION, INSTALLATION**.

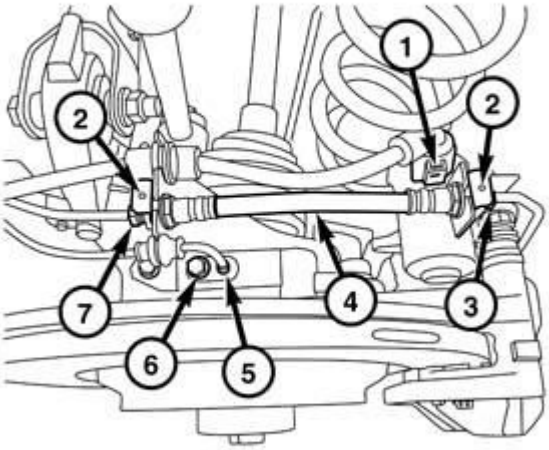

1715005817

Fig. 12: Removing/Installing Rear Wheel Speed Sensor
Courtesy of CHRYSLER GROUP, LLC

11. Install wheel speed sensor (5) into knuckle.
12. Install the retaining bolt (6) and tighten to specifications. Refer to **SPECIFICATIONS** .
13. Install the wheel and tire assembly. Refer to **INSTALLATION** .
14. Remove the supports and lower the vehicle.

HUB AND BEARING

DIAGNOSIS AND TESTING

DIAGNOSIS AND TESTING - HUB AND BEARING - NOISE

NOTE: The wheel bearing is designed to last for the life of the vehicle and requires no type of periodic maintenance.

Bearings will produce noise if worn or damaged. The noise will generally change when the bearings are loaded. A road test of the vehicle is normally required to determine if there is a bearing noise, or if it may be some other component, and to assist in finding the location. The following procedure, together with the **DIAGNOSTIC CHART** , should help determine the proper cause. Note that if a particular vehicle road test maneuver, steering to the right for instance, results in noise only part of the time, it is not likely a faulty bearing. Bearing noises are not typically intermittent.

NOTE: Damaged bearing seals and the resulting excessive grease loss may also require bearing replacement. Moderate grease seepage from the bearing is considered normal and should not require replacement of the wheel bearing. Wheel bearings are designed to last the life of the vehicle and require no type of periodic maintenance. To diagnose the hub, measure hub runout. Refer to ROTOR, BRAKE, DIAGNOSIS AND TESTING .

DIAGNOSTIC PROCEDURE:

1. Perform drive evaluation. Find a smooth level road surface void of traffic or obstructions. Turn off any accessories which may cause background noise. Evaluate for noise at 50 km/h (30 mph) and 100 km/h (60 mph) and with vehicle in neutral to eliminate potential drivetrain noises. With vehicle at a constant speed, steer back and forth to left and right (approximately 45 degree steering input each way). This will load and unload the bearings and may change the noise level. When bearing damage is slight, the noise is sometimes noticeable at lower speeds and at other times is more noticeable at higher speeds.
2. Drive evaluation results: Noise increase when turning right may indicate a problem with the left bearing. Noise increase when turning left may indicate a problem with the right bearing.
3. Put vehicle up on hoist. Grab the tire by pushing in on the top center and pulling out on the bottom center to check for excessive movement in the bearing.
4. Check for potential rubbing on rotating components, such as rotor splash shields, heat shields touching propshaft or halfshaft, wheel well liners contacting tire, wheel cover on wheel, etc. Any cyclic noise (once per wheel revolution for example) is not likely a wheel bearing fault.
5. Remove the wheel and tire assembly, disc brake caliper and brake rotor. Refer to **ROTOR, BRAKE,**

DIAGNOSIS AND TESTING .

6. Rotate the wheel hub, checking for resistance or roughness.
7. Any roughness or resistance to rotation may indicate dirt intrusion or a failed hub bearing. If the bearing exhibits any of these conditions, the hub & bearing will require replacement. Do not attempt to disassemble the bearing for repair.
8. Rotate the wheel hub, utilize Chassis Ears (or equivalent) to check for noise.
9. If none of the above checks indicate a bearing failure, refer to the **DIAGNOSTIC CHART** for other possible causes.

DIAGNOSTIC CHART - HUB & BEARING

CONDITION	POSSIBLE CAUSES	POTENTIAL CORRECTIONS
FRONT END WHINE ON TURNS	1. Low Power Steering Fluid Level (if applicable)	1. Fill power steering fluid reservoir to proper level, check for leaks (make sure all air is bled from system fluid)
	2. Worn Tires and/or Incorrect Wheel Alignment	2. Replace Tires, Check And Reset Wheel Alignment
	3. Defective Wheel Bearing	3. Replace Wheel Bearing
	4. Wrong Power Steering Fluid (if applicable)	4. Replace With Correct Power Steering Fluid
FRONT END GROWL OR GRINDING ON TURNS	1. Loose Wheel Lug Nuts	1. Verify Wheel Lug Nut Torque
	2. Engine Mount Grounding Against Frame Or Body Of Vehicle	2. Check For Engine Mount Hitting Frame Rail And Reposition Engine As Required
	3. Worn Tires and/or Incorrect Wheel Alignment	3. Replace Tires, Check and Reset Wheel Alignment
	4. Defective Wheel Bearing	4. Replace Wheel Bearing
	5. Worn or Broken C/V Joint	5. Replace C/V Joint
	6. Engine Not Centered, Causing Axle Half Shaft to Bottom Out	6. Center the Engine
POPPING/CLICKING/SNAPPING DURING ACCELERATION AFTER DRIVE-TO-REVERSE SHIFT, REVERSE-TO-DRIVE SHIFT OR WHILE TURNING	1. Insufficient Hub Nut Torque	1. Torque Hub Nut to Spec
	2. Insufficient Grease on Mating Surface of Axle Half Shaft Outer C/V Joint to Wheel Hub/Bearing, or Worn/Damaged Gasket	2. Separate Half Shaft From Hub and Bearing and Wipe Mating Surfaces Clean. Apply Light Coating of Wheel Bearing Grease to C/V Joint Surface and Reassemble, or Replace Gasket. Torque Hub

		Nut to Spec
WHINE/HUM/ROAR WITH VEHICLE GOING STRAIGHT AT A CONSTANT SPEED	1. Worn Tires and/or Incorrect Wheel Alignment 2. Defective Wheel Bearing	1. Replace Tires and Reset Wheel Alignment 2. Replace Wheel Bearing
GROWL OR GRINDING WITH VEHICLE GOING STRAIGHT AT A CONSTANT SPEED	1. Engine Mount Grinding Against Frame or Body 2. Defective Wheel Bearing 3. Worn or Broken C/V Joint	1. Check and Reposition Engine as Required 2. Replace Wheel Bearing 3. Replace C/V Joint

REMOVAL

REMOVAL

NOTE: Before proceeding, refer to WARNING.

1. Raise and support the vehicle. Refer to **HOISTING, STANDARD PROCEDURE** .
2. Remove the wheel mounting bolts, then the tire and wheel assembly.

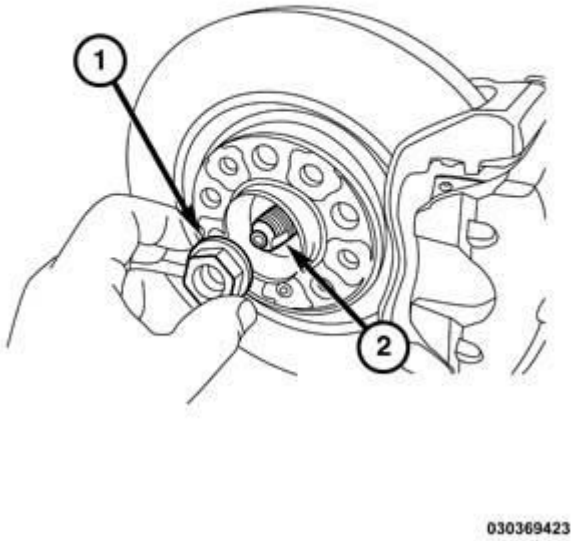

Fig. 13: Hub Nut & Halfshaft
Courtesy of CHRYSLER GROUP, LLC

3. Using a suitable punch, lift the two staked areas in the hub nut to avoid damaging the halfshaft (if equipped).
4. While a helper applies the brakes to keep the hub from rotating, remove the hub nut (1) from the halfshaft

(if equipped) (2) and discard it.

The used hub nut is not reusable.

5. Access and remove the rear brake rotor. Refer to **ROTOR, BRAKE, REMOVAL** .

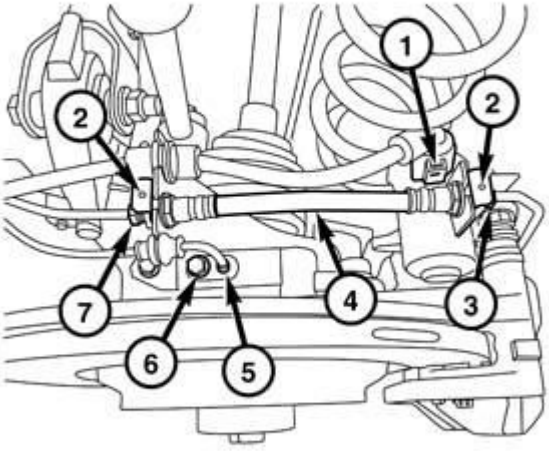

1715005817

Fig. 14: Removing/Installing Rear Wheel Speed Sensor
Courtesy of CHRYSLER GROUP, LLC

6. Remove the rear wheel speed sensor retaining bolt (6) and remove the sensor (5) from the knuckle.

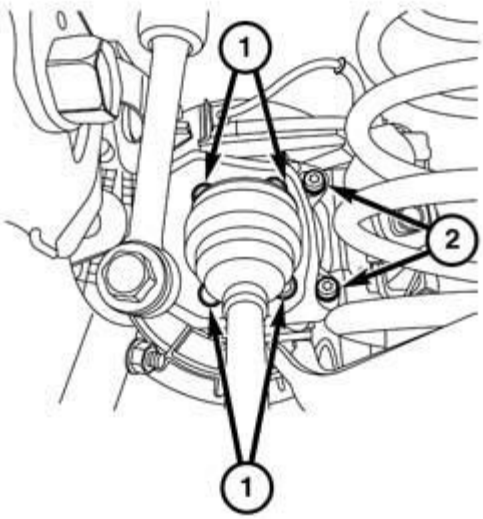

1715005821

Fig. 15: Removing Caliper Bracket Mounting Bolts And Mounting Bracket
Courtesy of CHRYSLER GROUP, LLC

7. Remove the four bolts (1) fastening the hub and bearing to the knuckle.

NOTE: The bolts are one time use and need to be discarded.

8. Slide the hub and bearing off the halfshaft (if equipped) and out of the knuckle.

INSTALLATION

INSTALLATION

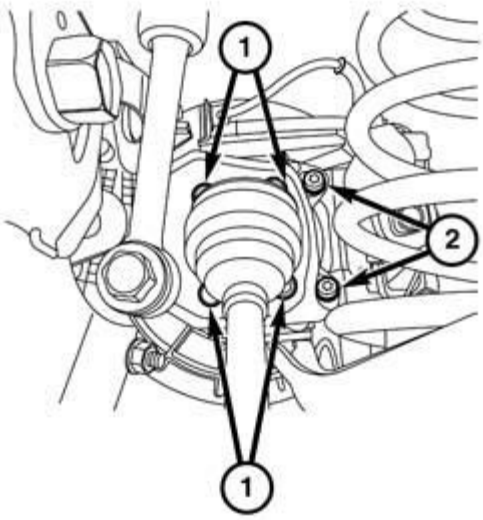

1715005821

Fig. 16: Removing Caliper Bracket Mounting Bolts And Mounting Bracket
Courtesy of CHRYSLER GROUP, LLC

1. Slide the hub and bearing onto the half shaft (if equipped) and install into the knuckle.
2. Install four **NEW** mounting bolts (1). Refer to **SPECIFICATIONS** and tighten to specifications.

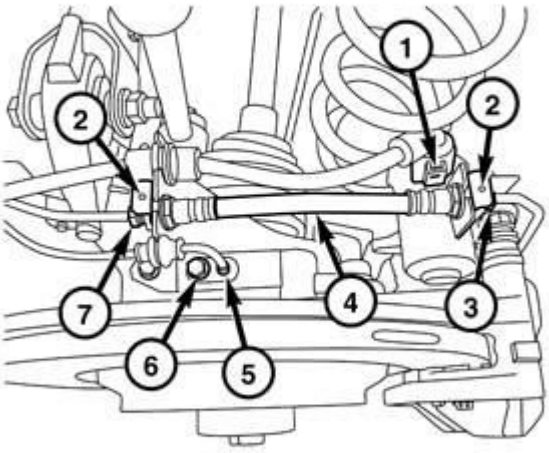

1715005817

Fig. 17: Removing/Installing Rear Wheel Speed Sensor
Courtesy of CHRYSLER GROUP, LLC

3. Install the rear wheel speed sensor (5) in the knuckle.
4. Install the retaining bolt (6) and tighten to specifications. Refer to **SPECIFICATIONS** .

NOTE: Always install a new hub nut. The original hub nut is one-time use only and must be discarded when removed.

5. Install the rear brake rotor. Refer to **ROTOR, BRAKE, INSTALLATION** .
6. Install a **NEW** hub nut and while a helper applies the brakes, tighten the nut to specifications. Refer to **SPECIFICATIONS**.

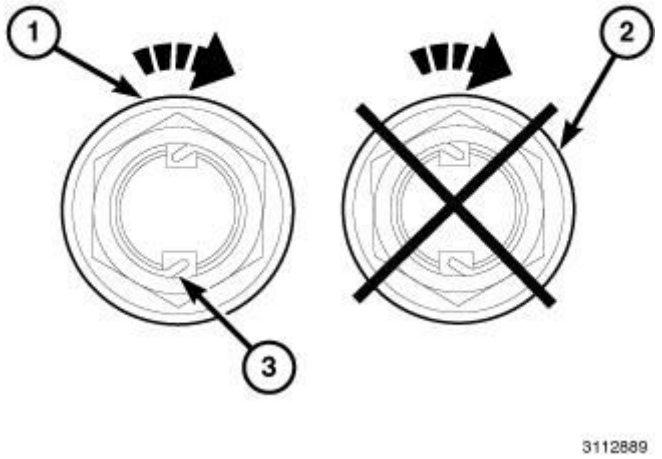

Fig. 18: Correct Hub Nut Staking
Courtesy of CHRYSLER GROUP, LLC

NOTE: Do not use air tools on staking tool while staking hub nut.

7. Using (special tool #10287, Tool, Front Hub Staking) align the leading cutting edge of tool with the top left side channel on axle as shown (1). Tighten fastener on staking tool with hand tools until the threads bottom out completely.

NOTE: The hub nut must be staked so that it looks similar to Fig. 2. Both edges must be split and bent into the shape shown (3). The staking must be in the opposite direction from the forward rotation of the wheel.

8. Install the wheel and tire assembly. Refer to **INSTALLATION** .
9. Lower the vehicle.
10. Pump the brake pedal several times to ensure the vehicle has a firm brake pedal before moving the vehicle.

LINK, STABILIZER BAR

REMOVAL

REMOVAL

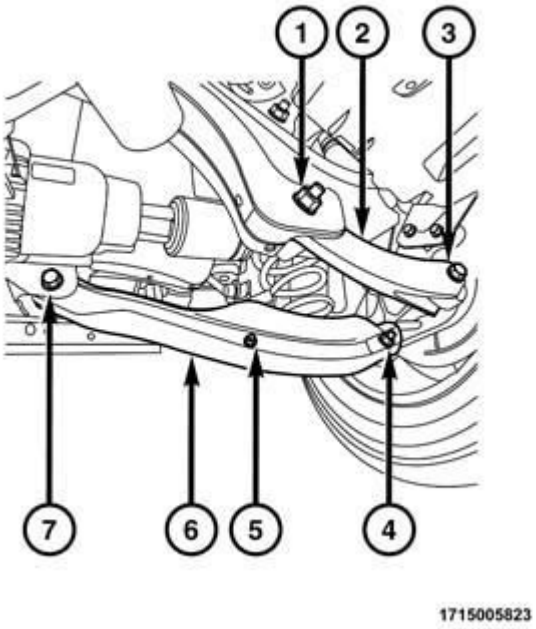

Fig. 19: Identifying Spring Link, Camber Link, Nuts & Bolts
Courtesy of CHRYSLER GROUP, LLC

1. Raise and support the vehicle. Refer to **HOISTING, STANDARD PROCEDURE** .
2. Hold the stabilizer bar link stud stationary and remove the lower nut (5) securing the link.

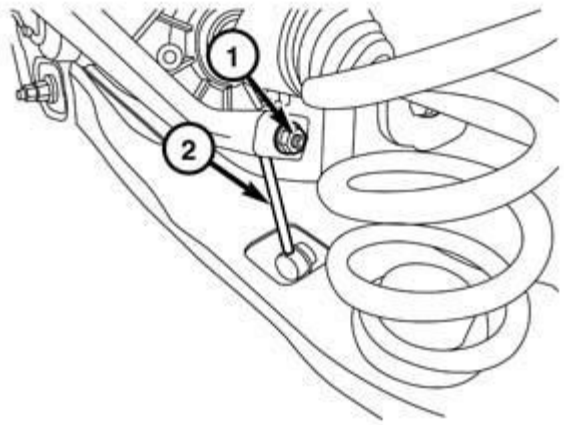

1715005806

Fig. 20: Identifying Stabilizer Bar Link & Upper Nut
Courtesy of CHRYSLER GROUP, LLC

3. Hold the stabilizer bar link stud stationary and remove the upper nut (1) securing the link (2).
4. Remove the stabilizer bar link (2).

INSTALLATION

INSTALLATION

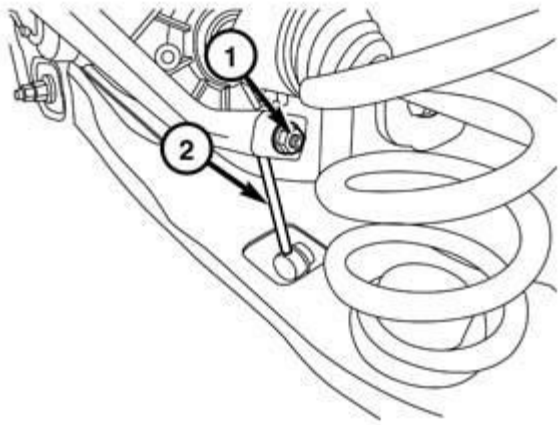

1715005806

Fig. 21: Identifying Stabilizer Bar Link & Upper Nut
Courtesy of CHRYSLER GROUP, LLC

1. Install the stabilizer link (2) upper stud in the end of the stabilizer bar from the outboard side. Install the nut (1) on the upper stud and while holding the stabilizer link stud stationary, tighten the nut to specifications. Refer to **SPECIFICATIONS**.

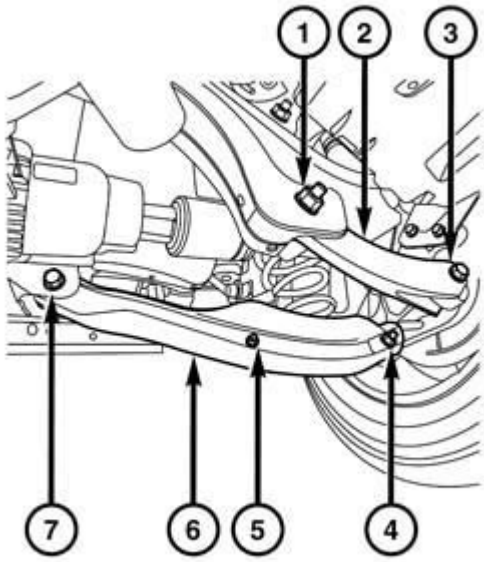

1715005823

Fig. 22: Identifying Spring Link, Camber Link, Nuts & Bolts

Courtesy of CHRYSLER GROUP, LLC

2. Attach the stabilizer bar link to the spring link (6). Install the nut (5) and while holding the stabilizer bar link lower stud stationary, tighten the nut (5) to specification. Refer to **SPECIFICATIONS**.
3. Lower the vehicle.

SHOCK ABSORBER, SUSPENSION

REMOVAL

REMOVAL

NOTE: Before proceeding, refer to WARNING.

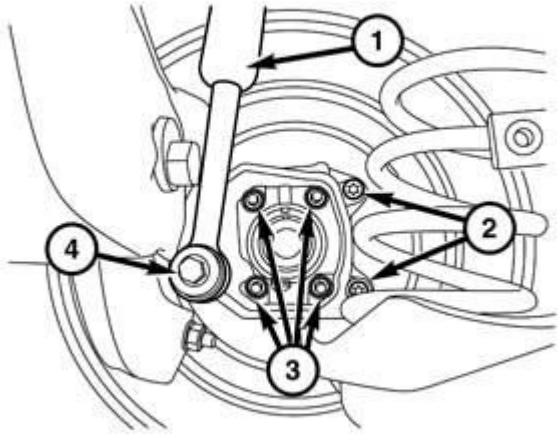

0508006463

Fig. 23: Identifying Lower Shock, Nuts & Bolts
Courtesy of CHRYSLER GROUP, LLC

1. Raise and support the vehicle. Refer to **HOISTING, STANDARD PROCEDURE** .
2. Remove the wheel mounting bolts, then the rear tire and wheel assembly.
3. Remove the wheel house splash shield. Refer to **SHIELD, SPLASH, REAR WHEELHOUSE, REMOVAL** .
4. Support the rear suspension with a jack stand or equivalent.
5. Remove the bolt (4) securing the lower end of the shock assembly (1) to the lower knuckle assembly.

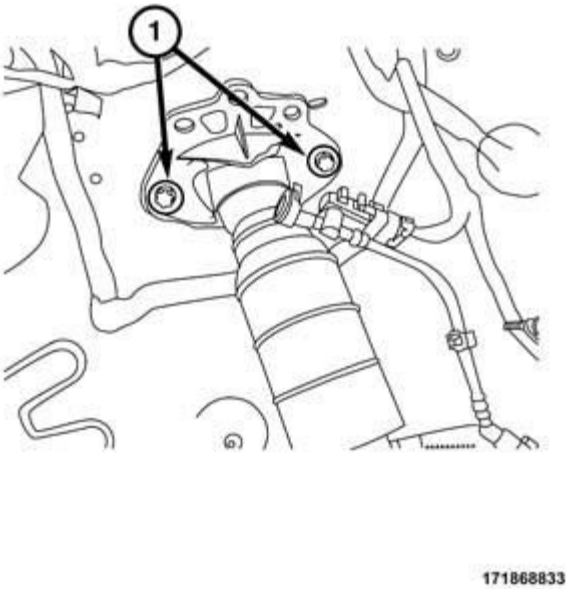

Fig. 24: Upper Shock Mounting Bolts
Courtesy of CHRYSLER GROUP, LLC

6. Remove the upper shock mounting bolts (1) and remove the shock from the vehicle.

DISASSEMBLY

DISASSEMBLY

Fig. 25: Identifying Pliers On Chrome Machined Surface Of Shock/Strut Rod

Courtesy of CHRYSLER GROUP, LLC

CAUTION: Do not use any type of pliers on the chrome machined surface of shock/strut rod to assist in the disassembly/assembly of shocks or struts. Use only tools designed to hold the shock/strut rod stationary when servicing shock or strut components.

NOTE: View is typical

NOTE: The shock assembly must be removed from the vehicle for it to be disassembled and assembled. Refer to SHOCK ABSORBER, SUSPENSION, REMOVAL.

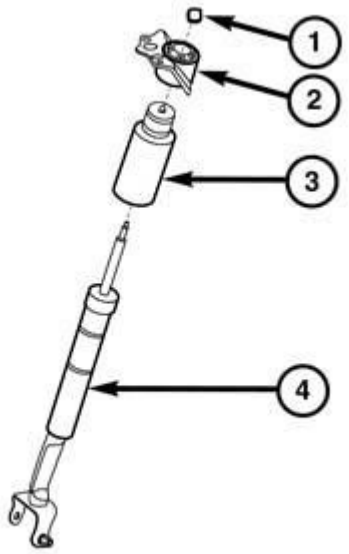

171069591

Fig. 26: Retaining Nut, Upper Shock Mount, Dust Shield & Shock Body
Courtesy of CHRYSLER GROUP, LLC

1. Remove the retaining nut (1) using the appropriate shock absorber tool kit.
2. Remove the upper shock mount (2).
3. Remove the dust shield (3) from the shock body (4).
4. Perform the inspection procedure below:
   - Inspect the shock absorber (damper) (4) for shaft binding over the full stroke of the shaft.
   - Inspect the dust shield (3) for cracks and tears.
   - Check the upper mounting bracket (2) for cracks and distortion
5. For reassembly, refer to **SHOCK ABSORBER, SUSPENSION, ASSEMBLY**.

ASSEMBLY

ASSEMBLY

Fig. 27: Identifying Pliers On Chrome Machined Surface Of Shock/Strut Rod
Courtesy of CHRYSLER GROUP, LLC

CAUTION: Do not use any type of pliers on the chrome machined surface of shock/strut rod to assist in the disassembly/assembly of shocks or struts. Use only tools designed to hold the shock/strut rod stationary when servicing shock or strut components.

NOTE: View is typical

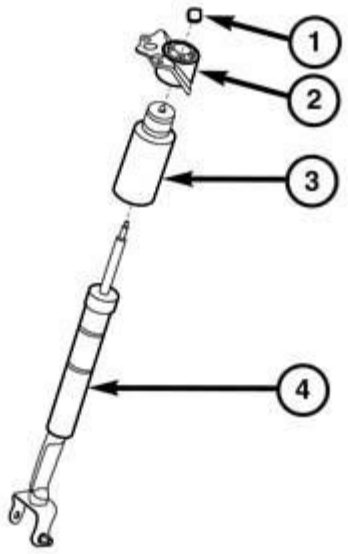

171069591

Fig. 28: Retaining Nut, Upper Shock Mount, Dust Shield & Shock Body
Courtesy of CHRYSLER GROUP, LLC

1. Place the dust shield (3) over the shock body (4).
2. Install the upper shock mount (2) and install the retaining nut (1). Using the appropriate shock absorber tool kit, tighten the nut to 30 N.m (22 ft. lbs.).
3. Install the shock in the vehicle. Refer to **SHOCK ABSORBER, SUSPENSION, INSTALLATION**.

INSTALLATION

INSTALLATION

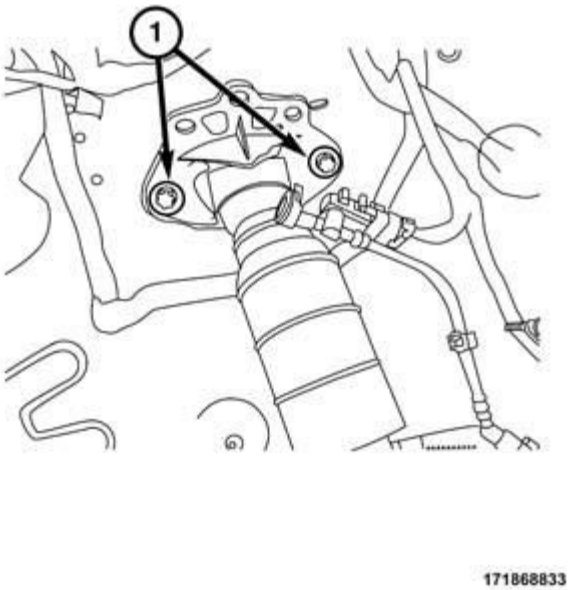

Fig. 29: Upper Shock Mounting Bolts
Courtesy of CHRYSLER GROUP, LLC

1. Use a jack stand or equivalent to raise the suspension into position.
2. Install the shock upper mount to the body and install the upper mounting bolts (1) and tighten to specifications. Refer to **SPECIFICATIONS**.

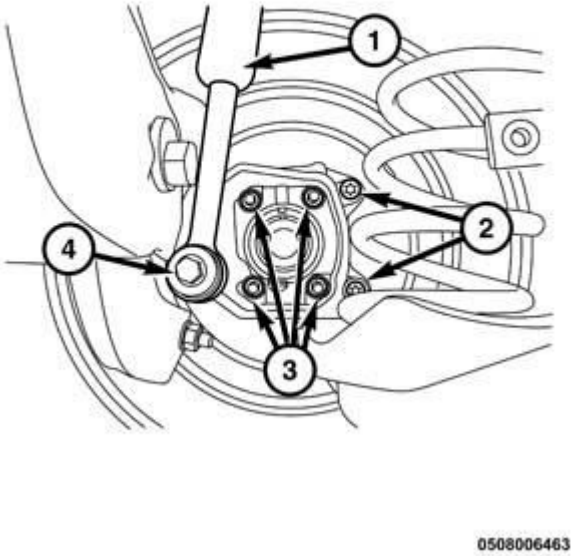

Fig. 30: Identifying Lower Shock, Nuts & Bolts
Courtesy of CHRYSLER GROUP, LLC

3. Position the lower end of the shock (1) to the knuckle assembly.
4. Install the lower retaining bolt (4) and tighten to specifications. Refer to **SPECIFICATIONS**.
5. Install the wheel house splash shield. Refer to **SHIELD, SPLASH, REAR WHEELHOUSE, INSTALLATION** .
6. Install the tire and wheel assembly. Refer to **INSTALLATION** .
7. Lower the vehicle.

SPRING(S)

REMOVAL

REMOVAL

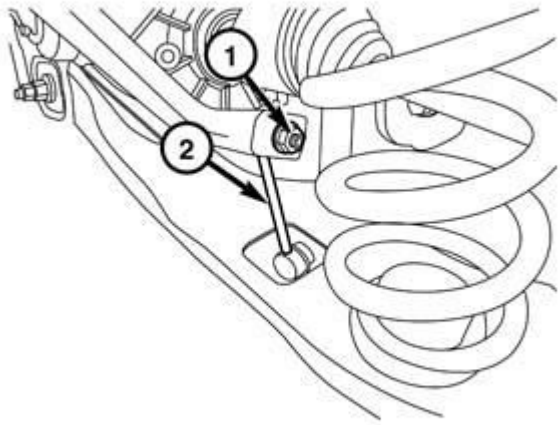

1715005806

Fig. 31: Identifying Stabilizer Bar Link & Upper Nut
Courtesy of CHRYSLER GROUP, LLC

NOTE: Before proceeding, refer to WARNING.

1. Raise and support the vehicle. Refer to **HOISTING, STANDARD PROCEDURE** .
2. Remove the wheel mounting bolts, then the rear tire and wheel assembly.
3. Hold the upper stud stationary and remove the stabilizer link nut (1).
4. Separate the stabilizer link (2) from the stabilizer bar.

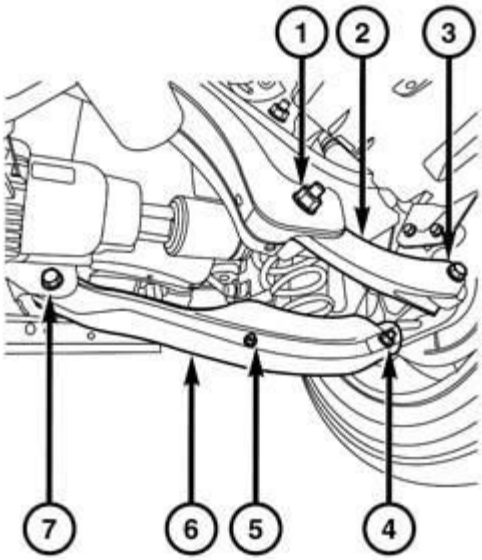

1715005823

Fig. 32: Identifying Spring Link, Camber Link, Nuts & Bolts
Courtesy of CHRYSLER GROUP, LLC

5. Support the suspension with a jack stand or equivalent.
6. Remove the spring link bolt (4) and separate the spring link (6) from the knuckle.

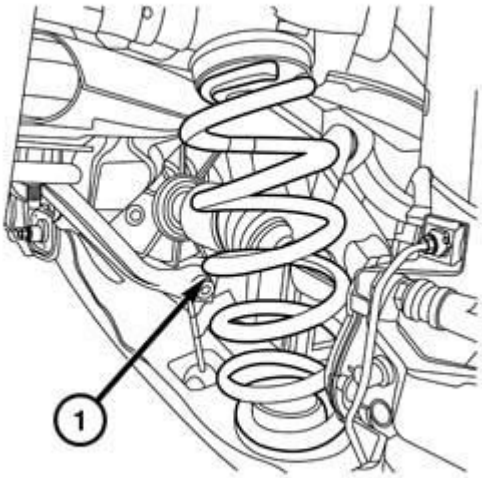

1715005820

Fig. 33: Identifying Coil Spring

Courtesy of CHRYSLER GROUP, LLC

7. Slowly lower the jack stand and remove the coil spring (1).
8. If replacing the spring, remove the spring isolators from the top and bottom of the spring.

INSTALLATION

INSTALLATION

Fig. 34: Identifying Lower End Of Spring & Spring Isolator
Courtesy of CHRYSLER GROUP, LLC

NOTE: When installing the spring, the lower end of the spring (1) and the spring isolator orientation feature (2) must be aligned as shown. The lower end of the spring is always outboard.

NOTE: The label on the spring is always closest to the top isolator.

1. If spring isolators were removed or a new spring is being installed, place spring isolator on each end of spring.

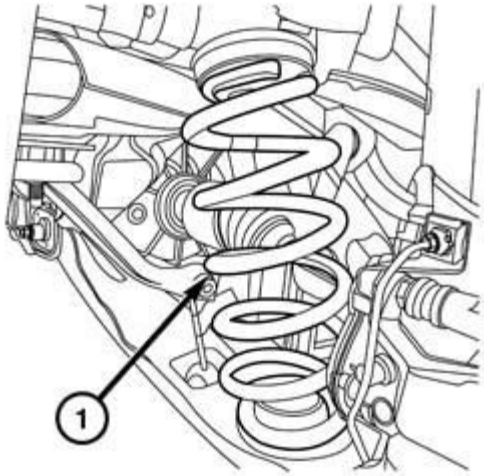

1715005820

Fig. 35: Identifying Coil Spring
Courtesy of CHRYSLER GROUP, LLC

2. Place the coil spring (1) on top of the spring link perches.

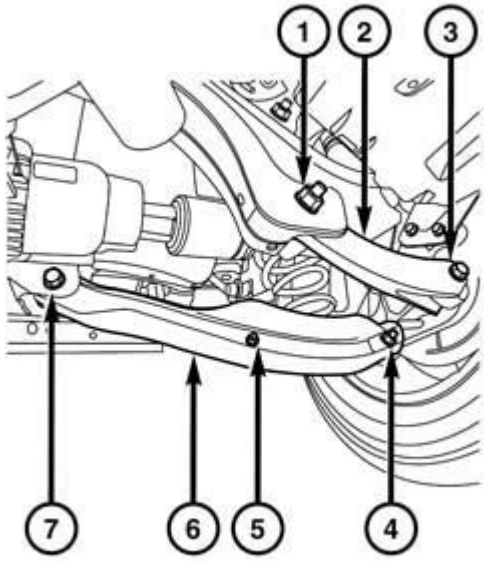

1715005823

Fig. 36: Identifying Spring Link, Camber Link, Nuts & Bolts
Courtesy of CHRYSLER GROUP, LLC

3. Use a jack stand or equivalent to raise the suspension into place.
4. Position the spring link (6) in the installed position and install the bolt (4). Do not tighten to specification at this time.

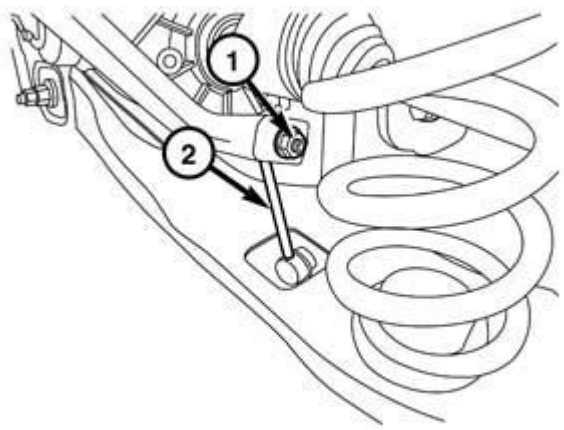

1715005806

Fig. 37: Identifying Stabilizer Bar Link & Upper Nut
Courtesy of CHRYSLER GROUP, LLC

5. Install the stabilizer link (2) stud to the stabilizer bar and install the retaining nut (1).
6. While holding the stabilizer link stud stationary, tighten the nut to specifications. Refer to **SPECIFICATIONS**.
7. Install the tire and wheel assembly. Refer to **INSTALLATION** .
8. Lower the vehicle to normal ride height and tighten the spring link to the lower knuckle assembly bolt to specifications. Refer to **SPECIFICATIONS**.
9. Check for proper vehicle curb height. Refer to **WHEEL ALIGNMENT, STANDARD PROCEDURE** .

STABILIZER BAR, REAR SUSPENSION

REMOVAL

REMOVAL

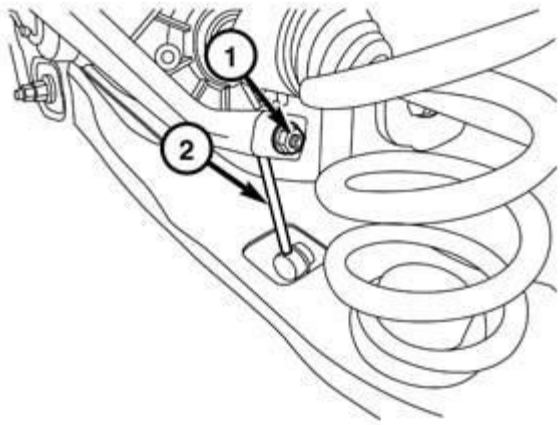

1715005806

Fig. 38: Identifying Stabilizer Bar Link & Upper Nut
Courtesy of CHRYSLER GROUP, LLC

NOTE: Before proceeding, refer to WARNING.

NOTE: The stabilizer cushions are not serviced separately. If they require replacement, the entire stabilizer bar must be replaced.

1. Raise and support the vehicle. Refer to **HOISTING, STANDARD PROCEDURE** .
2. On each side of the vehicle, while holding the stabilizer bar link studs stationary, remove the nuts (1) securing the link (2) to the stabilizer bar.

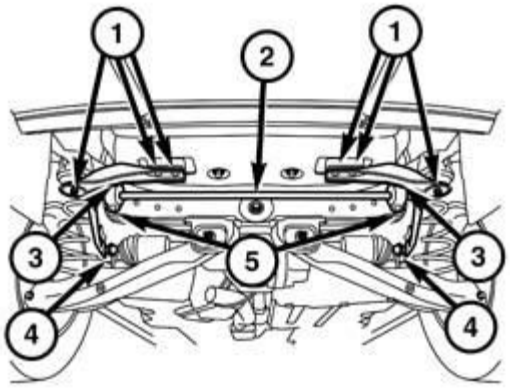

0508006461

Fig. 39: Identifying Stabilizer Bar, Crossmember, Brackets & Fasteners
Courtesy of CHRYSLER GROUP, LLC

3. On each side of the vehicle, remove the screws (1) securing the brackets (3) to the crossmember and remove brackets.
4. On each side of the vehicle, remove the upper and lower screws (5) securing the stabilizer bar (2) to the crossmember.
5. Remove the stabilizer bar (2) from the vehicle.

INSTALLATION

INSTALLATION

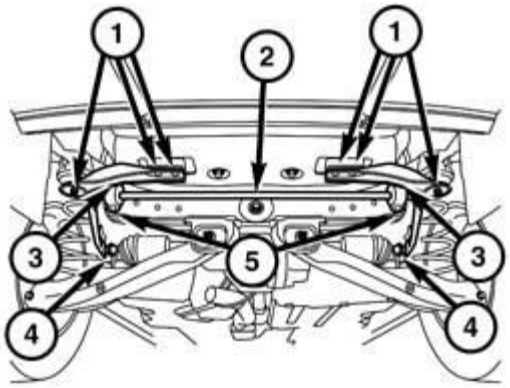

0508006461

Fig. 40: Identifying Stabilizer Bar, Crossmember, Brackets & Fasteners
Courtesy of CHRYSLER GROUP, LLC

1. Position the stabilizer bar (2) on the rear crossmember.
2. Install the upper and lower retaining screws (5) in the mounting holes. Do not tighten the screws at this time.

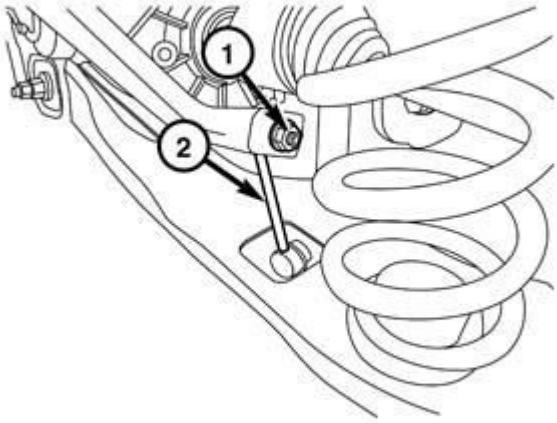

1715005806

Fig. 41: Identifying Stabilizer Bar Link & Upper Nut
Courtesy of CHRYSLER GROUP, LLC

3. On each side of the vehicle, install the stabilizer link (2) studs, one in the in the end of the stabilizer bar and one in the lower mounting location. Install the nut (1) on each end and while holding the stabilizer link stud stationary, tighten each nut to specifications. Refer to **SPECIFICATIONS**.
4. On each side of the vehicle, tighten the stabilizer bar to crossmember retainer screws (1). Refer to **SPECIFICATIONS**.

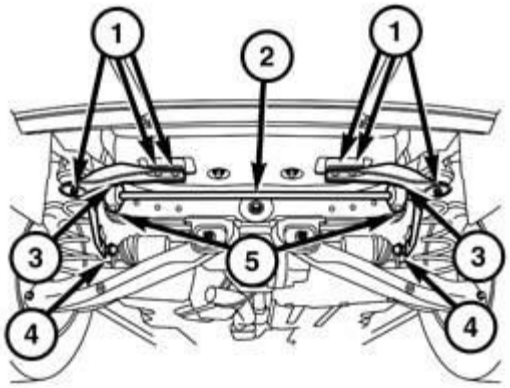

0508006461

Fig. 42: Identifying Stabilizer Bar, Crossmember, Brackets & Fasteners
Courtesy of CHRYSLER GROUP, LLC

5. On each side of the vehicle, install the brackets (3) and the screws (1) securing the brackets to the crossmember.
6. Lower the vehicle.

LINK, CAMBER

DESCRIPTION

DESCRIPTION

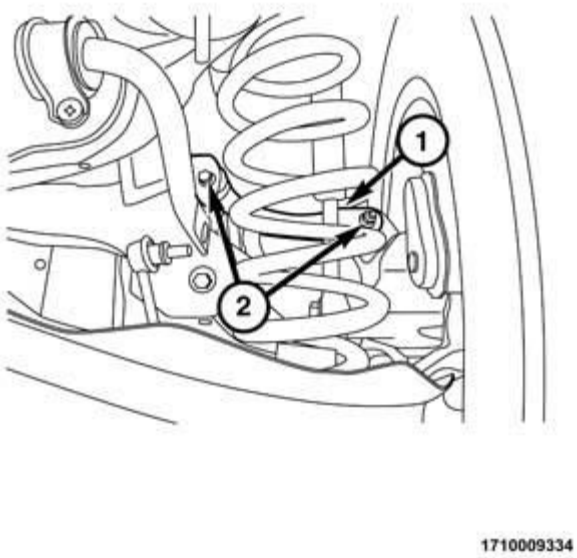

Fig. 43: Identifying Toe Link, Nuts & Bolts
Courtesy of CHRYSLER GROUP, LLC

The camber link (1) is connected between the cradle and the front of the knuckle with a bonded bushing on each end. The bushings are serviced with a new link only. On the knuckle side of the link, the bushing is not between two parts of a bracket. Because of this the bolt (2) has a captive washer that will hold the bushing/link in place if the bonding were to separate from the link. Make sure that the proper bolts and nuts are used when servicing.

REMOVAL

REMOVAL

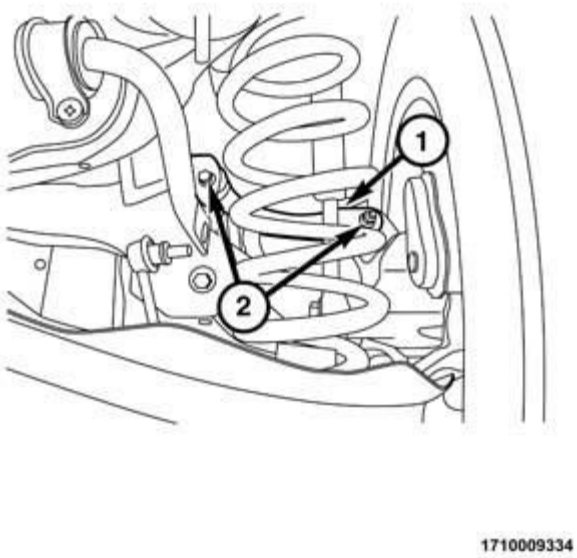

Fig. 44: Identifying Toe Link, Nuts & Bolts
Courtesy of CHRYSLER GROUP, LLC

1. Raise and support the vehicle. Refer to **HOISTING, STANDARD PROCEDURE** .
2. Remove the camber link to cradle bolt/nut (2), the camber link to knuckle bolt/nut (2) and remove the camber link (1) from the vehicle.

INSTALLATION

INSTALLATION

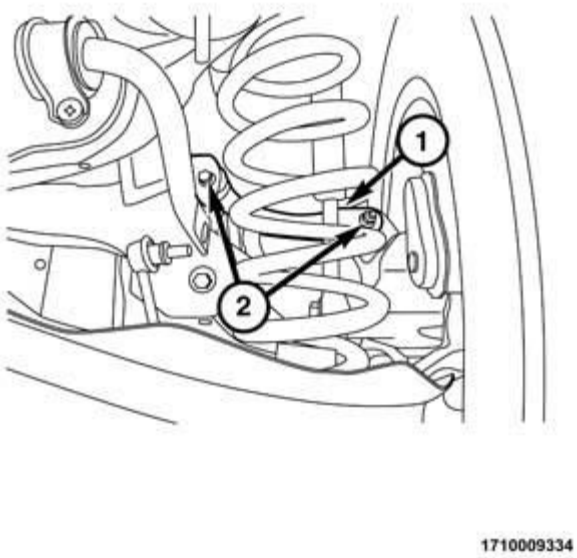

Fig. 45: Identifying Toe Link, Nuts & Bolts
Courtesy of CHRYSLER GROUP, LLC

1. Position the camber link (1) and install the camber link to knuckle bolt/nut (2) and camber link to cradle cam bolt/nut (2). Do not tighten.
2. Using a suitable holding fixture, support the outboard end of the spring link and lift it to normal ride height.
3. Tighten the camber link to knuckle bolt/nut to specifications. Refer to **SPECIFICATIONS**.
4. Tighten the camber link to cradle bolt/nut to specifications. Refer to **SPECIFICATIONS**.
5. Remove the spring link holding fixture.
6. Lower the vehicle.

LINK, TOE

DESCRIPTION

DESCRIPTION

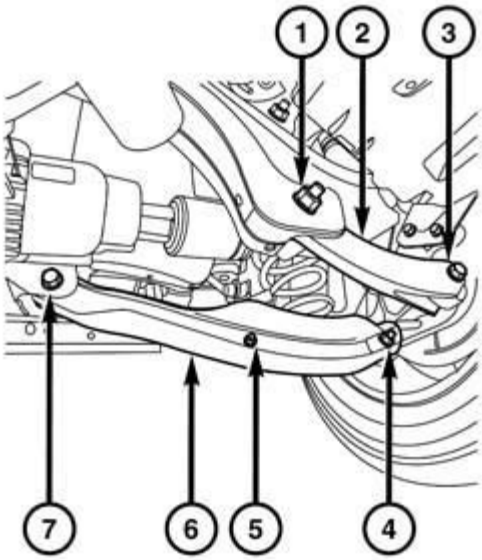

1715005823

Fig. 46: Identifying Spring Link, Camber Link, Nuts & Bolts
Courtesy of CHRYSLER GROUP, LLC

The toe link (2) is connected between the cradle and the middle of the knuckle with a bonded bushing on the cradle side end. The bushing is serviced with a new link only. On the cradle side of the link a cam bolt (1) is used for alignment purposes. On the knuckle side of the link, the bushing is on the knuckle and is between the two parts of the toe link. Make sure that the proper bolts and nuts are used when servicing.

REMOVAL

REMOVAL

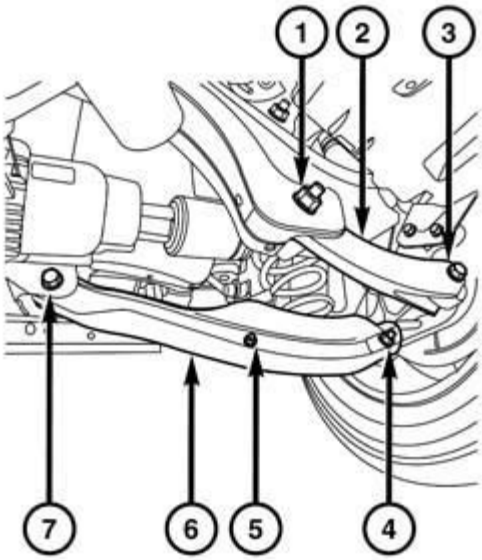

1715005823

Fig. 47: Identifying Spring Link, Camber Link, Nuts & Bolts
Courtesy of CHRYSLER GROUP, LLC

1. Raise and support the vehicle. Refer to **HOISTING, STANDARD PROCEDURE** .
2. Remove the wheel.

NOTE: Mark the position of the cam nut/bolt on the cradle side for installation.

3. Remove and discard the toe link to cradle bolt/nut (1) and the toe link to knuckle bolt/nut (3) and remove the toe link (2) from the vehicle.

INSTALLATION

INSTALLATION

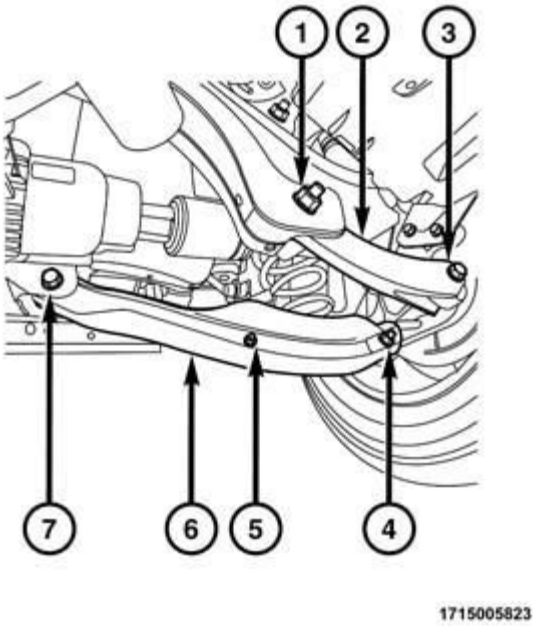

Fig. 48: Identifying Spring Link, Camber Link, Nuts & Bolts
Courtesy of CHRYSLER GROUP, LLC

1. Position the toe link (2) and install a **New** link to knuckle bolt/nut (3). Do not tighten.

NOTE: Always use new fasteners

2. Install a **New** toe link to cradle cam bolt/nut (1). Do not tighten.
3. Using a suitable holding fixture, support the outboard end of the spring link and lift it to normal ride height.
4. Tighten the toe link to knuckle bolt/nut (3) to specifications. Refer to **SPECIFICATIONS**.

NOTE: Position the cam as close to removal marking as possible to aid in alignment.

5. Tighten the toe link to cradle cam bolt/nut (1) to specifications. Refer to **SPECIFICATIONS**.
6. Remove the spring link holding fixture.
7. Install the wheel. Refer to **INSTALLATION** .
8. Remove the supports and lower the vehicle.
9. Perform an alignment. Refer to **WHEEL ALIGNMENT, STANDARD PROCEDURE** .

LINK, SPRING

REMOVAL

REMOVAL

YouTube	A multimedia supplement to the instructions contained in this article is available. To view the multimedia example of the condition described go to; **http://www.youtube.com/user/Mitchell1Tips** **then type "A00641397.vid1" into the "Search Channel" box.**

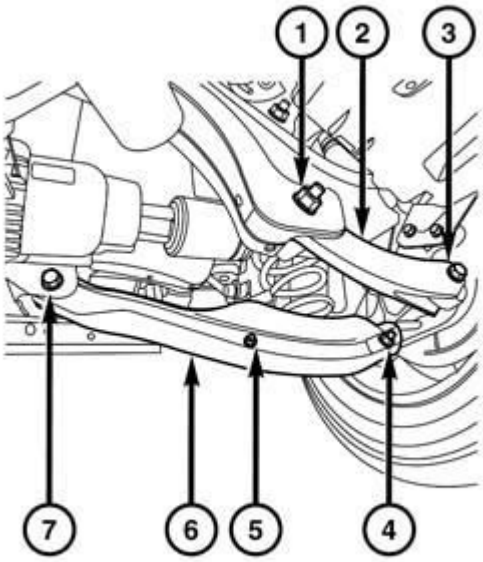

1715005823

Fig. 49: Identifying Spring Link, Camber Link, Nuts & Bolts
Courtesy of CHRYSLER GROUP, LLC

NOTE: On four wheel drive models, the spring link to cradle bolt (7) will contact the rear differential unit when attempting to remove it. To remove it, partially remove the bolt, cut it in half, then remove the remaining portion of the bolt. Install the new bolt and cam nut in the opposite direction from which it was removed.

1. Raise and support the vehicle. Refer to **HOISTING, STANDARD PROCEDURE** .
2. Remove the wheel mounting bolts then the tire and wheel assembly.
3. Support the spring link with a jack stand or equivalent.
4. While holding the lower stud stationary, remove the lower stabilizer link nut (5) and separate the link from the spring link.

NOTE: Mark the location of the outer mounting bolt (4) with a grease pencil or equivalent to mark the position to help during installation and rear wheel alignment.

5. Remove and discard the bolt/nut (4) from the spring link (6).

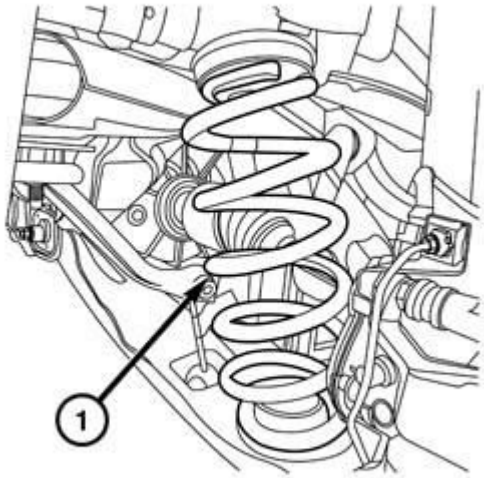

1715005820

Fig. 50: Identifying Coil Spring
Courtesy of CHRYSLER GROUP, LLC

6. Slowly lower the jack stand or equivalent and remove the rear spring (1) from the vehicle while separating the spring link from the knuckle.

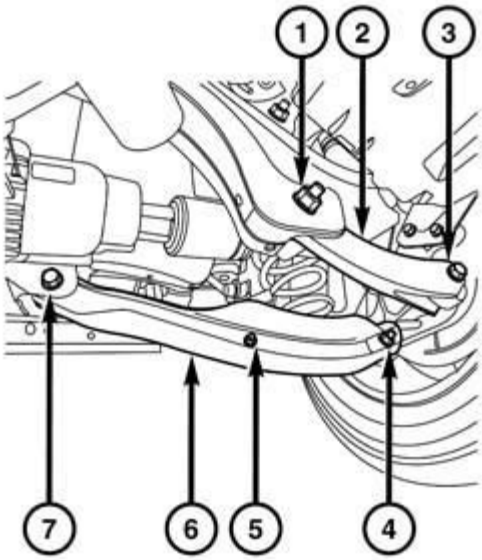

1715005823

Fig. 51: Identifying Spring Link, Camber Link, Nuts & Bolts
Courtesy of CHRYSLER GROUP, LLC

NOTE: **Mark the location of the inner mounting bolts (7) with a paint marker or equivalent. The marked location will be used during installation to make sure the rear alignment is not changed.**

7. Remove and discard the spring link bolt/nut (7) from the spring link.

INSTALLATION

INSTALLATION

Fig. 52: Identifying Lower End Of Spring & Spring Isolator
Courtesy of CHRYSLER GROUP, LLC

NOTE: **When installing the spring, the lower end of the spring (1) and the spring isolator orientation feature (2) must be aligned as shown. The lower end of the spring is always outboard.**

NOTE: **The label on the spring is always closest to the top isolator.**

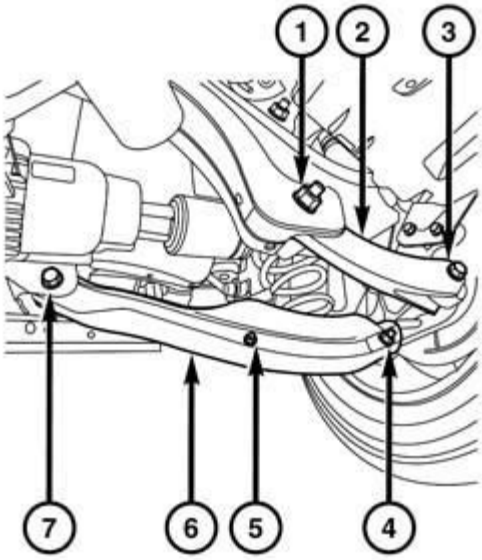

1715005823

Fig. 53: Identifying Spring Link, Camber Link, Nuts & Bolts

Courtesy of CHRYSLER GROUP, LLC

1. Position the spring link (6) to the mount.

NOTE: On four wheel drive models, install the spring link to cradle bolt in the opposite direction from which it was removed.

2. Install a **NEW** bolt/nut (7), but do not tighten to specification at this time. Support the spring link with a jack stand or equivalent.

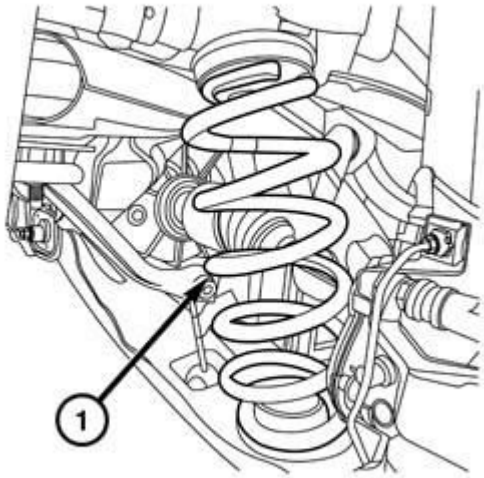

1715005820

Fig. 54: Identifying Coil Spring
Courtesy of CHRYSLER GROUP, LLC

3. Install the rear spring (1) into the vehicle.

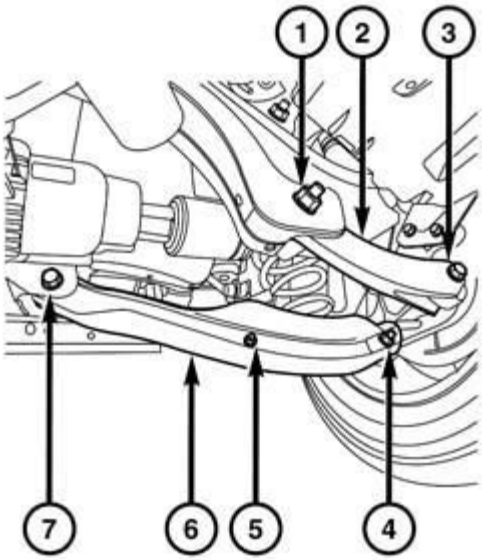

1715005823

Fig. 55: Identifying Spring Link, Camber Link, Nuts & Bolts
Courtesy of CHRYSLER GROUP, LLC

4. While raising the jack stand or equivalent, attach the spring link (6) to the knuckle.
5. Install a **NEW** bolt/nut (4) but do not tighten to specification at this time.

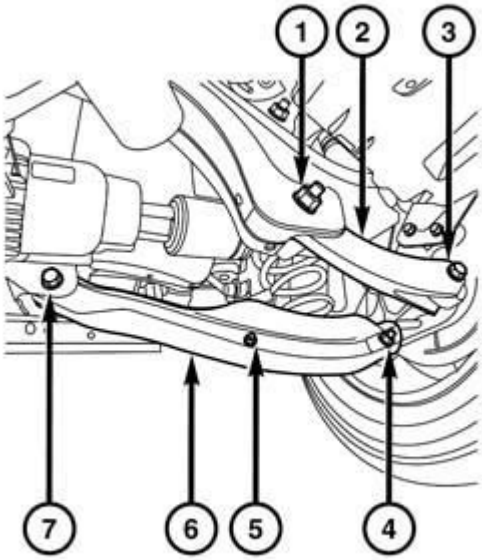

1715005823

Fig. 56: Identifying Spring Link, Camber Link, Nuts & Bolts

Courtesy of CHRYSLER GROUP, LLC

6. Install the stabilizer link to the spring link.
7. Hold the stabilizer stud stationary and tighten the retaining nut to specifications. Refer to **SPECIFICATIONS**.
8. Install the tire and wheel assembly. Refer to **INSTALLATION** .
9. Lower vehicle to normal ride height. Tighten the spring link to knuckle and the spring link to cradle fasteners to specifications. Refer to **SPECIFICATIONS**.
10. Perform wheel alignment as necessary. Refer to **WHEEL ALIGNMENT, STANDARD PROCEDURE** .

LINK, TRAILING, REAR

REMOVAL

REMOVAL

1. Raise and support the vehicle. Refer to **HOISTING, STANDARD PROCEDURE** .
2. Remove the wheel mounting bolts, then the tire and wheel assembly.

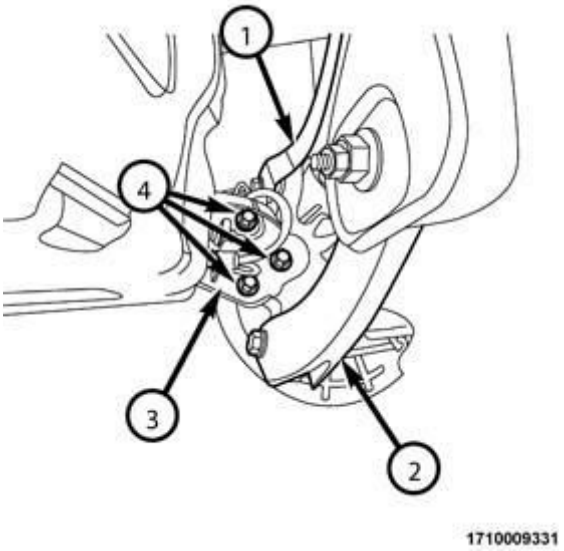

Fig. 57: Identifying Toe Link, Trailing Link, Knuckle, Nuts & Bolts
Courtesy of CHRYSLER GROUP, LLC

3. Remove the routing clips attached to the trailing link (3).
4. Remove the three bolts (4) securing the knuckle to the trailing link (3).

Fig. 58: Identifying Trailing Link & Bolts
Courtesy of CHRYSLER GROUP, LLC

5. Remove the two bolts (1) fastening the leading end of the trailing link (2) to the body.
6. Remove the trailing link.

INSTALLATION

INSTALLATION

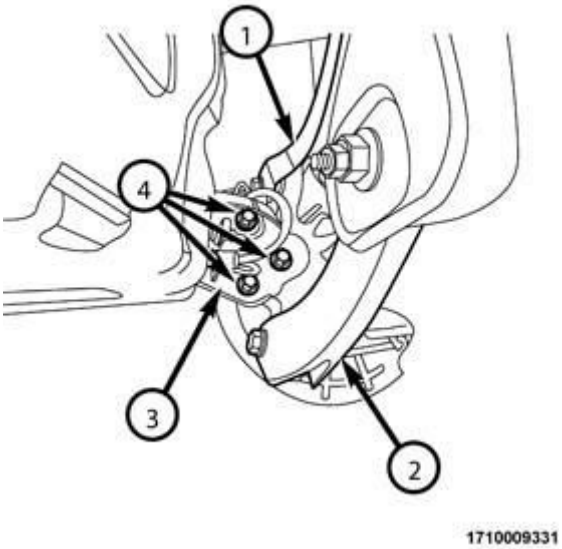

Fig. 59: Identifying Toe Link, Trailing Link, Knuckle, Nuts & Bolts
Courtesy of CHRYSLER GROUP, LLC

1. Position the trailing link (3) and install the three bolts (4) securing the trailing link to the knuckle. Tighten the mounting bolts to specifications. Refer to **SPECIFICATIONS**.

Fig. 60: Identifying Trailing Link & Bolts
Courtesy of CHRYSLER GROUP, LLC

2. Position the forward end of the trailing link (2) on the body and install the two mounting bolts (1). Do not tighten the bolts at this time.
3. Using a suitable holding fixture, support the outboard end of the spring link and lift it to normal ride height.
4. Tighten the two mounting bolts (1) fastening the leading end of the trailing link (2) to the body to specifications. Refer to **SPECIFICATIONS**.
5. Remove the lower control arm holding fixture.
6. Install the routing clips attached to the trailing link.
7. Install tire and wheel assembly. Refer to **INSTALLATION** .
8. Lower the vehicle.

2014 SUSPENSION

Tires & Wheels - Service Information - Cherokee

DIAGNOSIS AND TESTING

DIAGNOSIS AND TESTING - TIRE AND WHEEL VIBRATION

Tire and wheel imbalance, runout and tire road force variation can cause vehicles to exhibit steering wheel vibration and/or seat vibration.

VISUAL INSPECTION

Visual inspection of the vehicle is recommended prior to road testing or performing any other procedure. Raise and support the vehicle. Refer to **HOISTING, STANDARD PROCEDURE** .

Inspect for the following:

- Verify correct (OEM) wheel and tire, as well as presence of wheel weights.
- Inspect tires and wheels for damage, mud packing and unusual wear; correct as necessary.
- Check and adjust tire air pressure to the pressure listed on the label attached to the driver's door opening.

ROAD TEST

NOTE: If a Noise & Vibration Analyzer is available, use it to diagnosis the issue during the road test.

NOTE: If the vehicle has been sitting for an extended period of time it is recommended to drive to warm the tires. This process could eliminate flat spots that can cause vibration.

Road test vehicle on a smooth road **at and near the designated speed** where legal speed limits allow. Lightly place hands on steering wheel at the 10:00 and 2:00 positions and observe for:

- Steering wheel oscillation: clockwise/counterclockwise
- Steering wheel high frequency movement: rapid vibration up and down
- Seat high frequency movement: rapid vibration up and down

To rule out vibrations due to brakes or powertrain:

- Lightly apply brakes at the designated speed; if vibration occurs or is enhanced, vibration is likely due to a brake concern.
- Shift transmission into neutral while vibration is occurring; if vibration is eliminated, vibration is likely due to a powertrain concern. Refer to **DIAGNOSIS AND TESTING** for additional information.

TIRE/WHEEL BALANCE AND ROAD FORCE VARIATION

NOTE: If wheel balance equipment is capable of testing tire road force variation and the tire/wheel assemblies are within specification, place the tires with the greater road force variation on the rear of the vehicle.

Balance the tire and wheel assemblies as necessary, and if wheel balance equipment is capable, also test for tire and wheel runout and road force variation following the wheel balancer manufacturer's instructions and using the information listed in Tire And Wheel Balance. Refer to **STANDARD PROCEDURE**. Repeat the road test above to verify the vibration is repaired.

STANDARD PROCEDURE

TIRE AND WHEEL BALANCE

NOTE: Always verify the wheel and tire balance before removing any wheel weights. If assembly is within specification and weights are not corroded or loose, do not remove weights. The process of removing and adding weight could damage wheel protective coating.

NOTE: Balance and road force variation equipment must be calibrated and maintained per equipment manufacturer's specifications.

NOTE: If a tire sealant & inflator kit was used to temporarily repair small punctures then the tire must be removed from wheel and all the sealant must be removed with a water damped cloth before repairing & balancing the assembly.

NOTE: Some wheels may not have an outer flange. Apply adhesive weights on midplane surface to balance.

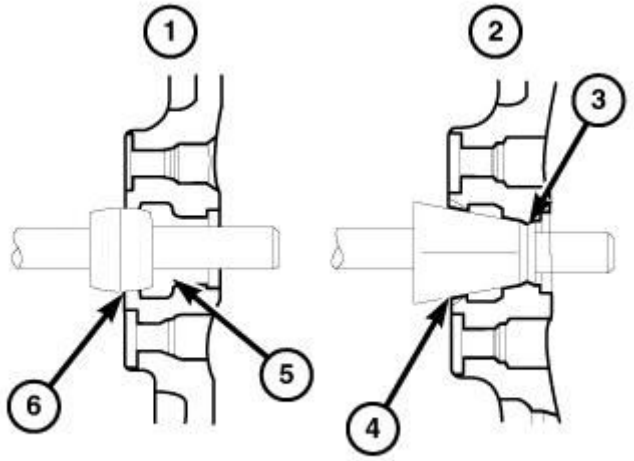

24801P3

Fig. 1: Balancing Wheels Using Cone/Collet
Courtesy of CHRYSLER GROUP, LLC

NOTE: **Use of the proper collet will prevent potential damage to the Chrome Clad wheels.**

NOTE: **Balance equipment could read an incorrect balance result when measuring Chrome Clad wheels. This is caused by the equipments mounting cone/collet contacting the cladding or the cone/collet is not balanced. A dual-taper collet (1) type wheel centering tool is recommended as opposed to a high-taper cone (2) type wheel centering tool. Always use the manufacturer's recommended balance equipment.**

- **Dual-taper collet type (1)**
- **High-taper cone type (2)**
- **Possible obstruction (3)**
- **May not seat properly (4)**
- **No obstruction (5)**
- **Properly seated (6)**

NOTE: **If wheel balance equipment is capable of testing tire road force variation and the tire/wheel assemblies are within specification, place the tires with the greater road force variation on the rear of the vehicle.**

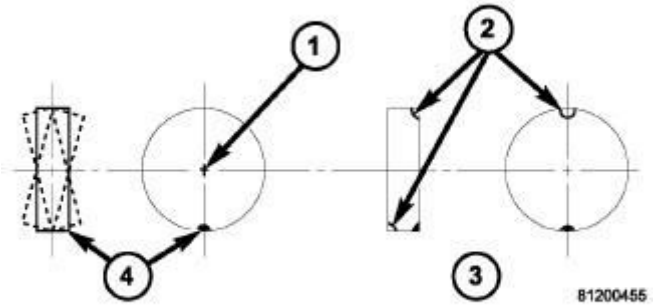

Fig. 2: Dynamic Balancing
Courtesy of CHRYSLER GROUP, LLC

For dynamic balancing (**recommended**), the balance equipment is designed to indicate the location and amount of weight to be applied to both the inner and outer rim flanges (2).

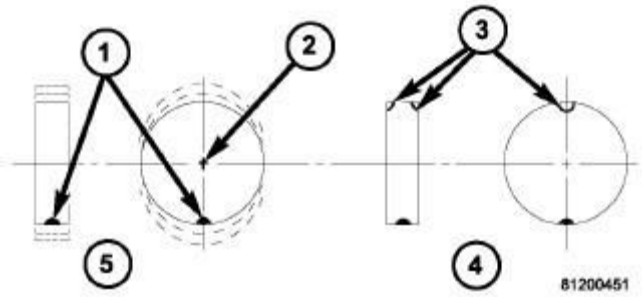

Fig. 3: Static Balancing
Courtesy of CHRYSLER GROUP, LLC

For static balancing (**not recommended**), find the location of the heavy spot causing the imbalance (1). Counter balance the wheel directly opposite the heavy spot. Determine weight required to counterbalance the area of imbalance. Place half of this weight on the **inner** rim flange and the other half on the **outer** rim flange (3) at the predetermined spots.

Aluminum wheels use a different type wheel weight than steel wheels. Be sure to use the correct wheel weight for the wheel type.

Always verify the balance. When using off-vehicle equipment, remount the tire and wheel assembly 180 degrees on the balancer spindle and recheck balance. Balance variation from one spot to the other should not be more than 0.125 (?) ounce. If variation is more than 0.125 ounce, balancing equipment could be malfunctioning, or the wrong collet/cone may have been used.

If difficult to balance, break down the tire and wheel assembly and check for loose debris inside the tire. Prior to disassembly, mark (index) the tire at the valve stem. Use this mark in order to remount the tire in its original orientation with respect to the wheel.

TIRE AND WHEEL ROTATION

NOTE: Refer to the Owner's Manual for rotation schedules.

NON-DIRECTIONAL TREAD PATTERN TIRES

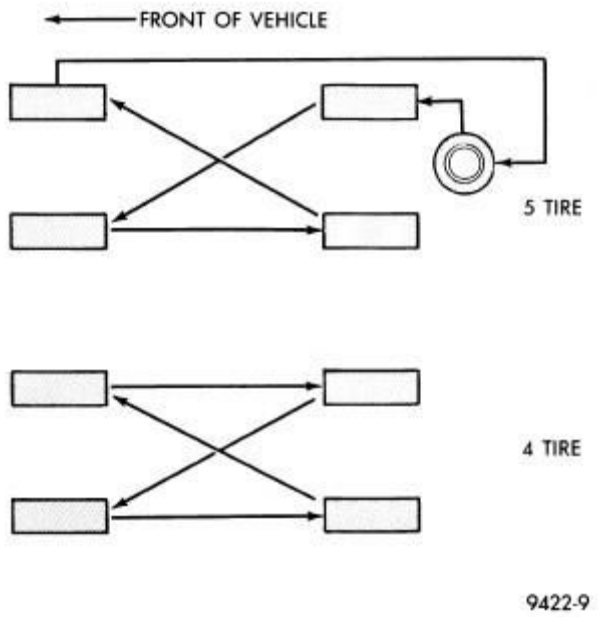

Fig. 4: Forward-Cross Tire Rotation Method
Courtesy of CHRYSLER GROUP, LLC

Tires on the front and rear operate at different loads and perform different steering, driving, and braking functions. For these reasons they wear at unequal rates and tend to develop irregular wear patterns. These effects can be reduced by rotating the tires at regular intervals. The benefits of tire rotation are:

- Increase tread life
- Maintain traction levels
- A smooth, quiet ride

The suggested method of tire rotation is shown in this graphic. Other rotation methods can be used, but they will not provide all the tire longevity benefits.

CAUTION: Only the four-tire rotation may be used on vehicles equipped with tire pressure monitoring (TPM) due to sensors being present in the four road wheels and not in the spare.

NOTE: Only the four-tire rotation method may be used if the vehicle is equipped with a compact or temporary spare tire.

DIRECTIONAL TREAD PATTERN TIRES

Some vehicles may be fitted with special high-performance tires having a directional tread pattern. These tires are designed to improve traction on wet pavement. To obtain the full benefits of this design, the tires must be installed so that they rotate in the correct direction. This is indicated by arrows on the tire sidewalls.

When being installed, extra care is needed to ensure that this direction of rotation is maintained.

REMOVAL

REMOVAL

1. Raise and support the vehicle so that tire and wheel assembly clears ground level. Refer to **HOISTING, STANDARD PROCEDURE** .
2. Remove the five wheel mounting (lug) bolts.
3. Remove the tire and wheel assembly from the hub.

INSTALLATION

INSTALLATION

WARNING: **Installing wheels without good metal-to-metal contact with the mounting surface could cause loosening of the wheel mounting (lug) bolts. This could adversely affect the safety and handling of the vehicle.**

1. Never use oil or grease on studs or wheel mounting (lug) bolts.

   Clean the wheel mounting surfaces, removing any build-up of corrosion. It is important to have good metal-to-metal contact between the wheel and vehicle.

2. Install and lightly snug all five wheel mounting (lug) bolts. **Do not tighten at this time** .
3. Remove the support and lower the vehicle.
4. Progressively tighten all the wheel mounting (lug) bolts in a star pattern to the proper specification. Refer to **SPECIFICATIONS** .

TIRE PRESSURE MONITORING

DESCRIPTION

DESCRIPTION

The Tire Pressure Monitoring (TPM) system monitors air pressure in the four road tires (excludes spare). Pressure in the spare tire is monitored incase of a matching spare with sensor. Sensor transmissions occur if there is significant change in pressure. RFHM has to be awake when sensor transmits to monitor spare pressure.

The TPM system consists of tire pressure monitoring sensors attached to each road wheel through the valve stem mounting hole, an electronic display, and an indicator lamp. The system communicates through the RF Hub Module.

The receiver circuit for the TPM system is integrated into the RF Hub. The RF Hub decodes the RF signals transmitted by each of the vehicle's tire pressure sensors. The decoded information is used to determine if "warning" or "fault" conditions exist within the TPM system.

Upon detection of a warning or fault condition, the RF Hub will send a request to the module that controls the indicator lamp and the text display via the vehicle bus system to illuminate or flash the indicator lamp. Also, upon detection of a warning or fault condition, the electronic display will send a request to sound the "chime".

The RF Hub will store all warning and fault conditions, placard pressure values and low-pressure threshold values (lamp ON and OFF) in memory that can be accessed through diagnostic communication. If new sensors are introduced to the vehicle, the data stored for the sensor being replaced will be deleted.

The RF Hub will store all wheel sensor IDs and locations and faults in memory that can be accessed through diagnostic communication. All other data values transmitted from each active wheel sensor shall be stored in the RF Hub memory.

The RF Hub automatically learns and stores the sensor IDs while driving "within 20 minutes continuously above 20 mph (32 km/h)" after a sensor has been replaced. The learning sequence will initiate when the vehicle has been stopped for more than 20 minutes.

NOTE: A new sensor ID can also be programmed directly into the RF Hub by using a RKE-TPM Analyzer in conjunction with a Scan Tool. Once the new sensor ID has been programmed, the RKE-TPM Analyzer can be used to update the TPMS by activating the sensor.

OPERATION

OPERATION

TIRE PRESSURE MONITORING

The tire pressure monitoring system (TPMS) is designed to operate without loss of function for all OEM tire construction for this vehicle. Sensors, mounted to each road wheel as part of the valve stem, transmit an RF signal indicating their individual pressure to a receiver located in the Radio Frequency (RF) Hub. Refer to **SENSOR, TIRE PRESSURE MONITORING (TPM), OPERATION**.

If the TPM system detects that the tire pressure in any road tire is low, beyond the Low Pressure (lamp) ON threshold (see placard table below), the TPM system will continuously illuminate an indicator lamp. If a system fault is detected, the indicator lamp will flash on/off for 75 seconds, then remain on solid.

If the RF Hub detects a warning or fault condition at ignition key "on", the display module will request a chime once per ignition cycle for the first "warning" or "fault" condition detected. A "warning" or "fault" condition will remain enabled until the problem causing the condition is corrected and removed/reset.

The RF Hub shall continuously monitor for the receipt of tire pressure RF message transmissions from the wheel sensors during both the ignition key "on" and key "off" cycles. The wheel sensor ID's and the location of each sensor (e.g. Tire 1, Tire 2 etc.) are stored in the RF Hub non-volatile memory during the initial

Manufacturing Plant Process, or during a service procedure, as required.

The TPM System will continue to warn the driver of low tire pressure as long as the condition exists, and will not turn off the indicator lamp until the tire pressure is at or above the placard. The system will automatically update and the TPM indicator lamp will extinguish once the updated tire pressures have been received.

Tire pressure will vary with temperature by about 1 psi (6.9 kPa) for every 12°F (6.5°C). This means that when the outside temperature decreases, the tire pressure will decrease. Tire pressure should always be set based on cold inflation tire pressure (placard pressure). This is defined as the tire pressure after a vehicle has not been driven for more than 3 hours (and in outside ambient temperature). The tire pressure will also increase as the vehicle is driven; this is normal and there should be no adjustment for this increased pressure. For a system fault, the system will return to normal once the RF Hub receives a valid transmission from that sensor location.

TPM THRESHOLD PRESSURES

The recommended "Placard Pressure" for the tires installed on the vehicle, are stored in the RF Hub non-volatile memory during the initial Manufacturing Plant Process, or during a service procedure, as required. To determine the pressure thresholds for a vehicle, refer to the Tire Inflation Pressure (Placard) Label, and then apply the placard pressure to the following table.

For further information, refer to the Owners Manual or the Appropriate Diagnostic Information.

TPM THRESHOLD PRESSURES

Placard Pressure (Cold) (PSI)	Low Pressure ON Threshold (PSI)	
28	22	
29	23	
30	24	
31	25	
32	25	
33	26	
34	27	
35	28	
36	29	
37	29	
38	30	
39	31	
40	32	
41	33	
42	34	
43	35	
44	36	
45	36	
46	37	
47	38	

48	38	
49	39	
50	40	
51	41	
55	44	
60	48	
65	52	
70	56	
75	60	
80	64	

DIAGNOSIS AND TESTING

DIAGNOSIS AND TESTING - TIRE PRESSURE MONITORING

When diagnosing a tire pressure issue, first check the Tire Pressure Monitoring (TPM) indicator lamp in the instrument cluster during ignition key ON. From the OFF position, turn the key to ON and check the TPM indicator lamp to observe one of the following:

- If after 10 seconds the indicator lamp is illuminating continuously (not flashing), proceed to **LOW PRESSURE** .
- If after 10 seconds the indicator lamp flashes on/off for 75 seconds, then remains on solid, there is a system fault detected. Proceed to **SYSTEM FAULT** .

LOW PRESSURE

NOTE: Tire pressure may increase from 2 to 6 psi (14 to 41 kPa) during normal driving conditions. Do NOT reduce this normal pressure build up.

NOTE: Tire pressure will vary with temperature by about 1 psi (6.9 kPa) for every 12°F (6.5°C). This means that when the outside temperature decreases, the tire pressure will also decrease. Tire pressure should always be set based on cold inflation tire pressure. For details, refer to TIRES, STANDARD PROCEDURE.

Check air pressure as necessary in all tires using a known accurate air gauge and adjust to the specification listed on the Tire Inflation Pressure Label (Placard) provided with the vehicle (usually applied to the driver side B-pillar). After adjusting air pressure in a tire on the vehicle, allow approximately two minutes for the message or indicator lamp to go out.

If air pressure in any tire is low, inspect **all** the tires for leaks. A water "dunk tank" or other water test may be used to check for a leak around the sensor as long as any water at the valve core is removed once the procedure is completed. The water can be easily expelled from the core area by pushing in on the core for several seconds, allowing escaping air to drive out any moisture. Reinflate the tire as necessary. Always make sure the original (special) valve stem cap is securely installed to keep moisture out of the sensor.

If the indicator lamp is still ON continuously, refer to the appropriate diagnostic information.

SYSTEM FAULT

If a system fault is detected, a chime will sound, and the TPM indicator lamp will flash for 75 seconds, then remain on solid. For vehicles with TPM Systems, a "SERVICE TIRE PRESSURE MONITORING SYSTEM" (Highline IPC) or "SERVICE TIRE PRESSURE SYSTEM" (Midline IPC) message will appear in the Electronic Vehicle Information Center (EVIC), followed by a graphic display. A system fault can occur by many scenarios, including the following:

- Signal interference due to electronic devices or driving next to facilities emitting the same Radio Frequencies as the TPM sensors.
- Installing some form of aftermarket window tinting that affects radio wave signals.
- Accumulation of snow or ice around the wheels or wheel housings.
- Using tire chains on the vehicle.
- Using wheels not equipped with TPM sensors.

Refer to the appropriate diagnostic information.

SENSOR, TIRE PRESSURE MONITORING (TPM)

CAUTION

CAUTION

CAUTION: The Tire Pressure Monitoring (TPM) system has been optimized for the original equipment tires and wheels. TPM system pressures have been established for the tire size equipped on the vehicle. Undesirable system operation or sensor damage may result when using replacement equipment that is not of the same size, type, or style. Aftermarket wheels can cause sensor damage. Do not use aftermarket tire sealants or balance beads if your vehicle is equipped with TPM, as damage to the sensors may result.

CAUTION: Do not attempt to install a tire pressure sensor in an aftermarket wheel. Use tire pressure sensors in original style factory wheels only. If aftermarket wheels are installed, and therefore do not contain tire pressure sensors, the system will not function properly and the driver will be continuously notified of a system malfunction.

CAUTION: After inspecting or adjusting the tire pressure always reinstall the valve stem cap. This will prevent moisture and dirt from entering the valve stem, which could damage the Tire Pressure Sensor.

CAUTION: Tire pressure sensor valve stem caps and cores are specially designed for

the sensors. Due to risk of corrosion, do not use a standard valve stem cap or core in a tire pressure sensor in place of the original equipment style sensor cap and core.

CAUTION: Any time a sensor is to be installed in a wheel, it is necessary to install a new sensor-to-wheel seal, metal washer and valve stem nut, to ensure air tight sealing.

CAUTION: When installing the valve core, be sure to tighten the core to specifications. Overtightening by a little as three or four inch pounds can damage the sensor.

DESCRIPTION

DESCRIPTION

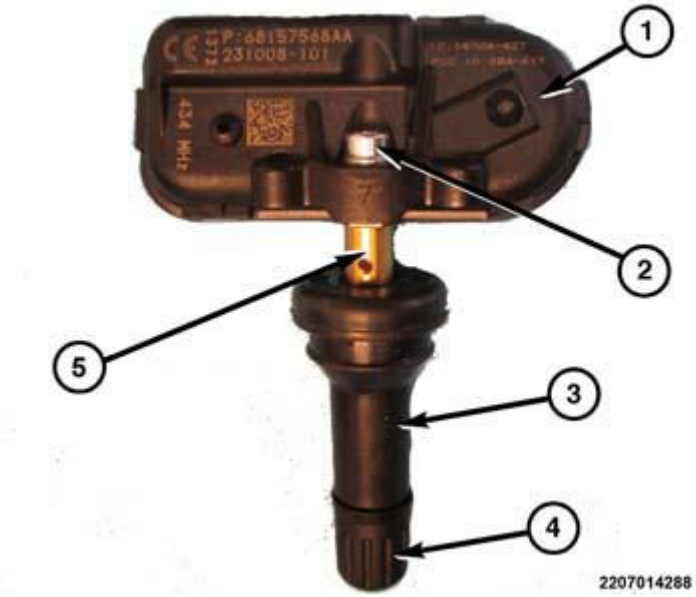

Fig. 5: Tire Pressure Sensor & Components
Courtesy of CHRYSLER GROUP, LLC

NOTE: Replace the valve stem assembly and tire pressure sensor mounting screw with each tire change.

One tire pressure sensor (1) is mounted to a valve stem (3) specifically designed for mounting the pressure sensor (1) in each wheel in place of the traditional tire valve stem. Each sensor has an internal battery that lasts up to 10 years. The battery is not serviceable. At the time of battery failure, the sensor (1) must be replaced. The TPM system operates on a 433 MHz radio frequency. The tire pressure sensor valve stem (3) looks similar to a standard valve stem with the tire mounted on the wheel.

NOTE: This vehicle uses the 433 MHz TPM sensor. Although 315 MHz and 433 MHz sensors are identical in size and shape, they are not interchangeable. Always make sure the correct sensor is being used. A RKE-TPM Analyzer can be used to determine the sensor's frequency without having to dismount the tire.

The TPM sensors are designed for original style factory wheels. It is not recommended to install a tire pressure sensor in an aftermarket wheel. (This could cause sealing and system performance issues.)

The serviceable components of the tire pressure sensor are:

- Tire pressure sensor (1), including all components below:
- Valve stem (3), including screw (2).
- Valve stem core (not shown).
- Valve stem cap (4)

The valve stem caps and cores used are specifically designed for the tire pressure monitoring sensors. Although similar to standard valve stem caps and cores, they are different. The valve stem cap has a special seal inside to keep moisture and corrosion out. The valve stem core has a special nickel coating to protect from corrosion.

OPERATION

OPERATION

CAUTION: The TPMS has been optimized for the original equipment tires and wheels. TPMS pressures have been established for the tire size equipped on your vehicle. Undesirable system operation or sensor damage may result when using replacement equipment that is not of the same size, type, and/or style. After-market wheels can cause sensor damage. Do not use aftermarket tire sealants or balance beads if your vehicle is equipped with a TPMS, as damage to the sensors may result.

CAUTION: After inspecting or adjusting the tire pressure always reinstall the valve stem cap. This will prevent moisture and dirt from entering the valve stem, which could damage the Tire Pressure Monitoring Sensor.

CAUTION: Tire pressure sensor valve stem caps and cores are specially designed for the sensors. Due to risk of corrosion, do not use a standard valve stem cap or core in a tire pressure sensor in place of the original equipment style sensor cap and core.

CAUTION: Any time a sensor is to be reinstalled in a wheel, a new valve stem assembly must be installed to ensure air tight sealing.

NOTE: TPM thresholds have been established for the original tire size equipped on the

vehicle. Use original size tires only to maintain system accuracy.

The battery operated tire pressure sensor is both a transmitter and a receiver. The TPM sensor can be forced to transmit if using a special tool such as a TPM-RKE Analyzer. The TPM-RKE Analyzer has the ability to change the sensor mode and to diagnose a faulty TPM sensor. Using a TPM-RKE Analyzer can take up to a minute to force a transmission from a sensor.

Each sensor's (transmitter) broadcast is uniquely coded so that the module can monitor the state of each of the sensors on the four rotating road wheels. The module can automatically learn and store the sensor's ID while driving "within 20 minutes continuously above 20 m.p.h. (32 Km/h)" after a sensor has been replaced. The vehicle must be stationary for more then 20 minutes in order to initiate the learning sequence.

The sensor IDs can also be programmed using the TPM-RKE Analyzer Tool. Scan each TPM sensor at each road wheel, and store each Sensor ID in the correct location. (LEFT FRONT, LEFT REAR, RIGHT FRONT, and RIGHT REAR) Connect the TPM-RKE Analyzer Tool to the Scan Tool. Then follow the programming steps outlined in the diagnostic Scan Tool for "Program Tire Pressure Sensor ID w/ TPM Tool".

REMOVAL

REMOVAL

1. Raise and support vehicle. Refer to **HOISTING, STANDARD PROCEDURE** .
2. Remove tire and wheel assembly.

CAUTION: The cap used on this valve stem contains an O-ring seal to prevent contamination and moisture from entering the valve stem. Do not substitute a regular valve stem cap in its place.

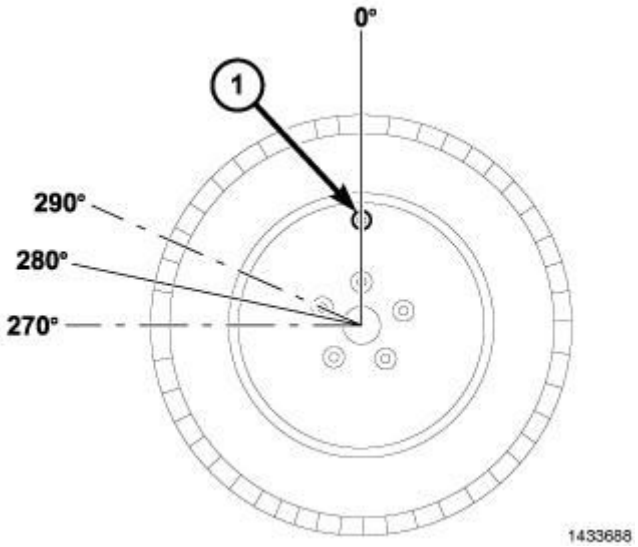

Fig. 6: Start Mount/Dismount Tool Within 10 Degrees Of Valve Stem
Courtesy of CHRYSLER GROUP, LLC

3. Dismount tire from wheel following tire changer manufacturers instructions while paying special attention to the following to avoid damaging the pressure sensor:
   a. When breaking the tire bead loose from the wheel rim, avoid using the Bead Breaker in the area of the sensor (1). That includes both outer and inner beads of the tire.
   b. When preparing to dismount the tire from the wheel, carefully insert the mounting/dismounting tool 280° from the valve stem ± 10°, then proceed to dismount the tire from the wheel. Use this process on both outer and inner tire beads.

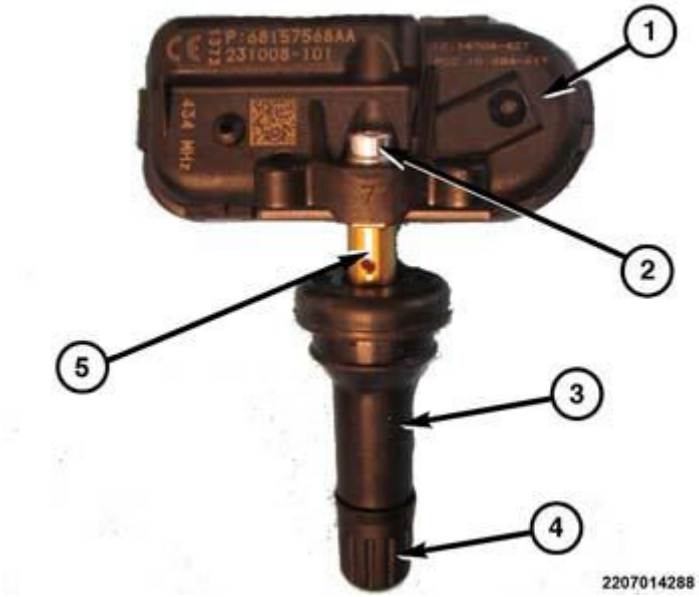

Fig. 7: Tire Pressure Sensor & Components
Courtesy of CHRYSLER GROUP, LLC

4. Remove the sensor to valve stem retainer screw (2) and remove the sensor (1) from the valve stem (3).
5. Remove the valve stem (3) from the wheel.

INSTALLATION

INSTALLATION

NOTE: **If replacing tire pressure sensor, a new valve stem will be pre-mounted to the sensor as an assembly. Verify that the sensor is positioned properly before seating the valve stem. If replacing a valve stem only (using the existing tire pressure sensor), the new valve stem will include a new tire pressure sensor mounting screw. Always use a new mounting screw when attaching a sensor to a valve stem.**

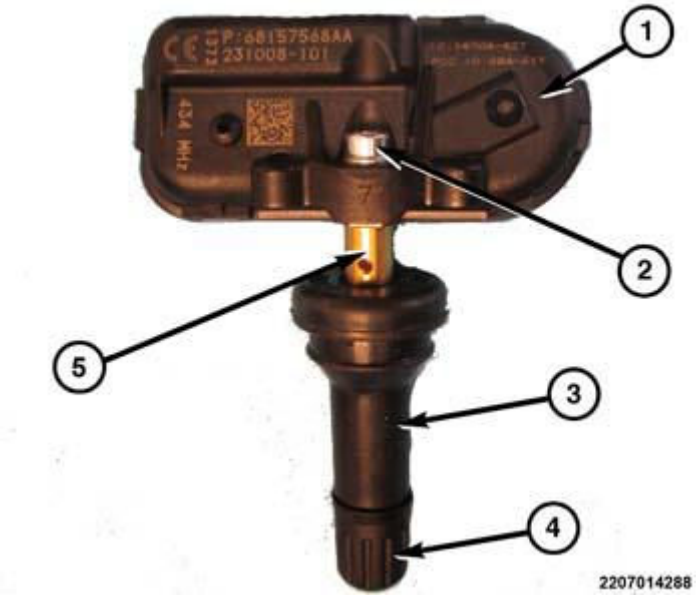

Fig. 8: Tire Pressure Sensor & Components
Courtesy of CHRYSLER GROUP, LLC

CAUTION: Any time a sensor is to be reinstalled in a wheel, a new valve stem assembly must be installed to ensure air tight sealing.

1. Wipe area clean around sensor/valve stem mounting hole in wheel. Make sure surface of wheel is not damaged.

NOTE: When installing a new valve stem, tire bead lubricant should be used for proper installation.

NOTE: If replacing tire pressure sensor, a new valve stem will be pre-mounted to the sensor as an assembly. Verify that the sensor is positioned properly before seating the valve stem.

2. Insert valve stem (3) through wheel and pull through to seat with standard valve stem installation tool.
3. If replacing the valve stem (3) only (using the existing tire pressure sensor), verify that the flat sides of the brass extension on the bottom of the valve stem (5) are at a 90 degree angle with the wheel. Position the pressure sensor (1) over the brass extension (5), install the retainer screw (2) and tighten to 1.4 N.m (12 in. lbs.).
4. Mount tire on wheel following tire changer manufacturers instructions, paying special attention to the following to avoid damaging tire pressure sensor:

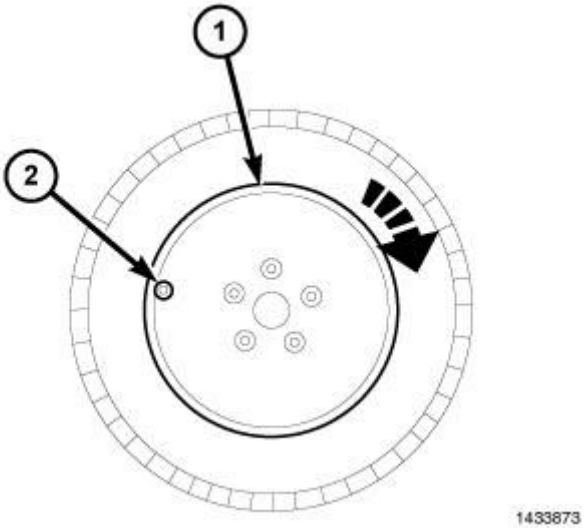

Fig. 9: Mounting Tire Using Rotating Wheel Machine
Courtesy of CHRYSLER GROUP, LLC

a. Rotating Wheel Tire Changers - Once the wheel is mounted to the changer, position the sensor valve stem (2) approximately 280° from the head of the changer (located at 1) in a clockwise direction before rotating the wheel (also in a clockwise direction) to mount the tire. Use this procedure on both the outer and inner tire beads.

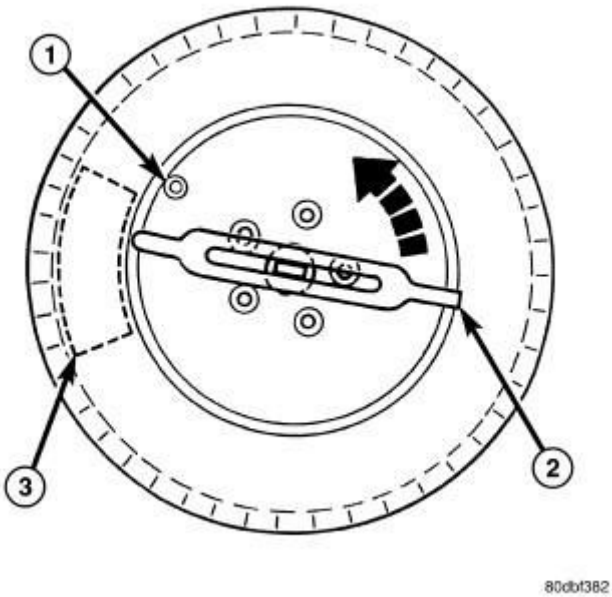

Fig. 10: Mounting Tire Using Rotating Tool Machine
Courtesy of CHRYSLER GROUP, LLC

b. Rotating Tool Tire Changers - Position the wheel on the changer so that the sensor valve stem (1) is

located approximately 210° clockwise from the installation end of the mounting/dismounting tool (2) once the tool is mounted for tire installation. Make sure the sensor is clear of the lower bead breaker area (3) to avoid damaging the sensor when the breaker rises. Rotate the tool (2) in a counterclockwise direction to mount the tire. Use this procedure on both the outer and inner tire beads.

c. Adjust air pressure to that listed on Tire Inflation Pressure Label (Placard) provided with vehicle (usually applied to driver's side B-pillar). Make sure **original style** valve stem cap is securely installed to keep moisture out of sensor.
d. Install tire and wheel assembly on the vehicle.
e. Remove the support and lower the vehicle.
f. Perform one of the following to make the system learn the new sensor ID.
g. Use the TPM-RKE Analyzer, 9936, with the Scan Tool to program the RF Hub module with the tire pressure sensor ID. This is part of the TPM Diagnostic Verification Test. Refer to **STANDARD PROCEDURE** .
h. Once the vehicle has remained stationary for more than 20 minutes, drive vehicle for a minimum of 20 minutes while maintaining a continuous speed above 20 mph (32 km/h). During this time, the system will learn the new sensor ID. This is part of the TPM Diagnostic Verification Test. Refer to **STANDARD PROCEDURE** .

NOTE: If a sensor cannot be trained, refer to appropriate diagnostic information.

TIRES

DESCRIPTION

TIRE

Tires are designed and engineered for each specific vehicle. They provide the best overall performance for normal operation. The ride and handling characteristics match the vehicle's requirements. With proper care they will give excellent reliability, traction, skid resistance, and tread life.

Driving habits have more effect on tire life than any other factor. Careful drivers will obtain, in most cases, much greater mileage than severe use or careless drivers. A few of the driving habits which will shorten the life of any tire are:

- Rapid acceleration
- Severe application of brakes
- High-speed driving
- Taking turns at excessive speeds
- Striking curbs and other obstacles
- Operating vehicle with over or under inflated tire pressures

Radial ply tires are more prone to irregular tread wear. It is important to follow the tire rotation interval shown in **TIRE AND WHEEL ROTATION** . This will help to achieve a greater tread-life potential.

TIRE IDENTIFICATION

Tire type, size, load index and speed rating are encoded in the letters and numbers imprinted on the side wall of the tire. Refer to the Tire Identification chart to decipher the code. An All Season type tire will also have either M + S, M AND S or M - S (indicating mud and snow traction) imprinted on the side wall. An Extra or Light Load marking "XL" or "LL" may also be listed on the sidewall.

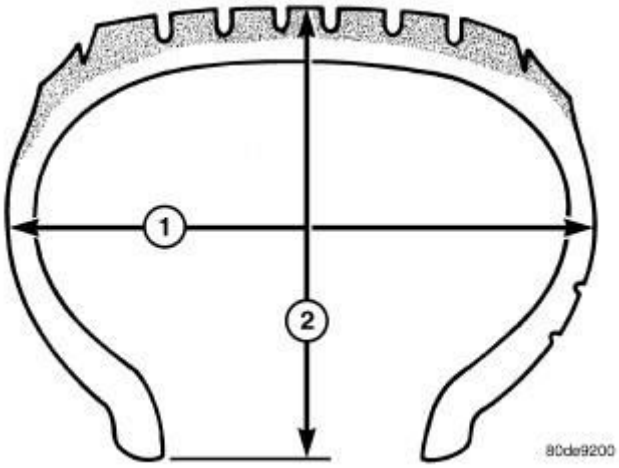

Fig. 11: Tire Aspect Ratio
Courtesy of CHRYSLER GROUP, LLC

For example purposes, tire size P225/60 R 16 97 T is used in the Tire Identification chart. P stands for Passenger tire. Sectional width (1) is 225mm. Sectional height (2) is 60 percent of sectional width. R represents Radial construction. 16 is the wheel diameter in inches. 97 T is the tire manufacturers load and speed ratings.

TIRE IDENTIFICATION

Reading Tire Codes		
P	TIRE TYPE (Not present on all tires)	P - Passenger
		T - Temporary
		C - Commercial
		LT - Light Truck
225	SECTIONAL WIDTH	SHOWN IN MILLIMETERS
60	ASPECT RATIO	SHOWN IN PERCENTAGE
R	CONSTRUCTION TYPE	R - RADIAL
		B - BIAS BELTED
		D - DIAGONAL (BIAS)
16	WHEEL DIAMETER	SHOWN IN INCHES
97	LOAD INDEX	*
T	SPEED RATING	*
* Consult the tire manufacturer regarding any questions on tire specifications or capabilities.		

TIRE CHAINS

Refer to the owners manual supplied with the vehicle to determine whether the use of tire chains is permitted on this vehicle.

REPLACEMENT TIRES

WARNING: Failure to equip the vehicle with tires having adequate speed capability can result in sudden tire failure.

WARNING: In order to maintain the speed capability of the vehicle, replacement tires must have speed ratings equal to or higher than those fitted to the vehicle as original equipment. If tires with lower speed ratings are fitted, the vehicle's handling may be affected and the speed capability of the vehicle may be lowered to the maximum speed capability of the replacement tires. To avoid an accident resulting in severe or fatal injury, consult the tire manufacturer in regards to maximum speed ratings.

It is recommended that tires equivalent to the original equipment tires be used when replacement is needed.

Failure to use equivalent replacement tires may adversely affect the safety and handling of the vehicle.

The original equipment tires provide a proper combination of many characteristics such as:

- Ride
- Noise
- Handling
- Durability
- Tread life
- Traction
- Rolling resistance
- Speed capability

The use of tires smaller than the minimum tire size approved for the vehicle can result in tire overloading and failure.

Use tires that have the approved load rating for the vehicle and never overload them. Failure to equip the vehicle with tires having adequate speed capability can result in sudden tire failure and loss of vehicle control.

The use of oversize tires may cause interference with vehicle components. Under extremes of suspension and steering travel, interference with vehicle components may cause tire damage.

SPARE TIRE

A compact (temporary) spare tire and wheel assembly is standard equipment on this vehicle.

Some vehicles are equipped with a Tire Inflator/Sealant tire repair kit as standard equipment in place of a spare tire. It is to be used to repair small punctures in the tire as necessary. For additional information, refer to the Owners Manual.

The compact spare tire is designed for emergency use only. The original tire should be repaired or replaced at the first opportunity, then reinstalled. Do not exceed speeds of 80 km/h (50 mph) when using the compact spare tire. Refer to the Owner's Manual for complete details.

DIAGNOSIS AND TESTING

TIRE NOISE

Unusual tire noise can be associated with tire and wheel vibration or irregular tire wear. For vibration issues, refer to **DIAGNOSIS AND TESTING**. For irregular tire wear issues, refer to **TIRES, DIAGNOSIS AND TESTING**.

TIRE WEAR PATTERNS

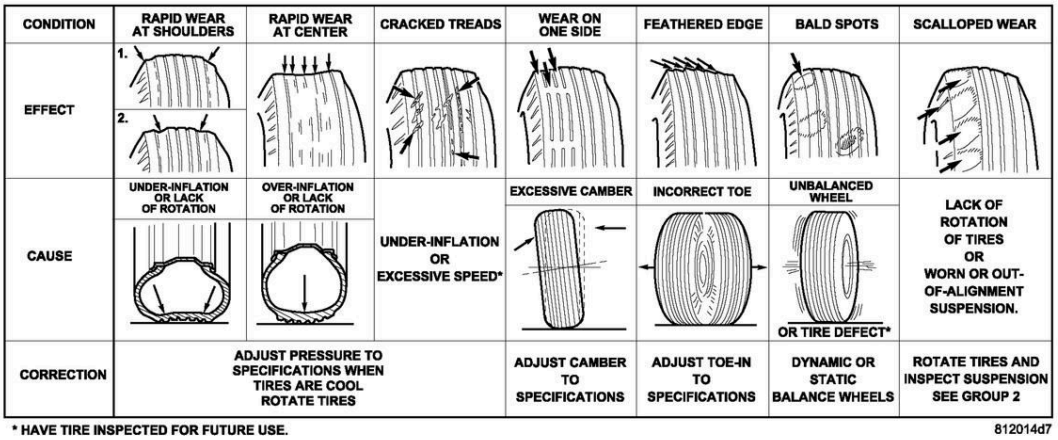

Fig. 12: Identifying Tire Wear Patterns
Courtesy of CHRYSLER GROUP, LLC

Under inflation will cause wear on the shoulders of tire. Over inflation will cause wear at the center of tire.

Excessive camber causes the tire to run at an angle to the road. One side of tread is then worn more than the other.

Excessive toe-in or toe-out causes wear on the tread edges and a feathered effect across the tread.

TREAD WEAR INDICATORS

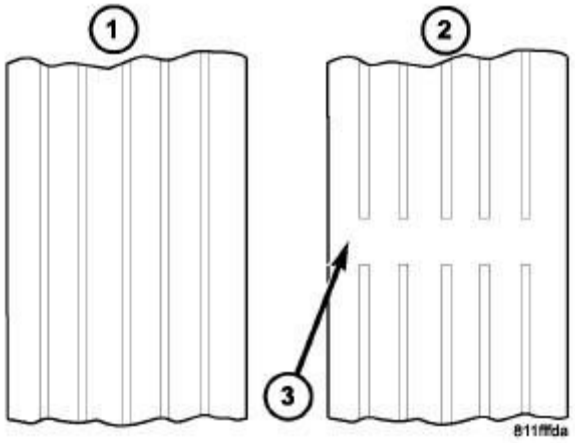

Fig. 13: Identifying Tread Wear Indicators
Courtesy of CHRYSLER GROUP, LLC

Tread wear indicators are molded into the bottom of the tread grooves. When tread depth is 1.6 mm (1/16 in.), the tread wear indicators will appear as a 13 mm (1/2 in.) band (3).

Tire replacement is necessary when indicators appear in two or more grooves or if localized balding occurs.

STANDARD PROCEDURE

TIRE INFLATION PRESSURES

The specified tire pressures have been chosen to provide safe operation, vehicle stability, and a smooth ride. The proper tire pressure specification can be found on the Tire And Loading Information Label provided with the vehicle (usually on the driver's door opening (B-pillar) or rear shutface of driver's door).

A quality air pressure gauge is recommended to check tire air pressure. Tire pressure should be checked cold once per month. Check tire pressure more frequently when the weather temperature varies widely. Tire pressure will decrease when the outdoor temperature drops. After checking the air pressure, replace valve cap finger tight.

Inflation pressures specified on the Tire Inflation Pressure Label are always the cold inflation pressure of the tire. Cold inflation pressure is obtained after the vehicle has not been operated for at least 3 hours, or the vehicle is driven less than one mile after being inoperative for 3 hours. Tire inflation pressures may increase from 2 to 6 pounds per square inch (psi) during operation. Do not reduce this normal pressure buildup.

Improper inflation can cause:

- Uneven wear patterns
- Reduced tread life
- Reduced fuel economy
- Unsatisfactory ride

- The vehicle to drift.

WARNING: Over or Under inflated tires can affect vehicle handling. The tire can fail suddenly, resulting in loss of vehicle control.

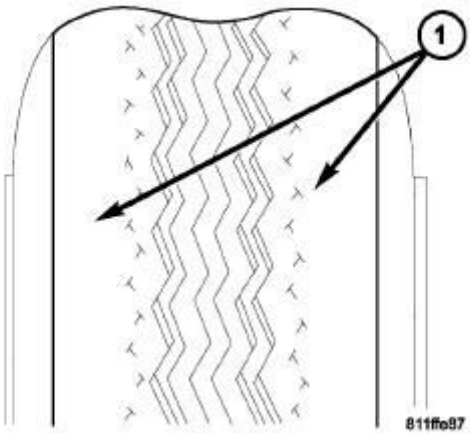

Fig. 14: Under Inflation
Courtesy of CHRYSLER GROUP, LLC

Under inflation causes rapid shoulder wear, tire flexing, and can result in tire failure (1).

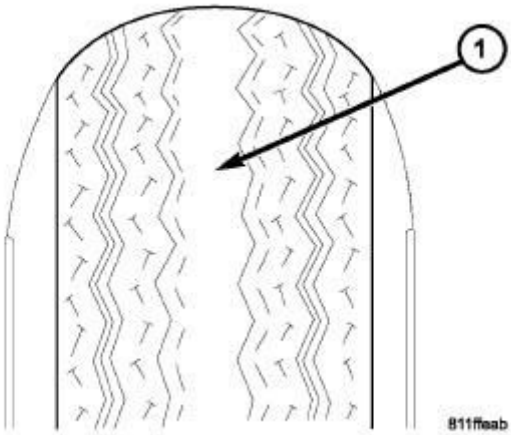

Fig. 15: Identifying Over Inflated Tire
Courtesy of CHRYSLER GROUP, LLC

Over inflation causes rapid center wear and loss of the tire's ability to cushion shocks (1).

TIRE PRESSURE FOR HIGH SPEED OPERATION

Refer to the vehicle's Owners Manual Package.

TIRE LEAK REPAIRING

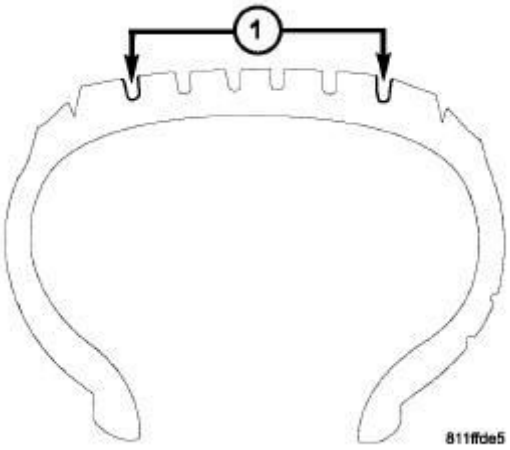

Fig. 16: Identifying Tire Repair Area
Courtesy of CHRYSLER GROUP, LLC

For proper repairing, a radial tire must be removed from the wheel. Repairs should only be made if the defect, or puncture, is in the tread area (1). The tire should be replaced if the puncture is located in the sidewall.

Deflate tire completely before attempting to dismount the tire from the wheel. **Use a lubricant such as a mild soap solution when dismounting or mounting tire.** Use tools free of burrs or sharp edges which could damage the tire or wheel rim.

Before mounting tire on wheel, make sure all rust is removed from the rim bead and repaint if necessary.

Install wheel on vehicle. Refer to **INSTALLATION**.

CLEANING

CLEANING

Before delivery of a vehicle, remove the protective coating on the tires with white sidewalls or raised white letters. To remove the protective coating, apply warm water and let it soak for a few minutes. Afterwards, scrub the coating away with a soft bristle brush. Steam cleaning may also be used to remove the coating.

CAUTION: DO NOT use gasoline, mineral oil, oil-based solvent or a wire brush for cleaning.

REMOVAL

REMOVAL

	A multimedia supplement to the instructions contained in this article is

YouTube	available. To view the multimedia example of the condition described go to; **http://www.youtube.com/user/Mitchell1Tips** **then type "A00641393.vid1" into the "Search Channel" box.**

YouTube	A multimedia supplement to the instructions contained in this article is available. To view the multimedia example of the condition described go to; **http://www.youtube.com/user/Mitchell1Tips** **then type "A00641393.vid2" into the "Search Channel" box.**

IF REMOVING THE TIRE FROM THE WHEEL, PERFORM THE PROCEDURE BELOW:

CAUTION: The cap used on this valve stem contains an O-ring seal to prevent contamination and moisture from entering the valve stem. Do not substitute a regular valve stem cap in its place.

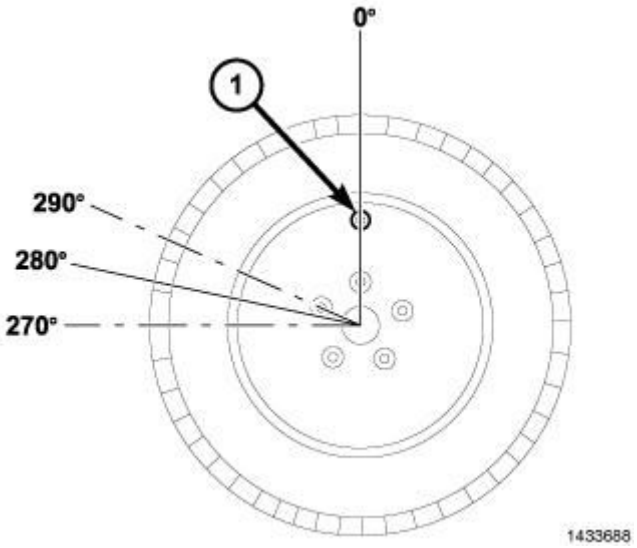

Fig. 17: Start Mount/Dismount Tool Within 10 Degrees Of Valve Stem
Courtesy of CHRYSLER GROUP, LLC

1.
2. Dismount tire from wheel following tire changer manufacturers instructions while paying special attention to the following to avoid damaging the pressure sensor:
   a. When breaking the tire bead loose from the wheel rim, avoid using the Bead Breaker in the area of the sensor (1). That includes both outer and inner beads of the tire.
   b. When preparing to dismount the tire from the wheel, carefully insert the mounting/dismounting tool 280° from the valve stem ± 10°, then proceed to dismount the tire from the wheel. Use this process on both outer and inner tire beads.

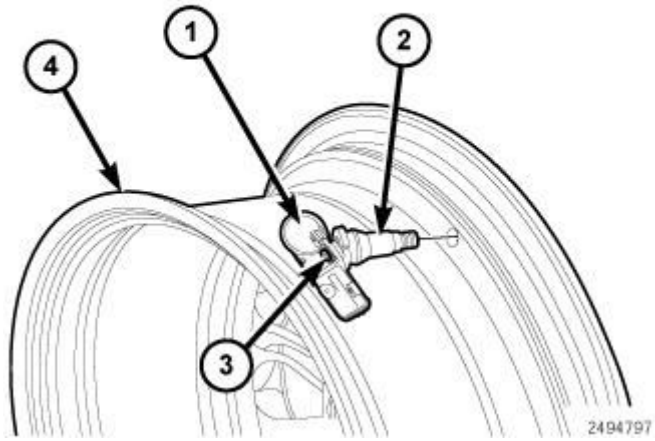

Fig. 18: Sensor Mounting To Wheel
Courtesy of CHRYSLER GROUP, LLC

3. Remove the sensor to valve stem retainer screw (3) and remove the sensor (1) from the valve stem (2).
4. Remove the valve stem (2) from the wheel (4).

INSTALLATION

INSTALLATION

NOTE: **If replacing tire pressure sensor, a new valve stem will be pre-mounted to the sensor as an assembly. Verify that the sensor is positioned properly before seating the valve stem. If replacing a valve stem only (using the existing tire pressure sensor), the new valve stem will include a new tire pressure sensor mounting screw. Always use a new mounting screw when attaching a sensor to a valve stem.**

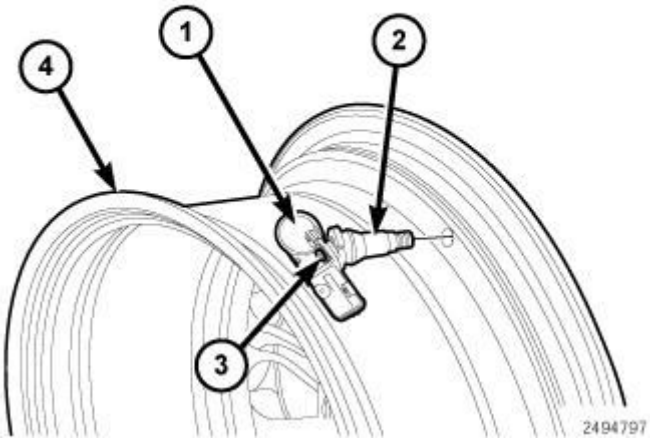

Fig. 19: Sensor Mounting To Wheel
Courtesy of CHRYSLER GROUP, LLC

CAUTION: Any time a sensor is to be reinstalled in a wheel, a new valve stem assembly must be installed to ensure air tight sealing.

IF THE TIRE WAS REMOVED FROM THE WHEEL, PERFORM THE PROCEDURE BELOW:

1. Wipe area clean around sensor/valve stem mounting hole in wheel (4). Make sure surface of wheel is not damaged.

NOTE: A new valve stem is pre-lubricated for proper installation with a standard tool.

NOTE: If replacing tire pressure sensor, a new valve stem will be pre-mounted to the sensor as an assembly. Verify that the sensor is positioned properly before seating the valve stem.

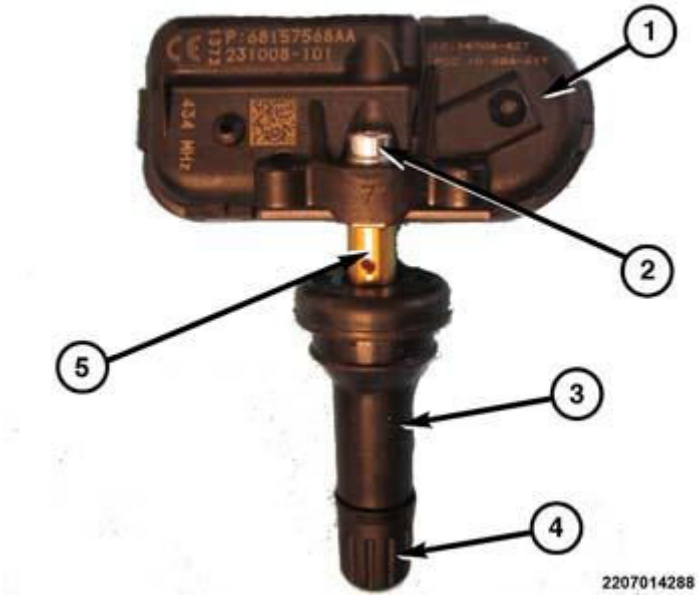

Fig. 20: Tire Pressure Sensor & Components
Courtesy of CHRYSLER GROUP, LLC

2. Insert valve stem (3) through wheel and pull through to seat with standard valve stem installation tool.
3. If replacing the valve stem (3) only (using the existing tire pressure sensor), verify that the flat sides of the brass extension on the bottom of the valve stem (3) are at a 90 degree angle with the wheel. Position the pressure sensor (1) over the brass extension (5), install the retainer screw (2) and tighten to 1.4 N.m (12 in. lbs.).
4. Mount tire on wheel following tire changer manufacturers instructions, paying special attention to the following to avoid damaging tire pressure sensor:

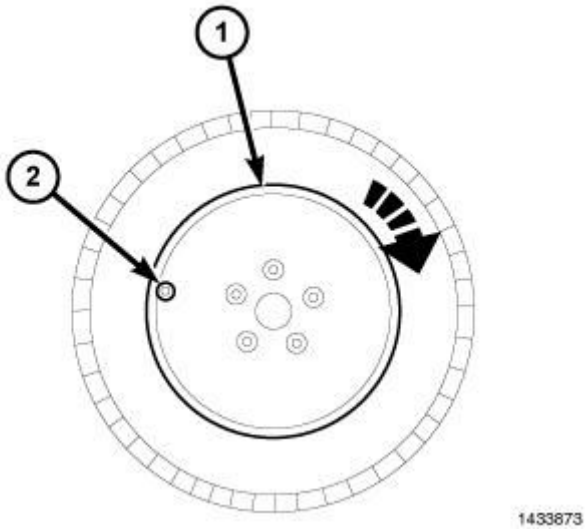

Fig. 21: Mounting Tire Using Rotating Wheel Machine
Courtesy of CHRYSLER GROUP, LLC

a. Rotating Wheel Tire Changers - Once the wheel is mounted to the changer, position the sensor valve stem (2) approximately 280° from the head of the changer (located at 1) in a clockwise direction before rotating the wheel (also in a clockwise direction) to mount the tire. Use this procedure on both the outer and inner tire beads.

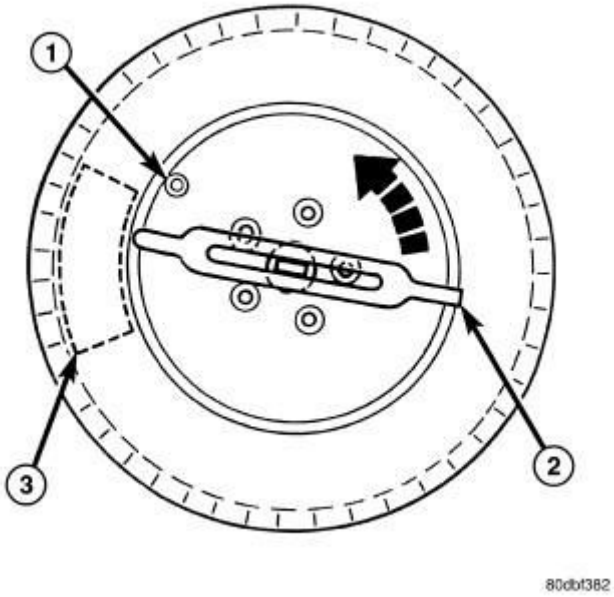

Fig. 22: Mounting Tire Using Rotating Tool Machine
Courtesy of CHRYSLER GROUP, LLC

b. Rotating Tool Tire Changers - Position the wheel on the changer so that the sensor valve stem (1) is located approximately 210° clockwise from the installation end of the mounting/dismounting tool (2) once the tool is mounted for tire installation. Make sure the sensor is clear of the lower bead breaker area (3) to avoid damaging the sensor when the breaker rises. Rotate the tool (2) in a counterclockwise direction to mount the tire. Use this procedure on both the outer and inner tire beads.

c. Adjust air pressure to that listed on Tire Inflation Pressure Label (Placard) provided with vehicle (usually applied to driver's side B-pillar). Make sure **original style** valve stem cap is securely installed to keep moisture out of sensor.

d. Install tire and wheel assembly on the vehicle.

e. Remove the support and lower the vehicle.

f. Perform one of the following to make the system learn the new sensor ID.

g. Use the TPM-RKE Analyzer, 9936, with the Scan Tool to program the RF Hub module with the tire pressure sensor ID. This is part of the TPM Diagnostic Verification Test. Refer to **STANDARD PROCEDURE** .

h. Once the vehicle has remained stationary for more than 20 minutes, drive vehicle for a minimum of 10 minutes while maintaining a continuous speed above 15 mph (24 km/h). During this time, the

system will learn the new sensor ID. This is part of the TPM Diagnostic Verification Test. Refer to **STANDARD PROCEDURE** .

NOTE: If a sensor cannot be trained, refer to appropriate diagnostic information.

WHEELS

DESCRIPTION

DESCRIPTION

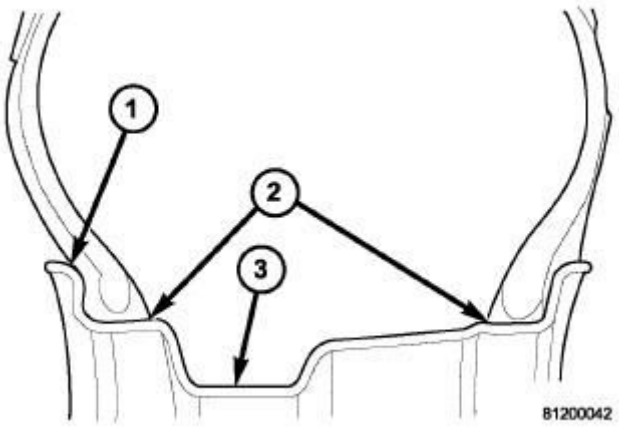

Fig. 23: Identifying Wheel/Rim Design
Courtesy of CHRYSLER GROUP, LLC

All vehicles use either steel or cast aluminum drop center wheels. The original equipment wheels are designed for proper operation at all loads up to the specified maximum vehicle capacity.

Every wheel has raised sections between the rim flanges (1) and drop well (3) called safety humps (2). In case of air loss, these raised sections help hold the tire in position on the wheel until the vehicle can be brought to a safe stop. When being installed on the wheel, initial inflation of the tire forces the tire bead over these raised sections into place.

The wheel studs and nuts are designed for specific wheel applications and must be replaced with equivalent parts. Do not use replacement parts of lesser quality or of a substitute design. All aluminum and steel wheels have wheel stud nuts with an enlarged nose. This enlarged nose is necessary to ensure proper retention of the wheels.

DIAGNOSIS AND TESTING

DIAGNOSIS AND TESTING - WHEEL INSPECTION

Inspect wheels for:

- Excessive runout
- Dents, cracks or irregular bends
- Damaged wheel stud (lug) holes
- Air Leaks

NOTE: Do not attempt to repair a wheel by hammering, heating or welding.

If a wheel is damaged, an original equipment replacement wheel should be used. When obtaining replacement wheels, they should be equivalent in load carrying capacity. The diameter, width, offset, pilot hole and bolt circle of the wheel should be the same as the original wheel.

WARNING: **Failure to use equivalent replacement wheels may adversely affect the safety and handling of the vehicle.**

WARNING: **Replacement with used wheels is not recommended. The service history of the wheel may have included severe treatment or very high mileage. The rim could fail without warning.**

WARNING: **Chrysler LLC does not recommend that customers use "reconditioned" wheels (wheels that have been damaged and repaired) because they can result in a sudden catastrophic wheel failure which could cause loss of control and result in injury or death. For clarification:**

- **Cosmetic refinishing for the purpose of repairing a superficial flaw is an acceptable procedure providing it is limited to paint or clear coat only, the wheel is not modified in any way, and there is no exposure to paint curing heat over 200 degrees Fahrenheit (93 degrees Celsius).**
- **Damaged wheels are those which have been bent, broken, cracked or sustained some other physical damage which may have compromised the wheel structure.**
- **Repaired indicates that the wheel has been modified through bending, welding, heating, straightening, or material removal to rectify damage.**
- **Re-plating of chrome plated wheels is not an acceptable procedure nor is chrome plating of original equipment painted or polished wheels, as this may alter mechanical properties and affect fatigue life.**

SPECIFICATIONS

SPECIFICATIONS

TORQUE SPECIFICATIONS

DESCRIPTION	N.m	Ft. Lbs.	In. Lbs.
Valve Core	0.5	-	4
Wheel Mounting (Lug) Bolt	130	96	-

CLEANING

CLEANING

All wheels and wheel trim, especially aluminum and chrome plated, should be cleaned regularly using mild soap and water to maintain their luster and to prevent corrosion. Wash them with the same soap solution recommended for the body of the vehicle.

When cleaning extremely dirty wheels, care must be taken in the selection of tire and wheel cleaning chemicals and equipment to prevent damage to the wheels. Mopar® Wheel Treatment or Mopar® Chrome Cleaner is recommended. Any of the "DO NOT USE" items listed below can damage wheels and wheel trim.

DO NOT USE:

- Any abrasive cleaner
- Any abrasive cleaning pad (such as steel wool) or abrasive brush
- Any cleaner that contains an acid which can react with and discolor the chrome surface. **Many wheel cleaners contain acids that can harm the wheel surface.**
- Oven cleaner
- A car wash that uses carbide-tipped wheel cleaning brushes or acidic solutions.

2014 SYSTEM WIRING DIAGRAMS

Jeep - Cherokee

USING MITCHELL1'S WIRING DIAGRAMS

For information on using these wiring diagrams, see **USING MITCHELL1'S SYSTEM WIRING DIAGRAMS** article.

AIR CONDITIONING

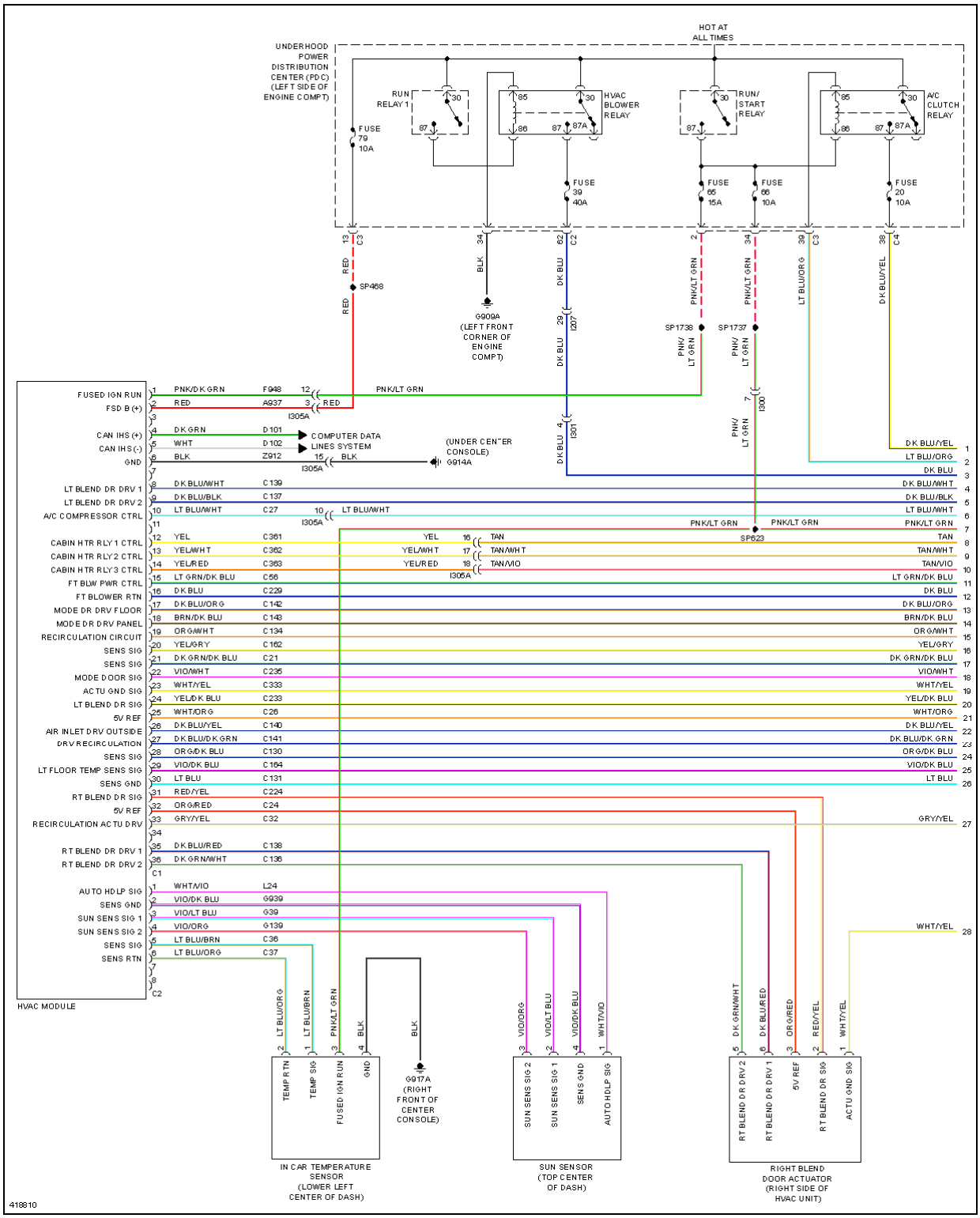
HOT AT ALL TIMES
UNDERHOOD POWER DISTRIBUTION CENTER (PDC) (LEFT SIDE OF ENGINE COMPT)
RUN RELAY 1
HVAC BLOWER RELAY
RUN/ START RELAY
A/C CLUTCH RELAY
FUSE 79 10A
FUSE 39 40A
FUSE 65 15A
FUSE 66 10A
FUSE 20 10A
SP468
G909A (LEFT FRONT CORNER OF ENGINE COMPT)
SP1738
SP1737
SP623
(UNDER CENTER CONSOLE)
G914A
COMPUTER DATA LINES SYSTEM
FUSED IGN RUN
FSD B (+)
CAN IHS (+)
CAN IHS (-)
GND
LT BLEND DR DRV 1
LT BLEND DR DRV 2
A/C COMPRESSOR CTRL
CABIN HTR RLY 1 CTRL
CABIN HTR RLY 2 CTRL
CABIN HTR RLY 3 CTRL
FT BLW PWR CTRL
FT BLOWER RTN
MODE DR DRV FLOOR
MODE DR DRV PANEL
RECIRCULATION CIRCUIT
SENS SIG
SENS SIG
MODE DOOR SIG
ACTU GND SIG
LT BLEND DR SIG
5V REF
AIR INLET DRV OUTSIDE
DRV RECIRCULATION
SENS SIG
LT FLOOR TEMP SENS SIG
SENS GND
RT BLEND DR SIG
5V REF
RECIRCULATION ACTU DRV
RT BLEND DR DRV 1
RT BLEND DR DRV 2
AUTO HDLP SIG
SENS GND
SUN SENS SIG 1
SUN SENS SIG 2
SENS SIG
SENS RTN
HVAC MODULE
G917A (RIGHT FRONT OF CENTER CONSOLE)
TEMP RTN
TEMP SIG
FUSED IGN RUN
GND
IN CAR TEMPERATURE SENSOR (LOWER LEFT CENTER OF DASH)
SUN SENS SIG 2
SUN SENS SIG 1
SENS GND
AUTO HDLP SIG
SUN SENSOR (TOP CENTER OF DASH)
RT BLEND DR DRV 2
RT BLEND DR DRV 1
5V REF
RT BLEND DR SIG
ACTU GND SIG
RIGHT BLEND DOOR ACTUATOR (RIGHT SIDE OF HVAC UNIT)
416810

Fig. 1: Automatic A/C Circuit (1 of 5)

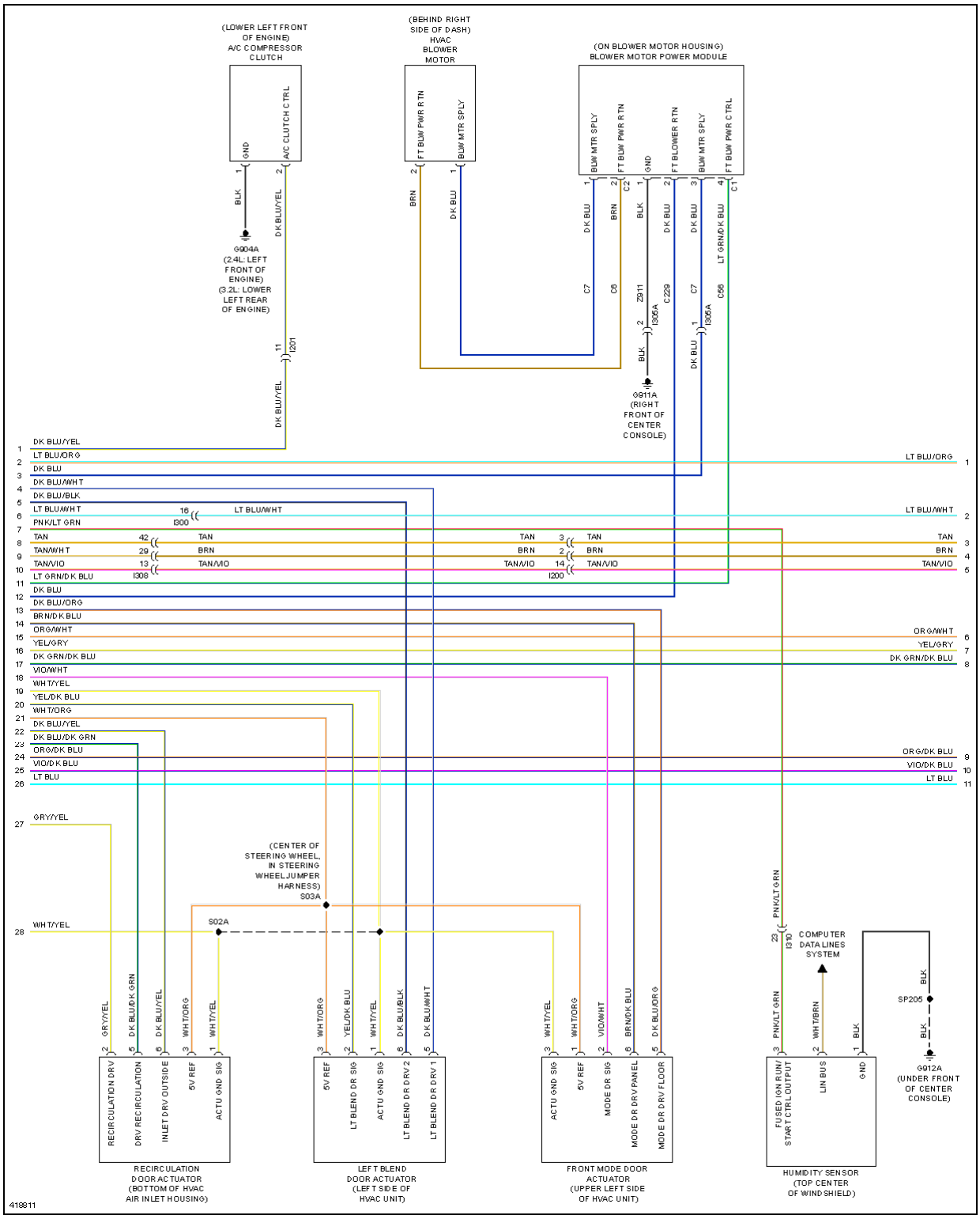
(LOWER LEFT FRONT OF ENGINE) A/C COMPRESSOR CLUTCH
GND
A/C CLUTCH CTRL
BLK
DK BLU/YEL
G904A (2.4L: LEFT FRONT OF ENGINE) (3.2L: LOWER LEFT REAR OF ENGINE)
I201
(BEHIND RIGHT SIDE OF DASH) HVAC BLOWER MOTOR
FT BLW PWR RTN
BLW MTR SPLY
BRN
DK BLU
(ON BLOWER MOTOR HOUSING) BLOWER MOTOR POWER MODULE
BLW MTR SPLY
FT BLW PWR RTN
GND
FT BLOWER RTN
BLW MTR SPLY
FT BLW PWR CTRL
C2
C1
DK BLU
BRN
BLK
DK BLU
DK BLU
LT GRN/DK BLU
C7
C6
2911
I906A
C229
C7
C56
I906A
BLK
DK BLU
G911A (RIGHT FRONT OF CENTER CONSOLE)
DK BLU/YEL
LT BLU/ORG
DK BLU
DK BLU/WHT
DK BLU/BLK
LT BLU/WHT
PNK/LT GRN
TAN
TAN/WHT
TAN/VIO
LT GRN/DK BLU
DK BLU
DK BLU/ORG
BRN/DK BLU
ORG/WHT
YEL/GRY
DK GRN/DK BLU
VIO/WHT
WHT/YEL
YEL/DK BLU
WHT/ORG
DK BLU/YEL
DK BLU/DK GRN
ORG/DK BLU
VIO/DK BLU
LT BLU
GRY/YEL
WHT/YEL
(CENTER OF STEERING WHEEL, IN STEERING WHEEL JUMPER HARNESS) S03A
S02A
PNK/LT GRN
COMPUTER DATA LINES SYSTEM
SP205
BLK
G912A (UNDER FRONT OF CENTER CONSOLE)
RECIRCULATION DRV
DRV RECIRCULATION
INLET DRV OUTSIDE
5V REF
ACTU GND SIG
RECIRCULATION DOOR ACTUATOR (BOTTOM OF HVAC AIR INLET HOUSING)
5V REF
LT BLEND DR SIG
ACTU GND SIG
LT BLEND DR DRV 2
LT BLEND DR DRV 1
LEFT BLEND DOOR ACTUATOR (LEFT SIDE OF HVAC UNIT)
ACTU GND SIG
5V REF
MODE DR SIG
MODE DR DRV PANEL
MODE DR DRV FLOOR
FRONT MODE DOOR ACTUATOR (UPPER LEFT SIDE OF HVAC UNIT)
FUSED IGN RUN/ START CTRL OUTPUT
LIN BUS
GND
HUMIDITY SENSOR (TOP CENTER OF WINDSHIELD)
418811

Fig. 2: Automatic A/C Circuit (2 of 5)

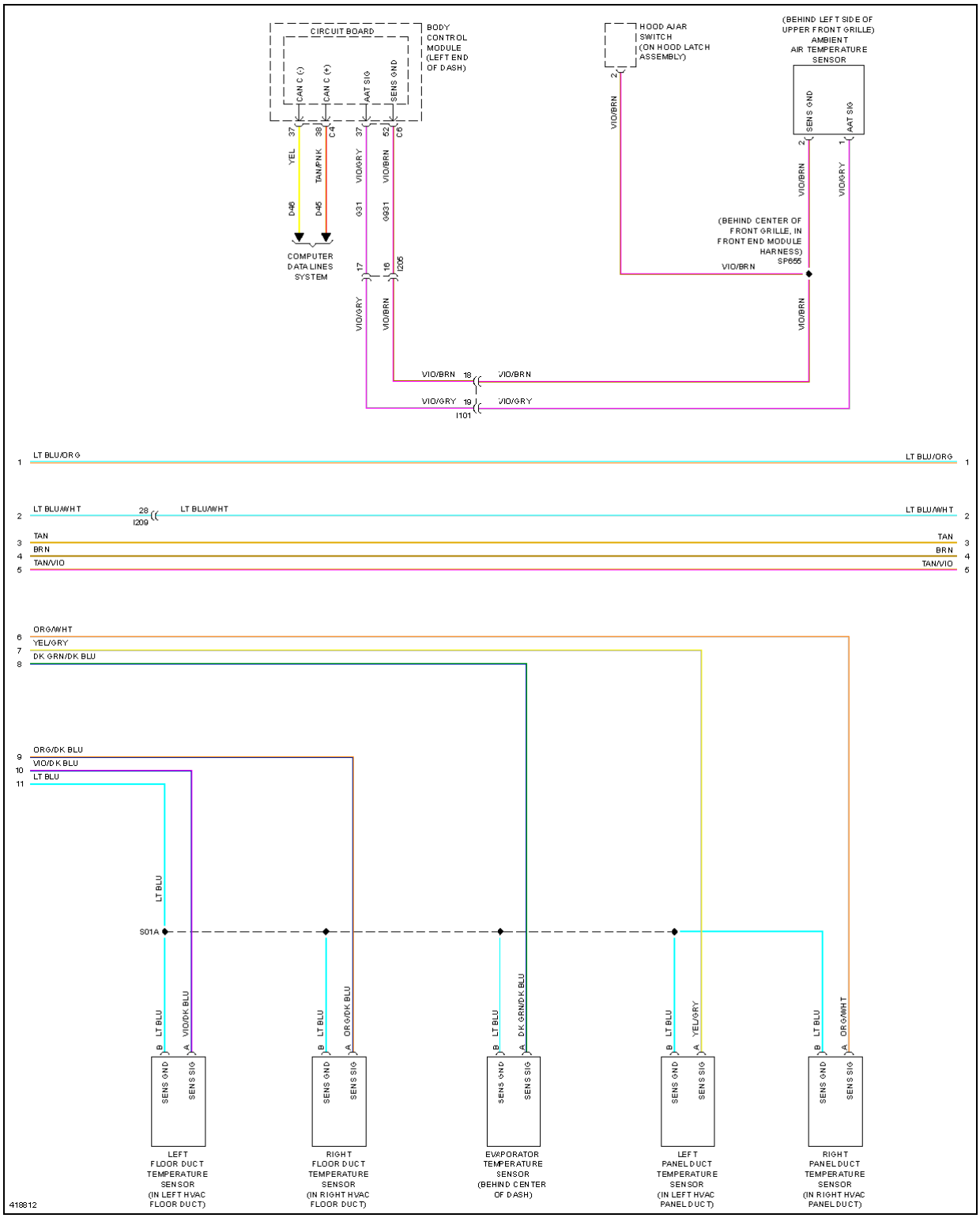
CIRCUIT BOARD
BODY CONTROL MODULE (LEFT END OF DASH)
CAN C (-)
CAN C (+)
AAT SIG
SENS GND
HOOD AJAR SWITCH (ON HOOD LATCH ASSEMBLY)
(BEHIND LEFT SIDE OF UPPER FRONT GRILLE) AMBIENT AIR TEMPERATURE SENSOR
COMPUTER DATA LINES SYSTEM
(BEHIND CENTER OF FRONT GRILLE, IN FRONT END MODULE HARNESS) SP655
LT BLU/ORG
LT BLU/WHT
TAN
BRN
TAN/VIO
ORG/WHT
YEL/GRY
DK GRN/DK BLU
ORG/DK BLU
VIO/DK BLU
LT BLU
S01A
LEFT FLOOR DUCT TEMPERATURE SENSOR (IN LEFT HVAC FLOOR DUCT)
RIGHT FLOOR DUCT TEMPERATURE SENSOR (IN RIGHT HVAC FLOOR DUCT)
EVAPORATOR TEMPERATURE SENSOR (BEHIND CENTER OF DASH)
LEFT PANEL DUCT TEMPERATURE SENSOR (IN LEFT HVAC PANEL DUCT)
RIGHT PANEL DUCT TEMPERATURE SENSOR (IN RIGHT HVAC PANEL DUCT)
418812

Fig. 3: Automatic A/C Circuit (3 of 5)

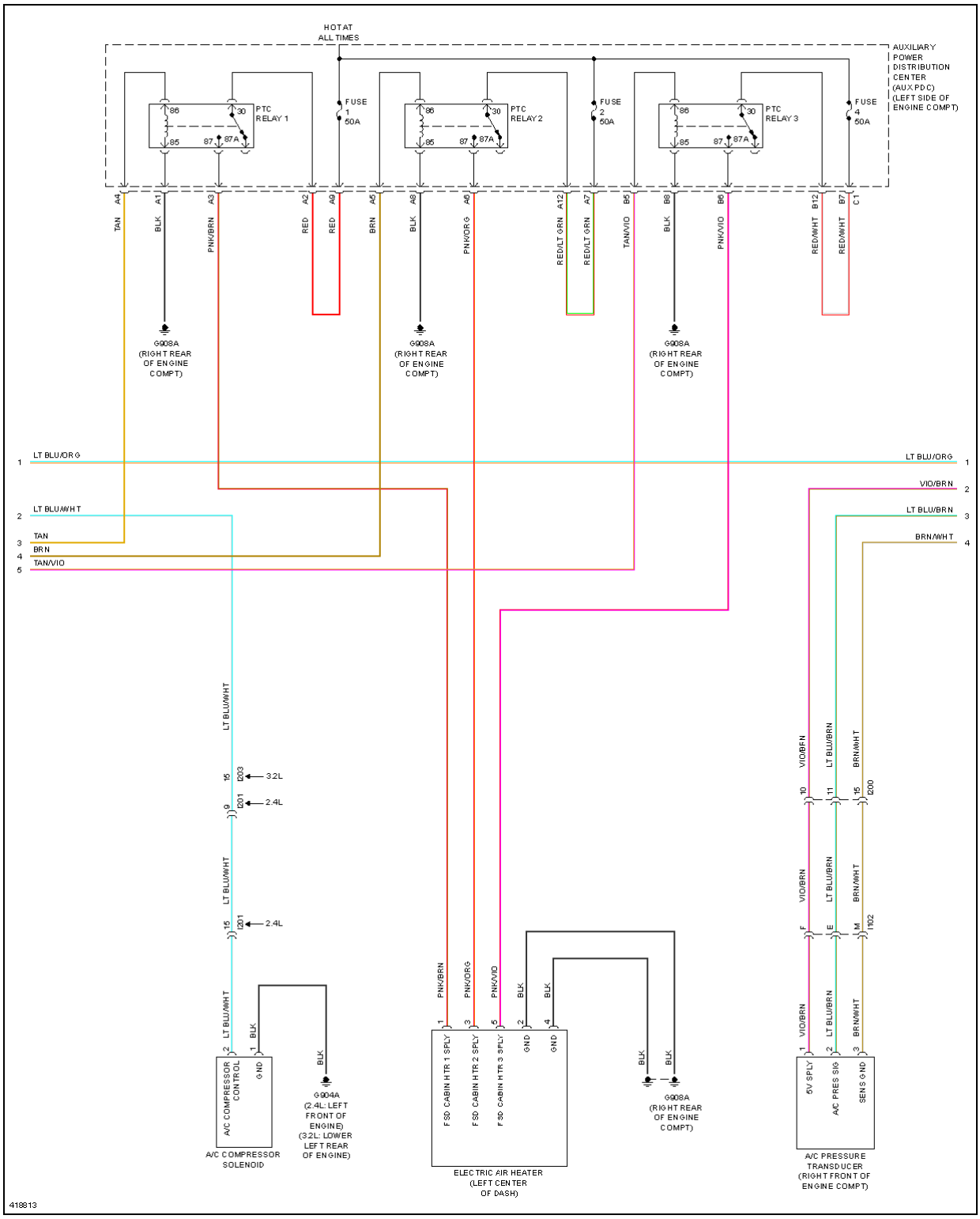
HOT AT ALL TIMES
AUXILIARY POWER DISTRIBUTION CENTER (AUX PDC) (LEFT SIDE OF ENGINE COMPT)
PTC RELAY 1
PTC RELAY 2
PTC RELAY 3
FUSE 1 50A
FUSE 2 50A
FUSE 4 50A
G908A (RIGHT REAR OF ENGINE COMPT)
LT BLU/ORG
LT BLU/WHT
TAN
BRN
TAN/VIO
VIO/BRN
LT BLU/BRN
BRN/WHT
3.2L
2.4L
A/C COMPRESSOR CONTROL
GND
A/C COMPRESSOR SOLENOID
G904A (2.4L: LEFT FRONT OF ENGINE) (3.2L: LOWER LEFT REAR OF ENGINE)
FSD CABIN HTR 1 SPLY
FSD CABIN HTR 2 SPLY
FSD CABIN HTR 3 SPLY
ELECTRIC AIR HEATER (LEFT CENTER OF DASH)
5V SPLY
A/C PRES SIG
SENS GND
A/C PRESSURE TRANSDUCER (RIGHT FRONT OF ENGINE COMPT)
418813

Fig. 4: Automatic A/C Circuit (4 of 5)

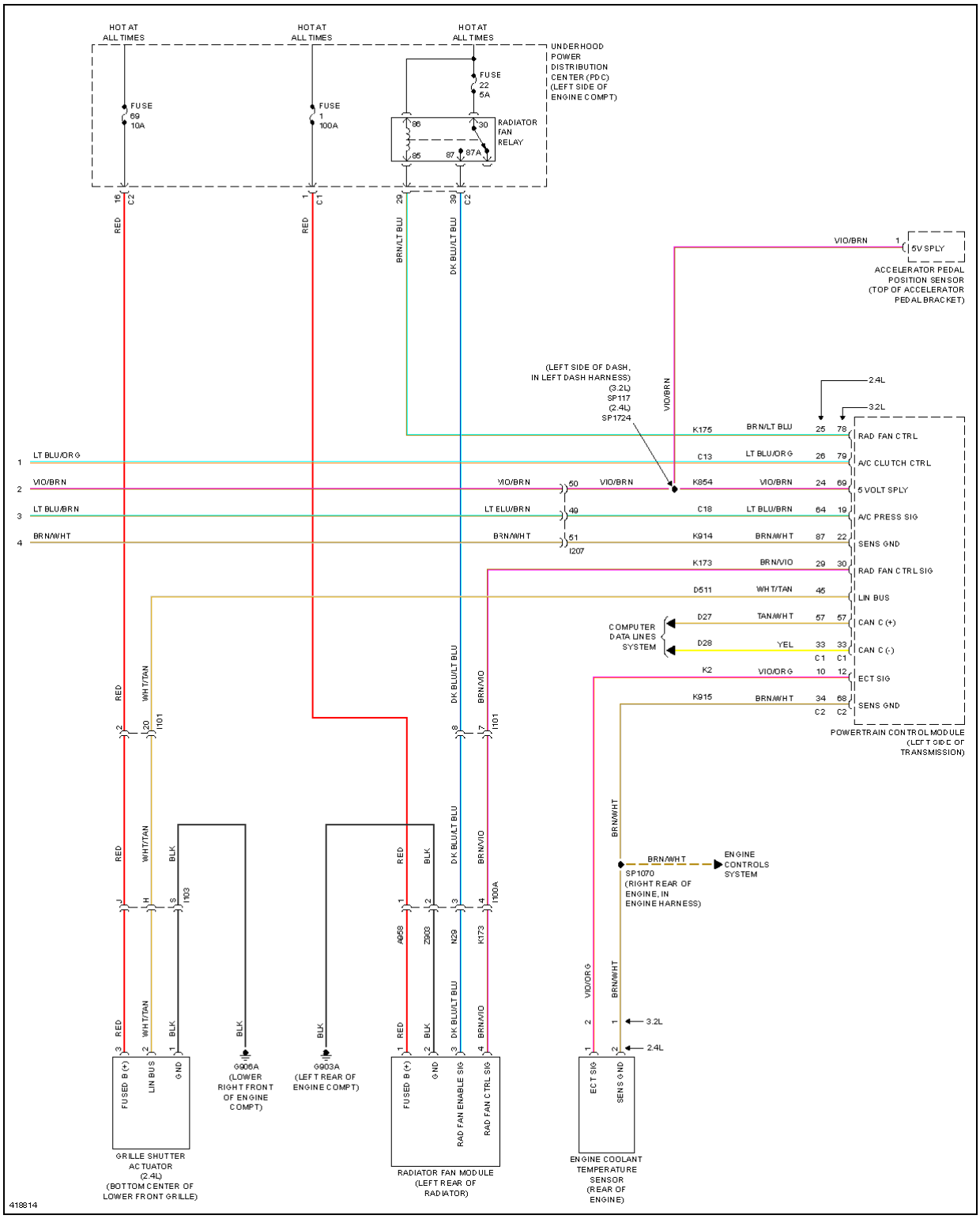
HOT AT ALL TIMES
HOT AT ALL TIMES
HOT AT ALL TIMES
UNDERHOOD POWER DISTRIBUTION CENTER (PDC) (LEFT SIDE OF ENGINE COMPT)
FUSE 69 10A
FUSE 1 100A
FUSE 22 5A
RADIATOR FAN RELAY
86
85
87
87A
30
RED
BRN/LT BLU
DK BLU/LT BLU
VIO/BRN
5V SPLY
ACCELERATOR PEDAL POSITION SENSOR (TOP OF ACCELERATOR PEDAL BRACKET)
(LEFT SIDE OF DASH, IN LEFT DASH HARNESS) (3.2L) SP117 (2.4L) SP1724
2.4L
3.2L
K175 BRN/LT BLU 25 78 RAD FAN CTRL
C13 LT BLU/ORG 26 79 A/C CLUTCH CTRL
K854 VIO/BRN 24 69 5 VOLT SPLY
C18 LT BLU/BRN 64 19 A/C PRESS SIG
K914 BRN/WHT 87 22 SENS GND
K173 BRN/VIO 29 30 RAD FAN CTRL SIG
D511 WHT/TAN 45 LIN BUS
D27 TAN/WHT 57 57 CAN C (+)
D28 YEL 33 33 CAN C (-)
C1 C1
K2 VIO/ORG 10 12 ECT SIG
K915 BRN/WHT 34 68 SENS GND
C2 C2
LT BLU/ORG
VIO/BRN
LT BLU/BRN
BRN/WHT
50
49
51
I207
COMPUTER DATA LINES SYSTEM
POWERTRAIN CONTROL MODULE (LEFT SIDE OF TRANSMISSION)
WHT/TAN
BLK
I101
I103
I100A
A968
Z903
N29
K173
SP1070 (RIGHT REAR OF ENGINE, IN ENGINE HARNESS)
ENGINE CONTROLS SYSTEM
FUSED B (+)
LIN BUS
GND
G906A (LOWER RIGHT FRONT OF ENGINE COMPT)
G903A (LEFT REAR OF ENGINE COMPT)
RAD FAN ENABLE SIG
RAD FAN CTRL SIG
ECT SIG
SENS GND
GRILLE SHUTTER ACTUATOR (2.4L) (BOTTOM CENTER OF LOWER FRONT GRILLE)
RADIATOR FAN MODULE (LEFT REAR OF RADIATOR)
ENGINE COOLANT TEMPERATURE SENSOR (REAR OF ENGINE)
418814

Fig. 5: Automatic A/C Circuit (5 of 5)

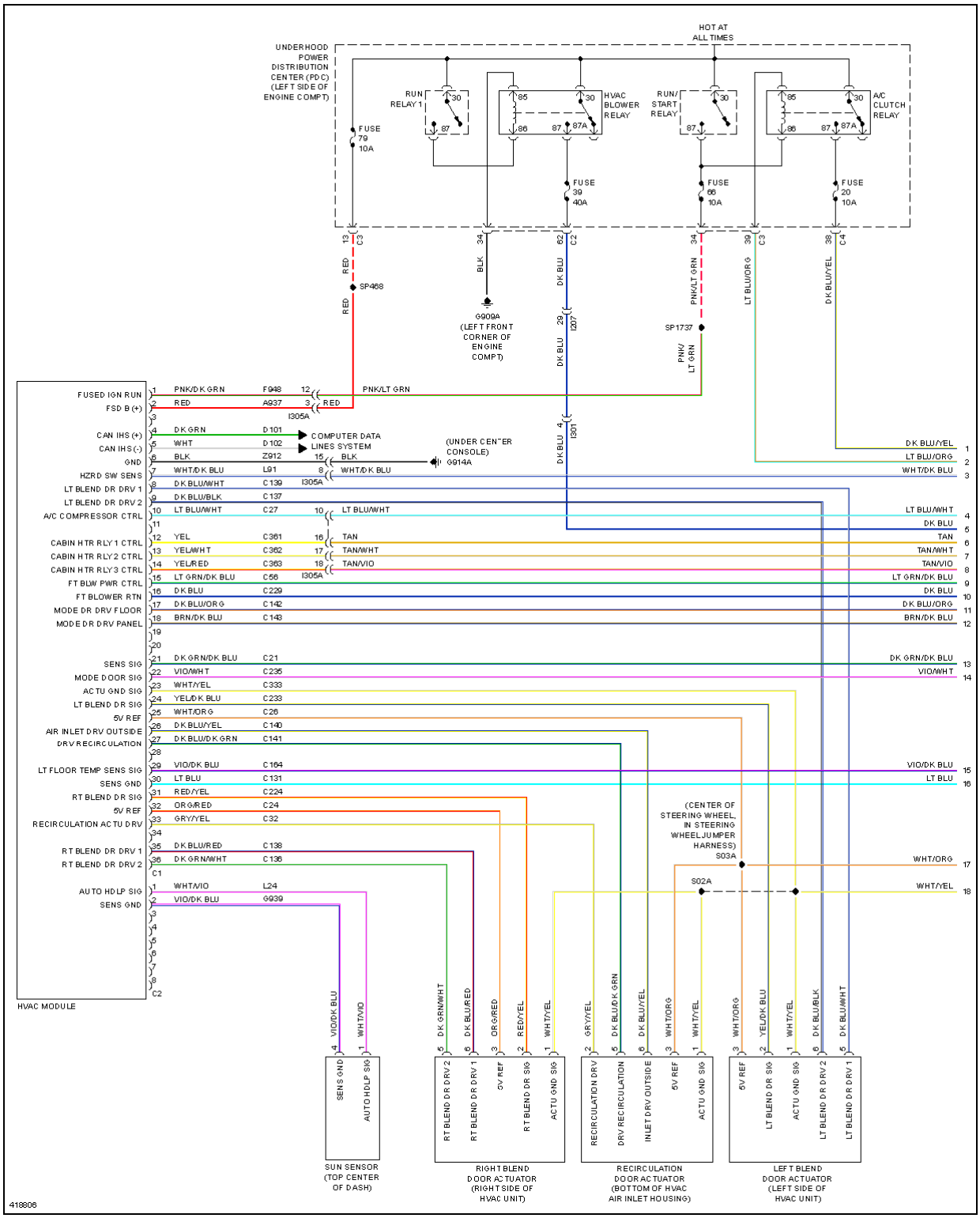
HOT AT ALL TIMES
UNDERHOOD POWER DISTRIBUTION CENTER (PDC) (LEFT SIDE OF ENGINE COMPT)
RUN RELAY 1
HVAC BLOWER RELAY
RUN/ START RELAY
A/C CLUTCH RELAY
FUSE 79 10A
FUSE 39 40A
FUSE 66 10A
FUSE 20 10A
SP468
G909A (LEFT FRONT CORNER OF ENGINE COMPT)
SP1737
FUSED IGN RUN
FSD B (+)
CAN IHS (+)
CAN IHS (-)
GND
HZRD SW SENS
LT BLEND DR DRV 1
LT BLEND DR DRV 2
A/C COMPRESSOR CTRL
CABIN HTR RLY 1 CTRL
CABIN HTR RLY 2 CTRL
CABIN HTR RLY 3 CTRL
FT BLW PWR CTRL
FT BLOWER RTN
MODE DR DRV FLOOR
MODE DR DRV PANEL
SENS SIG
MODE DOOR SIG
ACTU GND SIG
LT BLEND DR SIG
5V REF
AIR INLET DRV OUTSIDE
DRV RECIRCULATION
LT FLOOR TEMP SENS SIG
SENS GND
RT BLEND DR SIG
5V REF
RECIRCULATION ACTU DRV
RT BLEND DR DRV 1
RT BLEND DR DRV 2
AUTO HDLP SIG
SENS GND
HVAC MODULE
COMPUTER DATA LINES SYSTEM
(UNDER CENTER CONSOLE) G914A
(CENTER OF STEERING WHEEL, IN STEERING WHEEL JUMPER HARNESS) S03A
S02A
SUN SENSOR (TOP CENTER OF DASH)
RIGHT BLEND DOOR ACTUATOR (RIGHT SIDE OF HVAC UNIT)
RECIRCULATION DOOR ACTUATOR (BOTTOM OF HVAC AIR INLET HOUSING)
LEFT BLEND DOOR ACTUATOR (LEFT SIDE OF HVAC UNIT)
418806

Fig. 6: Manual A/C Circuit (1 of 4)

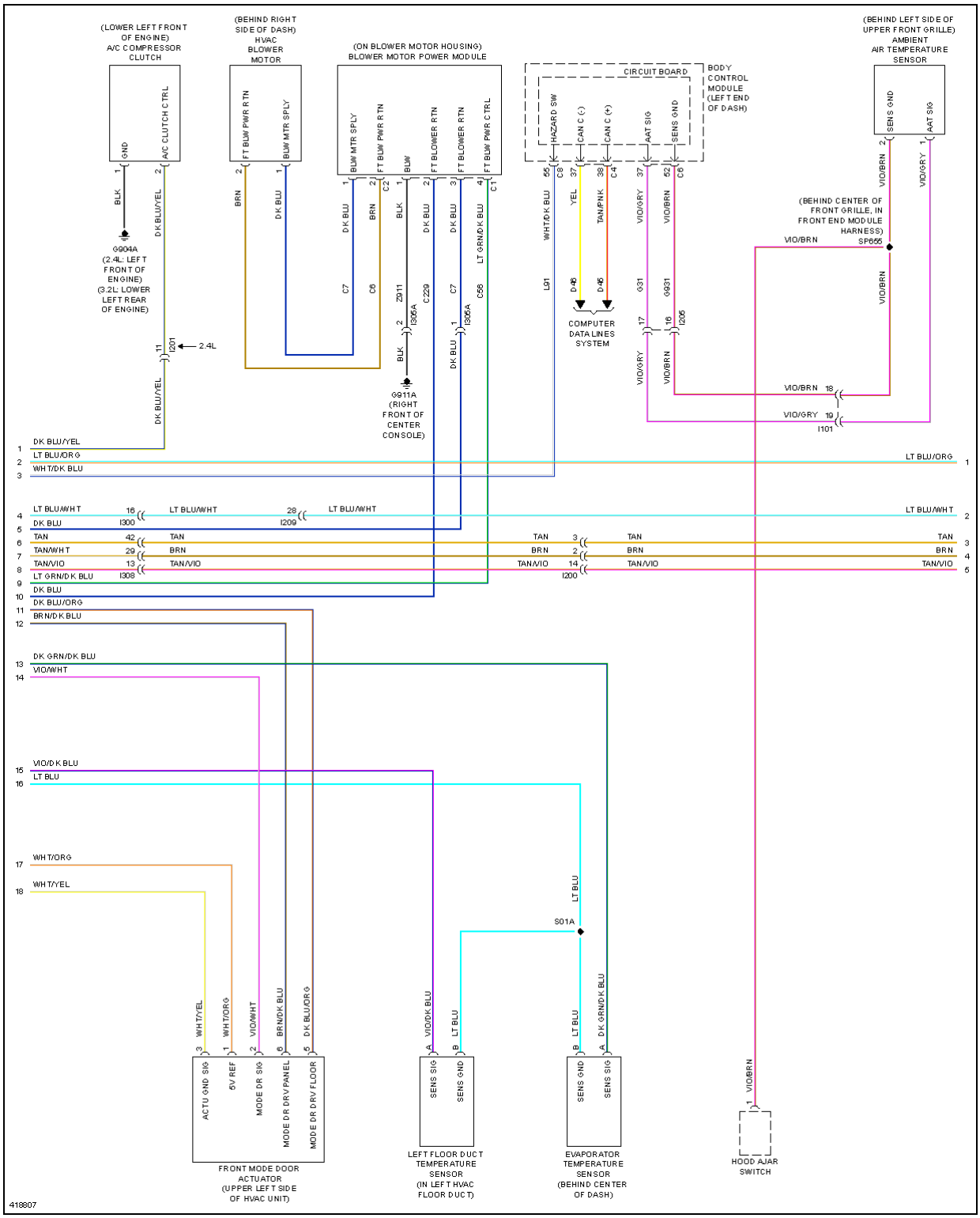
(LOWER LEFT FRONT OF ENGINE) A/C COMPRESSOR CLUTCH
(BEHIND RIGHT SIDE OF DASH) HVAC BLOWER MOTOR
(ON BLOWER MOTOR HOUSING) BLOWER MOTOR POWER MODULE
CIRCUIT BOARD
BODY CONTROL MODULE (LEFT END OF DASH)
(BEHIND LEFT SIDE OF UPPER FRONT GRILLE) AMBIENT AIR TEMPERATURE SENSOR
GND
A/C CLUTCH CTRL
FT BLW PWR RTN
BLW MTR SPLY
BLW MTR SPLY
FT BLW PWR RTN
BLW
FT BLOWER RTN
FT BLOWER RTN
FT BLW PWR CTRL
HAZARD SW
CAN C (-)
CAN C (+)
AAT SIG
SENS GND
SENS GND
AAT SIG
G904A (2.4L: LEFT FRONT OF ENGINE) (3.2L: LOWER LEFT REAR OF ENGINE)
2.4L
G911A (RIGHT FRONT OF CENTER CONSOLE)
COMPUTER DATA LINES SYSTEM
(BEHIND CENTER OF FRONT GRILLE, IN FRONT END MODULE HARNESS)
SP655
DK BLU/YEL
LT BLU/ORG
WHT/DK BLU
LT BLU/WHT
DK BLU
TAN
TAN/WHT
TAN/VIO
LT GRN/DK BLU
BRN
DK BLU/ORG
BRN/DK BLU
DK GRN/DK BLU
VIO/WHT
VIO/DK BLU
LT BLU
WHT/ORG
WHT/YEL
S01A
ACTU GND SIG
5V REF
MODE DR SIG
MODE DR DRV PANEL
MODE DR DRV FLOOR
FRONT MODE DOOR ACTUATOR (UPPER LEFT SIDE OF HVAC UNIT)
SENS SIG
SENS GND
LEFT FLOOR DUCT TEMPERATURE SENSOR (IN LEFT HVAC FLOOR DUCT)
EVAPORATOR TEMPERATURE SENSOR (BEHIND CENTER OF DASH)
HOOD AJAR SWITCH
418807

Fig. 7: Manual A/C Circuit (2 of 4)

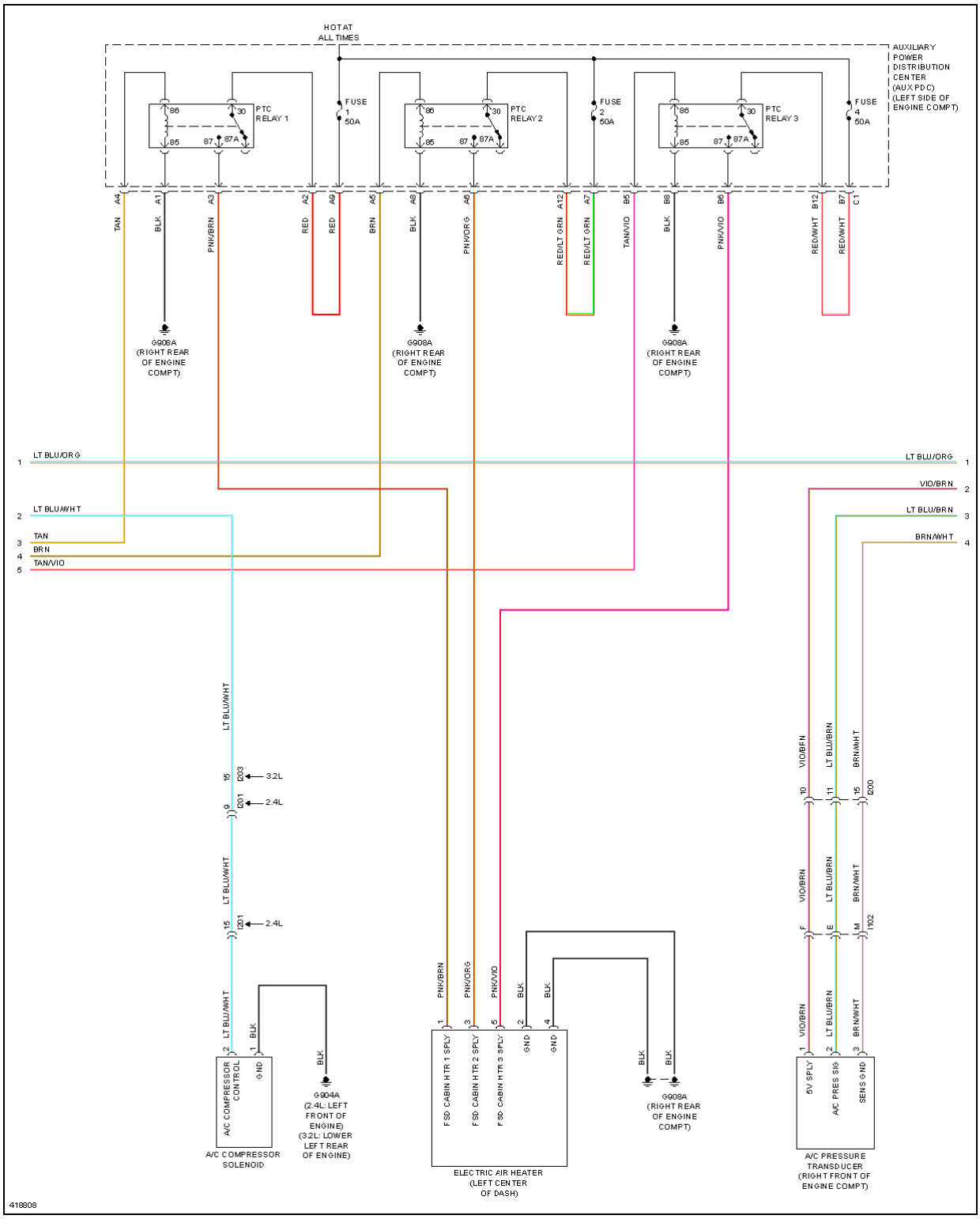
HOT AT ALL TIMES
AUXILIARY POWER DISTRIBUTION CENTER (AUX PDC) (LEFT SIDE OF ENGINE COMPT)
PTC RELAY 1
PTC RELAY 2
PTC RELAY 3
FUSE 1 50A
FUSE 2 50A
FUSE 4 50A
G908A (RIGHT REAR OF ENGINE COMPT)
LT BLU/ORG
LT BLU/WHT
TAN
BRN
TAN/VIO
VIO/BRN
LT BLU/BRN
BRN/WHT
3.2L
2.4L
A/C COMPRESSOR CONTROL
GND
A/C COMPRESSOR SOLENOID
G904A (2.4L: LEFT FRONT OF ENGINE) (3.2L: LOWER LEFT REAR OF ENGINE)
FSD CABIN HTR 1 SPLY
FSD CABIN HTR 2 SPLY
FSD CABIN HTR 3 SPLY
ELECTRIC AIR HEATER (LEFT CENTER OF DASH)
5V SPLY
A/C PRES SIG
SENS GND
A/C PRESSURE TRANSDUCER (RIGHT FRONT OF ENGINE COMPT)
418808

Fig. 8: Manual A/C Circuit (3 of 4)

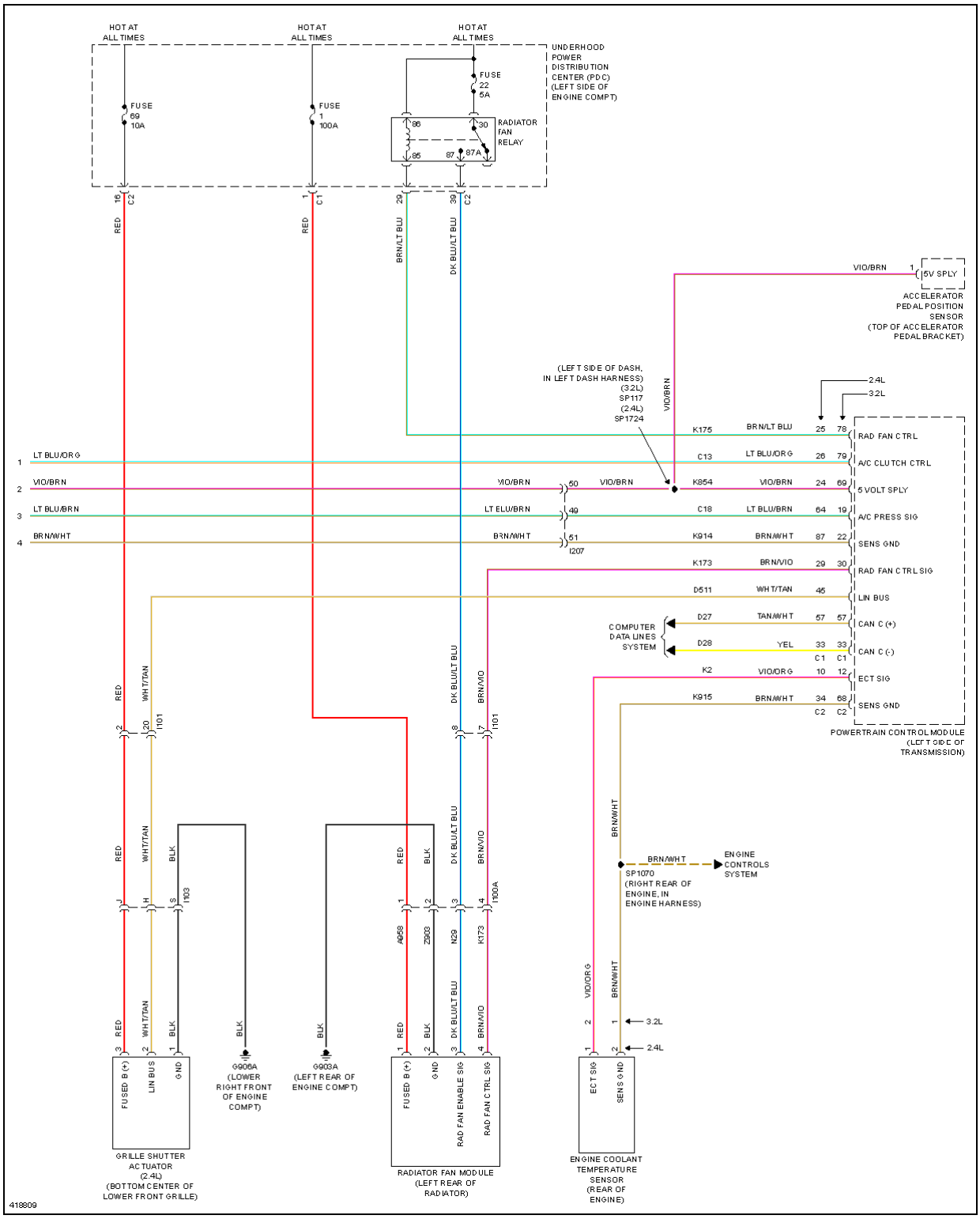
HOT AT ALL TIMES
HOT AT ALL TIMES
HOT AT ALL TIMES
UNDERHOOD POWER DISTRIBUTION CENTER (PDC) (LEFT SIDE OF ENGINE COMPT)
FUSE 69 10A
FUSE 1 100A
FUSE 22 5A
RADIATOR FAN RELAY
86
85
87
87A
30
RED
BRN/LT BLU
DK BLU/LT BLU
VIO/BRN
5V SPLY
ACCELERATOR PEDAL POSITION SENSOR (TOP OF ACCELERATOR PEDAL BRACKET)
(LEFT SIDE OF DASH, IN LEFT DASH HARNESS) (3.2L) SP117 (2.4L) SP1724
2.4L
3.2L
LT BLU/ORG
LT BLU/BRN
BRN/WHT
K175
C13
K854
C18
K914
K173
D511
D27
D28
K2
K915
RAD FAN CTRL
A/C CLUTCH CTRL
5 VOLT SPLY
A/C PRESS SIG
SENS GND
RAD FAN CTRL SIG
LIN BUS
CAN C (+)
CAN C (-)
ECT SIG
SENS GND
COMPUTER DATA LINES SYSTEM
TAN/WHT
YEL
VIO/ORG
POWERTRAIN CONTROL MODULE (LEFT SIDE OF TRANSMISSION)
WHT/TAN
BLK
BRN/VIO
I101
I103
I100A
I207
SP1070 (RIGHT REAR OF ENGINE, IN ENGINE HARNESS)
ENGINE CONTROLS SYSTEM
A958
Z903
N29
FUSED B (+)
LIN BUS
GND
GRILLE SHUTTER ACTUATOR (2.4L) (BOTTOM CENTER OF LOWER FRONT GRILLE)
G906A (LOWER RIGHT FRONT OF ENGINE COMPT)
G903A (LEFT REAR OF ENGINE COMPT)
RAD FAN ENABLE SIG
RAD FAN CTRL SIG
RADIATOR FAN MODULE (LEFT REAR OF RADIATOR)
ECT SIG
SENS GND
ENGINE COOLANT TEMPERATURE SENSOR (REAR OF ENGINE)
418809

Fig. 9: Manual A/C Circuit (4 of 4)

ANTI-LOCK BRAKES

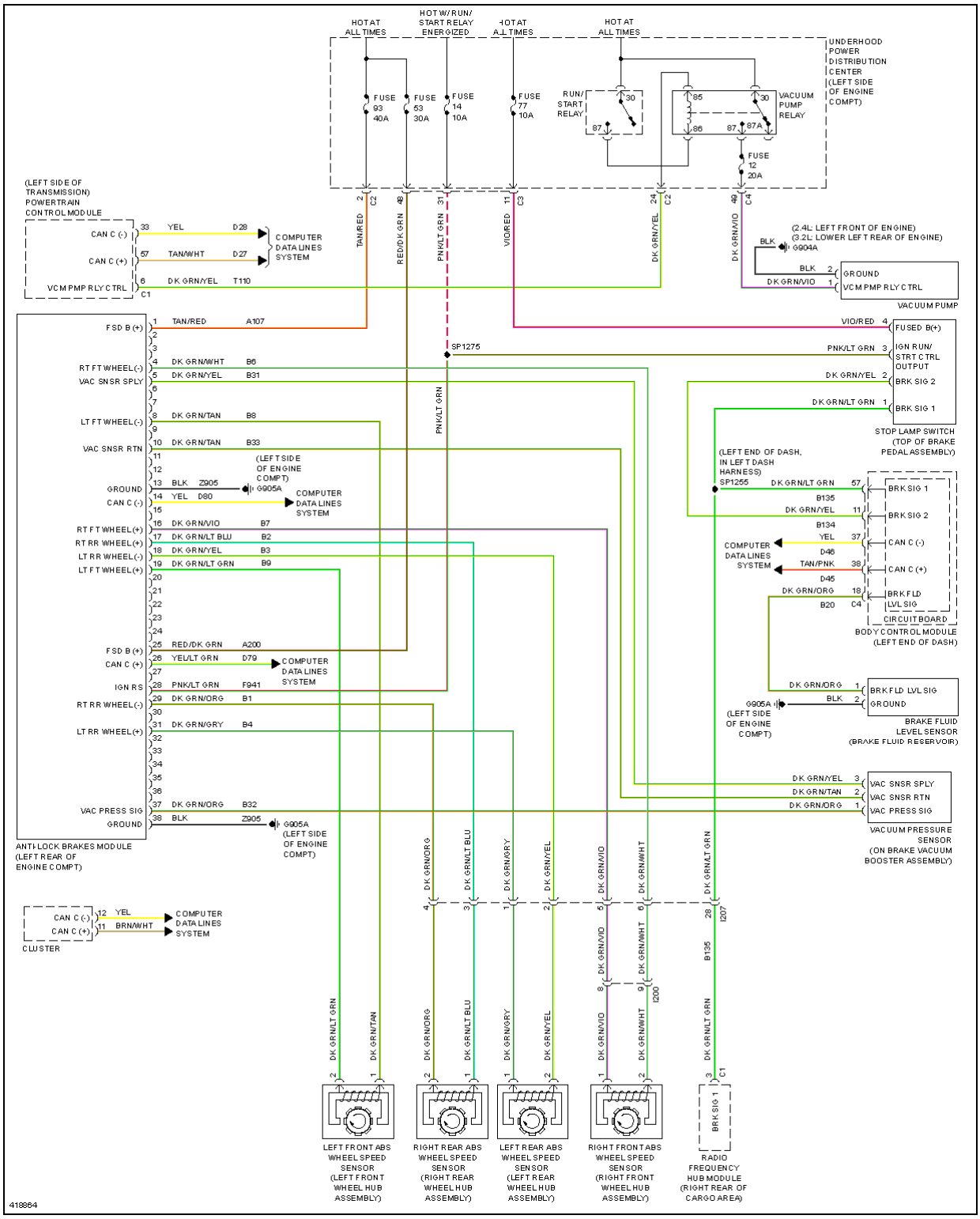
HOT AT ALL TIMES
HOT W/ RUN/ START RELAY ENERGIZED
HOT AT ALL TIMES
HOT AT ALL TIMES
UNDERHOOD POWER DISTRIBUTION CENTER (LEFT SIDE OF ENGINE COMPT)
FUSE 93 40A
FUSE 53 30A
FUSE 14 10A
FUSE 77 10A
RUN/ START RELAY
VACUUM PUMP RELAY
FUSE 12 20A
(LEFT SIDE OF TRANSMISSION) POWERTRAIN CONTROL MODULE
CAN C (-)
CAN C (+)
VCM PMP RLY CTRL
COMPUTER DATA LINES SYSTEM
(2.4L: LEFT FRONT OF ENGINE) (3.2L: LOWER LEFT REAR OF ENGINE)
G904A
GROUND
VCM PMP RLY CTRL
VACUUM PUMP
FUSED B(+)
IGN RUN/ STRT CTRL OUTPUT
BRK SIG 2
BRK SIG 1
STOP LAMP SWITCH (TOP OF BRAKE PEDAL ASSEMBLY)
FSD B (+)
RT FT WHEEL(-)
VAC SNSR SPLY
LT FT WHEEL(-)
VAC SNSR RTN
GROUND
CAN C (-)
RT FT WHEEL(+)
RT RR WHEEL(+)
LT RR WHEEL(-)
LT FT WHEEL(+)
FSD B (+)
CAN C (+)
IGN RS
RT RR WHEEL(-)
LT RR WHEEL(+)
VAC PRESS SIG
GROUND
ANTI-LOCK BRAKES MODULE (LEFT REAR OF ENGINE COMPT)
G905A (LEFT SIDE OF ENGINE COMPT)
(LEFT END OF DASH, IN LEFT DASH HARNESS)
SP1255
SP1275
BRK SIG 1
BRK SIG 2
CAN C (-)
CAN C (+)
BRK FLD LVL SIG
CIRCUIT BOARD
BODY CONTROL MODULE (LEFT END OF DASH)
BRK FLD LVL SIG
GROUND
BRAKE FLUID LEVEL SENSOR (BRAKE FLUID RESERVOIR)
VAC SNSR SPLY
VAC SNSR RTN
VAC PRESS SIG
VACUUM PRESSURE SENSOR (ON BRAKE VACUUM BOOSTER ASSEMBLY)
CLUSTER
CAN C (-)
CAN C (+)
COMPUTER DATA LINES SYSTEM
LEFT FRONT ABS WHEEL SPEED SENSOR (LEFT FRONT WHEEL HUB ASSEMBLY)
RIGHT REAR ABS WHEEL SPEED SENSOR (RIGHT REAR WHEEL HUB ASSEMBLY)
LEFT REAR ABS WHEEL SPEED SENSOR (LEFT REAR WHEEL HUB ASSEMBLY)
RIGHT FRONT ABS WHEEL SPEED SENSOR (RIGHT FRONT WHEEL HUB ASSEMBLY)
RADIO FREQUENCY HUB MODULE (RIGHT REAR OF CARGO AREA)
418864

Fig. 10: Anti-lock Brakes Circuit

ANTI-THEFT

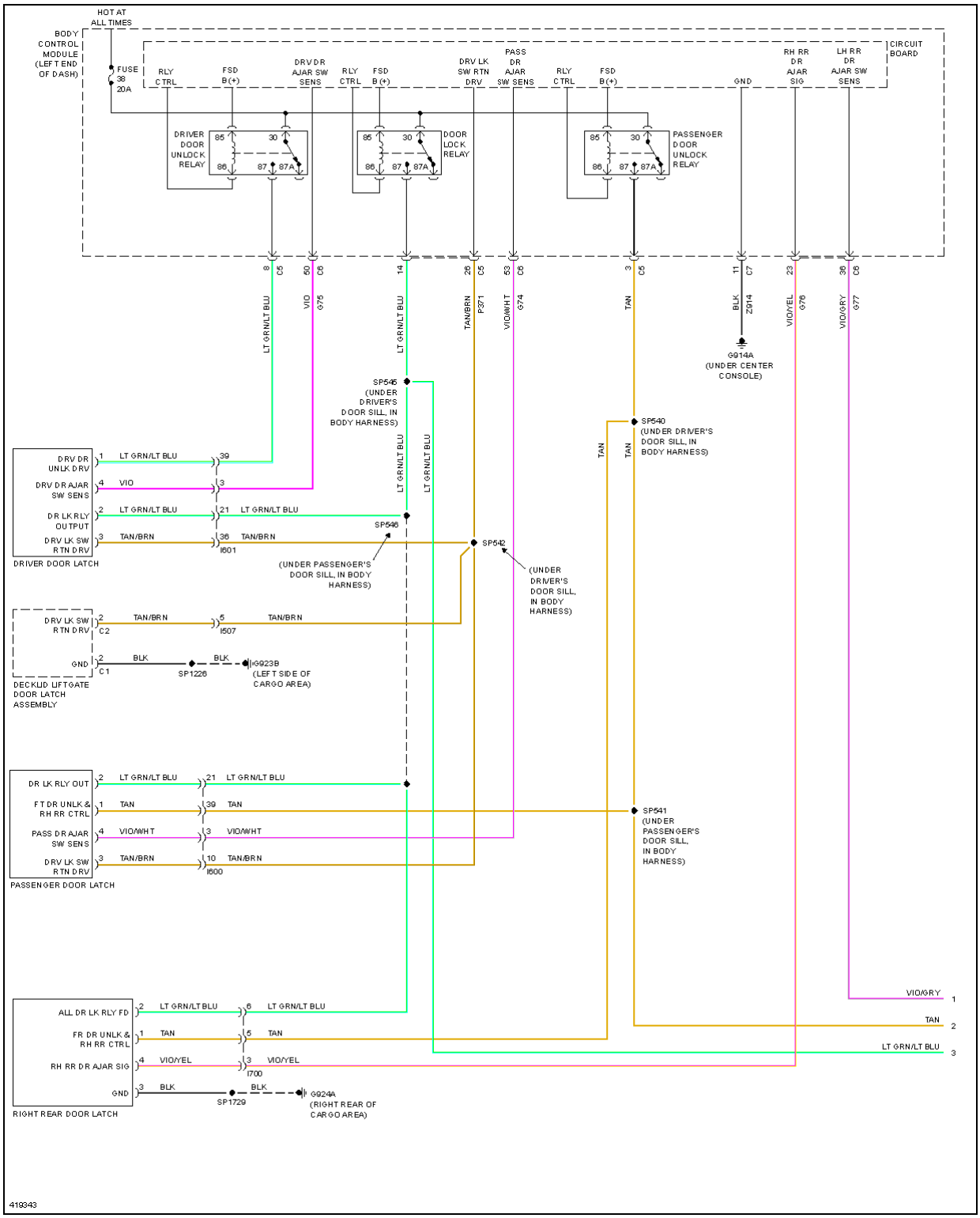
HOT AT ALL TIMES
BODY CONTROL MODULE (LEFT END OF DASH)
FUSE 38 20A
CIRCUIT BOARD
RLY CTRL
FSD B(+)
DRV DR AJAR SW SENS
DRV LK SW RTN DRV
PASS DR AJAR SW SENS
GND
RH RR DR AJAR SIG
LH RR DR AJAR SW SENS
DRIVER DOOR UNLOCK RELAY
DOOR LOCK RELAY
PASSENGER DOOR UNLOCK RELAY
G914A (UNDER CENTER CONSOLE)
SP545 (UNDER DRIVER'S DOOR SILL, IN BODY HARNESS)
SP540 (UNDER DRIVER'S DOOR SILL, IN BODY HARNESS)
DRV DR UNLK DRV
DRV DR AJAR SW SENS
DR LK RLY OUTPUT
DRV LK SW RTN DRV
DRIVER DOOR LATCH
SP546
SP542
(UNDER PASSENGER'S DOOR SILL, IN BODY HARNESS)
(UNDER DRIVER'S DOOR SILL, IN BODY HARNESS)
DECKLID LIFTGATE DOOR LATCH ASSEMBLY
GND
SP1226
G923B (LEFT SIDE OF CARGO AREA)
DR LK RLY OUT
FT DR UNLK & RH RR CTRL
PASS DR AJAR SW SENS
PASSENGER DOOR LATCH
SP541 (UNDER PASSENGER'S DOOR SILL, IN BODY HARNESS)
ALL DR LK RLY FD
FR DR UNLK & RH RR CTRL
RH RR DR AJAR SIG
RIGHT REAR DOOR LATCH
SP1729
G924A (RIGHT REAR OF CARGO AREA)
419343

Fig. 11: Forced Entry Circuit (1 of 2)

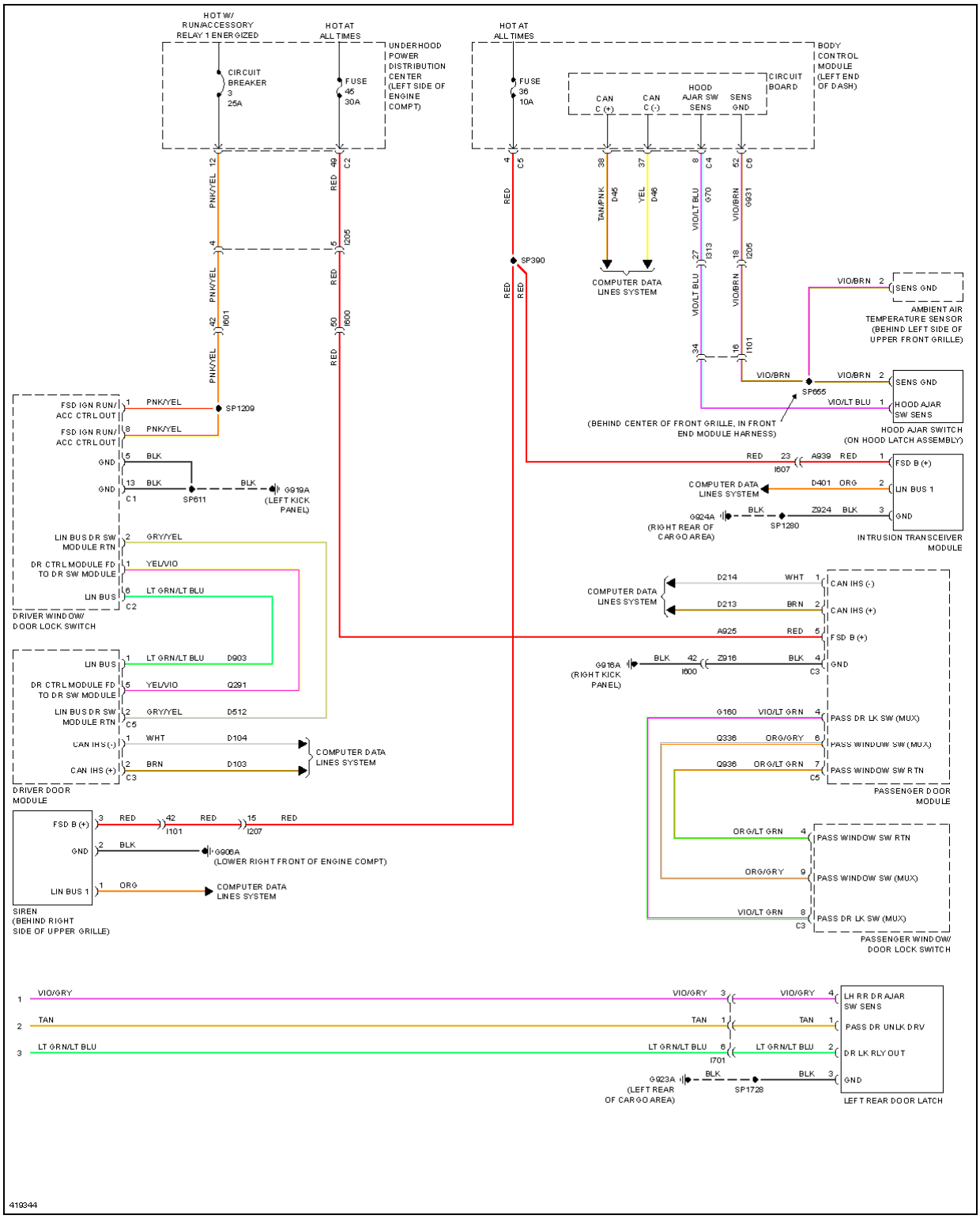
HOT W/ RUN/ACCESSORY RELAY 1 ENERGIZED
HOT AT ALL TIMES
UNDERHOOD POWER DISTRIBUTION CENTER (LEFT SIDE OF ENGINE COMPT)
CIRCUIT BREAKER 3 25A
FUSE 45 30A
HOT AT ALL TIMES
BODY CONTROL MODULE (LEFT END OF DASH)
FUSE 36 10A
CIRCUIT BOARD
CAN C (+)
CAN C (-)
HOOD AJAR SW SENS
SENS GND
COMPUTER DATA LINES SYSTEM
AMBIENT AIR TEMPERATURE SENSOR (BEHIND LEFT SIDE OF UPPER FRONT GRILLE)
HOOD AJAR SWITCH (ON HOOD LATCH ASSEMBLY)
(BEHIND CENTER OF FRONT GRILLE, IN FRONT END MODULE HARNESS)
INTRUSION TRANSCEIVER MODULE
(RIGHT REAR OF CARGO AREA)
DRIVER WINDOW/ DOOR LOCK SWITCH
DRIVER DOOR MODULE
(RIGHT KICK PANEL)
(LEFT KICK PANEL)
PASSENGER DOOR MODULE
PASSENGER WINDOW/ DOOR LOCK SWITCH
SIREN (BEHIND RIGHT SIDE OF UPPER GRILLE)
(LOWER RIGHT FRONT OF ENGINE COMPT)
LEFT REAR DOOR LATCH
(LEFT REAR OF CARGO AREA)
419344

Fig. 12: Forced Entry Circuit (2 of 2)

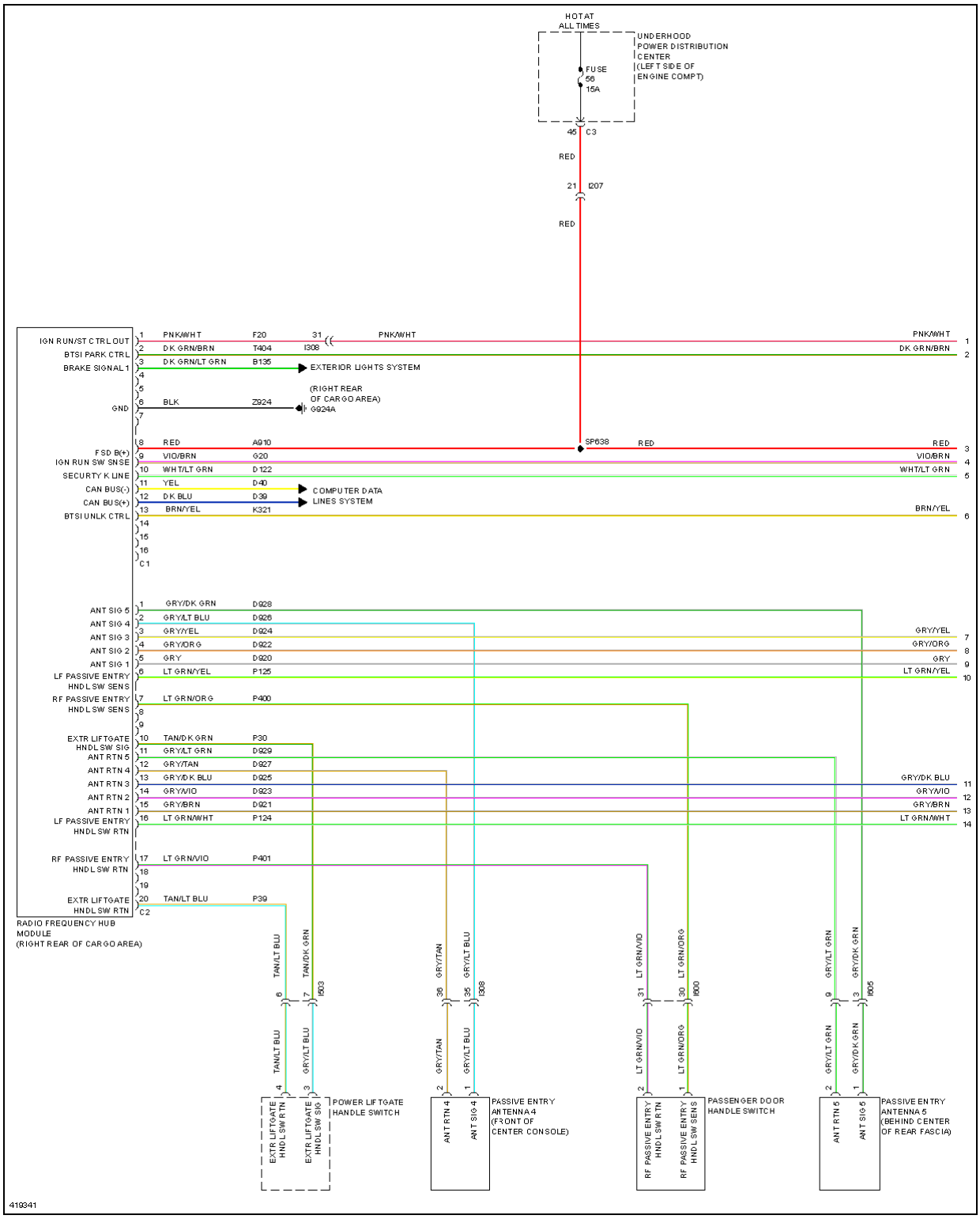
HOT AT ALL TIMES
UNDERHOOD POWER DISTRIBUTION CENTER (LEFT SIDE OF ENGINE COMPT)
FUSE 66 15A
46 C3
RED
21 I207
RED
IGN RUN/ST CTRL OUT
BTSI PARK CTRL
BRAKE SIGNAL 1
GND
FSD B(+)
IGN RUN SW SNSE
SECURTY K LINE
CAN BUS(-)
CAN BUS(+)
BTSI UNLK CTRL
PNK/WHT F20 31 PNK/WHT
DK GRN/BRN T404 I308
DK GRN/LT GRN B135
EXTERIOR LIGHTS SYSTEM
BLK Z924
(RIGHT REAR OF CARGO AREA) G924A
RED A910
SP638 RED
VIO/BRN G20
WHT/LT GRN D122
YEL D40
DK BLU D39
BRN/YEL K321
COMPUTER DATA LINES SYSTEM
C1
ANT SIG 5
ANT SIG 4
ANT SIG 3
ANT SIG 2
ANT SIG 1
LF PASSIVE ENTRY HNDL SW SENS
RF PASSIVE ENTRY HNDL SW SENS
EXTR LIFTGATE HNDL SW SIG
ANT RTN 5
ANT RTN 4
ANT RTN 3
ANT RTN 2
ANT RTN 1
LF PASSIVE ENTRY HNDL SW RTN
RF PASSIVE ENTRY HNDL SW RTN
EXTR LIFTGATE HNDL SW RTN
GRY/DK GRN D928
GRY/LT BLU D926
GRY/YEL D924
GRY/ORG D922
GRY D920
LT GRN/YEL P125
LT GRN/ORG P400
TAN/DK GRN P30
GRY/LT GRN D929
GRY/TAN D927
GRY/DK BLU D925
GRY/VIO D923
GRY/BRN D921
LT GRN/WHT P124
LT GRN/VIO P401
TAN/LT BLU P39
C2
RADIO FREQUENCY HUB MODULE (RIGHT REAR OF CARGO AREA)
TAN/LT BLU
TAN/DK GRN
I603
GRY/TAN
GRY/LT BLU
I308
LT GRN/VIO
LT GRN/ORG
I600
GRY/LT GRN
GRY/DK GRN
I605
EXTR LIFTGATE HNDL SW RTN
EXTR LIFTGATE HNDL SW SIG
POWER LIFTGATE HANDLE SWITCH
ANT RTN 4
ANT SIG 4
PASSIVE ENTRY ANTENNA 4 (FRONT OF CENTER CONSOLE)
RF PASSIVE ENTRY HNDL SW RTN
RF PASSIVE ENTRY HNDL SW SENS
PASSENGER DOOR HANDLE SWITCH
ANT RTN 5
ANT SIG 5
PASSIVE ENTRY ANTENNA 5 (BEHIND CENTER OF REAR FASCIA)
419341

Fig. 13: Passive Entry Circuit (1 of 2)

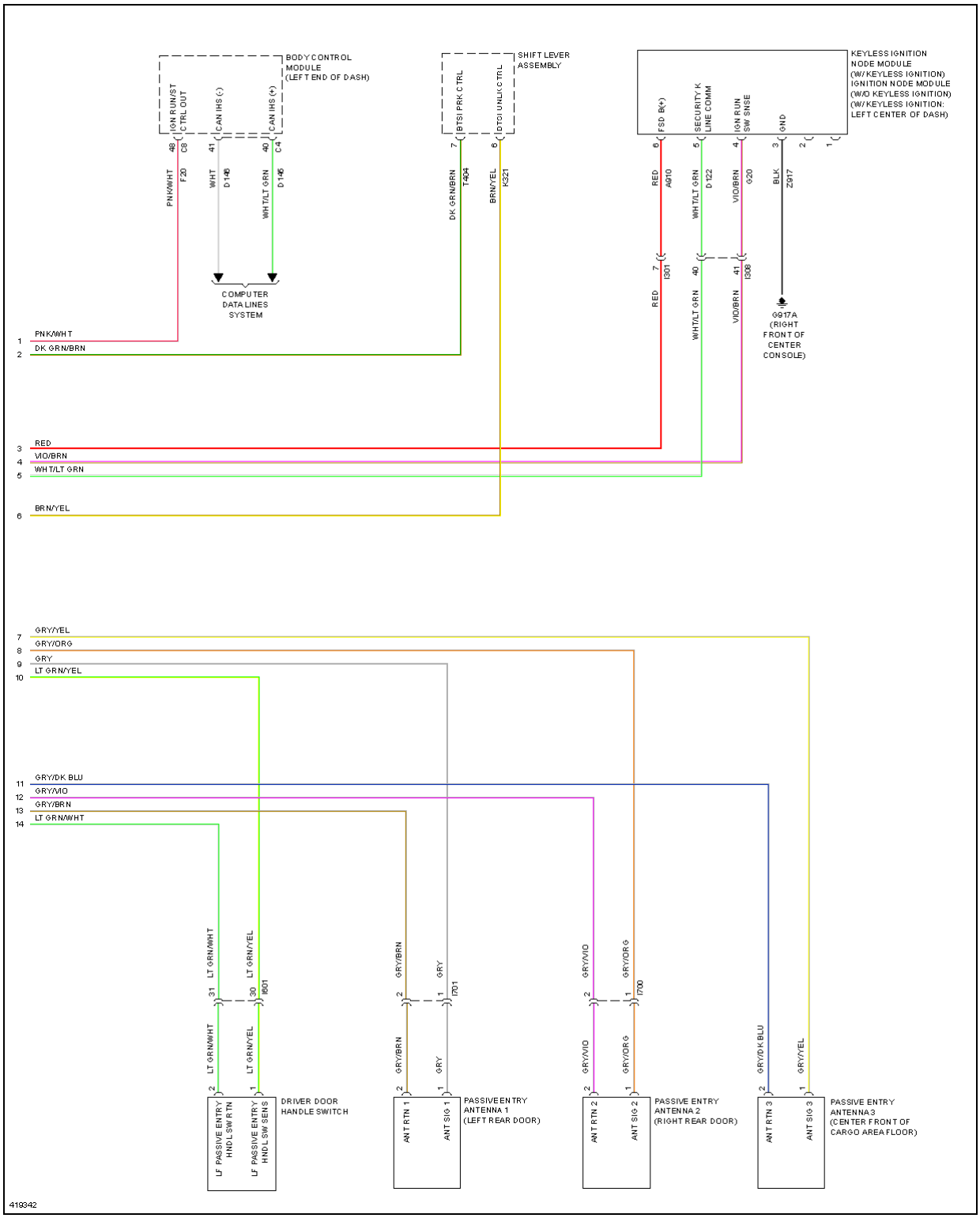
BODY CONTROL MODULE (LEFT END OF DASH)
IGN RUN/ST CTRL OUT
CAN IHS (-)
CAN IHS (+)
SHIFT LEVER ASSEMBLY
BTSI PRK CTRL
DTSI UNLK CTRL
KEYLESS IGNITION NODE MODULE (W/ KEYLESS IGNITION) IGNITION NODE MODULE (W/O KEYLESS IGNITION) (W/ KEYLESS IGNITION: LEFT CENTER OF DASH)
FSD B(+)
SECURITY K LINE COMM
IGN RUN SW SNSE
GND
PNK/WHT
DK GRN/BRN
WHT
WHT7/LT GRN
BRN/YEL
RED
VIO/BRN
BLK
COMPUTER DATA LINES SYSTEM
G917A (RIGHT FRONT OF CENTER CONSOLE)
GRY/YEL
GRY/ORG
GRY
LT GRN/YEL
GRY/DK BLU
GRY/VIO
GRY/BRN
LT GRN/WHT
LF PASSIVE ENTRY HNDL SW RTN
LF PASSIVE ENTRY HNDL SW SENS
DRIVER DOOR HANDLE SWITCH
ANT RTN 1
ANT SIG 1
PASSIVE ENTRY ANTENNA 1 (LEFT REAR DOOR)
ANT RTN 2
ANT SIG 2
PASSIVE ENTRY ANTENNA 2 (RIGHT REAR DOOR)
ANT RTN 3
ANT SIG 3
PASSIVE ENTRY ANTENNA 3 (CENTER FRONT OF CARGO AREA FLOOR)
419342

Fig. 14: Passive Entry Circuit (2 of 2)

BODY CONTROL MODULES

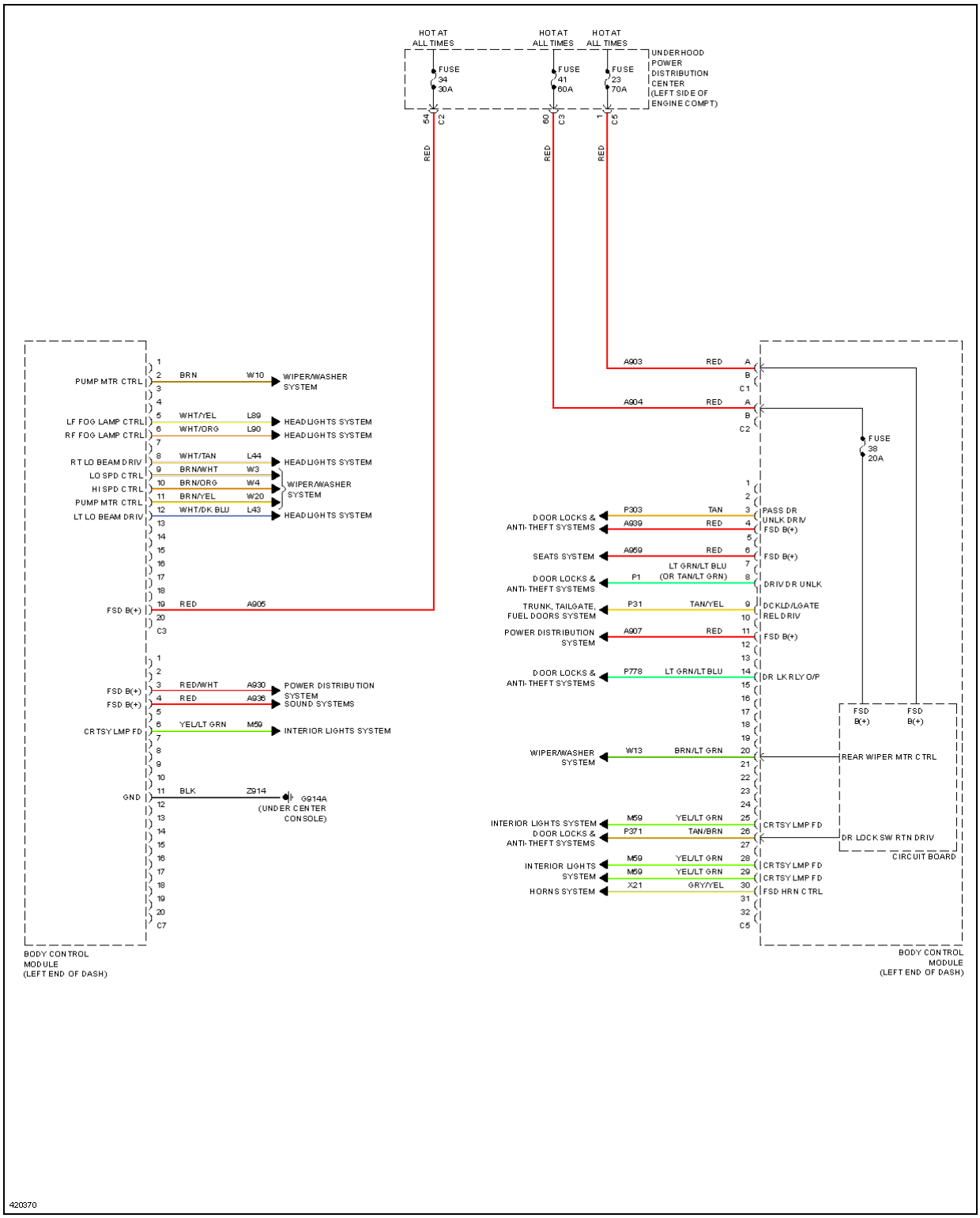
HOT AT ALL TIMES
HOT AT ALL TIMES
HOT AT ALL TIMES
FUSE 34 30A
FUSE 41 60A
FUSE 23 70A
UNDERHOOD POWER DISTRIBUTION CENTER (LEFT SIDE OF ENGINE COMPT)
54 C2
60 C3
1 C5
RED
RED
RED
PUMP MTR CTRL
BRN W10 WIPER/WASHER SYSTEM
LF FOG LAMP CTRL
WHT/YEL L89 HEADLIGHTS SYSTEM
RF FOG LAMP CTRL
WHT/ORG L90 HEADLIGHTS SYSTEM
RT LO BEAM DRIV
WHT/TAN L44 HEADLIGHTS SYSTEM
LO SPD CTRL
BRN/WHT W3
HI SPD CTRL
BRN/ORG W4
PUMP MTR CTRL
BRN/YEL W20
WIPER/WASHER SYSTEM
LT LO BEAM DRIV
WHT/DK BLU L43 HEADLIGHTS SYSTEM
FSD B(+)
RED A905
C3
FSD B(+)
RED/WHT A930 POWER DISTRIBUTION SYSTEM
FSD B(+)
RED A936 SOUND SYSTEMS
CRTSY LMP FD
YEL/LT GRN M59 INTERIOR LIGHTS SYSTEM
GND
BLK Z914 G914A (UNDER CENTER CONSOLE)
C7
BODY CONTROL MODULE (LEFT END OF DASH)
A903 RED A
B
C1
A904 RED A
B
C2
FUSE 38 20A
DOOR LOCKS & ANTI-THEFT SYSTEMS
P303 TAN
A939 RED
PASS DR UNLK DRIV
FSD B(+)
SEATS SYSTEM
A959 RED
FSD B(+)
DOOR LOCKS & ANTI-THEFT SYSTEMS
P1 LT GRN/LT BLU (OR TAN/LT GRN)
DRIV DR UNLK
TRUNK, TAILGATE, FUEL DOORS SYSTEM
P31 TAN/YEL
DCKLD/LGATE REL DRIV
POWER DISTRIBUTION SYSTEM
A907 RED
FSD B(+)
DOOR LOCKS & ANTI-THEFT SYSTEMS
P778 LT GRN/LT BLU
DR LK RLY O/P
WIPER/WASHER SYSTEM
W13 BRN/LT GRN
REAR WIPER MTR CTRL
INTERIOR LIGHTS SYSTEM
M59 YEL/LT GRN
DOOR LOCKS & ANTI-THEFT SYSTEMS
P371 TAN/BRN
CRTSY LMP FD
DR LOCK SW RTN DRIV
CIRCUIT BOARD
INTERIOR LIGHTS SYSTEM
M59 YEL/LT GRN
M59 YEL/LT GRN
CRTSY LMP FD
CRTSY LMP FD
HORNS SYSTEM
X21 GRY/YEL
FSD HRN CTRL
C5
BODY CONTROL MODULE (LEFT END OF DASH)
420370

Fig. 15: Body Control Modules Circuit (1 of 3)

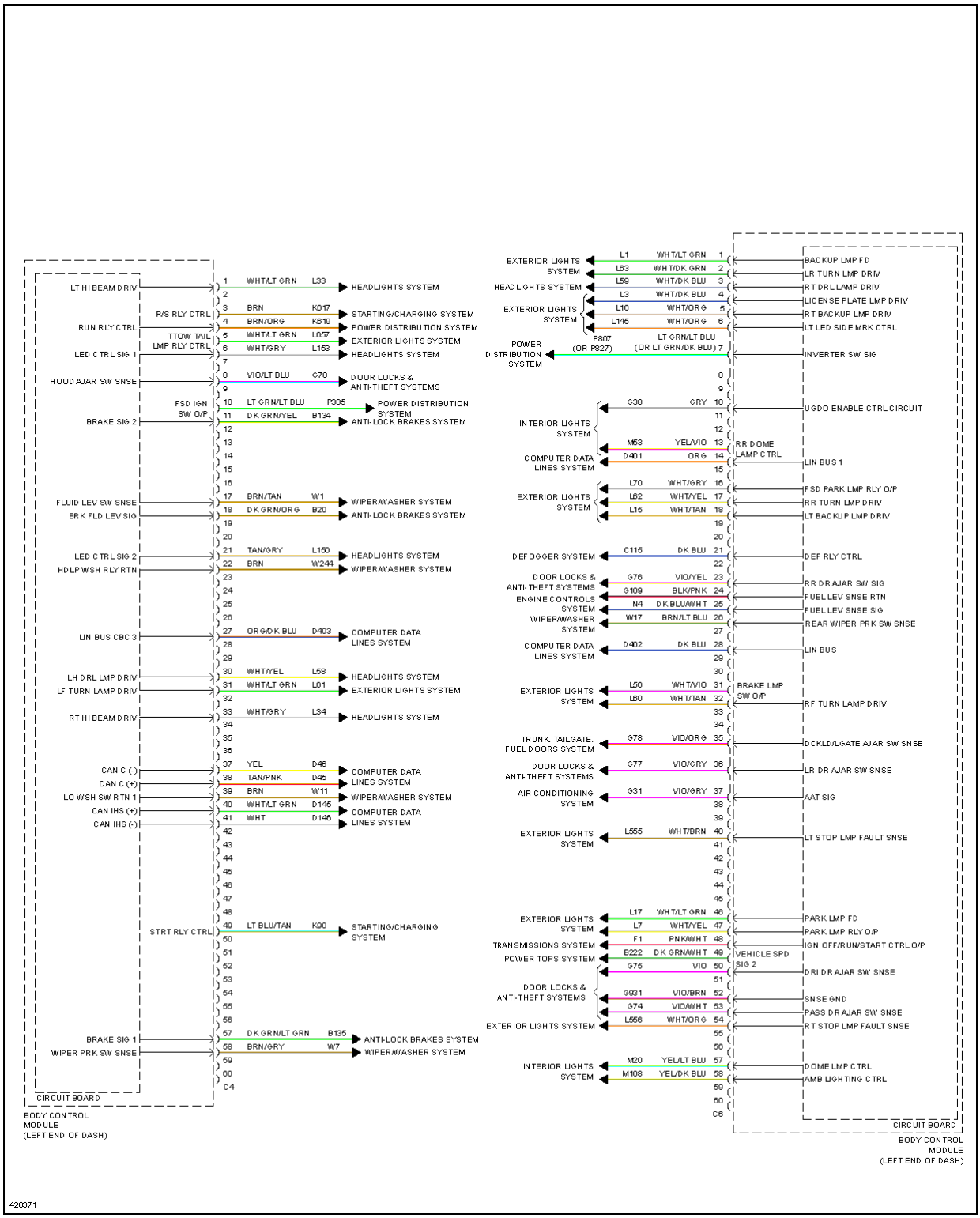
LT HI BEAM DRIV
R/S RLY CTRL
RUN RLY CTRL
TTOW TAIL LMP RLY CTRL
LED CTRL SIG 1
HOOD AJAR SW SNSE
FSD IGN SW O/P
BRAKE SIG 2
FLUID LEV SW SNSE
BRK FLD LEV SIG
LED CTRL SIG 2
HDLP WSH RLY RTN
LIN BUS CBC 3
LH DRL LMP DRIV
LF TURN LAMP DRIV
RT HI BEAM DRIV
CAN C (-)
CAN C (+)
LO WSH SW RTN 1
CAN IHS (+)
CAN IHS (-)
STRT RLY CTRL
BRAKE SIG 1
WIPER PRK SW SNSE
CIRCUIT BOARD
BODY CONTROL MODULE (LEFT END OF DASH)
1 WHT/LT GRN L33 HEADLIGHTS SYSTEM
3 BRN K617 STARTING/CHARGING SYSTEM
4 BRN/ORG K619 POWER DISTRIBUTION SYSTEM
5 WHT/LT GRN L657 EXTERIOR LIGHTS SYSTEM
6 WHT/GRY L153 HEADLIGHTS SYSTEM
8 VIO/LT BLU G70 DOOR LOCKS & ANTI-THEFT SYSTEMS
10 LT GRN/LT BLU P305 POWER DISTRIBUTION SYSTEM
11 DK GRN/YEL B134 ANTI-LOCK BRAKES SYSTEM
17 BRN/TAN W1 WIPER/WASHER SYSTEM
18 DK GRN/ORG B20 ANTI-LOCK BRAKES SYSTEM
21 TAN/GRY L150 HEADLIGHTS SYSTEM
22 BRN W244 WIPER/WASHER SYSTEM
27 ORG/DK BLU D403 COMPUTER DATA LINES SYSTEM
30 WHT/YEL L58 HEADLIGHTS SYSTEM
31 WHT/LT GRN L61 EXTERIOR LIGHTS SYSTEM
33 WHT/GRY L34 HEADLIGHTS SYSTEM
37 YEL D46 COMPUTER DATA LINES SYSTEM
38 TAN/PNK D45 COMPUTER DATA LINES SYSTEM
39 BRN W11 WIPER/WASHER SYSTEM
40 WHT/LT GRN D145 COMPUTER DATA LINES SYSTEM
41 WHT D146 COMPUTER DATA LINES SYSTEM
49 LT BLU/TAN K90 STARTING/CHARGING SYSTEM
57 DK GRN/LT GRN B135 ANTI-LOCK BRAKES SYSTEM
58 BRN/GRY W7 WIPER/WASHER SYSTEM
C4
EXTERIOR LIGHTS SYSTEM
HEADLIGHTS SYSTEM
EXTERIOR LIGHTS SYSTEM
POWER DISTRIBUTION SYSTEM
L1 WHT/LT GRN 1 BACKUP LMP FD
L63 WHT/DK GRN 2 LR TURN LMP DRIV
L59 WHT/DK BLU 3 RT DRL LAMP DRIV
L3 WHT/DK BLU 4 LICENSE PLATE LMP DRIV
L16 WHT/ORG 5 RT BACKUP LMP DRIV
L145 WHT/ORG 6 LT LED SIDE MRK CTRL
P807 (OR P827) LT GRN/LT BLU (OR LT GRN/DK BLU) 7 INVERTER SW SIG
INTERIOR LIGHTS SYSTEM
COMPUTER DATA LINES SYSTEM
EXTERIOR LIGHTS SYSTEM
DEFOGGER SYSTEM
DOOR LOCKS & ANTI-THEFT SYSTEMS
ENGINE CONTROLS SYSTEM
WIPER/WASHER SYSTEM
COMPUTER DATA LINES SYSTEM
EXTERIOR LIGHTS SYSTEM
TRUNK, TAILGATE, FUEL DOORS SYSTEM
DOOR LOCKS & ANTI-THEFT SYSTEMS
AIR CONDITIONING SYSTEM
EXTERIOR LIGHTS SYSTEM
EXTERIOR LIGHTS SYSTEM
TRANSMISSIONS SYSTEM
POWER TOPS SYSTEM
DOOR LOCKS & ANTI-THEFT SYSTEMS
EXTERIOR LIGHTS SYSTEM
INTERIOR LIGHTS SYSTEM
G38 GRY 10 UGDO ENABLE CTRL CIRCUIT
M53 YEL/VIO 13 RR DOME LAMP CTRL
D401 ORG 14 LIN BUS 1
L70 WHT/GRY 16 FSD PARK LMP RLY O/P
L62 WHT/YEL 17 RR TURN LMP DRIV
L15 WHT/TAN 18 LT BACKUP LMP DRIV
C115 DK BLU 21 DEF RLY CTRL
G76 VIO/YEL 23 RR DR AJAR SW SIG
G109 BLK/PNK 24 FUEL LEV SNSE RTN
N4 DK BLU/WHT 25 FUEL LEV SNSE SIG
W17 BRN/LT BLU 26 REAR WIPER PRK SW SNSE
D402 DK BLU 28 LIN BUS
L56 WHT/VIO 31 BRAKE LMP SW O/P
L60 WHT/TAN 32 RF TURN LAMP DRIV
G78 VIO/ORG 35 DCKLD/LGATE AJAR SW SNSE
G77 VIO/GRY 36 LR DR AJAR SW SNSE
G31 VIO/GRY 37 AAT SIG
L555 WHT/BRN 40 LT STOP LMP FAULT SNSE
L17 WHT/LT GRN 46 PARK LMP FD
L7 WHT/YEL 47 PARK LMP RLY O/P
F1 PNK/WHT 48 IGN OFF/RUN/START CTRL O/P
B222 DK GRN/WHT 49 VEHICLE SPD SIG 2
G75 VIO 50 DRI DR AJAR SW SNSE
G931 VIO/BRN 52 SNSE GND
G74 VIO/WHT 53 PASS DR AJAR SW SNSE
L556 WHT/ORG 54 RT STOP LMP FAULT SNSE
M20 YEL/LT BLU 57 DOME LMP CTRL
M108 YEL/DK BLU 58 AMB LIGHTING CTRL
C6
CIRCUIT BOARD
BODY CONTROL MODULE (LEFT END OF DASH)
420371

Fig. 16: Body Control Modules Circuit (2 of 3)

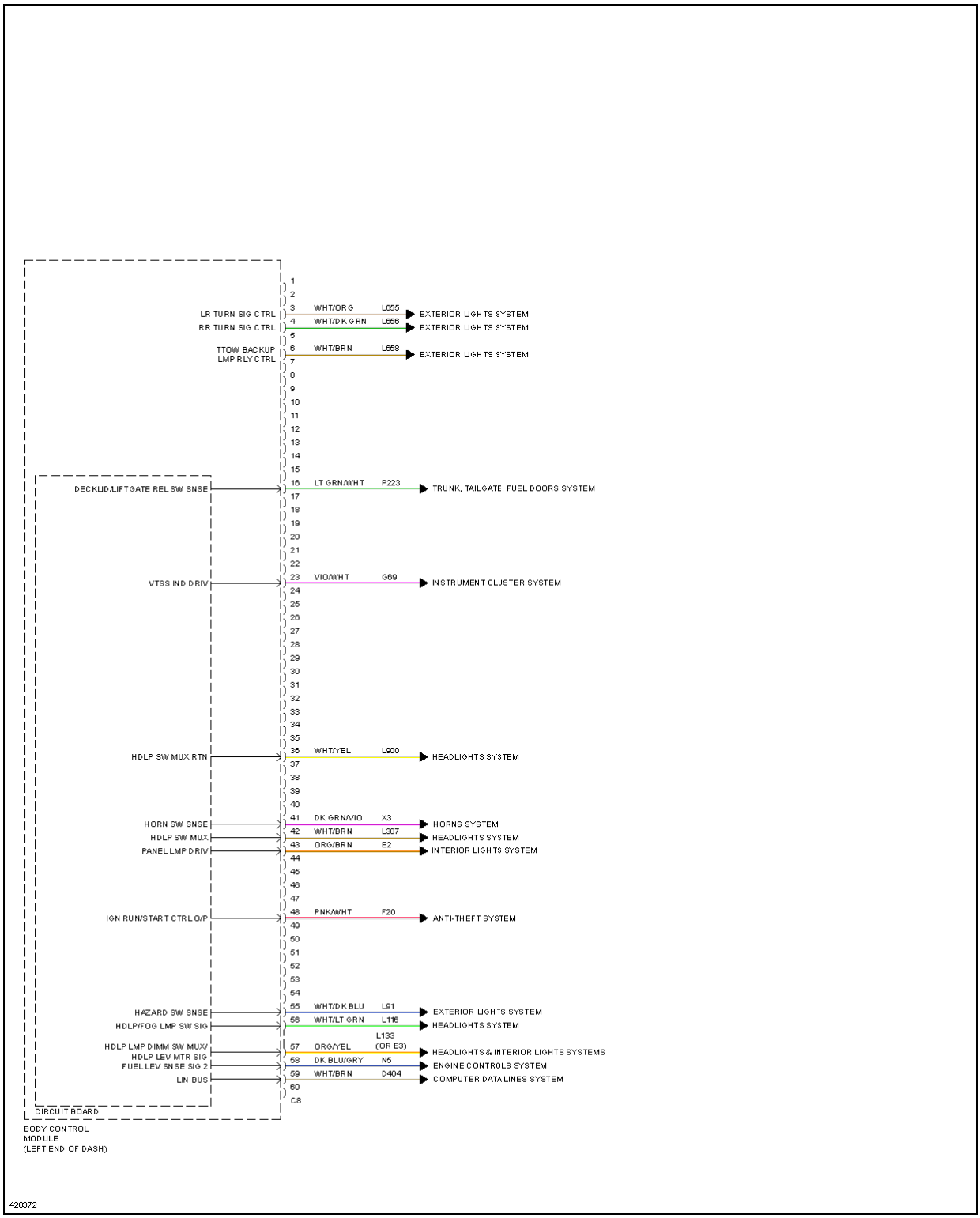
LR TURN SIG CTRL
RR TURN SIG CTRL
TTOW BACKUP LMP RLY CTRL
DECKLID/LIFTGATE REL SW SNSE
VTSS IND DRIV
HDLP SW MUX RTN
HORN SW SNSE
HDLP SW MUX
PANEL LMP DRIV
IGN RUN/START CTRL O/P
HAZARD SW SNSE
HDLP/FOG LMP SW SIG
HDLP LMP DIMM SW MUX/
HDLP LEV MTR SIG
FUEL LEV SNSE SIG 2
LIN BUS
CIRCUIT BOARD
BODY CONTROL MODULE (LEFT END OF DASH)
3 WHT/ORG L655 EXTERIOR LIGHTS SYSTEM
4 WHT/DK GRN L656 EXTERIOR LIGHTS SYSTEM
6 WHT/BRN L658 EXTERIOR LIGHTS SYSTEM
16 LT GRN/WHT P223 TRUNK, TAILGATE, FUEL DOORS SYSTEM
23 VIO/WHT G69 INSTRUMENT CLUSTER SYSTEM
36 WHT/YEL L900 HEADLIGHTS SYSTEM
41 DK GRN/VIO X3 HORNS SYSTEM
42 WHT/BRN L307 HEADLIGHTS SYSTEM
43 ORG/BRN E2 INTERIOR LIGHTS SYSTEM
48 PNK/WHT F20 ANTI-THEFT SYSTEM
55 WHT/DK BLU L91 EXTERIOR LIGHTS SYSTEM
56 WHT/LT GRN L116 HEADLIGHTS SYSTEM
57 ORG/YEL L133 (OR E3) HEADLIGHTS & INTERIOR LIGHTS SYSTEMS
58 DK BLU/GRY N5 ENGINE CONTROLS SYSTEM
59 WHT/BRN D404 COMPUTER DATA LINES SYSTEM
C8
420372

Fig. 17: Body Control Modules Circuit (3 of 3)

COMPUTER DATA LINES

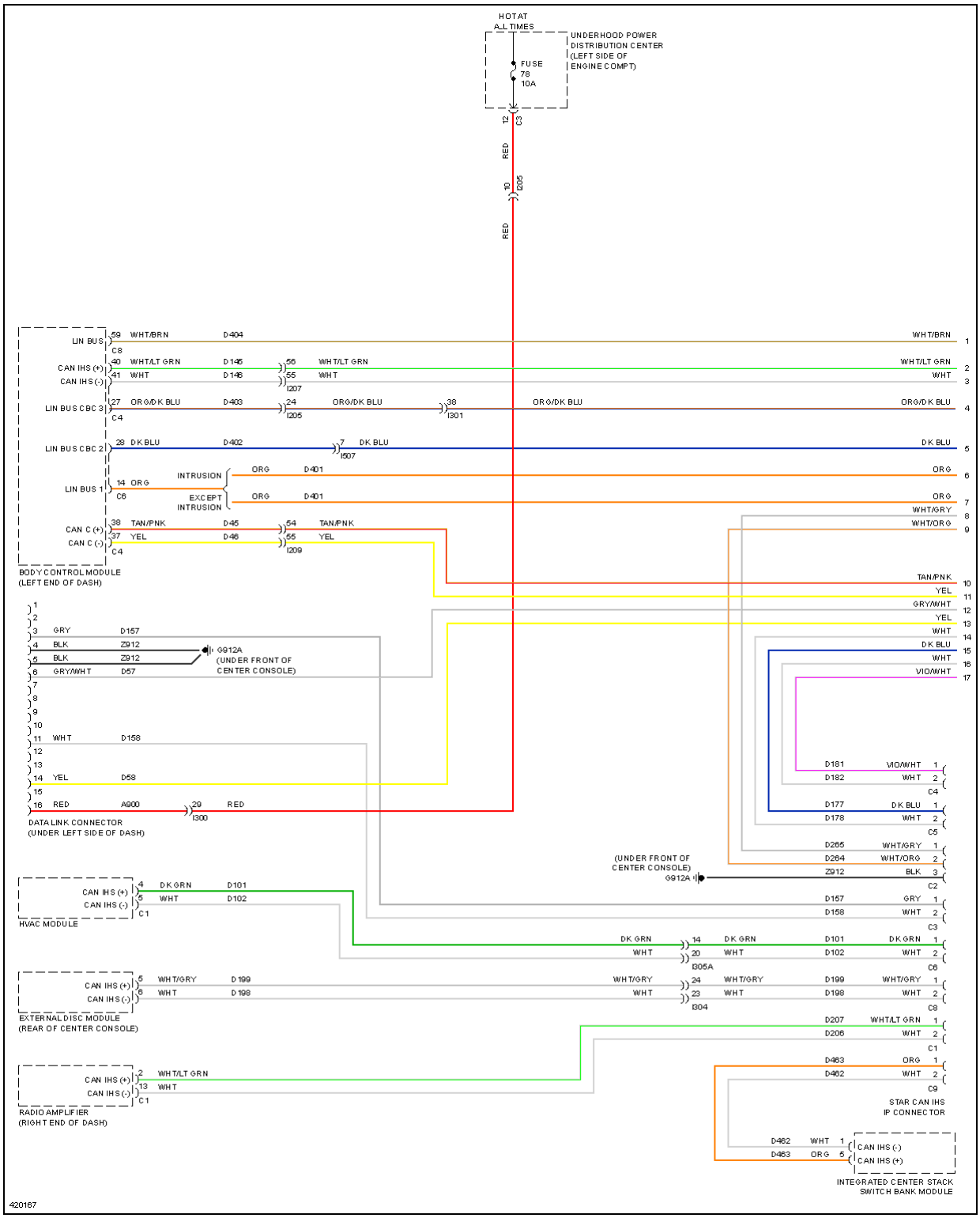
HOT AT ALL TIMES
UNDERHOOD POWER DISTRIBUTION CENTER (LEFT SIDE OF ENGINE COMPT)
FUSE 78 10A
RED
BODY CONTROL MODULE (LEFT END OF DASH)
LIN BUS
CAN IHS (+)
CAN IHS (-)
LIN BUS CBC 3
LIN BUS CBC 2
LIN BUS 1
INTRUSION
EXCEPT INTRUSION
CAN C (+)
CAN C (-)
DATA LINK CONNECTOR (UNDER LEFT SIDE OF DASH)
G912A (UNDER FRONT OF CENTER CONSOLE)
HVAC MODULE
EXTERNAL DISC MODULE (REAR OF CENTER CONSOLE)
RADIO AMPLIFIER (RIGHT END OF DASH)
STAR CAN IHS IP CONNECTOR
INTEGRATED CENTER STACK SWITCH BANK MODULE
420167

Fig. 18: Computer Data Lines Circuit (1 of 5)

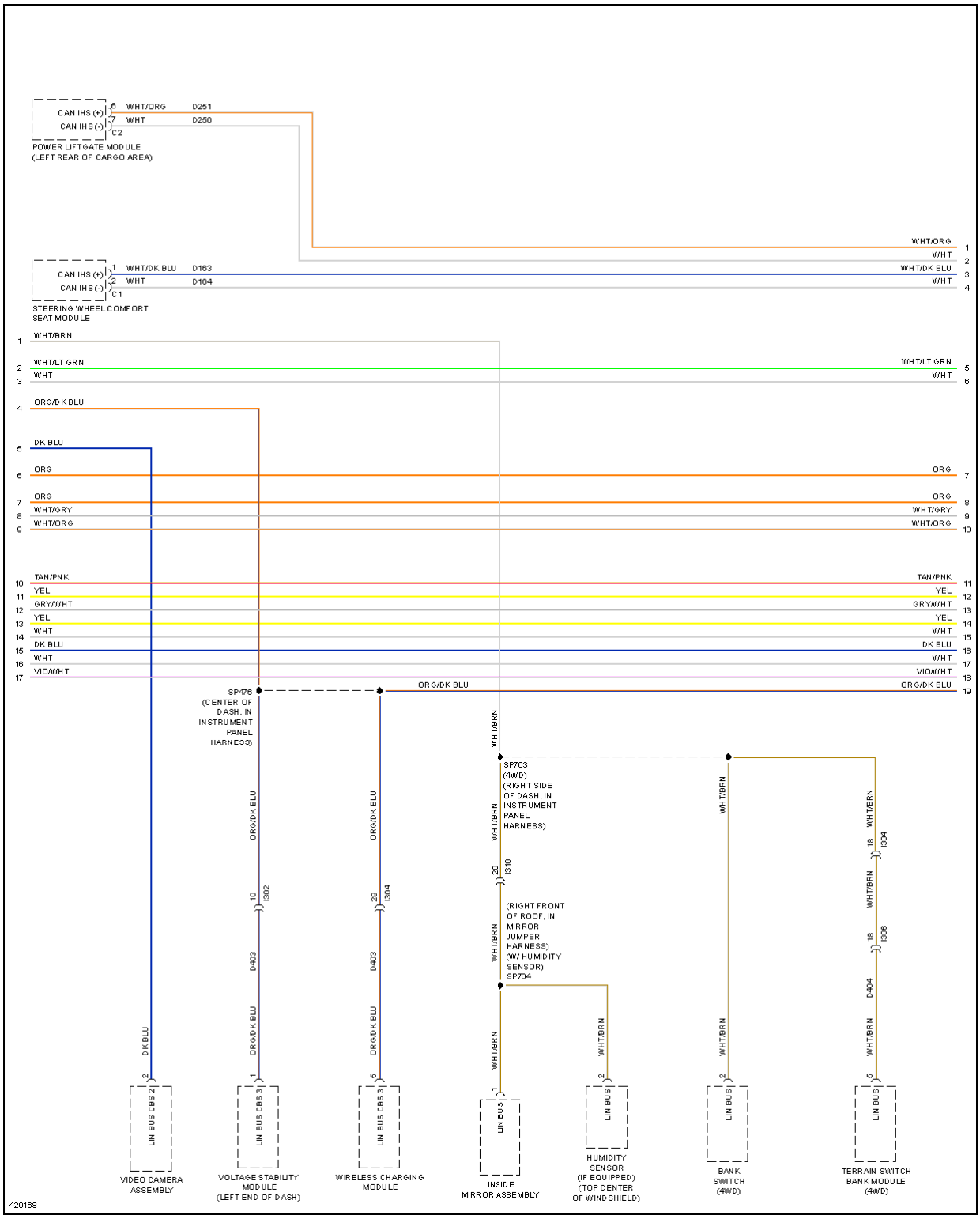
CAN IHS (+)
CAN IHS (-)
6 WHT/ORG D251
7 WHT D250
C2
POWER LIFTGATE MODULE
(LEFT REAR OF CARGO AREA)
1 WHT/DK BLU D163
2 WHT D164
C1
STEERING WHEEL COMFORT
SEAT MODULE
WHT/ORG
WHT
WHT/DK BLU
WHT
WHT/BRN
WHT/LT GRN
WHT
ORG/DK BLU
DK BLU
ORG
ORG
WHT/GRY
WHT/ORG
TAN/PNK
YEL
GRY/WHT
YEL
WHT
DK BLU
WHT
VIO/WHT
SP476
(CENTER OF
DASH, IN
INSTRUMENT
PANEL
HARNESS)
SP703
(4WD)
(RIGHT SIDE
OF DASH, IN
INSTRUMENT
PANEL
HARNESS)
(RIGHT FRONT
OF ROOF, IN
MIRROR
JUMPER
HARNESS)
(W/ HUMIDITY
SENSOR)
SP704
LIN BUS CBS 2
LIN BUS CBS 3
LIN BUS
VIDEO CAMERA
ASSEMBLY
VOLTAGE STABILITY
MODULE
(LEFT END OF DASH)
WIRELESS CHARGING
MODULE
INSIDE
MIRROR ASSEMBLY
HUMIDITY
SENSOR
(IF EQUIPPED)
(TOP CENTER
OF WINDSHIELD)
BANK
SWITCH
(4WD)
TERRAIN SWITCH
BANK MODULE
(4WD)
420168

Fig. 19: Computer Data Lines Circuit (2 of 5)

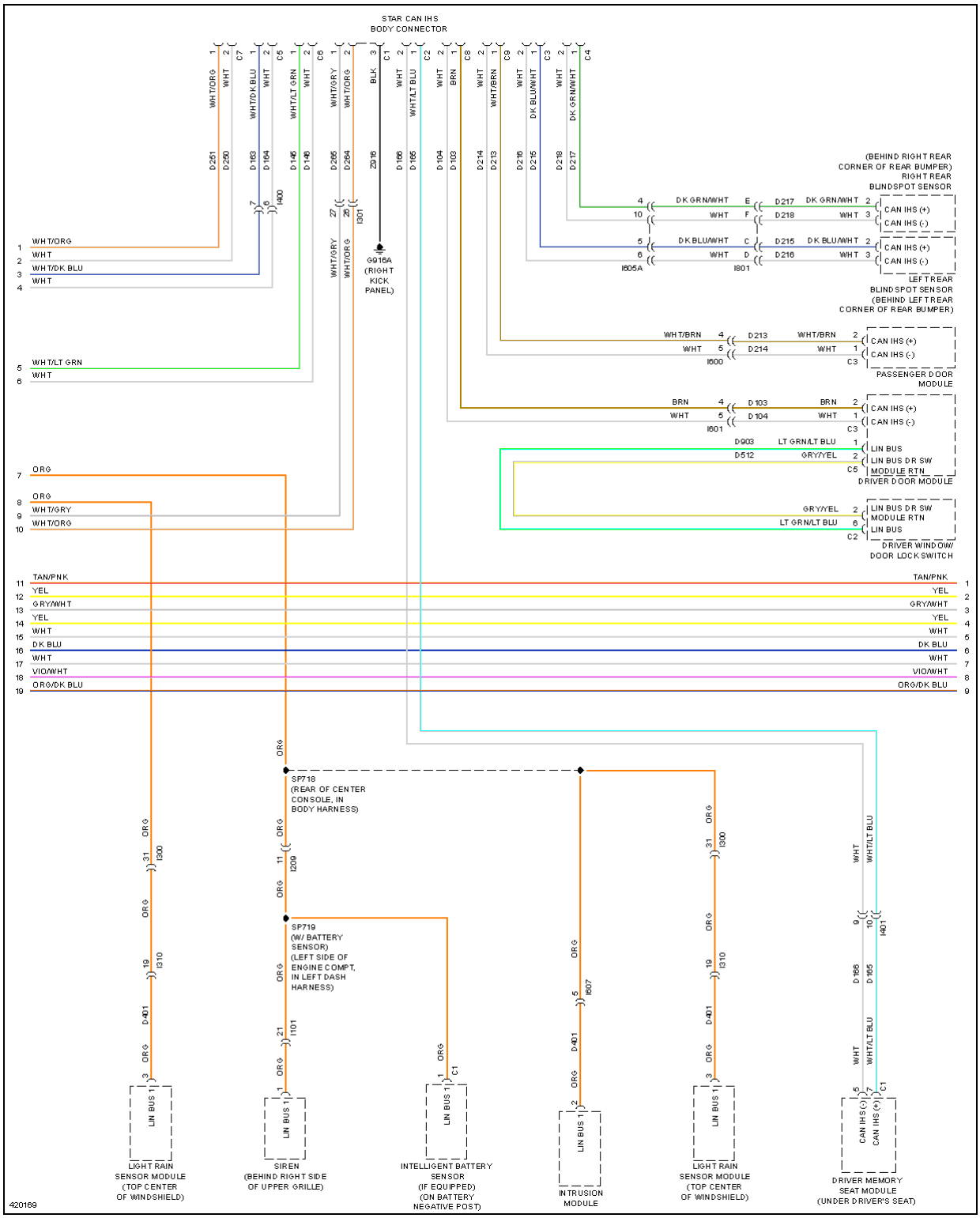
STAR CAN IHS
BODY CONNECTOR
G916A
(RIGHT
KICK
PANEL)
(BEHIND RIGHT REAR
CORNER OF REAR BUMPER)
RIGHT REAR
BLINDSPOT SENSOR
CAN IHS (+)
CAN IHS (-)
LEFT REAR
BLINDSPOT SENSOR
(BEHIND LEFT REAR
CORNER OF REAR BUMPER)
PASSENGER DOOR
MODULE
DRIVER DOOR MODULE
LIN BUS
LIN BUS DR SW
MODULE RTN
DRIVER WINDOW/
DOOR LOCK SWITCH
SP718
(REAR OF CENTER
CONSOLE, IN
BODY HARNESS)
SP719
(W/ BATTERY
SENSOR)
(LEFT SIDE OF
ENGINE COMPT,
IN LEFT DASH
HARNESS)
LIGHT RAIN
SENSOR MODULE
(TOP CENTER
OF WINDSHIELD)
SIREN
(BEHIND RIGHT SIDE
OF UPPER GRILLE)
INTELLIGENT BATTERY
SENSOR
(IF EQUIPPED)
(ON BATTERY
NEGATIVE POST)
INTRUSION
MODULE
DRIVER MEMORY
SEAT MODULE
(UNDER DRIVER'S SEAT)
420169

Fig. 20: Computer Data Lines Circuit (3 of 5)

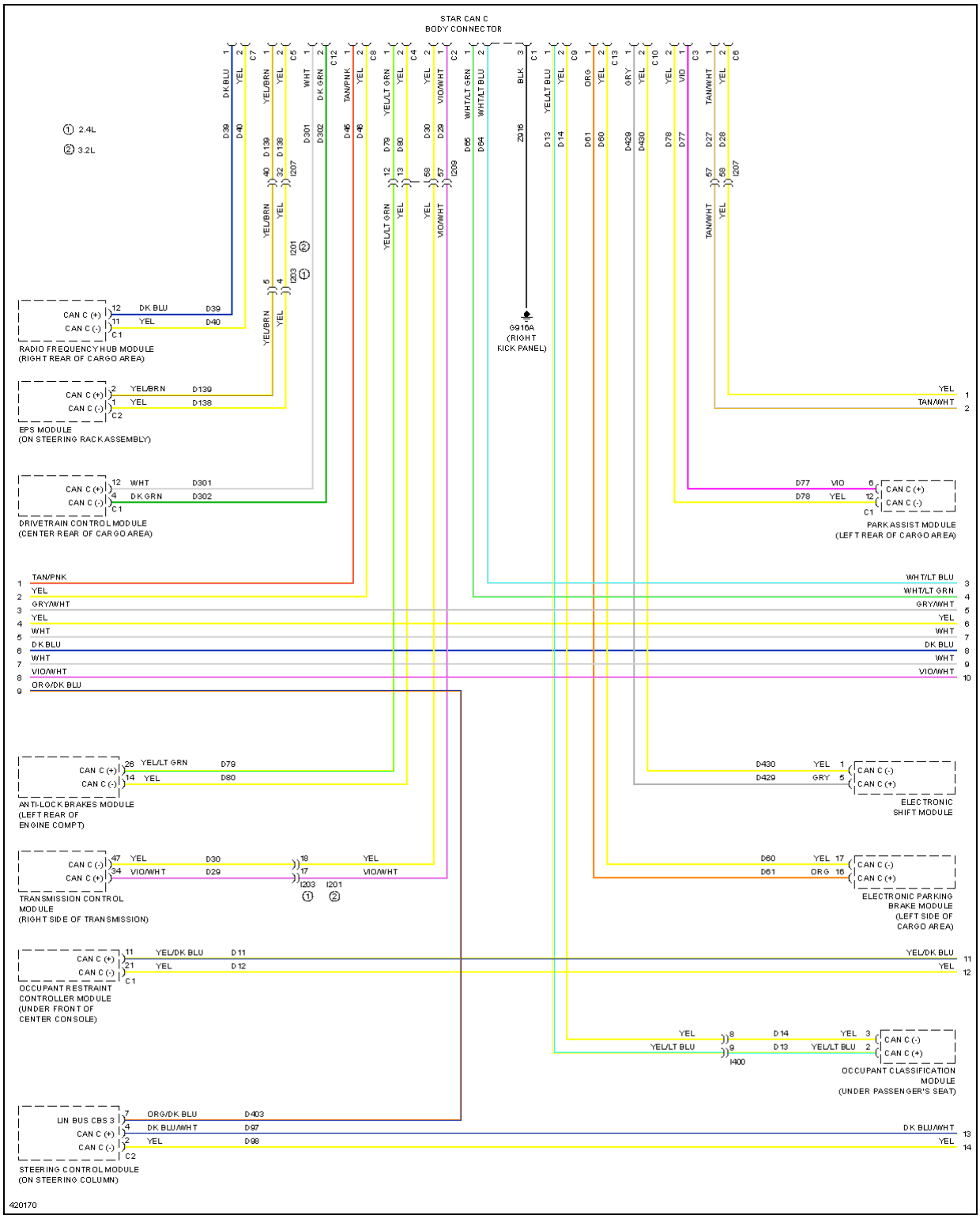
STAR CAN C
BODY CONNECTOR
① 2.4L
② 3.2L
G916A
(RIGHT
KICK PANEL)
RADIO FREQUENCY HUB MODULE
(RIGHT REAR OF CARGO AREA)
EPS MODULE
(ON STEERING RACK ASSEMBLY)
DRIVETRAIN CONTROL MODULE
(CENTER REAR OF CARGO AREA)
PARK ASSIST MODULE
(LEFT REAR OF CARGO AREA)
ANTI-LOCK BRAKES MODULE
(LEFT REAR OF
ENGINE COMPT)
ELECTRONIC
SHIFT MODULE
TRANSMISSION CONTROL
MODULE
(RIGHT SIDE OF TRANSMISSION)
ELECTRONIC PARKING
BRAKE MODULE
(LEFT SIDE OF
CARGO AREA)
OCCUPANT RESTRAINT
CONTROLLER MODULE
(UNDER FRONT OF
CENTER CONSOLE)
OCCUPANT CLASSIFICATION
MODULE
(UNDER PASSENGER'S SEAT)
STEERING CONTROL MODULE
(ON STEERING COLUMN)
420170

Fig. 21: Computer Data Lines Circuit (4 of 5)

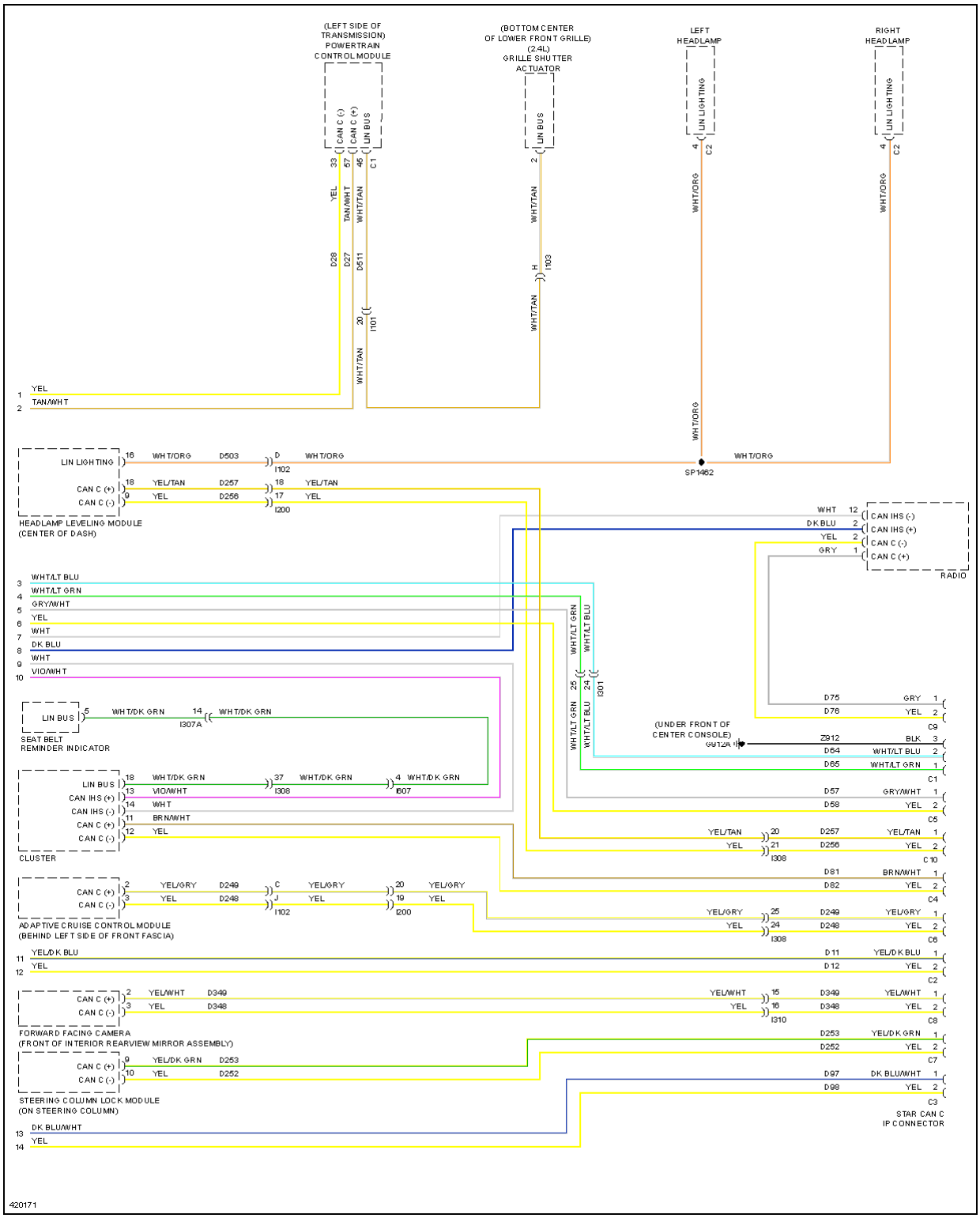
(LEFT SIDE OF TRANSMISSION) POWERTRAIN CONTROL MODULE
(BOTTOM CENTER OF LOWER FRONT GRILLE) (2.4L) GRILLE SHUTTER ACTUATOR
LEFT HEADLAMP
RIGHT HEADLAMP
CAN C (-)
CAN C (+)
LIN BUS
LIN LIGHTING
SP1462
HEADLAMP LEVELING MODULE (CENTER OF DASH)
RADIO
CAN IHS (-)
CAN IHS (+)
SEAT BELT REMINDER INDICATOR
CLUSTER
(UNDER FRONT OF CENTER CONSOLE)
ADAPTIVE CRUISE CONTROL MODULE (BEHIND LEFT SIDE OF FRONT FASCIA)
FORWARD FACING CAMERA (FRONT OF INTERIOR REARVIEW MIRROR ASSEMBLY)
STEERING COLUMN LOCK MODULE (ON STEERING COLUMN)
STAR CAN C IP CONNECTOR
420171

Fig. 22: Computer Data Lines Circuit (5 of 5)

COOLING FAN

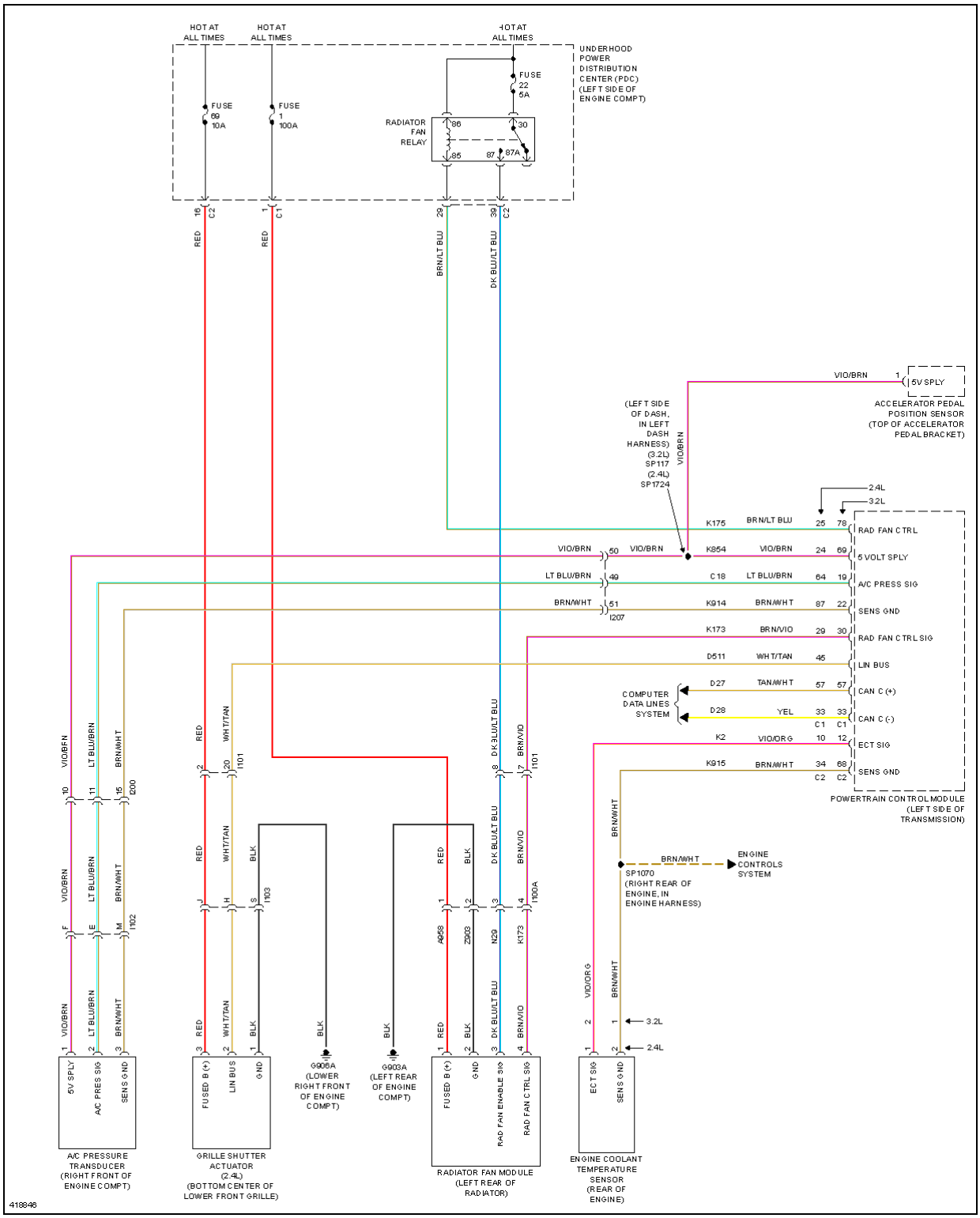
HOT AT ALL TIMES
HOT AT ALL TIMES
HOT AT ALL TIMES
UNDERHOOD POWER DISTRIBUTION CENTER (PDC) (LEFT SIDE OF ENGINE COMPT)
FUSE 69 10A
FUSE 1 100A
FUSE 22 5A
RADIATOR FAN RELAY
86
30
85
87
87A
RED
RED
BRN/LT BLU
DK BLU/LT BLU
VIO/BRN
5V SPLY
ACCELERATOR PEDAL POSITION SENSOR (TOP OF ACCELERATOR PEDAL BRACKET)
(LEFT SIDE OF DASH, IN LEFT DASH HARNESS) (3.2L) SP117 (2.4L) SP1724
2.4L
3.2L
K175 BRN/LT BLU 25 78 RAD FAN CTRL
K854 VIO/BRN 24 69 5 VOLT SPLY
C18 LT BLU/BRN 64 19 A/C PRESS SIG
K914 BRN/WHT 87 22 SENS GND
K173 BRN/VIO 29 30 RAD FAN CTRL SIG
D511 WHT/TAN 45 LIN BUS
D27 TAN/WHT 57 57 CAN C (+)
D28 YEL 33 33 CAN C (-)
C1 C1
K2 VIO/ORG 10 12 ECT SIG
K915 BRN/WHT 34 68 SENS GND
C2 C2
POWERTRAIN CONTROL MODULE (LEFT SIDE OF TRANSMISSION)
COMPUTER DATA LINES SYSTEM
BRN/WHT
ENGINE CONTROLS SYSTEM
SP1070 (RIGHT REAR OF ENGINE, IN ENGINE HARNESS)
VIO/BRN
LT BLU/BRN
BRN/WHT
WHT/TAN
BLK
DK BLU/LT BLU
BRN/VIO
VIO/ORG
5V SPLY
A/C PRESS SIG
SENS GND
A/C PRESSURE TRANSDUCER (RIGHT FRONT OF ENGINE COMPT)
FUSED B (+)
LIN BUS
GND
GRILLE SHUTTER ACTUATOR (2.4L) (BOTTOM CENTER OF LOWER FRONT GRILLE)
G906A (LOWER RIGHT FRONT OF ENGINE COMPT)
G903A (LEFT REAR OF ENGINE COMPT)
RAD FAN ENABLE SIG
RAD FAN CTRL SIG
RADIATOR FAN MODULE (LEFT REAR OF RADIATOR)
ECT SIG
ENGINE COOLANT TEMPERATURE SENSOR (REAR OF ENGINE)
418846

Fig. 23: Cooling Fan Circuit

CRUISE CONTROL

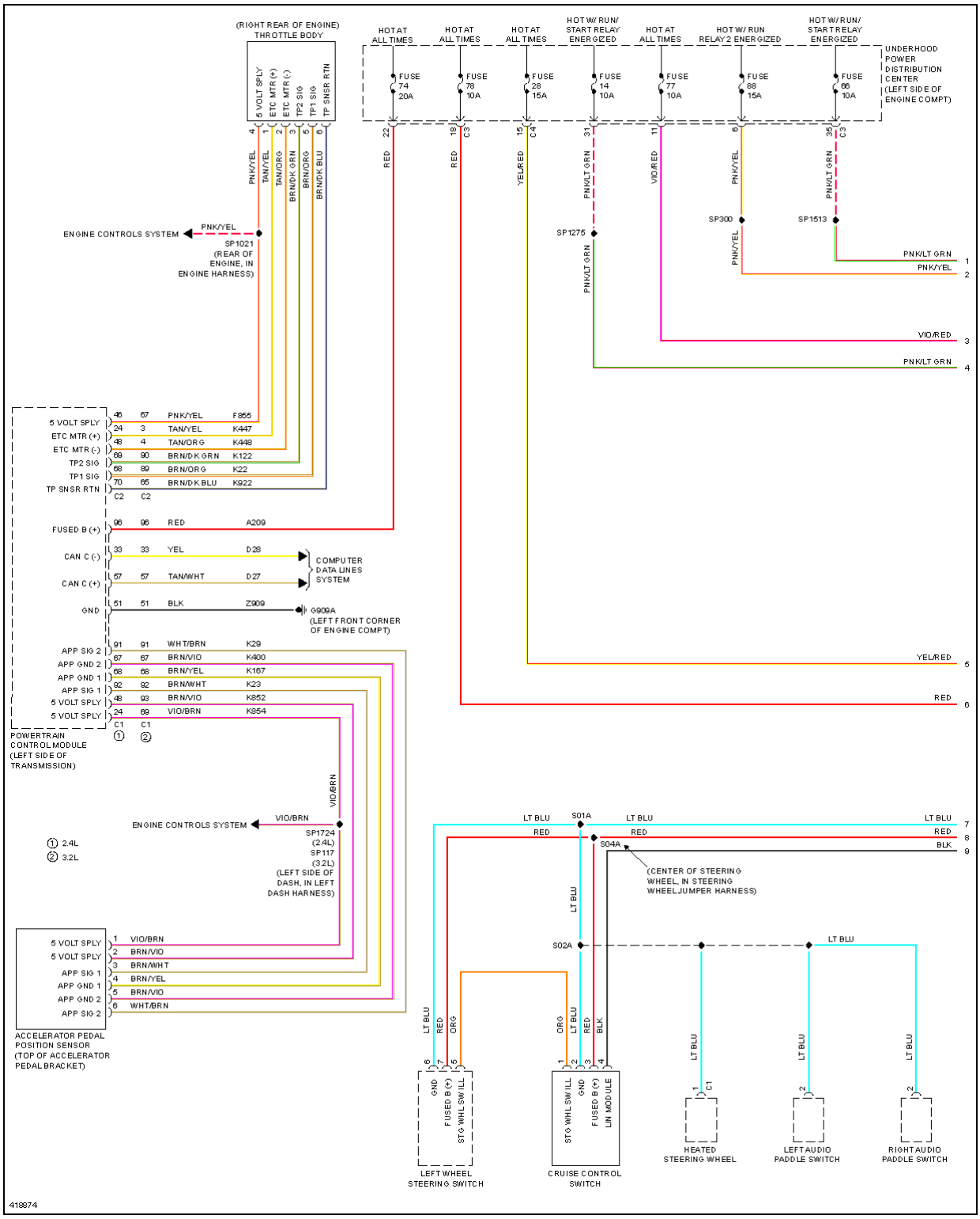
(RIGHT REAR OF ENGINE)
THROTTLE BODY
5 VOLT SPLY
ETC MTR (+)
ETC MTR (-)
TP2 SIG
TP1 SIG
TP SNSR RTN
HOT AT ALL TIMES
HOT W/ RUN/ START RELAY ENERGIZED
HOT W/ RUN RELAY 2 ENERGIZED
UNDERHOOD POWER DISTRIBUTION CENTER (LEFT SIDE OF ENGINE COMPT)
FUSE 74 20A
FUSE 78 10A
FUSE 28 15A
FUSE 14 10A
FUSE 77 10A
FUSE 88 15A
FUSE 66 10A
ENGINE CONTROLS SYSTEM
SP1021 (REAR OF ENGINE, IN ENGINE HARNESS)
SP1275
SP300
SP1513
PNK/LT GRN
PNK/YEL
VIO/RED
YEL/RED
RED
POWERTRAIN CONTROL MODULE (LEFT SIDE OF TRANSMISSION)
FUSED B (+)
CAN C (-)
CAN C (+)
GND
COMPUTER DATA LINES SYSTEM
G909A (LEFT FRONT CORNER OF ENGINE COMPT)
APP SIG 2
APP GND 2
APP GND 1
APP SIG 1
VIO/BRN
SP1724 (2.4L) SP117 (3.2L) (LEFT SIDE OF DASH, IN LEFT DASH HARNESS)
2.4L
3.2L
ACCELERATOR PEDAL POSITION SENSOR (TOP OF ACCELERATOR PEDAL BRACKET)
S01A
S04A
S02A
LT BLU
BLK
(CENTER OF STEERING WHEEL, IN STEERING WHEEL JUMPER HARNESS)
ORG
STG WHL SW ILL
LIN MODULE
LEFT WHEEL STEERING SWITCH
CRUISE CONTROL SWITCH
HEATED STEERING WHEEL
LEFT AUDIO PADDLE SWITCH
RIGHT AUDIO PADDLE SWITCH
418874

Fig. 24: Cruise Control Circuit (1 of 2)

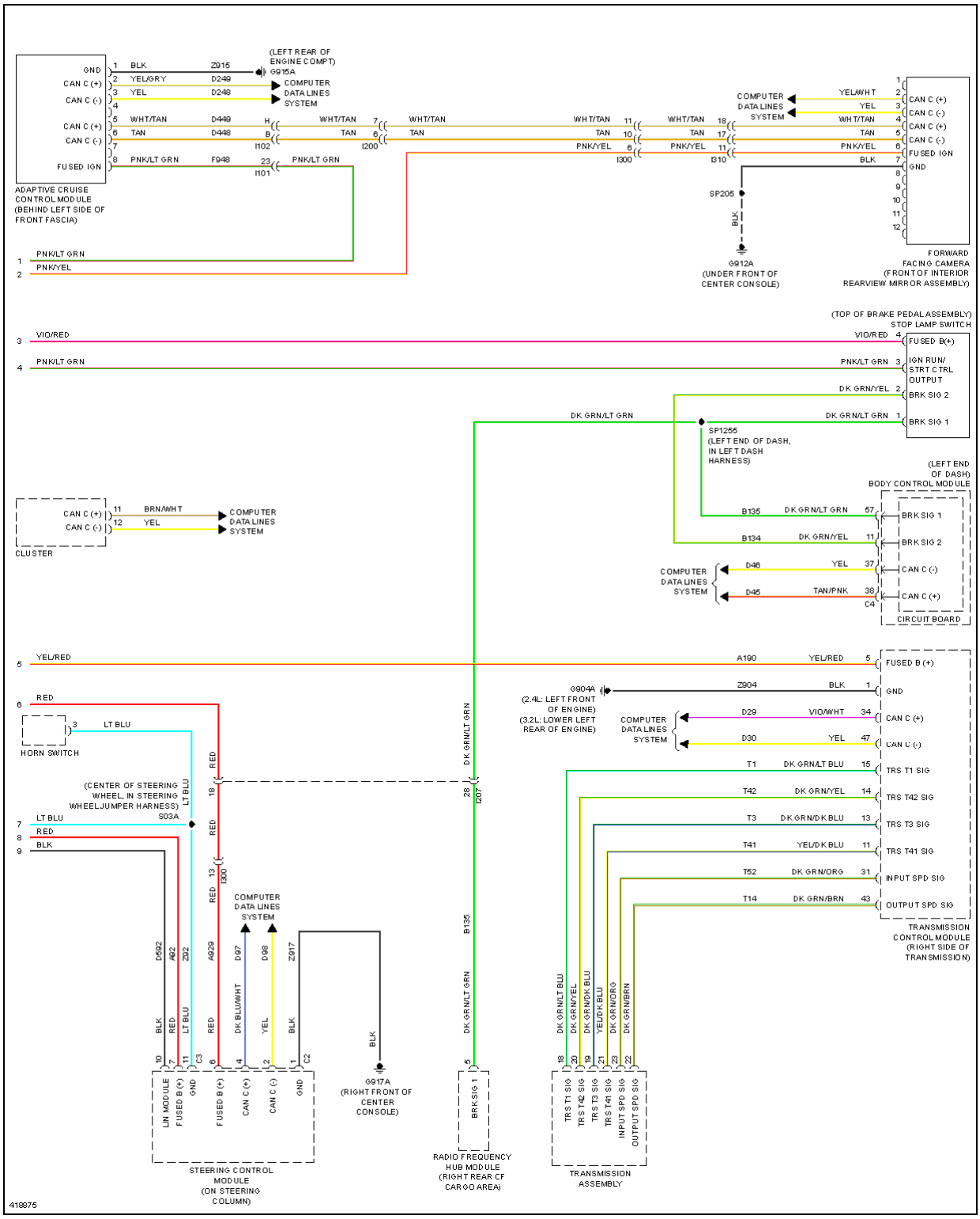
ADAPTIVE CRUISE CONTROL MODULE (BEHIND LEFT SIDE OF FRONT FASCIA)
GND
CAN C (+)
CAN C (-)
FUSED IGN
(LEFT REAR OF ENGINE COMPT) G915A
COMPUTER DATA LINES SYSTEM
G912A (UNDER FRONT OF CENTER CONSOLE)
SP205
FORWARD FACING CAMERA (FRONT OF INTERIOR REARVIEW MIRROR ASSEMBLY)
(TOP OF BRAKE PEDAL ASSEMBLY) STOP LAMP SWITCH
FUSED B(+)
IGN RUN/ STRT CTRL OUTPUT
BRK SIG 2
BRK SIG 1
SP1255 (LEFT END OF DASH, IN LEFT DASH HARNESS)
(LEFT END OF DASH) BODY CONTROL MODULE
CIRCUIT BOARD
CLUSTER
HORN SWITCH
(CENTER OF STEERING WHEEL, IN STEERING WHEEL JUMPER HARNESS) S03A
G904A (2.4L: LEFT FRONT OF ENGINE) (3.2L: LOWER LEFT REAR OF ENGINE)
TRS T1 SIG
TRS T42 SIG
TRS T3 SIG
TRS T41 SIG
INPUT SPD SIG
OUTPUT SPD SIG
TRANSMISSION CONTROL MODULE (RIGHT SIDE OF TRANSMISSION)
G917A (RIGHT FRONT OF CENTER CONSOLE)
STEERING CONTROL MODULE (ON STEERING COLUMN)
RADIO FREQUENCY HUB MODULE (RIGHT REAR OF CARGO AREA)
TRANSMISSION ASSEMBLY
418875

Fig. 25: Cruise Control Circuit (2 of 2)

DEFOGGERS

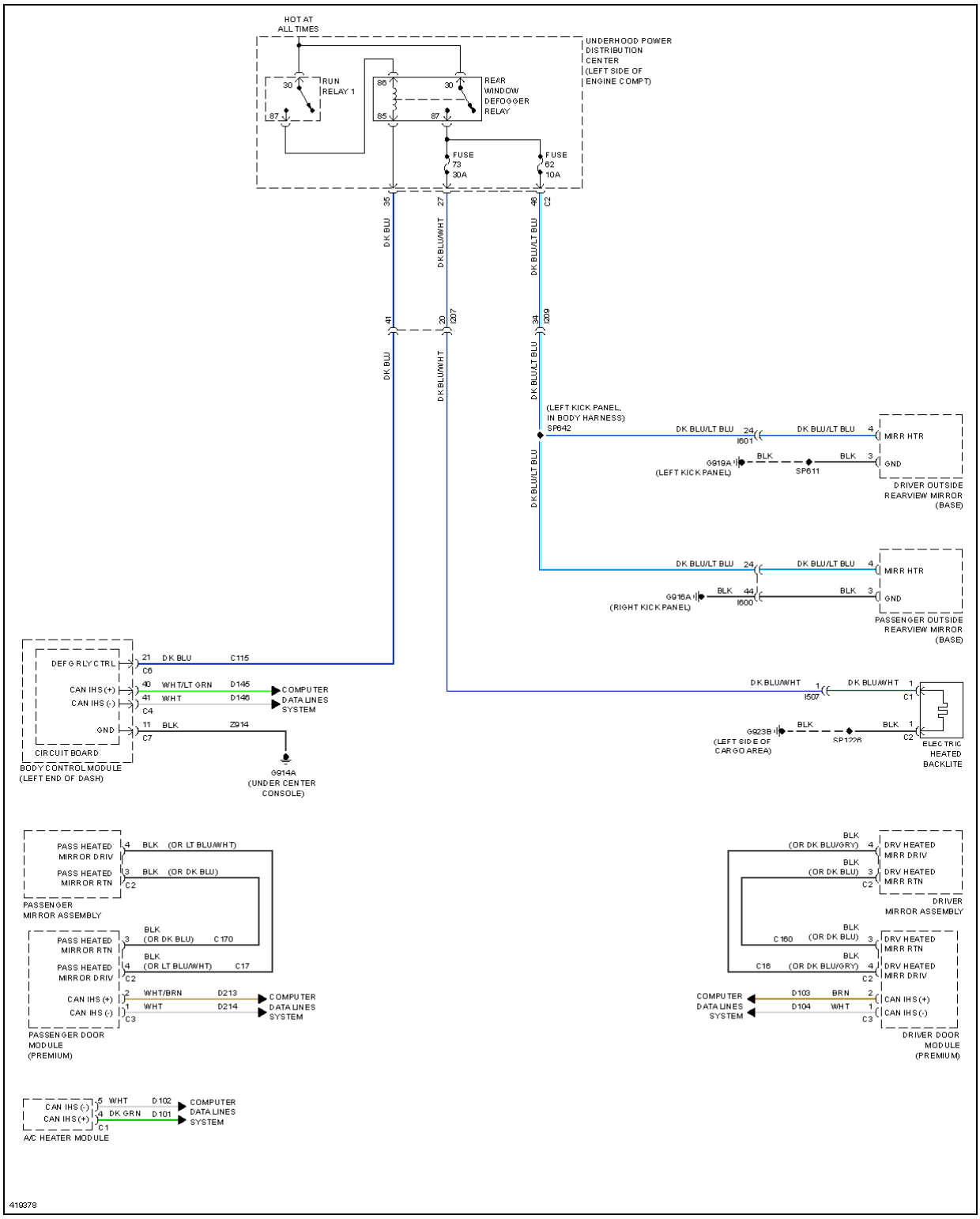
HOT AT ALL TIMES
UNDERHOOD POWER DISTRIBUTION CENTER (LEFT SIDE OF ENGINE COMPT)
RUN RELAY 1
REAR WINDOW DEFOGGER RELAY
FUSE 73 30A
FUSE 62 10A
DK BLU
DK BLU/WHT
DK BLU/LT BLU
(LEFT KICK PANEL, IN BODY HARNESS)
SP642
MIRR HTR
GND
DRIVER OUTSIDE REARVIEW MIRROR (BASE)
PASSENGER OUTSIDE REARVIEW MIRROR (BASE)
(LEFT KICK PANEL)
(RIGHT KICK PANEL)
DEF G RLY CTRL
CAN IHS (+)
CAN IHS (-)
GND
CIRCUIT BOARD
BODY CONTROL MODULE (LEFT END OF DASH)
COMPUTER DATA LINES SYSTEM
G914A (UNDER CENTER CONSOLE)
ELECTRIC HEATED BACKLITE
(LEFT SIDE OF CARGO AREA)
PASS HEATED MIRROR DRIV
PASS HEATED MIRROR RTN
PASSENGER MIRROR ASSEMBLY
PASSENGER DOOR MODULE (PREMIUM)
DRV HEATED MIRR DRIV
DRV HEATED MIRR RTN
DRIVER MIRROR ASSEMBLY
DRIVER DOOR MODULE (PREMIUM)
A/C HEATER MODULE
419378

Fig. 26: Defoggers Circuit

ELECTRONIC POWER STEERING

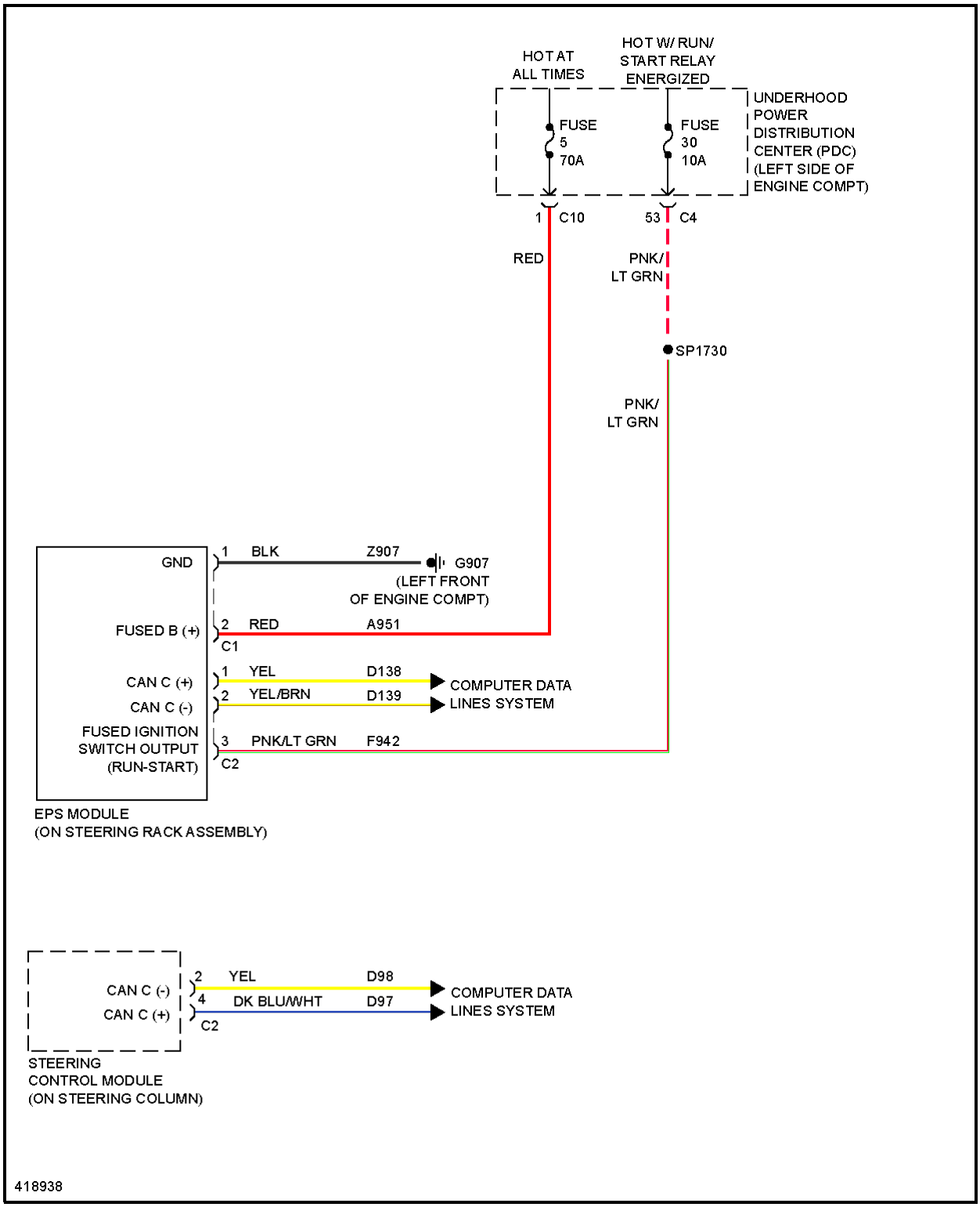
HOT AT ALL TIMES
HOT W/ RUN/ START RELAY ENERGIZED
UNDERHOOD POWER DISTRIBUTION CENTER (PDC) (LEFT SIDE OF ENGINE COMPT)
FUSE 5 70A
FUSE 30 10A
1 C10
53 C4
RED
PNK/ LT GRN
SP1730
PNK/ LT GRN
GND
1 BLK Z907
G907 (LEFT FRONT OF ENGINE COMPT)
FUSED B (+)
2 RED A951
C1
CAN C (+)
1 YEL D138
COMPUTER DATA LINES SYSTEM
CAN C (-)
2 YEL/BRN D139
FUSED IGNITION SWITCH OUTPUT (RUN-START)
3 PNK/LT GRN F942
C2
EPS MODULE (ON STEERING RACK ASSEMBLY)
CAN C (-)
2 YEL D98
COMPUTER DATA LINES SYSTEM
CAN C (+)
4 DK BLU/WHT D97
C2
STEERING CONTROL MODULE (ON STEERING COLUMN)
418938

Fig. 27: Electronic Power Steering Circuit

ENGINE PERFORMANCE

2.4L

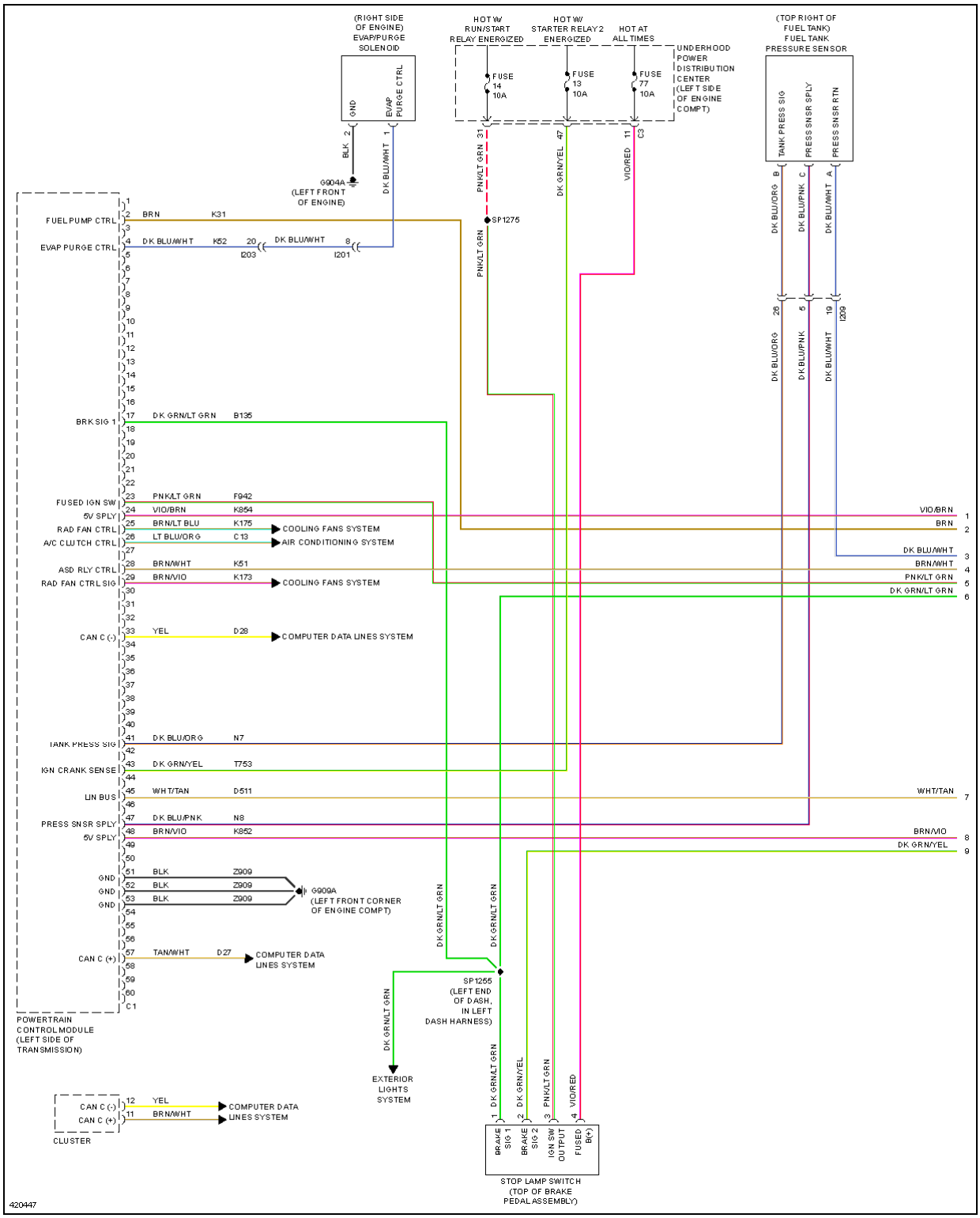
(RIGHT SIDE OF ENGINE) EVAP/PURGE SOLENOID
GND
EVAP PURGE CTRL
HOT W/ RUN/START RELAY ENERGIZED
HOT W/ STARTER RELAY 2 ENERGIZED
HOT AT ALL TIMES
UNDERHOOD POWER DISTRIBUTION CENTER (LEFT SIDE OF ENGINE COMPT)
FUSE 14 10A
FUSE 13 10A
FUSE 77 10A
(TOP RIGHT OF FUEL TANK) FUEL TANK PRESSURE SENSOR
TANK PRESS SIG
PRESS SNSR SPLY
PRESS SNSR RTN
G904A (LEFT FRONT OF ENGINE)
SP1275
FUEL PUMP CTRL
EVAP PURGE CTRL
BRK SIG 1
FUSED IGN SW
5V SPLY
RAD FAN CTRL
A/C CLUTCH CTRL
ASD RLY CTRL
RAD FAN CTRL SIG
CAN C (-)
TANK PRESS SIG
IGN CRANK SENSE
LIN BUS
PRESS SNSR SPLY
5V SPLY
GND
CAN C (+)
COOLING FANS SYSTEM
AIR CONDITIONING SYSTEM
COMPUTER DATA LINES SYSTEM
G909A (LEFT FRONT CORNER OF ENGINE COMPT)
POWERTRAIN CONTROL MODULE (LEFT SIDE OF TRANSMISSION)
SP1255 (LEFT END OF DASH, IN LEFT DASH HARNESS)
EXTERIOR LIGHTS SYSTEM
CLUSTER
BRAKE SIG 1
BRAKE SIG 2
IGN SW OUTPUT
FUSED B(+)
STOP LAMP SWITCH (TOP OF BRAKE PEDAL ASSEMBLY)
420447

Fig. 28: 2.4L, Engine Performance Circuit (1 of 7)

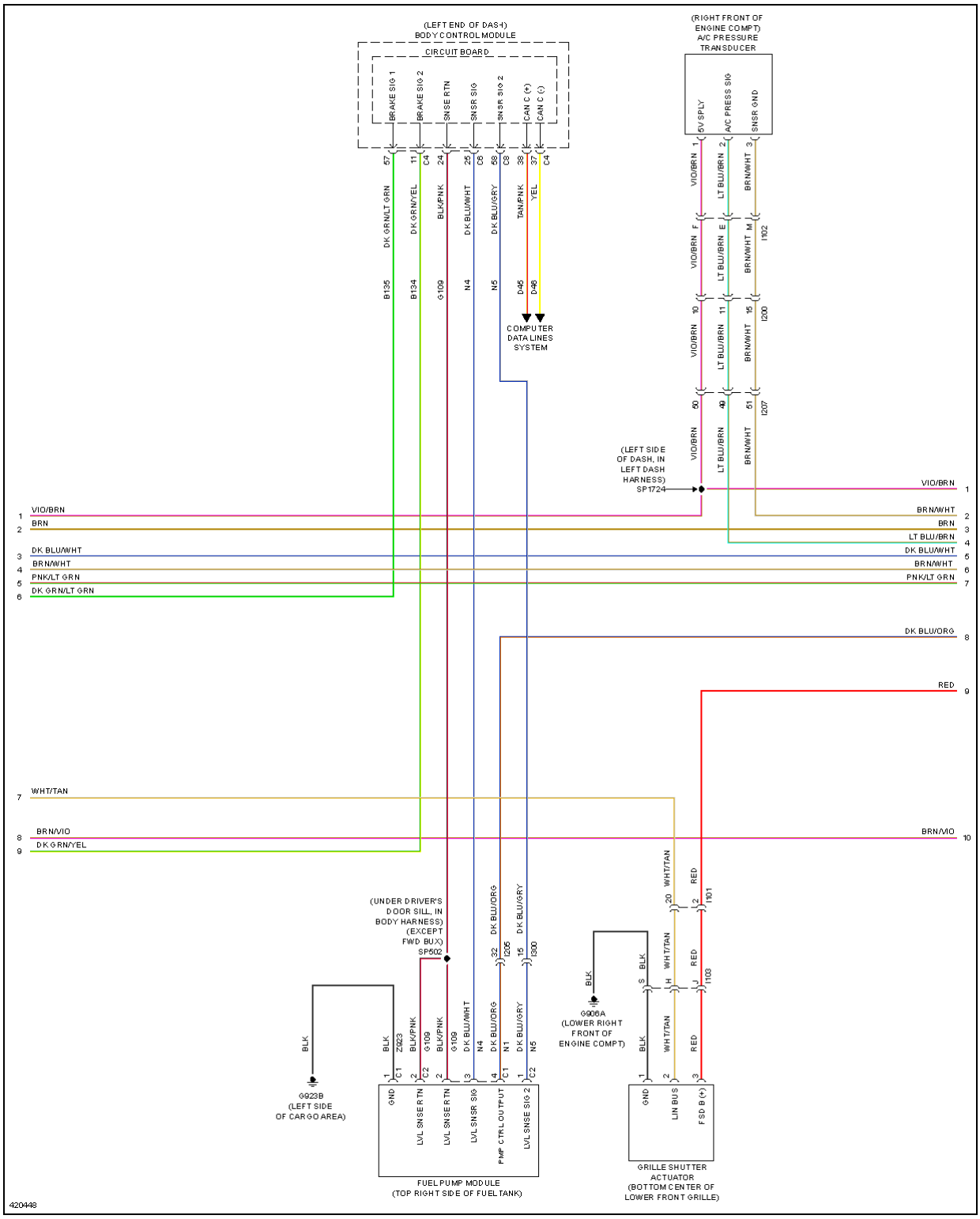
(LEFT END OF DASH)
BODY CONTROL MODULE
CIRCUIT BOARD
BRAKE SIG 1
BRAKE SIG 2
SNSR RTN
SNSR SIG
SNSR SIG 2
CAN C (+)
CAN C (-)
(RIGHT FRONT OF ENGINE COMPT)
A/C PRESSURE TRANSDUCER
5V SPLY
A/C PRESS SIG
SNSR GND
COMPUTER DATA LINES SYSTEM
(LEFT SIDE OF DASH, IN LEFT DASH HARNESS)
SP1724
VIO/BRN
BRN/WHT
BRN
LT BLU/BRN
DK BLU/WHT
PNK/LT GRN
DK GRN/LT GRN
DK BLU/ORG
RED
WHT/TAN
BRN/VIO
DK GRN/YEL
(UNDER DRIVER'S DOOR SILL, IN BODY HARNESS) (EXCEPT FWD BUX)
SP502
G923B
(LEFT SIDE OF CARGO AREA)
G906A
(LOWER RIGHT FRONT OF ENGINE COMPT)
GND
LV/L SNSE RTN
LV/L SNSR SIG
PMP CTRL OUTPUT
LV/L SNSE SIG 2
FUEL PUMP MODULE
(TOP RIGHT SIDE OF FUEL TANK)
LIN BUS
FSD B (+)
GRILLE SHUTTER ACTUATOR
(BOTTOM CENTER OF LOWER FRONT GRILLE)
420448

Fig. 29: 2.4L, Engine Performance Circuit (2 of 7)

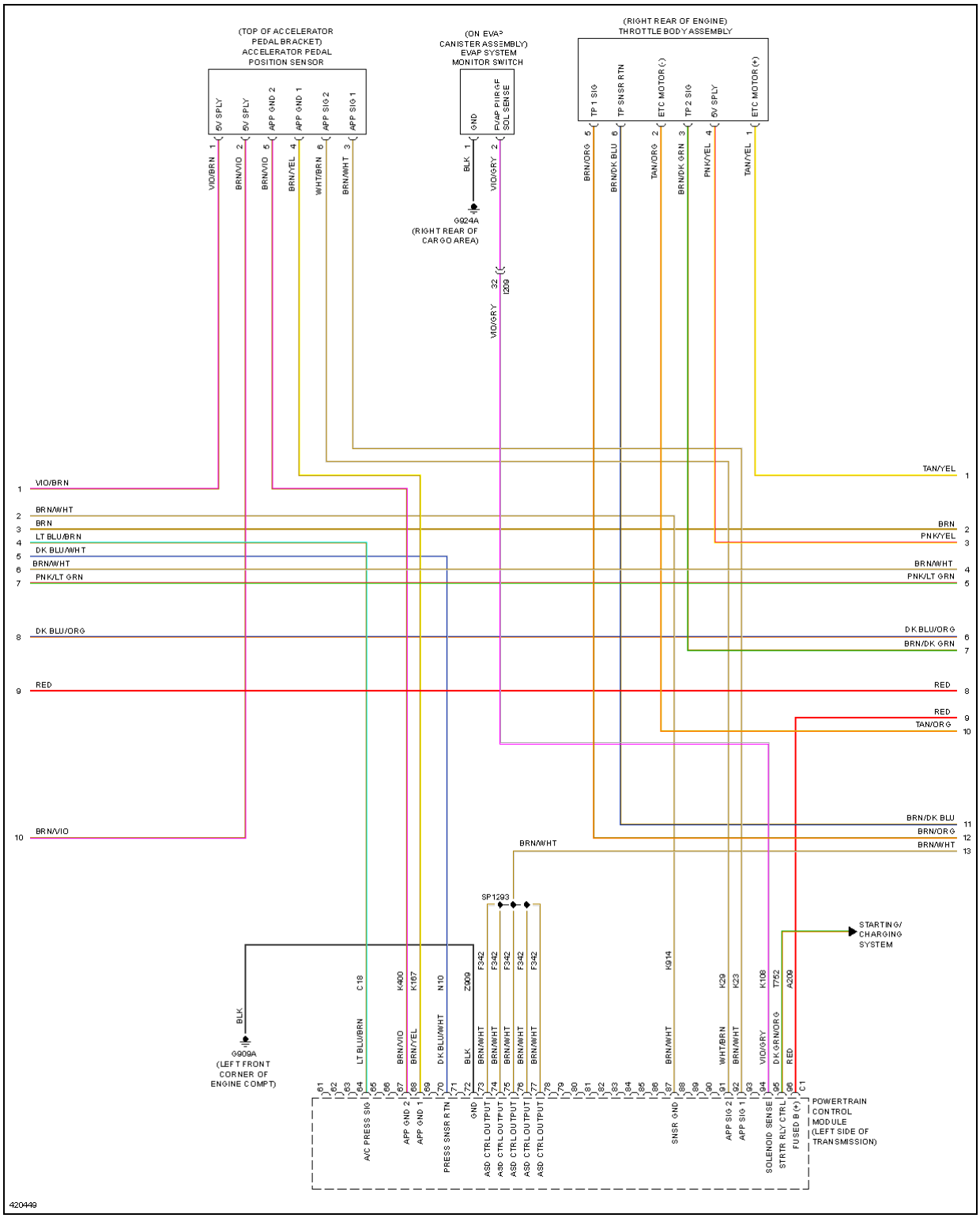
(TOP OF ACCELERATOR PEDAL BRACKET) ACCELERATOR PEDAL POSITION SENSOR
5V SPLY
5V SPLY
APP GND 2
APP GND 1
APP SIG 2
APP SIG 1
(ON EVAP CANISTER ASSEMBLY) EVAP SYSTEM MONITOR SWITCH
GND
EVAP PURGE SOL SENSE
(RIGHT REAR OF ENGINE) THROTTLE BODY ASSEMBLY
TP 1 SIG
TP SNSR RTN
ETC MOTOR (-)
TP 2 SIG
5V SPLY
ETC MOTOR (+)
G924A (RIGHT REAR OF CARGO AREA)
I209
G909A (LEFT FRONT CORNER OF ENGINE COMPT)
SP1293
F342
K914
K29
K23
K108
T752
A209
STARTING/ CHARGING SYSTEM
POWERTRAIN CONTROL MODULE (LEFT SIDE OF TRANSMISSION)
A/C PRESS SIG
APP GND 2
APP GND 1
PRESS SNSR RTN
GND
ASD CTRL OUTPUT
SNSR GND
APP SIG 2
APP SIG 1
SOLENOID SENSE
STRTR RLY CTRL
FUSED B (+)
420449

Fig. 30: 2.4L, Engine Performance Circuit (3 of 7)

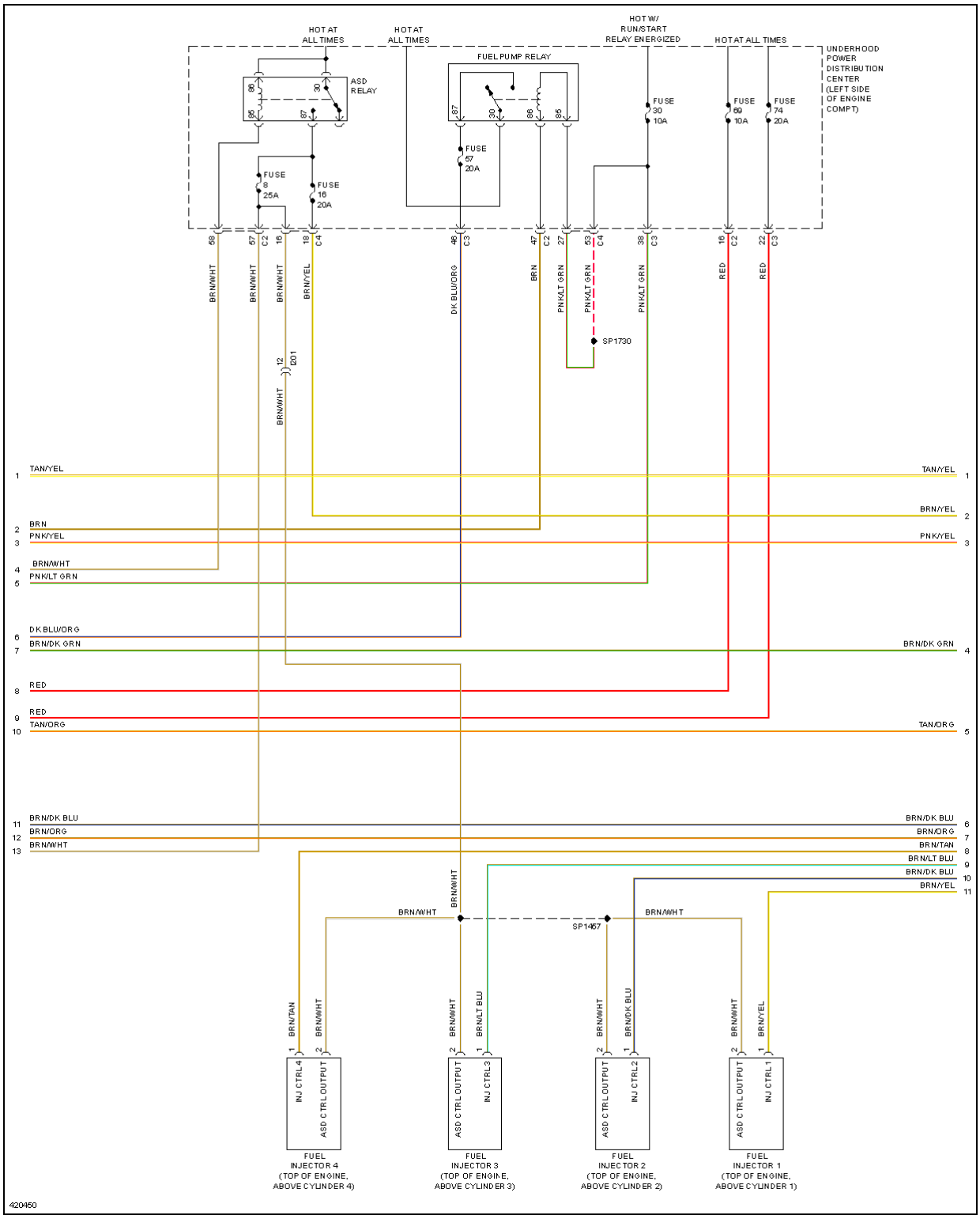
HOT AT ALL TIMES
HOT AT ALL TIMES
HOT W/ RUN/START RELAY ENERGIZED
HOT AT ALL TIMES
UNDERHOOD POWER DISTRIBUTION CENTER (LEFT SIDE OF ENGINE COMPT)
FUEL PUMP RELAY
ASD RELAY
FUSE 30 10A
FUSE 69 10A
FUSE 74 20A
FUSE 57 20A
FUSE 8 25A
FUSE 16 20A
SP1730
SP1457
TAN/YEL
BRN
PNK/YEL
BRN/WHT
PNK/LT GRN
DK BLU/ORG
BRN/DK GRN
RED
TAN/ORG
BRN/DK BLU
BRN/ORG
BRN/TAN
BRN/LT BLU
BRN/YEL
INJ CTRL 4
ASD CTRL OUTPUT
INJ CTRL 3
INJ CTRL 2
INJ CTRL 1
FUEL INJECTOR 4 (TOP OF ENGINE, ABOVE CYLINDER 4)
FUEL INJECTOR 3 (TOP OF ENGINE, ABOVE CYLINDER 3)
FUEL INJECTOR 2 (TOP OF ENGINE, ABOVE CYLINDER 2)
FUEL INJECTOR 1 (TOP OF ENGINE, ABOVE CYLINDER 1)
420450

Fig. 31: 2.4L, Engine Performance Circuit (4 of 7)

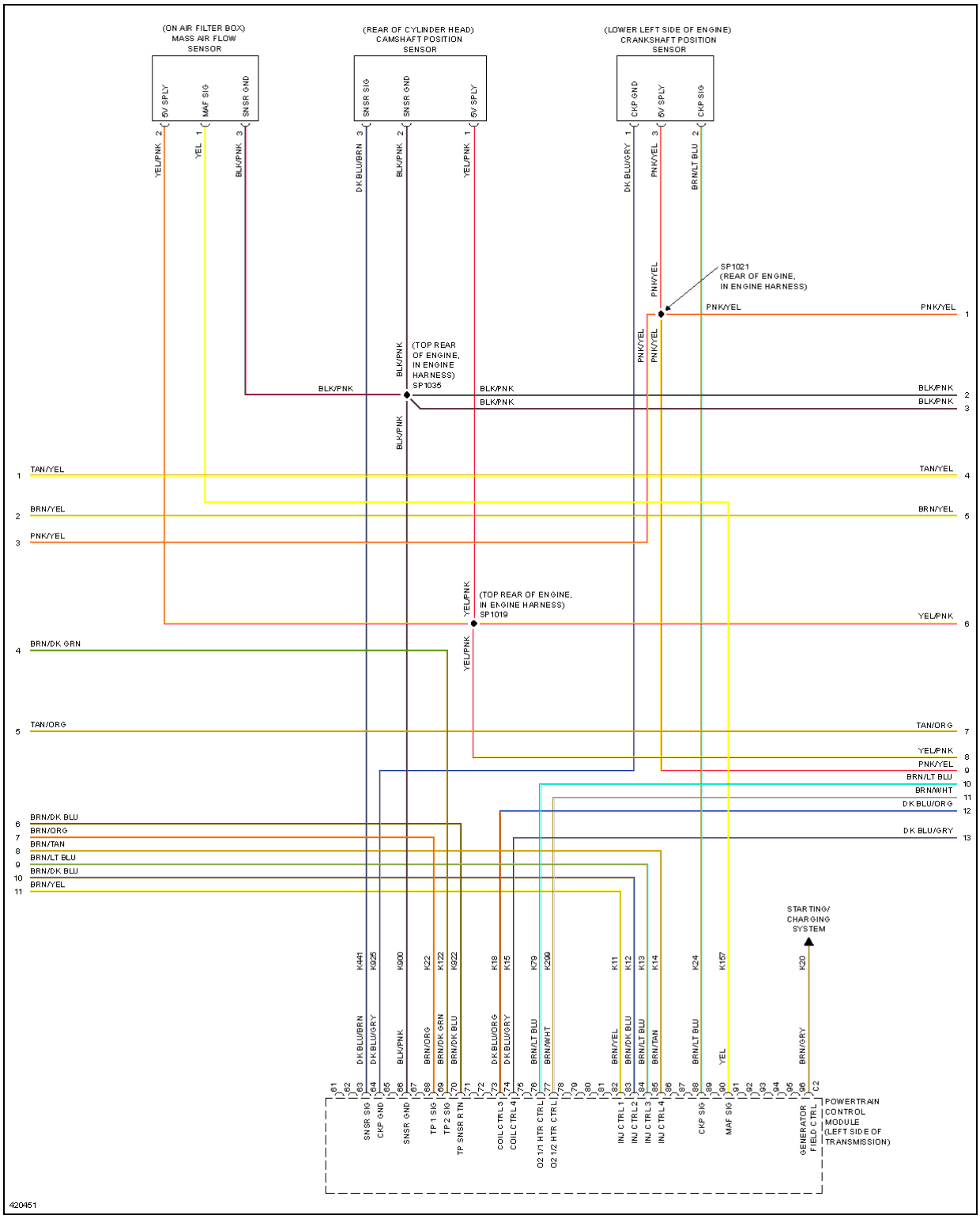
(ON AIR FILTER BOX)
MASS AIR FLOW
SENSOR
5V SPLY
MAF SIG
SNSR GND
(REAR OF CYLINDER HEAD)
CAMSHAFT POSITION
SENSOR
SNSR SIG
SNSR GND
5V SPLY
(LOWER LEFT SIDE OF ENGINE)
CRANKSHAFT POSITION
SENSOR
CKP GND
5V SPLY
CKP SIG
SP1021
(REAR OF ENGINE,
IN ENGINE HARNESS)
(TOP REAR
OF ENGINE,
IN ENGINE
HARNESS)
SP1035
(TOP REAR OF ENGINE,
IN ENGINE HARNESS)
SP1019
STARTING/
CHARGING
SYSTEM
POWERTRAIN
CONTROL
MODULE
(LEFT SIDE OF
TRANSMISSION)
420451

Fig. 32: 2.4L, Engine Performance Circuit (5 of 7)

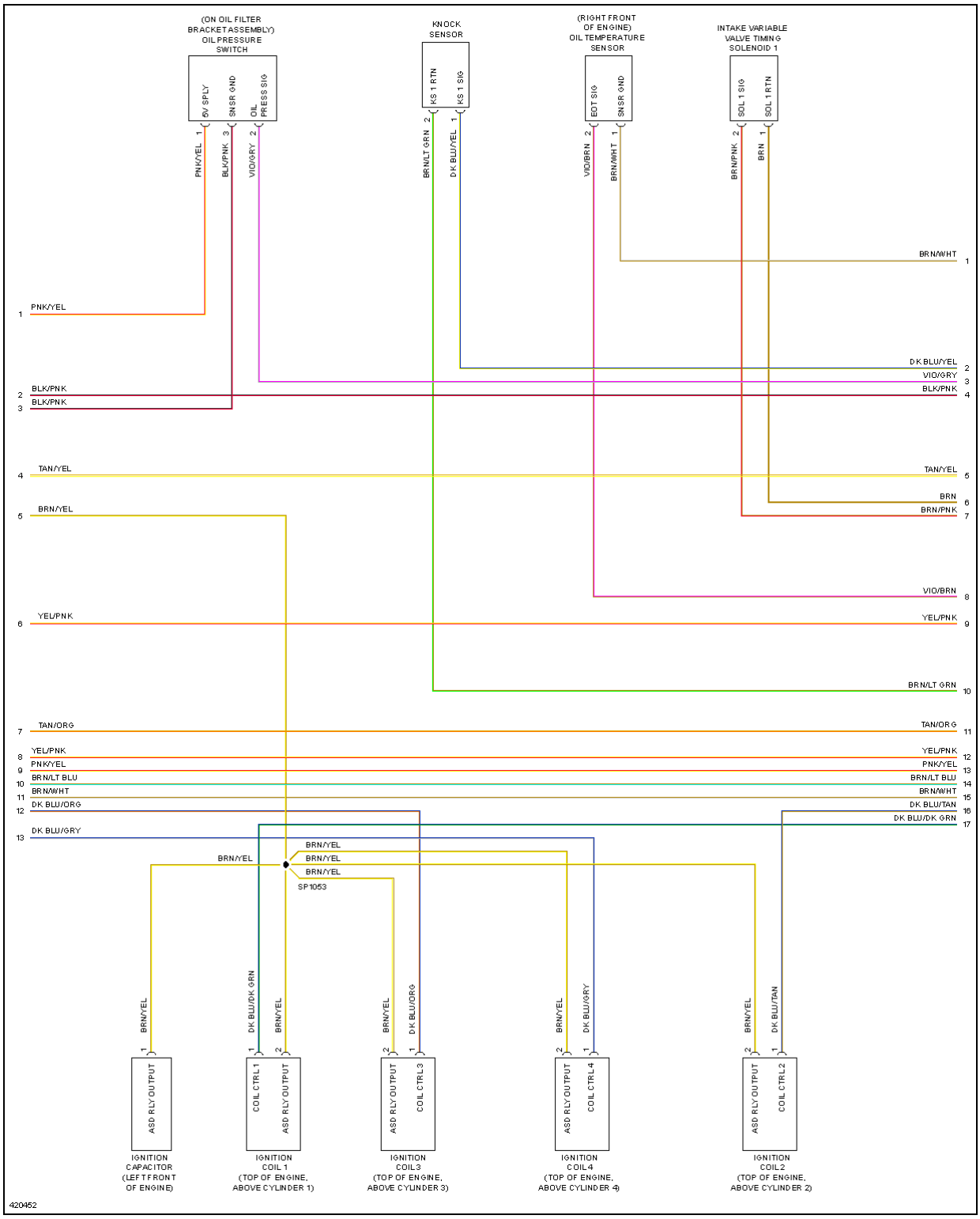
(ON OIL FILTER BRACKET ASSEMBLY) OIL PRESSURE SWITCH
5V SPLY
SNSR GND
OIL PRESS SIG
KNOCK SENSOR
KS 1 RTN
KS 1 SIG
(RIGHT FRONT OF ENGINE) OIL TEMPERATURE SENSOR
EOT SIG
SNSR GND
INTAKE VARIABLE VALVE TIMING SOLENOID 1
SOL 1 SIG
SOL 1 RTN
PNK/YEL
BLK/PNK
VIO/GRY
BRN/LT GRN
DK BLU/YEL
VIO/BRN
BRN/WHT
BRN/PNK
BRN
BRN/WHT
DK BLU/YEL
VIO/GRY
BLK/PNK
BLK/PNK
TAN/YEL
TAN/YEL
BRN
BRN/PNK
BRN/YEL
VIO/BRN
YEL/PNK
YEL/PNK
BRN/LT GRN
TAN/ORG
TAN/ORG
YEL/PNK
YEL/PNK
PNK/YEL
PNK/YEL
BRN/LT BLU
BRN/LT BLU
BRN/WHT
BRN/WHT
DK BLU/ORG
DK BLU/TAN
DK BLU/DK GRN
DK BLU/GRY
BRN/YEL
BRN/YEL
BRN/YEL
BRN/YEL
SP1053
BRN/YEL
DK BLU/DK GRN
BRN/YEL
BRN/YEL
DK BLU/ORG
BRN/YEL
DK BLU/GRY
BRN/YEL
DK BLU/TAN
ASD RLY OUTPUT
COIL CTRL 1
ASD RLY OUTPUT
ASD RLY OUTPUT
COIL CTRL 3
ASD RLY OUTPUT
COIL CTRL 4
ASD RLY OUTPUT
COIL CTRL 2
IGNITION CAPACITOR (LEFT FRONT OF ENGINE)
IGNITION COIL 1 (TOP OF ENGINE, ABOVE CYLINDER 1)
IGNITION COIL 3 (TOP OF ENGINE, ABOVE CYLINDER 3)
IGNITION COIL 4 (TOP OF ENGINE, ABOVE CYLINDER 4)
IGNITION COIL 2 (TOP OF ENGINE, ABOVE CYLINDER 2)
420452

Fig. 33: 2.4L, Engine Performance Circuit (6 of 7)

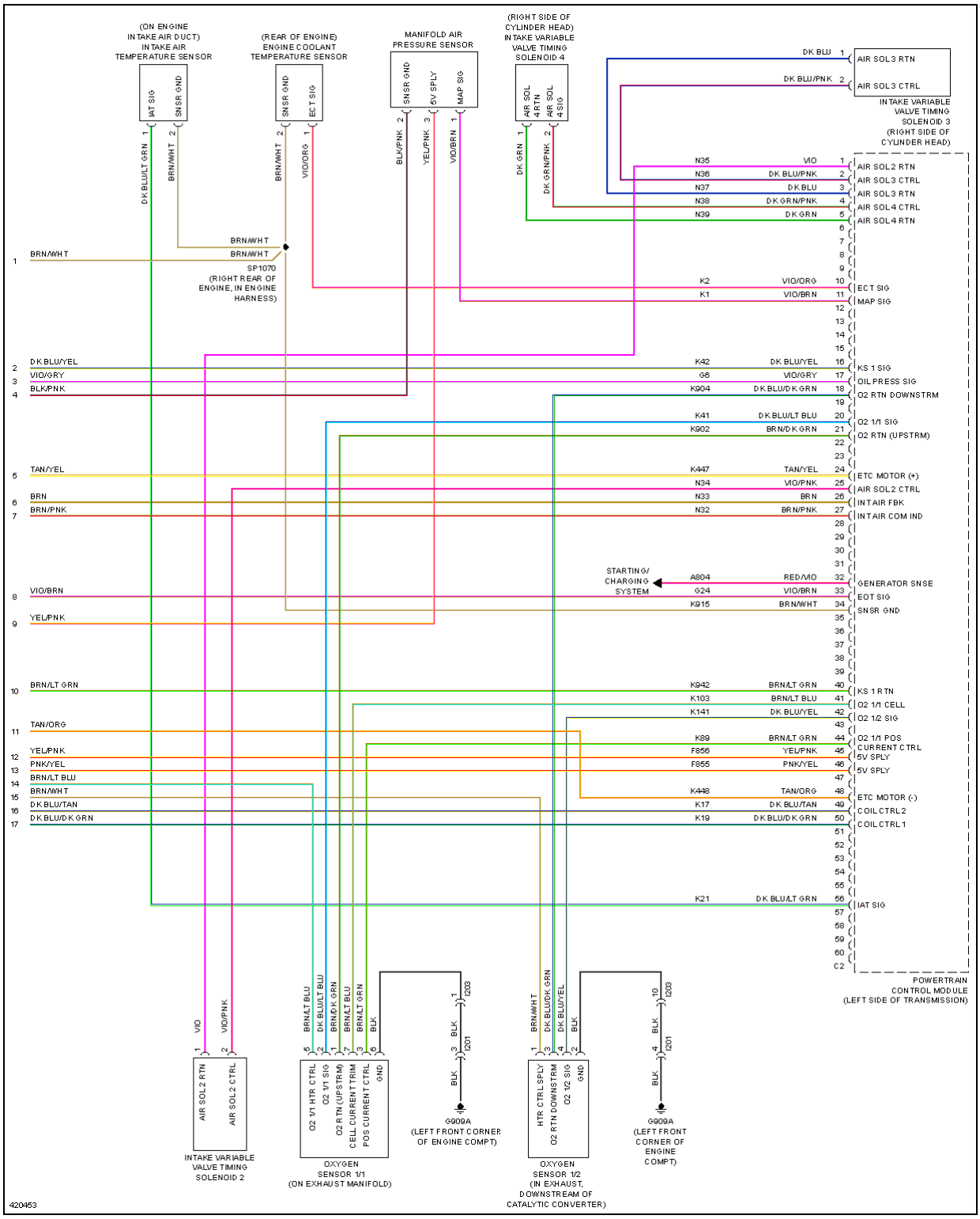
(ON ENGINE INTAKE AIR DUCT) INTAKE AIR TEMPERATURE SENSOR
IAT SIG
SNSR GND
(REAR OF ENGINE) ENGINE COOLANT TEMPERATURE SENSOR
SNSR GND
ECT SIG
MANIFOLD AIR PRESSURE SENSOR
SNSR GND
5V SPLY
MAP SIG
(RIGHT SIDE OF CYLINDER HEAD) INTAKE VARIABLE VALVE TIMING SOLENOID 4
AIR SOL 4 RTN
AIR SOL 4 SIG
DK BLU
AIR SOL 3 RTN
DK BLU/PNK
AIR SOL 3 CTRL
INTAKE VARIABLE VALVE TIMING SOLENOID 3 (RIGHT SIDE OF CYLINDER HEAD)
N35 VIO AIR SOL 2 RTN
N36 DK BLU/PNK AIR SOL 3 CTRL
N37 DK BLU AIR SOL 3 RTN
N38 DK GRN/PNK AIR SOL 4 CTRL
N39 DK GRN AIR SOL 4 RTN
K2 VIO/ORG ECT SIG
K1 VIO/BRN MAP SIG
K42 DK BLU/YEL KS 1 SIG
G6 VIO/GRY OIL PRESS SIG
K904 DK BLU/DK GRN O2 RTN DOWNSTRM
K41 DK BLU/LT BLU O2 1/1 SIG
K902 BRN/DK GRN O2 RTN (UPSTRM)
K447 TAN/YEL ETC MOTOR (+)
N34 VIO/PNK AIR SOL 2 CTRL
N33 BRN INT AIR FBK
N32 BRN/PNK INT AIR COM IND
STARTING/ CHARGING SYSTEM
A904 RED/VIO GENERATOR SNSE
G24 VIO/BRN EOT SIG
K915 BRN/WHT SNSR GND
K942 BRN/LT GRN KS 1 RTN
K103 BRN/LT BLU O2 1/1 CELL
K141 DK BLU/YEL O2 1/2 SIG
K89 BRN/LT GRN O2 1/1 POS CURRENT CTRL
F856 YEL/PNK 5V SPLY
F855 PNK/YEL 5V SPLY
K448 TAN/ORG ETC MOTOR (-)
K17 DK BLU/TAN COIL CTRL 2
K19 DK BLU/DK GRN COIL CTRL 1
K21 DK BLU/LT GRN IAT SIG
POWERTRAIN CONTROL MODULE (LEFT SIDE OF TRANSMISSION)
SP1070 (RIGHT REAR OF ENGINE, IN ENGINE HARNESS)
AIR SOL 2 RTN
AIR SOL 2 CTRL
INTAKE VARIABLE VALVE TIMING SOLENOID 2
O2 1/1 HTR CTRL
O2 1/1 SIG
O2 RTN (UPSTRM)
CELL CURRENT TRIM
POS CURRENT CTRL
GND
OXYGEN SENSOR 1/1 (ON EXHAUST MANIFOLD)
G909A (LEFT FRONT CORNER OF ENGINE COMPT)
HTR CTRL SPLY
O2 RTN DOWNSTRM
O2 1/2 SIG
GND
OXYGEN SENSOR 1/2 (IN EXHAUST, DOWNSTREAM OF CATALYTIC CONVERTER)
G909A (LEFT FRONT CORNER OF ENGINE COMPT)
420453

Fig. 34: 2.4L, Engine Performance Circuit (7 of 7)

3.2L

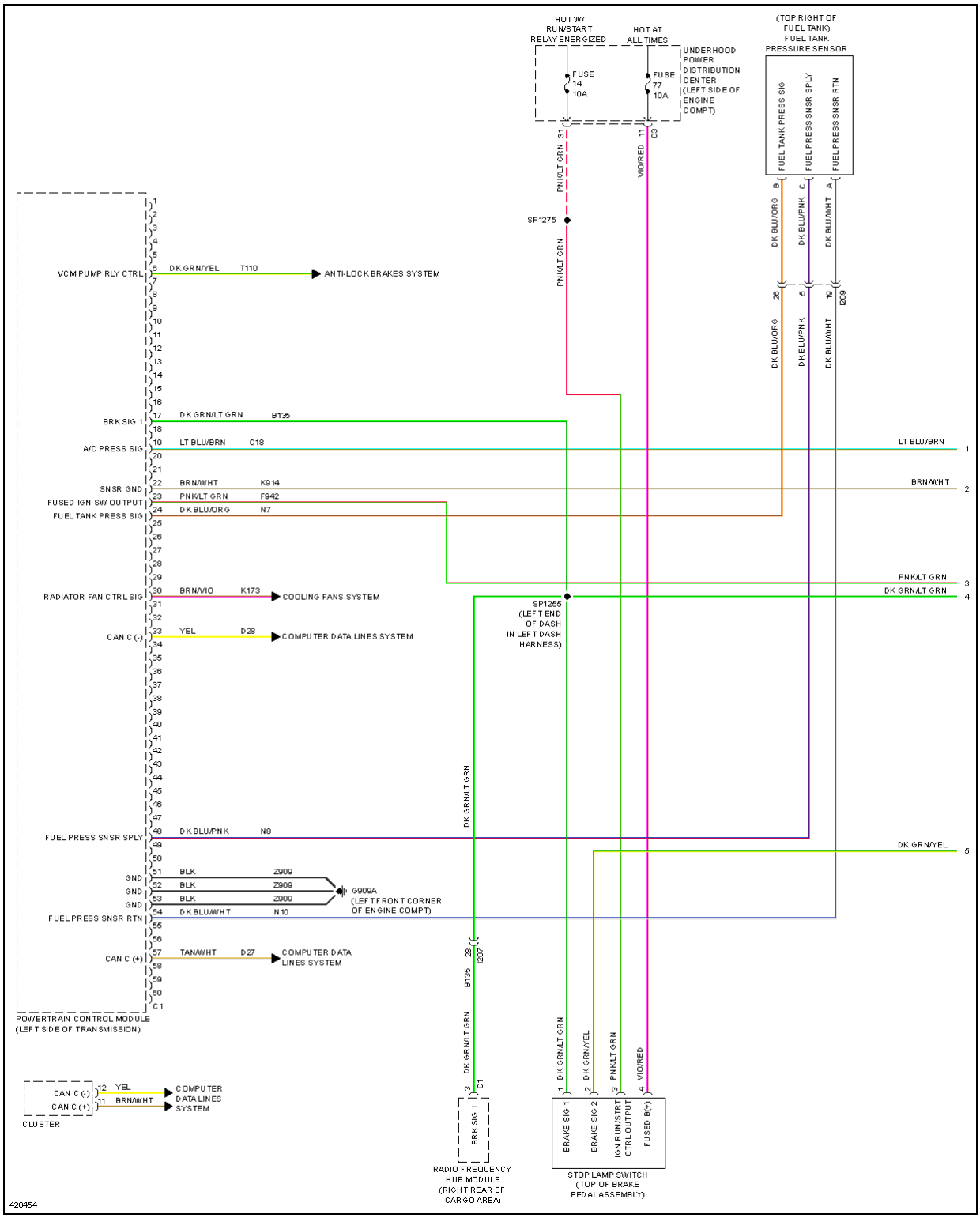
HOT W/ RUN/START RELAY ENERGIZED
HOT AT ALL TIMES
UNDERHOOD POWER DISTRIBUTION CENTER (LEFT SIDE OF ENGINE COMPT)
FUSE 14 10A
FUSE 77 10A
(TOP RIGHT OF FUEL TANK) FUEL TANK PRESSURE SENSOR
FUEL TANK PRESS SIG
FUEL PRESS SNSR SPLY
FUEL PRESS SNSR RTN
PNK/LT GRN 31
VIO/RED 11 C3
SP1275
PNK/LT GRN
DK BLU/ORG B
DK BLU/PNK C
DK BLU/WHT A
DK BLU/ORG 26
DK BLU/PNK 5
DK BLU/WHT 19 I209
VCM PUMP RLY CTRL 6 DK GRN/YEL T110 ANTI-LOCK BRAKES SYSTEM
BRK SIG 1 17 DK GRN/LT GRN B135
A/C PRESS SIG 19 LT BLU/BRN C18
SNSR GND 22 BRN/WHT K914
FUSED IGN SW OUTPUT 23 PNK/LT GRN F942
FUEL TANK PRESS SIG 24 DK BLU/ORG N7
RADIATOR FAN CTRL SIG 30 BRN/VIO K173 COOLING FANS SYSTEM
CAN C (-) 33 YEL D28 COMPUTER DATA LINES SYSTEM
FUEL PRESS SNSR SPLY 48 DK BLU/PNK N8
GND 51 BLK Z909
GND 52 BLK Z909
GND 53 BLK Z909
G909A (LEFT FRONT CORNER OF ENGINE COMPT)
FUEL PRESS SNSR RTN 54 DK BLU/WHT N10
CAN C (+) 57 TAN/WHT D27 COMPUTER DATA LINES SYSTEM
C1
POWERTRAIN CONTROL MODULE (LEFT SIDE OF TRANSMISSION)
LT BLU/BRN 1
BRN/WHT 2
PNK/LT GRN 3
DK GRN/LT GRN 4
DK GRN/YEL 5
SP1255 (LEFT END OF DASH IN LEFT DASH HARNESS)
DK GRN/LT GRN
B135 29 I207
DK GRN/LT GRN 3 C1
BRK SIG 1
RADIO FREQUENCY HUB MODULE (RIGHT REAR CF CARGO AREA)
DK GRN/LT GRN 1
DK GRN/YEL 2
PNK/LT GRN 3
VIO/RED 4
BRAKE SIG 1
BRAKE SIG 2
IGN RUN/STRT CTRL OUTPUT
FUSED B(+)
STOP LAMP SWITCH (TOP OF BRAKE PEDAL ASSEMBLY)
CAN C (-) 12 YEL
CAN C (+) 11 BRN/WHT
COMPUTER DATA LINES SYSTEM
CLUSTER
420454

Fig. 35: 3.2L, Engine Performance Circuit (1 of 7)

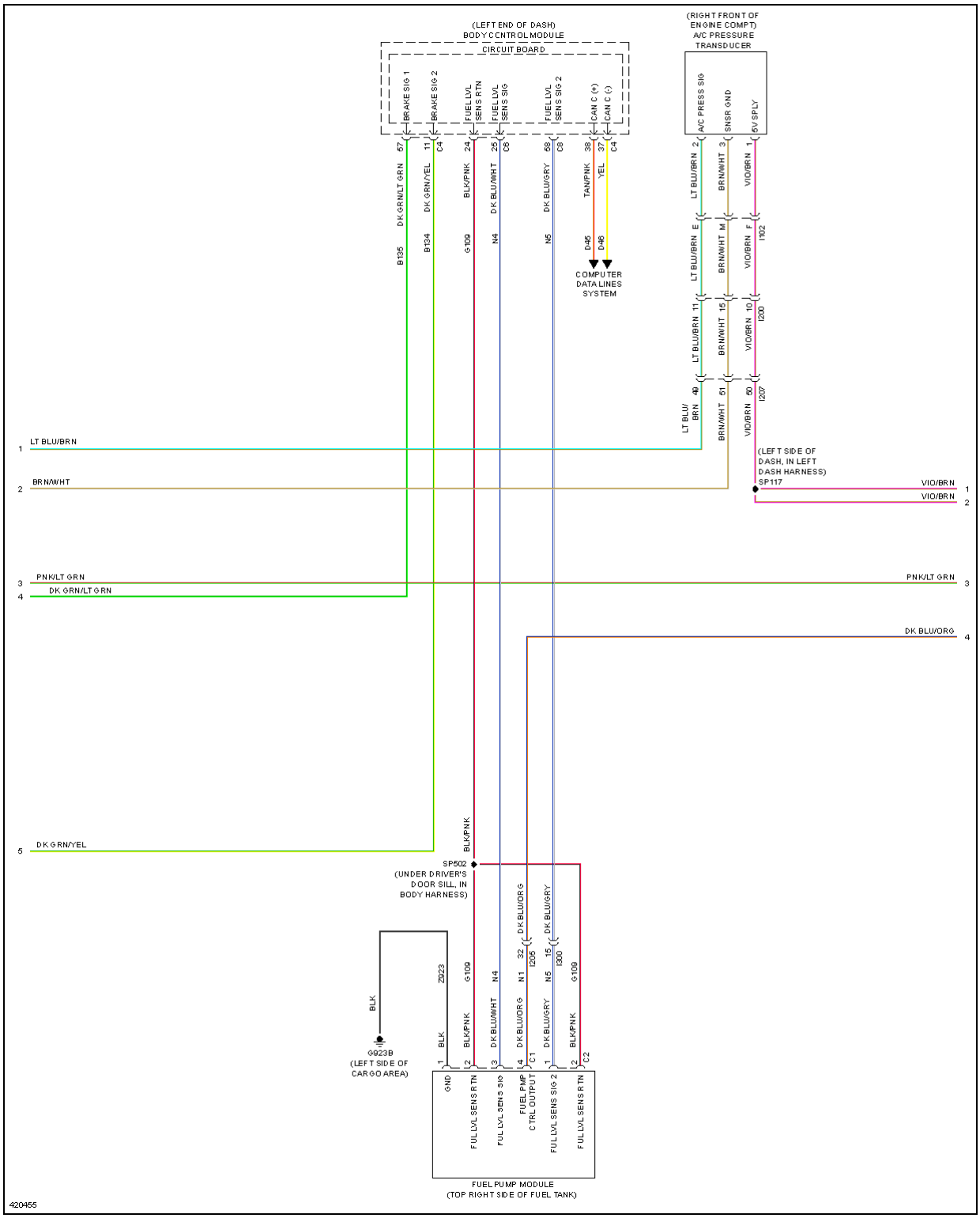
(LEFT END OF DASH)
BODY CONTROL MODULE
CIRCUIT BOARD
BRAKE SIG 1
BRAKE SIG 2
FUEL LVL SENS RTN
FUEL LVL SENS SIG
FUEL LVL SENS SIG 2
CAN C (+)
CAN C (-)
(RIGHT FRONT OF ENGINE COMPT)
A/C PRESSURE TRANSDUCER
A/C PRESS SIG
SNSR GND
5V SPLY
COMPUTER DATA LINES SYSTEM
LT BLU/BRN
BRN/WHT
PNK/LT GRN
DK GRN/LT GRN
DK GRN/YEL
DK BLU/ORG
(LEFT SIDE OF DASH, IN LEFT DASH HARNESS)
SP117
VIO/BRN
SP502
(UNDER DRIVER'S DOOR SILL, IN BODY HARNESS)
BLK/PNK
G9023B
(LEFT SIDE OF CARGO AREA)
BLK
GND
FUEL PMP CTRL OUTPUT
FUEL PUMP MODULE
(TOP RIGHT SIDE OF FUEL TANK)
420455

Fig. 36: 3.2L, Engine Performance Circuit (2 of 7)

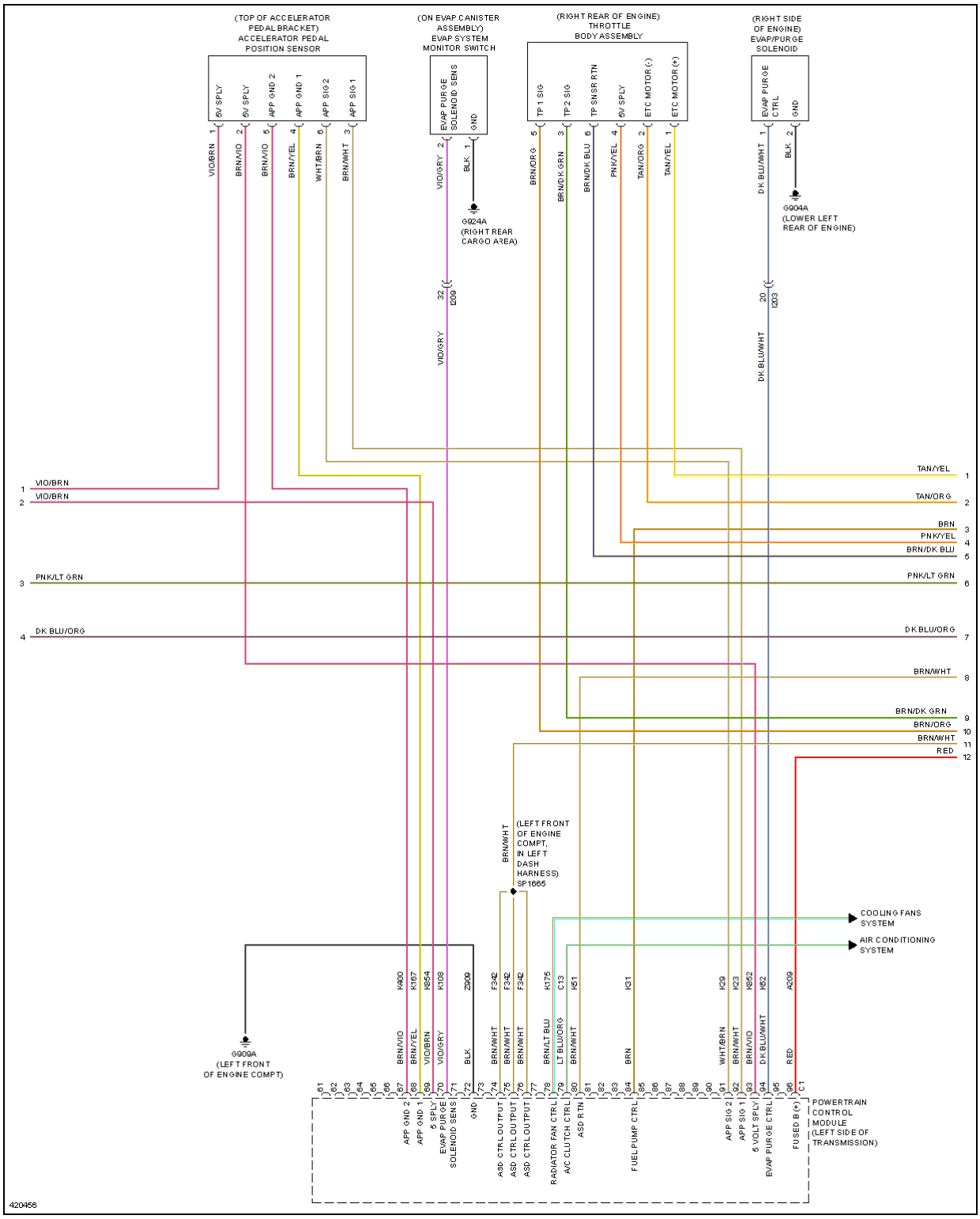
(TOP OF ACCELERATOR PEDAL BRACKET) ACCELERATOR PEDAL POSITION SENSOR
5V SPLY
5V SPLY
APP GND 2
APP GND 1
APP SIG 2
APP SIG 1
(ON EVAP CANISTER ASSEMBLY) EVAP SYSTEM MONITOR SWITCH
EVAP PURGE SOLENOID SENS
GND
(RIGHT REAR OF ENGINE) THROTTLE BODY ASSEMBLY
TP 1 SIG
TP 2 SIG
TP SNSR RTN
5V SPLY
ETC MOTOR (-)
ETC MOTOR (+)
(RIGHT SIDE OF ENGINE) EVAP/PURGE SOLENOID
EVAP PURGE CTRL
GND
G924A (RIGHT REAR CARGO AREA)
G904A (LOWER LEFT REAR OF ENGINE)
I209
I203
VIO/BRN
VIO/BRN
PNK/LT GRN
DK BLU/ORG
TAN/YEL
TAN/ORG
BRN
PNK/YEL
BRN/DK BLU
PNK/LT GRN
DK BLU/ORG
BRN/WHT
BRN/DK GRN
BRN/ORG
BRN/WHT
RED
(LEFT FRONT OF ENGINE COMPT, IN LEFT DASH HARNESS) SP1665
COOLING FANS SYSTEM
AIR CONDITIONING SYSTEM
G909A (LEFT FRONT OF ENGINE COMPT)
POWERTRAIN CONTROL MODULE (LEFT SIDE OF TRANSMISSION)
APP GND 2
APP GND 1
5 SPLY
EVAP PURGE SOLENOID SENS
GND
ASD CTRL OUTPUT
ASD CTRL OUTPUT
ASD CTRL OUTPUT
RADIATOR FAN CTRL
A/C CLUTCH CTRL
ASD RTN
FUEL PUMP CTRL
APP SIG 2
APP SIG 1
5 VOLT SPLY
EVAP PURGE CTRL
FUSED B (+)
420456

Fig. 37: 3.2L, Engine Performance Circuit (3 of 7)

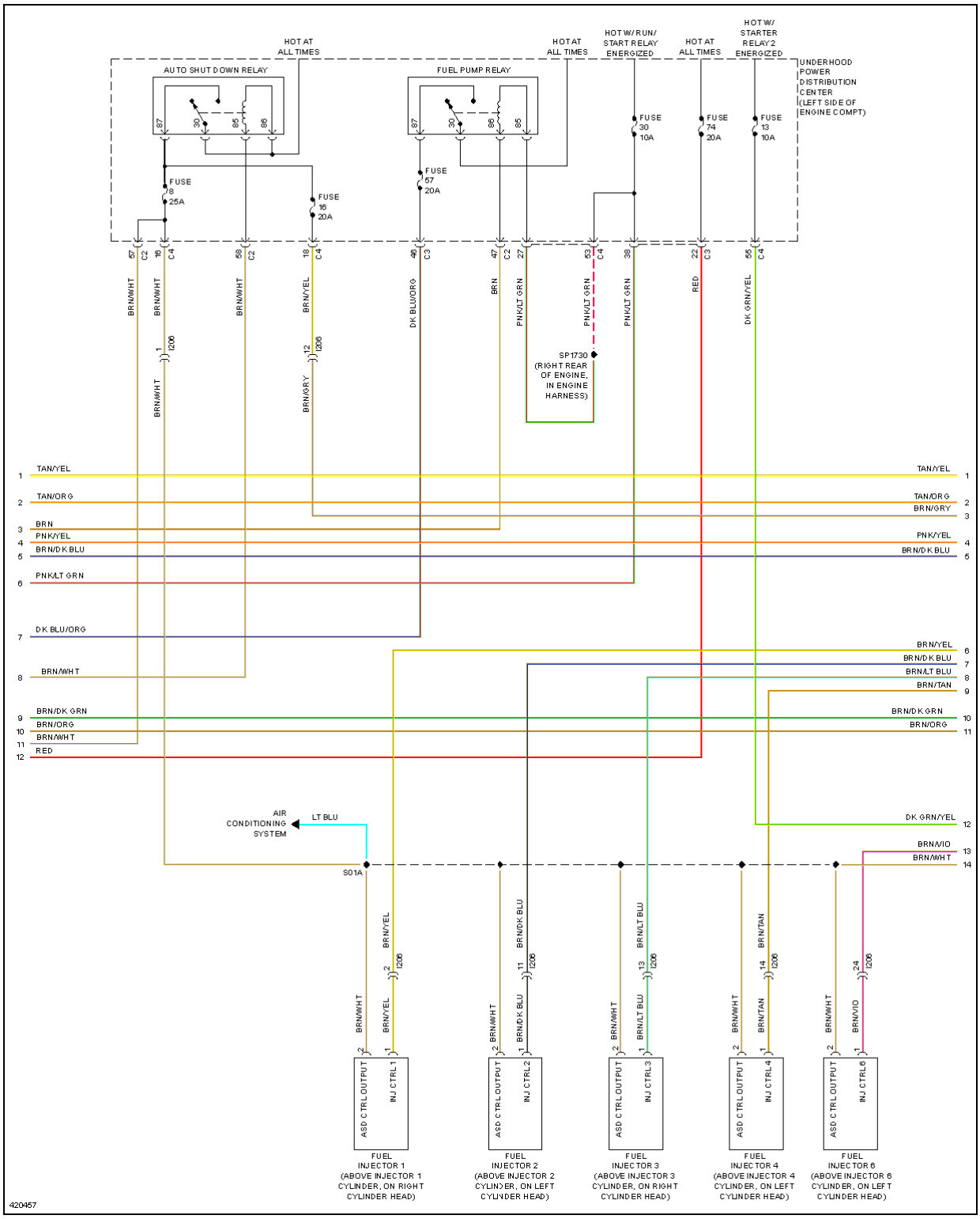
HOT AT ALL TIMES
AUTO SHUT DOWN RELAY
FUEL PUMP RELAY
HOT AT ALL TIMES
HOT W/ RUN/ START RELAY ENERGIZED
HOT AT ALL TIMES
HOT W/ STARTER RELAY 2 ENERGIZED
UNDERHOOD POWER DISTRIBUTION CENTER (LEFT SIDE OF ENGINE COMPT)
FUSE 30 10A
FUSE 74 20A
FUSE 13 10A
FUSE 18 25A
FUSE 16 20A
FUSE 57 20A
SP1730 (RIGHT REAR OF ENGINE, IN ENGINE HARNESS)
TAN/YEL
TAN/ORG
BRN/GRY
BRN
PNK/YEL
BRN/DK BLU
PNK/LT GRN
DK BLU/ORG
BRN/WHT
BRN/YEL
BRN/DK BLU
BRN/LT BLU
BRN/TAN
BRN/DK GRN
BRN/ORG
RED
DK GRN/YEL
BRN/VIO
AIR CONDITIONING SYSTEM
LT BLU
S01A
ASD CTRL OUTPUT
INJ CTRL 1
INJ CTRL 2
INJ CTRL 3
INJ CTRL 4
INJ CTRL 6
FUEL INJECTOR 1 (ABOVE INJECTOR 1 CYLINDER, ON RIGHT CYLINDER HEAD)
FUEL INJECTOR 2 (ABOVE INJECTOR 2 CYLINDER, ON LEFT CYLINDER HEAD)
FUEL INJECTOR 3 (ABOVE INJECTOR 3 CYLINDER, ON RIGHT CYLINDER HEAD)
FUEL INJECTOR 4 (ABOVE INJECTOR 4 CYLINDER, ON LEFT CYLINDER HEAD)
FUEL INJECTOR 6 (ABOVE INJECTOR 6 CYLINDER, ON LEFT CYLINDER HEAD)
420457

Fig. 38: 3.2L, Engine Performance Circuit (4 of 7)

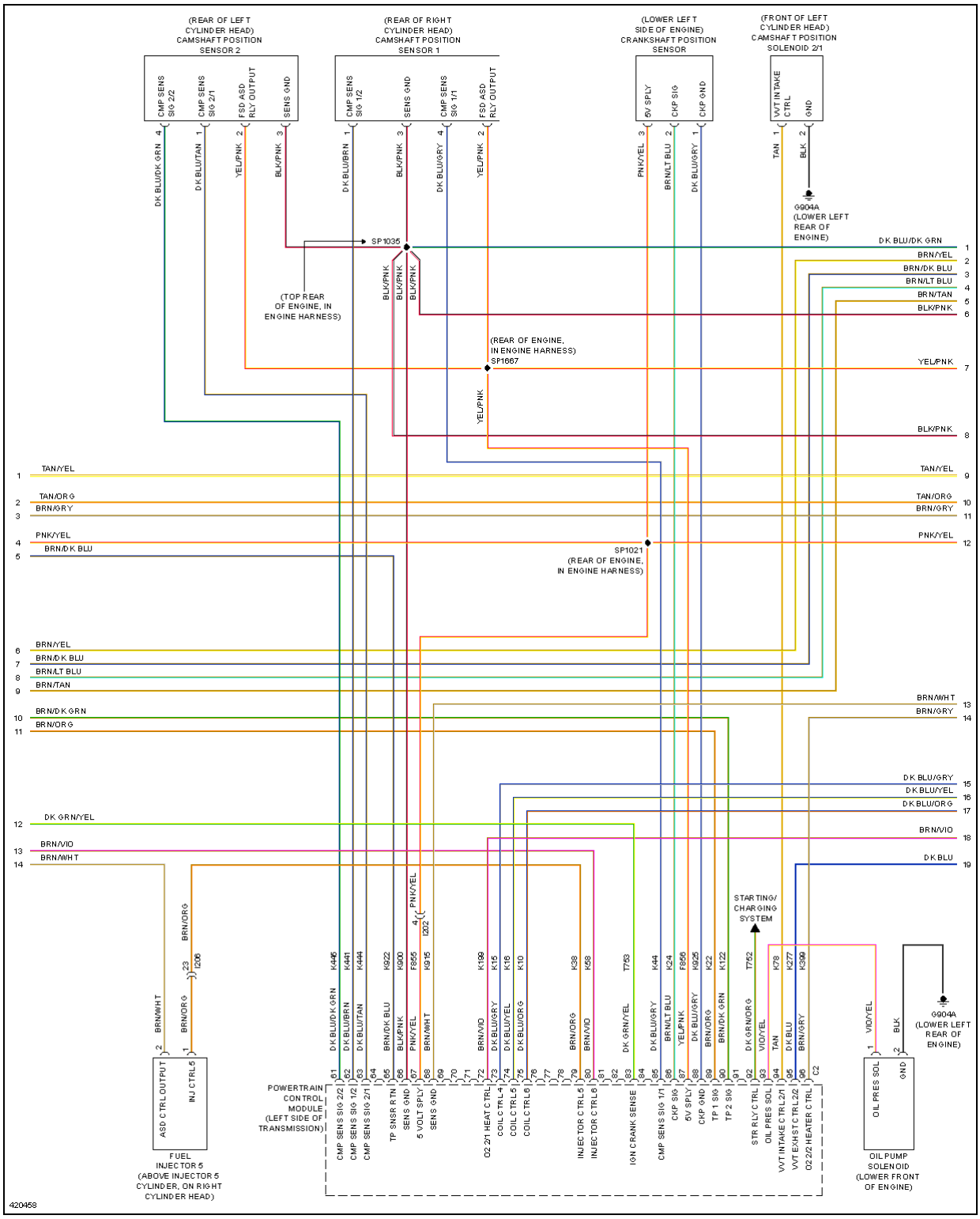
(REAR OF LEFT CYLINDER HEAD) CAMSHAFT POSITION SENSOR 2
(REAR OF RIGHT CYLINDER HEAD) CAMSHAFT POSITION SENSOR 1
(LOWER LEFT SIDE OF ENGINE) CRANKSHAFT POSITION SENSOR
(FRONT OF LEFT CYLINDER HEAD) CAMSHAFT POSITION SOLENOID 2/1
CMP SENS SIG 2/2
CMP SENS SIG 2/1
FSD ASD RLY OUTPUT
SENS GND
CMP SENS SIG 1/2
CMP SENS SIG 1/1
5V SPLY
CKP SIG
CKP GND
VVT IN TAKE CTRL
GND
G904A (LOWER LEFT REAR OF ENGINE)
SP1035
(TOP REAR OF ENGINE, IN ENGINE HARNESS)
(REAR OF ENGINE, IN ENGINE HARNESS) SP1667
SP1021 (REAR OF ENGINE, IN ENGINE HARNESS)
STARTING/ CHARGING SYSTEM
ASD CTRL OUTPUT
INJ CTRL 5
FUEL INJECTOR 5 (ABOVE INJECTOR 5 CYLINDER, ON RIGHT CYLINDER HEAD)
POWERTRAIN CONTROL MODULE (LEFT SIDE OF TRANSMISSION)
CMP SENS SIG 2/2
CMP SENS SIG 1/2
CMP SENS SIG 2/1
TP SNSR RTN
SENS GND
5 VOLT SPLY
SENS GND
O2 2/1 HEAT CTRL
COIL CTRL 4
COIL CTRL 5
COIL CTRL 6
INJECTOR CTRL 5
INJECTOR CTRL 6
IGN CRANK SENSE
CMP SENS SIG 1/1
CKP SIG
5V SPLY
CKP GND
TP 1 SIG
TP 2 SIG
STR RLY CTRL
OIL PRES SOL
VVT INTAKE CTRL 2/1
VVT EXHST CTRL 2/2
O2 2/2 HEATER CTRL
OIL PRES SOL
GND
OIL PUMP SOLENOID (LOWER FRONT OF ENGINE)
420458

Fig. 39: 3.2L, Engine Performance Circuit (5 of 7)

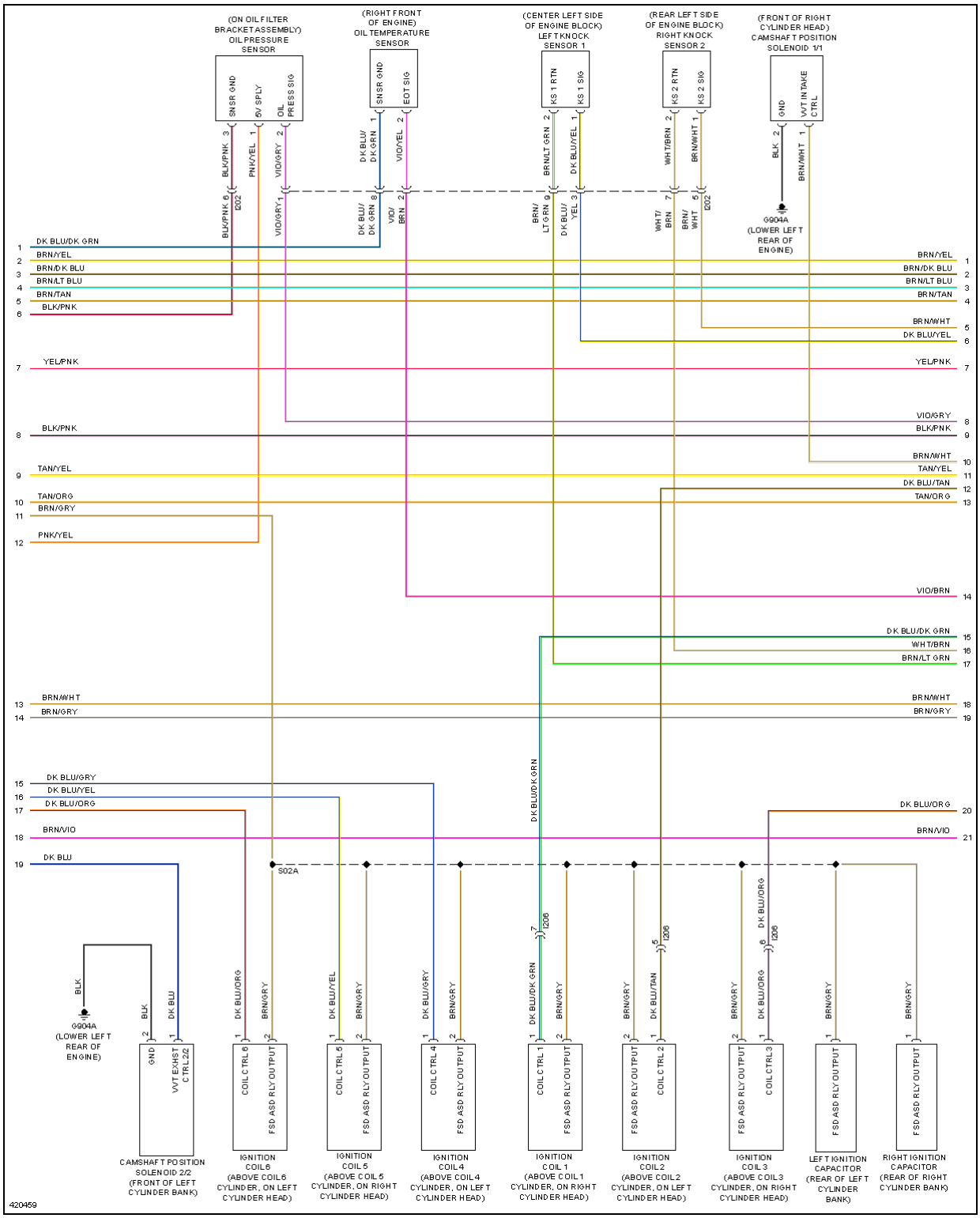
(ON OIL FILTER BRACKET ASSEMBLY) OIL PRESSURE SENSOR
SNSR GND
5V SPLY
OIL PRESS SIG
(RIGHT FRONT OF ENGINE) OIL TEMPERATURE SENSOR
SNSR GND
EOT SIG
(CENTER LEFT SIDE OF ENGINE BLOCK) LEFT KNOCK SENSOR 1
KS 1 RTN
KS 1 SIG
(REAR LEFT SIDE OF ENGINE BLOCK) RIGHT KNOCK SENSOR 2
KS 2 RTN
KS 2 SIG
(FRONT OF RIGHT CYLINDER HEAD) CAMSHAFT POSITION SOLENOID 1/1
GND
VVT INTAKE CTRL
G904A (LOWER LEFT REAR OF ENGINE)
S02A
G904A (LOWER LEFT REAR OF ENGINE)
GND
VVT EXHST CTRL 2/2
CAMSHAFT POSITION SOLENOID 2/2 (FRONT OF LEFT CYLINDER BANK)
COIL CTRL 6
FSD ASD RLY OUTPUT
IGNITION COIL 6 (ABOVE COIL 6 CYLINDER, ON LEFT CYLINDER HEAD)
COIL CTRL 5
FSD ASD RLY OUTPUT
IGNITION COIL 5 (ABOVE COIL 5 CYLINDER, ON RIGHT CYLINDER HEAD)
COIL CTRL 4
FSD ASD RLY OUTPUT
IGNITION COIL 4 (ABOVE COIL 4 CYLINDER, ON LEFT CYLINDER HEAD)
COIL CTRL 1
FSD ASD RLY OUTPUT
IGNITION COIL 1 (ABOVE COIL 1 CYLINDER, ON RIGHT CYLINDER HEAD)
FSD ASD RLY OUTPUT
COIL CTRL 2
IGNITION COIL 2 (ABOVE COIL 2 CYLINDER, ON LEFT CYLINDER HEAD)
FSD ASD RLY OUTPUT
COIL CTRL 3
IGNITION COIL 3 (ABOVE COIL 3 CYLINDER, ON RIGHT CYLINDER HEAD)
FSD ASD RLY OUTPUT
LEFT IGNITION CAPACITOR (REAR OF LEFT CYLINDER BANK)
FSD ASD RLY OUTPUT
RIGHT IGNITION CAPACITOR (REAR OF RIGHT CYLINDER BANK)
420459

Fig. 40: 3.2L, Engine Performance Circuit (6 of 7)

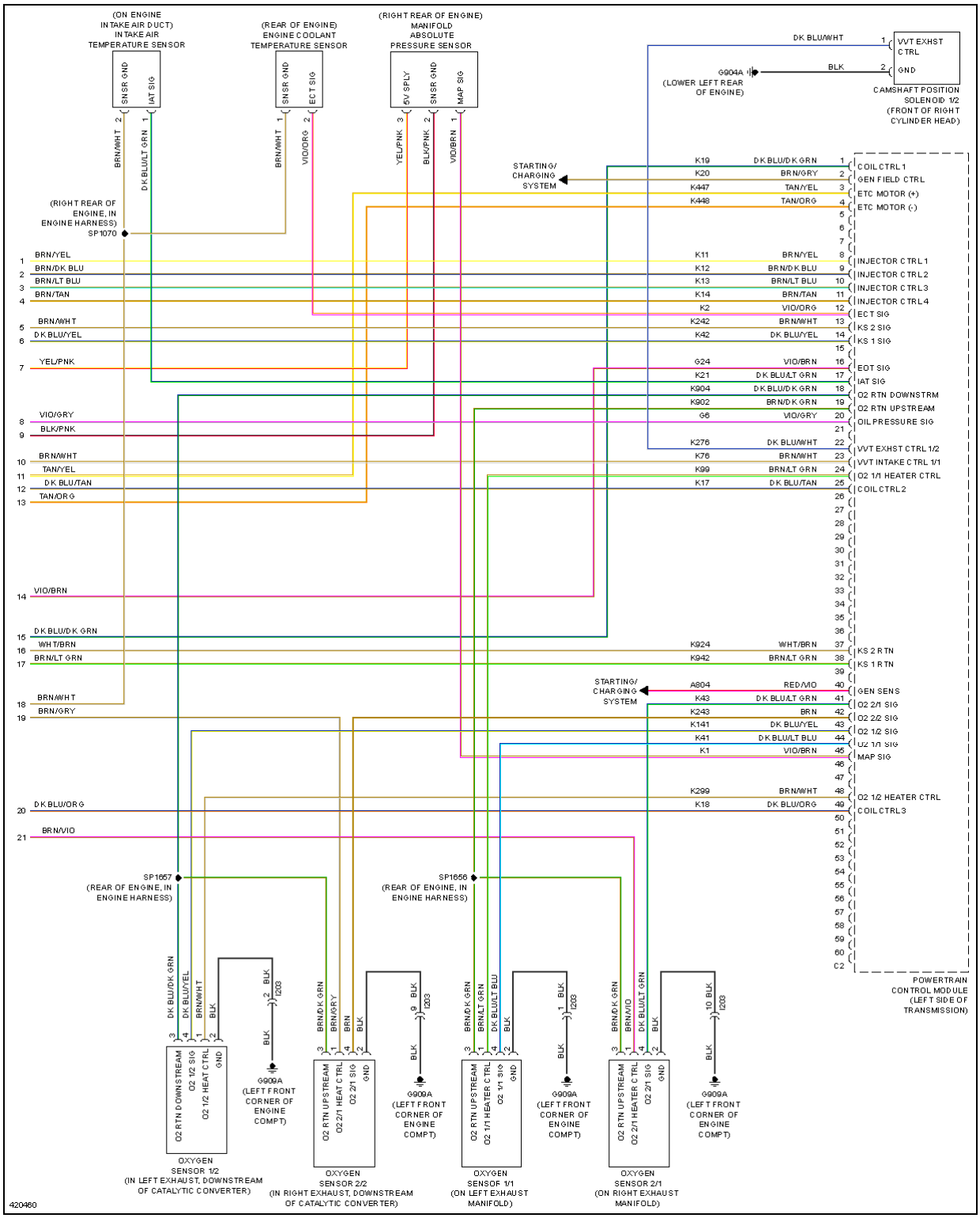
(ON ENGINE INTAKE AIR DUCT) IN TAKE AIR TEMPERATURE SENSOR
SNSR GND
IAT SIG
(REAR OF ENGINE) ENGINE COOLANT TEMPERATURE SENSOR
SNSR GND
ECT SIG
(RIGHT REAR OF ENGINE) MANIFOLD ABSOLUTE PRESSURE SENSOR
5V SPLY
SNSR GND
MAP SIG
VVT EXHST CTRL
GND
CAMSHAFT POSITION SOLENOID 1/2 (FRONT OF RIGHT CYLINDER HEAD)
G904A (LOWER LEFT REAR OF ENGINE)
DK BLU/WHT
BLK
STARTING/ CHARGING SYSTEM
(RIGHT REAR OF ENGINE, IN ENGINE HARNESS) SP1070
COIL CTRL 1
GEN FIELD CTRL
ETC MOTOR (+)
ETC MOTOR (-)
INJECTOR CTRL 1
INJECTOR CTRL 2
INJECTOR CTRL 3
INJECTOR CTRL 4
ECT SIG
KS 2 SIG
KS 1 SIG
EOT SIG
IAT SIG
O2 RTN DOWNSTRM
O2 RTN UPSTREAM
OIL PRESSURE SIG
VVT EXHST CTRL 1/2
VVT INTAKE CTRL 1/1
O2 1/1 HEATER CTRL
COIL CTRL 2
KS 2 RTN
KS 1 RTN
GEN SENS
O2 2/1 SIG
O2 2/2 SIG
O2 1/2 SIG
O2 1/1 SIG
MAP SIG
O2 1/2 HEATER CTRL
COIL CTRL 3
STARTING/ CHARGING SYSTEM
SP1657 (REAR OF ENGINE, IN ENGINE HARNESS)
SP1656 (REAR OF ENGINE, IN ENGINE HARNESS)
POWERTRAIN CONTROL MODULE (LEFT SIDE OF TRANSMISSION)
O2 RTN DOWNSTREAM
O2 1/2 SIG
O2 1/2 HEAT CTRL
GND
G909A (LEFT FRONT CORNER OF ENGINE COMPT)
OXYGEN SENSOR 1/2 (IN LEFT EXHAUST, DOWNSTREAM OF CATALYTIC CONVERTER)
O2 RTN UPSTREAM
O2 2/1 HEAT CTRL
O2 2/1 SIG
OXYGEN SENSOR 2/2 (IN RIGHT EXHAUST, DOWNSTREAM OF CATALYTIC CONVERTER)
O2 RTN UPSTREAM
O2 1/1 HEATER CTRL
O2 1/1 SIG
OXYGEN SENSOR 1/1 (ON LEFT EXHAUST MANIFOLD)
O2 RTN UPSTREAM
O2 2/1 HEATER CTRL
O2 2/1 SIG
OXYGEN SENSOR 2/1 (ON RIGHT EXHAUST MANIFOLD)
420460

Fig. 41: 3.2L, Engine Performance Circuit (7 of 7)

EXTERIOR LIGHTS

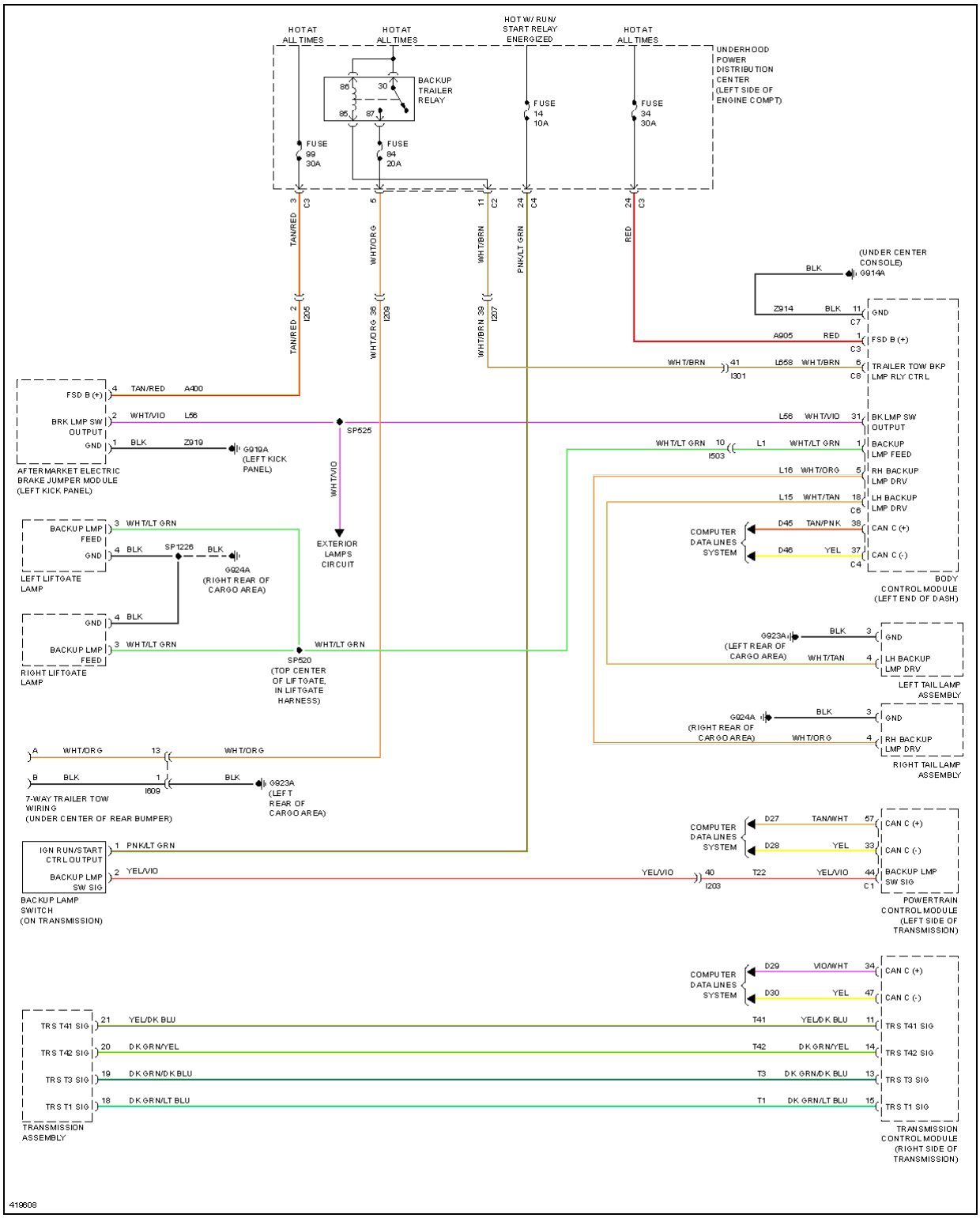
HOT AT ALL TIMES
HOT AT ALL TIMES
HOT W/ RUN/ START RELAY ENERGIZED
HOT AT ALL TIMES
UNDERHOOD POWER DISTRIBUTION CENTER (LEFT SIDE OF ENGINE COMPT)
BACKUP TRAILER RELAY
86
30
85
87
FUSE 99 30A
FUSE 84 20A
FUSE 14 10A
FUSE 34 30A
TAN/RED
WHT/ORG
WHT/BRN
PNK/LT GRN
RED
(UNDER CENTER CONSOLE) G914A
BLK
Z914
A905
GND
FSD B (+)
TRAILER TOW BKP LMP RLY CTRL
WHT/BRN
L658
I301
FSD B (+)
TAN/RED
A400
BRK LMP SW OUTPUT
GND
WHT/VIO
L56
BLK
Z919
G919A (LEFT KICK PANEL)
AFTERMARKET ELECTRIC BRAKE JUMPER MODULE (LEFT KICK PANEL)
SP525
WHT/VIO
EXTERIOR LAMPS CIRCUIT
BK LMP SW OUTPUT
WHT/LT GRN
L1
I503
BACKUP LMP FEED
L16
WHT/ORG
RH BACKUP LMP DRV
L15
WHT/TAN
LH BACKUP LMP DRV
COMPUTER DATA LINES SYSTEM
D45
TAN/PNK
CAN C (+)
D46
YEL
CAN C (-)
BODY CONTROL MODULE (LEFT END OF DASH)
BACKUP LMP FEED
GND
SP1226
G924A (RIGHT REAR OF CARGO AREA)
LEFT LIFTGATE LAMP
RIGHT LIFTGATE LAMP
SP520 (TOP CENTER OF LIFTGATE, IN LIFTGATE HARNESS)
G923A (LEFT REAR OF CARGO AREA)
LH BACKUP LMP DRV
LEFT TAIL LAMP ASSEMBLY
RH BACKUP LMP DRV
RIGHT TAIL LAMP ASSEMBLY
WHT/ORG
7-WAY TRAILER TOW WIRING (UNDER CENTER OF REAR BUMPER)
I609
IGN RUN/START CTRL OUTPUT
BACKUP LMP SW SIG
PNK/LT GRN
YEL/VIO
BACKUP LAMP SWITCH (ON TRANSMISSION)
D27
TAN/WHT
D28
YEL
BACKUP LMP SW SIG
T22
I203
POWERTRAIN CONTROL MODULE (LEFT SIDE OF TRANSMISSION)
D29
VIO/WHT
D30
YEL
TRS T41 SIG
TRS T42 SIG
TRS T3 SIG
TRS T1 SIG
YEL/DK BLU
DK GRN/YEL
DK GRN/DK BLU
DK GRN/LT BLU
TRANSMISSION ASSEMBLY
TRANSMISSION CONTROL MODULE (RIGHT SIDE OF TRANSMISSION)
419608

Fig. 42: Backup Lamps Circuit

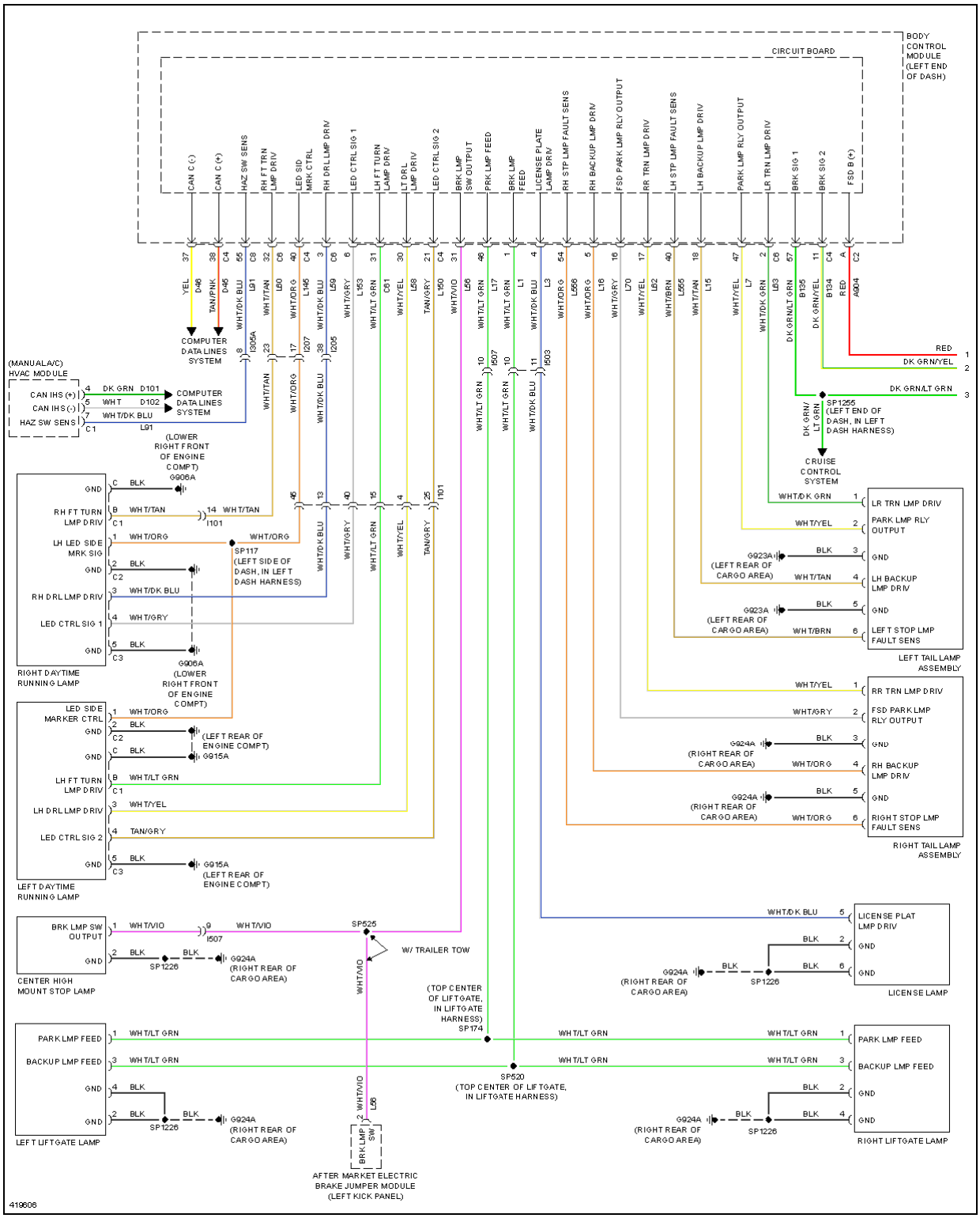
BODY CONTROL MODULE (LEFT END OF DASH)
CIRCUIT BOARD
CAN C (-)
CAN C (+)
HAZ SW SENS
RH FT TRN LMP DRIV
LED SID MRK CTRL
RH DRL LMP DRIV
LED CTRL SIG 1
LH FT TURN LAMP DRIV
LT DRL LMP DRIV
LED CTRL SIG 2
BRK LMP SW OUTPUT
PRK LMP FEED
BRK LMP FEED
LICENSE PLATE LAMP DRIV
RH STP LMP FAULT SENS
RH BACKUP LMP DRIV
FSD PARK LMP RLY OUTPUT
RR TRN LMP DRIV
LH STP LMP FAULT SENS
LH BACKUP LMP DRIV
PARK LMP RLY OUTPUT
LR TRN LMP DRIV
BRK SIG 1
BRK SIG 2
FSD B (+)
COMPUTER DATA LINES SYSTEM
(MANUAL A/C) HVAC MODULE
CAN IHS (+)
CAN IHS (-)
HAZ SW SENS
DK GRN D101
WHT D102
WHT/DK BLU L91
(LOWER RIGHT FRONT OF ENGINE COMPT) G906A
RED
DK GRN/YEL
DK GRN/LT GRN
SP1255 (LEFT END OF DASH, IN LEFT DASH HARNESS)
CRUISE CONTROL SYSTEM
RIGHT DAYTIME RUNNING LAMP
RH FT TURN LMP DRIV
LH LED SIDE MRK SIG
RH DRL LMP DRIV
LED CTRL SIG 1
SP117 (LEFT SIDE OF DASH, IN LEFT DASH HARNESS)
LEFT DAYTIME RUNNING LAMP
LED SIDE MARKER CTRL
LH FT TURN LMP DRIV
LH DRL LMP DRIV
LED CTRL SIG 2
(LEFT REAR OF ENGINE COMPT) G915A
LR TRN LMP DRIV
PARK LMP RLY OUTPUT
G923A (LEFT REAR OF CARGO AREA)
LH BACKUP LMP DRIV
LEFT STOP LMP FAULT SENS
LEFT TAIL LAMP ASSEMBLY
RR TRN LMP DRIV
FSD PARK LMP RLY OUTPUT
G924A (RIGHT REAR OF CARGO AREA)
RH BACKUP LMP DRIV
RIGHT STOP LMP FAULT SENS
RIGHT TAIL LAMP ASSEMBLY
BRK LMP SW OUTPUT
CENTER HIGH MOUNT STOP LAMP
SP525
W/ TRAILER TOW
(TOP CENTER OF LIFTGATE, IN LIFTGATE HARNESS) SP174
SP520 (TOP CENTER OF LIFTGATE, IN LIFTGATE HARNESS)
LICENSE PLAT LMP DRIV
LICENSE LAMP
PARK LMP FEED
BACKUP LMP FEED
LEFT LIFTGATE LAMP
RIGHT LIFTGATE LAMP
AFTER MARKET ELECTRIC BRAKE JUMPER MODULE (LEFT KICK PANEL)
419606

Fig. 43: Exterior Lamps Circuit (1 of 2)

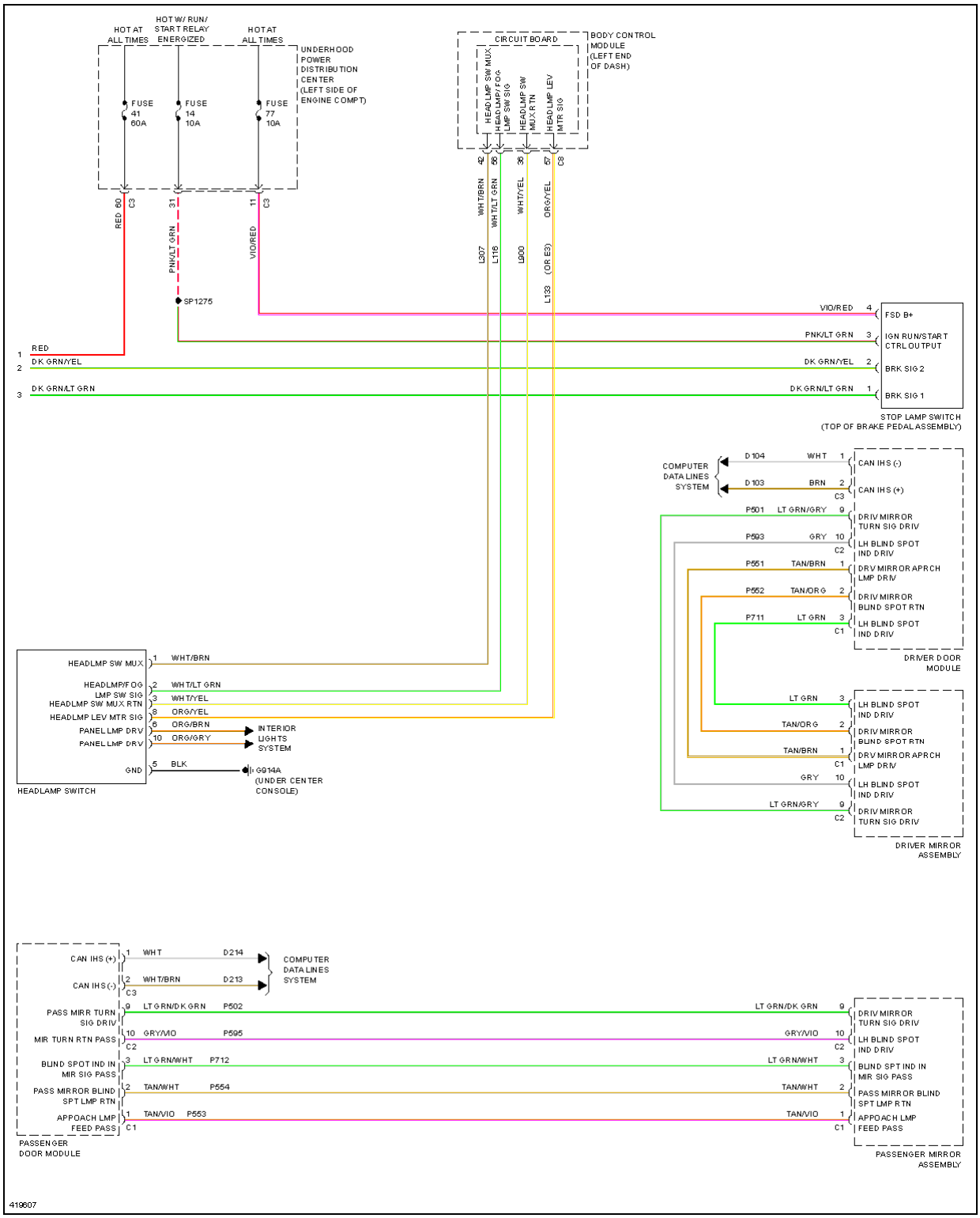
HOT AT ALL TIMES
HOT W/ RUN/ START RELAY ENERGIZED
HOT AT ALL TIMES
UNDERHOOD POWER DISTRIBUTION CENTER (LEFT SIDE OF ENGINE COMPT)
FUSE 41 60A
FUSE 14 10A
FUSE 77 10A
CIRCUIT BOARD
BODY CONTROL MODULE (LEFT END OF DASH)
HEAD LMP SW MUX
HEADLMP/ FOG LMP SW SIG
HEADLMP SW MUX RTN
HEAD LMP LEV MTR SIG
RED 60 C3
PNK/LT GRN 31
VIO/RED 11 C3
WHT/BRN L307
WHT/LT GRN L116
WHT/YEL L900
ORG/YEL L133 (OR E3)
SP1275
VIO/RED 4
PNK/LT GRN 3
DK GRN/YEL 2
DK GRN/LT GRN 1
FSD B+
IGN RUN/START CTRL OUTPUT
BRK SIG 2
BRK SIG 1
STOP LAMP SWITCH (TOP OF BRAKE PEDAL ASSEMBLY)
COMPUTER DATA LINES SYSTEM
D104 WHT 1 CAN IHS (-)
D103 BRN 2 CAN IHS (+) C3
P501 LT GRN/GRY 9 DRIV MIRROR TURN SIG DRIV
P593 GRY 10 LH BLIND SPOT IND DRIV C2
P551 TAN/BRN 1 DRV MIRROR APRCH LMP DRIV
P552 TAN/ORG 2 DRIV MIRROR BLIND SPOT RTN
P711 LT GRN 3 LH BLIND SPOT IND DRIV C1
DRIVER DOOR MODULE
HEADLMP SW MUX 1 WHT/BRN
HEADLMP/FOG LMP SW SIG 2 WHT/LT GRN
HEADLMP SW MUX RTN 3 WHT/YEL
HEADLMP LEV MTR SIG 8 ORG/YEL
PANEL LMP DRV 6 ORG/BRN
PANEL LMP DRV 10 ORG/GRY
INTERIOR LIGHTS SYSTEM
GND 5 BLK
G914A (UNDER CENTER CONSOLE)
HEADLAMP SWITCH
LT GRN 3 LH BLIND SPOT IND DRIV
TAN/ORG 2 DRIV MIRROR BLIND SPOT RTN
TAN/BRN 1 DRV MIRROR APRCH LMP DRIV C1
GRY 10 LH BLIND SPOT IND DRIV
LT GRN/GRY 9 DRIV MIRROR TURN SIG DRIV C2
DRIVER MIRROR ASSEMBLY
CAN IHS (+) 1 WHT D214
CAN IHS (-) 2 WHT/BRN D213 C3
COMPUTER DATA LINES SYSTEM
PASS MIRR TURN SIG DRIV 9 LT GRN/DK GRN P502
MIR TURN RTN PASS 10 GRY/VIO P595 C2
BLIND SPOT IND IN MIR SIG PASS 3 LT GRN/WHT P712
PASS MIRROR BLIND SPT LMP RTN 2 TAN/WHT P554
APPOACH LMP FEED PASS 1 TAN/VIO P553 C1
PASSENGER DOOR MODULE
LT GRN/DK GRN 9 DRIV MIRROR TURN SIG DRIV
GRY/VIO 10 LH BLIND SPOT IND DRIV C2
LT GRN/WHT 3 BLIND SPT IND IN MIR SIG PASS
TAN/WHT 2 PASS MIRROR BLIND SPT LMP RTN
TAN/VIO 1 APPOACH LMP FEED PASS C1
PASSENGER MIRROR ASSEMBLY
419607

Fig. 44: Exterior Lamps Circuit (2 of 2)

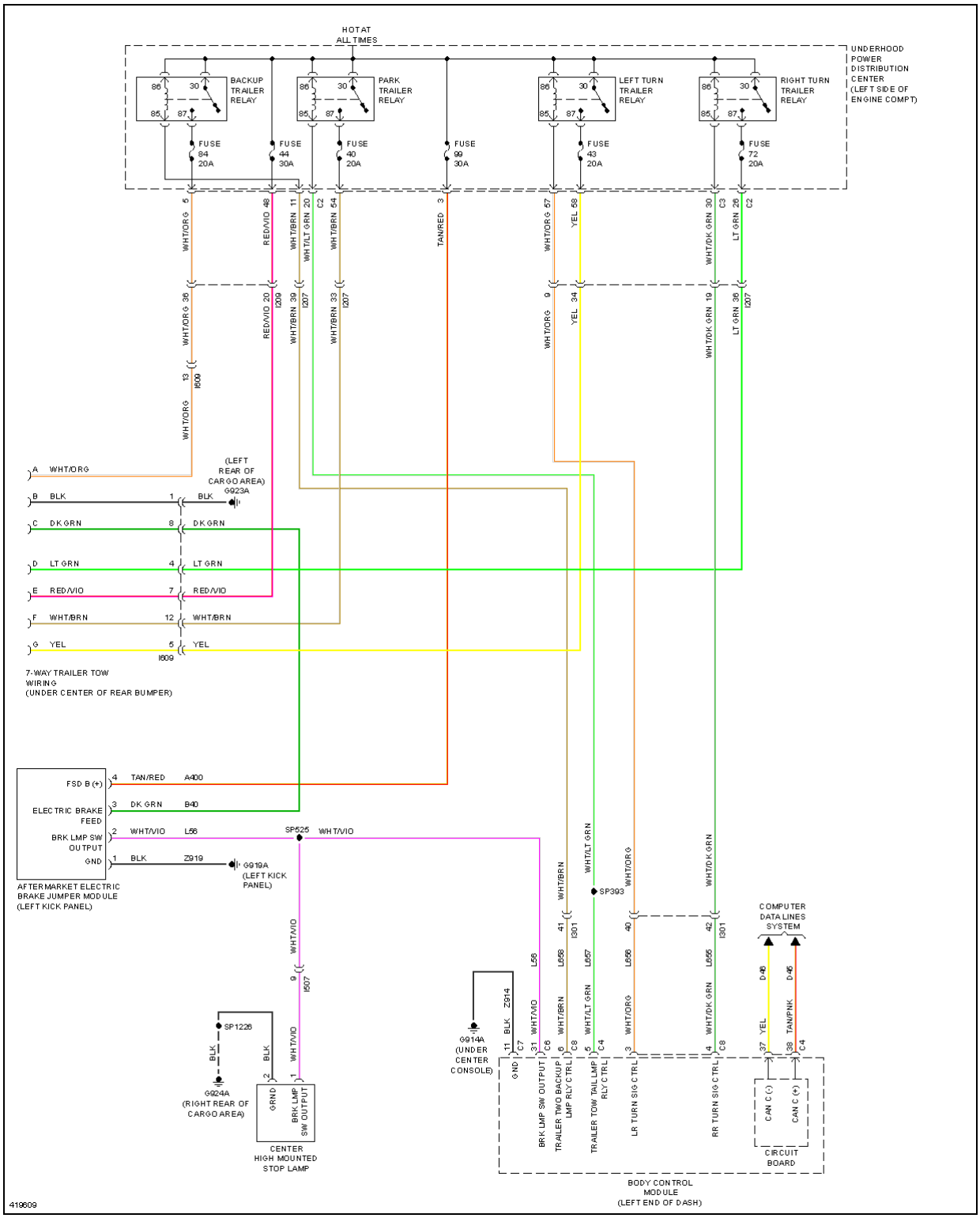
HOT AT ALL TIMES
UNDERHOOD POWER DISTRIBUTION CENTER (LEFT SIDE OF ENGINE COMPT)
BACKUP TRAILER RELAY
PARK TRAILER RELAY
LEFT TURN TRAILER RELAY
RIGHT TURN TRAILER RELAY
FUSE 84 20A
FUSE 44 30A
FUSE 40 20A
FUSE 99 30A
FUSE 43 20A
FUSE 72 20A
(LEFT REAR OF CARGO AREA) G923A
7-WAY TRAILER TOW WIRING (UNDER CENTER OF REAR BUMPER)
AFTERMARKET ELECTRIC BRAKE JUMPER MODULE (LEFT KICK PANEL)
FSD B (+)
ELECTRIC BRAKE FEED
BRK LMP SW OUTPUT
GND
G919A (LEFT KICK PANEL)
SP525
SP393
SP1226
G924A (RIGHT REAR OF CARGO AREA)
CENTER HIGH MOUNTED STOP LAMP
G914A (UNDER CENTER CONSOLE)
COMPUTER DATA LINES SYSTEM
CIRCUIT BOARD
BODY CONTROL MODULE (LEFT END OF DASH)
419609

Fig. 45: Trailer Tow Circuit

GROUND DISTRIBUTION

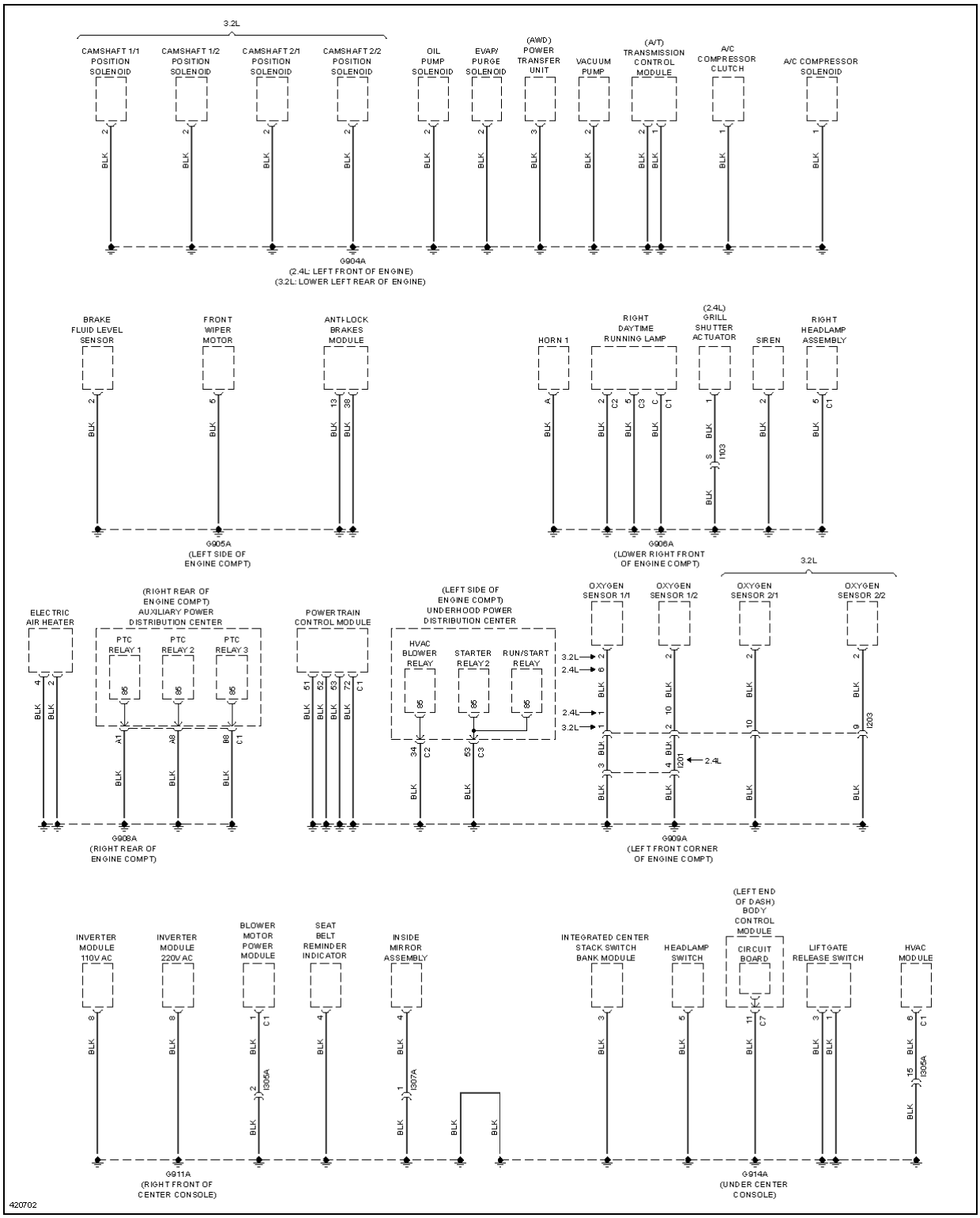
3.2L
CAMSHAFT 1/1 POSITION SOLENOID
CAMSHAFT 1/2 POSITION SOLENOID
CAMSHAFT 2/1 POSITION SOLENOID
CAMSHAFT 2/2 POSITION SOLENOID
OIL PUMP SOLENOID
EVAP/ PURGE SOLENOID
(AWD) POWER TRANSFER UNIT
VACUUM PUMP
(A/T) TRANSMISSION CONTROL MODULE
A/C COMPRESSOR CLUTCH
A/C COMPRESSOR SOLENOID
G904A
(2.4L: LEFT FRONT OF ENGINE)
(3.2L: LOWER LEFT REAR OF ENGINE)
BRAKE FLUID LEVEL SENSOR
FRONT WIPER MOTOR
ANTI-LOCK BRAKES MODULE
G905A
(LEFT SIDE OF ENGINE COMPT)
HORN 1
RIGHT DAYTIME RUNNING LAMP
(2.4L) GRILL SHUTTER ACTUATOR
SIREN
RIGHT HEADLAMP ASSEMBLY
G906A
(LOWER RIGHT FRONT OF ENGINE COMPT)
ELECTRIC AIR HEATER
(RIGHT REAR OF ENGINE COMPT) AUXILIARY POWER DISTRIBUTION CENTER
PTC RELAY 1
PTC RELAY 2
PTC RELAY 3
G908A
(RIGHT REAR OF ENGINE COMPT)
POWERTRAIN CONTROL MODULE
(LEFT SIDE OF ENGINE COMPT) UNDERHOOD POWER DISTRIBUTION CENTER
HVAC BLOWER RELAY
STARTER RELAY 2
RUN/START RELAY
OXYGEN SENSOR 1/1
OXYGEN SENSOR 1/2
OXYGEN SENSOR 2/1
OXYGEN SENSOR 2/2
G909A
(LEFT FRONT CORNER OF ENGINE COMPT)
INVERTER MODULE 110V AC
INVERTER MODULE 220V AC
BLOWER MOTOR POWER MODULE
SEAT BELT REMINDER INDICATOR
INSIDE MIRROR ASSEMBLY
G911A
(RIGHT FRONT OF CENTER CONSOLE)
INTEGRATED CENTER STACK SWITCH BANK MODULE
HEADLAMP SWITCH
(LEFT END OF DASH) BODY CONTROL MODULE
CIRCUIT BOARD
LIFTGATE RELEASE SWITCH
HVAC MODULE
G914A
(UNDER CENTER CONSOLE)
420702

Fig. 46: Ground Distribution Circuit (1 of 4)

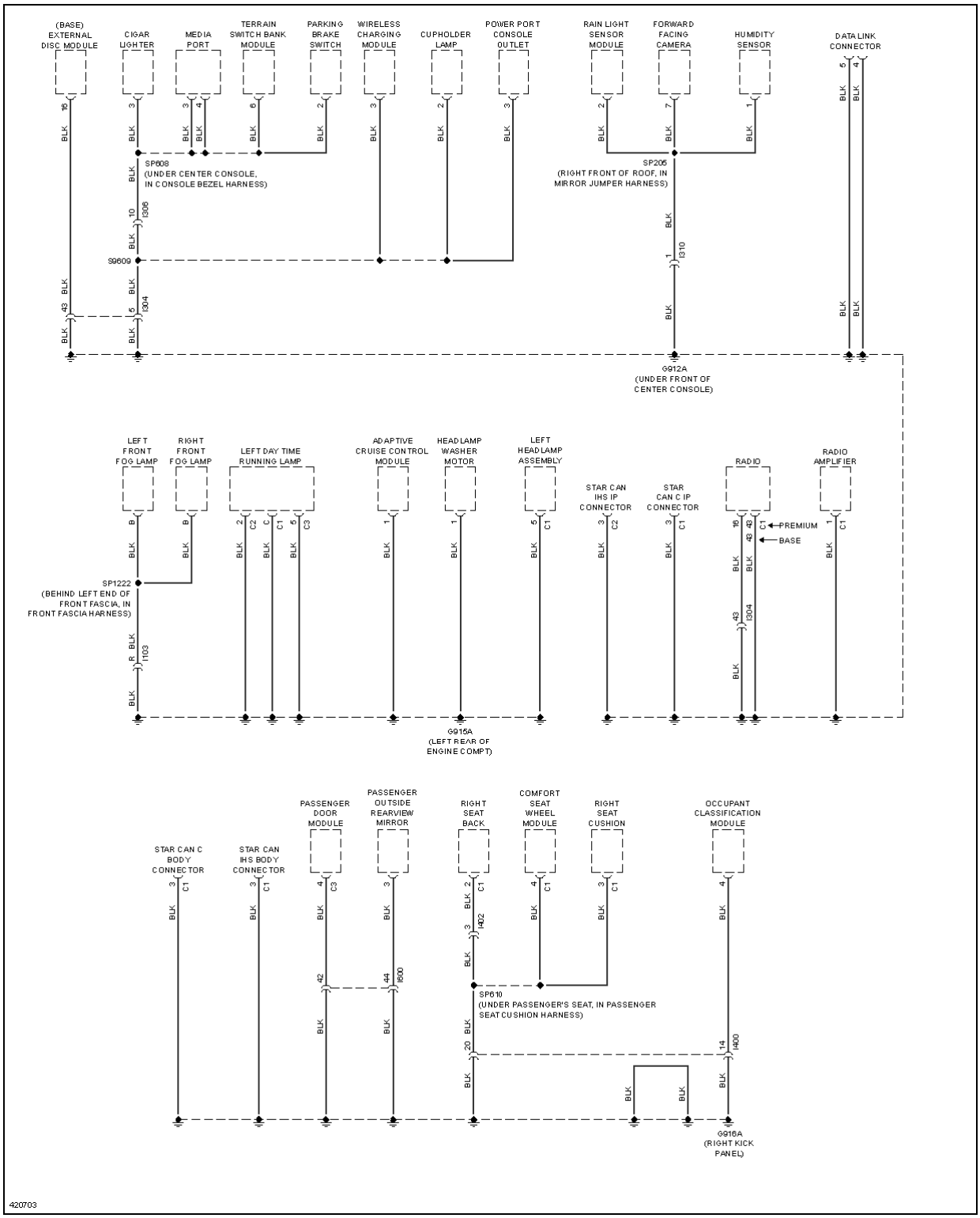
(BASE) EXTERNAL DISC MODULE
CIGAR LIGHTER
MEDIA PORT
TERRAIN SWITCH BANK MODULE
PARKING BRAKE SWITCH
WIRELESS CHARGING MODULE
CUPHOLDER LAMP
POWER PORT CONSOLE OUTLET
RAIN LIGHT SENSOR MODULE
FORWARD FACING CAMERA
HUMIDITY SENSOR
DATA LINK CONNECTOR
SP608 (UNDER CENTER CONSOLE, IN CONSOLE BEZEL HARNESS)
SP205 (RIGHT FRONT OF ROOF, IN MIRROR JUMPER HARNESS)
S9609
G912A (UNDER FRONT OF CENTER CONSOLE)
LEFT FRONT FOG LAMP
RIGHT FRONT FOG LAMP
LEFT DAY TIME RUNNING LAMP
ADAPTIVE CRUISE CONTROL MODULE
HEADLAMP WASHER MOTOR
LEFT HEADLAMP ASSEMBLY
STAR CAN IHS IP CONNECTOR
STAR CAN C IP CONNECTOR
RADIO
RADIO AMPLIFIER
PREMIUM
BASE
SP1222 (BEHIND LEFT END OF FRONT FASCIA, IN FRONT FASCIA HARNESS)
G915A (LEFT REAR OF ENGINE COMPT)
STAR CAN C BODY CONNECTOR
STAR CAN IHS BODY CONNECTOR
PASSENGER DOOR MODULE
PASSENGER OUTSIDE REARVIEW MIRROR
RIGHT SEAT BACK
COMFORT SEAT WHEEL MODULE
RIGHT SEAT CUSHION
OCCUPANT CLASSIFICATION MODULE
SP610 (UNDER PASSENGER'S SEAT, IN PASSENGER SEAT CUSHION HARNESS)
G916A (RIGHT KICK PANEL)
420703

Fig. 47: Ground Distribution Circuit (2 of 4)

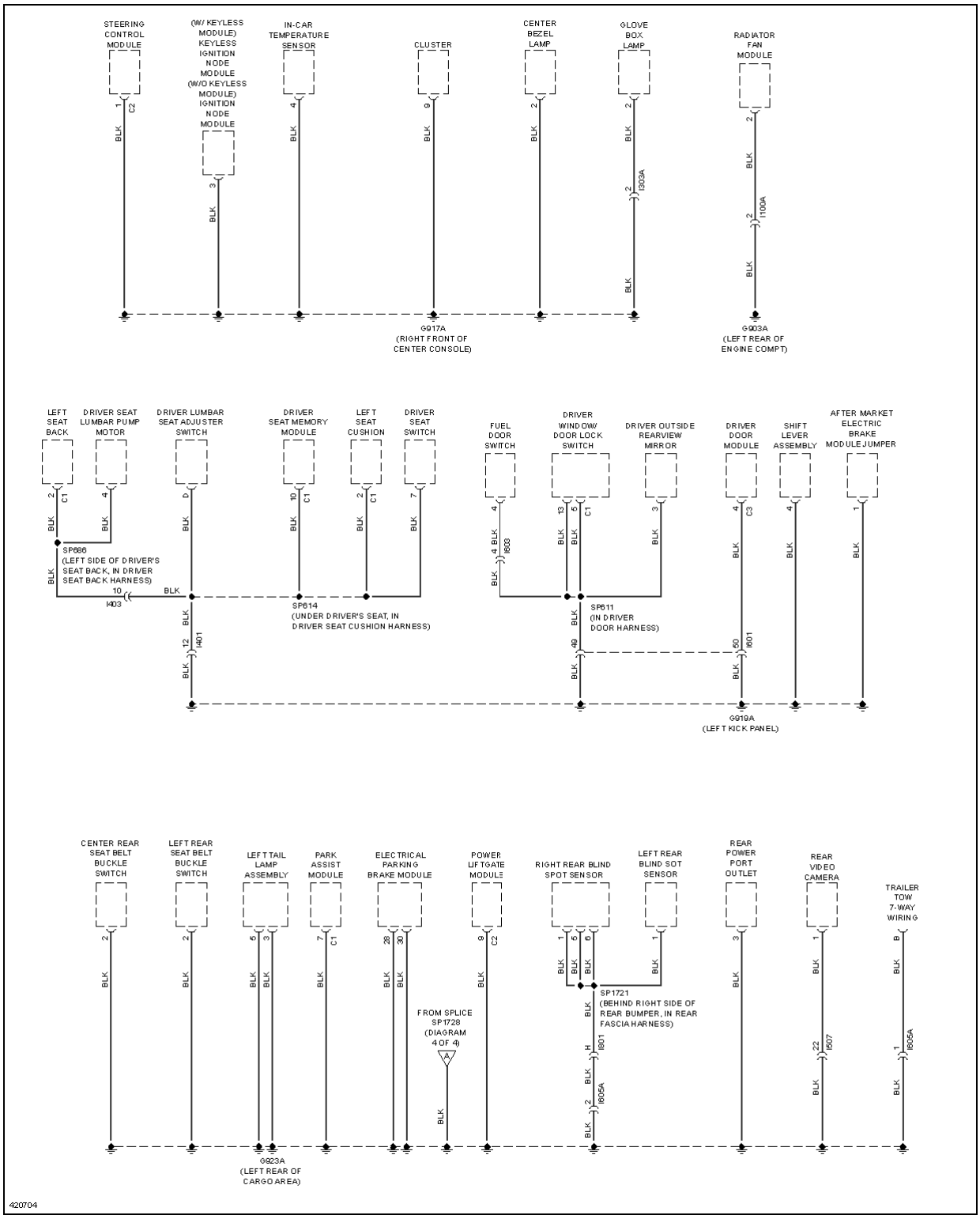
STEERING CONTROL MODULE
(W/ KEYLESS MODULE) KEYLESS IGNITION NODE MODULE
(W/O KEYLESS MODULE) IGNITION NODE MODULE
IN-CAR TEMPERATURE SENSOR
CLUSTER
CENTER BEZEL LAMP
GLOVE BOX LAMP
RADIATOR FAN MODULE
G917A (RIGHT FRONT OF CENTER CONSOLE)
G903A (LEFT REAR OF ENGINE COMPT)
LEFT SEAT BACK
DRIVER SEAT LUMBAR PUMP MOTOR
DRIVER LUMBAR SEAT ADJUSTER SWITCH
DRIVER SEAT MEMORY MODULE
LEFT SEAT CUSHION
DRIVER SEAT SWITCH
FUEL DOOR SWITCH
DRIVER WINDOW/ DOOR LOCK SWITCH
DRIVER OUTSIDE REARVIEW MIRROR
DRIVER DOOR MODULE
SHIFT LEVER ASSEMBLY
AFTER MARKET ELECTRIC BRAKE MODULE JUMPER
SP686 (LEFT SIDE OF DRIVER'S SEAT BACK, IN DRIVER SEAT BACK HARNESS)
SP614 (UNDER DRIVER'S SEAT, IN DRIVER SEAT CUSHION HARNESS)
SP611 (IN DRIVER DOOR HARNESS)
G919A (LEFT KICK PANEL)
CENTER REAR SEAT BELT BUCKLE SWITCH
LEFT REAR SEAT BELT BUCKLE SWITCH
LEFT TAIL LAMP ASSEMBLY
PARK ASSIST MODULE
ELECTRICAL PARKING BRAKE MODULE
POWER LIFTGATE MODULE
RIGHT REAR BLIND SPOT SENSOR
LEFT REAR BLIND SOT SENSOR
REAR POWER PORT OUTLET
REAR VIDEO CAMERA
TRAILER TOW 7-WAY WIRING
FROM SPLICE SP1728 (DIAGRAM 4 OF 4)
SP1721 (BEHIND RIGHT SIDE OF REAR BUMPER, IN REAR FASCIA HARNESS)
G923A (LEFT REAR OF CARGO AREA)
420704

Fig. 48: Ground Distribution Circuit (3 of 4)

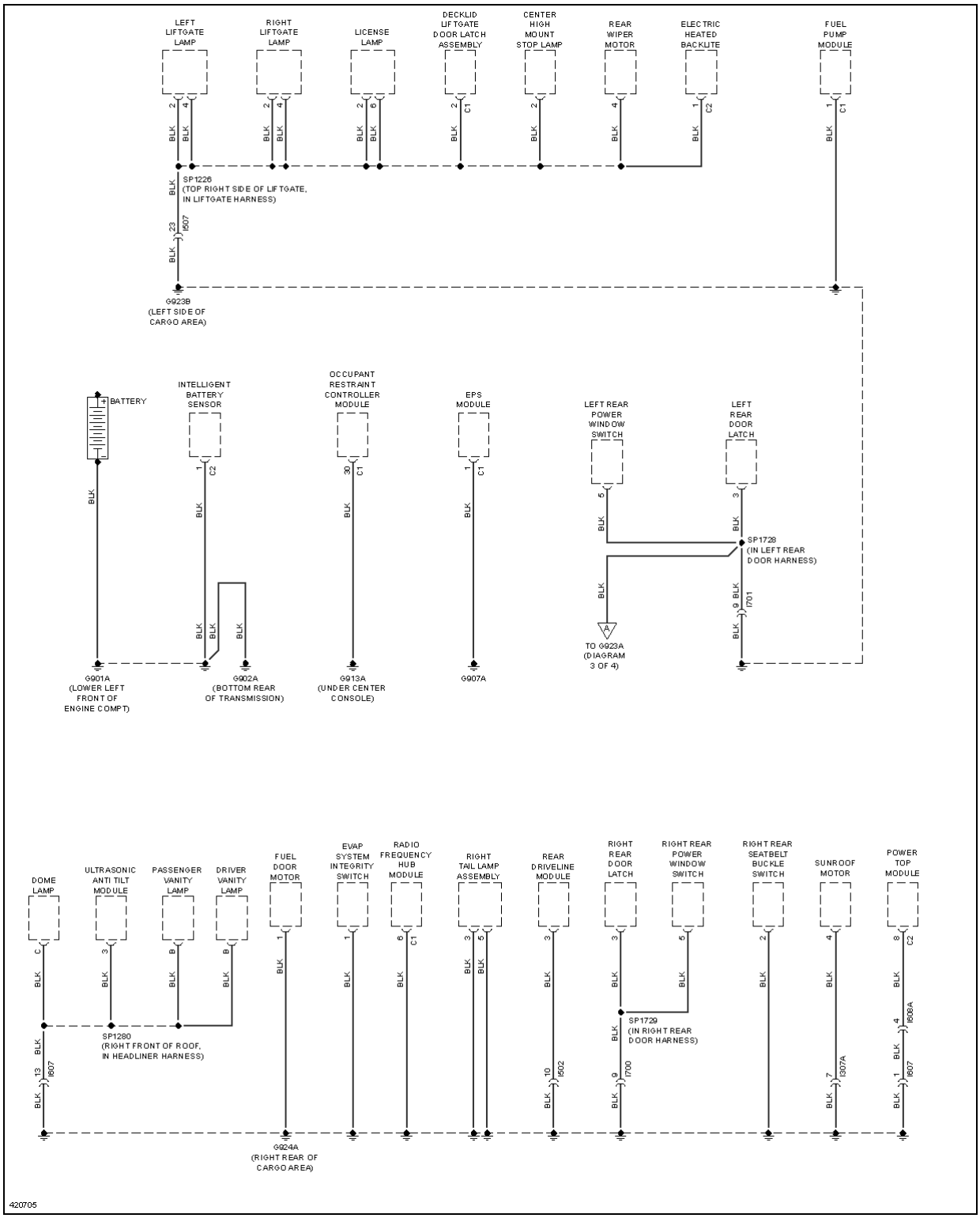
LEFT LIFTGATE LAMP
RIGHT LIFTGATE LAMP
LICENSE LAMP
DECKLID LIFTGATE DOOR LATCH ASSEMBLY
CENTER HIGH MOUNT STOP LAMP
REAR WIPER MOTOR
ELECTRIC HEATED BACKLITE
FUEL PUMP MODULE
SP1226 (TOP RIGHT SIDE OF LIFTGATE, IN LIFTGATE HARNESS)
I507
G923B (LEFT SIDE OF CARGO AREA)
BATTERY
INTELLIGENT BATTERY SENSOR
OCCUPANT RESTRAINT CONTROLLER MODULE
EPS MODULE
LEFT REAR POWER WINDOW SWITCH
LEFT REAR DOOR LATCH
SP1728 (IN LEFT REAR DOOR HARNESS)
I701
TO G923A (DIAGRAM 3 OF 4)
G901A (LOWER LEFT FRONT OF ENGINE COMPT)
G902A (BOTTOM REAR OF TRANSMISSION)
G913A (UNDER CENTER CONSOLE)
G907A
DOME LAMP
ULTRASONIC ANTI TILT MODULE
PASSENGER VANITY LAMP
DRIVER VANITY LAMP
FUEL DOOR MOTOR
EVAP SYSTEM INTEGRITY SWITCH
RADIO FREQUENCY HUB MODULE
RIGHT TAIL LAMP ASSEMBLY
REAR DRIVELINE MODULE
RIGHT REAR DOOR LATCH
RIGHT REAR POWER WINDOW SWITCH
RIGHT REAR SEATBELT BUCKLE SWITCH
SUNROOF MOTOR
POWER TOP MODULE
SP1280 (RIGHT FRONT OF ROOF, IN HEADLINER HARNESS)
I607
I502
SP1729 (IN RIGHT REAR DOOR HARNESS)
I700
I907A
I608A
G924A (RIGHT REAR OF CARGO AREA)
420705

Fig. 49: Ground Distribution Circuit (4 of 4)

HEADLIGHTS

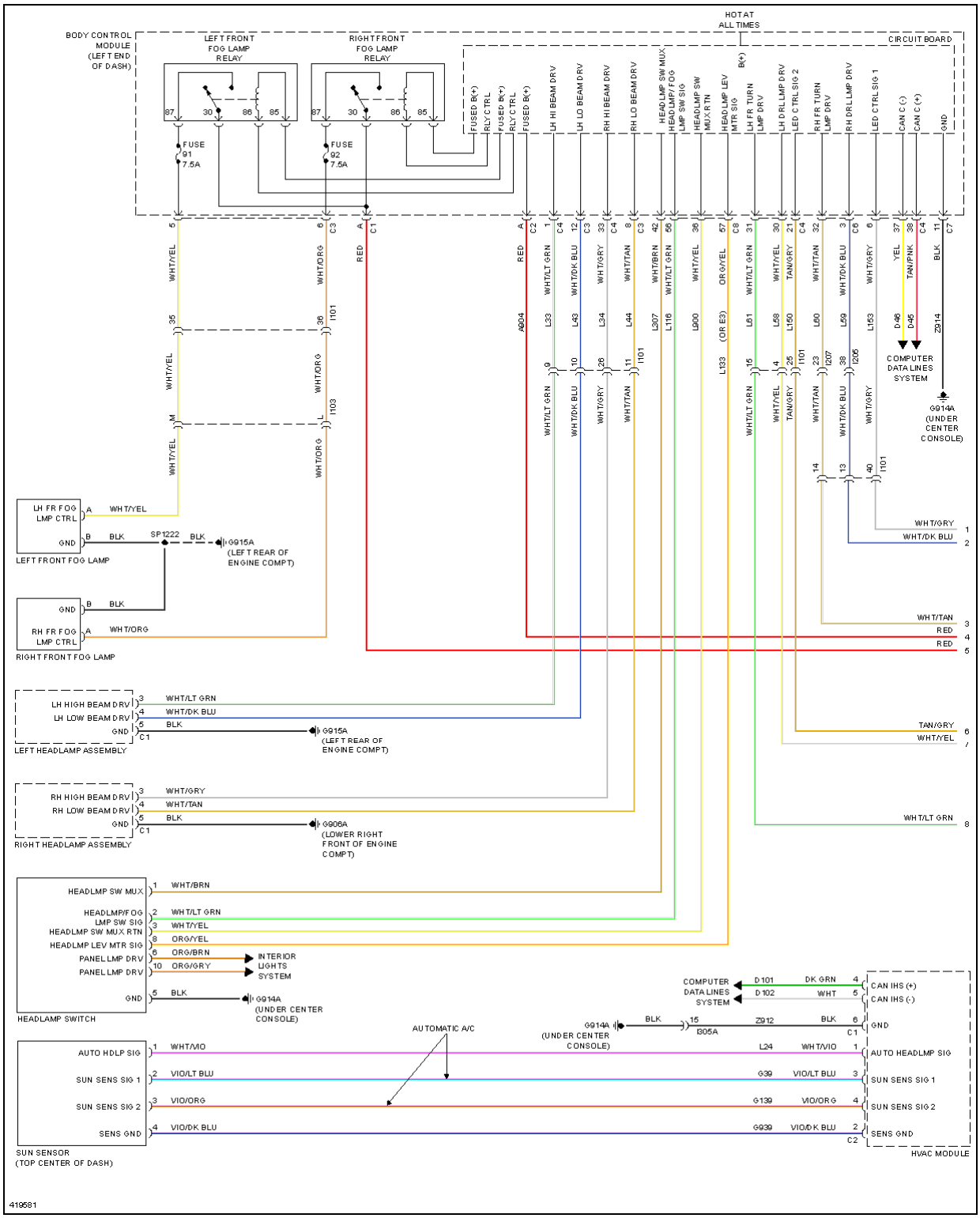
BODY CONTROL MODULE (LEFT END OF DASH)
HOT AT ALL TIMES
CIRCUIT BOARD
LEFT FRONT FOG LAMP RELAY
RIGHT FRONT FOG LAMP RELAY
FUSE 91 7.5A
FUSE 92 7.5A
FUSED B(+)
RLY CTRL
LH HI BEAM DRV
LH LO BEAM DRV
RH HI BEAM DRV
RH LO BEAM DRV
HEADLMP SW MUX
HEADLMP/FOG LMP SW SIG
HEADLMP SW MUX RTN
HEADLMP LEV MTR SIG
LH FR TURN LMP DRV
LH DRL LMP DRV
LED CTRL SIG 2
RH FR TURN LMP DRV
RH DRL LMP DRV
LED CTRL SIG 1
CAN C (-)
CAN C (+)
GND
COMPUTER DATA LINES SYSTEM
G914A (UNDER CENTER CONSOLE)
LH FR FOG LMP CTRL
GND
LEFT FRONT FOG LAMP
SP1222
G915A (LEFT REAR OF ENGINE COMPT)
RH FR FOG LMP CTRL
RIGHT FRONT FOG LAMP
LH HIGH BEAM DRV
LH LOW BEAM DRV
LEFT HEADLAMP ASSEMBLY
RH HIGH BEAM DRV
RH LOW BEAM DRV
RIGHT HEADLAMP ASSEMBLY
G906A (LOWER RIGHT FRONT OF ENGINE COMPT)
HEADLMP SW MUX
HEADLMP/FOG LMP SW SIG
HEADLMP SW MUX RTN
HEADLMP LEV MTR SIG
PANEL LMP DRV
INTERIOR LIGHTS SYSTEM
HEADLAMP SWITCH
CAN IHS (+)
CAN IHS (-)
AUTO HDLP SIG
SUN SENS SIG 1
SUN SENS SIG 2
SENS GND
SUN SENSOR (TOP CENTER OF DASH)
AUTOMATIC A/C
HVAC MODULE
419581

Fig. 50: Headlights Circuit (1 of 2)

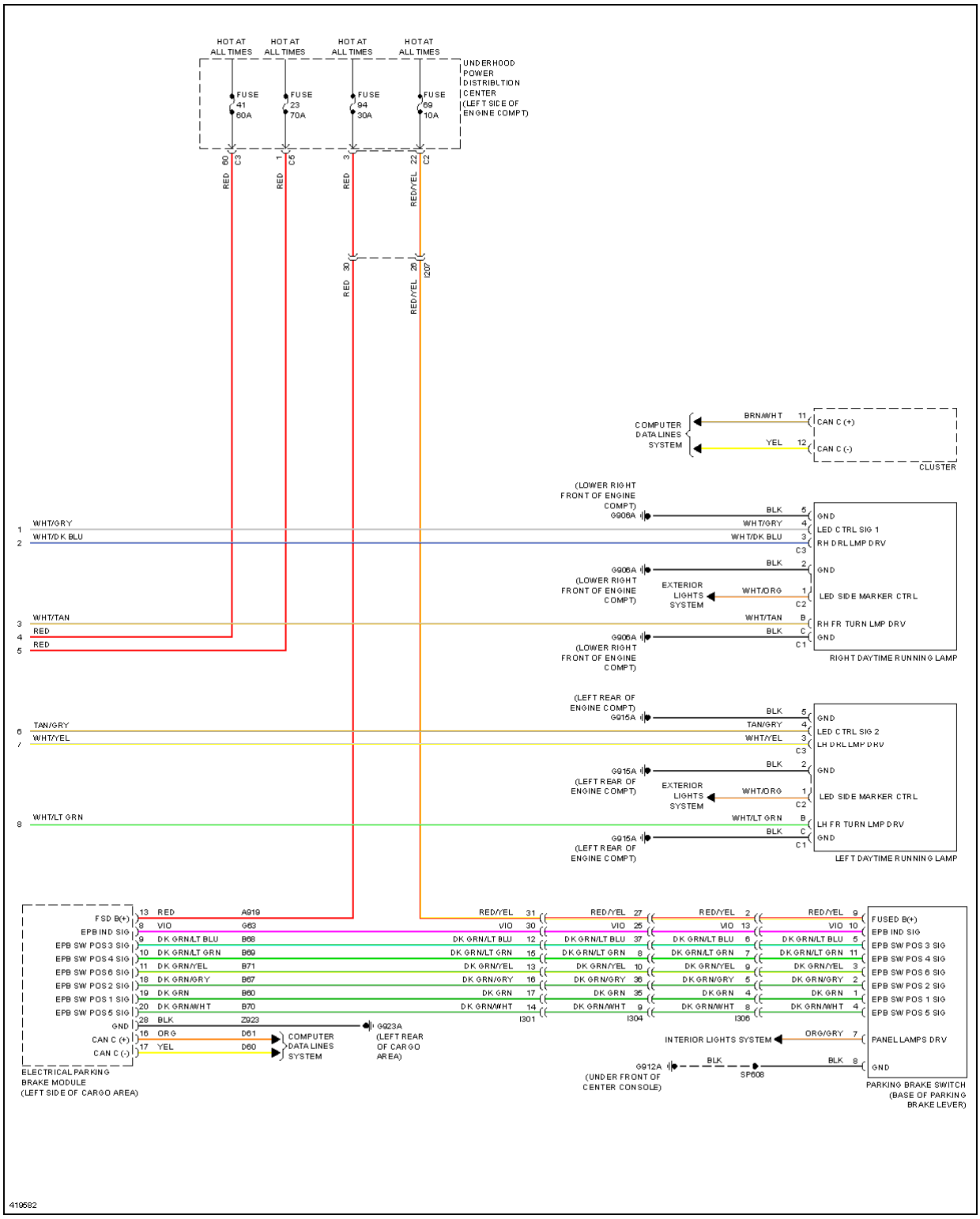
HOT AT ALL TIMES
HOT AT ALL TIMES
HOT AT ALL TIMES
HOT AT ALL TIMES
UNDERHOOD POWER DISTRIBUTION CENTER (LEFT SIDE OF ENGINE COMPT)
FUSE 41 60A
FUSE 23 70A
FUSE 94 30A
FUSE 69 10A
RED 60 C3
RED 1 C5
RED 3
RED/YEL 22 C2
RED 30
RED/YEL 28 I207
COMPUTER DATA LINES SYSTEM
BRN/WHT 11 CAN C (+)
YEL 12 CAN C (-)
CLUSTER
(LOWER RIGHT FRONT OF ENGINE COMPT) G906A
BLK 5 GND
WHT/GRY 4 LED CTRL SIG 1
WHT/DK BLU 3 RH DRL LMP DRV
C3
BLK 2 GND
EXTERIOR LIGHTS SYSTEM
WHT/ORG 1 LED SIDE MARKER CTRL
C2
WHT/TAN B RH FR TURN LMP DRV
BLK C GND
C1
RIGHT DAYTIME RUNNING LAMP
(LEFT REAR OF ENGINE COMPT) G915A
TAN/GRY 4 LED CTRL SIG 2
WHT/YEL 3 LH DRL LMP DRV
WHT/LT GRN B LH FR TURN LMP DRV
LEFT DAYTIME RUNNING LAMP
ELECTRICAL PARKING BRAKE MODULE (LEFT SIDE OF CARGO AREA)
FSD B(+) 13 RED A919
EPB IND SIG 8 VIO G63
EPB SW POS 3 SIG 9 DK GRN/LT BLU B68
EPB SW POS 4 SIG 10 DK GRN/LT GRN B69
EPB SW POS 6 SIG 11 DK GRN/YEL B71
EPB SW POS 2 SIG 18 DK GRN/GRY B67
EPB SW POS 1 SIG 19 DK GRN B60
EPB SW POS 5 SIG 20 DK GRN/WHT B70
GND 28 BLK Z923
CAN C (+) 16 ORG D61
CAN C (-) 17 YEL D60
COMPUTER DATA LINES SYSTEM
G923A (LEFT REAR OF CARGO AREA)
RED/YEL 31 I301
VIO 30
DK GRN/LT BLU 12
DK GRN/LT GRN 15
DK GRN/YEL 13
DK GRN/GRY 16
DK GRN 17
DK GRN/WHT 14
RED/YEL 27 I304
VIO 25
DK GRN/LT BLU 37
DK GRN/LT GRN 8
DK GRN/YEL 10
DK GRN/GRY 36
DK GRN 35
DK GRN/WHT 9
RED/YEL 2 I306
VIO 13
DK GRN/LT BLU 6
DK GRN/LT GRN 7
DK GRN/YEL 9
DK GRN/GRY 5
DK GRN 4
DK GRN/WHT 8
FUSED B(+)
EPB IND SIG
EPB SW POS 3 SIG
EPB SW POS 4 SIG
EPB SW POS 6 SIG
EPB SW POS 2 SIG
EPB SW POS 1 SIG
EPB SW POS 5 SIG
INTERIOR LIGHTS SYSTEM
ORG/GRY 7 PANEL LAMPS DRV
G912A (UNDER FRONT OF CENTER CONSOLE)
BLK SP608 BLK 8 GND
PARKING BRAKE SWITCH (BASE OF PARKING BRAKE LEVER)
419582

Fig. 51: Headlights Circuit (2 of 2)

HORN

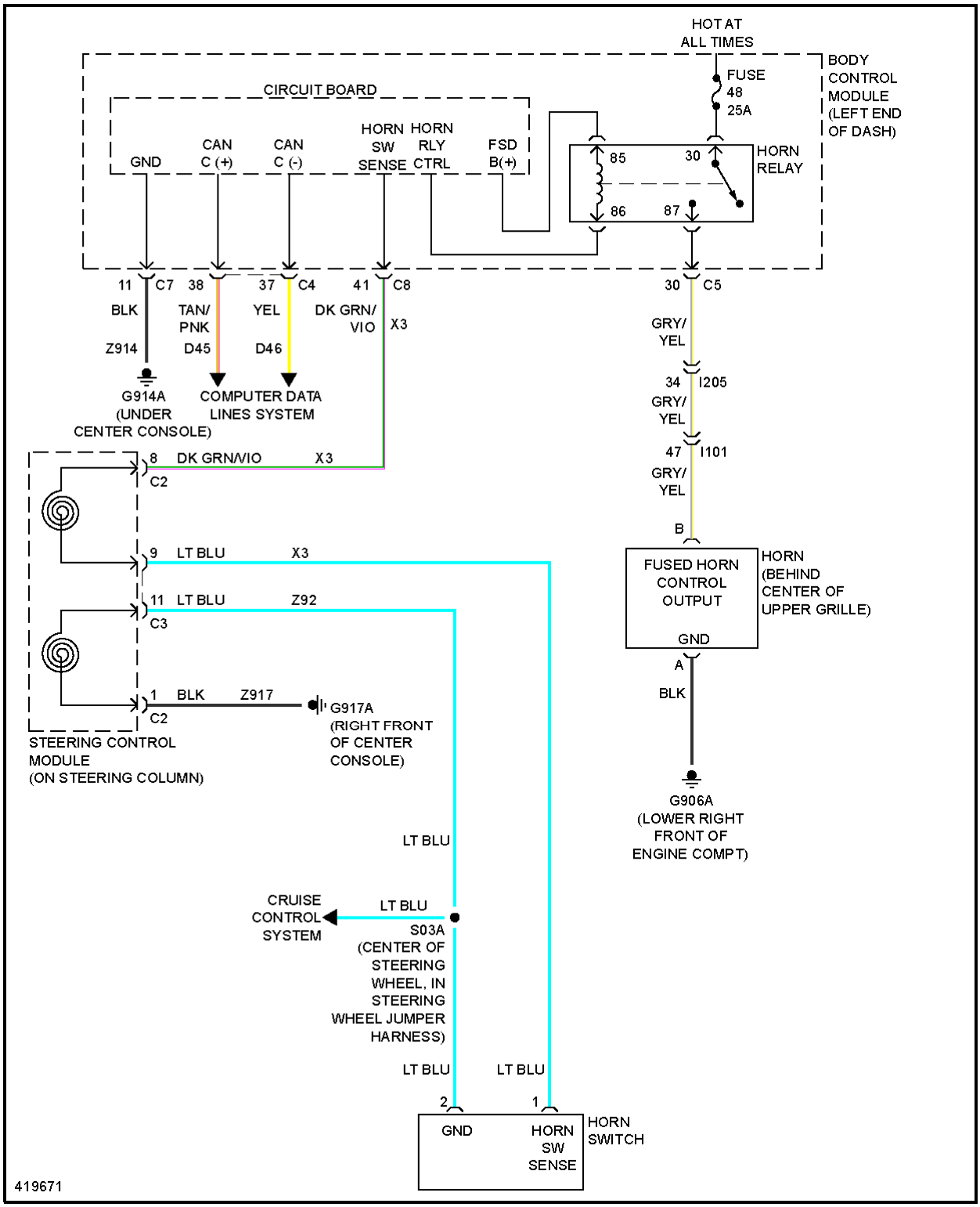
HOT AT ALL TIMES
BODY CONTROL MODULE (LEFT END OF DASH)
FUSE 48 25A
CIRCUIT BOARD
GND
CAN C (+)
CAN C (-)
HORN SW SENSE
HORN RLY CTRL
FSD B(+)
85
30
86
87
HORN RELAY
11 C7
38
37 C4
41 C8
30 C5
BLK
TAN/ PNK
YEL
DK GRN/ VIO
X3
Z914
D45
D46
GRY/ YEL
34 I205
GRY/ YEL
47 I101
GRY/ YEL
G914A (UNDER CENTER CONSOLE)
COMPUTER DATA LINES SYSTEM
8 DK GRN/VIO X3
C2
9 LT BLU X3
11 LT BLU Z92
C3
1 BLK Z917
C2
G917A (RIGHT FRONT OF CENTER CONSOLE)
STEERING CONTROL MODULE (ON STEERING COLUMN)
B
FUSED HORN CONTROL OUTPUT
GND
HORN (BEHIND CENTER OF UPPER GRILLE)
A
BLK
G906A (LOWER RIGHT FRONT OF ENGINE COMPT)
LT BLU
CRUISE CONTROL SYSTEM
LT BLU
S03A (CENTER OF STEERING WHEEL, IN STEERING WHEEL JUMPER HARNESS)
LT BLU
LT BLU
2
1
GND
HORN SW SENSE
HORN SWITCH
419671

Fig. 52: Horn Circuit

INSTRUMENT CLUSTER

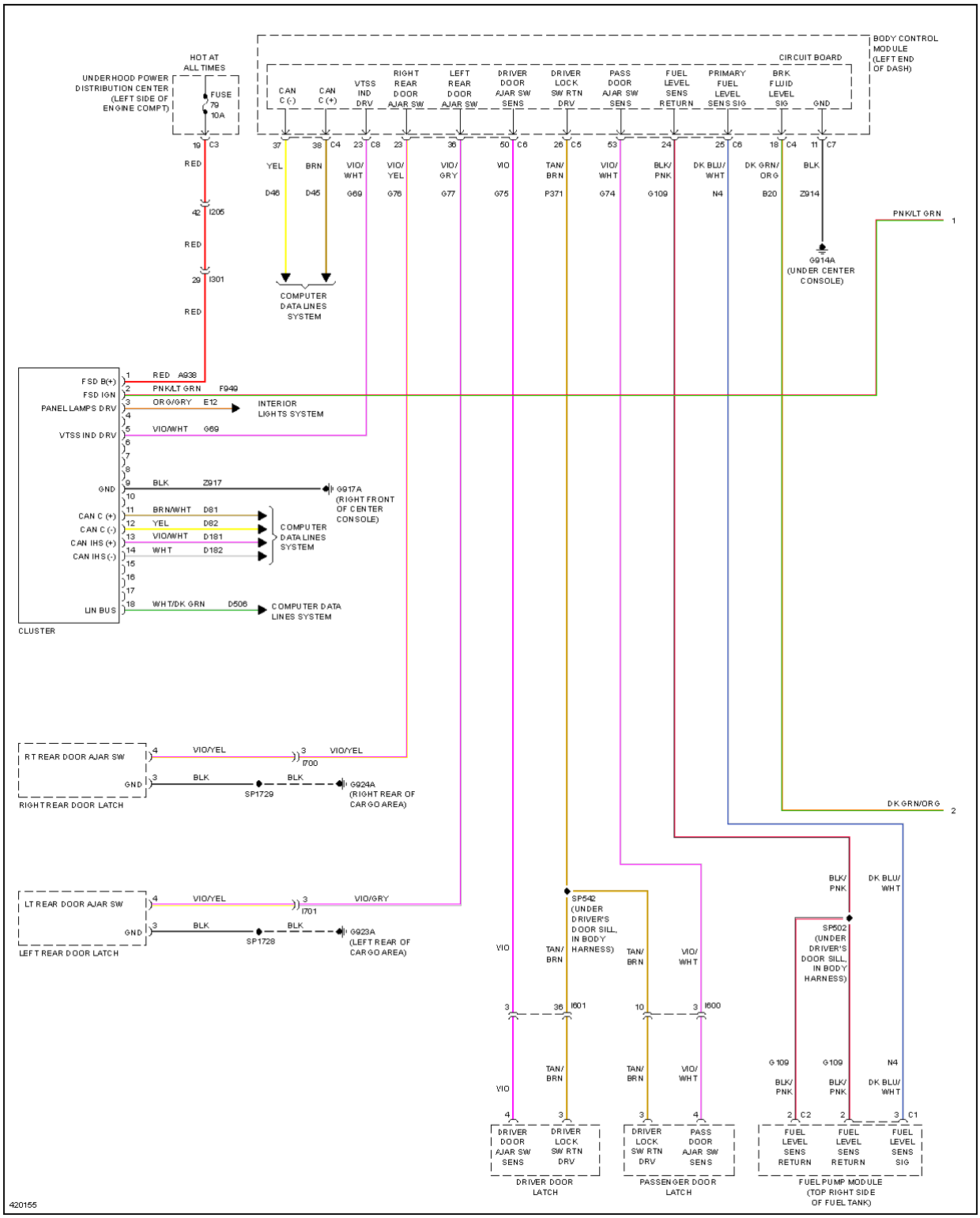
BODY CONTROL MODULE (LEFT END OF DASH)
CIRCUIT BOARD
HOT AT ALL TIMES
UNDERHOOD POWER DISTRIBUTION CENTER (LEFT SIDE OF ENGINE COMPT)
FUSE 79 10A
CAN C (-)
CAN C (+)
VTSS IND DRV
RIGHT REAR DOOR AJAR SW
LEFT REAR DOOR AJAR SW
DRIVER DOOR AJAR SW SENS
DRIVER LOCK SW RTN DRV
PASS DOOR AJAR SW SENS
FUEL LEVEL SENS RETURN
PRIMARY FUEL LEVEL SENS SIG
BRK FLUID LEVEL SIG
GND
COMPUTER DATA LINES SYSTEM
G914A (UNDER CENTER CONSOLE)
PNK/LT GRN
INTERIOR LIGHTS SYSTEM
FSD B(+)
FSD IGN
PANEL LAMPS DRV
VTSS IND DRV
GND
CAN C (+)
CAN C (-)
CAN IHS (+)
CAN IHS (-)
LIN BUS
CLUSTER
G917A (RIGHT FRONT OF CENTER CONSOLE)
COMPUTER DATA LINES SYSTEM
COMPUTER DATA LINES SYSTEM
RT REAR DOOR AJAR SW
RIGHT REAR DOOR LATCH
SP1729
G924A (RIGHT REAR OF CARGO AREA)
DK GRN/ORG
LT REAR DOOR AJAR SW
LEFT REAR DOOR LATCH
SP1728
G923A (LEFT REAR OF CARGO AREA)
SP542 (UNDER DRIVER'S DOOR SILL, IN BODY HARNESS)
SP502 (UNDER DRIVER'S DOOR SILL, IN BODY HARNESS)
DRIVER DOOR AJAR SW SENS
DRIVER LOCK SW RTN DRV
DRIVER DOOR LATCH
DRIVER LOCK SW RTN DRV
PASS DOOR AJAR SW SENS
PASSENGER DOOR LATCH
FUEL LEVEL SENS RETURN
FUEL LEVEL SENS RETURN
FUEL LEVEL SENS SIG
FUEL PUMP MODULE (TOP RIGHT SIDE OF FUEL TANK)
420155

Fig. 53: Instrument Cluster Circuit (1 of 2)

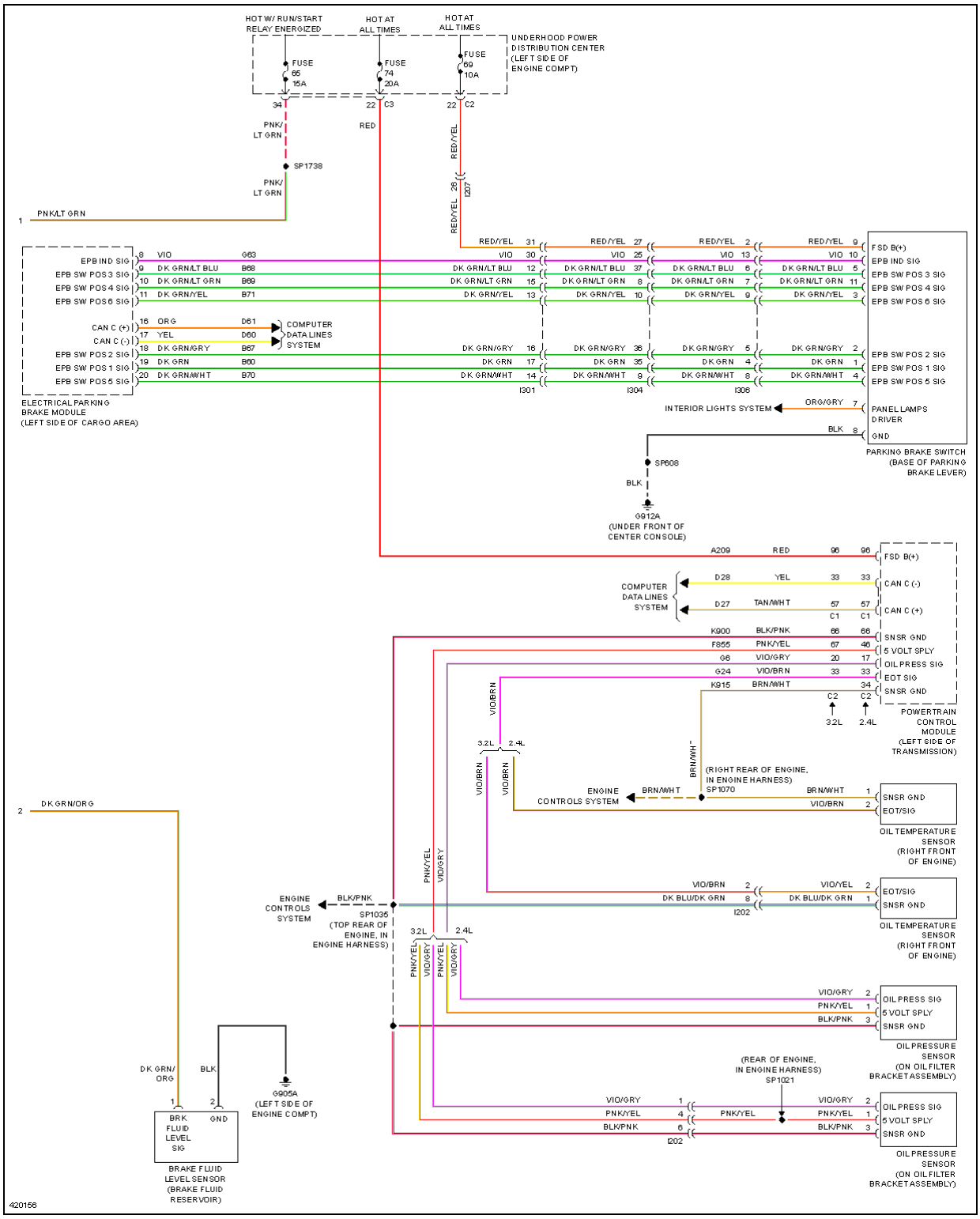
HOT W/ RUN/START RELAY ENERGIZED
HOT AT ALL TIMES
HOT AT ALL TIMES
UNDERHOOD POWER DISTRIBUTION CENTER (LEFT SIDE OF ENGINE COMPT)
FUSE 65 15A
FUSE 74 20A
FUSE 69 10A
PNK/ LT GRN
SP1738
RED
RED/YEL
I207
PNK/LT GRN
ELECTRICAL PARKING BRAKE MODULE (LEFT SIDE OF CARGO AREA)
EPB IND SIG
EPB SW POS 3 SIG
EPB SW POS 4 SIG
EPB SW POS 6 SIG
CAN C (+)
CAN C (-)
EPB SW POS 2 SIG
EPB SW POS 1 SIG
EPB SW POS 5 SIG
COMPUTER DATA LINES SYSTEM
I301
I304
I306
INTERIOR LIGHTS SYSTEM
PANEL LAMPS DRIVER
GND
PARKING BRAKE SWITCH (BASE OF PARKING BRAKE LEVER)
SP608
G912A (UNDER FRONT OF CENTER CONSOLE)
FSD B(+)
POWERTRAIN CONTROL MODULE (LEFT SIDE OF TRANSMISSION)
SNSR GND
5 VOLT SPLY
OIL PRESS SIG
EOT SIG
ENGINE CONTROLS SYSTEM
(RIGHT REAR OF ENGINE, IN ENGINE HARNESS) SP1070
OIL TEMPERATURE SENSOR (RIGHT FRONT OF ENGINE)
EOT/SIG
I202
SP1035 (TOP REAR OF ENGINE, IN ENGINE HARNESS)
OIL PRESSURE SENSOR (ON OIL FILTER BRACKET ASSEMBLY)
(REAR OF ENGINE, IN ENGINE HARNESS) SP1021
DK GRN/ ORG
BLK
G905A (LEFT SIDE OF ENGINE COMPT)
BRK FLUID LEVEL SIG
BRAKE FLUID LEVEL SENSOR (BRAKE FLUID RESERVOIR)
420156

Fig. 54: Instrument Cluster Circuit (2 of 2)

INTERIOR LIGHTS

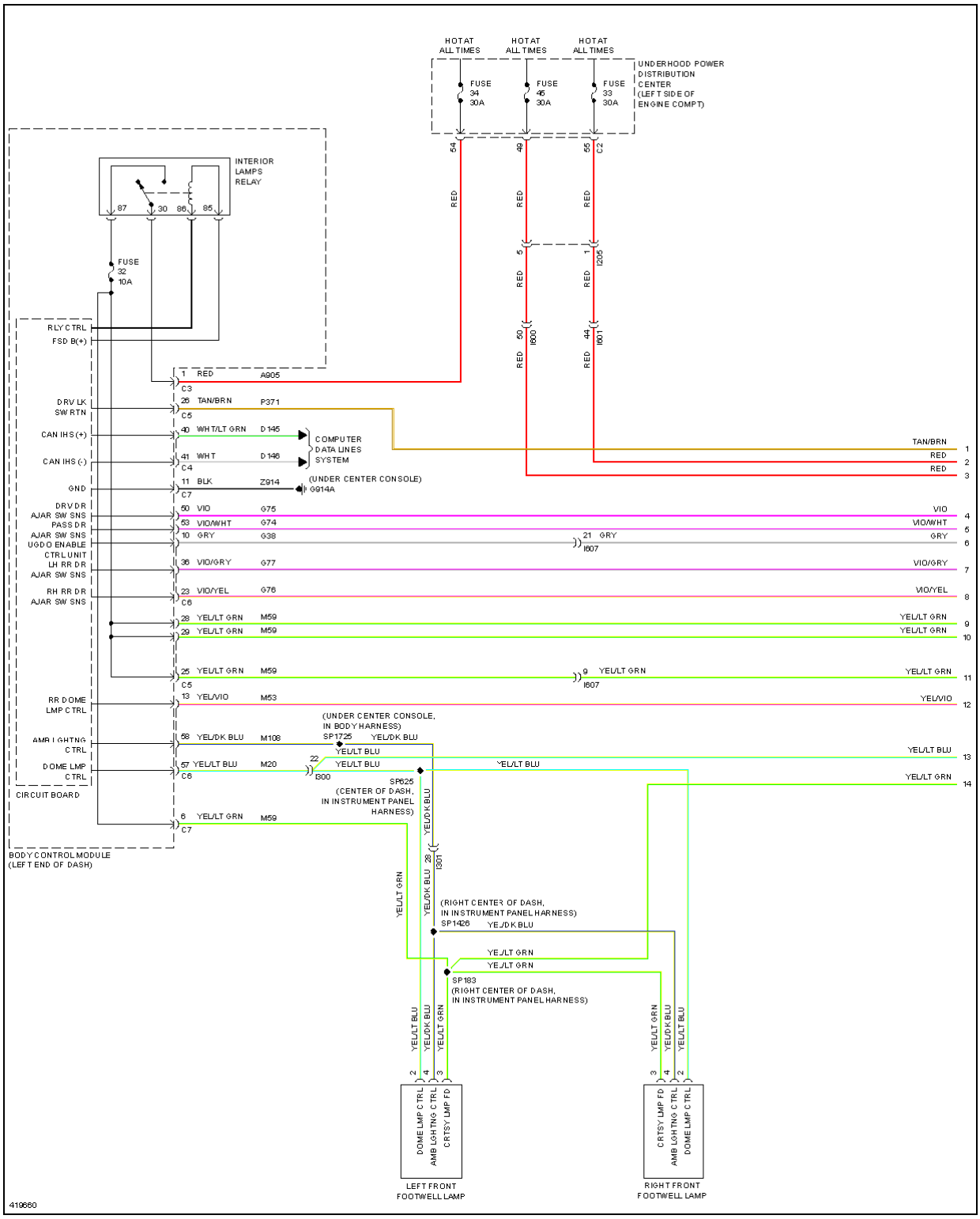
HOT AT ALL TIMES
HOT AT ALL TIMES
HOT AT ALL TIMES
FUSE 34 30A
FUSE 46 30A
FUSE 33 30A
UNDERHOOD POWER DISTRIBUTION CENTER (LEFT SIDE OF ENGINE COMPT)
INTERIOR LAMPS RELAY
87
30
86
85
FUSE 32 10A
RLY CTRL
FSD B(+)
DRV LK SW RTN
CAN IHS (+)
CAN IHS (-)
GND
DRV DR AJAR SW SNS
PASS DR AJAR SW SNS
UGDO ENABLE
CTR LUNIT
LH RR DR AJAR SW SNS
RH RR DR AJAR SW SNS
RR DOME LMP CTRL
AMB LIGHTNG CTRL
DOME LMP CTRL
CIRCUIT BOARD
BODY CONTROL MODULE (LEFT END OF DASH)
COMPUTER DATA LINES SYSTEM
(UNDER CENTER CONSOLE)
G914A
(UNDER CENTER CONSOLE, IN BODY HARNESS)
SP1725
SP625
(CENTER OF DASH, IN INSTRUMENT PANEL HARNESS)
(RIGHT CENTER OF DASH, IN INSTRUMENT PANEL HARNESS)
SP1426
SP183
(RIGHT CENTER OF DASH, IN INSTRUMENT PANEL HARNESS)
DOME LMP CTRL
AMB LIGHTNG CTRL
CRTSY LMP FD
LEFT FRONT FOOTWELL LAMP
RIGHT FRONT FOOTWELL LAMP
419660

Fig. 55: Courtesy Lamps Circuit (1 of 3)

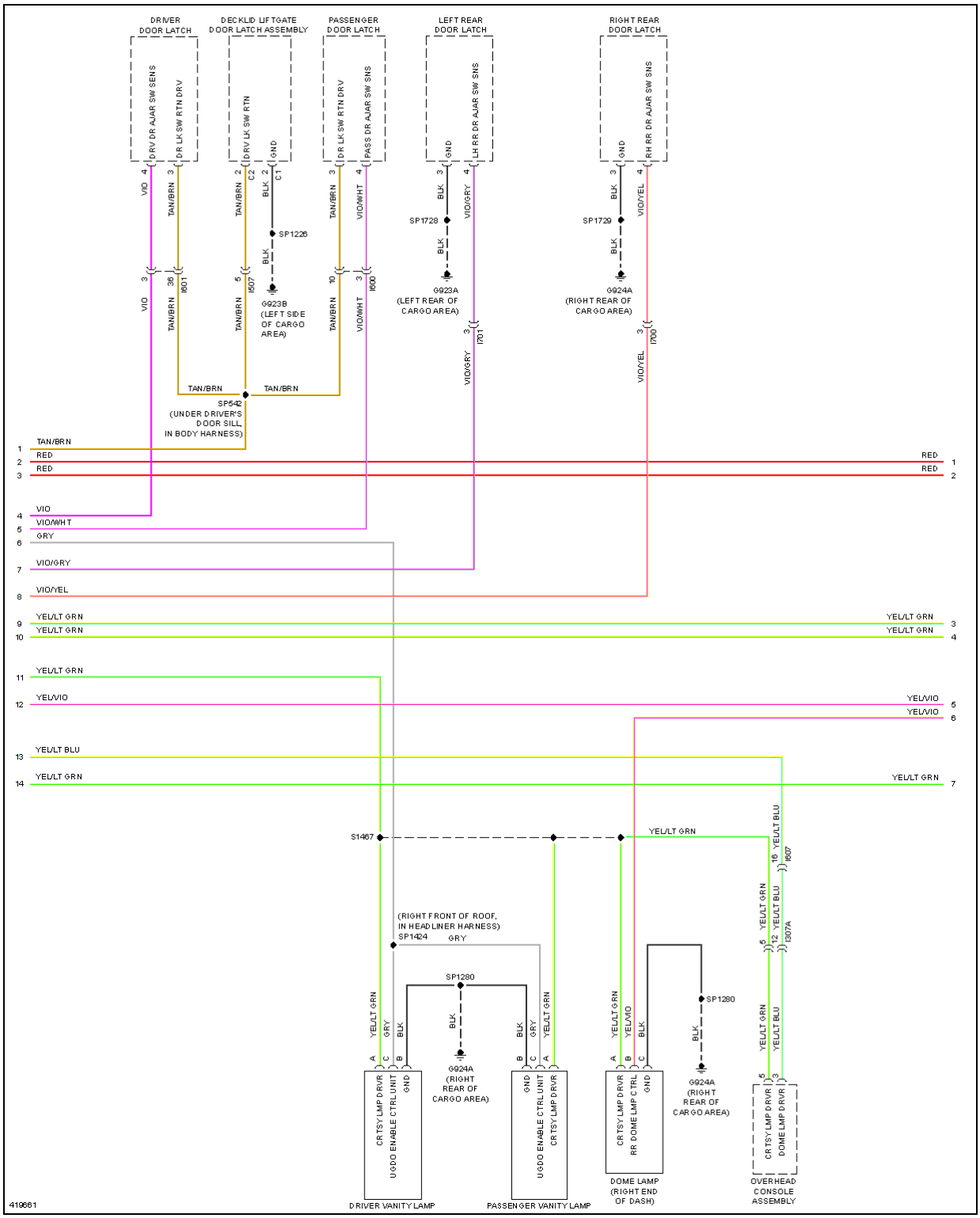
DRIVER DOOR LATCH
DECK LID LIFTGATE DOOR LATCH ASSEMBLY
PASSENGER DOOR LATCH
LEFT REAR DOOR LATCH
RIGHT REAR DOOR LATCH
DRV DR AJAR SW SENS
DR LK SW RTN DRV
DRV LK SW RTN
GND
DR LK SW RTN DRV
PASS DR AJAR SW SNS
GND
LH RR DR AJAR SW SNS
GND
RH RR DR AJAR SW SNS
SP1226
G923B (LEFT SIDE OF CARGO AREA)
SP1728
G923A (LEFT REAR OF CARGO AREA)
SP1729
G924A (RIGHT REAR OF CARGO AREA)
SP542 (UNDER DRIVER'S DOOR SILL, IN BODY HARNESS)
TAN/BRN
RED
VIO
VIO/WHT
GRY
VIO/GRY
VIO/YEL
YEL/LT GRN
YEL/VIO
YEL/LT BLU
S1467
(RIGHT FRONT OF ROOF, IN HEADLINER HARNESS) SP1424
SP1280
G924A (RIGHT REAR OF CARGO AREA)
CR TSY LMP DRVR
UGDO ENABLE CTRL UNIT
GND
DRIVER VANITY LAMP
PASSENGER VANITY LAMP
YEL/MO
RR DOME LMP CTRL
DOME LAMP (RIGHT END OF DASH)
DOME LMP DRVR
OVERHEAD CONSOLE ASSEMBLY
419661

Fig. 56: Courtesy Lamps Circuit (2 of 3)

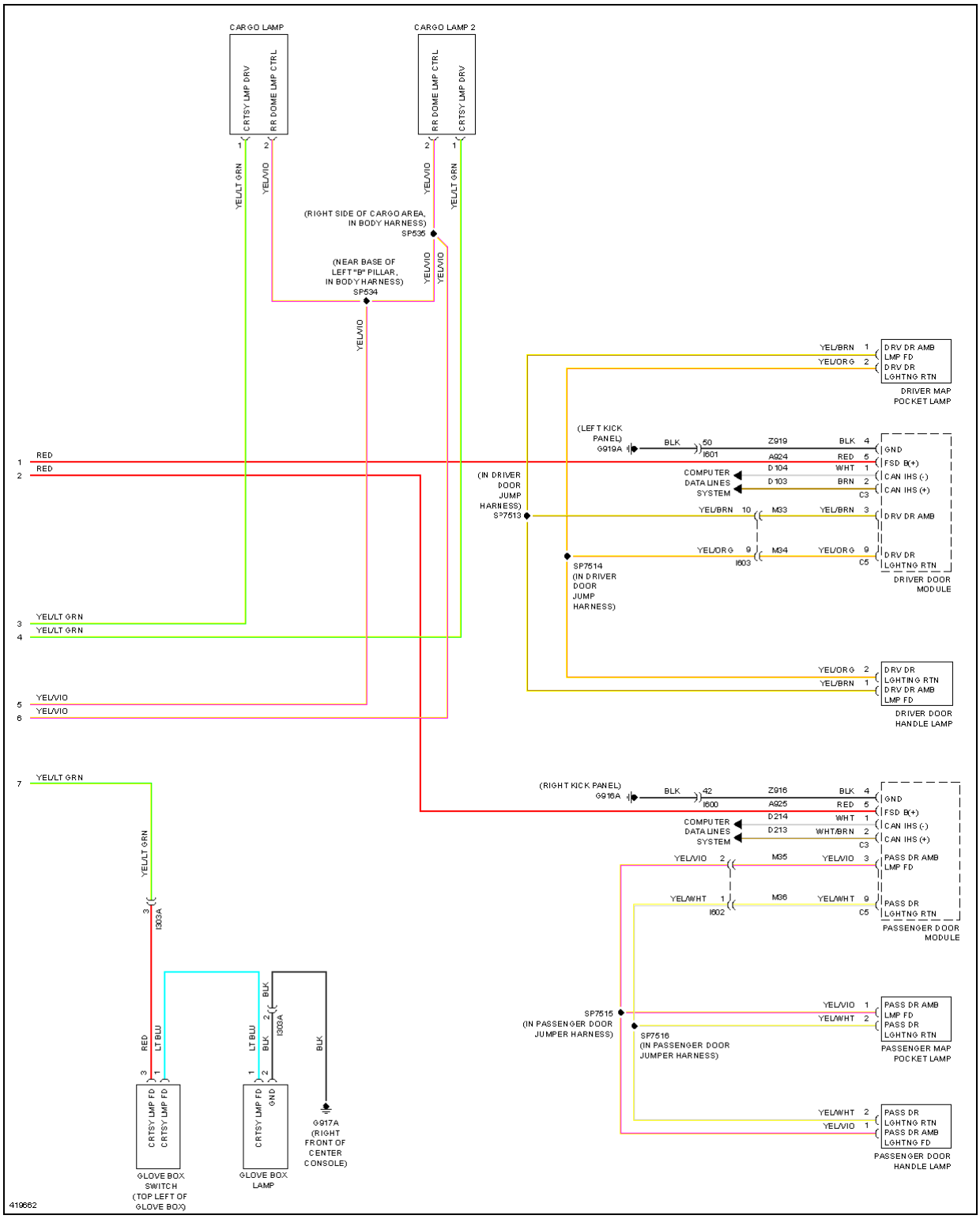
CARGO LAMP
CRTSY LMP DRV
RR DOME LMP CTRL
CARGO LAMP 2
RR DOME LMP CTRL
CRTSY LMP DRV
YEL/LT GRN
YEL/VIO
(RIGHT SIDE OF CARGO AREA, IN BODY HARNESS) SP536
(NEAR BASE OF LEFT "B" PILLAR, IN BODY HARNESS) SP534
YEL/BRN
YEL/ORG
DRV DR AMB
LMP FD
DRV DR
LGHTNG RTN
DRIVER MAP POCKET LAMP
(LEFT KICK PANEL) G919A
BLK
50
I601
Z919
A924
D104
D103
GND
FSD B(+)
CAN IHS (-)
CAN IHS (+)
COMPUTER DATA LINES SYSTEM
RED
(IN DRIVER DOOR JUMP HARNESS) SP7513
M33
M34
I603
SP7514 (IN DRIVER DOOR JUMP HARNESS)
DRIVER DOOR MODULE
DRIVER DOOR HANDLE LAMP
(RIGHT KICK PANEL) G916A
42
I600
Z916
A925
D214
D213
WHT/BRN
PASS DR AMB
PASS DR
PASSENGER DOOR MODULE
M35
M36
I602
SP7515 (IN PASSENGER DOOR JUMPER HARNESS)
SP7516 (IN PASSENGER DOOR JUMPER HARNESS)
PASSENGER MAP POCKET LAMP
PASSENGER DOOR HANDLE LAMP
I303A
LT BLU
CRTSY LMP FD
GND
GLOVE BOX SWITCH (TOP LEFT OF GLOVE BOX)
GLOVE BOX LAMP
G917A (RIGHT FRONT OF CENTER CONSOLE)
419662

Fig. 57: Courtesy Lamps Circuit (3 of 3)

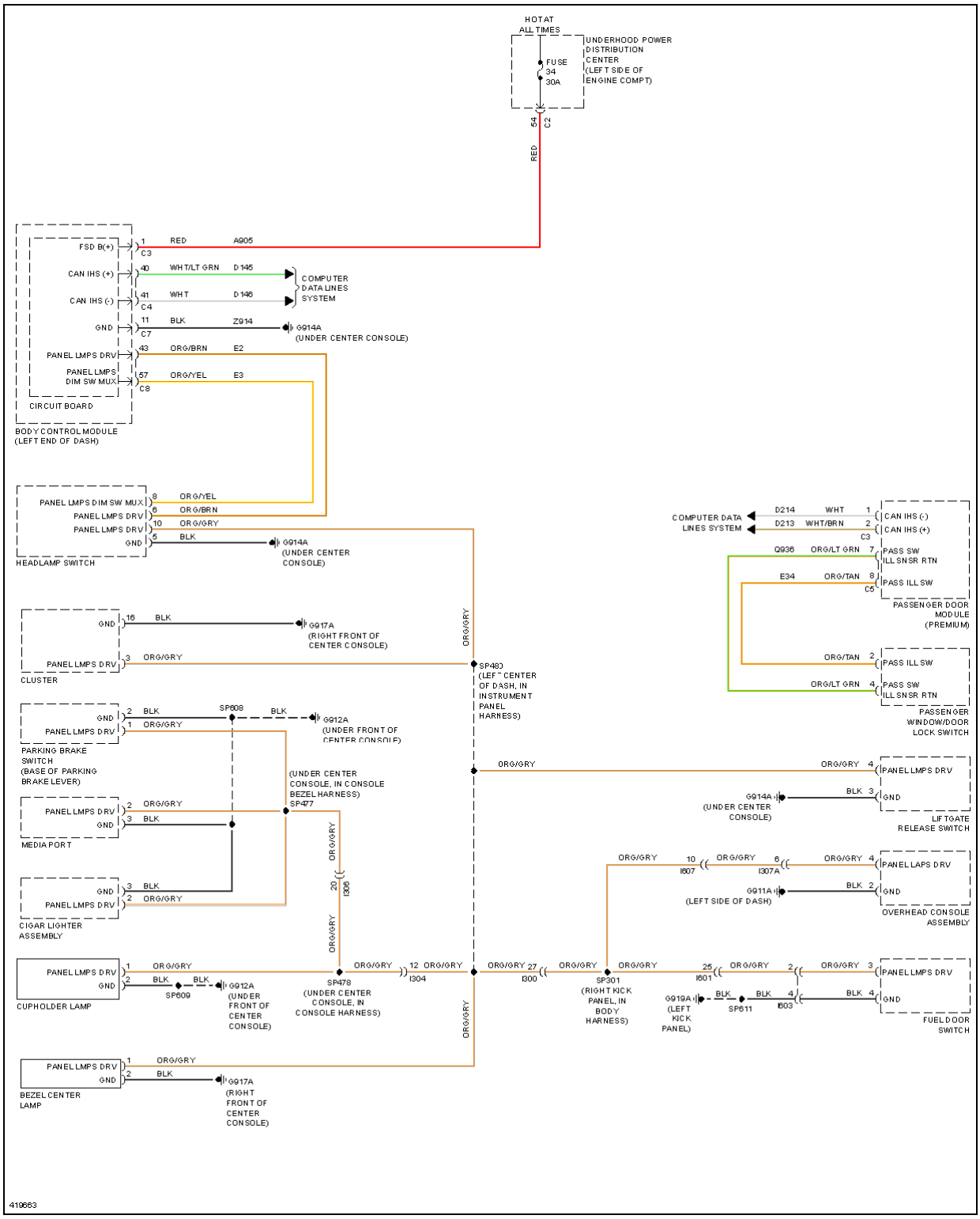
HOT AT ALL TIMES
FUSE 34 30A
UNDERHOOD POWER DISTRIBUTION CENTER (LEFT SIDE OF ENGINE COMPT)
54
C2
RED
FSD B(+)
CAN IHS (+)
CAN IHS (-)
GND
PANEL LMPS DRV
PANEL LMPS DIM SW MUX
CIRCUIT BOARD
BODY CONTROL MODULE (LEFT END OF DASH)
RED A905
WHT/LT GRN D145
WHT D146
BLK Z914
ORG/BRN E2
ORG/YEL E3
COMPUTER DATA LINES SYSTEM
G914A (UNDER CENTER CONSOLE)
HEADLAMP SWITCH
ORG/YEL
ORG/BRN
ORG/GRY
BLK
CLUSTER
G917A (RIGHT FRONT OF CENTER CONSOLE)
SP480 (LEFT CENTER OF DASH, IN INSTRUMENT PANEL HARNESS)
PARKING BRAKE SWITCH (BASE OF PARKING BRAKE LEVER)
SP608
G912A (UNDER FRONT OF CENTER CONSOLE)
MEDIA PORT
(UNDER CENTER CONSOLE, IN CONSOLE BEZEL HARNESS) SP477
CIGAR LIGHTER ASSEMBLY
CUPHOLDER LAMP
SP609
SP478 (UNDER CENTER CONSOLE, IN CONSOLE HARNESS)
I304
I306
BEZEL CENTER LAMP
COMPUTER DATA LINES SYSTEM
D214 WHT
D213 WHT/BRN
CAN IHS (-)
CAN IHS (+)
Q936 ORG/LT GRN
E34 ORG/TAN
PASS SW ILL SNSR RTN
PASS ILL SW
PASSENGER DOOR MODULE (PREMIUM)
PASSENGER WINDOW/DOOR LOCK SWITCH
PANEL LMPS DRV
GND
G914A (UNDER CENTER CONSOLE)
LIFTGATE RELEASE SWITCH
I607
I307A
G911A (LEFT SIDE OF DASH)
OVERHEAD CONSOLE ASSEMBLY
I300
SP301 (RIGHT KICK PANEL, IN BODY HARNESS)
I601
G919A (LEFT KICK PANEL)
SP611
I603
FUEL DOOR SWITCH
419663

Fig. 58: Instrument Illumination Circuit

MEMORY SYSTEMS

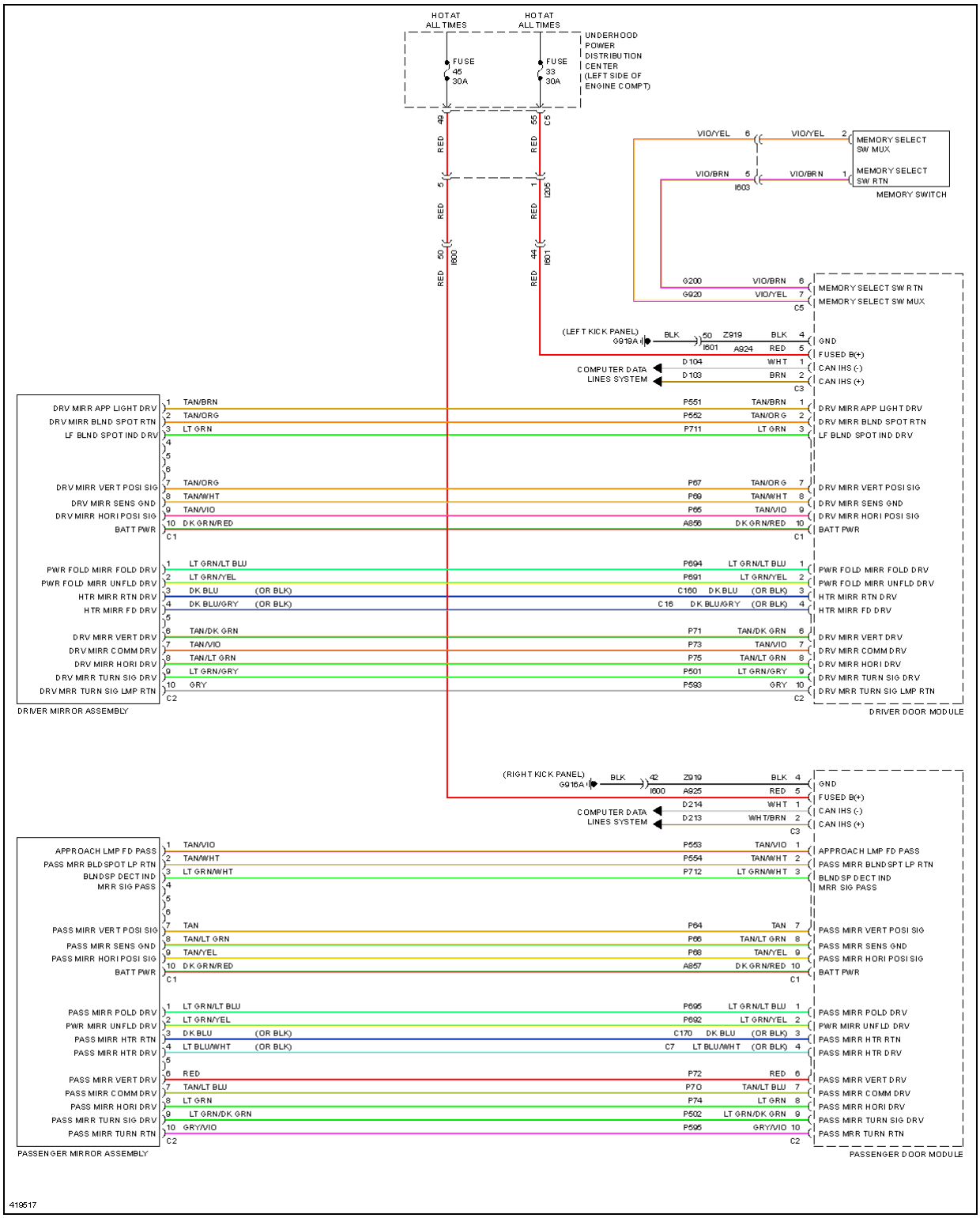
HOT AT ALL TIMES
HOT AT ALL TIMES
UNDERHOOD POWER DISTRIBUTION CENTER (LEFT SIDE OF ENGINE COMPT)
FUSE 45 30A
FUSE 33 30A
MEMORY SELECT SW MUX
MEMORY SELECT SW RTN
MEMORY SWITCH
MEMORY SELECT SW RTN
MEMORY SELECT SW MUX
(LEFT KICK PANEL)
GND
FUSED B(+)
CAN IHS (-)
CAN IHS (+)
COMPUTER DATA LINES SYSTEM
DRV MIRR APP LIGHT DRV
DRV MIRR BLND SPOT RTN
LF BLND SPOT IND DRV
DRV MIRR VERT POSI SIG
DRV MIRR SENS GND
DRV MIRR HORI POSI SIG
BATT PWR
PWR FOLD MIRR FOLD DRV
PWR FOLD MIRR UNFLD DRV
HTR MIRR RTN DRV
HTR MIRR FD DRV
DRV MIRR VERT DRV
DRV MIRR COMM DRV
DRV MIRR HORI DRV
DRV MIRR TURN SIG DRV
DRV MRR TURN SIG LMP RTN
DRIVER MIRROR ASSEMBLY
DRIVER DOOR MODULE
(RIGHT KICK PANEL)
APPROACH LMP FD PASS
PASS MRR BLD SPOT LP RTN
BLND SP DECT IND
MRR SIG PASS
PASS MIRR VERT POSI SIG
PASS MIRR SENS GND
PASS MIRR HORI POSI SIG
PASS MIRR POLD DRV
PWR MIRR UNFLD DRV
PASS MIRR HTR RTN
PASS MIRR HTR DRV
PASS MIRR VERT DRV
PASS MIRR COMM DRV
PASS MIRR HORI DRV
PASS MIRR TURN SIG DRV
PASS MIRR TURN RTN
PASSENGER MIRROR ASSEMBLY
PASSENGER DOOR MODULE
419517

Fig. 59: Memory Mirrors Circuit

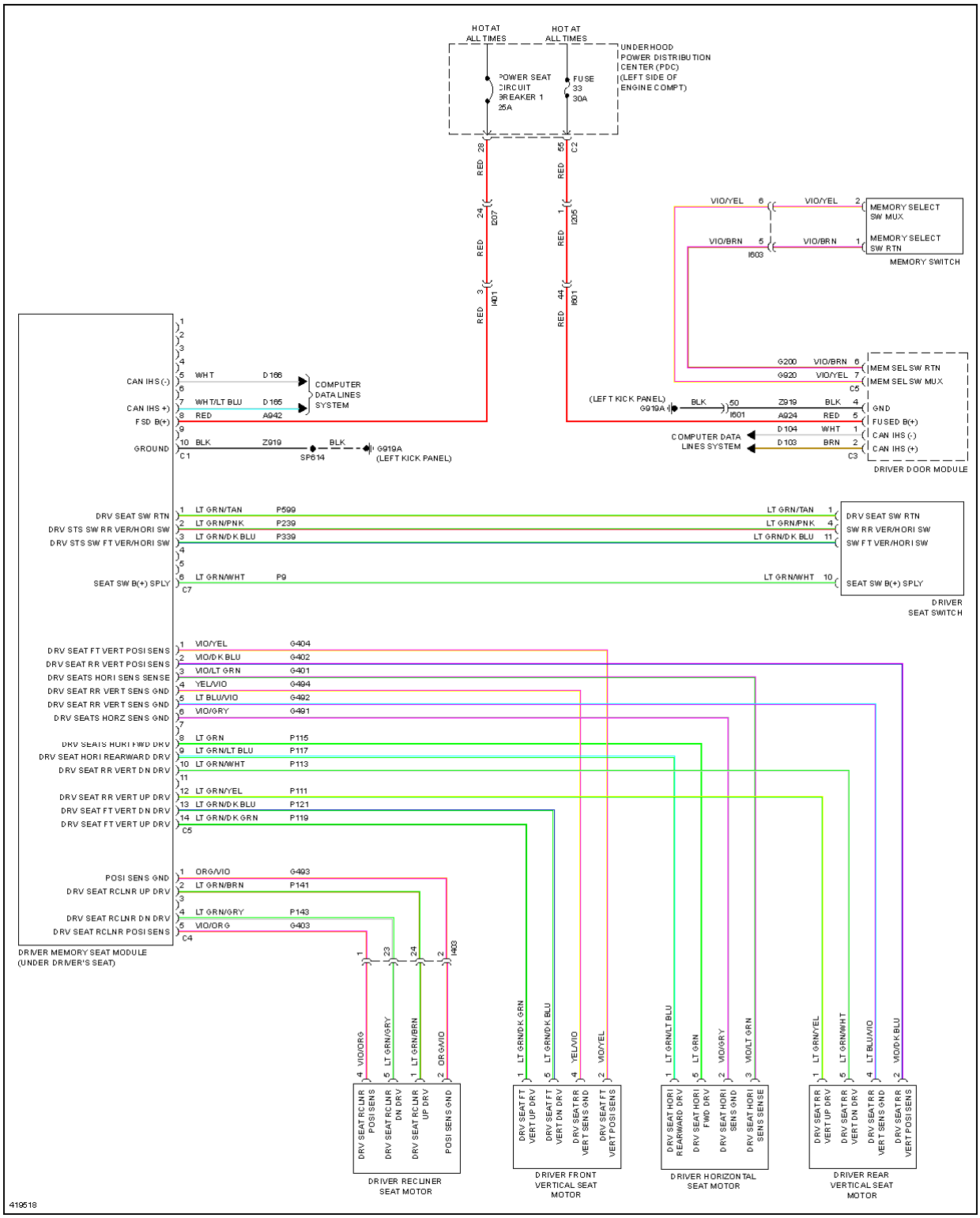
HOT AT ALL TIMES
HOT AT ALL TIMES
UNDERHOOD POWER DISTRIBUTION CENTER (PDC) (LEFT SIDE OF ENGINE COMPT)
POWER SEAT CIRCUIT BREAKER 1 25A
FUSE 33 30A
MEMORY SELECT SW MUX
MEMORY SELECT SW RTN
MEMORY SWITCH
COMPUTER DATA LINES SYSTEM
CAN IHS (-)
CAN IHS (+)
FSD B(+)
GROUND
(LEFT KICK PANEL)
MEM SEL SW RTN
MEM SEL SW MUX
GND
FUSED B(+)
CAN IHS (-)
CAN IHS (+)
DRIVER DOOR MODULE
DRV SEAT SW RTN
DRV STS SW RR VER/HORI SW
DRV STS SW FT VER/HORI SW
SEAT SW B(+) SPLY
DRIVER SEAT SWITCH
DRV SEAT FT VERT POSI SENS
DRV SEAT RR VERT POSI SENS
DRV SEATS HORI SENS SENSE
DRV SEAT RR VERT SENS GND
DRV SEATS HORZ SENS GND
DRV SEAT HORI FWD DRV
DRV SEAT HORI REARWARD DRV
DRV SEAT RR VERT DN DRV
DRV SEAT RR VERT UP DRV
DRV SEAT FT VERT DN DRV
DRV SEAT FT VERT UP DRV
POSI SENS GND
DRV SEAT RCLNR UP DRV
DRV SEAT RCLNR DN DRV
DRV SEAT RCLNR POSI SENS
DRIVER MEMORY SEAT MODULE (UNDER DRIVER'S SEAT)
DRIVER RECLINER SEAT MOTOR
DRIVER FRONT VERTICAL SEAT MOTOR
DRIVER HORIZONTAL SEAT MOTOR
DRIVER REAR VERTICAL SEAT MOTOR
419518

Fig. 60: Memory Seat Circuit

NAVIGATION

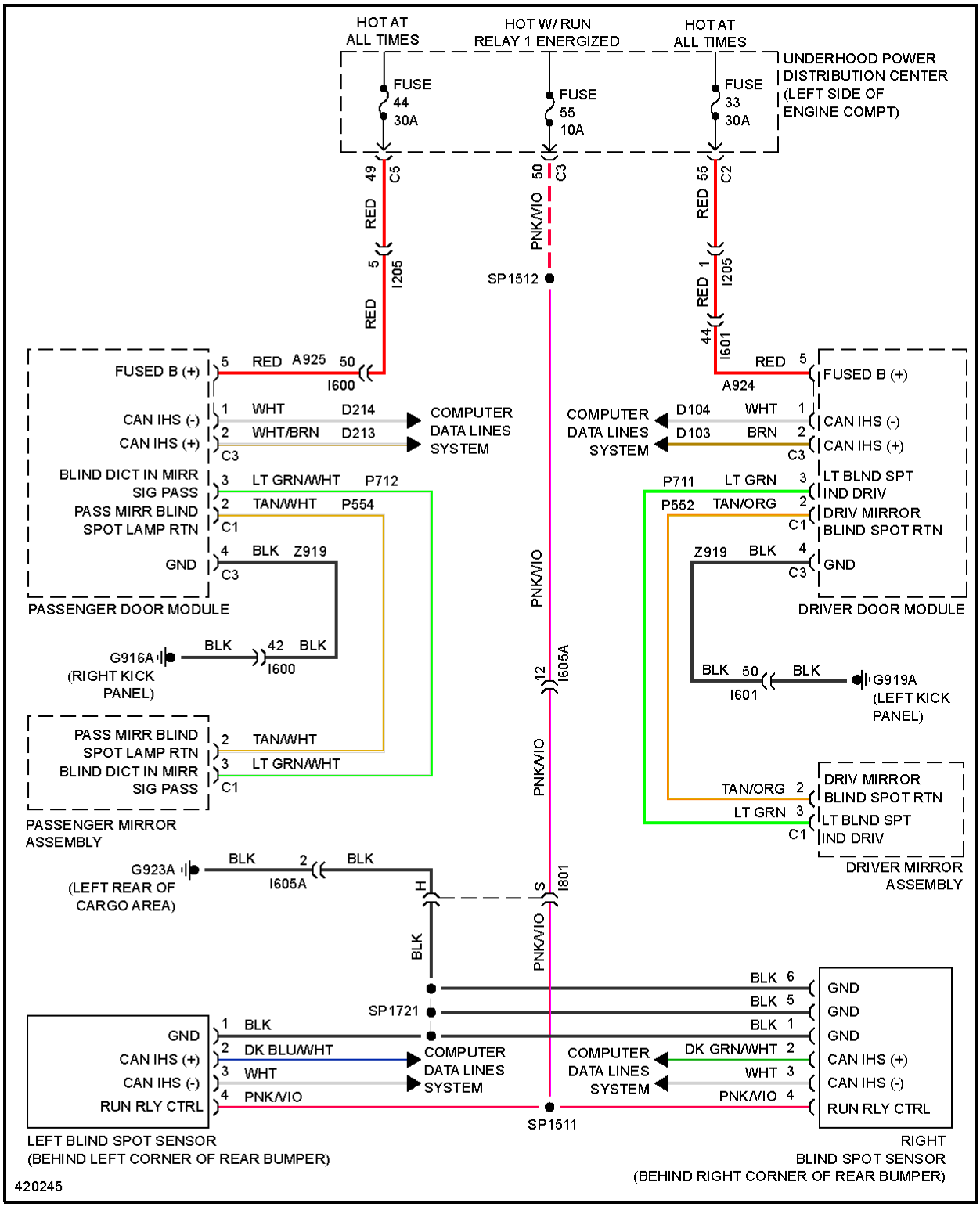
HOT AT ALL TIMES
HOT W/ RUN RELAY 1 ENERGIZED
HOT AT ALL TIMES
UNDERHOOD POWER DISTRIBUTION CENTER (LEFT SIDE OF ENGINE COMPT)
FUSE 44 30A
FUSE 55 10A
FUSE 33 30A
49 C5
50 C3
55 C2
RED
PNK/VIO
RED
5 I205
SP1512
RED 1 I205
44 I601
FUSED B (+)
5 RED A925 50
I600
RED 5
A924
FUSED B (+)
CAN IHS (-)
CAN IHS (+)
1 WHT D214
2 WHT/BRN D213
C3
COMPUTER DATA LINES SYSTEM
COMPUTER DATA LINES SYSTEM
D104 WHT 1
D103 BRN 2
C3
CAN IHS (-)
CAN IHS (+)
BLIND DICT IN MIRR SIG PASS
PASS MIRR BLIND SPOT LAMP RTN
GND
3 LT GRN/WHT P712
2 TAN/WHT P554
C1
4 BLK Z919
C3
PASSENGER DOOR MODULE
P711 LT GRN 3
P552 TAN/ORG 2
C1
LT BLND SPT IND DRIV
DRIV MIRROR BLIND SPOT RTN
Z919 BLK 4
C3
GND
DRIVER DOOR MODULE
G916A
(RIGHT KICK PANEL)
BLK
42 BLK
I600
12 I605A
BLK 50 BLK
I601
G919A
(LEFT KICK PANEL)
PASS MIRR BLIND SPOT LAMP RTN
BLIND DICT IN MIRR SIG PASS
2 TAN/WHT
3 LT GRN/WHT
C1
PASSENGER MIRROR ASSEMBLY
TAN/ORG 2
LT GRN 3
C1
DRIV MIRROR BLIND SPOT RTN
LT BLND SPT IND DRIV
DRIVER MIRROR ASSEMBLY
G923A
(LEFT REAR OF CARGO AREA)
BLK 2 BLK
I605A
H
S
I801
BLK
PNK/VIO
BLK 6
BLK 5
BLK 1
SP1721
GND
CAN IHS (+)
CAN IHS (-)
RUN RLY CTRL
1 BLK
2 DK BLU/WHT
3 WHT
4 PNK/VIO
COMPUTER DATA LINES SYSTEM
COMPUTER DATA LINES SYSTEM
DK GRN/WHT 2
WHT 3
PNK/VIO 4
GND
GND
GND
CAN IHS (+)
CAN IHS (-)
RUN RLY CTRL
SP1511
LEFT BLIND SPOT SENSOR (BEHIND LEFT CORNER OF REAR BUMPER)
RIGHT BLIND SPOT SENSOR (BEHIND RIGHT CORNER OF REAR BUMPER)
420245

Fig. 61: Blind Spot Monitoring Circuit

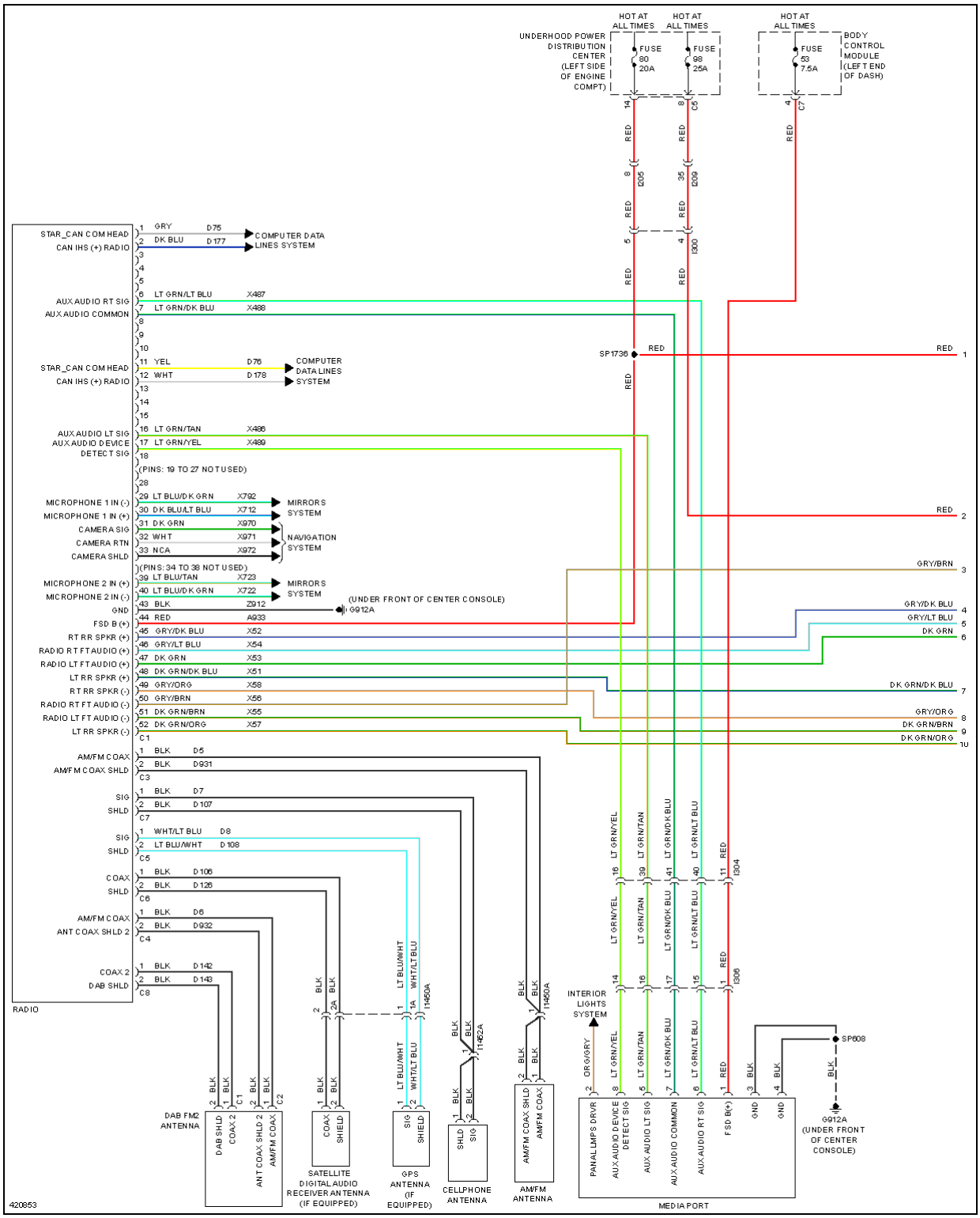
UNDERHOOD POWER DISTRIBUTION CENTER (LEFT SIDE OF ENGINE COMPT)
HOT AT ALL TIMES
FUSE 80 20A
FUSE 98 25A
BODY CONTROL MODULE (LEFT END OF DASH)
FUSE 53 7.5A
STAR_CAN COM HEAD
CAN IHS (+) RADIO
COMPUTER DATA LINES SYSTEM
AUX AUDIO RT SIG
AUX AUDIO COMMON
AUX AUDIO LT SIG
AUX AUDIO DEVICE DETECT SIG
(PINS: 19 TO 27 NOT USED)
MICROPHONE 1 IN (-)
MICROPHONE 1 IN (+)
CAMERA SIG
CAMERA RTN
CAMERA SHLD
MIRRORS SYSTEM
NAVIGATION SYSTEM
(PINS: 34 TO 38 NOT USED)
MICROPHONE 2 IN (+)
MICROPHONE 2 IN (-)
GND
FSD B (+)
RT RR SPKR (+)
RADIO RT FT AUDIO (+)
RADIO LT FT AUDIO (+)
LT RR SPKR (+)
RT RR SPKR (-)
RADIO RT FT AUDIO (-)
RADIO LT FT AUDIO (-)
LT RR SPKR (-)
(UNDER FRONT OF CENTER CONSOLE)
G912A
AM/FM COAX
AM/FM COAX SHLD
SIG
SHLD
COAX
AM/FM COAX ANT COAX SHLD 2
COAX 2
DAB SHLD
RADIO
DAB FM2 ANTENNA
SATELLITE DIGITAL AUDIO RECEIVER ANTENNA (IF EQUIPPED)
GPS ANTENNA (IF EQUIPPED)
CELLPHONE ANTENNA
AM/FM ANTENNA
INTERIOR LIGHTS SYSTEM
PANAL LMPS DRVR
AUX AUDIO DEVICE DETECT SIG
AUX AUDIO LT SIG
AUX AUDIO COMMON
AUX AUDIO RT SIG
FSD B(+)
GND
MEDIA PORT
SP608
G912A (UNDER FRONT OF CENTER CONSOLE)
420853

Fig. 62: Navigation Circuit, Premium (1 of 3)

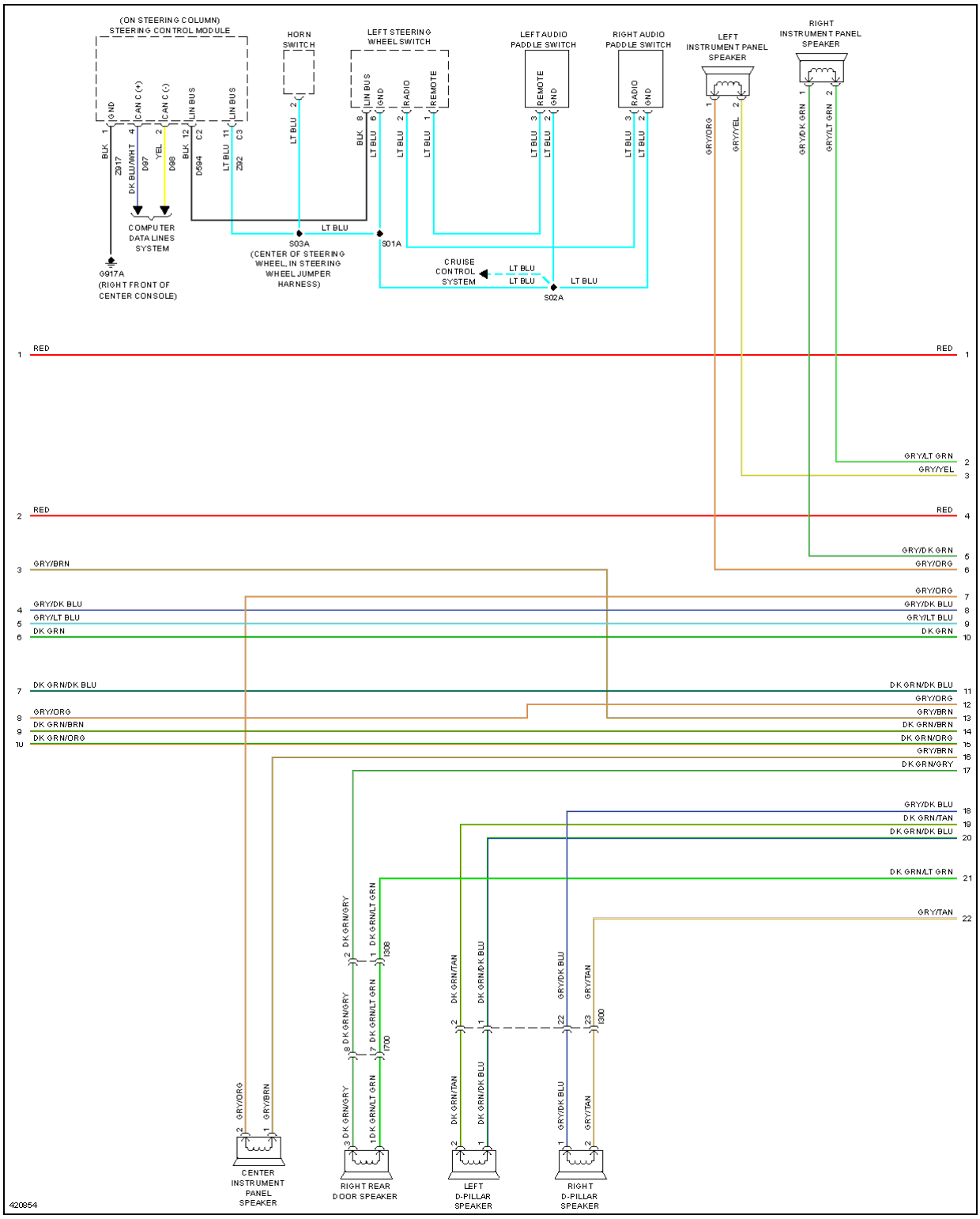
(ON STEERING COLUMN)
STEERING CONTROL MODULE
HORN SWITCH
LEFT STEERING WHEEL SWITCH
LEFT AUDIO PADDLE SWITCH
RIGHT AUDIO PADDLE SWITCH
LEFT INSTRUMENT PANEL SPEAKER
RIGHT INSTRUMENT PANEL SPEAKER
COMPUTER DATA LINES SYSTEM
G917A (RIGHT FRONT OF CENTER CONSOLE)
S03A (CENTER OF STEERING WHEEL, IN STEERING WHEEL JUMPER HARNESS)
S01A
S02A
CRUISE CONTROL SYSTEM
CENTER INSTRUMENT PANEL SPEAKER
RIGHT REAR DOOR SPEAKER
LEFT D-PILLAR SPEAKER
RIGHT D-PILLAR SPEAKER
420854

Fig. 63: Navigation Circuit, Premium (2 of 3)

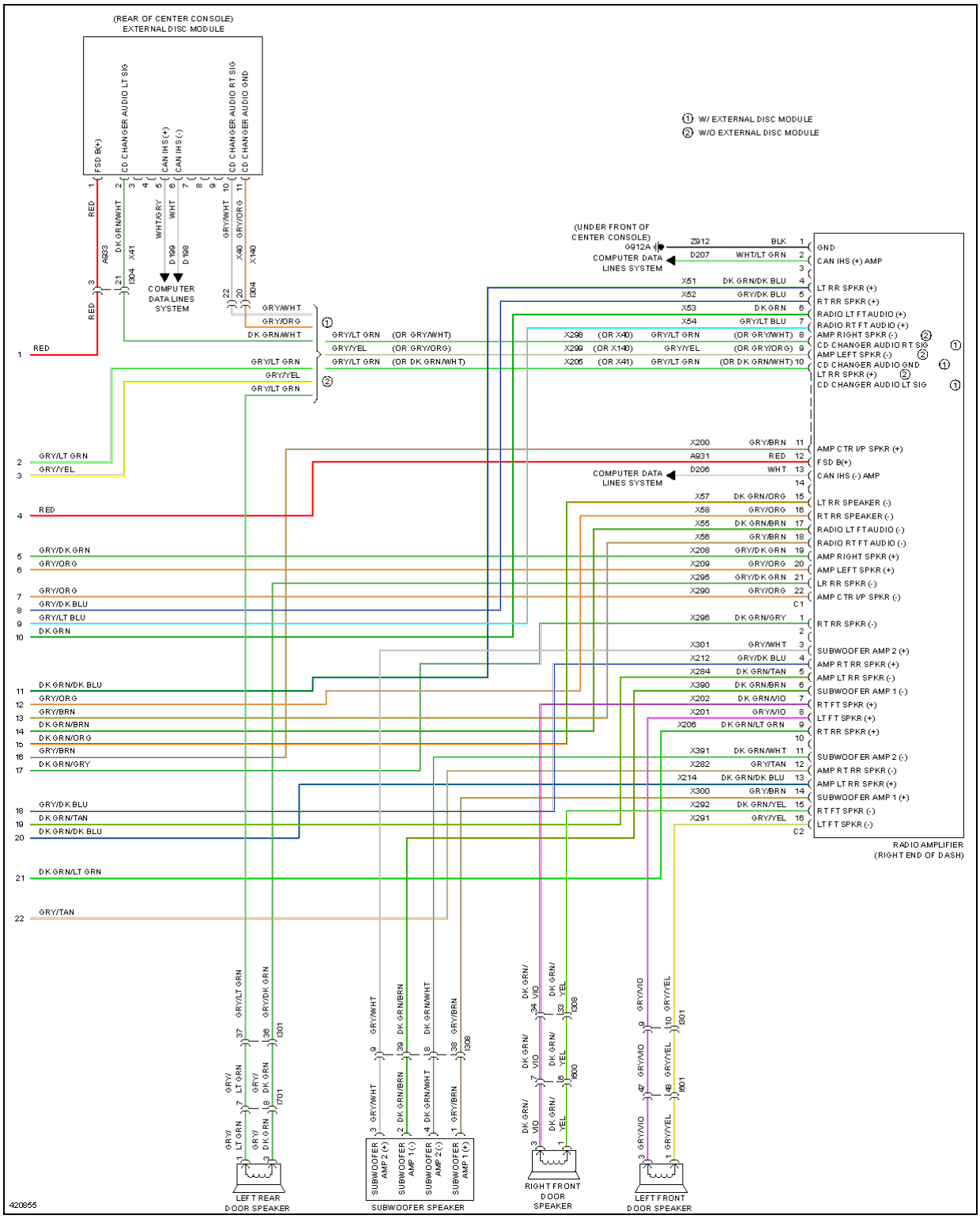
(REAR OF CENTER CONSOLE)
EXTERNAL DISC MODULE
FSD B(+)
CD CHANGER AUDIO LT SIG
CAN IHS (+)
CAN IHS (-)
CD CHANGER AUDIO RT SIG
CD CHANGER AUDIO GND
① W/ EXTERNAL DISC MODULE
② W/O EXTERNAL DISC MODULE
COMPUTER DATA LINES SYSTEM
(UNDER FRONT OF CENTER CONSOLE)
G912A
Z912 BLK 1 GND
D207 WHT/LT GRN 2 CAN IHS (+) AMP
3
X51 DK GRN/DK BLU 4 LT RR SPKR (+)
X52 GRY/DK BLU 5 RT RR SPKR (+)
X53 DK GRN 6 RADIO LT FT AUDIO (+)
X54 GRY/LT BLU 7 RADIO RT FT AUDIO (+)
X298 (OR X40) GRY/LT GRN (OR GRY/WHT) 8 AMP RIGHT SPKR (-) ②
X299 (OR X140) GRY/YEL (OR GRY/ORG) 9 CD CHANGER AUDIO RT SIG ①
X205 (OR X41) GRY/LT GRN (OR DK GRN/WHT) 10 AMP LEFT SPKR (-) ②
CD CHANGER AUDIO GND ①
LT RR SPKR (+) ②
CD CHANGER AUDIO LT SIG ①
X200 GRY/BRN 11 AMP CTR I/P SPKR (+)
A931 RED 12 FSD B(+)
D206 WHT 13 CAN IHS (-) AMP
14
X57 DK GRN/ORG 15 LT RR SPEAKER (-)
X58 GRY/ORG 16 RT RR SPEAKER (-)
X55 DK GRN/BRN 17 RADIO LT FT AUDIO (-)
X56 GRY/BRN 18 RADIO RT FT AUDIO (-)
X208 GRY/DK GRN 19 AMP RIGHT SPKR (+)
X209 GRY/ORG 20 AMP LEFT SPKR (+)
X295 GRY/DK GRN 21 LR RR SPKR (-)
X290 GRY/ORG 22 AMP CTR I/P SPKR (-)
C1
X296 DK GRN/GRY 1 RT RR SPKR (-)
2
X301 GRY/WHT 3 SUBWOOFER AMP 2 (+)
X212 GRY/DK BLU 4 AMP RT RR SPKR (+)
X284 DK GRN/TAN 5 AMP LT RR SPKR (-)
X390 DK GRN/BRN 6 SUBWOOFER AMP 1 (-)
X202 DK GRN/VIO 7 RT FT SPKR (+)
X201 GRY/VIO 8 LT FT SPKR (+)
X206 DK GRN/LT GRN 9 RT RR SPKR (+)
10
X391 DK GRN/WHT 11 SUBWOOFER AMP 2 (-)
X282 GRY/TAN 12 AMP RT RR SPKR (-)
X214 DK GRN/DK BLU 13 AMP LT RR SPKR (+)
X300 GRY/BRN 14 SUBWOOFER AMP 1 (+)
X292 DK GRN/YEL 15 RT FT SPKR (-)
X291 GRY/YEL 16 LT FT SPKR (-)
C2
RADIO AMPLIFIER
(RIGHT END OF DASH)
LEFT REAR DOOR SPEAKER
SUBWOOFER SPEAKER
RIGHT FRONT DOOR SPEAKER
LEFT FRONT DOOR SPEAKER
420855

Fig. 64: Navigation Circuit, Premium (3 of 3)

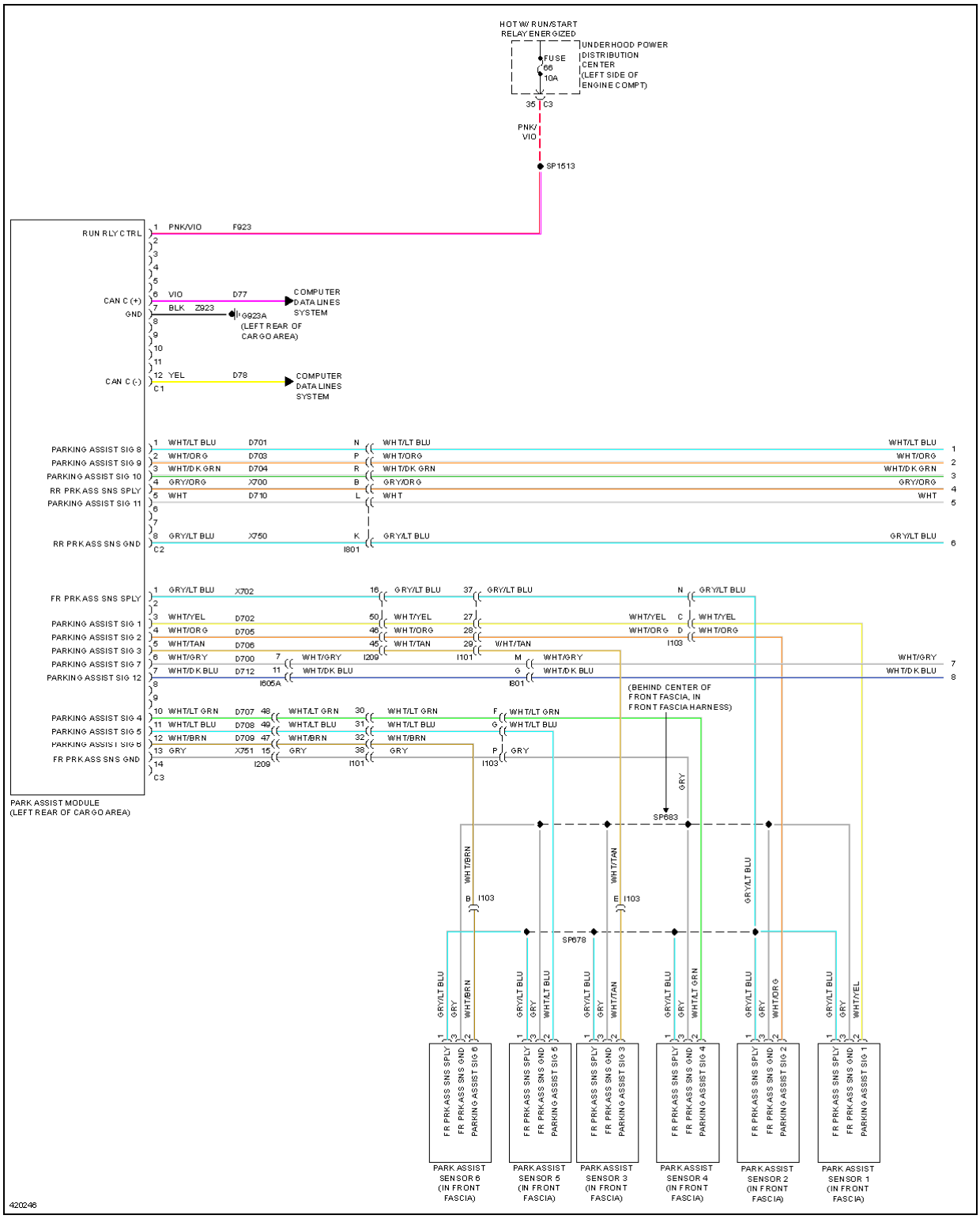
HOT W/ RUN/START RELAY ENERGIZED
FUSE 66 10A
UNDERHOOD POWER DISTRIBUTION CENTER (LEFT SIDE OF ENGINE COMPT)
35 C3
PNK/VIO
SP1513
RUN RLY CTRL
PNK/VIO F923
CAN C (+)
VIO D77
COMPUTER DATA LINES SYSTEM
GND
BLK Z923
G923A (LEFT REAR OF CARGO AREA)
CAN C (-)
YEL D78
C1
PARKING ASSIST SIG 8
PARKING ASSIST SIG 9
PARKING ASSIST SIG 10
RR PRK ASS SNS SPLY
PARKING ASSIST SIG 11
RR PRK ASS SNS GND
C2
FR PRK ASS SNS SPLY
PARKING ASSIST SIG 1
PARKING ASSIST SIG 2
PARKING ASSIST SIG 3
PARKING ASSIST SIG 7
PARKING ASSIST SIG 12
PARKING ASSIST SIG 4
PARKING ASSIST SIG 5
PARKING ASSIST SIG 6
FR PRK ASS SNS GND
C3
PARK ASSIST MODULE (LEFT REAR OF CARGO AREA)
(BEHIND CENTER OF FRONT FASCIA, IN FRONT FASCIA HARNESS)
SP683
SP678
PARK ASSIST SENSOR 6 (IN FRONT FASCIA)
PARK ASSIST SENSOR 5 (IN FRONT FASCIA)
PARK ASSIST SENSOR 3 (IN FRONT FASCIA)
PARK ASSIST SENSOR 4 (IN FRONT FASCIA)
PARK ASSIST SENSOR 2 (IN FRONT FASCIA)
PARK ASSIST SENSOR 1 (IN FRONT FASCIA)
420246

Fig. 65: Parking Assistant Circuit (1 of 2)

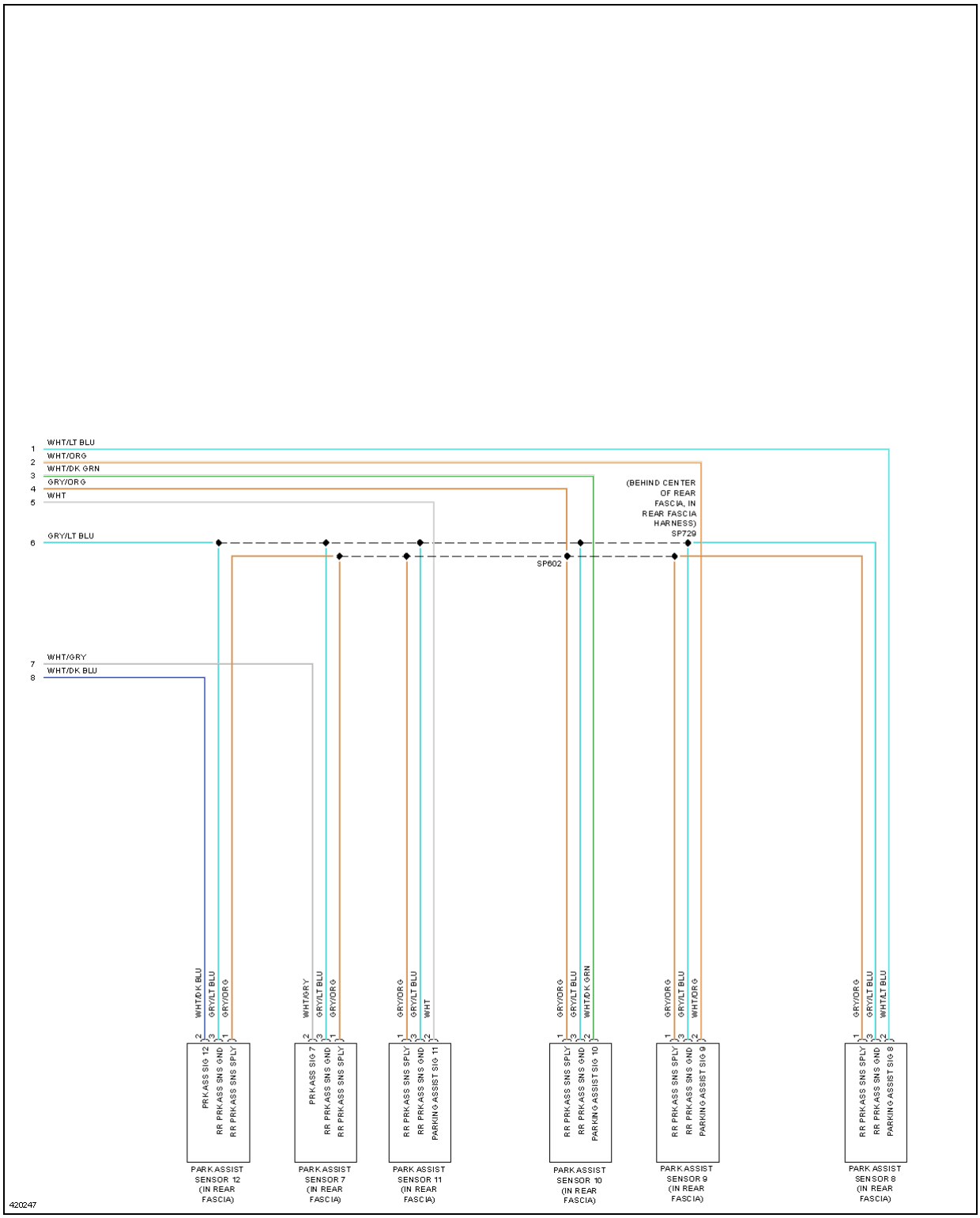
1 WHT/LT BLU
2 WHT/ORG
3 WHT/DK GRN
4 GRY/ORG
5 WHT
6 GRY/LT BLU
7 WHT/GRY
8 WHT/DK BLU
(BEHIND CENTER OF REAR FASCIA, IN REAR FASCIA HARNESS)
SP729
SP602
PARK ASSIST SENSOR 12 (IN REAR FASCIA)
PARK ASSIST SENSOR 7 (IN REAR FASCIA)
PARK ASSIST SENSOR 11 (IN REAR FASCIA)
PARK ASSIST SENSOR 10 (IN REAR FASCIA)
PARK ASSIST SENSOR 9 (IN REAR FASCIA)
PARK ASSIST SENSOR 8 (IN REAR FASCIA)
420247

Fig. 66: Parking Assistant Circuit (2 of 2)

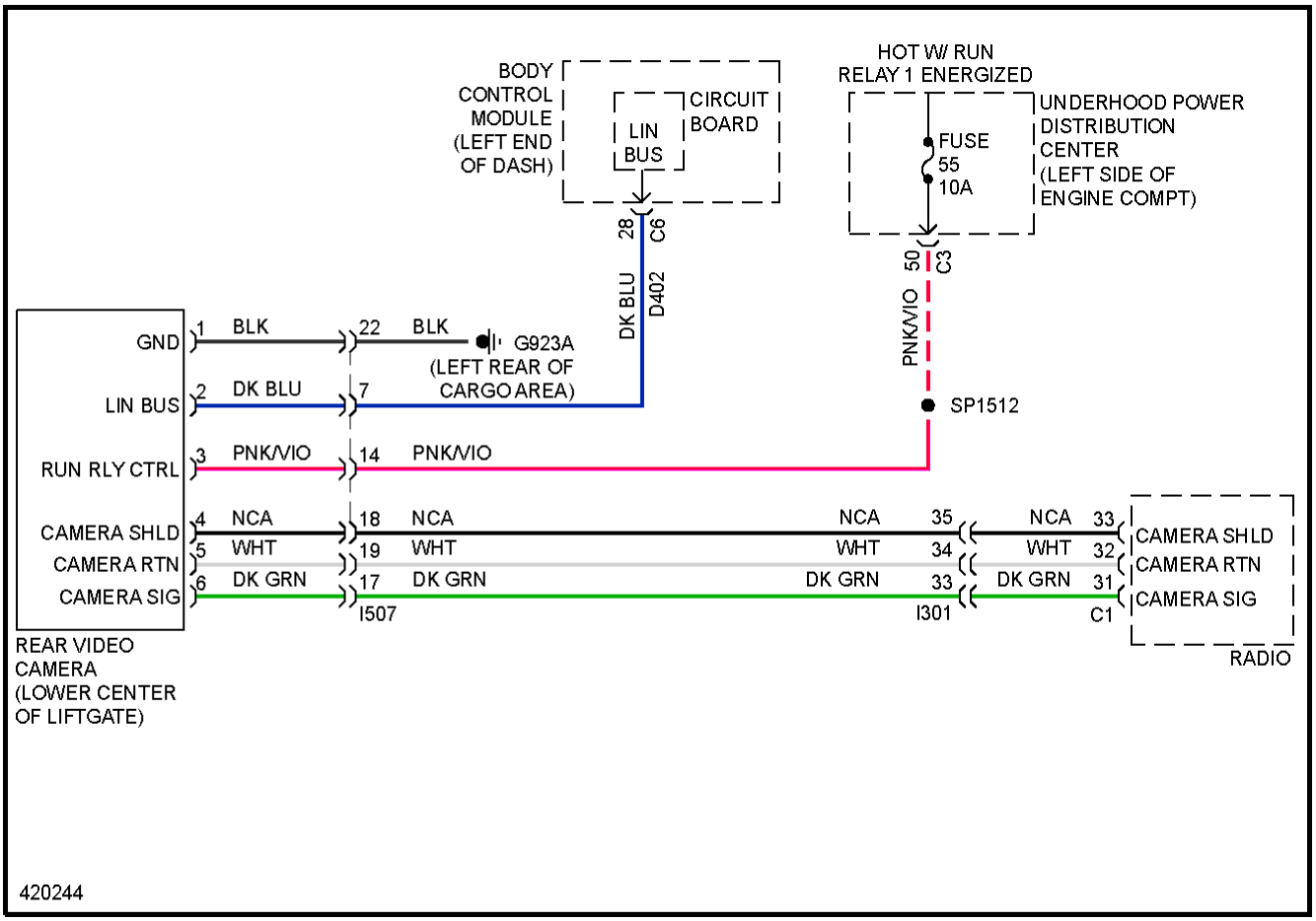
BODY CONTROL MODULE (LEFT END OF DASH)
CIRCUIT BOARD
LIN BUS
HOT W/ RUN RELAY 1 ENERGIZED
FUSE 55 10A
UNDERHOOD POWER DISTRIBUTION CENTER (LEFT SIDE OF ENGINE COMPT)
28 C6
DK BLU D402
50 C3
PNK/VIO
GND
1 BLK
22 BLK
G923A (LEFT REAR OF CARGO AREA)
LIN BUS
2 DK BLU
7
SP1512
RUN RLY CTRL
3 PNK/VIO
14 PNK/VIO
CAMERA SHLD
4 NCA
18 NCA
NCA 35
NCA 33
CAMERA RTN
5 WHT
19 WHT
WHT 34
WHT 32
CAMERA SIG
6 DK GRN
17 DK GRN
DK GRN 33
DK GRN 31
I507
I301
C1
CAMERA SHLD
CAMERA RTN
CAMERA SIG
RADIO
REAR VIDEO CAMERA (LOWER CENTER OF LIFTGATE)
420244

Fig. 67: Rear Camera Circuit

POWER DISTRIBUTION

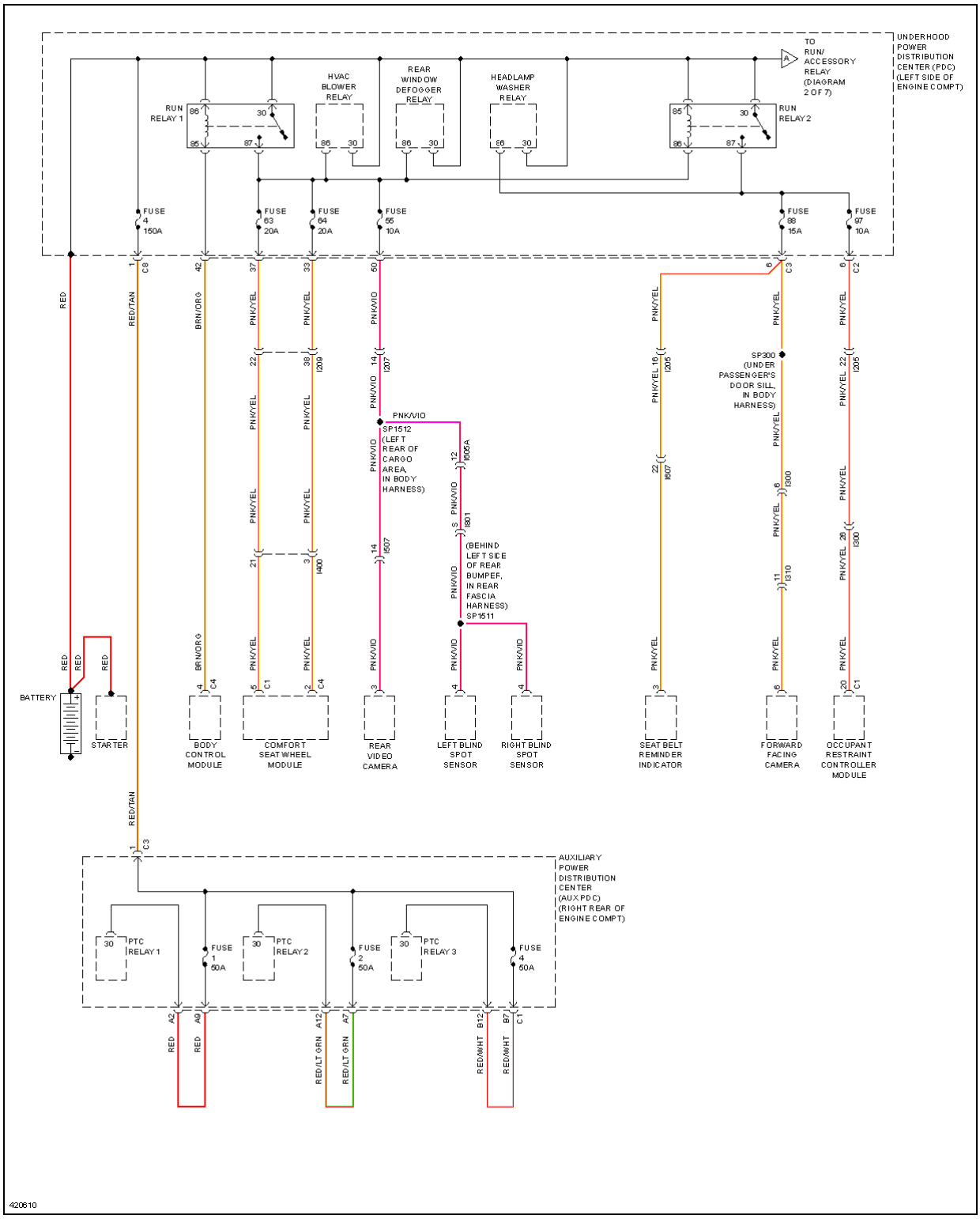
UNDERHOOD POWER DISTRIBUTION CENTER (PDC) (LEFT SIDE OF ENGINE COMPT)
TO RUN/ ACCESSORY RELAY (DIAGRAM 2 OF 7)
RUN RELAY 1
HVAC BLOWER RELAY
REAR WINDOW DEFOGGER RELAY
HEADLAMP WASHER RELAY
RUN RELAY 2
FUSE 4 150A
FUSE 63 20A
FUSE 64 20A
FUSE 55 10A
FUSE 88 15A
FUSE 97 10A
SP300 (UNDER PASSENGER'S DOOR SILL, IN BODY HARNESS)
SP1512 (LEFT REAR OF CARGO AREA, IN BODY HARNESS)
(BEHIND LEFT SIDE OF REAR BUMPER, IN REAR FASCIA HARNESS) SP1511
BATTERY
STARTER
BODY CONTROL MODULE
COMFORT SEAT WHEEL MODULE
REAR VIDEO CAMERA
LEFT BLIND SPOT SENSOR
RIGHT BLIND SPOT SENSOR
SEAT BELT REMINDER INDICATOR
FORWARD FACING CAMERA
OCCUPANT RESTRAINT CONTROLLER MODULE
AUXILIARY POWER DISTRIBUTION CENTER (AUX PDC) (RIGHT REAR OF ENGINE COMPT)
PTC RELAY 1
PTC RELAY 2
PTC RELAY 3
FUSE 1 50A
FUSE 2 50A
FUSE 4 50A
420610

Fig. 68: Power Distribution Circuit (1 of 7)

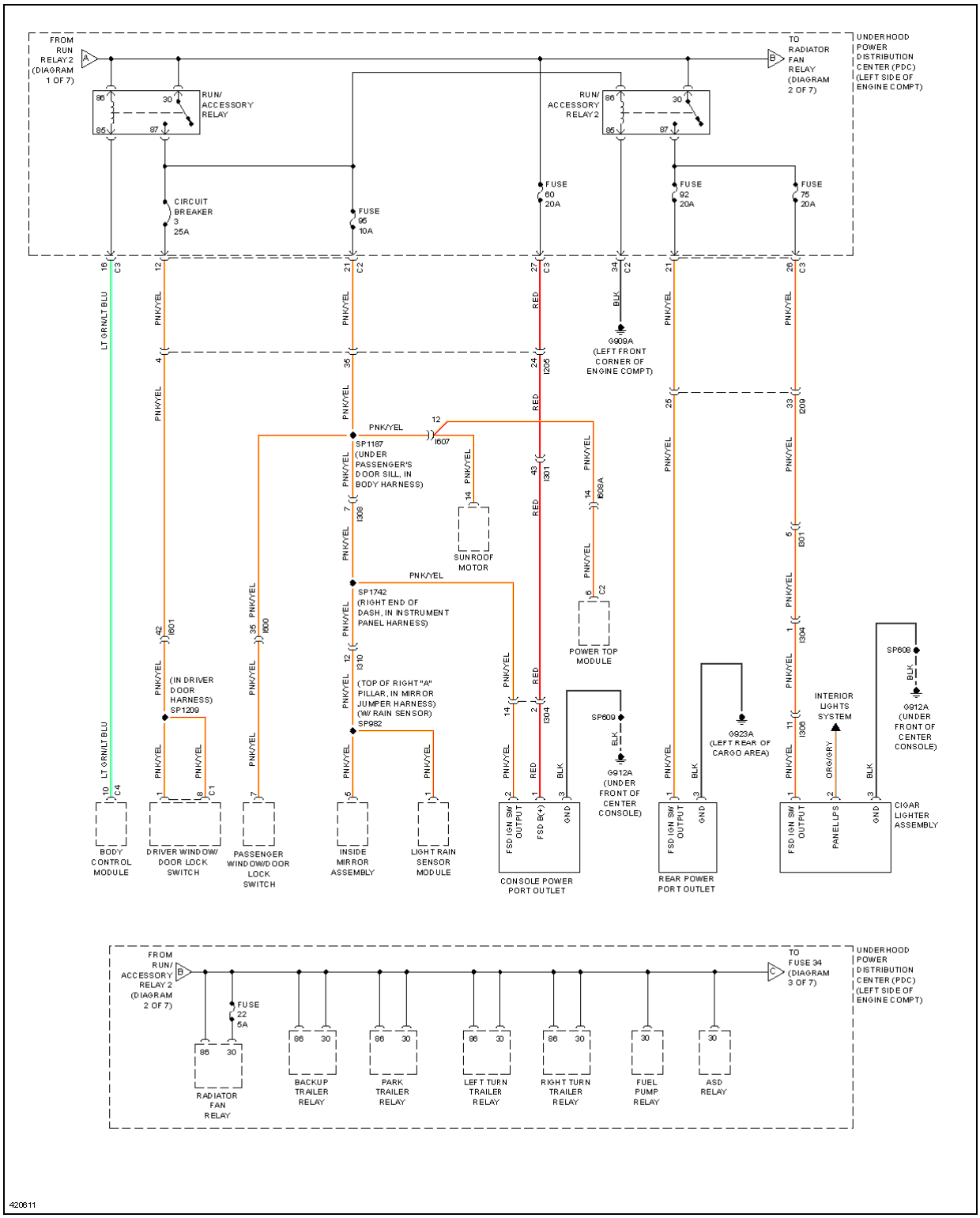
FROM RUN RELAY 2 (DIAGRAM 1 OF 7)
TO RADIATOR FAN RELAY (DIAGRAM 2 OF 7)
UNDERHOOD POWER DISTRIBUTION CENTER (PDC) (LEFT SIDE OF ENGINE COMPT)
RUN/ ACCESSORY RELAY
RUN/ ACCESSORY RELAY 2
CIRCUIT BREAKER 3 25A
FUSE 95 10A
FUSE 60 20A
FUSE 92 20A
FUSE 75 20A
G909A (LEFT FRONT CORNER OF ENGINE COMPT)
SP1187 (UNDER PASSENGER'S DOOR SILL, IN BODY HARNESS)
SUNROOF MOTOR
SP1742 (RIGHT END OF DASH, IN INSTRUMENT PANEL HARNESS)
POWER TOP MODULE
(IN DRIVER DOOR HARNESS) SP1209
(TOP OF RIGHT "A" PILLAR, IN MIRROR JUMPER HARNESS) (W/ RAIN SENSOR) SP982
SP609
G912A (UNDER FRONT OF CENTER CONSOLE)
G923A (LEFT REAR OF CARGO AREA)
INTERIOR LIGHTS SYSTEM
SP608
G912A (UNDER FRONT OF CENTER CONSOLE)
BODY CONTROL MODULE
DRIVER WINDOW/ DOOR LOCK SWITCH
PASSENGER WINDOW/DOOR LOCK SWITCH
INSIDE MIRROR ASSEMBLY
LIGHT RAIN SENSOR MODULE
CONSOLE POWER PORT OUTLET
REAR POWER PORT OUTLET
CIGAR LIGHTER ASSEMBLY
FSD IGN SW OUTPUT
FSD B(+)
GND
PANEL LPS
FROM RUN/ ACCESSORY RELAY 2 (DIAGRAM 2 OF 7)
TO FUSE 34 (DIAGRAM 3 OF 7)
FUSE 22 5A
RADIATOR FAN RELAY
BACKUP TRAILER RELAY
PARK TRAILER RELAY
LEFT TURN TRAILER RELAY
RIGHT TURN TRAILER RELAY
FUEL PUMP RELAY
ASD RELAY
420611

Fig. 69: Power Distribution Circuit (2 of 7)

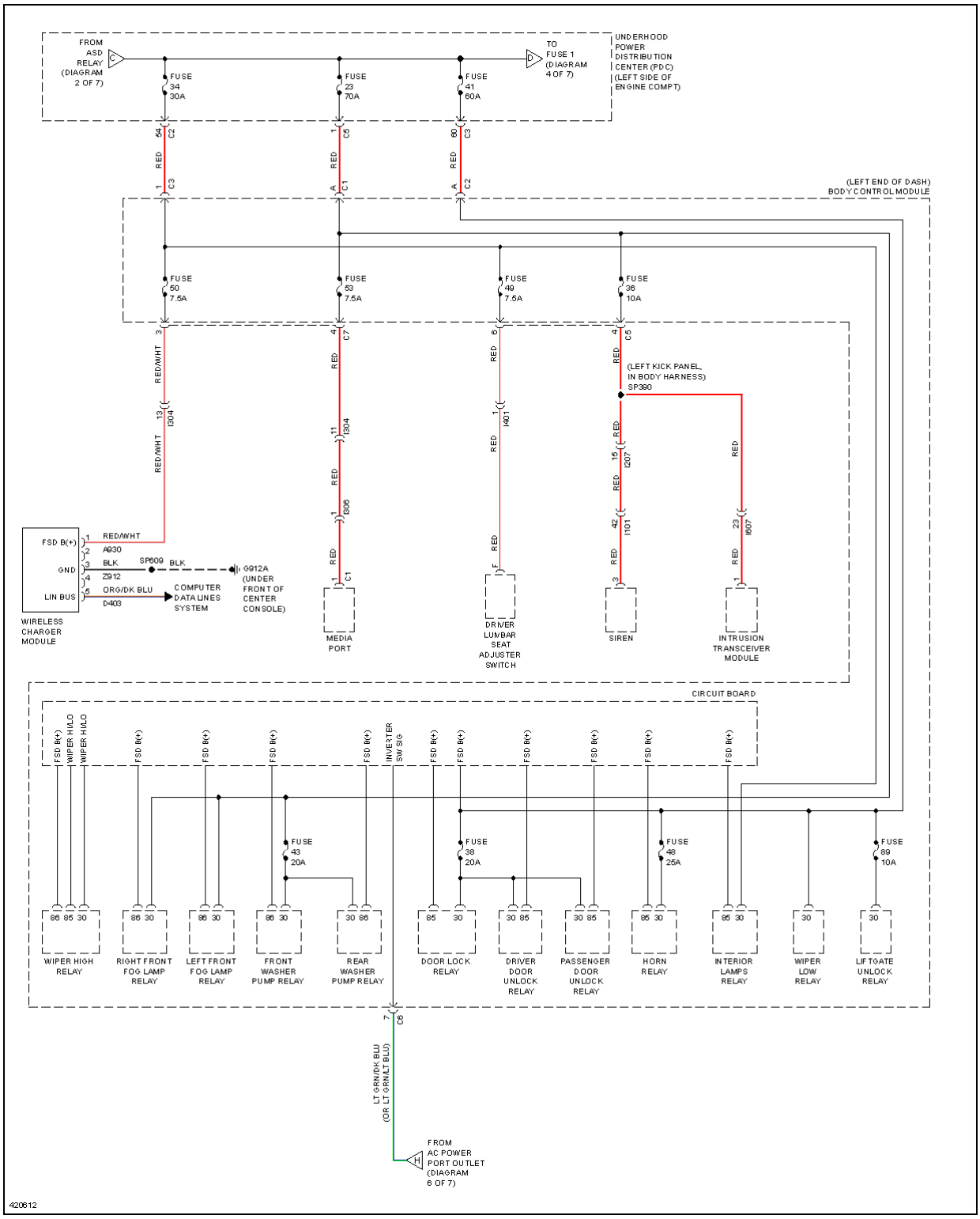
FROM ASD RELAY (DIAGRAM 2 OF 7)
FUSE 34 30A
FUSE 23 70A
FUSE 41 60A
TO FUSE 1 (DIAGRAM 4 OF 7)
UNDERHOOD POWER DISTRIBUTION CENTER (PDC) (LEFT SIDE OF ENGINE COMPT)
(LEFT END OF DASH) BODY CONTROL MODULE
FUSE 50 7.5A
FUSE 53 7.5A
FUSE 49 7.5A
FUSE 36 10A
(LEFT KICK PANEL, IN BODY HARNESS) SP390
RED/WHT
RED
FSD B(+)
GND
LIN BUS
A930
SP609
BLK
Z912
ORG/DK BLU
D403
COMPUTER DATA LINES SYSTEM
G912A (UNDER FRONT OF CENTER CONSOLE)
WIRELESS CHARGER MODULE
MEDIA PORT
DRIVER LUMBAR SEAT ADJUSTER SWITCH
SIREN
INTRUSION TRANSCEIVER MODULE
CIRCUIT BOARD
WIPER HI/LO
INVERTER SW SIG
FUSE 43 20A
FUSE 38 20A
FUSE 48 25A
FUSE 89 10A
WIPER HIGH RELAY
RIGHT FRONT FOG LAMP RELAY
LEFT FRONT FOG LAMP RELAY
FRONT WASHER PUMP RELAY
REAR WASHER PUMP RELAY
DOOR LOCK RELAY
DRIVER DOOR UNLOCK RELAY
PASSENGER DOOR UNLOCK RELAY
HORN RELAY
INTERIOR LAMPS RELAY
WIPER LOW RELAY
LIFTGATE UNLOCK RELAY
LT GRN/DK BLU (OR LT GRN/LT BLU)
FROM AC POWER PORT OUTLET (DIAGRAM 6 OF 7)
420612

Fig. 70: Power Distribution Circuit (3 of 7)

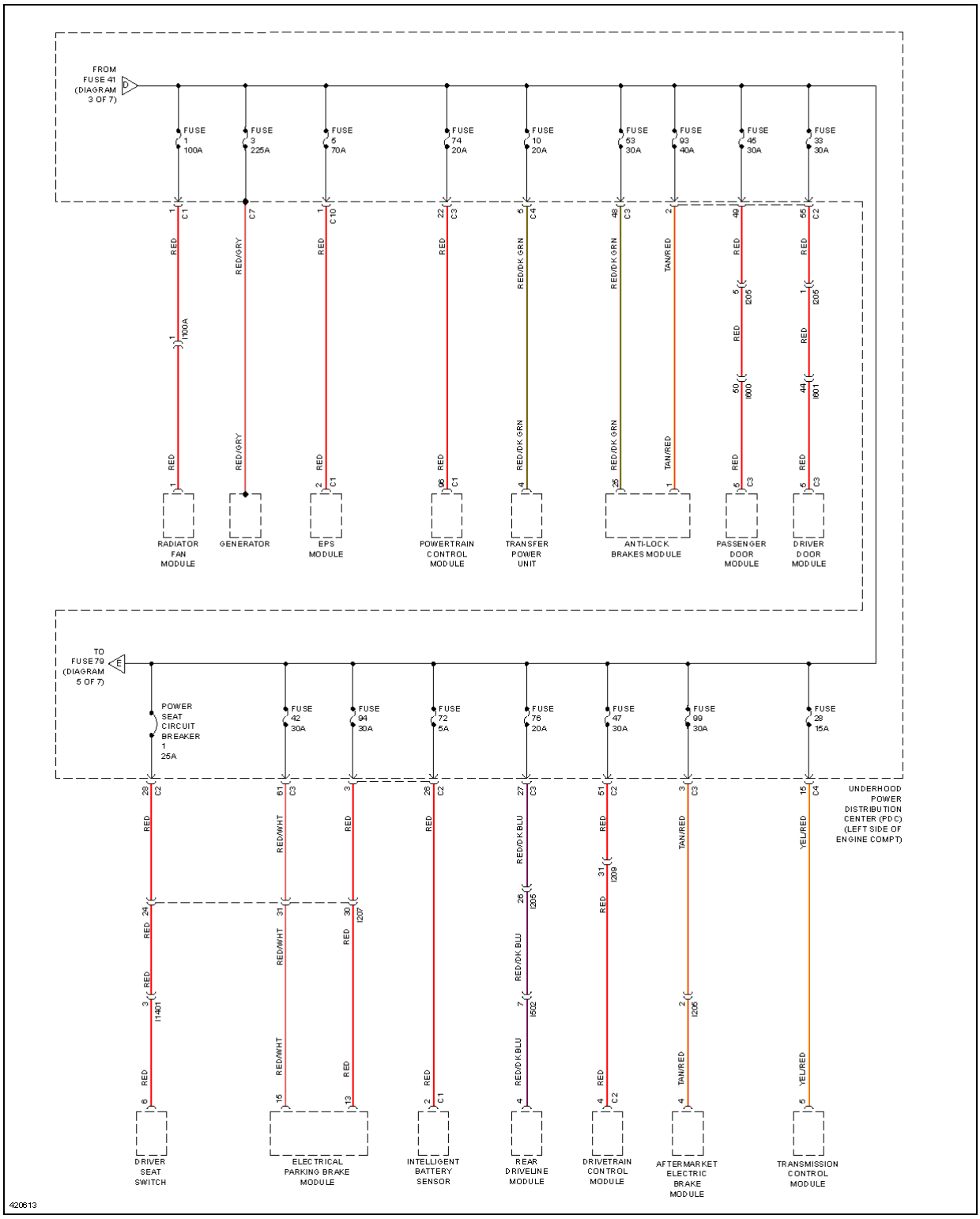
FROM FUSE 41 (DIAGRAM 3 OF 7)
FUSE 1 100A
FUSE 3 225A
FUSE 5 70A
FUSE 74 20A
FUSE 10 20A
FUSE 53 30A
FUSE 93 40A
FUSE 45 30A
FUSE 33 30A
RADIATOR FAN MODULE
GENERATOR
EPS MODULE
POWERTRAIN CONTROL MODULE
TRANSFER POWER UNIT
ANTI-LOCK BRAKES MODULE
PASSENGER DOOR MODULE
DRIVER DOOR MODULE
TO FUSE79 (DIAGRAM 5 OF 7)
POWER SEAT CIRCUIT BREAKER 1 25A
FUSE 42 30A
FUSE 94 30A
FUSE 72 5A
FUSE 76 20A
FUSE 47 30A
FUSE 99 30A
FUSE 28 15A
UNDERHOOD POWER DISTRIBUTION CENTER (PDC) (LEFT SIDE OF ENGINE COMPT)
DRIVER SEAT SWITCH
ELECTRICAL PARKING BRAKE MODULE
INTELLIGENT BATTERY SENSOR
REAR DRIVELINE MODULE
DRIVETRAIN CONTROL MODULE
AFTERMARKET ELECTRIC BRAKE MODULE
TRANSMISSION CONTROL MODULE
420613

Fig. 71: Power Distribution Circuit (4 of 7)

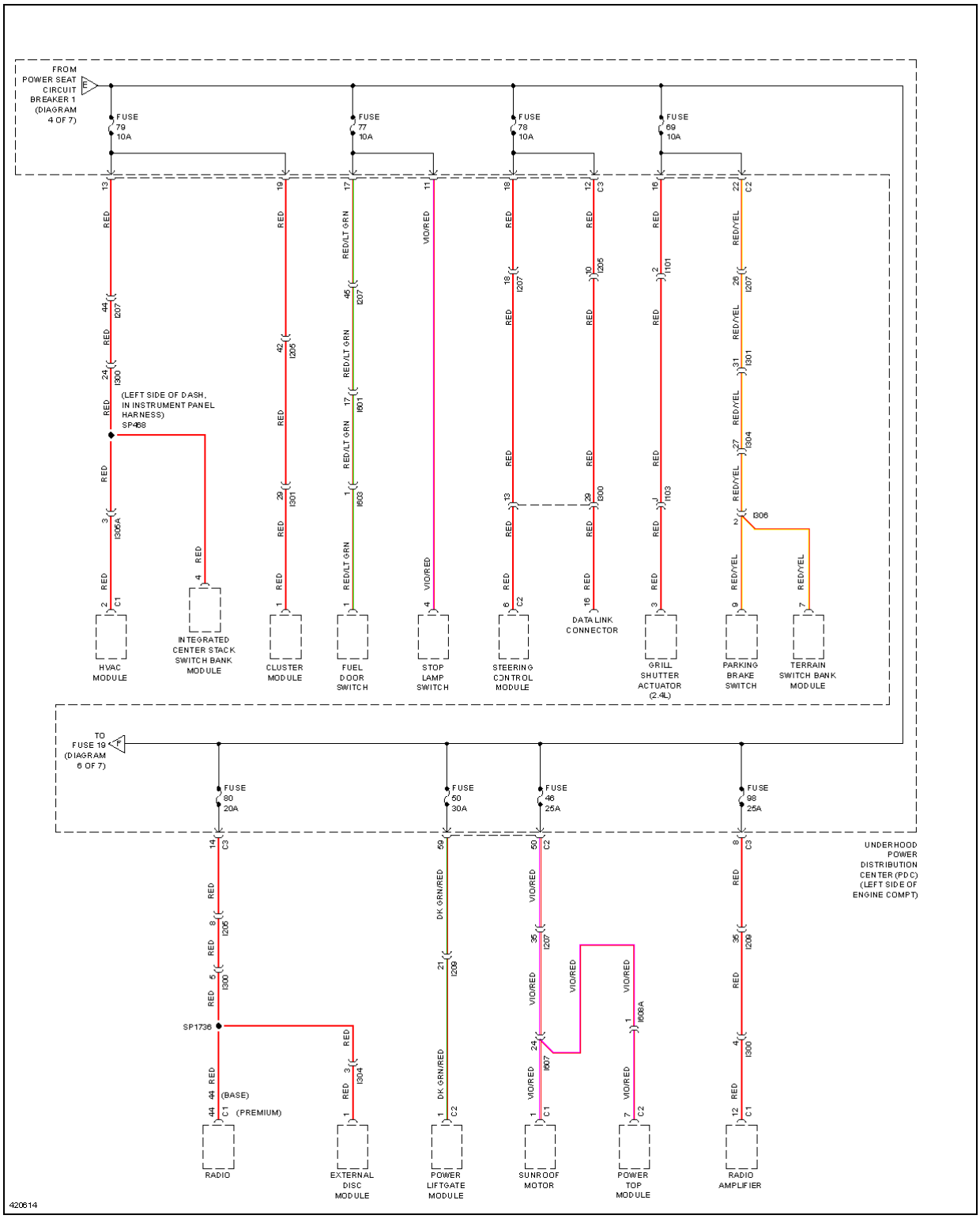
FROM POWER SEAT CIRCUIT BREAKER 1 (DIAGRAM 4 OF 7)
FUSE 79 10A
FUSE 77 10A
FUSE 78 10A
FUSE 69 10A
(LEFT SIDE OF DASH, IN INSTRUMENT PANEL HARNESS) SP468
HVAC MODULE
INTEGRATED CENTER STACK SWITCH BANK MODULE
CLUSTER MODULE
FUEL DOOR SWITCH
STOP LAMP SWITCH
STEERING CONTROL MODULE
DATA LINK CONNECTOR
GRILL SHUTTER ACTUATOR (2.4L)
PARKING BRAKE SWITCH
TERRAIN SWITCH BANK MODULE
TO FUSE 19 (DIAGRAM 6 OF 7)
FUSE 80 20A
FUSE 50 30A
FUSE 46 25A
FUSE 98 25A
UNDERHOOD POWER DISTRIBUTION CENTER (PDC) (LEFT SIDE OF ENGINE COMPT)
SP1736
(BASE)
(PREMIUM)
RADIO
EXTERNAL DISC MODULE
POWER LIFTGATE MODULE
SUNROOF MOTOR
POWER TOP MODULE
RADIO AMPLIFIER
420614

Fig. 72: Power Distribution Circuit (5 of 7)

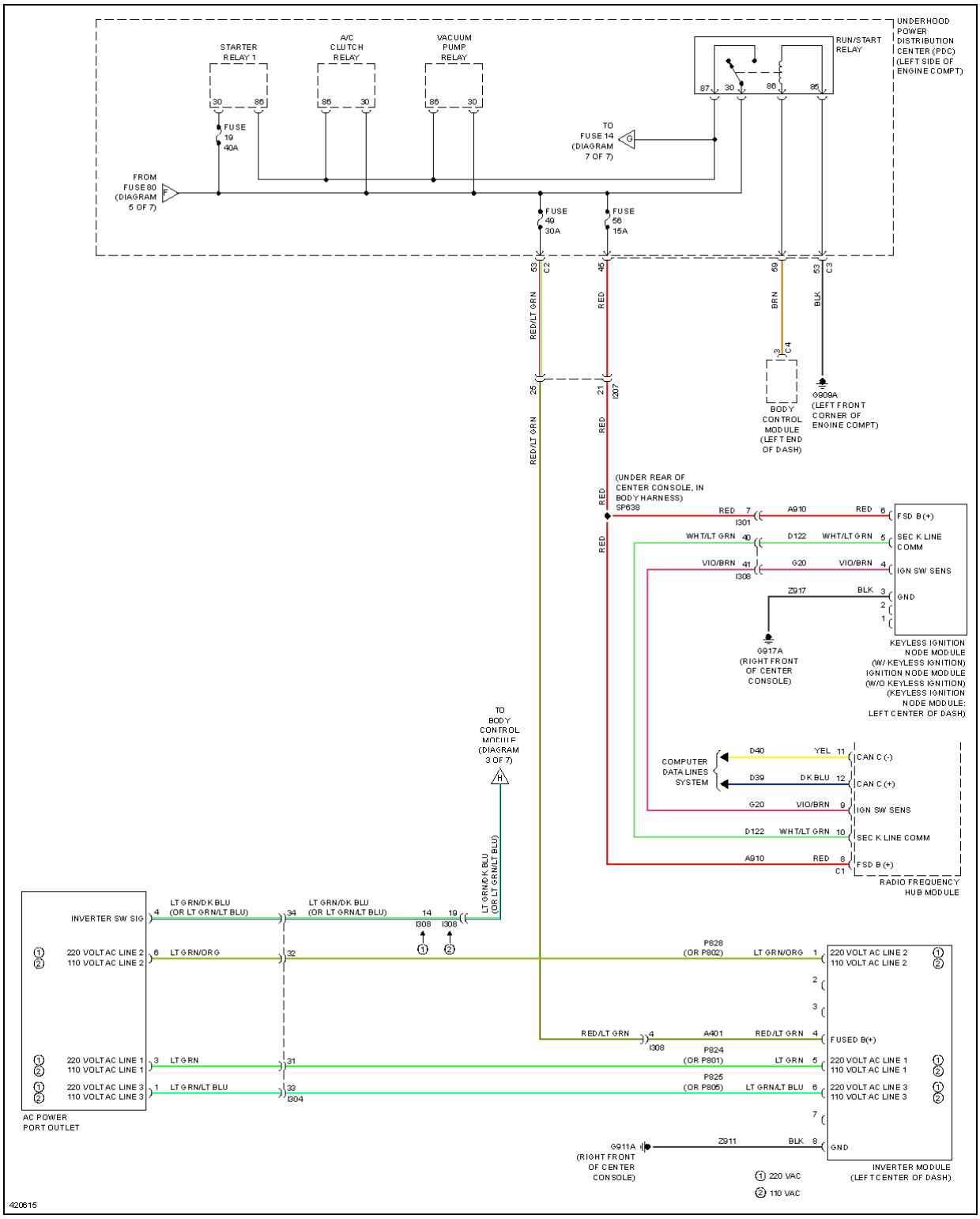
UNDERHOOD POWER DISTRIBUTION CENTER (PDC) (LEFT SIDE OF ENGINE COMPT)
STARTER RELAY 1
A/C CLUTCH RELAY
VACUUM PUMP RELAY
RUN/START RELAY
FUSE 19 40A
TO FUSE 14 (DIAGRAM 7 OF 7)
FROM FUSE 80 (DIAGRAM 5 OF 7)
FUSE 49 30A
FUSE 56 15A
RED/LT GRN
RED
BRN
BLK
BODY CONTROL MODULE (LEFT END OF DASH)
G909A (LEFT FRONT CORNER OF ENGINE COMPT)
(UNDER REAR OF CENTER CONSOLE, IN BODY HARNESS) SP638
A910
D122
G20
Z917
FSD B(+)
SEC K LINE COMM
IGN SW SENS
GND
G917A (RIGHT FRONT OF CENTER CONSOLE)
KEYLESS IGNITION NODE MODULE (W/ KEYLESS IGNITION) IGNITION NODE MODULE (W/O KEYLESS IGNITION) (KEYLESS IGNITION NODE MODULE: LEFT CENTER OF DASH)
TO BODY CONTROL MODULE (DIAGRAM 3 OF 7)
COMPUTER DATA LINES SYSTEM
D40
D39
CAN C (-)
CAN C (+)
RADIO FREQUENCY HUB MODULE
LT GRN/DK BLU (OR LT GRN/LT BLU)
INVERTER SW SIG
220 VOLT AC LINE 2
110 VOLT AC LINE 2
LT GRN/ORG
P828 (OR P802)
220 VOLT AC LINE 1
110 VOLT AC LINE 1
LT GRN
P824 (OR P801)
220 VOLT AC LINE 3
110 VOLT AC LINE 3
LT GRN/LT BLU
P825 (OR P805)
A401
FUSED B(+)
Z911
G911A (RIGHT FRONT OF CENTER CONSOLE)
INVERTER MODULE (LEFT CENTER OF DASH)
AC POWER PORT OUTLET
220 VAC
110 VAC
420615

Fig. 73: Power Distribution Circuit (6 of 7)

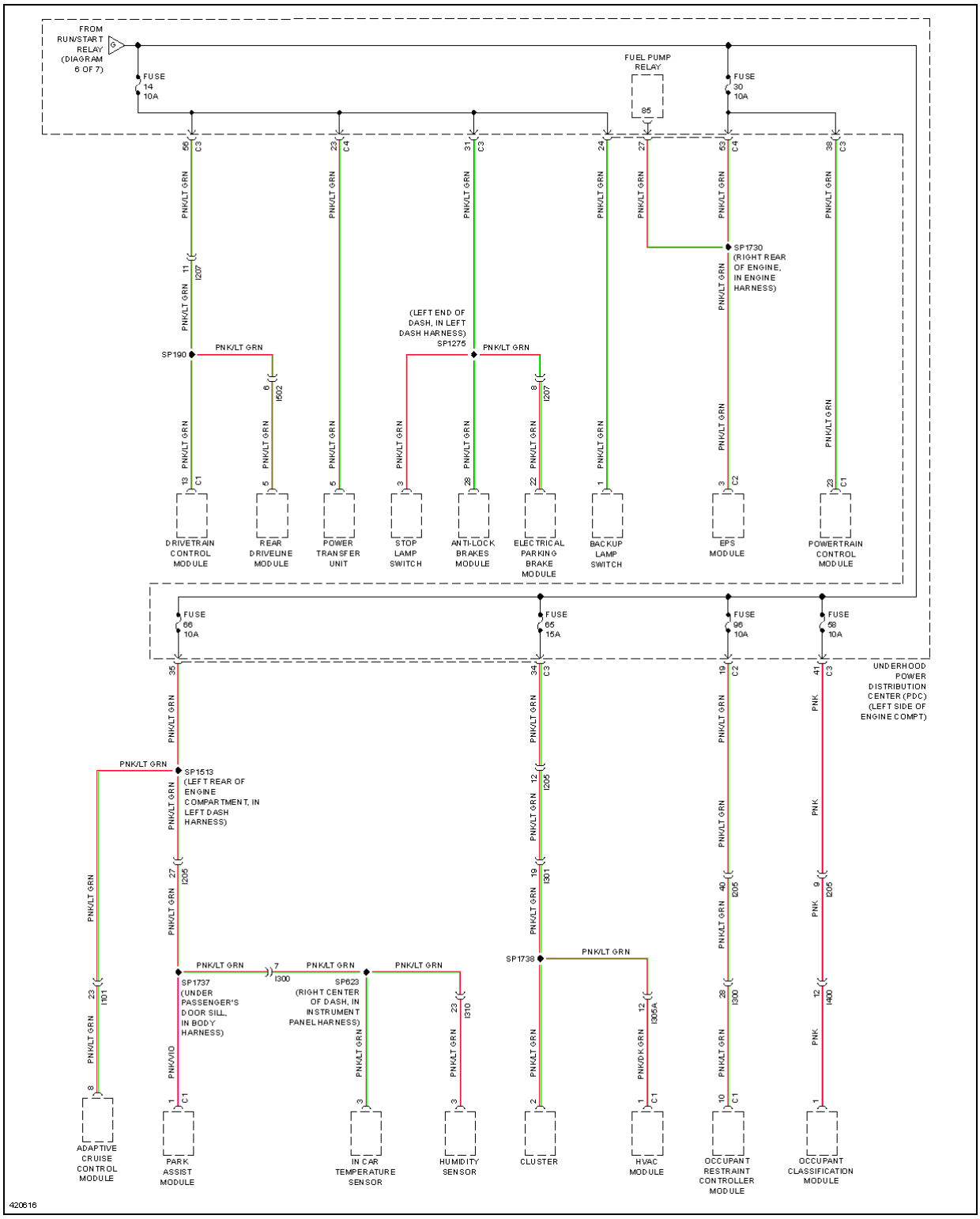
FROM RUN/START RELAY (DIAGRAM 6 OF 7)
FUSE 14 10A
FUEL PUMP RELAY
85
FUSE 30 10A
SP1730 (RIGHT REAR OF ENGINE, IN ENGINE HARNESS)
(LEFT END OF DASH, IN LEFT DASH HARNESS) SP1275
SP190
DRIVETRAIN CONTROL MODULE
REAR DRIVELINE MODULE
POWER TRANSFER UNIT
STOP LAMP SWITCH
ANTI-LOCK BRAKES MODULE
ELECTRICAL PARKING BRAKE MODULE
BACKUP LAMP SWITCH
EPS MODULE
POWERTRAIN CONTROL MODULE
FUSE 66 10A
FUSE 65 15A
FUSE 96 10A
FUSE 58 10A
UNDERHOOD POWER DISTRIBUTION CENTER (PDC) (LEFT SIDE OF ENGINE COMPT)
SP1513 (LEFT REAR OF ENGINE COMPARTMENT, IN LEFT DASH HARNESS)
SP1737 (UNDER PASSENGER'S DOOR SILL, IN BODY HARNESS)
SP623 (RIGHT CENTER OF DASH, IN INSTRUMENT PANEL HARNESS)
SP1738
ADAPTIVE CRUISE CONTROL MODULE
PARK ASSIST MODULE
IN CAR TEMPERATURE SENSOR
HUMIDITY SENSOR
CLUSTER
HVAC MODULE
OCCUPANT RESTRAINT CONTROLLER MODULE
OCCUPANT CLASSIFICATION MODULE
420616

Fig. 74: Power Distribution Circuit (7 of 7)

POWER DOOR LOCKS

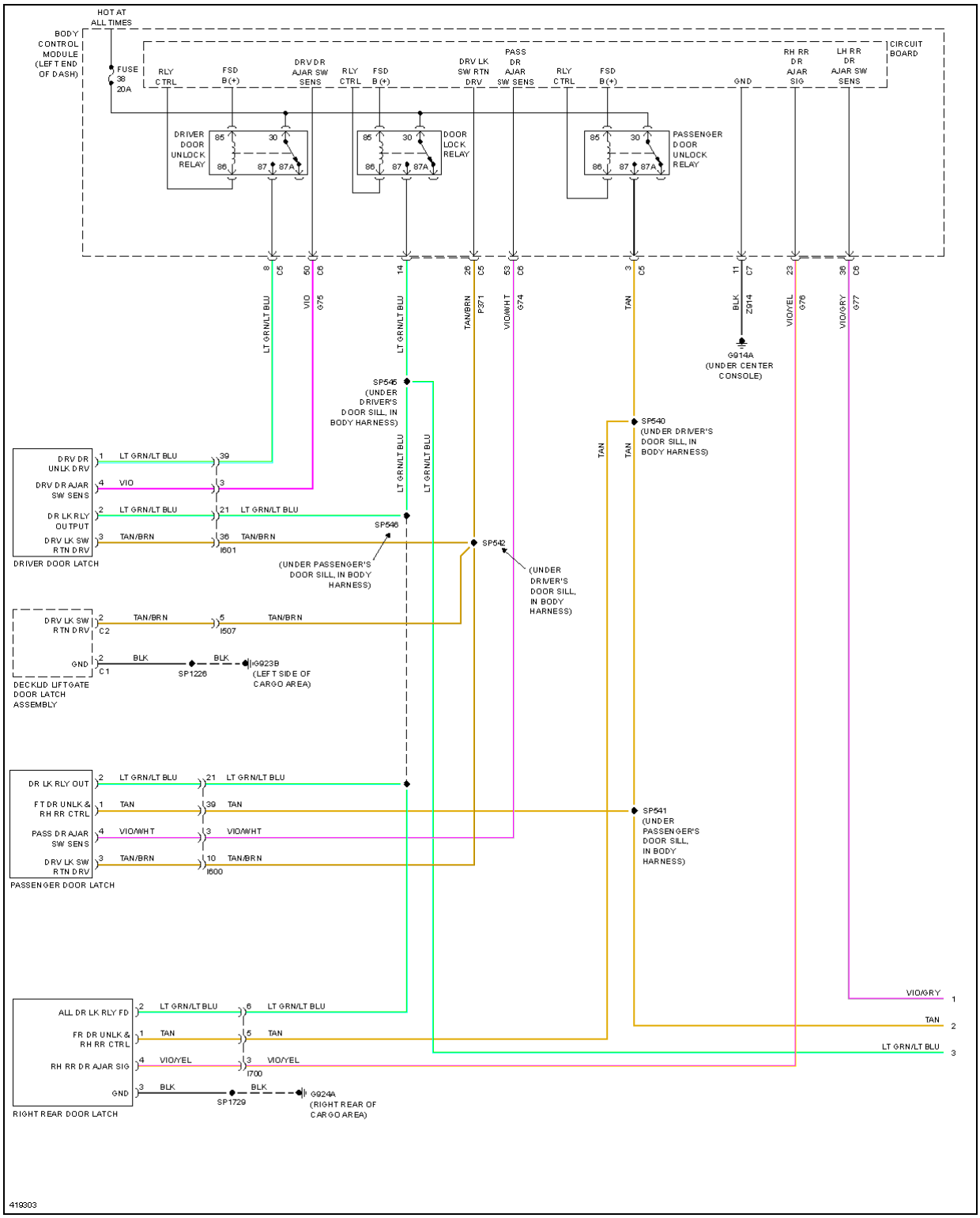
HOT AT ALL TIMES
BODY CONTROL MODULE (LEFT END OF DASH)
FUSE 38 20A
CIRCUIT BOARD
RLY CTRL
FSD B(+)
DRV DR AJAR SW SENS
DRV LK SW RTN DRV
PASS DR AJAR SW SENS
GND
RH RR DR AJAR SIG
LH RR DR AJAR SW SENS
DRIVER DOOR UNLOCK RELAY
DOOR LOCK RELAY
PASSENGER DOOR UNLOCK RELAY
G914A (UNDER CENTER CONSOLE)
SP545 (UNDER DRIVER'S DOOR SILL, IN BODY HARNESS)
SP540 (UNDER DRIVER'S DOOR SILL, IN BODY HARNESS)
DRV DR UNLK DRV
DRV DR AJAR SW SENS
DR LK RLY OUTPUT
DRV LK SW RTN DRV
DRIVER DOOR LATCH
SP546
SP542
(UNDER PASSENGER'S DOOR SILL, IN BODY HARNESS)
(UNDER DRIVER'S DOOR SILL, IN BODY HARNESS)
DECKLID LIFTGATE DOOR LATCH ASSEMBLY
SP1226
G923B (LEFT SIDE OF CARGO AREA)
DR LK RLY OUT
FT DR UNLK & RH RR CTRL
PASS DR AJAR SW SENS
PASSENGER DOOR LATCH
SP541 (UNDER PASSENGER'S DOOR SILL, IN BODY HARNESS)
ALL DR LK RLY FD
FR DR UNLK & RH RR CTRL
RH RR DR AJAR SIG
RIGHT REAR DOOR LATCH
SP1729
G924A (RIGHT REAR OF CARGO AREA)
419303

Fig. 75: Power Door Locks Circuit (1 of 2)

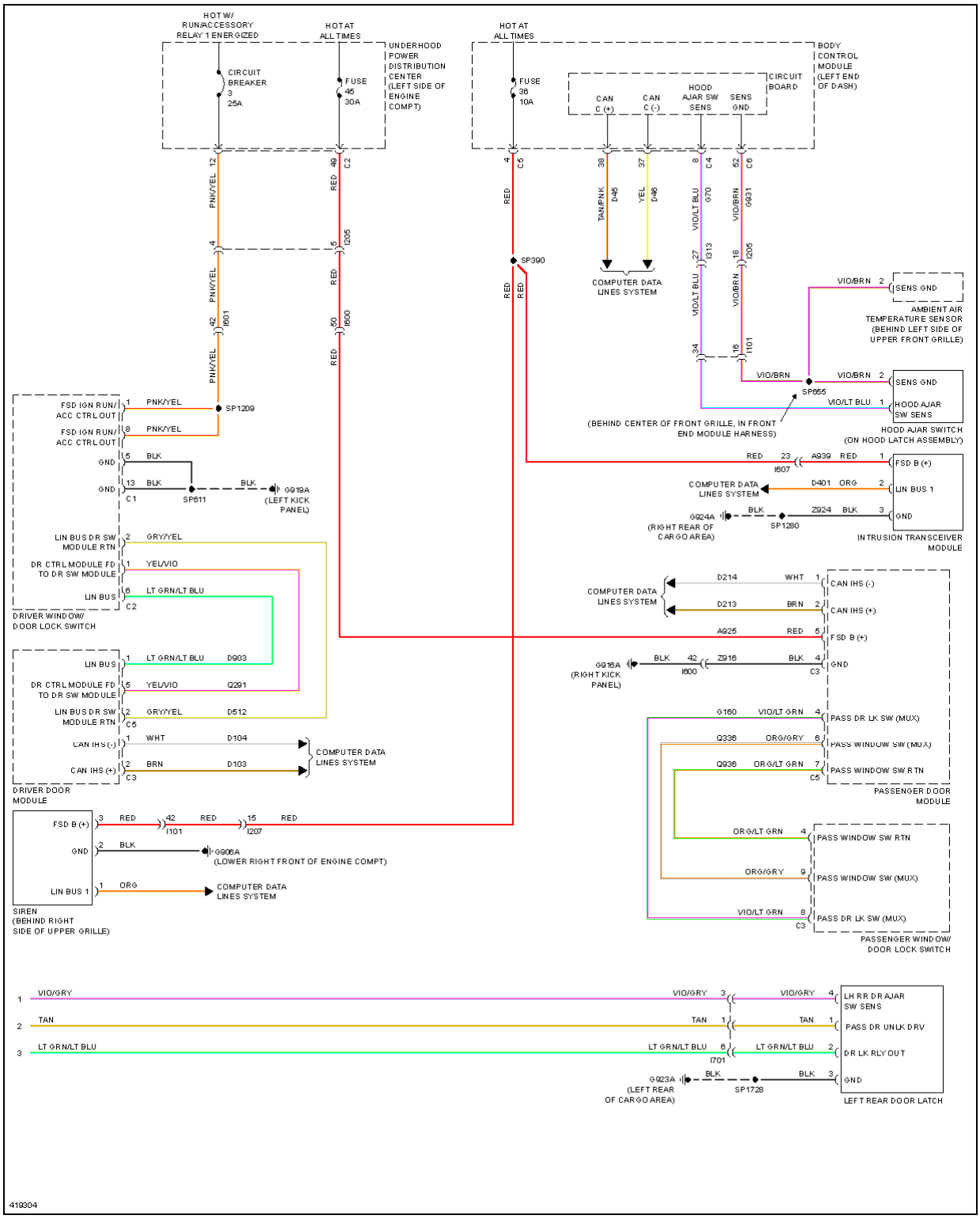
HOT W/ RUN/ACCESSORY RELAY 1 ENERGIZED
HOT AT ALL TIMES
UNDERHOOD POWER DISTRIBUTION CENTER (LEFT SIDE OF ENGINE COMPT)
CIRCUIT BREAKER 3 25A
FUSE 45 30A
HOT AT ALL TIMES
BODY CONTROL MODULE (LEFT END OF DASH)
FUSE 36 10A
CIRCUIT BOARD
CAN C (+)
CAN C (-)
HOOD AJAR SW SENS
SENS GND
COMPUTER DATA LINES SYSTEM
SP390
SP1209
SP611
G919A (LEFT KICK PANEL)
AMBIENT AIR TEMPERATURE SENSOR (BEHIND LEFT SIDE OF UPPER FRONT GRILLE)
SP655
(BEHIND CENTER OF FRONT GRILLE, IN FRONT END MODULE HARNESS)
HOOD AJAR SWITCH (ON HOOD LATCH ASSEMBLY)
G924A (RIGHT REAR OF CARGO AREA)
SP1280
INTRUSION TRANSCEIVER MODULE
DRIVER WINDOW/ DOOR LOCK SWITCH
DRIVER DOOR MODULE
G916A (RIGHT KICK PANEL)
PASSENGER DOOR MODULE
PASSENGER WINDOW/ DOOR LOCK SWITCH
SIREN (BEHIND RIGHT SIDE OF UPPER GRILLE)
G906A (LOWER RIGHT FRONT OF ENGINE COMPT)
G923A (LEFT REAR OF CARGO AREA)
SP1728
LEFT REAR DOOR LATCH
419304

Fig. 76: Power Door Locks Circuit (2 of 2)

POWER MIRRORS

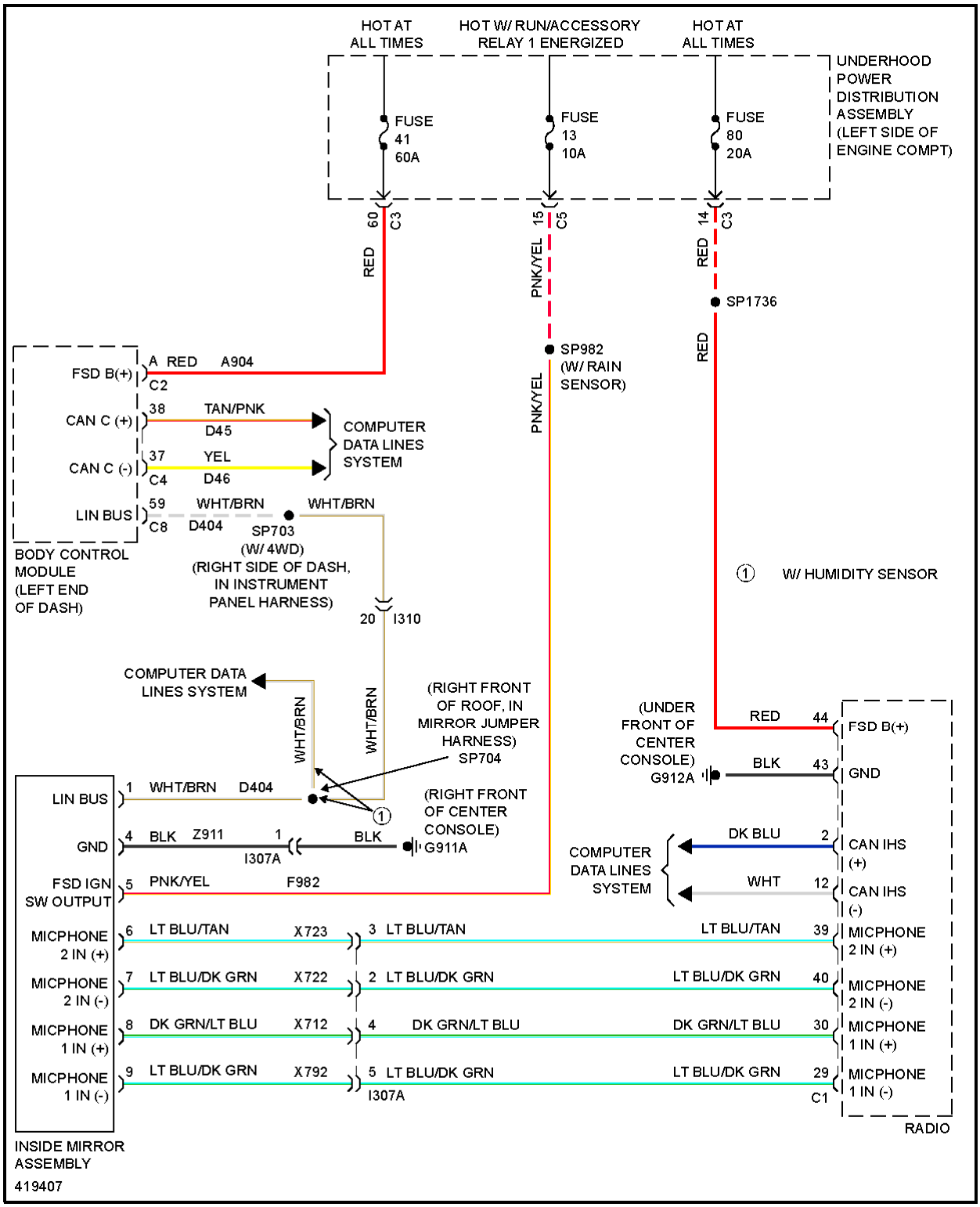
HOT AT ALL TIMES
HOT W/ RUN/ACCESSORY RELAY 1 ENERGIZED
HOT AT ALL TIMES
UNDERHOOD POWER DISTRIBUTION ASSEMBLY (LEFT SIDE OF ENGINE COMPT)
FUSE 41 60A
FUSE 13 10A
FUSE 80 20A
60 C3
15 C5
14 C3
RED
PNK/YEL
RED
SP1736
SP982 (W/ RAIN SENSOR)
PNK/YEL
RED
FSD B(+)
A RED A904
C2
CAN C (+)
38 TAN/PNK
D45
CAN C (-)
37 YEL
C4 D46
COMPUTER DATA LINES SYSTEM
LIN BUS
59 WHT/BRN
C8 D404
WHT/BRN
SP703 (W/ 4WD) (RIGHT SIDE OF DASH, IN INSTRUMENT PANEL HARNESS)
BODY CONTROL MODULE (LEFT END OF DASH)
20 I310
① W/ HUMIDITY SENSOR
COMPUTER DATA LINES SYSTEM
WHT/BRN
WHT/BRN
(RIGHT FRONT OF ROOF, IN MIRROR JUMPER HARNESS) SP704
(UNDER FRONT OF CENTER CONSOLE) G912A
RED 44 FSD B(+)
BLK 43 GND
LIN BUS
1 WHT/BRN D404
①
(RIGHT FRONT OF CENTER CONSOLE) G911A
GND
4 BLK Z911 1
I307A
BLK
COMPUTER DATA LINES SYSTEM
DK BLU 2 CAN IHS (+)
WHT 12 CAN IHS (-)
FSD IGN SW OUTPUT
5 PNK/YEL F982
MICPHONE 2 IN (+)
6 LT BLU/TAN X723
3 LT BLU/TAN
LT BLU/TAN 39 MICPHONE 2 IN (+)
MICPHONE 2 IN (-)
7 LT BLU/DK GRN X722
2 LT BLU/DK GRN
LT BLU/DK GRN 40 MICPHONE 2 IN (-)
MICPHONE 1 IN (+)
8 DK GRN/LT BLU X712
4 DK GRN/LT BLU
DK GRN/LT BLU 30 MICPHONE 1 IN (+)
MICPHONE 1 IN (-)
9 LT BLU/DK GRN X792
5 LT BLU/DK GRN
I307A
LT BLU/DK GRN 29 MICPHONE 1 IN (-)
C1
RADIO
INSIDE MIRROR ASSEMBLY
419407

Fig. 77: Automatic Day/Night Mirror Circuit

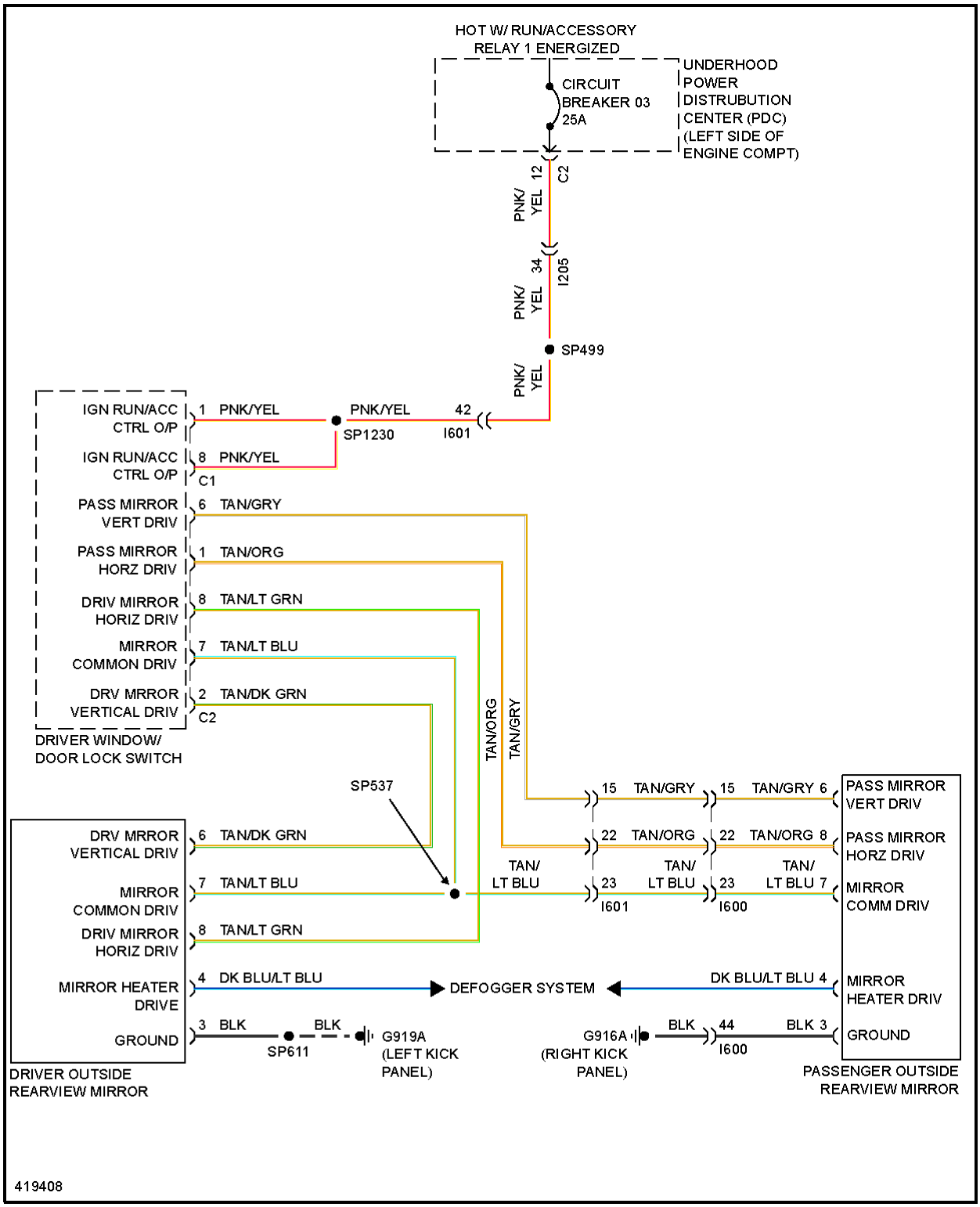
HOT W/ RUN/ACCESSORY RELAY 1 ENERGIZED
CIRCUIT BREAKER 03 25A
UNDERHOOD POWER DISTRUBUTION CENTER (PDC) (LEFT SIDE OF ENGINE COMPT)
PNK/YEL 12 C2
PNK/YEL 34 I205
SP499
PNK/YEL
IGN RUN/ACC CTRL O/P 1 PNK/YEL
PNK/YEL 42 I601
SP1230
IGN RUN/ACC CTRL O/P 8 PNK/YEL
C1
PASS MIRROR VERT DRIV 6 TAN/GRY
PASS MIRROR HORZ DRIV 1 TAN/ORG
DRIV MIRROR HORIZ DRIV 8 TAN/LT GRN
MIRROR COMMON DRIV 7 TAN/LT BLU
DRV MRROR VERTICAL DRIV 2 TAN/DK GRN
C2
DRIVER WINDOW/ DOOR LOCK SWITCH
TAN/ORG
TAN/GRY
SP537
15 TAN/GRY 15 TAN/GRY 6
PASS MIRROR VERT DRIV
22 TAN/ORG 22 TAN/ORG 8
PASS MIRROR HORZ DRIV
TAN/ LT BLU
TAN/ LT BLU
TAN/ LT BLU 7
23 I601
23 I600
MIRROR COMM DRIV
DRV MRROR VERTICAL DRIV 6 TAN/DK GRN
MIRROR COMMON DRIV 7 TAN/LT BLU
DRIV MIRROR HORIZ DRIV 8 TAN/LT GRN
MIRROR HEATER DRIVE 4 DK BLU/LT BLU
DEFOGGER SYSTEM
DK BLU/LT BLU 4
MIRROR HEATER DRIV
GROUND 3 BLK
BLK
SP611
G919A (LEFT KICK PANEL)
G916A (RIGHT KICK PANEL)
BLK 44 I600
BLK 3
GROUND
DRIVER OUTSIDE REARVIEW MIRROR
PASSENGER OUTSIDE REARVIEW MIRROR
419408

Fig. 78: Power Mirrors Circuit, Base

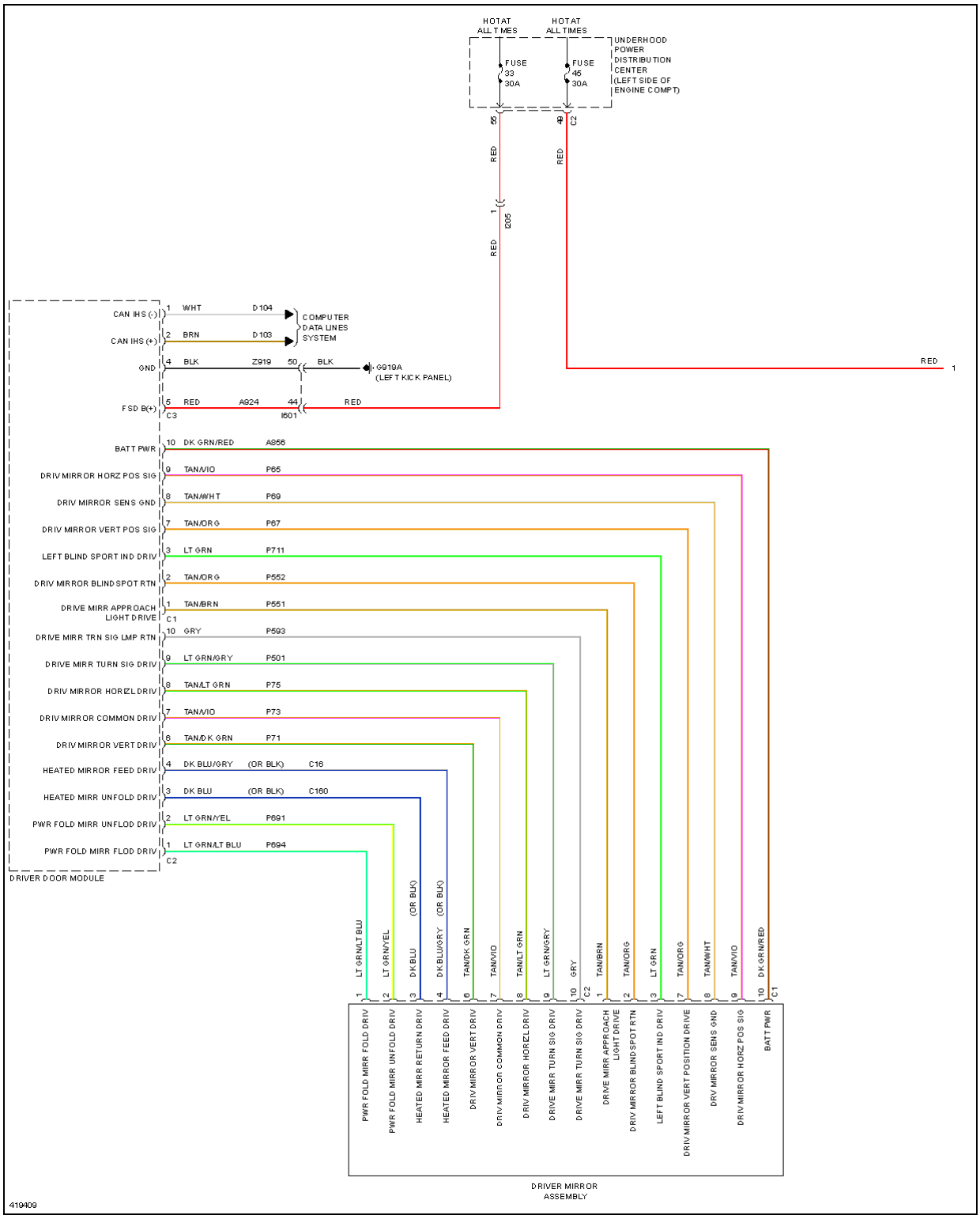
HOT AT ALL TIMES
HOT AT ALL TIMES
UNDERHOOD POWER DISTRIBUTION CENTER (LEFT SIDE OF ENGINE COMPT)
FUSE 33 30A
FUSE 45 30A
55
49
C2
RED
RED
1
I205
RED
CAN IHS (-)
CAN IHS (+)
GND
FSD B(+)
C3
1 WHT D104
2 BRN D103
COMPUTER DATA LINES SYSTEM
4 BLK Z919 50 BLK
G919A (LEFT KICK PANEL)
5 RED A924 44 RED
I601
RED
1
BATT PWR
DRIV MIRROR HORZ POS SIG
DRIV MIRROR SENS GND
DRIV MIRROR VERT POS SIG
LEFT BLIND SPORT IND DRIV
DRIV MIRROR BLIND SPOT RTN
DRIVE MIRR APPROACH LIGHT DRIVE
C1
DRIVE MIRR TRN SIG LMP RTN
DRIVE MIRR TURN SIG DRIV
DRIV MIRROR HORIZL DRIV
DRIV MIRROR COMMON DRIV
DRIV MIRROR VERT DRIV
HEATED MIRROR FEED DRIV
HEATED MIRR UNFOLD DRIV
PWR FOLD MIRR UNFLOD DRIV
PWR FOLD MIRR FLOD DRIV
C2
10 DK GRN/RED A856
9 TAN/VIO P65
8 TAN/WHT P69
7 TAN/ORG P67
3 LT GRN P711
2 TAN/ORG P552
1 TAN/BRN P551
10 GRY P593
9 LT GRN/GRY P501
8 TAN/LT GRN P75
7 TAN/VIO P73
6 TAN/DK GRN P71
4 DK BLU/GRY (OR BLK) C16
3 DK BLU (OR BLK) C160
2 LT GRN/YEL P691
1 LT GRN/LT BLU P694
DRIVER DOOR MODULE
1 LT GRN/LT BLU
2 LT GRN/YEL
3 DK BLU (OR BLK)
4 DK BLU/GRY (OR BLK)
6 TAN/DK GRN
7 TAN/VIO
8 TAN/LT GRN
9 LT GRN/GRY
10 GRY
C2
1 TAN/BRN
2 TAN/ORG
3 LT GRN
7 TAN/ORG
8 TAN/WHT
9 TAN/VIO
10 DK GRN/RED
C1
PWR FOLD MIRR FOLD DRIV
PWR FOLD MIRR UNFOLD DRIV
HEATED MIRR RETURN DRIV
HEATED MIRROR FEED DRIV
DRIV MIRROR VERT DRIV
DRIV MIRROR COMMON DRIV
DRIV MIRROR HORIZL DRIV
DRIVE MIRR TURN SIG DRIV
DRIVE MIRR TURN SIG DRIV
DRIVE MIRR APPROACH LIGHT DRIVE
DRIV MIRROR BLIND SPOT RTN
LEFT BLIND SPORT IND DRIV
DRIV MIRROR VERT POSITION DRIVE
DRIV MIRROR SENS GND
DRIV MIRROR HORZ POS SIG
BATT PWR
DRIVER MIRROR ASSEMBLY
419409

Fig. 79: Power Mirrors Circuit, Premium (1 of 2)

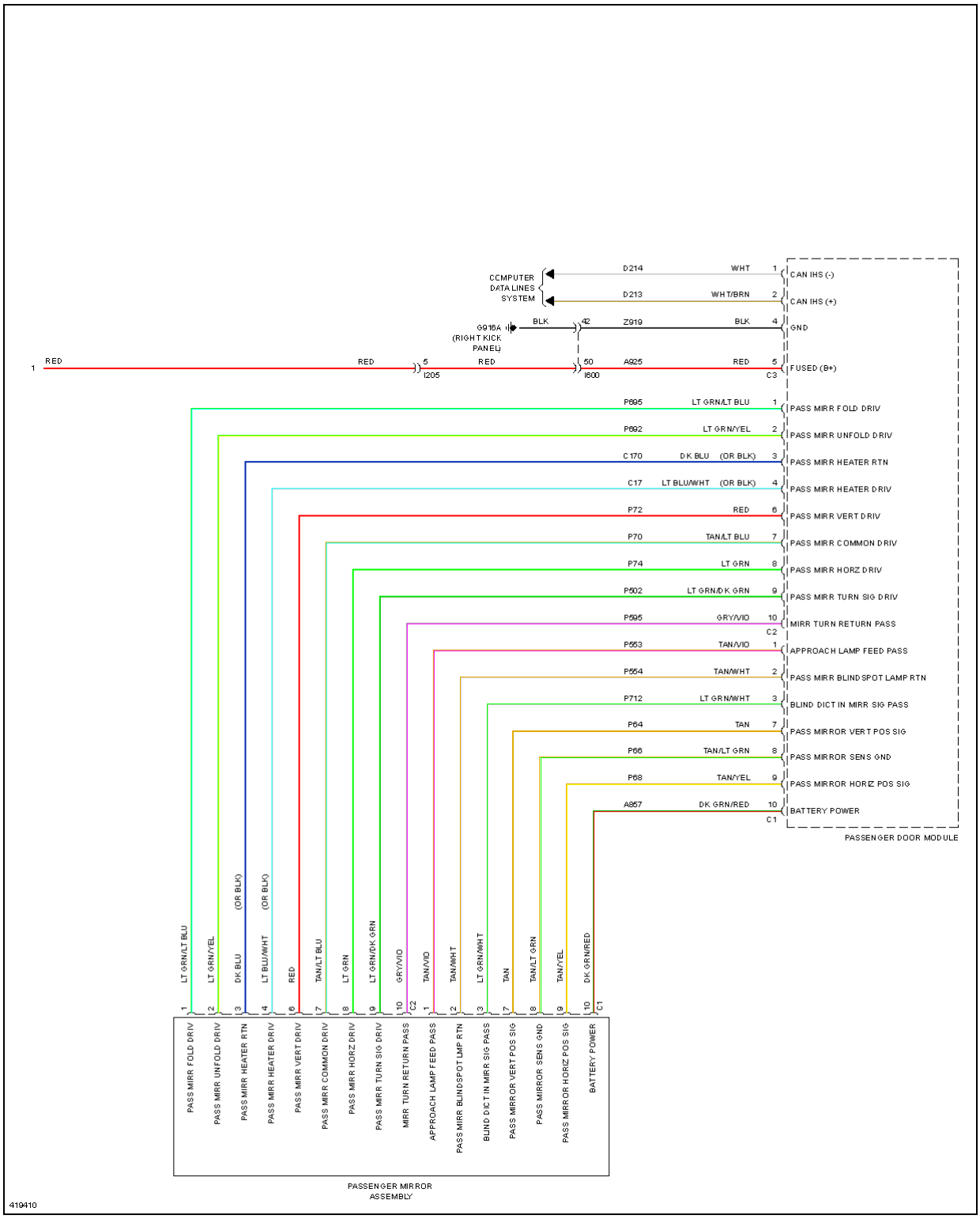
COMPUTER DATA LINES SYSTEM
D214 WHT 1 CAN IHS (-)
D213 WHT/BRN 2 CAN IHS (+)
G916A (RIGHT KICK PANEL)
BLK 42 Z919 BLK 4 GND
1 RED RED 5 I205 RED 50 I600 A925 RED 5 C3 FUSED (B+)
P695 LT GRN/LT BLU 1 PASS MIRR FOLD DRIV
P692 LT GRN/YEL 2 PASS MIRR UNFOLD DRIV
C170 DK BLU (OR BLK) 3 PASS MIRR HEATER RTN
C17 LT BLU/WHT (OR BLK) 4 PASS MIRR HEATER DRIV
P72 RED 6 PASS MIRR VERT DRIV
P70 TAN/LT BLU 7 PASS MIRR COMMON DRIV
P74 LT GRN 8 PASS MIRR HORZ DRIV
P502 LT GRN/DK GRN 9 PASS MIRR TURN SIG DRIV
P595 GRY/VIO 10 C2 MIRR TURN RETURN PASS
P553 TAN/VIO 1 APPROACH LAMP FEED PASS
P554 TAN/WHT 2 PASS MIRR BLINDSPOT LAMP RTN
P712 LT GRN/WHT 3 BLIND DICT IN MIRR SIG PASS
P64 TAN 7 PASS MIRROR VERT POS SIG
P66 TAN/LT GRN 8 PASS MIRROR SENS GND
P68 TAN/YEL 9 PASS MIRROR HORIZ POS SIG
A857 DK GRN/RED 10 C1 BATTERY POWER
PASSENGER DOOR MODULE
LT GRN/LT BLU 1 PASS MIRR FOLD DRIV
LT GRN/YEL 2 PASS MIRR UNFOLD DRIV
DK BLU (OR BLK) 3 PASS MIRR HEATER RTN
LT BLU/WHT (OR BLK) 4 PASS MIRR HEATER DRIV
RED 6 PASS MIRR VERT DRIV
TAN/LT BLU 7 PASS MIRR COMMON DRIV
LT GRN 8 PASS MIRR HORZ DRIV
LT GRN/DK GRN 9 PASS MIRR TURN SIG DRIV
GRY/VIO 10 C2 MIRR TURN RETURN PASS
TAN/VIO 1 APPROACH LAMP FEED PASS
TAN/WHT 2 PASS MIRR BLINDSPOT LMP RTN
LT GRN/WHT 3 BLIND DICT IN MIRR SIG PASS
TAN 7 PASS MIRROR VERT POS SIG
TAN/LT GRN 8 PASS MIRROR SENS GND
TAN/YEL 9 PASS MIRROR HORIZ POS SIG
DK GRN/RED 10 C1 BATTERY POWER
PASSENGER MIRROR ASSEMBLY
419410

Fig. 80: Power Mirrors Circuit, Premium (2 of 2)

POWER SEATS

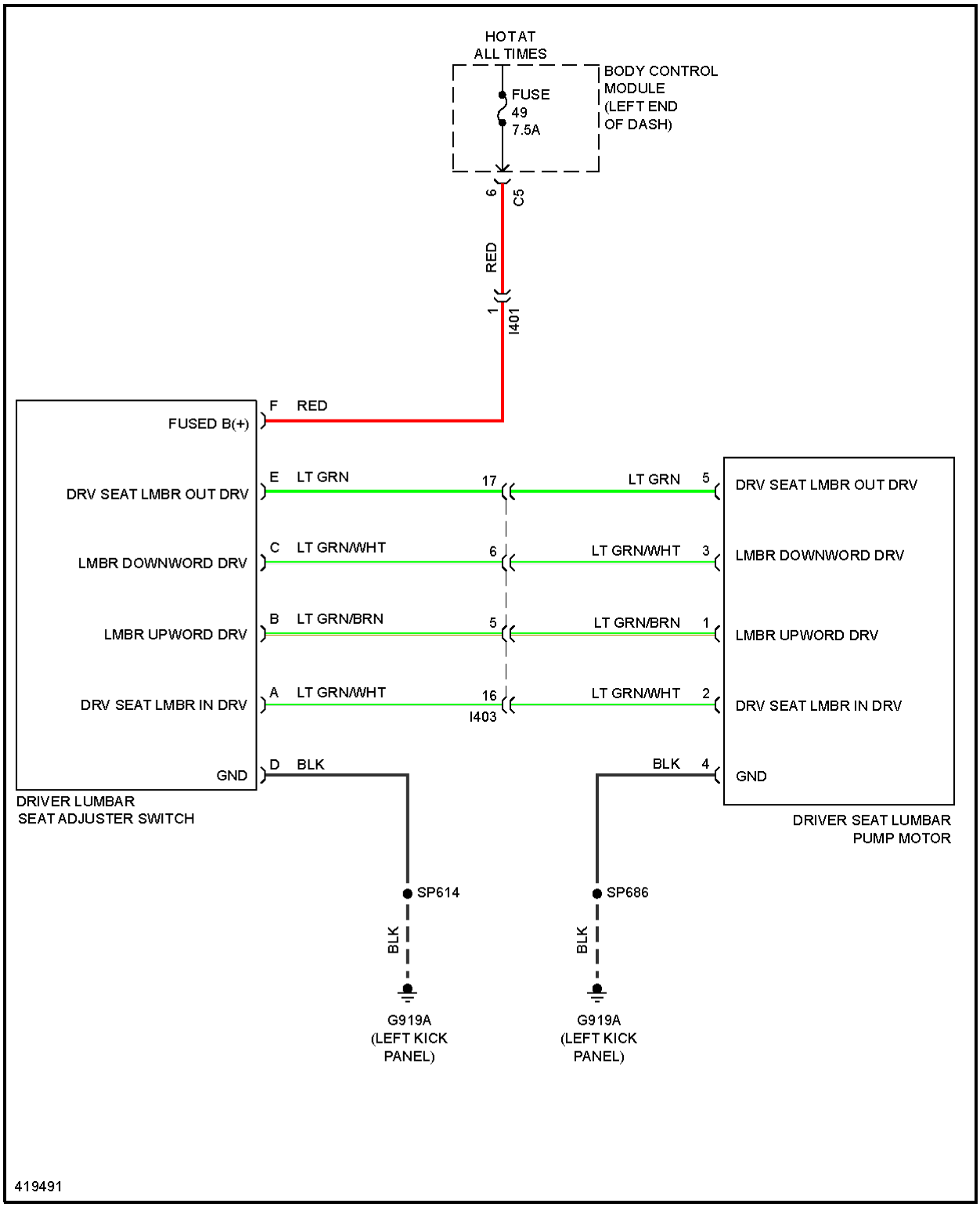
HOT AT
ALL TIMES
FUSE
49
7.5A
BODY CONTROL
MODULE
(LEFT END
OF DASH)
6
C5
RED
1
I401
F RED
FUSED B(+)
E LT GRN
17
LT GRN 5
DRV SEAT LMBR OUT DRV
DRV SEAT LMBR OUT DRV
C LT GRN/WHT
6
LT GRN/WHT 3
LMBR DOWNWORD DRV
LMBR DOWNWORD DRV
B LT GRN/BRN
5
LT GRN/BRN 1
LMBR UPWORD DRV
LMBR UPWORD DRV
A LT GRN/WHT
16
I403
LT GRN/WHT 2
DRV SEAT LMBR IN DRV
DRV SEAT LMBR IN DRV
D BLK
GND
BLK 4
GND
DRIVER LUMBAR
SEAT ADJUSTER SWITCH
DRIVER SEAT LUMBAR
PUMP MOTOR
SP614
SP686
BLK
BLK
G919A
(LEFT KICK
PANEL)
G919A
(LEFT KICK
PANEL)
419491

Fig. 81: Driver"s Lumbar Circuit

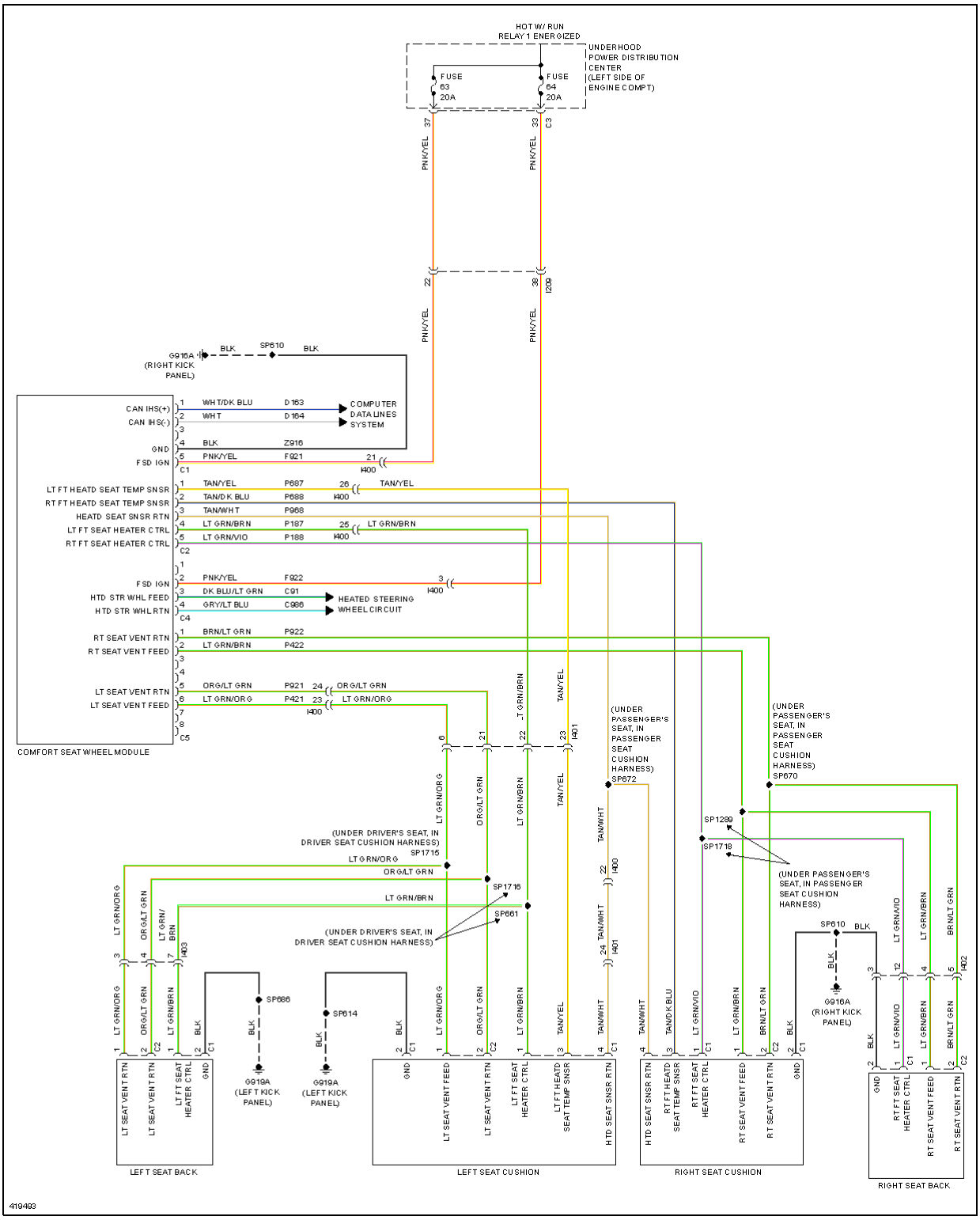
HOT W/ RUN
RELAY 1 ENERGIZED
UNDERHOOD
POWER DISTRIBUTION
CENTER
(LEFT SIDE OF
ENGINE COMPT)
FUSE
63
20A
FUSE
64
20A
PNK/YEL
G916A
(RIGHT KICK
PANEL)
BLK
SP610
CAN IHS(+)
CAN IHS(-)
WHT/DK BLU
WHT
D163
D164
COMPUTER
DATA LINES
SYSTEM
GND
BLK
Z916
FSD IGN
PNK/YEL
F921
LT FT HEATD SEAT TEMP SNSR
RT FT HEATD SEAT TEMP SNSR
HEATD SEAT SNSR RTN
LT FT SEAT HEATER CTRL
RT FT SEAT HEATER CTRL
TAN/YEL
TAN/DK BLU
TAN/WHT
LT GRN/BRN
LT GRN/VIO
P687
P688
P968
P187
P188
TAN/YEL
LT GRN/BRN
FSD IGN
PNK/YEL
F922
HTD STR WHL FEED
HTD STR WHL RTN
DK BLU/LT GRN
GRY/LT BLU
C91
C986
HEATED STEERING
WHEEL CIRCUIT
RT SEAT VENT RTN
RT SEAT VENT FEED
BRN/LT GRN
LT GRN/BRN
P922
P422
LT SEAT VENT RTN
LT SEAT VENT FEED
ORG/LT GRN
LT GRN/ORG
P921
P421
ORG/LT GRN
LT GRN/ORG
COMFORT SEAT WHEEL MODULE
(UNDER
PASSENGER'S
SEAT, IN
PASSENGER
SEAT
CUSHION
HARNESS)
SP672
(UNDER
PASSENGER'S
SEAT, IN
PASSENGER
SEAT
CUSHION
HARNESS)
SP670
SP1299
SP1718
(UNDER PASSENGER'S
SEAT, IN PASSENGER
SEAT CUSHION
HARNESS)
(UNDER DRIVER'S SEAT, IN
DRIVER SEAT CUSHION HARNESS)
SP1715
LT GRN/ORG
ORG/LT GRN
SP1716
LT GRN/BRN
SP661
(UNDER DRIVER'S SEAT, IN
DRIVER SEAT CUSHION HARNESS)
SP686
SP614
G919A
(LEFT KICK
PANEL)
G919A
(LEFT KICK
PANEL)
SP610
BLK
G916A
(RIGHT KICK
PANEL)
LT SEAT VENT RTN
LT SEAT VENT RTN
LT FT SEAT
HEATER CTRL
GND
LEFT SEAT BACK
GND
LT SEAT VENT FEED
LT SEAT VENT RTN
LT FT SEAT
HEATER CTRL
LT FT HEATD
SEAT TEMP SNSR
HTD SEAT SNSR RTN
LEFT SEAT CUSHION
HTD SEAT SNSR RTN
RT FT HEATD
SEAT TEMP SNSR
RT FT SEAT
HEATER CTRL
RT SEAT VENT FEED
RT SEAT VENT RTN
GND
RIGHT SEAT CUSHION
GND
RT FT SEAT
HEATER CTRL
RT SEAT VENT FEED
RT SEAT VENT RTN
RIGHT SEAT BACK
419493

Fig. 82: Heated Seats Circuit

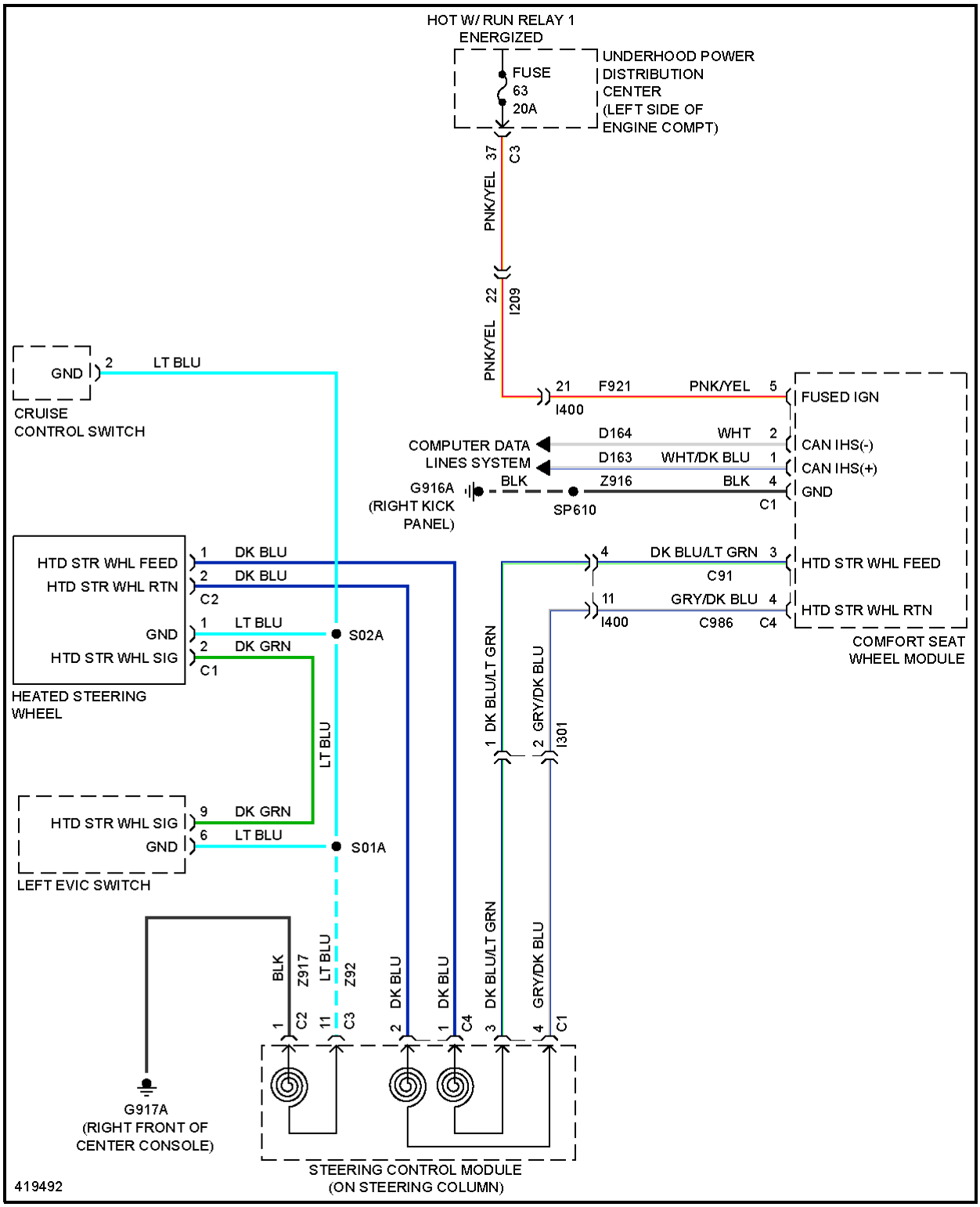
HOT W/ RUN RELAY 1 ENERGIZED
FUSE 63 20A
UNDERHOOD POWER DISTRIBUTION CENTER (LEFT SIDE OF ENGINE COMPT)
37 C3
PNK/YEL
22 I209
PNK/YEL
GND 2 LT BLU
CRUISE CONTROL SWITCH
21 F921 PNK/YEL 5
I400
FUSED IGN
COMPUTER DATA LINES SYSTEM
D164 WHT 2
CAN IHS(-)
D163 WHT/DK BLU 1
CAN IHS(+)
G916A (RIGHT KICK PANEL)
BLK
Z916 BLK 4
SP610
C1
GND
HTD STR WHL FEED 1 DK BLU
HTD STR WHL RTN 2 DK BLU
C2
GND 1 LT BLU
S02A
HTD STR WHL SIG 2 DK GRN
C1
HEATED STEERING WHEEL
4 DK BLU/LT GRN 3
C91
HTD STR WHL FEED
11 GRY/DK BLU 4
I400 C986 C4
HTD STR WHL RTN
COMFORT SEAT WHEEL MODULE
LT BLU
1 DK BLU/LT GRN
2 GRY/DK BLU
I301
HTD STR WHL SIG 9 DK GRN
GND 6 LT BLU
S01A
LEFT EVIC SWITCH
BLK
Z917
LT BLU
Z92
DK BLU
DK BLU
DK BLU/LT GRN
GRY/DK BLU
1 C2
11 C3
2
1 C4
3
4 C1
G917A (RIGHT FRONT OF CENTER CONSOLE)
STEERING CONTROL MODULE (ON STEERING COLUMN)
419492

Fig. 83: Heated Steering Wheel Circuit

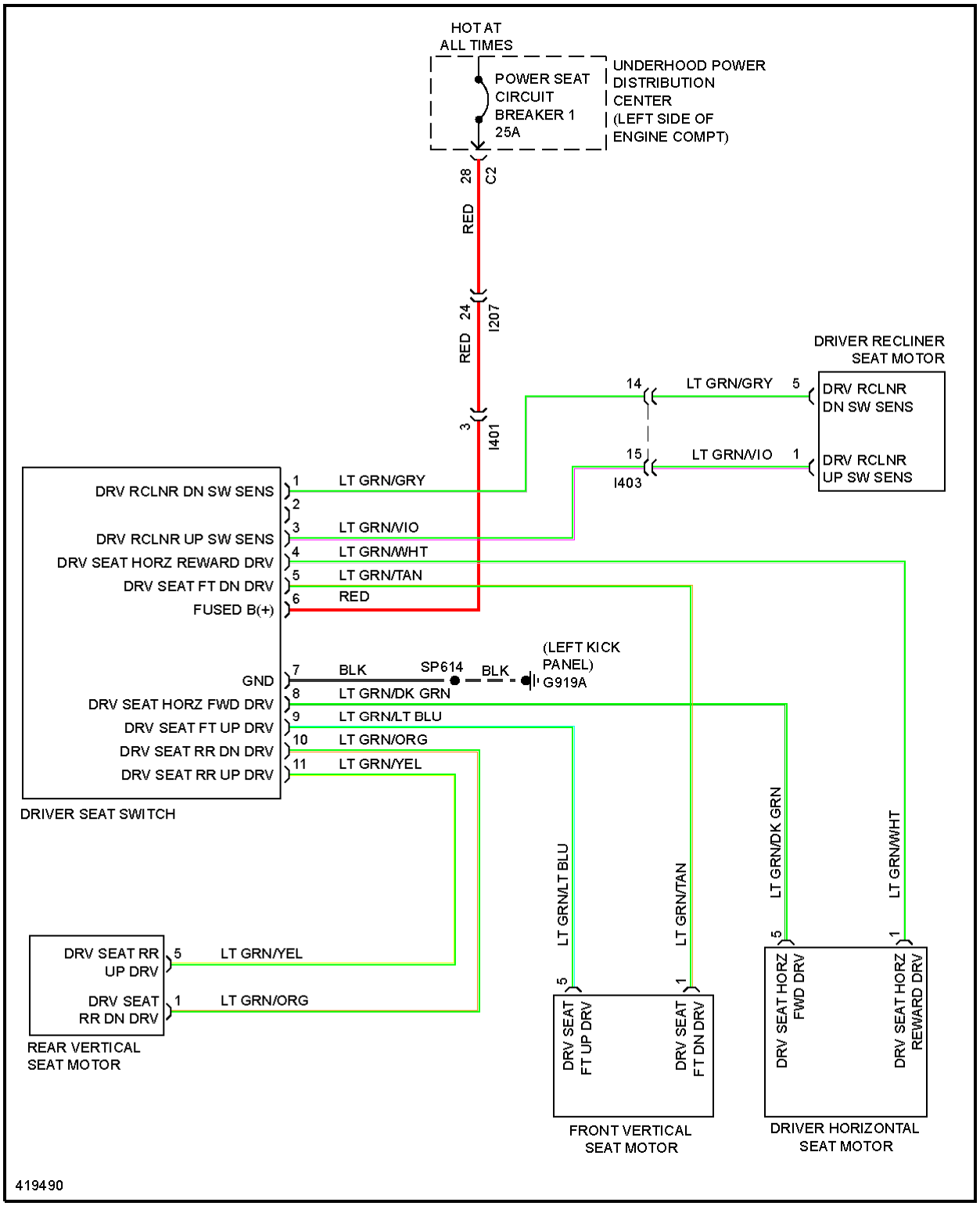
HOT AT ALL TIMES
POWER SEAT CIRCUIT BREAKER 1 25A
UNDERHOOD POWER DISTRIBUTION CENTER (LEFT SIDE OF ENGINE COMPT)
28
C2
RED
24
I207
RED
3
I401
DRIVER RECLINER SEAT MOTOR
14
LT GRN/GRY
5
DRV RCLNR DN SW SENS
15
LT GRN/VIO
1
DRV RCLNR UP SW SENS
I403
DRV RCLNR DN SW SENS
1
LT GRN/GRY
2
DRV RCLNR UP SW SENS
3
LT GRN/VIO
DRV SEAT HORZ REWARD DRV
4
LT GRN/WHT
DRV SEAT FT DN DRV
5
LT GRN/TAN
FUSED B(+)
6
RED
GND
7
BLK
SP614
BLK
(LEFT KICK PANEL)
G919A
DRV SEAT HORZ FWD DRV
8
LT GRN/DK GRN
DRV SEAT FT UP DRV
9
LT GRN/LT BLU
DRV SEAT RR DN DRV
10
LT GRN/ORG
DRV SEAT RR UP DRV
11
LT GRN/YEL
DRIVER SEAT SWITCH
DRV SEAT RR UP DRV
5
LT GRN/YEL
DRV SEAT RR DN DRV
1
LT GRN/ORG
REAR VERTICAL SEAT MOTOR
LT GRN/LT BLU
LT GRN/TAN
LT GRN/DK GRN
LT GRN/WHT
5
DRV SEAT FT UP DRV
1
DRV SEAT FT DN DRV
FRONT VERTICAL SEAT MOTOR
5
DRV SEAT HORZ FWD DRV
1
DRV SEAT HORZ REWARD DRV
DRIVER HORIZONTAL SEAT MOTOR
419490

Fig. 84: Power Seats Circuit

POWER TOP/SUNROOF

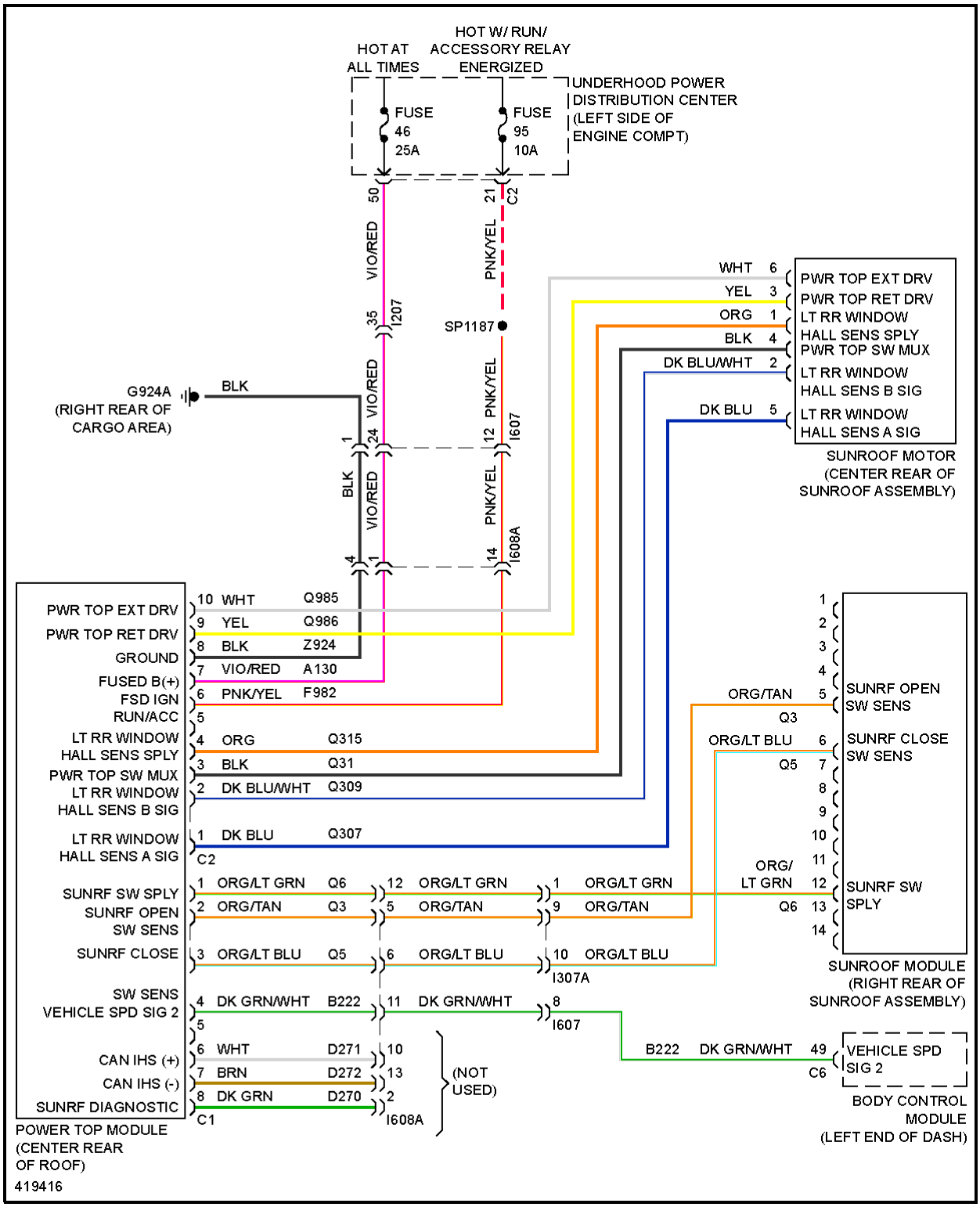
HOT AT ALL TIMES
HOT W/ RUN/ ACCESSORY RELAY ENERGIZED
UNDERHOOD POWER DISTRIBUTION CENTER (LEFT SIDE OF ENGINE COMPT)
FUSE 46 25A
FUSE 95 10A
50 VIO/RED
21 PNK/YEL C2
35 I207
SP1187
G924A (RIGHT REAR OF CARGO AREA)
BLK
1 24 VIO/RED
12 PNK/YEL I607
BLK
4 1 VIO/RED
14 PNK/YEL I608A
WHT 6 PWR TOP EXT DRV
YEL 3 PWR TOP RET DRV
ORG 1 LT RR WINDOW HALL SENS SPLY
BLK 4 PWR TOP SW MUX
DK BLU/WHT 2 LT RR WINDOW HALL SENS B SIG
DK BLU 5 LT RR WINDOW HALL SENS A SIG
SUNROOF MOTOR (CENTER REAR OF SUNROOF ASSEMBLY)
PWR TOP EXT DRV 10 WHT Q985
PWR TOP RET DRV 9 YEL Q986
GROUND 8 BLK Z924
FUSED B(+) 7 VIO/RED A130
FSD IGN 6 PNK/YEL F982
RUN/ACC 5
LT RR WINDOW HALL SENS SPLY 4 ORG Q315
PWR TOP SW MUX 3 BLK Q31
LT RR WINDOW HALL SENS B SIG 2 DK BLU/WHT Q309
LT RR WINDOW HALL SENS A SIG 1 DK BLU Q307
C2
SUNRF SW SPLY 1 ORG/LT GRN Q6 12 ORG/LT GRN 1 ORG/LT GRN
SUNRF OPEN SW SENS 2 ORG/TAN Q3 5 ORG/TAN 9 ORG/TAN
SUNRF CLOSE 3 ORG/LT BLU Q5 6 ORG/LT BLU 10 ORG/LT BLU
I307A
SW SENS VEHICLE SPD SIG 2 4 DK GRN/WHT B222 11 DK GRN/WHT 8
I607
5
CAN IHS (+) 6 WHT D271 10
CAN IHS (-) 7 BRN D272 13
SUNRF DIAGNOSTIC 8 DK GRN D270 2
C1
I608A
(NOT USED)
POWER TOP MODULE (CENTER REAR OF ROOF)
419416
ORG/TAN Q3
ORG/LT BLU Q5
ORG/ LT GRN Q6
1 2 3 4 5 6 7 8 9 10 11 12 13 14
SUNRF OPEN SW SENS
SUNRF CLOSE SW SENS
SUNRF SW SPLY
SUNROOF MODULE (RIGHT REAR OF SUNROOF ASSEMBLY)
B222 DK GRN/WHT 49 VEHICLE SPD SIG 2
C6
BODY CONTROL MODULE (LEFT END OF DASH)

Fig. 85: Retractable Roof Circuit

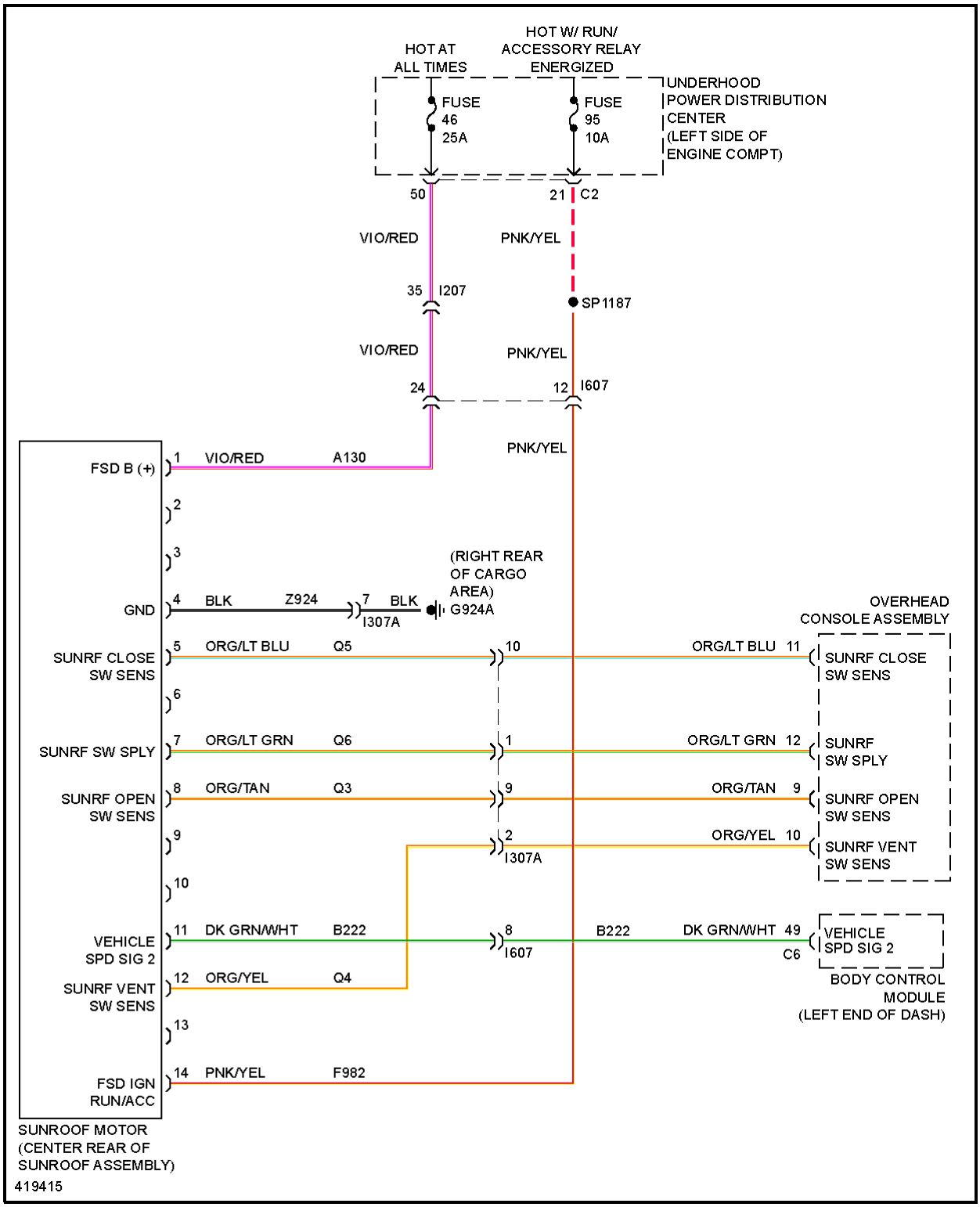
HOT AT ALL TIMES
HOT W/ RUN/ ACCESSORY RELAY ENERGIZED
FUSE 46 25A
FUSE 95 10A
UNDERHOOD POWER DISTRIBUTION CENTER (LEFT SIDE OF ENGINE COMPT)
50
21 C2
VIO/RED
PNK/YEL
35 I207
SP1187
VIO/RED
PNK/YEL
24
12 I607
PNK/YEL
FSD B (+)
1 VIO/RED A130
2
3
(RIGHT REAR OF CARGO AREA)
GND
4 BLK Z924
7 BLK
I307A
G924A
OVERHEAD CONSOLE ASSEMBLY
SUNRF CLOSE SW SENS
5 ORG/LT BLU Q5
10
ORG/LT BLU 11
SUNRF CLOSE SW SENS
6
SUNRF SW SPLY
7 ORG/LT GRN Q6
1
ORG/LT GRN 12
SUNRF SW SPLY
SUNRF OPEN SW SENS
8 ORG/TAN Q3
9
ORG/TAN 9
SUNRF OPEN SW SENS
9
2
I307A
ORG/YEL 10
SUNRF VENT SW SENS
10
VEHICLE SPD SIG 2
11 DK GRN/WHT B222
8
I607
B222
DK GRN/WHT 49
C6
VEHICLE SPD SIG 2
SUNRF VENT SW SENS
12 ORG/YEL Q4
BODY CONTROL MODULE (LEFT END OF DASH)
13
FSD IGN RUN/ACC
14 PNK/YEL F982
SUNROOF MOTOR (CENTER REAR OF SUNROOF ASSEMBLY)
419415

Fig. 86: Sunroof Circuit

POWER WINDOWS

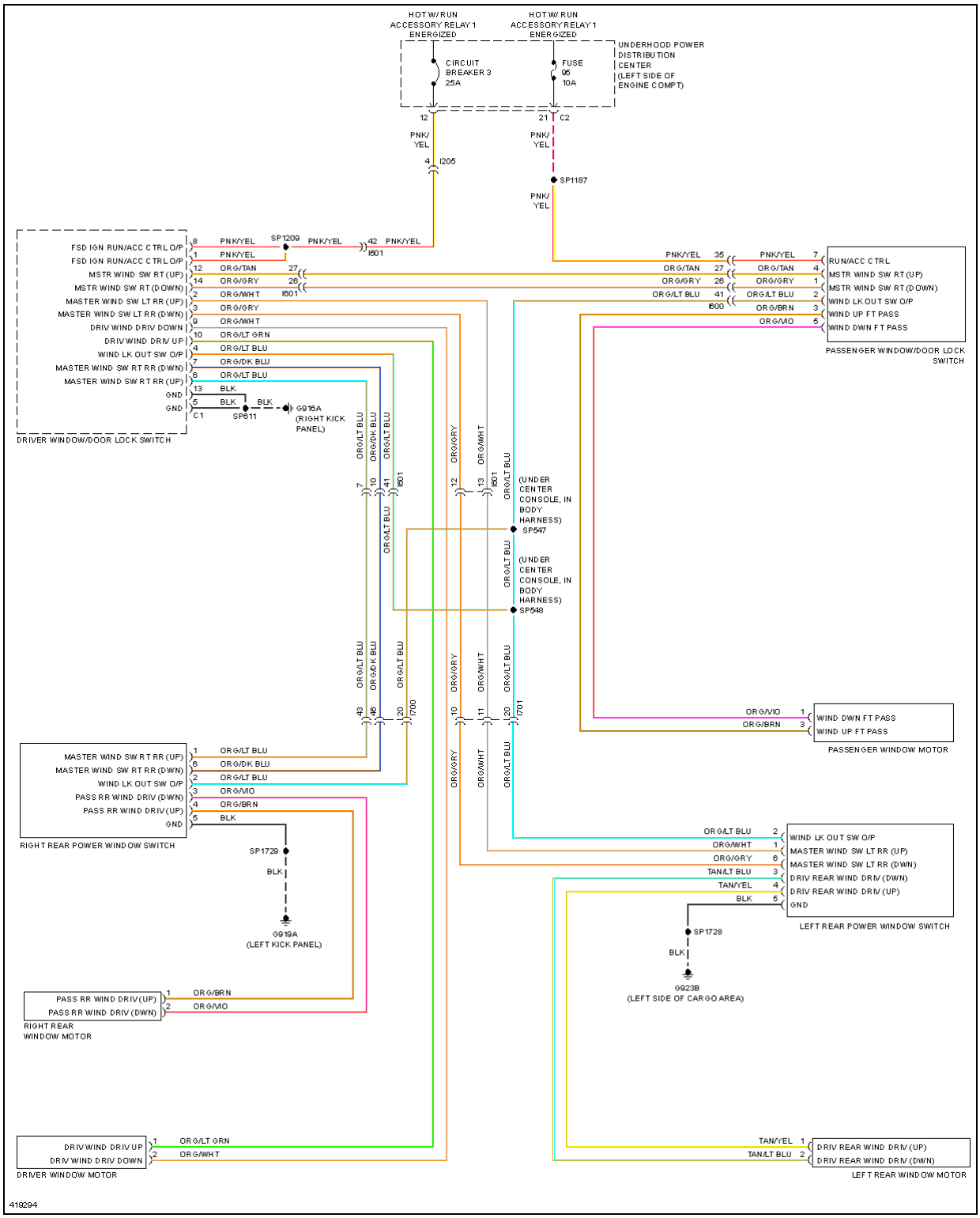
HOT W/ RUN ACCESSORY RELAY 1 ENERGIZED
HOT W/ RUN ACCESSORY RELAY 1 ENERGIZED
CIRCUIT BREAKER 3 25A
FUSE 95 10A
UNDERHOOD POWER DISTRIBUTION CENTER (LEFT SIDE OF ENGINE COMPT)
PNK/YEL
SP1187
SP1209
I205
I601
I600
I700
I701
DRIVER WINDOW/DOOR LOCK SWITCH
FSD IGN RUN/ACC CTRL O/P
MSTR WIND SW RT (UP)
MSTR WIND SW RT (DOWN)
MASTER WIND SW LT RR (UP)
MASTER WIND SW LT RR (DWN)
DRIV WIND DRIV DOWN
DRIV WIND DRIV UP
WIND LK OUT SW O/P
MASTER WIND SW RT RR (DWN)
MASTER WIND SW RT RR (UP)
GND
SP611
G916A (RIGHT KICK PANEL)
PASSENGER WINDOW/DOOR LOCK SWITCH
RUN/ACC CTRL
WIND DWN FT PASS
WIND UP FT PASS
PASSENGER WINDOW MOTOR
(UNDER CENTER CONSOLE, IN BODY HARNESS) SP547
(UNDER CENTER CONSOLE, IN BODY HARNESS) SP548
RIGHT REAR POWER WINDOW SWITCH
PASS RR WIND DRIV (DWN)
PASS RR WIND DRIV (UP)
SP1729
G919A (LEFT KICK PANEL)
RIGHT REAR WINDOW MOTOR
LEFT REAR POWER WINDOW SWITCH
DRIV REAR WIND DRIV (DWN)
DRIV REAR WIND DRIV (UP)
SP1728
G923B (LEFT SIDE OF CARGO AREA)
DRIVER WINDOW MOTOR
LEFT REAR WINDOW MOTOR
419294

Fig. 87: Power Windows Circuit, Base

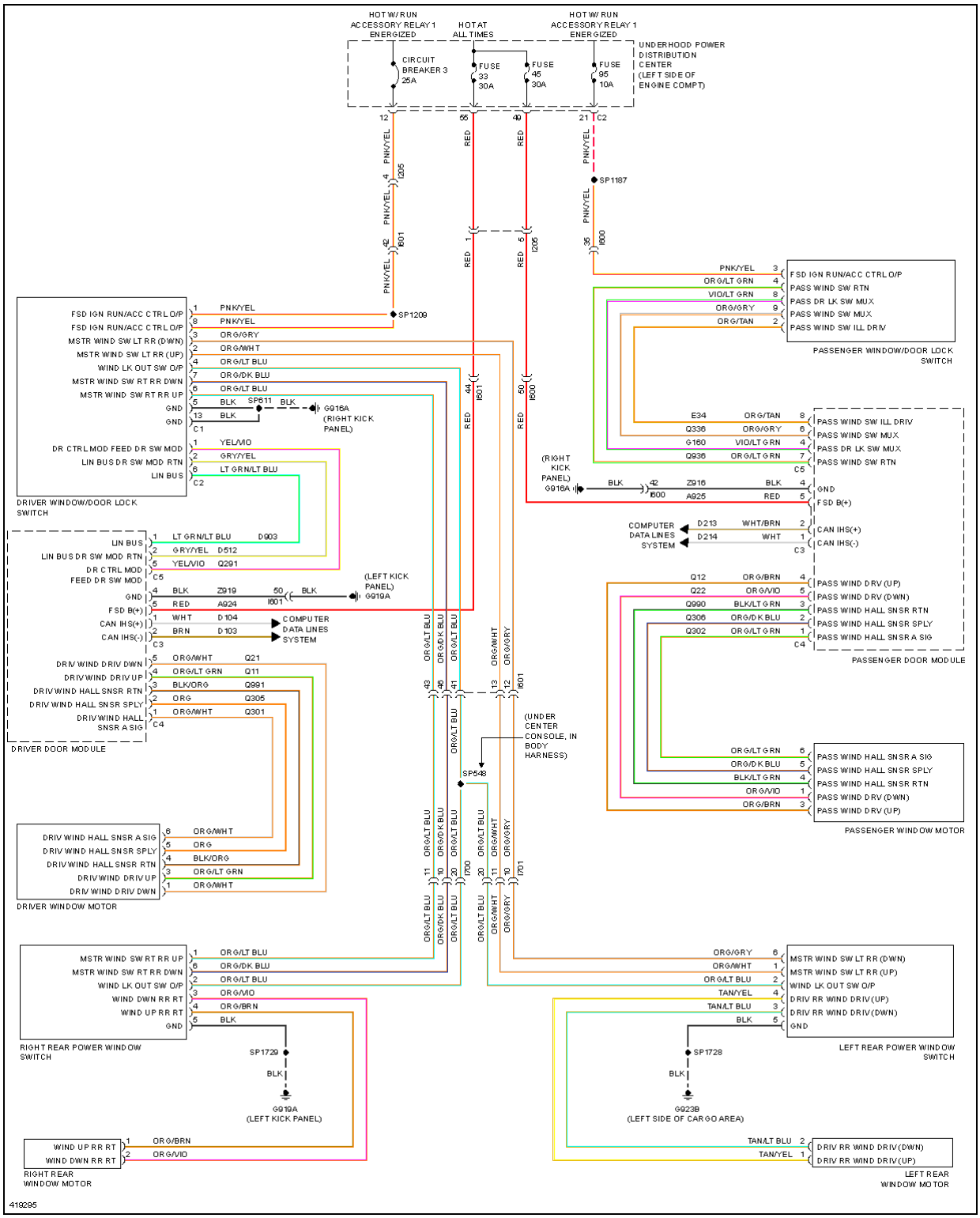
HOT W/ RUN ACCESSORY RELAY 1 ENERGIZED
HOT AT ALL TIMES
HOT W/ RUN ACCESSORY RELAY 1 ENERGIZED
UNDERHOOD POWER DISTRIBUTION CENTER (LEFT SIDE OF ENGINE COMPT)
CIRCUIT BREAKER 3 25A
FUSE 33 30A
FUSE 45 30A
FUSE 95 10A
SP1187
SP1209
SP548
SP1729
SP1728
G916A (RIGHT KICK PANEL)
G919A (LEFT KICK PANEL)
G923B (LEFT SIDE OF CARGO AREA)
(UNDER CENTER CONSOLE, IN BODY HARNESS)
DRIVER WINDOW/DOOR LOCK SWITCH
PASSENGER WINDOW/DOOR LOCK SWITCH
DRIVER DOOR MODULE
PASSENGER DOOR MODULE
DRIVER WINDOW MOTOR
PASSENGER WINDOW MOTOR
RIGHT REAR POWER WINDOW SWITCH
LEFT REAR POWER WINDOW SWITCH
RIGHT REAR WINDOW MOTOR
LEFT REAR WINDOW MOTOR
COMPUTER DATA LINES SYSTEM
419295

Fig. 88: Power Windows Circuit, Premium

RADIO

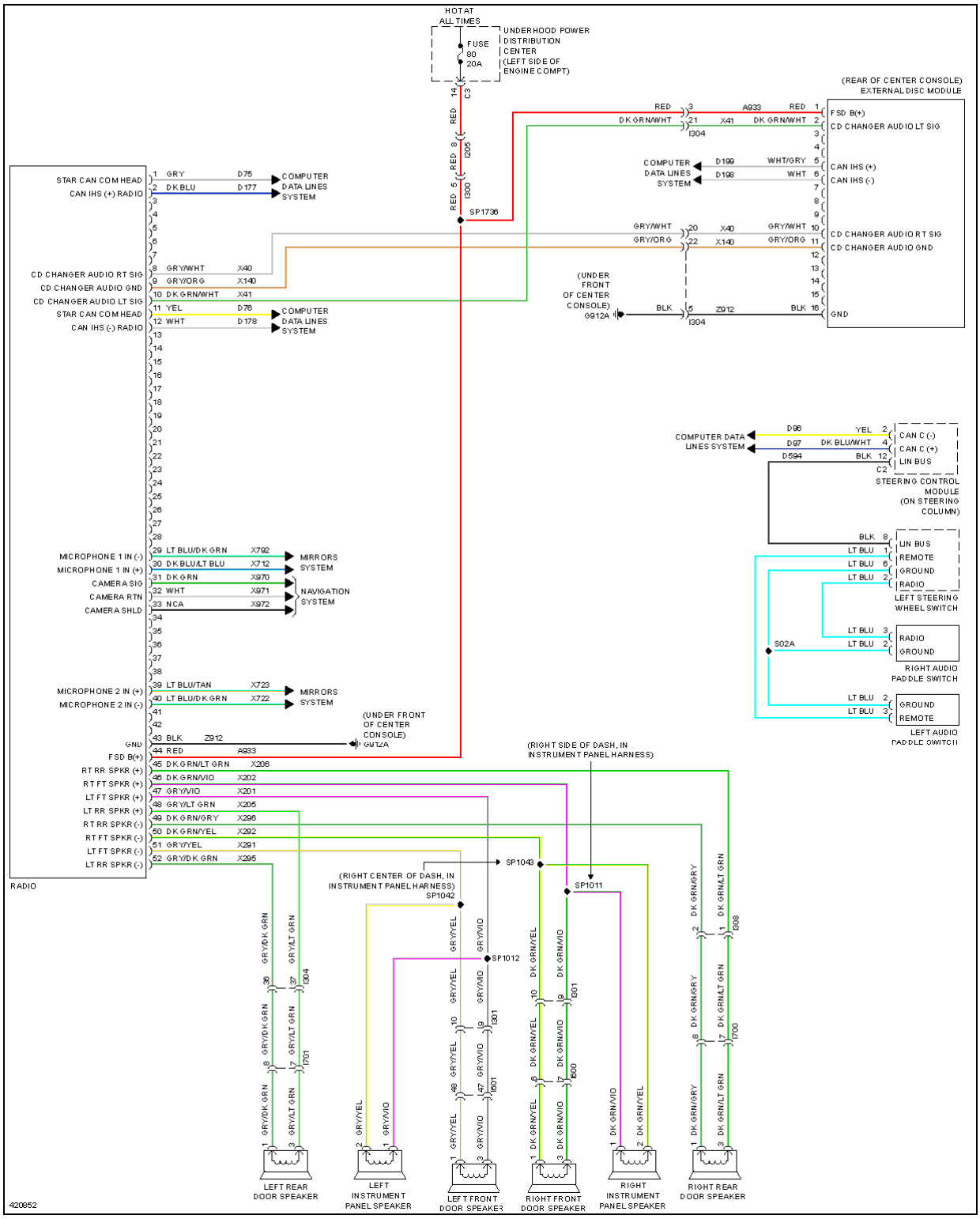
HOT AT ALL TIMES
FUSE 80 20A
UNDER HOOD POWER DISTRIBUTION CENTER (LEFT SIDE OF ENGINE COMPT)
(REAR OF CENTER CONSOLE) EXTERNAL DISC MODULE
FSD B(+)
CD CHANGER AUDIO LT SIG
CAN IHS (+)
CAN IHS (-)
CD CHANGER AUDIO RT SIG
CD CHANGER AUDIO GND
GND
COMPUTER DATA LINES SYSTEM
(UNDER FRONT OF CENTER CONSOLE) G912A
STAR CAN COM HEAD
CAN IHS (+) RADIO
CAN IHS (-) RADIO
CD CHANGER AUDIO RT SIG
CD CHANGER AUDIO GND
CD CHANGER AUDIO LT SIG
STAR CAN COM HEAD
CAN IHS (-) RADIO
MICROPHONE 1 IN (-)
MICROPHONE 1 IN (+)
CAMERA SIG
CAMERA RTN
CAMERA SHLD
MIRRORS SYSTEM
NAVIGATION SYSTEM
MICROPHONE 2 IN (+)
MICROPHONE 2 IN (-)
GND
FSD B(+)
RT RR SPKR (+)
RT FT SPKR (+)
LT FT SPKR (+)
LT RR SPKR (+)
RT RR SPKR (-)
RT FT SPKR (-)
LT FT SPKR (-)
LT RR SPKR (-)
RADIO
(UNDER FRONT OF CENTER CONSOLE) G912A
(RIGHT SIDE OF DASH, IN INSTRUMENT PANEL HARNESS)
(RIGHT CENTER OF DASH, IN INSTRUMENT PANEL HARNESS) SP1042
SP1736
SP1043
SP1011
SP1012
CAN C (-)
CAN C (+)
LIN BUS
STEERING CONTROL MODULE (ON STEERING COLUMN)
LIN BUS
REMOTE
GROUND
RADIO
LEFT STEERING WHEEL SWITCH
RADIO
GROUND
RIGHT AUDIO PADDLE SWITCH
GROUND
REMOTE
LEFT AUDIO PADDLE SWITCH
S02A
LEFT REAR DOOR SPEAKER
LEFT INSTRUMENT PANEL SPEAKER
LEFT FRONT DOOR SPEAKER
RIGHT FRONT DOOR SPEAKER
RIGHT INSTRUMENT PANEL SPEAKER
RIGHT REAR DOOR SPEAKER
420852

Fig. 89: Radio Circuit, Base

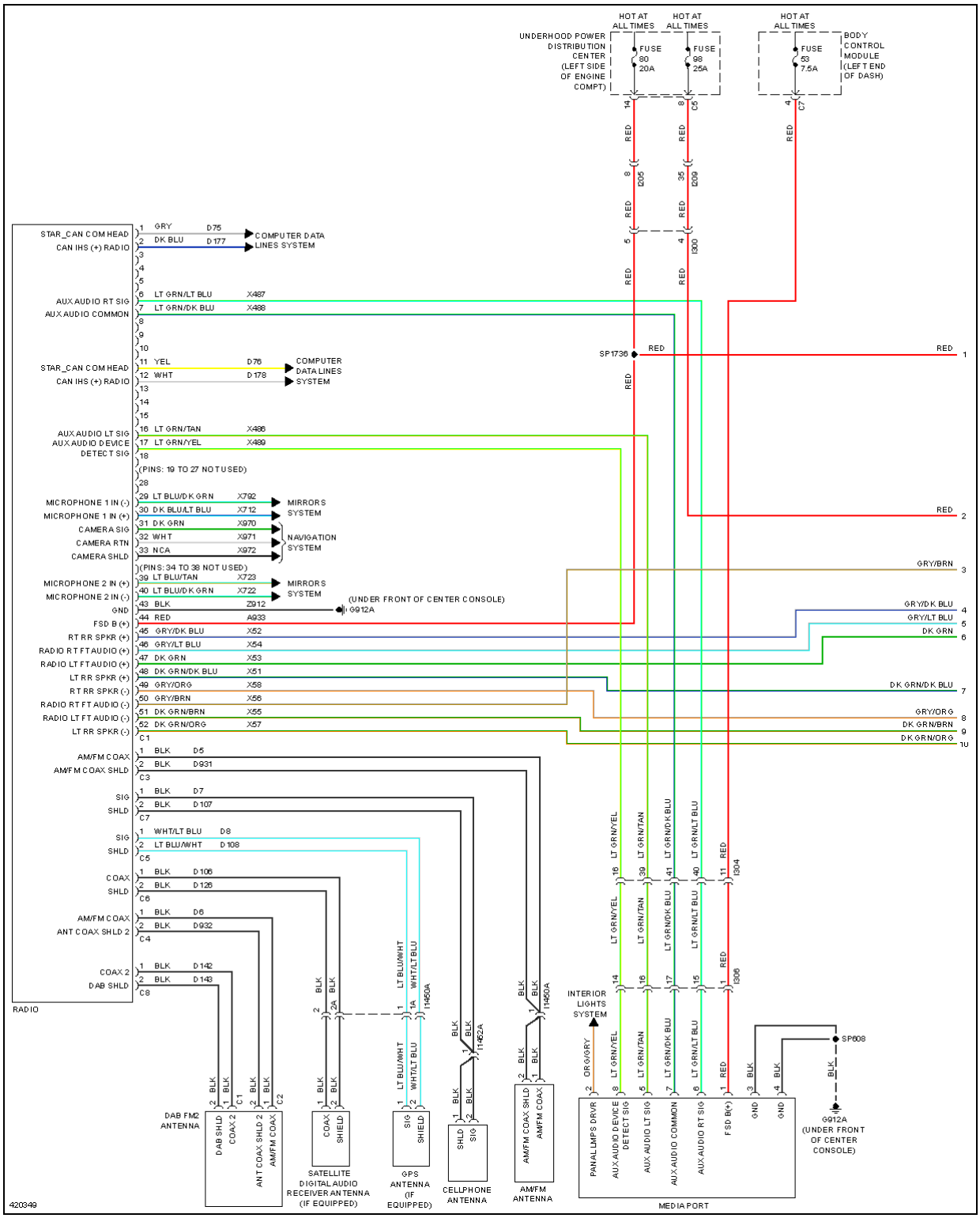
UNDERHOOD POWER DISTRIBUTION CENTER (LEFT SIDE OF ENGINE COMPT)
HOT AT ALL TIMES
FUSE 80 20A
FUSE 98 25A
BODY CONTROL MODULE (LEFT END OF DASH)
FUSE 53 7.5A
STAR_CAN COM HEAD
CAN IHS (+) RADIO
COMPUTER DATA LINES SYSTEM
AUX AUDIO RT SIG
AUX AUDIO COMMON
AUX AUDIO LT SIG
AUX AUDIO DEVICE DETECT SIG
(PINS: 19 TO 27 NOT USED)
MICROPHONE 1 IN (-)
MICROPHONE 1 IN (+)
CAMERA SIG
CAMERA RTN
CAMERA SHLD
MIRRORS SYSTEM
NAVIGATION SYSTEM
(PINS: 34 TO 38 NOT USED)
MICROPHONE 2 IN (+)
MICROPHONE 2 IN (-)
GND
FSD B (+)
RT RR SPKR (+)
RADIO RT FT AUDIO (+)
RADIO LT FT AUDIO (+)
LT RR SPKR (+)
RT RR SPKR (-)
RADIO RT FT AUDIO (-)
RADIO LT FT AUDIO (-)
LT RR SPKR (-)
(UNDER FRONT OF CENTER CONSOLE)
G912A
AM/FM COAX
AM/FM COAX SHLD
SIG
SHLD
COAX
AM/FM COAX ANT COAX SHLD 2
COAX 2
DAB SHLD
RADIO
DAB FM2 ANTENNA
SATELLITE DIGITAL AUDIO RECEIVER ANTENNA (IF EQUIPPED)
GPS ANTENNA (IF EQUIPPED)
CELLPHONE ANTENNA
AM/FM ANTENNA
INTERIOR LIGHTS SYSTEM
PANAL LMPS DRVR
AUX AUDIO DEVICE DETECT SIG
AUX AUDIO LT SIG
AUX AUDIO COMMON
AUX AUDIO RT SIG
FSD B(+)
GND
MEDIA PORT
SP608
420349

Fig. 90: Radio Circuit, Premium (1 of 3)

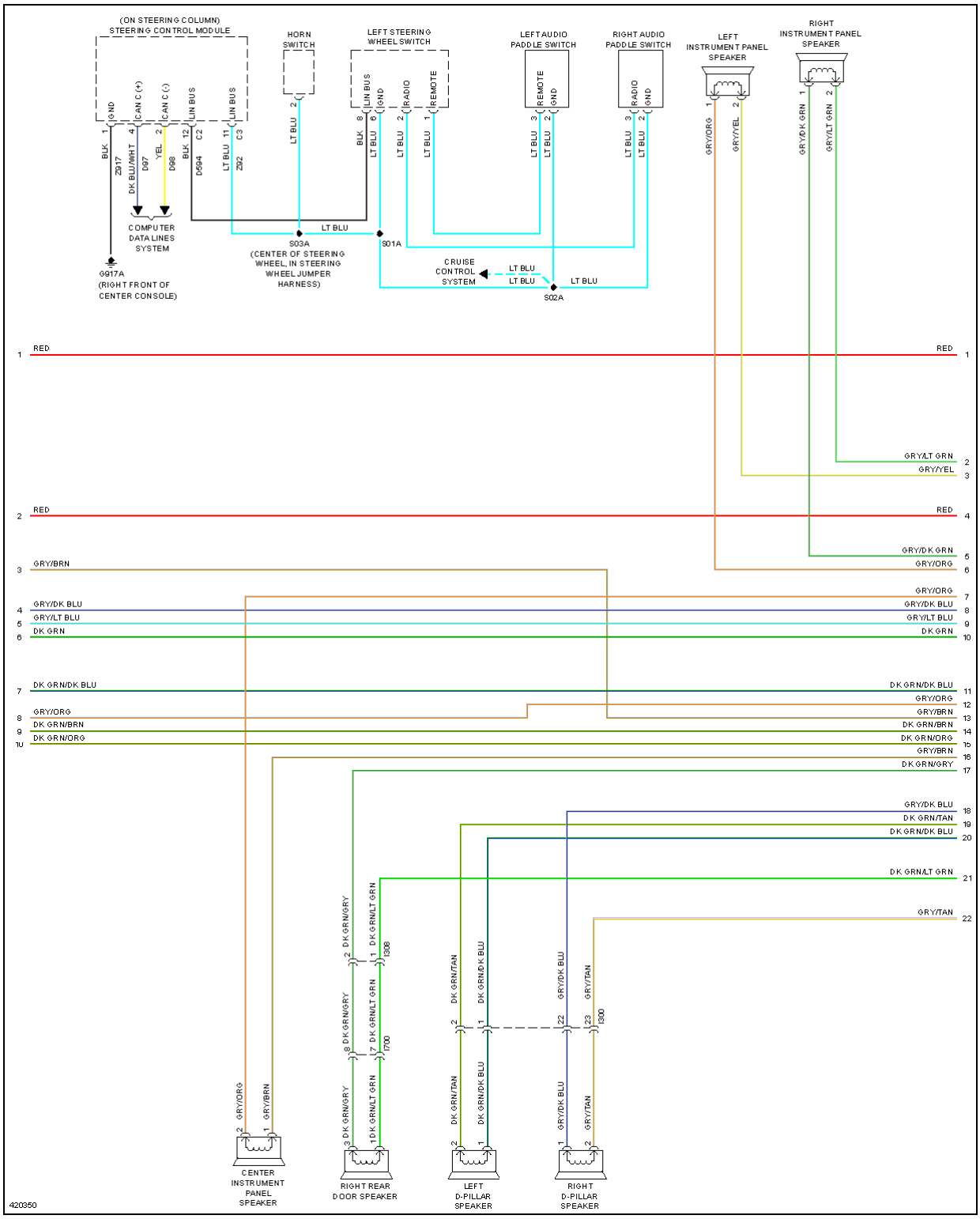
(ON STEERING COLUMN)
STEERING CONTROL MODULE
HORN SWITCH
LEFT STEERING WHEEL SWITCH
LEFT AUDIO PADDLE SWITCH
RIGHT AUDIO PADDLE SWITCH
LEFT INSTRUMENT PANEL SPEAKER
RIGHT INSTRUMENT PANEL SPEAKER
COMPUTER DATA LINES SYSTEM
G917A (RIGHT FRONT OF CENTER CONSOLE)
S03A (CENTER OF STEERING WHEEL, IN STEERING WHEEL JUMPER HARNESS)
S01A
CRUISE CONTROL SYSTEM
S02A
CENTER INSTRUMENT PANEL SPEAKER
RIGHT REAR DOOR SPEAKER
LEFT D-PILLAR SPEAKER
RIGHT D-PILLAR SPEAKER
420350

Fig. 91: Radio Circuit, Premium (2 of 3)

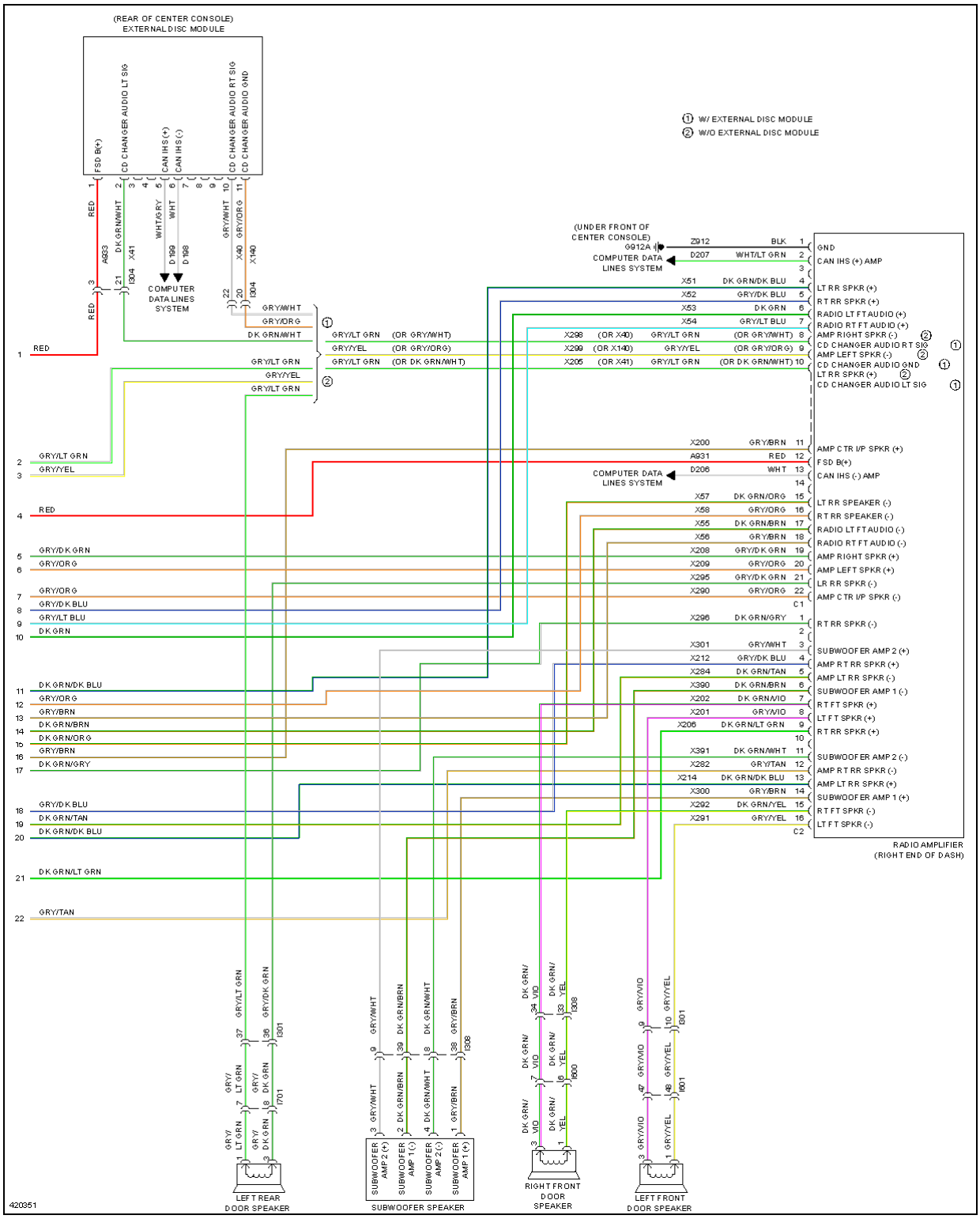
(REAR OF CENTER CONSOLE)
EXTERNAL DISC MODULE
FSD B(+)
CD CHANGER AUDIO LT SIG
CAN IHS (+)
CAN IHS (-)
CD CHANGER AUDIO RT SIG
CD CHANGER AUDIO GND
COMPUTER DATA LINES SYSTEM
① W/ EXTERNAL DISC MODULE
② W/O EXTERNAL DISC MODULE
(UNDER FRONT OF CENTER CONSOLE)
G912A
COMPUTER DATA LINES SYSTEM
GND
CAN IHS (+) AMP
LT RR SPKR (+)
RT RR SPKR (+)
RADIO LT FT AUDIO (+)
RADIO RT FT AUDIO (+)
AMP RIGHT SPKR (-)
CD CHANGER AUDIO RT SIG
AMP LEFT SPKR (-)
CD CHANGER AUDIO GND
LT RR SPKR (+)
CD CHANGER AUDIO LT SIG
AMP CTR I/P SPKR (+)
FSD B(+)
CAN IHS (-) AMP
LT RR SPEAKER (-)
RT RR SPEAKER (-)
RADIO LT FT AUDIO (-)
RADIO RT FT AUDIO (-)
AMP RIGHT SPKR (+)
AMP LEFT SPKR (+)
LR RR SPKR (-)
AMP CTR I/P SPKR (-)
RT RR SPKR (-)
SUBWOOFER AMP 2 (+)
AMP RT RR SPKR (+)
AMP LT RR SPKR (-)
SUBWOOFER AMP 1 (-)
RT FT SPKR (+)
LT FT SPKR (+)
RT RR SPKR (+)
SUBWOOFER AMP 2 (-)
AMP RT RR SPKR (-)
AMP LT RR SPKR (+)
SUBWOOFER AMP 1 (+)
RT FT SPKR (-)
LT FT SPKR (-)
RADIO AMPLIFIER
(RIGHT END OF DASH)
LEFT REAR DOOR SPEAKER
SUBWOOFER SPEAKER
RIGHT FRONT DOOR SPEAKER
LEFT FRONT DOOR SPEAKER
420351

Fig. 92: Radio Circuit, Premium (3 of 3)

SHIFT INTERLOCK

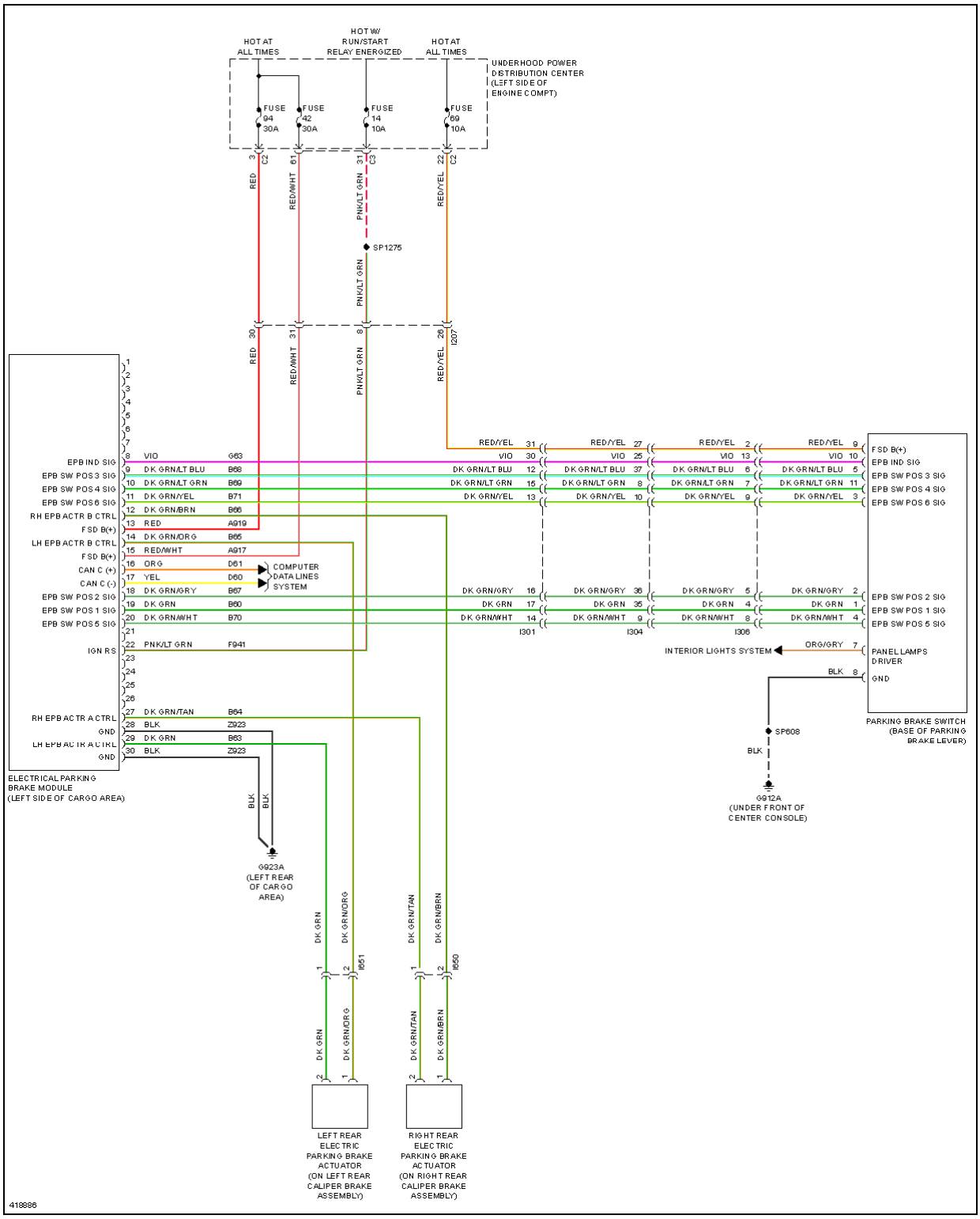
HOT AT ALL TIMES
HOT W/ RUN/START RELAY ENERGIZED
HOT AT ALL TIMES
UNDERHOOD POWER DISTRIBUTION CENTER (LEFT SIDE OF ENGINE COMPT)
FUSE 94 30A
FUSE 42 30A
FUSE 14 10A
FUSE 69 10A
SP1275
ELECTRICAL PARKING BRAKE MODULE (LEFT SIDE OF CARGO AREA)
EPB IND SIG
EPB SW POS 3 SIG
EPB SW POS 4 SIG
EPB SW POS 6 SIG
RH EPB ACTR B CTRL
FSD B(+)
LH EPB ACTR B CTRL
FSD B(+)
CAN C (+)
CAN C (-)
COMPUTER DATA LINES SYSTEM
EPB SW POS 2 SIG
EPB SW POS 1 SIG
EPB SW POS 5 SIG
IGN RS
RH EPB ACTR A CTRL
GND
LH EPB ACTR A CTRL
GND
G923A (LEFT REAR OF CARGO AREA)
LEFT REAR ELECTRIC PARKING BRAKE ACTUATOR (ON LEFT REAR CALIPER BRAKE ASSEMBLY)
RIGHT REAR ELECTRIC PARKING BRAKE ACTUATOR (ON RIGHT REAR CALIPER BRAKE ASSEMBLY)
INTERIOR LIGHTS SYSTEM
PARKING BRAKE SWITCH (BASE OF PARKING BRAKE LEVER)
FSD B(+)
EPB IND SIG
EPB SW POS 3 SIG
EPB SW POS 4 SIG
EPB SW POS 6 SIG
EPB SW POS 2 SIG
EPB SW POS 1 SIG
EPB SW POS 5 SIG
PANEL LAMPS DRIVER
GND
SP608
G912A (UNDER FRONT OF CENTER CONSOLE)
418886

Fig. 93: Park Brake Release Circuit

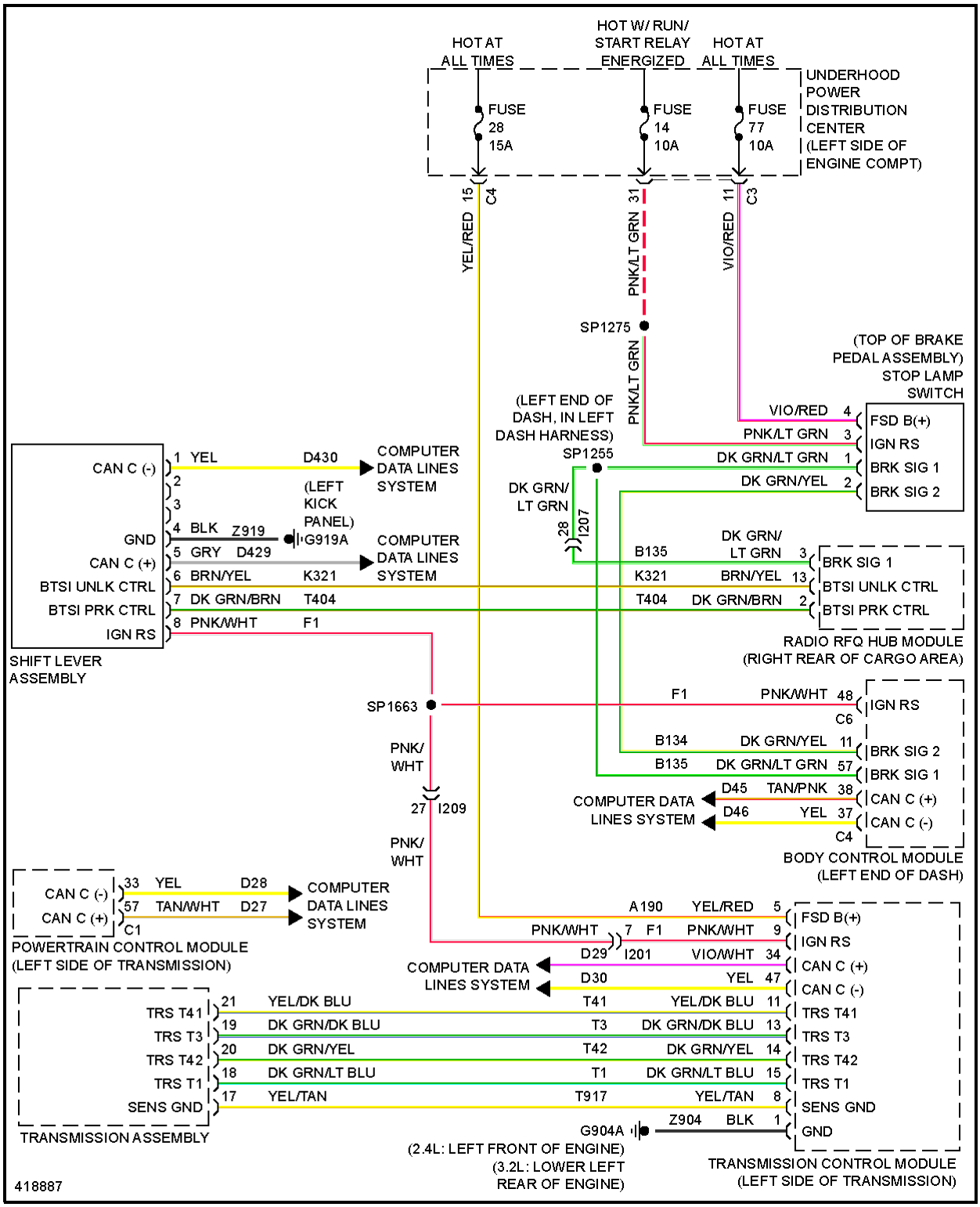
HOT AT ALL TIMES
HOT W/ RUN/ START RELAY ENERGIZED
HOT AT ALL TIMES
UNDERHOOD POWER DISTRIBUTION CENTER (LEFT SIDE OF ENGINE COMPT)
FUSE 28 15A
FUSE 14 10A
FUSE 77 10A
YEL/RED 15 C4
PNK/LT GRN 31
VIO/RED 11 C3
SP1275
PNK/LT GRN
(TOP OF BRAKE PEDAL ASSEMBLY) STOP LAMP SWITCH
(LEFT END OF DASH, IN LEFT DASH HARNESS)
SP1255
VIO/RED 4 FSD B(+)
PNK/LT GRN 3 IGN RS
DK GRN/LT GRN 1 BRK SIG 1
DK GRN/YEL 2 BRK SIG 2
DK GRN/ LT GRN
28 I207
CAN C (-) 1 YEL D430 COMPUTER DATA LINES SYSTEM
2
3
(LEFT KICK PANEL)
GND 4 BLK Z919 G919A
CAN C (+) 5 GRY D429 COMPUTER DATA LINES SYSTEM
BTSI UNLK CTRL 6 BRN/YEL K321
BTSI PRK CTRL 7 DK GRN/BRN T404
IGN RS 8 PNK/WHT F1
SHIFT LEVER ASSEMBLY
B135 DK GRN/ LT GRN 3 BRK SIG 1
K321 BRN/YEL 13 BTSI UNLK CTRL
T404 DK GRN/BRN 2 BTSI PRK CTRL
RADIO RFQ HUB MODULE (RIGHT REAR OF CARGO AREA)
SP1663
F1 PNK/WHT 48 IGN RS
C6
PNK/ WHT
27 I209
B134 DK GRN/YEL 11 BRK SIG 2
B135 DK GRN/LT GRN 57 BRK SIG 1
COMPUTER DATA LINES SYSTEM
D45 TAN/PNK 38 CAN C (+)
D46 YEL 37 CAN C (-)
C4
BODY CONTROL MODULE (LEFT END OF DASH)
PNK/ WHT
CAN C (-) 33 YEL D28 COMPUTER DATA LINES SYSTEM
CAN C (+) 57 TAN/WHT D27
C1
POWERTRAIN CONTROL MODULE (LEFT SIDE OF TRANSMISSION)
A190 YEL/RED 5 FSD B(+)
PNK/WHT 7 F1 PNK/WHT 9 IGN RS
D29 I201 VIO/WHT 34 CAN C (+)
COMPUTER DATA LINES SYSTEM
D30 YEL 47 CAN C (-)
TRS T41 21 YEL/DK BLU T41 YEL/DK BLU 11 TRS T41
TRS T3 19 DK GRN/DK BLU T3 DK GRN/DK BLU 13 TRS T3
TRS T42 20 DK GRN/YEL T42 DK GRN/YEL 14 TRS T42
TRS T1 18 DK GRN/LT BLU T1 DK GRN/LT BLU 15 TRS T1
SENS GND 17 YEL/TAN T917 YEL/TAN 8 SENS GND
TRANSMISSION ASSEMBLY
G904A Z904 BLK 1 GND
(2.4L: LEFT FRONT OF ENGINE)
(3.2L: LOWER LEFT REAR OF ENGINE)
TRANSMISSION CONTROL MODULE (LEFT SIDE OF TRANSMISSION)
418887

Fig. 94: Shift Interlock Circuit

STARTING/CHARGING

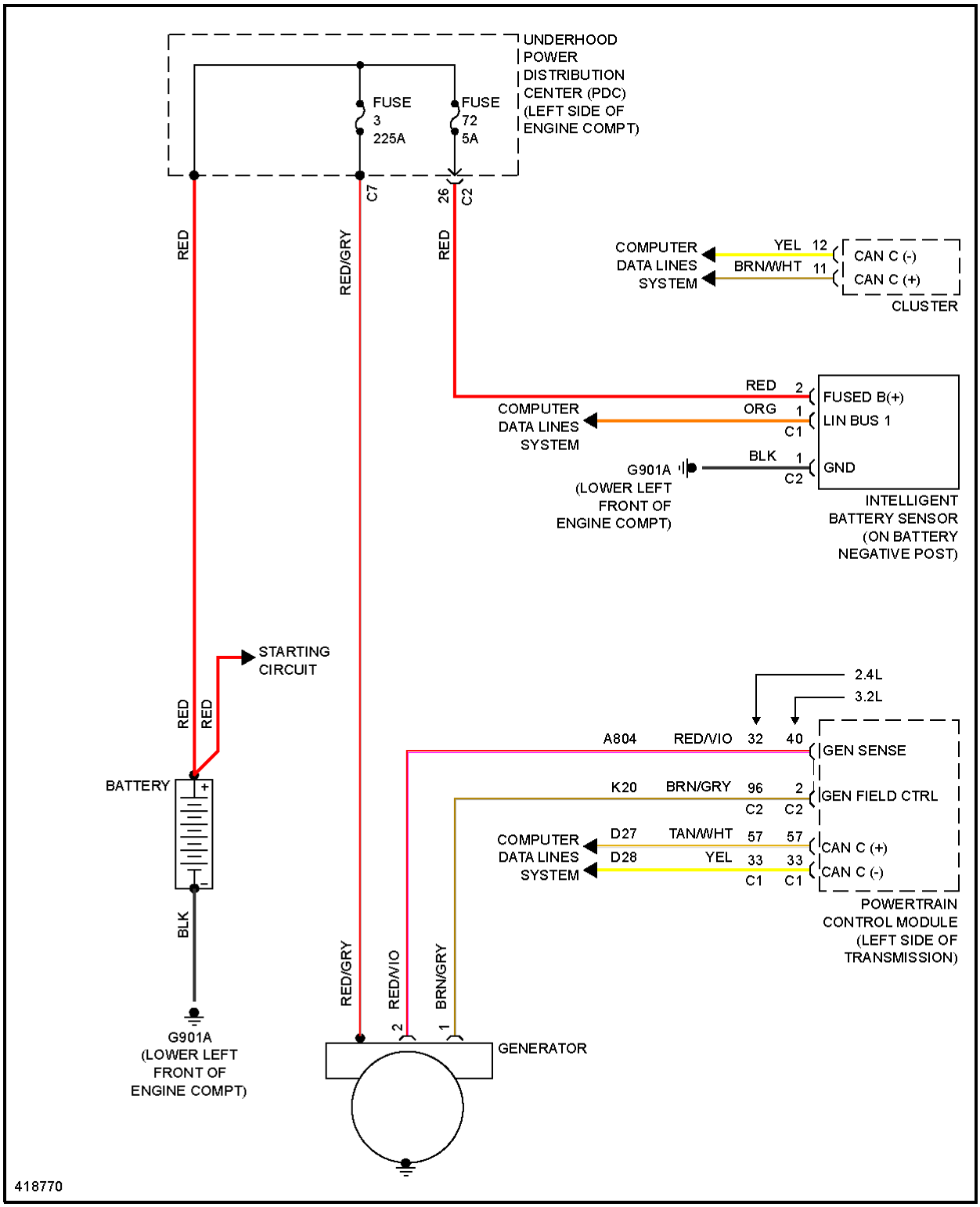
UNDERHOOD POWER DISTRIBUTION CENTER (PDC) (LEFT SIDE OF ENGINE COMPT)
FUSE 3 225A
FUSE 72 5A
C7
26
C2
RED
RED/GRY
RED
COMPUTER DATA LINES SYSTEM
YEL 12
BRN/WHT 11
CAN C (-)
CAN C (+)
CLUSTER
RED 2
ORG 1
C1
FUSED B(+)
LIN BUS 1
COMPUTER DATA LINES SYSTEM
BLK 1
C2
GND
G901A
(LOWER LEFT FRONT OF ENGINE COMPT)
INTELLIGENT BATTERY SENSOR (ON BATTERY NEGATIVE POST)
STARTING CIRCUIT
RED
RED
BATTERY
BLK
G901A
(LOWER LEFT FRONT OF ENGINE COMPT)
2.4L
3.2L
A804 RED/VIO 32 40
GEN SENSE
K20 BRN/GRY 96 2
C2 C2
GEN FIELD CTRL
COMPUTER DATA LINES SYSTEM
D27 TAN/WHT 57 57
D28 YEL 33 33
C1 C1
CAN C (+)
CAN C (-)
POWERTRAIN CONTROL MODULE (LEFT SIDE OF TRANSMISSION)
RED/GRY
RED/VIO
BRN/GRY
2
1
GENERATOR
418770

Fig. 95: Charging Circuit

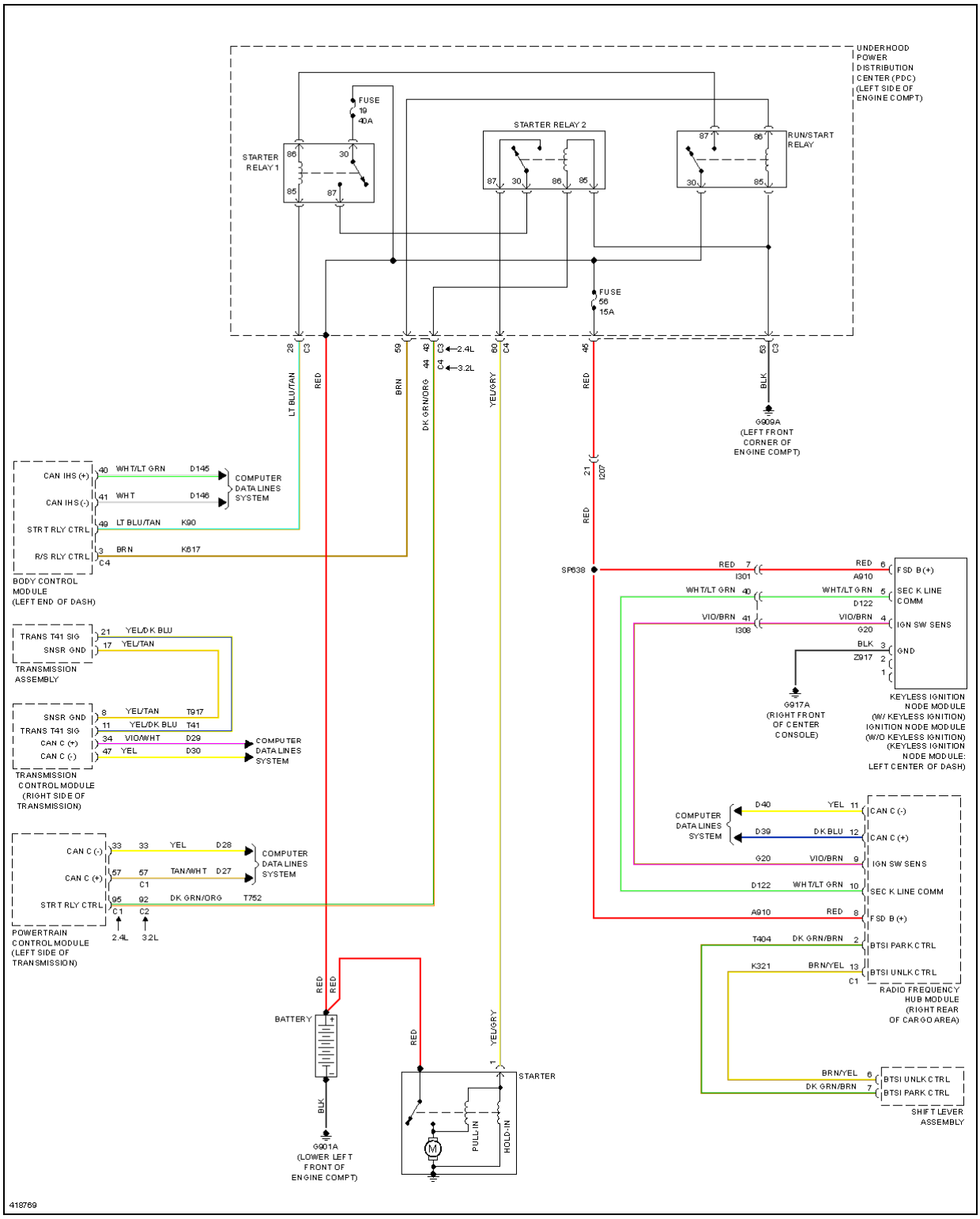
UNDERHOOD POWER DISTRIBUTION CENTER (PDC) (LEFT SIDE OF ENGINE COMPT)
FUSE 19 40A
STARTER RELAY 1
STARTER RELAY 2
RUN/START RELAY
FUSE 56 15A
G909A (LEFT FRONT CORNER OF ENGINE COMPT)
BODY CONTROL MODULE (LEFT END OF DASH)
CAN IHS (+)
CAN IHS (-)
STRT RLY CTRL
R/S RLY CTRL
COMPUTER DATA LINES SYSTEM
TRANS T41 SIG
SNSR GND
TRANSMISSION ASSEMBLY
TRANSMISSION CONTROL MODULE (RIGHT SIDE OF TRANSMISSION)
CAN C (+)
CAN C (-)
POWERTRAIN CONTROL MODULE (LEFT SIDE OF TRANSMISSION)
2.4L
3.2L
BATTERY
G901A (LOWER LEFT FRONT OF ENGINE COMPT)
STARTER
PULL-IN
HOLD-IN
SP638
FSD B (+)
SEC K LINE COMM
IGN SW SENS
GND
G917A (RIGHT FRONT OF CENTER CONSOLE)
KEYLESS IGNITION NODE MODULE (W/ KEYLESS IGNITION) IGNITION NODE MODULE (W/O KEYLESS IGNITION) (KEYLESS IGNITION NODE MODULE: LEFT CENTER OF DASH)
BTSI PARK CTRL
BTSI UNLK CTRL
RADIO FREQUENCY HUB MODULE (RIGHT REAR OF CARGO AREA)
SHIFT LEVER ASSEMBLY
418769

Fig. 96: Starting Circuit

SUPPLEMENTAL RESTRAINTS

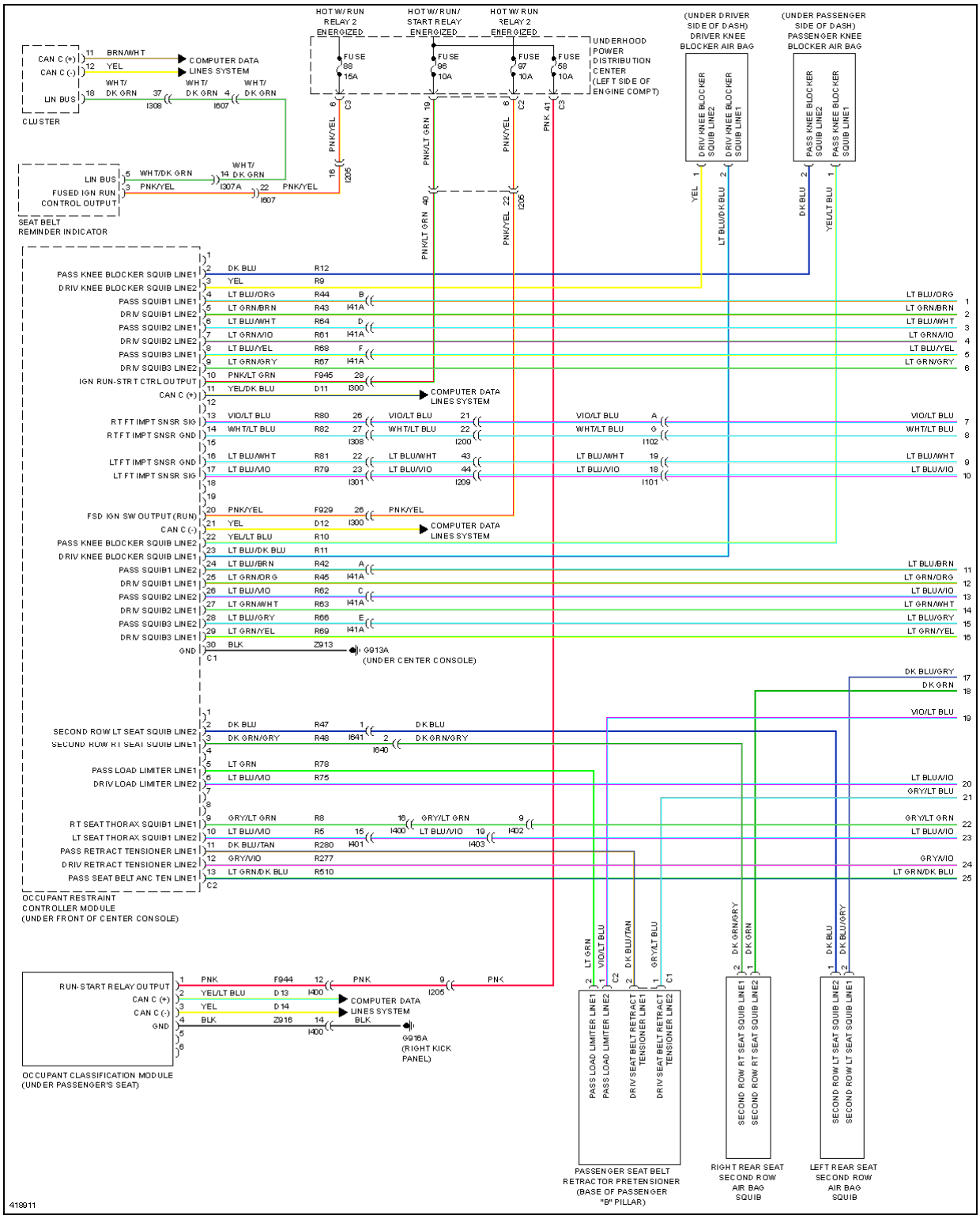
HOT W/ RUN RELAY 2 ENERGIZED
HOT W/ RUN/ START RELAY ENERGIZED
HOT W/ RUN RELAY 2 ENERGIZED
UNDERHOOD POWER DISTRIBUTION CENTER (LEFT SIDE OF ENGINE COMPT)
FUSE 88 15A
FUSE 96 10A
FUSE 97 10A
FUSE 58 10A
(UNDER DRIVER SIDE OF DASH) DRIVER KNEE BLOCKER AIR BAG
(UNDER PASSENGER SIDE OF DASH) PASSENGER KNEE BLOCKER AIR BAG
CAN C (+)
CAN C (-)
LIN BUS
COMPUTER DATA LINES SYSTEM
CLUSTER
SEAT BELT REMINDER INDICATOR
FUSED IGN RUN CONTROL OUTPUT
PASS KNEE BLOCKER SQUIB LINE1
DRIV KNEE BLOCKER SQUIB LINE2
PASS SQUIB1 LINE1
DRIV SQUIB1 LINE2
PASS SQUIB2 LINE1
DRIV SQUIB2 LINE2
PASS SQUIB3 LINE1
DRIV SQUIB3 LINE2
IGN RUN-STRT CTRL OUTPUT
RT FT IMPT SNSR SIG
RT FT IMPT SNSR GND
LT FT IMPT SNSR GND
LT FT IMPT SNSR SIG
FSD IGN SW OUTPUT (RUN)
PASS KNEE BLOCKER SQUIB LINE2
DRIV KNEE BLOCKER SQUIB LINE1
PASS SQUIB1 LINE2
DRIV SQUIB1 LINE1
PASS SQUIB2 LINE2
DRIV SQUIB2 LINE1
PASS SQUIB3 LINE2
DRIV SQUIB3 LINE1
GND
G913A (UNDER CENTER CONSOLE)
SECOND ROW LT SEAT SQUIB LINE2
SECOND ROW RT SEAT SQUIB LINE1
PASS LOAD LIMITER LINE1
DRIV LOAD LIMITER LINE2
RT SEAT THORAX SQUIB1 LINE1
LT SEAT THORAX SQUIB1 LINE2
PASS RETRACT TENSIONER LINE1
DRIV RETRACT TENSIONER LINE2
PASS SEAT BELT ANC TEN LINE1
OCCUPANT RESTRAINT CONTROLLER MODULE (UNDER FRONT OF CENTER CONSOLE)
RUN-START RELAY OUTPUT
G916A (RIGHT KICK PANEL)
OCCUPANT CLASSIFICATION MODULE (UNDER PASSENGER'S SEAT)
PASSENGER SEAT BELT RETRACTOR PRETENSIONER (BASE OF PASSENGER "B" PILLAR)
RIGHT REAR SEAT SECOND ROW AIR BAG SQUIB
LEFT REAR SEAT SECOND ROW AIR BAG SQUIB
418911

Fig. 97: Supplemental Restraints Circuit (1 of 3)

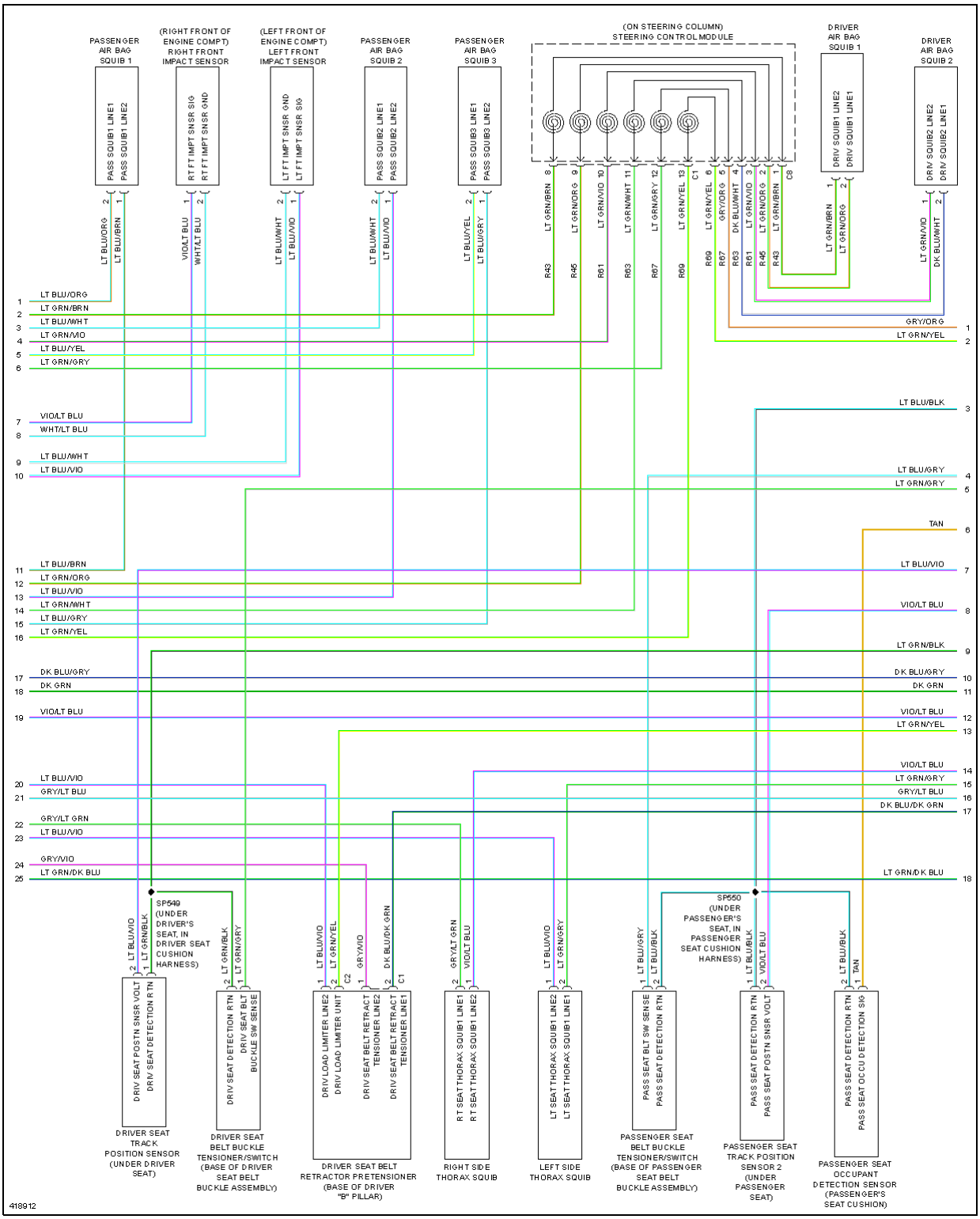
PASSENGER AIR BAG SQUIB 1
PASS SQUIB1 LINE1
PASS SQUIB1 LINE2
(RIGHT FRONT OF ENGINE COMPT) RIGHT FRONT IMPACT SENSOR
RT FT IMPT SNSR SIG
RT FT IMPT SNSR GND
(LEFT FRONT OF ENGINE COMPT) LEFT FRONT IMPACT SENSOR
LT FT IMPT SNSR GND
LT FT IMPT SNSR SIG
PASSENGER AIR BAG SQUIB 2
PASS SQUIB2 LINE1
PASS SQUIB2 LINE2
PASSENGER AIR BAG SQUIB 3
PASS SQUIB3 LINE1
PASS SQUIB3 LINE2
(ON STEERING COLUMN) STEERING CONTROL MODULE
DRIVER AIR BAG SQUIB 1
DRIV SQUIB1 LINE2
DRIV SQUIB1 LINE1
DRIVER AIR BAG SQUIB 2
DRIV SQUIB2 LINE2
DRIV SQUIB2 LINE1
SP549 (UNDER DRIVER'S SEAT, IN DRIVER SEAT CUSHION HARNESS)
SP550 (UNDER PASSENGER'S SEAT, IN PASSENGER SEAT CUSHION HARNESS)
DRIV SEAT POSTN SNSR VOLT
DRIV SEAT DETECTION RTN
DRIVER SEAT TRACK POSITION SENSOR (UNDER DRIVER SEAT)
DRIV SEAT DETECTION RTN
DRIV SEAT BLT BUCKLE SW SENSE
DRIVER SEAT BELT BUCKLE TENSIONER/SWITCH (BASE OF DRIVER SEAT BELT BUCKLE ASSEMBLY)
DRIV LOAD LIMITER LINE2
DRIV LOAD LIMITER UNIT
DRIV SEAT BELT RETRACT TENSIONER LINE2
DRIV SEAT BELT RETRACT TENSIONER LINE1
DRIVER SEAT BELT RETRACTOR PRETENSIONER (BASE OF DRIVER "B" PILLAR)
RT SEAT THORAX SQUIB1 LINE1
RT SEAT THORAX SQUIB1 LINE2
RIGHT SIDE THORAX SQUIB
LT SEAT THORAX SQUIB1 LINE2
LT SEAT THORAX SQUIB1 LINE1
LEFT SIDE THORAX SQUIB
PASS SEAT BLT SW SENSE
PASS SEAT DETECTION RTN
PASSENGER SEAT BELT BUCKLE TENSIONER/SWITCH (BASE OF PASSENGER SEAT BELT BUCKLE ASSEMBLY)
PASS SEAT DETECTION RTN
PASS SEAT POSTN SNSR VOLT
PASSENGER SEAT TRACK POSITION SENSOR 2 (UNDER PASSENGER SEAT)
PASS SEAT DETECTION RTN
PASS SEAT OCCU DETECTION SIG
PASSENGER SEAT OCCUPANT DETECTION SENSOR (PASSENGER'S SEAT CUSHION)
418912

Fig. 98: Supplemental Restraints Circuit (2 of 3)

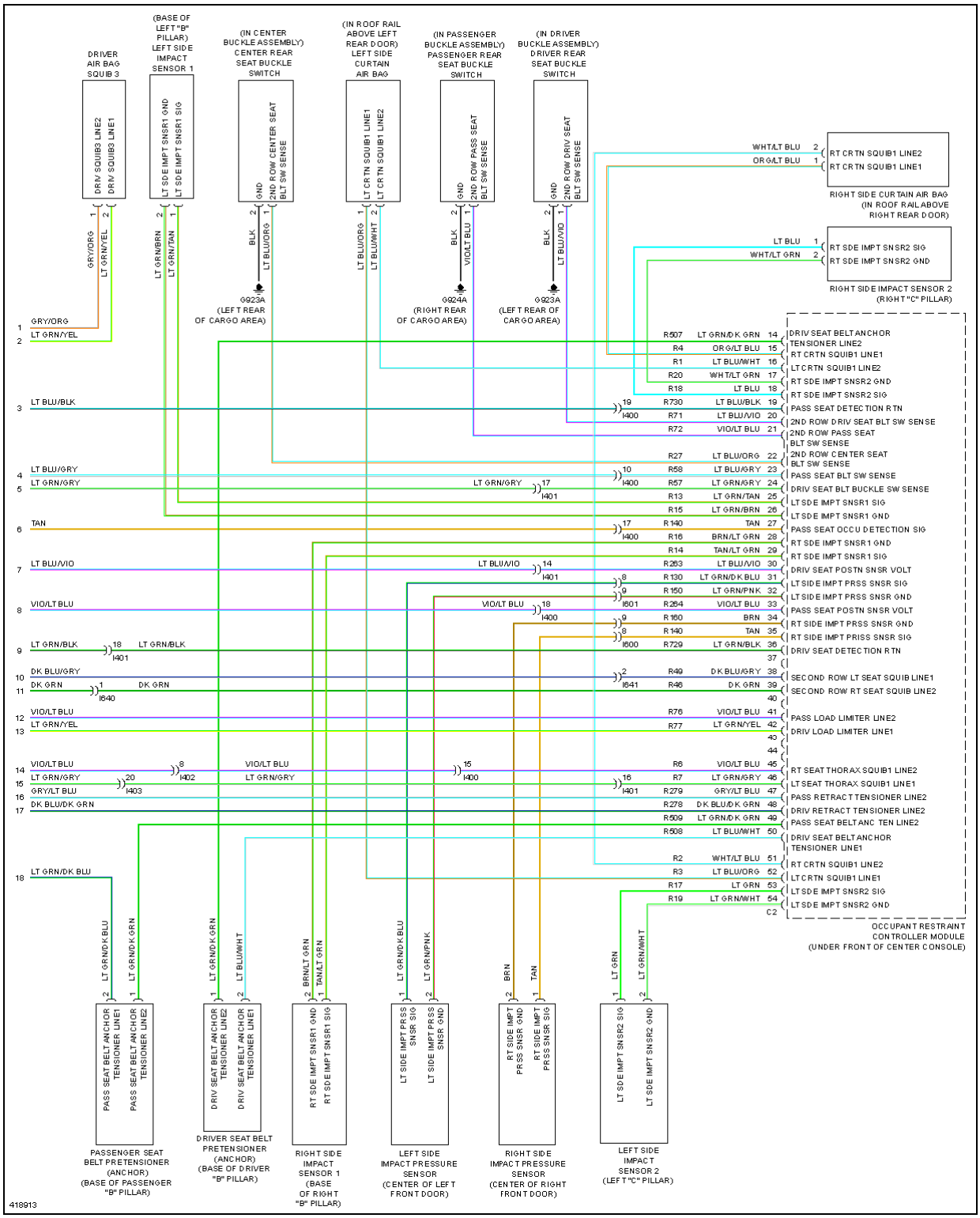
DRIVER AIR BAG SQUIB 3
DRIV SQUIB3 LINE2
DRIV SQUIB3 LINE1
(BASE OF LEFT "B" PILLAR) LEFT SIDE IMPACT SENSOR 1
LT SDE IMPT SNSR1 GND
LT SDE IMPT SNSR1 SIG
(IN CENTER BUCKLE ASSEMBLY) CENTER REAR SEAT BUCKLE SWITCH
GND
2ND ROW CENTER SEAT BLT SW SENSE
(IN ROOF RAIL ABOVE LEFT REAR DOOR) LEFT SIDE CURTAIN AIR BAG
LT CRTN SQUIB1 LINE1
LT CRTN SQUIB1 LINE2
(IN PASSENGER BUCKLE ASSEMBLY) PASSENGER REAR SEAT BUCKLE SWITCH
2ND ROW PASS SEAT BLT SW SENSE
(IN DRIVER BUCKLE ASSEMBLY) DRIVER REAR SEAT BUCKLE SWITCH
2ND ROW DRIV SEAT BLT SW SENSE
WHT/LT BLU
ORG/LT BLU
RT CRTN SQUIB1 LINE2
RT CRTN SQUIB1 LINE1
RIGHT SIDE CURTAIN AIR BAG (IN ROOF RAIL ABOVE RIGHT REAR DOOR)
LT BLU
WHT/LT GRN
RT SDE IMPT SNSR2 SIG
RT SDE IMPT SNSR2 GND
RIGHT SIDE IMPACT SENSOR 2 (RIGHT "C" PILLAR)
G923A (LEFT REAR OF CARGO AREA)
G924A (RIGHT REAR OF CARGO AREA)
G923A (LEFT REAR OF CARGO AREA)
DRIV SEAT BELT ANCHOR TENSIONER LINE2
RT CRTN SQUIB1 LINE1
LT CRTN SQUIB1 LINE2
RT SDE IMPT SNSR2 GND
RT SDE IMPT SNSR2 SIG
PASS SEAT DETECTION RTN
2ND ROW DRIV SEAT BLT SW SENSE
2ND ROW PASS SEAT BLT SW SENSE
2ND ROW CENTER SEAT BLT SW SENSE
PASS SEAT BLT SW SENSE
DRIV SEAT BLT BUCKLE SW SENSE
LT SDE IMPT SNSR1 SIG
LT SDE IMPT SNSR1 GND
PASS SEAT OCCU DETECTION SIG
RT SDE IMPT SNSR1 GND
RT SDE IMPT SNSR1 SIG
DRIV SEAT POSTN SNSR VOLT
LT SIDE IMPT PRSS SNSR SIG
LT SIDE IMPT PRSS SNSR GND
PASS SEAT POSTN SNSR VOLT
RT SIDE IMPT PRSS SNSR GND
RT SIDE IMPT PRISS SNSR SIG
DRIV SEAT DETECTION RTN
SECOND ROW LT SEAT SQUIB LINE1
SECOND ROW RT SEAT SQUIB LINE2
PASS LOAD LIMITER LINE2
DRIV LOAD LIMITER LINE1
RT SEAT THORAX SQUIB1 LINE2
LT SEAT THORAX SQUIB1 LINE1
PASS RETRACT TENSIONER LINE2
DRIV RETRACT TENSIONER LINE2
PASS SEAT BELT ANC TEN LINE2
DRIV SEAT BELT ANCHOR TENSIONER LINE1
RT CRTN SQUIB1 LINE2
LT CRTN SQUIB1 LINE1
LT SDE IMPT SNSR2 SIG
LT SDE IMPT SNSR2 GND
OCCUPANT RESTRAINT CONTROLLER MODULE (UNDER FRONT OF CENTER CONSOLE)
PASS SEAT BELT ANCHOR TENSIONER LINE1
PASS SEAT BELT ANCHOR TENSIONER LINE2
PASSENGER SEAT BELT PRETENSIONER (ANCHOR) (BASE OF PASSENGER "B" PILLAR)
DRIV SEAT BELT ANCHOR TENSIONER LINE2
DRIV SEAT BELT ANCHOR TENSIONER LINE1
DRIVER SEAT BELT PRETENSIONER (ANCHOR) (BASE OF DRIVER "B" PILLAR)
RT SDE IMPT SNSR1 GND
RT SDE IMPT SNSR1 SIG
RIGHT SIDE IMPACT SENSOR 1 (BASE OF RIGHT "B" PILLAR)
LT SIDE IMPT PRSS SNSR SIG
LT SIDE IMPT PRSS SNSR GND
LEFT SIDE IMPACT PRESSURE SENSOR (CENTER OF LEFT FRONT DOOR)
RT SIDE IMPT PRSS SNSR GND
RT SIDE IMPT PRSS SNSR SIG
RIGHT SIDE IMPACT PRESSURE SENSOR (CENTER OF RIGHT FRONT DOOR)
LT SDE IMPT SNSR2 SIG
LT SDE IMPT SNSR2 GND
LEFT SIDE IMPACT SENSOR 2 (LEFT "C" PILLAR)
418913

Fig. 99: Supplemental Restraints Circuit (3 of 3)

TRANSMISSION

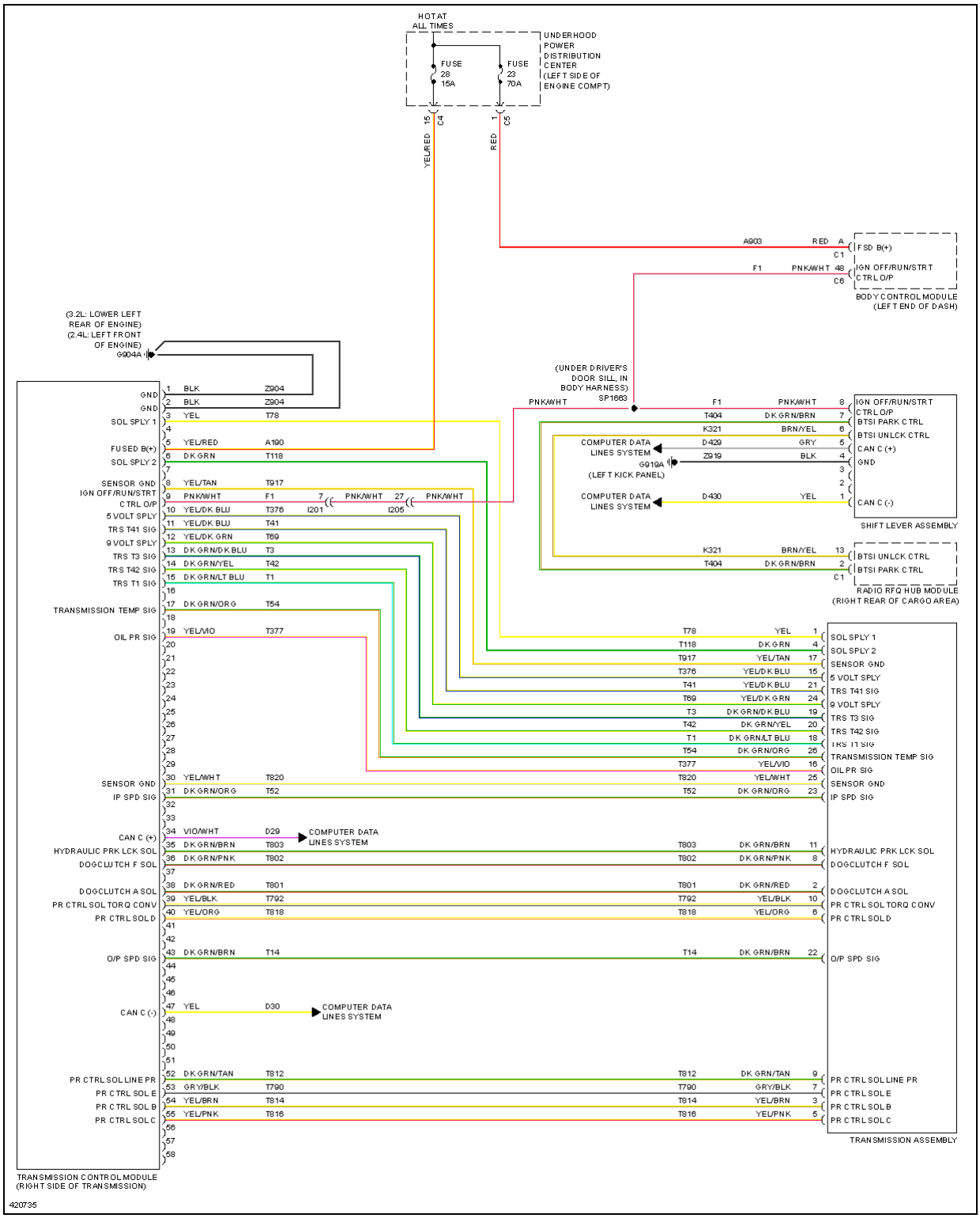
HOT AT ALL TIMES
UNDERHOOD POWER DISTRIBUTION CENTER (LEFT SIDE OF ENGINE COMPT)
FUSE 28 15A
FUSE 23 70A
YEL/RED 15 C4
RED 1 C5
A903 RED A C1 FSD B(+)
F1 PNK/WHT 48 C6 IGN OFF/RUN/STRT CTRL O/P
BODY CONTROL MODULE (LEFT END OF DASH)
(3.2L: LOWER LEFT REAR OF ENGINE) (2.4L: LEFT FRONT OF ENGINE) G904A
(UNDER DRIVER'S DOOR SILL, IN BODY HARNESS) SP1663
PNK/WHT
GND 1 BLK Z904
GND 2 BLK Z904
SOL SPLY 1 3 YEL T78
FUSED B(+) 5 YEL/RED A190
SOL SPLY 2 6 DK GRN T118
SENSOR GND 8 YEL/TAN T917
IGN OFF/RUN/STRT CTRL O/P 9 PNK/WHT F1 7 I201 PNK/WHT 27 I205 PNK/WHT
5 VOLT SPLY 10 YEL/DK BLU T376
TRS T41 SIG 11 YEL/DK BLU T41
9 VOLT SPLY 12 YEL/DK GRN T69
TRS T3 SIG 13 DK GRN/DK BLU T3
TRS T42 SIG 14 DK GRN/YEL T42
TRS T1 SIG 15 DK GRN/LT BLU T1
TRANSMISSION TEMP SIG 17 DK GRN/ORG T54
OIL PR SIG 19 YEL/VIO T377
SENSOR GND 30 YEL/WHT T820
IP SPD SIG 31 DK GRN/ORG T52
CAN C (+) 34 VIO/WHT D29 COMPUTER DATA LINES SYSTEM
HYDRAULIC PRK LCK SOL 35 DK GRN/BRN T803
DOGCLUTCH F SOL 36 DK GRN/PNK T802
DOGCLUTCH A SOL 38 DK GRN/RED T801
PR CTRL SOL TORQ CONV 39 YEL/BLK T792
PR CTRL SOL D 40 YEL/ORG T818
O/P SPD SIG 43 DK GRN/BRN T14
CAN C (-) 47 YEL D30 COMPUTER DATA LINES SYSTEM
PR CTRL SOL LINE PR 52 DK GRN/TAN T812
PR CTRL SOL E 53 GRY/BLK T790
PR CTRL SOL B 54 YEL/BRN T814
PR CTRL SOL C 55 YEL/PNK T816
TRANSMISSION CONTROL MODULE (RIGHT SIDE OF TRANSMISSION)
F1 PNK/WHT 8 IGN OFF/RUN/STRT CTRL O/P
T404 DK GRN/BRN 7 BTSI PARK CTRL
K321 BRN/YEL 6 BTSI UNLCK CTRL
COMPUTER DATA LINES SYSTEM D429 GRY 5 CAN C (+)
Z919 BLK 4 GND
G919A (LEFT KICK PANEL)
COMPUTER DATA LINES SYSTEM D430 YEL 1 CAN C (-)
SHIFT LEVER ASSEMBLY
K321 BRN/YEL 13 BTSI UNLCK CTRL
T404 DK GRN/BRN 2 BTSI PARK CTRL
C1
RADIO RFQ HUB MODULE (RIGHT REAR OF CARGO AREA)
T78 YEL 1 SOL SPLY 1
T118 DK GRN 4 SOL SPLY 2
T917 YEL/TAN 17 SENSOR GND
T376 YEL/DK BLU 15 5 VOLT SPLY
T41 YEL/DK BLU 21 TRS T41 SIG
T69 YEL/DK GRN 24 9 VOLT SPLY
T3 DK GRN/DK BLU 19 TRS T3 SIG
T42 DK GRN/YEL 20 TRS T42 SIG
T1 DK GRN/LT BLU 18 TRS T1 SIG
T54 DK GRN/ORG 26 TRANSMISSION TEMP SIG
T377 YEL/VIO 16 OIL PR SIG
T820 YEL/WHT 25 SENSOR GND
T52 DK GRN/ORG 23 IP SPD SIG
T803 DK GRN/BRN 11 HYDRAULIC PRK LCK SOL
T802 DK GRN/PNK 8 DOGCLUTCH F SOL
T801 DK GRN/RED 2 DOGCLUTCH A SOL
T792 YEL/BLK 10 PR CTRL SOL TORQ CONV
T818 YEL/ORG 6 PR CTRL SOL D
T14 DK GRN/BRN 22 O/P SPD SIG
T812 DK GRN/TAN 9 PR CTRL SOL LINE PR
T790 GRY/BLK 7 PR CTRL SOL E
T814 YEL/BRN 3 PR CTRL SOL B
T816 YEL/PNK 5 PR CTRL SOL C
TRANSMISSION ASSEMBLY
420735

Fig. 100: A/T Circuit

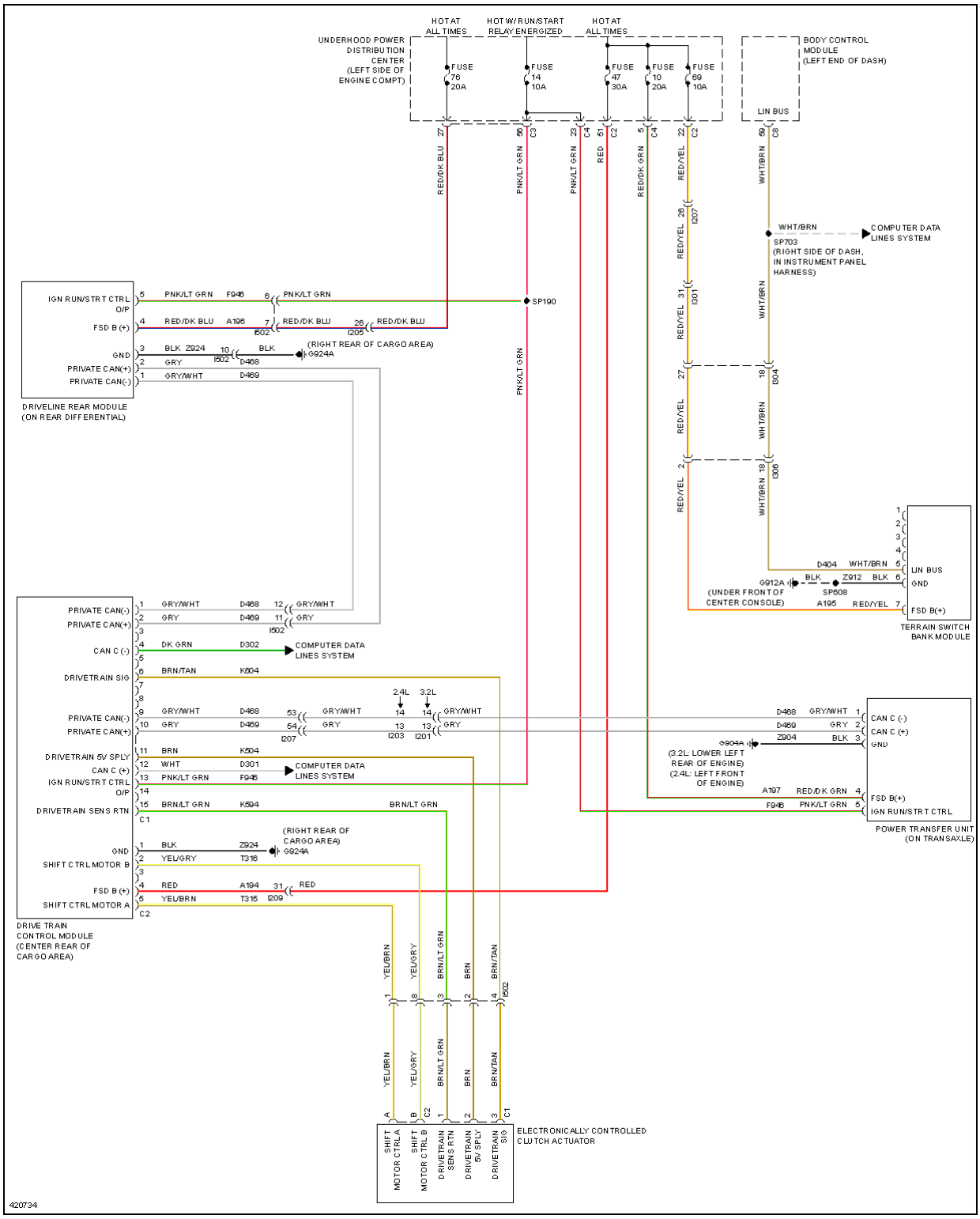
HOT AT ALL TIMES
HOT W/ RUN/START RELAY ENERGIZED
HOT AT ALL TIMES
UNDERHOOD POWER DISTRIBUTION CENTER (LEFT SIDE OF ENGINE COMPT)
FUSE 76 20A
FUSE 14 10A
FUSE 47 30A
FUSE 10 20A
FUSE 69 10A
BODY CONTROL MODULE (LEFT END OF DASH)
LIN BUS
RED/DK BLU
PNK/LT GRN
PNK/LT GRN
RED
RED/DK GRN
RED/YEL
WHT/BRN
WHT/BRN
COMPUTER DATA LINES SYSTEM
SP703 (RIGHT SIDE OF DASH, IN INSTRUMENT PANEL HARNESS)
IGN RUN/STRT CTRL O/P
FSD B (+)
GND
PRIVATE CAN(+)
PRIVATE CAN(-)
PNK/LT GRN F946 6 PNK/LT GRN
RED/DK BLU A196 7 I502 RED/DK BLU 26 I205 RED/DK BLU
SP190
BLK Z924 10 I502 BLK
GRY D468
(RIGHT REAR OF CARGO AREA) G924A
GRY/WHT D469
DRIVELINE REAR MODULE (ON REAR DIFFERENTIAL)
PNK/LT GRN
RED/YEL 28 I207
RED/YEL 31 I301
RED/YEL 27
RED/YEL 2
WHT/BRN 18 I304
WHT/BRN 18 I306
D404 WHT/BRN 5
G912A BLK
Z912 BLK 6
SP608
(UNDER FRONT OF CENTER CONSOLE)
A195 RED/YEL 7
LIN BUS
GND
FSD B(+)
TERRAIN SWITCH BANK MODULE
PRIVATE CAN(-) 1 GRY/WHT D468 12 GRY/WHT
PRIVATE CAN(+) 2 GRY D469 11 I502 GRY
CAN C (-) 4 DK GRN D302
COMPUTER DATA LINES SYSTEM
DRIVETRAIN SIG 6 BRN/TAN K504
2.4L 3.2L
PRIVATE CAN(-) 9 GRY/WHT D468 53 I207 GRY/WHT 14 14 GRY/WHT
PRIVATE CAN(+) 10 GRY D469 54 GRY 13 13 GRY I203 I201
DRIVETRAIN 5V SPLY 11 BRN K504
CAN C (+) 12 WHT D301
IGN RUN/STRT CTRL O/P 13 PNK/LT GRN F946
COMPUTER DATA LINES SYSTEM
DRIVETRAIN SENS RTN 15 BRN/LT GRN K594
BRN/LT GRN
GND 1 BLK Z924 (RIGHT REAR OF CARGO AREA) G924A
SHIFT CTRL MOTOR B 2 YEL/GRY T316
FSD B (+) 4 RED A194 31 I209 RED
SHIFT CTRL MOTOR A 5 YEL/BRN T315
DRIVE TRAIN CONTROL MODULE (CENTER REAR OF CARGO AREA)
D468 GRY/WHT 1 CAN C (-)
D469 GRY 2 CAN C (+)
G904A Z904 BLK 3 GND
(3.2L: LOWER LEFT REAR OF ENGINE) (2.4L: LEFT FRONT OF ENGINE)
A197 RED/DK GRN 4 FSD B(+)
F946 PNK/LT GRN 5 IGN RUN/STRT CTRL
POWER TRANSFER UNIT (ON TRANSAXLE)
YEL/BRN
YEL/GRY
BRN/LT GRN
BRN
BRN/TAN
I502
SHIFT MOTOR CTRL A
SHIFT MOTOR CTRL B
DRIVETRAIN SENS RTN
DRIVETRAIN 5V SPLY
DRIVETRAIN SIG
ELECTRONICALLY CONTROLLED CLUTCH ACTUATOR
420734

Fig. 101: Transfer Case Circuit

TRUNK, TAILGATE, FUEL DOOR

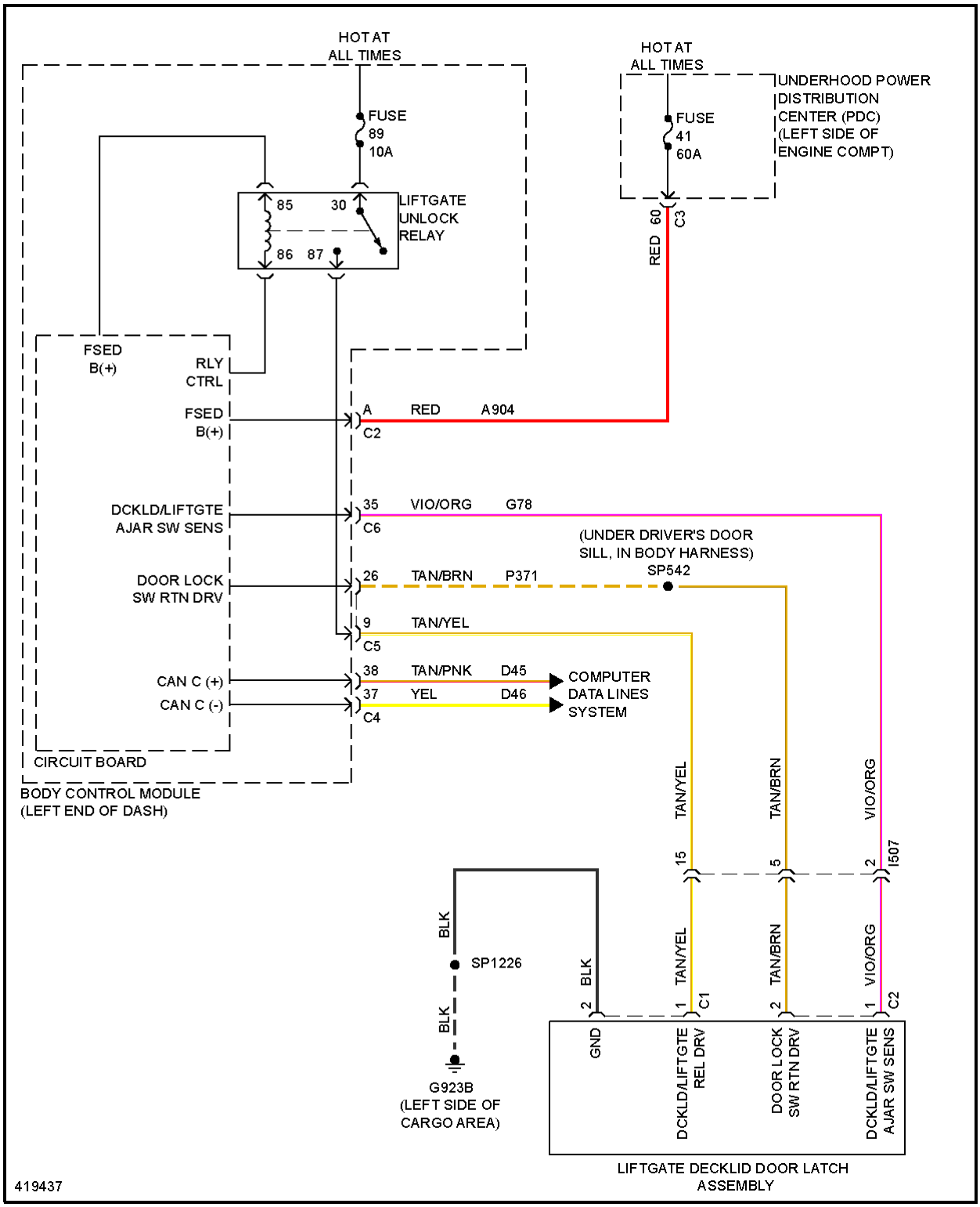
HOT AT ALL TIMES
FUSE 89 10A
85
30
86
87
LIFTGATE UNLOCK RELAY
HOT AT ALL TIMES
FUSE 41 60A
UNDERHOOD POWER DISTRIBUTION CENTER (PDC) (LEFT SIDE OF ENGINE COMPT)
RED 60
C3
FSED B(+)
RLY CTRL
FSED B(+)
A
C2
RED
A904
DCKLD/LIFTGTE AJAR SW SENS
35
C6
VIO/ORG
G78
(UNDER DRIVER'S DOOR SILL, IN BODY HARNESS)
SP542
DOOR LOCK SW RTN DRV
26
TAN/BRN
P371
9
C5
TAN/YEL
CAN C (+)
CAN C (-)
38
37
C4
TAN/PNK
YEL
D45
D46
COMPUTER DATA LINES SYSTEM
CIRCUIT BOARD
BODY CONTROL MODULE (LEFT END OF DASH)
TAN/YEL
TAN/BRN
VIO/ORG
15
5
2
I507
BLK
SP1226
BLK
G923B (LEFT SIDE OF CARGO AREA)
2
BLK
1
TAN/YEL
C1
2
TAN/BRN
1
VIO/ORG
C2
GND
DCKLD/LIFTGTE REL DRV
DOOR LOCK SW RTN DRV
DCKLD/LIFTGTE AJAR SW SENS
LIFTGATE DECKLID DOOR LATCH ASSEMBLY
419437

Fig. 102: Deck Lid Release Circuit

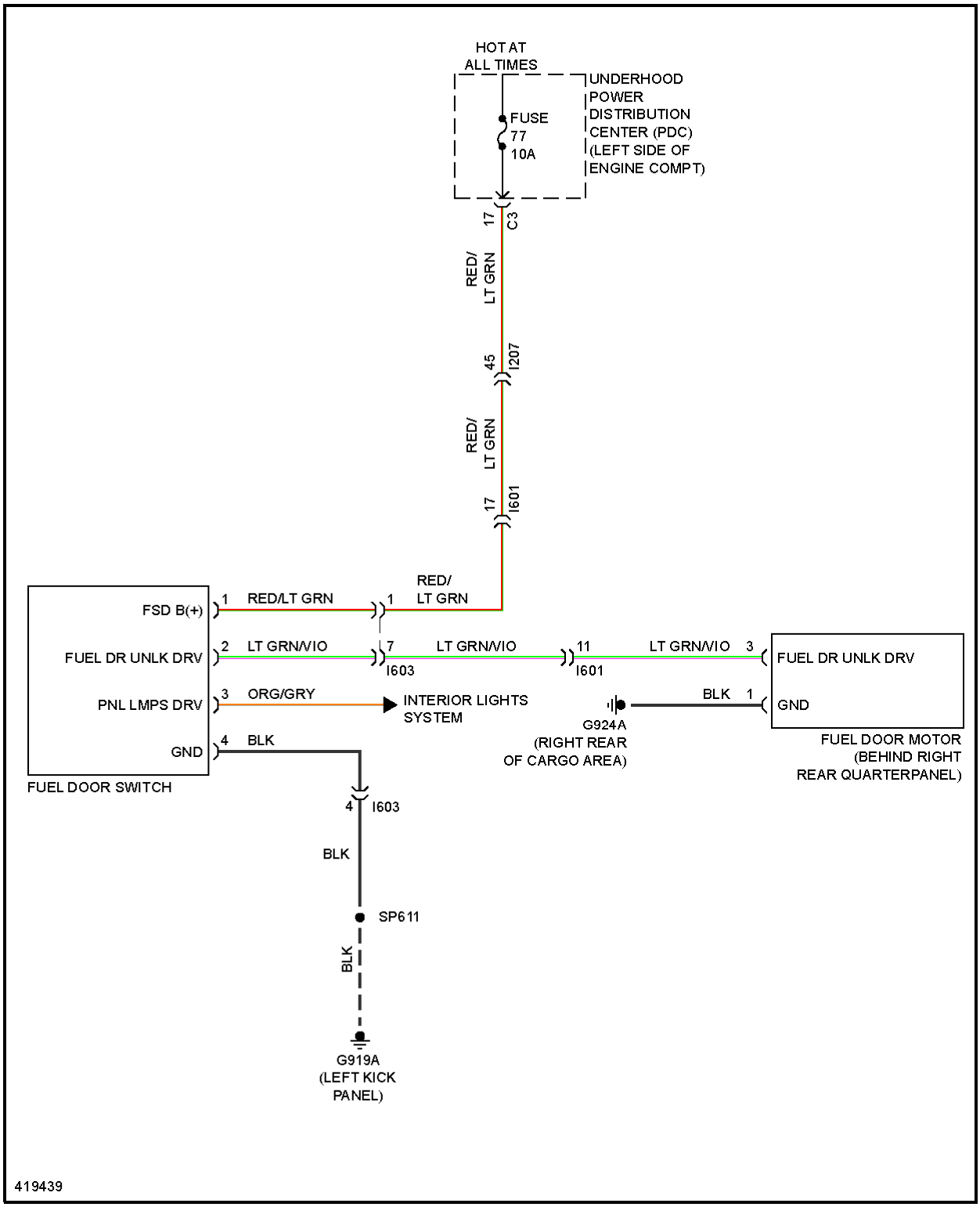
HOT AT ALL TIMES
UNDERHOOD POWER DISTRIBUTION CENTER (PDC) (LEFT SIDE OF ENGINE COMPT)
FUSE 77 10A
17
C3
RED/ LT GRN
45
I207
RED/ LT GRN
17
I601
RED/ LT GRN
FSD B(+)
1
RED/LT GRN
1
FUEL DR UNLK DRV
2
LT GRN/VIO
7
I603
LT GRN/VIO
11
I601
LT GRN/VIO
3
FUEL DR UNLK DRV
PNL LMPS DRV
3
ORG/GRY
INTERIOR LIGHTS SYSTEM
BLK
1
GND
G924A
(RIGHT REAR OF CARGO AREA)
GND
4
BLK
FUEL DOOR SWITCH
FUEL DOOR MOTOR (BEHIND RIGHT REAR QUARTERPANEL)
4
I603
BLK
SP611
BLK
G919A
(LEFT KICK PANEL)
419439

Fig. 103: Fuel Door Release Circuit

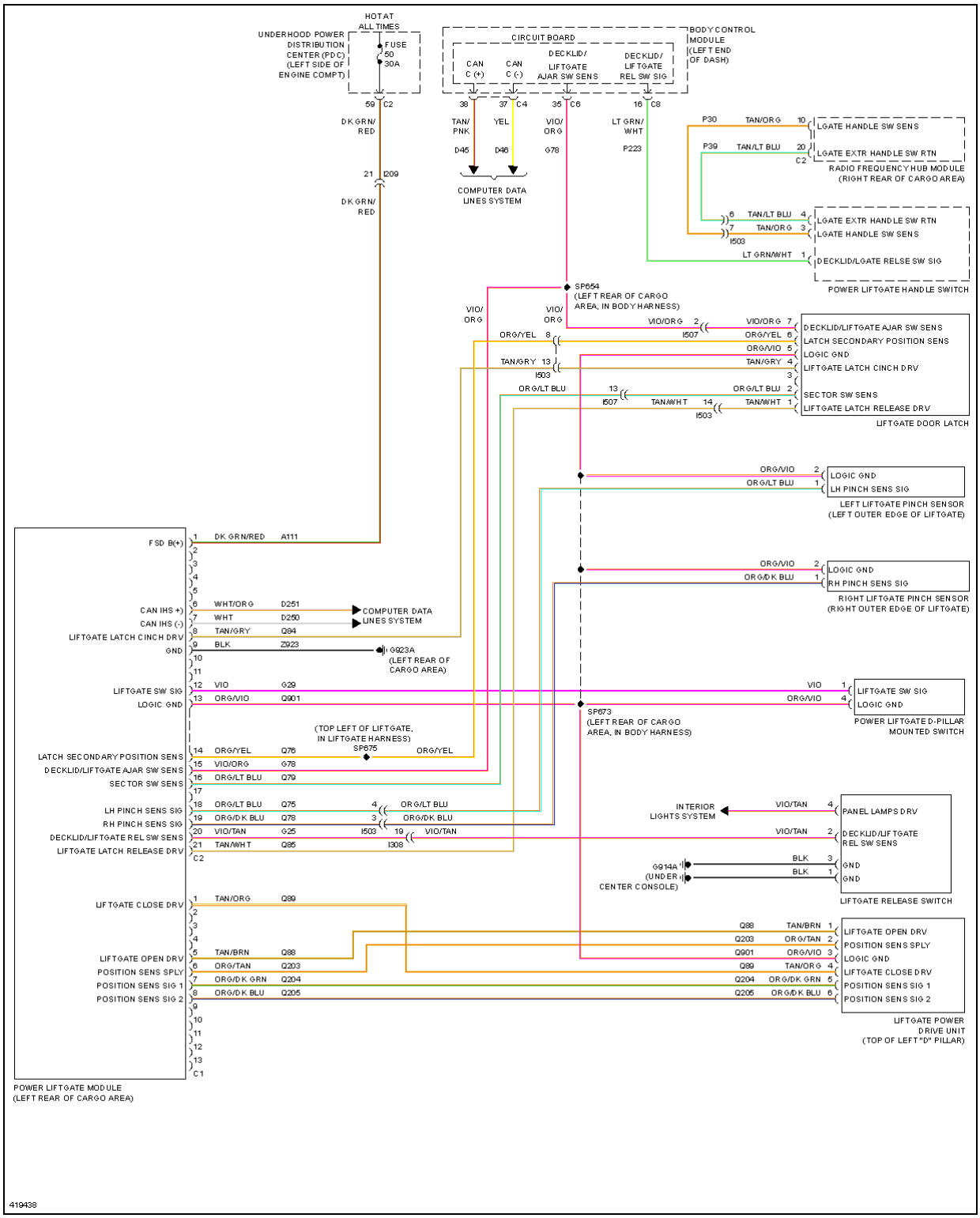
HOT AT ALL TIMES
UNDERHOOD POWER DISTRIBUTION CENTER (PDC) (LEFT SIDE OF ENGINE COMPT)
FUSE 50 30A
CIRCUIT BOARD
CAN C (+)
CAN C (-)
DECKLID/ LIFTGATE AJAR SW SENS
DECKLID/ LIFTGATE REL SW SIG
BODY CONTROL MODULE (LEFT END OF DASH)
COMPUTER DATA LINES SYSTEM
RADIO FREQUENCY HUB MODULE (RIGHT REAR OF CARGO AREA)
LGATE HANDLE SW SENS
LGATE EXTR HANDLE SW RTN
POWER LIFTGATE HANDLE SWITCH
DECKLID/LGATE RELSE SW SIG
SP654 (LEFT REAR OF CARGO AREA, IN BODY HARNESS)
LIFTGATE DOOR LATCH
DECKLID/LIFTGATE AJAR SW SENS
LATCH SECONDARY POSITION SENS
LOGIC GND
LIFTGATE LATCH CINCH DRV
SECTOR SW SENS
LIFTGATE LATCH RELEASE DRV
LEFT LIFTGATE PINCH SENSOR (LEFT OUTER EDGE OF LIFTGATE)
LH PINCH SENS SIG
RIGHT LIFTGATE PINCH SENSOR (RIGHT OUTER EDGE OF LIFTGATE)
RH PINCH SENS SIG
G923A (LEFT REAR OF CARGO AREA)
LIFTGATE SW SIG
POWER LIFTGATE D-PILLAR MOUNTED SWITCH
SP673 (LEFT REAR OF CARGO AREA, IN BODY HARNESS)
(TOP LEFT OF LIFTGATE, IN LIFTGATE HARNESS)
SP675
INTERIOR LIGHTS SYSTEM
PANEL LAMPS DRV
DECKLID/LIFTGATE REL SW SENS
G914A (UNDER CENTER CONSOLE)
GND
LIFTGATE RELEASE SWITCH
LIFTGATE OPEN DRV
POSITION SENS SPLY
LIFTGATE CLOSE DRV
POSITION SENS SIG 1
POSITION SENS SIG 2
LIFTGATE POWER DRIVE UNIT (TOP OF LEFT "D" PILLAR)
POWER LIFTGATE MODULE (LEFT REAR OF CARGO AREA)
419438

Fig. 104: Power Liftgate Circuit

WARNING SYSTEMS

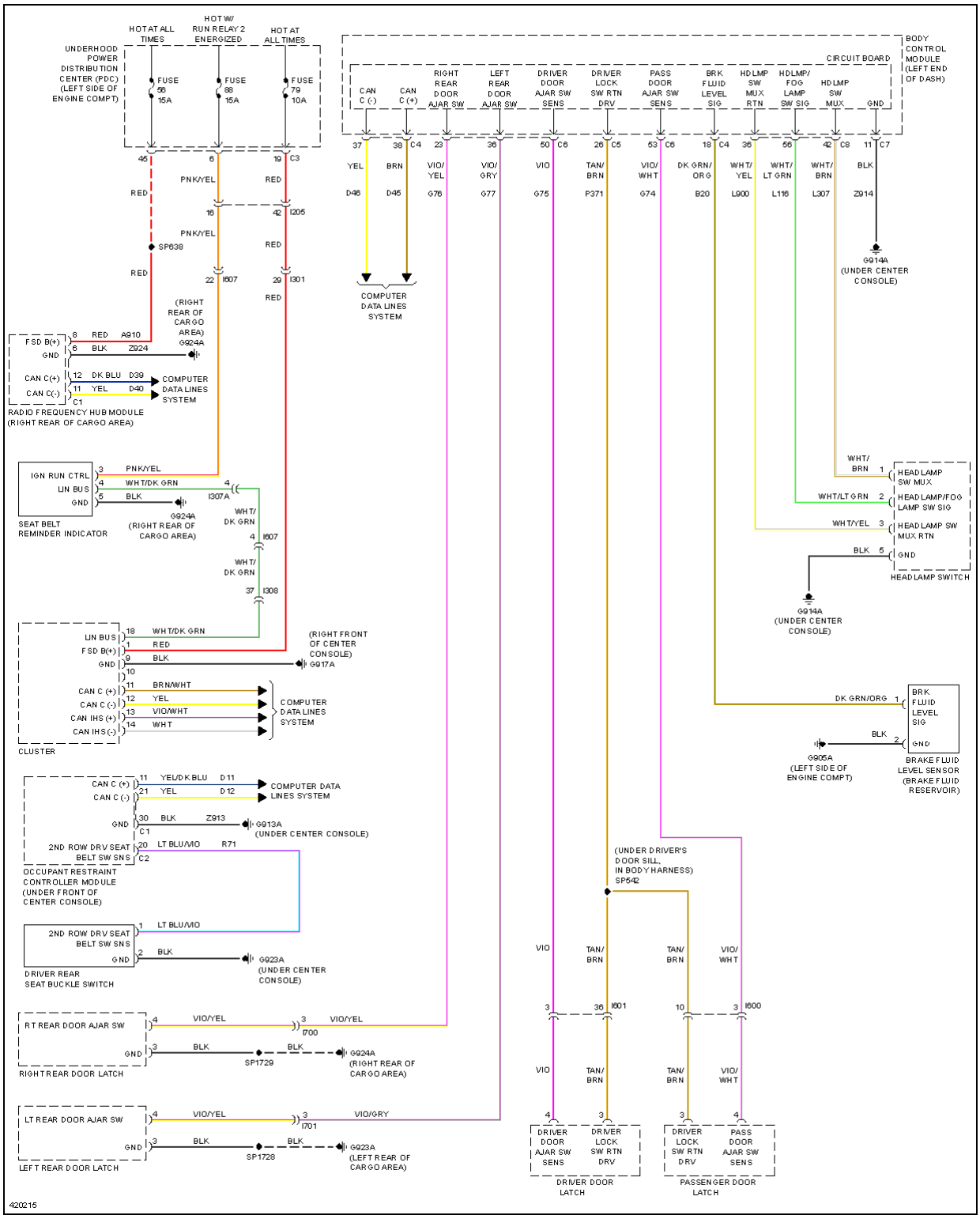
HOT AT ALL TIMES
HOT W/ RUN RELAY 2 ENERGIZED
HOT AT ALL TIMES
UNDERHOOD POWER DISTRIBUTION CENTER (PDC) (LEFT SIDE OF ENGINE COMPT)
FUSE 56 15A
FUSE 88 15A
FUSE 79 10A
BODY CONTROL MODULE (LEFT END OF DASH)
CIRCUIT BOARD
CAN C (-)
CAN C (+)
RIGHT REAR DOOR AJAR SW
LEFT REAR DOOR AJAR SW
DRIVER DOOR AJAR SW SENS
DRIVER LOCK SW RTN DRV
PASS DOOR AJAR SW SENS
BRK FLUID LEVEL SIG
HDLMP SW MUX RTN
HDLMP/ FOG LAMP SW SIG
HDLMP SW MUX
GND
COMPUTER DATA LINES SYSTEM
G914A (UNDER CENTER CONSOLE)
SP638
(RIGHT REAR OF CARGO AREA) G924A
FSD B(+)
GND
CAN C(+)
CAN C(-)
RADIO FREQUENCY HUB MODULE (RIGHT REAR OF CARGO AREA)
IGN RUN CTRL
LIN BUS
GND
SEAT BELT REMINDER INDICATOR
G924A (RIGHT REAR OF CARGO AREA)
HEAD LAMP SW MUX
HEAD LAMP/FOG LAMP SW SIG
HEAD LAMP SW MUX RTN
GND
HEAD LAMP SWITCH
G914A (UNDER CENTER CONSOLE)
LIN BUS
FSD B(+)
GND
(RIGHT FRONT OF CENTER CONSOLE) G917A
CAN C (+)
CAN C (-)
CAN IHS (+)
CAN IHS (-)
COMPUTER DATA LINES SYSTEM
CLUSTER
BRK FLUID LEVEL SIG
GND
G905A (LEFT SIDE OF ENGINE COMPT)
BRAKE FLUID LEVEL SENSOR (BRAKE FLUID RESERVOIR)
CAN C (+)
CAN C (-)
COMPUTER DATA LINES SYSTEM
GND
G913A (UNDER CENTER CONSOLE)
2ND ROW DRV SEAT BELT SW SNS
OCCUPANT RESTRAINT CONTROLLER MODULE (UNDER FRONT OF CENTER CONSOLE)
(UNDER DRIVER'S DOOR SILL, IN BODY HARNESS) SP542
2ND ROW DRV SEAT BELT SW SNS
GND
DRIVER REAR SEAT BUCKLE SWITCH
G923A (UNDER CENTER CONSOLE)
RT REAR DOOR AJAR SW
GND
SP1729
G924A (RIGHT REAR OF CARGO AREA)
RIGHT REAR DOOR LATCH
LT REAR DOOR AJAR SW
GND
SP1728
G923A (LEFT REAR OF CARGO AREA)
LEFT REAR DOOR LATCH
DRIVER DOOR AJAR SW SENS
DRIVER LOCK SW RTN DRV
DRIVER DOOR LATCH
DRIVER LOCK SW RTN DRV
PASS DOOR AJAR SW SENS
PASSENGER DOOR LATCH
420215

Fig. 105: Warning Systems Circuit

WIPER/WASHER

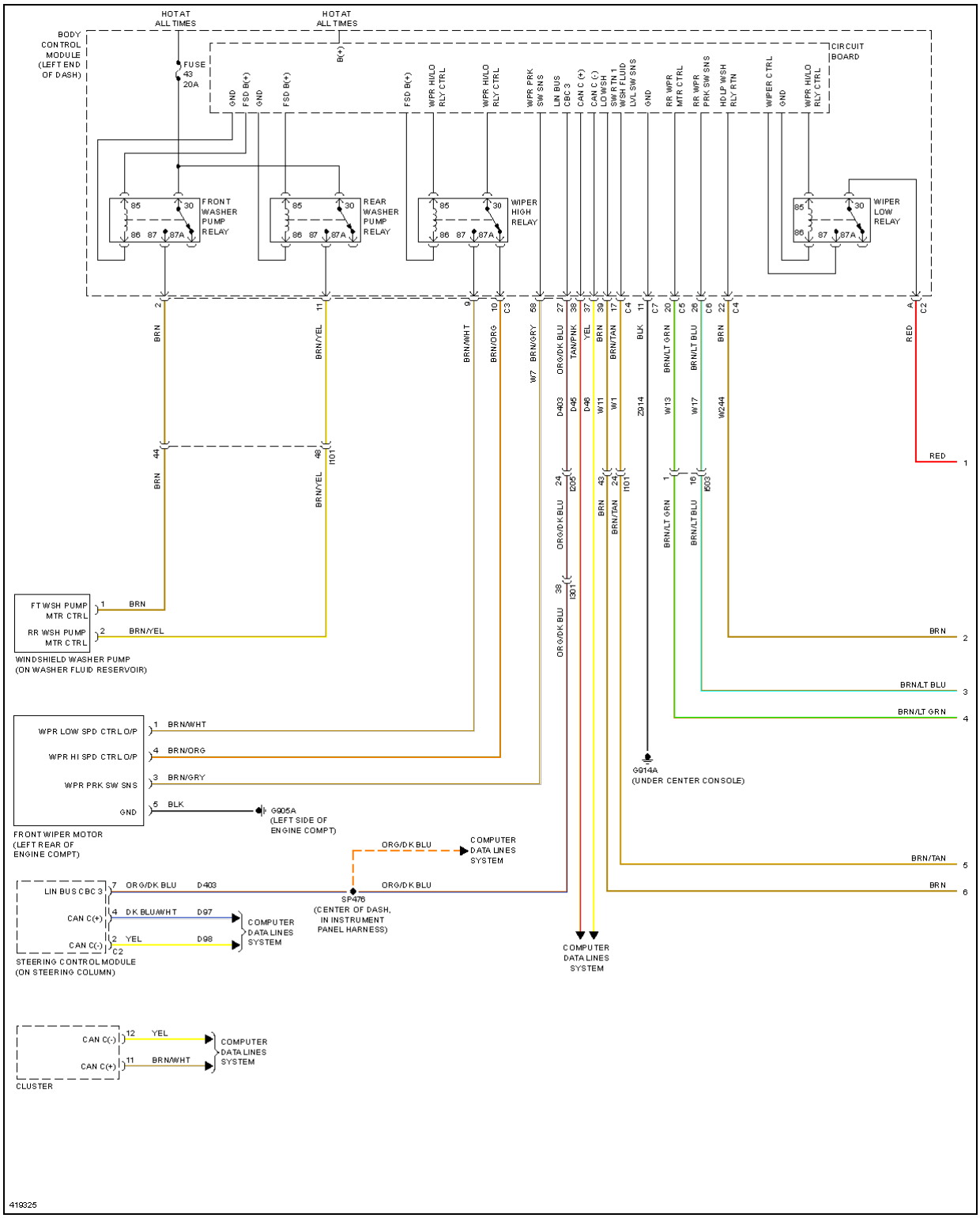
HOT AT ALL TIMES
HOT AT ALL TIMES
BODY CONTROL MODULE (LEFT END OF DASH)
FUSE 43 20A
CIRCUIT BOARD
FRONT WASHER PUMP RELAY
REAR WASHER PUMP RELAY
WIPER HIGH RELAY
WIPER LOW RELAY
FT WSH PUMP MTR CTRL
RR WSH PUMP MTR CTRL
WINDSHIELD WASHER PUMP (ON WASHER FLUID RESERVOIR)
WPR LOW SPD CTRL O/P
WPR HI SPD CTRL O/P
WPR PRK SW SNS
GND
FRONT WIPER MOTOR (LEFT REAR OF ENGINE COMPT)
G905A (LEFT SIDE OF ENGINE COMPT)
G914A (UNDER CENTER CONSOLE)
COMPUTER DATA LINES SYSTEM
SP476 (CENTER OF DASH, IN INSTRUMENT PANEL HARNESS)
LIN BUS CBC 3
CAN C(+)
CAN C(-)
STEERING CONTROL MODULE (ON STEERING COLUMN)
CLUSTER
419325

Fig. 106: Wiper/Washer Circuit (1 of 2)

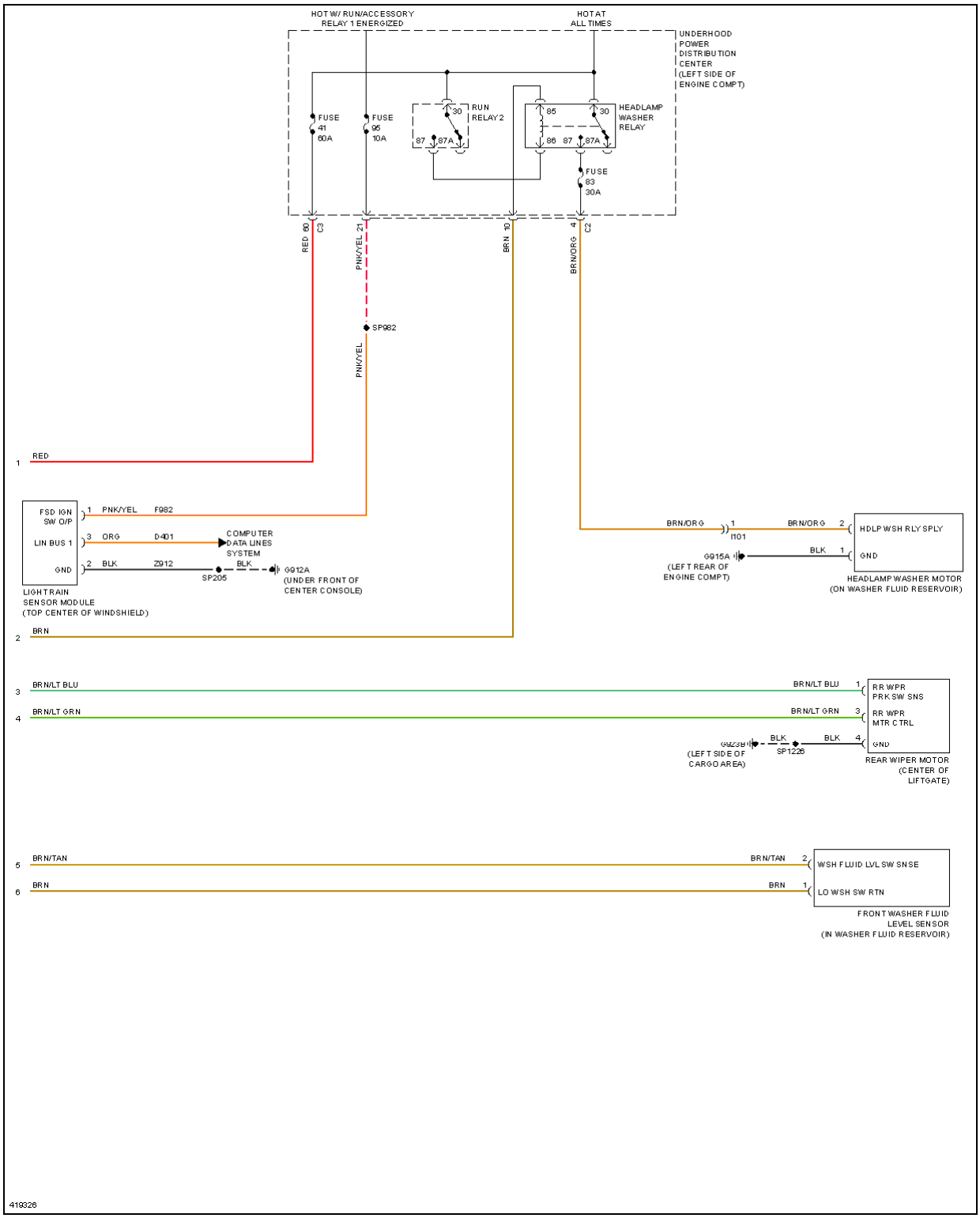
HOT W/ RUN/ACCESSORY RELAY 1 ENERGIZED
HOT AT ALL TIMES
UNDERHOOD POWER DISTRIBUTION CENTER (LEFT SIDE OF ENGINE COMPT)
FUSE 41 60A
FUSE 95 10A
RUN RELAY 2
30
87
87A
85
86
HEADLAMP WASHER RELAY
FUSE 83 30A
RED 60 C3
PNK/YEL 21
BRN 10
BRN/ORG 4 C2
SP982
PNK/YEL
1 RED
FSD IGN SW O/P
LIN BUS 1
GND
1 PNK/YEL F982
3 ORG D401
2 BLK Z912
COMPUTER DATA LINES SYSTEM
BLK
SP205
G912A (UNDER FRONT OF CENTER CONSOLE)
LIGHT RAIN SENSOR MODULE (TOP CENTER OF WINDSHIELD)
2 BRN
BRN/ORG
1 I101
BRN/ORG 2
HDLP WSH RLY SPLY
G915A (LEFT REAR OF ENGINE COMPT)
BLK 1
GND
HEADLAMP WASHER MOTOR (ON WASHER FLUID RESERVOIR)
3 BRN/LT BLU
4 BRN/LT GRN
BRN/LT BLU 1
BRN/LT GRN 3
RR WPR PRK SW SNS
RR WPR MTR CTRL
GND
BLK
SP1226
(LEFT SIDE OF CARGO AREA)
REAR WIPER MOTOR (CENTER OF LIFTGATE)
5 BRN/TAN
6 BRN
BRN/TAN 2
BRN 1
WSH FLUID LVL SW SNSE
LO WSH SW RTN
FRONT WASHER FLUID LEVEL SENSOR (IN WASHER FLUID RESERVOIR)
419326

Fig. 107: Wiper/Washer Circuit (2 of 2)

2014 TRANSFER CASE

Power Transfer Unit - Service Information - Cherokee

DESCRIPTION

DESCRIPTION

ONE SPEED PTU

The one Speed Power Transfer Unit (PTU) is a **service as an assembly component** when mechanical faults are evident. The shift actuator is a serviceable component, and if leaking, the input shaft seal(s), drive pinion seal, and case gasket can be serviced. Special tools have been developed to service the seals in the one speed PTU.

NOTE: There are two one speed PTU's in use, one for the automatic transmission and one for the manual transmission, they have unique mounting provisions, and are not interchangeable. The manual transmission version also has two opposed seals on the input shaft, the automatic transmission version has a single seal on the input shaft.

TWO SPEED PTU

The two Speed Power Transfer Unit (PTU) is a **service as assembly component** when mechanical faults and some oil leaks are evident. The shift actuator, rear output seal, right halfshaft outer seal, and the plug are serviceable. Special tools have been developed to service the seals in the two speed PTU. If hypoid fluid is leaking from the weep-hole between the transaxle and the PTU, the two speed PTU must be replaced.

STANDARD PROCEDURE

STANDARD PROCEDURE - PTU FLUID FILL

1. Raise vehicle on hoist. Refer to **HOISTING, STANDARD PROCEDURE** .
2. Position a drain pan under the fill plug.
3. Remove the Power Transfer Unit (PTU) fill plug. The fill plug is located on the right side of the case.
4. Fill the PTU to the bottom of the fill plug hole using the specified fluid.

   Refer to **CAPACITIES AND RECOMMENDED FLUIDS, SPECIFICATIONS** .

   NOTE: It may take several minutes for the fluid to equalize in the PTU before a final fluid level check can be determined.

5. Install fill plug and tighten to the proper specification. Refer to **SPECIFICATIONS**.
6. Lower vehicle.

SPECIFICATIONS

ONE SPEED PTU SPECIFICATIONS

ONE SPEED PTU SPECIFICATIONS

PTU SPECIFIC	SPECIFICATIONS
Fluid Type	75-W 90 Gear Lube
Fluid Capacity	0.7 L (0.74 qt.)
Weight	23 kg (50 lb.)
Gear Ratio	2.734:1
Hypoid Gear Ratio	2.231 (13:29)*
Helical Gear Ratio	1.226 (31:38)*
Ring Gear Diameter	131 mm (5.2 in)
* = Gear to Gear Count Ratio	

TWO SPEED PTU SPECIFICATIONS

TWO SPEED PTU SPECIFICATIONS

PTU SPECIFIC	SPECIFICATIONS
Fluid Type	75-W 90 Gear Lube
Fluid Capacity	1.2 L (1.27 qt.)
Weight	30 kg (63 lb.)
Hi Range Gear Ratio	2.734:1
Overall Low Range Gear Ratio	2.91:1
Ring Gear Diameter	131 mm (5.2 in)
* = Gear to Gear Count Ratio	

TORQUE SPECIFICATIONS

TORQUE SPECIFICATIONS

Fastener	N.m	in. lbs.	ft. lbs.
Damper to PTU	26.2	-	19.5
Exhaust Support to PTU Bracket (3.2 liter engine)	12	106	-
Heat Shield to PTU	13.7	121	-
Intake Manifold Support to PTU Bracket	11.5	102	-
Mounting Bracket to PTU	22	-	16
PTU Fill Plug	40	-	29.5
PTU to Transaxle Flange	48	-	35
On used fasteners that have a thread locker patch use Mopar® Lock & Seal Adhesive			

ONE SPEED PTU BENCH TIGHTENING REFERENCE

ONE SPEED PTU BENCH TIGHTENING REFERENCE

Fastener	N.m	ft. lbs.	in. lbs.
Shift Actuator to PTU (Use new fasteners)	10	-	88.5
Fill Plug to PTU	40	29.5	-
Right to Left Housing (M-8 x 1.25)	55	41	-
On used fasteners that have a thread locker patch use Mopar® Lock & Seal Adhesive			

TWO SPEED PTU BENCH TIGHTENING REFERENCE

TWO SPEED PTU BENCH TIGHTENING REFERENCE

Fastener	N.m	ft. lbs.	in. lbs.
Shift Actuator to PTU (Use new fasteners)	10	-	88.5
Fill Plug to PTU	40	29.5	-
Lower Cover to PTU (M-10 x 1.5)	90	66	-
Lower Cover to PTU (M-8 x 1.25)	55	41	-
Outer Cover to PTU (M-8 x 1.25)	55	41	-
On used fasteners that have a thread locker patch use Mopar® Lock & Seal Adhesive			

REMOVAL

REMOVAL

1. Position the vehicle on a suitable hoist with the transaxle in neutral. Refer to **HOISTING, STANDARD PROCEDURE** .
2. Disconnect the battery negative cable clamp from the battery.
3. Remove the right front wheel. Refer to **REMOVAL** .
4. Remove the right front halfshaft. Refer to **REMOVAL** .
5. If equipped with a 2.4L, remove the intake manifold. Refer to **MANIFOLD, INTAKE, REMOVAL** .
6. Remove the rear propeller shaft. Refer to **REMOVAL** .
7. Remove the bolts holding the rear maniverter to the cylinder head. Refer to **MANIFOLD, EXHAUST, REMOVAL** .
8. Separate the rear catalytic converter from the cylinder head and wire it up and out of the way.
9. Remove the crossunder exhaust pipe. Refer to **PIPE, EXHAUST CROSSUNDER, REMOVAL** .

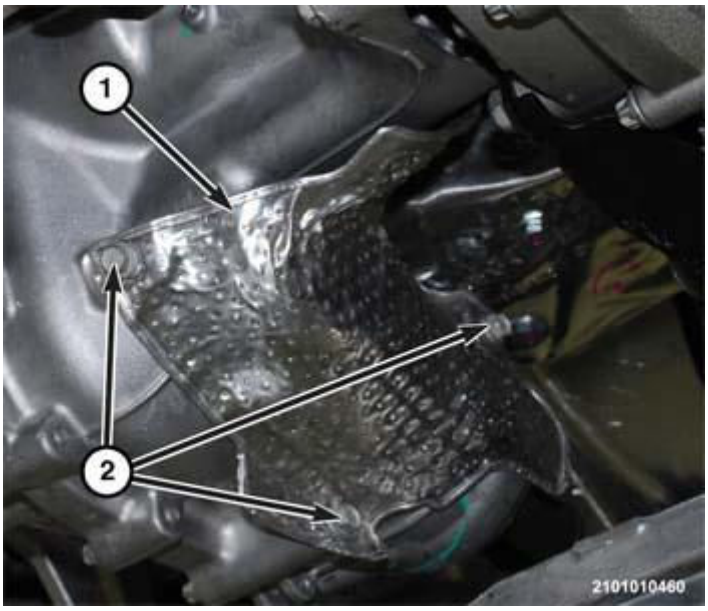

Fig. 1: Heat Shield & Bolts
Courtesy of CHRYSLER GROUP, LLC

10. Remove the bolts (2) holding the heat shield (1) to the PTU.
11. Separate the heat shield (1) from the PTU.

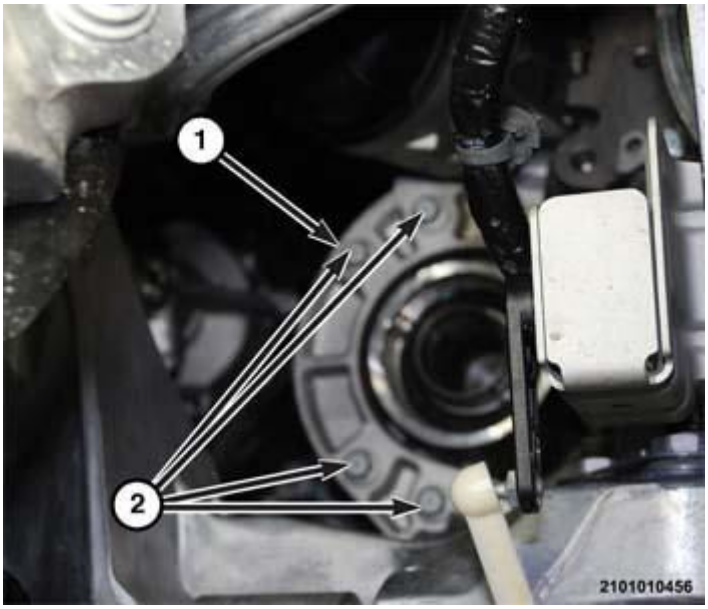

Fig. 2: PTU Support Bracket & Bolts At PTU
Courtesy of CHRYSLER GROUP, LLC

12. Remove the bolts (2) holding the PTU support bracket (1) to the PTU.

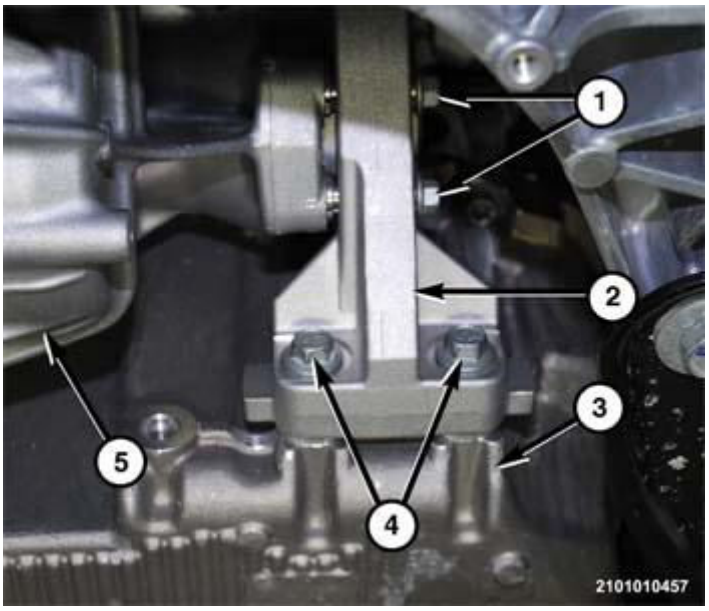

Fig. 3: PTU Support Bracket & Bolts At Block & Oil Pan
Courtesy of CHRYSLER GROUP, LLC

13. Remove the bolts (4) holding the PTU support bracket (2) to the engine block and the oil pan (3).
14. Separate the PTU support bracket (2) from the PTU (5).

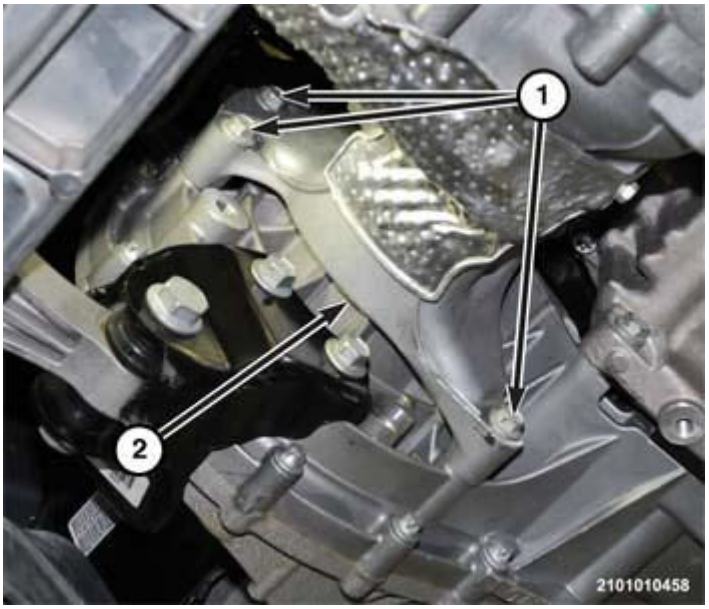

Fig. 4: PTU & Bolts At Transaxle
Courtesy of CHRYSLER GROUP, LLC

15. Remove the bolts (1) holding the PTU (2) to the transaxle.

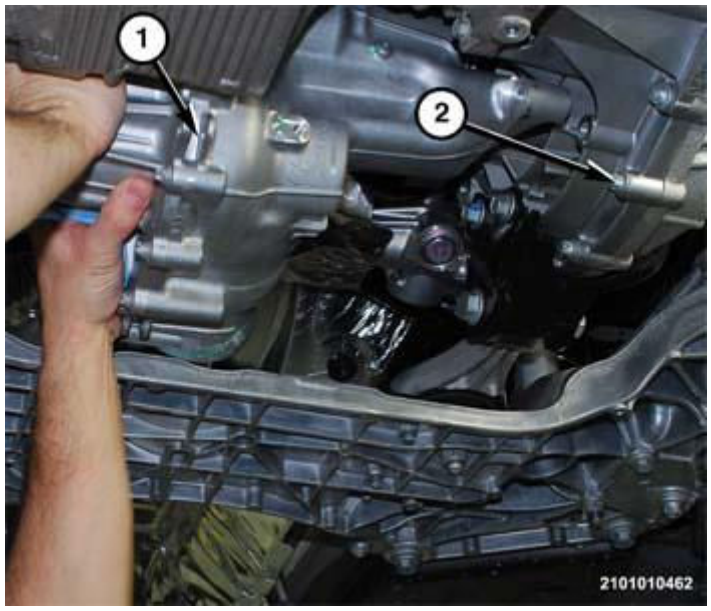

Fig. 5: Shifting PTU To Right Away From Transaxle
Courtesy of CHRYSLER GROUP, LLC

16. Shift the PTU (1) to the right away from the transaxle (2) and separate the spline shaft from the transaxle output shaft.

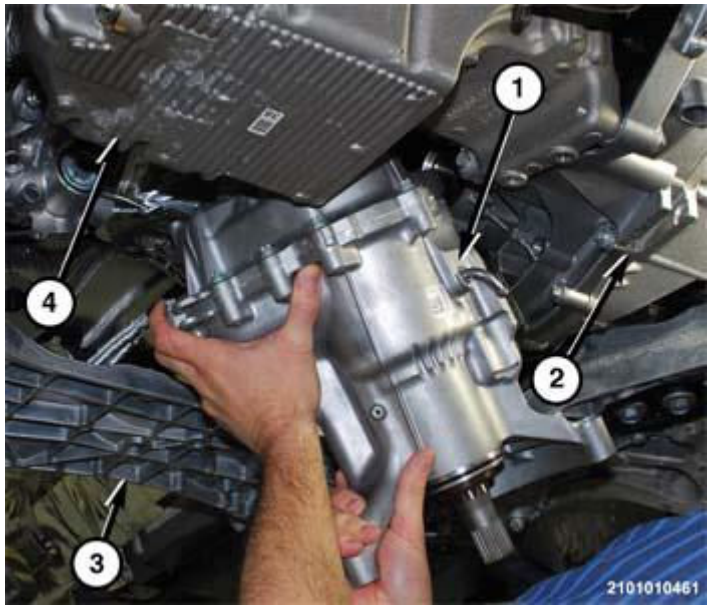

Fig. 6: Removing/Installing PTU
Courtesy of CHRYSLER GROUP, LLC

17. Push the PTU (1) to the right side of the vehicle and tip the left side downward and out of the vehicle.

DISASSEMBLY

ONE SPEED PTU DISASSEMBLY

NOTE: The PTU is a service by replacement component. If the PTU is leaking fluid, the lip seals can be replaced.

1. Remove the Power Transfer Unit (PTU) from the vehicle.
2. Place the PTU on a suitable, clean and stable work surface.
3. Drain the fluid from the PTU into a suitable drain pan.

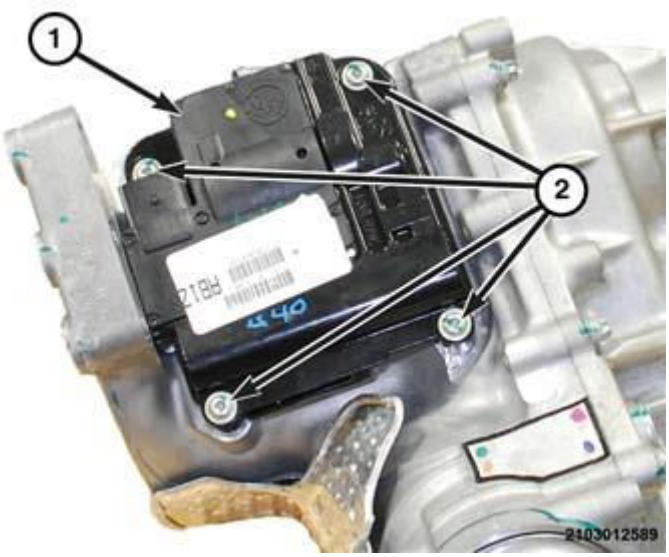

Fig. 7: PTU Shift Actuator & Screws
Courtesy of CHRYSLER GROUP, LLC

4. Remove the screws holding the shift actuator to the PTU and discard screws.
5. Remove the PTU shift actuator.

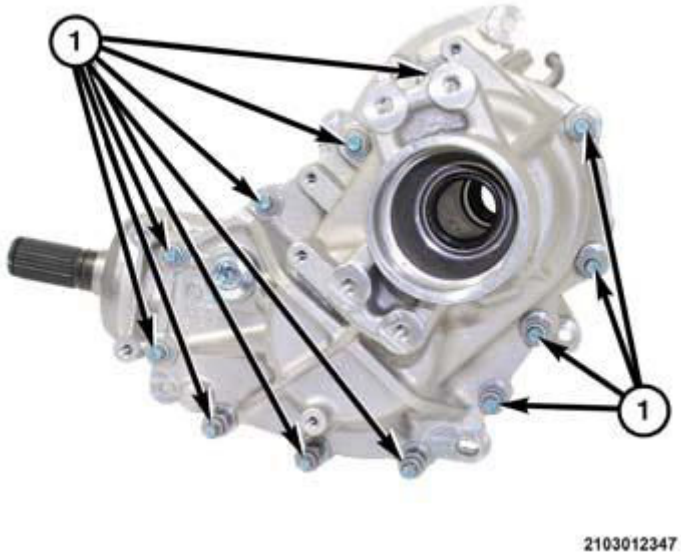

Fig. 8: Locating PTU Housing Bolts
Courtesy of CHRYSLER GROUP, LLC

NOTE: **It is not necessary to remove the intermediate shaft from the PTU to service the seals.**

6. Remove the bolts (1) holding the PTU housing halves together.

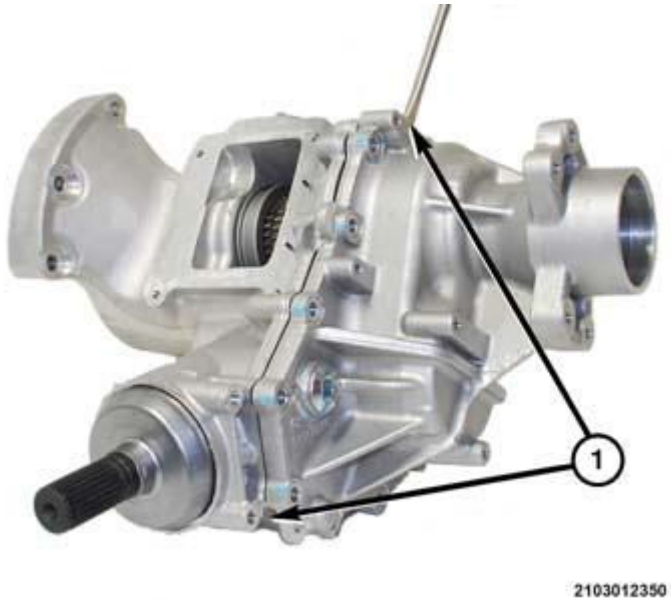

Fig. 9: Prying PTU Housing Halves Apart
Courtesy of CHRYSLER GROUP, LLC

7. Using a suitable pry bar, pry (1) the PTU housing halves apart.

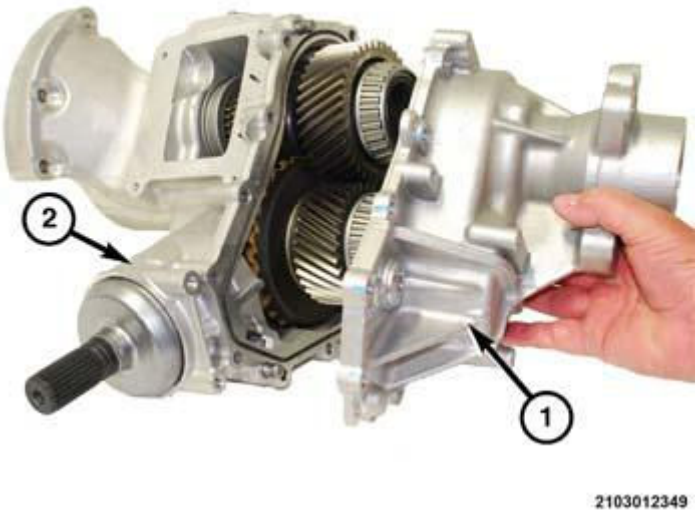

Fig. 10: Separating/Installing Right Housing At PTU Housing
Courtesy of CHRYSLER GROUP, LLC

NOTE: When separating the housing, bearings and preload shims may dislodge. Make note of bearing cup and shim location for proper reassembly.

8. Carefully separate the right housing (1) from the PTU housing (2).

Fig. 11: PTU Housing & Gasket
Courtesy of CHRYSLER GROUP, LLC

9. Remove the gasket (1) from the groove in the PTU housing (2).

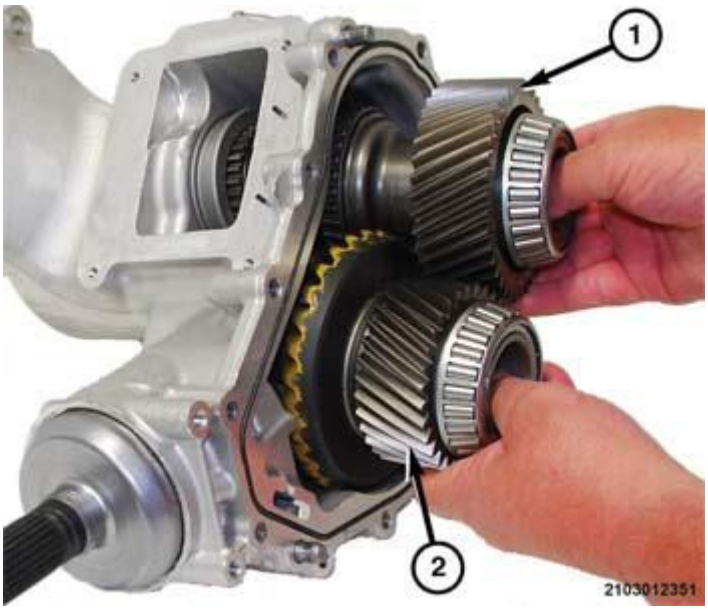

Fig. 12: Removing/Installing Input Gear & Output Ring Gear At PTU Housing
Courtesy of CHRYSLER GROUP, LLC

10. In unison, pull the input gear (1) and output ring gear (2) from the PTU housing.

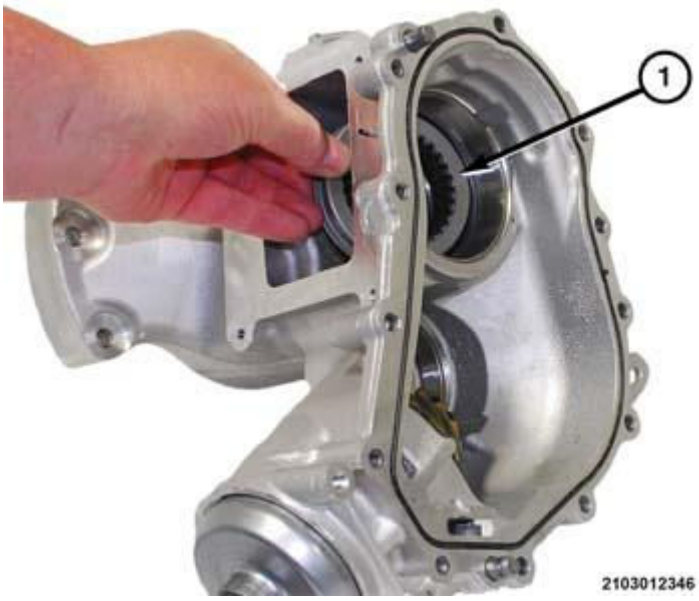

Fig. 13: Locating Dog Clutch Sleeve
Courtesy of CHRYSLER GROUP, LLC

11. Remove the dog clutch sleeve (1) from the input shaft.

NOTE: **Note the orientation of the tapered splines in the dog clutch sleeve for reassembly.**

Fig. 14: Removing/Installing Input Shaft & Bearing At PTU Housing
Courtesy of CHRYSLER GROUP, LLC

12. Remove the input shaft (1) and bearing from the PTU housing.

Fig. 15: Removing Seal(s) From PTU Housing
Courtesy of CHRYSLER GROUP, LLC

13. Using a suitable screw driver, remove both the inner and outer input shaft seals if a manual transmission vehicle, or the single seal if an automatic transmission equipped vehicle from the PTU housing (1).

NOTE: The inner lip seal keeps PTU fluid from entering the transmission, the outer lip seal keeps transmission fluid from entering the PTU when

equipped with a manual transmission. There is a weep hole in the cavity between the two seals.

Fig. 16: Removing Seal(s) From Input Shaft
Courtesy of CHRYSLER GROUP, LLC

14. Using a suitable screw driver, remove the inner and outer seals if a manual transmission vehicle, or the single seal if an automatic transmission equipped vehicle from the inside of the input shaft (1).

NOTE: **The inner lip seal keeps PTU fluid from entering the transmission, the outer lip seal keeps transmission fluid from entering the PTU when equipped with a manual transmission. There is a weep hole in the cavity between the two seals.**

ASSEMBLY

ONE SPEED PTU ASSEMBLY

Clean the Power Transfer Unit (PTU) components using a suitable solvent. Blow the components dry using regulated 344 kPa (50 psi) shop air. Inspect all sealing surfaces for excessive wear or scratches the may cause damage to new seals. If damage is evident replace the PTU assembly.

Fig. 17: Installing Outer Seal In Input Gear
Courtesy of CHRYSLER GROUP, LLC

1. If a manual transmission equipped vehicle, using tool (special tool #10517, Installer, Seal) (1), with the long side (4) toward the seal (2), install the outer seal (2) in the input gear (3) with the tension spring facing outward. The shoulder on the tool will stop against the input shaft (3) roller bearing.
2. For both automatic and manual transmission equipped vehicle, using tool (special tool #10517, Installer, Seal) (1), with the short side (4) toward the seal (2), install the inner seal (2) in the input gear (3) with the tension spring facing the tool. The shoulder on the tool will stop against the input shaft (3) roller bearing.

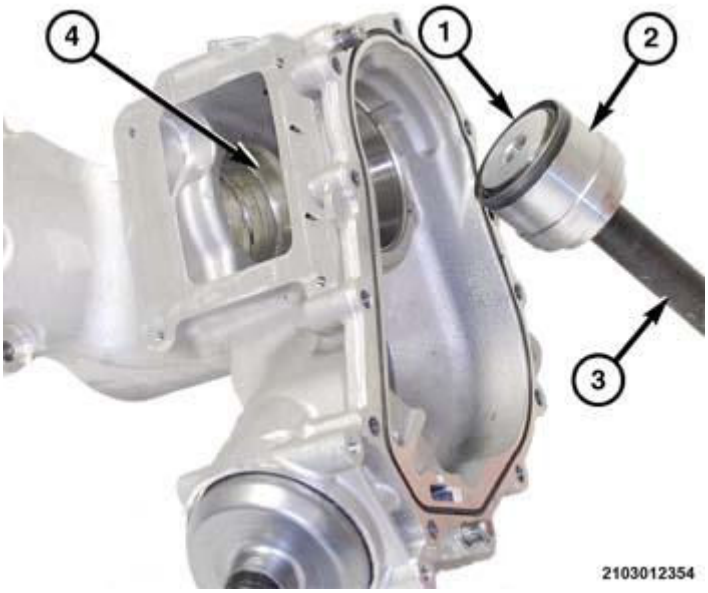

Fig. 18: Installing Outer Seal Into Housing
Courtesy of CHRYSLER GROUP, LLC

3. If a manual transmission equipped vehicle, using tool (special tool #10515, Installer, Seal) and (special tool #C-4171, Driver Handle, Universal), with the long side (2) toward the seal (1), install the outer seal (1) in the housing (4) with the tension spring facing outward. The shoulder on the tool will stop against the top of the bore in the housing (4).
4. For both automatic and manual transmission equipped vehicle, using tool (special tool #10515, Installer, Seal) and (special tool #C-4171, Driver Handle, Universal), with the short side (2) toward the seal (1), install the inner seal (1) in the housing (4) with the tension spring facing the tool. The shoulder on the tool will stop against the top of the bore in the housing (4).

Fig. 19: Removing/Installing Input Shaft & Bearing At PTU Housing
Courtesy of CHRYSLER GROUP, LLC

5. Install the input shaft (1) and bearing into the PTU housing.

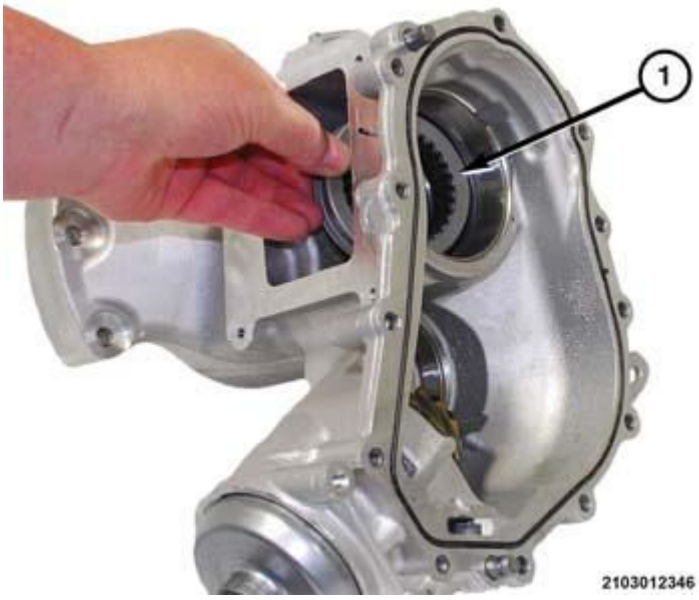

Fig. 20: Locating Dog Clutch Sleeve
Courtesy of CHRYSLER GROUP, LLC

6. Install the dog clutch sleeve (1) onto the input shaft

Fig. 21: Ensuring Proper Orientation Of Tapered Splines On Dog Clutch Sleeve
Courtesy of CHRYSLER GROUP, LLC

NOTE: **Ensure that the dog clutch sleeve is oriented so that the tapered splines (1) are facing the input gear (towards the interior of the case).**

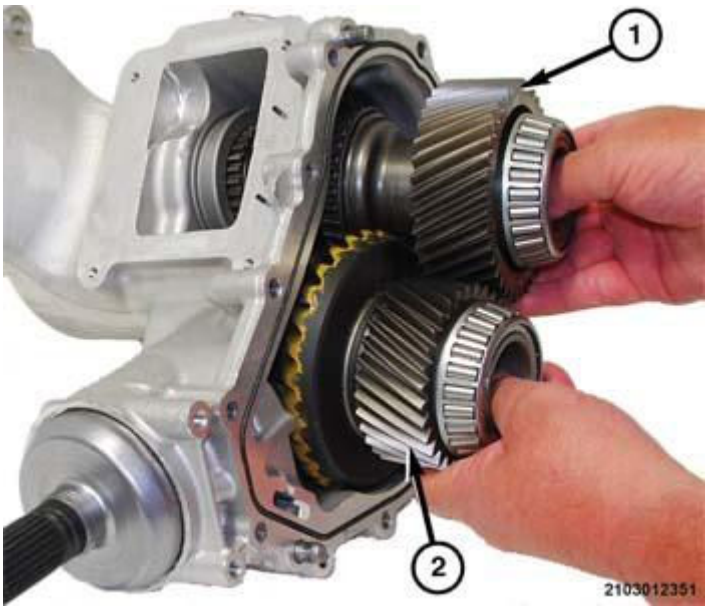

Fig. 22: Removing/Installing Input Gear & Output Ring Gear At PTU Housing
Courtesy of CHRYSLER GROUP, LLC

7. In unison, install the input gear (1) and output ring gear (2) into the PTU housing.

Fig. 23: PTU Housing & Gasket
Courtesy of CHRYSLER GROUP, LLC

8. Install the gasket (1) into the groove in the PTU housing (2).

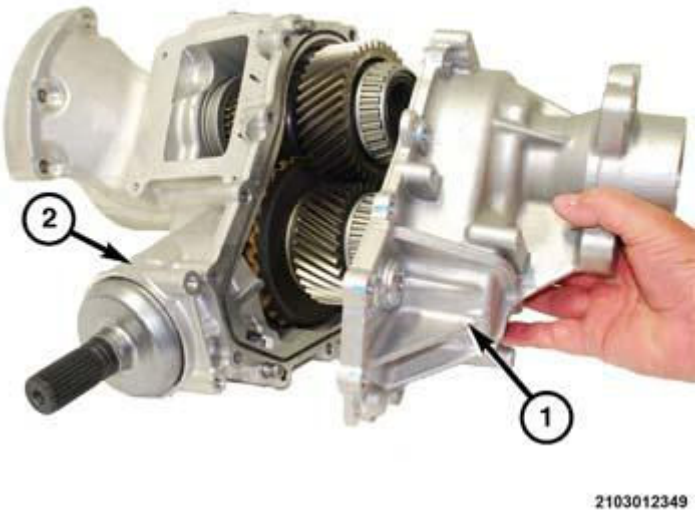

Fig. 24: Separating/Installing Right Housing At PTU Housing
Courtesy of CHRYSLER GROUP, LLC

9. If necessary, install the bearing cups and shims into their proper bores of the right PTU housing. Use a light grease to retain the cups in their bores.
10. Place the right housing (1) onto the PTU housing (2).

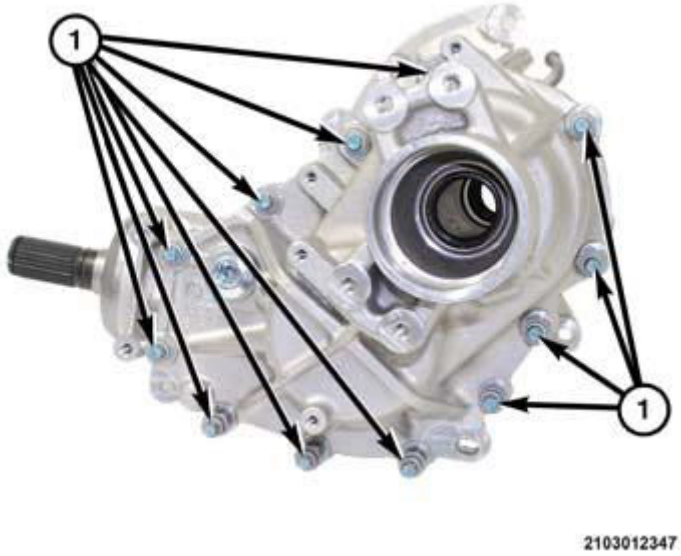

Fig. 25: Locating PTU Housing Bolts
Courtesy of CHRYSLER GROUP, LLC

11. Install the bolts (1) to hold the PTU housing halves together. Refer to **SPECIFICATIONS**.
12. Lubricate the intermediate shaft splines.

13. Install the PTU in the vehicle.
14. Fill the PTU to the proper lever with Mopar® 75W-90 fluid.
15. Road test the vehicle to verify the repair.

INSTALLATION

INSTALLATION

1. If manual transmission equipped, install a new O-ring in the groove around the outside of the Power Transfer Unit (PTU) input shaft housing.

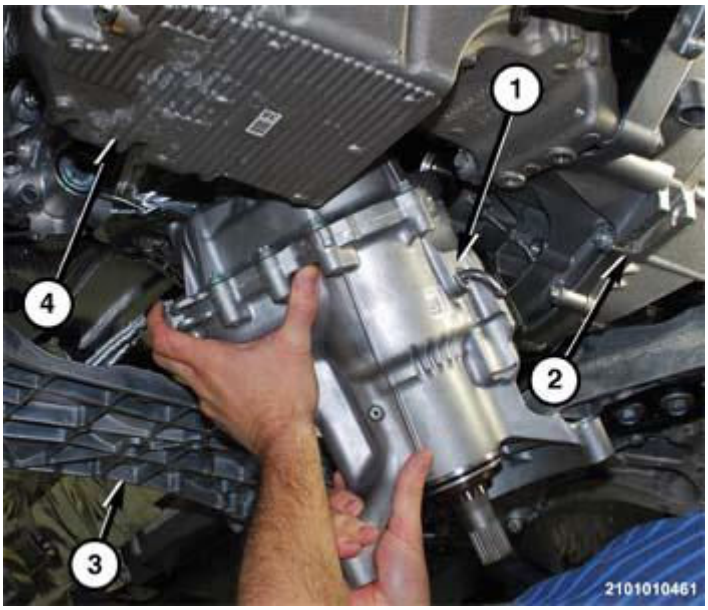

Fig. 26: Removing/Installing PTU
Courtesy of CHRYSLER GROUP, LLC

2. Tip the right side upward and into the gap over the suspension cradle and align the PTU (1) with the transaxle output shaft.

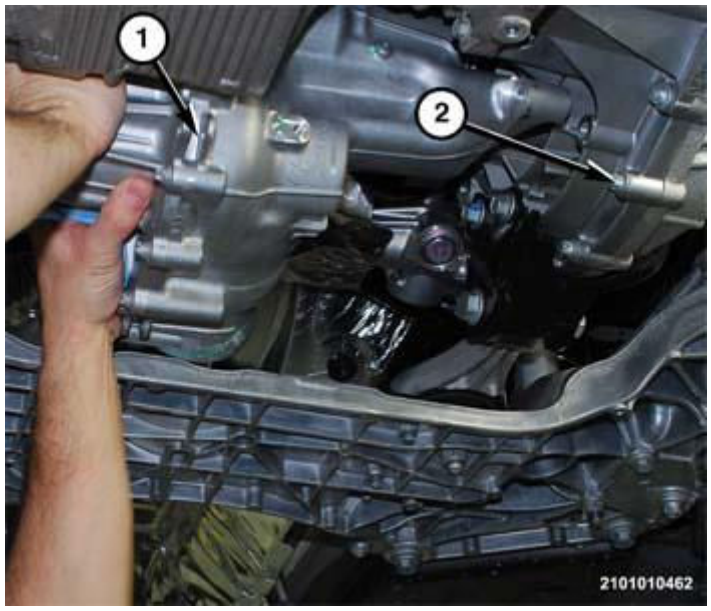

Fig. 27: Shifting PTU To Right Away From Transaxle
Courtesy of CHRYSLER GROUP, LLC

3. Shift the PTU (1) to the left onto transaxle (2) and engage the spline shaft into the transaxle output shaft adapter.

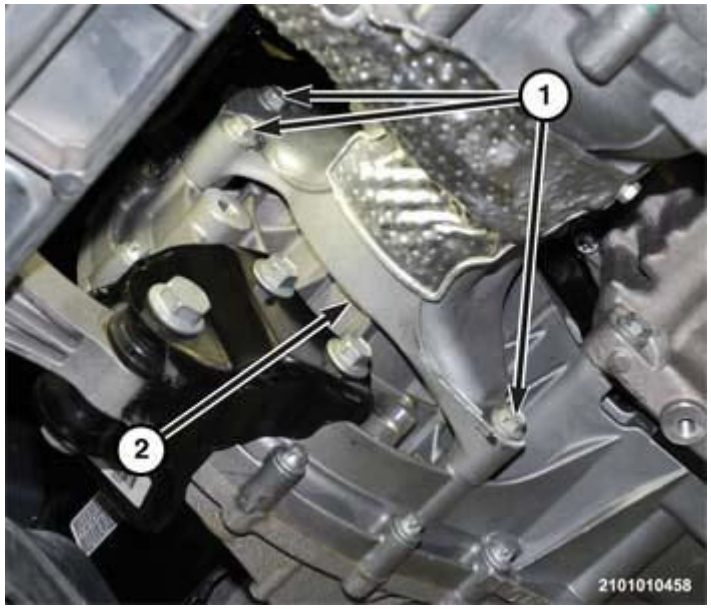

Fig. 28: PTU & Bolts At Transaxle
Courtesy of CHRYSLER GROUP, LLC

4. Install the bolts (1) to hold the PTU (2) to the transaxle. Refer to **SPECIFICATIONS**.

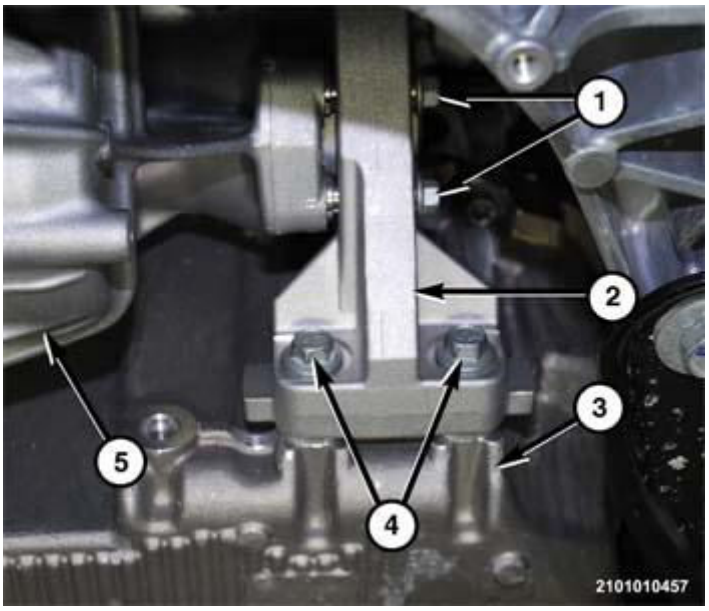

Fig. 29: PTU Support Bracket & Bolts At Block & Oil Pan
Courtesy of CHRYSLER GROUP, LLC

NOTE: The PTU to block bracket has a sleeve that slides in the bracket, if the sleeve is seized in the bracket, the bracket must be replaced.

5. Place the PTU support bracket (2) in position on the PTU (5).
6. Install the bolts (4) to hold the PTU support bracket (2) to the engine block (3). Refer to **SPECIFICATIONS**.

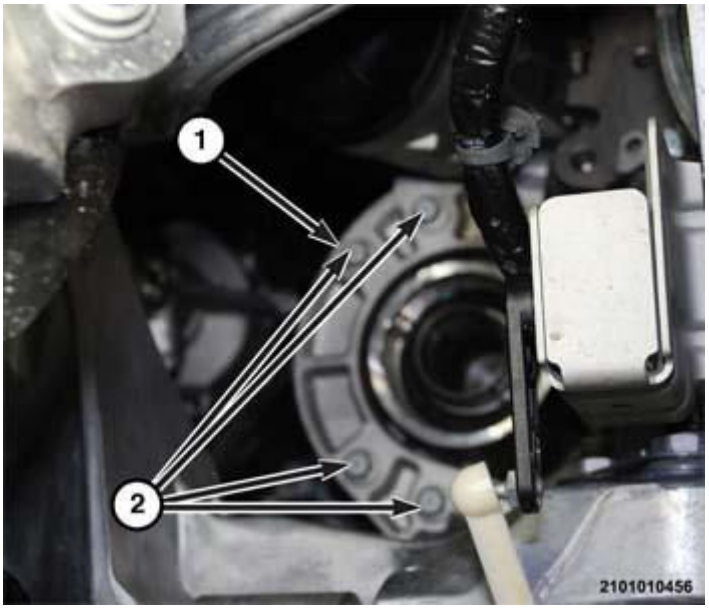

Fig. 30: PTU Support Bracket & Bolts At PTU
Courtesy of CHRYSLER GROUP, LLC

7. Install the bolts (2) to hold the PTU support bracket (1) to the PTU. Refer to **SPECIFICATIONS**.

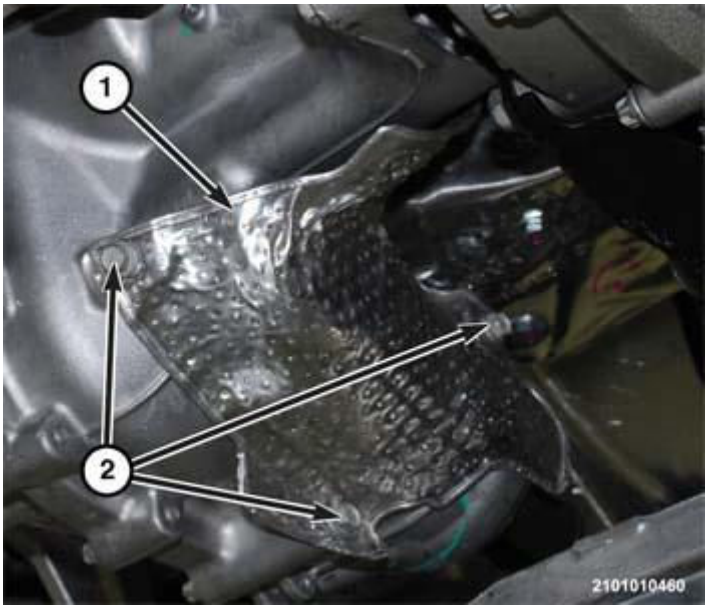

Fig. 31: Heat Shield & Bolts
Courtesy of CHRYSLER GROUP, LLC

8. Place the heat shield (1) in position on the PTU.
9. Install the bolts (2) to hold the heat shield (1) to the PTU. Refer to **SPECIFICATIONS**.
10. Install the crossunder exhaust pipe. Refer to **PIPE, EXHAUST CROSSUNDER, INSTALLATION** .
11. If equipped with a 3.2L, place the rear catalytic converter in position the cylinder head.
12. Install the bolts holding the rear maniverter to the cylinder head. Install the rear propeller shaft. Refer to **INSTALLATION** .
13. If equipped with a 2.4L, install the intake manifold. Refer to **MANIFOLD, INTAKE, INSTALLATION** .

NOTE: **The right halfshaft passes through multiple seals in manual transmission equipped vehicles, use care when installing the halfshaft.**

14. Install the right front halfshaft. Refer to **INSTALLATION** .
15. Install the right front wheel. Refer to **INSTALLATION** .
16. Verify that the PTU and transaxle are filled to the specified fluid level. Refer to **CAPACITIES AND RECOMMENDED FLUIDS, SPECIFICATIONS** .
17. Lower the vehicle.
18. Connect the battery negative cable clamp to the battery.
19. Road test the vehicle to verify the repair.

SPECIAL TOOLS

SPECIAL TOOLS

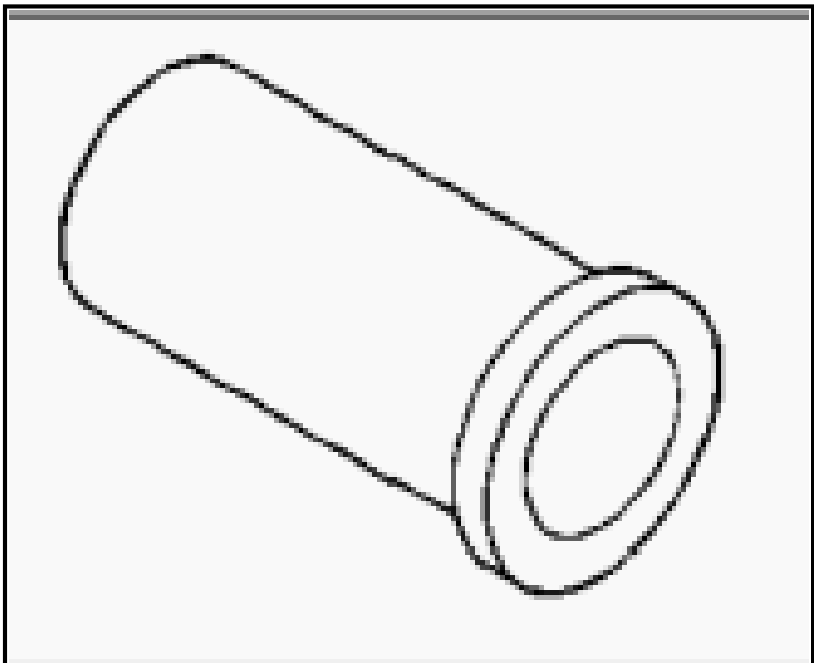	6342 - Installer, Seal (Originally Shipped In Kit Number(s) 6672.)
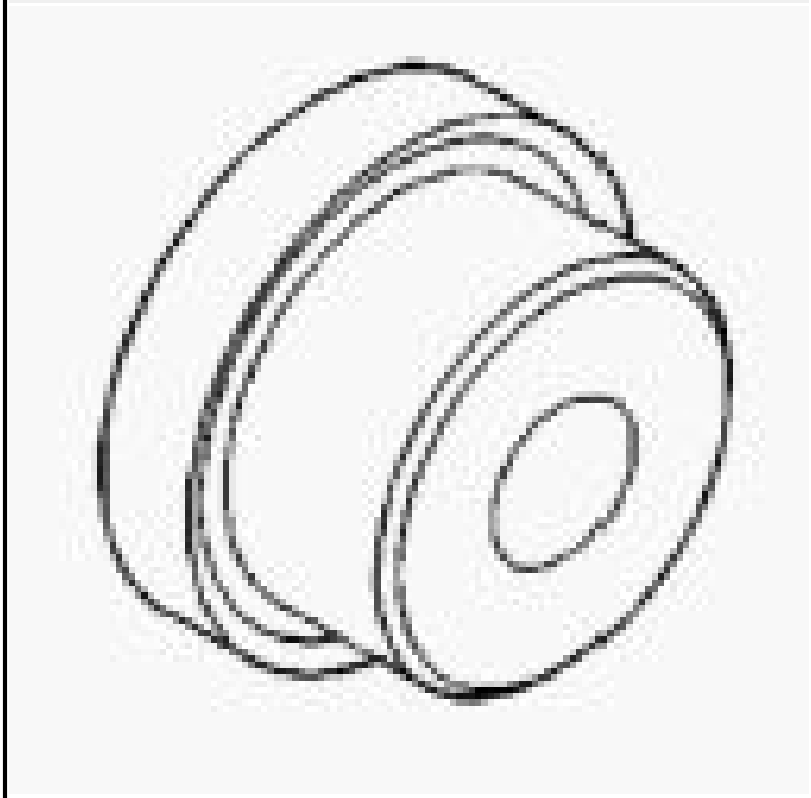	7828-A - Installer, Bearing (Originally Shipped In Kit Number(s) 9960.)

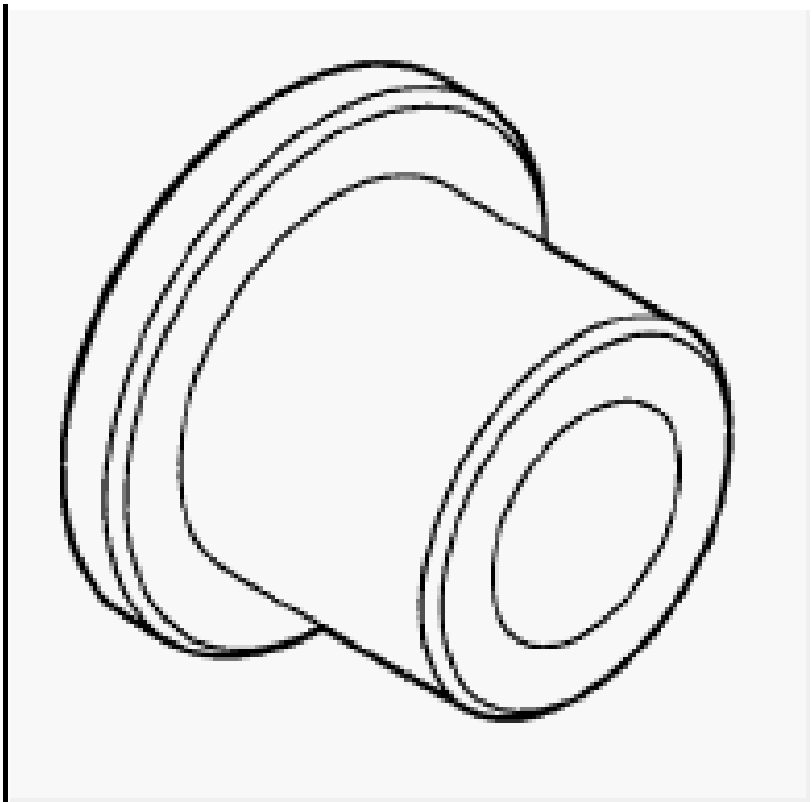

8239 - Installer, Bushing
(Originally Shipped In Kit Number(s) 8295, 8295CC, 8636.)

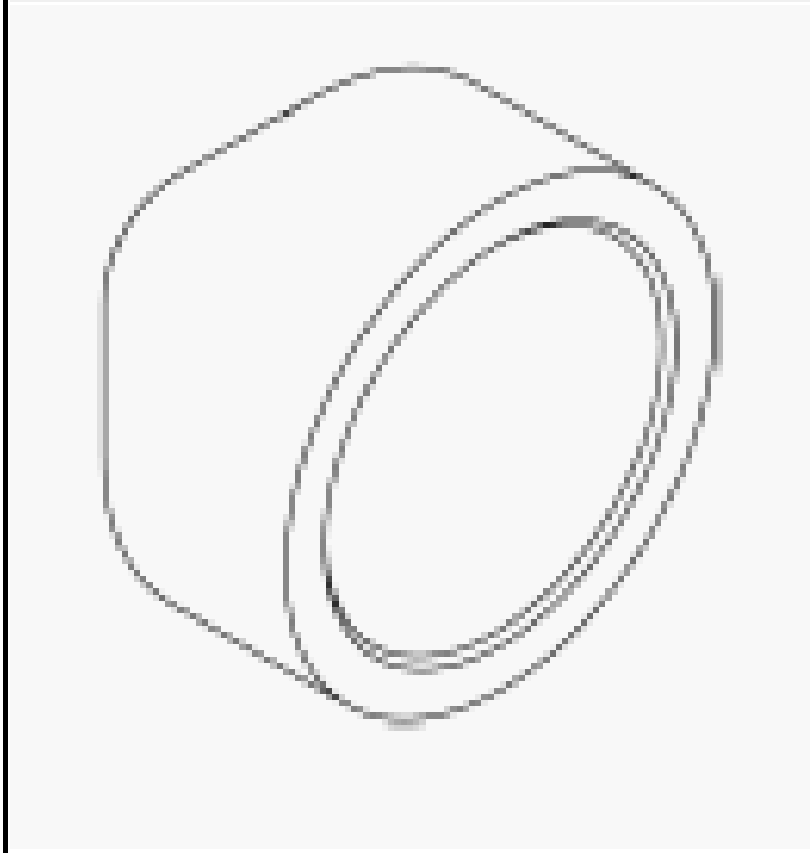

9684 - Installer, Seal
(Originally Shipped In Kit Number(s) 9656.)

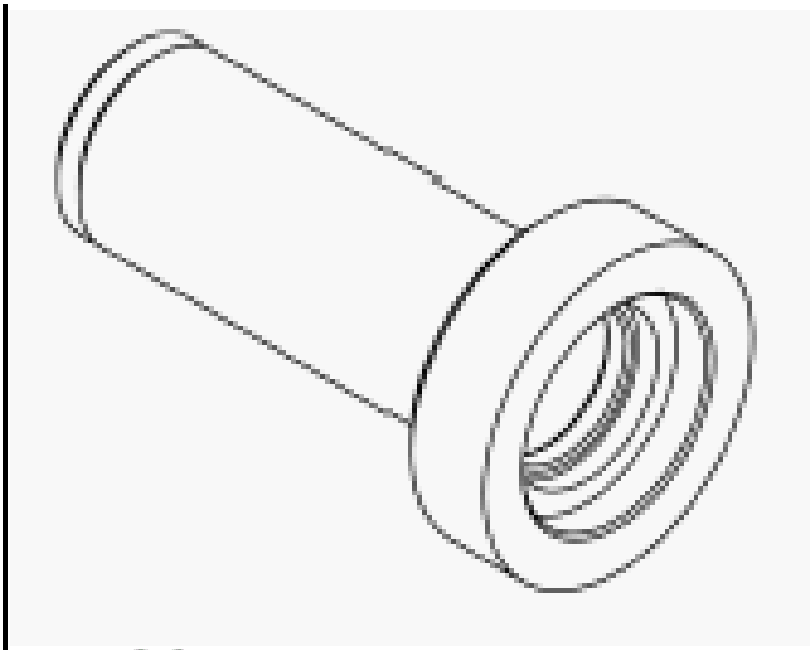

10117 - Installer, Seal
(Originally Shipped In Kit Number(s) 10075-CHRYSLER, 10075-DODGE.)

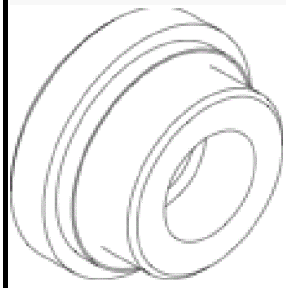

10382 - Installer, Oil Pump Housing Needle Bearing
(Originally Shipped In Kit Number(s) 10394A, 10394-UPD.)

10515 - Installer, Seal

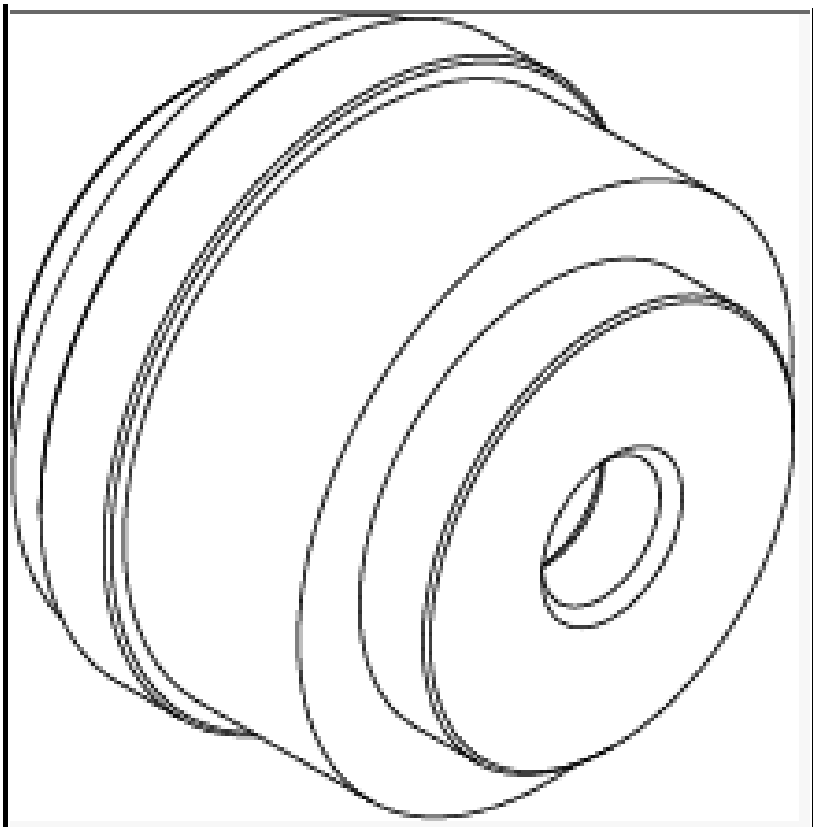

(Originally Shipped In Kit Number(s).)

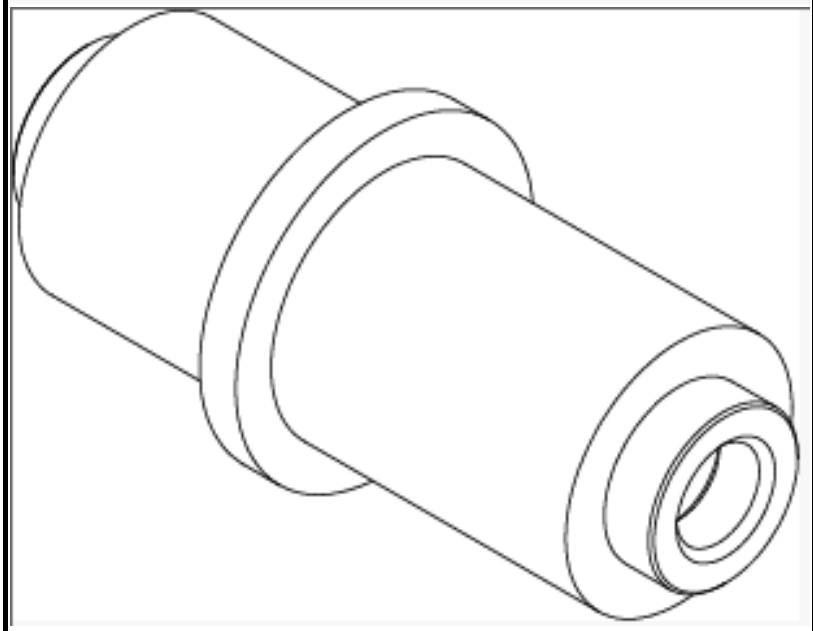

10517 - Installer, Seal
(Originally Shipped In Kit Number(s).)

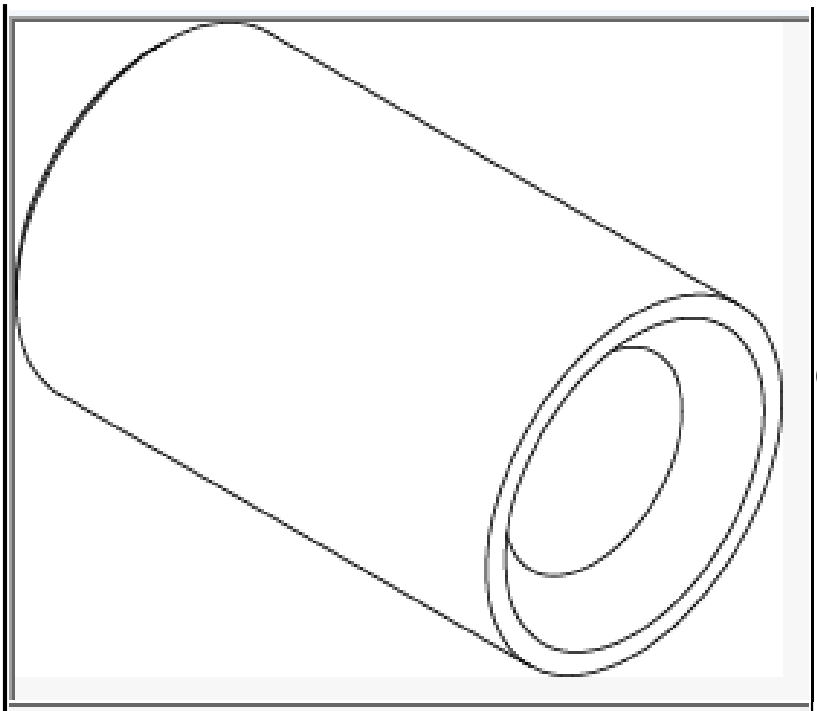	10518 - Installer, Oil Slinger (Originally Shipped In Kit Number(s).)
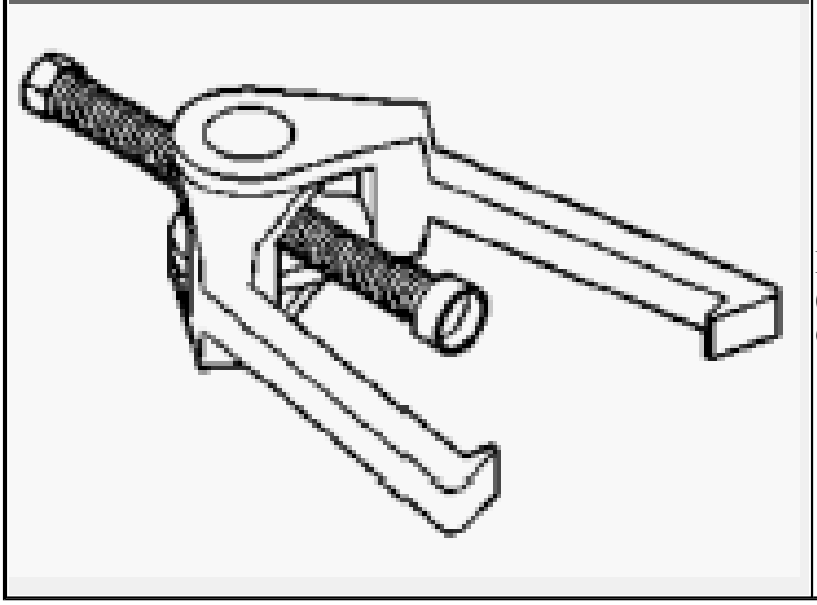	D-389 - Installer, Bearing (Originally Shipped In Kit Number(s) 6745.)

ACTUATOR, SHIFT

REMOVAL

ONE SPEED PTU

1. Remove the Power Transfer Unit (PTU) from the vehicle.
2. Place the PTU on a suitable, clean and stable work surface.
3. Drain the fluid from the PTU into a suitable drain pan.

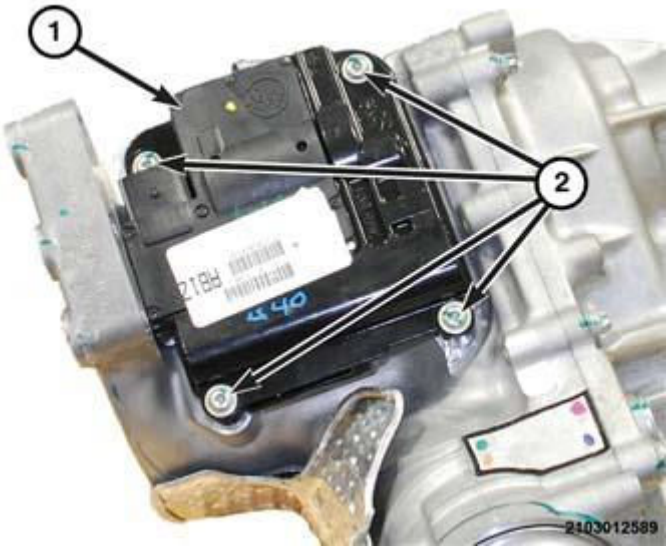

Fig. 32: PTU Shift Actuator & Screws
Courtesy of CHRYSLER GROUP, LLC

4. Remove the screws (2) holding the shift actuator (1) to the PTU. Discard the screws.
5. Separate the shift actuator from the PTU.

Fig. 33: Shift Actuator, Shift Fork & Gasket
Courtesy of CHRYSLER GROUP, LLC

6. Remove the gasket (2) from the groove in the shift actuator (1).

TWO SPEED PTU

NOTE: **If the PTU actuator is functional and is being removed to correct a fluid leak, the PTU should be placed in the 2WD mode before removing the PTU from the vehicle. If the actuator is not functional the actuator can be removed when the PTU is not in the 2WD mode, but it will be difficult to install the shift forks on the shift sleeves.**

1. Remove the PTU from the vehicle.
2. Place the PTU on a suitable work surface

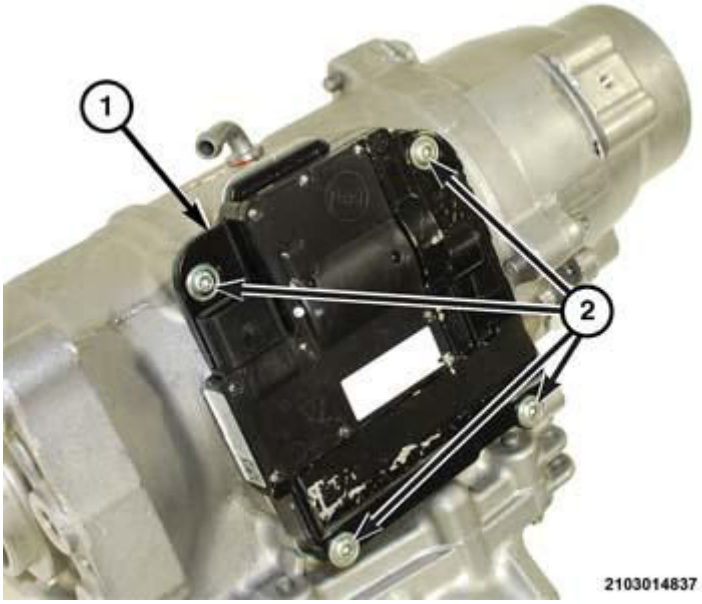

Fig. 34: Shift Actuator & Screws
Courtesy of CHRYSLER GROUP, LLC

3. Remove the screws (2) holding the shift actuator (1) to the PTU housing. Discard the screws.

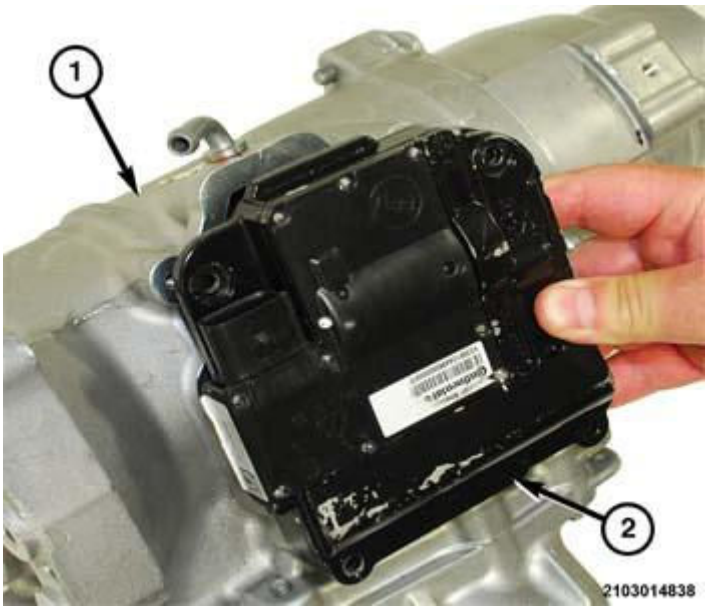

Fig. 35: Removing/Installing Shift Actuator At PTU
Courtesy of CHRYSLER GROUP, LLC

4. Separate the shift actuator (2) from the PTU (1).

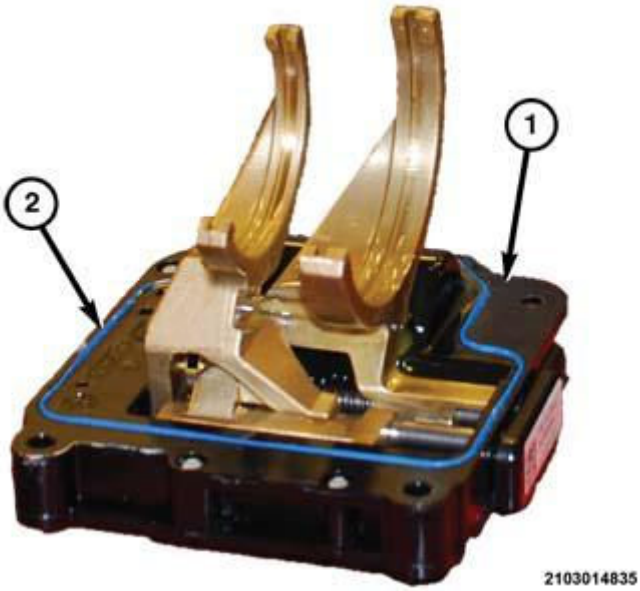

Fig. 36: Locating Gasket At Shift Actuator Sealing Surface Groove
Courtesy of CHRYSLER GROUP, LLC

5. Remove the gasket (2) from the groove in the shift actuator sealing surface (1).

INSTALLATION

ONE SPEED PTU

NOTE: **If installing a new actuator, there are two locating dowels that may have stayed in the case, remove them from the case as the dowels will come installed in the new actuator.**

Fig. 37: Shift Actuator, Shift Fork & Gasket
Courtesy of CHRYSLER GROUP, LLC

1. Using a clean lint free cloth, wipe the sealing surfaces clean.

   NOTE: **Do not use solvent to clean the PTU components.**

2. Install a NEW gasket (2) in the groove on the shift actuator.
3. Place the shift actuator in position on the PTU.
4. Engage the shift fork in the groove on the shift sleeve in the PTU and align the locating dowels.

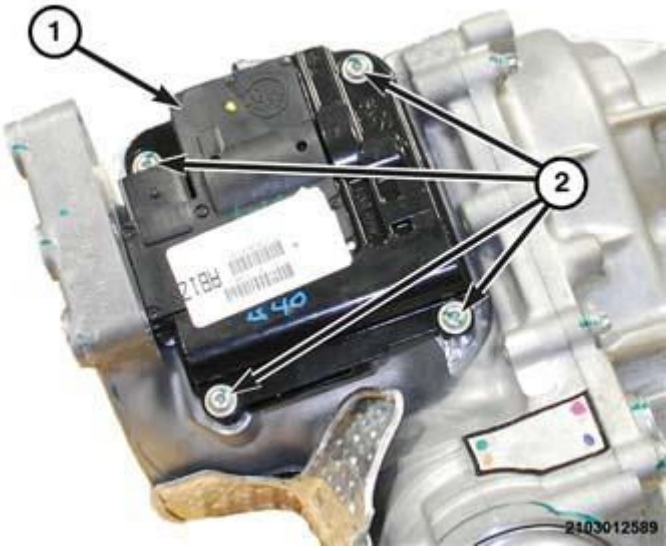

Fig. 38: PTU Shift Actuator & Screws
Courtesy of CHRYSLER GROUP, LLC

NOTE: Do not reuse the actuator mounting screws.

5. Install **NEW** screws (2) to hold the shaft actuator to the PTU. Refer to **SPECIFICATIONS**.
6. Install the PTU in the vehicle.
7. Verify that the PTU is properly filled with Mopar® 75W-90 fluid.
8. Road test the vehicle to verify the repair.

TWO SPEED PTU

NOTE: If the actuator was inoperative and was not in the 2WD mode before it was removed, the shift forks can be aligned by placing a large plastic loom tie between the shift fork and the actuator housing to position the fork closer to the center of the actuator. Do not attempt to join the ends of the loop tie around the shift mechanism. The loom tie will serve as a shim and can be pulled out after the actuator is in position on the PTU.

NOTE: If installing a new actuator, there are two locating dowels that may have stayed in the case, remove them from the case as the dowels will come installed in the new actuator.

1. Using a clean lint free cloth, wipe the sealing surfaces clean.

NOTE: Do not use solvent to clean the PTU components.

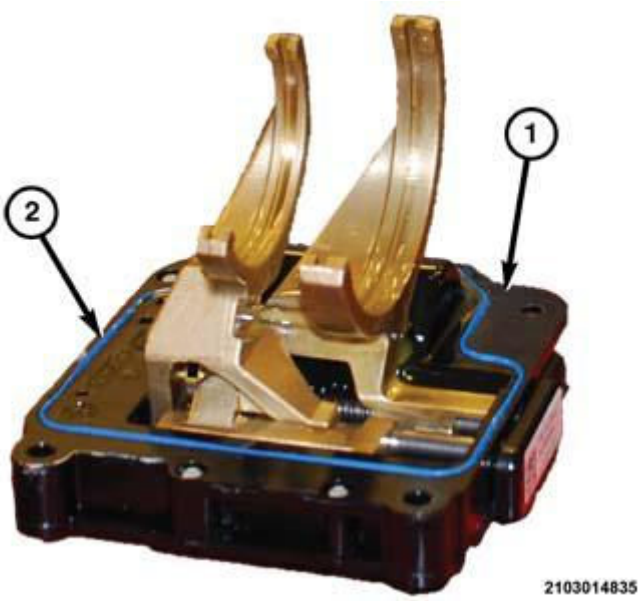

Fig. 39: Locating Gasket At Shift Actuator Sealing Surface Groove
Courtesy of CHRYSLER GROUP, LLC

2. Install a NEW gasket (2) in the groove in the sealing surface of the shaft actuator (1).

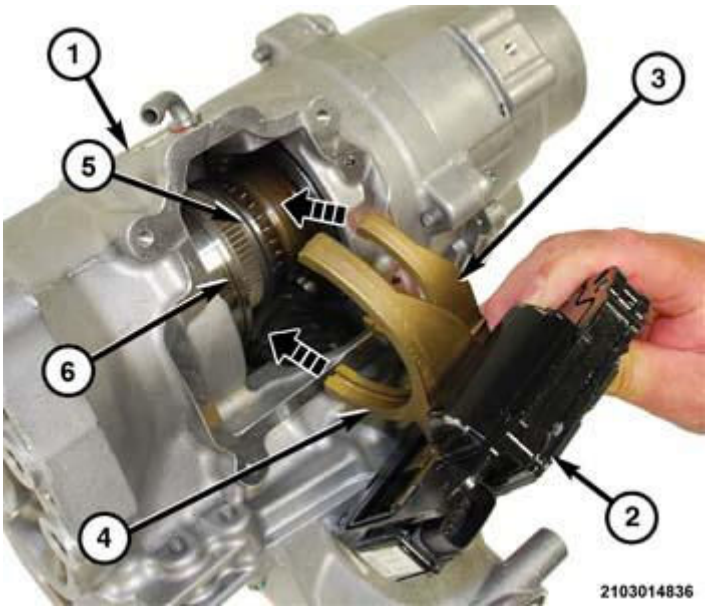

Fig. 40: Actuator, Shift Forks, Shifts Sleeves & PTU
Courtesy of CHRYSLER GROUP, LLC

3. While carefully guiding the shift forks (3 and 4) into the PTU housing, align the grooves in the shift forks (3 and 4) to the rails on the shift sleeves (5 and 6).

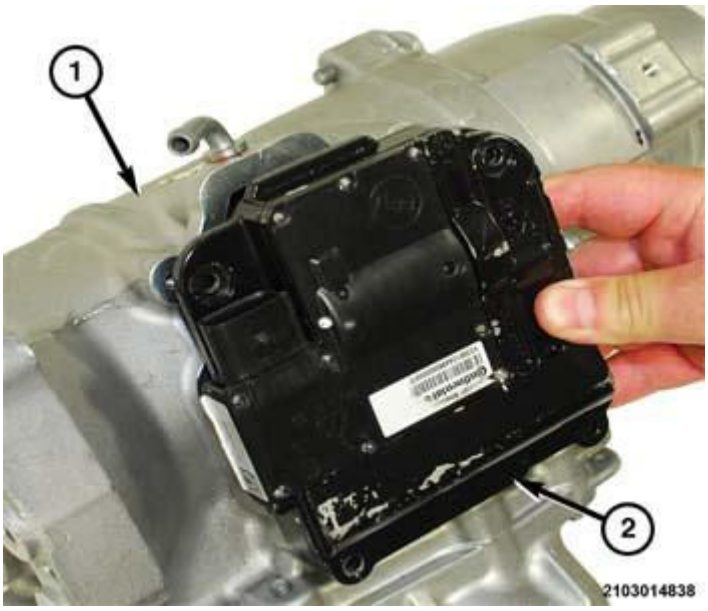

Fig. 41: Removing/Installing Shift Actuator At PTU
Courtesy of CHRYSLER GROUP, LLC

4. Push the actuator (2) downward until the sealing surfaces mate and the locating dowels line up with the PTU (1).
5. If a loom tie was used as a shim, pull the loom tie out from under the actuator.

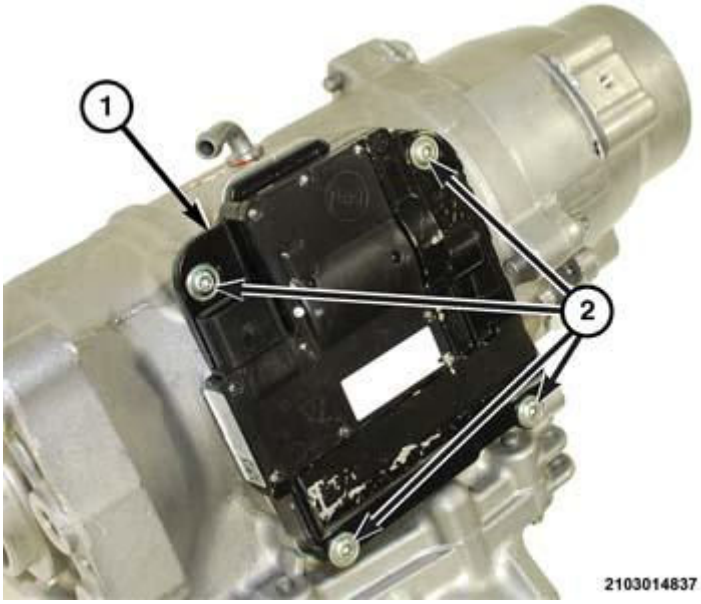

Fig. 42: Shift Actuator & Screws
Courtesy of CHRYSLER GROUP, LLC

NOTE: Do not reuse the actuator mounting screws.

6. Install **new** screws (2) to hold the shift actuator to the PTU housing. Refer to **SPECIFICATIONS**.

NOTE: **Prior to fully installing the PTU in vehicle, use the scan tool to actuate the actuator to all positions to verify the shift forks properly engaged the hubs in the PTU. It may be necessary to manually manipulate the output shafts to allow the actuator to engage in all positions.**

7. Install the PTU in the vehicle. Refer to **INSTALLATION**.
8. Fill the PTU to the proper level with the specified fluid.
9. Road test the vehicle to verify the repair.

PLUG, RING GEAR SHAFT

REMOVAL

REMOVAL

1. Remove the PTU from the vehicle.
2. Place the PTU on a suitable work surface.

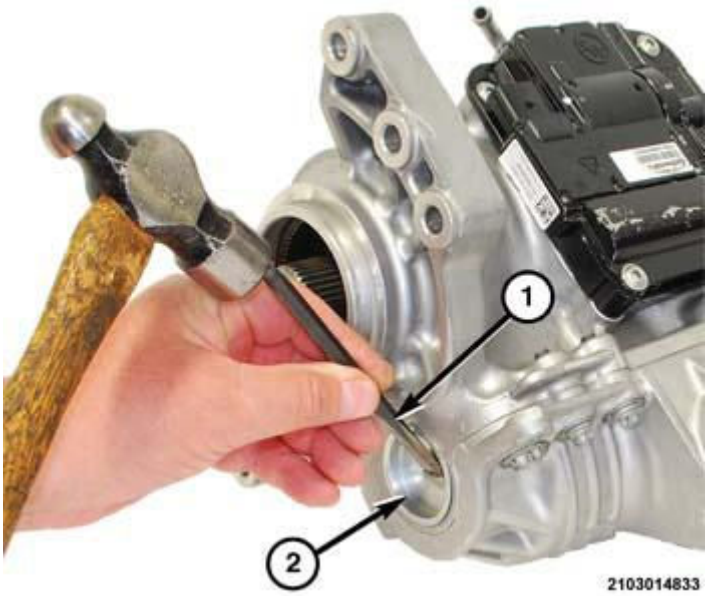

Fig. 43: Piercing Hole In Center Of Plug Using Chisel
Courtesy of CHRYSLER GROUP, LLC

3. Using a suitable sharp chisel (1), pierce a hole in the center of the plug (2).

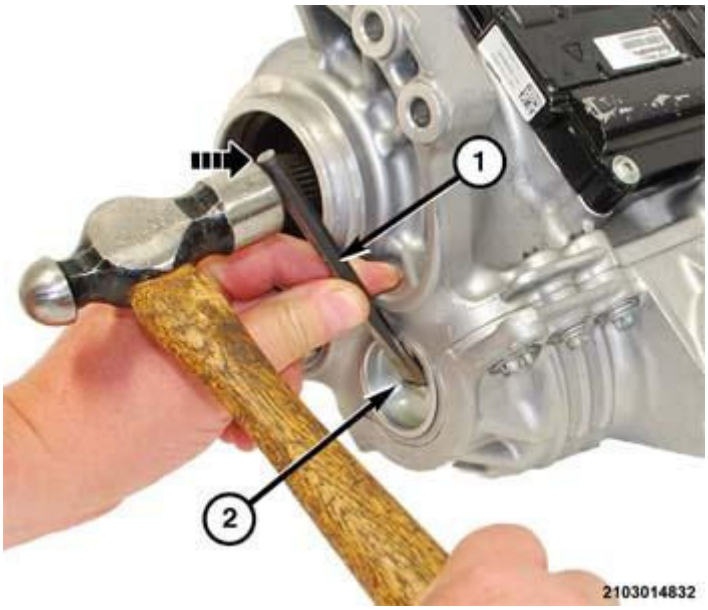

Fig. 44: Driving Chisel Side Ways To Lever Plug Out Of PTU
Courtesy of CHRYSLER GROUP, LLC

4. Drive the chisel (1) side ways to lever the plug (2) out of the PTU.

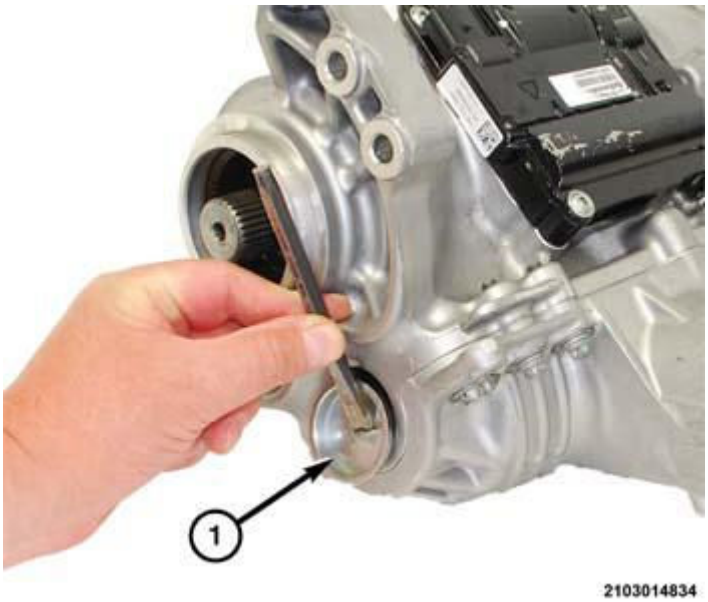

Fig. 45: Separating Plug From PTU
Courtesy of CHRYSLER GROUP, LLC

5. Separate the plug (1) from the PTU.

INSTALLATION

INSTALLATION

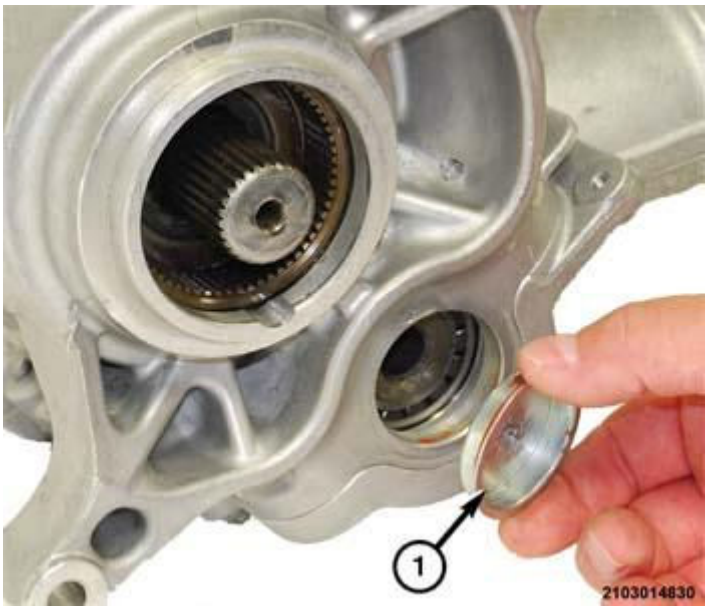

Fig. 46: Placing New Plug Into Hole In PTU
Courtesy of CHRYSLER GROUP, LLC

1. Using the clean lint free cloth, wipe the circumference of the plug hole free of debris and oil.
2. Place a NEW plug into the hole in the PTU.

Fig. 47: Driving New Plug Into Hole In PTU
Courtesy of CHRYSLER GROUP, LLC

3. Using tool (special tool #6342, Installer, Seal), drive the new plug into the hole in the PTU until the lip of the plug is flush against the outer surface of the PTU.
4. Install the PTU in the vehicle.

5. Verify that the PTU fluid is at the specified level.
6. Road test the vehicle to verify the repair.

SEAL, AXLE DRIVE SHAFT, OUTER

REMOVAL

REMOVAL

1. Position the vehicle on a suitable hoist with the transaxle in neutral.
2. Place a suitable drain pan under the PTU to catch fluid that may spill when the seal is removed.
3. Remove right halfshaft. Refer to **REMOVAL** .

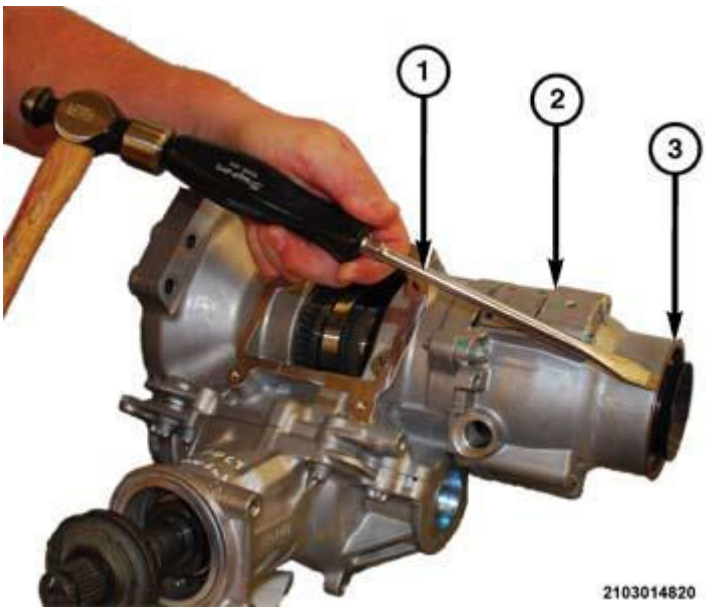

Fig. 48: Removing Output Shaft Seal From PTU Housing
Courtesy of CHRYSLER GROUP, LLC

4. Using a suitable screw driver (1), remove the output shaft seal (3) from the PTU housing (2).

INSTALLATION

INSTALLATION

1. Using a clean lint free cloth, wipe the seal cavity clean of oil and debris.
2. Inspect the seal bore for scratches or cracks. If damage is evident replace the PTU.

Fig. 49: Placing New Lip Seal Into Position On PTU Housing
Courtesy of CHRYSLER GROUP, LLC

3. Place the new lip seal (1) in position on the PTU housing (2).

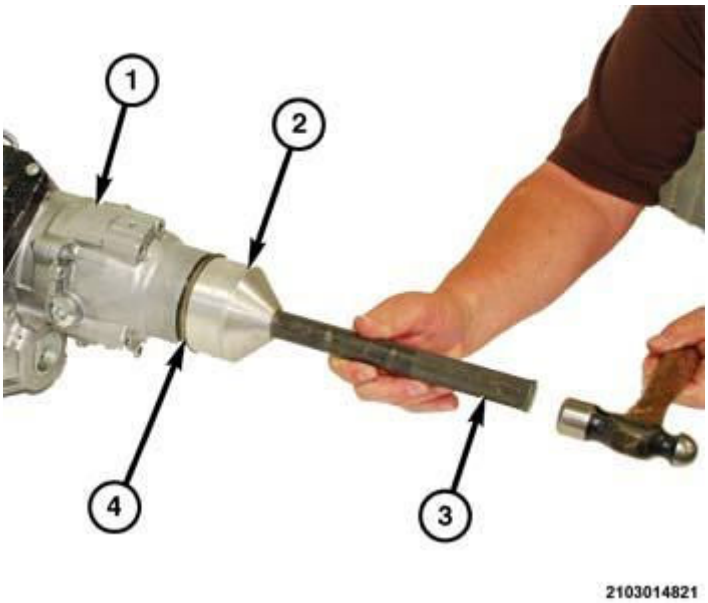

Fig. 50: Installing New Lip Seal Into PTU Housing
Courtesy of CHRYSLER GROUP, LLC

4. Using tool (special tool #9684, Installer, Seal) (2) and (special tool #C-4171, Driver Handle, Universal) (3), install the new seal in the PTU housing (1).
5. Install the right side halfshaft. Refer to **INSTALLATION** .
6. Remove the drain pan from under the vehicle.

7. Fill the PTU with the proper fluid.
8. Lower the vehicle.
9. Road test the vehicle to verify the repair.

SEAL, REAR OUTPUT SHAFT

REMOVAL

ONE SPEED PTU

1. Position the vehicle on a suitable hoist with the transaxle in neutral.
2. Raise the vehicle to gain access to the rear drive shaft. Refer to **HOISTING, STANDARD PROCEDURE** .
3. Remove the rear drive shaft from the vehicle. Refer to **REMOVAL** .

Fig. 51: Removing/Installing Circlip At Rear Output Shaft
Courtesy of CHRYSLER GROUP, LLC

4. Remove the c-clip (2) from the groove in the rear output shaft (1).

Fig. 52: Removing/Installing O-Ring At Rear Output Shaft
Courtesy of CHRYSLER GROUP, LLC

5. Remove the O-ring seal (1) from the groove in the rear output shaft (2).

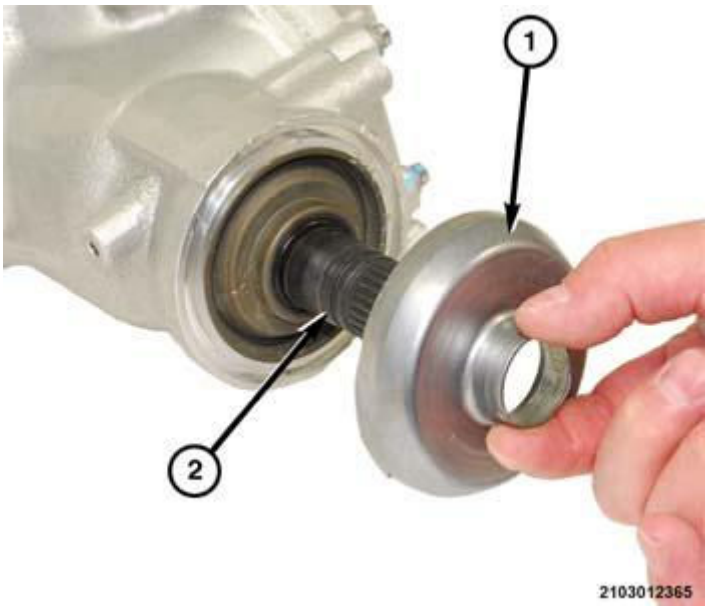

Fig. 53: Dust Deflector & Rear Output Shaft
Courtesy of CHRYSLER GROUP, LLC

6. Using suitable prying tools, pry the dust deflector from the rear output shaft.

NOTE: **It may be necessary to punch a hole in the metal deflector to enable removal.**

7. Place a suitable drain pan under the PTU output shaft to catch fluid that may spill from PTU when the seal is removed.

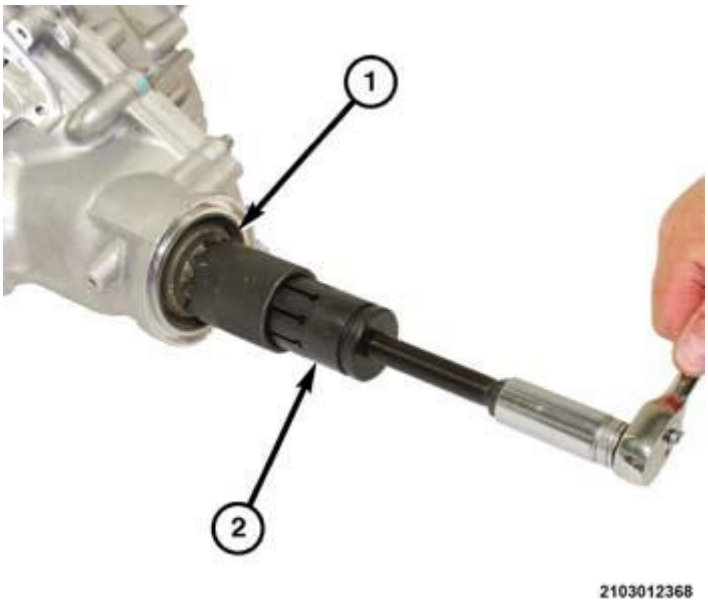

Fig. 54: Removing Seal From PTU Housing
Courtesy of CHRYSLER GROUP, LLC

8. Using tool (special tool #9082A, Remover, Bearing), remove the seal from the PTU housing.

NOTE: **It may be necessary to squeeze the spring fingers on tool (special tool #9082A, Remover, Bearing) with suitable pliers to lock the jaws into the shoulder on the lip seal.**

9. Clean and inspect the sealing surface and the seal bore, if any damage is present, it will be necessary to replace the PTU.

TWO SPEED PTU

1. Position the vehicle on a suitable hoist with the transaxle in neutral.
2. Raise the vehicle to gain access to the rear drive shaft. Refer to **HOISTING, STANDARD PROCEDURE** .
3. Remove the rear drive shaft from the vehicle. Refer to **REMOVAL** .

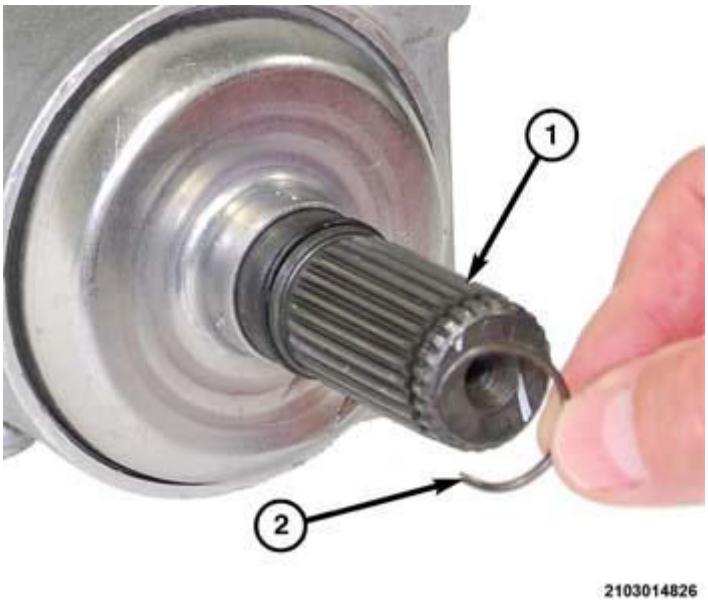

Fig. 55: Removing/Installing Circlip At Rear Output Shaft
Courtesy of CHRYSLER GROUP, LLC

4. Remove the circlip (2) from the groove in the rear output shaft (1).

Fig. 56: Removing/Installing O-Ring At Rear Output Shaft
Courtesy of CHRYSLER GROUP, LLC

5. Remove the O-ring seal (1) from the groove in the rear output shaft (2).

Fig. 57: Dust Deflector & PTU Housing
Courtesy of CHRYSLER GROUP, LLC

6. Using suitable prying tools, pry the dust deflector (2) from the rear output shaft.

NOTE: **It may be necessary to punch a hole in the dust deflector to enable removal.**

7. Place a suitable drain pan under the PTU output shaft to catch fluid that may spill from PTU when the seal is removed.

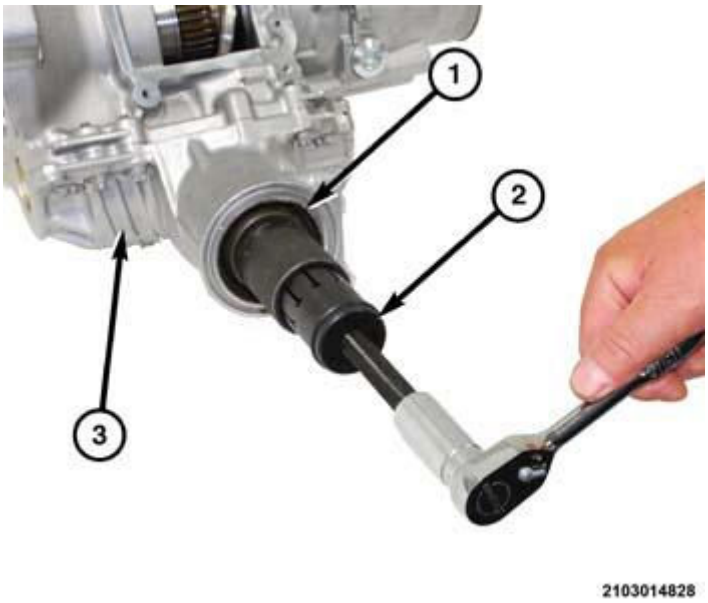

Fig. 58: Removing Seal From PTU Lower Housing
Courtesy of CHRYSLER GROUP, LLC

8. Using tool (special tool #9082A, Remover, Bearing) (2), remove the seal (1) from the PTU lower housing (3).

NOTE: It may be necessary to squeeze the spring fingers on tool (special tool #9082A, Remover, Bearing) with suitable pliers to lock the jaws into the shoulder on the lip seal.

9. Clean and inspect the sealing surfaces and the seal bore, if any damage is present it will be necessary to replace the PTU.

INSTALLATION

ONE SPEED PTU

Fig. 59: Placing New Seal In Position On PTU Output Shaft
Courtesy of CHRYSLER GROUP, LLC

1. Apply assembly lube on the lip of the seal to aid installation onto the output shaft.
2. Place the NEW seal (1) in position on the PTU output shaft.

Fig. 60: Installing New Seal Into PTU Housing
Courtesy of CHRYSLER GROUP, LLC

3. Using tool (2) (special tool #10117, Installer, Seal), install the NEW seal (1) into the PTU housing
4. Remove the drain pan from under the PTU output shaft.

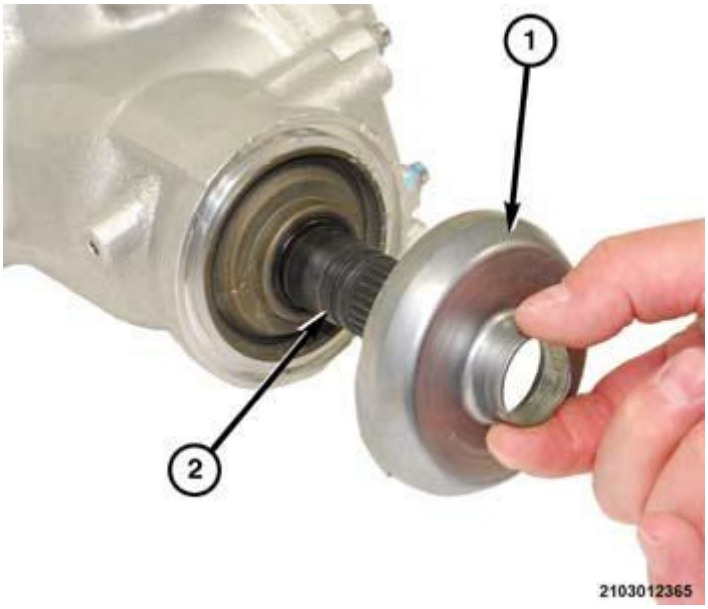

Fig. 61: Dust Deflector & Rear Output Shaft
Courtesy of CHRYSLER GROUP, LLC

5. Place the dust deflector (1) in position on the rear output shaft (2).

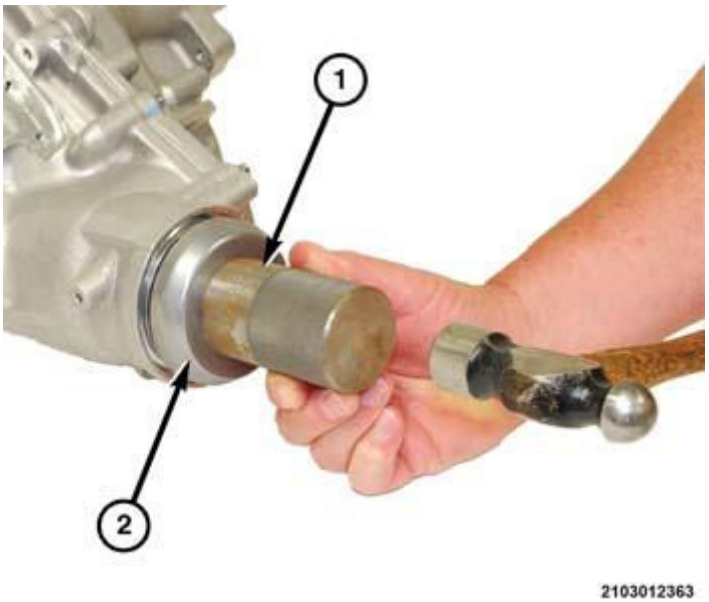

Fig. 62: Installing Dust Deflector
Courtesy of CHRYSLER GROUP, LLC

6. Using tool (special tool #10518, Installer, Oil Slinger) (1), install the dust deflector (2).

Fig. 63: Removing/Installing O-Ring At Rear Output Shaft
Courtesy of CHRYSLER GROUP, LLC

7. Install the O-ring seal (1) in the groove in the rear output shaft (2).

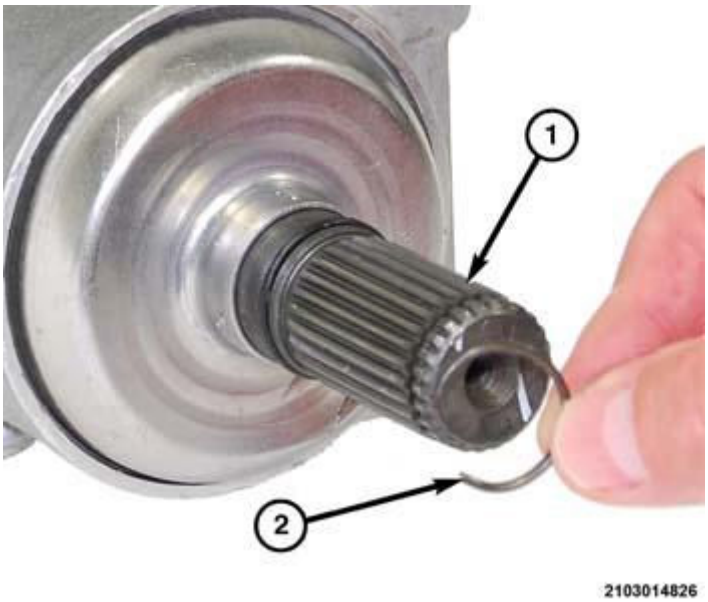

Fig. 64: Removing/Installing Circlip At Rear Output Shaft
Courtesy of CHRYSLER GROUP, LLC

8. Install the circlip (2) in the groove in the rear output shaft (1).
9. Install the rear drive shaft in the vehicle. Refer to **INSTALLATION** .
10. Fill the PTU to the proper level with the Mopar® 75W90 fluid.
11. Lower the vehicle.
12. Road test the vehicle to verify the repair.

TWO SPEED PTU

Fig. 65: Placing New Seal In Position On PTU Rear Output Shaft

Courtesy of CHRYSLER GROUP, LLC

1. Apply assembly lube on the lip of the seal to aid installation onto the output shaft.
2. Place the NEW seal (1) in position on the PTU (2) rear output shaft.

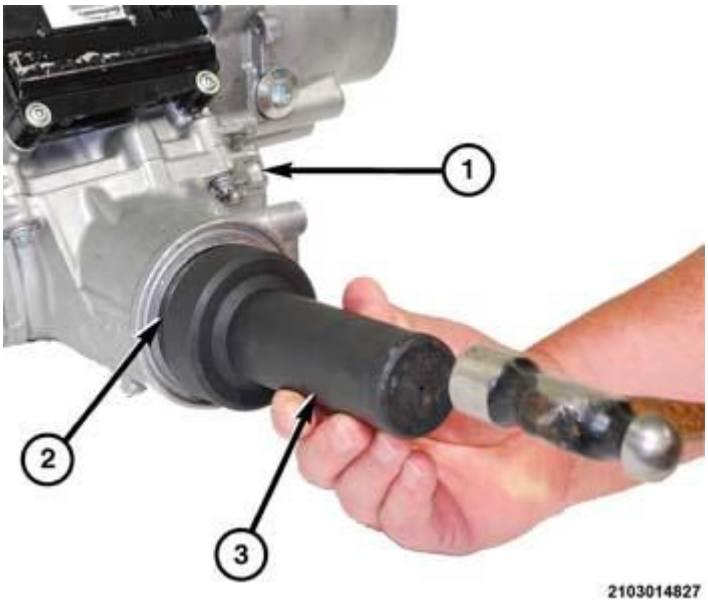

Fig. 66: Installing New Seal Into PTU Lower Housing
Courtesy of CHRYSLER GROUP, LLC

3. Using tool (3) (special tool #10117, Installer, Seal), install the NEW seal (2) into the PTU lower housing (1).
4. Remove the drain pan from under the PTU output shaft.

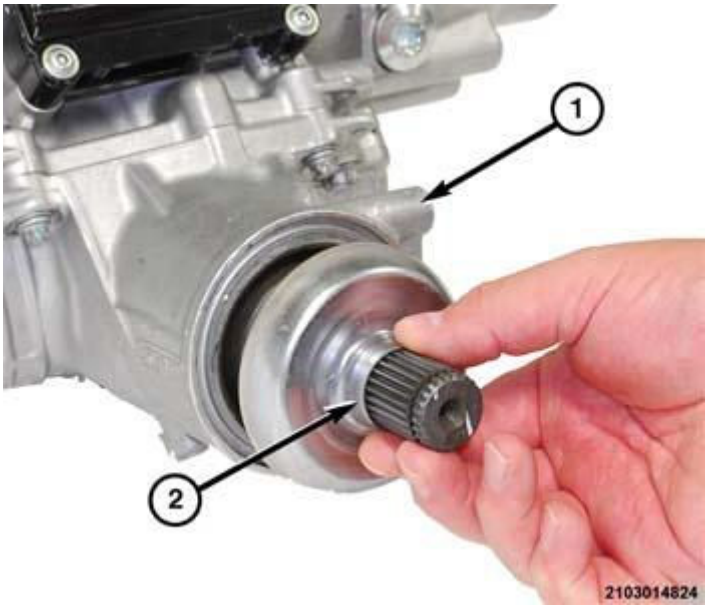

Fig. 67: Dust Deflector & PTU Housing

Courtesy of CHRYSLER GROUP, LLC

5. Place the dust deflector (2) in position on the rear output shaft (1).

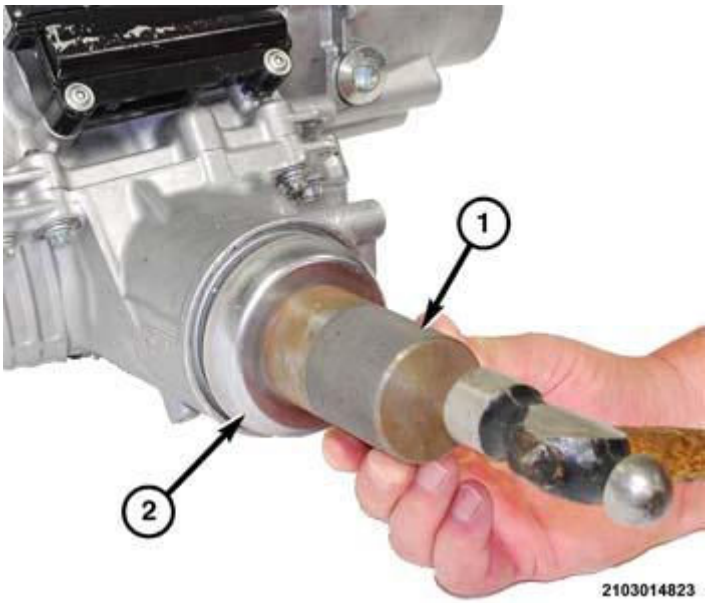

Fig. 68: Installing Dust Deflector
Courtesy of CHRYSLER GROUP, LLC

6. Using tool (special tool #10518, Installer, Oil Slinger) (1), Install the dust deflector (2).

Fig. 69: Removing/Installing O-Ring At Rear Output Shaft
Courtesy of CHRYSLER GROUP, LLC

7. Install the O-ring seal (1) in the groove in the rear output shaft (2).

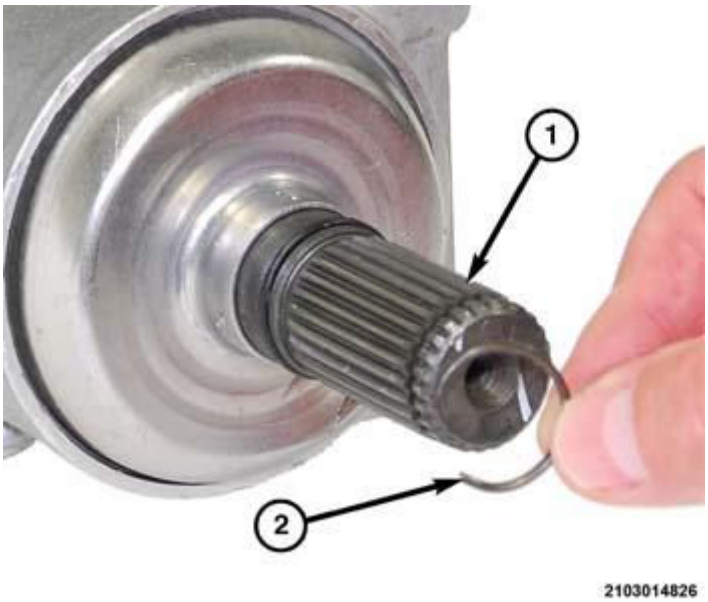

Fig. 70: Removing/Installing Circlip At Rear Output Shaft
Courtesy of CHRYSLER GROUP, LLC

8. Install the Circlip (2) in the groove in the rear output shaft (1).
9. Install the rear drive shaft in the vehicle. Refer to **INSTALLATION** .
10. Fill the PTU to the proper level with the Mopar® 75W90 fluid.
11. Lower the vehicle.
12. Road test the vehicle to verify the repair.